CATERPILLAR®

SEBP3851-06
November 2005

VOLUME I
Pages 1-500

RUTHZIL TRATOR COMERCIAL DE PEÇAS LTDA 11 97083-6812 ROLANDO

Parts Manual

SIS

See “General Information” for New Parts Manual Features.

994F Wheel Loader

4421-Up (Machine)
8WM1-Up (Engine)
DWX1-Up (Transmission)
6JT1-Up (Torque Converter)

Powered By 3516 Engine
This Parts Manual is also Available in .PDF Format on Compact Disc(CD-ROM)-Caterpillar Form No. SERP3851

Product and Dealer Information

Note: For product identification plate locations, see the section “Product Identification Information” in the Operation and Maintenance Manual.

Delivery Date: _____

Product Information

Model: _____

Product Identification Number: _____

Engine Serial Number: _____

Transmission Serial Number: _____

Generator Serial Number: _____

Attachment Serial Numbers: _____

Attachment Information: _____

Customer Equipment Number: _____

Dealer Equipment Number: _____

Dealer Information

Name: _____ Branch: _____

Address: _____

_____

_____

	Dealer Contact	Phone Number	Hours
Sales:	_____	_____	_____
Parts:	_____	_____	_____
Service:	_____	_____	_____

Informations produit et concessionnaire

Nota: Voir l'emplacement de la plaque signalétique du produit au chapitre "Informations produit" du guide d'utilisation et d'entretien.

Date de livraison: _____

Informations produit

Modèle: _____

Numéro d'identification produit: _____

Numéro de série du moteur: _____

Numéro de série de la boîte de vitesses: _____

Numéro de série de l'alternateur: _____

Numéros de série d'équipement: _____

Informations sur l'équipement: _____

Numéro matériel client: _____

Numéro matériel concessionnaire: _____

Informations concessionnaire

Nom: _____ Agence: _____

Adresse: _____

_____

_____

	Contact concessionnaire	Numéro de téléphone	Heures
Ventes:			
Pièces:			
Service:			

Información del Producto/Distribuidor

Nota: Para saber la ubicación de las placas de identificación del producto, ver la sección “Información sobre identificación del producto” en el Manual de Operación y Mantenimiento.

Fecha de entrega: _____

Información del producto

Modelo: _____

Número de identificación del producto: _____

Número de serie del motor: _____

Número de serie de la transmisión: _____

Número de serie del generador: _____

Números de serie de los accesorios: _____

Información sobre los accesorios: _____

Número del equipo del cliente: _____

Número del equipo del distribuidor: _____

Información del distribuidor

Nombre: _____ Sucursal: _____

Dirección: _____

_____

_____

Comunicación con el distribuidor	Número de teléfono	Horas
Ventas: _____	_____	_____
Piezas: _____	_____	_____
Servicio: _____	_____	_____

Informações Sobre Produto e Revendedor

Nota: Para localizações da placa de identificação do produto, consulte a seção, “Informações Sobre Identificação do Produto” no Manual de Operação e Manutenção.

Data de Entrega: _____

Informações Sobre o Produto

Modelo: _____

Número de Identificação do Produto: _____

Número de Série do Motor: _____

Número de Série da Transmissão: _____

Número de Série do Gerador: _____

Números de Série de Acessórios: _____

Informações Sobre Acessórios: _____

Número do Equipamento do Cliente: _____

Número do Equipamento do Revendedor: _____

Informações Sobre o Revendedor

Nome: _____ Filial: _____

Endereço: _____

_____

_____

	Contato do Revendedor	Telefone	Horas
Vendas:	_____	_____	_____
Peças:	_____	_____	_____
Serviço:	_____	_____	_____

Produkt- und Händlerinformation

Anmerkung: Für die Lage der Produkt-Identnummer und Seriennummern siehe Abschnitt “Produkt-Identinformation” im Betriebs- und Wartungshandbuch.

Lieferdatum: _____

Produkt-Identinformation

Modell: _____

Produkt-Identnummer: _____

Seriennummer des Motors: _____

Seriennummer des Getriebes: _____

Seriennummer des Generators: _____

Seriennummern der Arbeitsgeräte: _____

Arbeitsgeräteinformation: _____

Kundennummer: _____

Händlernummer: _____

Händlerinformation

Name: _____ Niederlassung: _____

Adresse: _____

_____

_____

	Kontaktperson beim Händler	Telefon	Dienststunden
Verkauf:	_____	_____	_____
Ersatzteile:	_____	_____	_____
Service:	_____	_____	_____

MEMORANDA

TABLE OF CONTENTS

Name	Page
GENERAL INFORMATION	A32
REPAIR ALTERNATIVES	A51
SUPPLEMENTAL COOLANT ADDITIVES	A56
MAINTENANCE PARTS	A61
INDEX	A84
MACHINE ARRANGEMENT	1
CHASSIS AR-FRONT	1
CHASSIS AR-REAR	2
COMMON AR	2
CONVERSION AR-CERTIFICATION	3
INSTALLATION AR-FIELD	3
ENGINE ARRANGEMENT	5
ENGINE AR	5
INSTALLATION AR-ENGINE	7
BASIC ENGINE	8
AIR COMPRESSOR GP	8
BASE GP-VALVE COVER	10
BELT TIGHTENER GP	11
CAMSHAFT GP	13
COVER GP-CYLINDER BLOCK	14
COVER GP-ENGINE	15
COVER GP-FRONT HOUSING	17
COVER GP-VALVE MECHANISM	19
CRANKSHAFT GP	20
CYLINDER BLOCK AS	21
CYLINDER BLOCK GP	22
CYLINDER HEAD AS	24
CYLINDER HEAD GP	25
DAMPER GP	29
DRIVE AR-FAN	30
DRIVE GP-ACCESSORY	31
DRIVE GP-AUXILIARY	36
DRIVE GP-FAN	38
FLYWHEEL GP	44
GEAR GP-FRONT	45
GEAR GP-REAR	47
GUARD GP-BELT	49
HOUSING GP-FLYWHEEL	52
HOUSING GP-FRONT	54
IDLER GP-BELT	55
LIFTING GP-ENGINE	56
LINES GP-AIR COMPRESSOR	57
MOUNTING GP-ALTERNATOR	59
PAN GP-OIL	61
PISTON & ROD GP	64
SEAL GP-CRANKSHAFT	67
SUPPORT GP-ENGINE	68
VALVE MECHANISM GP	70
LUBRICATION SYSTEM	72
BREATHER GP	72
FILLER GP-ENGINE OIL	74
FILTER GP-ENGINE OIL	75
FUMES DISPOSAL GP	77
GAUGE GP-OIL LEVEL (DIPSTICK)	78
LINES GP-ENGINE OIL	80
LINES GP-TURBOCHARGER OIL	86
METERING GP-ENGINE OIL	89
OIL CHANGE GP-HIGH SPEED	91
PUMP & MOTOR GP-PRELUBRICATION	93
PUMP GP-ENGINE OIL	94
PUMP GP-PRELUBRICATION	96
PUMP GP-SCAVENGE	103
RENEWAL AR-OIL	106
TANK & MTG GP-ENGINE OIL	107
TANK GP-ENGINE OIL	109
VALVE & MTG GP-FAN DRIVE	110
VALVE GP-METERING	111
COOLING SYSTEM	112
CONNECTION GP-WATER	112
COOLER GP-ENGINE OIL	113
CORE GP-ENGINE OIL COOLER	114
CORE GP-OIL COOLER	115
FAN GP-BLOWER	116
GAUGE GP-COOLANT LEVEL	117
HOUSING & REGULATOR GP	118
LINES GP-COOLANT	119
LINES GP-TURBOCHARGER WATER	123
LINES GP-WATER	127
PUMP GP-AUXILIARY WATER	141
PUMP GP-WATER	143
RADIATOR GP	146
VALVE GP-COOLANT SAMPLING	154
AIR INLET AND EXHAUST SYSTEM	155
AFTERCOOLER GP-TREATED WATER	155
AIR CLEANER GP	156
DUST EJECTOR GP	158
EXTENSION GP-EXHAUST	159
INDICATOR GP-AIR FILTER CHANGE	160
LINES GP-AIR	161
LINES GP-TURBOCHARGER AIR	162
MANIFOLD GP-EXHAUST	164
MUFFLER GP	166
PRECLEANER GP	167
TURBOCHARGER GP	171
FUEL SYSTEM	173
FILTER GP-FUEL	173

TABLE OF CONTENTS

Name	Page
FILTER GP-PRIMARY FUEL	175
FITTING GP-FUEL TANK	176
LINES GP-FUEL	177
LINES GP-FUEL INJECTION	179
MANIFOLD GP-FUEL	182
PUMP GP-FUEL INJECTION	184
PUMP GP-FUEL PRIMING	185
PUMP GP-FUEL PRM & PRIM FILTER	187
PUMP GP-FUEL TRANSFER	188
TANK GP-FUEL	190
ELECTRICAL AND STARTING SYSTEM	194
ALARM GP	194
ALTERNATOR GP-CHARGING	195
BATTERY & WIRING GP	197
BATTERY GP	199
BLOCK GP-JUNCTION	202
BUFFER GP-SENSOR	203
CAMERA AR	204
CONTROL & MTG GP-COMMUNICATION	205
CONTROL & MTG GP-ENGINE ELEK	206
CONTROL AR-GRADE	207
CONTROL GP-AIR STARTING	208
CONTROL GP-ENGINE ELECTRONIC	215
CONTROL GP-POSITION	216
CONTROL GP-UNPROGRAMMED	217
COVER GP-MODULE CONNECTOR	219
ELECTRONICS AR-MACHINE	220
ELECTRONICS GP-COMMUNICATION	221
ELECTRONICS GP-IMPLEMENT	222
ELECTRONICS GP-MONITOR	222
ELECTRONICS GP-POWER TRAIN	223
FASTENER GP-ELECTRONICS	224
HARNESS AS-ENGINE	225
HEATER GP-ENGINE OIL	226
HEATER GP-FUEL	227
HEATER GP-JACKET WATER	229
INSTALLATION AR-CAES	230
INSTALLATION AR-COMMUNICATION	230
INSTALLATION GP-COMMUNICATION	231
INSTALLATION GP-GRADE CONTROL	233
LAMP GP-DOME	236
LAMP GP-FLOOD	237
LAMP GP-SIGNAL	242
LAMP GP-WARNING BEACON	243
LIGHTING AR-STOP & FLOOD	244
LIGHTING AR-WARNING BEACON	244
LIGHTING GP-FLOOD	245
LIGHTING GP-STOP	255
LIGHTING GP-STOP & TAIL	257
LIGHTING GP-WARNING BEACON	259
LINES GP-AIR TANK	260
LUBRICATOR GP-AIR MOTOR	263
MOUNTING GP-SENSOR	264
SENDER GP-FUEL LEVEL	265
SENSOR & MTG GP-LIFT POSITION	266
SENSOR GP-EXHAUST TEMPERATURE	268
SENSOR GP-POSITION	269
SENSOR GP-PRESSURE	272
SENSOR GP-SPEED	276
SENSOR GP-TEMPERATURE	279
STARTING AID GP-ETHER	282
STARTING AR-AIR	287
STARTING AR-COLD WEATHER	288
STARTING AR-ELECTRIC	288
STARTING MOTOR GP-AIR	289
STARTING MOTOR GP-ELECTRIC	295
SWITCH GP-BYPASS	299
SWITCH GP-DISCONNECT	300
SWITCH GP-FLOW	301
SWITCH GP-LIQUID LEVEL	302
SWITCH GP-MAGNETIC	303
SWITCH GP-WIPER	306
VALVE GP-ETHER STARTING	307
WARNING GP-BACKUP	308
WIRING GP-CAB	309
WIRING GP-CAMERA	318
WIRING GP-ELECTRIC START	320
WIRING GP-ENGINE	325
WIRING GP-FILTERS	331
WIRING GP-FIREWALL	333
WIRING GP-FRONT	335
WIRING GP-HEATER	338
WIRING GP-MACHINE	340
WIRING GP-MONITOR	353
WIRING GP-OIL RENEWAL SYSTEM	360
WIRING GP-PLATFORM	363
WIRING GP-POWER TRAIN	369
WIRING GP-REAR	372
WIRING GP-ROPS	378
WIRING GP-SENSOR	380
WIRING GP-START CONTROL	381
POWER TRAIN	382
ADAPTER GP-FLYWHEEL HOUSING	382
AXLE AR-FIXED	383
AXLE AR-OSCILLATING	383
AXLE GP-FIXED	384
AXLE GP-OSCILLATING	385
CASE & PARTS GP-PLANETARY	387
CASE GP-GEAR	389
CONTROL GP-STIC	390
CONTROL GP-STIC LOCKOUT	393
CONTROL GP-TRANSMISSION HYD	395

TABLE OF CONTENTS

Name	Page
COOLER GP-TRANSMISSION OIL	396
CORE GP-TMSN OIL COOLER	397
COUPLING GP-AUXILIARY DRIVE	398
COUPLING GP-TORSIONAL	399
COVER GP-SHIPPING	400
DIFFERENTIAL & BEVEL GEAR GP	401
DIFFERENTIAL GP	403
DRIVE & MTG GP-PUMP	404
DRIVE GP-PUMP	405
FASTENER GP-FIXED AXLE	411
FASTENER GP-OSCILLATING AXLE	412
FILLER GP-POWER TRAIN OIL	413
FILTER & MTG GP-POWER TRAIN	416
FILTER GP-OIL	418
GEAR GP-INPUT TRANSFER	422
GEAR GP-OUTPUT TRANSFER	424
LINES GP-POWER TAKE-OFF	428
LINES GP-TRANSMISSION OIL	431
MOUNTING GP-BEVEL GEAR	439
MOUNTING GP-RIM	440
MOUNTING GP-TRANSMISSION	442
PLANETARY GP-TRANSMISSION	444
POWER TRAIN AR	451
PUMP & MTG GP-DRIVE LUBE	452
PUMP GP-GEAR	453
PUMP GP-TRANSMISSION	454
RIM AR	456
RIM GP-DEMOUNTABLE	458
RIM GP-SINGLE	462
SHAFT GP-DRIVE	464
SHAFT GP-INPUT DRIVE	467
SHAFT GP-PUMP DRIVE	468
SHAFT GP-PUMP DRIVE INPUT	471
SLIP JOINT GP	472
SPIDER & BEARING GP	475
TIRE GP	475
TORQUE CONVERTER & HOUSING GP	477
TORQUE CONVERTER GP	479
TRANSMISSION AR	482
UNIVERSAL JOINT GP	483
VALVE GP-MODULATING	485
VALVE GP-SELECTOR	488
VALVE GP-SELECTOR & PRESS CONT	489
VALVE GP-SOLENOID	492
VALVE GP-TORQUE CONV PRIORITY	493
VALVE GP-TRANSMISSION CONTROL	495
WHEEL GP-FINAL DRIVE & BRAKE	498
FRAME AND BODY	501
BUMPER & DRAWBAR AR	501
BUMPER & DRAWBAR GP	503
COVER GP-ACCESS	509
FASTENER GP-BOTTOM GUARD	511
FASTENER GP-DRAWBAR & BUMPER	512
FASTENER GP-FENDER	514
FASTENER GP-HANDHOLD	515
FENDER GP-FRONT	517
FENDER GP-REAR	518
FRAME AS-LOADER	520
FRAME AS-REAR	524
FRAME GP-LOADER	527
FRAME GP-REAR	529
GRILL GP-RADIATOR	531
GUARD GP-BRAKE LINES	533
GUARD GP-CRANKCASE	535
GUARD GP-FRONT	536
GUARD GP-POWER TRAIN	537
GUARD GP-RADIATOR	538
HITCH GP-ARTICULATING	540
HOOD & GUARD GP	541
LIFTING GP-MACHINE	547
LINES GP-AUTOMATIC LUBRICATION	548
LINES GP-LUBRICATION	575
LINK GP-STEERING FRAME LOCK	579
LUBRICATION GP-AUTOMATIC	580
MOUNTING GP-BATTERY	582
PLATE GP-FIREWALL	583
PUMP GP-LUBRICATION	586
STEP GP	589
TANK GP-GREASE	591
VALVE & LINES GP-LUBRICATION	592
VALVE GP-LUBE DISTRIBUTION	596
WALKWAY GP	599
BRAKING SYSTEM	601
ACCUMULATOR & MTG GP-BRAKE	601
ACCUMULATOR GP-BRAKE	604
AIR DRYER GP	606
BASE GP-FOOT BRAKE	608
BRAKE GP-PARKING	611
CONTROL GP-FOOT BRAKE	613
CONTROL GP-PARKING BRAKE	614
CONTROL GP-SERVICE BRAKE	615
LINES GP-ACCUMULATOR	619
LINES GP-AIR TANK	622
LINES GP-BRAKE COOLING	627
LINES GP-PARKING BRAKE	639
LINES GP-SERVICE BRAKE	641
PUMP & MTG GP-BRAKE	645
PUMP GP-PISTON	646
ROTATING GP-PUMP	648
SCREEN GP-HYDRAULIC	649
TANK GP-AIR	650
VALVE & MTG GP-BRAKE CONTROL	652
VALVE GP-BRAKE CONTROL	654

TABLE OF CONTENTS

Name	Page
VALVE GP-CHECK	655
VALVE GP-PUMP CONTROL	656
VALVE GP-SOLENOID	657
STEERING SYSTEM	658
ACTUATOR GP-PUMP	658
BARREL GP-PUMP	661
CONTROL GP-STEERING	662
CYLINDER & MTG GP-STEERING	664
CYLINDER GP-STEERING	665
FILTER & MTG GP-CASE DRAIN	669
FILTER & MTG GP-STEER & IMPL	671
FILTER & MTG GP-STEERING	672
FILTER GP-OIL	673
HEAD GP-PUMP	676
LINES GP-SECONDARY STEERING	677
LINES GP-STEER & BRAKE COOLER	681
LINES GP-STEERING	687
LINES GP-STEERING NEUTRALIZER	697
PUMP & MTG GP-SECONDARY STEER	700
PUMP & MTG GP-STEERING & BRAKE	701
PUMP & MTG GP-STER & BRAKE CLR	702
PUMP GP-GEAR	703
PUMP GP-PISTON	706
ROTATING GP-PUMP	710
SCREEN GP-HIGH PRESSURE	711
VALVE & LINES GP-STEERING NEUT	712
VALVE & MTG GP-SECONDARY STEER	714
VALVE & MTG GP-STEERING	715
VALVE & MTG GP-STEERING NEUT	718
VALVE GP-CHECK	720
VALVE GP-DIVERTER	724
VALVE GP-PILOT	727
VALVE GP-PILOT CARTRIDGE	728
VALVE GP-PUMP CONTROL	730
VALVE GP-RELIEF	733
VALVE GP-SELECTOR & PRESS CONT	737
VALVE GP-SHUTTLE	738
VALVE GP-STEERING	739
VALVE GP-STEERING NEUTRALIZER	742
HYDRAULIC SYSTEM	743
CONTROL GP-HYDRAULIC LOCKOUT	743
CONTROL GP-PILOT OPERATED HYD	744
COOLER GP-HYDRAULIC OIL	746
CYLINDER AR-LIFT	747
CYLINDER AR-TILT	748
CYLINDER GP-LIFT	749
CYLINDER GP-TILT	755
FILLER GP-HYDRAULIC OIL	767
FILTER & MTG GP-PLT & PUMP DR	770
FILTER GP-OIL	771
HEAD GP-PUMP	772
HYDRAULIC AR-FRONT	774
HYDRAULIC AR-REAR	775
KICKOUT & POSITIONER GP	776
LINES GP-CASE DRAIN	780
LINES GP-DRAIN	784
LINES GP-EXPANSION TANK	785
LINES GP-HYDRAULIC	789
LINES GP-HYDRAULIC OIL COOLER	797
LINES GP-LIFT CYLINDER	804
LINES GP-PAYLOAD MONITOR HYD	811
LINES GP-PILOT	813
LINES GP-TILT CYLINDER	824
MAGNET GP-PILOT VALVE	829
MOUNTING GP-EXPANSION TANK	831
MOUNTING GP-LIFT CYLINDER	833
PUMP & MTG GP-IMPLEMENT	834
PUMP & MTG GP-PILOT & COOLER	835
PUMP GP-GEAR	836
PUMP GP-PISTON	840
ROTATING GP-PUMP	844
TANK & MTG GP-HYDRAULIC	847
TANK GP-EXPANSION	850
TANK GP-HYDRAULIC	852
VALVE & MTG GP-MAIN CONTROL	859
VALVE GP-CHECK	863
VALVE GP-CHECK & RELIEF	864
VALVE GP-MAIN CONTROL	865
VALVE GP-PILOT	873
VALVE GP-PILOT CARTRIDGE	876
VALVE GP-PUMP CONTROL	880
VALVE GP-RELIEF	883
VALVE GP-SELECTOR	891
VALVE GP-SELECTOR & PRESS CONT	892
VALVE GP-SOLENOID	893
VESSEL AR	895
IMPLEMENTS	896
ARM & BEARING AS	896
ARM AR-LIFT	902
LIFT AR	905
LINK GP-BUCKET	906
PIN & SEAL GP-LINKAGE	912
WORK TOOLS	915
BUCKET AS-COAL	915
BUCKET AS-ROCK	919
BUCKET GP-COAL	929
BUCKET GP-ROCK	930
EDGE GP-CUTTING	936

TABLE OF CONTENTS

Name	Page
PROTECTOR GP-EDGE	940
TIP GP-ABRASION	941
TIP GP-GENERAL PURPOSE	943
TIP GP-LONG	944
TIP GP-PENETRATION	945
TIP-PENETRATION	948
WING GP-BUCKET	949
OPERATOR STATION	950
ADJUSTER GP-SEAT	950
AIR COMPRESSOR GP-SEAT	951
AIR CONDITIONER AR	952
AIR CONDITIONER GP	953
ARM GP-WINDOW WIPER	956
BOX GP-STORAGE	957
CAB & PLATFORM GP	959
CAB AR	961
CAB GP	962
CLEANING GP-CAB	964
COMPRESSOR & MTG GP-REFRIG	966
COMPRESSOR GP-REFRIGERANT	969
CONDENSER & MTG GP-REFRIGERANT	970
CONTROL GP-UNPRGMED MONITOR	971
COVER GP-CAB	972
COVER GP-PLATFORM	974
DISPLAY GP-MONITOR	977
DOOR GP-CAB	978
DUCT GP-AIR	980
FASTENER GP-ROPS	981
FILTER GP-CAB AIR	982
HANDHOLD GP	985
HORN GP-AIR	987
INSTALLATION GP-RADIO	991
LATCH GP-CAB DOOR & WINDOW	993
LINER GP-CAB	996
LINES GP-AIR CONDITIONER	1001
LINES GP-CAB HEATER	1008
MIRROR GP-LH	1010
MIRROR GP-RH	1012
MODULE GP-MESSAGE CENTER	1014
MODULE GP-MONITOR KEYPAD	1014
MODULE GP-QUAD GAUGE	1015
MOTOR GP-WINDOW WIPER	1016
MOUNTING GP-ANTENNA	1020
MOUNTING GP-MONITOR	1021
MOUNTING GP-PLATFORM	1022
MOUNTING GP-PLATFORM BRACKET	1025
OPERATOR AR	1026
PAN GP-BACKREST	1027
PANEL GP-INSTRUMENT	1028
PEDAL GP-GOVERNOR	1032
PLATFORM AR	1034
PLATFORM GP-OPERATOR	1036
PRECLEANER AR-CAB AIR	1043
PRECLEANER GP-CAB AIR	1044
RECLINER GP-SEAT	1045
ROPS AR	1046
ROPS GP	1047
SEALING GP-GLASS	1048
SEAT GP	1049
SEAT GP-COMPANION	1053
SEAT GP-SUSPENSION	1057
SPRING GP-CAB DOOR	1058
SUPPORT GP-HYDRAULIC CONTROL	1060
SUPPORT GP-SEAT	1063
SUPPORT GP-STEERING CONTROL	1064
SUSPENSION GP-SEAT	1067
WASHER GP-WINDOW	1069
WIPER & WASHER GP-WINDOW	1070
WIPER GP-WINDOW	1072
SERVICE EQUIPMENT AND SUPPLIES	1077
FILM GP	1077
FILM GP-INTERNATIONAL	1081
FILM GP-U.S.	1081
LINES GP-DIAGNOSTIC	1082
PLATE & FILM GP	1090
SERVICE CENTER GP	1093
PART NUMBER INDEX	B1

TABLE DES MATIÈRES

Désignation	Page
GÉNÉRALITÉS	A35
OPTIONS DE RÉPARATION	A52
ADDITIFS POUR LIQUIDE DE REFROIDISSEMENT	A57
PIÈCES DE RECHANGE	A65
INDEX	A98
VERSION DE MACHINE	1
CHASSIS - AVANT - VERSION	1
CHÂSSIS ARRIÈRE (VERSION)	2
VERSION NORMALE	2
VERSION DE TRANSFORMATION - HOMOLOGATION	3
*CONVERSION AR-CERTIFICATION	3
MONTAGE SUR CHANTIER (VERSION)	3
MOTEUR (VERSION)	5
MOTEUR (VERSION)	5
MONTAGE DE MOTEUR (VERSION)	7
MOTEUR STANDARD	8
COMPRESSEUR D'AIR (ASS)	8
*BASE GP-VALVE COVER	10
TENDEUR DE COURROIE (ASS)	11
ARBRE A CAMES (ASS)	13
BLOC-CYLINDRES - COUVERCLE (ASS)	14
MOTEUR - COUVERCLE (ASS)	15
COUVERCLE DE CARTER AV (ASS)	17
CACHE-SOUPAPES (ASS)	19
VILEBREQUIN (ASS)	20
BLOC-CYLINDRES (ENS)	21
BLOC-CYLINDRES (ASS)	22
CULASSE (ENS)	24
CULASSE (ASS)	25
AMORTISSEUR DE VIBRATIONS (ASS)	29
ENTRAINEMENT DE VENTILATEUR (VERSION)	30
ENTRAÎNEMENT AUXILIAIRE (ASS)	31
ENTRAÎNEMENT DE VENTILATEUR (ASS)	38
VOLANT MOTEUR (ASS)	44
PIGNONNERIE AV (ASS)	45
PIGNON AR (ASS)	47
PROTEGE-COURROIE (ASS)	49
CARTER DE VOLANT (ASS)	52
CARTER AV (ASS)	54
COURROIE INTERMÉDIAIRE (ASS)	55
OEILLETONS DE LEVAGE MOTEUR (ASS)	56
CANALISATIONS DU COMPRESSEUR D'AIR (ASS)	57
MONTAGE D'ALTERNATEUR (ASS)	59
HUILE MOTEUR - CARTER (ASS)	61
PISTON ET BIELLE (ASS)	64
JOINT DE VILEBREQUIN (ASS)	67
SUPPORT DE MOTEUR (ASS)	68
CULBUTERIE (ASS)	70
CIRCUIT DE GRAISSAGE	72
RENIFLARD (ASS)	72
BOUCHON DE REMPLISSAGE D'HUILE MOTEUR (ASS)	74
FILTRE À HUILE MOTEUR (ASS)	75
DISPOSITIF D'EVACUATION DES VAPEURS DE CARTER	77
JAUGE D'HUILE MOTEUR (BAIONNETTE) (ASS)	78
CANALISATIONS D'HUILE MOTEUR (ASS)	80
CANALISATIONS D'HUILE DE TURBOCOMPRESSEUR (ASS)	86
RÉGULATION D'HUILE MOTEUR (ASS)	89
DISPOSITIF DE VIDANGE RAPIDE D'HUILE (ASS)	91
POMPE ET MOTEUR DE PRÉ-GRAISSAGE (ASS)	93
POMPE A HUILE MOTEUR (ASS)	94
POMPE DE PRÉGRAISSAGE (ASS)	96
POMPE DE REPRISE (ASS)	103
VERSION D'HUILE DE RENOUVELLEMENT	106
RÉSRVOIR D'HUILE MOTEUR ET MONTAGE (ASS)	107
RÉSERVOIR D'HUILE MOTEUR (ASS)	109
SOUPAPE ET MONTAGE-ENTRAÎNEMENT DE VENTILATEUR (ASS)	110
SOUPAPE DE RÉGULATION	111
CIRCUIT DE REFROIDISSEMENT	112
RACCORD D'EAU (ASS)	112
REFROIDISSEUR D'HUILE MOTEUR (ASS)	113
FAISCEAU DE REFROIDISSEUR D'HUILE MOTEUR (ENS)	114
FAISCEAU DU REFROIDISSEUR D'HUILE (ASS)	115
VENTILATEUR SOUFFLANT (ASS)	116

* TRADUCTION NON DISPONIBLE AU MOMENT DE LA PUBLICATION

TABLE DES MATIÈRES

Désignation	Page
INDICATEUR DE NIVEAU DE LIQUIDE DE REFROIDISSEMENT (ASS)	117
THERMOSTAT ET BOITIER (ASS)	118
CANALISATIONS DE LIQUIDE DE REFROIDISSEMENT (ASS)	119
CANALISATIONS D'EAU DE TURBOCOMPRESSEUR	123
CANALISATIONS D'EAU (ASS)	127
POMPE AUXILIAIRE D'EAU DOUCE (ASS)	141
POMPE A EAU (ASS)	143
RADIATEUR (ASS)	146
ROBINET DE PRÉLÈVEMENT D'ÉCHANTILLON D'HUILE (ASS)	154
CIRCUIT D'ADMISSION D'AIR ET D'ÉCHAPPEMENT	155
REFROIDISSEUR D'ADMISSION - EAU (ASS)	155
FILTRE A AIR (ASS)	156
ÉJECTEUR AUTOMATIQUE DE POUSSIÈRE (ASS)	158
RALLONGE D'ÉCHAPPEMENT (ASS)	159
INDICATEUR DE COLMATAGE DE FILTRE À AIR (ASS)	160
CANALISATIONS D'AIR (ASS)	161
CANALISATIONS D'AIR DE TURBOCOMPRESSEUR (ASS)	162
COLLECTEUR D'ÉCHAPPEMENT (ASS)	164
SILENCIEUX (ASS)	166
PREFILTRE (ASS)	167
TURBOCOMPRESSEUR (ASS)	171
CIRCUIT DE CARBURANT	173
FILTRE A CARBURANT (ASS)	173
FILTRE À CARBURANT PRINCIPAL (ASS)	175
RACCORD DE RÉSERVOIR DE CARBURANT (ASS)	176
CANALISATIONS DE CARBURANT (ASS)	177
CANALISATIONS D'INJECTION DE CARBURANT (ASS)	179
COLLECTEUR DE CARBURANT (ASS)	182
POMPE D'INJECTION DE CARBURANT (ASS)	184
POMPE D'AMORÇAGE DE CARBURANT (ASS)	185
POMPE D'AMORÇAGE DE CARBURANT ET FILTRE PRINCIPAL	187
POMPE D'ALIMENTATION EN CARBURANT (ASS)	188
RÉSERVOIR DE CARBURANT (ASS)	190
CIRCUIT ELECTRIQUE ET DE DEMARRAGE	194
AVERTISSEUR (ASS)	194
ALTERNATEUR DE CHARGE (ASS)	195
BATTERIE ET CÂBLAGE	197
BATTERIE (ASS)	199
BLOC DE BRANCHEMENT (ASS)	202
AMPLIFICATEUR - CAPTEUR (ASS)	203
VERSION DE CAMÉRA	204
COMMANDE ET MONTAGE-COMMUNICATION (ASS)	205
COMMANDE ET MONTAGE - MOTEUR	206
COMMANDE DE PROFIL LONGITUDINAL	207
COMMANDE DE DEMARRAGE PNEUMATIQUE	208
COMMANDE ELECTRONIQUE DE MOTEUR (ASS)	215
COMMANDE DE POSITION (ASS)	216
COMMANDE NON PROGRAMMEE (ASS)	217
COUVERCLE DE PRISE DE MODULE (ASS)	219
COMPOSANTS ÉLECTRONIQUES DE LA MACHINE (VERSION)	220
ÉLECTRONIQUE - COMMUNICATION (ASS)	221
COMMANDE ÉLECTRONIQUE D'ÉQUIPEMENT (ASS)	222
ÉLECTRONIQUE-MONITEUR (ASS)	222
ÉLECTRONIQUE DE TRANSMISSION (ASS)	223
BOULONNERIE - COMPOSANT ÉLECTRONIQUE (ASS)	224
CABLAGE MOTEUR (ENS)	225
RÉCHAUFFEUR D'HUILE MOTEUR (ASS)	226
RECHAUFFEUR DE CARBURANT (ASS)	227
EAU DES CHEMISES - RECHAUFFEUR (ASS)	229
VERSION DE MONTAGE DE CAES	230
VERSION DE MONTAGE-COMMUNICATION	230
MONTAGE-COMMUNICATION (ASS)	231
MONTAGE DE COMMANDE DE PROFIL LONGITUDINAL (ASS)	233
PLAFONNIER (ASS)	236

* TRADUCTION NON DISPONIBLE AU MOMENT DE LA PUBLICATION

TABLE DES MATIÈRES

Désignation	Page
LAMPE - PHARE (ASS)	237
LAMPE - CLIGNOTANT DE DIRECTION (ASS)	242
LAMPE - GYROPHARE (ASS)	243
ECLAIRAGE - ARRÊT ET PROJECTEURS (VERSION)	244
VERSION DE GYROPHARE	244
ÉCLAIRAGE - PROJECTEURS (ASS)	245
ÉCLAIRAGE-FEUX D'ARRÊT (ASS)	255
ÉCLAIRAGE-FEUX DE STOP ET ARRIÈRE (ASS)	257
ÉCLAIRAGE - GYROPHARE (ASS)	259
CANALISATIONS DU RÉSERVOIR D'AIR (ASS)	260
MOTEUR PNEUMATIQUE - GRAISSAGE (ASS)	263
MONTAGE - CAPTEUR (ASS)	264
*SENDER GP-FUEL LEVEL	265
CAPTEUR ET MONTAGE-POSITION DE LEVAGE (ASS)	266
CAPTEUR DE TEMPERATURE D'ECHAPPEMENT (ASS)	268
SONDE - CIRCUIT DE CARBURANT	269
CAPTEUR DE PRESSION (ASS)	272
CAPTEUR DE VITESSE (ASS)	276
CAPTEUR DE TEMPERATURE (ASS)	279
AUXILIAIRE DE DÉMARRAGE À L'ÉTHER	282
DEMARREUR PNEUMATIQUE (VERSION)	287
DÉMARRAGE PAR TEMPS FROID (VERSION)	288
DEMARREUR ELECTRIQUE (VERSION)	288
DEMARREUR PNEUMATIQUE (ASS)	289
DÉMARREUR ÉLECTRIQUE (ASS)	295
INTERRUPTEUR - DÉRIVATION (ASS)	299
ROBINET DE BATTERIE (ASS)	300
CONTACTEUR DE DEBIT (ASS)	301
CONTACTEUR - NIVEAU DE LIQUIDE (ASS)	302
CONTACTEUR MAGNETIQUE (ASS)	303
INTERRUPTEUR D'ESSUIE-GLACE (ASS)	306
SOUPAPE DE DÉMARRAGE À L'ÉTHER (ASS)	307
AVERTISSEUR DE RECUL (ASS)	308
CABLAGE DE CABINE (ASS)	309
CÂBLAGE DE CAMÉRA (ASS)	318
CÂBLAGE-DÉMARRAGE ÉLECTRIQUE (ASS)	320
CABLAGE DE MOTEUR (ASS)	325
CÂBLAGE DE FILTRES (ASS)	331
CÂBLAGE DE CLOISON PARE-FEU	333
CABLAGE AV (ASS)	335
CABLAGE DU CHAUFFAGE DE CABINE (ASS)	338
CABLAGE DE LA MACHINE (ASS)	340
CABLAGE DU PANNEAU DE COMMANDE	353
CÂBLAGE DE CIRCUIT DE RENOUVELLEMENT D'HUILE (ASS)	360
CABLAGE - PLATE-FORME (ASS)	363
CABLAGE DE TRANSMISSION (ASS)	369
CABLAGE AR (ASS)	372
CÂBLAGE BÂTI ROPS	378
CABLAGE - CAPTEUR (ASS)	380
CÂBLAGE DE COMMANDE DE DÉMARRAGE (ASS)	381
TRANSMISSION	382
ADAPTATEUR DE CARTER DE VOLANT (ASS)	382
ESSIEU FIXE (VERSION)	383
ESSIEU OSCILLANT (VERSION)	383
ESSIEU FIXE	384
ESSIEU OSCILLANT	385
TRAINS PLANÉTAIRES - CARTER ET PIÈCES	387
CARTER D'ENGRENAGE (ASS)	389
COMMANDE DE BRAS (ASS)	390
VERROUILLAGE DE COMMANDE STIC	393
COMMANDE HYDRAULIQUE DE BOÎTE (ASS)	395
REFROIDISSEUR D'HUILE DE BOÎTE (ASS)	396
*CORE GP-TMSN OIL COOLER	397
ACCOUPLEMENT D'ENTRAINEMENT AUXILIAIRE (ASS)	398
*COUPLING GP-TORSIONAL	399
COUVERCLES D'EXPEDITION (ASS)	400
COURONNE ET DIFFERENTIEL (ASS)	401
DIFFERENTIEL (ASS)	403
ENTRAÎNEMENT ET MONTAGE DE POMPE (ASS)	404
ENTRAÎNEMENT DE POMPE (ASS)	405
BOULONNERIE D'ESSIEU FIXE (ASS)	411
BOULONNERIE D'ESSIEU OSCILLANT (ASS)	412
GOULOTTE DE REMPLISSAGE D'HUILE DE TRANSMISSION	413
FILTRE ET MONTAGE - TRANSMISSION (ASS)	416
FILTRE A HUILE (ASS)	418

* TRADUCTION NON DISPONIBLE AU MOMENT DE LA PUBLICATION

TABLE DES MATIÈRES

Désignation	Page
PIGNONNERIE D'ENTREE DE TRANSFERT (ASS)	422
ENGRENAGE DE TRANSFERT DE RENDEMENT (ASS)	424
CANALISATIONS DE PRISE DE FORCE (ASS)	428
CANALISATIONS D'HUILE DE BOÎTE (ASS)	431
MONTAGE DE COURONNE (ASS)	439
MONTAGE DE JANTE (ASS)	440
REDUCTEUR MARIN - MONTAGE (ASS)	442
BOÎTE PLANÉTAIRE (ASS)	444
TRANSMISSION (VERSION)	451
POMPE DE GRAISSAGE D'ENTRAÎNEMENT ET MONTAGE (ASS)	452
POMPE A ENGRENAGES (ASS)	453
POMPE DE BOÎTE DE VITESSES (ASS)	454
JANTE (VERSION)	456
JANTE DÉMONTABLE (ASS)	458
JANTE SIMPLE	462
ARBRE D'ENTRAÎNEMENT (ASS)	464
ARBRE DE TRANSMISSION D'ENTRÉE (ASS)	467
ARBRE D'ENTRAÎNEMENT DE POMPE (ASS)	468
ARBRE D'ENTRÉE D'ENTRAÎNEMENT DE POMPE (ASS)	471
CARDAN COULISSANT (ASS)	472
CROISILLON ET ROULEMENT	475
PNEUMATIQUE (ASS)	475
CONVERTISSEUR DE COUPLE ET CARTER (ASS)	477
CONVERTISSEUR DE COUPLE (ASS)	479
BOÎTE DE VITESSES (VERSION)	482
JOINT UNIVERSEL (ASS)	483
SOUPAPE DE MODULATION (ASS)	485
SOUPAPE SÉLECTRICE (ASS)	488
SOUPAPE SELECTRICE ET REGULATRICE DE PRESSION	489
SOUPAPE - SOLÉNOÏDE (ASS)	492
SOUPAPE DE PRIORITÉ DE CONVERTISSEUR DE COUPLE (ASS)	493
DISTRIBUTEUR DE BOITE (ASS)	495
RÉDUCTEURS, ROUE ET FREIN (ASS)	498
CHÂSSIS ET BENNE	501
PARE-CHOCS ET BARRE D'ATTELAGE (VERSION)	501
PARE-CHOCS ET BARRE D'ATTELAGE (ASS)	503
COUVERCLE DE VISITE (ASS)	509
BOULONNERIE DE BLINDAGE INFERIEUR (ASS)	511
BOULONNERIE DE BARRE D'ATTELAGE ET PARE-CHOCS	512
BOULONNERIE DE GARDE-BOUE	514
BOULONNERIE DE POIGNÉE (ASS)	515
GARDE-BOUE AV (ASS)	517
GARDE-BOUE AR (ASS)	518
BÂTI - CHARGEUSE (ENS)	520
BÂTI AR (ENS)	524
BATI - CHARGEUSE (ASS)	527
BÂTI AR (ASS)	529
GRILLE DE RADIATEUR (ASS)	531
BLINDAGE DES CANALISATIONS DES FREINS	533
CARTER - BLINDAGE (ASS)	535
PROTECTION AV (ASS)	536
BLINDAGE DE TRANSMISSION (ASS)	537
PROTÈGE-RADIATEUR (ASS)	538
ATTELAGE D'ARTICULATION (ASS)	540
CAPOT ET PROTECTION (ASS)	541
MACHINE DE LEVAGE	547
CANALISATIONS DE GRAISSAGE AUTOMATIQUE (ASS)	548
CANALISATIONS DE GRAISSAGE (ASS)	575
LIAISON - VERROUILLAGE DE CHÂSSIS DE DIRECTION (ASS)	579
GRAISSAGE AUTOMATIQUE (ASS)	580
MONTAGE DE BATTERIE (ASS)	582
PLAQUE - CLOISON PARE-FEU (ASS)	583
POMPE DE GRAISSAGE (ASS)	586
MARCHEPIED (ASS)	589
RÉSERVOIR - GRAISSE (ASS)	591
SOUPAPE ET CONDUITES DE GRAISSAGE (ASS)	592
SOUPAPE DE DISTRIBUTION DE GRAISSAGE (ASS)	596
PASSERELLE (ASS)	599
CIRCUIT DE FREINS	601
ACCUMULATEUR DE FREIN ET MONTAGE (ASS)	601
ACCUMULATEUR - FREIN	604
DESHYDRATEUR (ASS)	606
SUPPORT - PÉDALE DE FREIN (ASS)	608
FREIN DE STATIONNEMENT (ASS)	611
COMMANDE DE LA PÉDALE DE FREIN (ASS)	613

* TRADUCTION NON DISPONIBLE AU MOMENT DE LA PUBLICATION

TABLE DES MATIÈRES

Désignation	Page
COMMANDE DE FREIN DE STATIONNEMENT (ASS)	614
FREIN DE MANOEUVRE - COMMANDE (ASS)	615
CANALISATIONS D'ACCUMULATEUR (ASS)	619
CANALISATIONS DU RÉSERVOIR D'AIR (ASS)	622
CANALISATIONS DE REFROIDISSEMENT DES FREINS	627
CANALISATIONS DU FREIN DE STATIONNEMENT	639
CANALISATIONS DU FREIN DE MANOEUVRE (ASS)	641
POMPE ET MONTAGE - FREIN (ASS)	645
POMPE A PISTONS (ASS)	646
GROUPE DE ROTATION DE POMPE	648
ÉCRAN (ASS)-HYDRAULIQUE	649
RÉSERVOIR PNEUMATIQUE (ASS)	650
SOUPAPE ET MONTAGE - COMMANDE DE FREIN (ASS)	652
DISTRIBUTEUR DE FREIN (ASS)	654
CLAPET DE RETENUE (ENS)	655
DISTRIBUTEUR DE POMPE (ASS)	656
SOUPAPE - SOLÉNOÏDE (ASS)	657
CIRCUIT DE DIRECTION	658
MECANISME DE COMMANDE DE POMPE (ASS)	658
CORPS DE POMPE (ASS)	661
COMMANDE DE DIRECTION (ASS)	662
VERIN DE DIRECTION ET MONTAGE (ASS)	664
VERIN DE DIRECTION (ASS)	665
FILTRE DE RETOUR AU CARTER ET MONTAGE (ASS)	669
FILTRE ET MONTAGE - DIRECTION ET ÉQUIPEMENT (ASS)	671
FILTRE DE DIRECTION ET MONTAGE (ASS)	672
FILTRE A HUILE (ASS)	673
TÊTE DE POMPE (ASS)	676
CANALISATION DE DIRECTION AUXILIAIRE	677
CANALISATIONS DE DIRECTION ET DE REFROIDISSEUR DE FREIN	681
CANALISATIONS DE DIRECTION (ASS)	687
CANALISATIONS DE NEUTRALISATION DE DIRECTION (ASS)	697
POMPE DE DIRECTION AUXILIAIRE ET MONTAGE (ASS)	700
POMPE ET MONTAGE - DIRECTION ET FREIN (ASS)	701
POMPE DU REFROIDIS. DE DIRECTION ET FREIN ET MONT.	702
POMPE A ENGRENAGES (ASS)	703
POMPE A PISTONS (ASS)	706
GROUPE DE ROTATION DE POMPE	710
FILTRE HAUTE PRESSION (ASS)	711
SOUPAPE ET CANALISATIONS - NEUTRALISATION DE DIR.	712
SOUPAPE ET MONTAGE - DIRECTION AUX. (ASS)	714
SOUPAPE DE DIRECTION ET MONTAGE (ENS)	715
SOUPAPE DE NEUTR. DE DIRECTION ET MONTAGE (ASS)	718
CLAPET DE RETENUE (ENS)	720
SOUPAPE DE DERIVATION (ASS)	724
SOUPAPE PILOTE (ASS)	727
SOUPAPE - CARTOUCHE PILOTE (ASS)	728
DISTRIBUTEUR DE POMPE (ASS)	730
CLAPET DE DECHARGE (ASS)	733
SOUPAPE SELECTRICE ET REGULATRICE DE PRESSION	737
VANNE PILOTE (ASS)	738
SOUPAPE DE DIRECTION (ASS)	739
SOUPAPE DE NEUTRALISATION DE DIRECTION (ASS)	742
CIRCUIT HYDRAULIQUE	743
COMMANDE DE SÉCURITÉ HYDRAULIQUE (ASS)	743
COMMANDE HYDRAULIQUE PILOTE (ASS)	744
REFROIDISSEUR D'HUILE HYDRAULIQUE (ASS)	746
VERSION DE VÉRIN DE LEVAGE	747
VÉRIN D'INCLINAISON (VERSION)	748
VÉRIN DE LEVAGE (ASS)	749
VÉRIN D'INCLINAISON (ASS)	755
GOULOTTE DE REMPLISSAGE D'HUILE HYDRAULIQUE (ASS)	767
*FILTER & MTG GP-PLT & PUMP DR	770
FILTRE A HUILE (ASS)	771
TÊTE DE POMPE (ASS)	772
VERSION HYDRAULIQUE AVANT	774
VERSION HYDRAULIQUE ARRIÈRE	775
LIMITEUR DE LEVAGE ET RETOUR À L'ANGLE DE CAVAGE	776
CANALISATIONS DE RETOUR AU CARTER (ASS)	780
CANALISATIONS DE VIDANGE (ASS)	784

* TRADUCTION NON DISPONIBLE AU MOMENT DE LA PUBLICATION

TABLE DES MATIÈRES

Désignation	Page
CANALISATIONS DE VASE D'EXPANSION (ASS)	785
CANALISATIONS HYDRAULIQUES (ASS)	789
CANALISATIONS DE REFROIDISSEUR D'HUILE HYDR. (ASS)	797
CANALISATIONS DE VÉRIN DE LEVAGE (ASS)	804
CANALISATIONS-HYDRAULIQUE D'INDICATEUR DE CHARGE UTILE (ASS)	811
CANALISATIONS A COMMANDE PILOTE (ASS)	813
CANALISATIONS DU VÉRIN D'INCLINAISON (ASS)	824
AIMANT DE SOUPAPE PILOTE (ASS)	829
SUPPORT DE VASE D'EXPANSION (ASS)	831
MONTAGE DU VÉRIN DE LEVAGE (ASS)	833
POMPE D'EQUIPEMENT ET MONTAGE (ASS)	834
POMPE ET MONTAGE - PILOTE ET REFROIDISSEUR (ASS)	835
POMPE A ENGRENAGES (ASS)	836
POMPE A PISTONS (ASS)	840
GROUPE DE ROTATION DE POMPE	844
RÉSERVOIR HYDRAULIQUE ET MONTAGE (ASS)	847
RESERVOIR D'EXPANSION (ASS)	850
RÉSERVOIR HYDRAULIQUE (ASS)	852
COMMANDE PRINCIPALE DE SOUPAPE ET MONTAGE (ASS)	859
CLAPET DE RETENUE (ENS)	863
CLAPET DE DECHARGE ET ANTI-RETOUR	864
SOUPAPE DE COMMANDE PRINCIPALE (ASS)	865
SOUPAPE PILOTE (ASS)	873
SOUPAPE - CARTOUCHE PILOTE (ASS)	876
DISTRIBUTEUR DE POMPE (ASS)	880
CLAPET DE DECHARGE (ASS)	883
SOUPAPE SÉLECTRICE (ASS)	891
SOUPAPE SELECTRICE ET REGULATRICE DE PRESSION	892
SOUPAPE - SOLÉNOÏDE (ASS)	893
VERSION DE VAISSEAU	895
ÉQUIPEMENTS	896
BRAS ET PALIER (ENS)	896
VERSION DE BRAS DE LEVAGE	902
LEVAGE (VERSION)	905
LIAISON-GODET (ASS)	906
AXE ET JOINT - TIMONERIE (ASS)	912
OUTILS DE TRAVAIL	915
GODET POUR CHARBON (ENS)	915
GODET-ROCHE (ENS)	919
GODET POUR CHARBON (ASS)	929
GODET-ROCHE (ASS)	930
LAME DE COUPE (ASS)	936
PROTECTEURS DE LAME (ASS)	940
POINTE ABRASION (ASS)	941
POINTE - UNIVERSELLE (ASS)	943
POINTE LONGUE (ASS)	944
POINTE PENETRATION	945
GODET - DEFLECTEUR (ASS)	949
POSTE DE CONDUITE	950
REGLAGE DE SIEGE (ASS)	950
SIÈGE - COMPRESSEUR D'AIR (ASS)	951
CLIMATISEUR (VERSION)	952
CLIMATISEUR (ASS)	953
BRAS D'ESSUIE-GLACE (ASS)	956
COFFRE DE RANGEMENT (ASS)	957
CABINE ET PLATE-FORME (ASS)	959
CABINE (VERSION)	961
CABINE (ASS)	962
NETTOYAGE DE CABINE (ASS)	964
COMPRESSEUR ET MONTAGE - RÉFRIGÉRANT (ASS)	966
COMPRESSEUR DE REFRIGERANT (ASS)	969
CONDENSATEUR ET MONTAGE (RÉFRIGÉRANT)	970
COMMANDE DE MONITEUR NON PROGRAMMÉE (ASS)	971
COUVERCLE - CABINE (ASS)	972
COUVERCLE DE PLATEFORME	974
ÉCRAN DU MONITEUR (ASS)	977
PORTIÈRE DE CABINE (ASS)	978
GAINE D'AIR (ASS)	980
BOULONNERIE DU TOIT ROPS (ASS)	981
FILTRE À AIR DE CABINE (ASS)	982
POIGNÉE	985
KLAXON PNEUMATIQUE (ASS)	987
MONTAGE DE RADIO (ASS)	991
LOQUET - PORTE DE CABINE ET GLACE	993
CABINE - REVÊTEMENT (ASS)	996
CANALISATIONS DE CLIMATISEUR (ASS)	1001
CANALISATIONS DE CHAUFFAGE DE CABINE (ASS)	1008
RÉTROVISEUR GAUCHE (ASS)	1010

* TRADUCTION NON DISPONIBLE AU MOMENT DE LA PUBLICATION

TABLE DES MATIÈRES

Désignation	Page
RÉTROVISEUR DROIT (ASS)	1012
MODULE (ASS)-CENTRE DE MESSAGE	1014
MODULE (ASS)-TOUCHE DE MODULE DE SURVEILLANCE	1014
MODULE - QUATRE INSTRUMENTS (ASS)	1015
MOTEUR D'ESSUIE-GLACE (ASS)	1016
MONTAGE-ANTENNE (ASS)	1020
MONTAGE DE MONITEUR (ASS)	1021
MONTAGE DE PLATE-FORME (ASS)	1022
MONTAGE DE SUPPORT DE PLATE-FORME (ASS)	1025
POSTE DE CONDUITE (VERSION)	1026
COUVERCLE INFÉRIEUR-DOSSIER (ASS)	1027
TABLEAU DE BORD (ASS)	1028
RÉGULATEUR - PÉDALE (ASS)	1032
PLATE-FORME (VERSION)	1034
PLATE-FORME DE CABINE	1036
VERSION DE PRÉFILTRE À AIR DE CABINE	1043
*PRECLEANER GP-CAB AIR	1044
SIÈGE INCLINABLE (ASS)	1045
ROPS (VERSION)	1046
TOIT ROPS (ASS)	1047
ÉTANCHÉITÉ - GLACE (ASS)	1048
SIÈGE (ASS)	1049
SIEGE PASSAGER (ASS)	1053
SIÈGE AVEC SUSPENSION (ASS)	1057
PORTE DE CABINE - RESSORT (ASS)	1058
SUPPORT DE COMMANDE HYDRAULIQUE (ASS)	1060
SUPPORT DE SIÈGE (ASS)	1063
SUPPORT DE COMMANDE DE DIRECTION (ASS)	1064
SIÈGE AVEC SUSPENSION (ASS)	1067
LAVE-GLACE - VITRE (ASS)	1069
ESSUIE-GLACE ET LAVE-GLACE	1070
ESSUIE-GLACE (ASS)	1072
MATÉRIEL ET FOURNITURES D'ENTRETIEN	1077
PLAQUE SIGNALÉTIQUE (ASS)	1077
*FILM GP-INTERNATIONAL	1081
*FILM GP-U.S.	1081
CANALISATIONS DE DIAGNOSTIC (ASS)	1082
PLAQUES SIGNALETIQUES ET AUTOCOLLANTS (ASS)	1090
CENTRE D'ENTRETIEN (ASS)	1093
INDEX DE NUMÉROS DE PIÈCES	B1

* TRADUCTION NON DISPONIBLE AU MOMENT DE LA PUBLICATION

CONTENIDO

Nombre	Página
INFORMACIÓN GENERAL	A39
ALTERNATIVAS DE REPARACIÓN	A53
ADITIVOS DE REFRIGERANTE SUPLEMENTARIOS	A58
PIEZAS DE MANTENIMIENTO	A70
INDICE	A113
CONFIGURACIÓN DE MÁQUINAS	1
CHASIS DELANTERO (COFIG)	1
CHASIS TRASERO (CONFIG)	2
CONFIGURACIÓN COMÚN	2
CONFIGURACIÓN DE TRANSFORMACIÓN PARA CERTIFICACIÓN	3
*CONVERSION AR-CERTIFICATION	3
INSTALACIÓN EN EL CAMPO (CONFIG)	3
CONFIGURACION DE MOTOR	5
CONFIGURACIÓN DE MOTORES	5
CONFIGURACIÓN DE INSTALACIÓN DEL MOTOR	7
MOTOR BÁSICO	8
COMPRESOR DE AIRE (GR)	8
*BASE GP-VALVE COVER	10
AJUSTADOR DE CORREA (GR)	11
ÁRBOL DE LEVAS (GR)	13
TAPA DEL BLOQUE MOTOR (GR)	14
TAPA DEL MOTOR (GR)	15
TAPA DE LA CAJA DELANTERA (GR)	17
TAPA DEL MECANISMO DE VÁLVULAS (GR)	19
CIGÜEÑAL (GR)	20
BLOQUE MOTOR (CONJ)	21
BLOQUE MOTOR (GR)	22
CULATA DE CILINDROS (CONJ)	24
CULATA DE CILINDROS (GR)	25
AMORTIGUADOR DE VIBRACIONES (GR)	29
MANDO DE VENTILADOR (CONFIG)	30
ACCESORIOS - IMPULSOR DE (GR)	31
MANDO AUXILIAR (GR)	36
IMPULSOR DE VENTILADOR (GR)	38
VOLANTE (GR)	44
ENGRANAJE DELANTERO (GR)	45
ENGRANAJE TRASERO (GR)	47
PROTECTOR DE CORREA (GR)	49
VOLANTE - CAJA DE (GR)	52
CAJA DELANTERA (GR)	54
GRUPO DE GUIA, CORREA	55
CÁNCAMOS DE LEVANTAMIENTO DEL MOTOR (GR)	56
TUBERÍAS DEL COMPRESOR DE AIRE (GR)	57
MONTAJE DEL ALTERNADOR (GR)	59
CÁRTER - COLECTOR DEL (GR)	61
PISTÓN Y BIELA (GR)	64
SELLO DE CIGÜEÑAL (GR)	67
MOTOR - SOPORTE DEL (GR)	68
MECANISMO DE VÁLVULAS (GR)	70
SISTEMA DE LUBRICACIÓN	72
RESPIRADERO (GR)	72
TUBO DE LLENADO DE ACEITE (GR)	74
FILTRO DE ACEITE DEL MOTOR (GR)	75
ESCAPE DE GASES (GR)	77
INDICADOR DEL NIVEL DE ACEITE (VARILLA) (GR)	78
TUBERÍAS DE ACEITE DEL MOTOR (GR)	80
TURBOCOMPRESOR - TUBERÍAS DE ACEITE DEL (GR)	86
DOSIFICADOR DE ACEITE DE MOTOR (GR)	89
CAMBIO RÁPIDO DE ACEITE (GR)	91
BOMBA Y MOTOR DE PRELUBRICACIÓN (CONJ)	93
BOMBA DE ACEITE DEL MOTOR (GR)	94
BOMBA DE PRELUBRICACION (GR)	96
BOMBA DE BARRIDO (GR)	103
*RENEWAL AR-OIL	106
*TANK & MTG GP-ENGINE OIL	107
GRUPO DE TANQUE, ACEITE DEL MOTOR	109
VALVULA Y MONTAJE DE MANDO DE VENTILADOR (GR))	110
VÁLVULA DE DOSIFICACIÓN (GR)	111
SISTEMA DE ENFRIAMIENTO	112
AGUA - CONEXIÓN DE (GR)	112
ENFRIADOR DE ACEITE DEL MOTOR (GR)	113
NUCLEO DE ENFRIADOR DE ACEITE DE MOTOR (GR)	114
NÚCLEO DEL ENFRIADOR DE ACEITE (GR)	115
SOPLADOR - VENTILADOR (GR)	116
GRUPO DE MEDIDOR DE NIVEL DE REFRIGERANTE	117
REGULADOR Y CAJA (GR)	118

* NO HAY TRADUCCION DISPONIBLE EN EL MOMENTO DE LA IMPRESION

CONTENIDO

Nombre	Página
REFRIGERANTE - TUBERÍAS DE (GR)	119
TUBERIAS DE AGUA DEL TURBOCOMPRESOR (GR)	123
TUBERÍAS DEL AGUA (GR)	127
BOMBA AUXILIAR DE AGUA DULCE (GR)	141
BOMBA DE AGUA (GR)	143
RADIADOR (GR)	146
VÁLVULA DE MUESTREO DE REFRIGERANTE (GR)	154
SISTEMA DE AIRE DE ADMISIÓN Y ESCAPE	155
POSENFRIADOR DE AGUA DULCE (GR)	155
FILTRO DE AIRE (GR)	156
EXPULSOR DE POLVO (GR)	158
EXTENSIÓN DEL ESCAPE (GR)	159
INDICADOR DE CAMBIO DE FILTRO DE ACEITE (GR)	160
AIRE - TUBERÍAS DE (GR)	161
GRUPO DE TUBERÍAS DE AIRE DEL TURBOCOMPRESOR	162
MÚLTIPLE DE ESCAPE (GR)	164
SILENCIADOR (GR)	166
ANTEFILTRO (GR)	167
TURBOCOMPRESOR (GR)	171
SISTEMA DE COMBUSTIBLE	173
FILTRO DE COMBUSTIBLE (GR)	173
FILTRO PRIMARIO DE COMBUSTIBLE (GR)	175
CONEXIÓN DEL TANQUE DE COMBUSTIBLE (GR)	176
TUBERÍAS DE COMBUSTIBLE (GR)	177
TUBERÍAS DE INYECCIÓN DE COMBUSTIBLE (GR)	179
MULTIPLE DE COMBUSTIBLE (GR)	182
BOMBA DE INYECCIÓN DE COMBUSTIBLE (GR)	184
BOMBA DE CEBADO DE COMBUSTIBLE (GR)	185
BOMBA DE CEBADO Y FILTRO PRIMARIO DE COMBUSTIBLE (GR)	187
BOMBA DE TRANSFERENCIA DE COMBUSTIBLE (GR)	188
COMBUSTIBLE - TANQUE DE (GR)	190
SISTEMA ELECTRICO Y DE ARRANQUE	194
ALARMA (GR)	194
CARGA - ALTERNADOR DE (GR)	195
BATERÍA Y CABLES (GR)	197
BATERÍA (GR)	199
BLOQUE DE EMPALME (GR)	202
SENSOR DE AMORTIGUADOR (GR)	203
*CAMERA AR	204
CONTROL DE COMUNICACION Y MONTAJE (GR)	205
CONTROL ELECTRÓNICO DEL MOTOR Y MONTAJE	206
CONTROL DE RASANTE (CONFIG)	207
CONTROL DE ARRANQUE NEUMÁTICO (GR)	208
CONTROL ELECTRÓNICO DEL MOTOR (GR)	215
CONTROL DE POSICION (GR)	216
CONTROL NO PROGRAMADO (GR)	217
TAPA DEL CONECTOR DEL MODULO (GR)	219
CONFIGURACIÓN ELECTRÓNICA DE LA MÁQUINA	220
GRUPO ELECTRONICO-COMUNICACION	221
IMPLEMENTOS (GR ELECTRÓNICO)	222
ELECTRONICA DE MONITOR (GR)	222
TREN DE FUERZA-GRUPO ELECTRÓNICO	223
TORNILLERÍA DEL SISTEMA ELECTRÓNICO (GR)	224
MAZO DE CABLES DEL MOTOR (CONJ)	225
CALENTADOR DE ACEITE DE MOTOR (GR)	226
CALENTADOR DEL COMBUSTIBLE (GR)	227
AGUA DE LAS CAMISAS - CALENTADOR DEL (GR)	229
INSTALACIÓN CAES (CONFIG)	230
INSTALACION DE COMUNICATION (CONFIG)	230
INSTALACION DE COMUNICACION (GR)	231
GRUPO DE INSTALACION, CONTROL DE GRADO	233
LÁMPARA DEL TECHO (GR)	236
REFLECTOR (GR)	237
LUZ DE SEÑAL DE GIRO (GR)	242
LÁMPARA DE BALIZA DE ADVERTENCIA (GR)	243
LUCES DE PARADA Y REFLECTORES (CONFIG)	244
*LIGHTING AR-WARNING BEACON	244
LUCES DE REFLECTOR (GR)	245
LUCES DE PARADA (GR)	255

* NO HAY TRADUCCION DISPONIBLE EN EL MOMENTO DE LA IMPRESION

CONTENIDO

Nombre	Página
LUCES DE PARADA Y DE COLA (GR)	257
LUZ DE BALIZA (GR)	259
TUBERÍAS DEL TANQUE DE AIRE (GR)	260
LUBRICADOR DE MOTOR NEUMATICO (GR)	263
MONTAJE DEL SENSOR (GR)	264
*SENDER GP-FUEL LEVEL	265
SENSOR DE LA POSICION DE LEVANTAMIENTO Y MONTAJE (GR)	266
SENSOR DE TEMPERATURA DE ESCAPE (GR)	268
DETECTOR DE POSICIÓN (SISTEMA DE COMBUST.) (GR)	269
SENSOR DE PRESIÓN (GR)	272
SENSOR DE VELOCIDAD (GR)	276
SENSOR DE TEMPERATURA (GR)	279
AUXILIAR DE ARRANQUE CON ÉTER (GR)	282
ARRANQUE NEUMÁTICO (CONFIG)	287
ARRANQUE EN TIEMPO FRIO (CONFIG)	288
ARRANQUE ELÉCTRICO (CONFIG)	288
ARRANQUE POR AIRE - MOTOR DE (GR)	289
MOTOR DE ARRANQUE ELÉCTRICO (GR)	295
INTERRUPTOR DE DERIVACIÓN	299
DISYUNTOR (GR)	300
INTERRUPTOR DE FLUJO (GR)	301
INTERRUPTOR DE NIVEL DE LIQUIDO (GR)	302
INTERRUPTOR MAGNÉTICO (GR)	303
INTERRUPTOR DEL LIMPIADOR (GR)	306
GRUPO DE VÁLVULA-ARRANQUE CON ÉTER	307
RETROCESO - ALARMA DE (GR)	308
CABLES DE LA CABINA (GR)	309
*WIRING GP-CAMERA	318
ALAMBRADO DE ARRANQUE ELECTRICO (GR)	320
CABLES DEL MOTOR (GR)	325
*WIRING GP-FILTERS	331
*WIRING GP-FIREWALL	333
CABLES DELANTEROS (GR)	335
CABLES DE CALEFACCIÓN (GR)	338
CABLES DE LA MÁQUINA (GR)	340
CABLES DEL TABLERO MONITOR (GR)	353
*WIRING GP-OIL RENEWAL SYSTEM	360
CABLES DE LA PLATAFORMA (GR)	363
CABLES DEL TREN DE FUERZA (GR)	369
CABLES POSTERIORES (GR)	372
CABLES DE LA ESTRUCTURA ROPS (GR)	378
CABLES DE SENSOR (GR)	380
*WIRING GP-START CONTROL	381
TREN DE FUERZA	382
ADAPTADOR DE LA CAJA DE VOLANTE (GR)	382
EJE FIJO (CONFIG)	383
EJE OSCILANTE (CONFIG)	383
EJE FIJO (GR)	384
EJE OSCILANTE (GR)	385
CAJA Y PIEZAS DE LOS PLANETARIOS	387
CAJA DE ENGRANAJE (GR)	389
CONTROL DE LA PALANCA (GR)	390
TRABA DE LA PALANCA DE CONTROL (GR)	393
CONTROL HIDRÁULICO DE LA TRANSMISIÓN (GR)	395
ENFRIADOR DE ACEITE DE LA TRANSMISIÓN (GR)	396
*CORE GP-TMSN OIL COOLER	397
ACOPLAMIENTO DEL MANDO AUXILIAR (GR)	398
*COUPLING GP-TORSIONAL	399
TAPAS PROTECTORAS DE EMBARQUE (GR)	400
DIFERENCIAL Y CORONA (GR)	401
DIFERENCIAL (GR)	403
MANDO DE LA BOMBA Y MONTAJE (GR)	404
MANDO DE BOMBA (GR)	405
TORNILLERÍA DE EJE FIJO (GR)	411
TORNILLERÍA DEL EJE OSCILANTE (GR)	412
TUBO DE LLENADO DE ACEITE DE LA TRANSMISIÓN (GR)	413
FILTRO Y MONTAJE DEL TREN DE FUERZA (GR)	416
FILTRO DE ACEITE (GR)	418
ENGRANAJE DE TRANSFERENCIA DE ENTRADA (GR)	422
ENGRANAJE DE TRANSFERENCIA DE SALIDA	424
TUBERÍAS DE LA TOMA DE FUERZA (GR)	428
TUBERÍAS DE ACEITE DE LA TRANSMISIÓN (GR)	431
MONTAJE DE LA CORONA (GR)	439
MONTAJE DE ARO	440
MONTAJE DE LA TRANSMISIÓN (GR)	442
TRANSMISIÓN PLANETARIA (GR)	444

* NO HAY TRADUCCION DISPONIBLE EN EL MOMENTO DE LA IMPRESION

CONTENIDO

Nombre	Página
TREN DE FUERZA (CONFIG)	451
BOMBA Y MONTAJE DE LUBRICACIÓN DEL MANDO (GR)	452
BOMBA DE ENGRANAJES (GR)	453
BOMBA DE LA TRANSMISIÓN (GR)	454
LLANTA (CONFIG)	456
ARO DESMONTABLE (GR)	458
LLANTA DE REPUESTO (UNA SOLA)	462
EJE DE MANDO (GR)	464
EJE DE MANDO DE ENTRADA (GR)	467
EJE DE MANDO DE LA BOMBA (GR)	468
*SHAFT GP-PUMP DRIVE INPUT	471
JUNTA DESLIZANTE (GR)	472
CRUCETA Y COJINETE (GR)	475
NEUMÁTICO (GR)	475
CONVERTIDOR DE PAR Y CAJA (GR)	477
CONVERTIDOR DE PAR (GR)	479
TRANSMISION (CONFIG)	482
JUNTA UNIVERSAL (GR)	483
VÁLVULA DE MODULACIÓN (GR)	485
VÁLVULA SELECTORA (GR)	488
VÁLVULA SELECTORA Y DE CONTROL DE PRESIÓN (GR)	489
VÁLVULA DE SOLENOIDE (GR)	492
VÁLVULA DE PRIORIDAD DEL CONVERTIDOR DE PAR (GR)	493
VÁLVULA DE CONTROL DE LA TRANSMISIÓN (GR)	495
MANDOS FINALES, RUEDA Y FRENO (GR)	498
BASTIDOR Y CAJA	501
PARAGOLPES Y BARRA DE TIRO (CONFIG)	501
PARACHOQUES Y BARRA DE TIRO (GR)	503
GRUPO DE TAPA, ACCESO	509
TORNILLERÍA DE PROTECTOR INFERIOR (GR)	511
TORNILLERÍA DE LA BARRA DE TIRO Y PARACHOQUES	512
TORNILLERÍA DE GUARDABARROS	514
TORNILLERIA DEL PASAMANOS (GR)	515
GUARDABARROS DELANTERO (GR)	517
GUARDABARROS TRASERO (GR)	518
BASTIDOR DEL CARGADOR (CONJ)	520
BASTIDOR TRASERO (CONJ)	524
BASTIDOR DEL CARGADOR (GR)	527
BASTIDOR TRASERO (GR)	529
REJILLA DEL RADIADOR (GR)	531
PROTECTOR DE LAS TUBERÍAS DE LOS FRENOS (GR)	533
CÁRTER - PROTECTOR DEL (GR)	535
PROTECTOR DELANTERO (GR)	536
PROTECTOR DEL TREN DE FUERZA (GR)	537
PROTECTOR DEL RADIADOR (GR)	538
ENGANCHE ARTICULADO (GR)	540
CAPO Y PROTECTOR (GR)	541
LEVANTAMIENTO DE LA MÁQUINA (GR)	547
GRUPO DE TUBERIAS DE LUBRICACIÓN AUTOMÁTICA	548
TUBERÍAS DE LUBRICACIÓN (GR)	575
TIRANTE DE TRABA DEL BASTIDOR DE DIRECCIÓN (GR)	579
LUBRICACIÓN AUTOMÁTICA (GR)	580
*MOUNTING GP-BATTERY	582
PLANCHA DE LA MAMPARA ANTITÉRMICA (GR)	583
BOMBA DE LUBRICACIÓN (GR)	586
ESTRIBO DEL OPERADOR (GR)	589
TANQUE DE GRASA (GR)	591
VÁLVULAS Y TUBERIAS, LUBRICACIÓN	592
VÁLVULA DE DISTRIBUCIÓN DE LUBRICACIÓN (GR)	596
PASARELA (GR)	599
SISTEMA DE FRENOS	601
ACUMULADOR Y MONTAJE DEL FRENO (GR)	601
ACUMULADOR DEL FRENO (GR)	604
DESHIDRATADOR (GR)	606
BASE DEL FRENO DE PIE (GR)	608
FRENO DE ESTACIONAMIENTO (GR)	611
CONTROL DEL PEDAL DE FRENO (GR)	613
CONTROL DEL FRENO DE ESTACIONAMIENTO	614
FRENO DE SERVICIO - CONTROL (GR)	615
TUBERÍAS DEL ACUMULADOR (GR)	619
TUBERÍAS DEL TANQUE DE AIRE (GR)	622
*LINES GP-BRAKE COOLING	627
TUBERÍAS DEL FRENO DE ESTACIONAMIENTO (GR)	639
TUBERÍAS DEL FRENO DE SERVICIO (GR)	641
BOMBA Y MONTAJE DEL FRENO (GR)	645
BOMBA DE PISTONES (GR)	646
GRUPO GIRATORIO DE BOMBA	648

* NO HAY TRADUCCION DISPONIBLE EN EL MOMENTO DE LA IMPRESION

CONTENIDO

Nombre	Página
REJILLA DEL SISTEMA HIDRÁULICO(GR)	649
TANQUE DE AIRE (GR)	650
VÁLVULA Y MONTAJE DEL CONTROL DE FRENO (GR)	652
VÁLVULA DE CONTROL DEL FRENO (GR)	654
VÁLVULA DE RETENCIÓN (GR)	655
VALVULA DE CONTROL DE LA BOMBA (GR)	656
VÁLVULA DE SOLENOIDE (GR)	657
SISTEMA DE DIRECCIÓN	658
ACTIVADOR DE LA BOMBA (GR)	658
CAÑÓN DE LA BOMBA (GR)	661
CONTROL DE DIRECCIÓN (GR)	662
CILINDRO DE DIRECCIÓN Y MONTAJE (GR)	664
CILINDRO DE DIRECCIÓN (GR)	665
GRUPO DE MONTAJE Y FILTRO DEL DRENAJE DE LA CAJA	669
FILTRO Y MONTAJE DEL DIRECCIONAL E IMPLEMENTOS	671
*FILTER & MTG GP-STEERING	672
FILTRO DE ACEITE (GR)	673
CABEZA DE BOMBA (GR)	676
TUBERÍAS DE LA DIRECCIÓN SECUNDARIA (GR)	677
TUBERÍAS DIRECCIONALES Y ENFRIADOR DE FRENO	681
TUBERÍAS DE DIRECCIÓN (GR)	687
TUBERÍAS DE NEUTRALIZACIÓN DE LA DIRECCIÓN (GR)	697
BOMBA Y MONTAJE DE LA DIRECCIÓN SECUNDARIA (GR)	700
BOMBA DE DIRECCIÓN Y DE FRENO Y MONTAJE (GR)	701
BOMBA DE DIRECCIÓN Y ENFR. DEL FRENO Y MONTAJE	702
BOMBA DE ENGRANAJES (GR)	703
BOMBA DE PISTONES (GR)	706
GRUPO GIRATORIO DE BOMBA	710
REJILLA DE ALTA PRESION (GR)	711
TUBERÍAS Y VÁLVULAS DE LA DIRECCIÓN NEUTRAL (GR)	712
VÁLVULA DE DIRECCIÓN SECUNDARIA Y MONTAJE	714
VÁLVULA DE DIRECCIÓN Y MONTAJE (GR)	715
VÁLV DE NEUTRALIZ DE DIR Y MONTAJE (GR)	718
VÁLVULA DE RETENCIÓN (GR)	720
VÁLVULA DE DERIVACIÓN (GR)	724
VÁLVULA PILOTO (GR)	727
VALVULA PILOTO DE CARTUCHO (GR)	728
VALVULA DE CONTROL DE LA BOMBA (GR)	730
VÁLVULA DE ALIVIO (GR)	733
VÁLVULA SELECTORA Y DE CONTROL DE PRESIÓN (GR)	737
VÁLVULA DE LANZADERA (GR)	738
VÁLVULAS DE LA DIRECCIÓN (GR)	739
VÁLVULA NEUTRALIZADORA DE DIRECCIÓN (GR)	742
SISTEMA HIDRÁULICO	743
GRUPO DE CONTROL-CORTE HIDRÁULICO	743
CONTROL HIDRÁULICO DE OPERACIÓN PILOTO (GR)	744
ENFRIADOR DEL ACEITE HIDRAULICO (GR)	746
CILINDRO DE LEVANTAMIENTO (CONFIG)	747
CILINDRO DE INCLINACIÓN (GR)	748
CILINDRO DE LEVANTAMIENTO (GR)	749
INCLINACIÓN HORIZONTAL - CILINDRO DE (GR)	755
TUBO DE LLENADO DE ACEITE HIDRÁULICO (GR)	767
*FILTER & MTG GP-PLT & PUMP DR	770
FILTRO DE ACEITE (GR)	771
CABEZA DE BOMBA (GR)	772
CONFIGURACIÓN HIDRÁULICA DELANTERA	774
*HYDRAULIC AR-REAR	775
POSICIONADOR DEL CUCHARÓN Y DESCONEXIÓN (GR)	776
TUBERIAS GR-DRENAJE	780
TUBERÍAS DE DRENAJE (GR)	784
*LINES GP-EXPANSION TANK	785
TUBERÍAS HIDRÁULICAS (GR)	789
TUBERÍAS DEL ENFRIADOR DE ACEITE HIDRÁULICO (GR)	797
CILINDRO DE LEVANTAMIENTO - TUBERÍAS DEL (GR)	804
TUBERIAS HIDRAULICAS DE MONITOR DE CARGA UTIL (GR)	811
TUBERÍAS CON SERVOMANDO (GR)	813
TUBERÍAS DEL CILINDRO DE INCLINACIÓN (GR)	824
MAGNETO GR-VÁLVULA PILOTO	829
*MOUNTING GP-EXPANSION TANK	831
MONTAJE DEL CILINDRO DE LEVANTAMIENTO (GR)	833

* NO HAY TRADUCCION DISPONIBLE EN EL MOMENTO DE LA IMPRESION

CONTENIDO

Nombre	Página
BOMBA DE IMPLEMENTOS Y MONTAJE (GR)	834
BOMBA Y MONTAJE DEL PILOTO Y EL ENFRIADOR	835
BOMBA DE ENGRANAJES (GR)	836
BOMBA DE PISTONES (GR)	840
GRUPO GIRATORIO DE BOMBA	844
TANQUE HIDRÁULICO Y MONTAJE (GR)	847
TANQUE DE EXPANSIÓN (GR)	850
TANQUE HIDRÁULICO (GR)	852
MONTAJE Y VALVULA DEL CONTROL PRINCIPAL (GR)	859
VÁLVULA DE RETENCIÓN (GR)	863
VALVULA DE RETENCIÓN Y ALIVIO (GR)	864
VÁLVULA DEL CONTROL PRINCIPAL (GR)	865
VÁLVULA PILOTO (GR)	873
VALVULA PILOTO DE CARTUCHO (GR)	876
VALVULA DE CONTROL DE LA BOMBA (GR)	880
VÁLVULA DE ALIVIO (GR)	883
VÁLVULA SELECTORA (GR)	891
VÁLVULA SELECTORA Y DE CONTROL DE PRESIÓN (GR)	892
VÁLVULA DE SOLENOIDE (GR)	893
*VESSEL AR	895
IMPLEMENTOS	896
BRAZO Y COJINETE (CONJ)	896
BRAZO DE LEVANTAMIENTO (CONFIG)	902
LEVANTAMIENTO (CONFIG)	905
ESLABON DEL CUCHARON (GR)	906
PASADOR Y SELLO-VARILLAJE (GR)	912
HERRAMIENTAS	915
CUCHARÓN PARA CARBÓN (CONJ)	915
CUCHARÓN PARA ROCA (CONJ)	919
CUCHARÓN PARA CARBÓN (GR)	929
CUCHARÓN PARA ROCA (GR)	930
CUCHILLA (GR)	936
PROTECTOR DE LA CUCHILLA (GR)	940
PUNTA RESISTENTE A LA ABRASIÓN (GR)	941
PUNTA PARA CUCHARON DE USO GENERAL (GR)	943
PUNTA LARGA (GR)	944
PUNTA PARA PENETRACIÓN (GR)	945
PUNTA PARA PENETRACIÓN	948
ALA DE CUCHARON (GR)	949
PUESTO DEL OPERADOR	950
AJUSTADOR DEL ASIENTO (GR)	950
COMPRESOR DE AIRE DEL ASIENTO (GR)	951
ACONDICIONADOR DE AIRE (CONFIG)	952
ACONDICIONADOR DE AIRE (GR)	953
BRAZO DE LIMPIAPARABRISAS (GR)	956
CAJA DE ALMACENAMIENTO	957
CABINA Y PLATAFORMA (GR)	959
CABINA (CONFIG)	961
CABINA (GR)	962
LIMPIAR LA CABINA (GR)	964
COMPRESOR DE REFRIGERANTE Y GRUPO DE MONTAJE	966
COMPRESOR DE REFRIGERANTE (GR)	969
CONDENSADOR DEL REFRIGERANTE Y MONTAJE (GR)	970
GRUPO DE CONTROL-MONITOR NO PROGRAMADO	971
TAPA DE LA CABINA (GR)	972
CUBIERTA DE PLATAFORMA (SISTEMA DE ARRANQUE) (GR)	974
PANTALLA DEL MONITOR (GR)	977
PUERTA DE CABINA	978
CONDUCTO DE AIRE (GR)	980
TORNILLERÍA DE LA ESTRUCTURA ROPS (GR)	981
FILTRO DE AIRE DE LA CABINA (GR)	982
PASAMANOS (GR)	985
BOCINA DE AIRE (GR)	987
INSTALACIÓN DE RADIO (GR)	991
PESTILLO DE PUERTA Y VENTANA DE LA CABINA (GR)	993
REVESTIMIENTO DE LA CABINA (GR)	996
TUBERÍAS DE ACONDICIONADOR DE AIRE (GR)	1001
TUBERÍAS DE CALEFACCIÓN DE LA CABINA	1008
RETROVISOR IZQUIERDO (GR)	1010
RETROVISOR DERECHO (GR)	1012
MODULO CENTRAL DE MENSAJES(GR)	1014
MODULO DEL TECLADO MONITOR (GR)	1014
MODULO ELECTRÓNICO DE CUATRO INDICADORES (GR)	1015
MOTOR-LIMPIAPARABRISAS (GR)	1016
MONTAJE DE ANTENA (GR)	1020
MONTAJE GR-MONITOR	1021
MONTAJE DE LA PLATAFORMA (GR)	1022

* NO HAY TRADUCCION DISPONIBLE EN EL MOMENTO DE LA IMPRESION

CONTENIDO

Nombre	Página
MONTAJE DEL SOPORTE DE LA PLATAFORMA	1025
COMPARTIMIENTO DEL OPERADOR (CONFIG)	1026
SOPORTE DEL RESPALDO (GR)	1027
TABLERO DE INSTRUMENTOS (GR)	1028
REGULADOR - PEDAL DEL (GR)	1032
PLATAFORMA (CONFIG)	1034
PLATAFORMA DE LA CABINA	1036
*PRECLEANER AR-CAB AIR	1043
*PRECLEANER GP-CAB AIR	1044
RECLINACION DE ASIENTO (GR)	1045
ESTRUCTURA ROPS (CONFIG)	1046
ESTRUCTURA ROPS (GR)	1047
SELLADO DEL VIDRIO (GR)	1048
ASIENTO (GR)	1049
ASIENTO PARA ACOMPAÑANTE (GR)	1053
SUSPENSIÓN - ASIENTO CON (GR)	1057
RESORTE DE LA PUERTA DE LA CABINA (GR)	1058
SOPORTE DEL CONTROL HIDRÁULICO (GR)	1060
SOPORTE DEL ASIENTO (GR)	1063
SOPORTE DE CONTROL DE LA DIRECCIÓN (GR)	1064
ASIENTO CON SUSPENSIÓN (GR)	1067
LAVAPARABRISAS DE LA VENTANA (GR)	1069
LIMPIA Y LAVAPARABRISAS (GR)	1070
LIMPIAPARABRISAS DE LA VENTANA (GR)	1072
EQUIPO DE SERVICIO Y SUMINISTROS	1077
ETIQUETA DE ADVERTENCIA (GR)	1077
*FILM GP-INTERNATIONAL	1081
*FILM GP-U.S.	1081
GRUPO DE TUBERIAS DE DIAGNÓSTICO	1082
CALCOMANÍAS Y PLACAS DE IDENTIFICACIÓN (GR)	1090
CENTRO DE SERVICIO GR	1093
INDICE DE NUMEROS DE PIEZA	B1

* NO HAY TRADUCCION DISPONIBLE EN EL MOMENTO DE LA IMPRESION

ÍNDICE

Designação	Página
INFORMAÇÃO GERAL	A43
ALTERNATIVAS DE REPARO	A54
ADITIVOS SUPLEMENTARES DO LÍQUIDO ARREFECEDOR	A59
PEÇAS DE MANUTENÇÃO	A75
ÍNDICE	A128
MÁQUINA - ARRANJO	1
CHASSI DIANTEIRO	1
CHASSI - TRASEIRO	2
ARRANJO BÁSICO	2
GR. DE CONVERSÃO - CERTIFICADO	3
*CONVERSION AR-CERTIFICATION	3
INSTALAÇÃO NO CAMPO	3
MOTOR - ARRANJO	5
MOTOR	5
GRUPO DE INSTALAÇÃO - MOTOR	7
MOTOR BÁSICO	8
COMPRESSOR DE AR	8
*BASE GP-VALVE COVER	10
AJUSTADOR DE CORREIAS	11
EIXO-COMANDO DE VÁLVULA	13
TAMPA - BLOCO DO MOTOR	14
TAMPA - MOTOR	15
TAMPA - CAIXA DIANTEIRA	17
TAMPA - MECANISMO DAS VÁLVULAS	19
VIRABREQUIM	20
BLOCO DO MOTOR	21
CABEÇOTE DO MOTOR	24
AMORTECEDOR	29
COMANDO DO VENTILADOR	30
COMANDO DE ACESSÓRIOS	31
COMANDO AUXILIAR	36
COMANDO DO VENTILADOR	38
VOLANTE DO MOTOR	44
ENGRENAGENS DE DISTRIBUIÇÃO	45
ENGRENAGENS DE COMANDO TRASEIRO	47
PROTETOR - CORREIAS	49
CAIXA DO VOLANTE DO MOTOR	52
CAIXA DIANTEIRA	54
RODA-GUIA - CORREIA	55
LEVANTAMENTO DO MOTOR	56
TUBOS - COMPRESSOR DE AR	57
MONTAGEM - ALTERNADOR	59
CÁRTER DO ÓLEO DO MOTOR	61
PISTÃO E BIELA	64
RETENTOR DO VIRABREQUIM	67
SUPORTE DO MOTOR	68
MECANISMO DAS VÁLVULAS	70
SISTEMA DE LUBRIFICAÇÃO	72
RESPIRO	72
BOCAL DE ENCHIMENTO DE ÓLEO DO MOTOR	74
FILTRO - ÓLEO DO MOTOR	75
ELIMINAÇÃO DE VAPORES DO CÁRTER	77
INDICADOR - NÍVEL DO ÓLEO (VARETA)	78
TUBOS - ÓLEO DO MOTOR	80
TUBOS - ÓLEO DO TURBOALIMENTADOR	86
MEDIÇÃO - ÓLEO DO MOTOR	89
ÓLEO - ARRANJO PARA TROCA RÁPIDA	91
BOMBA E MOTOR - PRÉ-LUBRIFICAÇÃO	93
BOMBA DE ÓLEO - MOTOR	94
BOMBA DE PRÉ-LUBRIFICAÇÃO	96
BOMBA AUXILIAR DO SISTEMA DE TRANSMISSÃO	103
RENOVAÇÃO-ÓLEO	106
TANQUE E MONTAGEM-ÓLEO DO MOTOR	107
TANQUE - ÓLEO DO MOTOR	109
VÁLVULA DO COMANDO DO VENTILADOR E MONTAGEM	110
VÁLVULA - MEDIÇÃO	111
SISTEMA DE ARREFECIMENTO	112
CONEXÃO - TUBO D'ÁGUA	112
ARREFECEDOR - ÓLEO DO MOTOR	113
COLMÉIA - ARREFECEDOR DE ÓLEO DO MOTOR	114
COLMÉIA - ARREFECEDOR DE ÓLEO	115
VENTILADOR DE SOPRO	116
INDICADOR - NÍVEL DO LÍQUIDO ARREFECEDOR	117
TERMOSTATO / REGULADOR DE TEMPERATURA	118
TUBOS - SISTEMA DE ARREFECIMENTO	119
TUBOS - ÁGUA DO TURBOALIMENTADOR	123
TUBOS - ÁGUA	127
BOMBA AUXILIAR DE ÁGUA DOCE	141
BOMBA DE ÁGUA	143

* TRADUÇÃO NÃO DISPONÍVEL NO MOMENTO DA IMPRESSÃO

ÍNDICE

Designação	Página
RADIADOR	146
VÁLVULA DE TIRAR AMOSTRAS DO LÍQUIDO ARREFECEDOR	154
SISTEMA DA ADMISSÃO DE AR E DE ESCAPE	155
PÓS-ARREFECEDOR COM ÁGUA TRATADA	155
PURIFICADOR DE AR	156
EJETOR DE POEIRA	158
EXTENSÃO DO TUBO DE ESCAPE	159
INDICADOR - TROCA DO FILTRO DE AR	160
TUBOS - AR	161
TUBULAÇÕES - AR DO TURBOALIMENTADOR	162
COLETOR DE ESCAPE	164
SILENCIADOR	166
PRÉ-PURIFICADOR	167
TURBOALIMENTADOR	171
SISTEMA DE COMBUSTÍVEL	173
FILTRO - COMBUSTÍVEL	173
FILTRO - PRIMÁRIO DE COMBUSTÍVEL	175
CONEXÃO - TANQUE DE COMBUSTÍVEL	176
TUBOS - COMBUSTÍVEL	177
TUBOS - INJEÇÃO DO COMBUSTÍVEL	179
COLETOR DE COMBUSTÍVEL	182
BOMBA DE INJEÇÃO DO COMBUSTÍVEL	184
BOMBA DE ESCORVA DO COMBUSTÍVEL	185
BOMBA DE ESCORVA DO COMBUSTÍVEL E DO FILTRO PRIMÁRIO	187
BOMBA DE TRANSFERÊNCIA DO COMBUSTÍVEL	188
TANQUE DE COMBUSTÍVEL	190
SISTEMA ELÉTRICO E DE PARTIDA	194
ALARME	194
ALTERNADOR DE CORRENTE	195
BATERIA E CABOS / FIOS ELÉTRICOS	197
BATERIA	199
BLOCO DE JUNÇÃO	202
AMORTECEDOR - SENSOR	203
CÂMERA	204
CONTROLE & MONTAGEM-COMUNICAÇÃO	205
CONTROLE ELETRÔNICO E MONTAGEM - MOTOR	206
CONTROLE - RAMPA	207
CONTROLE DE PARTIDA A AR	208
CONTROLE ELETRÔNICO - MOTOR	215
CONTROLE - POSIÇÃO	216
CONTROLE - NÃO PROGRAMADO	217
TAMPA DO CONECTOR DO MÓDULO	219
SISTEMA ELETRÔNICO - MÁQUINA	220
SISTEMA ELETRÔNICO-COMUNICAÇÃO	221
SIST. ELETRÔNICO - ACESSÓRIO	222
SISTEMA ELETRÔNICO - MONITOR	222
SISTEMA ELETRÔNICO - TREM DE FORÇA	223
FIXADOR DO SISTEMA ELETRÔNICO	224
CHICOTE - MOTOR	225
ÓLEO DO MOTOR - AQUECEDOR	226
AQUECEDOR DO COMBUSTÍVEL	227
AQUECEDOR DA ÁGUA DO MOTOR	229
INSTALAÇÃO - CAES	230
INSTALAÇÃO-COMUNICAÇÃO	230
INSTALAÇÃO-CONTROLE DA INCLINAÇÃO	233
LÂMPADA - TETO	236
LÂMPADA - FAROL	237
LÂMPADA - SINALIZAÇÃO	242
LUZ GIRATÓRIA DE ALARME	243
ILUMINAÇÃO - FREIOS E FARÓIS	244
ILUMINAÇÃO-LUZ GIRATÓRIA DE ALERTA	244
SISTEMA DE ILUMINAÇÃO - FARÓIS	245
ILUMINAÇÃO - FREIOS	255
ILUMINAÇÃO - FREIO E MARCHA À RÉ	257
SIST. DE ILUMINAÇÃO - PISCA-PISCA GIRATÓRIO DE ADVERTÊNCIA	259
TUBOS - TANQUE DE AR	260
LUBRIFICADOR DO MOTOR DE PARTIDA A AR	263
MONTAGEM - SENSOR	264
*SENDER GP-FUEL LEVEL	265
SENSOR - POSIÇÃO DE LEVANTAMENTO E MONTAGEM	266
SENSOR - TEMPERATURA DE ESCAPE	268
EMISSOR - POSIÇÃO	269
SENSOR - PRESSÃO	272
SENSOR DE VELOCIDADE	276
SENSOR - TEMPERATURA	279
AUXILIAR DE PARTIDA A ÉTER	282
PARTIDA A AR	287

* TRADUÇÃO NÃO DISPONÍVEL NO MOMENTO DA IMPRESSÃO

ÍNDICE

Designação	Página
PARTIDA EM TEMPO FRIO - ARRANJO	288
MOTOR ELÉTRICO DE PARTIDA	288
MOTOR DE PARTIDA A AR	289
MOTOR ELÉTRICO DE PARTIDA	295
INTERRUPTOR DE DERIVAÇÃO	299
CHAVE GERAL	300
INTERRUPTOR - FLUXO	301
INTERRUPTOR - NÍVEL DO LÍQUIDO	302
INTERRUPTOR - MAGNÉTICO	303
INTERRUPTOR - LIMPADOR DO PÁRA-BRISA	306
VALVULA - PARTIDA A ETER	307
ALARME DE MARCHA À RÉ	308
CABOS/FIOS ELÉTRICOS - CABINE	309
FIAÇÃO-CÂMERA	318
CABOS/FIOS ELÉTRICOS - PARTIDA ELÉTRICA	320
CABOS/FIOS ELÉTRICOS - MOTOR	325
FIAÇÃO-FILTROS	331
FIAÇÃO-PAINEL DO MOTOR	333
CABOS/FIOS ELÉTRICOS - DIANTEIROS	335
CABOS/FIOS ELÉTRICOS - AQUECEDOR	338
CABOS/FIOS ELÉTRICOS - MÁQUINA	340
CABOS/FIOS ELÉTRICOS - PAINEL MONITOR	353
FIAÇÃO-SISTEMA DE RENOVAÇÃO DO ÓLEO	360
CABOS/FIOS ELÉTRICOS - PLATAFORMA	363
CABOS/FIOS ELÉTRICOS - TREM DE FORÇA	369
CABOS/FIOS ELÉTRICOS - TRASEIROS	372
CABOS/FIOS ELÉTRICOS - ESTRUTURA ROPS	378
CABOS/FIOS ELÉTRICOS - SENSOR	380
FIAÇÃO-CONTROLE DA PARTIDA	381
TREM DE FORÇA	382
ADAPTADOR DA CAIXA DO VOLANTE DO MOTOR	382
EIXO FIXO	383
EIXO OSCILANTE	383
EIXO FIXO	384
EIXO OSCILANTE	385
CARCAÇA DAS ENGRENAGENS PLANETÁRIAS E COMPONENTES	387
CAIXA - ENGRENAGEM	389
CONTROLE INTEGRADO DA TRANSMISSÂO DA DIREÇÃO	390
TRAVA - CONTROLE DO BRAÇO	393
CONTROLE HIDRÁULICO DA TRANSMISSÃO	395
ARREFECEDOR DE ÓLEO DA TRANSMISSÃO	396
*CORE GP-TMSN OIL COOLER	397
ACOPLAMENTO DO COMANDO AUXILIAR	398
*COUPLING GP-TORSIONAL	399
TAMPA - EMBARQUE	400
DIFERENCIAL E COROA	401
DIFERENCIAL	403
COMANDO DA BOMBA E MONTAGEM	404
COMANDO DA BOMBA	405
FIXADORES - EIXO FIXO	411
FIXADORES - EIXO OSCILANTE	412
BOCAL DE ENCHIMENTO DE ÓLEO DO TREM DE FORÇA	413
FILTRO DO TREM DE FORÇA E MONTAGEM	416
FILTRO - ÓLEO	418
ENGRENAGEM - TRANSFERÊNCIA DE ENTRADA	422
ENGRENAGENS DE SAÍDA DE TRANSFERÊNCIA	424
TUBOS - TOMADA DE FORÇA	428
TUBOS - ÓLEO DA TRANSMISSÃO	431
MONTAGEM - COROA CÔNICA	439
MONTAGEM - ARO	440
MONTAGEM - TRANSMISSÃO	442
ENGRENAGENS PLANETÁRIAS - TRANSMISSÃO	444
TREM DE FORÇA	451
BOMBA E MONTAGEM - LUBRIFICAÇÃO DO COMANDO	452
BOMBA DE ENGRENAGENS	453
BOMBA DA TRANSMISSÃO	454
ARO	456
ARO DESMONTÁVEL	458
ARO SIMPLES	462
EIXO DE TRANSMISSÃO	464
EIXO DO COMANDO DE ENTRADA	467
EIXO DE COMANDO DA BOMBA	468
EIXO-ENTRADA DO COMANDO DA BOMBA	471
JUNTA CORREDIÇA	472
CRUZETA E MANCAL	475
PNEU	475
CONVERSOR DE TORQUE E CARCAÇA	477
CONVERSOR DE TORQUE	479
TRANSMISSÃO	482

* TRADUÇÃO NÃO DISPONÍVEL NO MOMENTO DA IMPRESSÃO

ÍNDICE

Designação	Página
JUNTA UNIVERSAL	483
VÁLVULA DE MODULAÇÃO	485
VÁLVULA SELETORA	488
VÁLVULA SELETORA E CONTROLE DE PRESSÃO	489
VÁLVULA SOLENÓIDE	492
VÁLVULA DE PRIORIDADE DO CONVERSOR DE TORQUE	493
VÁLVULA DE CONTROLE - TRANSMISSÃO	495
RODA - COMANDO FINAL E FREIO	498
CHASSI E CARROCERIA	501
PÁRA-CHOQUE E BARRA DE TRAÇÃO	501
TAMPA - ACESSO	509
FIXADORES - PROTETOR INFERIOR	511
FIXADORES - BARRA DE TRAÇÃO E PÁRA-CHOQUE	512
FIXADORES - PÁRA-LAMA	514
FIXADORES - PEGA-MÃO	515
PÁRA-LAMA DIANTEIRO	517
PÁRA-LAMA TRASEIRO	518
CHASSI DIANTEIRO	520
CHASSI TRASEIRO	524
CHASSI DIANTEIRO	527
CHASSI TRASEIRO	529
GRADE DO RADIADOR	531
PROTETOR - TUBOS DO FREIO	533
PROTETOR - CÁRTER DO ÓLEO DO MOTOR	535
PROTETOR - DIANTEIRO	536
PROTETOR - TREM DE FORÇA	537
PROTETOR - RADIADOR	538
ENGATE - ARTICULAÇÃO	540
CAPÔ E PROTETOR	541
LEVANTAMENTO DA MÁQUINA	547
TUBULAÇÕES - LUBRIFICAÇÃO AUTOMÁTICA	548
TUBOS - LUBRIFICAÇÃO	575
ELO - TRAVA DA ARMAÇÃO DA DIREÇÃO	579
LUBRIFICAÇÃO - AUTOMÁTICA	580
MONTAGEM - BATERIA	582
PLACA - PAINEL TRASEIRO DO MOTOR	583
BOMBA DE LUBRIFICAÇÃO	586
DEGRAU	589
TANQUE - GRAXA	591
VÁLVULA E TUBULAÇÕES - LUBRIFICAÇÃO	592
VÁLVULA DE LUBRIFICAÇÃO - DISTRIBUIÇÃO	596
PASSADIÇO	599
SISTEMA DE FREIO	601
ACUMULADOR DO FREIO E MONTAGEM	601
ACUMULADOR - FREIO	604
SECADOR DE AR	606
BASE DO FREIO - PEDAL	608
FREIO DE ESTACIONAMENTO	611
CONTROLE DO PEDAL DO FREIO	613
CONTROLE DO FREIO DE ESTACIONAMENTO	614
CONTROLE DO FREIO DE SERVIÇO	615
TUBOS - ACUMULADOR	619
TUBOS - TANQUE DE AR	622
TUBULAÇÕES-ARREFECIMENTO DOS FREIOS	627
TUBOS - FREIO DE ESTACIONAMENTO	639
TUBOS - FREIO DE SERVIÇO	641
BOMBA DO FREIO E MONTAGEM	645
BOMBA DE PISTÃO	646
GRUPO ROTATIVO DA BOMBA	648
TELA - SIST. HIDRÁULICO	649
TANQUE DE AR	650
VÁLVULA DE CONTROLE E MONTAGEM - FREIOS	652
VÁLVULA DE CONTROLE DOS FREIOS	654
VÁLVULA DE RETENÇÃO	655
VÁLVULA DE CONTROLE DA BOMBA	656
VÁLVULA SOLENÓIDE	657
SISTEMA DE DIREÇÃO	658
ACIONADOR DA BOMBA	658
CILINDRO DA BOMBA	661
CONTROLE DE DIREÇÃO	662
CILINDRO DE DIREÇÃO E MONTAGEM	664
CILINDRO DA DIREÇÃO	665
FILTRO E MONTAGEM - DRENO DA CAIXA	669
FILTRO E MONTAGEM - DIREÇÃO E IMPLEMENTOS	671
FILTRO - DIREÇÃO E MONTAGEM	672
FILTRO - ÓLEO	673
CABEÇA DA BOMBA	676
TUBOS - DIREÇÃO SECUNDÁRIA	677
TUBOS - ARREFECEDOR DOS FREIOS E DIREÇÃO	681
TUBOS - DIREÇÃO	687
TUBOS - NEUTRALIZADOR DA DIREÇÃO	697

* TRADUÇÃO NÃO DISPONÍVEL NO MOMENTO DA IMPRESSÃO

ÍNDICE

Designação	Página
BOMBA DA DIREÇÃO SECUNDÁRIA E MONTAGEM	700
BOMBA DE FREIO E DE DIREÇÃO E MONTAGEM	701
BOMBA E MONTAGEM - DIREÇÃO E ARREF. DOS FREIOS	702
BOMBA DE ENGRENAGENS	703
BOMBA DE PISTÃO	706
GRUPO ROTATIVO DA BOMBA	710
TELA - PRESSÃO ALTA	711
VÁLVULA E TUBOS - DIREÇÃO NEUTRA	712
VÁLVULA E MONTAGEM - DIREÇÃO SECUNDÁRIA	714
VÁLVULA DA DIREÇÃO E MONTAGEM	715
VÁLVULA NEUTRALIZADORA DA DIREÇÃO E MONTAGEM	718
VÁLVULA DE RETENÇÃO	720
VÁLVULA DESVIADORA	724
VÁLVULA DE CONTROLE PILOTO	727
VÁLVULA DO CARTUCHO PILOTO	728
VÁLVULA DE CONTROLE DA BOMBA	730
VÁLVULA DE ALÍVIO	733
VÁLVULA SELETORA E CONTROLE DE PRESSÃO	737
VÁLVULA DE SEPARAÇÃO	738
VÁLVULA DA DIREÇÃO	739
VÁLVULA - NEUTRALIZADOR DA DIREÇÃO	742
SISTEMA HIDRÁULICO	743
CONTROLE-TRAVAMENTO HIDRÁULICO	743
CONTROLE HIDRÁULICO DE OPERAÇÃO PILOTO	744
ARREFECEDOR DO ÓLEO HIDRÁULICO	746
CILINDRO - LEVANTAMENTO	747
CILINDRO DE INCLINAÇÃO	748
CILINDRO DE LEVANTAMENTO	749
CILINDRO DE INCLINAÇÃO	755
BOCAL DE ENCHIMENTO DE ÓLEO HIDRÁULICO	767
FILTRO E MONTAGEM-COMANDO PILOTO E DA BOMBA	770
FILTRO - ÓLEO	771
CABEÇA DA BOMBA	772
SIST. HIDRÁULICO - DIANTEIRO	774
HIDRÁULICO - PARTE TRASEIRA	775
DESENGATE E POSICIONADOR DA CAÇAMBA	776
TUBULAÇÕES-DRENO DA CAIXA	780
TUBOS - DRENAGEM	784
TUBULAÇÕES-TANQUE DE EXPANSÃO	785
TUBOS - ÓLEO HIDRÁULICO	789
TUBOS - ARREFECEDOR DE ÓLEO HIDRÁULICO	797
TUBOS - CILINDRO DE LEVANTAMENTO	804
TUBULAÇÕES - SISTEMA HIDRÁULICO DO MONITOR DE CARGA ÚTIL	811
TUBOS - CIRCUITO PILOTO	813
TUBOS - CILINDRO DE INCLINAÇÃO	824
IMÃ-VÃLVULA PILOTO	829
MONTAGEM-TANQUE DE EXPANSÃO	831
MONTAGEM - CILINDRO DE LEVANTAMENTO	833
BOMBA E MONTAGEM - ACESSÓRIO	834
BOMBA E MONTAGEM - PILOTO E ARREF.	835
BOMBA DE ENGRENAGENS	836
BOMBA DE PISTÃO	840
GRUPO ROTATIVO DA BOMBA	844
TANQUE DE ÓLEO HIDRÁULICO E MONTAGEM	847
TANQUE DE EXPANSÃO	850
TANQUE HIDRÁULICO	852
VÁLVULA DO CONTROLE PRINCIPAL E MONTAGEM	859
VÁLVULA DE RETENÇÃO	863
VÁLVULA DE RETENÇÃO E DE ALÍVIO	864
VÁLVULA - CONTROLE PRINCIPAL	865
VÁLVULA DE CONTROLE PILOTO	873
VÁLVULA DO CARTUCHO PILOTO	876
VÁLVULA DE CONTROLE DA BOMBA	880
VÁLVULA DE ALÍVIO	883
VÁLVULA SELETORA	891
VÁLVULA SELETORA E CONTROLE DE PRESSÃO	892
VÁLVULA SOLENÓIDE	893
EMBARCAÇÃO	895
ACESSÓRIOS	896
BRAÇO E MANCAL TIPO LUVA	896
BRAÇO - LEVANTAMENTO	902
LEVANTAMENTO - ARRANJO	905
ARTICULAÇÃO - CAÇAMBA	906
PINO E RETENTOR - ARTICULAÇÃO	912
FERRAMENTAS DE TRABALHO	915
CAÇAMBA PARA CARVÃO	915
CAÇAMBA PARA ROCHAS	919
CAÇAMBA PARA CARVÃO	929

* TRADUÇÃO NÃO DISPONÍVEL NO MOMENTO DA IMPRESSÃO

ÍNDICE

Designação	Página
CAÇAMBA PARA ROCHAS	930
BORDA CORTANTE	936
PROTETOR DA BORDA CORTANTE	940
PONTA - ABRASÃO	941
PONTA PARA APLICAÇÕES GERAIS	943
PONTA LONGA	944
PONTA - PENETRAÇÃO	945
CAÇAMBA - ASAS	949
ESTAÇÃO DO OPERADOR	950
AJUSTADOR DO ASSENTO	950
COMPRESSOR DE AR - ASSENTO	951
CONDICIONADOR DE AR	952
BRACO DO LIMPADOR	956
CAIXA DE ARMAZENAMENTO	957
CABINE E PLATAFORMA	959
CABINE	961
LIMPEZA - CABINE	964
COMPRESSOR DE REFRIGERANTE E MONTAGEM	966
COMPRESSOR DE REFRIGERANTE	969
CONDENSADOR DO REFRIGERANTE E MONTAGEM	970
CONTROLE-MONITOR NÃO PROGRAMADO	971
TAMPA - CABINE	972
TAMPA - PLATAFORMA	974
VISOR - MONITOR	977
PORTA DA CABINE	978
DUCTO DE AR	980
FIXADORES - ESTRUTURA ROPS	981
FILTRO - AR DA CABINE	982
PEGA-MÃO	985
BUZINA DE AR	987
INSTALAÇÃO DO RÁDIO	991
TRINCO - PORTA DA CABINA E JANELA	993
REVESTIMENTO DA CABINE	996
TUBOS - AR CONDICIONADO	1001
TUBOS - AQUECEDOR DA CABINE	1008
ESPELHO RETROVISOR - LADO ESQUERDO	1010
ESPELHO RETROVISOR - LADO DIREITO	1012
MÓDULO - CENTRO DE MENSAGEM	1014
MÓDULO - TECLADO DO MONITOR	1014
MÓDULO ELETRÔNICO DE QUATRO INDICADORES	1015
MOTOR - LIMPADOR DO VIDRO	1016
MONTAGEM-ANTENA	1020
MONTAGEM - MONITOR	1021
MONTAGEM - PLATAFORMA	1022
MONTAGEM - SUPORTE DA PLATAFORMA	1025
CABINE	1026
FUNDO - ENCOSTO	1027
PAINEL DE INSTRUMENTOS	1028
PEDAL DO GOVERNADOR	1032
PISO	1034
PLATAFORMA DO OPERADOR	1036
PRÉ-PURIFICADOR, AR DA CABINE	1043
PRÉ-PURIFICADOR-AR DA CABINE	1044
RECLINAÇÃO - ASSENTO	1045
ESTRUTURA ROPS	1046
RETENÇÃO - VIDRO	1048
ASSENTO	1049
ASSENTO DE PASSAGEIRO	1053
ASSENTO COM SUSPENSÃO	1057
MOLA - PORTA DA CABINA	1058
SUPORTE - CONTROLE HIDRÁULICO	1060
SUPORTE - ASSENTO	1063
SUPORTE - CONTRÔLE DA DIREÇÃO	1064
SUSPENSÃO - ASSENTO	1067
LAVADOR DO VIDRO	1069
LIMPADOR E LAVADOR - JANELA	1070
LIMPADOR DO VIDRO	1072
EQUIPAMENTOS DE SERVIÇO E SUPRIMENTOS	1077
DECALQUE	1077
ADESIVO-INTERNACIONAL	1081
ADESIVO-EUA	1081
TUBULAÇÕES DE DIAGNÓSTICO	1082
PLACA E DECALQUE	1090
CENTRO DE SERVIÇO	1093
ÍNDICE DE NÚMERO DE PEÇA	B1

* TRADUÇÃO NÃO DISPONÍVEL NO MOMENTO DA IMPRESSÃO

INHALTSVERZEICHNIS

Bezeichnung	Seite
ALLGEMEINE HINWEISE	A47
REPARATURALTERNATIVEN	A55
KÜHLMITTELZUSATZ	A60
WARTUNGSTEILE	A80
STICHWORTVERZEICHNIS	A142
MASCHINE	1
FAHRGESTELL, VORNE	1
ZUGEINHEIT - FAHRGESTELL, HINTEN	2
GRUNDAUSFÜHRUNG	2
UMBAUSATZ - ZULASSUNG	3
*CONVERSION AR-CERTIFICATION	3
FELD-EINBAUSATZ	3
MOTOR	5
MOTORAUSFÜHRUNG	5
MOTOR-EINBAUSATZ	7
MOTOR (GRUNDAUSFÜHRUNG)	8
LUFTKOMPRESSOR	8
*BASE GP-VALVE COVER	10
RIEMENSPANNER	11
NOCKENWELLE	13
MOTORBLOCKDECKEL	14
MOTORVERKLEIDUNG	15
STIRNRADGEHÄUSEDECKEL	17
VENTILDECKEL	19
KURBELWELLE	20
MOTORBLOCK	21
ZYLINDERKOPF	24
DÄMPFER	29
LÜFTERANTRIEB	30
NEBENANTRIEB	31
LÜFTERANTRIEB	38
SCHWUNGRAD	44
STIRNRAD	45
ZAHNRADVORGELEGE	47
RIEMENSCHUTZ	49
SCHWUNGRADGEHÄUSE	52
STIRNRADGEHÄUSE	54
LEITRAD - RIEMEN	55
MOTORHUBÖSE	56
DRUCKLUFTKOMPRESSORLEITUNGEN	57
DREHSTROMGENERATOR - BEFESTIGUNG	59
ÖLWANNE	61
PLEUELSTANGE UND KOLBEN	64
KURBELWELLENDICHTUNG	67
MOTORAUFHÄNGUNG	68
VENTILSTEUERUNG	70
SCHMIERSYSTEM	72
ENTLÜFTER	72
MOTORÖLEINFÜLLSTUTZEN	74
ÖLFILTER	75
ENTDUNSTER	77
ÖLMESSSTAB	78
MOTORÖLLEITUNGEN	80
TURBOLADERÖLLEITUNGEN	86
DOSIERVORRICHTUNG - MOTORÖL	89
ÖLSCHNELLWECHSELANSCHLUSS	91
VORSCHMIERPUMPE UND MOTOR	93
SCHMIERPUMPE	94
VORSCHMIERPUMPE	96
RÜCKSPÜLPUMPE	103
ÖLAUFFRISCHUNGSVORRICHTUNG	106
MOTORÖLTANK U. BEFESTIGUNG	107
MOTORÖLTANK	109
LÜFTERANTRIEBSVENTIL U. BEFESTIGUNGSSATZ	110
DOSIERVENTIL	111
KÜHLSYSTEM	112
KÜHLWASSERANSCHLUSS	112
MOTORÖLKÜHLER	113
MOTORÖLKÜHLER BLOCK	114
ÖLKÜHLERBLOCK	115
DRUCKLÜFTER	116
KÜHLMITTELSTANDANZEIGE	117
KÜHLWASSER-TEMPERATURREGLER UND GEHÄUSE	118
KÜHLMITTELLEITUNGEN	119
TURBOLADER-KÜHLWASSERLEITUNGEN	123
KÜHLWASSERLEITUNGEN	127
ZUSATZSÜSSWASSERPUMPE	141
KÜHLWASSERPUMPE	143
KÜHLER	146
KÜHLMITTELPROBEENTNAHMEVENTIL	154
LUFTANSAUG- UND ABGASSYSTEM	155
LADELUFTKÜHLER (FRISCHWASSER)	155
LUFTREINIGER	156
STAUBAUSWERFER	158
AUSPUFFROHRVERLÄNGERUNG	159
LUFTFILTERWARTUNGSANZEIGE	160
DRUCKLUFTLEITUNGEN	161
TURBOLADERLUFTLEITUNGEN	162

* ÜBERSETZUNG ZUM ZEITPUNKT DER DRUCKLEGUNG NICHT VORHANDEN

INHALTSVERZEICHNIS

Bezeichnung	Seite
AUSPUFFKRÜMMER	164
SCHALLDÄMPFER	166
VORREINIGER	167
TURBOLADER	171
KRAFTSTOFFSYSTEM	173
KRAFTSTOFFILTER	173
KRAFTSTOFFHAUPTFILTER	175
KRAFTSTOFFTANKANSCHLUSS	176
KRAFTSTOFFLEITUNGEN	177
KRAFTSTOFFEINSPRITZLEITUNGEN	179
KRAFTSTOFFKRÜMMER	182
KRAFTSTOFFEINSPRITZPUMPE	184
KRAFTSTOFF-ENTLÜFTUNGSPUMPE	185
KRAFTSTOFFENTLÜFTUNGSPUMPE UND -HAUPTFILTER	187
KRAFTSTOFFÖRDERPUMPE	188
KRAFTSTOFFTANK	190
ELEKTRISCHE ANLAGE U. STARTSYSTEM	194
WARNVORRICHTUNG	194
DREHSTROMGENERATOR	195
BATTERIE UND VERDRAHTUNG	197
BATTERIE	199
KLEMMLEISTE	202
PUFFER - SENSOR	203
KAMERA	204
ÜBERTRAGUNGSSTEUERUNG U. BEFESTIGUNG	205
STEUERUNGSEINHEIT, ELEKTRON. FÜR MOTOR UND BEFEST.	206
NEIGUNGSSTEUERUNG	207
DRUCKLUFTSTARTANLAGE	208
MOTORSTEUERUNG, ELEKTRON.	215
STELLUNGSSTEUERUNG	216
STEUERUNG - NICHT PROGRAMMIERT	217
MODULVERBINDER-ABDECKUNG	219
ELEKTRONIK - MASCHINE	220
ELEKTRONIK, KOMMUNIKATION	221
ARBEITSGERÄTEELEKTRONIK	222
ELEKTRONIK - MONITOR	222
KRAFTÜBERTRAGUNGSELEKTRONIK	223
ELEKTRONIKBEFESTIGUNG	224
MOTORKABELSTRANG	225
MOTORÖL-VORWÄRMGERÄT	226
KRAFTSTOFFHEIZUNG	227
UMLAUFKÜHLWASSERHEIZUNG	229
EINBAUSATZ - CAES	230
ÜBERTRAGUNGSEINBAUSATZ	230
KOMMUNIKATIONSEINBAUSATZ	231
EINBAUSATZ - PLANIERSTEUERUNG	233
FAHRERHAUSBELEUCHTUNG	236
ARBEITSLEUCHTEN	237
BLINKLEUCHTE	242
RUNDUM-KENNLEUCHTE	243
BREMS- U. ARBEITSLEUCHTEN	244
*LIGHTING AR-WARNING BEACON	244
ARBEITSLEUCHTEN	245
BREMSBELEUCHTUNG	255
BREMS- UND RÜCKLEUCHTEN	257
RUNDUM-KENNLEUCHTE	259
DRUCKLUFTTANKLEITUNGEN	260
SCHMIERANLAGE (DRUCKLUFTSTARTERMOTOR)	263
SENSORBEFESTIGUNG	264
*SENDER GP-FUEL LEVEL	265
HUBSTELLUNGSSENSOR U. BEFESTIGUNGSTEILE	266
AUSPUFFTEMPERATURSENSOR	268
STELLUNGSSENSOR	269
DRUCKSENSOR	272
DREHZAHLSENSOR	276
TEMPERATURSENSOR	279
ÄTHERSTARTHILFE	282
DRUCKLUFTSTARTER	287
KALTWETTERSTARTANLAGE	288
STARTERMOTOR, ELEKTRISCH	288
DRUCKLUFTSTARTANLAGE	289
STARTERMOTOR	295
UMGEHUNGSSCHALTER	299
TRENNSCHALTER	300
STRÖMUNGSSCHALTER	301
FLÜSSIGKEITSSCHALTER	302
MAGNETSCHALTER	303
SCHEIBENWISCHERSCHALTER	306
ÄTHERSTARTVENTIL	307
RÜCKFAHRWARNHORN	308
FAHRERHAUSVERDRAHTUNG	309
KAMERA, VERDRAHTUNG	318
ELEKTROSTARTER-VERDRAHTUNG	320
MOTORVERDRAHTUNG	325
FILTERVERDRAHTUNG	331
FEUERWAND VERDRAHTUNG	333
VERDRAHTUNG, VORNE	335
HEIZUNGSVERDRAHTUNG	338
MASCHINENVERDRAHTUNG	340
ÜBERWACHUNGSTAFELVERDRAHTUNG	353
ÖLAUFFRISCHUNGSSYSTEM - VERDRAHTUNG	360

* ÜBERSETZUNG ZUM ZEITPUNKT DER DRUCKLEGUNG NICHT VORHANDEN

INHALTSVERZEICHNIS

Bezeichnung	Seite
FAHRERPLATTFORMVERDRAHTUNG	363
KRAFTÜBERTRAGUNGSVERDRAHTUNG	369
VERDRAHTUNG, HINTEN	372
ÜBERROLLSCHUTZVERDRAHTUNG	378
SENSORVERDRAHTUNG	380
*WIRING GP-START CONTROL	381
KRAFTÜBERTRAGUNG	382
SCHWUNGSCHEIBENGEHÄUSEANSCHLUSS	382
STARRACHSE	383
PENDELACHSE	383
STARRACHSE	384
PENDELACHSE	385
PLANETENANTRIEBSGEHÄUSE U. TEILE	387
GETRIEBEGEHÄUSE	389
STIC-KOMBIHEBEL	390
STIC-KOMBIHEBEL - STEUERUNGSSPERRE	393
GETRIEBEHYDRAULIK	395
GETRIEBEÖLKÜHLER	396
*CORE GP-TMSN OIL COOLER	397
NEBENANTRIEBSKUPPLUNG	398
*COUPLING GP-TORSIONAL	399
VERSANDDECKEL	400
DIFFERENTIAL UND TELLERRAD	401
DIFFERENTIAL	403
PUMPENANTRIEB U. BEFESTIGUNGSTEILE	404
PUMPENANTRIEB	405
STARRACHSEN-HALTETEILE	411
PENDELACHSEN-HALTETEILE	412
GETRIEBEÖLFÜLLSTUTZEN	413
KRAFTÜBERTRAGUNG - FILTER U. BEFESTIGUNG	416
ÖLFILTER	418
VERTEILERGETRIEBEANTRIEB	422
ZAPFWELLENLEITUNGEN	428
GETRIEBEÖLLEITUNGEN	431
TELLERRADAUFHÄNGUNG	439
FELGENAUFHÄNGUNG	440
GETRIEBEAUFLAGER	442
PLANETENGETRIEBE	444
KRAFTÜBERTRAGUNG	451
ANTRIEBSSCHMIERPUMPE U. BEFESTIGUNG	452
ZAHNRADPUMPE	453
GETRIEBEPUMPE	454
FELGE	456
FELGE (TEILBAR)	458
EINZELFELGE	462
ANTRIEBSWELLE	464
PUMPENANTRIEBSWELLE	468
PUMPENANTRIEBSEINGANGSWELLE	471
ANTRIEBSWELLEN-KEILVERZAHNUNG	472
KREUZGELENK UND LAGER	475
REIFEN	475
DREHZAHLWANDLER U. GEHÄUSE	477
DREHMOMENTWANDLER	479
GETRIEBE	482
KREUZGELENK	483
MODULATORVENTIL	485
SCHALTVENTIL	488
VENTIL - SCHALT- UND DRUCKSTEUERUNG	489
MAGNETVENTIL	492
DREHMOMENTWANDLER-VORRANGVENTIL	493
GETRIEBESTEUERVENTIL	495
SEITENANTRIEB UND RADBREMSE	498
RAHMEN UND FAHRGESTELL	501
STOSSSTANGE U. ZUGHAKEN	501
STOSSSTANGE UND ZUGSTANGE	503
ZUGANGSKLAPPE	509
PANZERWANNEN-HALTETEILE	511
ZUGSTANGEN- UND STOSSSTANGEN-HALTETEILE	512
SCHUTZBLECH-HALTETEIL	514
HANDGRIFFBEFESTIGUNG	515
SCHUTZBLECHE, VORNE	517
SCHUTZBLECHE, HINTEN	518
LADERRAHMEN	520
HINTERRAHMEN	524
LADERRAHMEN	527
RAHMEN, HINTEN	529
KÜHLERGRILL	531
BREMSLEITUNGSVERKLEIDUNG	533
PANZERWANNE	535
VERKLEIDUNGEN, VORN	536
ANTRIEBSSCHUTZ	537
KÜHLERSCHUTZ	538
KNICKGELENK-ANHÄNGUNG	540
MOTORHAUBE UND VERKLEIDUNG	541
MASCHINENHUBÖSE	547
AUTOMATISCHE SCHMIERLEITUNGEN	548
SCHMIERLEITUNGEN	575
KNICKGELENKSPERRE	579
SCHMIERSYSTEM, AUTOM.	580
BATTERIEAUFHÄNGUNG	582

* ÜBERSETZUNG ZUM ZEITPUNKT DER DRUCKLEGUNG NICHT VORHANDEN

INHALTSVERZEICHNIS

Bezeichnung	Seite
FEUERSCHUTZWANDPLATTE	583
SCHMIERPUMPE	586
STEIGLEITER	589
SCHMIERFETTANK	591
SCHMIERVENTIL U. -LEITUNGEN	592
SCHMIERÖLVERTEILERVENTIL	596
LAUFSTEG	599
BREMSSYSTEM	601
BREMSDRUCKSPEICHER U. BEFESTIGUNGSTEILE	601
BREMSDRUCKSPEICHER	604
LUFTTROCKNER	606
FUSSBREMSSOCKEL	608
FESTSTELLBREMSE	611
FUSSBREMSGESTÄNGE	613
FESTSTELLBREMSGESTÄNGE	614
BREMSGESTÄNGE	615
DRUCKSPEICHERLEITUNGEN	619
DRUCKLUFTTANKLEITUNGEN	622
BREMSKÜHLLEITUNGEN	627
FESTSTELLBREMSLEITUNGEN	639
BETRIEBSBREMSLEITUNGEN	641
BREMSPUMPE UND BEFESTIGUNGSTEILE	645
KOLBENPUMPE	646
KOLBENPUMPENUMLAUFSATZ	648
HYDRAULIKSIEB	649
DRUCKLUFTBEHÄLTER	650
BREMSSTEUERVENTIL UND BEFESTIGUNGSTEILE	652
BREMSSTEUERVENTIL	654
SPERRVENTIL	655
PUMPENSTEUERVENTIL	656
MAGNETVENTIL	657
LENKSYSTEM	658
PUMPENSTELLGLIED	658
PUMPENZYLINDER	661
LENKBETÄTIGUNG	662
LENKZYLINDER UND AUFHÄNGUNG	664
LENKZYLINDER	665
GEHÄUSEABLASSFILTER	669
LENK- U. ARBEITSGERÄTEÖLFILTER U. BEFESTIGUNGSTEILE	671
LENKUNG, FILTER U. BEFESTIGUNG	672
ÖLFILTER	673
PUMPENKOPF	676
NOTLENKUNGSLEITUNGEN	677
LENK- U. BREMSÖLKÜHLERLEITUNGEN	681
LENKÖLLEITUNGEN	687
LENKNEUTRALISIERLEITUNGEN	697
NOTLENKUNGSPUMPE UND BEFESTIGUNGSTEILE	700
LENK- U. BREMSPUMPE U. BEFESTIGUNGSTEILE	701
LENK- UND BREMSÖLKÜHLERPUMPE UND AUFHÄNGUNG	702
ZAHNRADPUMPE	703
KOLBENPUMPE	706
KOLBENPUMPENUMLAUFSATZ	710
HOCHDRUCKSIEB	711
LENKNEUTRALISIERVENTIL U. LEITUNGEN	712
NOTLENKUNGSVENTIL U. BEFESTIGUNGSTEILE	714
LENKVENTIL U. BEFESTIGUNGSTEILE	715
LENKNEUTRALISIERVENTIL U. BEFESTIGUNGSTEILE	718
SPERRVENTIL	720
UMLEITVENTIL	724
VORSTEUERVENTIL	727
EINBAUVORSTEUERVENTIL	728
PUMPENSTEUERVENTIL	730
ÜBERDRUCKVENTIL	733
VENTIL - SCHALT- UND DRUCKSTEUERUNG	737
PENDELVENTIL	738
LENKVENTIL	739
LENKNEUTRALISIERVENTIL	742
HYDRAULIKSYSTEM	743
HYDRAULISCHE SPERRSTEUERUNG	743
HYDRAULIKBEDIENUNG (MIT VORSTEUERUNG)	744
HYDRAULIKÖLKÜHLER	746
HUBZYLINDER	747
KIPPZYLINDER	748
HUBZYLINDER	749
KIPPZYLINDER	755
HYDRAULIKÖLEINFÜLLSTUTZEN	767
*FILTER & MTG GP-PLT & PUMP DR	770
ÖLFILTER	771
PUMPENKOPF	772
HYDRAULIK, VORNE	774
HYDRAULIK, HINTEN	775
SCHAUFELAUSSCHALTER UND -EINSTELLER	776
GEHÄUSEABLASSLEITUNGEN	780
ABLASSLEITUNGEN	784
*LINES GP-EXPANSION TANK	785
HYDRAULIKLEITUNGEN	789
HYDRAULIKÖLKÜHLERLEITUNGEN	797

* ÜBERSETZUNG ZUM ZEITPUNKT DER DRUCKLEGUNG NICHT VORHANDEN

INHALTSVERZEICHNIS

Bezeichnung	Seite
HUBZYLINDERLEITUNGEN	804
NUTZLASTWÄGEEINRICHTUNGS-HYDRAULIKLEITUNGEN	811
VORSTEUERLEITUNGEN	813
NEIGEZYLINDERLEITUNGEN	824
VORSTEUERVENTILMAGNET	829
*MOUNTING GP-EXPANSION TANK	831
HUBZYLINDERAUFHÄNGUNG	833
ARBEITSGERÄTEPUMPE UND AUFHÄNGUNG	834
VORSTEUER- U. KÜHLERPUMPE U. BEFESTIGUNGSTEILE	835
ZAHNRADPUMPE	836
KOLBENPUMPE	840
KOLBENPUMPENUMLAUFSATZ	844
HYDRAULIKTANK UND BEFESTIGUNGS-TEILE	847
AUSGLEICHSBEHÄLTER	850
HYDRAULIKTANK	852
VENTIL UND BEFESTIGUNGSTEILE - HAUPTSTEUERUNG	859
SPERRVENTIL	863
RÜCKSCHLAG- U. DRUCKBEGRENZUNGS-VENTIL	864
HAUPTSTEUERVENTIL	865
VORSTEUERVENTIL	873
EINBAUVORSTEUERVENTIL	876
PUMPENSTEUERVENTIL	880
ÜBERDRUCKVENTIL	883
SCHALTVENTIL	891
VENTIL - SCHALT- UND DRUCKSTEUE-RUNG	892
MAGNETVENTIL	893
*VESSEL AR	895
ARBEITSGERÄTE	896
ARM U. LAGER	896
HUBARM	902
HUBVORRICHTUNG	905
SCHAUFELUMLENKMECHANISMUS	906
GESTÄNGEBOLZEN UND DICHTUNG	912
ARBEITSGERÄTE	915
KOHLESCHAUFEL	915
FELSSCHAUFEL	919
KOHLESCHAUFEL	929
FELSSCHAUFEL	930
SCHNEIDMESSER	936
MESSERSCHUTZ	940
ZAHNSPITZE, VERSTÄRKT	941
NORMALZAHNSPITZE	943
ZAHNSPITZE, LANG	944
ZAHNSPITZE, SCHARF	945
SCHAUFELABSTREIFER	949
FAHRERHAUS	950
FAHRERSITZVERSTELLER	950
LUFTKOMPRESSORSITZ	951
KLIMAANLAGE	952
SCHEIBENWISCHERARM	956
VERSTAUKASTEN	957
FAHRERHAUS UND PLATTFORM	959
FAHRERHAUS	961
REINIGUNGSVORRICHTUNG - FAHRERHAUS	964
KÄLTEMITTELKOMPRESSOR U. BEFESTIGUNG	966
KÄLTEMITTELKOMPRESSOR	969
KÄLTEMITTELKONDENSATOR U. BEFESTIGUNGSTEILE	970
STEUERUNG, NICHT PROGRAMMIERTER MONITOR	971
FAHRERHAUSABDECKUNG	972
PLATTFORMVERKLEIDUNG	974
MONITORDISPLAY	977
FAHRERHAUSTÜR	978
LUFTKANAL	980
ÜBERROLLSCHUTZ-HALTETEILE	981
FAHRERHAUSLUFTFILTER	982
HALTEGRIFF	985
DRUCKLUFTHUPE	987
RADIOEINBAUSATZ	991
FAHRERHAUSTÜR- U. FENSTERVERRIE-GELUNG	993
FAHRERHAUSAUSKLEIDUNG	996
KLIMAANLAGENLEITUNGEN	1001
FAHRERHAUSHEIZUNGSLEITUN-GEN	1008
SPIEGEL, LINKS	1010
SPIEGEL, RECHTS	1012
MELDEZENTRUMMODUL	1014
MODUL-MONITORTASTATUR	1014
MODUL - VIER ELEKTRON. ANZEIGEN	1015
SCHEIBENWISCHERMOTOR	1016
ANTENNENBEFESTIGUNG	1020
MONITORBEFESTIGUNG	1021
PLATTFORM-ANBAUSATZ	1022
PLATTFORM-HALTERUNGSAUFHÄN-GUNG	1025
FAHRERHAUSAUSRÜSTUNG	1026
SCHALE - RÜCKENLEHNE	1027
INSTRUMENTENTAFEL	1028
GASPEDAL	1032
PLATTFORM	1034
FAHRERPLATTFORM	1036

* ÜBERSETZUNG ZUM ZEITPUNKT DER DRUCKLEGUNG NICHT VORHANDEN

INHALTSVERZEICHNIS

Bezeichnung	Seite
FAHRERHAUS - VORREINIGER	1043
*PRECLEANER GP-CAB AIR	1044
VERSTELLBARER SITZ	1045
ÜBERROLLSCHUTZ	1046
GLASDICHTUNG	1048
FAHRERSITZ	1049
BEIFAHRERSITZ	1053
SCHWINGSITZ	1057
FAHRERHAUSTÜRFEDER	1058
HYDRAULIKSTEUERAUFHÄNGUNG	1060
SITZUNTERBAU	1063
LENKBETÄTIGUNGSAUFHÄNGUNG	1064
FAHRERSITZFEDERUNG	1067
SCHEIBENWASCHANLAGE	1069
SCHEIBENWISCHER UND -WASCHANLAGE	1070
SCHEIBENWISCHER	1072
WARTUNGSAUSRÜSTUNG UND -ZUBEHÖR	1077
AUFKLEBER	1077
*FILM GP-INTERNATIONAL	1081
*FILM GP-U.S.	1081
DIAGNOSELEITUNGEN	1082
SCHILD UND AUFKLEBER	1090
SERVICE CENTER	1093
ERSATZTEILNUMMERNINDEX	B1

* ÜBERSETZUNG ZUM ZEITPUNKT DER DRUCKLEGUNG NICHT VORHANDEN

GENERAL INFORMATION

1. MACHINE IDENTIFICATION

Caterpillar machines are identified by Product Identification Numbers (PIN). Some components included in a machine may be identified by Serial Numbers (S/N). Typical components that will be serialized include engines, transmissions, bulldozers, and rippers. The machine and engine are further identified by arrangement numbers and in some cases modification numbers. These numbers are shown on the product identification plate(s) and on the master plate in the operator's compartment.

Caterpillar dealers need all of these numbers to determine accurate parts identification.

SIS *New Feature*

Effective First Quarter 2001 the Caterpillar Product Identification Number (PIN) changed from 8 to 17 characters. In an effort to provide uniform equipment identification, Caterpillar and other construction equipment manufacturers are moving to comply with the latest version of the product identification numbering standard. Non-road machine PINs are defined by ISO 10261. The new PIN format will apply to all Caterpillar machines and generator sets. The PIN plates and frame marking will display the 17 character PIN. The new format will look like the following:

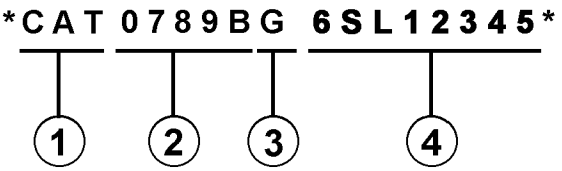

Where:

1. Caterpillar's World Manufacturing Code (characters 1-3)

2. Machine Descriptor (characters 4-8)

3. Check Character (character 9)

4. Machine Indicator Section (MIS) or Product Sequence Number (characters 10-17). These were previously referred to as the Serial Number.

Machines and generator sets produced before First Quarter 2001 will maintain their 8 character PIN format.

Components such as engines, transmissions, axles, etc. and work tools will continue to use an 8 character Serial Number (S/N).

2. ORDERING PARTS

⚠ WARNING

When replacement parts are required for this product Caterpillar recommends using Caterpillar replacement parts or parts with equivalent specifications including, but not limited to, physical dimensions, type, strength and material.

Failure to heed this warning can lead to premature failures, product damage, personal injury or death.

Quality Caterpillar replacement parts are available from Caterpillar dealers throughout the world. Their parts inventories are up to date and include all parts normally required to protect your investment in Caterpillar machines. Dealers may offer repair kits or remanufactured parts to allow selection of the most effective repair alternative for a particular situation. When ordering parts, your order should specify the quantity, part number, part name, and the serial number/product identification number of the machine for which the parts are needed.

3. PARTS MANUAL ORGANIZATION

Product information in this manual is presented as "information elements" that represent all of the components for the specific model. Engine Arrangement and Seat Group are examples of information elements. The information elements are organized alphabetically by part name and secondarily by part number within each major section of the manual.

4. TABLE OF CONTENTS

A table of contents (TOC) is found at the beginning of the manual. The TOC lists each section of the manual with a complete list of all information elements organized as they appear in the manual. Page numbers are provided for quick reference to detailed parts identification illustrations and serviceable consist lists.

5. MAINTENANCE PARTS INDEX

The Maintenance Parts Index, located near the beginning of the manual, references most frequently used maintenance part numbers, providing description, quantity, usage and page number. This information is organized alphabetically by part description.

6. INDEX

The index located near the front of the manual is an alphabetical listing of all information elements included in the manual. Page numbers are provided for quick reference to detailed parts identification illustrations and serviceable consist lists.

7. PART NUMBER INDEX

A numerical index listing all part numbers and the corresponding page number(s) appears at the back of the manual.

8. CAPTIONS

Captions located at the beginning of each information element identify the part number and part name along with additional descriptive information. PIN and S/N information found in each caption should be used to select correct information for a specific machine. Field replacement options, identification of optional attachment components, and where used ("part of") information is also provided.

The first line of a caption is shown in larger type font to indicate the beginning of an information element. Captions for additional pages that may be required to illustrate an information element will be shown in standard type font and will include the term *(contd.)* .

9. NON-SERVICED PARTS

In some instances it is necessary to display non-serviced parts that are a link to a lower level serviceable consist lists. These non-serviced part numbers are shown in *italic* type indicating that they are not available.

10. PARTS LIST REFERENCE NUMBERS

Numbers shown in the Ref No column correspond to numbers used in the associated graphic(s). An alphabetic suffix may be added to a reference number to identify lower level consist items. Numbers shown in the Graphic Ref column refer to the graphic number identifier displayed in the lower left corner of each illustration. The Graphic Ref number may be used in combination with the item Ref No to determine the correct part number. There may be intentional omission of a Ref No in a consist list as information is updated to reflect the latest serviceable part numbers.

11. INDENTED PART NAMES

When a part name is indented in a parts list, it is part of (included in) the group or assembly under which it is indented.

12. ILLUSTRATION REFERENCE LETTERS

When necessary, illustrations contain reference letters (A, B, C etc.) that are intended to track lines and harnesses from one point to another. They are also used to show where to reconnect illustrations that have been separated.

13. ABBREVIATIONS AND SYMBOLS

O.D. – Outside Diameter
I.D. – Inside Diameter
A – Not Part Of This Group
B – Use As Required
C – Change From Previous Type
D – Order By The Meter
E – Order By The Centimeter
F – Not Shown
G – Order By The Inch
I – Refer To Hydraulic Information System
M – Metric Part
R – Remfg Part May Be Available
Y – Separate Illustration
Z – Not Serviced Separately

SIS *New Feature*

14.<END>

This symbol indicates the end of an information element.

NOTE:

Continuing improvement and advancement of product design may cause changes to your machine which may not be included in this publication. Whenever a question arises regarding your caterpillar product or this publication, please consult your caterpillar dealer for the latest available information.

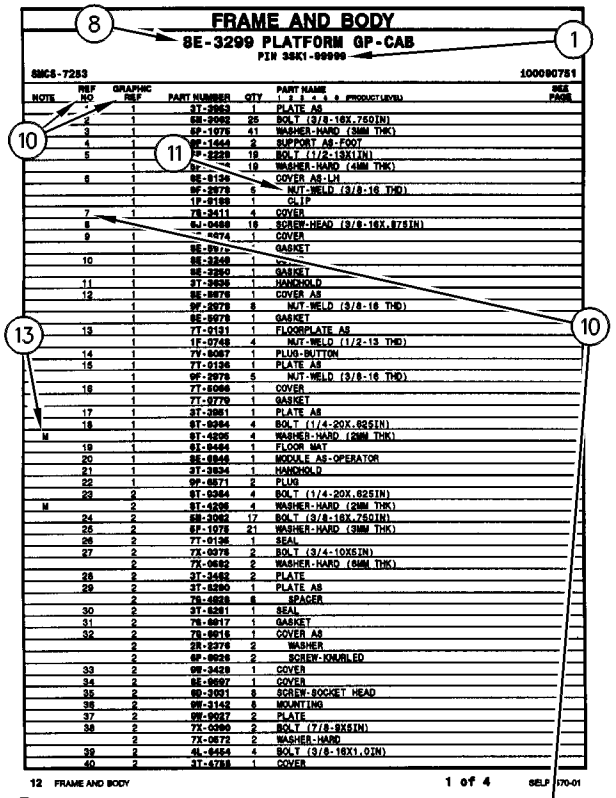

FRAME AND BODY

8E-3299 PLATFORM GP-CAB

PIN 3SK1-99999

SMCS-7283 100090751

NOTE	REF NO	GRAPHIC REF	PART NUMBER	QTY	PART NAME 1 2 3 4 5 6 (PRODUCT LEVEL)	SEE PAGE
	*	1	3T-3963	1	PLATE AS	
	2	1	5B-3062	25	BOLT (3/8-16X.750IN)	
	3	1	6P-1075	41	WASHER-HARD (3MM THK)	
	4	1	8E-1443	2	SUPPORT AS-FOOT	
	5	1	5P-2229	19	BOLT (1/2-13X1IN)	
		1	6P-[illegible]	19	WASHER-HARD (4MM THK)	
	6	1	8E-9136	*	COVER AS-LH	
		1	9F-2979	6	NUT-WELD (3/8-16 THD)	
		1	1P-0189	1	CLIP	
	7	1	7X-3411	4	COVER	
	8	1	6J-0468	18	SCREW-HEAD (3/8-16X.87SIN)	
	9	1	[illegible]-0274	1	COVER	
		1	8E-9[illegible]	*	GASKET	
	10	1	8E-3248	1	[illegible]	
		1	8E-3250	1	GASKET	
	11	1	3T-3636	1	HANDHOLD	
	12	1	8E-9076	1	COVER AS	
		1	9F-2979	8	NUT-WELD (3/8-16 THD)	
		1	8E-9078	1	GASKET	
	13	1	7T-9131	1	FLOORPLATE AS	
		1	1F-0748	4	NUT-WELD (1/2-13 THD)	
	14	1	7V-8067	1	PLUG-BUTTON	
	15	1	7T-9136	1	PLATE AS	
		1	9F-2979	5	NUT-WELD (3/8-16 THD)	
	16	1	7T-5066	1	COVER	
		1	7T-9779	1	GASKET	
	17	1	3T-3951	1	PLATE AS	
	18	1	9T-0264	4	BOLT (1/4-20X.62SIN)	
M		1	9T-4295	4	WASHER-HARD (2MM THK)	
	19	1	6I-9464	1	FLOOR MAT	
	20	1	8E-6848	1	MODULE AS-OPERATOR	
	21	1	3T-3934	1	HANDHOLD	
	22	1	9P-0671	2	PLUG	
	23	2	9T-0264	4	BOLT (1/4-20X.62SIN)	
M		2	9T-4295	4	WASHER-HARD (2MM THK)	
	24	2	5B-3062	17	BOLT (3/8-16X.75QIN)	
	25	2	6P-1075	21	WASHER-HARD (3MM THK)	
	26	2	7T-9136	1	SEAL	
	27	2	7X-0078	2	BOLT (3/4-10X5IN)	
		2	7X-0682	2	WASHER-HARD (6MM THK)	
	28	2	3T-3482	2	PLATE	
	29	2	3T-5290	1	PLATE AS	
		2	7S-4828	6	SPACER	
	30	2	3T-5291	1	SEAL	
	31	2	7S-8817	1	GASKET	
	32	2	7S-8818	1	COVER AS	
		2	5R-2276	2	WASHER	
		2	9F-9026	2	SCREW-KNURLED	
	33	2	9W-3429	1	COVER	
	34	2	8E-9697	1	COVER	
	35	2	9D-3031	8	SCREW-SOCKET HEAD	
	36	2	9W-3143	8	MOUNTING	
	37	2	9W-9037	2	PLATE	
	38	2	7X-0360	2	BOLT (7/8-9X5IN)	
		2	7X-0672	2	WASHER-HARD	
	39	2	4L-6454	4	BOLT (3/8-16X1.0IN)	
	40	2	3T-4788	1	COVER	

12 FRAME AND BODY 1 of 4 SELP4570-01

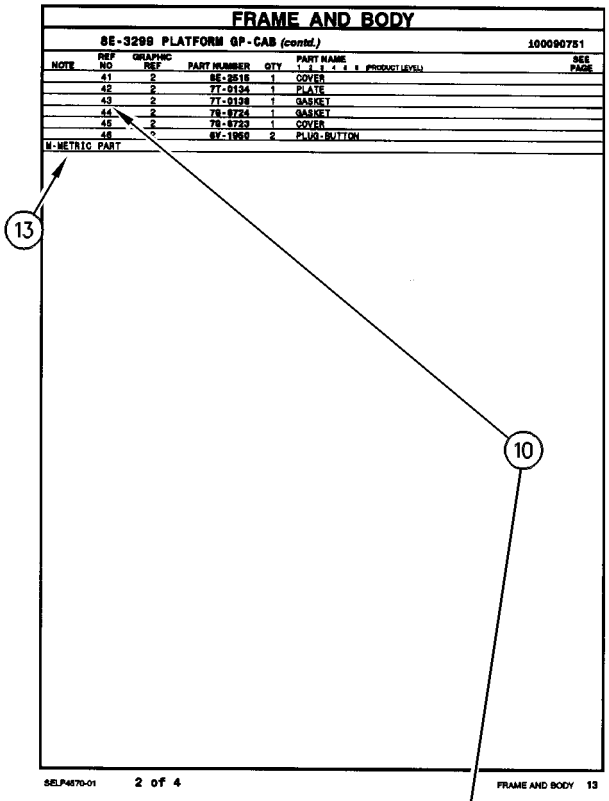

FRAME AND BODY

8E-3299 PLATFORM GP-CAB (contd.) 100090751

NOTE	REF NO	GRAPHIC REF	PART NUMBER	QTY	PART NAME 1 2 3 4 5 6 (PRODUCT LEVEL)	SEE PAGE
	41	2	8E-2515	1	COVER	
	42	2	7T-9134	1	PLATE	
	43	2	7T-9138	1	GASKET	
	44	2	7S-8724	1	GASKET	
	45	2	7S-8723	1	COVER	
	46	*	8Y-1950	2	PLUG-BUTTON	

M-METRIC PART

SELP4570-01 2 of 4 FRAME AND BODY 13

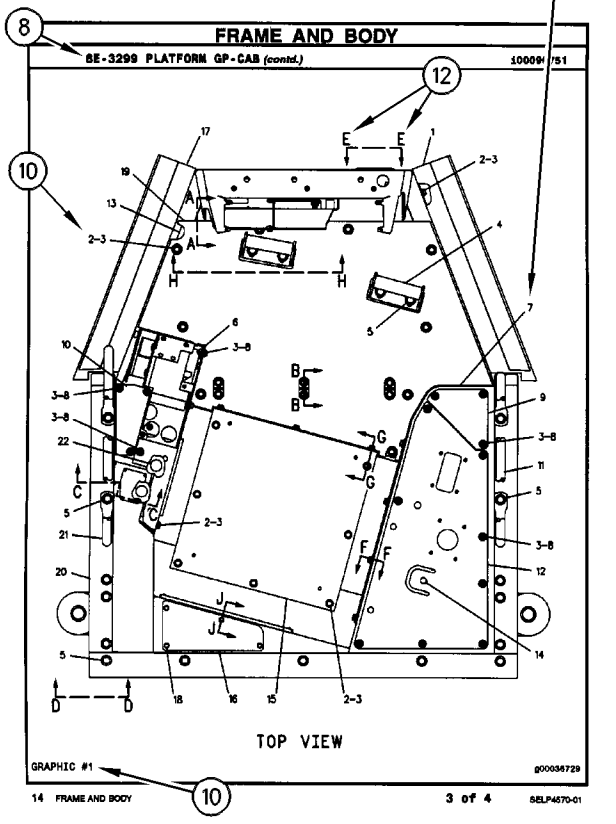

FRAME AND BODY

8E-3299 PLATFORM GP-CAB (contd.) 100090751

TOP VIEW

GRAPHIC #1 g00036729

14 FRAME AND BODY 3 of 4 SELP4570-01

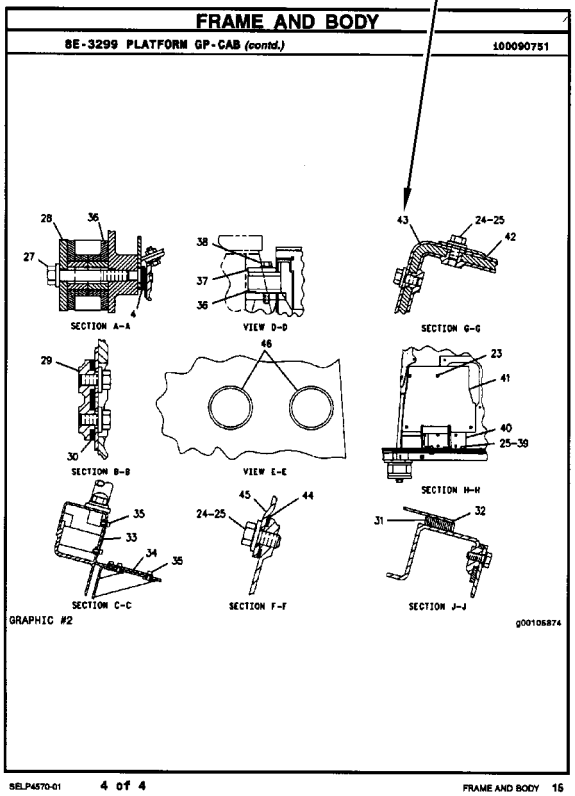

FRAME AND BODY

8E-3299 PLATFORM GP-CAB (contd.) 100090751

SECTION A-A VIEW D-D SECTION G-G

SECTION B-B VIEW E-E SECTION H-H

SECTION C-C SECTION F-F SECTION J-J

GRAPHIC #2 g00105874

SELP4570-01 4 of 4 FRAME AND BODY 15

1. IDENTIFICATION DE LA MACHINE

Toutes les machines Caterpillar portent un numéro d'identification (PIN). Certains composants des machines peuvent porter des numéros de série (S/N). En général, parmi les composants qui portent des numéros de série il y a les moteurs, les transmissions, les bulldozers et les rippers. En plus, la machine et le moteur peuvent recevoir des numéros de version, et dans certains cas, de modification. Ces numéros figurent sur les plaques de numéro de série et sur la plaque signalétique principale qui se trouve dans le poste de conduite.

Les concessionnaires Caterpillar doivent connaître tous ces numéros pour identifier correctement les pièces.

SIS *Nouvelle Caractéristique*

À partir du premier trimestre 2001, le numéro d'identification produit (PIN) Caterpillar passe de 8 à 17 caractères. Afin de permettre une identification uniforme des matériels, Caterpillar et d'autres constructeurs de machines de travaux publics s'efforcent de se conformer à la norme la plus récente portant sur les numéros d'identification des produits. Les numéros d'identification (PIN) de machines de chantier sont définis par la norme ISO 10261. Le nouveau format du numéro d'identification est valable pour toutes les machines et tous les groupes électrogènes Caterpillar. Le numéro d'identification produit (PIN) figurant sur la plaque et sur le châssis se composera de 17 caractères. Le nouveau format ressemblera à ceci:

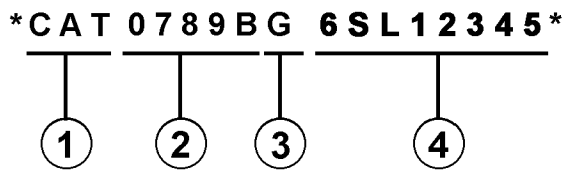

Il se décomposera de la façon suivante:

1. Code international de fabrication de Caterpillar (caractères 1 à 3)

2. Descriptif de la machine (caractères 4 à 8)

3. Contrôle (caractère 9)

4. Indicateur machine (MIS) ou numéro de séquence produit (caractères 10 à 17). Ceux-ci étaient auparavant désignés sous le terme de numéro de série.

Les machines et les groupes électrogènes construits avant le premier trimestre 2001 garderont le format à 8 caractères du numéro d'identification produit (PIN).

Les organes tels que les moteurs, les boîtes de vitesses, les essieux, etc., continueront d'être désignés par un numéro de série (S/N) à 8 caractères.

2. COMMANDE DE PIÈCES

⚠ DANGER

Lorsqu'il faut remplacer des pièces de rechange pour ce produit Caterpillar recommande d'utiliser les pièces de rechange Caterpillar ou les pièces qui ont des spécifications équivalentes dont les dimensions physiques, le type, la force et le matériau. Ces équivalences ne se limitent pas à l'énoncé précédent.

L'inobservation de cette mise en garde peut entraîner des défaillances prématurées, des dommages au produit, des blessures ou même la mort.

Les concessionnaires Caterpillar fournissent dans le monde entier des pièces de rechange de qualité Caterpillar. Leurs stocks de pièces sont constamment réapprovisionnés et comptent toutes les pièces nécessaires pour assurer la bonne marche de vos machines Caterpillar. Certains concessionnaires proposent également des kits de réparation ou des pièces rénovées, ce qui permet de choisir la solution la plus économique dans une situation donnée. Lors des commandes de pièces, mentionner la quantité, le numéro et la désignation des pièces ainsi que le numéro de série ou le numéro d'identification (PIN) de la machine pour laquelle ces pièces sont requises.

3. ORGANISATION DU CATALOGUE DE PIÈCES

Les renseignements sur les produits sont présentés sous forme de "Information element" (élément d'information) représentant tous les composants d'un modèle donné. "Engine Arrangement" (version de moteur) et "Seat Group" (assemblage de siège)" sont des exemples d'éléments d'information. Les éléments d'information sont classés par ordre alphabétique par la désignation standard des pièces et par numéros de pièces dans chaque partie importante du manuel.

4. TABLE DES MATIÈRES

SIS *Nouvelle Caractéristique*

La table des matières se trouve au début du manuel. La table des matières fournit la liste de tous les chapitres du manuel avec une liste complète de tous les éléments d'information classés par ordre d'apparition dans le manuel. Les numéros de page sont fournis afin que l'utilisateur puisse trouver rapidement les illustrations détaillées concernant l'identification des pièces et les listes des pièces d'entretien.

5. INDEX DES PIÈCES D'ENTRETIEN

La rubrique "Index des pièces d'entretien" qui se trouve au début du manuel renvoie aux pièces d'entretien les plus fréquemment utilisées en précisant la désignation, la quantité, là où la pièce est utilisée et le numéro de page. Ces pièces sont classés par ordre alphabétique.

6. INDEX

L'index qui se trouve vers le début du manuel est une liste alphabétique de tous les éléments d'information du manuel. Les numéros de page sont fournis afin que l'utilisateur puisse trouver rapidement les illustrations détaillées concernant l'identification des pièces et les listes des pièces d'entretien.

7. INDEX DES NUMÉROS DE PIÈCES

Une liste numérique de tous les numéros de pièces et des pages correspondantes se trouve à la fin du manuel.

8. LÉGENDES

Les légendes qui se trouvent en haut de chaque page de chaque élément d'information fournissent le numéro de pièce, la désignation ainsi que des renseignements supplémentaires sur les pièces. Les renseignements concernant les numéros de série (S/N) qui se trouvent dans chaque légende doivent être utilisés pour sélectionner les informations correctes pour un moteur donné. Les informations concernant les options de remplacement sur le chantier, l'identification des composants des équipements offerts en option et les lieux d'application sont aussi fournies.

SIS *Nouvelle Caractéristique*

Les lettres de la première ligne d'une légende sont présentées en police plus grande afin d'indiquer le début d'une unité d'information. Les légendes qui pourraient être requises pour des pages supplémentaires afin d'illustrer une unité d'information seront présentées en police standard et comprendront le terme (à suivre).

9. PIÈCES NON FOURNIES

SIS *Nouvelle Caractéristique*

Dans certains cas, il est nécessaire d'indiquer les pièces non fournies qui sont en aval de la liste des pièces d'entretien. Les numéros des pièces non fournies dans la liste des pièces et les légendes seront en italique pour signaler qu'ils ne sont pas disponibles.

10. NUMÉROS DE RÉFÉRENCE DE LA LISTE DES PIÈCES

SIS *Nouvelle Caractéristique*

Les numéros indiqués dans la colonne des numéros de références correspondent aux numéros utilisés dans les illustrations auxquelles ils sont associés. Un suffixe alphabétique peut être ajouté à un numéro de référence pour identifier la liste des articles en aval. Les numéros indiqués dans la colonne de référence de l'illustration renvoient à l'identification du numéro affiché dans le coin inférieur gauche de chaque illustration. Le numéro de référence de l'illustration pourrait être utilisé avec le numéro de référence de l'article pour déterminer le numéro de pièce correct. Il peut y avoir une omission intentionnelle d'un numéro de référence dans une liste de pièces suite à la mise à jour des informations en vue de refléter les numéros de pièces les plus récentes.

11. DÉSIGNATIONS DE PIÈCES EN RETRAIT

Lorsqu'une désignation de pièce est en retrait, cela veut dire que l'article en regard fait partie de l'ensemble sous lequel il figure.

12. LETTRES DE RÉFÉRENCE DES ILLUSTRATIONS

Quand cela est nécessaire, les illustrations comportent des lettres de référence (A, B, C, etc.) pour montrer le trajet des canalisations et faisceaux de câbles d'un point à l'autre. Elles sont utilisées également pour indiquer où relier les illustrations séparées auparavant.

13. ABRÉVIATIONS ET SYMBOLES

O.D. – Diamètre extérieur
I.D. – Diamètre intérieur
A – Ne fait pas partie de ce groupe
B – Utiliser selon besoin
C – Modification
D – Commander par mètre
E – Commander par centimètre
F – Non représenté
G – Commander par pouce
I – Voir "Hydraulic Information System"
M – Pièce métrique
R – Pièce rénovée éventuellement disponible
Y – Illustration séparée
Z – Non fourni séparément

NOTA:

En raison du progrès technique et des améliorations continuelles apportées au matériel, votre machine comporte peut-être des modifications qui n'apparaissent pas dans la présente publication. En cas de doute sur un détail de votre machine Caterpillar ou sur le texte de la présente publication, adressez-vous à votre concessionnaire Caterpillar.

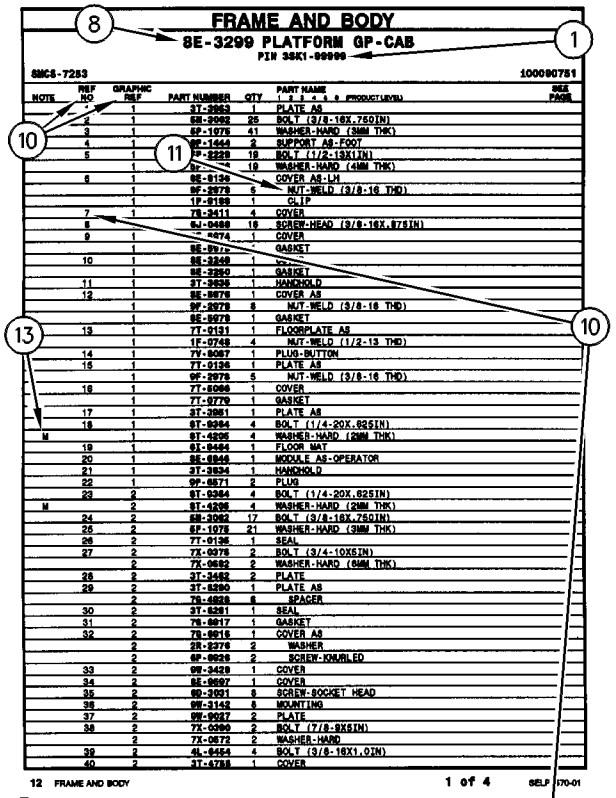
FRAME AND BODY
8E-3299 PLATFORM GP-CAB
PIN 3SK1-99999
SMCS-7283
100090751
1 of 4
SELP4570-01

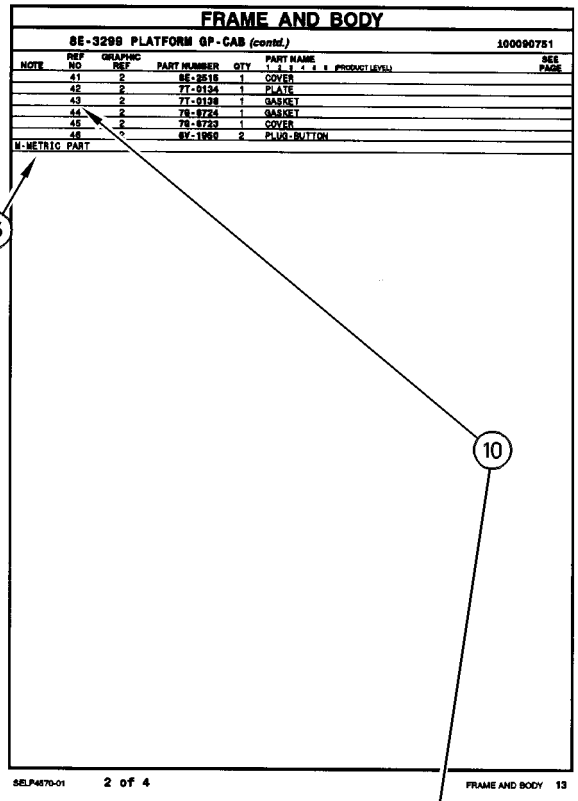
FRAME AND BODY
8E-3299 PLATFORM GP-CAB (contd.)
100090751
2 of 4
SELP4570-01

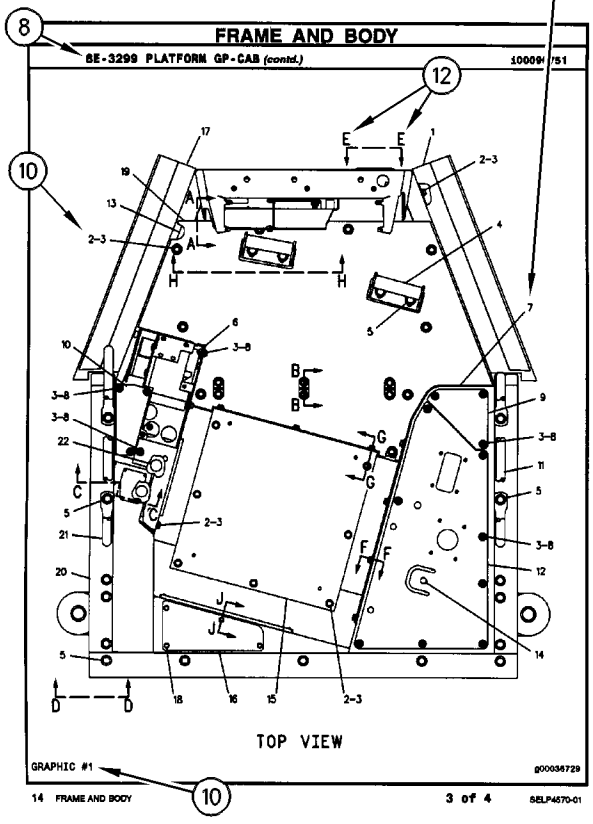
FRAME AND BODY
8E-3299 PLATFORM GP-CAB (contd.)
100090751
TOP VIEW
GRAPHIC #1
g00036729
3 of 4
SELP4570-01

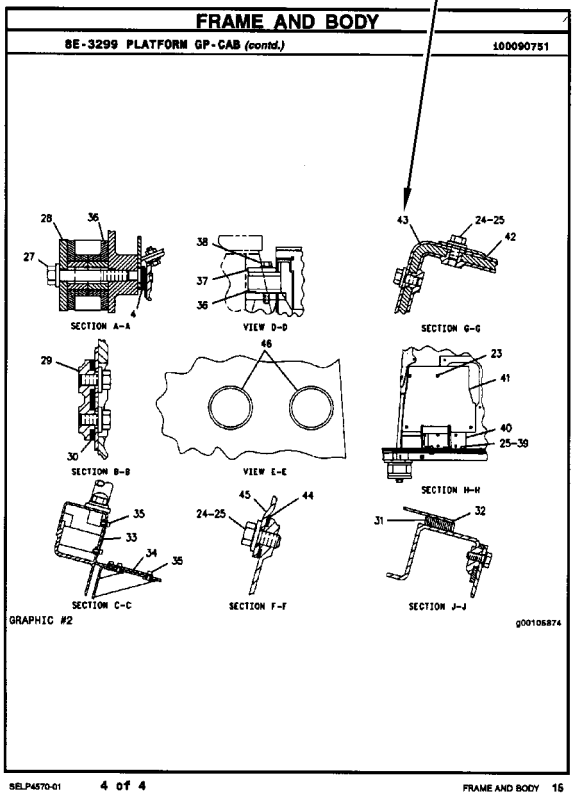
FRAME AND BODY
8E-3299 PLATFORM GP-CAB (contd.)
100090751
SECTION A-A
VIEW D-D
SECTION G-G
SECTION B-B
VIEW E-E
SECTION H-H
SECTION C-C
SECTION F-F
SECTION J-J
GRAPHIC #2
g00105874
4 of 4
SELP4570-01

INFORMACIÓN GENERAL

1. MÁQUINAS

Las máquinas Caterpillar se identifican con Números de Identificación del Producto (PIN). Algunos componentes incluídos en la máquina pueden estar identificados con Números de Serie (N/S). Los componentes que tienen típicamente esta identificación incluyen motores, transmisiones, hojas topadoras y desgarradores. La máquina y el motor se identifican además con Números de Configuración y en algunos casos, Números de Modificación. Estos números están en las placas de identificación del producto o en la placa principal en la cabina del operador.

Los distribuidores Caterpillar necesitan estos números para identificar con exactitud los números de piezas de repuesto.

SIS *Nueva Característica*

A partir del primer trimestre del 2001, el Número de Identificación de Producto (PIN) de Caterpillar cambió de 8 a 17 caracteres. Para hacer más uniforme el método de identificación de equipos, Caterpillar y otros fabricantes de equipo de construcción han tomado medidas para cumplir con la versión más reciente de la norma de numeración de identificación de productos. Los Números de Identificación de Producto para máquinas que no se operan en carreteras son definidos por la norma ISO 10261. El nuevo formato PIN corresponderá a todas las máquinas y grupos electrógenos Caterpillar. Las placas y los caracteres PIN estampados en el bastidor mostrarán el PIN de 17 caracteres. El nuevo formato tendrá la apariencia siguiente:

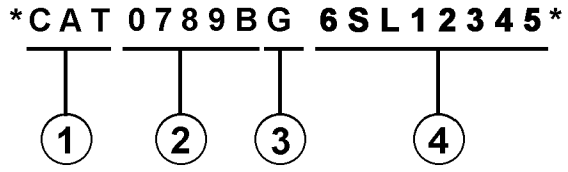

Significado de los caracteres:

1. Código de Fabricación Mundial de Caterpillar (caracteres 1-3)

2. Sección Descriptor de la Máquina (caracteres 4-8)

3. Carácter de Verificación (carácter 9)

4. Sección Indicador de la Máquina (MIS) o Número de Secuencia de Producto (caracteres 10-17). Anteriormente, estos caracteres constituían el Número de Serie.

Las máquinas y grupos electrógenos producidos antes del primer semestre del 2001 mantendrán su formato PIN de 8 caracteres.

Los componentes como motores, transmisiones, ejes, herramientas de trabajo, etc., continuarán usando un Número de Serie (S/N) de 8 caracteres.

2. COMO PEDIR REPUESTOS

⚠ ADVERTENCIA

Cuando se necesiten piezas de repuesto para este producto, Caterpillar recomienda usar piezas de repuesto Caterpillar o piezas que tengan especificaciones equivalentes incluyendo, pero sin estar limitadas a, dimensiones físicas, tipo, fortaleza y material.

El no hacer caso de esta advertencia puede llevar a fallas prematuras, daños al producto y lesiones graves o mortales.

Las piezas de repuesto Caterpillar de calidad están a la disposición de los distribuidores Caterpillar en todo el mundo. Sus existencias actualizadas incluyen todas las piezas normalmente requeridas para proteger su inversión en máquinas Caterpillar. Los distribuidores pueden tener juegos de reparación o piezas remanufacturadas para permitir la selección de la mejor alternativa de reparación en un caso en particular. Al pedir piezas de repuesto, especifique en su pedido la cantidad, el número de pieza, el nombre de la pieza y el número de serie/número de identificación del producto, de la máquina para la cual se necesitan estas piezas.

3. ORGANIZACION DEL MANUAL DE PIEZAS

La información sobre el producto, se presenta en este manual, como "elementos de información" que representan todos los componentes de un modelo específico. Las configuraciones de motores y los grupos de asientos son ejemplos de elementos de información. Los elementos de información están organizados primeramente por nombres de piezas en orden alfabético y en segundo lugar, por el número de pieza dentro de cada sección principal del manual.

4. CONTENIDO

La página de Contenido se encuentra al principio del manual. El Contenido indica cada sección del manual con una lista completa de todos los elementos de información organizados en el orden que aparecen en el manual. Los números de página proporcionan una referencia rápida a las ilustraciones detalladas de identificación de piezas y a las listas de componentes de repuesto de dichas piezas.

5. ÍNDICE DE PIEZAS DE MANTENIMIENTO

Al principio de este catálogo se encuentra un índice de los números de piezas utilizadas más frecuentemente para el mantenimiento, que incluye descripción, cantidad necesaria, lugar de utilización y número de página. Esta información está organizada alfabéticamente, por descripción de la pieza.

6. ÍNDICE

El Índice, ubicado cerca del principio del manual, es una lista en orden alfabético de todos los elementos de información incluídos en el manual. Los números de página proporcionan una referencia rápida a las ilustraciones detalladas de identificación de piezas y a las listas de componentes de repuesto de dichas piezas.

7. INDICE NUMÉRICO DE PIEZAS

Un índice numérico de piezas con el correspondiente número de página aparece al final de este catálogo.

8. TÍTULOS

Los títulos ubicados al principio de cada elemento de información identifican el número y el nombre de la pieza junto con información descriptiva. Se debe usar información sobre los Números de Identificación de Pieza (PIN) y los números de serie (S/N) para seleccionar la información que corresponda a una máquina en particular. También se suministra información sobre las opciones de reparación en el campo, la identificación de componentes de accesorios optativos y el lugar de ubicación de la pieza ("es parte de").

La primera línea del título se muestra con un tipo de letra más grande para indicar el comienzo de un elemento de información. Si se requieren páginas adicionales para ilustrar un elemento de información, los títulos se muestran con un tipo de letra normal y la continuación se indica entre paréntesis.

9. PIEZAS QUE NO SE SUMINISTRAN COMO REPUESTO

En algunos casos es necesario indicar piezas que no se suministran como repuesto pero que pueden estar conectadas a listas de componentes de otras piezas de repuesto. En tal caso, dichas piezas se muestran en cursiva para indicar que no son piezas disponibles.

10. NÚMEROS DE REFERENCIA

Los números en la columna de No. de Referencia corresponden a los números indicados en la ilustración que pertenece a ese número de pieza. Los números que tienen un sufijo alfabético identifican artículos de las listas de componentes de piezas. Los números en la columna de Referencia de la ilustración se identifican en la esquina inferior izquierda de cada ilustración. Para determinar el número de pieza correcto se puede utilizar tanto el No. de Referencia de la ilustración como el No. de Referencia del artículo. A medida que se actualiza la información para indicar los más recientes números de piezas de repuesto, puede omitirse intencionalmente un No. de Referencia en una lista de componentes de piezas.

11. NOMBRES DE PIEZA SANGRADOS

Cuando el nombre de una pieza está sangrado en una lista, significa que esta pieza forma parte del grupo o conjunto del renglón inmediatamente superior.

12. LETRAS DE REFERENCIA DE ILUSTRACIONES

Las ilustraciones contienen algunas veces letras de referencia (A, B, C etc.) cuyo propósito es seguir el trayecto de líneas y mazos de cables de un punto a otro. También se utilizan para mostrar dónde volver a unir ilustraciones que se habían separado.

13. ABREVIATURAS Y SIMBOLOS

O.D. – Diámetro exterior
I.D. – Diámetro interior
A – No es pieza de este grupo
B – Utilizado según la demanda
C – Indica cambio
D – Se pide por metro
E – Se pide por centímetro
F – No se muestra
G – Se pide por pulgada
I – Consulte el sistema de información hidráulica
M – Pieza métrica
R – Puede estar disponible como pieza remanufacturada
Y – Ilustración separada
Z – No se suministra por separado

SIS *Nueva Característica*

14.<END>

Este símbolo indica el final de un elemento de información.

NOTA:

Las contínuas mejoras y adelantos en diseño podrían originar cambios a su máquina que no se incluyen en esta publicación. Cuando tenga alguna pregunta acerca de su producto Caterpillar o de esta publicación, consulte al distribuidor Caterpillar para obtener la información más reciente.

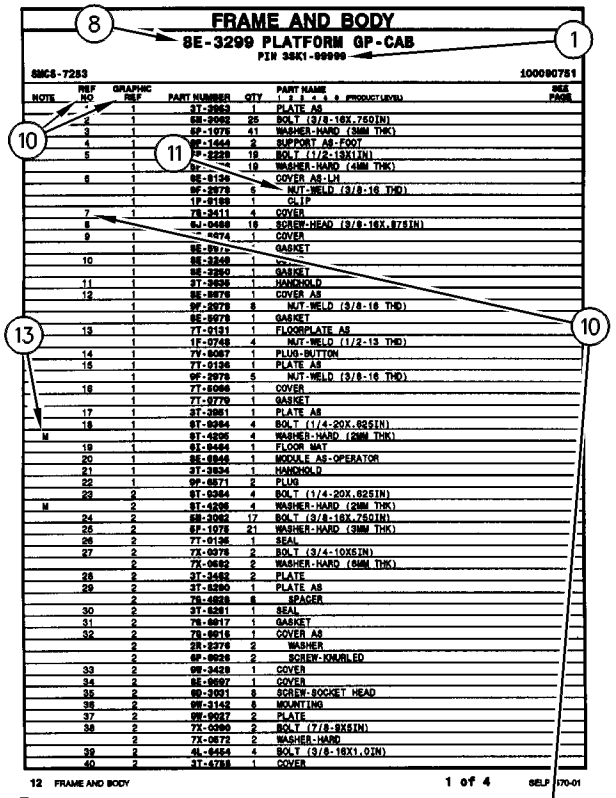

FRAME AND BODY
8E-3299 PLATFORM GP-CAB
PIN 3SK1-99999
SMCS-7283 100090751

NOTE	REF NO	GRAPHIC REF	PART NUMBER	QTY	PART NAME (1 2 3 4 5 6 PRODUCT LEVEL)	SEE PAGE
	*	1	3T-3963	1	PLATE AS	
	2	1	5M-2062	25	BOLT (3/8-16X.750IN)	
	3	1	6P-1075	41	WASHER-HARD (3MM THK)	
	4	1	9E-1444	2	SUPPORT AS-FOOT	
	5	1	9P-2228	18	BOLT (1/2-13X1IN)	
		1	9P-[illegible]	18	WASHER-HARD (4MM THK)	
	6	1	9E-9136	*	COVER AS-LH	
		1	9F-2978	6	NUT-WELD (3/8-16 THD)	
		1	1P-0189	1	CLIP	
	7	1	7S-2411	4	COVER	
	8	1	6J-0468	18	SCREW-HEAD (3/8-16X.87SIN)	
	9	1	[illegible]-0274	1	COVER	
		1	9E-9976	*	GASKET	
	10	1	9E-3248	1	[illegible]	
		1	9E-2250	1	GASKET	
	11	1	3T-3936	1	HANDHOLD	
	12	1	9E-9976	1	COVER AS	
		1	9F-2978	8	NUT-WELD (3/8-16 THD)	
		1	9E-9978	1	GASKET	
	13	1	7T-9131	1	FLOORPLATE AS	
		1	1F-0748	4	NUT-WELD (1/2-13 THD)	
	14	1	7V-9067	1	PLUG-BUTTON	
	15	1	7T-9136	1	PLATE AS	
		1	9F-2978	5	NUT-WELD (3/8-16 THD)	
	16	1	7T-5066	1	COVER	
		1	7T-9779	1	GASKET	
	17	1	3T-3951	1	PLATE AS	
	18	1	9T-0264	4	BOLT (1/4-20X.62SIN)	
M		1	9T-4295	4	WASHER-HARD (2MM THK)	
	19	1	9I-9454	1	FLOOR MAT	
	20	1	9E-6946	1	MODULE AS-OPERATOR	
	21	1	3T-3934	1	HANDHOLD	
	22	1	9P-0571	2	PLUG	
	23	2	9T-0264	4	BOLT (1/4-20X.62SIN)	
M		2	9T-4295	4	WASHER-HARD (2MM THK)	
	24	2	5M-2062	17	BOLT (3/8-16X.75QIN)	
	25	2	6P-1075	21	WASHER-HARD (3MM THK)	
	26	2	7T-9136	1	SEAL	
	27	2	7X-0078	2	BOLT (3/4-10X5IN)	
		2	7X-0682	2	WASHER-HARD (6MM THK)	
	28	2	3T-3482	2	PLATE	
	29	2	3T-5290	1	PLATE AS	
		2	7S-4828	6	SPACER	
	30	2	3T-5291	1	SEAL	
	31	2	7S-9817	1	GASKET	
	32	2	7S-9816	1	COVER AS	
		2	5R-2276	2	WASHER	
		2	9F-9928	2	SCREW-KNURLED	
	33	2	9W-3429	1	COVER	
	34	2	9E-9697	1	COVER	
	35	2	9D-3931	8	SCREW-SOCKET HEAD	
	36	2	9W-3143	8	MOUNTING	
	37	2	9W-9937	2	PLATE	
	38	2	7X-0360	2	BOLT (7/8-9X5IN)	
		2	7X-0672	2	WASHER-HARD	
	39	2	4L-9454	4	BOLT (3/8-16X1.0IN)	
	40	2	3T-4788	1	COVER	

12 FRAME AND BODY 1 of 4 SELP4570-01

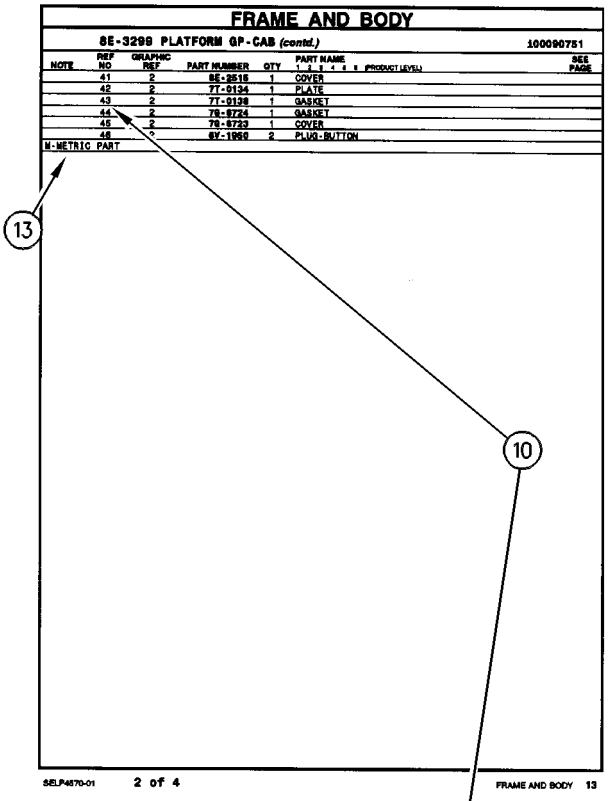

FRAME AND BODY
8E-3299 PLATFORM GP-CAB (contd.)
100090751

NOTE	REF NO	GRAPHIC REF	PART NUMBER	QTY	PART NAME (1 2 3 4 5 6 PRODUCT LEVEL)	SEE PAGE
	41	2	9E-2515	1	COVER	
	42	2	7T-9134	1	PLATE	
	43	2	7T-9138	1	GASKET	
	44	2	7S-9724	1	GASKET	
	45	2	7S-9723	1	COVER	
	46	*	8Y-1950	2	PLUG-BUTTON	

M-METRIC PART

SELP4570-01 2 of 4 FRAME AND BODY 13

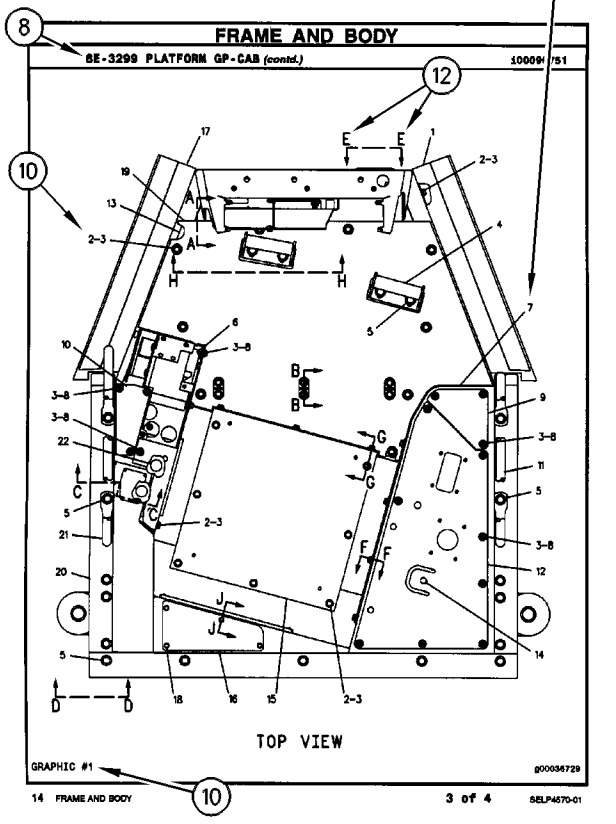

FRAME AND BODY
8E-3299 PLATFORM GP-CAB (contd.)
100090751

14 FRAME AND BODY 3 of 4 SELP4570-01

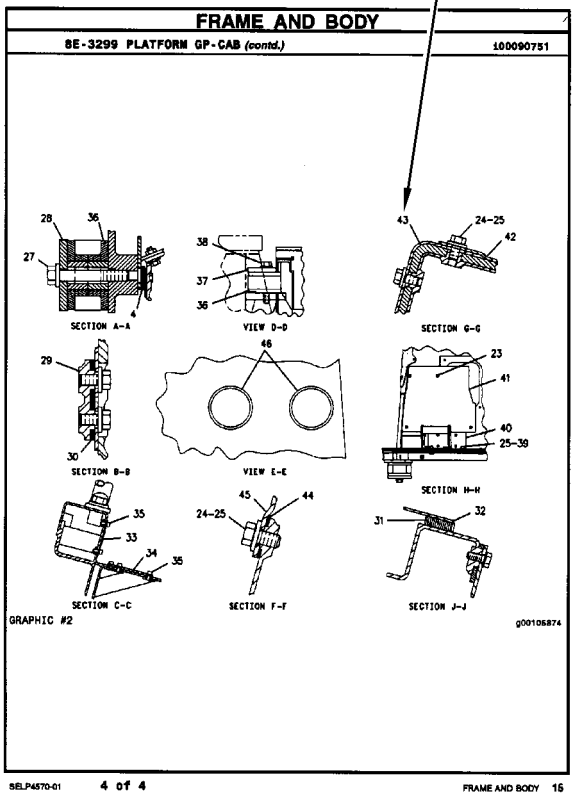

FRAME AND BODY
8E-3299 PLATFORM GP-CAB (contd.)
100090751

SELP4570-01 4 of 4 FRAME AND BODY 15

INFORMAÇÃO GERAL

1. IDENTIFICAÇÃO DA MÁQUINA

As máquinas Caterpillar são identificadas pelos Números de Informação do Produto (PIN). Alguns componentes incluídos numa máquina podem ser identificados por Números de Série (S/N). Componentes típicos que serão enumerados com números de série incluem motores, transmissões, lâminas e ríperes. Além do número de série, a máquina e o motor são ainda identificados por números de arranjo e, em alguns casos, números de modificações. Tais números encontram-se na(s) placa(s) de identificação do produto e na placa mestre no compartimento do operador.

SIS *Novidades*

A partir do primeiro trimestre de 2001 o Número de Identificação de Produto da Caterpillar (PIN) precisa ser mudado de 8 para 17 caracteres. Esforçando-se para fornecer uma identificação uniforme de equipamentos, a Caterpillar e outros fabricantes de equipamento de construção estão mudando para atender a versão mais atualizada do padrão de identificação de produtos. Os números de PIN para produtos de aplicações não rodoviárias são definidos pela ISO 10261. O novo formato de número PIN será adotado em todas as máquinas e grupos geradores Caterpillar. As placas e as marcações do chassi mostrarão os 17 dígitos de PIN. O novo formato terá a seguinte disposição:

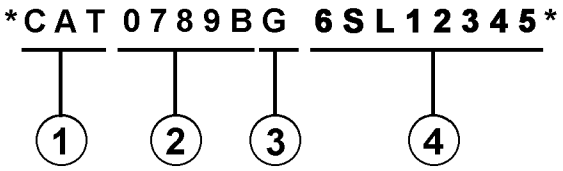

Onde:

1. Código de Fabricação Mundial da Caterpillar (dígitos 1-3)

2. Descrição da Máquina (dígitos 4-8)

3. Dígito de Verificação (dígito 9)

4. Seção de Indicador da Máquina (MIS) ou Número de Seqüência de Produto (dígitos 10-17). Estes eram anteriormente chamados de Número de Série.

Máquinas e grupos geradores produzidos antes do primeiro trimestre de 2001 manterão o formato de 8 caracteres de PIN.

Componentes como motores, transmissões, eixos, ferramentas de trabalho, etc. continuarão a usar Número de Série (S/N) com oito caracteres.

2. COMO OBTER PEÇAS

⚠ CUIDADO

Quando peças de substituição são exigidas para este produto, a Caterpillar recomenda a utilização de peças de substituição Caterpillar ou peças com as especificações equivalentes incluindo, mas não limitadas, à dimensões físicas, tipos, resistência e materiais.

A inobservância desta advertência poderá resultar em falhas prematuras, danos ao produto, ferimentos ou morte.

As Peças de Reposição de Qualidade Caterpillar encontram-se disponíveis nos revendedores Caterpillar no mundo inteiro. Seus estoques de peças são atualizados e incluem todas as peças normalmente necessárias para proteger seu investimento em máquinas Caterpillar. Alguns revendedores podem oferecer jogos de reparo ou peças de troca/remanufaturadas disponíveis como uma opção da alternativa de reparo mais eficaz para uma situação específica. Ao encomendar peças, seu pedido deve especificar a quantidade, o número e o nome da peça e o número de série/número de identificação do produto referentes à máquina para a qual as peças se destinam.

3. ORGANIZAÇÃO DO MANUAL DE PEÇAS

A informação do produto neste manual é apresentada em forma de "elementos de informação" que representam todos os componentes para o modelo específico. Arranjo de Motor e Grupo de Assento são exemplos de elementos de informação. Os elementos de informação são organizados em ordem alfabética por nome de peça ou secundariamente, por número de peça incluído em cada seção principal do manual.

4. LISTA DE CONTEÚDOS

A Lista de Conteúdos (TOC) se encontra no princípio do manual. A Lista de Conteúdos (TOC) relaciona em cada seção do manual uma lista completa com todos os elementos de informação organizados conforme aparecem no manual. Números de página são fornecidos para que se tenha referência rápida de ilustrações de peças detalhadas e listas de conteúdos que podem receber serviço de manutenção.

INFORMAÇÃO GERAL

5. ÍNDICE DE PEÇAS DE MANUTENÇÃO

O Índice de Peças de Manutenção, localizado perto do princípio do manual, faz referência aos números de peça de manutenção usados com maior frequência, fornecendo uma descrição, a quantidade, o uso e o número de página. Esta informação é organizada com a descrição da peça em ordem alfabética.

6. ÍNDICE

O Índice localizado perto do princípio do manual, consiste de uma lista em ordem alfabética de todos os elementos de informação incluídos no manual. Números de página são fornecidos para que se tenha referência rápida de ilustrações de peças detalhadas e listas de conteúdos que podem receber serviço de manutenção.

7. ÍNDICE DE NÚMERO DE PEÇA

Um índice numérico relacionando todos os números de peça e a(s) página(s) correspondentes, aparece no final do manual.

8. LEGENDAS

As legendas localizadas no início de cada elemento de informação identificam o número e o nome de peça, juntamente com informação descritiva adicional. Informações sobre o Número de Informação do Produto (PIN) e o Número de Série (S/N) encontradas em cada legenda devem ser usadas para selecionar a informação correta sobre uma máquina específica. Opções de substituição no campo, identificação de componentes de acessórios opcionais e informações sobre onde são utilizados ("parte de") são também fornecidas.

A primeira linha de uma legenda é indicada em tipo maior para indicar o princípio de um elemento de informação. Legendas para páginas adicionais que podem ser necessárias para ilustrar um elemento de informação serão apresentadas em tipo padrão e incluirão o termo *(continua)* .

9. NÃO DISPONÍVEL SEPARADAMENTE

Em alguns casos, é necessário mostrar peças não disponíveis separadamente que têm uma ligação com listas de conteúdos de nível inferior que podem receber serviço de manutenção. Os números de peça destes componentes não disponíveis aparecerão em *itálico* , a fim de indicar que não estão disponíveis.

10. NÙMEROS DE REFERÊNCIA À LISTA DE PEÇAS

Os números indicados na coluna Ref No (No. de Referência) correspondem-se aos números usados no(s) gráfico(s) correspondente(s). Um sufixo com letras pode ser acrescentado a um número de referência para identificar itens de conteúdo de nível inferior. Os números indicados na coluna Graphic Ref (Referência de Gráfico) referem-se ao identificador de número de gráfico presente no canto esquerdo inferior de cada ilustração. O número de Referência de Gráfico pode ser usado em combinação com o item Ref No para determinar-se o número de peça correto. Poderá haver omissão intencional de um número de referência (Ref No) de uma lista de conteúdos uma vez que as informações são atualizadas para refletir os números de peça mais recentes que podem receber serviço de manutenção.

11. NOMES DE PEÇAS DESALINHADOS

Quando um nome de peça encontra-se desalinhado numa lista de peças, significa que tal item faz parte do (está incluído no) grupo ou conjunto sob o qual está relacionado.

12. LETRAS DE REFERÊNCIA NAS ILUSTRAÇÕES

Quando necessário, as ilustrações contêm letras de referência (A, B, C, etc.) que são utilizadas para seguir tubulações e cabos elétricos de um ponto a outro. Também foram utilizadas para indicar onde se pode reconectar as ilustrações que foram separadas.

13. ABREVIAÇÕES E SÍMBOLOS

O.D. – "Outside Diameter" (Diâmetro Externo)
I.D. – "Inside Diameter" (Diâmetro Interno)
A – Não faz parte deste grupo
B – Use conforme necessário
C – Indica modificação
D – Vendido por metro
E – Vendido por centímetro
F – Não ilustrado
G – Vendido por polegada
I – Consultar o Sistema de Informações Hidráulicas
M – Peça métrica
R – Peça remanufaturada pode estar disponível; consulte o seu revendedor Cat
Y – Ilustração separada
Z – Não disponível separadamente

SIS *Novidades*

14. <END>

Este símbolo indica o final de um elemento de informação.

NOTA:

Os contínuos aperfeiçoamentos e avanços no projeto do produto podem ocasionar modificações em sua máquina que talvez ainda não estejam incluídas nesta publicação. Sempre que surgirem dúvidas quanto a um produto Caterpillar ou quanto à presente publicação, consulte o seu revendedor Caterpillar para obter as informações mais recentes disponíveis.

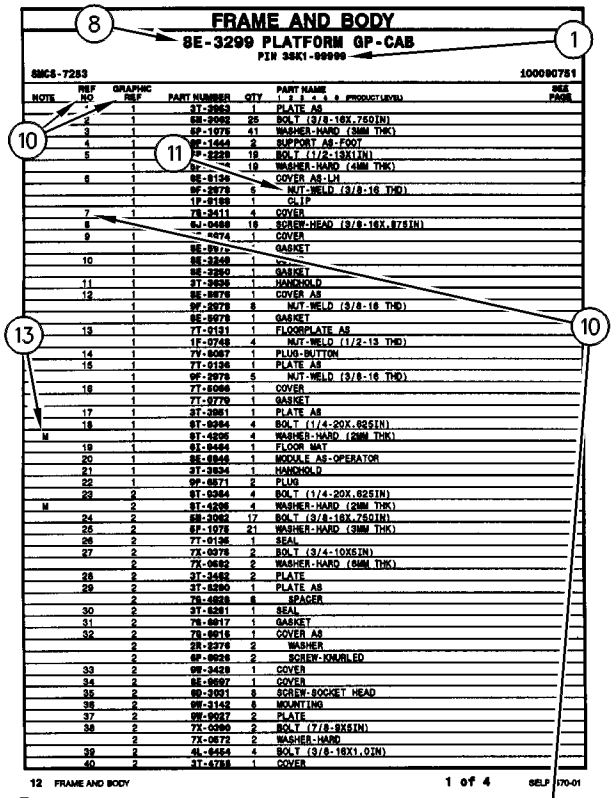

FRAME AND BODY

8E-3299 PLATFORM GP-CAB

PIN 3SK1-99999

SMCS-7283 100090751

NOTE	REF NO	GRAPHIC REF	PART NUMBER	QTY	PART NAME 1 2 3 4 5 6 (PRODUCT LEVEL)	SEE PAGE
	*	1	3T-3963	1	PLATE AS	
	2	1	5B-3062	25	BOLT (3/8-16X.750IN)	
	3	1	6P-1075	41	WASHER-HARD (3MM THK)	
	4	1	8E-1443	2	SUPPORT AS-FOOT	
	5	1	5P-2229	19	BOLT (1/2-13X1IN)	
		1	6P-	19	WASHER-HARD (4MM THK)	
	6	1	8E-9136	*	COVER AS-LH	
		1	9F-2979	6	NUT-WELD (3/8-16 THD)	
		1	1F-0189	1	CLIP	
	7	1	7X-3411	4	COVER	
	8	1	6J-0468	18	SCREW-HEAD (3/8-16X.87SIN)	
	9	1	[illegible]	1	COVER	
		1	8E-9976	*	GASKET	
	10	1	8E-3248	1	[illegible]	
		1	8E-3250	1	GASKET	
	11	1	3T-3636	1	HANDHOLD	
	12	1	8E-9978	1	COVER AS	
		1	9F-2979	8	NUT-WELD (3/8-16 THD)	
		1	8E-9979	1	GASKET	
	13	1	7T-9131	1	FLOORPLATE AS	
		1	1F-0748	4	NUT-WELD (1/2-13 THD)	
	14	1	7V-8067	1	PLUG-BUTTON	
	15	1	7T-9136	1	PLATE AS	
		1	9F-2979	5	NUT-WELD (3/8-16 THD)	
	16	1	7T-8066	1	COVER	
		1	7T-9779	1	GASKET	
	17	1	3T-3951	1	PLATE AS	
	18	1	9T-8264	4	BOLT (1/4-20X.88SIN)	
M		1	9T-4296	4	WASHER-HARD (2MM THK)	
	19	1	6I-8464	1	FLOOR MAT	
	20	1	8E-8848	1	MODULE AS-OPERATOR	
	21	1	3T-3934	1	HANDHOLD	
	22	1	9P-8671	2	PLUG	
	23	2	9T-0364	4	BOLT (1/4-20X.62SIN)	
M		2	9T-4296	4	WASHER-HARD (2MM THK)	
	24	2	5B-3062	17	BOLT (3/8-16X.75QIN)	
	25	2	6P-1075	21	WASHER-HARD (3MM THK)	
	26	2	7T-9136	1	SEAL	
	27	2	7X-0078	2	BOLT (3/4-10X5IN)	
		2	7X-0682	2	WASHER-HARD (6MM THK)	
	28	2	3T-3482	2	PLATE	
	29	2	3T-8290	1	PLATE AS	
		2	7S-4828	6	SPACER	
	30	2	3T-8291	1	SEAL	
	31	2	7S-8817	1	GASKET	
	32	2	7S-8816	1	COVER AS	
		2	5R-2276	2	WASHER	
		2	9F-9026	2	SCREW-KNURLED	
	33	2	9W-3429	1	COVER	
	34	2	8E-9697	1	COVER	
	35	2	9D-3031	8	SCREW-SOCKET HEAD	
	36	2	9W-3143	8	MOUNTING	
	37	2	9W-9027	2	PLATE	
	38	2	7X-0360	2	BOLT (7/8-9X5IN)	
		2	7X-0672	2	WASHER-HARD	
	39	2	4L-8454	4	BOLT (3/8-16X1.0IN)	
	40	2	3T-4788	1	COVER	

12 FRAME AND BODY 1 of 4 SELP4570-01

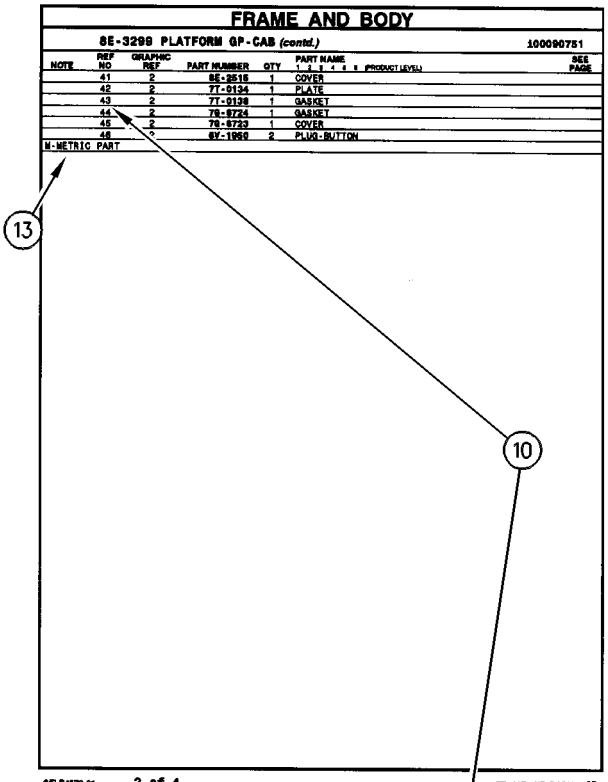

FRAME AND BODY

8E-3299 PLATFORM GP-CAB (contd.) 100090751

NOTE	REF NO	GRAPHIC REF	PART NUMBER	QTY	PART NAME 1 2 3 4 5 6 (PRODUCT LEVEL)	SEE PAGE
	41	2	8E-2515	1	COVER	
	42	2	7T-9134	1	PLATE	
	43	2	7T-9138	1	GASKET	
	44	2	7S-8724	1	GASKET	
	45	2	7S-8723	1	COVER	
	46	*	8Y-1950	2	PLUG-BUTTON	

M-METRIC PART

SELP4570-01 2 of 4 FRAME AND BODY 13

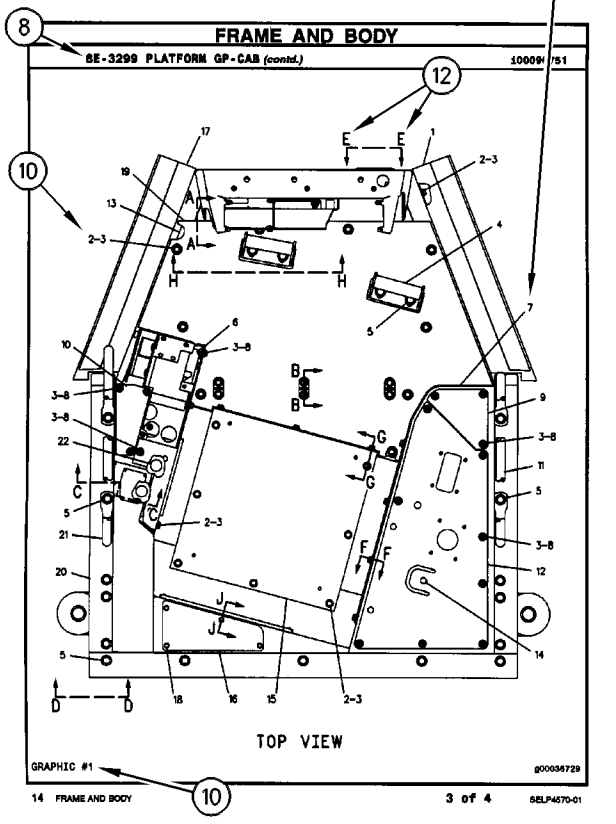

FRAME AND BODY

8E-3299 PLATFORM GP-CAB (contd.) 100090751

TOP VIEW

GRAPHIC #1 g00036729

14 FRAME AND BODY 3 of 4 SELP4570-01

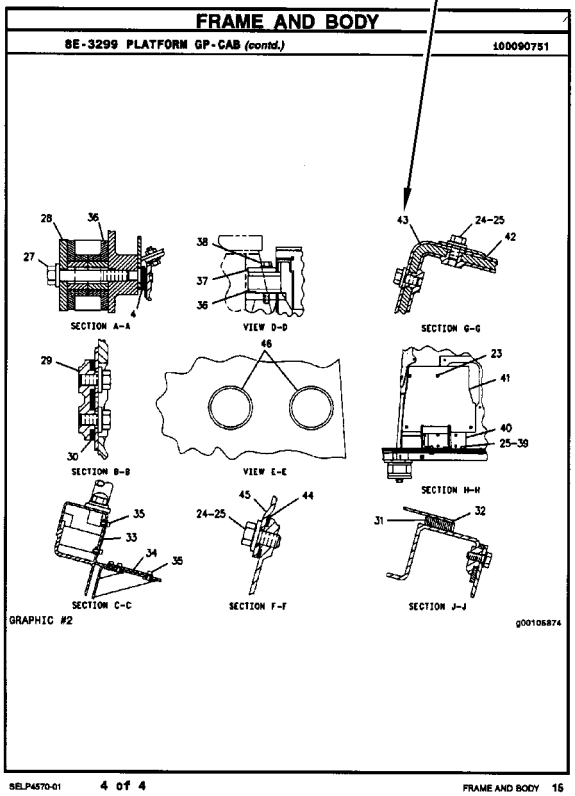

FRAME AND BODY

8E-3299 PLATFORM GP-CAB (contd.) 100090751

SECTION A-A VIEW D-D SECTION G-G

SECTION B-B VIEW E-E SECTION H-H

SECTION C-C SECTION F-F SECTION J-J

GRAPHIC #2 g00105874

SELP4570-01 4 of 4 FRAME AND BODY 15

ALLGEMEINE HINWEISE

1. MASCHINENKENNZEICHNUNG

Caterpillar-Maschinen sind mit PRODUCT IDENTIFICATION NUMBERS (PIN) (Produkt-Identnummern) gekennzeichnet. Einige Baugruppen, z.B. Motoren, Getriebe, Planierschilde und Aufreißer, sind mit SERIAL NUMBERS (S/N) (Seriennummern) gekennzeichnet. An der Maschine und am Motor befinden sich außerdem ARRANGEMENT NUMBERS (Ausrüstungsnummern) sowie in einigen Fällen MODIFICATION NUMBERS (Änderungsnummern). Sie befinden sich auf den PIN-Schildern und auf dem Typenschild im Fahrerhaus.

Bei Ersatzteilbestellungen müssen dem Händler alle diese Nummern zur Verfügung gestellt werden.

SIS *Neu im Parts Manual*

Vom ersten Quartal 2001 ab wurde die Caterpillar Produkt-Identnummer (PIN) von 8 auf 17 Zeichen geändert. Um zur Standardisierung der Produkt-Identnummer beizutragen, sind Caterpillar und andere Baumaschinenhersteller bestrebt, die aktuellste Norm zur Produkt-Identnummerierung einzuführen. Produkt-Identnummern für Baumaschinen sind durch ISO 10261 definiert. Das neue Format der Produkt-Identnummern gilt für alle Caterpillar-Maschinen und -Stromaggregate. Die Produkt-Identschilder und -Identrahmenmarkierung enthalten die aus 17 Zeichen bestehende Identnummer. Das neue Format hat folgende Abschnitte:

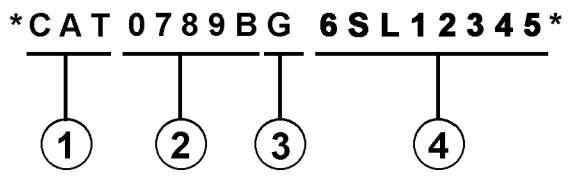

Abschnitte:

1. Caterpillars weltweiter Herstellungscode (Zeichen 1-3)

2. Modell (Zeichen 4-8)

3. Kontrollzeichen (Zeichen 9)

4. Maschinenspezifische Kennung (MIS) oder Produktsequenznummer (Zeichen 10-17). Diese wurde früher als Seriennummer bezeichnet.

Für vor dem ersten Quartal 2001 hergestellte Maschinen und Stromaggregate wird das aus 8 Zeichen bestehende PIN-Format beibehalten.

Bauteile wie z.B. Motoren, Getriebe, Achsen sowie Arbeitsgeräte werden weiterhin eine aus 8 Zeichen bestehende Seriennummer (S/N) aufweisen.

2. BESTELLEN VON ERSATZTEILEN

⚠ WARNUNG

Wenn für diese Maschine Ersatzteile benötigt werden, empfiehlt Caterpillar, ausschließlich Caterpillar-Ersatzteile oder solche zu verwenden, die die gleichen technischen Merkmale hinsichtlich Typ, Festigkeit, Werkzeugeigenschaften und die gleichen Maße aufweisen.

Bei Nichtbeachtung dieser Warnung besteht Verletzungs- oder sogar Lebensgefahr! Ferner kann Nichtbeachtung vorzeitige Ausfälle der Teile und Beschädigung der Maschine zur Folge haben.

Original Caterpillar-Ersatzteile können weltweit bei jedem Caterpillar-Händlern bestellt werden. Die umfangreichen Händlerlager enthalten normalerweise alle Teile, die Sie für Ihre Caterpillar-Maschine benötigen. Einige Händler bieten Reparatursätze, Austausch- oder werküberholte Teile an, so daß Sie eine Auswahl unter verschiedenen Reparaturmöglichkeiten treffen können. Ihre Bestellung muß folgende Angaben enthalten: Anzahl der benötigten Teile, Bestellnummer, Bezeichnung des Teils, Serien-Nr./Produkt-Ident-Nr., Ausrüstungs-Nr. und Änderungs-Nr. der Maschine, für die diese Teile benötigt werden.

3. AUFBAU DES PARTS MANUAL

Die Produktinformationen für alle Komponenten eines bestimmten Modells sind in INFORMATION ELEMENTS (Informationseinheiten) gegliedert. ENGINE ARRANGEMENT (Motorausführung) und SEAT GROUP (Fahrersitz) sind Beispiele für solche Informationseinheiten. Sie sind innerhalb jeder Gruppe alphabetisch, entsprechend der Ersatzteilbezeichnung, und zusätzlich numerisch, entsprechend der Ersatzteilnummer, geordnet.

4. INHALTSVERZEICHNIS

Das Inhaltsverzeichnis befindet sich am Anfang des Buches. Im Inhaltsverzeichnis werden die einzelnen Abschnitte des Buches aufgeführt. Die Abschnitte enthalten eine vollständige Aufstellung aller Informationseinheiten. Diese sind entsprechend ihrem Erscheinen im Buch geordnet. Das Inhaltsverzeichnis enthält Seitenangaben für Schnellverweise auf detaillierte Abbildungen und Teillisten.

ALLGEMEINE HINWEISE

5. INDEX FÜR WARTUNGSTEILE

Der Index für Wartungsteile vorn im Buch enthält die Bestellnummern, Seitenangaben, Mengenangaben und Informationen über den Einsatzbereich für die am häufigsten benötigten Ersatzteile. Die Angaben sind alphabetisch entsprechend der Teilebezeichnung geordnet.

6. INDEX

Der Index vorn im Buch enthält eine alphabetische Liste aller Informationseinheiten. Er enthält Seitenangaben für Schnellverweise auf detaillierte Abbildungen und Teillisten.

7. INDEX FÜR BESTELLNUMMERN

Hinten im Buch befindet sich ein numerischer Index, mit allen Bestellnummern und dem Hinweis auf die Seite, auf der sich die betreffende Abbildung befindet.

8. ÜBERSCHRIFTEN

Die Überschriften, die sich am Anfang jeder der Informationseinheiten befinden, enthalten Bestellnummern, Ersatzteilbezeichnungen und zusätzliche beschreibende Informationen. Produkt-Ident- und Seriennummern in den Überschriften sollten zur Auswahl der richtigen Informationen für die betreffende Maschine verwendet werden. Die Überschriften enthalten außerdem Informationen über möglichen Außendienstersatz, mögliche Baugerätekomponenten und die Baugruppe, zu der das Teil gehört.

Die erste Zeile einer Überschrift erscheint in einer größeren Schriftart, um den Anfang einer Informationseinheit zu kennzeichnen. Überschriften für zusätzliche Seiten, die zur Erläuterung einer Informationseinheit notwendig sind, erscheinen in normaler Schriftart und enthalten den Begriff "(contd.)".

9. NICHT EINZELN LIEFERBARE TEILE

In einigen Fällen ist es notwendig nicht lieferbare Teile, die selbst mit einer eigenen Teilliste im Buch vertreten sind, aufzuführen. Die Bestellnummern dieser nicht einzeln lieferbaren Teile erscheinen kursiv, wodurch angezeigt wird, daß sie nur in Verbindung mit anderen Teilen lieferbar sind.

10. REFERENZNUMMER FÜR ERSATZTEILE

Die Zahlen, die in der Spalte "Ref No" aufgeführt sind, stimmen mit den Zahlen in den beigefügten Abbildungen überein. Ein Buchstaben-Suffix kann zu einer Referenznummer hinzugefügt werden, um zu kennzeichnen, daß das Teil mit einer eigenen Teilliste im Buch aufgeführt ist. Die in der Spalte "Graphic Ref" angeführten Zahlen verweisen auf die Identifikationsnummer der Abbildung, die sich in der linken unteren Ecke der Abbildung befindet. Diese Nummer kann zusammen mit der Referenznummer des Teils angegeben werden, um die richtige Ersatzteilnummer zu ermitteln. Referenznummern können absichtlich weggelassen werden, da die Nummern der lieferbaren Ersatzteile ständig aktualisiert werden.

11. EINGERÜCKTE BEZEICHNUNGEN

Wenn eine Bezeichnung eingerückt ist, wird dadurch angezeigt, daß das Teil zu einer Baugruppe gehört, unter deren Bezeichnung es eingerückt ist.

12. REFERENZBUCHSTABEN

Falls erforderlich sind in den Abbildungen Referenzbuchstaben enthalten (z.B. A, B, C, usw.), die Leitungen und Kabelbäume von einem Punkt zum anderen verfolgen. Außerdem geben sie die Stelle an, an der getrennte Abbildungen fortgesetzt werden.

13. ABKÜRZUNGEN UND SYMBOLE

O.D. – Außendurchmesser
I.D. – Innendurchmesser
A – kein Teil dieser Gruppe
B – nach Bedarf verwenden
C – Hinweis auf eine Änderung
D – in Meter-Länge bestellen
E – in Zentimeter-Länge bestellen
F – nicht gezeigt
G – in Zoll-Länge bestellen
I – siehe Hydraulikinformationssystem
M – metrisches Teil
R – werküberholtes Teil unter Umständen lieferbar
Y – separate Abbildung
Z – nicht einzeln lieferbar

SIS *Neu im Parts Manual*

14. <END>

Dieses Symbol zeigt das Ende eines Informationselements an.

ANMERKUNG:

Ständig vorgenommene Verbesserungen und Weiterentwicklungen an Ihrer Maschine können Änderungen verursachen, die in der vorliegenden Ausgabe noch nicht berücksichtigt sind. Fragen zu Ihrer Caterpillar-Maschine oder diesem Ersatzteilbuch beantwortet Ihr Caterpillar-Händler.

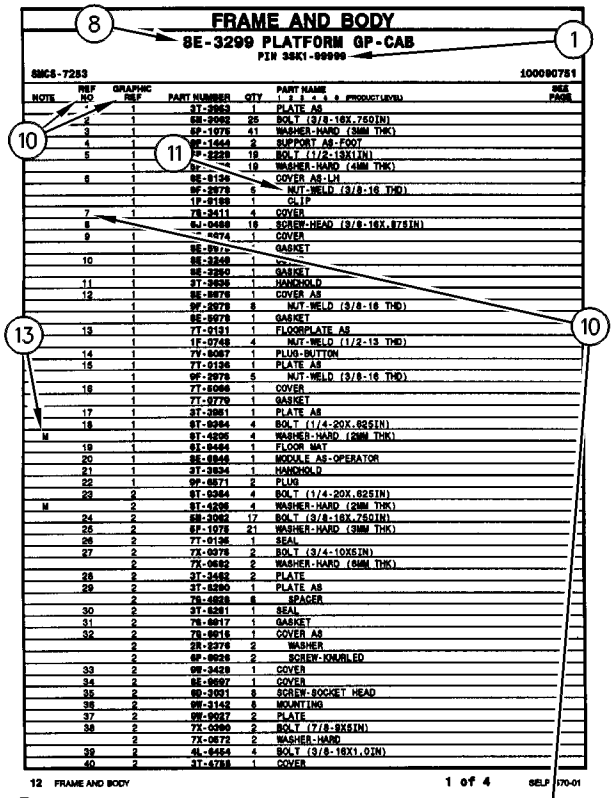

FRAME AND BODY

8E-3299 PLATFORM GP-CAB

PIN 3SK1-99999

SMCS-7283 100090751

NOTE	REF NO	GRAPHIC REF	PART NUMBER	QTY	PART NAME 1 2 3 4 5 6 (PRODUCT LEVEL)	SEE PAGE
	*	1	3T-3963	1	PLATE AS	
	2	1	5M-2062	25	BOLT (3/8-16X.750IN)	
	3	1	6P-1075	41	WASHER-HARD (3MM THK)	
	4	1	9E-1444	2	SUPPORT AS-FOOT	
	5	1	9P-2229	19	BOLT (1/2-13X1IN)	
		1	9P-[illegible]	19	WASHER-HARD (4MM THK)	
	6	1	9E-9136	*	COVER AS-LH	
		1	9F-2979	6	NUT-WELD (3/8-16 THD)	
		1	1F-0189	1	CLIP	
	7	1	7X-3411	4	COVER	
	8	1	6J-0468	18	SCREW-HEAD (3/8-16X.87SIN)	
	9	1	[illegible]074	1	COVER	
		1	9E-9[illegible]	*	GASKET	
	10	1	9E-3248	1	[illegible]	
		1	9E-2250	1	GASKET	
	11	1	3T-3636	1	HANDHOLD	
	12	1	9E-9076	1	COVER AS	
		1	9F-2979	8	NUT-WELD (3/8-16 THD)	
		1	9E-9078	1	GASKET	
	13	1	7T-9131	1	FLOORPLATE AS	
		1	1F-0748	4	NUT-WELD (1/2-13 THD)	
	14	1	7V-8067	1	PLUG-BUTTON	
	15	1	7T-9136	1	PLATE AS	
		1	9F-2979	5	NUT-WELD (3/8-16 THD)	
	16	1	7T-5066	1	COVER	
		1	7T-9779	1	GASKET	
	17	1	3T-3951	1	PLATE AS	
	18	1	9T-0264	4	BOLT (1/4-20X.62SIN)	
M		1	9T-4295	4	WASHER-HARD (2MM THK)	
	19	1	9I-9454	1	FLOOR MAT	
	20	1	9E-6946	1	MODULE AS-OPERATOR	
	21	1	3T-3934	1	HANDHOLD	
	22	1	9P-0571	2	PLUG	
	23	2	9T-0264	4	BOLT (1/4-20X.62SIN)	
M		2	9T-4295	4	WASHER-HARD (2MM THK)	
	24	2	5M-2062	17	BOLT (3/8-16X.75QIN)	
	25	2	6P-1075	21	WASHER-HARD (3MM THK)	
	26	2	7T-9136	1	SEAL	
	27	2	7X-0075	2	BOLT (3/4-10X5IN)	
		2	7X-0682	2	WASHER-HARD (6MM THK)	
	28	2	3T-3482	2	PLATE	
	29	2	3T-5290	1	PLATE AS	
		2	7E-4828	6	SPACER	
	30	2	3T-5291	1	SEAL	
	31	2	7E-9817	1	GASKET	
	32	2	7E-9816	1	COVER AS	
		2	5R-2276	2	WASHER	
		2	9F-9026	2	SCREW-KNURLED	
	33	2	9M-3429	1	COVER	
	34	2	8E-9697	1	COVER	
	35	2	9D-3031	8	SCREW-SOCKET HEAD	
	36	2	9M-3143	8	MOUNTING	
	37	2	9M-9037	2	PLATE	
	38	2	7X-0360	2	BOLT (7/8-9X5IN)	
		2	7X-0672	2	WASHER-HARD	
	39	2	4L-6454	4	BOLT (3/8-16X1.0IN)	
	40	2	3T-4788	1	COVER	

12 FRAME AND BODY 1 of 4 SELP4570-01

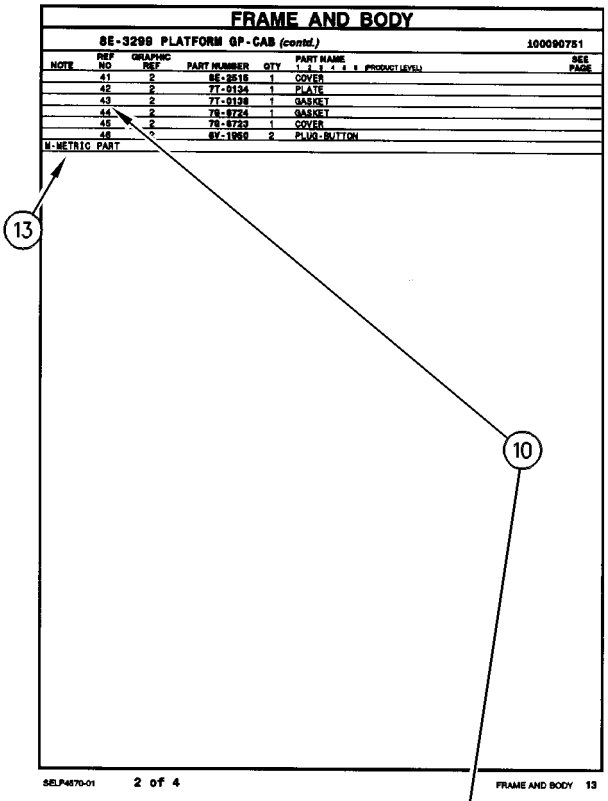

FRAME AND BODY

8E-3299 PLATFORM GP-CAB (contd.) 100090751

NOTE	REF NO	GRAPHIC REF	PART NUMBER	QTY	PART NAME 1 2 3 4 5 6 (PRODUCT LEVEL)	SEE PAGE
	41	2	8E-2515	1	COVER	
	42	2	7T-9134	1	PLATE	
	43	2	7T-9138	1	GASKET	
	44	2	7E-9724	1	GASKET	
	45	2	7E-9723	1	COVER	
	46	*	8Y-1950	2	PLUG-BUTTON	

M-METRIC PART

SELP4570-01 2 of 4 FRAME AND BODY 13

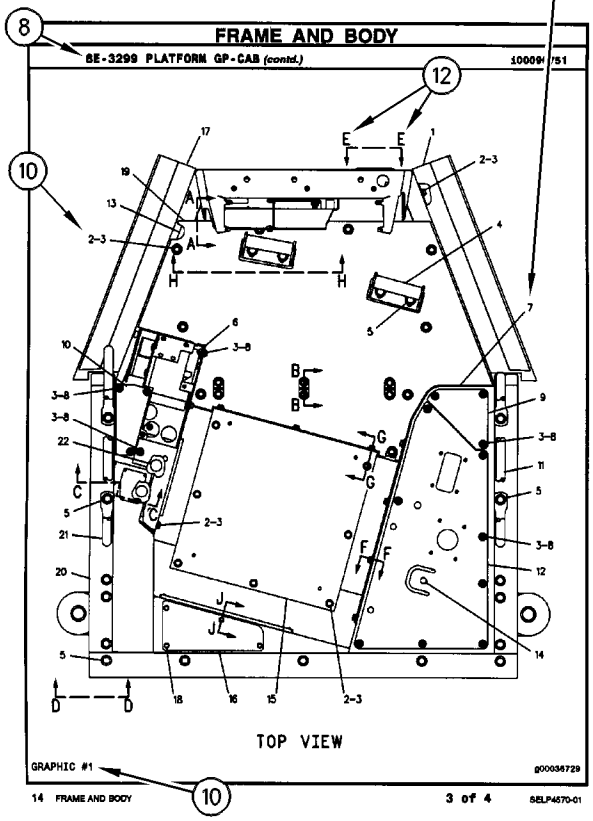

FRAME AND BODY

8E-3299 PLATFORM GP-CAB (contd.) 100090751

14 FRAME AND BODY 3 of 4 SELP4570-01

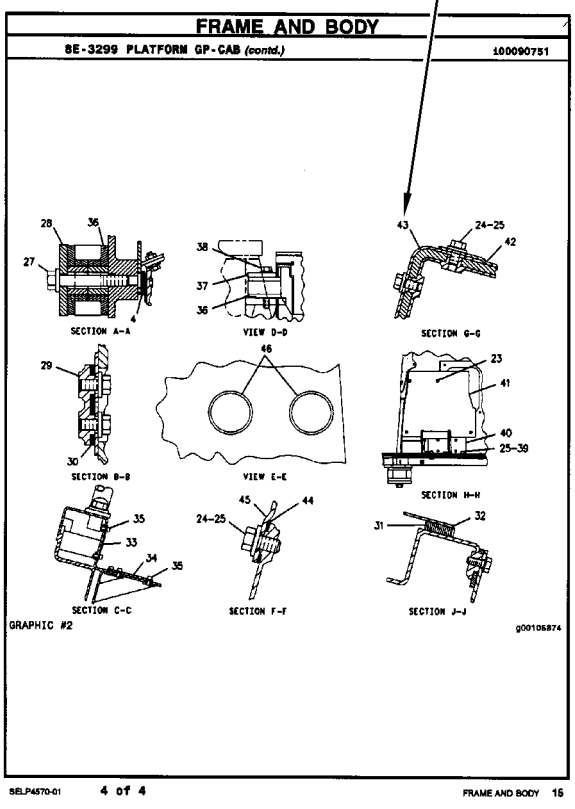

FRAME AND BODY

8E-3299 PLATFORM GP-CAB (contd.) 100090751

SELP4570-01 4 of 4 FRAME AND BODY 15

REMANUFACTURED COMPONENTS

As an option when making repairs consider Caterpillar Remanufactured Components. Components that are available through the Caterpillar Remanufactured Program are identified three ways in the parts book:

- with the letter R in the note field of the parts list
- with an R* at the beginning of the first line of the caption
- with an *R at the end of the first line of the caption

Typical components included in the Remanufacturing Program include:

ALTERNATORS
CONNECTING RODS
CRANKSHAFTS - UNDERSIZE
CRANKSHAFTS - UPGRADE TO NEW
CYLINDER HEADS
ELECTRONIC CONTROL MODULES (ECM)
ELECTRONIC SENSORS
FUEL INJECTORS
FUEL NOZZLES
FUEL PUMPS
GOVERNORS
OIL PUMPS
PISTONS
SHORT BLOCKS
STARTERS
TURBOCHARGERS - COMPLETE
TURBOCHARGER CARTRIDGES
WATER PUMPS

Caterpillar Remanufactured engines for many engine arrangements are also available.

OPTIONS DE RÉPARATION

COMPOSANTS RÉNOVÉS

Comme option de réparation, considérer les composants rénovés Caterpillar. Les composants disponibles dans le cadre du programme Caterpillar de composants rénovés sont identifiés de trois façons dans le catalogue de pièces:

- avec la lettre "R" dans l'espace note de la liste des pièces
- avec R* au début de la première ligne des légendes
- avec *R à la fin de la première ligne des légendes

Les composants suivants figurent parmi les composants typiques du programme de rénovation:

ALTERNATEURS
BIELLES
VILEBREQUINS - SOUS-DIMENSIONNÉS
VILEBREQUINS - REMIS À NEUF
CULASSES
MODULES DE COMMANDE ÉLECTRONIQUE (ECM)
CAPTEURS ÉLECTRONIQUES
INJECTEURS
TÊTES D'INJECTEURS
POMPES À CARBURANT
RÉGULATEURS
POMPES À HUILE
PISTONS
BLOCS EMBIELLÉS
DÉMARREURS
TURBOCOMPRESSEURS - COMPLETS
CARTOUCHES DE TURBOCOMPRESSEUR
POMPES À EAU

Des moteurs rénovés sont aussi disponibles pour plusieurs versions de moteur.

ALTERNATIVAS DE REPARACIÓN

COMPONENTES REMANUFACTURADOS

Al hacer reparaciones, tenga en cuenta la opción de Componentes Remanufacturados Caterpillar. Los componentes que están disponibles por medio del programa de Productos Remanufacturados Caterpillar se identifican de tres maneras en el manual de piezas:

- con la letra R en el espacio de Nota de la lista de piezas
- con una R* al comienzo de la primera línea de la leyenda
- con una *R al final de la primera línea de la leyenda

Los componentes que se incluyen típicamente en el Programa de Productos Remanufacturados son:

ALTERNADORES
BIELAS
CIGÜEÑALES - BAJOMEDIDA
CIGÜEÑALES - REMANUFACTURADOS A NUEVO
CULATAS
MÓDULOS DE CONTROL ELECTRÓNICO (ECM)
SENSORES ELECTRONICOS
INYECTORES
BOQUILLAS
BOMBAS DE COMBUSTIBLE
REGULADORES
BOMBAS DE ACEITE
PISTONES
MONOBLOQUES
MOTORES DE ARRANQUE
TURBOCOMPRESORES - COMPLETOS
NÚCLEOS DE TURBOCOMPRESOR
BOMBAS DE AGUA

También hay disponibles motores Remanufacturados Caterpillar para muchas de las configuraciones de motores.

ALTERNATIVAS DE REPARO

COMPONENTES REMANUFATURADOS

Considere o uso de Componentes Remanufaturados Caterpillar ao efetuar reparos. Os componentes disponíveis através do Programa de Remanufatura Caterpillar são identificados de três formas no manual de peças:

- com um R na área da nota da lista de peças
- com um R* no princípio da primeira linha da legenda
- com um *R no final da primeira linha da legenda

Os componentes típicos que constam no Programa de Remanufatura incluem:

ALTERNADORES
BIELAS
VIRABREQUINS - SUBMEDIDAS
VIRABREQUINS - ATUALIZAÇÃO
CABEÇOTES
MÓDULOS DE CONTROLE ELETRÔNICO (ECM)
SENSORES ELETRÔNICOS
INJETORES DE COMBUSTÍVEL
BICOS DE ABASTECIMENTO DE COMBUSTÍVEL
BOMBAS DE COMBUSTÍVEL
GOVERNADORES
BOMBAS DE ÓLEO
PISTÕES
BLOCOS BÁSICOS DO MOTOR
MOTORES DE PARTIDA
TURBOALIMENTADORES - COMPLETOS
CARTUCHOS DE TURBOALIMENTADORES
BOMBAS D'ÁGUA

Motores Remanufaturados Caterpillar também encontram-se disponíveis para diversos arranjos de motor.

WERKÜBERHOLTE AT-PRODUKTE

Bei Reparaturen sollten werküberholte AT-Produkte von Caterpillar in Betracht gezogen werden. Die durch das AT-Programm von Caterpillar erhältlichen Teile sind im Parts Book auf drei verschiedene Arten gekennzeichnet:

- mit dem Buchstaben R in der Spalte NOTE der Ersatzteilliste
- mit einem R* am Anfang der ersten Zeile der Überschrift
- mit einem *R am Ende der ersten Zeile der Überschrift

Das AT-Programm umfaßt u.a. folgende Produkte:

DREHSTROMGENERATOREN
PLEUELSTANGEN
KURBELWELLEN - MIT UNTERMASS
KURBELWELLEN - MIT ORIGINALMASS
ZYLINDERKÖPFE
ELEKTRONISCHE STEUEREINHEITEN (EMC)
ELEKTRONISCHE SENSOREN
PUMPENDÜSEN
EINSPRITZDÜSEN
KRAFTSTOFFPUMPEN
DREHZAHLREGLER
ÖLPUMPEN
KOLBEN
TEILMOTOREN
ANLASSER
TURBOLADER - KOMPLETT
TURBOLADERLAUFZEUGE
KÜHLWASSERPUMPEN

Viele Motoren können durch werküberholte AT-Motoren von Caterpillar ersetzt werden.

SUPPLEMENTAL COOLANT ADDITIVES

CUSTOMER BENEFITS:

Protects against cavitation, foam, erosion, corrosion, and scale buildup in cooling systems.

- Provides measured coolant conditioner.

DESCRIPTION:

Additives deplete from the coolant with normal operation. For this reason, Supplemental Coolant Additives (SCA) must be added to all heavy duty coolants at regular intervals. In addition, when not using a fully formulated, pre-charged antifreeze, like Caterpillar's DEAC, an initial charge of SCA must be added to the cooling system. The amount of SCA added to the system is dependent on the capacity of the system.

The SCA for initial fill is provided as a liquid. SCA's for maintenance intervals are available in liquid form and as a spin-on element. (No Spin-on available for 3600 Family of Engines)

NOTE:

The amount of SCA added at initial fill is not the same as the amount added at maintenance intervals.

The coolant additive elements can be used with any ethylene or propylene glycol type antifreeze which meets ASTM D4985 or ASTM D5345 Specifications.

NOTE:

For use with standard heavy duty coolant only, not for use with Extended Life Coolant.

PARTS NEEDED:

Cooling System Capacity		Liquid SCA at Initial Fill	Liquid SCA at Maintenance*	Spin-on SCA Maintenance Element*
Liters	Gallons			
22-30	(6-8)	3P-2044 (1)	6V-3542 (1)	111-2370 (1)
30-38	(8-10)	3P-2044 (1) 6V-3542 (1)	111-2372 (1)	111-2369 (1)
38-49	(10-13)	3P-2044 (1) 8T-1589 (1)	111-2372 (1)	111-2369 (1)
49-64	(13-17)	3P-2044 (2)	8T-1589 (1)	9N-3368 (1)
64-83	(17-22)	3P-2044 (2) 8T-1589 (1)	111-2372 (1) 6V-3542 (1)	111-2371 (1)
83-114	(22-30)	3P-2044 (3) 8T-1589 (1)	3P-2044 (1)	9N-3718 (1)
114-163	(30-43)	3P-2044 (5)	3P-2044 (1) 6V-3542 (1)	111-2371 (2)
163-242	(43-64)	3P-2044 (8)	3P-2044 (2)	9N-3718 (2)

** Normal maintenance period is 250 hrs. See your Operation and Maintenance Manual for complete coolant maintenance instructions.*

( ) Indicates quantity required.

ADDITIFS POUR LIQUIDE DE REFROIDISSEMENT

AVANTAGES POUR LE CLIENT

L'additif protège contre la cavitation, la mousse, l'érosion, la corrosion et l'accumulation de dépôts dans le circuit de refroidissement.

- L'additif complémentaire fournit une quantité mesurée d'additif.

DESCRIPTION:

Les additifs s'épuisent pendant l'utilisation du moteur. C'est pourquoi l'on doit ajouter de l'additif au liquide de refroidissement/antigel pour moteurs diesel à intervalles réguliers. En plus, si l'on n'utilise pas de l'antigel entièrement formulé et pré-chargé comme le liquide de refroidissement/antigel Caterpillar pour moteurs diesel, une quantité initiale d'additif doit être ajoutée au circuit de refroidissement. La quantité d'additif à ajouter au circuit dépend de la contenance du circuit.

L'additif pour le remplissage initial est fourni sous forme liquide. L'additif pour l'entretien ultérieur est disponible sous forme liquide et sous forme d'élément à visser. (Il n'y a pas d'élément à visser pour les moteurs de la famille 3600).

NOTA:

La quantité d'additif à ajouter au remplissage initial diffère de la quantité à ajouter aux intervalles d'entretien.

Les éléments d'additif peuvent être utilisés avec tout antigel de type éthylène ou propylène-glycol conforme à la norme ASTM D4985 ou ASTM D5345.

NOTA:

A utiliser uniquement avec du liquide de refroidissement pour moteurs diesel et non avec le liquide de refroidissement longue durée.

PIÈCES NÉCESSAIRES:

Contenance du circuit de refroidissement		Additif liquide au remplissage initial	Additif liquide aux intervalles d'entretien*	Elément d'additif à visser aux intervalles d'entretien*
Litres	Gallons U.S.			
22-30	(6-8)	3P-2044 (1)	6V-3542 (1)	111-2370 (1)
30-38	(8-10)	3P-2044 (1) 6V-3542 (1)	111-2372 (1)	111-2369 (1)
38-49	(10-13)	3P-2044 (1) 8T-1589 (1)	111-2372 (1)	111-2369 (1)
49-64	(13-17)	3P-2044 (2)	8T-1589 (1)	9N-3368 (1)
64-83	(17-22)	3P-2044 (2) 8T-1589 (1)	111-2372 (1) 6V-3542 (1)	111-2371 (1)
83-114	(22-30)	3P-2044 (3) 8T-1589 (1)	3P-2044 (1)	9N-3718 (1)
114-163	(30-43)	3P-2044 (5)	3P-2044 (1) 6V-3542 (1)	111-2371 (2)
163-242	(43-64)	3P-2044 (8)	3P-2044 (2)	9N-3718 (2)

** L'intervalle d'entretien normal est de 250 heures-service. Voir le Guide d'utilisation et d'entretien pour de plus amples renseignements concernant l'entretien du circuit de refroidissement.*

( ) Indique la quantité exigée.

ADITIVOS DE REFRIGERANTE SUPLEMENTARIOS

VENTAJAS PARA EL USUARIO:

Protegen contra la cavitación, la formación de espuma, la corrosión y la acumulación de escamas en los sistemas de enfriamiento.

- Suministra un acondicionador dosificado de refrigerante.

DESCRIPCIÓN:

Los aditivos en el refrigerante se agotan con la operación normal. Por esta razón, se debe agregar Aditivo de refrigerante suplementario (SCA) a todos los refrigerantes para servicio pesado, a intervalos regulares. Además, cuando no se usa un anticongelante de precarga completo, tal como el DEAC de Caterpillar, es necesario agregar una cantidad de aditivo de refrigerante suplementario inicial al sistema de enfriamiento. La cantidad de aditivo que se debe agregar depende de la capacidad del sistema.

El SCA de llenado inicial es líquido. El que se usa para el mantenimiento está disponible tanto en líquido como en un elemento enroscable. (No hay elemento enroscable disponible para la Familia de Motores 3600).

NOTA:

La cantidad de aditivo de llenado inicial no es la misma que se agrega en los intervalos de mantenimiento.

Los elementos de aditivo de refrigerante se pueden usar con cualquier anticongelante de tipo glicol etilénico o propílico que esté de acuerdo con las especificaciones de las normas ASTM D4985 o ASTM D5345.

NOTA:

Se debe utilizar únicamente con refrigerante estándar para servicio pesado; no se debe usar con Refrigerante de Larga Duración.

PIEZAS NECESARIAS:

Capacidad del Sistema de Enfriamiento		SCA líquido de llenado inicial	SCA líquido de mantenimiento*	Elemento de mantenimiento enroscable*
litros	gal EE.UU.			
22-30	6-8	3P-2044 (1)	6V-3542 (1)	111-2370 (1)
30-38	8-10	3P-2044 (1) 6V-3542 (1)	111-2372 (1)	111-2369 (1)
38-49	10-13	3P-2044 (1) 8T-1589 (1)	111-2372 (1)	111-2369 (1)
49-64	13-17	3P-2044 (2)	8T-1589 (1)	9N-3368 (1)
64-83	17-22	3P-2044 (2) 8T-1589 (1)	111-2372 (1) 6V-3542 (1)	111-2371 (1)
83-114	22-30	3P-2044 (3) 8T-1589 (1)	3P-2044 (1)	9N-3718 (1)
114-163	30-43	3P-2044 (5)	3P-2044 (1) 6V-3542 (1)	111-2371 (2)
163-242	43-64	3P-2044 (8)	3P-2044 (2)	9N-3718 (2)

** El período normal de mantenimiento es de 250 horas. Para ver las instrucciones completas sobre el mantenimiento del refrigerante, consulte el Manual de Operación y Mantenimiento.*

( ) Indica la cantidad necesaria.

ADITIVOS SUPLEMENTARES DO LÍQUIDO ARREFECEDOR

BENEFÍCIOS PARA O CLIENTE:

Protege contra cavitação, espuma, erosão, corrosão e acúmulo de crostas nos sistemas de arrefecimento.

- Fornece uma quantidade pré-determinada de condicionador de arrefecimento.

DESCRIÇÃO:

Com a operação normal, os aditivos se esgotam do líquido arrefecedor. Por isso, Aditivos Suplementares do Líquido Arrefecedor (SCA) devem ser acrescentados a todos os líquidos arrefecedores para serviço pesado em intervalos regulares. Além disso, quando um anticongelante pré-carregado, totalmente formulado não for usado, como o DEAC Caterpillar, uma carga inicial de SCA deve ser acrescentada ao sistema de arrefecimento. A quantidade de SCA acrescentada ao sistema depende da capacidade do sistema.

O SCA para abastecimento inicial é fornecido em forma de líquido. Os aditivos suplementares (SCA) para intervalos de manutenção estão à disposição em forma líquida e como um elemento com roscas. (Exceto os Motores da Família 3600)

NOTA:

A quantidade de SCA adicionada no abastecimento inicial não é a mesma que a acrescentada nos intervalos de manutenção.

Os elementos do aditivo do líquido arrefecedor podem ser usados com qualquer tipo de anticongelante etileno ou propileno que satisfaz as Especificações ASTM D4985 ou ASTM D5345.

NOTA:

Para uso apenas com líquido arrefecedor para serviço pesado padrão, não deve ser usado com Líquido Arrefecedor de Vida Longa.

PEÇAS NECESSÁRIAS:

Capacidade do Sistema de Arrefecimento		Líquido SCA Durante Abastecimento Inicial	Líquido SCA Durante Manutenção*	Elemento de Manutenção de SCA com Roscas*
Litros	Galões			
22-30	6-8	3P-2044 (1)	6V-3542 (1)	111-2370 (1)
30-38	8-10	3P-2044 (1) 6V-3542 (1)	111-2372 (1)	111-2369 (1)
38-49	10-13	3P-2044 (1) 8T-1589 (1)	111-2372 (1)	111-2369 (1)
49-64	13-17	3P-2044 (2)	8T-1589 (1)	9N-3368 (1)
64-83	17-22	3P-2044 (2) 8T-1589 (1)	111-2372 (1) 6V-3542 (1)	111-2371 (1)
83-114	22-30	3P-2044 (3) 8T-1589 (1)	3P-2044 (1)	9N-3718 (1)
114-163	30-43	3P-2044 (5)	3P-2044 (1) 6V-3542 (1)	111-2371 (2)
163-242	43-64	3P-2044 (8)	3P-2044 (2)	9N-3718 (2)

** O período normal de manutenção é de 250 horas. Consulte o Manual de Operação e Manutenção para obter instruções completas quanto à manutenção do líquido arrefecedor.*

( ) Indica a quantidade exigida.

KÜHLMITTELZUSATZ

VORTEILE FÜR DEN KUNDEN:

Schutz gegen Kavitation, Schaumbildung, Erosion, Korrosion und Kesselsteinbildung in Kühlsystemen.

- Richtig dosierter Kühlmittelzusatz

BESCHREIBUNG:

Additive erschöpfen sich während des Motorbetriebs. Deshalb muß allen HD-Kühlmitteln regelmäßig Kühlmittelzusatz beigefügt werden. Wenn bei Erstfüllung kein vollwertiges Fertigkühlmittel, wie das Frostschutz- und Kühlmittel für Dieselmotoren von Caterpiller (DEAC), verwendet wird, muß bei Erstfüllung Kühlmittelzusatz beigefügt werden. Wieviel Kühlmittelzusatz beigefügt werden muß, hängt vom Inhalt des Kühlsystems ab.

Für Erstfüllung ist Kühlmittelzusatz nur in flüssiger Form erhältlich. Für Wartungsintervalle ist Kühlmittelzusatz in flüssiger Form und als Zusatzelement erhältlich. (Für die Motorbaureihe 3600 sind keine Zusatzelemente erhältlich.)

ANMERKUNG:

Die Kühlmittelmenge bei Erstfüllung ist nicht die gleiche Menge, die bei Wartungsintervallen beigefügt werden muß.

Die Kühlmittelzusatzelemente können mit allen Frostschutzmitteln auf Ethylen- oder Propylenglykolbasis verwendet werden, die den Standards nach ASTM D4985 oder ASTM D5345 entsprechen.

ANMERKUNG:

Den Kühlmittelzusatz nicht mit Langzeitkühlmittel (ELC) von Caterpillar verwenden. Der Kühlmittelzusatz ist nur für HD-Kühlmittel bestimmt.

TEILEBEZEICHNUNG:

Kühlsysteminhalt		Kühlmittelzusatz bei Erstfüllung	Flüssiger Kühlmittelzusatz bei Wartung*	Kühlmittelzusatzelement bei Wartung*
Liter	US-Gall.			
22-30	(6-8)	3P-2044 (1)	6V-3542 (1)	111-2370 (1)
30-38	(8-10)	3P-2044 (1) 6V-3542 (1)	111-2372 (1)	111-2369 (1)
38-49	(10-13)	3P-2044 (1) 8T-1589 (1)	111-2372 (1)	111-2369 (1)
49-64	(13-17)	3P-2044 (2)	8T-1589 (1)	9N-3368 (1)
64-83	(17-22)	3P-2044 (2) 8T-1589 (1)	111-2372 (1) 6V-3542 (1)	111-2371 (1)
83-114	(22-30)	3P-2044 (3) 8T-1589 (1)	3P-2044 (1)	9N-3718 (1)
114-163	(30-43)	3P-2044 (5)	3P-2044 (1) 6V-3542 (1)	111-2371 (2)
163-242	(43-64)	3P-2044 (8)	3P-2044 (2)	9N-3718 (2)

** Der normale Wartungsintervall beträgt 250 Betriebsstunden. Für vollständige Anweisungen zur Wartung des Kühlsystems, siehe Betriebs- und Wartungshandbuch.*

( ) Erforderliche Anzahl

MAINTENANCE PARTS

DESCRIPTION	PART NUMBER	QTY	WHERE USED	PAGE
AIR INLET AND EXHAUST SYSTEM				
FILTER ELEMENT AS-AIR (PRIMARY)	6I-2509	1	AIR CLEANER GP	156
FILTER ELEMENT AS-AIR (SECONDARY)	6I-2510	1	AIR CLEANER GP	156
INDICATOR GP-AIR FILTER CHANGE	7W-7417	4	INDICATOR GP-AIR FILTER CHANGE	160
SCREEN-AIR CLEANER INLET	7M-1674	4	AIR CLEANER GP	157
BASIC ENGINE				
BELT (ALTERNATOR)	178-6402	2	MOUNTING GP-ALTERNATOR	59
PLUG-DRAIN	2A-5220	6	HOUSING GP-FRONT	54
PLUG-OIL DRAIN (OIL PAN)	4B-2363	1	PAN GP-OIL	61
	6I-0723	1	PAN GP-OIL	61
SEAL	208-2362	16	COVER GP-CYLINDER BLOCK	14
	208-2363	16	COVER GP-CYLINDER BLOCK	14
SEAL (VALVE COVER)	208-2364	1	COVER GP-VALVE MECHANISM	19
V-BELT SET (INCLUDES 6-BELTS) (FAN)	102-9928	1	DRIVE GP-FAN	38
COOLING SYSTEM				
CAP-RADIATOR (7-PSI)	6L-8617	2	RADIATOR GP	146
FILTER (WATER PUMP)	4N-5834	2	PUMP GP-WATER	145
HOSE	068-4772	1	LINES GP-WATER	139
PLUG-DRAIN	6N-9590	2	LINES GP-COOLANT	119
REGULATOR-WATER TEMPERATURE (92-DEG C)	6I-4950	4	HOUSING & REGULATOR GP	118
SEAL-LIP TYPE (REGULATOR HOUSING)	3S-9643	4	HOUSING & REGULATOR GP	118

MAINTENANCE PARTS

DESCRIPTION	PART NUMBER	QTY	WHERE USED	PAGE
ELECTRICAL AND STARTING SYSTEM				
BATTERY	101-4000	2	BATTERY GP	199
BATTERY GP (24-VOLT)	167-8984	1	INSTALLATION GP-GRADE CONTROL	233
		1	WIRING GP-MACHINE	351
BATTERY (12 VOLT)	101-4000	4	BATTERY GP	200
BELT-DRIVE (WARNING BEACON)	9X-8139	1	LAMP GP-WARNING BEACON	243
CIRCUIT BREAKER AS (10-AMPERE) (KEY SWITCH)	6T-3642	1	WIRING GP-MONITOR	355
CIRCUIT BREAKER AS (10-AMPERE) (RUNNING LIGHTS)	9G-9882	1	WIRING GP-MONITOR	355
CIRCUIT BREAKER AS (105-AMPERE) (MAIN)	171-2212	1	WIRING GP-MONITOR	354
CIRCUIT BREAKER AS (15-AMPERE) (ENGINE ECM)	6T-3643	1	WIRING GP-MONITOR	353
CIRCUIT BREAKER AS (80-AMPERE) (ALTERNATOR NO. 1)	171-2210	1	WIRING GP-MONITOR	354
CIRCUIT BREAKER AS (80-AMPERE) (ALTERNATOR NO. 2)	171-2210	1	WIRING GP-MONITOR	354
CIRCUIT BREAKER AS (80-AMPERE) (PRELUBRICATION)	171-2210	1	WIRING GP-MONITOR	354
ELEMENT AS-ENGINE OIL HEATER	9X-9753	2	HEATER GP-ENGINE OIL	226
ELEMENT AS-JACKET WATER HEATER	9X-1292	4	HEATER GP-JACKET WATER	229
FUSE (10-AMPERE)	9W-1442	23	WIRING GP-MONITOR	353
FUSE (15-AMPERE)	5N-5534	6	WIRING GP-HEATER	338
	9W-1441	9	WIRING GP-MONITOR	353
KEY (BATTERY DISCONNECT)(STARTER)	8H-5306	1	SWITCH GP-DISCONNECT	300
LAMP AS (AMBER, LED, 24-VOLT) (TRANSMISSION LOCKOUT INDICATOR)	250-2298	1	WIRING GP-REAR	374
LAMP AS-FLOOD (24-VOLT, 70-WATT)	213-4998	1	LAMP GP-FLOOD	241
LAMP-HALOGEN (24-VOLT, 65-WATT)	9X-3463	1	LAMP GP-FLOOD	238
		1	LAMP GP-FLOOD	237
LAMP-HALOGEN (24-VOLT, 65-WATT) (FLOODLIGHT)	9X-3463	1	LAMP GP-FLOOD	240
LAMP-INTERIOR (24-VOLT)	8Y-6335	1	WIRING GP-CAB	309
LAMP (12-VOLT, 24-VOLT, 35-WATT)	209-6638	1	LAMP GP-FLOOD	239
LAMP (24-VOLT)	7N-9943	1	LAMP GP-DOME	236
	110-2079	11	WIRING GP-CAB	309
	163-1884	1	WIRING GP-OIL RENEWAL SYSTEM	360
LAMP (24-VOLT, RED)	163-1882	1	WIRING GP-CAB	310
LAMP (24-VOLT, YELLOW)	163-1883	3	WIRING GP-CAB	310
LAMP (24-VOLT, 70-WATT)	9X-7849	1	LAMP GP-WARNING BEACON	243
LENS AS (FLOODLIGHT)	158-0248	1	LAMP GP-FLOOD	237
		1	LAMP GP-FLOOD	238
PADLOCK GP	246-2641	2	WIRING GP-REAR	374
FRAME AND BODY				
BREATHER (LUBRICATION PUMP)	9T-1119	1	PUMP GP-LUBRICATION	587
CAP-FILLER	5K-1568	1	PUMP GP-LUBRICATION	586
PADLOCK GP	246-2641	2	BUMPER & DRAWBAR AR	501
		2	BUMPER & DRAWBAR AR	502
		1	HOOD & GUARD GP	541

MAINTENANCE PARTS

DESCRIPTION	PART NUMBER	QTY	WHERE USED	PAGE
FUEL SYSTEM				
CAP AS-FILLER (FUEL TANK)	7X-7700	1	TANK GP-FUEL	190
		1	TANK GP-FUEL	191
FILTER AS-FUEL	1R-0750	1	PUMP GP-FUEL PRM & PRIM FILTER	187
	1R-0755	2	FILTER GP-FUEL	173
FILTER ELEMENT AS-FUEL (PRIMARY)	9M-2342	1	FILTER GP-PRIMARY FUEL	175
SEAL-RING (PRIMARY FUEL FILTER)	8H-2778	1	FILTER GP-PRIMARY FUEL	175
STRAINER-FUEL	9P-7121	1	TANK GP-FUEL	190
		1	TANK GP-FUEL	191
HYDRAULIC SYSTEM				
BREATHER	9T-1119	2	TANK & MTG GP-HYDRAULIC	847
CAP-FILLER	4J-3754	1	TANK GP-HYDRAULIC	852
	7H-1447	1	TANK GP-HYDRAULIC	855
	118-0165	1	FILLER GP-HYDRAULIC OIL	767
CAP-FILLER (HYDRAULIC OIL)	7H-1447	1	FILLER GP-HYDRAULIC OIL	767
FILTER ELEMENT (PUMP DRIVE)	1G-8878	1	FILTER GP-OIL	771
PLUG-DRAIN	9J-7031	1	TANK GP-HYDRAULIC	852
		1	TANK GP-HYDRAULIC	855
PLUG-OIL DRAIN	109-5839	1	LINES GP-DRAIN	784
SCREEN AS (HYDRAULIC TANK)	9T-9227	2	TANK GP-HYDRAULIC	852
		5	TANK GP-HYDRAULIC	857
SCREEN GP	7J-2656	4	TANK GP-HYDRAULIC	852
		1	TANK GP-HYDRAULIC	857
STRAINER AS	3D-6678	1	TANK GP-HYDRAULIC	852
	5J-7438	1	FILLER GP-HYDRAULIC OIL	767
STRAINER (FILLER)	9J-3047	1	TANK GP-HYDRAULIC	855
LUBRICATION SYSTEM				
BREATHER AS (CRANKCASE)	4W-3027	4	BREATHER GP	72
		4	BREATHER GP	73
BREATHER AS (ENGINE OIL METERING TANK)	9G-5127	1	TANK GP-ENGINE OIL	109
CAP AS (ENGINE OIL FILL) (ENGINE)	133-5946	1	FILLER GP-ENGINE OIL	74
CAP-FILLER	118-0165	1	OIL CHANGE GP-HIGH SPEED	91
CAP-FILLER (ENGINE OIL METERING TANK)	6G-9333	1	TANK GP-ENGINE OIL	109
FILTER AS-ENGINE OIL	2P-4005	4	FILTER GP-ENGINE OIL	75
PADLOCK GP (ENGINE OIL FILL TUBE)	5P-8502	1	GAUGE GP-OIL LEVEL (DIPSTICK)	78
PADLOCK GP (ENGINE OIL FILLER)	5P-8502	1	FILLER GP-ENGINE OIL	74
SCREEN-SCAVENGE (FRONT SUMP PUMP)	4P-4917	1	PUMP GP-SCAVENGE	103
	4P-5500	1	PUMP GP-SCAVENGE	103
SEAL (BREATHER COVER)	208-2364	4	BREATHER GP	72
SEAL (COVER, VALVE MECHANISM)	208-2364	4	BREATHER GP	73

MAINTENANCE PARTS

DESCRIPTION	PART NUMBER	QTY	WHERE USED	PAGE
OPERATOR STATION				
BATTERY GP-ELECTRONIC CONTROL (ROAD ANALYSIS/VIMS MAIN MODULE)	143-8480	1	CONTROL GP-UNPRGMED MONITOR	971
BELT-SERPENTINE (REFRIGERANT COMPRESSOR)	186-4195	1	COMPRESSOR & MTG GP-REFRIG	966
BLADE AS-WIPER	6V-7419	2	WIPER GP-WINDOW	1073
BLADE AS-WIPER (FRONT)	6V-5851	1	WIPER & WASHER GP-WINDOW	1070
	6V-7419	1	WIPER & WASHER GP-WINDOW	1070
CAP-VENTED (WINDOW WASHER)	8E-8292	1	WASHER GP-WINDOW	1069
FILTER-CAB AIR	9X-8216	1	FILTER GP-CAB AIR	982
		1	LINER GP-CAB	996
PADLOCK GP	246-2641	1	PLATFORM AR	1035
SCREEN-FILTER	8T-5913	4	WASHER GP-WINDOW	1069
SEAT BELT GP	222-0345	1	SEAT GP	1051
POWER TRAIN				
BREATHER	4H-6112	1	FILLER GP-POWER TRAIN OIL	413
CAP-OIL FILLER	6L-7527	1	FILLER GP-POWER TRAIN OIL	413
CAP-VALVE (STEM)	9K-7951	1	MOUNTING GP-RIM	440
		1	MOUNTING GP-RIM	441
CUP-DUST	168-1917	1	SLIP JOINT GP	473
FILTER ELEMENT AS-OIL (POWER TRAIN)	132-8876	1	FILTER GP-OIL	418
		2	FILTER GP-OIL	420
KEY-SQUARE	4E-8560	2	CONTROL GP-STIC LOCKOUT	393
PLUG	6B-5262	1	TORQUE CONVERTER & HOUSING GP	477
PLUG-MAGNETIC	5P-4484	1	AXLE GP-FIXED	384
		1	AXLE GP-OSCILLATING	385
	6V-0439	1	WHEEL GP-FINAL DRIVE & BRAKE	499
	8M-3837	1	DRIVE GP-PUMP	409
SCREEN-SUCTION	3S-3875	3	GEAR GP-OUTPUT TRANSFER	425
STEERING SYSTEM				
FILTER AS-OIL (HYDRAULIC, HIGH EFFICIENCY)	126-1817	1	FILTER GP-OIL	675
FILTER ELEMENT AS-OIL (STEERING, BRAKE)	132-8876	2	FILTER GP-OIL	673
SCREEN AS	6J-3795	1	FILTER GP-OIL	673
	104-3895	1	SCREEN GP-HIGH PRESSURE	711
SEAL-O-RING	6V-5324	1	VALVE GP-SHUTTLE	738

PIÈCES DE RECHANGE

DESCRIPTION	NUMÉRO DE PIECÈS	QTÉ	DOMAINE D'APPLICATION	PAGE
CHÂSSIS ET BENNE				
BOUCHON DE GOULOTTE DE REMPLISSAGE	5K-1568	1	POMPE DE GRAISSAGE (ASS)	586
CADENAS (ASS)	246-2641	1	CAPOT ET PROTECTION (ASS)	541
		2	PARE-CHOCS ET BARRE D'ATTELAGE (VERSION)	501
		2	PARE-CHOCS ET BARRE D'ATTELAGE (VERSION)	502
RENIFLARD (POMPE DE GRAISSAGE)	9T-1119	1	POMPE DE GRAISSAGE (ASS)	587
CIRCUIT D'ADMISSION D'AIR ET D'ÉCHAPPEMENT				
ÉLÉMENT DE FILTRE À AIR (ENS) (PRINCIPAL)	6I-2509	1	FILTRE A AIR (ASS)	156
ÉLÉMENT DE FILTRE À AIR (ENS) (SECONDAIRE)	6I-2510	1	FILTRE A AIR (ASS)	156
FILTRE À AIR D'ADMISSION	7M-1674	4	FILTRE A AIR (ASS)	157
INDICATEUR DE COLMATAGE DE FILTRE À AIR (ASS)	7W-7417	4	INDICATEUR DE COLMATAGE DE FILTRE À AIR (ASS)	160
CIRCUIT DE CARBURANT				
BOUCHON DE GOULOTTE DE REMPLISSAGE (ENS) (RÉSERVOIR DE CARBURANT)	7X-7700	1	RÉSERVOIR DE CARBURANT (ASS)	190
		1	RÉSERVOIR DE CARBURANT (ASS)	191
ÉLÉMENT DE FILTRE (ENS)-CARBURANT (PRINCIPAL)	9M-2342	1	FILTRE À CARBURANT PRINCIPAL (ASS)	175
FILTRE À CARBURANT	9P-7121	1	RÉSERVOIR DE CARBURANT (ASS)	190
		1	RÉSERVOIR DE CARBURANT (ASS)	191
FILTRE A CARBURANT (ENS)	1R-0750	1	POMPE D'AMORÇAGE DE CARBURANT ET FILTRE PRINCIPAL	187
	1R-0755	2	FILTRE A CARBURANT (ASS)	173
SEGMENT D'ÉTANCHÉITÉ (FILTRE À CARBURANT PRINCIPAL)	8H-2778	1	FILTRE À CARBURANT PRINCIPAL (ASS)	175
CIRCUIT DE DIRECTION				
ÉCRAN (ENS)	6J-3795	1	FILTRE A HUILE (ASS)	673
	104-3895	1	FILTRE HAUTE PRESSION (ASS)	711
ÉLÉMENT DE FILTRE À HUILE (ENS) (DIRECTION, FREIN)	132-8876	2	FILTRE A HUILE (ASS)	673
FILTRE À HUILE (ENS) (HYDRAULIQUE, GRANDE EFFICACITÉ)	126-1817	1	FILTRE A HUILE (ASS)	675
JOINT TORIQUE	6V-5324	1	VANNE PILOTE (ASS)	738

* TRADUCTION NON DISPONIBLE AU MOMENT DE LA PUBLICATION

PIÈCES DE RECHANGE

DESCRIPTION	NUMÉRO DE PIECÈS	QTÉ	DOMAINE D'APPLICATION	PAGE
CIRCUIT DE GRAISSAGE				
BOUCHON DE GOULOTTE DE REMPLISSAGE	118-0165	1	DISPOSITIF DE VIDANGE RAPIDE D'HUILE (ASS)	91
BOUCHON DE GOULOTTE DE REMPLISSAGE (RÉSERVOIR DE RÉGULATION D'HUILE MOTEUR)	6G-9333	1	RÉSERVOIR D'HUILE MOTEUR (ASS)	109
BOURRELET D'ÉTANCHÉITÉ (COUVERCLE DE RENIFLARD)	208-2364	4	RENIFLARD (ASS)	72
BOURRELET D'ÉTANCHÉITÉ (*COVER, VALVE MECHANISM)	208-2364	4	RENIFLARD (ASS)	73
CADENAS (ASS) (GOULOTTE DE REMPLISSAGE D'HUILE MOTEUR)	5P-8502	1	BOUCHON DE REMPLISSAGE D'HUILE MOTEUR (ASS)	74
CADENAS (ASS) (GOULOTTTE DE REMPLISSAGE D'HUILE MOTEUR)	5P-8502	1	JAUGE D'HUILE MOTEUR (BAIONNETTE) (ASS)	78
CHAPEAU (ENS) (*ENGINE OIL FILL) (MOTEUR)	133-5946	1	BOUCHON DE REMPLISSAGE D'HUILE MOTEUR (ASS)	74
ÉCRAN - REPRISE (POMPE DE CARTER AVANT)	4P-4917	1	POMPE DE REPRISE (ASS)	103
	4P-5500	1	POMPE DE REPRISE (ASS)	103
FILTRE A HUILE MOTEUR (ENS)	2P-4005	4	FILTRE À HUILE MOTEUR (ASS)	75
RENIFLARD (ENS) (RÉSERVOIR DE RÉGULATION D'HUILE MOTEUR)	9G-5127	1	RÉSERVOIR D'HUILE MOTEUR (ASS)	109
RENIFLARD (ENS) (VILEBREQUIN)	4W-3027	4	RENIFLARD (ASS)	72
		4	RENIFLARD (ASS)	73
CIRCUIT DE REFROIDISSEMENT				
BOUCHON DE VIDANGE	6N-9590	2	CANALISATIONS DE LIQUIDE DE REFROIDISSEMENT (ASS)	119
CHAPEAU - RADIATEUR (7-PSI)	6L-8617	2	RADIATEUR (ASS)	146
FILTRE (POMPE À EAU)	4N-5834	2	POMPE A EAU (ASS)	145
FLEXIBLE	068-4772	1	CANALISATIONS D'EAU (ASS)	139
THERMOSTAT-TEMPÉRATURE D'EAU (92-DEG C)	6I-4950	4	THERMOSTAT ET BOITIER (ASS)	118
TYPE LÈVRE À JOINT (CARTER DE RÉGULATEUR)	3S-9643	4	THERMOSTAT ET BOITIER (ASS)	118
CIRCUIT ELECTRIQUE ET DE DEMARRAGE				
AMPOULE (12V, 24V, 35W)	209-6638	1	LAMPE - PHARE (ASS)	239
AMPOULE (24 VOLTS)	110-2079	11	CABLAGE DE CABINE (ASS)	309
	163-1884	1	CÂBLAGE DE CIRCUIT DE RENOUVELLEMENT D'HUILE (ASS)	360
	7N-9943	1	PLAFONNIER (ASS)	236
AMPOULE (24-VOLTS, ROUGE)	163-1882	1	CABLAGE DE CABINE (ASS)	310
AMPOULE (24V, JAUNE)	163-1883	3	CABLAGE DE CABINE (ASS)	310
AMPOULE (24V, 70W)	9X-7849	1	LAMPE - GYROPHARE (ASS)	243
BATTERIE	101-4000	2	BATTERIE (ASS)	199
BATTERIE (ASS) (24 VOLTS)	167-8984	1	CABLAGE DE LA MACHINE (ASS)	351
		1	MONTAGE DE COMMANDE DE PROFIL LONGITUDINAL (ASS)	233
BATTERIE (12 VOLTS)	101-4000	4	BATTERIE (ASS)	200
CADENAS (ASS)	246-2641	2	CABLAGE AR (ASS)	374

* TRADUCTION NON DISPONIBLE AU MOMENT DE LA PUBLICATION

PIÈCES DE RECHANGE

DESCRIPTION	NUMÉRO DE PIECÈS	QTÉ	DOMAINE D'APPLICATION	PAGE
CLÉ (DÉBRANCHEMENT DE BATTERIE)(DÉMARREUR)	8H-5306	1	ROBINET DE BATTERIE (ASS)	300
DISJONCTEUR (ENS) (10A) (FEUX DE ROUTE)	9G-9882	1	CABLAGE DU PANNEAU DE COMMANDE	355
DISJONCTEUR (ENS) (10A) (INTERRUPTEUR À CLÉ)	6T-3642	1	CABLAGE DU PANNEAU DE COMMANDE	355
DISJONCTEUR (ENS) (105A) (PRINCIPAL)	171-2212	1	CABLAGE DU PANNEAU DE COMMANDE	354
DISJONCTEUR (ENS) (15A) (MODULE DE COMMANDE MOTEUR)	6T-3643	1	CABLAGE DU PANNEAU DE COMMANDE	353
DISJONCTEUR (ENS) (80A) (ALTERNATEUR NO 1)	171-2210	1	CABLAGE DU PANNEAU DE COMMANDE	354
DISJONCTEUR (ENS) (80A) (ALTERNATEUR NO 2)	171-2210	1	CABLAGE DU PANNEAU DE COMMANDE	354
DISJONCTEUR (ENS) (80A) (PRÉGRAISSAGE)	171-2210	1	CABLAGE DU PANNEAU DE COMMANDE	354
*ELEMENT AS-ENGINE OIL HEATER	9X-9753	2	RÉCHAUFFEUR D'HUILE MOTEUR (ASS)	226
ÉLÉMENT DU RÉCHAUFFEUR D'EAU DES CHEMISES (ENS)	9X-1292	4	EAU DES CHEMISES - RECHAUFFEUR (ASS)	229
ENTRAÎNEMENT POUR COURROIE (GYROPHARE)	9X-8139	1	LAMPE - GYROPHARE (ASS)	243
FUSIBLE (10A)	9W-1442	23	CABLAGE DU PANNEAU DE COMMANDE	353
FUSIBLE (15A)	5N-5534	6	CABLAGE DU CHAUFFAGE DE CABINE (ASS)	338
	9W-1441	9	CABLAGE DU PANNEAU DE COMMANDE	353
LAMPE - PHARE (ENS) (24V, 70W)	213-4998	1	LAMPE - PHARE (ASS)	241
LAMPE (ENS) (*AMBER, LED, 24-VOLT) (TÉMOIN DE VERROUILLAGE DE TRANSMISSION)	250-2298	1	CABLAGE AR (ASS)	374
LAMPE HALOGÈNE (24V, 65W)	9X-3463	1	LAMPE - PHARE (ASS)	238
		1	LAMPE - PHARE (ASS)	237
LAMPE HALOGÈNE (24V, 65W) (PROJECTEUR)	9X-3463	1	LAMPE - PHARE (ASS)	240
LENTILLE (ENS) (PROJECTEUR)	158-0248	1	LAMPE - PHARE (ASS)	237
		1	LAMPE - PHARE (ASS)	238
PLAFONNIER (24 VOLTS)	8Y-6335	1	CABLAGE DE CABINE (ASS)	309

* TRADUCTION NON DISPONIBLE AU MOMENT DE LA PUBLICATION

PIÈCES DE RECHANGE

DESCRIPTION	NUMÉRO DE PIECÈS	QTÉ	DOMAINE D'APPLICATION	PAGE
CIRCUIT HYDRAULIQUE				
BOUCHON DE GOULOTTE DE REMPLISSAGE	4J-3754	1	RÉSERVOIR HYDRAULIQUE (ASS)	852
	7H-1447	1	RÉSERVOIR HYDRAULIQUE (ASS)	855
	118-0165	1	GOULOTTE DE REMPLISSAGE D'HUILE HYDRAULIQUE (ASS)	767
BOUCHON DE GOULOTTE DE REMPLISSAGE (HUILE HYDRAULIQUE)	7H-1447	1	GOULOTTE DE REMPLISSAGE D'HUILE HYDRAULIQUE (ASS)	767
BOUCHON DE VIDANGE	9J-7031	1	RÉSERVOIR HYDRAULIQUE (ASS)	852
		1	RÉSERVOIR HYDRAULIQUE (ASS)	855
BOUCHON DE VIDANGE D'HUILE	109-5839	1	CANALISATIONS DE VIDANGE (ASS)	784
CREPINE (ENS)	3D-6678	1	RÉSERVOIR HYDRAULIQUE (ASS)	852
	5J-7438	1	GOULOTTE DE REMPLISSAGE D'HUILE HYDRAULIQUE (ASS)	767
CREPINE (GOULOTTE DE REMPLISSAGE)	9J-3047	1	RÉSERVOIR HYDRAULIQUE (ASS)	855
ECRAN (ASS)	7J-2656	4	RÉSERVOIR HYDRAULIQUE (ASS)	852
		1	RÉSERVOIR HYDRAULIQUE (ASS)	857
ÉCRAN (ENS) (RÉSERVOIR HYDRAULIQUE)	9T-9227	2	RÉSERVOIR HYDRAULIQUE (ASS)	852
		5	RÉSERVOIR HYDRAULIQUE (ASS)	857
ÉLÉMENT DE FILTRE (ENTRAINEMENT DE POMPE)	1G-8878	1	FILTRE A HUILE (ASS)	771
RENIFLARD	9T-1119	2	RÉSERVOIR HYDRAULIQUE ET MONTAGE (ASS)	847
MOTEUR STANDARD				
BOUCHON DE VIDANGE	2A-5220	6	CARTER AV (ASS)	54
BOUCHON DE VIDANGE D'HUILE (CARTER D'HUILE)	4B-2363	1	HUILE MOTEUR - CARTER (ASS)	61
	6I-0723	1	HUILE MOTEUR - CARTER (ASS)	61
BOURRELET D'ÉTANCHÉITÉ	208-2362	16	BLOC-CYLINDRES - COUVERCLE (ASS)	14
	208-2363	16	BLOC-CYLINDRES - COUVERCLE (ASS)	14
BOURRELET D'ÉTANCHÉITÉ (CACHE-SOUPAPES)	208-2364	1	CACHE-SOUPAPES (ASS)	19
COURROIE (ALTERNATEUR)	178-6402	2	MONTAGE D'ALTERNATEUR (ASS)	59
JEU DE COURROIES TRAPEZOIDALES (COMPREND 6 COURROIES) (VENTILATEUR)	102-9928	1	ENTRAÎNEMENT DE VENTILATEUR (ASS)	38

* TRADUCTION NON DISPONIBLE AU MOMENT DE LA PUBLICATION

PIÈCES DE RECHANGE

DESCRIPTION	NUMÉRO DE PIECÈS	QTÉ	DOMAINE D'APPLICATION	PAGE
POSTE DE CONDUITE				
BALAI D'ESSUIE-GLACE (ENS)	6V-7419	2	ESSUIE-GLACE (ASS)	1073
BALAI D'ESSUIE-GLACE (ENS) (AVANT)	6V-5851	1	ESSUIE-GLACE ET LAVE-GLACE	1070
	6V-7419	1	ESSUIE-GLACE ET LAVE-GLACE	1070
BATTERIE-COMMANDE ÉLECTRONIQUE (ASS) (ANALYSE SUR ROUTES/ MODULE VIMS PRINCIPAL)	143-8480	1	COMMANDE DE MONITEUR NON PROGRAMMÉE (ASS)	971
BOUCHON À ÉVENT (LAVE-GLACE)	8E-8292	1	LAVE-GLACE - VITRE (ASS)	1069
CADENAS (ASS)	246-2641	1	PLATE-FORME (VERSION)	1035
CEINTURE DE SECURITE (ASS)	222-0345	1	SIÈGE (ASS)	1051
COURROIE MULTIPLE (COMPRESSEUR DE RÉFRIGÉRANT)	186-4195	1	COMPRESSEUR ET MONTAGE - RÉFRIGÉRANT (ASS)	966
FILTRE	8T-5913	4	LAVE-GLACE - VITRE (ASS)	1069
FILTRE À AIR DE CABINE	9X-8216	1	CABINE - REVÊTEMENT (ASS)	996
		1	FILTRE À AIR DE CABINE (ASS)	982
TRANSMISSION				
BOUCHON AIMANTÉ	5P-4484	1	ESSIEU FIXE	384
		1	ESSIEU OSCILLANT	385
	6V-0439	1	RÉDUCTEURS, ROUE ET FREIN (ASS)	499
	8M-3837	1	ENTRAÎNEMENT DE POMPE (ASS)	409
BOUCHON DE GOULOTTE DE REMPLISSAGE D'HUILE	6L-7527	1	GOULOTTE DE REMPLISSAGE D'HUILE DE TRANSMISSION	413
BOUCHON FILETÉ	6B-5262	1	CONVERTISSEUR DE COUPLE ET CARTER (ASS)	477
BOUCHON PARE-POUSSIÈRE	168-1917	1	CARDAN COULISSANT (ASS)	473
CHAPEAU DE VALVE (TIGE)	9K-7951	1	MONTAGE DE JANTE (ASS)	440
		1	MONTAGE DE JANTE (ASS)	441
CLÉ CARRÉE	4E-8560	2	VERROUILLAGE DE COMMANDE STIC	393
ÉLÉMENT DE FILTRE À HUILE (ENS) (TRANSMISSION)	132-8876	1	FILTRE A HUILE (ASS)	418
		2	FILTRE A HUILE (ASS)	420
RENIFLARD	4H-6112	1	GOULOTTE DE REMPLISSAGE D'HUILE DE TRANSMISSION	413
TAMIS D'ASPIRATION	3S-3875	3	ENGRENAGE DE TRANSFERT DE RENDEMENT (ASS)	425

* TRADUCTION NON DISPONIBLE AU MOMENT DE LA PUBLICATION

PIEZAS DE MANTENIMIENTO

DESCRIPCION	NUMERO DE PIEZA	CANT	SE UTILIZA EN	PAGINA
BASTIDOR Y CAJA				
CANDADO (GR)	246-2641	1	CAPO Y PROTECTOR (GR)	541
		2	PARAGOLPES Y BARRA DE TIRO (CONFIG)	501
		2	PARAGOLPES Y BARRA DE TIRO (CONFIG)	502
RESPIRADERO (BOMBA DE LUBRICACION)	9T-1119	1	BOMBA DE LUBRICACIÓN (GR)	587
TAPA DEL TUBO DE LLENADO	5K-1568	1	BOMBA DE LUBRICACIÓN (GR)	586
MOTOR BÁSICO				
CORREA (ALTERNADOR)	178-6402	2	MONTAJE DEL ALTERNADOR (GR)	59
JUEGO DE CORREAS TRAPEZOIDALES (INCLUYE 6-CORREAS) (VENTILADOR)	102-9928	1	IMPULSOR DE VENTILADOR (GR)	38
SELLO	208-2362	16	TAPA DEL BLOQUE MOTOR (GR)	14
	208-2363	16	TAPA DEL BLOQUE MOTOR (GR)	14
SELLO (TAPA DE VÁLVULA)	208-2364	1	TAPA DEL MECANISMO DE VÁLVULAS (GR)	19
TAPÓN DE DRENAJE	2A-5220	6	CAJA DELANTERA (GR)	54
TAPON DE DRENAJE DE ACEITE (COLECTOR DE ACEITE)	4B-2363	1	CÁRTER - COLECTOR DEL (GR)	61
	6I-0723	1	CÁRTER - COLECTOR DEL (GR)	61
PUESTO DEL OPERADOR				
BATERIA DE CONTROL ELECTRONICO (GR) (ANALISIS DE VÍA/MODULO PRINCIPAL VIMS)	143-8480	1	GRUPO DE CONTROL-MONITOR NO PROGRAMADO	971
CANDADO (GR)	246-2641	1	PLATAFORMA (CONFIG)	1035
CINTURÓN DE SEGURIDAD (GR)	222-0345	1	ASIENTO (GR)	1051
CORREA-SERPENTIN (COMPRESOR DEL REFRIGERANTE)	186-4195	1	COMPRESOR DE REFRIGERANTE Y GRUPO DE MONTAJE	966
FILTRO DE AIRE DE CABINA	9X-8216	1	FILTRO DE AIRE DE LA CABINA (GR)	982
		1	REVESTIMIENTO DE LA CABINA (GR)	996
HOJA DE LIMPIAPARABRISAS (CONJ)	6V-7419	2	LIMPIAPARABRISAS DE LA VENTANA (GR)	1073
HOJA DE LIMPIAPARABRISAS (CONJ) (DELANTERO)	6V-5851	1	LIMPIA Y LAVAPARABRISAS (GR)	1070
	6V-7419	1	LIMPIA Y LAVAPARABRISAS (GR)	1070
REJILLA DE FILTRO	8T-5913	4	LAVAPARABRISAS DE LA VENTANA (GR)	1069
TAPA CON RESPIRADERO (LIMPIAPARABRISAS)	8E-8292	1	LAVAPARABRISAS DE LA VENTANA (GR)	1069

* NO HAY TRADUCCION DISPONIBLE EN EL MOMENTO DE LA IMPRESION

PIEZAS DE MANTENIMIENTO

DESCRIPCION	NUMERO DE PIEZA	CANT	SE UTILIZA EN	PAGINA
SISTEMA DE AIRE DE ADMISIÓN Y ESCAPE				
ELEMENTO DEL FILTRO DE AIRE (CONJ) (PRIMARIO)	6I-2509	1	FILTRO DE AIRE (GR)	156
ELEMENTO DEL FILTRO DE AIRE (CONJ) (SECUNDARIO)	6I-2510	1	FILTRO DE AIRE (GR)	156
INDICADOR DE CAMBIO DE FILTRO DE ACEITE (GR)	7W-7417	4	INDICADOR DE CAMBIO DE FILTRO DE ACEITE (GR)	160
*SCREEN-AIR CLEANER INLET	7M-1674	4	FILTRO DE AIRE (GR)	157
SISTEMA DE COMBUSTIBLE				
COLADOR DE COMBUSTIBLE	9P-7121	1	COMBUSTIBLE - TANQUE DE (GR)	190
		1	COMBUSTIBLE - TANQUE DE (GR)	191
ELEMENTO DE FILTRO DE COMBUSTIBLE (CONJ) (PRIMARIO)	9M-2342	1	FILTRO PRIMARIO DE COMBUSTIBLE (GR)	175
FILTRO DE COMBUSTIBLE (CONJ)	1R-0750	1	BOMBA DE CEBADO Y FILTRO PRIMARIO DE COMBUSTIBLE (GR)	187
	1R-0755	2	FILTRO DE COMBUSTIBLE (GR)	173
SELLO ANULAR (FILTRO PRIMARIO DE COMBUSTIBLE)	8H-2778	1	FILTRO PRIMARIO DE COMBUSTIBLE (GR)	175
TAPA DE LLENADO (CONJ) (TANQUE DE COMBUSTIBLE)	7X-7700	1	COMBUSTIBLE - TANQUE DE (GR)	190
		1	COMBUSTIBLE - TANQUE DE (GR)	191
SISTEMA DE DIRECCIÓN				
ELEMENTO DE FILTRO DE ACEITE (CONJ) (*STEERING, BRAKE)	132-8876	2	FILTRO DE ACEITE (GR)	673
FILTRO DE ACEITE (CONJ) (HIDRAULICO, ALTA EFICIENCIA)	126-1817	1	FILTRO DE ACEITE (GR)	675
PANTALLA (CONJ)	6J-3795	1	FILTRO DE ACEITE (GR)	673
	104-3895	1	REJILLA DE ALTA PRESION (GR)	711
SELLO ANULAR	6V-5324	1	VÁLVULA DE LANZADERA (GR)	738
SISTEMA DE ENFRIAMIENTO				
FILTRO (BOMBA DE AGUA)	4N-5834	2	BOMBA DE AGUA (GR)	145
MANGUERA	068-4772	1	TUBERÍAS DEL AGUA (GR)	139
REGULADOR DE TEMPERATURA DEL AGUA (92 GRADOS CENTÍGRADOS)	6I-4950	4	REGULADOR Y CAJA (GR)	118
SELLO DE LABIO (CAJA DE REGULADOR)	3S-9643	4	REGULADOR Y CAJA (GR)	118
TAPA DEL RADIADOR (7 LB/PULG2)	6L-8617	2	RADIADOR (GR)	146
TAPÓN DE DRENAJE	6N-9590	2	REFRIGERANTE - TUBERÍAS DE (GR)	119

* NO HAY TRADUCCION DISPONIBLE EN EL MOMENTO DE LA IMPRESION

PIEZAS DE MANTENIMIENTO

DESCRIPCION	NUMERO DE PIEZA	CANT	SE UTILIZA EN	PAGINA
SISTEMA DE LUBRICACIÓN				
CANDADO (GR) (LLENADO DE ACEITE DE MOTOR)	5P-8502	1	TUBO DE LLENADO DE ACEITE (GR)	74
CANDADO (GR) (TUBERIA DE LLENADO DE ACITE DE MOTORN)	5P-8502	1	INDICADOR DEL NIVEL DE ACEITE (VARILLA) (GR)	78
FILTRO DE ACEITE DEL MOTOR (CONJ)	2P-4005	4	FILTRO DE ACEITE DEL MOTOR (GR)	75
REJILLA PARA BARRIDO (BOMBA DE SUMIDERO FRONTAL)	4P-4917	1	BOMBA DE BARRIDO (GR)	103
	4P-5500	1	BOMBA DE BARRIDO (GR)	103
RESPIRADERO (CONJ) (CÁRTER DEL MOTOR)	4W-3027	4	RESPIRADERO (GR)	72
		4	RESPIRADERO (GR)	73
RESPIRADERO (CONJ) (TANQUE DE DOSIFICACION DE ACEITE DE MOTOR)	9G-5127	1	GRUPO DE TANQUE, ACEITE DEL MOTOR	109
SELLO (*COVER, VALVE MECHANISM)	208-2364	4	RESPIRADERO (GR)	73
SELLO (TAPA DE RESPIRADERO)	208-2364	4	RESPIRADERO (GR)	72
TAPA DEL TUBO DE LLENADO	118-0165	1	CAMBIO RÁPIDO DE ACEITE (GR)	91
TAPA DEL TUBO DE LLENADO (TANQUE DE DOSIFICACION DE ACEITE DE MOTOR)	6G-9333	1	GRUPO DE TANQUE, ACEITE DEL MOTOR	109
TAPÓN (CONJ) (*ENGINE OIL FILL) (MOTOR)	133-5946	1	TUBO DE LLENADO DE ACEITE (GR)	74
SISTEMA ELECTRICO Y DE ARRANQUE				
BATERÍA	101-4000	2	BATERÍA (GR)	199
BATERÍA (GR) (24 VOLTIOS)	167-8984	1	CABLES DE LA MÁQUINA (GR)	351
		1	GRUPO DE INSTALACION, CONTROL DE GRADO	233
BATERÍA (12 VOLTIOS)	101-4000	4	BATERÍA (GR)	200
CANDADO (GR)	246-2641	2	CABLES POSTERIORES (GR)	374
CONFIGURACION DE LAMPARA DE REFLECTOR (24-VOLTIOS, 70-VATIOS)	213-4998	1	REFLECTOR (GR)	241
DISYUNTOR (CONJ) (10-AMPERIOS) (INTERRUPTOR DE LLAVE)	6T-3642	1	CABLES DEL TABLERO MONITOR (GR)	355
DISYUNTOR (CONJ) (10-AMPERIOS) (LUCES DE TRABAJO)	9G-9882	1	CABLES DEL TABLERO MONITOR (GR)	355
DISYUNTOR (CONJ) (105 AMPERIOS) (PRINCIPAL)	171-2212	1	CABLES DEL TABLERO MONITOR (GR)	354
DISYUNTOR (CONJ) (15 AMPERIOS) (ECM (MÓDULO DE CONTROL ELECTRÓNICO) DEL MOTOR)	6T-3643	1	CABLES DEL TABLERO MONITOR (GR)	353
DISYUNTOR (CONJ) (80 AMPERIOS) (*ALTERNATOR NO. 1)	171-2210	1	CABLES DEL TABLERO MONITOR (GR)	354
DISYUNTOR (CONJ) (80 AMPERIOS) (*ALTERNATOR NO. 2)	171-2210	1	CABLES DEL TABLERO MONITOR (GR)	354
DISYUNTOR (CONJ) (80 AMPERIOS) (PRELUBRICACION)	171-2210	1	CABLES DEL TABLERO MONITOR (GR)	354
*ELEMENT AS-ENGINE OIL HEATER	9X-9753	2	CALENTADOR DE ACEITE DE MOTOR (GR)	226
ELEMENTO DEL CALENTADOR DEL AGUA DE LAS CAMISAS	9X-1292	4	AGUA DE LAS CAMISAS - CALENTADOR DEL (GR)	229

* NO HAY TRADUCCION DISPONIBLE EN EL MOMENTO DE LA IMPRESION

PIEZAS DE MANTENIMIENTO

DESCRIPCION	NUMERO DE PIEZA	CANT	SE UTILIZA EN	PAGINA
FUSIBLE (10-AMPERIOS)	9W-1442	23	CABLES DEL TABLERO MONITOR (GR)	353
FUSIBLE (15 AMPERIOS)	5N-5534	6	CABLES DE CALEFACCIÓN (GR)	338
	9W-1441	9	CABLES DEL TABLERO MONITOR (GR)	353
LÁMPARA (CONJ) (*AMBER, LED, 24-VOLT) (*TRANSMISSION LOCKOUT INDICATOR)	250-2298	1	CABLES POSTERIORES (GR)	374
LÁMPARA (12 VOLTIOS, 24 VOLTIOS, 35 VATIOS)	209-6638	1	REFLECTOR (GR)	239
LÁMPARA (24 VOLTIOS)	7N-9943	1	LÁMPARA DEL TECHO (GR)	236
	110-2079	11	CABLES DE LA CABINA (GR)	309
	163-1884	1	*WIRING GP-OIL RENEWAL SYSTEM	360
LÁMPARA (24 VOLTIOS, AMARILLO)	163-1883	3	CABLES DE LA CABINA (GR)	310
LÁMPARA (24-VOLTIOS, ROJO)	163-1882	1	CABLES DE LA CABINA (GR)	310
LÁMPARA (24-VOLTIOS, 70-VATIOS)	9X-7849	1	LÁMPARA DE BALIZA DE ADVERTENCIA (GR)	243
LLAVE (DESCONEXIÓN DE BATERÍA)(ARRANQUE)	8H-5306	1	DISYUNTOR (GR)	300
LUCES DE ALÓGENO (24 VOLTIOS, 65 VATIOS)	9X-3463	1	REFLECTOR (GR)	237
		1	REFLECTOR (GR)	238
LUCES DE ALÓGENO (24 VOLTIOS, 65 VATIOS) (REFLECTOR)	9X-3463	1	REFLECTOR (GR)	240
LUZ INTERIOR (24 VOLTIOS)	8Y-6335	1	CABLES DE LA CABINA (GR)	309
MANDO DE CORREA (BALIZA DE ADVERTENCIA)	9X-8139	1	LÁMPARA DE BALIZA DE ADVERTENCIA (GR)	243
VIDRIO (CONJ) (REFLECTOR)	158-0248	1	REFLECTOR (GR)	237
		1	REFLECTOR (GR)	238

* NO HAY TRADUCCION DISPONIBLE EN EL MOMENTO DE LA IMPRESION

PIEZAS DE MANTENIMIENTO

DESCRIPCION	NUMERO DE PIEZA	CANT	SE UTILIZA EN	PAGINA
SISTEMA HIDRÁULICO				
COLADOR (CONJ)	3D-6678	1	TANQUE HIDRÁULICO (GR)	852
	5J-7438	1	TUBO DE LLENADO DE ACEITE HIDRÁULICO (GR)	767
COLADOR (ORIFICIO DE LLENADO)	9J-3047	1	TANQUE HIDRÁULICO (GR)	855
ELEMENTO DE FILTRO (MANDO DE LA BOMBA)	1G-8878	1	FILTRO DE ACEITE (GR)	771
PANTALLA (CONJ) (TANQUE HIDRAULICO)	9T-9227	2	TANQUE HIDRÁULICO (GR)	852
		5	TANQUE HIDRÁULICO (GR)	857
REJILLA (GR)	7J-2656	4	TANQUE HIDRÁULICO (GR)	852
		1	TANQUE HIDRÁULICO (GR)	857
RESPIRADERO	9T-1119	2	TANQUE HIDRÁULICO Y MONTAJE (GR)	847
TAPA DEL TUBO DE LLENADO	4J-3754	1	TANQUE HIDRÁULICO (GR)	852
	7H-1447	1	TANQUE HIDRÁULICO (GR)	855
	118-0165	1	TUBO DE LLENADO DE ACEITE HIDRÁULICO (GR)	767
TAPA DEL TUBO DE LLENADO (ACEITE HIDRÁULICO)	7H-1447	1	TUBO DE LLENADO DE ACEITE HIDRÁULICO (GR)	767
TAPÓN DE DRENAJE	9J-7031	1	TANQUE HIDRÁULICO (GR)	852
		1	TANQUE HIDRÁULICO (GR)	855
TAPON DE DRENAJE DE ACEITE	109-5839	1	TUBERÍAS DE DRENAJE (GR)	784
TREN DE FUERZA				
*CUP-DUST	168-1917	1	JUNTA DESLIZANTE (GR)	473
ELEMENTO DE FILTRO DE ACEITE (CONJ) (TREN DE FUERZA)	132-8876	1	FILTRO DE ACEITE (GR)	418
		2	FILTRO DE ACEITE (GR)	420
LLAVE-CUADRADA	4E-8560	2	TRABA DE LA PALANCA DE CONTROL (GR)	393
REJILLA DE SUCCIÓN	3S-3875	3	ENGRANAJE DE TRANSFERENCIA DE SALIDA	425
RESPIRADERO	4H-6112	1	TUBO DE LLENADO DE ACEITE DE LA TRANSMISIÓN (GR)	413
TAPA DEL TUBO DE LLENADO DE ACEITE	6L-7527	1	TUBO DE LLENADO DE ACEITE DE LA TRANSMISIÓN (GR)	413
TAPA (VASTAGO)	9K-7951	1	MONTAJE DE ARO	440
		1	MONTAJE DE ARO	441
TAPÓN	6B-5262	1	CONVERTIDOR DE PAR Y CAJA (GR)	477
TAPÓN MAGNÉTICO	5P-4484	1	EJE FIJO (GR)	384
		1	EJE OSCILANTE (GR)	385
	6V-0439	1	MANDOS FINALES, RUEDA Y FRENO (GR)	499
	8M-3837	1	MANDO DE BOMBA (GR)	409

* NO HAY TRADUCCION DISPONIBLE EN EL MOMENTO DE LA IMPRESION

PEÇAS DE MANUTENÇÃO

DESCRIÇÃO	NÚMERO DE PEÇA	QUANT	UTILIZADA EM	PÁGINA
CHASSI E CARROCERIA				
CADEADO	246-2641	1	CAPÔ E PROTETOR	541
		2	PÁRA-CHOQUE E BARRA DE TRAÇÃO	501
		2	PÁRA-CHOQUE E BARRA DE TRAÇÃO	502
RESPIRO (BOMBA DE LUBRIFICAÇÃO)	9T-1119	1	BOMBA DE LUBRIFICAÇÃO	587
TAMPA - BOCAL DE ENCHIMENTO	5K-1568	1	BOMBA DE LUBRIFICAÇÃO	586
ESTAÇÃO DO OPERADOR				
BATERIA - CONTROLE ELETRÔNICO (ANÁLISE NA ESTRADA - MÓDULO PRINCIPAL DO VIMS)	143-8480	1	CONTROLE-MONITOR NÃO PROGRAMADO	971
CADEADO	246-2641	1	PISO	1035
CINTO DE SEGURANÇA	222-0345	1	ASSENTO	1051
CORREIA- SERPENTINA (COMPRESSOR DO REFRIGERANTE)	186-4195	1	COMPRESSOR DE REFRIGERANTE E MONTAGEM	966
FILTRO DE AR DE CABINA	9X-8216	1	FILTRO - AR DA CABINE	982
		1	REVESTIMENTO DA CABINE	996
LÂMINA DO LIMPADOR DE PÁRA-BRISA	6V-7419	2	LIMPADOR DO VIDRO	1073
LÂMINA DO LIMPADOR DE PÁRA-BRISA (DIANTEIRO)	6V-5851	1	LIMPADOR E LAVADOR - JANELA	1070
	6V-7419	1	LIMPADOR E LAVADOR - JANELA	1070
TAMPA COM RESPIRO (LAVADOR DO VIDRO)	8E-8292	1	LAVADOR DO VIDRO	1069
TELA - FILTRO	8T-5913	4	LAVADOR DO VIDRO	1069
MOTOR BÁSICO				
BUJÃO - DRENAGEM DO ÓLEO (RESERVATÓRIO DE ÓLEO)	4B-2363	1	CÁRTER DO ÓLEO DO MOTOR	61
	6I-0723	1	CÁRTER DO ÓLEO DO MOTOR	61
BUJÃO DO DRENO	2A-5220	6	CAIXA DIANTEIRA	54
CORREIA (ALTERNADOR)	178-6402	2	MONTAGEM - ALTERNADOR	59
JOGO DE CORREIAS EM V (INCLUI 6 CORREIAS) (VENTILADOR)	102-9928	1	COMANDO DO VENTILADOR	38
RETENTOR	208-2362	16	TAMPA - BLOCO DO MOTOR	14
	208-2363	16	TAMPA - BLOCO DO MOTOR	14
RETENTOR (MECANISMO DAS VÁLVULAS - TAMPA)	208-2364	1	TAMPA - MECANISMO DAS VÁLVULAS	19
SISTEMA DA ADMISSÃO DE AR E DE ESCAPE				
ELEMENTO DO FILTRO DE AR (PRIMÁRIO)	6I-2509	1	PURIFICADOR DE AR	156
ELEMENTO DO FILTRO DE AR (SECUNDÁRIO)	6I-2510	1	PURIFICADOR DE AR	156
INDICADOR - TROCA DO FILTRO DE AR	7W-7417	4	INDICADOR - TROCA DO FILTRO DE AR	160
TELA-ADMISSÃO DO PURIFICADOR DE AR	7M-1674	4	PURIFICADOR DE AR	157

* TRADUÇÃO NÃO DISPONÍVEL NO MOMENTO DA IMPRESSÃO

PEÇAS DE MANUTENÇÃO

DESCRIÇÃO	NÚMERO DE PEÇA	QUANT	UTILIZADA EM	PÁGINA
SISTEMA DE ARREFECIMENTO				
BUJÃO DO DRENO	6N-9590	2	TUBOS - SISTEMA DE ARREFECIMENTO	119
FILTRO (BOMBA D'ÁGUA)	4N-5834	2	BOMBA DE ÁGUA	145
MANGUEIRA	068-4772	1	TUBOS - ÁGUA	139
REGULADOR DE TEMPERATURA DA ÁGUA (92 GRAUS C)	6I-4950	4	TERMOSTATO / REGULADOR DE TEMPERATURA	118
TAMPA - RADIADOR (7 PSI)	6L-8617	2	RADIADOR	146
VEDADOR TIPO LABIO (ALOJAMENTO DO REGULADOR)	3S-9643	4	TERMOSTATO / REGULADOR DE TEMPERATURA	118
SISTEMA DE COMBUSTÍVEL				
ELEMENTO - FILTRO DE COMBUSTÍVEL (PRIMÁRIO)	9M-2342	1	FILTRO - PRIMÁRIO DE COMBUSTÍVEL	175
FILTRO - COMBUSTÍVEL	1R-0750	1	BOMBA DE ESCORVA DO COMBUSTÍVEL E DO FILTRO PRIMÁRIO	187
	1R-0755	2	FILTRO - COMBUSTÍVEL	173
	9P-7121	1	TANQUE DE COMBUSTÍVEL	190
		1	TANQUE DE COMBUSTÍVEL	191
RETENTOR TIPO ANEL (FILTRO DE COMBUSTÍVEL PRIMÁRIO)	8H-2778	1	FILTRO - PRIMÁRIO DE COMBUSTÍVEL	175
TAMPA - BOCAL DE ENCHIMENTO (TANQUE DE COMBUSTÍVEL)	7X-7700	1	TANQUE DE COMBUSTÍVEL	190
		1	TANQUE DE COMBUSTÍVEL	191
SISTEMA DE DIREÇÃO				
ELEMENTO FILTRANTE - ÓLEO (DIREÇÃO, FREIO)	132-8876	2	FILTRO - ÓLEO	673
FILTRO - ÓLEO (HIDRÁULICO, ALTA ENFICIÊNCIA)	126-1817	1	FILTRO - ÓLEO	675
RETENTOR DE ANEL-O	6V-5324	1	VÁLVULA DE SEPARAÇÃO	738
TELA FILTRANTE	6J-3795	1	FILTRO - ÓLEO	673
	104-3895	1	TELA - PRESSÃO ALTA	711

* TRADUÇÃO NÃO DISPONÍVEL NO MOMENTO DA IMPRESSÃO

PEÇAS DE MANUTENÇÃO

DESCRIÇÃO	NÚMERO DE PEÇA	QUANT	UTILIZADA EM	PÁGINA
SISTEMA DE LUBRIFICAÇÃO				
CADEADO (BOCAL DE ENCHIMENTO DO OLEO DO MOTOR)	5P-8502	1	BOCAL DE ENCHIMENTO DE ÓLEO DO MOTOR	74
CADEADO (TUBO DE ENCHIMENTO DO OLEO DO MOTOR)	5P-8502	1	INDICADOR - NÍVEL DO ÓLEO (VARETA)	78
FILTRO - ÓLEO DO MOTOR	2P-4005	4	FILTRO - ÓLEO DO MOTOR	75
RESPIRO (CÁRTER)	4W-3027	4	RESPIRO	72
		4	RESPIRO	73
RESPIRO (TANQUE DE MEDIÇÃO DO ÓLEO DO MOTOR)	9G-5127	1	TANQUE - ÓLEO DO MOTOR	109
RETENTOR (TAMPA DO RESPIRO)	208-2364	4	RESPIRO	72
RETENTOR (TAMPA, MECANISMO DA VÁLVULA)	208-2364	4	RESPIRO	73
TAMPA - BOCAL DE ENCHIMENTO	118-0165	1	ÓLEO - ARRANJO PARA TROCA RÁPIDA	91
TAMPA - BOCAL DE ENCHIMENTO (TANQUE DE MEDIÇÃO DO ÓLEO DO MOTOR)	6G-9333	1	TANQUE - ÓLEO DO MOTOR	109
TAMPA (*ENGINE OIL FILL) (MOTOR)	133-5946	1	BOCAL DE ENCHIMENTO DE ÓLEO DO MOTOR	74
TELA - RETORNO (BOMBA DE ESGOTAMENTO DIANTEIRO)	4P-4917	1	BOMBA AUXILIAR DO SISTEMA DE TRANSMISSÃO	103
	4P-5500	1	BOMBA AUXILIAR DO SISTEMA DE TRANSMISSÃO	103
SISTEMA ELÉTRICO E DE PARTIDA				
BATERIA	101-4000	2	BATERIA	199
BATERIA (12 V)	101-4000	4	BATERIA	200
BATERIA (24 VOLTS)	167-8984	1	CABOS/FIOS ELÉTRICOS - MÁQUINA	351
		1	INSTALAÇÃO-CONTROLE DA INCLINAÇÃO	233
CADEADO	246-2641	2	CABOS/FIOS ELÉTRICOS - TRASEIROS	374
CHAVE (CHAVE GERAL DA BATERIA)(MOTOR DE PARTIDA)	8H-5306	1	CHAVE GERAL	300
CORREIA DE COMANDO (PISCA-ALERTA)	9X-8139	1	LUZ GIRATÓRIA DE ALARME	243
DISJUNTOR AUTOMÁTICO DE CIRCUITO (10 AMPERES) (CHAVE INTERRUPTORA)	6T-3642	1	CABOS/FIOS ELÉTRICOS - PAINEL MONITOR	355
DISJUNTOR AUTOMÁTICO DE CIRCUITO (10 AMPERES) (ILUMINAÇÃO DE OPERAÇÃO)	9G-9882	1	CABOS/FIOS ELÉTRICOS - PAINEL MONITOR	355
DISJUNTOR AUTOMÁTICO DE CIRCUITO (105 AMPERES) (PRINCIPAL)	171-2212	1	CABOS/FIOS ELÉTRICOS - PAINEL MONITOR	354
DISJUNTOR AUTOMÁTICO DE CIRCUITO (15 AMPERES) (ECM DO MOTOR)	6T-3643	1	CABOS/FIOS ELÉTRICOS - PAINEL MONITOR	353
DISJUNTOR AUTOMÁTICO DE CIRCUITO (80 AMPERES) (ALTERNADOR NO. 1)	171-2210	1	CABOS/FIOS ELÉTRICOS - PAINEL MONITOR	354

* TRADUÇÃO NÃO DISPONÍVEL NO MOMENTO DA IMPRESSÃO

PEÇAS DE MANUTENÇÃO

DESCRIÇÃO	NÚMERO DE PEÇA	QUANT	UTILIZADA EM	PÁGINA
DISJUNTOR AUTOMÁTICO DE CIRCUITO (80 AMPERES) (ALTERNADOR NO. 2)	171-2210	1	CABOS/FIOS ELÉTRICOS - PAINEL MONITOR	354
DISJUNTOR AUTOMÁTICO DE CIRCUITO (80 AMPERES) (PRÉ-LUBRIFICAÇÃO)	171-2210	1	CABOS/FIOS ELÉTRICOS - PAINEL MONITOR	354
ELEMENTO - AQUECEDOR DE ÁGUA DA CAMISA	9X-1292	4	AQUECEDOR DA ÁGUA DO MOTOR	229
ELEMENTO-AQUECEDOR DO ÓLEO DO MOTOR	9X-9753	2	ÓLEO DO MOTOR - AQUECEDOR	226
FUSÍVEL (10 AMPERES)	9W-1442	23	CABOS/FIOS ELÉTRICOS - PAINEL MONITOR	353
FUSÍVEL (15 AMPERES)	5N-5534	6	CABOS/FIOS ELÉTRICOS - AQUECEDOR	338
	9W-1441	9	CABOS/FIOS ELÉTRICOS - PAINEL MONITOR	353
LÂMPADA - FAROL (24 VOLTS, 70 WATTS)	213-4998	1	LÂMPADA - FAROL	241
LÂMPADA - HALOGÊNEO (24 VOLTS, 65 WATTS)	9X-3463	1	LÂMPADA - FAROL	237
		1	LÂMPADA - FAROL	238
LÂMPADA - HALOGÊNEO (24 VOLTS, 65 WATTS) (FAROL)	9X-3463	1	LÂMPADA - FAROL	240
LÂMPADA (*AMBER, LED, 24-VOLT) (INDICADOR DE TRAVAMENTO DA TRANSMISSÃO)	250-2298	1	CABOS/FIOS ELÉTRICOS - TRASEIROS	374
LÂMPADA-INTERNA (24 VOLTS)	8Y-6335	1	CABOS/FIOS ELÉTRICOS - CABINE	309
LÂMPADA (12 VOLTS, 24 VOLTS, 35 WATTS)	209-6638	1	LÂMPADA - FAROL	239
LÂMPADA (24 VOLTS)	7N-9943	1	LÂMPADA - TETO	236
	110-2079	11	CABOS/FIOS ELÉTRICOS - CABINE	309
	163-1884	1	FIAÇÃO-SISTEMA DE RENOVAÇÃO DO ÓLEO	360
LÂMPADA (24 VOLTS, AMARELA)	163-1883	3	CABOS/FIOS ELÉTRICOS - CABINE	310
LÂMPADA (24-VOLTS, VERMELHO)	163-1882	1	CABOS/FIOS ELÉTRICOS - CABINE	310
LÂMPADA (24 VOLTS, 70 WATTS)	9X-7849	1	LUZ GIRATÓRIA DE ALARME	243
LENTE (FAROL)	158-0248	1	LÂMPADA - FAROL	237
		1	LÂMPADA - FAROL	238

* TRADUÇÃO NÃO DISPONÍVEL NO MOMENTO DA IMPRESSÃO

PEÇAS DE MANUTENÇÃO

DESCRIÇÃO	NÚMERO DE PEÇA	QUANT	UTILIZADA EM	PÁGINA
SISTEMA HIDRÁULICO				
BUJÃO - DRENAGEM DO ÓLEO	109-5839	1	TUBOS - DRENAGEM	784
BUJÃO DO DRENO	9J-7031	1	TANQUE HIDRÁULICO	852
		1	TANQUE HIDRÁULICO	855
ELEMENTO FILTRANTE (COMANDO DA BOMBA)	1G-8878	1	FILTRO - ÓLEO	771
RESPIRO	9T-1119	2	TANQUE DE ÓLEO HIDRÁULICO E MONTAGEM	847
TAMPA - BOCAL DE ENCHIMENTO	4J-3754	1	TANQUE HIDRÁULICO	852
	7H-1447	1	TANQUE HIDRÁULICO	855
	118-0165	1	BOCAL DE ENCHIMENTO DE ÓLEO HIDRÁULICO	767
TAMPA - BOCAL DE ENCHIMENTO (ÓLEO HIDRÁULICO)	7H-1447	1	BOCAL DE ENCHIMENTO DE ÓLEO HIDRÁULICO	767
TELA FILTRANTE	3D-6678	1	TANQUE HIDRÁULICO	852
	5J-7438	1	BOCAL DE ENCHIMENTO DE ÓLEO HIDRÁULICO	767
	7J-2656	4	TANQUE HIDRÁULICO	852
		1	TANQUE HIDRÁULICO	857
TELA FILTRANTE (BOCAL DE ENCHIMENTO)	9J-3047	1	TANQUE HIDRÁULICO	855
TELA FILTRANTE (TANQUE HIDRÁULICO)	9T-9227	2	TANQUE HIDRÁULICO	852
		5	TANQUE HIDRÁULICO	857
TREM DE FORÇA				
BUJÃO MAGNÉTICO	5P-4484	1	EIXO FIXO	384
		1	EIXO OSCILANTE	385
	6V-0439	1	RODA - COMANDO FINAL E FREIO	499
	8M-3837	1	COMANDO DA BOMBA	409
CAPA-CONTRA POEIRA	168-1917	1	JUNTA CORREDIÇA	473
CHAVE-QUADRADA	4E-8560	2	TRAVA - CONTROLE DO BRAÇO	393
ELEMENTO FILTRANTE - ÓLEO (TREM DE FORÇA)	132-8876	1	FILTRO - ÓLEO	418
		2	FILTRO - ÓLEO	420
RESPIRO	4H-6112	1	BOCAL DE ENCHIMENTO DE ÓLEO DO TREM DE FORÇA	413
TAMPA - BOCAL DE ENCHIMENTO DE ÓLEO	6L-7527	1	BOCAL DE ENCHIMENTO DE ÓLEO DO TREM DE FORÇA	413
TAMPA DA VÁLVULA (HASTE)	9K-7951	1	MONTAGEM - ARO	440
		1	MONTAGEM - ARO	441
TAMPÃO	6B-5262	1	CONVERSOR DE TORQUE E CARCAÇA	477
TELA DE SUCÇÃO	3S-3875	3	ENGRENAGENS DE SAÍDA DE TRANSFERÊNCIA	425

* TRADUÇÃO NÃO DISPONÍVEL NO MOMENTO DA IMPRESSÃO

WARTUNGSTEILE

BESCHREIBUNG	ERSATZTEIL-NUMMER	MENGE	VERWENDET IN	SEITE
ELEKTRISCHE ANLAGE U. STARTSYSTEM				
ABDECKGLAS (ARBEITSSCHEINWERFER)	158-0248	1	ARBEITSLEUCHTEN	237
		1	ARBEITSLEUCHTEN	238
ARBEITSLEUCHTEN (24 V, 70 W)	213-4998	1	ARBEITSLEUCHTEN	241
BATTERIE	101-4000	2	BATTERIE	199
BATTERIE (12 V)	101-4000	4	BATTERIE	200
BATTERIE (24 V)	167-8984	1	EINBAUSATZ - PLANIERSTEUERUNG	233
		1	MASCHINENVERDRAHTUNG	351
BELEUCHTUNGSANLAGE (*AMBER, LED, 24-VOLT) (GETRIEBSPERRANZEIGE)	250-2298	1	VERDRAHTUNG, HINTEN	374
*ELEMENT AS-ENGINE OIL HEATER	9X-9753	2	MOTORÖL-VORWÄRMGERÄT	226
HALOGENSCHINWERFER (24V)(65W)	9X-3463	1	ARBEITSLEUCHTEN	237
		1	ARBEITSLEUCHTEN	238
HALOGENSCHINWERFER (24V)(65W) (ARBEITSSCHEINWERFER)	9X-3463	1	ARBEITSLEUCHTEN	240
INNENLEUCHTE (24 V)	8Y-6335	1	FAHRERHAUSVERDRAHTUNG	309
LAUFBAND UND ANTRIEB (RUNDUM-KENNLEUCHTE)	9X-8139	1	RUNDUM-KENNLEUCHTE	243
LEUCHTE (12 V, 24 V, 35 W)	209-6638	1	ARBEITSLEUCHTEN	239
LEUCHTE (24 V)	110-2079	11	FAHRERHAUSVERDRAHTUNG	309
	163-1884	1	ÖLAUFFRISCHUNGSSYSTEM - VERDRAHTUNG	360
	7N-9943	1	FAHRERHAUSBELEUCHTUNG	236
LEUCHTE (24 V, GELB)	163-1883	3	FAHRERHAUSVERDRAHTUNG	310
LEUCHTE (24 V, ROT)	163-1882	1	FAHRERHAUSVERDRAHTUNG	310
LEUCHTE (24 V, 70 W)	9X-7849	1	RUNDUM-KENNLEUCHTE	243
SCHLÜSSEL (ELEKTR. HAUPTSCHALTER)(STARTER)	8H-5306	1	TRENNSCHALTER	300
SICHERUNG (10 A)	9W-1442	23	ÜBERWACHUNGSTAFELVERDRAHTUNG	353
SICHERUNG (15 A)	5N-5534	6	HEIZUNGSVERDRAHTUNG	338
	9W-1441	9	ÜBERWACHUNGSTAFELVERDRAHTUNG	353
UMLAUFKÜHLWASSERHEIZUNGS-ELEMENT	9X-1292	4	UMLAUFKÜHLWASSERHEIZUNG	229
UNTERBRECHER (10 A) (FAHRSCHEINWERFER)	9G-9882	1	ÜBERWACHUNGSTAFELVERDRAHTUNG	355
UNTERBRECHER (10 A) (STARTSCHALTERSCHLÜSSEL)	6T-3642	1	ÜBERWACHUNGSTAFELVERDRAHTUNG	355
UNTERBRECHER (105 A) (HAUPTUNTERBRECHER)	171-2212	1	ÜBERWACHUNGSTAFELVERDRAHTUNG	354
UNTERBRECHER (15 A) (ELEKTRON. STEUERMODUL DES MOTORS)	6T-3643	1	ÜBERWACHUNGSTAFELVERDRAHTUNG	353
UNTERBRECHER (80 A) (*ALTERNATOR NO. 1)	171-2210	1	ÜBERWACHUNGSTAFELVERDRAHTUNG	354
UNTERBRECHER (80 A) (*ALTERNATOR NO. 2)	171-2210	1	ÜBERWACHUNGSTAFELVERDRAHTUNG	354
UNTERBRECHER (80 A) (VORSCHMIERUNG)	171-2210	1	ÜBERWACHUNGSTAFELVERDRAHTUNG	354
VORHÄNGESCHLOSS	246-2641	2	VERDRAHTUNG, HINTEN	374

* ÜBERSETZUNG ZUM ZEITPUNKT DER DRUCKLEGUNG NICHT VORHANDEN

WARTUNGSTEILE

BESCHREIBUNG	ERSATZTEIL-NUMMER	MENGE	VERWENDET IN	SEITE
FAHRERHAUS				
BATTERIE - ELEKTRONISCHE STEUERUNG (STRASSENANALYSE/ VIMS HAUPTMODUL)	143-8480	1	STEUERUNG, NICHT PROGRAMMIERTER MONITOR	971
FAHRERHAUSLUFTFILTER	9X-8216	1	FAHRERHAUSAUSKLEIDUNG	996
		1	FAHRERHAUSLUFTFILTER	982
FILTERSIEB	8T-5913	4	SCHEIBENWASCHANLAGE	1069
KAPPE MIT ENTLÜFTER (SCHEIBENWASCHER)	8E-8292	1	SCHEIBENWASCHANLAGE	1069
SCHEIBENWISCHERBLATT	6V-7419	2	SCHEIBENWISCHER	1073
SCHEIBENWISCHERBLATT (VORNE)	6V-5851	1	SCHEIBENWISCHER UND -WASCHANLAGE	1070
	6V-7419	1	SCHEIBENWISCHER UND -WASCHANLAGE	1070
SERPENTINENFÖRMIGER RIEMEN (KÄLTEMITTELKOMPRESSOR)	186-4195	1	KÄLTEMITTELKOMPRESSOR U. BEFESTIGUNG	966
SICHERHEITSGURT	222-0345	1	FAHRERSITZ	1051
VORHÄNGESCHLOSS	246-2641	1	PLATTFORM	1035
HYDRAULIKSYSTEM				
ABLASSSTOPFEN	9J-7031	1	HYDRAULIKTANK	852
		1	HYDRAULIKTANK	855
EINFÜLLSTUTZENKAPPE	4J-3754	1	HYDRAULIKTANK	852
	7H-1447	1	HYDRAULIKTANK	855
	118-0165	1	HYDRAULIKÖLEINFÜLLSTUTZEN	767
EINFÜLLSTUTZENKAPPE (HYDRAULIKÖL)	7H-1447	1	HYDRAULIKÖLEINFÜLLSTUTZEN	767
ENTLÜFTER	9T-1119	2	HYDRAULIKTANK UND BEFESTIGUNGSTEILE	847
FILTER (PUMPENANTRIEB)	1G-8878	1	ÖLFILTER	771
FILTERSIEB	3D-6678	1	HYDRAULIKTANK	852
	5J-7438	1	HYDRAULIKÖLEINFÜLLSTUTZEN	767
ÖLABLASSSCHRAUBE	109-5839	1	ABLASSLEITUNGEN	784
SIEB	7J-2656	4	HYDRAULIKTANK	852
		1	HYDRAULIKTANK	857
SIEB (FÜLLER)	9J-3047	1	HYDRAULIKTANK	855
SIEB (HYDRAULIKTANK)	9T-9227	2	HYDRAULIKTANK	852
		5	HYDRAULIKTANK	857
KRAFTSTOFFSYSTEM				
DICHTUNGSRING (KRAFTSTOFFHAUPTFILTER)	8H-2778	1	KRAFTSTOFFHAUPTFILTER	175
EINFÜLLKAPPE (KRAFTSTOFFTANK)	7X-7700	1	KRAFTSTOFFTANK	190
		1	KRAFTSTOFFTANK	191
KRAFTSTOFFFILTEREINSATZ (HAUPTELEMENT)	9M-2342	1	KRAFTSTOFFHAUPTFILTER	175
KRAFTSTOFFILTER	1R-0750	1	KRAFTSTOFFENTLÜFTUNGSPUMPE UND -HAUPTFILTER	187
	1R-0755	2	KRAFTSTOFFILTER	173
KRAFTSTOFFSIEB	9P-7121	1	KRAFTSTOFFTANK	190
		1	KRAFTSTOFFTANK	191

* ÜBERSETZUNG ZUM ZEITPUNKT DER DRUCKLEGUNG NICHT VORHANDEN

WARTUNGSTEILE

BESCHREIBUNG	ERSATZTEIL-NUMMER	MENGE	VERWENDET IN	SEITE
KRAFTÜBERTRAGUNG				
ANSAUGSIEB	3S-3875	3	VERTEILERGETRIEBEANTRIEB	425
ENTLÜFTER	4H-6112	1	GETRIEBEÖLFÜLLSTUTZEN	413
MAGNETSTOPFEN	5P-4484	1	PENDELACHSE	385
		1	STARRACHSE	384
	6V-0439	1	SEITENANTRIEB UND RADBREMSE	499
	8M-3837	1	PUMPENANTRIEB	409
ÖLEINFÜLLKAPPE	6L-7527	1	GETRIEBEÖLFÜLLSTUTZEN	413
ÖLFILTERELEMENT (KRAFTÜBERTRAGUNG)	132-8876	1	ÖLFILTER	418
		2	ÖLFILTER	420
SCHLÜSSEL, VIERKANT	4E-8560	2	STIC-KOMBIHEBEL - STEUERUNGSSPERRE	393
SCHRAUBE	6B-5262	1	DREHZAHLWANDLER U. GEHÄUSE	477
STAUBKAPPE	168-1917	1	ANTRIEBSWELLEN-KEILVERZAHNUNG	473
VENTILKAPPE (SCHAFT)	9K-7951	1	FELGENAUFHÄNGUNG	440
		1	FELGENAUFHÄNGUNG	441
KÜHLSYSTEM				
ABLASSSTOPFEN	6N-9590	2	KÜHLMITTELLEITUNGEN	119
FILTER (WASSERPUMPE)	4N-5834	2	KÜHLWASSERPUMPE	145
KÜHLERKAPPE (7 PSI)	6L-8617	2	KÜHLER	146
LIPPENDICHTUNG (REGULATORGEHÄUSE)	3S-9643	4	KÜHLWASSER-TEMPERATURREGLER UND GEHÄUSE	118
SCHLAUCHLEITUNG	068-4772	1	KÜHLWASSERLEITUNGEN	139
WASSERTEMPERATURREGLER (92 GRAD)	6I-4950	4	KÜHLWASSER-TEMPERATURREGLER UND GEHÄUSE	118
LENKSYSTEM				
O-RING-DICHTUNG	6V-5324	1	PENDELVENTIL	738
ÖLFILTER (HYDRAULIK, HOCHLEISTUNG)	126-1817	1	ÖLFILTER	675
ÖLFILTERELEMENT (LENKUNG, BREMSE)	132-8876	2	ÖLFILTER	673
SIEB	6J-3795	1	ÖLFILTER	673
	104-3895	1	HOCHDRUCKSIEB	711
LUFTANSAUG- UND ABGASSYSTEM				
LUFTFILTER (HAUPTELEMENT)	6I-2509	1	LUFTREINIGER	156
LUFTFILTER (HILFSELEMENT)	6I-2510	1	LUFTREINIGER	156
LUFTFILTERWARTUNGSANZEIGE	7W-7417	4	LUFTFILTERWARTUNGSANZEIGE	160
*SCREEN-AIR CLEANER INLET	7M-1674	4	LUFTREINIGER	157

* ÜBERSETZUNG ZUM ZEITPUNKT DER DRUCKLEGUNG NICHT VORHANDEN

WARTUNGSTEILE

BESCHREIBUNG	ERSATZTEIL-NUMMER	MENGE	VERWENDET IN	SEITE
MOTOR (GRUNDAUSFÜHRUNG)				
ABLASSSTOPFEN	2A-5220	6	STIRNRADGEHÄUSE	54
DICHTUNG	208-2362	16	MOTORBLOCKDECKEL	14
	208-2363	16	MOTORBLOCKDECKEL	14
DICHTUNG (VENTILDECKEL)	208-2364	1	VENTILDECKEL	19
KEILRIEMEN (DREHSTROMGENERATOR)	178-6402	2	DREHSTROMGENERATOR - BEFESTIGUNG	59
KEILRIEMENSATZ (EINSCHL. 6 RIEMEN) (LÜFTER)	102-9928	1	LÜFTERANTRIEB	38
ÖLABLASSSCHRAUBE (ÖLWANNE)	4B-2363	1	ÖLWANNE	61
	6I-0723	1	ÖLWANNE	61
RAHMEN UND FAHRGESTELL				
EINFÜLLSTUTZENKAPPE	5K-1568	1	SCHMIERPUMPE	586
ENTLÜFTER (SCHMIERUNGSPUMPE)	9T-1119	1	SCHMIERPUMPE	587
VORHÄNGESCHLOSS	246-2641	1	MOTORHAUBE UND VERKLEIDUNG	541
		2	STOSSSTANGE U. ZUGHAKEN	501
		2	STOSSSTANGE U. ZUGHAKEN	502
SCHMIERSYSTEM				
ABSAUGSIEB (VORDERER PUMPENSUMPF)	4P-4917	1	RÜCKSPÜLPUMPE	103
	4P-5500	1	RÜCKSPÜLPUMPE	103
DICHTUNG (*COVER, VALVE MECHANISM)	208-2364	4	ENTLÜFTER	73
DICHTUNG (ENTLÜFTERDECKEL)	208-2364	4	ENTLÜFTER	72
EINFÜLLSTUTZENKAPPE	118-0165	1	ÖLSCHNELLWECHSELANSCHLUSS	91
EINFÜLLSTUTZENKAPPE (MOTORÖL-DOSIERTANK)	6G-9333	1	MOTORÖLTANK	109
ENTLÜFTER (KURBELGEHÄUSE)	4W-3027	4	ENTLÜFTER	72
		4	ENTLÜFTER	73
ENTLÜFTER (MOTORÖL-DOSIERTANK)	9G-5127	1	MOTORÖLTANK	109
KAPPE (*ENGINE OIL FILL) (MOTOR)	133-5946	1	MOTORÖLEINFÜLLSTUTZEN	74
ÖLFILTER	2P-4005	4	ÖLFILTER	75
VORHÄNGESCHLOSS (MOTORÖLEINFÜLLSTUTZEN)	5P-8502	1	ÖLMESSSTAB	78
VORHÄNGESCHLOSS (MOTORÖLEINFÜLLUNG)	5P-8502	1	MOTORÖLEINFÜLLSTUTZEN	74

* ÜBERSETZUNG ZUM ZEITPUNKT DER DRUCKLEGUNG NICHT VORHANDEN

INDEX

Name	Page
A	
ACCUMULATOR & MTG GP-BRAKE	601
ACCUMULATOR GP-BRAKE–CHARGED	604
ACCUMULATOR GP-BRAKE–UNCHARGED	605
ACTUATOR GP-PUMP	658
	659
	660
ADAPTER GP	413
ADAPTER GP-FLYWHEEL HOUSING	382
ADJUSTER GP-SEAT	950
AFTERCOOLER GP-TREATED WATER	155
AIR CLEANER GP	156
	157
AIR COMPRESSOR GP	8
	9
AIR COMPRESSOR GP-SEAT	951
	1067
AIR CONDITIONER AR	952
AIR CONDITIONER GP	953
AIR DRYER GP	606
	607
ALARM GP–ACTION	194
ALTERNATOR GP-CHARGING	195
ARM & BEARING AS–HIGH LIFT MACHINES	898
ARM & BEARING AS–STANDARD LIFT MACHINES	896
ARM & BEARING AS–SUPER HIGH LIFT MACHINES	900
ARM AR-LIFT	902
ARM AR-LIFT–HIGH LIFT MACHINES	903
ARM AR-LIFT–SUPER HIGH LIFT MACHINES	904
ARM GP-WINDOW WIPER–FRONT	956
ASHTRAY	1060
AXLE AR-FIXED–FRONT	383
AXLE AR-OSCILLATING–REAR	383
AXLE GP-FIXED	384
AXLE GP-OSCILLATING–REAR	385
B	
BARREL GP-PUMP–STEERING	661
BASE GP-FOOT BRAKE–PEDAL, LH	608
BASE GP-FOOT BRAKE–PEDAL, RH	610
BASE GP-FUEL FILTER	187
BASE GP-VALVE COVER	10
BATTERY	199
BATTERY & WIRING GP	197
BATTERY GP	199
	200
	201
BATTERY GP-ELECTRONIC CONTROL (ROAD ANALYSIS/VIMS MAIN MODULE)	971
BATTERY GP (24-VOLT)	233
	351
BATTERY (12 VOLT)	200
BELT (ALTERNATOR)	59
BELT-DRIVE (WARNING BEACON)	243
BELT-SERPENTINE (REFRIGERANT COMPRESSOR)	966
BELT TIGHTENER GP	11
BLADE AS-WIPER	1073
BLADE AS-WIPER (FRONT)	1070
BLOCK AS-FUSE	354
BLOCK GP-JUNCTION–BATTERY	202
BOX GP-STORAGE	957
	958
BRACKET	250
BRACKET AS-ADJUSTABLE SWITCH (STOP LIGHT LIMIT)	608
BRACKET GP-MOUNTING (AIR DRYER)	607
BRAKE GP-PARKING	611
BREATHER	413
	847
BREATHER AS (CRANKCASE)	72
	73
BREATHER AS (ENGINE OIL METERING TANK)	109
BREATHER GP–CRANKCASE	72
	73
BREATHER (LUBRICATION PUMP)	587
BUCKET AS-COAL	915
	917
BUCKET AS-ROCK	919
	920
	922
	924
	926
	927
BUCKET GP-COAL	929
BUCKET GP-ROCK	930
	931
	932
	933
	934
	935
BUFFER GP-SENSOR–FUEL LEVEL	203
BUMPER & DRAWBAR AR	501
	502
BUMPER & DRAWBAR GP	503
	506
C	
CAB & PLATFORM GP	959
CAB AR	961
CAB GP	962
CAMERA AR	204
CAMERA GP (115-DEGREE, COLOR)	318

INDEX

Name	Page
CAMSHAFT GP	13
CAP AS (ENGINE OIL FILL) (ENGINE)	74
CAP AS-FILLER (FUEL TANK)	190
CAP AS-FILLER (FUEL TANK)	191
CAP-FILLER	91
	586
	767
	852
	855
CAP-FILLER (ENGINE OIL METERING TANK)	109
CAP-FILLER (HYDRAULIC OIL)	767
CAP-OIL FILLER	413
CAP-RADIATOR (7-PSI)	146
CAP-VALVE (STEM)	440
	441
CAP-VENTED (WINDOW WASHER)	1069
CASE & PARTS GP-PLANETARY	387
CASE GP-GEAR	389
CHASSIS AR-FRONT	1
CHASSIS AR-REAR	2
CIRCUIT BREAKER AS (10-AMPERE) (KEY SWITCH)	355
CIRCUIT BREAKER AS (10-AMPERE) (RUNNING LIGHTS)	355
CIRCUIT BREAKER AS (105-AMPERE) (MAIN)	354
CIRCUIT BREAKER AS (15-AMPERE) (ENGINE ECM)	353
CIRCUIT BREAKER AS (80-AMPERE) (ALTERNATOR NO. 1)	354
CIRCUIT BREAKER AS (80-AMPERE) (ALTERNATOR NO. 2)	354
CIRCUIT BREAKER AS (80-AMPERE) (PRELUBRICATION)	354
CLEANING GP-CAB	964
COMMON AR	2
COMPRESSOR & MTG GP-REFRIG	966
COMPRESSOR GP-REFRIGERANT	969
CONDENSER & MTG GP-REFRIGERANT	970
CONNECTION GP-WATER	112
CONTROL & MTG GP-COMMUNICATION–PRODUCT LINK	205
CONTROL & MTG GP-ENGINE ELEK	206
CONTROL AR-GRADE	207
CONTROL GP-AIR STARTING	208
	212
CONTROL GP-ENGINE ELECTRONIC	215
CONTROL GP-FOOT BRAKE	613
CONTROL GP-HYDRAULIC LOCKOUT	743
CONTROL GP-PARKING BRAKE	614
CONTROL GP-PILOT OPERATED HYD–2-FUNCTION	744
CONTROL GP-POSITION–BUCKET	216
CONTROL GP-POSITION (BUCKET)	776
	778
CONTROL GP-SERVICE BRAKE	615
CONTROL GP-STEERING	662
CONTROL GP-STIC	390
	391
CONTROL GP-STIC LOCKOUT	393
CONTROL GP-TRANSMISSION HYD	395
CONTROL GP-UNPRGMED MONITOR–VIMS	971
CONTROL GP-UNPROGRAMMED	205
CONTROL GP-UNPROGRAMMED–POWER TRAIN	217
CONTROL GP-UNPROGRAMMED–PRODUCT LINK 300	218
CONTROL GP-UNPROGRAMMED (IMPLEMENT)	354
CONTROL GP-UNPROGRAMMED (POWER TRAIN)	353
CONVERSION AR-CERTIFICATION	3
CONVERTER GP-ELECTRICAL (24-VOLT TO 12-VOLT)	233
	349
	351
COOLANT HEATER LINES	1008
COOLER GP-ENGINE OIL	113
COOLER GP-HYDRAULIC OIL–HYDRAULIC, STEERING, BRAKE	746
COOLER GP-TRANSMISSION OIL	396
CORE AS-AFTERCOOLER	155
CORE AS-OIL COOLER (TRANSMISSION)	396
CORE AS-RADIATOR	152
CORE GP-ENGINE OIL COOLER	114
CORE GP-OIL COOLER–BRAKE COOLING	115
CORE GP-TMSN OIL COOLER	397
COUPLING GP-AUXILIARY DRIVE	398
COUPLING GP-AUXILIARY DRIVE (REAR)	451
COUPLING GP-TORSIONAL	399
COVER GP-ACCESS	510
COVER GP-ACCESS–RADIATOR	509
COVER GP-CAB	972
COVER GP-CYLINDER BLOCK	14
COVER GP-ENGINE–REAR	15
COVER GP-FRONT HOUSING	17
COVER GP-MODULE CONNECTOR	219
COVER GP-PLATFORM	974
	975
COVER GP-PLATFORM–REAR CAB	976
COVER GP-SHIPPING	400
COVER GP-VALVE MECHANISM	19
CRANKSHAFT GP	20
CUP-DUST	473
CYLINDER & MTG GP-STEERING	664
CYLINDER AR-LIFT–HIGH LIFT MACHINES	747
CYLINDER AR-LIFT–STANDARD LIFT MACHINES	747

INDEX

Name	Page
CYLINDER AR-LIFT–SUPER HIGH LIFT MACHINES	747
CYLINDER AR-TILT–HIGH LIFT MACHINES	748
CYLINDER AR-TILT–STANDARD LIFT MACHINES	748
CYLINDER AR-TILT–SUPER HIGH LIFT MACHINES	748
CYLINDER AS-ETHER	282, 284
CYLINDER BLOCK AS	21
CYLINDER BLOCK GP	22
CYLINDER GP-LIFT–HIGH LIFT MACHINES	749
CYLINDER GP-LIFT–STANDARD LIFT MACHINES	751
CYLINDER GP-LIFT–SUPER HIGH LIFT MACHINES	753
CYLINDER GP-STEERING–LH	665
CYLINDER GP-STEERING–RH	667
CYLINDER GP-TILT–HIGH LIFT MACHINES, LH	759
CYLINDER GP-TILT–HIGH LIFT MACHINES, RH	761
CYLINDER GP-TILT–STANDARD LIFT MACHINES, LH	757
CYLINDER GP-TILT–STANDARD LIFT MACHINES, RH	755
CYLINDER GP-TILT–SUPER HIGH LIFT MACHINES, LH	763
CYLINDER GP-TILT–SUPER HIGH LIFT MACHINES, RH	765
CYLINDER HEAD AS	24
CYLINDER HEAD GP	25, 27

D

Name	Page
DAMPER GP	29
DIFFERENTIAL & BEVEL GEAR GP	401
DIFFERENTIAL GP	403
DISPLAY GP-MONITOR–NAVIGATOR	977
DOOR GP-CAB–LH	978
DRIVE & MTG GP-PUMP–FRONT	404
DRIVE AR-FAN	30
DRIVE GP-ACCESSORY–A/C COMPRESSOR	32
DRIVE GP-ACCESSORY–UPPER, LH–ALTERNATOR	34
DRIVE GP-ACCESSORY–UPPER, RH–ALTERNATOR	31
DRIVE GP-AUXILIARY–LOWER, LH	36
DRIVE GP-FAN	38, 42
DRIVE GP-FAN–VARIABLE SPEED	40
DRIVE GP-PUMP–FRONT	409
DRIVE GP-PUMP–REAR	405
DUCT GP-AIR	980
DUST EJECTOR GP	158

E

Name	Page
EDGE GP-CUTTING	936, 937, 938, 939, 940
ELECTRONICS AR-MACHINE	220
ELECTRONICS GP-COMMUNICATION–PRODUCT LINK 300	221
ELECTRONICS GP-COMMUNICATION (PRODUCT LINK 300)	230
ELECTRONICS GP-ENGINE RATINGS	5
ELECTRONICS GP-IMPLEMENT	222
ELECTRONICS GP-MONITOR–VIMS-ENGLISH, GERMAN	222
ELECTRONICS GP-MONITOR–VIMS-ENGLISH, PORTUGUESE	222
ELECTRONICS GP-MONITOR–VIMS-ENGLISH, RUSSIAN	222
ELECTRONICS GP-MONITOR–VIMS-ENGLISH, SWEDISH	223
ELECTRONICS GP-POWER TRAIN	223
ELEMENT AS-ENGINE OIL HEATER	226
ELEMENT AS-JACKET WATER HEATER	229
ENGINE AR	5
EXTENSION GP-BACKREST (CLOTH)	1051
EXTENSION GP-EXHAUST	159

F

Name	Page
FAN GP-BLOWER	116
FASTENER GP-BOTTOM GUARD	511
FASTENER GP-CYLINDER HEAD	25
FASTENER GP-DRAWBAR & BUMPER	512
FASTENER GP-DRAWBAR & BUMPER–FRONT	513
FASTENER GP-ELECTRONICS–MONITOR ECM	224
FASTENER GP-FENDER	514
FASTENER GP-FIXED AXLE	411
FASTENER GP-HANDHOLD	515
FASTENER GP-OSCILLATING AXLE	412
FASTENER GP-ROPS	981
FENDER GP-FRONT	517
FENDER GP-REAR	518
FILLER GP-ENGINE OIL	74
FILLER GP-HYDRAULIC OIL–IMPLEMENT TANK	767
FILLER GP-POWER TRAIN OIL	413
FILM GP	1080
FILM GP–LH	1077

INDEX

Name	Page
FILM GP–PAYLOAD CONTROL	1078
FILM GP–RH	1079
FILM GP-INTERNATIONAL	1081
FILM GP-U.S.	1081
FILM-IDENTIFICATION	1093
FILM-IDENTIFICATION (ELECTRONIC CONTROL MODULE)	222
FILM-IDENTIFICATION (PRELUBRICATION PUMP)	1090
FILM-INFORMATION (INPUT/OUTPUT)	1091
FILM-INSTRUCTION	216
FILM-INSTRUCTION (ELECTRICAL DISCONNECT)	353
FILM-INSTRUCTION (ENGINE SHUTDOWN)	501 502
FILM-INSTRUCTION (KICKOUT CONTROL)	1091
FILM-INSTRUCTION (LIFT EYE, TIE-DOWN)	1034
FILM-INSTRUCTION (SEAT ADJUSTMENT)	1067
FILM-INSTRUCTION (WATER IN, WATER OUT)	953
FILM-WARNING (DO NOT LIFT)	1091
FILM-WARNING (HIGH PRESSURE, READ MANUAL)	604
FILM-WARNING (PRODUCT LINK)	230
FILTER & MTG GP-CASE DRAIN–STEERING PUMP	669
FILTER & MTG GP-PLT & PUMP DR	770
FILTER & MTG GP-POWER TRAIN	416
FILTER & MTG GP-STEER & IMPL	671
FILTER & MTG GP-STEERING–HIGH PRESSURE SCREENS	672
FILTER AS-ENGINE OIL	75
FILTER AS-FUEL	173 187
FILTER AS-OIL (HYDRAULIC, HIGH EFFICIENCY)	675
FILTER-CAB AIR	982 996
FILTER ELEMENT AS-AIR (PRIMARY)	156
FILTER ELEMENT AS-AIR (SECONDARY)	156
FILTER ELEMENT AS-FUEL (PRIMARY)	175
FILTER ELEMENT AS-OIL (POWER TRAIN)	418 420
FILTER ELEMENT AS-OIL (STEERING, BRAKE)	673
FILTER ELEMENT (PUMP DRIVE)	771
FILTER GP-CAB AIR	982
FILTER GP-ENGINE OIL	75
FILTER GP-FUEL–SECONDARY	173
FILTER GP-OIL	675
FILTER GP-OIL–COOLER SCREEN	673
FILTER GP-OIL–FRONT PUMP DRIVE	771
FILTER GP-OIL–POWER TRAIN	418 420
FILTER GP-OIL (FRONT PUMP DRIVE)	770
FILTER GP-OIL (HYDRAULIC COOLER SCREEN)	671
FILTER GP-OIL (STEERING, BRAKE COOLER SCREEN)	671
FILTER GP-PRIMARY FUEL	175
FILTER (WATER PUMP)	145
FINAL DRIVE & WHEEL	498
FITTING GP-FUEL TANK	176
FLOOR MAT	997
FLYWHEEL GP	44
FRAME AS-LOADER	520
FRAME AS-REAR	524
FRAME GP-LOADER	527
FRAME GP-REAR	529
FUMES DISPOSAL GP	77
FUSE (10-AMPERE)	353
FUSE (15-AMPERE)	338 353

G

GAUGE AS-OIL LEVEL (DIPSTICK)	79
GAUGE GP-COOLANT LEVEL	117
GAUGE GP-OIL LEVEL (DIPSTICK)	78 79
GAUGE-SIGHT	146 855
GAUGE-SIGHT (OIL LEVEL)	109
GEAR GP-FRONT	45
GEAR GP-INPUT TRANSFER	422
GEAR GP-OUTPUT TRANSFER	424
GEAR GP-REAR	47
GLASS-SIGHT	852
GRILL GP-RADIATOR	531
GUARD GP-BELT–AIR CONDITIONER COMPRESSOR	51
GUARD GP-BELT–ALTERNATOR	49
GUARD GP-BRAKE LINES–FRONT	533
GUARD GP-CRANKCASE	535
GUARD GP-FRONT	536
GUARD GP-POWER TRAIN–TRANSMISSION	537
GUARD GP-POWER TRAIN (TRANSMISSION)	3
GUARD GP-RADIATOR	538

H

HANDHOLD GP	985
HARNESS AS-BRAKE (STOP LIGHT)	608
HARNESS AS-CAB (UPPER)	310
HARNESS AS-CONTROL (BUCKET POSITIONER)	776 778

INDEX

Name	Page
HARNESS AS-CONTROL (OIL RENEWAL SYSTEM, CHASSIS)	360
HARNESS AS-CONTROL (OIL RENEWAL SYSTEM, FIREWALL)	360
HARNESS AS-ENGINE	225
	325
HARNESS AS (FRONT AXLE OIL TEMPERATURE)	380
HARNESS AS-FRONT CHASSIS (FENDER, LH)	335
HARNESS AS-FRONT CHASSIS (FENDER, RH)	335
HARNESS AS-LIGHTING	247
HARNESS AS-SENSOR	42
HARNESS AS-SENSOR (HYD LEVEL, TEMP; FR AXLE TEMP)	335
HARNESS AS-SENSOR (REAR AXLE OIL TEMPERATURE)	380
HARNESS AS-TRANSMISSION	495
HARNESS AS-VALVE (SEAT AIR COMPRESSOR)	1067
HARNESS AS-WINDOW WIPER (QUARTER WINDOW)	310
HARNESS AS-WINDOW WIPER (WASHER)	310
HARNESS AS-WIRING (VALVE MECHANISM)	70
HEAD GP-PUMP	772
HEAD GP-PUMP–STEERING	676
HEATER GP-ENGINE OIL	226
HEATER GP-FUEL	227
HEATER GP-JACKET WATER	229
HITCH GP-ARTICULATING	540
HOOD & GUARD GP	541
HORN GP-AIR	987
HORN GP-AIR–LH	988
HORN GP-AIR–RH	990
HOSE	139
HOUSING & REGULATOR GP–OUTLET CONTROL	118
HOUSING GP-FLYWHEEL	52
HOUSING GP-FRONT	54
HYDRAULIC AR-FRONT	774
HYDRAULIC AR-REAR	775

I

Name	Page
IDLER GP-BELT	55
INDICATOR GP-AIR FILTER CHANGE	160
INJECTOR GP-FUEL	184
INSTALLATION AR-CAES	230
INSTALLATION AR-COMMUNICATION–PRODUCT LINK 300	230
INSTALLATION AR-ENGINE	7
INSTALLATION AR-FIELD	3
INSTALLATION GP-COMMUNICATION–PRODUCT LINK 321SR	231
INSTALLATION GP-GRADE CONTROL	235
INSTALLATION GP-GRADE CONTROL–ROPS	233
INSTALLATION GP-RADIO	991

K

Name	Page
KEY (BATTERY DISCONNECT)(STARTER)	300
KEY-SQUARE	393
KICKOUT & POSITIONER GP–TILT	776
	778
KIT-ADAPTER	227
KIT-AIR CLEANER CLAMP	156
KIT-AIR VALVE	1067
KIT-BASIC ENGINE REPAIR (MAIN BEARING)	20
KIT-BEARING (ALTERNATOR)	195
KIT-BOLT (ELECTRICAL CONNECTORS)	378
KIT-BUSHING (CRANKSHAFT PULLEY) (FLANGED)	38
KIT-CAP FILTER (FUEL TANK)	190
	191
KIT-CRANKSHAFT BEARING (AIR COMPRESSOR) (AIR COMPRESSOR)	8
KIT-CYLINDER HEAD (AIR COMPRESSOR) (AIR COMPRESSOR)	8
KIT-DIAPHRAGM (HORN)	987
KIT-DRIVE HOUSING (AIR STARTING MOTOR)	289
KIT-GOVERNOR OVERHAUL (AIR COMPRESSOR)	9
KIT-HARDWARE (ALTERNATOR)	195
KIT-HYDRAULIC CYLINDER SEAL (CYLINDER-1)	665
KIT-INJECTOR (LUBE)	596
	597
	598
KIT-LEVEL SENDER	265
KIT-METERING CAP SEAL	878
KIT-OVERHAUL (TURBINE AIR STARTER)	292
	293
	294
KIT-PLANETARY GEAR (TURBINE AIR STARTER)	293
KIT-PLUNGER SEAL	728
	876
	877
	879
KIT-PUMP	587
KIT-PUMP SEAL	646
KIT-PURGE VALVE (AIR DRYER)	607
KIT-REBUILD (AUXILIARY WATER PUMP)	141

INDEX

Name	Page
KIT-REBUILD (WATER PUMP)	145
KIT-REPAIR (BYPASS VALVE) (FUEL TRANSFER PUMP)	189
KIT-REPAIR (GEAR, SHAFT) (FUEL TRANSFER PUMP)	189
KIT-REPAIR (VARIABLE SPEED FAN DRIVE)	40
KIT-RETAINING BOLT	223
KIT-RETAINING BOLT (UNPROGRAMMED CONTROL)	217
KIT-ROLLER (GOVERNOR PEDAL)	1033
KIT-ROTOR (FIRST STAGE AIR STARTER)	292
	294
KIT-ROTOR (SECOND STAGE AIR STARTER)	294
KIT-ROTOR (2ND STAGE AIR STARTER)	292
KIT-SCREEN	649
KIT-SEAL	208
	212
	472
	473
	474
	492
	604
	703
	704
	735
	887
KIT-SEAL & VANE (AIR STARTING MOTOR) (AIR STARTING MOTOR)	289
KIT-SEAL (AIR MOTOR LUBRICATOR)	263
KIT-SEAL (CYLINDER-2)	665
KIT-SEAL (FUEL TRANSFER PUMP)	189
KIT-SEAL (GEAR PUMP)	705
KIT-SEAL (PILOT GEAR PUMP)	453
KIT-SEAL (SOLENOID VALVE)	485
	893
	894
KIT-SEAL (TURBINE AIR STARTER)	293
KIT-SEAL (VARIABLE SPEED FAN DRIVE)	40
KIT-SHOCK ABSORBER	1067
KIT-SLIDER BLOCK	1057
KIT-STANDARD RING (AIR COMPRESSOR) (AIR COMPRESSOR)	8
KIT-STARTER REPAIR (TURBINE AIR STARTER)	292
	294
KIT-TERMINAL (ALTERNATOR)	195
KIT-TERMINAL (LOCK)	354
KIT-TERMINAL (STARTING MOTOR)	296
KIT-TETHER	1067
KIT-TREADLE PIN (GOVERNOR PEDAL)	1033
KIT-TUBE (LUBRICATION PUMP)	587
KIT-TURBINE WHEEL (TURBINE AIR STARTER)	293
KIT-VALVE	208
	212
	587
KIT-VALVE (AIR DRYER)	607

L

Name	Page
LAMP AS (AMBER, LED, 24-VOLT) (TRANSMISSION LOCKOUT INDICATOR)	374
LAMP AS-FLOOD (24-VOLT, 70-WATT)	241
LAMP GP-DOME	236
LAMP GP-FLOOD	238
LAMP GP-FLOOD–HID, VERTCAL MOUNT	239
LAMP GP-FLOOD–SUSPENDED MOUNT	237
	240
LAMP GP-FLOOD–VERTICAL MOUNT	241
LAMP GP-SIGNAL–STOP, TAIL	242
LAMP GP-WARNING BEACON–AMBER	243
LAMP-HALOGEN (24-VOLT, 65-WATT)	237
	238
LAMP-HALOGEN (24-VOLT, 65-WATT) (FLOODLIGHT)	240
LAMP-INTERIOR (24-VOLT)	309
LAMP (12-VOLT, 24-VOLT, 35-WATT)	239
LAMP (24-VOLT)	236
	309
	360
LAMP (24-VOLT, RED)	310
LAMP (24-VOLT, YELLOW)	310
LAMP (24-VOLT, 70-WATT)	243
LATCH GP-CAB DOOR & WINDOW	993
LENS AS (FLOODLIGHT)	237
	238
LIFT AR–HIGH LIFT MACHINES	905
LIFT AR–STANDARD LIFT MACHINES	905
LIFT AR–SUPER HIGH LIFT MACHINES	905
LIFTING GP-ENGINE	56
LIFTING GP-MACHINE	547
LIGHTER GP-CIGAR (12-VOLT)	310
LIGHTING AR-STOP & FLOOD	244
LIGHTING AR-WARNING BEACON	244
LIGHTING GP-FLOOD– 2-LAMP, ENGINE COMPARTMENT	253
LIGHTING GP-FLOOD– 2-LAMP, LOADER FRAME	246
LIGHTING GP-FLOOD–2-LAMP, PLATFORM	245
LIGHTING GP-FLOOD–2-LAMP, REAR	249
	251
LIGHTING GP-FLOOD–4-LAMP	252
LIGHTING GP-FLOOD– 6-LAMP, FRONT FENDER	247
LIGHTING GP-FLOOD–8-LAMP, ROPS	250
LIGHTING GP-FLOOD (2-LAMP, PLATFORM)	3
LIGHTING GP-STOP–2-LAMP, REAR	255
	256

INDEX

Name	Page
LIGHTING GP-STOP & TAIL–HIGH INTENSITY DISCHARGE	257
LIGHTING GP-WARNING BEACON	259
LINER GP-CAB	996
LINES GP-ACCUMULATOR–BRAKE	619
LINES GP-AIR	161
LINES GP-AIR COMPRESSOR	57
LINES GP-AIR CONDITIONER–RADIATOR	1006
LINES GP-AIR CONDITIONER–REAR	1001
LINES GP-AIR TANK–AIR STARTING	260
LINES GP-AIR TANK–PLATFORM, LH	625
LINES GP-AIR TANK–PLATFORM, RH	622
LINES GP-AUTOMATIC LUBRICATION–LIFT CYLINDER	552
LINES GP-AUTOMATIC LUBRICATION–LOADER FRAME	548 560 566
LINES GP-AUTOMATIC LUBRICATION–REAR FRAME	571
LINES GP-AUTOMATIC LUBRICATION–TILT CYLINDER	555
LINES GP-BRAKE COOLING–FRONT	632
LINES GP-BRAKE COOLING–FRONT AXLE	627
LINES GP-BRAKE COOLING–REAR	634
LINES GP-BRAKE COOLING–REAR AXLE	630
LINES GP-CAB HEATER–REAR	1008
LINES GP-CASE DRAIN–IMPLEMENT PUMP	780
LINES GP-CASE DRAIN–STEERING	782
LINES GP-COOLANT	119
LINES GP-DIAGNOSTIC–REMOTE PRESSURE TAPS, FRONT	1082
LINES GP-DIAGNOSTIC–REMOTE PRESSURE TAPS, REAR	1085
LINES GP-DRAIN–ENGINE OIL PAN, COOLERS, TRANSMISSION	784
LINES GP-DRAIN (ENGINE OIL PAN, COOLERS, TMSN)	775
LINES GP-ENGINE OIL	80
LINES GP-ENGINE OIL–FAN DRIVE	84
LINES GP-EXPANSION TANK–AIR	785
LINES GP-EXPANSION TANK–ELECTRIC START	787
LINES GP-FUEL–PRIMARY FUEL FILTER	177
LINES GP-FUEL–WITHOUT HEATER	178
LINES GP-FUEL INJECTION	179
LINES GP-FUEL (PRIMARY FUEL FILTER)	2
LINES GP-HYDRAULIC	796
LINES GP-HYDRAULIC–FRONT	792
LINES GP-HYDRAULIC–HIGH PRESSURE SCREENS	789
LINES GP-HYDRAULIC OIL COOLER	797
LINES GP-HYDRAULIC OIL COOLER–REAR FRAME	799
LINES GP-HYDRAULIC OIL COOLER–REAR FRAME TO COOLER	802
LINES GP-LIFT CYLINDER	804
LINES GP-LIFT CYLINDER–CYLINDER TUBE MOUNTED	806 809
LINES GP-LIFT CYLINDER–LOADER FRAME	807 810
LINES GP-LUBRICATION–BUCKET LINKS	576 577 578
LINES GP-LUBRICATION–DRIVE SHAFT SUPPORT BEARING	575
LINES GP-LUBRICATION (DRIVE SHAFT SUPPORT BEARING)	566
LINES GP-PARKING BRAKE–FRONT	639
LINES GP-PAYLOAD MONITOR HYD	811
LINES GP-PILOT–FRONT	813
LINES GP-PILOT–REAR	820
LINES GP-POWER TAKE-OFF–PUMP DRIVE	428
LINES GP-SECONDARY STEERING	677
LINES GP-SERVICE BRAKE–FRONT	643 644
LINES GP-SERVICE BRAKE–REAR	641
LINES GP-STEER & BRAKE COOLER–REAR FRAME	684
LINES GP-STEER & BRAKE COOLER–REAR FRAME TO COOLER	681
LINES GP-STEERING	692
LINES GP-STEERING–MAIN PUMP, REAR	687
LINES GP-STEERING NEUTRALIZER–REAR FRAME	697
LINES GP-TILT CYLINDER	824
LINES GP-TILT CYLINDER–CYLINDER TUBE MOUNTED	826
LINES GP-TILT CYLINDER–LOADER FRAME	827
LINES GP-TILT CYLINDER–SUPER HIGH LIFT MACHINES	828
LINES GP-TRANSMISSION OIL	431
LINES GP-TURBOCHARGER AIR	162
LINES GP-TURBOCHARGER OIL	86
LINES GP-TURBOCHARGER WATER	125
LINES GP-TURBOCHARGER WATER–TURBOCHARGER	123
LINES GP-WATER–AFTERCOOLER	137
LINES GP-WATER–BYPASS	135
LINES GP-WATER–LOWER	129
LINES GP-WATER–RADIATOR	139
LINES GP-WATER–REAR	133
LINES GP-WATER–UPPER	127
LINK GP-BUCKET–HIGH LIFT MACHINES	908
LINK GP-BUCKET–STANDARD LIFT MACHINES	906
LINK GP-BUCKET–SUPER HIGH LIFT MACHINES	910

INDEX

Name	Page
LINK GP-STEERING FRAME LOCK	579
LOCKOUT AS-SWITCH	197
LUBRICATION GP-AUTOMATIC	580
LUBRICATION GP-AUTOMATIC (PLATFORM)	1035
LUBRICATOR GP-AIR MOTOR	263

M

MAGNET GP-PILOT VALVE	829, 830
MANIFOLD GP-EXHAUST	164
MANIFOLD GP-FUEL–LH	183
MANIFOLD GP-FUEL–RH	182
METERING GP-ENGINE OIL–OIL RENEWAL SYSTEM	89
MIRROR GP-LH	4, 1010
MIRROR GP-RH	4, 1012
MODULE GP-MESSAGE CENTER	1014
MODULE GP-MONITOR KEYPAD	1014
MODULE GP-QUAD GAUGE	1015
MODULE GP-SPEEDOMETER & TACH	309
MOTOR & PUMP GP-PRELUBRICATION	93
MOTOR GP-WINDOW WIPER–FRONT	1017
MOTOR GP-WINDOW WIPER–FRONT QUARTER, LH	1019
MOTOR GP-WINDOW WIPER–FRONT QUARTER, RH	1018
MOTOR GP-WINDOW WIPER–REAR	1016
MOTOR GP-WINDOW WIPER (24-VOLT, 2-SPEED)	1018, 1019
MOUNTING GP-ALTERNATOR	59
MOUNTING GP-ANTENNA–RADIO	1020
MOUNTING GP-BATTERY	582
MOUNTING GP-BEVEL GEAR	439
MOUNTING GP-EXPANSION TANK–AIR STARTING	831
MOUNTING GP-LIFT CYLINDER	833
MOUNTING GP-MONITOR–CAES	1021
MOUNTING GP-PLATFORM	1022, 1024
MOUNTING GP-PLATFORM–CAB ACCESS	1023
MOUNTING GP-PLATFORM BRACKET	1025
MOUNTING GP-RIM	440, 441
MOUNTING GP-SENSOR–BUCKET POSITIONER	264
MOUNTING GP-TRANSMISSION	442
MUFFLER GP	166

O

OIL CHANGE GP-HIGH SPEED	91
OPERATOR AR	1026

P

PADLOCK GP	374, 501, 502, 541, 1035
PADLOCK GP (ENGINE OIL FILL TUBE)	78
PADLOCK GP (ENGINE OIL FILLER)	74
PAN GP-BACKREST–CLOTH	1027
PAN GP-OIL	61
PANEL GP-INSTRUMENT–FRONT	1030
PANEL GP-INSTRUMENT–SIDE	1028
PEDAL GP-GOVERNOR	1032, 1033
PIN & SEAL GP-LINKAGE	912, 913
PISTON & ROD GP	64, 66
PLANETARY GP-TRANSMISSION	444
PLATE & FILM GP	1090
PLATE GP-FIREWALL	583
PLATE-SERIAL NUMBER (TRANSMISSION)	444
PLATFORM AR–AIR STARTING, RH	1034
PLATFORM AR–ELECTRIC START, RH	1034
PLATFORM AR–LH	1035
PLATFORM AR–RH	1034
PLATFORM GP-OPERATOR	1036
PLATFORM GP-OPERATOR–CAB ACCESS, LH	1039
PLATFORM GP-OPERATOR–CAB ACCESS, RH	1037
PLUG	477
PLUG-DRAIN	54, 119, 852, 855
PLUG-MAGNETIC	384, 385, 409, 499
PLUG-OIL DRAIN	784
PLUG-OIL DRAIN (OIL PAN)	61
POWER TRAIN AR	451
PRECLEANER AR-CAB AIR	1043
PRECLEANER GP	167, 168, 169, 170
PRECLEANER GP-CAB AIR	1044

INDEX

Name	Page
PROTECTOR GP-EDGE	940
PUMP & MOTOR GP-PRELUBRICATION	93
PUMP & MTG GP-BRAKE	645
PUMP & MTG GP-DRIVE LUBE	452
PUMP & MTG GP-IMPLEMENT	834
PUMP & MTG GP-PILOT & COOLER	835
PUMP & MTG GP-SECONDARY STEER	700
PUMP & MTG GP-STEERING & BRAKE	701
PUMP & MTG GP-STER & BRAKE CLR	702
PUMP GP-AUXILIARY WATER	141
PUMP GP-ENGINE OIL	94
	95
PUMP GP-FUEL INJECTION	184
PUMP GP-FUEL PRIMING	185
PUMP GP-FUEL PRM & PRIM FILTER	187
PUMP GP-FUEL TRANSFER	188
	189
PUMP GP-GEAR–BRAKE COOLING	705
PUMP GP-GEAR–FRONT SECTION–HYD OIL COOLER, PILOT SYSTEM	837
PUMP GP-GEAR–PILOT SYSTEM, HYD OIL COOLER	836
PUMP GP-GEAR–PUMP DRIVE LUBRICATION	453
PUMP GP-GEAR–REAR SECTION–PILOT SYSTEM	839
PUMP GP-GEAR–SECONDARY STEERING	704
PUMP GP-GEAR–STEERING, BRAKE OIL COOLER	703
PUMP GP-GEAR (BRAKE COOLING)	701
PUMP GP-GEAR (SECONDARY STEERING)	700
PUMP GP-GEAR (STEERING, BRAKE OIL COOLER)	702
PUMP GP-LUBRICATION–AUTOMATIC	586
PUMP GP-PISTON–BRAKE	646
PUMP GP-PISTON–IMPL, VARIABLE DISPLACEMENT	842
PUMP GP-PISTON–IMPLEMENT, FIXED DISPLACEMENT	840
PUMP GP-PISTON–STEERING, LH	706
PUMP GP-PISTON–STEERING, RH	708
PUMP GP-PISTON (IMPLEMENT, FIXED DISPLACEMENT)	834
PUMP GP-PRELUBRICATION	96
	99
PUMP GP-SCAVENGE	105
PUMP GP-SCAVENGE–FRONT SUMP	103
PUMP GP-TRANSMISSION–CHARGE	454
	455
PUMP GP-WATER	143
PUMP GP-WATER–JACKET WATER	144
	145
RADIATOR GP	146
	152
RADIO GP-COMMUNICATION (PRODUCT LINK)	205
RADIO GP-COMMUNICATION (PRODUCT LINK 121SR)	231
RECEIVER GP (GLOBAL POSITIONING SYSTEM)	235
RECLINER GP-SEAT	1045
REGULATOR AS-VOLTAGE (24-VOLT) (ALTERNATOR)	195
REGULATOR-WATER TEMPERATURE (92-DEG C)	118
RELAY AS (24-VOLT) (AIR CONDITIONER PRECLEANER)	353
RELAY AS (24-VOLT) (BACKLIGHT)	353
RELAY AS (24-VOLT) (BACKUP ALARM)	353
RELAY AS (24-VOLT) (ENGINE SHUTDOWN)	353
RELAY AS (24-VOLT) (FRONT FLOODLIGHTS)	353
RELAY AS (24-VOLT) (FRONT ROPS FLOODLIGHTS)	353
RELAY AS (24-VOLT) (LIGHTS)	353
RELAY AS (24-VOLT) (PLATFORM FLOODLIGHTS)	353
RELAY AS (24-VOLT) (PRELUBRICATION)	353
RELAY AS (24-VOLT) (REAR ROPS FLOODLIGHTS)	353
RELAY AS (24-VOLT) (ROPS HID LIGHTS NO. 1)	353
RELAY AS (24-VOLT) (ROPS HID LIGHTS NO. 2)	353
RELAY AS (24-VOLT) (START)	353
RENEWAL AR-OIL	106
RIM AR	456
	457
RIM GP-DEMOUNTABLE	458
	459
	460
	461
RIM GP-SINGLE	462
	463
RIM GP-SINGLE–SPARE	462
ROPS AR	1046
ROPS GP	1047
ROTATING GP-PUMP–BRAKE	648
ROTATING GP-PUMP–IMPLEMENT	844
	845
ROTATING GP-PUMP–STEERING	710
SCREEN-AIR CLEANER INLET	157

R

S

INDEX

Name	Page
SCREEN AS	673, 711
SCREEN AS (HYDRAULIC TANK)	852, 857
SCREEN-FILTER	1069
SCREEN GP	852, 857
SCREEN GP-HIGH PRESSURE–HYDRAULIC, STEERING	711
SCREEN GP-HYDRAULIC–BRAKE COOLING	649
SCREEN-SCAVENGE (FRONT SUMP PUMP)	103
SCREEN-SUCTION	425
SEAL	14
SEAL (BREATHER COVER)	72
SEAL (COVER, VALVE MECHANISM)	73
SEAL GP-CRANKSHAFT	67
SEAL GP-WATER PUMP	145
SEAL-LIP TYPE (REGULATOR HOUSING)	118
SEAL-O-RING	738
SEAL-RING (PRIMARY FUEL FILTER)	175
SEAL (VALVE COVER)	19
SEALING GP-GLASS	1048
SEAT BELT GP	1051
SEAT GP	1052
SEAT GP–CLOTH	1049, 1051
SEAT GP-COMPANION	1053, 1054, 1055, 1056
SEAT GP-SUSPENSION	1057
SENDER AS-TEMPERATURE (JACKET WATER)	325
SENDER GP-FUEL LEVEL	265
SENSOR & MTG GP-LIFT POSITION	266
SENSOR GP-EXHAUST TEMPERATURE	268
SENSOR GP-EXHAUST TEMPERATURE (TURBOCHARGER INLET, LH)	325
SENSOR GP-EXHAUST TEMPERATURE (TURBOCHARGER INLET, RH)	325
SENSOR GP-POSITION–LEFT BRAKE PEDAL	271
SENSOR GP-POSITION–LIFT, TILT	269
SENSOR GP-POSITION–ROTARY–THROTTLE	270
SENSOR GP-PRESSURE–AIR TANK	274
SENSOR GP-PRESSURE–ENGINE OIL	275
SENSOR GP-PRESSURE–INLET AIR RESTRICTION	273
SENSOR GP-PRESSURE–TC IMPELLER CLUTCH OIL	272
SENSOR GP-PRESSURE (ATMOSPHERIC AIR)	325
SENSOR GP-PRESSURE (AUTOMATIC LUBRICATION)	363
SENSOR GP-PRESSURE (CRANKCASE)	325
SENSOR GP-PRESSURE (FILTERED OIL)	325
SENSOR GP-PRESSURE (IMPLEMENT PUMP OIL)	335
SENSOR GP-PRESSURE (LIFT CYLINDER HEAD END OIL)	335
SENSOR GP-PRESSURE (UNFILTERED OIL)	325
SENSOR GP-SPEED	277
SENSOR GP-SPEED–FAN DRIVE	276
SENSOR GP-SPEED–MAGNETIC, LOW OUTPUT	278
SENSOR GP-SPEED (TIMING)	325
SENSOR GP-SPEED (TIMING CALIBRATION)	325
SENSOR GP-SPEED (TORQUE CONVERTER OUTPUT)	369
SENSOR GP-TEMPERATURE	281
SENSOR GP-TEMPERATURE–AMBIENT AIR	280
SENSOR GP-TEMPERATURE–ENGINE COOLANT	279
SENSOR GP-TEMPERATURE (JACKET WATER)	325
SENSOR GP-TEMPERATURE (REAR AFTERCOOLER)	325
SERVICE CENTER GP	1093
SERVICE GP-COMMUNICATION (PRODUCT LINK 300)	221
SHAFT GP-DRIVE–MAIN; CENTER, FRONT	464
SHAFT GP-DRIVE–REAR	466
SHAFT GP-INPUT DRIVE	467
SHAFT GP-PUMP DRIVE–FRONT	470
SHAFT GP-PUMP DRIVE–REAR	468
SHAFT GP-PUMP DRIVE (FRONT)	451
SHAFT GP-PUMP DRIVE INPUT	451, 471
SHAFT GP-PUMP DRIVE (REAR)	451
SLIP JOINT GP	474
SLIP JOINT GP–CENTER	473
SLIP JOINT GP–FRONT PUMP DRIVE SHAFT	472
SLIP JOINT GP–INPUT DRIVE SHAFT	474
SOFTWARE GP-COMMUNICATION (PRODUCT LINK 121SR)	231
SOFTWARE GP-COMMUNICATION (PRODUCT LINK 300)	221
SOLENOID AS-STARTING MOTOR	295
SPIDER & BEARING GP	472, 474, 475
SPRING GP-CAB DOOR	1058
STARTING AID GP-ETHER	282, 284, 285

INDEX

Name	Page
STARTING AR-AIR	287
STARTING AR-COLD WEATHER	288
STARTING AR-ELECTRIC	288
STARTING MOTOR GP-AIR–TURBINE	292, 293, 294
STARTING MOTOR GP-AIR–VANE	289, 291
STARTING MOTOR GP-AIR (TURBINE)	293
STARTING MOTOR GP-ELECTRIC	298
STARTING MOTOR GP-ELECTRIC–UPPER	295
STEP GP	589, 590
STRAINER AS	767, 852
STRAINER (FILLER)	855
STRAINER-FUEL	190, 191
SUPPORT GP-ENGINE	68, 69
SUPPORT GP-HYDRAULIC CONTROL	1060
SUPPORT GP-SEAT	1063
SUPPORT GP-STEERING CONTROL	1064
SUSPENSION GP-SEAT–AIR	1067
SWITCH AS-LIMIT (PARKING BRAKE)	340
SWITCH AS-LIMIT (STIC CONTROL LOCKOUT)	310
SWITCH AS-LIMIT (STOP LIGHT)	608
SWITCH AS-PRESSURE	675
SWITCH AS-PRESSURE (FUEL FILTER DIFFERENTIAL)	325
SWITCH AS-PRESSURE (IMPLEMENT FILTER BYPASS)	333
SWITCH AS-PRESSURE (PARKING BRAKE OIL)	340
SWITCH AS-PRESSURE (PRIMARY STEERING OIL)	340
SWITCH AS-PRESSURE (REFRIGERANT)	42, 1001
SWITCH AS-PRESSURE (SERVICE BRAKE OIL)	615
SWITCH AS-PRESSURE (STEERING, BRAKE FILTER BYPASS)	333
SWITCH AS-PUSH BUTTON (HORN)	310
SWITCH AS-PUSH BUTTON (REMOTE PAYLOAD STORE)	310
SWITCH AS-PUSH BUTTON (THROTTLE LOCK RESUME)	310
SWITCH AS-PUSH BUTTON (THROTTLE LOCK SET)	310
SWITCH AS-ROCKER (FLOODLIGHT)	244
SWITCH AS-ROCKER (FRONT FLOODLIGHTS)	312
SWITCH AS-ROCKER (HID FLOODLIGHTS, FRONT)	312
SWITCH AS-ROCKER (INTERIOR LIGHT)	312
SWITCH AS-ROCKER (LIFT POSITION SET)	312
SWITCH AS-ROCKER (REAR FLOODLIGHTS)	312
SWITCH AS-ROCKER (RUNNING LIGHTS)	310
SWITCH AS-ROCKER (STAIRWAY ACCESS LIGHT)	310
SWITCH AS-ROCKER (STARTING AID)	310
SWITCH AS-ROCKER (THROTTLE LOCK ENABLE)	310
SWITCH AS-ROCKER (TORQUE CONVERTER LOCKUP CLUTCH)	310
SWITCH AS-ROCKER (WARNING BEACON)	244, 310
SWITCH AS-ROTARY (A/C, HEATER FAN CONTROL)	309
SWITCH AS-ROTARY (REDUCED RIMPULL SELECT)	309
SWITCH AS-ROTARY (WIPER, WASHER) (QUARTER WINDOW)	309
SWITCH AS-TEMPERATURE (ENGINE OIL)	226
SWITCH AS-TEMPERATURE (REFRIGERANT)	954
SWITCH AS-TOGGLE (HOOD LIGHTS)	374
SWITCH AS-TOGGLE (STAIRWAY LIGHTS)	374
SWITCH AS-WIPER (24-VOLT) (INTERMITTENT)	306
SWITCH GP-BYPASS– POWER TRAIN OIL FILTER	299
SWITCH GP-DISCONNECT–BATTERY	300
SWITCH GP-FLOW–ENGINE COOLANT	301
SWITCH GP-KEY	310
SWITCH GP-KEY (VIMS SERVICE)	374
SWITCH GP-LIQUID LEVEL– OIL COMPARTMENTS	302
SWITCH GP-MAGNETIC–MAIN RELAY	305
SWITCH GP-MAGNETIC– PRELUBRICATION PUMP RELAY	304
SWITCH GP-MAGNETIC–START RELAY	303
SWITCH GP-MAGNETIC (PRELUBRICATION PUMP RELAY)	99
SWITCH GP-MAGNETIC (24-VOLT) (MAIN RELAY)	353
SWITCH GP-PRESSURE (OIL FILTER BYPASS) (PUMP DRIVE FILTER BYPASS)	771
SWITCH GP-ROCKER (FLOODLIGHTS, FRONT) (FLOODLIGHT)	244
SWITCH GP-ROCKER (WARNING BEACON)	244
SWITCH GP-TOGGLE (FUEL FILTER DIFFERENTIAL)	173
SWITCH GP-TOGGLE (GROUND LEVEL SHUTDOWN)	375
SWITCH GP-TOGGLE (STARTING MOTOR LOCKOUT)	375

INDEX

Name	Page
SWITCH GP-TOGGLE (TRANSMISSION LOCKOUT)	374
SWITCH GP-WIPER–INTERMITTENT– FRONT, REAR	306
T	
TANK & MTG GP-ENGINE OIL– OIL RENEWAL SYSTEM	107
TANK & MTG GP-HYDRAULIC–IMPLEMENT	849
TANK & MTG GP-HYDRAULIC– STEERING, BRAKE, BRAKE COOLING	847
TANK GP-AIR	651
TANK GP-AIR–STARTING	650
TANK GP-ENGINE OIL– METERING, OIL RENEWAL SYSTEM	109
TANK GP-EXPANSION–AIR	850
TANK GP-FUEL–CENTER	193
TANK GP-FUEL–LH	191
TANK GP-FUEL–RH	190
TANK GP-GREASE	591
TANK GP-HYDRAULIC–BRAKE COOLING	855
TANK GP-HYDRAULIC–IMPLEMENT	857
TANK GP-HYDRAULIC–STEERING, BRAKE	852
TIP GP-ABRASION	941 942
TIP GP-GENERAL PURPOSE	943
TIP GP-LONG	944 945
TIP GP-PENETRATION	945 946 947
TIP-PENETRATION	948
TIRE GP	475 476
TORQUE CONVERTER & HOUSING GP– LOCKUP	477
TORQUE CONVERTER GP–LOCKUP	479
TRANSMISSION AR	482
TURBOCHARGER GP	171 172
U	
UNIVERSAL JOINT GP– FRONT DRIVE SHAFT	483
UNIVERSAL JOINT GP–REAR DRIVE SHAFT	484
V	
V-BELT SET (INCLUDES 6-BELTS) (FAN)	38
VALVE	865 869
VALVE & LINES GP-LUBRICATION	592 594
VALVE & LINES GP-STEERING NEUT	712
VALVE & MTG GP-BRAKE CONTROL– PARKING	652
VALVE & MTG GP-FAN DRIVE	110
VALVE & MTG GP-MAIN CONTROL	859 861
VALVE & MTG GP-SECONDARY STEER	714
VALVE & MTG GP-STEERING	715 716
VALVE & MTG GP-STEERING NEUT	718
VALVE AS-FLUID SAMPLING (HYDRAULIC OIL)	684
VALVE GP-BRAKE CONTROL–PARKING	654
VALVE GP-CHECK	863
VALVE GP-CHECK–BRAKE COOLING	655
VALVE GP-CHECK–PILOT	863
VALVE GP-CHECK–STEERING	722 723
VALVE GP-CHECK– STEERING PUMP DISCHARGE	720
VALVE GP-CHECK–STEERING QUAD	721
VALVE GP-CHECK & RELIEF– MAIN HYDRAULIC	864
VALVE GP-CHECK (BRAKE ACCUMULATOR)	601
VALVE GP-CHECK (BRAKE PUMP)	601
VALVE GP-CHECK (LUBRICATION PUMP)	586
VALVE GP-CHECK (PILOT)	813
VALVE GP-CHECK (STEERING PUMP)	687
VALVE GP-COOLANT SAMPLING	154
VALVE GP-DIVERTER– SECONDARY STEERING	724
VALVE GP-ETHER STARTING	307
VALVE GP-LUBE DISTRIBUTION– 2-INJECTOR	598
VALVE GP-LUBE DISTRIBUTION– 3-INJECTOR	596
VALVE GP-LUBE DISTRIBUTION– 4-INJECTOR	597
VALVE GP-MAIN CONTROL–LH	865
VALVE GP-MAIN CONTROL–RH	869
VALVE GP-METERING–ENGINE OIL– OIL RENEWAL SYSTEM	111
VALVE GP-MODULATING–FAN DRIVE	485
VALVE GP-MODULATING– TC IMPELLER CLUTCH	487
VALVE GP-MODULATING– TC LOCKUP CLUTCH	486
VALVE GP-PILOT–LIFT	875
VALVE GP-PILOT–LIFT, TILT	873
VALVE GP-PILOT–STIC STEERING	727
VALVE GP-PILOT–TILT	874
VALVE GP-PILOT CARTRIDGE	728 729 876

INDEX

Name	Page
	877
	878
	879
VALVE GP-PILOT (LIFT)	873
VALVE GP-PILOT (TILT)	873
VALVE GP-PUMP CONTROL–FLOW COMPENSATOR–STEERING	731
VALVE GP-PUMP CONTROL–PRESSURE COMPENSATOR–BRAKE	656
VALVE GP-PUMP CONTROL–PRESSURE COMPENSATOR–IMPLEMENT	880
	882
VALVE GP-PUMP CONTROL–PRESSURE COMPENSATOR–STEERING	732
VALVE GP-PUMP CONTROL–PRESSURE, FLOW COMPENSATOR–IMPLEMENT	881
VALVE GP-PUMP CONTROL–PRESSURE, FLOW COMPENSATOR–STEERING	730
VALVE GP-PURGE (AIR DRYER)	607
VALVE GP-RELIEF	890
VALVE GP-RELIEF–HYDRAULIC OIL COOLER BYPASS	888
VALVE GP-RELIEF–LINE	883
	884
	889
VALVE GP-RELIEF–MAIN	885
VALVE GP-RELIEF–PILOT	886
	887
VALVE GP-RELIEF–PUMP BACKUP	736
VALVE GP-RELIEF–SECONDARY STEERING	733
	734
	735
VALVE GP-RELIEF (LINE, TILT CYL ROD END PORT)	865
VALVE GP-RELIEF (MAIN)	885
VALVE GP-RELIEF (SECONDARY STEERING)	724
VALVE GP-SELECTOR–CLUTCH OIL DISTRIBUTION	488
VALVE GP-SELECTOR–HYDRAULIC	891
VALVE GP-SELECTOR & PRESS CONT–DEAD ENGINE, LIFT ARM LOWER	892
VALVE GP-SELECTOR & PRESS CONT–STEERING	737
VALVE GP-SELECTOR & PRESS CONT–TRANSMISSION	489
VALVE GP-SELECTOR & PRESS CONT (CLUTCH OIL PRESSURE)	495
VALVE GP-SELECTOR & PRESS CONT (DEAD ENGINE LOWER)	813
VALVE GP-SELECTOR (CLUTCH OIL DISTRIBUTION)	495
VALVE GP-SELECTOR (HYDRAULIC)	813
VALVE GP-SHUTTLE	738
VALVE GP-SOLENOID–AIR HORN	657
VALVE GP-SOLENOID–LOAD SENSING SIGNAL	893
VALVE GP-SOLENOID–LOWER, RAISE CONTROL	894
VALVE GP-SOLENOID–TRANSMISSION CLUTCH	492
VALVE GP-SOLENOID (AIR START)	208
	212
VALVE GP-SOLENOID (AUTOLUBE AIR CONTROL)	586
VALVE GP-STEERING	739
VALVE GP-STEERING NEUTRALIZER	742
VALVE GP-TIRE	441
	462
	463
VALVE GP-TORQUE CONV PRIORITY	493
VALVE GP-TRANSMISSION CONTROL	495
VALVE MECHANISM GP	70
VESSEL AR	895

W

WALKWAY GP	599
WARNING GP-BACKUP	308
WASHER GP-WINDOW	1069
WHEEL GP-FINAL DRIVE & BRAKE	498
WING GP-BUCKET	949
WIPER & WASHER GP-WINDOW–FRONT, REAR	1070
WIPER GP-WINDOW	1072
WIPER GP-WINDOW–FRONT QUARTER	1073
WIRING GP-CAB	309
WIRING GP-CAMERA	318
WIRING GP-ELECTRIC START	320
WIRING GP-ENGINE	325
WIRING GP-FILTERS–POWER TRAIN; STEERING CASE DRAIN	331
WIRING GP-FIREWALL	333
WIRING GP-FRONT	335
WIRING GP-HEATER	338
WIRING GP-MACHINE	340
WIRING GP-MACHINE–CAES	349
	351
WIRING GP-MONITOR	353
WIRING GP-OIL RENEWAL SYSTEM	360
WIRING GP-PLATFORM	367
WIRING GP-PLATFORM–AIR START, RH	365
WIRING GP-PLATFORM–AUTOMATIC LUBRICATION, LH	363
WIRING GP-POWER TRAIN	369

INDEX

Name	Page	Name	Page
WIRING GP-REAR	372		
WIRING GP-REAR–BUMPER	374		
WIRING GP-REAR–RADIATOR GUARD	377		
WIRING GP-ROPS	378		
WIRING GP-SENSOR–AXLE OIL TEMPERATURE	380		
WIRING GP-START CONTROL	381		

INDEX

Désignation	Page

A

ACCOUPLEMENT D'ENTRAINEMENT AUXILIAIRE (ASS) 398
ACCOUPLEMENT D'ENTRAINEMENT AUXILIAIRE (ASS) (ARRIÈRE) 451
ACCUMULATEUR - FREIN 604
605
ACCUMULATEUR DE FREIN ET MONTAGE (ASS) 601
ADAPTATEUR (ASS) 413
ADAPTATEUR DE CARTER DE VOLANT (ASS) 382
AIMANT DE SOUPAPE PILOTE (ASS) 829
830
ALLUME-CIGARETTES (ASS) (12 VOLTS) 310
ALTERNATEUR DE CHARGE (ASS) 195
AMORTISSEUR DE VIBRATIONS (ASS) 29
AMPLIFICATEUR - CAPTEUR (ASS) 203
AMPOULE (12V, 24V, 35W) 239
AMPOULE (24 VOLTS) 236
309
360
AMPOULE (24-VOLTS, ROUGE) 310
AMPOULE (24V, JAUNE) 310
AMPOULE (24V, 70W) 243
ARBRE A CAMES (ASS) 13
ARBRE DE TRANSMISSION D'ENTRÉE (ASS) 467
ARBRE D'ENTRAÎNEMENT (ASS) 464
466
ARBRE D'ENTRAÎNEMENT DE POMPE (ASS) 468
470
ARBRE D'ENTRAÎNEMENT DE POMPE (ASS) (ARRIÈRE) 451
ARBRE D'ENTRAÎNEMENT DE POMPE (ASS) (AVANT) 451
ARBRE D'ENTRÉE D'ENTRAÎNEMENT DE POMPE (ASS) 451
471
ATTELAGE D'ARTICULATION (ASS) 540
AUTOCOLLANT DE MISE EN GARDE (HAUTE PRESSION, LIRE LE MANUEL) 604
AUTOCOLLANT DE MISE EN GARDE (LIAISON DE PRODUIT) 230
AUTOCOLLANT DE MISE EN GARDE (NE PAS LEVER) 1091
AUTOCOLLANT D'IDENTIFICATION 1093
AUTOCOLLANT D'IDENTIFICATION (MODULE DE COMMANDE ÉLECTRONIQUE) 222
AUTOCOLLANT D'IDENTIFICATION (POMPE DE PRÉGRAISSAGE) 1090
AUTOCOLLANT-INFORMATION (ENTRÉE/ SORTIE) 1091
AUXILIAIRE DE DÉMARRAGE À L'ÉTHER 282
284
285
AVERTISSEUR (ASS) 194
AVERTISSEUR DE RECUL (ASS) 308
AXE ET JOINT - TIMONERIE (ASS) 912
913

B

BALAI D'ESSUIE-GLACE (ENS) 1073
BALAI D'ESSUIE-GLACE (ENS) (AVANT) 1070
BASE DE FILTRE À CARBURANT (ASS) 187
*BASE GP-VALVE COVER 10
BATI - CHARGEUSE (ASS) 527
BÂTI - CHARGEUSE (ENS) 520
BÂTI AR (ASS) 529
BÂTI AR (ENS) 524
BATTERIE 199
BATTERIE (ASS) 199
200
201
BATTERIE (ASS) (24 VOLTS) 233
351
BATTERIE-COMMANDE ÉLECTRONIQUE (ASS) (ANALYSE SUR ROUTES/ MODULE VIMS PRINCIPAL) 971
BATTERIE ET CÂBLAGE 197
BATTERIE (12 VOLTS) 200
BLINDAGE DE TRANSMISSION (ASS) 537
BLINDAGE DE TRANSMISSION (ASS) (BOITE DE VITESSE) 3
BLINDAGE DES CANALISATIONS DES FREINS 533
BLOC-CYLINDRES - COUVERCLE (ASS) 14
BLOC-CYLINDRES (ASS) 22
BLOC-CYLINDRES (ENS) 21
BLOC DE BRANCHEMENT (ASS) 202
BLOC-FUSIBLE (ENS) 354
BOÎTE DE VITESSES (VERSION) 482
BOÎTE PLANÉTAIRE (ASS) 444
BOUCHON À ÉVENT (LAVE-GLACE) 1069
BOUCHON AIMANTÉ 384
385
409
499
BOUCHON DE GOULOTTE DE REMPLISSAGE 91
586
767
852

* TRADUCTION NON DISPONIBLE AU MOMENT DE LA PUBLICATION

INDEX

Désignation	Page
	855
BOUCHON DE GOULOTTE DE REMPLISSAGE D'HUILE	413
BOUCHON DE GOULOTTE DE REMPLISSAGE (ENS) (RÉSERVOIR DE CARBURANT)	191
BOUCHON DE GOULOTTE DE REMPLISSAGE (ENS) (RÉSERVOIR DE CARBURANT)	190
BOUCHON DE GOULOTTE DE REMPLISSAGE (HUILE HYDRAULIQUE)	767
BOUCHON DE GOULOTTE DE REMPLISSAGE (RÉSERVOIR DE RÉGULATION D'HUILE MOTEUR)	109
BOUCHON DE REMPLISSAGE D'HUILE MOTEUR (ASS)	74
BOUCHON DE VIDANGE	54
	119
	852
	855
BOUCHON DE VIDANGE D'HUILE	784
BOUCHON DE VIDANGE D'HUILE (CARTER D'HUILE)	61
BOUCHON FILETÉ	477
BOUCHON PARE-POUSSIÈRE	473
BOULONNERIE - COMPOSANT ÉLECTRONIQUE (ASS)	224
BOULONNERIE DE BARRE D'ATTELAGE ET PARE-CHOCS	512
	513
BOULONNERIE DE BLINDAGE INFERIEUR (ASS)	511
BOULONNERIE DE GARDE-BOUE	514
BOULONNERIE DE LA CULASSE (ASS)	25
BOULONNERIE DE POIGNÉE (ASS)	515
BOULONNERIE D'ESSIEU FIXE (ASS)	411
BOULONNERIE D'ESSIEU OSCILLANT (ASS)	412
BOULONNERIE DU TOIT ROPS (ASS)	981
BOURRELET D'ÉTANCHÉITÉ	14
BOURRELET D'ÉTANCHÉITÉ (CACHE-SOUPAPES)	19
BOURRELET D'ÉTANCHÉITÉ (COUVERCLE DE RENIFLARD)	72
BOURRELET D'ÉTANCHÉITÉ (*COVER, VALVE MECHANISM)	73
BRAS D'ESSUIE-GLACE (ASS)	956
BRAS ET PALIER (ENS)	896
	898
	900

C

CABINE - REVÊTEMENT (ASS)	996
CABINE (ASS)	962
CABINE ET PLATE-FORME (ASS)	959
CABINE-FAISCEAU DE CÂBLES (ENS) (SUPÉRIEUR)	310
CABINE (VERSION)	961
CABLAGE - CAPTEUR (ASS)	380
CABLAGE - PLATE-FORME (ASS)	363
CABLAGE - PLATE-FORME (ASS)	365
	367
CABLAGE AR (ASS)	372
	374
	377
CABLAGE AV (ASS)	335
CÂBLAGE BÂTI ROPS	378
CABLAGE DE CABINE (ASS)	309
CÂBLAGE DE CAMÉRA (ASS)	318
CÂBLAGE DE CIRCUIT DE RENOUVELLEMENT D'HUILE (ASS)	360
CÂBLAGE DE CLOISON PARE-FEU	333
CÂBLAGE DE COMMANDE DE DÉMARRAGE (ASS)	381
CÂBLAGE DE FILTRES (ASS)	331
CABLAGE DE LA MACHINE (ASS)	340
	349
	351
CABLAGE DE MOTEUR (ASS)	325
CABLAGE DE TRANSMISSION (ASS)	369
CÂBLAGE-DÉMARRAGE ÉLECTRIQUE (ASS)	320
CABLAGE DU CHAUFFAGE DE CABINE (ASS)	338
CABLAGE DU PANNEAU DE COMMANDE	353
CABLAGE MOTEUR (ENS)	225
	325
CACHE-SOUPAPES (ASS)	19
CADENAS (ASS)	374
	501
	502
	541
	1035
CADENAS (ASS) (GOULOTTE DE REMPLISSAGE D'HUILE MOTEUR)	74
CADENAS (ASS) (GOULOTTTE DE REMPLISSAGE D'HUILE MOTEUR)	78
*CAMERA GP (*115-DEGREE, COLOR)	318
CANALISATION DE DIRECTION AUXILIAIRE	677
CANALISATIONS A COMMANDE PILOTE (ASS)	813
	820
CANALISATIONS D'ACCUMULATEUR (ASS)	619
CANALISATIONS D'AIR (ASS)	161
CANALISATIONS D'AIR DE TURBOCOMPRESSEUR (ASS)	162
CANALISATIONS DE CARBURANT (ASS)	177

* TRADUCTION NON DISPONIBLE AU MOMENT DE LA PUBLICATION

INDEX

Désignation	Page
	178
CANALISATIONS DE CARBURANT (ASS) (FILTRE À CARBURANT PRIMAIRE)	2
CANALISATIONS DE CHAUFFAGE DE CABINE (ASS)	1008
CANALISATIONS DE CLIMATISEUR (ASS)	1001
	1006
CANALISATIONS DE DIAGNOSTIC (ASS)	1082
	1085
CANALISATIONS DE DIRECTION (ASS)	687
	692
CANALISATIONS DE DIRECTION ET DE REFROIDISSEUR DE FREIN	681
	684
CANALISATIONS DE GRAISSAGE (ASS)	575
	576
	577
	578
CANALISATIONS DE GRAISSAGE (ASS) (*DRIVE SHAFT SUPPORT BEARING)	566
CANALISATIONS DE GRAISSAGE AUTOMATIQUE (ASS)	548
	552
	555
	560
	566
	571
CANALISATIONS DE LIQUIDE DE REFROIDISSEMENT (ASS)	119
CANALISATIONS DE NEUTRALISATION DE DIRECTION (ASS)	697
CANALISATIONS DE PRISE DE FORCE (ASS)	428
CANALISATIONS DE RÉCHAUFFEUR DE LIQUIDE DE REFROIDISSEMENT	1008
CANALISATIONS DE REFROIDISSEMENT DES FREINS	627
	630
	632
	634
CANALISATIONS DE REFROIDISSEUR D'HUILE HYDR. (ASS)	797
	799
	802
CANALISATIONS DE RETOUR AU CARTER (ASS)	780
	782
CANALISATIONS DE VASE D'EXPANSION (ASS)	785
	787
CANALISATIONS DE VÉRIN DE LEVAGE (ASS)	804
	806
	807
	809
	810
CANALISATIONS DE VIDANGE (ASS)	784
CANALISATIONS DE VIDANGE (ASS) (*ENGINE OIL PAN, COOLERS, TMSN)	775
CANALISATIONS D'EAU (ASS)	127
	129
	133
	135
	137
	139
CANALISATIONS D'EAU DE TURBOCOMPRESSEUR	123
	125
CANALISATIONS D'HUILE DE BOÎTE (ASS)	431
CANALISATIONS D'HUILE DE TURBOCOMPRESSEUR (ASS)	86
CANALISATIONS D'HUILE MOTEUR (ASS)	80
	84
CANALISATIONS D'INJECTION DE CARBURANT (ASS)	179
CANALISATIONS DU COMPRESSEUR D'AIR (ASS)	57
CANALISATIONS DU FREIN DE MANOEUVRE (ASS)	641
	643
	644
CANALISATIONS DU FREIN DE STATIONNEMENT	639
CANALISATIONS DU RÉSERVOIR D'AIR (ASS)	260
CANALISATIONS DU RÉSERVOIR D'AIR (ASS)	622
	625
CANALISATIONS DU VÉRIN D'INCLINAISON (ASS)	824
	826
	827
	828
CANALISATIONS-HYDRAULIQUE D'INDICATEUR DE CHARGE UTILE (ASS)	811
CANALISATIONS HYDRAULIQUES (ASS)	789
	792
	796
CAPOT ET PROTECTION (ASS)	541
CAPTEUR DE PRESSION (ASS)	272
	273
	274
	275
CAPTEUR DE PRESSION (ASS) (AIR ATMOSPHÉRIQUE)	325

* TRADUCTION NON DISPONIBLE AU MOMENT DE LA PUBLICATION

INDEX

Désignation	Page
CAPTEUR DE PRESSION (ASS) (CARTER)	325
CAPTEUR DE PRESSION (ASS) (GRAISSAGE AUTOMATIQUE)	363
CAPTEUR DE PRESSION (ASS) (HUILE CÔTÉ TÊTE DU VÉRIN DE LEVAGE)	335
CAPTEUR DE PRESSION (ASS) (HUILE DE POMPE D'ÉQUIPEMENT)	335
CAPTEUR DE PRESSION (ASS) (HUILE FILTRÉE)	325
CAPTEUR DE PRESSION (ASS) (HUILE NON FILTRÉE)	325
CAPTEUR DE TEMPERATURE (ASS)	279
	280
	281
CAPTEUR DE TEMPERATURE (ASS) (EAU DES CHEMISES)	325
CAPTEUR DE TEMPERATURE (ASS) (REFROIDISSEUR D'ADMISSION AR)	325
CAPTEUR DE TEMPERATURE D'ECHAPPEMENT (ASS)	268
CAPTEUR DE TEMPERATURE D'ECHAPPEMENT (ASS) (ADMISSION DU TURBOCOMPRESSEUR, GAUCHE)	325
CAPTEUR DE TEMPERATURE D'ECHAPPEMENT (ASS) (ADMISSION DU TURBOCOMPRESSION, DROITE)	325
CAPTEUR DE TEMPÉRATURE (ENS) (EAU DES CHEMISES)	325
CAPTEUR DE VITESSE (ASS)	276
	277
	278
CAPTEUR DE VITESSE (ASS) (CALAGE)	325
CAPTEUR DE VITESSE (ASS) (ÉTALONNAGE DU CALAGE)	325
CAPTEUR DE VITESSE (ASS) (SORTIE DU CONVERTISSEUR DE COUPLE)	369
CAPTEUR ET MONTAGE-POSITION DE LEVAGE (ASS)	266
CARDAN COULISSANT (ASS)	472
	473
	474
CARTER - BLINDAGE (ASS)	535
CARTER AV (ASS)	54
CARTER DE VOLANT (ASS)	52
CARTER D'ENGRENAGE (ASS)	389
CEINTURE DE SECURITE (ASS)	1051
CENDRIER	1060
CENTRE D'ENTRETIEN (ASS)	1093
CHAPEAU - RADIATEUR (7-PSI)	146
CHAPEAU DE VALVE (TIGE)	440
	441
CHAPEAU (ENS) (*ENGINE OIL FILL) (MOTEUR)	74
CHASSIS - AVANT - VERSION	1
CHÂSSIS ARRIÈRE (VERSION)	2
CLAPET	865
	869
CLAPET DE DECHARGE (ASS)	733
	734
	735
	736
	883
	884
	885
	886
	887
	888
	889
	890
CLAPET DE DECHARGE (ASS) (CANALISATION, ORIFICE DU CÔTÉ TIGE DU VÉRIN D'INCLINAISON)	865
CLAPET DE DECHARGE (ASS) (DIRECTION AUXILIAIRE)	724
CLAPET DE DECHARGE (ASS) (PRINCIPAL)	885
CLAPET DE DECHARGE ET ANTI-RETOUR	864
CLAPET DE RETENUE (ENS)	655
	720
	721
	722
	723
	863
CLAPET DE RETENUE (ENS) (ACCUMULATEUR DE FREIN)	601
CLAPET DE RETENUE (ENS) (PILOTE)	813
CLAPET DE RETENUE (ENS) (PILOTE)	813
CLAPET DE RETENUE (ENS) (POMPE DE DIRECTION)	687
CLAPET DE RETENUE (ENS) (POMPE DE FREIN)	601
CLAPET DE RETENUE (ENS) (POMPE DE GRAISSAGE)	586
CLÉ CARRÉE	393
CLÉ DE CONTACTEUR (ASS)	310
CLÉ DE CONTACTEUR (ASS) (ENTRETIEN DU VIMS)	374
CLÉ (DÉBRANCHEMENT DE BATTERIE)(DÉMARREUR)	300
CLIMATISEUR (ASS)	953
CLIMATISEUR (VERSION)	952
COFFRE DE RANGEMENT (ASS)	957
	958
COLLECTEUR DE CARBURANT (ASS)	182
	183
COLLECTEUR D'ÉCHAPPEMENT (ASS)	164
COMMANDE DE BRAS (ASS)	390

* TRADUCTION NON DISPONIBLE AU MOMENT DE LA PUBLICATION

INDEX

Désignation	Page
	391
COMMANDE DE DEMARRAGE PNEUMATIQUE	208
	212
COMMANDE DE DIRECTION (ASS)	662
COMMANDE DE FAISCEAU (ENS) (*OIL RENEWAL SYSTEM, CHASSIS)	360
COMMANDE DE FAISCEAU (ENS) (*OIL RENEWAL SYSTEM, FIREWALL)	360
COMMANDE DE FAISCEAU (ENS) (POSITIONNEUR DE GODET)	776
	778
COMMANDE DE FREIN DE STATIONNEMENT (ASS)	614
COMMANDE DE LA PÉDALE DE FREIN (ASS)	613
COMMANDE DE MONITEUR NON PROGRAMMÉE (ASS)	971
COMMANDE DE POSITION (ASS)	216
COMMANDE DE POSITION (ASS) (GODET)	776
	778
COMMANDE DE PROFIL LONGITUDINAL	207
COMMANDE DE SÉCURITÉ HYDRAULIQUE (ASS)	743
COMMANDE ELECTRONIQUE DE MOTEUR (ASS)	215
COMMANDE ÉLECTRONIQUE D'ÉQUIPEMENT (ASS)	222
COMMANDE ET MONTAGE - MOTEUR	206
COMMANDE ET MONTAGE-COMMUNICATION (ASS)	205
COMMANDE HYDRAULIQUE DE BOÎTE (ASS)	395
COMMANDE HYDRAULIQUE PILOTE (ASS)	744
COMMANDE NON PROGRAMMEE (ASS)	205
	217
	218
COMMANDE NON PROGRAMMEE (ASS) (ÉQUIPEMENT)	354
COMMANDE NON PROGRAMMEE (ASS) (TRANSMISSION)	353
COMMANDE PRINCIPALE DE SOUPAPE ET MONTAGE (ASS)	859
	861
COMPOSANTS ÉLECTRONIQUES DE LA MACHINE (VERSION)	220
COMPRESSEUR D'AIR (ASS)	8
	9
COMPRESSEUR DE REFRIGERANT (ASS)	969
COMPRESSEUR ET MONTAGE - RÉFRIGÉRANT (ASS)	966
CONDENSATEUR ET MONTAGE (RÉFRIGÉRANT)	970
CONTACTEUR - NIVEAU DE LIQUIDE (ASS)	302
CONTACTEUR DE DEBIT (ASS)	301
CONTACTEUR DE DÉVERROUILLAGE (ENS)	197
CONTACTEUR MAGNETIQUE (ASS)	303
	304
	305
CONTACTEUR MAGNETIQUE (ASS) (RELAIS DE POMPE DE PRÉGRAISSAGE)	99
CONTACTEUR MAGNETIQUE (ASS) (24 VOLTS) (RELAIS PRINCIPAL)	353
CONTACTEUR RÉGLABLE DE SUPPORT (ENS) (LIMITE DES FEUXD'ARRÊT)	608
*CONVERSION AR-CERTIFICATION	3
CONVERTISSEUR DE COUPLE (ASS)	479
CONVERTISSEUR DE COUPLE ET CARTER (ASS)	477
*CORE GP-TMSN OIL COOLER	397
CORPS DE POMPE (ASS)	661
*COUPLING GP-TORSIONAL	399
COURONNE ET DIFFERENTIEL (ASS)	401
COURROIE (ALTERNATEUR)	59
COURROIE INTERMÉDIAIRE (ASS)	55
COURROIE MULTIPLE (COMPRESSEUR DE RÉFRIGÉRANT)	966
COUVERCLE - CABINE (ASS)	972
COUVERCLE DE CARTER AV (ASS)	17
COUVERCLE DE PLATEFORME	974
	975
	976
COUVERCLE DE PRISE DE MODULE (ASS)	219
COUVERCLE DE VISITE (ASS)	509
	510
COUVERCLE INFÉRIEUR-DOSSIER (ASS)	1027
COUVERCLES D'EXPEDITION (ASS)	400
CREPINE (ENS)	767
	852
CREPINE (GOULOTTE DE REMPLISSAGE)	855
CROISILLON ET ROULEMENT	472
	474
	475
CULASSE (ASS)	25
	27
CULASSE (ENS)	24
CULBUTERIE (ASS)	70
CYLINDRE D'ETHER (ENS)	282
	284

D

Désignation	Page
DÉMARRAGE PAR TEMPS FROID (VERSION)	288
DÉMARREUR ÉLECTRIQUE (ASS)	295

* TRADUCTION NON DISPONIBLE AU MOMENT DE LA PUBLICATION

INDEX

Désignation	Page
	298
DEMARREUR ELECTRIQUE (VERSION)	288
DEMARREUR PNEUMATIQUE (ASS)	289
	291
	292
	293
DEMARREUR PNEUMATIQUE (ASS)	294
DEMARREUR PNEUMATIQUE (ASS) (TURBINE)	293
DEMARREUR PNEUMATIQUE (VERSION)	287
DESHYDRATEUR (ASS)	606
	607
DIFFERENTIEL (ASS)	403
DISJONCTEUR DE SECURITE (ENS) (FEUX D'ARRÊT)	608
DISJONCTEUR DE SECURITE (ENS) (FREIN DE STATIONNEMENT)	340
DISJONCTEUR DE SECURITE (ENS) (*STIC CONTROL LOCKOUT)	310
DISJONCTEUR (ENS) (10A) (FEUX DE ROUTE)	355
DISJONCTEUR (ENS) (10A) (INTERRUPTEUR À CLÉ)	355
DISJONCTEUR (ENS) (105A) (PRINCIPAL)	354
DISJONCTEUR (ENS) (15A) (MODULE DE COMMANDE MOTEUR)	353
DISJONCTEUR (ENS) (80A) (ALTERNATEUR NO 1)	354
DISJONCTEUR (ENS) (80A) (ALTERNATEUR NO 2)	354
DISJONCTEUR (ENS) (80A) (PRÉGRAISSAGE)	354
DISPOSITIF DE VIDANGE RAPIDE D'HUILE (ASS)	91
DISPOSITIF D'EVACUATION DES VAPEURS DE CARTER	77
DISTRIBUTEUR DE BOITE (ASS)	495
DISTRIBUTEUR DE FREIN (ASS)	654
DISTRIBUTEUR DE POMPE (ASS)	730
	731
	732
	880
	881
	882
DISTRIBUTEUR DE POMPE (ASS)	656

E

Désignation	Page
EAU DES CHEMISES - RECHAUFFEUR (ASS)	229
ECLAIRAGE - ARRÊT ET PROJECTEURS (VERSION)	244
ÉCLAIRAGE - GYROPHARE (ASS)	259
ÉCLAIRAGE - PROJECTEURS (ASS)	245
	246
	247
	249
	250
	251
	252
	253
ÉCLAIRAGE - PROJECTEURS (ASS) (2 LAMPES, PLATEFORME)	3
ÉCLAIRAGE-FEUX D'ARRÊT (ASS)	255
	256
ÉCLAIRAGE-FEUX DE STOP ET ARRIÈRE (ASS)	257
ÉCRAN - REPRISE (POMPE DE CARTER AVANT)	103
ECRAN (ASS)	852
	857
ÉCRAN (ASS)-HYDRAULIQUE	649
ÉCRAN DU MONITEUR (ASS)	977
ÉCRAN (ENS)	673
	711
ÉCRAN (ENS) (RÉSERVOIR HYDRAULIQUE)	852
	857
ÉJECTEUR AUTOMATIQUE DE POUSSIÈRE (ASS)	158
ÉLECTRONIQUE - COMMUNICATION (ASS)	221
ÉLECTRONIQUE - COMMUNICATION (ASS) (PRODUCT LINK 300)	230
ÉLECTRONIQUE DE TRANSMISSION (ASS)	223
ÉLECTRONIQUE-MONITEUR (ASS)	222
	223
*ELEMENT AS-ENGINE OIL HEATER	226
ÉLÉMENT DE FILTRE À AIR (ENS) (PRINCIPAL)	156
ÉLÉMENT DE FILTRE À AIR (ENS) (SECONDAIRE)	156
ÉLÉMENT DE FILTRE À HUILE (ENS) (DIRECTION, FREIN)	673
ÉLÉMENT DE FILTRE À HUILE (ENS) (TRANSMISSION)	418
	420
ÉLÉMENT DE FILTRE (ENS)-CARBURANT (PRINCIPAL)	175
ÉLÉMENT DE FILTRE (ENTRAINEMENT DE POMPE)	771
ÉLÉMENT DU RÉCHAUFFEUR D'EAU DES CHEMISES (ENS)	229
ENGRENAGE DE TRANSFERT DE RENDEMENT (ASS)	424
ENTRAÎNEMENT AUXILIAIRE (ASS)	31
	32
	34

* TRADUCTION NON DISPONIBLE AU MOMENT DE LA PUBLICATION

INDEX

Désignation	Page
	36
ENTRAÎNEMENT DE POMPE (ASS)	405
	409
ENTRAÎNEMENT DE VENTILATEUR (ASS)	40
	42
ENTRAÎNEMENT DE VENTILATEUR (ASS)	38
ENTRAINEMENT DE VENTILATEUR (VERSION)	30
ENTRAÎNEMENT ET MONTAGE DE POMPE (ASS)	404
ENTRAÎNEMENT POUR COURROIE (GYROPHARE)	243
ESSIEU FIXE	384
ESSIEU FIXE (VERSION)	383
ESSIEU OSCILLANT	385
ESSIEU OSCILLANT (VERSION)	383
ESSUIE-GLACE (ASS)	1072
	1073
ESSUIE-GLACE ET LAVE-GLACE	1070
ÉTANCHÉITÉ - GLACE (ASS)	1048

F

FAISCEAU-BOÎTE DE TRANSMISSION	495
FAISCEAU DE CABLES - CAPTEUR (ENS)	42
FAISCEAU DE CABLES - CAPTEUR (ENS) (TEMPÉRATURE D'HUILE D'ESSIEU ARRIÈRE)	380
FAISCEAU DE CABLES - CAPTEUR (ENS) (TEMPÉRATURE, NIVEAU HYDRAULIQUE; TEMPÉRATURE D'ESSIEU AVANT)	335
FAISCEAU DE CÂBLES DE FREINS (ENS) (FEU DE STOP)	608
FAISCEAU DE CABLES (ENS) (CULBUTERIE)	70
FAISCEAU DE CABLES (ENS) (TEMPÉRATURE D'HUILE D'ESSIEU AVANT)	380
FAISCEAU DE CHÂSSIS AVANT (ENS) (GARDE-BOUE DROIT)	335
FAISCEAU DE CHÂSSIS AVANT (ENS) (GARDE-BOUE GAUCHE)	335
FAISCEAU DE REFROIDISSEUR D'ADMISSION (ENS)	155
FAISCEAU DE REFROIDISSEUR D'HUILE MOTEUR (ENS)	114
FAISCEAU DE SOUPAPE (ENS) (COMPRESSEUR PNEUMATIQUE DE SIÈGE)	1067
FAISCEAU D'ÉCLAIRAGE (ENS)	247
FAISCEAU D'ESSUIE-GLACE (ENS) (GLACE DE CUSTODE)	310
FAISCEAU D'ESSUIE-GLACE (ENS) (RONDELLE)	310
FAISCEAU DU REFROIDISSEUR D'HUILE (ASS)	115
FAISCEAU DU REFROIDISSEUR D'HUILE (ENS) (BOITE DE VITESSE)	396
*FILM GP-INTERNATIONAL	1081
*FILM GP-U.S.	1081
*FILTER & MTG GP-PLT & PUMP DR	770
FILTRE	1069
FILTRE A AIR (ASS)	156
	157
FILTRE À AIR D'ADMISSION	157
FILTRE À AIR DE CABINE	982
	996
FILTRE À AIR DE CABINE (ASS)	982
FILTRE À CARBURANT	190
	191
FILTRE A CARBURANT (ASS)	173
FILTRE A CARBURANT (ENS)	173
	187
FILTRE À CARBURANT PRINCIPAL (ASS)	175
FILTRE A HUILE (ASS)	418
	420
	673
	675
	771
FILTRE A HUILE (ASS) (ENTRAÎNEMENT DE POMPE AVANT)	770
FILTRE A HUILE (ASS) (FILTRE DE REFROIDISSEUR DE FREIN, DIRECTION)	671
FILTRE A HUILE (ASS) (FILTRE DE REFROIDISSEUR HYDRAULIQUE)	671
FILTRE À HUILE (ENS) (HYDRAULIQUE, GRANDE EFFICACITÉ)	675
FILTRE À HUILE MOTEUR (ASS)	75
FILTRE A HUILE MOTEUR (ENS)	75
FILTRE DE DIRECTION ET MONTAGE (ASS)	672
FILTRE DE RETOUR AU CARTER ET MONTAGE (ASS)	669
FILTRE ET MONTAGE - DIRECTION ET ÉQUIPEMENT (ASS)	671
FILTRE ET MONTAGE - TRANSMISSION (ASS)	416
FILTRE HAUTE PRESSION (ASS)	711
FILTRE (POMPE À EAU)	145
FLEXIBLE	139
FREIN DE MANOEUVRE - COMMANDE (ASS)	615
FREIN DE STATIONNEMENT (ASS)	611
FUSIBLE (10A)	353
FUSIBLE (15A)	338
	353

* TRADUCTION NON DISPONIBLE AU MOMENT DE LA PUBLICATION

INDEX

Désignation	Page
G	
GAINE D'AIR (ASS)	980
GARDE-BOUE AR (ASS)	518
GARDE-BOUE AV (ASS)	517
GODET - DEFLECTEUR (ASS)	949
GODET POUR CHARBON (ASS)	929
GODET POUR CHARBON (ENS)	915 917
GODET-ROCHE (ASS)	930 931 932 933 934 935
GODET-ROCHE (ENS)	919 920 922 924 926 927
GOULOTTE DE REMPLISSAGE D'HUILE DE TRANSMISSION	413
GOULOTTE DE REMPLISSAGE D'HUILE HYDRAULIQUE (ASS)	767
GRAISSAGE AUTOMATIQUE (ASS)	580
GRAISSAGE AUTOMATIQUE (ASS) (PLATE-FORME)	1035
GRILLE DE RADIATEUR (ASS)	531
GROUPE DE ROTATION DE POMPE	648 710 844 845
H	
HUILE MOTEUR - CARTER (ASS)	61
I	
INDICATEUR DE COLMATAGE DE FILTRE À AIR (ASS)	160
INDICATEUR DE NIVEAU DE LIQUIDE DE REFROIDISSEMENT (ASS)	117
INJECTEUR DE CARBURANT (ASS)	184
INTERRUPTEUR - BOUTON-POUSSOIR (ENS) (ENREGISTREMENT DE CHARGE UTILE À DISTANCE)	310
INTERRUPTEUR - BOUTON-POUSSOIR (ENS) (ENSEMBLE DE VERROU DE LA MANETTE DE GAZ)	310
INTERRUPTEUR - BOUTON-POUSSOIR (ENS) (KLAXON)	310
INTERRUPTEUR - BOUTON-POUSSOIR (ENS) (RÉENCLENCHEMENT DU VERROU DE LA MANETTE DE GAZ)	310
INTERRUPTEUR - DÉRIVATION (ASS)	299
INTERRUPTEUR À BASCULE (ASS) (ARRÊT DEPUIS LE SOL)	375
INTERRUPTEUR À BASCULE (ASS) (DIFFÉRENTIEL DE FILTRE À CARBURANT)	173
INTERRUPTEUR À BASCULE (ASS) (*FLOODLIGHTS, FRONT) (PROJECTEUR)	244
INTERRUPTEUR À BASCULE (ASS) (GYROPHARE)	244
INTERRUPTEUR À BASCULE (ASS) (VERROUILLAGE DE LA BOÎTE DE VITESSES)	374
INTERRUPTEUR À BASCULE (ASS) (VERROUILLAGE DU DÉMARREUR)	375
INTERRUPTEUR À BASCULE (ENS) (ÉCLAIRAGE DE CAPOT)	374
INTERRUPTEUR À BASCULE (ENS) (ÉCLAIRAGE DE MARCHEPIED)	374
INTERRUPTEUR BALANCIER (ENS) (ACTIVATION DU VERROUILLAGE DU PAPILLON DES GAZ)	310
INTERRUPTEUR BALANCIER (ENS) (AUXILIAIRE DE DÉMARRAGE)	310
INTERRUPTEUR BALANCIER (ENS) (ÉCLAIRAGE DE MARCHEPIED)	310
INTERRUPTEUR BALANCIER (ENS) (ECLAIRAGE INTERIEUR)	312
INTERRUPTEUR BALANCIER (ENS) (EMBRAYAGE DE VERROUILLAGE DE CONVERTISSEUR DE COUPLE)	310
INTERRUPTEUR BALANCIER (ENS) (ENSEMBLE DE POSITION DE LEVAGE)	312
INTERRUPTEUR BALANCIER (ENS) (FEUX DE ROUTE)	310
INTERRUPTEUR BALANCIER (ENS) (GYROPHARE)	310
INTERRUPTEUR BALANCIER (ENS) (GYROPHARE)	244
INTERRUPTEUR BALANCIER (ENS) (PROJECTEUR)	244
INTERRUPTEUR BALANCIER (ENS) (PROJECTEURS ARRIÈRE)	312
INTERRUPTEUR BALANCIER (ENS) (PROJECTEURS AVANT)	312
INTERRUPTEUR BALANCIER (ENS) (PROJECTEURS HID, AVANT)	312
INTERRUPTEUR D'ESSUIE-GLACE (ASS)	306

* TRADUCTION NON DISPONIBLE AU MOMENT DE LA PUBLICATION

INDEX

Désignation	Page
INTERRUPTEUR D'ESSUIE-GLACE (24 VOLTS) (INTERMITTENT)	306
INTERRUPTEUR ROTATIF (ENS) (COMMANDE DE CLIMATISATION, CHAUFFAGE)	309
INTERRUPTEUR ROTATIF (ENS) (ESSUIE-GLACE, LAVE-GLACE) (*QUARTER WINDOW)	309
INTERRUPTEUR ROTATIF (ENS) (SÉLECTION D'EFFORT À LA JANTE RÉDUIT)	309
J	
JANTE DÉMONTABLE (ASS)	458
	459
	460
	461
JANTE SIMPLE	462
	463
JANTE (VERSION)	456
	457
JAUGE D'HUILE MOTEUR (BAIONNETTE) (ASS)	78
JAUGE D'HUILE MOTEUR (BAIONNETTE) (ASS)	79
JAUGE D'HUILE MOTEUR (BAÏONNETTE) (ENS)	79
JEU DE COURROIES TRAPEZOIDALES (COMPREND 6 COURROIES) (VENTILATEUR)	38
JOINT DE VILEBREQUIN (ASS)	67
JOINT-POMPE À EAU (ASS)	145
JOINT TORIQUE	738
JOINT UNIVERSEL (ASS)	483
	484
K	
KIT D'ADAPTATEUR	227
KIT D'AMORTISSEUR	1067
KIT D'ATTACHE	1067
KIT D'AXE À PÉDALE (PÉDALE DU RÉGULATEUR)	1033
KIT DE BAGUE (POULIE DE VILEBREQUIN) (A BRIDE)	38
KIT DE BLOC COULISSANT	1057
KIT DE BORNE (ALTERNATEUR)	195
KIT DE BORNE (DÉMARREUR)	296
KIT DE BORNE (VERROUILLAGE)	354
KIT DE BOULONNERIE (ALTERNATEUR)	195
KIT DE BRIDE DE FIXATION DE FILTRE A AIR	156
KIT DE CARTER D'ENTRAINEMENT (DÉMARREUR PNEUMATIQUE)	289
KIT DE CHAPEAU DE FILTRE (RÉSERVOIR DE CARBURANT)	190
	191
KIT DE COUSSINET (ALTERNATEUR)	195
KIT DE COUSSINET DE VILEBREQUIN (COMPRESSEUR D'AIR) (COMPRESSEUR D'AIR)	8
KIT DE CULASSE (COMPRESSEUR D'AIR) (COMPRESSEUR D'AIR)	8
KIT DE DIAPHRAGME (KLAXON)	987
KIT DE JOINT - CHAPEAU DE POMPE DE RÉGUL. DE DÉBIT	878
KIT DE JOINT DE PLONGEUR	728
	876
	877
	879
KIT DE JOINT DE VERIN HYDRAULIQUE (VÉRIN-1)	665
KIT DE JOINTS	208
	212
	472
	473
	474
	492
	604
	703
	704
	735
	887
KIT DE JOINTS (DÉMARREUR À AIR DE TURBINE)	293
KIT DE JOINTS (ÉLECTROVANNE)	893
	894
KIT DE JOINTS (ÉLECTROVANNE)	485
KIT DE JOINTS (ENTRAÎNEMENT DE VENTILATEUR À VITESSE VARIABLE)	40
KIT DE JOINTS (GRAISSEUR MOTEUR PNEUMATIQUE)	263
KIT DE JOINTS (POMPE À ENGRENAGES)	705
KIT DE JOINTS (POMPE D'ALIMENTATION EN CARBURANT)	189
KIT DE JOINTS (POMPE PILOTE À ENGRENAGES)	453
KIT DE JOINTS (VÉRIN-2)	665
KIT DE PALETTE ET JOINT (DÉMARREUR PNEUMATIQUE) (DEMARREUR PNEUMATIQUE)	289
KIT DE POMPE	587
KIT DE RÉNOVATION (POMPE À EAU)	145
KIT DE RÉNOVATION (POMPE À EAU AUXILIAIRE)	141
KIT DE RÉPARATION DE DÉMARREUR (DÉMARREUR À AIR DE TURBINE)	292

* TRADUCTION NON DISPONIBLE AU MOMENT DE LA PUBLICATION

INDEX

Désignation	Page
	294
KIT DE RÉPARATION DE MOTEUR DE BASE (PALIER PRINCIPAL)	20
KIT DE RÉPARATION (ENTRAÎNEMENT DE VENTILATEUR À VITESSE VARIABLE)	40
KIT DE RÉPARATION (PIGNON D'ARBRE) (POMPE D'ALIMENTATION EN CARBURANT)	189
KIT DE RÉPARATION (SOUPAPE DE DÉRIVATION) (POMPE D'ALIMENTATION EN CARBURANT)	189
KIT DE REVISION GENERALE (DÉMARREUR À AIR DE TURBINE)	292 293 294
KIT DE ROTOR (DÉMARREUR PNEUMATIQUE DEUXIÈME NIVEAU)	294
KIT DE ROTOR (DÉMARREUR PNEUMATIQUE PREMIER STADE)	292 294
KIT DE ROTOR (DÉMARREUR PNEUMATIQUE 2E STADE)	292
KIT DE ROUE DE TURBINE (DÉMARREUR À AIR DE TURBINE)	293
KIT DE ROULEAU (PÉDALE DU RÉGULATEUR)	1033
KIT DE SEGMENT STANDARD (COMPRESSEUR D'AIR) (COMPRESSEUR D'AIR)	8
KIT DE SOUPAPE	208 212 587
KIT DE SOUPAPE DE PURIFICATION (DÉSHYDRATEUR)	607
KIT DE SOUPAPE (DÉSHYDRATEUR)	607
KIT DE SOUPAPE PNEUMATIQUE	1067
KIT DE TAMIS	649
KIT DE TUYAU (POMPE DE GRAISSAGE)	587
KIT DE VERIFICATION DU REGULATEUR (COMPRESSEUR D'AIR)	9
KIT DE VIS (CONNECTEURS ÉLECTRIQUES)	378
KIT DE VIS DE RETENUE	223
KIT DE VIS DE RETENUE (COMMANDE NON PROGRAMMÉE)	217
KIT D'ÉMETTEUR DE LEVIER	265
KIT D'ENGRENAGES PLANÉTAIRES (DÉMARREUR À AIR DE TURBINE)	293
KIT D'INJECTEUR (GRAISSAGE)	596 597 598
KIT (JOINTS DE POMPE)	646
KLAXON PNEUMATIQUE (ASS)	987
	988
	990

L

Désignation	Page
LAME DE COUPE (ASS)	936 937 938 939 940
LAMPE - CLIGNOTANT DE DIRECTION (ASS)	242
LAMPE - GYROPHARE (ASS)	243
LAMPE - PHARE (ASS)	237 240
LAMPE - PHARE (ASS)	238 239
LAMPE - PHARE (ASS)	241
LAMPE - PHARE (ENS) (24V, 70W)	241
LAMPE (ENS) (*AMBER, LED, 24-VOLT) (TÉMOIN DE VERROUILLAGE DE TRANSMISSION)	374
LAMPE HALOGÈNE (24V, 65W)	237 238
LAMPE HALOGÈNE (24V, 65W) (PROJECTEUR)	240
LAVE-GLACE - VITRE (ASS)	1069
LENTILLE (ENS) (PROJECTEUR)	237 238
LEVAGE (VERSION)	905
LIAISON - VERROUILLAGE DE CHÂSSIS DE DIRECTION (ASS)	579
LIAISON-GODET (ASS)	906 908 910
LIMITEUR DE LEVAGE ET RETOUR À L'ANGLE DE CAVAGE	778
LIMITEUR DE LEVAGE ET RETOUR À L'ANGLE DE CAVAGE	776
LOGICIEL DE COMMUNICATION (ASS) (PRODUCT LINK 121SR)	231
LOGICIEL DE COMMUNICATION (ASS) (PRODUCT LINK 300)	221
LOQUET - PORTE DE CABINE ET GLACE	993

M

Désignation	Page
MACHINE DE LEVAGE	547
MANOCONTACT (DÉRIVATION DU FILTRE À HUILE) (DÉRIVATION DE FILTRE D'ENTRAÎNEMENT DE POMPE)	771
MANOCONTACT (ENS)	675

* TRADUCTION NON DISPONIBLE AU MOMENT DE LA PUBLICATION

INDEX

Désignation	Page
MANOCONTACT (ENS) (DÉRIVATION DU FILTRE D'ÉQUIPEMENT)	333
MANOCONTACT (ENS) (DÉRIVATION DU FILTRE DES FREINS DE DIRECTION)	333
MANOCONTACT (ENS) (DIFFÉRENTIEL DE FILTRE À CARBURANT)	325
MANOCONTACT (ENS) (HUILE DE DIRECTION PRINCIPALE)	340
MANOCONTACT (ENS) (HUILE DE FREIN DE MANOEUVRE)	615
MANOCONTACT (ENS) (HUILE DE FREIN DE STATIONNEMENT)	340
MANOCONTACT (ENS) (RÉFRIGÉRANT)	42
MANOCONTACT (ENS) (RÉFRIGÉRANT)	1001
MARCHEPIED (ASS)	589
	590
MECANISME DE COMMANDE DE POMPE (ASS)	658
	659
	660
MODULE - QUATRE INSTRUMENTS (ASS)	1015
MODULE (ASS)-CENTRE DE MESSAGE	1014
MODULE (ASS)-TOUCHE DE MODULE DE SURVEILLANCE	1014
MODULE D'INDICATEUR DE VITESSE ET COMPTE-TOURS (ASS)	309
MONTAGE - CAPTEUR (ASS)	264
MONTAGE-ANTENNE (ASS)	1020
MONTAGE-COMMUNICATION (ASS)	231
MONTAGE D'ALTERNATEUR (ASS)	59
MONTAGE DE BATTERIE (ASS)	582
MONTAGE DE COMMANDE DE PROFIL LONGITUDINAL (ASS)	233
	235
MONTAGE DE COURONNE (ASS)	439
MONTAGE DE JANTE (ASS)	440
MONTAGE DE JANTE (ASS)	441
MONTAGE DE MONITEUR (ASS)	1021
MONTAGE DE MOTEUR (VERSION)	7
MONTAGE DE PLATE-FORME (ASS)	1022
	1023
	1024
MONTAGE DE RADIO (ASS)	991
MONTAGE DE SUPPORT DE PLATE-FORME (ASS)	1025
MONTAGE DU VÉRIN DE LEVAGE (ASS)	833
MONTAGE SUR CHANTIER (VERSION)	3
MOTEUR - COUVERCLE (ASS)	15
MOTEUR D'ESSUIE-GLACE (ASS)	1016
	1017
	1018
	1019
MOTEUR D'ESSUIE-GLACE (ASS) (24V, 2 VITESSES)	1018
	1019
MOTEUR PNEUMATIQUE - GRAISSAGE (ASS)	263
MOTEUR (VERSION)	5

N

Désignation	Page
NETTOYAGE DE CABINE (ASS)	964

O

Désignation	Page
OEILLETONS DE LEVAGE MOTEUR (ASS)	56

P

Désignation	Page
PARE-CHOCS ET BARRE D'ATTELAGE (ASS)	503
	506
PARE-CHOCS ET BARRE D'ATTELAGE (VERSION)	501
	502
PASSERELLE (ASS)	599
PIGNON AR (ASS)	47
PIGNONNERIE AV (ASS)	45
PIGNONNERIE D'ENTREE DE TRANSFERT (ASS)	422
PISTON ET BIELLE (ASS)	64
	66
PLAFONNIER (ASS)	236
PLAFONNIER (24 VOLTS)	309
PLAQUE - CLOISON PARE-FEU (ASS)	583
PLAQUE DE NUMÉRO DE SÉRIE (BOITE DE VITESSE)	444
PLAQUE SIGNALÉTIQUE (ASS)	1077
	1078
	1079
	1080
PLAQUES SIGNALETIQUES ET AUTOCOLLANTS (ASS)	1090
PLATE-FORME DE CABINE	1036
	1037
	1039
PLATE-FORME (VERSION)	1034
	1035
PNEU - GROUPE DE VALVE	441
	462
	463
PNEUMATIQUE (ASS)	475
	476
POIGNÉE	985
POINTE - UNIVERSELLE (ASS)	943

* TRADUCTION NON DISPONIBLE AU MOMENT DE LA PUBLICATION

INDEX

Désignation	Page
POINTE ABRASION (ASS)	941
	942
POINTE LONGUE (ASS)	944
	945
POINTE PENETRATION	945
	946
	947
	948
POMPE A EAU (ASS)	143
	144
	145
POMPE A ENGRENAGES (ASS)	703
	704
	705
	836
	837
	839
POMPE A ENGRENAGES (ASS)	453
POMPE A ENGRENAGES (ASS) (DIRECTION AUXILIAIRE)	700
POMPE A ENGRENAGES (ASS) (REFROIDISSEMENT DE FREIN)	701
POMPE A ENGRENAGES (ASS) (REFROIDISSEUR D'HUILE DE FREIN, DIRECTION)	702
POMPE A HUILE MOTEUR (ASS)	94
	95
POMPE A PISTONS (ASS)	646
	706
	708
	840
	842
POMPE A PISTONS (ASS) (ÉQUIPEMENT, CYLINDRÉE FIXE)	834
POMPE AUXILIAIRE D'EAU DOUCE (ASS)	141
POMPE D'ALIMENTATION EN CARBURANT (ASS)	188
	189
POMPE D'AMORÇAGE DE CARBURANT (ASS)	185
POMPE D'AMORÇAGE DE CARBURANT ET FILTRE PRINCIPAL	187
POMPE DE BOÎTE DE VITESSES (ASS)	454
	455
POMPE DE DIRECTION AUXILIAIRE ET MONTAGE (ASS)	700
POMPE DE GRAISSAGE (ASS)	586
POMPE DE GRAISSAGE D'ENTRAÎNEMENT ET MONTAGE (ASS)	452
POMPE DE PRÉGRAISSAGE (ASS)	96
	99
POMPE DE REPRISE (ASS)	103
	105
POMPE D'EQUIPEMENT ET MONTAGE (ASS)	834
POMPE D'INJECTION DE CARBURANT (ASS)	184
POMPE DU REFROIDIS. DE DIRECTION ET FREIN ET MONT.	702
POMPE ET MONTAGE - DIRECTION ET FREIN (ASS)	701
POMPE ET MONTAGE - FREIN (ASS)	645
POMPE ET MONTAGE - PILOTE ET REFROIDISSEUR (ASS)	835
POMPE ET MOTEUR DE PRÉ-GRAISSAGE (ASS)	93
PORTE DE CABINE - RESSORT (ASS)	1058
PORTIÈRE DE CABINE (ASS)	978
POSTE DE CONDUITE (VERSION)	1026
*PRECLEANER GP-CAB AIR	1044
PREFILTRE (ASS)	167
	168
	169
	170
PRÉGRAISSAGE DE MOTEUR ET DE POMPE	93
PROTECTEURS DE LAME (ASS)	940
PROTECTION AV (ASS)	536
PROTEGE-COURROIE (ASS)	49
	51
PROTÈGE-RADIATEUR (ASS)	538

R

Désignation	Page
RACCORD DE RÉSERVOIR DE CARBURANT (ASS)	176
RACCORD D'EAU (ASS)	112
RADIATEUR (ASS)	146
	152
RADIATEUR-CORPS (ENS)	152
RADIO -COMMUNICATION (ASS) (LIAISON DE PRODUIT)	205
RADIO -COMMUNICATION (ASS) (PRODUCT LINK 121SR)	231
RALLONGE D'ÉCHAPPEMENT (ASS)	159
RALLONGE DU DOSSIER DE SIEGE (TOILE)	1051
*RECEIVER GP (SYSTÈME DE POSITIONNEMENT PAR SATELLITE)	235
RECHAUFFEUR DE CARBURANT (ASS)	227
RÉCHAUFFEUR D'HUILE MOTEUR (ASS)	226
RÉDUCTEUR ET ROUE	498
REDUCTEUR MARIN - MONTAGE (ASS)	442
RÉDUCTEURS, ROUE ET FREIN (ASS)	498
REFROIDISSEUR D'ADMISSION - EAU (ASS)	155
REFROIDISSEUR D'HUILE DE BOÎTE (ASS)	396

* TRADUCTION NON DISPONIBLE AU MOMENT DE LA PUBLICATION

INDEX

Désignation	Page
REFROIDISSEUR D'HUILE HYDRAULIQUE (ASS)	746
REFROIDISSEUR D'HUILE MOTEUR (ASS)	113
REGARD DE NIVEAU	146
	852
	855
REGARD DE NIVEAU (NIVEAU D'HUILE)	109
REGLAGE DE SIEGE (ASS)	950
RÉGLAGE ÉLECTRO. DE PUISSANCE DU MOTEUR	5
RÉGULATEUR - PÉDALE (ASS)	1032
	1033
REGULATEUR DE LA TENSION (ENS) (24 VOLTS) (ALTERNATEUR)	195
RÉGULATION D'HUILE MOTEUR (ASS)	89
RELAIS (ENS) (24 VOLTS) (ARRÊT DU MOTEUR)	353
RELAIS (ENS) (24 VOLTS) (AVERTISSEUR DE RECUL)	353
RELAIS (ENS) (24 VOLTS) (DÉMARRAGE)	353
RELAIS (ENS) (24 VOLTS) (ÉCLAIRAGE)	353
RELAIS (ENS) (24 VOLTS) (LAMPES HID ROPS NO 1)	353
RELAIS (ENS) (24 VOLTS) (LAMPES HID ROPS NO 2)	353
RELAIS (ENS) (24 VOLTS) (PRÉFILTRE DE CLIMATISEUR)	353
RELAIS (ENS) (24 VOLTS) (PRÉGRAISSAGE)	353
RELAIS (ENS) (24 VOLTS) (PROJECTEURS AVANT)	353
RELAIS (ENS) (24 VOLTS) (PROJECTEURS DE ROPS AVANT)	353
RELAIS (ENS) (24 VOLTS) (PROJECTEURS SUR PLATE-FORME)	353
RELAIS (ENS) (24 VOLTS) (PROJECTEURS SUR ROPS ARRIÈRE)	353
RELAIS (ENS) (24 VOLTS) (RÉTROÉCLAIRAGE)	353
RENIFLARD	413
	847
RENIFLARD (ASS)	72
RENIFLARD (ASS)	73
RENIFLARD (ENS) (RÉSERVOIR DE RÉGULATION D'HUILE MOTEUR)	109
RENIFLARD (ENS) (VILEBREQUIN)	72
	73
RENIFLARD (POMPE DE GRAISSAGE)	587
RÉSERVOIR - GRAISSE (ASS)	591
RÉSERVOIR DE CARBURANT (ASS)	190
	191
	193
RESERVOIR D'EXPANSION (ASS)	850
RÉSERVOIR D'HUILE MOTEUR (ASS)	109
RÉSERVOIR HYDRAULIQUE (ASS)	855
	857
RÉSERVOIR HYDRAULIQUE (ASS)	852
RÉSERVOIR HYDRAULIQUE ET MONTAGE (ASS)	847
	849
RÉSERVOIR PNEUMATIQUE (ASS)	650
	651
RÉSRVOIR D'HUILE MOTEUR ET MONTAGE (ASS)	107
RÉTROVISEUR DROIT (ASS)	4
	1012
RÉTROVISEUR GAUCHE (ASS)	1010
RÉTROVISEUR GAUCHE (ASS)	4
ROBINET DE BATTERIE (ASS)	300
ROBINET DE PRÉLÈVEMENT D'ÉCHANTILLON D'HUILE (ASS)	154
ROBINET-ÉCHANTILLON DE LIQUIDE (ENS) (HUILE HYDRAULIQUE)	684
ROPS (VERSION)	1046
ROTATION DE LA ROUE DU VENTILATEUR SOUFFLANT	216
ROTATION DE LA ROUE DU VENTILATEUR SOUFFLANT (ARRÊT MOTEUR)	501
	502
ROTATION DE LA ROUE DU VENTILATEUR SOUFFLANT (COMMANDE DE LIMITEUR)	1091
ROTATION DE LA ROUE DU VENTILATEUR SOUFFLANT (*ELECTRICAL DISCONNECT)	353
ROTATION DE LA ROUE DU VENTILATEUR SOUFFLANT (ENTRÉE D'EAU, SORTIE D'EAU)	953
ROTATION DE LA ROUE DU VENTILATEUR SOUFFLANT (OEILLETON DE LEVAGE, TIRANT)	1034
ROTATION DE LA ROUE DU VENTILATEUR SOUFFLANT (RÉGLAGE DU SIÈGE)	1067

S

SEGMENT D'ÉTANCHÉITÉ (FILTRE À CARBURANT PRINCIPAL)	175
*SENDER GP-FUEL LEVEL	265
*SERVICE GP-COMMUNICATION (PRODUCT LINK 300)	221
SIÈGE - COMPRESSEUR D'AIR (ASS)	1067
SIÈGE - COMPRESSEUR D'AIR (ASS)	951
SIÈGE (ASS)	1049
	1051
	1052
SIÈGE AVEC SUSPENSION (ASS)	1057

* TRADUCTION NON DISPONIBLE AU MOMENT DE LA PUBLICATION

INDEX

Désignation	Page
	1067
SIÈGE INCLINABLE (ASS)	1045
SIEGE PASSAGER (ASS)	1053
	1054
	1055
	1056
SILENCIEUX (ASS)	166
SOLÉNOÏDE DE DÉMARREUR (ENS)	295
SONDE - CIRCUIT DE CARBURANT	269
	270
	271
SOUPAPE - CARTOUCHE PILOTE (ASS)	728
	729
	876
	877
	878
	879
SOUPAPE - SOLÉNOÏDE (ASS)	492
	657
	893
	894
SOUPAPE - SOLÉNOÏDE (ASS) (COMMANDE PNEUMATIQUE DE GRAISSAGE AUTOMATIQUE)	586
SOUPAPE - SOLÉNOÏDE (ASS) (DÉMARREUR PNEUMATIQUE)	208
	212
SOUPAPE DE COMMANDE PRINCIPALE (ASS)	865
	869
SOUPAPE DE DÉMARRAGE À L'ÉTHER (ASS)	307
SOUPAPE DE DERIVATION (ASS)	724
SOUPAPE DE DIRECTION (ASS)	739
SOUPAPE DE DIRECTION ET MONTAGE (ENS)	715
	716
SOUPAPE DE DISTRIBUTION DE GRAISSAGE (ASS)	596
	597
	598
SOUPAPE DE MODULATION (ASS)	485
SOUPAPE DE MODULATION (ASS)	486
	487
SOUPAPE DE NEUTR. DE DIRECTION ET MONTAGE (ASS)	718
SOUPAPE DE NEUTRALISATION DE DIRECTION (ASS)	742
SOUPAPE DE PRIORITÉ DE CONVERTISSEUR DE COUPLE (ASS)	493
SOUPAPE DE PURGE (ASS) (DÉSHYDRATEUR)	607
SOUPAPE DE RÉGULATION	111
SOUPAPE ET CANALISATIONS - NEUTRALISATION DE DIR.	712
SOUPAPE ET CONDUITES DE GRAISSAGE (ASS)	592
	594
SOUPAPE ET MONTAGE - COMMANDE DE FREIN (ASS)	652
SOUPAPE ET MONTAGE - DIRECTION AUX. (ASS)	714
SOUPAPE ET MONTAGE-ENTRAÎNEMENT DE VENTILATEUR (ASS)	110
SOUPAPE PILOTE (ASS)	727
	873
	874
	875
SOUPAPE PILOTE (ASS) (INCLINAISON)	873
SOUPAPE PILOTE (ASS) (LEVAGE)	873
SOUPAPE SÉLECTRICE (ASS)	488
	891
SOUPAPE SÉLECTRICE (ASS) (DISTRIBUTION D'HUILE D'EMBRAYAGE)	495
SOUPAPE SÉLECTRICE (ASS) (HYDRAULIQUE)	813
SOUPAPE SELECTRICE ET REGULATRICE DE PRESSION	489
	737
	892
SOUPAPE SELECTRICE ET REGULATRICE DE PRESSION (ABAISSEMENT MOTEUR COUPÉ)	813
SOUPAPE SELECTRICE ET REGULATRICE DE PRESSION (PRESSION D'HUILE D'EMBRAYAGE)	495
SUPPORT	250
SUPPORT - MONTAGE (ASS) (DÉSHYDRATEUR)	607
SUPPORT - PÉDALE DE FREIN (ASS)	608
	610
SUPPORT DE COMMANDE DE DIRECTION (ASS)	1064
SUPPORT DE COMMANDE HYDRAULIQUE (ASS)	1060
SUPPORT DE MOTEUR (ASS)	68
	69
SUPPORT DE SIÈGE (ASS)	1063
SUPPORT DE VASE D'EXPANSION (ASS)	831

T

TABLEAU DE BORD (ASS)	1028
	1030
TAMIS D'ASPIRATION	425
TAPIS DE PLANCHER	997

* TRADUCTION NON DISPONIBLE AU MOMENT DE LA PUBLICATION

INDEX

Désignation	Page
TENDEUR DE COURROIE (ASS)	11
TÊTE DE POMPE (ASS)	772
TÊTE DE POMPE (ASS)	676
THERMOCONTACT (ENS) (HUILE MOTEUR)	226
THERMOCONTACT (ENS) (RÉFRIGÉRANT)	954
THERMOSTAT ET BOITIER (ASS)	118
THERMOSTAT-TEMPÉRATURE D'EAU (92-DEG C)	118
TOIT ROPS (ASS)	1047
TRAINS PLANÉTAIRES - CARTER ET PIÈCES	387
TRANSFORMATION ELECTRIQUE (ASS) (24-VOLTS À 12-VOLTS)	233
TRANSFORMATION ELECTRIQUE (ASS) (24-VOLTS À 12-VOLTS)	349
	351
TRANSMISSION (VERSION)	451
TURBOCOMPRESSEUR (ASS)	171
	172
TYPE LÈVRE À JOINT (CARTER DE RÉGULATEUR)	118

V

Désignation	Page
VANNE PILOTE (ASS)	738
VENTILATEUR SOUFFLANT (ASS)	116
VERIN DE DIRECTION (ASS)	665
	667
VERIN DE DIRECTION ET MONTAGE (ASS)	664
VÉRIN DE LEVAGE (ASS)	749
	751
	753
VÉRIN D'INCLINAISON (ASS)	755
	757
	759
	761
	763
	765
VÉRIN D'INCLINAISON (VERSION)	748
VERROUILLAGE DE COMMANDE STIC	393
VERSION DE BRAS DE LEVAGE	902
	903
	904
VERSION DE CAMÉRA	204
VERSION DE GYROPHARE	244
VERSION DE MONTAGE-COMMUNICATION	230
VERSION DE MONTAGE DE CAES	230
VERSION DE PRÉFILTRE À AIR DE CABINE	1043
VERSION DE TRANSFORMATION - HOMOLOGATION	3
VERSION DE VAISSEAU	895
VERSION DE VÉRIN DE LEVAGE	747
VERSION D'HUILE DE RENOUVELLEMENT	106
VERSION HYDRAULIQUE ARRIÈRE	775
VERSION HYDRAULIQUE AVANT	774
VERSION NORMALE	2
VILEBREQUIN (ASS)	20
VOLANT MOTEUR (ASS)	44

* TRADUCTION NON DISPONIBLE AU MOMENT DE LA PUBLICATION

INDICE

Nombre	Página
A	
ACCESORIOS - IMPULSOR DE (GR)	31, 32, 34
ACONDICIONADOR DE AIRE (CONFIG)	952
ACONDICIONADOR DE AIRE (GR)	953
ACOPLAMIENTO DEL MANDO AUXILIAR (GR)	398
ACOPLAMIENTO DEL MANDO AUXILIAR (GR) (SELECTOR DE MARCHAS AUTOMÁTICO/MANUAL)	451
ACTIVADOR DE LA BOMBA (GR)	658, 659, 660
ACUMULADOR DEL FRENO (GR)	604
ACUMULADOR DEL FRENO (GR)	605
ACUMULADOR Y MONTAJE DEL FRENO (GR)	601
ADAPTADOR DE LA CAJA DE VOLANTE (GR)	382
ADAPTADOR (GR)	413
AGUA - CONEXIÓN DE (GR)	112
AGUA DE LAS CAMISAS - CALENTADOR DEL (GR)	229
AIRE - TUBERÍAS DE (GR)	161
AJUSTADOR DE CORREA (GR)	11
AJUSTADOR DEL ASIENTO (GR)	950
ALA DE CUCHARON (GR)	949
ALAMBRADO DE ARRANQUE ELECTRICO (GR)	320
ALARMA (GR)	194
ALFOMBRILLA DEL PISO	997
AMORTIGUADOR DE VIBRACIONES (GR)	29
ANTEFILTRO (GR)	167, 168, 169, 170
ÁRBOL DE LEVAS (GR)	13
ARO DESMONTABLE (GR)	458, 459, 460, 461
ARRANQUE ELÉCTRICO (CONFIG)	288
ARRANQUE EN TIEMPO FRIO (CONFIG)	288
ARRANQUE NEUMÁTICO (CONFIG)	287
ARRANQUE POR AIRE - MOTOR DE (GR)	291, 292, 293, 294
ARRANQUE POR AIRE - MOTOR DE (GR)	289
ARRANQUE POR AIRE - MOTOR DE (GR) (TURBINA)	293
ASIENTO CON SUSPENSIÓN (GR)	1067
ASIENTO (GR)	1049, 1051, 1052
ASIENTO PARA ACOMPAÑANTE (GR)	1053, 1054, 1055, 1056
AUXILIAR DE ARRANQUE CON ÉTER (GR)	282, 284, 285
B	
BASE DEL FILTRO DE COMBUSTIBLE (GR)	187
BASE DEL FRENO DE PIE (GR)	610
BASE DEL FRENO DE PIE (GR)	608
*BASE GP-VALVE COVER	10
BASTIDOR DEL CARGADOR (CONJ)	520
BASTIDOR DEL CARGADOR (GR)	527
BASTIDOR TRASERO (CONJ)	524
BASTIDOR TRASERO (GR)	529
BATERÍA	199
BATERIA DE CONTROL ELECTRONICO (GR) (ANALISIS DE VÍA/MODULO PRINCIPAL VIMS)	971
BATERÍA (GR)	199, 200, 201
BATERÍA (GR) (24 VOLTIOS)	233, 351
BATERÍA Y CABLES (GR)	197
BATERÍA (12 VOLTIOS)	200
BLOQUE DE EMPALME (GR)	202
BLOQUE DE FUSIBLES (CONJ)	354
BLOQUE DESLIZANTE-JUEGO	1057
BLOQUE MOTOR (CONJ)	21
BLOQUE MOTOR (GR)	22
BOCINA DE AIRE (GR)	987, 988, 990
BOMBA AUXILIAR DE AGUA DULCE (GR)	141
BOMBA DE ACEITE DEL MOTOR (GR)	94, 95
BOMBA DE AGUA (GR)	143, 144, 145
BOMBA DE BARRIDO (GR)	103, 105
BOMBA DE CEBADO DE COMBUSTIBLE (GR)	185
BOMBA DE CEBADO Y FILTRO PRIMARIO DE COMBUSTIBLE (GR)	187

* NO HAY TRADUCCION DISPONIBLE EN EL MOMENTO DE LA IMPRESION

INDICE

Nombre	Página
BOMBA DE DIRECCIÓN Y DE FRENO Y MONTAJE (GR)	701
BOMBA DE DIRECCIÓN Y ENFR. DEL FRENO Y MONTAJE	702
BOMBA DE ENGRANAJES (GR)	453
	836
	837
	839
BOMBA DE ENGRANAJES (GR)	703
	704
	705
BOMBA DE ENGRANAJES (GR) (DIRECCIÓN SECUNDARIA)	700
BOMBA DE ENGRANAJES (GR) (ENFRIAMIENTO DEL FRENO)	701
BOMBA DE ENGRANAJES (GR) (*STEERING, BRAKE OIL COOLER)	702
BOMBA DE IMPLEMENTOS Y MONTAJE (GR)	834
BOMBA DE INYECCIÓN DE COMBUSTIBLE (GR)	184
BOMBA DE LA TRANSMISIÓN (GR)	454
	455
BOMBA DE LUBRICACIÓN (GR)	586
BOMBA DE PISTONES (GR)	646
	706
	708
	840
	842
BOMBA DE PISTONES (GR) (IMPLEMENTO, DESPLAZAMIENTO FIJO)	834
BOMBA DE PRELUBRICACION (GR)	96
	99
BOMBA DE TRANSFERENCIA DE COMBUSTIBLE (GR)	188
	189
BOMBA Y MONTAJE DE LA DIRECCIÓN SECUNDARIA (GR)	700
BOMBA Y MONTAJE DE LUBRICACIÓN DEL MANDO (GR)	452
BOMBA Y MONTAJE DEL FRENO (GR)	645
BOMBA Y MONTAJE DEL PILOTO Y EL ENFRIADOR	835
BOMBA Y MOTOR DE PRELUBRICACIÓN (CONJ)	93
*BRACKET	250
*BRACKET AS-ADJUSTABLE SWITCH (LIMITE DE LUZ DE PARADA)	608
BRAZO DE LEVANTAMIENTO (CONFIG)	902
	903
	904
BRAZO DE LIMPIAPARABRISAS (GR)	956
BRAZO Y COJINETE (CONJ)	896
	898
	900

C

Nombre	Página
CABEZA DE BOMBA (GR)	676
	772
CABINA - MAZO DE CABLES DE LA (SUPERIOR)	310
CABINA (CONFIG)	961
CABINA (GR)	962
CABINA Y PLATAFORMA (GR)	959
CABLES CONJ. -LIMPIADOR DE VENTANAS (*QUARTER WINDOW)	310
CABLES CONJ. -LIMPIADOR DE VENTANAS (*WASHER)	310
CABLES DE CALEFACCIÓN (GR)	338
CABLES DE LA CABINA (GR)	309
CABLES DE LA ESTRUCTURA ROPS (GR)	378
CABLES DE LA MÁQUINA (GR)	349
CABLES DE LA MÁQUINA (GR)	340
	351
CABLES DE LA PLATAFORMA (GR)	363
CABLES DE LA PLATAFORMA (GR)	365
	367
CABLES DE SENSOR (GR)	380
CABLES DEL MOTOR (GR)	325
CABLES DEL TABLERO MONITOR (GR)	353
CABLES DEL TREN DE FUERZA (GR)	369
CABLES DELANTEROS (GR)	335
CABLES POSTERIORES (GR)	377
CABLES POSTERIORES (GR)	372
	374
CAJA DE ALMACENAMIENTO	957
	958
CAJA DE ENGRANAJE (GR)	389
CAJA DELANTERA (GR)	54
CAJA Y PIEZAS DE LOS PLANETARIOS	387
CALCOMANÍA DE ADVERTENCIA	216
CALCOMANÍA DE ADVERTENCIA (ASIENTO AJUSTABLE)	1067
CALCOMANÍA DE ADVERTENCIA (CONTROL DE DESCONEXIÓN)	1091
CALCOMANÍA DE ADVERTENCIA (*ELECTRICAL DISCONNECT)	353
CALCOMANÍA DE ADVERTENCIA (ENTRADA DE AGUA, SALIDA DE AGUA)	953
CALCOMANÍA DE ADVERTENCIA (ESLABON DE PRODUCTO)	230
CALCOMANÍA DE ADVERTENCIA (*HIGH PRESSURE, READ MANUAL)	604
CALCOMANÍA DE ADVERTENCIA (NO LEVANTE)	1091

* NO HAY TRADUCCION DISPONIBLE EN EL MOMENTO DE LA IMPRESION

INDICE

Nombre	Página
CALCOMANÍA DE ADVERTENCIA (OJO DE LEVANTAMIENTO, AMARRE)	1034
CALCOMANÍA DE ADVERTENCIA (PARADA DE MOTOR)	501, 502
CALCOMANÍA DE IDENTIFICACIÓN	1093
CALCOMANÍA DE IDENTIFICACIÓN (BOMBA DE PRELUBRICACION)	1090
CALCOMANÍA DE IDENTIFICACIÓN (MÓDULO DE CONTROL ELECTRONICO)	222
CALCOMANÍAS Y PLACAS DE IDENTIFICACIÓN (GR)	1090
CALENTADOR DE ACEITE DE MOTOR (GR)	226
CALENTADOR DEL COMBUSTIBLE (GR)	227
CAMBIO RÁPIDO DE ACEITE (GR)	91
*CAMERA AR	204
*CAMERA GP (*115-DEGREE, COLOR)	318
CÁNCAMOS DE LEVANTAMIENTO DEL MOTOR (GR)	56
CANDADO (GR)	374, 501, 502, 541, 1035
CANDADO (GR) (LLENADO DE ACEITE DE MOTOR)	74
CANDADO (GR) (TUBERIA DE LLENADO DE ACITE DE MOTORN)	78
CAÑÓN DE LA BOMBA (GR)	661
CAPO Y PROTECTOR (GR)	541
CAPTADOR DE TEMPERATURA (AGUA DE LAS CAMISAS)	325
CARGA - ALTERNADOR DE (GR)	195
CÁRTER - COLECTOR DEL (GR)	61
CÁRTER - PROTECTOR DEL (GR)	535
CENICERO	1060
CENTRO DE SERVICIO GR	1093
CHASIS DELANTERO (COFIG)	1
CHASIS TRASERO (CONFIG)	2
CIGÜEÑAL (GR)	20
CILINDRO DE DIRECCIÓN (GR)	665, 667
CILINDRO DE DIRECCIÓN Y MONTAJE (GR)	664
CILINDRO DE ÉTER (CONJ)	282, 284
CILINDRO DE INCLINACIÓN (GR)	748
CILINDRO DE LEVANTAMIENTO - TUBERÍAS DEL (GR)	804, 806, 807, 809, 810
CILINDRO DE LEVANTAMIENTO (CONFIG)	747
CILINDRO DE LEVANTAMIENTO (GR)	749, 751, 753
CINTURÓN DE SEGURIDAD (GR)	1051
COLADOR (CONJ)	767, 852
COLADOR DE COMBUSTIBLE	190, 191
COLADOR (ORIFICIO DE LLENADO)	855
COMBUSTIBLE - TANQUE DE (GR)	190
COMBUSTIBLE - TANQUE DE (GR)	191, 193
COMPARTIMIENTO DEL OPERADOR (CONFIG)	1026
COMPRESOR DE AIRE DEL ASIENTO (GR)	1067
COMPRESOR DE AIRE DEL ASIENTO (GR)	951
COMPRESOR DE AIRE (GR)	8, 9
COMPRESOR DE REFRIGERANTE (GR)	969
COMPRESOR DE REFRIGERANTE Y GRUPO DE MONTAJE	966
CONDENSADOR DEL REFRIGERANTE Y MONTAJE (GR)	970
CONDUCTO DE AIRE (GR)	980
CONEXIÓN DEL TANQUE DE COMBUSTIBLE (GR)	176
(CONFIG) CABLERIA, CHASIS DELANTERO (*FENDER, LH)	335
(CONFIG) CABLERIA, CHASIS DELANTERO (GUARDABARROS, LADO DERECHO)	335
CONFIGURACIÓN COMÚN	2
CONFIGURACIÓN DE INSTALACIÓN DEL MOTOR	7
CONFIGURACION DE LAMPARA DE REFLECTOR (24-VOLTIOS, 70-VATIOS)	241
CONFIGURACIÓN DE MOTORES	5
CONFIGURACIÓN DE TRANSFORMACIÓN PARA CERTIFICACIÓN	3
CONFIGURACIÓN ELECTRÓNICA DE LA MÁQUINA	220
CONFIGURACIÓN HIDRÁULICA DELANTERA	774
CONJUNTO DE CABLES, VÁLVULA (COMPRESOR DE AIRE DEL ASIENTO)	1067
CONJUNTO DE TRABA DE INTERRUPTOR	197
CONTROL DE ARRANQUE NEUMÁTICO (GR)	208, 212
CONTROL DE COMUNICACION Y MONTAJE (GR)	205
CONTROL DE DIRECCIÓN (GR)	662
CONTROL DE LA PALANCA (GR)	390, 391

* NO HAY TRADUCCION DISPONIBLE EN EL MOMENTO DE LA IMPRESION

INDICE

Nombre	Página
CONTROL DE POSICION (GR)	216
CONTROL DE POSICION (GR) (CUCHARÓN)	776
	778
CONTROL DE RASANTE (CONFIG)	207
CONTROL DEL FRENO DE ESTACIONAMIENTO	614
CONTROL DEL PEDAL DE FRENO (GR)	613
CONTROL ELECTRÓNICO DEL MOTOR (GR)	215
CONTROL ELECTRÓNICO DEL MOTOR Y MONTAJE	206
CONTROL HIDRÁULICO DE LA TRANSMISIÓN (GR)	395
CONTROL HIDRÁULICO DE OPERACIÓN PILOTO (GR)	744
CONTROL NO PROGRAMADO (GR)	205
	217
	218
CONTROL NO PROGRAMADO (GR) (IMPLEMENTO)	354
CONTROL NO PROGRAMADO (GR) (TREN DE FUERZA)	353
*CONVERSION AR-CERTIFICATION	3
CONVERTIDOR DE PAR (GR)	479
CONVERTIDOR DE PAR Y CAJA (GR)	477
CONVERTIDOR ELÉCTRICO (GR) (24 VOLTIOS A 12 VOLTIOS)	349
CONVERTIDOR ELÉCTRICO (GR) (24 VOLTIOS A 12 VOLTIOS)	233
	351
*CORE GP-TMSN OIL COOLER	397
CORREA (ALTERNADOR)	59
CORREA-SERPENTIN (COMPRESOR DEL REFRIGERANTE)	966
*COUPLING GP-TORSIONAL	399
CRUCETA Y COJINETE (GR)	472
	474
	475
CUBIERTA DE PLATAFORMA (SISTEMA DE ARRANQUE) (GR)	974
	975
	976
CUCHARÓN PARA CARBÓN (CONJ)	915
	917
CUCHARÓN PARA CARBÓN (GR)	929
CUCHARÓN PARA ROCA (CONJ)	919
	920
	922
	924
	926
	927
CUCHARÓN PARA ROCA (GR)	930
	931
	932
	933
	934
	935
CUCHILLA (GR)	936
	937
	938
	939
	940
CULATA DE CILINDROS - TORNILLERÍA DE LA (GR)	25
CULATA DE CILINDROS (CONJ)	24
CULATA DE CILINDROS (GR)	25
	27
*CUP-DUST	473

D

DESHIDRATADOR (GR)	606
	607
DETECTOR DE POSICIÓN (SISTEMA DE COMBUST.) (GR)	269
	270
	271
DIFERENCIAL (GR)	403
DIFERENCIAL Y CORONA (GR)	401
DISYUNTOR (CONJ) (10-AMPERIOS) (INTERRUPTOR DE LLAVE)	355
DISYUNTOR (CONJ) (10-AMPERIOS) (LUCES DE TRABAJO)	355
DISYUNTOR (CONJ) (105 AMPERIOS) (PRINCIPAL)	354
DISYUNTOR (CONJ) (15 AMPERIOS) (ECM (MÓDULO DE CONTROL ELECTRÓNICO) DEL MOTOR)	353
DISYUNTOR (CONJ) (80 AMPERIOS) (*ALTERNATOR NO. 1)	354
DISYUNTOR (CONJ) (80 AMPERIOS) (*ALTERNATOR NO. 2)	354
DISYUNTOR (CONJ) (80 AMPERIOS) (PRELUBRICACION)	354
DISYUNTOR (GR)	300
DOSIFICADOR DE ACEITE DE MOTOR (GR)	89

E

EJE DE MANDO DE ENTRADA (GR)	467
EJE DE MANDO DE LA BOMBA (GR)	468
	470
EJE DE MANDO DE LA BOMBA (GR) (*FRONT)	451

* NO HAY TRADUCCION DISPONIBLE EN EL MOMENTO DE LA IMPRESION

INDICE

Nombre	Página
EJE DE MANDO DE LA BOMBA (GR) (SELECTOR DE MARCHAS AUTOMÁTICO/MANUAL)	451
EJE DE MANDO (GR)	464
	466
EJE FIJO (CONFIG)	383
EJE FIJO (GR)	384
EJE OSCILANTE (CONFIG)	383
EJE OSCILANTE (GR)	385
ELECTRONICA DE MONITOR (GR)	222
	223
*ELEMENT AS-ENGINE OIL HEATER	226
ELEMENTO DE FILTRO DE ACEITE (CONJ) (*STEERING, BRAKE)	673
ELEMENTO DE FILTRO DE ACEITE (CONJ) (TREN DE FUERZA)	418
	420
ELEMENTO DE FILTRO DE COMBUSTIBLE (CONJ) (PRIMARIO)	175
ELEMENTO DE FILTRO (MANDO DE LA BOMBA)	771
ELEMENTO DEL CALENTADOR DEL AGUA DE LAS CAMISAS	229
ELEMENTO DEL FILTRO DE AIRE (CONJ) (PRIMARIO)	156
ELEMENTO DEL FILTRO DE AIRE (CONJ) (SECUNDARIO)	156
ENCENDEDOR DE CIGARRILLOS (GR) (12 VOLTIOS)	310
ENFRIADOR DE ACEITE DE LA TRANSMISIÓN (GR)	396
ENFRIADOR DE ACEITE DEL MOTOR (GR)	113
ENFRIADOR DEL ACEITE HIDRAULICO (GR)	746
ENGANCHE ARTICULADO (GR)	540
ENGRANAJE DE TRANSFERENCIA DE ENTRADA (GR)	422
ENGRANAJE DE TRANSFERENCIA DE SALIDA	424
ENGRANAJE DELANTERO (GR)	45
ENGRANAJE TRASERO (GR)	47
ESCAPE DE GASES (GR)	77
ESLABON DEL CUCHARON (GR)	906
	908
	910
ESTRIBO DEL OPERADOR (GR)	589
	590
ESTRUCTURA ROPS (CONFIG)	1046
ESTRUCTURA ROPS (GR)	1047
ETIQUETA DE ADVERTENCIA (GR)	1077
	1078
	1079
	1080
EXPULSOR DE POLVO (GR)	158
EXTENSIÓN DEL ESCAPE (GR)	159
EXTENSIÓN DEL RESPALDO (GR) (DE TELA)	1051

F

*FILM GP-INTERNATIONAL	1081
*FILM GP-U.S.	1081
*FILTER & MTG GP-PLT & PUMP DR	770
*FILTER & MTG GP-STEERING	672
FILTRO (BOMBA DE AGUA)	145
FILTRO DE ACEITE (CONJ) (HIDRAULICO, ALTA EFICIENCIA)	675
FILTRO DE ACEITE DEL MOTOR (CONJ)	75
FILTRO DE ACEITE DEL MOTOR (GR)	75
FILTRO DE ACEITE (GR)	418
	420
	673
	675
	771
FILTRO DE ACEITE (GR) (*FRONT PUMP DRIVE)	770
FILTRO DE ACEITE (GR) (*HYDRAULIC COOLER SCREEN)	671
FILTRO DE ACEITE (GR) (*STEERING, BRAKE COOLER SCREEN)	671
FILTRO DE AIRE DE CABINA	982
	996
FILTRO DE AIRE DE LA CABINA (GR)	982
FILTRO DE AIRE (GR)	156
	157
FILTRO DE COMBUSTIBLE (CONJ)	187
FILTRO DE COMBUSTIBLE (CONJ)	173
FILTRO DE COMBUSTIBLE (GR)	173
FILTRO PRIMARIO DE COMBUSTIBLE (GR)	175
FILTRO Y MONTAJE DEL DIRECCIONAL E IMPLEMENTOS	671
FILTRO Y MONTAJE DEL TREN DE FUERZA (GR)	416
FRENO DE ESTACIONAMIENTO (GR)	611
FRENO DE SERVICIO - CONTROL (GR)	615
FUSIBLE (10-AMPERIOS)	353
FUSIBLE (15 AMPERIOS)	353
FUSIBLE (15 AMPERIOS)	338

G

GRUPO DE CONTROL-CORTE HIDRÁULICO	743
GRUPO DE CONTROL-MONITOR NO PROGRAMADO	971
GRUPO DE GUIA, CORREA	55

* NO HAY TRADUCCION DISPONIBLE EN EL MOMENTO DE LA IMPRESION

INDICE

Nombre	Página
GRUPO DE INSTALACION, CONTROL DE GRADO	233
	235
GRUPO DE MEDIDOR DE NIVEL DE REFRIGERANTE	117
GRUPO DE MONTAJE Y FILTRO DEL DRENAJE DE LA CAJA	669
GRUPO DE SOFTWARE, COMUNICACIÓN (*PRODUCT LINK 121SR)	231
GRUPO DE SOFTWARE, COMUNICACIÓN (*PRODUCT LINK 300)	221
GRUPO DE TANQUE, ACEITE DEL MOTOR	109
GRUPO DE TAPA, ACCESO	509
	510
GRUPO DE TUBERÍAS DE AIRE DEL TURBOCOMPRESOR	162
GRUPO DE TUBERIAS DE DIAGNÓSTICO	1082
	1085
GRUPO DE TUBERIAS DE LUBRICACIÓN AUTOMÁTICA	548
	552
	555
	560
	566
	571
GRUPO DE VÁLVULA-ARRANQUE CON ÉTER	307
GRUPO ELECTRONICO-COMUNICACION	221
GRUPO ELECTRONICO-COMUNICACION (*PRODUCT LINK 300)	230
GRUPO ELECTRONICO DE CLASIFICACION DE MOTORES	5
GRUPO GIRATORIO DE BOMBA	648
	710
	844
	845
GUARDABARROS DELANTERO (GR)	517
GUARDABARROS TRASERO (GR)	518

H

HOJA DE LIMPIAPARABRISAS (CONJ)	1073
HOJA DE LIMPIAPARABRISAS (CONJ) (DELANTERO)	1070
*HYDRAULIC AR-REAR	775

I

IMPLEMENTOS (GR ELECTRÓNICO)	222
IMPULSOR DE VENTILADOR (GR)	38
	40
	42
INCLINACIÓN HORIZONTAL - CILINDRO DE (GR)	755
	757
	759
	761
	763
	765
INDICADOR DE CAMBIO DE FILTRO DE ACEITE (GR)	160
INDICADOR DEL NIVEL DE ACEITE (VARILLA) (GR)	79
INDICADOR DEL NIVEL DE ACEITE (VARILLA) (GR)	78
INDICADOR DEL NIVEL DEL ACEITE (VARILLA) (CONJ)	79
INSTALACIÓN CAES (CONFIG)	230
INSTALACION DE COMUNICACION (GR)	231
INSTALACION DE COMUNICATION (CONFIG)	230
INSTALACIÓN DE RADIO (GR)	991
INSTALACIÓN EN EL CAMPO (CONFIG)	3
INTERRUPTOR DE DERIVACIÓN	299
INTERRUPTOR DE FLUJO (GR)	301
INTERRUPTOR DE LÍMITE (CONJ) (FRENO DE ESTACIONAMIENTO)	340
INTERRUPTOR DE LÍMITE (CONJ) (LUZ DE PARADA)	608
INTERRUPTOR DE LÍMITE (CONJ) (*STIC CONTROL LOCKOUT)	310
INTERRUPTOR DE LLAVE (GR)	310
INTERRUPTOR DE LLAVE (GR) (SERVICIO DEL SISTEMA VIMS)	374
INTERRUPTOR DE NIVEL DE LIQUIDO (GR)	302
INTERRUPTOR DE PRESIÓN (CONJ)	675
INTERRUPTOR DE PRESIÓN (CONJ) (ACEITE DE FRENO DE ESTACIONAMIENTO)	340
INTERRUPTOR DE PRESIÓN (CONJ) (ACEITE DE LA DIRECCION PRIMARIA)	340
INTERRUPTOR DE PRESIÓN (CONJ) (ACEITE DEL FRENO DE SERVICIO)	615
INTERRUPTOR DE PRESIÓN (CONJ) (DIFERENCIAL DE FILTRO DEL COMBUSTIBLE)	325
INTERRUPTOR DE PRESIÓN (CONJ) (*IMPLEMENT FILTER BYPASS)	333
INTERRUPTOR DE PRESIÓN (CONJ) (REFRIGERANTE)	42
INTERRUPTOR DE PRESIÓN (CONJ) (REFRIGERANTE)	1001
INTERRUPTOR DE PRESIÓN (CONJ) (*STEERING, BRAKE FILTER BYPASS)	333

* NO HAY TRADUCCION DISPONIBLE EN EL MOMENTO DE LA IMPRESION

INDICE

Nombre	Página
INTERRUPTOR DE PRESIÓN (GR) (DERIVADOR DE FILTRO DE ACEITE) (*PUMP DRIVE FILTER BYPASS)	771
INTERRUPTOR DE TEMPERATURA (CONJ) (ACEITE DEL MOTOR)	226
INTERRUPTOR DE TEMPERATURA (CONJ) (REFRIGERANTE)	954
INTERRUPTOR DE VOLQUETE (CONJ) (AUXILIAR DE ARRANQUE)	310
INTERRUPTOR DE VOLQUETE (CONJ) (BALIZA GIRATORIA DE ADVERTENCIA)	244 310
INTERRUPTOR DE VOLQUETE (CONJ) (EMBRAGUE DE TRABA DE CONVERTIDOR DE PAR)	310
INTERRUPTOR DE VOLQUETE (CONJ) (*HID FLOODLIGHTS, FRONT)	312
INTERRUPTOR DE VOLQUETE (CONJ) (*HOOD LIGHTS)	374
INTERRUPTOR DE VOLQUETE (CONJ) (*LIFT POSITION SET)	312
INTERRUPTOR DE VOLQUETE (CONJ) (LUCES DE ESCALERILLA DE ACCESO)	310
INTERRUPTOR DE VOLQUETE (CONJ) (LUCES DE TRABAJO)	310
INTERRUPTOR DE VOLQUETE (CONJ) (LUZ INTEROR)	312
INTERRUPTOR DE VOLQUETE (CONJ) (REFLECTOR)	244
INTERRUPTOR DE VOLQUETE (CONJ) (REFLECTORES DELANTEROS)	312
INTERRUPTOR DE VOLQUETE (CONJ) (REFLECTORES TRASEROS)	312
INTERRUPTOR DE VOLQUETE (CONJ) (*STAIRWAY LIGHTS)	374
INTERRUPTOR DE VOLQUETE (CONJ) (TRABA DE ACTIVACION DEL ACELERADOR)	310
INTERRUPTOR DE VOLQUETE (GR) (APAGADO A NIVEL DEL SUELO)	375
INTERRUPTOR DE VOLQUETE (GR) (BALIZA GIRATORIA DE ADVERTENCIA)	244
INTERRUPTOR DE VOLQUETE (GR) (DIFERENCIAL DE FILTRO DEL COMBUSTIBLE)	173
INTERRUPTOR DE VOLQUETE (GR) (*FLOODLIGHTS, FRONT) (REFLECTOR)	244
INTERRUPTOR DE VOLQUETE (GR) (*STARTING MOTOR LOCKOUT)	375
INTERRUPTOR DE VOLQUETE (GR) (*TRANSMISSION LOCKOUT)	374
INTERRUPTOR DEL LIMPIADOR (GR)	306
INTERRUPTOR DEL LIMPIAPARABRISAS (CONJ) (24 VOLTIOS) (INTERMITENTE)	306
INTERRUPTOR MAGNÉTICO (GR)	303 304 305
INTERRUPTOR MAGNÉTICO (GR) (RELÉ DE BOMBA DE PRELUBRICACIÓN)	99
INTERRUPTOR MAGNÉTICO (GR) (24 VOLTIOS) (RELE PRINCIPAL)	353
INTERRUPTOR PULSADOR (CONJ) (AJUSTE DE TRABA DE ACELERACION)	310
INTERRUPTOR PULSADOR (CONJ) (BOCINA)	310
INTERRUPTOR PULSADOR (CONJ) (*REMOTE PAYLOAD STORE)	310
INTERRUPTOR PULSADOR (CONJ) (RESUMICION DEL AJUSTE DE LA TRABA DE ACELERACION)	310
INTERRUPTOR ROTATIVO (CONJ) (CONTROL DEL VENTILADOR DE CALEFACCION, ACONDICIONADOR DE AIRE)	309
INTERRUPTOR ROTATIVO (CONJ) (LIMPIA, LAVAPARABRISAS) (*QUARTER WINDOW)	309
INTERRUPTOR ROTATIVO (CONJ) (SELECTOR DE REDUCCIÓN DE FUERZA DE TRACCIÓN)	309
INYECTOR DE COMBUSTIBLE (GR)	184

J

JUEGO DE ABRAZADERA DEL FILTRO DE AIRE	156
JUEGO DE ADAPTADOR	227
JUEGO DE AMORTIGUADOR	1067
JUEGO DE ANILLO ESTANDAR (COMPRESOR DE AIRE) (COMPRESOR DE AIRE)	8
JUEGO DE ATADURA	1067
JUEGO DE BOMBA	587
JUEGO DE BUJES (POLEA DE CIGÜEÑAL) (CON BRIDA)	38
JUEGO DE CAJA DE MANDO (MOTOR DE ARRANQUE NEUMÁTICO)	289
JUEGO DE COJINETES (ALTERNADOR)	195
JUEGO DE COJINETES DE BANCADA (COMPRESOR DE AIRE) (COMPRESOR DE AIRE)	8
JUEGO DE CORREAS TRAPEZOIDALES (INCLUYE 6-CORREAS) (VENTILADOR)	38
JUEGO DE DIAFRAGMA (BOCINA)	987
JUEGO DE EMISOR DE NIVEL	265
JUEGO DE ENGRANAJE PLANETARIO (MOTOR DE ARRANQUE NEUMATICO DE TURBINA)	293

* NO HAY TRADUCCION DISPONIBLE EN EL MOMENTO DE LA IMPRESION

INDICE

Nombre	Página
JUEGO DE FILTRO DE TAPA (TANQUE DE COMBUSTIBLE)	190, 191
JUEGO DE INYECTOR (*LUBE)	596, 597, 598
JUEGO DE LA CULATA DE CILINDROS (COMPRESOR DE AIRE) (COMPRESOR DE AIRE)	8
JUEGO DE PANTALLA	649
JUEGO DE PASADOR DE PEDAL (PEDAL DEL REGULADOR)	1033
JUEGO DE PERNO RETENEDOR	223
JUEGO DE PERNO RETENEDOR (CONTROL NO PROGRAMADO)	217
JUEGO DE PERNOS (CONECTORES ELECTRICOS)	378
JUEGO DE REACONDICIONAMIENTO DEL REGULADOR (COMPRESOR DE AIRE)	9
JUEGO DE REACONDICIONAMIENTO (MOTOR DE ARRANQUE NEUMATICO DE TURBINA)	292
JUEGO DE REACONDICIONAMIENTO (MOTOR DE ARRANQUE NEUMATICO DE TURBINA)	294
JUEGO DE REACONDICIONAMIENTO (MOTOR DE ARRANQUE NEUMATICO DE TURBINA)	293
JUEGO DE RECONSTRUCCIÓN (BOMBA DE AGUA)	145
JUEGO DE RECONSTRUCCIÓN (BOMBA DE AGUA AUXILIAR)	141
JUEGO DE REPARACIÓN DEL MOTOR DE ARRANQUE (MOTOR DE ARRANQUE NEUMATICO DE TURBINA)	292, 294
JUEGO DE REPARACIÓN (TUBERÍAS DEL FRENO) (ENGRANAJE, CAMBIO) (BOMBA DE TRANSFERENCIA DE COMBUSTIBLE)	189
JUEGO DE REPARACIÓN (TUBERÍAS DEL FRENO) (MANDO DE VENTILADOR DE VELOCIDAD VARIABLE)	40
JUEGO DE REPARACIÓN (TUBERÍAS DEL FRENO) (VÁLVULA DE DERIVACIÓN) (BOMBA DE TRANSFERENCIA DE COMBUSTIBLE)	189
JUEGO DE RODILLO (PEDAL DEL REGULADOR)	1033
JUEGO DE ROTOR (ARRANQUE NEUMÁTICO - SEGUNDA ETAPA)	294
JUEGO DE ROTOR (ARRANQUE NEUMÁTICO, ETAPA 2)	292
JUEGO DE ROTOR (ARRANQUE NEUMÁTICO, PRIMERA ETAPA)	292, 294
JUEGO DE RUEDAS DE TURBINA (MOTOR DE ARRANQUE NEUMATICO DE TURBINA)	293
JUEGO DE SELLO DE BOMBA	646
JUEGO DE SELLO DE CILINDRO HIDRAULICO (CILINDRO-1)	665
JUEGO DE SELLO DE TAPA DE BOMBA DOSIFICADORA	878
JUEGO DE SELLO Y PALETA (MOTOR DE ARRANQUE NEUMÁTICO) (MOTOR DE ARRANQUE NEUMATICO)	289
JUEGO DE SELLOS	208, 212, 472, 473, 474, 492, 604, 703, 704, 735, 887
JUEGO DE SELLOS (BOMBA DE ENGRANAJE)	705
JUEGO DE SELLOS (BOMBA DE ENGRANAJES DE SIST. PILOTO)	453
JUEGO DE SELLOS (BOMBA DE TRANSFERENCIA DE COMBUSTIBLE)	189
JUEGO DE SELLOS (CILINDRO-2)	665
JUEGO DE SELLOS DEL ÉMBOLO	728, 876, 877, 879
JUEGO DE SELLOS (LUBRICADOR DE MOTOR NEUMATICO)	263
JUEGO DE SELLOS (MANDO DE VENTILADOR DE VELOCIDAD VARIABLE)	40
JUEGO DE SELLOS (MOTOR DE ARRANQUE NEUMATICO DE TURBINA)	293
JUEGO DE SELLOS (VALVULA DE SOLENOIDE)	485, 893, 894
JUEGO DE TERMINAL (ALTERNADOR)	195
JUEGO DE TERMINAL (ALTERNADOR)	195
JUEGO DE TERMINAL (*LOCK)	354
JUEGO DE TERMINAL (MOTOR DE ARRANQUE)	296
JUEGO DE TORNILLERÍA (ALTERNADOR)	195
JUEGO DE TUBO (*LUBRICATION PUMP)	587
JUEGO DE VALVULA DE AIRE	1067

* NO HAY TRADUCCION DISPONIBLE EN EL MOMENTO DE LA IMPRESION

INDICE

Nombre	Página
JUEGO DE VALVULA DE PURGA (SECADOR DE AIRE)	607
JUEGO DE VÁLVULAS	208
	212
	587
JUEGO DE VÁLVULAS (SECADOR DE AIRE)	607
JUEGO-REPARACIÓN BASICA DE MOTOR (COJINETE PRINCIPAL)	20
JUNTA DESLIZANTE (GR)	472
	473
	474
JUNTA UNIVERSAL (GR)	483
	484

L

LÁMPARA (CONJ) (*AMBER, LED, 24-VOLT) (*TRANSMISSION LOCKOUT INDICATOR)	374
LÁMPARA DE BALIZA DE ADVERTENCIA (GR)	243
LÁMPARA DEL TECHO (GR)	236
LÁMPARA (12 VOLTIOS, 24 VOLTIOS, 35 VATIOS)	239
LÁMPARA (24 VOLTIOS)	236
	309
	360
LÁMPARA (24 VOLTIOS, AMARILLO)	310
LÁMPARA (24-VOLTIOS, ROJO)	310
LÁMPARA (24-VOLTIOS, 70-VATIOS)	243
LAVAPARABRISAS DE LA VENTANA (GR)	1069
LEVANTAMIENTO (CONFIG)	905
LEVANTAMIENTO DE LA MÁQUINA (GR)	547
*LIGHTING AR-WARNING BEACON	244
LIMPIA Y LAVAPARABRISAS (GR)	1070
LIMPIAPARABRISAS DE LA VENTANA (GR)	1072
	1073
LIMPIAR LA CABINA (GR)	964
*LINES GP-BRAKE COOLING	627
	630
	632
	634
*LINES GP-EXPANSION TANK	785
	787
LLANTA (CONFIG)	456
	457
LLANTA DE REPUESTO (UNA SOLA)	462
	463
LLANTA DE REPUESTO (UNA SOLA)	462
LLAVE-CUADRADA	393
LLAVE (DESCONEXIÓN DE BATERÍA)(ARRANQUE)	300
LUBRICACIÓN AUTOMÁTICA (GR)	580
LUBRICACIÓN AUTOMÁTICA (GR) (PLATAFORMA)	1035
LUBRICADOR DE MOTOR NEUMATICO (GR)	263
LUCES DE ALÓGENO (24 VOLTIOS, 65 VATIOS)	237
	238
LUCES DE ALÓGENO (24 VOLTIOS, 65 VATIOS) (REFLECTOR)	240
LUCES DE PARADA (GR)	255
	256
LUCES DE PARADA Y DE COLA (GR)	257
LUCES DE PARADA Y REFLECTORES (CONFIG)	244
LUCES DE REFLECTOR (GR)	245
	246
	247
	249
	250
	251
	252
	253
LUCES DE REFLECTOR (GR) (*2-LAMP, PLATFORM)	3
LUZ DE BALIZA (GR)	259
LUZ DE SEÑAL DE GIRO (GR)	242
LUZ INTERIOR (24 VOLTIOS)	309

M

MAGNETO GR-VÁLVULA PILOTO	829
	830
MANDO AUXILIAR (GR)	36
MANDO DE BOMBA (GR)	405
	409
MANDO DE CORREA (BALIZA DE ADVERTENCIA)	243
MANDO DE LA BOMBA Y MONTAJE (GR)	404
MANDO DE VENTILADOR (CONFIG)	30
MANDOS FINALES, RUEDA Y FRENO (GR)	498
MANGUERA	139
MAZO DE CABLES (CONJ) (MECANISMO DE VALVULA)	70
MAZO DE CABLES DE CONTROL (CONJ) (*BUCKET POSITIONER)	776
	778
MAZO DE CABLES DE CONTROL (CONJ) (*OIL RENEWAL SYSTEM, CHASSIS)	360
MAZO DE CABLES DE CONTROL (CONJ) (*OIL RENEWAL SYSTEM, FIREWALL)	360
MAZO DE CABLES DE LA TRANSMISION	495
MAZO DE CABLES DE LOS FRENOS (CONJ) (LUZ DE PARADA)	608

* NO HAY TRADUCCION DISPONIBLE EN EL MOMENTO DE LA IMPRESION

INDICE

Nombre	Página
MAZO DE CABLES DE SENSOR (CONJ)	42
MAZO DE CABLES DE SENSOR (CONJ) (*HYD LEVEL, TEMP; FR AXLE TEMP)	335
MAZO DE CABLES DE SENSOR (CONJ) (*REAR AXLE OIL TEMPERATURE)	380
MAZO DE CABLES DEL MOTOR (CONJ)	225 325
MAZO DE CABLES (*FRONT AXLE OIL TEMPERATURE)	380
MAZO DE CABLES, LUCES	247
MECANISMO DE VÁLVULAS (GR)	70
MIRILLA	146 855
MIRILLA INDICADORA	852
MIRILLA (NIVEL DE ACEITE)	109
MODULO CENTRAL DE MENSAJES(GR)	1014
MÓDULO DEL TACÓMETRO Y DEL VELOCÍMETRO (GR)	309
MODULO DEL TECLADO MONITOR (GR)	1014
MODULO ELECTRÓNICO DE CUATRO INDICADORES (GR)	1015
MONTAJE DE ANTENA (GR)	1020
MONTAJE DE ARO	440 441
MONTAJE DE LA CORONA (GR)	439
MONTAJE DE LA PLATAFORMA (GR)	1022 1023 1024
MONTAJE DE LA TRANSMISIÓN (GR)	442
MONTAJE DEL ALTERNADOR (GR)	59
MONTAJE DEL CILINDRO DE LEVANTAMIENTO (GR)	833
MONTAJE DEL SENSOR (GR)	264
MONTAJE DEL SOPORTE DE LA PLATAFORMA	1025
MONTAJE GR-MONITOR	1021
MONTAJE Y VALVULA DEL CONTROL PRINCIPAL (GR)	859 861
MOTOR - SOPORTE DEL (GR)	68 69
MOTOR DE ARRANQUE ELÉCTRICO (GR)	295 298
MOTOR-LIMPIAPARABRISAS (GR)	1016 1017 1018 1019
MOTOR-LIMPIAPARABRISAS (GR) (24 VOLTIOS, 2 VELOCIDADES)	1018 1019
MOTOR Y BOMBA GR-PRELUBRICACIÓN	93
*MOUNTING GP-BATTERY	582
*MOUNTING GP-EXPANSION TANK	831
MULTIPLE DE COMBUSTIBLE (GR)	182 183
MÚLTIPLE DE ESCAPE (GR)	164

N

NEUMÁTICO (GR)	475 476
NUCLEO DE ENFRIADOR DE ACEITE DE MOTOR (GR)	114
NUCLEO DE RADIADOR (CONJ)	152
NÚCLEO DEL ENFRIADOR DE ACEITE (CONJ) (TRANSMISION)	396
NÚCLEO DEL ENFRIADOR DE ACEITE (GR)	115
NÚCLEO DEL POSENFRIADOR (CONJ)	155

P

PANTALLA (CONJ)	673 711
PANTALLA (CONJ) (TANQUE HIDRAULICO)	852 857
PANTALLA DEL MONITOR (GR)	977
PARACHOQUES Y BARRA DE TIRO (GR)	503 506
PARAGOLPES Y BARRA DE TIRO (CONFIG)	501 502
PASADOR Y SELLO-VARILLAJE (GR)	912 913
PASAMANOS (GR)	985
PASARELA (GR)	599
PESTILLO DE PUERTA Y VENTANA DE LA CABINA (GR)	993
PISTÓN Y BIELA (GR)	64 66
PLACA DE INFORMACION (ENTRADA/SALIDA)	1091
PLACA DEL NÚMERO DE SERIE (TRANSMISION)	444
PLANCHA DE LA MAMPARA ANTITÉRMICA (GR)	583
PLATAFORMA (CONFIG)	1034 1035
PLATAFORMA DE LA CABINA	1036 1037 1039
POSENFRIADOR DE AGUA DULCE (GR)	155
POSICIONADOR DEL CUCHARÓN Y DESCONEXIÓN (GR)	776 778
*PRECLEANER AR-CAB AIR	1043
*PRECLEANER GP-CAB AIR	1044
PROTECTOR DE CORREA (GR)	49

* NO HAY TRADUCCION DISPONIBLE EN EL MOMENTO DE LA IMPRESION

INDICE

Nombre	Página
	51
PROTECTOR DE LA CUCHILLA (GR)	940
PROTECTOR DE LAS TUBERÍAS DE LOS FRENOS (GR)	533
PROTECTOR DEL RADIADOR (GR)	538
PROTECTOR DEL TREN DE FUERZA (GR)	537
PROTECTOR DEL TREN DE FUERZA (GR) (TRANSMISION)	3
PROTECTOR DELANTERO (GR)	536
PUERTA DE CABINA	978
PUNTA LARGA (GR)	944
	945
PUNTA PARA CUCHARON DE USO GENERAL (GR)	943
PUNTA PARA PENETRACIÓN	948
PUNTA PARA PENETRACIÓN (GR)	945
	946
	947
PUNTA RESISTENTE A LA ABRASIÓN (GR)	941
	942

R

RADIADOR (GR)	146
	152
*RADIO GP-COMMUNICATION (ESLABON DE PRODUCTO)	205
*RADIO GP-COMMUNICATION (*PRODUCT LINK 121SR)	231
*RECEIVER GP (*GLOBAL POSITIONING SYSTEM)	235
RECLINACION DE ASIENTO (GR)	1045
REFLECTOR (GR)	237
	238
	239
	240
	241
REFRIGERANTE - TUBERÍAS DE (GR)	119
REGULADOR - PEDAL DEL (GR)	1032
	1033
REGULADOR DE TEMPERATURA DEL AGUA (92 GRADOS CENTÍGRADOS)	118
REGULADOR DE VOLTAJE (24 VOLTIOS) (ALTERNADOR)	195
REGULADOR Y CAJA (GR)	118
REJILLA DE ALTA PRESION (GR)	711
REJILLA DE FILTRO	1069
REJILLA DE SUCCIÓN	425
REJILLA DEL RADIADOR (GR)	531
REJILLA DEL SISTEMA HIDRÁULICO(GR)	649
REJILLA (GR)	852
REJILLA (GR)	857
REJILLA PARA BARRIDO (BOMBA DE SUMIDERO FRONTAL)	103
RELÉ (CONJ) (24 VOLTIOS) (*AIR CONDITIONER PRECLEANER)	353
RELÉ (CONJ) (24 VOLTIOS) (ALARMA DE RETROCESO)	353
RELÉ (CONJ) (24 VOLTIOS) (ARRANQUE)	353
RELÉ (CONJ) (24 VOLTIOS) (*FRONT ROPS FLOODLIGHTS)	353
RELÉ (CONJ) (24 VOLTIOS) (LUCES)	353
RELÉ (CONJ) (24 VOLTIOS) (LUZ TRASERA)	353
RELÉ (CONJ) (24 VOLTIOS) (PARADA DEL MOTOR)	353
RELÉ (CONJ) (24 VOLTIOS) (*PLATFORM FLOODLIGHTS)	353
RELÉ (CONJ) (24 VOLTIOS) (PRELUBRICACION)	353
RELÉ (CONJ) (24 VOLTIOS) (REFLECTORES DELANTEROS)	353
RELÉ (CONJ) (24 VOLTIOS) (REFLECTORES TRASEROS ROPS)	353
RELÉ (CONJ) (24 VOLTIOS) (*ROPS HID LIGHTS NO. 1)	353
RELÉ (CONJ) (24 VOLTIOS) (*ROPS HID LIGHTS NO. 2)	353
*RENEWAL AR-OIL	106
RESORTE DE LA PUERTA DE LA CABINA (GR)	1058
RESPIRADERO	413
	847
RESPIRADERO (BOMBA DE LUBRICACION)	587
RESPIRADERO (CONJ) (CÁRTER DEL MOTOR)	72
	73
RESPIRADERO (CONJ) (TANQUE DE DOSIFICACION DE ACEITE DE MOTOR)	109
RESPIRADERO (GR)	72
	73
RETROCESO - ALARMA DE (GR)	308
RETROVISOR DERECHO (GR)	4
	1012
RETROVISOR IZQUIERDO (GR)	1010
RETROVISOR IZQUIERDO (GR)	4
REVESTIMIENTO DE LA CABINA (GR)	996
RUEDA Y MANDOS FINALES	498

S

*SCREEN-AIR CLEANER INLET	157
SELLADO DEL VIDRIO (GR)	1048
SELLO	14
SELLO ANULAR	738

* NO HAY TRADUCCION DISPONIBLE EN EL MOMENTO DE LA IMPRESION

INDICE

Nombre	Página
SELLO ANULAR (FILTRO PRIMARIO DE COMBUSTIBLE)	175
SELLO (*COVER, VALVE MECHANISM)	73
SELLO DE BOMBA DE AGUA (GR)	145
SELLO DE CIGÜEÑAL (GR)	67
SELLO DE LABIO (CAJA DE REGULADOR)	118
SELLO (TAPA DE RESPIRADERO)	72
SELLO (TAPA DE VÁLVULA)	19
*SENDER GP-FUEL LEVEL	265
SENSOR DE AMORTIGUADOR (GR)	203
SENSOR DE LA POSICION DE LEVANTAMIENTO Y MONTAJE (GR)	266
SENSOR DE PRESIÓN (GR)	272
	273
	274
	275
SENSOR DE PRESIÓN (GR) (ACEITE DE BOMBA DE IMPLEMENTO)	335
SENSOR DE PRESIÓN (GR) (ACEITE DE EXTREMO DE CABEZA DE CIL. DE LEVANTAMIENTO)	335
SENSOR DE PRESIÓN (GR) (ACEITE FILTRADO)	325
SENSOR DE PRESIÓN (GR) (ACEITE SIN FILTRAR)	325
SENSOR DE PRESIÓN (GR) (AIRE ATMOSFERICO)	325
SENSOR DE PRESIÓN (GR) (CÁRTER DEL MOTOR)	325
SENSOR DE PRESIÓN (GR) (LUBRICACION AUTOMATICA)	363
SENSOR DE TEMPERATURA DE ESCAPE (GR)	268
SENSOR DE TEMPERATURA DE ESCAPE (GR) (TURBOALIMENTADOR DE ADMISIÓN, LADO DERECHO)	325
SENSOR DE TEMPERATURA DE ESCAPE (GR) (TURBOALIMENTADOR DE ADMISIÓN, LADO IZQUIERDO)	325
SENSOR DE TEMPERATURA (GR)	279
	280
	281
SENSOR DE TEMPERATURA (GR) (AGUA DE LAS CAMISAS)	325
SENSOR DE TEMPERATURA (GR) (POSENFRIADOR TRASERO)	325
SENSOR DE VELOCIDAD (GR)	276
	277
	278
SENSOR DE VELOCIDAD (GR) (CALIBRACIÓN SINCRONIZACIÓN)	325
SENSOR DE VELOCIDAD (GR) (SALIDA DEL CONVERTIDOR DE PAR)	369
SENSOR DE VELOCIDAD (GR) (SINCRONIZACIÓN)	325
*SERVICE GP-COMMUNICATION (*PRODUCT LINK 300)	221
*SHAFT GP-PUMP DRIVE INPUT	451
	471
SILENCIADOR (GR)	166
SOLENOIDE DEL MOTOR DE ARRANQUE (CONJ)	295
SOPLADOR - VENTILADOR (GR)	116
SOPORTE DE CONTROL DE LA DIRECCIÓN (GR)	1064
SOPORTE DE MONTAJE (GR) (SECADOR DE AIRE)	607
SOPORTE DEL ASIENTO (GR)	1063
SOPORTE DEL CONTROL HIDRÁULICO (GR)	1060
SOPORTE DEL RESPALDO (GR)	1027
SUSPENSIÓN - ASIENTO CON (GR)	1057

T

TABLERO DE INSTRUMENTOS (GR)	1028
	1030
*TANK & MTG GP-ENGINE OIL	107
TANQUE DE AIRE (GR)	650
	651
TANQUE DE EXPANSIÓN (GR)	850
TANQUE DE GRASA (GR)	591
TANQUE HIDRÁULICO (GR)	852
	855
	857
TANQUE HIDRÁULICO Y MONTAJE (GR)	847
	849
TAPA CON RESPIRADERO (LIMPIAPARABRISAS)	1069
TAPA DE LA CABINA (GR)	972
TAPA DE LA CAJA DELANTERA (GR)	17
TAPA DE LLENADO (CONJ) (TANQUE DE COMBUSTIBLE)	190
	191
TAPA DEL BLOQUE MOTOR (GR)	14
TAPA DEL CONECTOR DEL MODULO (GR)	219
TAPA DEL MECANISMO DE VÁLVULAS (GR)	19
TAPA DEL MOTOR (GR)	15
TAPA DEL RADIADOR (7 LB/PULG2)	146
TAPA DEL TUBO DE LLENADO	91
	586
	767
	852
	855
TAPA DEL TUBO DE LLENADO (ACEITE HIDRÁULICO)	767

* NO HAY TRADUCCION DISPONIBLE EN EL MOMENTO DE LA IMPRESION

INDICE

Nombre	Página
TAPA DEL TUBO DE LLENADO DE ACEITE	413
TAPA DEL TUBO DE LLENADO (TANQUE DE DOSIFICACION DE ACEITE DE MOTOR)	109
TAPA (VASTAGO)	440
	441
TAPAS PROTECTORAS DE EMBARQUE (GR)	400
TAPÓN	477
TAPÓN (CONJ) (*ENGINE OIL FILL) (MOTOR)	74
TAPÓN DE DRENAJE	54
	119
	852
	855
TAPON DE DRENAJE DE ACEITE	784
TAPON DE DRENAJE DE ACEITE (COLECTOR DE ACEITE)	61
TAPÓN MAGNÉTICO	384
	385
	409
	499
TIRANTE DE TRABA DEL BASTIDOR DE DIRECCIÓN (GR)	579
TORNILLERÍA DE EJE FIJO (GR)	411
TORNILLERÍA DE GUARDABARROS	514
TORNILLERÍA DE LA BARRA DE TIRO Y PARACHOQUES	512
	513
TORNILLERÍA DE LA ESTRUCTURA ROPS (GR)	981
TORNILLERÍA DE PROTECTOR INFERIOR (GR)	511
TORNILLERÍA DEL EJE OSCILANTE (GR)	412
TORNILLERIA DEL PASAMANOS (GR)	515
TORNILLERÍA DEL SISTEMA ELECTRÓNICO (GR)	224
TRABA DE LA PALANCA DE CONTROL (GR)	393
TRANSMISION (CONFIG)	482
TRANSMISIÓN PLANETARIA (GR)	444
TREN DE FUERZA (CONFIG)	451
TREN DE FUERZA-GRUPO ELECTRÓNICO	223
TUBERÍAS CON SERVOMANDO (GR)	813
	820
TUBERÍAS DE ACEITE DE LA TRANSMISIÓN (GR)	431
TUBERÍAS DE ACEITE DEL MOTOR (GR)	80
	84
TUBERÍAS DE ACONDICIONADOR DE AIRE (GR)	1001
	1006
TUBERIAS DE AGUA DEL TURBOCOMPRESOR (GR)	123
	125
TUBERIAS DE CALEFACCION	1008
TUBERÍAS DE CALEFACCIÓN DE LA CABINA	1008
TUBERÍAS DE COMBUSTIBLE (GR)	177
	178
TUBERÍAS DE COMBUSTIBLE (GR) (*PRIMARY FUEL FILTER)	2
TUBERÍAS DE DIRECCIÓN (GR)	687
	692
TUBERÍAS DE DRENAJE (GR)	784
TUBERÍAS DE DRENAJE (GR) (*ENGINE OIL PAN, COOLERS, TMSN)	775
TUBERÍAS DE INYECCIÓN DE COMBUSTIBLE (GR)	179
TUBERÍAS DE LA DIRECCIÓN SECUNDARIA (GR)	677
TUBERÍAS DE LA TOMA DE FUERZA (GR)	428
TUBERÍAS DE LUBRICACIÓN (GR)	575
	576
	577
	578
TUBERÍAS DE LUBRICACIÓN (GR) (*DRIVE SHAFT SUPPORT BEARING)	566
TUBERÍAS DE NEUTRALIZACIÓN DE LA DIRECCIÓN (GR)	697
TUBERÍAS DEL ACUMULADOR (GR)	619
TUBERÍAS DEL AGUA (GR)	127
	129
	133
	135
	137
	139
TUBERÍAS DEL CILINDRO DE INCLINACIÓN (GR)	824
	826
	827
	828
TUBERÍAS DEL COMPRESOR DE AIRE (GR)	57
TUBERÍAS DEL ENFRIADOR DE ACEITE HIDRÁULICO (GR)	797
	799
	802
TUBERÍAS DEL FRENO DE ESTACIONAMIENTO (GR)	639
TUBERÍAS DEL FRENO DE SERVICIO (GR)	641
	643
	644
TUBERÍAS DEL TANQUE DE AIRE (GR)	260
TUBERÍAS DEL TANQUE DE AIRE (GR)	622
	625
TUBERÍAS DIRECCIONALES Y ENFRIADOR DE FRENO	681
	684

* NO HAY TRADUCCION DISPONIBLE EN EL MOMENTO DE LA IMPRESION

INDICE

Nombre	Página
TUBERIAS GR-DRENAJE	780, 782
TUBERIAS HIDRAULICAS DE MONITOR DE CARGA UTIL (GR)	811
TUBERÍAS HIDRÁULICAS (GR)	789, 792, 796
TUBERÍAS Y VÁLVULAS DE LA DIRECCIÓN NEUTRAL (GR)	712
TUBO DE LLENADO DE ACEITE DE LA TRANSMISIÓN (GR)	413
TUBO DE LLENADO DE ACEITE (GR)	74
TUBO DE LLENADO DE ACEITE HIDRÁULICO (GR)	767
TURBOCOMPRESOR - TUBERÍAS DE ACEITE DEL (GR)	86
TURBOCOMPRESOR (GR)	171, 172

V

Nombre	Página
VÁLV DE NEUTRALIZ DE DIR Y MONTAJE (GR)	718
VÁLVULA	865, 869
VÁLVULA DE ALIVIO (GR)	733, 734, 735, 736, 883, 884, 885, 886, 887, 888, 889, 890
VÁLVULA DE ALIVIO (GR) (DIRECCIÓN SECUNDARIA)	724
VÁLVULA DE ALIVIO (GR) (PRINCIPAL)	885
VÁLVULA DE ALIVIO (GR) (TUBERIA, ORIFICIO DE EXTREMO DE VARILLA DE CILIND. DE INCLIN.)	865
VALVULA DE CONTROL DE LA BOMBA (GR)	656, 730, 731, 732, 880, 881, 882
VÁLVULA DE CONTROL DE LA TRANSMISIÓN (GR)	495
VÁLVULA DE CONTROL DEL FRENO (GR)	654
VÁLVULA DE DERIVACIÓN (GR)	724
VÁLVULA DE DIRECCIÓN SECUNDARIA Y MONTAJE	714
VÁLVULA DE DIRECCIÓN Y MONTAJE (GR)	715, 716
VÁLVULA DE DISTRIBUCIÓN DE LUBRICACIÓN (GR)	596, 597, 598
VÁLVULA DE DOSIFICACIÓN (GR)	111
VÁLVULA DE LANZADERA (GR)	738
VÁLVULA DE MODULACIÓN (GR)	486, 487
VÁLVULA DE MODULACIÓN (GR)	485
VALVULA DE MUESTRA DE FLUIDO (CONJ) (ACEITE HIDRÁULICO)	684
VÁLVULA DE MUESTREO DE REFRIGERANTE (GR)	154
VÁLVULA DE PRIORIDAD DEL CONVERTIDOR DE PAR (GR)	493
VALVULA DE PURGA (GR) (SECADOR DE AIRE)	607
VÁLVULA DE RETENCIÓN (GR)	655, 720, 721, 722, 723, 863
VÁLVULA DE RETENCIÓN (GR) (ACUMULADOR DEL FRENO)	601
VÁLVULA DE RETENCIÓN (GR) (BOMBA DE DIRECCION)	687
VÁLVULA DE RETENCIÓN (GR) (BOMBA DE FRENO)	601
VÁLVULA DE RETENCIÓN (GR) (BOMBA DE LUBRICACION)	586
VÁLVULA DE RETENCIÓN (GR) (PILOTO)	813
VÁLVULA DE RETENCIÓN (GR) (PILOTO)	813
VALVULA DE RETENCIÓN Y ALIVIO (GR)	864
VÁLVULA DE SOLENOIDE (GR)	492, 657, 893, 894
VÁLVULA DE SOLENOIDE (GR) (ARRANQUE NEUMATICO)	208, 212
VÁLVULA DE SOLENOIDE (GR) (*AUTOLUBE AIR CONTROL)	586
VÁLVULA DEL CONTROL PRINCIPAL (GR)	865, 869
VÁLVULA DEL NEUMÁTICO (GR)	441, 462, 463

* NO HAY TRADUCCION DISPONIBLE EN EL MOMENTO DE LA IMPRESION

INDICE

Nombre	Página
VÁLVULA NEUTRALIZADORA DE DIRECCIÓN (GR)	742
VALVULA PILOTO DE CARTUCHO (GR)	728
	729
	876
	877
	878
	879
VÁLVULA PILOTO (GR)	727
	873
	874
	875
VÁLVULA PILOTO (GR) (INCLINACIÓN)	873
VÁLVULA PILOTO (GR) (LEVANTAMIENTO)	873
VÁLVULA SELECTORA (GR)	488
	891
VÁLVULA SELECTORA (GR) (DISTRIBUCION DEL ACEITE DE EMBRAGUES)	495
VÁLVULA SELECTORA (GR) (HIDRÁULICO)	813
VÁLVULA SELECTORA Y DE CONTROL DE PRESIÓN (GR)	489
	892
VÁLVULA SELECTORA Y DE CONTROL DE PRESIÓN (GR)	737
VÁLVULA SELECTORA Y DE CONTROL DE PRESIÓN (GR) (BAJADA DE MOTOR INOPERANTE)	813
VÁLVULA SELECTORA Y DE CONTROL DE PRESIÓN (GR) (PRESION DEL ACEITE DE EMBRAGUES)	495
VALVULA Y MONTAJE DE MANDO DE VENTILADOR (GR))	110
VÁLVULA Y MONTAJE DEL CONTROL DE FRENO (GR)	652
VÁLVULAS DE LA DIRECCIÓN (GR)	739
VÁLVULAS Y TUBERIAS, LUBRICACIÓN	592
	594
*VESSEL AR	895
VIDRIO (CONJ) (REFLECTOR)	237
	238
VOLANTE - CAJA DE (GR)	52
VOLANTE (GR)	44

W

*WIRING GP-CAMERA	318
*WIRING GP-FILTERS	331
*WIRING GP-FIREWALL	333
*WIRING GP-OIL RENEWAL SYSTEM	360
*WIRING GP-START CONTROL	381

* NO HAY TRADUCCION DISPONIBLE EN EL MOMENTO DE LA IMPRESION

ÍNDICE

Designação	Página

A

ACENDEDOR DE CIGARROS (12-VOLTS)	310
ACIONADOR DA BOMBA	658
	659
	660
ACOPLAMENTO DO COMANDO AUXILIAR	398
ACOPLAMENTO DO COMANDO AUXILIAR (PARTE TRASEIRA)	451
ACUMULADOR - FREIO	604
	605
ACUMULADOR DO FREIO E MONTAGEM	601
ADAPTADOR	413
ADAPTADOR DA CAIXA DO VOLANTE DO MOTOR	382
ADESIVO-EUA	1081
ADESIVO-INTERNACIONAL	1081
AJUSTADOR DE CORREIAS	11
AJUSTADOR DO ASSENTO	950
ALARME	194
ALARME DE MARCHA À RÉ	308
ALTERNADOR DE CORRENTE	195
AMORTECEDOR	29
AMORTECEDOR - SENSOR	203
AQUECEDOR DA ÁGUA DO MOTOR	229
AQUECEDOR DO COMBUSTÍVEL	227
ARO	456
	457
ARO DESMONTÁVEL	458
	459
	460
	461
ARO SIMPLES	462
	463
ARRANJO BÁSICO	2
ARREFECEDOR - ÓLEO DO MOTOR	113
ARREFECEDOR DE ÓLEO DA TRANSMISSÃO	396
ARREFECEDOR DO ÓLEO HIDRÁULICO	746
ARTICULAÇÃO - CAÇAMBA	906
	908
	910
ASSENTO	1049
	1051
	1052
ASSENTO COM SUSPENSÃO	1057
ASSENTO DE PASSAGEIRO	1053
	1054
	1055
	1056
AUXILIAR DE PARTIDA A ÉTER	282
	284
	285

B

BASE DO FILTRO DE COMBUSTÍVEL	187
BASE DO FREIO - PEDAL	608
	610
*BASE GP-VALVE COVER	10
BATERIA	199
	200
	201
BATERIA - CONTROLE ELETRÔNICO (ANÁLISE NA ESTRADA - MÓDULO PRINCIPAL DO VIMS)	971
BATERIA E CABOS / FIOS ELÉTRICOS	197
BATERIA (12 V)	200
BATERIA (24 VOLTS)	233
	351
BLOCO DE FUSÍVEIS	354
BLOCO DE JUNÇÃO	202
BLOCO DO MOTOR	21
	22
BOCAL DE ENCHIMENTO DE ÓLEO DO MOTOR	74
BOCAL DE ENCHIMENTO DE ÓLEO DO TREM DE FORÇA	413
BOCAL DE ENCHIMENTO DE ÓLEO HIDRÁULICO	767
BOMBA AUXILIAR DE ÁGUA DOCE	141
BOMBA AUXILIAR DO SISTEMA DE TRANSMISSÃO	103
	105
BOMBA DA DIREÇÃO SECUNDÁRIA E MONTAGEM	700
BOMBA DA TRANSMISSÃO	454
	455
BOMBA DE ÁGUA	143
	144
	145
BOMBA DE ENGRENAGENS	453
	703
	704
	705
	836
	837
	839
BOMBA DE ENGRENAGENS (ARREFECIMENTO DO FREIO)	701
BOMBA DE ENGRENAGENS (DIREÇÃO, ARREFECEDOR DO ÓLEO DO FREIO)	702
BOMBA DE ENGRENAGENS (DIREÇÃO SECUNDÁRIA)	700
BOMBA DE ESCORVA DO COMBUSTÍVEL	185
BOMBA DE ESCORVA DO COMBUSTÍVEL E DO FILTRO PRIMÁRIO	187

* TRADUÇÃO NÃO DISPONÍVEL NO MOMENTO DA IMPRESSÃO

ÍNDICE

Designação	Página
BOMBA DE FREIO E DE DIREÇÃO E MONTAGEM	701
BOMBA DE INJEÇÃO DO COMBUSTÍVEL	184
BOMBA DE LUBRIFICAÇÃO	586
BOMBA DE ÓLEO - MOTOR	94
	95
BOMBA DE PISTÃO	646
	706
	708
	840
	842
BOMBA DE PISTÃO (ACESSÓRIO, DESLOCAMENTO FIXO)	834
BOMBA DE PRÉ-LUBRIFICAÇÃO	96
	99
BOMBA DE TRANSFERÊNCIA DO COMBUSTÍVEL	188
	189
BOMBA DO FREIO E MONTAGEM	645
BOMBA E MONTAGEM - ACESSÓRIO	834
BOMBA E MONTAGEM - DIREÇÃO E ARREF. DOS FREIOS	702
BOMBA E MONTAGEM - LUBRIFICAÇÃO DO COMANDO	452
BOMBA E MONTAGEM - PILOTO E ARREF.	835
BOMBA E MOTOR - PRÉ-LUBRIFICAÇÃO	93
BORDA CORTANTE	936
	937
	938
	939
	940
BRAÇO - LEVANTAMENTO	902
	903
	904
BRACO DO LIMPADOR	956
BRAÇO E MANCAL TIPO LUVA	896
	898
	900
BUJÃO - DRENAGEM DO ÓLEO	784
BUJÃO - DRENAGEM DO ÓLEO (RESERVATÓRIO DE ÓLEO)	61
BUJÃO DO DRENO	54
	119
	852
	855
BUJÃO MAGNÉTICO	384
	385
	409
	499
BUZINA DE AR	987
	988
	990

C

Designação	Página
CABEÇA DA BOMBA	676
	772
CABEÇOTE DO MOTOR	24
	25
	27
CABINE	961
	962
	1026
CABINE E PLATAFORMA	959
CABOS/FIOS ELÉTRICOS - AQUECEDOR	338
CABOS/FIOS ELÉTRICOS - CABINE	309
CABOS/FIOS ELÉTRICOS - DIANTEIROS	335
CABOS/FIOS ELÉTRICOS - ESTRUTURA ROPS	378
CABOS/FIOS ELÉTRICOS - MÁQUINA	340
	349
	351
CABOS/FIOS ELÉTRICOS - MOTOR	325
CABOS/FIOS ELÉTRICOS - PAINEL MONITOR	353
CABOS/FIOS ELÉTRICOS - PARTIDA ELÉTRICA	320
CABOS/FIOS ELÉTRICOS - PLATAFORMA	363
	365
	367
CABOS/FIOS ELÉTRICOS - SENSOR	380
CABOS/FIOS ELÉTRICOS - TRASEIROS	372
	374
	377
CABOS/FIOS ELÉTRICOS - TREM DE FORÇA	369
CAÇAMBA - ASAS	949
CAÇAMBA PARA CARVÃO	915
	917
	929
CAÇAMBA PARA ROCHAS	919
	920
	922
	924
	926
	927
	930
	931
	932
	933
	934
	935
CADEADO	374
	501
	502
	541
	1035

* TRADUÇÃO NÃO DISPONÍVEL NO MOMENTO DA IMPRESSÃO

ÍNDICE

Designação	Página
CADEADO (BOCAL DE ENCHIMENTO DO OLEO DO MOTOR)	74
CADEADO (TUBO DE ENCHIMENTO DO OLEO DO MOTOR)	78
CAIXA - ENGRENAGEM	389
CAIXA DE ARMAZENAMENTO	957
	958
CAIXA DIANTEIRA	54
CAIXA DO VOLANTE DO MOTOR	52
CÂMERA	204
CÂMERA (115 GRAUS, COR)	318
CAPA-CONTRA POEIRA	473
CAPÔ E PROTETOR	541
CARCAÇA DAS ENGRENAGENS PLANETÁRIAS E COMPONENTES	387
CÁRTER DO ÓLEO DO MOTOR	61
CENTRO DE SERVIÇO	1093
CHASSI - TRASEIRO	2
CHASSI DIANTEIRO	1
	520
	527
CHASSI TRASEIRO	524
	529
CHAVE (CHAVE GERAL DA BATERIA)(MOTOR DE PARTIDA)	300
CHAVE GERAL	300
CHAVE-QUADRADA	393
CHICOTE - CABINE (SUPERIOR)	310
CHICOTE - CABOS ELÉTRICOS (MECANISMO DE VÁLVULA)	70
CHICOTE - FREIOS (LUZ DO FREIO)	608
CHICOTE - ILUMINAÇÃO	247
CHICOTE - MOTOR	225
	325
CHICOTE - SENSOR	42
CHICOTE - SENSOR (NÍVEL HIDRÁULICO, TEMPERATURA-TEMPERATURA DO EIXO DIANTEIRO)	335
CHICOTE - SENSOR (TEMPERATURA DO ÓLEO DO EIXO TRASEIRO)	380
CHICOTE - TRANSMISSÃO	495
CHICOTE - VÁLVULA (COMPRESSOR DE AR DO ASSENTO)	1067
CHICOTE-CHASSI DIANTEIRO (PÁRA-LAMA, DIREITO)	335
CHICOTE-CHASSI DIANTEIRO (PÁRA-LAMA, ESQUERDO)	335
CHICOTE (TEMPERATURA DO ÓLEO DO EIXO DIANTEIRO)	380
CILINDRO - LEVANTAMENTO	747
CILINDRO DA BOMBA	661
CILINDRO DA DIREÇÃO	665
	667
CILINDRO DE DIREÇÃO E MONTAGEM	664
CILINDRO DE ÉTER	282
	284
CILINDRO DE INCLINAÇÃO	748
	755
	757
	759
	761
	763
	765
CILINDRO DE LEVANTAMENTO	749
	751
	753
CINTO DE SEGURANÇA	1051
CINZEIRO	1060
COLETOR DE COMBUSTÍVEL	182
	183
COLETOR DE ESCAPE	164
COLMÉIA - ARREFECEDOR DE ÓLEO	115
COLMÉIA - ARREFECEDOR DE ÓLEO DO MOTOR	114
COLMÉIA - ARREFECEDOR DE ÓLEO (TRANSMISSÃO)	396
COLMEIA DO ARREFECEDOR DA ADMISSAO	155
COLMEIA DO RADIADOR	152
COMANDO AUXILIAR	36
COMANDO DA BOMBA	405
	409
COMANDO DA BOMBA E MONTAGEM	404
COMANDO DE ACESSÓRIOS	31
	32
	34
COMANDO DO VENTILADOR	30
	38
	40
	42
COMANDO FINAL E RODA	498
COMPRESSOR DE AR	8
	9
COMPRESSOR DE AR - ASSENTO	951
	1067
COMPRESSOR DE REFRIGERANTE	969
COMPRESSOR DE REFRIGERANTE E MONTAGEM	966
CONDENSADOR DO REFRIGERANTE E MONTAGEM	970
CONDICIONADOR DE AR	952
	953
CONEXÃO - TANQUE DE COMBUSTÍVEL	176
CONEXÃO - TUBO D'ÁGUA	112
CONTROLE - NÃO PROGRAMADO	205
	217

* TRADUÇÃO NÃO DISPONÍVEL NO MOMENTO DA IMPRESSÃO

ÍNDICE

Designação	Página
	218
CONTROLE - NÃO PROGRAMADO (IMPLEMENTO)	354
CONTROLE - NÃO PROGRAMADO (TREM DE FORÇA)	353
CONTROLE - POSIÇÃO	216
CONTROLE - POSIÇÃO (CAÇAMBA)	776
	778
CONTROLE - RAMPA	207
CONTROLE & MONTAGEM-COMUNICAÇÃO	205
CONTROLE DE DIREÇÃO	662
CONTROLE DE PARTIDA A AR	208
	212
CONTROLE DO FREIO DE ESTACIONAMENTO	614
CONTROLE DO FREIO DE SERVIÇO	615
CONTROLE DO PEDAL DO FREIO	613
CONTROLE ELETRÔNICO - MOTOR	215
CONTROLE ELETRÔNICO E MONTAGEM - MOTOR	206
CONTROLE HIDRÁULICO DA TRANSMISSÃO	395
CONTROLE HIDRÁULICO DE OPERAÇÃO PILOTO	744
CONTROLE INTEGRADO DA TRANSMISSÂO DA DIREÇÃO	390
	391
CONTROLE-MONITOR NÃO PROGRAMADO	971
CONTROLE-TRAVAMENTO HIDRÁULICO	743
*CONVERSION AR-CERTIFICATION	3
CONVERSOR DE TORQUE	479
CONVERSOR DE TORQUE E CARCAÇA	477
CONVERSOR ELÉTRICO (24-VOLTS A 12-VOLTS)	233
	349
	351
*CORE GP-TMSN OIL COOLER	397
CORREIA- SERPENTINA (COMPRESSOR DO REFRIGERANTE)	966
CORREIA (ALTERNADOR)	59
CORREIA DE COMANDO (PISCA-ALERTA)	243
*COUPLING GP-TORSIONAL	399
CRUZETA E MANCAL	472
	474
	475

D

DECALQUE	1077
	1078
	1079
	1080
DECALQUE - ADVERTÊNCIA (ALTA PRESSÃO, CONSULTAR MANUAL)	604
DECALQUE - ADVERTÊNCIA (NÃO LEVANTAR)	1091
DECALQUE - ADVERTÊNCIA (PRODUCT LINK)	230
DECALQUE - IDENTIFICAÇÃO	1093
DECALQUE - IDENTIFICAÇÃO (BOMBA DE PRÉ-LUBRIFICAÇÃO)	1090
DECALQUE - IDENTIFICAÇÃO (MÓDULO DE CONTROLE ELETRÔNICO)	222
DECALQUE - INFORMAÇÕES (ENTRADA-SAÍDA)	1091
DECALQUE - INSTRUÇÃO	216
DECALQUE - INSTRUÇÃO (AJUSTE DO ASSENTO)	1067
DECALQUE - INSTRUÇÃO (CONTROLE DE DESENGATE AUTOMÁTICO)	1091
DECALQUE - INSTRUÇÃO (DESCONEXÃO ELÉTRICA)	353
DECALQUE - INSTRUÇÃO (ENTRADA E SAIDA DE AGUA)	953
DECALQUE - INSTRUÇÃO (OLHAL DE LEVANTAMENTO, AMARRAÇÃO)	1034
DECALQUE - INSTRUÇÃO (PARADA DO MOTOR)	501
	502
DEGRAU	589
	590
DESENGATE E POSICIONADOR DA CAÇAMBA	776
	778
DIFERENCIAL	403
DIFERENCIAL E COROA	401
DISJUNTOR AUTOMÁTICO DE CIRCUITO (10 AMPERES) (CHAVE INTERRUPTORA)	355
DISJUNTOR AUTOMÁTICO DE CIRCUITO (10 AMPERES) (ILUMINAÇÃO DE OPERAÇÃO)	355
DISJUNTOR AUTOMÁTICO DE CIRCUITO (105 AMPERES) (PRINCIPAL)	354
DISJUNTOR AUTOMÁTICO DE CIRCUITO (15 AMPERES) (ECM DO MOTOR)	353
DISJUNTOR AUTOMÁTICO DE CIRCUITO (80 AMPERES) (ALTERNADOR NO. 1)	354
DISJUNTOR AUTOMÁTICO DE CIRCUITO (80 AMPERES) (ALTERNADOR NO. 2)	354
DISJUNTOR AUTOMÁTICO DE CIRCUITO (80 AMPERES) (PRÉ-LUBRIFICAÇÃO)	354
DUCTO DE AR	980

* TRADUÇÃO NÃO DISPONÍVEL NO MOMENTO DA IMPRESSÃO

ÍNDICE

Designação	Página

E

EIXO-COMANDO DE VÁLVULA 13
EIXO DE COMANDO DA BOMBA 468
470
EIXO DE COMANDO DA BOMBA (DIANTEIRO) 451
EIXO DE COMANDO DA BOMBA (PARTE TRASEIRA) 451
EIXO DE TRANSMISSÃO 464
466
EIXO DO COMANDO DE ENTRADA 467
EIXO-ENTRADA DO COMANDO DA BOMBA . . . 451
471
EIXO FIXO 383
384
EIXO OSCILANTE 383
385
EJETOR DE POEIRA 158
ELEMENTO - AQUECEDOR DE ÁGUA DA CAMISA 229
ELEMENTO - FILTRO DE COMBUSTÍVEL (PRIMÁRIO) 175
ELEMENTO-AQUECEDOR DO ÓLEO DO MOTOR 226
ELEMENTO DO FILTRO DE AR (PRIMÁRIO) . . . 156
ELEMENTO DO FILTRO DE AR (SECUNDÁRIO) 156
ELEMENTO FILTRANTE - ÓLEO (DIREÇÃO, FREIO) 673
ELEMENTO FILTRANTE - ÓLEO (TREM DE FORÇA) 418
420
ELEMENTO FILTRANTE (COMANDO DA BOMBA) 771
ELIMINAÇÃO DE VAPORES DO CÁRTER 77
ELO - TRAVA DA ARMAÇÃO DA DIREÇÃO 579
EMBARCAÇÃO 895
EMISSOR - POSIÇÃO 269
270
271
EMISSOR DE TEMPERATURA (ÁGUA DO MOTOR) 325
ENGATE - ARTICULAÇÃO 540
ENGRENAGEM - TRANSFERÊNCIA DE ENTRADA 422
ENGRENAGENS DE COMANDO TRASEIRO . . . 47
ENGRENAGENS DE DISTRIBUIÇÃO 45
ENGRENAGENS DE SAÍDA DE TRANSFERÊNCIA 424
ENGRENAGENS PLANETÁRIAS - TRANSMISSÃO 444
ESPELHO RETROVISOR - LADO DIREITO 4
1012
ESPELHO RETROVISOR - LADO ESQUERDO 4
1010
ESTRUTURA ROPS 1046
1047
EXTENSÃO - ENCOSTO (TECIDO) 1051
EXTENSÃO DO TUBO DE ESCAPE 159

F

FIAÇÃO - CONTROLE (POSICIONADOR DA CAÇAMBA) 776
778
FIAÇÃO - CONTROLE (SISTEMA DE RENOVAÇÃO DO ÓLEO, CHASSI) 360
FIAÇÃO - CONTROLE (SISTEMA DE RENOVAÇÃO DO ÓLEO, PAINEL TRASEIRO DO MOTOR) 360
FIAÇÃO-CÂMERA 318
FIAÇÃO-CONTROLE DA PARTIDA 381
FIAÇÃO-FILTROS 331
FIAÇÃO-LIMPADOR DE VIDROS (ARRUELA) . . . 310
FIAÇÃO-LIMPADOR DE VIDROS (VIDRO LATERAL) 310
FIAÇÃO-PAINEL DO MOTOR 333
FIAÇÃO-SISTEMA DE RENOVAÇÃO DO ÓLEO 360
FILTRO - AR DA CABINE 982
FILTRO - COMBUSTÍVEL 173
187
190
191
FILTRO - DIREÇÃO E MONTAGEM 672
FILTRO - ÓLEO 418
420
673
675
771
FILTRO - ÓLEO (ACIONAMENTO DA BOMBA DIANTEIRA) . . . 770
FILTRO - ÓLEO (DIREÇÃO, TELA DO ARREFEDOR DO FREIO) 671
FILTRO - ÓLEO DO MOTOR 75
FILTRO - ÓLEO (HIDRÁULICO, ALTA ENFICIÊNCIA) 675
FILTRO - ÓLEO (TELA DO ARREFECEDOR HIDRÁULICO) . . . 671
FILTRO - PRIMÁRIO DE COMBUSTÍVEL 175
FILTRO (BOMBA D'ÁGUA) 145
FILTRO DE AR DE CABINA 982
996
FILTRO DO TREM DE FORÇA E MONTAGEM . . . 416

* TRADUÇÃO NÃO DISPONÍVEL NO MOMENTO DA IMPRESSÃO

ÍNDICE

Designação	Página
FILTRO E MONTAGEM - DIREÇÃO E IMPLEMENTOS	671
FILTRO E MONTAGEM - DRENO DA CAIXA	669
FILTRO E MONTAGEM-COMANDO PILOTO E DA BOMBA	770
FIXADOR DO SISTEMA ELETRÔNICO	224
FIXADORES - BARRA DE TRAÇÃO E PÁRA-CHOQUE	512 513
FIXADORES - CABEÇOTE DO MOTOR	25
FIXADORES - EIXO FIXO	411
FIXADORES - EIXO OSCILANTE	412
FIXADORES - ESTRUTURA ROPS	981
FIXADORES - PÁRA-LAMA	514
FIXADORES - PEGA-MÃO	515
FIXADORES - PROTETOR INFERIOR	511
FREIO DE ESTACIONAMENTO	611
FUNDO - ENCOSTO	1027
FUSÍVEL (10 AMPERES)	353
FUSÍVEL (15 AMPERES)	338 353

G

GR. DE CONVERSÃO - CERTIFICADO	3
GRADE DO RADIADOR	531
GRUPO DE INSTALAÇÃO - MOTOR	7
GRUPO ROTATIVO DA BOMBA	648 710 844 845

H

HIDRÁULICO - PARTE TRASEIRA	775

I

ILUMINAÇÃO - FREIO E MARCHA À RÉ	257
ILUMINAÇÃO - FREIOS	255 256
ILUMINAÇÃO - FREIOS E FARÓIS	244
ILUMINAÇÃO-LUZ GIRATÓRIA DE ALERTA	244
IMÃ-VÃLVULA PILOTO	829 830
INDICADOR - NÍVEL DO LÍQUIDO ARREFECEDOR	117
INDICADOR - NÍVEL DO ÓLEO (VARETA)	78 79
INDICADOR - TROCA DO FILTRO DE AR	160
INDICADOR - VARETA DO NÍVEL DE ÓLEO	79
INDICADOR VISUAL	852
INJETOR DE COMBUSTÍVEL	184
INSTALAÇÃO - CAES	230
INSTALAÇÃO-COMUNICAÇÃO	230 231
INSTALAÇÃO-CONTROLE DA INCLINAÇÃO	233 235
INSTALAÇÃO DO RÁDIO	991
INSTALAÇÃO NO CAMPO	3
INTERRUPTOR - BALANCIM (ACIONADOR DE TRAVA DO ACELERADOR)	310
INTERRUPTOR - BALANCIM (AJUSTE DA POSIÇÃO DE LEVANTAMENTO)	312
INTERRUPTOR - BALANCIM (AUXILIAR DE PARTIDA)	310
INTERRUPTOR - BALANCIM (DIFERENCIAL DO FILTRO DE COMBUSTÍVEL)	173
INTERRUPTOR - BALANCIM (EMBREAGEM DE TRAVA DO CONVERSOR DE TORQUE)	310
INTERRUPTOR - BALANCIM (FARÓIS DIANTEIROS)	312
INTERRUPTOR - BALANCIM (FARÓIS TRASEIROS)	312
INTERRUPTOR - BALANCIM (FAROL)	244
INTERRUPTOR - BALANCIM (HOLOFOTES, DIANTEIROS) (FAROL)	244
INTERRUPTOR - BALANCIM (HOLOFOTES HID, DIANTEIROS)	312
INTERRUPTOR - BALANCIM (ILUMINAÇÃO DE OPERAÇÃO)	310
INTERRUPTOR - BALANCIM (LUZ DO ACESSO ÀS ESCADAS)	310
INTERRUPTOR - BALANCIM (LUZ INTERIOR)	312
INTERRUPTOR - BALANCIM (LUZES DA ESCADA)	374
INTERRUPTOR - BALANCIM (LUZES DO CAPÔ)	374
INTERRUPTOR - BALANCIM (PARADA A NÍVEL DO SOLO)	375
INTERRUPTOR - BALANCIM (PISCA-PISCA DE ADVERTÊNCIA)	244 310
INTERRUPTOR - BALANCIM (TRAVA DA TRANSMISSÃO)	374
INTERRUPTOR - BALANCIM (TRAVA DO MOTOR DE PARTIDA)	375
INTERRUPTOR - BOTÃO (AJUSTAR A TRAVA DO ACELERADOR)	310
INTERRUPTOR - BOTÃO (ARMAZENAMENTO REMOTO DA CARGA ÚTIL)	310
INTERRUPTOR - BOTÃO (BUZINA)	310
INTERRUPTOR - BOTÃO (RETOMAR A TRAVA DO ACELERADOR)	310
INTERRUPTOR - FLUXO	301

* TRADUÇÃO NÃO DISPONÍVEL NO MOMENTO DA IMPRESSÃO

ÍNDICE

Designação	Página
INTERRUPTOR - LIMITADOR (FREIO DE ESTACIONAMENTO)	340
INTERRUPTOR - LIMITADOR (LUZ DE FREIO)	608
INTERRUPTOR - LIMITADOR (TRAVA DO CONTROLE STIC)	310
INTERRUPTOR - LIMPADOR DO PÁRA-BRISA	306
INTERRUPTOR - LIMPADOR (24 VOLTS) (INTERMITENTE)	306
INTERRUPTOR - MAGNÉTICO	303 304 305
INTERRUPTOR - MAGNÉTICO (RELE DA BOMBA DE PRE-LUBRIFICACAO)	99
INTERRUPTOR - MAGNÉTICO (24 VOLTS) (RELÉ PRINCIPAL)	353
INTERRUPTOR - NÍVEL DO LÍQUIDO	302
INTERRUPTOR - PRESSÃO	675
INTERRUPTOR - PRESSÃO (DERIVAÇÃO DO FILTRO DO IMPLEMENTO)	333
INTERRUPTOR - PRESSÃO (DERIVAÇÃO DO FILTRO DO ÓLEO) (DERIVAÇÃO DO FILTRO DO COMANDO DA BOMBA)	771
INTERRUPTOR - PRESSÃO (DIFERENCIAL DO FILTRO DE COMBUSTÍVEL)	325
INTERRUPTOR - PRESSÃO (DIREÇÃO, DERIVAÇÃO DO FILTRO DO FREIO)	333
INTERRUPTOR - PRESSÃO (ÓLEO DA DIREÇÃO PRIMÁRIA)	340
INTERRUPTOR - PRESSÃO (ÓLEO DO FREIO DE ESTACIONAMENTO)	340
INTERRUPTOR - PRESSÃO (ÓLEO DO FREIO DE SERVIÇO)	615
INTERRUPTOR - PRESSÃO (REFRIGERANTE)	42 1001
INTERRUPTOR - ROTATIVO (!AR CONDICIONADO, CONTROLE DO VENTILADOR DO AQUECEDOR)	309
INTERRUPTOR - ROTATIVO (LIMPADOR, LAVADOR DE PÁRA-BRISA) (VIDRO LATERAL)	309
INTERRUPTOR - ROTATIVO (SELEÇÃO DE FORÇA DE TRAÇÃO REDUZIDA)	309
INTERRUPTOR - TEMPERATURA (ÓLEO DO MOTOR)	226
INTERRUPTOR - TEMPERATURA (REFRIGERANTE)	954
INTERRUPTOR-CHAVE	310
INTERRUPTOR-CHAVE (MANUTENÇÃO DO SIST. VIMS)	374
INTERRUPTOR DE DERIVAÇÃO	299

J

Designação	Página
JOGO - ENGRENAGEM PLANETÁRIA (PARTIDA A AR DA TURBINA)	293
JOGO - REPARO DO MOTOR DE PARTIDA (PARTIDA A AR DA TURBINA)	292 294
JOGO DE ABRAÇADEIRA DO PURIFICADOR DE AR	156
JOGO DE ADAPTADOR	227
JOGO DE AMORTECEDOR DE CHOQUES	1067
JOGO DE ANEL PADRÃO (COMPRESSOR DE AR) (COMPRESSOR DE AR)	8
JOGO DE BLOCO DESLIZADOR	1057
JOGO DE BOMBA	587
JOGO DE BUCHA (POLIA DE VIRABREQUIM) (COM FLANGE)	38
JOGO DE CABEÇOTE (COMPRESSOR DE AR) (COMPRESSOR DE AR)	8
JOGO DE CORDÃO	1067
JOGO DE CORREIAS EM V (INCLUI 6 CORREIAS) (VENTILADOR)	38
JOGO DE DIAFRAGMA (BUZINA)	987
JOGO DE EMISSOR - NÍVEL	265
JOGO DE FILTRO DA TAMPA (TANQUE DE COMBUSTÍVEL)	190 191
JOGO DE FIXADORES (ALTERNADOR)	195
JOGO DE INJETOR (LUBRIFICAÇÃO)	596 597 598
JOGO DE MANCAL (ALTERNADOR)	195
JOGO DE MANCAL PRINCIPAL DO MOTOR (COMPRESSOR DE AR) (COMPRESSOR DE AR)	8
JOGO DE PARAFUSO (CONECTORES ELÉTRICOS)	378
JOGO DE PARAFUSO DE RETENÇÃO	223
JOGO DE PARAFUSO DE RETENÇÃO (CONTROLE NÃO PROGRAMADO)	217
JOGO DE PINO DO PEDAL (PEDAL DO GOVERNADOR)	1033
JOGO DE RECONDICIONAMENTO (BOMBA D'ÁGUA AUXILIAR)	141
JOGO DE RECONDICIONAMENTO (BOMBA DE ÁGUA)	145
JOGO DE REPARO - CAIXA DA TRANSMISSÃO (MOTOR DE PARTIDA A AR)	289
JOGO DE REPARO (COMANDO DO VENTILADOR DE VELOCIDADE VARIÁVEL)	40

* TRADUÇÃO NÃO DISPONÍVEL NO MOMENTO DA IMPRESSÃO

ÍNDICE

Designação	Página
JOGO DE REPARO (ENGRENAGEM, EIXO) (BOMBA DE TRANSFERÊNCIA DE COMBUSTÍVEL)	189
JOGO DE REPARO (VÁLVULA DE DERIVAÇÃO) (BOMBA DE TRANSFERÊNCIA DE COMBUSTÍVEL)	189
JOGO DE RETENTOR	208
	212
	472
	473
	474
	492
	604
	703
	704
	735
	887
JOGO DE RETENTOR (BOMBA DE ENGRENAGEM)	705
JOGO DE RETENTOR (BOMBA DE ENGRENAGEM PILOTO)	453
JOGO DE RETENTOR (BOMBA DE TRANSFERÊNCIA DE COMBUSTÍVEL)	189
JOGO DE RETENTOR (CILINDRO 2)	665
JOGO DE RETENTOR (COMANDO DO VENTILADOR DE VELOCIDADE VARIÁVEL)	40
JOGO DE RETENTOR DA BOMBA	646
JOGO DE RETENTOR DA TAMPA DA BOMBA REGULADORA	878
JOGO DE RETENTOR DO CILINDRO HIDRÁULICO (CILINDRO 1)	665
JOGO DE RETENTOR DO ÊMBOLO	728
	876
	877
	879
JOGO DE RETENTOR E PALHETA (MOTOR DE PARTIDA A AR) (MOTOR DE PARTIDA A AR)	289
JOGO DE RETENTOR (LUBRIFICADOR DE MOTOR DE PARTIDA A AR)	263
JOGO DE RETENTOR (PARTIDA A AR DA TURBINA)	293
JOGO DE RETENTOR (VÁLVULA SOLENÓIDE)	485
	893
	894
JOGO DE REVISÃO - GOVERNADOR (COMPRESSOR DE AR)	9
JOGO DE REVISÃO (PARTIDA A AR DA TURBINA)	292
	293
	294
JOGO DE RODA - TURBINA (PARTIDA A AR DA TURBINA)	293
JOGO DE ROLO (PEDAL DO GOVERNADOR)	1033
JOGO DE ROTOR (PRIMEIRO ESTÁGIO DO MOTOR DE PARTIDA A AR)	292
	294
JOGO DE ROTOR (SEGUNDO ESTÁGIO - PARTIDA A AR)	294
JOGO DE ROTOR (SEGUNDO ESTÁGIO DO MOTOR DE PARTIDA A AR)	292
JOGO DE TELA	649
JOGO DE TERMINAL (ALTERNADOR)	195
JOGO DE TERMINAL (MOTOR DE PARTIDA)	296
JOGO DE TERMINAL (TRAVA)	354
JOGO DE TUBO (BOMBA DE LUBRIFICAÇÃO)	587
JOGO DE VÁLVULA	208
	212
	587
JOGO DE VÁLVULA DE AR	1067
JOGO DE VÁLVULA REDUTORA DE PRESSÃO (SECADOR A AR)	607
JOGO DE VÁLVULA (SECADOR A AR)	607
JOGO-REPARO DO MOTOR BÁSICO (MANCAL PRINCIPAL)	20
JUNTA CORREDIÇA	472
	473
	474
JUNTA UNIVERSAL	483
	484

L

LÂMINA DO LIMPADOR DE PÁRA-BRISA	1073
LÂMINA DO LIMPADOR DE PÁRA-BRISA (DIANTEIRO)	1070
LÂMPADA - FAROL	237
	238
	239
	240
	241
LÂMPADA - FAROL (24 VOLTS, 70 WATTS)	241
LÂMPADA - HALOGÊNEO (24 VOLTS, 65 WATTS)	237
	238
LÂMPADA - HALOGÊNEO (24 VOLTS, 65 WATTS) (FAROL)	240
LÂMPADA - SINALIZAÇÃO	242
LÂMPADA - TETO	236
LÂMPADA (*AMBER, LED, 24-VOLT) (INDICADOR DE TRAVAMENTO DA TRANSMISSÃO)	374

* TRADUÇÃO NÃO DISPONÍVEL NO MOMENTO DA IMPRESSÃO

ÍNDICE

Designação	Página
LÂMPADA-INTERNA (24 VOLTS)	309
LÂMPADA (12 VOLTS, 24 VOLTS, 35 WATTS)	239
LÂMPADA (24 VOLTS)	236
	309
	360
LÂMPADA (24 VOLTS, AMARELA)	310
LÂMPADA (24-VOLTS, VERMELHO)	310
LÂMPADA (24 VOLTS, 70 WATTS)	243
LAVADOR DO VIDRO	1069
LENTE (FAROL)	237
	238
LEVANTAMENTO - ARRANJO	905
LEVANTAMENTO DA MÁQUINA	547
LEVANTAMENTO DO MOTOR	56
LIMPADOR DO VIDRO	1072
	1073
LIMPADOR E LAVADOR - JANELA	1070
LIMPEZA - CABINE	964
LUBRIFICAÇÃO - AUTOMÁTICA	580
LUBRIFICAÇÃO - AUTOMÁTICA (PLATAFORMA)	1035
LUBRIFICADOR DO MOTOR DE PARTIDA A AR	263
LUZ GIRATÓRIA DE ALARME	243

M

MANGUEIRA	139
MECANISMO DAS VÁLVULAS	70
MEDIÇÃO - ÓLEO DO MOTOR	89
MÓDULO - CENTRO DE MENSAGEM	1014
MÓDULO - TECLADO DO MONITOR	1014
MÓDULO - VELOCÍMETRO E TACÔMETRO	309
MÓDULO ELETRÔNICO DE QUATRO INDICADORES	1015
MOLA - PORTA DA CABINA	1058
MONTAGEM - ALTERNADOR	59
MONTAGEM - ARO	440
	441
MONTAGEM - BATERIA	582
MONTAGEM - CILINDRO DE LEVANTAMENTO	833
MONTAGEM - COROA CÔNICA	439
MONTAGEM - MONITOR	1021
MONTAGEM - PLATAFORMA	1022
	1023
	1024
MONTAGEM - SENSOR	264
MONTAGEM - SUPORTE DA PLATAFORMA	1025
MONTAGEM - TRANSMISSÃO	442
MONTAGEM-ANTENA	1020
MONTAGEM-TANQUE DE EXPANSÃO	831
MOTOR	5
MOTOR - LIMPADOR DO VIDRO	1016
	1017
	1018
	1019
MOTOR - LIMPADOR DO VIDRO (24 VOLTS, 2 VELOCIDADES)	1018
	1019
MOTOR DE PARTIDA A AR	289
	291
	292
	293
	294
MOTOR DE PARTIDA A AR (TURBINA)	293
MOTOR E BOMBA-PRÉ-LUBRIFICAÇÃO	93
MOTOR ELÉTRICO DE PARTIDA	288
	295
	298

O

ÓLEO - ARRANJO PARA TROCA RÁPIDA	91
ÓLEO DO MOTOR - AQUECEDOR	226

P

PAINEL DE INSTRUMENTOS	1028
	1030
PÁRA-CHOQUE E BARRA DE TRAÇÃO	501
	502
	503
	506
PÁRA-LAMA DIANTEIRO	517
PÁRA-LAMA TRASEIRO	518
PARTIDA A AR	287
PARTIDA EM TEMPO FRIO - ARRANJO	288
PASSADIÇO	599
PEDAL DO GOVERNADOR	1032
	1033
PEGA-MÃO	985
PINO E RETENTOR - ARTICULAÇÃO	912
	913
PISO	1034
	1035
PISTÃO E BIELA	64
	66
PLACA - NÚMERO DE SÉRIE (TRANSMISSÃO)	444
PLACA - PAINEL TRASEIRO DO MOTOR	583
PLACA E DECALQUE	1090
PLATAFORMA DO OPERADOR	1036
	1037
	1039
PNEU	475

* TRADUÇÃO NÃO DISPONÍVEL NO MOMENTO DA IMPRESSÃO

ÍNDICE

Designação	Página
	476
PONTA - ABRASÃO	941
	942
PONTA - PENETRAÇÃO	945
	946
	947
	948
PONTA LONGA	944
	945
PONTA PARA APLICAÇÕES GERAIS	943
PORTA DA CABINE	978
PÓS-ARREFECEDOR COM ÁGUA TRATADA	155
PRÉ-PURIFICADOR	167
	168
	169
	170
PRÉ-PURIFICADOR, AR DA CABINE	1043
PRÉ-PURIFICADOR-AR DA CABINE	1044
PROTETOR - CÁRTER DO ÓLEO DO MOTOR	535
PROTETOR - CORREIAS	49
	51
PROTETOR - DIANTEIRO	536
PROTETOR - RADIADOR	538
PROTETOR - TREM DE FORÇA	537
PROTETOR - TREM DE FORÇA (TRANSMISSÃO)	3
PROTETOR - TUBOS DO FREIO	533
PROTETOR DA BORDA CORTANTE	940
PURIFICADOR DE AR	156
	157

R

RADIADOR	146
	152
RÁDIO - COMUNICAÇÃO (PRODUCT LINK)	205
RÁDIO - COMUNICAÇÃO (PRODUCT LINK 121SR)	231
RECEPTOR (SISTEMA DE POSICIONAMENTO GLOBAL)	235
RECLINAÇÃO - ASSENTO	1045
REGULADOR DE TEMPERATURA DA ÁGUA (92 GRAUS C)	118
REGULADOR DE VOLTAGEM (24 VOLTS) (ALTERNADOR)	195
RELÉ (CONJ) (24 VOLTS) (ALARME DE MARCHA-À-RÉ)	353
RELÉ (CONJ) (24 VOLTS) (FARÓIS DIANTEIROS)	353
RELÉ (CONJ) (24 VOLTS) (FARÓIS TRASEIROS DA ROPS)	353
RELÉ (CONJ) (24 VOLTS) (HOLOFOTES DA PLATAFORMA)	353
RELÉ (CONJ) (24 VOLTS) (HOLOFOTES DIANTEIROS DA ROPS)	353
RELÉ (CONJ) (24 VOLTS) (LUZ TRASEIRA)	353
RELÉ (CONJ) (24 VOLTS) (LUZES)	353
RELÉ (CONJ) (24 VOLTS) (LUZES HIDRÁULICAS DA ROPS NO. 1)	353
RELÉ (CONJ) (24 VOLTS) (LUZES HIDRÚALICAS DA ROPS NO. 2)	353
RELÉ (CONJ) (24 VOLTS) (PARADA DO MOTOR)	353
RELÉ (CONJ) (24 VOLTS) (PARTIDA)	353
RELÉ (CONJ) (24 VOLTS) (PRÉ-LUBRIFICAÇÃO)	353
RELÉ (CONJ) (24 VOLTS) (PRÉ-PURIFICADOR DO CONDICIONADOR DE AR)	353
RENOVAÇÃO-ÓLEO	106
RESPIRO	72
	73
	413
	847
RESPIRO (BOMBA DE LUBRIFICAÇÃO)	587
RESPIRO (CÁRTER)	72
	73
RESPIRO (TANQUE DE MEDIÇÃO DO ÓLEO DO MOTOR)	109
RETENÇÃO - VIDRO	1048
RETENTOR	14
RETENTOR - BOMBA D'ÁGUA	145
RETENTOR DE ANEL-O	738
RETENTOR DO VIRABREQUIM	67
RETENTOR (MECANISMO DAS VÁLVULAS - TAMPA)	19
RETENTOR (TAMPA DO RESPIRO)	72
RETENTOR (TAMPA, MECANISMO DA VÁLVULA)	73
RETENTOR TIPO ANEL (FILTRO DE COMBUSTÍVEL PRIMÁRIO)	175
REVESTIMENTO DA CABINE	996
RODA - COMANDO FINAL E FREIO	498
RODA-GUIA - CORREIA	55

S

SECADOR DE AR	606
	607
*SENDER GP-FUEL LEVEL	265
SENSOR - POSIÇÃO DE LEVANTAMENTO E MONTAGEM	266
SENSOR - PRESSÃO	272
	273
	274

* TRADUÇÃO NÃO DISPONÍVEL NO MOMENTO DA IMPRESSÃO

ÍNDICE

Designação	Página
	275
SENSOR - PRESSÃO (AR ATMOSFÉRICO)	325
SENSOR - PRESSÃO (CÁRTER DO MOTOR)	325
SENSOR - PRESSÃO (LUBRIFICAÇÃO AUTOMÁTICA)	363
SENSOR - PRESSÃO (ÓLEO DA BOMBA DO ACESSÓRIO)	335
SENSOR - PRESSÃO (ÓLEO DA EXTREMIDADE DO CABEÇOTE DO CILINDRO DE LEVANTAMENTO)	335
SENSOR - PRESSÃO (ÓLEO FILTRADO)	325
SENSOR - PRESSÃO (ÓLEO SEM FILTRAR)	325
SENSOR - TEMPERATURA	279
	280
	281
SENSOR - TEMPERATURA (ÁGUA DO MOTOR)	325
SENSOR - TEMPERATURA DE ESCAPE	268
SENSOR - TEMPERATURA DE ESCAPE (ADMISSÃO DO TURBOALIMENTADOR, DIREITA)	325
SENSOR - TEMPERATURA DE ESCAPE (ADMISSÃO DO TURBOALIMENTADOR, ESQUERDA)	325
SENSOR - TEMPERATURA (PÓS-ARREFECEDOR TRASEIRO)	325
SENSOR DE VELOCIDADE	276
	277
	278
SENSOR DE VELOCIDADE (REGULAGEM DA CALIBRAGEM)	325
SENSOR DE VELOCIDADE (REGULAGEM DE INJEÇÃO OU IGNIÇÃO)	325
SENSOR DE VELOCIDADE (SAÍDA DO CONVERSOR DE TORQUE)	369
SERVIÇO-COMUNICAÇÃO (PRODUCT LINK 300)	221
SILENCIADOR	166
SIST. DE ILUMINAÇÃO - PISCA-PISCA GIRATÓRIO DE ADVERTÊNCIA	259
SIST. ELETRÔNICO - ACESSÓRIO	222
SIST. HIDRÁULICO - DIANTEIRO	774
SISTEMA DE ILUMINAÇÃO - FARÓIS	245
	246
	247
	249
	250
	251
	252
	253
SISTEMA DE ILUMINAÇÃO - FARÓIS (LÂMPADA 2, PLATAFORMA)	3
SISTEMA ELETRÔNICO - CLASSIFICAÇÕES DO MOTOR	5
SISTEMA ELETRÔNICO - MÁQUINA	220
SISTEMA ELETRÔNICO - MONITOR	222
	223
SISTEMA ELETRÔNICO - TREM DE FORÇA	223
SISTEMA ELETRÔNICO-COMUNICAÇÃO	221
SISTEMA ELETRÔNICO-COMUNICAÇÃO (PRODUCT LINK 300)	230
SOFTWARE - COMUNICAÇÃO (PRODUCT LINK 121SR)	231
SOFTWARE - COMUNICAÇÃO (PRODUCT LINK 300)	221
SOLENÓIDE DO MOTOR DE ARRANQUE	295
SUPORTE	250
SUPORTE - ASSENTO	1063
SUPORTE - CONTRÔLE DA DIREÇÃO	1064
SUPORTE - CONTROLE HIDRÁULICO	1060
SUPORTE - MONTAGEM (SECADOR A AR)	607
SUPORTE DO MOTOR	68
	69
SUPORTE-INTERRUPTOR AJUSTÁVEL (LIMITE DA LUZ DO FREIO)	608
SUSPENSÃO - ASSENTO	1067

T

TAMPA - ACESSO	509
	510
TAMPA - BLOCO DO MOTOR	14
TAMPA - BOCAL DE ENCHIMENTO	91
	586
	767
	852
	855
TAMPA - BOCAL DE ENCHIMENTO DE ÓLEO	413
TAMPA - BOCAL DE ENCHIMENTO (ÓLEO HIDRÁULICO)	767
TAMPA - BOCAL DE ENCHIMENTO (TANQUE DE COMBUSTÍVEL)	190
	191
TAMPA - BOCAL DE ENCHIMENTO (TANQUE DE MEDIÇÃO DO ÓLEO DO MOTOR)	109
TAMPA - CABINE	972
TAMPA - CAIXA DIANTEIRA	17
TAMPA - EMBARQUE	400
TAMPA - MECANISMO DAS VÁLVULAS	19
TAMPA - MOTOR	15
TAMPA - PLATAFORMA	974
	975
	976
TAMPA - RADIADOR (7 PSI)	146

* TRADUÇÃO NÃO DISPONÍVEL NO MOMENTO DA IMPRESSÃO

ÍNDICE

Designação	Página
TAMPA COM RESPIRO (LAVADOR DO VIDRO)	1069
TAMPA DA VÁLVULA (HASTE)	440
	441
TAMPA DO CONECTOR DO MÓDULO	219
TAMPA (*ENGINE OIL FILL) (MOTOR)	74
TAMPÃO	477
TANQUE - GRAXA	591
TANQUE - ÓLEO DO MOTOR	109
TANQUE DE AR	650
	651
TANQUE DE COMBUSTÍVEL	190
	191
	193
TANQUE DE EXPANSÃO	850
TANQUE DE ÓLEO HIDRÁULICO E MONTAGEM	847
	849
TANQUE E MONTAGEM-ÓLEO DO MOTOR	107
TANQUE HIDRÁULICO	852
	855
	857
TAPETE	997
TELA - FILTRO	1069
TELA - PRESSÃO ALTA	711
TELA - RETORNO (BOMBA DE ESGOTAMENTO DIANTEIRO)	103
TELA - SIST. HIDRÁULICO	649
TELA-ADMISSÃO DO PURIFICADOR DE AR	157
TELA DE SUCÇÃO	425
TELA FILTRANTE	673
	711
	767
	852
	857
TELA FILTRANTE (BOCAL DE ENCHIMENTO)	855
TELA FILTRANTE (TANQUE HIDRÁULICO)	852
	857
TERMOSTATO / REGULADOR DE TEMPERATURA	118
TRANSMISSÃO	482
TRAVA - CONTROLE DO BRAÇO	393
TRAVA - INTERRUPTOR	197
TREM DE FORÇA	451
TRINCO - PORTA DA CABINA E JANELA	993
TUBOS - ACUMULADOR	619
TUBOS - ÁGUA	127
	129
	133
	135
	137
	139
TUBOS - ÁGUA DO TURBOALIMENTADOR	123
	125
TUBOS - AQUECEDOR DA CABINE	1008
TUBOS - AR	161
TUBOS - AR CONDICIONADO	1001
	1006
TUBOS - ARREFECEDOR DE ÓLEO HIDRÁULICO	797
	799
	802
TUBOS - ARREFECEDOR DOS FREIOS E DIREÇÃO	681
	684
TUBOS - CILINDRO DE INCLINAÇÃO	824
	826
	827
	828
TUBOS - CILINDRO DE LEVANTAMENTO	804
	806
	807
	809
	810
TUBOS - CIRCUITO PILOTO	813
	820
TUBOS - COMBUSTÍVEL	177
	178
TUBOS - COMBUSTÍVEL (FILTRO DO COMBUSTÍVEL PRIMÁRIO)	2
TUBOS - COMPRESSOR DE AR	57
TUBOS - DIREÇÃO	687
	692
TUBOS - DIREÇÃO SECUNDÁRIA	677
TUBOS - DRENAGEM	784
TUBOS - DRENAGEM (CÁRTER DO MOTOR, ARREFECEDORES, TRANSMISSÃO)	775
TUBOS - FREIO DE ESTACIONAMENTO	639
TUBOS - FREIO DE SERVIÇO	641
	643
	644
TUBOS - INJEÇÃO DO COMBUSTÍVEL	179
TUBOS - LUBRIFICAÇÃO	575
	576
	577
	578
TUBOS - LUBRIFICAÇÃO (MANCAL DO SUPORTE DO EIXO DE COMANDO)	566
TUBOS - NEUTRALIZADOR DA DIREÇÃO	697
TUBOS - ÓLEO DA TRANSMISSÃO	431
TUBOS - ÓLEO DO MOTOR	80
	84
TUBOS - ÓLEO DO TURBOALIMENTADOR	86
TUBOS - ÓLEO HIDRÁULICO	789
	792

* TRADUÇÃO NÃO DISPONÍVEL NO MOMENTO DA IMPRESSÃO

ÍNDICE

Designação	Página
	796
TUBOS - SISTEMA DE ARREFECIMENTO	119
TUBOS - TANQUE DE AR	260
	622
	625
TUBOS - TOMADA DE FORÇA	428
TUBOS DO AQUECEDOR	1008
TUBULAÇÕES - AR DO TURBOALIMENTADOR	162
TUBULAÇÕES - LUBRIFICAÇÃO AUTOMÁTICA	548
	552
	555
	560
	566
	571
TUBULAÇÕES - SISTEMA HIDRÁULICO DO MONITOR DE CARGA ÚTIL	811
TUBULAÇÕES-ARREFECIMENTO DOS FREIOS	627
	630
	632
	634
TUBULAÇÕES DE DIAGNÓSTICO	1082
	1085
TUBULAÇÕES-DRENO DA CAIXA	780
	782
TUBULAÇÕES-TANQUE DE EXPANSÃO	785
	787
TURBOALIMENTADOR	171
	172

V

VÁLVULA	865
	869
VÁLVULA - AMOSTRA DE FLUIDOS (ÓLEO HIDRÁULICO)	684
VÁLVULA - CONTROLE PRINCIPAL	865
	869
VÁLVULA - MEDIÇÃO	111
VÁLVULA - NEUTRALIZADOR DA DIREÇÃO	742
VALVULA - PARTIDA A ETER	307
VÁLVULA DA DIREÇÃO	739
VÁLVULA DA DIREÇÃO E MONTAGEM	715
	716
VÁLVULA DE ALÍVIO	733
	734
	735
	736
	883
	884
	885
	886
	887
	888
	889
	890
VÁLVULA DE ALÍVIO (ABERTURA DA EXTREMIDADE DA HASTE DO CILINDRO DE INCLINAÇÃO, TUBULAÇÃO)	865
VÁLVULA DE ALÍVIO (DIREÇÃO SECUNDÁRIA)	724
VÁLVULA DE ALÍVIO (PRINCIPAL)	885
VÁLVULA DE CONTROLE - TRANSMISSÃO	495
VÁLVULA DE CONTROLE DA BOMBA	656
	730
	731
	732
	880
	881
	882
VÁLVULA DE CONTROLE DOS FREIOS	654
VÁLVULA DE CONTROLE E MONTAGEM - FREIOS	652
VÁLVULA DE CONTROLE PILOTO	727
	873
	874
	875
VÁLVULA DE CONTROLE PILOTO (INCLINAÇÃO)	873
VÁLVULA DE CONTROLE PILOTO (LEVANTAMENTO)	873
VÁLVULA DE LUBRIFICAÇÃO - DISTRIBUIÇÃO	596
	597
	598
VÁLVULA DE MODULAÇÃO	485
	486
	487
VÁLVULA DE PNEU	441
	462
	463
VÁLVULA DE PRIORIDADE DO CONVERSOR DE TORQUE	493
VÁLVULA DE PURIFICAÇÃO (SECADOR A AR)	607
VÁLVULA DE RETENÇÃO	655
	720
	721
	722
	723
	863
VÁLVULA DE RETENÇÃO (ACUMULADOR DO FREIO)	601

* TRADUÇÃO NÃO DISPONÍVEL NO MOMENTO DA IMPRESSÃO

ÍNDICE

Designação	Página
VÁLVULA DE RETENÇÃO (BOMBA DA DIREÇÃO)	687
VÁLVULA DE RETENÇÃO (BOMBA DE LUBRIFICAÇÃO)	586
VÁLVULA DE RETENÇÃO (BOMBA DO FREIO)	601
VÁLVULA DE RETENÇÃO E DE ALÍVIO	864
VÁLVULA DE RETENÇÃO (PILOTO)	813
VÁLVULA DE RETENÇÃO (PILOTO)	813
VÁLVULA DE SEPARAÇÃO	738
VÁLVULA DE TIRAR AMOSTRAS DO LÍQUIDO ARREFECEDOR	154
VÁLVULA DESVIADORA	724
VÁLVULA DO CARTUCHO PILOTO	728 729 876 877 878 879
VÁLVULA DO COMANDO DO VENTILADOR E MONTAGEM	110
VÁLVULA DO CONTROLE PRINCIPAL E MONTAGEM	859 861
VÁLVULA E MONTAGEM - DIREÇÃO SECUNDÁRIA	714
VÁLVULA E TUBOS - DIREÇÃO NEUTRA	712
VÁLVULA E TUBULAÇÕES - LUBRIFICAÇÃO	592 594
VÁLVULA NEUTRALIZADORA DA DIREÇÃO E MONTAGEM	718
VÁLVULA SELETORA	488 891
VÁLVULA SELETORA (DISTRIBUIÇÃO DO ÓLEO DA EMBREAGEM)	495
VÁLVULA SELETORA E CONTROLE DE PRESSÃO	489 737 892
VÁLVULA SELETORA E CONTROLE DE PRESSÃO (MOTOR INATIVO INFERIOR)	813
VÁLVULA SELETORA E CONTROLE DE PRESSÃO (PRESSÃO DO ÓLEO DA EMBREAGEM)	495
VÁLVULA SELETORA (HIDRÁULICO)	813
VÁLVULA SOLENÓIDE	492 657 893 894
VÁLVULA SOLENÓIDE (CONTROLE DE AR DE LUBRIFICAÇÃO AUTOMÁTICA)	586
VÁLVULA SOLENÓIDE (PARTIDA A AR)	208 212
VEDADOR TIPO LABIO (ALOJAMENTO DO REGULADOR)	118
VENTILADOR DE SOPRO	116
VIGIA	146 855
VIGIA (NÍVEL DO ÓLEO)	109
VIRABREQUIM	20
VISOR - MONITOR	977
VOLANTE DO MOTOR	44

* TRADUÇÃO NÃO DISPONÍVEL NO MOMENTO DA IMPRESSÃO

STICHWORTVERZEICHNIS

Bezeichnung	Seite
A	
ABDECKGLAS (ARBEITSSCHEINWERFER)	237, 238
ABLASSLEITUNGEN	784
ABLASSLEITUNGEN (*ENGINE OIL PAN, COOLERS, TMSN)	775
ABLASSSTOPFEN	54, 119, 852, 855
ABSAUGSIEB (VORDERER PUMPEN-SUMPF)	103
ANSAUGSIEB	425
ANSCHLUSS	413
ANSCHLUSSKLEMMENSATZ (DREHSTROM-GENERATOR)	195
ANSCHLUSSKLEMMENSATZ (DREHSTROM-GENERATOR)	195
ANSCHLUSSKLEMMENSATZ (SPERRE)	354
ANSCHLUSSKLEMMENSATZ (STARTERMO-TOR)	296
ANSCHLUSSSATZ	227
ANTENNENBEFESTIGUNG	1020
ANTRIEBSGEHÄUSE-EINBAUSATZ (DRUCKLUFTSTARTMOTOR)	289
ANTRIEBSSCHMIERPUMPE U. BEFESTIGUNG	452
ANTRIEBSSCHUTZ	537
ANTRIEBSSCHUTZ (GETRIEBE)	3
ANTRIEBSWELLE	464, 466, 467
ANTRIEBSWELLEN-KEILVERZAHNUNG	472, 473, 474
ANZUGSLEINE	1067
ARBEITSGERÄTEELEKTRONIK	222
ARBEITSGERÄTEPUMPE UND AUFHÄNGUNG	834
ARBEITSLEUCHTEN	237, 238, 239, 240, 241, 245, 246, 247, 249, 250, 251, 252, 253
ARBEITSLEUCHTEN (2 LEUCHTEN, PLATTFORM)	3
ARBEITSLEUCHTEN (24 V, 70 W)	241
ARM U. LAGER	896, 898, 900
ASCHENBECHER	1060
ÄTHERSTARTHILFE	282, 284, 285
ÄTHERSTARTHILFEZYLINDER	282, 284
ÄTHERSTARTVENTIL	307
AUFKLEBER	1077, 1078, 1079, 1080
AUFKLEBER - INFORMATION (EINGANG/ AUSGANG)	1091
AUSGLEICHSBEHÄLTER	850
AUSPUFFKRÜMMER	164
AUSPUFFROHRVERLÄNGERUNG	159
AUSPUFFTEMPERATURSENSOR	268
AUSPUFFTEMPERATURSENSOR (TURBOLADEREINLASS, LINKS)	325
AUSPUFFTEMPERATURSENSOR (TURBOLADEREINLASS, RECHTS)	325
AUSSCHALTER	197
AUTOMATISCHE SCHMIERLEITUNGEN	548, 552, 555, 560, 566, 571
B	
*BASE GP-VALVE COVER	10
BATTERIE	199, 200, 201
BATTERIE - ELEKTRONISCHE STEUERUNG (STRASSENANALYSE/VIMS HAUPTMODUL)	971
BATTERIE UND VERDRAHTUNG	197
BATTERIE (12 V)	200
BATTERIE (24 V)	233, 351
BATTERIEAUFHÄNGUNG	582
BEFESTIGUNGSHALTERUNG (LUFTTROCK-NER)	607
BEFESTIGUNGSSCHRAUBENSATZ	223

* ÜBERSETZUNG ZUM ZEITPUNKT DER DRUCKLEGUNG NICHT VORHANDEN

STICHWORTVERZEICHNIS

Bezeichnung	Seite
BEFESTIGUNGSSCHRAUBENSATZ (NICHT PROGRAMMIERTE STEUERUNG)	217
BEFESTIGUNGSTEILE (DREHSTROMGENERATOR)	195
BEIFAHRERSITZ	1053
	1054
	1055
	1056
BELEUCHTUNGSANLAGE (*AMBER, LED, 24-VOLT) (GETRIEBSPERRANZEIGE)	374
BELEUCHTUNGSKABELSTRANG	247
BETRIEBSBREMSLEITUNGEN	641
	643
	644
BLINKLEUCHTE	242
BREMS- U. ARBEITSLEUCHTEN	244
BREMS- UND RÜCKLEUCHTEN	257
BREMS-KABELBAUM (BREMSLEUCHTE)	608
BREMSBELEUCHTUNG	255
	256
BREMSDRUCKSPEICHER	604
	605
BREMSDRUCKSPEICHER U. BEFESTIGUNGSTEILE	601
BREMSGESTÄNGE	615
BREMSKÜHLLEITUNGEN	627
	630
	632
	634
BREMSLEITUNGSVERKLEIDUNG	533
BREMSPUMPE UND BEFESTIGUNGSTEILE	645
BREMSSTEUERVENTIL	654
BREMSSTEUERVENTIL UND BEFESTIGUNGSTEILE	652
BUCHSEN-EINBAUSATZ (KURBELWELLEN-RIEMENSCHEIBE) (ANGEFLANSCHT)	38

C

*CAMERA GP (*115-DEGREE, COLOR)	318
*CONVERSION AR-CERTIFICATION	3
*CORE GP-TMSN OIL COOLER	397
*COUPLING GP-TORSIONAL	399

D

DÄMPFER	29
DIAGNOSELEITUNGEN	1082
	1085
DICHTUNG	14
DICHTUNG (*COVER, VALVE MECHANISM)	73
DICHTUNG (ENTLÜFTERDECKEL)	72
DICHTUNG (VENTILDECKEL)	19
DICHTUNGS- UND FLÜGELEINBAUSATZ (DRUCKLUFTSTARTMOTOR) (DRUCKLUFTSTARTANLAGE)	289
DICHTUNGSRING (KRAFTSTOFFHAUPTFILTER)	175
DICHTUNGSSATZ	208
	212
	472
	473
	474
	492
	604
	703
	704
	735
	887
DICHTUNGSSATZ (DRUCKLUFTMOTOR - SCHMIERVORRICHTUNG)	263
DICHTUNGSSATZ (KRAFTSTOFFFÖRDERPUMPE)	189
DICHTUNGSSATZ (SOLENOIDVENTIL)	485
	893
	894
DICHTUNGSSATZ (TURBINENDRUCKLUFTSTARTER)	293
DICHTUNGSSATZ (VERSTELLLÜFTERANTRIEB)	40
DICHTUNGSSATZ (VORSTEUERZAHNRADPUMPE)	453
DICHTUNGSSATZ (ZAHNRADPUMPE)	705
DICHTUNGSSATZ (ZYLINDER 2)	665
DIFFERENTIAL	403
DIFFERENTIAL UND TELLERRAD	401
DOSIERVENTIL	111
DOSIERVORRICHTUNG - MOTORÖL	89
DREHKNOPFSCHALTER (KLIMAANLAGE, HEIZUNGSGEBLÄSESTEUERUNG)	309
DREHKNOPFSCHALTER (REDUZIERTE FELGENKRAFT WÄHLEN)	309
DREHKNOPFSCHALTER (WISCHER, WASCHER) (*QUARTER WINDOW)	309
DREHMOMENTWANDLER	479
DREHMOMENTWANDLER-VORRANGVENTIL	493
DREHSTROMGENERATOR	195
DREHSTROMGENERATOR - BEFESTIGUNG	59
DREHZAHLSENSOR	276
	277
	278
DREHZAHLSENSOR (DREHMOMENTWANDLERAUSGANG)	369
DREHZAHLSENSOR (EINSPRITZZEITPUNKTKALIBRIERUNG)	325

* ÜBERSETZUNG ZUM ZEITPUNKT DER DRUCKLEGUNG NICHT VORHANDEN

STICHWORTVERZEICHNIS

Bezeichnung	Seite
DREHZAHLSENSOR (ZÜNDEINSTELLUNG)	325
DREHZAHLWANDLER U. GEHÄUSE	477
DRUCKKNOPFSCHALTER (DREHZAHLSPERRE BETÄTIGEN)	310
DRUCKKNOPFSCHALTER (DREHZAHLSPERRE WIEDER AUFNEHMEN)	310
DRUCKKNOPFSCHALTER (ENTFERNT GELEGENE NUTZLASTSPEICHERUNG)	310
DRUCKKNOPFSCHALTER (HUPE)	310
DRUCKLUFTBEHÄLTER	650
	651
DRUCKLÜFTER	116
DRUCKLUFTHUPE	987
	988
	990
DRUCKLUFTKOMPRESSORLEITUNGEN	57
DRUCKLUFTLEITUNGEN	161
DRUCKLUFTSTARTANLAGE	208
	212
	289
	291
	292
	293
	294
DRUCKLUFTSTARTANLAGE (TURBINE)	293
DRUCKLUFTSTARTER	287
DRUCKLUFTTANKLEITUNGEN	260
	622
	625
DRUCKLUFTVENTILSATZ	1067
DRUCKSCHALTER	675
DRUCKSCHALTER (ARBEITSGERÄTEFILTER-UMGEHUNG)	333
DRUCKSCHALTER (BETRIEBSBREMSENÖL)	615
DRUCKSCHALTER (FESTSTELLBREMSÖL)	340
DRUCKSCHALTER (HAUPTLENKUNGSÖL)	340
DRUCKSCHALTER (KRAFTSTOFFILTER)	325
DRUCKSCHALTER (KÜHLMITTEL)	42
	1001
DRUCKSCHALTER (LENKUNG, BREMFILTERUMGEHUNG)	333
DRUCKSCHALTER (ÖLFILTERUMGEHUNG) (*PUMP DRIVE FILTER BYPASS)	771
DRUCKSENSOR	272
	273
	274
	275
DRUCKSENSOR (ARBEITSGERÄTEPUMPENÖL)	335
DRUCKSENSOR (AUSSENLUFT)	325
DRUCKSENSOR (AUTOMATIKSCHMIERUNG)	363
DRUCKSENSOR (GEFILTERTES ÖL)	325
DRUCKSENSOR (HUBZYLINDER - BODENSEITENÖL)	335
DRUCKSENSOR (KURBELGEHÄUSE)	325
DRUCKSENSOR (UNGEFILTERTES ÖL)	325
DRUCKSPEICHERLEITUNGEN	619

E

Bezeichnung	Seite
EINBAUSATZ - CAES	230
EINBAUSATZ - PLANIERSTEUERUNG	233
	235
EINBAUVORSTEUERVENTIL	728
	729
	876
	877
	878
	879
EINFÜLLKAPPE (KRAFTSTOFFTANK)	191
EINFÜLLKAPPE (KRAFTSTOFFTANK)	190
EINFÜLLSTUTZENKAPPE	91
	586
	767
	852
	855
EINFÜLLSTUTZENKAPPE (HYDRAULIKÖL)	767
EINFÜLLSTUTZENKAPPE (MOTORÖL-DOSIERTANK)	109
EINSPRITZDÜSENSATZ (SCHMIERUNG)	596
	597
	598
EINZELFELGE	462
	463
ELEKTR. UMFORMER (24V - 24V)	233
	349
	351
ELEKTRONIK - MASCHINE	220
ELEKTRONIK - MONITOR	222
	223
ELEKTRONIK - MOTORNENNLEISTUNG	5
ELEKTRONIK, KOMMUNIKATION	221
ELEKTRONIK, KOMMUNIKATION (PRODUCT LINK 300)	230
ELEKTRONIKBEFESTIGUNG	224
ELEKTROSTARTER-VERDRAHTUNG	320
*ELEMENT AS-ENGINE OIL HEATER	226
ENDSCHALTER (BREMSLEUCHTE)	608
ENDSCHALTER (FESTSTELLBREMSE)	340
ENDSCHALTER (STIC STEUERUNG SPERRUNG)	310
ENTDUNSTER	77
ENTLEERVENTIL (LUFTTROCKNER)	607
ENTLÜFTER	72

* ÜBERSETZUNG ZUM ZEITPUNKT DER DRUCKLEGUNG NICHT VORHANDEN

STICHWORTVERZEICHNIS

Bezeichnung	Seite
	73
	413
	847
ENTLÜFTER (KURBELGEHÄUSE)	72
	73
ENTLÜFTER (MOTORÖL-DOSIERTANK)	109
ENTLÜFTER (SCHMIERUNGSPUMPE)	587
ENTLÜFTUNGSVENTIL (LUFTTROCKNER)	607

F

FAHRERHAUS	961
	962
FAHRERHAUS - VORREINIGER	1043
FAHRERHAUS-KABELBAUM (OBEN)	310
FAHRERHAUS UND PLATTFORM	959
FAHRERHAUSABDECKUNG	972
FAHRERHAUSAUSKLEIDUNG	996
FAHRERHAUSAUSRÜSTUNG	1026
FAHRERHAUSBELEUCHTUNG	236
FAHRERHAUSHEIZUNGSLEITUNGEN	1008
FAHRERHAUSLUFTFILTER	982
	996
FAHRERHAUSTÜR	978
FAHRERHAUSTÜR- U. FENSTERVERRIEGELUNG	993
FAHRERHAUSTÜRFEDER	1058
FAHRERHAUSVERDRAHTUNG	309
FAHRERPLATTFORM	1036
	1037
	1039
FAHRERPLATTFORMVERDRAHTUNG	363
	365
	367
FAHRERSITZ	1049
	1051
	1052
FAHRERSITZFEDERUNG	1067
FAHRERSITZVERSTELLER	950
FAHRGESTELL, VORNE	1
FELD-EINBAUSATZ	3
FELGE	456
	457
FELGE (TEILBAR)	458
	459
	460
	461
FELGENAUFHÄNGUNG	440
	441
FELSSCHAUFEL	919
	920
	922
	924
	926
	927
	930
	931
	932
	933
	934
	935
FESTSTELLBREMSE	611
FESTSTELLBREMSGESTÄNGE	614
FESTSTELLBREMSLEITUNGEN	639
FEUERSCHUTZWANDPLATTE	583
FEUERWAND VERDRAHTUNG	333
*FILM GP-INTERNATIONAL	1081
*FILM GP-U.S.	1081
*FILTER & MTG GP-PLT & PUMP DR	770
FILTER (PUMPENANTRIEB)	771
FILTER (WASSERPUMPE)	145
FILTERSIEB	767
	852
	1069
FILTERVERDRAHTUNG	331
FLÜSSIGKEITSSCHALTER	302
FLÜSSIGKEITSSTANDGEBER-EINBAUSATZ	265
FUSSBREMSGESTÄNGE	613
FUSSBREMSSOCKEL	608
	610
FUSSMATTE	997

G

GASPEDAL	1032
	1033
GEHÄUSEABLASSFILTER	669
GEHÄUSEABLASSLEITUNGEN	780
	782
GESCHWINDIGKEITS- U. DREHZAHLMESSER-MODUL	309
GESTÄNGEBOLZEN UND DICHTUNG	912
	913
GETRIEBE	482
GETRIEBE-KABELBAUM	495
GETRIEBEAUFLAGER	442
GETRIEBEGEHÄUSE	389
GETRIEBEHYDRAULIK	395
GETRIEBEÖLFÜLLSTUTZEN	413
GETRIEBEÖLKÜHLER	396
GETRIEBEÖLLEITUNGEN	431
GETRIEBEPUMPE	454
	455
GETRIEBESTEUERVENTIL	495
GLASDICHTUNG	1048
GLEITSCHIENENBLOCK-EINBAUSATZ	1057

* ÜBERSETZUNG ZUM ZEITPUNKT DER DRUCKLEGUNG NICHT VORHANDEN

STICHWORTVERZEICHNIS

Bezeichnung	Seite
GRUNDAUSFÜHRUNG	2

H

HALOGENSCHINWERFER (24V)(65W)	237
HALOGENSCHINWERFER (24V)(65W)	238
HALOGENSCHINWERFER (24V)(65W) (ARBEITSSCHEINWERFER)	240
HALTEGRIFF	985
HALTERUNG	250
HALTERUNG, EINSTELLBARER SCHALTER (BREMSLEUCHTENBEGRENZUNG)	608
HANDGRIFFBEFESTIGUNG	515
HAUPTSTEUERVENTIL	865
	869
HEIZUNGSLEITUNGEN	1008
HEIZUNGSVERDRAHTUNG	338
HINTERRAHMEN	524
HOCHDRUCKSIEB	711
HUBARM	902
	903
	904
HUBSTELLUNGSSENSOR U. BEFESTIGUNGS-TEILE	266
HUBVORRICHTUNG	905
HUBZYLINDER	747
	749
	751
	753
HUBZYLINDERAUFHÄNGUNG	833
HUBZYLINDERLEITUNGEN	804
	806
	807
	809
	810
HYDRAULIK, HINTEN	775
HYDRAULIK, VORNE	774
HYDRAULIKBEDIENUNG (MIT VORSTEUE-RUNG)	744
HYDRAULIKLEITUNGEN	789
	792
	796
HYDRAULIKÖLEINFÜLLSTUTZEN	767
HYDRAULIKÖLKÜHLER	746
HYDRAULIKÖLKÜHLERLEITUNGEN	797
	799
	802
HYDRAULIKSIEB	649
HYDRAULIKSTEUERAUFHÄNGUNG	1060
HYDRAULIKTANK	852
	855
	857
HYDRAULIKTANK UND BEFESTIGUNGSTEI-LE	847
	849
HYDRAULIKZYLINDER-DICHTUNGSSATZ (ZYLINDER 1)	665
HYDRAULISCHE SPERRSTEUERUNG	743

I

IDENTIFIZIERUNGS-AUFKLEBER	1093
IDENTIFIZIERUNGS-AUFKLEBER (ELEKTRN. STEUERMODUL)	222
IDENTIFIZIERUNGS-AUFKLEBER (VORSCHMIERPUMPE)	1090
INNENLEUCHTE (24 V)	309
INSTRUKTIONS-AUFKLEBER	216
INSTRUKTIONS-AUFKLEBER (*ELECTRICAL DISCONNECT)	353
INSTRUKTIONS-AUFKLEBER (ENTRASTUNGS-STEUERUNG)	1091
INSTRUKTIONS-AUFKLEBER (FÜR SITZVERSTELLUNG)	1067
INSTRUKTIONS-AUFKLEBER (*LIFT EYE, TIE-DOWN)	1034
INSTRUKTIONS-AUFKLEBER (MOTORABSTEL-LUNG)	501
	502
INSTRUKTIONS-AUFKLEBER (WASSER-EINGANG, WASSER-AUSGANG)	953
INSTRUMENTENTAFEL	1028
	1030

K

KABELSTRANG - VORDERES FAHRWERK (SCHUTZBLECH, LINKS)	335
KABELSTRANG - VORDERES FAHRWERK (SCHUTZBLECH, RECHTS)	335
KABELSTRANG (VORDERACHSÖLTEMPERA-TUR)	380
KÄLTEMITTELKOMPRESSOR	969
KÄLTEMITTELKOMPRESSOR U. BEFESTIGUNG	966
KÄLTEMITTELKONDENSATOR U. BEFESTIGUNGSTEILE	970
KALTWETTERSTARTANLAGE	288
KAMERA	204
KAMERA, VERDRAHTUNG	318
KAPPE (*ENGINE OIL FILL) (MOTOR)	74
KAPPE MIT ENTLÜFTER (SCHEIBENWA-SCHER)	1069
KAPPENDICHTUNGS-EINBAUSATZ (ZUMESS-PUMPE)	878

* ÜBERSETZUNG ZUM ZEITPUNKT DER DRUCKLEGUNG NICHT VORHANDEN

STICHWORTVERZEICHNIS

Bezeichnung	Seite
KAPPENFILTERSATZ (KRAFTSTOFFTANK)	190, 191
KEILRIEMEN (DREHSTROMGENERATOR)	59
KEILRIEMENSATZ (EINSCHL. 6 RIEMEN) (LÜFTER)	38
KIPPSCHALTER (ABSTELLUNG AUF STANDEBENE)	375
KIPPSCHALTER (ARBEITSSCHEINWERFER)	244
KIPPSCHALTER (DREHMOMENTWANDLER-ÜBERBRÜCKUNGSKUPPLUNG)	310
KIPPSCHALTER (FAHRSCHEINWERFER)	310
KIPPSCHALTER (*FLOODLIGHTS, FRONT) (ARBEITSSCHEINWERFER)	244
KIPPSCHALTER (GASREGELSPERRE)	310
KIPPSCHALTER (GETRIEBESPERRE)	374
KIPPSCHALTER (HAUBENLEUCHTEN)	374
KIPPSCHALTER (HID SCHIENWERFER, VORN)	312
KIPPSCHALTER (HINTERE ARBEITSLEUCHTEN)	312
KIPPSCHALTER (HUBSTELLUNGSEINSTELLUNG)	312
KIPPSCHALTER (INNENLEUCHTE)	312
KIPPSCHALTER (KRAFTSTOFFILTER)	173
KIPPSCHALTER (RUNDUM-KENNLEUCHTE)	310
KIPPSCHALTER (RUNDUM-KENNLEUCHTE)	244
KIPPSCHALTER (STARTERMOTOR SPERRUNG)	375
KIPPSCHALTER (STARTHILFE)	310
KIPPSCHALTER (STUFENZUGANGSBELEUCHTUNG)	310
KIPPSCHALTER (TREPPENLEUCHTEN)	374
KIPPSCHALTER (VORDERE ARBEITSLEUCHTEN)	312
KIPPZYLINDER	748, 755, 757, 759, 761, 763, 765
KLEMMLEISTE	202
KLIMAANLAGE	952, 953
KLIMAANLAGENLEITUNGEN	1001, 1006
KNICKGELENK-ANHÄNGUNG	540
KNICKGELENKSPERRE	579
KOHLESCHAUFEL	915, 917
	929
KOLBENDICHTUNGS-EINBAUSATZ	728, 876, 877, 879
KOLBENPUMPE	646, 706, 708, 840, 842
KOLBENPUMPE (ARBEITSGERÄT, KONSTANTPUMPE)	834
KOLBENPUMPENUMLAUFSATZ	648, 710, 844, 845
KOMMUNIKATIONSEINBAUSATZ	231
KRAFTSTOFF-ENTLÜFTUNGSPUMPE	185
KRAFTSTOFFEINSPRITZDÜSE	184
KRAFTSTOFFEINSPRITZLEITUNGEN	179
KRAFTSTOFFEINSPRITZPUMPE	184
KRAFTSTOFFENTLÜFTUNGSPUMPE UND -HAUPTFILTER	187
KRAFTSTOFFFILTEREINSATZ (HAUPTELEMENT)	175
KRAFTSTOFFHAUPTFILTER	175
KRAFTSTOFFHEIZUNG	227
KRAFTSTOFFILTER	173, 187
KRAFTSTOFFILTERSOCKEL	187
KRAFTSTOFFKRÜMMER	182, 183
KRAFTSTOFFLEITUNGEN	177, 178
KRAFTSTOFFLEITUNGEN (HAUPTKRAFTSTOFFFLTER)	2
KRAFTSTOFFÖRDERPUMPE	188, 189
KRAFTSTOFFSIEB	190, 191
KRAFTSTOFFTANK	190, 191, 193
KRAFTSTOFFTANKANSCHLUSS	176
KRAFTÜBERTRAGUNG	451
KRAFTÜBERTRAGUNG - FILTER U. BEFESTIGUNG	416
KRAFTÜBERTRAGUNGSELEKTRONIK	223
KRAFTÜBERTRAGUNGSVERDRAHTUNG	369
KREUZGELENK	483, 484
KREUZGELENK UND LAGER	472, 474

* ÜBERSETZUNG ZUM ZEITPUNKT DER DRUCKLEGUNG NICHT VORHANDEN

STICHWORTVERZEICHNIS

Bezeichnung	Seite
	475
KÜHLER	146
	152
KÜHLERBLOCK	152
KÜHLERGRILL	531
KÜHLERKAPPE (7 PSI)	146
KÜHLERSCHUTZ	538
KÜHLMITTELLEITUNGEN	119
KÜHLMITTELPROBEENTNAHMEVENTIL	154
KÜHLMITTELSTANDANZEIGE	117
KÜHLWASSER-TEMPERATURREGLER UND GEHÄUSE	118
KÜHLWASSERANSCHLUSS	112
KÜHLWASSERLEITUNGEN	127
	129
	133
	135
	137
	139
KÜHLWASSERPUMPE	143
	144
	145
KÜHLWASSERPUMPEN-REGENERIERSATZ (WASSERPUMPE)	145
KÜHLWASSERPUMPEN-REGENERIERSATZ (ZUSATZWASSERPUMPE)	141
KURBELLAGER-EINBAUSATZ (LUFTKOMPRESSOR) (DRUCKLUFTKOMPRESSOR)	8
KURBELWELLE	20
KURBELWELLENDICHTUNG	67

L

Bezeichnung	Seite
LADELUFTKÜHLER (FRISCHWASSER)	155
LADELUFTKÜHLERBLOCK	155
LADERRAHMEN	520
	527
LAGERSATZ (DREHSTROMGENERATOR)	195
LAUFBAND UND ANTRIEB (RUNDUMKENNLEUCHTE)	243
LAUFSTEG	599
LEITRAD - RIEMEN	55
LENK- U. ARBEITSGERÄTEÖLFILTER U. BEFESTIGUNGSTEILE	671
LENK- U. BREMSÖLKÜHLERLEITUNGEN	681
	684
LENK- U. BREMSPUMPE U. BEFESTIGUNGSTEILE	701
LENK- UND BREMSÖLKÜHLERPUMPE UND AUFHÄNGUNG	702
LENKBETÄTIGUNG	662
LENKBETÄTIGUNGSAUFHÄNGUNG	1064
LENKNEUTRALISIERLEITUNGEN	697
LENKNEUTRALISIERVENTIL	742
LENKNEUTRALISIERVENTIL U. BEFESTIGUNGSTEILE	718
LENKNEUTRALISIERVENTIL U. LEITUNGEN	712
LENKÖLLEITUNGEN	687
	692
LENKUNG, FILTER U. BEFESTIGUNG	672
LENKVENTIL	739
LENKVENTIL U. BEFESTIGUNGSTEILE	715
	716
LENKZYLINDER	665
	667
LENKZYLINDER UND AUFHÄNGUNG	664
LEUCHTE (12 V, 24 V, 35 W)	239
LEUCHTE (24 V)	236
	309
	360
LEUCHTE (24 V, GELB)	310
LEUCHTE (24 V, ROT)	310
LEUCHTE (24 V, 70 W)	243
*LIGHTING AR-WARNING BEACON	244
*LINES GP-EXPANSION TANK	785
	787
LIPPENDICHTUNG (REGULATORGEHÄUSE)	118
LÜFTERANTRIEB	30
	38
	40
	42
LÜFTERANTRIEBSVENTIL U. BEFESTIGUNGSSATZ	110
LUFTFILTER (HAUPTELEMENT)	156
LUFTFILTER (HILFSELEMENT)	156
LUFTFILTERWARTUNGSANZEIGE	160
LUFTKANAL	980
LUFTKOMPRESSOR	8
	9
LUFTKOMPRESSORSITZ	951
	1067
LUFTREINIGER	156
	157
LUFTREINIGERKLEMMEN-EINBAUSATZ	156
LUFTTROCKNER	606
	607

M

Bezeichnung	Seite
MAGNETSCHALTER	303
	304
	305
MAGNETSCHALTER (VORSCHMIERPUMPEN-RELAIS)	99
MAGNETSCHALTER (24 V) (HAUPTRELAIS)	353

* ÜBERSETZUNG ZUM ZEITPUNKT DER DRUCKLEGUNG NICHT VORHANDEN

STICHWORTVERZEICHNIS

Bezeichnung	Seite
MAGNETSPULE - ANLASSMOTOR (ELEKTR.)	295
MAGNETSTOPFEN	384
	385
	409
	499
MAGNETVENTIL	492
	657
	893
	894
MAGNETVENTIL (*AUTOLUBE AIR CONTROL)	586
MAGNETVENTIL (DRUCKLUFTANLASSER)	208
	212
MASCHINENHUBÖSE	547
MASCHINENVERDRAHTUNG	340
	349
	351
MELDEZENTRUMMODUL	1014
MEMBRANESATZ (HUPE)	987
MESSERSCHUTZ	940
MODUL - VIER ELEKTRON. ANZEIGEN	1015
MODUL-MONITORTASTATUR	1014
MODULATORVENTIL	485
	486
	487
MODULVERBINDER-ABDECKUNG	219
MONITORBEFESTIGUNG	1021
MONITORDISPLAY	977
MOTOR-EINBAUSATZ	7
MOTOR REPARATURSATZ (GRUNDAUSFÜHRUNG) (HAUPTLAGER)	20
MOTORAUFHÄNGUNG	68
	69
MOTORAUSFÜHRUNG	5
MOTORBLOCK	21
	22
MOTORBLOCKDECKEL	14
MOTORHAUBE UND VERKLEIDUNG	541
MOTORHUBÖSE	56
MOTORKABELSTRANG	225
	325
MOTORÖL-VORWÄRMGERÄT	226
MOTORÖLEINFÜLLSTUTZEN	74
MOTORÖLKÜHLER	113
MOTORÖLKÜHLER BLOCK	114
MOTORÖLLEITUNGEN	80
	84
MOTORÖLTANK	109
MOTORÖLTANK U. BEFESTIGUNG	107
MOTORSTEUERUNG, ELEKTRON.	215
MOTORVERDRAHTUNG	325
MOTORVERKLEIDUNG	15
*MOUNTING GP-EXPANSION TANK	831

N

Bezeichnung	Seite
NEBENANTRIEB	31
	32
	34
	36
NEBENANTRIEBSKUPPLUNG	398
NEBENANTRIEBSKUPPLUNG (HINTEN)	451
NEIGEZYLINDERLEITUNGEN	824
	826
	827
	828
NEIGUNGSSTEUERUNG	207
NOCKENWELLE	13
NORMALZAHNSPITZE	943
NOTLENKUNGSLEITUNGEN	677
NOTLENKUNGSPUMPE UND BEFESTIGUNGSTEILE	700
NOTLENKUNGSVENTIL U. BEFESTIGUNGSTEILE	714
NUTZLASTWÄGEEINRICHTUNGS-HYDRAULIKLEITUNGEN	811

O

Bezeichnung	Seite
O-RING-DICHTUNG	738
ÖLABLASSSCHRAUBE	784
ÖLABLASSSCHRAUBE (ÖLWANNE)	61
ÖLAUFFRISCHUNGSSYSTEM - VERDRAHTUNG	360
ÖLAUFFRISCHUNGSVORRICHTUNG	106
ÖLEINFÜLLKAPPE	413
ÖLFILTER	75
	418
	420
	673
	675
	771
ÖLFILTER (*HYDRAULIC COOLER SCREEN)	671
ÖLFILTER (HYDRAULIK, HOCHLEISTUNG)	675
ÖLFILTER (PUMPENANTRIEB, VORN)	770
ÖLFILTER (*STEERING, BRAKE COOLER SCREEN)	671
ÖLFILTERELEMENT (KRAFTÜBERTRAGUNG)	418
	420
ÖLFILTERELEMENT (LENKUNG, BREMSE)	673
ÖLKÜHLERBLOCK	115
ÖLKÜHLERBLOCK (GETRIEBE)	396
ÖLMESSSTAB	78
	79

* ÜBERSETZUNG ZUM ZEITPUNKT DER DRUCKLEGUNG NICHT VORHANDEN

STICHWORTVERZEICHNIS

Bezeichnung	Seite
ÖLSCHNELLWECHSELANSCHLUSS	91
ÖLWANNE	61

P

PANZERWANNE	535
PANZERWANNEN-HALTETEILE	511
PEDALBOLZEN (DREHZAHLREGLERPEDAL)	1033
PENDELACHSE	383, 385
PENDELACHSEN-HALTETEILE	412
PENDELVENTIL	738
PLANETENANTRIEBSGEHÄUSE U. TEILE	387
PLANETENGETRIEBE	444
PLANETENSATZ (TURBINENDRUCKLUFTSTARTER)	293
PLATTFORM	1034, 1035
PLATTFORM-ANBAUSATZ	1022, 1023, 1024
PLATTFORM-HALTERUNGSAUFHÄNGUNG	1025
PLATTFORMVERKLEIDUNG	974, 975, 976
PLEUELSTANGE UND KOLBEN	64, 66
*PRECLEANER GP-CAB AIR	1044
PROBEENTNAHMEVENTIL F. WARTUNGSFL. (HYDRAULIKÖL)	684
PUFFER - SENSOR	203
PUMPEN-EINBAUSATZ	587
PUMPENANTRIEB	405, 409
PUMPENANTRIEB U. BEFESTIGUNGSTEILE	404
PUMPENANTRIEBSEINGANGSWELLE	451, 471
PUMPENANTRIEBSWELLE	468, 470
PUMPENANTRIEBSWELLE (HINTEN)	451
PUMPENANTRIEBSWELLE (VORN)	451
PUMPENDICHTUNGSSATZ	646
PUMPENKOPF	676, 772
PUMPENSTELLGLIED	658, 659, 660
PUMPENSTEUERVENTIL	656, 730, 731, 732, 880, 881, 882
PUMPENZYLINDER	661

R

RADIO - KOMMUNIKATION (PRODUCT LINK RADIO)	205
RADIO - KOMMUNIKATION (PRODUCT LINK 212SR)	231
RADIOEINBAUSATZ	991
RAHMEN, HINTEN	529
*RECEIVER GP (*GLOBAL POSITIONING SYSTEM)	235
REGLEREINBAUSATZ (LUFTKOMPRESSOR)	9
REIFEN	475, 476
REIFENVENTIL	441, 462, 463
REINIGUNGSVORRICHTUNG - FAHRERHAUS	964
RELAIS (24 V) (*AIR CONDITIONER PRECLEANER)	353
RELAIS (24 V) (*FRONT ROPS FLOODLIGHTS)	353
RELAIS (24 V) (HINTERE ARBEITSSCHEINWERFER)	353
RELAIS (24 V) (LEUCHTEN)	353
RELAIS (24 V) (MOTORABSTELLUNG)	353
RELAIS (24 V) (*PLATFORM FLOODLIGHTS)	353
RELAIS (24 V) (*ROPS HID LIGHTS NO. 1)	353
RELAIS (24 V) (*ROPS HID LIGHTS NO. 2)	353
RELAIS (24 V) (RÜCKFAHRALARM)	353
RELAIS (24 V) (RÜCKLEUCHTE)	353
RELAIS (24 V) (STARTEN)	353
RELAIS (24 V) (VORDERE ARBEITSLEUCHTEN)	353
RELAIS (24 V) (VORSCHMIERUNG)	353
REPARATURSATZ (UMGEHUNGSVENTIL) (KRAFTSTOFFFÖRDERPUMPE)	189
REPARATURSATZ (VERSTELLLÜFTERANTRIEB)	40
REPARATURSATZ (ZAHNRAD, WELLE) (KRAFTSTOFFFÖRDERPUMPE)	189
RIEMENSCHUTZ	49, 51
RIEMENSPANNER	11
ROHR-EINBAUSATZ (SCHMIERPUMPE)	587
ROLLENSATZ (DREHZAHLREGLERPEDAL)	1033

* ÜBERSETZUNG ZUM ZEITPUNKT DER DRUCKLEGUNG NICHT VORHANDEN

STICHWORTVERZEICHNIS

Bezeichnung	Seite
ROTOR-EINBAUSATZ (DRUCKLUFTSTARTER - ERSTE STUFE)	292, 294
ROTOR-EINBAUSATZ (DRUCKLUFTSTARTER - ZWEITE STUFE)	292
ROTOR-EINBAUSATZ (LUFTSTARTER - ZWEITE STUFE)	294
RÜCKFAHRWARNHORN	308
RÜCKLEHNENVERLÄNGERUNG (STOFF)	1051
RÜCKSCHLAG- U. DRUCKBEGRENZUNGS-VENTIL	864
RÜCKSPÜLPUMPE	103, 105
RUNDUM-KENNLEUCHTE	243, 259

S

Bezeichnung	Seite
SCHALE - RÜCKENLEHNE	1027
SCHALLDÄMPFER	166
SCHALTVENTIL	488, 891
SCHALTVENTIL (HYDRAULIK)	813
SCHALTVENTIL (KUPPLUNGSÖLVERTEI-LUNG)	495
SCHAUFELABSTREIFER	949
SCHAUFELAUSSCHALTER UND -EINSTELLER	776, 778
SCHAUFELUMLENKMECHANISMUS	906, 908, 910
SCHAUGLAS	146, 852, 855
SCHAUGLAS (ÖLSTAND)	109
SCHEIBENWASCHANLAGE	1069
SCHEIBENWISCHER	1072, 1073
SCHEIBENWISCHER UND -WASCHANLAGE	1070
SCHEIBENWISCHERARM	956
SCHEIBENWISCHERBLATT	1073
SCHEIBENWISCHERBLATT (VORNE)	1070
SCHEIBENWISCHERKABELSTRANG (FENSTER)	310
SCHEIBENWISCHERKABELSTRANG (WASCHER)	310
SCHEIBENWISCHERMOTOR	1016, 1017, 1018, 1019
SCHEIBENWISCHERMOTOR (24V, 2 GESCHWINDIGKEITEN)	1018
	1019
SCHEIBENWISCHERSCHALTER	306
SCHEIBENWISCHERSCHALTER (24 V) (INTERVALLSCHALTUNG)	306
SCHILD UND AUFKLEBER	1090
SCHLAUCHLEITUNG	139
SCHLÜSSEL (ELEKTR. HAUPTSCHALTER) (STARTER)	300
SCHLÜSSEL, VIERKANT	393
SCHLÜSSELSCHALTER	310
SCHLÜSSELSCHALTER (VIMS - WARTUNG)	374
SCHMIERANLAGE (DRUCKLUFTSTARTERMO-TOR)	263
SCHMIERFETTANK	591
SCHMIERLEITUNGEN	575, 576, 577, 578
SCHMIERLEITUNGEN (*DRIVE SHAFT SUPPORT BEARING)	566
SCHMIERÖLVERTEILERVENTIL	596, 597, 598
SCHMIERPUMPE	94, 95, 586
SCHMIERSYSTEM, AUTOM.	580
SCHMIERSYSTEM, AUTOM. (PLATTFORM)	1035
SCHMIERVENTIL U. -LEITUNGEN	592, 594
SCHNEIDMESSER	936, 937, 938, 939, 940
SCHRAUBE	477
SCHRAUBENSATZ (ELEKTRISCHE VERBINDER)	378
SCHUTZBLECH-HALTETEIL	514
SCHUTZBLECHE, HINTEN	518
SCHUTZBLECHE, VORNE	517
SCHWINGSITZ	1057
SCHWUNGRAD	44
SCHWUNGRADGEHÄUSE	52
SCHWUNGSCHEIBENGEHÄUSEAN-SCHLUSS	382
*SCREEN-AIR CLEANER INLET	157
SEITENANTRIEB U. RAD	498
SEITENANTRIEB UND RADBREMSE	498
*SENDER GP-FUEL LEVEL	265
SENSOR, KABELSTRANG	42
SENSOR, KABELSTRANG (HINTERACHSÖL-TEMPERATUR)	380

* ÜBERSETZUNG ZUM ZEITPUNKT DER DRUCKLEGUNG NICHT VORHANDEN

STICHWORTVERZEICHNIS

Bezeichnung	Seite
SENSOR, KABELSTRANG (HYDRAULIKSTAND, TEMPERATUR, VORDERACHSTEMPERATUR)	335
SENSORBEFESTIGUNG	264
SENSORVERDRAHTUNG	380
SERIENNUMMERNSCHILD (GETRIEBE)	444
SERPENTINENFÖRMIGER RIEMEN (KÄLTEMITTELKOMPRESSOR)	966
SERVICE CENTER	1093
*SERVICE GP-COMMUNICATION (PRODUCT LINK 300)	221
SICHERHEITSGURT	1051
SICHERUNG (10 A)	353
SICHERUNG (15 A)	338
	353
SICHERUNGSBLOCK	354
SIEB	673
	711
	852
	857
SIEB-EINBAUSATZ	649
SIEB (FÜLLER)	855
SIEB (HYDRAULIKTANK)	852
	857
SITZUNTERBAU	1063
SOFTWARE - KOMMUNIKATION (PRODUCT LINK 212SR)	231
SOFTWARE - KOMMUNIKATION (PRODUCT LINK 300)	221
SPANNUNGSREGLER (24 V) (DREHSTROMGENERATOR)	195
SPERRVENTIL	655
	720
	721
	722
	723
	863
SPERRVENTIL (*BRAKE PUMP)	601
SPERRVENTIL (BREMSDRUCKSPEICHER)	601
SPERRVENTIL (LENKPUMPE)	687
SPERRVENTIL (SCHMIERUNGSPUMPE)	586
SPERRVENTIL (VORSTEUERUNG)	813
SPERRVENTIL (VORSTEUERUNG)	813
SPIEGEL, LINKS	4
	1010
SPIEGEL, RECHTS	4
	1012
STANDARDRINGSATZ (LUFTKOMPRESSOR) (DRUCKLUFTKOMPRESSOR)	8
STARRACHSE	383
	384
STARRACHSEN-HALTETEILE	411
STARTER - REPARATURSATZ (TURBINEN-DRUCKLUFTSTARTER)	292
	294
STARTERMOTOR	295
	298
STARTERMOTOR, ELEKTRISCH	288
STAUBAUSWERFER	158
STAUBKAPPE	473
STEIGLEITER	589
	590
STELLUNGSSENSOR	269
	270
	271
STELLUNGSSTEUERUNG	216
STELLUNGSSTEUERUNG (SCHAUFEL)	776
	778
STEUERUNG - NICHT PROGRAMMIERT	205
	217
	218
STEUERUNG - NICHT PROGRAMMIERT (ARBEITSGERÄT)	354
STEUERUNG - NICHT PROGRAMMIERT (KRAFTÜBERTRAGUNG)	353
STEUERUNG, NICHT PROGRAMMIERTER MONITOR	971
STEUERUNGS-KABELSTRANG (*OIL RENEWAL SYSTEM, CHASSIS)	360
STEUERUNGS-KABELSTRANG (*OIL RENEWAL SYSTEM, FIREWALL)	360
STEUERUNGS-KABELSTRANG (SCHAUFELEINSTELLER)	776
	778
STEUERUNGSEINHEIT, ELEKTRON. FÜR MOTOR UND BEFEST.	206
STIC-KOMBIHEBEL	390
	391
STIC-KOMBIHEBEL - STEUERUNGSSPERRE	393
STIRNRAD	45
STIRNRADGEHÄUSE	54
STIRNRADGEHÄUSEDECKEL	17
STOSSDÄMPFER-REPARATURSATZ	1067
STOSSSTANGE U. ZUGHAKEN	501
	502
STOSSSTANGE UND ZUGSTANGE	503
	506
STRÖMUNGSSCHALTER	301

T

TELLERRADAUFHÄNGUNG	439
TEMPERATURGEBER (UMLAUFWASSER)	325
TEMPERATURSCHALTER (KÜHLMITTEL)	954

* ÜBERSETZUNG ZUM ZEITPUNKT DER DRUCKLEGUNG NICHT VORHANDEN

STICHWORTVERZEICHNIS

Bezeichnung	Seite
TEMPERATURSCHALTER (MOTORÖL)	226
TEMPERATURSENSOR	279, 280, 281
TEMPERATURSENSOR (HINTERER LADELUFTKÜHLER)	325
TEMPERATURSENSOR (UMLAUFWASSER)	325
TRENNSCHALTER	300
TURBINENRADSATZ (TURBINENDRUCKLUFT-STARTER)	293
TURBOLADER	171, 172
TURBOLADER-KÜHLWASSERLEITUNGEN	123, 125
TURBOLADERLUFTLEITUNGEN	162
TURBOLADERÖLLEITUNGEN	86
UMLAUFKÜHLWASSERHEIZUNGS-ELEMENT	229
UMLEITVENTIL	724
UNTERBRECHER (10 A) (FAHRSCHEINWERFER)	355
UNTERBRECHER (10 A) (STARTSCHALTER-SCHLÜSSEL)	355
UNTERBRECHER (105 A) (HAUPTUNTERBRECHER)	354
UNTERBRECHER (15 A) (ELEKTRON. STEUERMODUL DES MOTORS)	353
UNTERBRECHER (80 A) (*ALTERNATOR NO. 1)	354
UNTERBRECHER (80 A) (*ALTERNATOR NO. 2)	354
UNTERBRECHER (80 A) (VORSCHMIERUNG)	354

U

ÜBERDRUCKVENTIL	733, 734, 735, 736, 883, 884, 885, 886, 887, 888, 889, 890
ÜBERDRUCKVENTIL (HAUPTUNTERBRECHER)	885
ÜBERDRUCKVENTIL (LEITUNG, KIPPZYLINDER-STANGENSEITENÖFFNUNG)	865
ÜBERDRUCKVENTIL (NOTLENKUNG)	724
ÜBERHOLSATZ (TURBINENDRUCKLUFTSTARTER)	292, 294
ÜBERHOLSATZ (TURBINENDRUCKLUFTSTARTER)	293
ÜBERROLLSCHUTZ	1046, 1047
ÜBERROLLSCHUTZ-HALTETEILE	981
ÜBERROLLSCHUTZVERDRAHTUNG	378
ÜBERTRAGUNGSEINBAUSATZ	230
ÜBERTRAGUNGSSTEUERUNG U. BEFESTIGUNG	205
ÜBERWACHUNGSTAFELVERDRAHTUNG	353
UMBAUSATZ - ZULASSUNG	3
UMGEHUNGSSCHALTER	299
UMLAUFKÜHLWASSERHEIZUNG	229

V

VENTIL	865, 869
VENTIL - SCHALT- UND DRUCKSTEUERUNG	489, 737, 892
VENTIL - SCHALT- UND DRUCKSTEUERUNG (ABSENKEN BEI AUSGEFALLENEM MOTOR)	813
VENTIL - SCHALT- UND DRUCKSTEUERUNG (KUPPLUNGSÖLDRUCK)	495
VENTIL UND BEFESTIGUNGSTEILE - HAUPTSTEUERUNG	859, 861
VENTILDECKEL	19
VENTILKABELSTRANG (SITZ LUFTKOMPRESSOR)	1067
VENTILKAPPE (SCHAFT)	440, 441
VENTILSATZ	208, 212, 587
VENTILSATZ (LUFTTROCKNER)	607
VENTILSTEUERUNG	70
VERDRAHTUNG, HINTEN	372, 374, 377
VERDRAHTUNG, VORNE	335
VERDRAHTUNGSKABELBAUM (VENTILMECHANISMUS)	70
VERKLEIDUNGEN, VORN	536
VERSANDDECKEL	400
VERSTAUKASTEN	957

* ÜBERSETZUNG ZUM ZEITPUNKT DER DRUCKLEGUNG NICHT VORHANDEN

STICHWORTVERZEICHNIS

Bezeichnung	Seite
	958
VERSTELLBARER SITZ	1045
VERTEILERGETRIEBEANTRIEB	422
	424
*VESSEL AR	895
VORHÄNGESCHLOSS	374
	501
	502
	541
	1035
VORHÄNGESCHLOSS (MOTORÖLEINFÜLLSTUTZEN)	78
VORHÄNGESCHLOSS (MOTORÖLEINFÜLLUNG)	74
VORREINIGER	167
	168
	169
	170
VORSCHMIERPUMPE	96
	99
VORSCHMIERPUMPE UND MOTOR	93
VORSCHMIERUNG - MOTOR U. PUMPE	93
VORSTEUER- U. KÜHLERPUMPE U. BEFESTIGUNGSTEILE	835
VORSTEUERLEITUNGEN	813
	820
VORSTEUERVENTIL	727
	873
	874
	875
VORSTEUERVENTIL (HUB)	873
VORSTEUERVENTIL (KIPPEN)	873
VORSTEUERVENTILMAGNET	829
	830

W

WARNAUFKLEBER (*HIGH PRESSURE, READ MANUAL)	604
WARNAUFKLEBER (NICHT HEBEN)	1091
WARNAUFKLEBER (PRODUCT LINK RADIO)	230
WARNVORRICHTUNG	194
WASSERPUMPENDICHTUNG	145
WASSERTEMPERATURREGLER (92 GRAD)	118
*WIRING GP-START CONTROL	381

Z

ZAHNRADPUMPE	453
	703
	704
	705
	836
	837
	839
ZAHNRADPUMPE (BREMSANLAGENKÜHLUNG)	701
ZAHNRADPUMPE (NOTLENKUNG)	700
ZAHNRADPUMPE (*STEERING, BRAKE OIL COOLER)	702
ZAHNRADVORGELEGE	47
ZAHNSPITZE, LANG	944
	945
ZAHNSPITZE, SCHARF	945
	946
	947
	948
ZAHNSPITZE, VERSTÄRKT	941
	942
ZAPFWELLENLEITUNGEN	428
ZIGARETTENANZÜNDER (12 V)	310
ZUGANGSKLAPPE	509
	510
ZUGEINHEIT - FAHRGESTELL, HINTEN	2
ZUGSTANGEN- UND STOSSSTANGENHALTETEILE	512
	513
ZUSATZSÜSSWASSERPUMPE	141
ZYLINDERKOPF	24
	25
	27
ZYLINDERKOPF-EINBAUSATZ (LUFTKOMPRESSOR) (DRUCKLUFTKOMPRESSOR)	8
ZYLINDERKOPF-HALTETEILE	25

* ÜBERSETZUNG ZUM ZEITPUNKT DER DRUCKLEGUNG NICHT VORHANDEN

MACHINE ARRANGEMENT

245-8811 CHASSIS AR-FRONT

S/N: 4421-UP

PART OF 245-8810 COMMON AR

SMCS-7000 **i02277362**

NOTE	PART NUMBER	QTY	PART NAME 1 2 3 4 5 6 (PRODUCT LEVEL)	SEE PAGE
Y	*116-1339*	1	BRAKE GP-PARKING	611
Y	*249-7832*	1	DRIVE & MTG GP-PUMP (FRONT)	404
Y	*247-7775*	1	FRAME GP-LOADER	527
Y	*249-8680*	1	GUARD GP-FRONT	536
Y	*244-7300*	1	HYDRAULIC AR-FRONT	774
Y	*161-4540*	1	LIGHTING GP-FLOOD (2-LAMP, LOADER FRAME)	246
Y	*247-5922*	1	LINES GP-AUTOMATIC LUBRICATION (LOADER FRAME)	566
Y	*247-4005*	1	WIRING GP-FRONT	335
	247-7774	1	SHIPPING AR	
	8T-4223	2	WASHER-HARD (13.5X25.5X3-MM THK)	
M	**8T-4244**	2	NUT (M12X1.75-THD)	

M-METRIC PART
Y-SEPARATE ILLUSTRATION

<END>

MACHINE ARRANGEMENT

245-8812 CHASSIS AR-REAR

S/N: 4421-UP

PART OF 245-8810 COMMON AR

SMCS-7000 **i02397211**

NOTE	PART NUMBER	QTY	PART NAME 1 2 3 4 5 6 (PRODUCT LEVEL)	SEE PAGE
Y	**240-7750**	1	ENGINE AR	5
Y	*247-5935*	1	FRAME GP-REAR	529
Y	*249-6777*	1	GRILL GP-RADIATOR	531
Y	*249-6778*	1	GUARD GP-RADIATOR	538
Y	*8X-0029*	1	HITCH GP-ARTICULATING	540
Y	*249-7166*	1	HOOD & GUARD GP	541
Y	*245-0700*	1	HYDRAULIC AR-REAR	775
Y	*250-7957*	1	INSTALLATION AR-ENGINE	7
Y	*274-8527*	1	LIGHTING GP-FLOOD (ENGINE COMPARTMENT)	253
Y	*245-0675*	1	LINES GP-AIR CONDITIONER (REAR)	1001
Y	*245-0680*	1	LINES GP-AIR CONDITIONER (RADIATOR)	1006
Y	*247-5923*	1	LINES GP-AUTOMATIC LUBRICATION (REAR FRAME)	571
Y	*244-7345*	1	LINES GP-CAB HEATER (REAR)	1008
Y	*244-7265*	1	LINES GP-EXPANSION TANK (HYDRAULIC)	785
Y	*8X-0039*	1	LINES GP-FUEL (PRIMARY FUEL FILTER)	177
Y	*8X-0043*	1	LINK GP-STEERING FRAME LOCK	579
Y	*268-9420*	1	MOUNTING GP-PLATFORM	1024
Y	*250-6194*	1	PLATE GP-FIREWALL	583
Y	*245-8809*	1	POWER TRAIN AR (REAR)	451
Y	*245-1315*	1	SERVICE CENTER GP (AUTO LUBRICATION, FAST FILL)	1093
Y	*250-6195*	1	STARTING AID GP-ETHER	284
Y	*247-4020*	1	WARNING GP-BACKUP	308
Y	*247-4396*	1	WIRING GP-FIREWALL	333
Y	*247-0180*	1	WIRING GP-MACHINE	340
Y	*247-4009*	1	WIRING GP-POWER TRAIN	369
Y	*247-4014*	1	WIRING GP-REAR (RADIATOR GUARD)	377
Y	*247-4008*	1	WIRING GP-REAR (CHASSIS)	372

Y-SEPARATE ILLUSTRATION

<END>

245-8810 COMMON AR

S/N: 4421-UP

SMCS-7000 **i02148069**

NOTE	PART NUMBER	QTY	PART NAME 1 2 3 4 5 6 (PRODUCT LEVEL)	SEE PAGE
Y	*152-8920*	1	AXLE AR-FIXED (FRONT)	383
Y	*152-8930*	1	AXLE AR-OSCILLATING (REAR)	383
Y	*245-8811*	1	CHASSIS AR-FRONT	1
Y	*245-8812*	1	CHASSIS AR-REAR	2
Y	*252-8683*	1	ELECTRONICS AR-MACHINE	220
Y	*245-8813*	1	INSTALLATION AR-FIELD	3
Y	*242-0338*	1	OPERATOR AR	1026
Y	*245-8804*	1	PLATE & FILM GP	1090
Y	*245-7454*	1	PLATFORM AR (LH)	1035
Y	*247-5919*	1	ROPS AR	1046

Y-SEPARATE ILLUSTRATION

<END>

MACHINE ARRANGEMENT

252-8762 CONVERSION AR-CERTIFICATION

S/N: 4421-UP

AN ATTACHMENT

SMCS-7000 **i02163043**

NOTE	PART NUMBER	QTY	PART NAME 1 2 3 4 5 6 (PRODUCT LEVEL)	SEE PAGE
Y	*248-1407*	1	LIGHTING AR-WARNING BEACON	244
Y	**245-1840**	1	TANK GP-EXPANSION (AIR)	850

Y-SEPARATE ILLUSTRATION

<END>

254-7028 CONVERSION AR-CERTIFICATION

S/N: 4421-UP

AN ATTACHMENT

SMCS-7000 **i02168371**

NOTE	PART NUMBER	QTY	PART NAME 1 2 3 4 5 6 (PRODUCT LEVEL)	SEE PAGE
Y	*248-1407*	1	LIGHTING AR-WARNING BEACON	244
Y	**245-1840**	1	TANK GP-EXPANSION (AIR)	850

Y-SEPARATE ILLUSTRATION

<END>

245-8813 INSTALLATION AR-FIELD

S/N: 4421-UP

PART OF 245-8810 COMMON AR

SMCS-7000 **i02294650**

NOTE	PART NUMBER	QTY	PART NAME 1 2 3 4 5 6 (PRODUCT LEVEL)	SEE PAGE
Y	*184-3214*	1	AIR CLEANER GP	157
Y	*264-5102*	1	COVER GP-ACCESS	510
Y	*250-6230*	1	COVER GP-PLATFORM (REAR CAB)	976
Y	*267-4458*	1	DUST EJECTOR GP	158
Y	*135-3879*	1	EXTENSION GP-EXHAUST	159
Y	*8X-1736*	1	FASTENER GP-BOTTOM GUARD	511
Y	*247-4019*	1	FASTENER GP-ELECTRONICS (MONITOR ECM)	224
Y	*253-1580*	1	FASTENER GP-FENDER	514
Y	*253-0417*	1	FASTENER GP-FIXED AXLE	411
Y	*246-6241*	1	FASTENER GP-HANDHOLD	515
Y	*8X-1741*	1	FASTENER GP-OSCILLATING AXLE	412
Y	*165-4012*	1	FASTENER GP-ROPS	981
Y	*250-5850*	1	FILTER & MTG GP-CASE DRAIN (STEERING PUMP)	669
Y	*245-1305*	1	FILTER & MTG GP-POWER TRAIN (TORQUE CONVERTER, TRANSMISSION)	416
Y	*245-0719*	1	FILTER & MTG GP-STEERING (HIGH PRESSURE SCREENS)	672
Y	*101-3756*	1	FITTING GP-FUEL TANK	176
Y	*267-4456*	1	FUMES DISPOSAL GP	77
Y	*252-6962*	1	GUARD GP-BRAKE LINES (FRONT)	533
Y	*8X-0026*	1	GUARD GP-POWER TRAIN (TRANSMISSION)	537
Y	*246-6240*	1	HANDHOLD GP	985
Y	*133-6503*	1	INDICATOR GP-AIR FILTER CHANGE	160
Y	*264-2280*	1	LIFTING GP-MACHINE	547
Y	*160-4337*	1	LIGHTING GP-FLOOD (2-LAMP, PLATFORM)	245
Y	*247-4024*	1	LIGHTING GP-FLOOD (6-LAMP, FRONT FENDER)	247
Y	*247-4394*	1	LIGHTING GP-FLOOD (2-LAMP, REAR)	249
Y	*247-4395*	1	LIGHTING GP-FLOOD (8-LAMP, ROPS)	250
Y	*252-0197*	1	LIGHTING GP-STOP (2-LAMP, REAR)	256

MACHINE ARRANGEMENT

245-8813 **INSTALLATION AR-FIELD** *(contd.)* **i02294650**

NOTE	PART NUMBER	QTY	PART NAME 1 2 3 4 5 6 (PRODUCT LEVEL)	SEE PAGE
Y	*138-4339*	1	LINES GP-BRAKE COOLING (FRONT AXLE)	627
Y	*138-4340*	1	LINES GP-BRAKE COOLING (REAR AXLE)	630
Y	*8X-1720*	1	LINES GP-SERVICE BRAKE (REAR)	641
Y	*152-8971*	1	LINES GP-SERVICE BRAKE (FRONT)	643
Y	*107-0257*	1	MIRROR GP-LH	1010
Y	*107-0256*	1	MIRROR GP-RH	1012
Y	*249-9177*	1	MOUNTING GP-PLATFORM (CAB ACCESS)	1023
Y	*245-1565*	1	PIN & SEAL GP-LINKAGE	913
Y	*133-6613*	1	PRECLEANER GP	168
Y	*245-1564*	1	SENSOR & MTG GP-LIFT POSITION	266
Y	*246-6150*	1	SHAFT GP-DRIVE (REAR)	466
Y	*246-6235*	1	STEP GP	589
Y	*262-7811*	1	WALKWAY GP	599
Y	*251-5830*	1	WIRING GP-FILTERS (POWER TRAIN, STEERING CASE DR)	331
Y	*265-4124*	1	WIRING GP-MONITOR	353
Y	*250-3837*	1	WIRING GP-SENSOR (AXLE OIL TEMPERATURE)	380
	266-2486	1	COVER GP	
M	**8T-4133**	22	NUT (M10X1.5 THD)	
M	**8T-4195**		BOLT (M10X1.5X30-MM)	
	8T-4897	4	WASHER (10.2X35X6-MM THK)	
	256-9970	2	FENDER AS	
			(EACH INCLUDES)	
M	**8T-3490**	48	NUT-WELD (M10X1.5-THD)	
	242-1886	1	FENDER AS (RH)	
	5G-8759	2	BOSS (M16X40-MM)	
M	**8T-3490**	9	NUT-WELD (M10X1.5-THD)	
M	**8T-3597**	8	NUT-WELD (M12X1.75 THD)	
	242-1887	1	FENDER AS (LH)	
	5G-8759	2	BOSS (M16X40-MM)	
M	**8T-3490**	9	NUT-WELD (M10X1.5-THD)	
M	**8T-3597**	8	NUT-WELD (M12X1.75 THD)	

M-METRIC PART
Y-SEPARATE ILLUSTRATION

<END>

ENGINE ARRANGEMENT

240-7750 ENGINE AR

S/N: 8WM1-UP

PART OF 245-8812 CHASSIS AR-REAR

SMCS-1000 **i02374872**

NOTE	PART NUMBER	QTY	PART NAME 1 2 3 4 5 6 (PRODUCT LEVEL)	SEE PAGE
Y	*107-7197*	1	AFTERCOOLER GP-TREATED WATER	155
Y	*117-0071*	1	AIR COMPRESSOR GP	9
YR	**177-9953**	2	ALTERNATOR GP-CHARGING (24-VOLT, 80-AMPERE)	195
Y	*102-9793*	1	BELT TIGHTENER GP	11
Y	*124-5513*	1	BREATHER GP (CRANKCASE)	72
			S/N: 8WM1-710	
Y	*267-4484*	1	BREATHER GP (CRANKCASE)	73
			S/N: 8WM711-UP	
Y	*106-4595*	1	CAMSHAFT GP	13
Y	*230-1081*	1	COMPRESSOR & MTG GP-REFRIG	966
Y	*157-2841*	1	CONNECTION GP-WATER	112
Y	*230-1077*	1	CONTROL & MTG GP-ENGINE ELEK	206
Y	*100-8007*	1	COOLER GP-ENGINE OIL	113
YR	**4P-1661**	2	CORE GP-TMSN OIL COOLER	397
Y	*119-6293*	1	COVER GP-CYLINDER BLOCK (CENTRAL STRUCTURE)	14
Y	*143-5128*	1	COVER GP-ENGINE (REAR)	15
Y	*119-6350*	1	COVER GP-FRONT HOUSING	17
Y	*101-0831*	12	COVER GP-VALVE MECHANISM	19
Y	*161-6928*	1	CRANKSHAFT GP	20
Y	*122-5954*	1	CYLINDER BLOCK GP	22
Y	*101-0830*	16	CYLINDER HEAD GP	25
Y	*7E-6140*	1	DAMPER GP	29
Y	*171-8947*	1	DRIVE GP-ACCESSORY (UPPER, LH)	34
Y	*112-6035*	1	DRIVE GP-ACCESSORY (LOWER, RH)	32
Y	*4P-0853*	1	DRIVE GP-ACCESSORY (UPPER, RH)	31
Y	*7E-7521*	1	DRIVE GP-AUXILIARY (LOWER, LH)	36
Y	*102-9792*	1	DRIVE GP-FAN	38
	252-6508	1	ELECTRONICS GP-ENGINE RATINGS	
Y	*119-6363*	1	FILLER GP-ENGINE OIL	74
Y	*257-6347*	1	FILTER GP-ENGINE OIL	75
Y	*246-5564*	1	FILTER GP-FUEL (SECONDARY)	173
Y	*9Y-9202*	1	FLYWHEEL GP	44
Y	*123-6975*	1	GAUGE GP-OIL LEVEL (DIPSTICK)	78
Y	*8N-7174*	1	GEAR GP-FRONT	45
Y	*124-8395*	1	GEAR GP-REAR	47
Y	*267-4459*	1	GUARD GP-BELT (AIR CONDITIONER COMPRESSOR)	51
			S/N: 8WM700-UP	
Y	*246-5579*	1	GUARD GP-BELT (ALTERNATOR)	49
Y	*7E-6713*	1	HEATER GP-JACKET WATER	229
Y	*157-2840*	1	HOUSING & REGULATOR GP	118
Y	*167-9574*	1	HOUSING GP-FLYWHEEL	52
Y	*4P-5426*	1	HOUSING GP-FRONT (ACCESSORY DRIVE)	54
Y	*7E-6872*	1	LIFTING GP-ENGINE	56
Y	*119-6321*	1	LINES GP-AIR COMPRESSOR	57
Y	*9Y-8902*	1	LINES GP-ENGINE OIL	80
Y	*246-5565*	1	LINES GP-FUEL INJECTION	179
Y	*156-6233*	1	LINES GP-TURBOCHARGER AIR	162
Y	*7E-5337*	1	LINES GP-TURBOCHARGER OIL	86
Y	*167-9562*	1	LINES GP-TURBOCHARGER WATER	123
			S/N: 8WM1-664	
Y	*175-5270*	1	LINES GP-TURBOCHARGER WATER	125
			S/N: 8WM665-UP	
Y	*240-7748*	1	LINES GP-WATER (AFTERCOOLER)	137
Y	*103-0888*	1	LINES GP-WATER (LOWER)	129
Y	*230-1082*	1	LINES GP-WATER (BYPASS)	135
Y	*7E-9221*	1	LINES GP-WATER (UPPER)	127

ENGINE ARRANGEMENT

240-7750 ENGINE AR *(contd.)* i02374872

NOTE	PART NUMBER	QTY	PART NAME 1 2 3 4 5 6 (PRODUCT LEVEL)	SEE PAGE
Y	*117-0040*	1	MANIFOLD GP-EXHAUST	164
Y	*246-5566*	1	MOUNTING GP-ALTERNATOR	59
Y	*117-0060*	1	PAN GP-OIL	61
Y	*160-5910*	16	PISTON & ROD GP	64
			S/N: 8WM1-748	
Y	*253-3066*	16	PISTON & ROD GP	66
			S/N: 8WM749-UP	
Y	*102-9939*	1	PLATE & FILM GP	1090
Y	*1W-0410*	1	PUMP GP-WATER (AFTERCOOLER)	143
Y	*106-9873*	1	PUMP GP-ENGINE OIL (2-SECTION GEAR)	95
Y	*147-0625*	16	PUMP GP-FUEL INJECTION	184
Y	*222-1906*	1	PUMP GP-FUEL PRIMING	185
Y	*8N-6151*	1	PUMP GP-FUEL TRANSFER (1-SECTION GEAR)	188
Y	*8N-2012*	1	PUMP GP-SCAVENGE (FRONT SUMP)	103
Y	*2W-9729*	1	PUMP GP-WATER (JACKET WATER)	144
Y	*7W-3813*	1	SEAL GP-CRANKSHAFT	67
	237-0598	2	SHIELD AS (AFTERCOOLER SEAL)	
Y	*137-8194*	1	STARTING AID GP-ETHER	282
			S/N: 8WM1-710	
Y	*267-4483*	1	STARTING AID GP-ETHER	285
			S/N: 8WM711-UP	
Y	*7E-4722*	1	SUPPORT GP-ENGINE	68
Y	*246-5563*	1	TURBOCHARGER GP	172
Y	*163-2596*	1	VALVE GP-COOLANT SAMPLING	154
Y	*224-9869*	16	VALVE MECHANISM GP	70
Y	*246-5580*	1	WIRING GP-ENGINE	325
			PLEASE USE THE GASKET KIT LINK IN SIS OR CONTACT YOUR LOCAL DEALER FOR THE LATEST GASKET KIT INFORMATION	

R-REMFG PART MAY BE AVAILABLE
Y-SEPARATE ILLUSTRATION

ENGINE ARRANGEMENT

250-7957 INSTALLATION AR-ENGINE

S/N: 4421-UP

PART OF 245-8812 CHASSIS AR-REAR

SMCS-1000 **i02302543**

NOTE	PART NUMBER	QTY	PART NAME 1 2 3 4 5 6 (PRODUCT LEVEL)	SEE PAGE
Y	*249-6834*	1	CONDENSER & MTG GP-REFRIGERANT	970
Y	*179-3642*	1	COOLER GP-HYDRAULIC OIL (HYDRAULIC, STEERING, BRAKE)	746
Y	*249-6780*	1	COOLER GP-TRANSMISSION OIL	396
Y	*132-3484*	1	FAN GP-BLOWER	116
Y	*244-8721*	1	LINES GP-AIR	161
Y	*152-8929*	1	LINES GP-COOLANT	119
Y	*105-4330*	1	LINES GP-WATER (BRAKE COOLER)	133
Y	*249-6867*	1	LINES GP-WATER (RADIATOR)	139
Y	*127-4494*	1	MUFFLER GP	166
Y	*249-6781*	1	RADIATOR GP	146
Y	*9Y-9212*	1	SUPPORT GP-ENGINE	69
	270-8613	1	SUPPRESSION GP-SOUND	

Y-SEPARATE ILLUSTRATION

117-0070 AIR COMPRESSOR GP*R

S/N: 8WM1-UP

PART OF 117-0071 AIR COMPRESSOR GP

SMCS-1803, 1804 **i01972657**

NOTE	REF NO	GRAPHIC REF	PART NUMBER	QTY	PART NAME 1 2 3 4 5 6 (PRODUCT LEVEL)	SEE PAGE
	1	1	**3B-4505**	4	LOCKWASHER	
	2	1	**4P-3977**	1	GASKET-CYLINDER HEAD	
	3	1	**0S-1617**	8	BOLT (5/16-18X0.75-IN)	
	4	1	**4P-3966**	1	PISTON & ROD AS	
	5	1	**6V-0387**	2	PLUG-PIPE	
	6	1	**0L-1352**	6	BOLT (3/8-16X3.25-IN)	
	7	1	**8T-6764**	2	PLUG-PIPE	
	8	1	**2B-2695**	6	BOLT (5/16-18X0.875-IN)	
	9	1	**6N-0634**	1	GASKET-COVER	
	10	1	**7F-2742**	2	BALL BEARING	
	11	1	**115-3629**	1	PAN	
	12	1	**9M-1974**	6	WASHER-HARD (8.8X16X2-MM THK)	
					AVAILABLE REPAIR KIT(S):	
			7E-8923	1	KIT-CRANKSHAFT BEARING (AIR COMPRESSOR) (AIR COMPRESSOR)	
			7E-8925	1	KIT-STANDARD RING (AIR COMPRESSOR) (AIR COMPRESSOR)	
			7E-8926	1	KIT-CYLINDER HEAD (AIR COMPRESSOR) (AIR COMPRESSOR)	

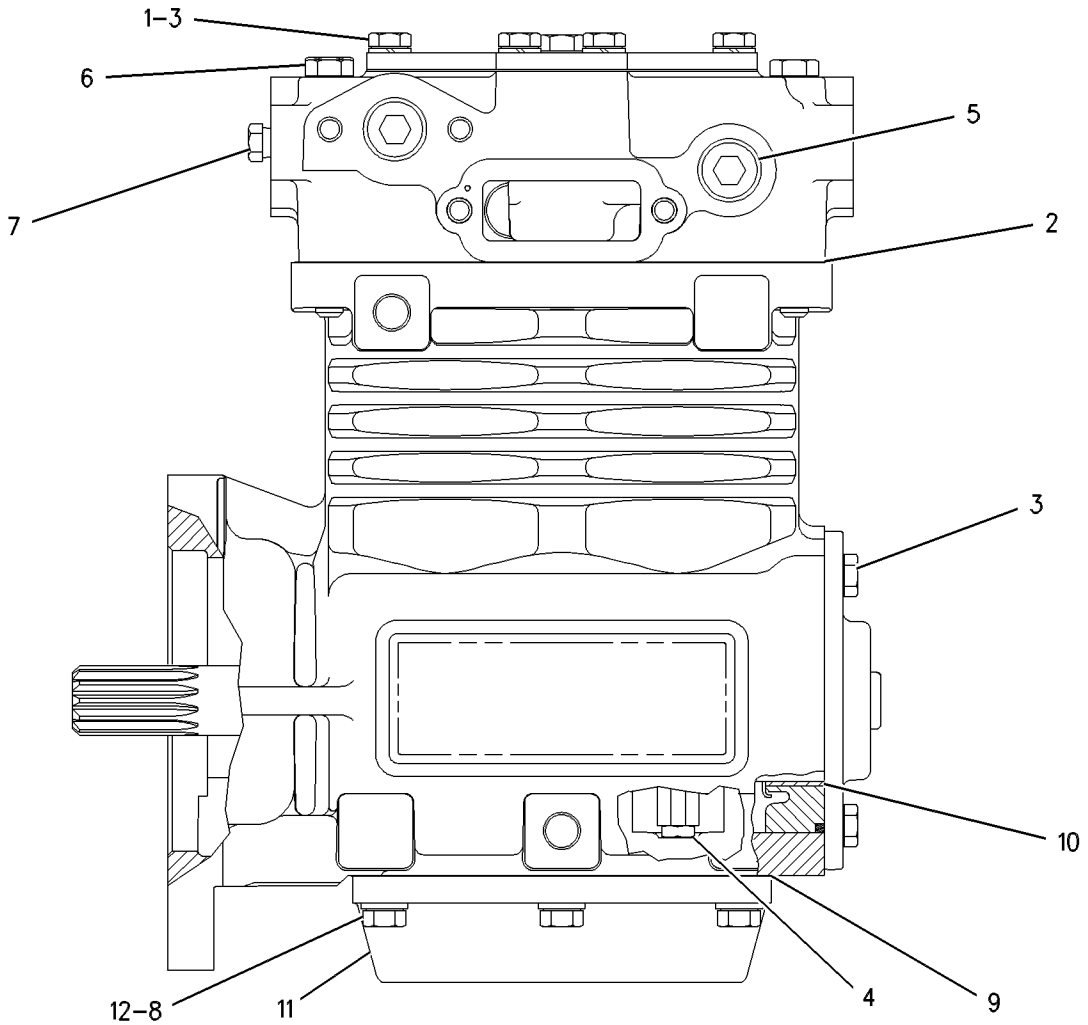

GRAPHIC #1 **<END>** g00583593

117-0071 AIR COMPRESSOR GP

S/N: 8WM1-UP

PART OF 240-7750 ENGINE AR

SMCS-1803, 1804 **i02180135**

NOTE	REF NO	GRAPHIC REF	PART NUMBER	QTY	PART NAME 1 2 3 4 5 6 (PRODUCT LEVEL)	SEE PAGE
YR	1	1	**117-0070**	1	AIR COMPRESSOR GP	8
	2	1	**127-4422**	1	GASKET	
J	3	1	**4N-9680**	1	GOVERNOR GP-AIR COMPRESSOR	
		1	**2S-2923**	1	COVER	
	4	1	**6L-1883**	1	GASKET	
	5	1	**9M-0378**	2	BOLT (5/16-18X2.87-IN)	
	6	1	**9M-1974**	2	WASHER-HARD (8.8X16X2-MM THK)	
	7	1	**5F-5434**	1	VALVE AS-RELIEF (AIR COMPRESSOR)	
	8	1	**8T-6757**	3	PLUG-PIPE	
	9	1	**0S-1587**	3	BOLT (1/2-13X1.75-IN)	
	10	1	**5P-8245**	3	WASHER-HARD (13.5X25.5X3-MM THK)	
					AVAILABLE REPAIR KIT(S):	
J			**9M-0402**	1	KIT-GOVERNOR OVERHAUL (AIR COMPRESSOR)	
					(INCLUDES FILTERS, GROMETS, SPRING, & VALVE)	

J-KIT MARKED J SERVICES PART MARKED J
R-REMFG PART MAY BE AVAILABLE
Y-SEPARATE ILLUSTRATION

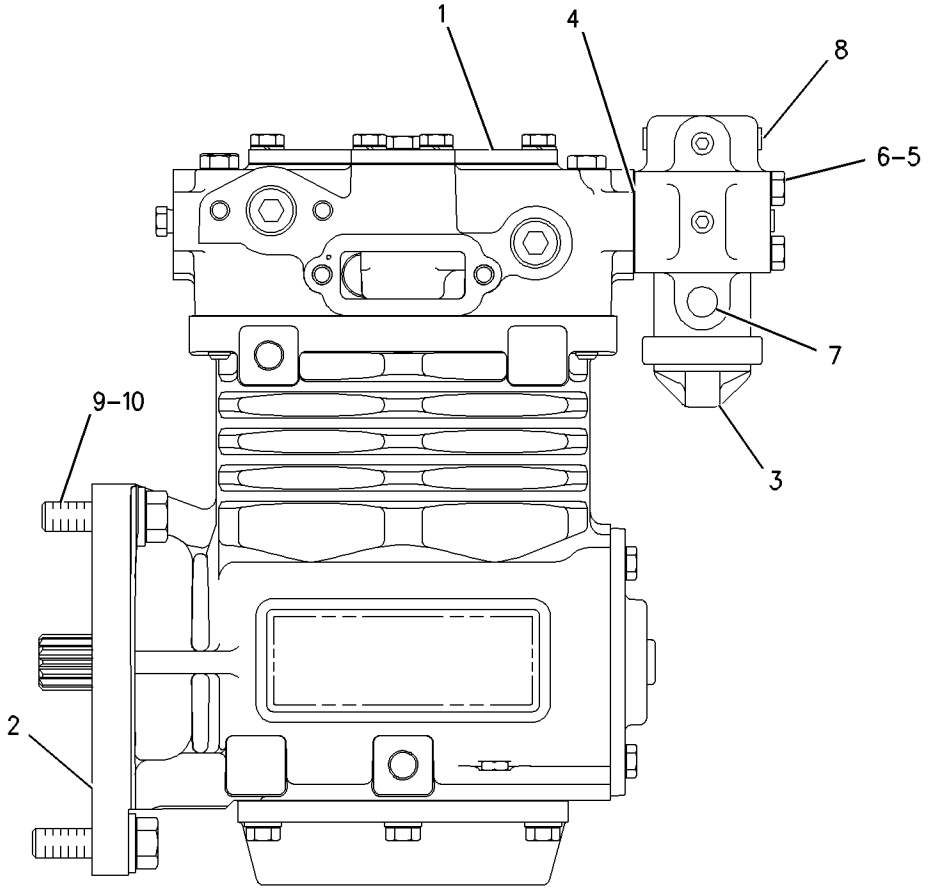

GRAPHIC #1 **<END>** g00684664

247-8341 BASE GP-VALVE COVER

S/N: 8WM1-UP

PART OF 224-9869 VALVE MECHANISM GP

SMCS-1120 **i02152443**

NOTE	REF NO	GRAPHIC REF	PART NUMBER	QTY	PART NAME 1 2 3 4 5 6 (PRODUCT LEVEL)	SEE PAGE
	1	1	**119-0839**	1	SPACER (17.5X30.94X98-MM)	
	2	1	**6V-6228**	3	SEAL-O-RING	
	3	1	**119-0838**	1	SPACER (17.5X30.94X98-MM)	
	4	1	**247-8340**	1	BASE AS	
	4A	1	**120-4339**	1	WASHER-SPRING	
	4B	1	**8N-4387**	1	DOWEL-HOLLOW	

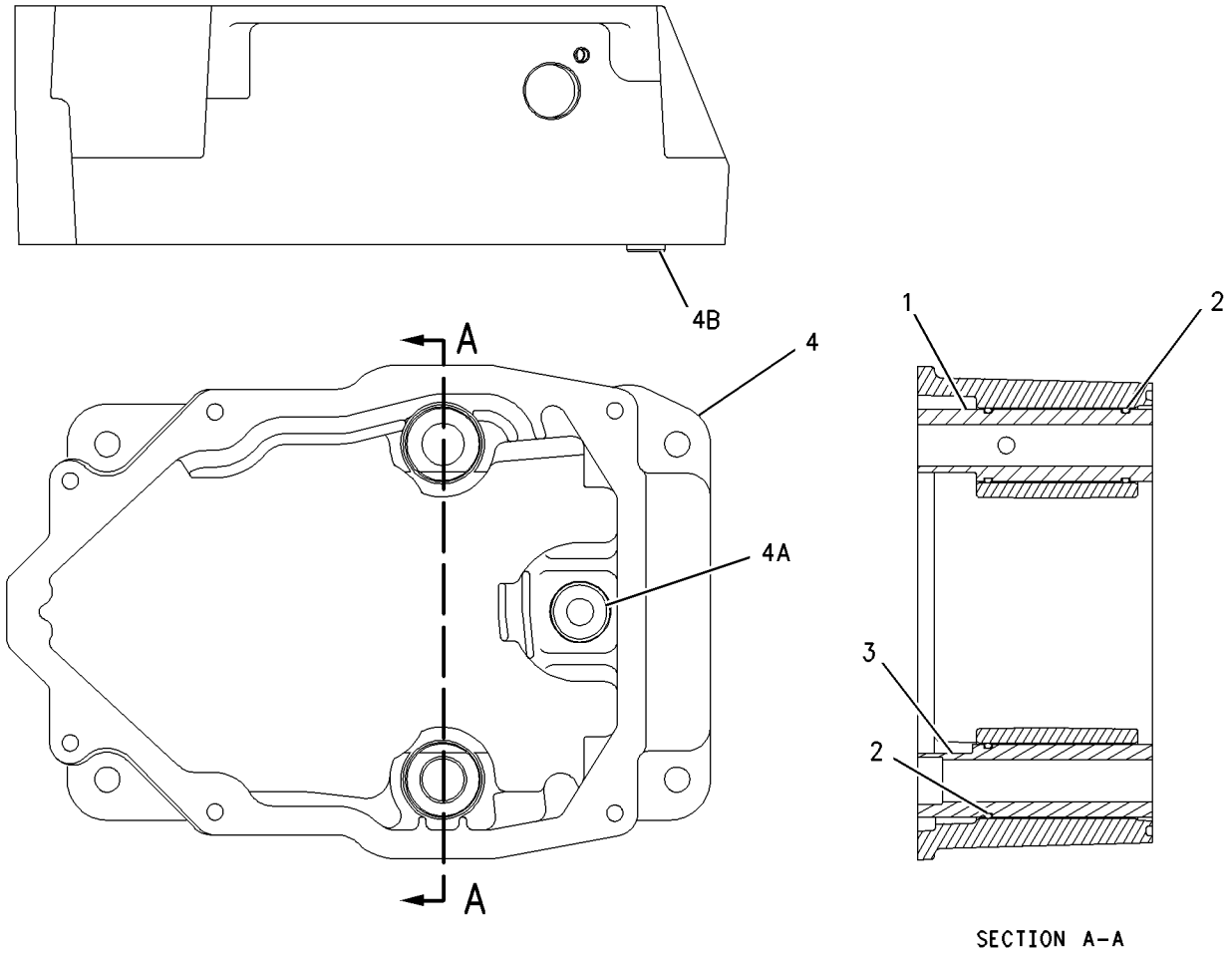

GRAPHIC #1 **<END>** g00842340

BASIC ENGINE

102-9793 BELT TIGHTENER GP

S/N: 8WM1-UP

PART OF 240-7750 ENGINE AR

SMCS-1358 **i02056098**

NOTE	REF NO	GRAPHIC REF	PART NUMBER	QTY	PART NAME 1 2 3 4 5 6 (PRODUCT LEVEL)	SEE PAGE
	1	1	**8N-9409**	1	COVER	
	2	1	**0L-2070**	2	BOLT (3/8-16X2.25-IN)	
	3	1	**7W-8460**	1	WASHER-RETAINING	
	4	1	**0S-1617**	4	BOLT (5/16-18X0.75-IN)	
	5	1	**9M-1974**	4	WASHER-HARD (8.8X16X2-MM THK)	
	6	1	**2N-8374**	1	GASKET	
	7	1	**8H-9789**	2	BALL BEARING	
	8	1	**8N-9419**	1	SPACER (18.25-MM THK)	
	9	1	**5S-2106**	1	SEAL-LIP TYPE	
	10	1	**5M-2057**	1	SEAL-O-RING	
	11	1	**8N-9410**	1	SPACER (16-MM THK)	
	12	1	**3B-8153**	2	PIN-CLEVIS	
	13	1	**3B-4617**	2	PIN-COTTER	
	14	1	**104-4772**	1	ARM AS-BELT	
		1	**2D-6642**	1	BALL (6.35MM DIA)	
		1	**4S-5367**	1	BUSHING AS	
		1	**5B-9318**	1	BALL (4.76MM DIA)	
		1	**5M-7937**	1	DOWEL	
	15	1	**0S-1594**	1	BOLT (3/8-16X1-IN)	
	16	1	**3V-3308**	1	WASHER-HARD (10.2X20.5X2.5-MM THK)	
	17	1	**2M-2742**	1	PLATE-RETAINER	
	18	1	**9Y-9385**	1	PULLEY-IDLER	
	19	1	**4B-4550**	1	FITTING-PRESSURE RELIEF	
	20	1	**8L-5008**	1	ELBOW-PIPE	
	21	1	**3B-8686**	1	FITTING-GREASE	
	22	1	**2V-0460**	1	HOSE AS	
	23	1	**4D-1326**	1	LOCKWASHER	
	24	1	**4S-5882**	2	BOLT (1/2-13X7.25-IN)	
	25	1	**5P-8245**	6	WASHER-HARD (13.5X25.5X3-MM THK)	
	26	1	**0S-1595**	2	BOLT (1/2-13X1.25-IN)	
	27	1	**6I-0761**	2	SPRING	
	28	1	**235-0282**	1	BRACKET AS	

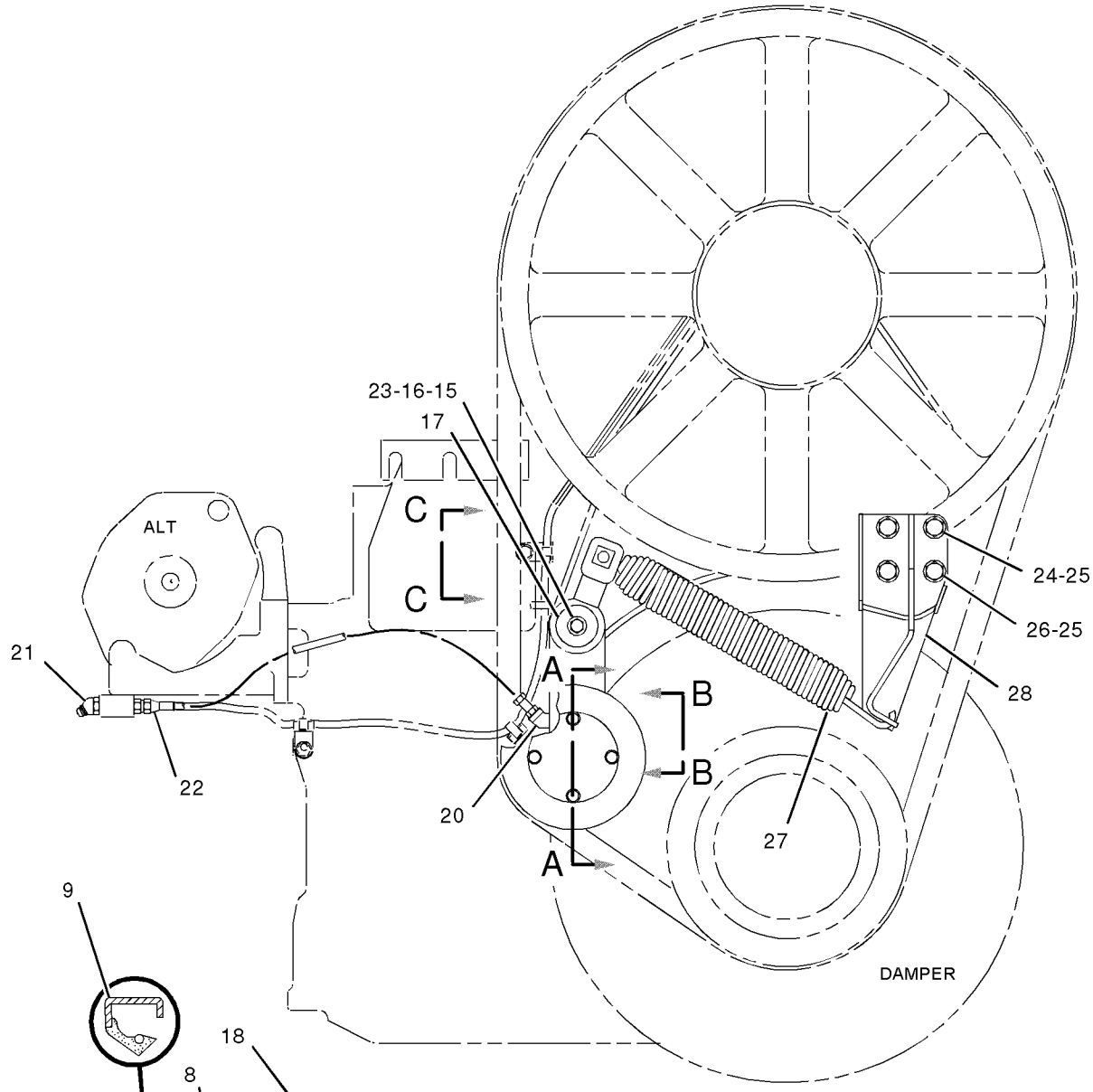

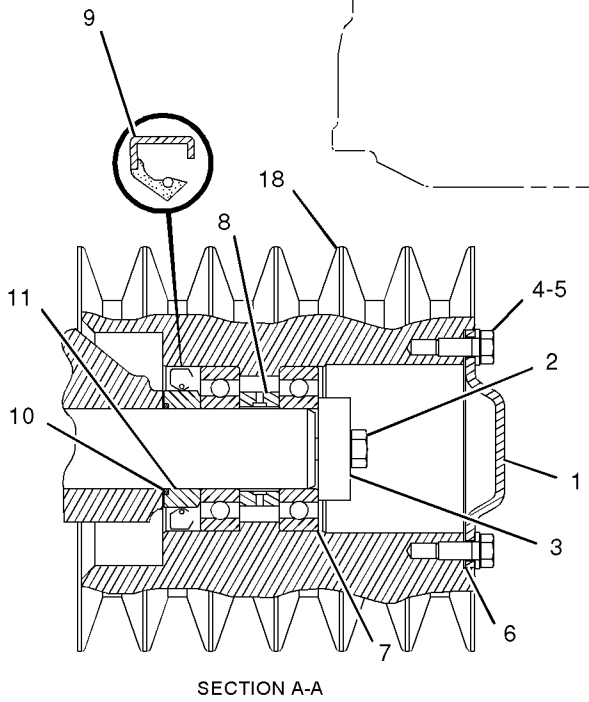

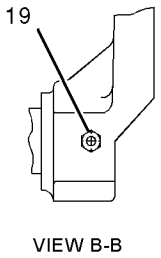

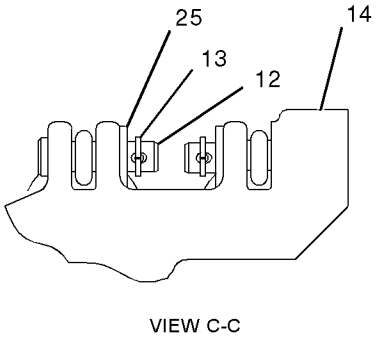

GRAPHIC #1 **<END>** g01055083

BASIC ENGINE

106-4595 CAMSHAFT GP

S/N: 8WM1-UP

PART OF 240-7750 ENGINE AR

SMCS-1210, 1211, 1212 **i02177042**

NOTE	REF NO	GRAPHIC REF	PART NUMBER	QTY	PART NAME 1 2 3 4 5 6 (PRODUCT LEVEL)	SEE PAGE
	1	1	**7N-3216**	2	SPACER (35.035X84X12-MM THK)	
C	2	1	**0L-1351**	4	BOLT (3/8-16X0.875-IN)	
R	3	1	**127-8260**	1	CAMSHAFT AS	
		1	**4N-1650**	1	DOWEL	
	4	1	**5P-0076**	16	BOLT-12 POINT HEAD (3/8-16X1.5-IN)	
R	5	1	**127-8261**	1	CAMSHAFT AS	
		1	**5B-5821**	1	DOWEL	
R	6	1	**127-8262**	1	CAMSHAFT AS	
		1	**4N-1650**	1	DOWEL	
C	7	1	**7N-3218**	2	WASHER-THRUST	
	8	1	**4W-6664**	2	PLATE AS-TIMING	
	9	1	**5M-2894**	2	WASHER-HARD (10.2X18.5X2.5-MM THK)	
R	10	1	**133-4081**	1	CAMSHAFT AS	
		1	**5B-5821**	1	DOWEL	
	11	1	**0S-0509**	2	BOLT (3/8-16X0.75-IN)	

C-CHANGE FROM PREVIOUS TYPE
R-REMFG PART MAY BE AVAILABLE

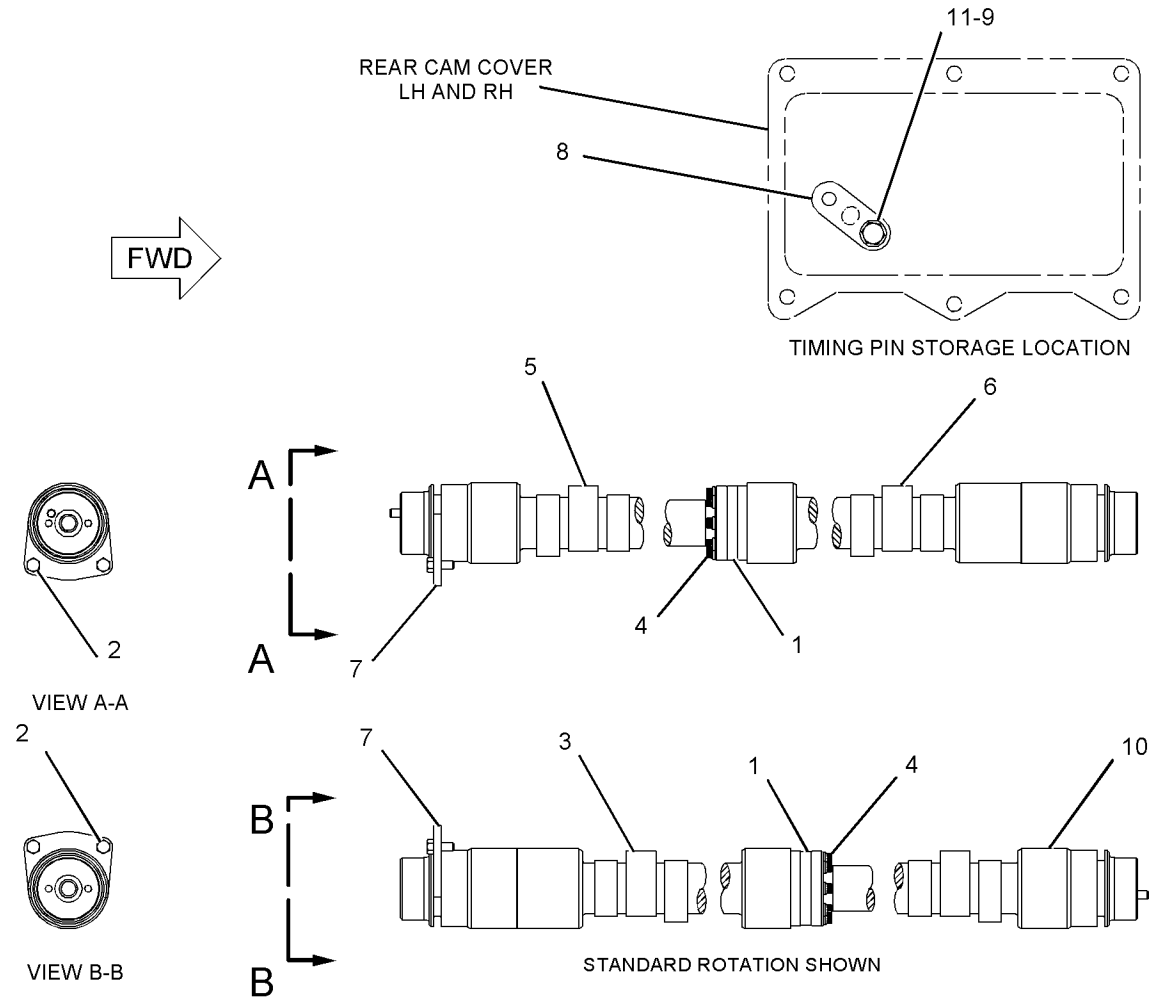

GRAPHIC #1 **<END>** g01102333

BASIC ENGINE

119-6293 COVER GP-CYLINDER BLOCK

S/N: 8WM1-UP

PART OF 240-7750 ENGINE AR

SMCS-1201 **i01719869**

NOTE	REF NO	GRAPHIC REF	PART NUMBER	QTY	PART NAME 1 2 3 4 5 6 (PRODUCT LEVEL)	SEE PAGE
	1	1	**8N-9992**	11	COVER-CAMSHAFT	
	2	1	**0S-1594**	108	BOLT (3/8-16X1-IN)	
	3	1	**208-2362**	16	SEAL	
	4	1	**2W-0752**	1	GASKET	
	5	1	**0S-1588**	4	BOLT (3/8-16X1.25-IN)	
	6	1	**7E-9437**	2	COVER	
	7	1	**7N-4945**	3	GASKET	
	8	1	**4P-0252**	1	COVER-BLOCK	
	9	1	**208-2363**	16	SEAL	
	10	1	**5M-2894**	164	WASHER-HARD (10.2X18.5X2.5-MM THK)	
	11	1	**1N-2914**	16	COVER-CYLINDER BLOCK SIDE	
	12	1	**8N-9993**	5	COVER-CAMSHAFT	
	13	1	**9X-8872**	64	BOLT-LOCKING (3/8-16X0.875-IN)	
	14	1	**209-5218**	1	BRACKET	
	15	1	**4W-5015**	1	COVER	
	16	1	**0S-1595**	4	BOLT (1/2-13X1.25-IN)	
	17	1	**5P-8245**	4	WASHER-HARD (13.5X25.5X3-MM THK)	

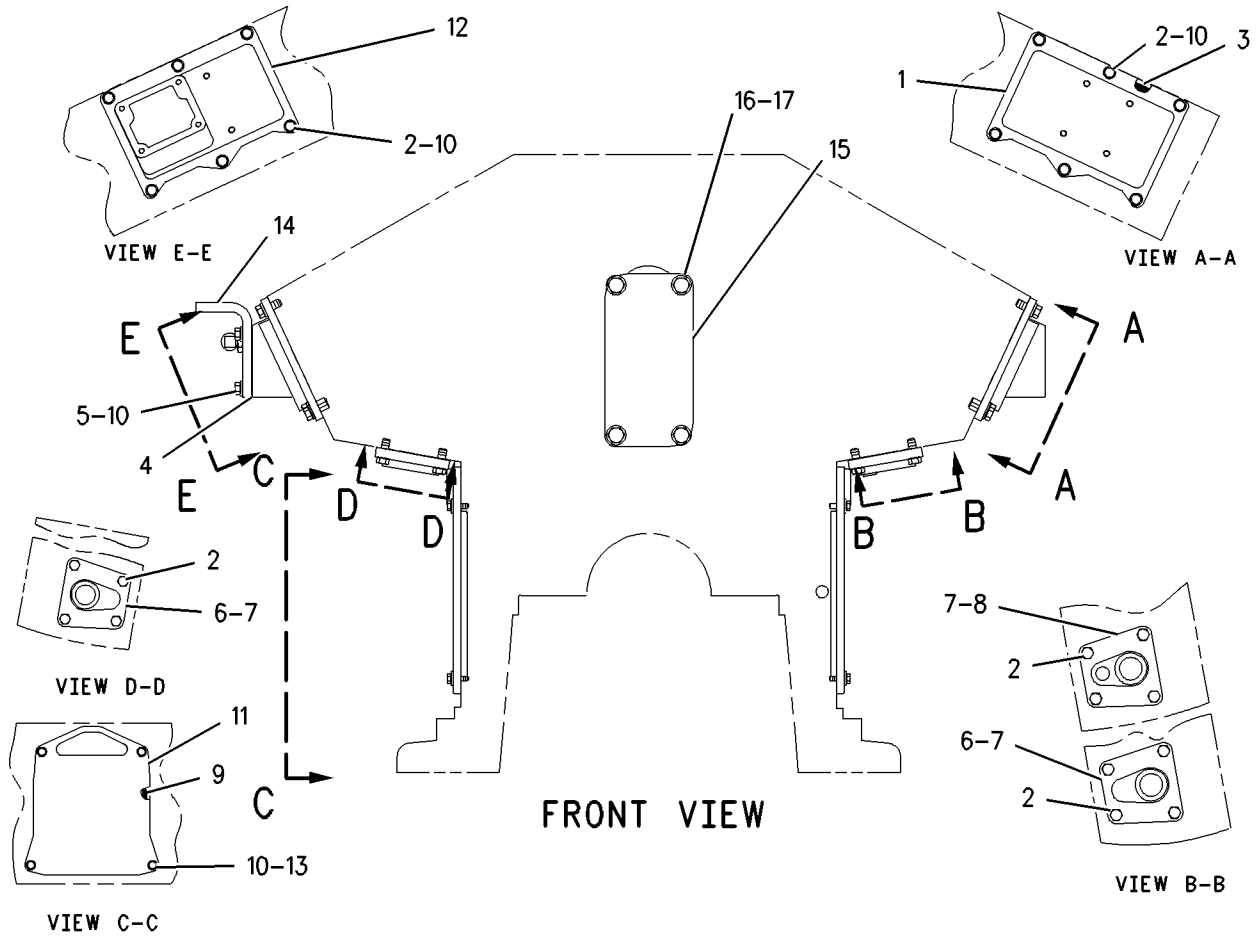

GRAPHIC #1 **<END>** g00802282

BASIC ENGINE

143-5128 COVER GP-ENGINE–REAR

S/N: 8WM1-UP

PART OF 240-7750 ENGINE AR

SMCS-1000 **i01884778**

NOTE	REF NO	GRAPHIC REF	PART NUMBER	QTY	PART NAME 1 2 3 4 5 6 (PRODUCT LEVEL)	SEE PAGE
	1	1	**1W-4954**	1	GASKET-COVER	
	3	1	**4B-3140**	1	COVER	
	4	1	**4B-8407**	3	GASKET	
	5	1	**4N-0933**	1	GASKET	
	6	1	**5F-0304**	2	PLUG	
	7	1	**7E-9784**	1	COVER	
	8	1	**7N-3170**	1	COVER	
	9	1	**7N-4319**	2	COVER	
	10	1	**7N-4320**	2	GASKET	
	14	1	**8T-6765**	1	PLUG-PIPE (1/4-18-THD)	
	15	1	**9L-2662**	1	GASKET	
	16	1	**9L-4234**	1	SPACER (0.406X1X0.962-IN THK)	
	17	1	**104-4767**	1	ADAPTER	
	18	1	**104-4768**	1	COVER	
	19	1	**0S-1591**	4	BOLT (3/8-16X1.5-IN)	
	20	1	**0S-1594**	39	BOLT (3/8-16X1-IN)	
	21	1	**0T-0055**	1	BOLT (3/8-16X4.25-IN)	
	22	1	**1F-7958**	4	NUT-FULL (1/2-13-THD)	
	23	1	**2J-6274**	1	SEAL-O-RING	
	25	1	**3D-0490**	4	STUD-TAPERLOCK (1/2-13X1.97-IN)	
	26	1	**3F-5792**	1	SEAL-O-RING	
	28	1	**5M-2894**	44	WASHER-HARD (10.2X18.5X2.5-MM THK)	
	29	1	**5P-8245**	4	WASHER-HARD (13.5X25.5X3-MM THK)	

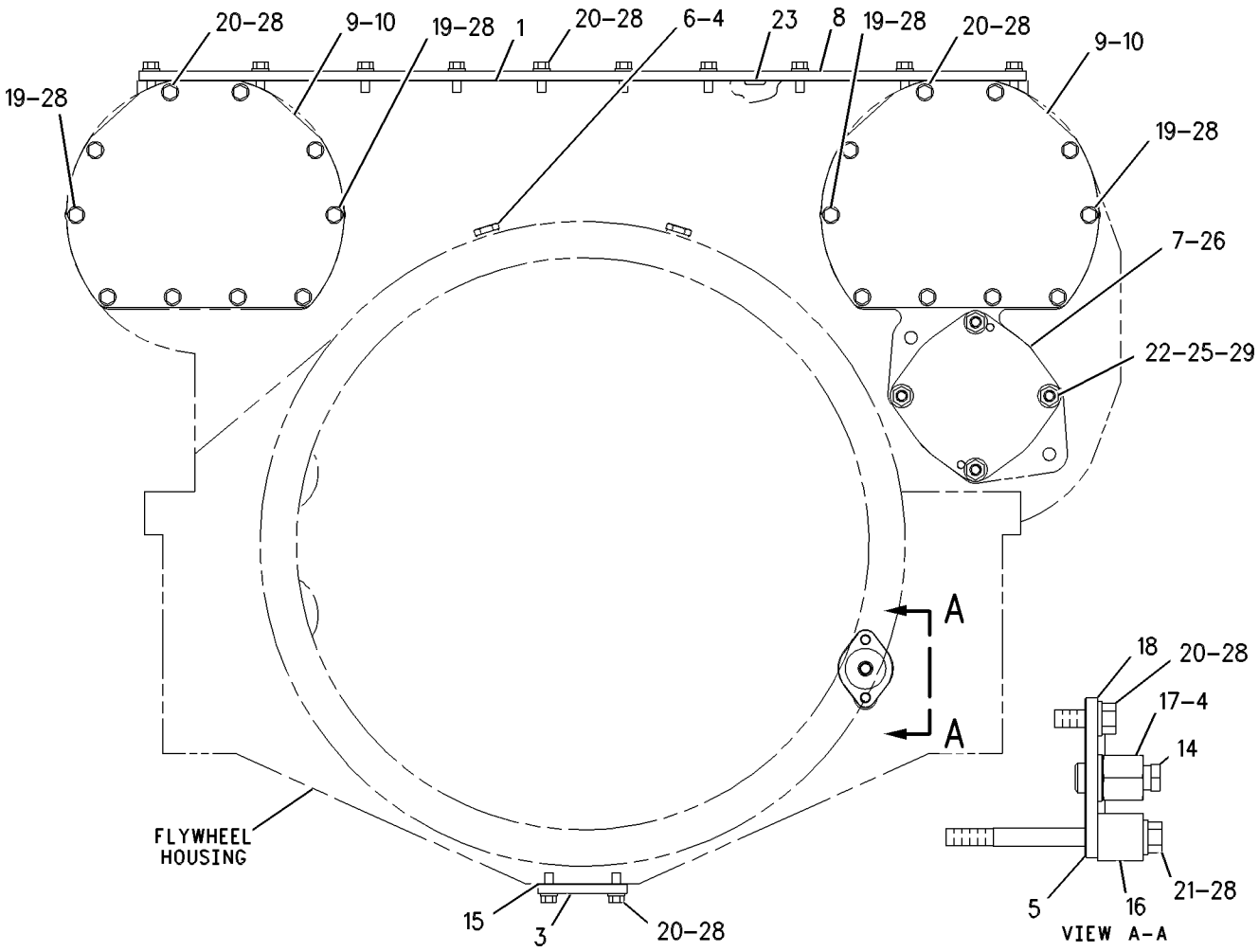

GRAPHIC #1 **<END>** g00505686

119-6350 COVER GP-FRONT HOUSING

S/N: 8WM1-UP

PART OF 240-7750 ENGINE AR

SMCS-1151, 1166 **i02100099**

NOTE	REF NO	GRAPHIC REF	PART NUMBER	QTY	PART NAME 1 2 3 4 5 6 (PRODUCT LEVEL)	SEE PAGE
	1	1	**7N-4951**	1	COVER	
	2	1	**235-3546**	1	SEAL-O-RING	
	3	1	**6V-3348**	1	SEAL-O-RING	
	4	1	**1A-2029**	15	BOLT (3/8-16X1.125-IN)	
	5	1	**5M-2894**	15	WASHER-HARD (10.2X18.5X2.5-MM THK)	
	6	1	**7N-4952**	1	COVER	
	7	1	**235-3548**	1	SEAL-O-RING	
	8	1	**5P-0840**	1	SEAL-O-RING	
	9	1	**3P-1896**	2	PLUG-CUP	
	10	1	**106-4685**	1	COVER	
	11	1	**8N-9885**	1	GASKET-DRIVE HOUSING	
	12	1	**9S-4191**	1	PLUG-O RING	
	13	1	**3D-2824**	1	SEAL-O-RING	
	14	1	**9S-4183**	1	PLUG	
	15	1	**033-6042**	1	SEAL-O-RING	
	16	1	**8T-6763**	1	PLUG-PIPE	

119-6350 **COVER GP-FRONT HOUSING** *(contd.)* **i02100099**

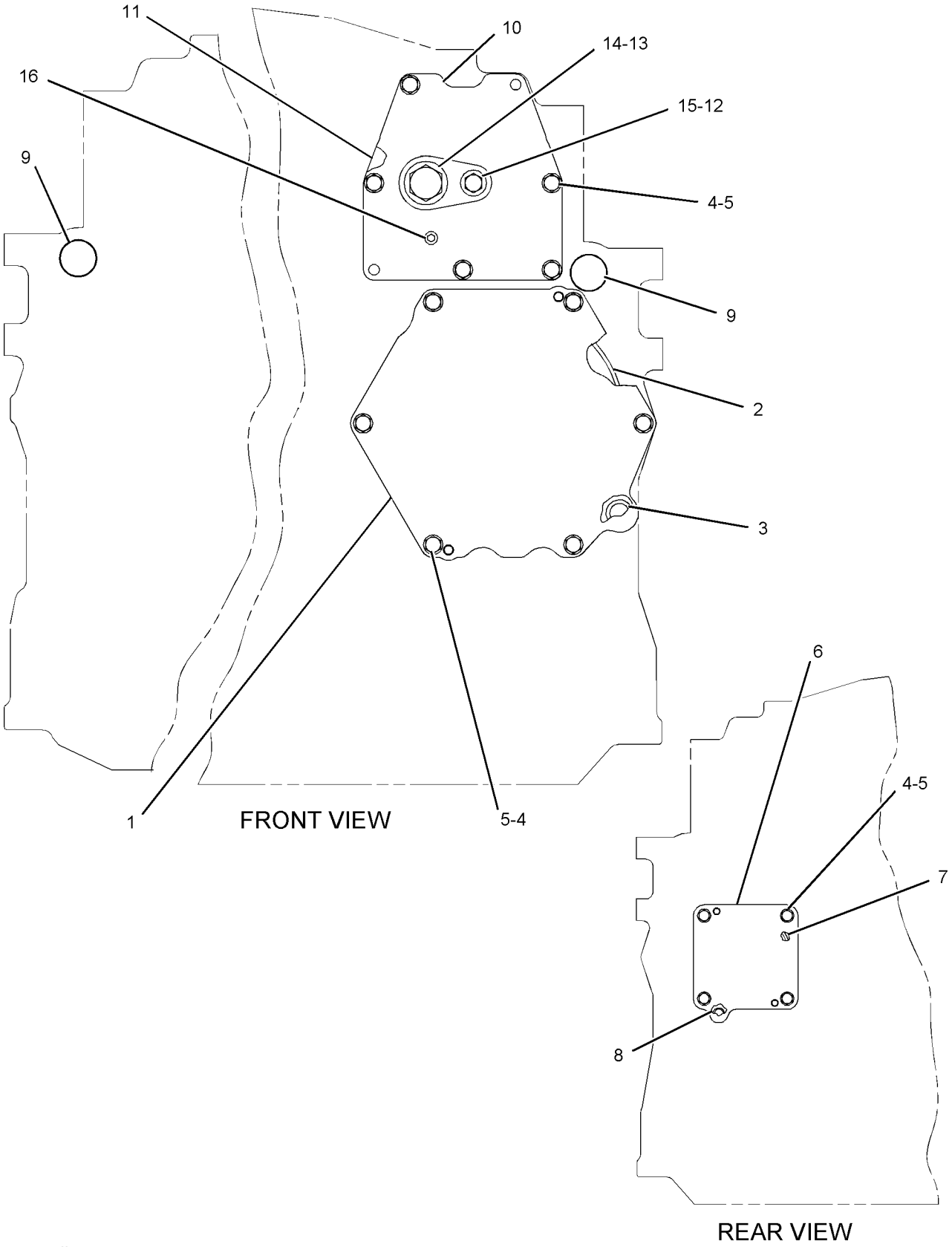

GRAPHIC #1 **<END>** g01070655

BASIC ENGINE

101-0831 COVER GP-VALVE MECHANISM

S/N: 8WM1-UP

PART OF 240-7750 ENGINE AR

SMCS-1107 **i02180140**

NOTE	REF NO	GRAPHIC REF	PART NUMBER	QTY	PART NAME 1 2 3 4 5 6 (PRODUCT LEVEL)	SEE PAGE
	1	1	**101-4197**	1	COVER	
	2	1	**1A-9579**	3	BOLT (5/16-18X1.5-IN)	
	3	1	**9M-1974**	3	WASHER-HARD (8.8X16X2-MM THK)	
	4	1	**208-2364**	1	SEAL (VALVE COVER)	
B	5	1	**1A-9579**	1	BOLT (5/16-18X1.5-IN)	
B	6	1	**9M-1974**	1	WASHER-HARD (8.8X16X2-MM THK)	

B-USE AS REQUIRED

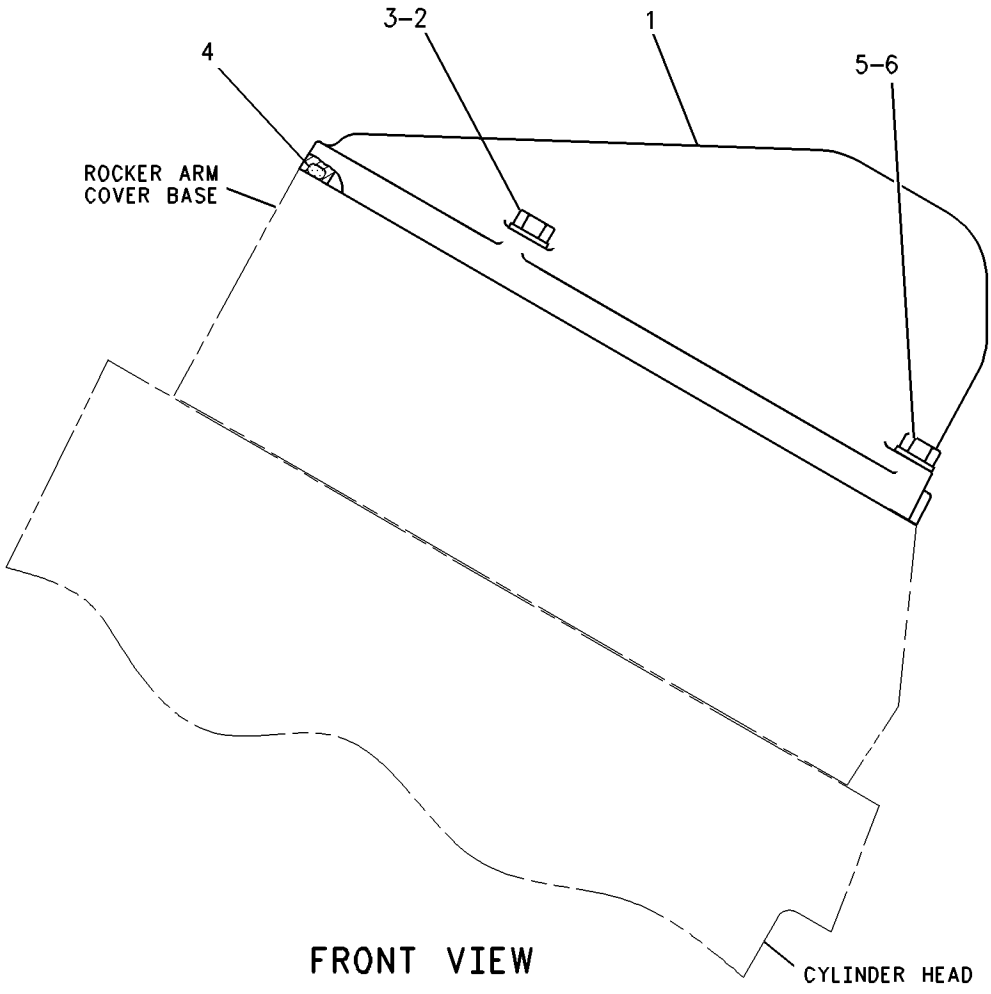

GRAPHIC #1 **<END>** g00773092

161-6928 CRANKSHAFT GP

S/N: 8WM1-UP

PART OF 240-7750 ENGINE AR

SMCS-1202 **i02174283**

NOTE	REF NO	GRAPHIC REF	PART NUMBER	QTY	PART NAME 1 2 3 4 5 6 (PRODUCT LEVEL)	SEE PAGE
	1	1	**172-0916**	1	CRANKSHAFT AS	
	1A	1	**2W-2288**	8	PLUG	
	1B	1	**7N-2003**	32	DOWEL	
	1C	1	**128-4845**	48	BOLT AS	
J	2	1	**149-6031**	9	BEARING AS-MAIN (STANDARD) (CRANKSHAFT)	
AB		1	**149-6032**		BEARING-MAIN (0.63-MM US ID) (CRANKSHAFT)	
AB		1	**149-6033**		BEARING-MAIN (1.27-MM US ID) (CRANKSHAFT)	
AB		1	**149-6034**		BEARING-MAIN (0.63-MM OS OD) (CRANKSHAFT)	
AB		1	**149-6035**		BEARING-MAIN (0.63-MM US ID - 0.63-MM OS OD) (CRANKSHAFT)	
J	3	1	**7C-6209**	2	PLATE-THRUST	
					AVAILABLE REPAIR KIT(S):	
J			**196-9531**		KIT-BASIC ENGINE REPAIR (MAIN BEARING)	
					(INCLUDES THRUST PLATES AND MAIN BEARINGS)	

A-NOT PART OF THIS GROUP
B-USE AS REQUIRED
J-KIT MARKED J INCLUDES PARTS MARKED J

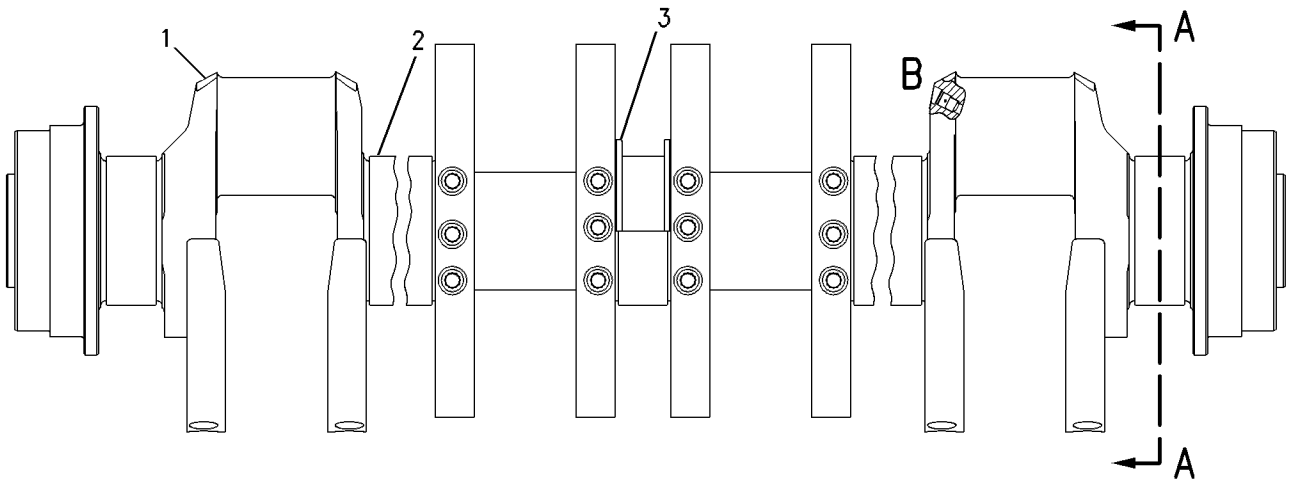

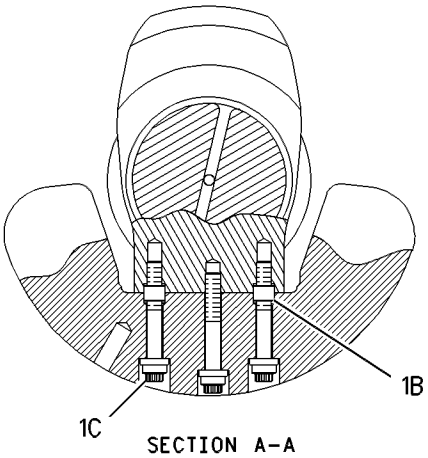

SECTION A-A

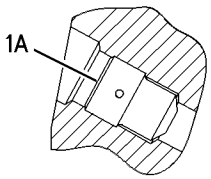

VIEW OF AREA B

GRAPHIC #1 **<END>** g00614916

BASIC ENGINE

101-1173 CYLINDER BLOCK AS

S/N: 8WM1-UP

PART OF 122-5954 CYLINDER BLOCK GP

SMCS-1201 **i02220745**

NOTE	REF NO	GRAPHIC REF	PART NUMBER	QTY	PART NAME 1 2 3 4 5 6 (PRODUCT LEVEL)	SEE PAGE
	1	1	**8N-4707**	16	BAND-FILLER	
	2	1	**223-1696**	9	CAP-CRANKSHAFT BEARING	
	3	1	**7X-7925**	36	BOLT (7/8-14X11-IN)	
		1	**5P-8249**	36	WASHER-HARD (24X41.5X4-MM THK)	
	4	1	**4W-4813**	2	PLUG	
	5	1	**8T-2929**	2	SEAL-O-RING	
	6	1	**7N-2046**	48	SEAL-O-RING	
	7	1	**211-7826**	16	LINER-CYLINDER	
	8	1	**8T-2928**	2	SEAL-O-RING	

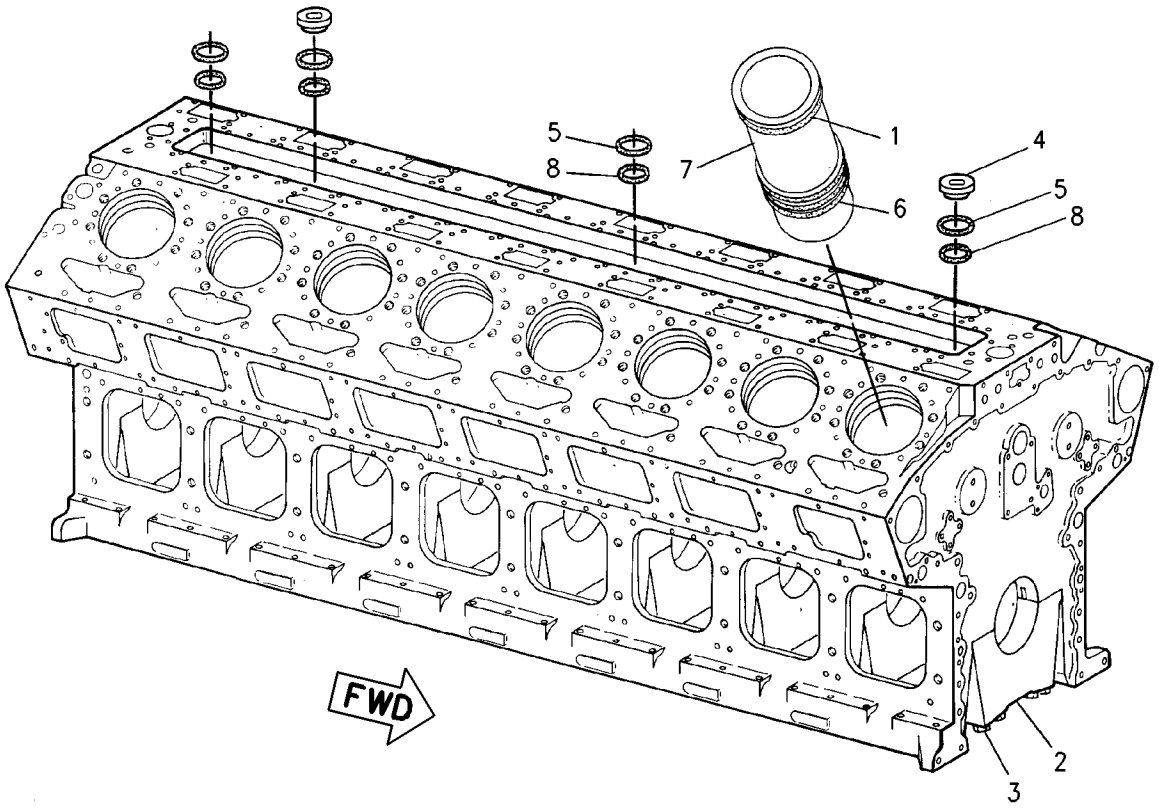

GRAPHIC #1 **<END>** g01003084

BASIC ENGINE

122-5954 CYLINDER BLOCK GP

S/N: 8WM1-UP

PART OF 240-7750 ENGINE AR

SMCS-1201 **i02280198**

NOTE	REF NO	GRAPHIC REF	PART NUMBER	QTY	PART NAME 1 2 3 4 5 6 (PRODUCT LEVEL)	SEE PAGE
Y	1	1	*101-1173*	1	CYLINDER BLOCK AS	21
	2	1	**9M-1974**	16	WASHER-HARD (8.8X16X2-MM THK)	
	3	1	**8T-2929**	2	SEAL-O-RING	
	4	1	**1A-2029**	2	BOLT (3/8-16X1.125-IN)	
	5	1	**7X-7731**	2	PLUG-PIPE	
	6	1	**9S-4191**	6	PLUG-O RING	
	7	1	**2W-2940**	8	PLUG	
	8	1	**7N-2044**	2	DOWEL	
	9	1	**8T-6762**	4	PLUG-PIPE	
	10	1	**5M-2894**	18	WASHER-HARD (10.2X18.5X2.5-MM THK)	
	11	1	**7N-2047**	3	DOWEL	
	12	1	**7X-4805**	3	SEAL-O-RING	
	13	1	**162-3898**	16	TUBE AS (PISTON COOLING JET)	
	14	1	**0T-0102**	16	BOLT (3/8-16X0.625-IN)	
	15	1	**101-1198**	18	BEARING-CAMSHAFT	
	16	1	**4N-0683**	2	DOWEL	
C	17	1	**8T-6763**	26	PLUG-PIPE	
	18	1	**4W-4813**	2	PLUG	
	19	1	**8T-0099**	32	DOWEL	
	20	1	**7N-5641**	2	PLUG-MANIFOLD	
	21	1	**197-7008**	16	DOWEL	
	22	1	**5P-0840**	32	SEAL-O-RING	
	23	1	**144-5692**	16	GASKET-PLATE	
	24	1	**110-6994**	16	PLATE-SPACER	
	25	1	**5F-9657**	4	SEAL-O-RING	
	26	1	**5P-8210**	2	SEAL-O-RING	
	27	1	**0S-1595**	2	BOLT (1/2-13X1.25-IN)	
	28	1	**5P-8245**	2	WASHER-HARD (13.5X25.5X3-MM THK)	
	29	1	**8N-8056**	2	COVER	
	30	1	**6V-3348**	8	SEAL-O-RING	
	31	1	**121-3558**	16	RETAINER AS	
					(EACH INCLUDES)	
		1	**6V-3537**	1	DOWEL	
	32	1	**1B-2790**	16	BOLT (5/16-18X1.375-IN)	
	33	1	**8T-2928**	2	SEAL-O-RING	
	34	1	**153-4906**	6	SEAL-O-RING	

C-CHANGE FROM PREVIOUS TYPE
Y-SEPARATE ILLUSTRATION

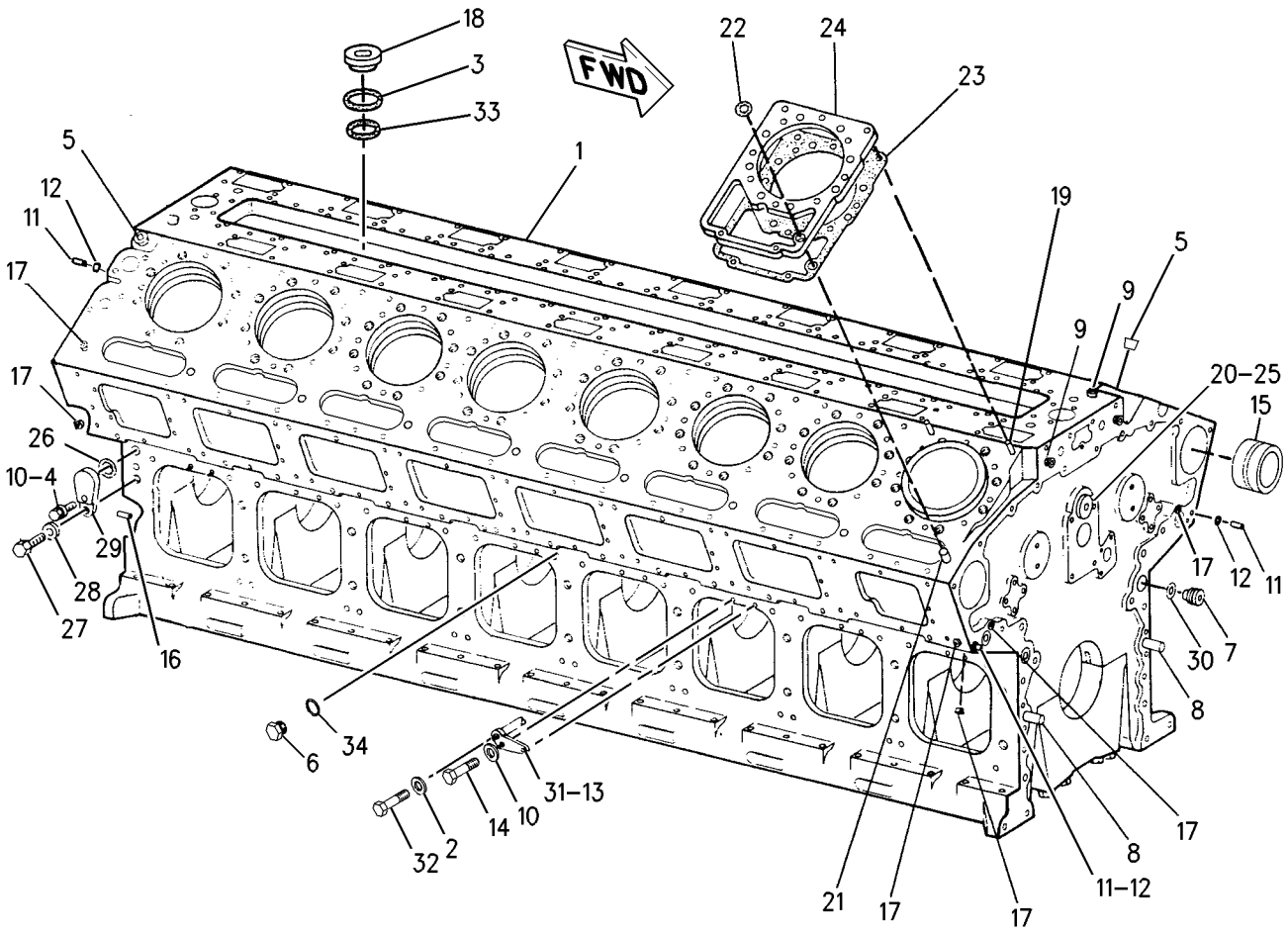

GRAPHIC #1 **<END>** g00680835

BASIC ENGINE

154-1612 CYLINDER HEAD AS

S/N: 8WM1-UP

PART OF 201-4257 CYLINDER HEAD GP

SMCS-1100, 1101 **i02405927**

NOTE	REF NO	GRAPHIC REF	PART NUMBER	QTY	PART NAME 1 2 3 4 5 6 (PRODUCT LEVEL)	SEE PAGE
	1	1	**130-2607**	2	INSERT-VALVE SEAT (STANDARD) (INTAKE)	
AB			**149-1981**		INSERT-VALVE SEAT (0.508-MM OS OD) (INTAKE)	
R	2	1	**130-2608**	2	INSERT-VALVE SEAT (STANDARD) (EXHAUST)	
AB			**166-5945**		INSERT-VALVE SEAT (0.508-MM OS OD) (EXHAUST)	
	3	1	**3J-7354**	4	SEAL-O-RING	
	4	1	**9S-8002**	4	PLUG	
	6	1	**3B-0623**	5	PLUG-CUP	
	7	1	**3B-0645**	5	PLUG-CUP	

A-NOT PART OF THIS GROUP
B-USE AS REQUIRED
R-REMFG PART MAY BE AVAILABLE

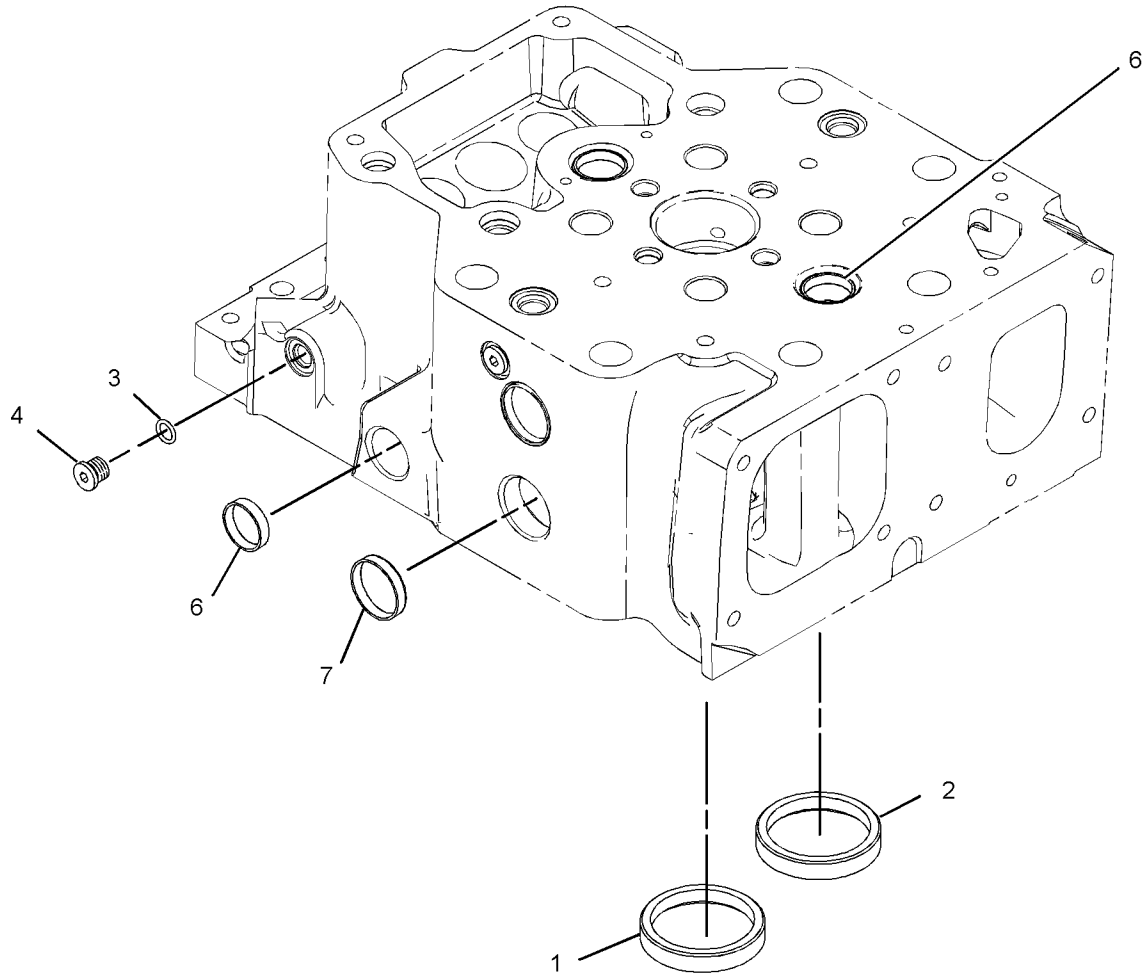

GRAPHIC #1 **<END>** g01205314

BASIC ENGINE

101-0830 CYLINDER HEAD GP

S/N: 8WM1-UP

PART OF 240-7750 ENGINE AR

SMCS-1100 **i02327556**

NOTE	REF NO	GRAPHIC REF	PART NUMBER	QTY	PART NAME 1 2 3 4 5 6 (PRODUCT LEVEL)	SEE PAGE
B	1	1	**5B-7890**	1	PLUG-PIPE	
CYR	2	1	**201-4257**	1	CYLINDER HEAD GP	27
	3	1	**131-0420**	6	FASTENER GP-CYLINDER HEAD	
					(EACH INCLUDES)	
		1	**187-7738**	1	WASHER-HARD (21X36.5X3.5-MM THK)	
		1	**7N-1961**	1	BOLT-12 POINT HEAD (3/4-16X8.5-IN)	
	4	1	**131-0421**	2	FASTENER GP-CYLINDER HEAD	
					(EACH INCLUDES)	
		1	**187-7738**	1	WASHER-HARD (21X36.5X3.5-MM THK)	
		1	**7N-1961**	1	BOLT-12 POINT HEAD (3/4-16X8.5-IN)	
		1	**9Y-0635**	1	SPACER (19.35X30.18X45-MM THK)	
	5	1	**204-5427**	4	SEAL	
	6	1	**5B-0213**	2	BOLT (3/8-16X2.375-IN)	
	7	1	**5M-2894**	2	WASHER-HARD (10.2X18.5X2.5-MM THK)	
	8	1	**110-6991**	1	GASKET-CYLINDER HEAD	
	9	1	**204-5426**	4	SEAL	

B-USE AS REQUIRED
C-CHANGE FROM PREVIOUS TYPE
R-REMFG PART MAY BE AVAILABLE
Y-SEPARATE ILLUSTRATION

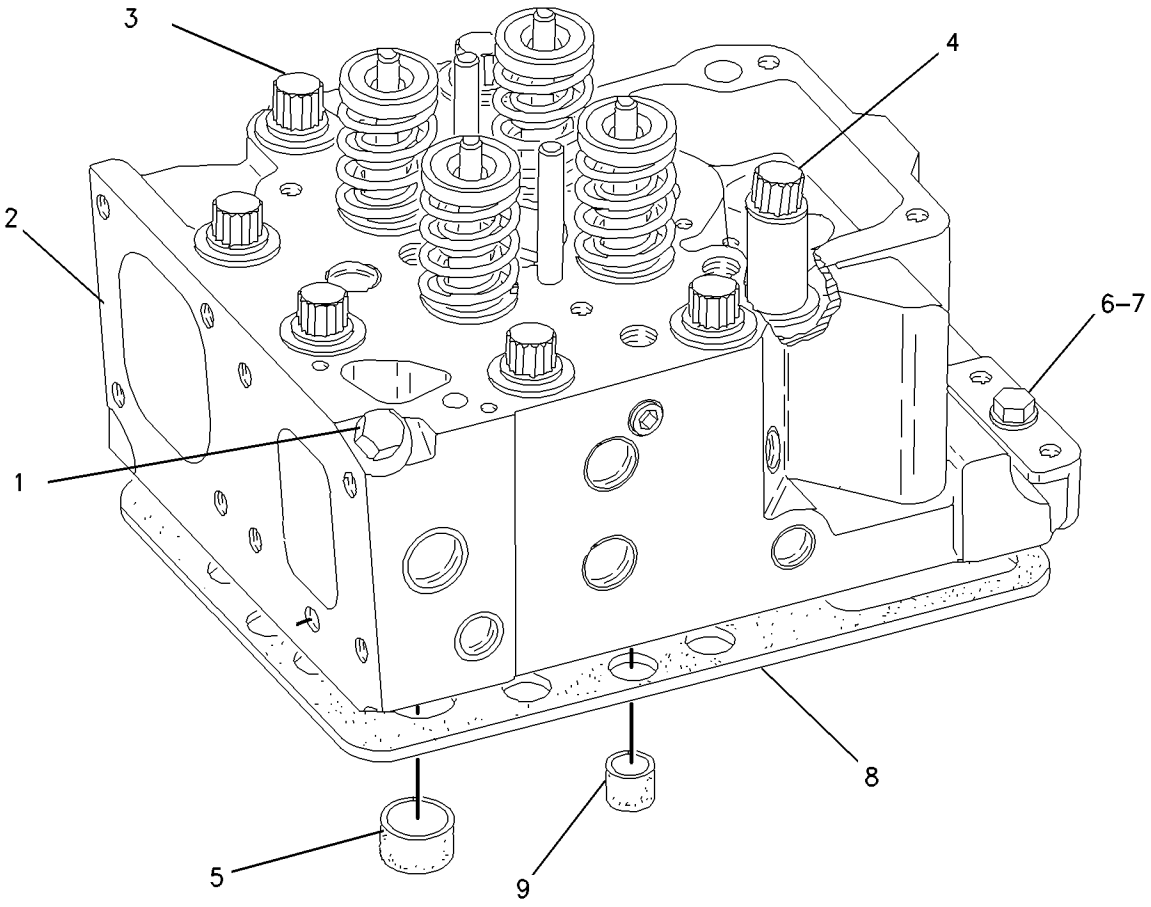

GRAPHIC #1 **<END>** g00903072

201-4257 CYLINDER HEAD GP*R

S/N: 8WM1-UP

PART OF 101-0830 CYLINDER HEAD GP

SMCS-1100 **i02407425**

NOTE	REF NO	GRAPHIC REF	PART NUMBER	QTY	PART NAME 1 2 3 4 5 6 (PRODUCT LEVEL)	SEE PAGE
	1	1	**2A-4429**	4	LOCK-RETAINER (INLET)	
R	2	1	**133-9306**	2	GUIDE-VALVE (STANDARD) (INLET)	
AB		1	**149-1982**		GUIDE-VALVE (0.508-MM OS OD) (INLET)	
ABR		1	**166-5944**		GUIDE-VALVE (0.127-MM OS OD) (INLET)	
Y	3	1	**154-1612**	1	CYLINDER HEAD AS	24
	4	1	**194-4897**	2	VALVE-EXHAUST	
	5	1	**194-4901**	4	SPRING-VALVE (OUTER)	
	6	1	**194-4902**	4	SPRING-VALVE (INNER)	
R	7	1	**197-6995**	2	GUIDE-VALVE (STANDARD) (EXHAUST)	
AB		1	**276-3875**	1	GUIDE-VALVE (0.127-MM OS OD)	
AB		1	**276-3876**	1	GUIDE-VALVE (0.254-MM OS OD)	
	8	1	**197-7006**	2	SEAL-VALVE STEM (INLET)	
	9	1	**197-7055**	4	LOCK-RETAINER (EXHAUST)	
	10	1	**197-7062**	2	ROTOCOIL AS (INLET)	
	11	1	**197-7063**	2	ROTOCOIL AS (EXHAUST)	
	12	1	**209-0962**	2	WASHER (17.8X45X7.29-MM THK)	
	13	1	**210-2542**	2	VALVE-INLET	
	14	1	**8T-6759**	1	PLUG-PIPE	

A-NOT PART OF THIS GROUP
B-USE AS REQUIRED
R-REMFG PART MAY BE AVAILABLE
Y-SEPARATE ILLUSTRATION

201-4257 **CYLINDER HEAD GP** *(contd.)* **i02407425**

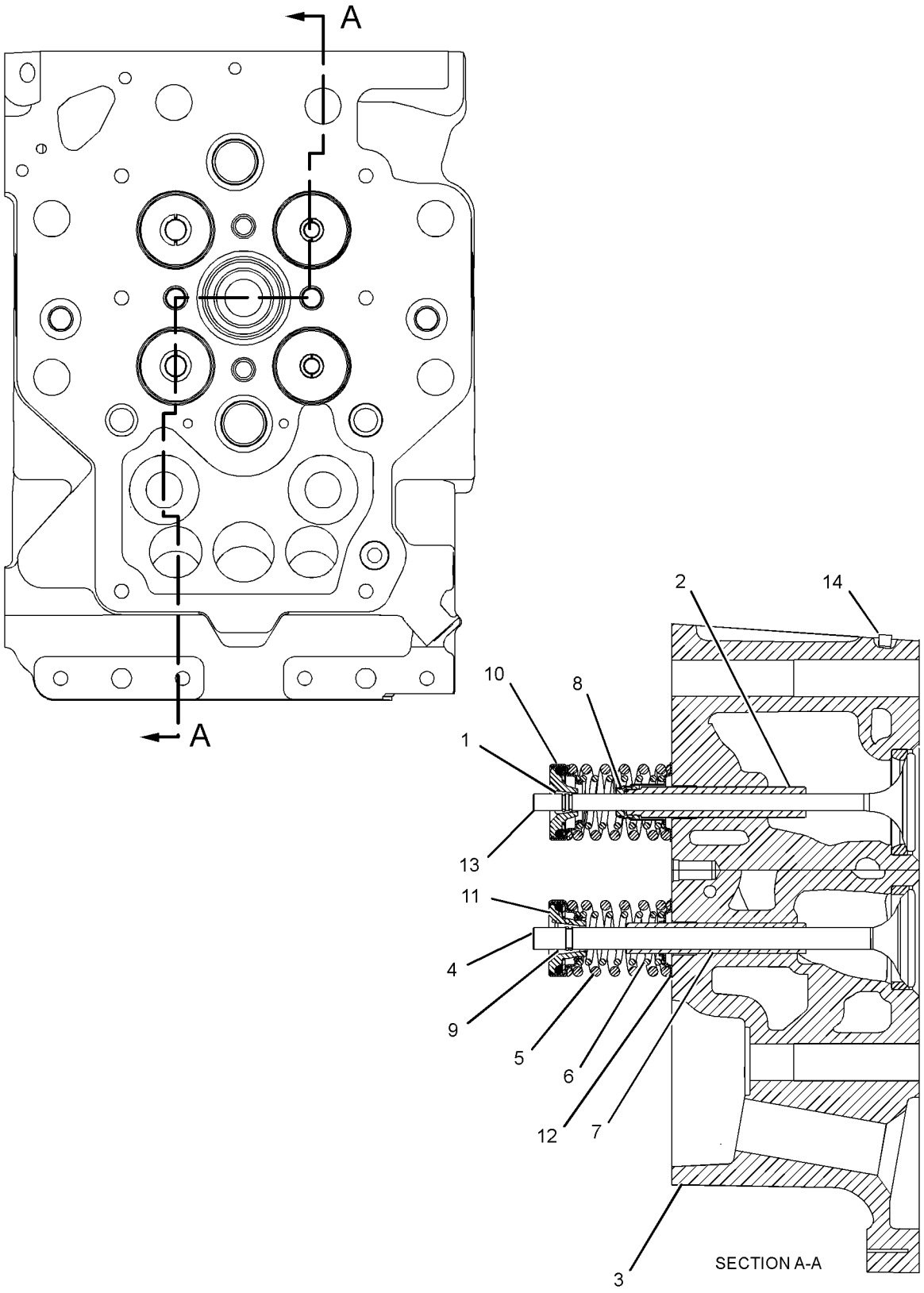

GRAPHIC #1 **<END>** g01202855

BASIC ENGINE

7E-6140 DAMPER GP

S/N: 8WM1-UP

PART OF 240-7750 ENGINE AR

SMCS-1205 **i01412238**

NOTE	REF NO	GRAPHIC REF	PART NUMBER	QTY	PART NAME 1 2 3 4 5 6 (PRODUCT LEVEL)	SEE PAGE
	1	1	**7E-6051**	1	ADAPTER-DAMPER	
C	2	1	**193-3288**	1	DAMPER AS	
	3	1	**7B-3235**	10	BOLT (1/2-13X1.375 IN)	
	4	1	**2M-0849**	10	WASHER-HARD (13.5X25.5X5MM THK)	

C-CHANGE FROM PREVIOUS TYPE

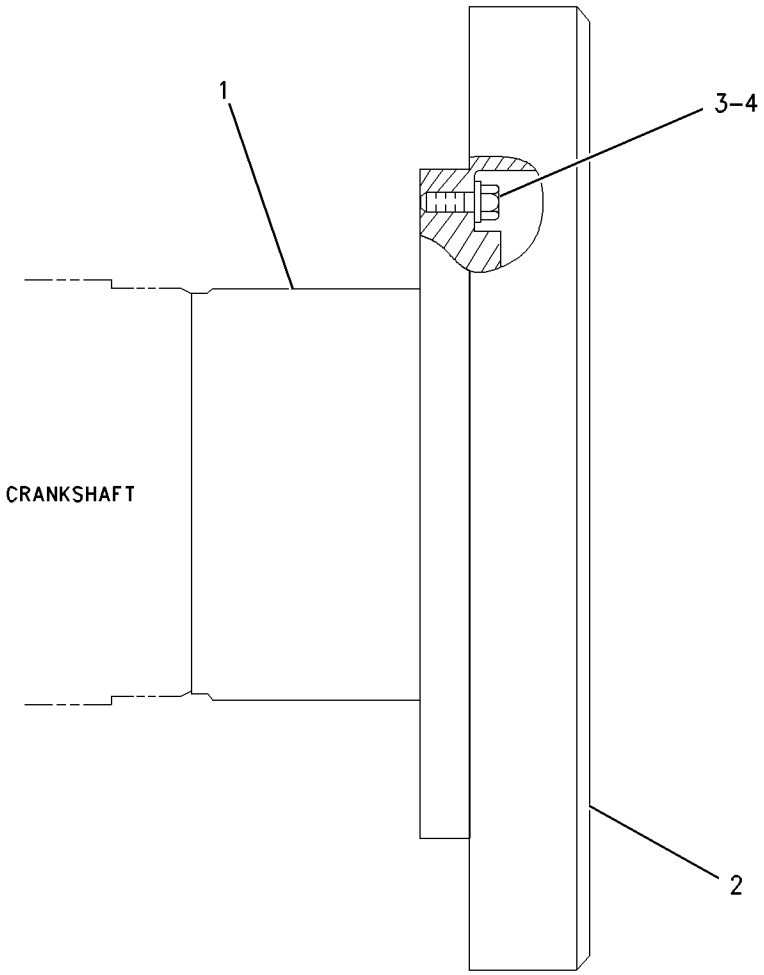

GRAPHIC #1 **<END>** g00743451

BASIC ENGINE

267-4451 DRIVE AR-FAN

S/N: 4421-UP

AN ATTACHMENT

SMCS-1359 **i02357644**

NOTE	PART NUMBER	QTY	PART NAME 1 2 3 4 5 6 (PRODUCT LEVEL)	SEE PAGE
Y	*267-4452*	1	DRIVE GP-FAN	42
Y	*123-6919*	1	LINES GP-ENGINE OIL (FAN DRIVE)	84

Y-SEPARATE ILLUSTRATION

<END>

4P-0853 DRIVE GP-ACCESSORY—UPPER, RH—ALTERNATOR

S/N: 8WM1-UP
STANDARD ROTATION
PART OF 240-7750 ENGINE AR

SMCS-1207 **i02007318**

NOTE	REF NO	GRAPHIC REF	PART NUMBER	QTY	PART NAME 1 2 3 4 5 6 (PRODUCT LEVEL)	SEE PAGE
	1	1	**7C-4164**	1	ADAPTER AS	
	1A	1	**127-5400**	1	BEARING-SLEEVE	
	2	1	**7C-4165**	1	ADAPTER AS	
	2A	1	**7N-5244**	1	BEARING-SLEEVE	
	3	1	**7W-1102**	1	GEAR-ACCESSORY DRIVE (55-TEETH)	
	4	1	**0L-1351**	4	BOLT (3/8-16X0.875-IN)	
	5	1	**0S-1594**	4	BOLT (3/8-16X1-IN)	
	6	1	**235-3546**	1	SEAL-O-RING	
	7	1	**5P-0840**	1	SEAL-O-RING	
	8	1	**6V-3348**	1	SEAL-O-RING	
	9	1	**235-3548**	1	SEAL-O-RING	
	10	1	**8T-6757**	2	PLUG-PIPE	
	11	1	**8T-6759**	1	PLUG-PIPE	

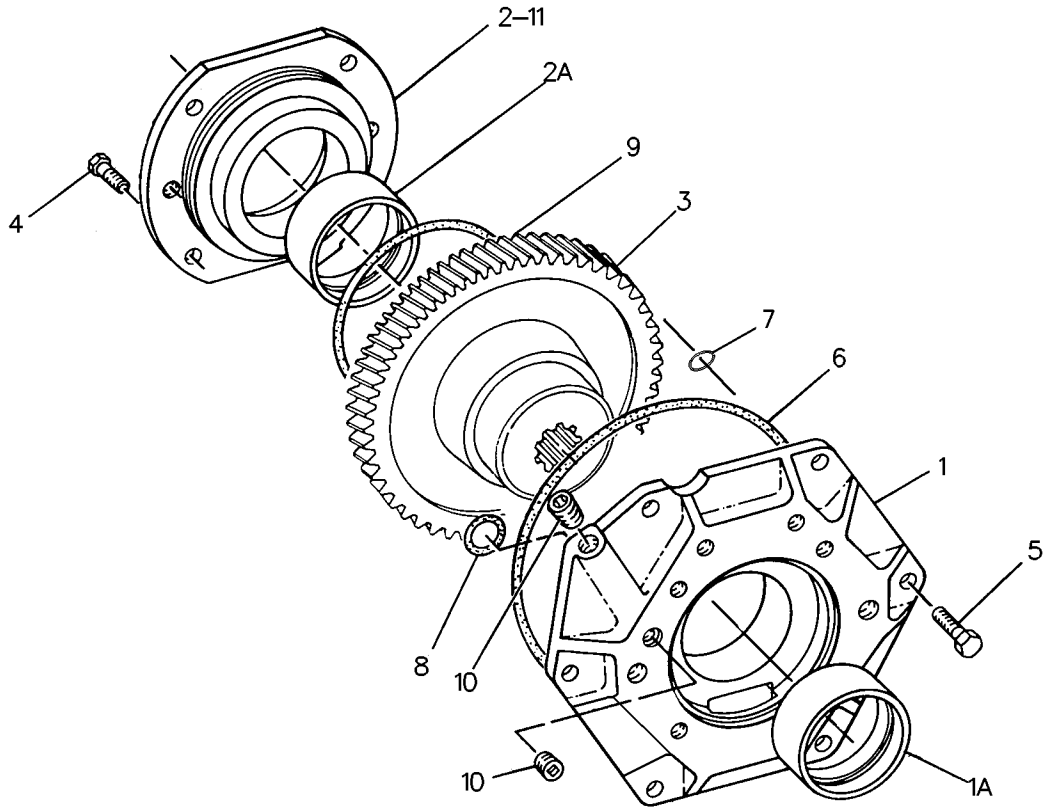

GRAPHIC #1 **<END>** g00994823

112-6035 DRIVE GP-ACCESSORY–A/C COMPRESSOR

S/N: 8WM1-UP

PART OF 240-7750 ENGINE AR

SMCS-1207 **i02404513**

NOTE	REF NO	GRAPHIC REF	PART NUMBER	QTY	PART NAME 1 2 3 4 5 6 (PRODUCT LEVEL)	SEE PAGE
	1	1	**5R-7136**	4	WASHER-SEALING	
	2	1	**112-6036**	1	ADAPTER	
	3	1	**141-7141**	1	PULLEY AS	
		1	**147-0805**	1	SLEEVE	
	4	1	**235-2484**	1	SEAL-LIP TYPE	
	5	1	**0S-1621**	4	BOLT (1/2-13X1-IN)	
	6	1	**0T-0573**	4	BOLT (3/8-16X2.75-IN)	
	7	1	**9X-7371**	1	SEAL-O-RING	
	8	1	**5M-2894**	4	WASHER-HARD (10.2X18.5X2.5-MM THK)	
	9	1	**238-8363**	1	SEAL	

112-6035 **DRIVE GP-ACCESSORY** *(contd.)* **i02404513**

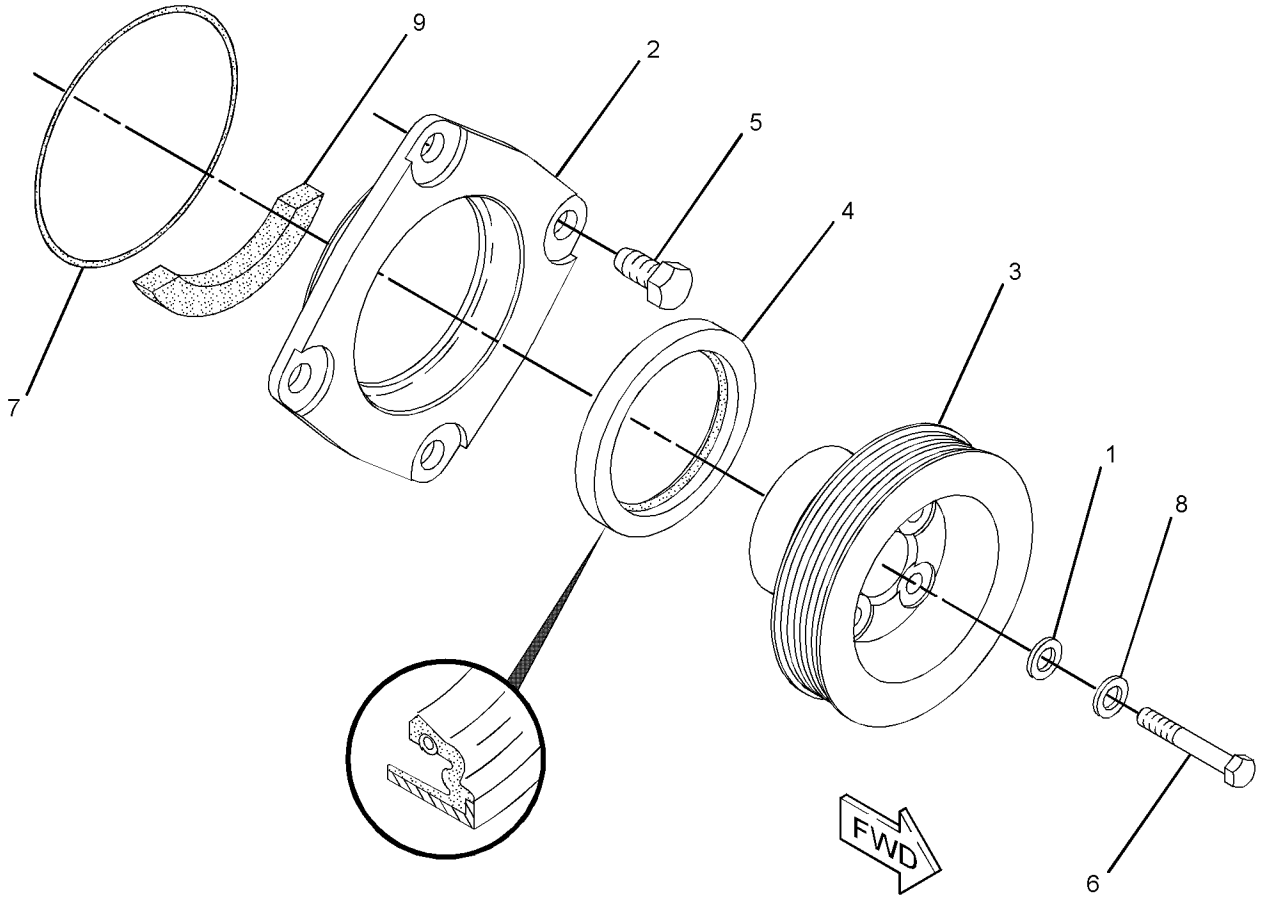

GRAPHIC #1 **<END>** g01201328

BASIC ENGINE

171-8947 DRIVE GP-ACCESSORY—UPPER, LH—ALTERNATOR

S/N: 8WM1-UP

PART OF 240-7750 ENGINE AR

SMCS-1207 **i02170603**

NOTE	REF NO	GRAPHIC REF	PART NUMBER	QTY	PART NAME 1 2 3 4 5 6 (PRODUCT LEVEL)	SEE PAGE
	1	1	**7C-4165**	1	ADAPTER AS	
	1A	1	**127-5400**	1	BEARING-SLEEVE	
	2	1	**107-0466**	1	GEAR-ACCESSORY DRIVE (55-TEETH)	
	3	1	**196-9140**	1	COVER AS	
	3A	1	**2S-7056**	1	BEARING-SLEEVE	
	4	1	**0L-1351**	4	BOLT (3/8-16X0.875-IN)	
	5	1	**0S-1594**	6	BOLT (3/8-16X1-IN)	
	6	1	**235-3546**	1	SEAL-O-RING	
	7	1	**5P-0840**	1	SEAL-O-RING	
	8	1	**6V-3348**	1	SEAL-O-RING	
	9	1	**235-3548**	1	SEAL-O-RING	
	10	1	**8T-6757**	1	PLUG-PIPE	
	11	1	**8T-6759**	1	PLUG-PIPE	

171-8947 **DRIVE GP-ACCESSORY** *(contd.)* **i02170603**

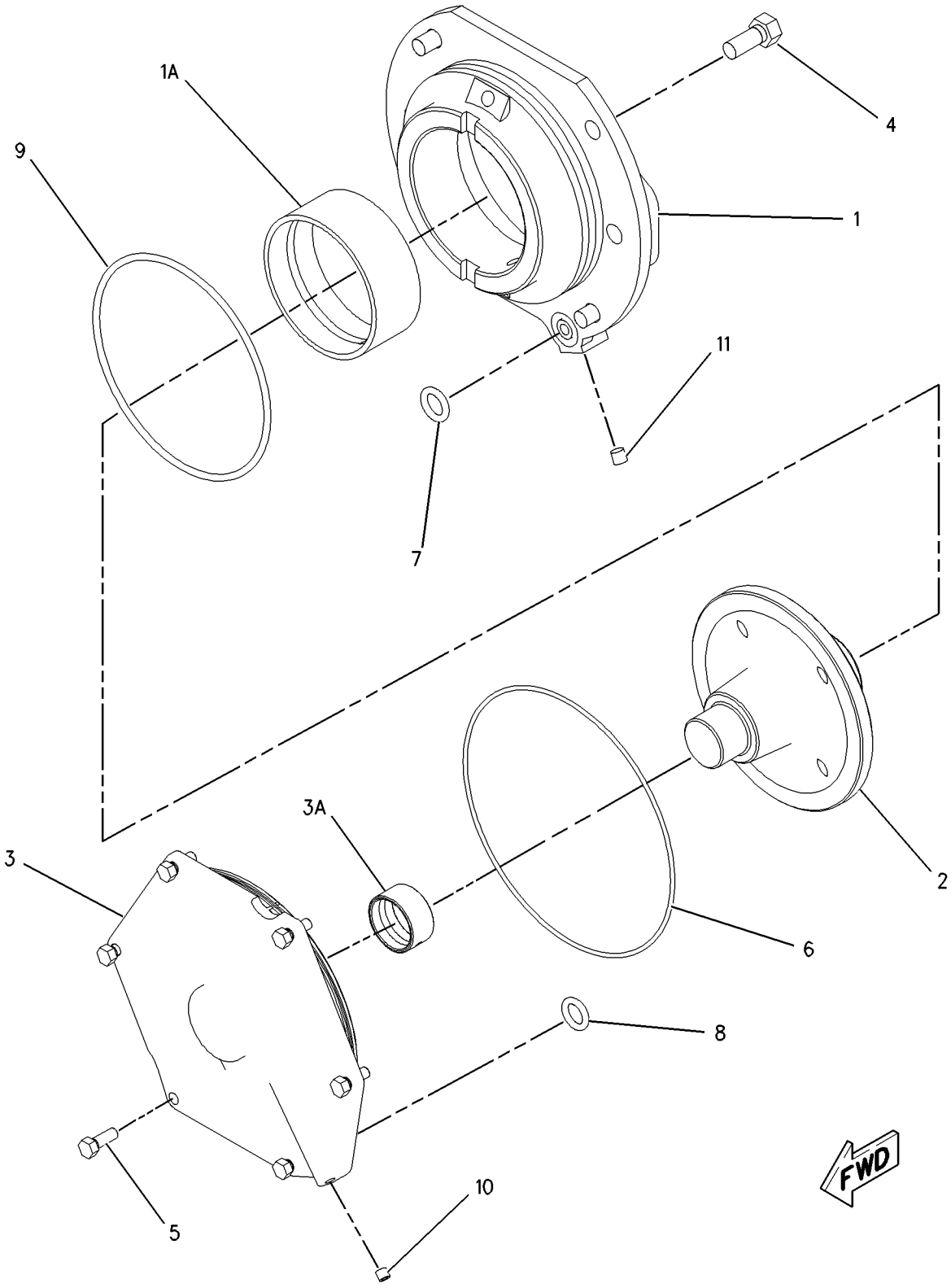

GRAPHIC #1 **<END>** g00723328

7E-7521 DRIVE GP-AUXILIARY—LOWER, LH

S/N: 8WM1-UP

PART OF 240-7750 ENGINE AR

SMCS-1207 **i02292284**

NOTE	REF NO	GRAPHIC REF	PART NUMBER	QTY	PART NAME 1 2 3 4 5 6 (PRODUCT LEVEL)	SEE PAGE
	1	1	**5P-0840**	1	SEAL-O-RING	
	2	1	**5R-7136**	1	WASHER-SEALING	
	3	1	**5R-7137**	2	WASHER-SEALING	
	4	1	**7C-3258**	1	WASHER AS-THRUST	
	4A	1	**7N-2047**	1	DOWEL	
	5	1	**7C-3260**	1	SHAFT	
	6	1	**7E-0275**	1	GEAR-WATER PUMP DRIVE (69-TEETH)	
	7	1	**7N-7539**	2	WASHER-THRUST	
	8	1	**235-3548**	2	SEAL-O-RING	
	9	1	**107-0779**	1	ADAPTER AS	
	9A	1	**127-5400**	1	BEARING-SLEEVE	
	9B	1	**8T-6759**	2	PLUG-PIPE	
	10	1	**122-3211**	1	SHAFT AS-PUMP DRIVE	
C	11	1	**144-8263**	1	GEAR AS-IDLER (53-TEETH)	
	11A	1	**140-9597**	1	BEARING-SLEEVE	
	12	1	**0T-0055**	1	BOLT (3/8-16X4.25-IN)	
	13	1	**1T-0720**	4	BOLT-12 POINT HEAD (3/8-16X1.25-IN)	
	14	1	**2B-2695**	4	BOLT (5/16-18X0.875-IN)	
	15	1	**5M-2894**	1	WASHER-HARD (10.2X18.5X2.5-MM THK)	
	16	1	**5P-8245**	2	WASHER-HARD (13.5X25.5X3-MM THK)	
	17	1	**6K-3771**	12	BOLT-12 POINT HEAD (7/16-14X1.5-IN)	
	18	1	**9M-1974**	4	WASHER-HARD (8.8X16X2-MM THK)	
	19	1	**9X-8879**	2	BOLT (1/2-13X5.5-IN)	

C-CHANGE FROM PREVIOUS TYPE

7E-7521 **DRIVE GP-AUXILIARY** *(contd.)* **i02292284**

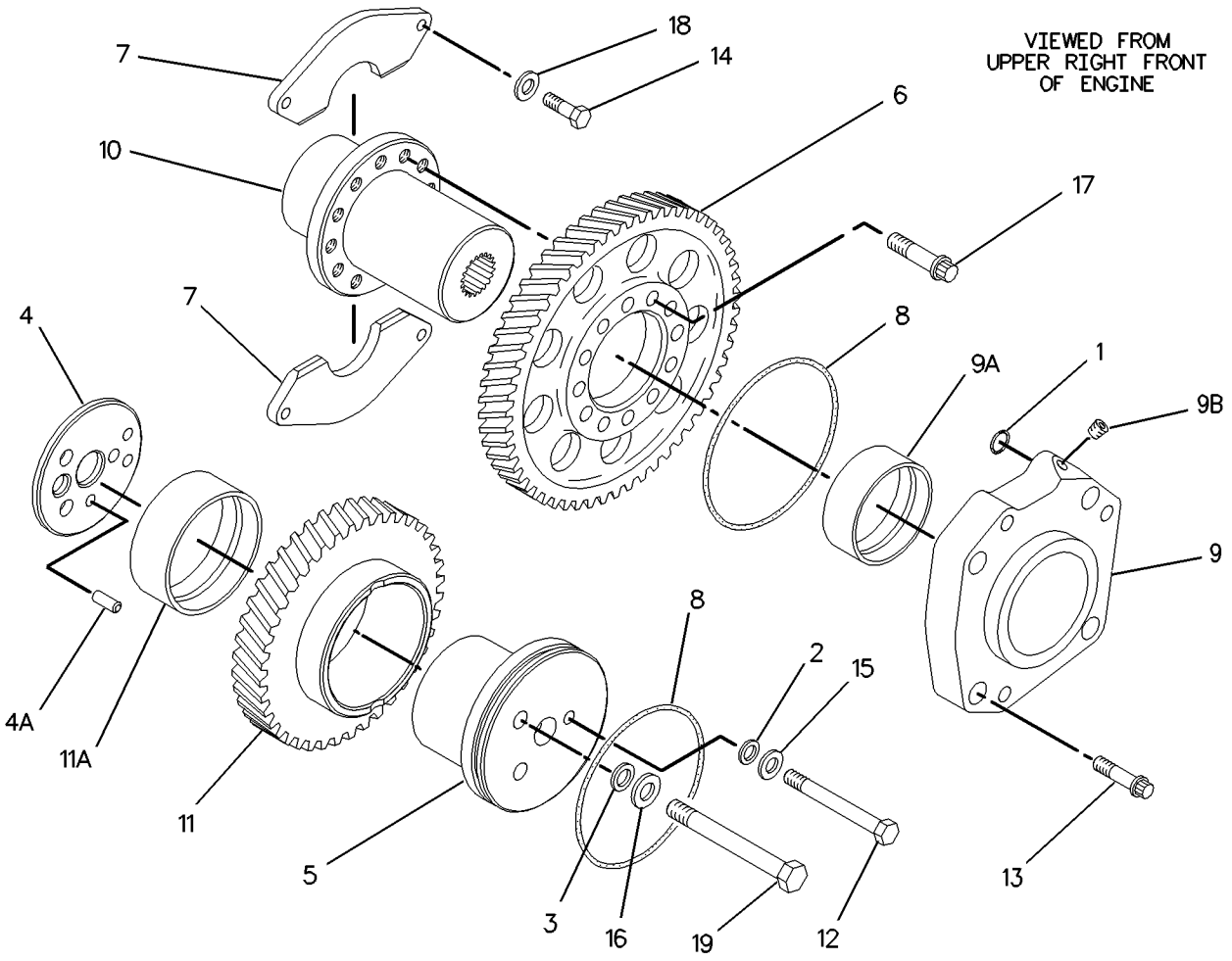

GRAPHIC #1 **<END>** g00889296

BASIC ENGINE

102-9792 DRIVE GP-FAN

S/N: 8WM1-UP

PART OF 240-7750 ENGINE AR

SMCS-1359 **i02149750**

NOTE	REF NO	GRAPHIC REF	PART NUMBER	QTY	PART NAME 1 2 3 4 5 6 (PRODUCT LEVEL)	SEE PAGE
	1	1	**3B-8686**	1	FITTING-GREASE	
	2	1	**4B-4550**	1	FITTING-PRESSURE RELIEF	
	3	1	**5T-4789**	1	HOSE AS	
	4	1	**6Y-7651**	2	CONE-BEARING	
	5	1	**6Y-7652**	2	CUP-BEARING (TAPERED ROLLER)	
C	6	1	**7E-4202**	2	WASHER-HARD (16.2X30X5-MM THK)	
	7	1	**7E-6854**	1	ADAPTER	
	8	1	**7N-7057**	1	SHAFT-STUB	
	9	1	**9X-6772**	4	STRAP-CABLE	
	10	1	**9Y-2647**	1	HUB-FAN PULLEY	
	11	1	**9Y-5010**	1	ADAPTER-GREASE	
J	12	1	**9Y-8465**	1	PULLEY-CRANKSHAFT	
		1	**6B-8865**	1	KEY	
	13	1	**102-6293**	1	PULLEY	
	14	1	**102-9928**	1	V-BELT SET (INCLUDES 6-BELTS) (FAN)	
C	15	1	**209-5296**	1	SPACER (63.6X76.2X76.2-MM THK)	
C	16	1	**217-6916**	1	WASHER (85X18-MM THK)	
C	17	1	**251-7646**	1	SUPPORT GP-FAN DRIVE	
	18	1	**0S-1571**	12	BOLT (3/8-16X1.75-IN)	
	19	1	**1J-4034**	1	SEAL-LIP TYPE	
	20	1	**2A-4639**	2	BOLT (3/8-16X1.625-IN)	
	21	1	**3B-1915**	8	BOLT (3/8-16X1-3/8-IN)	
	22	1	**3B-6552**	1	ELBOW	
	23	1	**4M-2442**	4	BOLT (1/2-13X12.32-IN)	
	24	1	**4P-8134**	3	CLIP	
	25	1	**5F-3144**	1	SEAL-O-RING	
	26	1	**5M-2894**	2	WASHER-HARD (10.2X18.5X2.5-MM THK)	
	27	1	**5P-8245**	6	WASHER-HARD (13.5X25.5X3-MM THK)	
	28	1	**5P-8250**	6	WASHER (28X49X5-MM THK)	
C	29	1	**7K-4370**	2	BOLT (5/8-11X1.75-IN)	
	30	1	**7X-7730**	1	PLUG-PIPE	
	31	1	**9F-8122**	6	BOLT (1-14X9-IN)	
	32	1	**9M-7269**	2	BOLT (1/2-13X6.75-IN)	
					AVAILABLE REPAIR KIT(S):	
J			**4W-5727**	1	KIT-BUSHING (CRANKSHAFT PULLEY) (FLANGED)	
					(INCLUDES BUSHING, BOLTS, LOCKWASHERS & SET SCREW)	

C-CHANGE FROM PREVIOUS TYPE
J-KIT MARKED J AVAILABLE FOR PART MARKED J

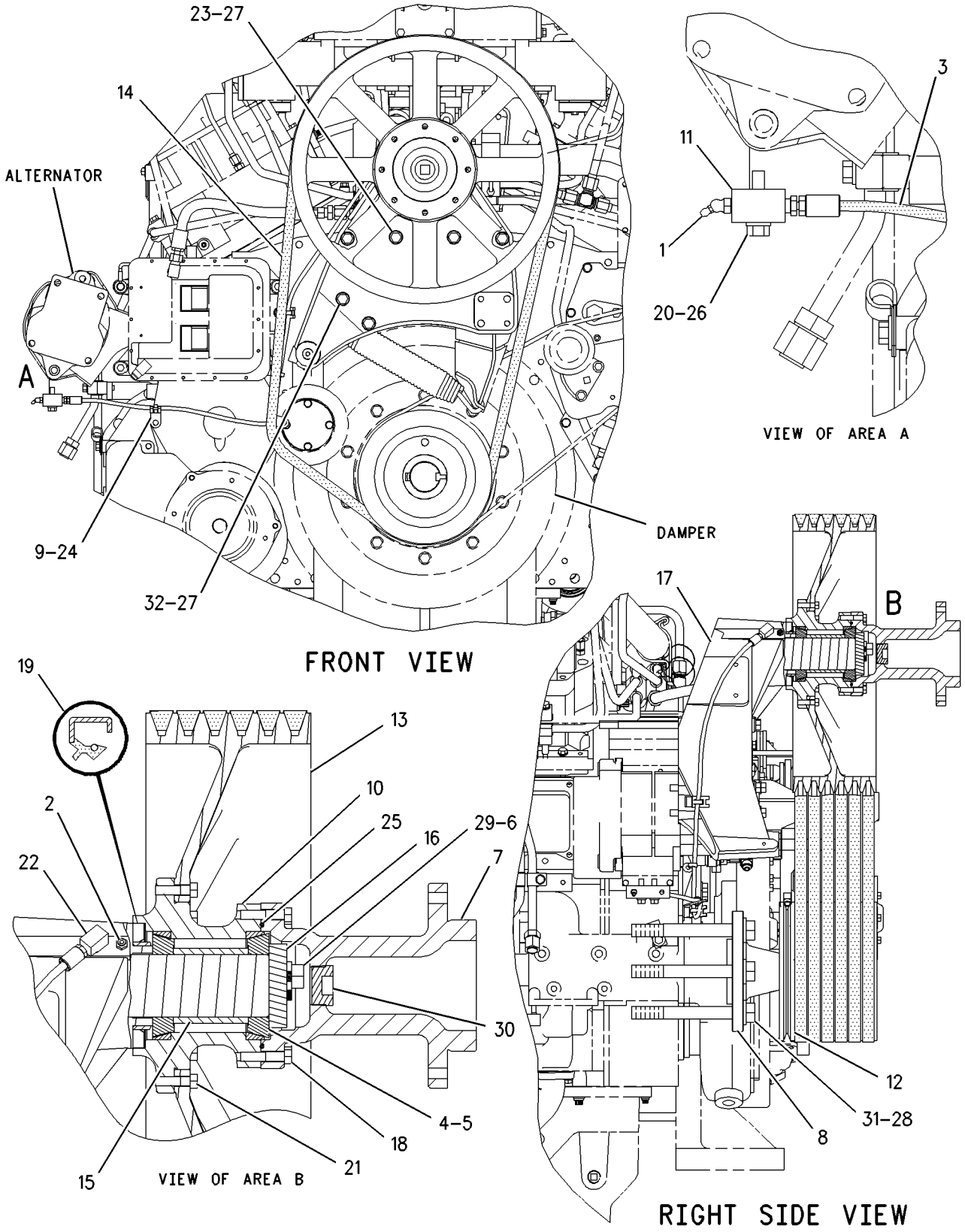

GRAPHIC #1 **<END>** g00932417

BASIC ENGINE

163-2592 DRIVE GP-FAN–VARIABLE SPEED*R

S/N: 4421-UP
PART OF 267-4452 DRIVE GP-FAN
AN ATTACHMENT

SMCS-1359 **i01870394**

NOTE	REF NO	GRAPHIC REF	PART NUMBER	QTY	PART NAME 1 2 3 4 5 6 (PRODUCT LEVEL)	SEE PAGE
	1	1	**109-8044**	1	PLUG-PIPE	
	2	1	**109-8048**	1	SLEEVE-WEAR	
	3	1	**109-8052**	2	SEAL-OIL	
	4	1	**109-8041**	1	RETAINER-BEARING	
	5	1	**109-8042**	1	RING-SNAP	
	6	1	**109-8053**	2	SEAL-RING	
	7	1	**109-8043**	1	PISTON-CLUTCH	
	8	1	**109-8054**	1	SEAL-RING	
	9	1	**109-8051**	1	SEAL-RING	
	10	1	**133-5913**	7	PLATE AS-CLUTCH	
	11	1	**109-8046**	7	PLATE-CLUTCH	
	12	1	**133-5908**	1	ADAPTER	
	13	1	**5M-2894**	16	WASHER-HARD (10.2X18.5X2.5MM THK)	
	14	1	**109-8058**	1	RETAINER-BEARING	
	15	1	**109-8065**	1	RING-SNAP	
	16	1	**109-8066**	1	RING-SNAP	
	17	1	**109-8060**	1	RING-SNAP	
	18	1	**109-8061**	2	TUBE-OIL	
	19	1	**109-8045**	1	HUB-SPLINED	
	20	1	**109-8063**	2	SEAL-O-RING	
	21	1	**109-8090**	1	WASHER-SPRING	
	22	1	**109-8085**	1	RING-SNAP	
B	23	1	**109-8087**	1	SHIM-ANNULAR	
	24	1	**109-8088**	1	ADAPTER-PULLEY	
	25	1	**1A-2029**	16	BOLT (3/8-16X1.125 IN)	
	26	1	**006-1800**	8	SCREW	
	27	1	**133-5909**	1	SEAL-O-RING	
Y	28	1	**126-1133**	1	SENSOR GP-SPEED (FAN DRIVE)	276
	29	1	**174-9349**	1	SHAFT AS	
	29A	1	**109-8047**	1	RETAINER	
	29B	1	**109-8048**	1	SLEEVE-WEAR	
	29C	1	**174-9347**	1	DOWEL	
	30	1	**177-6890**	1	BALL BEARING	
	31	1	**160-9828**	1	HUB AS	
	31A	1	**109-8047**	1	RETAINER	
	31B	1	**109-8056**	1	BEARING-SLEEVE	
	31C	1	**109-8069**	1	SLEEVE-WEAR	
	31D	1	**124-0327**	1	MAGNET AS	
	31E	1	**133-5907**	1	BEARING	
	31F	1	**162-8283**	1	SETSCREW	
	31G	1	**174-9372**	1	DOWEL	
	32	1	**177-6889**	1	BALL BEARING	
	33	1	**174-9339**	1	SPACER-BEARING (3.95 MM THK)	
					AVAILABLE REPAIR KIT(S):	
			122-3188	1	KIT-SEAL (VARIABLE SPEED FAN DRIVE)	
					(INCLUDES RETAINER, WEAR SLEEVE, SEALS, TUBE, SHIM, SPRING WASHERS & NAMEPLATE KIT)	
			174-9351		KIT-REPAIR (VARIABLE SPEED FAN DRIVE)	
					(INCLUDES SNAP RINGS, CLUTCH PLATE, BEARINGS, MAGNET AS, SETSCREW & DOWELS)	

B-USE AS REQUIRED
Y-SEPARATE ILLUSTRATION

163-2592 DRIVE GP-FAN *(contd.)*

i01870394

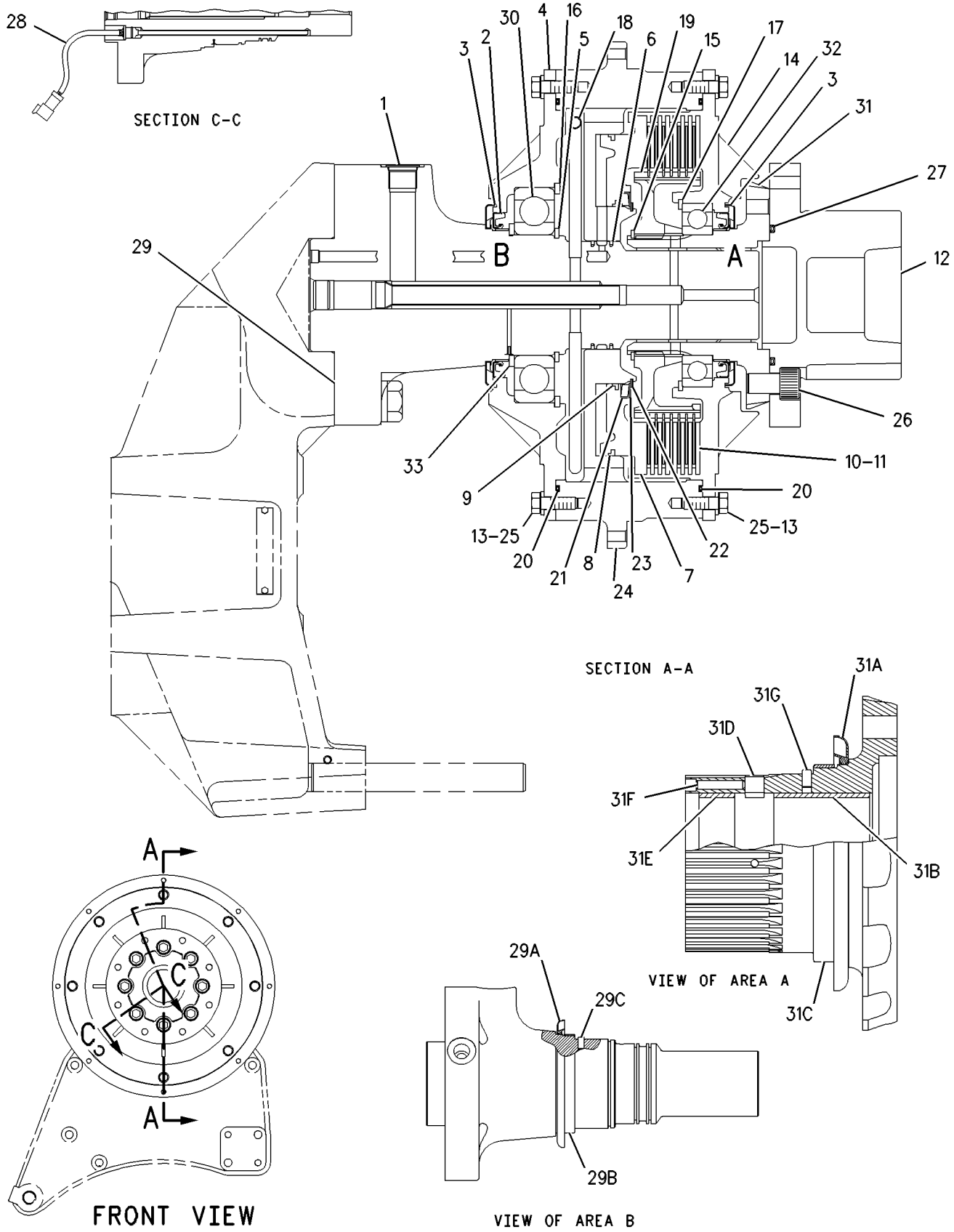

GRAPHIC #1

<END>

g00656073

BASIC ENGINE

267-4452 DRIVE GP-FAN

S/N: 4421-UP
PART OF 267-4451 DRIVE AR-FAN
AN ATTACHMENT

SMCS-1359 **i02385484**

NOTE	REF NO	GRAPHIC REF	PART NUMBER	QTY	PART NAME 1 2 3 4 5 6 (PRODUCT LEVEL)	SEE PAGE
	1	1	**109-8086**	1	BRACKET-SHAFT	
	2	1	**111-9560**	1	SWITCH AS-PRESSURE (REFRIGERANT)	
		1	**155-2270**	1	KIT-CONNECTING PLUG (2-PIN)	
					(INCLUDES PLUG AS AND WEDGE)	
		1	**186-3736**	2	SOCKET-CONNECTOR (16-GA TO 18-GA)	
	3	1	**141-7094**	1	PULLEY-FAN	
	4	1	**143-5123**	1	HARNESS AS-SENSOR	
		1	**155-2270**	1	KIT-CONNECTING PLUG (2-PIN)	
		1	**155-2260**	1	KIT-CONNECTING PLUG (3-PIN)	
					(EACH KIT PLUG INCLUDES PLUG AS AND WEDGE)	
		1	**102-8803**	1	KIT-RECEPTACLE (3-PIN)	
					(INCLUDES RECEPTACLE AS AND WEDGE)	
		1	**143-5122**	1	RESISTOR AS	
		1	**102-8802**	1	KIT-RECEPTACLE (2-PIN)	
					(INCLUDES RECEPTACLE AS AND WEDGE)	
YR	5	1	**163-2592**	1	DRIVE GP-FAN	40
	6	1	**3B-1915**	8	BOLT (3/8-16X1-3/8-IN)	
	7	1	**4M-2442**	4	BOLT (1/2-13X12.32-IN)	
	8	1	**5P-8245**	6	WASHER-HARD (13.5X25.5X3-MM THK)	
	9	1	**5P-8248**	4	WASHER-HARD (20X36.5X3.5-MM THK)	
	10	1	**8C-6857**	4	BOLT (3/4-10X2.75-IN)	
	11	1	**8T-6764**	1	PLUG-PIPE	
	12	1	**9M-7269**	2	BOLT (1/2-13X6.75-IN)	
	13	1	**9X-7378**	1	SEAL-O-RING	

R-REMFG PART MAY BE AVAILABLE
Y-SEPARATE ILLUSTRATION

267-4452 **DRIVE GP-FAN** *(contd.)* **i02385484**

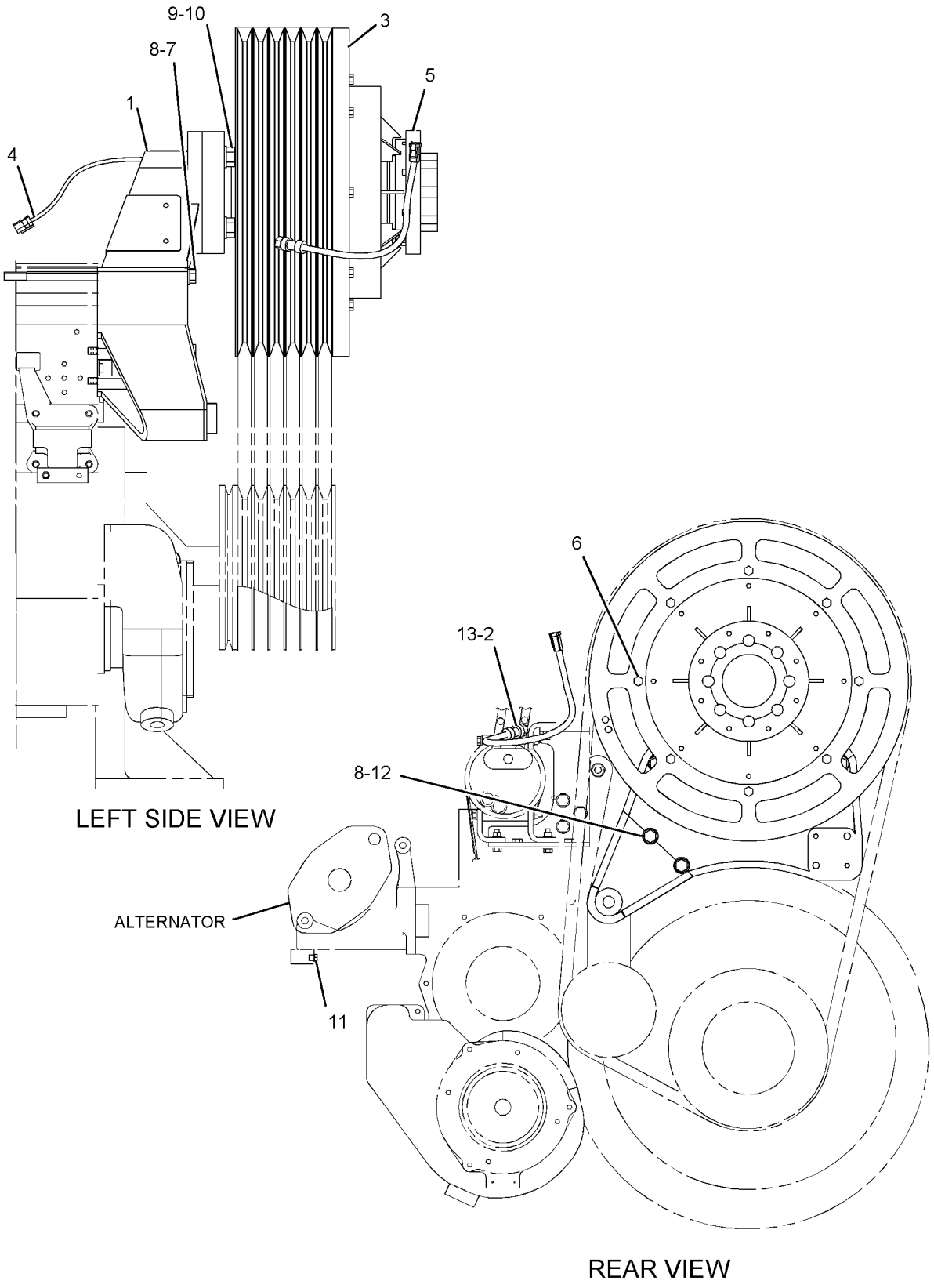

GRAPHIC #1 **<END>** g01178795

BASIC ENGINE

9Y-9202 FLYWHEEL GP

S/N: 8WM1-UP

PART OF 240-7750 ENGINE AR

SMCS-1156 **i02179329**

NOTE	REF NO	GRAPHIC REF	PART NUMBER	QTY	PART NAME 1 2 3 4 5 6 (PRODUCT LEVEL)	SEE PAGE
	1	1	**9Y-9438**	1	FLYWHEEL AS	
	2	1	**8N-0896**	1	GEAR (151-TEETH)	
	3	1	**9S-8893**	12	BOLT-12 POINT HEAD (1-14X101.6-MM)	
	4	1	**5P-8839**	12	WASHER-HARD (28X42X4-MM THK)	

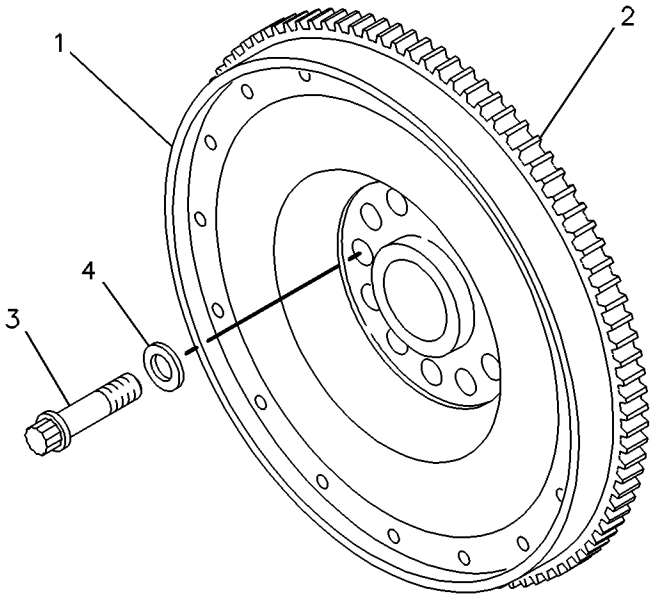

GRAPHIC #1 **<END>** g00082370

BASIC ENGINE

8N-7174 GEAR GP-FRONT

S/N: 8WM1-UP
STANDARD ROTATION
PART OF 240-7750 ENGINE AR

SMCS-1206 **i02405456**

NOTE	REF NO	GRAPHIC REF	PART NUMBER	QTY	PART NAME 1 2 3 4 5 6 (PRODUCT LEVEL)	SEE PAGE
	1	1	**2W-2895**	1	GEAR-CRANKSHAFT (92-TEETH)	
	2	1	**5R-7136**	1	WASHER-SEALING	
	3	1	**5R-7137**	2	WASHER-SEALING	
	4	1	**7C-3258**	1	WASHER AS-THRUST	
	4A	1	**7N-2047**	1	DOWEL	
	5	1	**7C-3260**	1	SHAFT	
	6	1	**7E-0275**	1	GEAR-WATER PUMP DRIVE (69-TEETH)	
	7	1	**7N-5239**	1	SHAFT AS-PUMP DRIVE	
	7A	1	**8T-2153**	1	SETSCREW-SOCKET (1/4-28X0.31-IN)	
	8	1	**7N-5245**	1	ADAPTER AS-PUMP (WATER)	
	8A	1	**127-5400**	1	BEARING-SLEEVE	
	9	1	**7N-5246**	2	WASHER-THRUST	
C	10	1	**144-8263**	1	GEAR AS-IDLER (53-TEETH)	
	10A	1	**140-9597**	1	BEARING-SLEEVE	
	11	1	**235-3546**	1	SEAL-O-RING	
	12	1	**235-3548**	2	SEAL-O-RING	
	13	1	**278-4287**	1	ADAPTER AS-PUMP (OIL)	
	13A	1	**127-5400**	1	BEARING-SLEEVE	
	14	1	**0S-1590**	5	BOLT (3/8-16X2-IN)	
	15	1	**0S-1594**	2	BOLT (3/8-16X1-IN)	
	16	1	**0T-0055**	1	BOLT (3/8-16X4.25-IN)	
	17	1	**3S-1307**	12	BOLT-12 POINT HEAD (3/8-16X2-IN)	
	18	1	**4B-3388**	4	BOLT (5/16-18X1.125-IN)	
	19	1	**5M-2894**	6	WASHER-HARD (10.2X18.5X2.5-MM THK)	
	20	1	**5P-8245**	2	WASHER-HARD (13.5X25.5X3-MM THK)	
	21	1	**6V-3348**	1	SEAL-O-RING	
	22	1	**9M-1974**	4	WASHER-HARD (8.8X16X2-MM THK)	
	23	1	**9X-8879**	2	BOLT (1/2-13X5.5-IN)	
BC	24	1	**6K-3771**	12	BOLT-12 POINT HEAD (7/16-14X1.5-IN)	

B-USE AS REQUIRED
C-CHANGE FROM PREVIOUS TYPE

8N-7174 **GEAR GP-FRONT** *(contd.)* **i02405456**

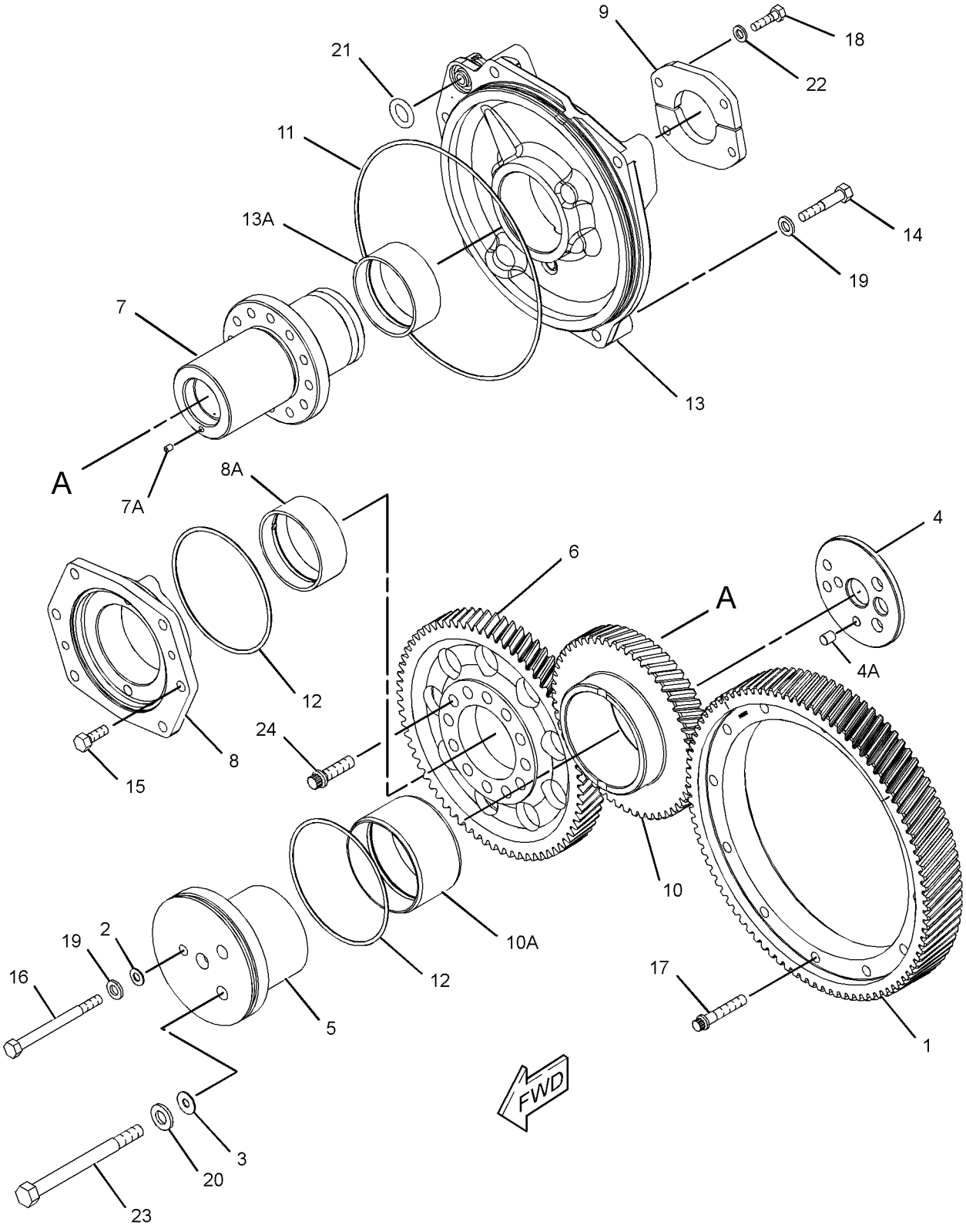

GRAPHIC #1 **<END>** g01202529

BASIC ENGINE

124-8395 GEAR GP-REAR

S/N: 8WM1-UP

PART OF 240-7750 ENGINE AR

SMCS-1204 **i01546653**

NOTE	REF NO	GRAPHIC REF	PART NUMBER	QTY	PART NAME 1 2 3 4 5 6 (PRODUCT LEVEL)	SEE PAGE
	1	1	**3S-1307**	12	BOLT-12 POINT HEAD (3/8-16X2 IN)	
	2	1	**114-3372**	1	GEAR AS-IDLER (92/35 TEETH CLUSTER)	
	2A	1	**101-1372**	1	BEARING-SLEEVE	
	3	1	**101-1366**	1	SHAFT-GEAR (CLUSTER)	
	4	1	**8M-2530**	4	BOLT-12 POINT HEAD (1/2-13X1.25 IN)	
	5	1	**101-1365**	1	PLATE-THRUST	
	6	1	**0L-1351**	4	BOLT (3/8-16X0.875 IN)	
	7	1	**101-1364**	2	GEAR AS-IDLER (69 TEETH)	
					(EACH INCLUDES)	
	7A	1	**125-9751**	1	BEARING-SLEEVE	
	8	1	**101-1367**	2	SHAFT-IDLER	
	9	1	**5P-8248**	2	WASHER-HARD (20X36.5X3.5MM THK)	
	10	1	**9X-8887**	2	BOLT (3/4-10X3 IN)	
	11	1	**1B-4367**	4	BOLT (5/8-11X3 IN)	
	12	1	**101-1368**	2	WASHER-THRUST (19.50 X 106 X 1.9MM THK)	
	13	1	**101-1369**	2	GEAR-CAMSHAFT DRIVE (70 TEETH)	
	14	1	**4W-4586**	1	PLATE	
	15	1	**101-1370**	1	GEAR-CRANKSHAFT (92 TEETH)	
	16	1	**8S-2331**	2	BOLT-12 POINT HEAD (5/8-11 X 2 IN)	
	17	1	**7E-5324**	1	RING	

124-8395 **GEAR GP-REAR** *(contd.)* **i01546653**

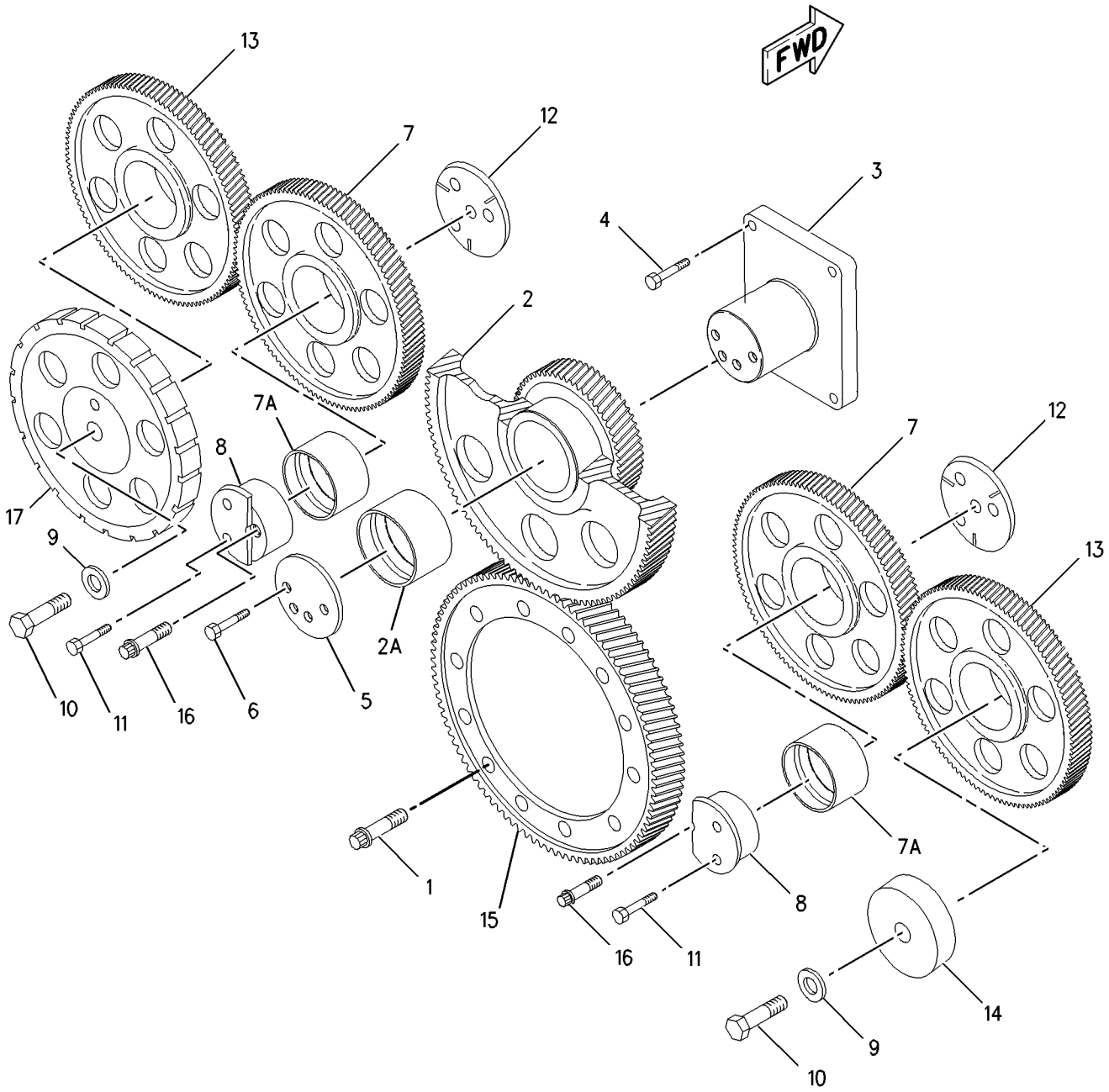

GRAPHIC #1 **<END>** g00663140

246-5579 GUARD GP-BELT–ALTERNATOR

S/N: 8WM1-UP

PART OF 240-7750 ENGINE AR

SMCS-7174 **i02208691**

NOTE	REF NO	GRAPHIC REF	PART NUMBER	QTY	PART NAME 1 2 3 4 5 6 (PRODUCT LEVEL)	SEE PAGE
	1	1	**160-9811**	1	GUARD AS-ALTERNATOR	
	2	1	**171-8946**	1	GUARD AS-ALTERNATOR	
	3	1	**209-5284**	1	GUARD	
	4	1	**246-5583**	1	GUARD	
	5	1	**0S-0509**	1	BOLT (3/8-16X0.75-IN)	
	6	1	**0S-1588**	1	BOLT (3/8-16X1.25-IN)	
	7	1	**1A-2029**	1	BOLT (3/8-16X1.125-IN)	
	8	1	**1T-0720**	1	BOLT-12 POINT HEAD (3/8-16X1.25-IN)	
	9	1	**5M-2894**	2	WASHER-HARD (10.2X18.5X2.5-MM THK)	
	10	1	**7E-5639**	2	SPACER (13.88X21.34X25-MM THK)	
	11	1	**9L-9132**	2	WASHER (10.2X25.5X2.5-MM THK)	
	12	1	**162-0303**	2	SPACER (13.87X21.34X14-MM THK)	

246-5579 **GUARD GP-BELT** *(contd.)* **i02208691**

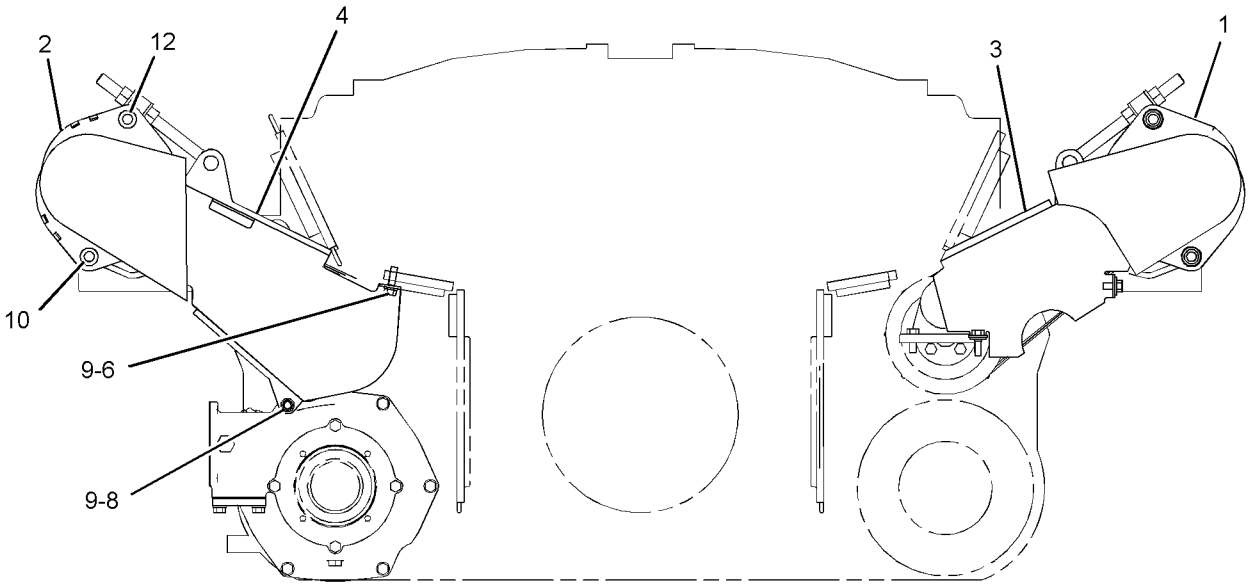

REAR VIEW

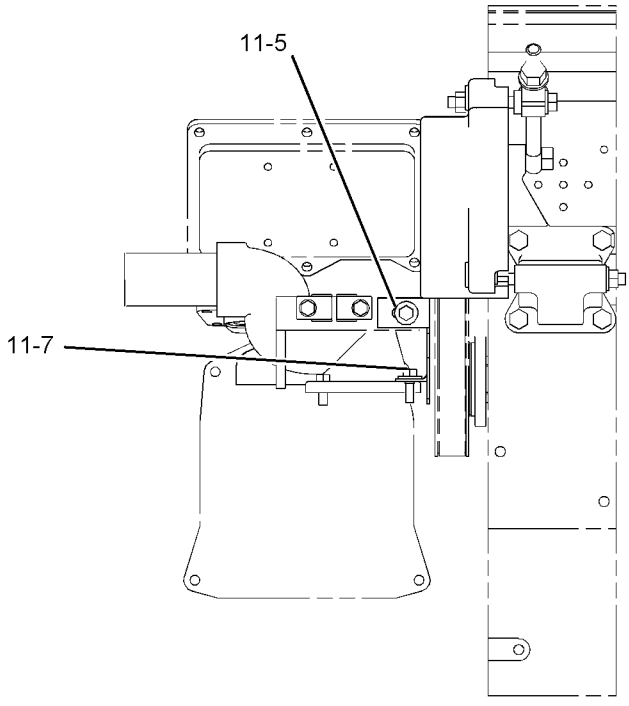

RIGHT SIDE VIEW

GRAPHIC #1 **<END>** g01118413

267-4459 GUARD GP-BELT—AIR CONDITIONER COMPRESSOR

S/N: 8WM1-UP

PART OF 240-7750 ENGINE AR

SMCS-7174 **i02337476**

NOTE	REF NO	GRAPHIC REF	PART NUMBER	QTY	PART NAME 1 2 3 4 5 6 (PRODUCT LEVEL)	SEE PAGE
	1	1	**267-4460**	1	GUARD-BELT	
		1	**1F-0750**	2	NUT-WELD (3/8-16-THD)	
	2	1	**267-4461**	1	GUARD-BELT	
	3	1	**0S-1618**	2	BOLT (5/16-18X1-IN)	
	4	1	**1A-8651**	2	BOLT (5/8-11X4.5-IN)	
	5	1	**2B-2695**	4	BOLT (5/16-18X0.875-IN)	
	6	1	**5P-8247**	2	WASHER-HARD (17X32X3.5-MM THK)	
	7	1	**6V-3964**	6	WASHER-HARD (8.8X25.5X5-MM THK)	

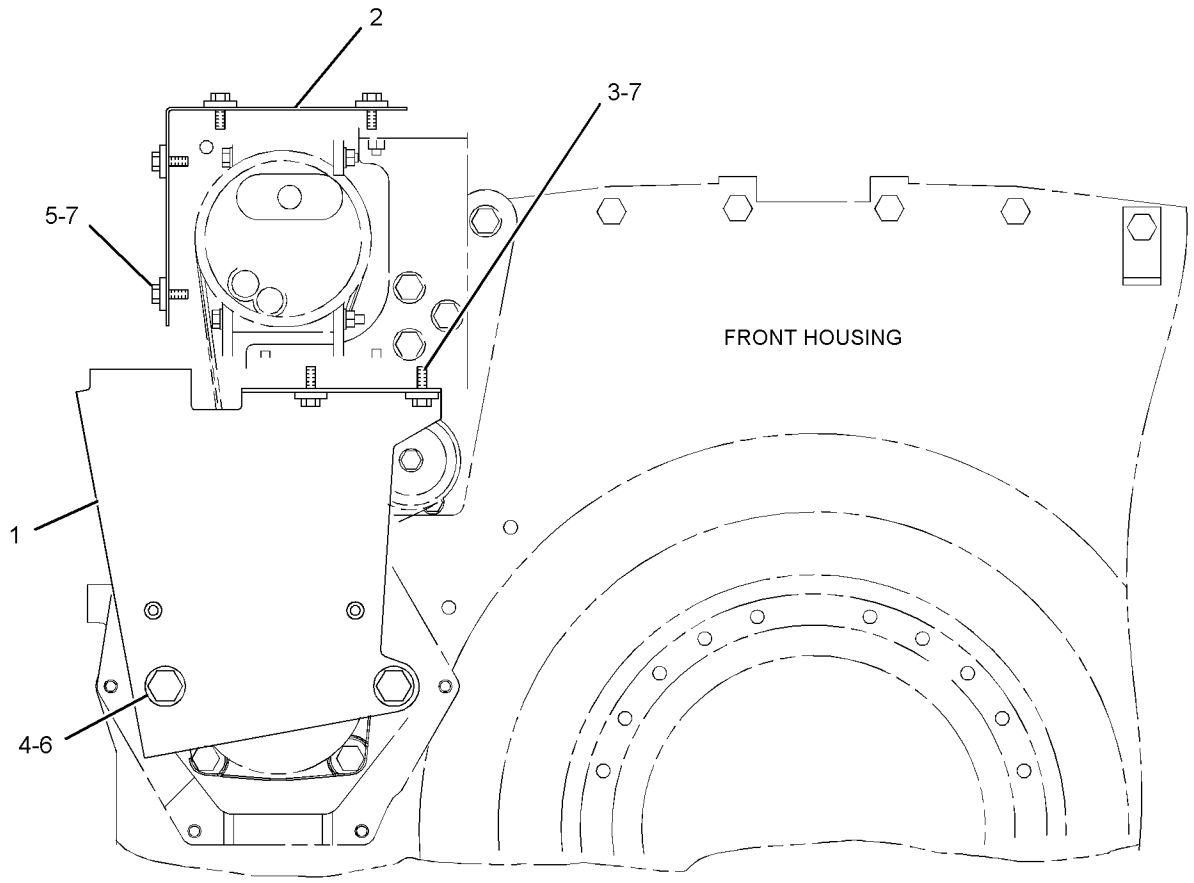

FRONT VIEW

GRAPHIC #1 **<END>** g01220727

BASIC ENGINE

167-9574 HOUSING GP-FLYWHEEL

S/N: 8WM1-UP

PART OF 240-7750 ENGINE AR

SMCS-1157 **i02280210**

NOTE	REF NO	GRAPHIC REF	PART NUMBER	QTY	PART NAME 1 2 3 4 5 6 (PRODUCT LEVEL)	SEE PAGE
	1	1	**106-7598**	1	HOUSING AS-FLYWHEEL	
	1A	1	**3F-6795**	2	DOWEL	
	1B	1	**3F-6808**	1	DOWEL	
	1C	1	**7N-2047**	3	DOWEL	
	2	1	**5P-8245**	19	WASHER-HARD (13.5X25.5X3-MM THK)	
	3	1	**5R-7137**	4	WASHER-SEALING	
	4	1	**5P-4626**	2	BOLT (5/8-11X10.5-IN)	
	5	1	**0S-1595**	7	BOLT (1/2-13X1.25-IN)	
	6	1	**8T-6763**	5	PLUG-PIPE	
	7	1	**1D-4574**	8	BOLT (1/2-13X6-IN)	
	8	1	**5D-9514**	12	BOLT (5/8-11X6.25-IN)	
	9	1	**1D-4597**	1	BOLT (5/8-11X6.5-IN)	
	10	1	**5P-8247**	17	WASHER-HARD (17X32X3.5-MM THK)	
	11	1	**235-3548**	1	SEAL-O-RING	
	12	1	**4P-5218**	1	COVER	
	13	1	**5D-3954**	2	STUD-TAPERLOCK (5/8-11X4.4-IN)	
	14	1	**4K-0367**	2	NUT-FULL (5/8-11-THD)	
	15	1	**1V-6341**	2	SEAL	
	16	1	**4P-5217**	1	COVER	
	17	1	**1A-1460**	2	BOLT (1/2-13X2-IN)	
	18	1	**9X-8873**	4	BOLT (1/2-13X2.25-IN)	

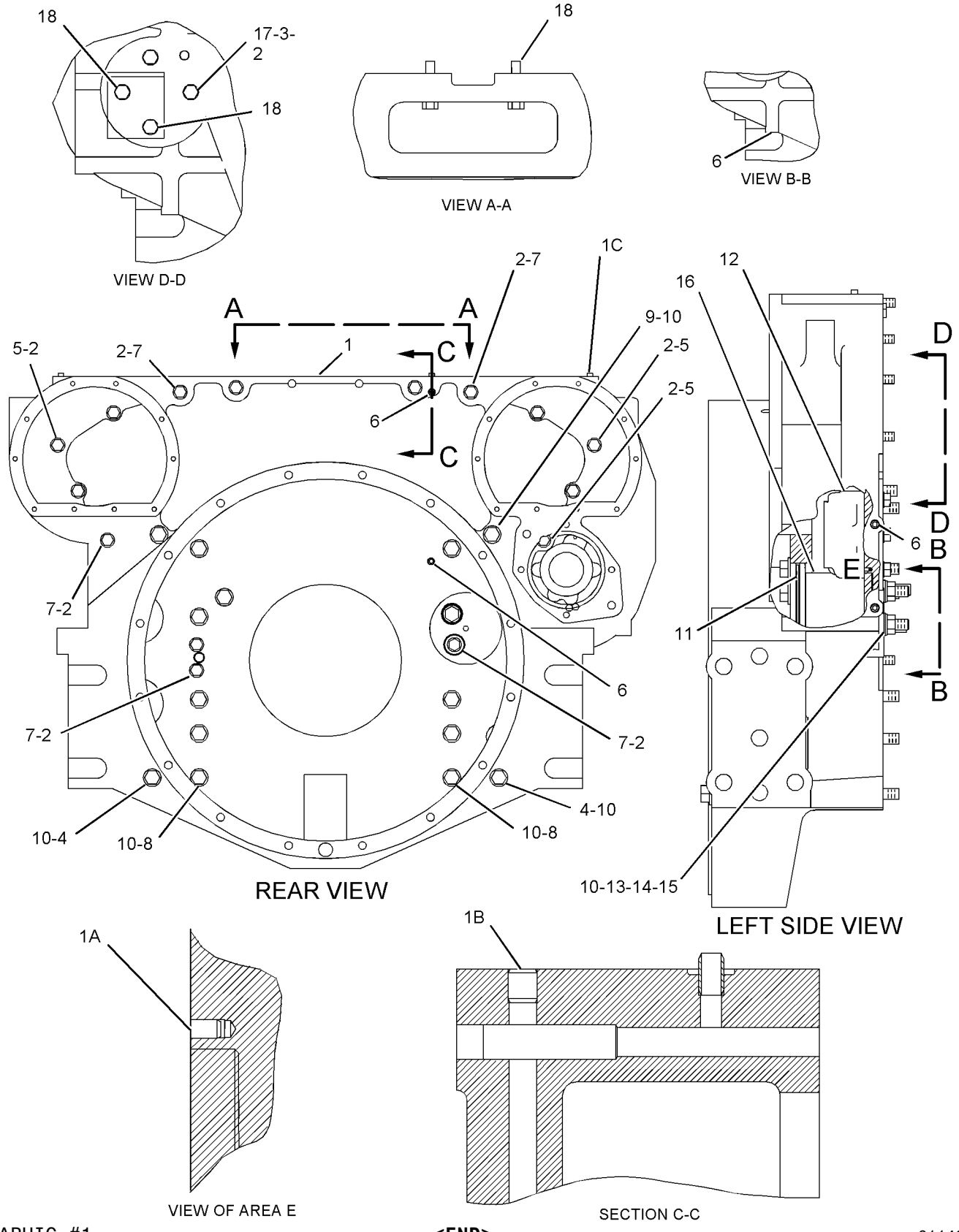

GRAPHIC #1

<END>

g01142248

4P-5426 HOUSING GP-FRONT

S/N: 8WM1-UP

PART OF 240-7750 ENGINE AR

SMCS-1151, 1162 **i02309221**

NOTE	REF NO	GRAPHIC REF	PART NUMBER	QTY	PART NAME 1 2 3 4 5 6 (PRODUCT LEVEL)	SEE PAGE
	1	1	**0S-1587**	4	BOLT (1/2-13X1.75-IN)	
	2	1	**1D-4593**	10	BOLT (5/8-11X5.5-IN)	
	3	1	**102-8634**	1	HOUSING-ACCESSORY DRIVE	
	4	1	**1B-4218**	6	WASHER (0.39X0.625X0.064-IN THK)	
	5	1	**2A-5220**	6	PLUG-DRAIN	
B	6	1	**8T-6765**	7	PLUG-PIPE (1/4-18-THD)	
	7	1	**8T-6762**	1	PLUG-PIPE	
	8	1	**8T-6758**	1	PLUG-PIPE	
	9	1	**9H-8260**	4	BOLT (1/2-13X6.25-IN)	
	10	1	**7N-3049**	1	GASKET	

B-USE AS REQUIRED

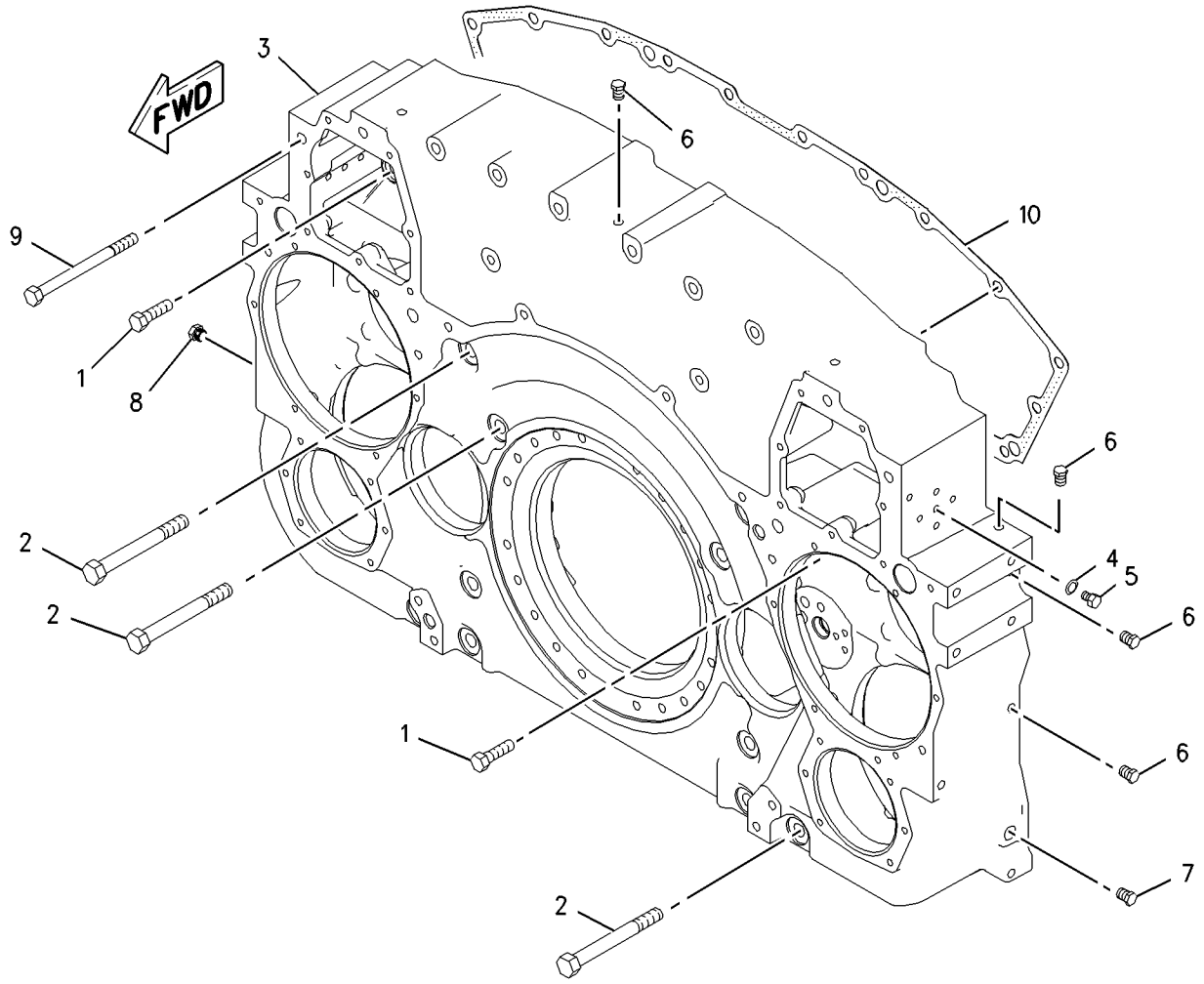

GRAPHIC #1 **<END>** g00995169

BASIC ENGINE

144-5612 IDLER GP-BELT

S/N: 8WM1-UP

PART OF 230-1081 COMPRESSOR & MTG GP-REFRIG

SMCS-1358, 1365, 1397, 1802 **i01714162**

NOTE	REF NO	GRAPHIC REF	PART NUMBER	QTY	PART NAME 1 2 3 4 5 6 (PRODUCT LEVEL)	SEE PAGE
	1	1	**144-5611**	1	PULLEY AS-IDLER	
M	2	1	**144-8122**	1	BOLT-SPECIAL (M10X1.5X65-MM)	
	3	1	**144-8123**	1	SPACER	
	4	1	**145-2901**	1	COVER-DUST	
	5	1	**6V-9027**	1	SEAL-O-RING	

M-METRIC PART

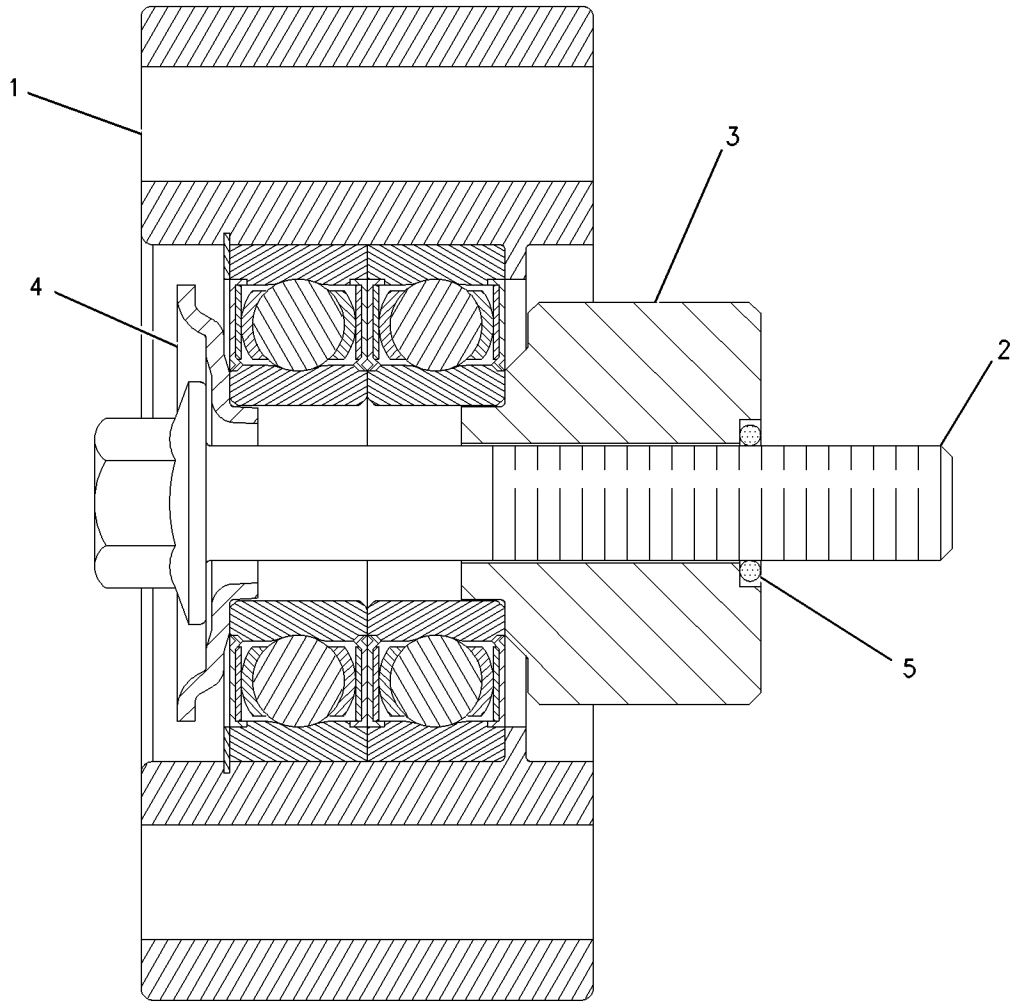

GRAPHIC #1 **<END>** g00882442

BASIC ENGINE

7E-6872 LIFTING GP-ENGINE

S/N: 8WM1-UP

PART OF 240-7750 ENGINE AR

SMCS-1122 **i02327558**

NOTE	REF NO	GRAPHIC REF	PART NUMBER	QTY	PART NAME 1 2 3 4 5 6 (PRODUCT LEVEL)	SEE PAGE
	1	1	**7N-2326**	2	EYE-LIFTING	
	2	1	**7N-2328**	4	DOWEL	
	3	1	**155-0726**	2	BRACKET AS	
	4	1	**193-3286**	1	RETAINER-EYE (REAR)	
	5	1	**4P-4642**	1	RETAINER-EYE (FRONT)	
	6	1	**0S-0509**	4	BOLT (3/8-16X0.75-IN)	
	7	1	**5P-1075**	4	WASHER-HARD (10.2X22.5X3-MM THK)	

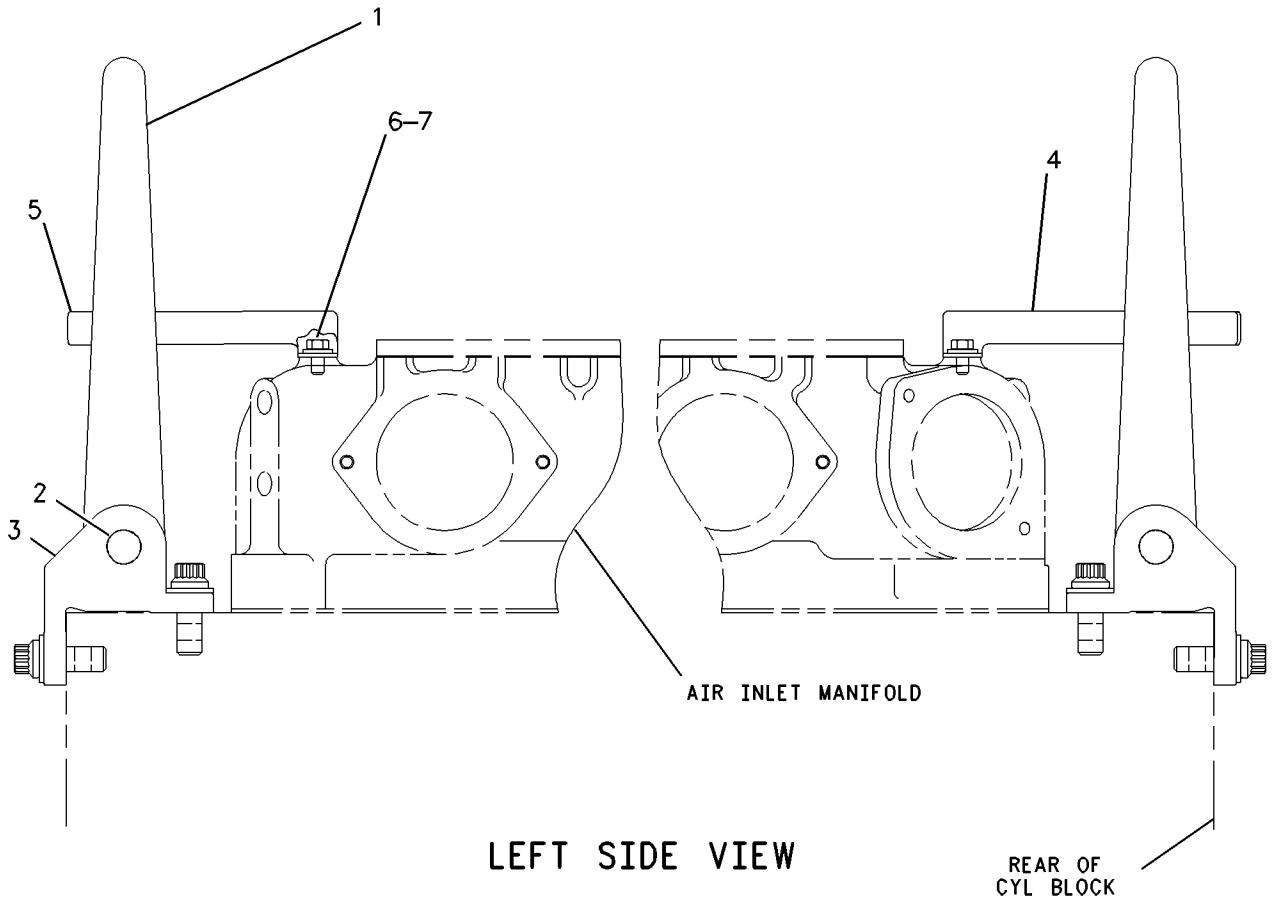

LEFT SIDE VIEW

GRAPHIC #1 **<END>** g00799817

119-6321 LINES GP-AIR COMPRESSOR

S/N: 8WM1-UP

PART OF 240-7750 ENGINE AR

SMCS-5502 **i02180143**

NOTE	REF NO	GRAPHIC REF	PART NUMBER	QTY	PART NAME 1 2 3 4 5 6 (PRODUCT LEVEL)	SEE PAGE
	1	1	**4P-0692**	2	CLAMP AS	
					(EACH INCLUDES)	
		1	**108-1434**	1	GROMMET	
I	2	1	**7V-0916**	1	HOSE AS	
	3	1	**7W-9834**	1	VALVE-REGULATOR (COMPRESSOR)	
	4	1	**8J-0135**	1	PLUG	
	5	1	**8M-7065**	1	GASKET	
	6	1	**061-6717**	1	ELBOW-FLARED	
	7	1	**107-0750**	1	TUBE AS	
	8	1	**119-6324**	1	TUBE AS	
	9	1	**122-3184**	1	TUBE AS	
	10	1	**152-1005**	1	HOSE AS	
	11	1	**032-1269**	5	ELBOW	
	12	1	**0T-0573**	1	BOLT (3/8-16X2.75-IN)	
	13	1	**1B-2790**	2	BOLT (5/16-18X1.375-IN)	
	14	1	**5M-2894**	1	WASHER-HARD (10.2X18.5X2.5-MM THK)	
	15	1	**5P-4479**	1	ELBOW (FLARED-LONG)	
	16	1	**6K-1972**	1	ELBOW	
	17	1	**7X-7731**	1	PLUG-PIPE	
	18	1	**9L-5254**	1	ELBOW	
	19	1	**9M-1974**	2	WASHER-HARD (8.8X16X2-MM THK)	
	20	1	**9M-6522**	1	CONNECTOR	

I-REFER TO HYDRAULIC INFORMATION SYSTEM

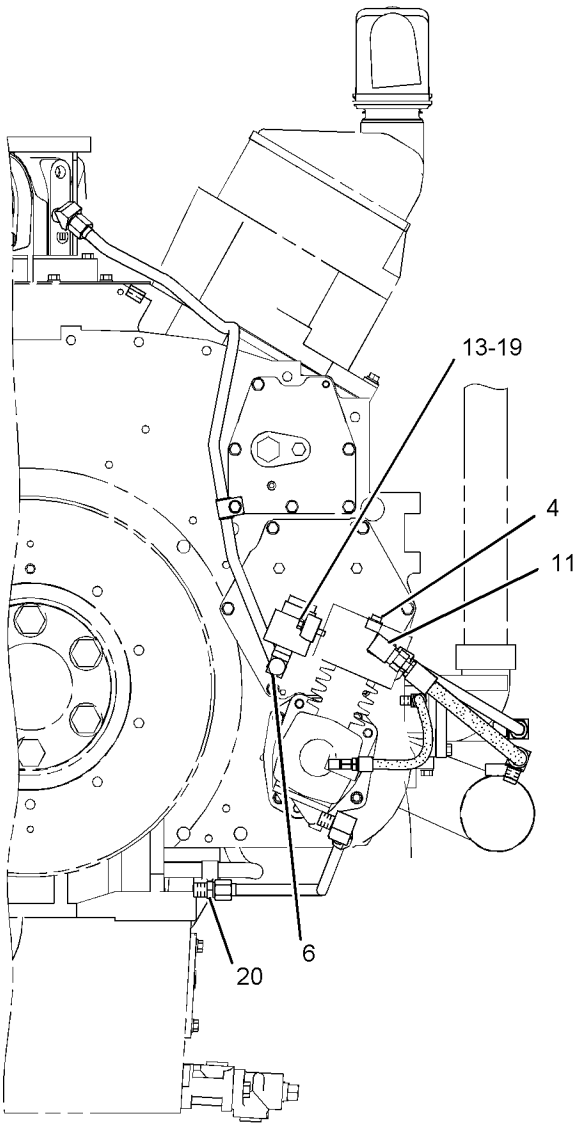

FRONT VIEW

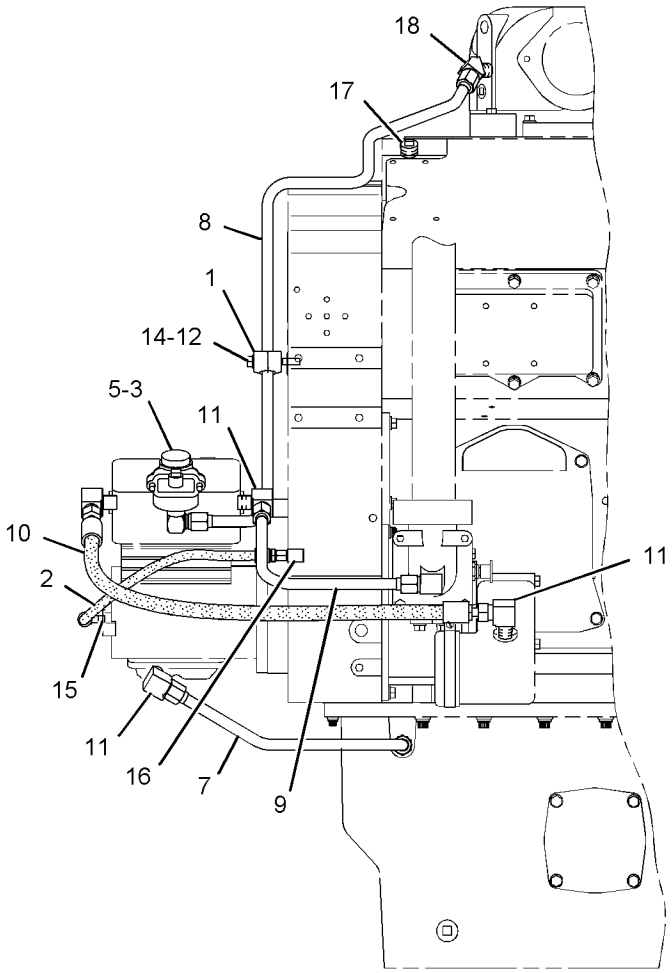

LEFT SIDE VIEW

GRAPHIC #1 **<END>** g01055084

246-5566 MOUNTING GP-ALTERNATOR

S/N: 8WM1-UP

PART OF 240-7750 ENGINE AR

SMCS-1405 **i02208694**

NOTE	REF NO	GRAPHIC REF	PART NUMBER	QTY	PART NAME 1 2 3 4 5 6 (PRODUCT LEVEL)	SEE PAGE
	1	1	**4P-5211**	1	SUPPORT-ALTERNATOR	
	2	1	*7E-4840*	2	PULLEY AS	
					(EACH INCLUDES)	
		1	**7E-4838**	1	PULLEY	
		1	**053-5065**	1	SLEEVE	
	3	1	**7N-2597**	2	SPACER (13.5X25.4X8.08-MM THK)	
	4	1	**167-9563**	2	PULLEY	
	5	1	**171-8914**	1	SUPPORT-ALTERNATOR	
	6	1	**178-6402**	2	BELT (ALTERNATOR)	
	7	1	**235-2484**	2	SEAL-LIP TYPE	
	8	1	**252-6464**	2	BLOCK	
	9	1	**252-6498**	2	ROD	
	10	1	**262-4377**	2	STUD	
	11	1	**0S-1571**	8	BOLT (3/8-16X1.75-IN)	
	12	1	**1A-0168**	2	BOLT (1/2-13X7.5-IN)	
	13	1	**1A-1460**	4	BOLT (1/2-13X2-IN)	
	14	1	**1D-4586**	2	BOLT (5/8-11X3.5-IN)	
	15	1	**1F-7958**	8	NUT-FULL (1/2-13-THD)	
	16	1	**2J-3506**	4	NUT-FULL (3/4-10-THD)	
	17	1	**3K-2889**	2	LOCKNUT (5/8-11-THD)	
	18	1	**5P-8245**	8	WASHER-HARD (13.5X25.5X3-MM THK)	
	19	1	**5P-8247**	2	WASHER-HARD (17X32X3.5-MM THK)	
	20	1	**5P-8248**	4	WASHER-HARD (20X36.5X3.5-MM THK)	
	21	1	**7B-3235**	4	BOLT (1/2-13X1.375-IN)	

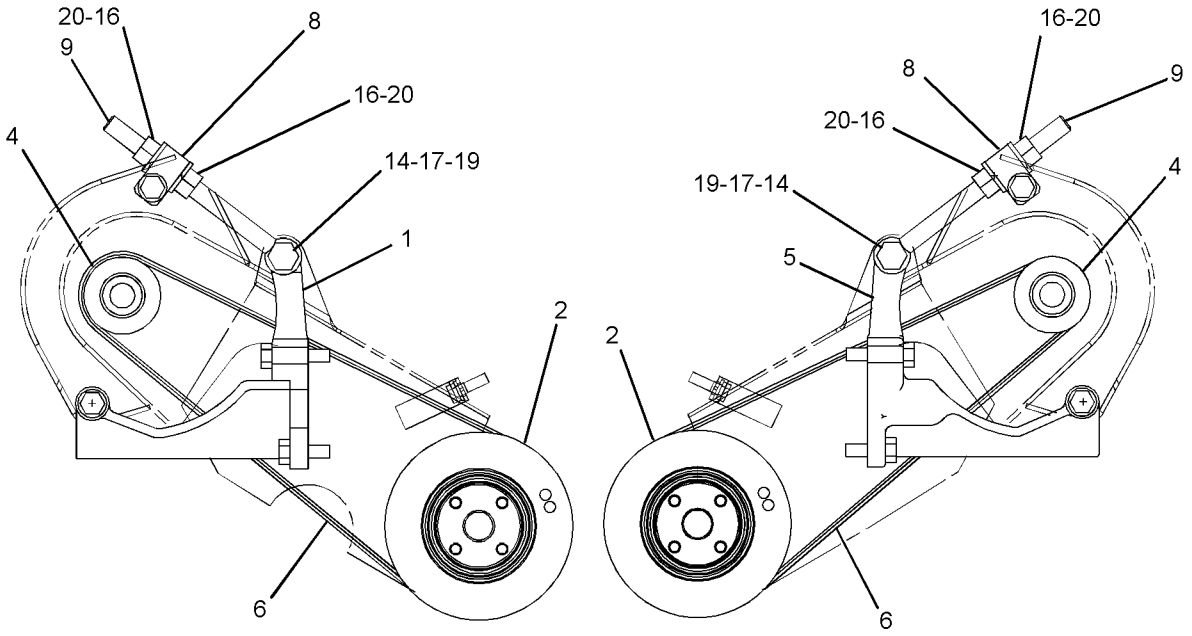

FRONT VIEW

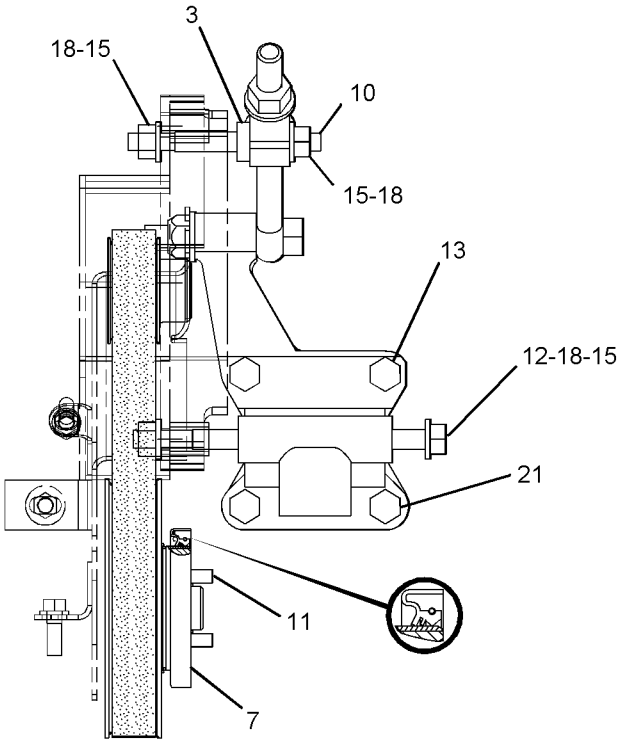

RIGHT SIDE VIEW

GRAPHIC #1 **<END>** g01118335

117-0060 PAN GP-OIL

S/N: 8WM1-UP

PART OF 240-7750 ENGINE AR

SMCS-1302 **i02179341**

NOTE	REF NO	GRAPHIC REF	PART NUMBER	QTY	PART NAME 1 2 3 4 5 6 (PRODUCT LEVEL)	SEE PAGE
	1	2	**1N-3150**	1	HOUSING-OIL SCREEN	
	2	2	**1N-4666**	1	TUBE	
	3	2	**1W-1563**	1	HANDLE-OIL SCREEN	
	4	2	**1W-1564**	1	SCREEN AS-SUCTION (OIL PAN)	
	5	1	**1W-1565**	1	ELBOW	
	6	1	**1W-1568**	1	PLATE	
	7	1	**1W-2060**	1	COVER	
	8	1	**1W-6114**	1	TUBE	
	9	2	**2M-9780**	1	SEAL-O-RING	
	10	1	**3P-0654**	2	SEAL-O-RING	
	11	1	**4B-2363**	1	PLUG-OIL DRAIN (OIL PAN)	
	12	1	**4N-0996**	3	COVER	
	13	2	**4P-9853**	1	BLOCK	
	14	1	**5P-4892**	1	SEAL-O-RING	
	15	2	**5P-8068**	2	SEAL-O-RING	
	16	1	**6F-4868**	1	GASKET	
	17	2	**6I-0723**	1	PLUG-OIL DRAIN (OIL PAN)	
	18	1	**6I-0724**	1	ADAPTER-PLUG	
	19	2	**6V-4314**	1	SEAL-O-RING	
	20	2	**6V-4315**	2	SEAL-O-RING	
	21	1	**6V-5101**	1	SEAL-O-RING	
	22	1	**7E-2632**	1	GASKET-OIL PAN	
	23	1	**7W-0117**	1	ELBOW	
	24	1	**8M-3175**	27	WASHER-HARD (10.2X16X3-MM THK)	
	25	1,2	**8T-6761**	5	PLUG-PIPE	
	26	2	**123-6906**	1	ADAPTER AS	
	27	1	**133-5926**	1	PAN-OIL (SCAVENGE)	
	28	1	**142-4159**	1	SEAL-INTEGRAL	
	29	1	**230-1070**	1	PAN AS-OIL	
		1	**119-6296**	2	PIPE	
		1	**101-2862**	2	DOWEL	
	30	2	**006-5707**	1	ELBOW-PIPE	
	31	2	**0L-1351**	1	BOLT (3/8-16X0.875-IN)	
	32	2	**0S-1571**	4	BOLT (3/8-16X1.75-IN)	
	33	1	**0S-1588**	8	BOLT (3/8-16X1.25-IN)	
	34	1	**1A-2029**	19	BOLT (3/8-16X1.125-IN)	
	35	1,2	**3B-1915**	17	BOLT (3/8-16X1.375-IN)	
	36	1	**3H-7654**	50	WASHER-HARD (13.5X22.5X3-MM THK)	
	37	1	**4F-3765**	3	GASKET-SHAFT	
	38	1,2	**5M-2894**	29	WASHER-HARD (10.2X18.5X2.5-MM THK)	
	39	1	**5P-0076**	18	BOLT-12 POINT HEAD (3/8-16X1.5-IN)	
	40	2	**5P-5700**	4	SEAL-O-RING	
	41	1	**5P-5855**	50	BOLT-12 POINT HEAD (1/2-13X1.75-IN)	
	42	2	**6V-0973**	1	SEAL-O-RING	
	43	1	**7X-7731**	1	PLUG-PIPE	
	44	1	**8M-9024**	15	WASHER-HARD (10.2X22.5X5-MM THK)	
	45	1	**8S-9089**	2	BOLT (1/2-13X4.5-IN)	
	46	2	**9S-4190**	1	PLUG	
	47	2	**9S-8752**	4	NUT-FULL (3/8-16-THD)	
B	50	1	**2M-9780**	1	SEAL-O-RING	
B	51	1	**9S-4190**	1	PLUG	
B	52	2	**7W-6492**	1	PLUG-PIPE	

B-USE AS REQUIRED

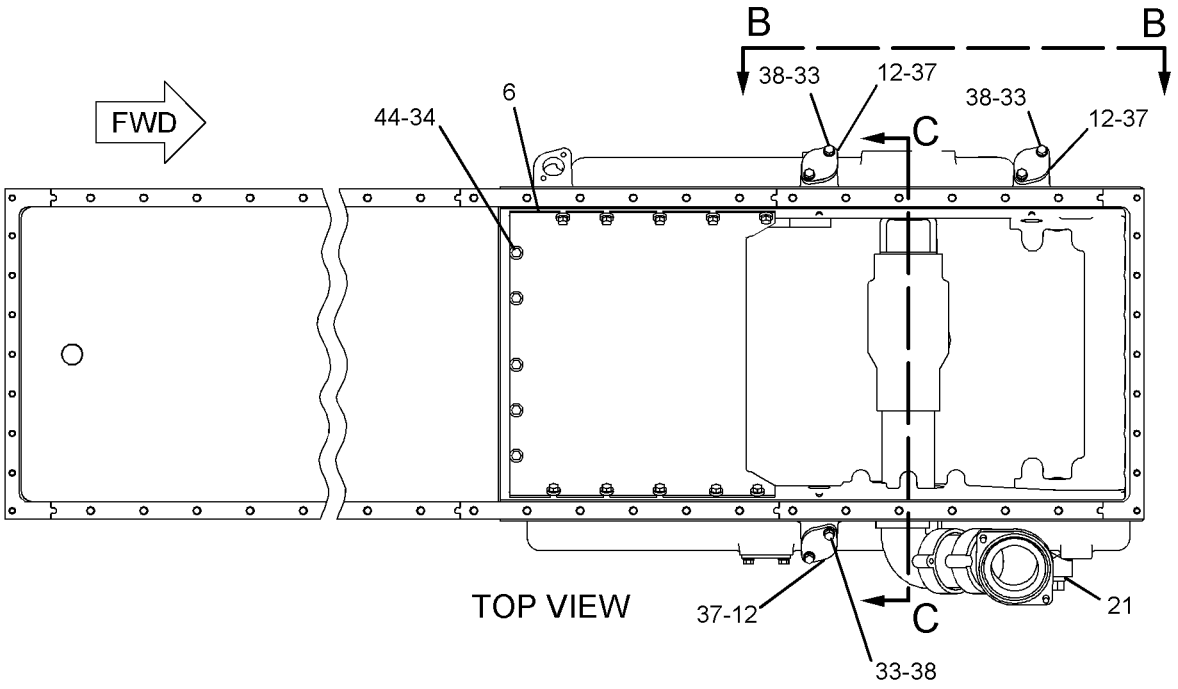

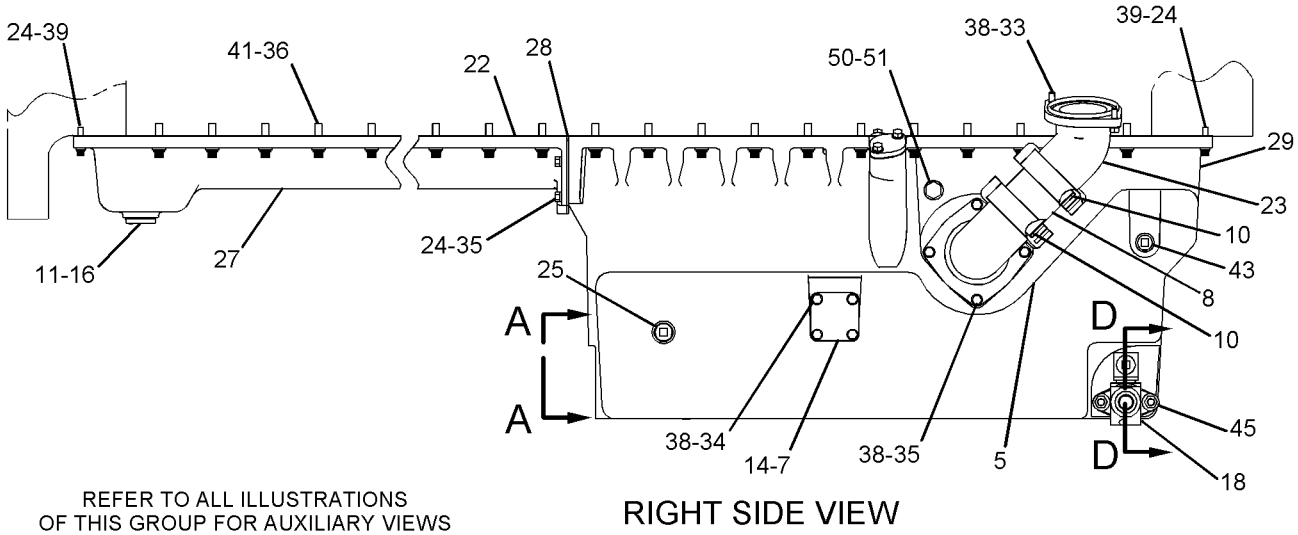

REFER TO ALL ILLUSTRATIONS
OF THIS GROUP FOR AUXILIARY VIEWS

GRAPHIC #1

g01091544

117-0060 **PAN GP-OIL** *(contd.)* **i02179341**

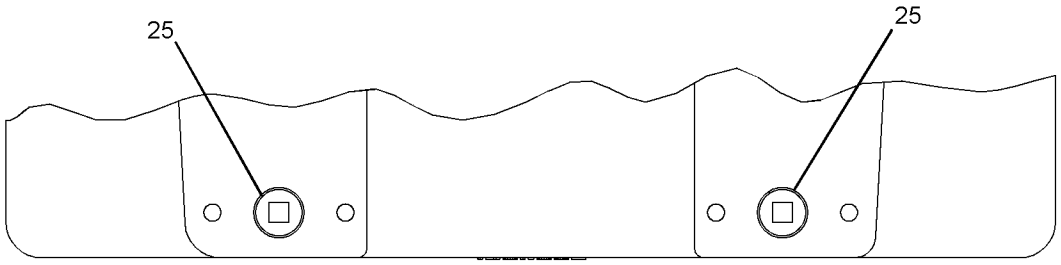

SECTION A-A

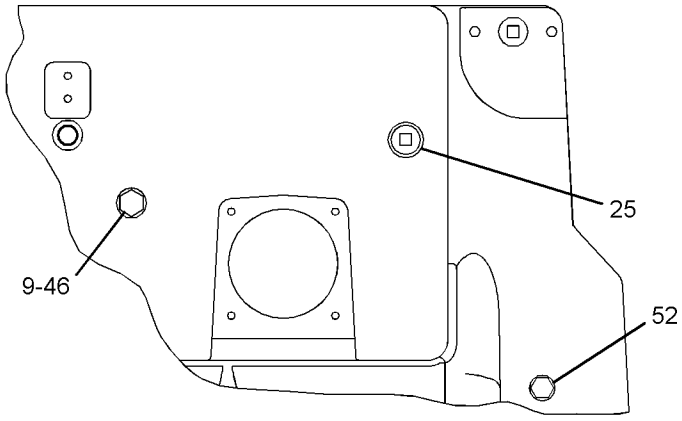

SECTION B-B

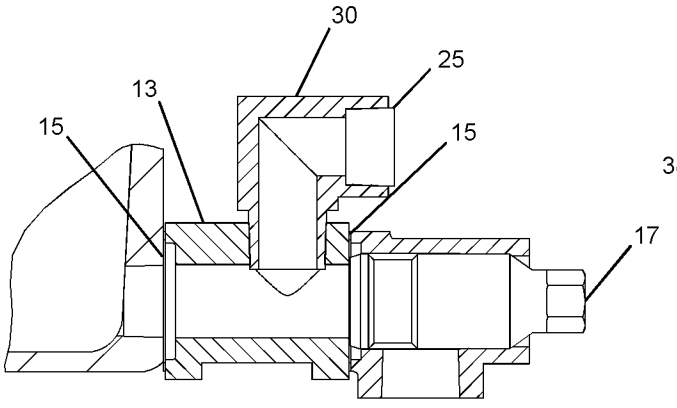

SECTION D-D

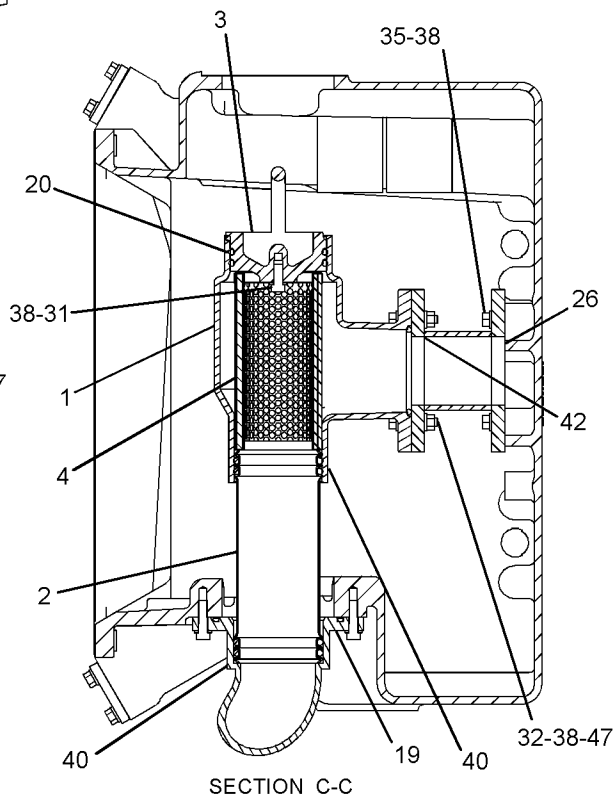

SECTION C-C

GRAPHIC #2 **<END>** g01103047

BASIC ENGINE

160-5910 PISTON & ROD GP

S/N: 8WM1-748

PART OF 240-7750 ENGINE AR

SMCS-1225 **i02391647**

NOTE	REF NO	GRAPHIC REF	PART NUMBER	QTY	PART NAME 1 2 3 4 5 6 (PRODUCT LEVEL)	SEE PAGE
	1	1	**138-8508**	1	PIN-PISTON	
	2	1	**144-5695**	1	RING-PISTON (INTERMEDIATE)	
	3	1	**165-6668**	1	RING-PISTON (OIL CONTROL)	
R	4	1	**172-0919**	1	CROWN AS	
	4A	1	**155-5271**	1	SKIRT-PISTON	
	5	1	**8N-7296**	2	RETAINER-PIN	
	6	1	**229-1632**	1	RING-PISTON (TOP)	
R	7	1	**257-4281**	1	ROD AS	
	7A	1	**7N-2043**	1	DOWEL	
	7B	1	**7N-2405**	4	BOLT-CONNECTING ROD	
	7C	1	**118-1655**	1	BEARING-SLEEVE	
	8	1	**107-7330**	1	BEARING-CONNECTING ROD (STANDARD)	
AB		1	**107-7331**		BEARING-CONNECTING ROD (0.63-MM US ID)	
AB		1	**107-7332**		BEARING-CONNECTING ROD (1.27-MM US ID)	
AB		1	**107-7333**		BEARING-CONNECTING ROD (0.25-MM OS OD)	
AB		1	**107-7334**		BEARING-CONNECTING ROD (0.63-MM US ID, 0.25-MM OS OD)	
AB		1	**107-7335**		BEARING-CONNECTING ROD (1.27-MM US ID, 0.25-MM OS OD)	

A-NOT PART OF THIS GROUP
B-USE AS REQUIRED
R-REMFG PART MAY BE AVAILABLE

160-5910 **PISTON & ROD GP** *(contd.)* **i02391647**

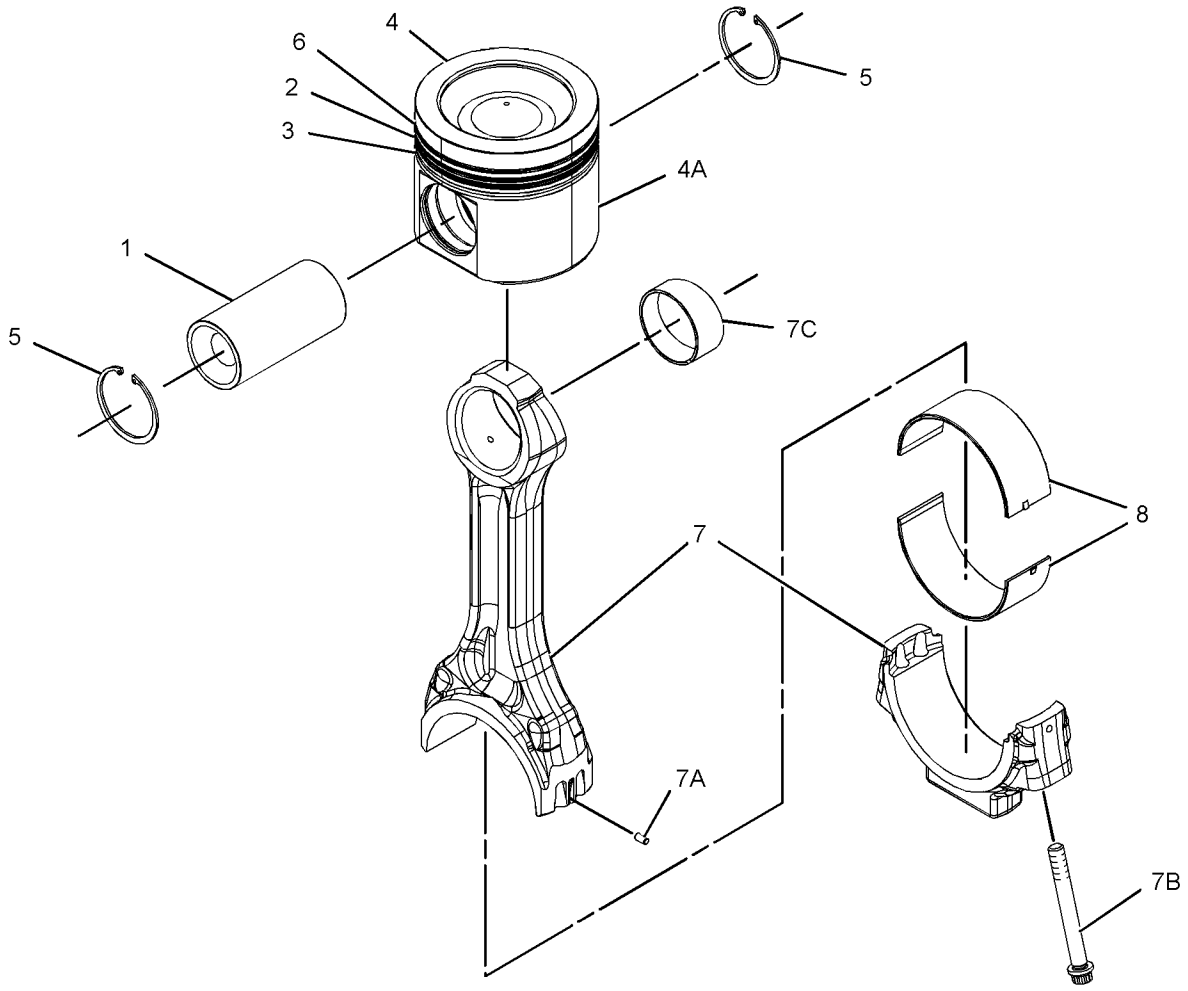

GRAPHIC #1 **<END>** g01194614

BASIC ENGINE

253-3066 PISTON & ROD GP

S/N: 8WM749-UP

PART OF 240-7750 ENGINE AR

SMCS-1225 **i02354404**

NOTE	REF NO	GRAPHIC REF	PART NUMBER	QTY	PART NAME 1 2 3 4 5 6 (PRODUCT LEVEL)	SEE PAGE
	1	1	**138-8508**	1	PIN-PISTON	
	2	1	**144-5695**	1	RING-PISTON (INTERMEDIATE)	
	3	1	**165-6668**	1	RING-PISTON (OIL CONTROL)	
R	4	1	**172-0919**	1	CROWN AS	
	4A	1	**155-5271**	1	SKIRT-PISTON	
	5	1	**8N-7296**	2	RETAINER-PIN	
	6	1	**229-1632**	1	RING-PISTON (TOP)	
	7	1	**230-2516**	1	ROD AS	
	7A	1	**7N-2043**	1	DOWEL	
	7B	1	**7N-2405**	4	BOLT-CONNECTING ROD	
	7C	1	**230-2519**	1	BEARING	
	8	1	**230-2520**	1	BEARING-CONNECTING ROD	

R-REMFG PART MAY BE AVAILABLE

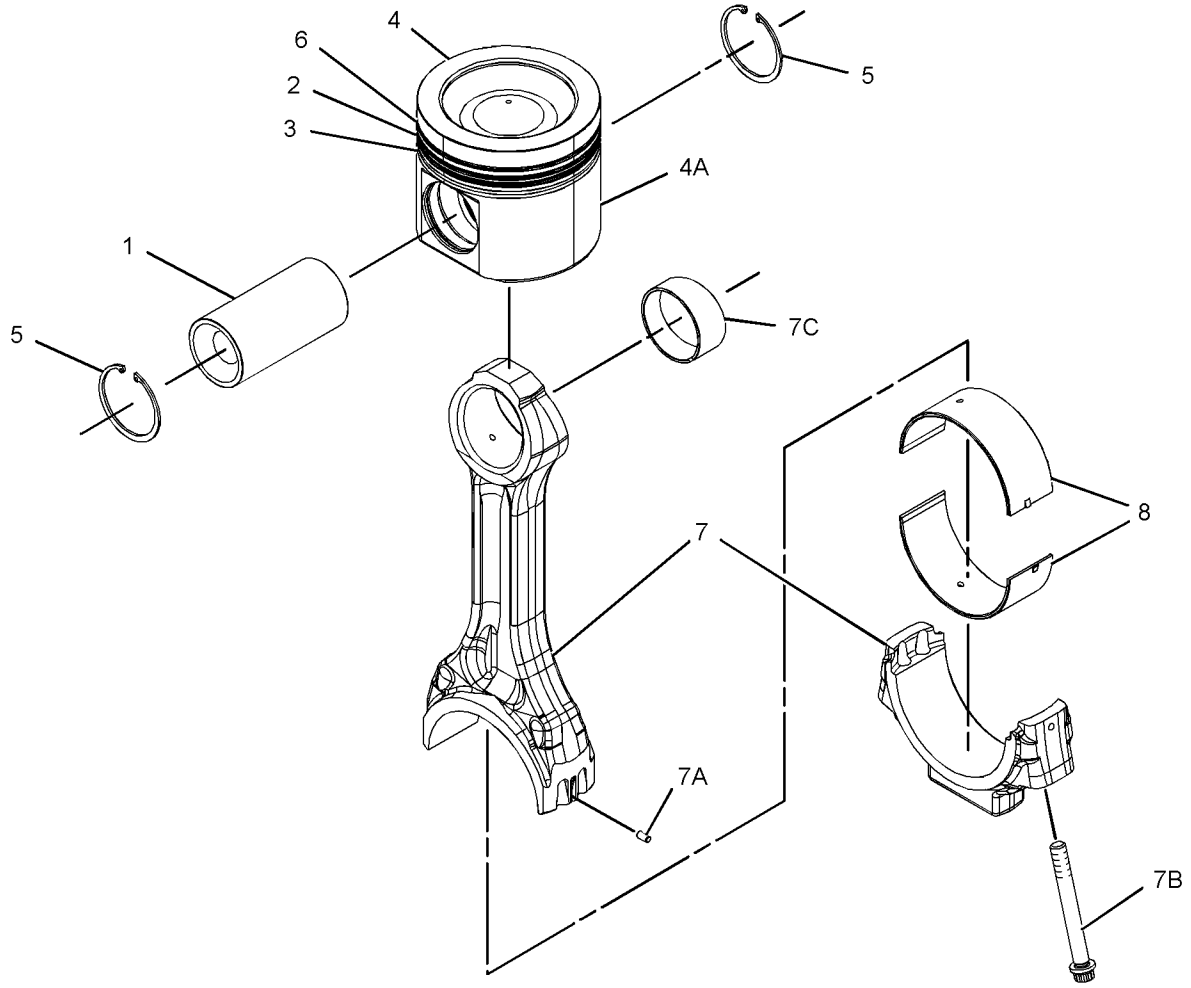

GRAPHIC #1 **<END>** g01186637

7W-3813 SEAL GP-CRANKSHAFT

S/N: 8WM1-UP

PART OF 240-7750 ENGINE AR

SMCS-1160, 1161 **i02390835**

NOTE	REF NO	GRAPHIC REF	PART NUMBER	QTY	PART NAME 1 2 3 4 5 6 (PRODUCT LEVEL)	SEE PAGE
C	1	1	**113-8433**	1	SEAL GP-CRANKSHAFT (CCW ROTATION)	
					(INSTALL IN FLYWHEEL HOUSING ON STANDARD ROTATION ENGINES & IN FRONT HOUSING ON REVERSE ROTATION ENGINES)	
C	2	1	**113-8432**	1	SEAL GP-CRANKSHAFT (CW ROTATION)	
					(INSTALL IN FRONT HOUSING ON STANDARD ROTATION ENGINES & IN FLYWHEEL HOUSING ON REVERSE ROTATION ENGINES)	

C-CHANGE FROM PREVIOUS TYPE

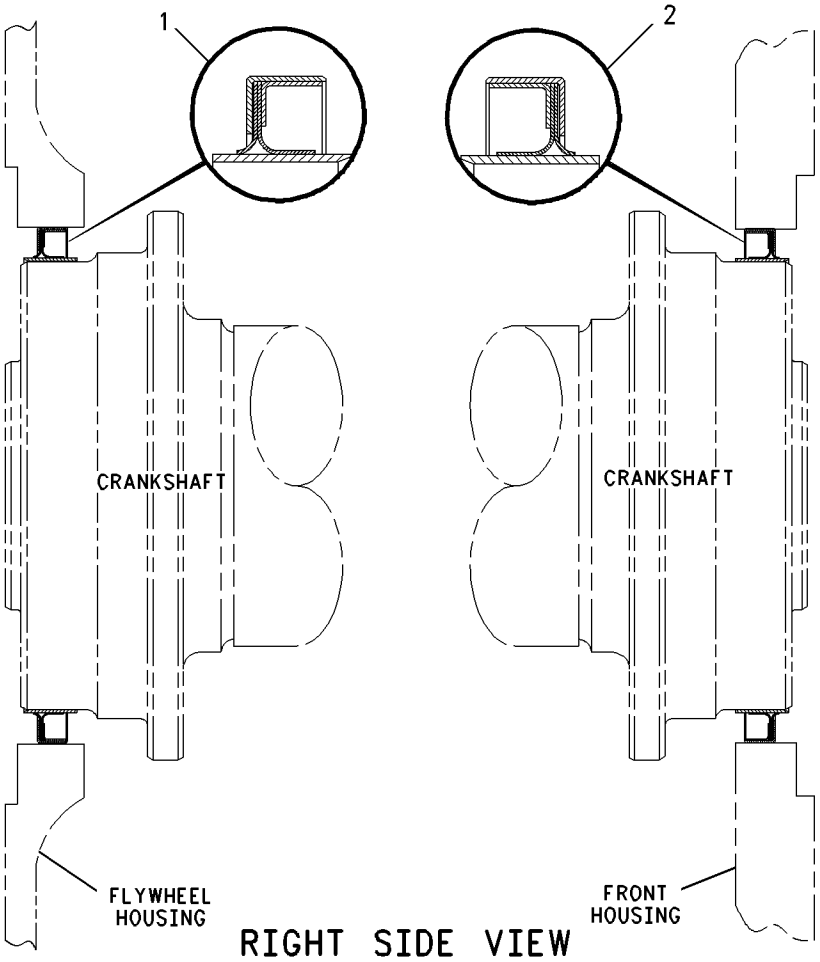

RIGHT SIDE VIEW

GRAPHIC #1 **<END>** g00899342

7E-4722 SUPPORT GP-ENGINE

S/N: 8WM1-UP

PART OF 240-7750 ENGINE AR

SMCS-1152, 1153, 1154 **i00095540**

NOTE	REF NO	GRAPHIC REF	PART NUMBER	QTY	PART NAME 1 2 3 4 5 6 (PRODUCT LEVEL)	SEE PAGE
	1	1	**7E-4721**	1	SUPPORT-FRONT	
	2	1	**1D-4566**	20	BOLT (1/2-13X3.5-IN)	
	3	1	**5P-8245**	20	WASHER-HARD (13.5X25.5X3-MM THK)	

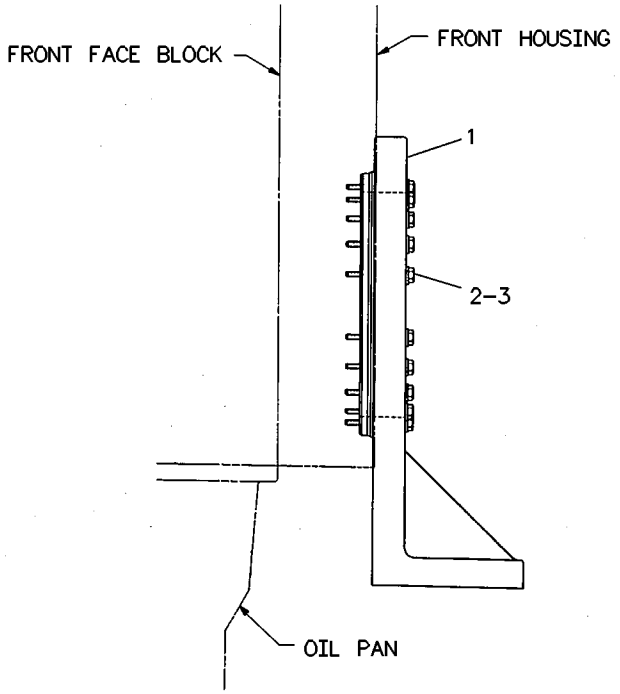

GRAPHIC #1 **<END>** g00082364

9Y-9212 SUPPORT GP-ENGINE

S/N: 4421-UP

PART OF 250-7957 INSTALLATION AR-ENGINE

SMCS-1152, 1153, 1154 **i02179347**

NOTE	REF NO	GRAPHIC REF	PART NUMBER	QTY	PART NAME 1 2 3 4 5 6 (PRODUCT LEVEL)	SEE PAGE
	1	1	**8X-0701**	1	BRACKET AS	
	2	1	**8X-0700**	1	BRACKET AS	
	3	1	**6Y-9980**	10	MOUNT AS	
	4	1	**3E-4887**	10	SLEEVE	
	5	1	**3E-4888**	10	WASHER (32X144X12-MM THK)	
M	6	1	**9X-6618**	4	BOLT (M30X3.5X130-MM)	
	7	1	**9X-8399**	16	WASHER (33X56X6-MM THK)	
M	8	1	**7X-3311**	6	BOLT (M30X3.5X200-MM)	
M	9	1	**8T-1583**	6	NUT (M30X3.5-THD)	
	10	1	**2H-3744**	24	BOLT (1-14X2.25-IN)	
	11	1	**5F-6562**	24	WASHER-HARD (28X44.5X4-MM THK)	

M-METRIC PART

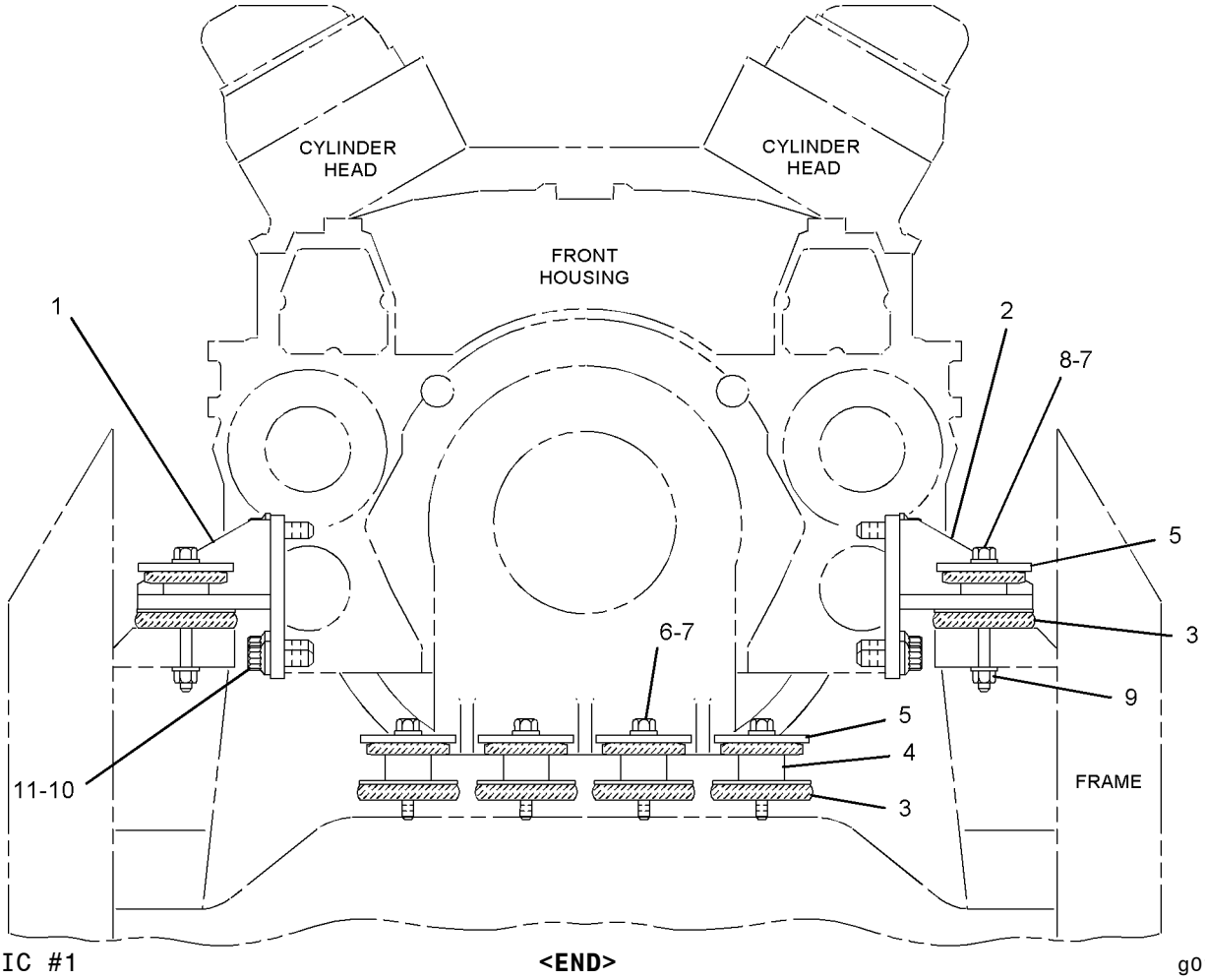

GRAPHIC #1 **<END>** g01103054

BASIC ENGINE

224-9869 VALVE MECHANISM GP

S/N: 8WM1-UP

PART OF 240-7750 ENGINE AR

SMCS-1102, 1121, 1123 **i02260467**

NOTE	REF NO	GRAPHIC REF	PART NUMBER	QTY	PART NAME 1 2 3 4 5 6 (PRODUCT LEVEL)	SEE PAGE
C	1	1	**240-7032**	1	SEAL	
	2	1	**263-6677**	1	LIFTER AS-INJECTOR	
	3	1	**230-2619**	1	SCREW-ADJUSTMENT	
	4	1	**5M-2894**	4	WASHER-HARD (10.2X18.5X2.5-MM THK)	
	5	1	**0L-2070**	2	BOLT (3/8-16X2.25-IN)	
	6	1	**100-3880**	2	PUSHROD-VALVE	
	7	1	**200-2003**	2	SCREW-ADJUSTMENT (1/2-20X2.42-IN)	
	8	1	**3J-9196**	2	NUT-JAM (1/2-20-THD)	
	9	1	**7N-4782**	2	SPRING-LIFTER GUIDE	
	10	1	**9S-1354**	1	NUT (5/8-18-THD)	
	11	1	**100-3879**	1	PUSHROD	
R	12	1	**230-2621**	2	ROCKER ARM AS	
					(EACH INCLUDES)	
		1	**8N-7197**	1	SOCKET-ARM	
		1	**230-2620**	1	BEARING-SLEEVE	
R	13	1	**230-2622**	1	ROCKER ARM AS	
		1	**8N-7197**	1	SOCKET-ARM	
		1	**230-2620**	1	BEARING-SLEEVE	
	14	1	**230-2633**	1	SHAFT AS	
	15	1	**265-7538**	1	BRIDGE (EXHAUST)	
	16	1	**9F-7707**	3	RING-RETAINING	
	17	1	**100-3877**	1	RETAINER-SPRING	
	18	1	**5P-7530**	1	SEAL-O-RING	
	19	1	**5P-0537**	1	WASHER-HARD (7.2X14.5X2-MM THK)	
	20	1	**265-7537**	1	BRIDGE (INLET)	
	21	1	**263-6674**	2	LIFTER AS-VALVE	
	22	1	**0S-1615**	1	BOLT (1/4-20X0.75-IN)	
	23	1	**9X-0352**	1	RECEPTACLE AS	
	24	1	**6J-2245**	1	SEAL-O-RING	
	25	1	**132-6469**	1	HARNESS AS-WIRING (VALVE MECHANISM)	
		1	**155-2270**	1	KIT-CONNECTING PLUG (2-PIN)	
					(INCLUDES PLUG ASSEMBLY AND WEDGE)	
CY	26	1	*247-8341*	1	BASE GP-VALVE COVER	10
	27	1	**100-3878**	1	SPRING-INJECTOR	
	28	1	**8D-7942**	2	BOLT-12 POINT HEAD (5/8-11X6.5-IN)	
	29	1	**7E-6508**	1	CAP AS	
	30	1	**0S-1590**	2	BOLT (3/8-16X2-IN)	
	31	1	**154-6389**	3	BUTTON	

C-CHANGE FROM PREVIOUS TYPE
R-REMFG PART MAY BE AVAILABLE
Y-SEPARATE ILLUSTRATION

224-9869 **VALVE MECHANISM GP** *(contd.)* **i02260467**

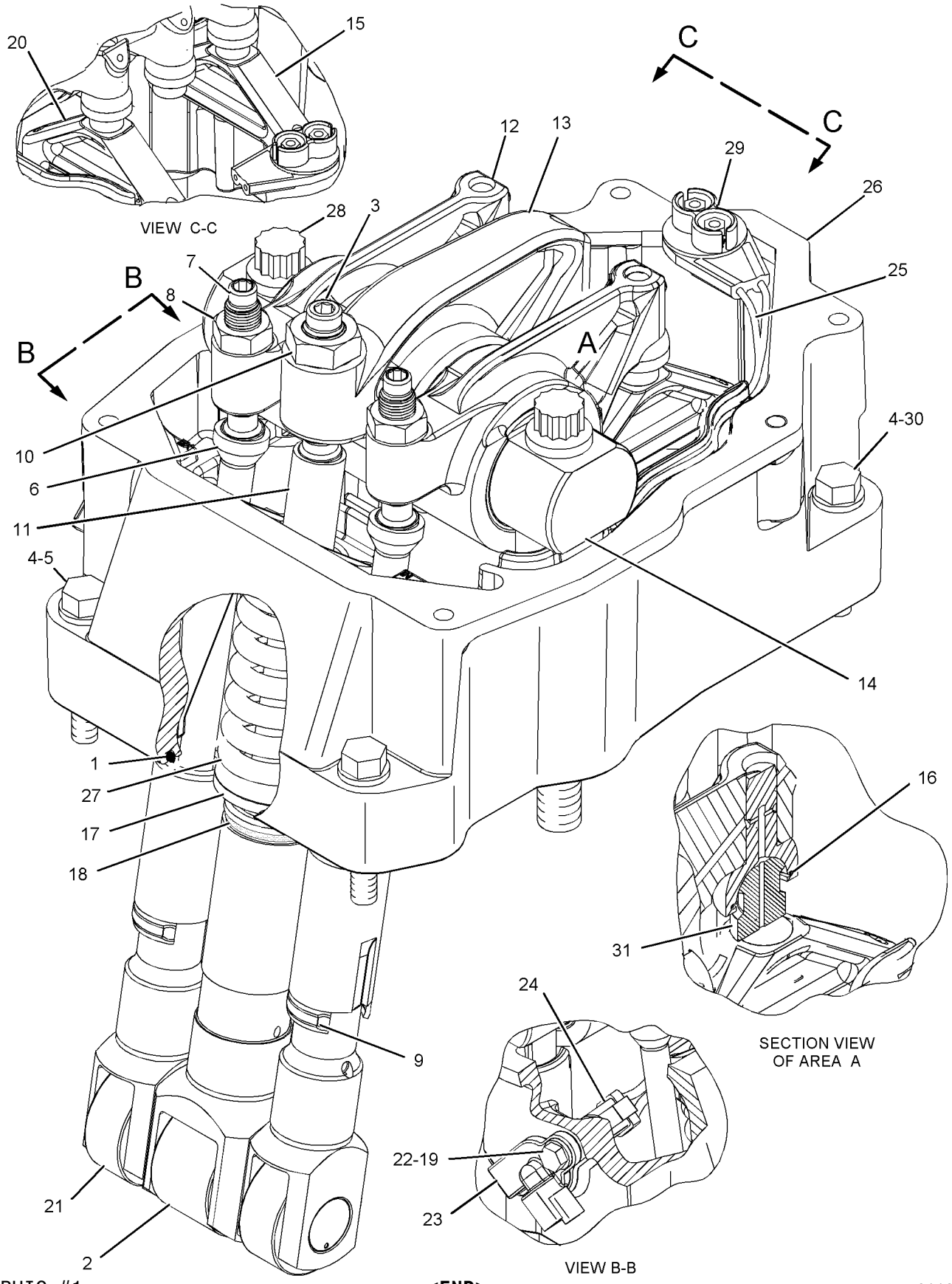

GRAPHIC #1 **<END>** g01120693

LUBRICATION SYSTEM

124-5513 BREATHER GP–CRANKCASE

S/N: 8WM1-UP

PART OF 240-7750 ENGINE AR

SMCS-1317 **i02250026**

NOTE	REF NO	GRAPHIC REF	PART NUMBER	QTY	PART NAME 1 2 3 4 5 6 (PRODUCT LEVEL)	SEE PAGE
	1	1	**208-2364**	4	SEAL (BREATHER COVER)	
	2	1	**4W-3027**	4	BREATHER AS (CRANKCASE)	
	3	1	**217-6692**	2	HOSE-TEE	
	4	1	**033-6031**	4	SEAL-O-RING	
	5	1	**1A-9579**	15	BOLT (5/16-18X1.5-IN)	
	6	1	**9M-1974**	15	WASHER-HARD (8.8X16X2-MM THK)	
	7	1	**101-4199**	4	COVER AS	
	8	1	**4W-3034**	4	CLAMP-HOSE	
	9	1	**5P-0597**	4	CLAMP-HOSE	
	10	1	**5P-4868**	2	CLAMP-HOSE	
B	12	1	**1A-9579**	1	BOLT (5/16-18X1.5-IN)	
B	13	1	**9M-1974**	1	WASHER-HARD (8.8X16X2-MM THK)	

B-USE AS REQUIRED

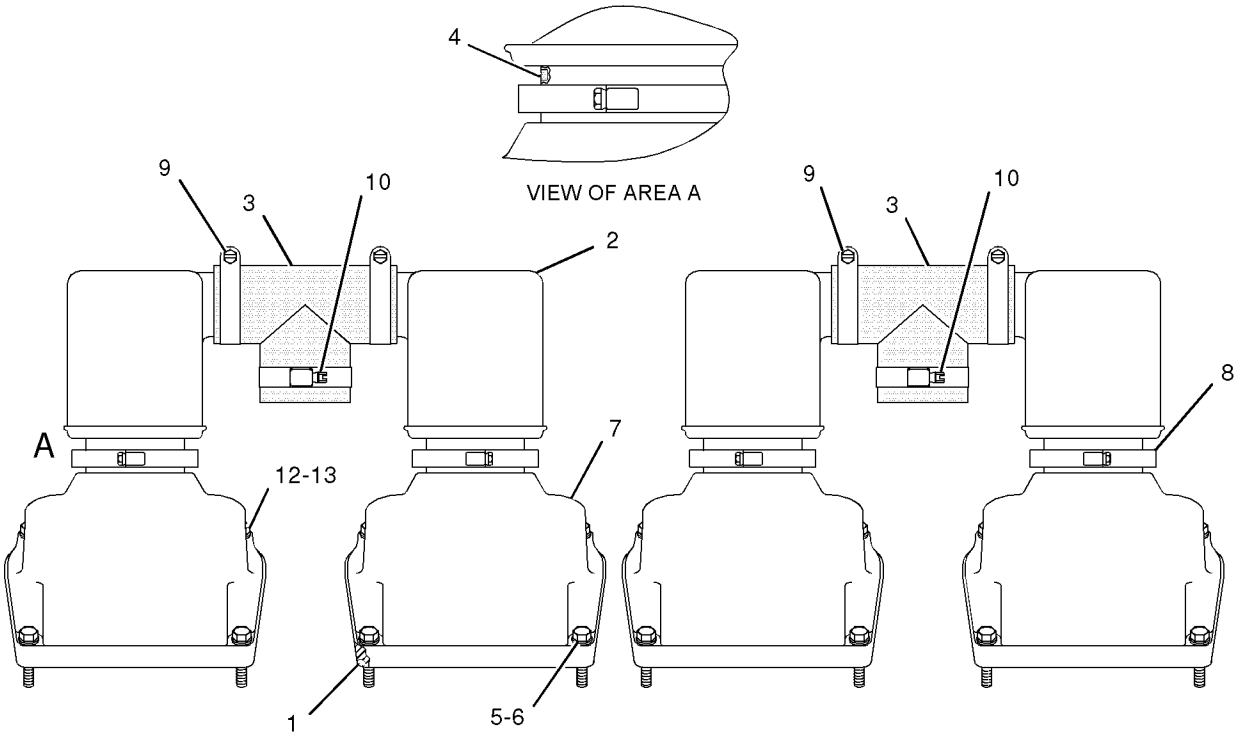

LEFT SIDE VIEW

GRAPHIC #1 **<END>** g01032552

267-4484 BREATHER GP–CRANKCASE

S/N: 8WM1-UP

PART OF 240-7750 ENGINE AR

SMCS-1317 **i02337468**

NOTE	REF NO	GRAPHIC REF	PART NUMBER	QTY	PART NAME 1 2 3 4 5 6 (PRODUCT LEVEL)	SEE PAGE
	1	1	**4W-3027**	4	BREATHER AS (CRANKCASE)	
	2	1	**4W-3034**	4	CLAMP-HOSE	
	3	1	**5P-0597**	4	CLAMP-HOSE	
	4	1	**5P-4868**	2	CLAMP-HOSE	
	5	1	**101-4199**	4	COVER AS	
	6	1	**208-2364**	4	SEAL (COVER, VALVE MECHANISM)	
	7	1	**217-6692**	2	HOSE-TEE	
	8	1	**033-6031**	4	SEAL-O-RING	
	9	1	**1A-9579**	16	BOLT (5/16-18X1.5-IN)	
	10	1	**9M-1974**	16	WASHER-HARD (8.8X16X2-MM THK)	

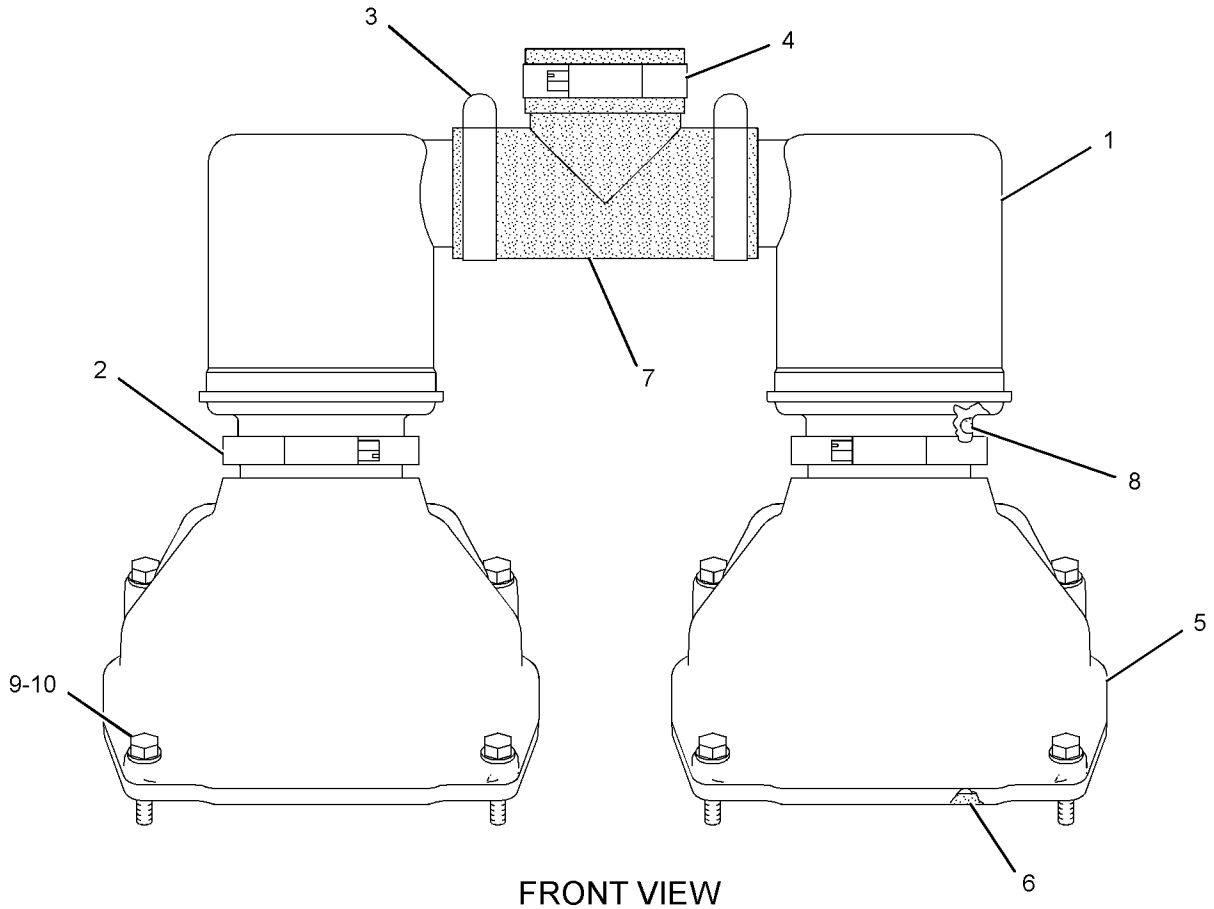

FRONT VIEW

GRAPHIC #1 **<END>** g01220708

LUBRICATION SYSTEM

119-6363 FILLER GP-ENGINE OIL

S/N: 8WM1-UP

PART OF 240-7750 ENGINE AR

SMCS-1316 **i02010913**

NOTE	REF NO	GRAPHIC REF	PART NUMBER	QTY	PART NAME 1 2 3 4 5 6 (PRODUCT LEVEL)	SEE PAGE
	1	1	**5P-8502**	1	PADLOCK GP (ENGINE OIL FILLER)	
		1	**5P-8500**	1	KEY	
		1	**8Y-6364**	1	SLEEVE	
	2	1	**0S-1588**	4	BOLT (3/8-16X1.25-IN)	
	3	1	**5M-2894**	4	WASHER-HARD (10.2X18.5X2.5-MM THK)	
	4	1	**6V-4314**	1	SEAL-O-RING	
	5	1	**205-4779**	1	ELBOW AS	
	6	1	**039-6937**	1	BOLT-SHOULDER (1/4-20X1-IN)	
	7	1	**7C-5694**	1	HASP	
	8	1	**133-5946**	1	CAP AS (ENGINE OIL FILL) (ENGINE)	
	9	1	**2D-6235**	1	LOCKNUT (1/4-20-THD)	

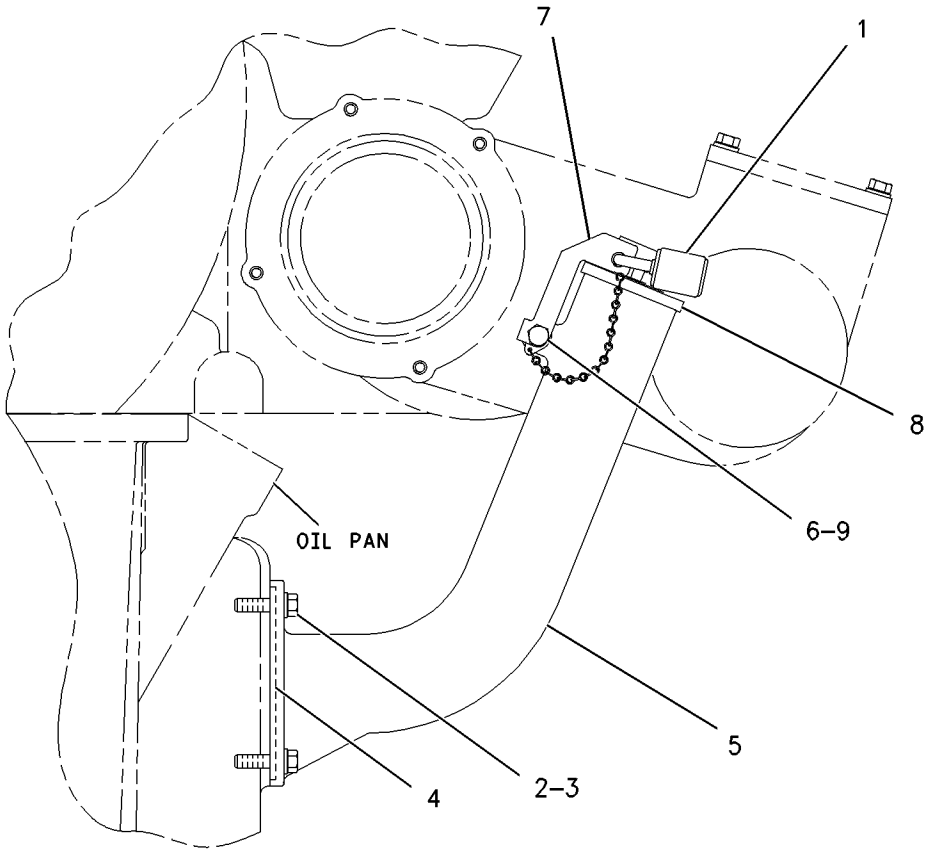

FRONT VIEW

GRAPHIC #1 **<END>** g00868192

257-6347 FILTER GP-ENGINE OIL

S/N: 8WM1-UP

PART OF 240-7750 ENGINE AR

SMCS-1306, 1308 **i02208708**

NOTE	REF NO	GRAPHIC REF	PART NUMBER	QTY	PART NAME 1 2 3 4 5 6 (PRODUCT LEVEL)	SEE PAGE
	1	1	**1P-1367**	4	PLUNGER	
	2	1	**2P-4005**	4	FILTER AS-ENGINE OIL	
	3	1	**7E-8413**	1	SUPPORT AS	
		1	**5V-9221**	3	SPACER (13.8X25X25-MM THK)	
	4	1	**7G-6713**	4	SPRING-MAIN	
	5	1	**8C-3445**	1	CAP-DUST	
	6	1	**9Y-8388**	3	GASKET	
	7	1	**100-8075**	3	CLAMP AS	
	8	1	**111-3820**	2	RING-RETAINING	
	9	1	**111-6119**	4	SHIELD	
	10	1	**111-9373**	1	CLAMP AS	
	11	1	**121-5734**	1	ADAPTER-BASE	
	12	1	**151-9270**	2	BASE AS-OIL FILTER	
					(EACH INCLUDES)	
		1	**2P-4304**	2	STUD-TAPERLOCK	
	13	1	**171-8936**	1	ELBOW	
	14	1	**171-8937**	1	TUBE-OIL	
	15	1	**0S-1571**	4	BOLT (3/8-16X1.75-IN)	
	16	1	**0S-1591**	12	BOLT (3/8-16X1.5-IN)	
	17	1	**0S-1594**	20	BOLT (3/8-16X1-IN)	
	18	1	**109-2332**	2	SEAL-O-RING	
	19	1	**1A-2029**	9	BOLT (3/8-16X1.125-IN)	
	20	1	**1S-7106**	4	COVER	
	21	1	**2B-2695**	8	BOLT (5/16-18X0.875-IN)	
	22	1	**5M-2894**	28	WASHER-HARD (10.2X18.5X2.5-MM THK)	
	23	1	**5P-8245**	6	WASHER-HARD (13.5X25.5X3-MM THK)	
	24	1	**7F-9090**	8	SCREW-DRIVE (NO 8X3/8-IN)	
	25	1	**8C-3446**	1	VALVE-FLUID SAMPLING (ENGINE OIL)	
	26	1	**8T-6758**	1	PLUG-PIPE	
	27	1	**8T-6762**	1	PLUG-PIPE	
	28	1	**9M-1974**	8	WASHER-HARD (8.8X16X2-MM THK)	
	29	1	**9S-8752**	16	NUT-FULL (3/8-16-THD)	
	30	1	**9X-8873**	6	BOLT (1/2-13X2.25-IN)	
	31	1	**9Y-8387**	4	GASKET	
	32	1	**6V-5048**	1	SEAL-O-RING	

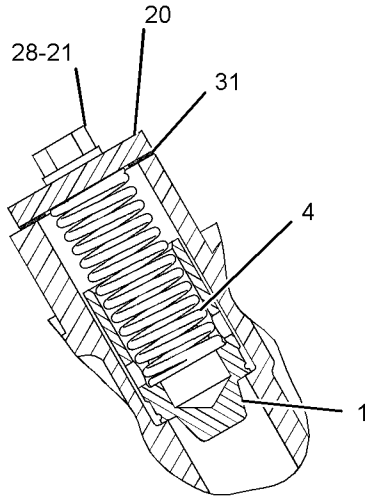

SECTION A-A

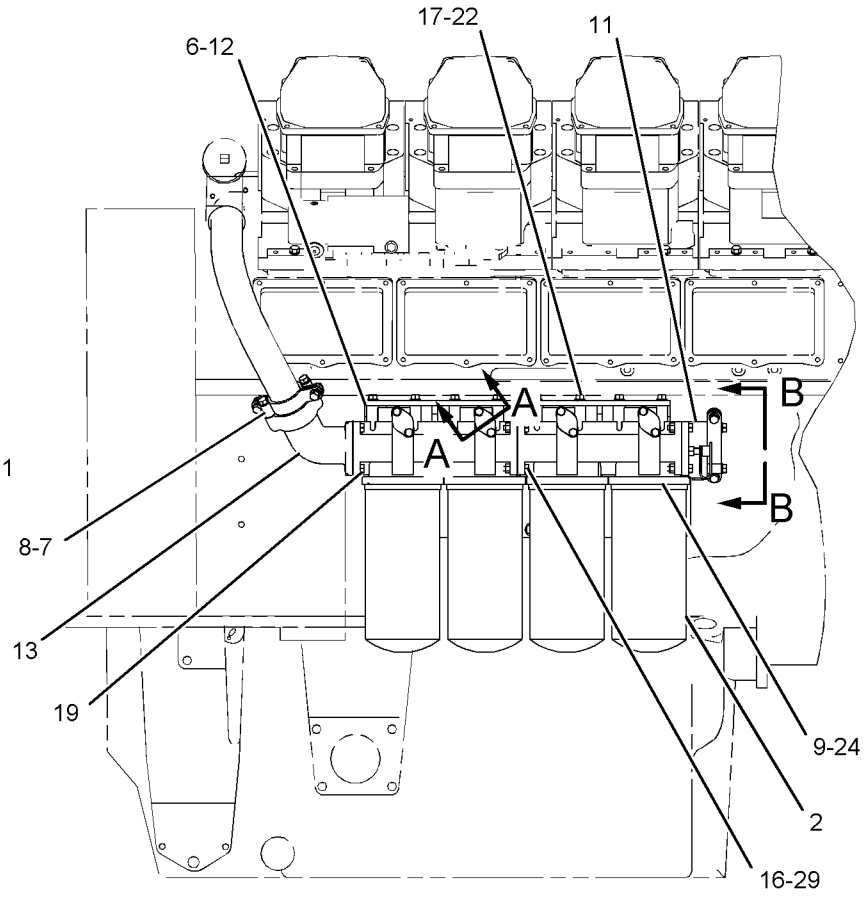

LEFT SIDE VIEW

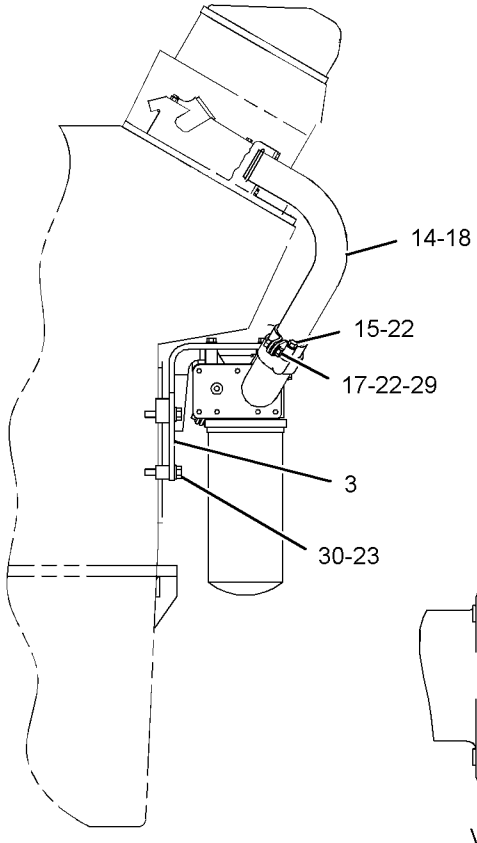

FRONT VIEW

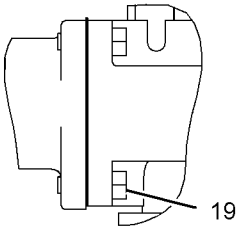

VIEW C-C

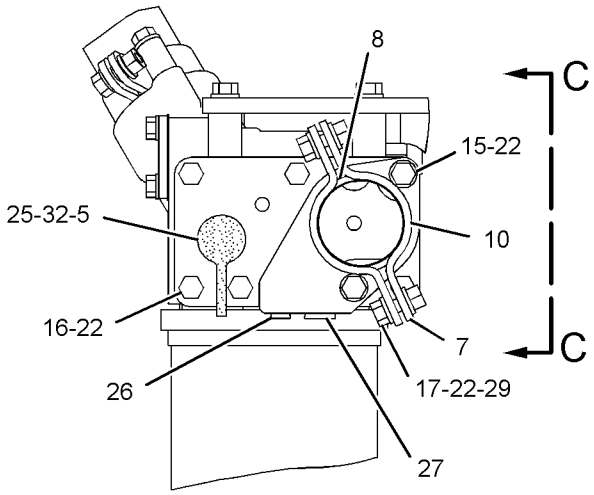

VIEW B-B

GRAPHIC #1 **<END>** g01118790

LUBRICATION SYSTEM

267-4456 FUMES DISPOSAL GP

S/N: 4421-UP

PART OF 245-8813 INSTALLATION AR-FIELD

SMCS-1317 **i02301016**

NOTE	REF NO	GRAPHIC REF	PART NUMBER	QTY	PART NAME 1 2 3 4 5 6 (PRODUCT LEVEL)	SEE PAGE
	1	1	**5P-4868**	8	CLAMP-HOSE	
	2	1	**136-1612**	2	CLIP	
	3	1	**175-5244**	2	FUMES DISPOSAL GP	
	4	1	**178-6365**	2	ELBOW	
	5	1	**178-6366**	4	TUBE	
M	6	1	**8T-4139**	2	BOLT (M12X1.75X30-MM)	
	7	1	**8T-4223**	4	WASHER-HARD (13.5X25.5X3-MM THK)	
M	8	1	**8T-4244**	2	NUT (M12X1.75-THD)	
	9	1	**5P-1261**		HOSE (175-CM EACH)	
	10	1	**270-8612**	2	INSULATION	

M-METRIC PART

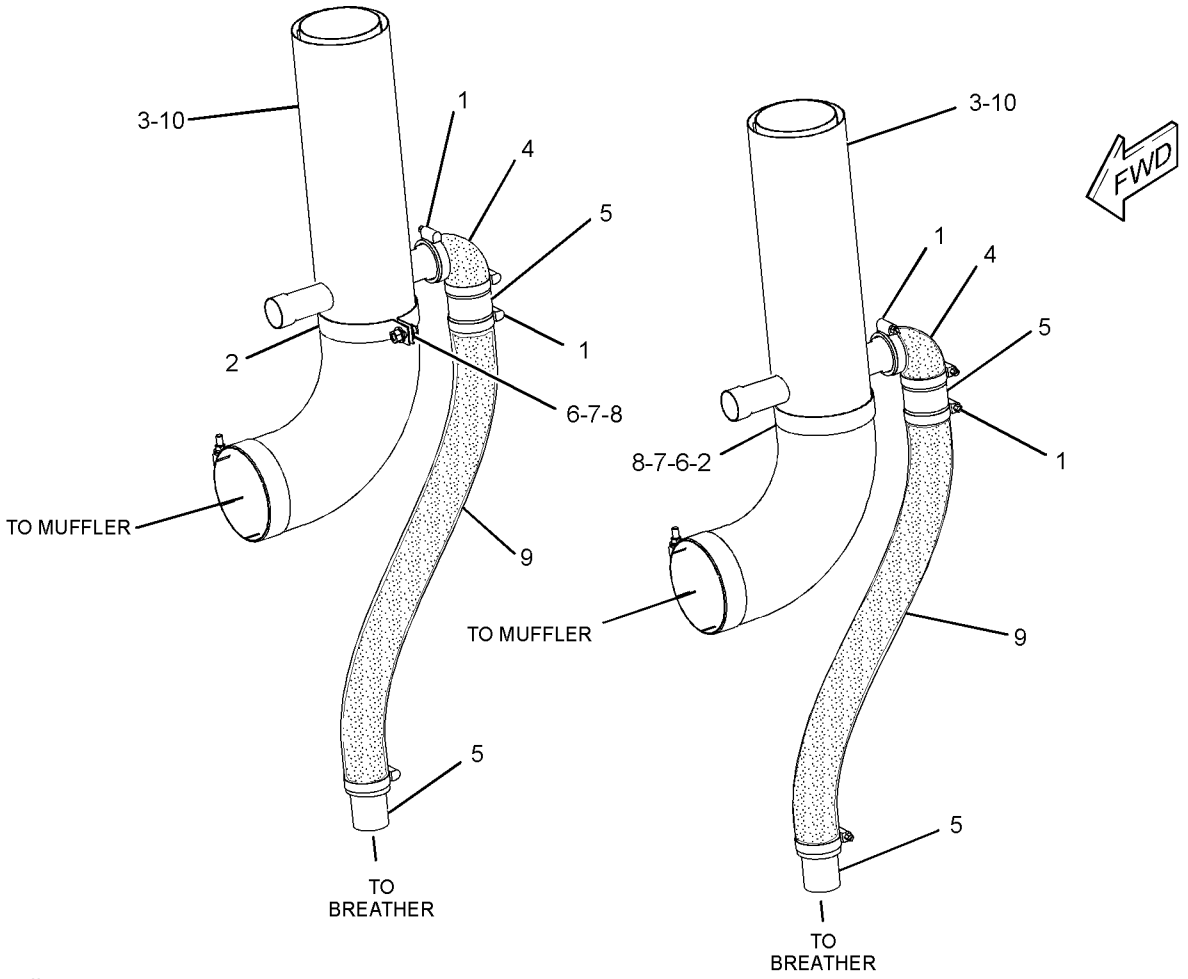

GRAPHIC #1 **<END>** g01152230

123-6975 GAUGE GP-OIL LEVEL (DIPSTICK)

S/N: 8WM1-UP

PART OF 240-7750 ENGINE AR

SMCS-1326 **i02312814**

NOTE	REF NO	GRAPHIC REF	PART NUMBER	QTY	PART NAME 1 2 3 4 5 6 (PRODUCT LEVEL)	SEE PAGE
	1	1	**123-6997**	1	GAUGE AS-OIL LEVEL (DIPSTICK)	
	2	1	**4P-0707**	2	CLAMP AS	
	3	1	**0L-1143**	1	BOLT (3/8-16X2.5-IN)	
	4	1	**9S-8752**	3	NUT-FULL (3/8-16-THD)	
	5	1	**123-6978**	1	TUBE AS-GAUGE GUIDE	
	6	1	**5M-2894**	8	WASHER-HARD (10.2X18.5X2.5-MM THK)	
	7	1	**5P-8502**	1	PADLOCK GP (ENGINE OIL FILL TUBE)	
A		1	**5P-8500**	1	KEY	
A		1	**8Y-6364**	1	SLEEVE	
	8	1	**111-4400**	1	BRACKET	
	9	1	**0S-1588**	2	BOLT (3/8-16X1.25-IN)	
	10	1	**4F-3765**	1	GASKET-SHAFT	
	11	1	**3B-1915**	2	BOLT (3/8-16X1.375-IN)	

A-NOT PART OF THIS GROUP

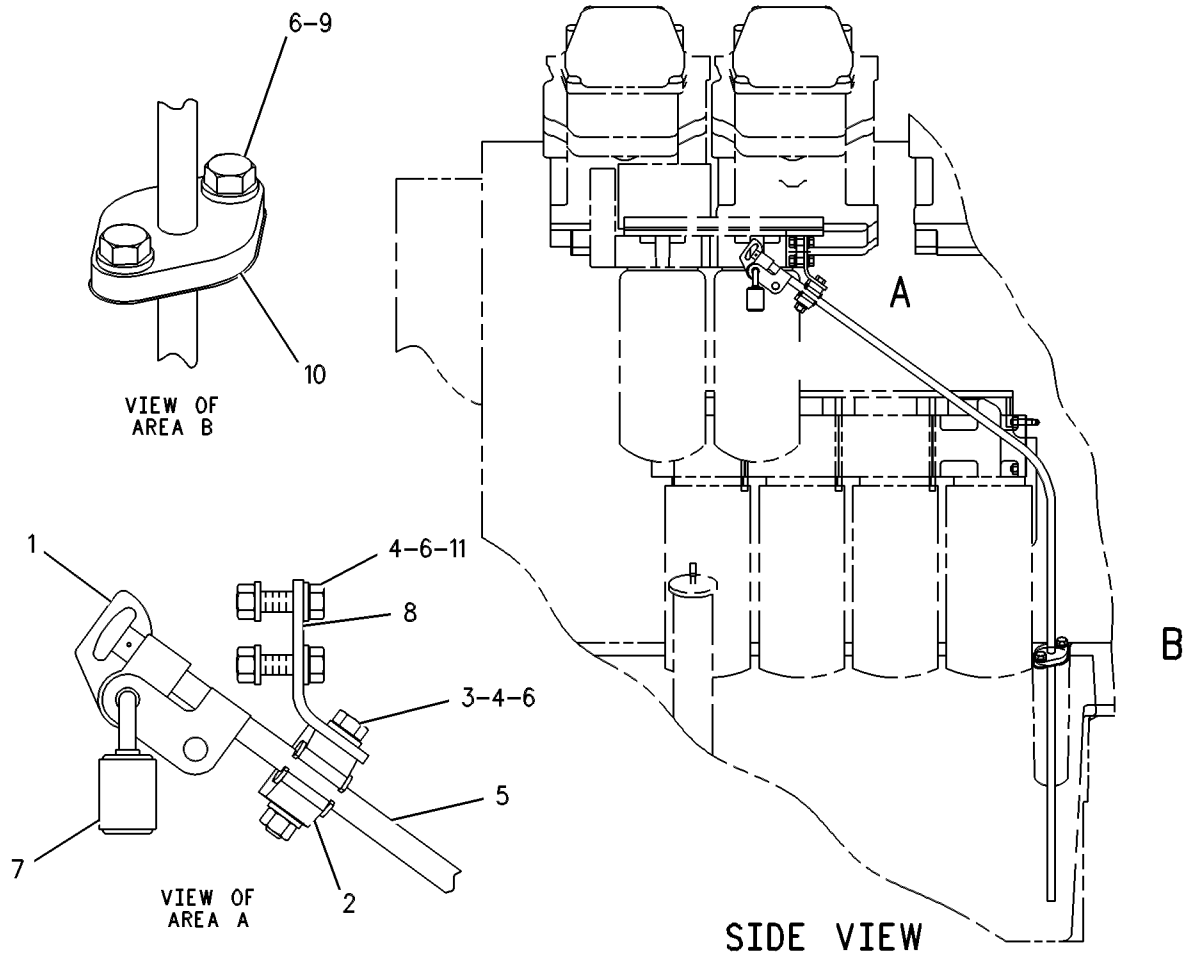

GRAPHIC #1 **<END>** g00276363

264-0000 GAUGE GP-OIL LEVEL (DIPSTICK)

S/N: 4421-UP

PART OF 244-7300 HYDRAULIC AR-FRONT

SMCS-1326 **i02356584**

NOTE	REF NO	GRAPHIC REF	PART NUMBER	QTY	PART NAME 1 2 3 4 5 6 (PRODUCT LEVEL)	SEE PAGE
	1	1	**3K-6905**	1	VALVE-BREATHER (DRIVE PUMP)	
		1	**1K-9005**	1	HINGE AS	
	2	1	**5H-4744**	1	SPACER (7/16-IN THK)	
	3	1	**264-0440**	1	GAUGE AS-OIL LEVEL (DIPSTICK)	
	4	1	**271-2073**	1	TUBE AS	
	5	1	**271-2074**	1	BRACKET AS	
	6	1	**164-4180**	1	PLUG AS	
		1	**7M-8485**	1	SEAL-O-RING	
		1	**9S-4181**	1	PLUG	
	7	1	**5P-7466**	1	CLIP (SLOT)	
	8	1	**5P-7467**	1	CLIP (TAB)	
	9	1	**5P-8112**	1	GROMMET	
	10	1	**6V-4245**	1	ELBOW	
	11	1	**6V-8978**	1	SEAL-O-RING	
	12	1	**8T-4121**	6	WASHER-HARD (11X21X2.5-MM THK)	
M	13	1	**8T-4186**	2	BOLT (M10X1.5X40-MM)	
M	14	1	**8T-4194**	1	BOLT (M12X1.75X50-MM)	
	15	1	**8T-4223**	1	WASHER-HARD (13.5X25.5X3-MM THK)	
M	16	1	**8T-5005**	2	BOLT (M10X1.5X70-MM)	

M-METRIC PART

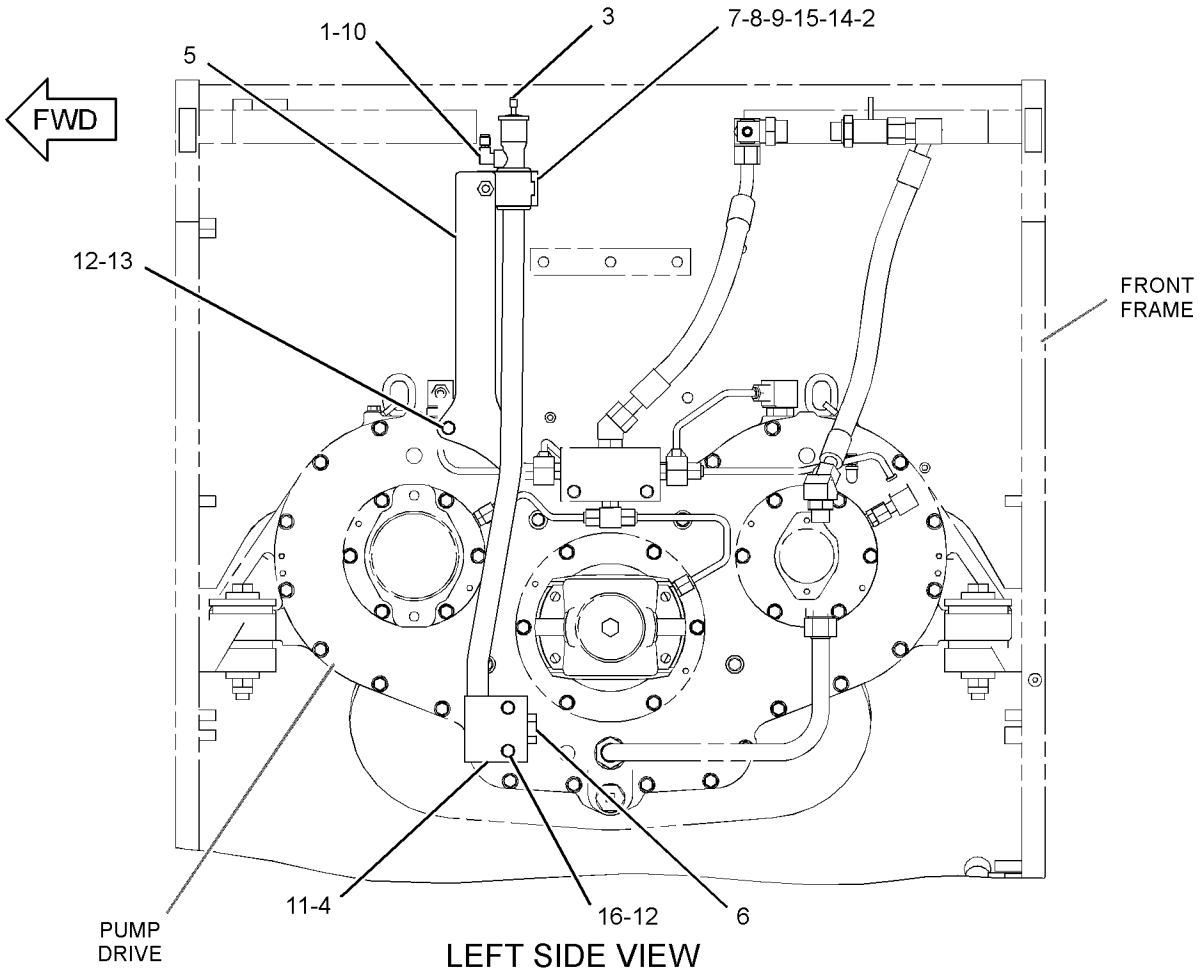

LEFT SIDE VIEW

GRAPHIC #1 **<END>** g01177565

LUBRICATION SYSTEM

9Y-8902 LINES GP-ENGINE OIL

S/N: 8WM1-UP

PART OF 240-7750 ENGINE AR

SMCS-1307 **i01568565**

NOTE	REF NO	GRAPHIC REF	PART NUMBER	QTY	PART NAME 1 2 3 4 5 6 (PRODUCT LEVEL)	SEE PAGE
	1	1	**1N-3333**	1	TUBE	
	2	2	**1W-2447**	1	ADAPTER-OUTLET	
	3	2	**2W-1053**	1	PLUG	
	4	2	**2W-1055**	1	ELBOW	
	5	2	**2W-1635**	1	SPRING	
	6	2	**2W-1969**	1	VALVE-BYPASS (OIL COOLER)	
	7	2	**2W-7226**	1	ADAPTER	
	8	2	**3P-0764**	1	PLUG	
	9	1	**4B-3140**	1	COVER	
	10	2	**4W-5596**	1	COVER (OIL COOLER BYPASS VALVE)	
	11	1	**4W-5890**	1	PLUG	
	12	1	**6B-9202**	2	SPRING	
	13	2	**7C-9217**	1	ELBOW	
	14	1	**7N-5413**	1	ELBOW	
	15	2	**7N-5416**	1	ELBOW	
	16	1	**7N-7697**	2	PLUNGER AS	
					(EACH INCLUDES)	
		1	**7M-1808**	1	DOWEL	
	17	2	**8N-1991**	1	RING-RETAINING	
	18	1,2	**8N-1992**	4	RETAINER	
	19	1	**8N-2929**	2	COVER	
C	20	1	**9M-4594**	2	SPACER (0.406X0.875X0.75-IN THK)	
	21	2	**100-8075**	2	CLAMP AS	
C	22	2	**105-4301**	1	TUBE	
	23	2	**111-3820**	1	RING-RETAINING	
	24	2	**061-9456**	4	SEAL-O-RING	
	25	2	**0L-1143**	4	BOLT (3/8-16X2.5-IN)	
	26	2	**0S-1571**	2	BOLT (3/8-16X1.75-IN)	
	27	1	**0S-1588**	6	BOLT (3/8-16X1.25-IN)	
	28	2	**0S-1591**	2	BOLT (3/8-16X1.5-IN)	
C	29	1,2	**0S-1594**	19	BOLT (3/8-16X1-IN)	
C	30	1	**0T-0573**	2	BOLT (3/8-16X2.75-IN)	
	31	1,2	**109-2332**	5	SEAL-O-RING	
	32	2	**1A-5964**	4	BOLT (3/8-16X4.5-IN)	
	33	1	**2K-4973**	2	LOCKNUT (3/8-16-THD)	
	34	1,2	**3P-0655**	3	SEAL-O-RING	
	35	1	**5F-4899**	1	BOLT (3/8-16X5.5-IN)	
	36	1,2	**5M-2894**	18	WASHER-HARD (10.2X18.5X2.5-MM THK)	
	37	2	**5P-4892**	1	SEAL-O-RING	
	38	1	**5P-5846**	1	SEAL-O-RING	
	39	2	**5P-7817**	1	SEAL-O-RING	
	40	2	**6B-5072**	1	BUSHING-REDUCING	
C	41	1	**6V-1572**	2	CLIP (SLOT)	
C	42	1	**6V-1573**	2	CLIP (TAB)	
	43	1	**6V-1574**	2	GROMMET	
	44	2	**6V-3908**	1	SEAL-O-RING	
	45	2	**6V-4589**	1	SEAL-O-RING	
	46	2	**6V-5048**	2	SEAL-O-RING	
C	47	2	**8T-6762**	1	PLUG-PIPE	
C	48	1	**8T-6765**	1	PLUG-PIPE (1/4-18-THD)	
	49	2	**9S-4182**	2	PLUG	
	50	2	**9S-8752**	2	NUT-FULL (3/8-16-THD)	
B	52	2	**8T-6765**	1	PLUG-PIPE (1/4-18-THD)	
B	53	2	**8T-6765**	2	PLUG-PIPE (1/4-18-THD)	
B	54	2	**0S-1594**	1	BOLT (3/8-16X1-IN)	

9Y-8902 **LINES GP-ENGINE OIL** ***(contd.)*** **i01568565**

B-USE AS REQUIRED
C-CHANGE FROM PREVIOUS TYPE

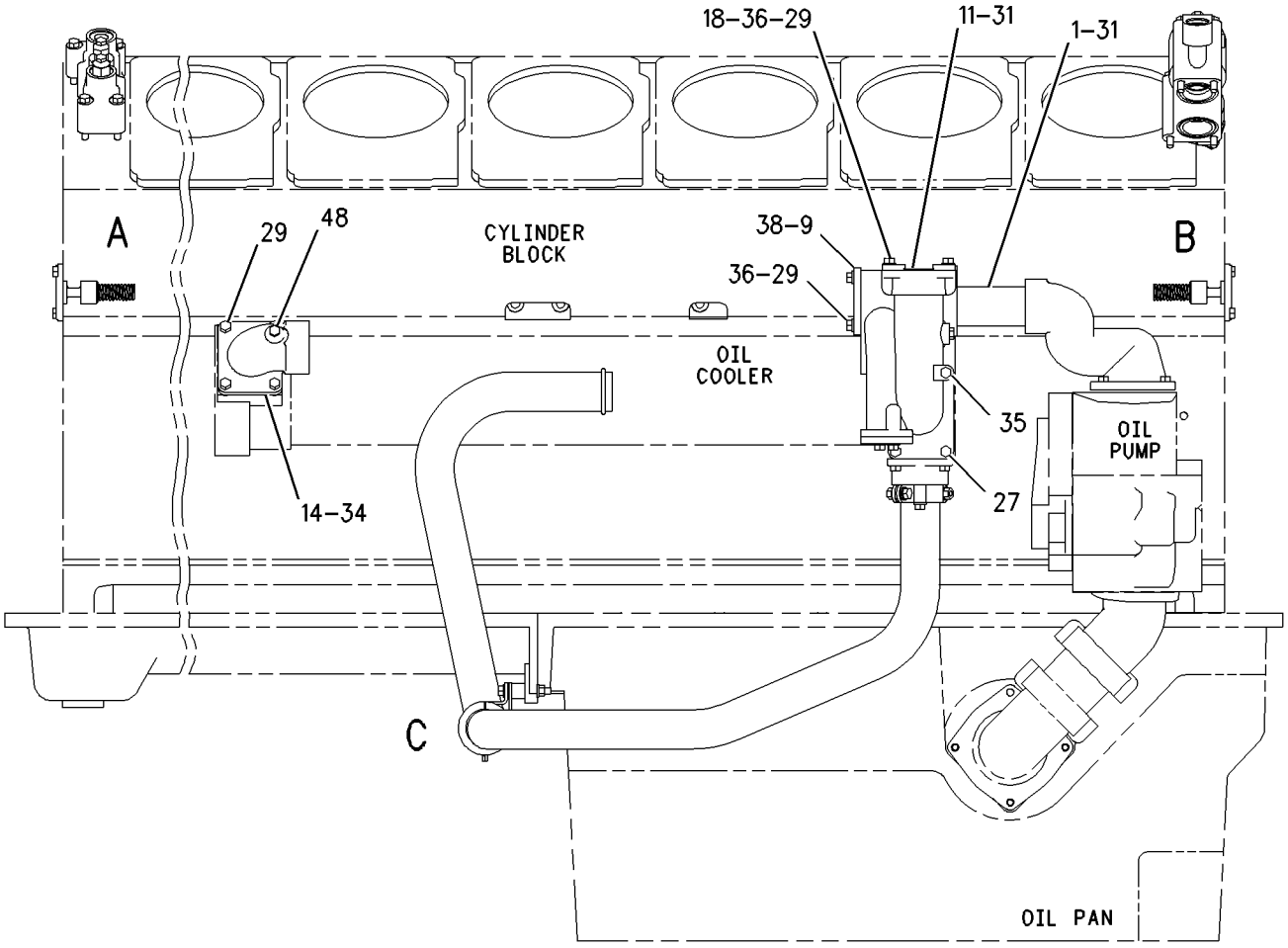

RIGHT SIDE VIEW

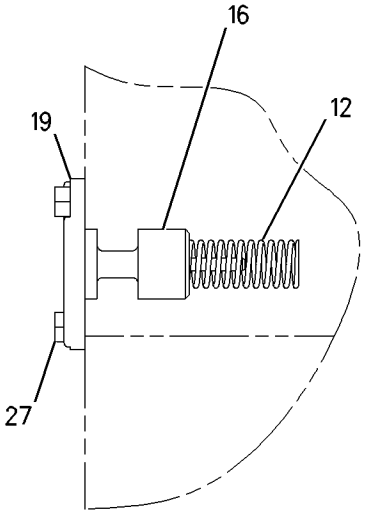

VIEW OF AREA A

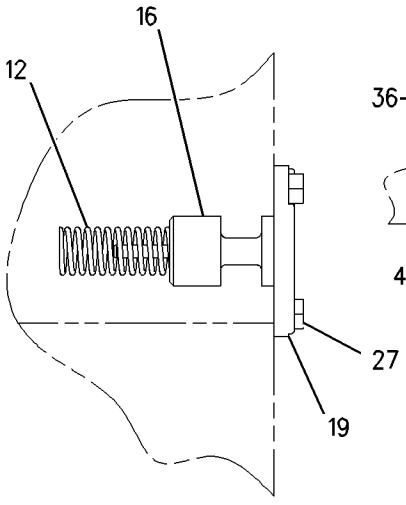

VIEW OF AREA B

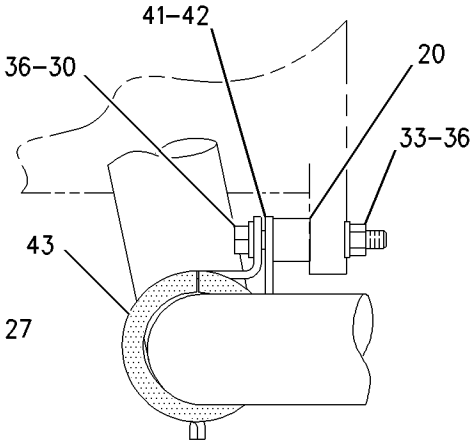

VIEW OF AREA C

GRAPHIC #1 g00768045

9Y-8902 **LINES GP-ENGINE OIL** *(contd.)* **i01568565**

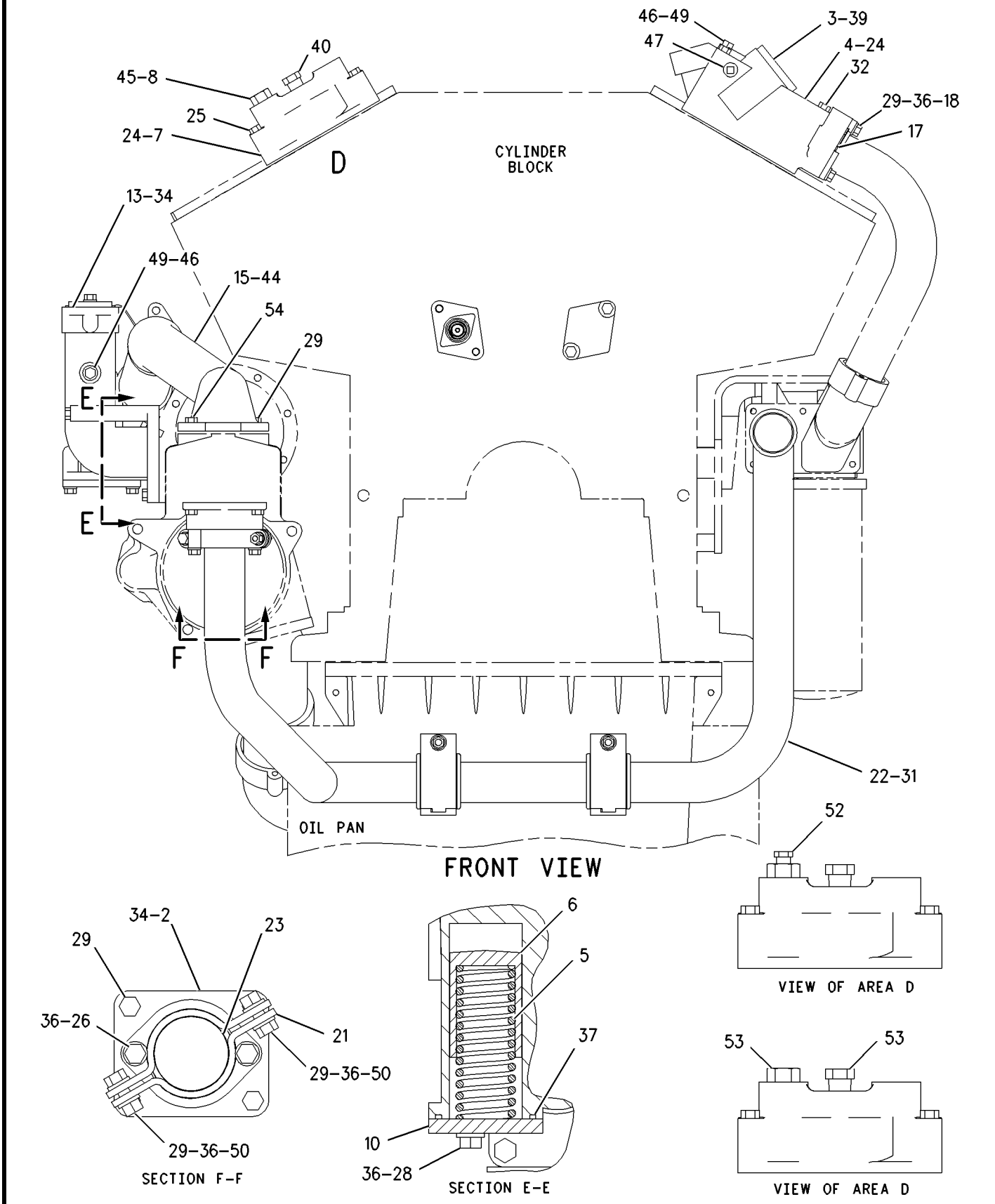

GRAPHIC #2

<END>

g00805190

LUBRICATION SYSTEM

123-6919 LINES GP-ENGINE OIL–FAN DRIVE

S/N: 4421-UP
PART OF 267-4451 DRIVE AR-FAN
AN ATTACHMENT

SMCS-1307 **i01994968**

NOTE	REF NO	GRAPHIC REF	PART NUMBER	QTY	PART NAME 1 2 3 4 5 6 (PRODUCT LEVEL)	SEE PAGE
	1	1	**4L-9337**	2	BOLT (3/8-16X1.5-IN)	
	2	1	**3J-1907**	4	SEAL-O-RING	
	3	1	**6V-4589**	1	SEAL-O-RING	
CY	4	1	**192-7139**	1	VALVE & MTG GP-FAN DRIVE	110
	5	1	**120-4512**	1	BRACKET	
	6	1	**6V-8627**	4	ELBOW	
	7	1	**061-7538**	6	SEAL-O-RING	
I	8	1	**104-4766**	1	HOSE AS	
	9	1	**8M-2770**	2	CLIP	
	10	1	**8T-4896**	7	WASHER-HARD (10.2X18.5X2.5-MM THK)	
I	12	1	**141-7196**	1	HOSE AS	
	13	1	**8L-2746**	2	SEAL-O-RING	
	14	1	**6V-8642**	1	CONNECTOR	
	15	1	**033-6033**	2	SEAL-O-RING	
B	16	1	**9X-6772**	4	STRAP-CABLE	
I	17	1	**104-4763**	1	HOSE AS	
	18	1	**119-6346**	1	TEE-FACE SEAL	
	19	1	**6V-5050**	2	SEAL-O-RING	
	20	1	**5P-2231**	1	ADAPTER	
	21	1	**4P-7581**	1	CLIP	
	22	1	**3K-0360**	1	SEAL-O-RING	
C	23	1	**8T-1686**	1	ELBOW	
	24	1	**6V-8713**	1	CONNECTOR	
	25	1	**100-7603**	1	ELBOW	
	26	1	**1J-9671**	1	SEAL-O-RING	
	27	1	**0T-0102**	1	BOLT (3/8-16X0.625-IN)	
C	28	1	**5P-7817**	1	SEAL-O-RING	
I	29	1	**104-4764**	2	HOSE AS	
	30	1	**8T-9371**	2	BOLT (3/8-16X0.5-IN)	
	31	1	**8T-2501**	2	BOLT (3/8-16X2-IN)	

B-USE AS REQUIRED
C-CHANGE FROM PREVIOUS TYPE
I-REFER TO HYDRAULIC INFORMATION SYSTEM
Y-SEPARATE ILLUSTRATION

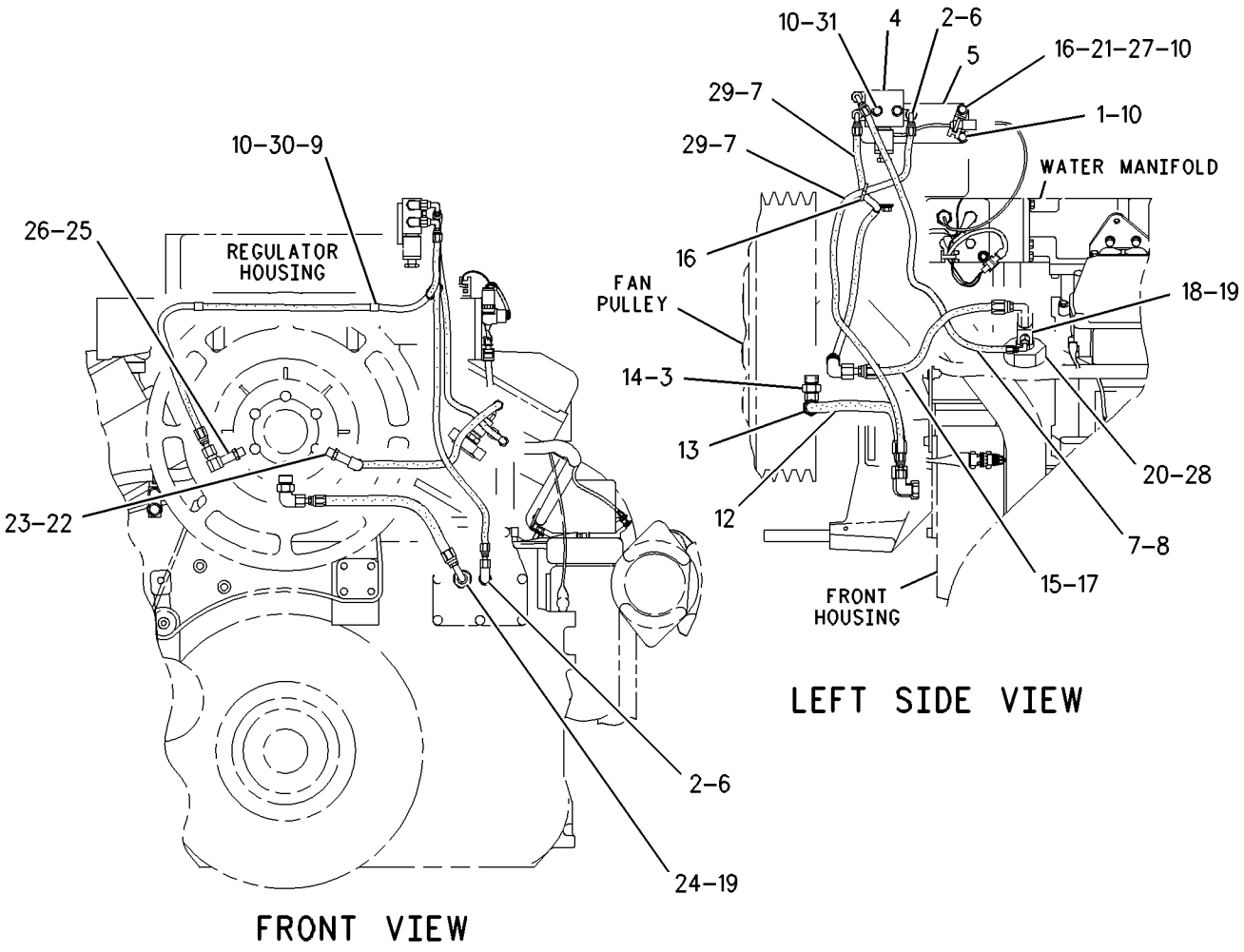

GRAPHIC #1 **<END>** g00893350

LUBRICATION SYSTEM

7E-5337 LINES GP-TURBOCHARGER OIL

S/N: 8WM1-UP

PART OF 240-7750 ENGINE AR

SMCS-1052, 1307 **i01942237**

NOTE	REF NO	GRAPHIC REF	PART NUMBER	QTY	PART NAME 1 2 3 4 5 6 (PRODUCT LEVEL)	SEE PAGE
	1	1,2	**7N-5094**	4	ELBOW-DRAIN	
	2	1,2	**5P-9890**	8	SEAL-O-RING	
	3	1,2	**7E-5338**	2	TUBE	
	4	1,2	**7E-5335**	4	BRACKET	
	5	1,2	**6K-5535**	4	CLIP (SLOT)	
	6	1,2	**6K-5536**	4	CLIP (TAB)	
	7	1,2	**0S-1594**	4	BOLT (3/8-16X1-IN)	
C	8	1,2	**3E-4352**	11	WASHER-HARD (8.8X20.5X2.5-MM THK)	
C	9	1,2	**9S-8752**	15	NUT-FULL (3/8-16-THD)	
	10	1,2	**9Y-5814**	4	ELBOW-DRAIN	
	11	1,2	**7N-7559**	4	GASKET	
	12	1,2	**0T-0055**	6	BOLT (3/8-16X4.25-IN)	
C	13	1,2	**5M-2894**	19	WASHER-HARD (10.2X18.5X2.5-MM THK)	
	14	1,2	**1W-7990**	2	TUBE	
	15	1,2	**0S-1588**	16	BOLT (3/8-16X1.25-IN)	
	16	1,2	**2W-0752**	4	GASKET	
	17	1	**030-7949**	1	ELBOW	
	18	1,2	**6V-4589**	2	SEAL-O-RING	
C	19	1,2	**4P-0692**	22	CLAMP AS	
C	20	1,2	**0S-1617**	11	BOLT (5/16-18X0.75-IN)	
	21	1,2	**003-8581**	2	TEE-UNION	
C	22	1,2	**7E-5330**	11	BRACKET	
	23	2	**9M-4584**	1	CONNECTOR	
	24	2	**7E-0949**	1	TUBE AS	
C	25	1	**205-4782**	1	TUBE AS	
C	26	1,2	**0L-1143**	11	BOLT (3/8-16X2.5-IN)	
	27	1,2	**3B-1915**	4	BOLT (3/8-16X1-3/8-IN)	
	28	1,2	**0S-1608**	4	BOLT (3/8-16X3.75-IN)	
	29	1,2	**184-3230**	4	HOSE AS	
	30	1,2	**6I-0812**	2	TUBE AS-OIL	
	31	1,2	**4P-4460**	4	GASKET	
C	32	1,2	**9X-6458**	11	WASHER-HARD (10.2X22.5X3-MM THK)	
	33	1,2	**6I-0805**	2	ADAPTER-TURBOCHARGER OIL	
	34	1,2	**6I-0804**	2	ADAPTER-TURBOCHARGER OIL	
	35	1,2	**8L-2786**	4	SEAL-O-RING	
	36	1,2	**2P-7636**	4	CONNECTOR	
	37	1,2	**5P-4900**	2	ELBOW-FLARED	
	38	1	**8S-9191**	2	BOLT (3/8-16X4-IN)	
B	39	2	**9R-5008**	2	SPACER (11X20X6-MM THK)	
C	40	1	**9Y-0047**	2	CLAMP	
C	41	1	**100-3237**	2	GROMMET	
C	42	1	**2B-2694**	1	BOLT (5/16-18X2-IN)	
C	43	1	**9N-0869**	1	WASHER-HARD (8.8X25.5X2-MM THK)	
	44	1,2	**9L-9132**	8	WASHER (10.2X25.5X2.5-MM THK)	

B-USE AS REQUIRED
C-CHANGE FROM PREVIOUS TYPE

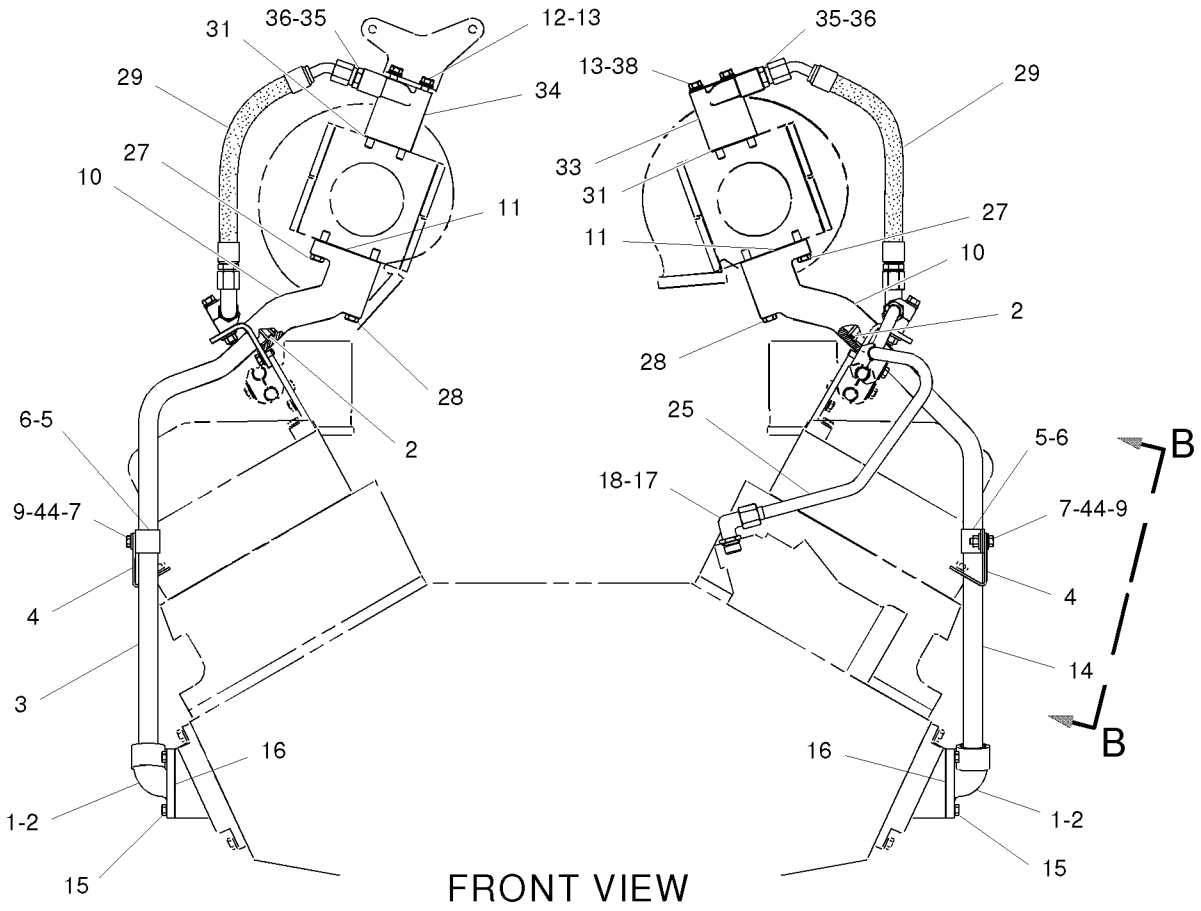

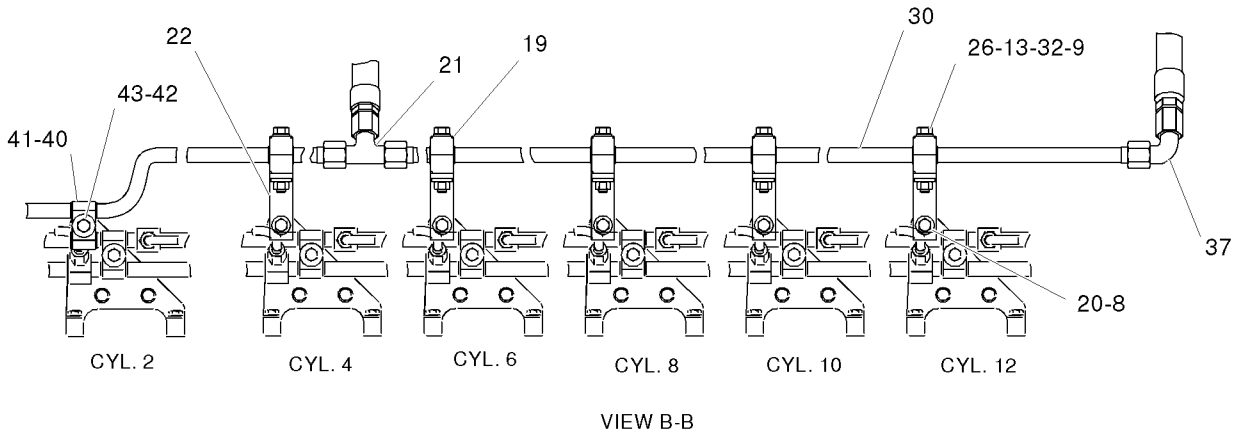

GRAPHIC #1 g01010861

7E-5337 **LINES GP-TURBOCHARGER OIL** *(contd.)* **i01942237**

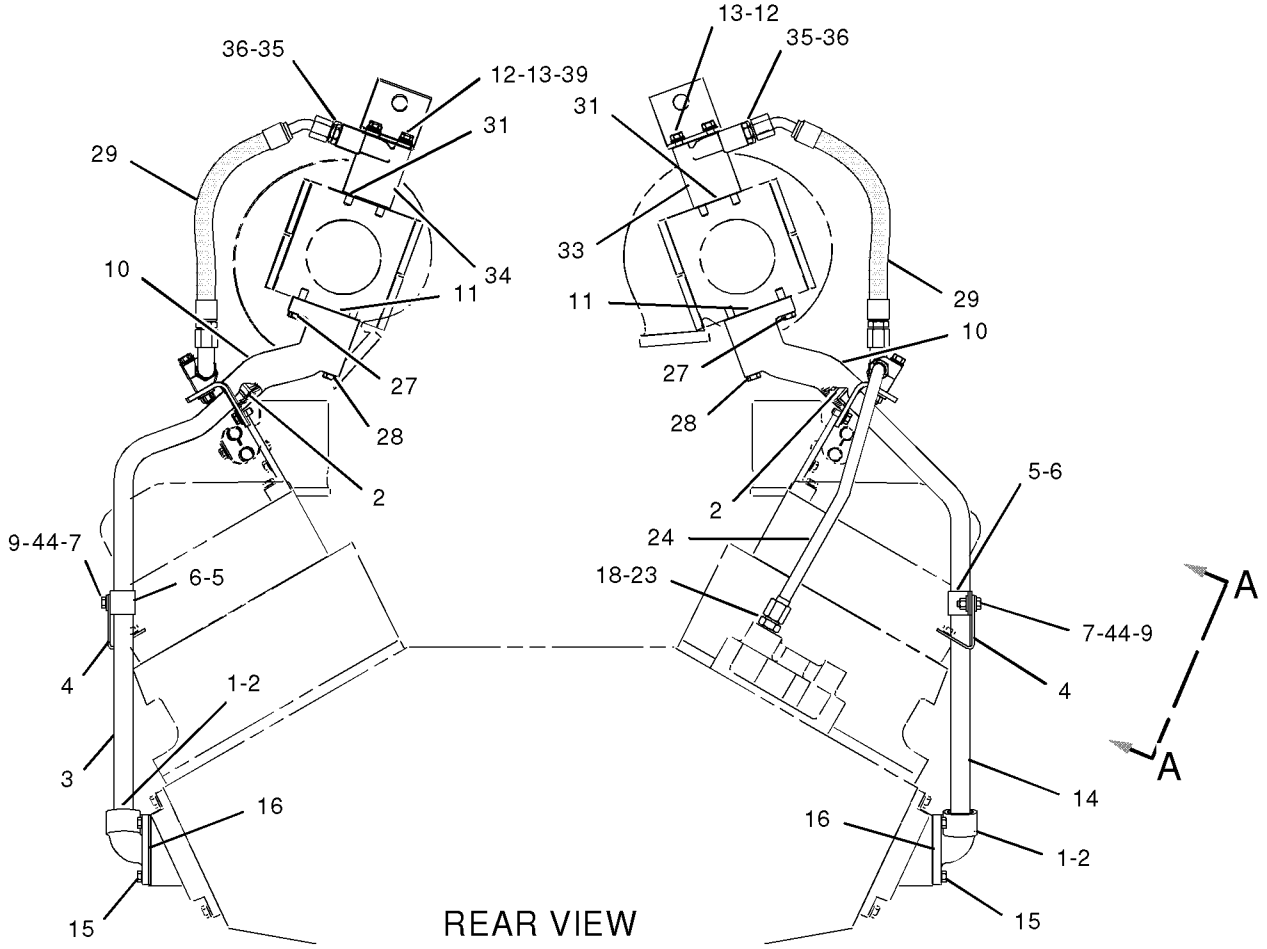

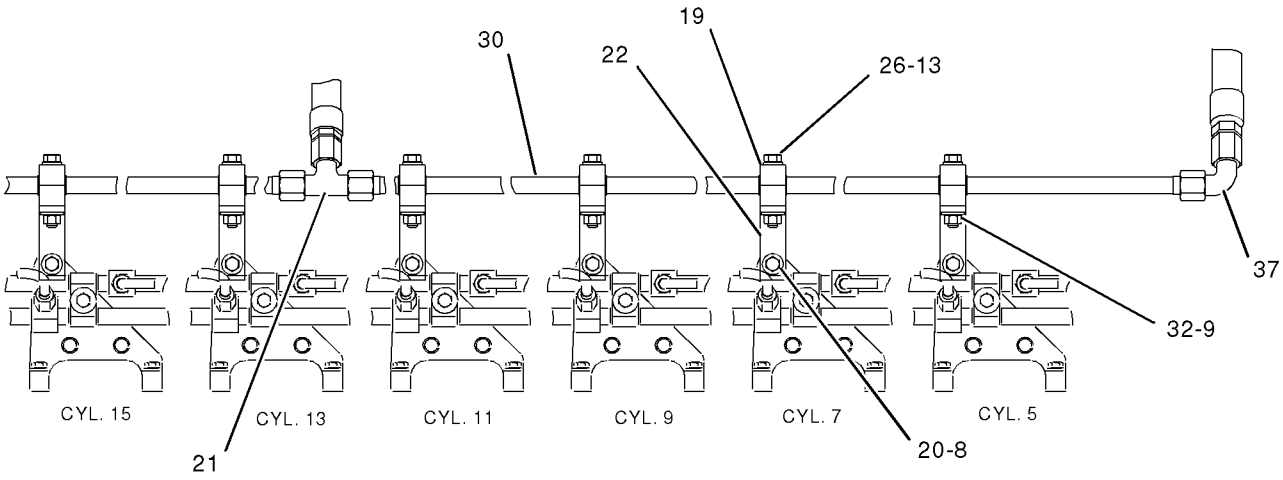

VIEW A-A

GRAPHIC #2 **<END>** g01010862

246-5553 METERING GP-ENGINE OIL—OIL RENEWAL SYSTEM

S/N: 4421-UP
PART OF 249-7584 RENEWAL AR-OIL
AN ATTACHMENT

SMCS-1307 **i02327913**

NOTE	REF NO	GRAPHIC REF	PART NUMBER	QTY	PART NAME 1 2 3 4 5 6 (PRODUCT LEVEL)	SEE PAGE
	1	1	**1W-8129**	1	SUPPORT	
	2	1	**2W-0752**	1	GASKET	
	3	1	**4P-7581**	1	CLIP	
	4	1	**4P-7850**	1	COVER	
	5	1	**4P-8134**	3	CLIP	
	6	1	**8N-9993**	1	COVER-CAMSHAFT	
	7	1	**9X-6772**	5	STRAP-CABLE	
	8	1	**208-2362**	1	SEAL	
Y	9	1	**235-0266**	1	VALVE GP-METERING (ENGINE OIL) (OIL RENEWAL SYSTEM)	111
I	10	1	**251-1520**	1	HOSE AS	
I	11	1	**251-1521**	1	HOSE AS	
I	12	1	**251-1670**	1	HOSE AS	
	13	1	*148-8351*	1	ELBOW AS	
		1	**6V-9849**	1	ELBOW (SWIVEL)	
		1	**4J-5477**	1	SEAL-O-RING	
	14	1	*148-8369*	1	ELBOW AS	
		1	**3J-7354**	1	SEAL-O-RING	
		1	**4J-5477**	1	SEAL-O-RING	
		1	**6V-8628**	1	ELBOW	
	15	1	*148-8385*	1	ELBOW AS	
		1	**3J-7354**	1	SEAL-O-RING	
		1	**4J-5477**	1	SEAL-O-RING	
		1	**6V-9000**	1	ELBOW	
	16	1	**3J-1907**	1	SEAL-O-RING	
	17	1	**4J-5477**	2	SEAL-O-RING	
	18	1	**5M-2894**	10	WASHER-HARD (10.2X18.5X2.5-MM THK)	
	19	1	**6V-8628**	1	ELBOW	
	20	1	**6V-8641**	1	CONNECTOR	
	21	1	**6V-8801**	2	NUT (3/8-16 THD)	
	22	1	**8T-8915**	2	BOLT (3/8-16X3.25-IN)	
	23	1	**8T-9379**	2	BOLT (3/8-16X4.25-IN)	
	24	1	**9B-7237**	4	BOLT (3/8-16X1.25-IN)	
	25	1	**8T-4896**	1	WASHER-HARD (10.2X18.5X2.5-MM THK)	

I-REFER TO HYDRAULIC INFORMATION SYSTEM
Y-SEPARATE ILLUSTRATION

246-5553 **METERING GP-ENGINE OIL** *(contd.)* **i02327913**

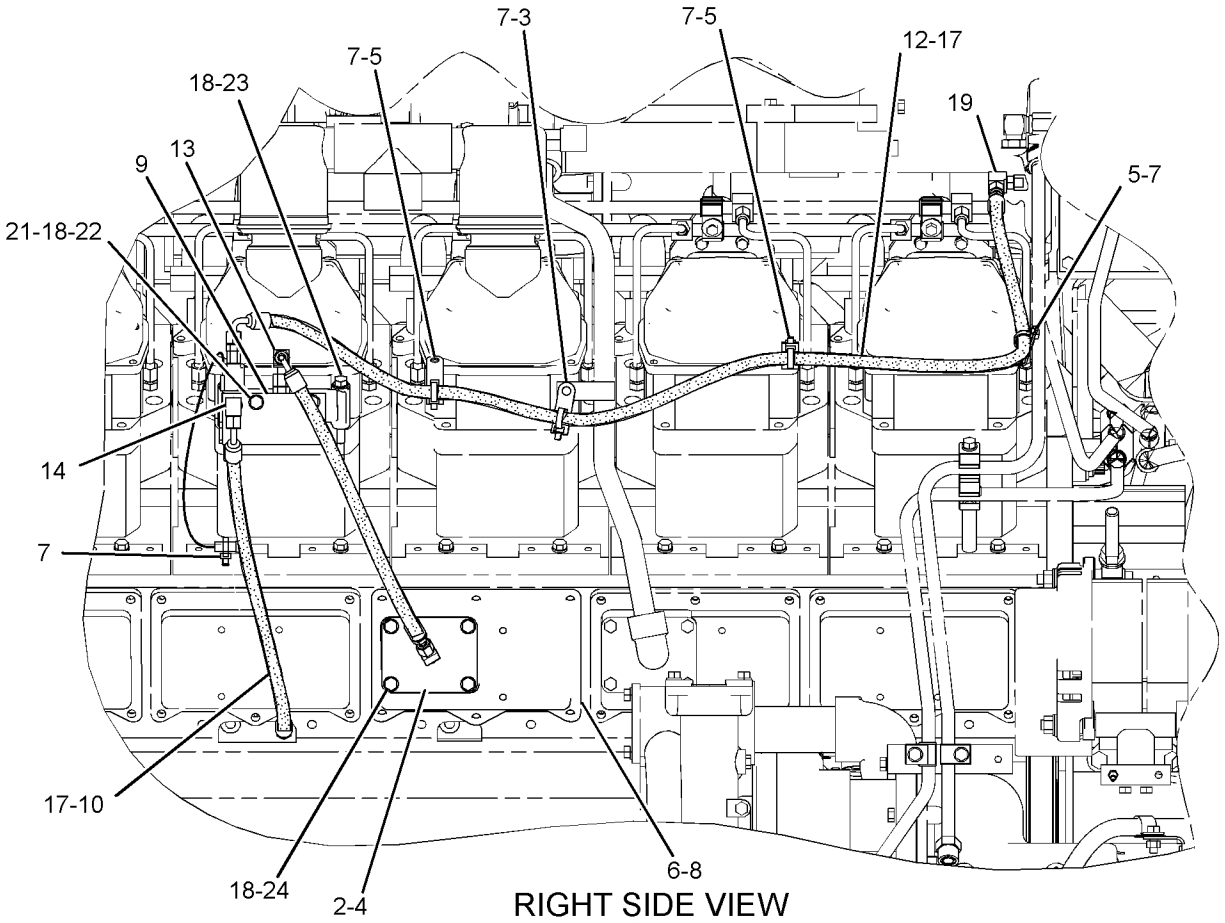

RIGHT SIDE VIEW

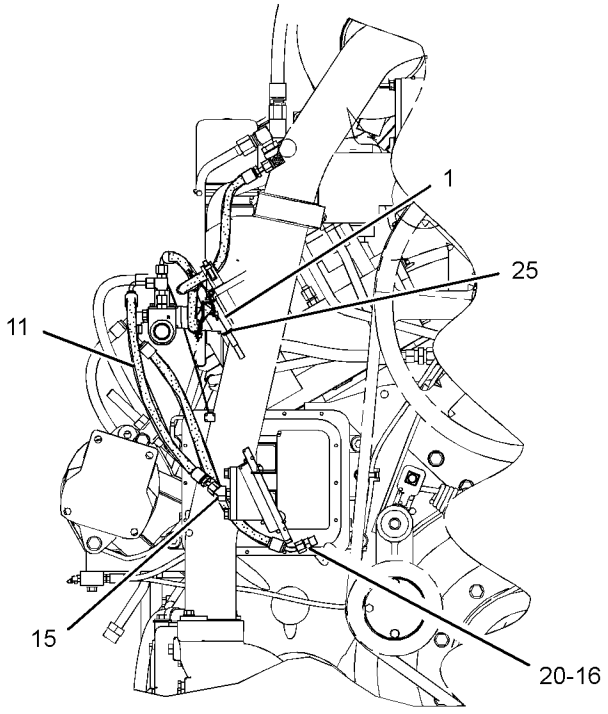

FRONT VIEW

GRAPHIC #1 **<END>** g01189371

264-0445 OIL CHANGE GP-HIGH SPEED

S/N: 4421-UP

PART OF 244-7300 HYDRAULIC AR-FRONT

SMCS-1325 **i02285771**

NOTE	REF NO	GRAPHIC REF	PART NUMBER	QTY	PART NAME 1 2 3 4 5 6 (PRODUCT LEVEL)	SEE PAGE
	1		**118-0166**	1	FITTING AS (QUICK DISCONNECT)	
			118-0165	1	CAP-FILLER	
	2		**229-5431**	1	ADAPTER	
	3		**264-0442**	1	TUBE AS	
I	4		**264-0443**	1	HOSE AS	
I	5		**265-5107**	1	HOSE AS	
	6		**061-9458**	1	SEAL-O-RING	
	7		**117-8568**	1	NUT-BULKHEAD (1-7/8-12-THD)	
	8		*148-8391*	1	ELBOW AS	
			2S-4078	1	SEAL-O-RING	
			5K-9090	1	SEAL-O-RING	
			8T-8987	1	ELBOW	
	9		**4S-4455**	2	CLIP	
	10		**5K-9090**	1	SEAL-O-RING	
	11		**6D-4246**	3	CLIP	
	12		**6V-9746**	2	SEAL-O-RING	
	13		**7C-4354**	1	CLIP	
	14		**8T-4121**	6	WASHER-HARD (11X21X2.5-MM THK)	
M	15		**8T-4133**	2	NUT (M10X1.15-THD)	
M	16		**8T-4136**	2	BOLT (M10X1.5X25-MM)	
M	17		**8T-4137**	2	BOLT (M10X1.5X20-MM)	

I-REFER TO HYDRAULIC INFORMATION SYSTEM
M-METRIC PART

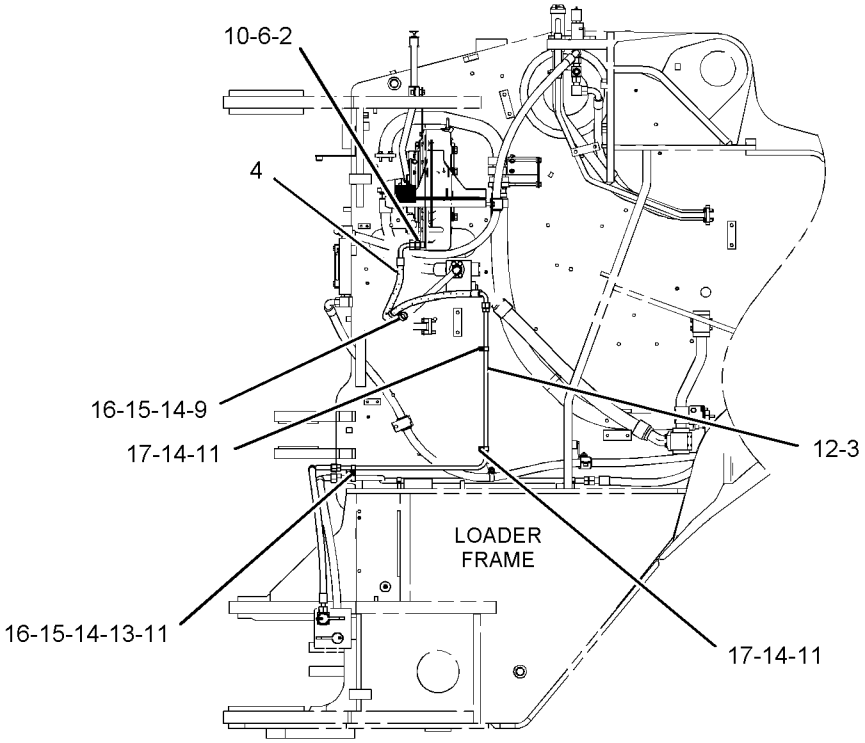

RIGHT SIDE VIEW

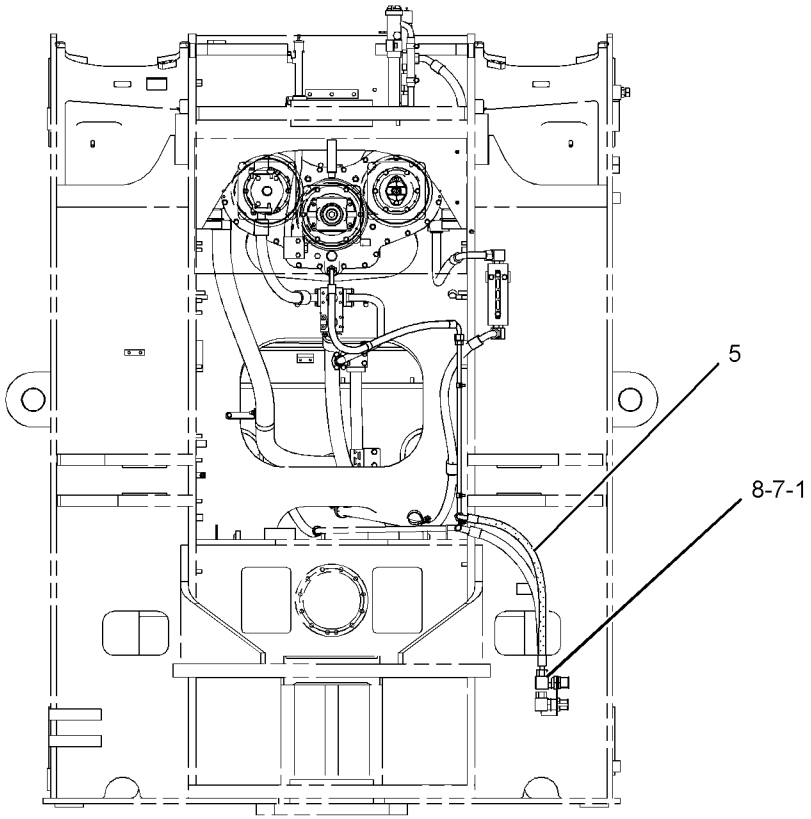

REAR VIEW

GRAPHIC #1 **<END>** g01148144

116-7153 PUMP & MOTOR GP-PRELUBRICATION

S/N: 4421-UP
PART OF 163-2192, 261-0987 PUMP GP-PRELUBRICATION
AN ATTACHMENT

SMCS-1319, 5927 **i02097647**

NOTE	REF NO	GRAPHIC REF	PART NUMBER	QTY	PART NAME 1 2 3 4 5 6 (PRODUCT LEVEL)	SEE PAGE
C	1	1	**109-8314**	1	CONNECTOR	
	2	1	**167-8058**	1	BRACKET AS	
C	3	1	**2M-9780**	1	SEAL-O-RING	
C	4	1	**3K-0360**	1	SEAL-O-RING	
	5	1	**6V-8189**	2	NUT (5/16-18-THD)	
	6	1	**6V-8400**	1	SEAL-O-RING	
C	7	1	**6V-8632**	1	CONNECTOR	
	8	1	**7J-9108**	1	SEAL-O-RING	
	9	1	**7X-0440**	2	BOLT (5/16-18X1.56-IN)	

C-CHANGE FROM PREVIOUS TYPE

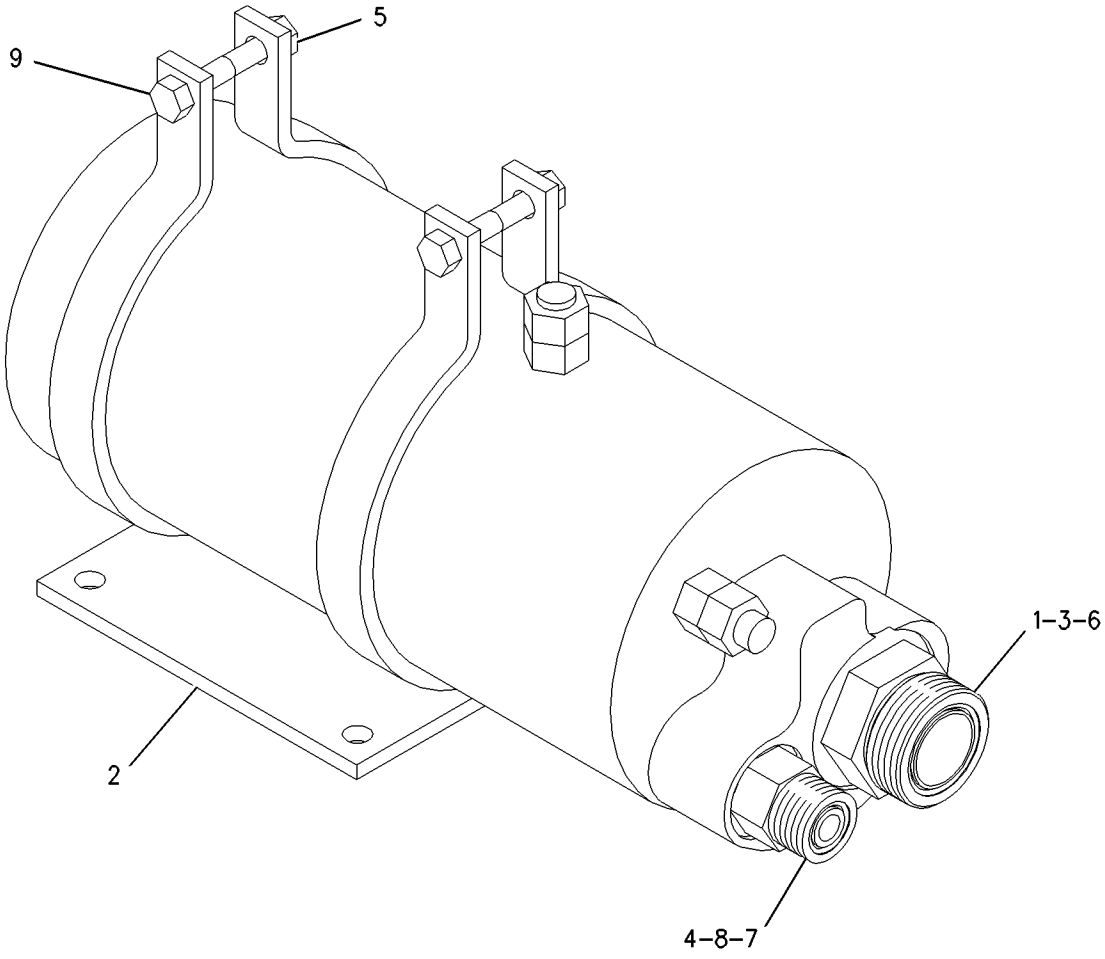

GRAPHIC #1 **<END>** g00947544

LUBRICATION SYSTEM

106-9872 PUMP GP-ENGINE OIL*R

S/N: 8WM1-UP
TWO-SECTION GEAR
PART OF 106-9873 PUMP GP-ENGINE OIL

SMCS-1304, 1315 **i02174992**

NOTE	REF NO	GRAPHIC REF	PART NUMBER	QTY	PART NAME 1 2 3 4 5 6 (PRODUCT LEVEL)	SEE PAGE
	1	1	**106-9871**	1	BODY AS-OIL PUMP	
	1A	1	**1W-6005**	3	BEARING-SLEEVE	
	2	1	**106-9869**	1	SHAFT AS-OIL PUMP DRIVE (12-TEETH)	
	3	1	**106-9867**	2	SHAFT AS-IDLER (12-TEETH)	
	4	1	**7W-0050**	1	COVER AS-PUMP	
	4A	1	**1W-6005**	3	BEARING-SLEEVE	
	4B	1	**4M-3248**	2	DOWEL-HOLLOW	
	5	1	**0S-1585**	6	BOLT (1/2-13X1.5-IN)	
	6	1	**1N-4637**	1	COVER AS-PUMP	
	6A	1	**7N-2043**	2	DOWEL	
	7	1	**107-7175**	1	SPRING	
	8	1	**7N-5057**	1	GASKET	
	9	1	**7N-5449**	1	SPOOL-PRESSURE RELIEF	
	10	1	**107-7326**	1	COVER-RELIEF VALVE	
	11	1	**111-1349**	1	GASKET	
	12	1	**7F-1866**	2	BOLT (3/8-16X3-IN)	
	13	1	**0S-1590**	9	BOLT (3/8-16X2-IN)	
	14	1	**5M-2894**	11	WASHER-HARD (10.2X18.5X2.5-MM THK)	

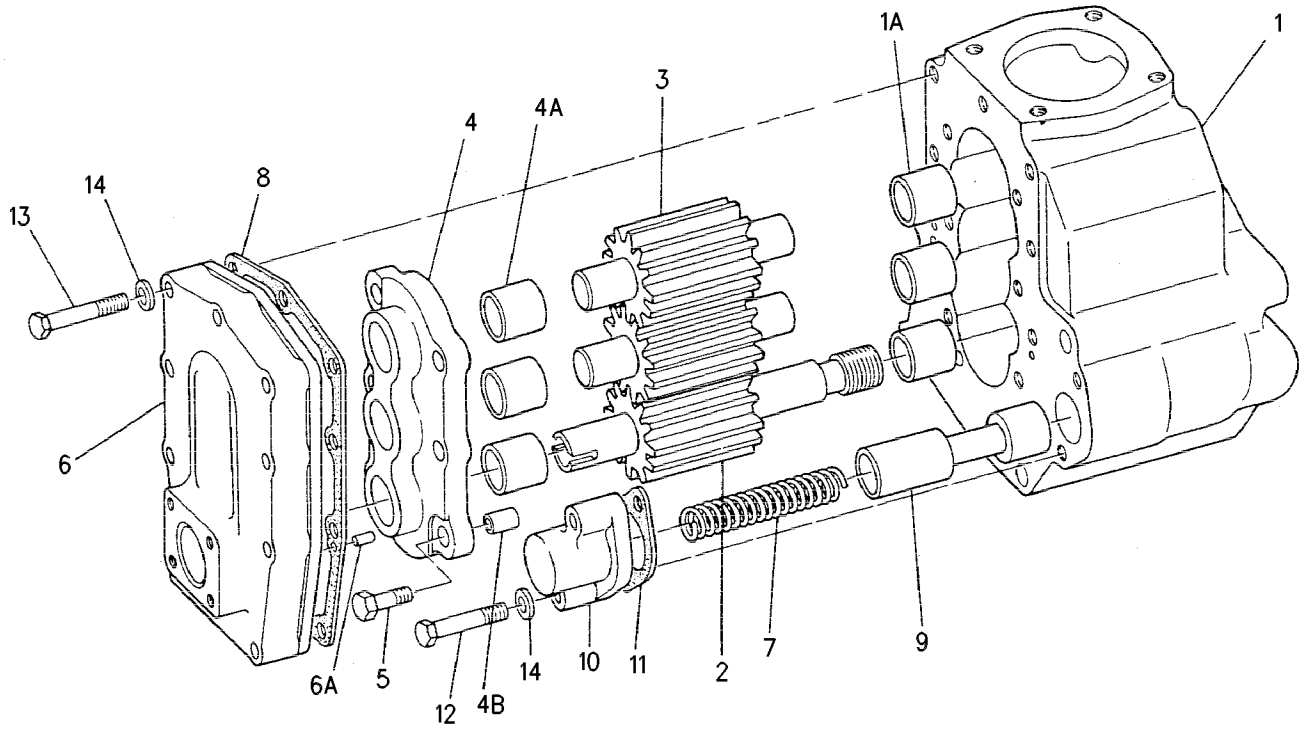

GRAPHIC #1 **<END>** g00475661

106-9873 PUMP GP-ENGINE OIL

S/N: 8WM1-UP
TWO-SECTION GEAR
PART OF 240-7750 ENGINE AR

SMCS-1304, 1315 **i02153764**

NOTE	REF NO	GRAPHIC REF	PART NUMBER	QTY	PART NAME 1 2 3 4 5 6 (PRODUCT LEVEL)	SEE PAGE
	1	1	**9M-4355**	3	DAMPER-BOLT	
YR	2	1	**106-9872**	1	PUMP GP-ENGINE OIL (2-SECTION GEAR)	94
B	3	1	**1B-3573**	1	BOLT (1/2-13X8.5-IN)	
	4	1	**5P-8245**	3	WASHER-HARD (13.5X25.5X3-MM THK)	
B	5	1	**6M-9613**	1	BOLT (1/2-13X9-IN)	
	6	1	**6V-7681**	1	SEAL-O-RING	
	7	1	**1B-3573**	2	BOLT (1/2-13X8.5-IN)	

B-USE AS REQUIRED
R-REMFG PART MAY BE AVAILABLE
Y-SEPARATE ILLUSTRATION

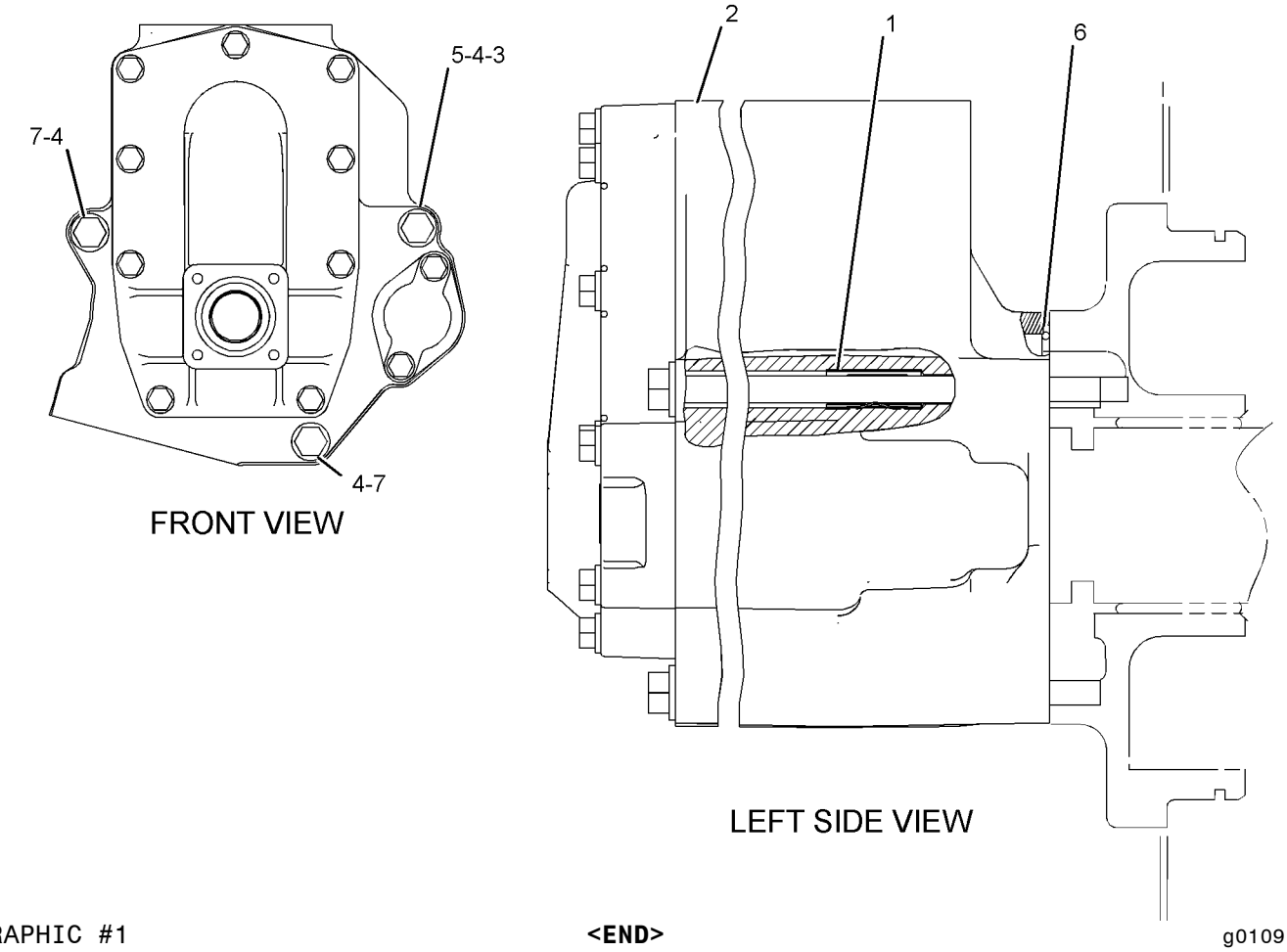

GRAPHIC #1 **<END>** g01091892

LUBRICATION SYSTEM

163-2192 PUMP GP-PRELUBRICATION

S/N: 4421-UP

AN ATTACHMENT

SMCS-1319 **i02180592**

NOTE	REF NO	GRAPHIC REF	PART NUMBER	QTY	PART NAME 1 2 3 4 5 6 (PRODUCT LEVEL)	SEE PAGE
	1	1	**8X-8130**	1	BLOCK	
	2	1	**9T-8844**	1	VALVE-CHECK	
Y	3	2	**116-7153**	1	PUMP & MOTOR GP-PRELUBRICATION	93
	4	1	**126-4167**	1	CABLE AS	
		1	**2L-0273**	2	FITTING (RUBBER)	
		1	**3L-6513**	2	TERMINAL (FOR 1/2-IN BOLT)	
BE		1	**6V-9023**		TUBE-HEAT SHRINK	
BE		1	**8C-0596**		CABLE (02-GA)	
	5	1	**138-6957**	1	COVER	
	6	2	**142-3331**	1	BRACKET AS	
M		2	**8T-3490**	1	NUT-WELD (M10X1.5-THD)	
I	7	1	**163-2191**	1	HOSE AS	
I	8	1	**241-3713**	1	HOSE AS	
	9	1	*148-8393*	2	ELBOW GP	
					(EACH INCLUDES)	
		1	**6V-9852**	1	ELBOW (SWIVEL)	
		1	**7J-9108**	1	SEAL-O-RING	
	10	1	**164-5592**	1	ELBOW AS	
		1	**3D-2824**	1	SEAL-O-RING	
		1	**6V-8400**	1	SEAL-O-RING	
	11	1	**2M-9189**	1	GASKET	
	12	1	**3K-0360**	1	SEAL-O-RING	
	13	1	**5P-5846**	1	SEAL-O-RING	
	14	2	**5P-7464**	4	CLIP (SLOT)	
	15	2	**5P-7465**	4	CLIP (TAB)	
	16	1	**5S-7382**	2	BOLT (3/8-16X1.375-IN)	
	17	2	**6V-1249**	4	GROMMET	
	18	2	**6V-1572**	1	CLIP (SLOT)	
	19	2	**6V-1573**	1	CLIP (TAB)	
	20	2	**6V-1875**	1	GROMMET	
	21	2	**6V-5039**	1	CLIP (SLOT)	
	22	2	**6V-5040**	1	CLIP (TAB)	
	23	1	**7J-9108**	1	SEAL-O-RING	
	24	1,2	**7X-7729**	6	WASHER (11X25X3-MM THK)	
	25	2	**8T-4121**	4	WASHER-HARD (11X21X2.5-MM THK)	
M	26	2	**8T-4133**	1	NUT (M10X1.5 THD)	
M	27	2	**8T-4137**	4	BOLT (M10X1.5X20-MM)	
M	28	2	**8T-4186**	1	BOLT (M10X1.5X40-MM)	
M	29	1	**8T-4192**	1	BOLT (M12X1.75X25-MM)	
CM	30	2	**8T-4195**	3	BOLT (M10X1.5X30-MM)	
M	31	2	**8T-4196**	1	BOLT (M10X1.5X35-MM)	
	32	2	**8T-4223**	3	WASHER-HARD (13.5X25.5X3-MM THK)	
	33	1	**8T-4896**	2	WASHER-HARD (10.2X18.5X2.5-MM THK)	
	34	1	**8T-8920**	2	BOLT (1/2-13X3.25-IN)	

B-USE AS REQUIRED
C-CHANGE FROM PREVIOUS TYPE
E-ORDER BY THE CENTIMETER
I-REFER TO HYDRAULIC INFORMATION SYSTEM
M-METRIC PART
Y-SEPARATE ILLUSTRATION

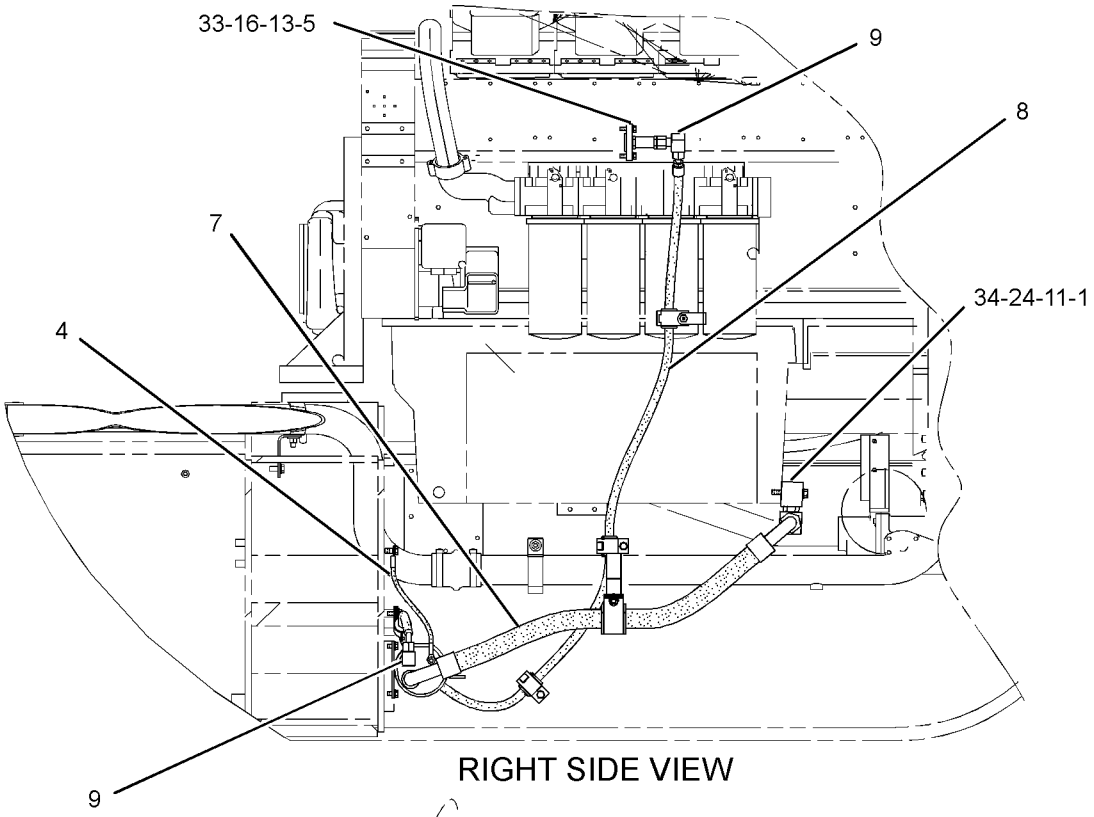

RIGHT SIDE VIEW

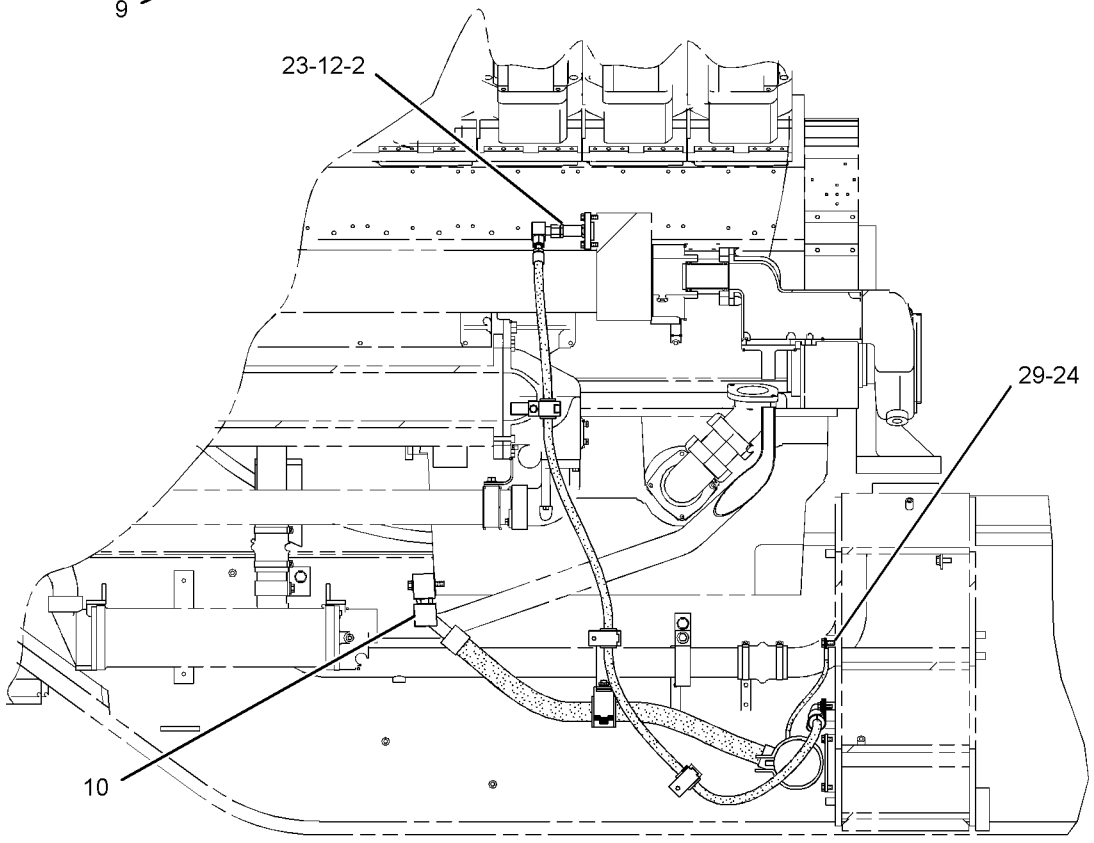

LEFT SIDE VIEW

GRAPHIC #1

g01153520

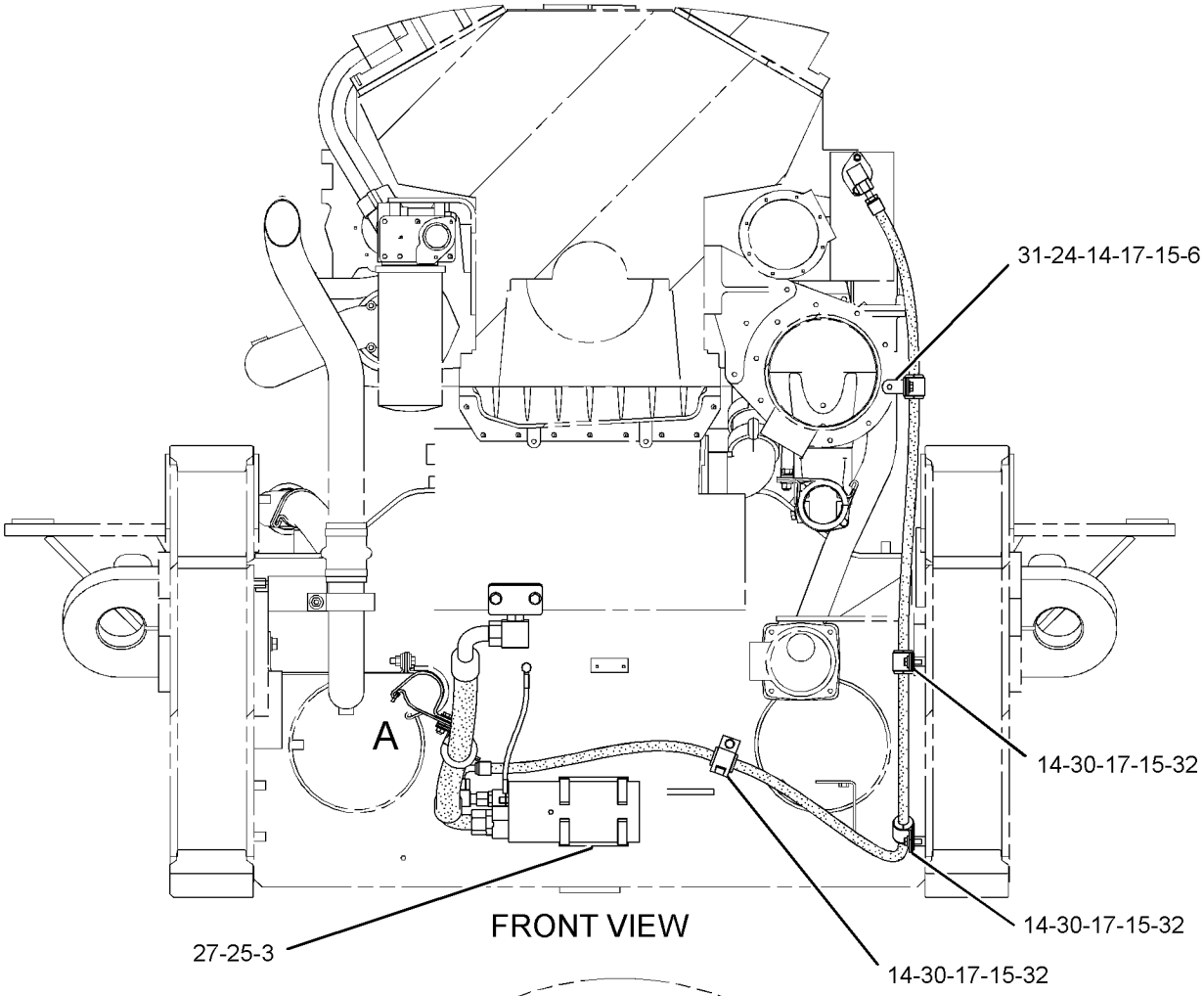

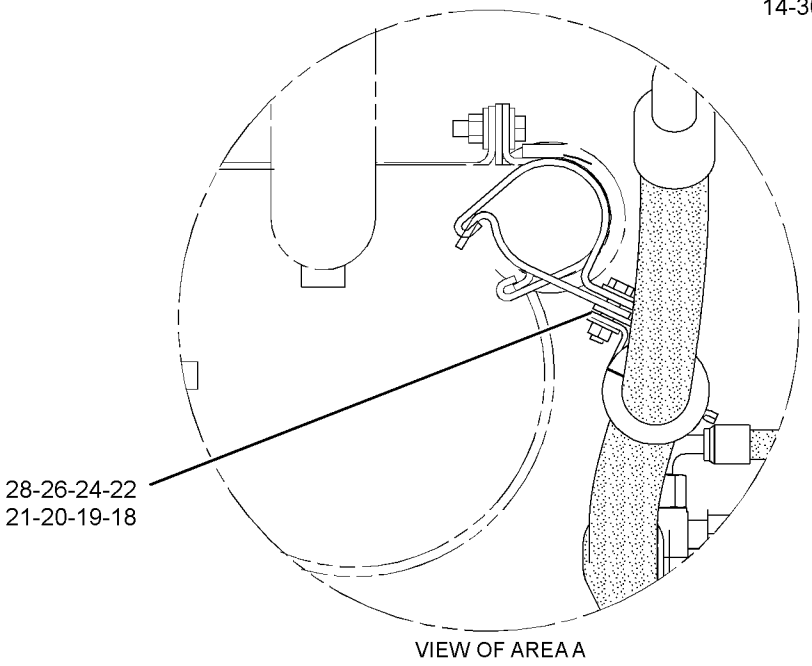

GRAPHIC #2 **<END>** g01153181

LUBRICATION SYSTEM

261-0987 PUMP GP-PRELUBRICATION

S/N: 4421-UP

AN ATTACHMENT

SMCS-1319 **i02312815**

NOTE	REF NO	GRAPHIC REF	PART NUMBER	QTY	PART NAME 1 2 3 4 5 6 (PRODUCT LEVEL)	SEE PAGE
	1	1	**8X-8130**	1	BLOCK	
	2	2	**9T-8844**	1	VALVE-CHECK	
Y	3	2	**116-7153**	1	PUMP & MOTOR GP-PRELUBRICATION	93
	4	1	**126-4167**	1	CABLE AS	
		1	**3L-6513**	2	TERMINAL (FOR 1/2-IN BOLT)	
E		1	**6V-9023**		TUBE-HEAT SHRINK (6-CM)	
E		1	**8C-0596**		CABLE (02-GA) (32-CM)	
		1	**121-1110**	1	BOOT	
	5	2	**138-6957**	1	COVER	
	6	2	**160-0564**	1	BRACKET AS	
M		2	**8T-3490**	1	NUT-WELD (M10X1.5-THD)	
I	7	1	**163-2191**	1	HOSE AS	
Y	8	2	**179-0006**	1	SWITCH GP-MAGNETIC (PRELUBRICATION PUMP RELAY)	304
I	9	2	**241-3713**	1	HOSE AS	
	10	2	**251-8391**	1	CABLE AS	
		2	**135-2543**	1	BOOT	
		2	**8T-8827**	1	BOOT	
		2	*131-1480*	1	TERMINAL AS	
		2	**9G-4336**	1	TERMINAL (CRIMP)	
E		2	**125-7876**		TUBE-HEAT SHRINK (4-CM)	
		2	*131-1481*	1	TERMINAL AS	
		2	**9G-4344**	1	TERMINAL (4-GA)	
E		2	**125-7876**		TUBE-HEAT SHRINK (4-CM)	
	11	1	**251-8496**	1	BRACKET AS	
M		1	**8T-3597**	1	NUT-WELD (M12X1.75 THD)	
	12	1,2	*148-8393*	2	ELBOW GP	
					(EACH INCLUDES)	
		1,2	**6V-9852**	1	ELBOW (SWIVEL)	
		1,2	**7J-9108**	1	SEAL-O-RING	
	13	2	**164-5592**	1	ELBOW AS	
		2	**3D-2824**	1	SEAL-O-RING	
		2	**6V-8400**	1	SEAL-O-RING	
		2	**8C-3751**	1	ELBOW	
	14	1	**2M-9189**	1	GASKET	
	15	2	**3K-0360**	1	SEAL-O-RING	
	16	2	**5P-5846**	1	SEAL-O-RING	
	17	1,2	**5P-7464**	3	CLIP (SLOT)	
	18	1,2	**5P-7465**	3	CLIP (TAB)	
	19	2	**5S-7382**	2	BOLT (3/8-16X1.375-IN)	
	20	2	**6D-4244**	1	CLIP	
	21	1,2	**6V-1249**	3	GROMMET	
	22	1	**6V-1572**	1	CLIP (SLOT)	
	23	1	**6V-1573**	1	CLIP (TAB)	
	24	1	**6V-1875**	1	GROMMET	
	25	1	**6V-5039**	1	CLIP (SLOT)	
	26	1	**6V-5040**	1	CLIP (TAB)	
	27	2	**7J-9108**	1	SEAL-O-RING	
	28	1,2	**7X-7729**	5	WASHER (11X25X3-MM THK)	
	29	2	**8T-4121**	6	WASHER-HARD (11X21X2.5-MM THK)	
M	30	1	**8T-4133**	1	NUT (M10X1.5 THD)	
M	31	2	**8T-4136**	1	BOLT (M10X1.5X25-MM)	
M	32	2	**8T-4137**	4	BOLT (M10X1.5X20-MM)	
M	33	1	**8T-4185**	1	BOLT (M10X1.5X50-MM)	
M	34	2	**8T-4195**	3	BOLT (M10X1.5X30-MM)	
	35	2	**8T-4205**	4	WASHER-HARD (7.2X14.5X2-MM THK)	

261-0987 **PUMP GP-PRELUBRICATION** *(contd.)* **i02312815**

NOTE	REF NO	GRAPHIC REF	PART NUMBER	QTY	PART NAME 1 2 3 4 5 6 (PRODUCT LEVEL)	SEE PAGE
	36	1	**8T-4223**	4	WASHER-HARD (13.5X25.5X3-MM THK)	
M	37	1	**8T-4244**	1	NUT (M12X1.75-THD)	
	38	2	**8T-4896**	2	WASHER-HARD (10.2X18.5X2.5-MM THK)	
M	39	1	**8T-4956**	1	BOLT (M12X1.75X35-MM)	
	40	1	**8T-8920**	2	BOLT (1/2-13X3.25-IN)	
	41	2	**8T-9364**	4	BOLT (1/4-20X0.625-IN)	

E-ORDER BY THE CENTIMETER
I-REFER TO HYDRAULIC INFORMATION SYSTEM
M-METRIC PART
Y-SEPARATE ILLUSTRATION

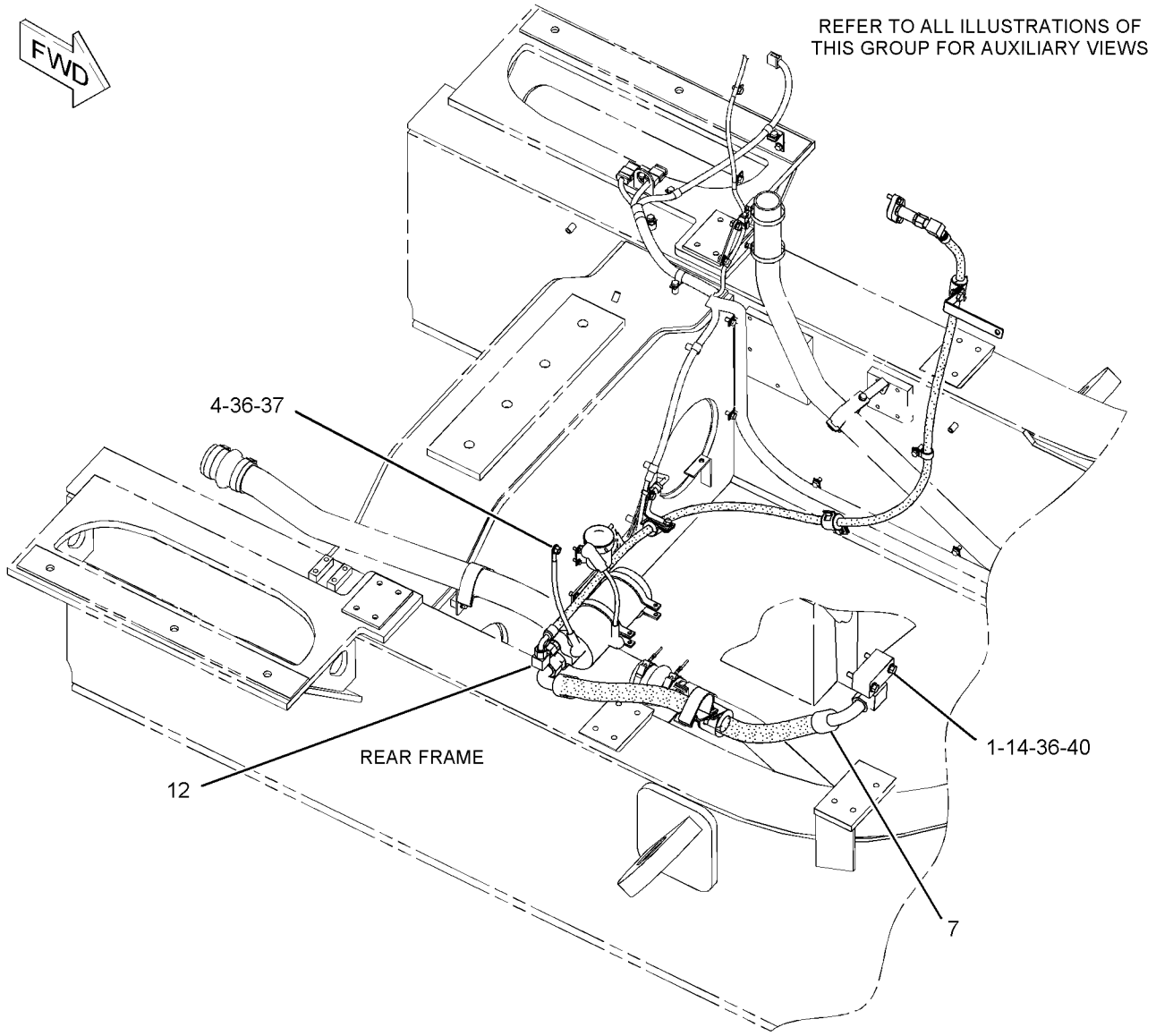

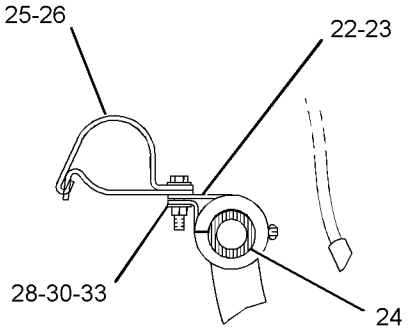

SECTION B-B

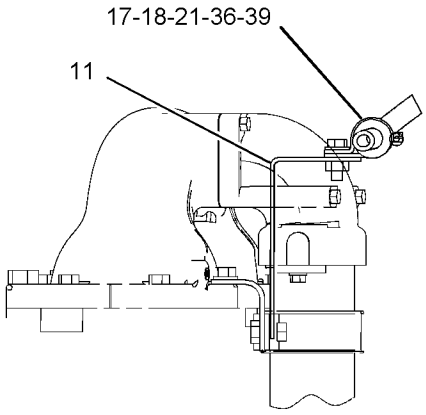

SECTION A-A

GRAPHIC #1

g01146216

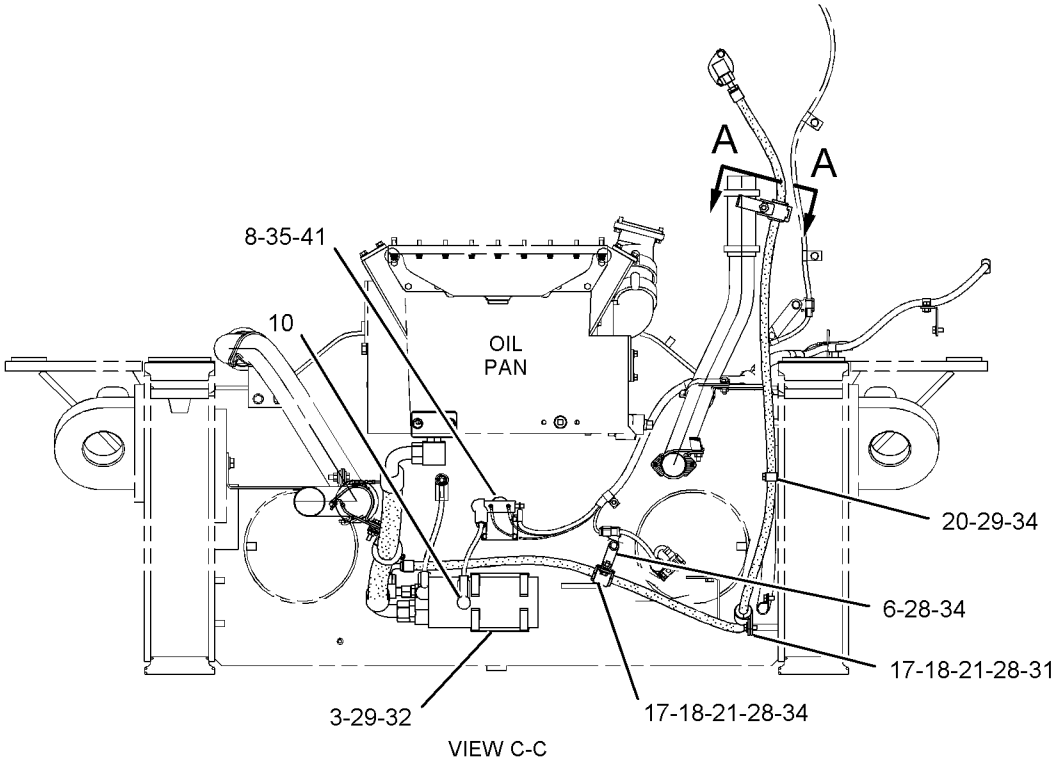

VIEW C-C

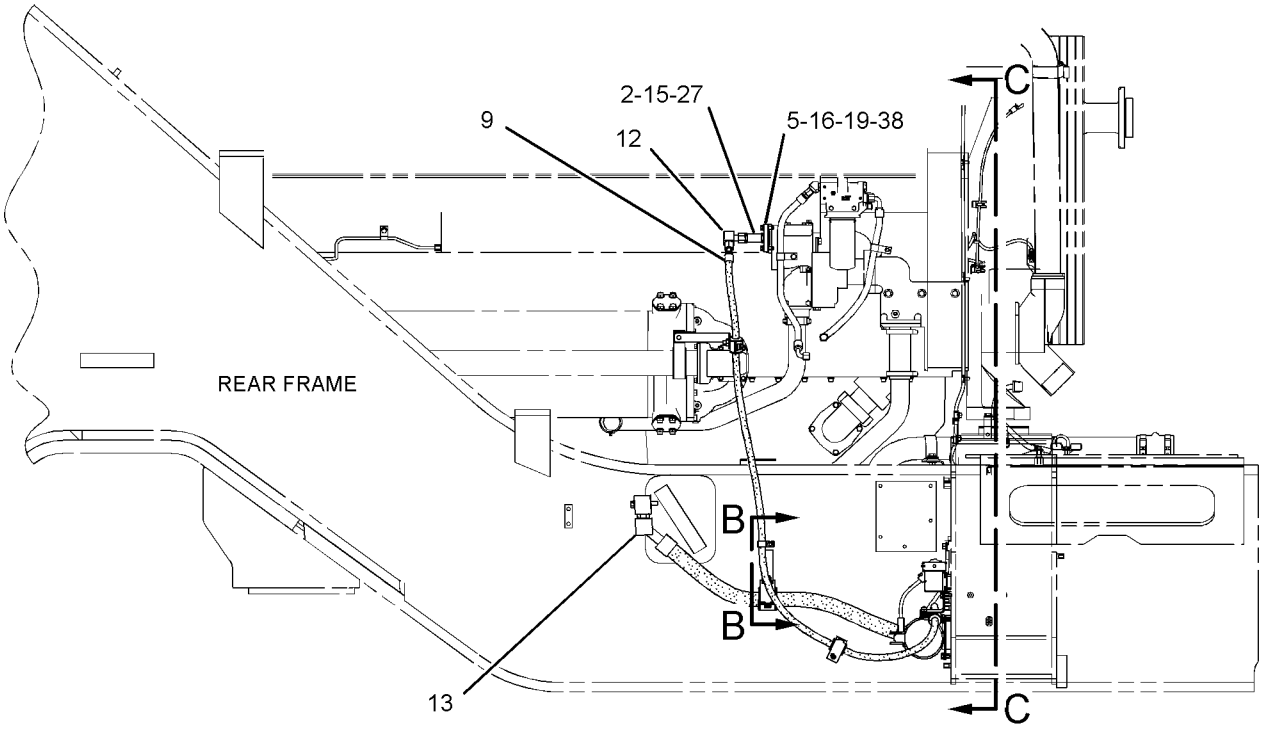

LEFT SIDE VIEW

GRAPHIC #2 **<END>** g01146217

8N-2012 PUMP GP-SCAVENGE–FRONT SUMP

S/N: 8WM1-UP
ONE SECTION GEAR
PART OF 240-7750 ENGINE AR

SMCS-1312 **i01749450**

NOTE	REF NO	GRAPHIC REF	PART NUMBER	QTY	PART NAME 1 2 3 4 5 6 (PRODUCT LEVEL)	SEE PAGE
CYR	1	1	**144-8267**	1	PUMP GP-SCAVENGE (FRONT SUMP)	105
	2	1	**4F-9351**	4	BOLT-SPECIAL (3/8-16X1.375-IN)	
	3	1	**1N-4381**	1	TUBE	
	4	1	**3P-0657**	10	SEAL-O-RING	
	5	1	**6V-1582**	2	CLIP (TAB)	
	6	1	**6V-1581**	2	CLIP (SLOT)	
	7	1	**5M-2894**	10	WASHER-HARD (10.2X18.5X2.5-MM THK)	
	8	1	**1A-2029**	2	BOLT (3/8-16X1.125-IN)	
	9	1	**1N-3193**	1	HOUSING	
	10	1	**0S-1590**	2	BOLT (3/8-16X2-IN)	
	11	1	**4P-5500**	1	SCREEN-SCAVENGE (FRONT SUMP PUMP)	
	12	1	**1N-3225**	1	COVER-SCAVENGE PUMP	
	13	1	**0S-1591**	8	BOLT (3/8-16X1.5-IN)	
	14	1	**1W-8805**	1	ELBOW	
	15	1	**0S-1619**	2	BOLT (3/8-16X3-IN)	
	16	1	**4P-4917**	1	SCREEN-SCAVENGE (FRONT SUMP PUMP)	

C-CHANGE FROM PREVIOUS TYPE
R-REMFG PART MAY BE AVAILABLE
Y-SEPARATE ILLUSTRATION

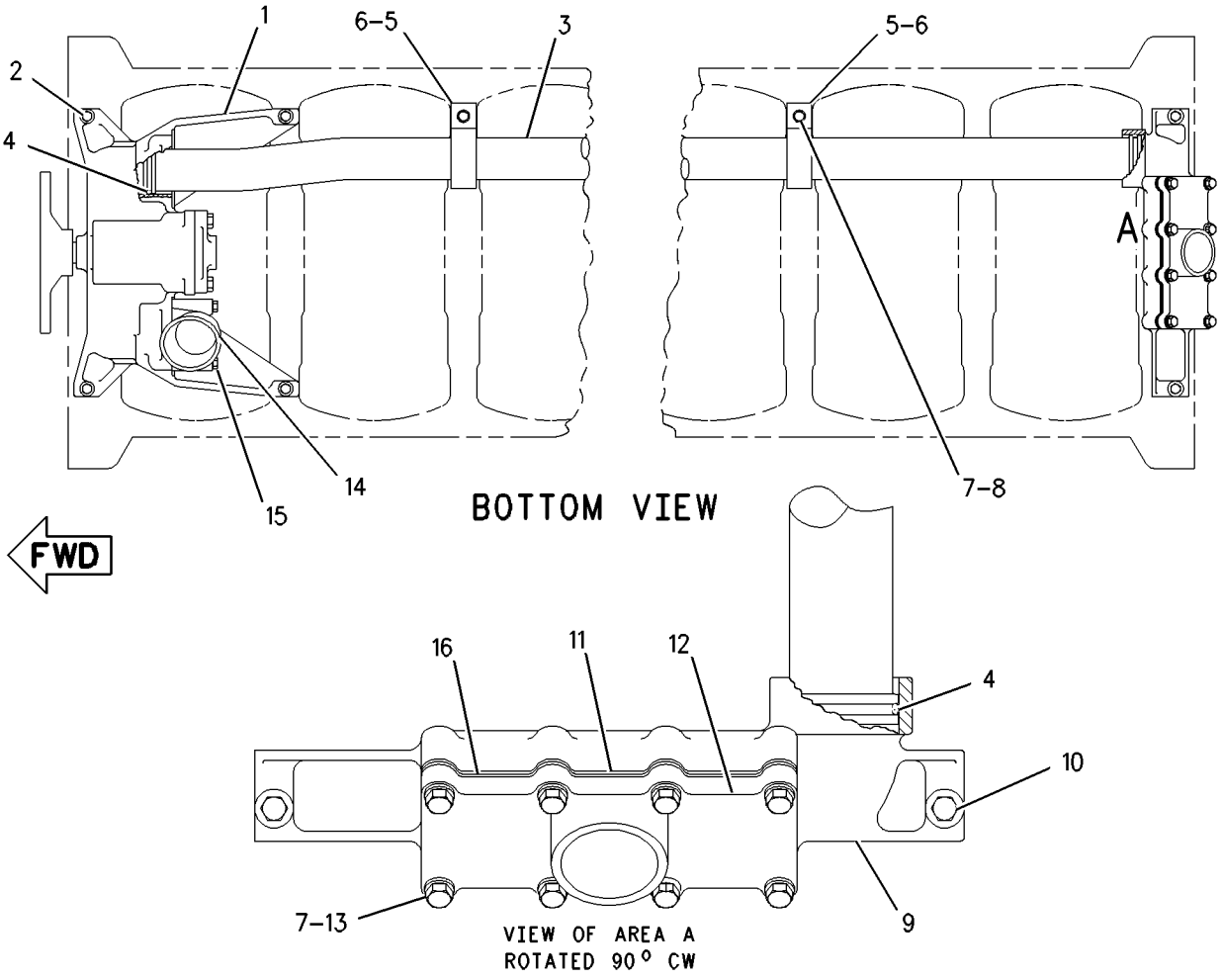

GRAPHIC #1

<END>

g00872656

144-8267 PUMP GP-SCAVENGE*R

S/N: 8WM1-UP
300-L/MIN. ONE SECTION GEAR
PART OF 8N-2012 PUMP GP-SCAVENGE
FOR USE WITH 3516 ENGINES TO INCREASE FLOW

SMCS-1312 **i01979502**

NOTE	REF NO	GRAPHIC REF	PART NUMBER	QTY	PART NAME 1 2 3 4 5 6 (PRODUCT LEVEL)	SEE PAGE
	1	1	**144-8266**	1	BODY AS-SCAVENGE OIL PUMP	
	1A	1	**1W-6005**	2	BEARING-SLEEVE	
	2	1	**144-8271**	1	SHAFT AS-IDLER	
	3	1	**176-3227**	1	SHAFT AS-DRIVE	
	4	1	**7N-8527**	1	COVER AS-PUMP	
	4A	1	**4M-3248**	2	DOWEL-HOLLOW	
	4B	1	**1W-6005**	2	BEARING-SLEEVE	
	5	1	**0S-1587**	4	BOLT (1/2-13X1.75 IN)	
	6	1	**0S-0484**	1	BOLT (1/2-20X2.25 IN)	
	7	1	**053-4679**	1	WASHER (13.5X44.45X10MM THK)	
	8	1	**161-2513**	1	GEAR-DRIVE (71 TEETH)	

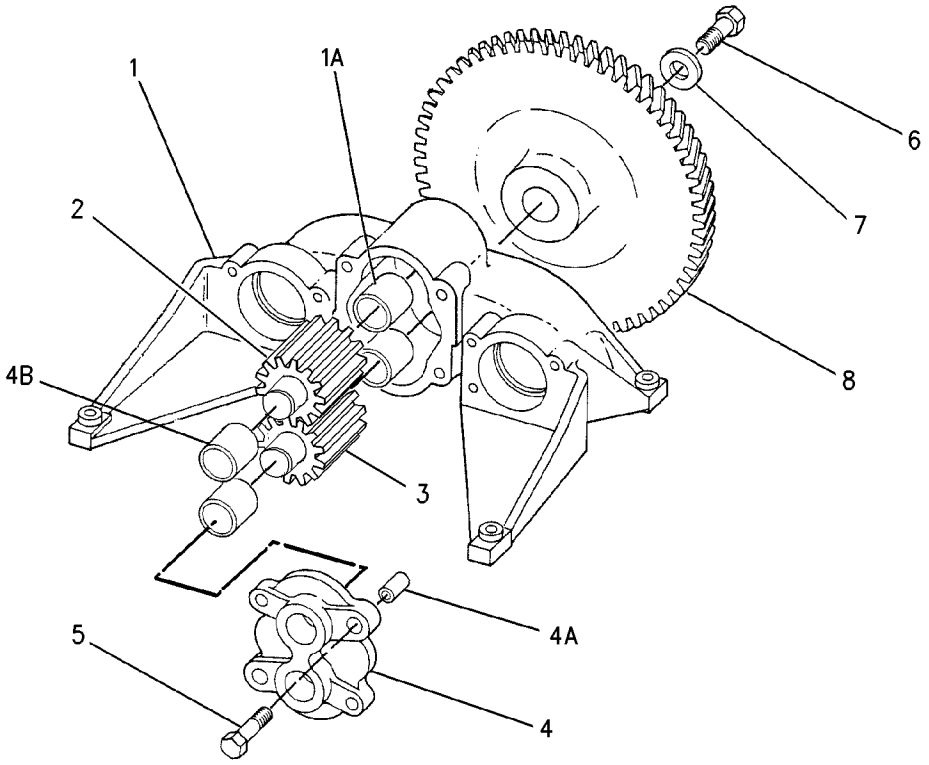

GRAPHIC #1 **<END>** g00642382

LUBRICATION SYSTEM

249-7584 RENEWAL AR-OIL

S/N: 4421-UP

AN ATTACHMENT

SMCS-1349 **i02282385**

NOTE	PART NUMBER	QTY	PART NAME 1 2 3 4 5 6 (PRODUCT LEVEL)	SEE PAGE
Y	*246-5553*	1	METERING GP-ENGINE OIL (OIL RENEWAL SYSTEM)	89
Y	*250-5796*	1	TANK & MTG GP-ENGINE OIL (OIL RENEWAL SYSTEM)	107
Y	*265-0983*	1	WIRING GP-OIL RENEWAL SYSTEM	360

Y-SEPARATE ILLUSTRATION

<END>

250-5796 TANK & MTG GP-ENGINE OIL—OIL RENEWAL SYSTEM

S/N: 4421-UP
PART OF 249-7584 RENEWAL AR-OIL
AN ATTACHMENT

SMCS-751T **i02282441**

NOTE	REF NO	GRAPHIC REF	PART NUMBER	QTY	PART NAME 1 2 3 4 5 6 (PRODUCT LEVEL)	SEE PAGE
	1	1	**7T-8331**	4	MOUNTING	
	2	1	**7W-8106**	1	SPACER (15-MM THK)	
	3	1	**8R-0721**	9	SPACER (11X16X35-MM THK)	
Y	4	1	*249-3149*	1	TANK GP-ENGINE OIL (METERING, OIL RENEWAL SYSTEM)	109
	5	1	**249-3167**	2	BRACKET AS	
					(EACH INCLUDES)	
M		1	**8T-3597**	2	NUT-WELD (M12X1.75 THD)	
I	6	1	**250-5797**	1	HOSE AS	
I	7	1	**259-3078**	1	HOSE AS	
	8	1	**265-3294**	1	TUBE AS	
	9	1	**148-8327**	1	CONNECTOR AS	
	10	1	*148-8376*	1	ELBOW AS	
		1	**6V-8983**	1	ELBOW	
		1	**6V-9746**	2	SEAL-O-RING	
	11	1	*148-8382*	1	ELBOW AS	
		1	**3D-2824**	1	SEAL-O-RING	
		1	**7J-9108**	1	SEAL-O-RING	
		1	**8T-0404**	1	ELBOW	
	12	1	**1S-0994**	14	CLIP	
	13	1	**2P-1293**	1	LOCKNUT (1-3/16-12 THD)	
	14	1	**5P-1076**	8	WASHER-HARD (13.5X30X4-MM THK)	
	15	1	**6V-2235**	1	CLIP	
	16	1	**6V-5039**	1	CLIP (SLOT)	
	17	1	**6V-5040**	1	CLIP (TAB)	
	18	1	**7X-0590**	4	WASHER-HARD (13.5X44.5X6-MM THK)	
M	19	1	**8T-0441**	1	BOLT (M10X1.5X45-MM)	
	20	1	**8T-4121**	13	WASHER-HARD (11X21X2.5-MM THK)	
M	21	1	**8T-4133**	2	NUT (M10X1.5 THD)	
M	22	1	**8T-4183**	8	BOLT (M12X1.75X40-MM)	
M	23	1	**8T-4195**	1	BOLT (M10X1.5X30-MM)	
M	24	1	**8T-4910**	4	BOLT (M12X1.75X60-MM)	
M	25	1	**8T-6466**	9	BOLT (M10X1.5X60-MM)	

I-REFER TO HYDRAULIC INFORMATION SYSTEM
M-METRIC PART
Y-SEPARATE ILLUSTRATION

250-5796 **TANK & MTG GP-ENGINE OIL** *(contd.)* **i02282441**

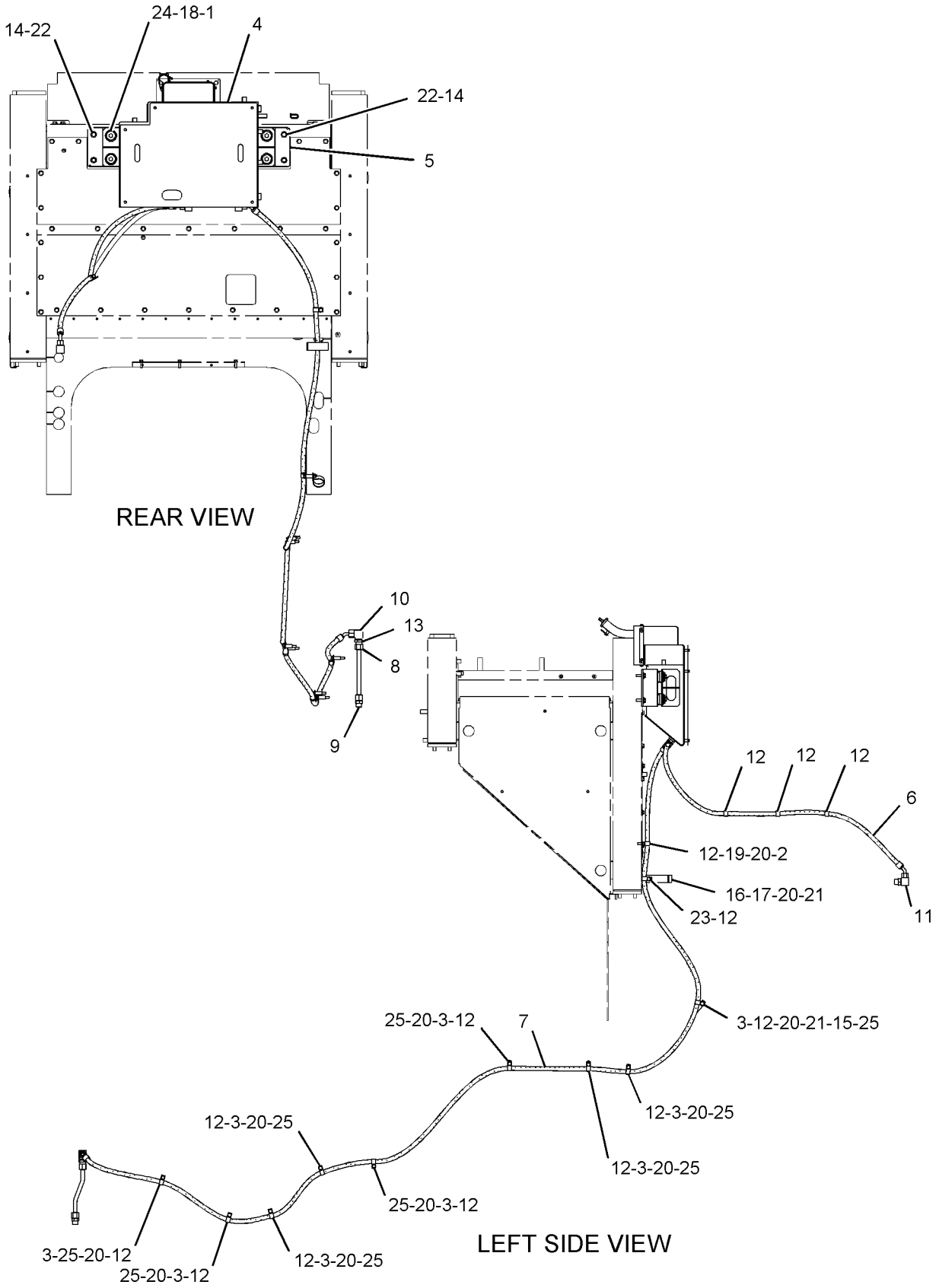

GRAPHIC #1 **<END>** g01144195

249-3149 TANK GP-ENGINE OIL–
METERING, OIL RENEWAL SYSTEM
S/N: 4421-UP
PART OF 250-5796 TANK & MTG GP-ENGINE OIL
AN ATTACHMENT

SMCS-751T **i02282365**

NOTE	REF NO	GRAPHIC REF	PART NUMBER	QTY	PART NAME 1 2 3 4 5 6 (PRODUCT LEVEL)	SEE PAGE
	1	1	**6G-9333**	1	CAP-FILLER (ENGINE OIL METERING TANK)	
	2	1	**9G-5127**	1	BREATHER AS (ENGINE OIL METERING TANK)	
	3	1	**9Y-9236**	1	GAUGE-SIGHT (OIL LEVEL)	
	4	1	**246-3365**	1	SHEET	
	5	1	**248-4768**	2	STRIP	
	6	1	**249-3140**	1	SEAL	
	7	1	**249-3141**	2	STRIP	
	8	1	**249-3148**	1	TANK AS-ENGINE OIL (OIL RENEWAL SYSTEM)	
	9	1	*148-8390*	2	ELBOW AS	
					(EACH INCLUDES)	
		1	**2M-9780**	1	SEAL-O-RING	
		1	**6V-8626**	1	ELBOW	
		1	**7J-9108**	1	SEAL-O-RING	
M	10	1	**5C-9553**	14	BOLT (M6X1X16-MM)	
	11	1	**7M-8485**	1	SEAL-O-RING	
	12	1	**9X-8256**	14	WASHER (6.6X12X2-MM THK)	

M-METRIC PART

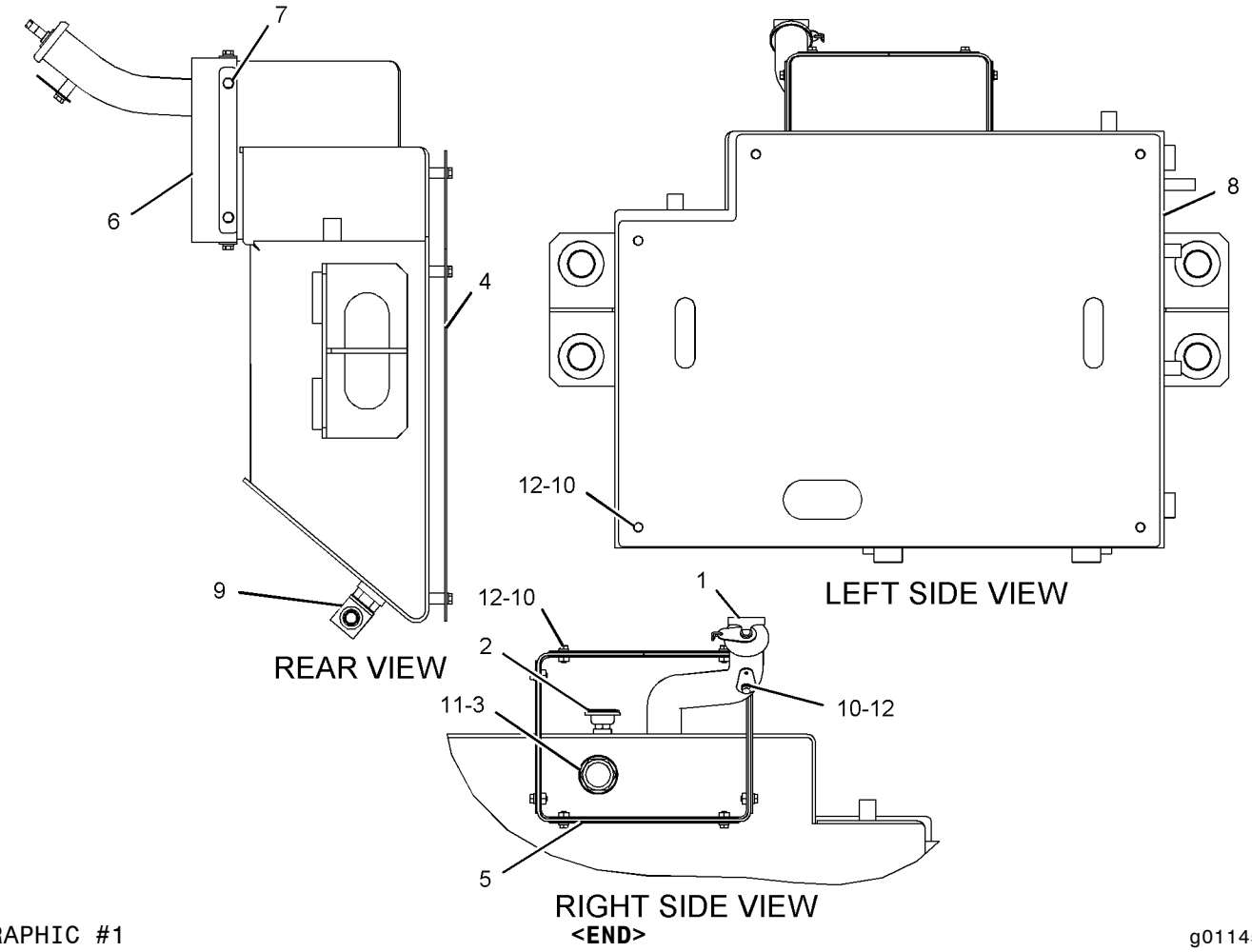

GRAPHIC #1

<END>

g01145650

LUBRICATION SYSTEM

192-7139 VALVE & MTG GP-FAN DRIVE

S/N: 4421-UP
PART OF 123-6919 LINES GP-ENGINE OIL
AN ATTACHMENT

SMCS-5479 **i02386005**

NOTE	REF NO	GRAPHIC REF	PART NUMBER	QTY	PART NAME 1 2 3 4 5 6 (PRODUCT LEVEL)	SEE PAGE
Y	1	1	**173-2056**	1	VALVE GP-MODULATING (FAN DRIVE)	485
	2	1	**175-3616**	1	MANIFOLD AS	
	2A	1	**6V-0852**	1	CAP-DUST	
	2B	1	**6V-3965**	1	FITTING AS (QUICK DISCONNECT)	
Y-SEPARATE ILLUSTRATION						

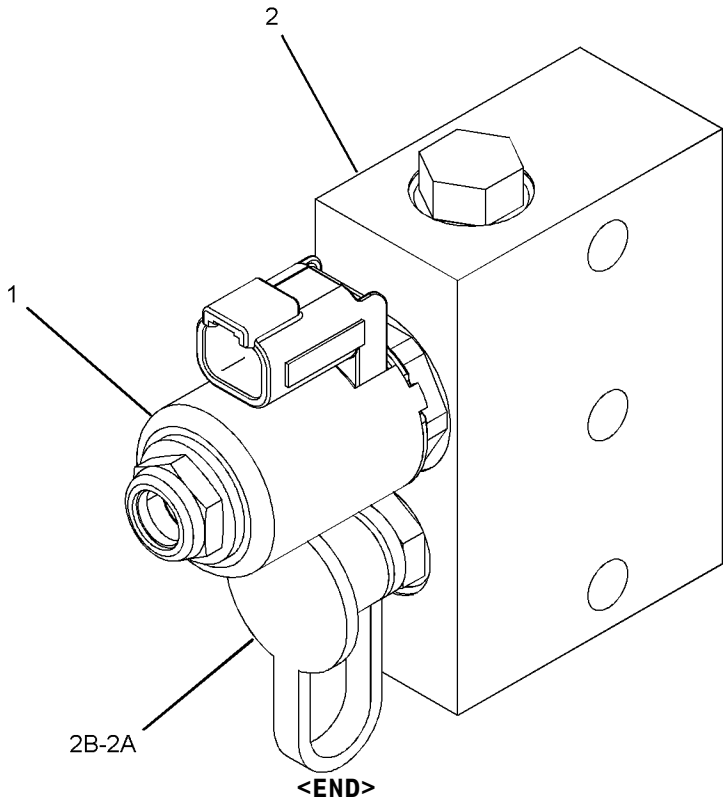

GRAPHIC #1 **<END>** g01032833

235-0266 VALVE GP-METERING–ENGINE OIL–
OIL RENEWAL SYSTEM
S/N: 4421-UP
PART OF 246-5553 METERING GP-ENGINE OIL
AN ATTACHMENT

SMCS-130M **i02209979**

NOTE	REF NO	GRAPHIC REF	PART NUMBER	QTY	PART NAME 1 2 3 4 5 6 (PRODUCT LEVEL)	SEE PAGE
	1	1	**081-5622**	1	ADAPTER	
	2	1	**155-2270**	1	KIT-CONNECTING PLUG (2-PIN)	
					(INCLUDES PLUG ASSEMBLY AND WEDGE)	
	3	1	**186-3736**	2	SOCKET-CONNECTOR (16-GA TO 18-GA)	
	4	1	**3J-7354**	1	SEAL-O-RING	
	5	1	**4J-5477**	3	SEAL-O-RING	
	6	1	**6V-8647**	1	CONNECTOR	
	7	1	**7J-0204**	1	SEAL-O-RING	

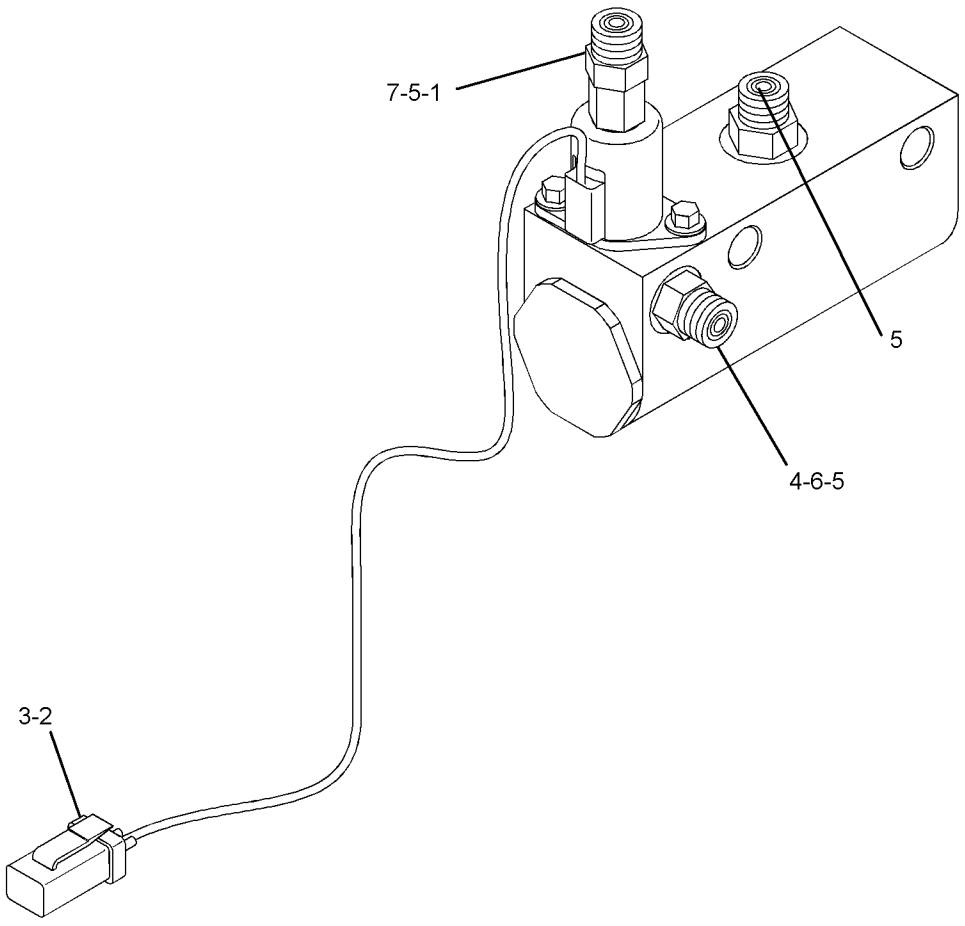

GRAPHIC #1 **<END>** g01120753

157-2841 CONNECTION GP-WATER

S/N: 8WM1-UP

PART OF 240-7750 ENGINE AR

SMCS-1380 **i00989479**

NOTE	REF NO	GRAPHIC REF	PART NUMBER	QTY	PART NAME 1 2 3 4 5 6 (PRODUCT LEVEL)	SEE PAGE
	1	1	**0S-1594**	10	BOLT (3/8-16X1-IN)	
	2	1	**5M-2894**	10	WASHER-HARD (10.2X18.5X2.5-MM THK)	
	3	1	**7E-6017**	3	COVER	
	4	1	**7E-6016**	4	GASKET	
	5	1	**1A-2029**	4	BOLT (3/8-16X1.125-IN)	
	6	1	**7N-4930**	1	ELBOW-OUTLET	
	7	1	**8T-6762**	1	PLUG-PIPE	
	8	1	**8T-6765**	1	PLUG-PIPE (1/4-18-THD)	

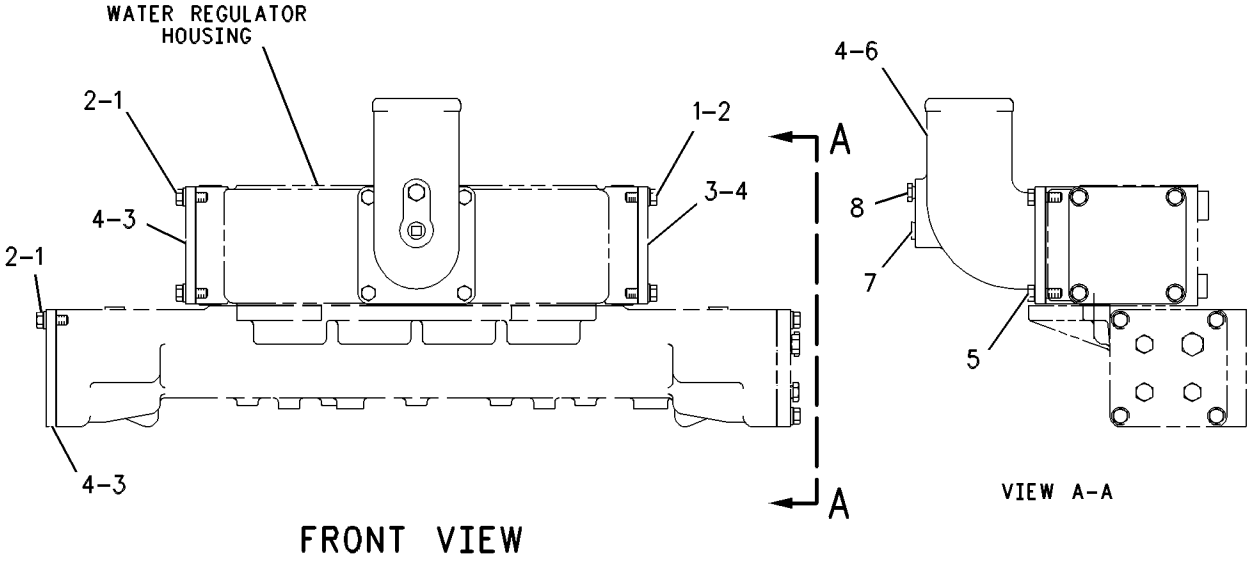

GRAPHIC #1 **<END>** g00510313

100-8007 COOLER GP-ENGINE OIL

S/N: 8WM1-UP

PART OF 240-7750 ENGINE AR

SMCS-1378 **i02041702**

NOTE	REF NO	GRAPHIC REF	PART NUMBER	QTY	PART NAME 1 2 3 4 5 6 (PRODUCT LEVEL)	SEE PAGE
	1	1	**1A-2029**	6	BOLT (3/8-16X1.125-IN)	
	2	1	**247-3796**	2	GASKET	
	3	1	**7W-1930**	1	TUBE	
	4	1	**109-2332**	2	SEAL-O-RING	
	5	1	**8S-9191**	8	BOLT (3/8-16X4-IN)	
YR	6	1	**100-8008**	1	CORE GP-ENGINE OIL COOLER	114
	7	1	**0S-1590**	2	BOLT (3/8-16X2-IN)	

R-REMFG PART MAY BE AVAILABLE
Y-SEPARATE ILLUSTRATION

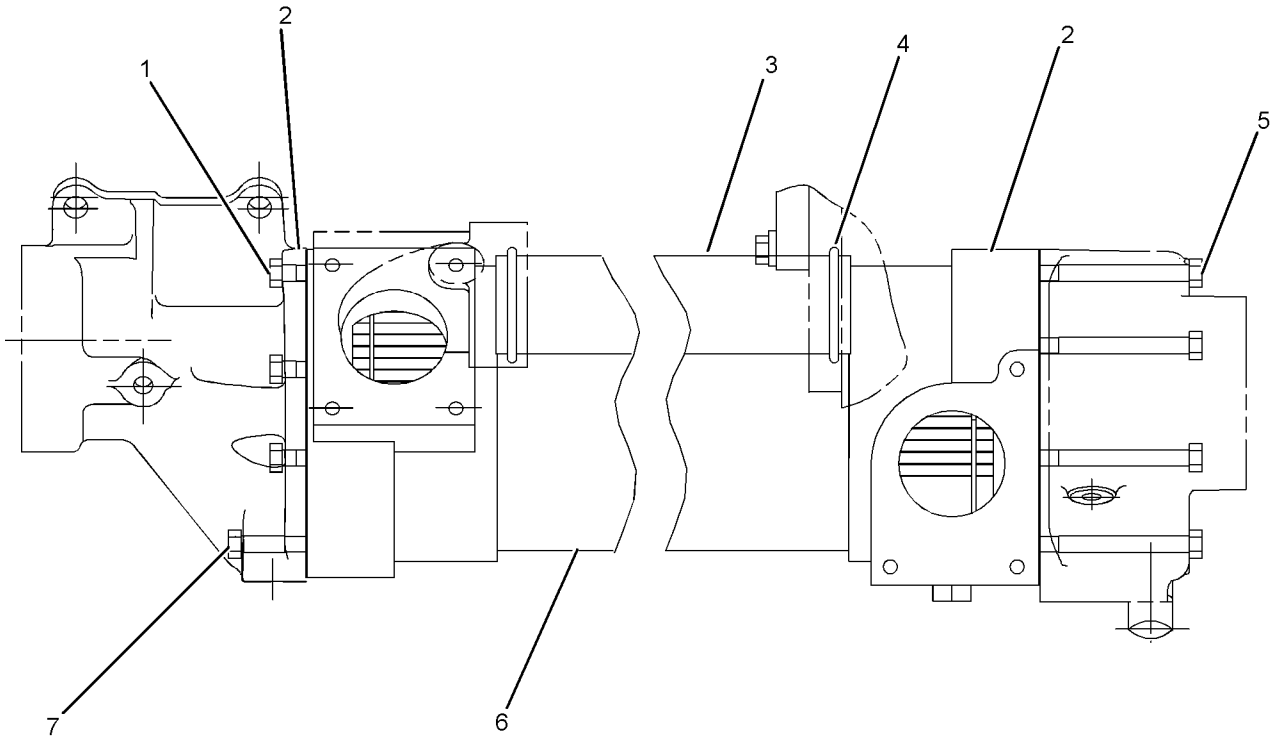

GRAPHIC #1 **<END>** g01050128

100-8008 CORE GP-ENGINE OIL COOLER*R

S/N: 8WM1-UP

PART OF 100-8007 COOLER GP-ENGINE OIL

SMCS-1378 **i01279129**

NOTE	REF NO	GRAPHIC REF	PART NUMBER	QTY	PART NAME 1 2 3 4 5 6 (PRODUCT LEVEL)	SEE PAGE
	1	1	**9S-4185**	1	PLUG	
	2	1	**8L-2786**	1	SEAL-O-RING	

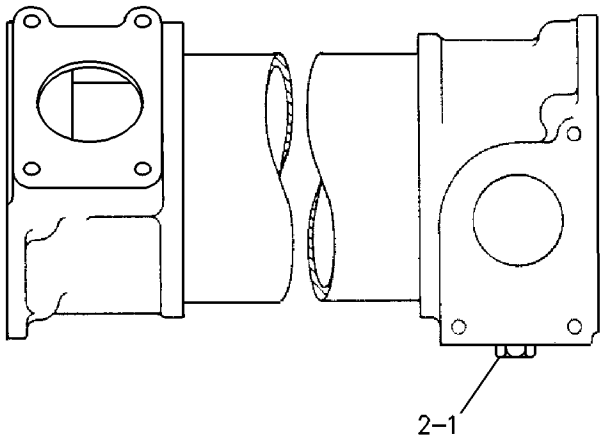

GRAPHIC #1 **<END>** g00083532

9Y-8890 CORE GP-OIL COOLER–BRAKE COOLING*R

S/N: 4421-UP

PART OF 105-4330 LINES GP-WATER

SMCS-1375, 1378 **i02155490**

NOTE	REF NO	GRAPHIC REF	PART NUMBER	QTY	PART NAME 1 2 3 4 5 6 (PRODUCT LEVEL)	SEE PAGE
	1	1	**9S-4191**	2	PLUG-O RING	
	2	1	**6V-5049**	2	SEAL-O-RING	

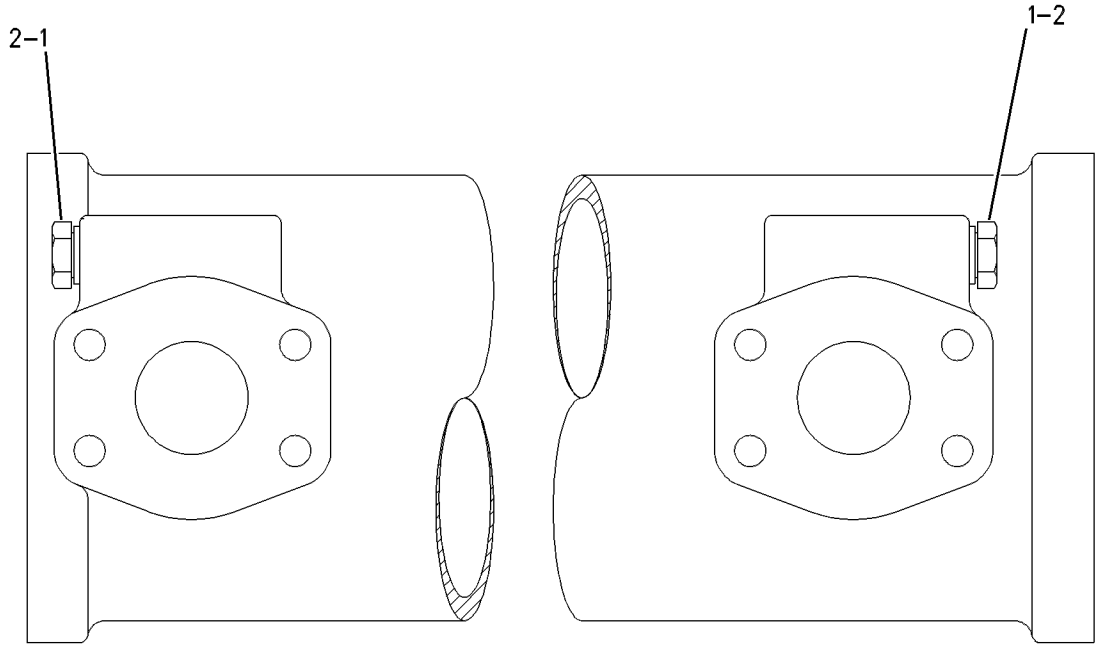

GRAPHIC #1 **<END>** g00570933

COOLING SYSTEM

132-3484 FAN GP-BLOWER

S/N: 4421-UP

PART OF 250-7957 INSTALLATION AR-ENGINE

SMCS-1356, 1360 **i02280327**

NOTE	REF NO	GRAPHIC REF	PART NUMBER	QTY	PART NAME 1 2 3 4 5 6 (PRODUCT LEVEL)	SEE PAGE
	1	1	**4P-7276**	2	BRACKET AS	
	2	1	**100-4817**	4	GUARD AS-FAN	
					(EACH INCLUDES)	
		1	**6N-8599**	2	CLIP	
M		1	**8T-3490**	2	NUT-WELD (M10X1.5-THD)	
	3	1	**111-4377**	1	SPIDER AS-FAN	
	4	1	**132-3481**	2	BRACKET AS	
	5	1	**1A-1460**	8	BOLT (1/2-13X2-IN)	
	6	1	**5P-8245**	8	WASHER-HARD (13.5X25.5X3-MM THK)	
	7	1	**7X-7729**	20	WASHER (11X25X3-MM THK)	
	8	1	**8T-4121**	16	WASHER-HARD (11X21X2.5-MM THK)	
M	9	1	**8T-4133**	8	NUT (M10X1.5 THD)	
M	10	1	**8T-4136**	12	BOLT (M10X1.5X25-MM)	
M	11	1	**8T-4195**	16	BOLT (M10X1.5X30-MM)	
M	12	1	**8T-4196**	16	BOLT (M10X1.5X35-MM)	
	13	1	**8T-7934**	16	WASHER-HARD (11X21X5-MM THK)	

M-METRIC PART

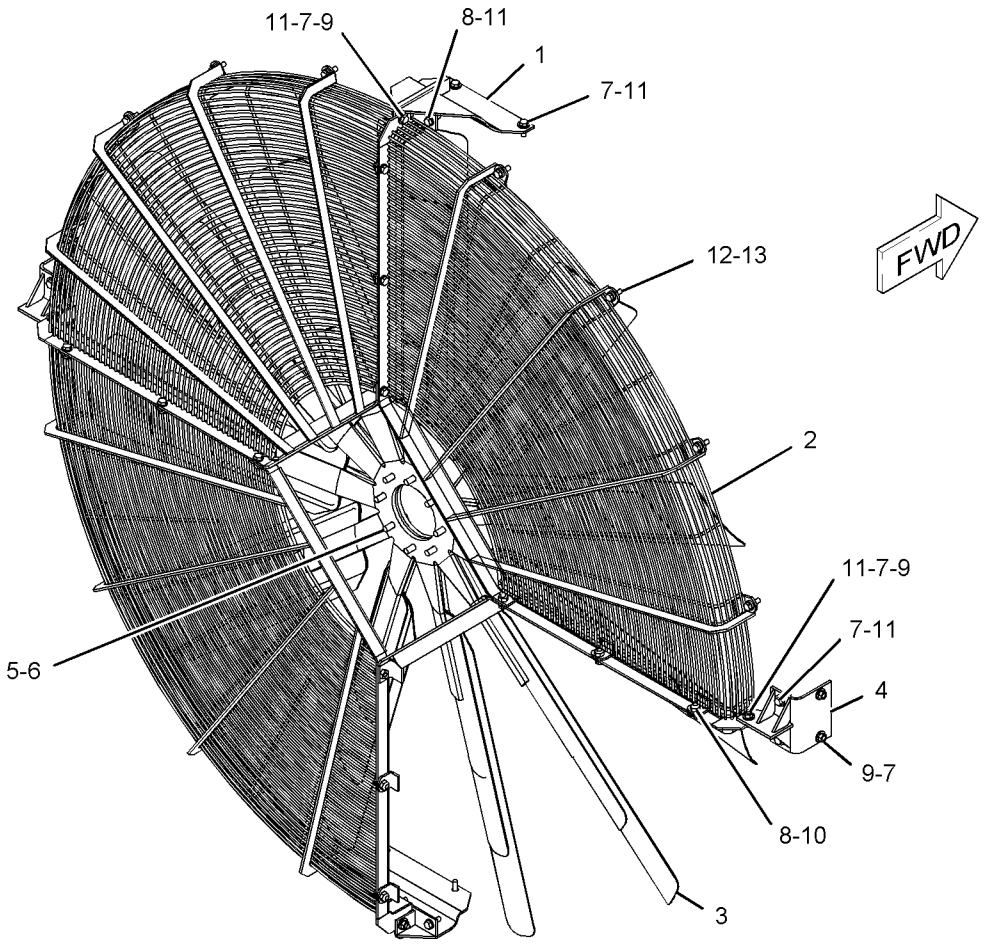

GRAPHIC #1 **<END>** g01143111

183-7142 GAUGE GP-COOLANT LEVEL

S/N: 4421-UP

PART OF 249-6781 RADIATOR GP

SMCS-7470 **i01471044**

NOTE	REF NO	GRAPHIC REF	PART NUMBER	QTY	PART NAME 1 2 3 4 5 6 (PRODUCT LEVEL)	SEE PAGE
	1	1	**103-1684**	1	DIAL	
	2	1	**2F-7306**	2	SCREW-MACHINE (6-32X.25 IN)	
	3	1	**1W-3601**	1	GASKET	

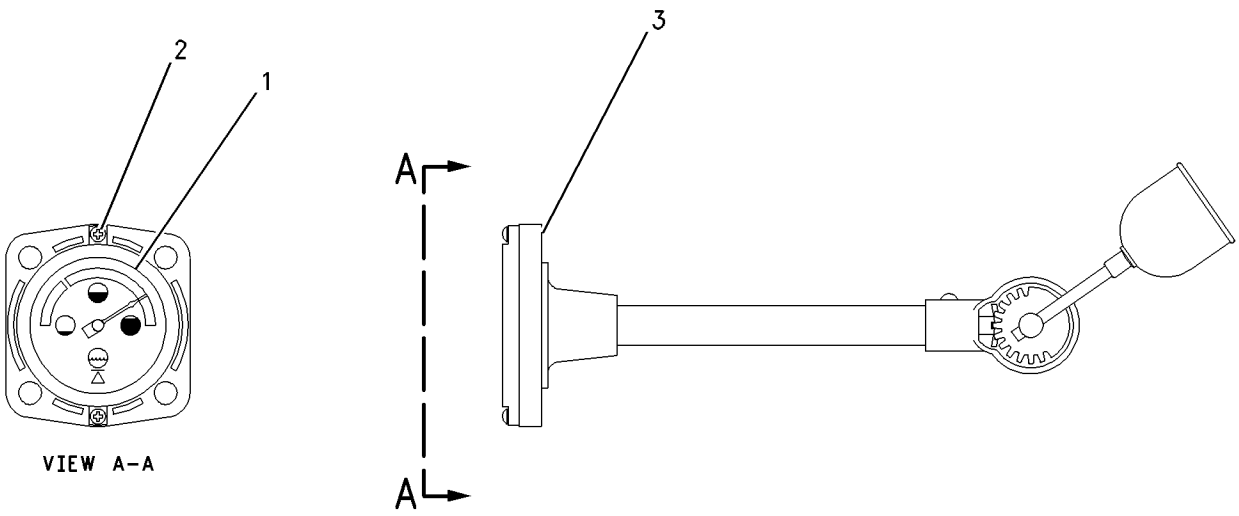

GRAPHIC #1 **<END>** g00767246

157-2840 HOUSING & REGULATOR GP–OUTLET CONTROL

S/N: 8WM1-UP

PART OF 240-7750 ENGINE AR

SMCS-1355, 1393 **i02179397**

NOTE	REF NO	GRAPHIC REF	PART NUMBER	QTY	PART NAME 1 2 3 4 5 6 (PRODUCT LEVEL)	SEE PAGE
	1	1	**7N-4927**	1	GASKET-HOUSING COVER	
	2	1	**6I-4950**	4	REGULATOR-WATER TEMPERATURE (92-DEG C)	
	3	1	**157-2839**	1	HOUSING AS-REGULATOR	
	3A	1	**3S-9643**	4	SEAL-LIP TYPE (REGULATOR HOUSING)	
	3B	1	**111-4374**	1	VALVE AS-VENT LINE	

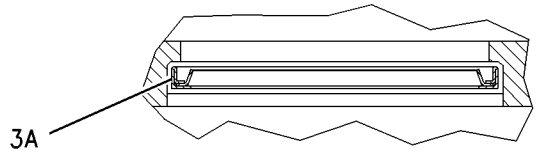

VIEW OF AREA A

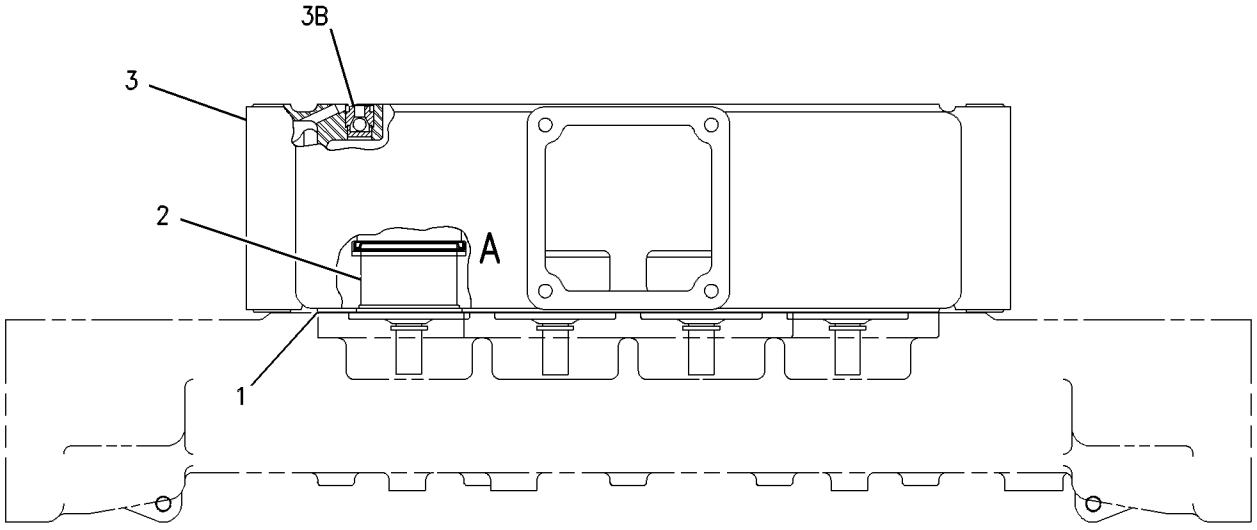

FRONT VIEW

GRAPHIC #1 **<END>** g00504285

COOLING SYSTEM

152-8929 LINES GP-COOLANT

S/N: 4421-UP

PART OF 250-7957 INSTALLATION AR-ENGINE

SMCS-1380 **i01788963**

NOTE	REF NO	GRAPHIC REF	PART NUMBER	QTY	PART NAME 1 2 3 4 5 6 (PRODUCT LEVEL)	SEE PAGE
C	1	1	**2T-2396**	1	ELBOW	
	2	2	**2W-3150**	1	ELBOW-RADIATOR	
I	3	1	**4P-0685**	1	HOSE AS	
I	4	1	**4P-8366**	1	HOSE AS	
	5	1	**4W-7725**	1	ELBOW-RADIATOR	
E	6	1	**5P-1269**		HOSE (30CM)	
	8	1	**6N-9590**	2	PLUG-DRAIN	
	9	1	**7E-9171**	2	ADAPTER-PLUG	
	10	2	**7E-9755**	1	FLANGE	
I	11	1	**7E-9829**	1	HOSE AS	
I	12	2	**7E-9831**	1	HOSE AS	
I	13	1	**7E-9832**	1	HOSE AS	
	14	2	**7E-9994**	1	FLANGE	
	15	1	**7E-9995**	2	PLATE	
	16	2	**7S-8780**	2	HOSE	
	17	1,2	**8M-7066**	3	GASKET	
	18	2	**216-2211**	4	CLAMP	
	19	1	**8T-7521**	1	ELBOW	
	21	2	**9M-3116**	1	GASKET	
	22	2	**9N-1909**	1	BRACKET	
	23	1	**221-9208**	2	CLAMP	
	24	1	**147-0842**	1	HOSE AS	
I	25	1	**163-2622**	1	HOSE AS	
	26	2	**1S-0994**	1	CLIP	
	27	1	**3D-2824**	1	SEAL-O-RING	
	28	1	**3J-1907**	6	SEAL-O-RING	
	29	2	**3K-0360**	2	SEAL-O-RING	
	30	2	**5S-7382**	2	BOLT (3/8-16X1.375-IN)	
C	31	1,2	**6D-4246**	8	CLIP	
C	32	1	**6V-5039**	1	CLIP (SLOT)	
C	33	1	**6V-5040**	1	CLIP (TAB)	
	34	1,2	**6V-8398**	17	SEAL-O-RING	
	35	2	**6V-8775**	2	TEE-FACE SEAL	
	36	1,2	**6V-9837**	3	TEE-SWIVEL	
	37	1	**6V-9873**	3	CONNECTOR	
C	38	1	**7D-7233**	2	CLIP	
	39	2	**7X-0772**	1	WASHER-HARD (10.2X25.5X2.5-MM THK)	
C	40	1	**7X-7729**	4	WASHER (11X25X3-MM THK)	
	41	1	**8C-6872**	1	CONNECTOR	
	42	1,2	**8H-8754**	2	GASKET	
C	43	1,2	**8S-0948**	3	CLIP	
C	44	1,2	**8T-4121**	25	WASHER-HARD (11X21X2.5-MM THK)	
CM	45	1,2	**8T-4133**	11	NUT (M10X1.15-THD)	
M	46	2	**8T-4136**	1	BOLT (M10X1.5X25-MM)	
CM	47	1,2	**8T-4137**	7	BOLT (M10X1.5X20-MM)	
CM	48	1,2	**8T-4183**	8	BOLT (M12X1.75X40-MM)	
CM	49	1	**8T-4186**	4	BOLT (M10X1.5X40-MM)	
M	50	1	**8T-4195**	4	BOLT (M10X1.5X30-MM)	
	51	2	**8T-4896**	5	WASHER-HARD (10.2X18.5X2.5-MM THK)	
M	52	1	**8T-5005**	4	BOLT (M10X1.5X70-MM)	
	53	1	**8T-5429**	1	ELBOW	
	54	2	**9B-7237**	3	BOLT (3/8-16X1.25-IN)	
	55	1	**9S-4191**	1	PLUG-O RING	

152-8929 **LINES GP-COOLANT** *(contd.)* **i01788963**

C-CHANGE FROM PREVIOUS TYPE
E-ORDER BY THE CENTIMETER
I-REFER TO HYDRAULIC INFORMATION SYSTEM
M-METRIC PART

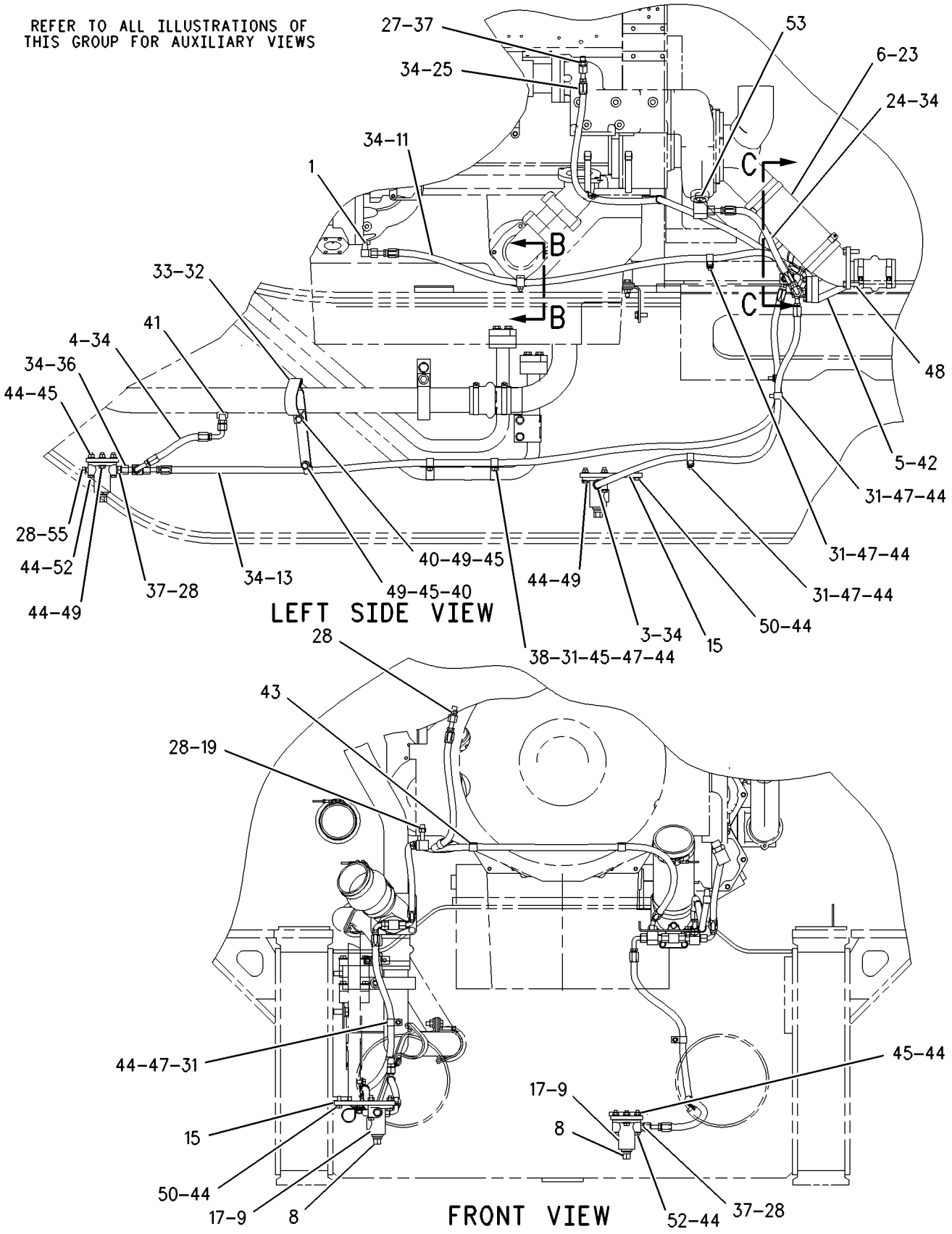

GRAPHIC #1 g00879445

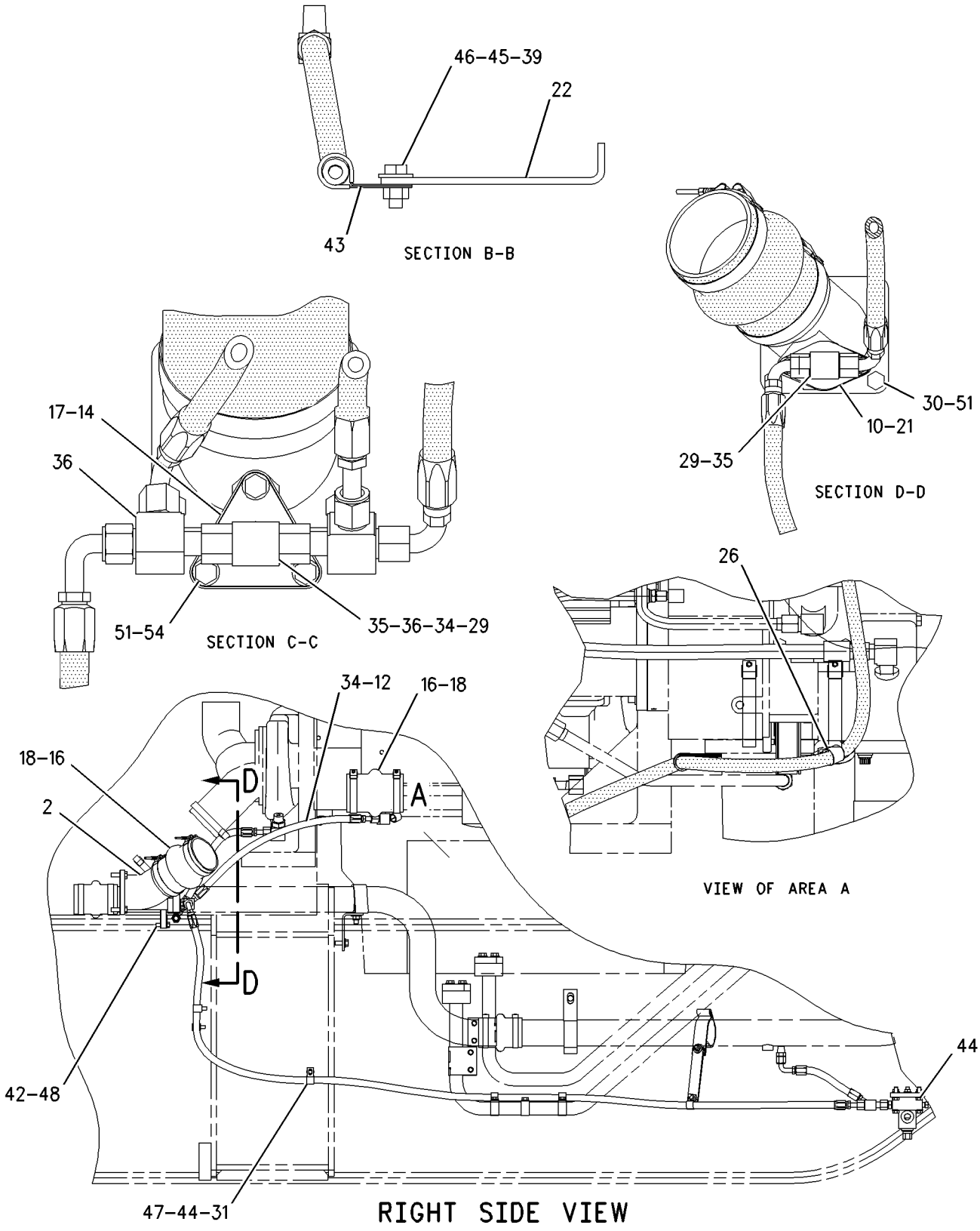

GRAPHIC #2 **<END>** g00915637

167-9562 LINES GP-TURBOCHARGER WATER—TURBOCHARGER

S/N: 8WM1-UP

PART OF 240-7750 ENGINE AR

SMCS-1052, 1380 **i01999291**

NOTE	REF NO	GRAPHIC REF	PART NUMBER	QTY	PART NAME 1 2 3 4 5 6 (PRODUCT LEVEL)	SEE PAGE
C	2	1	**4P-0693**	2	CLAMP AS	
					(EACH INCLUDES)	
		1	**108-1434**	2	GROMMET	
	3	1	**6K-8420**	3	LOCKNUT (1-1/16-12-THD)	
	4	1	**7F-2060**	2	LOCKNUT (7/8-14-THD)	
	5	1	**7N-7628**	16	GASKET	
	6	1	**7N-7878**	8	PLATE-COVER	
	7	1	**107-0744**	4	BLOCK	
	8	1	**153-7482**	2	BRACKET	
	9	1	**153-7491**	1	TUBE AS	
	10	1	**153-7492**	1	TUBE AS	
	11	1	**153-7493**	2	TUBE AS	
	12	1	**153-7499**	2	TUBE AS	
	13	1	**153-7500**	1	TUBE AS	
	14	1	**153-7505**	2	BRACKET	
	15	1	**153-7506**	1	TUBE AS	
	16	1	**155-0515**	4	ELBOW	
	17	1	**156-6277**	2	HOSE AS	
	18	1	**157-2797**	1	BRACKET	
C	19	1	**175-5246**	1	TUBE AS	
C	20	1	**175-5247**	1	TUBE AS	
C	21	1	**175-5249**	1	BRACKET AS	
	22	1	**030-7949**	2	ELBOW	
	23	1	**061-8827**	1	TEE-FLARED	
	24	1	**0L-1351**	1	BOLT (3/8-16X0.875-IN)	
C	25	1	**0L-2070**	1	BOLT (3/8-16X2.25-IN)	
	26	1	**0S-1594**	16	BOLT (3/8-16X1-IN)	
	27	1	**0S-1608**	4	BOLT (3/8-16X3.75-IN)	
	28	1	**2P-1296**	2	TEE	
	29	1	**2P-1326**	2	ELBOW-UNION (FLARED 90-DEG)	
	30	1	**2P-7636**	4	CONNECTOR	
	31	1	**3B-1915**	12	BOLT (3/8-16X1-3/8-IN)	
C	32	1	**5M-2894**	34	WASHER-HARD (10.2X18.5X2.5-MM THK)	
	33	1	**5P-1945**	4	REDUCER-FLARED	
	34	1	**5P-7154**	2	TEE-UNION	
	35	1	**6V-4589**	6	SEAL-O-RING	
	36	1	**8L-2786**	4	SEAL-O-RING	
	37	1	**9M-4584**	2	CONNECTOR	

C-CHANGE FROM PREVIOUS TYPE

167-9562 **LINES GP-TURBOCHARGER WATER** *(contd.)* **i01999291**

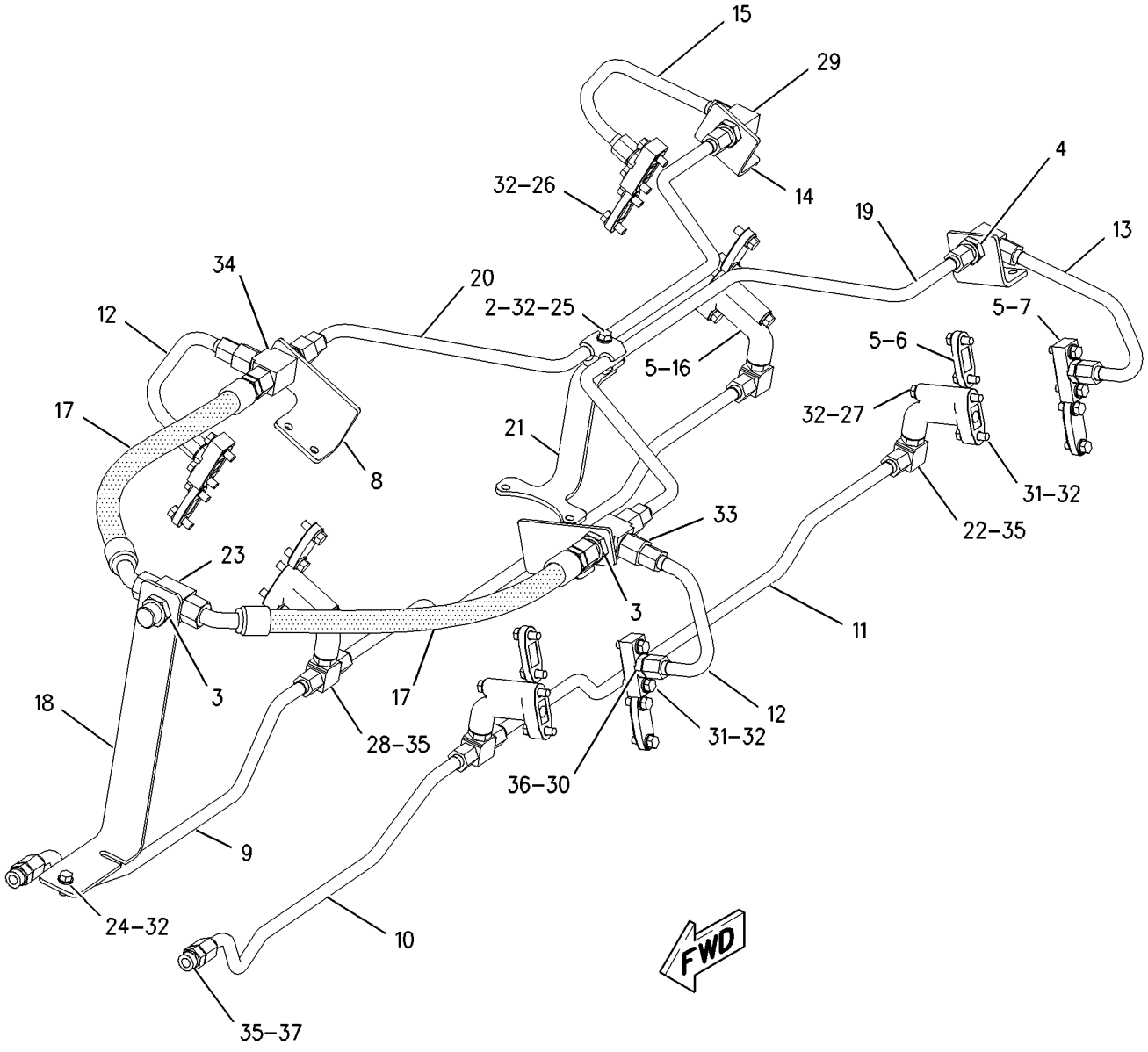

GRAPHIC #1 **<END>** g01035320

COOLING SYSTEM

175-5270 LINES GP-TURBOCHARGER WATER

S/N: 8WM665-UP

PART OF 240-7750 ENGINE AR

SMCS-1052, 1380 **i01999069**

NOTE	REF NO	GRAPHIC REF	PART NUMBER	QTY	PART NAME 1 2 3 4 5 6 (PRODUCT LEVEL)	SEE PAGE
	5	1	**9M-4584**	2	CONNECTOR	
	6	1	**4P-0693**	2	CLAMP AS	
					(EACH INCLUDES)	
		1	**108-1434**	2	GROMMET	
	7	1	**6K-8420**	2	LOCKNUT (1-1/16-12-THD)	
	8	1	**7F-2060**	2	LOCKNUT (7/8-14-THD)	
	9	1	**241-3283**	16	GASKET	
	10	1	**7N-7878**	8	PLATE-COVER	
	11	1	**107-0744**	4	BLOCK	
	12	1	**153-7482**	2	BRACKET	
	13	1	**153-7491**	1	TUBE AS	
	14	1	**153-7492**	1	TUBE AS	
	15	1	**153-7493**	2	TUBE AS	
	16	1	**153-7499**	2	TUBE AS	
	17	1	**153-7500**	1	TUBE AS	
	18	1	**153-7505**	2	BRACKET	
	19	1	**153-7506**	1	TUBE AS	
	20	1	**155-0515**	4	ELBOW	
	21	1	**175-5246**	1	TUBE AS	
	22	1	**175-5247**	1	TUBE AS	
	23	1	**175-5249**	1	BRACKET AS	
	24	1	**030-7949**	2	ELBOW	
	25	1	**0L-2070**	1	BOLT (3/8-16X2.25-IN)	
	26	1	**0S-1594**	16	BOLT (3/8-16X1-IN)	
	27	1	**0S-1608**	4	BOLT (3/8-16X3.75-IN)	
	28	1	**2P-1296**	2	TEE	
	29	1	**2P-1326**	2	ELBOW-UNION (FLARED 90-DEG)	
	30	1	**2P-7636**	4	CONNECTOR	
	31	1	**3B-1915**	12	BOLT (3/8-16X1-3/8-IN)	
	32	1	**5M-2894**	33	WASHER-HARD (10.2X18.5X2.5-MM THK)	
	33	1	**5P-1945**	4	REDUCER-FLARED	
	34	1	**5P-7154**	2	TEE-UNION	
	35	1	**6V-4589**	6	SEAL-O-RING	
	36	1	**8L-2786**	4	SEAL-O-RING	

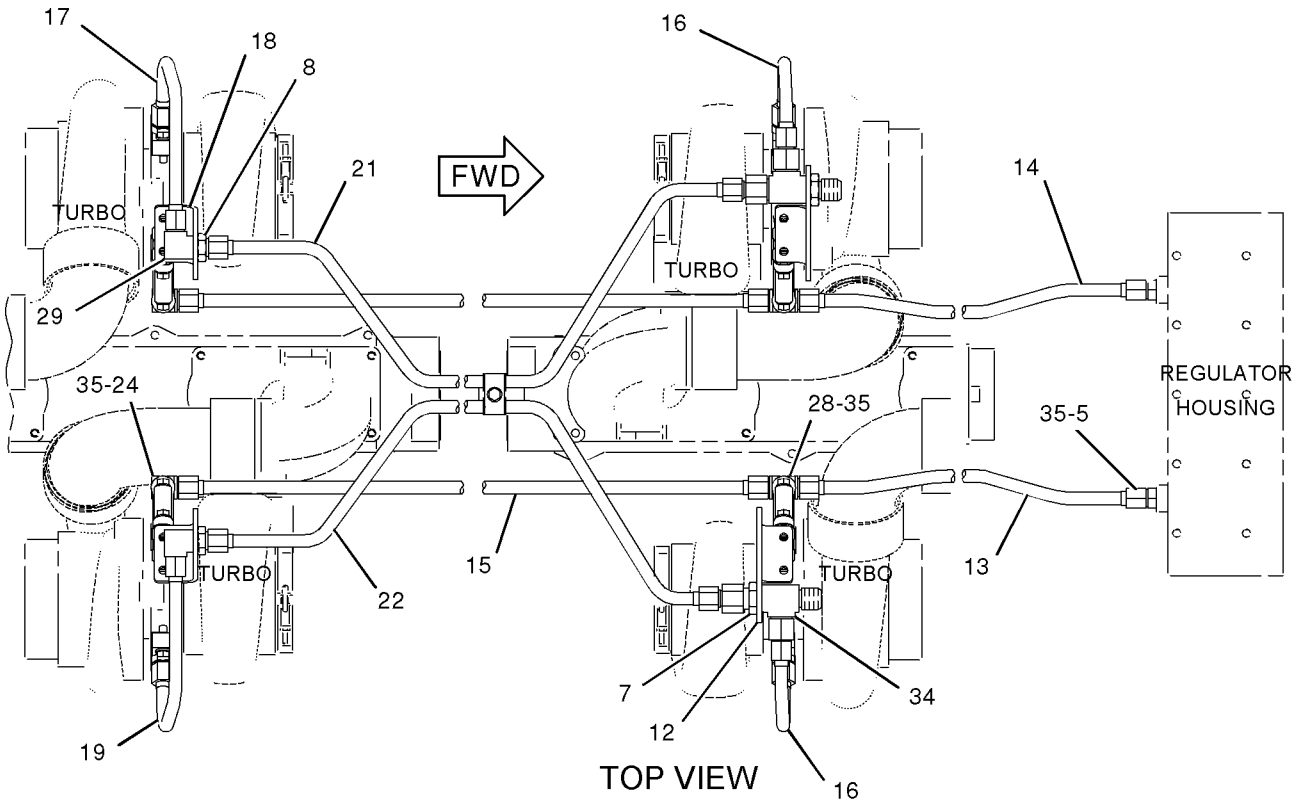

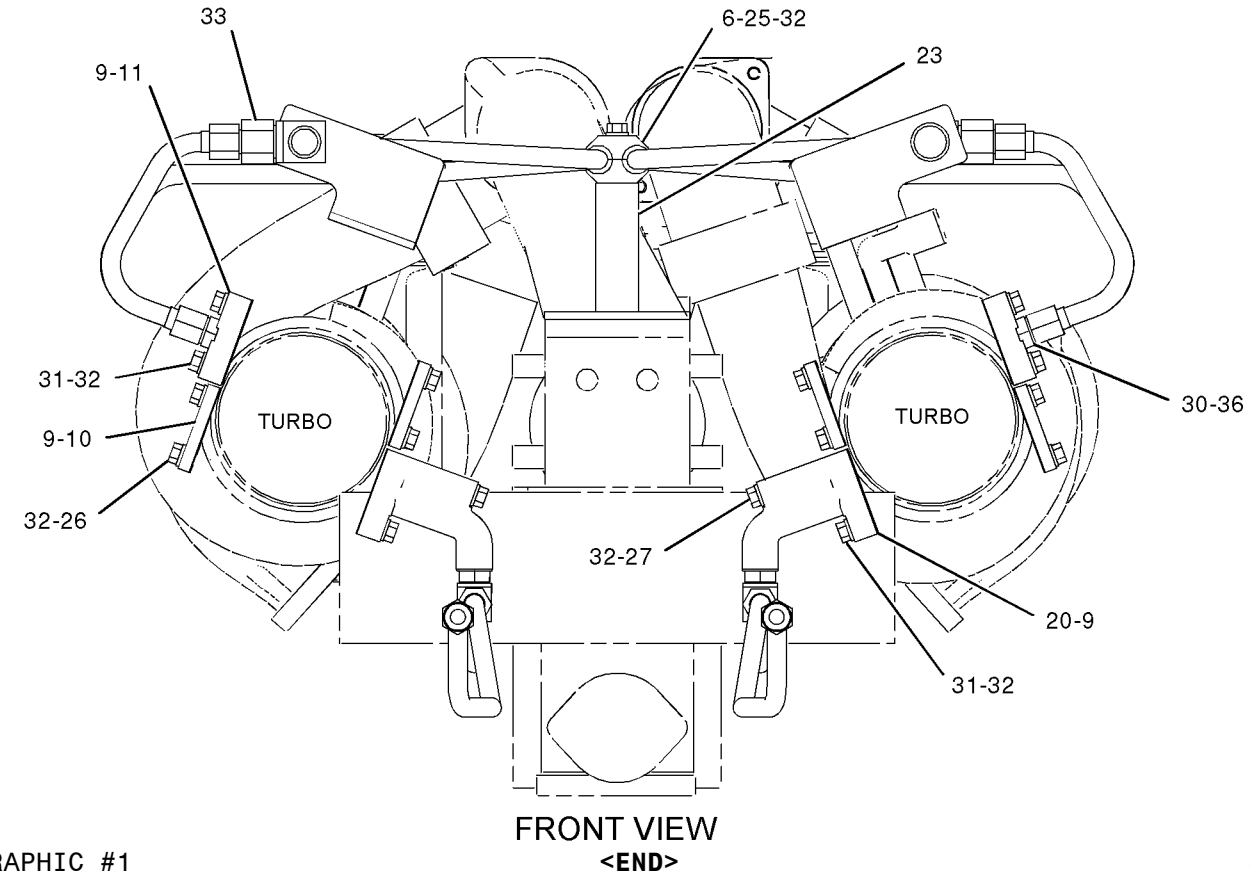

GRAPHIC #1

<END>

g01037099

COOLING SYSTEM

7E-9221 LINES GP-WATER—UPPER

S/N: 8WM1-UP

PART OF 240-7750 ENGINE AR

SMCS-1380 **i02179403**

NOTE	REF NO	GRAPHIC REF	PART NUMBER	QTY	PART NAME 1 2 3 4 5 6 (PRODUCT LEVEL)	SEE PAGE
	1	1	**4P-3897**	4	MANIFOLD (INTERMEDIATE)	
	2	1	**154-1618**	1	MANIFOLD-FRONT (LH)	
	3	1	**9Y-4090**	1	HOUSING-REGULATOR	
	4	1	**8N-9528**	2	BRACKET	
	5	1	**0S-1594**	40	BOLT (3/8-16X1-IN)	
	6	1	**5M-2894**	8	WASHER-HARD (10.2X18.5X2.5-MM THK)	
	7	1	**6V-9027**	1	SEAL-O-RING	
	8	1	**9S-4182**	1	PLUG	
	9	1	**8T-6762**	3	PLUG-PIPE	
	10	1	**6V-9769**	16	SEAL-O-RING	
	11	1	**2W-3146**	16	FLANGE	
	12	1	**8N-7639**	16	ELBOW	
	13	1	**1B-7182**	64	BOLT (5/16-18X1.25-IN)	
	14	1	**7N-3297**	2	COVER	
	15	1	**7N-3368**	2	GASKET	
	16	1	**4P-1654**	1	MANIFOLD-REAR (LH)	
	17	1	**243-2288**	6	GASKET	
	18	1	**127-2176**	16	SEAL-INTEGRAL	
	19	1	**0S-1618**	62	BOLT (5/16-18X1-IN)	
	20	1	**9M-1974**	62	WASHER-HARD (8.8X16X2-MM THK)	
	21	1	**241-5928**	16	GASKET	
	22	1	**122-8856**	2	GASKET	
	23	1	**4P-3896**	1	MANIFOLD-REAR (RH)	
	24	1	**154-1619**	1	MANIFOLD-FRONT (RH)	
B	25	1	**8T-6762**	1	PLUG-PIPE	
	26	1	**135-0175**	12	BRACKET	
	27	1	**133-8382**	4	BRACKET	

B-USE AS REQUIRED

7E-9221 **LINES GP-WATER** *(contd.)* **i02179403**

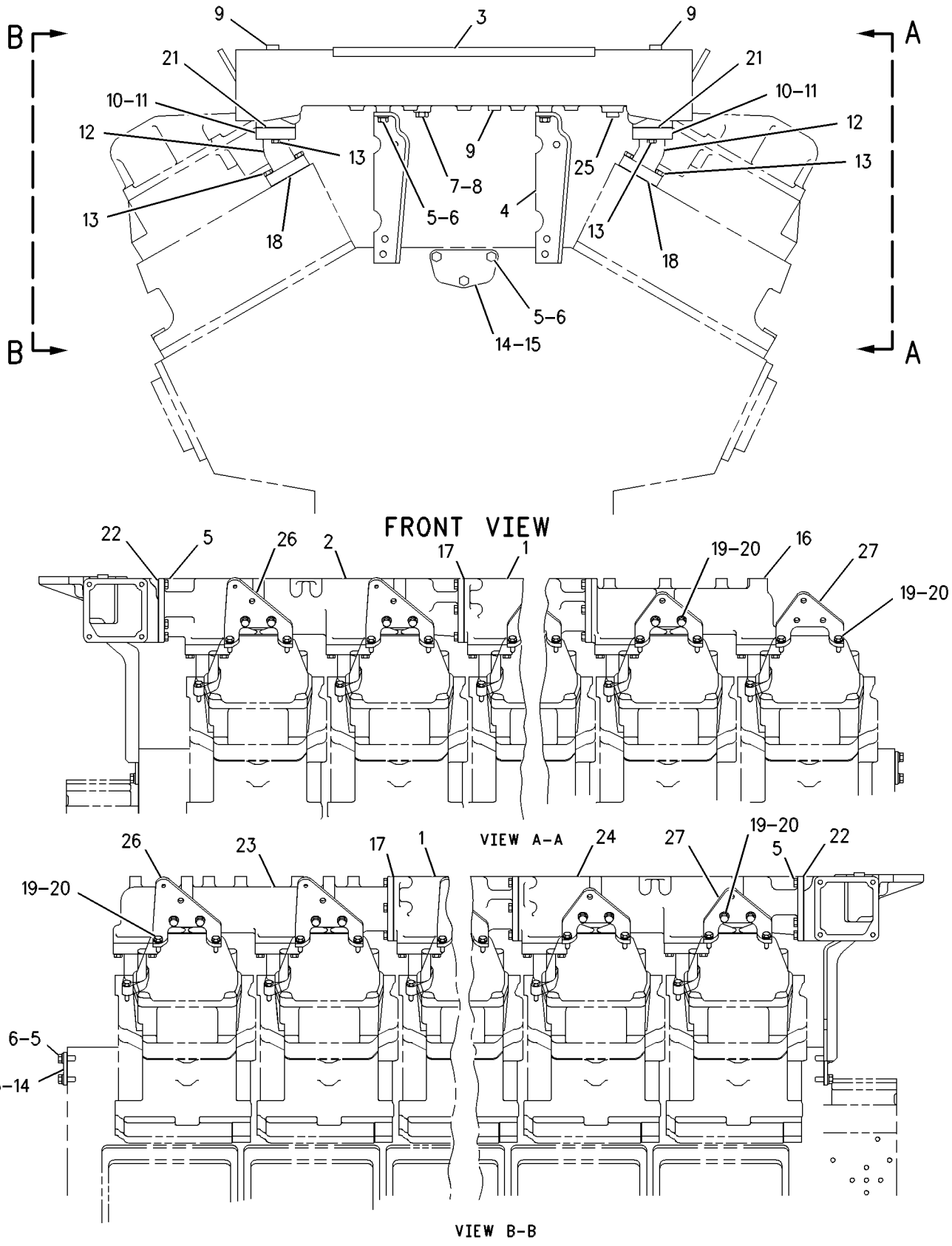

GRAPHIC #1 **<END>** g00554416

COOLING SYSTEM

103-0888 LINES GP-WATER—LOWER

S/N: 8WM1-UP

PART OF 240-7750 ENGINE AR

SMCS-1380 **i02089680**

NOTE	REF NO	GRAPHIC REF	PART NUMBER	QTY	PART NAME 1 2 3 4 5 6 (PRODUCT LEVEL)	SEE PAGE
	1	2	**8T-6764**	2	PLUG-PIPE	
	2	2	**7N-4932**	2	GASKET	
	3	1,2	**0S-1594**	11	BOLT (3/8-16X1-IN)	
	4	2	**1W-1475**	1	ADAPTER-LINES	
	5	2	**8T-6767**	3	PLUG-PIPE	
	6	2	**8T-6758**	6	PLUG-PIPE	
	7	2	**4N-1320**	1	GASKET	
	8	2	**8N-0386**	1	FLANGE	
	9	2	**2A-4639**	2	BOLT (3/8-16X1.625-IN)	
	10	1,2	**5M-2894**	11	WASHER-HARD (10.2X18.5X2.5-MM THK)	
	11	2	**8N-7641**	1	TUBE	
	12	2	**6V-5066**	7	SEAL-O-RING	
	13	2	**7N-4939**	1	BONNET-OIL COOLER	
	14	2	**7N-4940**	1	BRACKET	
	15	2	**0S-1585**	11	BOLT (1/2-13X1.5-IN)	
	16	2	**0S-1571**	2	BOLT (3/8-16X1.75-IN)	
	17	2	**1W-4935**	1	BONNET-OIL COOLER	
	18	1	**0S-1595**	4	BOLT (1/2-13X1.25-IN)	
	19	2	**7N-9044**	1	TUBE	
C	20	2	**105-4287**	1	BONNET	
	21	1	**4W-0327**	1	BRACKET	
	22	1	**2B-0947**	8	BOLT (1/2-13X2.25-IN)	
	24	2	**1D-4595**	2	BOLT (5/8-11X6-IN)	
	25	2	**1N-3006**	1	BONNET	
	26	2	**7S-8767**	4	GASKET	
	27	2	**2W-6059**	1	BONNET	
	28	1	**4W-8934**	1	BRACKET	
	29	1	**0L-1178**	2	BOLT (3/4-10X2-IN)	
	30	2	**9L-9132**	2	WASHER (10.2X25.5X2.5-MM THK)	
	31	2	**0S-1587**	14	BOLT (1/2-13X1.75-IN)	
	32	1	**2N-8630**	1	GASKET	
	33	1	**4W-7711**	1	ELBOW	
	34	1	**5F-4899**	2	BOLT (3/8-16X5.5-IN)	
	35	1	**0S-1591**	2	BOLT (3/8-16X1.5-IN)	
	36	1	**8N-3640**	2	RING-RETAINING	
	37	1,2	**8N-3639**	4	RETAINER	
	38	1	**9Y-5041**	1	TUBE AS	
	39	1	**7E-7586**	1	ELBOW	
	40	1	**7N-4945**	1	GASKET	
	41	1	**1A-2029**	2	BOLT (3/8-16X1.125-IN)	
	42	1	**0T-0065**	2	BOLT (3/8-16X3.5-IN)	
	43	1,2	**032-1267**	2	CONNECTOR	
	44	2	**032-1268**	2	ELBOW	
	45	2	**4W-7714**	1	TUBE AS	
	46	2	**4W-9992**	1	TUBE AS	
C	47	2	**105-4317**	1	FLANGE	
C	48	2	**6V-6782**	3	CLIP (SLOT)	
C	49	2	**6V-6783**	3	CLIP (TAB)	
C	50	1	**104-4771**	2	BRACKET AS	
		1	**1F-0748**	1	NUT-WELD (1/2-13-THD)	
	51	2	**7B-1597**	1	CLIP	
	52	1,2	**5P-8245**	24	WASHER-HARD (13.5X25.5X3-MM THK)	
	53	2	**0S-0509**	1	BOLT (3/8-16X0.75-IN)	
	54	2	**0S-1590**	2	BOLT (3/8-16X2-IN)	
	57	2	**9S-8752**	1	NUT-FULL (3/8-16-THD)	
	58	2	**1A-1460**	1	BOLT (1/2-13X2-IN)	

103-0888 **LINES GP-WATER** *(contd.)* **i02089680**

NOTE	REF NO	GRAPHIC REF	PART NUMBER	QTY	PART NAME 1 2 3 4 5 6 (PRODUCT LEVEL)	SEE PAGE
C	59	1	**103-0893**	1	BRACKET	
	60	2	**7E-0836**	1	PLATE	
	62	2	**8T-6760**	1	PLUG-PIPE	
C	64	2	**103-0892**	3	GROMMET	
M	67	2	**6A-5591**	16	BOLT (M12X1.75X25-MM)	
	68	2	**6V-6609**	2	SEAL-O-RING	
	69	2	**9S-4185**	2	PLUG	

C-CHANGE FROM PREVIOUS TYPE
M-METRIC PART

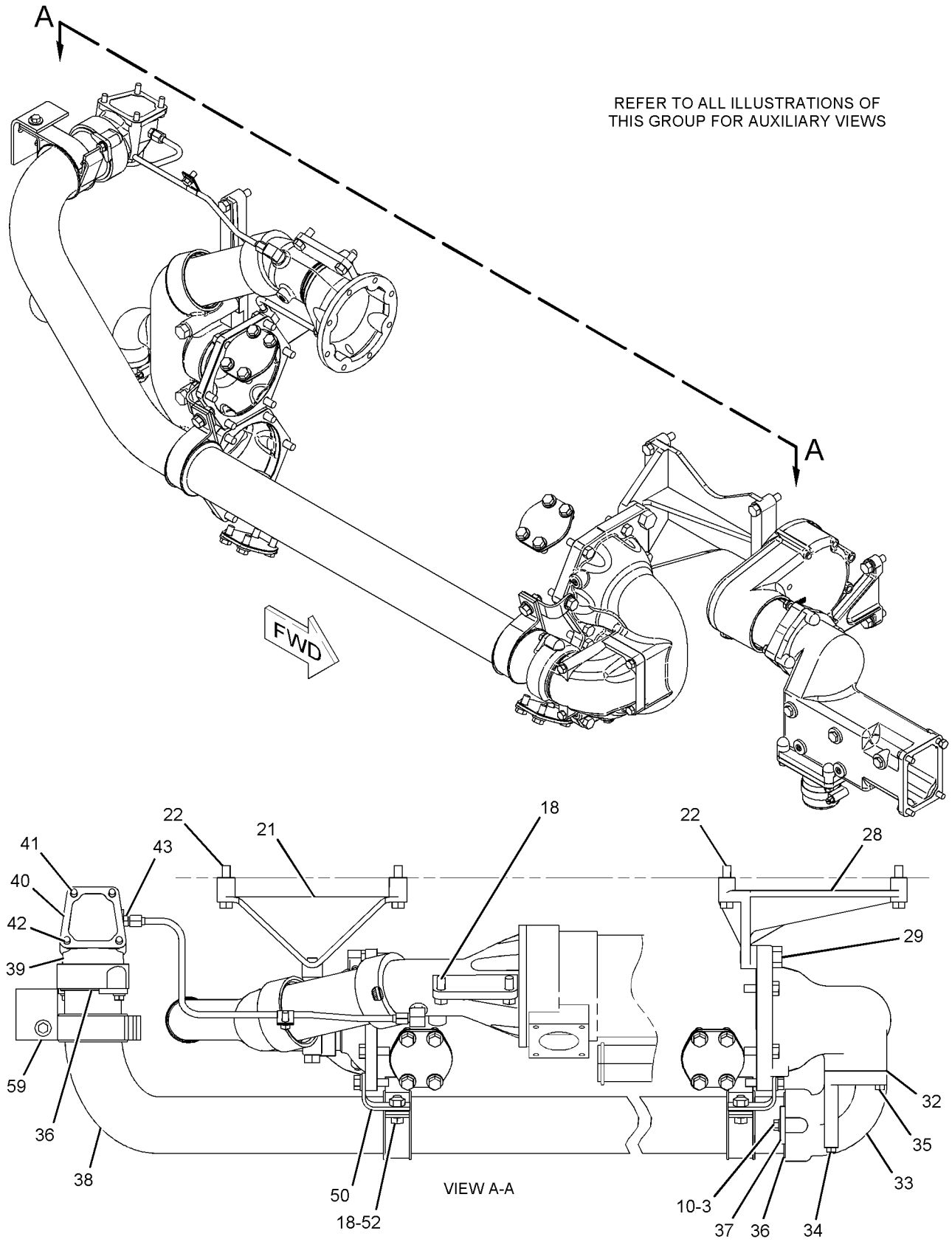

GRAPHIC #1

g01071218

103-0888 **LINES GP-WATER** *(contd.)* **i02089680**

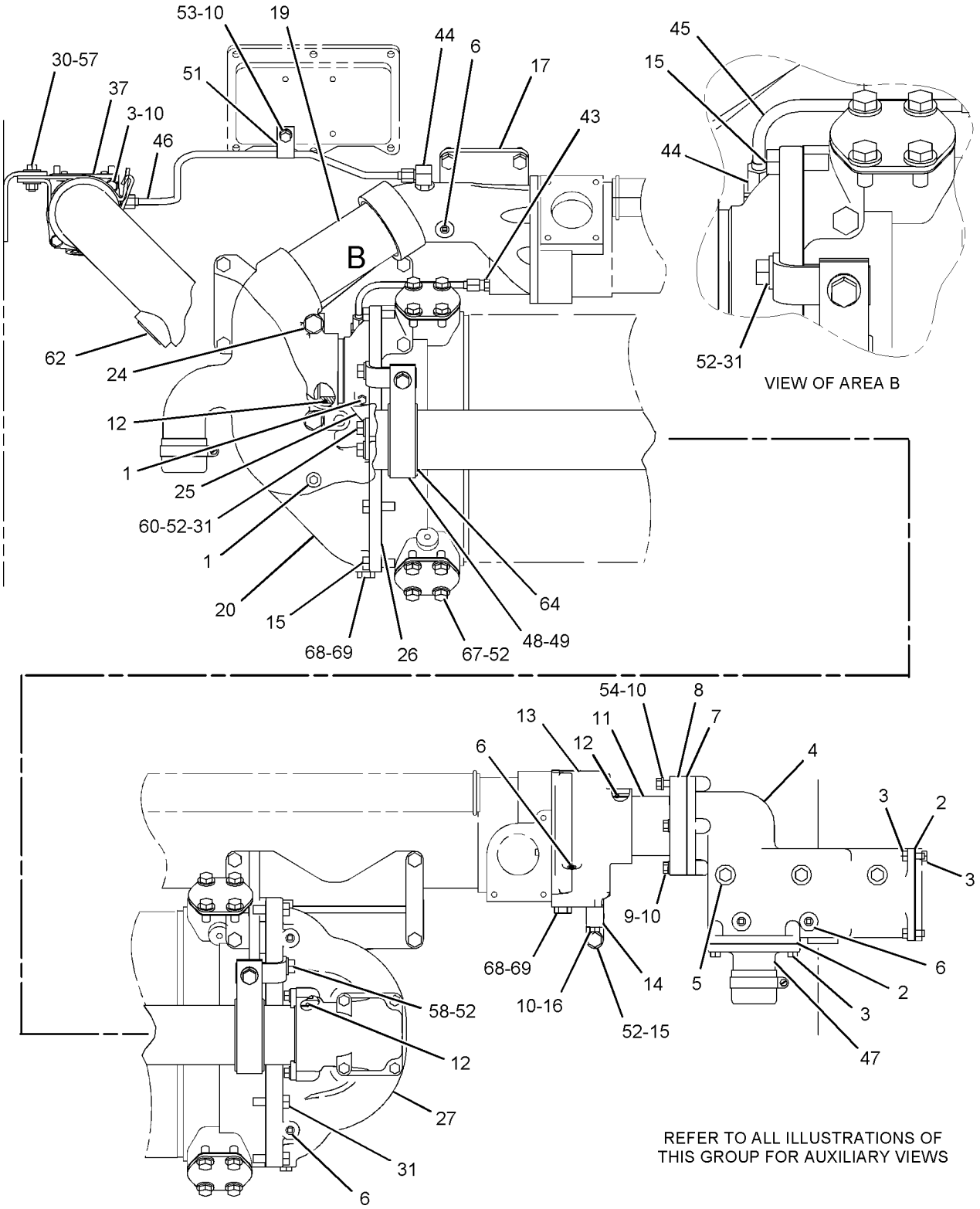

RIGHT SIDE VIEW

GRAPHIC #2

<END>

g01071217

105-4330 LINES GP-WATER–REAR

S/N: 4421-UP

PART OF 250-7957 INSTALLATION AR-ENGINE

SMCS-1380 **i02180649**

NOTE	REF NO	GRAPHIC REF	PART NUMBER	QTY	PART NAME 1 2 3 4 5 6 (PRODUCT LEVEL)	SEE PAGE
	1	1	**105-4278**	1	TUBE	
	2	1	**3E-7404**	4	CLAMP-HOSE	
	3	1	**7E-7555**	1	BONNET	
	4	1	**103-6003**	1	BRACKET AS	
	5	1	**103-0620**	1	BRACKET AS	
	6	1	**105-4288**	1	TUBE	
E	7	1	**5P-1262**		HOSE (17.5-CM)	
E	7A	1	**5P-1262**		HOSE (20-CM)	
C	8	1	**196-5053**	2	CLIP (TAB)	
C	9	1	**196-5052**	2	CLIP (SLOT)	
	10	1	**105-4277**	1	BONNET	
	11	1	**7W-7071**	2	GASKET	
YR	12	1	**9Y-8890**	1	CORE GP-OIL COOLER (BRAKE COOLING)	115
M	13	1	**8T-4136**	12	BOLT (M10X1.5X25-MM)	
	14	1	**8T-4121**	16	WASHER-HARD (11X21X2.5-MM THK)	
	15	1	**4W-0531**	2	RETAINER	
	16	1	**8T-1919**	2	SEAL-O-RING	
	17	1	**4W-0530**	2	RING-RETAINING	
M	18	1	**8T-4196**	2	BOLT (M10X1.5X35-MM)	
M	19	1	**8T-4133**	2	NUT (M10X1.15-THD)	
	20	1	**8C-4436**	8	BOLT (1/2-13X1.375-IN)	
	21	1	**106-4683**	1	BRACKET	
	22	1	**106-4684**	1	BRACKET	
	23	1	**9S-4191**	3	PLUG-O RING	
	24	1	**3J-1907**	3	SEAL-O-RING	

C-CHANGE FROM PREVIOUS TYPE
E-ORDER BY THE CENTIMETER
M-METRIC PART
R-REMFG PART MAY BE AVAILABLE
Y-SEPARATE ILLUSTRATION

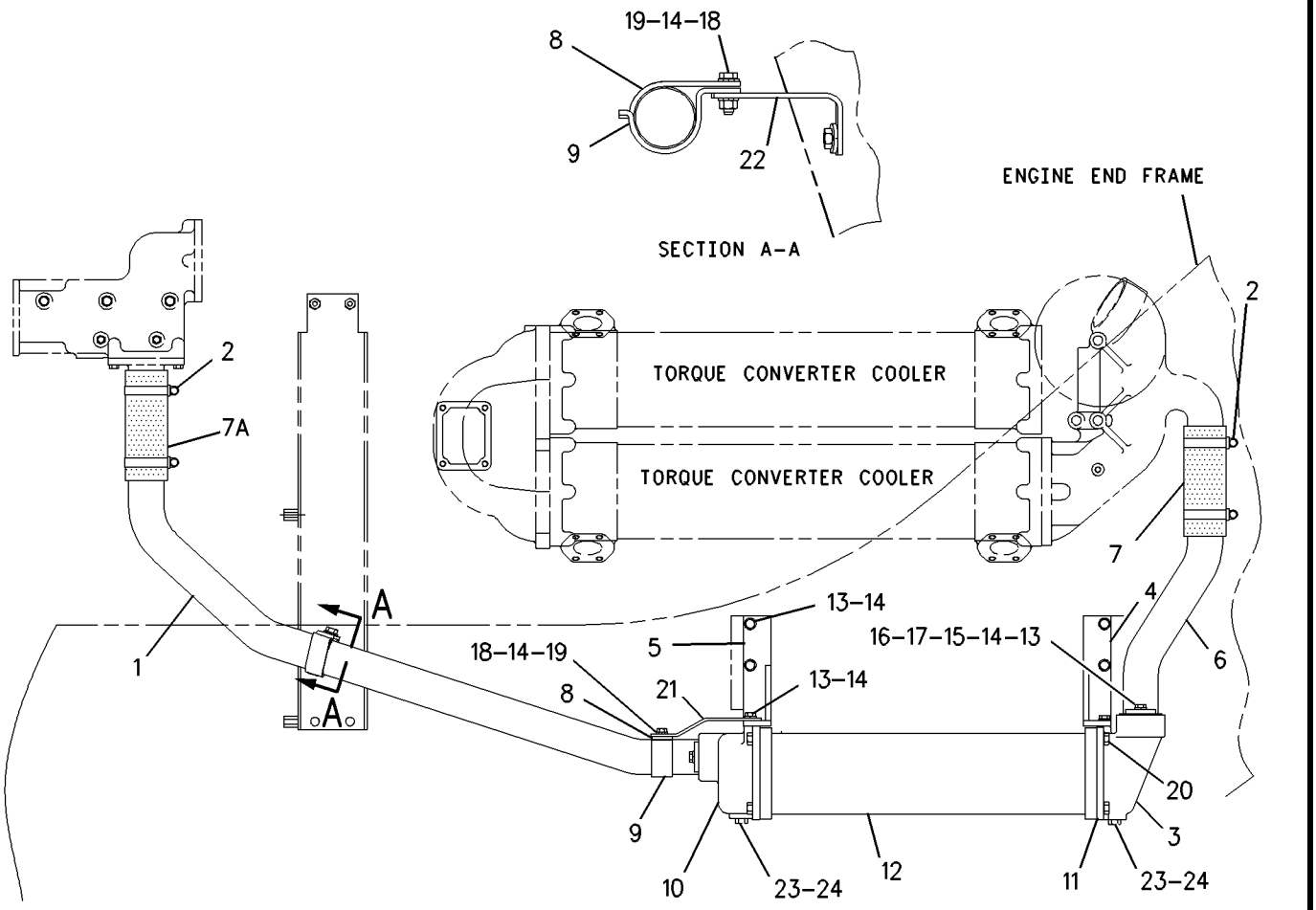

RIGHT SIDE VIEW

GRAPHIC #1 **<END>** g00876620

COOLING SYSTEM

230-1082 LINES GP-WATER–BYPASS

S/N: 8WM1-UP

PART OF 240-7750 ENGINE AR

SMCS-1380 **i02150162**

NOTE	REF NO	GRAPHIC REF	PART NUMBER	QTY	PART NAME 1 2 3 4 5 6 (PRODUCT LEVEL)	SEE PAGE
	1	1	**2N-0931**	1	GASKET	
	2	1	**4P-5752**	1	ELBOW	
	3	1	**4W-3100**	1	GASKET	
	4	1	**7E-9584**	1	ELBOW	
	5	1	**108-6170**	4	CLAMP AS	
	6	1	**110-0096**	2	RING	
	7	1	**246-5572**	1	TUBE AS	
	8	1	**246-5577**	1	BRACKET	
	9	1	**0S-1588**	2	BOLT (3/8-16X1.25-IN)	
	10	1	**0S-1591**	4	BOLT (3/8-16X1.5-IN)	
	11	1	**0S-1594**	9	BOLT (3/8-16X1-IN)	
	12	1	**103-0892**	1	GROMMET	
	13	1	**1A-2029**	1	BOLT (3/8-16X1.125-IN)	
	14	1	**1A-5183**	2	BOLT (3/8-16X4.75-IN)	
	15	1	**1D-4706**	4	BOLT (3/8-16X6-IN)	
	16	1	**5B-2638**	1	BOLT (3/8-16X5.25-IN)	
	17	1	**5M-2894**	15	WASHER-HARD (10.2X18.5X2.5-MM THK)	
	18	1	**6V-5066**	2	SEAL-O-RING	
	19	1	**6V-6782**	1	CLIP (SLOT)	
	20	1	**6V-6783**	1	CLIP (TAB)	
	21	1	**6V-6809**	1	SEAL-O-RING	
	22	1	**7L-7524**	1	BOLT (3/8-16X10.25-IN)	
	23	1	**7N-4928**	1	COVER	
	24	1	**8T-6765**	3	PLUG-PIPE (1/4-18-THD)	
	25	1	**8T-6767**	2	PLUG-PIPE	
	26	1	**9L-9132**	2	WASHER (10.2X25.5X2.5-MM THK)	
	27	1	**9S-8752**	5	NUT-FULL (3/8-16-THD)	
	28	1	**9X-6458**	5	WASHER-HARD (10.2X22.5X3-MM THK)	

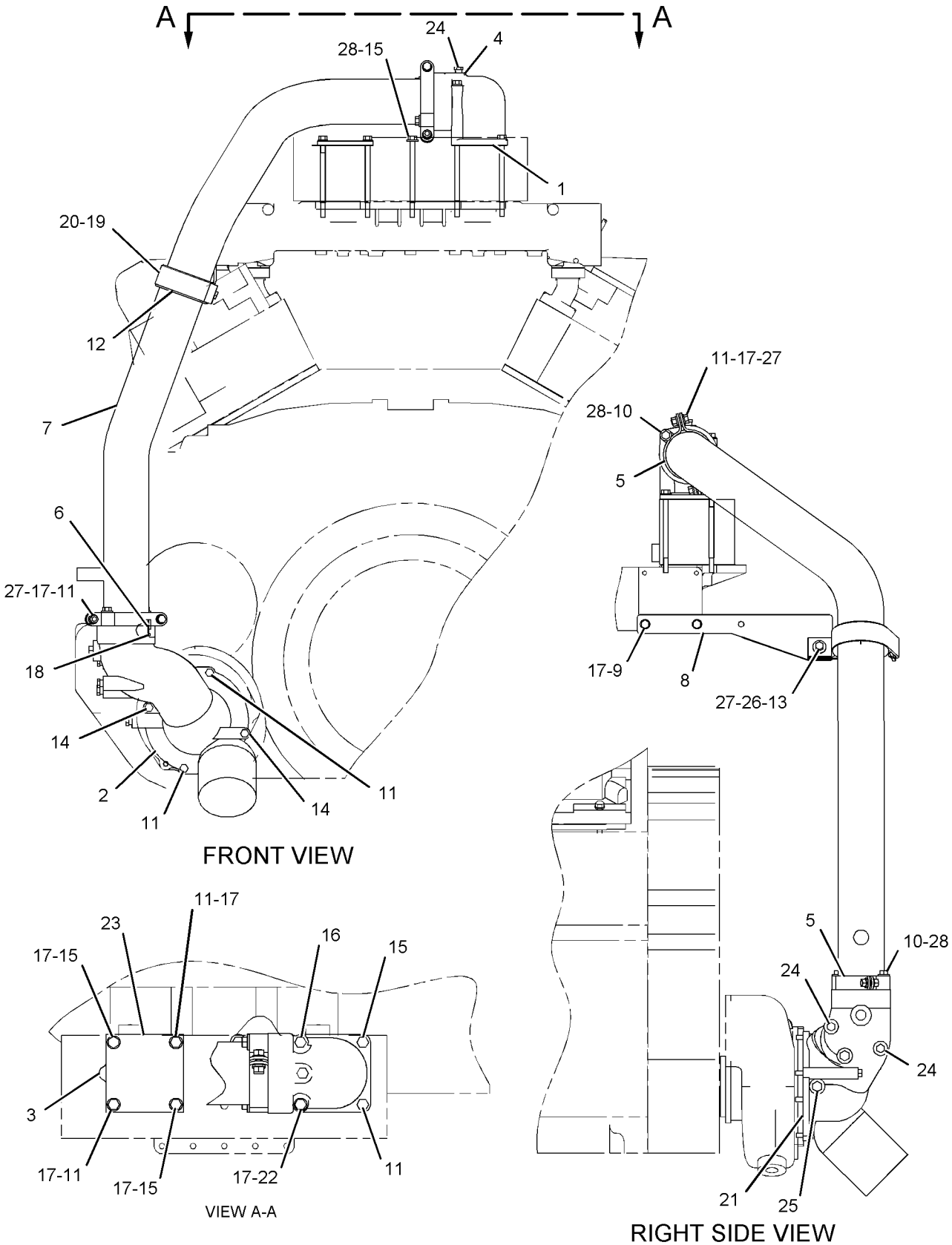

GRAPHIC #1 **<END>** g01092399

240-7748 LINES GP-WATER—AFTERCOOLER

S/N: 8WM1-UP

PART OF 240-7750 ENGINE AR

SMCS-1380 **i02394199**

NOTE	REF NO	GRAPHIC REF	PART NUMBER	QTY	PART NAME 1 2 3 4 5 6 (PRODUCT LEVEL)	SEE PAGE
	1	1	**2W-2609**	1	ELBOW	
	2	1	**4W-0530**	3	RING-RETAINING	
	3	1	**4W-0531**	6	RETAINER	
	4	1	**7C-9597**	3	FLANGE	
	5	1	**114-2040**	1	ELBOW	
	6	1	**115-7854**	1	TUBE	
	7	1	**153-9963**	1	RING	
	8	1	**186-4193**	2	CLAMP AS	
	9	1	**187-4607**	1	HOSE AS	
	10	1	**240-7749**	1	TUBE	
	11	1	**0L-2070**	6	BOLT (3/8-16X2.25-IN)	
	12	1	**0S-1571**	2	BOLT (3/8-16X1.75-IN)	
	13	1	**0S-1594**	8	BOLT (3/8-16X1-IN)	
	14	1	**1A-5964**	2	BOLT (3/8-16X4.5-IN)	
	15	1	**230-1072**	2	GASKET	
	16	1	**3B-1915**	2	BOLT (3/8-16X1.375-IN)	
	17	1	**3J-7354**	2	SEAL-O-RING	
	18	1	**5B-9603**	2	BOLT (3/8-16X5-IN)	
	19	1	**5M-2894**	16	WASHER-HARD (10.2X18.5X2.5-MM THK)	
	20	1	**5P-2645**	2	ELBOW	
	21	1	**6H-6698**	2	COVER	
	22	1	**6J-2680**	3	SEAL-O-RING	
	23	1	**6V-1581**	1	CLIP (SLOT)	
	24	1	**6V-1582**	1	CLIP (TAB)	
	25	1	**8T-1919**	4	SEAL-O-RING	
	26	1	**9S-8752**	6	NUT-FULL (3/8-16-THD)	

240-7748 **LINES GP-WATER** *(contd.)* **i02394199**

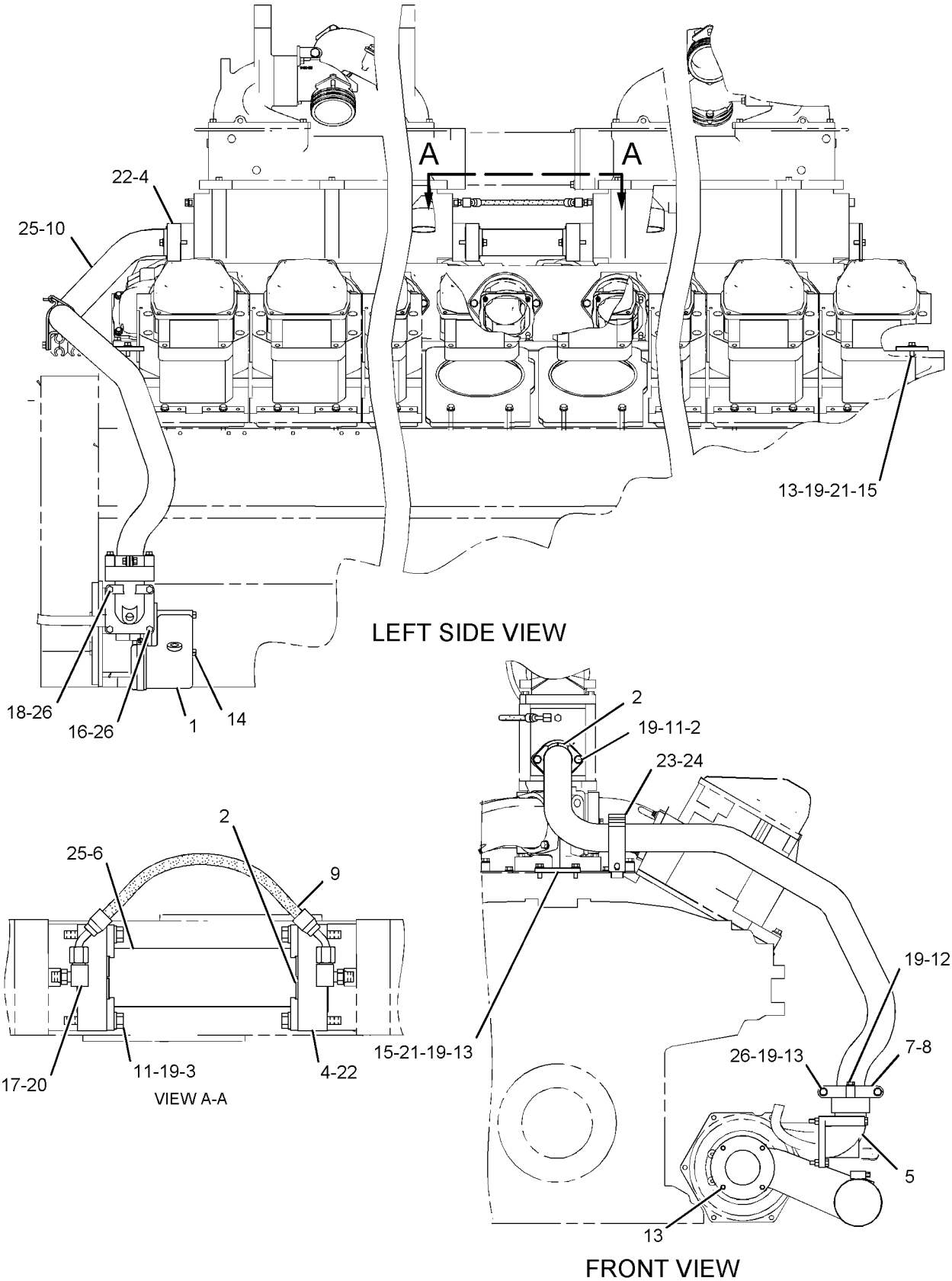

GRAPHIC #1 **<END>** g01092238

249-6867 LINES GP-WATER—RADIATOR

S/N: 4421-UP

PART OF 250-7957 INSTALLATION AR-ENGINE

SMCS-1380 **i02150840**

NOTE	REF NO	GRAPHIC REF	PART NUMBER	QTY	PART NAME 1 2 3 4 5 6 (PRODUCT LEVEL)	SEE PAGE
	1	1	**4P-8158**	1	TUBE AS	
	2	1	**4P-8222**	1	BRACKET	
	3	1	**4P-8223**	1	BRACKET	
	4	1	**4W-0530**	1	RING-RETAINING	
	5	1	**4W-0531**	2	RETAINER	
	6	1	**6K-1909**	1	BRACKET	
	7	1	**9X-3990**	3	HOSE	
I	8	1	**105-0251**	1	HOSE AS	
	9	1	**249-6868**	1	TUBE	
	10	1	**132-3505**	1	BRACKET	
	11	1	**132-3507**	1	TUBE	
	12	1	**132-3509**	1	ELBOW	
	13	1	**163-4142**	1	TUBE AS	
	14	1	**209-4573**	1	CLAMP	
	15	1	**209-4579**	7	CLAMP	
	16	1	**3J-1907**	1	SEAL-O-RING	
	17	1	**3J-7354**	1	SEAL-O-RING	
	18	1	**4L-6454**	2	BOLT (3/8-16X1-IN)	
	19	1	**5F-4899**	2	BOLT (3/8-16X5.5-IN)	
	20	1	**5P-1076**	11	WASHER-HARD (13.5X30X4-MM THK)	
	21	1	**068-4772**	1	HOSE	
	22	1	**6J-2680**	1	SEAL-O-RING	
	23	1	**6V-5039**	5	CLIP (SLOT)	
	24	1	**6V-5040**	5	CLIP (TAB)	
	25	1	**6V-8397**	2	SEAL-O-RING	
	26	1	**6V-9001**	1	ELBOW	
	27	1	**6V-9200**	1	ELBOW	
	28	1	**8M-2773**	1	CLIP	
	29	1	**8T-1919**	1	SEAL-O-RING	
M	30	1	**8T-4139**	2	BOLT (M12X1.75X30-MM)	
M	31	1	**8T-4184**	5	BOLT (M12X1.75X45-MM)	
M	32	1	**8T-4192**	1	BOLT (M12X1.75X25-MM)	
	33	1	**8T-4223**	2	WASHER-HARD (13.5X25.5X3-MM THK)	
M	34	1	**8T-4244**	5	NUT (M12X1.75-THD)	
M	35	1	**8T-4779**	2	BOLT (M16X2X35-MM)	
	36	1	**8T-4896**	4	WASHER-HARD (10.2X18.5X2.5-MM THK)	
	37	1	**9X-8257**	2	WASHER (17.5X30X3.5-MM THK)	

I-REFER TO HYDRAULIC INFORMATION SYSTEM
M-METRIC PART

249-6867 **LINES GP-WATER** *(contd.)* **i02150840**

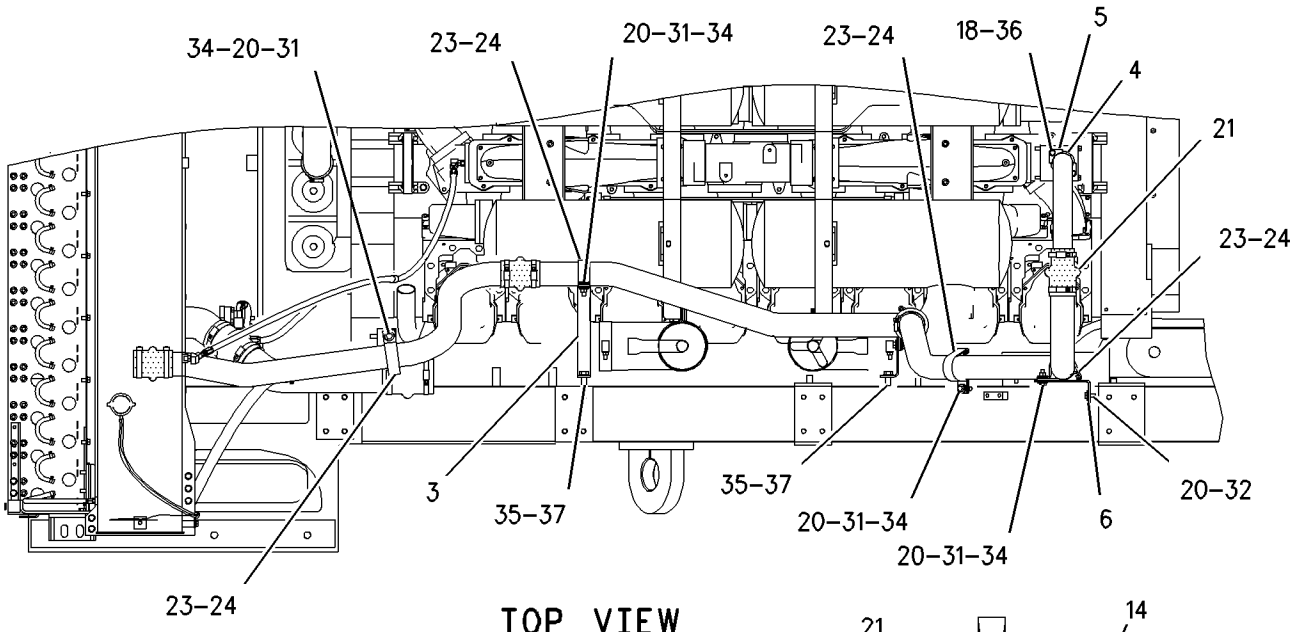

TOP VIEW

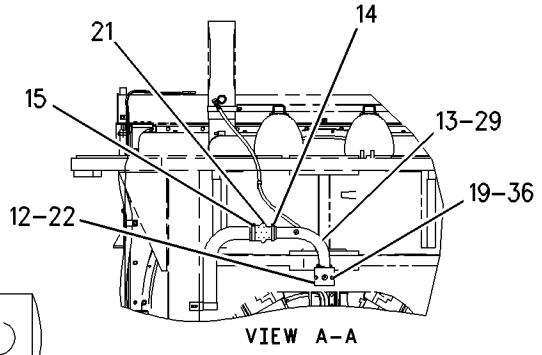

VIEW A-A

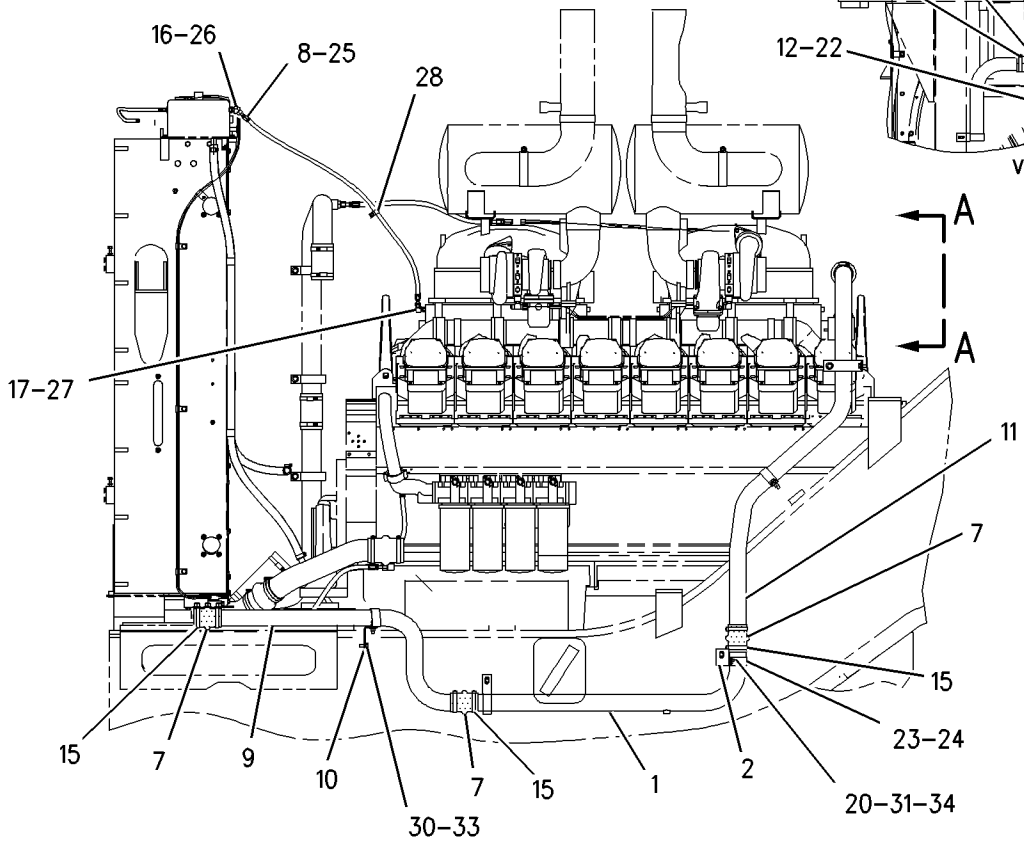

LEFT SIDE VIEW

GRAPHIC #1 **<END>** g00914784

212-8169 PUMP GP-AUXILIARY WATER*R

S/N: 8WM1-UP

PART OF 1W-0410 PUMP GP-WATER

SMCS-1371 **i02358950**

NOTE	REF NO	GRAPHIC REF	PART NUMBER	QTY	PART NAME 1 2 3 4 5 6 (PRODUCT LEVEL)	SEE PAGE
	1	1	**8T-6764**	1	PLUG-PIPE	
J	2	1	**9X-4594**	1	SEAL-LIP TYPE	
J	3	1	**4W-3864**	1	SEAL AS-WATER PUMP	
	4	1	**9M-3786**	1	SEAL-O-RING	
	5	1	**0S-1594**	4	BOLT (3/8-16X1-IN)	
J	6	1	**212-8183**	1	IMPELLER	
	7	1	**5N-2611**	1	ADAPTER	
J	8	1	**5N-4383**	2	WASHER-THRUST	
J	9	1	**8H-3128**	4	BOLT-SOCKET HEAD (1/4-20X0.625-IN)	
J	10	1	**212-8179**	1	SHAFT	
BJ	11	1	**8M-2933**	4	SHIM-CARRIER (0.078-IN THK)	
	12	1	**7E-9780**	1	HOUSING AS	
J	12A	1	**127-5400**	1	BEARING-SLEEVE	
B	13	1	**3J-1907**	1	SEAL-O-RING	
B	14	1	**9S-4191**	1	PLUG-O RING	
B	15	1	**7W-6492**	1	PLUG-PIPE	
					AVAILABLE REPAIR KIT(S):	
J			**221-9278**		KIT-REBUILD (AUXILIARY WATER PUMP)	

B-USE AS REQUIRED
J-KIT MARKED J INCLUDES PARTS MARKED J

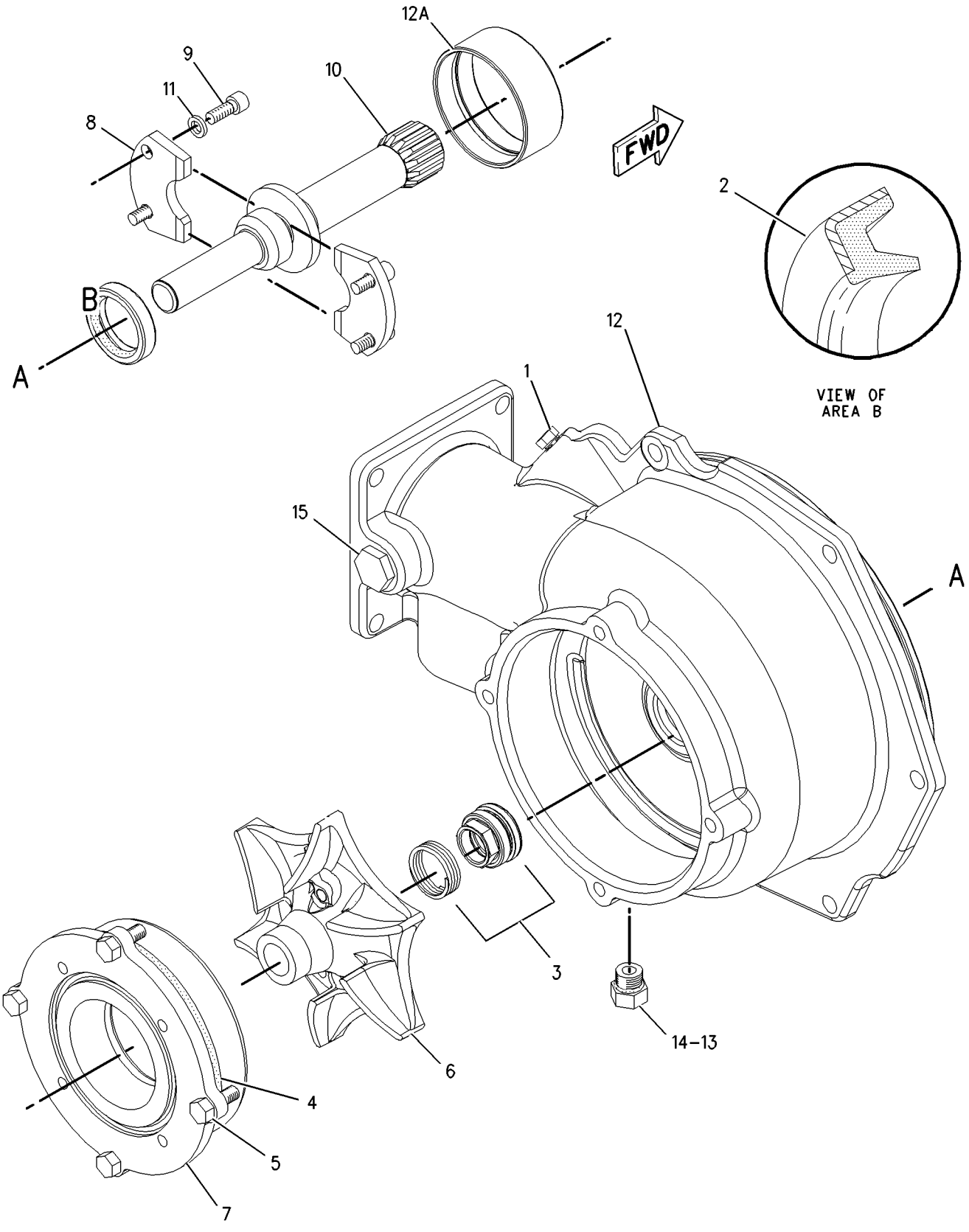

GRAPHIC #1 **<END>** g00931703

1W-0410 PUMP GP-WATER

S/N: 8WM1-UP

PART OF 240-7750 ENGINE AR

SMCS-1361 **i01811781**

NOTE	REF NO	GRAPHIC REF	PART NUMBER	QTY	PART NAME 1 2 3 4 5 6 (PRODUCT LEVEL)	SEE PAGE
	1	1	**4F-7387**	1	SEAL-O-RING	
YCR	2	1	**212-8169**	1	PUMP GP-AUXILIARY WATER	141
	3	1	**3B-8453**	1	SEAL-O-RING	
	4	1	**1T-0132**	1	SEAL-O-RING	
	5	1	**1T-0765**	1	BOLT (3/8-16X1-IN)	
	6	1	**5M-2894**	8	WASHER-HARD (10.2X18.5X2.5-MM THK)	
	7	1	**3P-6061**	1	GASKET	
	8	1	**5N-1940**	1	GASKET	
	9	1	**5N-1939**	1	COVER	
	10	1	**0S-1594**	7	BOLT (3/8-16X1-IN)	

C-CHANGE FROM PREVIOUS TYPE
R-REMFG PART MAY BE AVAILABLE
Y-SEPARATE ILLUSTRATION

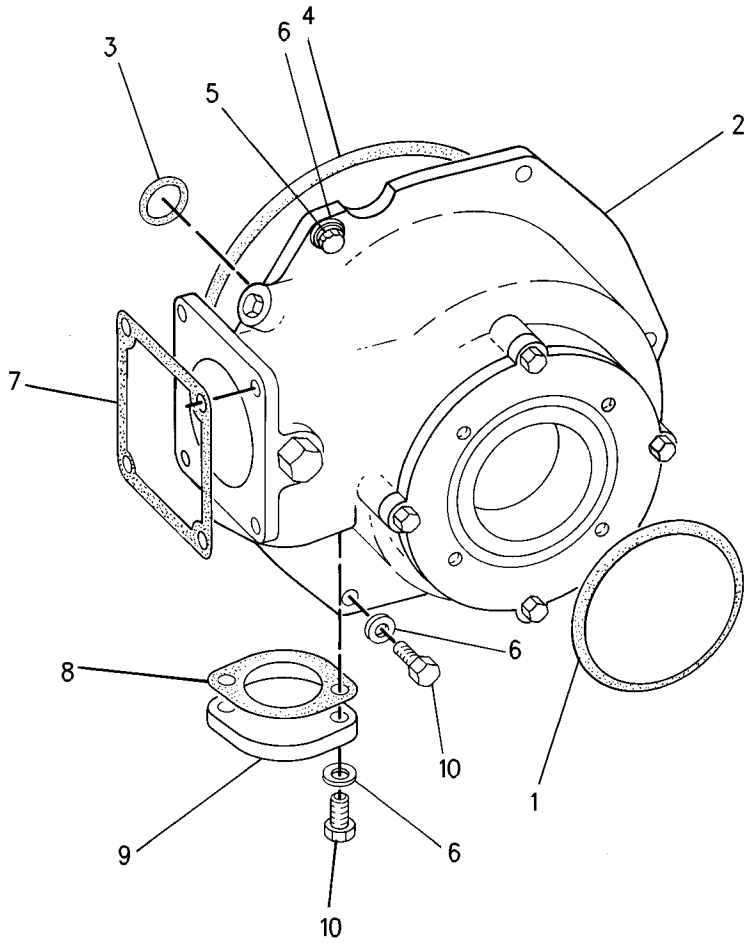

GRAPHIC #1 **<END>** g00942981

COOLING SYSTEM

2W-9729 PUMP GP-WATER–JACKET WATER

S/N: 8WM1-UP

PART OF 240-7750 ENGINE AR

SMCS-1361 **i02220677**

NOTE	REF NO	GRAPHIC REF	PART NUMBER	QTY	PART NAME 1 2 3 4 5 6 (PRODUCT LEVEL)	SEE PAGE
CYR	1	1	**212-8177**	1	PUMP GP-WATER	145
	2	1	**8N-6423**	1	COVER	
	3	1	**3B-1915**	4	BOLT (3/8-16X1-3/8-IN)	
	4	1	**5H-6734**	1	SEAL-O-RING	
	5	1	**149-5462**	1	SEAL-O-RING	
	6	1	**9S-8752**	3	NUT-FULL (3/8-16-THD)	
	7	1	**9M-2151**	3	STUD-TAPERLOCK (3/8-16X1.378-IN)	

C-CHANGE FROM PREVIOUS TYPE
R-REMFG PART MAY BE AVAILABLE
Y-SEPARATE ILLUSTRATION

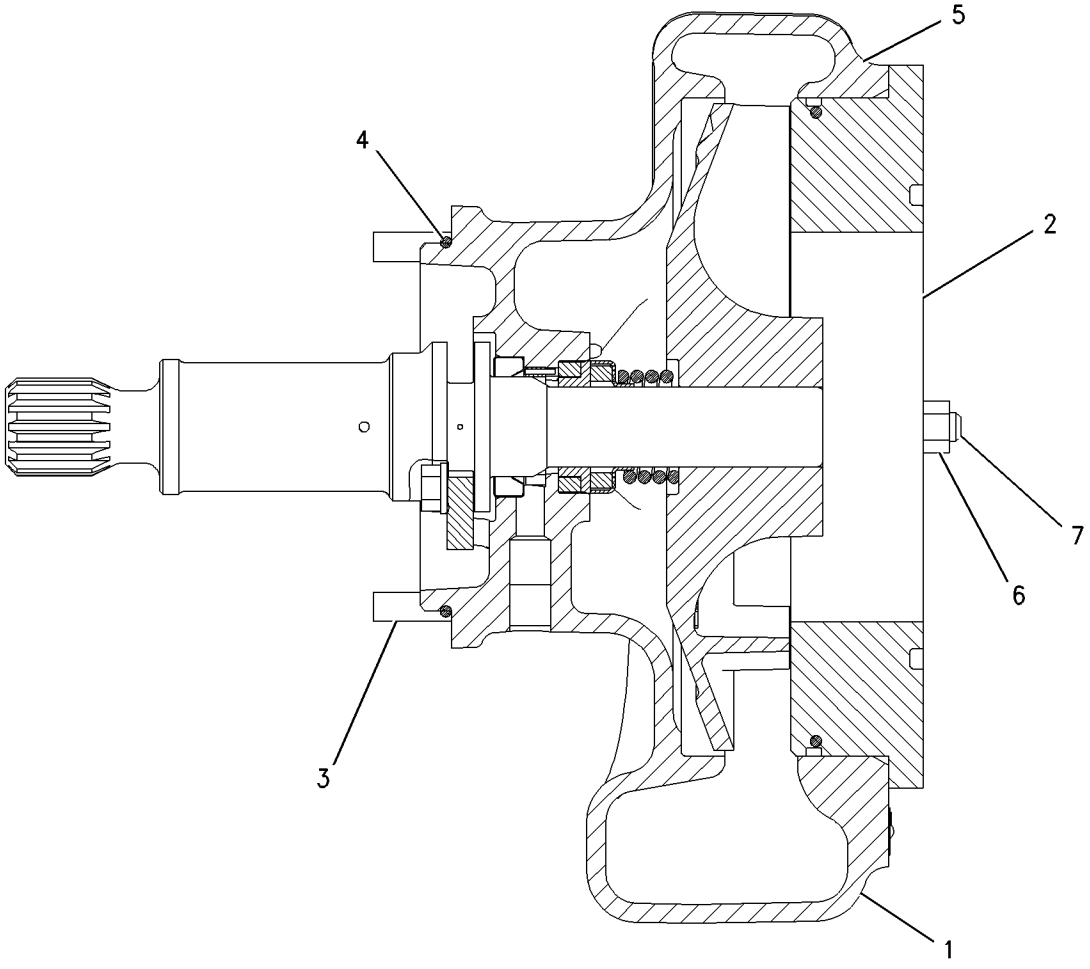

GRAPHIC #1 **<END>** g00898448

212-8177 PUMP GP-WATER–JACKET WATER*R

S/N: 8WM1-UP

PART OF 2W-9729 PUMP GP-WATER

SMCS-1361 **i02390817**

NOTE	REF NO	GRAPHIC REF	PART NUMBER	QTY	PART NAME 1 2 3 4 5 6 (PRODUCT LEVEL)	SEE PAGE
	1	1	**7N-4756**	1	HOUSING AS-PUMP	
J	1A	1	**3D-2824**	1	SEAL-O-RING	
	1B	1	**7G-8478**	1	ADAPTER	
J	1C	1	**4N-5834**	2	FILTER (WATER PUMP)	
	1D	1	**8T-6765**	1	PLUG-PIPE (1/4-18-THD)	
J	2	1	**212-8180**	1	SHAFT	
J		1	**4B-9782**	1	BALL	
J	3	1	**0S-1618**	2	BOLT (5/16-18X1-IN)	
J	4	1	**9M-1974**	2	WASHER-HARD (8.8X16X2-MM THK)	
J	5	1	**7N-4758**	1	WASHER-THRUST	
J	6	1	**8C-5236**	1	SEAL-LIP TYPE	
J	7	1	**166-4376**	1	SEAL GP-WATER PUMP	
J	8	1	**212-8184**	1	IMPELLER	
J	11	1	**166-4374**	1	RING AS	
J		1	**1L-5316**	1	PIN-SPRING	
					AVAILABLE REPAIR KIT(S):	
J			**222-5152**		KIT-REBUILD (WATER PUMP)	

J-KIT MARKED J INCLUDES PARTS MARKED J

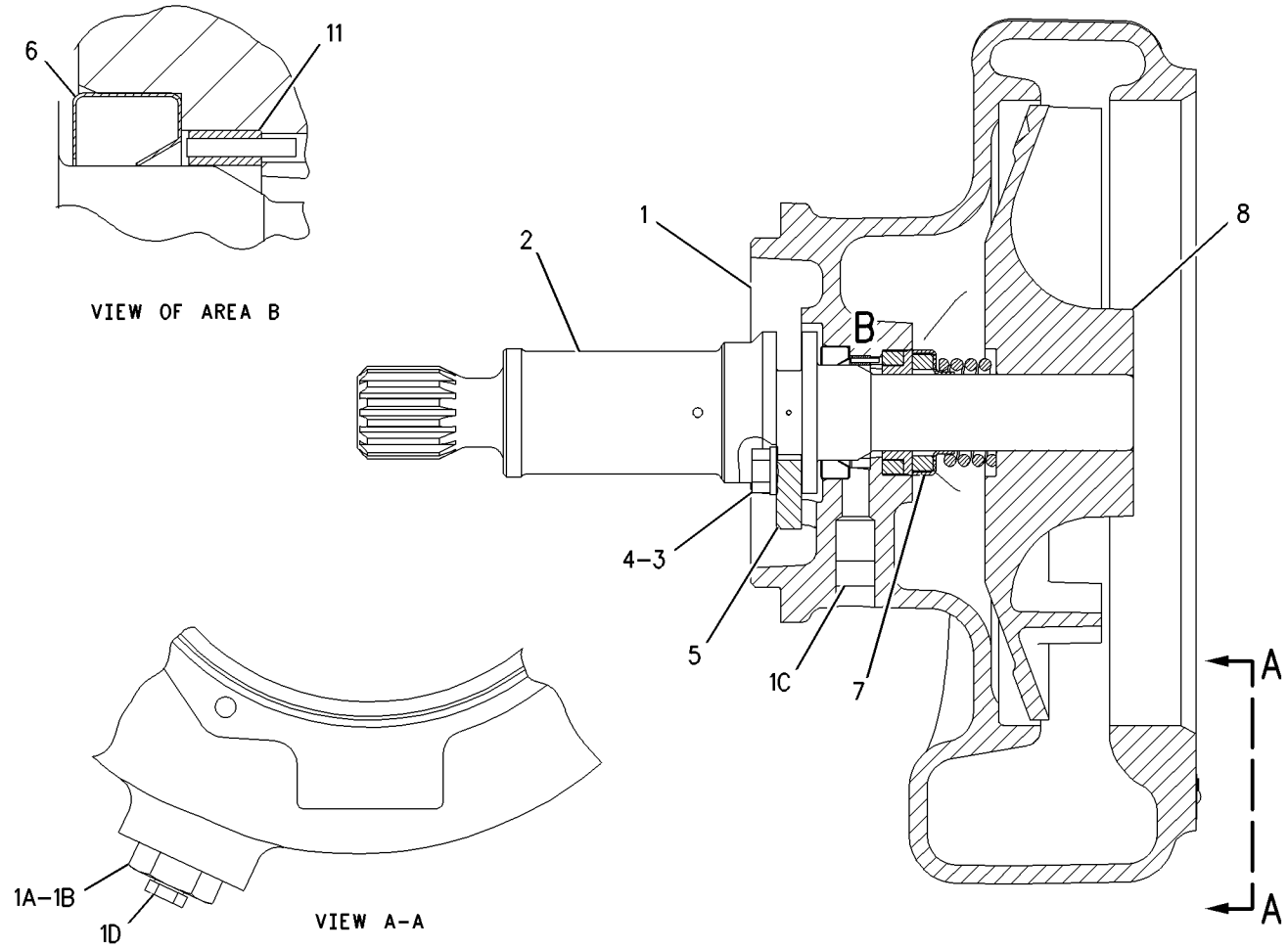

GRAPHIC #1 **<END>** g00898430

COOLING SYSTEM

249-6781 RADIATOR GP

S/N: 4421-UP

PART OF 250-7957 INSTALLATION AR-ENGINE

SMCS-1353 **i02302745**

NOTE	REF NO	GRAPHIC REF	PART NUMBER	QTY	PART NAME 1 2 3 4 5 6 (PRODUCT LEVEL)	SEE PAGE
	1	2	**1P-4278**	38	CLAMP-HOSE	
	2	1,3	**2S-3440**	7	CLAMP-HOSE	
	3	2	**2V-4869**	2	FITTING	
	4	1	**4P-0607**	2	STRIP AS-CENTER	
					(EACH INCLUDES)	
M		1	**8T-3490**	2	NUT-WELD (M10X1.5-THD)	
	5	1	**4P-6006**	2	BRACKET AS	
					(EACH INCLUDES)	
M		1	**8T-3490**	5	NUT-WELD (M10X1.5-THD)	
	6	1	**6I-4225**	20	SPACER (4.5-MM THK)	
	7	1	**6L-8617**	2	CAP-RADIATOR (7-PSI)	
	8	1	**7E-9136**	4	STRIP	
	9	1	**7E-9137**	2	STRIP	
	10	1	**7N-1639**	2	CAP	
E	11	2	**5P-0764**	3	HOSE (18-CM EACH)	
	12	1	**8H-8754**	2	GASKET	
	13	3	**8N-7257**	2	MOUNT AS	
	14	1	**9Y-9236**	2	GAUGE-SIGHT	
	15	1	**100-3122**	4	BAFFLE AS-FAN	
					(EACH INCLUDES)	
		1	**6I-4225**	11	SPACER (4.5-MM THK)	
	16	2	**106-4572**	16	HOSE	
	17	2	**111-7421**	2	CAP	
	18	1	**132-3469**	1	BRACKET AS	
	19	1	**132-3470**	1	BRACKET AS	
	20	1	**132-3500**	1	TUBE AS	
	21	2	**132-3503**	1	TUBE AS	
	22	1	**132-3515**	1	TUBE AS	
I	23	2	**138-1769**	1	HOSE AS	
	24	2	**138-1770**	1	BRACKET	
	25	3	**146-5067**	4	SPACER (13X30X22.2-MM THK)	
	26	3	**164-5597**	1	CONNECTOR AS	
	27	1	**179-5488**	2	SHIELD AS (LOWER RIGHT)	
	28	1	**179-5490**	2	SHIELD AS (LOWER LEFT)	
	29	2	**209-4588**	6	CLAMP	
I	30	2	**214-3645**	1	HOSE AS	
I	31	3	**230-3615**	1	HOSE AS	
	32	1	**246-0589**	1	TANK AS-RADIATOR TOP	
		1	**3L-5893**	2	TUBE-OVERFLOW	
		1	**8N-8846**	2	NECK-FILLER	
		1	**8R-2186**	2	BOSS	
	33	1	**249-2569**	1	BAFFLE	
	34	1	**249-2570**	1	BAFFLE	
Y	35	1	*249-6782*	1	RADIATOR GP	152
	36	1	**249-6846**	1	BAFFLE	
	37	3	**249-6850**	2	SUPPORT	
	38	3	**249-6851**	2	STRIP	
	39	3	**249-6856**	1	BAFFLE	
	40	1	**263-3400**	4	COVER	
	41	1	**264-9805**	1	BAFFLE	
	42	1	**264-9806**	1	BAFFLE	
	43	1	*148-8327*	1	CONNECTOR AS	
		1	**3D-2824**	1	SEAL-O-RING	
		1	**6V-8637**	1	CONNECTOR	
		1	**6V-9746**	1	SEAL-O-RING	
	44	3	*148-8353*	1	ELBOW AS	

249-6781 **RADIATOR GP** *(contd.)* **i02302745**

NOTE	REF NO	GRAPHIC REF	PART NUMBER	QTY	PART NAME 1 2 3 4 5 6 (PRODUCT LEVEL)	SEE PAGE
		3	**3J-1907**	1	SEAL-O-RING	
		3	**6V-8397**	1	SEAL-O-RING	
		3	**6V-9001**	1	ELBOW	
	45	2	*148-8365*	1	ELBOW AS	
		2	**3J-1907**	1	SEAL-O-RING	
		2	**6V-8398**	1	SEAL-O-RING	
		2	**8T-6876**	1	ELBOW	
	46	2	*148-8370*	1	ELBOW AS	
		2	**6V-8398**	1	SEAL-O-RING	
		2	**6V-9851**	1	ELBOW	
	47	2	*148-8444*	1	TEE AS-SWIVEL	
		2	**6V-8398**	2	SEAL-O-RING	
		2	**6V-9837**	1	TEE-SWIVEL	
	48	2	*155-6258*	1	ELBOW AS	
		2	**3D-2824**	1	SEAL-O-RING	
		2	**6V-8398**	1	SEAL-O-RING	
		2	**127-1647**	1	ELBOW	
	49	2	*169-7393*	2	CONNECTOR AS	
					(EACH INCLUDES)	
		2	**3J-7352**	1	CONNECTOR	
		2	**3J-7354**	1	SEAL-O-RING	
Y	50	1	**183-7142**	2	GAUGE GP-COOLANT LEVEL	117
	51	1	**1W-3601**	2	GASKET	
	52	1	**5K-3294**	2	CLIP	
	53	1	**5M-6213**	1	PLUG-PIPE	
	54	2	**5P-1076**	3	WASHER-HARD (13.5X30X4-MM THK)	
	55	1,2,3	**5P-7468**	8	CLIP (SLOT)	
	56	1,2,3	**5P-7469**	8	CLIP (TAB)	
	57	2	**6D-4246**	1	CLIP	
	58	2	**6V-4356**	4	CLIP (SLOT)	
	59	2	**6V-4357**	4	CLIP (TAB)	
M	60	1	**6V-5683**	8	BOLT (M6X1X16-MM)	
	61	3	**6V-9830**	1	CAP AS	
	62	1	**7M-8485**	2	SEAL-O-RING	
	63	1,2,3	**7X-7729**	51	WASHER (11X25X3-MM THK)	
	64	2	**8D-9671**	1	CLIP	
	65	2,3	**8M-2770**	8	CLIP	
	66	1,2,3	**8T-4121**	65	WASHER-HARD (11X21X2.5-MM THK)	
M	67	2	**8T-4133**	1	NUT (M10X1.15-THD)	
M	68	1,2	**8T-4136**	83	BOLT (M10X1.5X25-MM)	
M	69	2,3	**8T-4137**	21	BOLT (M10X1.5X20-MM)	
M	70	1	**8T-4192**	2	BOLT (M12X1.75X25-MM)	
M	71	1	**8T-4195**	8	BOLT (M10X1.5X30-MM)	
M	72	1,2	**8T-4196**	3	BOLT (M10X1.5X35-MM)	
	73	1	**8T-4205**	8	WASHER-HARD (7.2X14.5X2-MM THK)	
	74	1,3	**8T-4223**	8	WASHER-HARD (13.5X25.5X3-MM THK)	
M	75	3	**8T-4648**	4	BOLT (M12X1.75X70-MM)	
M	76	2	**8T-4956**	3	BOLT (M12X1.75X35-MM)	
M	77	1,3	**8T-6868**	6	BOLT (M12X1.75X80-MM)	
	78	1,2,3	**8T-7087**	8	GROMMET	
	79	2	**9D-3769**	2	GROMMET	
E	80A	2	**5P-1465**		HOSE (60-CM)	
E	80B	2	**5P-1465**		HOSE (40-CM)	
	81	1	**8I-1362**		HOSE	
E	81A	1	**8I-1362**		HOSE (224-CM)	
E	81B	1	**8I-1362**		HOSE (210-CM)	
E	82A	2	**7Y-1976**		HOSE (276-CM)	
E	82B	2	**7Y-1976**		HOSE (261-CM)	
E	83	2	**3E-8082**		SEAL (EACH 224-CM)	

249-6781 **RADIATOR GP** *(contd.)* **i02302745**

NOTE	REF NO	GRAPHIC REF	PART NUMBER	QTY	PART NAME 1 2 3 4 5 6 (PRODUCT LEVEL)	SEE PAGE
E	83A	2,3	**3E-8082**		SEAL (EACH 25-CM)	
	84	3	**157-2797**	1	BRACKET	
	85	3	**156-6277**	2	HOSE AS	
	86	2	**061-8827**	1	TEE-FLARED	
	87	2	**6K-8420**	1	LOCKNUT (1-1/16-12-THD)	
	88	3	**5M-2894**	1	WASHER-HARD (10.2X18.5X2.5-MM THK)	
	89	3	**0L-1351**	1	BOLT (3/8-16X0.875-IN)	

E-ORDER BY THE CENTIMETER
I-REFER TO HYDRAULIC INFORMATION SYSTEM
M-METRIC PART
Y-SEPARATE ILLUSTRATION

249-6781 **RADIATOR GP** *(contd.)* **i02302745**

REFER TO ALL ILLUSTRATIONS OF
THIS GROUP FOR AUXILIARY VIEWS

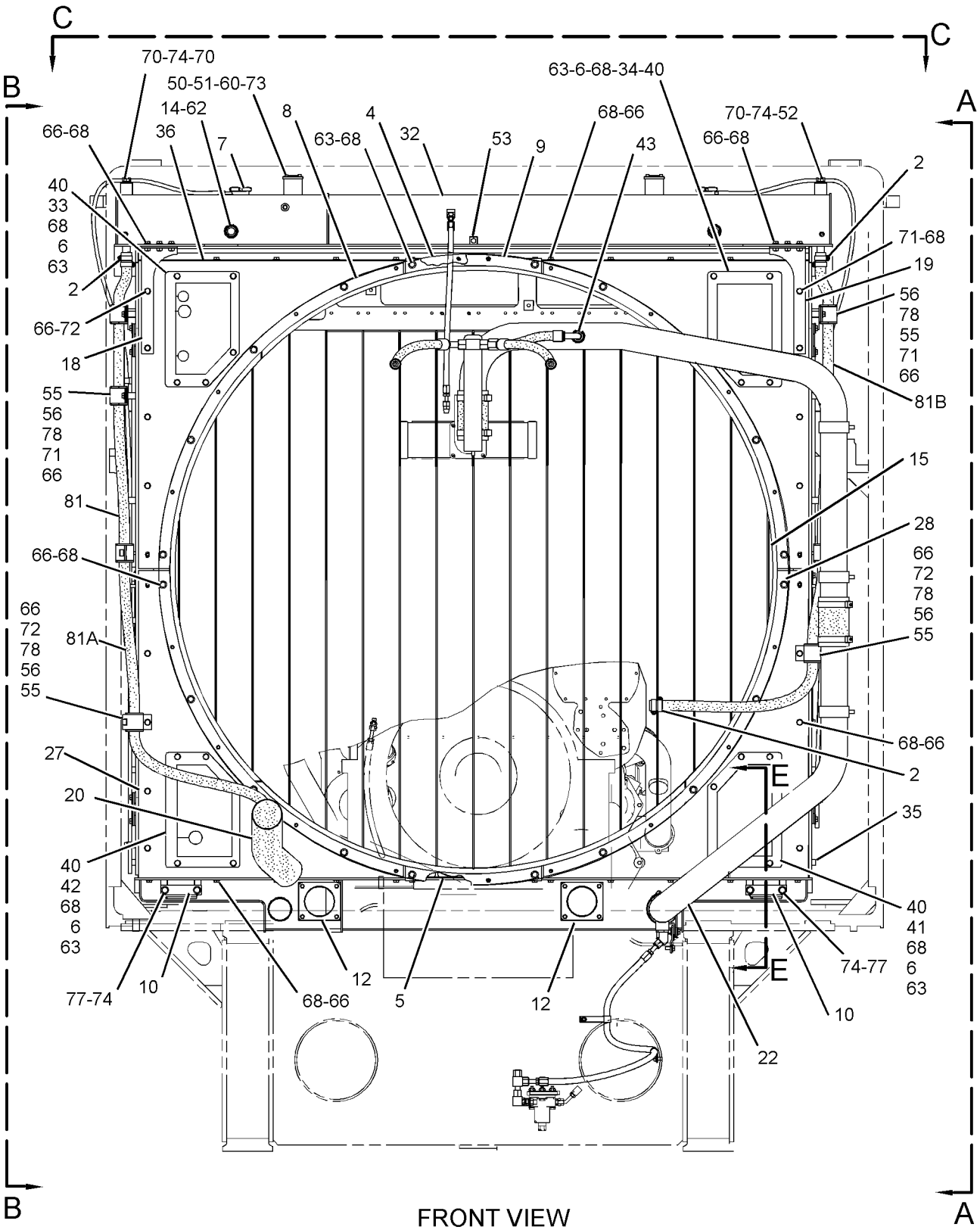

FRONT VIEW

GRAPHIC #1

g01170751

249-6781 **RADIATOR GP** *(contd.)* **i02302745**

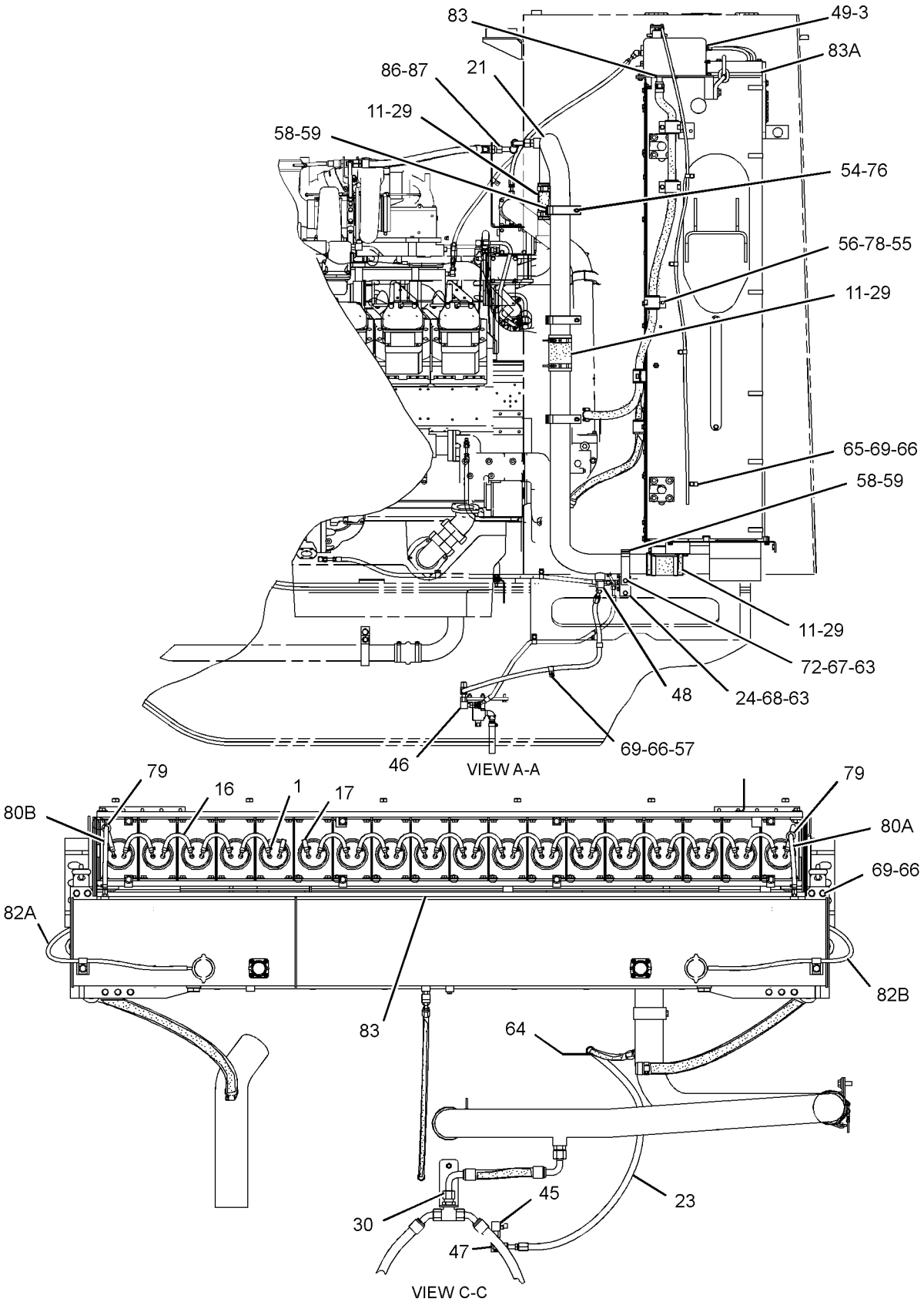

GRAPHIC #2 g01170752

249-6781 **RADIATOR GP** *(contd.)* **i02302745**

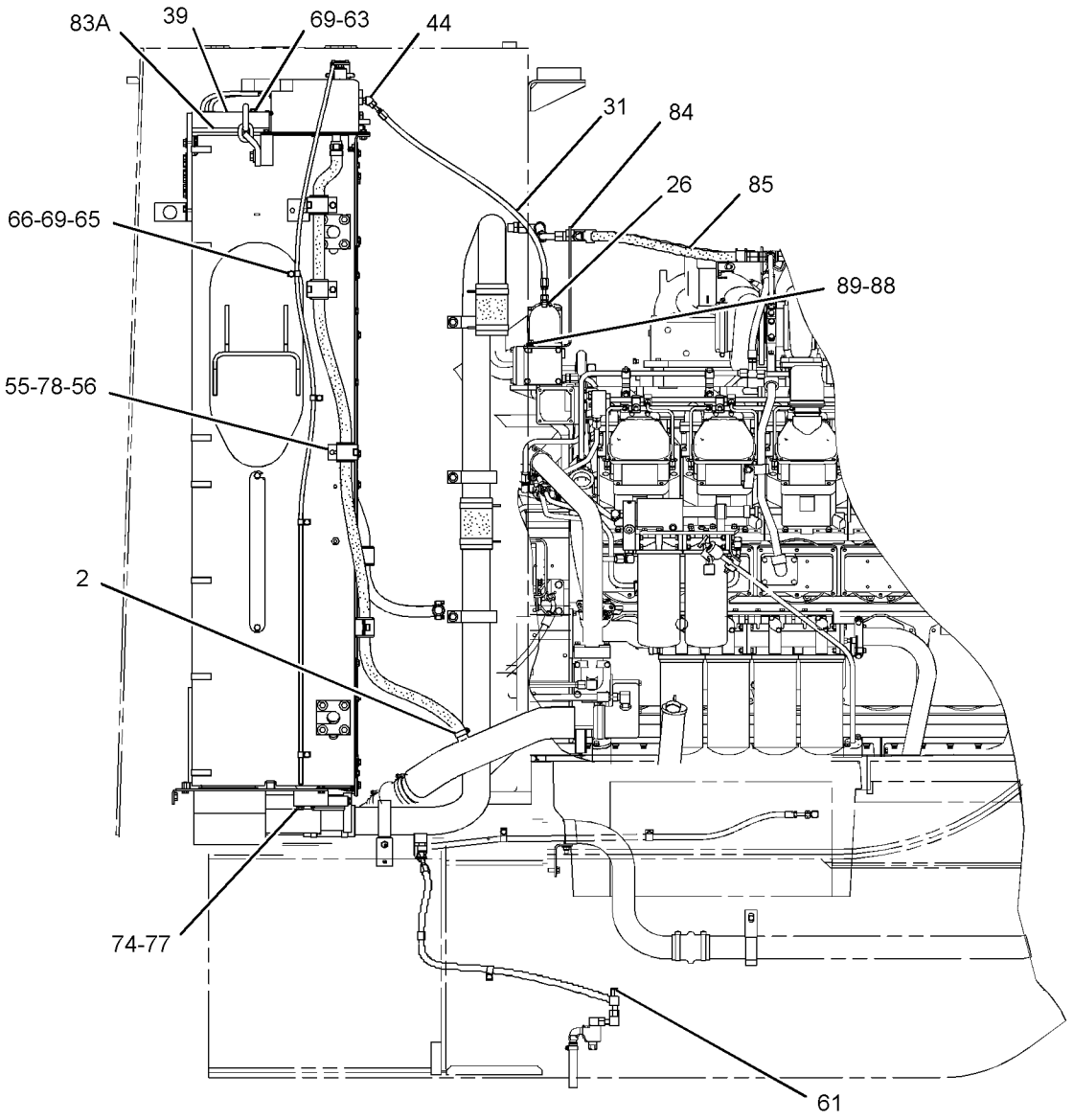

VIEW B-B

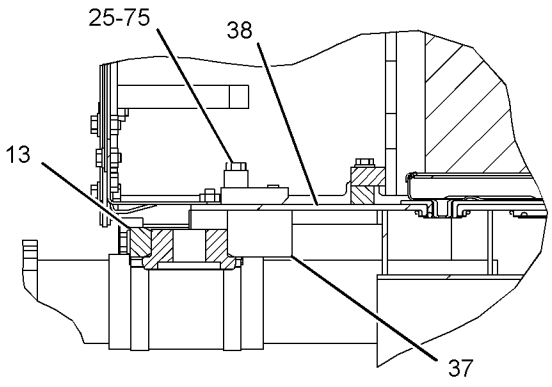

SECTION E-E

GRAPHIC #3 **<END>** g01170750

COOLING SYSTEM

249-6782 RADIATOR GP

S/N: 4421-UP

PART OF 249-6781 RADIATOR GP

SMCS-1353 **i02282379**

NOTE	REF NO	GRAPHIC REF	PART NUMBER	QTY	PART NAME 1 2 3 4 5 6 (PRODUCT LEVEL)	SEE PAGE
	1	1	**6I-2431**	18	SEAL (LOWER)	
	2	1	**6I-2435**	18	SPACER (RUBBER)	
	4	1	**179-3648**	18	RETAINER	
	5	1	**249-6821**	1	PLATE AS	
	6	1	**249-6823**	1	PLATE AS	
	7	1	**249-6825**	1	CHANNEL AS (LH)	
	8	1	**249-6831**	1	CHANNEL AS (RH)	
	9	1	**249-6838**	1	TANK AS-RADIATOR BOTTOM	
	10	1	**249-6852**	2	COVER	
	11	1	**223-5120**	13	CORE AS-RADIATOR	
	12	1	**223-5121**	5	CORE AS-RADIATOR	
	13	1	**5P-1076**	18	WASHER-HARD (13.5X30X4-MM THK)	
	14	1	**7X-7729**	74	WASHER (11X25X3-MM THK)	
	15	1	**8T-4121**	24	WASHER-HARD (11X21X2.5-MM THK)	
M	16	1	**8T-4136**	76	BOLT (M10X1.5X25-MM)	
M	17	1	**8T-4139**	8	BOLT (M12X1.75X30-MM)	
M	18	1	**8T-4183**	8	BOLT (M12X1.75X40-MM)	
M	19	1	**8T-4186**	10	BOLT (M10X1.5X40-MM)	
M	20	1	**8T-4192**	2	BOLT (M12X1.75X25-MM)	
M	21	1	**8T-4195**	16	BOLT (M10X1.5X30-MM)	
M	22	1	**8T-4137**	2	BOLT (M10X1.5X20-MM)	
BD	23	1	**6V-2499**		SEAL	
	24	1	**249-6857**	1	ANGLE	

B-USE AS REQUIRED
D-ORDER BY THE METER
M-METRIC PART

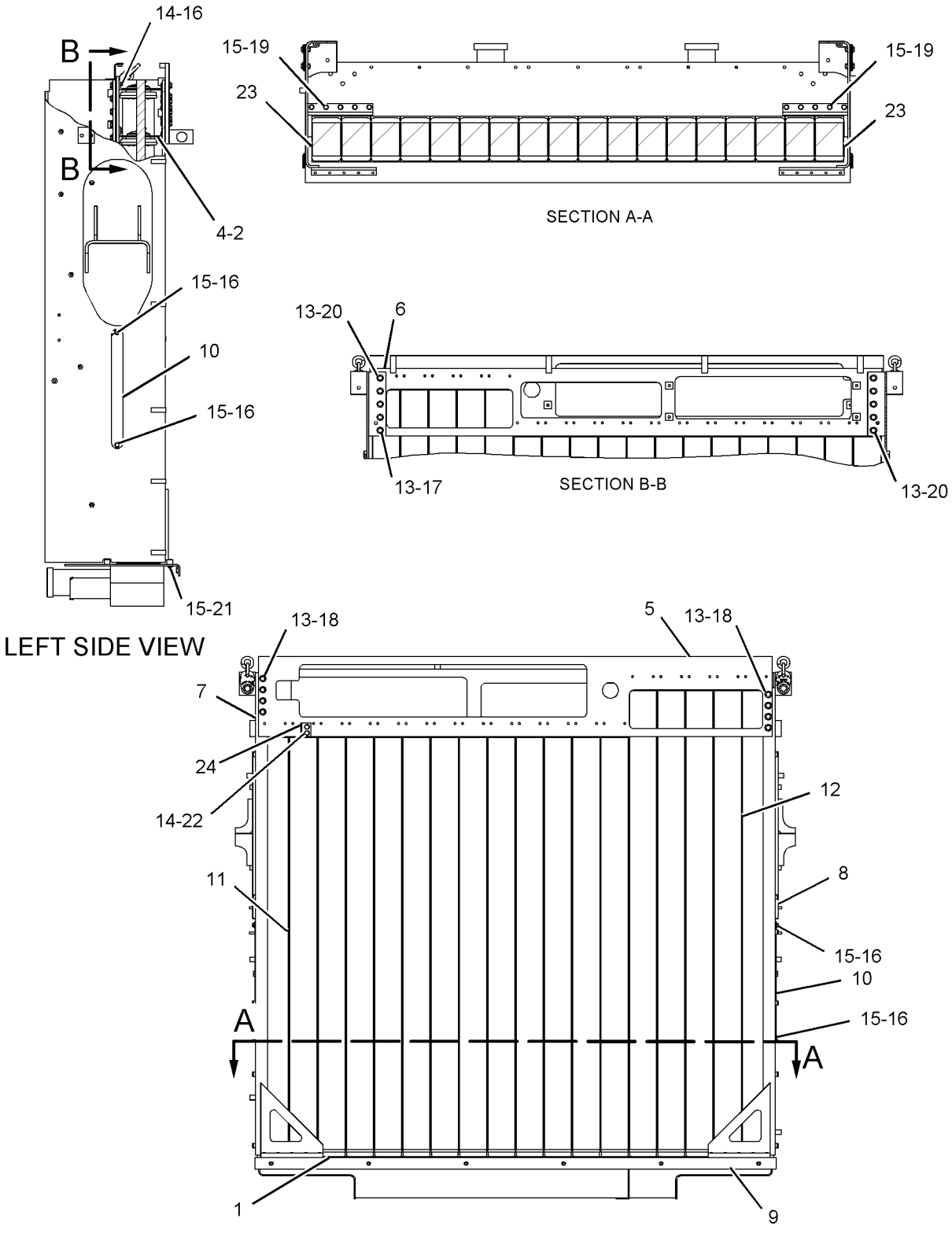

GRAPHIC #1 **<END>** g01145303

163-2596 VALVE GP-COOLANT SAMPLING

S/N: 8WM1-UP

PART OF 240-7750 ENGINE AR

SMCS-7542 **i02102829**

NOTE	REF NO	GRAPHIC REF	PART NUMBER	QTY	PART NAME 1 2 3 4 5 6 (PRODUCT LEVEL)	SEE PAGE
	1	1	**3B-7764**	1	BUSHING	
	2	1	**154-9025**	2	VALVE-FLUID SAMPLING	
	3	1	**157-0670**	2	CAP-DUST	

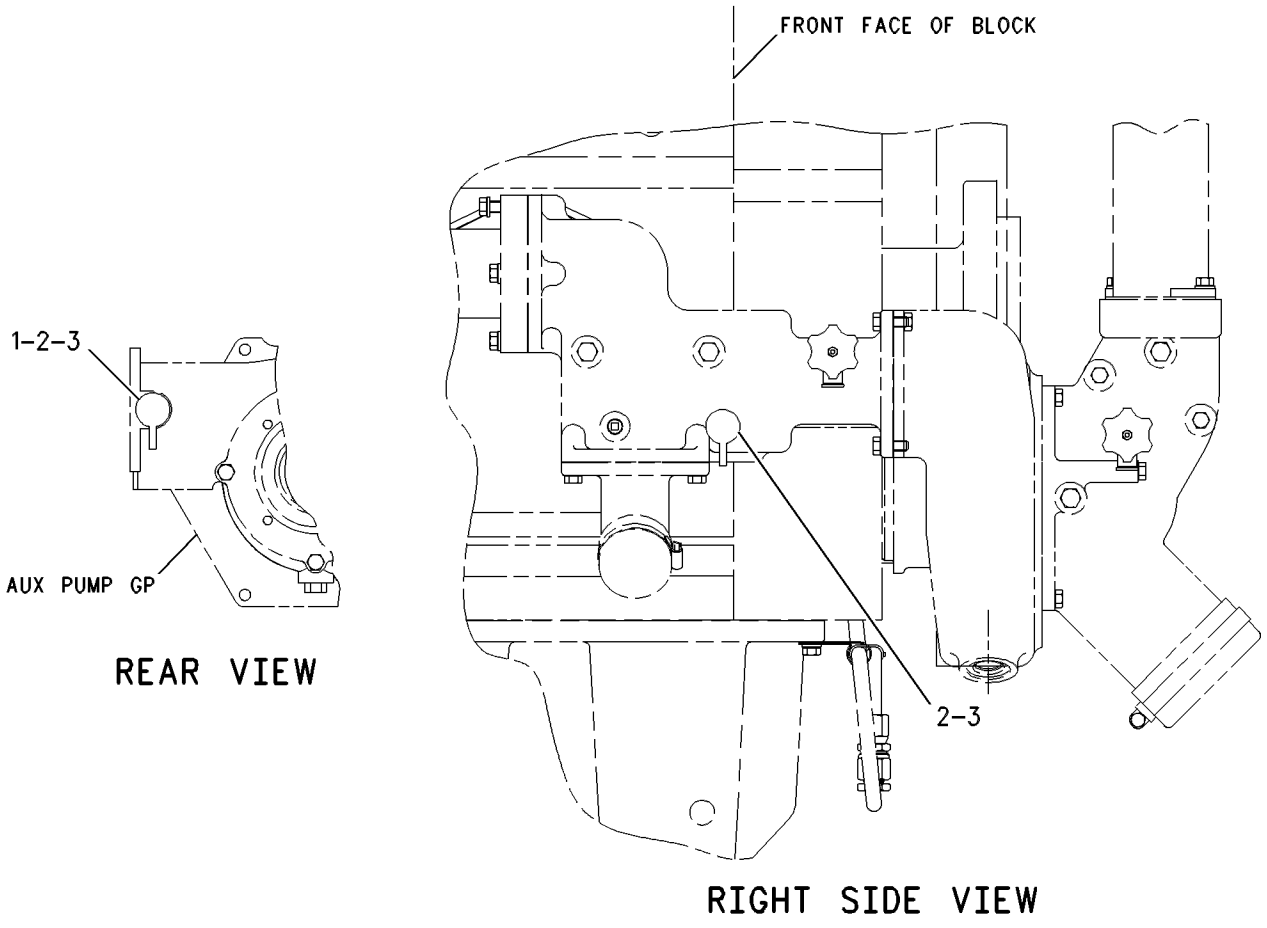

GRAPHIC #1 **<END>** g00614810

AIR INLET AND EXHAUST SYSTEM

107-7197 AFTERCOOLER GP-TREATED WATER

S/N: 8WM1-UP

PART OF 240-7750 ENGINE AR

SMCS-1063 **i02013458**

NOTE	REF NO	GRAPHIC REF	PART NUMBER	QTY	PART NAME 1 2 3 4 5 6 (PRODUCT LEVEL)	SEE PAGE
	1	1	**6V-9027**	1	SEAL-O-RING	
	2	1	**9S-4182**	1	PLUG	
	3	1	**107-3758**	4	SEAL	
	4	1	**111-5059**	2	CORE AS-AFTERCOOLER	

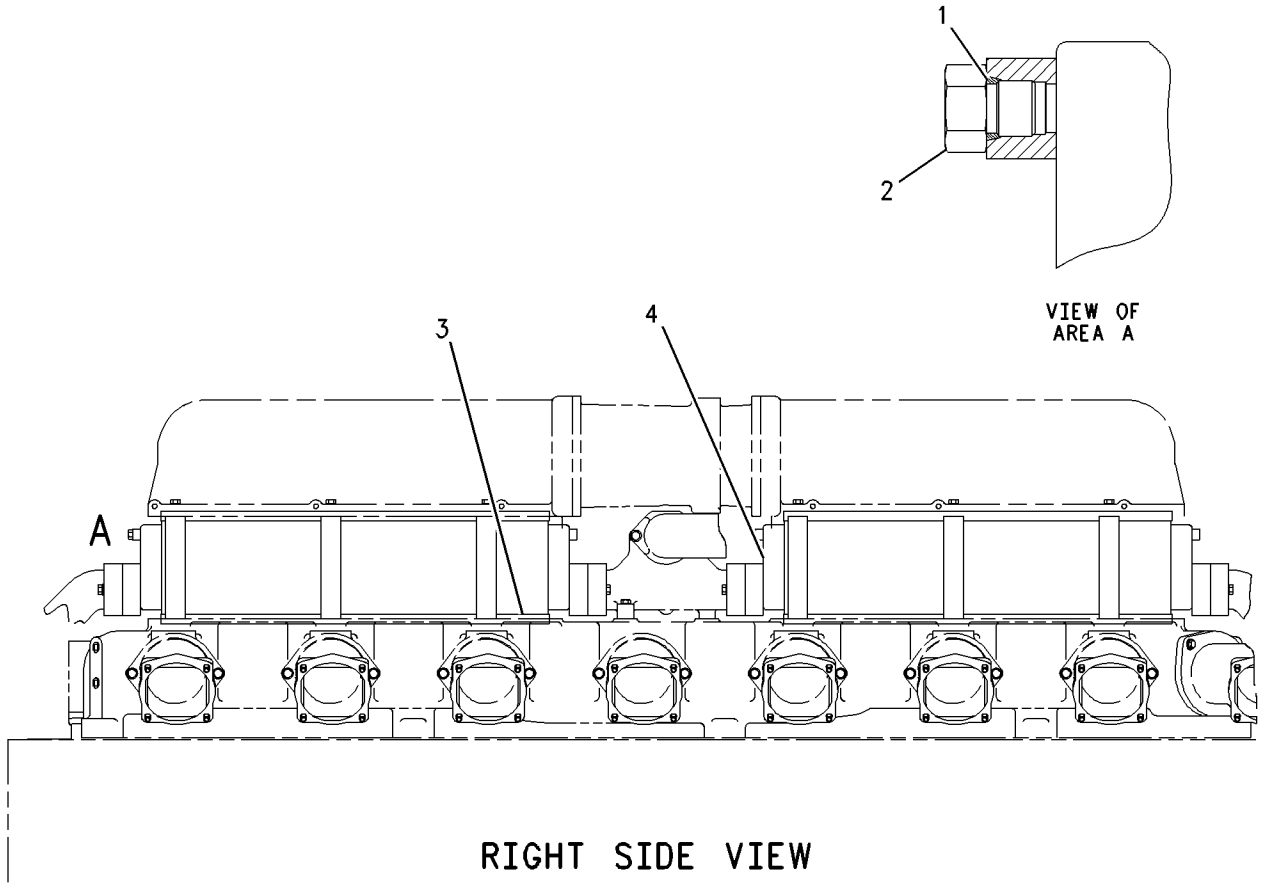

RIGHT SIDE VIEW

GRAPHIC #1 **<END>** g00773099

AIR INLET AND EXHAUST SYSTEM

184-3200 AIR CLEANER GP

S/N: 4421-UP

PART OF 184-3214 AIR CLEANER GP

SMCS-1051, 1054 **i02163078**

NOTE	REF NO	GRAPHIC REF	PART NUMBER	QTY	PART NAME 1 2 3 4 5 6 (PRODUCT LEVEL)	SEE PAGE
	1	1	**6I-2509**	1	FILTER ELEMENT AS-AIR (PRIMARY)	
	2	1	**6I-2510**	1	FILTER ELEMENT AS-AIR (SECONDARY)	
	3	1	**6I-4467**	1	COVER AS-AIR CLEANER	
	4	1	**8N-4617**	2	KIT-AIR CLEANER CLAMP	
					(INCLUDES CLIP AS AND RIVET)	

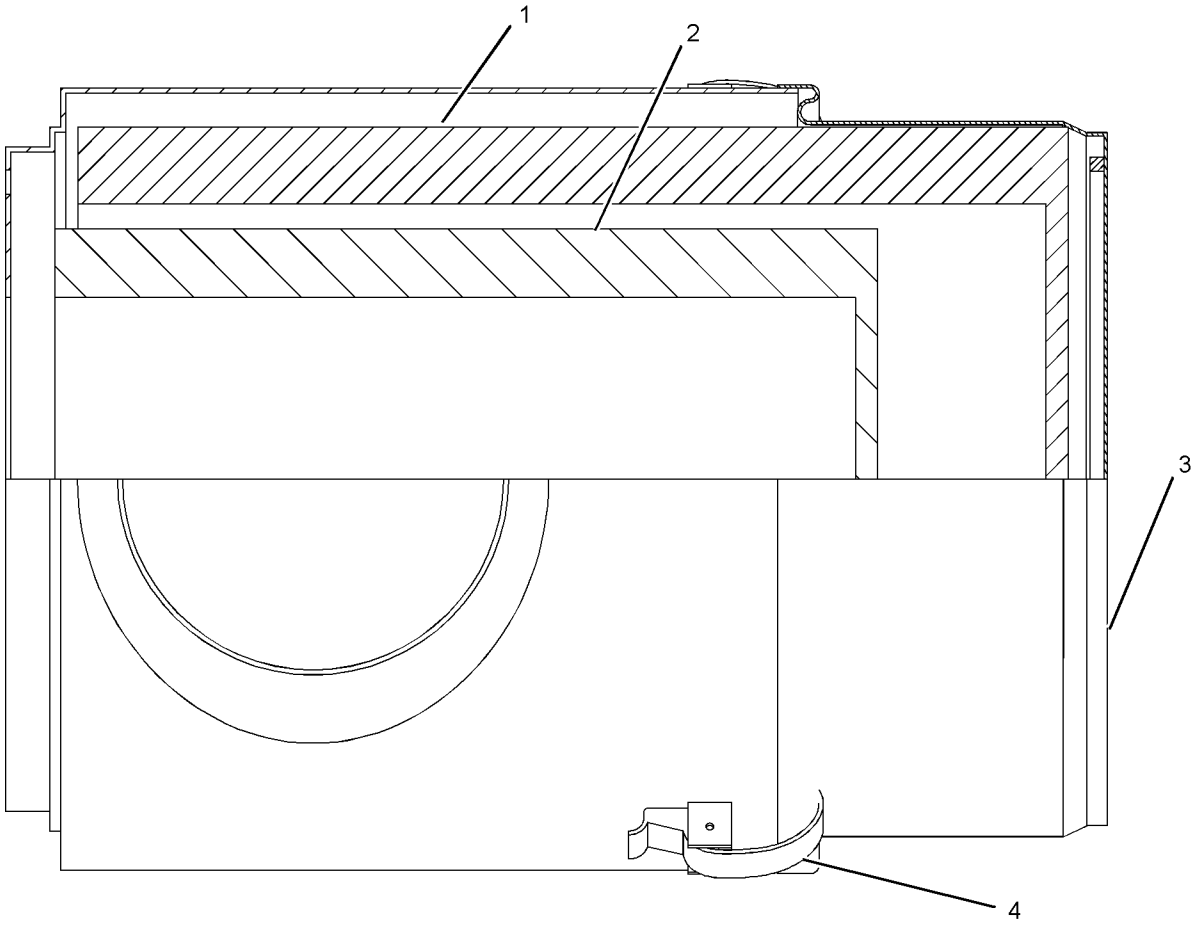

GRAPHIC #1 **<END>** g01093646

184-3214 AIR CLEANER GP

S/N: 4421-UP

PART OF 245-8813 INSTALLATION AR-FIELD

SMCS-1051, 1054 **i02277828**

NOTE	REF NO	GRAPHIC REF	PART NUMBER	QTY	PART NAME 1 2 3 4 5 6 (PRODUCT LEVEL)	SEE PAGE
	1	1	**1P-9390**	4	GASKET-OUTLET	
	2	1	**7M-1674**	4	SCREEN-AIR CLEANER INLET	
Y	3	1	**184-3200**	4	AIR CLEANER GP	156
	4	1	**187-4540**	4	ADAPTER-AIR CLEANER	
	5	1	**2K-4973**	40	LOCKNUT (3/8-16-THD)	
M	6	1	**8T-4184**	16	BOLT (M12X1.75X45-MM)	
	7	1	**8T-4896**	40	WASHER-HARD (10.2X18.5X2.5-MM THK)	
	8	1	**9M-2151**	40	STUD-TAPERLOCK (3/8-16X1.38-IN)	

QUANTITIES SHOWN ARE THOSE REQUIRED FOR BOTH LH AND RH SIDES
M-METRIC PART
Y-SEPARATE ILLUSTRATION

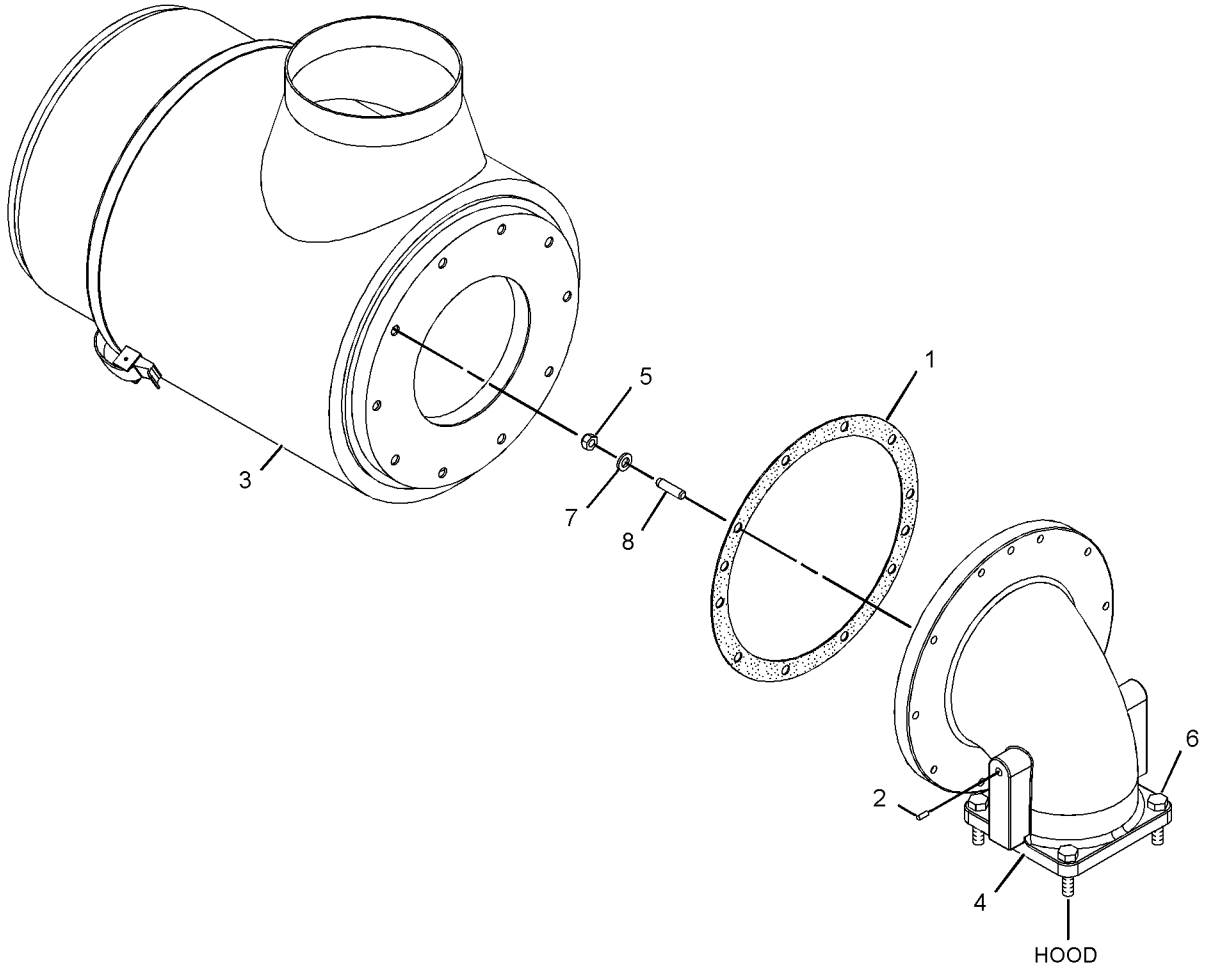

GRAPHIC #1 **<END>** g01142285

AIR INLET AND EXHAUST SYSTEM

267-4458 DUST EJECTOR GP

S/N: 4421-UP

PART OF 245-8813 INSTALLATION AR-FIELD

SMCS-1068 **i02301020**

NOTE	REF NO	GRAPHIC REF	PART NUMBER	QTY	PART NAME 1 2 3 4 5 6 (PRODUCT LEVEL)	SEE PAGE
	1	1	**8T-6703**	8	CLAMP-HOSE	
	2	1	**133-5935**	2	EJECTOR AS-DUST	
	3	1	**136-1612**	2	CLIP	
	4	1	**5P-4325**	4	CLIP	
	5	1	**8T-4121**	4	WASHER-HARD (11X21X2.5-MM THK)	
M	6	1	**8T-4136**	4	BOLT (M10X1.5X25-MM)	
M	7	1	**8T-4139**	2	BOLT (M12X1.75X30-MM)	
	8	1	**8T-4223**	4	WASHER-HARD (13.5X25.5X3-MM THK)	
M	9	1	**8T-4244**	2	NUT (M12X1.75-THD)	
	10	1	**5P-1471**	4	HOSE (132-CM EACH)	
	11	1	**270-8612**	2	INSULATION	

M-METRIC PART

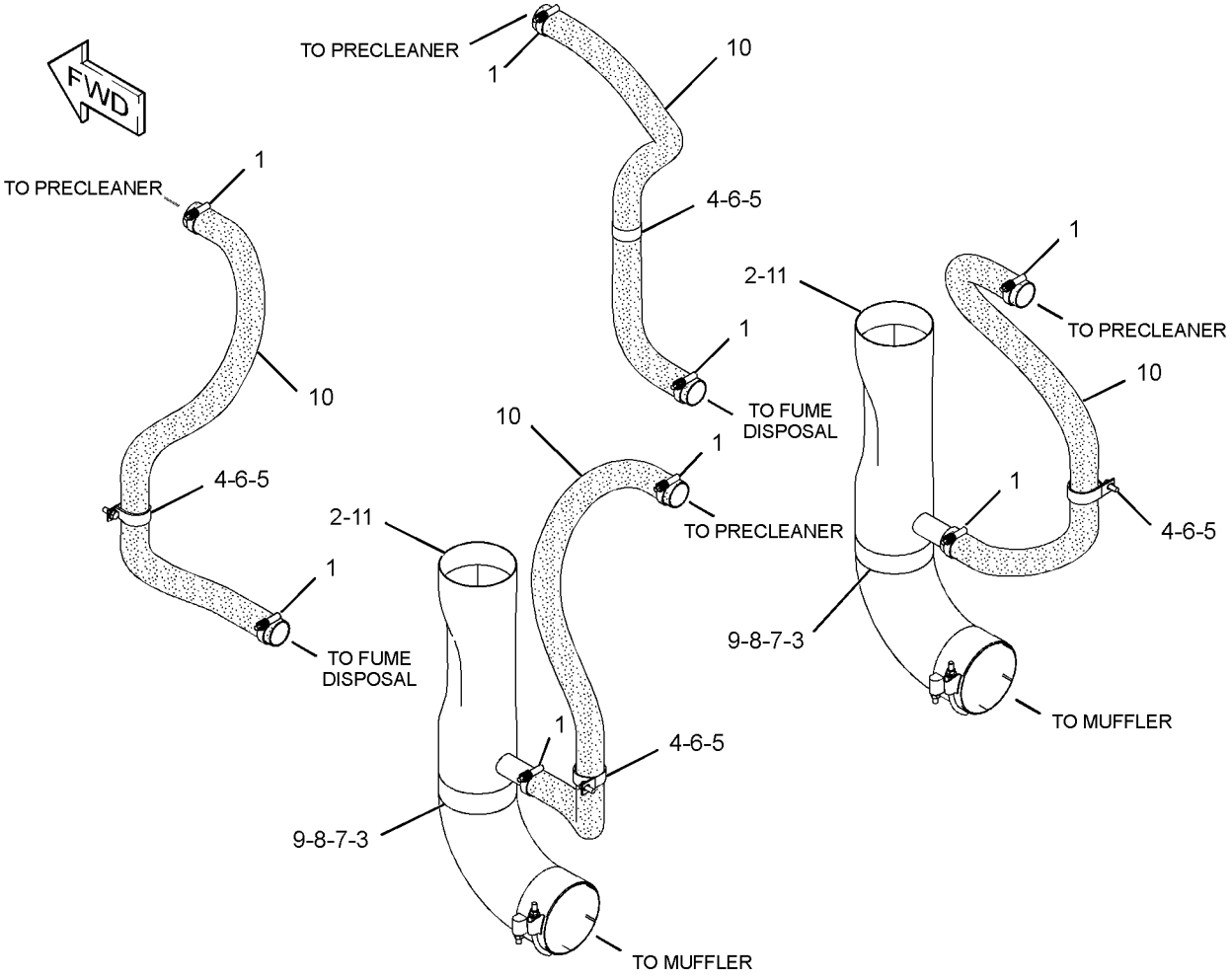

GRAPHIC #1 **<END>** g01152268

AIR INLET AND EXHAUST SYSTEM

135-3879 EXTENSION GP-EXHAUST

S/N: 4421-UP

PART OF 245-8813 INSTALLATION AR-FIELD

SMCS-1061 **i01359170**

NOTE	REF NO	GRAPHIC REF	PART NUMBER	QTY	PART NAME 1 2 3 4 5 6 (PRODUCT LEVEL)	SEE PAGE
	1	1	**147-5203**	4	PIPE-EXHAUST	
	2	1	**190-3946**	2	CLAMP AS	
	3	1	**179-6061**	2	CLAMP AS	
	4	1	**5P-1076**	16	WASHER-HARD (13.5X30X4-MM THK)	
	5	1	**5P-7468**	8	CLIP (SLOT)	
	6	1	**5P-7469**	8	CLIP (TAB)	
	7	1	**6V-1874**	8	GROMMET	
	8	1	**8T-4121**	8	WASHER-HARD (11X21X2.5-MM THK)	
M	9	1	**8T-4136**	8	BOLT (M10X1.5X25-MM)	
M	10	1	**8T-4139**	24	BOLT (M12X1.75X30-MM)	
	11	1	**190-3948**	2	CLAMP AS	
	12	1	**190-3947**	2	CLAMP AS	

M-METRIC PART

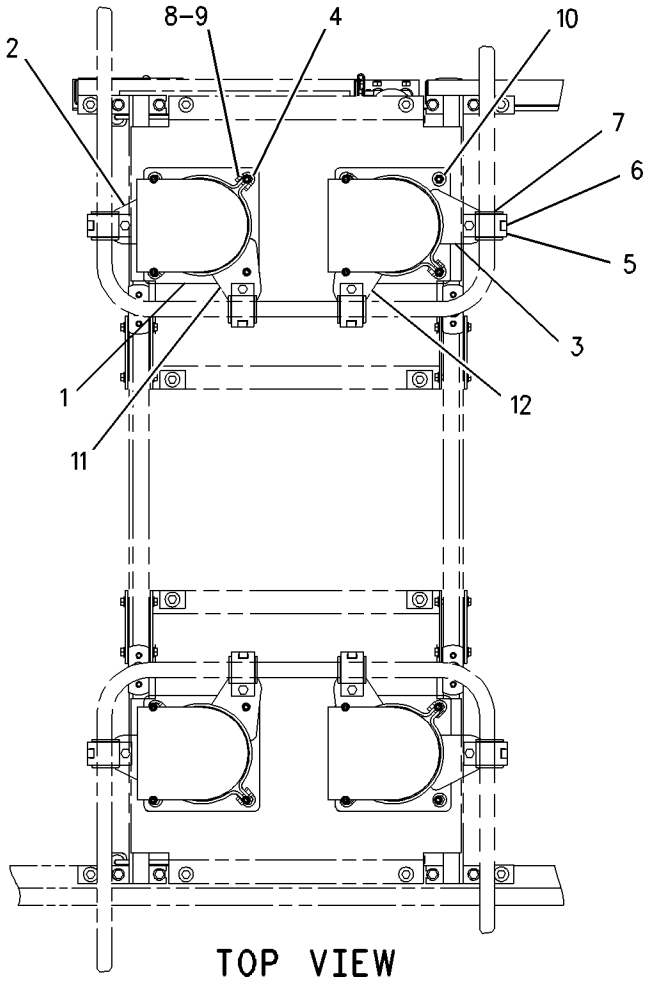

GRAPHIC #1 **<END>** g00717523

AIR INLET AND EXHAUST SYSTEM

133-6503 INDICATOR GP-AIR FILTER CHANGE

S/N: 4421-UP

PART OF 245-8813 INSTALLATION AR-FIELD

SMCS-7452 **i01053889**

NOTE	PART NUMBER	QTY	PART NAME 1 2 3 4 5 6 (PRODUCT LEVEL)	SEE PAGE
	3B-6552	4	ELBOW (90 DEGREES)	
	7W-7417	4	INDICATOR GP-AIR FILTER CHANGE	
	5K-5068	4	FITTING	
	5M-6214	4	PLUG-PIPE	

<END>

AIR INLET AND EXHAUST SYSTEM

244-8721 LINES GP-AIR

S/N: 4421-UP

PART OF 250-7957 INSTALLATION AR-ENGINE

SMCS-1071 **i02289986**

NOTE	REF NO	GRAPHIC REF	PART NUMBER	QTY	PART NAME 1 2 3 4 5 6 (PRODUCT LEVEL)	SEE PAGE
	1	1	**7E-6712**	2	TUBE	
	2	1	**7W-0650**	4	ELBOW	
	3	1	**8T-4989**	16	CLAMP-HOSE	
	4	1	**9X-0262**	2	ADAPTER	
	5	1	**9X-3997**	4	HOSE	
	6	1	**9X-6772**	2	STRAP-CABLE	
	7	1	**135-5145**	2	TUBE AS	
	8	1	**264-5035**	4	BRACKET AS	
					(EACH INCLUDES)	
M		1	**8T-3597**	4	NUT-WELD (M12X1.75-THD)	
	9	1	**244-8722**	2	TUBE AS	
	10	1	**244-8723**	2	TUBE AS	
Y	11	1	**161-9926**	2	SENSOR GP-PRESSURE (INLET AIR RESTRICTION)	273
	12	1	**6D-9157**	4	SEAL-O-RING	
	13	1	**6V-5048**	4	SEAL-O-RING	
	14	1	**190-7971**	16	WASHER-HARD (11X64X6-MM THK)	
M	15	1	**8T-4195**	16	BOLT (M10X1.5X30-MM)	
	16	1	**8T-4987**	8	CLAMP-HOSE	
	17	1	**8T-4988**	8	CLAMP-HOSE	

M-METRIC PART
Y-SEPARATE ILLUSTRATION

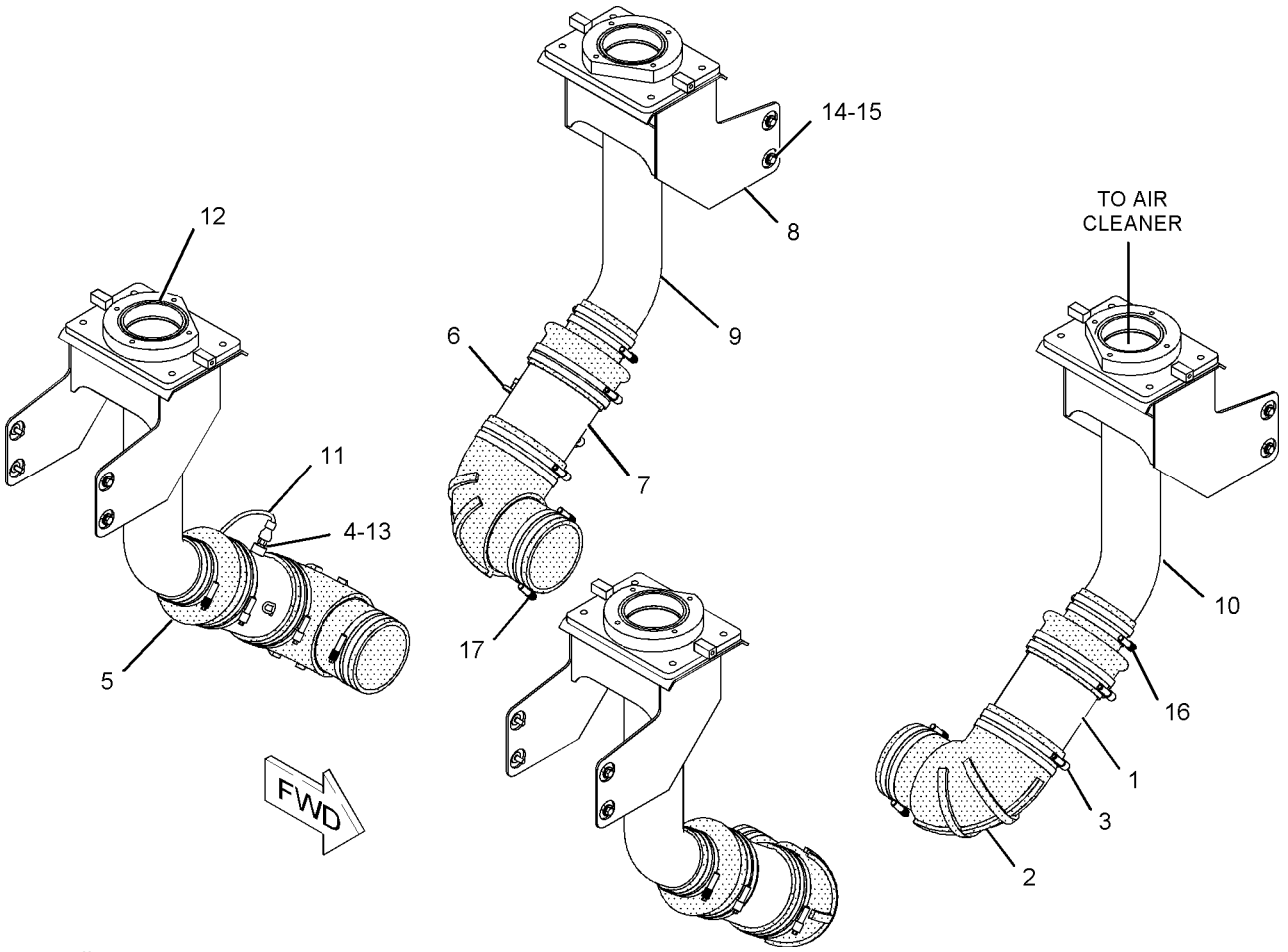

GRAPHIC #1 **<END>** g01095320

AIR INLET AND EXHAUST SYSTEM

156-6233 LINES GP-TURBOCHARGER AIR

S/N: 8WM1-UP

PART OF 240-7750 ENGINE AR

SMCS-1052, 1071 **i02180328**

NOTE	REF NO	GRAPHIC REF	PART NUMBER	QTY	PART NAME 1 2 3 4 5 6 (PRODUCT LEVEL)	SEE PAGE
	1	1	**0S-1591**	32	BOLT (3/8-16X1.5-IN)	
	2	1	**7C-7909**	14	ELBOW	
	3	1	**7C-7910**	2	ELBOW	
	4	1	**110-6990**	1	MANIFOLD (INLET)	
	5	1	**112-3591**	2	COVER	
	6	1	**123-6915**	1	PLATE	
	7	1	**155-0541**	2	ELBOW	
	8	1	**5M-2894**	152	WASHER-HARD (10.2X18.5X2.5-MM THK)	
	9	1	**109-7411**	4	SEAL-O-RING	
	10	1	**0S-1594**	26	BOLT (3/8-16X1-IN)	
	11	1	**2A-4639**	32	BOLT (3/8-16X1.625-IN)	
	12	1	**156-9830**	2	ELBOW	
	13	1	**6V-5101**	16	SEAL-O-RING	
	14	1	**9F-2773**	12	BOLT (3/8-16X8.5-IN)	
	15	1	**0S-0509**	6	BOLT (3/8-16X0.75-IN)	
	16	1	**0S-1590**	8	BOLT (3/8-16X2-IN)	
	17	1	**1T-0720**	64	BOLT-12 POINT HEAD (3/8-16X1.25-IN)	
	18	1	**7N-5080**	16	GASKET-MANIFOLD	
	19	1	**7C-8199**	16	FLANGE	
	20	1	**4S-5898**	16	SEAL-O-RING	
	21	1	**6V-3917**	16	SEAL-O-RING	
	22	1	**123-6914**	2	BAR	
	23	1	**2N-2765**	16	BOLT-HIGH TEMPERATURE (3/8-16X1.75-IN)	
	24	1	**123-6970**	4	ELBOW	
	27	1	**8T-6762**	8	PLUG-PIPE	
	28	1	**121-3562**	1	PIPE	
	29	1	**5P-8940**	3	SEAL-O-RING	
	30	1	**168-7800**	16	LOCKNUT (3/8-16-THD)	
	31	1	**6L-3005**	4	CLAMP-BAND	
					(EACH INCLUDES)	
		1	**8T-0122**	1	NUT-FULL (1/4-28-THD)	
	32	1	**127-4417**	4	COUPLING-ELBOW	
	33	1	**7E-1397**	4	CLAMP-BENT BOLT	
	34	1	**156-6261**	4	BRACKET	
	35	1	**9X-6458**	2	WASHER-HARD (10.2X22.5X3-MM THK)	
	36	1	**1A-2029**	2	BOLT (3/8-16X1.125-IN)	
	37	1	**0S-1619**	8	BOLT (3/8-16X3-IN)	
	38	1	**146-7383**	4	FLANGE	
	39	1	**5D-5957**	4	SEAL-O-RING	
	40	1	**7W-3145**	8	PLATE	
	41	1	**155-0544**	2	ELBOW	
	42	1	**155-0545**	2	ELBOW	
	43	1	**8T-6764**	4	PLUG-PIPE	
B	44	1	**0S-1588**	2	BOLT (3/8-16X1.25-IN)	
					-OR-	
B			**0S-1594**	2	BOLT (3/8-16X1-IN)	

B-USE AS REQUIRED

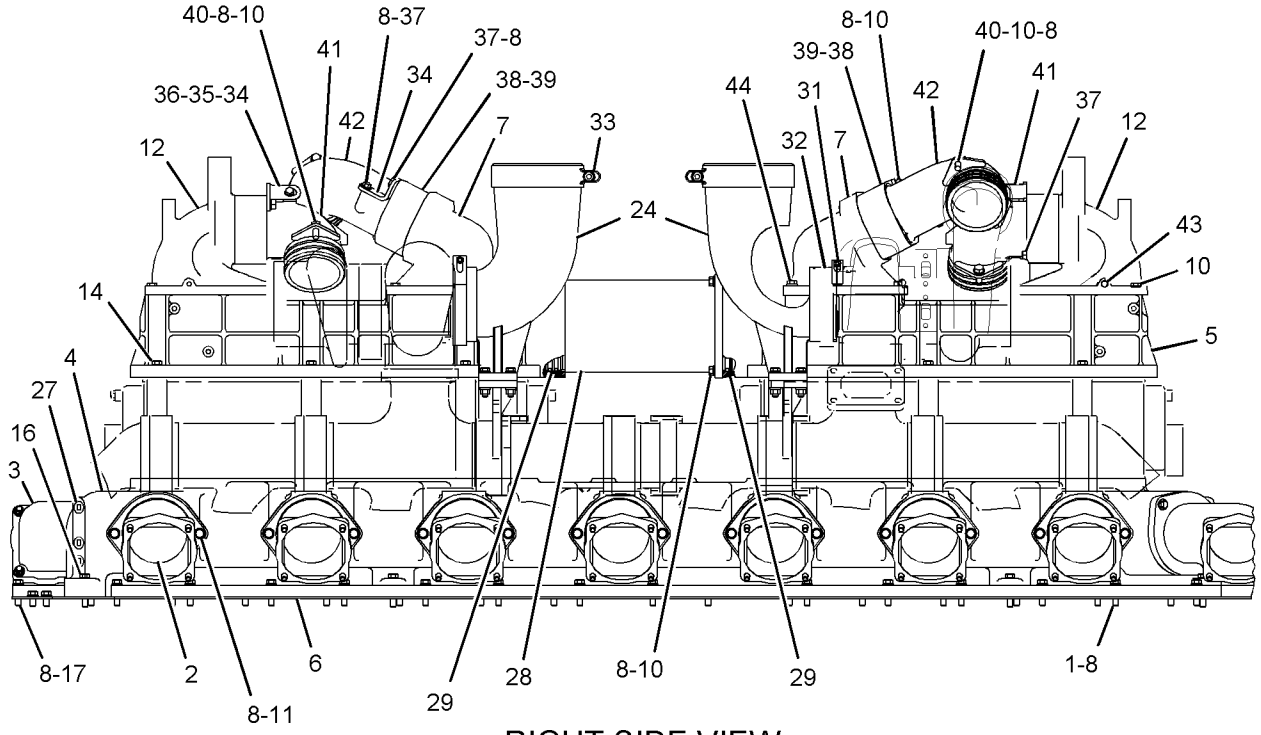

RIGHT SIDE VIEW

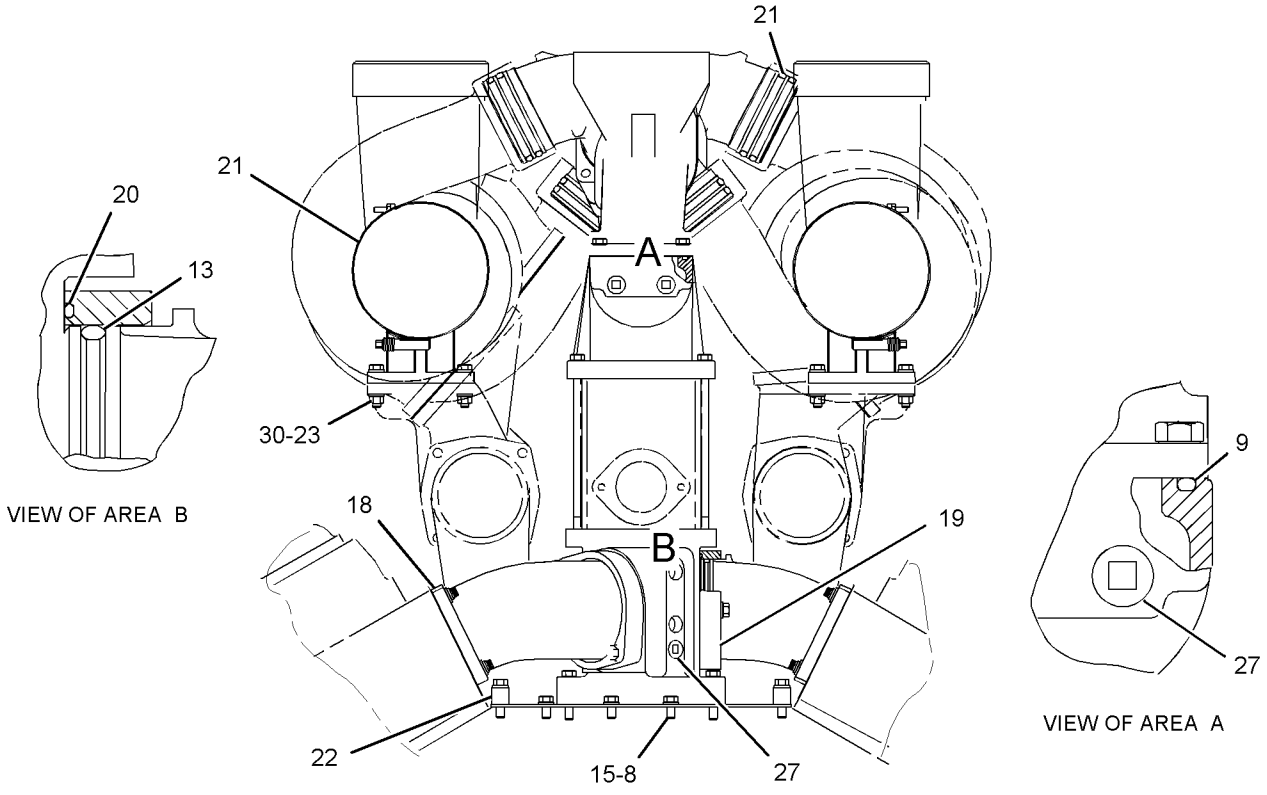

VIEW OF AREA B

VIEW OF AREA A

FRONT VIEW

GRAPHIC #1

<END>

g01067533

AIR INLET AND EXHAUST SYSTEM

117-0040 MANIFOLD GP-EXHAUST

S/N: 8WM1-UP

PART OF 240-7750 ENGINE AR

SMCS-1059 **i02121582**

NOTE	REF NO	GRAPHIC REF	PART NUMBER	QTY	PART NAME 1 2 3 4 5 6 (PRODUCT LEVEL)	SEE PAGE
	1	1	**115-0548**	2	MANIFOLD-EXHAUST (INTERMEDIATE)	
	2	1	**115-0549**	2	MANIFOLD-EXHAUST (RH FRONT/LH REAR)	
	3	1	**115-0553**	4	MANIFOLD-EXHAUST (INTERMEDIATE)	
	4	1	**115-0554**	2	MANIFOLD-EXHAUST (INTERMEDIATE)	
	5	1	**115-0555**	2	MANIFOLD-EXHAUST (LH FRONT/RH REAR)	
	6	1	**115-0556**	2	MANIFOLD-EXHAUST (INTERMEDIATE)	
	7	1	**115-0557**	2	MANIFOLD-EXHAUST (INTERMEDIATE)	
C	8	1	**5P-3875**	60	BOLT (3/8-16X2.75-IN)	
C	9	1	**2N-2766**	56	LOCKNUT (3/8-16-THD) (HIGH TEMPERATURE)	
C	10	1	**5P-3961**	4	BOLT (3/8-16X2.5-IN)	
	11	1	**5M-2894**	64	WASHER-HARD (10.2X18.5X2.5-MM THK)	
C	12	1	**203-2163**	60	SPACER (10.5X22.5X21.35-MM THK) (HIGH TEMPERATURE)	
	13	1	**8T-6765**	2	PLUG-PIPE (1/4-18-THD)	
	14	1	**111-8142**	4	SLEEVE-ELBOW SUPPORT	
C	15	1	**203-2143**	20	SLEEVE (EXHAUST MANIFOLD)	
	16	1	**7W-8145**	16	GASKET-EXHAUST MANIFOLD	
C	17	1	**127-8269**	10	SEAL-EXHAUST	
C	18	1	**4P-7680**	4	SPACER (10.5X22.5X15-MM THK)	
C	19	1	**5P-3345**	56	BOLT (3/8-16X3-IN)	

C-CHANGE FROM PREVIOUS TYPE

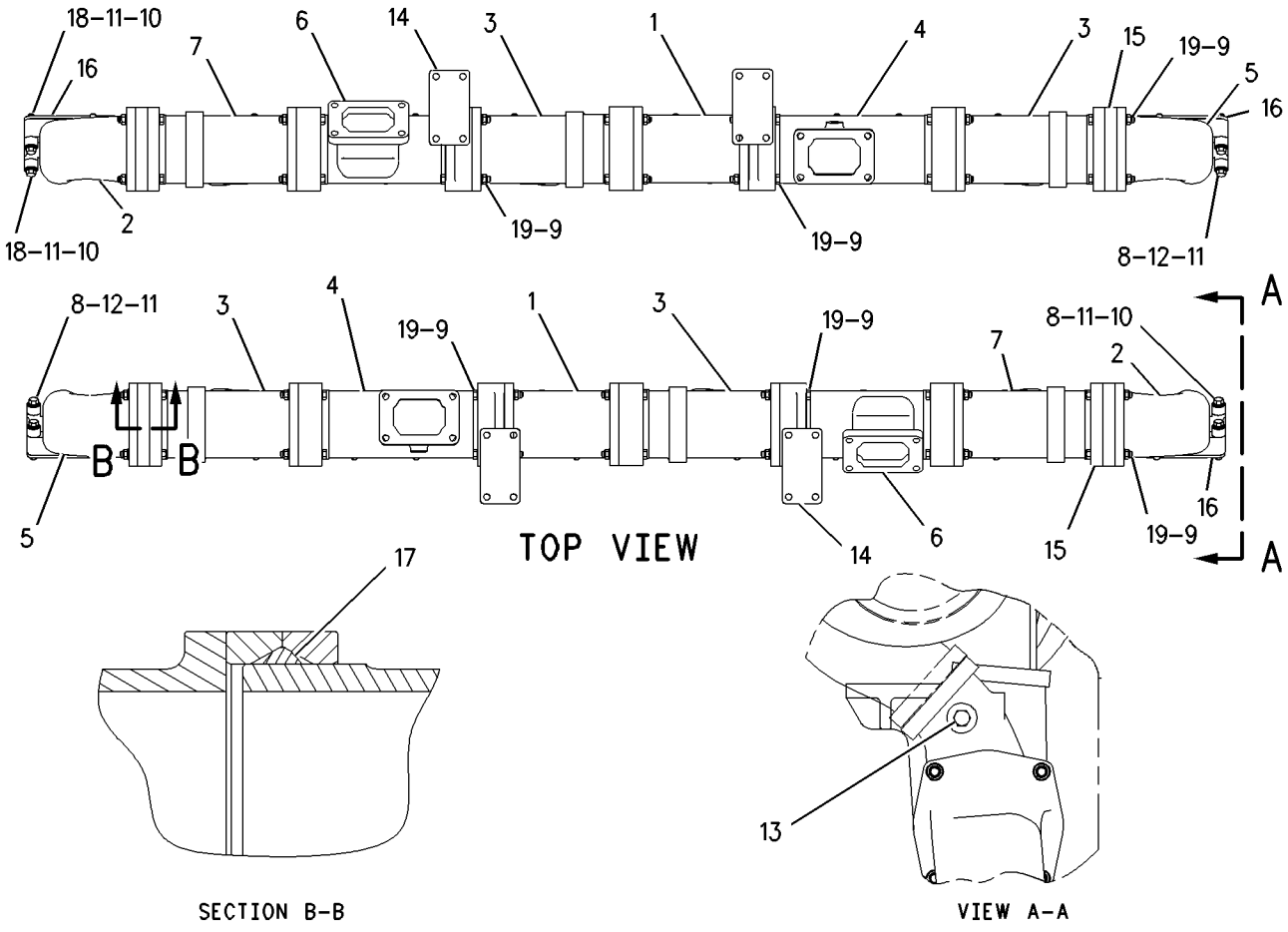

GRAPHIC #1 **<END>** g00843161

AIR INLET AND EXHAUST SYSTEM

127-4494 MUFFLER GP

S/N: 4421-UP

PART OF 250-7957 INSTALLATION AR-ENGINE

SMCS-1062 **i01740217**

NOTE	REF NO	GRAPHIC REF	PART NUMBER	QTY	PART NAME 1 2 3 4 5 6 (PRODUCT LEVEL)	SEE PAGE
	2	1	**7E-1397**	4	CLAMP-BENT BOLT	
	3	1	**127-4465**	2	SUPPORT	
	4	1	**129-9459**	2	MUFFLER AS	
	5	1	**133-5927**	2	MUFFLER AS	
	6	1	**133-5938**	2	BRACE	
	7	1	**5C-6565**	4	BOLT (1/2-13X1.125 IN)	
	8	1	**5P-1076**	16	WASHER-HARD (13.5X30X4MM THK)	
M	9	1	**8T-4183**	8	BOLT (M12X1.75X40MM)	
M	10	1	**8T-4192**	4	BOLT (M12X1.75X25MM)	

M-METRIC PART

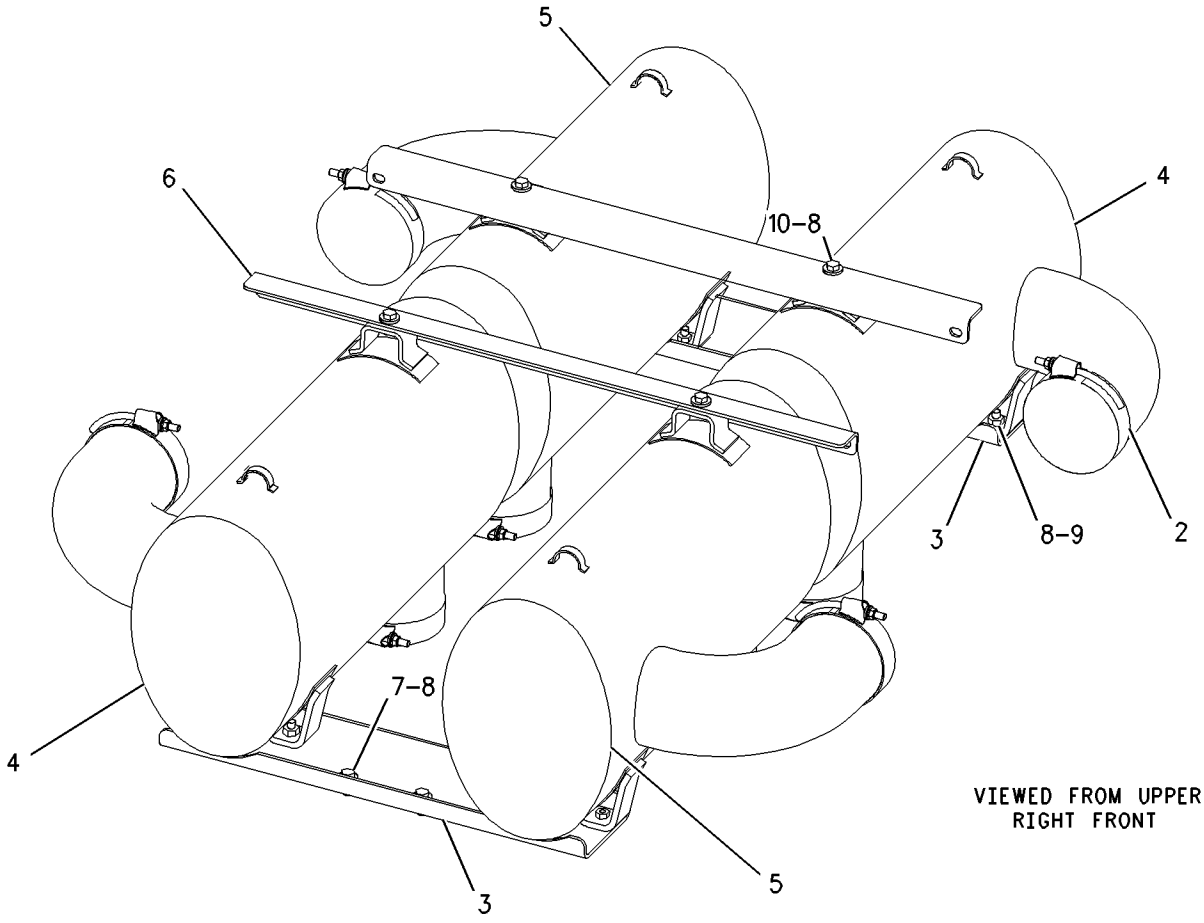

GRAPHIC #1 **<END>** g00892540

AIR INLET AND EXHAUST SYSTEM

7N-5974 PRECLEANER GP

S/N: 4421-UP
179 MM INLET
PART OF 133-6613 PRECLEANER GP

SMCS-1055 **i01911841**

NOTE	REF NO	GRAPHIC REF	PART NUMBER	QTY	PART NAME 1 2 3 4 5 6 (PRODUCT LEVEL)	SEE PAGE
	1	1	**7S-3687**	1	HOOD AS (PRECLEANER)	
		1	**0S-1591**	1	BOLT (3/8-16X1.5-IN)	
		1	**6V-8801**	1	NUT (3/8-16 THD)	
	2	1	**4L-9337**	2	BOLT (3/8-16X1.5-IN)	
		1	**6V-8801**	2	NUT (3/8-16 THD)	
	3	1	**7N-5973**	1	BODY AS-PRECLEANER	

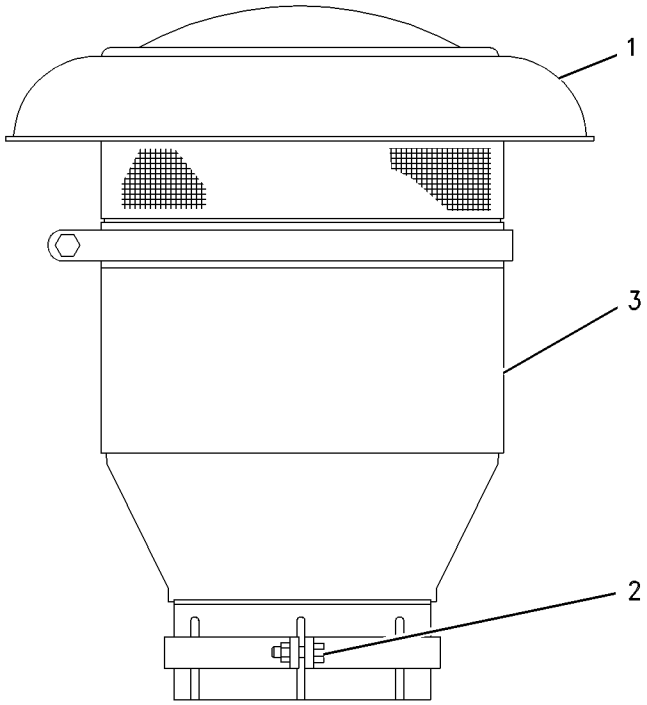

GRAPHIC #1 **<END>** g00494193

AIR INLET AND EXHAUST SYSTEM

133-6613 PRECLEANER GP

S/N: 4421-UP

PART OF 245-8813 INSTALLATION AR-FIELD

SMCS-1055 **i00095975**

NOTE	PART NUMBER	QTY	PART NAME 1 2 3 4 5 6 (PRODUCT LEVEL)	SEE PAGE
	7S-3687	4	HOOD AS	
			(EACH INCLUDES)	
	0S-1591	1	BOLT (3/8-16X1.5IN)	
	1D-4717	1	NUT (3/8-16 THD)	
Y	**7N-5974**	4	PRECLEANER GP	167

Y-SEPARATE ILLUSTRATION

<END>

146-8053 PRECLEANER GP

S/N: 4421-UP
TURBINE TYPE
PART OF 207-2686 PRECLEANER GP
AN ATTACHMENT

SMCS-1055 **i02203620**

NOTE	REF NO	GRAPHIC REF	PART NUMBER	QTY	PART NAME 1 2 3 4 5 6 (PRODUCT LEVEL)	SEE PAGE
	1	1	**130-3281**	1	PRECLEANER AS (AIR TURBINE)	
		1	**174-4895**	2	CLAMP	
	2	1	**145-9987**	1	ADAPTER AS	

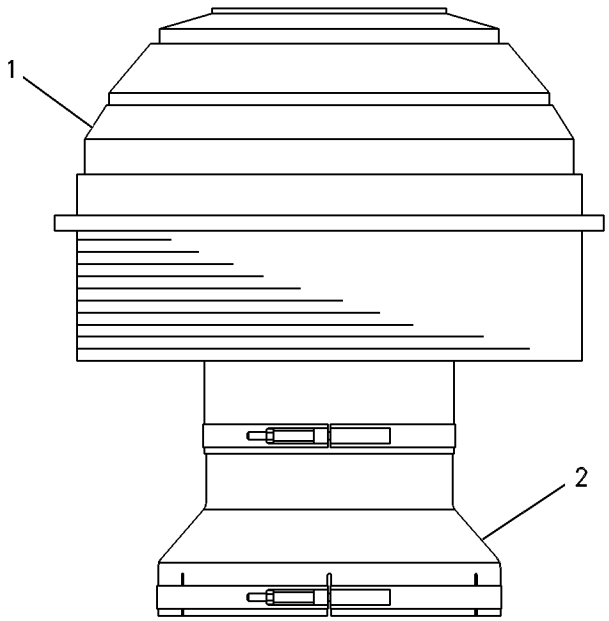

GRAPHIC #1 **<END>** g00286332

AIR INLET AND EXHAUST SYSTEM

207-2686 PRECLEANER GP

S/N: 4421-UP

AN ATTACHMENT

SMCS-1055 **i01551655**

NOTE	PART NUMBER	QTY	PART NAME 1 2 3 4 5 6 (PRODUCT LEVEL)	SEE PAGE
Y	*146-8053*	4	PRECLEANER GP	169

Y-SEPARATE ILLUSTRATION

<END>

AIR INLET AND EXHAUST SYSTEM

230-1060 TURBOCHARGER GP*R

S/N: 8WM1-UP

PART OF 246-5563 TURBOCHARGER GP

SMCS-1052, 1053 **i02009000**

NOTE	REF NO	GRAPHIC REF	PART NUMBER	QTY	PART NAME 1 2 3 4 5 6 (PRODUCT LEVEL)	SEE PAGE
R	1	1	**204-5480**	1	CARTRIDGE GP-TURBOCHARGER	
	2	1	**115-3525**	1	HOUSING-TURBINE	
	3	1	**230-1061**	1	COVER (COMPRESSOR)	
	4	1	**9N-2038**	1	CLAMP AS (TURBINE)	
		1	**7M-9918**	1	LOCKNUT (1/4-28 THD)	
	5	1	**4W-9977**	1	CLAMP AS (COMPRESSOR)	
		1	**7M-9918**	1	LOCKNUT (1/4-28 THD)	

R-REMFG PART MAY BE AVAILABLE

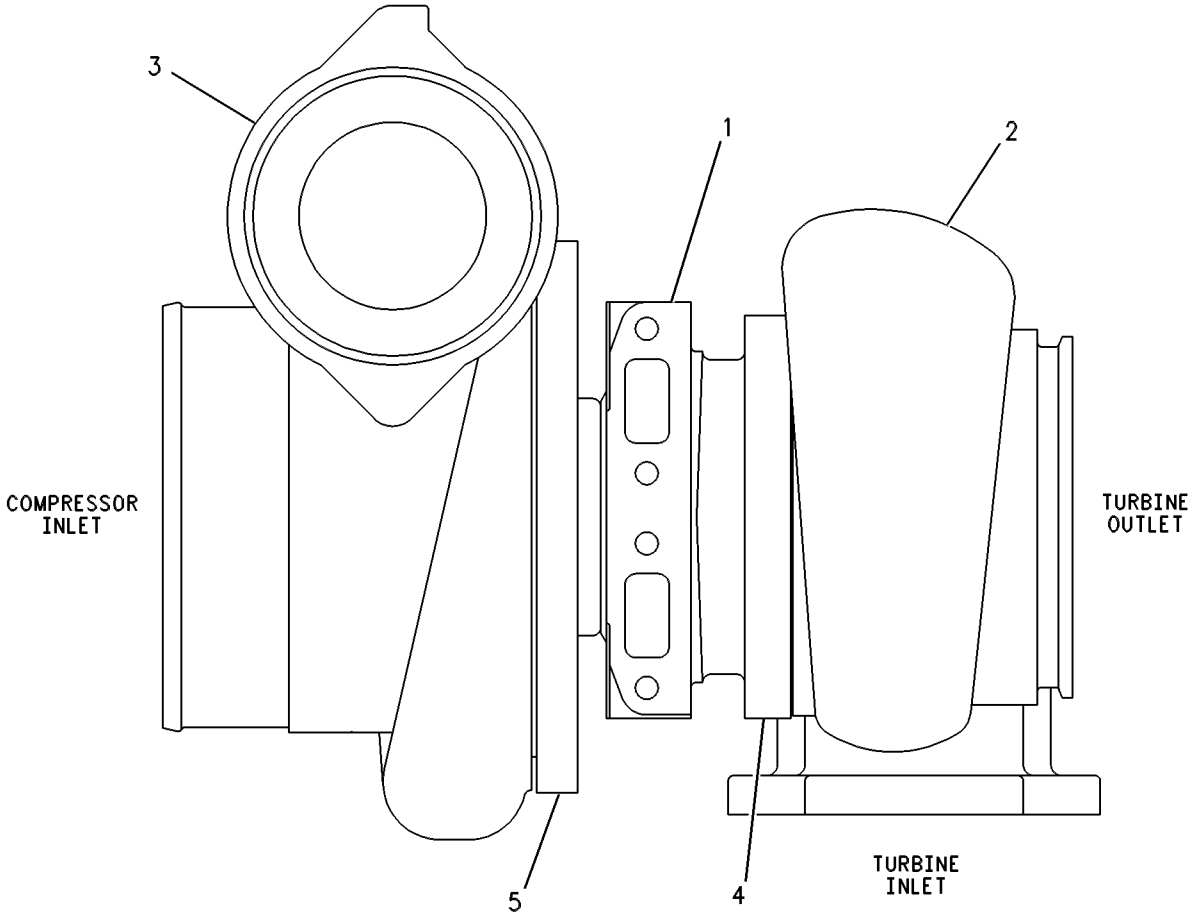

GRAPHIC #1 **<END>** g00273019

AIR INLET AND EXHAUST SYSTEM

246-5563 TURBOCHARGER GP

S/N: 8WM1-UP

PART OF 240-7750 ENGINE AR

SMCS-1052, 1053 **i02150166**

NOTE	REF NO	GRAPHIC REF	PART NUMBER	QTY	PART NAME 1 2 3 4 5 6 (PRODUCT LEVEL)	SEE PAGE
	1	1	**2N-2765**	16	BOLT-HIGH TEMPERATURE (3/8-16X1.75-IN)	
	2	1	**121-5736**	4	GASKET	
YR	3	1	**230-1060**	4	TURBOCHARGER GP	171
	4	1	**168-7800**	16	LOCKNUT (3/8-16-THD)	

R-REMFG PART MAY BE AVAILABLE
Y-SEPARATE ILLUSTRATION

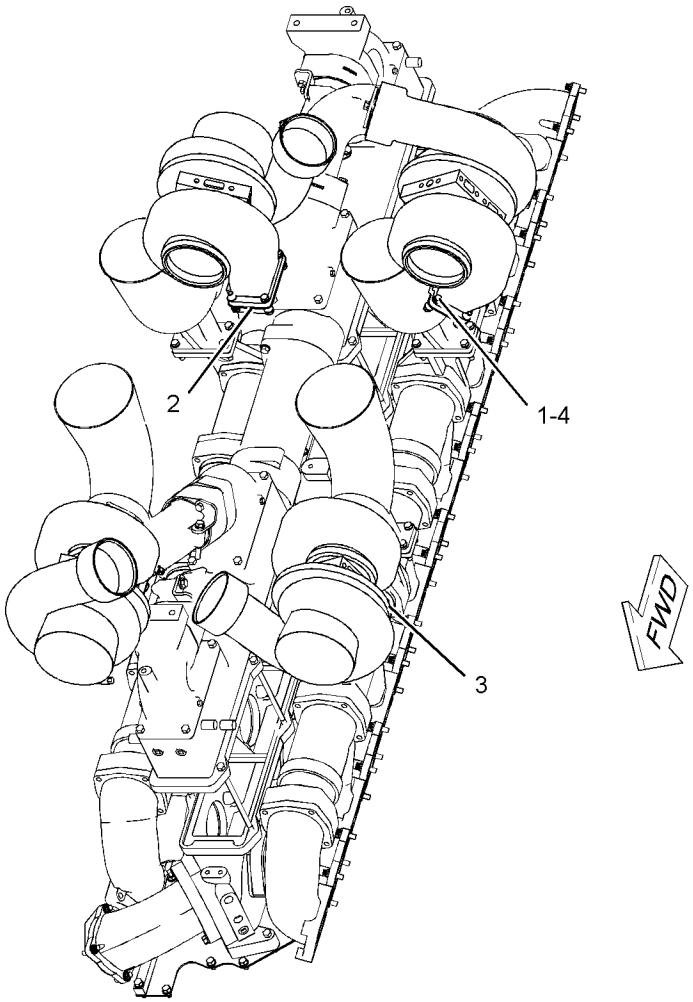

GRAPHIC #1 **<END>** g01092261

246-5564 FILTER GP-FUEL–SECONDARY

S/N: 8WM1-UP

PART OF 240-7750 ENGINE AR

SMCS-1261 **i02150168**

NOTE	REF NO	GRAPHIC REF	PART NUMBER	QTY	PART NAME 1 2 3 4 5 6 (PRODUCT LEVEL)	SEE PAGE
	1	1	**1R-0755**	2	FILTER AS-FUEL	
	2	1	**1W-2644**	1	SUPPORT AS	
		1	**7V-4240**	1	BLOCK	
	3	1	**1W-7559**	2	BASE AS-FUEL FILTER	
					(EACH INCLUDES)	
		1	**6N-1127**	1	SHIELD	
		1	**7F-9090**	2	SCREW-DRIVE (NO 8X3/8-IN)	
	4	1	**4W-5940**	1	ADAPTER-PUMP	
	5	1	**6N-4414**	1	COVER-FILTER BASE	
	6	1	**9Y-8389**	1	GASKET	
	7	1	**146-0240**	1	SWITCH GP-TOGGLE (FUEL FILTER DIFFERENTIAL)	
		1	**3E-3371**	1	WEDGE-RECEPTACLE LOCK (3-PIN)	
		1	**6T-3631**	2	NUT-HEX (15/32-32-THD)	
		1	**6T-3632**	1	LOCKWASHER	
		1	**6T-3633**	1	RING-LOCKING	
		1	**186-3735**	3	PIN-CONNECTOR (16-GA TO 18-GA)	
		1	**102-8803**	1	KIT-RECEPTACLE (3-PIN)	
					(INCLUDES RECEPTACLE AS AND WEDGE)	
	8	1	**205-4757**	1	SHIELD AS	
		1	**1F-0750**	1	NUT-WELD (3/8-16-THD)	
	9	1	**0S-0509**	1	BOLT (3/8-16X0.75-IN)	
	10	1	**1A-2029**	5	BOLT (3/8-16X1.125-IN)	
	11	1	**1H-5514**	1	BOLT (5/16-18X1.625-IN)	
	12	1	**2A-4639**	4	BOLT (3/8-16X1.625-IN)	
	13	1	**2A-5546**	1	BOLT (1/4-20X1.375-IN)	
	14	1	**2K-8198**	4	SEAL-O-RING	
	15	1	**3B-1915**	10	BOLT (3/8-16X1.375-IN)	
	16	1	**3K-0360**	2	SEAL-O-RING	
	17	1	**5M-2894**	23	WASHER-HARD (10.2X18.5X2.5-MM THK)	
	18	1	**5P-0537**	1	WASHER-HARD (7.2X14.5X2-MM THK)	
	19	1	**5P-1075**	1	WASHER-HARD (10.2X22.5X3-MM THK)	
	20	1	**8T-6758**	3	PLUG-PIPE	
	21	1	**9M-1974**	1	WASHER-HARD (8.8X16X2-MM THK)	
	22	1	**9S-4185**	1	PLUG	
	23	1	**9S-8005**	1	PLUG-O RING	
	24	1	**9S-8752**	4	NUT-FULL (3/8-16-THD)	

246-5564 **FILTER GP-FUEL** *(contd.)* **i02150168**

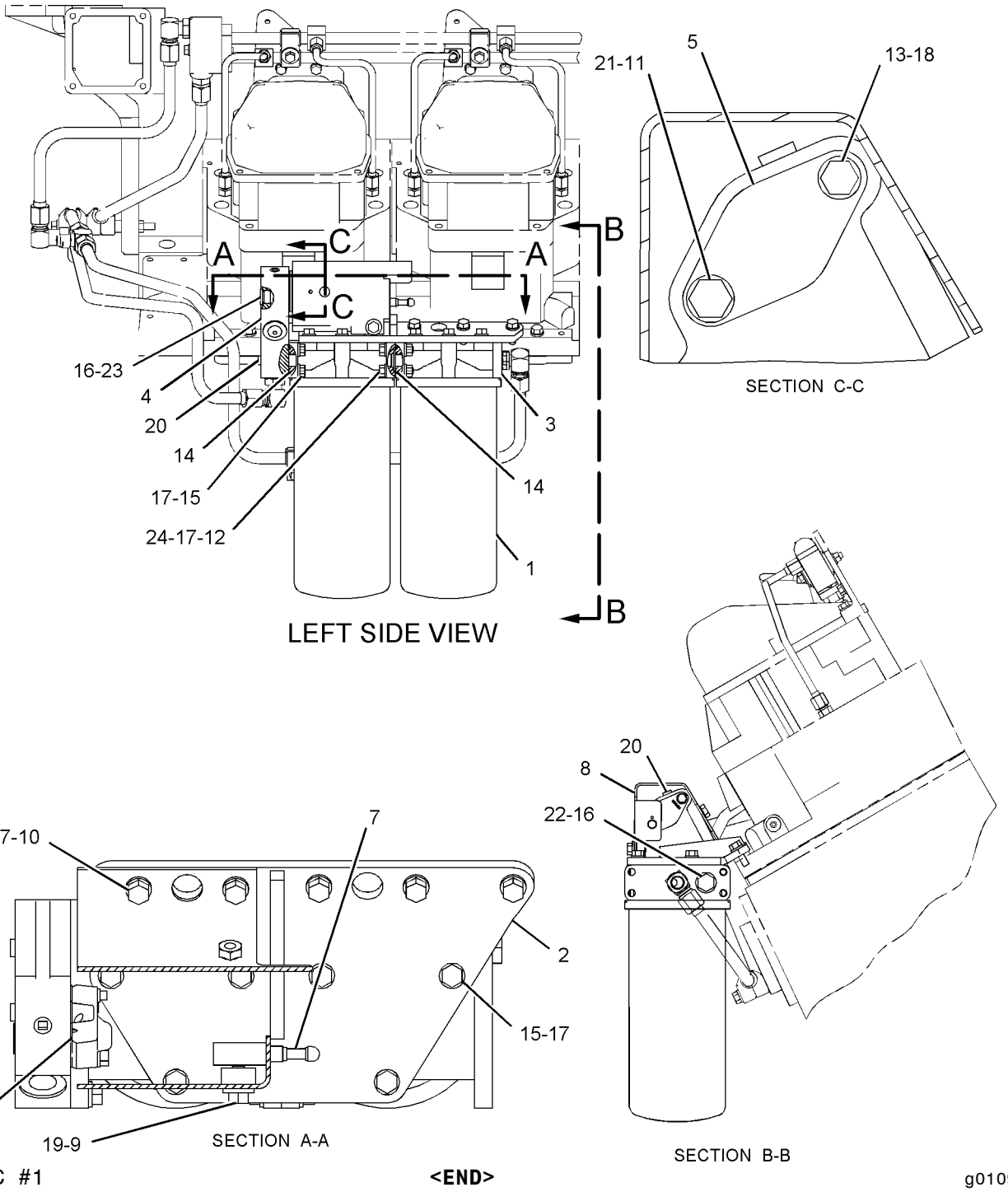

GRAPHIC #1 **<END>** g01092224

7E-6719 FILTER GP-PRIMARY FUEL

S/N: 4421-UP

PART OF 8X-0039 LINES GP-FUEL

SMCS-1260, 1261 **i02169314**

NOTE	REF NO	GRAPHIC REF	PART NUMBER	QTY	PART NAME 1 2 3 4 5 6 (PRODUCT LEVEL)	SEE PAGE
	1	1	**8H-2778**	1	SEAL-RING (PRIMARY FUEL FILTER)	
	2	1	**7E-7587**	1	BASE-PRIMARY FUEL FILTER	
	3	1	**2J-0157**	1	SEAL-O-RING	
	4	1	**7N-1628**	1	NUT (3/8-24-THD)	
	5	1	**1L-3769**	1	RING-RETAINING	
	6	1	**7S-9323**	1	SPRING	
	7	1	**2H-3429**	1	RING-RETAINING	
	8	1	**7H-9678**	1	RETAINER-ELEMENT	
	9	1	**8H-7202**	1	CASE AS-FUEL FILTER	
	10	1	**9M-2342**	1	FILTER ELEMENT AS-FUEL (PRIMARY)	

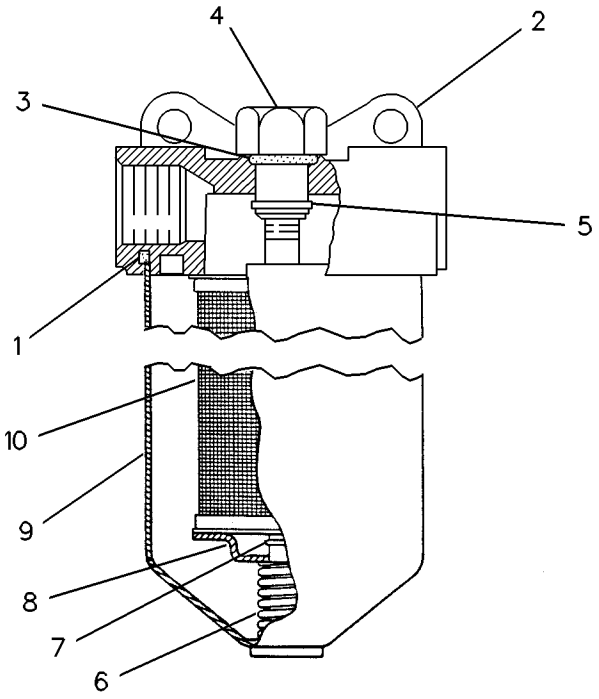

GRAPHIC #1 **<END>** g00082452

101-3756 FITTING GP-FUEL TANK

S/N: 4421-UP

PART OF 245-8813 INSTALLATION AR-FIELD

SMCS-1273 **i02289026**

NOTE	REF NO	GRAPHIC REF	PART NUMBER	QTY	PART NAME 1 2 3 4 5 6 (PRODUCT LEVEL)	SEE PAGE
	1	1	*148-8322*	1	CONNECTOR GP	
		1	**6V-8640**	1	CONNECTOR	
		1	**6V-9746**	1	SEAL-O-RING	
		1	**2M-9780**	1	SEAL-O-RING	
	2	1	*148-8342*	1	CONNECTOR AS	
		1	**6V-8632**	1	CONNECTOR	
		1	**7J-9108**	1	SEAL-O-RING	
		1	**3K-0360**	1	SEAL-O-RING	

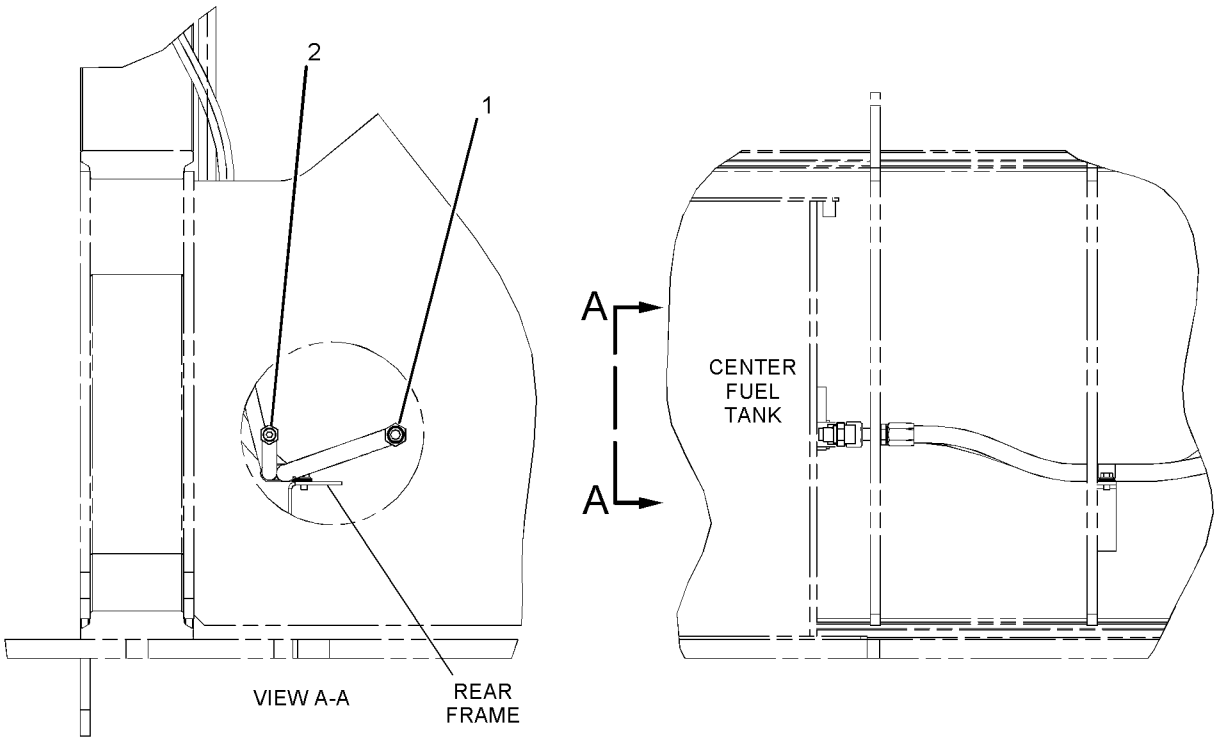

GRAPHIC #1 **<END>** g01145972

8X-0039 LINES GP-FUEL–PRIMARY FUEL FILTER

S/N: 4421-UP

PART OF 245-8812 CHASSIS AR-REAR

SMCS-1274 **i01740182**

NOTE	REF NO	GRAPHIC REF	PART NUMBER	QTY	PART NAME 1 2 3 4 5 6 (PRODUCT LEVEL)	SEE PAGE
Y	1	1	*7E-6719*	1	FILTER GP-PRIMARY FUEL	175
	2	1	**8X-1573**	1	BRACKET AS	
		1	**9R-2613**	3	BOSS-WELD (M10X1.5X25-MM OAL)	
M		1	**8T-3490**	3	NUT-WELD (M10X1.5-THD)	
I	3	1	**8X-1574**	1	HOSE AS	
	4	1	**3D-2824**	2	SEAL-O-RING	
	5	1	**5P-1076**	4	WASHER-HARD (13.5X30X4-MM THK)	
	6	1	**6D-1641**	1	CLIP	
	7	1	**6V-1889**	1	CLIP	
	8	1	**6V-9007**	2	ELBOW	
	9	1	**8T-4121**	4	WASHER-HARD (11X21X2.5-MM THK)	
M	10	1	**8T-4137**	1	BOLT (M10X1.5X20-MM)	
M	11	1	**8T-4139**	4	BOLT (M12X1.75X30-MM)	
M	12	1	**8T-4195**	3	BOLT (M10X1.5X30-MM)	
	13	1	**6V-9746**	3	SEAL-O-RING	

I-REFER TO HYDRAULIC INFORMATION SYSTEM
M-METRIC PART
Y-SEPARATE ILLUSTRATION

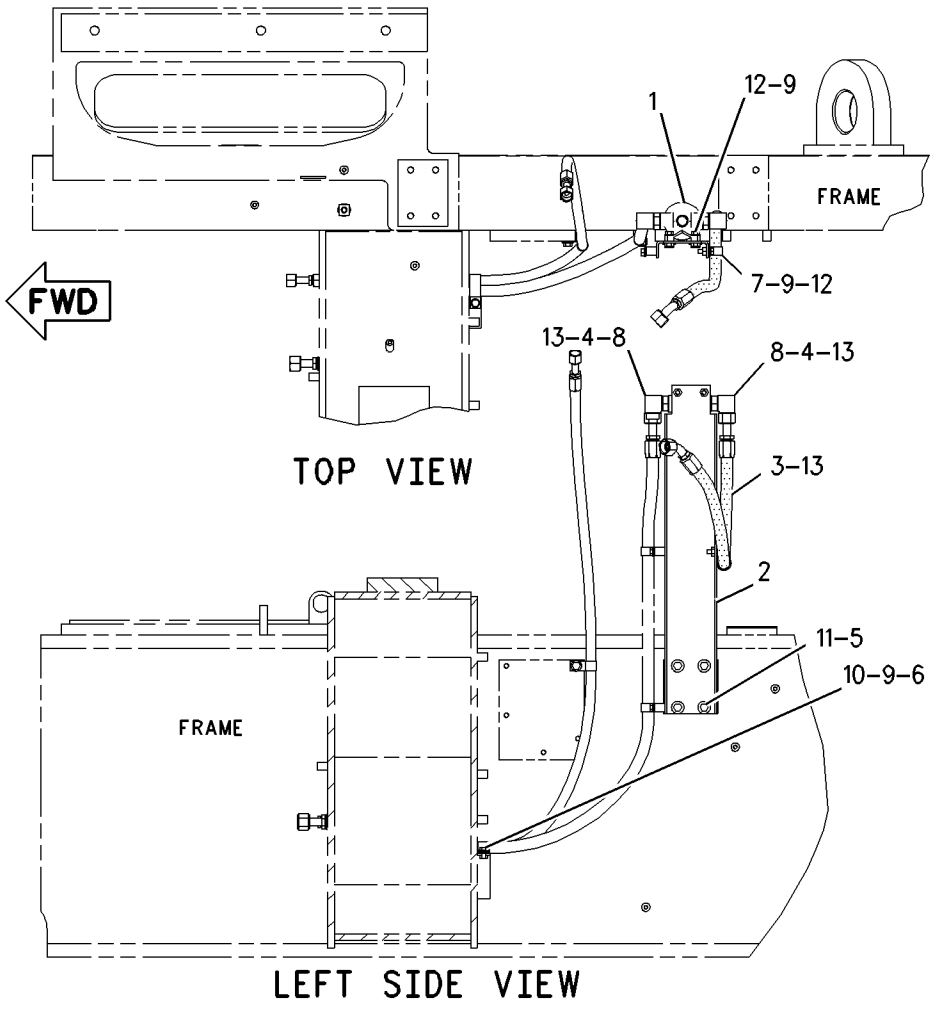

GRAPHIC #1 **<END>** g00932129

FUEL SYSTEM

259-3031 LINES GP-FUEL—WITHOUT HEATER

S/N: 4421-UP

AN ATTACHMENT

SMCS-1274 **i02154947**

NOTE	REF NO	GRAPHIC REF	PART NUMBER	QTY	PART NAME 1 2 3 4 5 6 (PRODUCT LEVEL)	SEE PAGE
I	1	1	**8X-1575**	1	HOSE AS	
I	2	1	**8X-1576**	1	HOSE AS	
	3	1	**8S-0948**	1	CLIP	
	4	1	**6V-1889**	2	CLIP	
	5	1	**7J-9108**	1	SEAL-O-RING	
	6	1	**8T-4121**	3	WASHER-HARD (11X21X2.5-MM THK)	
M	7	1	**8T-4137**	3	BOLT (M10X1.5X20-MM)	

I-REFER TO HYDRAULIC INFORMATION SYSTEM
M-METRIC PART

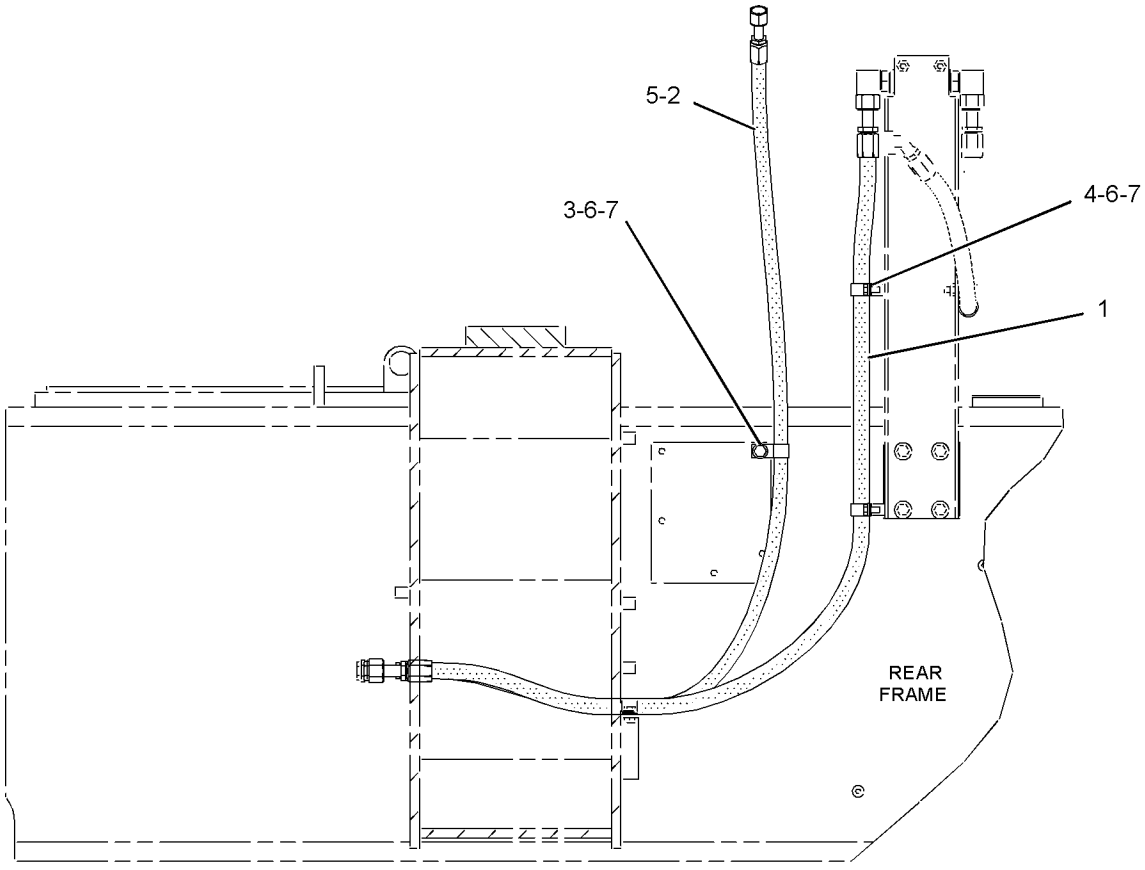

RIGHT SIDE
VIEW

GRAPHIC #1 **<END>** g01092949

FUEL SYSTEM

246-5565 LINES GP-FUEL INJECTION

S/N: 8WM1-UP

PART OF 240-7750 ENGINE AR

SMCS-1252, 1254 **i02342995**

NOTE	REF NO	GRAPHIC REF	PART NUMBER	QTY	PART NAME 1 2 3 4 5 6 (PRODUCT LEVEL)	SEE PAGE
	1	1	**1W-2925**	1	TUBE AS	
	2	1	**2W-0598**	1	TUBE AS	
	3	2	**2W-3973**	1	TUBE AS	
	4	1,2	**4P-0692**	14	CLAMP AS	
					(EACH INCLUDES)	
		1,2	**108-1434**	1	GROMMET	
	5	1	**4P-0693**	4	CLAMP AS	
					(EACH INCLUDES)	
		1	**108-1434**	2	GROMMET	
	6	1	**4P-3485**	1	BRACKET	
	7	1	**4W-1807**	1	ELBOW-FLARED	
	8	1	**4W-5977**	1	TUBE AS	
	9	2	**5T-6374**	1	SPACER (10.5X20X40-MM THK)	
	10	2	**7C-7677**	16	TUBE AS	
	11	2	**7C-7678**	16	TUBE AS	
	12	1	**7C-7682**	1	ADAPTER-FUEL MANIFOLD (RH)	
	13	1	**7C-7683**	1	ADAPTER-FUEL MANIFOLD (LH)	
	14	1	**7K-3377**	2	PIPE	
	15	2	**7N-6806**	4	SEAL-RECTANGULAR	
	16	2	**7W-2122**	32	CONNECTOR-PORT	
	17	2	**8T-5389**	1	ELBOW	
	18	1	**9M-4584**	2	CONNECTOR	
	19	2	**9N-4053**	1	SPRING	
	20	1	**003-8581**	1	TEE-UNION	
	21	1	**112-5992**	1	TUBE AS	
	22	2	**114-5477**	1	PLUNGER-VALVE	
Y	23	2	**156-9755**	1	MANIFOLD GP-FUEL (RH)	182
Y	24	1	**156-9756**	1	MANIFOLD GP-FUEL (LH)	183
	25	1	**167-9557**	1	TUBE AS	
	26	1	**240-7785**	1	TUBE AS	
	27	1,2	**030-7949**	3	ELBOW	
	28	1	**030-7972**	1	ELBOW	
	29	1	**030-7982**	1	UNION-FLARED	
	30	1,2	**0L-2070**	3	BOLT (3/8-16X2.25-IN)	
	31	2	**1D-4539**	1	BOLT (5/16-18X2.5-IN)	
	32	2	**1D-4541**	1	BOLT (5/16-18X3-IN)	
	33	1	**1P-7625**	1	ELBOW	
	34	1,2	**2M-9780**	7	SEAL-O-RING	
	35	2	**6V-5049**	32	SEAL-O-RING	
	36	2	**3J-7354**	1	SEAL-O-RING	
	37	2	**3K-0360**	2	SEAL-O-RING	
	38	1	**5B-2638**	1	BOLT (3/8-16X5.25-IN)	
	39	1	**5F-4899**	1	BOLT (3/8-16X5.5-IN)	
	40	1,2	**5M-2894**	7	WASHER-HARD (10.2X18.5X2.5-MM THK)	
	41	2	**5P-3166**	1	TEE-SWIVEL	
	42	1	**5S-0003**	1	NUT (5/16-18 THD)	
	43	2	**8B-0544**	1	SPACER (1-IN THK)	
	44	2	**8F-8544**	1	BOLT (3/8-16X6.25-IN)	
	45	2	**8K-2396**	1	ELBOW-FLARED	
	46	2	**8M-0505**	1	CONNECTOR	
	47	2	**9M-1974**	3	WASHER-HARD (8.8X16X2-MM THK)	
	48	2	**9S-4182**	1	PLUG	
	49	1	**9S-8752**	1	NUT-FULL (3/8-16-THD)	

Y-SEPARATE ILLUSTRATION

246-5565 **LINES GP-FUEL INJECTION** *(contd.)* **i02342995**

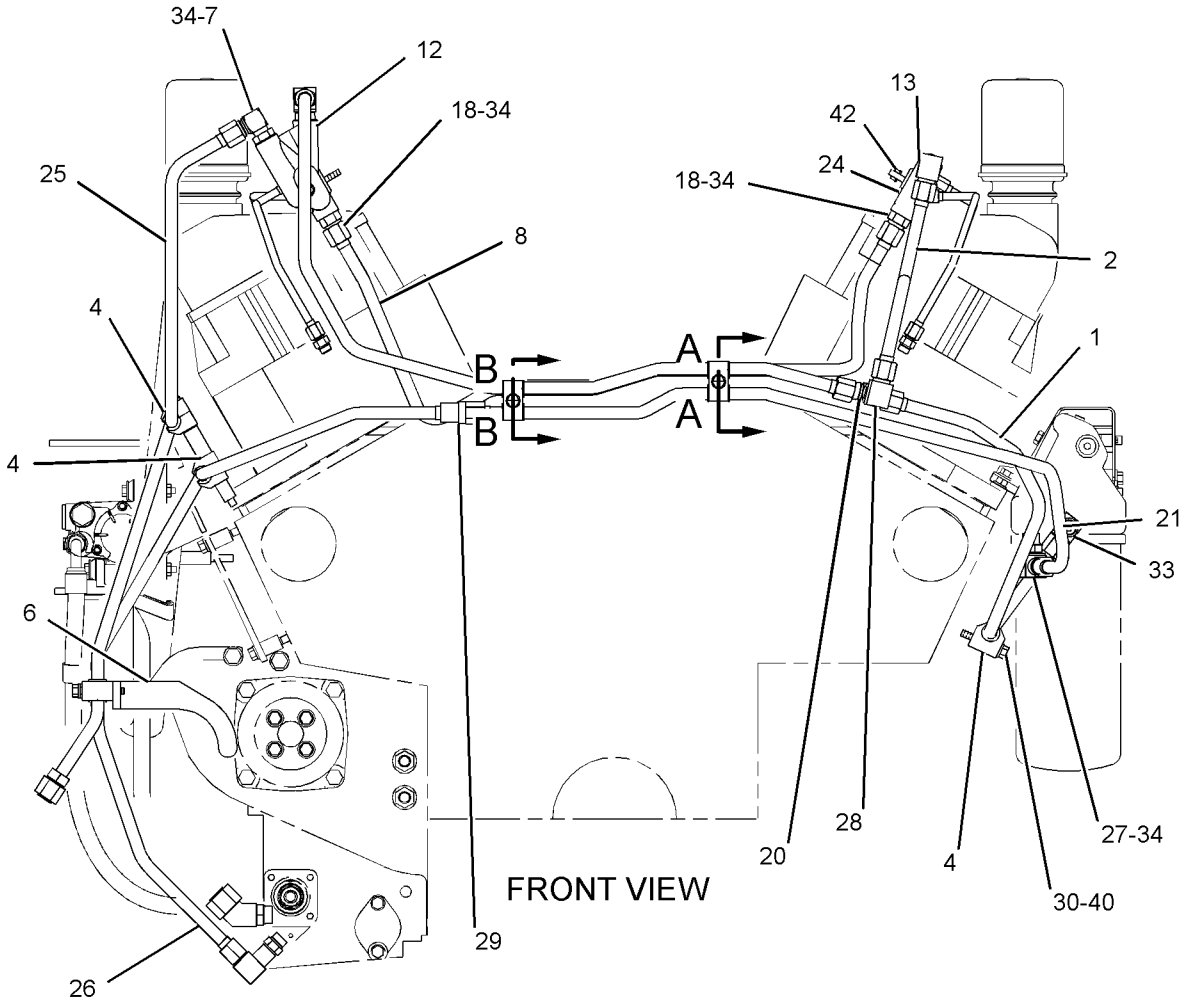

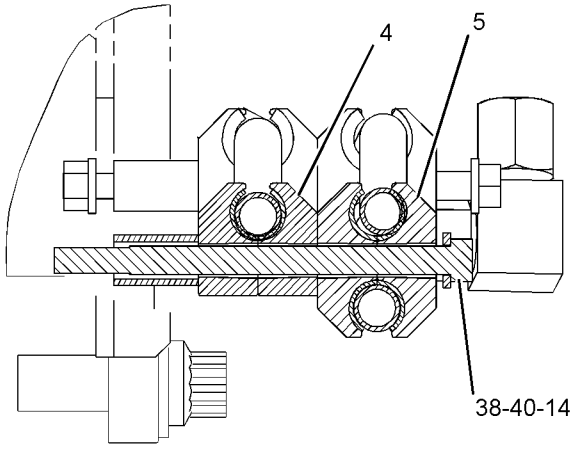

SECTION B-B

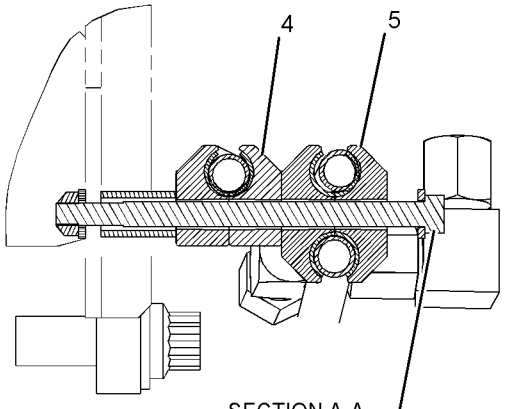

SECTION A-A

39-40-14-49

GRAPHIC #1

g01092345

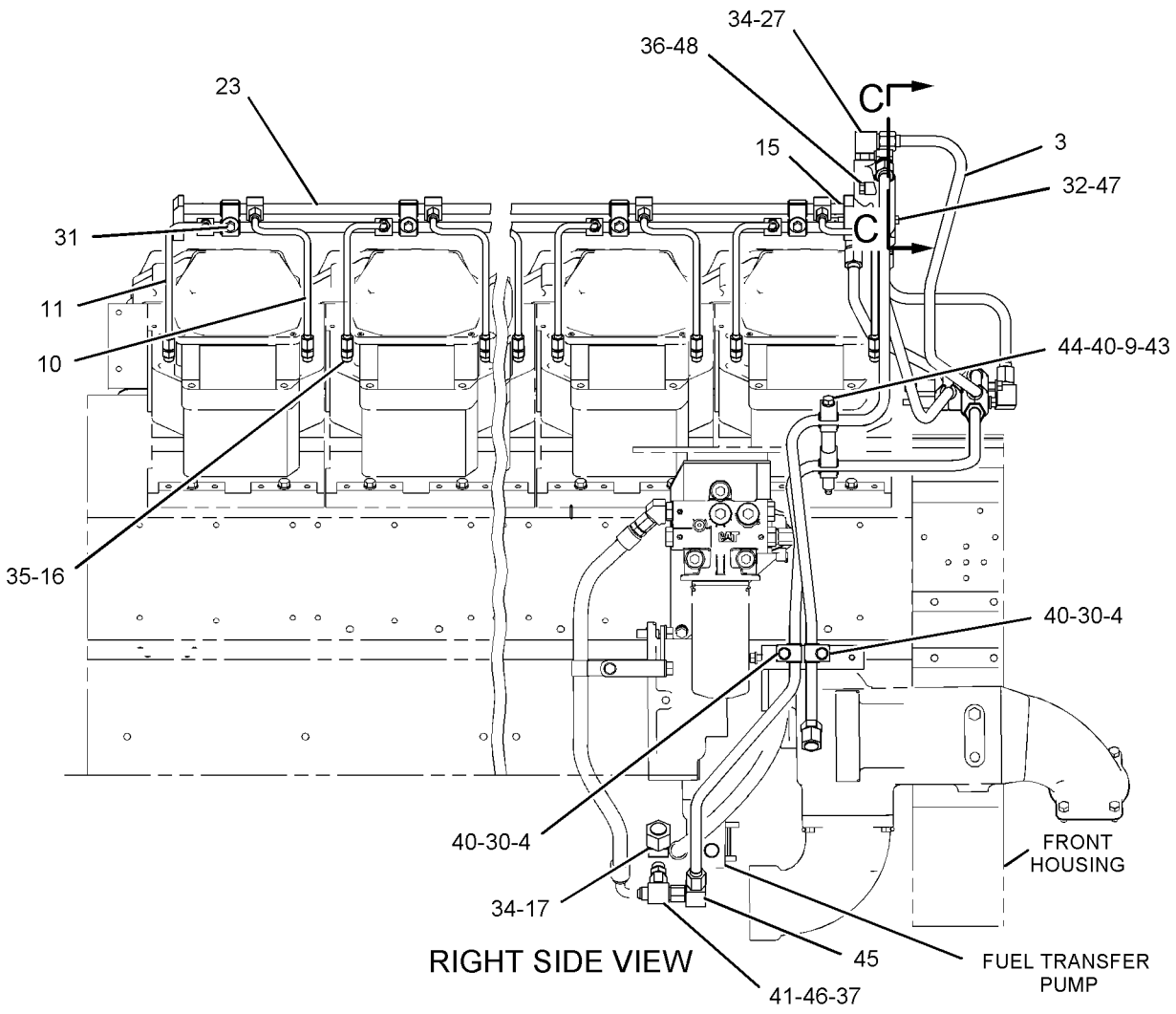

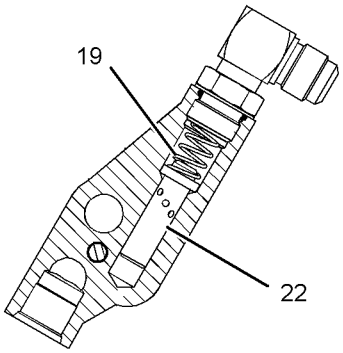

SECTION C-C

GRAPHIC #2

<END>

g01092348

156-9755 MANIFOLD GP-FUEL–RH

S/N: 8WM1-UP

PART OF 246-5565 LINES GP-FUEL INJECTION

SMCS-1274 **i02327540**

NOTE	REF NO	GRAPHIC REF	PART NUMBER	QTY	PART NAME 1 2 3 4 5 6 (PRODUCT LEVEL)	SEE PAGE
	1	1	**9Y-0047**	8	CLAMP	
	2	1	**147-3745**	8	WASHER-RETAINING	
	3	1	**156-9748**	8	CLAMP	
	4	1	**100-3237**	16	GROMMET	
	5	1	**1D-4539**	8	BOLT (5/16-18X2.5-IN)	
	6	1	**9N-0869**	8	WASHER-HARD (8.8X25.5X2-MM THK)	

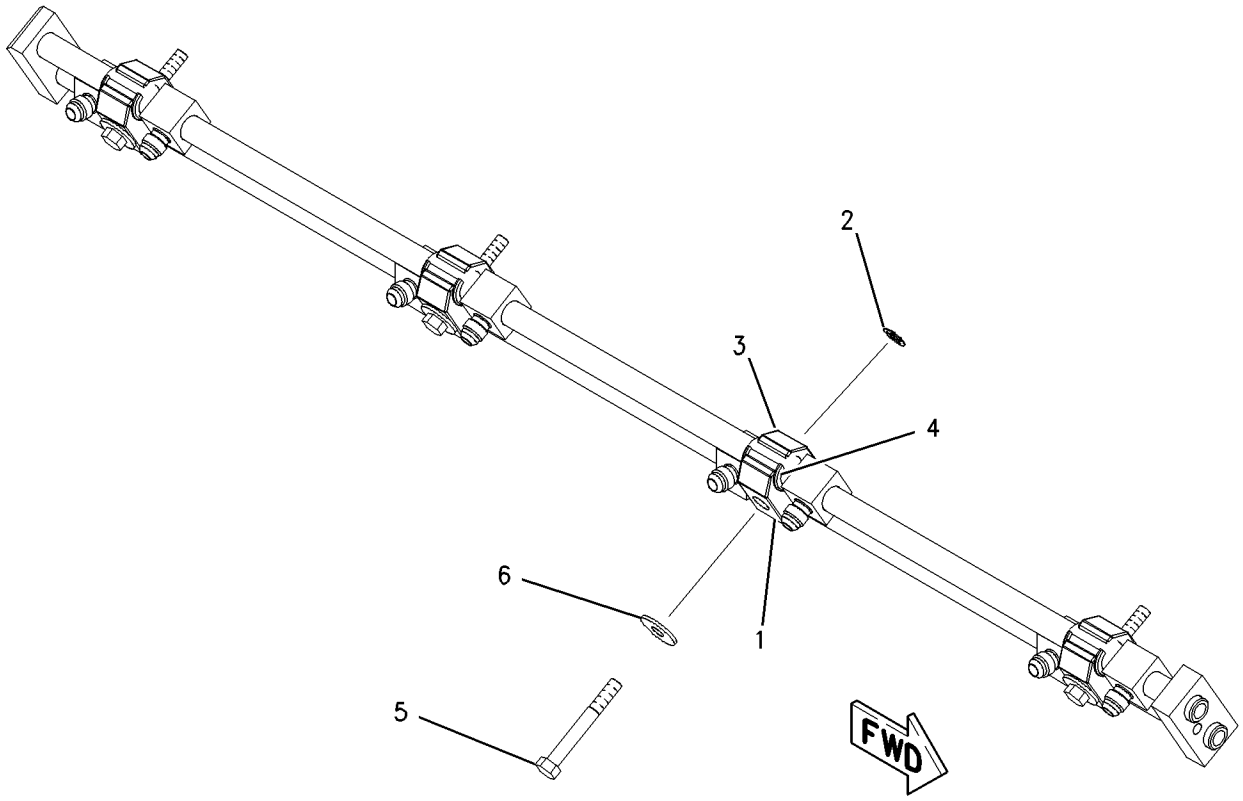

GRAPHIC #1 **<END>** g00901869

156-9756 MANIFOLD GP-FUEL–LH

S/N: 8WM1-UP

PART OF 246-5565 LINES GP-FUEL INJECTION

SMCS-1274 **i02327539**

NOTE	REF NO	GRAPHIC REF	PART NUMBER	QTY	PART NAME 1 2 3 4 5 6 (PRODUCT LEVEL)	SEE PAGE
	1	1	**9Y-0047**	8	CLAMP	
	2	1	**147-3745**	8	WASHER-RETAINING	
	3	1	**156-9748**	8	CLAMP	
	4	1	**100-3237**	16	GROMMET	
	5	1	**1D-4539**	8	BOLT (5/16-18X2.5-IN)	
	6	1	**9N-0869**	8	WASHER-HARD (8.8X25.5X2-MM THK)	

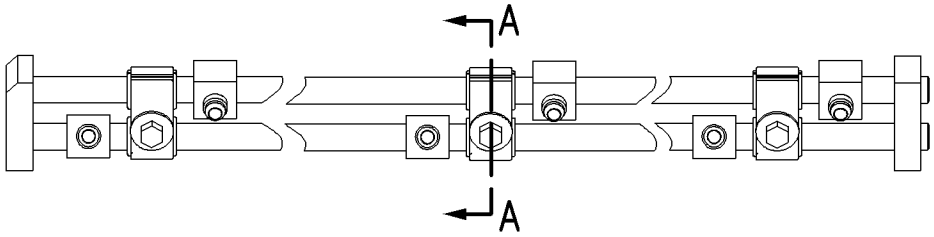

LEFT SIDE VIEW

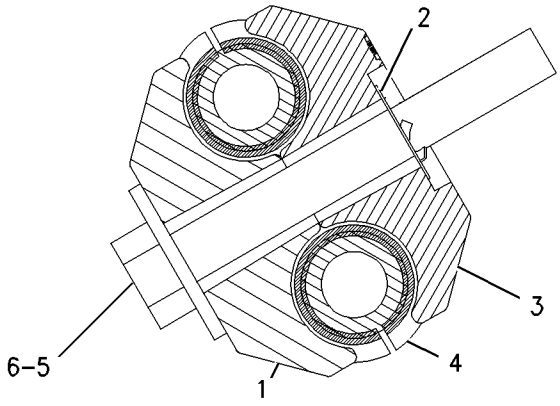

SECTION A-A

GRAPHIC #1 **<END>** g00901870

FUEL SYSTEM

147-0625 PUMP GP-FUEL INJECTION

S/N: 8WM1-UP

PART OF 240-7750 ENGINE AR

SMCS-1251, 1290 **i02193434**

NOTE	REF NO	GRAPHIC REF	PART NUMBER	QTY	PART NAME 1 2 3 4 5 6 (PRODUCT LEVEL)	SEE PAGE
CR	1	1	**250-1313**	1	INJECTOR GP-FUEL	
	1A	1	**245-4908**	1	SEAL-O-RING	
	1B	1	**245-4907**	1	SEAL-O-RING	
	2	1	**234-4182**	1	PLUG	
	3	1	**7E-2580**	1	CLAMP-INJECTOR	
	4	1	**7N-5487**	1	WASHER (12X22X9.5-MM THK)	
	5	1	**7F-8698**	1	BOLT (7/16-14X3.5-IN)	

C-CHANGE FROM PREVIOUS TYPE
R-REMFG PART MAY BE AVAILABLE

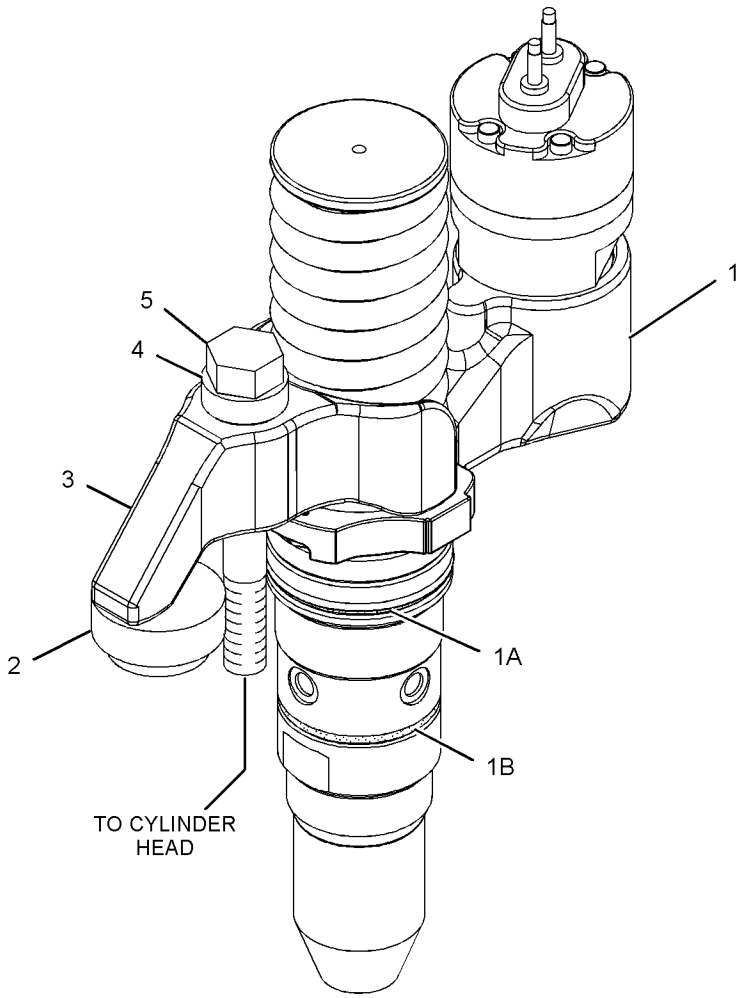

GRAPHIC #1 **<END>** g01108235

222-1906 PUMP GP-FUEL PRIMING

S/N: 8WM1-UP

PART OF 240-7750 ENGINE AR

SMCS-1258 **i02066623**

NOTE	REF NO	GRAPHIC REF	PART NUMBER	QTY	PART NAME 1 2 3 4 5 6 (PRODUCT LEVEL)	SEE PAGE
	1	1	**8T-9655**	6	MOUNT-ISOLATION	
	2	1	**032-3237**	3	SPACER (10.93X19.05X25.4-MM THK)	
	3	1	**191-1782**	1	SPACER (8.5X12.7X38.2-MM THK)	
	4	1	**191-1783**	2	SPACER (8.5X12.7X87.3-MM THK)	
Y	5	1	**217-6927**	1	PUMP GP-FUEL PRM & PRIM FILTER	187
I	6	1	**223-9132**	2	HOSE AS	
	7	1	**224-5495**	1	BRACKET AS	
		1	**4K-9097**	3	NUT-WELD (5/16-18-THD)	
	8	1	**0L-1143**	3	BOLT (3/8-16X2.5-IN)	
	9	1	**1D-4539**	1	BOLT (5/16-18X2.5-IN)	
	10	1	**2M-9780**	4	SEAL-O-RING	
	11	1	**3H-5932**	2	BOLT (5/16-18X4.5-IN)	
	12	1	**3J-1907**	1	SEAL-O-RING	
	13	1	**5M-2894**	3	WASHER-HARD (10.2X18.5X2.5-MM THK)	
	14	1	**5P-4318**	1	ELBOW	
	15	1	**6K-3607**	1	CONNECTOR	
	16	1	**8M-0506**	1	CONNECTOR	
	17	1	**8S-0948**	1	CLIP	
	18	1	**9N-0869**	6	WASHER-HARD (8.8X25.5X2-MM THK)	
	19	1	**9S-4190**	2	PLUG	
B	20	1	**4P-7048**	1	BRACKET	
B	21	1	**0L-1351**	1	BOLT (3/8-16X0.875-IN)	
B	22	1	**5M-2894**	2	WASHER-HARD (10.2X18.5X2.5-MM THK)	
B	23	1	**8S-0948**	1	CLIP	
B	24	1	**9S-8752**	1	NUT-FULL (3/8-16-THD)	

B-USE AS REQUIRED
I-REFER TO HYDRAULIC INFORMATION SYSTEM
Y-SEPARATE ILLUSTRATION

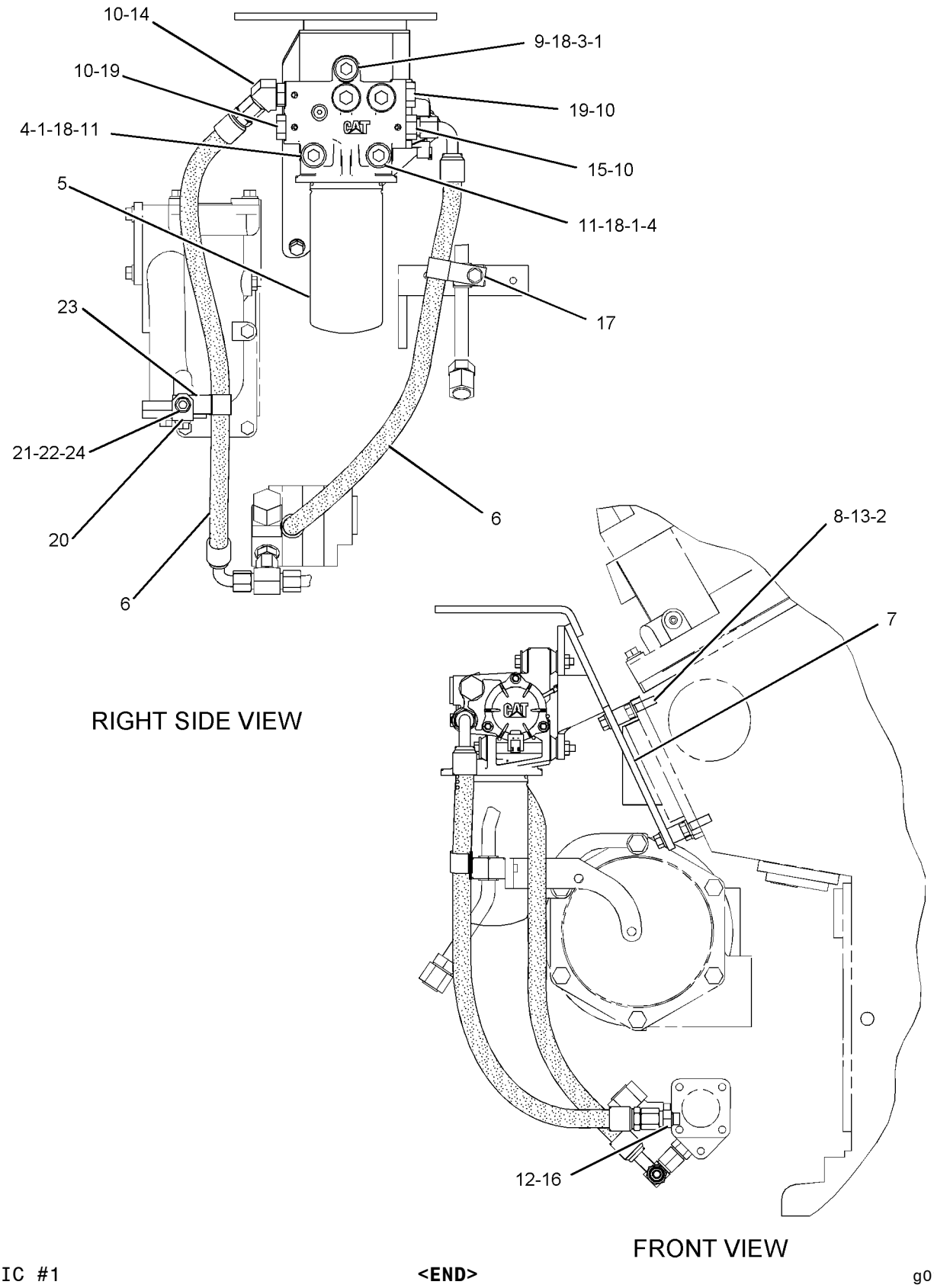

GRAPHIC #1 **<END>** g01062238

217-6927 PUMP GP-FUEL PRM & PRIM FILTER

S/N: 8WM1-UP

PART OF 222-1906 PUMP GP-FUEL PRIMING

SMCS-1258, 1260 **i02180644**

NOTE	REF NO	GRAPHIC REF	PART NUMBER	QTY	PART NAME 1 2 3 4 5 6 (PRODUCT LEVEL)	SEE PAGE
	1	1	**1R-0750**	1	FILTER AS-FUEL	
	2	1	**217-7455**	1	BASE GP-FUEL FILTER	

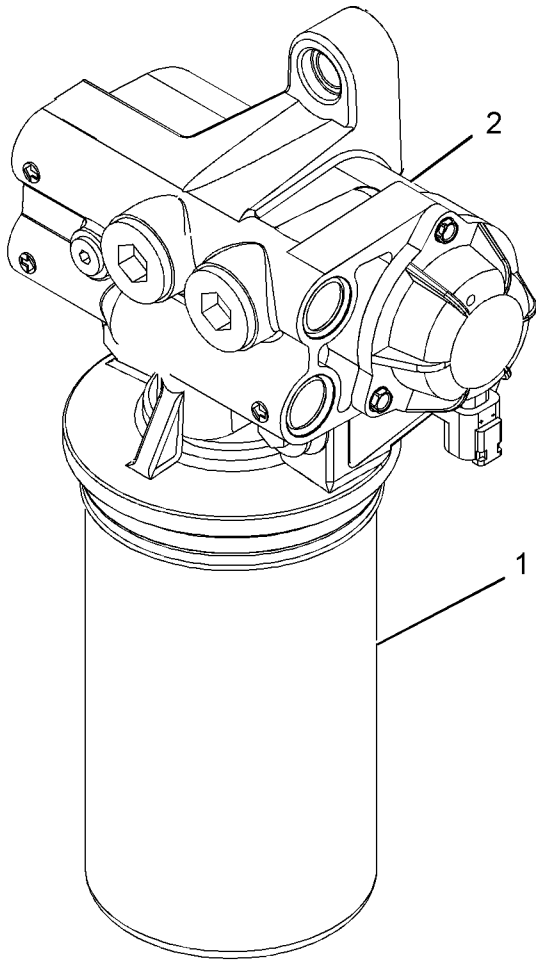

GRAPHIC #1 **<END>** g01103106

8N-6151 PUMP GP-FUEL TRANSFER

S/N: 8WM1-UP
ONE SECTION GEAR
PART OF 240-7750 ENGINE AR

SMCS-1256 **i02373432**

NOTE	REF NO	GRAPHIC REF	PART NUMBER	QTY	PART NAME 1 2 3 4 5 6 (PRODUCT LEVEL)	SEE PAGE
	1	1	**1N-4636**	1	COUPLING-DRIVE	
Y	2	1	**268-1900**	1	PUMP GP-FUEL TRANSFER	189
	3	1	**1H-9696**	1	SEAL-O-RING	
	4	1	**5L-1761**	4	BOLT (5/16-18X5.5-IN)	

Y-SEPARATE ILLUSTRATION

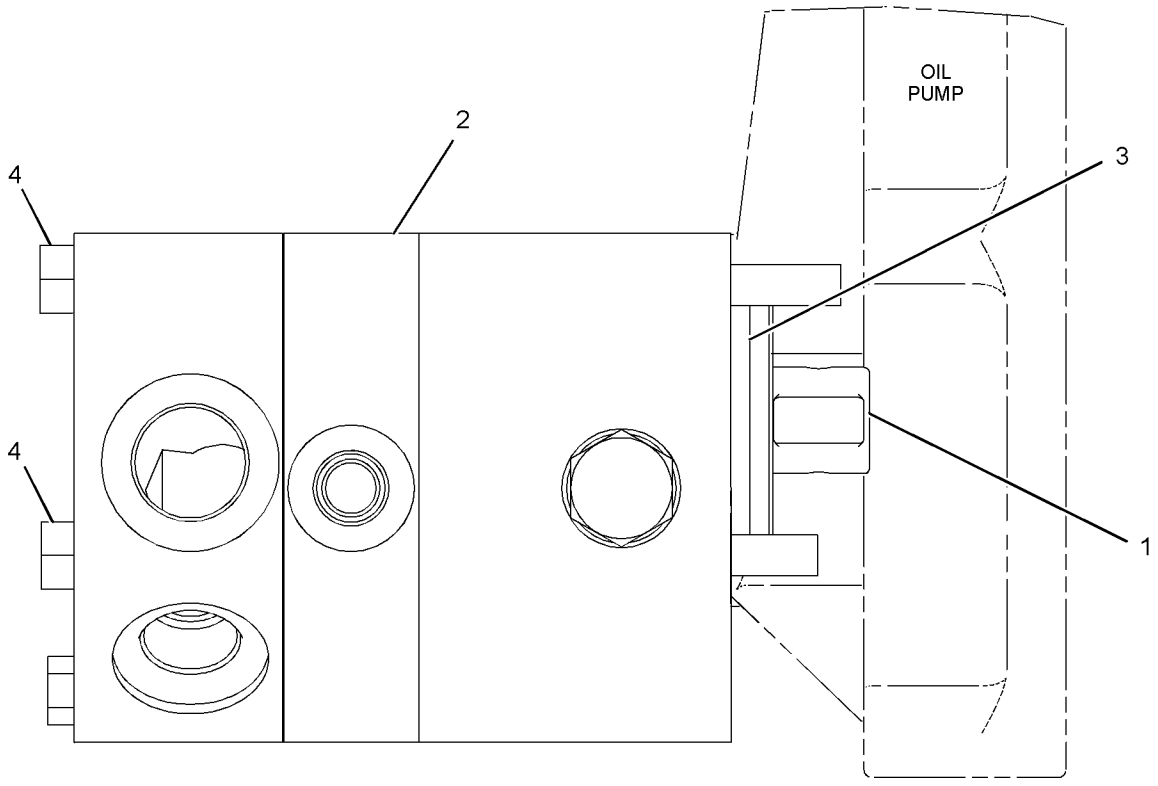

GRAPHIC #1 **<END>** g01184091

268-1900 PUMP GP-FUEL TRANSFER

S/N: 8WM1-UP

PART OF 8N-6151 PUMP GP-FUEL TRANSFER

SMCS-1256 **i02378521**

NOTE	REF NO	GRAPHIC REF	PART NUMBER	QTY	PART NAME 1 2 3 4 5 6 (PRODUCT LEVEL)	SEE PAGE
					AVAILABLE REPAIR KIT(S):	
			255-8691		KIT-SEAL (FUEL TRANSFER PUMP)	
					(INCLUDES GASKETS AND SEALS)	
			255-8692		KIT-REPAIR (GEAR, SHAFT) (FUEL TRANSFER PUMP)	
					(INCLUDES IDLER GEAR, BUSHINGS AND DRIVE SHAFT)	
			256-8766		KIT-REPAIR (BYPASS VALVE) (FUEL TRANSFER PUMP)	
					(INCLUDES VALVE POPPET, VALVE SPRING, RELIEF VALVE CAP AND WASHER)	

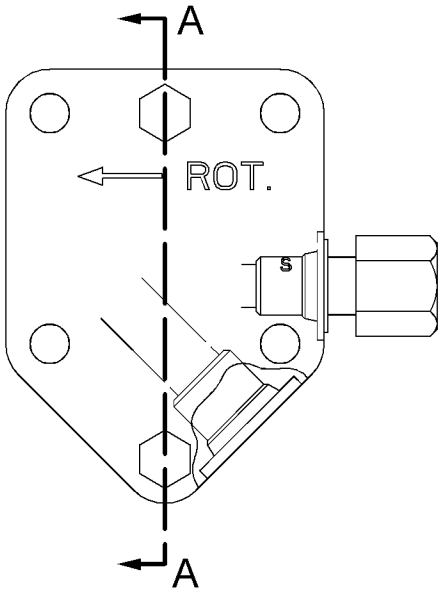

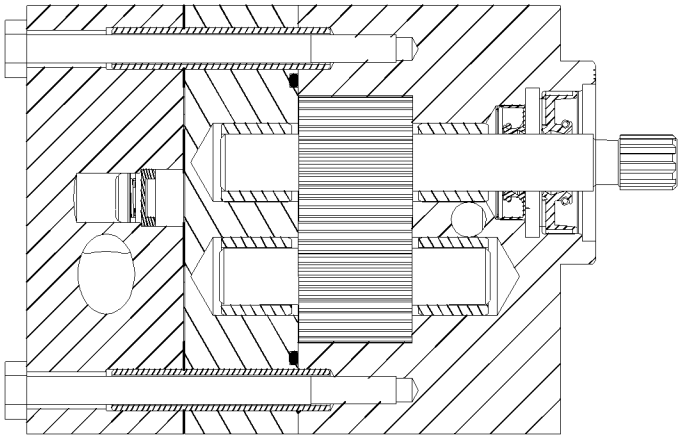

VIEW A-A

GRAPHIC #1 **<END>** g01120440

235-2976 TANK GP-FUEL–RH

S/N: 4421-UP
PART OF 246-6220, 248-0986 BUMPER & DRAWBAR AR
AN ATTACHMENT

SMCS-1273 **i02153510**

NOTE	REF NO	GRAPHIC REF	PART NUMBER	QTY	PART NAME 1 2 3 4 5 6 (PRODUCT LEVEL)	SEE PAGE
	1	1	**1H-8306**	1	SCREW-PURGE (1/2-20X1.625-IN)	
J	2	1	**7X-7700**	1	CAP AS-FILLER (FUEL TANK)	
		1	**9X-8600**	1	SEAL-O-RING	
	3	1	**9P-7121**	1	STRAINER-FUEL	
	4	1	**235-2980**	1	TANK AS-FUEL (RH)	
	5	1	**3B-0551**	1	PLUG-PIPE	
					AVAILABLE REPAIR KIT(S):	
J			**9X-2205**	1	KIT-CAP FILTER (FUEL TANK)	
					(INCLUDES 2 SCREWS, 4 GASKETS, FILTER ASSEMBLY, AND VALVE)	

J-KIT MARKED J SERVICES PART MARKED J

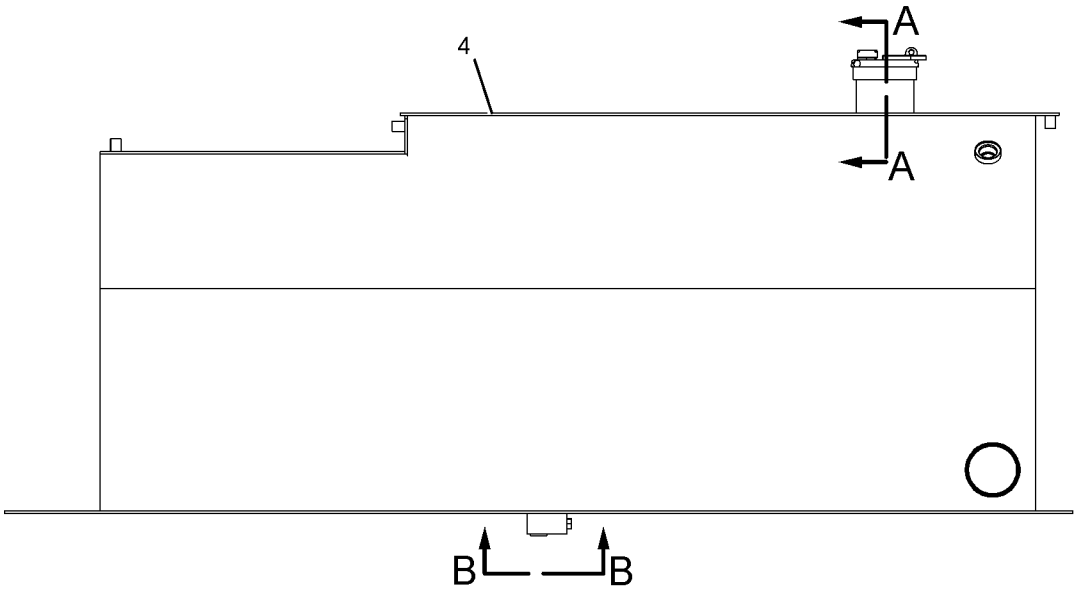

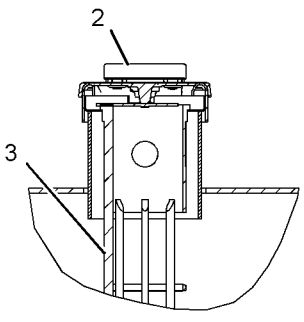

SECTION A-A

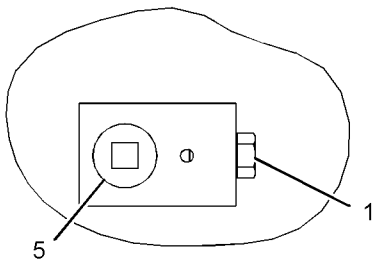

VIEW B-B

GRAPHIC #1 **<END>** g01095239

235-2977 TANK GP-FUEL–LH

S/N: 4421-UP
PART OF 246-6220, 248-0986 BUMPER & DRAWBAR AR
AN ATTACHMENT

SMCS-1273 **i02225880**

NOTE	REF NO	GRAPHIC REF	PART NUMBER	QTY	PART NAME 1 2 3 4 5 6 (PRODUCT LEVEL)	SEE PAGE
	1	1	**1H-8306**	1	SCREW-PURGE (1/2-20X1.625-IN)	
J	2	1	**7X-7700**	1	CAP AS-FILLER (FUEL TANK)	
		1	**9X-8600**	1	SEAL-O-RING	
	3	1	**9D-0630**	1	CAP-DUST	
	4	1	**9P-7121**	1	STRAINER-FUEL	
	5	1	**188-5095**	1	VENT AS	
	6	1	**221-7693**	1	VALVE (FAST FILL FUEL)	
	7	1	**232-1767**	1	RECEIVER AS (FAST FILL FUEL)	
	8	1	**235-2981**	1	TANK AS-FUEL (LH)	
	9	1	**246-3261**	1	HOSE AS	
	10	1	**1H-8128**	1	SEAL-O-RING	
	11	1	**1J-9671**	2	SEAL-O-RING	
	12	1	**1P-4582**	2	FLANGE-HALF	
	13	1	**3B-0551**	1	PLUG-PIPE	
	14	1	**4J-0527**	1	SEAL-O-RING	
	15	1	**5H-6734**	1	SEAL-O-RING	
	16	1	**5P-2618**	2	CONNECTOR	
	17	1	**8M-2772**	1	CLIP	
	18	1	**8T-4121**	12	WASHER-HARD (11X21X2.5-MM THK)	
M	19	1	**8T-4136**	6	BOLT (M10X1.5X25-MM)	
M	20	1	**8T-4184**	4	BOLT (M12X1.75X45-MM)	
	21	1	**8T-4223**	4	WASHER-HARD (13.5X25.5X3-MM THK)	
M	22	1	**101-7404**	6	BOLT-SOCKET HEAD (M10X1.5X30-MM)	
					AVAILABLE REPAIR KIT(S):	
J			**9X-2205**	1	KIT-CAP FILTER (FUEL TANK)	
					(INCLUDES FILTER AS, 2 SCREWS, 4 GASKETS, AND VALVE)	

J-KIT MARKED J SERVICES PARTS MARKED J
M-METRIC PART

235-2977 TANK GP-FUEL *(contd.)* **i02225880**

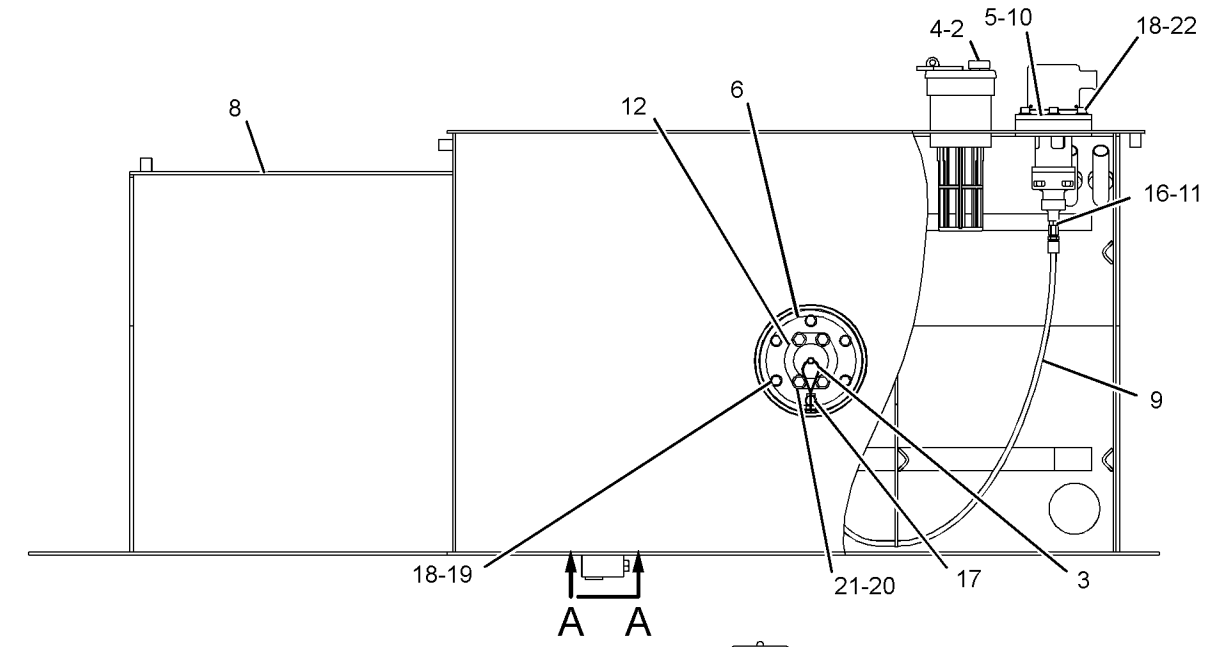

LEFT SIDE VIEW

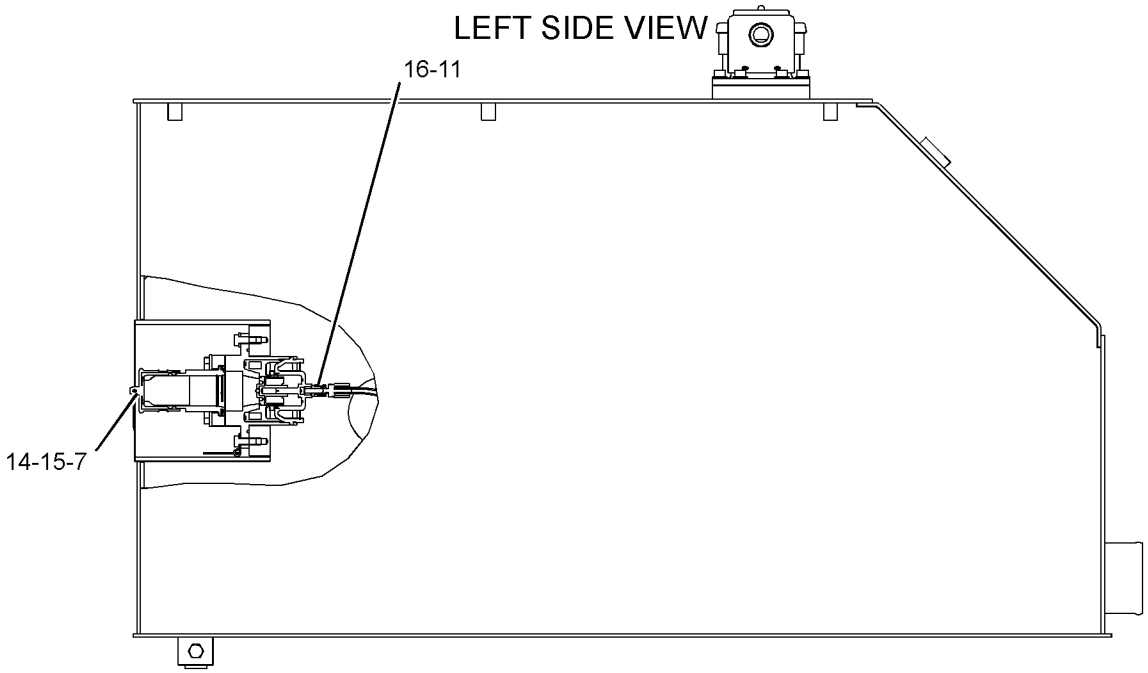

REAR VIEW

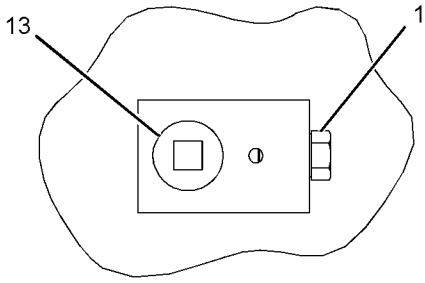

VIEW A-A

GRAPHIC #1 **<END>** g01153477

FUEL SYSTEM

235-2978 TANK GP-FUEL–CENTER

S/N: 4421-UP
PART OF 246-6220, 248-0986 BUMPER & DRAWBAR AR
AN ATTACHMENT

SMCS-1273 **i02153514**

NOTE	REF NO	GRAPHIC REF	PART NUMBER	QTY	PART NAME 1 2 3 4 5 6 (PRODUCT LEVEL)	SEE PAGE
	1	1	**1H-8306**	1	SCREW-PURGE (1/2-20X1.625-IN)	
	2	1	**235-2983**	1	TANK AS-FUEL (CENTER)	
	3	1	**3B-0551**	1	PLUG-PIPE	

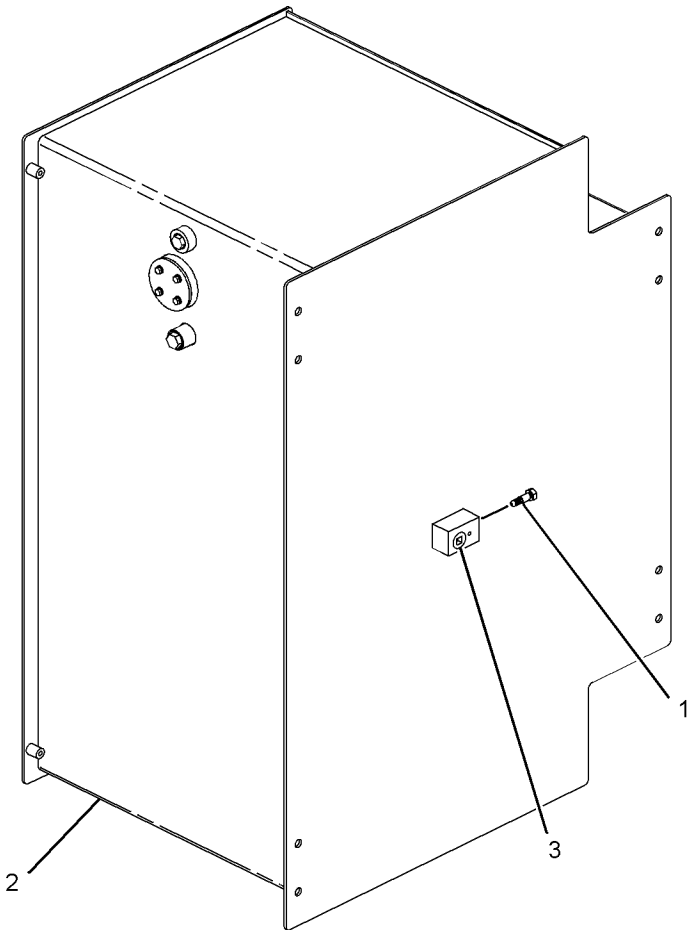

GRAPHIC #1 **<END>** g01095229

3E-6328 ALARM GP–ACTION

S/N: 4421-UP
24-VOLT
PART OF 245-1428 WIRING GP-CAB

SMCS-7400, 7402, 7407 **i02160203**

NOTE	REF NO	GRAPHIC REF	PART NUMBER	QTY	PART NAME 1 2 3 4 5 6 (PRODUCT LEVEL)	SEE PAGE
	1	1	**102-8802**	1	KIT-RECEPTACLE (2-PIN)	
					(INCLUDES RECEPTACLE AS & WEDGE)	
	2	1	**186-3735**	2	PIN-CONNECTOR	
	3	1	**3E-3365**	1	WEDGE-RECEPTACLE LOCK (2-PIN)	

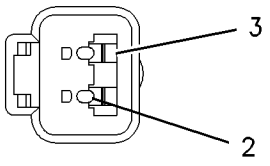

VIEW A–A

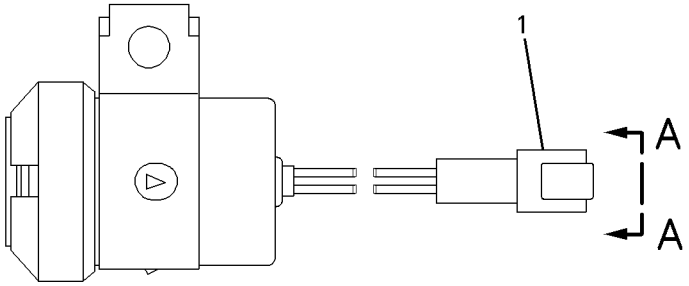

GRAPHIC #1 **<END>** g00826023

177-9953 ALTERNATOR GP-CHARGING*R

S/N: 8WM1-UP
24-VOLT, 80-AMPERE
PART OF 240-7750 ENGINE AR

SMCS-1405 **i02298927**

NOTE	REF NO	GRAPHIC REF	PART NUMBER	QTY	PART NAME 1 2 3 4 5 6 (PRODUCT LEVEL)	SEE PAGE
	1	1	**185-2653**	1	FRAME	
	2	1	**5S-7349**	1	BOLT (1/4-20X0.5-IN)	
	3	1	**185-2639**	1	FAN AS	
	4	1	**1H-3244**	1	LOCKWASHER	
	5	1	**185-2645**	1	FRAME	
	6	1	**2K-4821**	1	LOCKNUT (5/8-18-THD)	
	7	1	**5P-8247**	1	WASHER-HARD (17X32X3.5-MM THK)	
	8	1	**185-2651**	1	COVER	
	9	1	**8T-4205**	1	WASHER-HARD (7.2X14.5X2-MM THK)	
	10	1	**185-2647**	1	GROMMET	
	11	1	**9L-6770**	1	CAP	
	12	1	**185-2643**	1	STATOR AS	
	13	1	**185-2638**	2	COLLAR	
	14	1	**185-2654**	1	PLATE	
	15	1	**185-2650**	1	ROTOR AS	
	16	1	**185-2644**	1	COIL AS	
	17	1	**185-2648**	1	REGULATOR AS-VOLTAGE (24-VOLT) (ALTERNATOR)	
J	18	1	**6V-8189**	1	NUT (5/16-18-THD)	
J	19	1	**8T-4224**	1	WASHER-HARD (8.8X16X2-MM THK)	
J	20	1	**3F-9556**	1	LOCKWASHER	
					AVAILABLE REPAIR KIT(S):	
J			**199-7891**		KIT-TERMINAL (ALTERNATOR)	
					(INCLUDES INSULATORS, WASHERS, NUT, AND STEP NUT)	
			185-2655		KIT-BEARING (ALTERNATOR)	
					(INCLUDES 3 BEARINGS)	
			199-8436		KIT-TERMINAL (ALTERNATOR)	
					(INCLUDES HOLDER AS, PLATE, INSULATOR, PIN, BOLT, GROMMET, AND NUT)	
			185-2658		KIT-HARDWARE (ALTERNATOR)	
					(INCLUDES BOLTS)	

J-KIT MARKED J SERVICES PARTS MARKED J

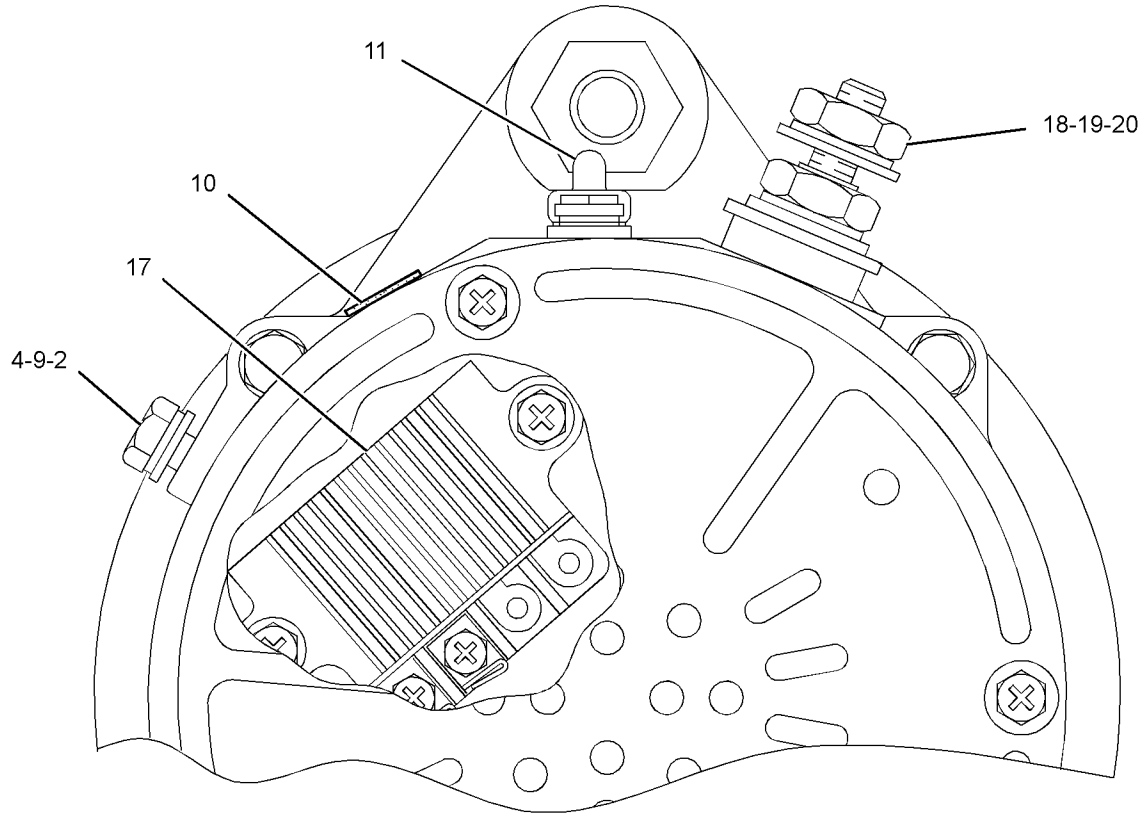

VIEW A-A

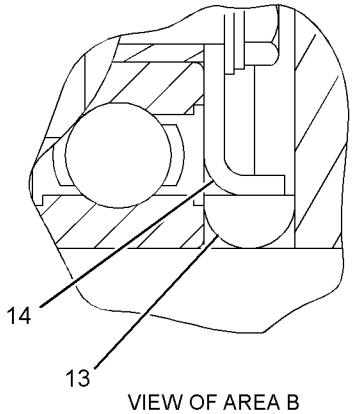

VIEW OF AREA B

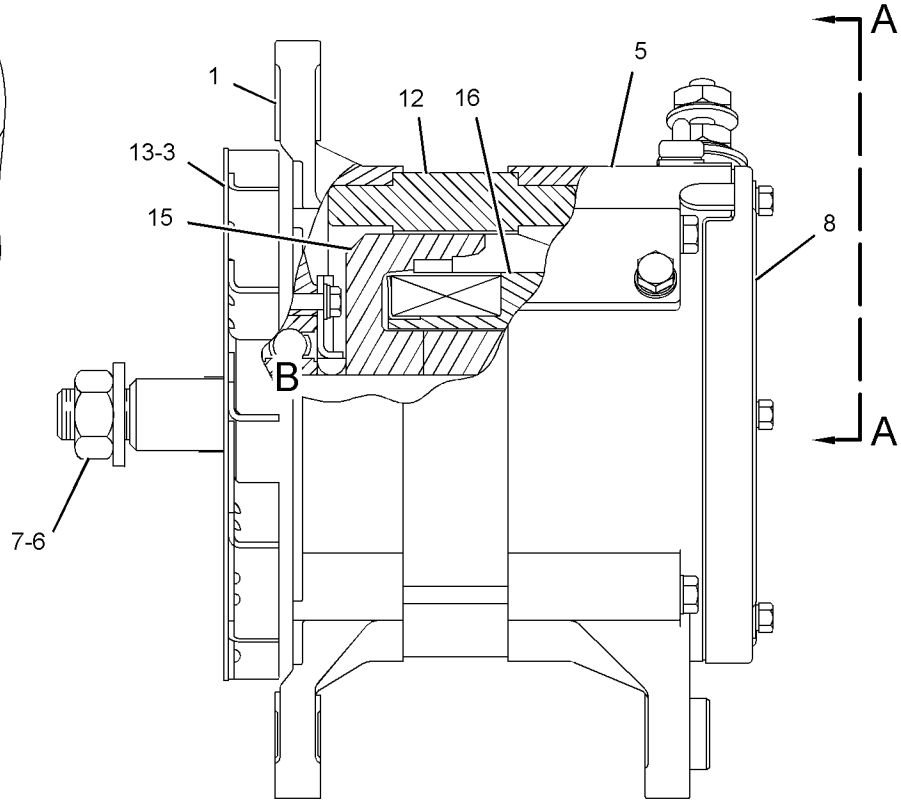

GRAPHIC #1

<END>

g01151601

ELECTRICAL AND STARTING SYSTEM

244-3646 BATTERY & WIRING GP

S/N: 4421-UP

PART OF 245-7454 PLATFORM AR

SMCS-1401, 1402, 1408 **i02397882**

NOTE	REF NO	GRAPHIC REF	PART NUMBER	QTY	PART NAME 1 2 3 4 5 6 (PRODUCT LEVEL)	SEE PAGE
Y	1	1	**7N-0718**	1	SWITCH GP-DISCONNECT (BATTERY)	300
	2	1	**8W-4479**	1	HOLD-DOWN AS	
	3	1	**8X-7847**	4	ROD	
	4	1	**9G-2758**	1	LOCKOUT AS-SWITCH	
Y	5	1	*9W-0742*	2	BLOCK GP-JUNCTION	202
	6	1	**118-1277**	1	CABLE AS	
E		1	**5P-0761**		CABLE (00-GA, RED) (20-CM)	
		1	**9G-0003**	1	COVER-TERMINAL (BLACK)	
		1	**9G-0004**	1	COVER-TERMINAL (RED)	
	7	1	**124-3019**	1	BRACKET AS	
M		1	**8T-3490**	1	NUT-WELD (M10X1.5-THD)	
	8	1	**142-1657**	1	BRACKET AS	
M		1	**8T-3490**	1	NUT-WELD (M10X1.5-THD)	
	9	1	**147-3150**	1	ANGLE AS	
M		1	**8T-3490**	1	NUT-WELD (M10X1.5-THD)	
	10	1	**247-0179**	1	CABLE AS	
		1	**3L-7634**	1	TERMINAL-RING (0000-GA, 0.5-IN)	
		1	**5A-4252**	1	CAP	
E		1	**5P-0745**		CABLE (0000-GA) (49-CM)	
		1	**9X-5583**	1	COVER-TERMINAL	
		1	**9X-6760**	1	TERMINAL AS (NEGATIVE)	
	11	1	**247-0183**	1	CABLE AS	
		1	**3L-7634**	1	TERMINAL-RING (0000-GA, 0.5-IN)	
		1	**8N-0869**	1	COVER-TERMINAL (RED)	
		1	**9X-4504**	1	TERMINAL AS-BATTERY (POSITIVE)	
		1	**9X-5632**	1	COVER-TERMINAL (RED, RH POS)	
E		1	**9X-6278**		CABLE (0000-GA) (53-CM)	
	12	1	**264-3872**	1	CABLE AS	
		1	**3L-7634**	1	TERMINAL-RING (0000-GA, 0.5-IN)	
		1	**6T-0465**	1	COVER-TERMINAL (BLACK)	
		1	**9X-5699**	1	BOOT	
E		1	**159-8054**		CABLE-ELECTRICAL (00-GA, BLACK) (168-CM)	
	13	1	**264-3874**	1	CABLE AS	
E		1	**159-8054**		CABLE-ELECTRICAL (00-GA, BLACK) (109-CM)	
	14	1	**264-6945**	1	CABLE AS	
		1	**1S-7251**	2	TERMINAL-RING (FOR 1/2-IN BOLT)	
E		1	**8N-0869**	2	COVER-TERMINAL (RED)	
E		1	**159-8049**		CABLE (00-GA, RED) (118-CM)	
	15	1	**125-4124**	4	CLAMP	
	16	1	**1M-4543**	3	GROMMET	
	17	1	**1S-0994**	3	CLIP	
	18	1	**1S-1015**	1	CLIP	
	19	1	**4S-1962**	4	CLIP	
	20	1	**5P-1076**	4	WASHER-HARD (13.5X30X4-MM THK)	
	21	1	**5P-8939**	4	GROMMET	
M	22	1	**6V-7687**	4	LOCKNUT (M12X1.75-THD)	
	23	1	**8S-0948**	1	CLIP	
	24	1	**8T-4121**	15	WASHER-HARD (11X21X2.5-MM THK)	
M	25	1	**8T-4136**	14	BOLT (M10X1.5X25-MM)	
M	26	1	**8T-4137**	1	BOLT (M10X1.5X20-MM)	
	27	1	**8T-4223**	4	WASHER-HARD (13.5X25.5X3-MM THK)	
M	28	1	**8T-4244**	4	NUT (M12X1.75-THD)	

E-ORDER BY THE CENTIMETER
M-METRIC PART
Y-SEPARATE ILLUSTRATION

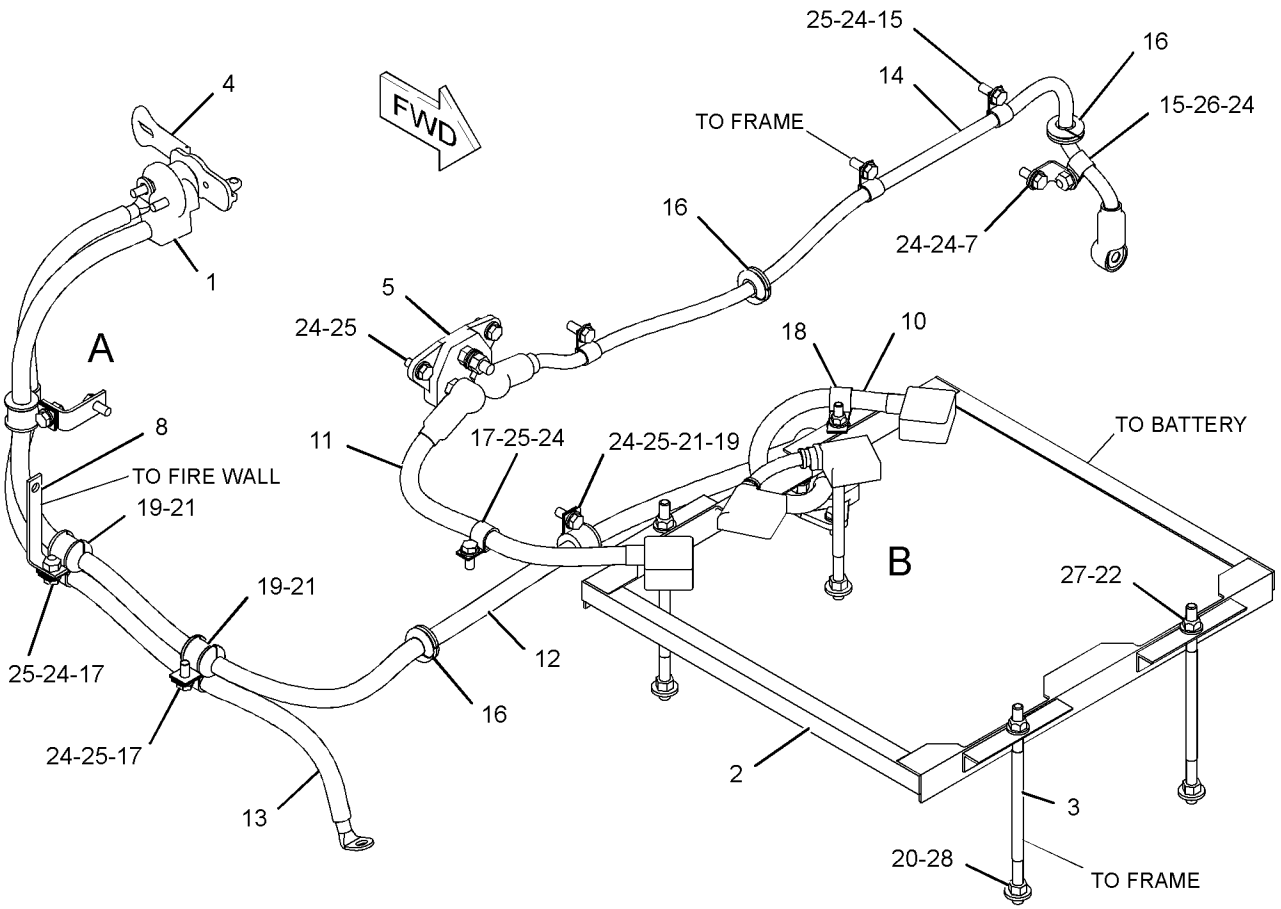

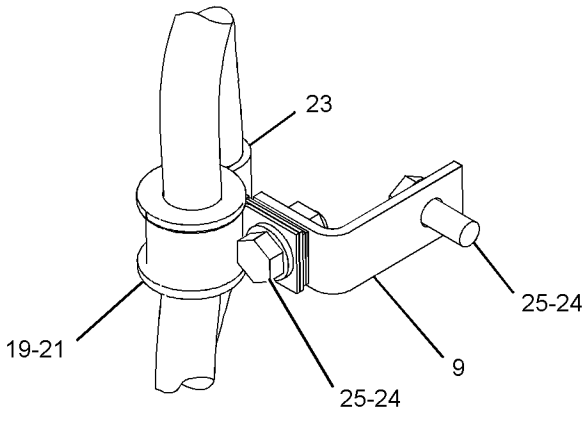

VIEW OF AREA A

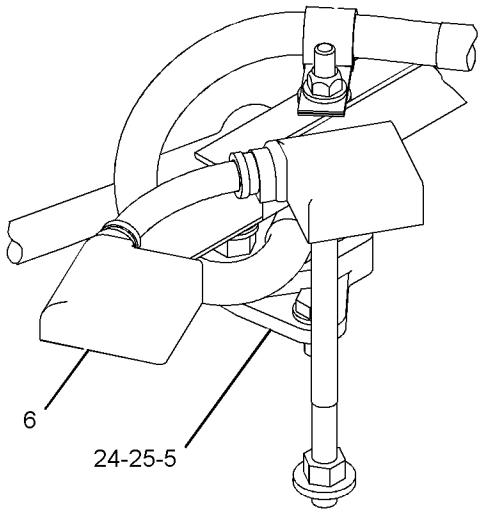

VIEW OF AREA B

GRAPHIC #1 **<END>** g01201444

108-8165 BATTERY GP

S/N: 4421-UP
DRY
PART OF 245-7454 PLATFORM AR
FOR USE WITH AIR STARTING AR

SMCS-1401 **i01292706**

NOTE	REF NO	GRAPHIC REF	PART NUMBER	QTY	PART NAME 1 2 3 4 5 6 (PRODUCT LEVEL)	SEE PAGE
	1	1	**101-4000**	2	BATTERY	

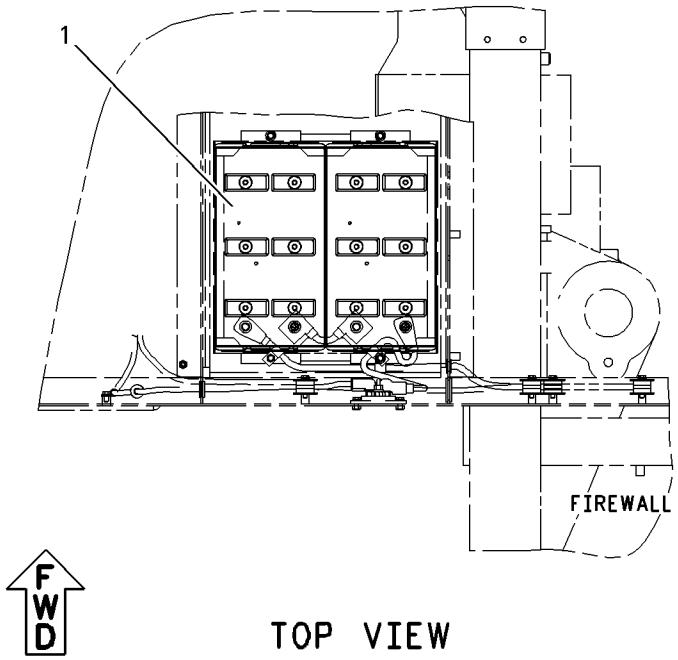

TOP VIEW

GRAPHIC #1 **<END>** g00684898

108-8169 BATTERY GP

S/N: 4421-UP
DRY
PART OF 245-3885 PLATFORM AR
FOR USE WITH ELECTRIC STARTING AR
AN ATTACHMENT

SMCS-1401 **i01943625**

NOTE	REF NO	GRAPHIC REF	PART NUMBER	QTY	PART NAME 1 2 3 4 5 6 (PRODUCT LEVEL)	SEE PAGE
	1	1	**101-4000**	4	BATTERY (12 VOLT)	

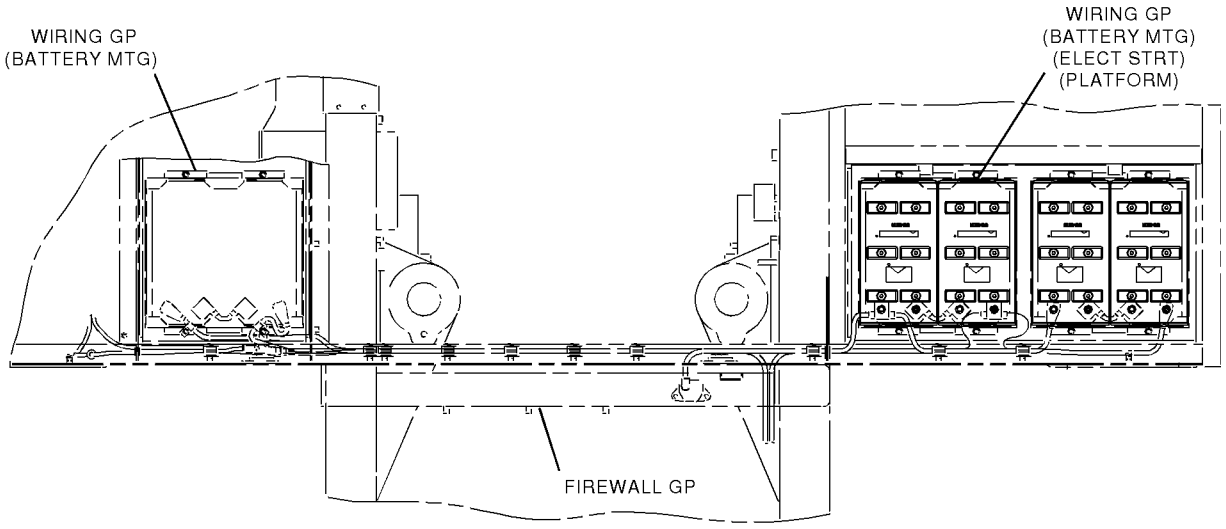

TOP VIEW

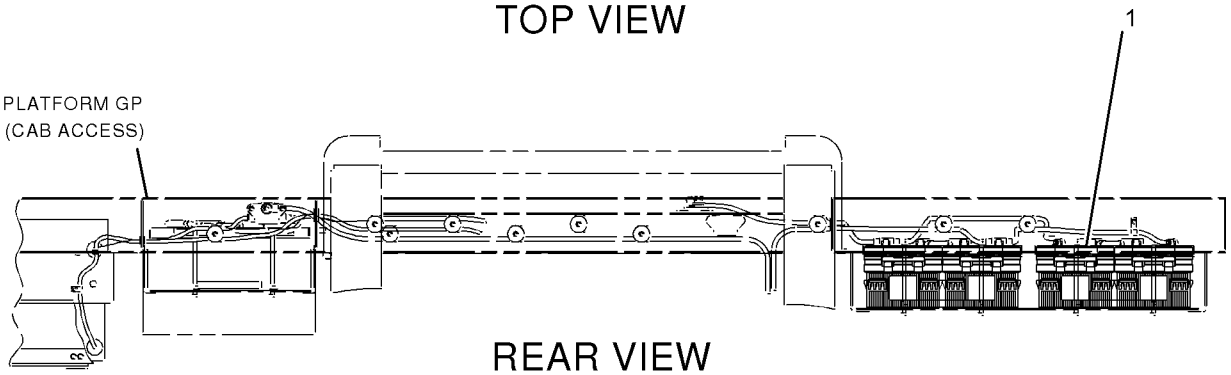

REAR VIEW

GRAPHIC #1

<END>

g01023703

167-8984 BATTERY GP

S/N: 4421-UP
24 VOLT. CAES ULTRA
PART OF 244-6889 INSTALLATION GP-GRADE CONTROL, 263-7748 WIRING GP-MACHINE
AN ATTACHMENT

SMCS-1401 **i02279216**

NOTE	REF NO	GRAPHIC REF	PART NUMBER	QTY	PART NAME 1 2 3 4 5 6 (PRODUCT LEVEL)	SEE PAGE
	1	1	**102-8803**	1	KIT-RECEPTACLE (3-PIN)	
					(KIT INCLUDES RECEPTACLE AS AND WEDGE)	
	2	1	**155-2260**	1	KIT-CONNECTING PLUG (3-PIN)	
					(KIT INCLUDES RECEPTACLE AS AND WEDGE)	
	3	1	**7X-6085**	1	GROMMET AS-SEAL	
		1	**5S-7348**	1	SCREW-MACHINE (6-32X0.375-IN)	

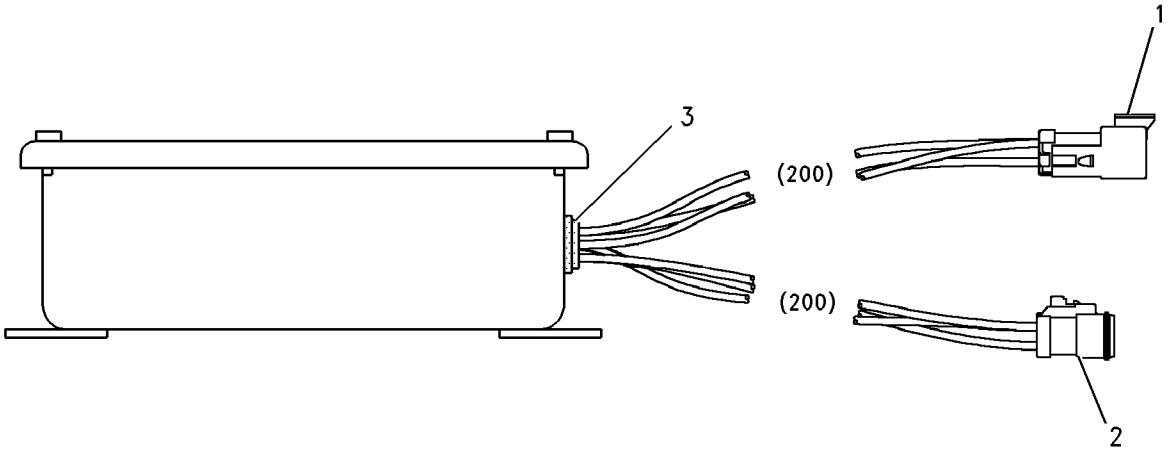

GRAPHIC #1 **<END>** g00989583

9W-0742 BLOCK GP-JUNCTION–BATTERY

S/N: 4421-UP

PART OF 244-3646 BATTERY & WIRING GP, 250-7668 WIRING GP-ELECTRIC START

ALSO AN ATTACHMENT

SMCS-1408, 7426 **i02388218**

NOTE	REF NO	GRAPHIC REF	PART NUMBER	QTY	PART NAME 1 2 3 4 5 6 (PRODUCT LEVEL)	SEE PAGE
	1	1	**8C-6358**	1	BLOCK GP-JUNCTION	
	1A	1	**8T-3519**	3	BOLT-BRONZE (1/2-13X2-IN)	
BD	2	1	**6V-2722**		TUBE-HEAT SHRINK	
	3	1	**7F-0560**	6	WASHER (0.516X0.938X0.101-IN THK)	
	4	1	**8T-3518**	6	NUT-FULL (1/2-13-THD)	

B-USE AS REQUIRED
D-ORDER BY THE METER

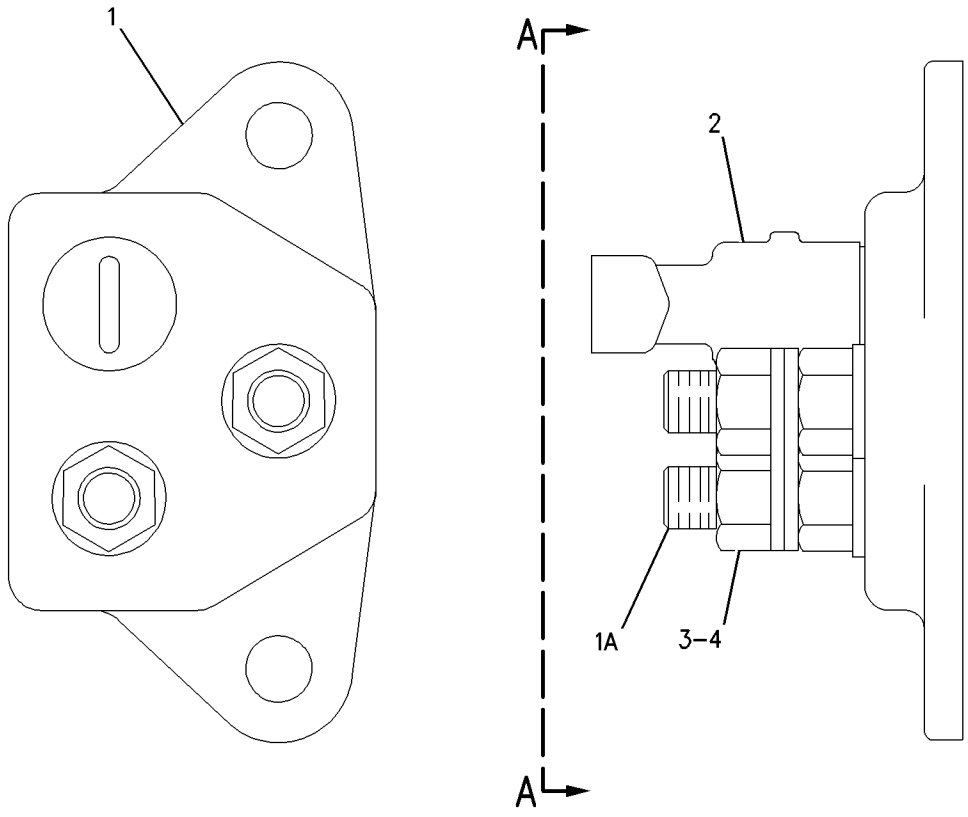

VIEW A–A

GRAPHIC #1 **<END>** g00650721

126-0182 BUFFER GP-SENSOR–FUEL LEVEL

S/N: 4421-UP

PART OF 247-0180 WIRING GP-MACHINE

SMCS-1408 **i02144777**

NOTE	REF NO	GRAPHIC REF	PART NUMBER	QTY	PART NAME 1 2 3 4 5 6 (PRODUCT LEVEL)	SEE PAGE
	1	1	**8T-8730**	2	SOCKET-CONNECTOR	
BE	2	1	**9X-1813**		SLEEVE	
	3	1	**102-8803**	1	KIT-RECEPTACLE (3-PIN)	
					(INCLUDES RECEPTACLE AS & WEDGE)	
	4	1	**3E-3371**	1	WEDGE-RECEPTACLE LOCK (3-PIN)	
	5	1	**8T-8729**	3	PIN-CONNECTOR	
	6	1	**155-2270**	1	KIT-CONNECTING PLUG (2-PIN)	
					(INCLUDES PLUG AS & WEDGE)	
	7	1	**3E-3362**	1	WEDGE-PLUG LOCK (2-PIN)	

B-USE AS REQUIRED
E-ORDER BY THE CENTIMETER

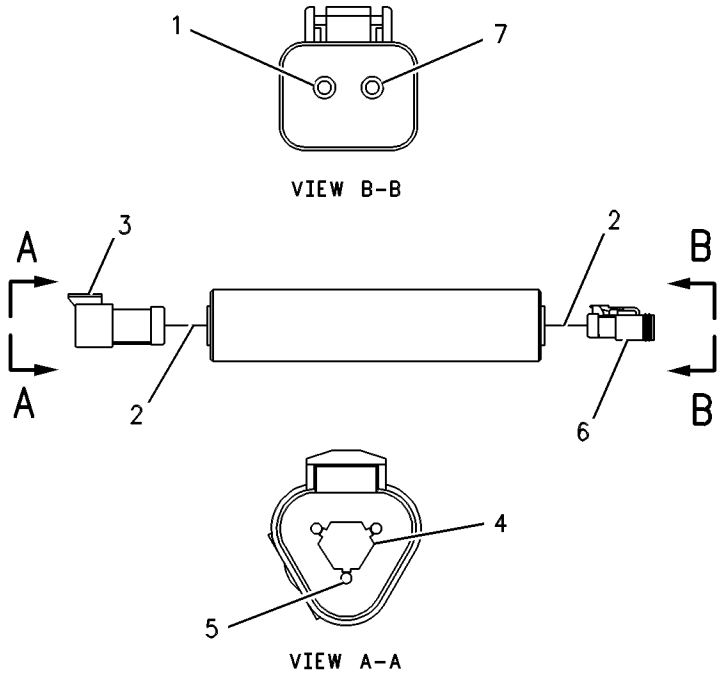

GRAPHIC #1 **<END>** g00255089

ELECTRICAL AND STARTING SYSTEM

252-1762 CAMERA AR

S/N: 4421-UP

AN ATTACHMENT

SMCS-7348 **i02154837**

NOTE	PART NUMBER	QTY	PART NAME 1 2 3 4 5 6 (PRODUCT LEVEL)	SEE PAGE
Y	*251-7435*	1	WIRING GP-CAMERA	318
J	**252-9529**	1	MOUNTING GP-CAMERA	

J-PART NOT RELEASED
Y-SEPARATE ILLUSTRATION

<END>

252-7133 CONTROL & MTG GP-COMMUNICATION–
PRODUCT LINK
S/N: 4421-UP
AN ATTACHMENT

SMCS-7606 **i02195181**

NOTE	REF NO	GRAPHIC REF	PART NUMBER	QTY	PART NAME 1 2 3 4 5 6 (PRODUCT LEVEL)	SEE PAGE
	1	1	**8C-5607**	8	MOUNT-ISOLATION	
	2	1	**8C-5608**	4	SPACER (6.5X9.5X25.4-MM THK)	
	3	1	**239-9954**	1	CONTROL GP-UNPROGRAMMED	
	4	1	**242-9230**	1	RADIO GP-COMMUNICATION (PRODUCT LINK)	
	5	1	**252-7845**	1	PLATE AS	
M		1	**6V-9632**	4	NUT-WELD (M6X1-THD)	
	6	1	**252-7888**	1	PLATE AS	
		1	**4E-8266**	4	BOSS (M6X1-6HX19-MM)	
M	7	1	**6V-8490**	4	BOLT (M6X1X25-MM)	
M	8	1	**8C-8451**	4	BOLT (M6X1X40-MM)	
	9	1	**8T-4121**	8	WASHER-HARD (11X21X2.5-MM THK)	
M	10	1	**8T-4137**	8	BOLT (M10X1.5X20-MM)	
	11	1	**8T-4205**	4	WASHER-HARD (7.2X14.5X2-MM THK)	
	12	1	**9X-6165**	4	WASHER (6.5X22X2.5-MM THK)	

M-METRIC PART

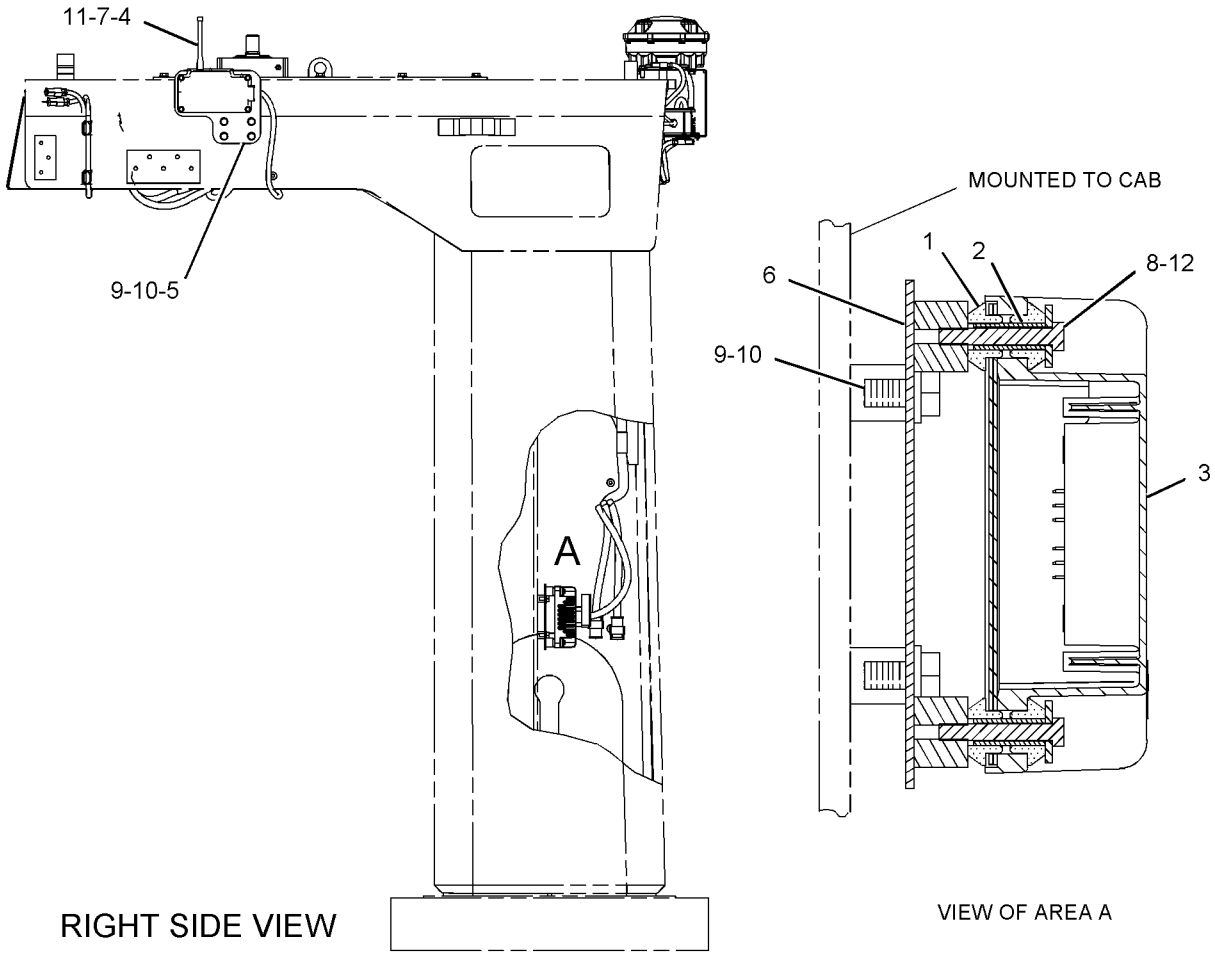

GRAPHIC #1

<END>

g01096519

230-1077 CONTROL & MTG GP-ENGINE ELEK

S/N: 8WM1-UP

PART OF 240-7750 ENGINE AR

SMCS-1901, 7620 **i02150157**

NOTE	REF NO	GRAPHIC REF	PART NUMBER	QTY	PART NAME 1 2 3 4 5 6 (PRODUCT LEVEL)	SEE PAGE
	1	1	**5P-8245**	4	WASHER-HARD (13.5X25.5X3-MM THK)	
	2	1	**6I-1418**	4	SPACER (8.2X12.7X28.7-MM THK)	
	3	1	**8T-9655**	8	MOUNT-ISOLATION	
	4	1	**9N-0869**	4	WASHER-HARD (8.8X25.5X2-MM THK)	
Y	5	1	**206-2710**	1	CONTROL GP-ENGINE ELECTRONIC	215
	6	1	**230-1078**	1	PLATE AS	
	7	1	**1B-9575**	4	BOLT (5/16-18X1.75-IN)	
	8	1	**9M-1974**	1	WASHER-HARD (8.8X16X2-MM THK)	
	9	1	**9X-8874**	4	BOLT (1/2-13X3-IN)	

Y-SEPARATE ILLUSTRATION

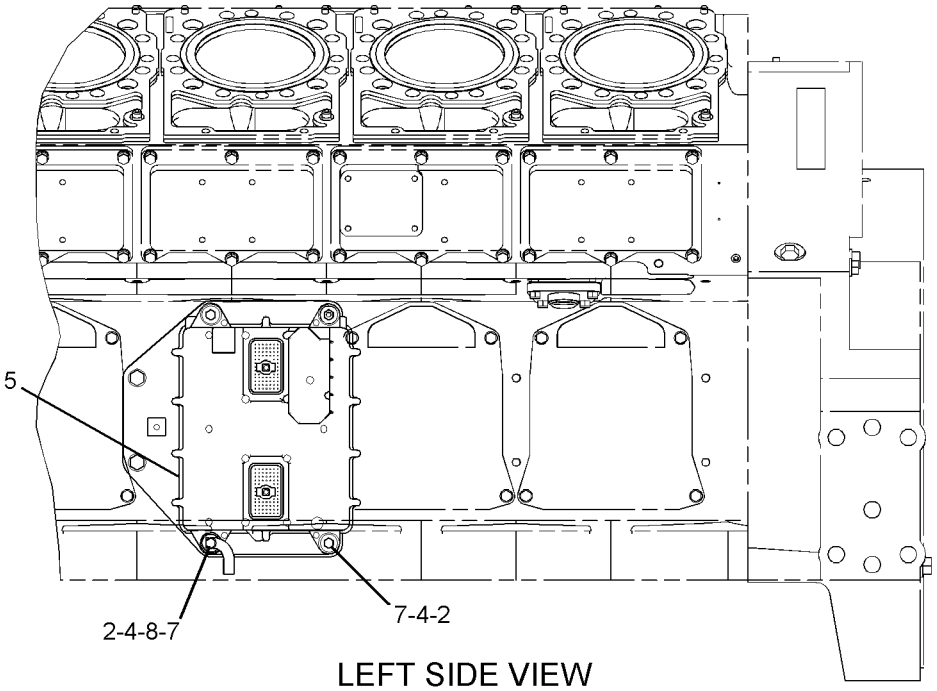

LEFT SIDE VIEW

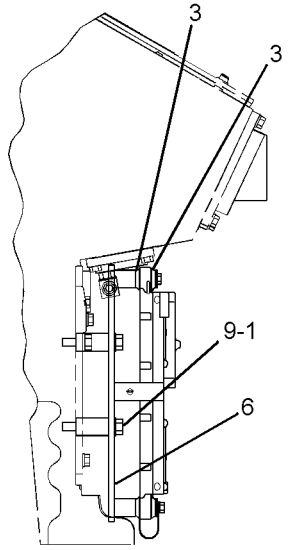

FRONT VIEW

GRAPHIC #1

<END>

g01091636

ELECTRICAL AND STARTING SYSTEM

253-0001 CONTROL AR-GRADE

S/N: 4421-UP

AN ATTACHMENT

SMCS-7220 **i02154843**

NOTE	PART NUMBER	QTY	PART NAME 1 2 3 4 5 6 (PRODUCT LEVEL)	SEE PAGE
Y	*244-6889*	1	INSTALLATION GP-GRADE CONTROL (ROPS)	233
J	**252-6457**	1	MOUNTING GP-MONITOR (CAES)	

J-PART NOT RELEASED
Y-SEPARATE ILLUSTRATION

<END>

ELECTRICAL AND STARTING SYSTEM

245-1320 CONTROL GP-AIR STARTING

S/N: 4421-UP
PART OF 250-2819, 263-1827 STARTING AR-AIR
AN ATTACHMENT

SMCS-1462 **i02286805**

NOTE	REF NO	GRAPHIC REF	PART NUMBER	QTY	PART NAME 1 2 3 4 5 6 (PRODUCT LEVEL)	SEE PAGE
	1	2	**1L-0766**	1	ELBOW	
	2	1	**1L-1722**	2	CONNECTOR-PIPE	
	3	3	**2H-3940**	1	ELBOW	
	4	2	**3D-7587**	1	ELBOW	
I	5	1	**4D-2847**	1	HOSE AS	
I	6	1	**4D-7969**	1	HOSE AS	
	8	3	**4S-6668**	3	CLIP	
I	9	1	**265-5118**	1	HOSE AS	
I	10	2	**8X-5816**	1	HOSE AS	
	11	2	**8X-5820**	1	BRACKET	
J	12	1	**115-9190**	1	VALVE GP-RELAY (AIR START)	
I	13	1	**263-7675**	1	HOSE AS	
I	14	1	**228-4519**	1	HOSE AS	
L	15	2	**221-9576**	1	VALVE GP-SOLENOID (AIR START)	
		2	**221-9577**	1	COIL AS	
	16	3	**251-1060**	1	HOSE AS	
	17	2	**039-4966**	2	ADAPTER	
	18	3	**6D-4244**	2	CLIP	
	19	2	**3B-6552**	1	ELBOW	
	20	2	**3S-6115**	1	TEE	
	21	2	**4D-9976**	1	UNION	
	22	1,2	**4H-6147**	3	CONNECTOR	
	23	3	**4K-8864**	1	CLIP	
	24	2	**5B-7660**	1	BUSHING-REDUCER	
	25	2	**5H-4778**	1	ELBOW	
	26	1	**5P-7470**	2	CLIP (SLOT)	
	27	1	**5P-7471**	2	CLIP (TAB)	
	28	1	**5P-7703**	2	GROMMET	
	29	2	**6L-5955**	1	ELBOW	
	30	1	**7X-0613**	3	WASHER-HARD (8.8X25.5X5-MM THK)	
M	31	1	**7X-2539**	3	BOLT (M8X1.25X110-MM)	
	33	1,2,3	**8T-4121**	8	WASHER-HARD (11X21X2.5-MM THK)	
M	34	3	**8T-4136**	5	BOLT (M10X1.5X25-MM)	
M	35	1,2	**8T-4137**	3	BOLT (M10X1.5X20-MM)	
M	36	2	**8T-4179**	2	BOLT (M12X1.75X20-MM)	
M	37	1	**8T-4183**	1	BOLT (M12X1.75X40-MM)	
	38	2	**8T-4205**	2	WASHER-HARD (7.2X14.5X2-MM THK)	
	39	1,2	**8T-4223**	4	WASHER-HARD (13.5X25.5X3-MM THK)	
M	40	1	**8T-4244**	1	NUT (M12X1.75-THD)	
	41	2	**8T-9364**	2	BOLT (1/4-20X0.625-IN)	
	42	1,2	**9M-8406**	3	CLIP	
					AVAILABLE REPAIR KIT(S):	
J			**115-9191**	1	KIT-SEAL	
					(INCLUDES O-RINGS AND COMPRESSION SPRING)	
L			**221-9578**	1	KIT-VALVE	
					(INCLUDES O-RING, PLUNGER, SPRING, AND SCREWS)	

I-REFER TO HYDRAULIC INFORMATION SYSTEM
J-KIT MARKED J SERVICES PARTS MARKED J
L-KIT MARKED L SERVICES PARTS MARKED L
M-METRIC PART

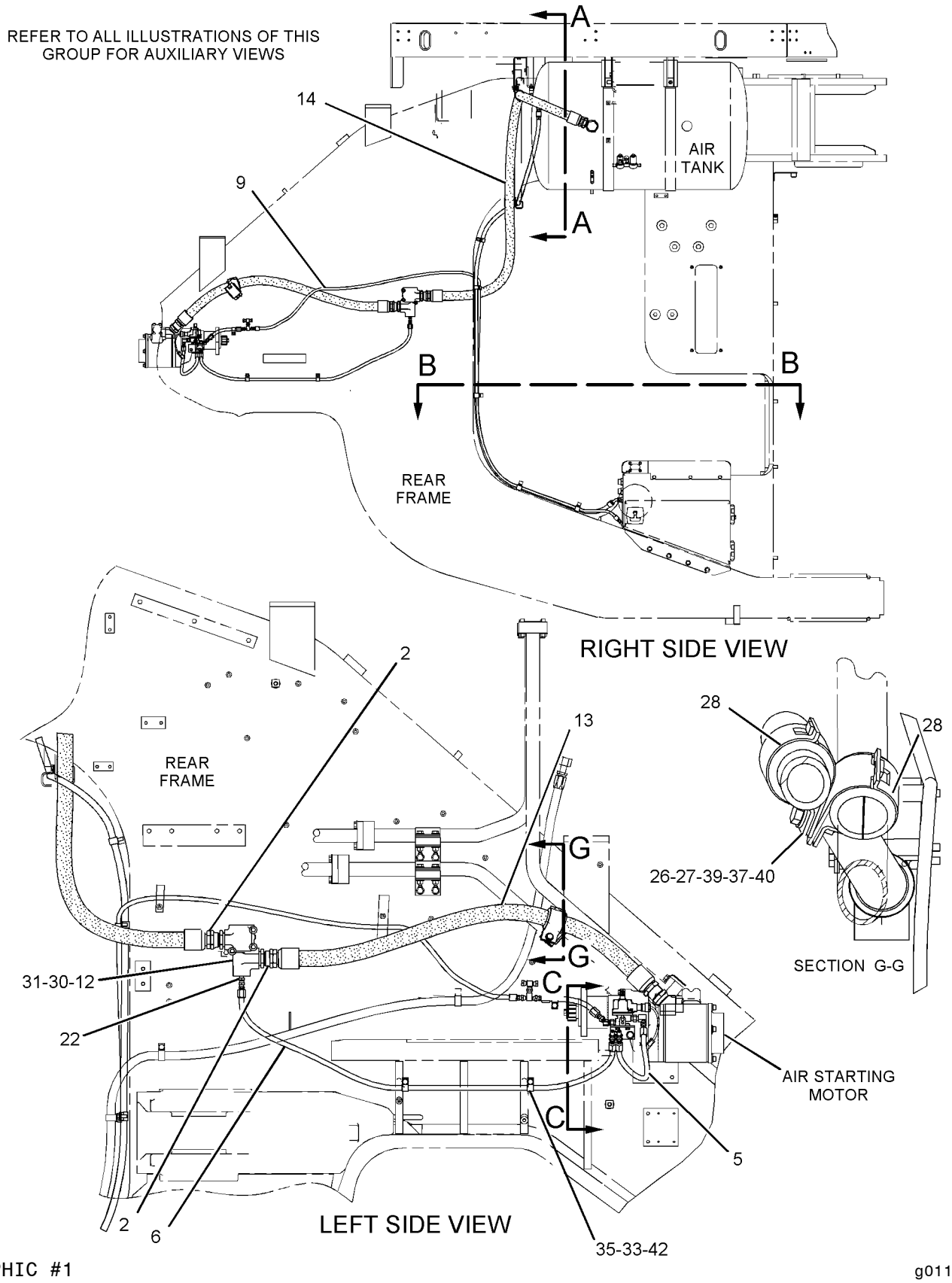

GRAPHIC #1

g01149159

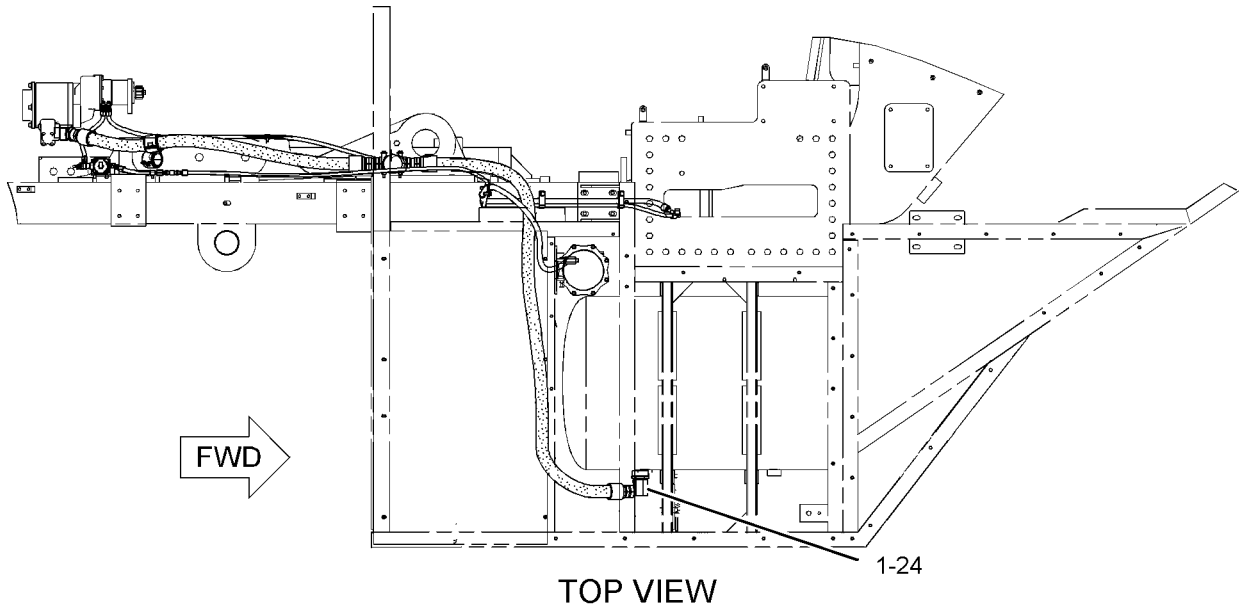

TOP VIEW

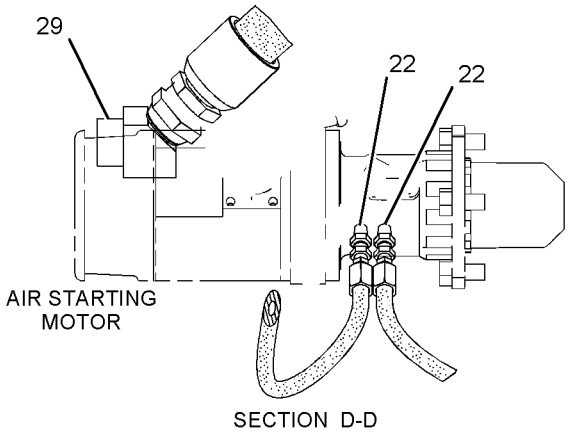

SECTION D-D

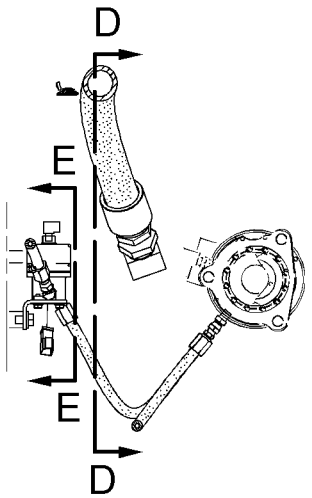

SECTION C-C

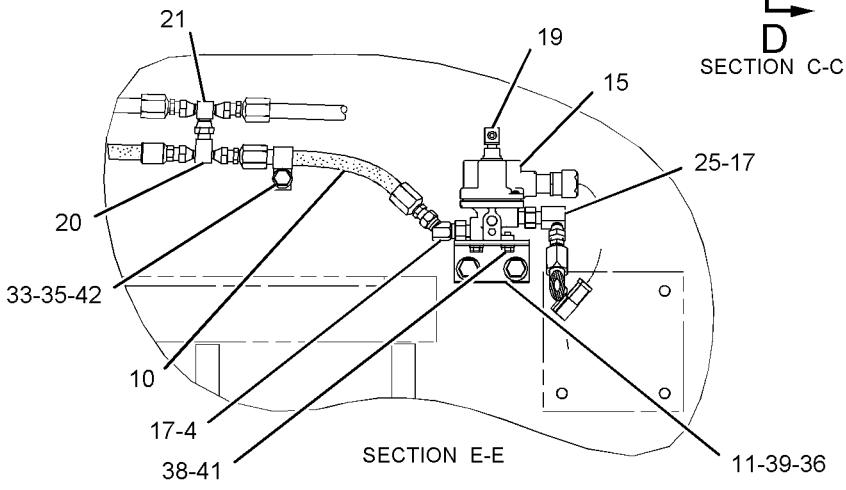

SECTION E-E

GRAPHIC #2

g01149160

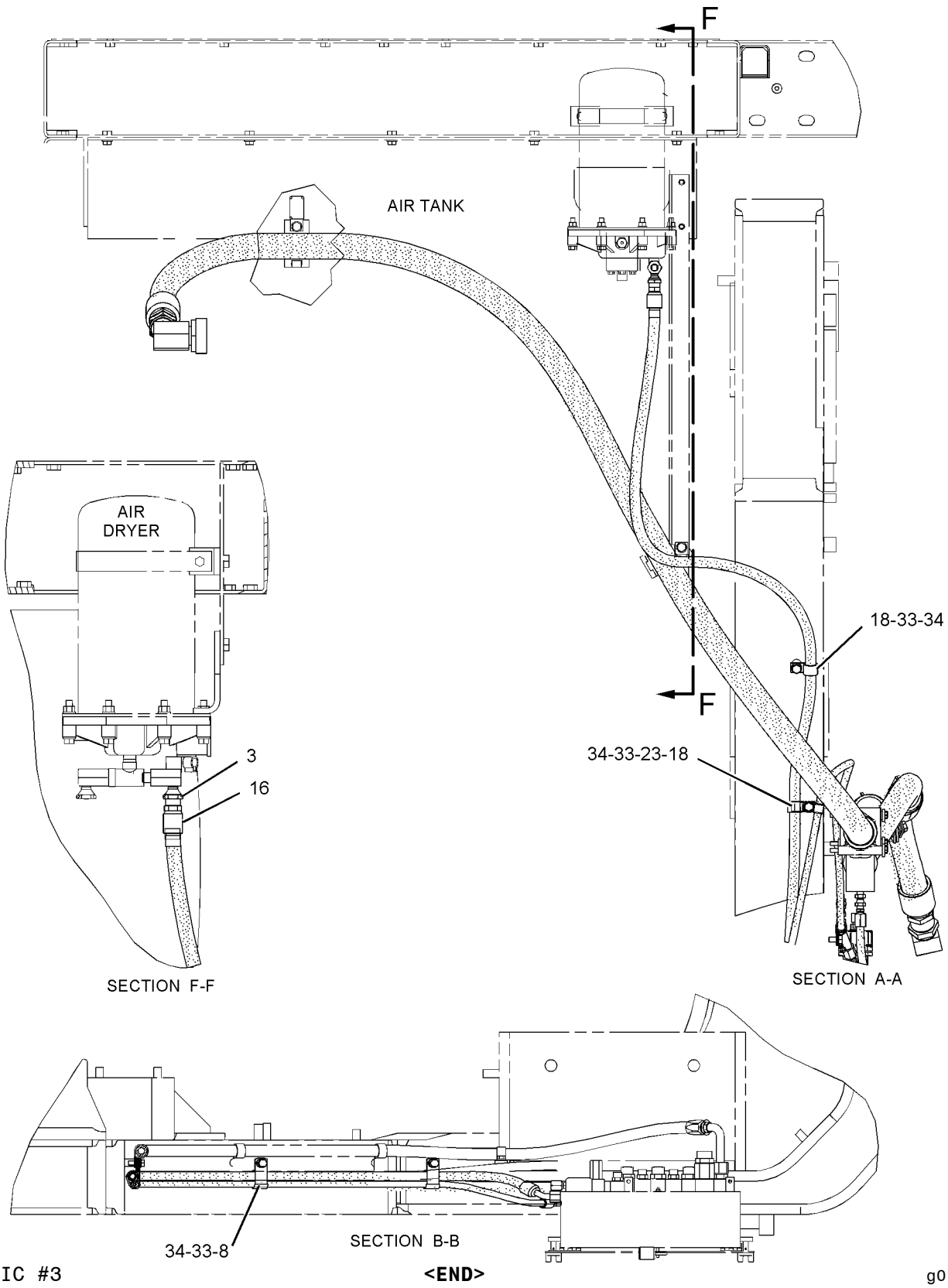

GRAPHIC #3 **<END>** g01149161

ELECTRICAL AND STARTING SYSTEM

245-1330 CONTROL GP-AIR STARTING

S/N: 4421-UP
PART OF 250-2820 STARTING AR-AIR
AN ATTACHMENT

SMCS-1462 **i02286896**

NOTE	REF NO	GRAPHIC REF	PART NUMBER	QTY	PART NAME 1 2 3 4 5 6 (PRODUCT LEVEL)	SEE PAGE
	1	1	**1L-0766**	1	ELBOW	
	2	1,2	**1L-1722**	3	CONNECTOR-PIPE	
	3	1	**2H-3940**	1	ELBOW	
	4	2	**3D-7587**	1	ELBOW	
I	5	1	**4D-2847**	1	HOSE AS	
I	6	1	**4D-6243**	1	HOSE AS	
	8	1	**4S-6668**	3	CLIP	
I	9	1	**265-5118**	1	HOSE AS	
I	10	2	**8X-5816**	1	HOSE AS	
	11	2	**8X-5820**	1	BRACKET	
J	12	1	**115-9190**	1	VALVE GP-RELAY (AIR START)	
L	13	2	**221-9576**	1	VALVE GP-SOLENOID (AIR START)	
		2	**221-9577**	1	COIL AS	
I	14	1	**228-4518**	1	HOSE AS	
I	15	1	**228-4519**	1	HOSE AS	
	16	1	**228-4520**	1	BRACKET AS	
M		1	**8T-3490**	2	NUT-WELD (M10X1.5-THD)	
	17	1	**251-1060**	1	HOSE AS	
	18	2	**039-4966**	2	ADAPTER	
	19	2	**109-5605**	1	ADAPTER-PIPE	
	20	2	**3B-6552**	1	ELBOW	
	21	2	**3S-6115**	1	TEE	
	22	2	**4D-9976**	1	UNION	
	23	1,2	**4H-6147**	2	CONNECTOR	
	24	1	**4K-8864**	1	CLIP	
	25	1	**5B-7660**	1	BUSHING-REDUCER	
	26	2	**5H-4778**	3	ELBOW	
	27	1	**5P-7470**	2	CLIP (SLOT)	
	28	1	**5P-7471**	2	CLIP (TAB)	
	29	1	**5P-7703**	2	GROMMET	
	30	1	**6D-4244**	2	CLIP	
	32	2	**7B-3395**	1	ELBOW	
	33	1	**7X-0613**	3	WASHER-HARD (8.8X25.5X5-MM THK)	
M	34	1	**7X-2539**	3	BOLT (M8X1.25X110-MM)	
	35	1	**7X-7729**	2	WASHER (11X25X3-MM THK)	
	37	1,2	**8T-4121**	8	WASHER-HARD (11X21X2.5-MM THK)	
M	38	1	**8T-4136**	5	BOLT (M10X1.5X25-MM)	
M	39	1,2	**8T-4137**	3	BOLT (M10X1.5X20-MM)	
M	40	2	**8T-4179**	2	BOLT (M12X1.75X20-MM)	
M	41	1	**8T-4195**	2	BOLT (M10X1.5X30-MM)	
	42	2	**8T-4205**	2	WASHER-HARD (7.2X14.5X2-MM THK)	
	43	2	**8T-4223**	2	WASHER-HARD (13.5X25.5X3-MM THK)	
	44	2	**8T-9364**	2	BOLT (1/4-20X0.625-IN)	
	45	1,2	**9M-8406**	3	CLIP	
					AVAILABLE REPAIR KIT(S):	
J			**115-9191**	1	KIT-SEAL	
					(INCLUDES O-RINGS AND COMPRESSION SPRING)	
L			**221-9578**	1	KIT-VALVE	
					(INCLUDES O-RING, PLUNGER, SPRING, AND SCREWS)	

I-REFER TO HYDRAULIC INFORMATION SYSTEM
J-KIT MARKED J SERVICES PARTS MARKED J
L-KIT MARKED L SERVICES PARTS MARKED L
M-METRIC PART

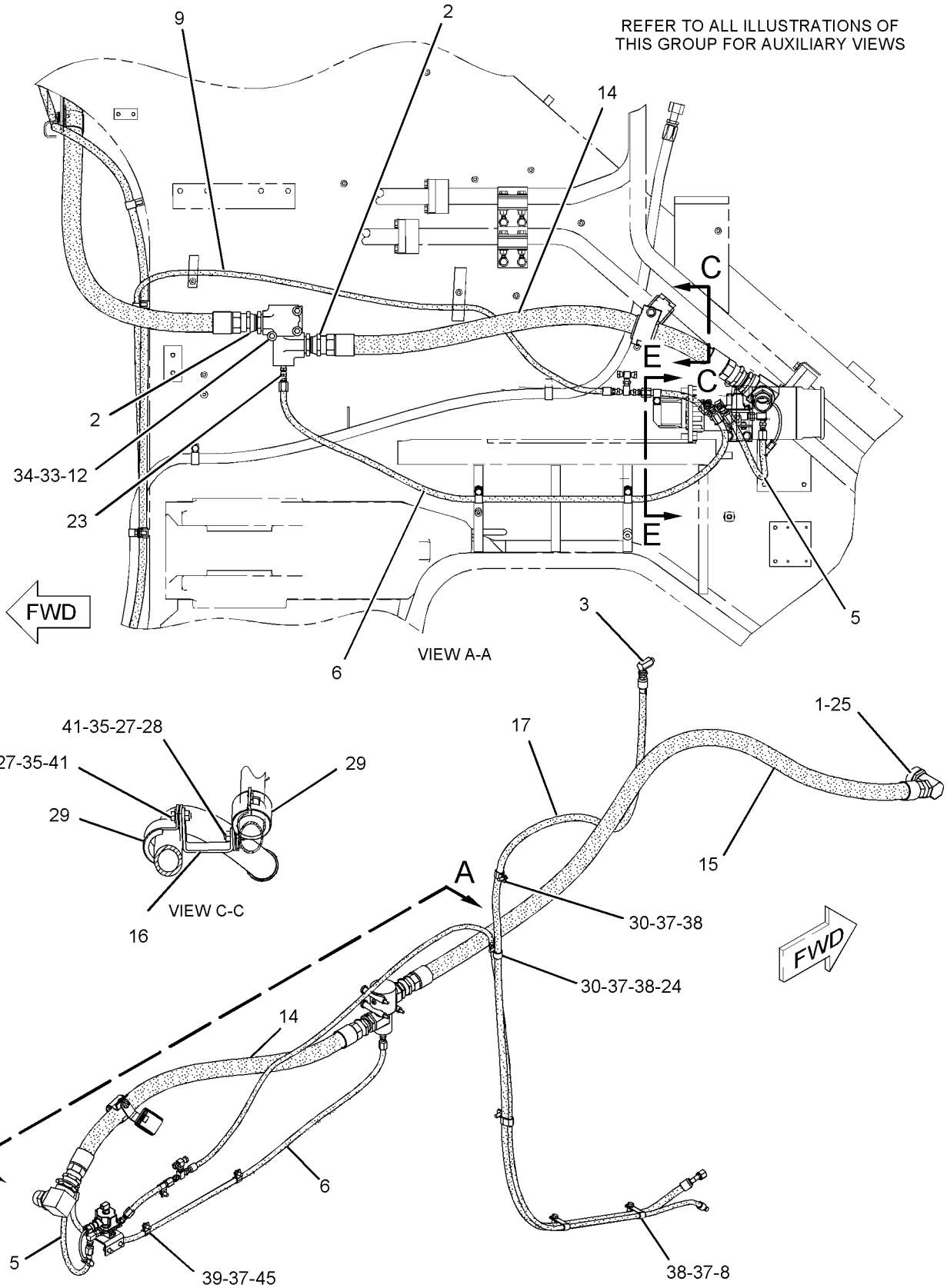

GRAPHIC #1 g01150278

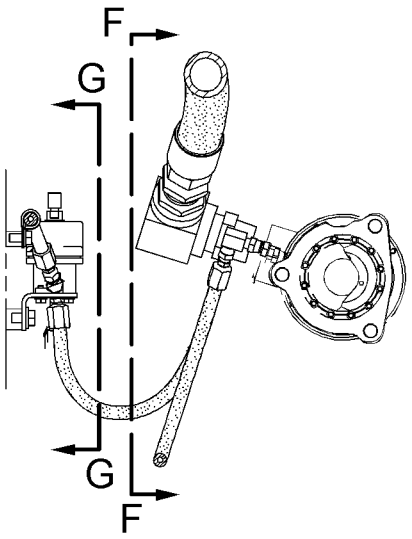

SECTION E-E

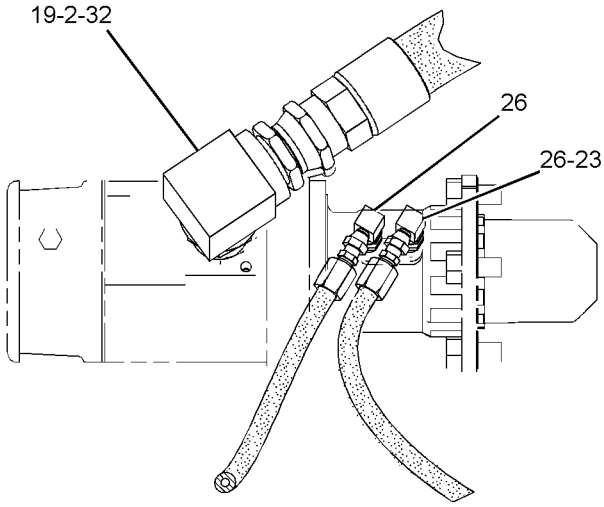

VIEW F-F

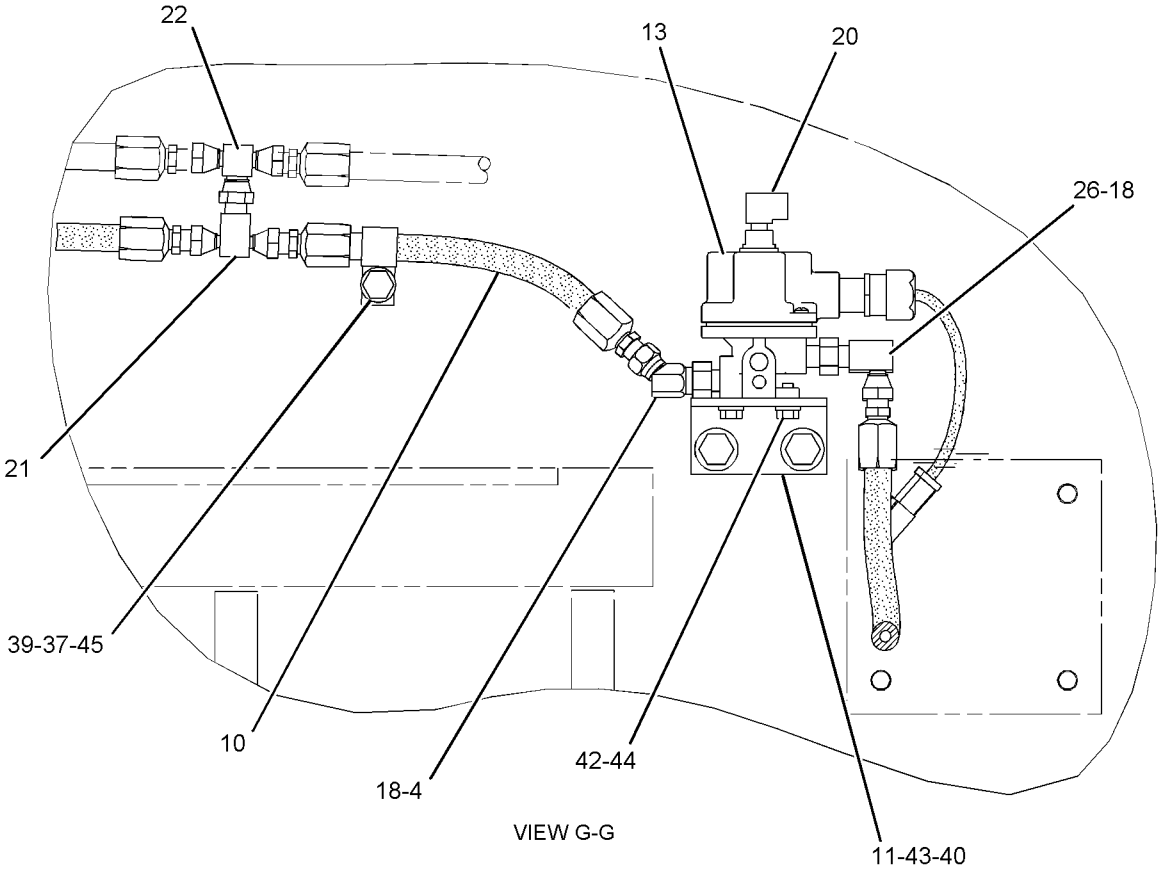

VIEW G-G

GRAPHIC #2

<END>

g01150277

206-2710 CONTROL GP-ENGINE ELECTRONIC

S/N: 8WM1-UP

PART OF 230-1077 CONTROL & MTG GP-ENGINE ELEK

SMCS-1901 **i02362911**

NOTE	REF NO	GRAPHIC REF	PART NUMBER	QTY	PART NAME 1 2 3 4 5 6 (PRODUCT LEVEL)	SEE PAGE
	1	1	**7X-6315**	1	STRAP AS-GROUND	
	2	1	**184-2472**	1	SCREW-PAN HEAD (NO 8-32X9.52-MM)	

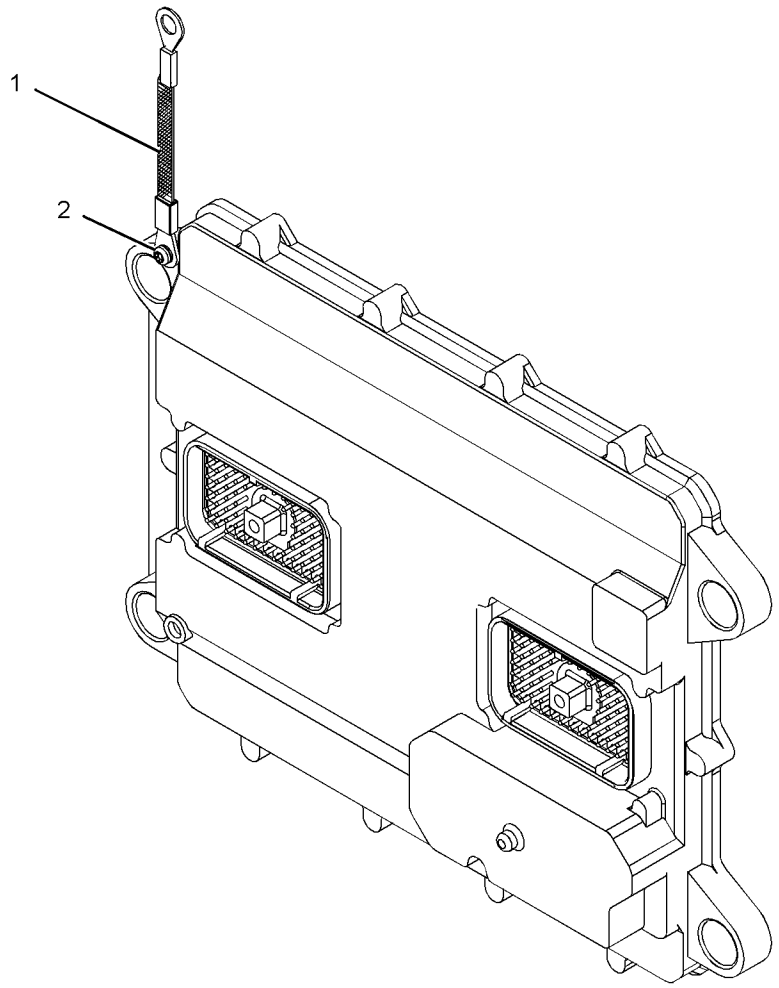

GRAPHIC #1 **<END>** g01180180

176-5459 CONTROL GP-POSITION–BUCKET

S/N: 4421-UP
PART OF 251-3143, 251-3144 KICKOUT & POSITIONER GP
AN ATTACHMENT

SMCS-5112 **i01294037**

NOTE	REF NO	GRAPHIC REF	PART NUMBER	QTY	PART NAME 1 2 3 4 5 6 (PRODUCT LEVEL)	SEE PAGE
	1	1	**9X-5617**	1	FILM-INSTRUCTION	
	2	1	**8T-8730**	3	SOCKET-CONNECTOR	
	3	1	**155-2276**	1	WEDGE-PLUG LOCK (3-PIN)	
	4	1	**155-2267**	1	PLUG AS-CONNECTOR (3-PIN)	

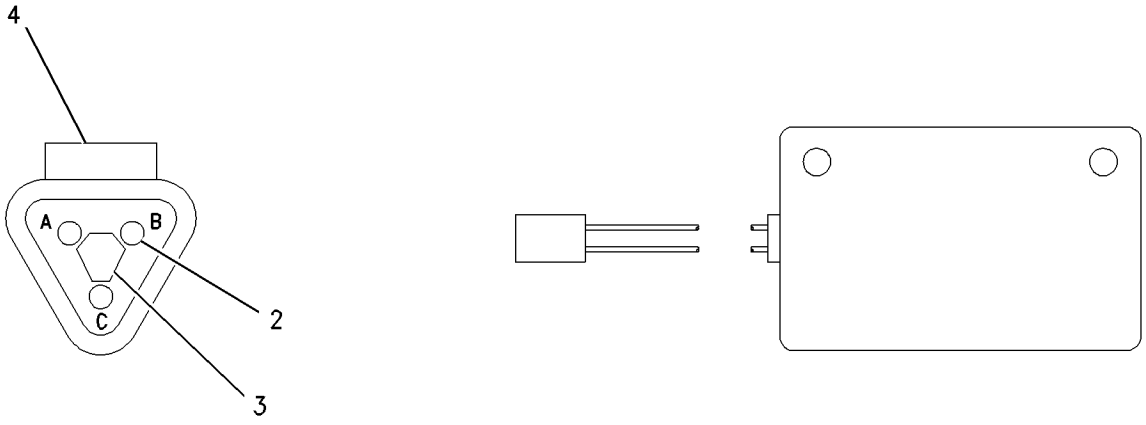

GRAPHIC #1 **<END>** g00685725

172-9389 CONTROL GP-UNPROGRAMMED–POWER TRAIN

S/N: 4421-UP

PART OF 265-4124 WIRING GP-MONITOR

SMCS-7610 **i02127652**

NOTE	REF NO	GRAPHIC REF	PART NUMBER	QTY	PART NAME 1 2 3 4 5 6 (PRODUCT LEVEL)	SEE PAGE
	1	1	**7X-6315**	1	STRAP AS-GROUND	
	2	1	**101-0852**	1	SCREW-PAN HEAD (NO 8X3/8-IN)	
M	3	1	**6V-6703**	2	KIT-RETAINING BOLT (UNPROGRAMMED CONTROL) (EACH INCLUDES BOLT, RING, AND SEALS)	
	4	1	**134-4126**	1	WASHER (4.52X8.28X0.76-MM THK)	

M-METRIC PART

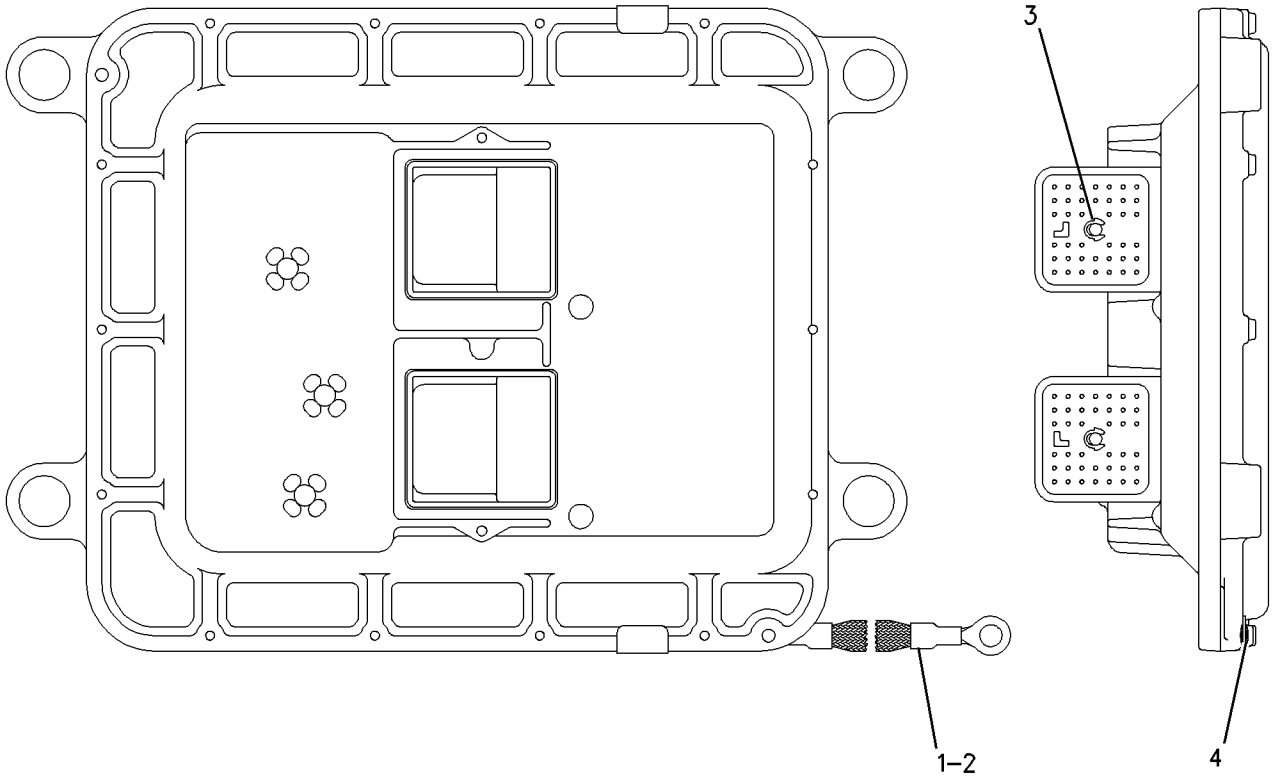

GRAPHIC #1 **<END>** g00951290

239-9954 CONTROL GP-UNPROGRAMMED–PRODUCT LINK 300

S/N: 4421-UP

PART OF 265-6782 INSTALLATION GP-COMMUNICATION

AN ATTACHMENT

SMCS-7610 **i02293389**

NOTE	REF NO	GRAPHIC REF	PART NUMBER	QTY	PART NAME 1 2 3 4 5 6 (PRODUCT LEVEL)	SEE PAGE
	1	1	**7X-6315**	1	STRAP AS-GROUND	
	2	1	**126-7574**	1	SCREW-PAN HEAD (8-32X9.52-MM)	
	3	1	**134-4126**	1	WASHER (4.52X8.28X0.76-MM THK)	

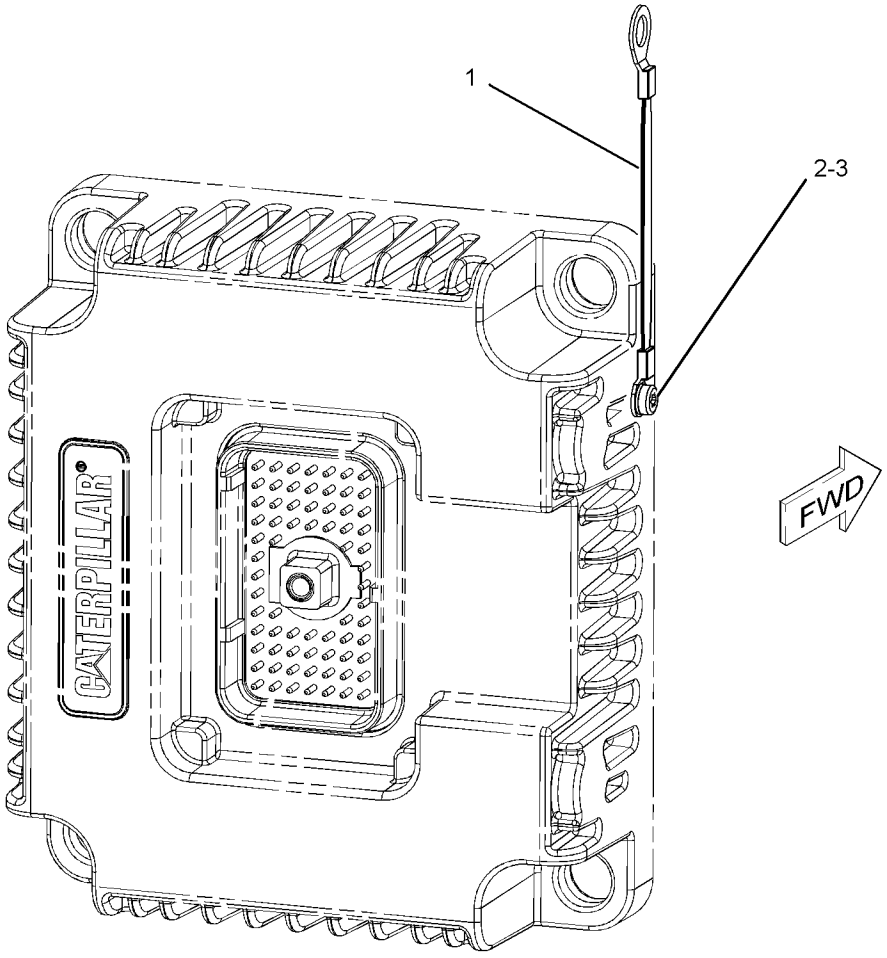

GRAPHIC #1 **<END>** g01145801

232-4670 COVER GP-MODULE CONNECTOR

S/N: 8WM1-UP

PART OF 246-5582 HARNESS AS-ENGINE

SMCS-1901 **i02422294**

NOTE	REF NO	GRAPHIC REF	PART NUMBER	QTY	PART NAME 1 2 3 4 5 6 (PRODUCT LEVEL)	SEE PAGE
M	1	1	**8T-9006**	4	BOLT-SOCKET HEAD (M3X0.5X20-MM)	
	2	1	**232-4671**	1	CONNECTOR AS (BOTTOM)	
	3	1	**232-4672**	1	CONNECTOR AS (TOP)	
	4	1	**232-4673**	1	PLUG	
	5	1	**232-4674**	1	SEAL-CONNECTOR	
	6	1	**232-4675**	1	SEAL-CONNECTOR	

M-METRIC PART

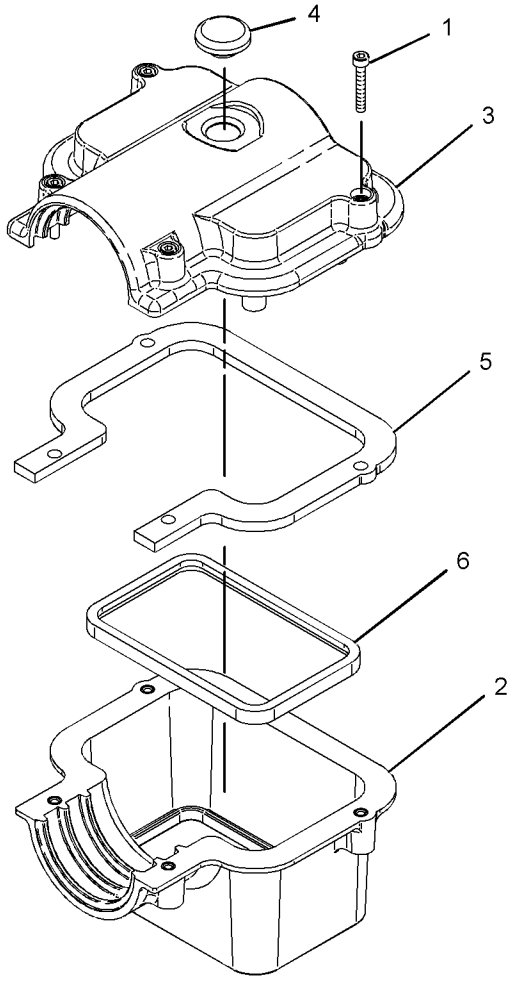

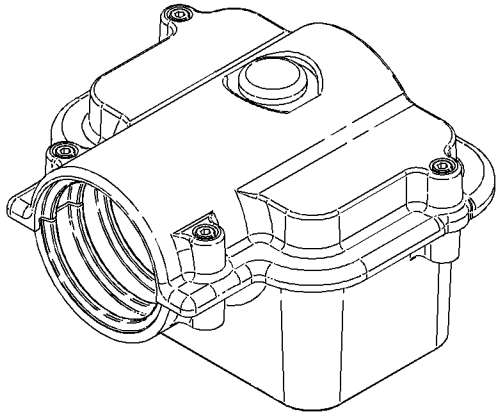

UNEXPLODED VIEW

GRAPHIC #1 **<END>** g01210314

ELECTRICAL AND STARTING SYSTEM

252-8683 ELECTRONICS AR-MACHINE

S/N: 4421-UP

PART OF 245-8810 COMMON AR

SMCS-7610, 7620 **i02291071**

NOTE	PART NUMBER	QTY	PART NAME 1 2 3 4 5 6 (PRODUCT LEVEL)	SEE PAGE
Y	*250-7667*	1	ELECTRONICS GP-IMPLEMENT	222
Y	*250-7666*	1	ELECTRONICS GP-POWER TRAIN	223

Y-SEPARATE ILLUSTRATION

<END>

262-2043 ELECTRONICS GP-COMMUNICATION–

PRODUCT LINK 300

S/N: 4421-UP

PART OF 272-5959, 273-8707 INSTALLATION AR-COMMUNICATION

AN ATTACHMENT

SMCS-7606, 7610, 7620 **i02357697**

NOTE	REF NO	GRAPHIC REF	PART NUMBER	QTY	PART NAME 1 2 3 4 5 6 (PRODUCT LEVEL)	SEE PAGE
	1	1	**265-9642**	1	SOFTWARE GP-COMMUNICATION (PRODUCT LINK 300)	
					-OR-	
					(OPTIONAL SERVICE REPLACEMENT)	
	2	1	**265-9643**	1	SERVICE GP-COMMUNICATION (PRODUCT LINK 300)	
					(INCLUDES CONTROL GP AND SOFTWARE)	
	3	1	**7X-6315**	1	STRAP AS-GROUND	
	4	1	**126-7574**	1	SCREW-PAN HEAD (8-32X9.52-MM)	
	5	1	**134-4126**	1	WASHER (4.52X8.28X0.76-MM THK)	

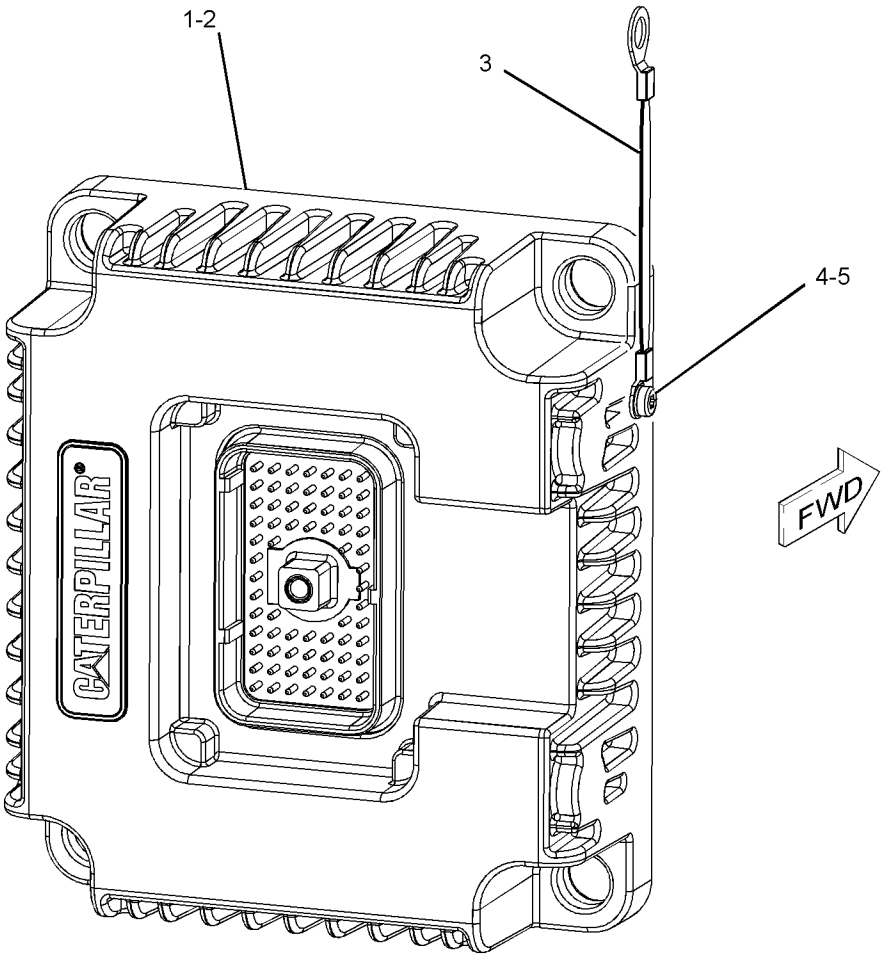

GRAPHIC #1 **<END>** g01157176

250-7667 ELECTRONICS GP-IMPLEMENT

S/N: 4421-UP

PART OF 252-8683 ELECTRONICS AR-MACHINE

SMCS-5701, 7610, 7620 **i02150068**

NOTE	PART NUMBER	QTY	PART NAME 1 2 3 4 5 6 (PRODUCT LEVEL)	SEE PAGE
	134-3379	1	FILM-IDENTIFICATION (ELECTRONIC CONTROL MODULE)	
			(NOT SERVICED SEPARATELY-FACTORY INSTALLED)	
	252-8363	1	SOFTWARE GP-IMPLEMENT	
			NOTE: 252-8364 SERVICE GP-IMPLEMENT	
			IS AVAILABLE	
			NOTE:THIS ELECTRONICS GP CONTAINS SOFTWARE	
			FOR CONTROL GP-UNPROGRAMMED (IMPLEMENT)	

<END>

267-4700 ELECTRONICS GP-MONITOR–VIMS-ENGLISH, GERMAN

S/N: 4421-UP

AN ATTACHMENT

SMCS-7490, 7494, 7601, 7603, 7610, 7620 **i02285808**

NOTE	PART NUMBER	QTY	PART NAME 1 2 3 4 5 6 (PRODUCT LEVEL)	SEE PAGE
	266-9260	1	SOFTWARE GP-MONITOR (VIMS-ENGLISH, GERMAN)	

<END>

267-4701 ELECTRONICS GP-MONITOR–VIMS-ENGLISH, RUSSIAN

S/N: 4421-UP

AN ATTACHMENT

SMCS-7490, 7494, 7601, 7603, 7610, 7620 **i02285809**

NOTE	PART NUMBER	QTY	PART NAME 1 2 3 4 5 6 (PRODUCT LEVEL)	SEE PAGE
	266-9261	1	SOFTWARE GP-MONITOR (VIMS-ENGLISH, RUSSIAN)	

<END>

267-4702 ELECTRONICS GP-MONITOR– VIMS-ENGLISH, PORTUGUESE

S/N: 4421-UP

AN ATTACHMENT

SMCS-7490, 7494, 7601, 7603, 7610, 7620 **i02285810**

NOTE	PART NUMBER	QTY	PART NAME 1 2 3 4 5 6 (PRODUCT LEVEL)	SEE PAGE
	266-9262	1	SOFTWARE GP-MONITOR (VIMS-ENGLISH, PORTUGUESE)	

<END>

267-4703 ELECTRONICS GP-MONITOR—VIMS-ENGLISH, SWEDISH

S/N: 4421-UP

AN ATTACHMENT

SMCS-7490, 7494, 7601, 7603, 7610, 7620 **i02285815**

NOTE	PART NUMBER	QTY	PART NAME 1 2 3 4 5 6 (PRODUCT LEVEL)	SEE PAGE
	266-9263	1	SOFTWARE GP-MONITOR (VIMS-ENGLISH, SWEDISH)	

<END>

250-7666 ELECTRONICS GP-POWER TRAIN

S/N: 4421-UP

PART OF 252-8683 ELECTRONICS AR-MACHINE

SMCS-4800, 4808, 7610, 7620 **i02387910**

NOTE	PART NUMBER	QTY	PART NAME 1 2 3 4 5 6 (PRODUCT LEVEL)	SEE PAGE
	278-5643	1	SOFTWARE GP-POWER TRAIN	
			-OR-	
			(OPTIONAL SERVICE REPLACEMENT)	
	252-8371	1	SERVICE GP-POWER TRAIN	
	101-0852	1	SCREW-PAN HEAD (NO 8X3/8-IN)	
	7X-6315	1	STRAP AS-GROUND	
M	**6V-6703**	2	KIT-RETAINING BOLT	
			(EACH INCLUDES BOLT, RING, & SEAL)	

M-METRIC PART

<END>

247-4019 FASTENER GP-ELECTRONICS—MONITOR ECM

S/N: 4421-UP

PART OF 245-8813 INSTALLATION AR-FIELD

SMCS-7553 **i02357668**

NOTE	REF NO	GRAPHIC REF	PART NUMBER	QTY	PART NAME 1 2 3 4 5 6 (PRODUCT LEVEL)	SEE PAGE
	1	1	**1K-4649**	8	SPACER (0.516X1X1-IN THK)	
	2	1	**8T-4222**	8	WASHER-PLATED (11X32X2.5-MM THK)	
M	3	1	**8T-4139**	2	BOLT (M12X1.75X30-MM)	
	4	1	**8T-4223**	4	WASHER-HARD (13.5X25.5X3-MM THK)	
M	5	1	**8T-4244**	2	NUT (M12X1.75-THD)	
M	6	1	**8T-6466**	8	BOLT (M10X1.5X60-MM)	

M-METRIC PART

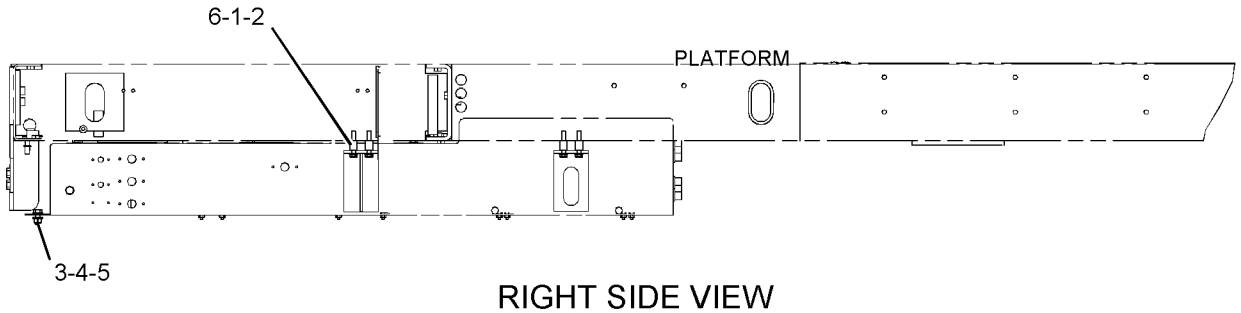

RIGHT SIDE VIEW

GRAPHIC #1 **<END>** g01145688

246-5582 HARNESS AS-ENGINE

S/N: 8WM1-UP

PART OF 246-5580 WIRING GP-ENGINE

SMCS-1403, 1408 **i02318517**

NOTE	PART NUMBER	QTY	PART NAME 1 2 3 4 5 6 (PRODUCT LEVEL)	SEE PAGE
	8N-1521	2	BELL AS-END (2-GA)	
	8T-8827	2	BOOT	
	126-1774	2	COVER	
	3B-3638	2	FITTING	
C	**155-2270**	58	KIT-CONNECTING PLUG (2-PIN)	
C	**155-2260**	22	KIT-CONNECTING PLUG (3-PIN)	
	174-0503	1	KIT-CONNECTING PLUG (3-PIN)	
			(EACH INCLUDES PLUG ASSEMBLY & WEDGE)	
	102-8802	10	KIT-RECEPTACLE (2-PIN)	
	102-8803	13	KIT-RECEPTACLE (3-PIN)	
			(EACH INCLUDES RECEPTACLE ASSEMBLY AND WEDGE)	
C	**186-3735**	28	PIN-CONNECTOR (16-GA TO 18-GA)	
C	**9G-3695**	51	PLUG (GROMMET SEALING)	
	8N-1518	1	PLUG AS-CONNECTOR (25-PIN)	
	8N-1514	1	PLUG AS-CONNECTOR (37-PIN)	
	147-1443	1	PLUG AS-CONNECTOR (70-PIN)	
	160-7690	1	PLUG AS-CONNECTOR (70-PIN)	
	7G-7917	27	PLUG-SEAL	
C	**8T-8737**	10	PLUG-SEAL	
	134-2540	1	RECEPTACLE AS-CONNECTOR (3-PIN)	
C	**9X-6857**	28	SOCKET-CONNECTOR (16-GA TO 18-GA)	
	8N-1541	2	SOCKET-CONNECTOR (12-GA TO 14-GA)	
	8N-1543	1	SOCKET-CONNECTOR (10-GA)	
	8N-1545	2	SOCKET-CONNECTOR (8-GA)	
	8N-1549	2	SOCKET-CONNECTOR (4-GA)	
	9W-0844	1	SOCKET-CONNECTOR (14-GA)	
	9X-3402	88	SOCKET-CONNECTOR (16-GA TO 18-GA)	
C	**126-1768**	4	SOCKET-CONNECTOR (14-GA)	
	186-3736	86	SOCKET-CONNECTOR (16-GA TO 18-GA)	
	9X-6772	2	STRAP-CABLE	
	106-8704	1	SUPPRESSOR AS-ARC	
	110-8769	2	WIRE AS	
BE	**119-3662**		TUBE-HEAT SHRINK (78-CM)	
	155-2266	1	WEDGE-PLUG LOCK (3-PIN)	
	2L-8049	2	TERMINAL (6-GA, NO.10 SCREW)	
			—OR—	
	2L-8057	2	TERMINAL (8-GA, NO.10 SCREW)	
	2L-8071	1	TERMINAL (10-GA TO 12-GA, 1/2-IN SCREW)	
	2L-8081	1	TERMINAL (14-GA TO 16-GA)	
	3T-4688	2	TERMINAL (4-GA)	

B-USE AS REQUIRED
C-CHANGE FROM PREVIOUS TYPE
E-ORDER BY THE CENTIMETER

<END>

8X-0118 HEATER GP-ENGINE OIL

S/N: 4421-UP
240 VOLT
PART OF 264-2285 STARTING AR-COLD WEATHER
AN ATTACHMENT

SMCS-1333 **i02418923**

NOTE	REF NO	GRAPHIC REF	PART NUMBER	QTY	PART NAME 1 2 3 4 5 6 (PRODUCT LEVEL)	SEE PAGE
	1	1	**9X-9752**	2	HOUSING AS	
	2	1	**9X-9753**	2	ELEMENT AS-ENGINE OIL HEATER	
	3	1	**9W-3797**	1	SWITCH AS-TEMPERATURE (ENGINE OIL)	
	4	1	**9X-9751**	1	HOUSING AS	

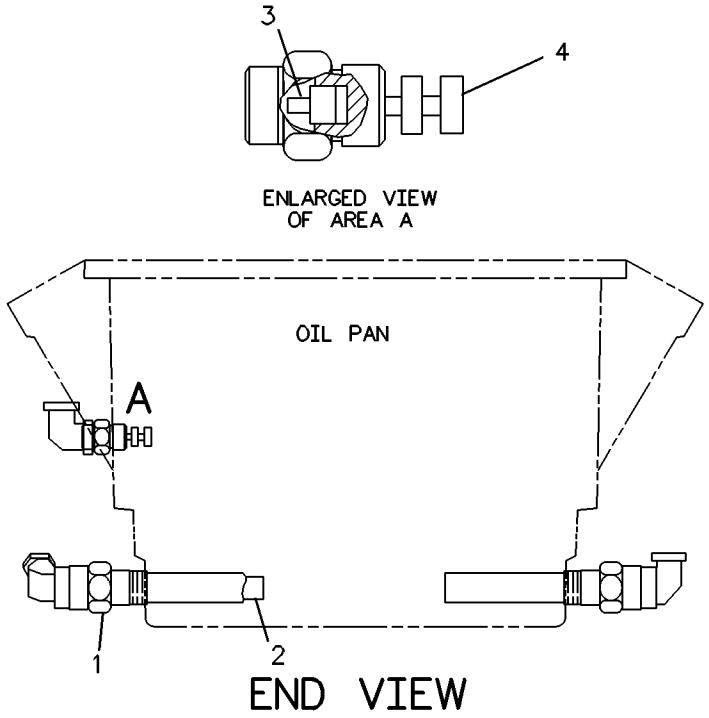

GRAPHIC #1 **<END>** g00082586

259-3023 HEATER GP-FUEL

S/N: 4421-UP
PART OF 264-2285 STARTING AR-COLD WEATHER
AN ATTACHMENT

SMCS-1296 **i02285538**

NOTE	REF NO	GRAPHIC REF	PART NUMBER	QTY	PART NAME 1 2 3 4 5 6 (PRODUCT LEVEL)	SEE PAGE
	1	1	**7W-5300**	1	HEATER AS-FUEL	
		1	**138-1240**	1	KIT-ADAPTER	
	2	1	**117-3033**	1	ELBOW	
I	3	1	**259-3024**	1	HOSE AS	
I	4	1	**259-3025**	1	HOSE AS	
I	5	1	**259-3026**	1	HOSE AS	
I	6	1	**259-3027**	1	HOSE AS	
	7	1	**061-9593**	3	BUSHING-REDUCER	
	8	1	**1S-1015**	1	CLIP	
	9	1	**2T-1922**	1	ELBOW	
	10	1	**3P-2404**	1	CLIP	
	11	1	**5P-7464**	4	CLIP (SLOT)	
	12	1	**5P-7465**	4	CLIP (TAB)	
	13	1	**6B-9081**	1	BUSHING-REDUCING	
	14	1	**6V-1249**	1	GROMMET	
	15	1	**6V-7359**	3	GROMMET	
	16	1	**6V-8398**	2	SEAL-O-RING	
	17	1	**6V-8632**	1	CONNECTOR	
	18	1	**6V-8638**	1	CONNECTOR	
	19	1	**6V-8943**	1	REDUCER	
	20	1	**7J-9108**	4	SEAL-O-RING	
	21	1	**8C-6873**	2	CONNECTOR	
M	22	1	**8T-4183**	2	BOLT (M12X1.75X40-MM)	
M	23	1	**8T-4194**	4	BOLT (M12X1.75X50-MM)	
	24	1	**8T-4223**	4	WASHER-HARD (13.5X25.5X3-MM THK)	
M	25	1	**8T-4244**	6	NUT (M12X1.75-THD)	

I-REFER TO HYDRAULIC INFORMATION SYSTEM
M-METRIC PART

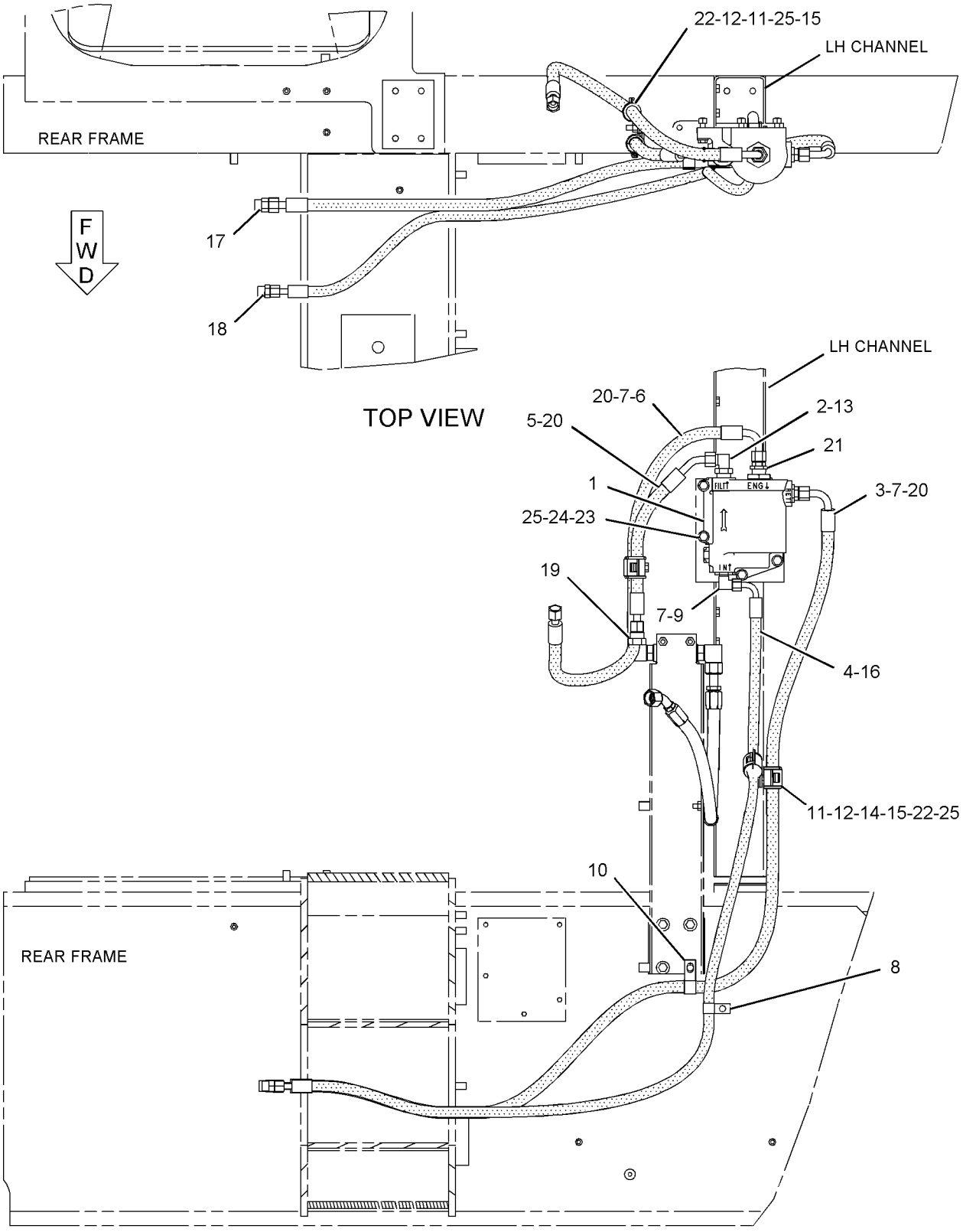

GRAPHIC #1

<END>

g01147984

7E-6713 HEATER GP-JACKET WATER

S/N: 8WM1-UP
240 VOLT
PART OF 240-7750 ENGINE AR

SMCS-1383 **i02179428**

NOTE	REF NO	GRAPHIC REF	PART NUMBER	QTY	PART NAME 1 2 3 4 5 6 (PRODUCT LEVEL)	SEE PAGE
	1	1	**9X-1292**	4	ELEMENT AS-JACKET WATER HEATER	
					(EACH INCLUDES)	
		1	**6V-5050**	1	SEAL-O-RING	
	2	1	**6N-1604**	4	CAP AS-DUST	

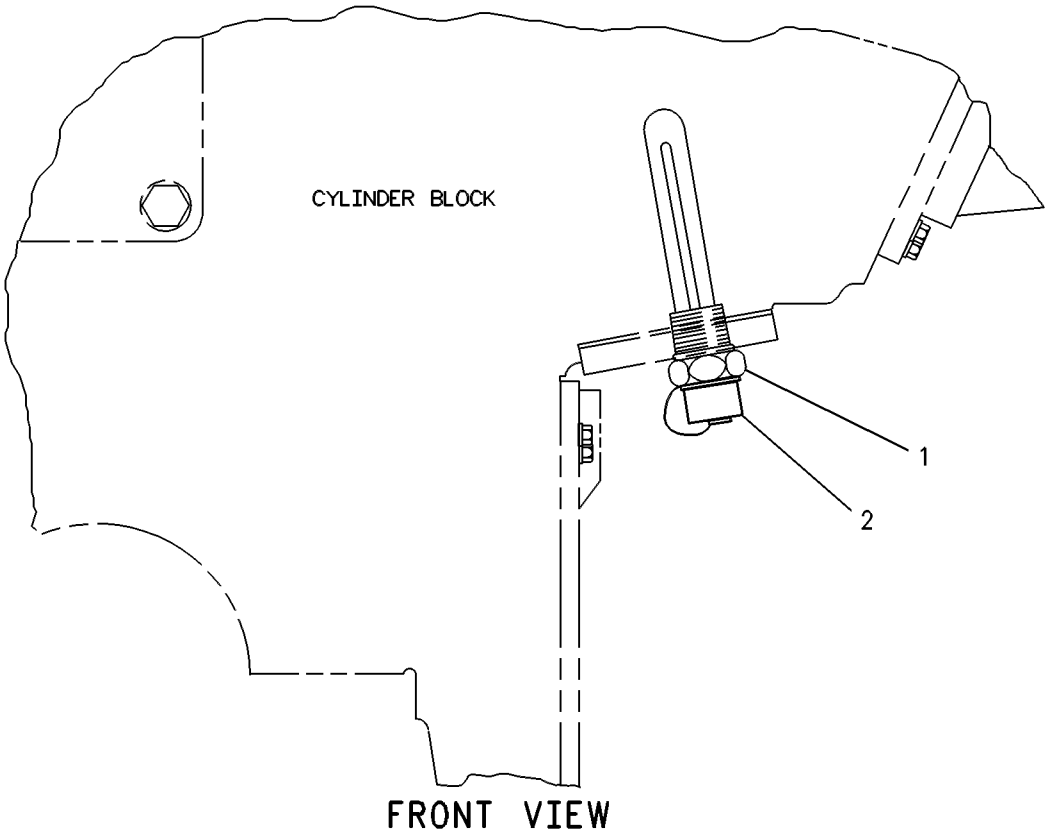

GRAPHIC #1 **<END>** g00089042

264-9725 INSTALLATION AR-CAES

S/N: 4421-UP

AN ATTACHMENT

SMCS-7604 **i02294517**

NOTE	PART NUMBER	QTY	PART NAME 1 2 3 4 5 6 (PRODUCT LEVEL)	SEE PAGE
Y	*252-6457*	1	MOUNTING GP-MONITOR (CAES)	1021
Y	*263-7748*	1	WIRING GP-MACHINE (CAES)	351

Y-SEPARATE ILLUSTRATION

<END>

272-5959 INSTALLATION AR-COMMUNICATION–

PRODUCT LINK 300

S/N: 4421-UP

AN ATTACHMENT

SMCS-7606 **i02419437**

NOTE	PART NUMBER	QTY	PART NAME 1 2 3 4 5 6 (PRODUCT LEVEL)	SEE PAGE
Y	*262-2043*	1	ELECTRONICS GP-COMMUNICATION (PRODUCT LINK 300)	221
Y	*265-6782*	1	INSTALLATION GP-COMMUNICATION (PRODUCT LINK 121SR)	231
	260-7652	1	FILM-WARNING (PRODUCT LINK)	
			INSIDE CAB ON LEFT FRONT METAL POST (A POST) 1200 MM ABOVE CAB FLOOR	

Y-SEPARATE ILLUSTRATION

<END>

273-8707 INSTALLATION AR-COMMUNICATION–

PRODUCT LINK 300

S/N: 4421-UP

AN ATTACHMENT

SMCS-7606 **i02419423**

NOTE	PART NUMBER	QTY	PART NAME 1 2 3 4 5 6 (PRODUCT LEVEL)	SEE PAGE
Y	*262-2043*	1	ELECTRONICS GP-COMMUNICATION (PRODUCT LINK 300)	221
Y	*265-6782*	1	INSTALLATION GP-COMMUNICATION (PRODUCT LINK 121SR)	231
	260-7653	1	FILM-WARNING (PRODUCT LINK)	
			INSIDE CAB ON LEFT FRONT METAL POST (A POST) 1200 MM ABOVE CAB FLOOR	

Y-SEPARATE ILLUSTRATION

<END>

265-6782 INSTALLATION GP-COMMUNICATION–

PRODUCT LINK 321SR

S/N: 4421-UP

PART OF 272-5959, 273-8707 INSTALLATION AR-COMMUNICATION

AN ATTACHMENT

SMCS-7606 **i02300861**

NOTE	REF NO	GRAPHIC REF	PART NUMBER	QTY	PART NAME 1 2 3 4 5 6 (PRODUCT LEVEL)	SEE PAGE
	1	1	**8C-5607**	8	MOUNT-ISOLATION	
	2	1	**8C-5608**	4	SPACER (6.5X9.5X25.4-MM THK)	
	3	1	**9X-6772**	1	STRAP-CABLE	
Y	4	1	**239-9954**	1	CONTROL GP-UNPROGRAMMED (PRODUCT LINK 300)	218
	5	1	**252-7888**	1	PLATE AS	
		1	**4E-8266**	4	BOSS (M6X1-6HX19-MM)	
	6	1	**263-7297**	1	PLATE AS	
M		1	**6V-9632**	4	NUT-WELD (M6X1-THD)	
	7	1	**263-9088**	1	RADIO GP-COMMUNICATION (PRODUCT LINK 121SR)	
		1	**267-4603**	1	SOFTWARE GP-COMMUNICATION (PRODUCT LINK 121SR)	
	8	1	**265-3394**	1	HARNESS AS-CONTROL (PRODUCT LINK)	
		1	**8T-8737**	60	PLUG-SEAL	
		1	**9X-6772**	2	STRAP-CABLE	
		1	**126-1774**	1	COVER	
		1	**160-7690**	1	PLUG AS-CONNECTOR (70-PIN)	
		1	**159-9322**	1	SEAL-O-RING	
		1	**155-2255**	1	KIT-CONNECTING PLUG (12-PIN)	
					(INCLUDES PLUG AS AND WEDGE)	
	9	1	**033-8248**	1	CLIP	
M	10	1	**6V-8490**	4	BOLT (M6X1X25-MM)	
M	11	1	**8C-8451**	4	BOLT (M6X1X40-MM)	
	12	1	**8T-4121**	9	WASHER-HARD (11X21X2.5-MM THK)	
M	13	1	**8T-4137**	9	BOLT (M10X1.5X20-MM)	
	14	1	**8T-4205**	4	WASHER-HARD (7.2X14.5X2-MM THK)	
	15	1	**9X-6165**	4	WASHER (6.5X22X2.5-MM THK)	

M-METRIC PART
Y-SEPARATE ILLUSTRATION

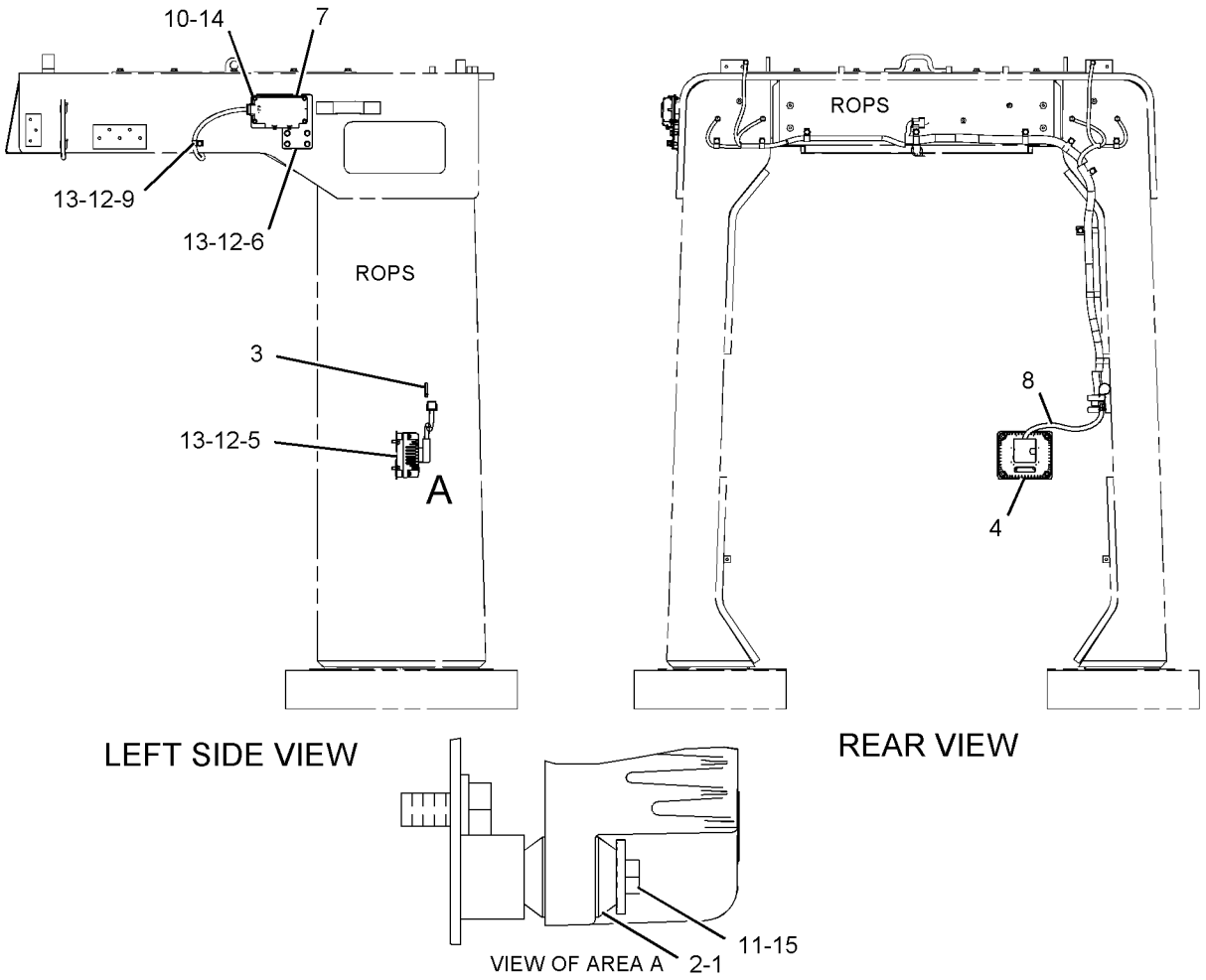

GRAPHIC #1 **<END>** g01145343

244-6889 INSTALLATION GP-GRADE CONTROL–ROPS

S/N: 4421-UP
PART OF 253-0001 CONTROL AR-GRADE
AN ATTACHMENT

SMCS-7220 **i02154844**

NOTE	REF NO	GRAPHIC REF	PART NUMBER	QTY	PART NAME 1 2 3 4 5 6 (PRODUCT LEVEL)	SEE PAGE
	1	1	**8C-5607**	6	MOUNT-ISOLATION	
	2	1	**8C-5608**	3	SPACER (6.5X9.5X25.4-MM THK)	
	3	1	**140-7480**	1	BRACKET-MOUNTING	
	4	1	**167-8610**	1	BRACKET AS	
Y	5	1	**167-8984**	1	BATTERY GP (24-VOLT)	201
	6	1	**205-4285**	1	CONVERTER GP-ELECTRICAL (24-VOLT TO 12-VOLT)	
	7	1	**252-8014**	1	BRACKET AS	
M		1	**6V-9632**	3	NUT-WELD (M6X1-THD)	
	8	1	**252-8089**	1	BRACKET AS	
M		1	**165-8718**	6	NUT-WELD (M4X0.07-THD)	
M	9	1	**112-8372**	6	BOLT (M4X16-MM)	
	10	1	**5S-7349**	2	BOLT (1/4-20X0.5-IN)	
M	11	1	**8C-8451**	3	BOLT (M6X1X40-MM)	
	12	1	**8T-4121**	10	WASHER-HARD (11X21X2.5-MM THK)	
M	13	1	**8T-4136**	6	BOLT (M10X1.5X25-MM)	
M	14	1	**8T-4137**	4	BOLT (M10X1.5X20-MM)	
	15	1	**8T-4205**	2	WASHER-HARD (7.2X14.5X2-MM THK)	
	16	1	**9X-6165**	3	WASHER (6.5X22X2.5-MM THK)	
	17	1	**9X-8267**	6	WASHER (6.6X12X2-MM THK)	

M-METRIC PART
Y-SEPARATE ILLUSTRATION

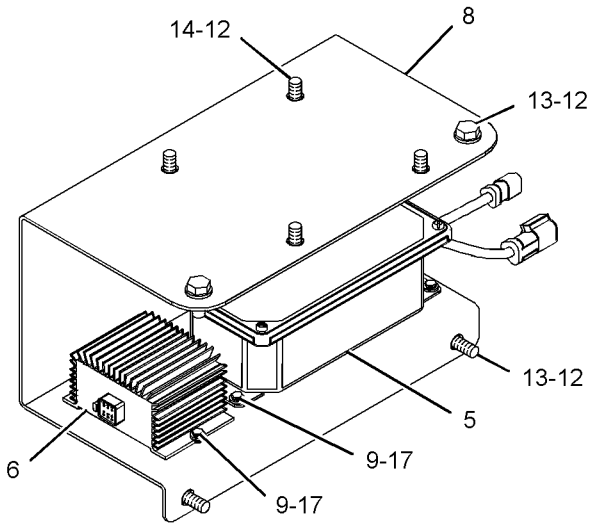

VIEW OF AREA B

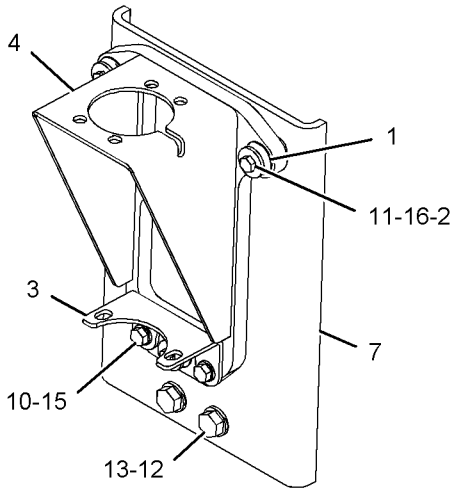

VIEW OF AREA A

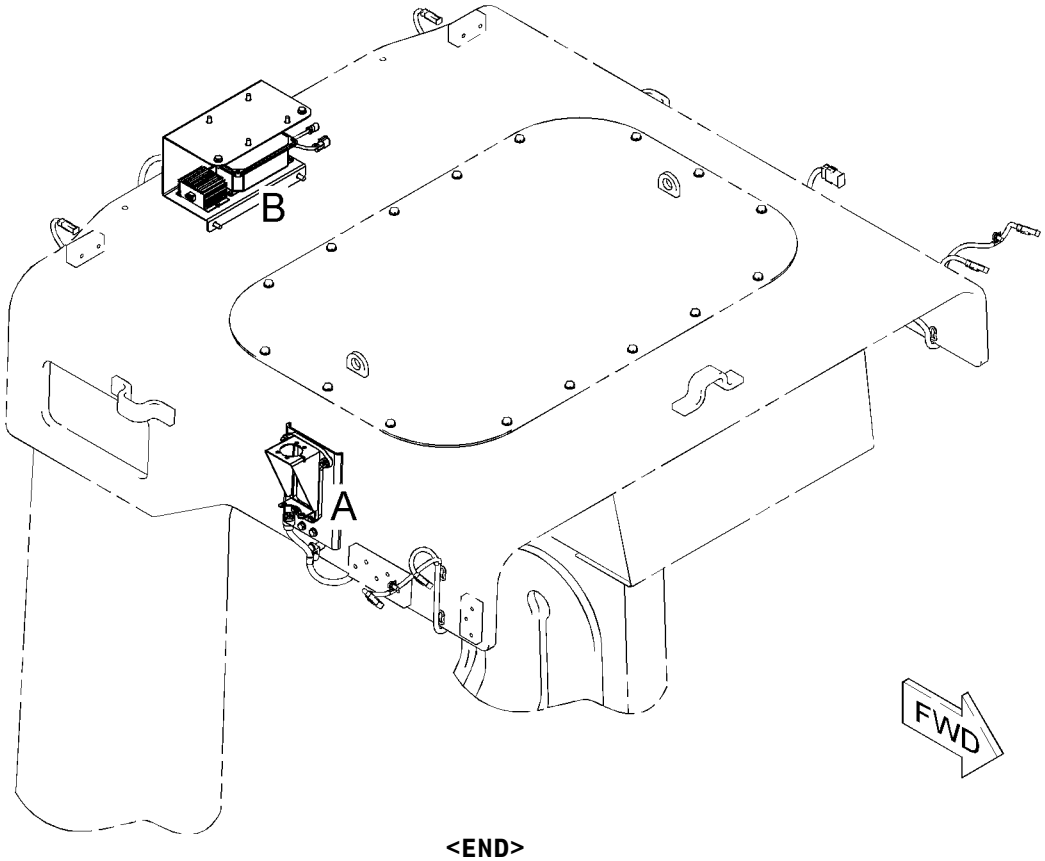

GRAPHIC #1 **<END>** g01094317

ELECTRICAL AND STARTING SYSTEM

257-5849 INSTALLATION GP-GRADE CONTROL

S/N: 4421-UP

AN ATTACHMENT

SMCS-7220 **i02386858**

NOTE	PART NUMBER	QTY	PART NAME 1 2 3 4 5 6 (PRODUCT LEVEL)	SEE PAGE
Y	*239-9532*	1	DISPLAY GP-MONITOR (NAVIGATOR)	977
M	**8T-4136**	4	BOLT (M10X1.5X25-MM)	
	8T-9364	4	BOLT (1/4-20X0.625-IN)	
	244-1717	1	RECEIVER GP (GLOBAL POSITIONING SYSTEM)	
	5P-4115	4	WASHER-HARD (7.2X19X2-MM THK)	
	8T-4121	4	WASHER-HARD (11X21X2.5-MM THK)	

M-METRIC PART
Y-SEPARATE ILLUSTRATION

<END>

3E-6389 LAMP GP-DOME

S/N: 4421-UP
24-VOLT, WITH SWITCH
PART OF 250-3018 LINER GP-CAB, 245-1428 WIRING GP-CAB

SMCS-1433 **i02286066**

NOTE	REF NO	GRAPHIC REF	PART NUMBER	QTY	PART NAME 1 2 3 4 5 6 (PRODUCT LEVEL)	SEE PAGE
	1	1	**7N-9943**	1	LAMP (24-VOLT)	
	2	1	**102-8803**	1	KIT-RECEPTACLE (3-PIN)	
					(INCLUDES RECEPTACLE AS & WEDGE)	
	3	1	**3E-3371**	1	WEDGE-RECEPTACLE LOCK (3-PIN)	
	4	1	**8T-8729**	3	PIN-CONNECTOR	
	5	1	**7T-0020**	1	LENS-DOME LAMP	

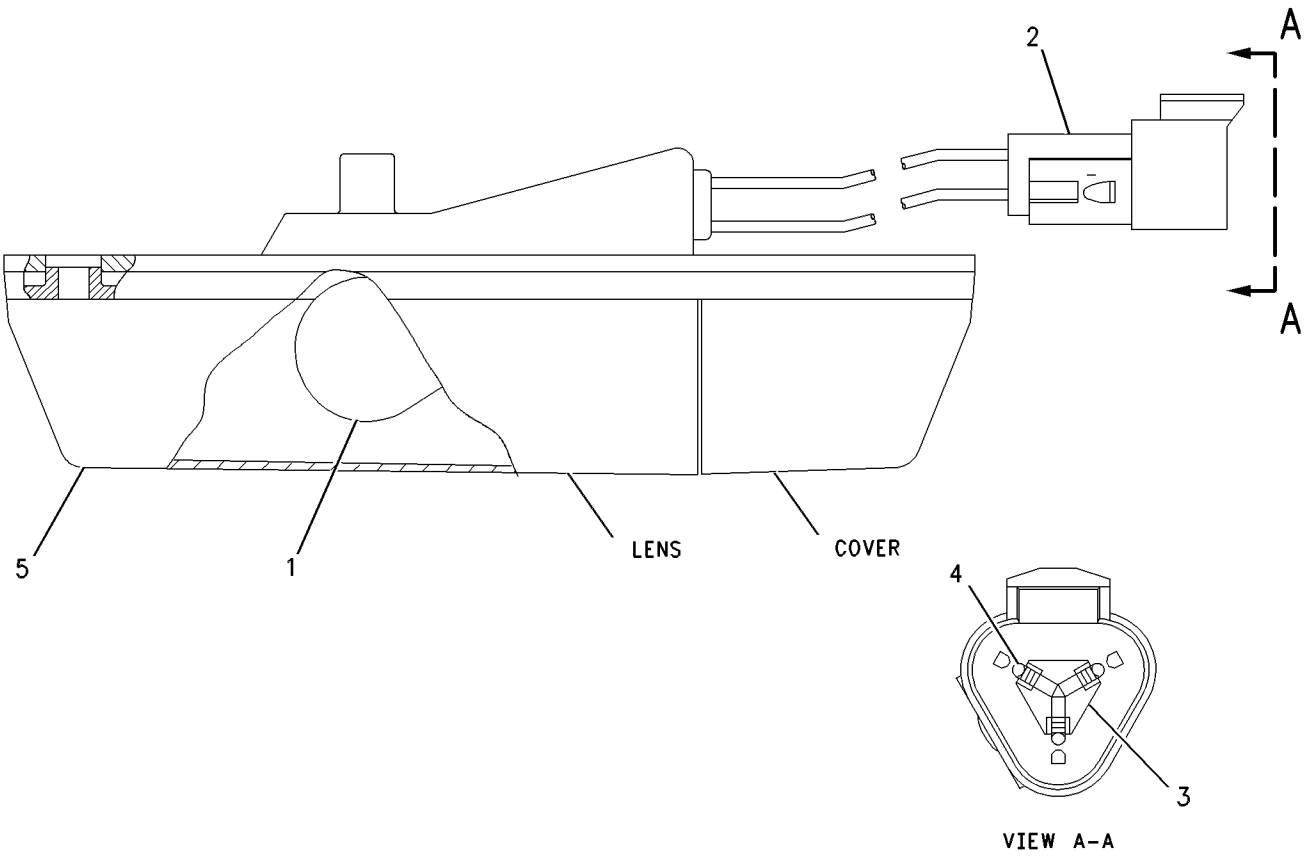

GRAPHIC #1 **<END>** g00647928

147-0319 LAMP GP-FLOOD–SUSPENDED MOUNT

S/N: 4421-UP
24-VOLT
PART OF 247-4395 LIGHTING GP-FLOOD

SMCS-1434 **i02358050**

NOTE	REF NO	GRAPHIC REF	PART NUMBER	QTY	PART NAME 1 2 3 4 5 6 (PRODUCT LEVEL)	SEE PAGE
	1	1	**9X-3463**	1	LAMP-HALOGEN (24-VOLT, 65-WATT)	
	2	1	**158-0250**	1	BODY AS-LAMP	
	3	1	**158-0248**	1	LENS AS (FLOODLIGHT)	
	4	1	**158-0252**	1	BEZEL	
	5	1	**188-8849**	2	CLAMP	

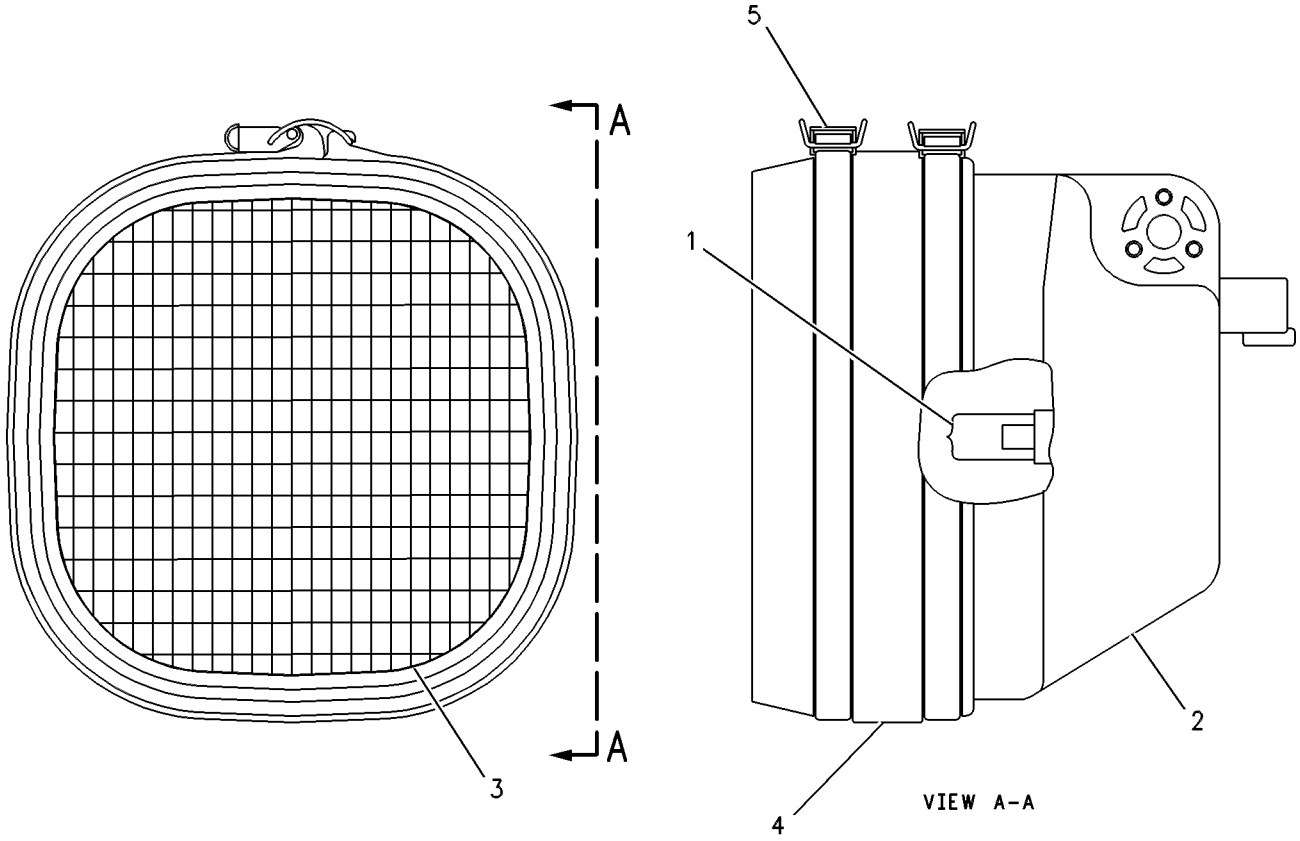

GRAPHIC #1 **<END>** g00458549

153-2073 LAMP GP-FLOOD

S/N: 4421-UP

24-VOLT

PART OF 160-4337, 161-4540, 247-4024, 247-4394, 247-4395 LIGHTING GP-FLOOD

SMCS-1434 **i02391550**

NOTE	REF NO	GRAPHIC REF	PART NUMBER	QTY	PART NAME 1 2 3 4 5 6 (PRODUCT LEVEL)	SEE PAGE
	1	1	**9X-3463**	1	LAMP-HALOGEN (24-VOLT, 65-WATT)	
	2	1	**158-0250**	1	BODY AS-LAMP	
	3	1	**158-0248**	1	LENS AS (FLOODLIGHT)	
	4	1	**158-0252**	1	BEZEL	
	5	1	**188-8849**	2	CLAMP	

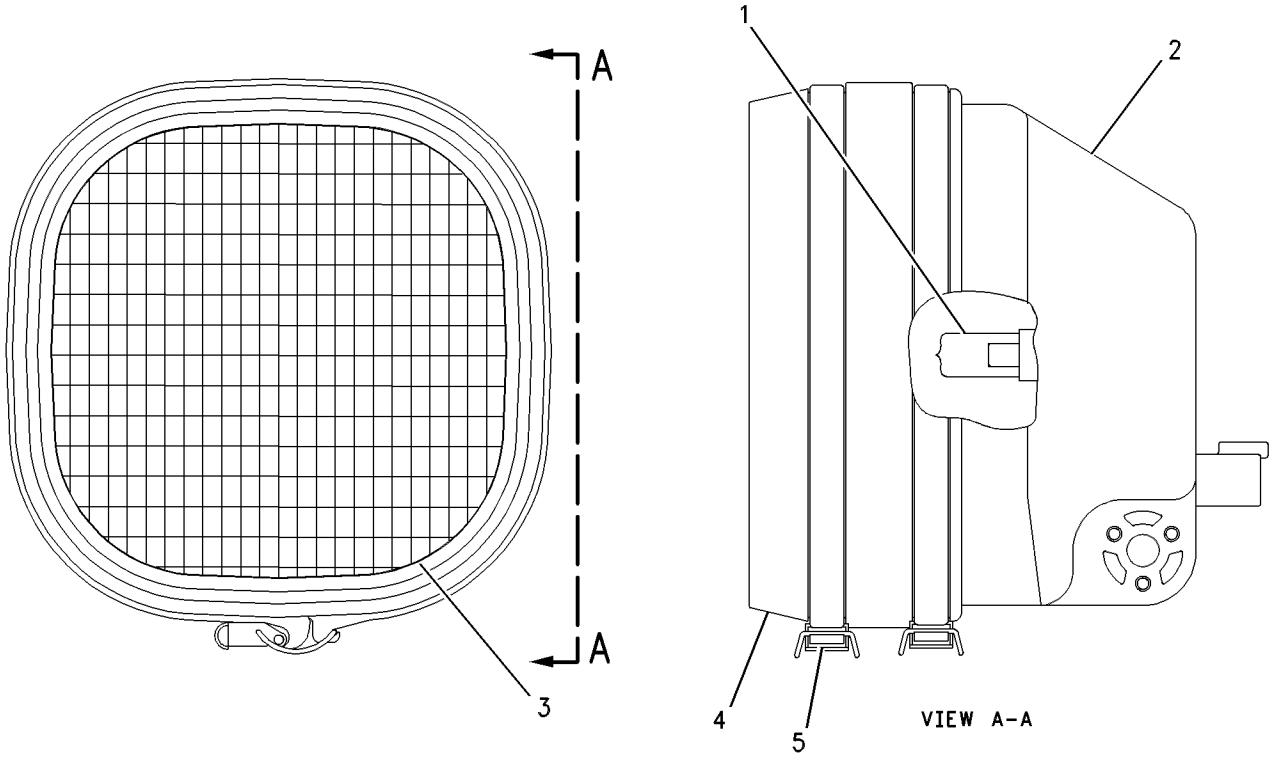

GRAPHIC #1 **<END>** g00449633

210-8423 LAMP GP-FLOOD–HID, VERTCAL MOUNT

S/N: 4421-UP
24-VOLT, 35-WATT
PART OF 247-4399 LIGHTING GP-FLOOD
AN ATTACHMENT

SMCS-1434 **i02254177**

NOTE	REF NO	GRAPHIC REF	PART NUMBER	QTY	PART NAME 1 2 3 4 5 6 (PRODUCT LEVEL)	SEE PAGE
	1	1	**229-9969**	1	LENS AS (FLOODLIGHT)	
	2	1	**209-6638**	1	LAMP (12-VOLT, 24-VOLT, 35-WATT)	
M	3	1	**151-8754**	1	BOLT (M10X1.5X40-MM)	
	4	1	**8T-4121**	1	WASHER-HARD (11X21X2.5-MM THK)	
M	5	1	**120-9027**	4	SCREW-PAN HEAD (M3X0.5X16-MM)	
M	6	1	**8T-4189**	2	BOLT (M8X1.25X20-MM)	
M	7	1	**6V-9189**	2	LOCKNUT (M8X1.25-THD)	
	8	1	**229-9972**	1	BRACKET AS	
	9	1	**229-9974**	1	BEZEL	

M-METRIC PART

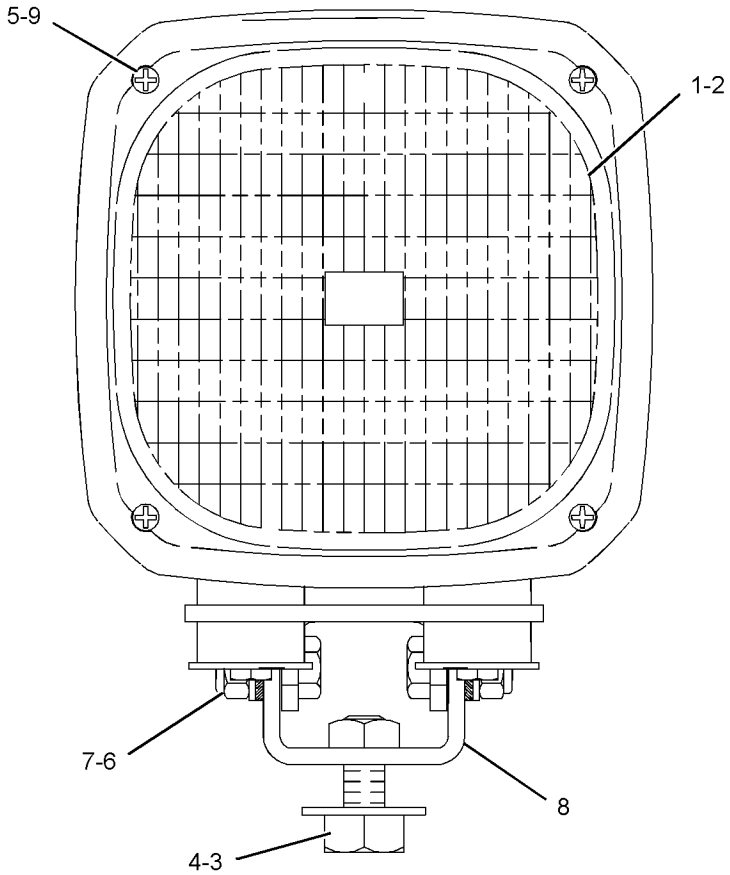

GRAPHIC #1 **<END>** g01022778

219-6487 LAMP GP-FLOOD–SUSPENDED MOUNT

S/N: 4421-UP
24-VOLT
PART OF 274-8527 LIGHTING GP-FLOOD

SMCS-1434 **i02286102**

NOTE	REF NO	GRAPHIC REF	PART NUMBER	QTY	PART NAME 1 2 3 4 5 6 (PRODUCT LEVEL)	SEE PAGE
	1	1	**9X-3463**	1	LAMP-HALOGEN (24-VOLT, 65-WATT) (FLOODLIGHT)	
M	2	1	**8T-6912**	1	BOLT (M8X1.25X50-MM)	
M	3	1	**5C-7261**	1	NUT (M8X1.25-THD)	
	4	1	**8T-4224**	2	WASHER-HARD (8.8X16X2-MM THK)	
	5	1	**9X-4244**	2	SCREW	
	6	1	**202-6612**	1	SEAL	
	7	1	**202-6614**	1	LENS AS (FLOODLIGHT)	
	8	1	**175-4292**	1	BODY AS	
	9	1	**164-7556**	1	CLIP	
	10	1	**175-4291**	1	BRACKET AS	

M-METRIC PART

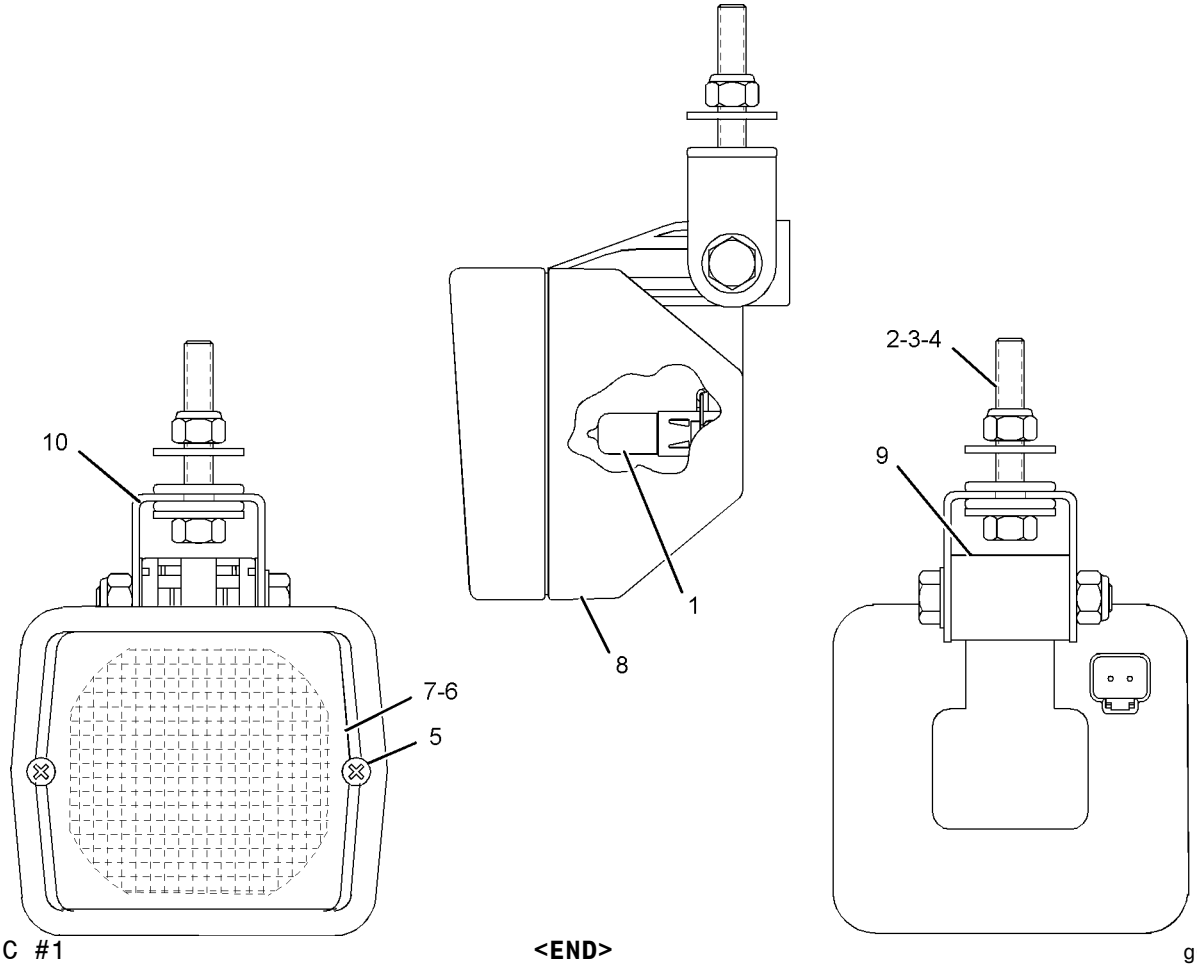

GRAPHIC #1 **<END>** g01021977

247-0294 LAMP GP-FLOOD–VERTICAL MOUNT

S/N: 4421-UP
24-VOLT
PART OF 247-4400 LIGHTING GP-FLOOD
AN ATTACHMENT

SMCS-1434 **i02047506**

NOTE	REF NO	GRAPHIC REF	PART NUMBER	QTY	PART NAME 1 2 3 4 5 6 (PRODUCT LEVEL)	SEE PAGE
	1	1	**213-4998**	1	LAMP AS-FLOOD (24-VOLT, 70-WATT)	
	2	1	**9X-9896**	8	MOUNT (ISOLATION)	
	3	1	**8C-5608**	4	SPACER (6.5X9.5X25.4-MM THK)	
	4	1	**9X-6165**	4	WASHER (6.5X22X2.5-MM THK)	
M	5	1	**120-9027**	4	SCREW-PAN HEAD (M3X0.5X16-MM)	
M	6	1	**7X-2533**	4	BOLT (M6X1X35-MM)	
M	7	1	**8T-6868**	1	BOLT (M12X1.75X80-MM)	
M	8	1	**129-3180**	1	LOCKNUT (M12X1.75-THD)	
	9	1	**215-1933**	1	BRACKET	
	10	1	**246-6720**	1	BEZEL	

M-METRIC PART

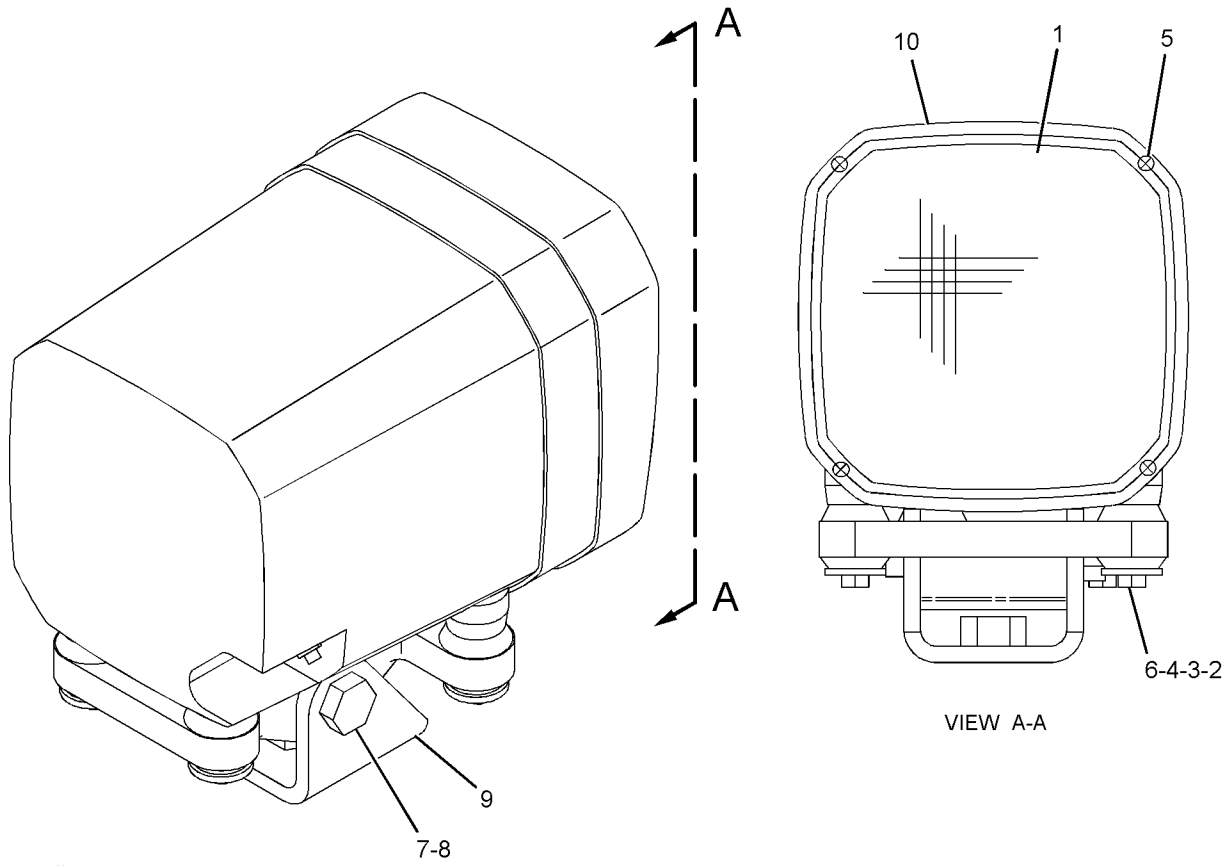

GRAPHIC #1 **<END>** g01052442

135-0426 LAMP GP-SIGNAL–STOP, TAIL

S/N: 4421-UP
24-VOLT
PART OF 8R-5645 LIGHTING GP-STOP, 224-9280 LIGHTING GP-STOP & TAIL
ALSO AN ATTACHMENT

SMCS-1430 **i02427577**

NOTE	REF NO	GRAPHIC REF	PART NUMBER	QTY	PART NAME 1 2 3 4 5 6 (PRODUCT LEVEL)	SEE PAGE
	1	1	**102-8803**	1	KIT-RECEPTACLE (3-PIN)	
					(INCLUDES RECEPTACLE AS & WEDGE)	
	2	1	**186-3735**	3	PIN-CONNECTOR (16-GA TO 18-GA)	

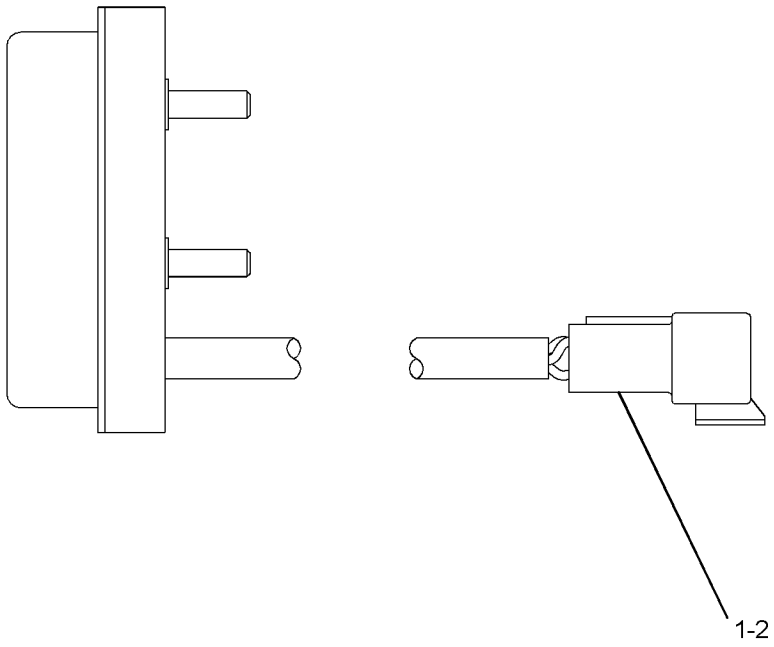

GRAPHIC #1 **<END>** g01213248

235-3937 LAMP GP-WARNING BEACON–AMBER

S/N: 4421-UP
24-VOLT
PART OF 247-4015 LIGHTING GP-WARNING BEACON
AN ATTACHMENT

SMCS-1431 **i02401156**

NOTE	REF NO	GRAPHIC REF	PART NUMBER	QTY	PART NAME 1 2 3 4 5 6 (PRODUCT LEVEL)	SEE PAGE
J	1	1	**272-9800**	1	LENS (WARNING BEACON)	
	2	1	**9X-7849**	1	LAMP (24-VOLT, 70-WATT)	
	3	1	**9X-8139**	1	BELT-DRIVE (WARNING BEACON)	
M	5	1	**6V-8225**	3	NUT (M6X1-THD)	
	6	1	**5P-0537**	3	WASHER-HARD (7.2X14.5X2-MM THK)	
	7	1	**102-8802**	1	KIT-RECEPTACLE (2-PIN)	
					(INCLUDES RECEPTACLE AS & WEDGE)	
	9	1	**186-3735**	2	PIN-CONNECTOR (16-GA TO 18-GA)	

J-PART MARKED J NOT YET RELEASED
M-METRIC PART

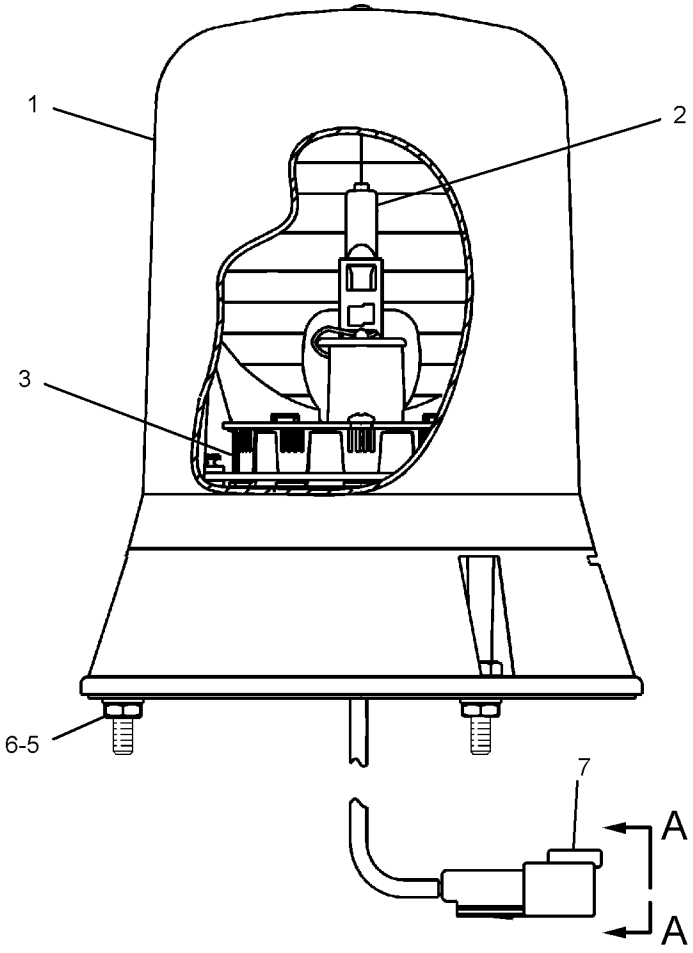

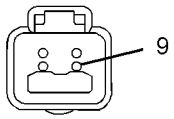

VIEW A-A

GRAPHIC #1 **<END>** g01199570

247-4397 LIGHTING AR-STOP & FLOOD

S/N: 4421-UP

CANNOT BE USED WITH 8R-5645—PAGE 255, 247-4394—PAGE 249

AN ATTACHMENT

SMCS-1432, 1434 **i02154445**

NOTE	PART NUMBER	QTY	PART NAME 1 2 3 4 5 6 (PRODUCT LEVEL)	SEE PAGE
Y	*247-4399*	1	LIGHTING GP-FLOOD (2-LAMP, HID, RADIATOR GUARD) (HIGH INTENSITY DISCHARGE)	251
Y	*247-4400*	1	LIGHTING GP-FLOOD (4-LAMP, CAB FRONT, HID) (HIGH INTENSITY DISCHARGE)	252
Y	*224-9280*	1	LIGHTING GP-STOP & TAIL (2-LAMP, HID, RADIATOR GUARD) (HIGH INTENSITY DISCHARGE)	257
	229-2106	1	SWITCH GP-ROCKER (FLOODLIGHTS, FRONT) (FLOODLIGHT)	
	223-8975	1	SWITCH AS-ROCKER (FLOODLIGHT)	

Y-SEPARATE ILLUSTRATION

<END>

248-1407 LIGHTING AR-WARNING BEACON

S/N: 4421-UP

PART OF 252-8762, 254-7028 CONVERSION AR-CERTIFICATION

AN ATTACHMENT

SMCS-1431 **i02154453**

NOTE	PART NUMBER	QTY	PART NAME 1 2 3 4 5 6 (PRODUCT LEVEL)	SEE PAGE
Y	*247-4015*	1	LIGHTING GP-WARNING BEACON	259
	228-9625	1	SWITCH GP-ROCKER (WARNING BEACON)	
	219-9522	1	SWITCH AS-ROCKER (WARNING BEACON)	

Y-SEPARATE ILLUSTRATION

<END>

160-4337 LIGHTING GP-FLOOD–2-LAMP, PLATFORM

S/N: 4421-UP

PART OF 245-8813 INSTALLATION AR-FIELD

SMCS-1434 **i01266517**

NOTE	REF NO	GRAPHIC REF	PART NUMBER	QTY	PART NAME 1 2 3 4 5 6 (PRODUCT LEVEL)	SEE PAGE
	1	1	**101-8418**	2	BRACKET	
	2	1	**130-6469**	2	BRACKET AS	
Y	3	1	**153-2073**	2	LAMP GP-FLOOD (24-VOLT, VERTICAL MOUNT)	238
M	4	1	**6V-9189**	2	LOCKNUT (M8X1.25-THD)	
	5	1	**8T-4121**	6	WASHER-HARD (11X21X2.5-MM THK)	
M	6	1	**8T-4136**	6	BOLT (M10X1.5X25-MM)	
	7	1	**8T-4224**	4	WASHER-HARD (8.8X16X2-MM THK)	
M	8	1	**8T-6869**	2	BOLT (M8X1.25X60-MM)	

M-METRIC PART
Y-SEPARATE ILLUSTRATION

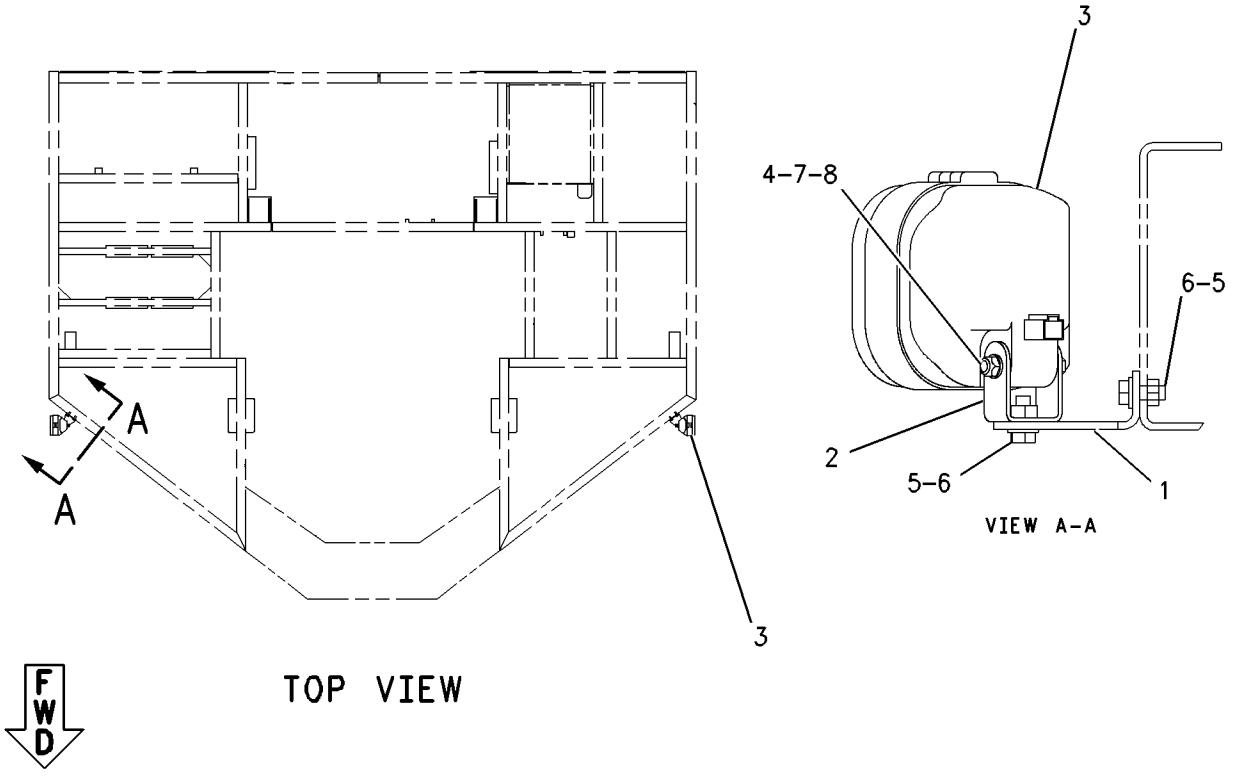

GRAPHIC #1 **<END>** g00673188

161-4540 LIGHTING GP-FLOOD–2-LAMP, LOADER FRAME

S/N: 4421-UP

PART OF 245-8811 CHASSIS AR-FRONT

SMCS-1434 **i01884511**

NOTE	REF NO	GRAPHIC REF	PART NUMBER	QTY	PART NAME 1 2 3 4 5 6 (PRODUCT LEVEL)	SEE PAGE
	1	1	**101-3787**	2	BRACKET AS	
	2	1	**130-6469**	2	BRACKET AS	
					(EACH INCLUDES)	
M	2A	1	**8T-3490**	1	NUT-WELD (M10X1.5-THD)	
Y	3	1	**153-2073**	2	LAMP GP-FLOOD (24-VOLT, VERTICAL MOUNT)	238
M	4	1	**6V-9189**	2	LOCKNUT (M8X1.25-THD)	
	5	1	**8T-4121**	6	WASHER-HARD (11X21X2.5-MM THK)	
M	6	1	**8T-4136**	6	BOLT (M10X1.5X25-MM)	
	7	1	**8T-4224**	4	WASHER-HARD (8.8X16X2-MM THK)	
M	8	1	**8T-6869**	2	BOLT (M8X1.25X60-MM)	

M-METRIC PART
Y-SEPARATE ILLUSTRATION

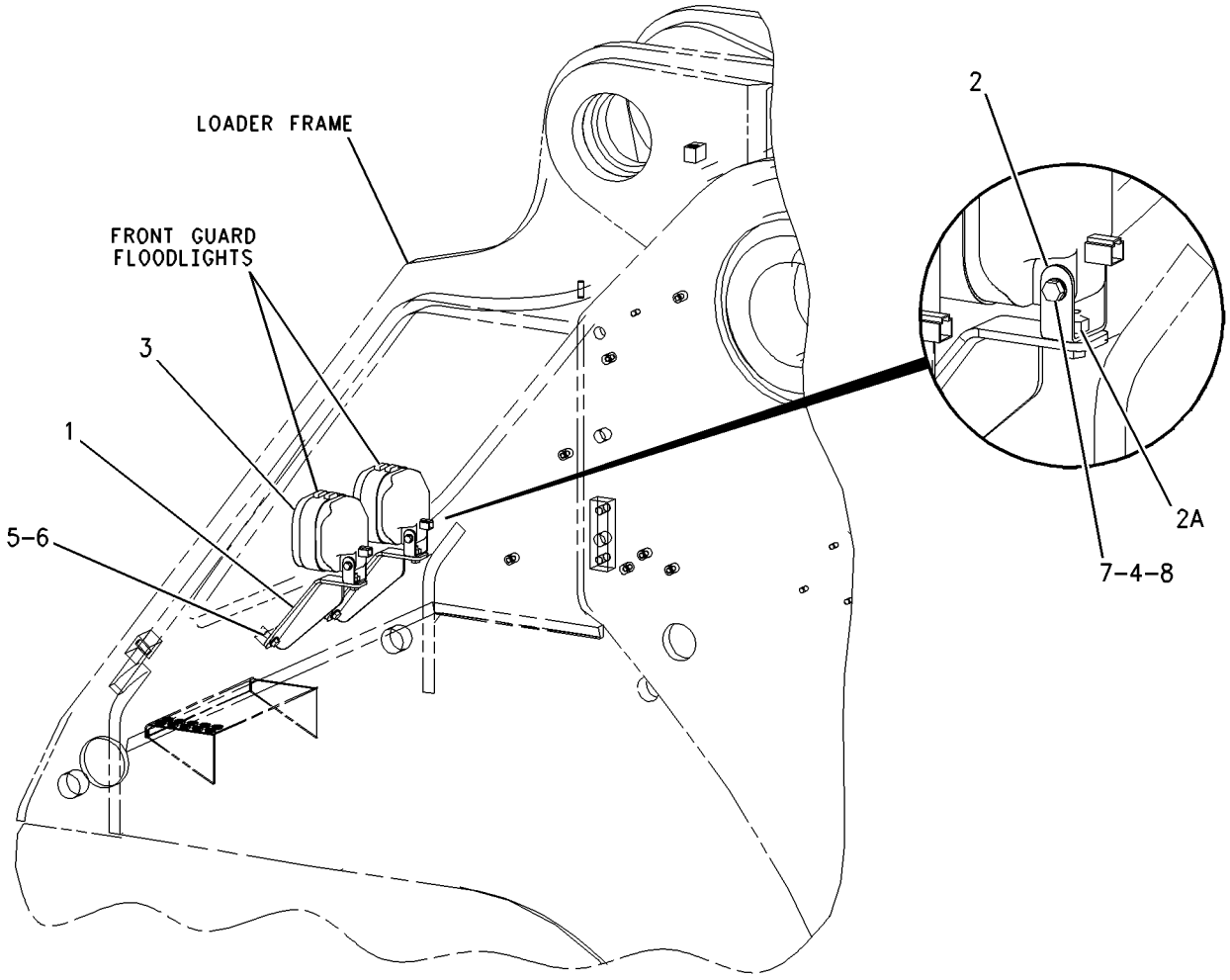

LEFT REAR VIEW

GRAPHIC #1 **<END>** g00976274

247-4024 LIGHTING GP-FLOOD–6-LAMP, FRONT FENDER

S/N: 4421-UP

PART OF 245-8813 INSTALLATION AR-FIELD

SMCS-1434 **i02282526**

NOTE	REF NO	GRAPHIC REF	PART NUMBER	QTY	PART NAME 1 2 3 4 5 6 (PRODUCT LEVEL)	SEE PAGE
	1	1	**9W-4361**	8	MOUNT-FLEXIBLE	
	2	1	**266-9373**	2	SUPPORT AS	
	3	1	**266-9374**	2	GUARD AS	
					(EACH INCLUDES)	
M		1	**8T-3490**	4	NUT-WELD (M10X1.5-THD)	
Y	4	1	**153-2073**	6	LAMP GP-FLOOD (24-VOLT, VERTICAL MOUNT)	238
	5	1	**247-2785**	2	HARNESS AS-LIGHTING	
					(EACH INCLUDES)	
		1	**102-8805**	1	KIT-RECEPTACLE (6-PIN)	
					(INCLUDES RECEPTACLE AS & WEDGE)	
		1	**8T-8737**	7	PLUG-SEAL	
		1	**155-2270**	1	KIT-CONNECTING PLUG (2-PIN)	
		1	**155-2274**	1	KIT-CONNECTING PLUG (6-PIN)	
					(EACH KIT-CONNECTING PLUG INCLUDES PLUG AS & WEDGE)	
	6	1	**067-2551**	2	CLIP	
	7	1	**115-0617**	6	BRACKET	
	8	1	**130-5300**	2	CLIP	
	9	1	**2D-1290**	2	GROMMET	
	10	1	**4K-8864**	2	CLIP	
	11	1	**6V-8801**	16	NUT (3/8-16-THD)	
M	12	1	**6V-9189**	6	LOCKNUT (M8X1.25-THD)	
	13	1	**7K-1659**	2	GROMMET	
	14	1	**8M-2770**	2	CLIP	
	15	1	**8T-4121**	10	WASHER-HARD (11X21X2.5-MM THK)	
M	16	1	**8T-4136**	6	BOLT (M10X1.5X25-MM)	
M	17	1	**8T-4183**	16	BOLT (M12X1.75X40-MM)	
M	18	1	**8T-4195**	4	BOLT (M10X1.5X30-MM)	
	19	1	**8T-4223**	16	WASHER-HARD (13.5X25.5X3-MM THK)	
	20	1	**8T-4224**	12	WASHER-HARD (8.8X16X2-MM THK)	
	21	1	**8T-4896**	16	WASHER-HARD (10.2X18.5X2.5-MM THK)	
M	22	1	**8T-6869**	6	BOLT (M8X1.25X60-MM)	
	23	1	**9K-0700**	2	GROMMET	

M-METRIC PART
Y-SEPARATE ILLUSTRATION

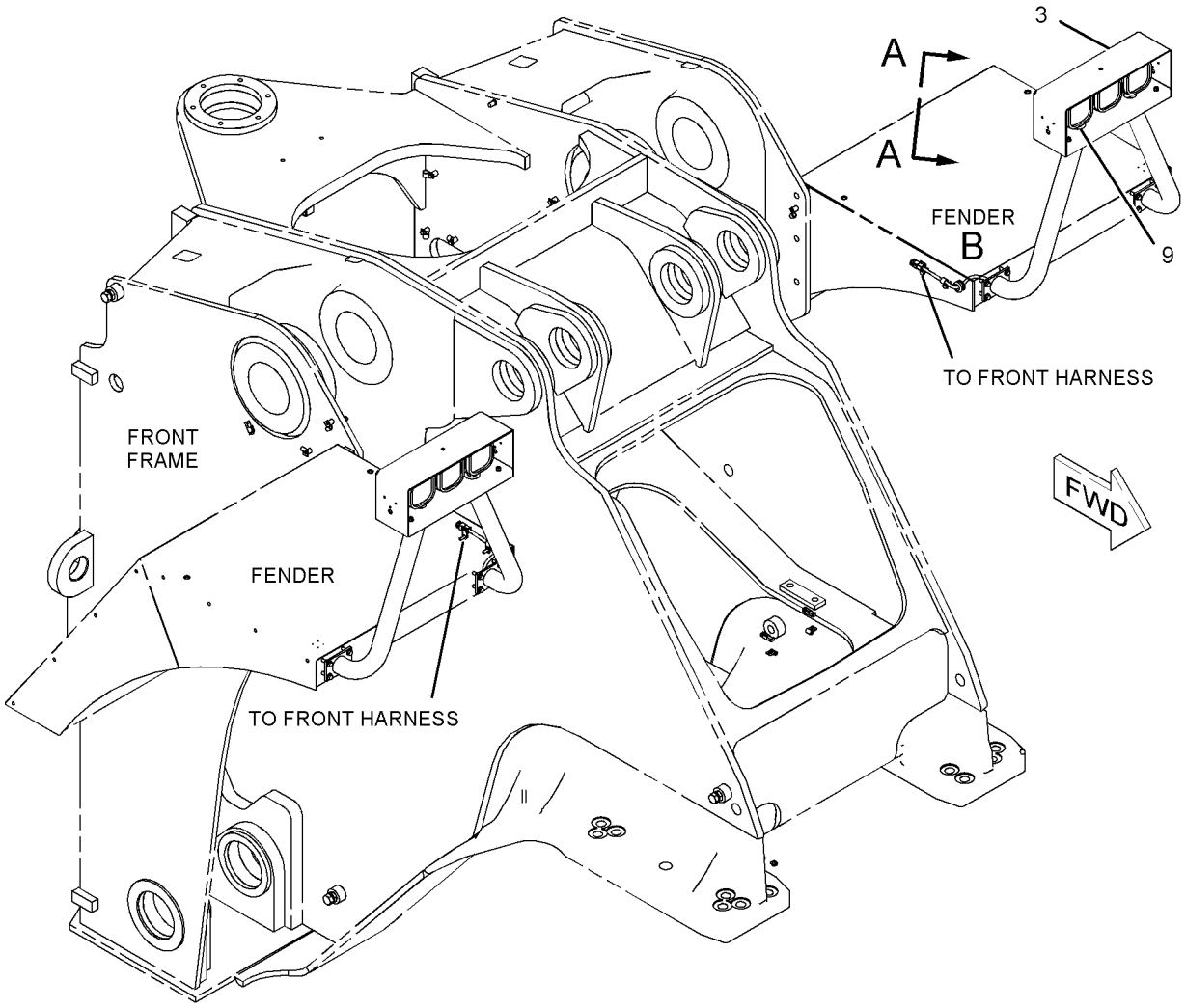

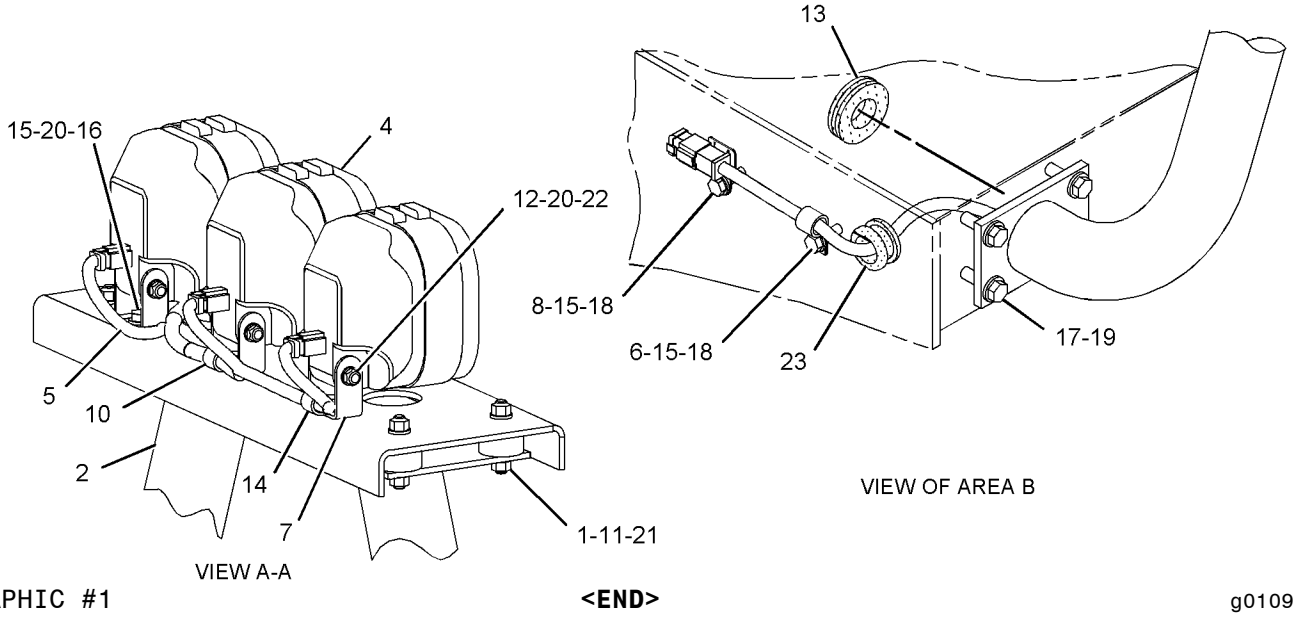

GRAPHIC #1 **<END>** g01091326

247-4394 LIGHTING GP-FLOOD–2-LAMP, REAR

S/N: 4421-UP

PART OF 245-8813 INSTALLATION AR-FIELD

SMCS-1434 **i02149243**

NOTE	REF NO	GRAPHIC REF	PART NUMBER	QTY	PART NAME 1 2 3 4 5 6 (PRODUCT LEVEL)	SEE PAGE
	1	1	**140-1088**	2	BRACKET AS	
M		1	**8T-3490**	1	NUT-WELD (M10X1.5-THD)	
Y	2	1	**153-2073**	2	LAMP GP-FLOOD (24-VOLT, VERTICAL MOUNT)	238
M	3	1	**5C-7261**	2	NUT (M8X1.25-THD)	
	4	1	**8T-4121**	2	WASHER-HARD (11X21X2.5-MM THK)	
M	5	1	**8T-4137**	2	BOLT (M10X1.5X20-MM)	
	6	1	**8T-4224**	4	WASHER-HARD (8.8X16X2-MM THK)	
M	7	1	**8T-6869**	2	BOLT (M8X1.25X60-MM)	

M-METRIC PART
Y-SEPARATE ILLUSTRATION

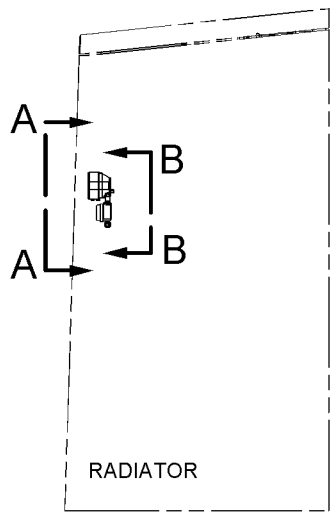

RIGHT SIDE VIEW

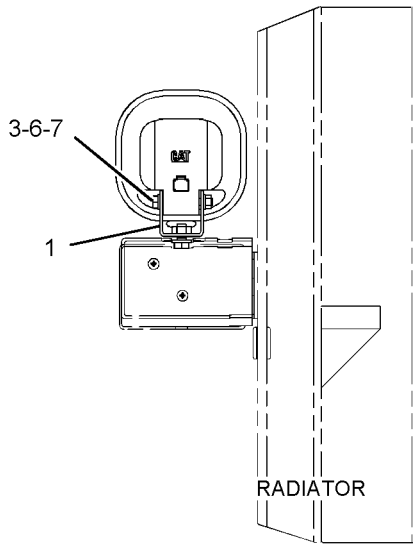

VIEW B-B

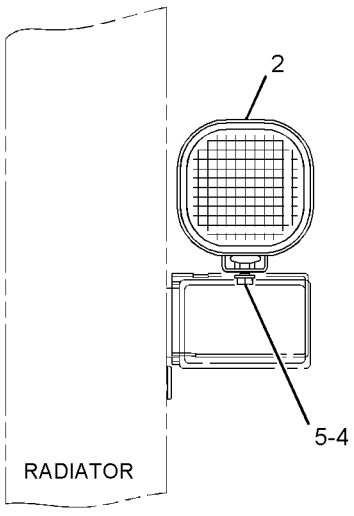

VIEW A-A

GRAPHIC #1

<END>

g01091161

247-4395 LIGHTING GP-FLOOD–8-LAMP, ROPS

S/N: 4421-UP

PART OF 245-8813 INSTALLATION AR-FIELD

SMCS-1434 **i02282528**

NOTE	REF NO	GRAPHIC REF	PART NUMBER	QTY	PART NAME 1 2 3 4 5 6 (PRODUCT LEVEL)	SEE PAGE
	1	1	**9X-9365**	4	BRACKET	
	2	1	**140-1088**	4	BRACKET AS	
					(EACH INCLUDES)	
M		1	**8T-3490**	1	NUT-WELD (M10X1.5-THD)	
		1	**115-0617**	1	BRACKET	
Y	3	1	**147-0319**	4	LAMP GP-FLOOD (24-VOLT, SUSPENDED MOUNT)	237
Y	4	1	**153-2073**	4	LAMP GP-FLOOD (24-VOLT, VERTICAL MOUNT)	238
	5	1	**174-7594**	4	BRACKET	
M	6	1	**6V-9189**	8	LOCKNUT (M8X1.25-THD)	
	7	1	**8T-4121**	12	WASHER-HARD (11X21X2.5-MM THK)	
M	8	1	**8T-4136**	12	BOLT (M10X1.5X25-MM)	
	9	1	**8T-4224**	16	WASHER-HARD (8.8X16X2-MM THK)	
M	10	1	**8T-6869**	8	BOLT (M8X1.25X60-MM)	

M-METRIC PART
Y-SEPARATE ILLUSTRATION

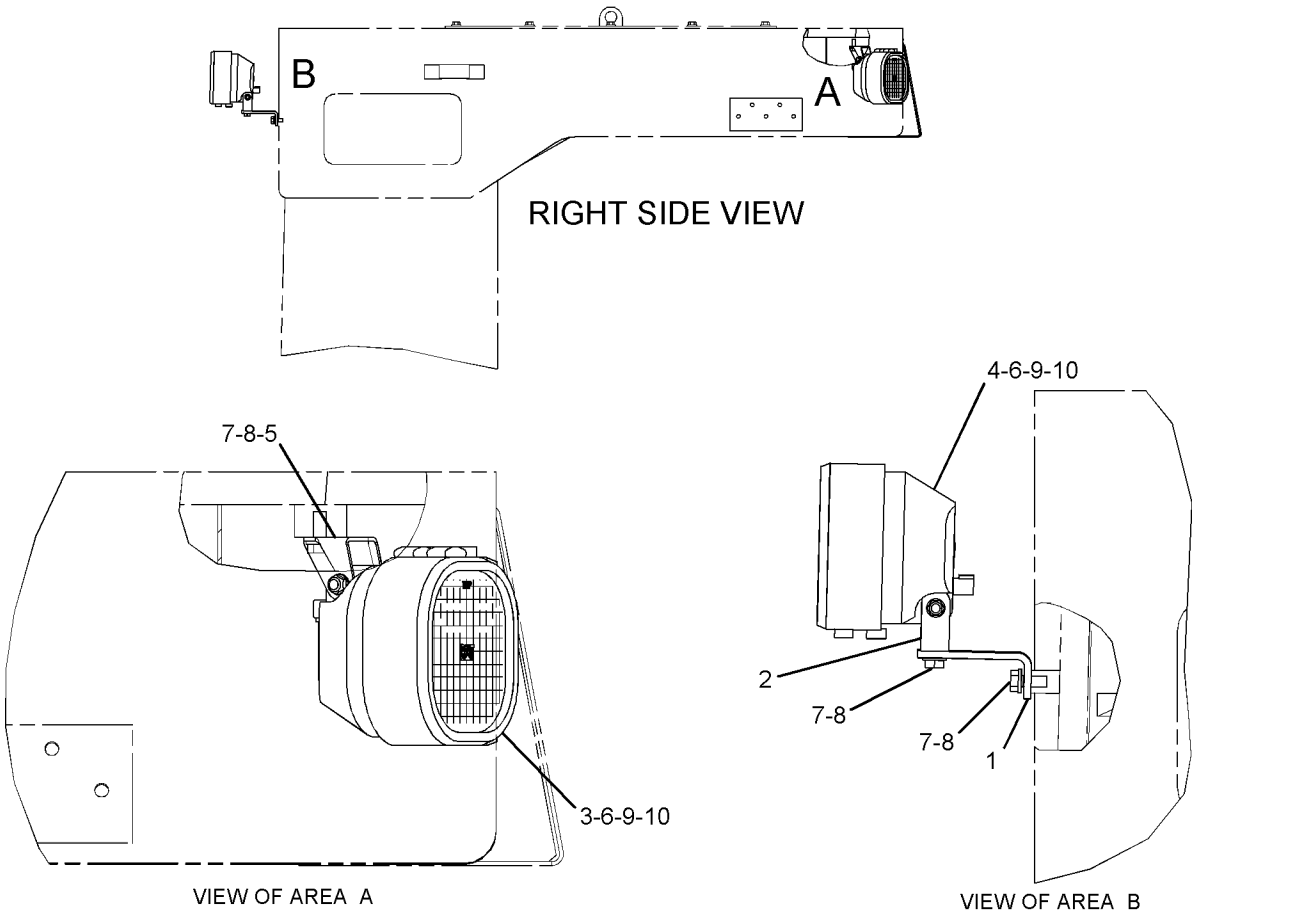

GRAPHIC #1 **<END>** g01091711

247-4399 LIGHTING GP-FLOOD–2-LAMP, REAR

S/N: 4421-UP

PART OF 247-4397 LIGHTING AR-STOP & FLOOD

AN ATTACHMENT

SMCS-1434 **i02181090**

NOTE	REF NO	GRAPHIC REF	PART NUMBER	QTY	PART NAME 1 2 3 4 5 6 (PRODUCT LEVEL)	SEE PAGE
Y	1	1	**210-8423**	2	LAMP GP-FLOOD (24-VOLT, 35-WATT, HID, VERT MT)	239
	2	1	**5P-9085**	2	CLIP	
	3	1	**8T-4121**	4	WASHER-HARD (11X21X2.5-MM THK)	
M	4	1	**8T-4137**	4	BOLT (M10X1.5X20-MM)	

M-METRIC PART
Y-SEPARATE ILLUSTRATION

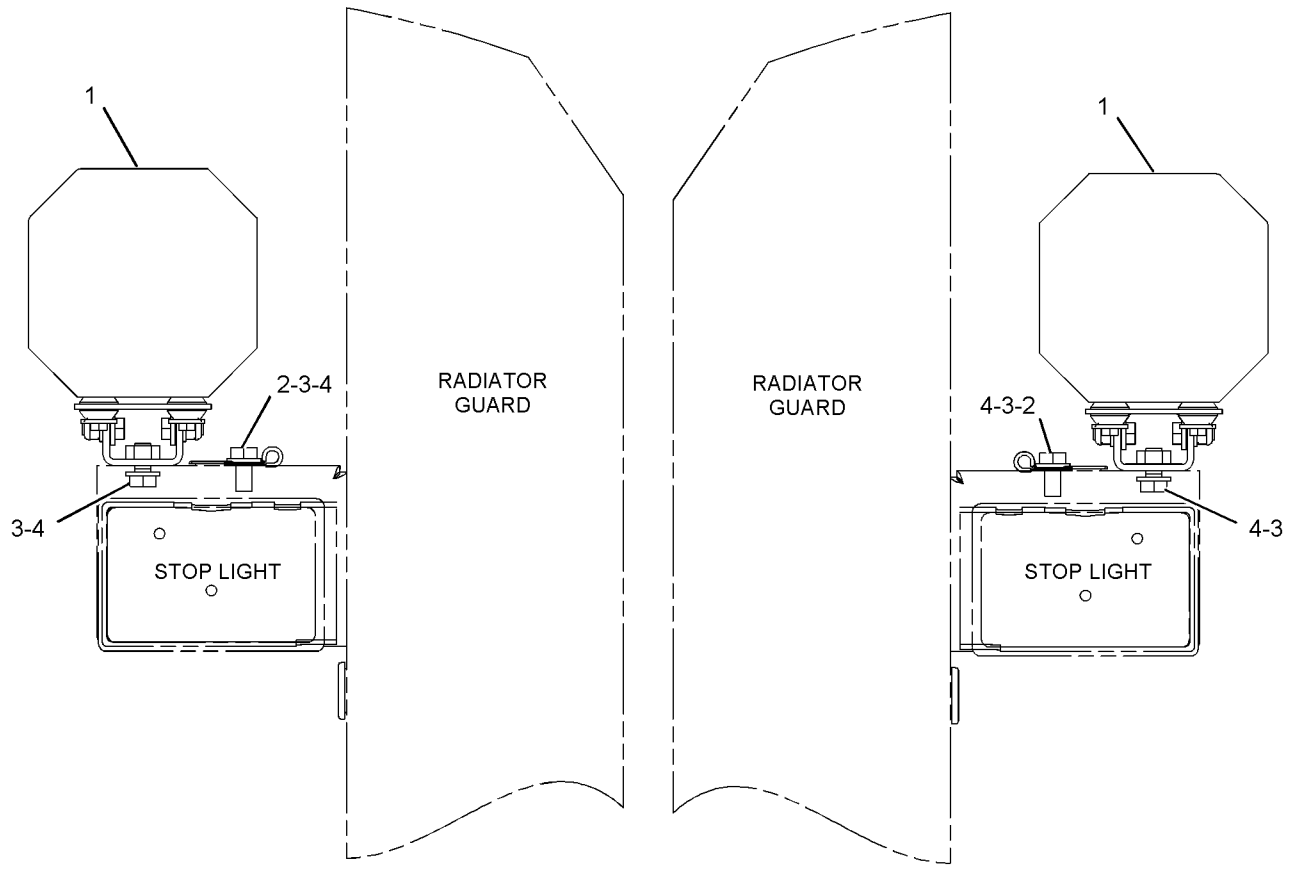

REAR VIEW

GRAPHIC #1 **<END>** g01094757

247-4400 LIGHTING GP-FLOOD–4-LAMP

S/N: 4421-UP
PART OF 247-4397 LIGHTING AR-STOP & FLOOD
AN ATTACHMENT

SMCS-1434 **i02282530**

NOTE	REF NO	GRAPHIC REF	PART NUMBER	QTY	PART NAME 1 2 3 4 5 6 (PRODUCT LEVEL)	SEE PAGE
	1	1	**9X-6772**	6	STRAP-CABLE	
Y	2	1	**247-0294**	4	LAMP GP-FLOOD (24-VOLT, VERTICAL MOUNT)	241
	3	1	**264-9001**	2	BRACKET AS	
					(EACH INCLUDES)	
		1	**9R-2613**	1	BOSS-WELD (M10X1.5X25-MM OAL)	
	4	1	**266-9337**	2	BRACKET AS	
					(EACH INCLUDES)	
M		1	**8T-3490**	1	NUT-WELD (M10X1.5-THD)	
	5	1	**5P-9085**	2	CLIP	
	6	1	**8T-4121**	10	WASHER-HARD (11X21X2.5-MM THK)	
M	7	1	**8T-4136**	6	BOLT (M10X1.5X25-MM)	
M	8	1	**8T-4137**	4	BOLT (M10X1.5X20-MM)	
M	9	1	**8T-4139**	4	BOLT (M12X1.75X30-MM)	
	10	1	**8T-4223**	4	WASHER-HARD (13.5X25.5X3-MM THK)	

M-METRIC PART
Y-SEPARATE ILLUSTRATION

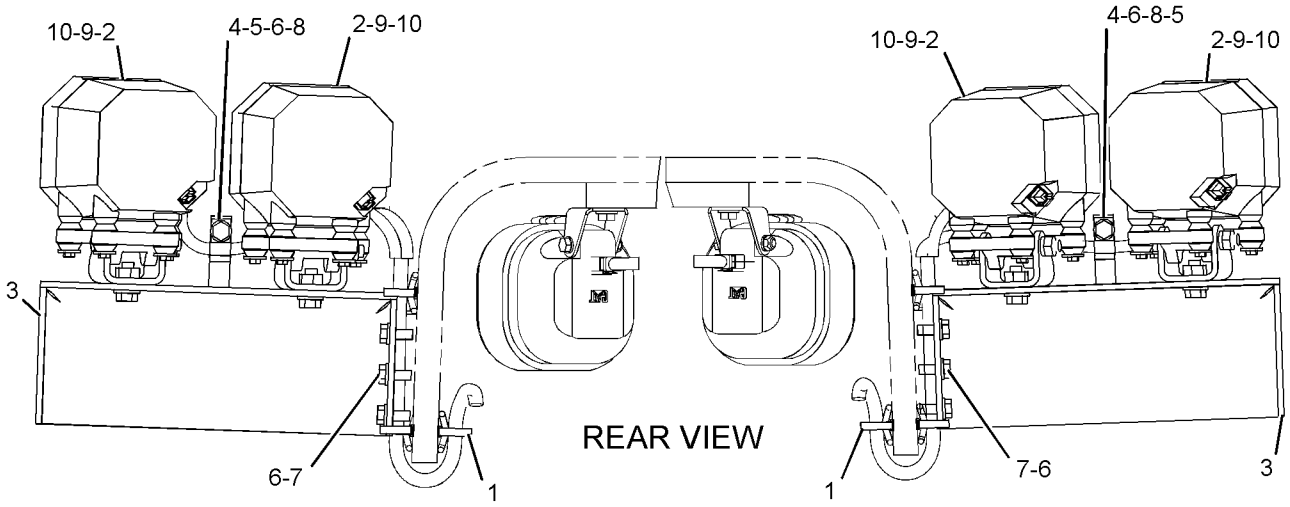

GRAPHIC #1 **<END>** g01144438

274-8527 LIGHTING GP-FLOOD–2-LAMP, ENGINE COMPARTMENT

S/N: 4421-UP

PART OF 245-8812 CHASSIS AR-REAR

SMCS-1434 **i02397241**

NOTE	REF NO	GRAPHIC REF	PART NUMBER	QTY	PART NAME 1 2 3 4 5 6 (PRODUCT LEVEL)	SEE PAGE
	1	1	**8R-9137**	2	ANGLE	
Y	2	1	**219-6487**	2	LAMP GP-FLOOD (24-VOLT, SUSPENDED MOUNT)	240
	3	1	**8T-4121**	2	WASHER-HARD (11X21X2.5-MM THK)	
M	4	1	**8T-4136**	2	BOLT (M10X1.5X25-MM)	

M-METRIC PART
Y-SEPARATE ILLUSTRATION

274-8527 **LIGHTING GP-FLOOD** *(contd.)* **i02397241**

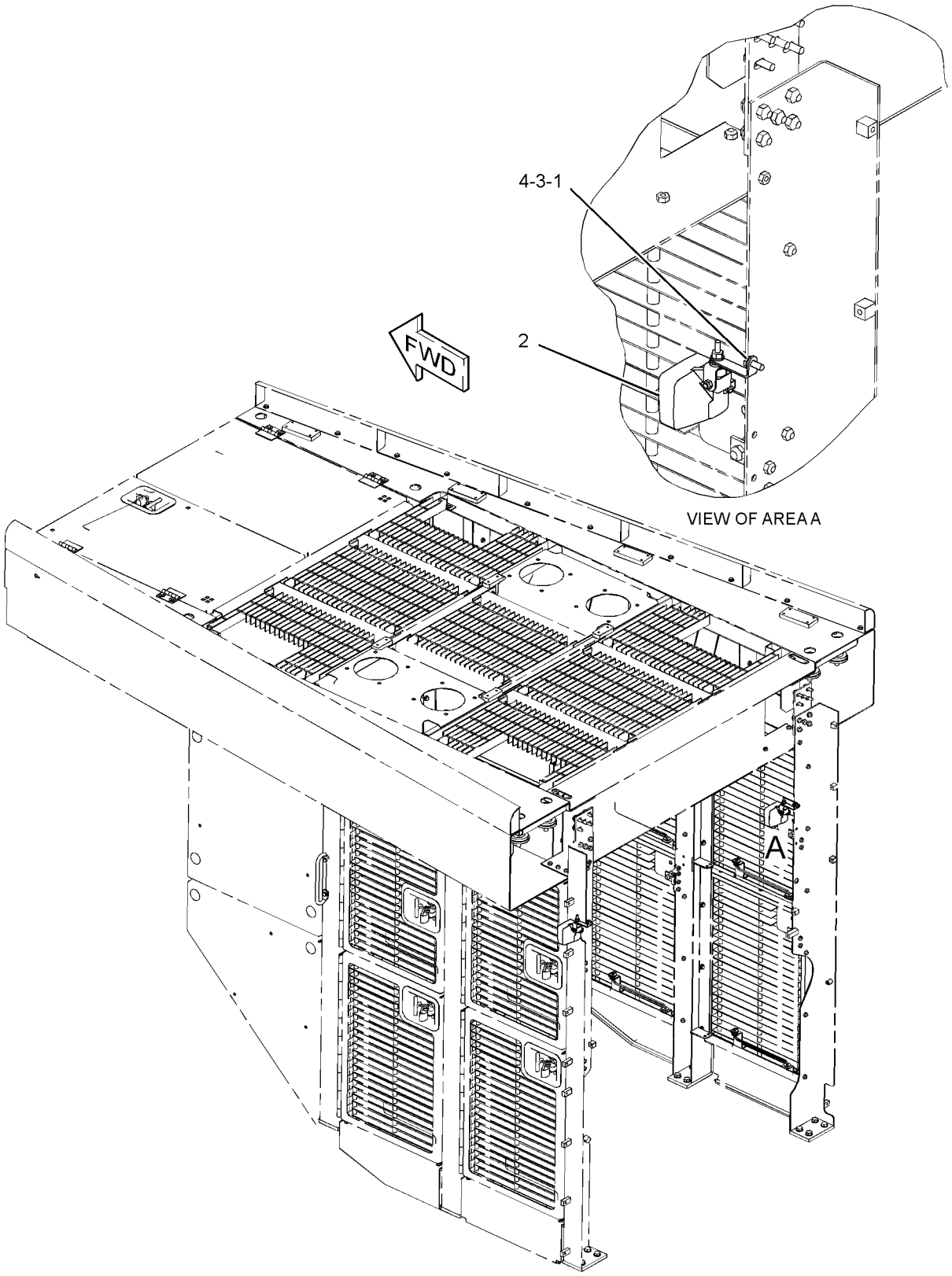

GRAPHIC #1 **<END>** g01199032

8R-5645 LIGHTING GP-STOP—2-LAMP, REAR

S/N: 4421-UP

PART OF 252-0197 LIGHTING GP-STOP

SMCS-1432 **i02279271**

NOTE	REF NO	GRAPHIC REF	PART NUMBER	QTY	PART NAME 1 2 3 4 5 6 (PRODUCT LEVEL)	SEE PAGE
	1	1	**4E-8975**	1	BRACKET	
	2	1	**4E-8976**	1	BRACKET	
	3	1	**4E-9924**	1	COVER	
	4	1	**4E-9925**	1	COVER	
Y	5	1	**135-0426**	2	LAMP GP-SIGNAL (24-VOLT, STOP, TAIL)	242
C	6	1	**230-8152**	4	SPACER	
C	7	1	**230-9715**	2	CLIP AS	
CM	8	1	**5C-2890**	2	NUT (M6X1-THD)	
	9	1	**8T-4121**	4	WASHER-HARD (11X21X2.5-MM THK)	
M	10	1	**8T-4195**	4	BOLT (M10X1.5X30-MM)	
C	11	1	**8T-4205**	2	WASHER-HARD (7.2X14.5X2-MM THK)	
M	12	1	**8T-6411**	4	SCREW-MACHINE (M6X1X12-MM)	

C-CHANGE FROM PREVIOUS TYPE
M-METRIC PART
Y-SEPARATE ILLUSTRATION

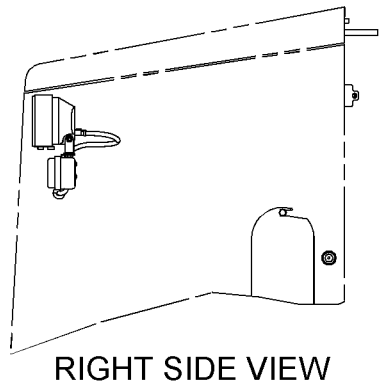

RIGHT SIDE VIEW

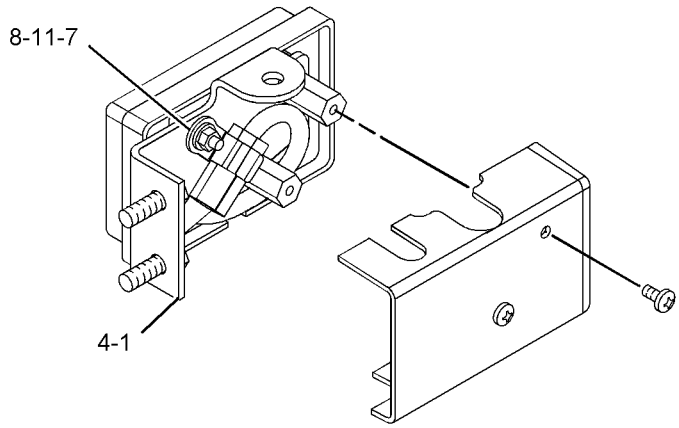

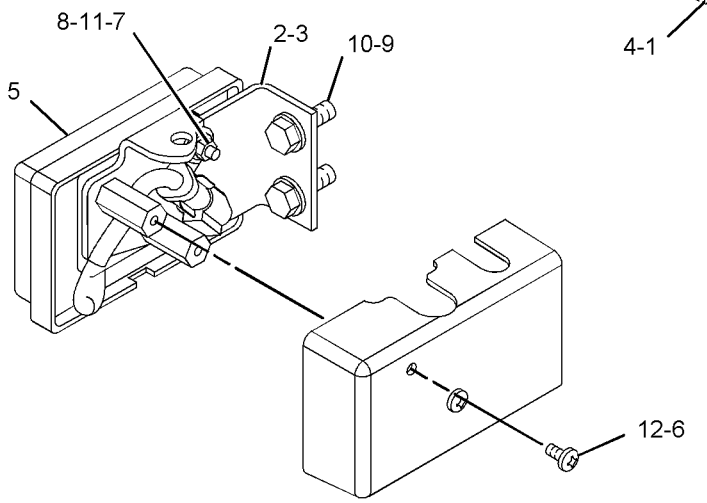



GRAPHIC #1 **<END>** g01024643

252-0197 LIGHTING GP-STOP–2-LAMP, REAR

S/N: 4421-UP

PART OF 245-8813 INSTALLATION AR-FIELD

SMCS-1432 **i02149237**

NOTE	REF NO	GRAPHIC REF	PART NUMBER	QTY	PART NAME 1 2 3 4 5 6 (PRODUCT LEVEL)	SEE PAGE
Y	1	1	*8R-5645*	1	LIGHTING GP-STOP (2-LAMP, REAR)	255
	2	1	**9X-7344**	2	GROMMET	

Y-SEPARATE ILLUSTRATION

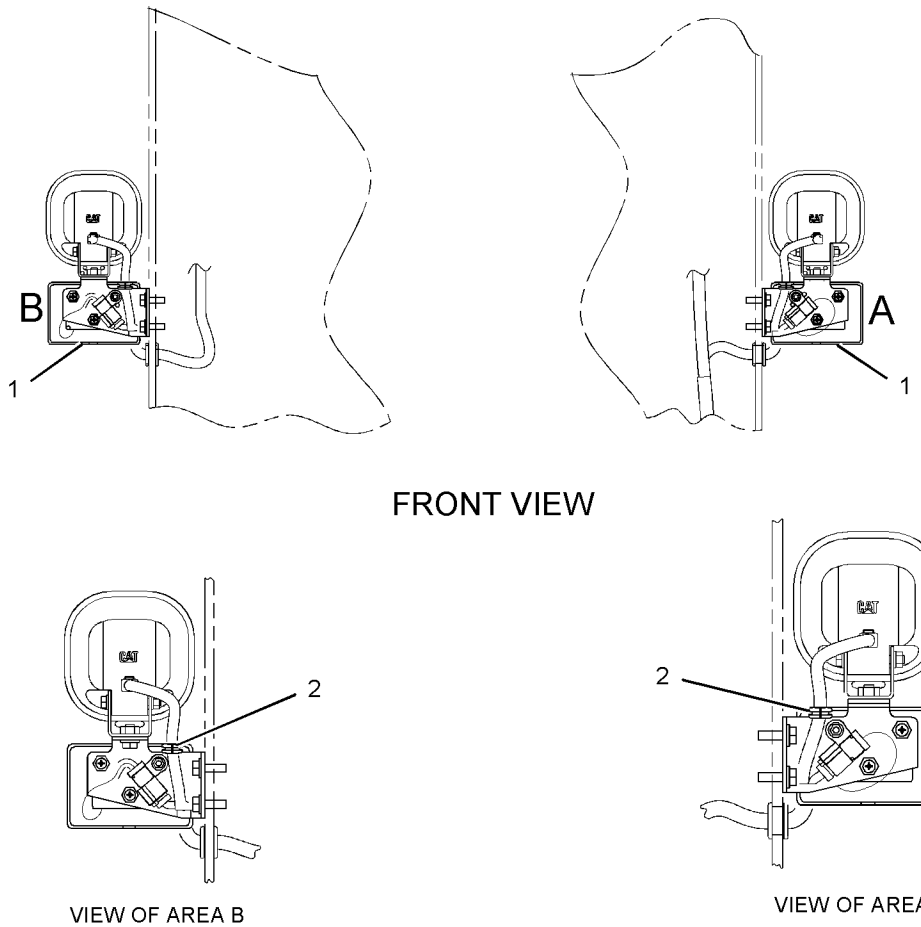

GRAPHIC #1 **<END>** g01091720

224-9280 LIGHTING GP-STOP & TAIL–

HIGH INTENSITY DISCHARGE

S/N: 4421-UP

PART OF 247-4397 LIGHTING AR-STOP & FLOOD

AN ATTACHMENT

SMCS-1432 **i02386878**

NOTE	REF NO	GRAPHIC REF	PART NUMBER	QTY	PART NAME 1 2 3 4 5 6 (PRODUCT LEVEL)	SEE PAGE
	1	1	**4E-9924**	1	COVER	
	2	1	**4E-9925**	1	COVER	
Y	3	1	**135-0426**	2	LAMP GP-SIGNAL (24-VOLT, STOP, TAIL)	242
	4	1	**219-0601**	1	BRACKET AS	
M		1	**8T-3490**	1	NUT-WELD (M10X1.5-THD)	
	5	1	**219-0602**	1	BRACKET AS	
M		1	**8T-3490**	1	NUT-WELD (M10X1.5-THD)	
	6	1	**230-8152**	4	SPACER	
	7	1	**230-9715**	2	CLIP AS	
M	8	1	**5C-2890**	6	NUT (M6X1-THD)	
	9	1	**8P-8540**	2	GROMMET	
	10	1	**8T-4121**	8	WASHER-HARD (11X21X2.5-MM THK)	
M	11	1	**8T-4195**	8	BOLT (M10X1.5X30-MM)	
	12	1	**8T-4205**	2	WASHER-HARD (7.2X14.5X2-MM THK)	
M	13	1	**8T-6411**	4	SCREW-MACHINE (M6X1X12-MM)	

M-METRIC PART
Y-SEPARATE ILLUSTRATION

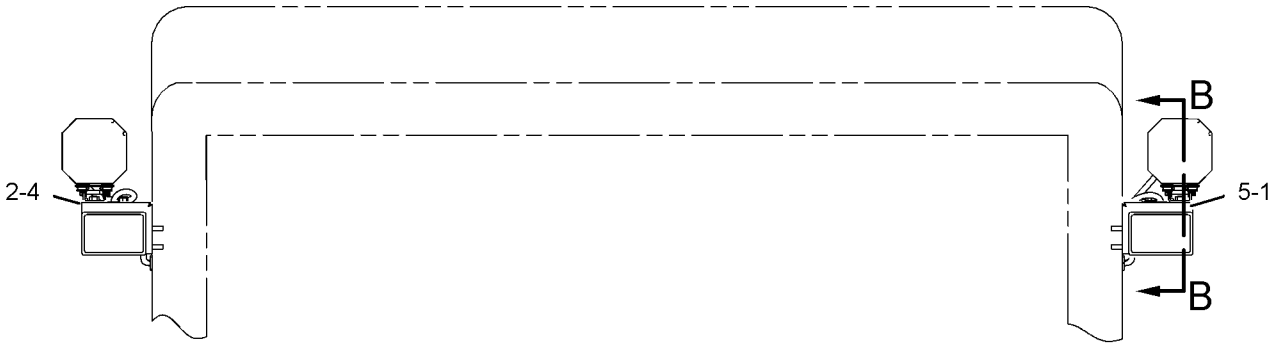

REAR VIEW

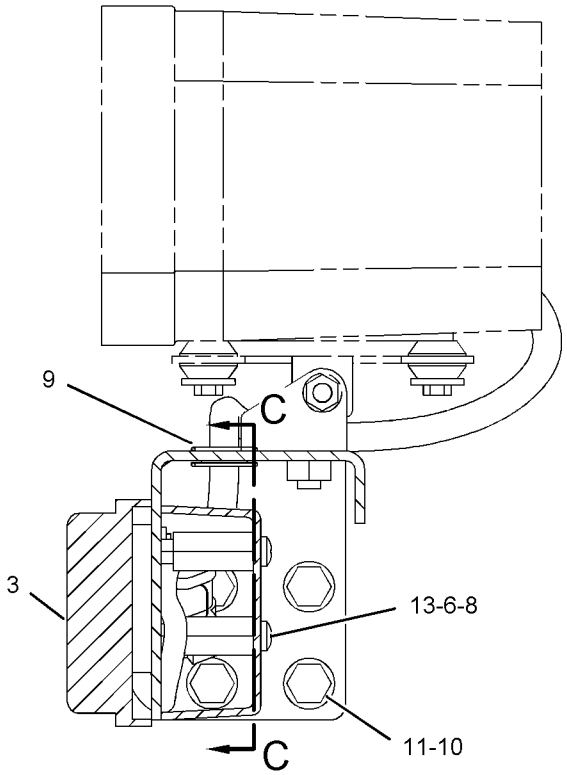

VIEW B-B

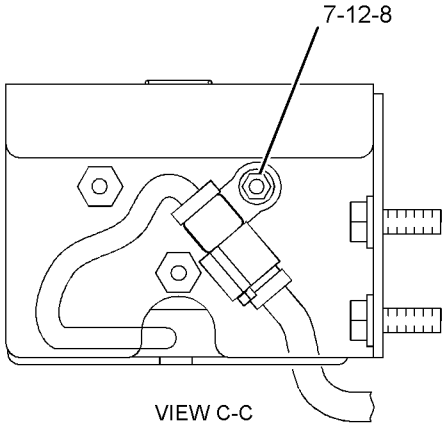

VIEW C-C

GRAPHIC #1 **<END>** g01022623

247-4015 LIGHTING GP-WARNING BEACON

S/N: 4421-UP
PART OF 248-1407 LIGHTING AR-WARNING BEACON
AN ATTACHMENT

SMCS-1431 **i02282524**

NOTE	REF NO	GRAPHIC REF	PART NUMBER	QTY	PART NAME 1 2 3 4 5 6 (PRODUCT LEVEL)	SEE PAGE
	1	1	**263-3765**	2	BRACKET AS	
					(EACH INCLUDES)	
		1	**7T-1099**	1	LINK	
		1	**9R-2613**	1	BOSS-WELD (M10X1.5X25-MM OAL)	
Y	2	1	**235-3937**	2	LAMP GP-WARNING BEACON (24-VOLT, AMBER)	243
	3	1	**130-5300**	2	CLIP	
	4	1	**5P-9085**	2	CLIP	
	5	1	**8T-4121**	8	WASHER-HARD (11X21X2.5-MM THK)	
M	6	1	**8T-4137**	8	BOLT (M10X1.5X20-MM)	

M-METRIC PART
Y-SEPARATE ILLUSTRATION

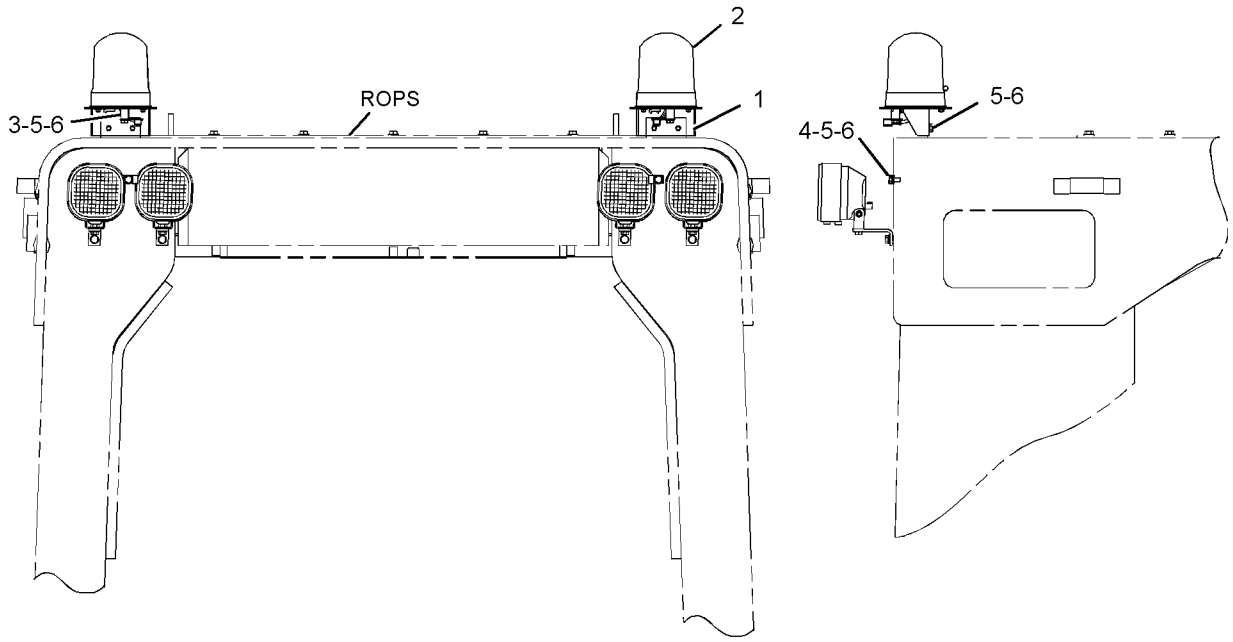

REAR VIEW RIGHT SIDE VIEW

GRAPHIC #1 **<END>** g01093923

244-7340 LINES GP-AIR TANK–AIR STARTING

S/N: 4421-UP

PART OF 250-2820, 263-1827 STARTING AR-AIR

AN ATTACHMENT

SMCS-1466 **i02289817**

NOTE	REF NO	GRAPHIC REF	PART NUMBER	QTY	PART NAME 1 2 3 4 5 6 (PRODUCT LEVEL)	SEE PAGE
	1	1,2	**2H-3940**	1	ELBOW	
	5	1,2	**4S-6668**	9	CLIP	
	6	2	**5H-4778**	1	ELBOW	
	7	1	**251-1061**	1	HOSE AS	
	8	2	**251-1062**	1	HOSE AS	
	9	2	**251-1063**	1	HOSE AS	
I	10	1	**266-1682**	1	HOSE AS	
	11	1	**130-3374**	1	CLIP	
	12	2	**3B-6552**	1	ELBOW	
	13	2	**4D-2560**	1	CONNECTOR-PIPE	
	14	1	**4K-8864**	6	CLIP	
	15	2	**4S-7606**	2	ELBOW	
	16	1,2	**5K-8451**	3	CLIP	
	17	2	**7D-4903**	1	ADAPTER	
	18	1,2	**8T-4121**	9	WASHER-HARD (11X21X2.5-MM THK)	
M	19	1	**8T-4133**	1	NUT (M10X1.5 THD)	
M	20	1,2	**8T-4137**	7	BOLT (M10X1.5X20-MM)	
M	21	1	**8T-4195**	1	BOLT (M10X1.5X30-MM)	

I-REFER TO HYDRAULIC INFORMATION SYSTEM
M-METRIC PART

REFER TO ALL ILLUSTRATIONS
OF THIS GROUP FOR AUXILIARY VIEWS

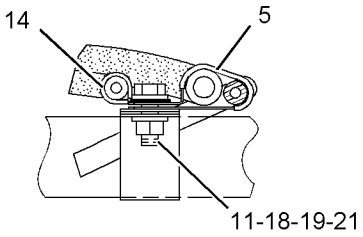

SECTION B-B

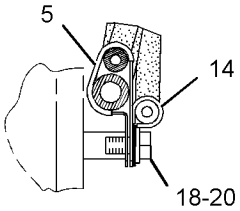

SECTION E-E

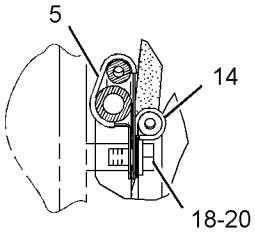

SECTION J-J

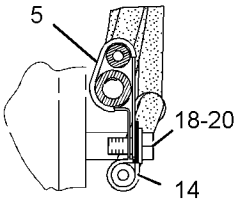

SECTION F-F

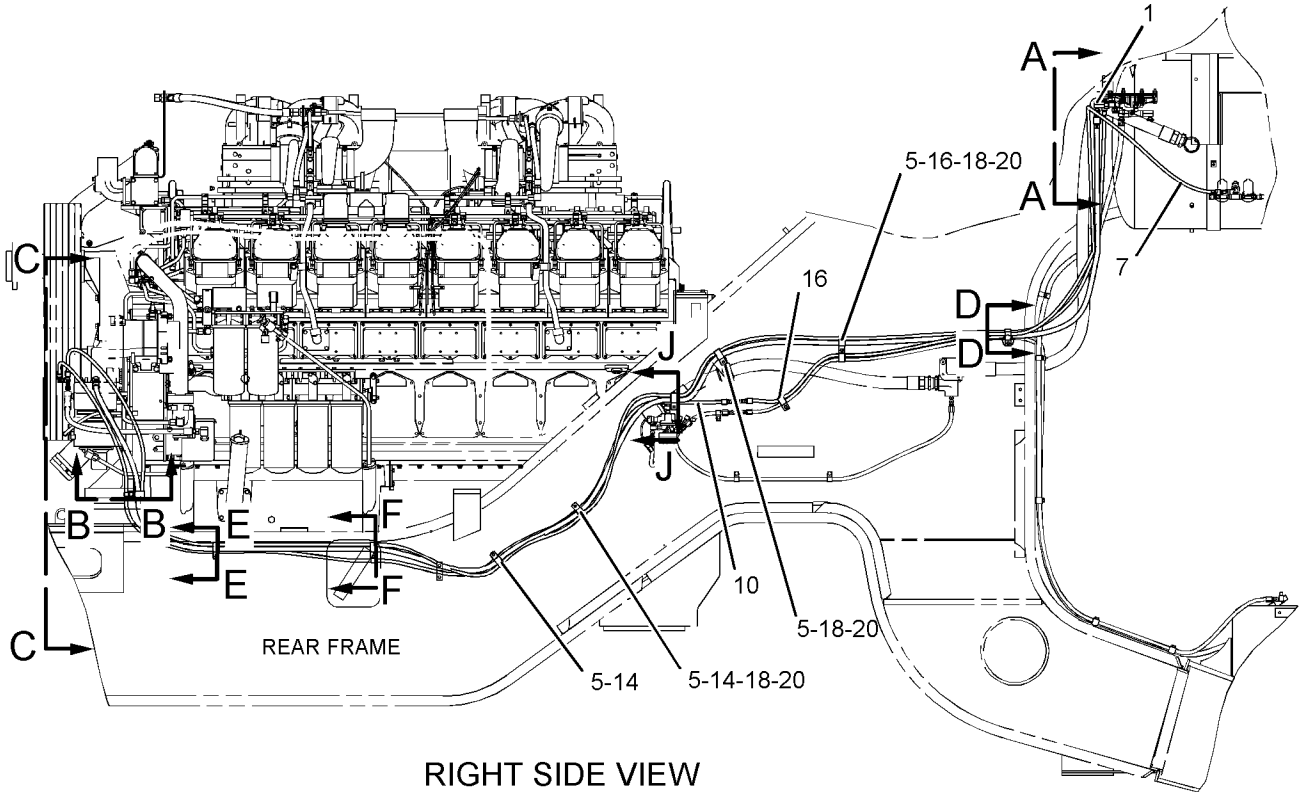

RIGHT SIDE VIEW

GRAPHIC #1 g01147073

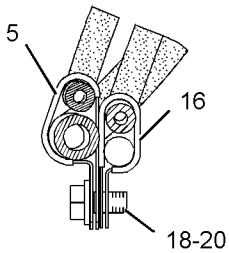

SECTION D-D

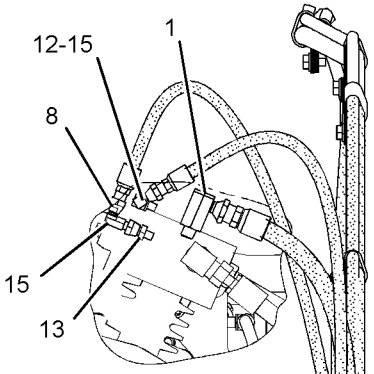

VIEW C-C

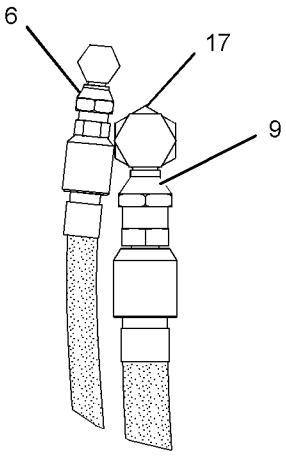

VIEW A-A

GRAPHIC #2 **<END>** g01147075

172-0208 LUBRICATOR GP-AIR MOTOR

S/N: 4421-UP
PART OF 4W-6634 STARTING MOTOR GP-AIR
AN ATTACHMENT

SMCS-1451 **i02116375**

NOTE	REF NO	GRAPHIC REF	PART NUMBER	QTY	PART NAME 1 2 3 4 5 6 (PRODUCT LEVEL)	SEE PAGE
					AVAILABLE REPAIR KIT(S):	
			186-4180	1	KIT-SEAL (AIR MOTOR LUBRICATOR)	
					(INCLUDES SEAL-O-RINGS, FILTER, SEAL-U-CUP AND SPRING)	

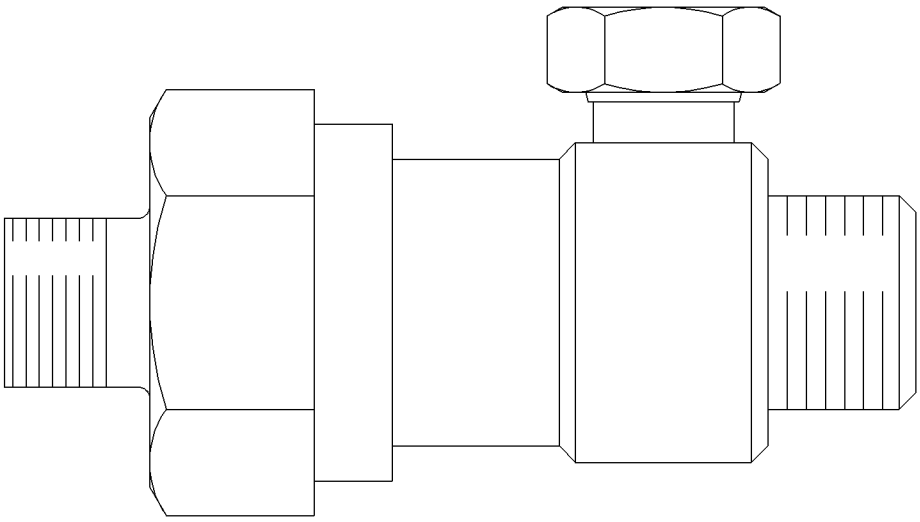

GRAPHIC #1 **<END>** g00673434

251-6744 MOUNTING GP-SENSOR–BUCKET POSITIONER

S/N: 4421-UP

PART OF 251-3143, 251-3144 KICKOUT & POSITIONER GP

AN ATTACHMENT

SMCS-5736 **i02154620**

NOTE	REF NO	GRAPHIC REF	PART NUMBER	QTY	PART NAME 1 2 3 4 5 6 (PRODUCT LEVEL)	SEE PAGE
	1	1	**251-6747**	1	PLATE AS	
M		1	**8T-3490**	2	NUT-WELD (M10X1.5-THD)	
	2	1	**251-6749**	1	PLATE AS	
M		1	**8T-3490**	2	NUT-WELD (M10X1.5-THD)	
	3	1	**8T-4121**	2	WASHER-HARD (11X21X2.5-MM THK)	
M	4	1	**8T-4196**	2	BOLT (M10X1.5X35-MM)	

M-METRIC PART

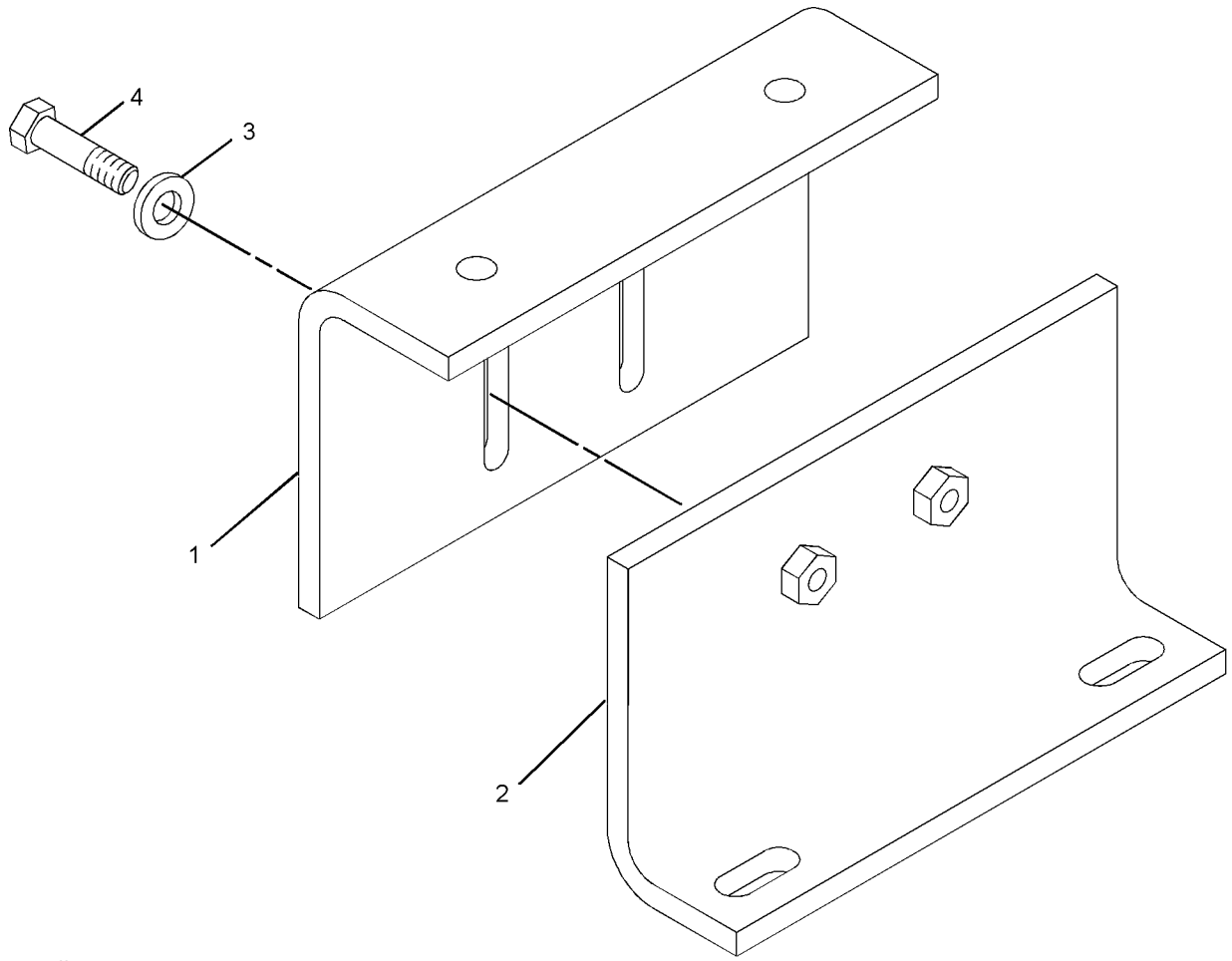

GRAPHIC #1 **<END>** g01096493

153-0509 SENDER GP-FUEL LEVEL

S/N: 4421-UP
PART OF 247-4012 WIRING GP-REAR
AN ATTACHMENT

SMCS-7481 **i01286095**

NOTE	REF NO	GRAPHIC REF	PART NUMBER	QTY	PART NAME 1 2 3 4 5 6 (PRODUCT LEVEL)	SEE PAGE
	1	1	**5P-3729**	1	SEAL-RECTANGULAR	
	2	1	**4B-1326**	4	SCREW-MACHINE (1/4-28X.625-IN)	
	3	1	**139-8667**	1	KIT-LEVEL SENDER	
		1	**3E-3365**	1	WEDGE-RECEPTACLE LOCK (2-PIN)	
		1	**8T-8729**	2	PIN-CONNECTOR	
		1	**102-8802**	1	KIT-RECEPTACLE (2-PIN)	
					(INCLUDES WEDGE)	
	4	1	**7V-6480**	2	SCREW-PAN HEAD	

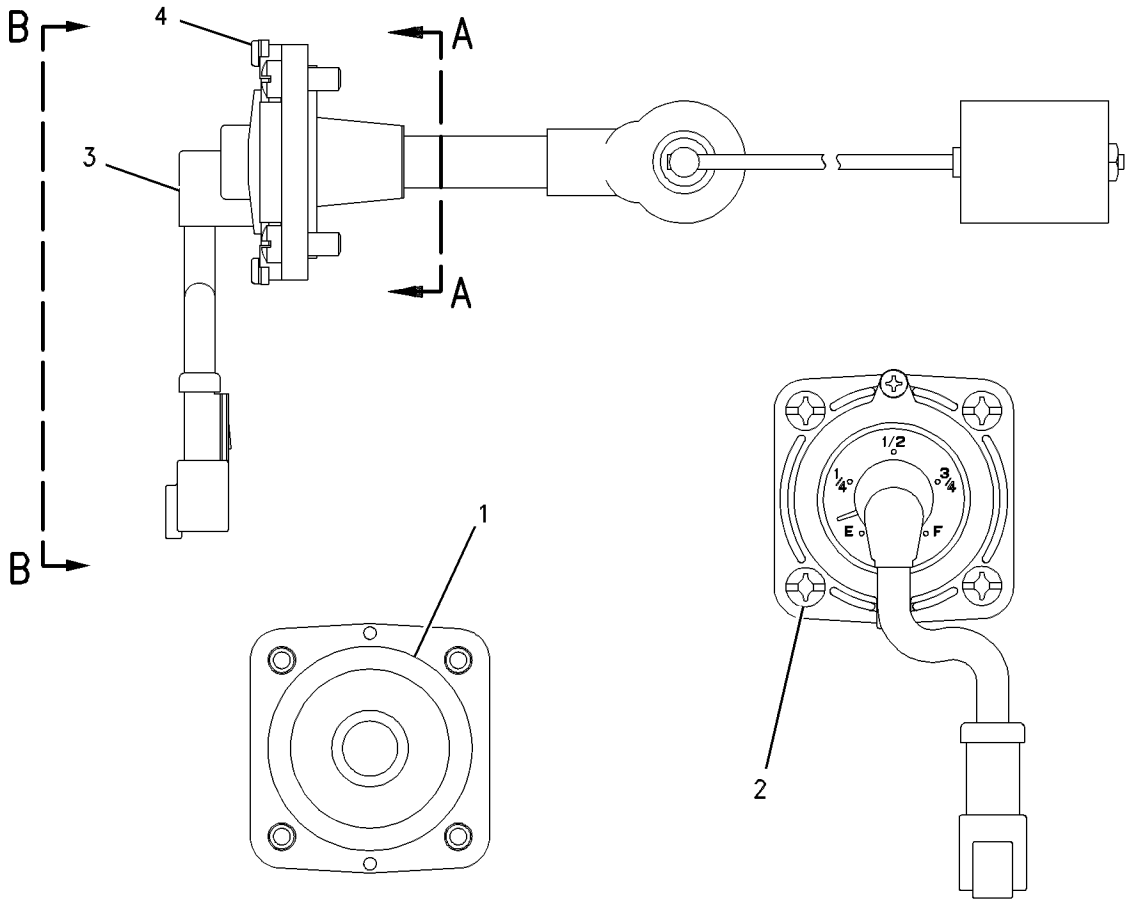

VIEW A-A VIEW B-B

GRAPHIC #1 **<END>** g00508394

245-1564 SENSOR & MTG GP-LIFT POSITION

S/N: 4421-UP

PART OF 245-8813 INSTALLATION AR-FIELD

SMCS-5736 **i02287993**

NOTE	REF NO	GRAPHIC REF	PART NUMBER	QTY	PART NAME 1 2 3 4 5 6 (PRODUCT LEVEL)	SEE PAGE
M	1	1	**100-3204**	1	BOLT (M24X3X420-MM)	
Y	2	1	**169-0417**	1	SENSOR GP-POSITION (LIFT)	269
	3	1	**250-0912**	1	BRACKET AS	
		1	**9R-2613**	1	BOSS-WELD (M10X1.5X25-MM OAL)	
	4	1	**250-0914**	1	PLATE AS	
	5	1	**130-5300**	1	CLIP	
M	7	1	**5C-7261**	5	NUT (M8X1.25-THD)	
M	8	1	**7X-0818**	5	BOLT (M8X1.25X45-MM)	
M	9	1	**7X-0851**	2	NUT (M24X3-THD)	
M	10	1	**7X-2552**	4	BOLT (M16X2X30-MM)	
	11	1	**8T-4121**	1	WASHER-HARD (11X21X2.5-MM THK)	
M	12	1	**8T-4136**	1	BOLT (M10X1.5X25-MM)	
	13	1	**8T-4224**	11	WASHER-HARD (8.8X16X2-MM THK)	
M	14	1	**8T-7547**	1	BOLT (M8X1.25X30-MM)	
	15	1	**9X-8257**	4	WASHER (17.5X30X3.5-MM THK)	

M-METRIC PART
Y-SEPARATE ILLUSTRATION

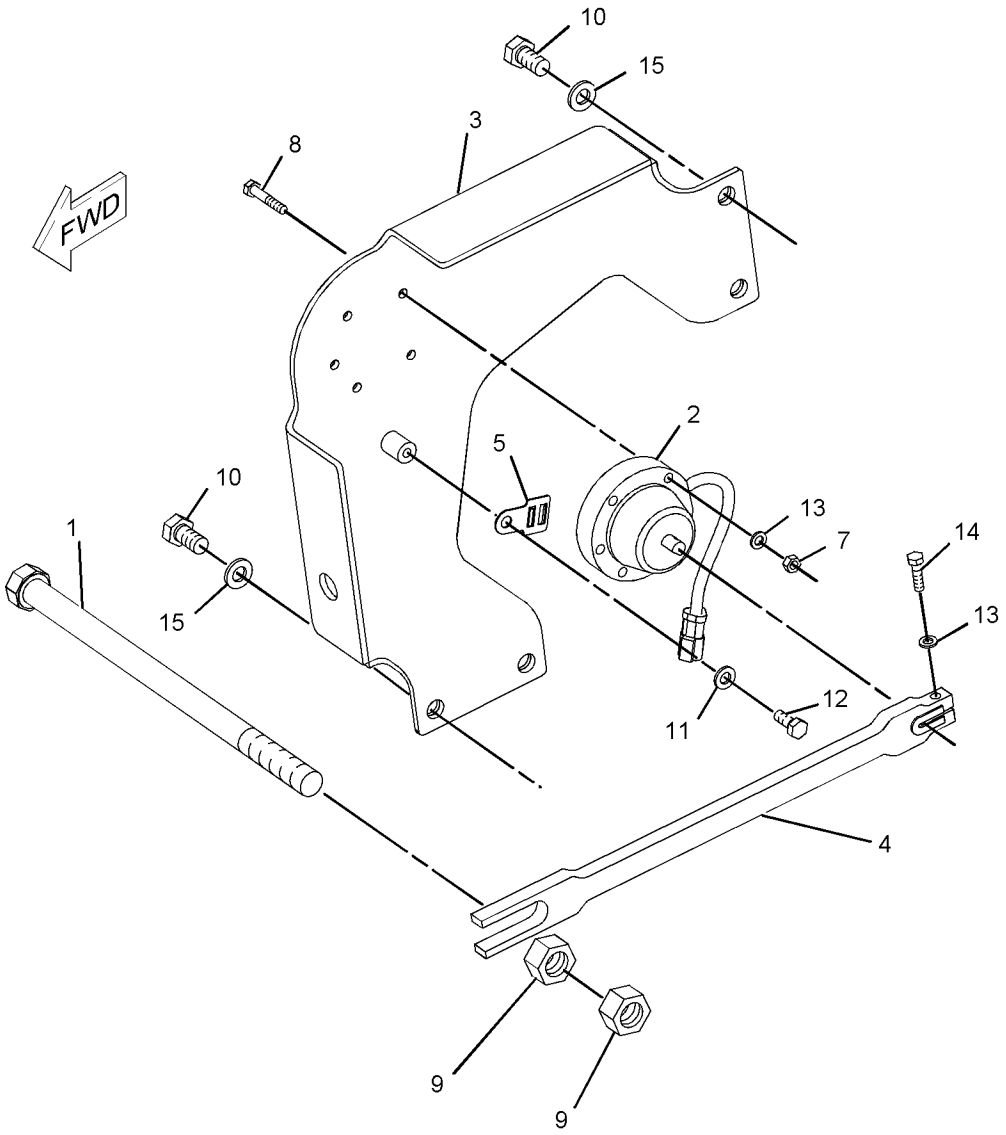

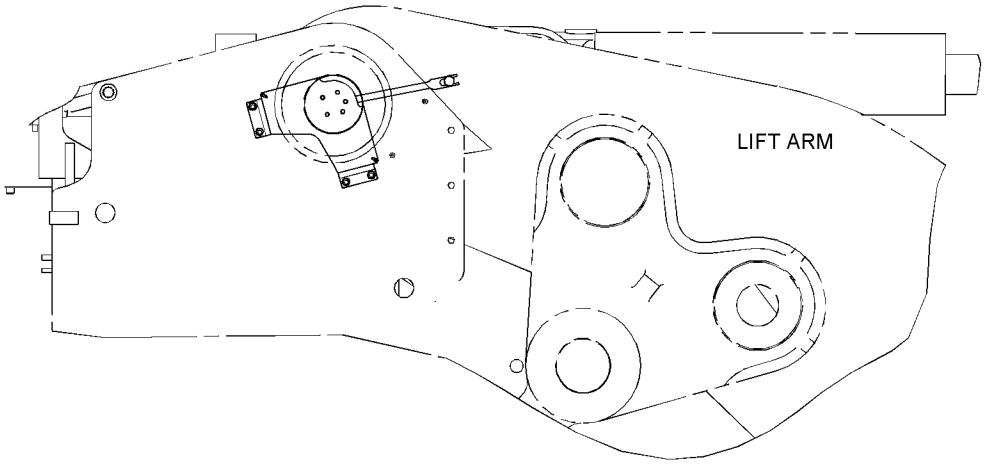

RIGHT SIDE VIEW

GRAPHIC #1 **<END>** g01145084

163-7882 SENSOR GP-EXHAUST TEMPERATURE

S/N: 8WM1-UP

PART OF 246-5580 WIRING GP-ENGINE

SMCS-1919 **i02298748**

NOTE	REF NO	GRAPHIC REF	PART NUMBER	QTY	PART NAME 1 2 3 4 5 6 (PRODUCT LEVEL)	SEE PAGE
E	1	1	**9X-1813**		SLEEVE (31-CM)	
	2	1	**186-3735**	3	PIN-CONNECTOR (16-GA TO 18-GA)	
	3	1	**3E-3371**	1	WEDGE-RECEPTACLE LOCK (3-PIN)	
	4	1	**102-8803**	1	KIT-RECEPTACLE (3-PIN)	
					(INCLUDES RECEPTACLE AS AND WEDGE)	
E-ORDER BY THE CENTIMETER						

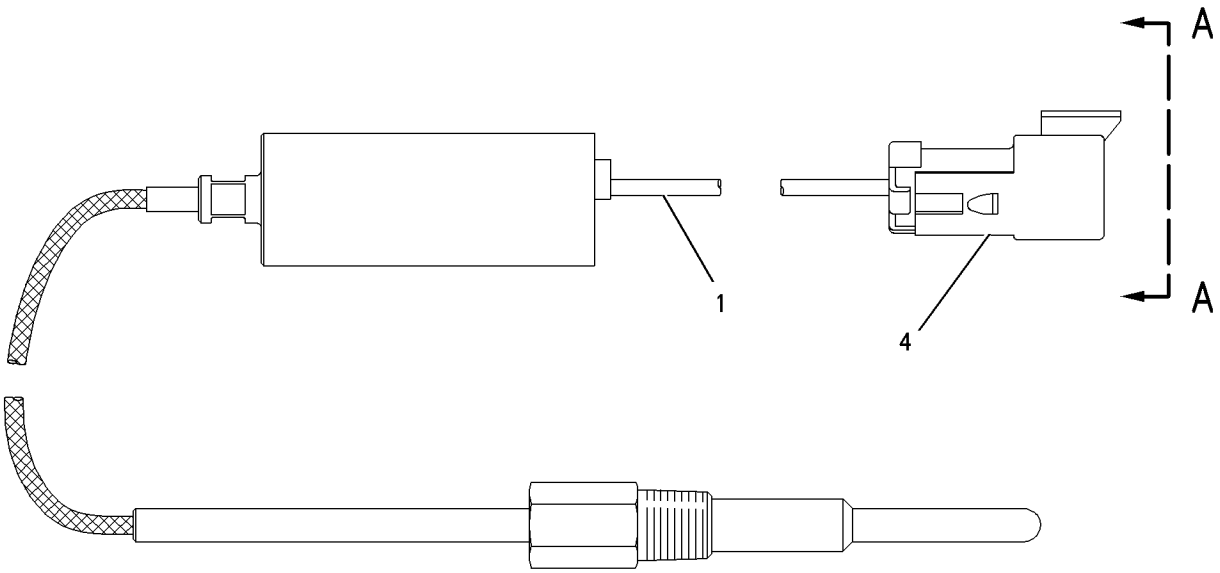

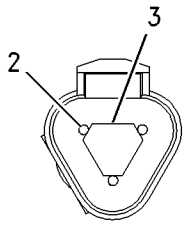

VIEW A–A

GRAPHIC #1 **<END>** g00941739

169-0417 SENSOR GP-POSITION–LIFT, TILT

S/N: 4421-UP
140-DEGREE
PART OF 245-1564 SENSOR & MTG GP-LIFT POSITION

SMCS-4269, 5702, 5736, 5737, 7494 **i02267066**

NOTE	REF NO	GRAPHIC REF	PART NUMBER	QTY	PART NAME 1 2 3 4 5 6 (PRODUCT LEVEL)	SEE PAGE
	2	1	**102-8803**	1	KIT-RECEPTACLE (3-PIN)	
					(INCLUDES RECEPTACLE AS AND WEDGE)	
	3	1	**9X-3401**	3	PIN-CONNECTOR (16-GA TO 18-GA)	
	4	1	**3E-3371**	1	WEDGE-RECEPTACLE LOCK (3-PIN)	
E	5	1	**119-3662**		TUBE-HEAT SHRINK (5-CM)	
E	6	1	**9X-1813**		SLEEVE (17-CM)	
	7	1	**172-1482**	1	CLAMP	
M	8	1	**3E-8048**	2	SCREW-MACHINE (M3X0.5X6-MM)	

E-ORDER BY THE CENTIMETER
M-METRIC PART

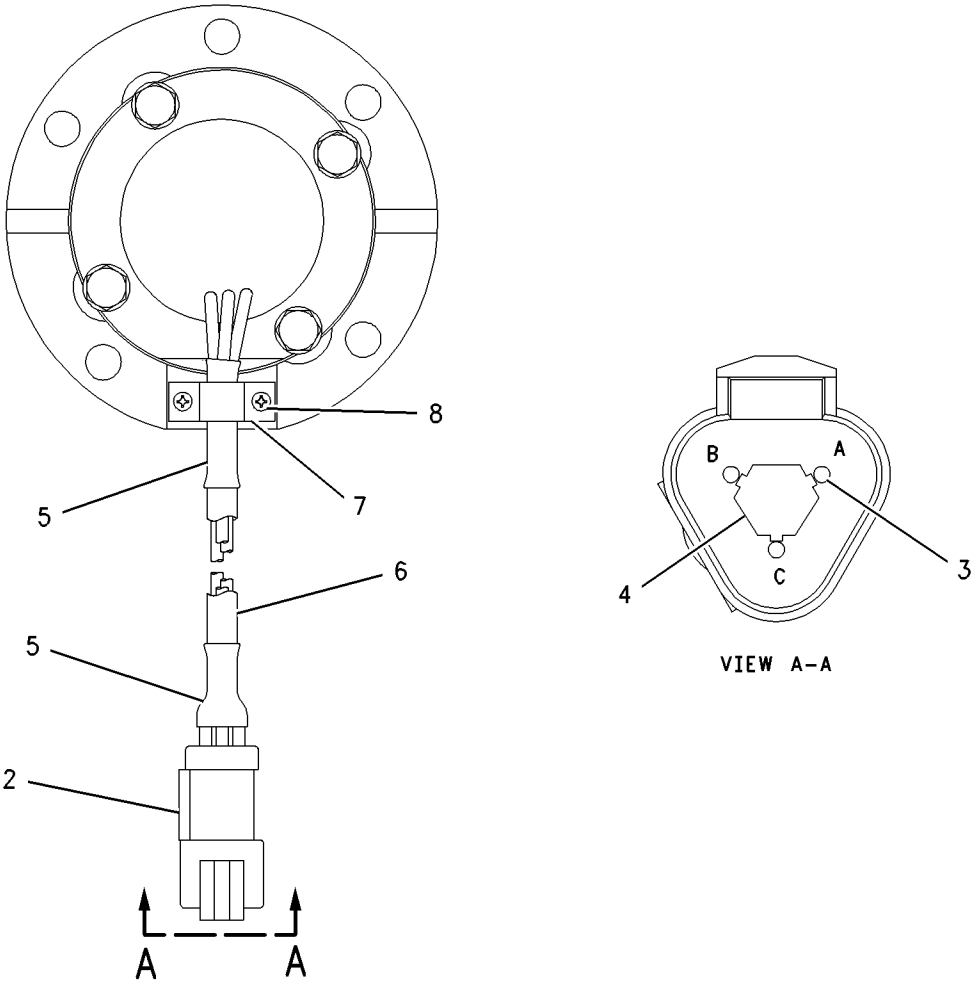

GRAPHIC #1 **<END>** g00934905

204-7949 SENSOR GP-POSITION–ROTARY–THROTTLE

S/N: 4421-UP
72-DEGREE
PART OF 113-4799 PEDAL GP-GOVERNOR

SMCS-4269, 5702, 5736, 5737, 7494 **i02277576**

NOTE	REF NO	GRAPHIC REF	PART NUMBER	QTY	PART NAME 1 2 3 4 5 6 (PRODUCT LEVEL)	SEE PAGE
	1	1	**102-8803**	1	KIT-RECEPTACLE (3-PIN)	
					(INCLUDES RECEPTACLE AS AND WEDGE)	
	2	1	**3E-3371**	1	WEDGE-RECEPTACLE LOCK (3-PIN)	
	3	1	**186-3735**	3	PIN-CONNECTOR (16-GA TO 18-GA)	

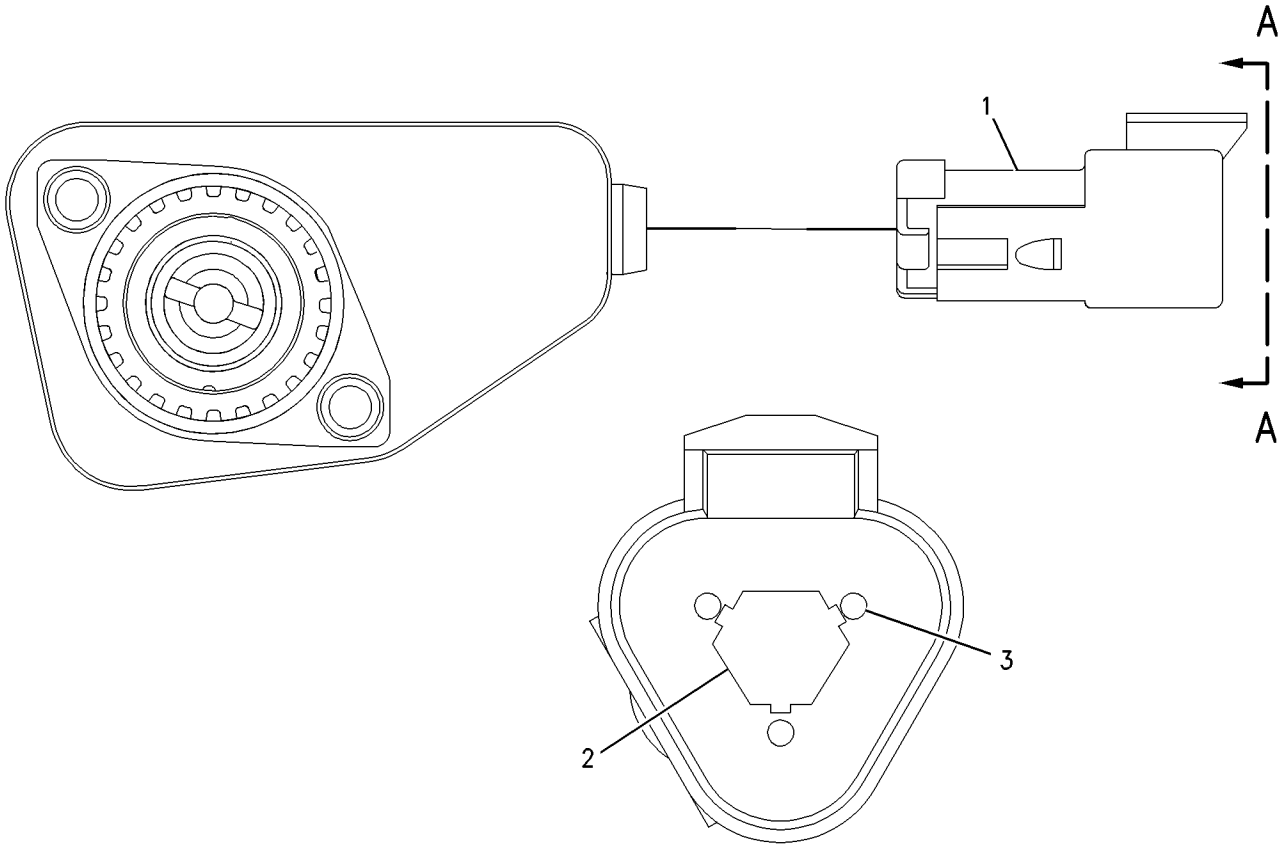

VIEW A-A

GRAPHIC #1 **<END>** g00925280

214-4863 SENSOR GP-POSITION–LEFT BRAKE PEDAL

S/N: 4421-UP

PART OF 205-9236 BASE GP-FOOT BRAKE

SMCS-4269, 5702, 5736, 5737, 7494 **i02267084**

NOTE	REF NO	GRAPHIC REF	PART NUMBER	QTY	PART NAME 1 2 3 4 5 6 (PRODUCT LEVEL)	SEE PAGE
	1	1	**102-8803**	1	KIT-RECEPTACLE (3-PIN)	
					(INCLUDES RECEPTACLE AS & WEDGE)	
	2	1	**186-3735**	1	PIN-CONNECTOR (16-GA TO 18-GA)	
	3	1	**3E-3371**	1	WEDGE-RECEPTACLE LOCK (3-PIN)	

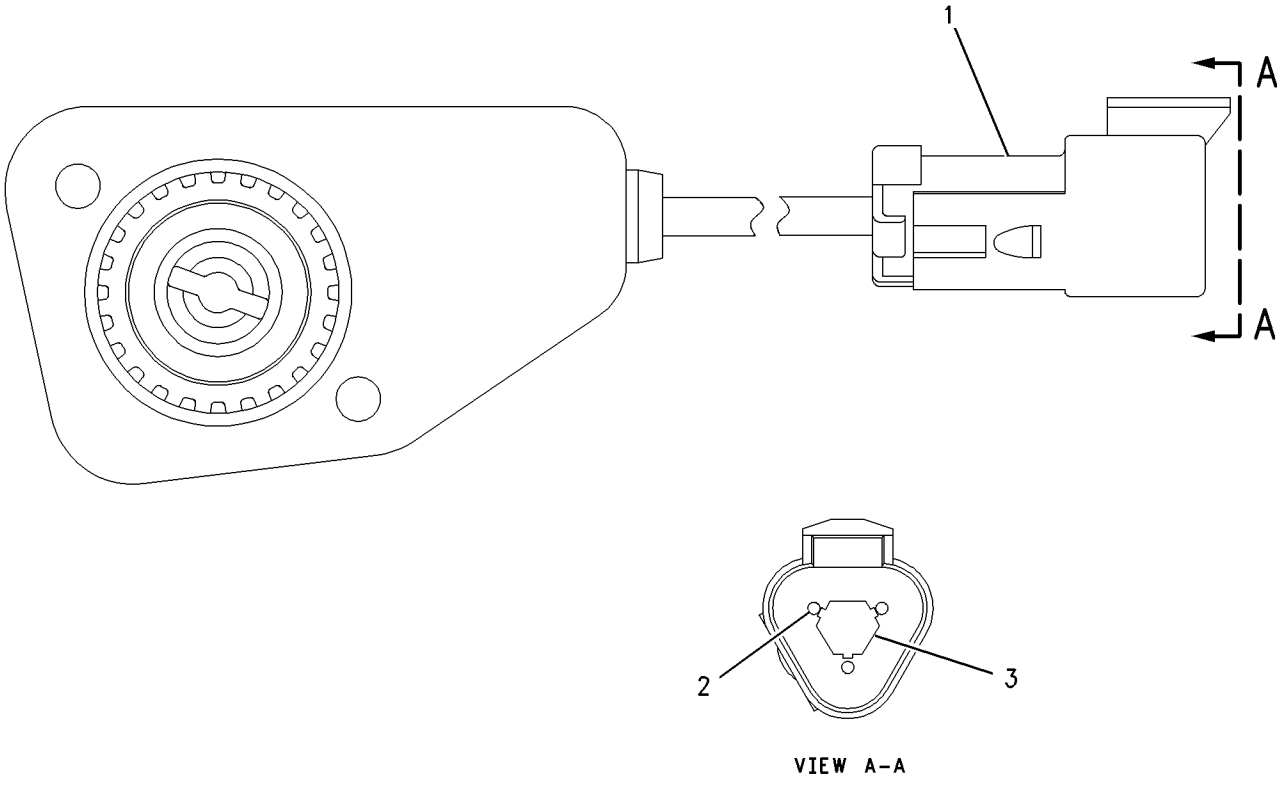

VIEW A-A

GRAPHIC #1 **<END>** g00925281

100-4311 SENSOR GP-PRESSURE–TC IMPELLER CLUTCH OIL

S/N: 4421-UP
5 KHZ. PULSE WIDTH MODULATION
PART OF 247-4009 WIRING GP-POWER TRAIN

SMCS-1408, 1925, 7494 **i02387521**

NOTE	REF NO	GRAPHIC REF	PART NUMBER	QTY	PART NAME 1 2 3 4 5 6 (PRODUCT LEVEL)	SEE PAGE
Z	1	1		1	CONTROL AS-ELECTRONIC	
BE	2	1	**9X-1813**		SLEEVE	
	3	1	**8T-8731**	1	PLUG-CONNECTOR	
	4	1	**8T-8730**	3	SOCKET-CONNECTOR	

B-USE AS REQUIRED
E-ORDER BY THE CENTIMETER
Z-NOT SERVICED SEPARATELY

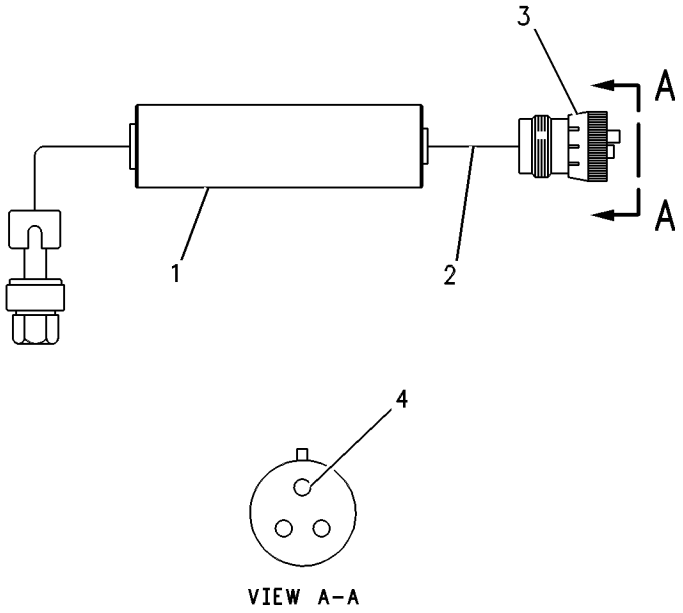

VIEW A-A

GRAPHIC #1 **<END>** g00268727

161-9926 SENSOR GP-PRESSURE–INLET AIR RESTRICTION

S/N: 4421-UP

PART OF 244-8721 LINES GP-AIR

SMCS-1408, 1925, 7494 **i02274431**

NOTE	REF NO	GRAPHIC REF	PART NUMBER	QTY	PART NAME 1 2 3 4 5 6 (PRODUCT LEVEL)	SEE PAGE
E	1	1	**9X-1813**		SLEEVE (34-CM)	
	2	1	**155-2260**	1	KIT-CONNECTING PLUG (3-PIN)	
					(INCLUDES PLUG AS & WEDGE)	
	3	1	**180-9340**	3	SOCKET-CONNECTOR	
	4	1	**3E-3368**	1	WEDGE-PLUG LOCK (3-PIN)	
E-ORDER BY THE CENTIMETER						

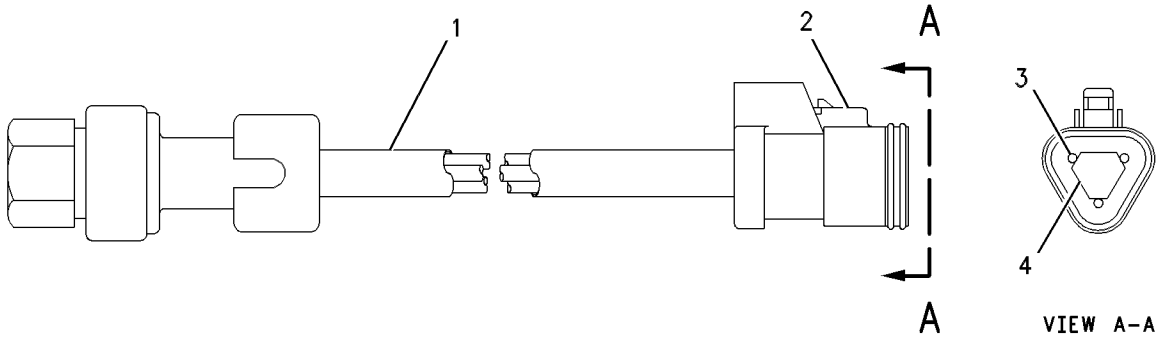

GRAPHIC #1 **<END>** g00513129

186-4095 SENSOR GP-PRESSURE–AIR TANK

S/N: 4421-UP
PART OF 247-4011 WIRING GP-PLATFORM
AN ATTACHMENT

SMCS-1408, 1925, 7494 **i02230720**

NOTE	REF NO	GRAPHIC REF	PART NUMBER	QTY	PART NAME 1 2 3 4 5 6 (PRODUCT LEVEL)	SEE PAGE
BE	2	1	**9X-1813**		SLEEVE	
	3	1	**102-8803**	1	KIT-RECEPTACLE (3-PIN)	
					(INCLUDES RECEPTACLE AS & WEDGE)	
	4	1	**8T-8729**	3	PIN-CONNECTOR	
	5	1	**3E-3371**	1	WEDGE-RECEPTACLE LOCK (3-PIN)	

B-USE AS REQUIRED
E-ORDER BY THE CENTIMETER

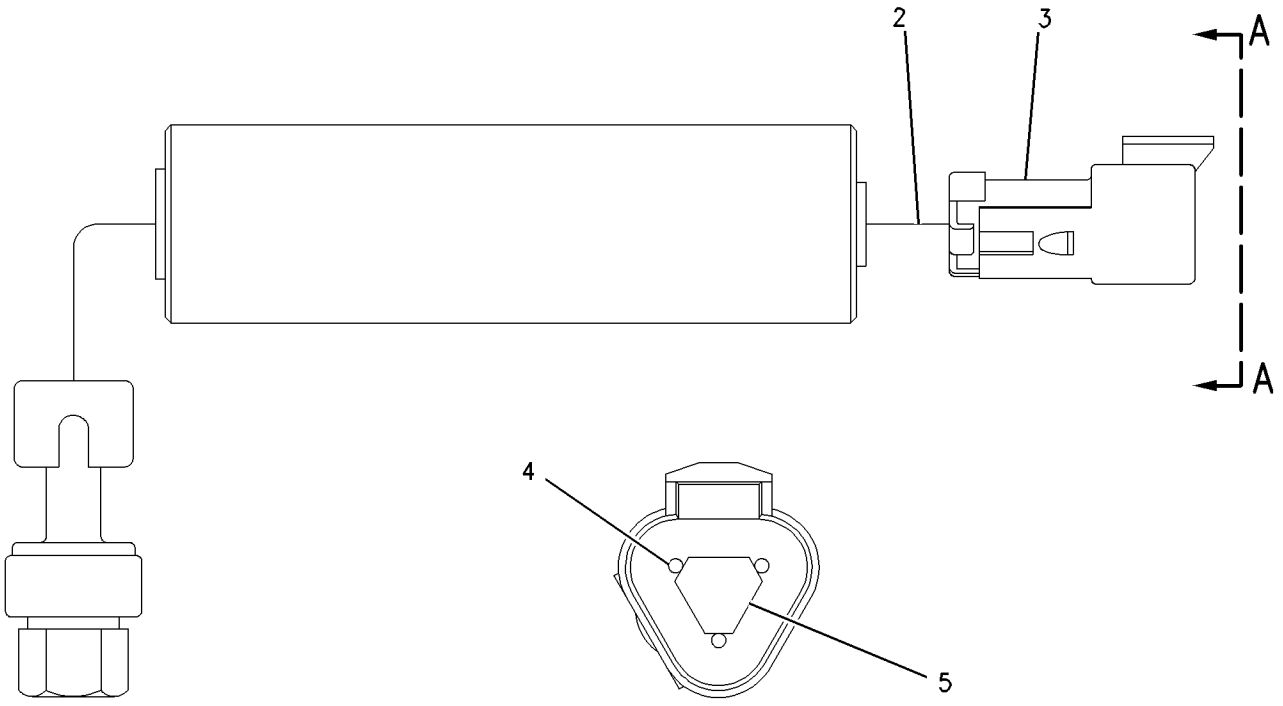

VIEW A-A

GRAPHIC #1 **<END>** g00715663

194-6725 SENSOR GP-PRESSURE–ENGINE OIL

S/N: 8WM1-UP

PART OF 246-5580 WIRING GP-ENGINE

SMCS-1408, 1925, 7494 **i02276739**

NOTE	REF NO	GRAPHIC REF	PART NUMBER	QTY	PART NAME 1 2 3 4 5 6 (PRODUCT LEVEL)	SEE PAGE
E	1	1	**9X-1813**		SLEEVE (34-CM)	
	2	1	**155-2260**	1	KIT-CONNECTING PLUG (3-PIN)	
					(INCLUDES PLUG AS AND WEDGE)	
	3	1	**194-5226**	3	WIRE AS-HARNESS (16-GA TO 18-GA)	
	4	1	**3E-3368**	1	WEDGE-PLUG LOCK (3-PIN)	

E-ORDER BY THE CENTIMETER

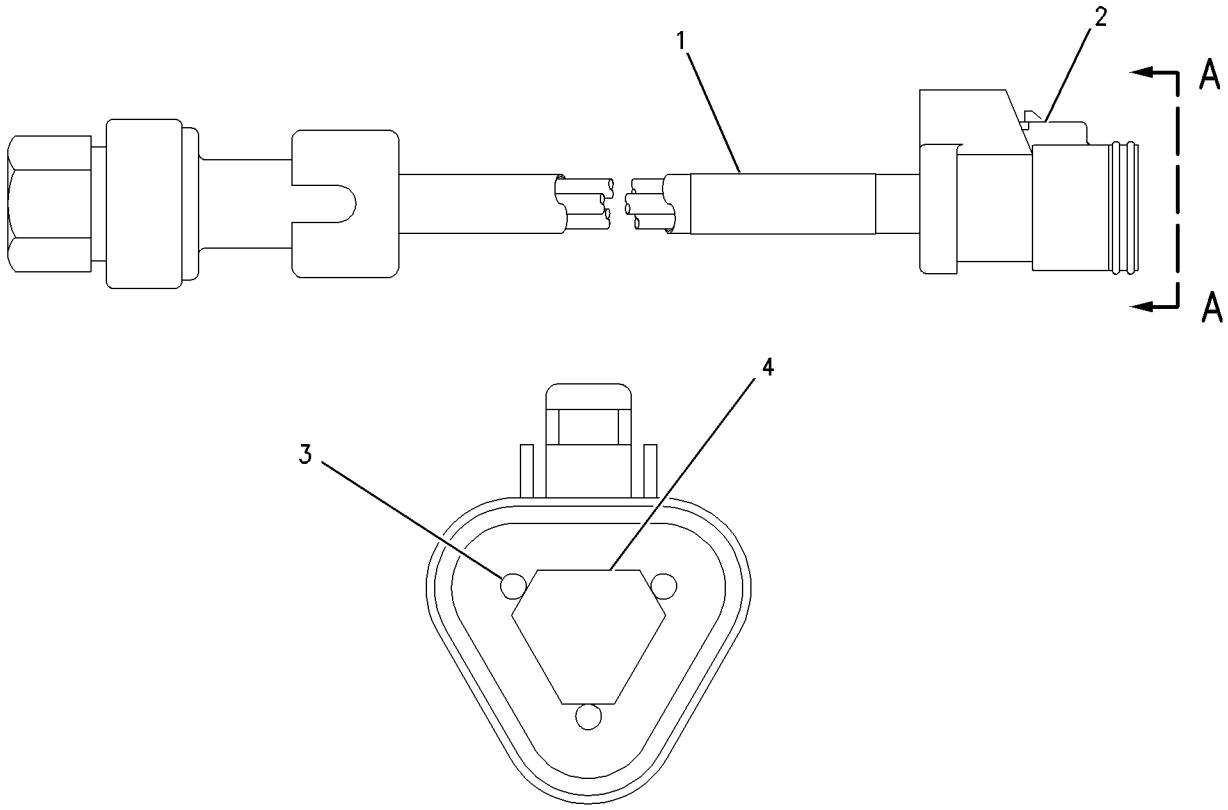

VIEW A-A

GRAPHIC #1 **<END>** g00851220

126-1133 SENSOR GP-SPEED–FAN DRIVE

S/N: 4421-UP
PART OF 163-2592 DRIVE GP-FAN
AN ATTACHMENT

SMCS-1907, 1912, 3175, 4803, 7493 **i01644693**

NOTE	REF NO	GRAPHIC REF	PART NUMBER	QTY	PART NAME 1 2 3 4 5 6 (PRODUCT LEVEL)	SEE PAGE
J	1	1	**3E-3371**	1	WEDGE-RECEPTACLE LOCK (3-PIN)	
	2	1	**033-6033**	1	SEAL-O-RING	
	3	1	**8H-3127**	1	BOLT (1/4-20X0.75-IN)	
	4	1	**6N-7523**	1	WASHER (6.48X11.9X1.57-MM THK)	
	5	1	**7X-2031**	1	RETAINER	
BE	6	1	**9X-1813**		SLEEVE	
J	7	1	**102-8803**	1	KIT-RECEPTACLE (3-PIN)	
					(INCLUDES RECEPTACLE AS & PART MARKED J)	
	8	1	**8T-8729**	3	PIN-CONNECTOR	

B-USE AS REQUIRED
E-ORDER BY THE CENTIMETER
J-KIT MARKED J SERVICES PART MARKED J

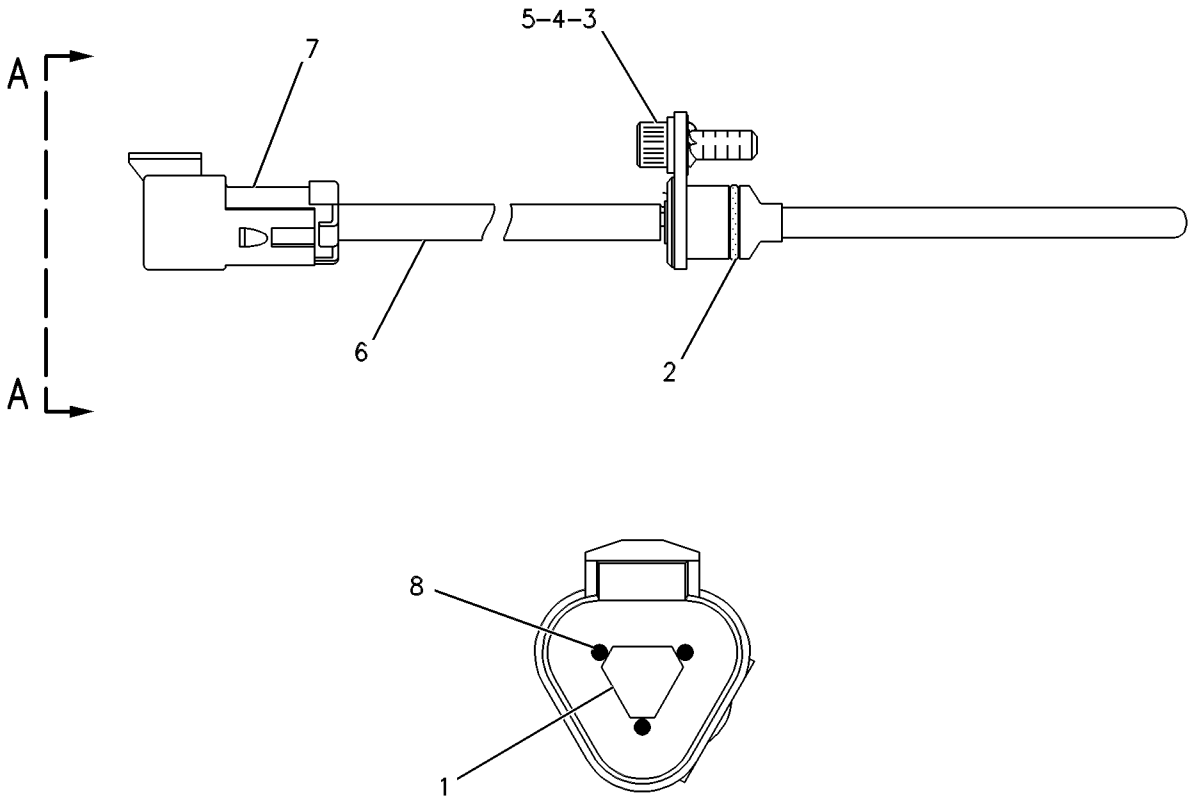

VIEW A–A

GRAPHIC #1 **<END>** g00087024

129-6628 SENSOR GP-SPEED

S/N: 8WM1-UP

PART OF 246-5580 WIRING GP-ENGINE

SMCS-1907, 1912, 3175, 4803, 7493 **i02179458**

NOTE	REF NO	GRAPHIC REF	PART NUMBER	QTY	PART NAME 1 2 3 4 5 6 (PRODUCT LEVEL)	SEE PAGE
E	1	1	**9X-1813**		SLEEVE (31-CM)	
	2	1	**155-2260**	1	KIT-CONNECTING PLUG (3-PIN)	
					(INCLUDES PLUG AS AND WEDGE)	
	3	1	**102-8813**	1	SEAL	
	4	1	**3E-3368**	1	WEDGE-PLUG LOCK (3-PIN)	
	5	1	**186-3736**	3	SOCKET-CONNECTOR (16-GA TO 18-GA)	
	6	1	**8L-2786**	1	SEAL-O-RING	

E-ORDER BY THE CENTIMETER

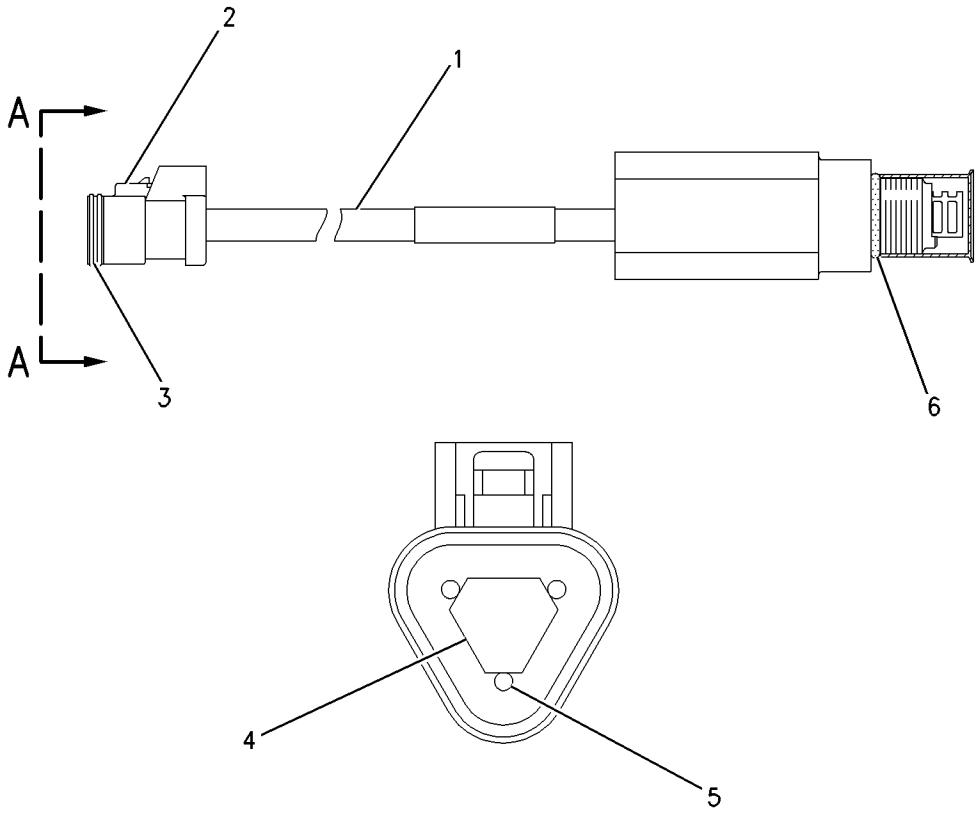

VIEW A-A

GRAPHIC #1 **<END>** g00714038

189-5746 SENSOR GP-SPEED—MAGNETIC, LOW OUTPUT

S/N: 8WM1-UP

PART OF 246-5580 WIRING GP-ENGINE

SMCS-1907, 1912, 3175, 4803, 7493 **i02300261**

NOTE	REF NO	GRAPHIC REF	PART NUMBER	QTY	PART NAME 1 2 3 4 5 6 (PRODUCT LEVEL)	SEE PAGE
	1	1	**171-5349**	1	MARKER	
	2	1	**102-8802**	1	KIT-RECEPTACLE (2-PIN)	
					(INCLUDES RECEPTACLE AS AND WEDGE)	
	3	1	**186-3735**	2	PIN-CONNECTOR (16-GA TO 18-GA)	
	4	1	**3E-3365**	1	WEDGE-RECEPTACLE LOCK (2-PIN)	
E	5	1	**9X-1386**		SLEEVE (14-CM)	

E-ORDER BY THE CENTIMETER

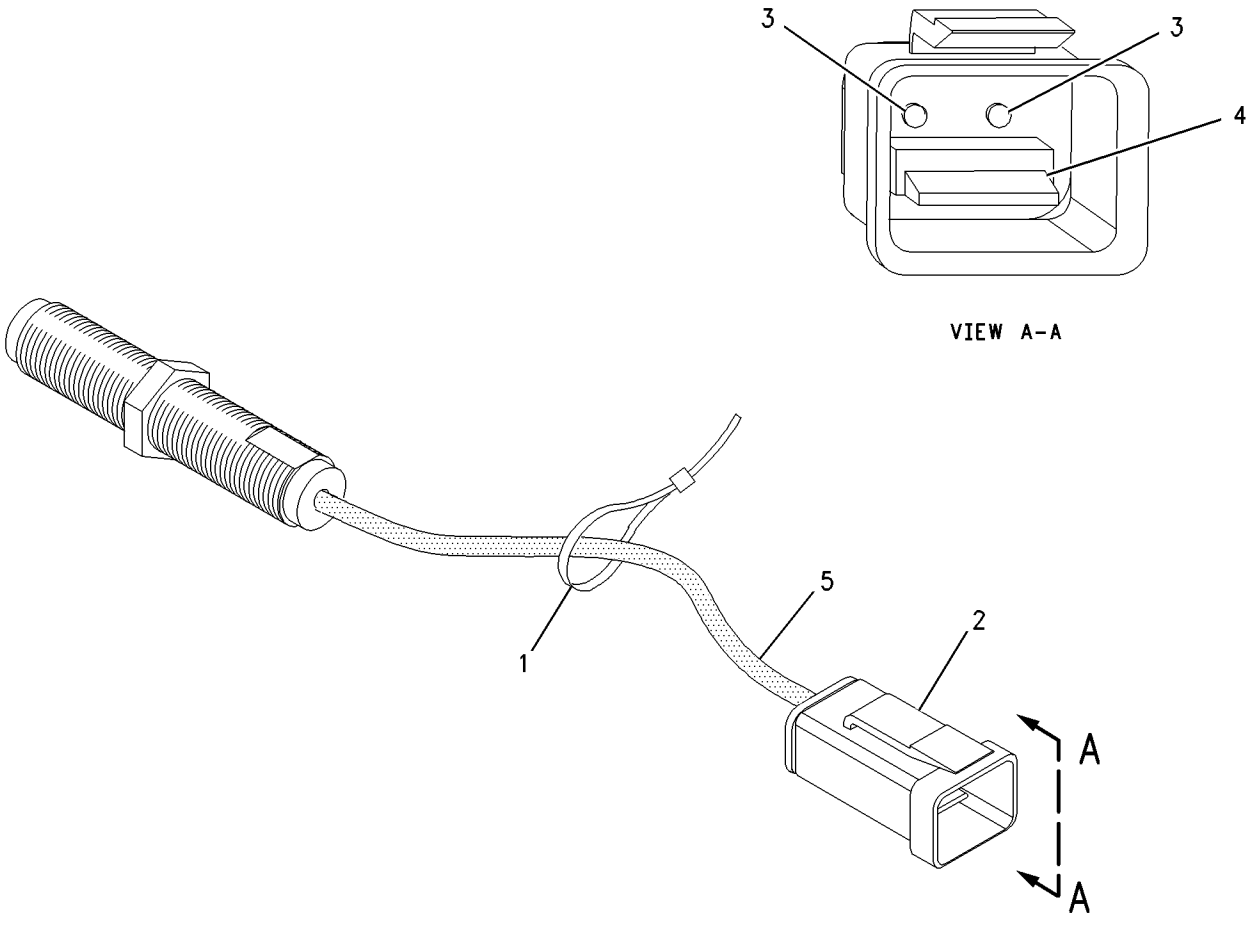

GRAPHIC #1 **<END>** g00837278

102-2240 SENSOR GP-TEMPERATURE–ENGINE COOLANT

S/N: 8WM1-UP

PART OF 246-5580 WIRING GP-ENGINE

SMCS-1408, 1906, 1921, 1922, 301T, 429T, 509T **i01966291**

NOTE	REF NO	GRAPHIC REF	PART NUMBER	QTY	PART NAME 1 2 3 4 5 6 (PRODUCT LEVEL)	SEE PAGE
BE	2	1	**9X-1813**		SLEEVE	
	3	1	**102-8803**	1	KIT-RECEPTACLE (3-PIN)	
					(KIT INCLUDES RECEPTACLE AS AND WEDGE)	
	4	1	**186-3735**	3	PIN-CONNECTOR (16-GA TO 18-GA)	
	5	1	**3E-3371**	1	WEDGE-RECEPTACLE LOCK (3-PIN)	

B-USE AS REQUIRED
E-ORDER BY THE CENTIMETER

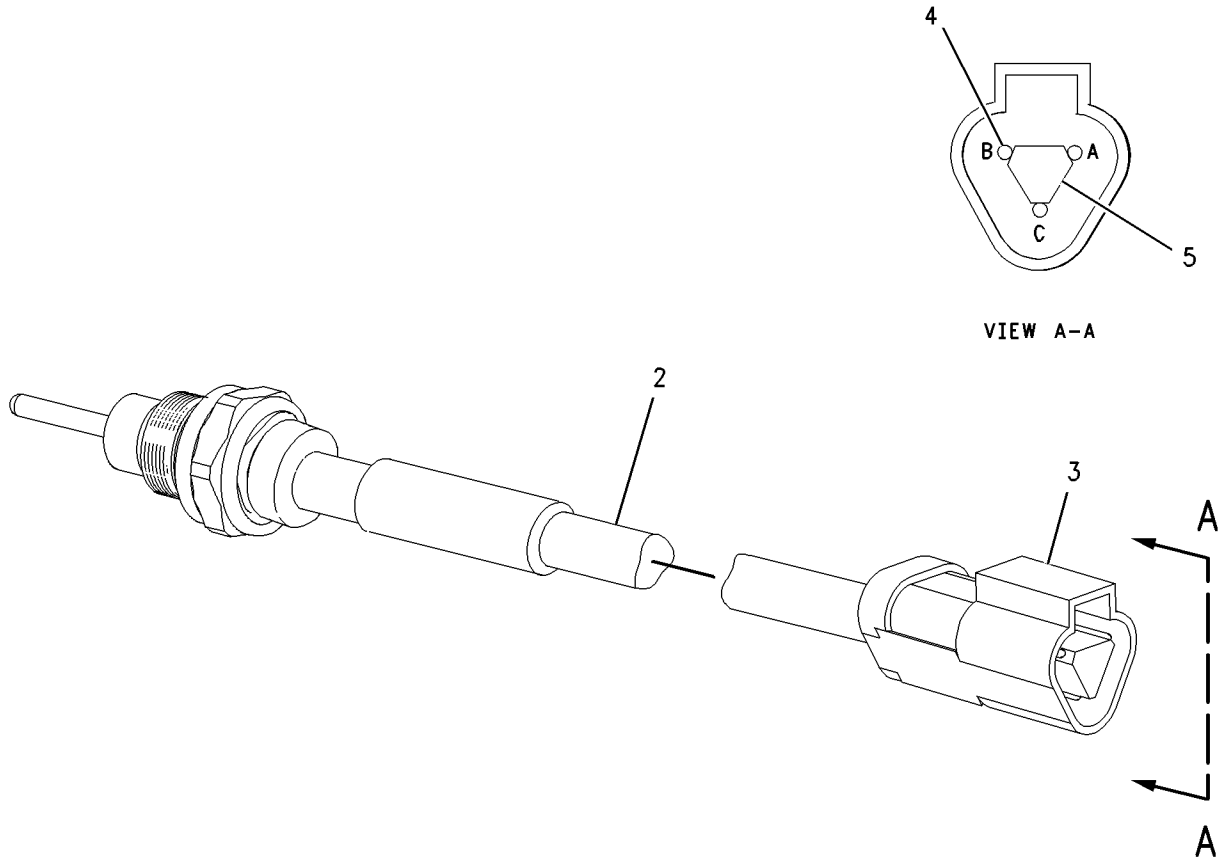

GRAPHIC #1 **<END>** g00790343

118-3909 SENSOR GP-TEMPERATURE–AMBIENT AIR

S/N: 4421-UP

PART OF 247-0180 WIRING GP-MACHINE

SMCS-1408, 1906, 1921, 1922, 301T, 429T, 509T **i02274438**

NOTE	REF NO	GRAPHIC REF	PART NUMBER	QTY	PART NAME 1 2 3 4 5 6 (PRODUCT LEVEL)	SEE PAGE
Z	1	1		1	CONTROL AS-ELECTRONIC	
E	2	1	**9X-1813**		SLEEVE (31-CM)	
	3	1	**8T-8732**	1	RECEPTACLE (3-PIN)	
	4	1	**186-3735**	3	PIN-CONNECTOR (16-GA TO 18-GA)	

E-ORDER BY THE CENTIMETER
Z-NOT SERVICED SEPARATELY

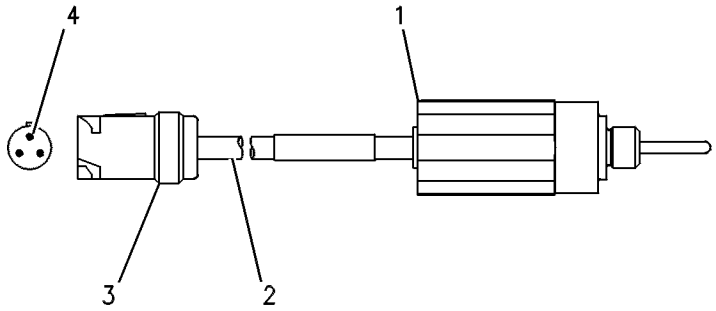

GRAPHIC #1 **<END>** g00085214

118-7226 SENSOR GP-TEMPERATURE

S/N: 4421-UP

PART OF 247-4396 WIRING GP-FIREWALL, 247-4005 WIRING GP-FRONT, 247-4009 WIRING GP-POWER TRAIN, 250-3837 WIRING GP-SENSOR

SMCS-1408, 1906, 1921, 1922, 301T, 429T, 509T **i02128103**

NOTE	REF NO	GRAPHIC REF	PART NUMBER	QTY	PART NAME 1 2 3 4 5 6 (PRODUCT LEVEL)	SEE PAGE
E	1	1	**9X-1813**		SLEEVE (33-CM)	
	2	1	**102-8803**	1	KIT-RECEPTACLE (3-PIN)	
					(INCLUDES RECEPTACLE AS & WEDGE)	
	3	1	**186-3735**	3	PIN-CONNECTOR (16-GA TO 18-GA)	
	4	1	**3E-3371**	1	WEDGE-RECEPTACLE LOCK (3-PIN)	

E-ORDER BY THE CENTIMETER

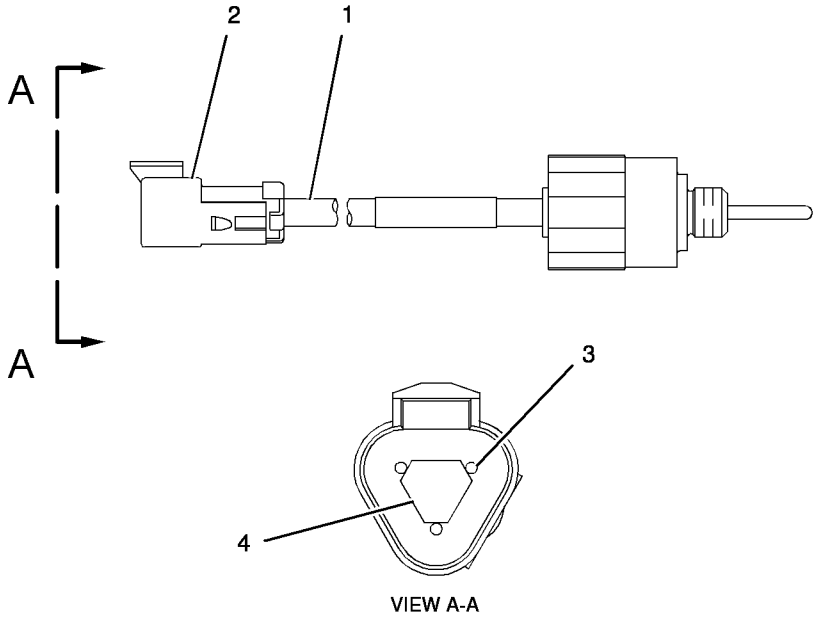

VIEW A-A

GRAPHIC #1 **<END>** g01023677

ELECTRICAL AND STARTING SYSTEM

137-8194 STARTING AID GP-ETHER

S/N: 8WM1-UP

PART OF 240-7750 ENGINE AR

SMCS-1456 **i01565658**

NOTE	REF NO	GRAPHIC REF	PART NUMBER	QTY	PART NAME 1 2 3 4 5 6 (PRODUCT LEVEL)	SEE PAGE
	1	1	**8R-9137**	1	ANGLE	
	3	1	**118-8454**	4	NOZZLE AS-ETHER	
	4	1	**133-9658**	2	HOSE AS	
	5	1	**135-6143**	2	PLATE AS	
					(EACH INCLUDES)	
		1	**1F-0750**	2	NUT-WELD (3/8-16-THD)	
	6	1	**135-7862**	4	HOSE AS	
	7	1	**0S-0509**	4	BOLT (3/8-16X0.75-IN)	
	8	1	**0S-1588**	6	BOLT (3/8-16X1.25-IN)	
	9	1	**0S-1594**	1	BOLT (3/8-16X1-IN)	
	10	1	**133-9660**	2	UNION-FLARED	
	11	1	**5M-2894**	12	WASHER-HARD (10.2X18.5X2.5-MM THK)	
	12	1	**7D-1728**	11	CLIP	
	13	1	**8M-2772**	2	CLIP	
	14	1	**9S-8752**	1	NUT-FULL (3/8-16-THD)	
B	15	1	**7D-1728**	2	CLIP	
AF		1	**7X-1062**	2	CYLINDER AS-ETHER	

A-NOT PART OF THIS GROUP
B-USE AS REQUIRED
F-NOT SHOWN

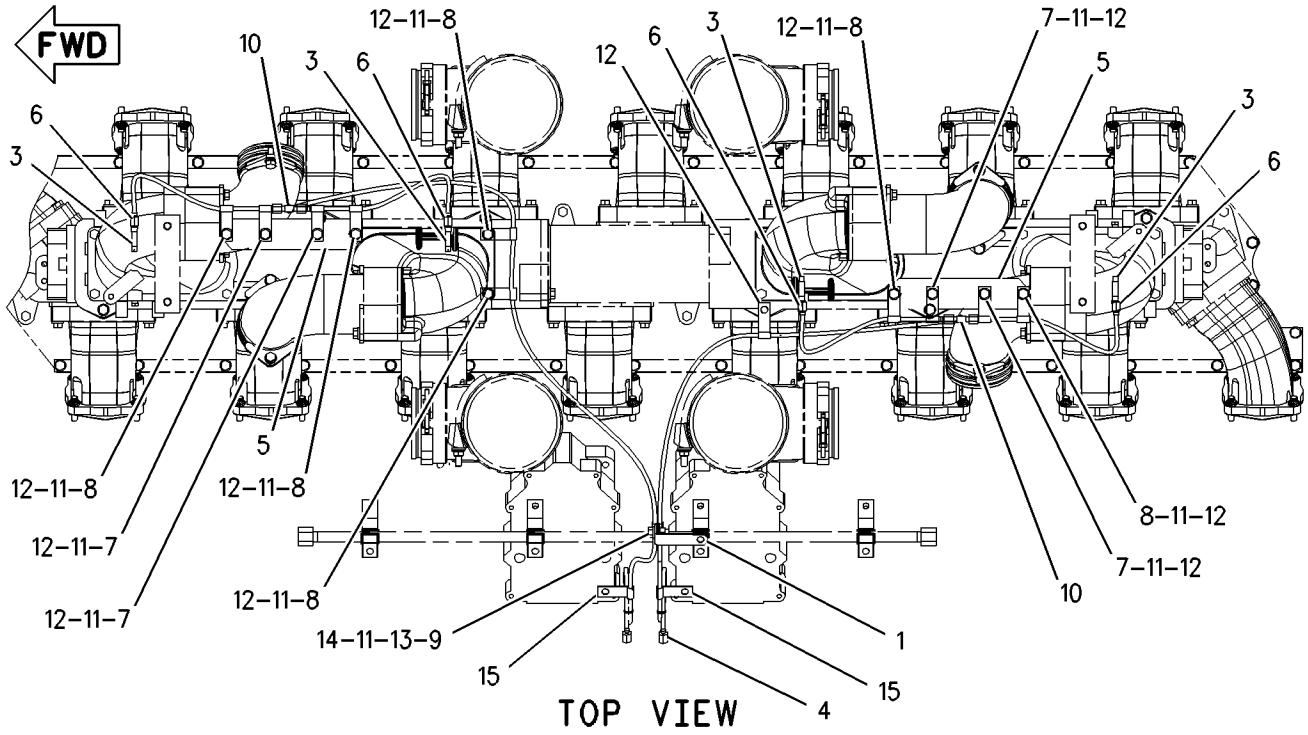

GRAPHIC #1 **<END>** g00832890

ELECTRICAL AND STARTING SYSTEM

250-6195 STARTING AID GP-ETHER

S/N: 4421-UP

PART OF 245-8812 CHASSIS AR-REAR

SMCS-1456 **i02285582**

NOTE	REF NO	GRAPHIC REF	PART NUMBER	QTY	PART NAME 1 2 3 4 5 6 (PRODUCT LEVEL)	SEE PAGE
	1	1	**5P-0598**	2	CLAMP	
	2	1	**7K-1181**	1	STRAP-CABLE	
	3	1	**138-3339**	1	PLATE AS	
M		1	**8T-3612**	7	NUT-WELD (M8X1.25-THD)	
M		1	**8T-6462**	2	BOSS-WELD (M10X1.5X25-MM OAL)	
	4	1	**164-5618**	2	ADAPTER	
Y	5	1	*235-8824*	2	VALVE GP-ETHER STARTING	307
	6	1	**4P-8134**	1	CLIP	
AB			**7N-0296**	1	CYLINDER AS-ETHER	
M	7	1	**5C-7261**	1	NUT (M8X1.25-THD)	
	8	1	**8T-4121**	2	WASHER-HARD (11X21X2.5-MM THK)	
M	9	1	**8T-4137**	2	BOLT (M10X1.5X20-MM)	
M	10	1	**8T-4189**	8	BOLT (M8X1.25X20-MM)	
	11	1	**8T-4224**	9	WASHER-HARD (8.8X16X2-MM THK)	

A-NOT PART OF THIS GROUP
B-USE AS REQUIRED
M-METRIC PART
Y-SEPARATE ILLUSTRATION

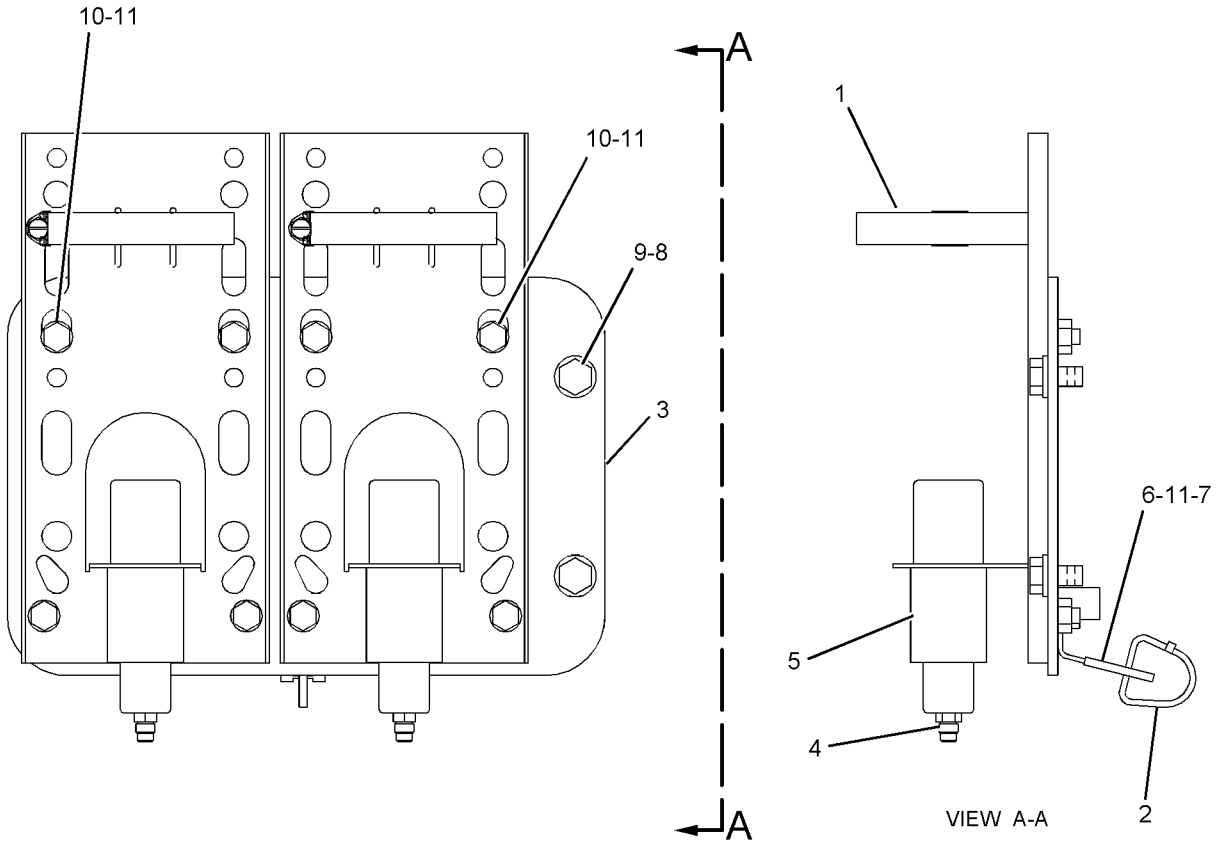

GRAPHIC #1 **<END>** g01148023

267-4483 STARTING AID GP-ETHER

S/N: 8WM1-UP

PART OF 240-7750 ENGINE AR

SMCS-1456 **i02337470**

NOTE	REF NO	GRAPHIC REF	PART NUMBER	QTY	PART NAME 1 2 3 4 5 6 (PRODUCT LEVEL)	SEE PAGE
	1	1	**8R-9137**	1	ANGLE	
	2	1	**118-8454**	4	NOZZLE AS-ETHER	
	3	1	**133-9658**	2	HOSE AS	
	4	1	**135-6143**	2	PLATE AS	
		1	**1F-0750**	2	NUT-WELD (3/8-16-THD)	
	5	1	**135-7862**	4	HOSE AS	
	6	1	**133-9660**	2	UNION-FLARED	
	7	1	**0S-0509**	4	BOLT (3/8-16X0.75-IN)	
	8	1	**0S-1588**	6	BOLT (3/8-16X1.25-IN)	
	9	1	**0S-1594**	1	BOLT (3/8-16X1-IN)	
	10	1	**5M-2894**	12	WASHER-HARD (10.2X18.5X2.5-MM THK)	
	11	1	**7D-1728**	11	CLIP	
	12	1	**8M-2772**	2	CLIP	
	13	1	**9S-8752**	1	NUT-FULL (3/8-16-THD)	

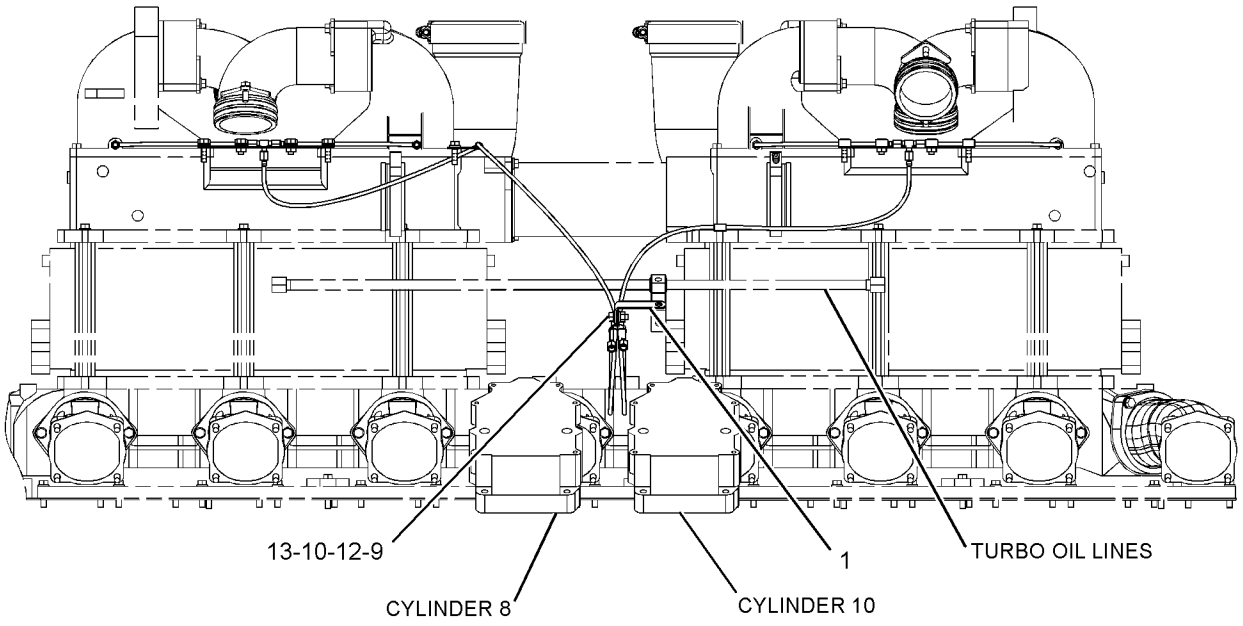

LEFT SIDE VIEW

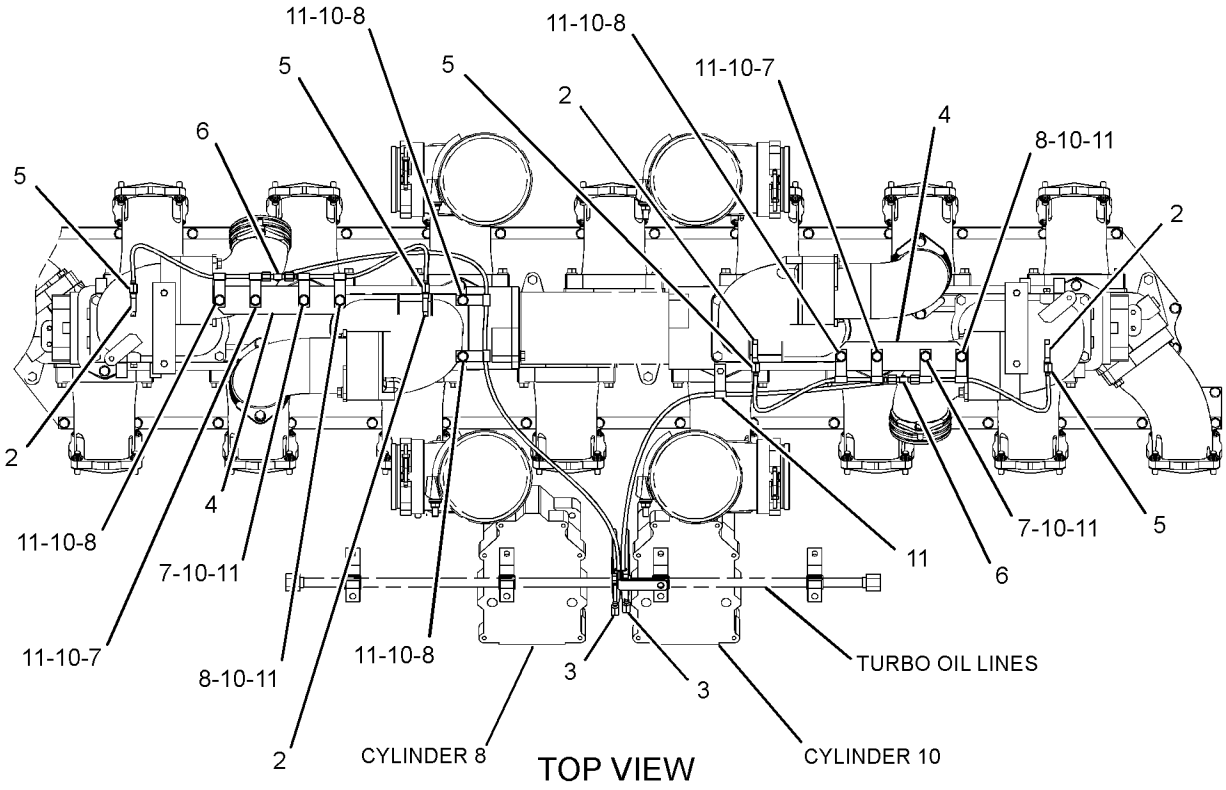

TOP VIEW

GRAPHIC #1 **<END>** g01220646

250-2819 STARTING AR-AIR

S/N: 4421-UP

CANNOT BE USED WITH 250-2820—PAGE 287, 250-2821—PAGE 288

AN ATTACHMENT

SMCS-1450 **i02156344**

NOTE	PART NUMBER	QTY	PART NAME 1 2 3 4 5 6 (PRODUCT LEVEL)	SEE PAGE
Y	*245-1320*	1	CONTROL GP-AIR STARTING	208
Y	*245-3880*	1	PLATFORM AR (AIR STARTING, RH) (FOR AIR START MODELS)	1034
Y	*4W-6634*	1	STARTING MOTOR GP-AIR	291
Y-SEPARATE ILLUSTRATION				

<END>

250-2820 STARTING AR-AIR

S/N: 4421-UP

CANNOT BE USED WITH 250-2819—PAGE 287, 250-2821—PAGE 288

AN ATTACHMENT

SMCS-1450 **i02291695**

NOTE	PART NUMBER	QTY	PART NAME 1 2 3 4 5 6 (PRODUCT LEVEL)	SEE PAGE
Y	*245-1330*	1	CONTROL GP-AIR STARTING	212
Y	*244-7340*	1	LINES GP-AIR TANK (AIR STARTING)	260
Y	*266-4229*	1	MOUNTING GP-EXPANSION TANK (AIR STARTING)	831
Y	*245-3880*	1	PLATFORM AR (AIR STARTING, RH)	1034
Y	*9Y-0646*	1	STARTING MOTOR GP-AIR	292
Y-SEPARATE ILLUSTRATION				

<END>

263-1827 STARTING AR-AIR

S/N: 4421-UP

AN ATTACHMENT

SMCS-1450 **i02294599**

NOTE	PART NUMBER	QTY	PART NAME 1 2 3 4 5 6 (PRODUCT LEVEL)	SEE PAGE
Y	*245-1320*	2	CONTROL GP-AIR STARTING	208
Y	*244-7340*	1	LINES GP-AIR TANK (AIR STARTING)	260
Y	*266-4229*	1	MOUNTING GP-EXPANSION TANK (AIR STARTING)	831
Y	*245-3880*	1	PLATFORM AR (AIR STARTING, RH) (FOR AIR STARTING MODELS)	1034
Y	*105-4326*	1	STARTING MOTOR GP-AIR	293
Y-SEPARATE ILLUSTRATION				

<END>

264-2285 STARTING AR-COLD WEATHER

S/N: 4421-UP

CANNOT BE USED WITH 259-3031—PAGE 178, 259-3023—PAGE 227, 250-2821—PAGE 288

AN ATTACHMENT

SMCS-1450 **i02285784**

NOTE	PART NUMBER	QTY	PART NAME 1 2 3 4 5 6 (PRODUCT LEVEL)	SEE PAGE
Y	*8X-0118*	1	HEATER GP-ENGINE OIL	226
Y	*259-3023*	1	HEATER GP-FUEL	227
Y	*129-0696*	1	WIRING GP-HEATER	338

Y-SEPARATE ILLUSTRATION

<END>

250-2821 STARTING AR-ELECTRIC

S/N: 4421-UP

CANNOT BE USED WITH 264-2285—PAGE 288

AN ATTACHMENT

SMCS-1450 **i02282393**

NOTE	PART NUMBER	QTY	PART NAME 1 2 3 4 5 6 (PRODUCT LEVEL)	SEE PAGE
Y	*266-4228*	1	LINES GP-EXPANSION TANK (ELECTRIC START)	787
Y	*245-3885*	1	PLATFORM AR (ELECTRIC START, RH)	1034
Y	*267-4446*	1	STARTING MOTOR GP-ELECTRIC	298
JY	*250-7668*	1	WIRING GP-ELECTRIC START (REAR)	320
JY	*251-2239*	1	WIRING GP-START CONTROL	381

J-PART NOT RELEASED
L-USE TO CONNECT 8X-5823 AND 251-1061 HOSE AS FROM 244-7340 LINES GP-AIR TANK
Y-SEPARATE ILLUSTRATION

<END>

4W-6633 STARTING MOTOR GP-AIR–VANE*R

S/N: 4421-UP

PART OF 4W-6634 STARTING MOTOR GP-AIR

AN ATTACHMENT

SMCS-1451 **i02418940**

NOTE	REF NO	GRAPHIC REF	PART NUMBER	QTY	PART NAME 1 2 3 4 5 6 (PRODUCT LEVEL)	SEE PAGE
M	1	1	**6V-3937**	1	BOLT (M5X0.8X20-MM)	
		1	**5N-8378**	1	NUT-ROTOR CLAMP (M5X0.8-THD)	
	2	1	**5N-8363**	1	COVER AS	
	3	1	**4D-3118**	3	PLUG-PIPE	
	4	1	**5N-8383**	1	CYLINDER	
	5	1	**6V-3916**	1	BALL BEARING	
		1	**1L-8497**	1	RING-SNAP	
		1	**6J-7855**	1	RING-LOCK	
	6	1	**5N-8375**	1	CUP-SPRING	
		1	**6V-3935**	1	RING-RETAINING	
	7	1	**5N-8381**	1	SPRING-CLUTCH	
	8	1	**2W-6081**	1	GEAR AS-DRIVE (37-TEETH)	
	9	1	**5N-9574**	1	JAW AS-CLUTCH	
	10	1	**5N-8387**	1	CASE-GEAR	
	11	1	**5N-8424**	1	BULKHEAD	
M	12	1	**6V-3940**	8	BOLT (M8X1.25X25-MM)	
		1	**3B-4505**	8	LOCKWASHER	
	13	1	**3J-7719**	1	RING-RETAINING (INNER)	
		1	**6V-3971**	1	RING-RETAINING (OUTER)	
	14	1	**7F-8671**	1	BALL BEARING	
	15	1	**5N-8428**	1	WASHER-GEAR (10.1X34X15.5-MM THK)	
M	16	1	**5N-8427**	4	BOLT-MOTOR (M10X1.5X180-MM)	
	17	1	**6V-3959**	5	LOCKWASHER	
M	18	1	**5N-8403**	1	SCREW-PINION (M12X1.25X70-MM)	
		1	**5N-8425**	1	WASHER (12.2X41.5X4.5-MM THK)	
	19	1	**2W-6078**	1	PINION-DRIVE	
	20	1	**5N-8380**	1	SPRING-PINION	
		1	**5N-8374**	1	SLEEVE-SPRING	
	21	1	**2W-6082**	1	KIT-DRIVE HOUSING (AIR STARTING MOTOR)	
					(INCLUDES O-RING, HOUSING, BEARING, SEAL & VENT)	
	22	1	**8B-7624**	1	BALL BEARING	
	23	1	**5N-8379**	1	SEAT-SPRING	
	24	1	**5N-8372**	1	SPRING-RETURN	
	25	1	**5N-8384**	1	SHAFT-DRIVE	
M	26	1	**6V-3938**	1	BOLT (M10X1.5X20-MM)	
	27	1	**5P-9514**	1	BALL BEARING	
	28	1	**5N-8377**	1	BEARING-DRIVE SHAFT	
	29	1	**5N-8373**	1	PISTON	
M	30	1	**6V-3939**	1	BOLT (M12X1.75X60-MM)	
	31	1	**5N-8368**	1	PINION-ROTOR	
	32	1	**6V-1394**	1	BALL BEARING	
		1	**039-4317**	2	WASHER-SPRING	
	33	1	**5N-8365**	1	PLATE-FRONT END	
	34	1	**111-4399**	1	HOUSING-MOTOR	
	35	1	**5N-8388**	1	ROTOR	
	36	1	**5N-8367**	1	PLATE-REAR END	
					AVAILABLE REPAIR KIT(S):	
			5N-8390	1	KIT-SEAL & VANE (AIR STARTING MOTOR) (AIR STARTING MOTOR)	
					(INCLUDES PINS, O-RINGS, SEALS, VANE, RETAINER & PISTON BUMPERS)	

M-METRIC PART

4W-6633 **STARTING MOTOR GP-AIR** *(contd.)* **i02418940**

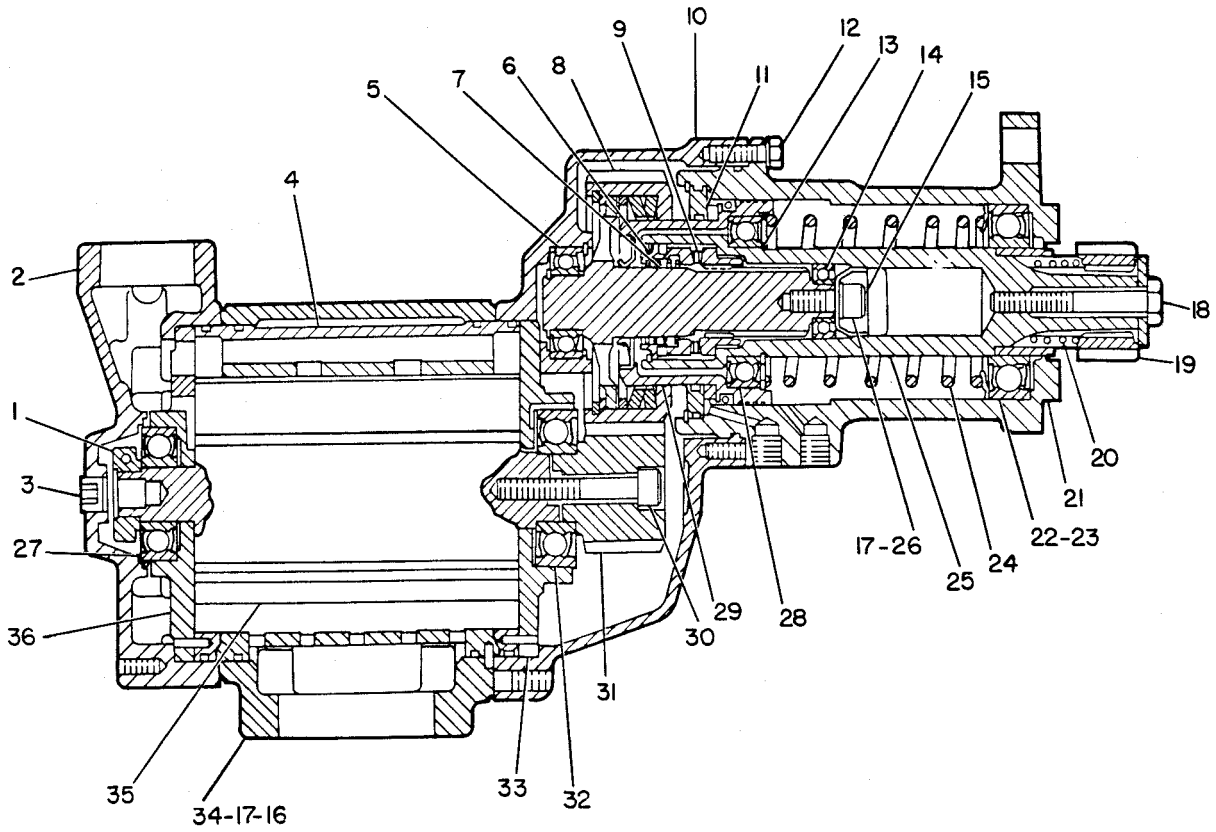

GRAPHIC #1 **<END>** g00081746

4W-6634 STARTING MOTOR GP-AIR–VANE

S/N: 4421-UP
SAE STANDARD ENGINE ROTATION
PART OF 250-2819 STARTING AR-AIR
FOR USE WITH "O" FLYWHEEL HOUSING
AN ATTACHMENT

SMCS-1451 **i02277430**

NOTE	REF NO	GRAPHIC REF	PART NUMBER	QTY	PART NAME 1 2 3 4 5 6 (PRODUCT LEVEL)	SEE PAGE
	1	1	**4H-7869**	1	GASKET	
YR	2	1	*4W-6633*	1	STARTING MOTOR GP-AIR (VANE)	289
	3	1	**5P-1717**	1	CLAMP-HOSE	
	4	1	**8N-8446**	1	ELBOW	
	5	1	**8N-8451**	1	GASKET	
	6	1	**8N-8452**	1	GASKET	
	7	1	**8T-8918**	4	BOLT-SOCKET HEAD (1/2-13X1.5-IN)	
	8	1	**107-8769**	1	SILENCER-AIR STARTING	
	9	1	**124-3647**	3	SPACER (20-MM THK)	
Y	10	1	**172-0208**	1	LUBRICATOR GP-AIR MOTOR	263
	11	1	**229-7339**	1	SLEEVE	
CI	12	1	**230-1096**	1	HOSE AS	
	13	1	**1D-4566**	4	BOLT (1/2-13X3.5-IN)	
	14	1	**5P-8245**	4	WASHER-HARD (13.5X25.5X3-MM THK)	
	15	1	**8L-6557**	1	CONNECTOR	
	16	1	**9X-8881**	3	BOLT (5/8-11X2.25-IN)	

C-CHANGE FROM PREVIOUS TYPE
I-REFER TO HYDRAULIC INFORMATION SYSTEM
R-REMFG PART MAY BE AVAILABLE
Y-SEPARATE ILLUSTRATION

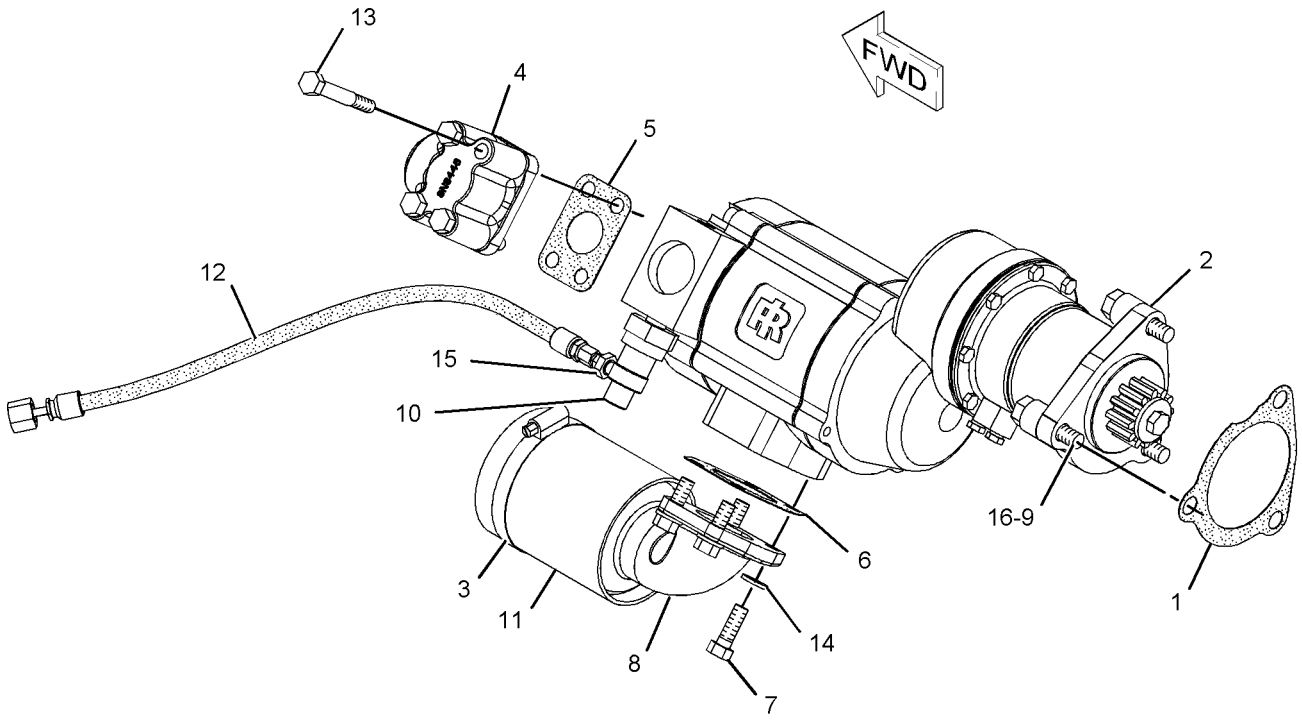

GRAPHIC #1 **<END>** g01141378

9Y-0646 STARTING MOTOR GP-AIR—TURBINE

S/N: 4421-UP
STANDARD ENGINE ROTATION
PART OF 250-2820 STARTING AR-AIR
AN ATTACHMENT

SMCS-1451 **i02336494**

NOTE	REF NO	GRAPHIC REF	PART NUMBER	QTY	PART NAME 1 2 3 4 5 6 (PRODUCT LEVEL)	SEE PAGE
	1	1	**4H-7869**	1	GASKET	
	2	1	**120-3929**	3	SPACER (8-MM THK)	
JY	3	1	**205-4824**	1	STARTING MOTOR GP-AIR (TURBINE)	294
	4	1	**8S-2332**	3	BOLT-12 POINT HEAD (5/8-11X1.75-IN)	
					AVAILABLE REPAIR KIT(S):	
J			**205-4825**	1	KIT-OVERHAUL (TURBINE AIR STARTER)	
					(INCLUDES SPLIT RINGS, LIP SEAL, SPACERS, O-RINGS, SPRING WASHERS, BEARINGS, RETAINING	
					RING, NUT, THRUST WASHERS, RHEOLUBE AND SCREWS)	
J			**205-4826**	1	KIT-STARTER REPAIR (TURBINE AIR STARTER)	
					(INCLUDES STARTER DRIVE)	
J			**205-4827**	1	KIT-ROTOR (FIRST STAGE AIR STARTER)	
					(INCLUDES ROTOR)	
J			**209-5216**	1	KIT-ROTOR (2ND STAGE AIR STARTER)	
					(INCLUDES ROTOR)	

J-KITS MARKED J SERVICE PART MARKED J
Y-SEPARATE ILLUSTRATION

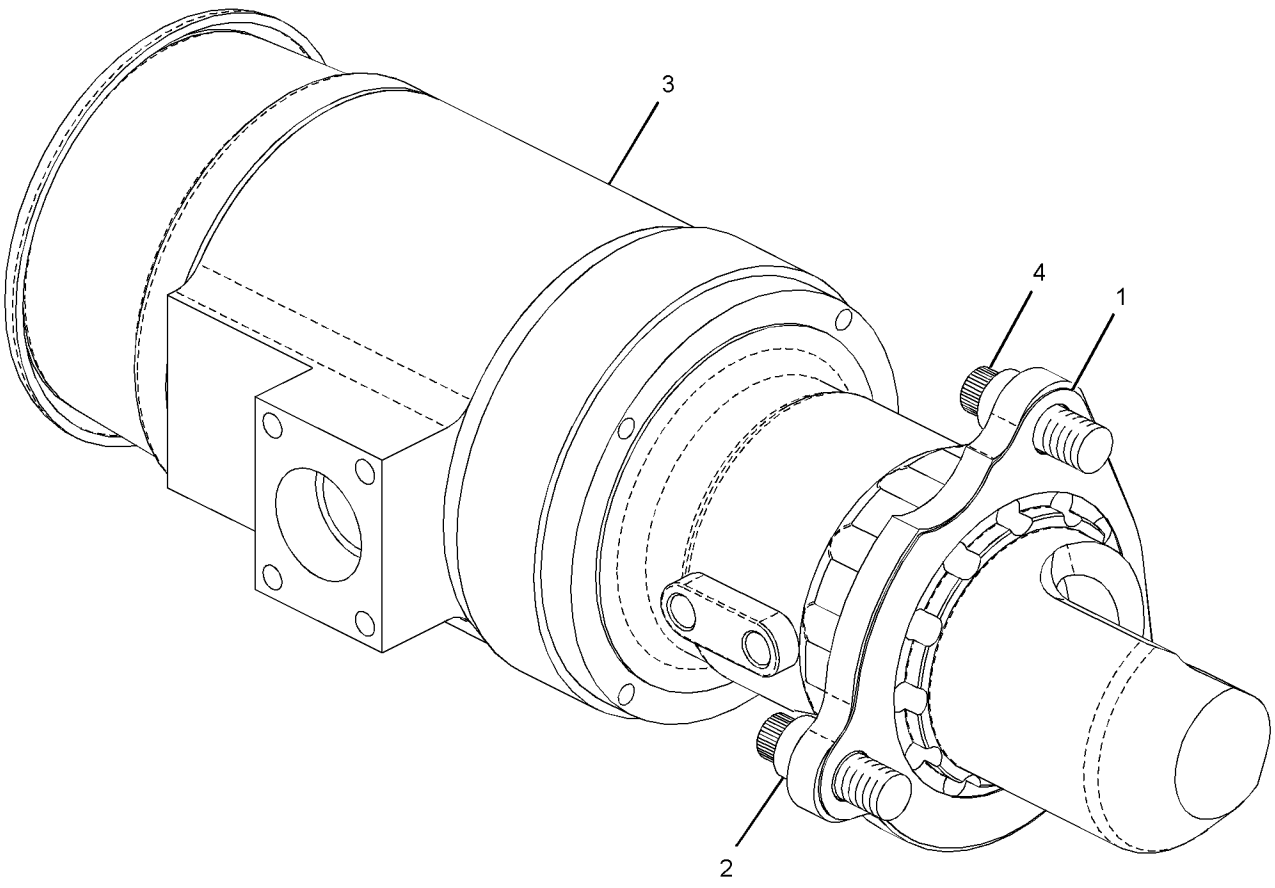

GRAPHIC #1 **<END>** g01166134

105-4326 STARTING MOTOR GP-AIR—TURBINE

S/N: 4421-UP
PART OF 263-1827 STARTING AR-AIR
AN ATTACHMENT

SMCS-1451 **i02365194**

NOTE	REF NO	GRAPHIC REF	PART NUMBER	QTY	PART NAME 1 2 3 4 5 6 (PRODUCT LEVEL)	SEE PAGE
	1	1	**4H-7869**	1	GASKET	
	2	1	**8N-8446**	1	ELBOW	
	3	1	**8N-8451**	1	GASKET	
JR	4	1	**105-4324**	1	STARTING MOTOR GP-AIR (TURBINE)	
	5	1	**0S-1566**	3	BOLT (5/8-11X1.5-IN)	
	6	1	**9X-8875**	4	BOLT (1/2-13X3.5-IN)	
					AVAILABLE REPAIR KIT(S):	
J			**129-2254**	1	KIT-PLANETARY GEAR (TURBINE AIR STARTER)	
					(INCLUDES O-RING, GEARS, NEEDLE ROLLER SETS, SPACERS & SHAFTS)	
J			**129-2253**	1	KIT-OVERHAUL (TURBINE AIR STARTER)	
					(INCLUDES GASKET, SCREWS & AIR INLET ASSEMBLY)	
J			**129-2251**	1	KIT-SEAL (TURBINE AIR STARTER)	
					(INCLUDES BEARING, O-RINGS, SEAT & RETAINER)	
J			**129-2252**	1	KIT-TURBINE WHEEL (TURBINE AIR STARTER)	
					(INCLUDES OVERHAUL KIT & MOTOR KIT)	

J-KITS MARKED J SERVICE PART MARKED J
R-REMFG PART MAY BE AVAILABLE

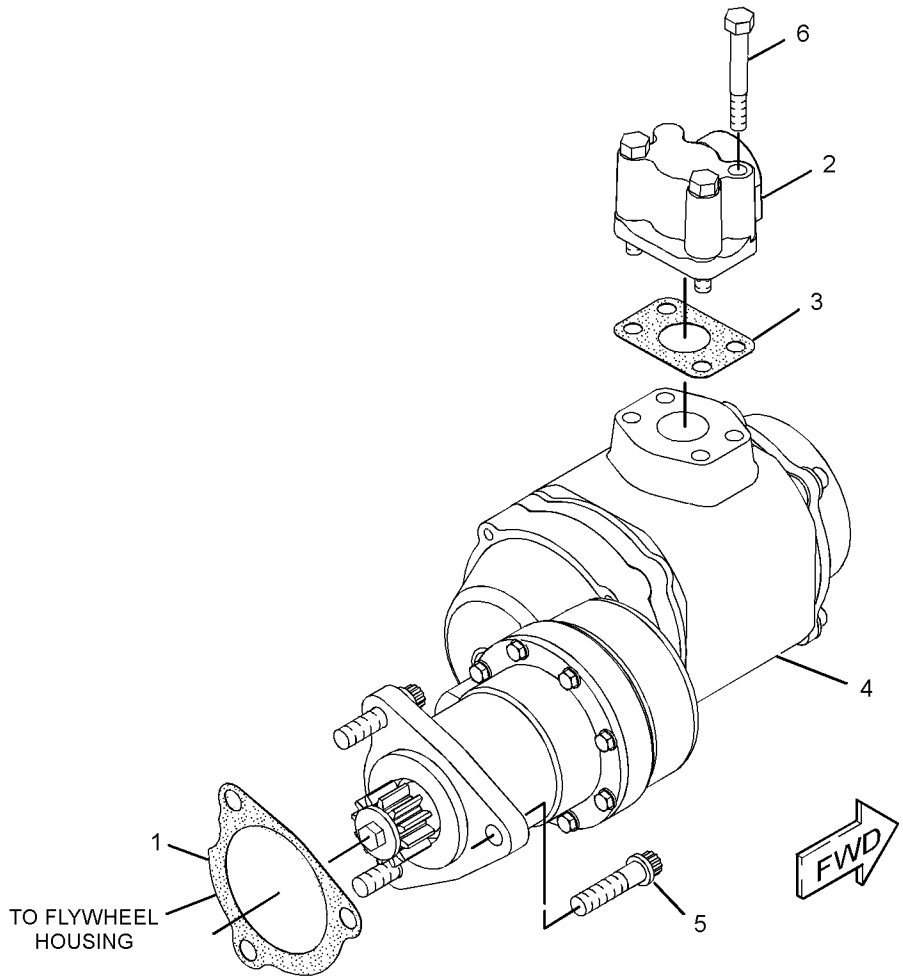

GRAPHIC #1 **<END>** g01181649

205-4824 STARTING MOTOR GP-AIR—TURBINE

S/N: 4421-UP

PART OF 9Y-0646 STARTING MOTOR GP-AIR

AN ATTACHMENT

SMCS-1451 **i01884561**

NOTE	REF NO	GRAPHIC REF	PART NUMBER	QTY	PART NAME 1 2 3 4 5 6 (PRODUCT LEVEL)	SEE PAGE
					AVAILABLE REPAIR KIT(S):	
			205-4825	1	KIT-OVERHAUL (TURBINE AIR STARTER)	
					(INCLUDES SPLIT RINGS, LIP SEAL, SPACERS, O-RINGS, SPRING WASHERS, BEARINGS, RETAINING RING, NUT, THRUST WASHERS,	
					RHEOLUBE AND SCREWS)	
			205-4826	1	KIT-STARTER REPAIR (TURBINE AIR STARTER)	
					(INCLUDES STARTER DRIVE)	
			205-4827	1	KIT-ROTOR (FIRST STAGE AIR STARTER)	
					(INCLUDES ROTOR)	
			209-5216	1	KIT-ROTOR (SECOND STAGE AIR STARTER)	
					(INCLUDES ROTOR)	

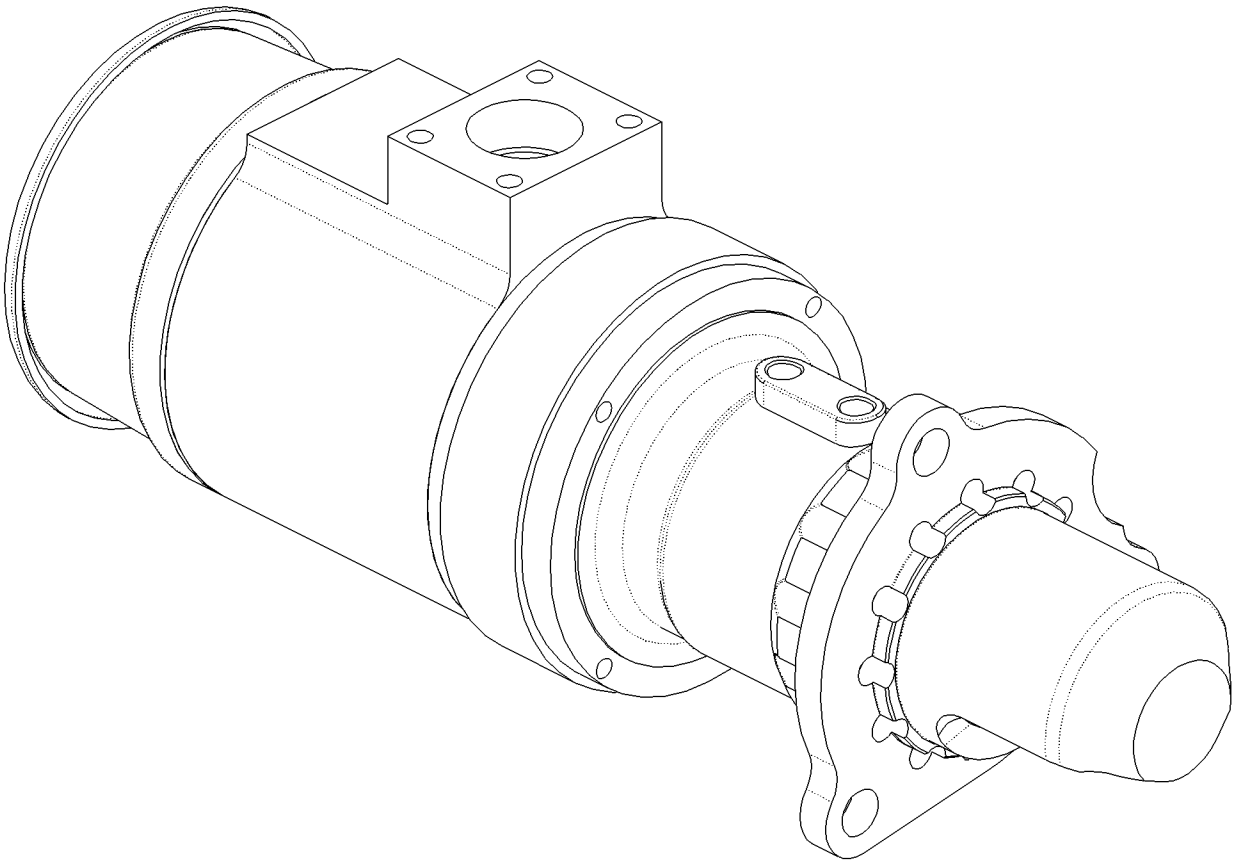

GRAPHIC #1 **<END>** g00878371

ELECTRICAL AND STARTING SYSTEM

6V-0889 STARTING MOTOR GP-ELECTRIC—UPPER

S/N: 4421-UP

PART OF 267-4446 STARTING MOTOR GP-ELECTRIC

AN ATTACHMENT

SMCS-1453 **i02093380**

NOTE	REF NO	GRAPHIC REF	PART NUMBER	QTY	PART NAME 1 2 3 4 5 6 (PRODUCT LEVEL)	SEE PAGE
	1	1	**036-9823**	13	BOLT (1/4-28X1-IN)	
	2	1	**3L-3380**	1	BUSHING-TERMINAL	
	3	1	**3T-3418**	1	FRAME AS-END	
	4	1	**3T-3423**	1	CUP	
	5	1	**9G-4101**	1	BUSHING-END	
	6	1	**3T-3424**	1	PLUG-FELT	
	7	1	**7M-0327**	1	WASHER-THRUST (17.4X25.4X1.6-MM THK)	
	8	1	**7M-8651**	1	ARMATURE AS	
	9	1	**7M-0324**	1	COIL AS-FIELD	
	10	1	**9H-3757**	2	WASHER (0.516X1X0.094-IN THK)	
	11	1	**7X-0562**	6	WASHER-HARD (13.5X19X0.8-MM THK)	
	12	1	**6V-8188**	6	NUT (1/2-13-THD)	
	13	1	**7M-0326**	1	CONNECTOR	
	14	1	**8T-4205**	4	WASHER-HARD (7.2X14.5X2-MM THK)	
C	15	1	**238-1851**	1	SOLENOID AS-STARTING MOTOR	
		1	**3R-8801**	1	CLAMP	
	16	1	**6V-1322**	4	BOLT (1/4-20X0.375-IN)	
	17	1	**4M-1831**	4	PLUG-LEVER HOUSING	
	18	1	**7L-2894**	4	GASKET	
	19	1	**3F-0379**	12	SCREW-POLE SHOE (3/8-24-THD)	
	20	1	**7M-0325**	1	INSULATOR	
	21	1	**7F-3488**	6	SHOE-POLE	
	22	1	**1S-7446**	3	SCREW-MACHINE (8-32X0.437-IN)	
	23	1	**3T-9524**	6	BRUSH AS (STARTING MOTOR)	
	24	1	**9S-2544**	9	SCREW-HEX HEAD (8-32X11.13-MM)	
	25	1	**3T-9525**	1	PLATE AS-BRUSH	
	26	1	**6T-0371**	1	INSULATOR	
	27	1	**3T-4711**	12	SCREW AS	
		1	**9F-5599**	12	LOCKWASHER	
	28	1	**7F-3525**	6	WASHER-BUSHING (0.207X0.39X0.09-IN THK)	
	29	1	**6T-0372**	1	PLATE	
	30	1	**3T-4709**	3	PLATE	
	31	1	**2L-6679**	3	PLATE-INSULATOR	
	32	1	**3T-4710**	3	PLATE	
	33	1	**6T-0363**	6	HOLDER AS-BRUSH (STARTING MOTOR)	
					(EACH INCLUDES)	
	34	1	**3T-9494**	1	SPRING (STARTING MOTOR)	
	35	1	**2D-6392**	1	SEAL-O-RING	
	36	1	**2J-8163**	2	SEAL-O-RING	
	37	1	**7F-3491**	2	WASHER (0.516X1X0.094-IN THK)	
	38	1	**3R-8801**	1	CLAMP	
	39	1	**6N-3826**	1	DRIVE AS-MOTOR	
	40	1	**1H-2629**	3	STRIP-INSULATION	
	41	1	**3T-3422**	1	WIRE AS	
	43	1	**036-9821**	1	WASHER	
	44	1	**4M-1829**	1	BOOT-RUBBER	
	45	1	**4M-1828**	1	RETAINER-SPRING	
	46	1	**9M-7609**	1	SPRING (SHIFT LEVER)	
	47	1	**1H-1023**	1	SEAL-O-RING	
	48	1	**3E-7771**	1	HOUSING AS	
	49	1	**3T-3424**	2	PLUG-FELT	
	50	1	**3T-3423**	2	CUP	
	51	1	**1M-9968**	1	BUSHING	
	52	1	**2F-6678**	1	SEAL-LIP TYPE	
	53	1	**4L-2729**	1	WASHER (0.844X1.9X0.188-IN THK)	

6V-0889 **STARTING MOTOR GP-ELECTRIC** *(contd.)* **i02093380**

NOTE	REF NO	GRAPHIC REF	PART NUMBER	QTY	PART NAME 1 2 3 4 5 6 (PRODUCT LEVEL)	SEE PAGE
	54	1	**4M-1854**	1	SHAFT-LEVER	
	55	1	**2H-3429**	2	RING-RETAINING	
	56	1	**4M-1853**	1	LEVER AS-SHIFT	
	57	1	**5M-3034**	1	LOCKNUT (5/16-24-THD)	
	58	1	**1M-9971**	1	SPACER (0.835X1.72X0.188-IN THK)	
	59	1	**4M-1827**	1	RETAINER-SPRING	
	60	1	**8C-3089**	1	SEAL-O-RING	
	61	1	**3E-7768**	1	HOUSING AS	
	62	1	**4M-1896**	1	BUSHING-TERMINAL	
	63	1	**8C-9660**	3	WASHER (4.6X7.9X0.8-MM THK)	
	64	1	**3T-9494**	6	SPRING (STARTING MOTOR BRUSH)	
	65	1	**5J-5314**	5	BOLT (5/16-18X1.5-IN)	
	66	1	**3N-3763**	1	KIT-TERMINAL (STARTING MOTOR)	
					(INCLUDES INSULATOR, BUSHINGS, & WASHER)	
	70	1	**7X-3373**	1	BOLT (5/16-18X0.88-IN)	
	71	1	**6N-3279**	1	INSULATOR	
	72	1	**4B-2049**	6	NUT (10-32-THD)	
	73	1	**8T-0328**	10	WASHER-HARD (5.5X10X1-MM THK)	
	74	1	**8F-1434**	2	LOCKWASHER	
B	75	1	**3T-3434**	6	PLUG	
	76	1	**125-6537**	1	INSULATOR	
	77	1	**045-4065**	4	SCREW-MACHINE (10-32X0.75-IN)	
	78	1	**125-6535**	1	COVER-STARTING MOTOR	
	79	1	**125-6536**	1	TERMINAL AS	
	80	1	**7T-9123**	1	GASKET-PLATE	

B-USE AS REQUIRED
C-CHANGE FROM PREVIOUS TYPE

6V-0889 **STARTING MOTOR GP-ELECTRIC** *(contd.)* **i02093380**

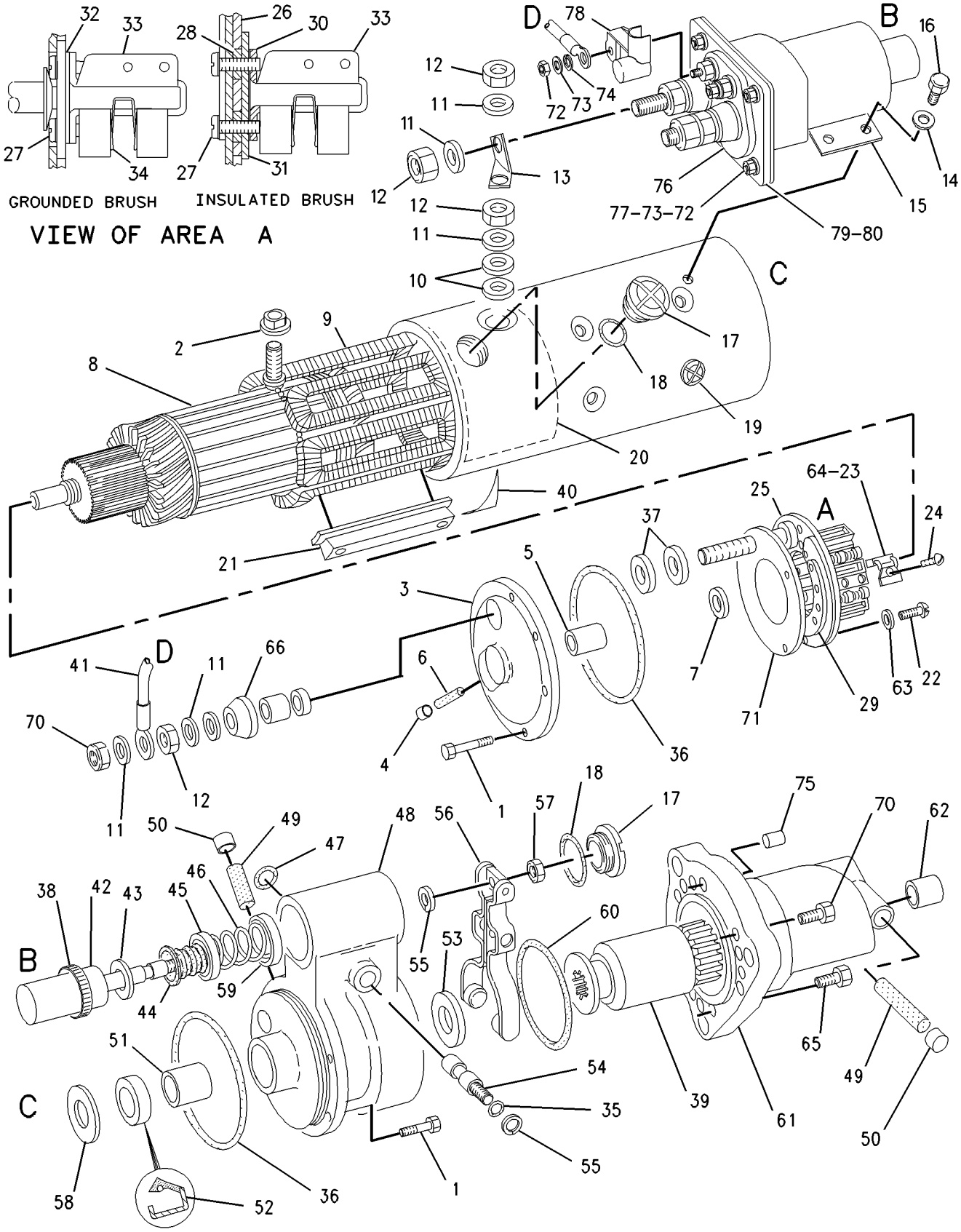

GRAPHIC #1 **<END>** g00634893

267-4446 STARTING MOTOR GP-ELECTRIC

S/N: 4421-UP
PART OF 250-2821 STARTING AR-ELECTRIC
AN ATTACHMENT

SMCS-1453 **i02285807**

NOTE	REF NO	GRAPHIC REF	PART NUMBER	QTY	PART NAME 1 2 3 4 5 6 (PRODUCT LEVEL)	SEE PAGE
Y	2	1	*6V-0889*	1	STARTING MOTOR GP-ELECTRIC (UPPER)	295
	3	1	**7N-6494**	2	GASKET	
	4	1	**110-5991**	1	CABLE AS	
		1	**1S-7251**	1	TERMINAL-RING (FOR 1/2-IN BOLT)	
E		1	**5P-0747**		CABLE (00-GA, BLACK) (19-CM)	
		1	**9X-9825**	1	TERMINAL-CABLE (FOR 1/2-IN BOLT)	
	5	1	**120-3929**	6	SPACER (8-MM THK)	
	6	1	**8S-2332**	6	BOLT-12 POINT HEAD (5/8-11X1.75-IN)	
	7	1	**8T-4223**	1	WASHER-HARD (13.5X25.5X3-MM THK)	
	8	1	**8T-9383**	1	BOLT (1/2-13X0.75-IN)	

E-ORDER BY THE CENTIMETER
R-REMFG PART MAY BE AVAILABLE
Y-SEPARATE ILLUSTRATION

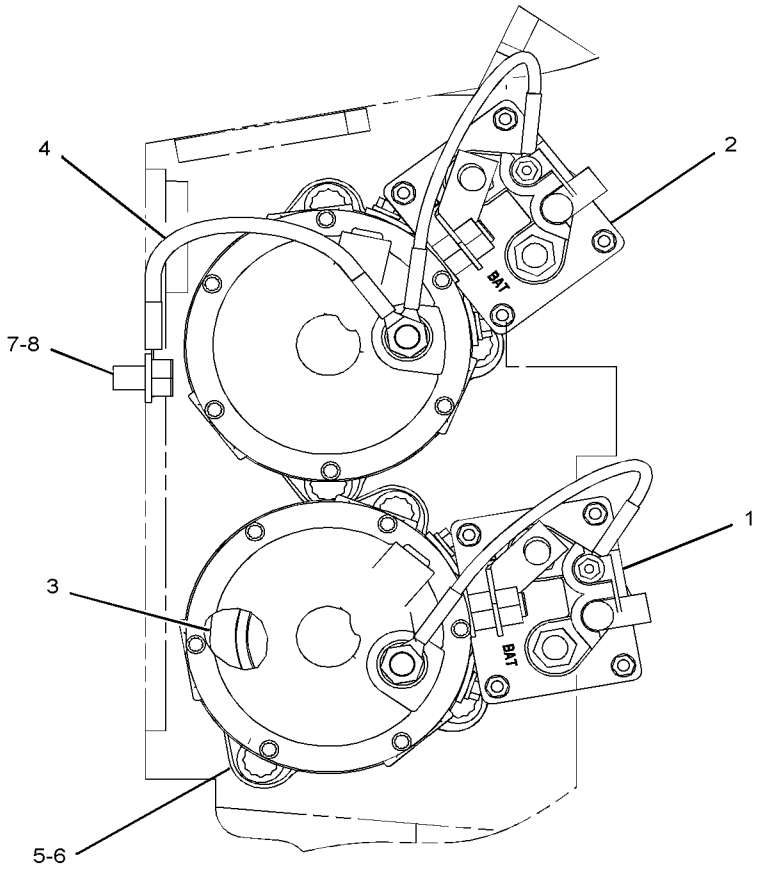

FRONT VIEW

GRAPHIC #1 **<END>** g01144403

164-7577 SWITCH GP-BYPASS–POWER TRAIN OIL FILTER

S/N: 4421-UP

PART OF 251-5830 WIRING GP-FILTERS

SMCS-1408, 1435 **i02406443**

NOTE	REF NO	GRAPHIC REF	PART NUMBER	QTY	PART NAME 1 2 3 4 5 6 (PRODUCT LEVEL)	SEE PAGE
E	1	1	**9X-1813**		SLEEVE (19-CM)	
	2	1	**102-8802**	1	KIT-RECEPTACLE (2-PIN)	
					(INCLUDES RECEPTACLE AS & WEDGE)	
	3	1	**186-3735**	2	PIN-CONNECTOR (16-GA TO 18-GA)	
	4	1	**3E-3365**	1	WEDGE-RECEPTACLE LOCK (2-PIN)	
	5	1	**3D-2824**	1	SEAL-O-RING	
Z	6	1		1	SWITCH AS (FILTER BYPASS)	

E-ORDER BY THE CENTIMETER
Z-NOT SERVICED SEPARATELY

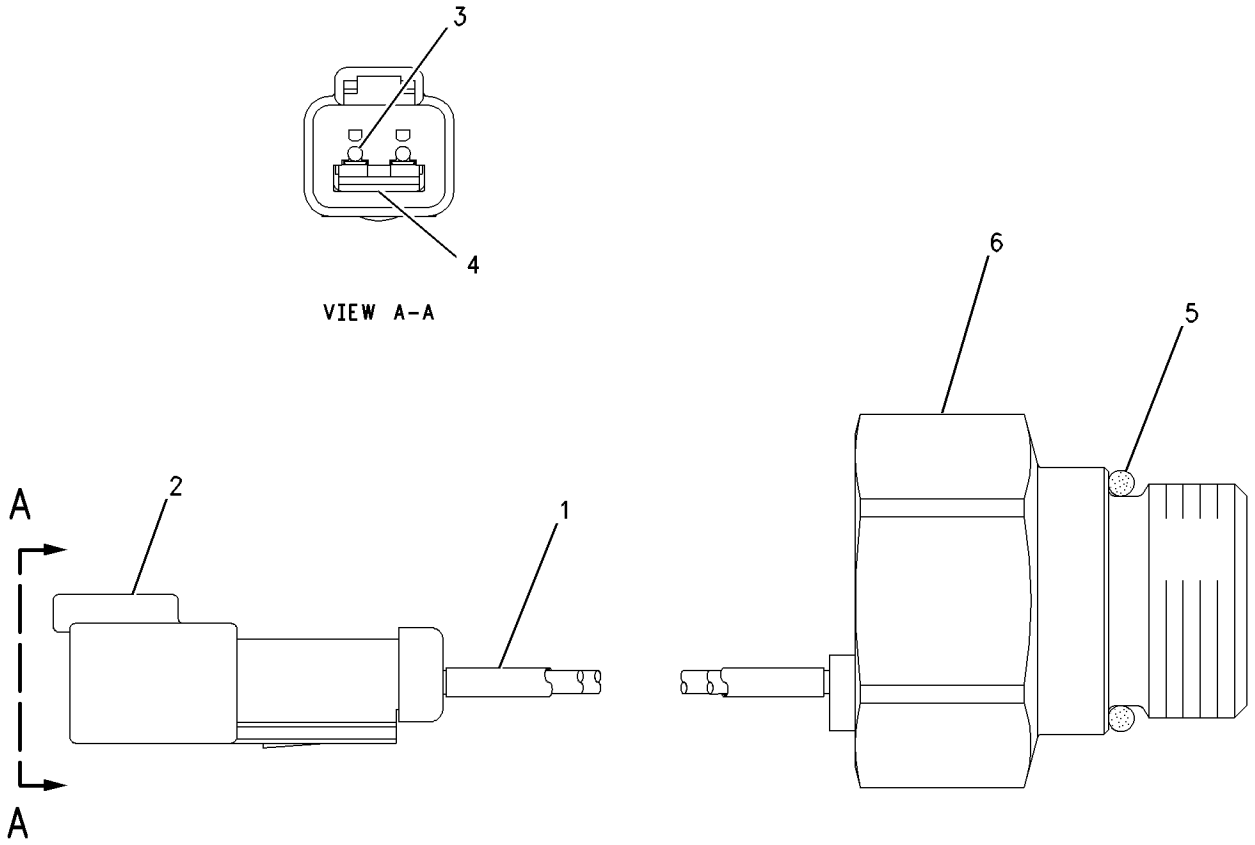

GRAPHIC #1 **<END>** g00750019

7N-0718 SWITCH GP-DISCONNECT–BATTERY

S/N: 4421-UP

PART OF 244-3646 BATTERY & WIRING GP

SMCS-1411 **i02410338**

NOTE	REF NO	GRAPHIC REF	PART NUMBER	QTY	PART NAME 1 2 3 4 5 6 (PRODUCT LEVEL)	SEE PAGE
	1	1	**8H-5306**	1	KEY (BATTERY DISCONNECT)(STARTER)	
	2	1	**8H-5303**	1	NUT (3/4-16-THD)	
	3	1	**2H-3922**	2	LOCKWASHER	
	4	1	**9F-5644**	2	LOCKWASHER	
	5	1	**6F-7045**	2	NUT-FULL (3/8X24-THD)	

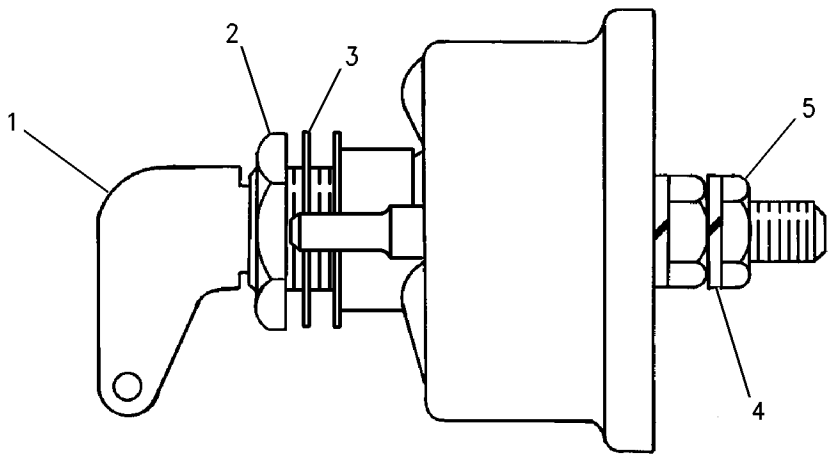

GRAPHIC #1 **<END>** g00715584

171-8708 SWITCH GP-FLOW–ENGINE COOLANT

S/N: 8WM1-UP

PART OF 246-5580 WIRING GP-ENGINE

SMCS-1435 **i01582521**

NOTE	REF NO	GRAPHIC REF	PART NUMBER	QTY	PART NAME 1 2 3 4 5 6 (PRODUCT LEVEL)	SEE PAGE
					(NO SERVICED PARTS)	

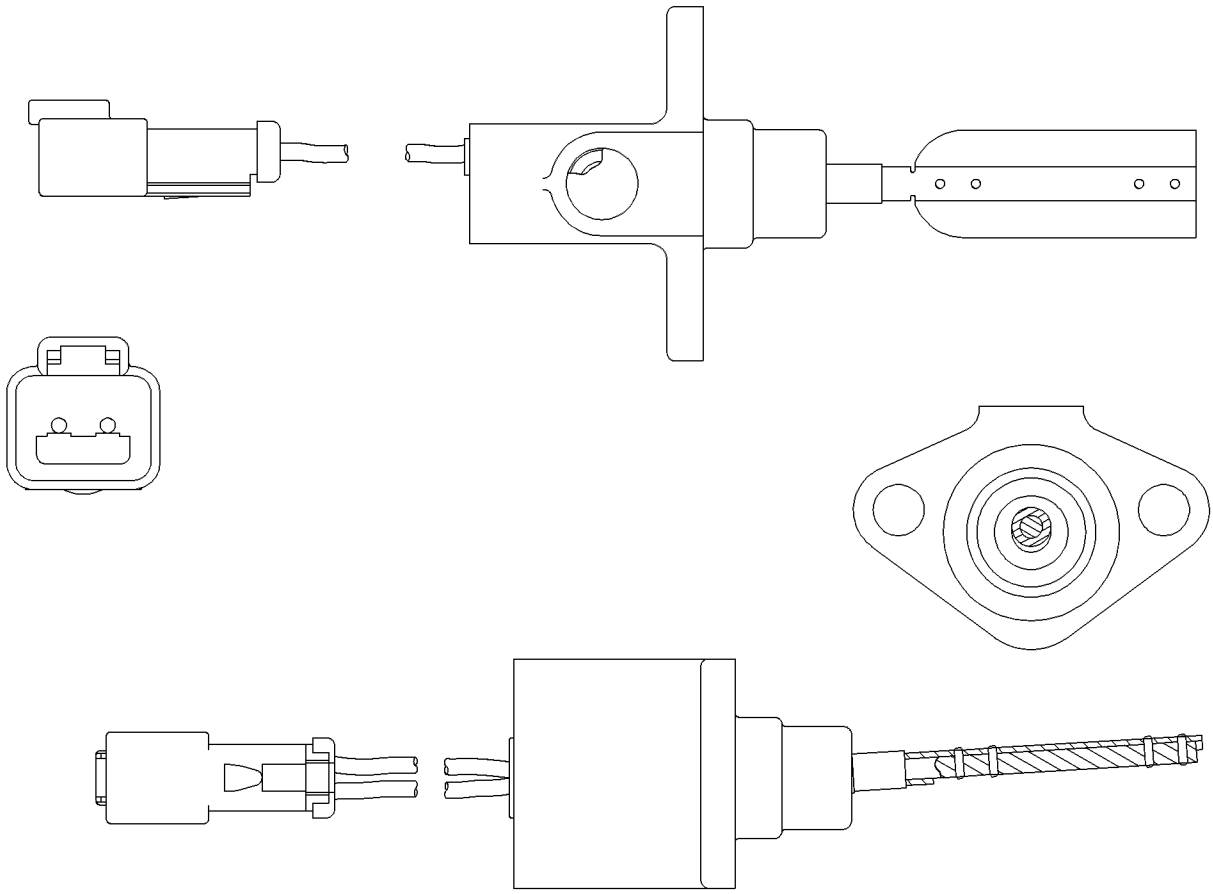

GRAPHIC #1 **<END>** g00613049

172-8660 SWITCH GP-LIQUID LEVEL–OIL COMPARTMENTS

S/N: 4421-UP; 8WM1-UP

PART OF 246-5580 WIRING GP-ENGINE, 247-4396 WIRING GP-FIREWALL, 247-4005 WIRING GP-FRONT, 265-0983 WIRING GP-OIL RENEWAL SYSTEM

ALSO AN ATTACHMENT

SMCS-7422 **i02163018**

NOTE	REF NO	GRAPHIC REF	PART NUMBER	QTY	PART NAME 1 2 3 4 5 6 (PRODUCT LEVEL)	SEE PAGE
	1	1	**102-8802**	1	KIT-RECEPTACLE (2-PIN)	
					(INCLUDES RECEPTACLE AS AND WEDGE)	
	2	1	**3E-3365**	1	WEDGE-RECEPTACLE LOCK (2-PIN)	
	3	1	**186-3735**	2	PIN-CONNECTOR (16-GA TO 18-GA)	

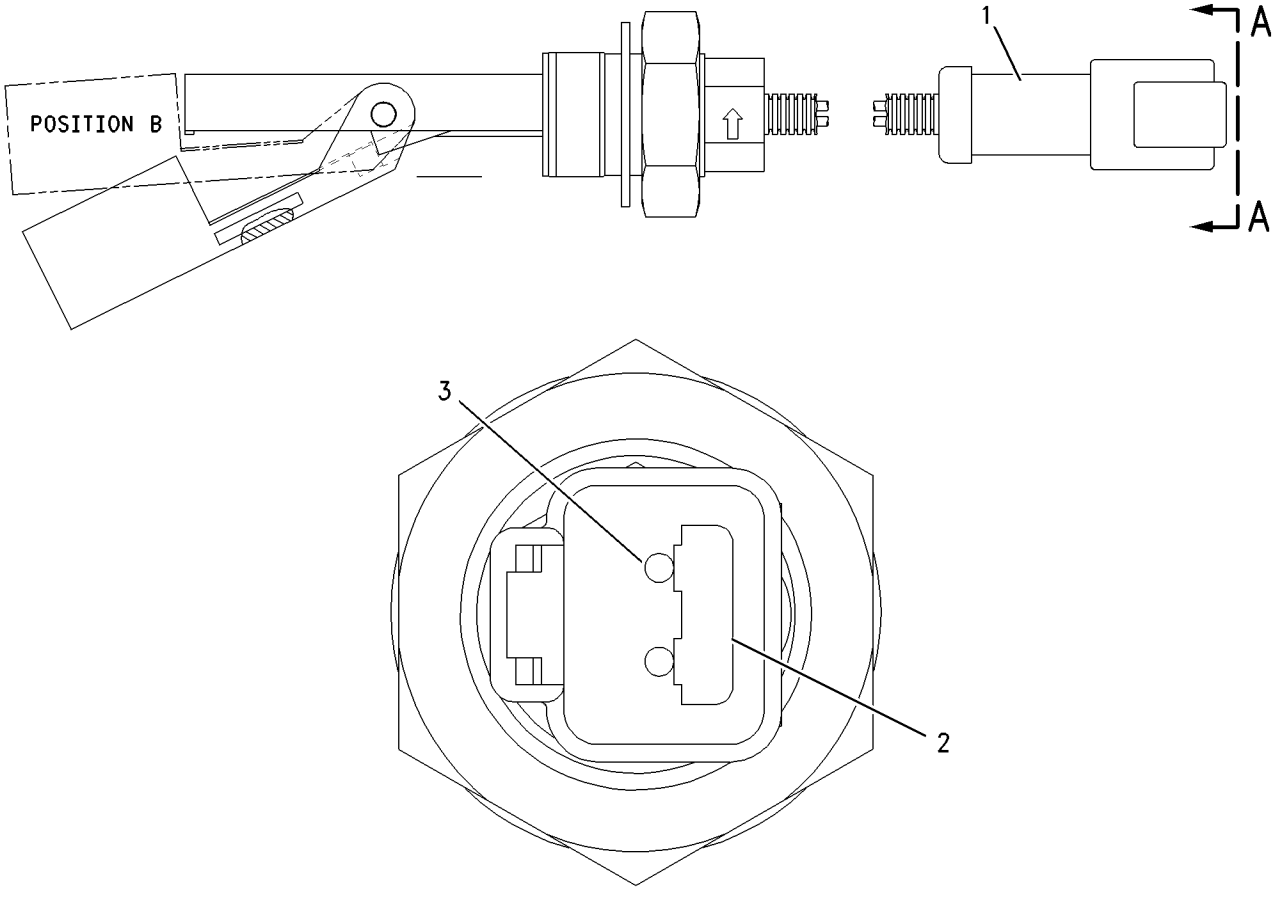

VIEW A-A

GRAPHIC #1 **<END>** g00946221

125-1302 SWITCH GP-MAGNETIC–START RELAY

S/N: 4421-UP
24-VOLT
PART OF 251-2239 WIRING GP-START CONTROL
AN ATTACHMENT

SMCS-7499 **i02415548**

NOTE	REF NO	GRAPHIC REF	PART NUMBER	QTY	PART NAME 1 2 3 4 5 6 (PRODUCT LEVEL)	SEE PAGE
	1	1	**102-8802**	1	KIT-RECEPTACLE (2-PIN)	
					(INCLUDES RECEPTACLE AS & WEDGE)	
	2	1	**186-3735**	2	PIN-CONNECTOR (16-GA TO 18-GA)	
	3	1	**1H-3338**	2	LOCKWASHER	
	4	1	**012-0380**	2	LOCKWASHER	
M	5	1	**5C-2890**	2	NUT (M6X1-THD)	
E	6	1	**9X-1813**		SLEEVE (16-CM)	

E-ORDER BY THE CENTIMETER
M-METRIC PART

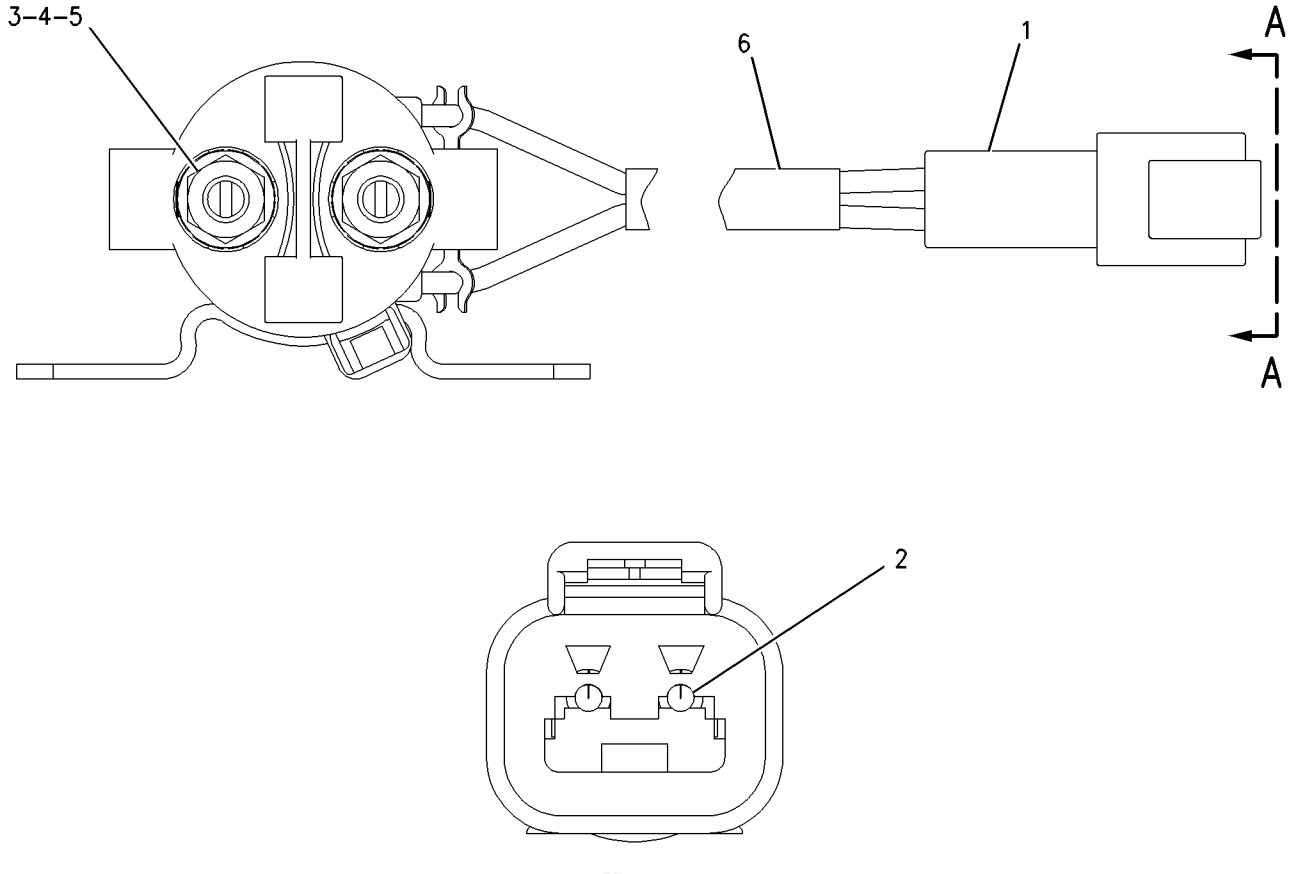

VIEW A–A

GRAPHIC #1 **<END>** g00988001

179-0006 SWITCH GP-MAGNETIC–PRELUBRICATION PUMP RELAY

S/N: 4421-UP

PART OF 261-0987 PUMP GP-PRELUBRICATION

AN ATTACHMENT

SMCS-7499 **i02241405**

NOTE	REF NO	GRAPHIC REF	PART NUMBER	QTY	PART NAME 1 2 3 4 5 6 (PRODUCT LEVEL)	SEE PAGE
	1	1	**7X-0620**	2	WASHER-HARD (5.5X13X1.6-MM THK)	
	2	1	**8F-1434**	2	LOCKWASHER	
	3	1	**6V-8378**	2	NUT (10-32-THD)	
	4	1	**4L-6499**	2	WASHER (0.38X0.88X0.02-IN THK)	
	5	1	**4D-1326**	2	LOCKWASHER	
	6	1	**1B-2578**	2	NUT (3/8-16-THD)	

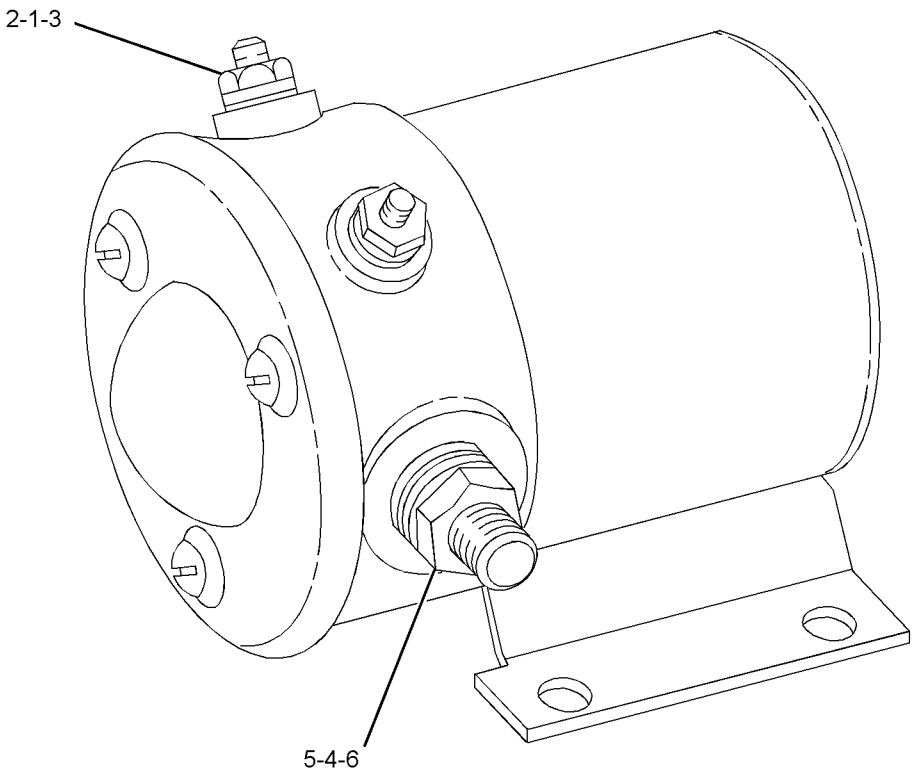

GRAPHIC #1 **<END>** g01132022

241-8368 SWITCH GP-MAGNETIC–MAIN RELAY

S/N: 4421-UP
24-VOLTS
PART OF 265-4124 WIRING GP-MONITOR

SMCS-7499 **i02325242**

NOTE	REF NO	GRAPHIC REF	PART NUMBER	QTY	PART NAME 1 2 3 4 5 6 (PRODUCT LEVEL)	SEE PAGE
	1	1	**155-2270**	1	KIT-CONNECTING PLUG (2-PIN)	
					(INCLUDES PLUG AS, WEDGE & INTERFACE SEAL)	
	2	1	**4F-2294**	2	NUT-JAM (5/16-24-THD)	
	3	1	**186-3736**	2	SOCKET-CONNECTOR (16-GA TO 18-GA)	

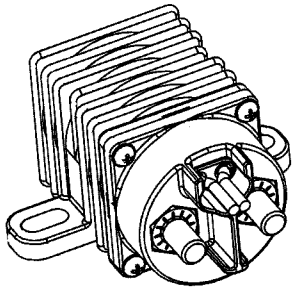

ISOMETRIC VIEW

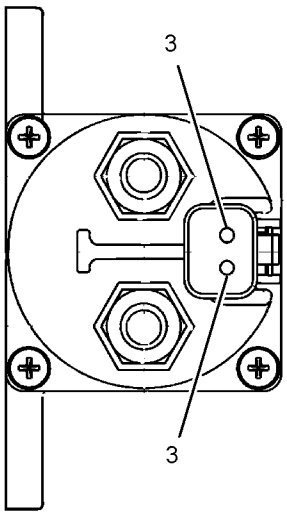

VIEW A-A

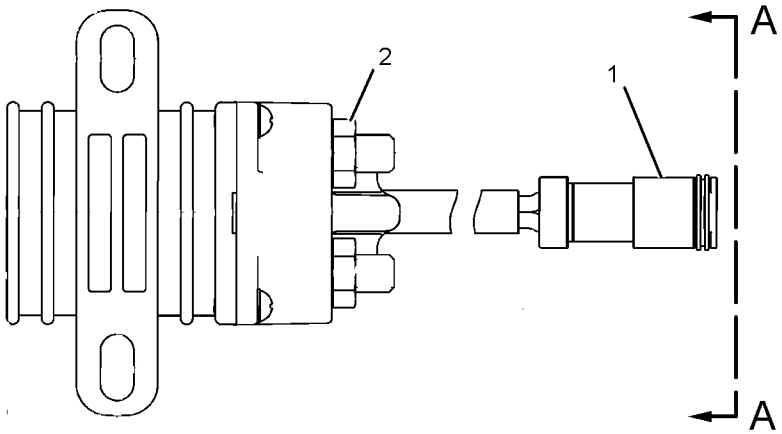

GRAPHIC #1 **<END>** g01077362

3E-0155 SWITCH GP-WIPER–INTERMITTENT–FRONT, REAR

S/N: 4421-UP
24 VOLT
PART OF 245-1428 WIRING GP-CAB

SMCS-7332 **i02248459**

NOTE	REF NO	GRAPHIC REF	PART NUMBER	QTY	PART NAME 1 2 3 4 5 6 (PRODUCT LEVEL)	SEE PAGE
	1	1	**110-7886**	1	SWITCH AS-WIPER (24-VOLT) (INTERMITTENT)	
	1A	1	**2H-3920**	1	LOCKWASHER	
	1B	1	**3E-3389**	1	WEDGE-RECEPTACLE LOCK	
	1C	1	**6V-8369**	1	NUT (7/16-28 THD)	
	1D	1	**8T-8737**	1	PLUG-SEAL	
C	1E	1	**9W-0852**	4	PIN-CONNECTOR (14-GA)	
C	1F	1	**102-8806**	1	KIT-RECEPTACLE (8-PIN)	
					(SERVICES RECEPTACLE AS AND WEDGE)	
	1G	1	**186-3735**	3	PIN-CONNECTOR (16-GA TO 18-GA)	
	2	1	**7T-9302**	1	KNOB (WIPER, WASHER)	

C-CHANGE FROM PREVIOUS TYPE

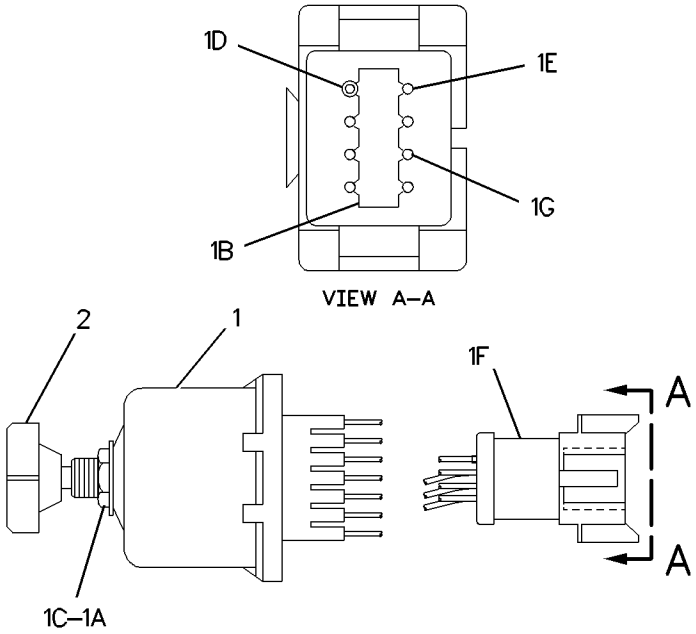

GRAPHIC #1 **<END>** g00899239

235-8824 VALVE GP-ETHER STARTING

S/N: 4421-UP
CONTINUOUS FLOW
PART OF 250-6195 STARTING AID GP-ETHER

SMCS-1456 **i02231094**

NOTE	REF NO	GRAPHIC REF	PART NUMBER	QTY	PART NAME 1 2 3 4 5 6 (PRODUCT LEVEL)	SEE PAGE
	1	1	**102-8802**	1	KIT-RECEPTACLE (2-PIN)	
					(INCLUDES RECEPTACLE AS AND WEDGE)	
	2	1	**3E-3365**	1	WEDGE-RECEPTACLE LOCK (2-PIN)	
	3	1	**186-3735**	2	PIN-CONNECTOR (16-GA TO 18-GA)	
	4	1	**235-8827**	1	ORIFICE (ETHER STARTING)	

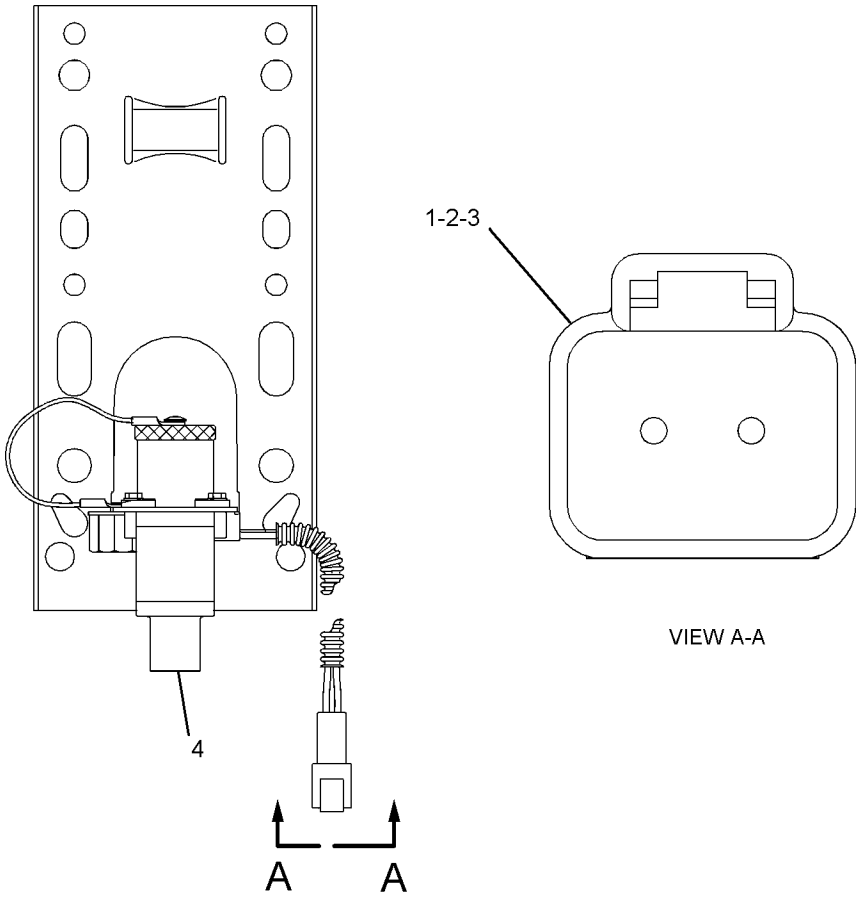

GRAPHIC #1 **<END>** g01023774

247-4020 WARNING GP-BACKUP

S/N: 4421-UP

PART OF 245-8812 CHASSIS AR-REAR

SMCS-7406 **i02312822**

NOTE	REF NO	GRAPHIC REF	PART NUMBER	QTY	PART NAME 1 2 3 4 5 6 (PRODUCT LEVEL)	SEE PAGE
	1	1	**213-9100**	2	ALARM AS-BACKUP (BACKUP)	
					(EACH INCLUDES)	
		1	**102-8802**	1	KIT-RECEPTACLE (2-PIN)	
					(INCLUDES RECEPTACLE AS & WEDGE)	
		1	**186-3735**	2	PIN-CONNECTOR (16-GA TO 18-GA)	
	2	1	**130-5300**	2	CLIP	
	3	1	**6V-3265**	2	CLIP (SLOT)	
	4	1	**7X-7729**	8	WASHER (11X25X3-MM THK)	
	5	1	**8T-4121**	2	WASHER-HARD (11X21X2.5-MM THK)	
M	6	1	**8T-4133**	2	NUT (M10X1.5 THD)	
M	7	1	**8T-4137**	8	BOLT (M10X1.5X20-MM)	

M-METRIC PART

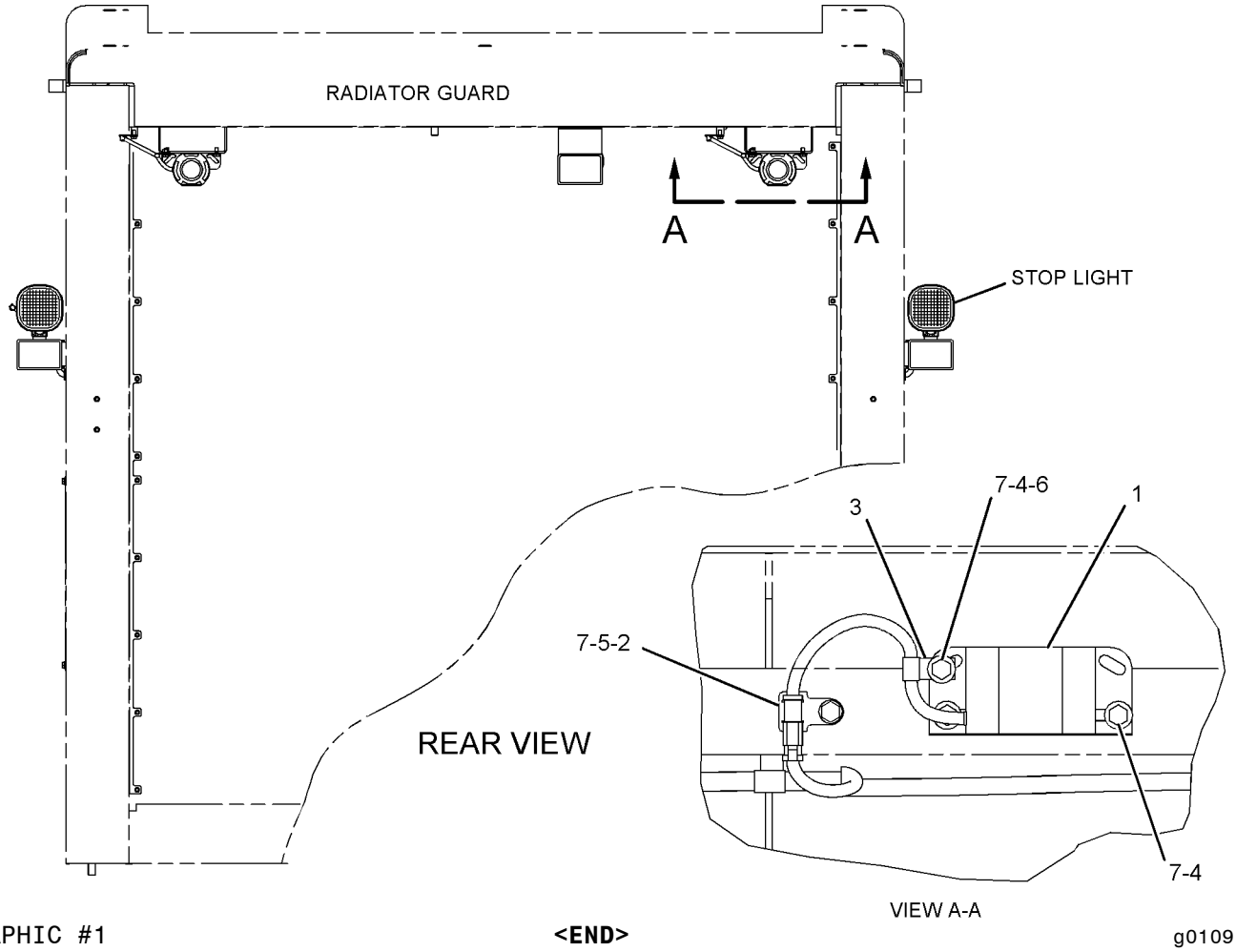

GRAPHIC #1 **<END>** g01091308

ELECTRICAL AND STARTING SYSTEM

245-1428 WIRING GP-CAB

S/N: 4421-UP

PART OF 242-0341 CAB AR

SMCS-1408, 7301 **i02386012**

NOTE	REF NO	GRAPHIC REF	PART NUMBER	QTY	PART NAME 1 2 3 4 5 6 (PRODUCT LEVEL)	SEE PAGE
	1	3	**2P-4339**	1	NUT-JAM (7/16-28-THD)	
	2	3	**2V-0099**	3	KNOB-CONTROL (PANEL ROTARY SWITCHES)	
	3	3	**3E-0109**	3	PLUG (ROCKER SWITCH)	
Y	4	3	**3E-0155**	2	SWITCH GP-WIPER (24-VOLT, INTERMITTENT) (FRONT, REAR)	306
	5	4	**3E-5165**	1	CAP AS-PROTECTION	
	6	3	**3E-5275**	1	SWITCH AS-ROTARY (WIPER, WASHER) (QUARTER WINDOW)	
		3	**2H-3920**	1	LOCKWASHER	
		3	**155-2265**	1	KIT-CONNECTING PLUG (8-PIN)	
					(INCLUDES PLUG AS AND WEDGE)	
		3	**3E-3386**	1	WEDGE-PLUG LOCK	
		3	**6V-8369**	1	NUT (7/16-28-THD)	
		3	**7T-9302**	1	KNOB (WIPER, WASHER)	
		3	**014-0816**	1	SETSCREW (8-32X0.5-IN)	
		3	**186-3736**	8	SOCKET-CONNECTOR (16-GA TO 18-GA)	
		3	**014-0816**	1	SETSCREW (8-32X0.5-IN)	
Y	7	4	**3E-6328**	1	ALARM GP (24-VOLT) (ACTION)	194
Y	8	1	**3E-6389**	1	LAMP GP-DOME (24-VOLT, WITH SWITCH) (CAB)	236
	9	1,2,3, 4	**3S-2093**	19	STRAP-CABLE	
	10	2	**4E-9055**	1	GASKET	
	11	3	**6P-3236**	1	SWITCH AS-ROTARY (A/C, HEATER FAN CONTROL)	
		3	**6V-8362**	5	SCREW-MACHINE (8-32X0.31-IN)	
		3	**9B-7233**	5	LOCKWASHER	
	12	4	**6V-6457**	1	MODULE GP-SPEEDOMETER & TACH	
		4	**102-8805**	1	KIT-RECEPTACLE (6-PIN)	
					(INCLUDES RECEPTACLE AS AND WEDGE)	
		4	**3E-3383**	1	WEDGE-RECEPTACLE LOCK (6-PIN)	
		4	**186-3735**	6	PIN-CONNECTOR (16-GA TO 18-GA)	
	13	4	**6V-9497**	4	WASHER-HARD (3.2X6X0.5-MM THK)	
	14	1,2,5	**7K-1181**	13	STRAP-CABLE	
	15	1	**8Y-6335**	1	LAMP-INTERIOR (24-VOLT)	
	16	2	**9U-4989**	2	PLATE	
	17	2	**9U-4990**	3	GASKET	
	18	4	**106-4454**	1	PLATE	
	19	4	**109-0365**	1	FILM-INSTRUCTION (SERVICE TOOL)	
	20	3,4	**110-2079**	11	LAMP (24-VOLT)	
	21	3	**111-0879**	1	POTENTIOMETER AS (TEMPERATURE CONTROL)	
		3	**186-3735**	3	PIN-CONNECTOR (16-GA TO 18-GA)	
		3	**102-8803**	1	KIT-RECEPTACLE (3-PIN)	
					(INCLUDES RECEPTACLE AS AND WEDGE)	
		3	**236-8722**	1	WASHER	
	22	3	**117-2311**	1	RECEPTACLE AS-POWER (12-VOLT)	
	23	3	**123-6383**	1	SWITCH AS-ROTARY (REDUCED RIMPULL SELECT)	
		3	**3E-3383**	1	WEDGE-RECEPTACLE LOCK (6-PIN)	
		3	**8T-8737**	1	PLUG-SEAL	
		3	**9W-0852**	5	PIN-CONNECTOR (14-GA)	
		3	**102-8805**	1	KIT-RECEPTACLE (6-PIN)	
					(INCLUDES RECEPTACLE AS AND WEDGE)	
	24	4	**123-8681**	1	HARNESS AS-MONITOR (VIMS MAIN MODULE)	
		4	**102-8803**	1	KIT-RECEPTACLE (3-PIN)	
					(INCLUDES RECEPTACLE AS AND WEDGE)	
		4	**3E-5136**	1	RECEPTACLE AS-CONNECTOR (5-PIN)	
	25	3	**128-6157**	1	PLATE	
	26	1	**128-8886**	1	STRAP AS-GROUND	

245-1428 **WIRING GP-CAB** ***(contd.)*** **i02386012**

NOTE	REF NO	GRAPHIC REF	PART NUMBER	QTY	PART NAME 1 2 3 4 5 6 (PRODUCT LEVEL)	SEE PAGE
	27	4	**129-7701**	1	PLATE AS	
M		4	**6V-9632**	2	NUT-WELD (M6X1-THD)	
Y	28	3	**149-3255**	1	MODULE GP-MONITOR KEYPAD (VIMS)	1014
	29	4	**163-1882**	1	LAMP (24-VOLT, RED)	
	30	4	**163-1883**	3	LAMP (24-VOLT, YELLOW)	
Y	31	4	**166-6928**	1	MODULE GP-QUAD GAUGE	1015
	32	5	**170-1821**	1	SWITCH AS-PUSH BUTTON (HORN)	
		5	**6F-0253**	1	LOCKWASHER	
		5	**186-3735**	2	PIN-CONNECTOR (16-GA TO 18-GA)	
		5	**172-3511**	1	NUT (5/8-24-THD)	
	33	4	**171-3759**	1	SWITCH AS-LIMIT (STIC CONTROL LOCKOUT)	
	34	3	**174-7580**	1	SWITCH GP-KEY	
		3	**7T-6799**	1	NUT-MOUNTING (1-32-THD)	
		3	**102-8804**	1	KIT-RECEPTACLE (4-PIN)	
					(INCLUDES RECEPTACLE AS AND WEDGE)	
		3	**186-3735**	4	PIN-CONNECTOR (16-GA TO 18-GA)	
Y	35	4	**179-1730**	1	MODULE GP-MESSAGE CENTER (VIMS)	1014
	36	3	**180-9900**	1	CAP AS	
		3	**5P-7958**	1	SLEEVE-CABLE SPLICE	
		3	**8C-6354**	1	CAP-RECEPTACLE (DUST)	
		3	**179-9392**	1	LANYARD	
	37	2	**188-0556**	1	COVER	
	38	5	**188-3983**	1	SWITCH AS-PUSH BUTTON (THROTTLE LOCK RESUME)	
		5	**3K-0835**	1	NUT (5/8-24-THD)	
		5	**6F-0253**	1	LOCKWASHER	
		5	**155-2260**	2	KIT-CONNECTING PLUG (3-PIN)	
					(INCLUDES PLUG AS AND WEDGE)	
		5	**186-3736**	3	SOCKET-CONNECTOR (16-GA TO 18-GA)	
	39	4	**188-3984**	1	SWITCH AS-PUSH BUTTON (REMOTE PAYLOAD STORE)	
	39A	4	**188-3984**	1	SWITCH AS-PUSH BUTTON (THROTTLE LOCK SET)	
					(EACH SWITCH AS INCLUDES)	
		4	**3E-3371**	1	WEDGE-RECEPTACLE LOCK (3-PIN)	
		4	**3K-0835**	1	NUT (5/8-24-THD)	
		4	**6F-0253**	1	LOCKWASHER	
		4	**102-8803**	1	KIT-RECEPTACLE (3-PIN)	
					(INCLUDES RECEPTACLE AS AND WEDGE)	
		4	**186-3735**	3	PIN-CONNECTOR (16-GA TO 18-GA)	
	40	3	**198-6570**	1	LIGHTER GP-CIGAR (12-VOLT)	
		3	**198-6571**	1	ELEMENT AS	
	41	1	**209-0381**	1	CONVERTER-POWER (24-VOLT TO 12-VOLT)	
	42	3	**219-9522**	1	SWITCH AS-ROCKER (WARNING BEACON)	
	43	3	**219-9529**	1	SWITCH AS-ROCKER (STARTING AID)	
	44	3	**223-8969**	1	SWITCH AS-ROCKER (TORQUE CONVERTER LOCKUP CLUTCH)	
	45	3	**223-8971**	1	SWITCH AS-ROCKER (STAIRWAY ACCESS LIGHT)	
	46	3	**223-8973**	1	SWITCH AS-ROCKER (RUNNING LIGHTS)	
	47	3	**223-8982**	1	SWITCH AS-ROCKER (THROTTLE LOCK ENABLE)	
	48	2	**238-9127**	1	HARNESS AS-WINDOW WIPER (WASHER)	
		2	**155-2271**	1	KIT-CONNECTING PLUG (4-PIN)	
					(INCLUDES PLUG AS AND WEDGE)	
	49	1	**238-9128**	1	HARNESS AS-WINDOW WIPER (QUARTER WINDOW)	
		1	**102-8802**	1	KIT-RECEPTACLE (2-PIN)	
					(INCLUDES RECEPTACLE AS AND WEDGE)	
		1	**155-2255**	1	KIT-CONNECTING PLUG (12-PIN)	
		1	**155-2270**	1	KIT-CONNECTING PLUG (2-PIN)	
		1	**155-2274**	2	KIT-CONNECTING PLUG (6-PIN)	
					(EACH INCLUDES PLUG AS AND WEDGE)	
	50	1	**238-9133**	1	HARNESS AS-CAB (UPPER)	
		1	**102-8801**	1	KIT-RECEPTACLE (12-PIN)	
					(INCLUDES RECEPTACLE AS AND WEDGE)	

245-1428 **WIRING GP-CAB** ***(contd.)*** **i02386012**

NOTE	REF NO	GRAPHIC REF	PART NUMBER	QTY	PART NAME 1 2 3 4 5 6 (PRODUCT LEVEL)	SEE PAGE
		1	**155-2265**	1	KIT-CONNECTING PLUG (8-PIN)	
		1	**155-2260**	1	KIT-CONNECTING PLUG (3-PIN)	
		1	**155-2274**	2	KIT-CONNECTING PLUG (6-PIN)	
					(EACH INCLUDES PLUG AS AND WEDGE)	
	51	2	**245-1429**	1	HARNESS AS-CAB (LOWER)	
		2	**102-8804**	2	KIT-RECEPTACLE (4-PIN)	
		2	**102-8805**	1	KIT-RECEPTACLE (6-PIN)	
		2	**102-8801**	1	KIT-RECEPTACLE (12-PIN)	
					(EACH INCLUDES RECEPTACLE AS AND WEDGE)	
		2	**3T-3412**	1	PLUG AS-CONNECTOR (37-PIN)	
		2	**8N-1514**	2	PLUG AS-CONNECTOR (37-PIN)	
		2	**8N-1520**	1	PLUG AS-CONNECTOR (12-PIN)	
		2	**8N-1521**	4	BELL AS-END (2-GA)	
		2	**9X-0141**	3	PLUG AS-CONNECTOR (40-PIN)	
		2	**9X-6772**	4	STRAP-CABLE	
		2	**9X-7147**	1	PLUG AS-CONNECTOR (40-PIN)	
		2	**155-2255**	1	KIT-CONNECTING PLUG (12-PIN)	
		2	**155-2260**	2	KIT-CONNECTING PLUG (3-PIN)	
					(EACH INCLUDES PLUG AS AND WEDGE)	
	52	5	**245-1430**	1	HARNESS AS-CAB (REAR, INSIDE)	
		5	**102-8801**	1	KIT-RECEPTACLE (12-PIN)	
					(INCLUDES RECEPTACLE AS AND WEDGE)	
		5	**9X-1343**	1	RECEPTACLE AS-CONNECTOR (40-PIN)	
		5	**155-2255**	1	KIT-CONNECTING PLUG (12-PIN)	
		5	**155-2265**	1	KIT-CONNECTING PLUG (8-PIN)	
		5	**155-2270**	1	KIT-CONNECTING PLUG (2-PIN)	
		5	**155-2271**	1	KIT-CONNECTING PLUG (4-PIN)	
					(EACH INCLUDES PLUG AS AND WEDGE)	
	53	4	**245-1431**	1	HARNESS AS-PANEL (FRONT)	
		4	**102-8802**	1	KIT-RECEPTACLE (2-PIN)	
		4	**102-8803**	2	KIT-RECEPTACLE (3-PIN)	
		4	**102-8805**	2	KIT-RECEPTACLE (6-PIN)	
		4	**102-8801**	1	KIT-RECEPTACLE (12-PIN)	
					(EACH INCLUDES RECEPTACLE AS AND WEDGE)	
		4	**9X-1343**	1	RECEPTACLE AS-CONNECTOR (40-PIN)	
		4	**155-2255**	1	KIT-CONNECTING PLUG (12-PIN)	
		4	**155-2260**	3	KIT-CONNECTING PLUG (3-PIN)	
		4	**155-2270**	2	KIT-CONNECTING PLUG (2-PIN)	
		4	**155-2274**	5	KIT-CONNECTING PLUG (6-PIN)	
					(EACH INCLUDES PLUG AS AND WEDGE)	
	54	3	**245-1432**	1	HARNESS AS-PANEL (SIDE)	
		3	**102-8803**	1	KIT-RECEPTACLE (3-PIN)	
		3	**102-8806**	1	KIT-RECEPTACLE (8-PIN)	
					(EACH INCLUDES RECEPTACLE AS AND WEDGE)	
		3	**3E-7996**	12	PLUG-CONNECTOR (6-PIN)	
		3	**9X-0196**	1	TERMINAL AS	
		3	**9X-1343**	1	RECEPTACLE AS-CONNECTOR (40-PIN)	
		3	**9X-7148**	1	RECEPTACLE AS-CONNECTOR (40-PIN)	
		3	**155-2255**	1	KIT-CONNECTING PLUG (12-PIN)	
		3	**155-2256**	1	KIT-CONNECTING PLUG (12-PIN)	
		3	**155-2265**	2	KIT-CONNECTING PLUG (8-PIN)	
		3	**155-2260**	2	KIT-CONNECTING PLUG (3-PIN)	
		3	**155-2271**	2	KIT-CONNECTING PLUG (4-PIN)	
		3	**155-2274**	2	KIT-CONNECTING PLUG (6-PIN)	
					(EACH INCLUDES PLUG AS AND WEDGE)	
	55	5	**245-1433**	1	HARNESS AS-OPERATOR CONTROLS (HYDRAULIC CONTROL)	
		5	**102-8803**	2	KIT-RECEPTACLE (3-PIN)	
		5	**102-8801**	1	KIT-RECEPTACLE (12-PIN)	
					(EACH INCLUDES RECEPTACLE AS AND WEDGE)	

245-1428 **WIRING GP-CAB** *(contd.)* **i02386012**

NOTE	REF NO	GRAPHIC REF	PART NUMBER	QTY	PART NAME 1 2 3 4 5 6 (PRODUCT LEVEL)	SEE PAGE
		5	**155-2255**	1	KIT-CONNECTING PLUG (12-PIN)	
		5	**155-2260**	2	KIT-CONNECTING PLUG (3-PIN)	
		5	**155-2270**	1	KIT-CONNECTING PLUG (2-PIN)	
		5	**155-2274**	1	KIT-CONNECTING PLUG (6-PIN)	
					(EACH INCLUDES PLUG AS AND WEDGE)	
	56	3	**250-9279**	1	SWITCH AS-ROCKER (LIFT POSITION SET)	
	57	3	**096-6166**	1	WASHER-HARD (4.5X9X1-MM THK)	
	58	4	**107-1964**	12	SCREW-PAN HEAD (6-19X0.5-IN)	
	59	1	**124-1479**	2	CLIP	
	60	1,2,4, 5	**130-5300**	7	CLIP	
	61	2	**158-0851**	1	CLIP	
	62	1	**174-5907**	11	CLIP	
	63	3	**223-8975**	1	SWITCH AS-ROCKER (FRONT FLOODLIGHTS)	
	63A	3	**223-8975**	1	SWITCH AS-ROCKER (REAR FLOODLIGHTS)	
	63B	3	**223-8975**	1	SWITCH AS-ROCKER (HID FLOODLIGHTS, FRONT)	
	64	1	**223-8977**	1	SWITCH AS-ROCKER (INTERIOR LIGHT)	
	65	1	**102-8802**	1	KIT-RECEPTACLE (2-PIN)	
					(INCLUDES RECEPTACLE AS AND WEDGE)	
	66	1	**3E-3365**	1	WEDGE-RECEPTACLE LOCK (2-PIN)	
	67	5	**3S-8665**	3	CLIP	
	68	3	**3S-9557**	4	SCREW-PAN HEAD (4-40X0.5-IN)	
	69	2	**4D-7794**	1	CLIP	
	70	2,3	**4P-7581**	3	CLIP	
	71	5	**4S-1962**	5	CLIP	
M	72	4	**5C-2890**	1	NUT (M6X1-THD)	
	73	2	**5P-7854**	2	CLIP	
	74	4	**5S-4245**	4	SCREW-MACHINE (4-40X0.5-IN)	
	75	4	**6B-4540**	4	NUT (4-40-THD)	
	76	2	**6D-3479**	1	CLIP	
	77	2	**6V-2687**	16	SCREW-PAN HEAD (10-24X1-IN)	
M	78	3	**7Y-7256**	4	SCREW-TRUSS HEAD (M4X0.7-MM)	
	79	2	**8M-6678**	2	CLIP	
	80	1,2,3, 5	**8T-4121**	21	WASHER-HARD (11X21X2.5-MM THK)	
M	81	5	**8T-4133**	4	NUT (M10X1.15-THD)	
M	82	5	**8T-4136**	2	BOLT (M10X1.5X25-MM)	
M	83	1,2,3, 5	**8T-4137**	19	BOLT (M10X1.5X20-MM)	
M	84	2	**8T-4189**	4	BOLT (M8X1.25X20-MM)	
M	85	2	**8T-4191**	1	BOLT (M10X1.5X16-MM)	
M	86	2	**8T-4200**	4	BOLT (M8X1.25X16-MM)	
	87	4	**8T-4205**	1	WASHER-HARD (7.2X14.5X2-MM THK)	
	88	2	**8T-4222**	2	WASHER-PLATED (11X32X2.5-MM THK)	
	89	2	**8T-4224**	8	WASHER-HARD (8.8X16X2-MM THK)	
	90	2	**9M-8406**	1	CLIP	
M	91	4	**9X-2042**	2	SCREW-TRUSS HEAD (M6X1X12-MM)	
M	92	4	**9X-2044**	3	SCREW-TRUSS HEAD (M6X1X16-MM)	
M	93	4	**9X-2045**	2	SCREW-TRUSS HEAD (M6X1X20-MM)	
	94	4	**9X-8256**	6	WASHER (6.6X12X2-MM THK)	

M-METRIC PART
Y-SEPARATE ILLUSTRATION

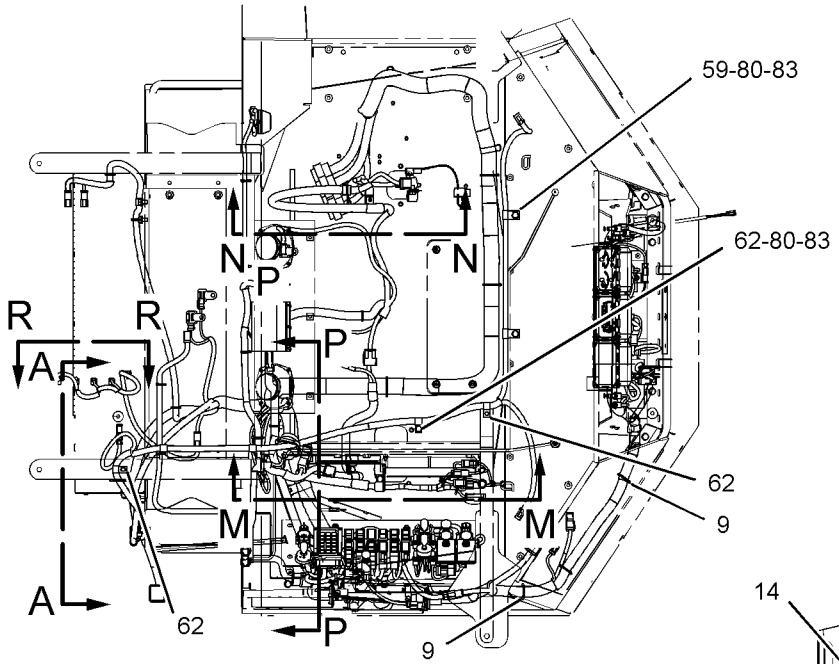

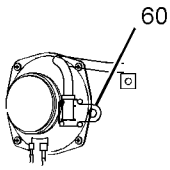

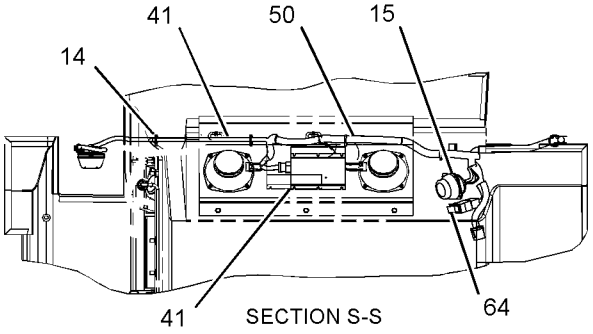

REFER TO ALL ILLUSTRATIONS OF
THIS GROUP FOR AUXILIARY VIEWS

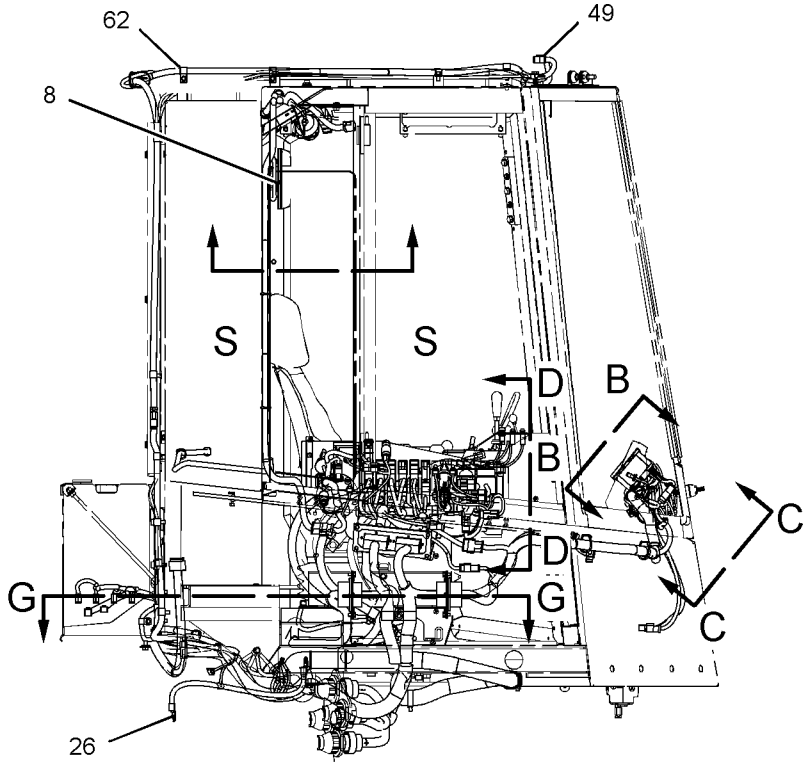

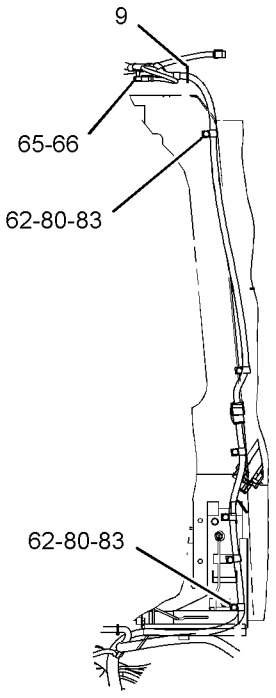

GRAPHIC #1

g01145672

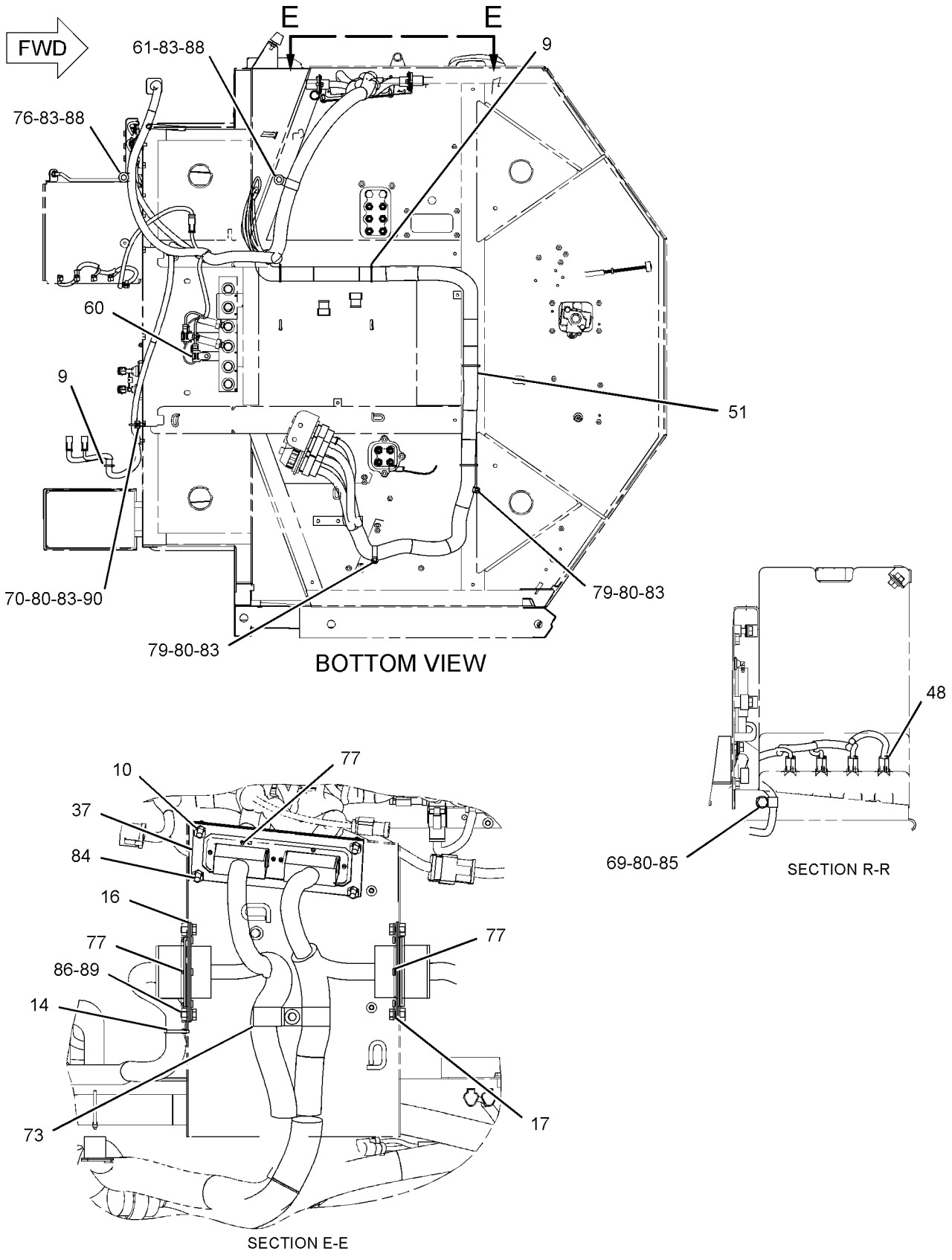

GRAPHIC #2

g01145673

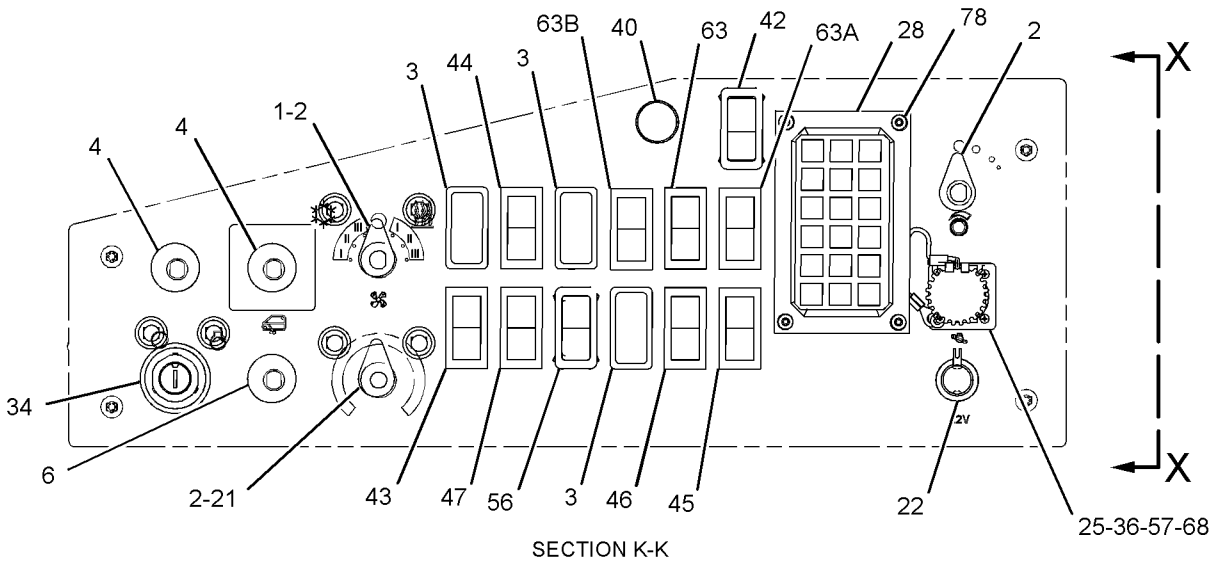

SECTION K-K

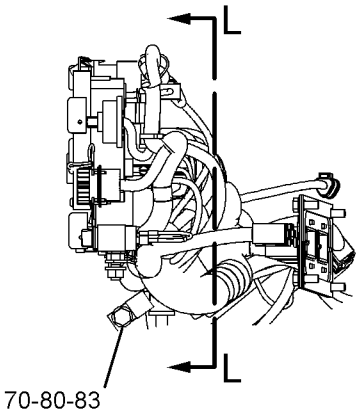

SECTION X-X

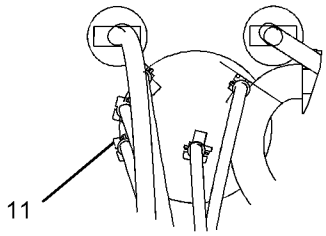

VIEW OF AREA T

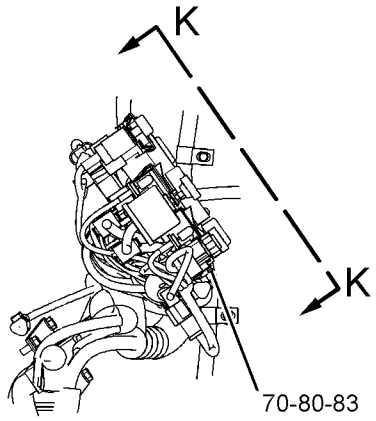

SECTION D-D

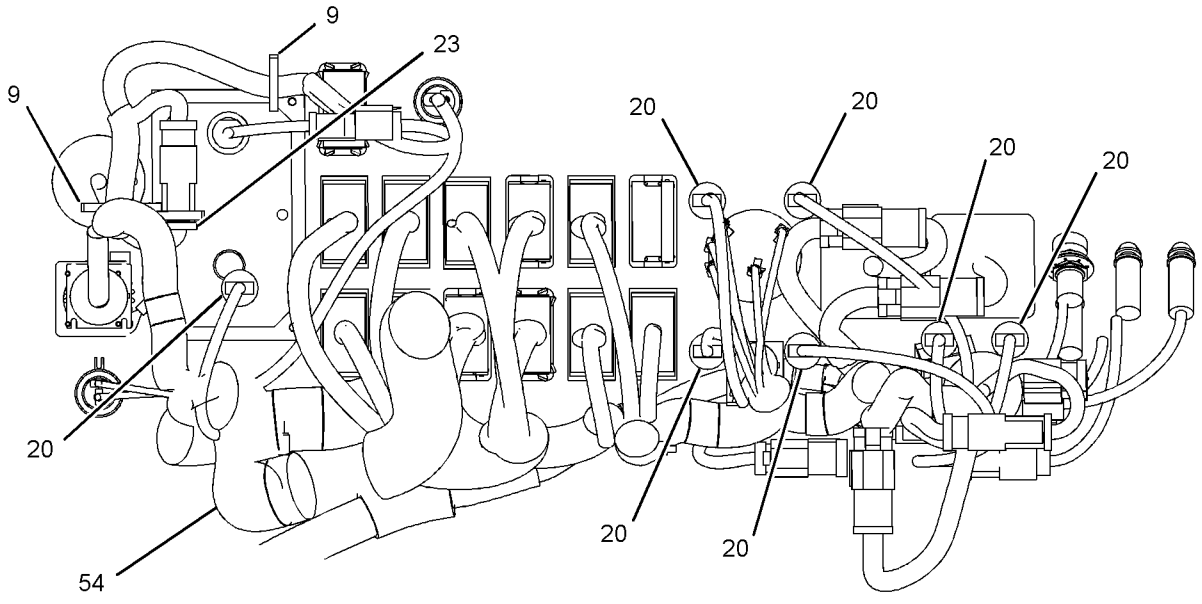

SECTION L-L

GRAPHIC #3 g01145675

245-1428 **WIRING GP-CAB** *(contd.)* **i02386012**

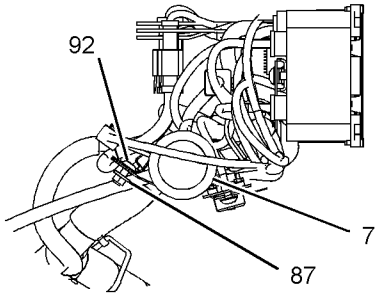

SECTION J-J

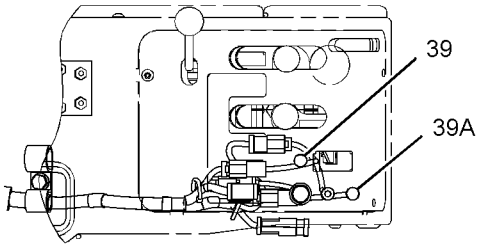

SECTION Y-Y

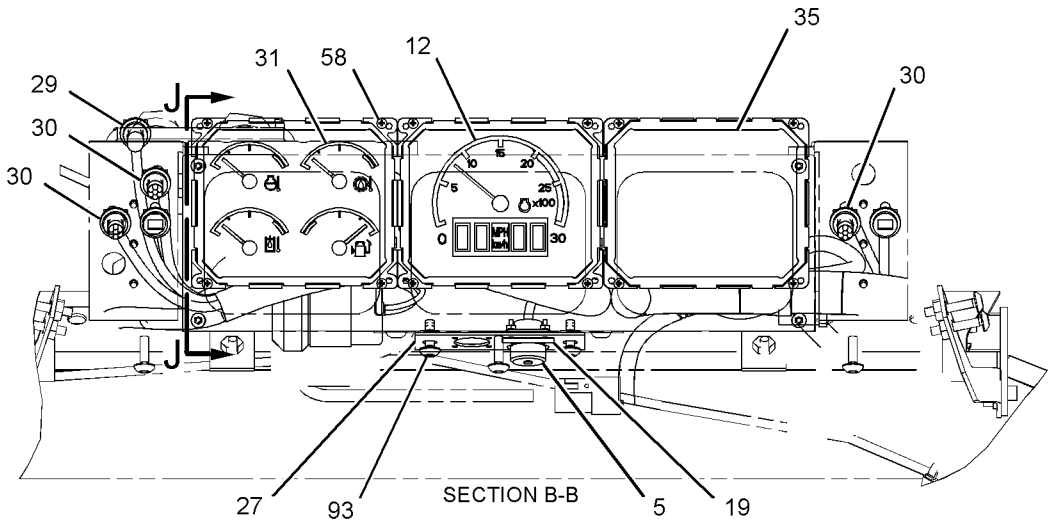

SECTION B-B

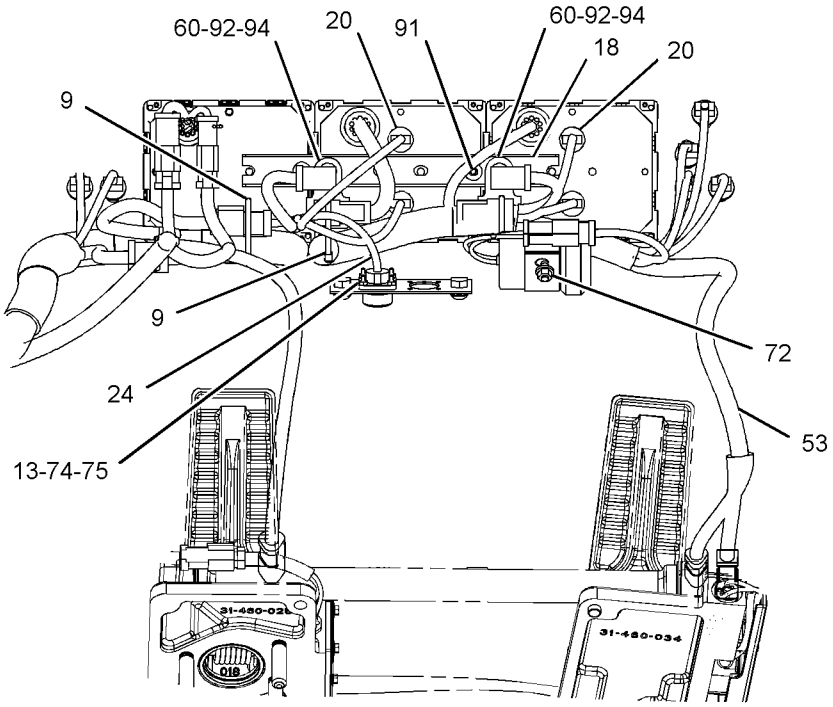

SECTION C-C

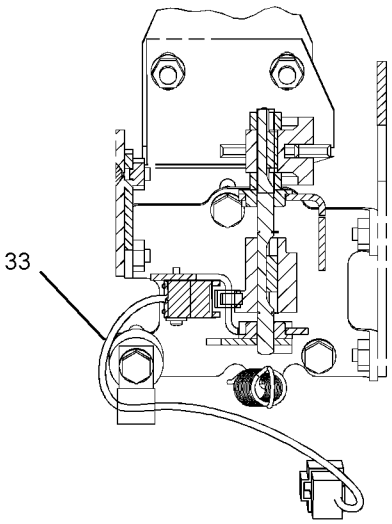

SECTION Z-Z

GRAPHIC #4 g01145670

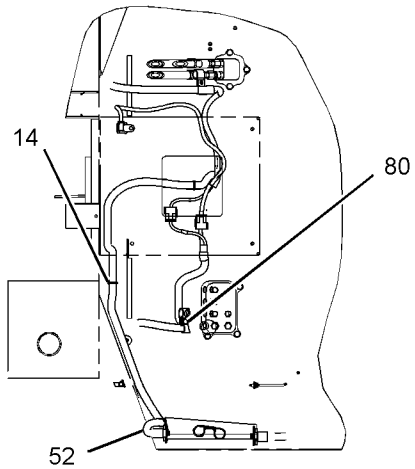

SECTION G-G

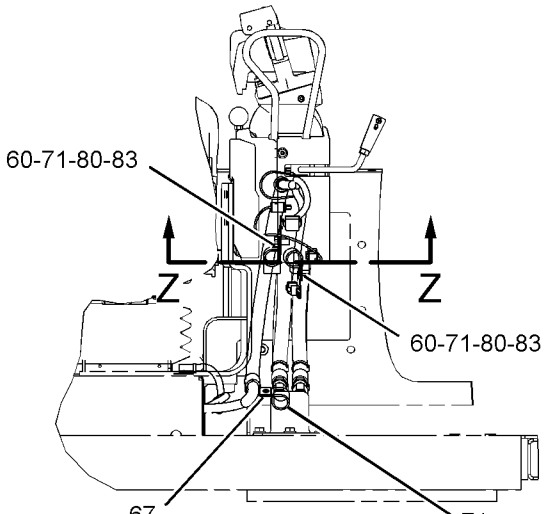

SECTION V-V

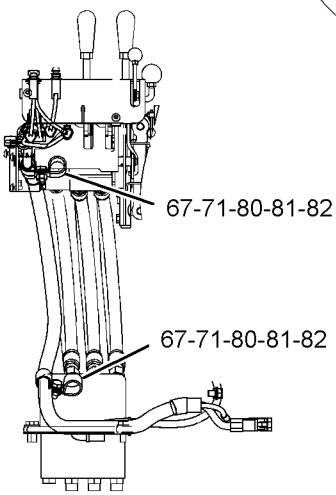

SECTION U-U

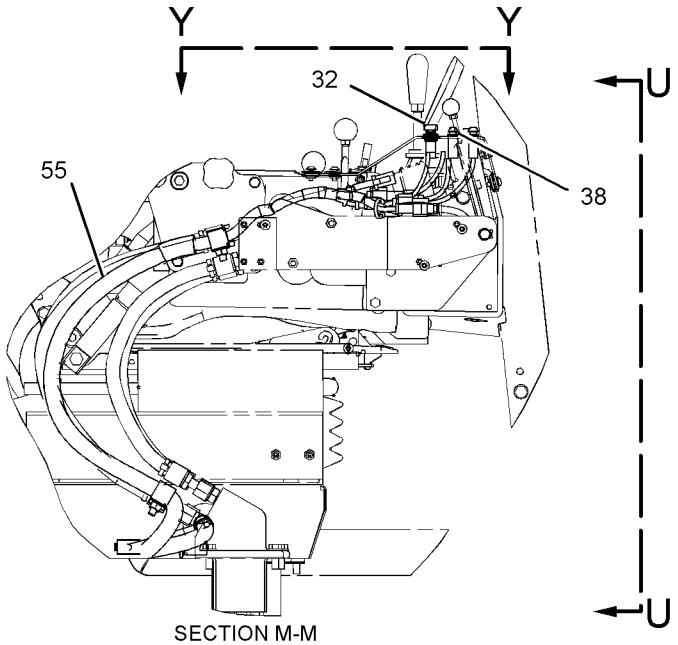

SECTION M-M

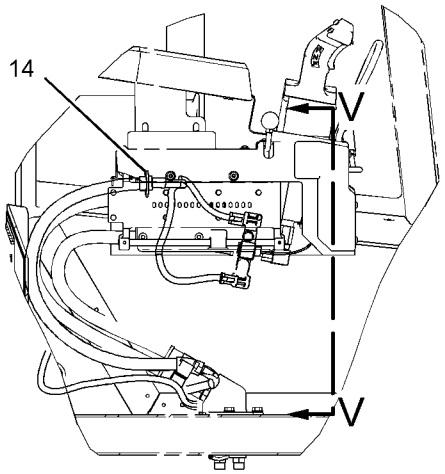

SECTION N-N

GRAPHIC #5 **<END>** g01145671

251-7435 WIRING GP-CAMERA

S/N: 4421-UP
PART OF 252-1762 CAMERA AR
AN ATTACHMENT

SMCS-1408, 7348 **i02394095**

NOTE	REF NO	GRAPHIC REF	PART NUMBER	QTY	PART NAME 1 2 3 4 5 6 (PRODUCT LEVEL)	SEE PAGE
	1	1	**9X-6772**	43	STRAP-CABLE	
	2	1	**122-5855**	1	SPACER (11.5X20X26-MM THK)	
	3	1	**251-4160**	1	CAMERA GP (115-DEGREE, COLOR)	
	4	1	**251-4169**	1	CABLE AS	
D	5	1	**251-8248**	1	CABLE AS	
	6	1	**268-9063**	1	BRACKET AS	
	7	1	**7Y-8169**	1	GROMMET	
	8	1	**8M-2772**	2	CLIP	
	9	1	**8T-4121**	5	WASHER-HARD (11X21X2.5-MM THK)	
M	10	1	**8T-4136**	3	BOLT (M10X1.5X25-MM)	
M	11	1	**8T-4137**	1	BOLT (M10X1.5X20-MM)	
M	12	1	**8T-4185**	1	BOLT (M10X1.5X50-MM)	

D-ORDER BY THE METER
M-METRIC PART

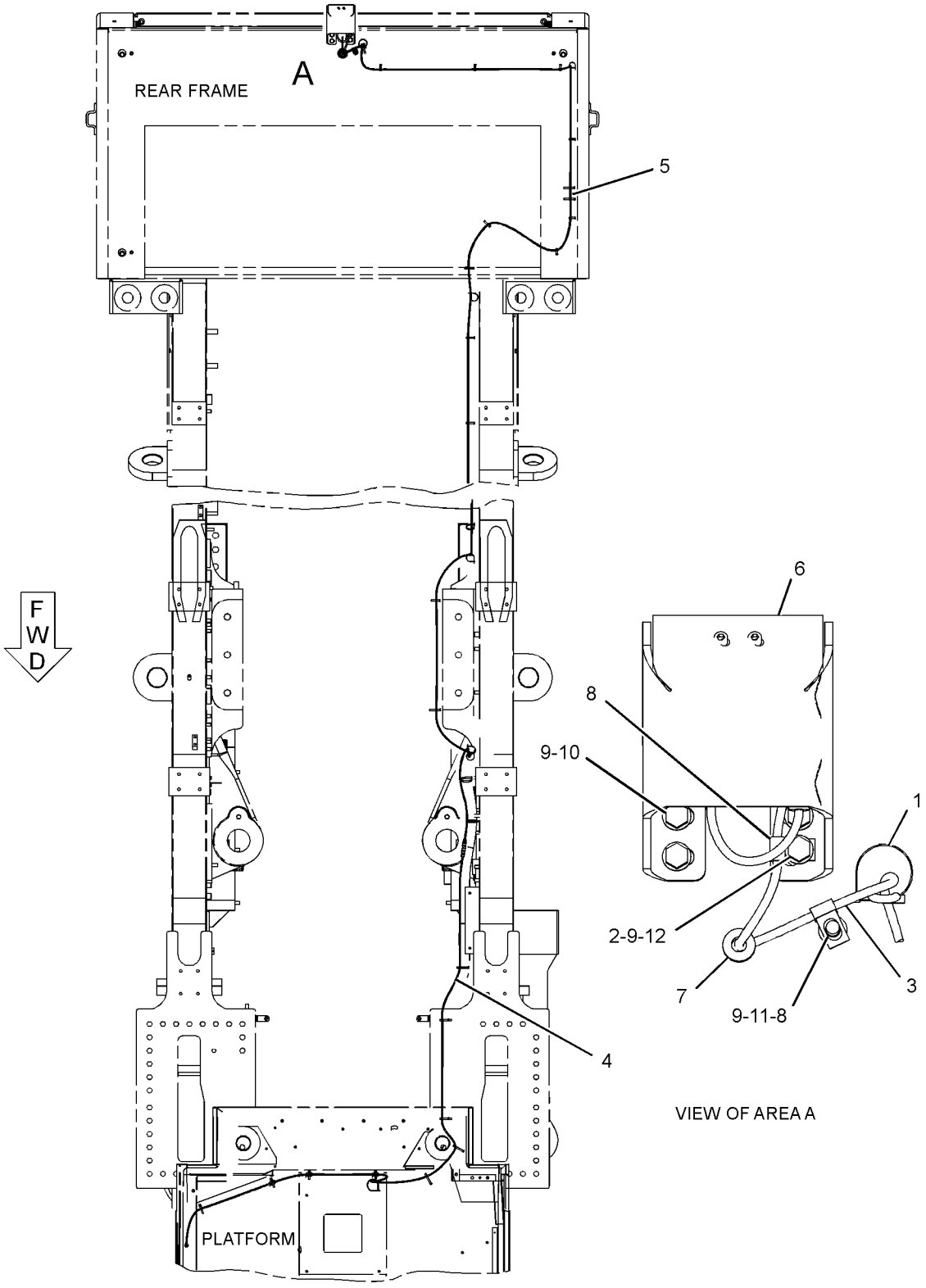

TOP VIEW

GRAPHIC #1 **<END>** g01195480

ELECTRICAL AND STARTING SYSTEM

250-7668 WIRING GP-ELECTRIC START

S/N: 4421-UP
PART OF 250-2821 STARTING AR-ELECTRIC
AN ATTACHMENT

SMCS-1408 **i02356592**

NOTE	REF NO	GRAPHIC REF	PART NUMBER	QTY	PART NAME 1 2 3 4 5 6 (PRODUCT LEVEL)	SEE PAGE
	1	2,3	**2G-8767**	27	WASHER (10.5X60X3-MM THK)	
	2	2,3	**6G-2256**	8	CLAMP	
	3	2,3	**6G-2263**	16	SPACER (10.5X19X28.5-MM THK)	
	4	2	**6S-1061**	1	CABLE AS-BATTERY	
		2	**1S-7251**	2	TERMINAL-RING (FOR 1/2-IN BOLT)	
E		2	**5P-0747**		CABLE (00-GA, BLACK) (22.9-CM)	
	5	2,3	**9U-1469**	7	CLAMP	
Y	6	3	*9W-0742*	1	BLOCK GP-JUNCTION	202
	7	2,3	**125-8534**	3	PLATE AS	
	8	2	**146-6747**	1	FILM-INFORMATION (24-VOLT)	
	9	1	**171-4430**	2	BRACKET AS	
					(EACH INCLUDES)	
M		1	**8T-3597**	1	NUT-WELD (M12X1.75 THD)	
	10	1	**264-6018**	1	CABLE AS	
		1	**3L-7634**	1	TERMINAL-RING (0000-GA, 0.5-IN)	
		1	**9X-4504**	1	TERMINAL AS-BATTERY (POSITIVE)	
		1	**9X-4245**	1	COVER-TERMINAL (RED, INLINE POS)	
		1	**9X-5632**	1	COVER-TERMINAL (RED, RH POS)	
		1	**9X-6766**	1	TERMINAL AS (INLINE POSITIVE)	
	11	1	**264-6020**	1	CABLE AS	
		1	**3L-7634**	2	TERMINAL-RING (0000-GA, 0.5-IN)	
		1	**9X-4519**	2	BOOT (RED)	
E		1	**159-8053**		CABLE-ELECTRICAL (00-GA, RED) (450-CM)	
	12	2	**265-1058**	1	RECEPTACLE AS	
		2	**3L-7634**	2	TERMINAL-RING (0000-GA, 0.5-IN)	
E		2	**159-8049**		CABLE (00-GA, RED) (410-CM)	
E		2	**159-8050**		CABLE (00-GA, BLACK) (400-CM)	
	13	2	**265-5209**	2	CABLE AS	
					(EACH INCLUDES)	
		2	**3L-7634**	2	TERMINAL-RING (0000-GA, 0.5-IN)	
		2	**9X-4519**	2	BOOT (RED)	
E		2	**159-8053**		CABLE-ELECTRICAL (00-GA, RED) (120-CM)	
	14	3	**265-5573**	1	BRACKET AS	
M		3	**8T-3490**	1	NUT-WELD (M10X1.5-THD)	
	15	2	**265-7024**	1	CABLE AS	
		2	**3L-7634**	2	TERMINAL-RING (0000-GA, 0.5-IN)	
E		2	**159-8054**		CABLE-ELECTRICAL (00-GA, BLACK) (50-CM)	
	16	2	**100-3237**	2	GROMMET	
	17	1	**3H-3244**	1	SPACER (12.52X17.14X57-MM THK)	
	18	1	**4S-1962**	7	CLIP	
	19	1	**5P-8939**	7	GROMMET	
	20	2	**7J-8581**	1	CLIP	
M	21	1	**7X-2543**	1	BOLT (M10X1.5X120-MM)	
	22	1	**8D-1470**	2	GROMMET	
	23	2	**8S-2634**	1	COVER AS	
		2	**2P-2975**	2	SEAL-O-RING	
	24	1,2,3	**8T-4121**	23	WASHER-HARD (11X21X2.5-MM THK)	
M	25	1	**8T-4137**	7	BOLT (M10X1.5X20-MM)	
M	26	2	**8T-4178**	2	BOLT (M10X1.5X90-MM)	
M	27	2	**8T-4189**	4	BOLT (M8X1.25X20-MM)	
M	28	3	**8T-4192**	2	BOLT (M12X1.75X25-MM)	
M	29	1	**8T-4195**	2	BOLT (M10X1.5X30-MM)	
	30	3	**8T-4223**	2	WASHER-HARD (13.5X25.5X3-MM THK)	
	31	2	**8T-4224**	4	WASHER-HARD (8.8X16X2-MM THK)	
M	32	2,3	**8T-6466**	11	BOLT (M10X1.5X60-MM)	

250-7668 **WIRING GP-ELECTRIC START** ***(contd.)*** **i02356592**

E-ORDER BY THE CENTIMETER
M-METRIC PART
Y-SEPARATE ILLUSTRATION

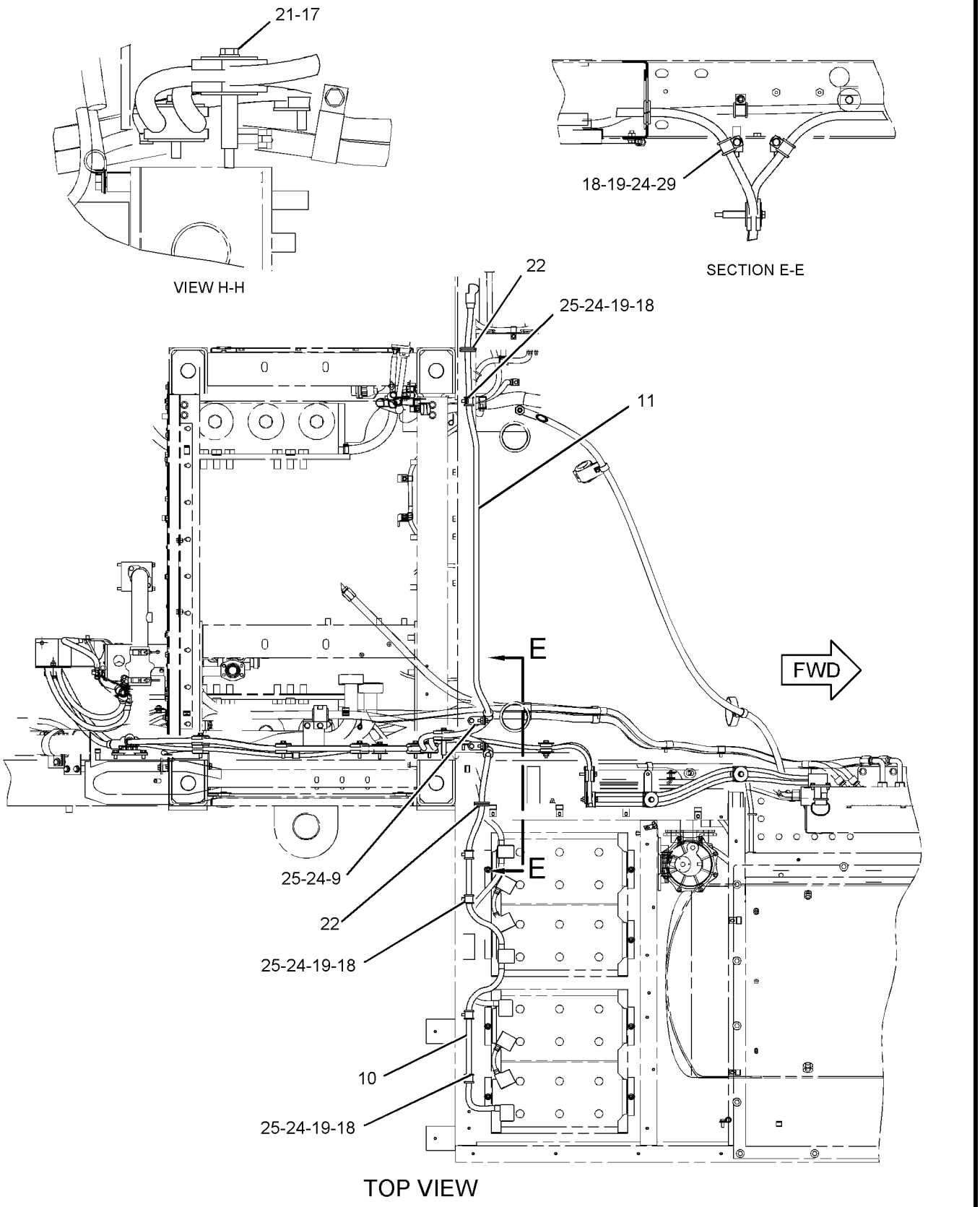

GRAPHIC #1

g01177695

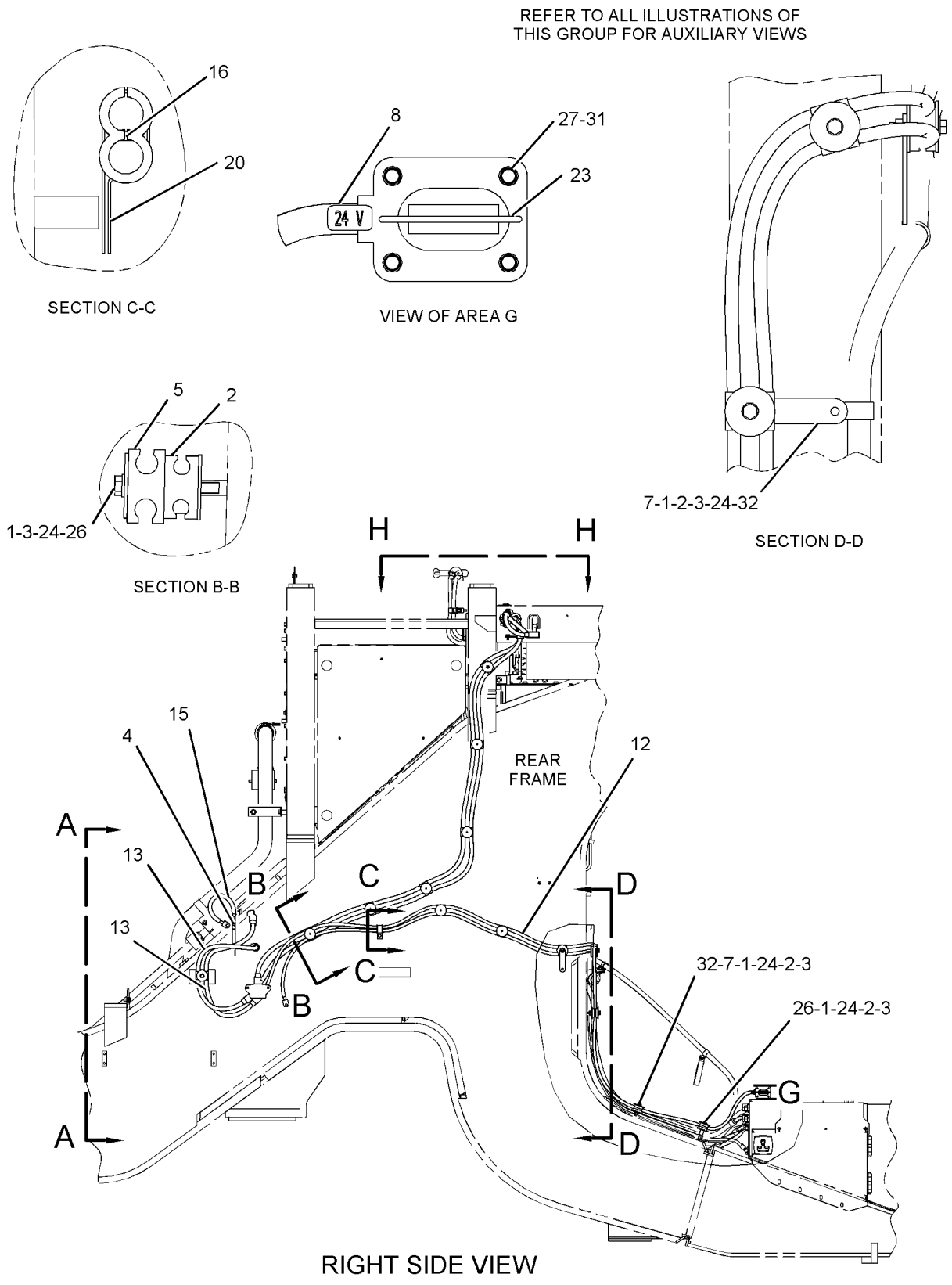

GRAPHIC #2

g01177694

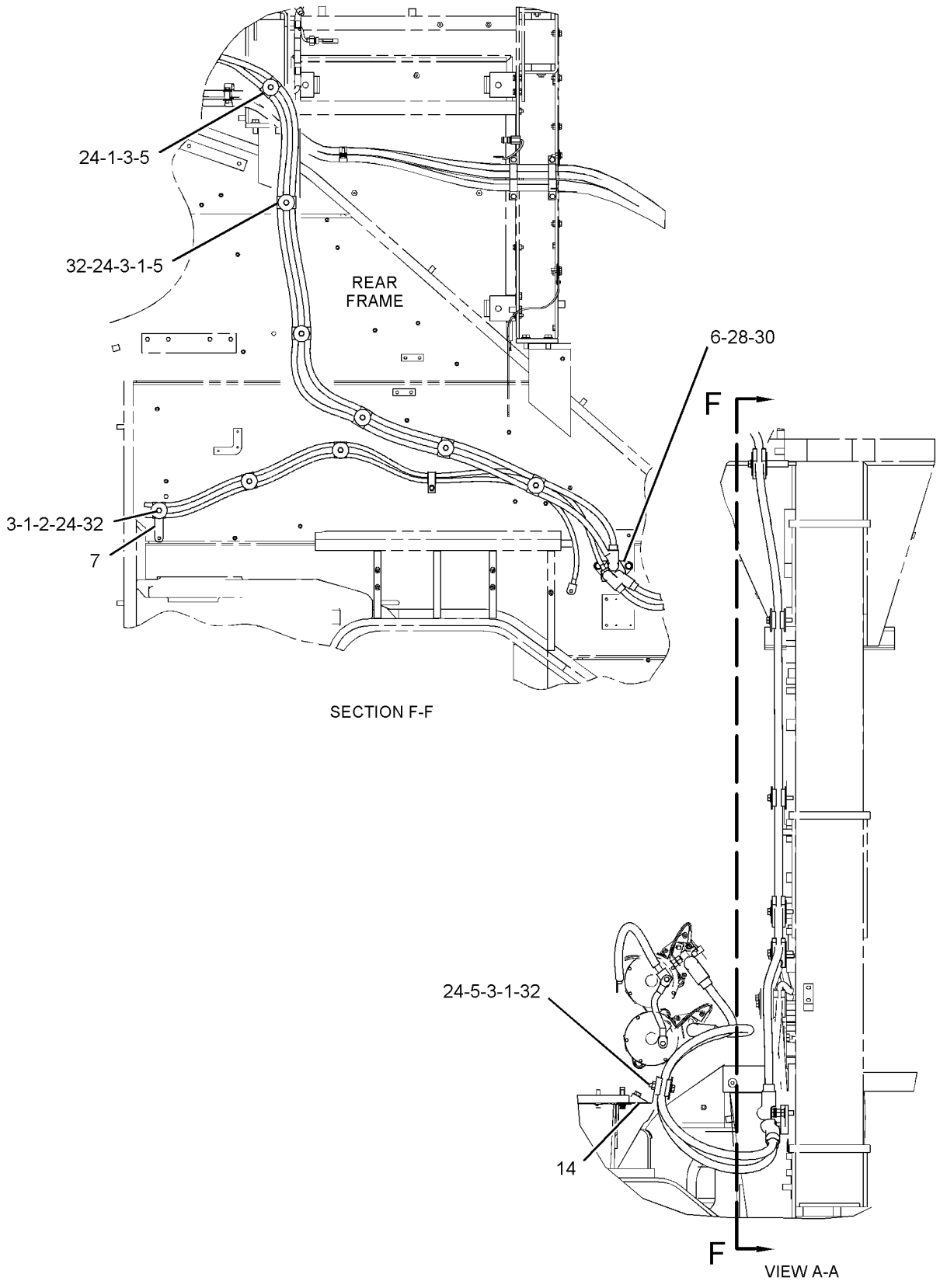

GRAPHIC #3 **<END>** g01177696

ELECTRICAL AND STARTING SYSTEM

246-5580 WIRING GP-ENGINE

S/N: 8WM1-UP

PART OF 240-7750 ENGINE AR

SMCS-1403, 1408 **i02312826**

NOTE	REF NO	GRAPHIC REF	PART NUMBER	QTY	PART NAME 1 2 3 4 5 6 (PRODUCT LEVEL)	SEE PAGE
	1	2	**3K-6905**	1	VALVE-BREATHER	
	2	3	**4N-3841**	1	GASKET	
	3	2	**6N-5926**	1	SENDER AS-TEMPERATURE (JACKET WATER)	
	4	2	**7E-5326**	1	COVER	
	5	2	**7E-6016**	1	GASKET	
	6	2	**9N-1909**	1	BRACKET	
	7	2	**9U-2277**	2	CLIP AS	
	8	1,2	**9X-0262**	3	ADAPTER	
	9	1,2,3, 4	**9X-6772**	70	STRAP-CABLE	
Y	10	2	**102-2240**	1	SENSOR GP-TEMPERATURE (JACKET WATER)	279
Y	10A	4	**102-2240**	2	SENSOR GP-TEMPERATURE (REAR AFTERCOOLER)	279
I	11	1	**117-0068**	1	HOSE AS	
	12	1	**117-0069**	1	BLOCK-SENSOR MOUNTING	
Y	13	2	**129-6628**	1	SENSOR GP-SPEED (TIMING)	277
	14	1,2	**153-7485**	2	WIRE AS-GROUND	
	15	2	**155-2078**	1	CONNECTOR	
	16	3	**160-9818**	1	BRACKET	
	17	2,3	**161-1703**	2	SENSOR GP-PRESSURE (CRANKCASE)	
	18	1	**161-1704**	1	SENSOR GP-PRESSURE (ATMOSPHERIC AIR)	
Y	19	2	**163-7882**	1	SENSOR GP-EXHAUST TEMPERATURE (TURBOCHARGER INLET, LH)	268
Y	19A	3	**163-7882**	1	SENSOR GP-EXHAUST TEMPERATURE (TURBOCHARGER INLET, RH)	268
Y	20	3	**171-8708**	1	SWITCH GP-FLOW (COOLANT)	301
Y	21	2	**172-8660**	2	SWITCH GP-LIQUID LEVEL (ENGINE OIL PAN)	302
Y	22	3	**189-5746**	2	SENSOR GP-SPEED (TIMING CALIBRATION)	278
	23	2,3,4	**193-3973**	21	TIE (WRAP)	
Y	24	2	**194-6725**	1	SENSOR GP-PRESSURE (UNFILTERED OIL)	275
Y	24A	2	**194-6725**	1	SENSOR GP-PRESSURE (FILTERED OIL)	275
	25	1,2,3, 4	**204-2281**	6	TIE	
	26	2,3,4	**204-8000**	23	ANCHOR-TIE	
Y	27	1	**246-5582**	1	HARNESS AS-ENGINE	225
	28	1	**030-7946**	1	ELBOW	
	29	1	**098-9852**	1	BAR	
	30	2	**0L-1351**	3	BOLT (3/8-16X0.875-IN)	
	31	2,3,4	**0S-0509**	38	BOLT (3/8-16X0.75-IN)	
	32	1,2	**0S-1588**	5	BOLT (3/8-16X1.25-IN)	
	33	1,2,3	**0S-1594**	6	BOLT (3/8-16X1-IN)	
	34	2	**0S-1620**	1	BOLT (1/2-13X0.75-IN)	
	35	1	**0S-1621**	1	BOLT (1/2-13X1-IN)	
	36	2	**116-9933**	1	SWITCH AS-PRESSURE (FUEL FILTER DIFFERENTIAL)	
		2	**102-8802**	1	KIT-RECEPTACLE (2-PIN)	
					(INCLUDES RECEPTACLE AS AND WEDGE)	
		2	**186-3735**	2	PIN-CONNECTOR (16-GA TO 18-GA)	
		2	**2M-9780**	1	SEAL-O-RING	
		2	**6V-3922**	1	SEAL-O-RING	
E		2	**9X-1813**		SLEEVE (14-CM)	
		2	**3E-3365**	1	WEDGE-RECEPTACLE LOCK (2-PIN)	
	37	1	**121-5729**	1	ELBOW	
	38	3	**135-9941**	1	ADAPTER-90 DEGREE	
	39	1	**1D-4597**	2	BOLT (5/8-11X6.5-IN)	
	40	1	**1F-7958**	1	NUT-FULL (1/2-13-THD)	
	41	1	**2A-1531**	1	BOLT (1/2-13X6.5-IN)	
	42	1	**2B-2695**	2	BOLT (5/16-18X0.875-IN)	
	43	2,3	**2H-3855**	2	BOLT (1/2-13X0.875-IN)	

246-5580 **WIRING GP-ENGINE** ***(contd.)*** **i02312826**

NOTE	REF NO	GRAPHIC REF	PART NUMBER	QTY	PART NAME 1 2 3 4 5 6 (PRODUCT LEVEL)	SEE PAGE
	44	2	**2M-9780**	2	SEAL-O-RING	
	45	2,3	**3A-3692**	2	CLIP	
	46	1,2	**3H-7654**	4	WASHER-HARD (13.5X22.5X3-MM THK)	
	47	2	**3K-0360**	1	SEAL-O-RING	
	48	3,4	**4B-4281**	2	WASHER (16.8X33X2.5-MM THK)	
	49	1	**4P-7428**	2	CLIP	
	50	2	**4P-7429**	3	CLIP	
	51	1,2,3	**4P-7581**	20	CLIP	
	52	1,2,3	**4P-8134**	35	CLIP	
	53	1,2,3, 4	**5M-2894**	54	WASHER-HARD (10.2X18.5X2.5-MM THK)	
	54	3	**5P-7466**	1	CLIP (SLOT)	
	55	3	**5P-7467**	1	CLIP (TAB)	
	56	3	**5P-8112**	1	GROMMET	
	57	2,3	**5P-8245**	2	WASHER-HARD (13.5X25.5X3-MM THK)	
	58	1,2,3	**6V-5048**	5	SEAL-O-RING	
	59	2,3	**6V-5049**	2	SEAL-O-RING	
	60	1	**8D-9059**	1	BRACKET	
	61	2	**8L-2786**	1	SEAL-O-RING	
	62	1	**8M-2771**	1	CLIP	
	63	2	**8T-6767**	2	PLUG-PIPE	
	64	1	**9H-8260**	4	BOLT (1/2-13X6.25-IN)	
	65	1	**9M-1974**	2	WASHER-HARD (8.8X16X2-MM THK)	
	66	1,2	**9S-8752**	2	NUT-FULL (3/8-16-THD)	

E-ORDER BY THE CENTIMETER
I-REFER TO HYDRAULIC INFORMATION SYSTEM
Y-SEPARATE ILLUSTRATION

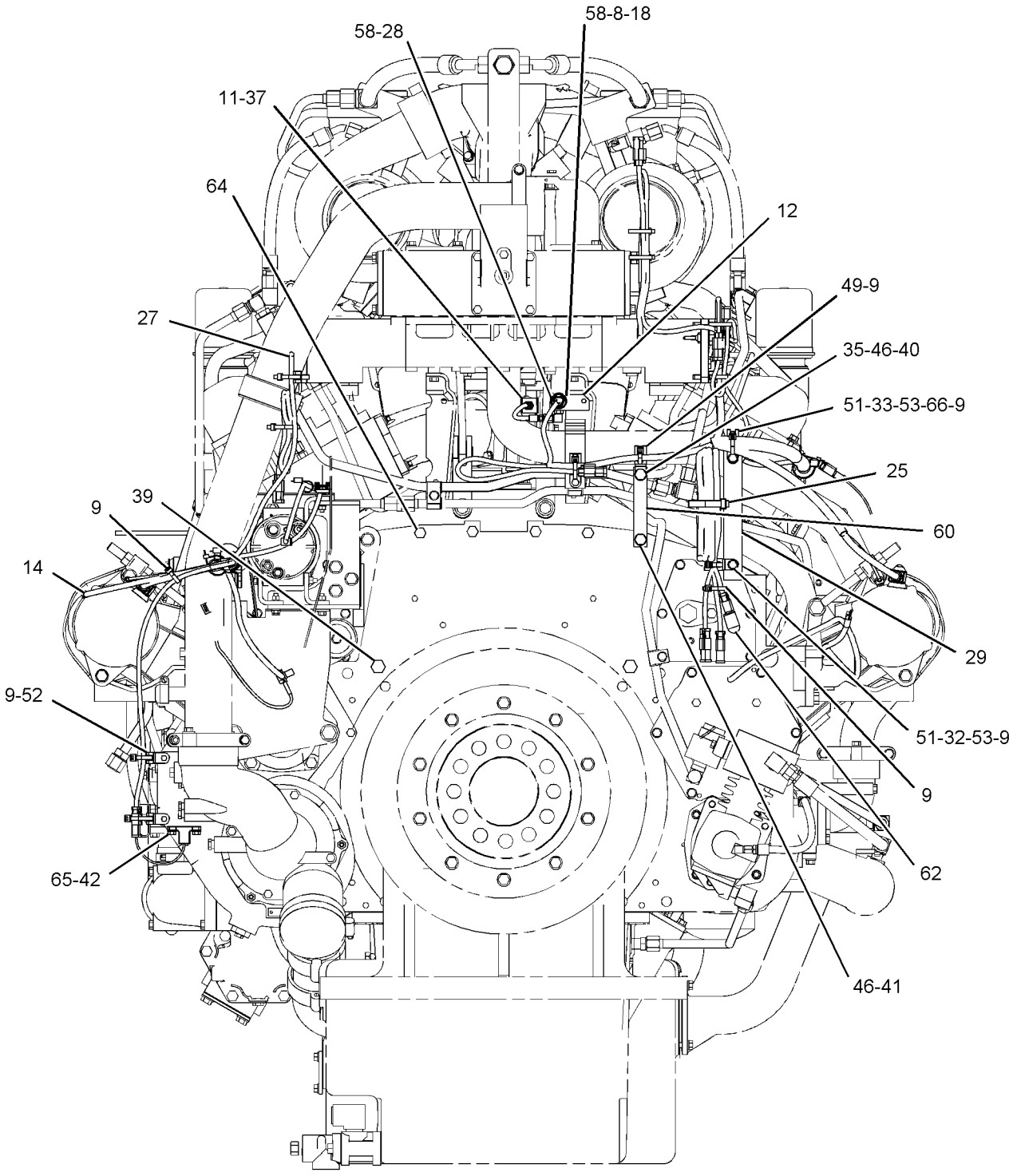

FRONT VIEW

GRAPHIC #1 g01142640

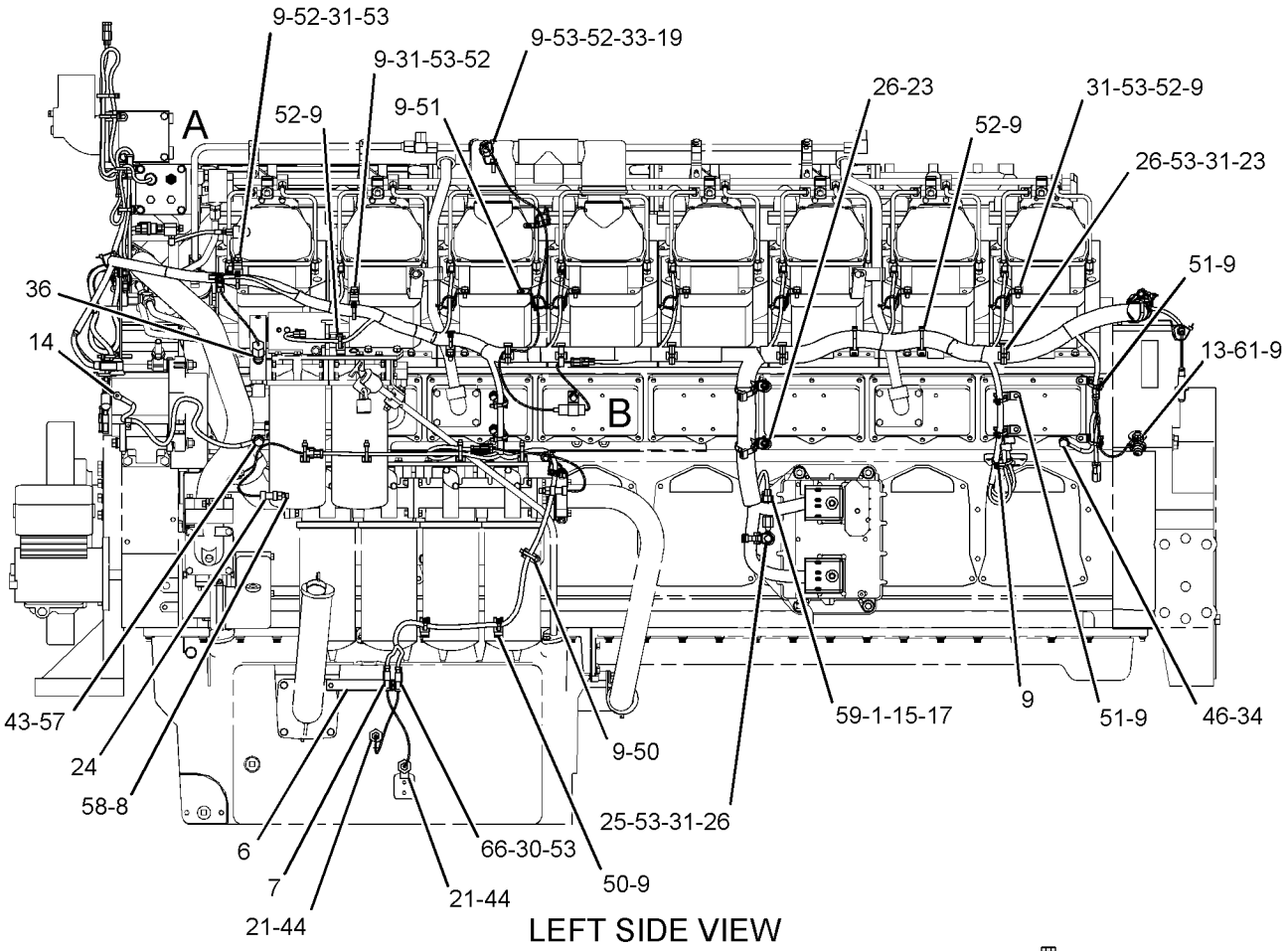

LEFT SIDE VIEW

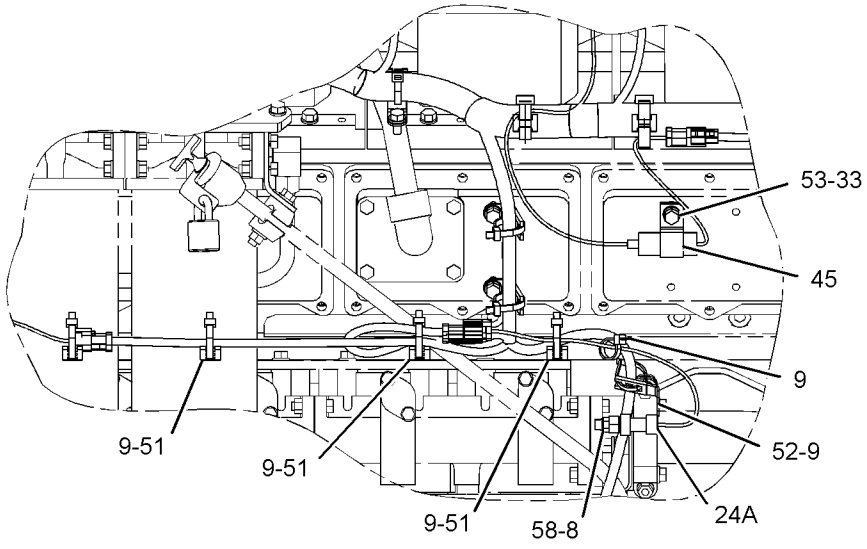

VIEW OF AREA B

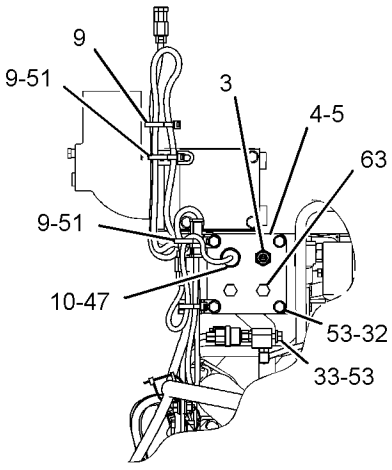

VIEW OF AREA A

GRAPHIC #2

g01158150

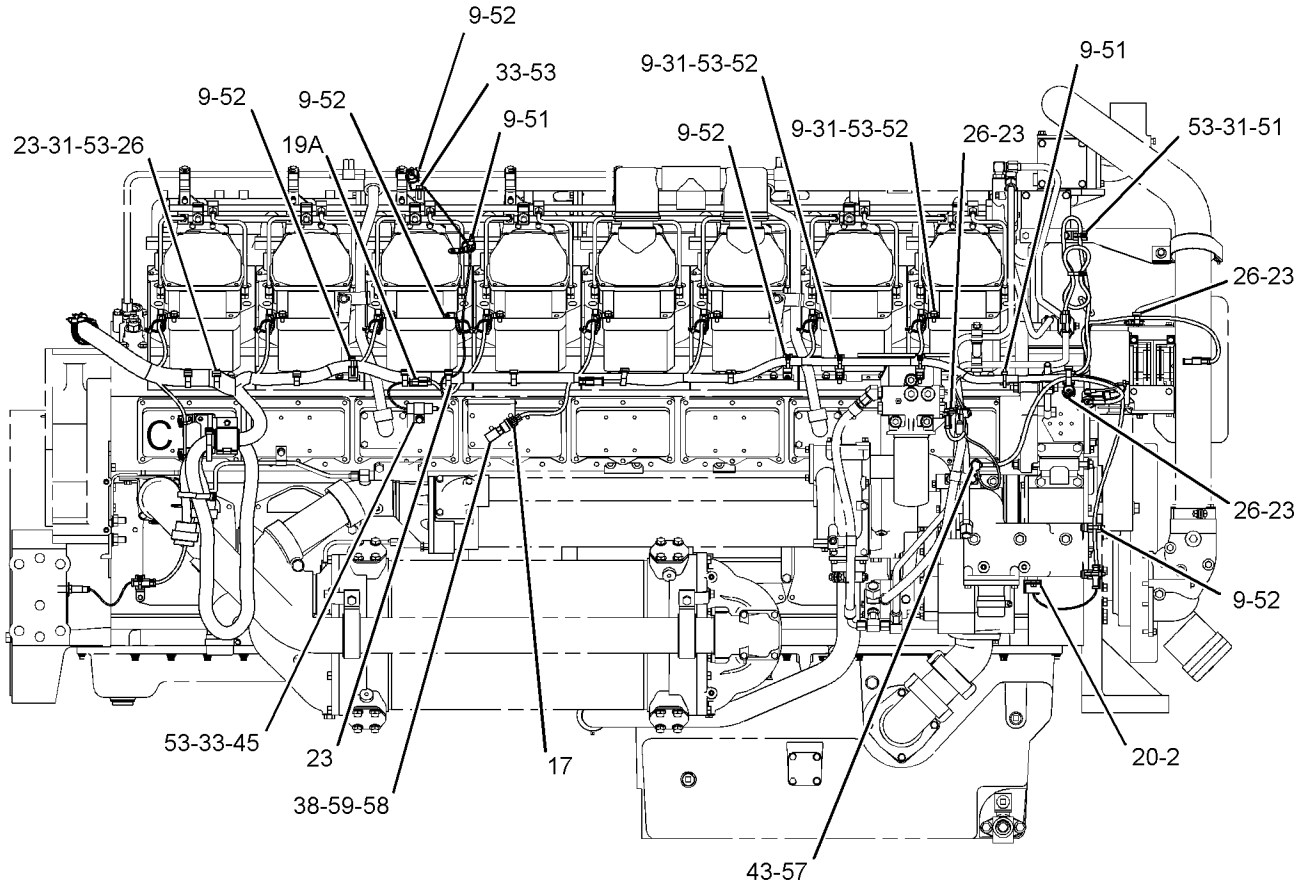

RIGHT SIDE VIEW

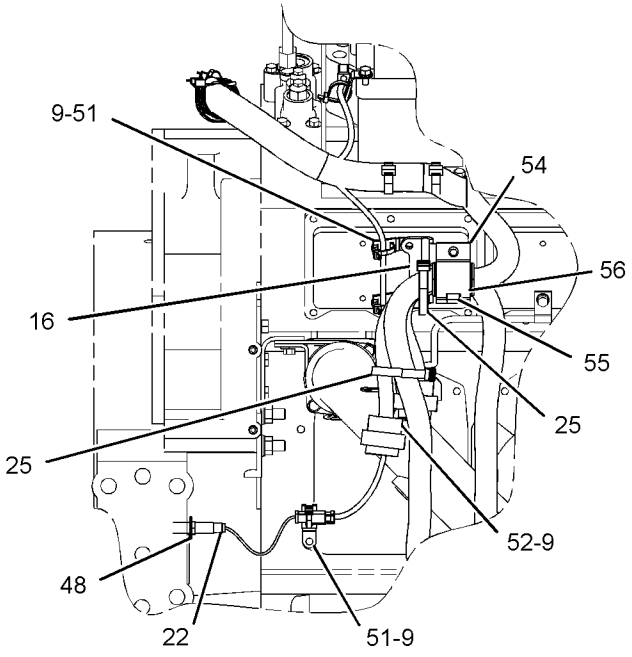

VIEW OF AREA C

GRAPHIC #3 g01158151

246-5580 **WIRING GP-ENGINE** *(contd.)* **i02312826**

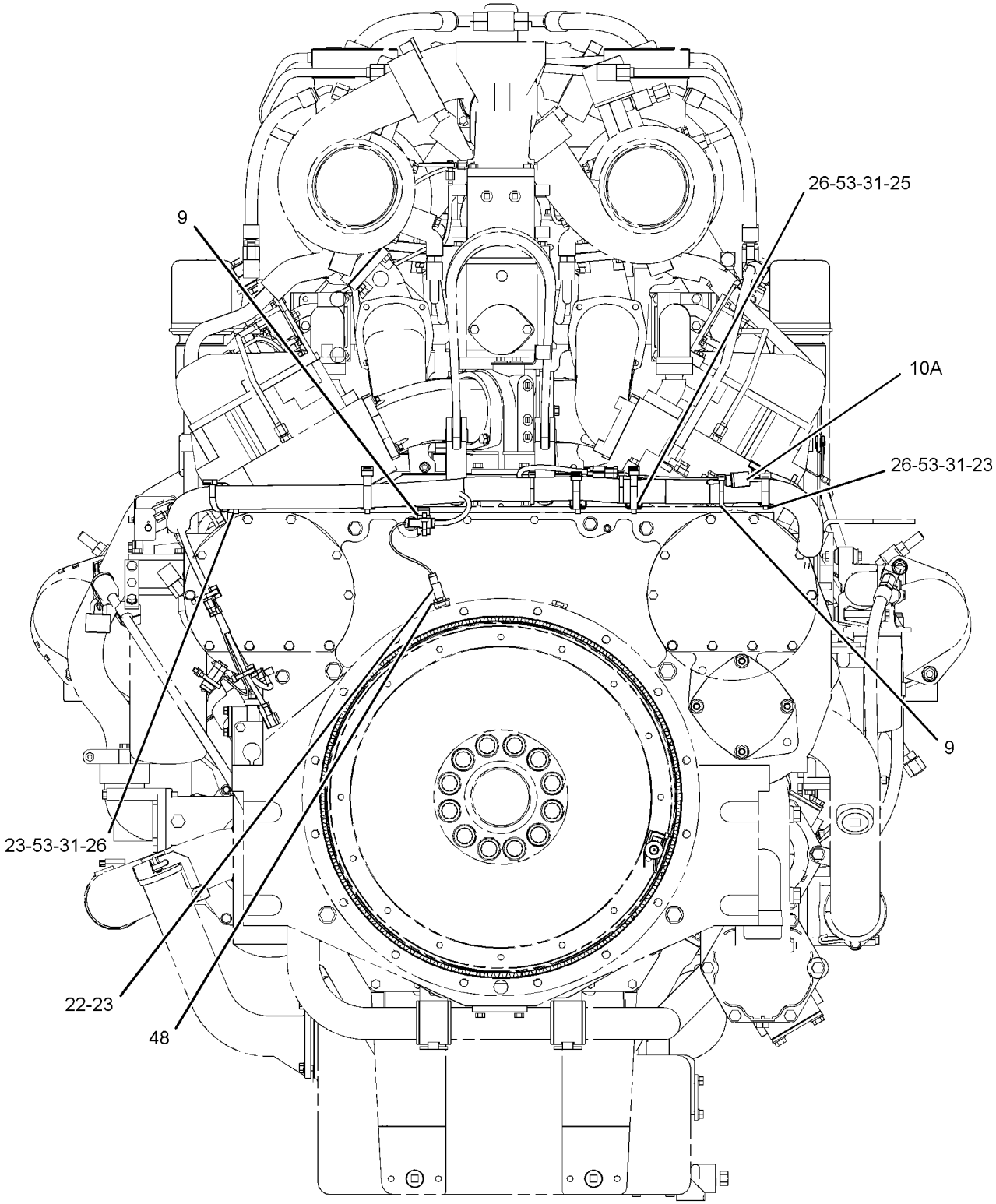

REAR VIEW

GRAPHIC #4 **<END>** g01158154

251-5830 WIRING GP-FILTERS–

POWER TRAIN; STEERING CASE DRAIN

S/N: 4421-UP

PART OF 245-8813 INSTALLATION AR-FIELD

SMCS-1408 **i02285560**

NOTE	REF NO	GRAPHIC REF	PART NUMBER	QTY	PART NAME 1 2 3 4 5 6 (PRODUCT LEVEL)	SEE PAGE
	1	1	**3S-2093**	4	STRAP-CABLE	
	2	1	**9X-6772**	2	STRAP-CABLE	
	3	1	**116-4491**	1	BRACKET AS	
M		1	**8T-3490**	1	NUT-WELD (M10X1.5-THD)	
Y	4	1	**164-7577**	2	SWITCH GP-BYPASS (POWER TRAIN OIL FILTER)	299
	5	1	**247-2807**	1	HARNESS AS-SWITCH (OIL FILTER BYPASS)	
		1	**102-8805**	1	KIT-RECEPTACLE (6-PIN)	
					(INCLUDES RECEPTACLE AS & WEDGE)	
		1	**8T-8737**	7	PLUG-SEAL	
		1	**155-2270**	1	KIT-CONNECTING PLUG (2-PIN)	
		1	**155-2274**	1	KIT-CONNECTING PLUG (6-PIN)	
					(KITS INCLUDE PLUG AS & WEDGE)	
	6	1	**264-1961**	2	GUARD	
	7	1	**119-5708**	1	CLIP	
	8	1	**130-5300**	4	CLIP	
	9	1	**147-0385**	1	CLIP	
	10	1	**4P-7581**	4	CLIP	
	11	1	**5K-4778**	1	CLIP	
	12	1	**5P-9297**	1	CLIP	
	13	1	**8T-4121**	9	WASHER-HARD (11X21X2.5-MM THK)	
M	14	1	**8T-4136**	8	BOLT (M10X1.5X25-MM)	
M	15	1	**8T-4191**	1	BOLT (M10X1.5X16-MM)	

M-METRIC PART
Y-SEPARATE ILLUSTRATION

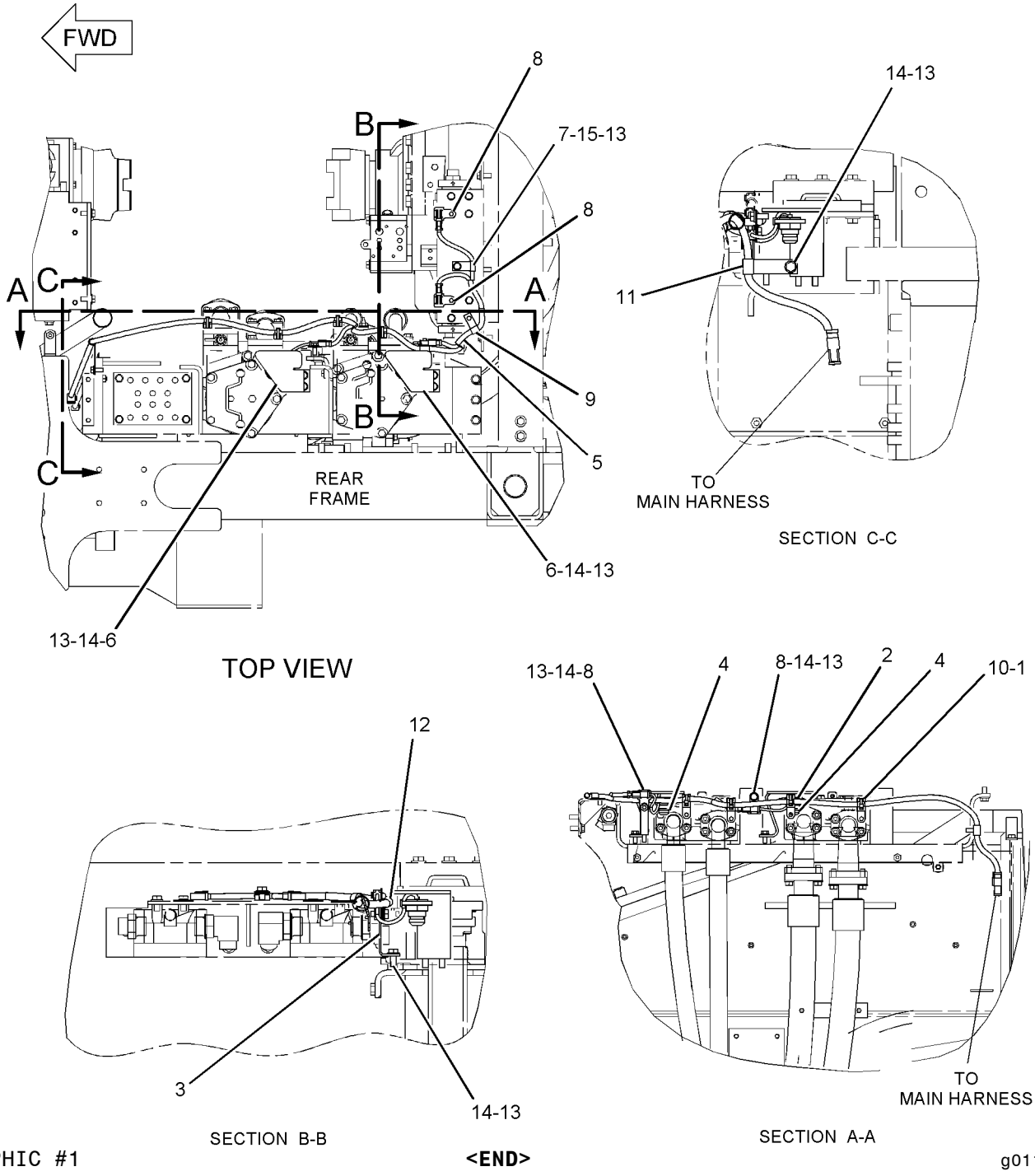

GRAPHIC #1 **<END>** g01148061

ELECTRICAL AND STARTING SYSTEM

247-4396 WIRING GP-FIREWALL

S/N: 4421-UP

PART OF 245-8812 CHASSIS AR-REAR

SMCS-1408 **i02377366**

NOTE	REF NO	GRAPHIC REF	PART NUMBER	QTY	PART NAME 1 2 3 4 5 6 (PRODUCT LEVEL)	SEE PAGE
	1	1	**9X-6772**	1	STRAP-CABLE	
	2	1	**106-4684**	1	BRACKET	
Y	3	1	**118-7226**	1	SENSOR GP-TEMPERATURE (STEERING, BRAKE OIL)	281
Y	3A	1	**118-7226**	1	SENSOR GP-TEMPERATURE (BRAKE COOLING OIL)	281
	4	1	**144-5661**	1	SWITCH AS-PRESSURE (STEERING, BRAKE FILTER BYPASS)	
	4A	1	**144-5661**	1	SWITCH AS-PRESSURE (IMPLEMENT FILTER BYPASS)	
					(EACH INCLUDES)	
		1	**2M-9780**	1	SEAL-O-RING	
		1	**102-8802**	1	KIT-RECEPTACLE (2-PIN)	
					(INCLUDES RECEPTACLE AS AND WEDGE)	
		1	**3E-3365**	1	WEDGE-RECEPTACLE LOCK (2-PIN)	
		1	**7J-9108**	1	SEAL-O-RING	
		1	**186-3735**	2	PIN-CONNECTOR (16-GA TO 18-GA)	
BE		1	**9X-1813**		SLEEVE	
Y	5	1	**172-8660**	1	SWITCH GP-LIQUID LEVEL (BRAKE COOLING TANK)	302
Y	5A	1	**172-8660**	1	SWITCH GP-LIQUID LEVEL (STEERING, BRAKE HYDRAULIC TANK)	302
	6	1	**264-4885**	1	HARNESS AS-CHASSIS	
		1	**102-8804**	1	KIT-RECEPTACLE (4-PIN)	
		1	**102-8801**	2	KIT-RECEPTACLE (12-PIN)	
					(EACH KIT RECEPTACLE INCLUDES RECEPTACLE AS AND WEDGE)	
		1	**155-2255**	3	KIT-CONNECTING PLUG (12-PIN)	
		1	**155-2260**	2	KIT-CONNECTING PLUG (3-PIN)	
		1	**155-2270**	4	KIT-CONNECTING PLUG (2-PIN)	
					(EACH PLUG KIT INCLUDES PLUG AS AND WEDGE)	
		1	**155-2272**	1	PLUG AS-CONNECTOR (4-PIN)	
		1	**155-2271**	1	KIT-CONNECTING PLUG (4-PIN)	
					(INCLUDES PLUG AS AND WEDGE)	
	7	1	**033-8248**	1	CLIP	
	8	1	**130-5300**	7	CLIP	
	9	1	**1S-0994**	6	CLIP	
	10	1	**2M-9780**	2	SEAL-O-RING	
	11	1	**3J-1907**	2	SEAL-O-RING	
	12	1	**3S-8664**	2	CLIP	
	13	1	**2T-3019**	1	CLIP	
	14	1	**4W-3588**	1	BRACKET	
	15	1	**8T-4121**	21	WASHER-HARD (11X21X2.5-MM THK)	
M	16	1	**8T-4133**	2	NUT (M10X1.15-THD)	
M	17	1	**8T-4136**	14	BOLT (M10X1.5X25-MM)	
M	18	1	**8T-4137**	2	BOLT (M10X1.5X20-MM)	
	19	1	**154-6626**	1	BRACKET AS	
	20	1	**130-5301**	3	CLIP	
M	21	1	**8T-4195**	3	BOLT (M10X1.5X30-MM)	
	22	1,1	**5P-9297**	4	CLIP	

B-USE AS REQUIRED
E-ORDER BY THE CENTIMETER
M-METRIC PART
Y-SEPARATE ILLUSTRATION

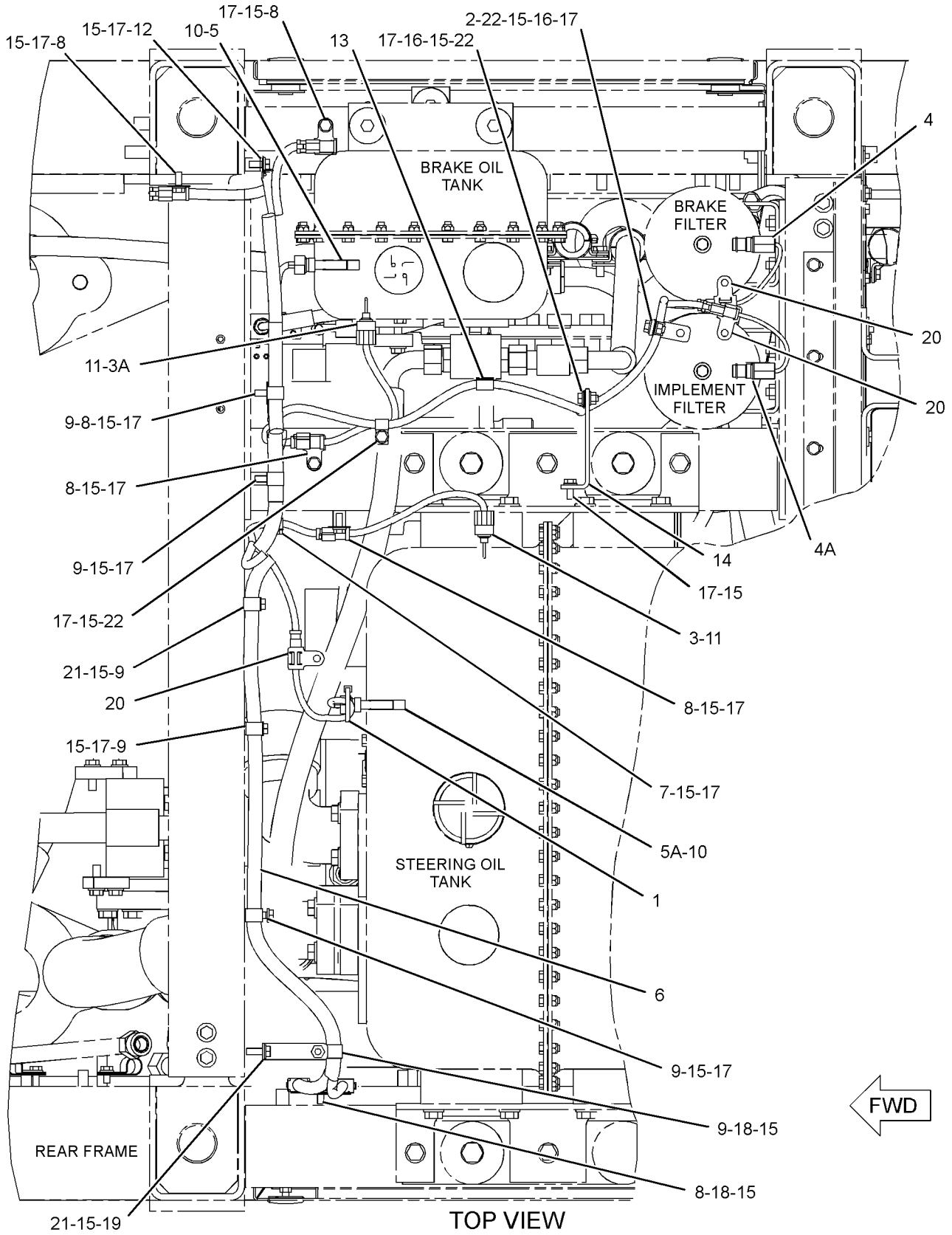

GRAPHIC #1 **<END>** g01186441

247-4005 WIRING GP-FRONT

S/N: 4421-UP

PART OF 245-8811 CHASSIS AR-FRONT

SMCS-5734 **i02282517**

NOTE	REF NO	GRAPHIC REF	PART NUMBER	QTY	PART NAME 1 2 3 4 5 6 (PRODUCT LEVEL)	SEE PAGE
	1	1	**9X-6772**	4	STRAP-CABLE	
	2	1	**118-6878**	1	BRACKET AS	
M		1	**8T-3490**	1	NUT-WELD (M10X1.5-THD)	
Y	3	1	**118-7226**	1	SENSOR GP-TEMPERATURE (HYDRAULIC OIL)	281
Y	3A	1	**118-7226**	1	SENSOR GP-TEMPERATURE (FRONT PUMP DRIVE OIL)	281
Y	4	1	**172-8660**	1	SWITCH GP-LIQUID LEVEL (HYDRAULIC TANK)	302
	5	1	**221-3405**	1	SENSOR GP-PRESSURE (IMPLEMENT PUMP OIL)	
		1	**155-2260**	1	KIT-CONNECTING PLUG (3-PIN)	
					(INCLUDES PLUG AS AND WEDGE)	
	6	1	**221-3416**	1	SENSOR GP-PRESSURE (LIFT CYLINDER HEAD END OIL)	
		1	**155-2260**	1	KIT-CONNECTING PLUG (3-PIN)	
					(INCLUDES PLUG AS AND WEDGE)	
	7	1	**247-2786**	1	HARNESS AS-FRONT CHASSIS (FENDER, LH)	
		1	**102-8805**	2	KIT-RECEPTACLE (6-PIN)	
		1	**102-8805**	1	KIT-RECEPTACLE (6-PIN)	
					(EACH KIT INCLUDES RECEPTACLE AS AND WEDGE)	
		1	**8T-8737**	12	PLUG-SEAL	
		1	**155-2274**	1	KIT-CONNECTING PLUG (6-PIN)	
		1	**155-2274**	1	KIT-CONNECTING PLUG (6-PIN)	
					(EACH KIT INCLUDES PLUG AS AND WEDGE)	
	8	1	**247-2793**	1	HARNESS AS-SENSOR (HYD LEVEL, TEMP; FR AXLE TEMP)	
		1	**102-8803**	1	KIT-RECEPTACLE (3-PIN)	
		1	**102-8803**	1	KIT-RECEPTACLE (3-PIN)	
					(EACH KIT INCLUDES RECEPTACLE AS AND WEDGE)	
		1	**8T-8737**	4	PLUG-SEAL	
		1	**155-2270**	1	KIT-CONNECTING PLUG (2-PIN)	
		1	**155-2274**	1	KIT-CONNECTING PLUG (6-PIN)	
		1	**155-2260**	2	KIT-CONNECTING PLUG (3-PIN)	
		1	**155-2270**	1	KIT-CONNECTING PLUG (2-PIN)	
		1	**155-2274**	1	KIT-CONNECTING PLUG (6-PIN)	
		1	**155-2260**	2	KIT-CONNECTING PLUG (3-PIN)	
					(EACH KIT INCLUDES PLUG AS AND WEDGE)	
	9	1	**247-2801**	1	HARNESS AS-FRONT CHASSIS (FENDER, RH)	
		1	**102-8803**	1	KIT-RECEPTACLE (3-PIN)	
		1	**102-8805**	1	KIT-RECEPTACLE (6-PIN)	
		1	**102-8801**	1	KIT-RECEPTACLE (12-PIN)	
		1	**102-8801**	1	KIT-RECEPTACLE (12-PIN)	
					(EACH KIT INCLUDES RECEPTACLE AS AND WEDGE)	
		1	**8T-8737**	18	PLUG-SEAL	
		1	**155-2274**	1	KIT-CONNECTING PLUG (6-PIN)	
		1	**155-2260**	1	KIT-CONNECTING PLUG (3-PIN)	
		1	**155-2274**	1	KIT-CONNECTING PLUG (6-PIN)	
		1	**155-2260**	1	KIT-CONNECTING PLUG (3-PIN)	
					(EACH KIT INCLUDES PLUG AS AND WEDGE)	
	10	1	**262-8516**	1	HARNESS AS-FRONT CHASSIS (MAIN)	
		1	**102-8802**	2	KIT-RECEPTACLE (2-PIN)	
		1	**102-8803**	4	KIT-RECEPTACLE (3-PIN)	
		1	**102-8805**	2	KIT-RECEPTACLE (6-PIN)	
		1	**102-8801**	1	KIT-RECEPTACLE (12-PIN)	
					(EACH KIT INCLUDES RECEPTACLE AS AND WEDGE)	
		1	**3T-0204**	1	RECEPTACLE AS-CONNECTOR (20-PIN)	
		1	**8N-1536**	1	NUT (1-5/8-18-THD)	
		1	**8N-1519**	1	RECEPTACLE AS-CONNECTOR (12-PIN)	
		1	**8N-1522**	1	NUT (2-1/4-16-THD)	

247-4005 **WIRING GP-FRONT** ***(contd.)*** **i02282517**

NOTE	REF NO	GRAPHIC REF	PART NUMBER	QTY	PART NAME 1 2 3 4 5 6 (PRODUCT LEVEL)	SEE PAGE
		1	**8N-1521**	1	BELL AS-END (2-GA)	
		1	**8N-1535**	2	BELL AS-END	
		1	**9X-6772**	3	STRAP-CABLE	
		1	**155-2255**	1	KIT-CONNECTING PLUG (12-PIN)	
		1	**155-2260**	4	KIT-CONNECTING PLUG (3-PIN)	
		1	**155-2270**	5	KIT-CONNECTING PLUG (2-PIN)	
		1	**155-2274**	2	KIT-CONNECTING PLUG (6-PIN)	
					(EACH KIT INCLUDES PLUG AS AND WEDGE)	
	11	1	**263-6180**	1	HARNESS AS-SWITCH (CASE DRAIN FILTER BYPASS)	
		1	**102-8805**	1	KIT-RECEPTACLE (6-PIN)	
					(INCLUDES RECEPTACLE AS AND WEDGE)	
		1	**155-2270**	4	KIT-CONNECTING PLUG (2-PIN)	
		1	**155-2274**	1	KIT-CONNECTING PLUG (6-PIN)	
					(EACH KIT INCLUDES PLUG AS AND WEDGE)	
	12	1	**033-8248**	15	CLIP	
	13	1	**130-5300**	17	CLIP	
	14	1	**130-5301**	1	CLIP	
	15	1	**1S-0994**	4	CLIP	
	16	1	**2M-9780**	1	SEAL-O-RING	
	17	1	**3J-1907**	4	SEAL-O-RING	
	18	1	**4D-8123**	1	CLIP	
	19	1	**4K-8864**	5	CLIP	
	20	1	**5P-7648**	4	GROMMET	
	21	1	**5P-9085**	5	CLIP	
	22	1	**5P-9297**	18	CLIP	
	23	1	**6D-3479**	1	CLIP	
	24	1	**6V-1249**	1	GROMMET	
	25	1	**6V-3265**	5	CLIP	
	26	1	**6V-3341**	1	GROMMET	
	27	1	**7G-7053**	1	GROMMET	
	28	1	**7X-4780**	4	GROMMET	
	29	1	**8M-2770**	9	CLIP	
	30	1	**8M-2773**	4	CLIP	
	31	1	**8T-4121**	72	WASHER-HARD (11X21X2.5-MM THK)	
M	32	1	**8T-4136**	2	BOLT (M10X1.5X25-MM)	
M	33	1	**8T-4137**	70	BOLT (M10X1.5X20-MM)	

M-METRIC PART
Y-SEPARATE ILLUSTRATION

247-4005 **WIRING GP-FRONT** *(contd.)* **i02282517**

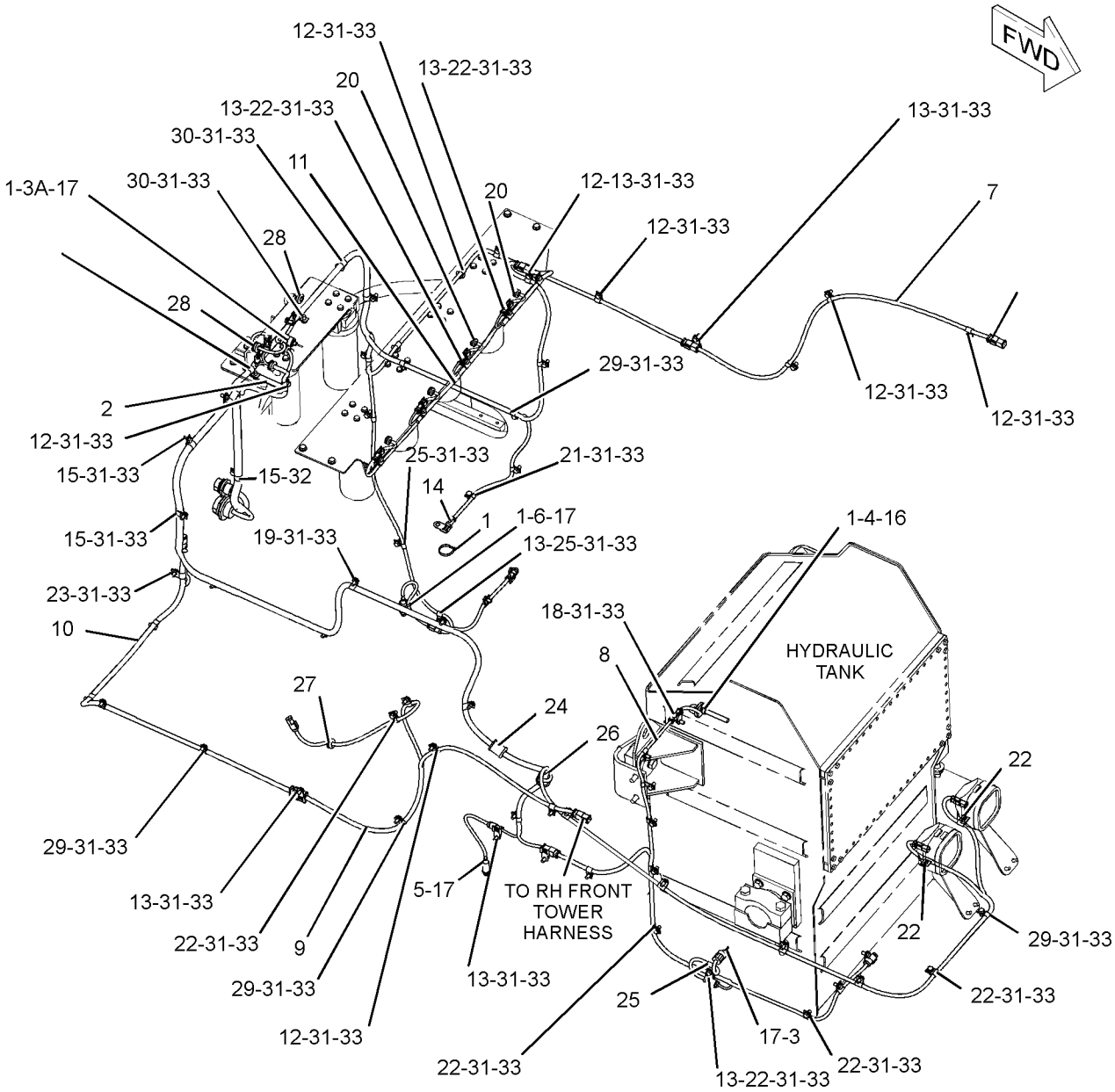

GRAPHIC #1 **<END>** g01148138

129-0696 WIRING GP-HEATER

S/N: 4421-UP
240 VOLT
PART OF 264-2285 STARTING AR-COLD WEATHER
AN ATTACHMENT

SMCS-1408 **i02312858**

NOTE	REF NO	GRAPHIC REF	PART NUMBER	QTY	PART NAME 1 2 3 4 5 6 (PRODUCT LEVEL)	SEE PAGE
	1	1	**8X-6020**	1	BOX AS	
		1	**8X-4711**	2	BOSS AS (M12X1.75X20-MM)	
	2	1	**5P-7703**	2	GROMMET	
M	3	1	**8T-4200**	4	BOLT (M8X1.25X16-MM)	
	4	1	**8T-4224**	4	WASHER-HARD (8.8X16X2-MM THK)	
M	5	1	**5C-7261**	4	NUT (M8X1.25-THD)	
	6	1	**147-6225**	1	HARNESS AS-HEATER (JACKET WATER)	
	7	1	**8X-6048**	1	HARNESS AS-HEATER (JACKET WATER)	
	8	1	**1S-0994**	7	CLIP	
	9	1	**8X-6645**	1	STRAP AS-GROUND	
	10	1	**147-6219**	1	HARNESS AS-HEATER (OIL)	
	11	1	**8X-6046**	1	HARNESS AS-HEATER (JACKET WATER)	
	12	1	**147-6227**	1	HARNESS AS-THERMOSTAT	
	13	1	**8X-6050**	1	HARNESS AS-HEATER (JACKET WATER)	
	14	1	**147-6223**	1	HARNESS AS-HEATER (JACKET WATER)	
	15	1	**8X-6641**	2	BRACKET AS	
M	16	1	**8T-4137**	4	BOLT (M10X1.5X20-MM)	
	17	1	**8T-4121**	4	WASHER-HARD (11X21X2.5-MM THK)	
	18	1	**4K-6498**	1	BLOCK-TERMINAL	
		1	**6V-8363**	12	SCREW (10-32X0.312-IN)	
M	19	1	**8T-0289**	4	BOLT (M5X0.8X20-MM)	
	20	1	**8X-6634**	1	WIRE AS	
	21	1	**9X-8194**	3	JUMPER-STRIP	
	22	1	**8X-6635**	2	WIRE AS	
	23	1	**8X-6636**	1	WIRE AS	
	24	1	**8X-6058**	2	WIRE AS	
	25	1	**8X-6631**	1	WIRE AS	
	26	1	**8X-6643**	1	PANEL	
	27	1	**9F-9327**	4	SCREW-MACHINE (10-32X0.375-IN)	
	28	1	**7X-0620**	4	WASHER-HARD (5.5X13X1.6-MM THK)	
	29	1	**5N-5536**	6	BLOCK-FUSE	
M	30	1	**6V-4298**	24	BOLT (M5X0.8X16-MM)	
	31	1	**8C-7507**	28	LOCKWASHER (5.25 MM)	
M	32	1	**5C-2874**	28	NUT (M5X0.8 THD)	
	33	1	**5N-5534**	6	FUSE (15-AMPERE)	
	34	1	**7X-6412**	1	RECEPTACLE AS	
		1	**7X-3349**	4	SCREW-HEX HEAD (M12-24X19.5-MM)	
		1	**9X-0259**	1	GASKET	
	35	1	**4B-2051**	4	NUT (M12-24-THD)	
	36	1	**8X-6633**	1	WIRE AS	
M	37	1	**8T-4192**	3	BOLT (M12X1.75X25-MM)	
	38	1	**8T-4223**	5	WASHER-HARD (13.5X25.5X3-MM THK)	
	39	1	**6Y-6815**	7	GASKET AS (CONNECTOR)	
	40	1	**7X-6413**	1	PLUG AS	
		1	**9X-0258**	1	GASKET	
	41	1	**9X-9754**	2	SPRING	
	42	1	**5C-6565**	2	BOLT (1/2-13X1.125-IN)	
	43	1	**7D-7735**	2	CLIP	
	44	1	**5P-7470**	2	CLIP (SLOT)	
	45	1	**5P-7471**	2	CLIP (TAB)	
	46	1	**6D-7573**	1	CLIP	

M-METRIC PART

129-0696 **WIRING GP-HEATER** *(contd.)* **i02312858**

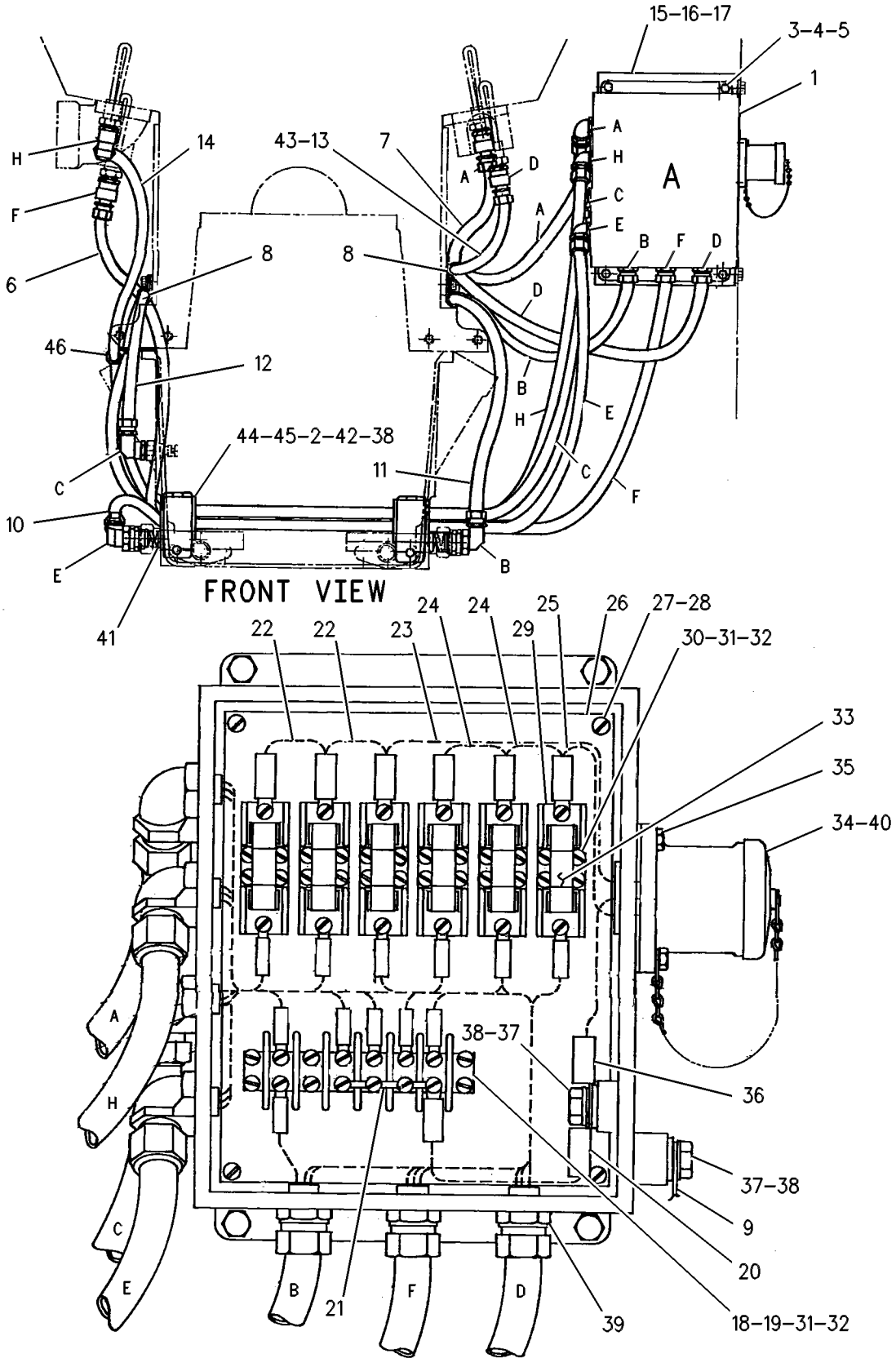

GRAPHIC #1 **<END>** g00506811

ELECTRICAL AND STARTING SYSTEM

247-0180 WIRING GP-MACHINE

S/N: 4421-UP

PART OF 245-8812 CHASSIS AR-REAR

SMCS-1408 **i02282516**

NOTE	REF NO	GRAPHIC REF	PART NUMBER	QTY	PART NAME 1 2 3 4 5 6 (PRODUCT LEVEL)	SEE PAGE
	1	5	**3E-5181**	1	SWITCH AS-LIMIT (PARKING BRAKE)	
		5	**3E-3377**	1	WEDGE-RECEPTACLE LOCK (4-PIN)	
		5	**186-3735**	4	PIN-CONNECTOR (16-GA TO 18-GA)	
BE		5	**9X-1386**		SLEEVE	
		5	**102-8804**	1	KIT-RECEPTACLE (4-PIN)	
					(INCLUDES RECEPTACLE AS AND WEDGE)	
	2	4	**230-5771**	1	SWITCH AS-PRESSURE (PRIMARY STEERING OIL)	
		4	**186-3735**	3	PIN-CONNECTOR (16-GA TO 18-GA)	
E		4	**9X-1813**		SLEEVE (30-CM)	
		4	**102-8803**	1	KIT-RECEPTACLE (3-PIN)	
					(INCLUDES RECEPTACLE AS AND WEDGE)	
	3	2	**8R-9137**	1	ANGLE	
	4	5	**9X-3495**	1	CLIP AS	
		5	**8C-3334**	2	RIVET-TUBULAR	
	5	4,5	**9X-6772**	4	STRAP-CABLE	
	6	4	**116-4491**	2	BRACKET AS	
					(EACH INCLUDES)	
M		4	**8T-3490**	1	NUT-WELD (M10X1.5-THD)	
Y	7	5	**118-3909**	1	SENSOR GP-TEMPERATURE (AMBIENT AIR)	280
	8	2	**121-1340**	1	ANGLE AS	
M		2	**8T-3490**	1	NUT-WELD (M10X1.5-THD)	
	9	3	**125-8534**	1	PLATE AS	
M		3	**8T-3490**	1	NUT-WELD (M10X1.5-THD)	
Y	10	2	**126-0182**	1	BUFFER GP-SENSOR (FUEL LEVEL)	203
	11	2	**127-9323**	1	BRACKET AS	
M		2	**8T-3490**	1	NUT-WELD (M10X1.5-THD)	
	12	2	**135-2543**	2	BOOT	
	13	3,4	**144-4613**	2	ANGLE AS	
					(EACH INCLUDES)	
M		3,4	**8T-3490**	1	NUT-WELD (M10X1.5-THD)	
	14	2	**145-3319**	1	BRACKET AS	
M		2	**8T-3597**	1	NUT-WELD (M12X1.75-THD)	
	15	2	**162-1966**	1	BRACKET	
	16	5	**174-4312**	1	SWITCH AS-PRESSURE (PARKING BRAKE OIL)	
		5	**102-8803**	1	KIT-RECEPTACLE (3-PIN)	
					(INCLUDES RECEPTACLE AS AND WEDGE)	
		5	**3E-3371**	1	WEDGE-RECEPTACLE LOCK (3-PIN)	
BD		5	**5P-6008**		TUBE	
BE		5	**8T-5677**		SLEEVE	
		5	**186-3735**	3	PIN-CONNECTOR (16-GA TO 18-GA)	
	17	2	**195-0882**	1	BRACKET AS	
M		2	**8T-3490**	1	NUT-WELD (M10X1.5-THD)	
		2	**195-2640**	1	BRACKET	
	18	1	**197-6453**	1	BRACKET AS	
M		1	**8T-3490**	1	NUT-WELD (M10X1.5-THD)	
	19	3	**247-2789**	1	HARNESS AS-LIGHTING (ENGINE FLOODLIGHTS)	
		3	**102-8802**	1	KIT-RECEPTACLE (2-PIN)	
					(INCLUDES RECEPTACLE AS AND WEDGE)	
		3	**155-2270**	2	KIT-CONNECTING PLUG (2-PIN)	
					(INCLUDES PLUG AS AND WEDGE)	
	20	4	**247-2795**	1	HARNESS AS-STARTING AID	
		4	**102-8802**	1	KIT-RECEPTACLE (2-PIN)	
					(INCLUDES RECEPTACLE AS AND WEDGE)	
		4	**8T-8737**	2	PLUG-SEAL	
		4	**155-2270**	3	KIT-CONNECTING PLUG (2-PIN)	
					(INCLUDES PLUG AS AND WEDGE)	

247-0180 **WIRING GP-MACHINE** ***(contd.)*** **i02282516**

NOTE	REF NO	GRAPHIC REF	PART NUMBER	QTY	PART NAME 1 2 3 4 5 6 (PRODUCT LEVEL)	SEE PAGE
	21	5	**248-1410**	1	HARNESS AS-BRAKE (PARKING)	
		5	**102-8801**	1	KIT-RECEPTACLE (12-PIN)	
					(INCLUDES RECEPTACLE AS AND WEDGE)	
		5	**8T-8737**	5	PLUG-SEAL	
		5	**155-2260**	1	KIT-CONNECTING PLUG (3-PIN)	
		5	**155-2271**	1	KIT-CONNECTING PLUG (4-PIN)	
					(EACH KIT INCLUDES PLUG AS AND WEDGE)	
	22	5	**251-9201**	1	BRACKET	
	23	5	**251-9204**	1	BRACKET AS	
	24	3	**263-2540**	1	HARNESS AS-CHASSIS (MAIN)	
		3	**102-8805**	1	KIT-RECEPTACLE (6-PIN)	
		3	**102-8801**	6	KIT-RECEPTACLE (12-PIN)	
					(EACH KIT INCLUDES RECEPTACLE AS AND WEDGE)	
		3	**3T-0204**	1	RECEPTACLE AS-CONNECTOR (20-PIN)	
		3	**8N-1536**	1	NUT (1-5/8-18-THD)	
		3	**3T-3410**	1	RECEPTACLE AS-CONNECTOR (37-PIN)	
		3	**8N-1522**	1	NUT (2-1/4-16-THD)	
		3	**3T-3412**	2	PLUG AS-CONNECTOR (37-PIN)	
		3	**8N-1513**	3	RECEPTACLE AS-CONNECTOR (37-PIN)	
		3	**8N-1522**	1	NUT (2-1/4-16-THD)	
		3	**8N-1514**	2	PLUG AS-CONNECTOR (37-PIN)	
		3	**8N-1516**	1	PLUG AS-CONNECTOR	
		3	**8N-1517**	1	RECEPTACLE AS-CONNECTOR (25-PIN)	
		3	**8N-1522**	1	NUT (2-1/4-16-THD)	
		3	**8N-1518**	1	PLUG AS-CONNECTOR (25-PIN)	
		3	**8N-1519**	2	RECEPTACLE AS-CONNECTOR (12-PIN)	
		3	**8N-1522**	1	NUT (2-1/4-16-THD)	
		3	**8N-1520**	1	PLUG AS-CONNECTOR (12-PIN)	
		3	**8N-1521**	14	BELL AS-END (2-GA)	
		3	**8N-1535**	1	BELL AS-END	
		3	**9X-6772**	51	STRAP-CABLE	
		3	**155-2255**	6	KIT-CONNECTING PLUG (12-PIN)	
		3	**155-2260**	1	KIT-CONNECTING PLUG (3-PIN)	
		3	**155-2270**	1	KIT-CONNECTING PLUG (2-PIN)	
		3	**155-2272**	1	PLUG AS-CONNECTOR (4-PIN)	
		3	**155-2271**	1	KIT-CONNECTING PLUG (4-PIN)	
		3	**155-2274**	1	KIT-CONNECTING PLUG (6-PIN)	
					(EACH KIT INCLUDES PLUG AS AND WEDGE)	
	25	1	**263-3742**	1	HARNESS AS-CHASSIS (ARTICULATED HITCH)	
		1	**9X-6772**	4	STRAP-CABLE	
		1	**8N-1521**	2	BELL AS-END (2-GA)	
		1	**8N-1535**	2	BELL AS-END	
		1	**3T-0203**	2	PLUG AS-CONNECTOR (20-PIN)	
	26	4	**263-5477**	1	STRAP AS-GROUND	
	27	4	**264-8100**	1	HARNESS AS-REAR CHASSIS (FRAME, RH)	
		4	**102-8802**	1	KIT-RECEPTACLE (2-PIN)	
		4	**102-8803**	1	KIT-RECEPTACLE (3-PIN)	
		4	**102-8804**	1	KIT-RECEPTACLE (4-PIN)	
		4	**102-8801**	1	KIT-RECEPTACLE (12-PIN)	
					(EACH KIT INCLUDES RECEPTACLE AS AND WEDGE)	
		4	**155-2260**	2	KIT-CONNECTING PLUG (3-PIN)	
		4	**155-2270**	1	KIT-CONNECTING PLUG (2-PIN)	
					(EACH KIT INCLUDES PLUG AS AND WEDGE)	
		4	**155-2272**	1	PLUG AS-CONNECTOR (4-PIN)	
		4	**155-2271**	1	KIT-CONNECTING PLUG (4-PIN)	
					(INCLUDES PLUG AS AND WEDGE)	
	28	5	**264-8862**	1	PLATE	
	29	5	**265-3274**	1	HARNESS AS-SOLENOID (RAISE, LOWER)	

247-0180 **WIRING GP-MACHINE** *(contd.)* **i02282516**

NOTE	REF NO	GRAPHIC REF	PART NUMBER	QTY	PART NAME 1 2 3 4 5 6 (PRODUCT LEVEL)	SEE PAGE
		5	**102-8804**	1	KIT-RECEPTACLE (4-PIN)	
					(INCLUDES RECEPTACLE AS AND WEDGE)	
		5	**155-2270**	2	KIT-CONNECTING PLUG (2-PIN)	
					(INCLUDES PLUG AS AND WEDGE)	
	30	5	**033-8248**	2	CLIP	
	31	5	**115-3072**	1	CLIP AS-CONNECTOR (8-PIN)	
		5	**8C-3334**	1	RIVET-TUBULAR	
	32	1,2,3, 4,5	**130-5300**	21	CLIP	
	33	5	**130-5301**	1	CLIP	
	34	1,2,5	**139-1398**	9	CLIP	
	35	5	**147-0385**	1	CLIP	
	36	2,3	**174-5907**	3	CLIP	
	37	5	**2P-1293**	1	LOCKNUT (1-3/16-12-THD)	
	38	3	**102-8802**	1	KIT-RECEPTACLE (2-PIN)	
					(INCLUDES RECEPTACLE AS AND WEDGE)	
	39	5	**3J-1907**	1	SEAL-O-RING	
	40	4	**3K-0360**	1	SEAL-O-RING	
	41	4	**4D-8123**	1	CLIP	
	42	3	**4D-8948**	5	CLIP	
	43	2	**4S-4455**	1	CLIP	
	44	4	**5K-4778**	2	CLIP	
	45	5	**5P-1076**	1	WASHER-HARD (13.5X30X4-MM THK)	
	46	2	**5P-7468**	2	CLIP (SLOT)	
	47	2	**5P-7469**	2	CLIP (TAB)	
	48	2	**5P-8444**	2	GROMMET	
	49	3,4	**5P-9085**	6	CLIP	
	50	4,5	**5P-9297**	3	CLIP	
	51	4,5	**5P-9299**	6	CLIP	
	52	2	**6D-4244**	2	CLIP	
	53	1	**6D-4636**	2	CLIP	
	54	1,3,5	**6V-2235**	4	CLIP	
	55	3	**6V-3265**	5	CLIP	
	56	5	**6V-3510**	1	ADAPTER	
	57	1,3	**7C-4354**	8	CLIP	
	58	5	**7D-1553**	1	CLIP	
	59	3	**7D-7233**	1	CLIP	
	60	2	**7X-7729**	2	WASHER (11X25X3-MM THK)	
	61	5	**8M-2770**	1	CLIP	
	62	2,4	**8M-2772**	3	CLIP	
	63	2	**8M-2773**	1	CLIP	
	64	1,2,3, 4,5	**8T-4121**	77	WASHER-HARD (11X21X2.5-MM THK)	
M	65	2,3	**8T-4133**	2	NUT (M10X1.15-THD)	
M	66	4,5	**8T-4136**	4	BOLT (M10X1.5X25-MM)	
M	67	1,2,3, 4,5	**8T-4137**	72	BOLT (M10X1.5X20-MM)	
M	68	2,5	**8T-4139**	3	BOLT (M12X1.75X30-MM)	
M	69	2	**8T-4182**	1	BOLT (M10X1.5X45-MM)	
M	70	5	**8T-4189**	1	BOLT (M8X1.25X20-MM)	
M	71	1,2,4, 5	**8T-4192**	7	BOLT (M12X1.75X25-MM)	
M	72	2	**8T-4196**	1	BOLT (M10X1.5X35-MM)	
	73	1,2,4, 5	**8T-4223**	9	WASHER-HARD (13.5X25.5X3-MM THK)	
	74	2	**9G-8909**	1	COVER-TERMINAL (BLACK)	
	75	1,2	**9M-4972**	4	CLIP	

247-0180 **WIRING GP-MACHINE** *(contd.)* **i02282516**

B-USE AS REQUIRED
D-ORDER BY THE METER
E-ORDER BY THE CENTIMETER
M-METRIC PART
Y-SEPARATE ILLUSTRATION

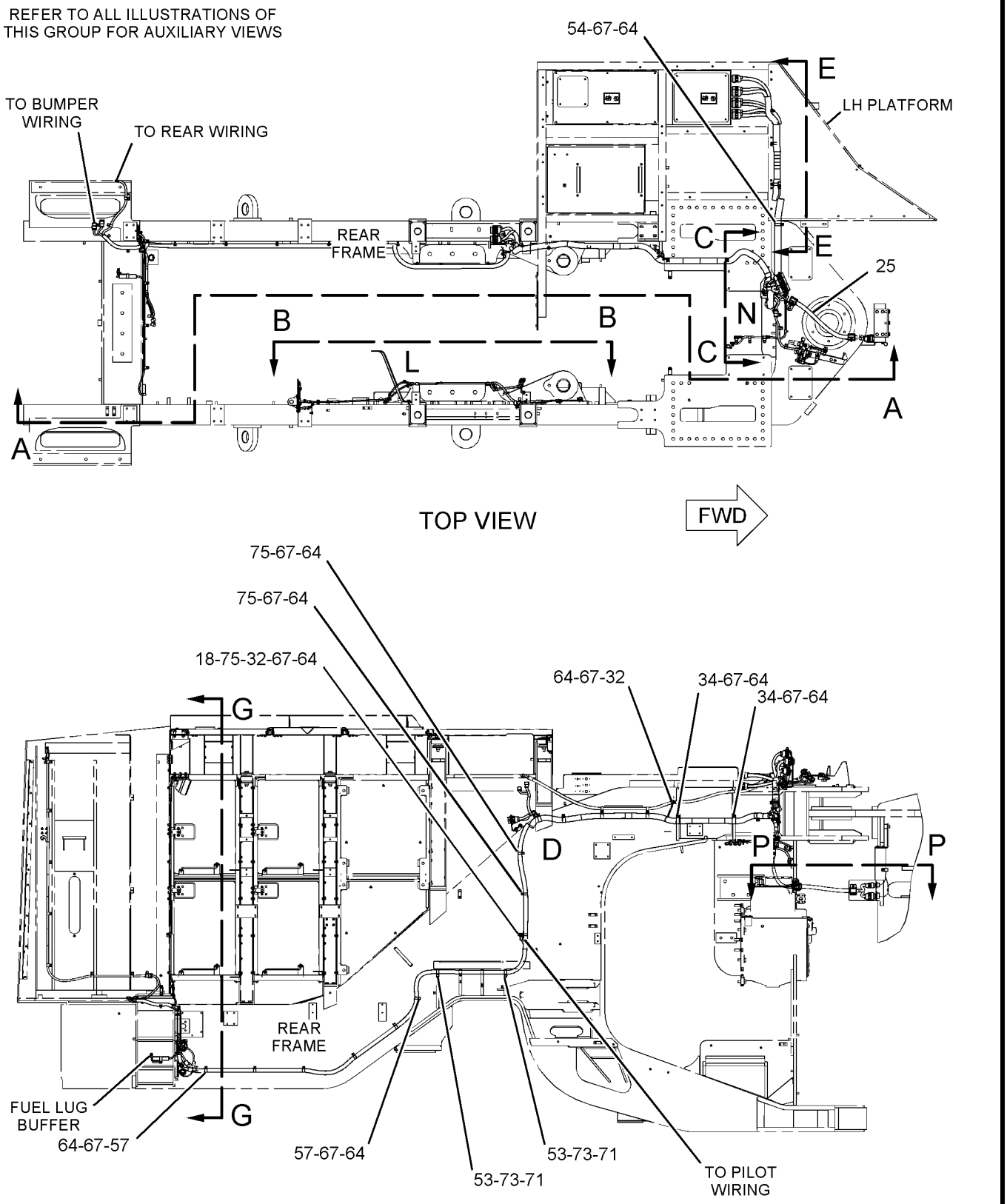

GRAPHIC #1 g01149194

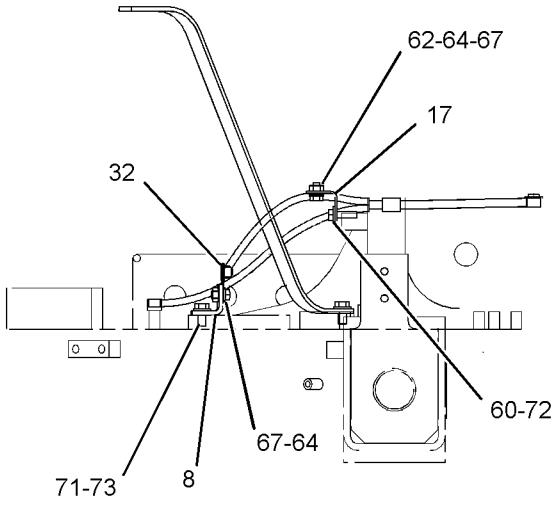

VIEW OF AREA L

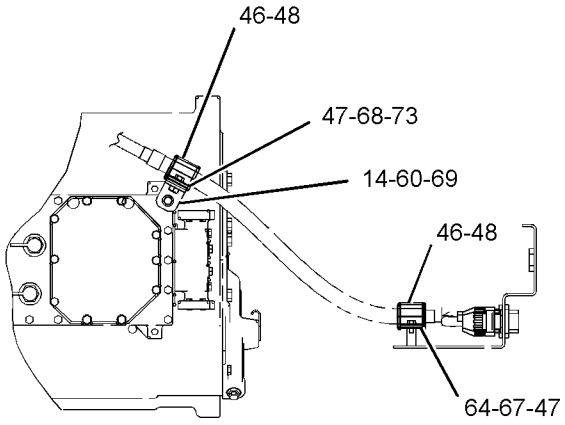

SECTION P-P

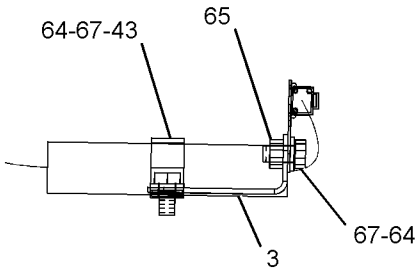

SECTION M-M

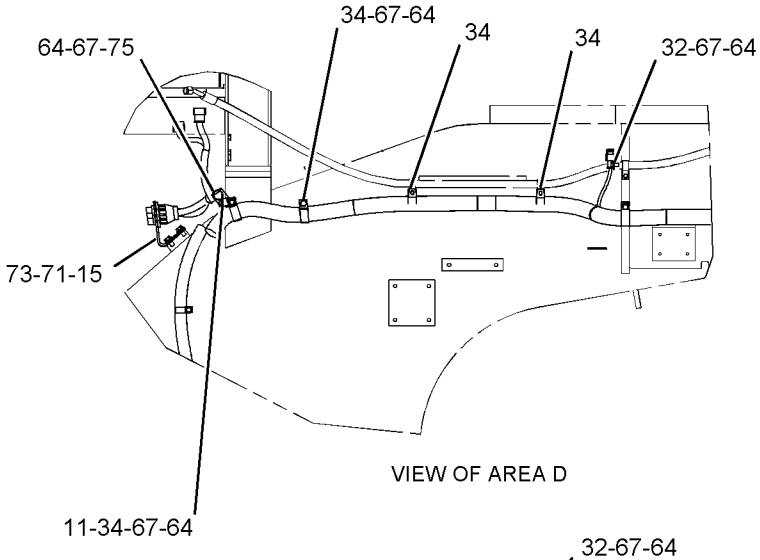

VIEW OF AREA D

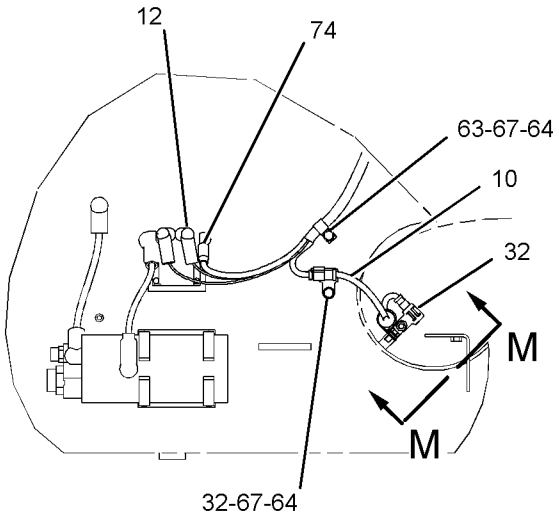

VIEW OF AREA T

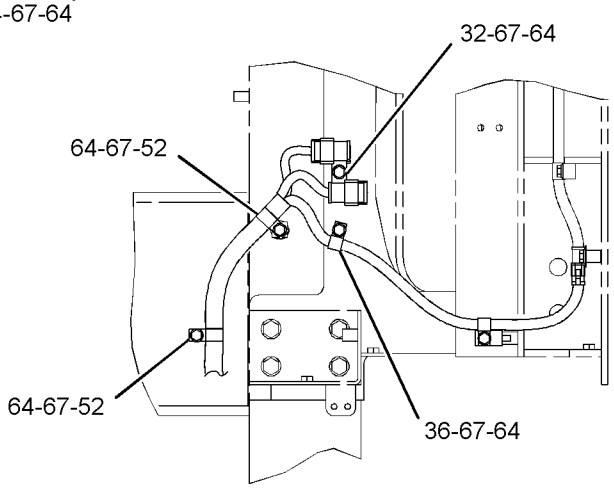

SECTION U-U

GRAPHIC #2 g01149195

REFER TO ALL ILLUSTRATIONS OF
THIS GROUP FOR AUXILIARY VIEWS

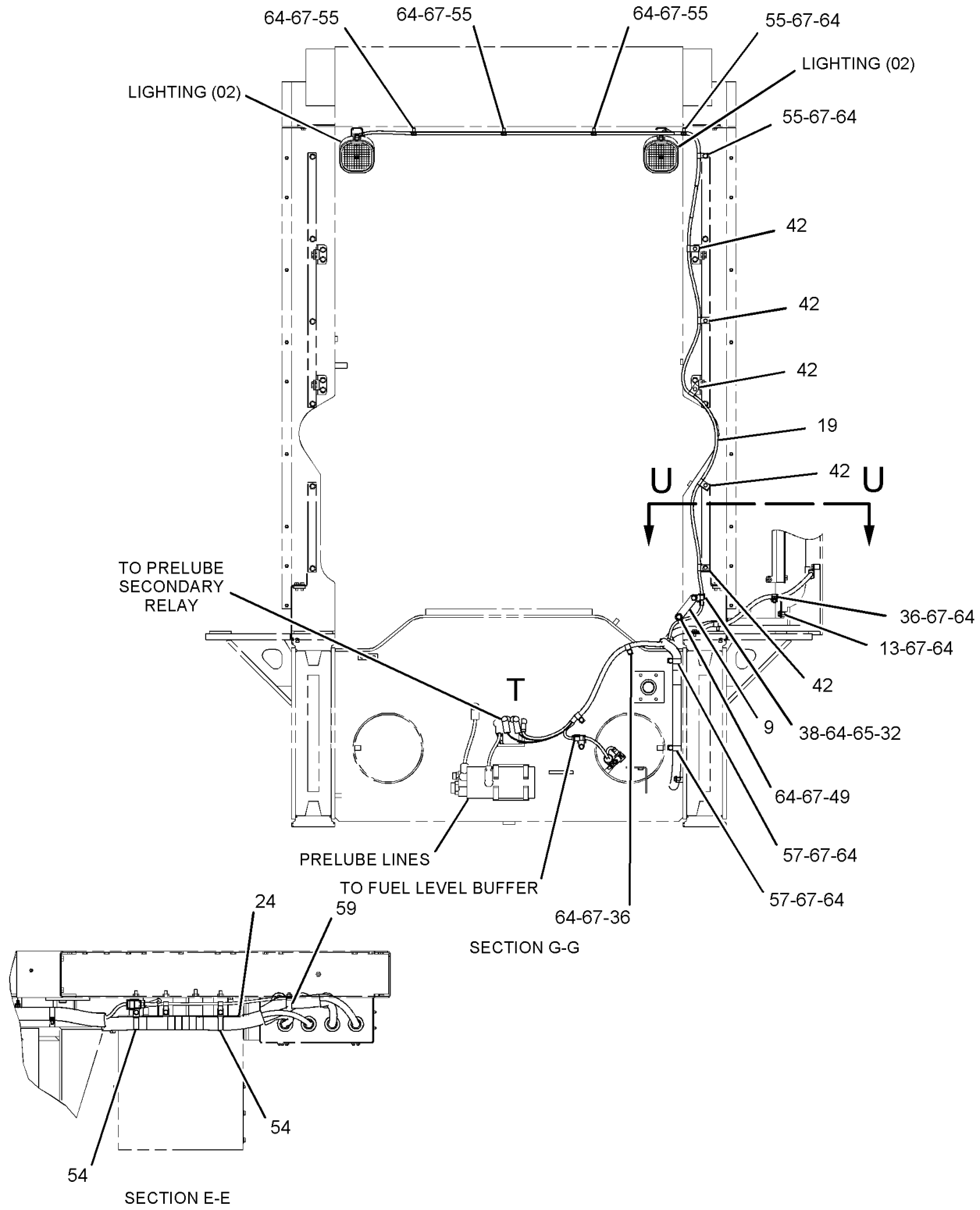

GRAPHIC #3

g01149196

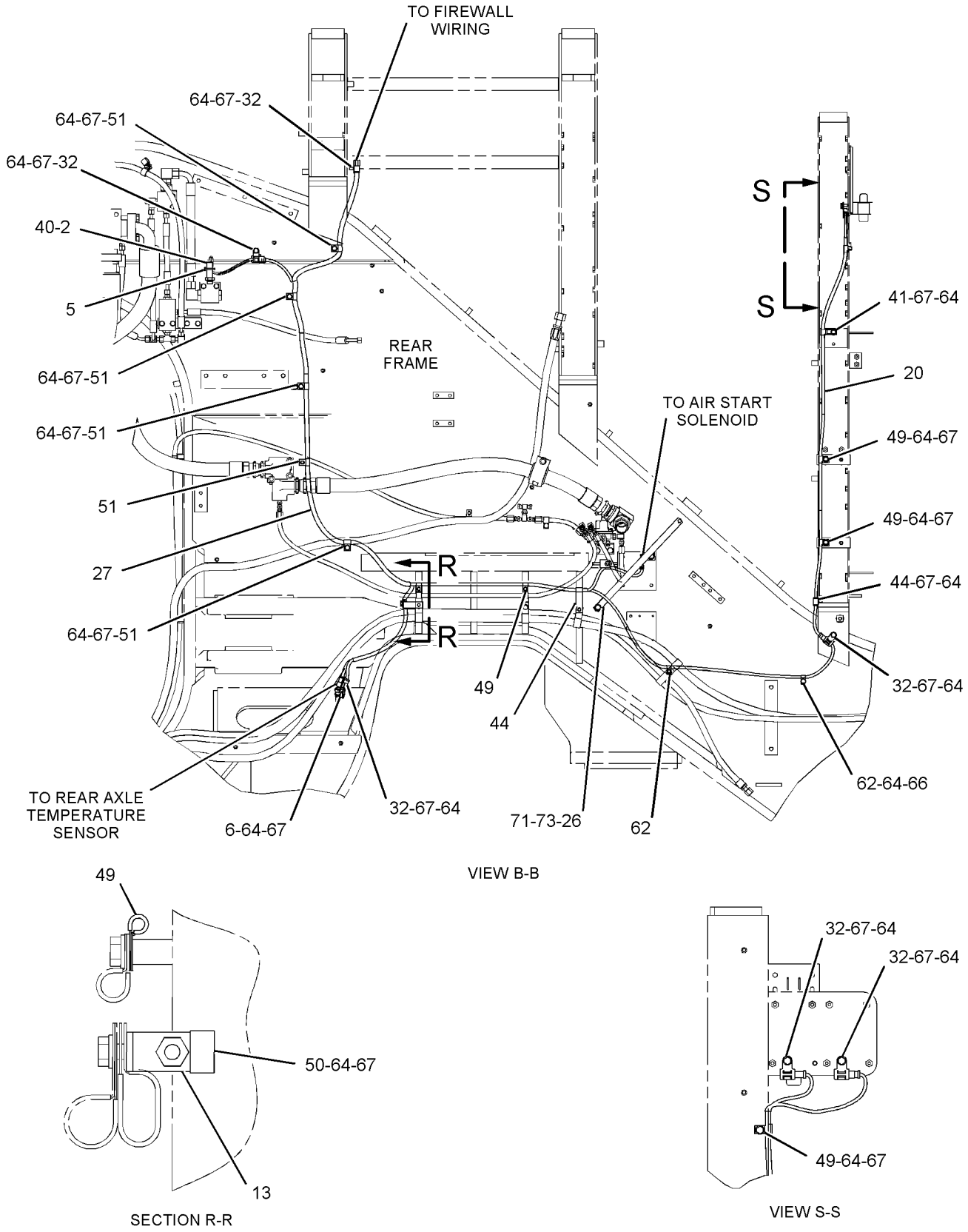

GRAPHIC #4

g01149197

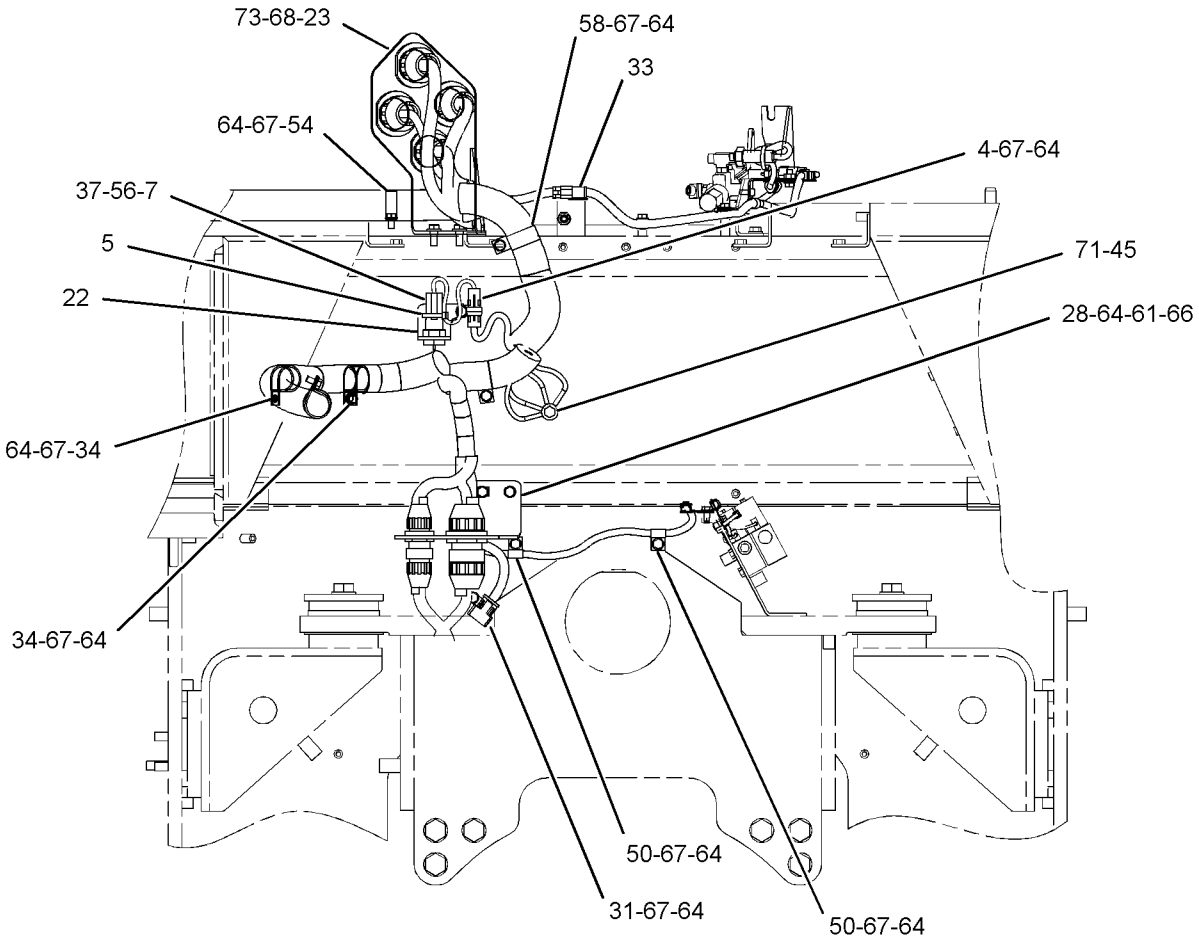

SECTION C-C

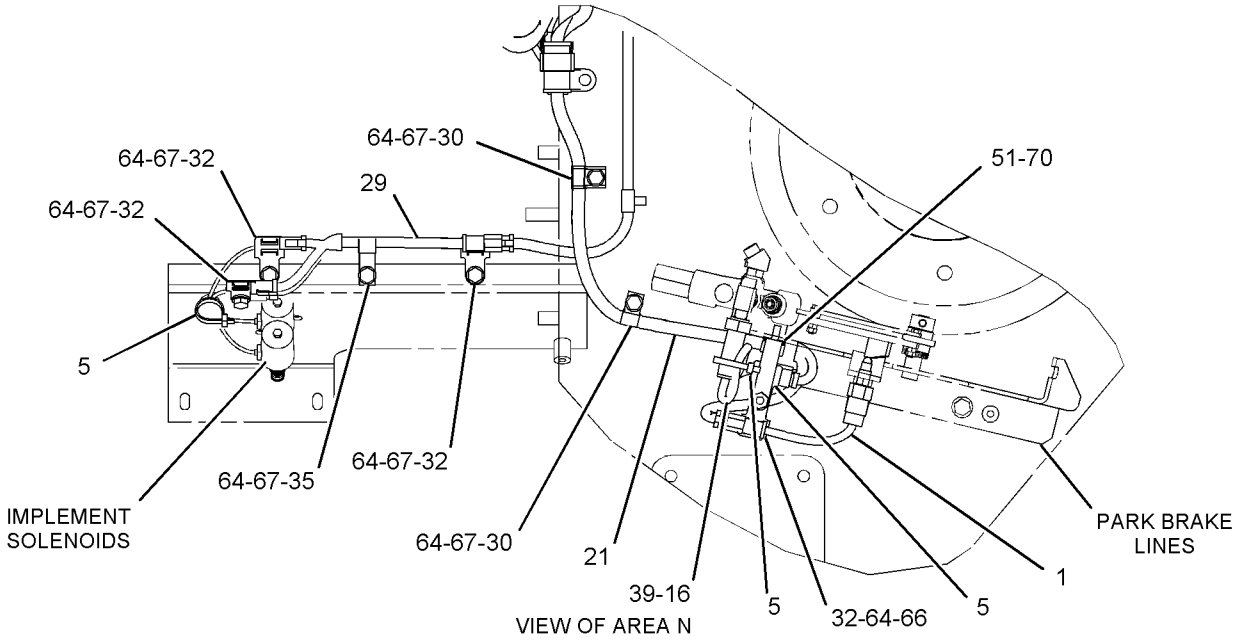

VIEW OF AREA N

GRAPHIC #5 **<END>** g01149198

263-1789 WIRING GP-MACHINE–CAES

S/N: 4421-UP

AN ATTACHMENT

SMCS-1408 **i02285752**

NOTE	REF NO	GRAPHIC REF	PART NUMBER	QTY	PART NAME 1 2 3 4 5 6 (PRODUCT LEVEL)	SEE PAGE
	1	1	**8C-5607**	6	MOUNT-ISOLATION	
	2	1	**8C-5608**	3	SPACER (6.5X9.5X25.4-MM THK)	
	3	1	**124-3019**	1	BRACKET AS	
M		1	**8T-3490**	1	NUT-WELD (M10X1.5-THD)	
	4	1	**167-8610**	1	BRACKET AS	
	5	1	**205-4285**	1	CONVERTER GP-ELECTRICAL (24-VOLT TO 12-VOLT)	
	6	1	**252-8014**	1	BRACKET AS	
M		1	**6V-9632**	3	NUT-WELD (M6X1 THD)	
	7	1	**263-7744**	1	HARNESS AS-CONTROL (CAES, ROPS SIDE)	
		1	**8T-8737**	4	PLUG-SEAL	
		1	**155-2255**	2	KIT-CONNECTING PLUG (12-PIN)	
		1	**155-2274**	2	KIT-CONNECTING PLUG (6-PIN)	
					(EACH KIT INCLUDES PLUG AS AND WEDGE)	
	8	1	**033-8248**	1	CLIP	
M	9	1	**112-8372**	2	BOLT (M4X16-MM)	
	10	1	**5P-9297**	1	CLIP	
M	11	1	**8C-8451**	3	BOLT (M6X1X40-MM)	
	12	1	**8T-4121**	4	WASHER-HARD (11X21X2.5-MM THK)	
M	13	1	**8T-4136**	2	BOLT (M10X1.5X25-MM)	
M	14	1	**8T-4137**	2	BOLT (M10X1.5X20-MM)	
	15	1	**9X-6165**	3	WASHER (6.5X22X2.5-MM THK)	
	16	1	**9X-8267**	2	WASHER (6.6X12X2-MM THK)	

M-METRIC PART

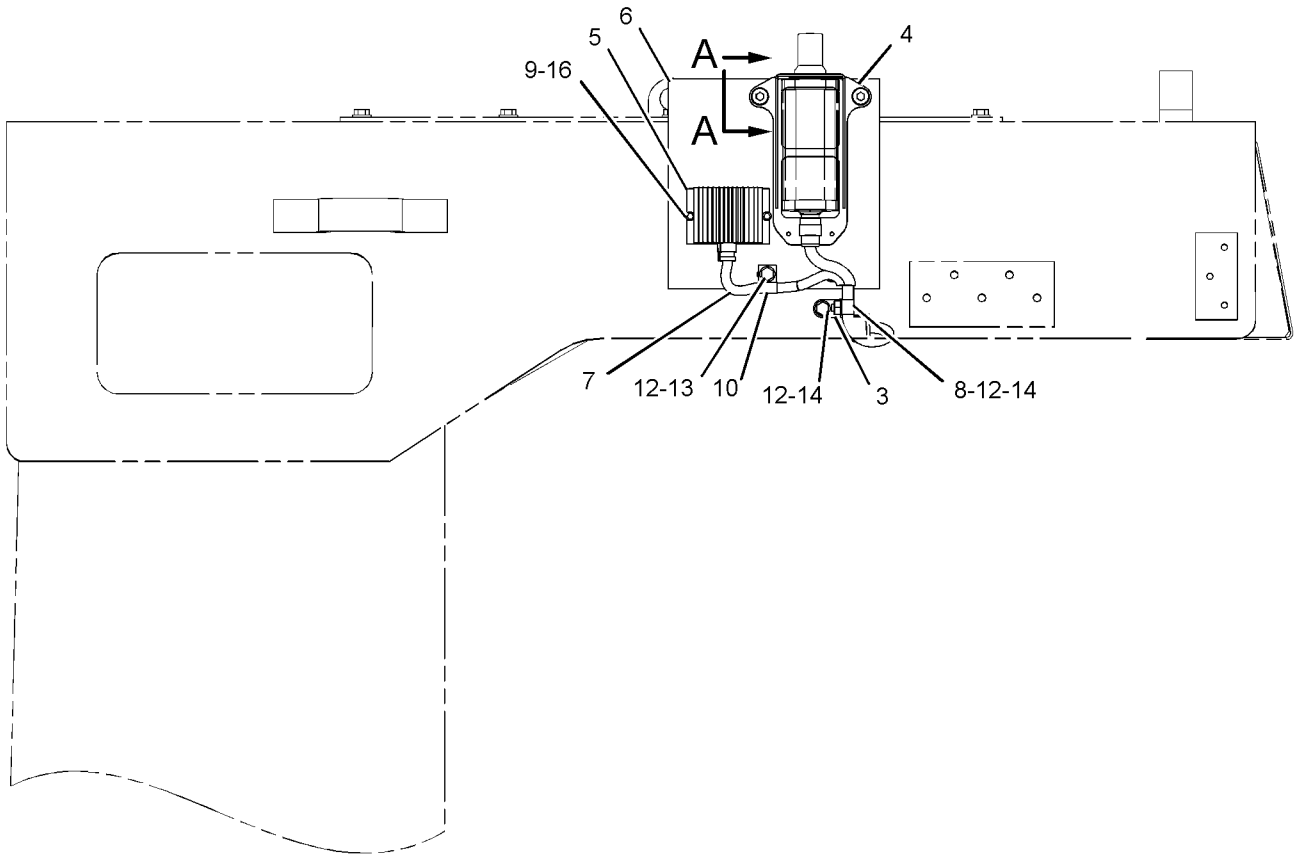

RIGHT SIDE VIEW

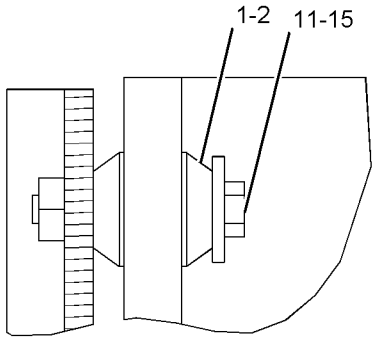

SECTION A-A

GRAPHIC #1 **<END>** g01145694

263-7748 WIRING GP-MACHINE–CAES

S/N: 4421-UP
PART OF 264-9725 INSTALLATION AR-CAES
AN ATTACHMENT

SMCS-1408 **i02285778**

NOTE	REF NO	GRAPHIC REF	PART NUMBER	QTY	PART NAME 1 2 3 4 5 6 (PRODUCT LEVEL)	SEE PAGE
	1	1	**8C-5607**	6	MOUNT-ISOLATION	
	2	1	**8C-5608**	3	SPACER (6.5X9.5X25.4-MM THK)	
	3	1	**9X-6772**	1	STRAP-CABLE	
	4	1	**167-8610**	1	BRACKET AS	
Y	5	1	**167-8984**	1	BATTERY GP (24-VOLT)	201
	6	1	**205-4285**	1	CONVERTER GP-ELECTRICAL (24-VOLT TO 12-VOLT)	
	7	1	**253-2587**	1	PLATE AS	
M		1	**8T-3490**	1	NUT-WELD (M10X1.5-THD)	
M		1	**165-8718**	4	NUT-WELD (M4X0.07-THD)	
	8	1	**263-7744**	1	HARNESS AS-CONTROL (CAES, ROPS SIDE)	
		1	**8T-8737**	4	PLUG-SEAL	
		1	**155-2255**	2	KIT-CONNECTING PLUG (12-PIN)	
		1	**155-2274**	2	KIT-CONNECTING PLUG (6-PIN)	
					(EACH KIT INCLUDES PLUG AS AND WEDGE)	
	9	1	**263-7745**	1	HARNESS AS-CONTROL (ROPS, REAR)	
		1	**102-8803**	2	KIT-RECEPTACLE (3-PIN)	
					(EACH KIT INCLUDES RECEPTACLE AS AND WEDGE)	
		1	**8T-8737**	1	PLUG-SEAL	
		1	**155-2255**	2	KIT-CONNECTING PLUG (12-PIN)	
		1	**155-2260**	2	KIT-CONNECTING PLUG (3-PIN)	
					(EACH KIT INCLUDES PLUG AS AND WEDGE)	
	10	1	**263-7746**	1	BRACKET AS	
M		1	**6V-9632**	3	NUT-WELD (M6X1-THD)	
	11	1	**266-9378**	2	BRACKET AS	
					(EACH INCLUDES)	
M		1	**8T-3490**	1	NUT-WELD (M10X1.5-THD)	
	12	1	**033-8248**	2	CLIP	
M	13	1	**112-8372**	6	BOLT (M4X16-MM)	
	14	1	**130-5300**	3	CLIP	
	15	1	**5P-9297**	1	CLIP	
	16	1	**6D-3479**	3	CLIP	
M	17	1	**8C-8451**	3	BOLT (M6X1X40-MM)	
	18	1	**8T-4121**	13	WASHER-HARD (11X21X2.5-MM THK)	
M	19	1	**8T-4136**	4	BOLT (M10X1.5X25-MM)	
M	20	1	**8T-4137**	9	BOLT (M10X1.5X20-MM)	
	21	1	**9X-6165**	3	WASHER (6.5X22X2.5-MM THK)	
	22	1	**9X-8267**	6	WASHER (6.6X12X2-MM THK)	

M-METRIC PART
Y-SEPARATE ILLUSTRATION

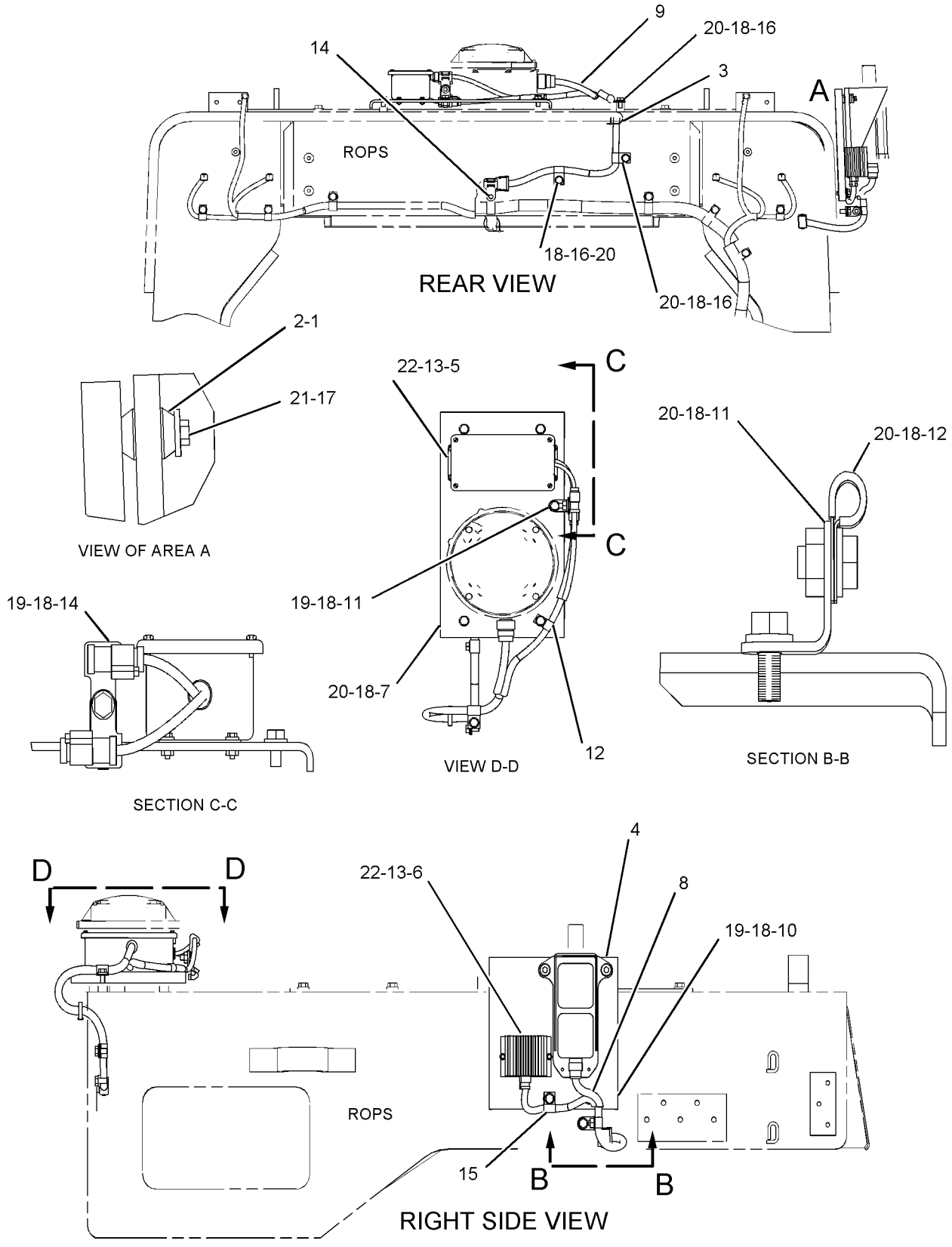

GRAPHIC #1 **<END>** g01145251

265-4124 WIRING GP-MONITOR

S/N: 4421-UP

PART OF 245-8813 INSTALLATION AR-FIELD

SMCS-1408, 7490, 7494 **i02298566**

NOTE	REF NO	GRAPHIC REF	PART NUMBER	QTY	PART NAME 1 2 3 4 5 6 (PRODUCT LEVEL)	SEE PAGE
	1	1,3	**3E-5239**	1	RELAY AS (24-VOLT) (PRELUBRICATION)	
	1A	3	**3E-5239**	1	RELAY AS (24-VOLT) (LIGHTS)	
	1B	3	**3E-5239**	1	RELAY AS (24-VOLT) (AIR CONDITIONER PRECLEANER)	
	1C	3	**3E-5239**	1	RELAY AS (24-VOLT) (FRONT FLOODLIGHTS)	
	1D	3	**3E-5239**	1	RELAY AS (24-VOLT) (FRONT ROPS FLOODLIGHTS)	
	1E	3	**3E-5239**	1	RELAY AS (24-VOLT) (REAR ROPS FLOODLIGHTS)	
	1F	1	**3E-5239**	1	RELAY AS (24-VOLT) (ROPS HID LIGHTS NO. 1)	
	1G	1	**3E-5239**	1	RELAY AS (24-VOLT) (BACKUP ALARM)	
	1H	1	**3E-5239**	1	RELAY AS (24-VOLT) (BACKLIGHT)	
	1I	1	**3E-5239**	1	RELAY AS (24-VOLT) (PLATFORM FLOODLIGHTS)	
	1J	1	**3E-5239**	1	RELAY AS (24-VOLT) (START)	
	1K	1	**3E-5239**	1	RELAY AS (24-VOLT) (ENGINE SHUTDOWN)	
	1L	1	**3E-5239**	1	RELAY AS (24-VOLT) (ROPS HID LIGHTS NO. 2)	
	2	2	**6I-1418**	4	SPACER (8.2X12.7X28.7-MM THK)	
	3	4	**6T-3643**	1	CIRCUIT BREAKER AS (15-AMPERE) (ENGINE ECM)	
		4	**6V-8376**	2	SCREW-MACHINE (8-32X0.25-IN)	
		4	**9B-7233**	2	LOCKWASHER	
	4	4	**7V-9275**	2	STRAP	
	5	2	**8L-5449**	2	SPACER (0.375X0.75X0.69-IN THK)	
	6	3	**9W-1441**	9	FUSE (15-AMPERE)	
	7	3	**9W-1442**	23	FUSE (10-AMPERE)	
	8	1,4	**9X-6772**	31	STRAP-CABLE	
	9	1	**102-1529**	2	FILM-INSTRUCTION (ELECTRICAL DISCONNECT)	
	10	4	**106-8704**	3	SUPPRESSOR AS-ARC	
					(EACH INCLUDES)	
		4	**102-8802**	1	KIT-RECEPTACLE (2-PIN)	
					(INCLUDES RECEPTACLE AS AND WEDGE)	
		4	**155-2270**	1	KIT-CONNECTING PLUG (2-PIN)	
					(INCLUDES PLUG AS AND WEDGE)	
		4	**186-3735**	1	PIN-CONNECTOR (16-GA TO 18-GA)	
	11	2	**133-3489**	1	PLATE AS	
		2	**9D-4439**	4	STUD-WELD (3/8-16X1-IN)	
	12	2	**145-0487**	8	SPACER (8.2X12.7X43.6-MM)	
Y	13	2	**160-4891**	1	CONTROL GP-UNPRGMED MONITOR (VIMS)	971
YR	14	2	**172-9389**	1	CONTROL GP-UNPROGRAMMED (POWER TRAIN)	217
	15	2	**187-6415**	5	TUBE	
	16	4	**187-8674**	1	BLOCK AS-JUNCTION	
	17	4	**187-8675**	1	GASKET	
	18	3	**202-4327**	1	PULLER-FUSE	
Y	19	2	*241-8368*	1	SWITCH GP-MAGNETIC (24-VOLT) (MAIN RELAY)	305
	20	1	**250-3235**	1	ENCLOSURE AS	
		1	**6E-5102**	10	PLATE	
M		1	**6V-9632**	15	NUT-WELD (M6X1-THD)	
M		1	**8T-3490**	13	NUT-WELD (M10X1.5-THD)	
M		1	**8T-3635**	2	STUD-WELD (M12X1.75X34.93-MM OAL)	
M		1	**8T-4967**	2	STUD-WELD (M10X1.5X23-MM OAL)	
M		1	**8T-8874**	4	NUT-WELD (M5X0.8-THD)	
		1	**9R-9866**	3	BOSS (M10X1.5X45-MM)	
		1	**262-4443**	1	BRACKET AS	
	21	1	**250-3248**	1	PLATE	
	22	1	**251-2070**	1	PLATE AS	
		1	**6E-5102**	4	PLATE	
M		1	**8T-3490**	4	NUT-WELD (M10X1.5-THD)	
	23	1	**251-2132**	1	PLATE	
	24	1	**251-8317**	1	FILM (BREAKER PANEL)	

265-4124 **WIRING GP-MONITOR** *(contd.)* **i02298566**

NOTE	REF NO	GRAPHIC REF	PART NUMBER	QTY	PART NAME 1 2 3 4 5 6 (PRODUCT LEVEL)	SEE PAGE
	25	1	**251-8318**	1	FILM (FUSE PANEL)	
	26	2	**262-1408**	1	CONTROL GP-UNPROGRAMMED (IMPLEMENT)	
	27	2	**263-3882**	1	CABLE AS	
	28	3	**264-4646**	1	PLATE AS	
	29	3	**264-6343**	1	FILM-FUSE PANEL	
	30	4	**264-6623**	1	HARNESS AS-MONITOR (VIMS)	
		4	**102-8802**	3	KIT-RECEPTACLE (2-PIN)	
					(EACH KIT INCLUDES RECEPTACLE AS AND WEDGE)	
		4	**3E-5519**	1	PLUG AS-CONNECTOR (5-PIN)	
		4	**110-6848**	1	PLUG AS-CONNECTOR (40-PIN)	
		4	**9X-1054**	9	PLUG AS-CONNECTOR (4-PIN)	
		4	**110-6848**	1	PLUG AS-CONNECTOR (40-PIN)	
		4	**147-1445**	2	PLUG AS-CONNECTOR (70-PIN)	
		4	**147-1446**	1	PLUG AS-CONNECTOR (70-PIN)	
		4	**160-7689**	1	PLUG AS-CONNECTOR (70-PIN)	
		4	**7G-7917**	29	PLUG-SEAL	
		4	**7G-7919**	3	PLUG-SEAL	
		4	**8T-8737**	235	PLUG-SEAL	
		4	**3T-3410**	2	RECEPTACLE AS-CONNECTOR (37-PIN)	
		4	**8N-1513**	2	RECEPTACLE AS-CONNECTOR (37-PIN)	
		4	**8N-1515**	1	RECEPTACLE AS-CONNECTOR (24-PIN)	
		4	**8N-1517**	1	RECEPTACLE AS-CONNECTOR (25-PIN)	
		4	**8N-1519**	1	RECEPTACLE AS-CONNECTOR (12-PIN)	
		4	**9X-6772**	8	STRAP-CABLE	
		4	**115-3082**	2	JUNCTION BLOCK	
		4	**115-3083**	2	BRACKET-BLOCK CONNECTOR	
		4	**126-1774**	4	COVER	
		4	**155-2270**	5	KIT-CONNECTING PLUG (2-PIN)	
					(EACH KIT INCLUDES PLUG AS AND WEDGE)	
		4	**188-6253**	1	BLOCK AS-FUSE	
		4	**1H-3244**	2	LOCKWASHER	
		4	**6V-8185**	2	NUT (1/4-20-THD)	
		4	**8T-4205**	2	WASHER-HARD (7.2X14.5X2-MM THK)	
		4	**151-1398**	3	KIT-TERMINAL (LOCK)	
		4	**199-6592**	1	BLOCK AS	
		4	**200-8789**	1	SEAL	
	31	2	**264-6657**	1	CABLE AS	
	32	1	**264-6663**	1	FILM-IDENTIFICATION (BREAKER)	
	33	2	**264-7038**	1	CABLE AS	
	34	2	**264-7039**	1	WIRE AS	
	35	2	**264-7040**	1	WIRE AS	
	36	2	**264-7481**	1	CABLE AS	
	37	3	**107-3727**	4	SCREW-PAN HEAD	
	38	4	**171-2210**	1	CIRCUIT BREAKER AS (80-AMPERE) (ALTERNATOR NO. 2)	
	38A	4	**171-2210**	1	CIRCUIT BREAKER AS (80-AMPERE) (ALTERNATOR NO. 1)	
	38B	4	**171-2210**	1	CIRCUIT BREAKER AS (80-AMPERE) (PRELUBRICATION)	
					(EACH CIRCUIT BREAKER AS INCLUDES)	
		4	**6V-8187**	2	NUT (1/4-28-THD)	
		4	**8T-4205**	2	WASHER-HARD (7.2X14.5X2-MM THK)	
		4	**253-2111**	2	LOCKWASHER	
	39	4	**171-2212**	1	CIRCUIT BREAKER AS (105-AMPERE) (MAIN)	
		4	**6V-8187**	2	NUT (1/4-28-THD)	
		4	**8T-4205**	2	WASHER-HARD (7.2X14.5X2-MM THK)	
		4	**253-2111**	2	LOCKWASHER	
	40	4	**3D-9799**	6	SCREW-MACHINE (8-32X0.875-IN)	
	41	4	**4B-1240**	8	SCREW-MACHINE (10-32X1-IN)	
	42	3	**4B-4274**	4	WASHER (5.5X13X1.2-MM THK)	

265-4124 **WIRING GP-MONITOR** ***(contd.)*** **i02298566**

NOTE	REF NO	GRAPHIC REF	PART NUMBER	QTY	PART NAME 1 2 3 4 5 6 (PRODUCT LEVEL)	SEE PAGE
	43	2	**4P-7581**	3	CLIP	
	44	2	**4P-8134**	3	CLIP	
	45	3	**6D-4244**	1	CLIP	
	46	4	**6T-3642**	1	CIRCUIT BREAKER AS (10-AMPERE) (KEY SWITCH)	
		4	**6V-8376**	2	SCREW-MACHINE (8-32X0.25-IN)	
		4	**9B-7233**	2	LOCKWASHER	
	47	3	**6V-5645**	4	SCREW-MACHINE (10-32X0.87-IN)	
	48	4	**6V-8188**	2	NUT (1/2-13-THD)	
	49	2	**6V-8801**	3	NUT (3/8-16-THD)	
	50	4	**7F-0560**	2	WASHER (0.516X0.938X0.101-IN THK)	
M	51	2	**7X-0818**	4	BOLT (M8X1.25X45-MM)	
	52	2	**7Y-3283**	1	SPACER (13.88X21.34X95-MM THK)	
M	53	4	**8C-6364**	4	BOLT-SOCKET HEAD (M5X0.8X14-MM)	
	54	4	**8T-0328**	4	WASHER-HARD (5.5X10X1-MM THK)	
	55	1,2,3	**8T-4121**	21	WASHER-HARD (11X21X2.5-MM THK)	
M	56	1,2,3	**8T-4136**	6	BOLT (M10X1.5X25-MM)	
M	57	2	**8T-4137**	4	BOLT (M10X1.5X20-MM)	
M	58	2	**8T-4177**	2	BOLT (M8X1.25X90-MM)	
M	59	1	**8T-4195**	10	BOLT (M10X1.5X30-MM)	
	60	2	**8T-4224**	2	WASHER-HARD (8.8X16X2-MM THK)	
	61	2	**8T-4896**	3	WASHER-HARD (10.2X18.5X2.5-MM THK)	
M	62	2	**8T-5436**	1	BOLT (M10X1.5X130-MM)	
M	63	2	**8T-6869**	6	BOLT (M8X1.25X60-MM)	
	64	2	**8T-9655**	24	MOUNT-ISOLATION	
	65	4	**9G-9882**	1	CIRCUIT BREAKER AS (10-AMPERE) (RUNNING LIGHTS)	
		4	**6V-8376**	2	SCREW-MACHINE (8-32X0.25-IN)	
		4	**9B-7233**	2	LOCKWASHER	
	66	2	**9N-0869**	12	WASHER-HARD (8.8X25.5X2-MM THK)	
M	67	1,2,3, 4	**9X-2042**	26	SCREW-TRUSS HEAD (M6X1X12-MM)	
M	68	2	**9X-2044**	2	SCREW-TRUSS HEAD (M6X1X16-MM)	
E	69	3	**103-2543**		SEAL (3-CM)	
E	70	1	**177-4122**		SEAL (239.5-CM)	
E	70A	1	**177-4122**		SEAL (74.5-CM)	
E	70B	1	**177-4122**		SEAL (156-CM)	
	71	1	**3T-2511**	2	TUBE	

E-ORDER BY THE CENTIMETER
M-METRIC PART
R-REMFG PART MAY BE AVAILABLE
Y-SEPARATE ILLUSTRATION

265-4124 **WIRING GP-MONITOR** *(contd.)* **i02298566**

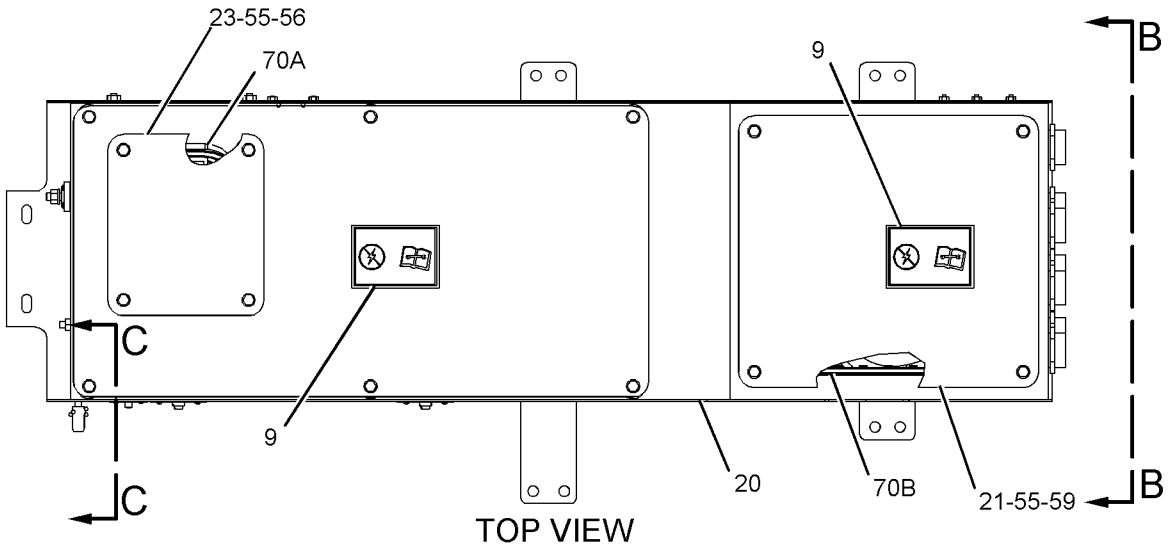

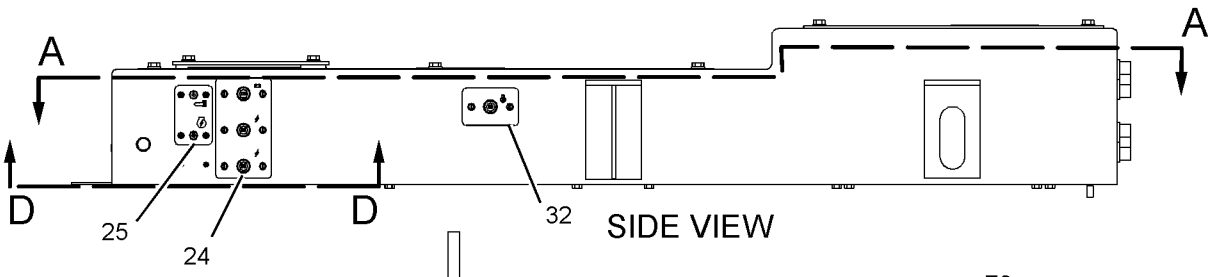

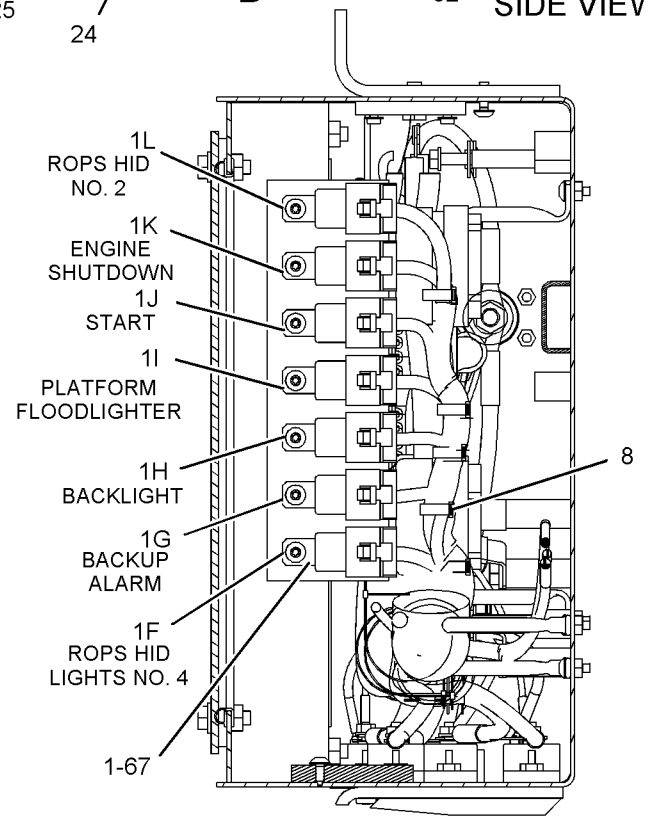

SECTION R-R

70

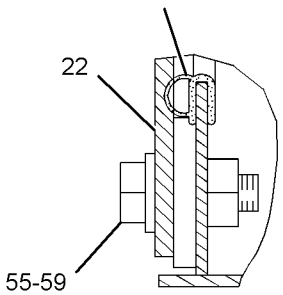

SECTION C-C

REFER TO ALL ILLUSTRATIONS OF
THIS GROUP FOR AUXILIARY VIEWS

GRAPHIC #1 g01146049

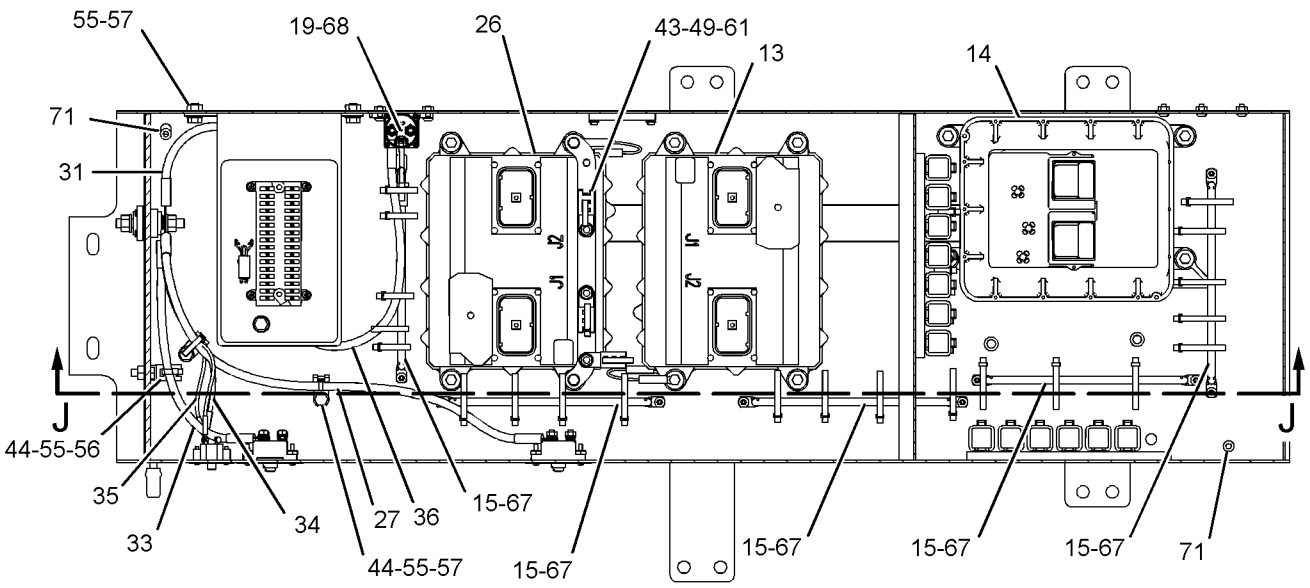

SECTION A-A

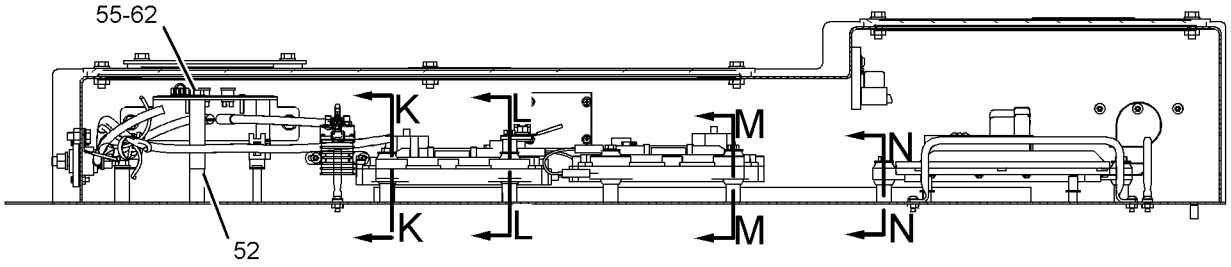

SECTION J-J

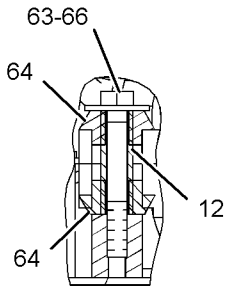

SECTION K-K

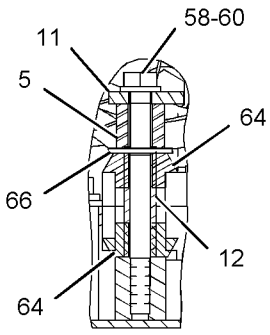

SECTION L-L

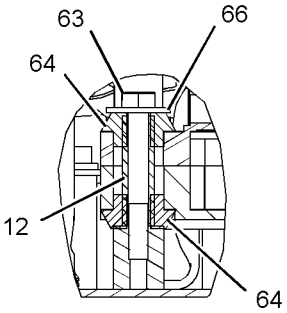

SECTION M-M

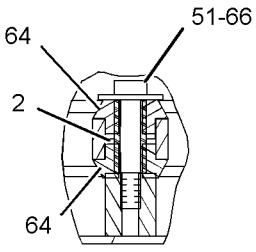

SECTION N-N

GRAPHIC #2 g01146052

265-4124 **WIRING GP-MONITOR** *(contd.)* **i02298566**

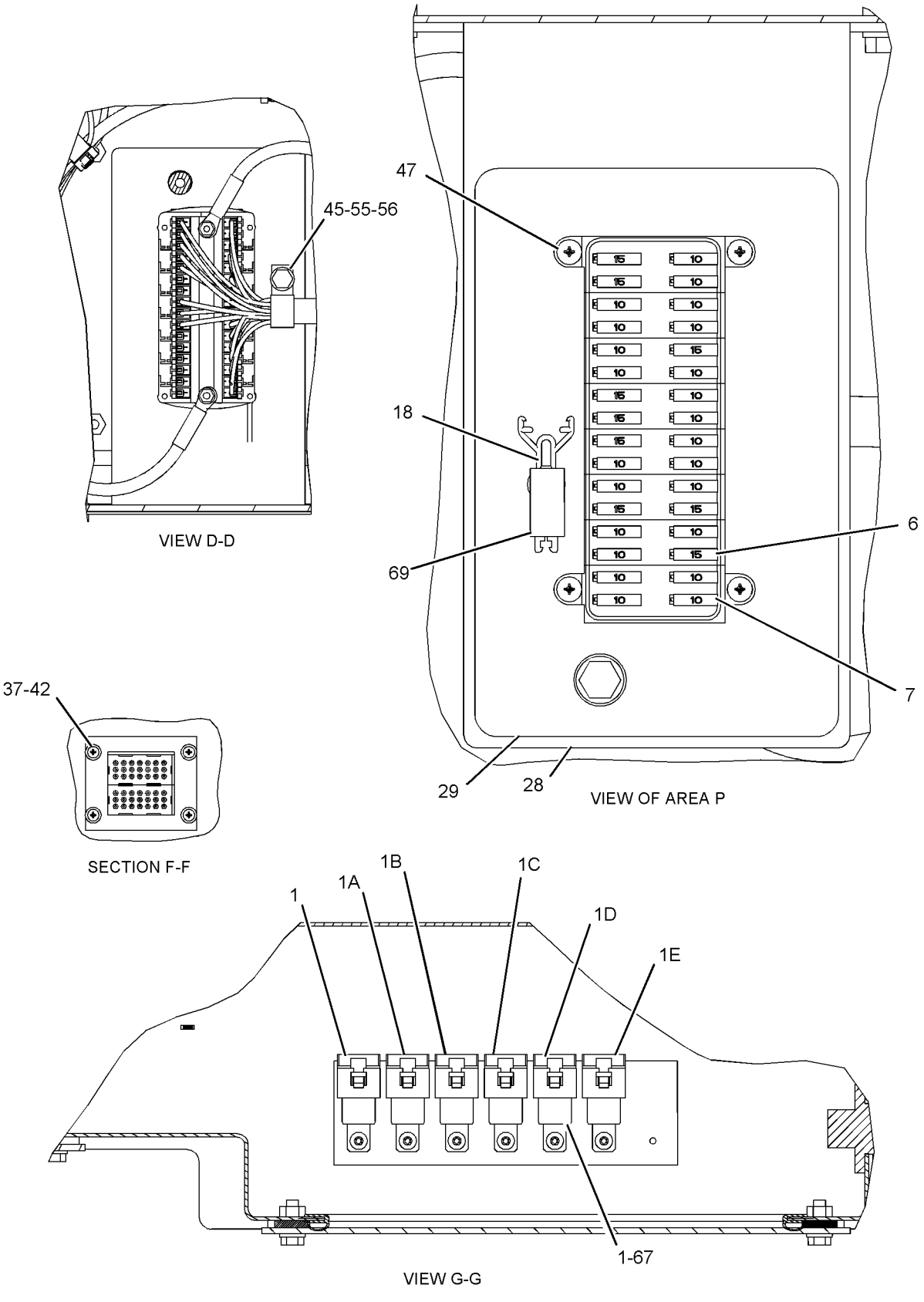

GRAPHIC #3 g01146115

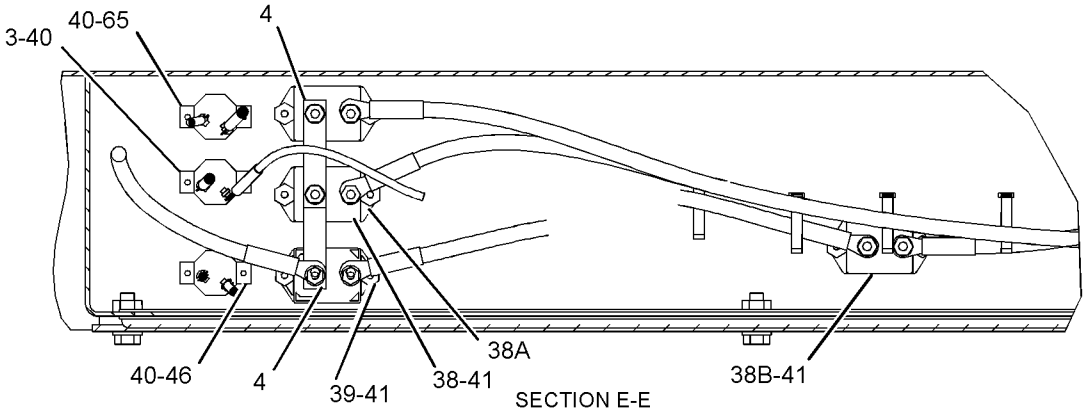

SECTION E-E

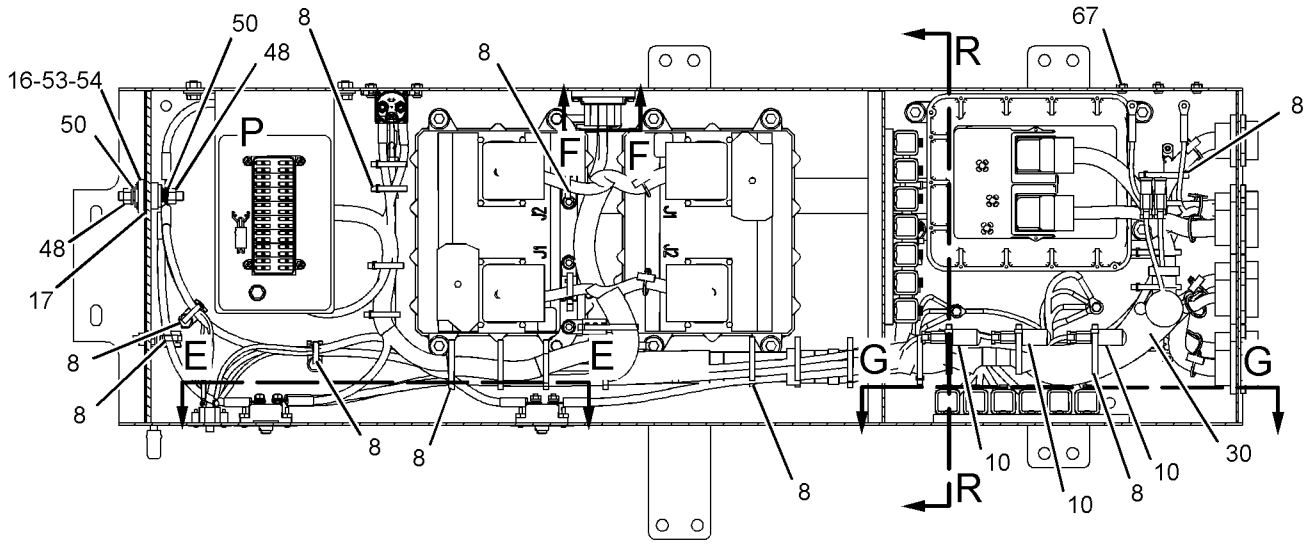

SECTION A-A

GRAPHIC #4 **<END>** g01146238

ELECTRICAL AND STARTING SYSTEM

265-0983 WIRING GP-OIL RENEWAL SYSTEM

S/N: 4421-UP
PART OF 249-7584 RENEWAL AR-OIL
AN ATTACHMENT

SMCS-1349, 1408 **i02425546**

NOTE	REF NO	GRAPHIC REF	PART NUMBER	QTY	PART NAME 1 2 3 4 5 6 (PRODUCT LEVEL)	SEE PAGE
	1	2	**9X-6772**	3	STRAP-CABLE	
	2	2	**142-1657**	5	BRACKET AS	
					(EACH INCLUDES)	
M		2	**8T-3490**	1	NUT-WELD (M10X1.5-THD)	
	3	2	**144-4613**	1	ANGLE AS	
M		2	**8T-3490**	1	NUT-WELD (M10X1.5-THD)	
	4	2	**157-7190**	1	BASE AS-INDICATOR (GREEN)	
		2	**8C-7329**	9	TUBE-HEAT SHRINK	
		2	**102-8803**	1	KIT-RECEPTACLE (3-PIN)	
					(INCLUDES RECEPTACLE AS AND WEDGE)	
Y	5	2	**172-8660**	2	SWITCH GP-LIQUID LEVEL (ENGINE OIL TANK)	302
	6	2	**226-1194**	1	BRACKET AS	
M		2	**8T-3490**	1	NUT-WELD (M10X1.5-THD)	
	7	1	**264-4999**	1	HARNESS AS-CONTROL (OIL RENEWAL SYSTEM, FIREWALL)	
		1	**102-8804**	1	KIT-RECEPTACLE (4-PIN)	
					(INCLUDES RECEPTACLE AS AND WEDGE)	
		1	**155-2270**	2	KIT-CONNECTING PLUG (2-PIN)	
					(EACH KIT INCLUDES PLUG AS AND WEDGE)	
	8	2	**264-5000**	1	HARNESS AS-CONTROL (OIL RENEWAL SYSTEM, CHASSIS)	
		2	**8T-8737**	1	PLUG-SEAL	
		2	**155-2260**	1	KIT-CONNECTING PLUG (3-PIN)	
		2	**155-2271**	1	KIT-CONNECTING PLUG (4-PIN)	
					(EACH KIT INCLUDES PLUG AS AND WEDGE)	
	9	1	**033-8248**	3	CLIP	
	10	2	**130-5300**	3	CLIP	
	11	2	**2M-9780**	2	SEAL-O-RING	
	12	1	**2T-3019**	1	CLIP	
	13	2	**6V-3341**	1	GROMMET	
	14	2	**5P-9297**	9	CLIP	
	15	1,2	**8T-4121**	15	WASHER-HARD (11X21X2.5-MM THK)	
M	16	1,2	**8T-4136**	6	BOLT (M10X1.5X25-MM)	
M	17	2	**8T-4137**	9	BOLT (M10X1.5X20-MM)	
	18	2	**163-1884**	1	LAMP (24-VOLT)	

M-METRIC PART
Y-SEPARATE ILLUSTRATION

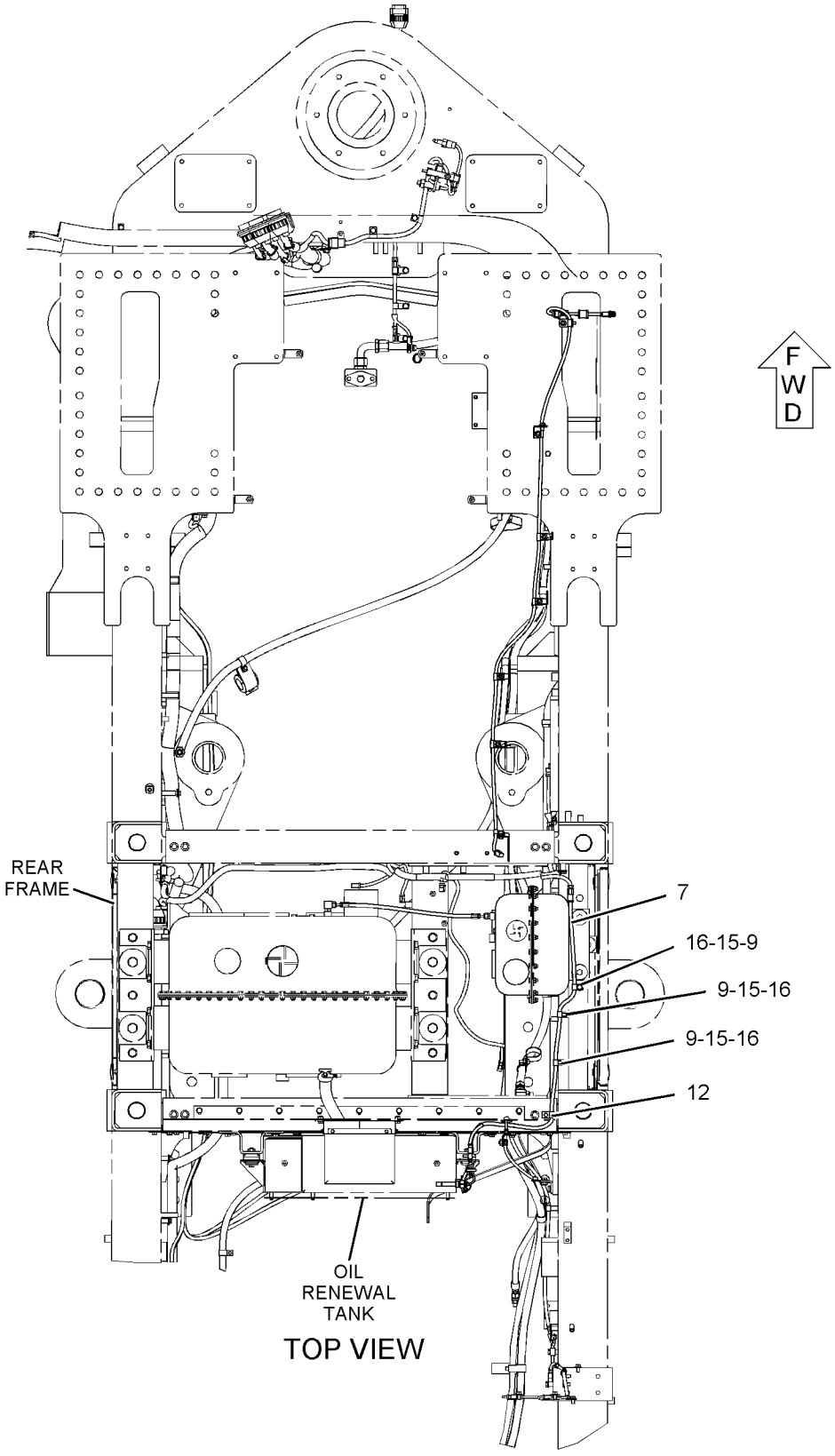

GRAPHIC #1 g01146905

265-0983 **WIRING GP-OIL RENEWAL SYSTEM** *(contd.)* **i02425546**

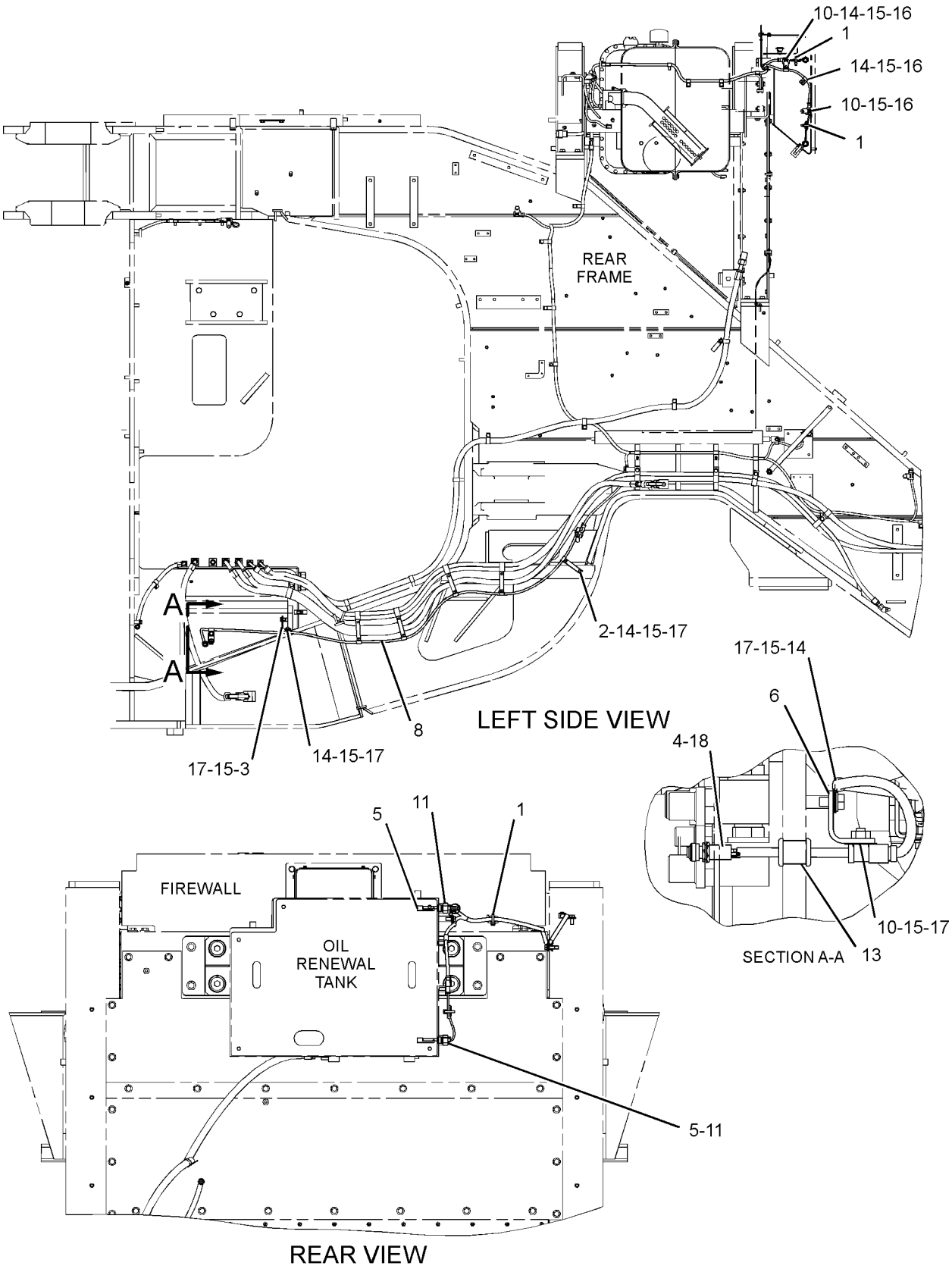

GRAPHIC #2 **<END>** g01212511

247-4010 WIRING GP-PLATFORM—AUTOMATIC LUBRICATION, LH

S/N: 4421-UP

PART OF 245-7454 PLATFORM AR

SMCS-1408 **i02282520**

NOTE	REF NO	GRAPHIC REF	PART NUMBER	QTY	PART NAME 1 2 3 4 5 6 (PRODUCT LEVEL)	SEE PAGE
	1	1	**8X-5803**	2	STRAP AS-GROUND	
	2	1	**9X-6772**	2	STRAP-CABLE	
	3	1	**124-3019**	2	BRACKET AS	
					(EACH INCLUDES)	
M		1	**8T-3490**	1	NUT-WELD (M10X1.5-THD)	
	4	1	**147-3150**	3	ANGLE AS	
					(EACH INCLUDES)	
M		1	**8T-3490**	1	NUT-WELD (M10X1.5-THD)	
	5	1	**221-3404**	1	SENSOR GP-PRESSURE (AUTOMATIC LUBRICATION)	
		1	**155-2260**	1	KIT-CONNECTING PLUG (3-PIN)	
					(INCLUDES PLUG AS AND WEDGE)	
		1	**180-9340**	3	SOCKET-CONNECTOR	
	6	1	**265-3948**	1	HARNESS AS-PLATFORM	
		1	**102-8803**	1	KIT-RECEPTACLE (3-PIN)	
		1	**102-8802**	1	KIT-RECEPTACLE (2-PIN)	
		1	**102-8801**	1	KIT-RECEPTACLE (12-PIN)	
					(EACH KIT INCLUDES RECEPTACLE AS AND WEDGE)	
		1	**155-2255**	1	KIT-CONNECTING PLUG (12-PIN)	
		1	**155-2270**	3	KIT-CONNECTING PLUG (2-PIN)	
					(EACH KIT INCLUDES PLUGS AS AND WEDGE)	
	7	1	**124-9633**	2	CLIP	
	8	1	**130-5300**	3	CLIP	
	9	1	**3J-1907**	1	SEAL-O-RING	
	10	1	**4D-8123**	4	CLIP	
	11	1	**8M-2772**	1	CLIP	
	12	1	**8T-4121**	9	WASHER-HARD (11X21X2.5-MM THK)	
M	13	1	**8T-4137**	9	BOLT (M10X1.5X20-MM)	
M	14	1	**8T-4192**	1	BOLT (M12X1.75X25-MM)	
	15	1	**8T-4223**	4	WASHER-HARD (13.5X25.5X3-MM THK)	
M	16	1	**8T-4244**	3	NUT (M12X1.75-THD)	

M-METRIC PART

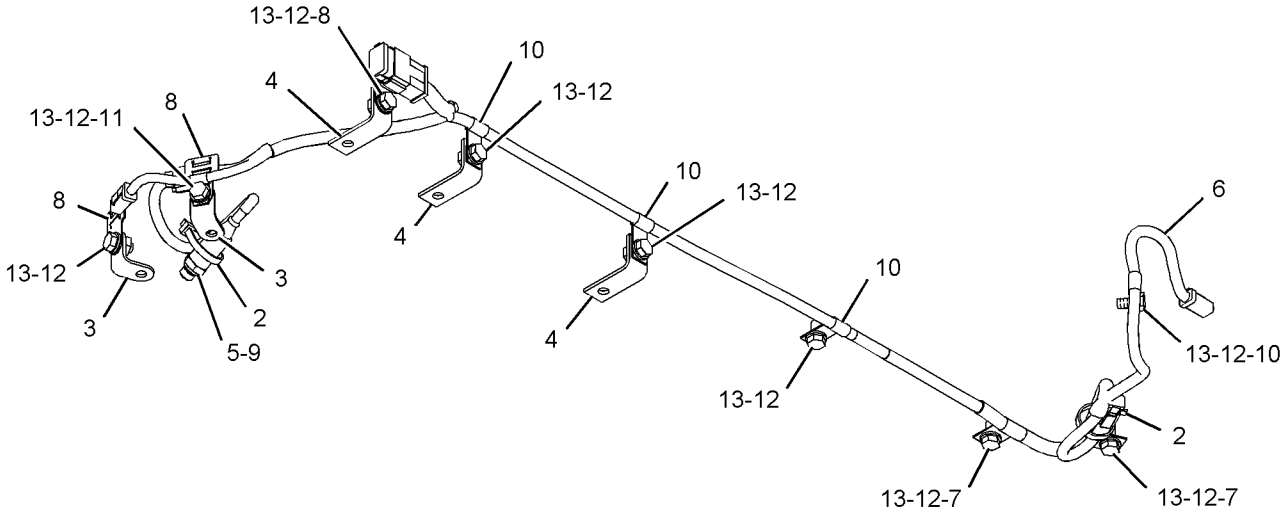

VIEW OF AREA A

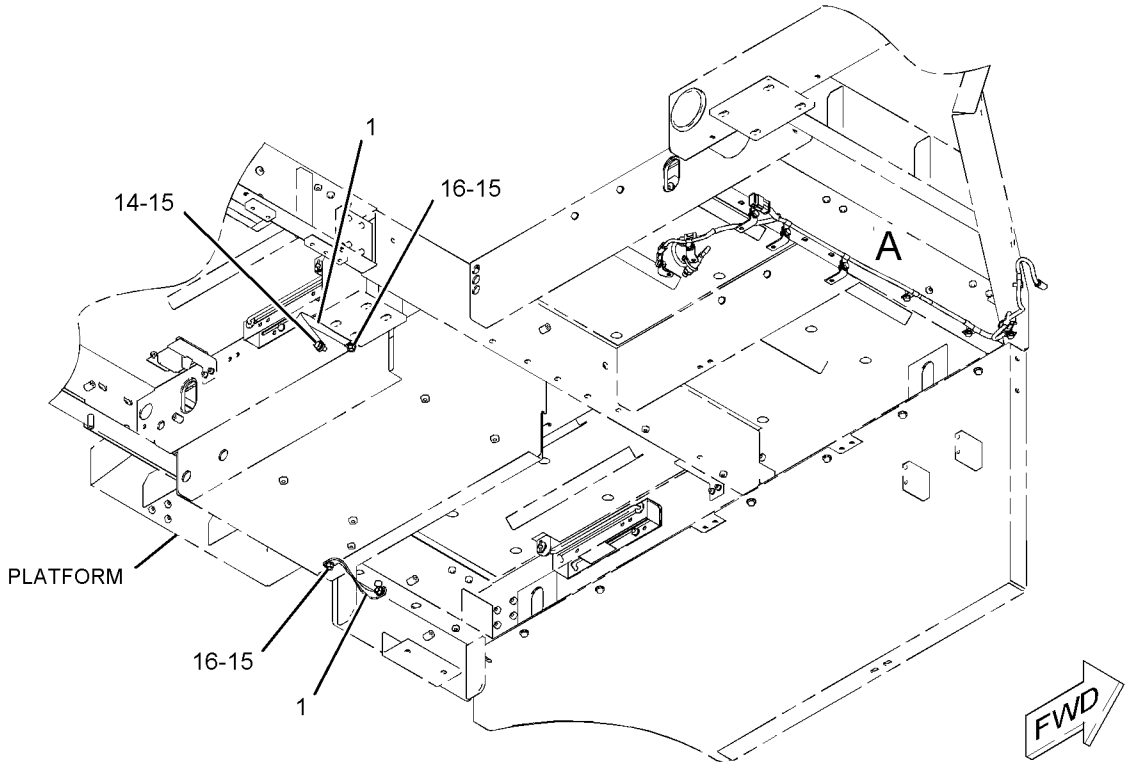

GRAPHIC #1 **<END>** g01146140

247-4011 WIRING GP-PLATFORM—AIR START, RH

S/N: 4421-UP
PART OF 245-3881 PLATFORM AR
AN ATTACHMENT

SMCS-1408 **i02282521**

NOTE	REF NO	GRAPHIC REF	PART NUMBER	QTY	PART NAME 1 2 3 4 5 6 (PRODUCT LEVEL)	SEE PAGE
	1	1	**9X-0435**	1	ADAPTER	
	2	1	**9X-6772**	3	STRAP-CABLE	
	3	1	**124-3019**	2	BRACKET AS	
					(EACH INCLUDES)	
M		1	**8T-3490**	1	NUT-WELD (M10X1.5-THD)	
Y	4	1	**186-4095**	1	SENSOR GP-PRESSURE (AIR TANK)	274
	5	1	**264-3049**	1	HARNESS AS-PLATFORM	
		1	**102-8802**	1	KIT-RECEPTACLE (2-PIN)	
		1	**102-8801**	1	KIT-RECEPTACLE (12-PIN)	
					(EACH RECEPTACLE KIT INCLUDES RECEPTACLE AS AND WEDGE)	
		1	**155-2255**	1	KIT-CONNECTING PLUG (12-PIN)	
		1	**155-2260**	1	KIT-CONNECTING PLUG (3-PIN)	
		1	**155-2270**	4	KIT-CONNECTING PLUG (2-PIN)	
					(EACH PLUG KIT INCLUDES PLUG AS AND WEDGE)	
	6	1	**124-0174**	2	CLIP	
	7	1	**124-1479**	1	CLIP	
	8	1	**124-9633**	1	CLIP	
	9	1	**130-5300**	1	CLIP	
	10	1	**147-0385**	2	CLIP	
	11	1	**174-5907**	3	CLIP	
	12	1	**3J-7354**	1	SEAL-O-RING	
	13	1	**4S-1936**	1	CLIP	
	14	1	**4S-4455**	1	CLIP	
	15	1	**6D-3479**	6	CLIP	
	16	1	**8T-4121**	16	WASHER-HARD (11X21X2.5-MM THK)	
M	17	1	**8T-4136**	16	BOLT (M10X1.5X25-MM)	
M	18	1	**8T-4179**	1	BOLT (M12X1.75X20-MM)	
	19	1	**8T-4223**	1	WASHER-HARD (13.5X25.5X3-MM THK)	
	20	1	**033-8248**	1	CLIP	

M-METRIC PART
Y-SEPARATE ILLUSTRATION

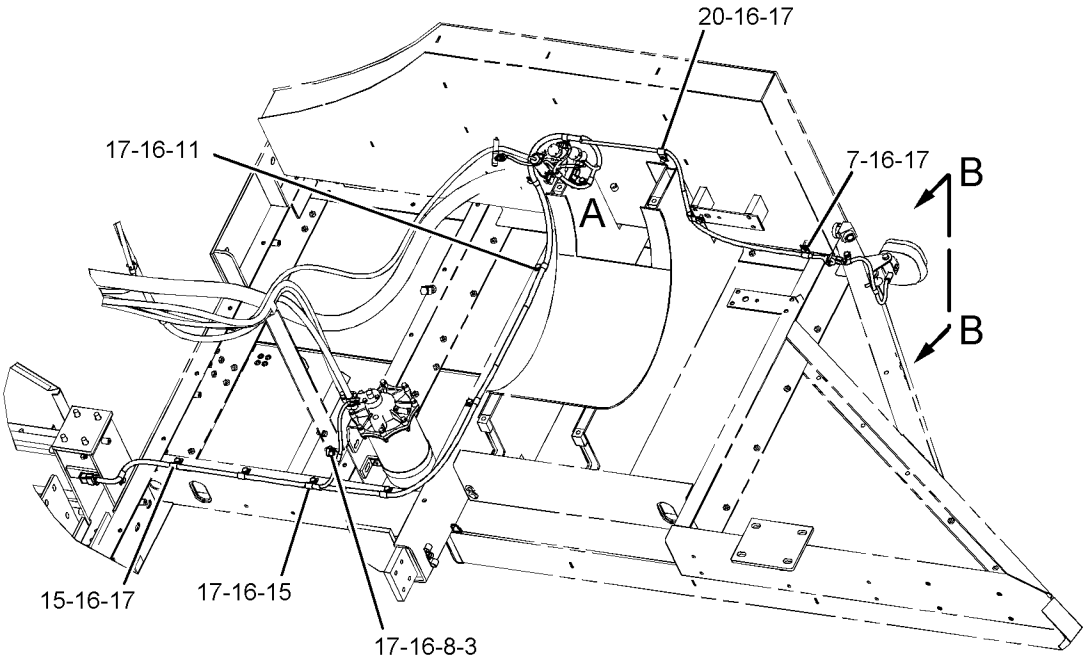

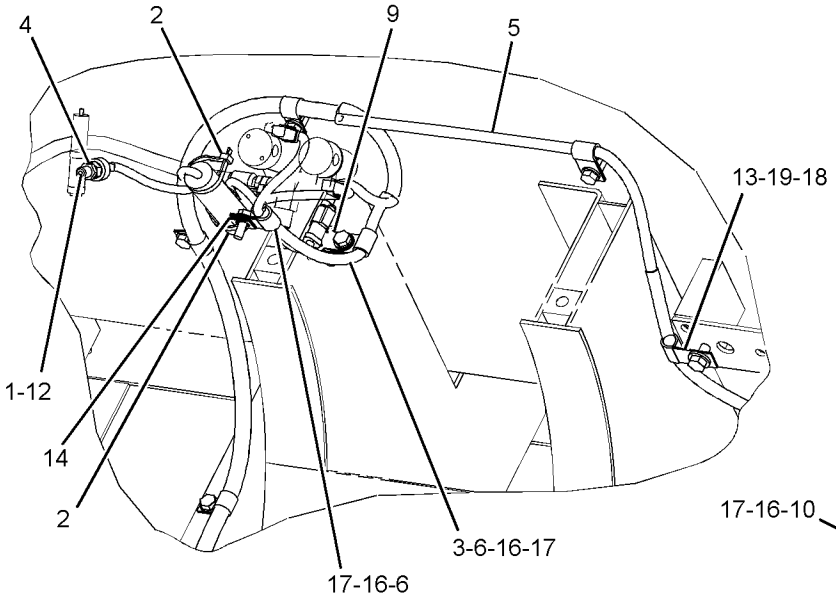

VIEW OF AREA A

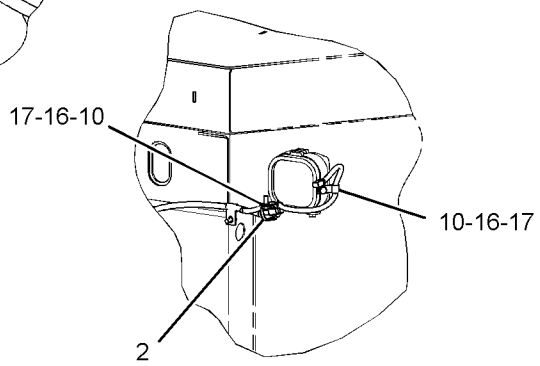

VIEW B-B

GRAPHIC #1 **<END>** g01149515

247-4398 WIRING GP-PLATFORM

S/N: 4421-UP
PART OF 245-3885 PLATFORM AR
AN ATTACHMENT

SMCS-1408 **i02285709**

NOTE	REF NO	GRAPHIC REF	PART NUMBER	QTY	PART NAME 1 2 3 4 5 6 (PRODUCT LEVEL)	SEE PAGE
	1	1	**2G-8767**	8	WASHER (10.5X60X3-MM THK)	
	2	1	**6G-2263**	4	SPACER (10.5X19X28.5-MM THK)	
	3	1	**8W-0933**	2	HOLD-DOWN AS-BATTERY	
		1	**8W-0932**	2	ANGLE	
	4	1	**8X-7847**	8	ROD	
	5	1	**9U-1469**	4	CLAMP	
	6	1	**118-1277**	2	CABLE AS	
					(EACH INCLUDES)	
E		1	**5P-0761**		CABLE (00-GA, RED) (20-CM)	
		1	**9G-0003**	1	COVER-TERMINAL (BLACK)	
		1	**8L-8413**	1	STRAP-CABLE	
		1	**9G-0004**	1	COVER-TERMINAL (RED)	
		1	**8L-8413**	1	STRAP-CABLE	
	7	1	**264-6019**	1	CABLE AS	
		1	**3L-7634**	1	TERMINAL-RING (0000-GA, 0.5-IN)	
		1	**5A-4252**	1	CAP	
		1	**7T-4925**	1	COVER-TERMINAL (BLACK)	
		1	**9X-5583**	1	COVER-TERMINAL	
E		1	**159-8054**		CABLE-ELECTRICAL (00-GA, BLACK) (370-CM)	
	8	1	**4S-1962**	6	CLIP	
	9	1	**5P-1076**	8	WASHER-HARD (13.5X30X4-MM THK)	
	10	1	**5P-8939**	6	GROMMET	
M	11	1	**6V-7687**	8	LOCKNUT (M12X1.75-THD)	
	12	1	**8D-1470**	2	GROMMET	
	13	1	**8T-4121**	10	WASHER-HARD (11X21X2.5-MM THK)	
M	14	1	**8T-4137**	6	BOLT (M10X1.5X20-MM)	
	15	1	**8T-4223**	8	WASHER-HARD (13.5X25.5X3-MM THK)	
M	16	1	**8T-4244**	8	NUT (M12X1.75-THD)	
M	17	1	**8T-6466**	4	BOLT (M10X1.5X60-MM)	

E-ORDER BY THE CENTIMETER
M-METRIC PART

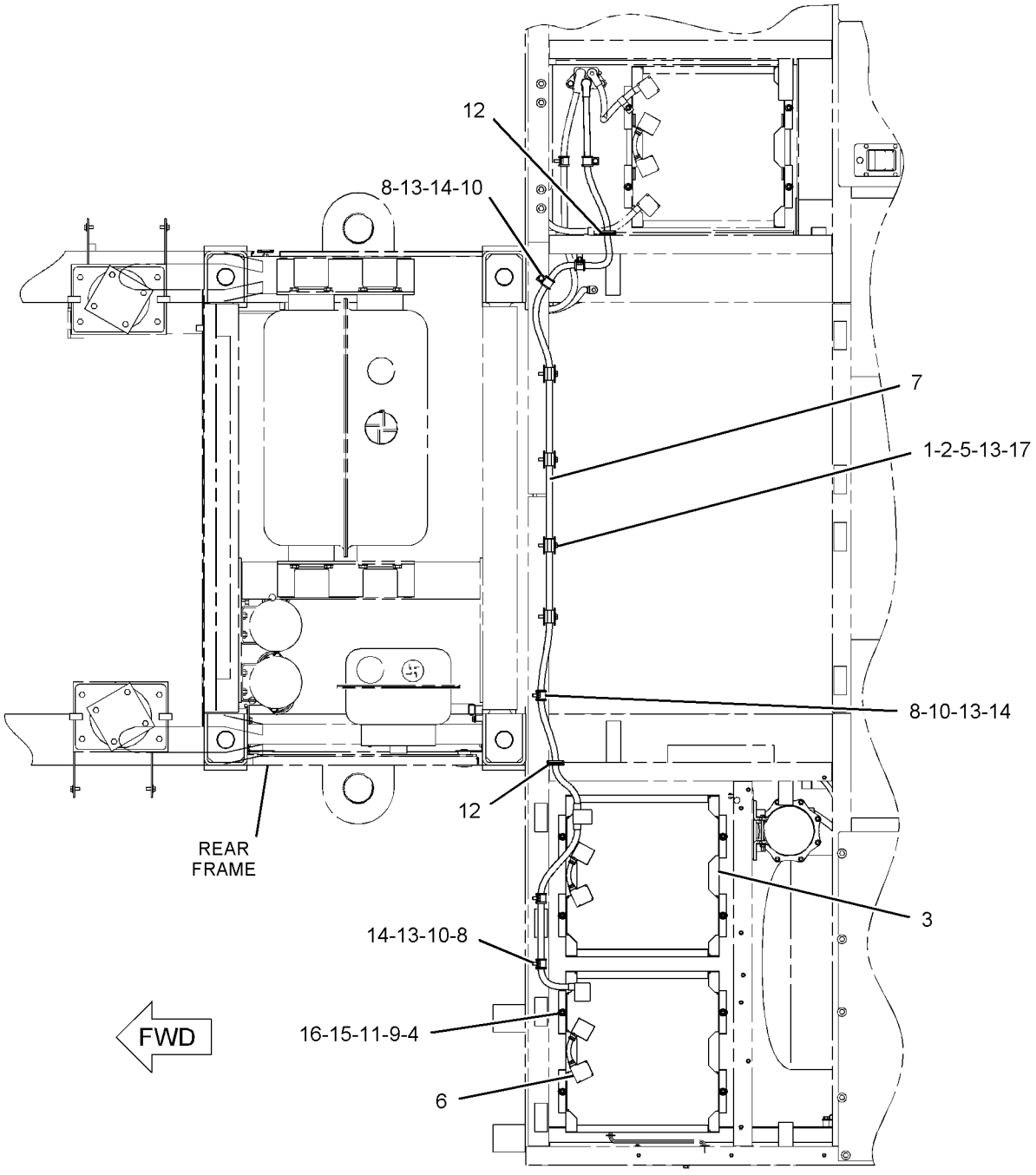

TOP VIEW

GRAPHIC #1 **<END>** g01144510

247-4009 WIRING GP-POWER TRAIN

S/N: 4421-UP

PART OF 245-8812 CHASSIS AR-REAR

SMCS-1634 **i02282519**

NOTE	REF NO	GRAPHIC REF	PART NUMBER	QTY	PART NAME 1 2 3 4 5 6 (PRODUCT LEVEL)	SEE PAGE
	1	1	**6V-0852**	2	CAP-DUST	
	2	1	**8S-0768**	2	SEAL-O-RING	
	3	1	**8X-7517**	1	BRACKET AS	
M		1	**8T-3490**	1	NUT-WELD (M10X1.5-THD)	
	4	1	**9X-3495**	1	CLIP AS	
		1	**8C-3334**	2	RIVET-TUBULAR	
	5	1	**9X-6772**	5	STRAP-CABLE	
Y	6	1	**100-4311**	1	SENSOR GP-PRESSURE (TC IMPELLER CLUTCH)	272
Y	7	1	**118-7226**	1	SENSOR GP-TEMPERATURE (TORQUE CONVERTER OIL)	281
	8	1	**121-1340**	1	ANGLE AS	
M		1	**8T-3490**	1	NUT-WELD (M10X1.5-THD)	
	9	1	**124-3019**	5	BRACKET AS	
					(EACH INCLUDES)	
M		1	**8T-3490**	1	NUT-WELD (M10X1.5-THD)	
	10	1	**136-9699**	1	BRACKET AS	
	11	1	**140-2978**	1	BRACKET AS	
M		1	**8T-3490**	1	NUT-WELD (M10X1.5-THD)	
	12	1	**144-0178**	1	SENSOR GP-SPEED (TORQUE CONVERTER OUTPUT)	
	13	1	**146-5230**	2	BRACKET AS	
					(EACH INCLUDES)	
M		1	**8T-3612**	1	NUT-WELD (M8X1.25-THD)	
	14	1	**147-3150**	1	ANGLE AS	
M		1	**8T-3490**	1	NUT-WELD (M10X1.5-THD)	
	15	1	*173-7223*	1	ADAPTER GP	
		1	**3J-1907**	1	SEAL-O-RING	
		1	**3J-7354**	1	SEAL-O-RING	
		1	**9X-0261**	1	ADAPTER	
	16	1	**179-4964**	1	WIRE AS	
	17	1	**193-1034**	1	BRACKET AS	
	18	1	**196-1185**	1	SENSOR GP-SPEED (TRANSMISSION OUTPUT 1)	
	18A	1	**196-1185**	1	SENSOR GP-SPEED (TRANSMISSION OUTPUT 2)	
					(EACH INCLUDES)	
		1	**102-8802**	1	KIT-RECEPTACLE (2-PIN)	
					(INCLUDES RECEPTACLE AS AND WEDGE)	
		1	**3E-3365**	1	WEDGE-RECEPTACLE LOCK (2-PIN)	
		1	**186-3735**	2	PIN-CONNECTOR (16-GA TO 18-GA)	
BE		1	**9X-1813**		SLEEVE	
		1	**171-5349**	1	MARKER	
Y	19	1	**216-5342**	1	VALVE GP-MODULATING (24-VOLT) (TC LOCKUP CLUTCH)	486
Y	20	1	**217-2708**	1	VALVE GP-MODULATING (24-VOLT) (TC IMPELLER CLUTCH)	487
	21	1	**264-4852**	1	HARNESS AS-TRANSMISSION (TORQUE CONVERTER)	
		1	**155-2255**	1	KIT-CONNECTING PLUG (12-PIN)	
		1	**155-2260**	2	KIT-CONNECTING PLUG (3-PIN)	
		1	**155-2270**	1	KIT-CONNECTING PLUG (2-PIN)	
					(EACH KIT INCLUDES PLUG AS AND WEDGE)	
	22	1	**264-4853**	1	HARNESS AS-TRANSMISSION	
		1	**155-2255**	1	KIT-CONNECTING PLUG (12-PIN)	
		1	**155-2270**	2	KIT-CONNECTING PLUG (2-PIN)	
					(EACH KIT INCLUDES PLUG AS AND WEDGE)	
	23	1	**130-5300**	5	CLIP	
	24	1	**147-0385**	3	CLIP	
	25	1	*148-8313*	1	ADAPTER AS	
		1	**3K-0360**	1	SEAL-O-RING	
		1	**5P-6944**	1	ADAPTER	

247-4009 **WIRING GP-POWER TRAIN** *(contd.)* **i02282519**

NOTE	REF NO	GRAPHIC REF	PART NUMBER	QTY	PART NAME 1 2 3 4 5 6 (PRODUCT LEVEL)	SEE PAGE
	26	1	**174-5907**	2	CLIP	
	27	1	**1V-1984**	1	CLIP	
	28	1	**2T-3019**	3	CLIP	
	29	1	**2Y-3812**	1	CLIP	
	30	1	**3J-1907**	1	SEAL-O-RING	
	31	1	**3K-0360**	3	SEAL-O-RING	
	32	1	**4S-4455**	1	CLIP	
	33	1	**5P-4116**	6	WASHER-HARD (8.8X20.5X2-MM THK)	
	34	1	**5P-8245**	2	WASHER-HARD (13.5X25.5X3-MM THK)	
	35	1	**5P-9297**	3	CLIP	
	36	1	**6D-3479**	2	CLIP	
	37	1	**8M-2773**	1	CLIP	
	38	1	**8T-4121**	15	WASHER-HARD (11X21X2.5-MM THK)	
M	39	1	**8T-4122**	1	WASHER-HARD (17X32X3.5-MM THK)	
M	40	1	**8T-4136**	7	BOLT (M10X1.5X25-MM)	
M	41	1	**8T-4137**	8	BOLT (M10X1.5X20-MM)	
M	42	1	**8T-4189**	2	BOLT (M8X1.25X20-MM)	
M	43	1	**8T-4190**	1	BOLT (M16X2X25-MM)	
M	44	1	**8T-6869**	4	BOLT (M8X1.25X60-MM)	

B-USE AS REQUIRED
E-ORDER BY THE CENTIMETER
M-METRIC PART
Y-SEPARATE ILLUSTRATION

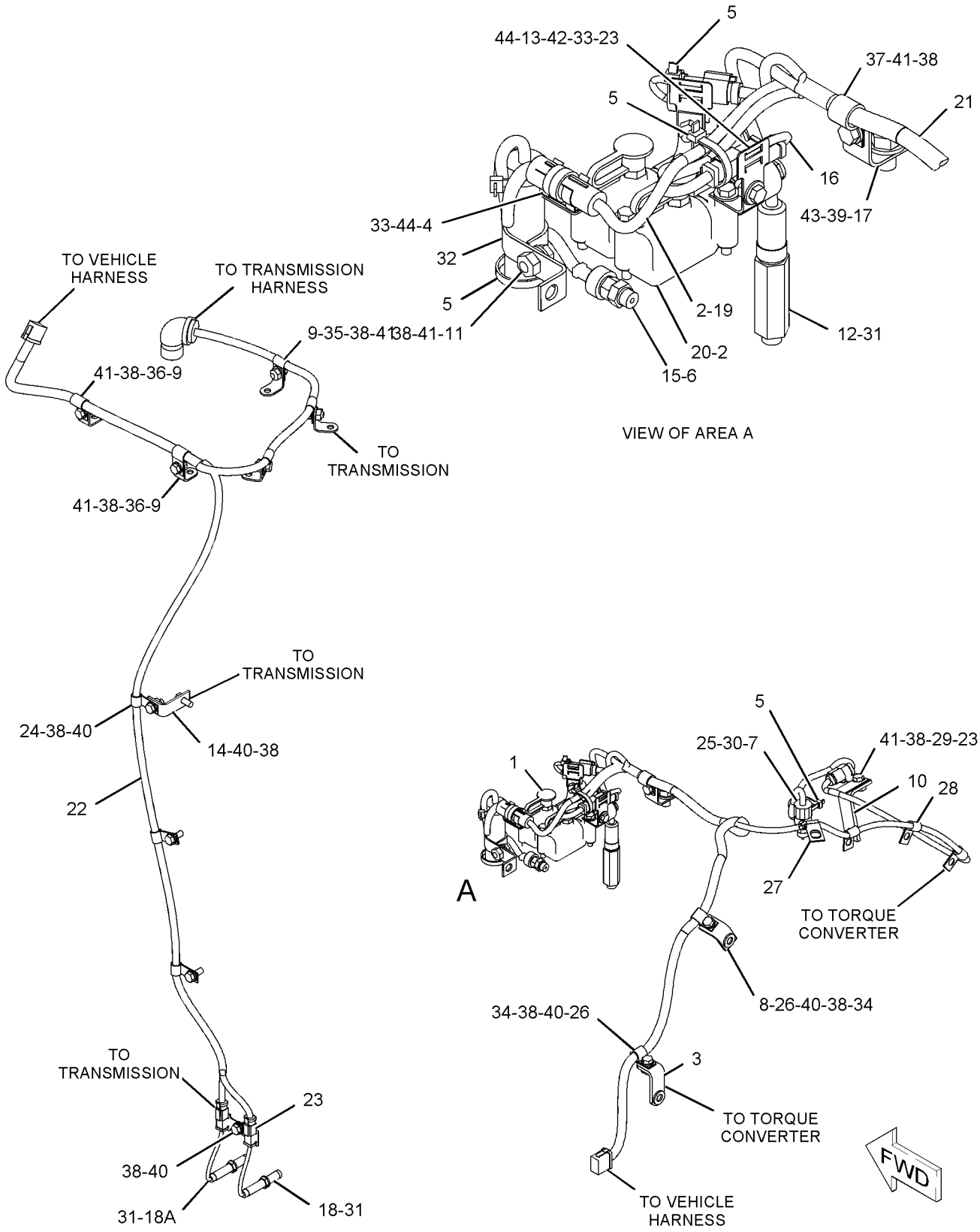

GRAPHIC #1 **<END>** g01150042

ELECTRICAL AND STARTING SYSTEM

247-4008 WIRING GP-REAR

S/N: 4421-UP

PART OF 245-8812 CHASSIS AR-REAR

SMCS-1408 **i02282518**

NOTE	REF NO	GRAPHIC REF	PART NUMBER	QTY	PART NAME 1 2 3 4 5 6 (PRODUCT LEVEL)	SEE PAGE
	1	1	**264-5936**	1	HARNESS AS-REAR CHASSIS (RADIATOR GUARD)	
		1	**102-8801**	1	KIT-RECEPTACLE (12-PIN)	
					(INCLUDES RECEPTACLE AS AND WEDGE)	
		1	**155-2260**	2	KIT-CONNECTING PLUG (3-PIN)	
		1	**155-2270**	5	KIT-CONNECTING PLUG (2-PIN)	
					(EACH KIT INCLUDES PLUG AS AND WEDGE)	
	2	1	**130-5300**	1	CLIP	
	3	1	**5P-9299**	3	CLIP	
	4	1	**6D-3479**	12	CLIP	
	5	1	**7B-1251**	2	GROMMET	
	6	1	**8T-4121**	16	WASHER-HARD (11X21X2.5-MM THK)	
M	7	1	**8T-4137**	16	BOLT (M10X1.5X20-MM)	

M-METRIC PART

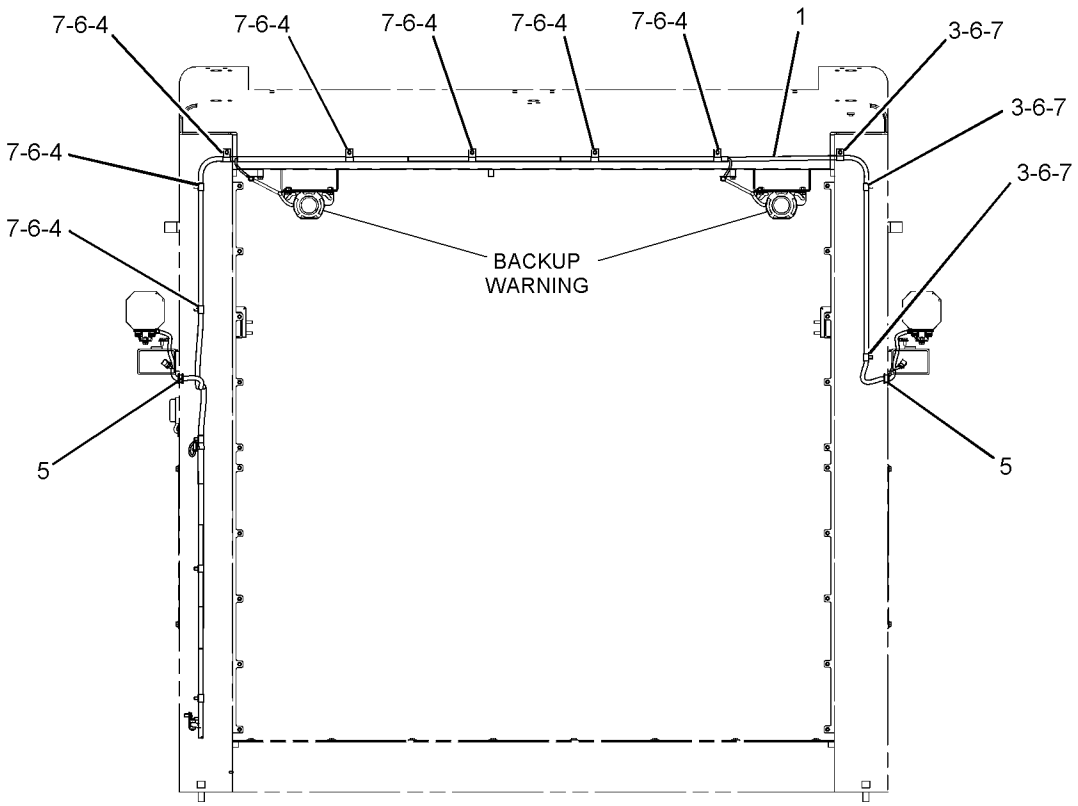

REAR VIEW

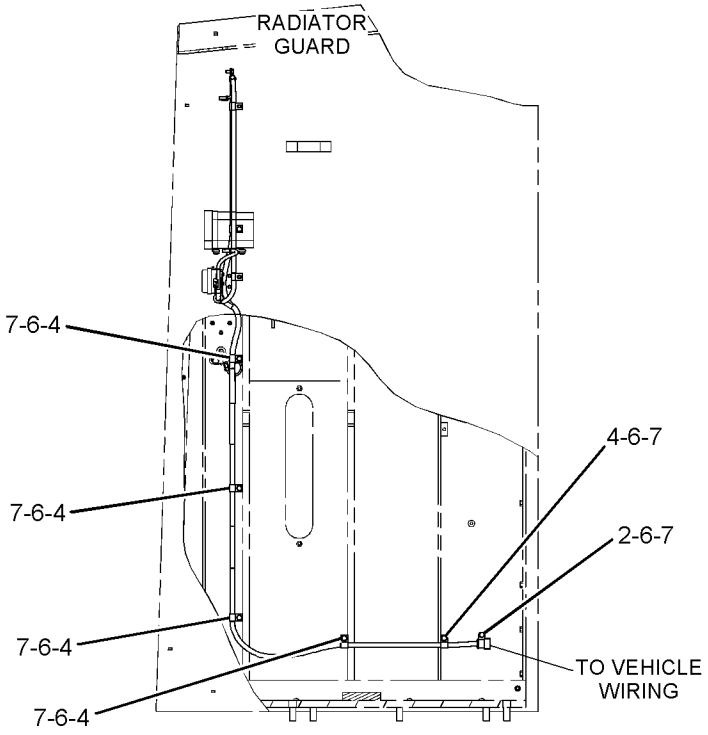

RIGHT SIDE VIEW

GRAPHIC #1

<END>

g01148188

ELECTRICAL AND STARTING SYSTEM

247-4012 WIRING GP-REAR–BUMPER

S/N: 4421-UP

PART OF 246-6220, 248-0986 BUMPER & DRAWBAR AR

AN ATTACHMENT

SMCS-1408 **i02282522**

NOTE	REF NO	GRAPHIC REF	PART NUMBER	QTY	PART NAME 1 2 3 4 5 6 (PRODUCT LEVEL)	SEE PAGE
	1	1	**246-2641**	2	PADLOCK GP	
					(EACH INCLUDES KEY)	
	2	1	**8D-9537**	1	CAP AS (DUST)	
	3	1	**9X-6772**	2	STRAP-CABLE	
	4	1	**139-2116**	1	SWITCH AS-TOGGLE (STAIRWAY LIGHTS)	
		1	**6T-3631**	2	NUT-HEX (15/32-32-THD)	
		1	**6T-3632**	1	LOCKWASHER	
		1	**6T-3633**	1	RING-LOCKING	
		1	**102-8803**	1	KIT-RECEPTACLE (3-PIN)	
					(INCLUDES RECEPTACLE ASSEMBLY AND WEDGE)	
	5	1	**139-2118**	1	SWITCH AS-TOGGLE (HOOD LIGHTS)	
		1	**6T-3631**	2	NUT-HEX (15/32-32-THD)	
		1	**6T-3632**	1	LOCKWASHER	
		1	**6T-3633**	1	RING-LOCKING	
		1	**102-8802**	1	KIT-RECEPTACLE (2-PIN)	
					(INCLUDES RECEPTACLE ASSEMBLY AND WEDGE)	
Y	6	1	**153-0509**	1	SENDER GP-FUEL LEVEL	265
	7	1	**250-2298**	1	LAMP AS (AMBER, LED, 24-VOLT) (TRANSMISSION LOCKOUT INDICATOR)	
		1	**186-3735**	3	PIN-CONNECTOR (16-GA TO 18-GA)	
	8	1	**170-2512**	1	SWITCH GP-TOGGLE (TRANSMISSION LOCKOUT)	
		1	**6T-3631**	2	NUT-HEX (15/32-32-THD)	
		1	**6T-3632**	1	LOCKWASHER	
		1	**6T-3633**	1	RING-LOCKING	
		1	**102-8805**	1	KIT-RECEPTACLE (6-PIN)	
					(INCLUDES RECEPTACLE ASSEMBLY AND WEDGE)	
	9	1	**174-7580**	1	SWITCH GP-KEY (VIMS SERVICE)	
		1	**7T-6799**	1	NUT-MOUNTING (1-32-THD)	
		1	**102-8804**	1	KIT-RECEPTACLE (4-PIN)	
					(INCLUDES RECEPTACLE ASSEMBLY AND WEDGE)	
		1	**186-3735**	4	PIN-CONNECTOR (16-GA TO 18-GA)	
	10	1	**263-6179**	1	HARNESS AS-CONTROL	
		1	**102-8802**	1	KIT-RECEPTACLE (2-PIN)	
		1	**102-8801**	2	KIT-RECEPTACLE (12-PIN)	
					(EACH RECEPTACLE KIT INCLUDES RECEPTACLE ASSEMBLY AND WEDGE)	
		1	**9D-3374**	1	RECEPTACLE AS-CONNECTOR (5-PIN)	
		1	**155-2255**	2	KIT-CONNECTING PLUG (12-PIN)	
		1	**155-2260**	2	KIT-CONNECTING PLUG (3-PIN)	
		1	**155-2270**	2	KIT-CONNECTING PLUG (2-PIN)	
		1	**155-2271**	3	KIT-CONNECTING PLUG (4-PIN)	
		1	**155-2274**	2	KIT-CONNECTING PLUG (6-PIN)	
					(EACH PLUG KIT INCLUDES PLUG ASSEMBLY AND WEDGE)	
	11	1	**250-2297**	1	METER GP-SERVICE	
		1	**4B-2043**	1	NUT (8-32-MM)	
		1	**9B-7233**	1	LOCKWASHER	
	12	1	**252-1757**	1	BRACKET AS	
		1	**7T-1099**	2	LINK	
M		1	**8T-3490**	6	NUT-WELD (M10X1.5-THD)	
		1	**9R-2613**	5	BOSS-WELD (M10X1.5X25-MM OAL)	
	13	1	**252-1763**	2	PIN AS	
					(EACH INCLUDES)	
		1	**5P-7958**	1	SLEEVE-CABLE SPLICE	
		1	**179-9392**	1	LANYARD	

247-4012 **WIRING GP-REAR** *(contd.)* **i02282522**

NOTE	REF NO	GRAPHIC REF	PART NUMBER	QTY	PART NAME 1 2 3 4 5 6 (PRODUCT LEVEL)	SEE PAGE
		1	**252-1765**	1	PIN AS	
M	14	1	**129-3178**	2	LOCKNUT (M6X1-THD)	
	15	1	**130-5300**	8	CLIP	
	16	1	**157-7191**	1	BASE AS-INDICATOR (STARTING MOTOR LOCKOUT)	
		1	**102-8803**	1	KIT-RECEPTACLE (3-PIN)	
					(INCLUDES RECEPTACLE ASSEMBLY AND WEDGE)	
	17	1	**158-6634**	1	SWITCH GP-TOGGLE (GROUND LEVEL SHUTDOWN)	
	17A	1	**158-6634**	1	SWITCH GP-TOGGLE (STARTING MOTOR LOCKOUT)	
					(EACH SWITCH GP INCLUDES)	
		1	**6T-3631**	2	NUT-HEX (15/32-32-THD)	
		1	**6T-3632**	1	LOCKWASHER	
		1	**6T-3633**	1	RING-LOCKING	
		1	**9G-3695**	1	PLUG (GROMMET SEALING)	
		1	**102-8804**	1	KIT-RECEPTACLE (4-PIN)	
					(INCLUDES RECEPTACLE ASSEMBLY AND WEDGE)	
	18	1	**1S-0994**	1	CLIP	
M	19	1	**3C-6969**	4	NUT (M3X0.5-THD)	
	20	1	**3E-5169**	1	GUARD-SWITCH (GROUND LEVEL SHUTDOWN)	
M	23	1	**6V-9671**	4	SCREW-MACHINE (M3X0.5X12-MM)	
	24	1	**8S-0948**	11	CLIP	
	25	1	**8M-2772**	2	CLIP	
	26	1	**8T-4121**	19	WASHER-HARD (11X21X2.5-MM THK)	
M	27	1	**8T-4136**	4	BOLT (M10X1.5X25-MM)	
M	28	1	**8T-4137**	10	BOLT (M10X1.5X20-MM)	
M	29	1	**8T-4185**	1	BOLT (M10X1.5X50-MM)	
M	30	1	**8T-4186**	4	BOLT (M10X1.5X40-MM)	
M	31	1	**8T-6411**	2	SCREW-MACHINE (M6X1X12-MM)	
	32	1	**4D-7735**	7	CLIP	

M-METRIC PART
Y-SEPARATE ILLUSTRATION

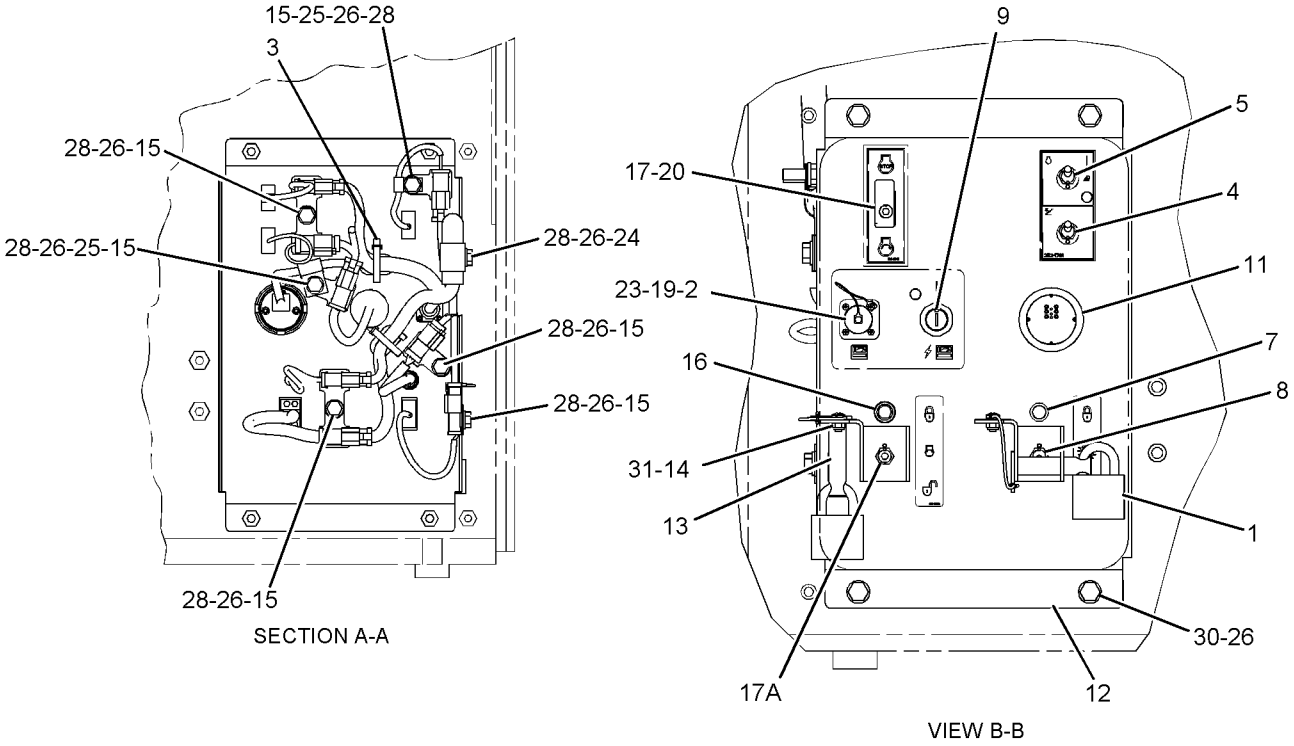

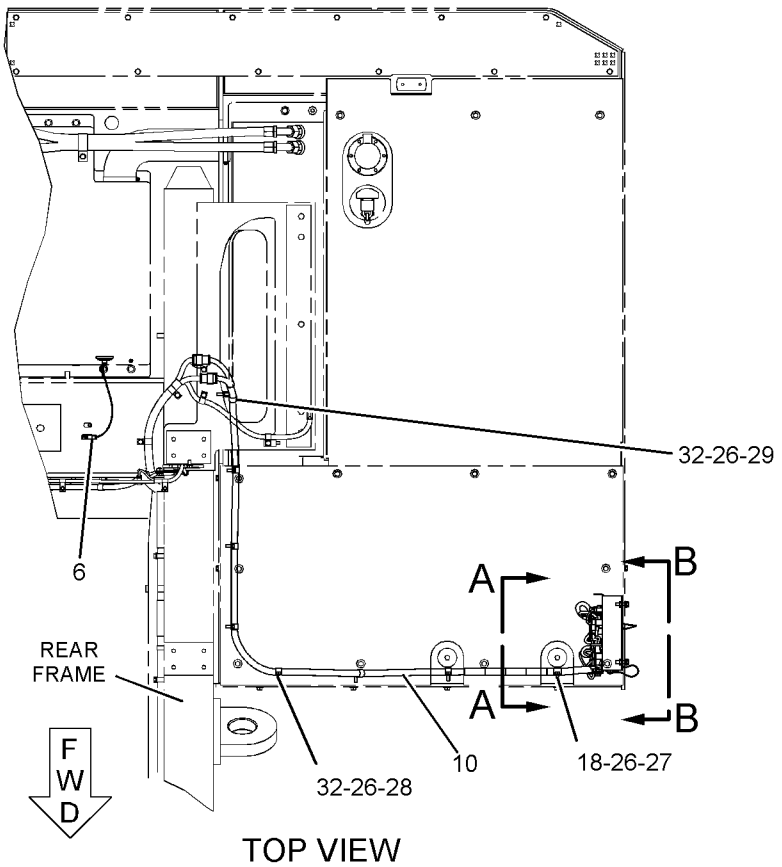

GRAPHIC #1 **<END>** g01147744

247-4014 WIRING GP-REAR–RADIATOR GUARD

S/N: 4421-UP

PART OF 245-8812 CHASSIS AR-REAR

SMCS-1408 **i02282523**

NOTE	REF NO	GRAPHIC REF	PART NUMBER	QTY	PART NAME 1 2 3 4 5 6 (PRODUCT LEVEL)	SEE PAGE
	1	1	**208-5021**	1	LAMP GP-SIGNAL	
		1	**3E-3365**	1	WEDGE-RECEPTACLE LOCK (2-PIN)	
		1	**186-3735**	2	PIN-CONNECTOR (16-GA TO 18-GA)	
		1	**102-8802**	1	KIT-RECEPTACLE (2-PIN)	
					(INLCLUDES RECEPTACLE AS & WEDGE)	
	2	1	**130-5301**	1	CLIP	
	3	1	**7B-1251**	1	GROMMET	
M	4	1	**8T-4134**	3	NUT (M6X1-THD)	
M	5	1	**8T-4139**	1	BOLT (M12X1.75X30-MM)	
	6	1	**8T-4205**	3	WASHER-HARD (7.2X14.5X2-MM THK)	
	7	1	**8T-4223**	1	WASHER-HARD (13.5X25.5X3-MM THK)	

M-METRIC PART

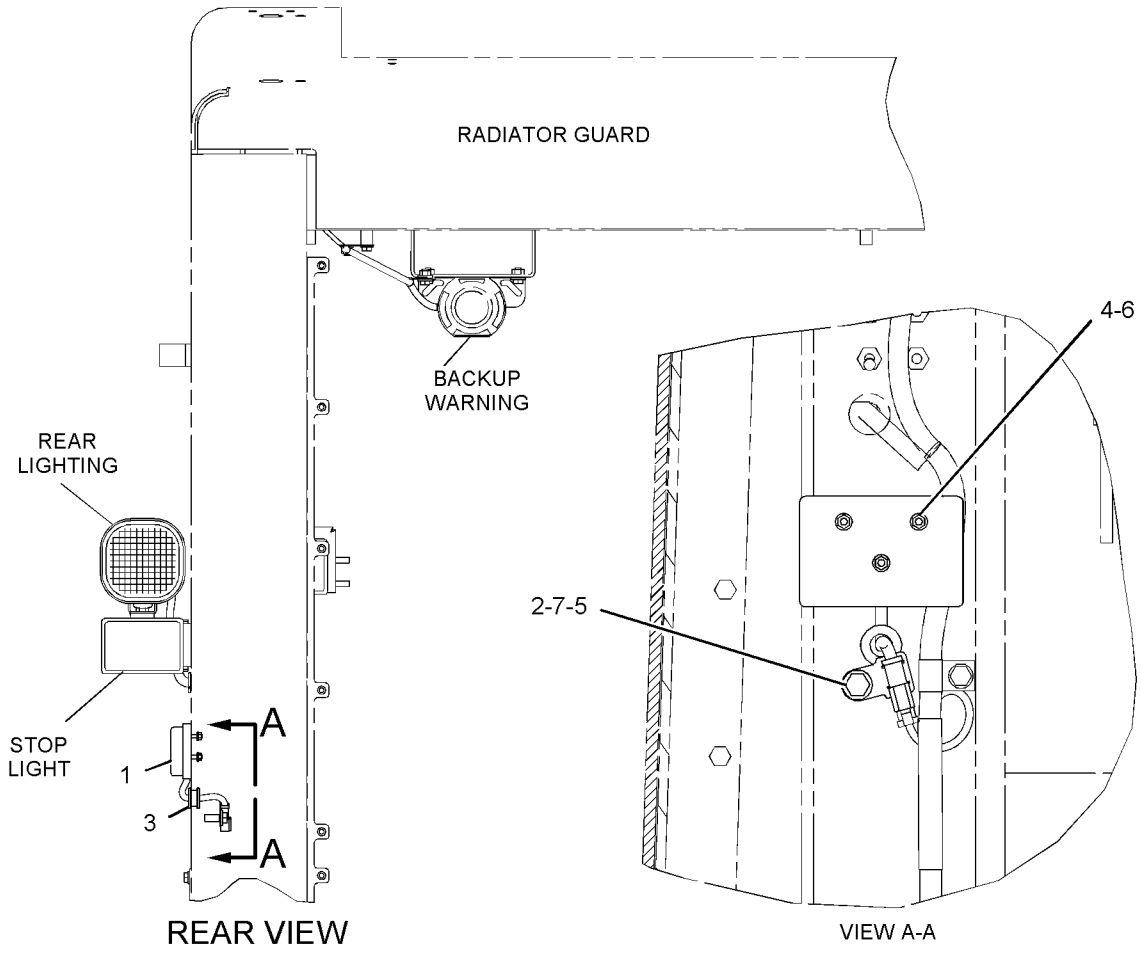

GRAPHIC #1 **<END>** g01146203

ELECTRICAL AND STARTING SYSTEM

247-4405 WIRING GP-ROPS

S/N: 4421-UP

PART OF 247-5919 ROPS AR

SMCS-1408 **i02282531**

NOTE	REF NO	GRAPHIC REF	PART NUMBER	QTY	PART NAME 1 2 3 4 5 6 (PRODUCT LEVEL)	SEE PAGE
	1	1	**9X-6772**	6	STRAP-CABLE	
	2	1	**108-9422**	1	BRACKET AS	
M		1	**8T-3490**	1	NUT-WELD (M10X1.5-THD)	
	3	1	**229-3177**	1	PLATE AS	
		1	**109-1645**	1	CLIP	
		1	**6V-6716**	2	RIVET-TRUSS HEAD	
	4	1	**262-8065**	1	HARNESS AS-LIGHTING	
		1	**102-8802**	1	KIT-RECEPTACLE (2-PIN)	
		1	**102-8803**	1	KIT-RECEPTACLE (3-PIN)	
		1	**102-8801**	1	KIT-RECEPTACLE (12-PIN)	
					(EACH RECEPTACLE KIT INCLUDES RECEPTACLE AS AND WEDGE)	
		1	**9X-6772**	10	STRAP-CABLE	
		1	**113-0580**	1	RECEPTACLE AS-CONNECTOR (40-PIN)	
		1	**106-4155**	1	KIT-BOLT (ELECTRICAL CONNECTORS)	
		1	**155-2255**	1	KIT-CONNECTING PLUG (12-PIN)	
		1	**155-2270**	1	KIT-CONNECTING PLUG (2-PIN)	
					(EACH PLUG KIT INCLUDES PLUG AS AND WEDGE)	
		1	**174-3016**	1	PLUG AS (3-PIN)	
	5	1	**033-8248**	2	CLIP	
	6	1	**097-4896**	1	SPACER (12X20X23-MM THK)	
	7	1	**099-3001**	3	CLIP	
	8	1	**1S-0994**	1	CLIP	
	9	1	**2V-8259**	2	GROMMET	
	10	1	**5P-9299**	1	CLIP	
	11	1	**6D-4244**	4	CLIP	
	12	1	**6D-4246**	3	CLIP	
	13	1	**8M-2770**	2	CLIP	
	14	1	**8M-2773**	2	CLIP	
	15	1	**8T-4121**	20	WASHER-HARD (11X21X2.5-MM THK)	
M	16	1	**8T-4136**	1	BOLT (M10X1.5X25-MM)	
M	17	1	**8T-4137**	18	BOLT (M10X1.5X20-MM)	
M	18	1	**8T-4182**	1	BOLT (M10X1.5X45-MM)	

M-METRIC PART

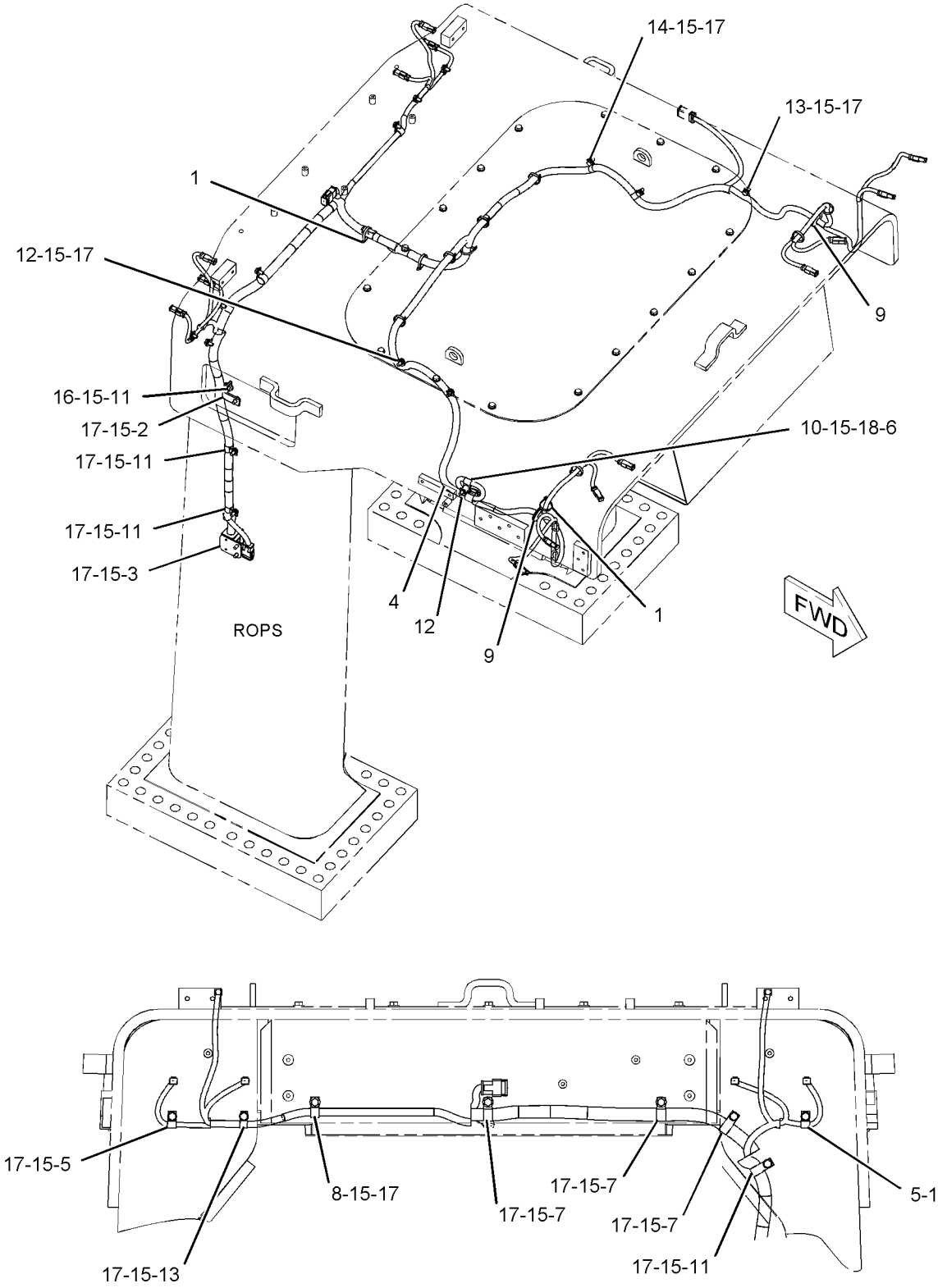

REAR VIEW

GRAPHIC #1 **<END>** g01144396

250-3837 WIRING GP-SENSOR–AXLE OIL TEMPERATURE

S/N: 4421-UP

PART OF 245-8813 INSTALLATION AR-FIELD

SMCS-1408 **i02149241**

NOTE	REF NO	GRAPHIC REF	PART NUMBER	QTY	PART NAME 1 2 3 4 5 6 (PRODUCT LEVEL)	SEE PAGE
	1	1	**9X-6772**	2	STRAP-CABLE	
Y	2	1	**118-7226**	2	SENSOR GP-TEMPERATURE (AXLE OIL)	281
	3	1	**247-2781**	1	HARNESS AS-SENSOR (REAR AXLE OIL TEMPERATURE)	
		1	**155-2260**	1	KIT-CONNECTING PLUG (3-PIN)	
					(INLUDES PLUG AS AND WEDGE)	
	4	1	**247-2782**	1	HARNESS AS (FRONT AXLE OIL TEMPERATURE)	
		1	**102-8803**	1	KIT-RECEPTACLE (3-PIN)	
					(INLUDES RECEPTACLE AS AND WEDGE)	
		1	**8T-8737**	3	PLUG-SEAL	
		1	**155-2260**	1	KIT-CONNECTING PLUG (3-PIN)	
					(INLUDES PLUG AS AND WEDGE)	
	5	1	**033-8248**	5	CLIP	
	6	1	**130-5300**	2	CLIP	
	7	1	**160-8708**	10	BRACKET AS	
M		1	**8T-3490**	1	NUT-WELD (M10X1.5-THD)	
	8	1	**3J-1907**	2	SEAL-O-RING	
	9	1	**4D-8123**	1	CLIP	
	10	1	**5P-9085**	3	CLIP	
	11	1	**8T-4121**	12	WASHER-HARD (11X21X2.5-MM THK)	
M	12	1	**8T-4136**	7	BOLT (M10X1.5X25-MM)	
M	13	1	**8T-4137**	5	BOLT (M10X1.5X20-MM)	
M	14	1	**8T-4192**	9	BOLT (M12X1.75X25-MM)	
	15	1	**8T-4223**	9	WASHER-HARD (13.5X25.5X3-MM THK)	

M-METRIC PART
Y-SEPARATE ILLUSTRATION

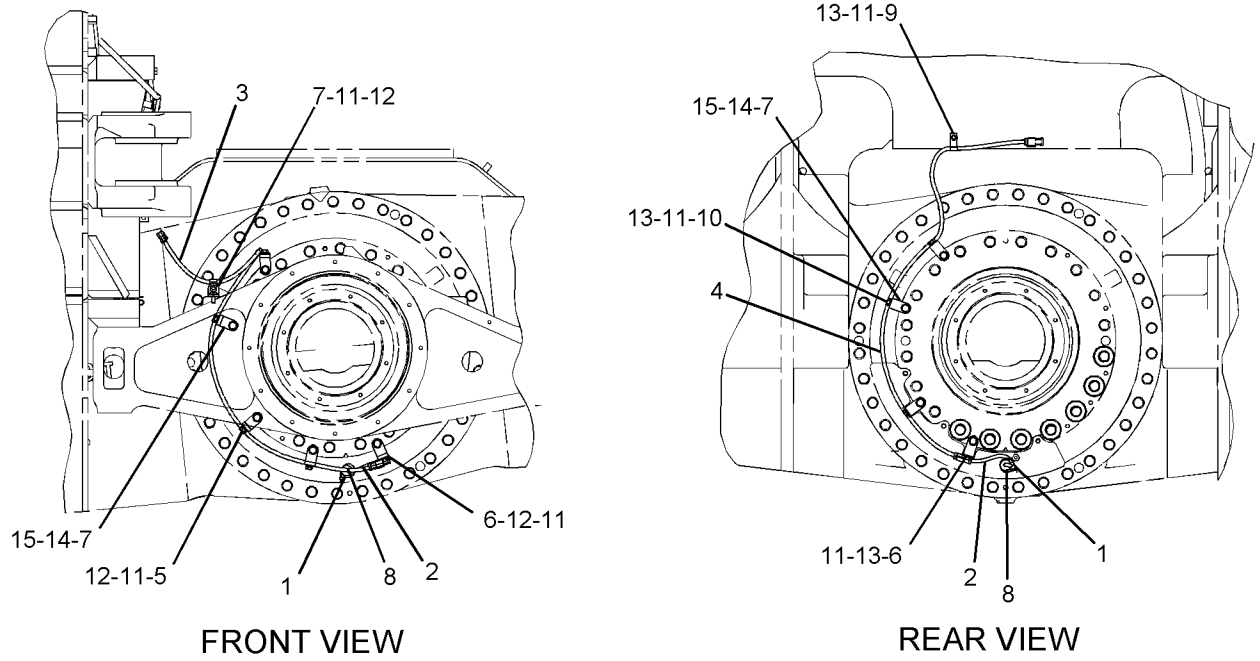

GRAPHIC #1 **<END>** g01091714

ELECTRICAL AND STARTING SYSTEM

251-2239 WIRING GP-START CONTROL

S/N: 4421-UP
PART OF 250-2821 STARTING AR-ELECTRIC
AN ATTACHMENT

SMCS-1408, 1426 **i02312860**

NOTE	REF NO	GRAPHIC REF	PART NUMBER	QTY	PART NAME 1 2 3 4 5 6 (PRODUCT LEVEL)	SEE PAGE
	1	1	**7I-3652**	1	STRIP	
Y	2	1	**125-1302**	2	SWITCH GP-MAGNETIC (24-VOLT) (START RELAY)	303
	3	1	**251-2238**	1	WIRE AS	
M	4	1	**9X-2042**	3	SCREW-TRUSS HEAD (M6X1X12-MM)	

M-METRIC PART
Y-SEPARATE ILLUSTRATION

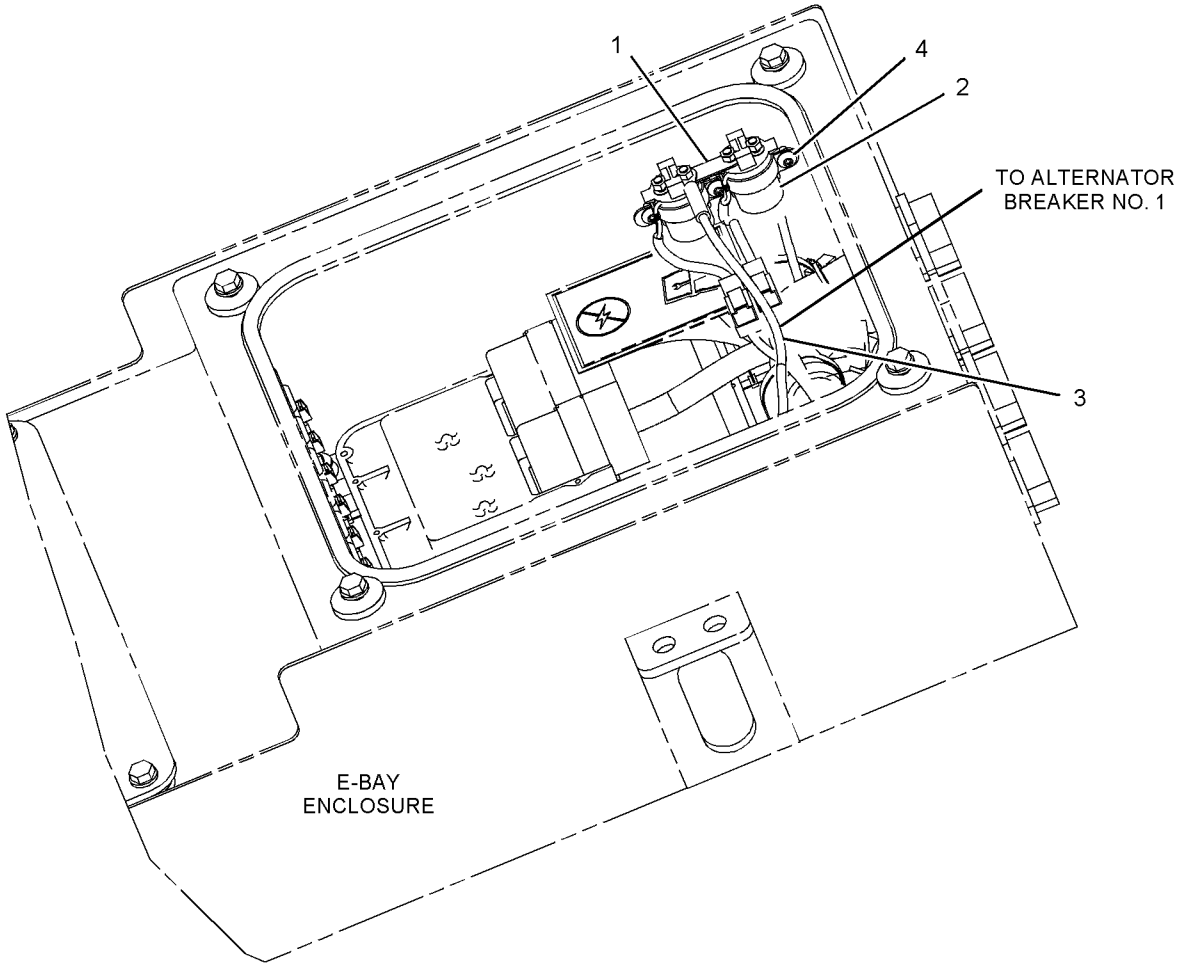

GRAPHIC #1 **<END>** g01148574

6Y-6697 ADAPTER GP-FLYWHEEL HOUSING

S/N: 4421-UP

PART OF 245-8809 POWER TRAIN AR

SMCS-1157 **i01010643**

NOTE	REF NO	GRAPHIC REF	PART NUMBER	QTY	PART NAME 1 2 3 4 5 6 (PRODUCT LEVEL)	SEE PAGE
	1	1	**6Y-6658**	1	ADAPTER-FLYWHEEL HOUSING	
	2	1	**2B-0947**	16	BOLT (1/2-13X2.25-IN)	
	3	1	**5P-8245**	16	WASHER-HARD (13.5X25.5X3-MM THK)	
	4	1	**8T-4835**	20	BOLT (1/2-13X2-IN)	
	5	1	**5D-7523**	1	SEAL-O-RING	
	6	1	**5P-2424**	2	BOLT (1/2-13X2.25-IN)	
	7	1	**8T-4223**	2	WASHER-HARD (13.5X25.5X3-MM THK)	

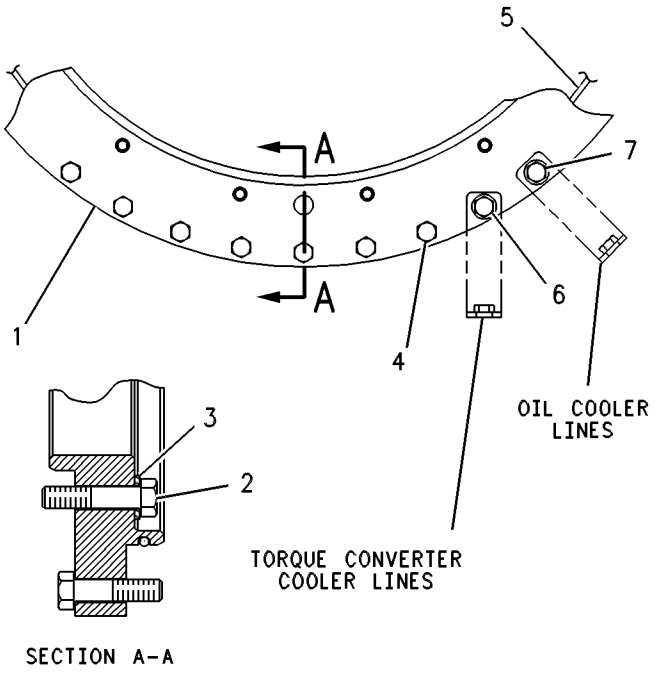

GRAPHIC #1 **<END>** g00087914

152-8920 AXLE AR-FIXED—FRONT

S/N: 4421-UP

PART OF 245-8810 COMMON AR

SMCS-3013, 3278 **i02154950**

NOTE	PART NUMBER	QTY	PART NAME 1 2 3 4 5 6 (PRODUCT LEVEL)	SEE PAGE
Y	*8X-0132*	1	AXLE GP-FIXED (FRONT)	384
Y	**119-1792**	1	DIFFERENTIAL & BEVEL GEAR GP	401
Y	*8X-3533*	1	MOUNTING GP-BEVEL GEAR	439
YR	**137-3505**	2	WHEEL GP-FINAL DRIVE & BRAKE	498
	8R-9312	1	GUARD	
	171-6803	1	YOKE AS	
	2J-8163	1	SEAL-O-RING	
	132-0348	1	CUP-DUST	
	132-1183	1	RING-RETAINING	
	171-6804	1	GUARD	

R-REMFG PART MAY BE AVAILABLE
Y-SEPARATE ILLUSTRATION

<END>

152-8930 AXLE AR-OSCILLATING—REAR

S/N: 4421-UP

PART OF 245-8810 COMMON AR

SMCS-3013, 3278 **i02161261**

NOTE	PART NUMBER	QTY	PART NAME 1 2 3 4 5 6 (PRODUCT LEVEL)	SEE PAGE
Y	*8X-0134*	1	AXLE GP-OSCILLATING (REAR)	385
Y	**119-1792**	1	DIFFERENTIAL & BEVEL GEAR GP	401
	8R-9312	1	GUARD	
Y	*8X-3533*	1	MOUNTING GP-BEVEL GEAR	439
YR	**137-3505**	2	WHEEL GP-FINAL DRIVE & BRAKE	498
	171-6803	1	YOKE AS	
	2J-8163	1	SEAL-O-RING	
	132-0348	1	CUP-DUST	
	132-1183	1	RING-RETAINING	
	171-6804	1	GUARD	

R-REMFG PART MAY BE AVAILABLE
Y-SEPARATE ILLUSTRATION

<END>

8X-0132 AXLE GP-FIXED

S/N: 4421-UP

PART OF 152-8920 AXLE AR-FIXED

SMCS-3278 **i01292732**

NOTE	REF NO	GRAPHIC REF	PART NUMBER	QTY	PART NAME 1 2 3 4 5 6 (PRODUCT LEVEL)	SEE PAGE
	1	1	**1V-6137**	2	DOWEL	
	2	1	**5P-4484**	1	PLUG-MAGNETIC	
	3	1	**7M-8485**	2	SEAL-O-RING	
	4	1	**9S-4181**	1	PLUG	
	5	1	**8C-5240**	1	SEAL-O-RING	
	6	1	**8R-5718**	1	COVER	
M	7	1	**9X-2199**	16	BOLT (M30X3.5X50-MM)	
	8	1	**9X-8399**	98	WASHER (33X56X6-MM THK)	
	9	1	**8X-4776**	1	HOUSING AS	
M	10	1	**129-3175**	82	BOLT (M30X3.5X120-MM)	
	11	1	**2K-9062**	1	PIN-SPRING	
	12	1	**4B-4550**	1	FITTING-PRESSURE RELIEF	
	13	1	**8R-6940**	2	SHAFT-AXLE	
	14	1	**1V-6659**	2	RING-RETAINING	

M-METRIC PART

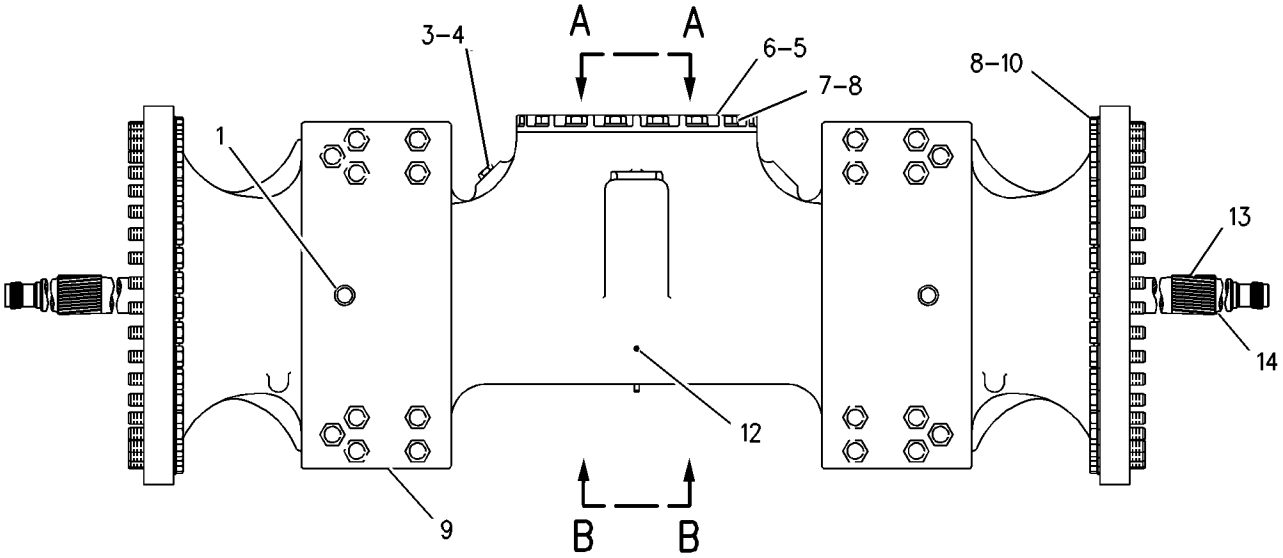

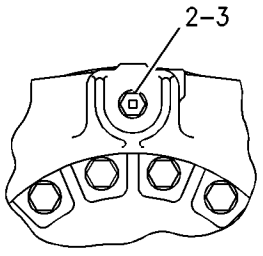

VIEW A–A

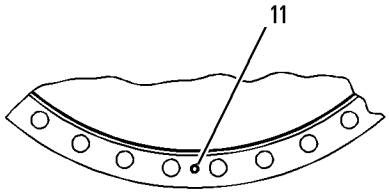

VIEW B–B

GRAPHIC #1 **<END>** g00684905

8X-0134 AXLE GP-OSCILLATING—REAR

S/N: 4421-UP

PART OF 152-8930 AXLE AR-OSCILLATING

SMCS-3278 **i01292733**

NOTE	REF NO	GRAPHIC REF	PART NUMBER	QTY	PART NAME 1 2 3 4 5 6 (PRODUCT LEVEL)	SEE PAGE
M	1	1	**6V-7673**	12	BOLT (M12X1.75X50-MM)	
	2	1	**5P-8245**	12	WASHER-HARD (13.5X25.5X3-MM THK)	
	3	1	**1K-6853**	2	FITTING	
	4	1	**8X-5372**	1	HOUSING AS	
	5	1	**165-4014**	1	SUPPORT-TRUNNION	
	6	1	**9S-4181**	1	PLUG	
	7	1	**7M-8485**	2	SEAL-O-RING	
	8	1	**165-4015**	1	SUPPORT-TRUNNION	
	9	1	**2K-9062**	1	PIN-SPRING	
	10	1	**5P-4946**	3	RING-SEALING	
	11	1	**8R-5724**	1	RETAINER-BEARING	
	12	1	**8R-5708**	2	BEARING-SLEEVE	
	13	1	**8C-5240**	1	SEAL-O-RING	
M	14	1	**8T-0669**	44	BOLT (M24X3X130-MM)	
	15	1	**6V-8237**	44	WASHER (26X44X4-MM THK)	
M	16	1	**8C-3222**	16	BOLT (M30X3.5X80-MM)	
	17	1	**9X-8399**	98	WASHER (33X56X6-MM THK)	
	18	1	**8R-5706**	1	PLATE-THRUST	
	19	1	**8R-5702**	2	BEARING-THRUST	
	20	1	**8R-5720**	1	TRUNNION	
	21	1	**5P-4484**	1	PLUG-MAGNETIC	
	22	1	**8R-5716**	1	COVER	
M	23	1	**129-3175**	82	BOLT (M30X3.5X120-MM)	
	24	1	**4B-4550**	1	FITTING-PRESSURE RELIEF	
	25	1	**6M-1622**	2	DOWEL	
	26	1	**8R-6940**	2	SHAFT-AXLE	
	27	1	**1V-6659**	2	RING-RETAINING	

M-METRIC PART

8X-0134 **AXLE GP-OSCILLATING** *(contd.)* **i01292733**

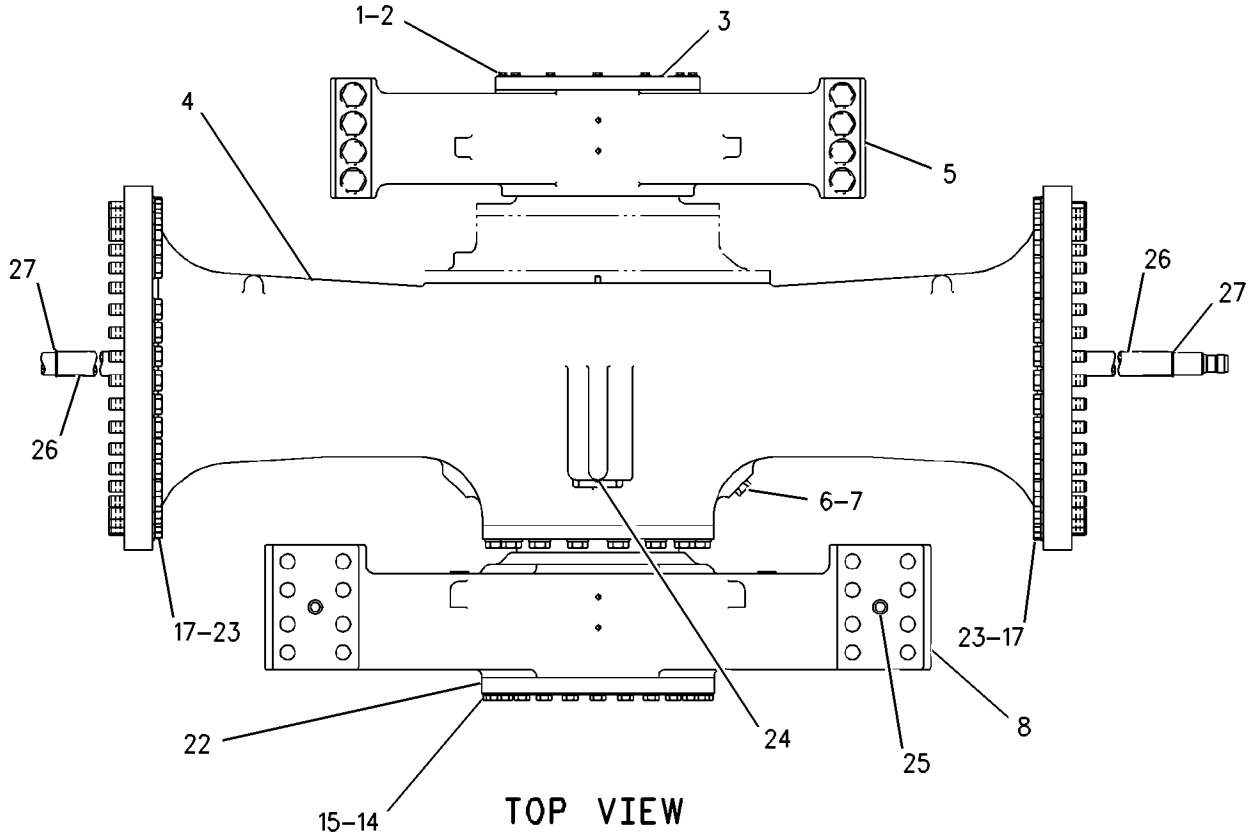

TOP VIEW

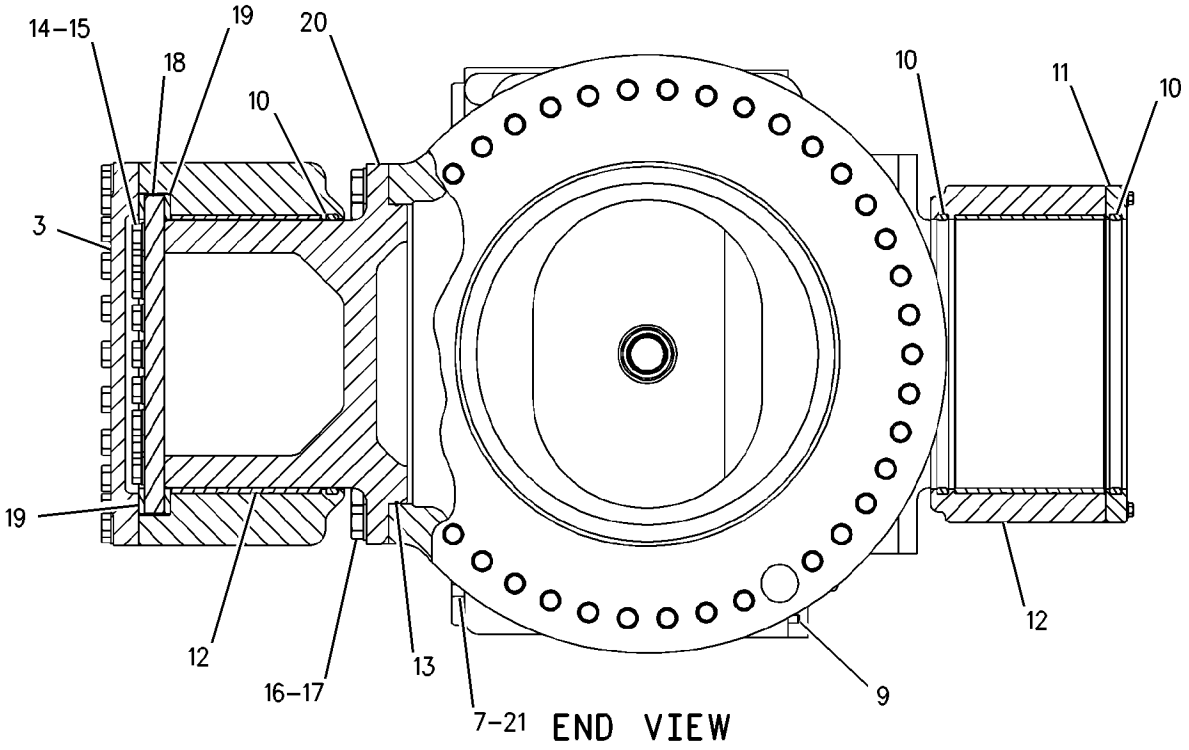

END VIEW

GRAPHIC #1 **<END>** g00684907

171-4621 CASE & PARTS GP-PLANETARY

S/N: DWX1-UP

PART OF 239-8137 TRANSMISSION AR

SMCS-3064 **i02289165**

NOTE	REF NO	GRAPHIC REF	PART NUMBER	QTY	PART NAME 1 2 3 4 5 6 (PRODUCT LEVEL)	SEE PAGE
	1	1	**3P-3461**	1	GASKET-COVER	
	2	1	**6V-0852**	4	CAP-DUST	
	3	1	**6V-3965**	4	FITTING AS (QUICK DISCONNECT)	
	4	1	**6Y-6976**	1	MANIFOLD	
	5	1	**7G-3737**	1	GASKET	
	6	1	**168-4480**	1	COVER AS	
	7	1	**174-0004**	1	CASE AS	
		1	**8P-0618**	1	TUBE	
	8	1	**174-0007**	1	MANIFOLD	
	9	1	**252-6437**	1	COVER	
	10	1	**1H-5728**	1	SEAL-O-RING	
	11	1	**2M-9780**	2	SEAL-O-RING	
	12	1	**3J-1907**	6	SEAL-O-RING	
	13	1	**5D-6176**	1	COVER	
	14	1	**5P-1404**	2	ADAPTER-O-RING	
M	15	1	**6A-5591**	4	BOLT (M12X1.75X25-MM)	
M	16	1	**6V-1820**	4	BOLT (M10X1.5X30-MM)	
M	17	1	**6V-3532**	17	BOLT (M20X2.5X60-MM)	
M	18	1	**6V-3668**	4	BOLT (M12X1.75X30-MM)	
	19	1	**6V-5839**	8	WASHER (11X21X2.5-MM THK)	
M	20	1	**6V-5842**	18	BOLT (M10X1.5X40-MM)	
M	21	1	**6V-5844**	5	BOLT (M16X2X35-MM)	
M	22	1	**6V-7742**	6	NUT-FULL (M20X2.5-THD)	
	23	1	**7S-8554**	1	SEAL-O-RING	
	24	1	**8M-4986**	2	SEAL-O-RING	
	25	1	**8M-4992**	2	SEAL-O-RING	
M	26	1	**8T-0644**	4	BOLT (M10X1.5X90-MM)	
	27	1	**8T-3282**	23	WASHER-HARD (22X35X3.5-MM THK)	
	28	1	**9M-6267**	1	COVER	
	29	1	**9M-9647**	1	SEAL-O-RING	
	30	1	**9S-4191**	2	PLUG-O RING	
	31	1	**5P-8245**	2	WASHER-HARD (13.5X25.5X3-MM THK)	

M-METRIC PART

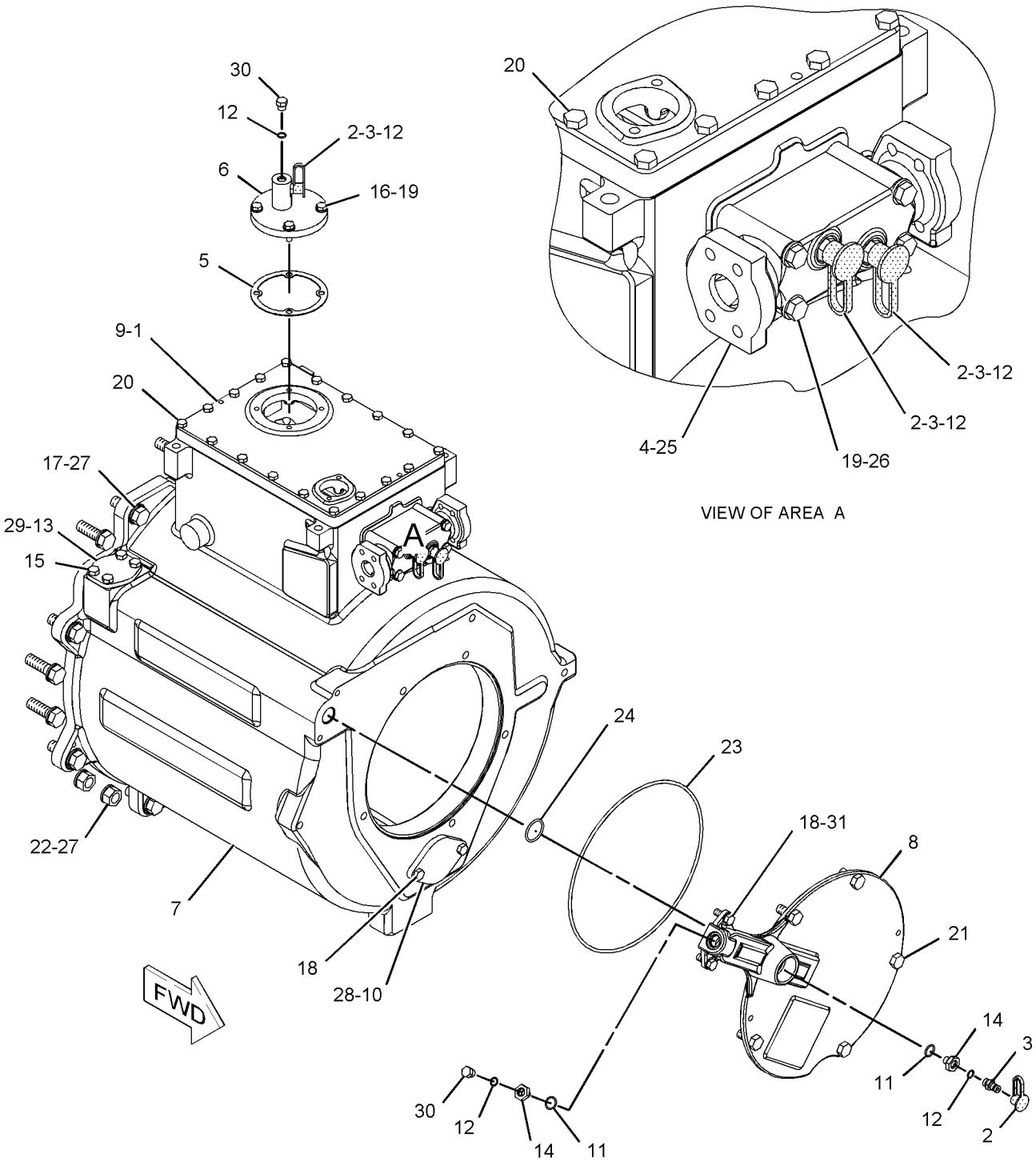

GRAPHIC #1 **<END>** g01145931

169-2677 CASE GP-GEAR

S/N: DWX1-UP

PART OF 239-8138 GEAR GP-OUTPUT TRANSFER

SMCS-3064, 3075, 3159 **i02289135**

NOTE	REF NO	GRAPHIC REF	PART NUMBER	QTY	PART NAME 1 2 3 4 5 6 (PRODUCT LEVEL)	SEE PAGE
	1	1	**7G-1593**	1	COVER	
	2	1	**7G-1594**	1	GASKET	
	3	1	**168-4344**	1	CASE AS	
M	4	1	**160-0011**	6	STUD-TAPERLOCK	
	5	1	**2D-6642**	1	BALL	
	6	1	**4D-8148**	2	DOWEL	
M	7	1	**6V-3823**	10	BOLT (M12X1.75X60-MM)	
	8	1	**171-1101**	1	COVER GP-ACCESS	
M	9	1	**6V-4248**	10	BOLT (M10X1.5X25-MM)	
	10	1	**6V-5839**	10	WASHER (11X21X2.5-MM THK)	

M-METRIC PART

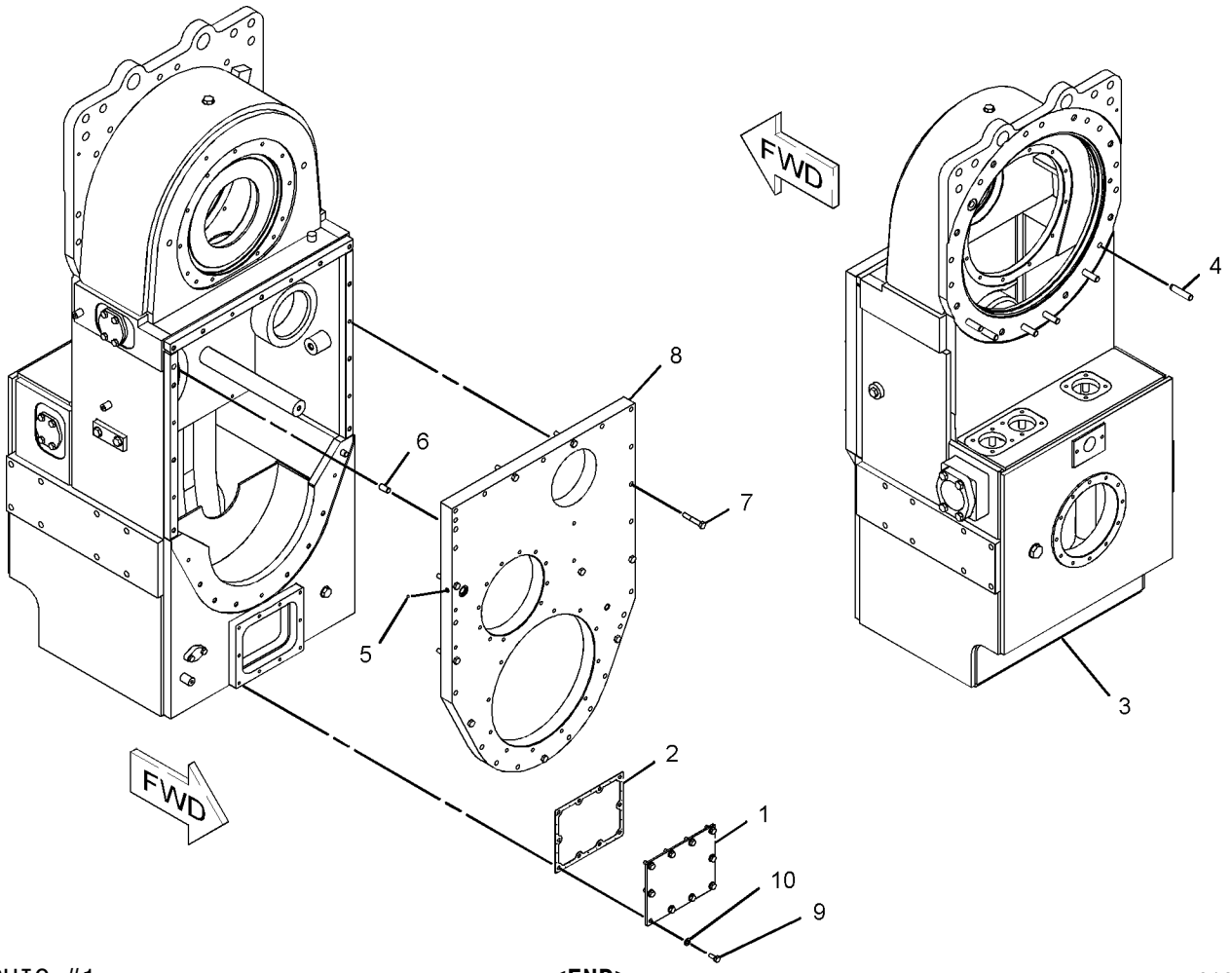

GRAPHIC #1 **<END>** g01094432

4E-8413 CONTROL GP-STIC

S/N: 4421-UP

PART OF 242-0341 CAB AR

SMCS-3033 **i02364975**

NOTE	REF NO	GRAPHIC REF	PART NUMBER	QTY	PART NAME 1 2 3 4 5 6 (PRODUCT LEVEL)	SEE PAGE
	1	1	**4E-7520**	1	BASE	
	2	1	**4E-7627**	1	HOUSING	
	3	1	**4E-7628**	1	COVER	
Y	4	1	**177-4113**	1	CONTROL GP-STIC	391
M	5	1	**6V-7687**	1	LOCKNUT (M12X1.75-THD)	
M	6	1	**8T-0269**	4	BOLT-SOCKET HEAD (M6X1X20-MM)	
M	7	1	**8T-0723**	2	SETSCREW-SOCKET	
M	8	1	**8T-4138**	4	BOLT (M6X1X20-MM)	

M-METRIC PART
Y-SEPARATE ILLUSTRATION

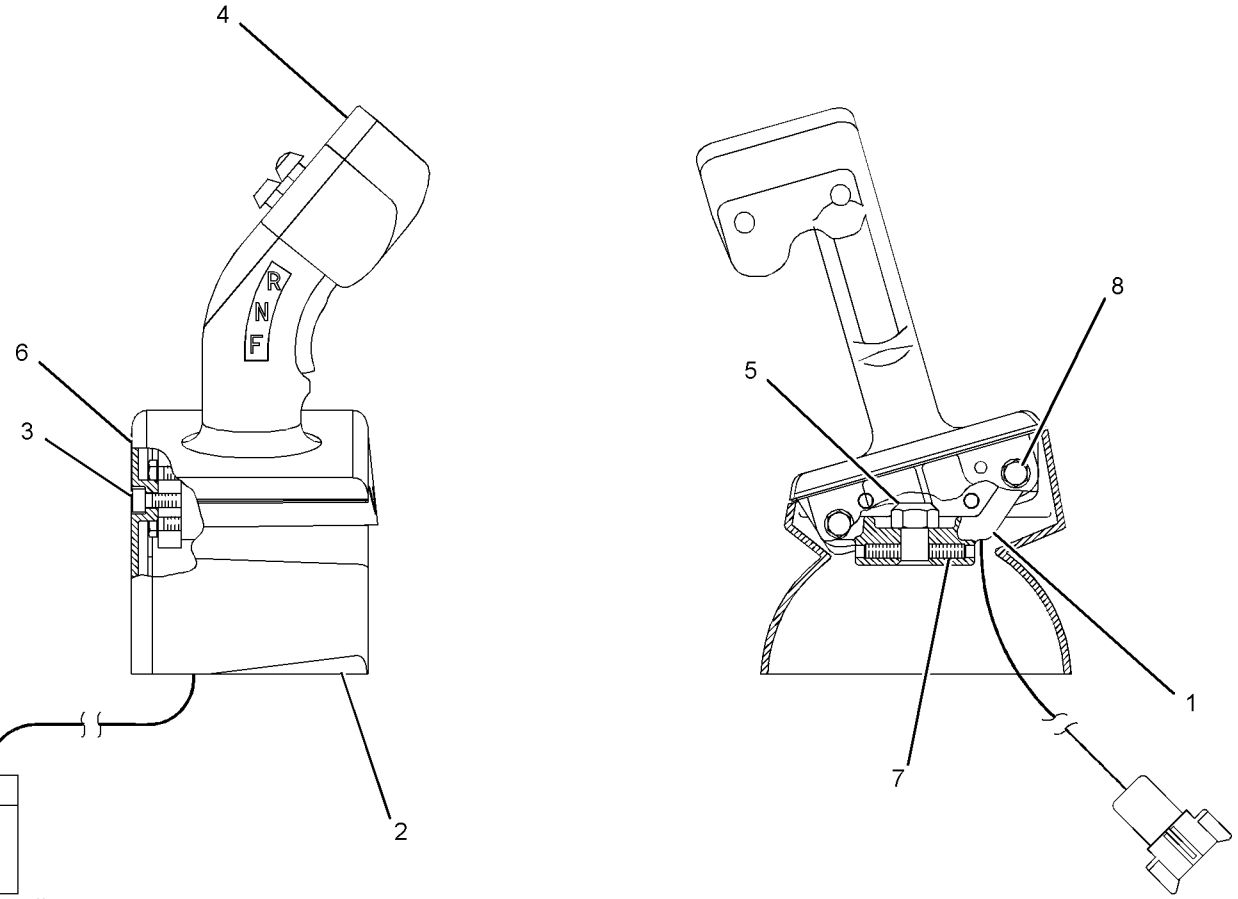

GRAPHIC #1

<END>

g01033706

177-4113 CONTROL GP-STIC

S/N: 4421-UP

PART OF 4E-8413 CONTROL GP-STIC

SMCS-3033 **i02273243**

NOTE	REF NO	GRAPHIC REF	PART NUMBER	QTY	PART NAME 1 2 3 4 5 6 (PRODUCT LEVEL)	SEE PAGE
	1	1	**160-3518**	1	KIT-RECEPTACLE (8-PIN)	
					(INCLUDES RECEPTACLE AS AND WEDGE)	
	2	1	**177-4112**	1	CAP GP-TRANSMISSION SWITCH	
	2A	1	**177-2374**	1	SWITCH AS-ROCKER (TRANSMISSION DIRECTION)	
		1	**5S-4246**	2	LOCKWASHER	
		1	**8T-8729**	3	PIN-CONNECTOR	
		1	**9X-8917**	2	SCREW-MACHINE (4-40X9.52-MM)	
		1	**096-5962**	2	WASHER-HARD (3.4X7X0.8-MM THK)	
		1	**105-8029**	1	ACTUATOR	
	2B	1	**159-8664**	1	SWITCH AS (TRANSMISSION UPSHIFT)	
	2C	1	**159-8665**	1	SWITCH AS (TRANSMISSION DOWNSHIFT)	
					(EACH SWITCH AS INCLUDES)	
		1	**3K-0835**	1	NUT (5/8-24-THD)	
		1	**6F-0253**	1	LOCKWASHER	
		1	**8T-8729**	2	PIN-CONNECTOR	
	3	1	**3E-3389**	1	WEDGE-RECEPTACLE LOCK	
	4	1	**105-9073**	1	GRIP	
M	5	1	**7Y-3173**	2	SCREW-BUTTON HEAD (M4X0.7X12-MM)	
	6	1	**8C-7508**	2	LOCKWASHER	
	7	1	**8C-9660**	2	WASHER (4.6X7.9X0.8-MM THK)	

M-METRIC PART

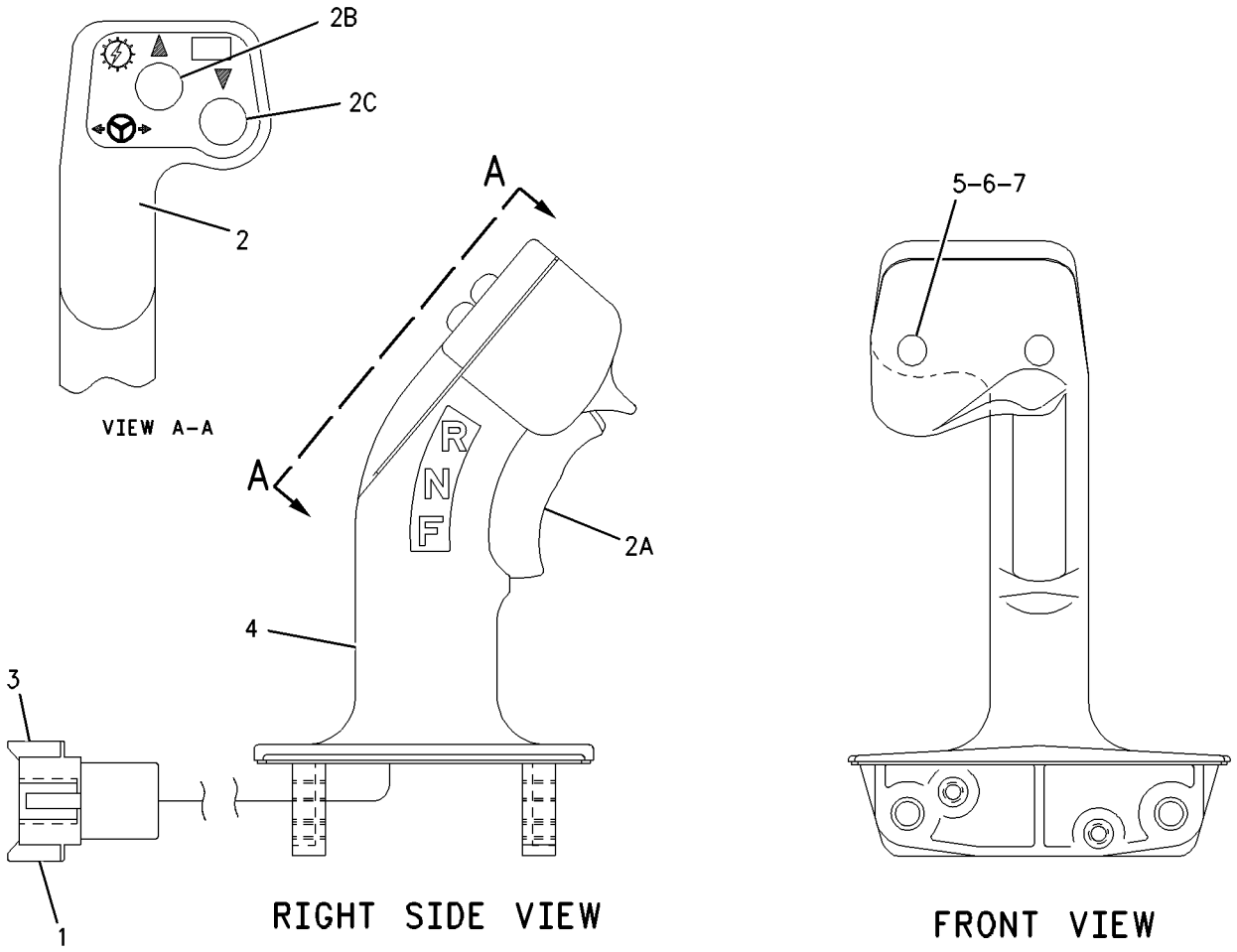

GRAPHIC #1 **<END>** g00898020

236-5241 CONTROL GP-STIC LOCKOUT

S/N: 4421-UP

PART OF 242-0341 CAB AR

SMCS-3034 **i02411297**

NOTE	REF NO	GRAPHIC REF	PART NUMBER	QTY	PART NAME 1 2 3 4 5 6 (PRODUCT LEVEL)	SEE PAGE
	1	1	**2V-4387**	1	SPACER (10.312X25.4X23.11-MM THK)	
	2	1	**8T-4224**	6	WASHER-HARD (8.8X16X2-MM THK)	
	3	1	**4E-8557**	1	SHAFT AS	
	4	1	**4E-8561**	1	CAM	
	5	1	**188-2048**	1	KNOB	
	6	1	**6L-8598**	2	RING-RETAINING	
	7	1	**8C-3442**	1	SPRING-COIL	
M	8	1	**5C-7423**	4	SCREW (M6X1X16-MM)	
	9	1	**144-7766**	1	LEVER AS-STIC STEER LOCKOUT	
	10	1	**145-8951**	1	PLATE AS	
	11	1	**145-8952**	1	PLATE AS	
M		1	**3E-6908**	2	STUD-WELD (M8X1.25X20-MM)	
	12	1	**151-6427**	2	BEARING	
	13	1	**170-0456**	1	GUARD AS	
	14	1	**204-3611**	1	PLATE AS	
M	15	1	**8T-4177**	1	BOLT (M8X1.25X90-MM)	
M	16	1	**8T-4133**	3	NUT (M10X1.15-THD)	
	17	1	**4D-7794**	1	CLIP	
	18	1	**4E-8560**	2	KEY-SQUARE	
M	19	1	**5C-7261**	2	NUT (M8X1.25-THD)	
M	20	1	**5C-9553**	2	BOLT (M6X1X16-MM)	
M	21	1	**6V-5220**	2	BOLT (M8X1.25X65-MM)	

M-METRIC PART

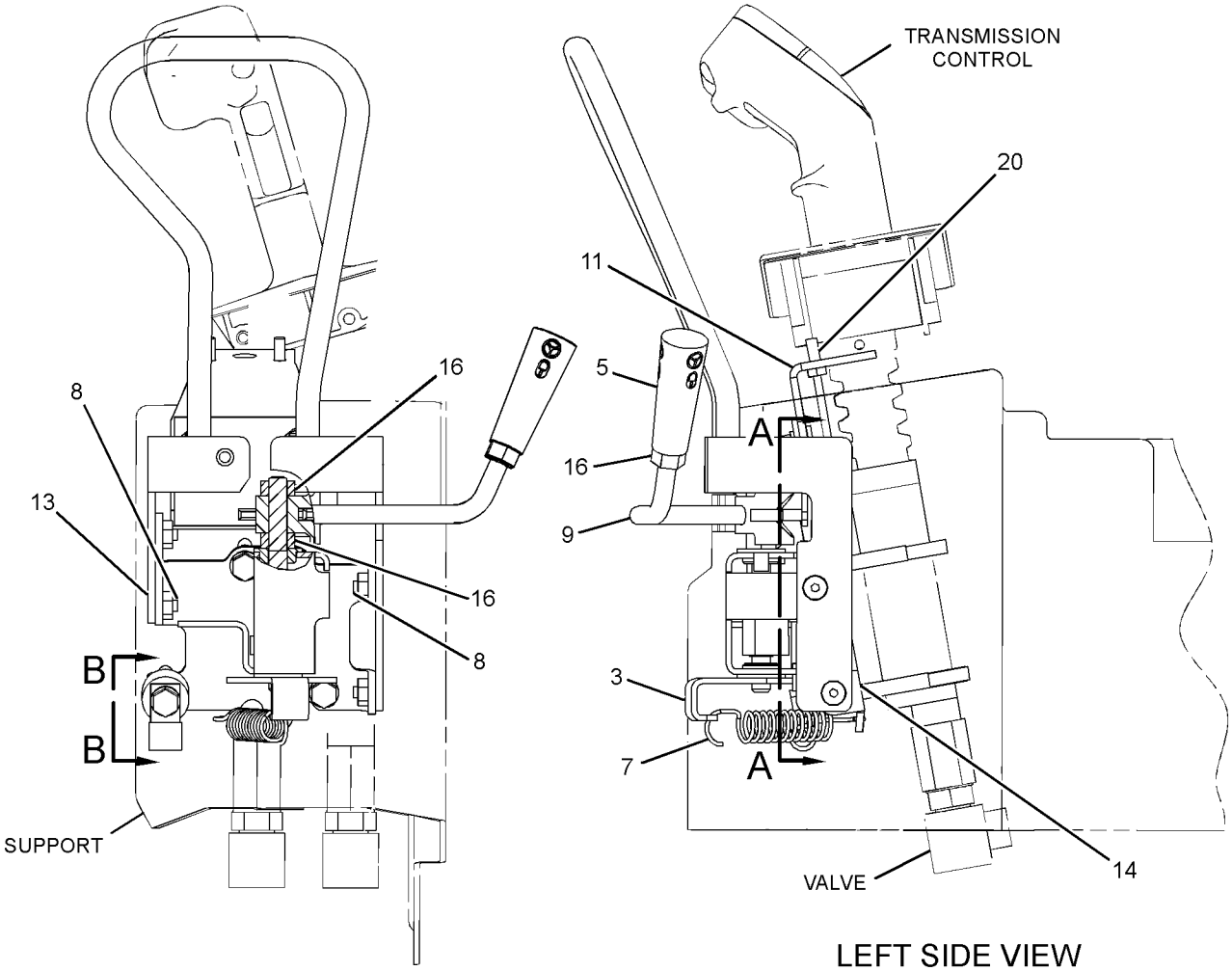

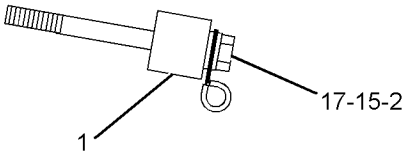

VIEW B-B

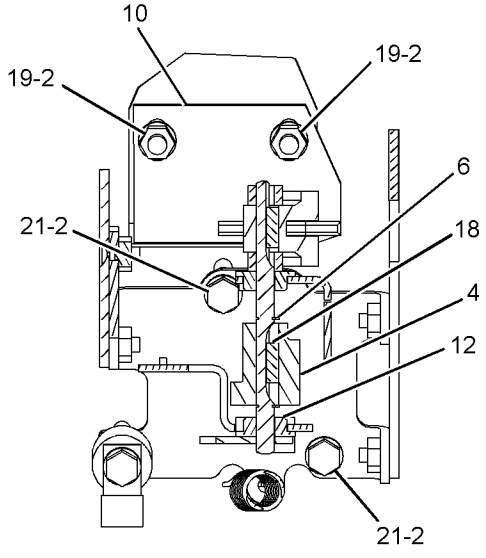

SECTION A-A

GRAPHIC #1 **<END>** g01211972

252-7818 CONTROL GP-TRANSMISSION HYD

S/N: DWX1-UP

PART OF 239-8137 TRANSMISSION AR

SMCS-3073, 3167 **i02151106**

NOTE	REF NO	GRAPHIC REF	PART NUMBER	QTY	PART NAME 1 2 3 4 5 6 (PRODUCT LEVEL)	SEE PAGE
Y	1	1	**253-7917**	1	VALVE GP-TRANSMISSION CONTROL	495
	2	1	**6B-1557**	4	BOLT (3/8-16X7.5-IN)	
	3	1	**5M-2894**	4	WASHER-HARD (10.2X18.5X2.5-MM THK)	
	4	1	**6P-4977**	2	SLEEVE	
	5	1	**8M-4432**	4	SEAL-O-RING	
	6	1	**104-6729**	1	RETAINER	
	7	1	**104-6730**	1	GASKET	
M	8	1	**8T-4195**	2	BOLT (M10X1.5X30-MM)	
	9	1	**8L-5922**	1	BOLT-LOCKING (5/16-18X0.563-IN)	
	10	1	**4F-3714**	1	WASHER (3/8X1.5X.1345-IN THK)	
	11	1	**168-4481**	1	SLEEVE	
	12	1	**6V-4365**	2	SEAL-O-RING	

M-METRIC PART
Y-SEPARATE ILLUSTRATION

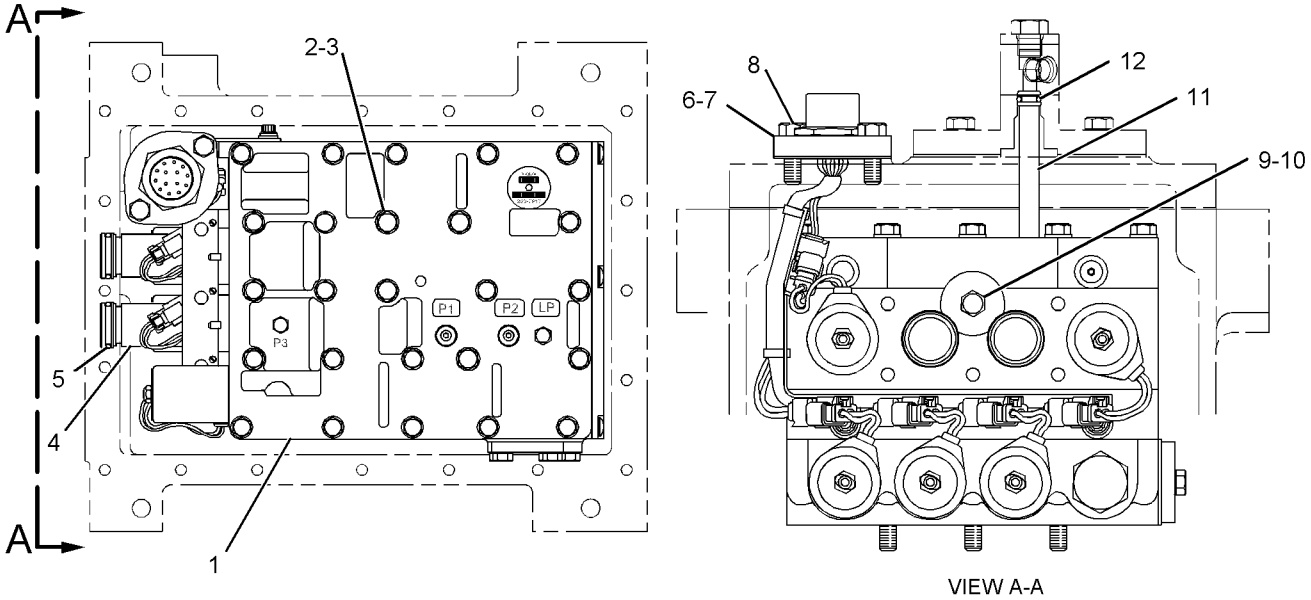

GRAPHIC #1 **<END>** g01093111

249-6780 COOLER GP-TRANSMISSION OIL

S/N: 4421-UP

PART OF 250-7957 INSTALLATION AR-ENGINE

SMCS-1375 **i02282370**

NOTE	REF NO	GRAPHIC REF	PART NUMBER	QTY	PART NAME 1 2 3 4 5 6 (PRODUCT LEVEL)	SEE PAGE
	1	1	**1P-5411**	8	SLEEVE	
	2	1	**1P-5412**	16	BUSHING-TERMINAL	
	3	1	**261-6916**	8	SPACER (13.8X35X20-MM THK)	
	4	1	**250-8298**	1	CORE AS-OIL COOLER (TRANSMISSION)	
	5	1	**250-8299**	1	CORE AS-OIL COOLER (TRANSMISSION)	
	6	1	**7X-0618**	8	WASHER-HARD (13.5X40X5-MM THK)	
M	7	1	**7X-2549**	8	BOLT (M12X1.75X100-MM)	

M-METRIC PART

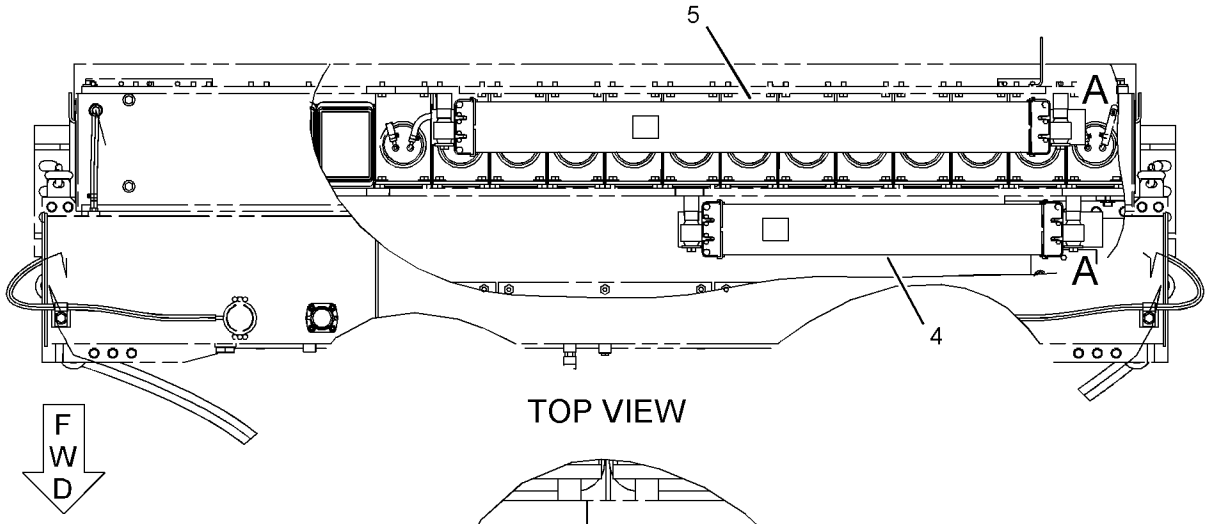

TOP VIEW

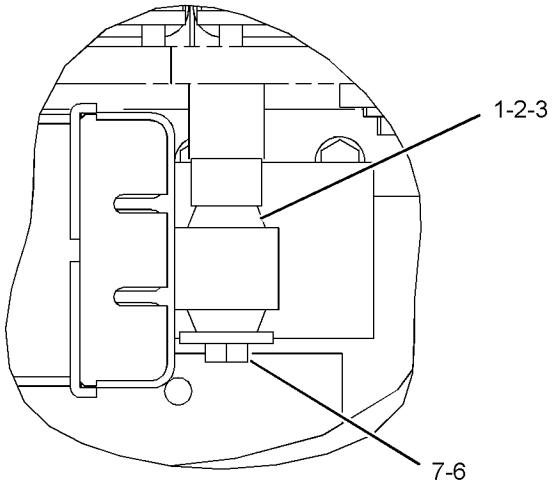

VIEW OF AREAS A

GRAPHIC #1

<END>

g01096575

4P-1661 CORE GP-TMSN OIL COOLER*R

S/N: 8WM1-UP

PART OF 240-7750 ENGINE AR

SMCS-1375 **i01955731**

NOTE	REF NO	GRAPHIC REF	PART NUMBER	QTY	PART NAME 1 2 3 4 5 6 (PRODUCT LEVEL)	SEE PAGE
	1	1	**5M-6214**	2	PLUG-PIPE	

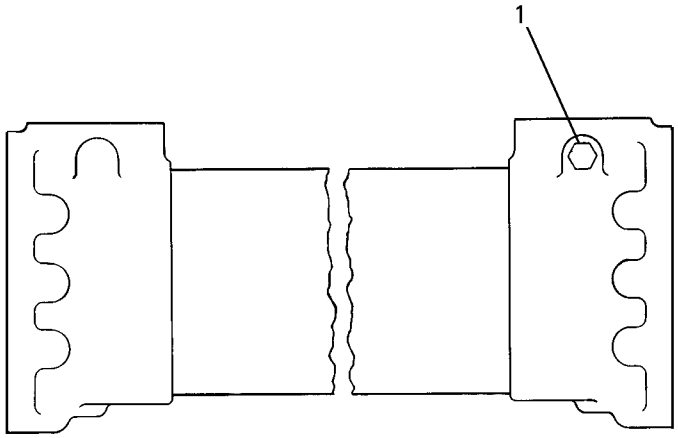

GRAPHIC #1 **<END>** g00082372

148-2711 COUPLING GP-AUXILIARY DRIVE

S/N: 4421-UP
(REAR)
PART OF 245-8809 POWER TRAIN AR

SMCS-3252 **i00811801**

NOTE	REF NO	GRAPHIC REF	PART NUMBER	QTY	PART NAME 1 2 3 4 5 6 (PRODUCT LEVEL)	SEE PAGE
	1	1	**148-6490**	1	TUBE AS	
M	2	1	**8T-0650**	12	BOLT (M16X2X160-MM)	
	3	1	**9X-8268**	12	WASHER (17.5X30X3.5-MM THK)	

M-METRIC PART

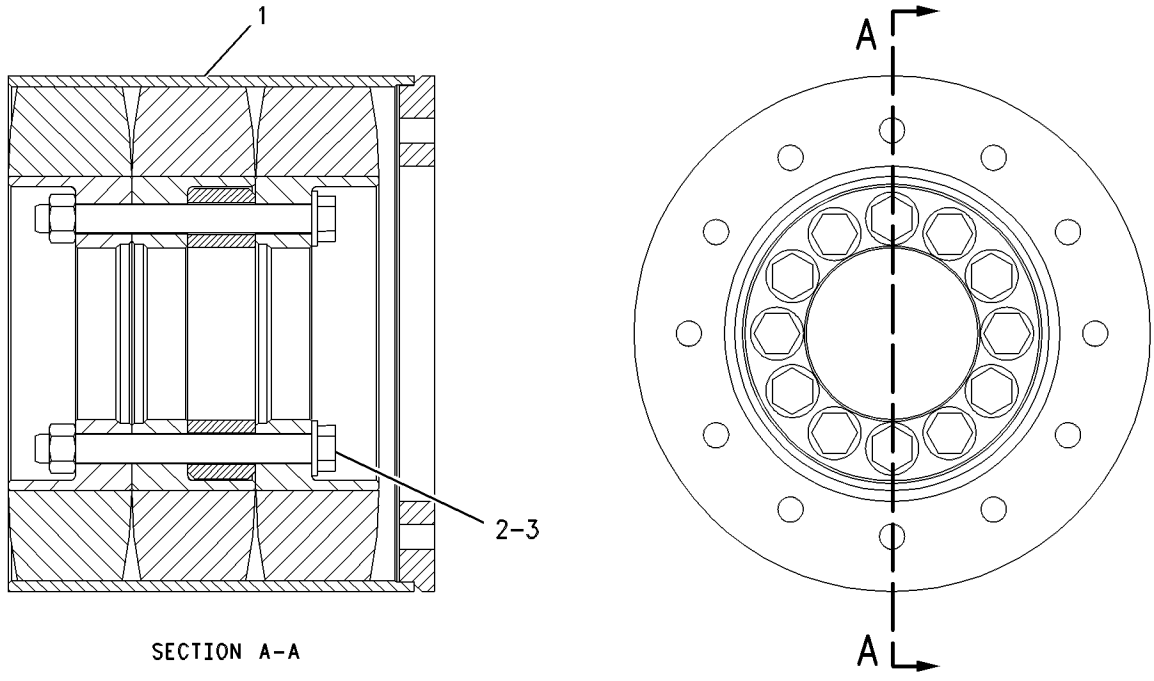

SECTION A-A

GRAPHIC #1 **<END>** g00346497

118-8274 COUPLING GP-TORSIONAL

S/N: 4421-UP

PART OF 245-8809 POWER TRAIN AR

SMCS-3279 **i01026667**

NOTE	REF NO	GRAPHIC REF	PART NUMBER	QTY	PART NAME 1 2 3 4 5 6 (PRODUCT LEVEL)	SEE PAGE
	1	1	**1D-4572**	16	BOLT (1/2-13X5.5-IN)	
	2	1	**119-8039**	1	COUPLING AS	
	3	1	**121-6603**	4	SCREW	
	4	1	**166-9258**	26	SPRING	
	5	1	**121-6600**	1	HUB	
	6	1	**121-6599**	16	SCREW	
	7	1	**121-6601**	2	HUB	
	8	1	**121-6602**	4	CAGE-SPRING	
	9	1	**121-6604**	3	SPACER	
	10	1	**121-6605**	1	RING-PILOT	
	11	1	**121-6606**	1	COLLAR	

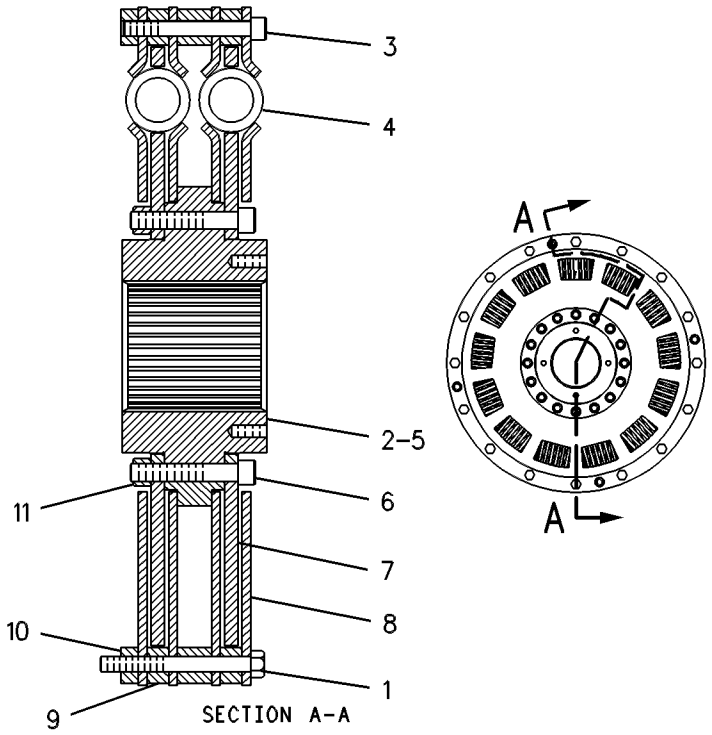

GRAPHIC #1 **<END>** g00086050

154-0156 COVER GP-SHIPPING

S/N: DWX1-UP

PART OF 239-8137 TRANSMISSION AR

SMCS-3064 **i00968173**

NOTE	REF NO	GRAPHIC REF	PART NUMBER	QTY	PART NAME 1 2 3 4 5 6 (PRODUCT LEVEL)	SEE PAGE
M	1	1	**6A-5591**	8	BOLT (M12X1.75X25MM)	
	2	1	**8X-6166**	2	COVER	
	3	1	**8E-7366**	2	GASKET	

M-METRIC PART

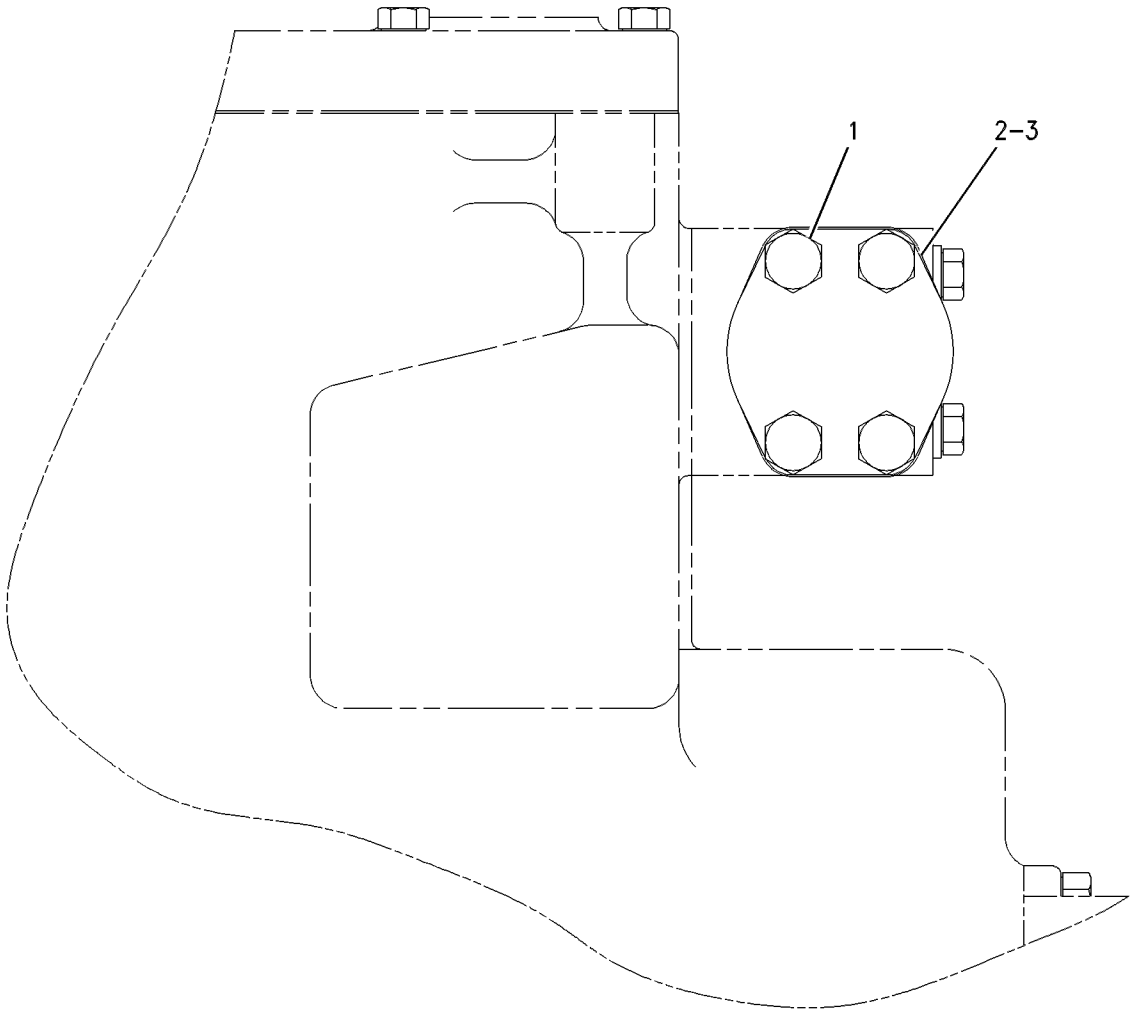

GRAPHIC #1 **<END>** g00495159

119-1792 DIFFERENTIAL & BEVEL GEAR GP

S/N: 4421-UP

PART OF 152-8920 AXLE AR-FIXED, 152-8930 AXLE AR-OSCILLATING

SMCS-3256, 3258 **i02203361**

NOTE	REF NO	GRAPHIC REF	PART NUMBER	QTY	PART NAME 1 2 3 4 5 6 (PRODUCT LEVEL)	SEE PAGE
M	1	1	**6V-8097**	2	BOLT (M12X1.75X30-MM)	
	2	1	**5P-8245**	2	WASHER-HARD (13.5X25.5X3-MM THK)	
	3	1	**9K-4454**	2	LOCK	
	4	1	**6W-8400**	1	NUT-ADJUSTMENT	
	5	1	**126-8181**	1	CONE-BEARING	
	6	1	**126-8182**	1	CUP-BEARING	
	7	1	**120-0258**	1	CARRIER AS	
M	7A	1	**8T-0672**	8	BOLT (M24X3X160-MM)	
	7B	1	**9H-1031**	8	WASHER-HARD (24X41.5X6-MM THK)	
	8	1	**5J-3941**	1	PIN-SPRING	
B	9	1	**8R-6185**	1	SHIM PACK (INCLUDES 18-SHIMS)	
	10	1	**8R-6184**	1	HOUSING-PINION	
	11	1	**201-3391**	1	CONE-BEARING	
	12	1	**8F-1586**	1	CUP-BEARING	
	13	1	**8J-8879**	1	SEAL-O-RING	
	14	1	**138-1844**	1	RETAINER	
	15	1	**127-9763**		GEAR-BEVEL (45-TEETH)	
		1	**127-9762**	1	SHAFT-BEVEL PINION	
	16	1	**133-4296**	1	SEAL-LIP TYPE	
M	17	1	**8R-6182**	1	NUT-STAKE (M110X2-6H THD)	
M	18	1	**6V-1820**	8	BOLT (M10X1.5X30-MM)	
	19	1	**6V-5839**	8	WASHER (11X21X2.5-MM THK)	
	20	1	**8R-6183**	1	WASHER (7-MM THK)	
	21	1	**159-3550**	1	CONE	
	22	1	**6Y-7441**	1	CUP-TAPERED ROLLER (311.048-MM ID)	
M	23	1	**8C-3222**	20	BOLT (M30X3.5X80-MM)	
	24	1	**9X-8399**	20	WASHER (33X56X6-MM THK)	
	25	1	**8D-4771**	1	SEAL-O-RING	
	26	1	**9M-2744**	1	CONE-BEARING	
	27	1	**1M-6573**	1	CUP-BEARING	
	28	1	**6W-8399**	1	NUT-ADJUSTMENT	
Y	29	1	**120-0550**	1	DIFFERENTIAL GP	403
M	30	1	**8T-0380**	36	BOLT (M24X3X60-MM)	
	31	1	**9H-1031**	36	WASHER-HARD (24X41.5X6-MM THK)	

B-USE AS REQUIRED
M-METRIC PART
Y-SEPARATE ILLUSTRATION

119-1792 **DIFFERENTIAL & BEVEL GEAR GP** *(contd.)* **i02203361**

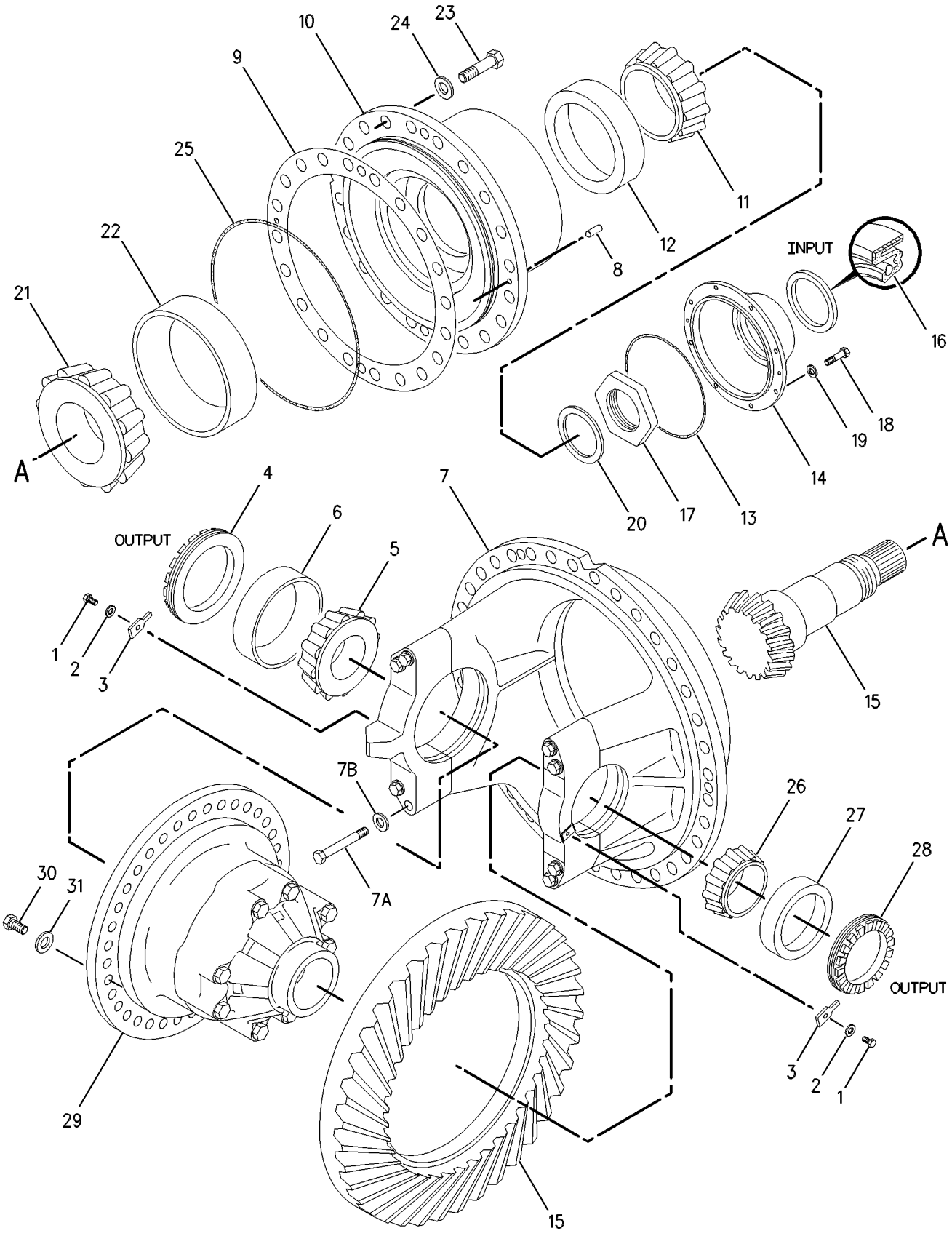

GRAPHIC #1 **<END>** g00543305

120-0550 DIFFERENTIAL GP

S/N: 4421-UP

PART OF 119-1792 DIFFERENTIAL & BEVEL GEAR GP

SMCS-3258 **i01395814**

NOTE	REF NO	GRAPHIC REF	PART NUMBER	QTY	PART NAME 1 2 3 4 5 6 (PRODUCT LEVEL)	SEE PAGE
	1	1	**120-0551**	1	CASE AS-DIFFERENTIAL	
Z	1A	1		1	CASE-DIFFERENTIAL	
Z	1B	1		1	CASE-DIFFERENTIAL	
M	1C	1	**6V-8198**	8	BOLT (M24X3.0X200MM)	
	1D	1	**9H-1031**	8	WASHER-HARD (24X41.5X6MM THK)	
	2	1	**9U-3295**	2	WASHER-GEAR THRUST	
M	3	1	**8C-7562**	4	SCREW-FLAT HEAD (M8X1.25X20.0MM)	
	4	1	**5T-5185**	4	PINION	
	5	1	**6W-8259**	2	GEAR-DIFFERENTIAL BEVEL (20 TEETH)	
	6	1	**4D-7534**	4	BEARING AS-ROLLER	
	7	1	**4D-7536**	4	LOCK-NUT	
	8	1	**9V-4373**	4	RETAINER	
	9	1	**2F-9064**	4	NUT (2-1/8-12 THD)	
	10	1	**9V-9840**	1	SPIDER	

M-METRIC PART
Z-NOT SERVICED SEPARATELY

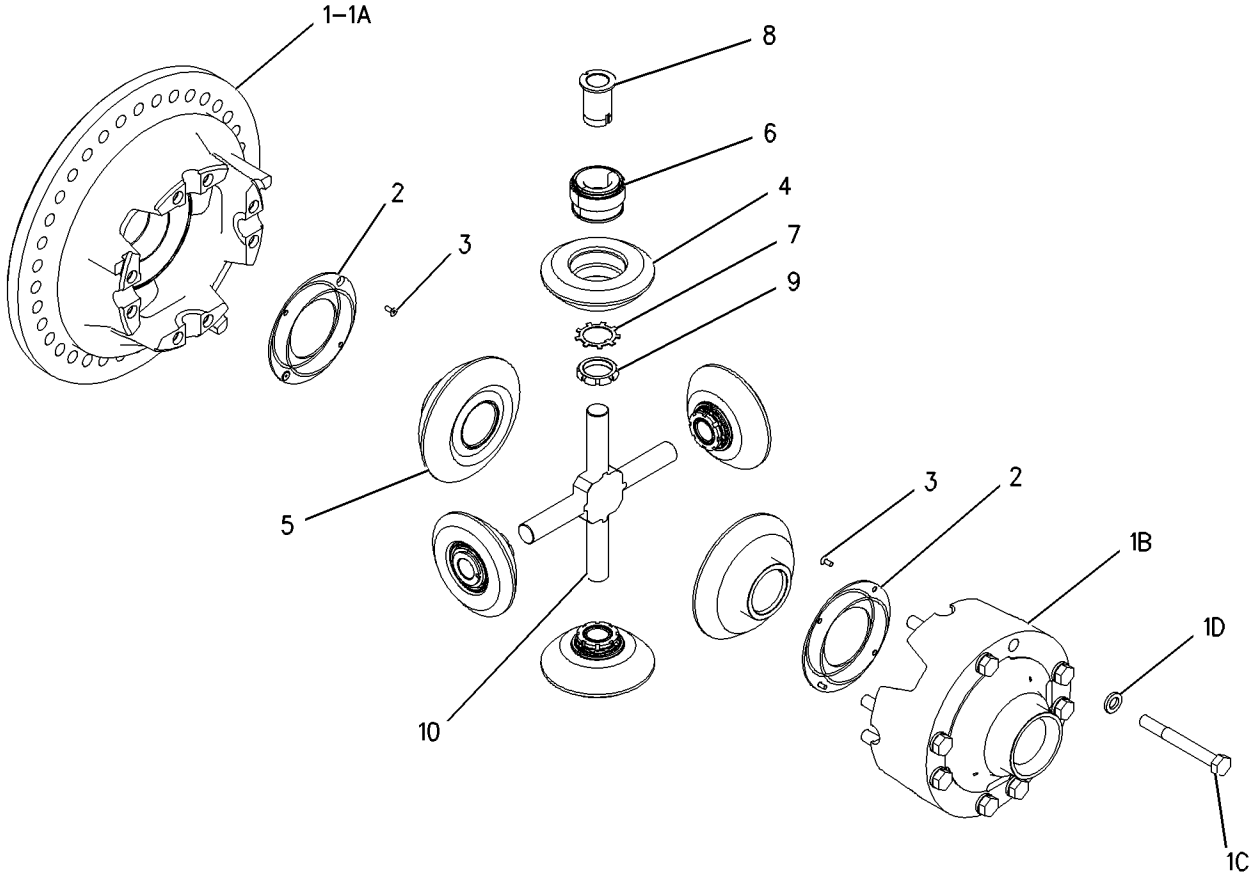

GRAPHIC #1 **<END>** g00737811

249-7832 DRIVE & MTG GP-PUMP–FRONT

S/N: 4421-UP

PART OF 245-8811 CHASSIS AR-FRONT

SMCS-3108 **i02424236**

NOTE	REF NO	GRAPHIC REF	PART NUMBER	QTY	PART NAME 1 2 3 4 5 6 (PRODUCT LEVEL)	SEE PAGE
	1	1	**6T-6080**	8	MOUNT-RUBBER	
Y	3	1	**246-6143**	1	DRIVE GP-PUMP (FRONT)	409
	4	1	**6C-9149**	8	WASHER (22X50X10-MM THK)	
M	5	1	**6V-7688**	4	LOCKNUT (M20X2.5-THD)	
M	6	1	**8T-0657**	4	BOLT (M20X2.5X160-MM)	
	9	1	**8X-0674**	4	WASHER (22X100X10-MM THK)	

M-METRIC PART
Y-SEPARATE ILLUSTRATION

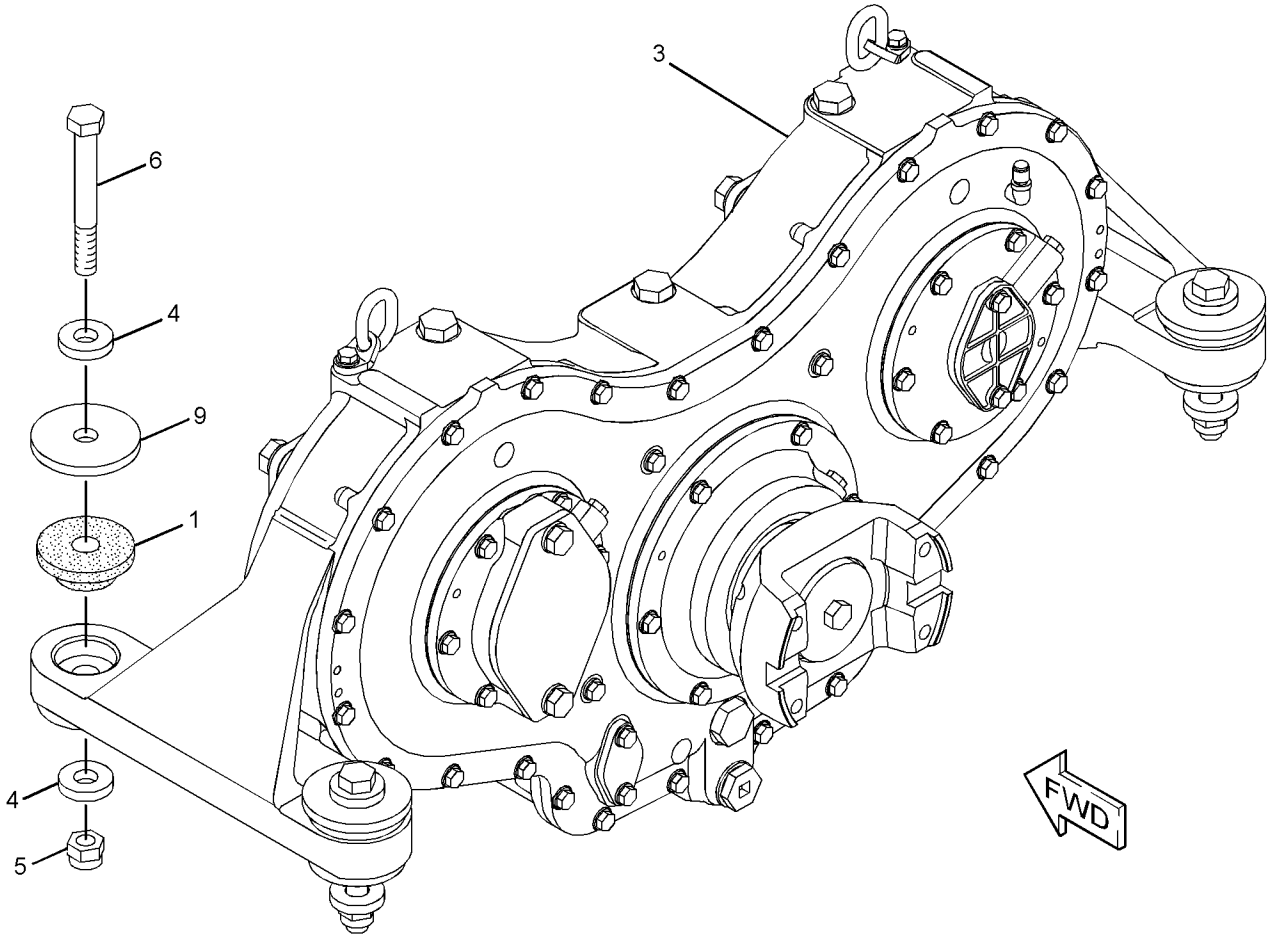

GRAPHIC #1 **<END>** g01211733

7I-5115 DRIVE GP-PUMP–REAR

S/N: 4421-UP

PART OF 245-8809 POWER TRAIN AR

SMCS-3108 **i01971191**

NOTE	REF NO	GRAPHIC REF	PART NUMBER	QTY	PART NAME 1 2 3 4 5 6 (PRODUCT LEVEL)	SEE PAGE
	1	1	**6Y-6675**	1	CASE AS-PUMP DRIVE	
	2	1	**6Y-6610**	2	GEAR (58-TEETH)	
	3	1	**6Y-6657**	2	ADAPTER-SEAL	
	4	1	**1P-2636**	4	CUP-BEARING	
	5	1	**1P-2662**	4	CONE-BEARING	
B	6	1	**6Y-6678**	3	SHIM PACK (INCLUDES 18-SHIMS)	
M	7	1	**6V-8675**	24	BOLT (M12X1.75X35-MM)	
	8	1	**5P-8245**	24	WASHER-HARD (13.5X25.5X3-MM THK)	
	9	1	**4D-4508**	3	SEAL-O-RING	
	10	1	**9W-7924**	4	RING-SEAL	
	11	1	**3D-8317**	1	RING-RETAINING	
	12	1	**6Y-6684**	1	COUPLING	
	13	1	**6Y-6685**	1	CAGE AS	
		1	**4B-9784**	1	BALL	
	14	1	**6Y-6677**	1	CAGE AS	
		1	**4B-9784**	1	BALL	
	15	1	**5P-6868**	1	SEAL-LIP TYPE	
	16	1	**2N-3253**	2	CUP-BEARING	
	17	1	**2N-3254**	2	CONE-BEARING	
	18	1	**6Y-6608**	1	GEAR (58-TEETH)	
	19	1	**6Y-6615**	1	CAGE-BEARING	
	20	1	**109-1529**	1	FLANGE	
	21	1	**6Y-6667**	1	SHAFT AS-OUTPUT	
		1	**9W-5766**	2	PLUG-CUP	
	22	1	**8S-5655**	2	SEAL-O-RING	
	23	1	**6Y-6613**	2	SHAFT-IDLER	
M	24	1	**7X-2551**	2	BOLT (M12X1.75X200-MM)	
	25	1	**6V-6560**	1	SEAL-O-RING	
	26	1	**8T-4223**	2	WASHER-HARD (13.5X25.5X3-MM THK)	
	27	1	**6Y-6659**	2	SPACER-BEARING	
	28	1	**6D-7690**	4	CUP-BEARING	
	29	1	**5P-3723**	4	CONE-BEARING	
	30	1	**6Y-6691**	2	RING-SPACER	
	31	1	**6Y-6639**	1	CAGE-BEARING	
	32	1	**8H-0901**	2	CUP-BEARING	
	33	1	**8H-0902**	2	CONE-BEARING	
	34	1	**8X-8244**	1	PLATE	
M	35	1,2	**8T-4139**	17	BOLT (M12X1.75X30-MM)	
B	36	1	**6Y-6683**	1	SHIM PACK (INCLUDES 19-SHIMS)	
	37	1	**6Y-6605**	1	GEAR (62-TEETH)	
	38	1	**6Y-6607**	2	GEAR (53-TEETH)	
	39	2	**6V-8628**	9	ELBOW	
	40	2	**3J-7354**	18	SEAL-O-RING	
	41	2	**4J-5477**	22	SEAL-O-RING	
	42	2	**8E-0219**	1	TUBE AS	
	43	2	**5F-9657**	5	SEAL-O-RING	
	44	2	**6Y-6708**	1	TUBE AS	
	45	2	**8E-0210**	1	TUBE AS	
	46	2	**8E-0211**	1	TUBE AS	
	47	2	**8E-0214**	1	TUBE AS	
	48	2	**8E-0213**	1	TUBE AS	
	49	2	**8K-5443**	2	CLIP	
	50	2	**2B-2404**	8	CLIP	
M	51	2	**8T-4191**	8	BOLT (M10X1.5X16-MM)	
	52	2	**6V-8773**	3	TEE-FACE SEAL	
	53	2	**8E-0209**	1	TUBE AS	

7I-5115 DRIVE GP-PUMP *(contd.)* i01971191

NOTE	REF NO	GRAPHIC REF	PART NUMBER	QTY	PART NAME 1 2 3 4 5 6 (PRODUCT LEVEL)	SEE PAGE
	54	2	**6V-8780**	1	TEE-FACE SEAL	
	55	2	**8E-0217**	1	TUBE AS	
	56	2	**8E-0220**	1	TUBE AS	
	57	2	**6V-8647**	5	CONNECTOR	
	58	2	**8E-0216**	1	TUBE AS	
	59	2	**8E-0215**	1	TUBE AS	
M	60	1	**6A-5591**	2	BOLT (M12X1.75X25-MM)	
	61	2	**8E-0212**	1	TUBE AS	
	62	1	**6Y-6701**	1	MANIFOLD AS	
		1	**8F-2804**	1	PLUG-CUP	
	63	2	**6Y-6705**	1	TUBE AS	
	64	2	**6Y-6707**	1	TUBE AS	
	65	2	**8E-0218**	1	TUBE AS	
	66	2	**6Y-6706**	1	TUBE AS	
	67	1	**7X-3391**	2	WASHER-HARD (13.5X32X6-MM THK)	

B-USE AS REQUIRED
M-METRIC PART

7I-5115 DRIVE GP-PUMP *(contd.)* i01971191

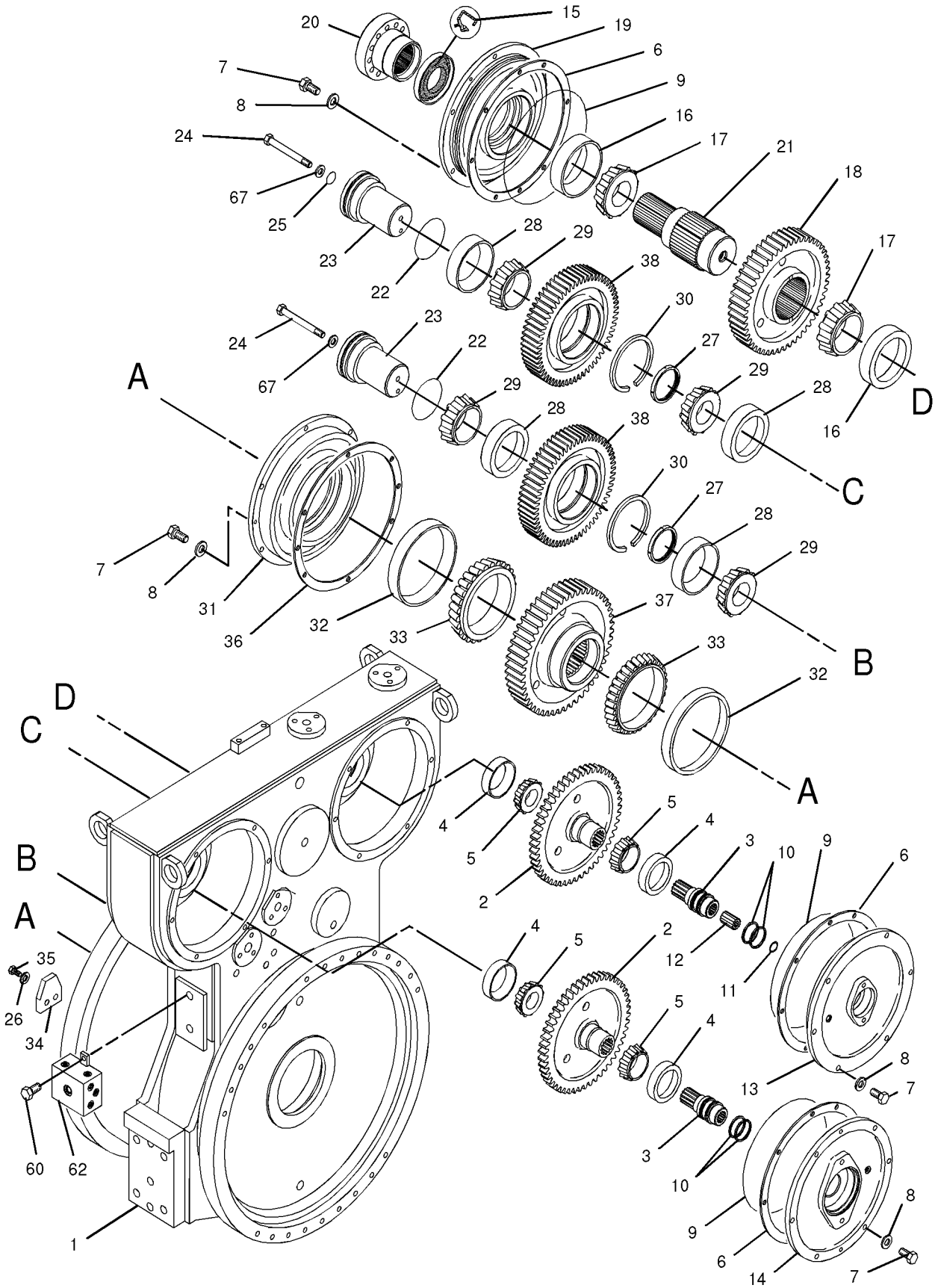

GRAPHIC #1 g01023110

7I-5115 DRIVE GP-PUMP *(contd.)* **i01971191**

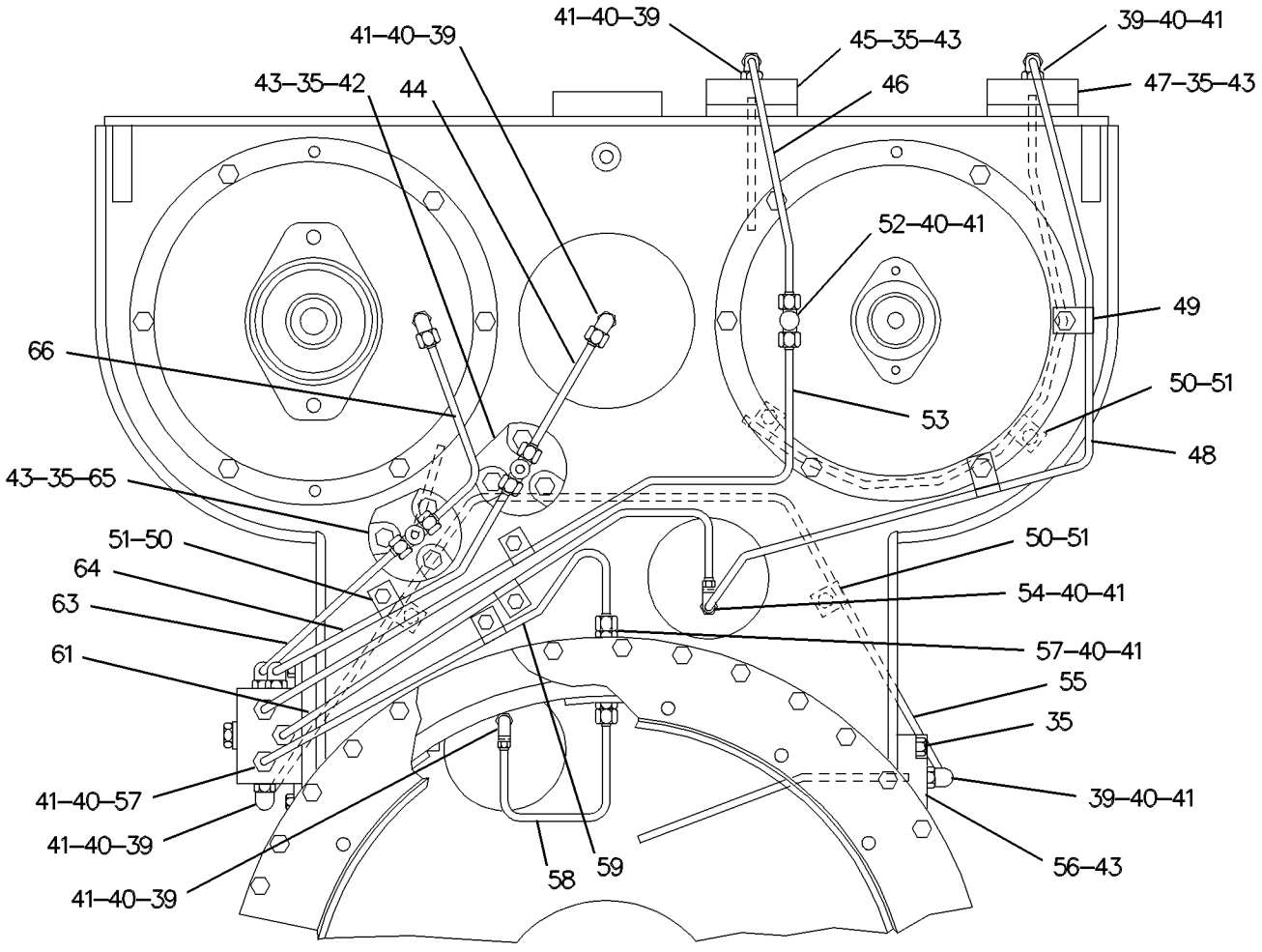

GRAPHIC #2 **<END>** g00576276

246-6143 DRIVE GP-PUMP—FRONT

S/N: 4421-UP

PART OF 249-7832 DRIVE & MTG GP-PUMP

SMCS-3108 **i02288471**

NOTE	REF NO	GRAPHIC REF	PART NUMBER	QTY	PART NAME 1 2 3 4 5 6 (PRODUCT LEVEL)	SEE PAGE
	1	1	**1P-2636**	4	CUP-BEARING	
	2	1	**1P-2662**	4	CONE-BEARING	
	3	1	**2A-3398**	1	GASKET	
	4	1	**3K-6905**	1	VALVE-BREATHER	
		1	**1K-9005**	1	HINGE AS	
	5	1	**3P-1669**	1	RETAINER (SHAFT)	
	6	1	**3V-6557**	1	ADAPTER-SPLINED	
	7	1	**4E-7924**	1	YOKE	
	9	1	**6V-4245**	1	ELBOW	
	11	1	**8M-3837**	1	PLUG-MAGNETIC	
	12	1	**8X-0692**	1	COVER-PUMP DRIVE	
	13	1	**8X-0693**	1	CAGE-BEARING	
B	14	1	**8X-0694**	1	SHIM PACK (INCLUDES 24-SHIMS)	
	15	1	**8X-0695**	1	ADAPTER	
B	16	1	**8X-0696**	2	SHIM PACK (INCLUDES 23-SHIMS)	
	21	1	**138-7573**	2	BRACKET-LINK	
	22	1	**148-6627**	1	BUSHING	
	23	1	**148-6628**	2	BUSHING	
	24	1	**154-0901**	2	GEAR-PUMP DRIVE (58-TEETH)	
	25	1	**154-0902**	1	CAGE-BEARING	
	26	1	**154-0903**	1	CAGE-BEARING	
	27	1	**161-6322**	1	SPACER (93X109X8.65-MM THK)	
	28	1	**174-3503**	2	CONE-SPECIAL TAPERED	
	29	1	**249-1034**	1	GEAR-PUMP DRIVE (58-TEETH)	
	30	1	**249-7833**	1	CASE-PUMP DRIVE	
	31	1	**250-3195**	1	BUSHING	
	32	1	**035-2297**	2	RING-RETAINING	
	34	1	**2N-3253**	2	CUP-BEARING	
	37	1	**5B-5821**	2	DOWEL	
	38	1	**5H-2824**	1	SEAL-O-RING	
	39	1	**5P-6868**	1	SEAL-LIP TYPE	
	40	1	**6D-3888**	4	DOWEL	
	44	1	**8F-8733**	2	SEAL-O-RING	
M	45	1	**8T-0281**	1	BOLT (M16X2X80-MM)	
	46	1	**8T-4121**	46	WASHER-HARD (11X21X2.5-MM THK)	
M	50	1	**8T-4195**	20	BOLT (M10X1.5X30-MM)	
M	51	1	**8T-4196**	24	BOLT (M10X1.5X35-MM)	
M	53	1	**8T-6466**	2	BOLT (M10X1.5X60-MM)	
	54	1	**9C-3493**	1	SEAL-D-RING	

B-USE AS REQUIRED
M-METRIC PART

246-6143 DRIVE GP-PUMP *(contd.)* i02288471

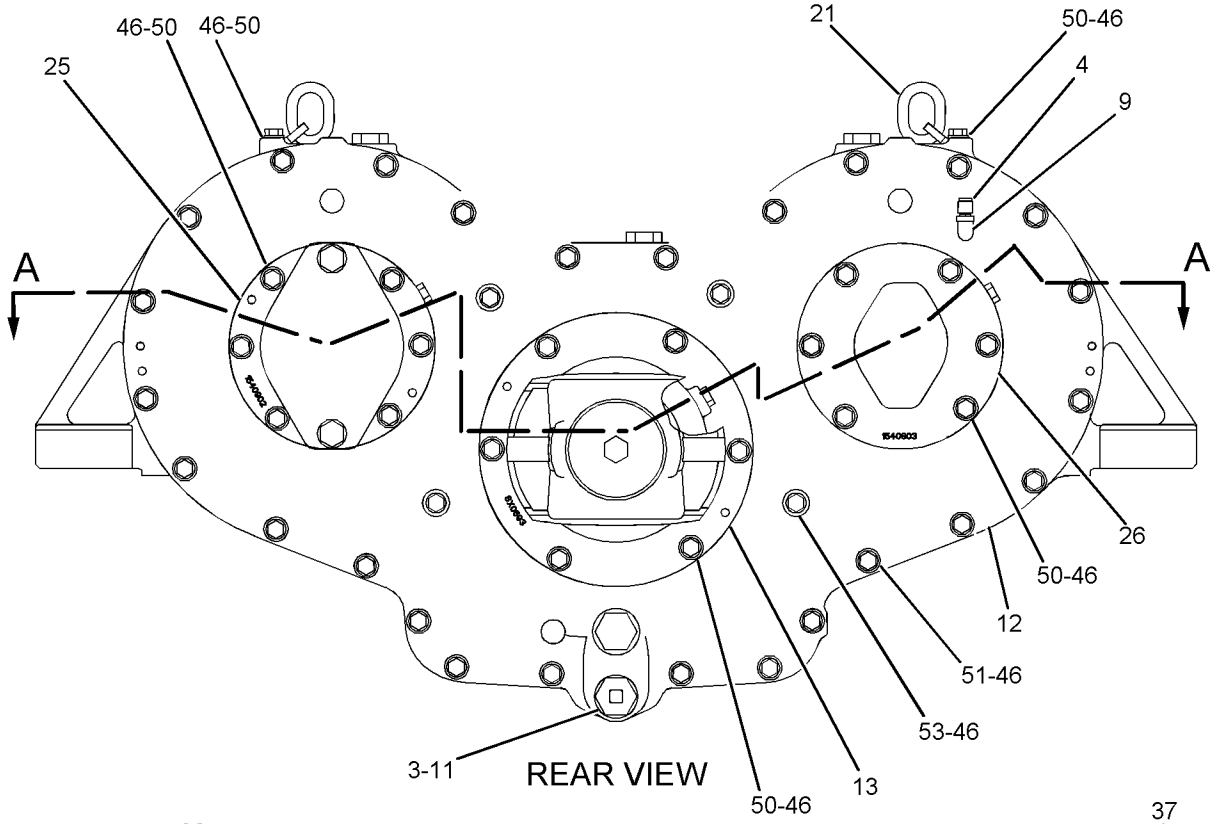

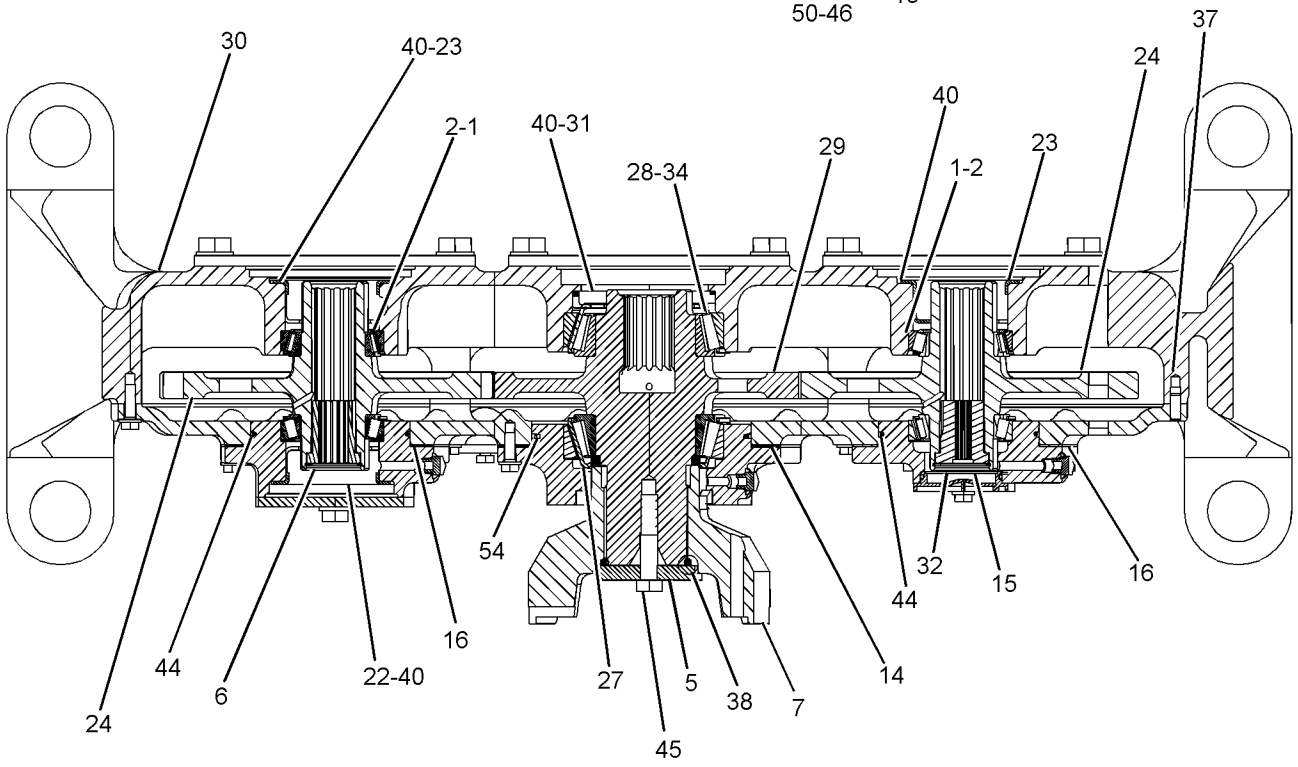

SECTION A-A

GRAPHIC #1 **<END>** g01145854

253-0417 FASTENER GP-FIXED AXLE

S/N: 4421-UP

PART OF 245-8813 INSTALLATION AR-FIELD

SMCS-3013 **i02149228**

NOTE	REF NO	GRAPHIC REF	PART NUMBER	QTY	PART NAME 1 2 3 4 5 6 (PRODUCT LEVEL)	SEE PAGE
	1	1	**253-0414**	8	SPACER (40.5X67X32-MM THK)	
M	2	1	**154-1586**	20	BOLT (MJ36X4X480-MM)	
	3	1	**5T-4896**	32	SPACER (40.5X67X12-MM THK)	
M	4	1	**8C-4032**	20	NUT (M36X4-THD)	

M-METRIC PART

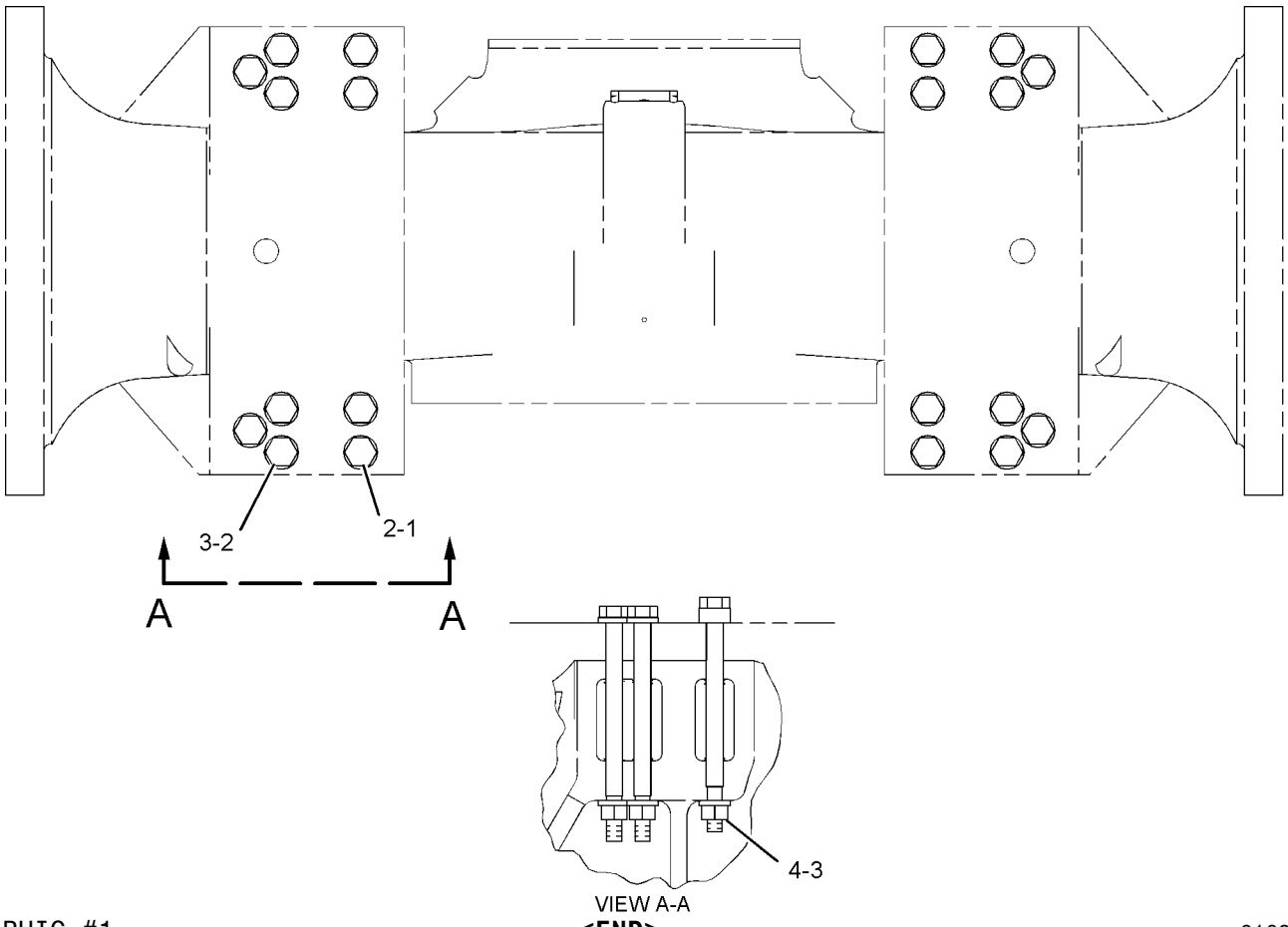

GRAPHIC #1

<END>

g01093994

8X-1741 FASTENER GP-OSCILLATING AXLE

S/N: 4421-UP

PART OF 245-8813 INSTALLATION AR-FIELD

SMCS-3013 **i00096190**

NOTE	REF NO	GRAPHIC REF	PART NUMBER	QTY	PART NAME 1 2 3 4 5 6 (PRODUCT LEVEL)	SEE PAGE
M	1	1	**9X-2198**	24	BOLT	
	2	1	**3S-6162**	24	WASHER-HARD (6MM THK)	

M-METRIC PART

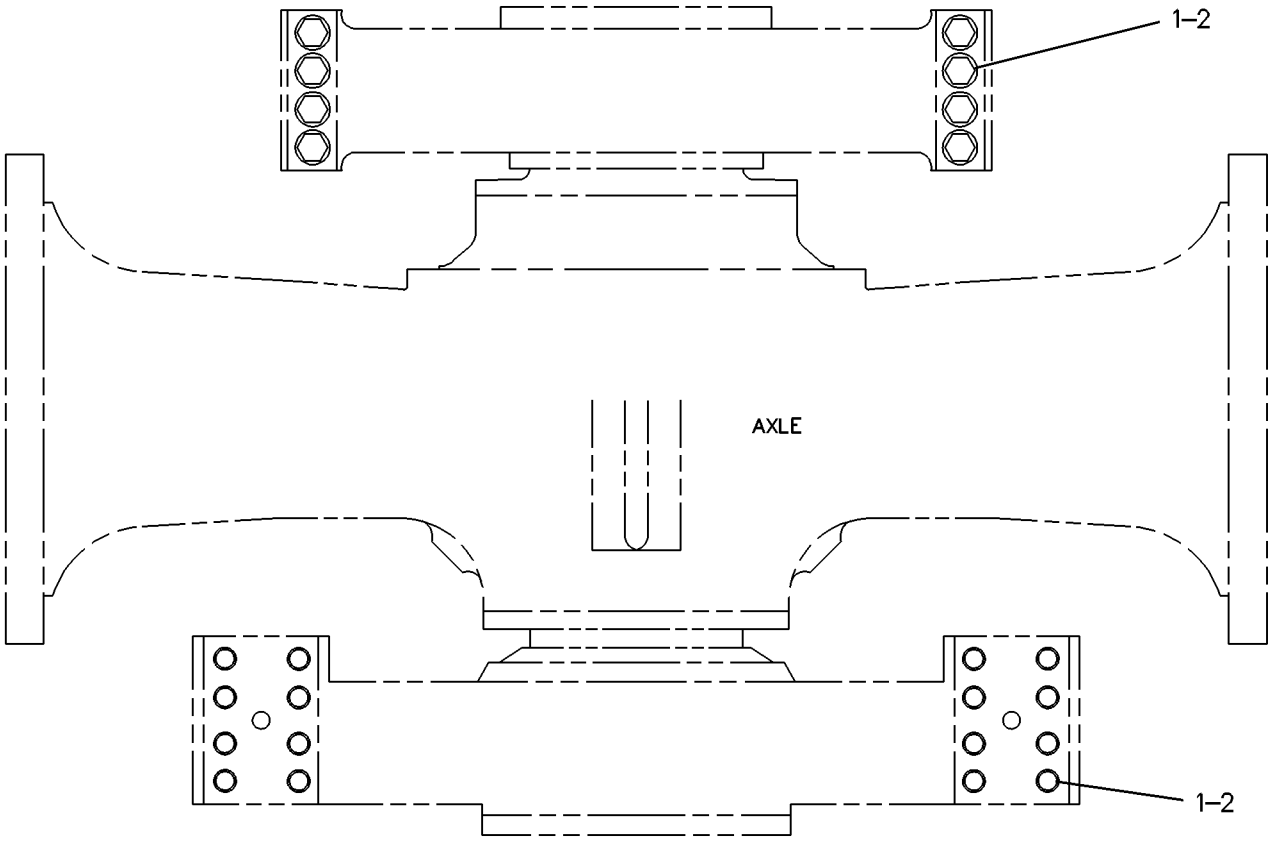

GRAPHIC #1 **<END>** g00082518

245-0685 FILLER GP-POWER TRAIN OIL

S/N: 4421-UP

PART OF 245-8809 POWER TRAIN AR

SMCS-3005, 3081 **i02420611**

NOTE	REF NO	GRAPHIC REF	PART NUMBER	QTY	PART NAME 1 2 3 4 5 6 (PRODUCT LEVEL)	SEE PAGE
	1	1	**4H-6112**	1	BREATHER	
	2	1	**6L-7527**	1	CAP-OIL FILLER	
BE	3	1	**5P-1293**		HOSE	
	4	1	**9M-0164**	2	CLAMP-HOSE	
	5	1	**6G-2263**	1	SPACER (10.5X19X28.5-MM THK)	
	6	1	**138-0588**	1	GAUGE AS-LIQUID LEVEL (POWER TRAIN OIL)	
		1	**114-4231**	2	BOLT-MOUNTING	
		1	**5J-2974**	4	SEAL-O-RING	
I	7	1	**246-2291**	1	HOSE AS	
	8	1	**251-6531**	1	TUBE AS	
	9	1	**251-6532**	1	TUBE AS	
I	10	1	**251-6534**	1	HOSE AS	
I	11	1	**251-6535**	1	HOSE AS	
I	12	1	**251-6536**	1	HOSE AS	
	13	1	**251-6538**	1	BRACKET AS	
M		1	**8T-3490**	1	NUT-WELD (M10X1.5-THD)	
	14	1	**251-6539**	1	TUBE AS	
I	15	1	**252-2653**	1	HOSE AS	
	16	1	*148-8345*	1	CONNECTOR AS	
		1	**2M-9780**	1	SEAL-O-RING	
		1	**6V-8398**	1	SEAL-O-RING	
		1	**6V-8638**	1	CONNECTOR	
	17	1	*148-8346*	1	ELBOW AS	
		1	**3K-0360**	1	SEAL-O-RING	
		1	**6V-8398**	1	SEAL-O-RING	
		1	**8T-1686**	1	ELBOW	
	18	1	*148-8412*	2	REDUCER AS	
					(EACH INCLUDES)	
		1	**6V-8398**	1	SEAL-O-RING	
		1	**6V-8944**	1	REDUCER-O-RING	
	19	1	*148-8436*	1	TEE AS	
		1	**3K-0360**	1	SEAL-O-RING	
		1	**6V-8398**	2	SEAL-O-RING	
		1	**6V-8775**	1	TEE-FACE SEAL	
	20	1	*148-8445*	1	FITTING GP-TEE	
		1	**5K-9090**	2	SEAL-O-RING	
		1	**6V-9847**	1	TEE-SWIVEL	
	21	1	*169-7394*	3	CONNECTOR AS	
					(EACH INCLUDES)	
		1	**3K-0360**	1	SEAL-O-RING	
		1	**5K-9090**	1	SEAL-O-RING	
		1	**8C-3370**	1	CONNECTOR	
	22	1	**1P-3708**	1	SEAL-RECTANGULAR	
	23	1	**1S-0994**	1	CLIP	
	24	1	**8M-2773**	1	CLIP	
	25	1	**6V-1572**	1	CLIP (SLOT)	
	26	1	**5K-9090**	2	SEAL-O-RING	
	27	1	**5P-4295**	1	CLIP	
	28	1	**5P-7854**	1	CLIP	
	29	1	**6F-0295**	1	CLIP	
	30	1	*161-9916*	1	ADAPTER GP	
		1	**2M-9780**	1	SEAL-O-RING	
		1	**6V-7420**	1	ADAPTER	
	31	1	**7J-8611**	1	ELBOW	
M	32	1	**8T-6868**	4	BOLT (M12X1.75X80-MM)	
M	33	1	**7X-2550**	4	BOLT (M12X1.75X110-MM)	

245-0685 **FILLER GP-POWER TRAIN OIL** *(contd.)* **i02420611**

NOTE	REF NO	GRAPHIC REF	PART NUMBER	QTY	PART NAME 1 2 3 4 5 6 (PRODUCT LEVEL)	SEE PAGE
	34	1	**8T-4121**	5	WASHER-HARD (11X21X2.5-MM THK)	
M	35	1	**8T-4133**	2	NUT (M10X1.15-THD)	
M	36	1	**8T-4136**	1	BOLT (M10X1.5X25-MM)	
M	37	1	**8T-4139**	2	BOLT (M12X1.75X30-MM)	
M	38	1	**8T-4195**	2	BOLT (M10X1.5X30-MM)	
	39	1	**8T-4223**	10	WASHER-HARD (13.5X25.5X3-MM THK)	
	40	1	**9X-6579**	2	NUT-ORIFICE (7/16-12-THD)	
M	41	1	**8T-4185**	1	BOLT (M10X1.5X50-MM)	
	42	1	**7X-7729**	1	WASHER (11X25X3-MM THK)	
	43	1	**7C-4355**	1	CLIP	
	44	1	**6V-1875**	1	GROMMET	
	45	1	**6V-1573**	1	CLIP (TAB)	

B-USE AS REQUIRED
E-ORDER BY THE CENTIMETER
I-REFER TO HYDRAULIC INFORMATION SYSTEM
M-METRIC PART

245-0685 **FILLER GP-POWER TRAIN OIL** *(contd.)* **i02420611**

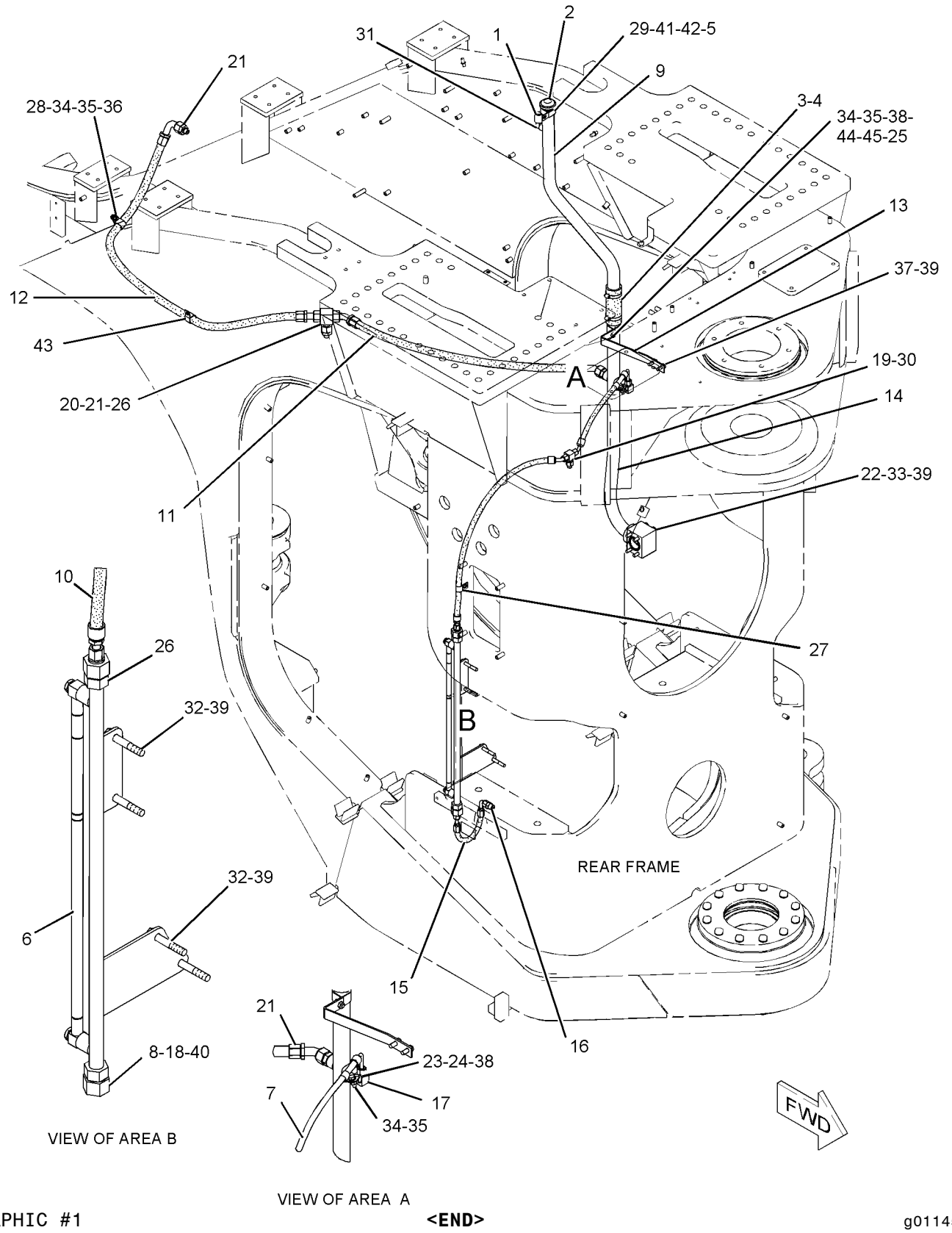

GRAPHIC #1 **<END>** g01145815

245-1305 FILTER & MTG GP-POWER TRAIN

S/N: 4421-UP

PART OF 245-8813 INSTALLATION AR-FIELD

SMCS-3004, 3067 **i02149224**

NOTE	REF NO	GRAPHIC REF	PART NUMBER	QTY	PART NAME 1 2 3 4 5 6 (PRODUCT LEVEL)	SEE PAGE
Y	1	1	*180-3377*	1	FILTER GP-OIL (POWER TRAIN)	420
	2	1	**250-5834**	1	SUPPORT AS	
M		1	**8T-3490**	3	NUT-WELD (M10X1.5-THD)	
		1	**9R-2613**	6	BOSS-WELD (M10X1.5X25-MM OAL)	
		1	**117-8721**	1	LUG (M10X1.5)	
Y	3	1	*133-1295*	1	FILTER GP-OIL (POWER TRAIN)	418
	4	1	**7X-7729**	8	WASHER (11X25X3-MM THK)	
M	5	1	**8T-4139**	6	BOLT (M12X1.75X30-MM)	
M	6	1	**8T-4195**	8	BOLT (M10X1.5X30-MM)	
	7	1	**8T-4223**	6	WASHER-HARD (13.5X25.5X3-MM THK)	

M-METRIC PART
Y-SEPARATE ILLUSTRATION

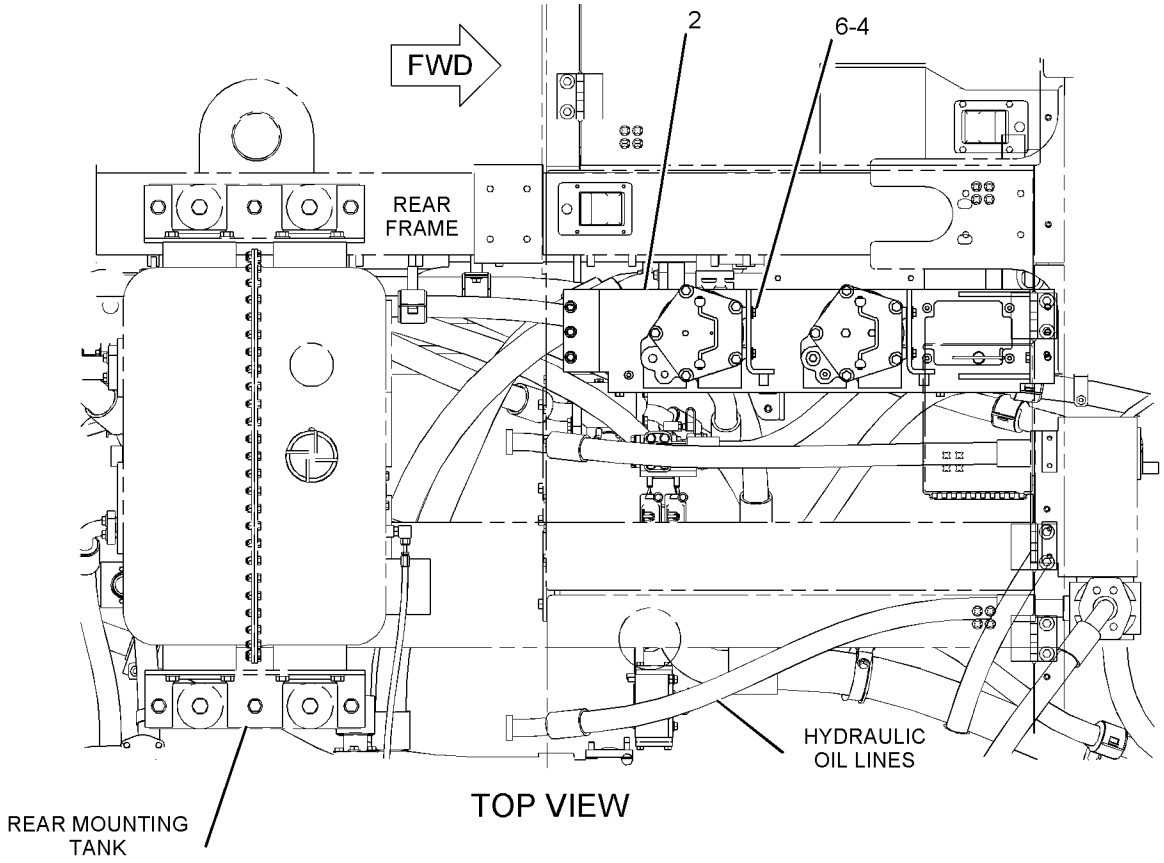

TOP VIEW

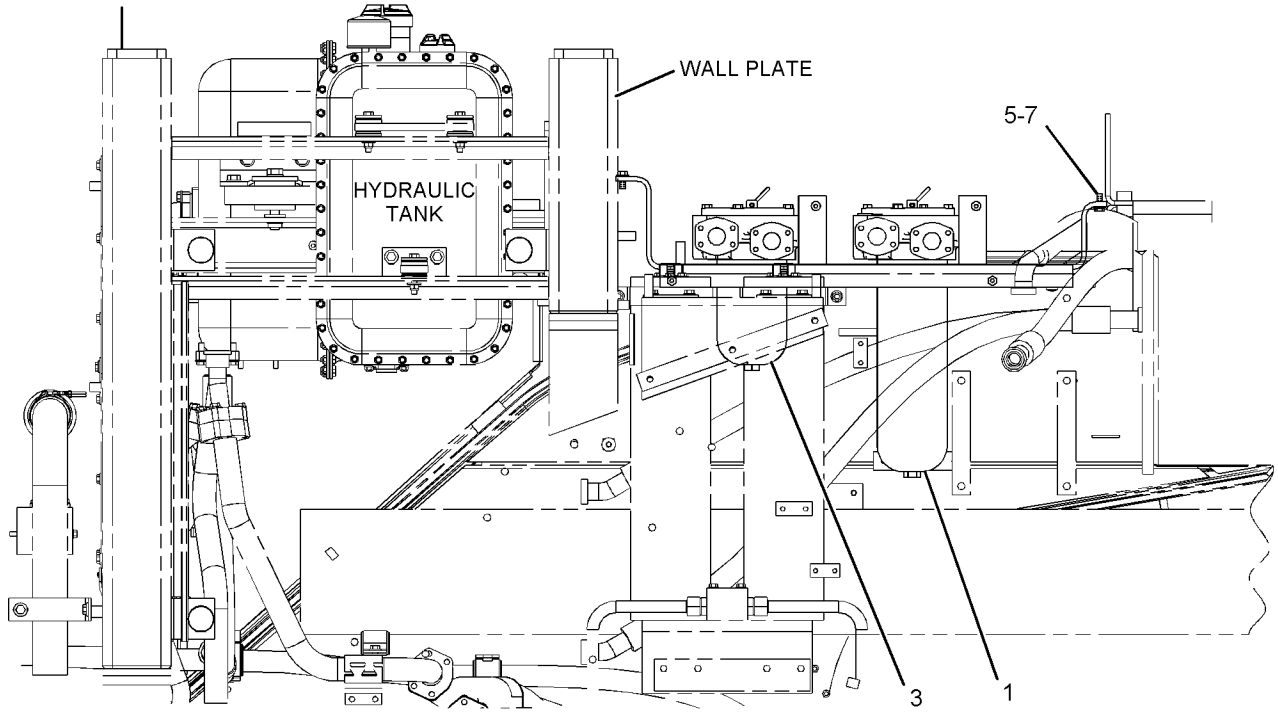

RIGHT SIDE VIEW

GRAPHIC #1

<END>

g01092103

133-1295 FILTER GP-OIL—POWER TRAIN

S/N: 4421-UP

PART OF 245-1305 FILTER & MTG GP-POWER TRAIN

SMCS-3004, 3067 **i02274774**

NOTE	REF NO	GRAPHIC REF	PART NUMBER	QTY	PART NAME 1 2 3 4 5 6 (PRODUCT LEVEL)	SEE PAGE
M	1	1	**8T-4956**	5	BOLT (M12X1.75X35-MM)	
	2	1	**9S-4191**	1	PLUG-O RING	
	3	1	**3J-1907**	1	SEAL-O-RING	
	4	1	**133-1276**	1	COVER AS	
		1	**133-8528**	1	STUD-TAPERLOCK	
	5	1	**2K-4472**	1	SEAL-O-RING	
	6	1	**6D-9157**	1	SEAL-O-RING	
	7	1	**202-9702**	1	HOUSING AS-FILTER	
	8	1	**132-8876**	1	FILTER ELEMENT AS-OIL (POWER TRAIN)	
	9	1	**4L-4986**	1	LOCKNUT (7/8-14-THD)	
	10	1	**9S-4183**	1	PLUG	
	11	1	**3D-2824**	2	SEAL-O-RING	
	12	1	**133-1299**	1	RETAINER	
	13	1	**133-2199**	1	SPRING	
	14	1	**6T-9222**	1	SPOOL	
	15	1	**9S-8008**	1	PLUG	
	16	1	**9S-4182**	1	PLUG	
	17	1	**3J-7354**	1	SEAL-O-RING	
	18	1	**9S-8005**	1	PLUG-O RING	
	19	1	**3K-0360**	1	SEAL-O-RING	

M-METRIC PART

133-1295 **FILTER GP-OIL** *(contd.)* **i02274774**

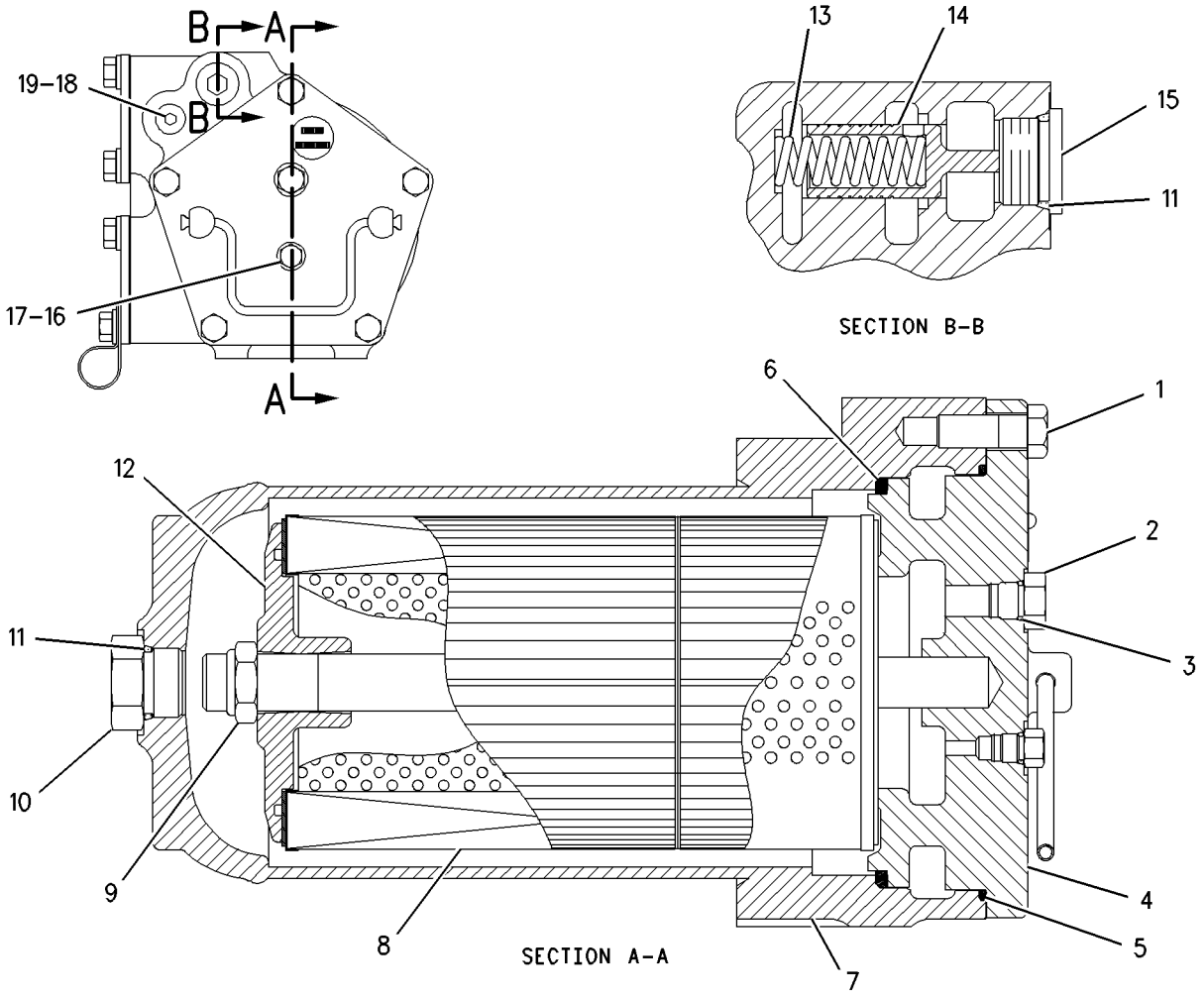

GRAPHIC #1 **<END>** g00796085

180-3377 FILTER GP-OIL—POWER TRAIN

S/N: 4421-UP

PART OF 245-1305 FILTER & MTG GP-POWER TRAIN

SMCS-3004, 3067 **i02312861**

NOTE	REF NO	GRAPHIC REF	PART NUMBER	QTY	PART NAME 1 2 3 4 5 6 (PRODUCT LEVEL)	SEE PAGE
M	1	1	**8T-4956**	5	BOLT (M12X1.75X35-MM)	
	2	1	**9S-4191**	1	PLUG-O RING	
	3	1	**3J-1907**	1	SEAL-O-RING	
	4	1	**8E-7683**	1	COVER AS	
		1	**8S-4784**	1	STUD-TAPERLOCK	
	5	1	**2K-4472**	1	SEAL-O-RING	
	6	1	**6D-9157**	1	SEAL-O-RING	
	7	1	**202-9708**	1	HOUSING AS-FILTER	
	8	1	**132-8876**	2	FILTER ELEMENT AS-OIL (POWER TRAIN)	
	9	1	**202-8058**	1	RETAINER	
	10	1	**9X-0941**	1	LOCKNUT (1/2-13-THD)	
	11	1	**9S-4183**	1	PLUG	
	12	1	**3D-2824**	2	SEAL-O-RING	
	13	1	**3S-9847**	1	RETAINER	
	14	1	**6T-9222**	1	SPOOL	
	15	1	**133-2199**	1	SPRING	
	16	1	**9S-8008**	1	PLUG	
	17	1	**9S-4182**	1	PLUG	
	18	1	**3J-7354**	1	SEAL-O-RING	
	19	1	**9S-8005**	1	PLUG-O RING	
	20	1	**3K-0360**	1	SEAL-O-RING	
	21	1	**1H-8128**	1	SEAL-O-RING	

M-METRIC PART

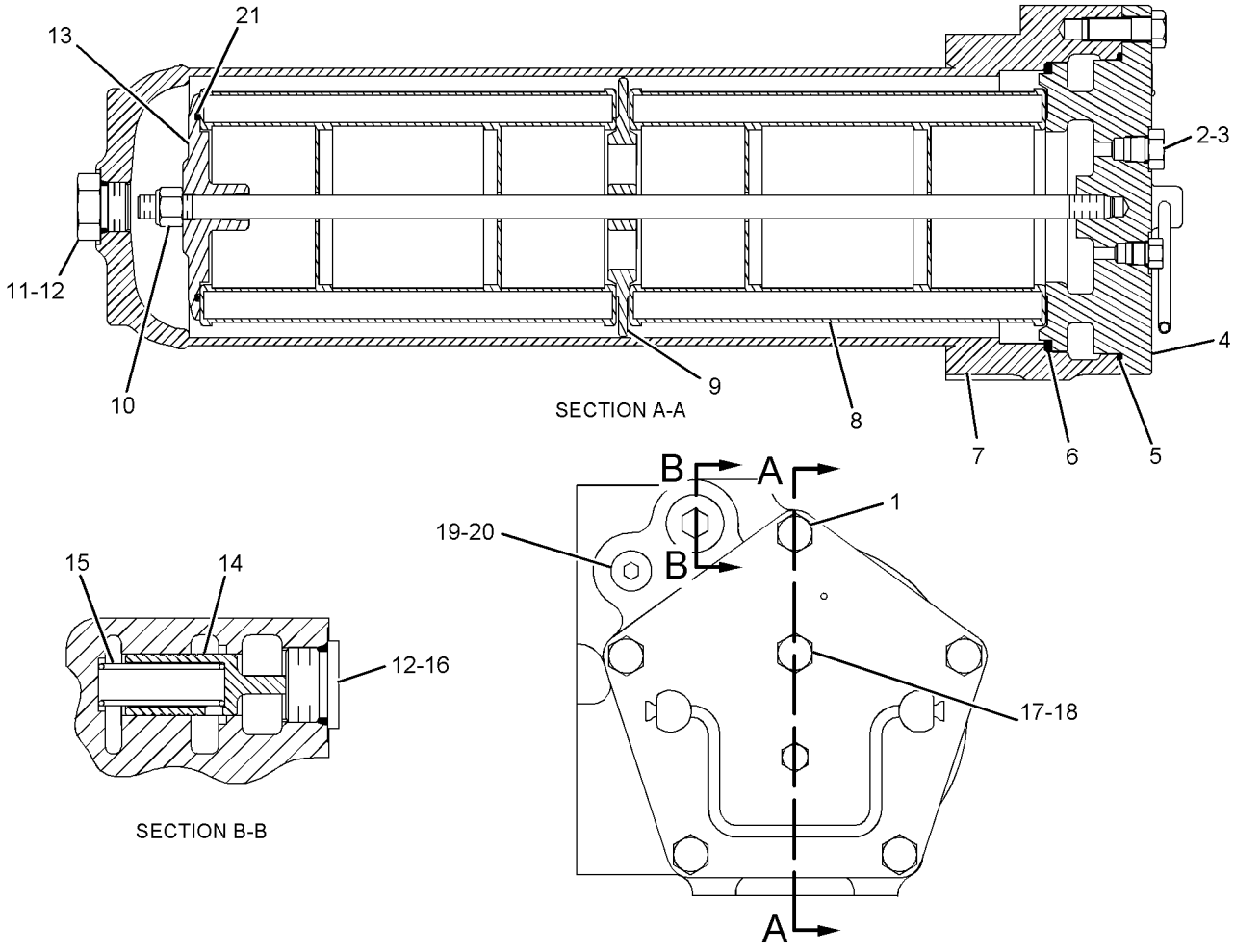

GRAPHIC #1 **<END>** g01097013

171-4619 GEAR GP-INPUT TRANSFER

S/N: DWX1-UP

PART OF 239-8137 TRANSMISSION AR

SMCS-3159 **i02151098**

NOTE	REF NO	GRAPHIC REF	PART NUMBER	QTY	PART NAME 1 2 3 4 5 6 (PRODUCT LEVEL)	SEE PAGE
	1	1	**148-0330**	4	BEARING	
	2	1	**4S-5879**	1	SEAL-O-RING	
	3	1	**6Y-6625**	1	CARRIER AS	
			8S-0527	1	PLUG-CUP	
	4	1	**6Y-6624**	4	SHAFT-PLANETARY	
	5	1	**6Y-6636**	1	YOKE AS	
		1	**2V-5906**	1	GUARD	
	6	1	**6Y-6640**	1	MANIFOLD	
	7	1	**6Y-6650**	1	COUPLING	
	8	1	**6Y-8655**	1	PLATE	
	9	1	**6Y-8853**	1	RETAINER	
	10	1	**8E-8316**	8	DISC-THRUST	
	11	1	**133-4296**	1	SEAL-LIP TYPE	
	12	1	**172-6024**	1	CAGE-BEARING	
	13	1	**172-6746**	1	GEAR-RING (94-TEETH)	
	14	1	**172-6747**	1	COUPLING	
	15	1	**172-7196**	1	RETAINER	
B	16	1	**172-7197**	1	SHIM PACK (INCLUDES 17-SHIMS)	
	17	1	**0S-1594**	4	BOLT (3/8-16X1-IN)	
	18	1	**108-2736**	1	RING-LOCK	
	19	1	**168-6915**	1	GEAR-SUN (38-TEETH)	
	20	1	**168-6916**	4	GEAR-PLANETARY (28-TEETH)	
	21	1	**1H-8278**	1	SEAL-O-RING	
	22	1	**1T-0550**	4	PIN-SPRING	
	23	1	**5F-3092**	1	SEAL-O-RING	
	24	1	**6P-7985**	1	RING-SEAL	
M	25	1	**6V-4248**	24	BOLT (M10X1.5X25-MM)	
	26	1	**6V-6765**	1	RING-RETAINING	
M	27	1	**6V-9667**	1	BOLT (M20X2.5X100-MM)	
	28	1	**6Y-8249**	1	BEARING AS-ROLLER	
	29	1	**8E-1218**	1	RING-RETAINING	
M	30	1	**8T-0646**	11	BOLT (M12X1.75X110-MM)	
M	31	1	**8T-5044**	2	BOLT (M12X1.75-THD)	

B-USE AS REQUIRED
M-METRIC PART

171-4619 **GEAR GP-INPUT TRANSFER** *(contd.)* **i02151098**

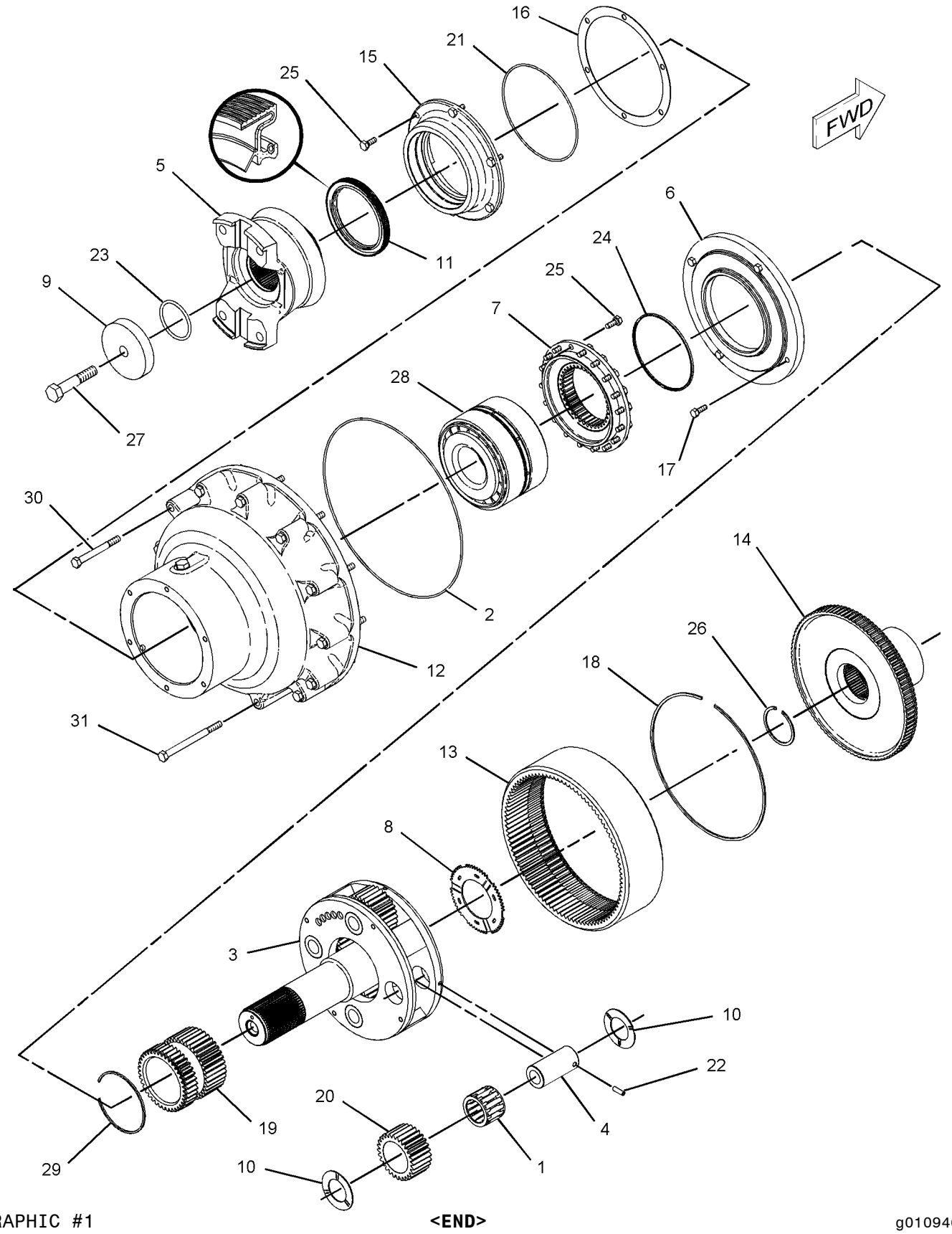

GRAPHIC #1 **<END>** g01094642

POWER TRAIN

239-8138 GEAR GP-OUTPUT TRANSFER

S/N: DWX1-UP

PART OF 239-8137 TRANSMISSION AR

SMCS-3075, 3159 **i02289379**

NOTE	REF NO	GRAPHIC REF	PART NUMBER	QTY	PART NAME 1 2 3 4 5 6 (PRODUCT LEVEL)	SEE PAGE
	1	1	**1P-4695**	2	CUP-BEARING	
	2	1	**1P-4696**	2	CONE-BEARING	
	3	1	**2J-7227**	2	CUP-BEARING	
	4	1	**2J-8914**	2	CONE-BEARING	
	5	1	**5P-2523**	2	CONE-BEARING	
	6	1	**5P-2525**	2	CUP-BEARING	
	7	1	**9W-4162**	1	BEARING	
	8	1	**6I-9790**	4	DAMPER-BOLT	
	9	1	**6Y-6614**	1	PLATE-RETAINER	
	10	1	**6Y-6616**	1	SPACER (115X140X10-MM THK)	
	11	1	**6Y-6638**	2	YOKE AS	
	12	1	**6Y-6681**	2	PLATE	
	13	2	**6Y-8242**	1	TUBE AS-DRAIN	
		2	**1A-2358**	1	PLUG-CUP	
		2	**6Y-8239**	1	FLANGE	
		2	**6Y-8241**	1	ADAPTER	
	14	1	**8E-7217**	1	COVER	
B	15	1	**8E-9103**	1	SHIM PACK (INCLUDES 7-SHIMS)	
	16	1	**8P-3251**	3	COVER AS	
					(EACH INCLUDES)	
		1	**7B-3028**	2	SCREW-DRIVE (NO 4X3/16-IN)	
		1	**7S-2962**	1	WASHER-SPRING (52.3X82.5X9.1-MM THK)	
		1	**8P-1722**	1	COVER	
	17	1	**9W-5531**	3	TUBE AS (MAGNETIC)	
					(EACH INCLUDES)	
		1	**8M-7160**	4	MAGNET	
	18	1	**168-4345**	1	GEAR-TRANSFER (45-TEETH)	
	19	1	**168-4346**	1	GEAR-TRANSFER (43-TEETH)	
	20	1	**168-4347**	1	GEAR-TRANSFER (45-TEETH)	
	21	1	**168-4350**	1	SHAFT-IDLER	
	22	1	**168-4351**	1	SHAFT	
	23	1	**168-4353**	1	CAGE-BEARING	
	24	1	**168-9882**	1	GEAR-TRANSFER (43-TEETH)	
	25	1	**168-9883**	1	GEAR-TRANSFER (80-TEETH)	
Y	26	1	**169-2677**	1	CASE GP-GEAR	389
B	27	1	**169-2678**	1	SHIM PACK (INCLUDES 24-SHIMS)	
	28	1	**169-2679**	1	SPACER (116X140X97-MM THK)	
	29	1	**169-2680**	1	LOCK SET	
	30	1	**169-2681**	1	CAP	
B	31	1	**169-2682**	1	SHIM PACK (INCLUDES 24-SHIMS)	
	32	1	**169-2683**	1	CAGE AS	
		1	**2D-6642**	2	BALL	
M		1	**8C-0623**	2	STUD-TAPERLOCK	
		1	**168-4354**	1	CAGE-BEARING	
	33	1	**171-2934**	1	CAGE-BEARING	
	34	1	**172-4235**	1	BEARING AS	
	35	2	**174-5671**	1	SLEEVE	
	36	2	**174-5674**	1	SLEEVE	
	37	1	**177-6894**	1	CAGE AS	
		1	**4B-9784**	1	BALL	
		1	**168-4355**	1	CAGE	
	38	2	**185-2035**	1	BLOCK	
	39	2	**185-2036**	1	BLOCK	
	40	2	**185-2038**	1	BLOCK	
	41	2	**185-2297**	1	BLOCK AS	
	42	2	**185-2298**	1	BLOCK AS	

239-8138 **GEAR GP-OUTPUT TRANSFER** *(contd.)* **i02289379**

NOTE	REF NO	GRAPHIC REF	PART NUMBER	QTY	PART NAME 1 2 3 4 5 6 (PRODUCT LEVEL)	SEE PAGE
	43	2	**185-2299**	1	BLOCK AS	
	44	2	**185-2300**	1	BLOCK AS	
	45	2	**185-3534**	1	TUBE AS	
	46	2	**185-3535**	1	TUBE AS	
	47	2	**185-3536**	1	TUBE AS	
	48	2	**185-3537**	1	TUBE AS	
	49	2	**185-3538**	1	TUBE AS	
	50	2	**185-3539**	1	TUBE AS	
	51	2	**185-3540**	1	TUBE AS	
	52	2	**185-3541**	1	TUBE AS	
	53	1	**220-6296**	1	SHAFT-OUTPUT	
	55	2	**254-1594**	1	BRACKET AS	
M		2	**8T-3490**	1	NUT-WELD (M10X1.5-THD)	
	56	1	**030-4605**	2	SEAL-O-RING	
M	57	1	**098-6000**	2	BOLT (M20X2.5X390-MM)	
	58	1	**116-9328**	2	SEAL-LIP TYPE	
	59	1	**1J-2859**	2	SEAL-O-RING	
	60	1	**1T-0132**	1	SEAL-O-RING	
	61	1	**2D-9572**	2	SEAL-O-RING	
	62	1	**5F-7054**	1	SEAL-O-RING	
	63	1	**2M-9780**	1	SEAL-O-RING	
	64	1	**3E-4371**	1	RING-RETAINING	
	65	1	**3F-5792**	1	SEAL-O-RING	
	66	2	**3K-0360**	16	SEAL-O-RING	
	67	1	**3S-3875**	3	SCREEN-SUCTION	
	68	2	**5F-3092**	2	SEAL-O-RING	
	69	2	**5P-1076**	1	WASHER-HARD (13.5X30X4-MM THK)	
	70	1	**5P-1979**	1	SEAL-O-RING	
	71	1	**5P-8247**	2	WASHER-HARD (17X32X3.5-MM THK)	
	72	1	**5P-8248**	2	WASHER-HARD (20X36.5X3.5-MM THK)	
	73	1	**5P-9147**	1	SEAL-O-RING	
	74	2	**6V-4365**	4	SEAL-O-RING	
M	75	1,2	**6V-5684**	16	BOLT (M12X1.75X45-MM)	
	76	1	**6V-5839**	10	WASHER (11X21X2.5-MM THK)	
M	77	1	**6V-5842**	22	BOLT (M10X1.5X40-MM)	
M	78	1	**6V-7673**	34	BOLT (M12X1.75X50-MM)	
M	79	2	**6V-7981**	6	BOLT (M10X1.5X70-MM)	
M	80	1	**6V-3823**	17	BOLT (M12X1.75X60-MM)	
	81	2	**6V-8398**	16	SEAL-O-RING	
	82	2	**6V-8639**	14	CONNECTOR	
	83	2	**6V-8775**	1	TEE-FACE SEAL	
M	84	1	**6V-9667**	2	BOLT (M20X2.5X100-MM)	
M	85	2	**7X-0909**	2	BOLT (M12X1.75X140-MM)	
	86	1	**8H-7521**	3	SEAL-O-RING	
M	87	2	**8T-0643**	2	BOLT (M10X1.5X80-MM)	
M	88	1	**8T-4132**	2	NUT (M16X2-THD)	
M	89	2	**8T-4183**	1	BOLT (M12X1.75X40-MM)	
	90	2	**9S-4185**	1	PLUG	
	91	1	**9S-4190**	1	PLUG	
	92	1	**9W-4163**	1	RACE-ROLLER BEARING	
	93	2	**6V-6640**		SEALANT	

B-USE AS REQUIRED
M-METRIC PART
Y-SEPARATE ILLUSTRATION

239-8138 **GEAR GP-OUTPUT TRANSFER** *(contd.)* **i02289379**

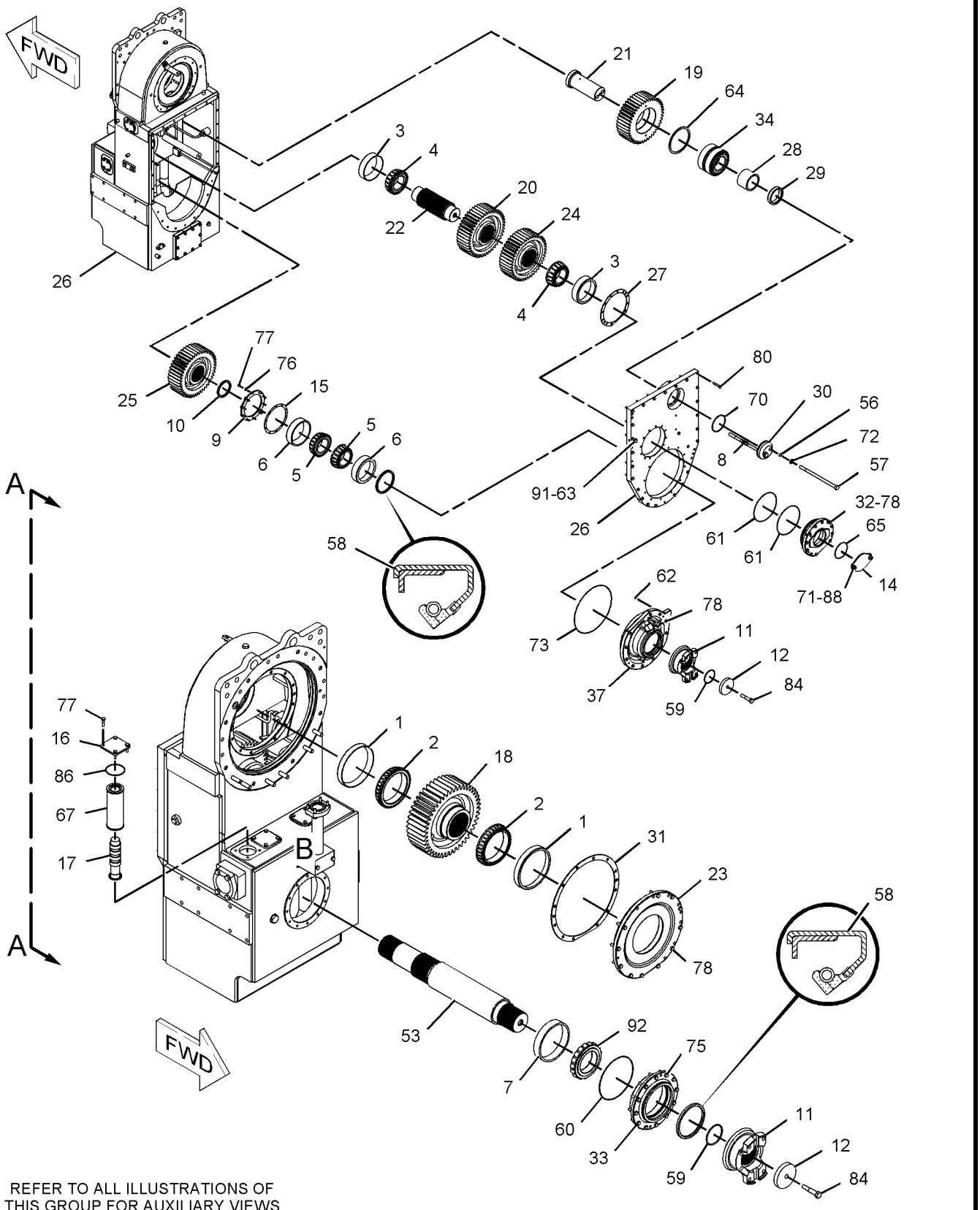

REFER TO ALL ILLUSTRATIONS OF
THIS GROUP FOR AUXILIARY VIEWS

GRAPHIC #1

g01095316

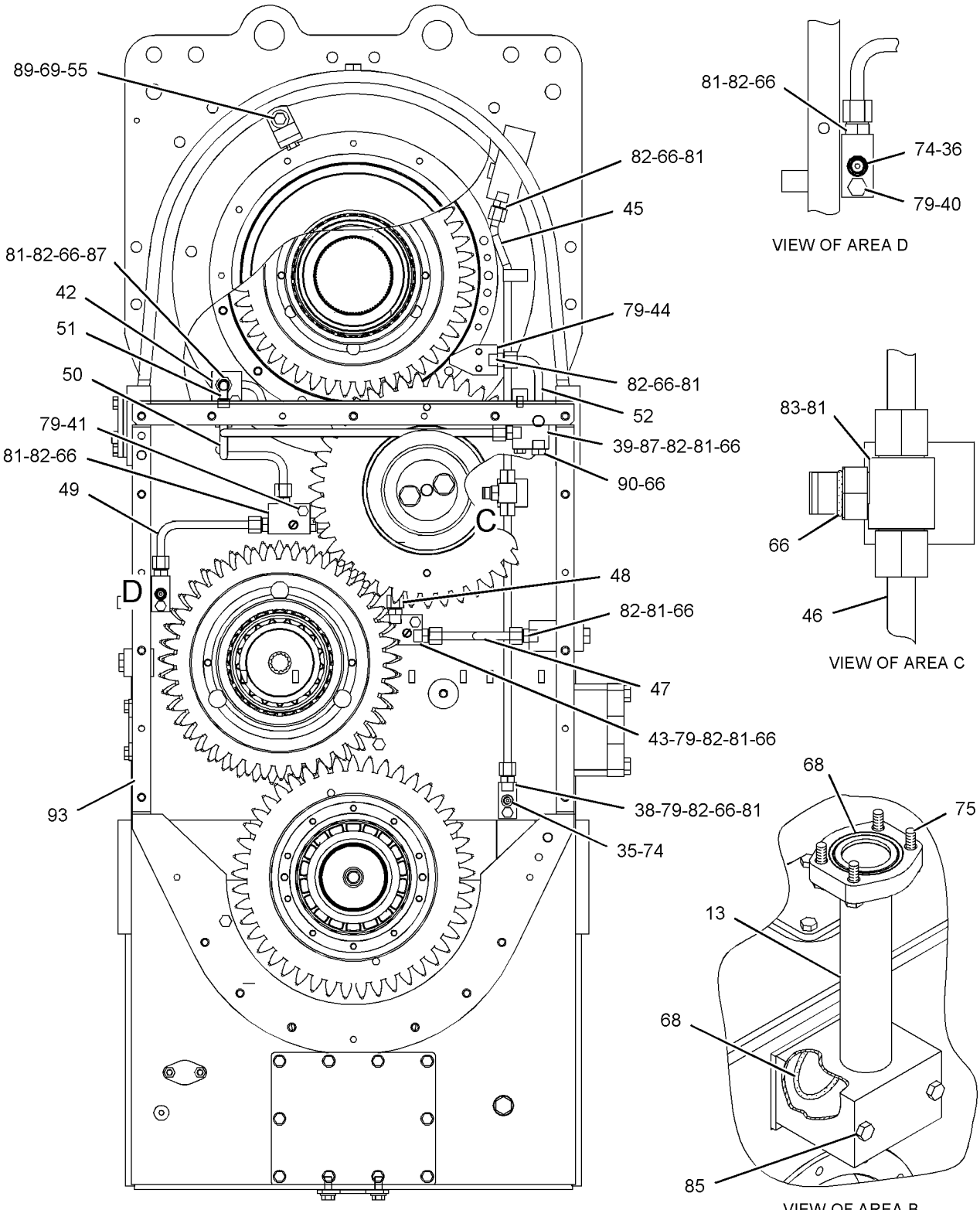

VIEW A-A
(SOME PARTS HAVE BEEN REMOVED FOR CLARITY)

GRAPHIC #2 **<END>** g01146070

POWER TRAIN

244-7320 LINES GP-POWER TAKE-OFF—PUMP DRIVE

S/N: 4421-UP

PART OF 244-7300 HYDRAULIC AR-FRONT

SMCS-3016 **i02289403**

NOTE	REF NO	GRAPHIC REF	PART NUMBER	QTY	PART NAME 1 2 3 4 5 6 (PRODUCT LEVEL)	SEE PAGE
	1	1	**6V-0852**	1	CAP-DUST	
	2	1	**8X-1389**	1	TUBE AS	
	3	1	**109-6511**	1	TEE-O-RING	
	4	1	*164-5611*	1	TEE AS	
		1	**6V-9746**	1	SEAL-O-RING	
		1	**7M-8485**	1	SEAL-O-RING	
		1	**8T-3312**	1	TEE	
I	5	1	**237-7232**	1	HOSE AS	
	6	1	**264-8280**	1	TUBE AS	
	7	1	**264-8281**	1	TUBE AS	
	8	1	**264-8282**	1	TUBE AS	
	9	1	**264-8283**	1	TUBE AS	
	10	1	**264-8284**	1	TUBE AS	
	11	1	**264-8285**	1	TUBE AS	
	12	1	**264-8286**	1	BLOCK	
I	13	1	**264-8300**	1	HOSE AS	
	14	1	**081-6344**	2	SPACER (13.3X21.3X25-MM THK)	
	15	1	*148-8305*	1	ADAPTER AS	
		1	**3J-1907**	1	SEAL-O-RING	
		1	**5P-9617**	1	ADAPTER	
	16	1	*148-8335*	2	CONNECTOR AS	
					(EACH INCLUDES)	
		1	**5K-9090**	1	SEAL-O-RING	
		1	**7M-8485**	1	SEAL-O-RING	
		1	**6V-8635**	1	CONNECTOR	
	17	1	*148-8370*	1	ELBOW AS	
		1	**6V-8398**	1	SEAL-O-RING	
		1	**6V-9851**	1	ELBOW	
	18	1	*148-8381*	3	ELBOW AS	
					(EACH INCLUDES)	
		1	**3D-2824**	1	SEAL-O-RING	
		1	**6V-8398**	1	SEAL-O-RING	
		1	**8T-5429**	1	ELBOW	
	19	1	*148-8392*	2	ELBOW AS	
					(EACH INCLUDES)	
		1	**6V-9746**	1	SEAL-O-RING	
		1	**6V-9853**	1	ELBOW	
	20	1	*148-8428*	2	TEE AS	
					(EACH INCLUDES)	
		1	**3K-0360**	1	SEAL-O-RING	
		1	**6V-8398**	2	SEAL-O-RING	
		1	**6V-8782**	1	TEE	
	21	1	*148-8436*	1	TEE AS	
		1	**3K-0360**	1	SEAL-O-RING	
		1	**6V-8398**	2	SEAL-O-RING	
		1	**6V-8775**	1	TEE-FACE SEAL	
	22	1	*150-4043*	3	CONNECTOR AS	
					(EACH INCLUDES)	
		1	**3J-1907**	1	SEAL-O-RING	
		1	**6V-8398**	1	SEAL-O-RING	
		1	**6V-9873**	1	CONNECTOR	
	23	1	*153-6237*	2	ELBOW AS	
					(EACH INCLUDES)	
		1	**3D-2824**	1	SEAL-O-RING	
		1	**6V-9746**	1	SEAL-O-RING	
		1	**6V-9004**	1	ELBOW	

244-7320 LINES GP-POWER TAKE-OFF *(contd.)* i02289403

NOTE	REF NO	GRAPHIC REF	PART NUMBER	QTY	PART NAME 1 2 3 4 5 6 (PRODUCT LEVEL)	SEE PAGE
	24	1	*164-5590*	1	VALVE AS-FLUID SAMPLING (PUMP DRIVE OIL)	
		1	**3J-7354**	1	SEAL-O-RING	
		1	**8C-3446**	1	VALVE-FLUID SAMPLING (PUMP DRIVE OIL)	
	25	1	**6V-9746**	1	SEAL-O-RING	
	26	1	**7M-8485**	1	SEAL-O-RING	
	27	1	**8T-4121**	2	WASHER-HARD (11X21X2.5-MM THK)	
M	28	1	**8T-6685**	2	BOLT (M10X1.5X110-MM)	

I-REFER TO HYDRAULIC INFORMATION SYSTEM
M-METRIC PART

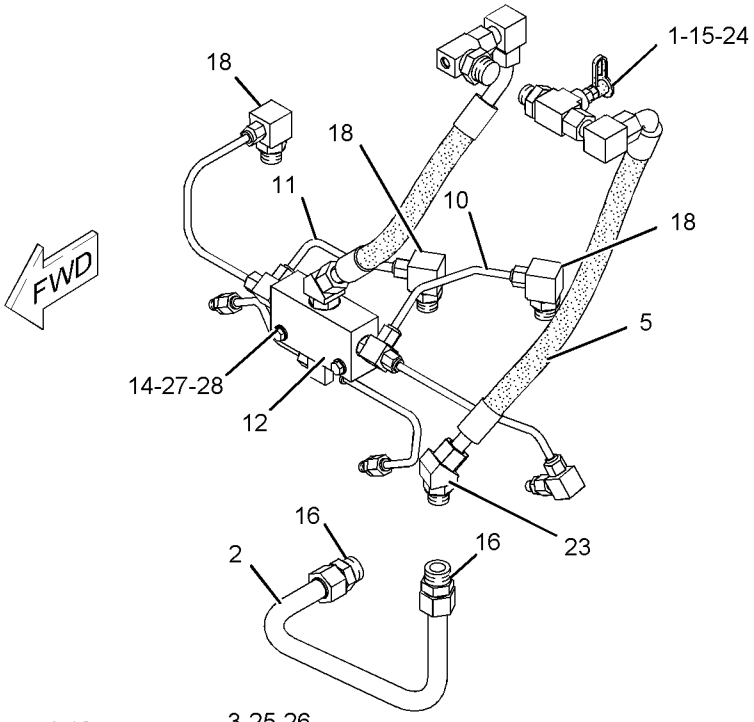

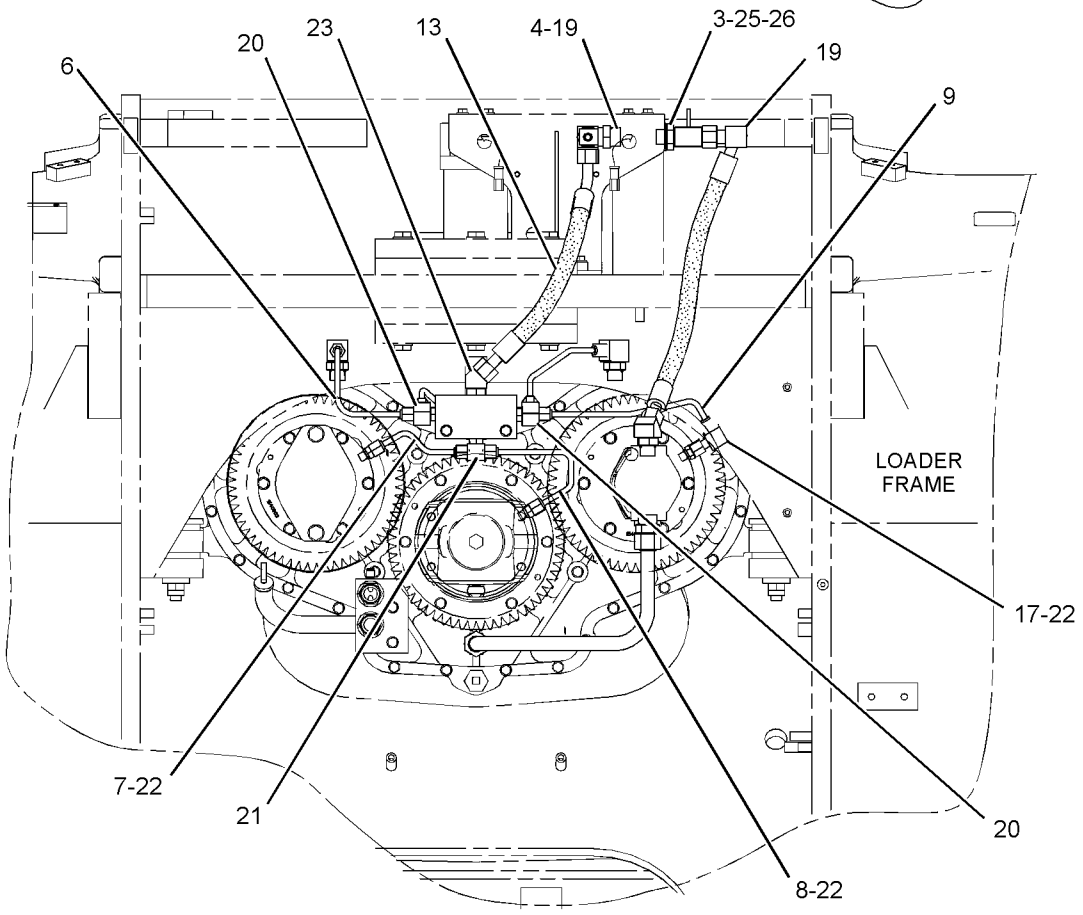

FRONT VIEW

GRAPHIC #1 **<END>** g01146270

POWER TRAIN

245-1285 LINES GP-TRANSMISSION OIL

S/N: 4421-UP

PART OF 245-0700 HYDRAULIC AR-REAR

SMCS-3016, 3154 **i02312863**

NOTE	REF NO	GRAPHIC REF	PART NUMBER	QTY	PART NAME 1 2 3 4 5 6 (PRODUCT LEVEL)	SEE PAGE
	1	4	**5H-4744**	1	SPACER (7/16-IN THK)	
	2	2	**5T-8877**	2	ELBOW	
Y	3	2	**6I-8563**	1	VALVE GP-TORQUE CONV PRIORITY	493
	4	3	**8X-3219**	1	ELBOW	
	5	3	**8X-3504**	1	BLOCK	
	6	2	**8X-4660**	2	FLANGE	
	7	1,2	**8X-4886**	2	ELBOW	
	8	4	**8X-7522**	1	BRACKET AS	
M		4	**8T-3597**	1	NUT-WELD (M12X1.75-THD)	
	9	1	**102-3478**	1	FLANGE	
	10	1	*148-8443*	1	TEE GP	
		1	**3J-1907**	1	SEAL-O-RING	
		1	**6V-8397**	1	SEAL-O-RING	
		1	**7X-2459**	1	TEE-O-RING	
	11	4	**184-6949**	1	BLOCK	
	12	2	**185-0004**	1	CONNECTOR AS	
	13	3	**187-0578**	1	ADAPTER	
	14	1,4	**196-5052**	1	CLIP (SLOT)	
	15	1	**196-5053**	1	CLIP (TAB)	
	16	1,2,3	**197-3295**	14	FLANGE-HALF	
	17	2	*216-2817*	1	UNION AS	
		2	**6V-8400**	2	SEAL-O-RING	
		2	**110-9160**	1	UNION	
I	18	2	*240-7177*	1	HOSE AS	
I	19	3	**244-1018**	1	HOSE AS	
	20	1	**244-4869**	1	TUBE AS	
	21	1	**244-4871**	1	TUBE AS	
	22	1	**244-7341**	1	BLOCK	
	23	3	**245-0679**	1	BLOCK	
	24	1	**245-1272**	1	BLOCK	
I	25	1	**245-1323**	1	HOSE AS	
I	26	3	**245-1326**	1	HOSE AS	
I	27	3	**245-1327**	1	HOSE AS	
I	28	1	**245-1328**	1	HOSE AS	
I	29	1	**245-1329**	1	HOSE AS	
I	30	1	**245-1813**	1	HOSE AS	
I	31	2	**245-1816**	1	HOSE AS	
I	32	1	**245-1817**	1	HOSE AS	
	33	3	**245-1818**	1	TUBE AS	
	34	1	**245-1821**	1	TUBE AS	
		1	**9S-7583**	1	PLUG	
I	35	3	**245-1823**	1	HOSE AS	
I	36	3	**245-1825**	1	HOSE AS	
I	37	3	**249-3707**	1	HOSE AS	
I	38	3	**249-3711**	1	HOSE AS	
	39	2	**251-5720**	1	BLOCK	
	40	2	**251-5721**	1	BLOCK	
	41	3	**252-5369**	1	BRACKET AS	
	42	3	**252-5371**	1	BRACKET AS	
	43	1	**252-5373**	1	TUBE AS	
		1	**6V-0422**	1	PLUG	
I	44	3	**252-5374**	1	HOSE AS	
	45	1	**252-5376**	1	TUBE AS	
		1	**6V-0422**	1	PLUG	
I	46	3	**252-5377**	1	HOSE AS	
	47	3	**252-5378**	1	TUBE AS	

245-1285 **LINES GP-TRANSMISSION OIL** *(contd.)* **i02312863**

NOTE	REF NO	GRAPHIC REF	PART NUMBER	QTY	PART NAME 1 2 3 4 5 6 (PRODUCT LEVEL)	SEE PAGE
	48	4	**252-5382**	1	BRACKET	
	49	4	**254-1594**	1	BRACKET AS	
M		4	**8T-3490**	1	NUT-WELD (M10X1.5-THD)	
	50	3	*260-9192*	1	CONNECTOR AS	
		3	**2S-4078**	1	SEAL-O-RING	
		3	**6V-8400**	1	SEAL-O-RING	
		3	**268-1512**	1	CONNECTOR	
	51	3	*260-9193*	1	CONNECTOR AS	
		3	**6K-6307**	1	SEAL-O-RING	
		3	**8T-0315**	1	SEAL-O-RING	
		3	**268-1513**	1	CONNECTOR	
I	52	1	**263-7301**	1	HOSE AS	
I	53	3	**264-4808**	1	HOSE AS	
I	54	1	**264-4809**	1	HOSE AS	
I	55	1	**264-4810**	1	HOSE AS	
	56	1	**264-4811**	1	TUBE AS	
I	57	1	**264-4812**	1	HOSE AS	
I	58	3	**264-4813**	1	HOSE AS	
	59	2	**265-3187**	1	BRACKET	
I	60	2	**265-3188**	1	HOSE AS	
I	61	2	**265-3190**	1	HOSE AS	
	62	1	**125-7131**	1	CLIP	
	63	1	*148-8318*	1	CONNECTOR AS	
		1	**3K-0360**	1	SEAL-O-RING	
		1	**6V-8397**	1	SEAL-O-RING	
		1	**6V-8634**	1	CONNECTOR	
	64	1,2,3	*148-8325*	3	CONNECTOR AS	
					(EACH INCLUDES)	
		1,2,3	**3J-1907**	2	SEAL-O-RING	
		1,2,3	**4J-5477**	2	SEAL-O-RING	
		1,2,3	**6V-8641**	2	CONNECTOR	
	65	2,3	*148-8334*	2	CONNECTOR AS	
					(EACH INCLUDES)	
		2,3	**2S-4078**	1	SEAL-O-RING	
		2,3	**6V-8400**	1	SEAL-O-RING	
		2,3	**8T-3611**	1	CONNECTOR	
	66	1,3	*148-8346*	2	ELBOW AS	
					(EACH INCLUDES)	
		1,3	**3K-0360**	1	SEAL-O-RING	
		1,3	**6V-8398**	1	SEAL-O-RING	
		1,3	**8T-1686**	1	ELBOW	
	67	3	*148-8347*	1	ELBOW AS	
		3	**3D-2824**	1	SEAL-O-RING	
		3	**6V-9007**	1	ELBOW	
		3	**6V-9746**	1	SEAL-O-RING	
	68	3	*148-8356*	1	ELBOW AS	
		3	**2S-4078**	1	SEAL-O-RING	
		3	**6V-8400**	1	SEAL-O-RING	
		3	**6V-9009**	1	ELBOW	
	69	2	*148-8387*	1	ELBOW GP	
		2	**6V-8400**	1	SEAL-O-RING	
		2	**6V-9855**	1	ELBOW	
	70	3	*148-8388*	1	ELBOW AS	
		3	**2M-9780**	1	SEAL-O-RING	
		3	**6V-8629**	1	ELBOW	
		3	**6V-9746**	1	SEAL-O-RING	
	71	1,3	*148-8407*	2	PLUG AS	
					(EACH INCLUDES)	
		1,3	**3J-1907**	1	SEAL-O-RING	

245-1285 **LINES GP-TRANSMISSION OIL** *(contd.)* **i02312863**

NOTE	REF NO	GRAPHIC REF	PART NUMBER	QTY	PART NAME 1 2 3 4 5 6 (PRODUCT LEVEL)	SEE PAGE
		1,3	**9S-4191**	1	PLUG-O RING	
	72	2	*163-1057*	1	TEE AS	
		2	**6V-8400**	2	SEAL-O-RING	
		2	**7X-2429**	1	TEE-SWIVEL	
	73	2	*164-5590*	2	VALVE AS-FLUID SAMPLING (TRANSMISSION OIL)	
					(EACH INCLUDES)	
		2	**3J-7354**	1	SEAL-O-RING	
		2	**8C-3446**	1	VALVE-FLUID SAMPLING (TRANSMISSION OIL)	
	74	3	**165-3938**	1	ADAPTER-TEE	
	75	2	*250-1423*	3	ELBOW AS	
					(EACH INCLUDES)	
		2	**6V-8400**	2	SEAL-O-RING	
		2	**6V-8985**	1	ELBOW	
	76	2,3	**1P-3706**	4	SEAL-RECTANGULAR	
	77	1	**1P-3707**	3	SEAL-RECTANGULAR	
	78	1	**1P-3708**	1	SEAL-RECTANGULAR	
	79	1,2,4	**1P-3709**	5	SEAL-RECTANGULAR	
	80	1,2,3,4	**1P-4579**	12	FLANGE-HALF	
	81	1,2,3,4	**1P-4582**	34	FLANGE-HALF	
	82	1,3	**1P-7016**	4	FLANGE-HALF	
	83	3	**1S-1015**	1	CLIP	
	84	1,3	**2H-3934**	2	SEAL-O-RING	
	85	3	**2J-5608**	1	COVER	
	86	3	**2S-4078**	1	SEAL-O-RING	
	87	1,4	**2V-0600**	6	CLAMP-HALF	
	88	2	**3K-0360**	2	SEAL-O-RING	
	89	2	**3P-1932**	2	ADAPTER	
	90	4	*4I-8933*	1	PIPE	
	91	1,2,3	**4J-0522**	9	SEAL-O-RING	
	92	1,2,3,4	**4J-0524**	8	SEAL-O-RING	
	93	1,2,3,4	**4J-0527**	17	SEAL-O-RING	
	94	4	**5P-1076**	1	WASHER-HARD (13.5X30X4-MM THK)	
	95	1	**5P-7462**	1	CLIP (SLOT)	
	96	1	**5P-7463**	1	CLIP (TAB)	
	97	1	**5P-7464**	1	CLIP (SLOT)	
	98	1	**5P-7465**	1	CLIP (TAB)	
	99	2	**5P-7466**	1	CLIP (SLOT)	
	100	2	**5P-7467**	1	CLIP (TAB)	
	101	3	**5P-7468**	2	CLIP (SLOT)	
	102	3	**5P-7469**	2	CLIP (TAB)	
	103	1,2,3,4	**5P-7470**	12	CLIP (SLOT)	
	104	1,2,3,4	**5P-7471**	12	CLIP (TAB)	
	105	3,4	**5P-7703**	3	GROMMET	
	106	2	**5P-8112**	1	GROMMET	
	107	1,2,4	**5P-8182**	9	GROMMET	
	108	3	**6F-8146**	1	SEAL-O-RING	
	109	1	**6V-0683**	1	GROMMET	
	110	1	**6V-1249**	1	GROMMET	
	111	1,3,4	**6V-1867**	5	CLIP (SLOT)	
	112	1,3,4	**6V-1868**	5	CLIP (TAB)	
	113	1,3,4	**6V-1869**	5	GROMMET	
	114	3	**6V-1874**	2	GROMMET	
	115	3	**6V-8400**	2	SEAL-O-RING	
	116	2	**6V-9173**	4	NUT-BULKHEAD (1-11/16-12-THD)	

245-1285 **LINES GP-TRANSMISSION OIL** *(contd.)* **i02312863**

NOTE	REF NO	GRAPHIC REF	PART NUMBER	QTY	PART NAME 1 2 3 4 5 6 (PRODUCT LEVEL)	SEE PAGE
	117	1,2,3	**6V-9828**	3	CAP AS	
	118	2	**7D-1553**	2	CLIP	
M	119	2,4	**7X-2549**	6	BOLT (M12X1.75X100-MM)	
M	120	1,2	**7X-2550**	6	BOLT (M12X1.75X110-MM)	
M	121	1	**7X-2551**	4	BOLT (M12X1.75X200-MM)	
	122	2,3	**7X-3392**	16	WASHER-HARD (13.5X22.5X3-MM THK)	
	123	2	**7X-7729**	4	WASHER (11X25X3-MM THK)	
	124	2	**8C-3447**	2	CAP-DUST	
	125	1,4	**8K-2665**	4	CLAMP-HALF	
	126	2	**8M-4986**	1	SEAL-O-RING	
	127	2	**8M-8157**	1	SEAL-O-RING	
	128	1,2,3, 4	**8T-4121**	37	WASHER-HARD (11X21X2.5-MM THK)	
M	129	1,3	**8T-4122**	8	WASHER-HARD (17X32X3.5-MM THK)	
M	130	1,2,3, 4	**8T-4133**	6	NUT (M10X1.15-THD)	
M	131	2,3	**8T-4136**	3	BOLT (M10X1.5X25-MM)	
M	132	1,4	**8T-4139**	4	BOLT (M12X1.75X30-MM)	
M	133	1,3	**8T-4140**	8	BOLT (M16X2X60-MM)	
M	134	1	**8T-4172**	2	BOLT (M10X1.5X80-MM)	
M	135	1,2,3, 4	**8T-4183**	70	BOLT (M12X1.75X40-MM)	
M	136	1,2,3	**8T-4184**	10	BOLT (M12X1.75X45-MM)	
M	137	3	**8T-4185**	1	BOLT (M10X1.5X50-MM)	
M	138	1,2,3, 4	**8T-4186**	5	BOLT (M10X1.5X40-MM)	
M	139	3	**8T-4192**	4	BOLT (M12X1.75X25-MM)	
M	140	2,4	**8T-4194**	3	BOLT (M12X1.75X50-MM)	
M	141	2	**8T-4195**	1	BOLT (M10X1.5X30-MM)	
M	142	1,2	**8T-4196**	16	BOLT (M10X1.5X35-MM)	
	143	1,2,3, 4	**8T-4223**	155	WASHER-HARD (13.5X25.5X3-MM THK)	
M	144	2,4	**8T-4244**	8	NUT (M12X1.75-THD)	
M	145	2	**8T-4648**	6	BOLT (M12X1.75X70-MM)	
M	146	1,2	**8T-4910**	6	BOLT (M12X1.75X60-MM)	
M	147	2,3	**8T-4956**	12	BOLT (M12X1.75X35-MM)	
M	148	2	**8T-5001**	4	BOLT (M12X1.75X130-MM)	
M	149	1,3	**8T-5092**	8	BOLT (M12X1.75X150-MM)	
M	150	2	**8T-5436**	3	BOLT (M10X1.5X130-MM)	
M	151	1	**8T-6466**	2	BOLT (M10X1.5X60-MM)	
M	152	1,3	**8T-6868**	9	BOLT (M12X1.75X80-MM)	
M	153	4	**8T-7930**	4	BOLT (M12X1.75X160-MM)	
	154	2	**8T-8919**	8	BOLT (1/2-13X1.75-IN)	
	155	3	**8T-9379**	2	BOLT (3/8-16X4.25-IN)	

I-REFER TO HYDRAULIC INFORMATION SYSTEM
M-METRIC PART
Y-SEPARATE ILLUSTRATION

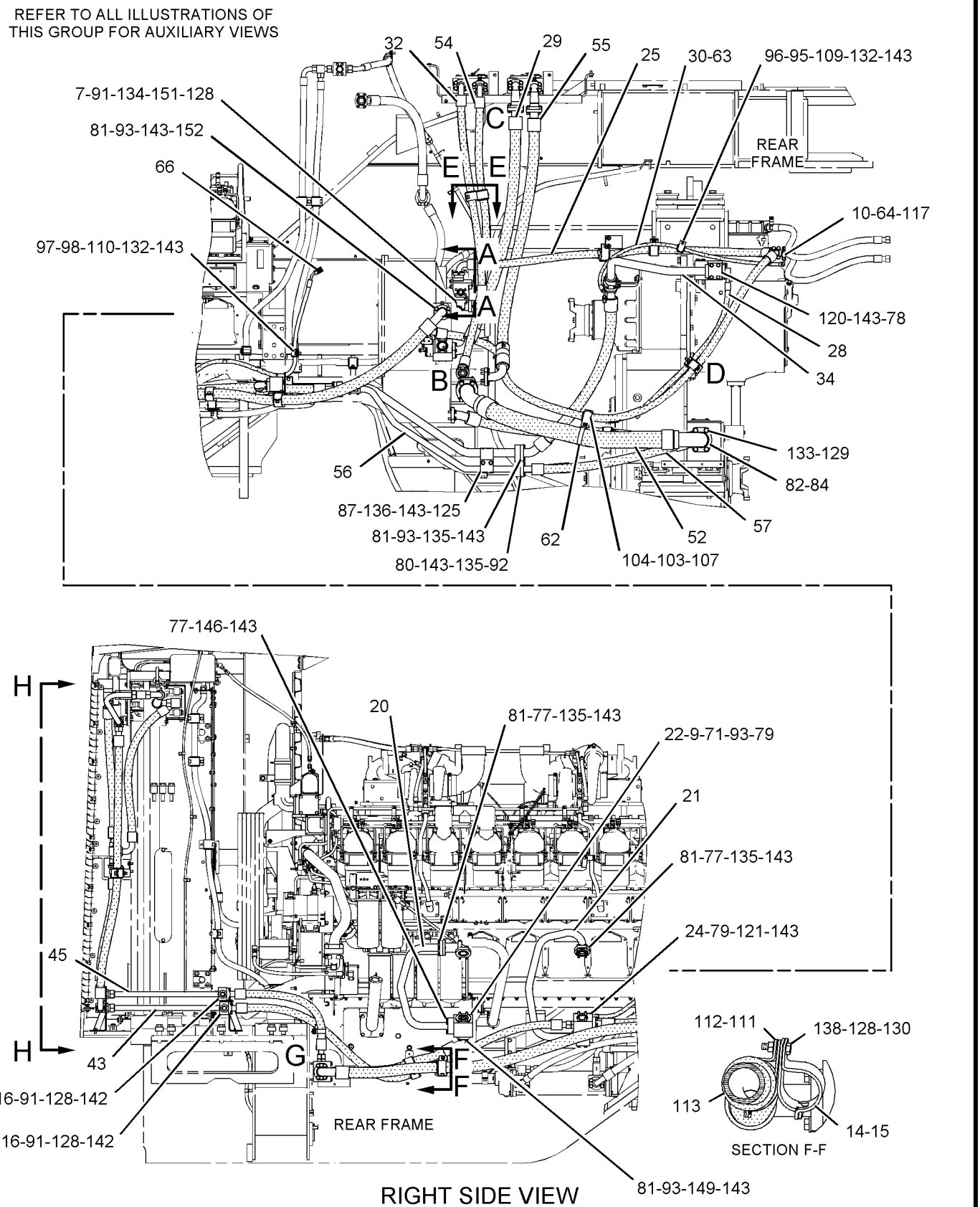

GRAPHIC #1 g01148202

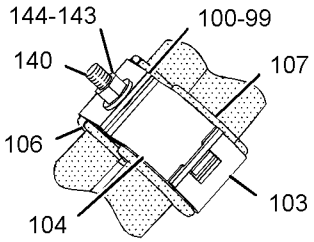

VIEW OF AREA D

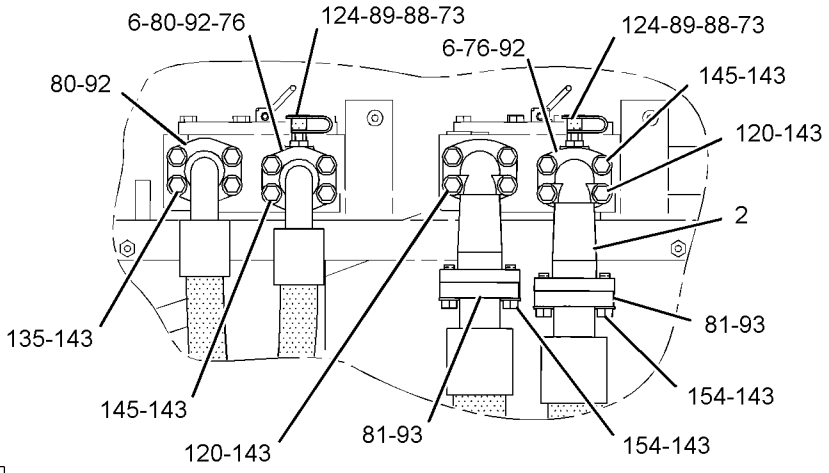

VIEW OF AREA C

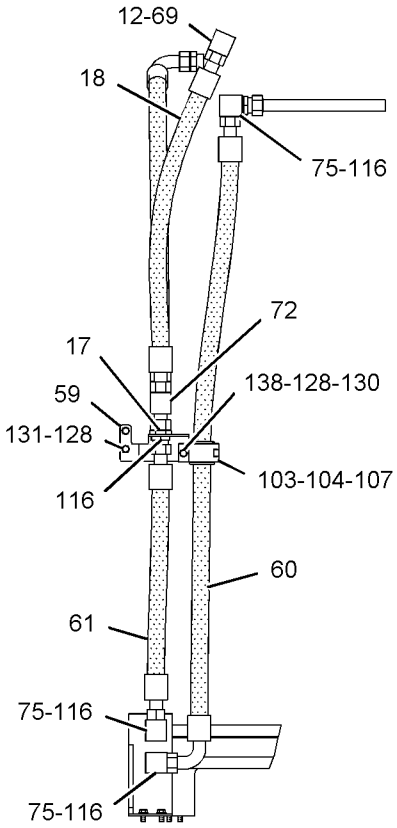

VIEW H-H

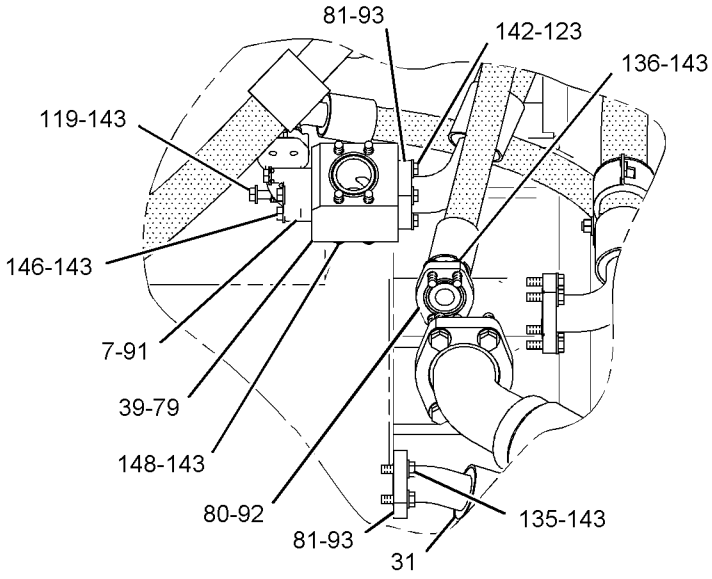

VIEW OF AREA B

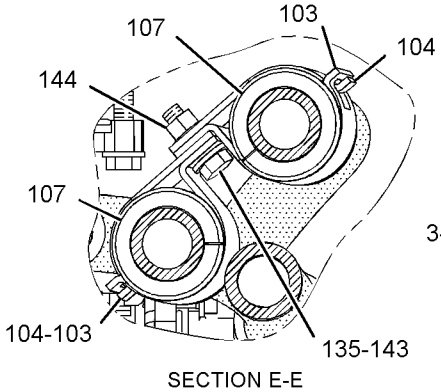

SECTION E-E

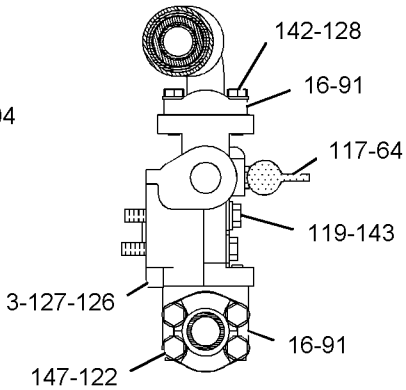

SECTION A-A

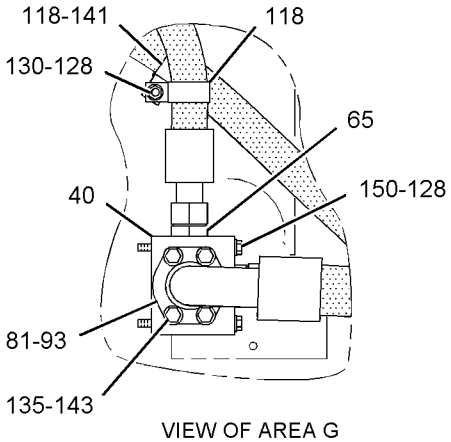

VIEW OF AREA G

GRAPHIC #2 g01148203

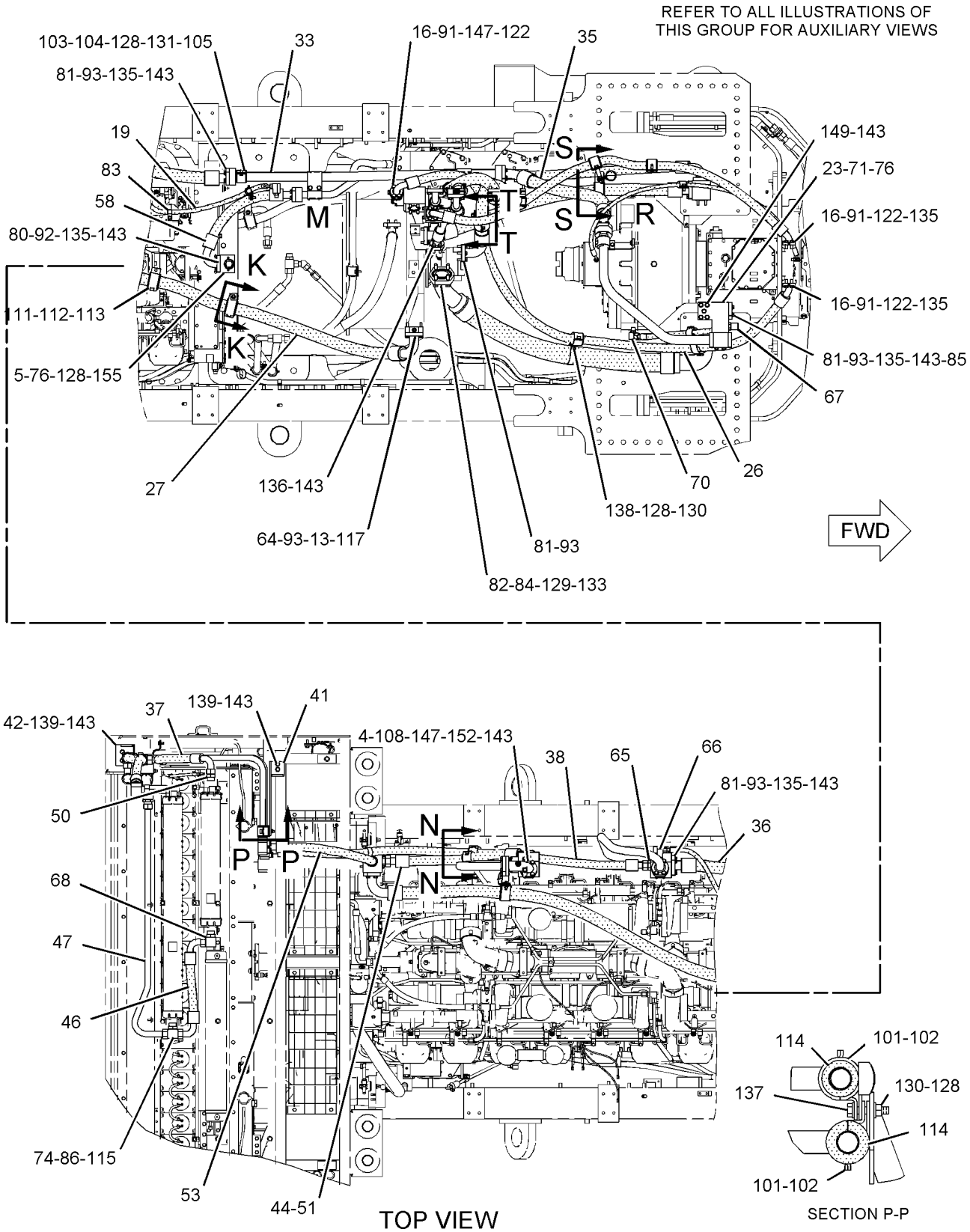

GRAPHIC #3

g01148204

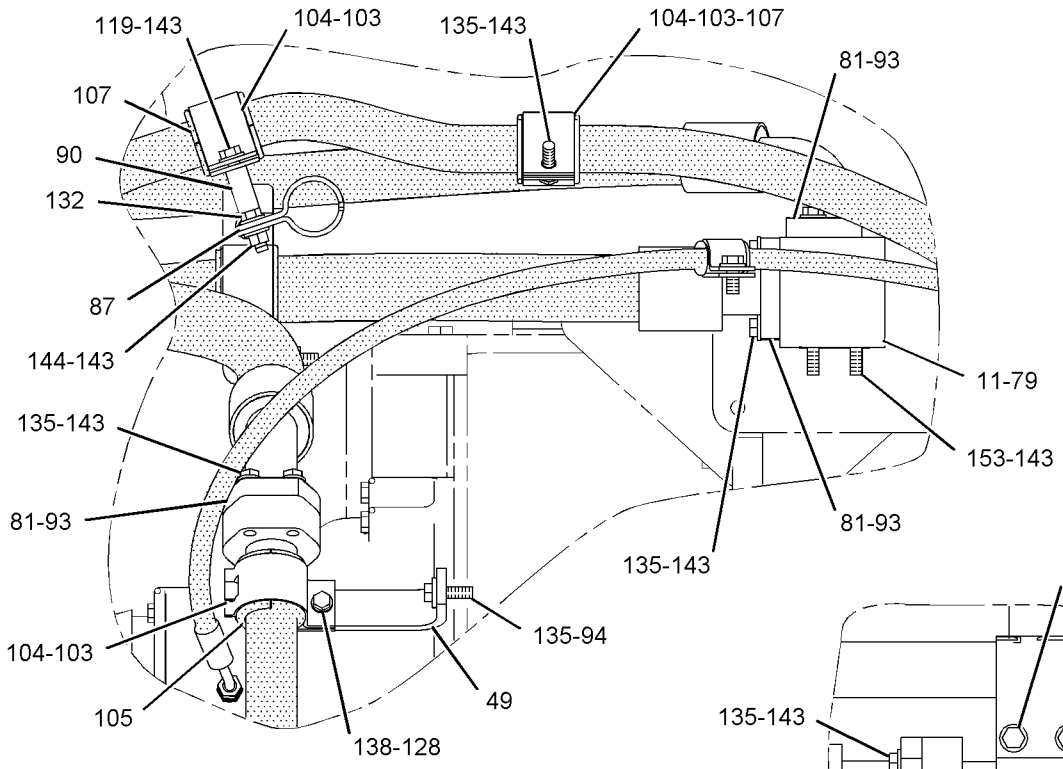

VIEW OF AREA R

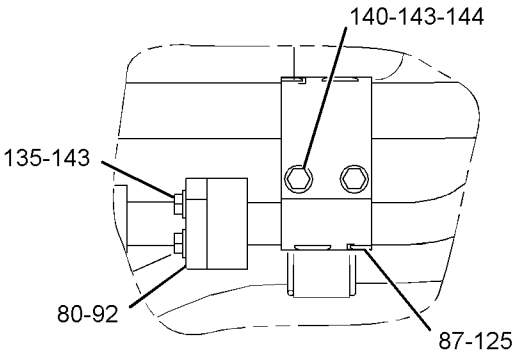

VIEW OF AREA M

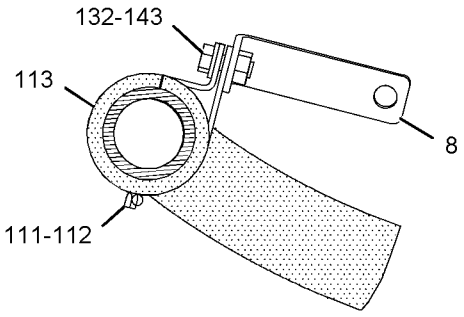

SECTION K-K

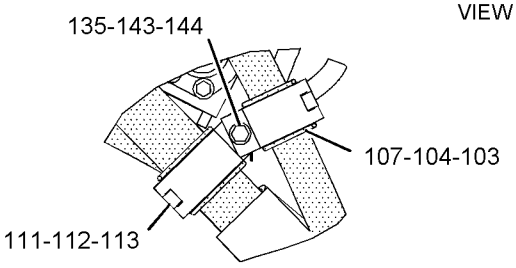

SECTION T-T

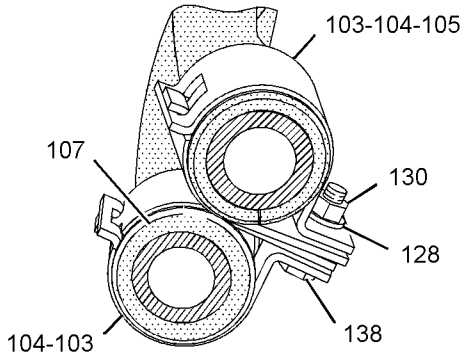

SECTION N-N

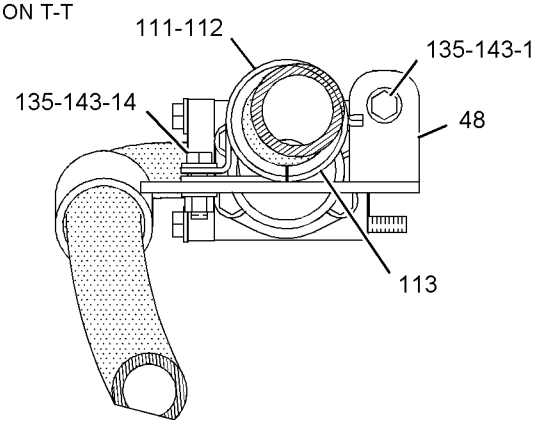

SECTION S-S

GRAPHIC #4 **<END>** g01148205

8X-3533 MOUNTING GP-BEVEL GEAR

S/N: 4421-UP

PART OF 152-8920 AXLE AR-FIXED, 152-8930 AXLE AR-OSCILLATING

SMCS-3256, 3283 **i01489102**

NOTE	REF NO	GRAPHIC REF	PART NUMBER	QTY	PART NAME 1 2 3 4 5 6 (PRODUCT LEVEL)	SEE PAGE
	1	1	**5P-8245**	4	WASHER-HARD (13.5X25.5X3-MM THK)	
M		1	**6V-8197**	4	BOLT (M12X1.75X40-MM)	
	2	1	**3D-3295**	1	SEAL-O-RING	
	3	1	**5V-5670**	1	COVER	
B	4	1	**5V-5669**	1	SHIM PACK (INCLUDES 15-SHIMS)	
	5	1	**2H-3932**	1	SEAL-O-RING	
	6	1	**6W-8401**	1	PIN	
	7	1	**9X-8399**	36	WASHER (33X56X6-MM THK)	
M	8	1	**8C-3222**	36	BOLT (M30X3.5X80-MM)	

B-USE AS REQUIRED
M-METRIC PART

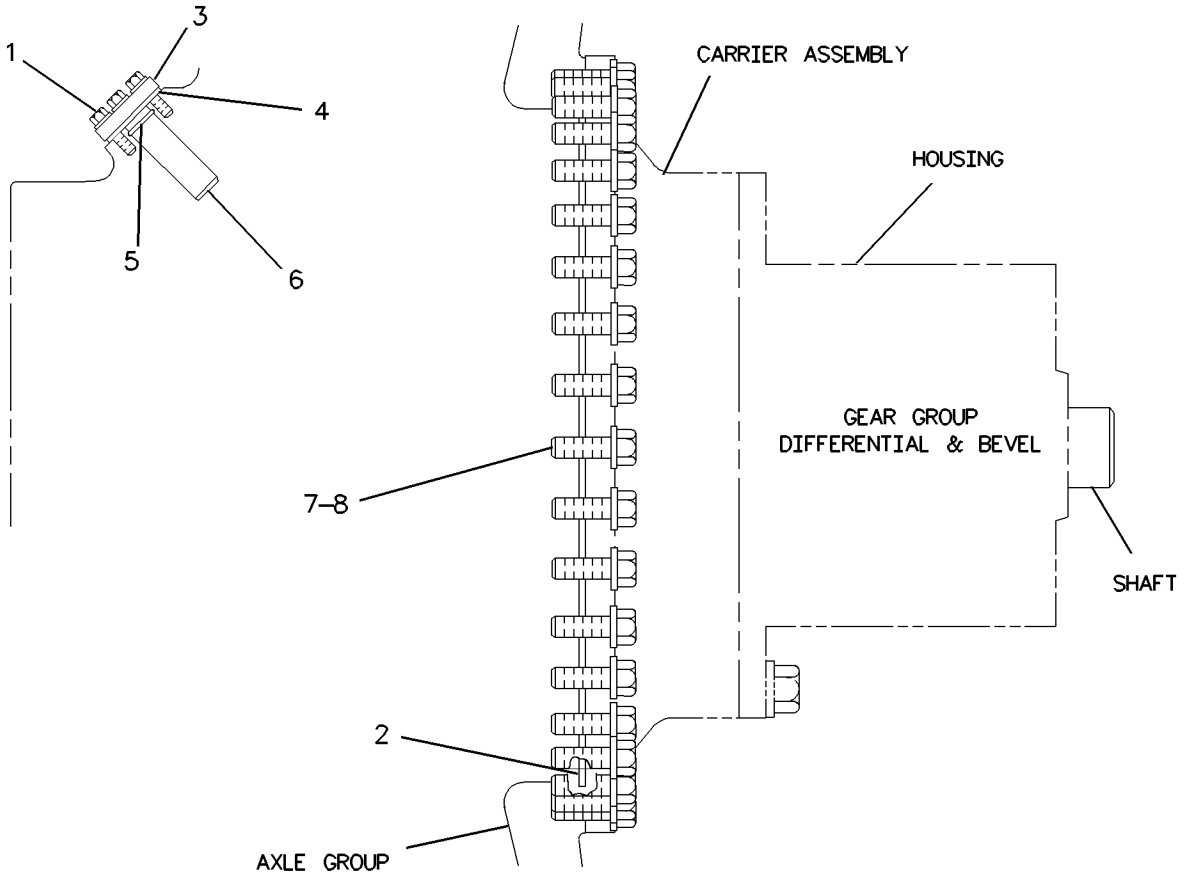

GRAPHIC #1 **<END>** g00773814

8X-1316 MOUNTING GP-RIM

S/N: 4421-UP
36.00 X 57
PART OF 123-5165, 251-3254 RIM AR
AN ATTACHMENT

SMCS-4202, 4209 **i01565949**

NOTE	REF NO	GRAPHIC REF	PART NUMBER	QTY	PART NAME 1 2 3 4 5 6 (PRODUCT LEVEL)	SEE PAGE
	1	1	**8W-0338**	1	SEAL-O-RING	
	2	1	**5T-9796**	1	CONNECTOR	
	3	1	**9X-8399**	61	WASHER (33X56X6MM THK)	
M	4	1	**8T-1583**	61	NUT (M30X3.50 THD)	
	5	1	**5T-9866**	1	LOCKNUT	
	6	1	**8X-2699**	1	HOSE AS-EXTENSION	
	7	1	**5T-9866**	2	LOCKNUT	
	8	1	**8X-2700**	1	SPUD AS	
	9	1	**2D-2508**	1	GROMMET	
	10	1	**5T-9866**	1	LOCKNUT	
	11	1	**6F-3930**	1	CORE-VALVE	
	12	1	**6J-3134**	1	SEAL-O-RING	
	13	1	**9K-7951**	1	CAP-VALVE (STEM)	

M-METRIC PART

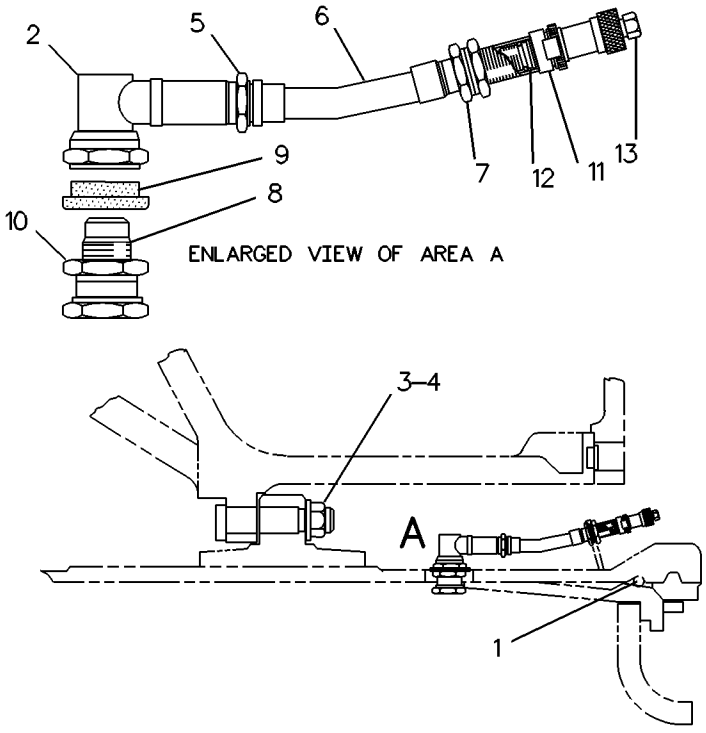

GRAPHIC #1 **<END>** g00082502

170-3917 MOUNTING GP-RIM

S/N: 4421-UP
PART OF 123-5168, 123-5170 RIM AR
AN ATTACHMENT

SMCS-4202, 4209 **i01889746**

NOTE	REF NO	GRAPHIC REF	PART NUMBER	QTY	PART NAME 1 2 3 4 5 6 (PRODUCT LEVEL)	SEE PAGE
M	1	1	**8T-1583**	61	NUT (M30X3.50 THD)	
	2	1	**9X-8399**	61	WASHER (33X56X6MM THK)	
	3	1	**8W-0338**	1	SEAL-O-RING	
	4	1	**5T-9797**	1	VALVE GP-TIRE	
		1	**9K-7951**	1	CAP-VALVE (STEM)	
		1	**6F-3930**	1	CORE-VALVE	
		1	**6J-3134**	1	SEAL-O-RING	
	5	1	**170-4689**	1	HOSE AS	
		1	**5T-9866**	2	LOCKNUT	
	6	1	**5T-9866**	1	LOCKNUT	
	7	1	**8X-2700**	1	SPUD AS	
		1	**2D-2508**	1	GROMMET	
		1	**5T-9866**	1	LOCKNUT	
	8	1	**5T-9796**	1	CONNECTOR	

M-METRIC PART

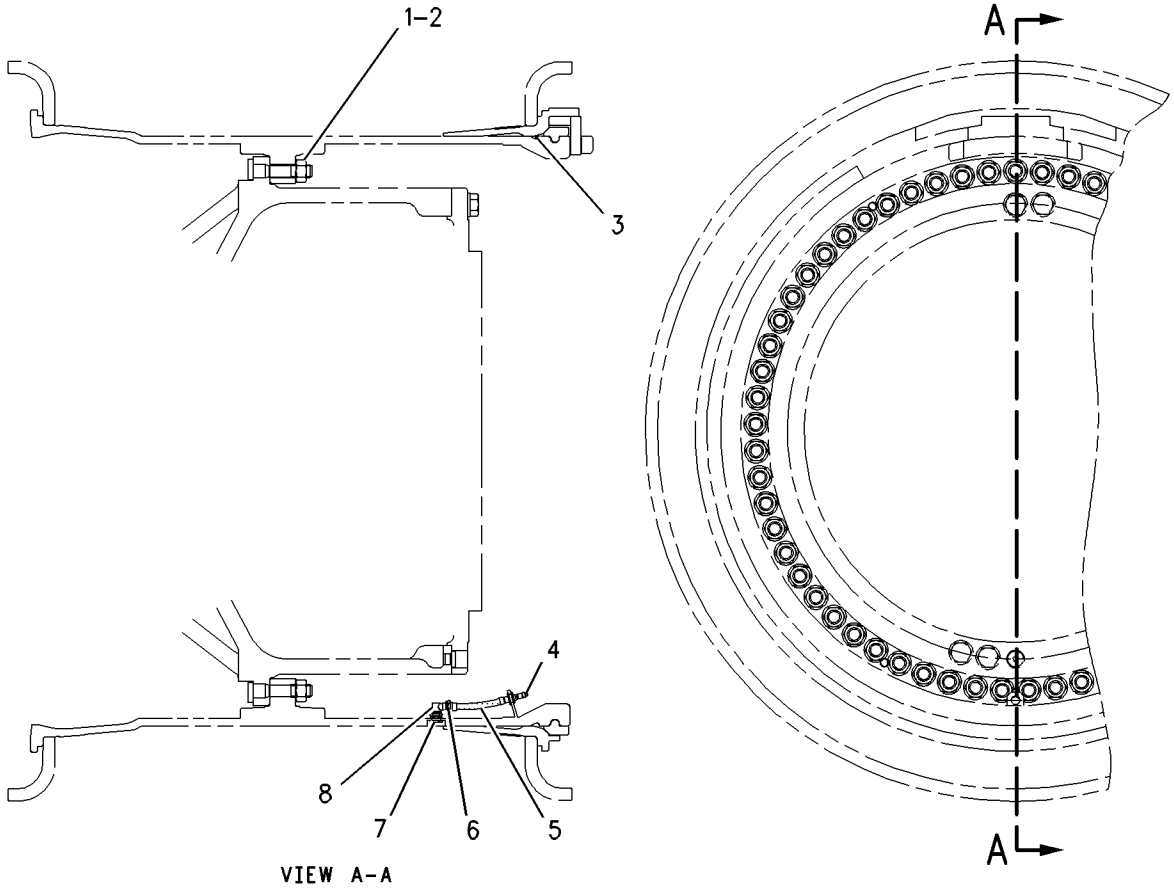

GRAPHIC #1 **<END>** g00658391

247-8198 MOUNTING GP-TRANSMISSION

S/N: 4421-UP

PART OF 245-8809 POWER TRAIN AR

SMCS-3082 **i02282364**

NOTE	REF NO	GRAPHIC REF	PART NUMBER	QTY	PART NAME 1 2 3 4 5 6 (PRODUCT LEVEL)	SEE PAGE
	1	1	**6Y-9980**	8	MOUNT AS	
					(EACH INCLUDES)	
	1A	1	**9W-8095**	1	PAD-REBOUND	
	1B	1	**9W-9958**	1	MOUNT	
	2	1	**8X-0676**	2	BRACKET AS	
					(EACH INCLUDES)	
		1	**9R-3845**	1	BOSS (M12X1.75X38-MM)	
	3	1	**8X-0702**	2	BRACKET AS	
	4	1	**9W-7385**	8	SLEEVE	
	5	1	**9W-7388**	8	WASHER (26X144X12-MM THK)	
	6	1	**175-0420**	1	BRACKET AS	
		1	**9R-2613**	2	BOSS-WELD (M10X1.5X25-MM OAL)	
		1	**9R-3845**	2	BOSS (M12X1.75X38-MM)	
	7	1	**068-6405**	4	WASHER (26X63.5X6-MM THK)	
M	8	1	**7X-2465**	4	BOLT (M24X3X180-MM)	
M	9	1	**7X-2563**	16	BOLT (M20X2.5X60-MM)	
M	10	1	**7X-2567**	4	BOLT (M24X3X160-MM)	
M	11	1	**8C-8723**	8	BOLT (M30X3.5X80-MM)	
M	12	1	**8T-4001**	8	NUT (M24X3-THD)	
	13	1	**8T-4123**	16	WASHER-PLATED (22X35X3.5-MM THK)	
	14	1	**8T-4167**	18	WASHER-HARD (26X44X4-MM THK)	
M	15	1	**8T-5878**	6	BOLT (M24X3X80-MM)	
	16	1	**9X-8258**	8	WASHER (33X56X6-MM THK)	

M-METRIC PART

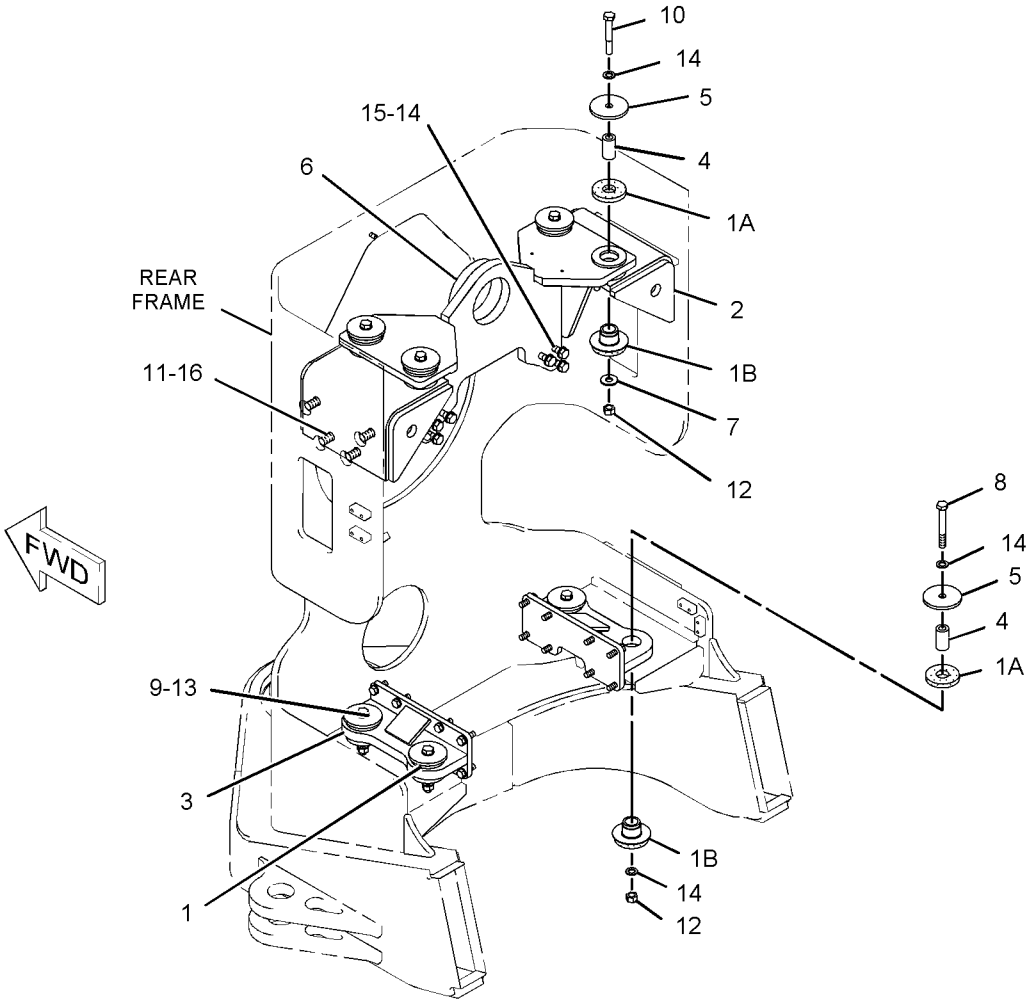

GRAPHIC #1 **<END>** g01144218

POWER TRAIN

171-4616 PLANETARY GP-TRANSMISSION

S/N: DWX1-UP

PART OF 239-8137 TRANSMISSION AR

SMCS-3160 **i02151094**

NOTE	REF NO	GRAPHIC REF	PART NUMBER	QTY	PART NAME 1 2 3 4 5 6 (PRODUCT LEVEL)	SEE PAGE
	1	2	**1N-5410**	1	RING-RETAINING	
	2	2	**1P-3958**	4	ROLLER AS-SPECIAL	
	3	2,3	**1S-8480**	24	SPRING	
	4	3	**1S-9110**	8	ROLLER AS	
	5	1	**1T-0808**	12	WASHER (0.516X0.812X0.09-IN THK)	
	6	1	**3E-4371**	1	RING-RETAINING	
	7	3	**3P-7149**	1	CAGE-BEARING	
R	8	1	**3P-7447**	4	PLATE-CLUTCH	
	9	1	**3P-7558**	4	SHAFT AS-PLANETARY	
					(EACH INCLUDES)	
		1	**3S-0036**	1	PLUG-CORE	
	10	1	**3P-7564**	1	GEAR-SUN (47-TEETH)	
	11	1	**3P-7566**	12	SPRING	
	12	1	**3P-7575**	1	GEAR-RING (85-TEETH)	
	13	2	**3P-7586**	1	GEAR-RING (82-TEETH)	
	14	1	**3P-7601**	2	PLATE-LOCK	
	15	2,3	**3S-8035**	2	RING-SEAL	
	16	2	**4M-1708**	1	RING	
	17	3	**4M-5397**	4	LOCK-NUT	
	18	1	**5M-7925**	4	BEARING AS-ROLLER	
	19	1	**5P-1669**	1	BALL BEARING	
	20	4	**5P-1670**	17	BOLT (3/4-10X18.5-IN)	
	21	4	**5P-6726**	1	RING-RETAINING	
	22	1	**5S-5880**	2	LOCK-NUT	
	23	4	**6F-0155**	2	RING-METAL SEAL	
	24	2	**6I-9790**	17	DAMPER-BOLT	
	25	4	**6V-1720**	1	PLATE-SERIAL NUMBER (TRANSMISSION)	
	26	1,3	**6V-6458**	3	RING-RETAINING	
	27	1	**6Y-5877**	1	PISTON-CLUTCH	
	28	1	**6Y-7260**	1	SHAFT AS-OUTPUT	
		1	**1T-0766**	2	BEARING-SLEEVE	
		1	**4S-8537**	1	DOWEL	
	29	1	**7G-3467**	4	GEAR-PLANETARY (20-TEETH)	
	30	2,3	**8E-0985**	19	DISC AS-CLUTCH	
	31	1	**8E-8310**	8	DISC-THRUST	
	32	2,3	**8E-8316**	24	DISC-THRUST	
	33	1	**8P-3133**	1	HUB	
	34	4	**8P-7236**	1	RETAINER	
	35	3	**8P-7242**	4	SHAFT AS-PLANETARY	
		3	**2A-3746**	1	PLUG-CUP	
	36	4	**8P-7243**	1	CARRIER-RING	
	37	2	**9H-5537**	24	SPRING	
	38	2	**9W-9100**	4	SHAFT-PLANETARY	
	39	3	**9W-9143**	1	GEAR-COUPLING (80-TEETH)	
	40	3	**115-0761**	1	CARRIER AS	
		3	**4B-9782**	4	BALL	
		3	**4S-8541**	1	DOWEL	
	41	3	**115-0763**	1	COUPLING	
	42	3	**115-0764**	1	RING-LOCK	
	43	2	**115-0767**	1	CARRIER-PLANETARY	
	44	2	**148-0330**	4	BEARING	
	45	4	**148-6559**	1	BALL BEARING	
	46	1	**148-9643**	3	RING-SEAL	
	47	4	**153-2838**	1	RETAINER-BEARING	
	48	2	**168-6920**	4	GEAR-PLANETARY (22-TEETH)	
	49	2	**168-6923**	1	GEAR-SUN (71-TEETH)	

171-4616 **PLANETARY GP-TRANSMISSION** *(contd.)* **i02151094**

NOTE	REF NO	GRAPHIC REF	PART NUMBER	QTY	PART NAME 1 2 3 4 5 6 (PRODUCT LEVEL)	SEE PAGE
	50	1	**172-4667**	1	SHAFT AS	
		1	**172-4668**	1	PLUG-ORIFICE	
	51	1	**172-4670**	1	HOUSING AS	
		1	**4D-8148**	2	DOWEL	
		1	**8B-6375**	1	DOWEL	
	52	1	**173-3270**	5	DISC AS-FRICTION	
	53	2	**173-9607**	1	GEAR AS-SUN (55-TEETH)	
		2	**4S-8537**	1	DOWEL	
	54	2	**173-9701**	4	GEAR-PLANETARY (22-TEETH)	
	55	1	**175-3153**	1	CAGE-BEARING	
	56	1	**175-3213**	1	HOUSING AS	
		1	**4S-8541**	1	DOWEL	
		1	**7M-5130**	1	PIN-SPRING	
		1	**7M-8480**	2	DOWEL	
		1	**175-3068**	1	CARRIER-RING	
	57	3	**187-3478**	1	GEAR-SUN (55-TEETH)	
	58	3	**187-3480**	4	GEAR-PLANETARY (26-TEETH)	
	59	2	**188-4655**	1	GEAR AS-RING (82-TEETH)	
		2	**3S-6605**	25	PLUG-CUP	
	60	4	**191-4546**	6	DOWEL-REACTION	
	61	1	**193-8609**	1	CARRIER-PLANETARY	
	62	2,3	**194-3811**	15	PLATE-CLUTCH	
	63	3	**194-3812**	1	PLATE AS-CENTER	
		3	**3F-3442**	2	DOWEL	
	64	2	**194-3814**	1	HOUSING-CLUTCH	
	65	2	**194-3816**	1	HOUSING AS-CLUTCH	
		2	**4D-8148**	4	DOWEL	
	66	2	**194-3819**	1	PISTON-CLUTCH	
	67	1	**194-3820**	1	HOUSING-CLUTCH	
	68	1	**194-3821**	1	PISTON-CLUTCH	
	69	4	**194-3822**	6	DOWEL-REACTION	
	70	1,3	**212-5023**	2	BALL BEARING	
	71	3	**238-5093**	1	PISTON	
	72	2	**238-5094**	1	PISTON	
	73	2,3	**238-5095**	2	PLATE-CLUTCH	
	74	4	**252-4406**	1	HOUSING-CLUTCH	
	75	4	**0L-2070**	2	BOLT (3/8-16X2.25-IN)	
	76	1	**0S-0509**	4	BOLT (3/8-16X0.75-IN)	
	77	4	**0S-1591**	6	BOLT (3/8-16X1.5-IN)	
	78	3	**0S-1594**	8	BOLT (3/8-16X1-IN)	
	79	1	**1B-2524**	12	PIN	
	80	1	**1D-4569**	12	BOLT (1/2-13X4.25-IN)	
	81	2	**2H-9445**	8	PIN-SPRING	
	82	4	**2S-0115**	17	WASHER-HARD (20X36.5X5-MM THK)	
	83	1	**2S-4078**	1	SEAL-O-RING	
	84	1	**3D-2824**	2	SEAL-O-RING	
	85	4	**3K-2559**	1	RING-RETAINING	
	86	1	**3P-7570**	1	RING-SEAL	
	87	1,2,3	**3P-7612**	4	RING-SEAL	
	88	1	**3P-7832**	6	DOWEL	
	89	1,4	**3S-2708**	5	PIN-SPRING	
	90	1	**4F-7391**	1	SEAL-O-RING	
	91	4	**4H-7925**	1	RING-METAL SEAL	
	92	1	**5D-6428**	2	SEAL-O-RING	
	93	4	**5L-5032**	1	SEAL-O-RING	
	94	4	**5M-2894**	6	WASHER-HARD (10.2X18.5X2.5-MM THK)	
	95	3	**5P-6651**	1	RING-RETAINING	
	96	4	**5P-6727**	1	BALL BEARING	
	97	1	**5P-8245**	7	WASHER-HARD (13.5X25.5X3-MM THK)	

171-4616 **PLANETARY GP-TRANSMISSION** *(contd.)* **i02151094**

NOTE	REF NO	GRAPHIC REF	PART NUMBER	QTY	PART NAME 1 2 3 4 5 6 (PRODUCT LEVEL)	SEE PAGE
	98	2	**6Y-7261**	1	RING-SEAL	
	99	1	**7B-3235**	7	BOLT (1/2-13X1.375-IN)	
	100	1	**8F-6230**	2	SEAL-O-RING	
	101	1	**8P-6292**	1	RING-SEAL	
	102	1	**8P-9569**	1	RING-SEAL	
	103	2,3	**9G-9557**	2	RING-SEAL	
	104	1	**9S-8008**	2	PLUG	
	105	1	**9S-8010**	1	PLUG	

R-REMFG PART MAY BE AVAILABLE

171-4616 **PLANETARY GP-TRANSMISSION** *(contd.)* **i02151094**

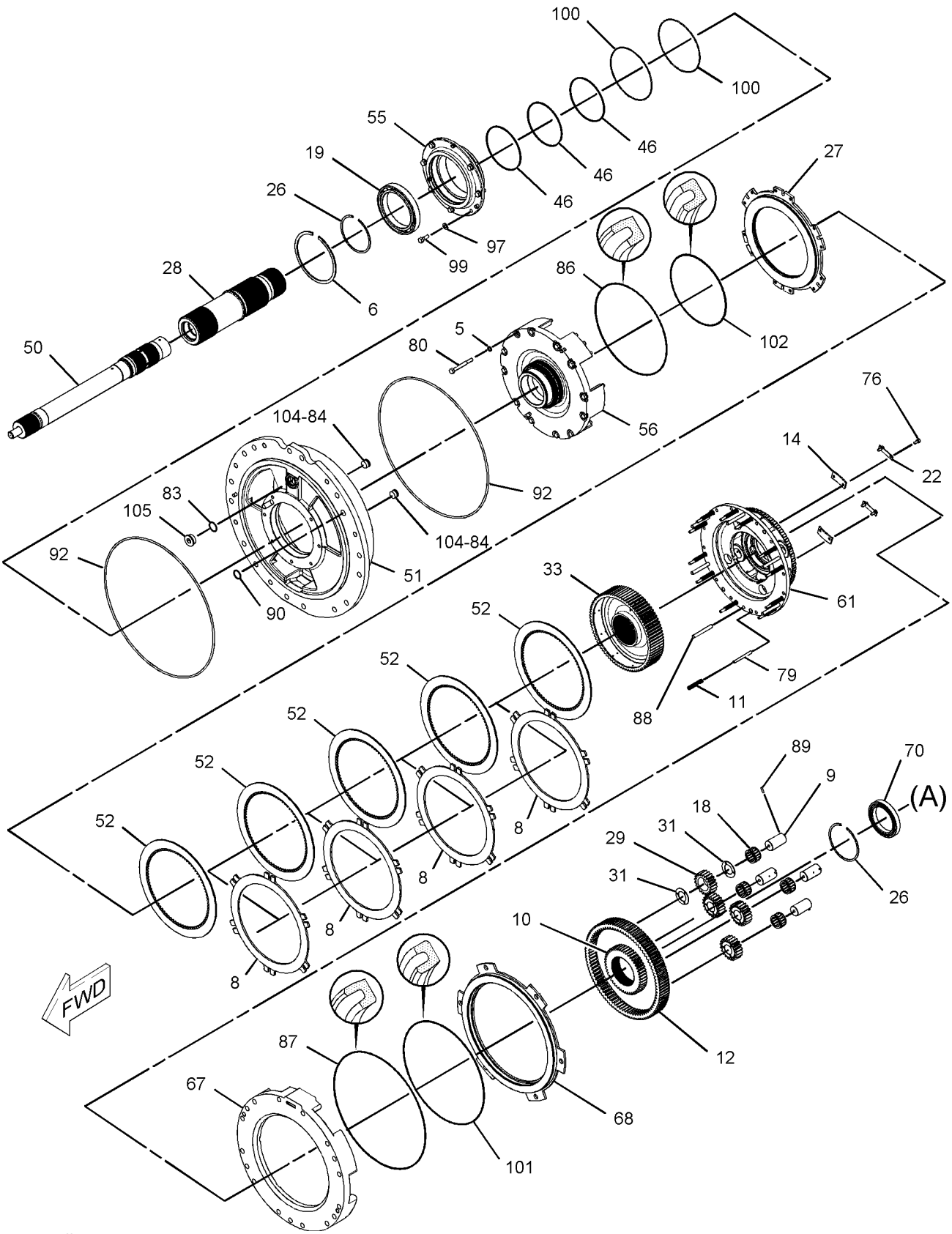

GRAPHIC #1 g01096752

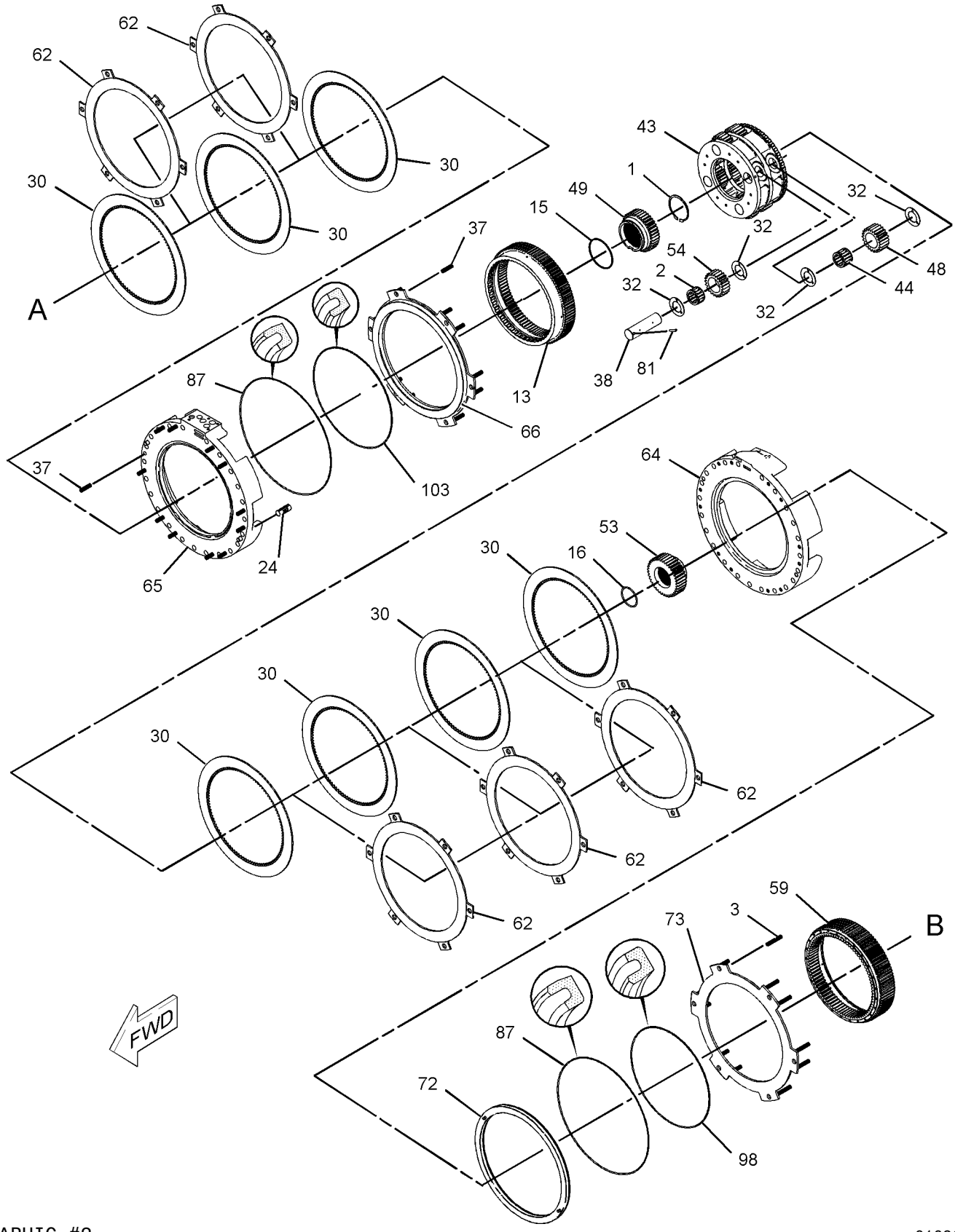

GRAPHIC #2 g01096753

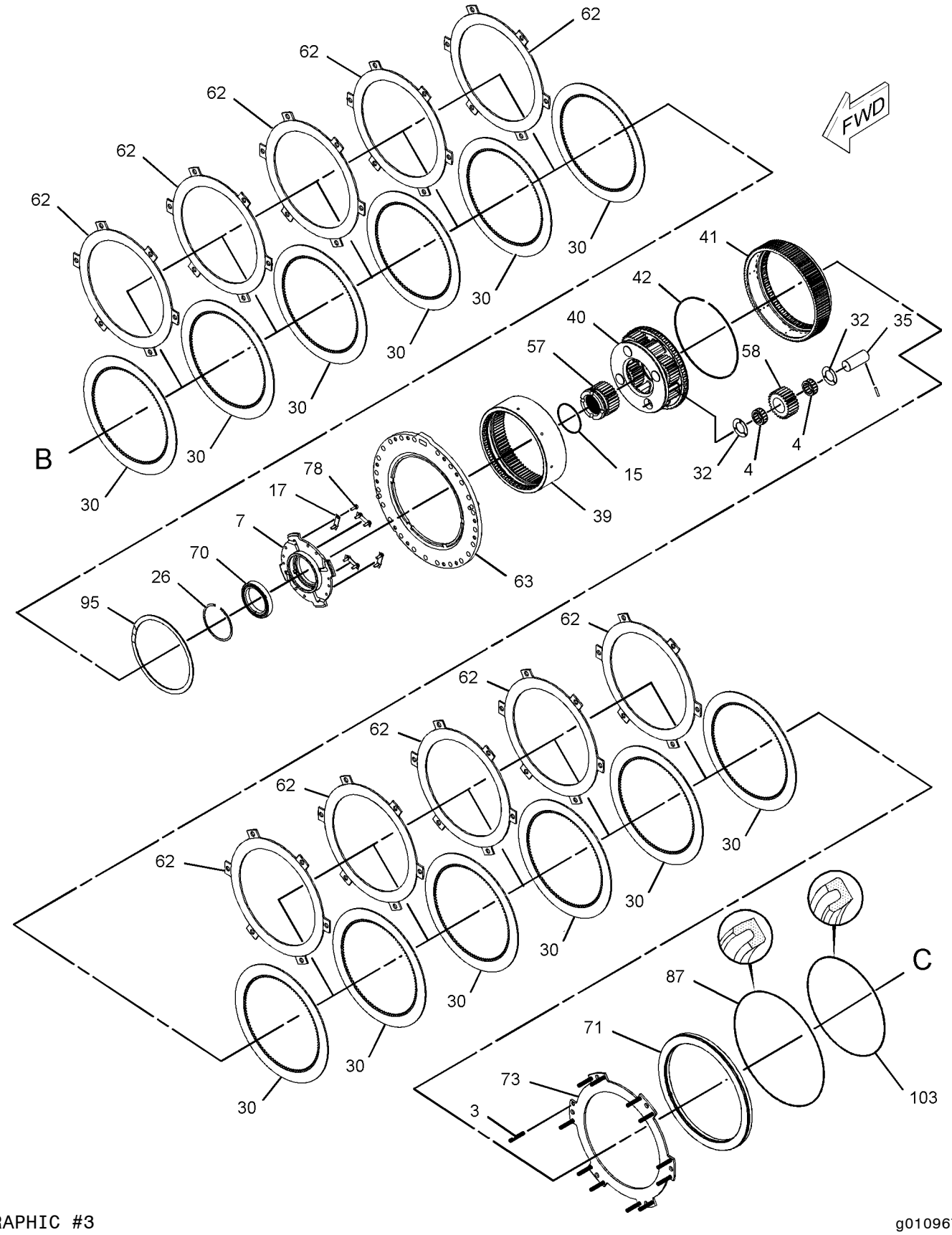

GRAPHIC #3

g01096754

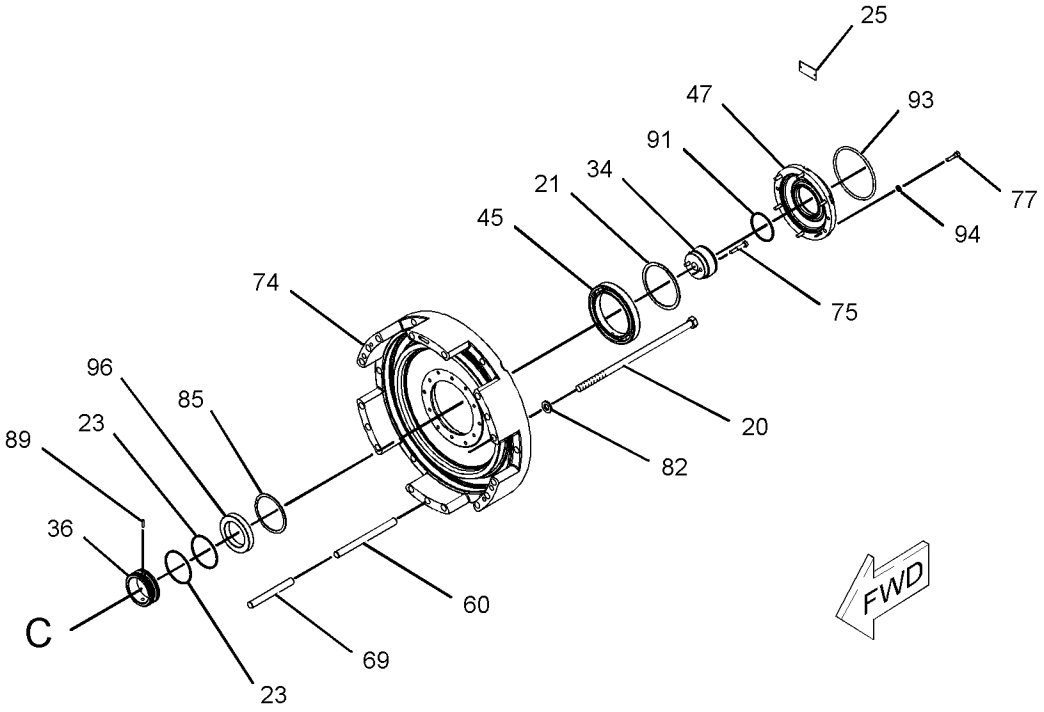

GRAPHIC #4 **<END>** g01096755

245-8809 POWER TRAIN AR

S/N: 4421-UP

PART OF 245-8812 CHASSIS AR-REAR

SMCS-3000, 4000 **i02180917**

NOTE	PART NUMBER	QTY	PART NAME 1 2 3 4 5 6 (PRODUCT LEVEL)	SEE PAGE
Y	*6Y-6697*	1	ADAPTER GP-FLYWHEEL HOUSING	382
Y	**148-2711**	1	COUPLING GP-AUXILIARY DRIVE (REAR)	398
Y	*118-8274*	1	COUPLING GP-TORSIONAL (DOUBLE SPRING)	399
Y	**7I-5115**	1	DRIVE GP-PUMP (REAR)	405
Y	*245-0685*	1	FILLER GP-POWER TRAIN OIL	413
Y	*247-8198*	1	MOUNTING GP-TRANSMISSION	442
Y	*104-4751*	1	SHAFT GP-DRIVE (MAIN; CENTER, FRONT)	464
Y	*246-6148*	1	SHAFT GP-INPUT DRIVE	467
Y	*8R-4208*	1	SHAFT GP-PUMP DRIVE (REAR)	468
Y	*8X-0093*	1	SHAFT GP-PUMP DRIVE (FRONT)	470
Y	*8X-8248*	1	SHAFT GP-PUMP DRIVE INPUT	471
Y	*180-0567*	1	TORQUE CONVERTER & HOUSING GP (LOCKUP)	477
Y	**239-8137**	1	TRANSMISSION AR	482

Y-SEPARATE ILLUSTRATION

<END>

8X-0065 PUMP & MTG GP-DRIVE LUBE

S/N: 4421-UP

PART OF 244-7300 HYDRAULIC AR-FRONT

SMCS-3108, 5073 **i02155073**

NOTE	REF NO	GRAPHIC REF	PART NUMBER	QTY	PART NAME 1 2 3 4 5 6 (PRODUCT LEVEL)	SEE PAGE
Y	1	1	**9T-0436**	1	PUMP GP-GEAR (PUMP DRIVE LUBRICATION)	453
	2	1	**6V-5778**	1	SEAL-O-RING	
	3	1	**8T-4121**	2	WASHER-HARD (11X21X2.5-MM THK)	
M	4	1	**8T-4195**	2	BOLT (M10X1.5X30-MM)	

M-METRIC PART
Y-SEPARATE ILLUSTRATION

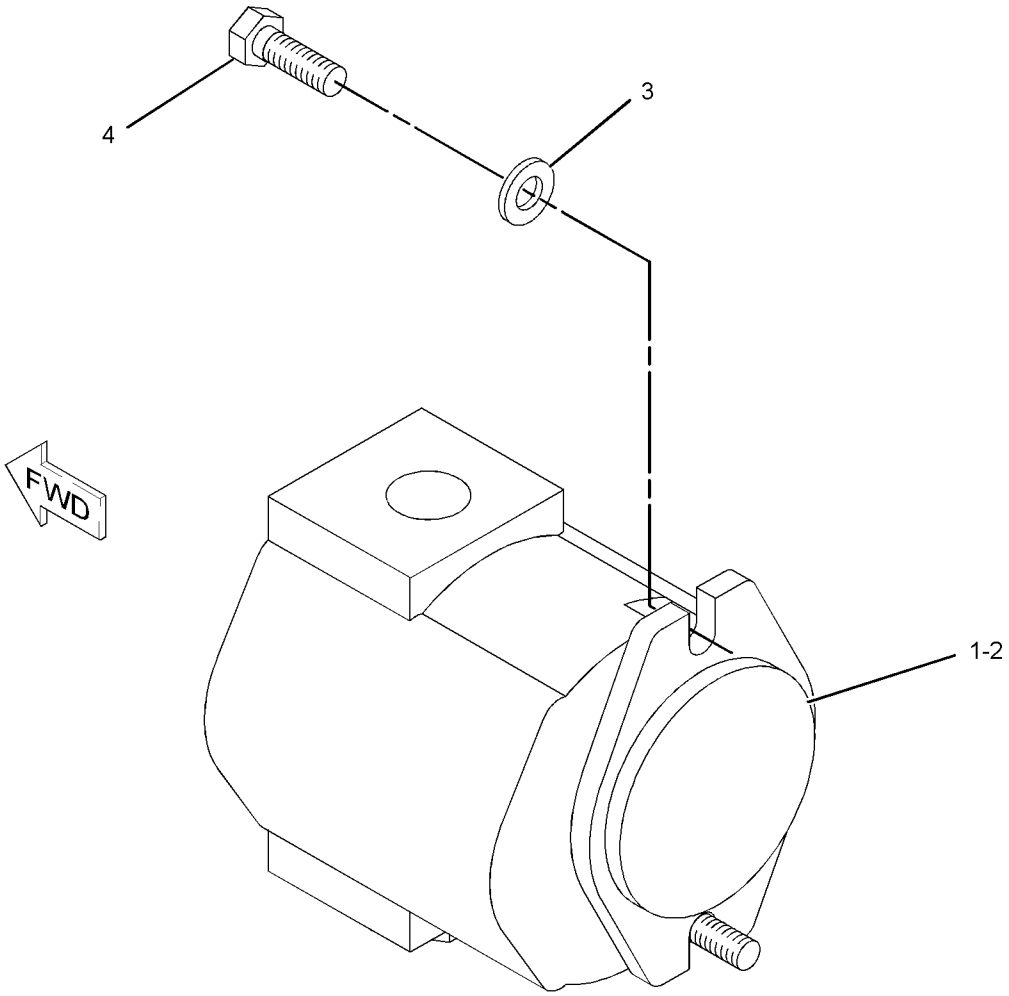

GRAPHIC #1 **<END>** g01093282

9T-0436 PUMP GP-GEAR–PUMP DRIVE LUBRICATION

S/N: 4421-UP

PART OF 8X-0065 PUMP & MTG GP-DRIVE LUBE

SMCS-3066, 5073 **i01501927**

NOTE	REF NO	GRAPHIC REF	PART NUMBER	QTY	PART NAME 1 2 3 4 5 6 (PRODUCT LEVEL)	SEE PAGE
	1	1	**8S-9089**	4	BOLT (1/2-13X4.5 IN)	
		1	**5P-7213**	4	WASHER-HARD (13.5X20.5X2MM THK)	
					AVAILABLE REPAIR KIT(S):	
			9T-1015	1	KIT-SEAL (PILOT GEAR PUMP)	
					(INCLUDES SEALS, RINGS & PLUG)	

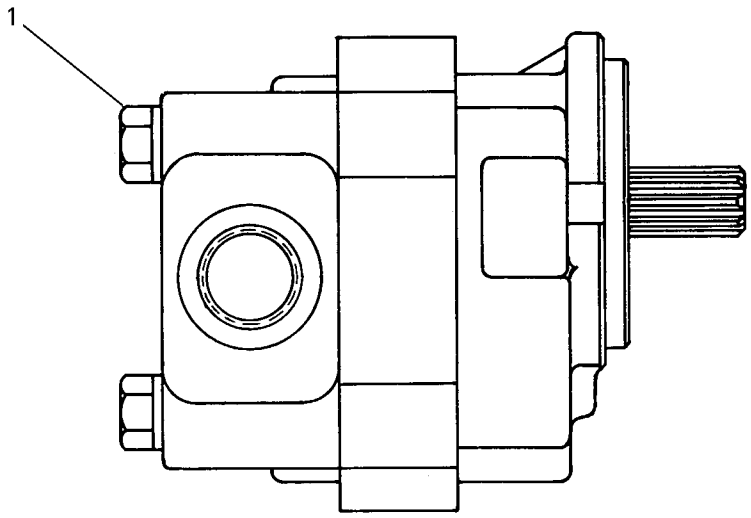

GRAPHIC #1 **<END>** g00674933

250-2353 PUMP GP-TRANSMISSION–CHARGE

S/N: 4421-UP

PART OF 251-2240 PUMP GP-TRANSMISSION

SMCS-3066 **i02291054**

NOTE	REF NO	GRAPHIC REF	PART NUMBER	QTY	PART NAME 1 2 3 4 5 6 (PRODUCT LEVEL)	SEE PAGE
	1	1	**265-7023**	2	GEAR (8-TEETH)	
	2	1	**3S-0004**	6	WASHER (0.406X0.728X0.09-IN THK)	
M	3	1	**8T-6854**	4	BOLT (M10X1.5X200-MM)	
	4	1	**7S-6978**	1	COVER AS-PUMP	
		1	**5M-3320**	1	BEARING-SLEEVE	
	5	1	**8E-1171**	1	BODY AS-OIL PUMP	
		1	**8M-8489**	4	DOWEL	
	6	1	**250-2354**	1	BODY AS	
		1	**1M-3909**	1	BEARING-SLEEVE	
		1	**8M-8489**	2	DOWEL	
	7	1	**250-2357**	1	MANIFOLD AS	
		1	**5M-3320**	1	BEARING-SLEEVE	
	8	1	**250-2359**	1	GEAR AS (12-TEETH)	
	9	1	**250-2361**	1	GEAR AS (12-TEETH)	
M	10	1	**8T-5005**	2	BOLT (M10X1.5X70-MM)	
	11	1	**1B-8736**	1	KEY-WOODRUFF	
	12	1	**2D-8009**	3	SEAL-O-RING	

M-METRIC PART

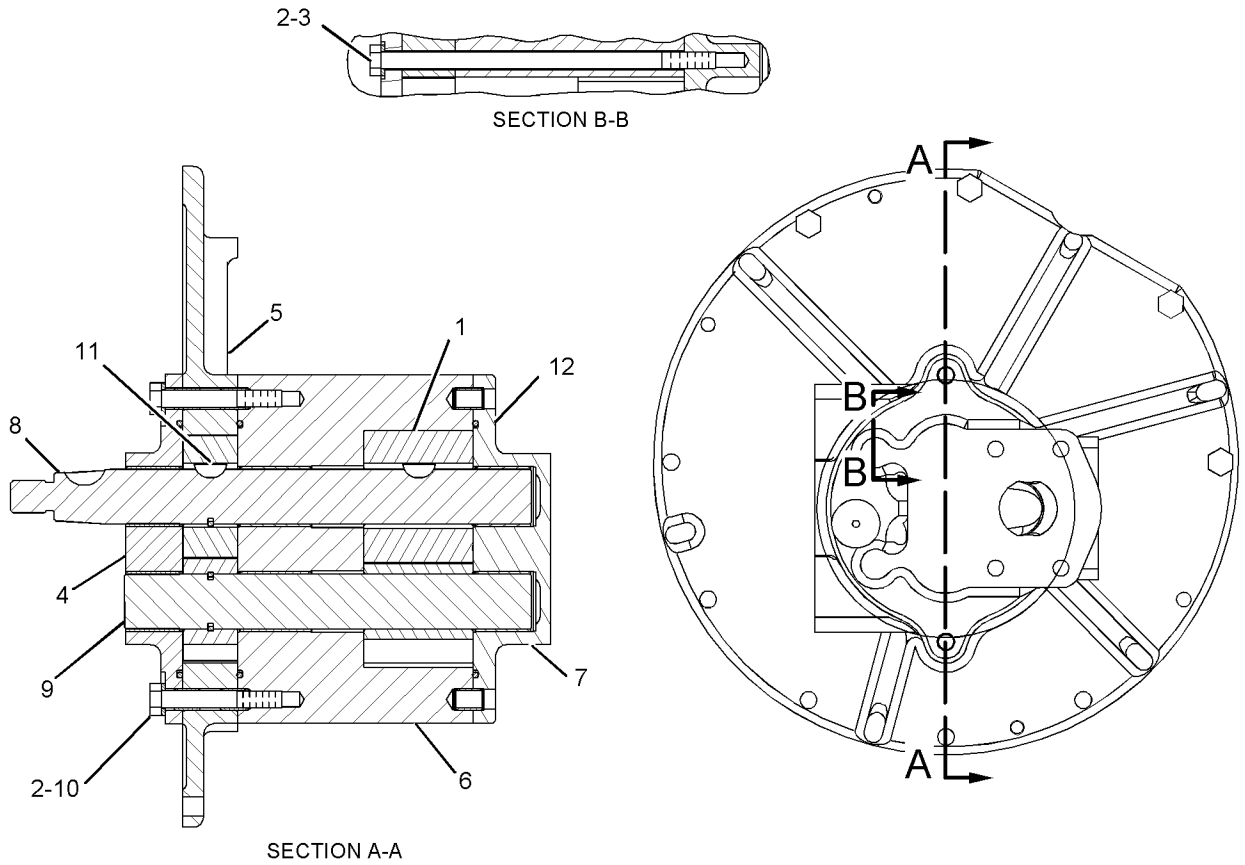

GRAPHIC #1 **<END>** g01093968

251-2240 PUMP GP-TRANSMISSION–CHARGE

S/N: 4421-UP

PART OF 245-0700 HYDRAULIC AR-REAR

SMCS-3066 **i02282412**

NOTE	REF NO	GRAPHIC REF	PART NUMBER	QTY	PART NAME 1 2 3 4 5 6 (PRODUCT LEVEL)	SEE PAGE
	1	1	**6Y-9347**	1	GASKET	
	2	1	**124-2731**	1	GEAR-OIL PUMP DRIVE (96-TEETH)	
Y	3	1	**250-2353**	1	PUMP GP-TRANSMISSION (CHARGE)	454
	4	1	**1B-8714**	1	KEY-WOODRUFF	
	5	1	**2K-0337**	1	LOCKNUT (3/4-16-THD)	
	6	1	**4S-9134**	1	WASHER-HARD (20X30X3-MM THK)	
M	7	1	**8T-4136**	9	BOLT (M10X1.5X25-MM)	

M-METRIC PART
Y-SEPARATE ILLUSTRATION

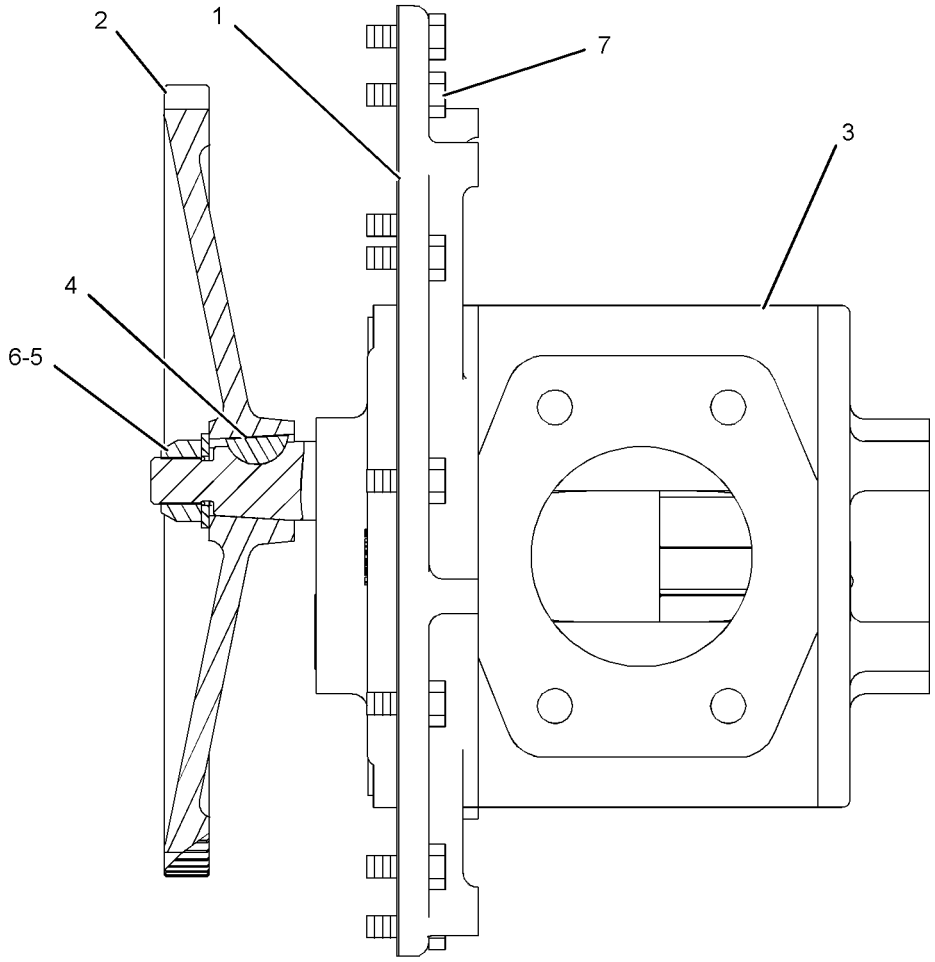

GRAPHIC #1

<END>

g01091567

123-5165 RIM AR

S/N: 4421-UP
36.00 X 57
AN ATTACHMENT

SMCS-4209 **i01146339**

NOTE	PART NUMBER	QTY	PART NAME 1 2 3 4 5 6 (PRODUCT LEVEL)	SEE PAGE
Y	*8X-1316*	4	MOUNTING GP-RIM (36.00X57)	440
Y	*138-7585*	4	RIM GP-DEMOUNTABLE	458

Y-SEPARATE ILLUSTRATION

<END>

123-5168 RIM AR

S/N: 4421-UP
44.00 X 57
AN ATTACHMENT

SMCS-4209 **i01228390**

NOTE	PART NUMBER	QTY	PART NAME 1 2 3 4 5 6 (PRODUCT LEVEL)	SEE PAGE
Y	*108-5477*	4	RIM GP-DEMOUNTABLE	
			-OR-	
Y	*170-3918*	4	RIM GP-DEMOUNTABLE	459
Y	*170-3917*	4	MOUNTING GP-RIM	441

Y-SEPARATE ILLUSTRATION

<END>

123-5170 RIM AR

S/N: 4421-UP
44.00 X 57
FOR USE WITH MICHELIN TIRES ONLY
AN ATTACHMENT

SMCS-4209 **i01228784**

NOTE	PART NUMBER	QTY	PART NAME 1 2 3 4 5 6 (PRODUCT LEVEL)	SEE PAGE
Y	*170-3919*	4	RIM GP-DEMOUNTABLE	460
Y	*170-3917*	4	MOUNTING GP-RIM	441

Y-SEPARATE ILLUSTRATION

<END>

POWER TRAIN

251-3254 RIM AR

S/N: 4421-UP

AN ATTACHMENT

SMCS-4209 **i02154815**

NOTE	PART NUMBER	QTY	PART NAME 1 2 3 4 5 6 (PRODUCT LEVEL)	SEE PAGE
Y	*8X-1316*	4	MOUNTING GP-RIM	440
Y	*248-2822*	4	RIM GP-DEMOUNTABLE	461

Y-SEPARATE ILLUSTRATION

<END>

138-7585 RIM GP-DEMOUNTABLE

S/N: 4421-UP
PART OF 123-5165 RIM AR, 101-9048 RIM GP-SINGLE
AN ATTACHMENT

SMCS-4209 **i01157082**

NOTE	REF NO	GRAPHIC REF	PART NUMBER	QTY	PART NAME 1 2 3 4 5 6 (PRODUCT LEVEL)	SEE PAGE
	1	1	**138-7584**	1	RIM AS	
	2	1	**104-7203**	2	FLANGE	
	3	1	**168-4541**	1	BAND-BEAD SEAT	
	4	1	**8X-2509**	1	KEY-DRIVER	
	5	1	**8W-0335**	1	LOCKRING	

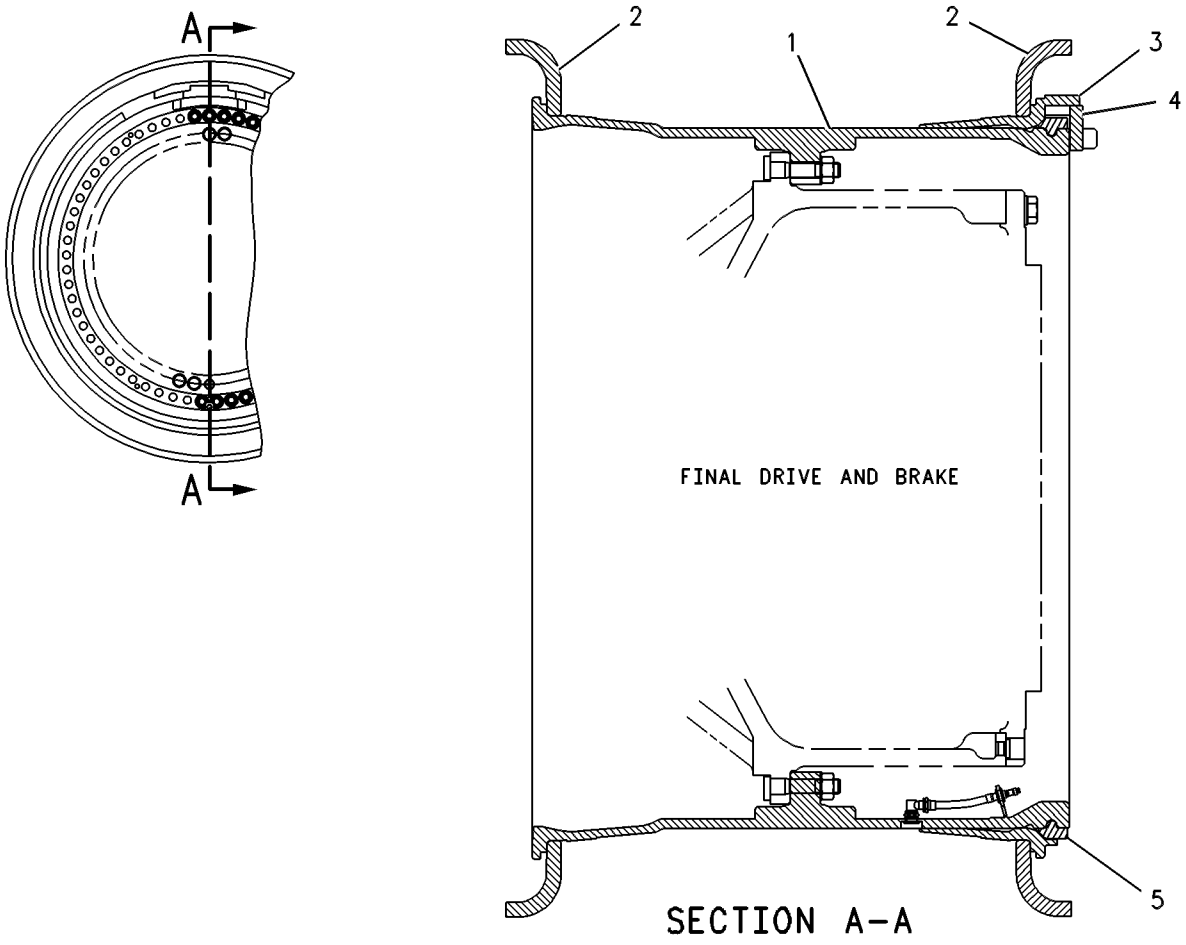

GRAPHIC #1 **<END>** g00088746

170-3918 RIM GP-DEMOUNTABLE

S/N: 4421-UP

PART OF 123-5168 RIM AR, 113-7098 RIM GP-SINGLE

AN ATTACHMENT

SMCS-4209 **i01228539**

NOTE	REF NO	GRAPHIC REF	PART NUMBER	QTY	PART NAME 1 2 3 4 5 6 (PRODUCT LEVEL)	SEE PAGE
	1	1	**170-1561**	1	RIM AS	
	2	1	**104-7203**	2	FLANGE	
	3	1	**168-4541**	1	BAND-BEAD SEAT	
	4	1	**8X-2509**	1	KEY-DRIVER	
	5	1	**8W-0335**	1	LOCKRING	

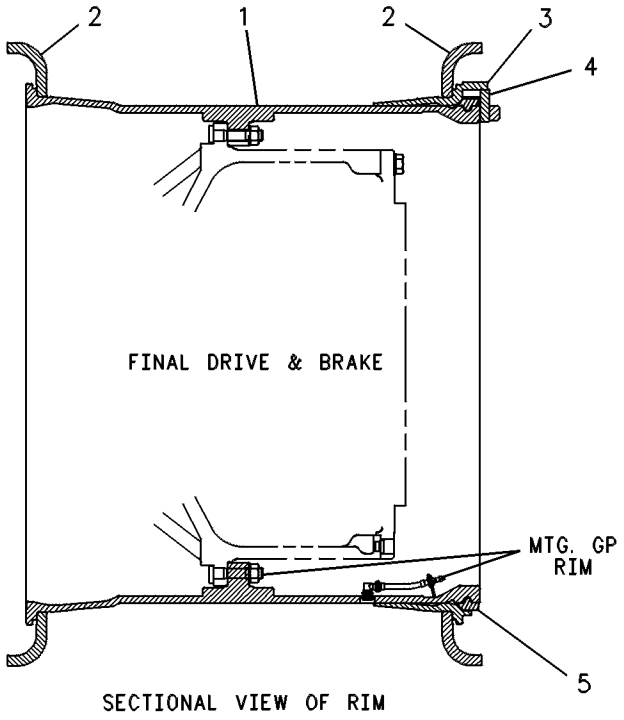

SECTIONAL VIEW OF RIM

GRAPHIC #1 **<END>** g00085380

170-3919 RIM GP-DEMOUNTABLE

S/N: 4421-UP
PART OF 123-5170 RIM AR, 113-7097 RIM GP-SINGLE
FOR USE WITH MICHELIN TIRES ONLY
AN ATTACHMENT

SMCS-4209 **i01228339**

NOTE	REF NO	GRAPHIC REF	PART NUMBER	QTY	PART NAME 1 2 3 4 5 6 (PRODUCT LEVEL)	SEE PAGE
	1	1	**170-1561**	1	RIM AS	
B	2	1	**109-7089**	2	FLANGE	
	3	1	**168-4541**	1	BAND-BEAD SEAT	
	4	1	**8X-2509**	1	KEY-DRIVER	
	5	1	**8W-0335**	1	LOCKRING	

B-USE AS REQUIRED

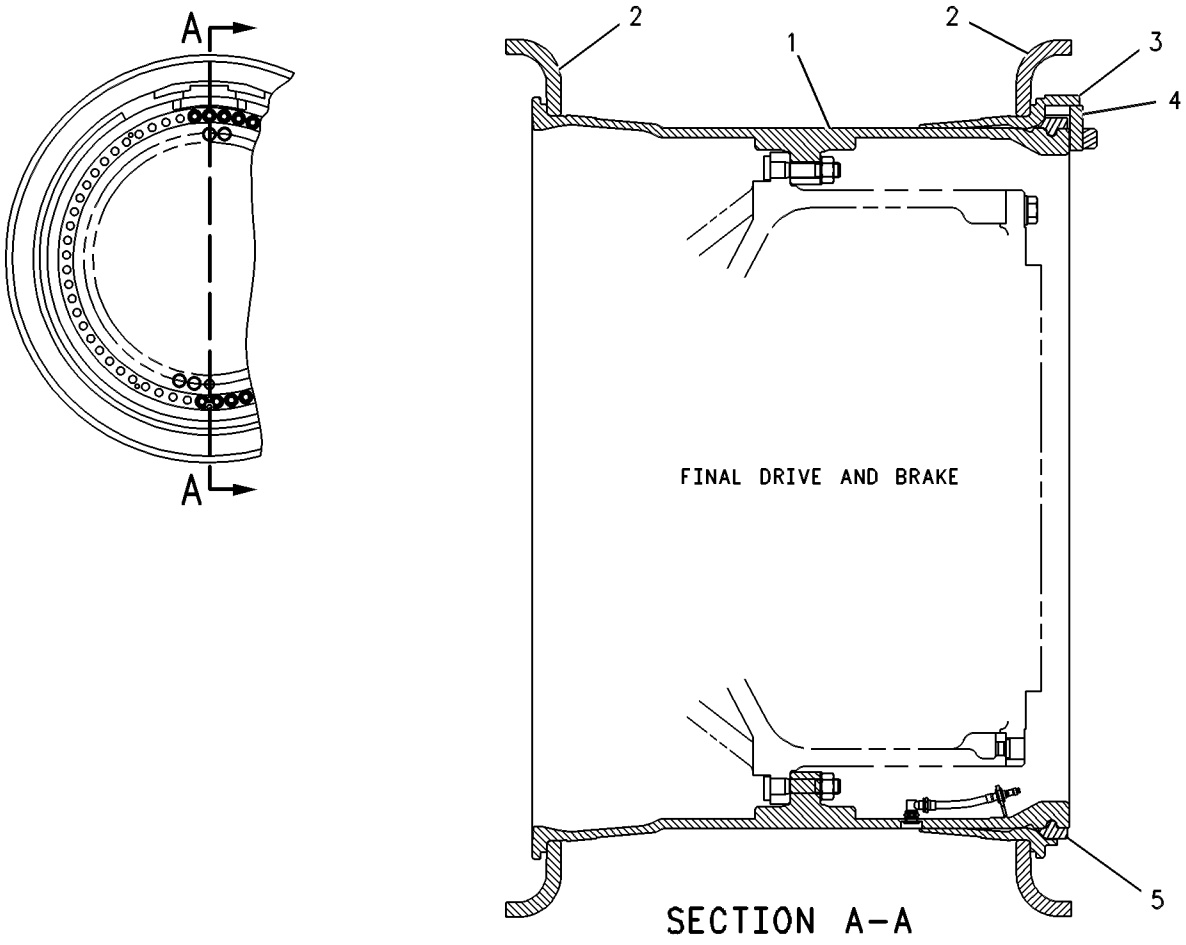

GRAPHIC #1 **<END>** g00088784

248-2822 RIM GP-DEMOUNTABLE

S/N: 4421-UP

PART OF 251-3254 RIM AR, 260-5784 RIM GP-SINGLE

AN ATTACHMENT

SMCS-4209 **i02154816**

NOTE	REF NO	GRAPHIC REF	PART NUMBER	QTY	PART NAME 1 2 3 4 5 6 (PRODUCT LEVEL)	SEE PAGE
	1	1	**8W-0335**	1	RING-LOCK	
	2	1	**8X-2509**	1	KEY-DRIVER	
	3	1	**168-4541**	1	BAND-BEAD SEAT	
	4	1	**248-2742**	1	RIM AS	
	5	1	**104-7203**	2	FLANGE	

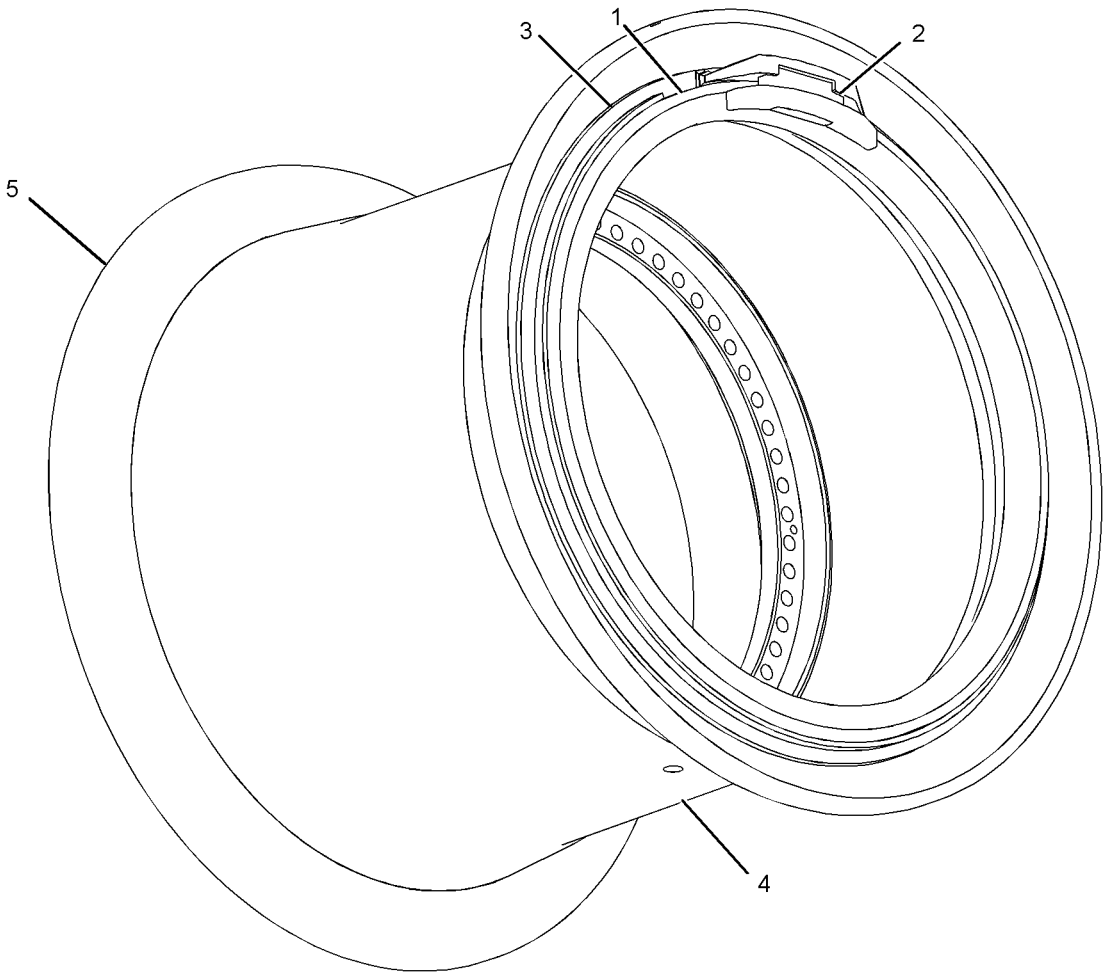

GRAPHIC #1 **<END>** g01095900

101-9048 RIM GP-SINGLE–SPARE

S/N: 4421-UP
36.00 X 57
AN ATTACHMENT

SMCS-4209 **i02169327**

NOTE	PART NUMBER	QTY	PART NAME 1 2 3 4 5 6 (PRODUCT LEVEL)	SEE PAGE
Y	*8X-0123*	1	RIM GP-DEMOUNTABLE	
			-OR-	
Y	*109-9667*	1	RIM GP-DEMOUNTABLE	
			-OR-	
Y	*138-7585*	1	RIM GP-DEMOUNTABLE	458
	5T-9796	1	CONNECTOR	
	8X-2699	1	HOSE AS-EXTENSION	
	5T-9866	1	LOCKNUT	
	8W-0338	1	SEAL-O-RING	
	8X-2700	1	SPUD AS	
	2D-2508	1	GROMMET	
	5T-9866	1	LOCKNUT	
	5T-9797	1	VALVE GP-TIRE	
	6F-3930	1	CORE-VALVE	
	6J-3134	1	SEAL-O-RING	
	9K-7951	1	CAP-VALVE (STEM)	

Y-SEPARATE ILLUSTRATION

<END>

113-7097 RIM GP-SINGLE

S/N: 4421-UP
44.00 X 57
FOR USE WITH MICHELIN TIRES
AN ATTACHMENT

SMCS-4209 **i02187886**

NOTE	PART NUMBER	QTY	PART NAME 1 2 3 4 5 6 (PRODUCT LEVEL)	SEE PAGE
Y	*170-3919*	1	RIM GP-DEMOUNTABLE	460
	5T-9796	1	CONNECTOR	
	170-4689	1	HOSE AS	
	5T-9866	1	LOCKNUT	
	8W-0338	1	SEAL-O-RING	
	8X-2700	1	SPUD AS	
	2D-2508	1	GROMMET	
	5T-9866	1	LOCKNUT	
	5T-9797	1	VALVE GP-TIRE	
	9K-7951	1	CAP-VALVE (STEM)	
	6F-3930	1	CORE-VALVE	
	6J-3134	1	SEAL-O-RING	

Y-SEPARATE ILLUSTRATION

<END>

113-7098 RIM GP-SINGLE

S/N: 4421-UP
44.00 X 57
CANNOT BE USED WITH MICHELIN TIRES
AN ATTACHMENT

SMCS-4209 **i02169329**

NOTE	PART NUMBER	QTY	PART NAME 1 2 3 4 5 6 (PRODUCT LEVEL)	SEE PAGE
Y	*170-3918*	1	RIM GP-DEMOUNTABLE	459
	5T-9796	1	CONNECTOR	
	170-4689	1	HOSE AS	
	5T-9866	1	LOCKNUT	
	8W-0338	1	SEAL-O-RING	
	8X-2700	1	SPUD AS	
	2D-2508	1	GROMMET	
	5T-9866	1	LOCKNUT	
	5T-9797	1	VALVE GP-TIRE	
	9K-7951	1	CAP-VALVE (STEM)	
	6F-3930	1	CORE-VALVE	
	6J-3134	1	SEAL-O-RING	

Y-SEPARATE ILLUSTRATION

<END>

260-5784 RIM GP-SINGLE

S/N: 4421-UP
47X57
AN ATTACHMENT

SMCS-4209 **i02285732**

NOTE	PART NUMBER	QTY	PART NAME 1 2 3 4 5 6 (PRODUCT LEVEL)	SEE PAGE
Y	*248-2822*	1	RIM GP-DEMOUNTABLE	461
	5T-9796	1	CONNECTOR	
	8X-2699	1	HOSE AS-EXTENSION	
	5T-9866	1	LOCKNUT	
	8W-0338	1	SEAL-O-RING	
	8X-2700	1	SPUD AS	
	2D-2508	1	GROMMET	
	5T-9866	1	LOCKNUT	
	5T-9797	1	VALVE GP-TIRE	

Y-SEPARATE ILLUSTRATION

<END>

104-4751 SHAFT GP-DRIVE—MAIN; CENTER, FRONT

S/N: 4421-UP
LOWER HITCH & FRONT AXLE.
OUTPUT TRANSFER CASE TO PARKING BRAKE TO FRONT AXLE
PART OF 245-8809 POWER TRAIN AR

SMCS-3253 **i02116815**

NOTE	REF NO	GRAPHIC REF	PART NUMBER	QTY	PART NAME 1 2 3 4 5 6 (PRODUCT LEVEL)	SEE PAGE
	1	1	**6K-2430**	2	SEAL-LIP TYPE	
	2	1	**116-1342**	1	YOKE	
	3	1	**8R-9312**	1	GUARD	
	4	1	**116-2858**	1	RETAINER-SEAL (150-MM ID)	
	5	1	**105-2036**	2	BALL BEARING (100-MM ID)	
	6	1	**105-2433**	1	CAGE-BEARING (147.5-MM ID)	
	7	1	**2V-2072**	1	GUARD	
	8	1	**106-7439**	1	SPACER (50-MM THK)	
M	9	1	**6V-5842**	12	BOLT (M10X1.5X40-MM)	
	10	1	**6V-5839**	12	WASHER (11X21X2.5-MM THK)	
	11	1	**4K-6804**	1	SEAL-O-RING	
M	12	1	**6V-8154**	12	BOLT (M16X2X150-MM)	
	13	1	**5P-8247**	12	WASHER-HARD (17X32X3.5-MM THK)	
B	14	1	**105-7134**	1	SHIM PACK (INCLUDES 9-SHIMS)	
	15	1	**4L-9564**	1	SEAL-O-RING	
M	16	1	**8T-0360**	1	BOLT (M20X2.5X90-MM)	
	17	1	**8R-8513**	1	RETAINER	
M	18	1	**9X-6480**	12	BOLT (M20X2.5X90-MM)	
CY	19	1	**168-1915**	1	SLIP JOINT GP (CENTER)	473
Y	20	1	**112-6547**	1	UNIVERSAL JOINT GP (FRONT DRIVE SHAFT)	483

B-USE AS REQUIRED
C-CHANGE FROM PREVIOUS TYPE
M-METRIC PART
Y-SEPARATE ILLUSTRATION

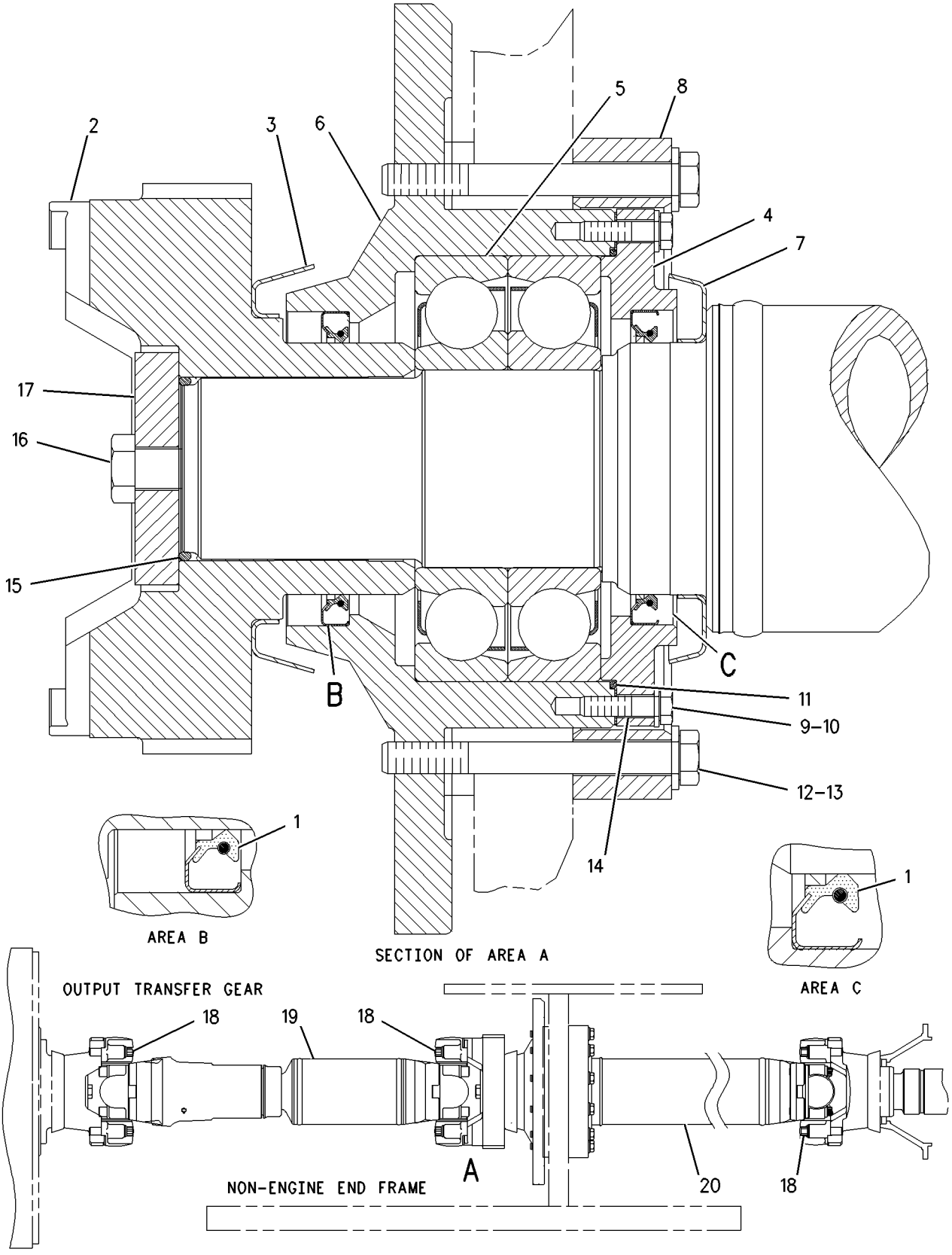

GRAPHIC #1 **<END>** g00655414

246-6150 SHAFT GP-DRIVE–REAR

S/N: 4421-UP

PART OF 245-8813 INSTALLATION AR-FIELD

SMCS-3253 **i02149253**

NOTE	REF NO	GRAPHIC REF	PART NUMBER	QTY	PART NAME 1 2 3 4 5 6 (PRODUCT LEVEL)	SEE PAGE
M	1	1	**9X-6480**	8	BOLT (M20X2.5X90-MM)	
Y	2	1	**252-5660**	1	UNIVERSAL JOINT GP (REAR DRIVE SHAFT)	484

M-METRIC PART
Y-SEPARATE ILLUSTRATION

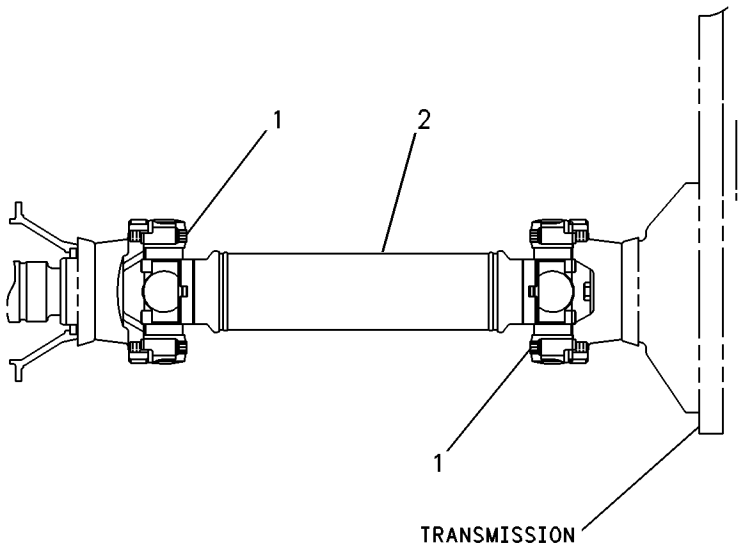

GRAPHIC #1 **<END>** g00084028

246-6148 SHAFT GP-INPUT DRIVE

S/N: 4421-UP

PART OF 245-8809 POWER TRAIN AR

SMCS-3253 **i02151076**

NOTE	REF NO	GRAPHIC REF	PART NUMBER	QTY	PART NAME 1 2 3 4 5 6 (PRODUCT LEVEL)	SEE PAGE
Y	1	1	**252-5657**	1	SLIP JOINT GP (INPUT DRIVE SHAFT)	474
M	2	1	**9X-6480**	8	BOLT (M20X2.5X90-MM)	

M-METRIC PART
Y-SEPARATE ILLUSTRATION

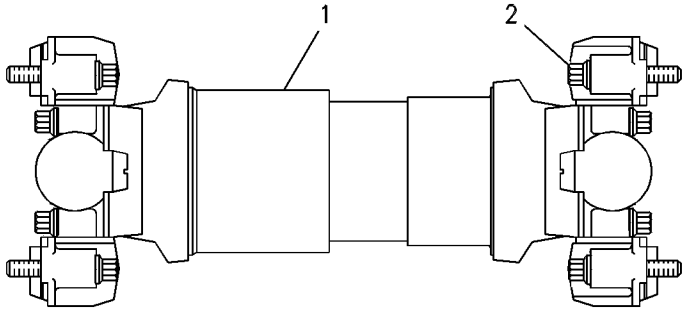

GRAPHIC #1 **<END>** g00085384

8R-4208 SHAFT GP-PUMP DRIVE–REAR

S/N: 4421-UP

UPPER DRIVESHAFT. REAR PUMP DRIVE TO SUPPORT BEARING ABOVE TRANSMISSION

PART OF 245-8809 POWER TRAIN AR

SMCS-3253 **i01011069**

NOTE	REF NO	GRAPHIC REF	PART NUMBER	QTY	PART NAME 1 2 3 4 5 6 (PRODUCT LEVEL)	SEE PAGE
	1	1	**2D-8540**	2	SEAL-LIP TYPE	
	2	1	**8R-4724**	1	CAGE-BEARING	
	3	1	**3K-9616**	1	BEARING-ROLLER	
	4	1	**1H-8278**	1	SEAL-O-RING	
	5	1	**5K-3968**	1	RETAINER-BEARING	
	6	1	**8R-4725**	1	YOKE	
	7	1	**8V-5386**	1	RETAINER	
M	8	1	**8T-0360**	1	BOLT (M20X2.5X90-MM)	
	9	1	**2H-3933**	1	SEAL-O-RING	
	10	1	**3K-9608**	2	GUARD	
M	11	1	**8T-4194**	6	BOLT (M12X1.75X50-MM)	
	12	1	**8T-4223**	6	WASHER-HARD (13.5X25.5X3-MM THK)	
C	13	1	**7I-3647**	1	SHAFT	
CM	14	1	**6V-5686**	12	BOLT (M16X2X50-MM)	
M	15	1	**8T-4195**	2	BOLT (M10X1.5X30-MM)	
	16	1	**8T-4121**	2	WASHER-HARD (11X21X2.5-MM THK)	
C	17	1	**5P-8247**	12	WASHER-HARD (17X32X3.5-MM THK)	

C-CHANGE FROM PREVIOUS TYPE
M-METRIC PART

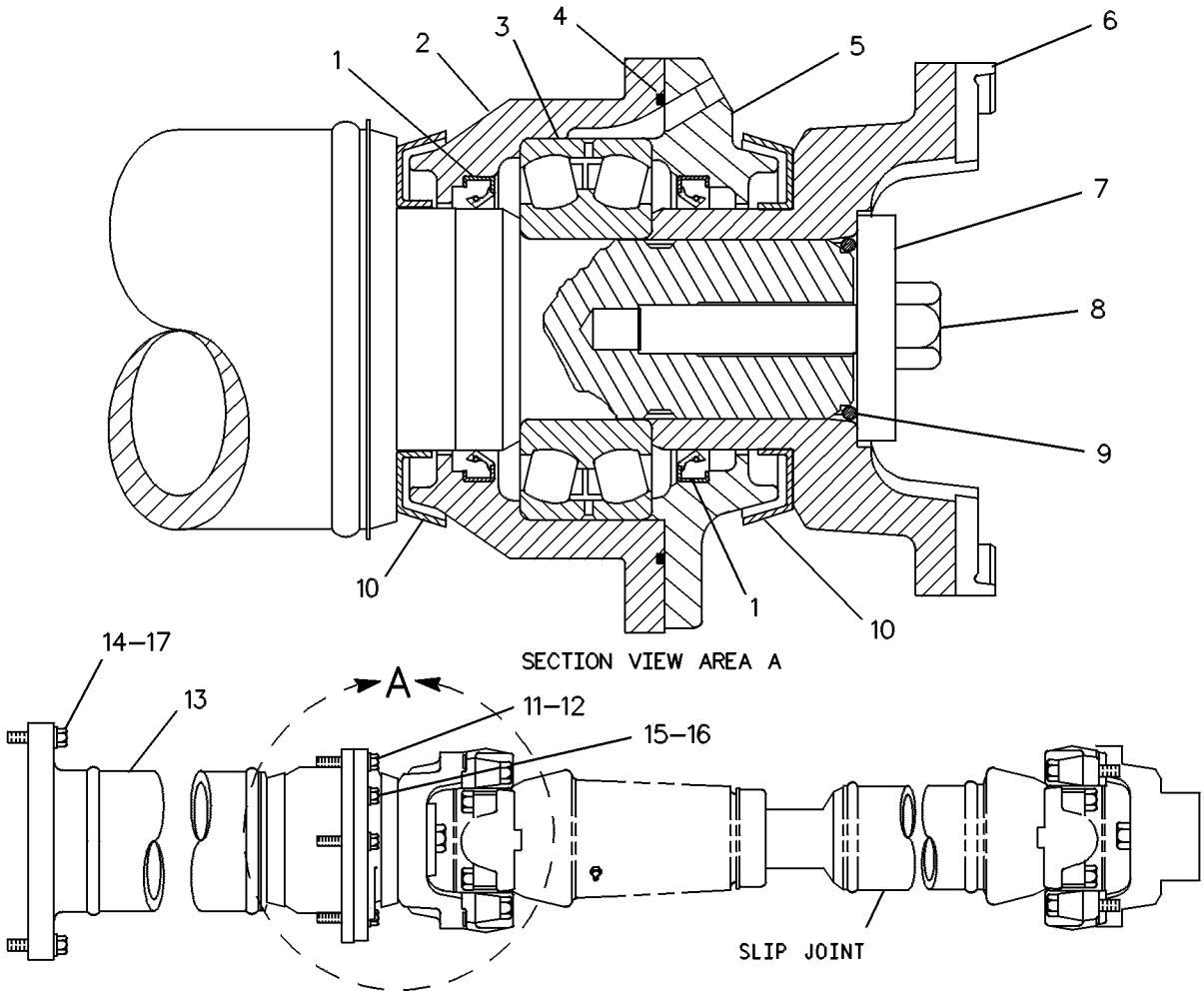

GRAPHIC #1 **<END>** g00085482

8X-0093 SHAFT GP-PUMP DRIVE–FRONT

S/N: 4421-UP
UPPER DRIVESHAFT ACROSS HITCH
PART OF 245-8809 POWER TRAIN AR

SMCS-3253 **i01884987**

NOTE	REF NO	GRAPHIC REF	PART NUMBER	QTY	PART NAME 1 2 3 4 5 6 (PRODUCT LEVEL)	SEE PAGE
Y	1	1	**8R-8510**	1	SLIP JOINT GP	472
M	2	1	**8T-0281**	8	BOLT (M16X2X80-MM)	

M-METRIC PART
Y-SEPARATE ILLUSTRATION

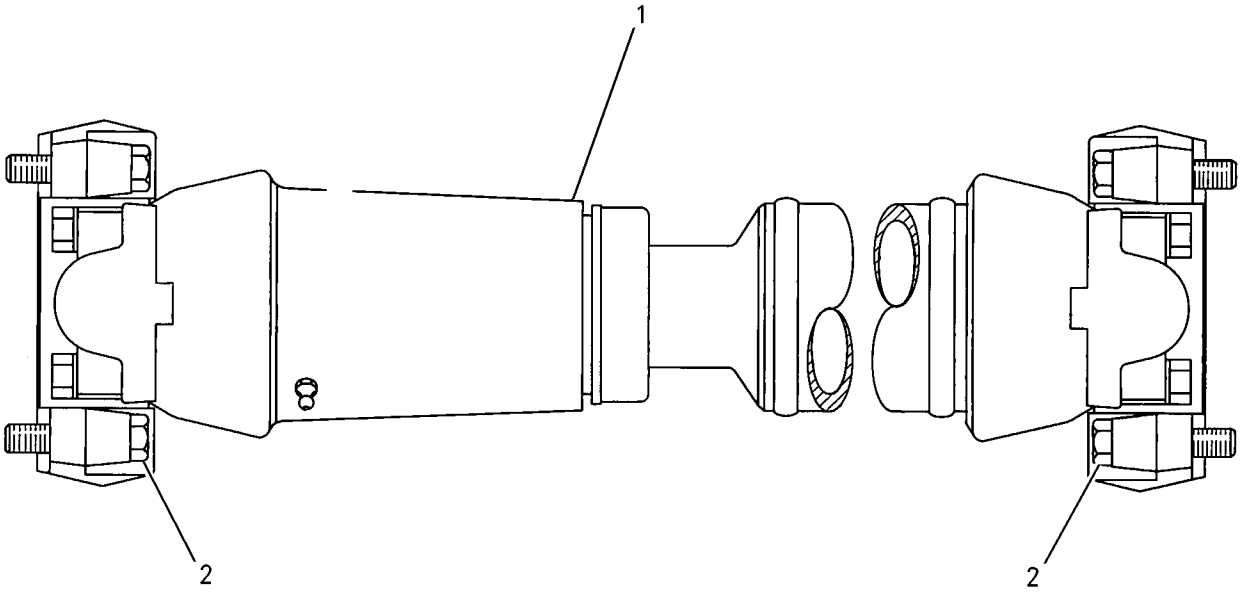

GRAPHIC #1 **<END>** g00676914

8X-8248 SHAFT GP-PUMP DRIVE INPUT

S/N: 4421-UP

ENGINE COUPLING TO TORQUE CONVERTER - THRU REAR PUMP DRIVE

PART OF 245-8809 POWER TRAIN AR

SMCS-3253 **i01002280**

NOTE	REF NO	GRAPHIC REF	PART NUMBER	QTY	PART NAME 1 2 3 4 5 6 (PRODUCT LEVEL)	SEE PAGE
	1	1	**145-6749**	1	SHAFT AS-INPUT	
	2	1	**9S-8004**	1	PLUG	
		1	**3J-1907**	1	SEAL-O-RING	
M	3	1	**6V-5686**	18	BOLT (M16X2X50-MM)	
	4	1	**5P-8247**	18	WASHER-HARD (17X32X3.5-MM THK)	
	5	1	**8X-7858**	1	FLANGE-DRIVER	

M-METRIC PART

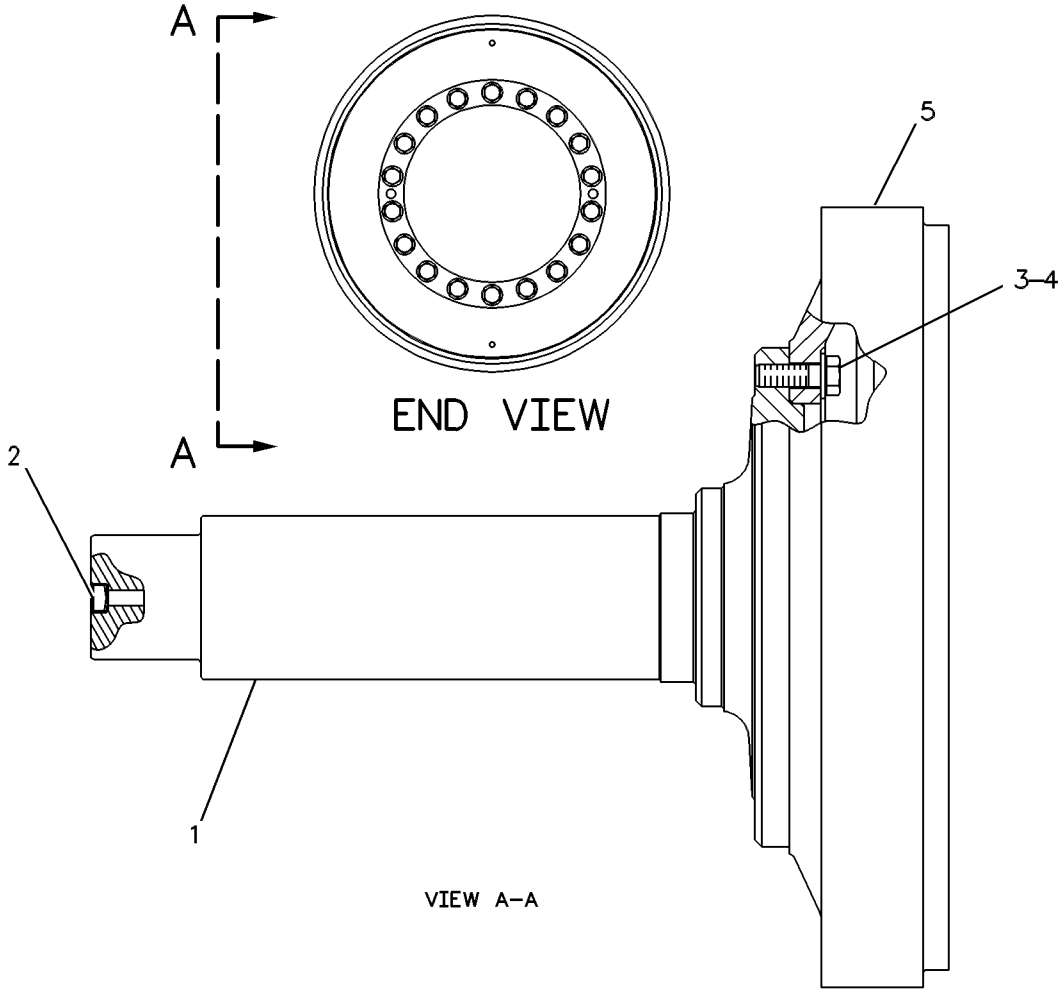

VIEW A–A

GRAPHIC #1 **<END>** g00284564

8R-8510 SLIP JOINT GP—FRONT PUMP DRIVE SHAFT

S/N: 4421-UP

PART OF 8X-0093 SHAFT GP-PUMP DRIVE

SMCS-3251 **i01011190**

NOTE	REF NO	GRAPHIC REF	PART NUMBER	QTY	PART NAME 1 2 3 4 5 6 (PRODUCT LEVEL)	SEE PAGE
	1	1	**3B-8489**	1	FITTING-GREASE	
	2	1	**4B-4550**	1	FITTING-PRESSURE RELIEF	
	3	1	**106-0933**	2	SPIDER & BEARING GP	
M	4	1	**8T-0281**	8	BOLT (M16X2X80-MM)	
					AVAILABLE REPAIR KIT(S):	
			2G-4563	1	KIT-SEAL	

M-METRIC PART

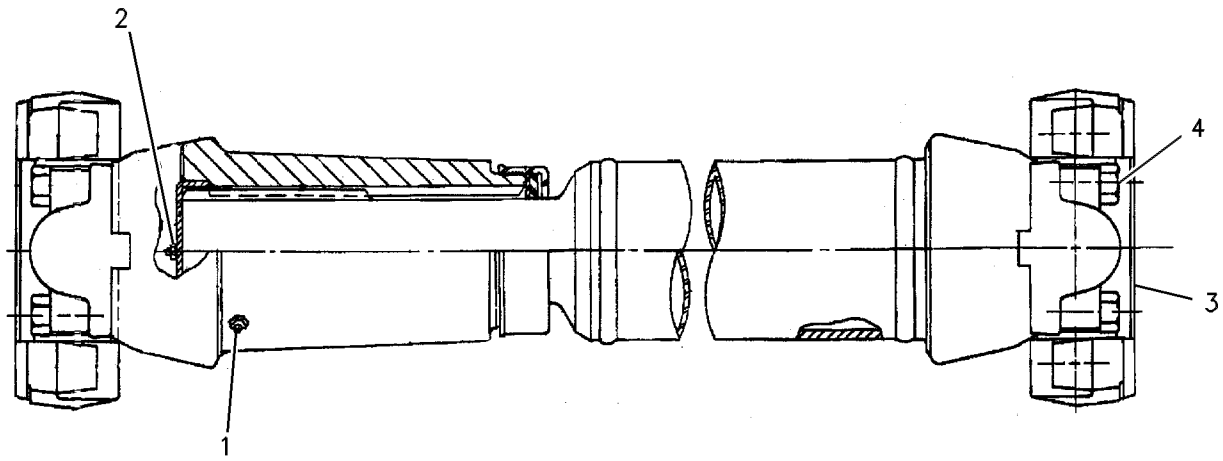

GRAPHIC #1 **<END>** g00084310

168-1915 SLIP JOINT GP–CENTER

S/N: 4421-UP

PART OF 104-4751 SHAFT GP-DRIVE

SMCS-3251 **i02149504**

NOTE	REF NO	GRAPHIC REF	PART NUMBER	QTY	PART NAME 1 2 3 4 5 6 (PRODUCT LEVEL)	SEE PAGE
M	1	1	**9X-6480**	8	BOLT (M20X2.5X90-MM)	
Y	2	1	**8R-7036**	2	SPIDER & BEARING GP	475
	3	1	**112-4886**	1	SHAFT AS	
	3A	1	**1K-6853**	1	FITTING	
	3B	1	**3B-8489**	1	FITTING-GREASE	
	3C	1	**5T-9482**	1	KIT-SEAL	
	3D	1	**168-1917**	1	CUP-DUST	
	3E	1	**5P-6414**	1	RING-RETAINING	
	3F	1	**132-1183**	1	RING-RETAINING	

M-METRIC PART
Y-SEPARATE ILLUSTRATION

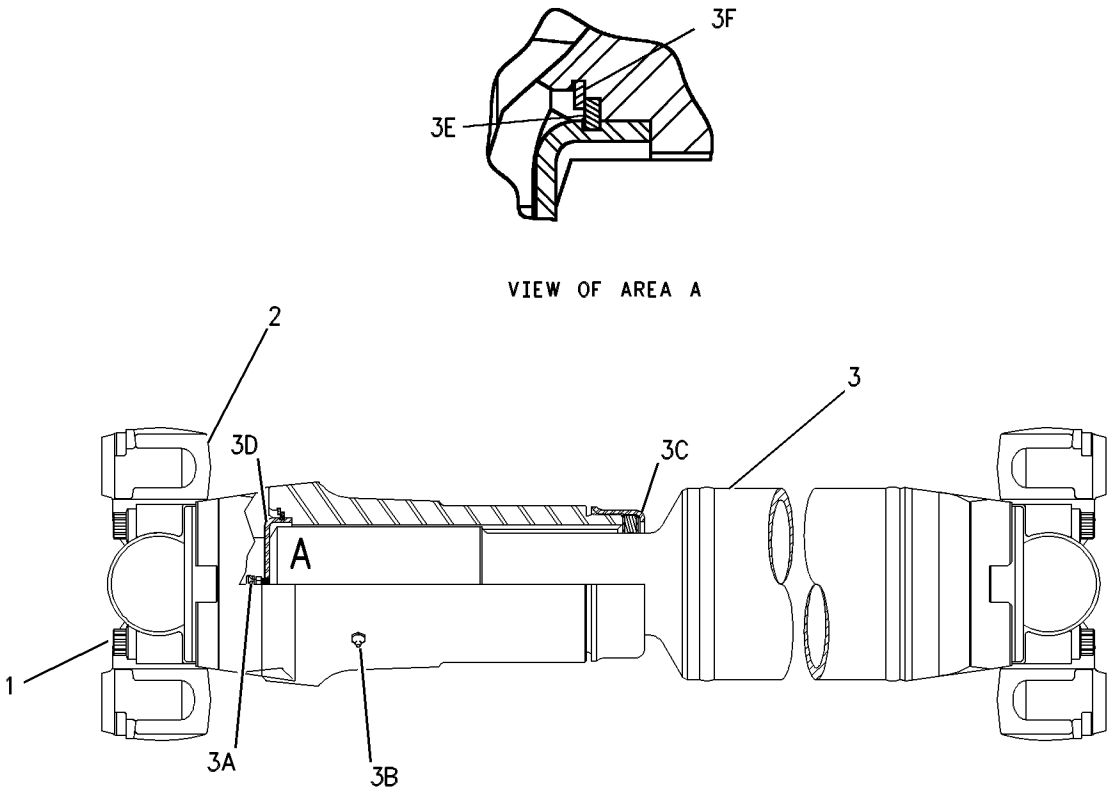

GRAPHIC #1 **<END>** g00558381

252-5657 SLIP JOINT GP—INPUT DRIVE SHAFT

S/N: 4421-UP

PART OF 246-6148 SHAFT GP-INPUT DRIVE

SMCS-3251 **i02151078**

NOTE	REF NO	GRAPHIC REF	PART NUMBER	QTY	PART NAME 1 2 3 4 5 6 (PRODUCT LEVEL)	SEE PAGE
	1	1	**252-5659**	1	SLIP JOINT GP	
		1	**3B-8489**	1	FITTING-GREASE	
		1	**5T-9482**	1	KIT-SEAL	
					(INCLUDES SEAL, WASHER, AND CAP)	
	2	1	**8X-0432**	2	SPIDER & BEARING GP	
M	3	1	**9X-6480**	8	BOLT (M20X2.5X90-MM)	

M-METRIC PART

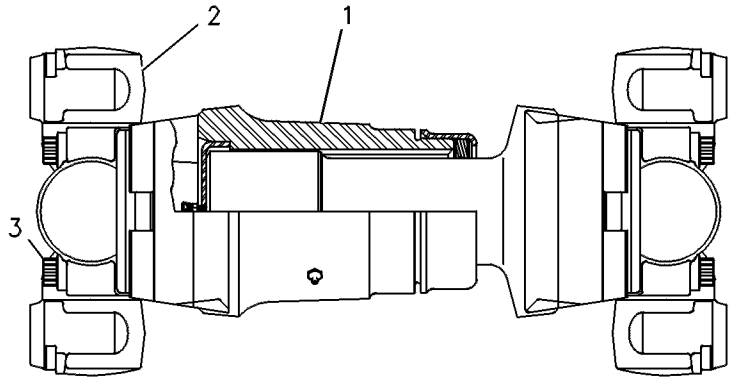

GRAPHIC #1 **<END>** g00085386

8R-7036 SPIDER & BEARING GP

S/N: 4421-UP

PART OF 168-1915 SLIP JOINT GP, 112-6547, 252-5660 UNIVERSAL JOINT GP

SMCS-3251, 3253 **i02169337**

NOTE	PART NUMBER	QTY	PART NAME 1 2 3 4 5 6 (PRODUCT LEVEL)	SEE PAGE
	8R-7034	1	SPIDER & BEARING GP	
			—OR—	
	8X-0432	1	SPIDER & BEARING GP	

<END>

255-0780 TIRE GP

S/N: 4421-UP

AN ATTACHMENT

SMCS-4203 **i02194577**

NOTE	PART NUMBER	QTY	PART NAME 1 2 3 4 5 6 (PRODUCT LEVEL)	SEE PAGE
	255-0779	4	TIRE (53.5/85-57)	

<END>

255-0783 TIRE GP

S/N: 4421-UP

AN ATTACHMENT

SMCS-4203 **i02194578**

NOTE	PART NUMBER	QTY	PART NAME 1 2 3 4 5 6 (PRODUCT LEVEL)	SEE PAGE
	255-0782	4	TIRE (53.5/85-57)	

<END>

255-0785 TIRE GP

S/N: 4421-UP

50/80-57 68PR L-4

AN ATTACHMENT

SMCS-4203 **i02194580**

NOTE	PART NUMBER	QTY	PART NAME 1 2 3 4 5 6 (PRODUCT LEVEL)	SEE PAGE
			(NO SERVICED PARTS)	

<END>

255-0788 TIRE GP

S/N: 4421-UP
49.5/85-57 76PR L-5
AN ATTACHMENT

SMCS-4203 **i02194582**

NOTE	PART NUMBER	QTY	PART NAME 1 2 3 4 5 6 (PRODUCT LEVEL)	SEE PAGE
			(NO SERVICED PARTS)	

<END>

255-0790 TIRE GP

S/N: 4421-UP
49.5/85-57 76PR L-5
AN ATTACHMENT

SMCS-4203 **i02194586**

NOTE	PART NUMBER	QTY	PART NAME 1 2 3 4 5 6 (PRODUCT LEVEL)	SEE PAGE
			(NO SERVICED PARTS)	

<END>

180-0567 TORQUE CONVERTER & HOUSING GP–LOCKUP

S/N: 4421-UP

PART OF 245-8809 POWER TRAIN AR

SMCS-3101, 3105 **i02169322**

NOTE	REF NO	GRAPHIC REF	PART NUMBER	QTY	PART NAME 1 2 3 4 5 6 (PRODUCT LEVEL)	SEE PAGE
	1	1	**189-1843**	1	HOUSING AS	
		1	**1F-1006**	2	DOWEL	
		1	**4B-9784**	2	BALL	
Y	2	1	**174-5723**	1	TORQUE CONVERTER GP (LOCKUP)	479
	3	1	**8T-3282**	16	WASHER-HARD (22X35X3.5-MM THK)	
M	4	1	**6V-3531**	16	BOLT (M20X2.5X50-MM)	
	5	1	**2M-3818**	2	SEAL-O-RING	
	6	1	**2A-3398**	1	GASKET	
	7	1	**6B-5262**	1	PLUG	
	8	1	**6V-0973**	1	SEAL-O-RING	
	9	1	**7T-2055**	1	RING	
	10	1	**5D-7523**	1	SEAL-O-RING	
	11	1	**032-3180**	14	BOLT (1/2-13X1.625-IN)	
	12	1	**1A-5822**	2	BOLT (1/2-13X2.75-IN)	
	13	1	**194-6254**	1	MANIFOLD AS	
		1	**4K-8603**	1	PLUG-CUP	
		1	**7M-5839**	1	PLUG-CUP	
		1	**194-8516**	1	PLUG-PIPE	
	14	1	**8M-8514**	3	SEAL-O-RING	
	15	1	**5P-8245**	16	WASHER-HARD (13.5X25.5X3-MM THK)	
M	16	1	**8T-5001**	2	BOLT (M12X1.75X130-MM)	
M	17	1	**8T-4956**	1	BOLT (M12X1.75X35-MM)	
	18	1	**3J-1907**	1	SEAL-O-RING	
	19	1	**9S-4191**	1	PLUG-O RING	
	20	1	**8T-4223**	3	WASHER-HARD (13.5X25.5X3-MM THK)	
	21	1	**189-1024**	1	COVER	
	22	1	**8M-4443**	1	SEAL-O-RING	
	23	1	**8M-5254**	1	SEAL-O-RING	
M	24	1	**8T-4136**	4	BOLT (M10X1.5X25-MM)	
	25	1	**8T-4121**	4	WASHER-HARD (11X21X2.5-MM THK)	

M-METRIC PART
Y-SEPARATE ILLUSTRATION

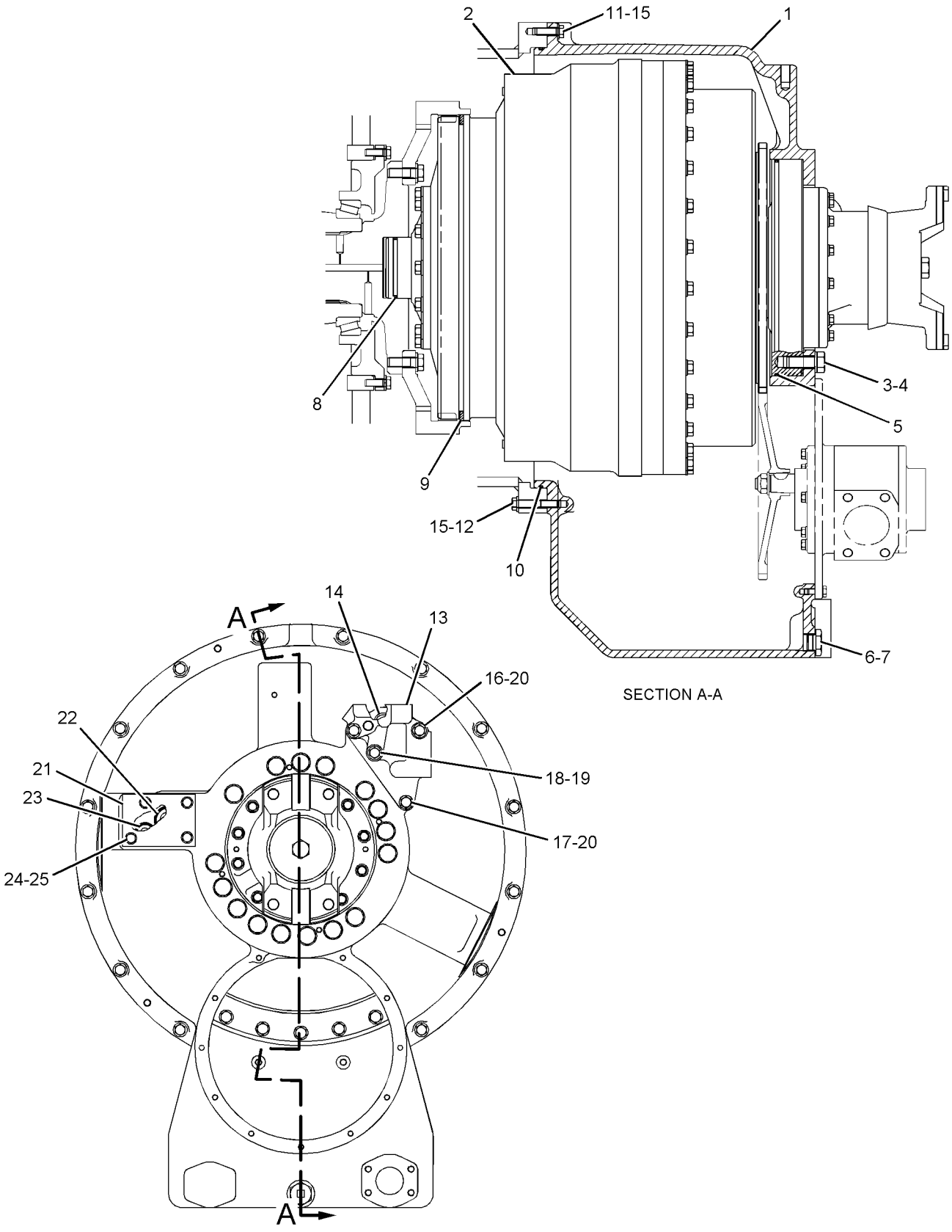

GRAPHIC #1 **<END>** g01096961

174-5723 TORQUE CONVERTER GP–LOCKUP

S/N: 6JT1-UP

PART OF 180-0567 TORQUE CONVERTER & HOUSING GP

SMCS-3101 **i02151033**

NOTE	REF NO	GRAPHIC REF	PART NUMBER	QTY	PART NAME 1 2 3 4 5 6 (PRODUCT LEVEL)	SEE PAGE
	1	1	**6Y-7195**	1	HUB AS-IMPELLER	
		1	**6Y-7196**	1	BEARING-SLEEVE	
		1	**8E-6992**	1	BEARING-SLEEVE	
	2	1	**111-3193**	1	IMPELLER-CONVERTER	
	3	1	**9U-9011**	1	ADAPTER AS-CLUTCH	
		1	**9M-4007**	2	DOWEL	
	4	1	**5P-8247**	42	WASHER-HARD (17X32X3.5-MM THK)	
	5	1	**9X-8883**	16	BOLT (5/8-11X2.75-IN)	
	6	1	**6Y-7191**	1	PLATE-CLUTCH BACKING	
	7	1	**6I-8597**	5	DISC-FRICTION	
	8	1	**6Y-7198**	4	PLATE-CLUTCH	
	9	1	**1S-6478**	1	RING-SEAL	
	10	1	**124-2730**	1	PISTON-CLUTCH	
	11	1	**6Y-8167**	1	WASHER-THRUST (280X217X4.5)	
	12	1	**7G-9922**	2	RING-SEAL	
	13	1	**7S-6892**	1	RING-SEAL	
	14	1	**124-2744**	1	HOUSING AS-CLUTCH	
		1	**8E-6993**	1	BEARING-SLEEVE	
	15	1	**5P-8245**	42	WASHER-HARD (13.5X25.5X3-MM THK)	
	16	1	**9X-8877**	30	BOLT (1/2-13X5-IN)	
	17	1	**124-2729**	1	GEAR-DRIVE (126-TEETH)	
	18	1	**0S-1588**	18	BOLT (3/8-16X1.25-IN)	
	19	1	**8E-6784**	1	RING-LOCK	
	20	1	**9W-6991**	2	RING-SEAL	
	21	1	**6Y-7197**	1	CARRIER-STATOR	
	22	1	**102-8618**	1	SHAFT-OUTPUT	
	23	1	**7T-2452**	1	CARRIER-RING	
	24	1	**128-1663**	1	RING-SEAL	
	25	1	**065-3758**	1	BALL BEARING	
	26	1	**7T-2058**	1	CARRIER-RING	
	27	1	**9P-7118**	2	RING-SEAL	
	28	1	**6I-8427**	1	GASKET	
	29	1	**6I-8426**	1	DISTRIBUTOR-OIL	
	30	1	**5M-2894**	12	WASHER-HARD (10.2X18.5X2.5-MM THK)	
	31	1	**131-6172**	1	ROTOR-SENSOR	
	32	1	**133-4296**	1	SEAL-LIP TYPE	
	33	1	**6Y-8137**	1	YOKE AS	
		1	**2V-5906**	1	GUARD	
	34	1	**4L-9564**	1	SEAL-O-RING	
	35	1	**6Y-9348**	1	RETAINER	
M	36	1	**6V-9667**	1	BOLT (M20X2.5X100-MM)	
	37	1	**6I-8575**	2	RACE-THRUST BEARING	
	38	1	**9M-9545**	2	SEAL-O-RING	
	39	1	**111-8922**	2	BEARING AS-NEEDLE	
	40	1	**7T-2056**	1	RACE AS	
	41	1	**6I-9495**	1	STATOR-CONVERTER	
	42	1	**5P-6047**	2	RING-RETAINING	
	43	1	**0T-0768**	12	BOLT (7/16-14X1.75-IN)	
	44	1	**6Y-8198**	1	SUPPORT	
	45	1	**6I-9498**	1	BEARING AS	
		1	**6I-9496**	1	BEARING-PILOT	
		1	**6I-9497**	1	RACE	
	46	1	**6Y-8061**	1	ADAPTER-SPLINED	
	47	1	**6Y-7202**	1	HUB	
	48	1	**7T-0282**	1	TURBINE-CONVERTER	
	49	1	**9X-8880**	26	BOLT (5/8-11X2-IN)	

174-5723 TORQUE CONVERTER GP *(contd.)* i02151033

NOTE	REF NO	GRAPHIC REF	PART NUMBER	QTY	PART NAME 1 2 3 4 5 6 (PRODUCT LEVEL)	SEE PAGE
	50	1	**102-3733**	1	HOUSING-ROTATING	
	51	1	**7H-3171**	2	PLUG-PIPE	
	52	1	**6Y-3608**	1	HOUSING-CLUTCH	
	53	1	**1T-1897**	2	PLATE-CLUTCH	
	54	1	**8E-8328**	3	DISC-FRICTION	
	55	1	**7T-1955**	1	SLEEVE-WEAR	
	56	1	**113-5945**	1	RING-SEAL	
	57	1	**7T-1957**	1	CARRIER-RING	
	58	1	**3S-0142**	1	RING-SEAL	
	59	1	**9U-9012**	1	PISTON-CLUTCH	
	60	1	**3S-1282**	1	RING-SEAL	
	61	1	**8T-0231**	1	BALL BEARING	
	62	1	**7T-1667**	1	WASHER-SPRING	
	63	1	**5H-0793**	1	RING-LOCK	
	64	1	**7T-1666**	1	PLATE-RETAINER	
	65	1	**0S-1602**	3	BOLT (5/8-18X3.5-IN)	
	66	1	**102-3730**	1	PILOT AS-PUMP DRIVE	
		1	**9N-4104**	1	PLUG	
	67	1	**7B-3235**	12	BOLT (1/2-13X1.375-IN)	
	68	1	**3K-6113**	12	WASHER-HARD (12X18.5X3-MM THK)	

M-METRIC PART

174-5723 TORQUE CONVERTER GP *(contd.)* i02151033

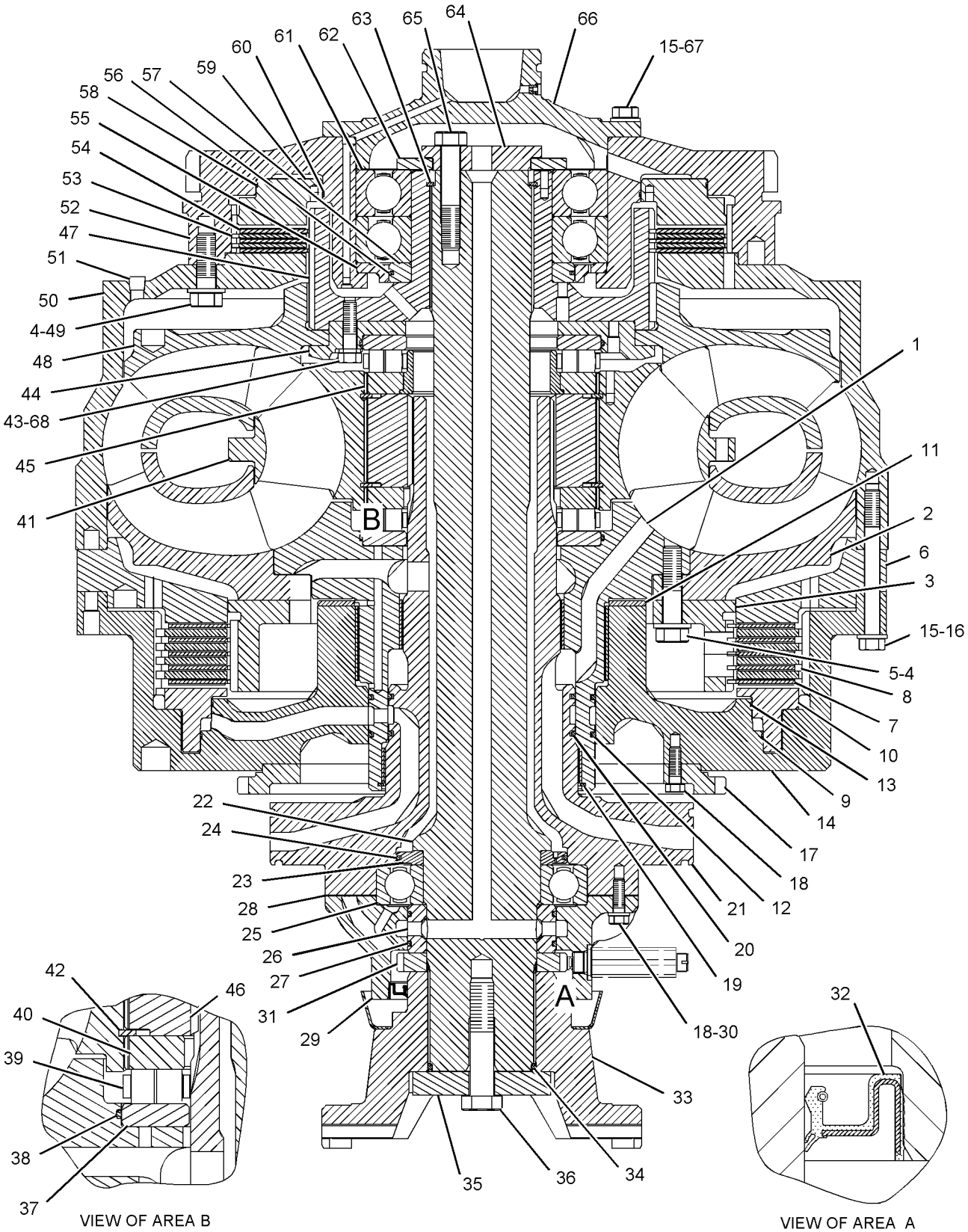

GRAPHIC #1 **<END>** g01098013

POWER TRAIN

239-8137 TRANSMISSION AR

S/N: DWX1-UP

PART OF 245-8809 POWER TRAIN AR

SMCS-3030 **i02151034**

NOTE	PART NUMBER	QTY	PART NAME 1 2 3 4 5 6 (PRODUCT LEVEL)	SEE PAGE
Y	*171-4621*	1	CASE & PARTS GP-PLANETARY	387
Y	*252-7818*	1	CONTROL GP-TRANSMISSION HYD	395
Y	*154-0156*	1	COVER GP-SHIPPING	400
Y	*171-4619*	1	GEAR GP-INPUT TRANSFER	422
Y	*239-8138*	1	GEAR GP-OUTPUT TRANSFER	424
Y	*171-4616*	1	PLANETARY GP-TRANSMISSION	444

Y-SEPARATE ILLUSTRATION

<END>

112-6547 UNIVERSAL JOINT GP–FRONT DRIVE SHAFT

S/N: 4421-UP

PART OF 104-4751 SHAFT GP-DRIVE

SMCS-3251, 3253 **i02288674**

NOTE	REF NO	GRAPHIC REF	PART NUMBER	QTY	PART NAME 1 2 3 4 5 6 (PRODUCT LEVEL)	SEE PAGE
Y	1	1	**8R-7036**	1	SPIDER & BEARING GP	475
	2	1	**104-4754**	1	SHAFT	
M	3	1	**9X-6480**	4	BOLT (M20X2.5X90-MM)	

M-METRIC PART
Y-SEPARATE ILLUSTRATION

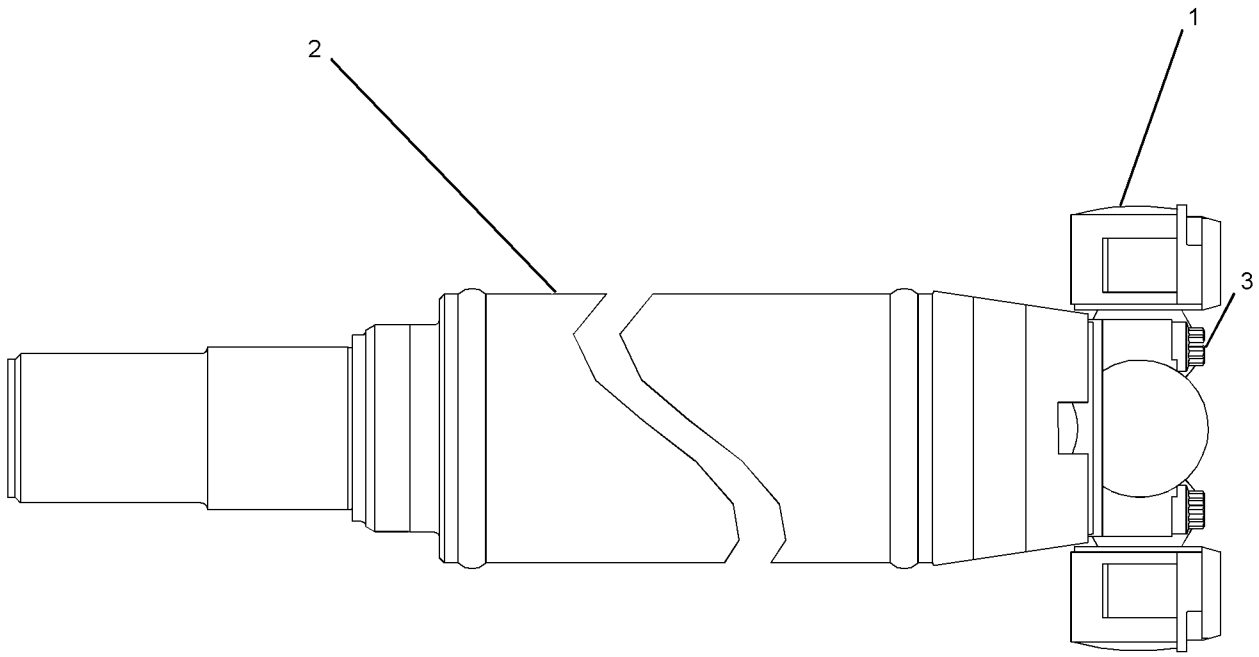

GRAPHIC #1 **<END>** g01145729

252-5660 UNIVERSAL JOINT GP–REAR DRIVE SHAFT

S/N: 4421-UP

PART OF 246-6150 SHAFT GP-DRIVE

SMCS-3251, 3253 **i02149262**

NOTE	REF NO	GRAPHIC REF	PART NUMBER	QTY	PART NAME 1 2 3 4 5 6 (PRODUCT LEVEL)	SEE PAGE
M	1	1	**9X-6480**	8	BOLT (M20X2.5X90-MM)	
Y	2	1	**8R-7036**	2	SPIDER & BEARING GP	475
	3	1	**252-5661**	1	UNIVERSAL JOINT GP	

M-METRIC PART
Y-SEPARATE ILLUSTRATION

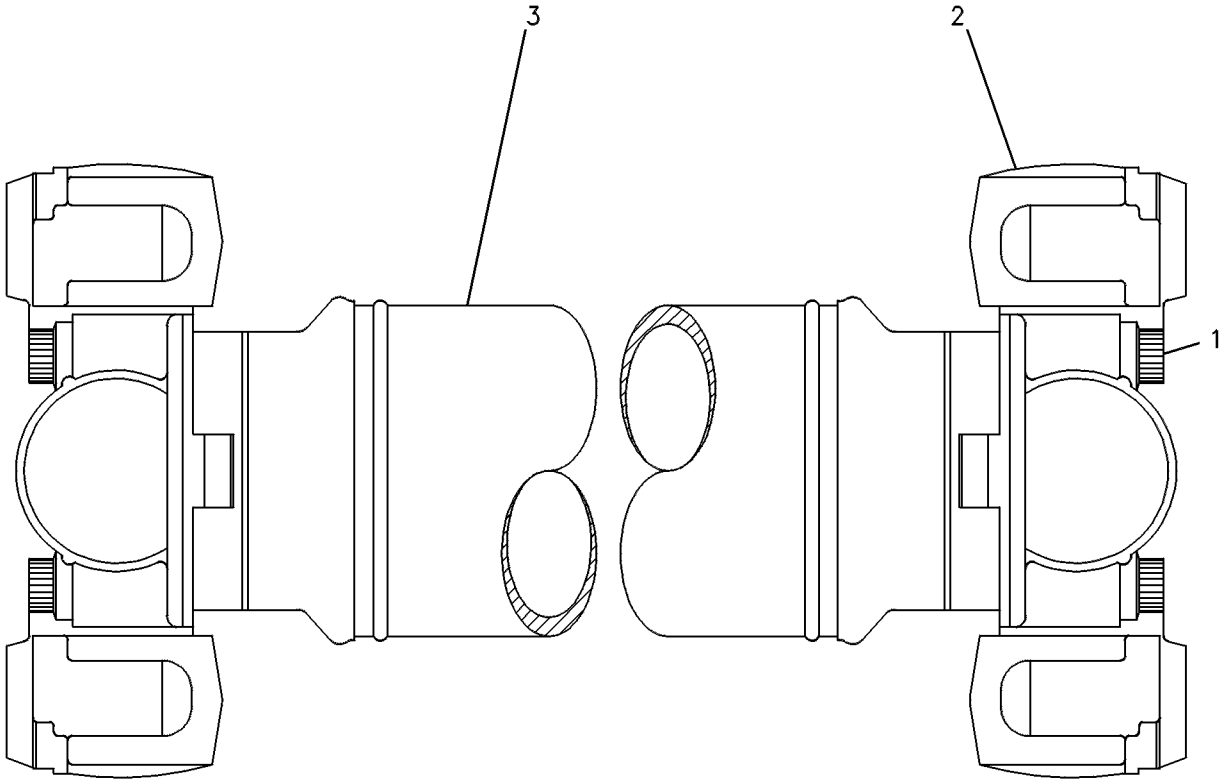

GRAPHIC #1 **<END>** g00085274

173-2056 VALVE GP-MODULATING–FAN DRIVE

S/N: 4421-UP

PART OF 192-7139 VALVE & MTG GP-FAN DRIVE

AN ATTACHMENT

SMCS-1359, 3139, 5479 **i02249716**

NOTE	REF NO	GRAPHIC REF	PART NUMBER	QTY	PART NAME 1 2 3 4 5 6 (PRODUCT LEVEL)	SEE PAGE
	1	1	**226-9629**	1	COIL AS-SOLENOID (12-VOLT)	
	2	1	**164-2108**	1	WASHER (13.03X25.4X2.38-MM THK)	
	3	1	**167-9524**	1	NUT-SELF-LOCKING (1/2-28-THD)	
					AVAILABLE REPAIR KIT(S):	
			111-3203	1	KIT-SEAL (SOLENOID VALVE)	
					(INCLUDES SEAL-O-RINGS)	

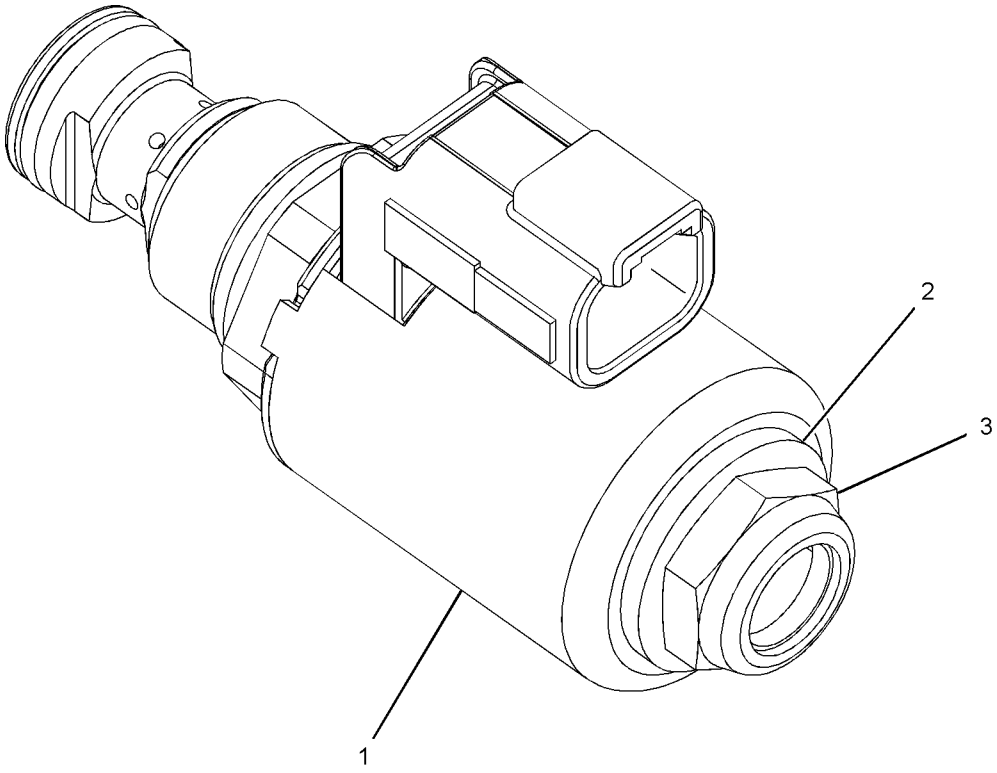

GRAPHIC #1 **<END>** g01032840

216-5342 VALVE GP-MODULATING–TC LOCKUP CLUTCH

S/N: 4421-UP
24-VOLT
PART OF 247-4009 WIRING GP-POWER TRAIN

SMCS-3139 **i02300836**

NOTE	REF NO	GRAPHIC REF	PART NUMBER	QTY	PART NAME 1 2 3 4 5 6 (PRODUCT LEVEL)	SEE PAGE
	1	1	**6V-3965**	1	FITTING AS (QUICK DISCONNECT)	
	2	1	**226-9622**	1	COIL AS (24 VOLT)	
	4	1	**164-2108**	1	WASHER (13.03X25.4X2.38-MM THK)	
	5	1	**167-9524**	1	NUT-SELF-LOCKING (1/2-28-THD)	
	6	1	**3J-1907**	1	SEAL-O-RING	
	7	1	**112-5282**	1	SEAL-O-RING	
	8	1	**117-2983**	1	SEAL-O-RING	

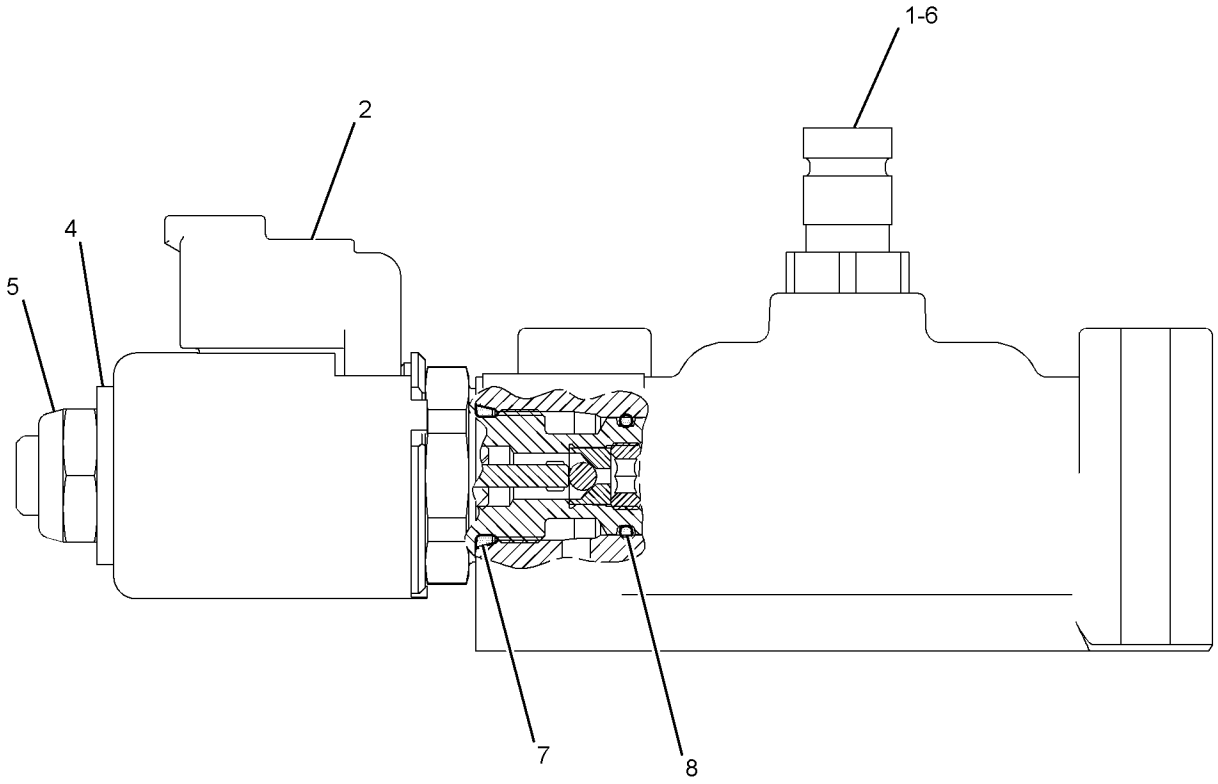

GRAPHIC #1 **<END>** g01152214

217-2708 VALVE GP-MODULATING–TC IMPELLER CLUTCH

S/N: 4421-UP
24-VOLT
PART OF 247-4009 WIRING GP-POWER TRAIN

SMCS-3139 **i02304978**

NOTE	REF NO	GRAPHIC REF	PART NUMBER	QTY	PART NAME 1 2 3 4 5 6 (PRODUCT LEVEL)	SEE PAGE
	1	1	**6V-3965**	1	FITTING AS (QUICK DISCONNECT)	
	2	1	**167-9524**	1	NUT-SELF-LOCKING (1/2-28-THD)	
	3	1	**245-7465**	1	COIL AS	
Z	4	1		1	VALVE AS	
	5	1	**187-2710**	1	WASHER	
	6	1	**3J-1907**	1	SEAL-O-RING	

Z-NOT SERVICED SEPARATELY

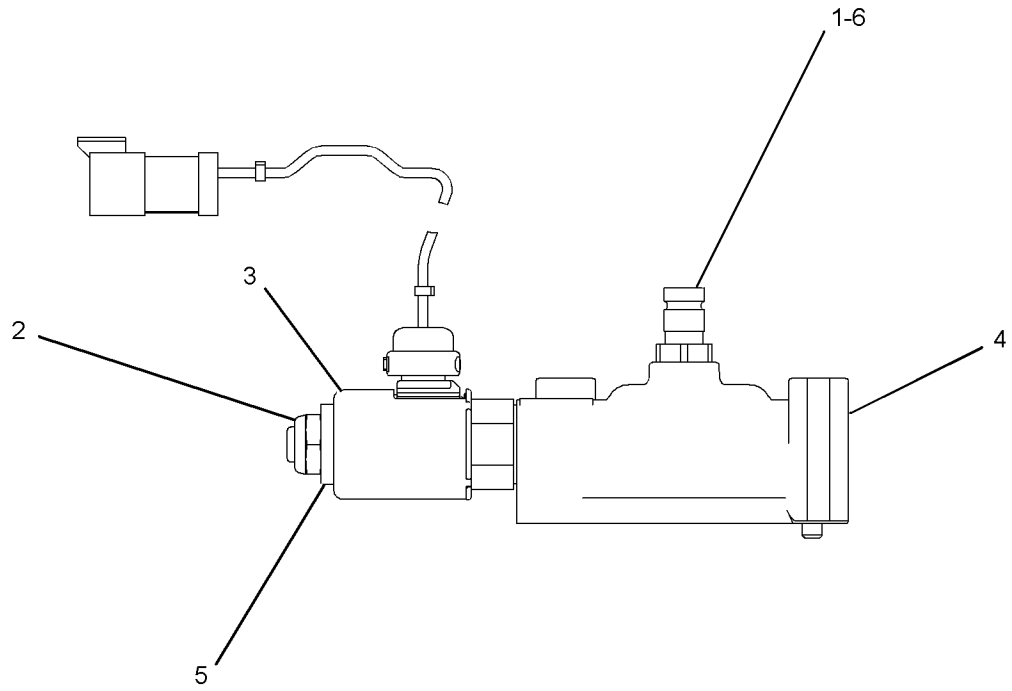

GRAPHIC #1 **<END>** g01154415

6Y-0723 VALVE GP-SELECTOR—CLUTCH OIL DISTRIBUTION

S/N: DWX1-UP

PART OF 253-7917 VALVE GP-TRANSMISSION CONTROL

SMCS-3157 **i01743176**

NOTE	REF NO	GRAPHIC REF	PART NUMBER	QTY	PART NAME 1 2 3 4 5 6 (PRODUCT LEVEL)	SEE PAGE
	1	1	**6Y-0718**	1	MANIFOLD-BOTTOM	
	2	1	**2S-4872**	1	STOP	
	3	1	**2S-0696**	1	DOWEL	
	4	1	**6Y-0725**	1	SPOOL-SELECTOR	
	5	1	**6Y-0726**	2	RETAINER	
	6	1	**6I-9519**	1	SPRING	
	7	1	**6Y-0729**	1	STOP	
	8	1	**5P-8065**	1	SEAL-O-RING	
	9	1	**5P-6261**	1	RING-RETAINING	
	10	1	**2B-2695**	2	BOLT (5/16-18X0.875-IN)	
	11	1	**7S-6997**	1	COVER	

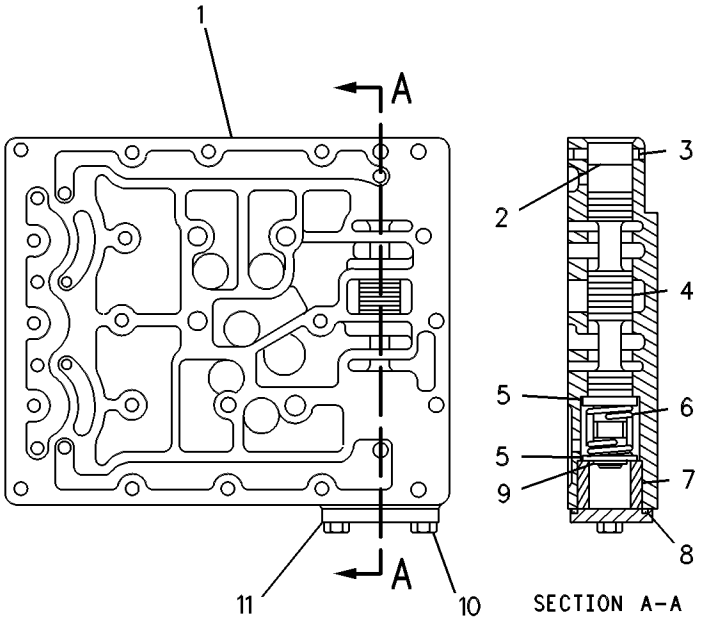

GRAPHIC #1 **<END>** g00252714

153-7909 VALVE GP-SELECTOR & PRESS CONT–

TRANSMISSION

S/N: DWX1-UP

PART OF 253-7917 VALVE GP-TRANSMISSION CONTROL

SMCS-3083 **i02279584**

NOTE	REF NO	GRAPHIC REF	PART NUMBER	QTY	PART NAME 1 2 3 4 5 6 (PRODUCT LEVEL)	SEE PAGE
	1	2	**6P-4943**	1	SPOOL-RATIO	
	2	2	**116-7474**	1	STOP	
	3	2	**9W-5568**	1	SLUG	
	4	2	**6Y-0724**	1	SPOOL-SPEED SELECTOR	
	5	2	**9W-5567**	1	SPOOL AS-RELIEF	
		2	**3D-8317**	1	RING-RETAINING	
		2	**4B-9880**	1	BALL	
		2	**4M-2381**	1	SPRING	
		2	**8M-1013**	1	RETAINER	
	6	2	**7G-4842**	1	SPRING	
	7	2	**9P-3041**	1	SPRING	
	8	2	**6Y-0726**	4	RETAINER	
	9	2	**6I-9519**	2	SPRING	
	10	2	**6Y-0727**	2	STOP	
	11	2	**4J-0521**	2	SEAL-O-RING	
	12	2	**5P-6261**	2	RING-RETAINING	
	13	2	**6F-6673**	2	SEAL-O-RING	
	14	2	**8E-8393**	1	PISTON-LOAD	
	15	2	**5M-9622**	1	SHIM (1.6-MM THK)	
	16	2	**5M-9623**	1	SHIM (0.9-MM THK)	
	17	2	**5M-9624**	3	SHIM (0.25-MM THK)	
	18	2	**6P-9785**	1	SPRING	
	19	2	**3P-8485**	1	RING-RETAINING	
	20	2	**6P-9786**	1	RETAINER	
	21	2	**6P-9783**	1	SPRING	
	22	2	**6P-9784**	1	SPRING	
	23	2	**6Y-0725**	1	SPOOL-SELECTOR	
	24	2	**8E-6433**	1	SPOOL-DIFFERENTIAL	
	25	2	**2S-4872**	1	STOP	
	26	2	**5S-7816**	1	SLUG	
	27	1	**8E-1711**	1	BODY-PRESSURE SELECTOR	
	28	1	**122-9278**	1	COVER	
	31	1	**030-8294**	5	SCREW-BUTTON HEAD	
	32	2	**6P-4978**	1	SPRING	
	33	2	**238-5508**	1	PLUG AS	
		2	**8L-2779**	1	SEAL-O-RING	
		2	**215-7183**	1	ORIFICE-SCREEN	
	34	2	**2S-0696**	2	DOWEL	
	35	2	**8P-9296**	2	ORIFICE-PLUG	
	36	2	**6Y-0744**	1	STOP	
	37	2	**118-0287**	1	SPRING	
	38	2	**116-7472**	1	PLUNGER	
	39	2	**2H-3429**	1	RING-RETAINING	

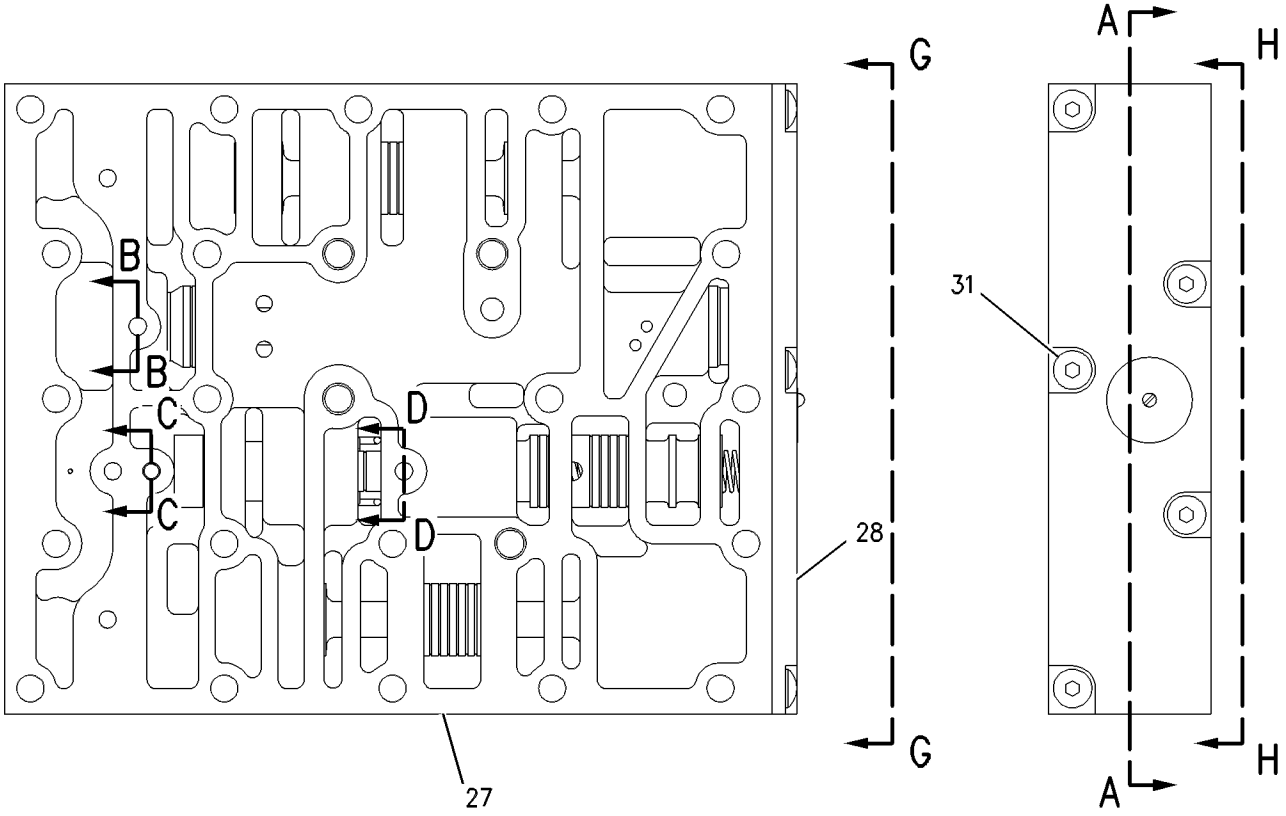

VIEW G-G

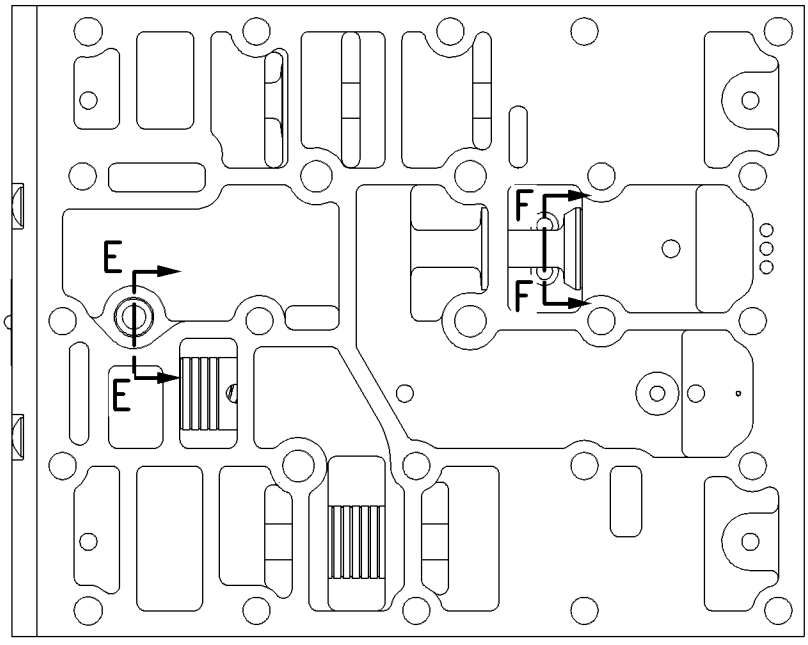

VIEW H-H

REFER TO ALL ILLUSTRATION OF THIS GROUP FOR AUXILIARY VIEWS

GRAPHIC #1 g00409460

153-7909 VALVE GP-SELECTOR & PRESS CONT *(contd.)* i02279584

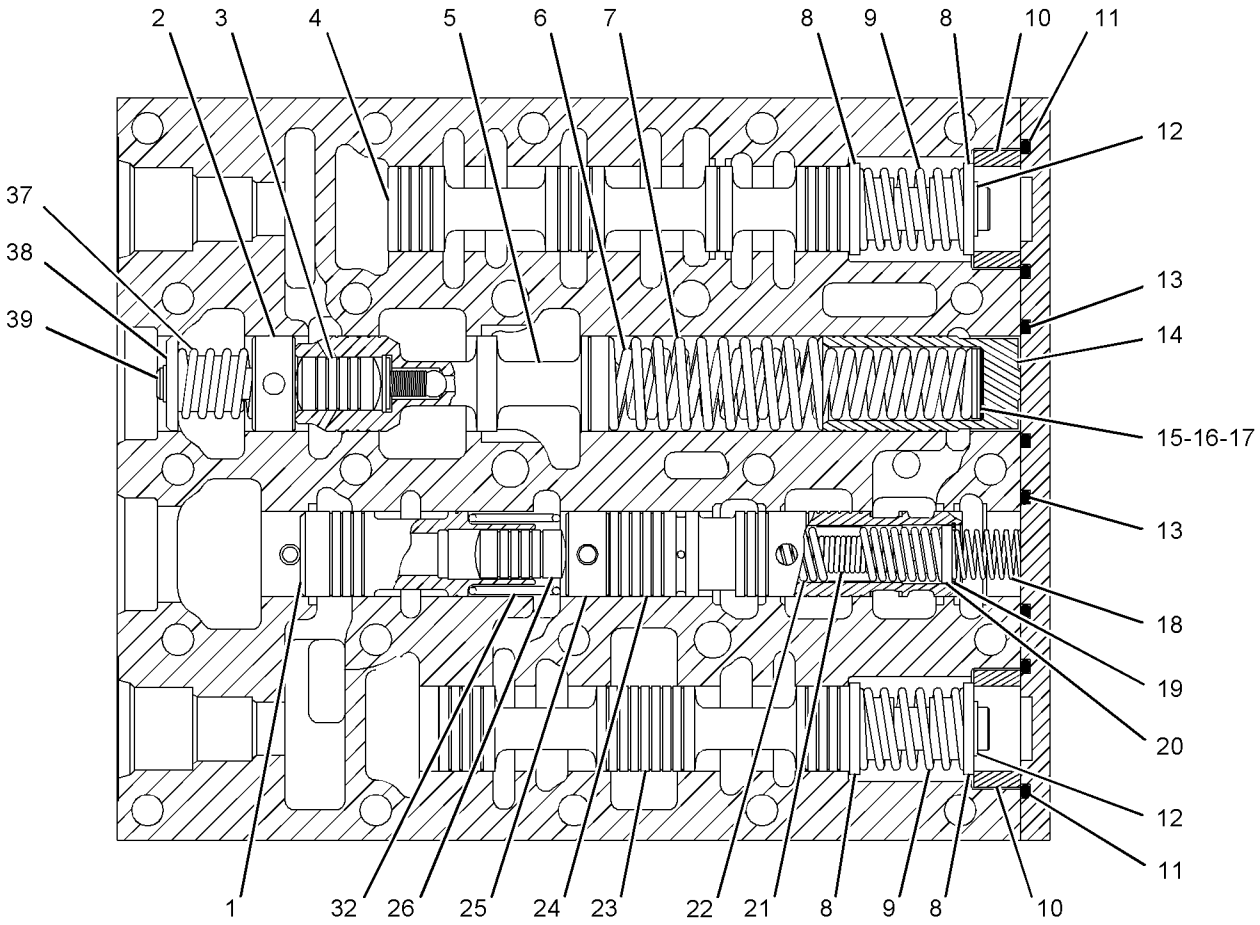

SECTION A-A

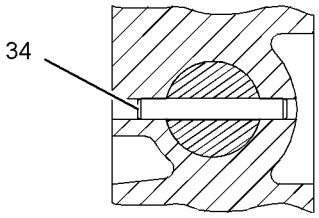

SECTION B-B

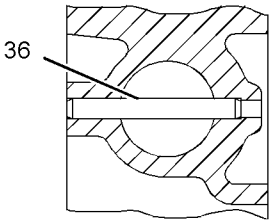

SECTION C-C

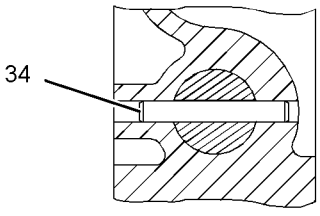

SECTION D-D

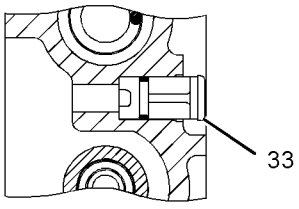

SECTION E-E

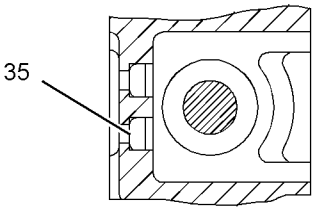

SECTION F-F

GRAPHIC #2 **<END>** g01141354

147-5399 VALVE GP-SOLENOID–TRANSMISSION CLUTCH

S/N: DWX1-UP
12 VOLT DC
PART OF 253-7917 VALVE GP-TRANSMISSION CONTROL

SMCS-3174, 4804, 4805, 5479 **i02428955**

NOTE	REF NO	GRAPHIC REF	PART NUMBER	QTY	PART NAME 1 2 3 4 5 6 (PRODUCT LEVEL)	SEE PAGE
	1	1	**107-8611**	1	CARTRIDGE AS	
		1	**111-0343**	1	LOCKNUT (5/16-18-THD)	
		1	**149-5628**	1	WASHER (8.3X38.1X1.2-MM THK)	
	2	1	*118-8182*	1	COIL AS	
		1	**1S-9593**	2	STRAP-CABLE	
		1	**3E-3362**	1	WEDGE-PLUG LOCK (2-PIN)	
		1	**155-2270**	1	KIT-CONNECTING PLUG (2-PIN)	
					(INCLUDES PLUG AS AND WEDGE)	
	3	1	**149-5628**	1	WASHER (8.3X38.1X1.2-MM THK)	
	4	1	**111-0343**	1	LOCKNUT (5/16-18-THD)	
					AVAILABLE REPAIR KIT(S):	
			100-4083	1	KIT-SEAL	
					(INCLUDES SEALS AND RINGS)	

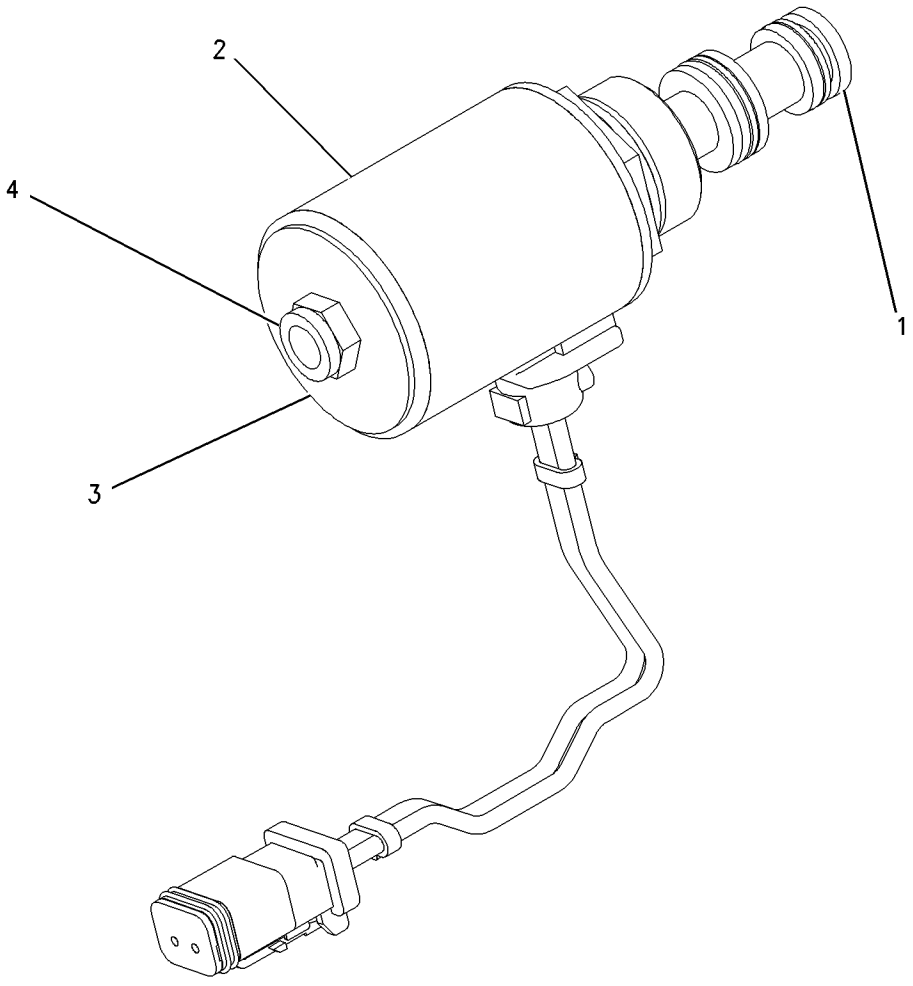

GRAPHIC #1 **<END>** g00747733

6I-8563 VALVE GP-TORQUE CONV PRIORITY

S/N: 4421-UP

PART OF 245-1285 LINES GP-TRANSMISSION OIL

SMCS-3180 **i01197566**

NOTE	REF NO	GRAPHIC REF	PART NUMBER	QTY	PART NAME 1 2 3 4 5 6 (PRODUCT LEVEL)	SEE PAGE
	1	1	**0S-1594**	2	BOLT (3/8-16X1-IN)	
		1	**5M-2894**	2	WASHER-HARD (10.2X18.5X2.5-MM THK)	
	2	1	**6I-8564**	1	BODY AS-VALVE	
		1	**2D-6642**	2	BALL	
	3	1	**3P-4053**	1	SPRING	
	4	1	**2S-9750**	1	COVER	
	5	1	**8M-5249**	1	SEAL-O-RING	
	6	1	**2M-7041**	1	SLUG	
	7	1	**1P-9699**	1	STOP	
	8	1	**8H-9513**	1	DOWEL	
	9	1	**8M-4446**	1	SEAL-O-RING	
	10	1	**5S-4437**	1	SPOOL AS	
	11	1	**4M-2381**	1	SPRING	
		1	**4B-9880**	1	BALL	
	12	1	**3D-8317**	1	RING-RETAINING	
		1	**8M-1013**	1	RETAINER	
	13	1	**5M-9624**	6	SHIM (0.25-MM THK)	
	14	1	**6V-3965**	1	FITTING AS (QUICK DISCONNECT)	
C	15	1	**3J-1907**	2	SEAL-O-RING	
C	16	1	**6V-0852**	1	CAP-DUST	
C	17	1	**6V-0484**	1	ADAPTER-O-RING	

C-CHANGE FROM PREVIOUS TYPE

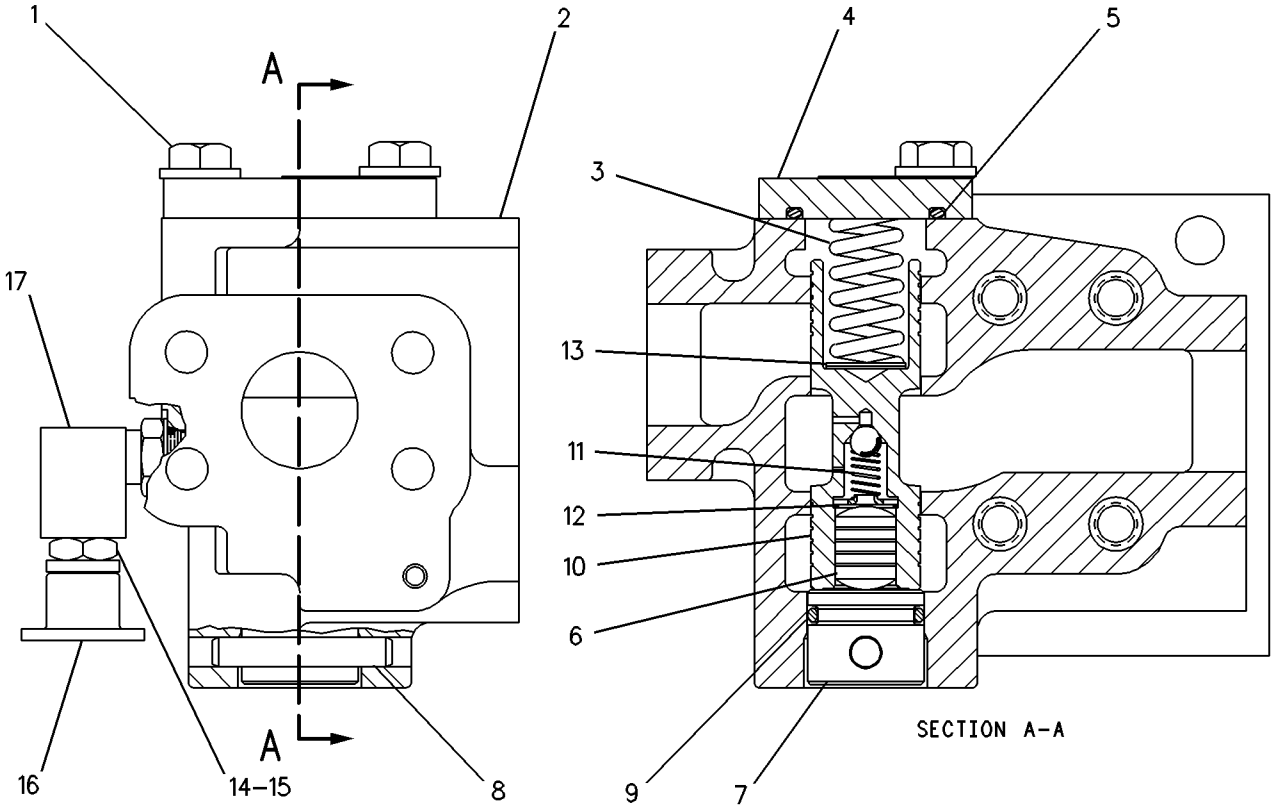

GRAPHIC #1 **<END>** g00083662

253-7917 VALVE GP-TRANSMISSION CONTROL

S/N: DWX1-UP

PART OF 252-7818 CONTROL GP-TRANSMISSION HYD

SMCS-3073, 3167 **i02151108**

NOTE	REF NO	GRAPHIC REF	PART NUMBER	QTY	PART NAME 1 2 3 4 5 6 (PRODUCT LEVEL)	SEE PAGE
Y	1	1	**6Y-0723**	1	VALVE GP-SELECTOR (CLUTCH OIL DISTRIBUTION)	488
	2	1	**6Y-2762**	1	PLATE-DIVIDER	
Y	3	1	**153-7909**	1	VALVE GP-SELECTOR & PRESS CONT (CLUTCH OIL PRESSURE)	489
	4	1	**250-6130**	1	MANIFOLD-TOP	
	5	2	**153-7916**	1	CLIP AS-CONNECTING	
	6	1	**1T-0416**	3	BOLT (5/16-18X0.75-IN)	
	7	1	**9M-1974**	24	WASHER-HARD (8.8X16X2-MM THK)	
	8	1	**5L-1761**	21	BOLT (5/16-18X5.5-IN)	
Y	9	1	**147-5399**	5	VALVE GP-SOLENOID (TRANSMISSION CLUTCH)	492
	10	2	**153-7915**	1	HARNESS AS-TRANSMISSION	
		2	**102-8802**	5	KIT-RECEPTACLE (2-PIN)	
					(INCLUDES RECEPTACLE AS & WEDGE)	
	11	2	**3S-2093**	7	STRAP-CABLE	
	12	1,2	**9S-8007**	4	PLUG	
	13	1,2	**7J-0204**	4	SEAL-O-RING	
	14	1	**5M-6214**	2	PLUG-PIPE	
	15	1	**9F-2247**	1	PLUG-PIPE	

Y-SEPARATE ILLUSTRATION

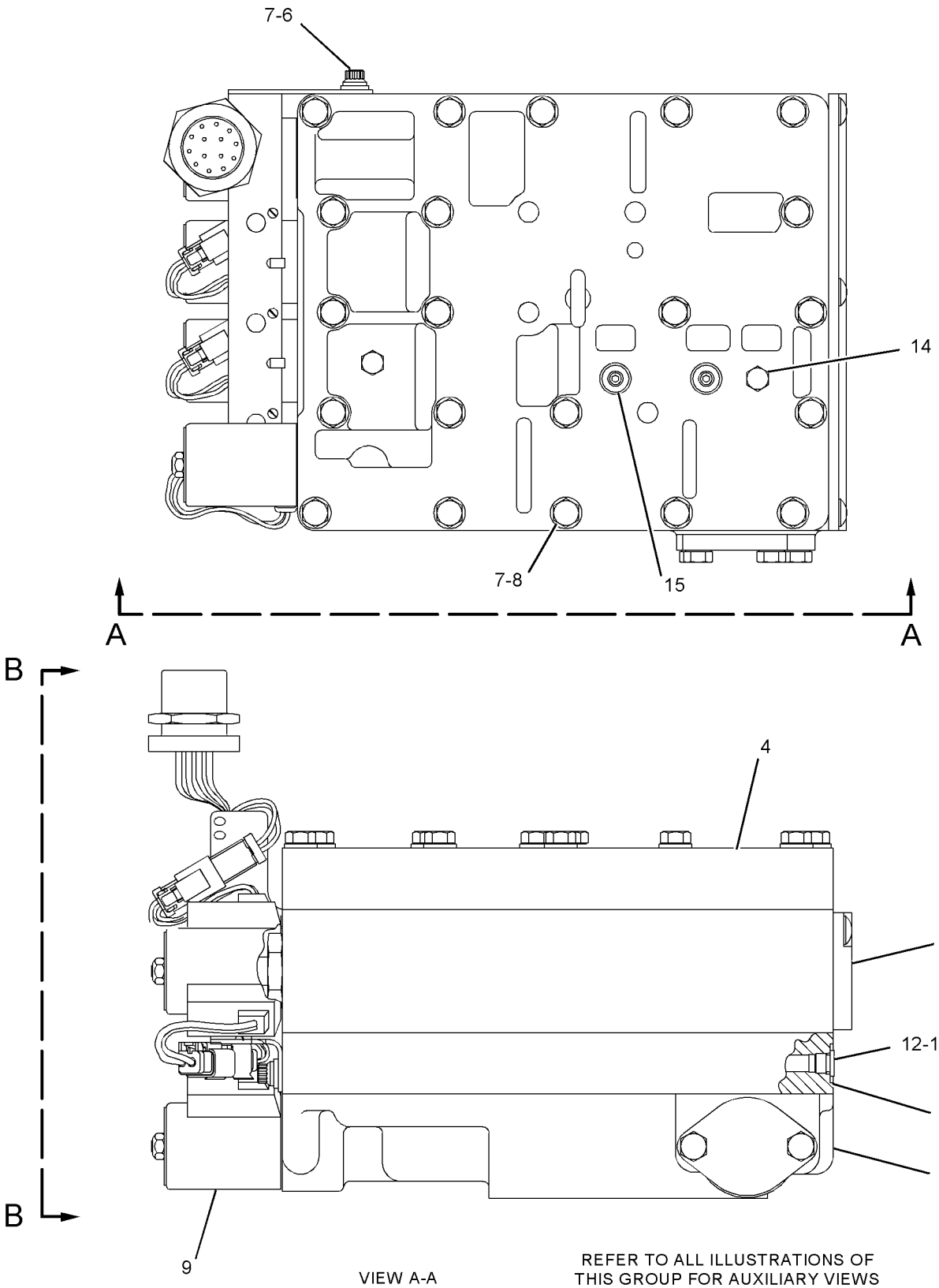

VIEW A-A

REFER TO ALL ILLUSTRATIONS OF THIS GROUP FOR AUXILIARY VIEWS

GRAPHIC #1

g01091600

253-7917 VALVE GP-TRANSMISSION CONTROL *(contd.)* **i02151108**

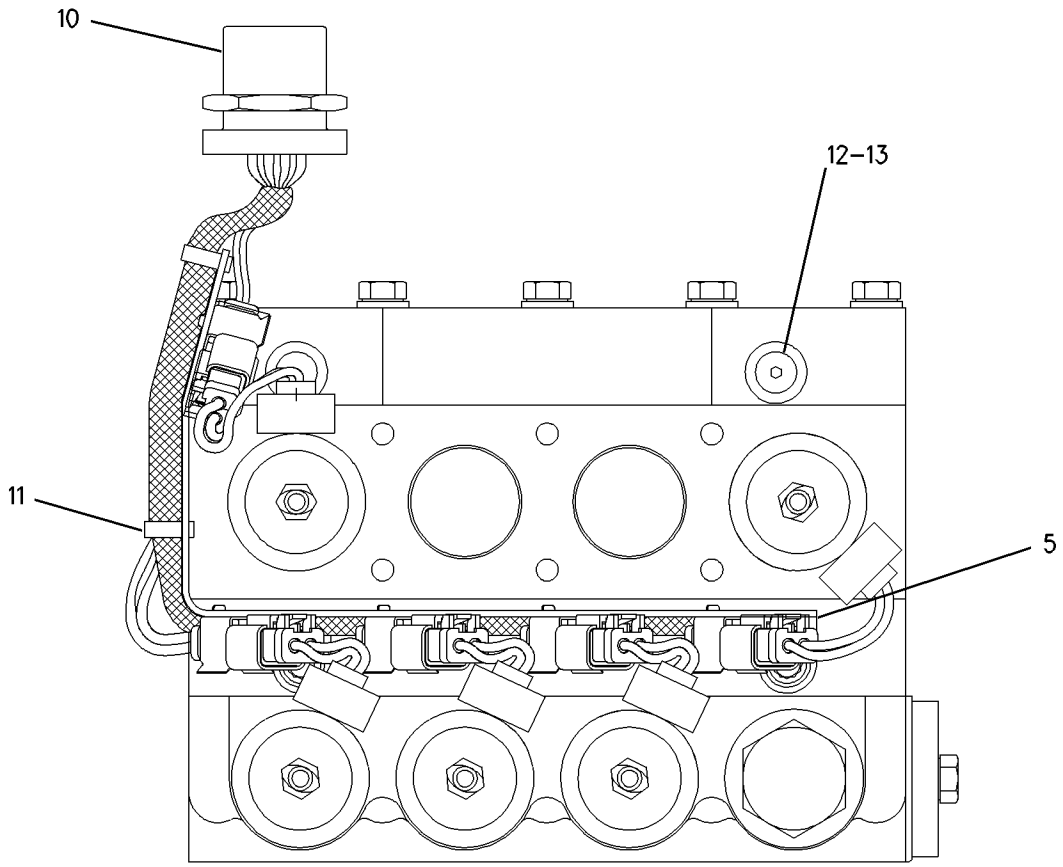

VIEW B-B

GRAPHIC #2 **<END>** g00748626

POWER TRAIN

137-3505 WHEEL GP-FINAL DRIVE & BRAKE*R

S/N: 4421-UP

PART OF 152-8920 AXLE AR-FIXED, 152-8930 AXLE AR-OSCILLATING

SMCS-4001 **i02355570**

NOTE	REF NO	GRAPHIC REF	PART NUMBER	QTY	PART NAME 1 2 3 4 5 6 (PRODUCT LEVEL)	SEE PAGE
	1	2	**9U-3749**	1	ANCHOR-BRAKE	
	2	2	**8R-6943**	1	PISTON	
	3	2	**8R-6944**	7	SPRING	
	4	2	**5H-8991**	7	SHAFT	
	5	2	**179-6865**	1	SEAL GP-DUO-CONE	
	6	2	**179-6864**	1	SEAL GP-DUO-CONE	
	7	2	**175-3280**	1	RING-SEAL	
	8	2	**175-3279**	1	RING-SEAL	
	9	2	**6Y-8813**	10	DISC-FRICTION	
	10	2	**8R-6941**	11	PLATE-OUTER	
	11	1	**8R-6948**	1	TUBE AS	
	12	1,2	**3J-7354**	2	SEAL-O-RING	
	13	1	**6V-8647**	1	CONNECTOR	
	14	1	**9X-2608**	1	ADAPTER	
	15	1	**4J-5477**	2	SEAL-O-RING	
	16	1	**2P-1279**	1	LOCKNUT (9/16-18-THD)	
	17	1	**8R-6945**	1	PLATE	
	18	1	**9F-2167**	1	SCREW-PURGE (3/8-24-THD)	
	19	2	**1W-6523**	1	PLUG	
	20	2	**7X-4781**	1	SEAL-O-RING	
M	21	1,2	**8T-0667**	60	BOLT (M24X3X100-MM)	
	22	1	**6V-8237**	40	WASHER (26X44X4-MM THK)	
R	23	2	**137-8627**	1	SPINDLE	
	24	2	**8R-6942**	1	SPACER	
	25	2	**196-7795**	1	BEARING AS-TAPERED ROLLER	
	27	2	**8R-6578**	1	WHEEL	
	27A	2	**8R-6946**	61	STUD	
	28	2	**201-7718**	1	BEARING AS-TAPERED ROLLER	
R	30	2	**137-8628**	1	HUB-REACTION	
B	31	2	**8R-6947**	1	SHIM PACK (INCLUDES 13-SHIMS)	
	32	2	**8R-6931**	1	RETAINER	
	33	2	**101-9445**	4	RETAINER	
M	34	2	**6V-8097**	28	BOLT (M12X1.75X30-MM)	
	35	2	**5P-8245**	28	WASHER-HARD (13.5X25.5X3-MM THK)	
	36	2	**197-2731**	1	GEAR-RING (72-TEETH)	
	37	2	**8X-0559**	1	RING-RETAINING	
	38	2	**197-2732**	1	GEAR-RING (72-TEETH)	
	39	2	**7I-5535**	2	WASHER-THRUST	
	40	2	**137-3506**	1	CARRIER-PLANETARY	
	41	2	**8R-6932**	4	RETAINER	
	42	2	**137-6923**	4	BEARING-SLEEVE	
	43	2	**115-4878**	4	GEAR-PLANETARY (23-TEETH)	
	44	2	**8R-6934**	8	WASHER-THRUST	
	45	2	**8R-6933**	4	SHAFT-PLANETARY	
	46	2	**115-4880**	4	GEAR-PLANETARY (23-TEETH)	
	47	2	**137-6924**	4	BEARING-SLEEVE	
	48	2	**8R-6938**	8	WASHER-THRUST	
	49	2	**8R-6937**	4	SHAFT-PLANETARY	
	50	2	**5P-1981**	4	RING-RETAINING	
	51	2	**8R-5960**	1	CARRIER-PLANETARY	
M	52	1	**8C-3411**	51	BOLT (M30X3.5X90-MM)	
	53	1	**3S-7023**	51	WASHER (34X57X6-MM THK)	
	54	2	**7X-4801**	1	SEAL-O-RING	
	55	2	**9S-8008**	1	PLUG	
	56	2	**3D-2824**	1	SEAL-O-RING	
	57	2	**8X-4161**	1	BEARING	

137-3505 WHEEL GP-FINAL DRIVE & BRAKE *(contd.)* i02355570

NOTE	REF NO	GRAPHIC REF	PART NUMBER	QTY	PART NAME 1 2 3 4 5 6 (PRODUCT LEVEL)	SEE PAGE
	58	2	**115-4877**	1	GEAR-SUN (24-TEETH)	
	59	2	**115-4879**	1	GEAR-SUN (24-TEETH)	
	60	2	**2G-4553**	1	PLATE	
	61	2	**6V-0439**	1	PLUG-MAGNETIC	
	62	2	**2S-4078**	1	SEAL-O-RING	
	63	2	**8R-7163**	1	COVER	
	64	2	**2D-6506**	1	SEAL-O-RING	
M	65	2	**6V-7732**	4	BOLT (M10X1.5X25-MM)	
	66	2	**6V-5839**	4	WASHER (11X21X2.5-MM THK)	
M	67	1	**6V-4429**	13	BOLT (M16X2X40-MM)	
	68	1	**5P-8247**	13	WASHER-HARD (17X32X3.5-MM THK)	
	69	2	**137-8629**	1	RING	
	70	2	**2D-8364**	1	SEAL-O-RING	
M	71	2	**9X-8483**	3	SETSCREW-SOCKET (M12X1.75X80-MM)	
M	72	2	**8T-9533**	3	SETSCREW (M12X1.75-THD)	
M	73	2	**8C-7562**	4	SCREW-FLAT HEAD (M8X1.25X20-MM)	
	74	2	**175-0100**	1	SEAL-RECTANGULAR	
	75	2	**175-0103**	1	SEAL-RECTANGULAR	

B-USE AS REQUIRED
M-METRIC PART
R-REMFG PART MAY BE AVAILABLE

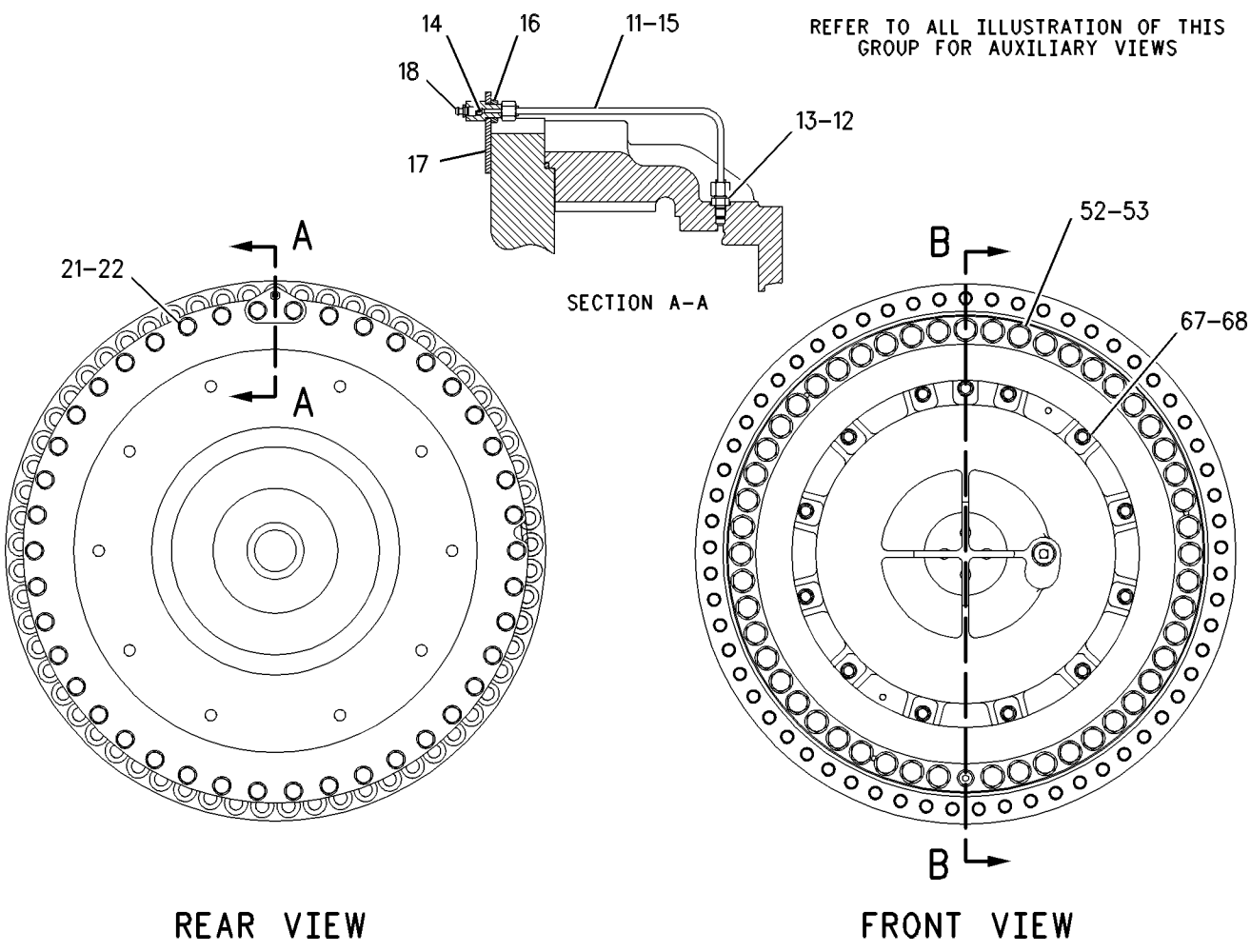

GRAPHIC #1 g00490272

137-3505 WHEEL GP-FINAL DRIVE & BRAKE *(contd.)* i02355570

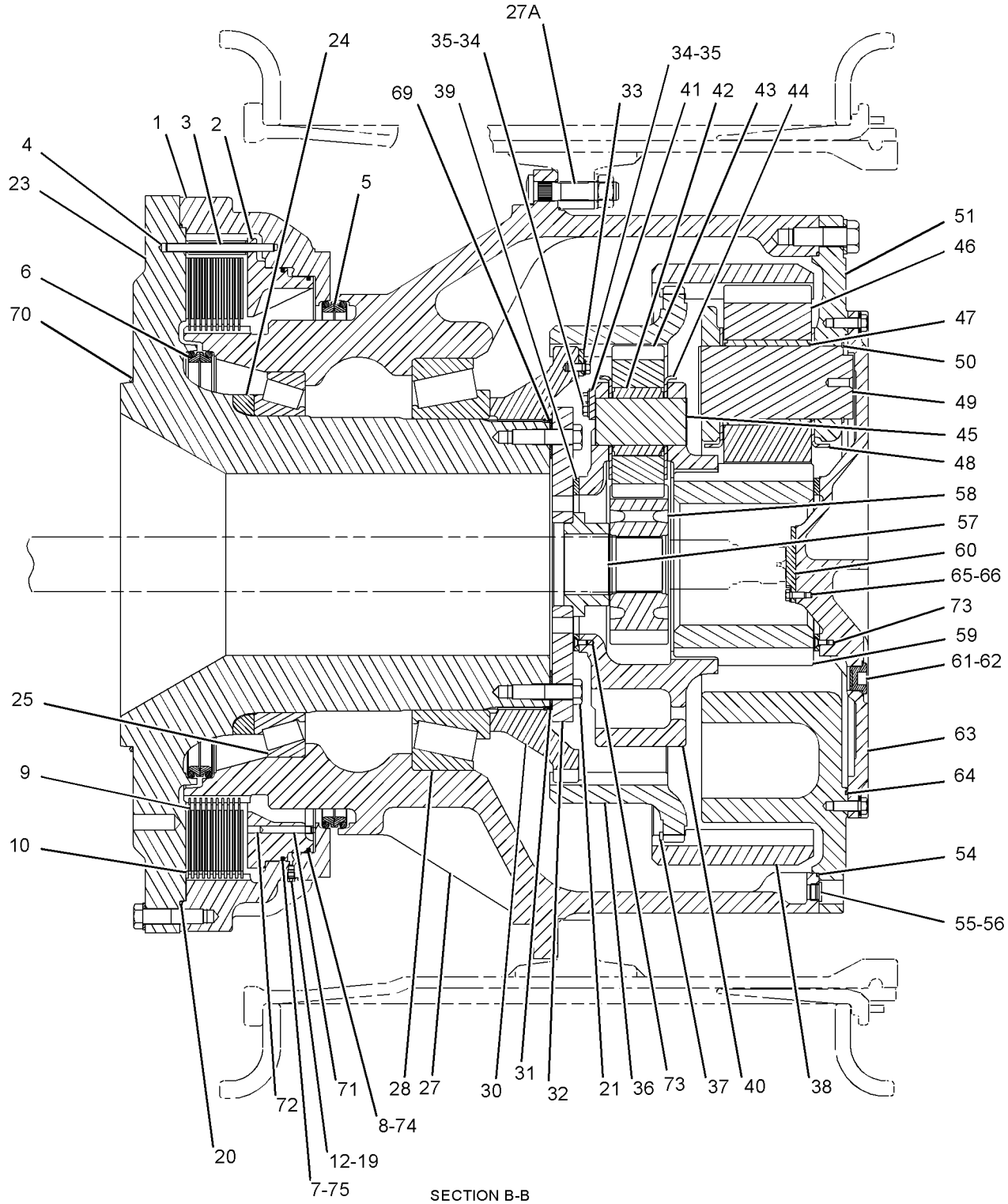

SECTION B-B

GRAPHIC #2

<END>

g01093573

246-6220 BUMPER & DRAWBAR AR

S/N: 4421-UP
PART OF 245-8805, 245-8806 LIFT AR
AN ATTACHMENT

SMCS-7105, 7156 **i02282510**

NOTE	PART NUMBER	QTY	PART NAME 1 2 3 4 5 6 (PRODUCT LEVEL)	SEE PAGE
Y	*246-6221*	1	BUMPER & DRAWBAR GP	503
Y	**235-2976**	1	TANK GP-FUEL (RH)	190
Y	**235-2977**	1	TANK GP-FUEL (LH)	191
Y	**235-2978**	1	TANK GP-FUEL (CENTER)	193
Y	*247-4012*	1	WIRING GP-REAR (BUMPER)	374
	251-8325	1	FILM-IDENTIFICATION (HOUR METER)	
			NEAR LOWER RIGHT OF VIMS HOURMETER IN LH FRONT CORNER OF BUMPER	
	251-8326	1	FILM-IDENTIFICATION (STARTING MOTOR LOCKOUT)	
			TO RIGHT OF STARTER LOCKOUT SWITCH IN LH FRONT CORNER OF BUMPER (SWITCH IS LOWER LEFT IN BUMPER OPENING)	
	252-1761	1	FILM-IDENTIFICATION (WORK LIGHTS)	
			OVER LIGHT SWITCHES IN LH FRONT CORNER OF BUMPER	
	190-5386	2	FILM-IDENTIFICATION (ROUND RED REFLECTIVE)	
			ON REAR OUTSIDE SURFACE OF BUMPER, 75 MM FROM EACH SIDE	
	7X-3229	4	FILM-INSTRUCTION (LIFT EYE, TIE-DOWN LOCATION)	
			ON SIDES OF BUMPER, ONE IN FRONT OF EACH 70 DIA HOLE	
	109-0361	1	FILM-INSTRUCTION (ENGINE SHUTDOWN)	
			OVER ENGINE SHUTDOWN SWITCH IN LH FRONT CORNER OF BUMPER	
	251-8327	1	FILM-IDENTIFICATION (TRANSMISSION LOCKOUT)	
			TO RIGHT OF TRANSMISSION LOCKOUT SWITCH IN LH FRONT CORNER OF BUMPER (SWITCH IS LOWER RIGHT IN BUMPER OPENING)	
	246-2641	2	PADLOCK GP	
			(EACH INCLUDES KEY)	
	124-7651	1	PLATE-INSTRUCTION (GROUND LEVEL)	
			OVER VIMS SWITCH AND PORT IN LH FRONT CORNER OF BUMPER	

Y-SEPARATE ILLUSTRATION

<END>

FRAME AND BODY

248-0986 BUMPER & DRAWBAR AR

S/N: 4421-UP
PART OF 245-8807 LIFT AR
AN ATTACHMENT

SMCS-7105, 7156 **i02281698**

NOTE	PART NUMBER	QTY	PART NAME 1 2 3 4 5 6 (PRODUCT LEVEL)	SEE PAGE
Y	*248-0987*	1	BUMPER & DRAWBAR GP	506
Y	**235-2976**	1	TANK GP-FUEL (RH)	190
Y	**235-2977**	1	TANK GP-FUEL (LH)	191
Y	**235-2978**	1	TANK GP-FUEL (CENTER)	193
Y	*247-4012*	1	WIRING GP-REAR (BUMPER)	374
	251-8325	1	FILM-IDENTIFICATION (HOUR METER)	
			NEAR LOWER RIGHT OF VIMS HOURMETER IN LH FRONT CORNER OF BUMPER.	
	251-8326	1	FILM-IDENTIFICATION (STARTING MOTOR LOCKOUT)	
			TO RIGHT OF STARTER LOCKOUT SWITCH IN LH FRONT CORNER OF BUTTON. (SWITCH IS LOWER LEFT IN BUMPER OPENING)	
	252-1761	1	FILM-IDENTIFICATION (WORK LIGHTS)	
			OVER LIGHT SWITCHES IN LH FRONT CORNER OF BUMPER.	
	190-5386	2	FILM-IDENTIFICATION (ROUND RED REFLECTIVE)	
			ON REAR OUTSIDE SURFACE OF BUMPER, 75 MM FROM EACH SIDE, CENTERED VERTICALLY ON SURFACE.	
	7X-3229	4	FILM-INSTRUCTION (LIFT EYE, TIE-DOWN LOCATION)	
			ON SIDES OF BUMPER, ONE IN FRONT OF EACH 70 DIA HOLE.	
	109-0361	1	FILM-INSTRUCTION (ENGINE SHUTDOWN)	
			OVER ENGINE SHUTDOWN SWITCH IN LH FRONT CORNER OF BUMPER.	
	251-8327	1	FILM-IDENTIFICATION (TRANSMISSION LOCKOUT)	
			TO RIGHT OF TRANSMISSION LOCKOUT SWITCH IN LH FRONT CORNER OF BUMPER. (SWITCH IS LOWER RIGHT IN BUMPER OPENING)	
	246-2641	2	PADLOCK GP	
			(EACH INCLUDES KEY)	
	124-7651	1	PLATE-INSTRUCTION (GROUND LEVEL)	
			OVER VIMS SWITCH AND PORT IN LH FRONT CORNER OF BUMPER.	

Y-SEPARATE ILLUSTRATION

<END>

FRAME AND BODY

246-6221 BUMPER & DRAWBAR GP

S/N: 4421-UP

PART OF 246-6220 BUMPER & DRAWBAR AR

AN ATTACHMENT

SMCS-7105, 7156 **i02282511**

NOTE	REF NO	GRAPHIC REF	PART NUMBER	QTY	PART NAME 1 2 3 4 5 6 (PRODUCT LEVEL)	SEE PAGE
	1	1	**7V-0638**	24	SPACER (16X28X25-MM THK)	
	2	1	**8T-4222**	18	WASHER-PLATED (11X32X2.5-MM THK)	
	3	1	**8T-4986**	4	CLAMP-HOSE	
	4	1	**8X-1400**	1	ROD AS	
	5	1	**8X-1401**	1	PIN	
	6	1	**8X-7075**	2	BRACKET AS	
					(EACH INCLUDES)	
		1	**2W-7940**	1	BRACKET	
M		1	**8T-3490**	2	NUT-WELD (M10X1.5-THD)	
	7	1	**235-6120**	2	HOSE	
I	8	1	**246-3259**	1	HOSE AS	
I	9	1	**246-3260**	1	HOSE AS	
	10	1	*246-6222*	1	BUMPER AS	
	11	1	**246-6234**	1	BRACKET AS	
M		1	**8T-3490**	2	NUT-WELD (M10X1.5-THD)	
	12	1	**251-2210**	4	BRACKET AS	
					(EACH INCLUDES)	
M		1	**8T-3490**	1	NUT-WELD (M10X1.5-THD)	
	13	1	**253-1582**	1	BRACKET AS (RH)	
M		1	**8T-3490**	3	NUT-WELD (M10X1.5-THD)	
M		1	**8T-3597**	6	NUT-WELD (M12X1.75-THD)	
	14	1	**253-1583**	1	BRACKET AS (LH)	
M		1	**8T-3490**	4	NUT-WELD (M10X1.5-THD)	
M		1	**8T-3597**	6	NUT-WELD (M12X1.75-THD)	
		1	**9R-2613**	3	BOSS-WELD (M10X1.5X25-MM OAL)	
	15	1	**253-1587**	1	TREAD AS (RH)	
	16	1	**253-1588**	1	TREAD AS (LH)	
	17	1	**264-6876**	1	TREAD AS (RH)	
M		1	**8T-3490**	3	NUT-WELD (M10X1.5-THD)	
	18	1	**264-6877**	1	TREAD AS (LH)	
M		1	**8T-3490**	3	NUT-WELD (M10X1.5-THD)	
	19	1	**264-7653**	2	COVER	
	20	1	**266-2490**	1	COVER	
	21	1	*148-8335*	3	CONNECTOR AS	
					(EACH INCLUDES)	
		1	**5K-9090**	1	SEAL-O-RING	
		1	**6V-8635**	1	CONNECTOR	
		1	**7M-8485**	1	SEAL-O-RING	
	22	1	*148-8357*	1	ELBOW AS	
		1	**5K-9090**	1	SEAL-O-RING	
		1	**6V-9008**	1	ELBOW	
		1	**7M-8485**	1	SEAL-O-RING	
	23	1	**5P-1076**	24	WASHER-HARD (13.5X30X4-MM THK)	
	24	1	**5P-7854**	2	CLIP	
	25	1	**7X-0515**	6	WASHER-HARD (17X35X5-MM THK)	
M	26	1	**7X-2554**	6	BOLT (M16X2X70-MM)	
	27	1	**7X-7729**	9	WASHER (11X25X3-MM THK)	
	28	1	**8T-4121**	10	WASHER-HARD (11X21X2.5-MM THK)	
M	29	1	**8T-4136**	30	BOLT (M10X1.5X25-MM)	
M	30	1	**8T-4137**	3	BOLT (M10X1.5X20-MM)	
M	31	1	**8T-4183**	12	BOLT (M12X1.75X40-MM)	
M	32	1	**8T-4186**	4	BOLT (M10X1.5X40-MM)	
	33	1	**8T-4223**	18	WASHER-HARD (13.5X25.5X3-MM THK)	
M	34	1	**8T-6466**	6	BOLT (M10X1.5X60-MM)	
M	35	1	**8T-6868**	24	BOLT (M12X1.75X80-MM)	

246-6221 **BUMPER & DRAWBAR GP** *(contd.)* **i02282511**

NOTE	REF NO	GRAPHIC REF	PART NUMBER	QTY	PART NAME 1 2 3 4 5 6 (PRODUCT LEVEL)	SEE PAGE
	36	1	**9D-1829**	1	CLIP	

I-REFER TO HYDRAULIC INFORMATION SYSTEM
M-METRIC PART

246-6221 **BUMPER & DRAWBAR GP** *(contd.)* **i02282511**

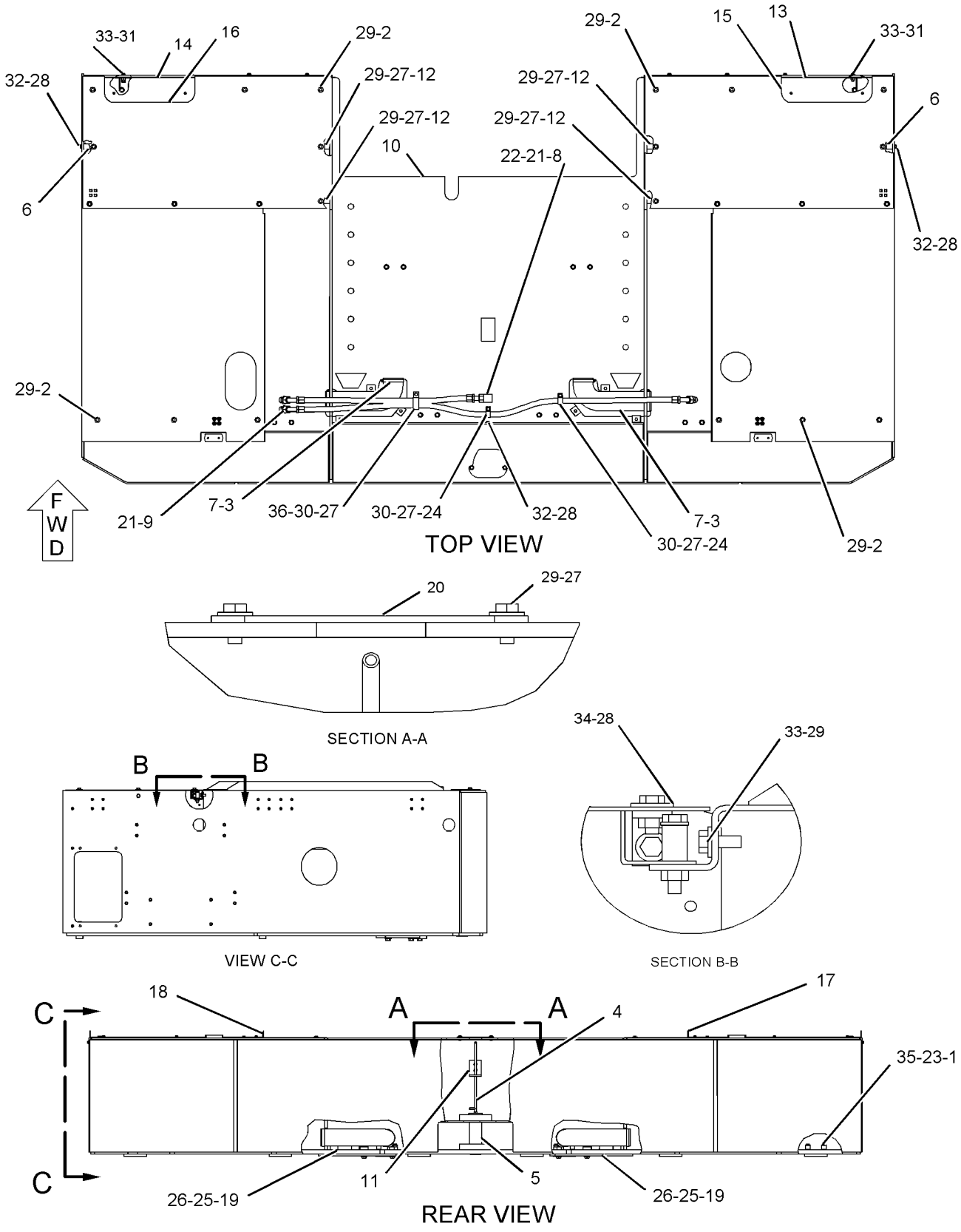

GRAPHIC #1 **<END>** g01146852

248-0987 BUMPER & DRAWBAR GP

S/N: 4421-UP
PART OF 248-0986 BUMPER & DRAWBAR AR
AN ATTACHMENT

SMCS-7105, 7156 **i02286843**

NOTE	REF NO	GRAPHIC REF	PART NUMBER	QTY	PART NAME 1 2 3 4 5 6 (PRODUCT LEVEL)	SEE PAGE
	1	1	**7V-0638**	24	SPACER (16X28X25-MM THK)	
	2	1	**8T-4222**	18	WASHER-PLATED (11X32X2.5-MM THK)	
	3	1	**8T-4986**	4	CLAMP-HOSE	
	4	1	**8X-1400**	1	ROD AS	
	5	1	**8X-1401**	1	PIN	
	6	1	**8X-7075**	2	BRACKET AS	
		1	**2W-7940**	1	BRACKET	
M		1	**8T-3490**	2	NUT-WELD (M10X1.5-THD)	
	7	1	**235-6120**	2	HOSE	
I	8	1	**246-3259**	1	HOSE AS	
I	9	1	**246-3260**	1	HOSE AS	
	10	1	**246-6234**	1	BRACKET AS	
M		1	**8T-3490**	2	NUT-WELD (M10X1.5-THD)	
	11	1	*248-0988*	1	BUMPER AS	
		1	**7I-5883**	2	PLATE	
M		1	**8T-3490**	32	NUT-WELD (M10X1.5-THD)	
M		1	**8T-3597**	24	NUT-WELD (M12X1.75-THD)	
		1	**8X-3178**	2	PLATE	
		1	**9R-2613**	1	BOSS-WELD (M10X1.5X25-MM OAL)	
	12	1	**251-2210**	4	BRACKET AS	
	13	1	**253-1582**	1	BRACKET AS (RH)	
M		1	**8T-3490**	3	NUT-WELD (M10X1.5-THD)	
M		1	**8T-3597**	6	NUT-WELD (M12X1.75-THD)	
	14	1	**253-1583**	1	BRACKET AS (LH)	
M		1	**8T-3490**	3	NUT-WELD (M10X1.5-THD)	
M		1	**8T-3597**	6	NUT-WELD (M12X1.75-THD)	
		1	**9R-2613**	3	BOSS-WELD (M10X1.5X25-MM OAL)	
	15	1	**253-1587**	1	TREAD AS (RH)	
	16	1	**253-1588**	1	TREAD AS (LH)	
	17	1	**264-6876**	1	TREAD AS (RH)	
M		1	**8T-3490**	3	NUT-WELD (M10X1.5-THD)	
	18	1	**264-6877**	1	TREAD AS (LH)	
M		1	**8T-3490**	3	NUT-WELD (M10X1.5-THD)	
	19	1	**264-7653**	2	COVER	
	20	1	**266-2490**	1	COVER	
	21	1	*148-8335*	3	CONNECTOR AS	
		1	**5K-9090**	1	SEAL-O-RING	
		1	**6V-8635**	1	CONNECTOR	
		1	**7M-8485**	1	SEAL-O-RING	
	22	1	*148-8357*	1	ELBOW AS	
		1	**5K-9090**	1	SEAL-O-RING	
		1	**6V-9008**	1	ELBOW	
		1	**7M-8485**	1	SEAL-O-RING	
	23	1	**5P-1076**	24	WASHER-HARD (13.5X30X4-MM THK)	
	24	1	**5P-7854**	2	CLIP	
	25	1	**7X-0515**	6	WASHER-HARD (17X35X5-MM THK)	
M	26	1	**7X-2554**	6	BOLT (M16X2X70-MM)	
	27	1	**7X-7729**	9	WASHER (11X25X3-MM THK)	
	28	1	**8T-4121**	10	WASHER-HARD (11X21X2.5-MM THK)	
M	29	1	**8T-4136**	30	BOLT (M10X1.5X25-MM)	
M	30	1	**8T-4137**	3	BOLT (M10X1.5X20-MM)	
M	31	1	**8T-4183**	12	BOLT (M12X1.75X40-MM)	
M	32	1	**8T-4186**	4	BOLT (M10X1.5X40-MM)	
	33	1	**8T-4223**	18	WASHER-HARD (13.5X25.5X3-MM THK)	
M	34	1	**8T-6466**	6	BOLT (M10X1.5X60-MM)	

248-0987 **BUMPER & DRAWBAR GP** *(contd.)* **i02286843**

NOTE	REF NO	GRAPHIC REF	PART NUMBER	QTY	PART NAME 1 2 3 4 5 6 (PRODUCT LEVEL)	SEE PAGE
M	35	1	**8T-6868**	24	BOLT (M12X1.75X80-MM)	
	36	1	**9D-1829**	1	CLIP	

I-REFER TO HYDRAULIC INFORMATION SYSTEM
M-METRIC PART

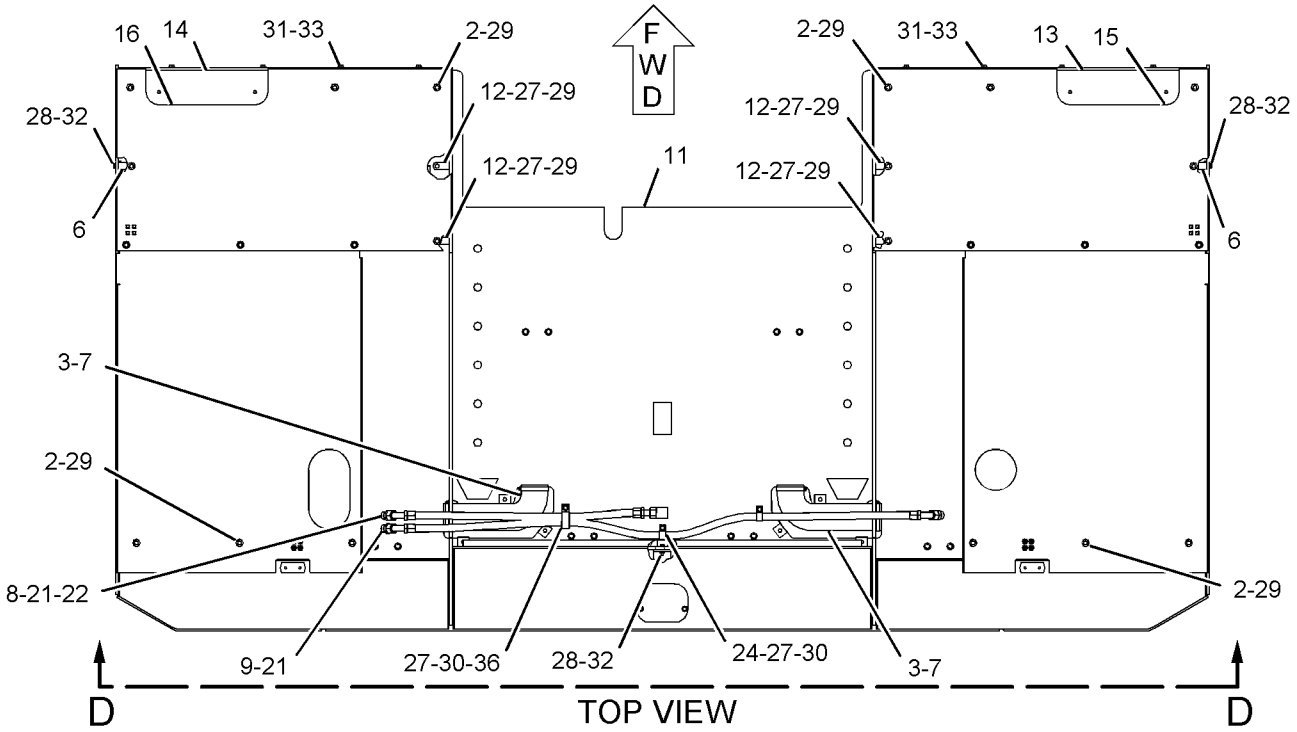

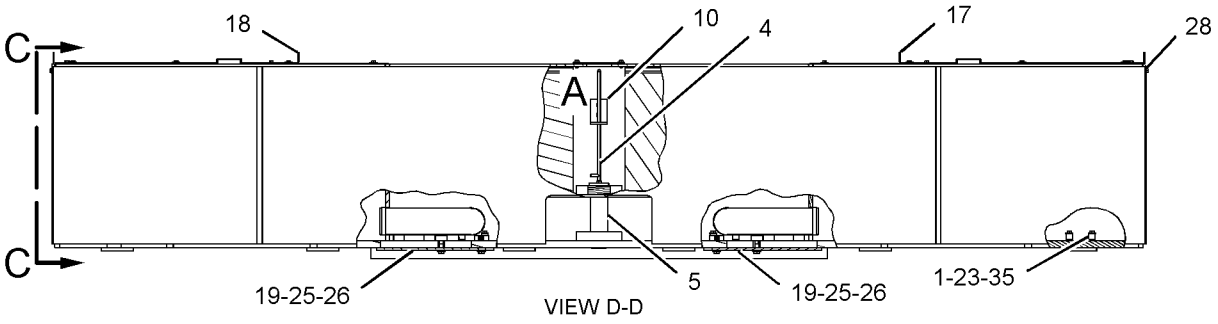

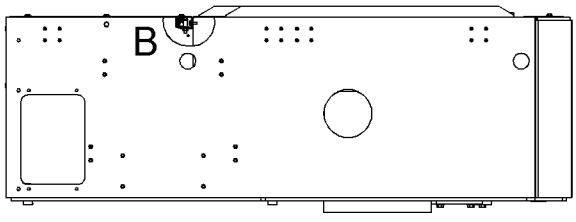

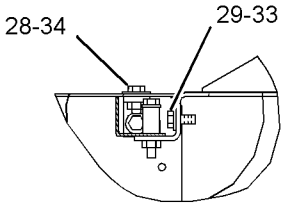

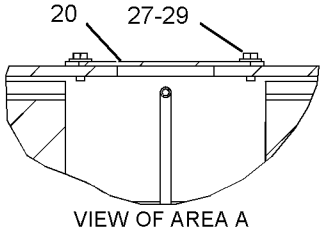

GRAPHIC #1 **<END>** g01146335

249-6790 COVER GP-ACCESS–RADIATOR

S/N: 4421-UP

PART OF 249-6778 GUARD GP-RADIATOR

SMCS-726A **i02282380**

NOTE	REF NO	GRAPHIC REF	PART NUMBER	QTY	PART NAME 1 2 3 4 5 6 (PRODUCT LEVEL)	SEE PAGE
	1	1	*8C-3468*	2	LOCK AS-CYLINDER	
					(EACH INCLUDES)	
		1	**226-0291**	1	LOCK AS	
		1	**226-0322**	1	CAM-LOCK	
	2	1	**125-8176**	2	CAM-LATCH	
	3	1	**174-6381**	2	LATCH AS	
	4	1	**249-6788**	1	COVER AS	
		1	**249-6792**	2	HINGE AS	

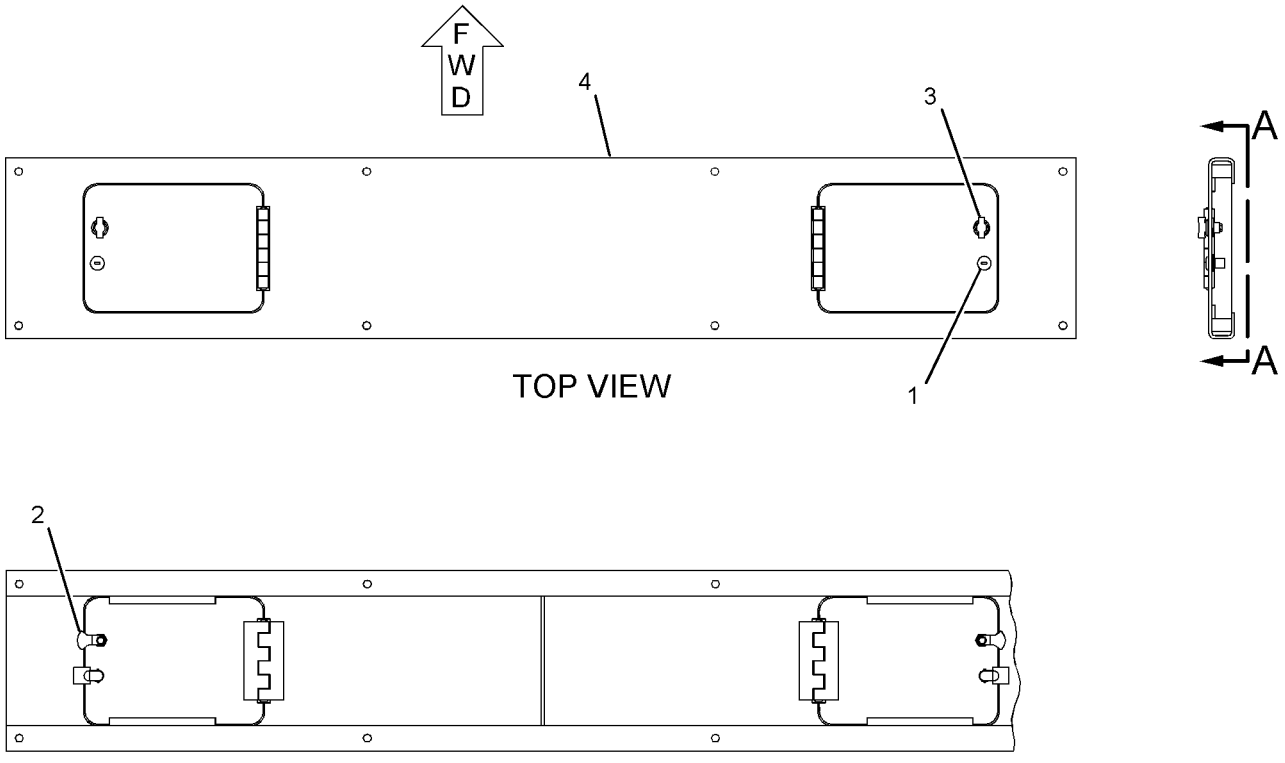

GRAPHIC #1

<END>

g01145298

FRAME AND BODY

264-5102 COVER GP-ACCESS

S/N: 4421-UP

PART OF 245-8813 INSTALLATION AR-FIELD

SMCS-726A **i02285785**

NOTE	REF NO	GRAPHIC REF	PART NUMBER	QTY	PART NAME 1 2 3 4 5 6 (PRODUCT LEVEL)	SEE PAGE
	1	1	**258-6582**	1	COVER	
M	2	1	**8T-4137**	4	BOLT (M10X1.5X20-MM)	
	3	1	**8T-4897**	4	WASHER (10.2X35X6-MM THK)	

M-METRIC PART

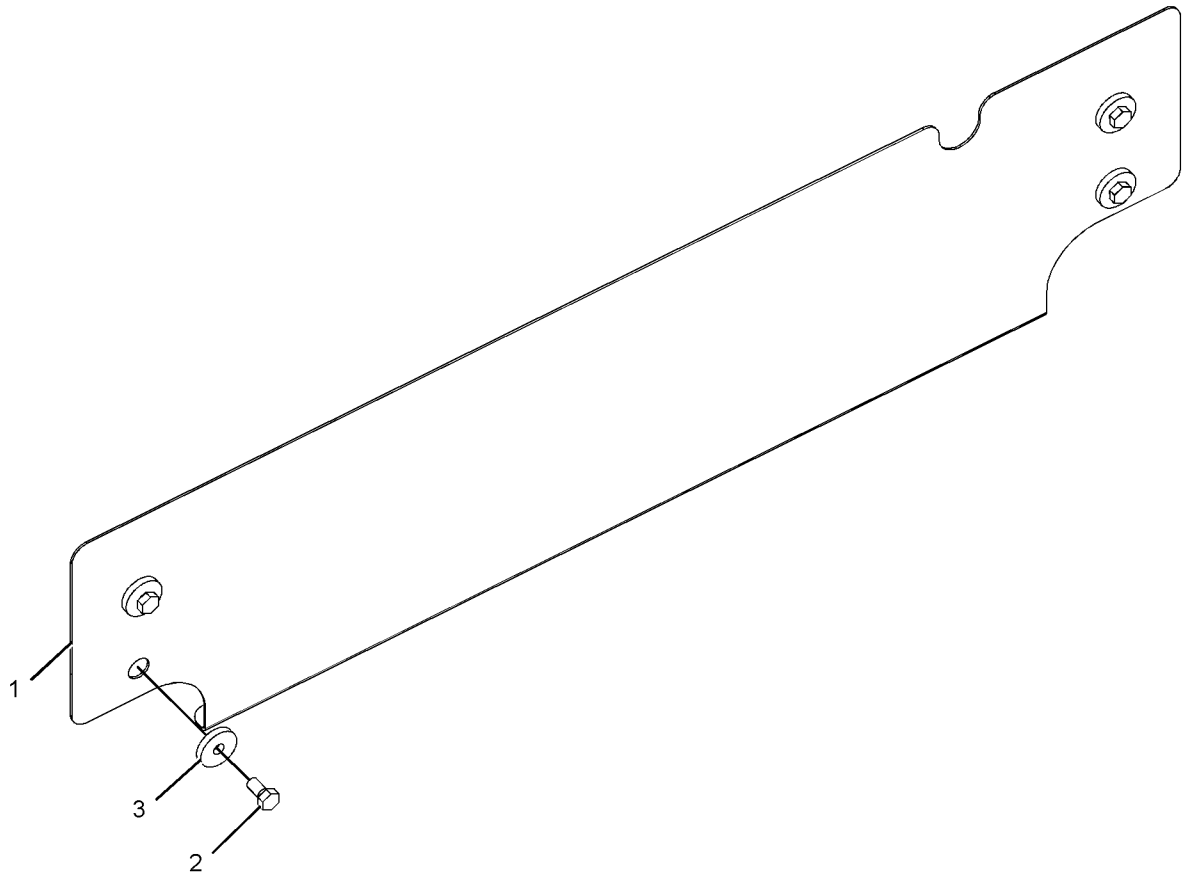

GRAPHIC #1 **<END>** g01145957

8X-1736 FASTENER GP-BOTTOM GUARD

S/N: 4421-UP
TRANSMISSION GUARD
PART OF 245-8813 INSTALLATION AR-FIELD

SMCS-7153 **i00105401**

NOTE	REF NO	GRAPHIC REF	PART NUMBER	QTY	PART NAME 1 2 3 4 5 6 (PRODUCT LEVEL)	SEE PAGE
M	1	1	**8T-6430**	17	BOLT (M20X2.5X50-MM)	
	2	1	**8T-5439**	17	WASHER (21.5X45X6-MM THK)	

M-METRIC PART

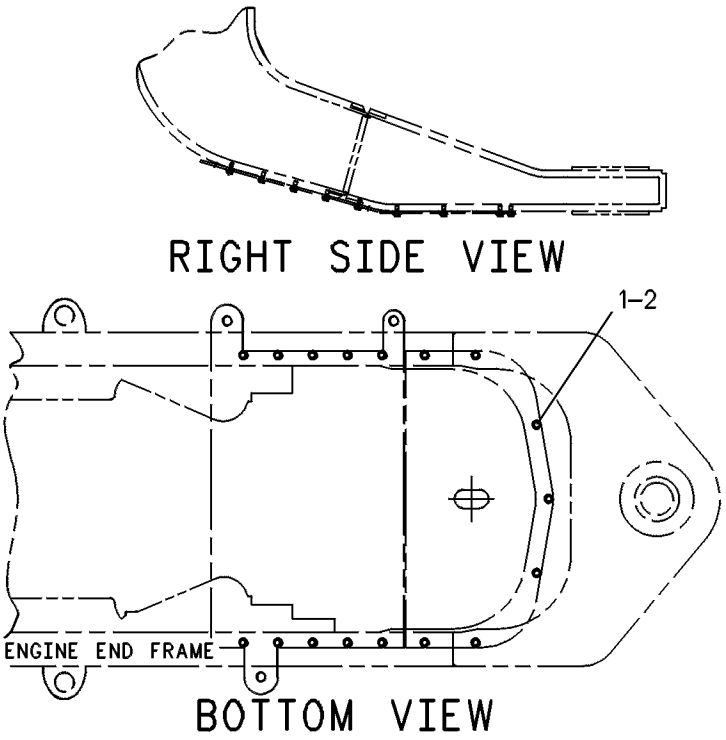

GRAPHIC #1 **<END>** g00084316

8X-1379 FASTENER GP-DRAWBAR & BUMPER

S/N: 4421-UP
PART OF 245-8805, 245-8806 LIFT AR
AN ATTACHMENT

SMCS-7105, 7156 **i01273545**

NOTE	REF NO	GRAPHIC REF	PART NUMBER	QTY	PART NAME 1 2 3 4 5 6 (PRODUCT LEVEL)	SEE PAGE
M	1	1	**8C-3411**	12	BOLT (M30X3.5X90MM)	
	2	1	**3S-7023**	12	WASHER (6.0MM THK)	

M-METRIC PART

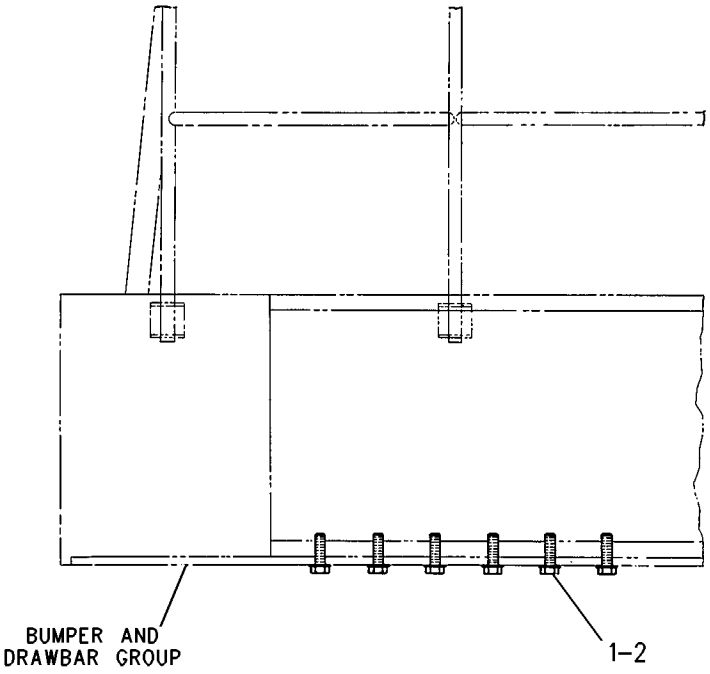

RIGHT SIDE VIEW

GRAPHIC #1 **<END>** g00676983

266-0893 FASTENER GP-DRAWBAR & BUMPER–FRONT

S/N: 4421-UP
PART OF 245-8807 LIFT AR
AN ATTACHMENT

SMCS-7105, 7156 **i02285804**

NOTE	REF NO	GRAPHIC REF	PART NUMBER	QTY	PART NAME 1 2 3 4 5 6 (PRODUCT LEVEL)	SEE PAGE
	1	1	**3S-7023**	12	WASHER (34X57X6-MM THK)	
M	2	1	**8C-3411**	8	BOLT (M30X3.5X90-MM)	
M	3	1	**8T-0370**	4	BOLT (M30X3.5X140-MM)	

M-METRIC PART

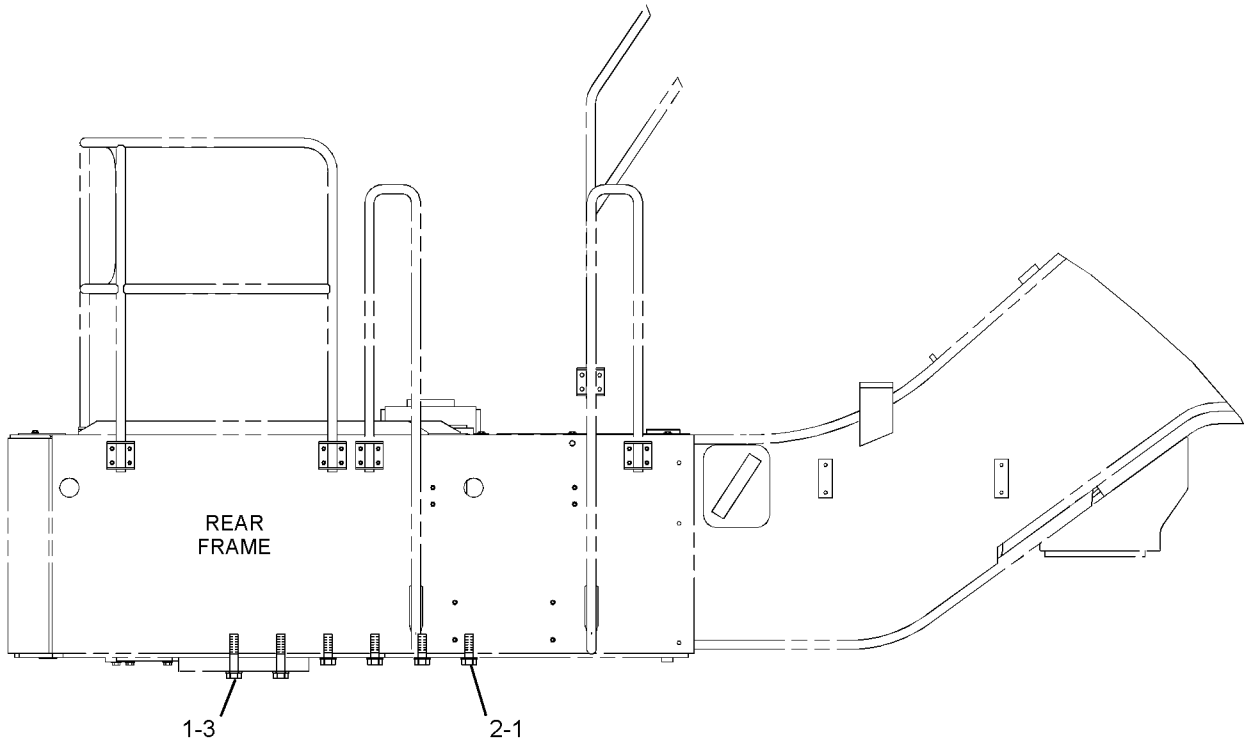

RIGHT SIDE VIEW

GRAPHIC #1 **<END>** g01147481

253-1580 FASTENER GP-FENDER

S/N: 4421-UP

PART OF 245-8813 INSTALLATION AR-FIELD

SMCS-7252 **i02285721**

NOTE	REF NO	GRAPHIC REF	PART NUMBER	QTY	PART NAME 1 2 3 4 5 6 (PRODUCT LEVEL)	SEE PAGE
	1	1	**5R-5927**	8	WASHER (14X65X6-MM THK)	
	2	1	**8G-0841**	8	MOUNTING	
	3	1	**253-1581**	2	PLATE AS	
M		1	**8T-3597**	6	NUT-WELD (M12X1.75-THD)	
	4	1	**5P-1076**	12	WASHER-HARD (13.5X30X4-MM THK)	
M	5	1	**7X-2563**	10	BOLT (M20X2.5X60-MM)	
M	6	1	**8T-4139**	12	BOLT (M12X1.75X30-MM)	
M	7	1	**8T-4648**	8	BOLT (M12X1.75X70-MM)	
	8	1	**8T-5439**	10	WASHER (21.5X45X6-MM THK)	

M-METRIC PART

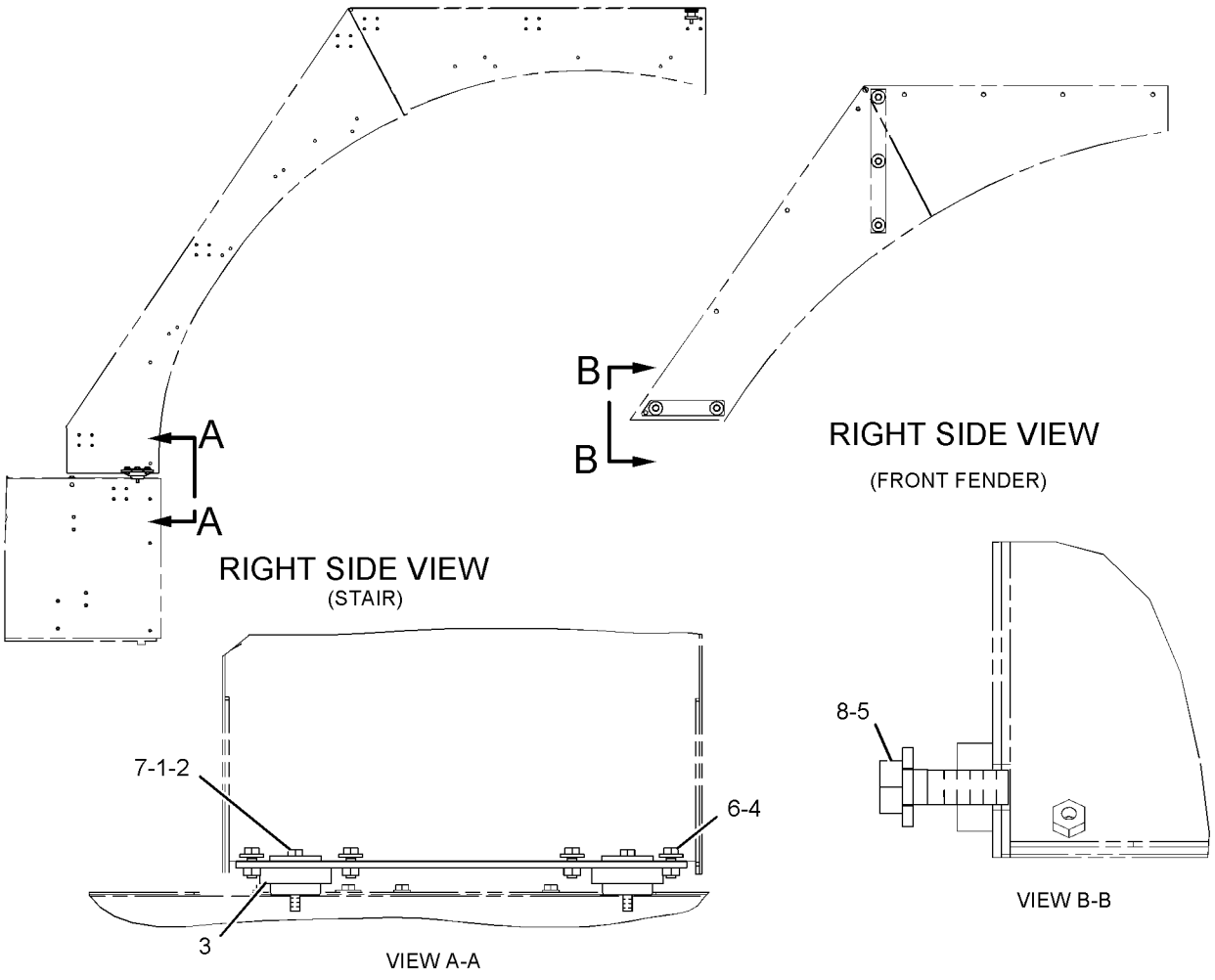

GRAPHIC #1 **<END>** g01144483

246-6241 FASTENER GP-HANDHOLD

S/N: 4421-UP

PART OF 245-8813 INSTALLATION AR-FIELD

SMCS-7256 **i02282513**

NOTE	REF NO	GRAPHIC REF	PART NUMBER	QTY	PART NAME 1 2 3 4 5 6 (PRODUCT LEVEL)	SEE PAGE
	1	1	**7X-2393**	2	BUMPER-CONICAL	
	2	1	**115-3580**	25	PLATE	
	3	1	**261-7189**	2	BRACKET	
	4	1	**264-7654**	8	BRACKET AS	
	5	1	**264-7655**	2	BRACKET	
M	6	1	**5C-7261**	2	NUT (M8X1.25-THD)	
	7	1	**5P-1076**	64	WASHER-HARD (13.5X30X4-MM THK)	
	8	1	**5P-7468**	52	CLIP (SLOT)	
	9	1	**5P-7469**	52	CLIP (TAB)	
	10	1	**6V-1874**	52	GROMMET	
	11	1	**8T-4121**	288	WASHER-HARD (11X21X2.5-MM THK)	
M	12	1	**8T-4136**	140	BOLT (M10X1.5X25-MM)	
M	13	1	**8T-4139**	2	BOLT (M12X1.75X30-MM)	
M	14	1	**8T-4183**	52	BOLT (M12X1.75X40-MM)	
M	15	1	**8T-4184**	8	BOLT (M12X1.75X45-MM)	
M	16	1	**8T-4195**	104	BOLT (M10X1.5X30-MM)	
M	17	1	**8T-4196**	44	BOLT (M10X1.5X35-MM)	
	18	1	**8T-4223**	52	WASHER-HARD (13.5X25.5X3-MM THK)	
	19	1	**8T-4224**	2	WASHER-HARD (8.8X16X2-MM THK)	
M	20	1	**8T-4244**	54	NUT (M12X1.75-THD)	

M-METRIC PART

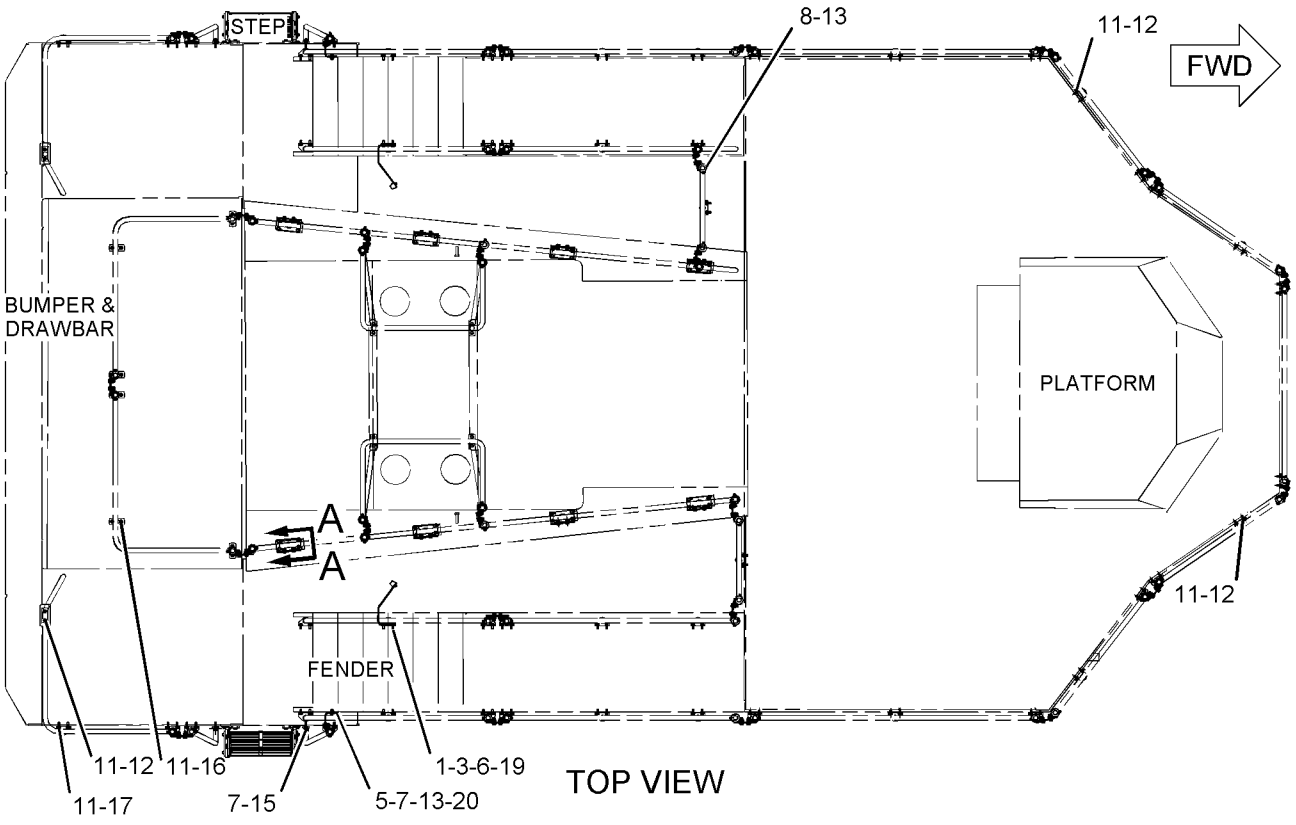

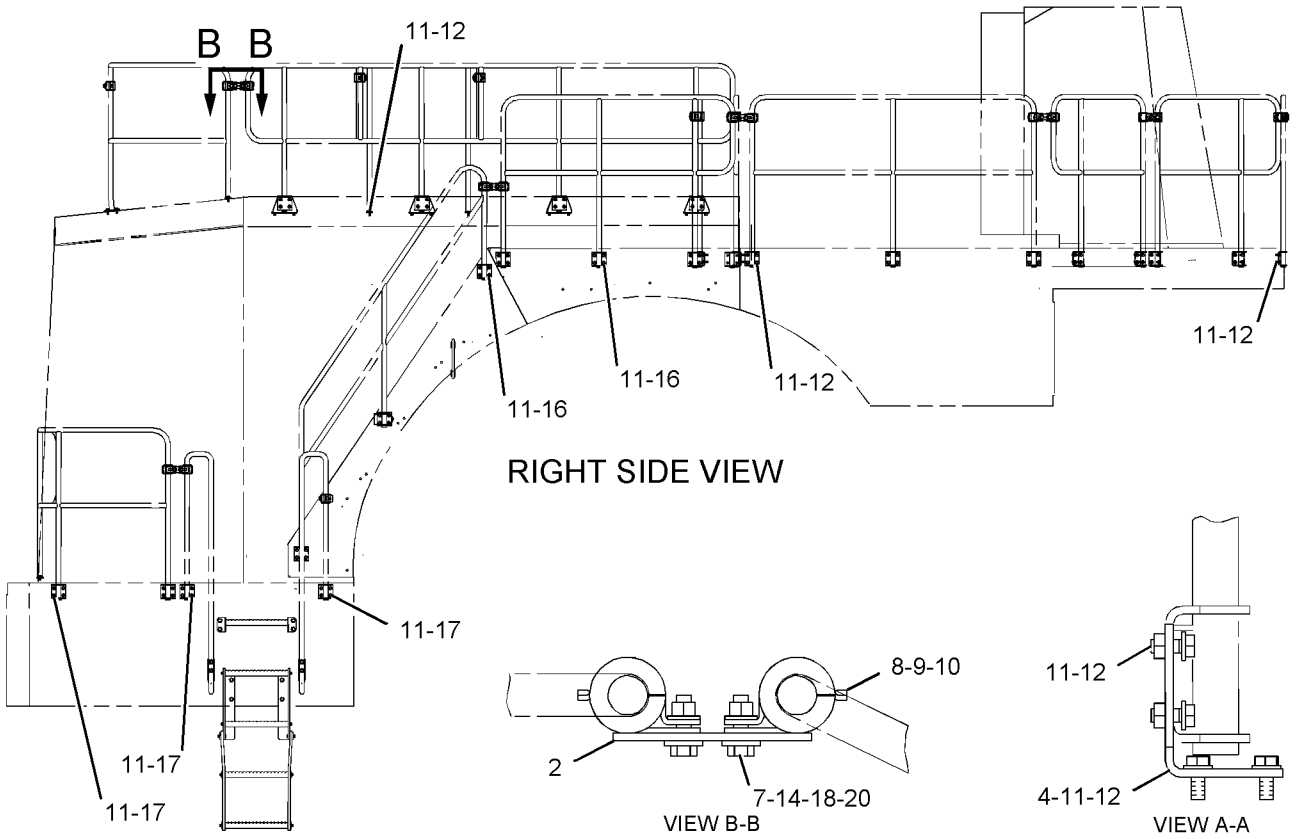

GRAPHIC #1

<END>

g01145503

259-7031 FENDER GP-FRONT

S/N: 4421-UP
AN ATTACHMENT

SMCS-7252 **i02285730**

NOTE	REF NO	GRAPHIC REF	PART NUMBER	QTY	PART NAME 1 2 3 4 5 6 (PRODUCT LEVEL)	SEE PAGE
	1	1	**244-4945**	1	SHEET (RH)	
	2	1	**244-4946**	1	SHEET (LH)	
	3	1	**244-4947**	1	SHEET (RH)	
	4	1	**244-4948**	1	SHEET (LH)	
	5	1	**244-4949**	2	PLATE	
	6	1	**244-4950**	2	STRIP	
	7	1	**244-6900**	2	DEFLECTOR	
M	8	1	**6V-7744**	12	LOCKNUT (M10X1.5 THD)	
	9	1	**7X-7729**	76	WASHER (11X25X3-MM THK)	
M	10	1	**8T-4133**	20	NUT (M10X1.5 THD)	
M	11	1	**8T-4136**	32	BOLT (M10X1.5X25-MM)	
M	12	1	**8T-4186**	12	BOLT (M10X1.5X40-MM)	

M-METRIC PART

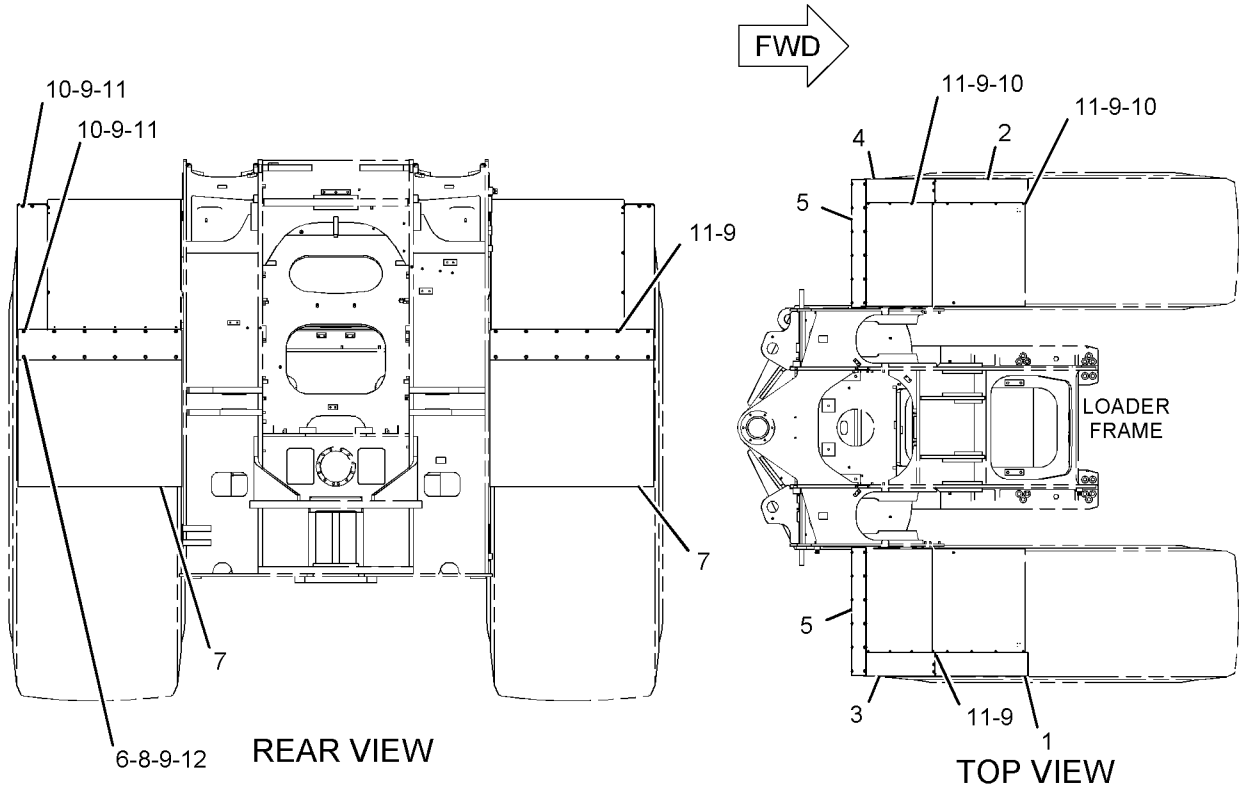

GRAPHIC #1 **<END>** g01146377

FRAME AND BODY

265-7026 FENDER GP-REAR

S/N: 4421-UP

AN ATTACHMENT

SMCS-7252 **i02285802**

NOTE	REF NO	GRAPHIC REF	PART NUMBER	QTY	PART NAME 1 2 3 4 5 6 (PRODUCT LEVEL)	SEE PAGE
	1	1	**142-5803**	2	STRIP	
	2	1	**210-7715**	2	FLAP	
	3	1	**211-4337**	2	STRIP	
	4	1	**242-1868**	1	BRACKET	
	5	1	**242-1869**	2	FLAP	
	6	1	**242-1870**	2	STRIP	
	7	1	**242-1875**	1	BRACKET AS (LH)	
	8	1	**256-9983**	1	SHEET AS (RH)	
	9	1	**256-9984**	1	SHEET AS (LH)	
	10	1	**259-7032**	1	SHEET	
	11	1	**259-7033**	1	SHEET	
	12	1	**259-7034**	2	FLAP	
	13	1	**259-7035**	2	STRIP	
	14	1	**259-7036**	1	SHEET AS (RH)	
	15	1	**259-7037**	1	SHEET AS (LH)	
	16	1	**259-7040**	2	FLAP	
	17	1	**259-7041**	1	SHEET AS (RH)	
	18	1	**259-7042**	1	SHEET AS (LH)	
	19	1	**259-7045**	1	SHEET AS (RH)	
	20	1	**259-7046**	1	SHEET AS (LH)	
	21	1	**259-7049**	1	SHEET	
	22	1	**259-7050**	1	SHEET	
	23	1	**260-3867**	1	SHEET	
	24	1	**260-3868**	1	SHEET	
	25	1	**260-3869**	1	SHEET	
	26	1	**260-3870**	1	SHEET	
	27	1	**264-7787**	1	SHEET AS (RH)	
	28	1	**264-7789**	1	SHEET AS (LH)	
	29	1	**174-5807**	26	RIVET-POP	
M	30	1	**6V-9189**	8	LOCKNUT (M8X1.25 THD)	
	31	1	**7X-0603**	2	WASHER-HARD (9.9X35X2.5-MM THK)	
	32	1	**7X-7729**	168	WASHER (11X25X3-MM THK)	
	33	1	**8T-4121**	10	WASHER-HARD (11X21X2.5-MM THK)	
M	34	1	**8T-4133**	86	NUT (M10X1.5 THD)	
M	35	1	**8T-4136**	86	BOLT (M10X1.5X25-MM)	
M	36	1	**8T-4186**	6	BOLT (M10X1.5X40-MM)	
M	37	1	**8T-7547**	8	BOLT (M8X1.25X30-MM)	

M-METRIC PART

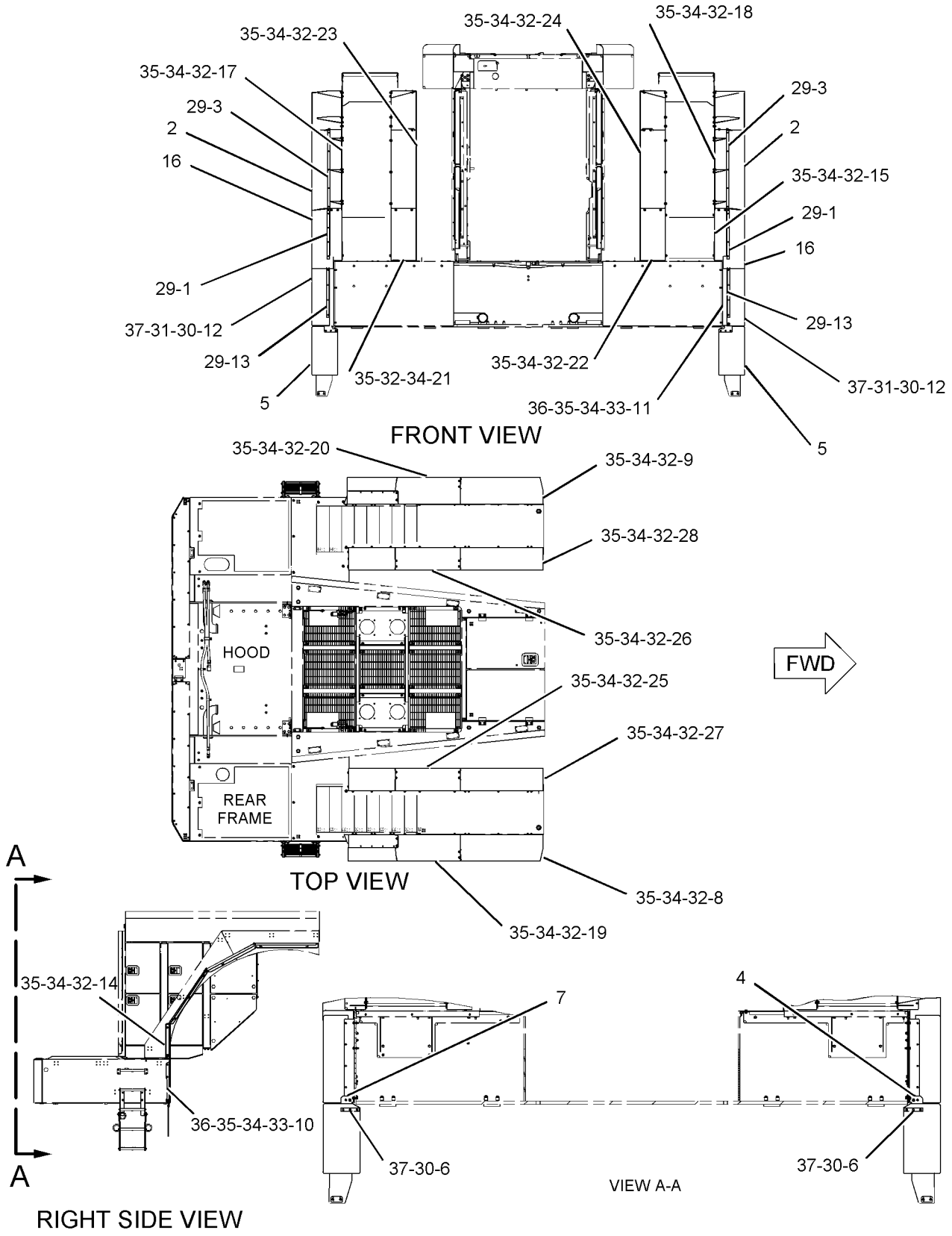

GRAPHIC #1 **<END>** g01146524

FRAME AND BODY

247-7770 FRAME AS-LOADER

S/N: 4421-UP

PART OF 247-7775 FRAME GP-LOADER

SMCS-7054 **i02282362**

NOTE	REF NO	GRAPHIC REF	PART NUMBER	QTY	PART NAME 1 2 3 4 5 6 (PRODUCT LEVEL)	SEE PAGE
	1	2	**8X-1667**	2	PLATE	
	2	2	**8X-1668**	2	PLATE	
	3	2	**8X-1669**	4	BOSS (10-MM THK)	
	4	2	**111-9758**	1	PLATE	
	5	2	**114-3098**	1	HITCH AS-LOWER	
	6	1	**131-1226**	2	BLOCK	
	7	1,3	**117-8721**	2	LUG (M10X1.5)	
M	8	3	**8T-4935**	2	BOSS-WELD (M10X1.5X45-MM)	
	9	2	**9R-2613**	2	BOSS-WELD (M10X1.5X25-MM OAL)	
	10	2	**9C-7863**	2	BLOCK	
	11	1,2	**8Y-3795**	3	BOSS (M10X1.5X39-MM)	
	12	1,2	**8X-7415**	1	PLATE	
	13	1	**8X-4116**	2	PLATE	
M	14	1	**8T-6911**	2	BOSS-WELD (M12X1.75)	
M	15	1,2,3	**8T-3851**	84	BOSS-WELD (M10X1.5X17.5-MM)	
M	16	1	**8T-3734**	1	BOSS-WELD (M10X1.5X40-MM)	
	17	1,3	**5I-3333**	2	PLATE	
	18	2	**4I-3723**	1	PLATE	
	19	1,3	**8X-3540**	4	BLOCK	
	20	2	**178-0711**	2	PLATE	

M-METRIC PART

247-7770 FRAME AS-LOADER *(contd.)* **i02282362**

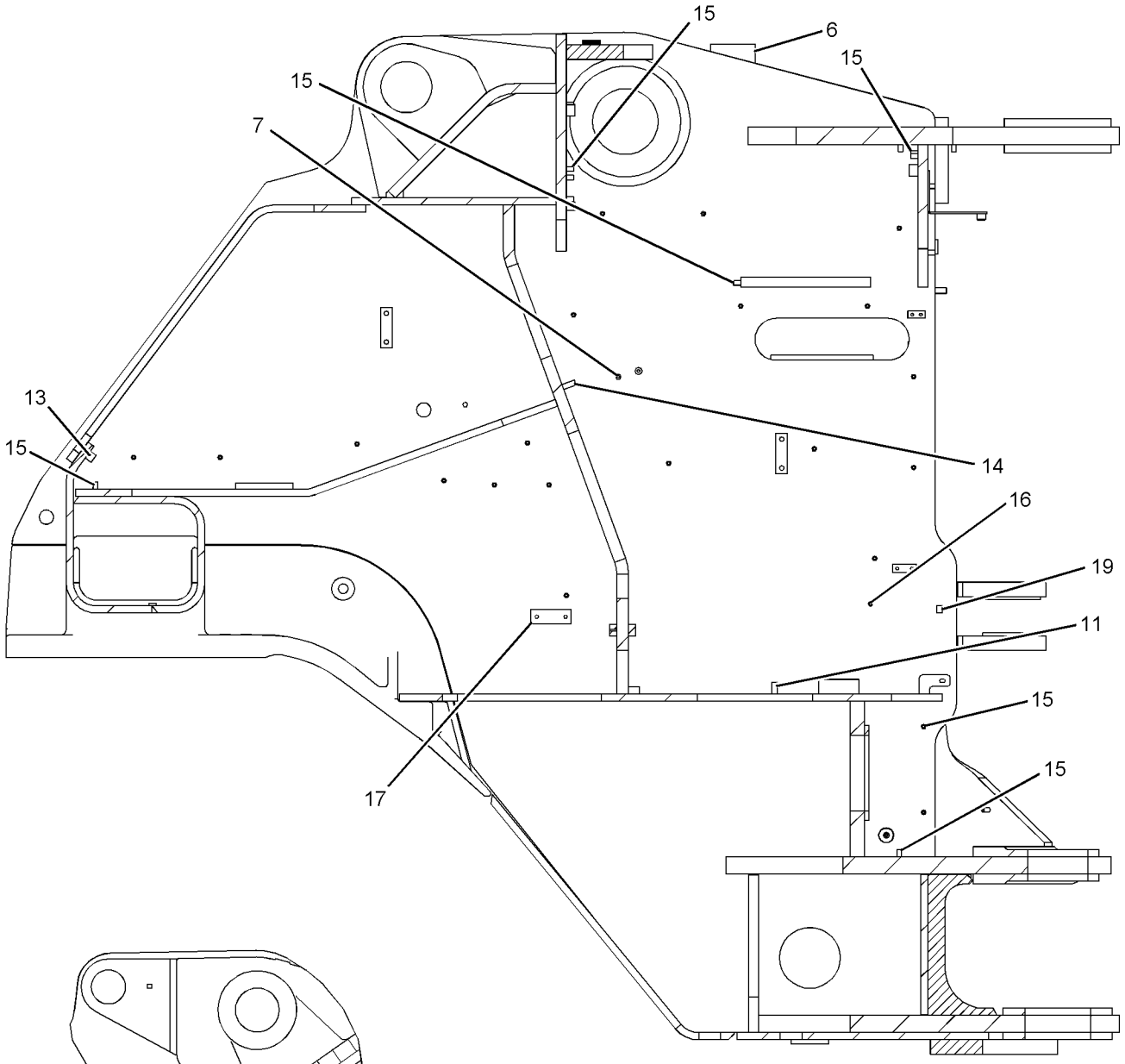

SECTION J-J

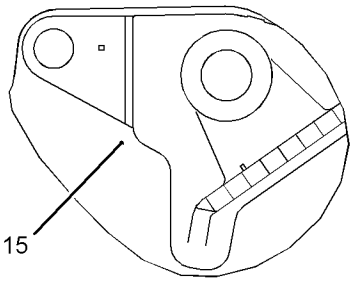

SECTION C-C

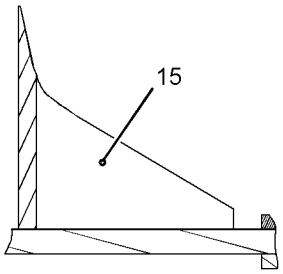

SECTION F-F

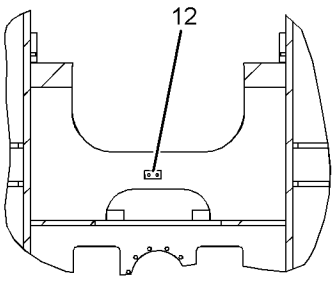

SECTION E-E

GRAPHIC #1

g01149860

247-7770 FRAME AS-LOADER *(contd.)* i02282362

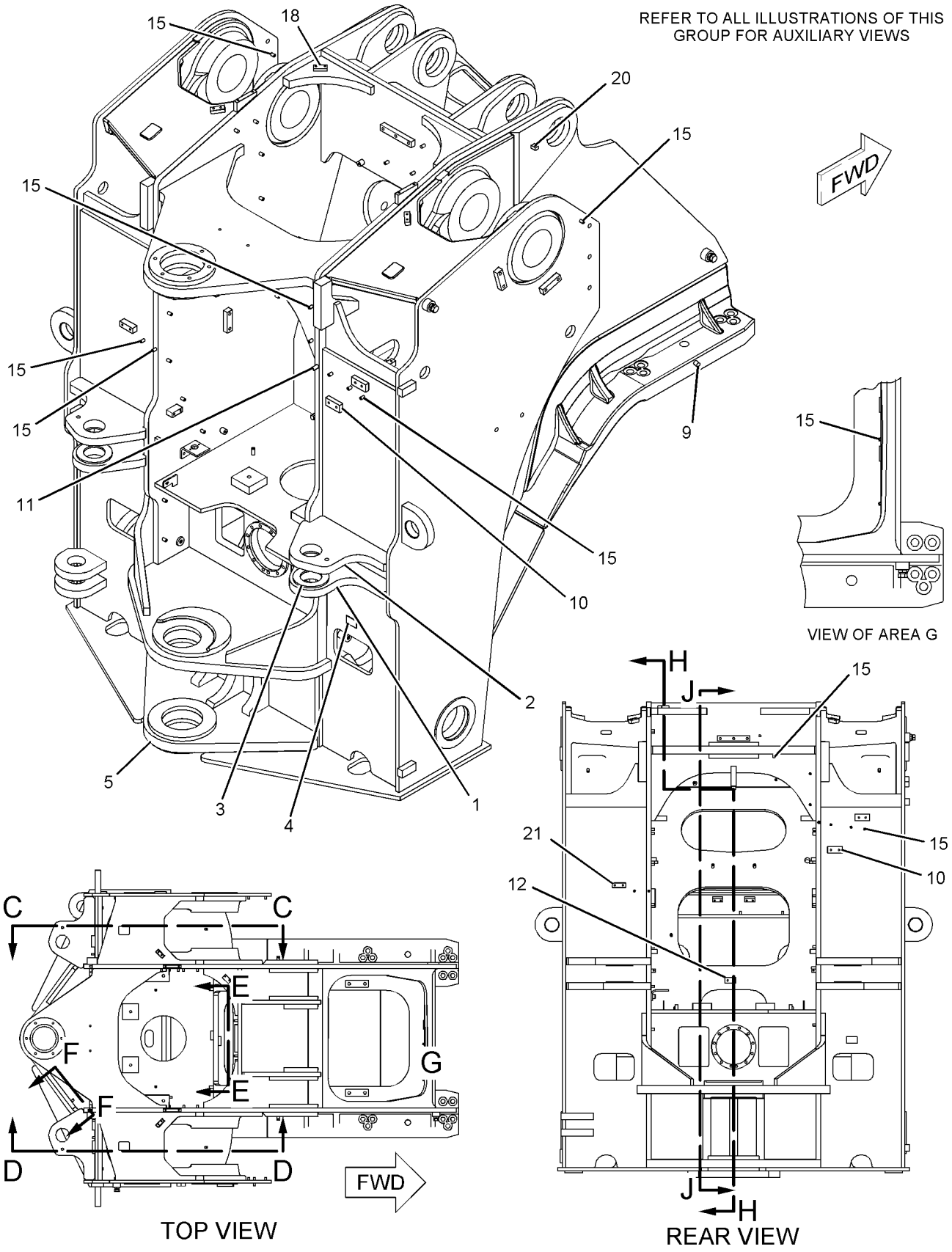

GRAPHIC #2 g01149861

247-7770 FRAME AS-LOADER *(contd.)* **i02282362**

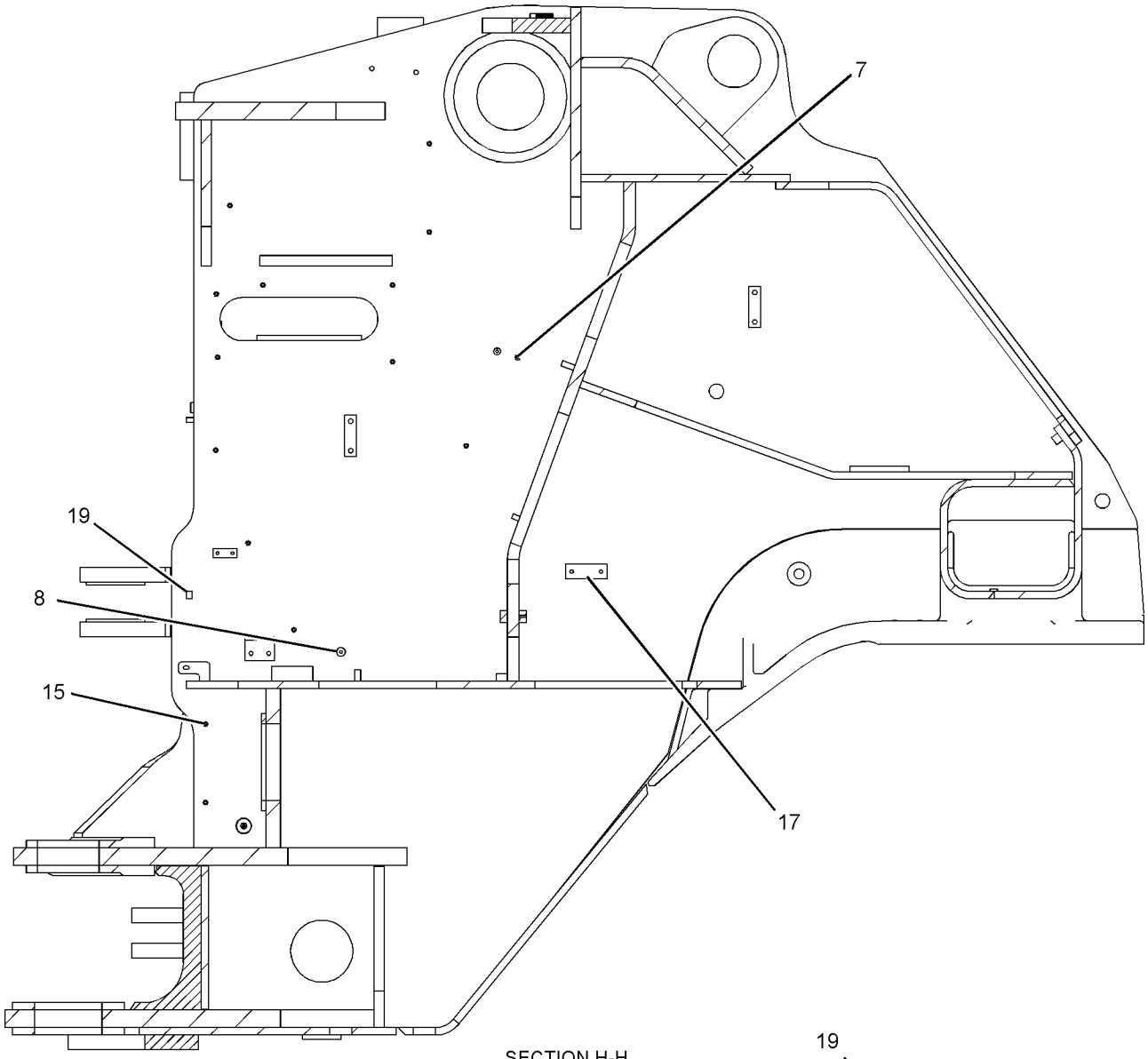

SECTION H-H

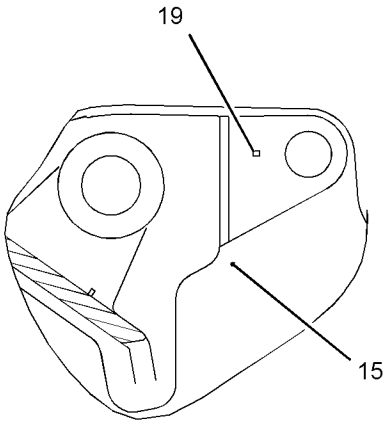

SECTION D-D

GRAPHIC #3 **<END>** g01149862

FRAME AND BODY

247-5930 FRAME AS-REAR

S/N: 4421-UP

PART OF 247-5935 FRAME GP-REAR

SMCS-7051 **i02282361**

NOTE	REF NO	GRAPHIC REF	PART NUMBER	QTY	PART NAME 1 2 3 4 5 6 (PRODUCT LEVEL)	SEE PAGE
	1	2	**8X-3540**	1	BLOCK	
	2	1,2	**8X-4711**	5	BOSS AS (M12X1.75X20-MM)	
	3	1	**8X-4714**	1	PLATE	
	4	2	**111-9758**	1	PLATE	
	5	1,2	**178-0711**	3	PLATE	
	6	2	**221-0008**	2	PLATE	
	7	1	**245-1822**	2	BLOCK	
	8	1,2	**117-8721**	3	LUG (M10X1.5)	
M	9	1	**7X-0750**	3	BOSS-WELD (M10X1.5X55-MM)	
M	10	1	**7X-0752**	8	BOSS-WELD (M10X1.5X65-MM OAL)	
	11	1,2	**7Y-2522**	9	PLATE	
M	13	1,2	**8T-3851**	131	BOSS-WELD (M10X1.5X17.5-MM)	
M	14	1,2	**8T-4935**	12	BOSS-WELD (M10X1.5X45-MM)	
	15	2	**5I-3333**	4	PLATE	
	16	2	**9R-1733**	1	BOSS (M10X1.5X66.5-MM)	
	17	1,2	**9R-2613**	12	BOSS-WELD (M10X1.5X25-MM OAL)	
	18	1	**9R-3845**	8	BOSS (M12X1.75X38-MM)	

M-METRIC PART

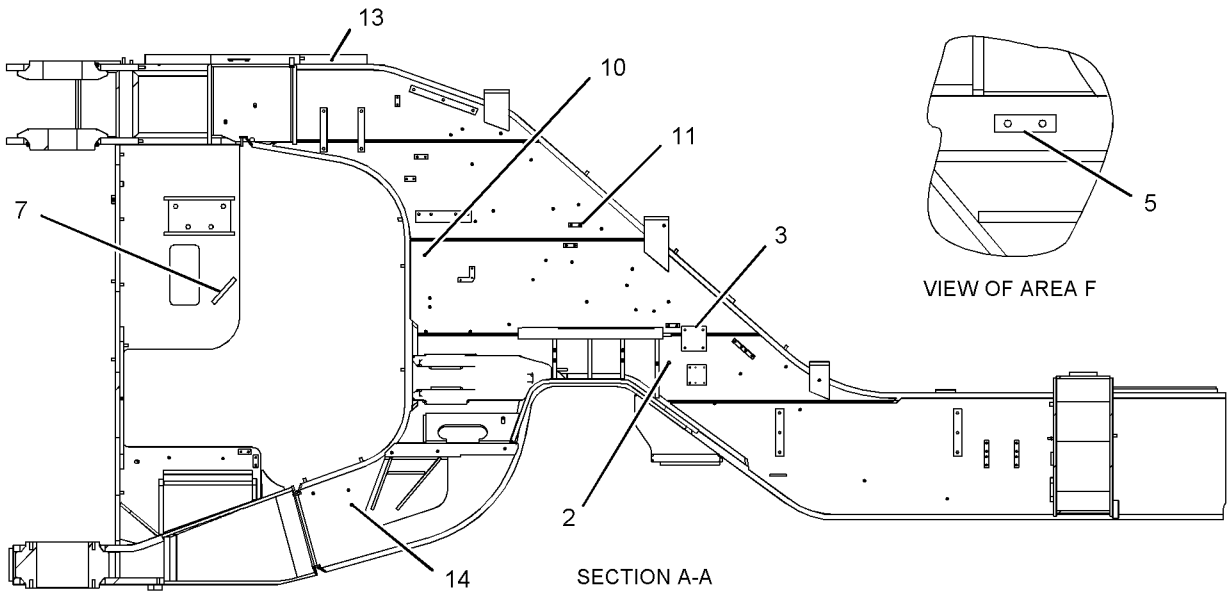

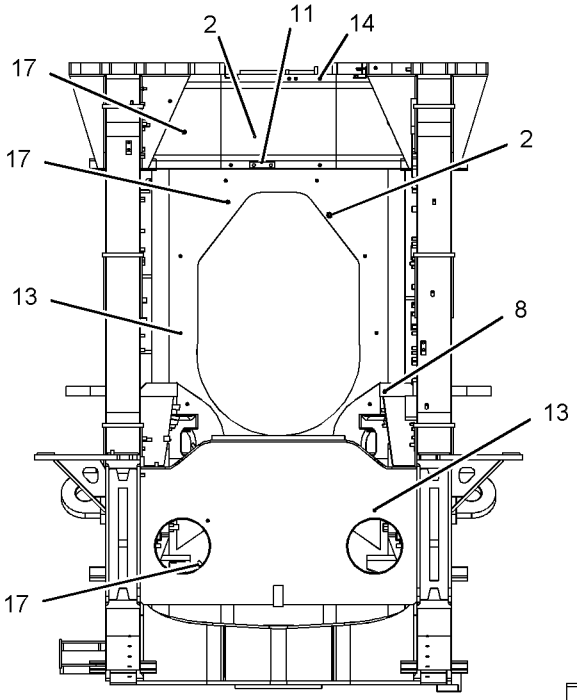

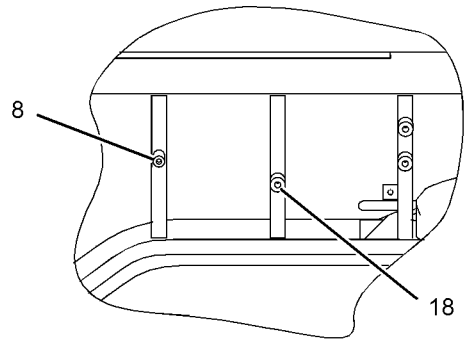

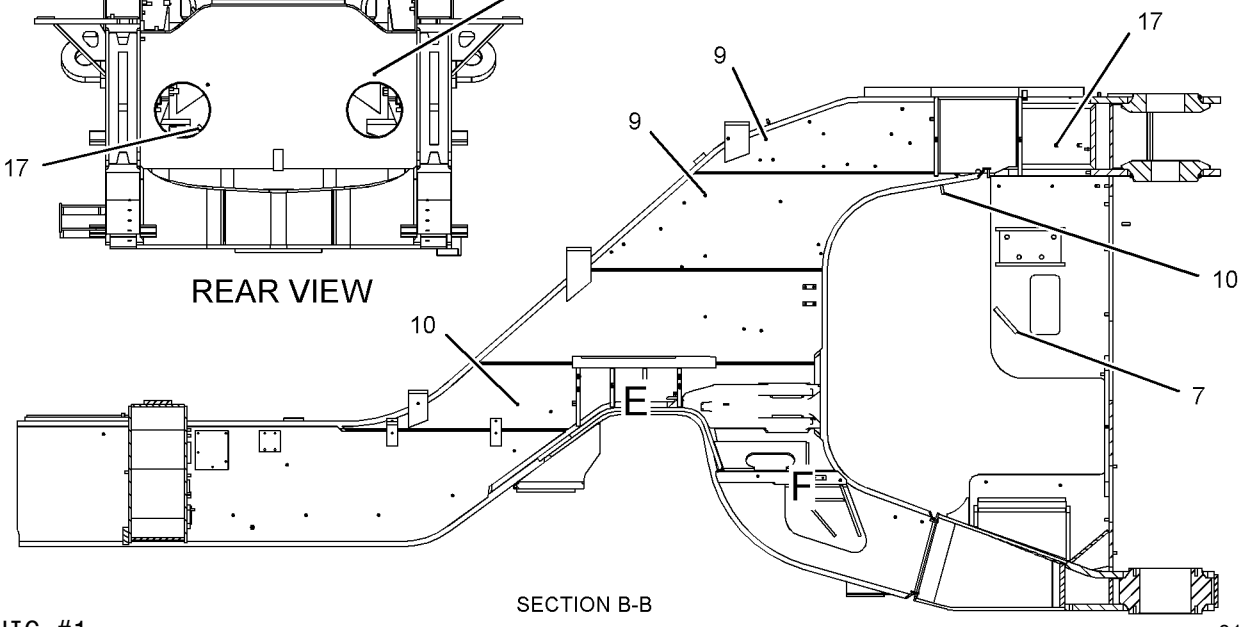

GRAPHIC #1

g01148973

247-5930 FRAME AS-REAR *(contd.)* **i02282361**

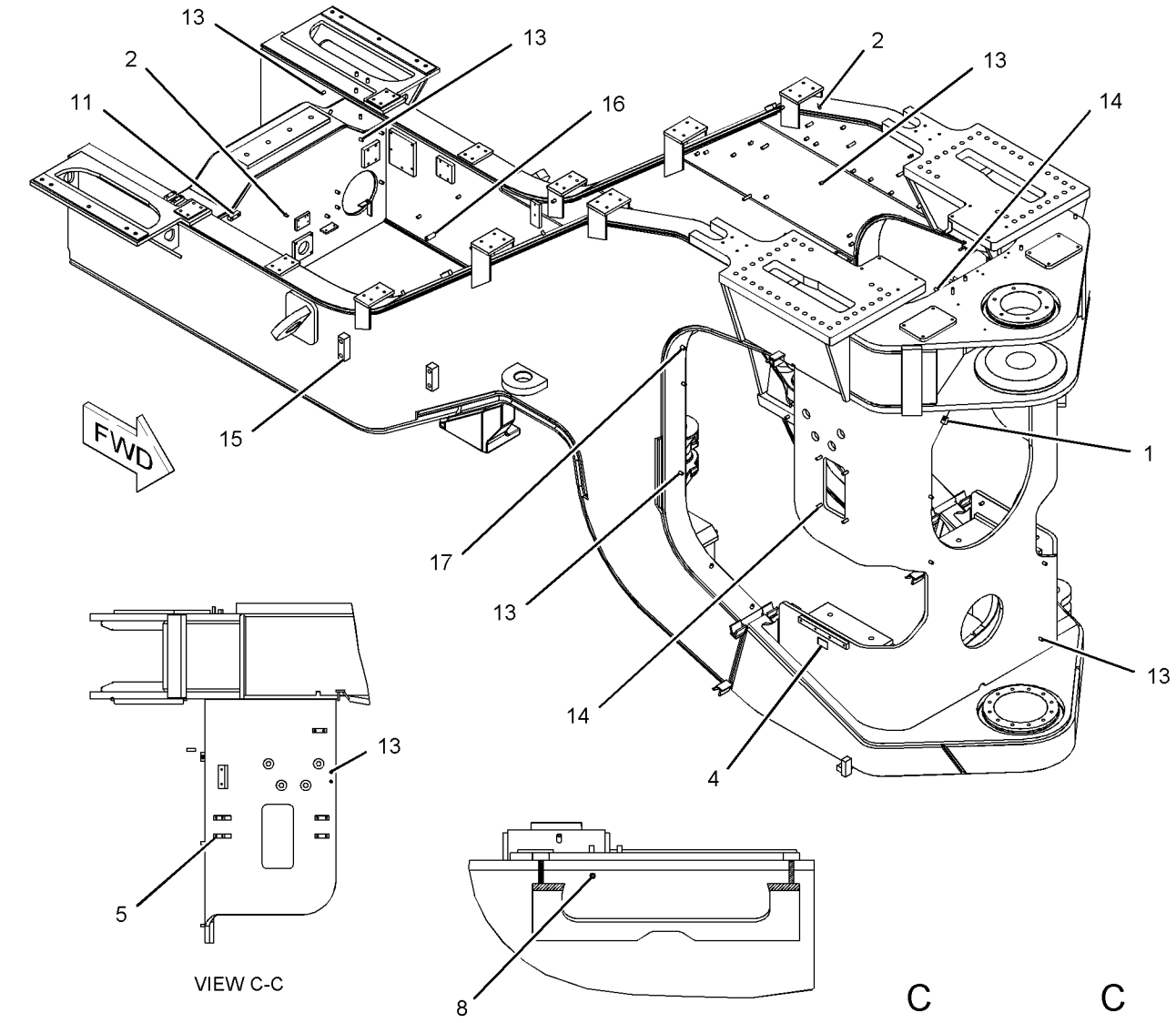

GRAPHIC #2

<END>

g01148974

FRAME AND BODY

247-7775 FRAME GP-LOADER

S/N: 4421-UP

PART OF 245-8811 CHASSIS AR-FRONT

SMCS-7054 **i02312767**

NOTE	REF NO	GRAPHIC REF	PART NUMBER	QTY	PART NAME 1 2 3 4 5 6 (PRODUCT LEVEL)	SEE PAGE
	1	1	**4B-4550**	1	FITTING-PRESSURE RELIEF	
	2	1	**4F-6464**	2	WASHER-HARD (26.2X60.3X5-MM THK)	
	3	1	**4V-1718**	2	SPACER (27.5X50X17-MM THK)	
	4	1	**8X-0147**	2	CAP	
	5	1	**8X-0148**	1	SHIM PACK (INCLUDES 27-SHIMS)	
	6	1	**8X-0763**	2	PIN AS	
Y	7	1	**247-7770**	1	FRAME AS-LOADER	520
	8	1	**3J-7354**	1	SEAL-O-RING	
	9	1	**3K-0158**	2	SEAL-LIP TYPE	
	10	1	**5F-2465**	2	CUP-BEARING	
	11	1	**5P-5528**	1	ADAPTER-O-RING	
M	12	1	**6V-5845**	12	BOLT (M20X2.5X70-MM)	
	13	1	**7M-5334**	2	CONE-BEARING	
M	14	1	**8T-0380**	2	BOLT (M24X3X60-MM)	
	15	1	**8T-3282**	12	WASHER-HARD (22X35X3.5-MM THK)	
	16	1	**8X-0759**	4	BUSHING-TERMINAL	

M-METRIC PART
Y-SEPARATE ILLUSTRATION

247-7775 **FRAME GP-LOADER** *(contd.)* **i02312767**

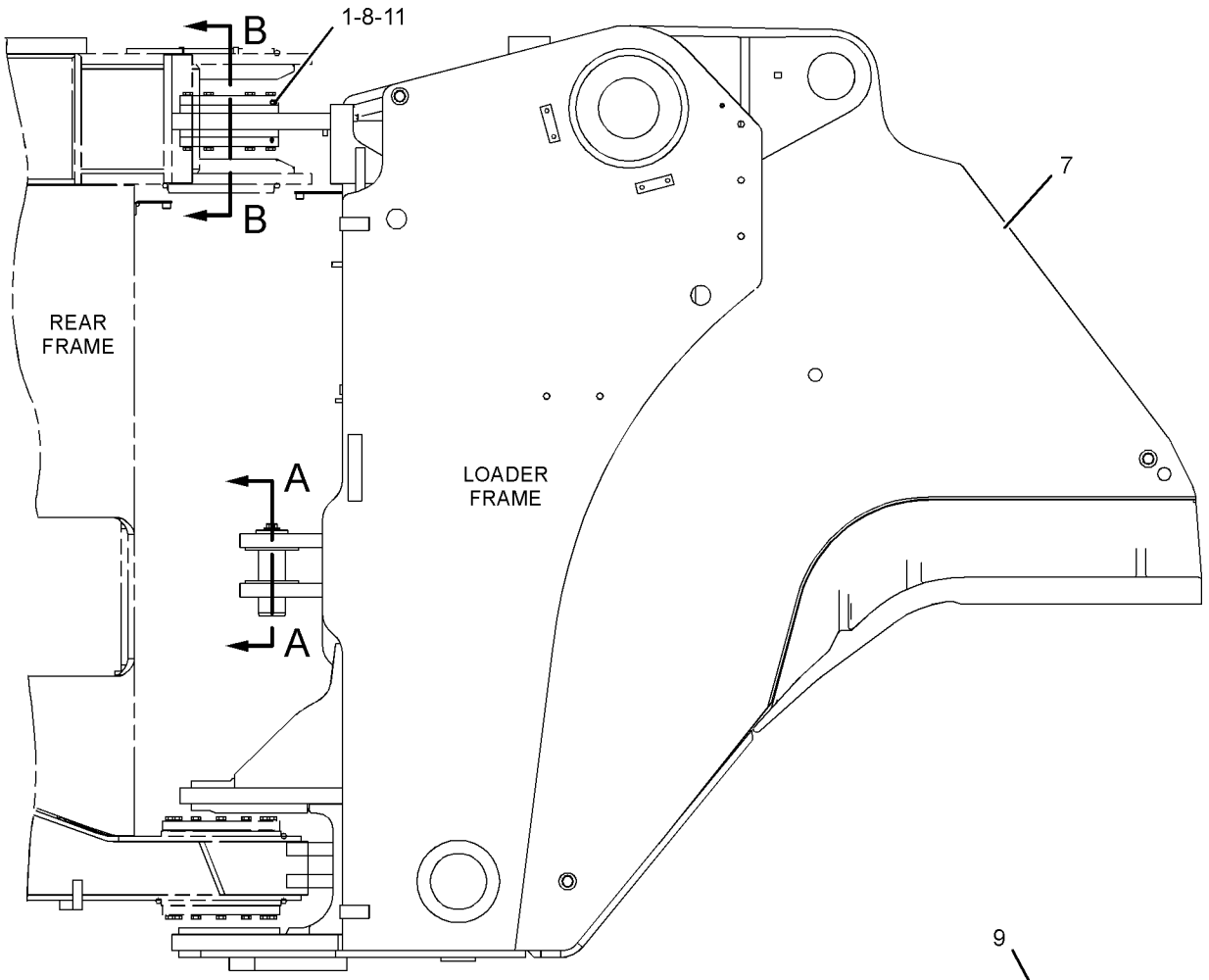

RIGHT SIDE VIEW

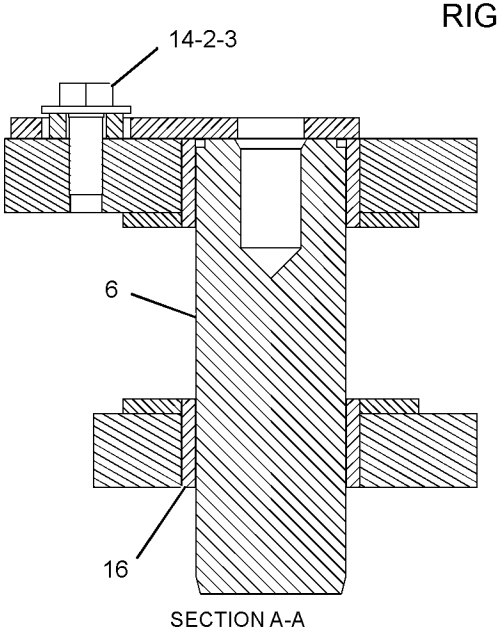

SECTION A-A

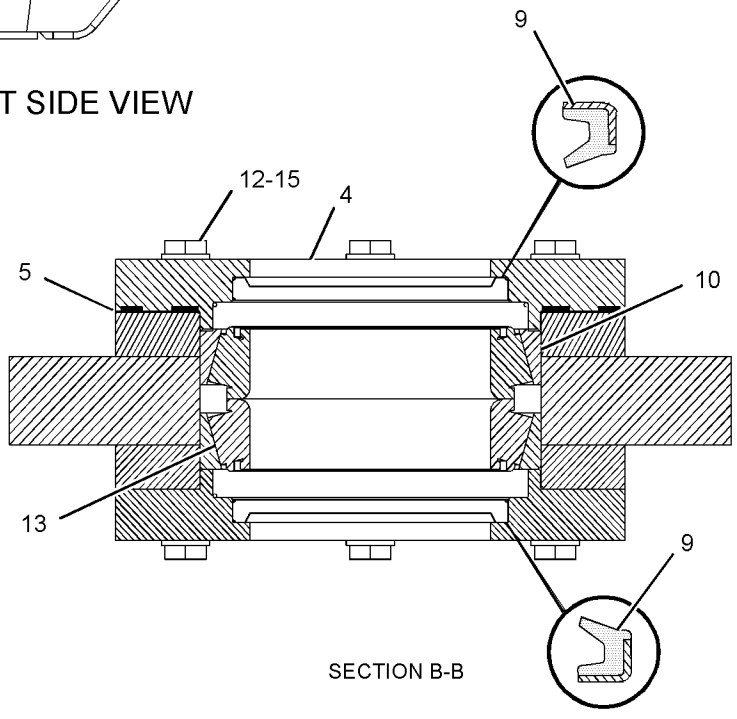

SECTION B-B

GRAPHIC #1 **<END>** g01158131

FRAME AND BODY

247-5935 FRAME GP-REAR

S/N: 4421-UP

PART OF 245-8812 CHASSIS AR-REAR

SMCS-7051 **i02154440**

NOTE	REF NO	GRAPHIC REF	PART NUMBER	QTY	PART NAME 1 2 3 4 5 6 (PRODUCT LEVEL)	SEE PAGE
	1	1	**4B-4550**	1	FITTING-PRESSURE RELIEF	
	2	1	**5P-5528**	1	ADAPTER-O-RING	
	3	1	**8X-0137**	2	CAP	
B	4	1	**8X-0138**	1	SHIM PACK (INCLUDES 27-SHIMS)	
	5	1	**136-4436**	1	SPACER	
Y	6	1	**247-5930**	1	FRAME AS-REAR	524
	7	1	**3J-7354**	1	SEAL-O-RING	
	8	1	**5D-6297**	2	CONE-BEARING	
	9	1	**5D-6298**	2	CUP-BEARING	
M	10	1	**6V-5845**	24	BOLT (M20X2.5X70-MM)	
	11	1	**7I-5759**	1	PIN	
	12	1	**8K-5271**	2	SEAL-LIP TYPE	
	13	1	**8T-3282**	24	WASHER-HARD (22X35X3.5-MM THK)	
	14	1	**8X-0758**	4	BUSHING	

B-USE AS REQUIRED
M-METRIC PART
Y-SEPARATE ILLUSTRATION

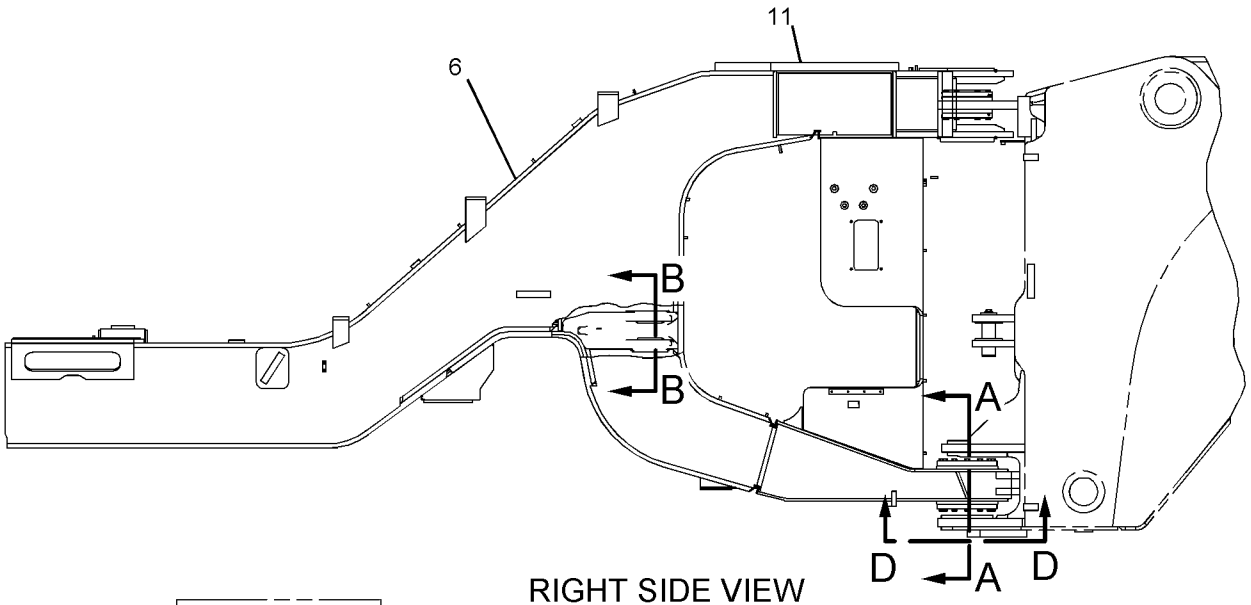

RIGHT SIDE VIEW

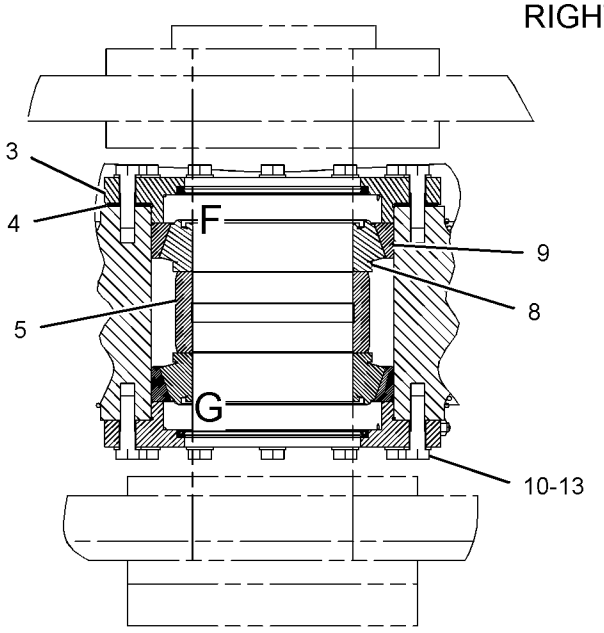

SECTION A-A

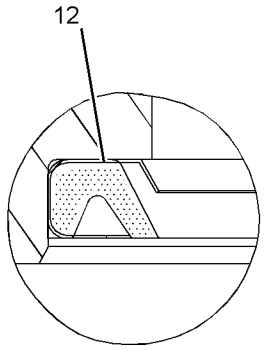

VIEW OF AREA F

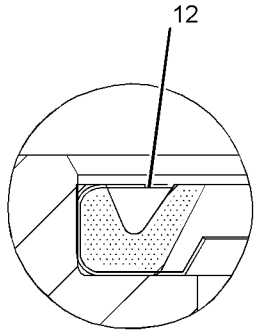

VIEW OF AREA G

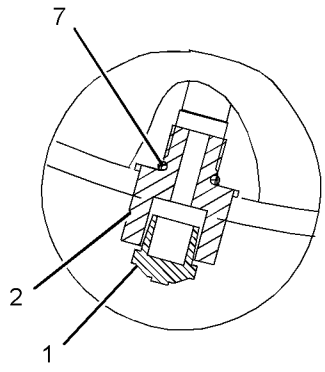

VIEW OF AREA E

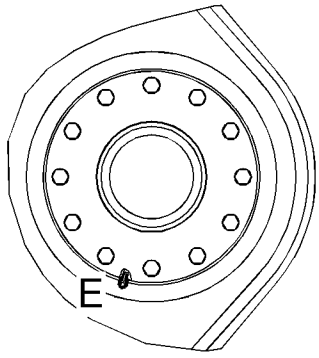

SECTION D-D

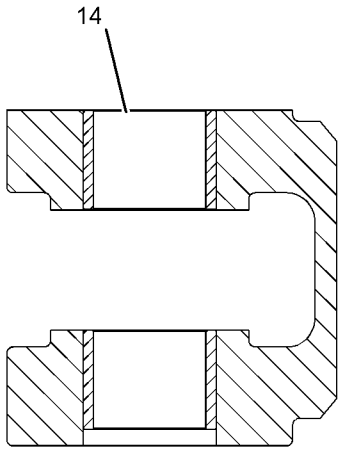

SECTION B-B

GRAPHIC #1

<END>

g01091607

249-6777 GRILL GP-RADIATOR

S/N: 4421-UP

PART OF 245-8812 CHASSIS AR-REAR

SMCS-7170 **i02421985**

NOTE	REF NO	GRAPHIC REF	PART NUMBER	QTY	PART NAME 1 2 3 4 5 6 (PRODUCT LEVEL)	SEE PAGE
	1	1	**8X-8854**	2	GRATE AS	
	2	1	**249-6833**	2	GRILL AS	
	3	1	**272-1148**	4	GRILL AS	
	4	1	**7X-7729**	52	WASHER (11X25X3-MM THK)	
	5	1	**8T-4121**	8	WASHER-HARD (11X21X2.5-MM THK)	
M	6	1	**8T-4136**	44	BOLT (M10X1.5X25-MM)	
M	7	1	**8T-4137**	16	BOLT (M10X1.5X20-MM)	

M-METRIC PART

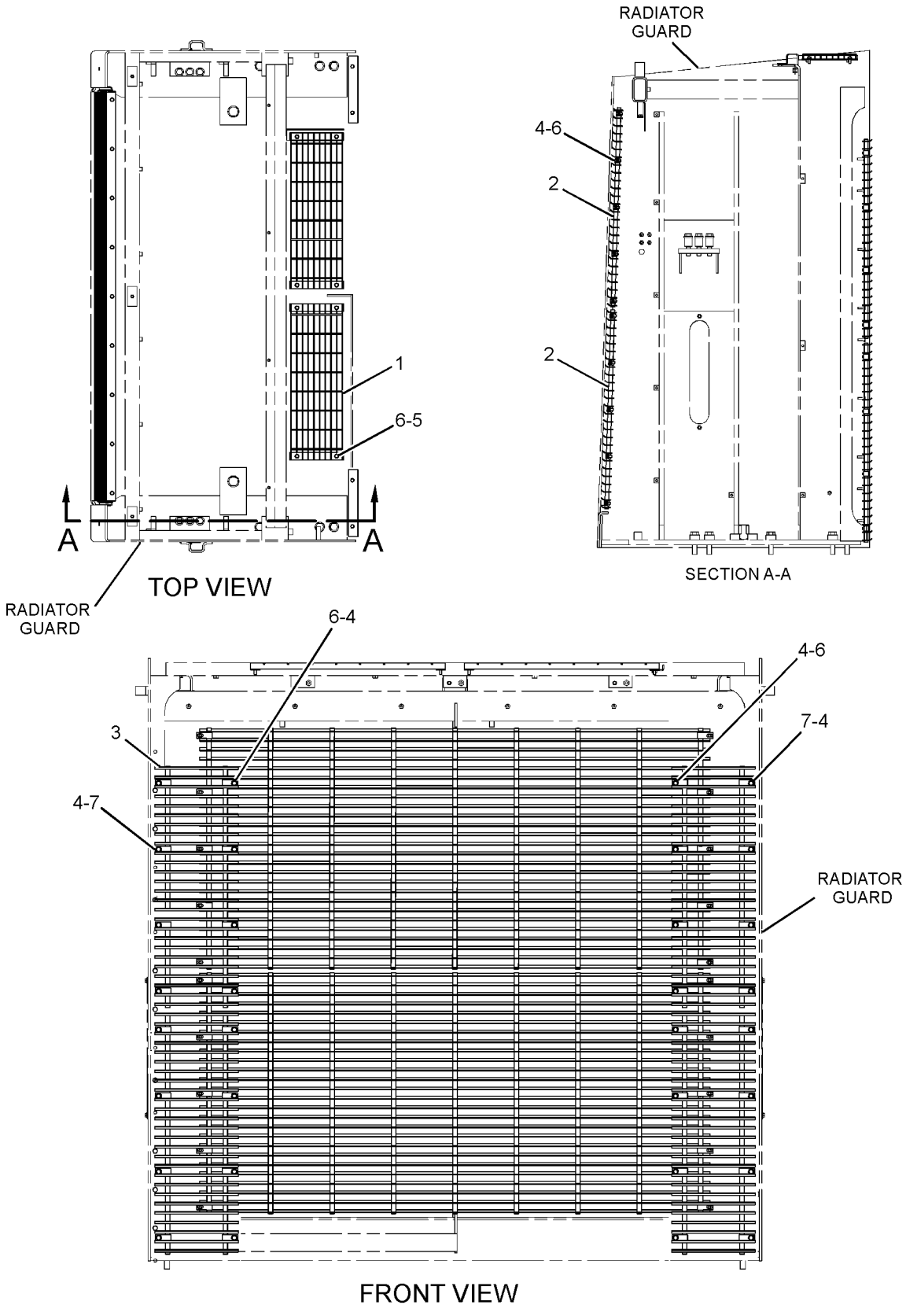

GRAPHIC #1

<END>

g01210522

252-6962 GUARD GP-BRAKE LINES–FRONT

S/N: 4421-UP

PART OF 245-8813 INSTALLATION AR-FIELD

SMCS-4257 **i02149236**

NOTE	REF NO	GRAPHIC REF	PART NUMBER	QTY	PART NAME 1 2 3 4 5 6 (PRODUCT LEVEL)	SEE PAGE
	1	1	**102-8970**	1	GUARD	
	2	1	**102-8971**	1	GUARD	
	3	1	**103-0010**	2	BRACKET AS	
					(EACH INCLUDES)	
M		1	**8T-3490**	1	NUT-WELD (M10X1.5 THD)	
	4	1	**104-2138**	1	GUARD AS	
M		1	**8T-3597**	4	NUT-WELD (M12X1.75 THD)	
	5	1	**104-2140**	1	GUARD AS	
M		1	**8T-3597**	4	NUT-WELD (M12X1.75 THD)	
	6	1	**250-7503**	1	GUARD AS	
M		1	**8T-3490**	1	NUT-WELD (M10X1.5 THD)	
	7	1	**104-2137**	2	SPACER	
	8	1	**104-2139**	4	SPACER (15.8X21.34X95-MM THK)	
M	9	1	**7X-2546**	2	BOLT (M10X1.5X180-MM)	
	10	1	**8T-4121**	6	WASHER-HARD (11X21X2.5-MM THK)	
M	11	1	**8T-4136**	4	BOLT (M10X1.5X25-MM)	
M	12	1	**8T-4139**	6	BOLT (M12X1.75X30-MM)	
M	13	1	**8T-4192**	11	BOLT (M12X1.75X25-MM)	
	14	1	**8T-4223**	21	WASHER-HARD (13.5X25.5X3-MM THK)	
M	15	1	**8T-5001**	4	BOLT (M12X1.75X130-MM)	

M-METRIC PART

252-6962 **GUARD GP-BRAKE LINES** *(contd.)* **i02149236**

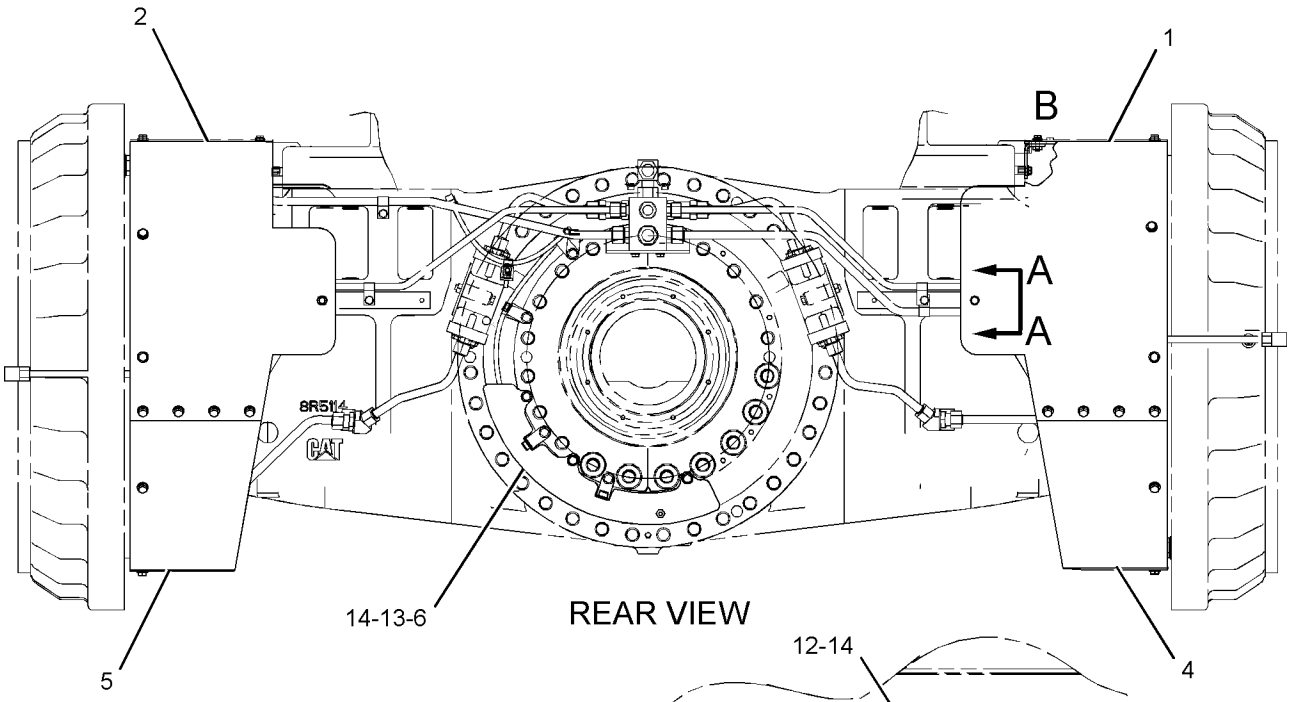

REAR VIEW

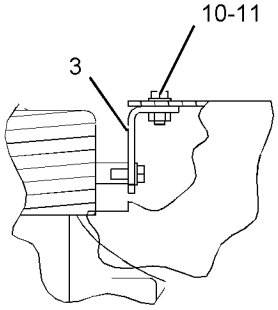

SECTION A-A

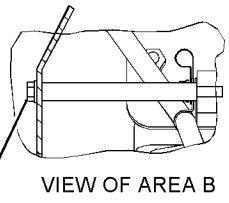

VIEW OF AREA B

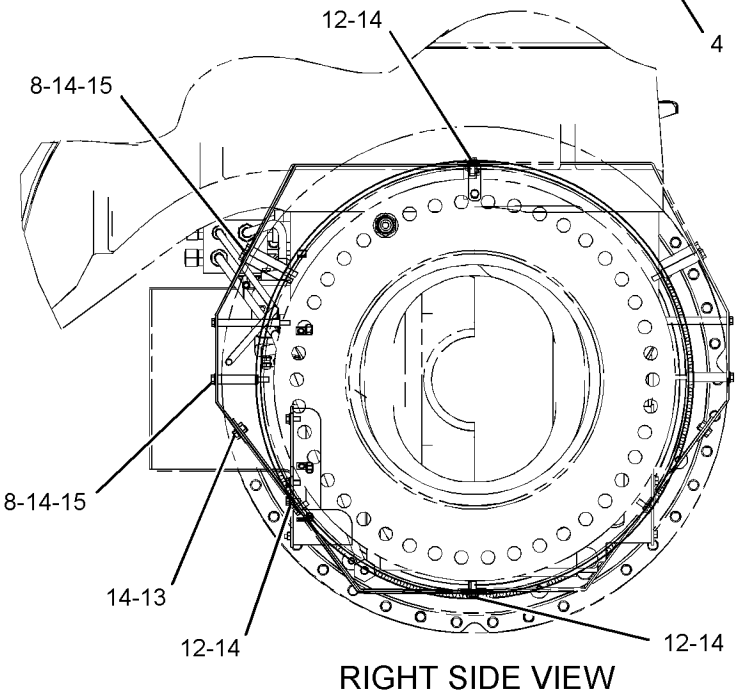

RIGHT SIDE VIEW

GRAPHIC #1

<END>

g01091659

FRAME AND BODY

109-0036 GUARD GP-CRANKCASE

S/N: 4421-UP

AN ATTACHMENT

SMCS-7151 **i02181225**

NOTE	REF NO	GRAPHIC REF	PART NUMBER	QTY	PART NAME 1 2 3 4 5 6 (PRODUCT LEVEL)	SEE PAGE
	1	1	**8X-0721**	1	GUARD	
	2	1	**8X-0724**	1	GUARD	
M	3	1	**8T-6430**	18	BOLT (M20X2.5X50-MM)	
	4	1	**8T-5439**	18	WASHER (21.5X45X6-MM THK)	

M-METRIC PART

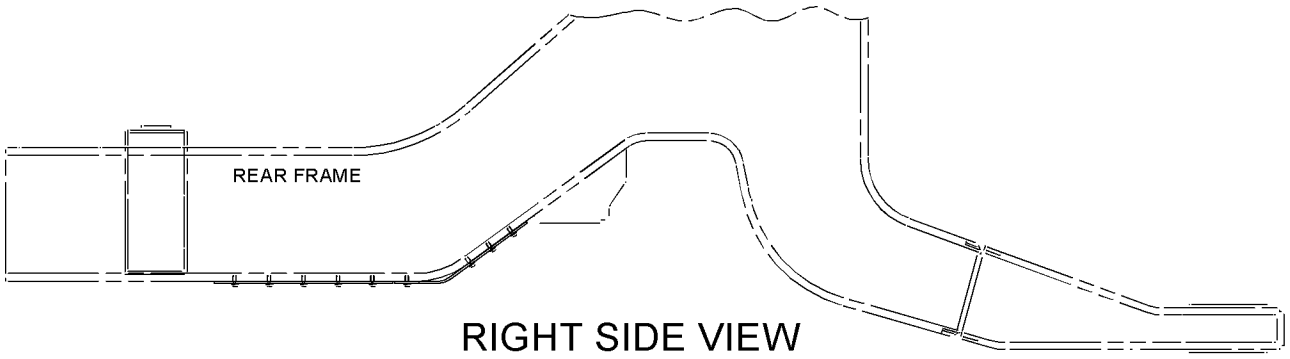

RIGHT SIDE VIEW

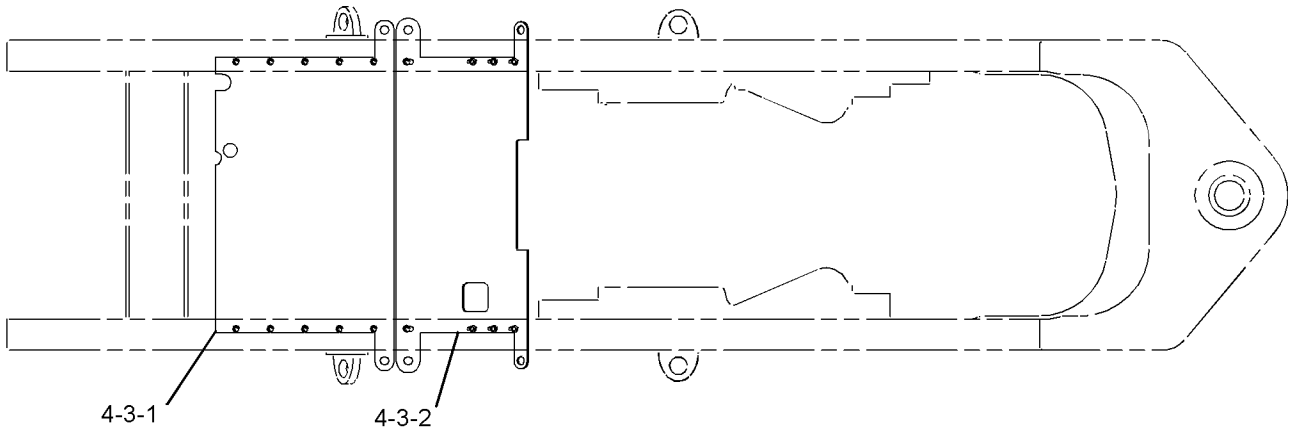

BOTTOM VIEW

GRAPHIC #1

<END>

g01103787

249-8680 GUARD GP-FRONT

S/N: 4421-UP

PART OF 245-8811 CHASSIS AR-FRONT

SMCS-7167 **i02148853**

NOTE	REF NO	GRAPHIC REF	PART NUMBER	QTY	PART NAME 1 2 3 4 5 6 (PRODUCT LEVEL)	SEE PAGE
	1	1	**1A-2519**	4	WASHER (14X44.5X4-MM THK)	
	2	1	**4V-0661**	4	MOUNT	
	3	1	**101-5306**	1	PLATE	
	4	1	**249-8679**	1	GUARD AS	
		1	**7D-4533**	4	HANDHOLD	
M		1	**8T-3490**	4	NUT-WELD (M10X1.5 THD)	
	5	1	**8T-4121**	4	WASHER-HARD (11X21X2.5-MM THK)	
M	6	1	**8T-4136**	4	BOLT (M10X1.5X25-MM)	
M	7	1	**8T-4194**	4	BOLT (M12X1.75X50-MM)	

M-METRIC PART

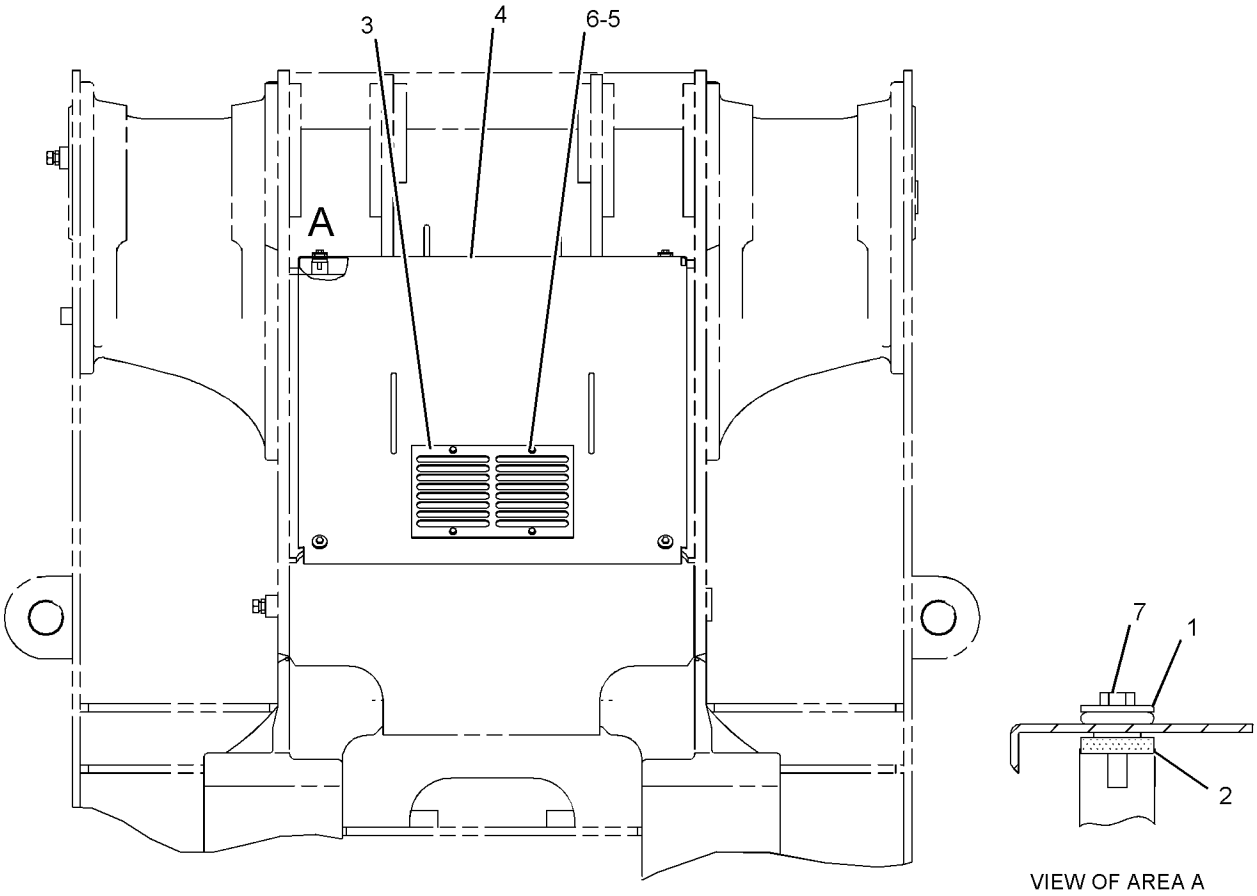

VIEW OF AREA A

FRONT VIEW

GRAPHIC #1 **<END>** g01091359

8X-0026 GUARD GP-POWER TRAIN–TRANSMISSION

S/N: 4421-UP

PART OF 245-8813 INSTALLATION AR-FIELD

SMCS-7153 **i02116833**

NOTE	REF NO	GRAPHIC REF	PART NUMBER	QTY	PART NAME 1 2 3 4 5 6 (PRODUCT LEVEL)	SEE PAGE
	1	1	**8X-0725**	1	GUARD	
	2	1	**8X-0726**	1	GUARD	

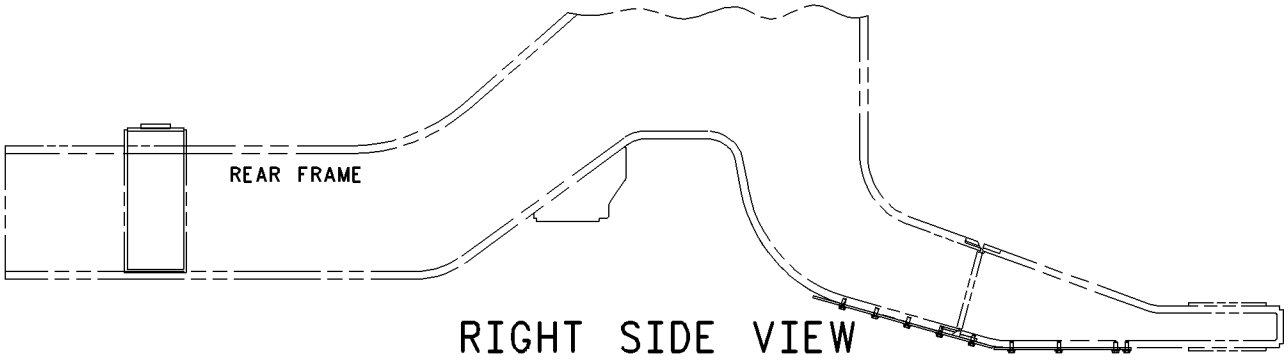

RIGHT SIDE VIEW

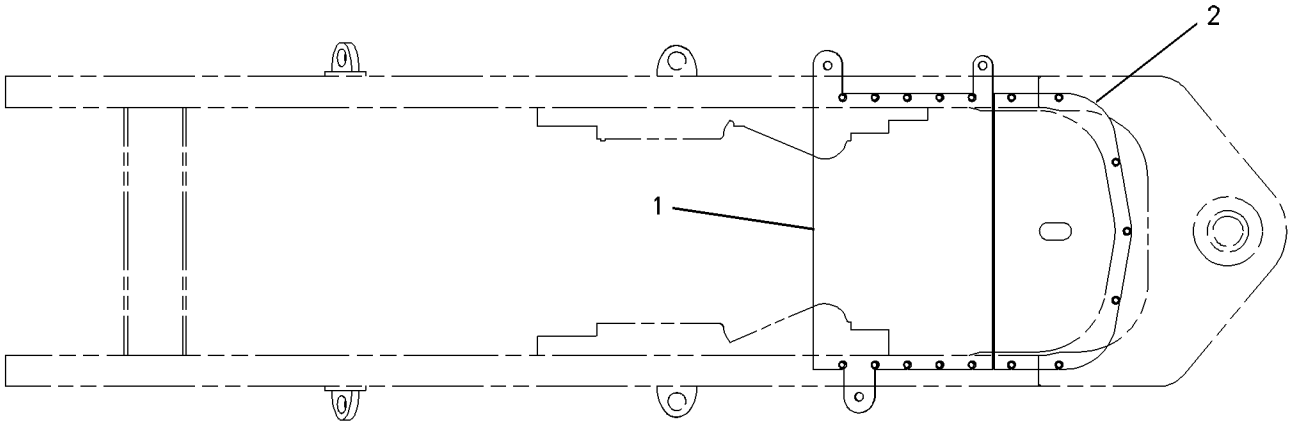

BOTTOM VIEW

GRAPHIC #1 **<END>** g00949735

FRAME AND BODY

249-6778 GUARD GP-RADIATOR

S/N: 4421-UP

PART OF 245-8812 CHASSIS AR-REAR

SMCS-7155 **i02282368**

NOTE	REF NO	GRAPHIC REF	PART NUMBER	QTY	PART NAME 1 2 3 4 5 6 (PRODUCT LEVEL)	SEE PAGE
	1	1	**8B-9840**	10	SPACER	
	2	1	**132-3514**	2	BRACKET AS	
	3	1	**141-7981**	6	TUBE	
	4	1	**249-6779**	1	GUARD AS	
	5	1	**249-6783**	1	COVER AS	
Y	6	1	**249-6790**	1	COVER GP-ACCESS (RADIATOR)	509
	7	1	**249-6848**	1	ANGLE	
	8	1	**249-6853**	2	COVER	
	9	1	**249-6858**	1	BAFFLE	
	10	1	**249-6859**	1	BAFFLE	
	11	1	**249-6860**	1	BAFFLE	
	12	1	**249-6861**	1	BAFFLE	
	13	1	**249-6862**	1	BAFFLE	
	14	1	**249-6863**	1	BAFFLE	
	15	1	**5P-1076**	23	WASHER-HARD (13.5X30X4-MM THK)	
	16	1	**7X-0515**	8	WASHER-HARD (17X35X5-MM THK)	
M	17	1	**7X-2489**	10	BOLT (M24X3X100-MM)	
M	18	1	**7X-2565**	6	BOLT (M20X2.5X100-MM)	
	19	1	**8T-4121**	4	WASHER-HARD (11X21X2.5-MM THK)	
M	20	1	**8T-4136**	22	BOLT (M10X1.5X25-MM)	
M	21	1	**8T-4137**	4	BOLT (M10X1.5X20-MM)	
M	22	1	**8T-4139**	15	BOLT (M12X1.75X30-MM)	
M	23	1	**8T-4195**	8	BOLT (M10X1.5X30-MM)	
	24	1	**8T-4222**	30	WASHER-PLATED (11X32X2.5-MM THK)	
M	25	1	**8T-4779**	8	BOLT (M16X2X35-MM)	
	26	1	**6I-4225**	6	SPACER (4.5-MM THK)	
M	27	1	**8T-6868**	8	BOLT (M12X1.75X80-MM)	

M-METRIC PART
Y-SEPARATE ILLUSTRATION

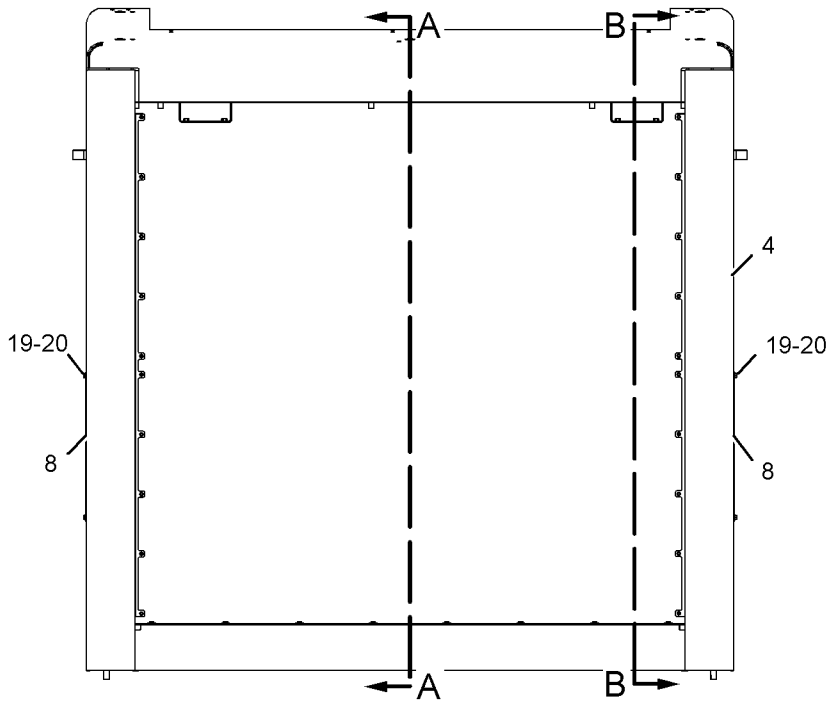

REAR VIEW

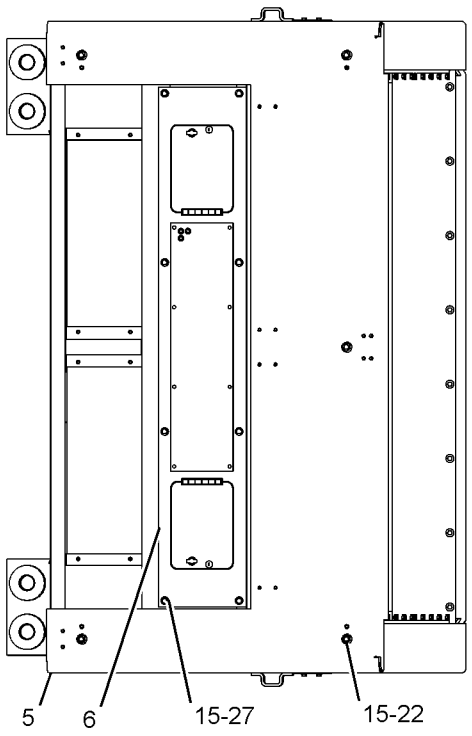

FWD

TOP VIEW

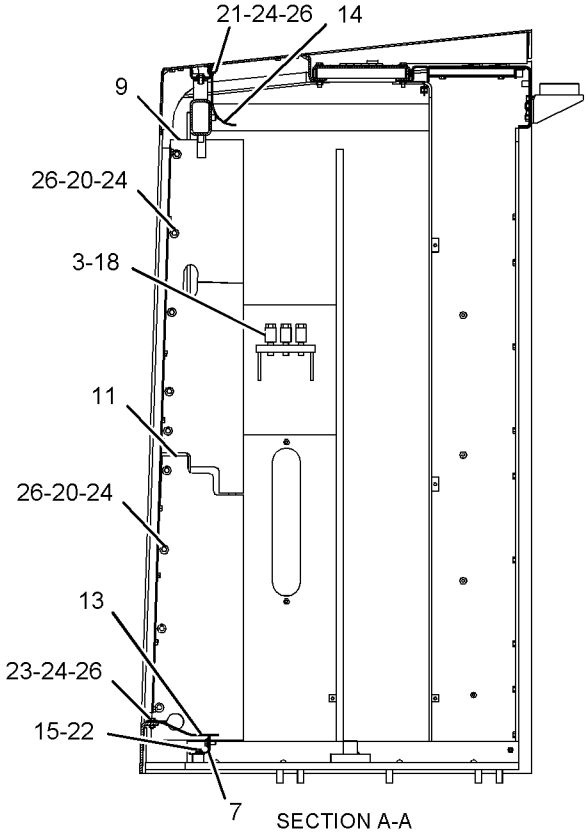

SECTION A-A

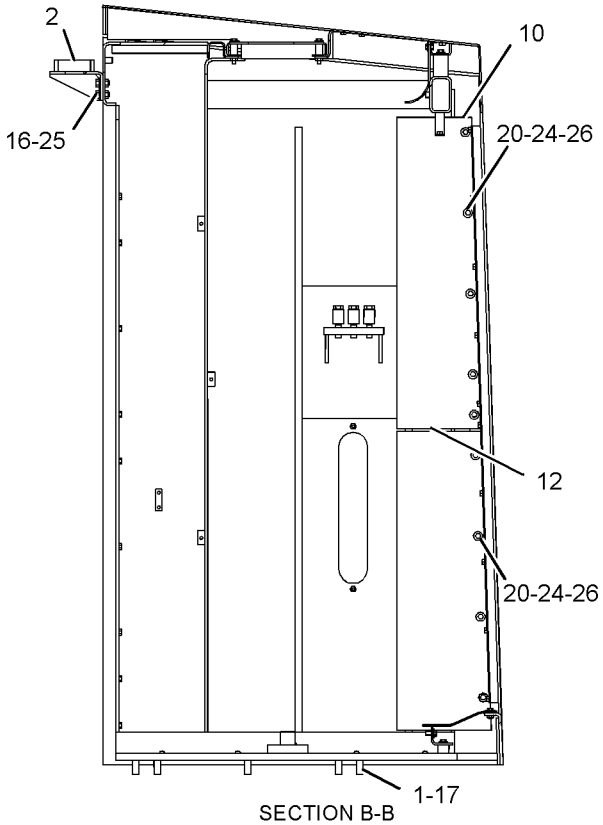

SECTION B-B

GRAPHIC #1 **<END>** g01145736

FRAME AND BODY

8X-0029 HITCH GP-ARTICULATING

S/N: 4421-UP

PART OF 245-8812 CHASSIS AR-REAR

SMCS-7057, 7100 **i01943364**

NOTE	REF NO	GRAPHIC REF	PART NUMBER	QTY	PART NAME 1 2 3 4 5 6 (PRODUCT LEVEL)	SEE PAGE
	1	1	**8X-0146**	1	BUSHING-TERMINAL	
M	2	1	**6V-9667**	6	BOLT (M20X2.5X100-MM)	
	3	1	**8T-4123**	20	WASHER-PLATED (22X35X3.5-MM THK)	
M	4	1	**6V-5845**	2	BOLT (M20X2.5X70-MM)	
	5	1	**8X-0145**	1	COVER	
	6	1	**8X-0149**	1	PIN	
B	7	1	**8X-0148**	1	SHIM PACK (INCLUDES 27-SHIMS)	
	8	1	**135-6104**	1	PLATE-LOCK	
	9	1	**8T-4167**	8	WASHER-HARD (26X44X4-MM THK)	
M	10	1	**6V-8132**	8	BOLT (M24X3X120-MM)	
	11	1	**8X-0136**	1	SPACER	
	12	1	**136-4437**	1	SPACER	
	13	1	**8X-0139**	1	PIN	
CM	14	1	**6V-9167**	12	BOLT (M20X2.5X140-MM)	
B	15	1	**134-5788**	1	SHIM PACK (INCLUDES 27-SHIMS)	
	16	1	**4D-0514**	2	PLUG-PIPE	

B-USE AS REQUIRED
C-CHANGE FROM PREVIOUS TYPE
M-METRIC PART

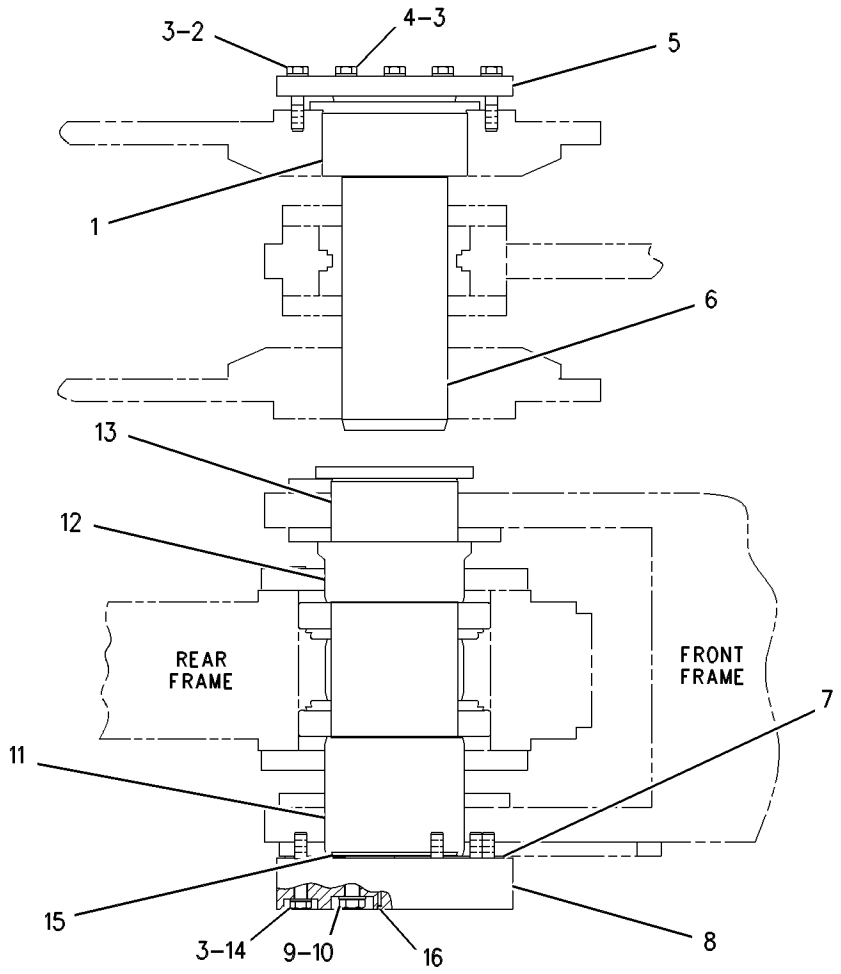

RIGHT SIDE VIEW

GRAPHIC #1 **<END>** g00286916

FRAME AND BODY

249-7166 HOOD & GUARD GP

S/N: 4421-UP

PART OF 245-8812 CHASSIS AR-REAR

SMCS-7251 **i02302366**

NOTE	REF NO	GRAPHIC REF	PART NUMBER	QTY	PART NAME 1 2 3 4 5 6 (PRODUCT LEVEL)	SEE PAGE
	1	1,2,3	**3T-7857**	18	PLUG-BUTTON	
	2	1,3	**4V-0661**	14	MOUNT	
	3	1,2	**5B-2183**	18	NUT-JAM (9/16-18-THD)	
	4	1,2,3	**246-2641**	1	PADLOCK GP	
					(INCLUDES KEY)	
	5	1	**6T-6080**	24	MOUNT-RUBBER	
	6	1,3	**6W-1594**	14	PLUG	
	7	2,3	**7J-5925**	12	PIN-COTTER	
	8	1,3	**8R-0126**	14	WASHER (12.2X50X3-MM THK)	
	9	1,2	**8T-1578**	9	PAWL	
	10	1	**8X-0674**	12	WASHER (22X100X10-MM THK)	
	11	2	**8X-3910**	1	GRATE AS (HOOD TOP, CENTER)	
	12	2	**264-5048**	2	CROSSMEMBER AS	
					(EACH INCLUDES)	
M		2	**8T-3490**	8	NUT-WELD (M10X1.5-THD)	
		2	**8X-3178**	2	PLATE	
	13	2	**8X-4522**	2	SUPPORT AS	
					(EACH INCLUDES)	
M		2	**8T-3490**	4	NUT-WELD (M10X1.5-THD)	
	14	2	**8X-4669**	1	CROSSMEMBER AS	
M		2	**8T-3490**	8	NUT-WELD (M10X1.5-THD)	
	15	2	**8X-4845**	1	DOOR AS-ACCESS (HOOD TOP, FRONT, LH)	
		2	**8X-3869**	2	HINGE	
		2	**8Y-6368**	1	PAN-MOUNT	
	16	2	**8X-4855**	1	DOOR AS-ACCESS (HOOD TOP, FRONT, RH)	
		2	**8X-3869**	2	HINGE	
	17	2	**8X-5340**	2	ROD AS	
					(EACH INCLUDES)	
		2	**2D-6416**	2	WASHER (0.438X1.25X0.12-IN THK)	
	18	1	**264-5049**	1	COLUMN AS (FRONT, RH)	
M		1	**8T-3490**	40	NUT-WELD (M10X1.5-THD)	
		1	**9R-2613**	2	BOSS-WELD (M10X1.5X25-MM OAL)	
	19	3	**8X-5353**	8	ROD AS	
					(EACH INCLUDES)	
		3	**2D-6416**	2	WASHER (0.438X1.25X0.12-IN THK)	
	20	3	**264-5050**	1	COLUMN AS (FRONT, LH)	
					(EACH INCLUDES)	
M		3	**8T-3490**	27	NUT-WELD (M10X1.5-THD)	
		3	**113-9064**	2	BRACKET AS	
	21	3	**259-3030**	1	COLUMN AS (CENTER, LH)	
M		3	**8T-3490**	30	NUT-WELD (M10X1.5-THD)	
		3	**113-9064**	2	BRACKET AS	
	22	1	**8X-5754**	1	COLUMN AS (CENTER, RH)	
M		1	**8T-3490**	31	NUT-WELD (M10X1.5-THD)	
	23	1,3	**8X-5769**	6	ANGLE	
	24	1	**8X-5770**	2	ANGLE (LOWER)	
	25	1	**8X-5771**	2	ANGLE (UPPER)	
	26	3	**8X-5774**	1	BRACKET AS	
	27	1	**8X-5775**	1	BRACKET AS	
	28	3	**8X-5776**	1	BRACKET AS	
	29	1	**8X-5777**	1	BRACKET AS	
	30	2	**8X-6662**	1	CHANNEL AS	
		2	**4B-1021**	4	SPACER	
M		2	**8T-3490**	8	NUT-WELD (M10X1.5-THD)	
	31	3	**8X-7611**	1	PLATE	
	32	1,2	**8Y-4000**	9	LATCH AS (T-BAR, COMPARTMENT)	

249-7166 **HOOD & GUARD GP** *(contd.)* **i02302366**

NOTE	REF NO	GRAPHIC REF	PART NUMBER	QTY	PART NAME 1 2 3 4 5 6 (PRODUCT LEVEL)	SEE PAGE
	33	1	**101-3327**	1	PANEL (RH)	
	34	3	**101-3328**	1	PANEL (LH)	
	35	1,3	**101-3329**	2	PANEL	
	36	1,3	**113-5092**	2	PANEL AS-ACCESS (HOOD SIDE, UPPER, FRONT)	
	37	1	**113-5093**	1	PANEL AS-ACCESS (HOOD SIDE, LOWER, FRONT, RH)	
	38	3	**113-5094**	1	PANEL AS-ACCESS (HOOD SIDE, LOWER, FRONT, LH)	
	39	1	**113-5241**	8	ANGLE	
	40	2	**131-3944**	2	GRATE AS (HOOD TOP, RH FRONT, LH REAR)	
	41	2	**131-3945**	2	GRATE AS (HOOD TOP, LH FRONT, RH REAR)	
	42	2	**131-3946**	2	GRATE AS (HOOD TOP, CENTER, FRONT/REAR)	
	43	2	**138-1436**	2	BRACKET AS (HOOD TOP)	
					(EACH INCLUDES)	
M		2	**8T-3490**	8	NUT-WELD (M10X1.5-THD)	
	44	2	**138-1437**	4	SUPPORT AS	
					(EACH INCLUDES)	
M		2	**8T-3490**	4	NUT-WELD (M10X1.5-THD)	
	45	3	**138-1440**	2	DOOR AS-ACCESS (HOOD SIDE, UPPER, LH) (LH)	
					(EACH INCLUDES)	
		3	**8Y-6368**	1	PAN-MOUNT	
	46	3	**138-1441**	2	DOOR AS-ACCESS (HOOD SIDE, LOWER, LH) (LH)	
					(EACH INCLUDES)	
		3	**8Y-6368**	1	PAN-MOUNT	
	47	1	**138-1442**	2	DOOR AS-ACCESS (HOOD SIDE, LOWER, LH) (RH)	
					(EACH INCLUDES)	
		1	**8Y-6368**	1	PAN-MOUNT	
	48	1	**138-1443**	2	DOOR AS-ACCESS (HOOD SIDE, UPPER, RH) (RH)	
					(EACH INCLUDES)	
		1	**8Y-6368**	1	PAN-MOUNT	
	49	1	**138-1882**	1	PLATE AS	
M		1	**7X-7962**	4	BOSS-WELD (M10X1.5-MM-THD)	
M		1	**8T-3490**	8	NUT-WELD (M10X1.5-THD)	
	50	2	**263-8867**	1	CHANNEL AS (FRONT)	
		2	**7I-5922**	2	BLOCK	
	51	1	**141-6518**	20	SPACER (13.5X30X10-MM THK)	
	52	3	**153-9510**	1	COLUMN AS (REAR, LH)	
		3	**5G-6973**	3	LUG	
M		3	**8T-3490**	20	NUT-WELD (M10X1.5-THD)	
M		3	**8T-3597**	5	NUT-WELD (M12X1.75-THD)	
		3	**9R-2613**	2	BOSS-WELD (M10X1.5X25-MM OAL)	
	53	1	**153-9512**	2	PLATE	
	54	2	**249-7163**	1	CHANNEL AS (REAR, RH) (RH)	
M		2	**8T-3490**	16	NUT-WELD (M10X1.5-THD)	
M		2	**8T-3597**	8	NUT-WELD (M12X1.75-THD)	
	55	2	**249-7165**	1	CHANNEL AS (REAR, LH)	
M		2	**8T-3490**	17	NUT-WELD (M10X1.5-THD)	
M		2	**8T-3597**	8	NUT-WELD (M12X1.75-THD)	
		2	**9R-2613**	2	BOSS-WELD (M10X1.5X25-MM OAL)	
	56	2	**250-6206**	1	SHEET AS (RH)	
	57	2	**250-6208**	1	SHEET AS	
	58	1	**250-6234**	1	COLUMN AS (REAR, RH) (RH)	
		1	**5G-6973**	4	LUG	
M		1	**8T-3490**	20	NUT-WELD (M10X1.5-THD)	
M		1	**8T-3597**	5	NUT-WELD (M12X1.75-THD)	
		1	**9R-2613**	1	BOSS-WELD (M10X1.5X25-MM OAL)	
	59	3	**4H-2558**	8	GROMMET	
	60	3	**4M-7470**	8	GROMMET	
	61	1,2	**5P-1076**	36	WASHER-HARD (13.5X30X4-MM THK)	
M	62	1	**7X-2532**	12	BOLT (M20X2.5X130-MM)	
M	63	1,3	**7X-2553**	24	BOLT (M16X2X40-MM)	

249-7166 **HOOD & GUARD GP** *(contd.)* **i02302366**

NOTE	REF NO	GRAPHIC REF	PART NUMBER	QTY	PART NAME 1 2 3 4 5 6 (PRODUCT LEVEL)	SEE PAGE
	64	1,2,3	**7X-7729**	192	WASHER (11X25X3-MM THK)	
	65	1,2,3	**8T-4121**	39	WASHER-HARD (11X21X2.5-MM THK)	
M	66	1,3	**8T-4122**	24	WASHER-HARD (17X32X3.5-MM THK)	
M	67	1	**8T-4131**	12	NUT (M20X2.5-THD)	
M	68	1,2,3	**8T-4133**	32	NUT (M10X1.15-THD)	
M	69	1,2,3	**8T-4136**	261	BOLT (M10X1.5X25-MM)	
M	70	2	**8T-4137**	6	BOLT (M10X1.5X20-MM)	
M	71	2	**8T-4139**	12	BOLT (M12X1.75X30-MM)	
M	72	1	**8T-4184**	20	BOLT (M12X1.75X45-MM)	
M	73	1,3	**8T-4195**	8	BOLT (M10X1.5X30-MM)	
	74	2,3	**8T-4222**	56	WASHER-PLATED (11X32X2.5-MM THK)	
M	75	2	**8T-4910**	4	BOLT (M12X1.75X60-MM)	
	76	1	**8T-5439**	12	WASHER (21.5X45X6-MM THK)	
BD	77	1,3	**5P-7483**		SEAL	
	78	1,3	**1D-4164**	2	HANDHOLD	

B-USE AS REQUIRED
D-ORDER BY THE METER
M-METRIC PART

249-7166 **HOOD & GUARD GP** *(contd.)* **i02302366**

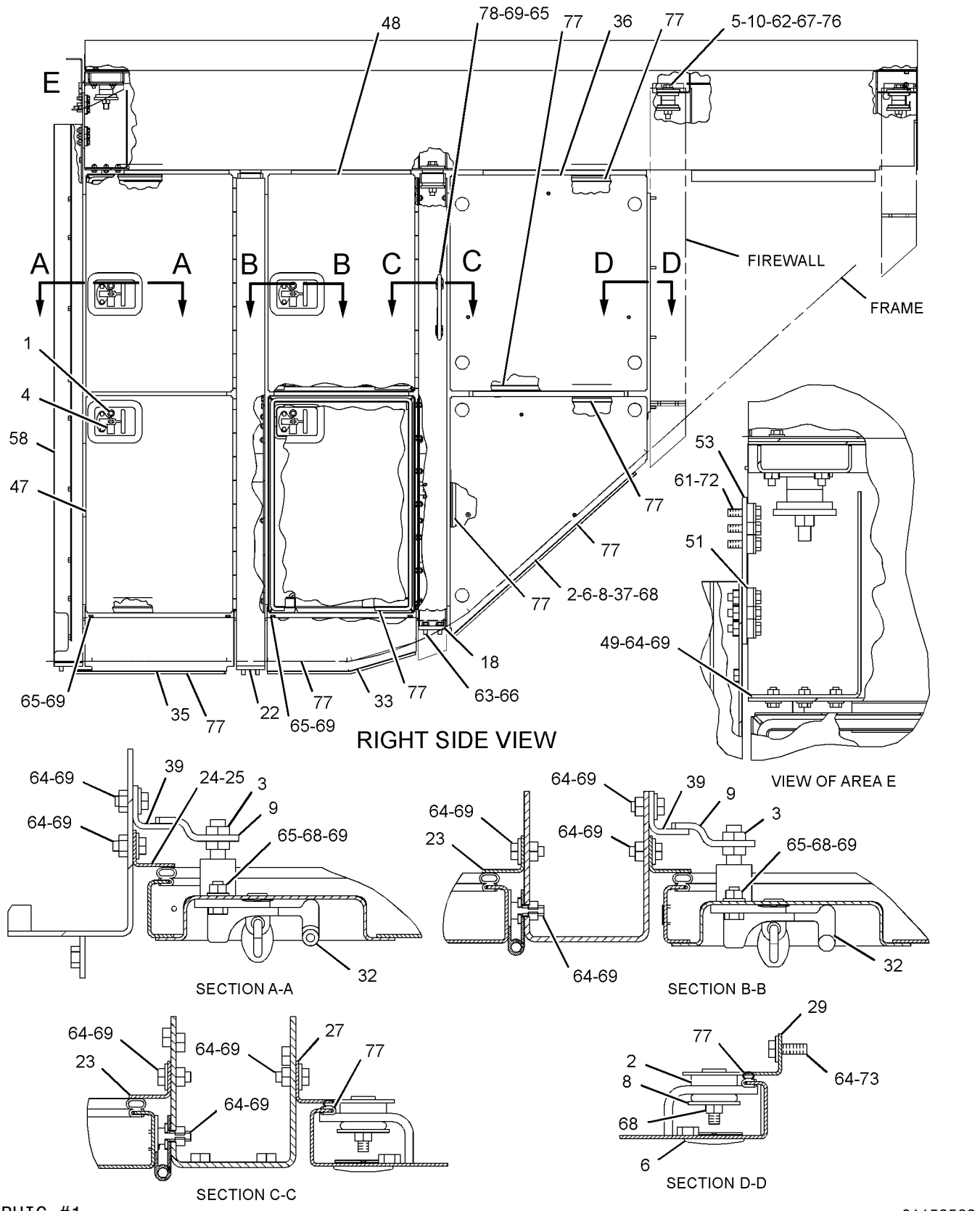

GRAPHIC #1

g01153563

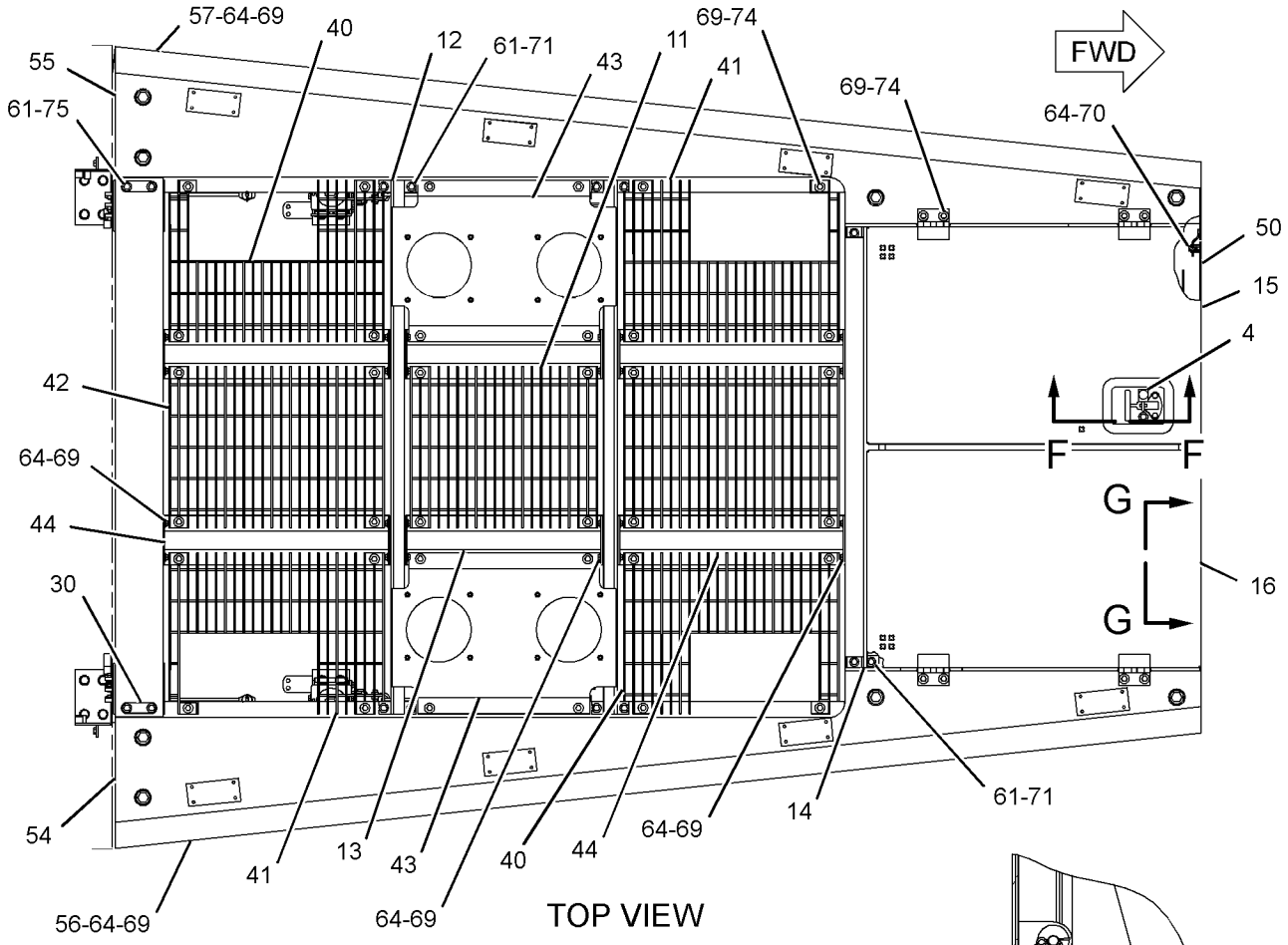

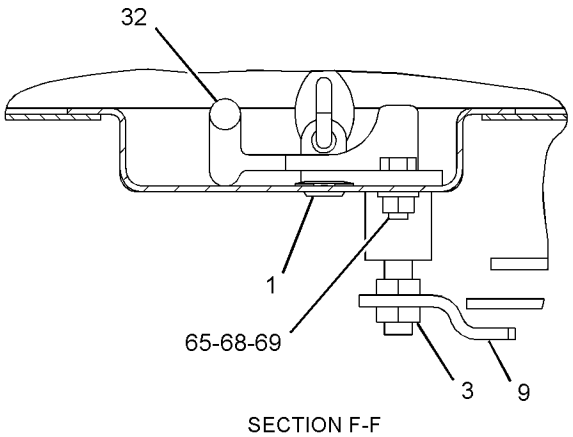

SECTION F-F

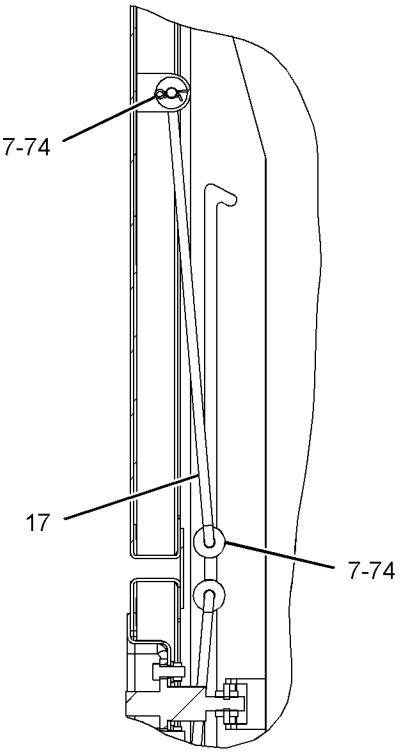

SECTION G-G

GRAPHIC #2

g01153564

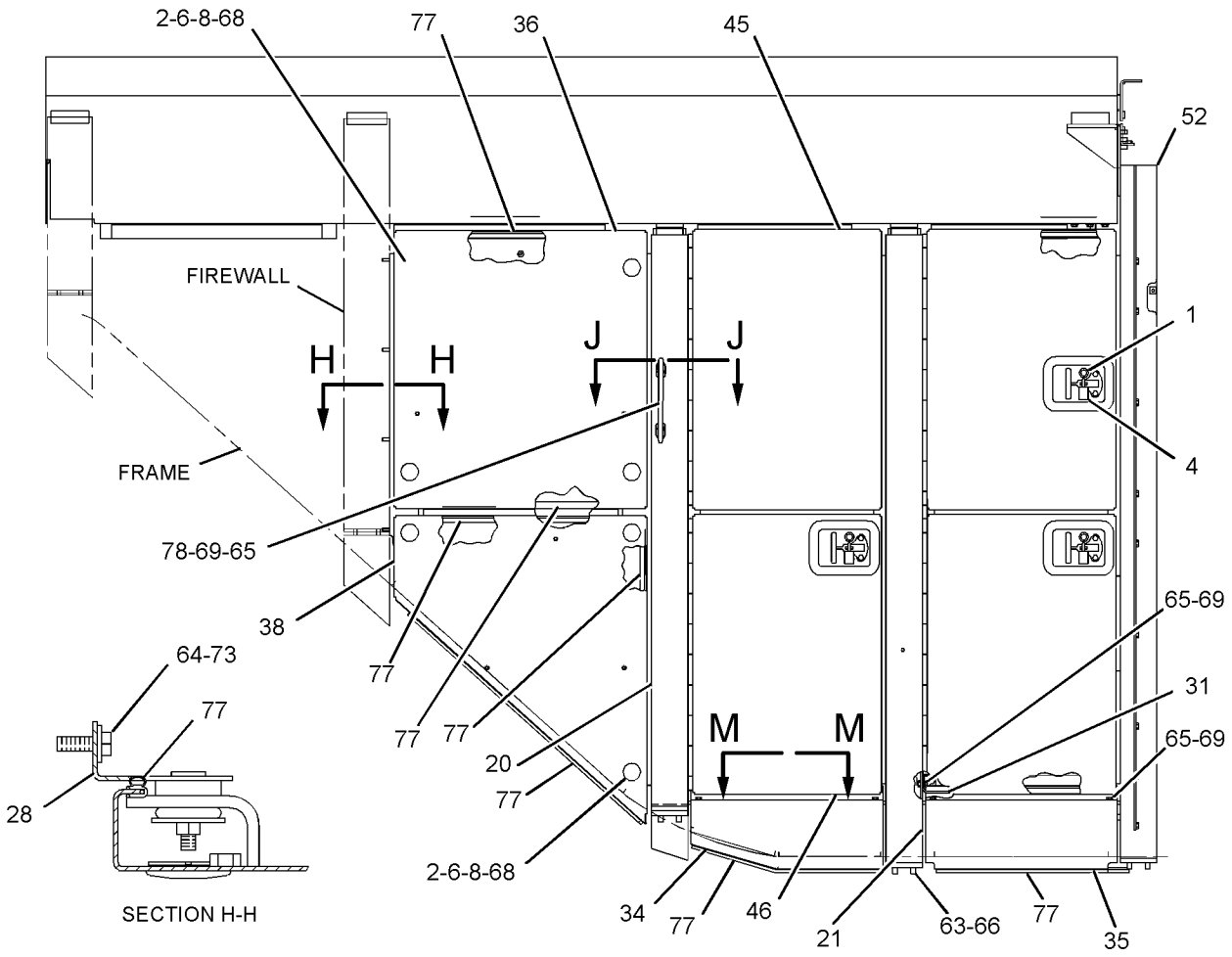

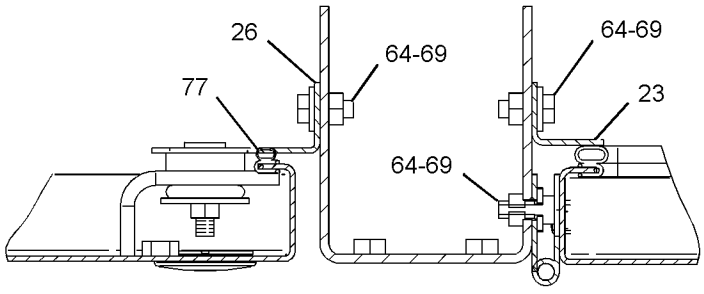

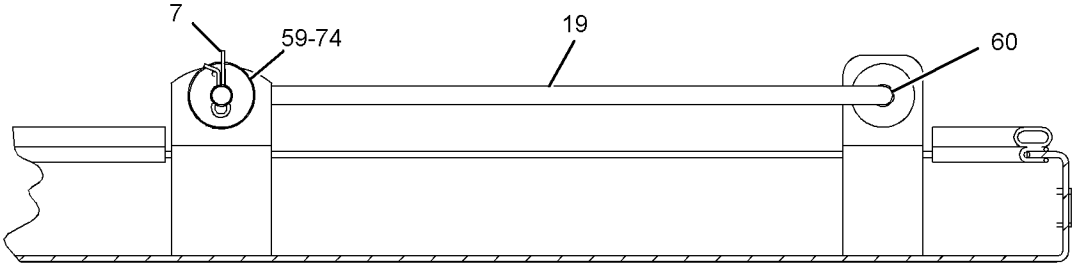

GRAPHIC #3

<END>

g01153565

FRAME AND BODY

264-2280 LIFTING GP-MACHINE

S/N: 4421-UP

PART OF 245-8813 INSTALLATION AR-FIELD

SMCS-1122 **i02285780**

NOTE	PART NUMBER	QTY	PART NAME 1 2 3 4 5 6 (PRODUCT LEVEL)	SEE PAGE
M	**7X-2553**	2	BOLT (M16X2X40-MM)	
M	**8T-4648**	4	BOLT (M12X1.75X70-MM)	
M	**8T-4956**	2	BOLT (M12X1.75X35-MM)	
	138-7573	6	BRACKET-LINK	
	138-7575	2	BRACKET-LINK	
	1U-9804	10	LINK GP	
M	**8T-4244**	4	NUT (M12X1.75-THD)	
	9X-8257	2	WASHER (17.5X30X3.5-MM THK)	
	8T-4223	10	WASHER-HARD (13.5X25.5X3-MM THK)	

M-METRIC PART

<END>

245-1566 LINES GP-AUTOMATIC LUBRICATION–

LOADER FRAME

S/N: 4421-UP

PART OF 246-6277 ARM AR-LIFT

AN ATTACHMENT

SMCS-7510, 7540 **i02282496**

NOTE	REF NO	GRAPHIC REF	PART NUMBER	QTY	PART NAME 1 2 3 4 5 6 (PRODUCT LEVEL)	SEE PAGE
	1	1,2	**5T-5012**	4	CAP-PROTECTION	
I	2	1,2	**8W-0266**	2	HOSE AS	
I	3	1,2	**8X-3497**	2	HOSE AS	
	4	1	**9X-6772**	4	STRAP-CABLE	
	5	1,2	**114-6060**	2	TUBE AS	
	6	1,2	**118-9901**	8	SPACER (12X20X10-MM THK)	
Y	7	1,2	**141-2107**	2	VALVE GP-LUBE DISTRIBUTION (2-INJECTOR)	598
I	8	1,2	**160-5118**	2	HOSE AS	
I	9	1,2	**172-4062**	2	HOSE AS	
I	10	1	**183-3800**	1	HOSE AS	
	11	2	**188-3387**	1	GUARD (RH)	
	12	1,2	**188-3388**	1	GUARD (LH)	
I	13	1	**250-4486**	2	HOSE AS	
	14	1,2	**250-4510**	2	PLATE AS	
	15	1,2	**250-4512**	2	PLATE AS	
I	16	1	**250-4519**	4	HOSE AS	
I	17	1	**250-4520**	2	HOSE AS	
I	18	1,2	**250-4530**	2	HOSE AS	
I	19	1	**250-4531**	1	HOSE AS	
I	20	2	**250-4532**	2	HOSE AS	
	21	2	**269-9376**	1	GUARD AS	
		2	**250-4533**	1	GUARD	
	22	1	**269-9377**	1	GUARD AS	
		1	**250-4533**	1	GUARD	
	23	2	**269-9378**	1	GUARD AS	
		2	**250-4535**	1	GUARD	
	24	1	**269-9379**	1	GUARD AS	
		1	**250-4534**	1	GUARD	
	25	1	*148-8316*	4	CONNECTOR AS	
					(EACH INCLUDES)	
		1	**3J-7354**	1	SEAL-O-RING	
		1	**4J-5477**	1	SEAL-O-RING	
		1	**6V-8647**	1	CONNECTOR	
	26	1,2	*148-8320*	4	CONNECTOR AS	
					(EACH INCLUDES)	
		1,2	**4J-5477**	1	SEAL-O-RING	
		1,2	**8C-6865**	1	CONNECTOR	
	27	1	*148-8340*	2	CONNECTOR AS	
					(EACH INCLUDES)	
		1	**3K-0360**	1	SEAL-O-RING	
		1	**6V-8398**	1	SEAL-O-RING	
		1	**6V-8639**	1	CONNECTOR	
	28	1,2	*148-8351*	2	ELBOW AS	
					(EACH INCLUDES)	
		1,2	**4J-5477**	1	SEAL-O-RING	
		1,2	**6V-9849**	1	ELBOW (SWIVEL)	
	29	1	**148-8354**	2	ELBOW AS	
					(EACH INCLUDES)	
		1	**3K-0360**	1	SEAL-O-RING	
		1	**6V-8398**	1	SEAL-O-RING	
		1	**6V-9002**	1	ELBOW	
	30	1	*148-8364*	2	ELBOW AS	
					(EACH INCLUDES)	
		1	**3K-0360**	1	SEAL-O-RING	

245-1566 **LINES GP-AUTOMATIC LUBRICATION** *(contd.)* **i02282496**

NOTE	REF NO	GRAPHIC REF	PART NUMBER	QTY	PART NAME 1 2 3 4 5 6 (PRODUCT LEVEL)	SEE PAGE
		1	**6V-8398**	1	SEAL-O-RING	
		1	**6V-8625**	1	ELBOW	
	31	1,2	*148-8369*	8	ELBOW AS	
					(EACH INCLUDES)	
		1,2	**3J-7354**	1	SEAL-O-RING	
		1,2	**4J-5477**	1	SEAL-O-RING	
		1,2	**6V-8628**	1	ELBOW	
	32	1	*148-8385*	6	ELBOW AS	
					(EACH INCLUDES)	
		1	**3J-7354**	1	SEAL-O-RING	
		1	**4J-5477**	1	SEAL-O-RING	
		1	**6V-9000**	1	ELBOW	
	33	1	*148-8454*	2	TEE AS	
					(EACH INCLUDES)	
		1	**6V-8398**	3	SEAL-O-RING	
		1	**6V-8789**	1	TEE	
	34	1,2	*150-3067*	2	UNION AS	
					(EACH INCLUDES)	
		1,2	**4J-5477**	2	SEAL-O-RING	
		1,2	**6V-8729**	1	UNION	
M	35	1,2	**176-5311**	8	LOCKNUT (M16X2-THD)	
	36	1,2	**2T-2396**	2	ELBOW	
	37	1,2	**3J-5390**	2	PLUG	
	38	1,2	**4J-5477**	2	SEAL-O-RING	
	39	1	**4K-8864**	6	CLIP	
	40	1	**5K-4778**	2	CLIP	
	41	1,2	**6D-3479**	22	CLIP	
	42	1	**6V-1228**	2	CLIP	
	43	1,2	**6V-8398**	2	SEAL-O-RING	
	44	1,2	**7X-0492**	2	ELBOW	
M	45	1,2	**8T-1757**	4	NUT (M16X2-THD)	
	46	1,2	**8T-4121**	38	WASHER-HARD (11X21X2.5-MM THK)	
M	47	1	**8T-4137**	2	BOLT (M10X1.5X20-MM)	
M	48	1,2	**8T-4182**	2	BOLT (M10X1.5X45-MM)	
M	49	1,2	**8T-4184**	8	BOLT (M12X1.75X45-MM)	
M	50	1	**8T-4186**	4	BOLT (M10X1.5X40-MM)	
M	51	1,2	**8T-4191**	22	BOLT (M10X1.5X16-MM)	
M	52	1,2	**8T-4195**	8	BOLT (M10X1.5X30-MM)	
	53	1,2	**8T-4223**	8	WASHER-HARD (13.5X25.5X3-MM THK)	
M	54	1,2	**8T-6385**	12	BOLT (M16X2X180-MM)	
	55	1,2	**9X-8250**	18	CLIP	
	56	1,2	**9X-8257**	24	WASHER (17.5X30X3.5-MM THK)	

I-REFER TO HYDRAULIC INFORMATION SYSTEM
M-METRIC PART
Y-SEPARATE ILLUSTRATION

245-1566 LINES GP-AUTOMATIC LUBRICATION *(contd.)* i02282496

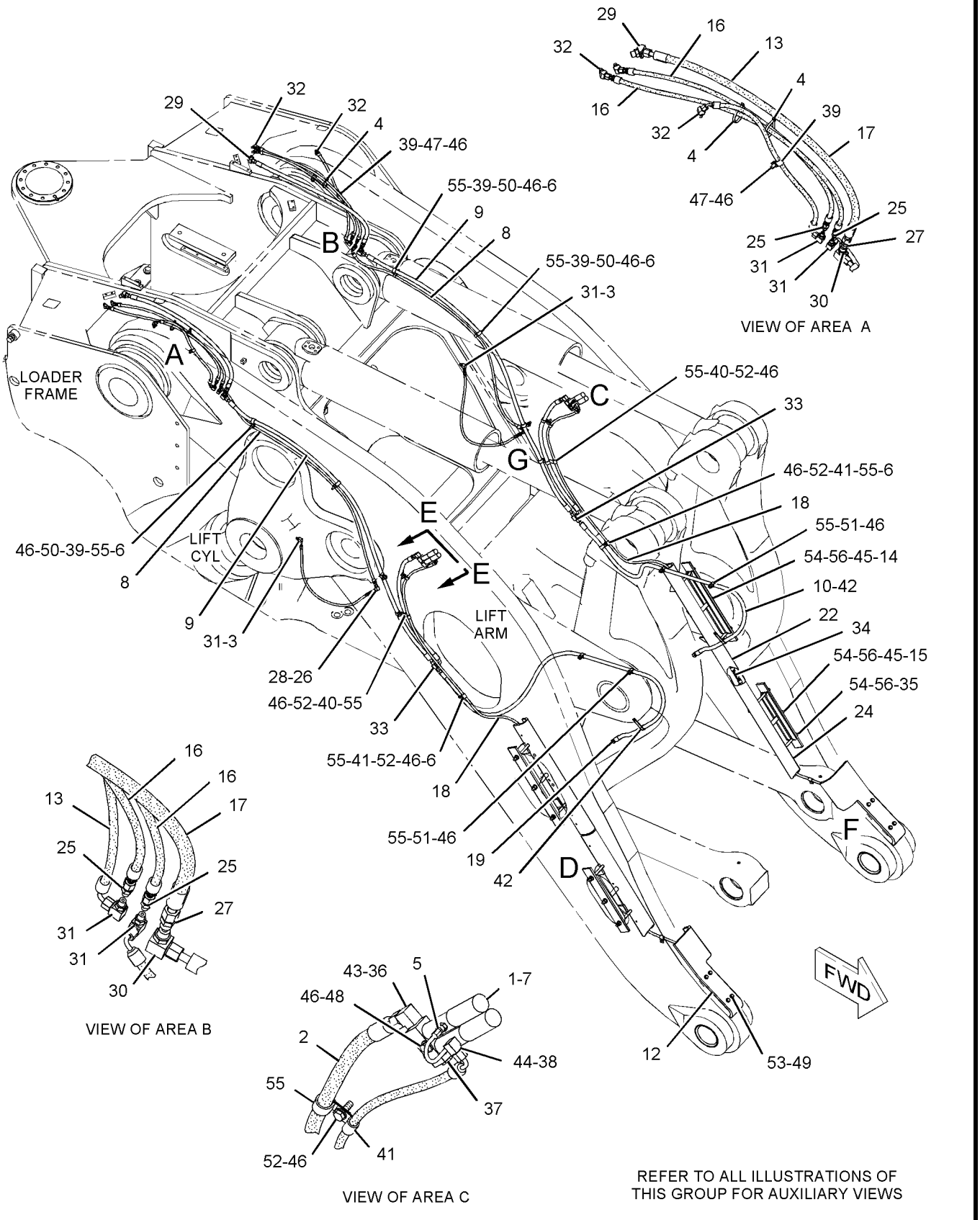

GRAPHIC #1 g01146657

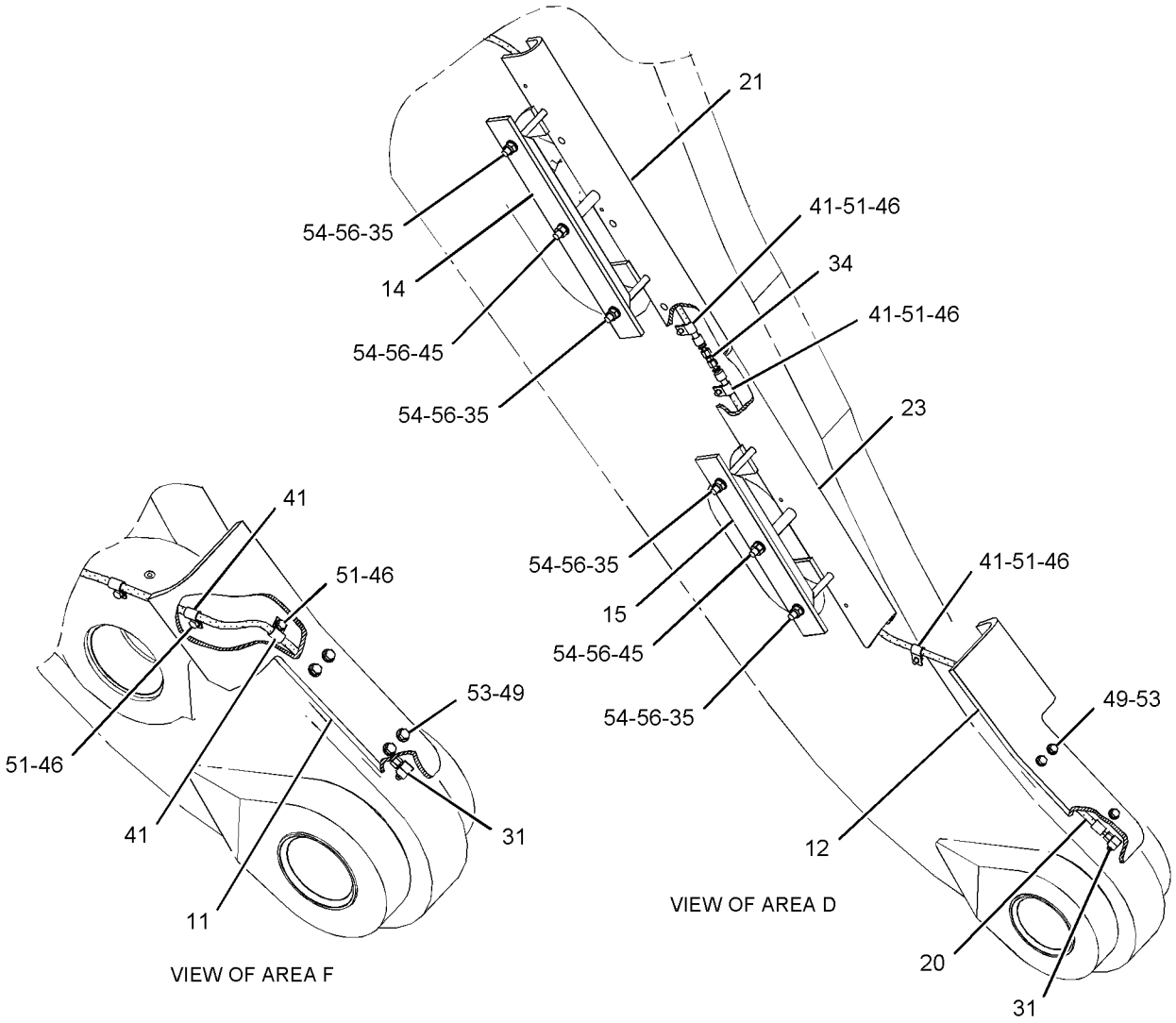

VIEW OF AREA F

VIEW OF AREA D

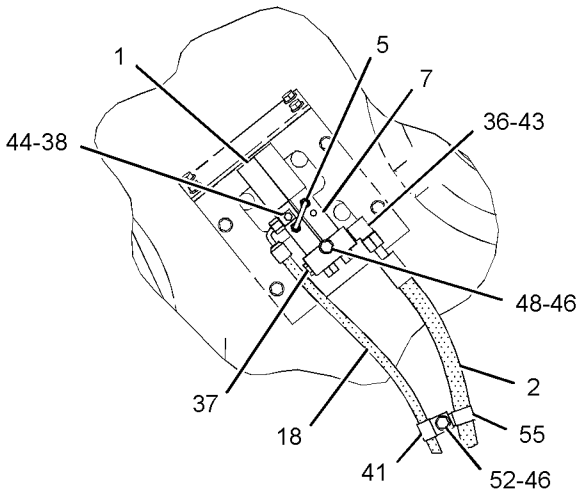

VIEW E-E

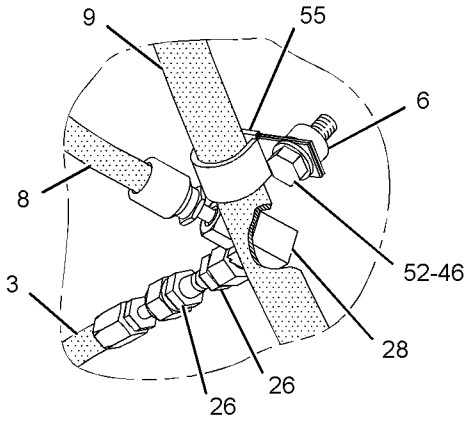

VIEW OF AREA G

GRAPHIC #2 **<END>** g01148685

245-1567 LINES GP-AUTOMATIC LUBRICATION–
LIFT CYLINDER
S/N: 4421-UP
PART OF 246-6277, 246-6278, 246-6279 ARM AR-LIFT
AN ATTACHMENT

SMCS-7510, 7540 **i02291139**

NOTE	REF NO	GRAPHIC REF	PART NUMBER	QTY	PART NAME 1 2 3 4 5 6 (PRODUCT LEVEL)	SEE PAGE
	1	1	**5T-5012**	8	CAP-PROTECTION	
	2	2	**5V-6103**	4	SPACER (14.27X22.23X70-MM THK)	
	3	2	**5V-9221**	4	SPACER (13.8X25X25-MM THK)	
	4	2	**7K-1181**	2	STRAP-CABLE	
Y	5	2	**8W-2597**	2	VALVE GP-LUBE DISTRIBUTION (4-INJECTOR) (RH, LH REAR BANKS)	597
	6	2	**8X-3182**	2	GUARD	
	7	2	**8X-3183**	2	GUARD AS	
					(EACH INCLUDES)	
M		2	**8T-3597**	1	NUT-WELD (M12X1.75-THD)	
	8	2	**8X-3489**	2	BLOCK	
I	9	2	**8X-3497**	2	HOSE AS	
	10	2	**9N-1216**	4	TUBE	
I	11	2	**250-4543**	2	HOSE AS	
	12	1	**250-4474**	2	GUARD AS	
					(EACH INCLUDES)	
M		1	**8T-3597**	1	NUT-WELD (M12X1.75-THD)	
I	13	1	**250-4475**	2	HOSE AS	
I	14	1	**250-4476**	2	HOSE AS	
	15	1	**250-4497**	2	PLATE	
	16	2	*148-8369*	2	ELBOW AS	
					(EACH INCLUDES)	
		2	**3J-7354**	1	SEAL-O-RING	
		2	**4J-5477**	1	SEAL-O-RING	
		2	**6V-8628**	1	ELBOW	
	17	2	*148-8385*	2	ELBOW AS	
					(EACH INCLUDES)	
		2	**3J-7354**	1	SEAL-O-RING	
		2	**4J-5477**	1	SEAL-O-RING	
		2	**6V-9000**	1	ELBOW	
	18	1	**2T-2396**	2	ELBOW	
	19	1	**2Y-1834**	2	CLIP	
	20	1	**3J-5390**	2	PLUG	
	21	1,2	**3J-7354**	4	SEAL-O-RING	
	22	1,2	**4J-5477**	10	SEAL-O-RING	
	23	2	**4K-8302**	4	CLIP	
	24	1,2	**5P-1076**	23	WASHER-HARD (13.5X30X4-MM THK)	
	25	2	**3S-8665**	4	CLIP	
	26	1	**6V-8398**	2	SEAL-O-RING	
	27	1	**6V-8647**	4	CONNECTOR	
	28	1,2	**7X-0492**	8	ELBOW	
	29	2	**112-9783**	2	ADAPTER	
	30	1,2	**8T-4121**	12	WASHER-HARD (11X21X2.5-MM THK)	
M	31	1	**8T-4133**	4	NUT (M10X1.15-THD)	
M	32	2	**8T-4136**	4	BOLT (M10X1.5X25-MM)	
M	33	1,2	**8T-4192**	10	BOLT (M12X1.75X25-MM)	
	34	2	**8T-4223**	1	WASHER-HARD (13.5X25.5X3-MM THK)	
M	35	2	**8T-4648**	6	BOLT (M12X1.75X70-MM)	
M	36	2	**8T-4910**	2	BOLT (M12X1.75X60-MM)	
M	37	2	**8T-5001**	6	BOLT (M12X1.75X130-MM)	
M	38	1	**8T-6466**	4	BOLT (M10X1.5X60-MM)	
	39	2	**9L-1366**	6	SPACER	
	40	2	**3K-0360**	2	SEAL-O-RING	

245-1567 **LINES GP-AUTOMATIC LUBRICATION** *(contd.)* **i02291139**

I-REFER TO HYDRAULIC INFORMATION SYSTEM
M-METRIC PART
Y-SEPARATE ILLUSTRATION

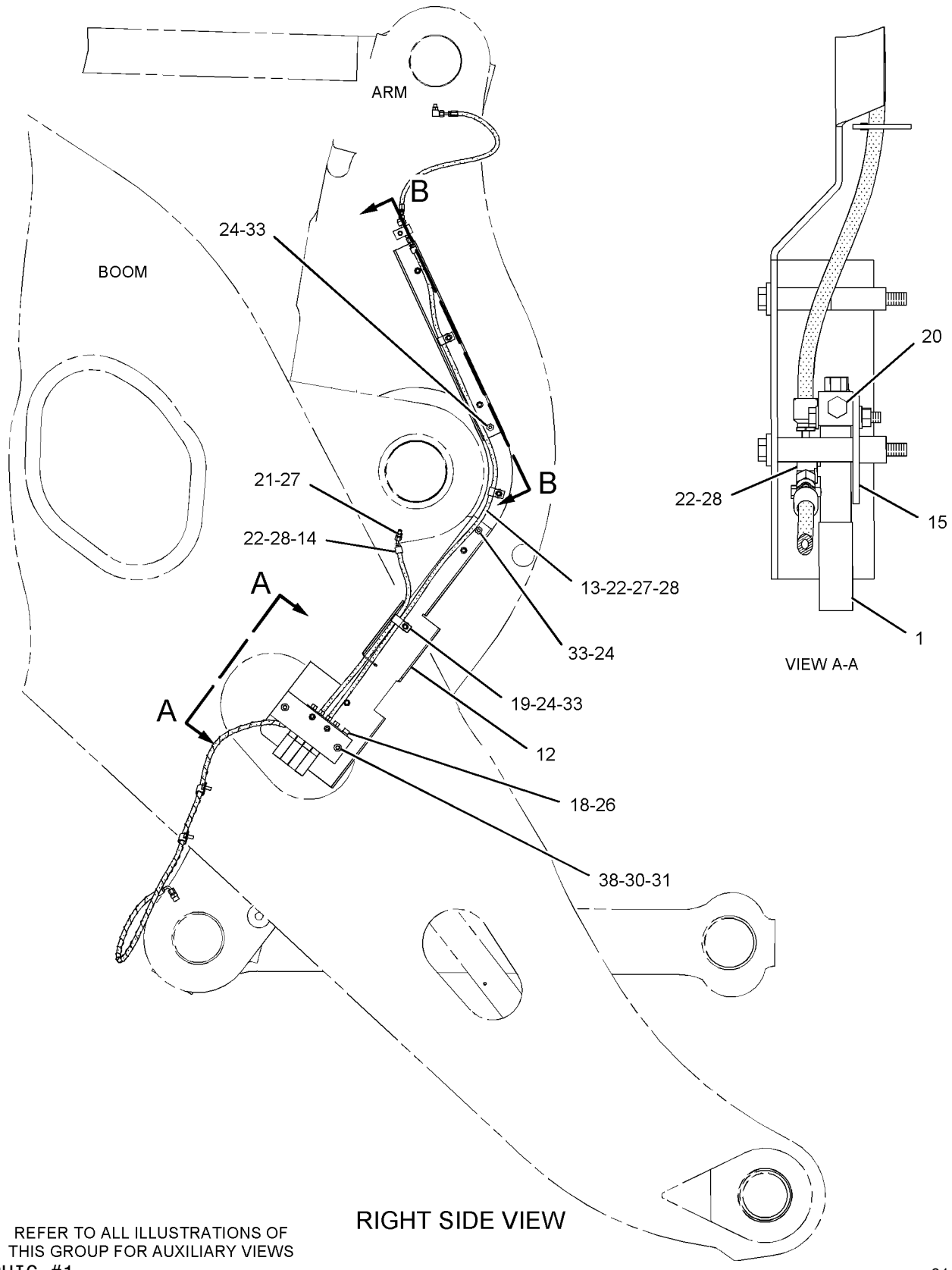

REFER TO ALL ILLUSTRATIONS OF
THIS GROUP FOR AUXILIARY VIEWS

GRAPHIC #1

g01149287

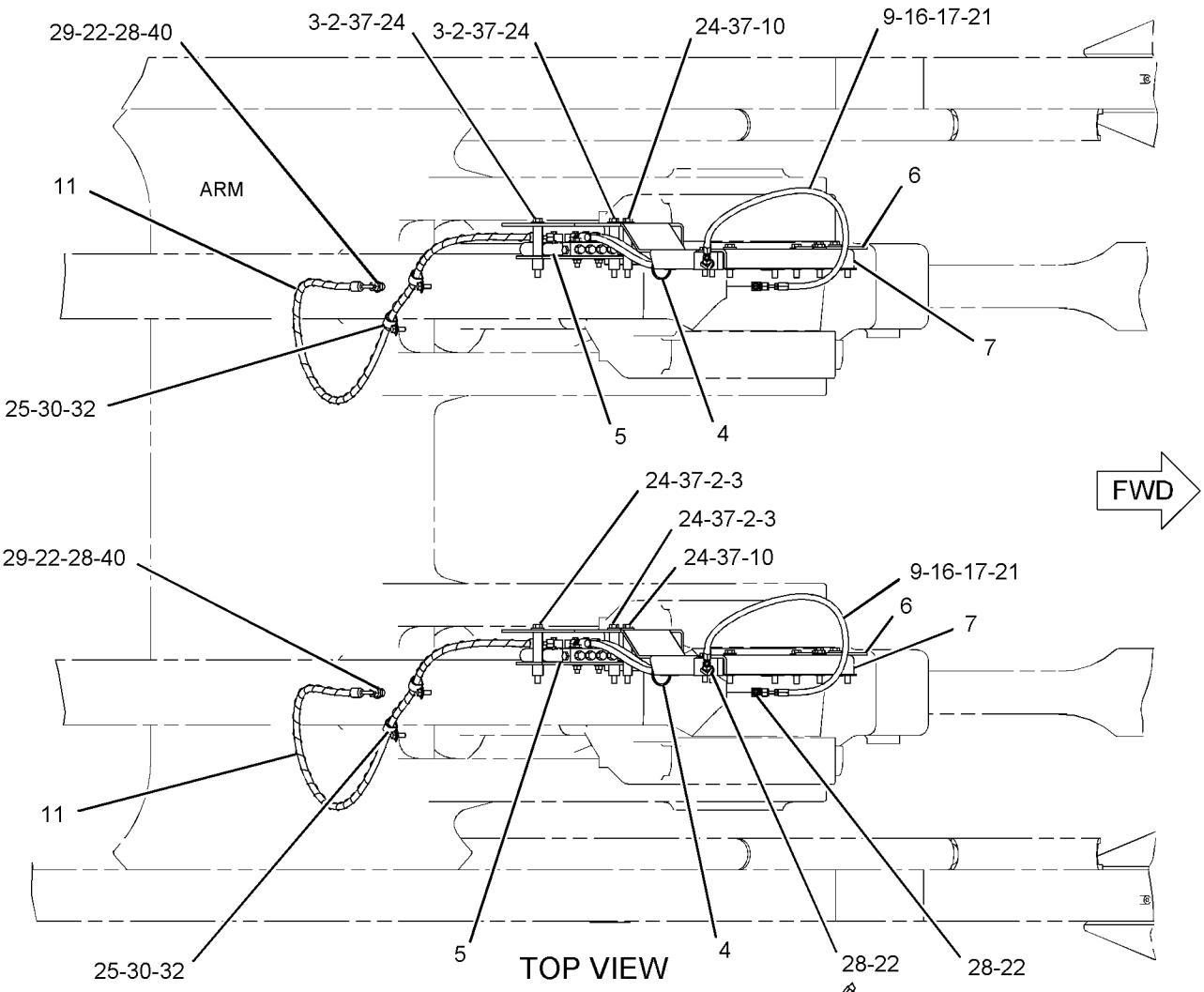

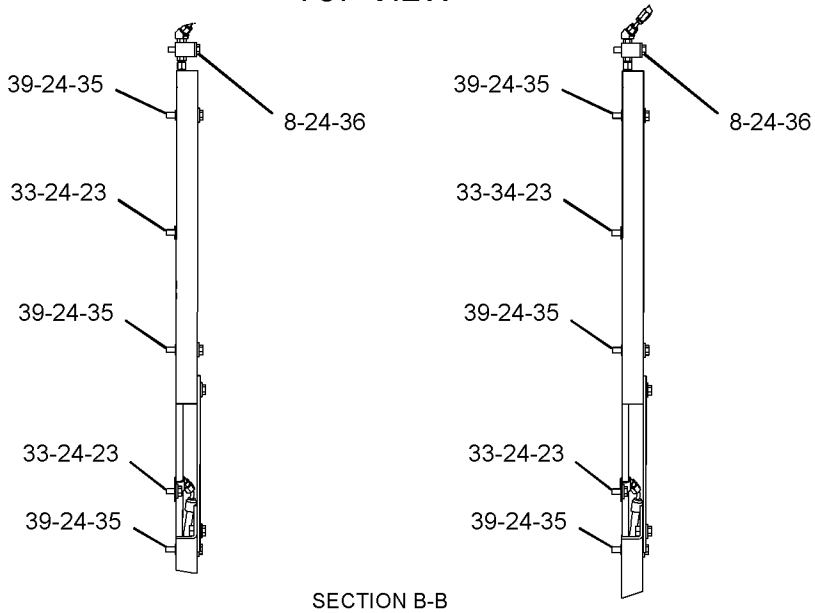

GRAPHIC #2

<END>

g01149682

245-1568 LINES GP-AUTOMATIC LUBRICATION–
TILT CYLINDER
S/N: 4421-UP
PART OF 246-6278 ARM AR-LIFT
AN ATTACHMENT

SMCS-7510, 7540 **i02287998**

NOTE	REF NO	GRAPHIC REF	PART NUMBER	QTY	PART NAME 1 2 3 4 5 6 (PRODUCT LEVEL)	SEE PAGE
	1	2,3	**5T-5012**	4	CAP-PROTECTION	
I	2	1	**8X-3497**	2	HOSE AS	
	3	1,3	**9X-6772**	4	STRAP-CABLE	
I	4	3	**105-4646**	1	HOSE AS	
	5	2,3	**114-6060**	2	TUBE AS	
Y	6	2,3	**141-2107**	2	VALVE GP-LUBE DISTRIBUTION (2-INJECTOR)	598
I	7	1	**159-5968**	1	HOSE AS	
I	8	2,3	**187-0858**	2	HOSE AS	
	9	2	**188-3387**	1	GUARD (RH)	
	10	2	**188-3388**	1	GUARD (LH)	
I	11	3	**250-4486**	2	HOSE AS	
	12	1,2	**250-4510**	2	PLATE AS	
					(EACH INCLUDES)	
		1,2	**6D-6433**	1	SPACER	
M		1,2	**8T-3597**	3	NUT-WELD (M12X1.75-THD)	
	13	1,2	**250-4512**	2	PLATE AS	
					(EACH INCLUDES)	
		1,2	**6D-6433**	1	SPACER	
M		1,2	**8T-3597**	3	NUT-WELD (M12X1.75-THD)	
I	14	3	**250-4519**	4	HOSE AS	
I	15	3	**250-4520**	2	HOSE AS	
I	16	1	**250-4523**	2	HOSE AS	
I	17	2,3	**250-4524**	2	HOSE AS	
I	18	1	**250-4525**	2	HOSE AS	
	19	2	**269-9372**	1	GUARD AS (RH)	
	20	1	**269-9373**	1	GUARD AS (LH)	
	21	2	**269-9374**	1	GUARD AS (RH)	
	22	1	**269-9375**	1	GUARD AS (LH)	
	23	3	*148-8316*	4	CONNECTOR AS	
					(EACH INCLUDES)	
		3	**3J-7354**	1	SEAL-O-RING	
		3	**4J-5477**	1	SEAL-O-RING	
		3	**6V-8647**	1	CONNECTOR	
	24	1,3	*148-8320*	4	CONNECTOR AS	
					(EACH INCLUDES)	
		1,3	**4J-5477**	1	SEAL-O-RING	
		1,3	**8C-6865**	1	CONNECTOR	
	25	3	*148-8340*	2	CONNECTOR AS	
					(EACH INCLUDES)	
		3	**3K-0360**	1	SEAL-O-RING	
		3	**6V-8398**	1	SEAL-O-RING	
		3	**6V-8639**	1	CONNECTOR	
	26	1,3	*148-8351*	2	ELBOW AS	
					(EACH INCLUDES)	
		1,3	**4J-5477**	1	SEAL-O-RING	
		1,3	**6V-9849**	1	ELBOW (SWIVEL)	
	27	1,3	**148-8354**	4	ELBOW AS	
					(EACH INCLUDES)	
		1,3	**6V-9002**	1	ELBOW	
		1,3	**3K-0360**	1	SEAL-O-RING	
		1,3	**6V-8398**	1	SEAL-O-RING	
	28	1,2,3	*148-8369*	8	ELBOW AS	
					(EACH INCLUDES)	
		1,2,3	**3J-7354**	1	SEAL-O-RING	

245-1568 **LINES GP-AUTOMATIC LUBRICATION** *(contd.)* **i02287998**

NOTE	REF NO	GRAPHIC REF	PART NUMBER	QTY	PART NAME 1 2 3 4 5 6 (PRODUCT LEVEL)	SEE PAGE
		1,2,3	**4J-5477**	1	SEAL-O-RING	
		1,2,3	**6V-8628**	1	ELBOW	
	29	1,3	*148-8385*	6	ELBOW AS	
					(EACH INCLUDES)	
		1,3	**3J-7354**	1	SEAL-O-RING	
		1,3	**4J-5477**	1	SEAL-O-RING	
		1,3	**6V-9000**	1	ELBOW	
	30	1,3	*148-8454*	2	TEE AS	
					(EACH INCLUDES)	
		1,3	**6V-8398**	3	SEAL-O-RING	
		1,3	**6V-8789**	1	TEE	
M	31	1,2	**176-5311**	8	LOCKNUT (M16X2-THD)	
	32	2,3	**2T-2396**	2	ELBOW	
	33	2,3	**3J-5390**	2	PLUG	
	34	2,3	**4J-5477**	2	SEAL-O-RING	
	35	1,3	**4K-8864**	6	CLIP	
	36	1,2,3	**6D-3479**	24	CLIP	
	37	1	**6V-1228**	2	CLIP	
	38	2,3	**6V-8398**	2	SEAL-O-RING	
	39	3	**7E-5639**	2	SPACER (13.88X21.34X25-MM THK)	
	40	2,3	**7X-0492**	2	ELBOW	
M	41	1,2	**8T-1757**	4	NUT (M16X2-THD)	
	42	1,2,3	**8T-4121**	38	WASHER-HARD (11X21X2.5-MM THK)	
M	43	1,2,3	**8T-4137**	8	BOLT (M10X1.5X20-MM)	
M	44	2,3	**8T-4182**	2	BOLT (M10X1.5X45-MM)	
M	45	2	**8T-4184**	8	BOLT (M12X1.75X45-MM)	
M	46	1	**8T-4185**	2	BOLT (M10X1.5X50-MM)	
M	47	1,2	**8T-4191**	16	BOLT (M10X1.5X16-MM)	
M	48	1,3	**8T-4195**	10	BOLT (M10X1.5X30-MM)	
	49	2	**8T-4223**	8	WASHER-HARD (13.5X25.5X3-MM THK)	
M	50	1,2	**8T-6385**	12	BOLT (M16X2X180-MM)	
	51	1,3	**9X-8250**	12	CLIP	
	52	1,2	**9X-8257**	24	WASHER (17.5X30X3.5-MM THK)	

I-REFER TO HYDRAULIC INFORMATION SYSTEM
M-METRIC PART
Y-SEPARATE ILLUSTRATION

REFER TO ALL ILLUSTRATIONS OF
THIS GROUP FOR AUXILIARY VIEWS

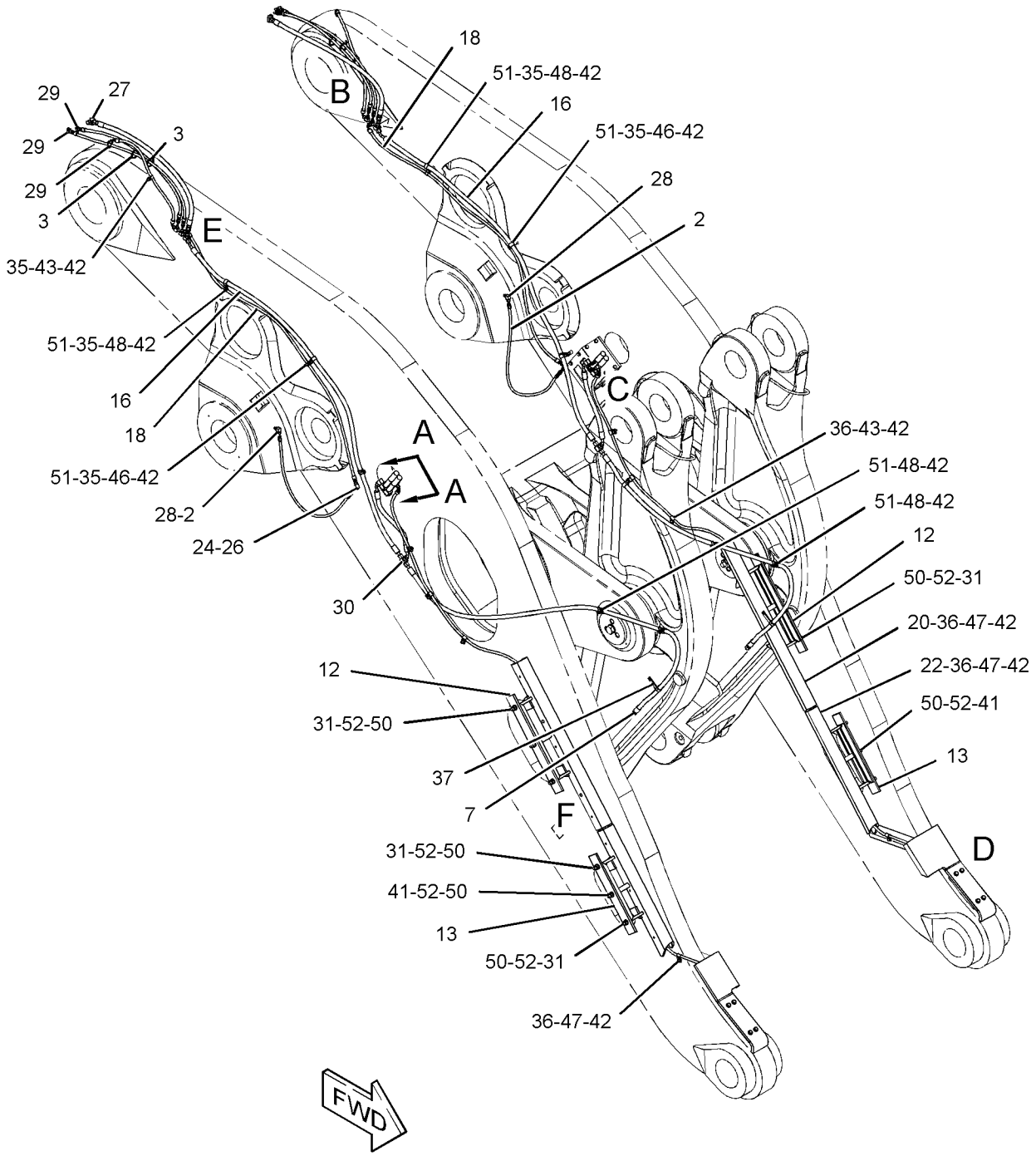

GRAPHIC #1

g01154853

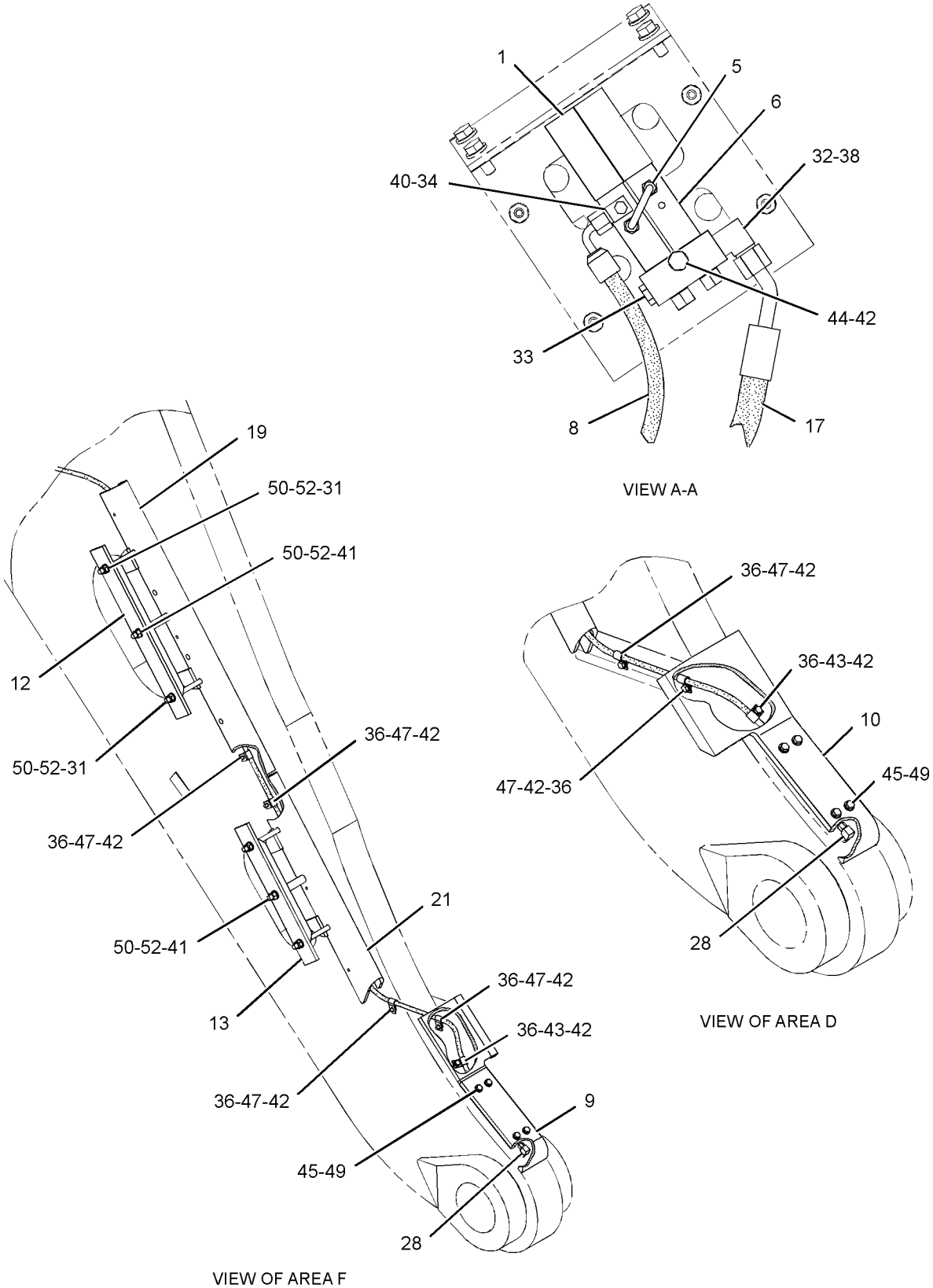

GRAPHIC #2

g01147679

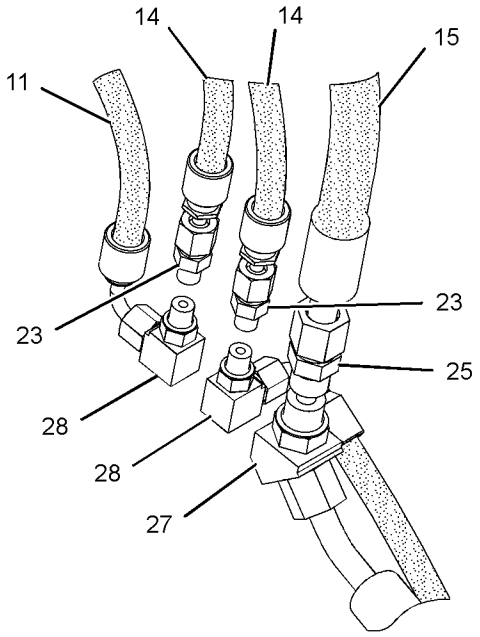

VIEW OF AREA E

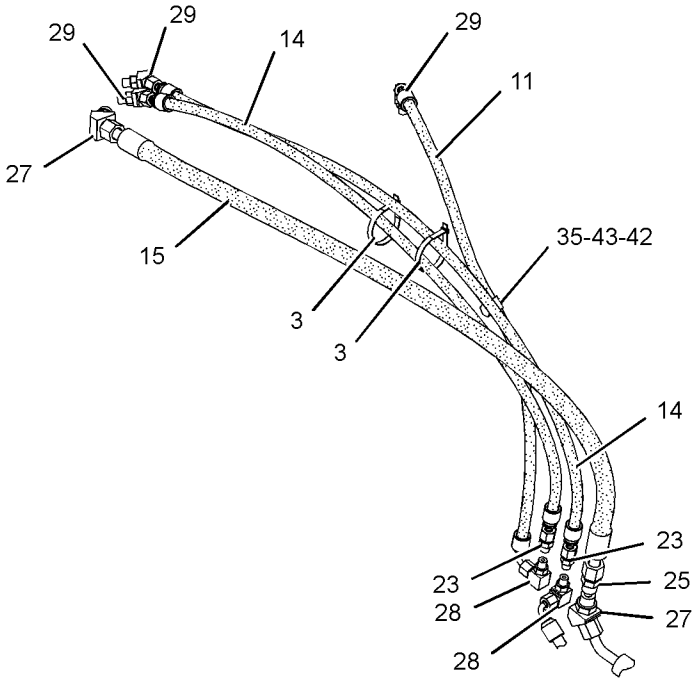

VIEW OF AREA B

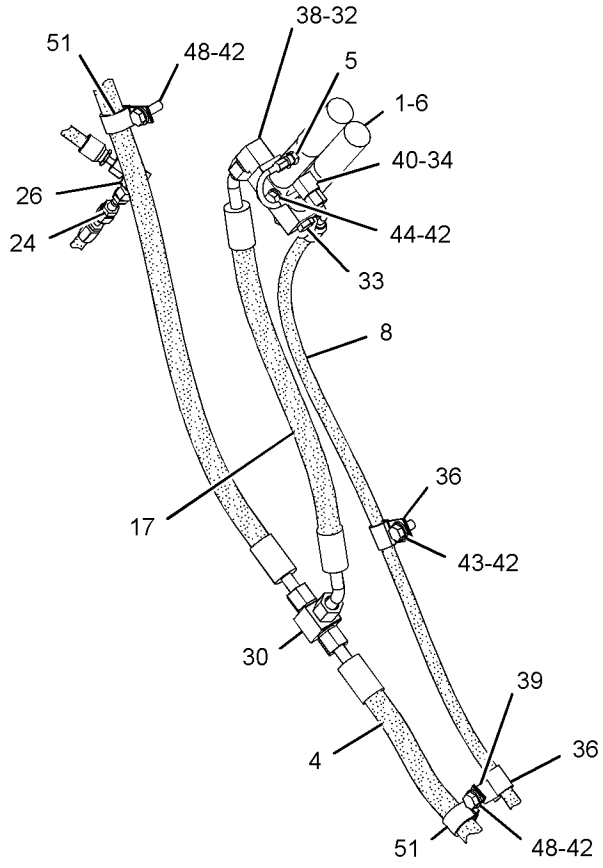

VIEW OF AREA C

GRAPHIC #3 **<END>** g01154854

FRAME AND BODY

245-1569 LINES GP-AUTOMATIC LUBRICATION–

LOADER FRAME

S/N: 4421-UP

PART OF 246-6279 ARM AR-LIFT

AN ATTACHMENT

SMCS-7510, 7540 **i02288024**

NOTE	REF NO	GRAPHIC REF	PART NUMBER	QTY	PART NAME 1 2 3 4 5 6 (PRODUCT LEVEL)	SEE PAGE
	2	2,3	**5T-5012**	4	CAP-PROTECTION	
	5	1	**9X-6772**	4	STRAP-CABLE	
	6	2,3	**114-6060**	2	TUBE AS	
Y	7	2,3	**141-2107**	2	VALVE GP-LUBE DISTRIBUTION (2-INJECTOR)	598
I	8	1	**143-7854**	1	HOSE AS	
I	9	1	**159-5968**	1	HOSE AS	
I	10	2,3	**160-6026**	2	HOSE AS	
	11	3	**188-3387**	1	GUARD (RH)	
	12	2	**188-3388**	1	GUARD (LH)	
I	13	2,3	**191-1862**	2	HOSE AS	
I	17	2,3	**250-4485**	2	HOSE AS	
I	18	2,3	**250-4486**	2	HOSE AS	
I	19	2,3	**250-4487**	2	HOSE AS	
I	20	2,3	**250-4493**	2	HOSE AS	
	21	2,3	**269-9372**	1	GUARD AS (RH)	
	22	2	**269-9374**	1	GUARD AS (RH)	
	23	3	**269-9375**	1	GUARD AS (LH)	
	24	1	**250-4510**	2	PLATE AS	
					(EACH INCLUDES)	
		1	**6D-6433**	1	SPACER	
M		1	**8T-3597**	3	NUT-WELD (M12X1.75-THD)	
	25	1	**250-4512**	2	PLATE AS	
					(EACH INCLUDES)	
		1	**6D-6433**	1	SPACER	
M		1	**8T-3597**	3	NUT-WELD (M12X1.75-THD)	
I	27	2,3	**250-4519**	4	HOSE AS	
I	28	2,3	**250-4520**	2	HOSE AS	
	29	2,3	*148-8316*	4	CONNECTOR AS	
					(EACH INCLUDES)	
		2,3	**3J-7354**	1	SEAL-O-RING	
		2,3	**4J-5477**	1	SEAL-O-RING	
		2,3	**6V-8647**	1	CONNECTOR	
	30	2,3	*148-8320*	2	CONNECTOR AS	
					(EACH INCLUDES)	
		2,3	**4J-5477**	1	SEAL-O-RING	
		2,3	**8C-6865**	1	CONNECTOR	
	31	2,3	*148-8340*	2	CONNECTOR AS	
					(EACH INCLUDES)	
		2,3	**3K-0360**	1	SEAL-O-RING	
		2,3	**6V-8398**	1	SEAL-O-RING	
		2,3	**6V-8639**	1	CONNECTOR	
	32	2,3	*148-8351*	2	ELBOW AS	
					(EACH INCLUDES)	
		2,3	**4J-5477**	1	SEAL-O-RING	
		2,3	**6V-9849**	1	ELBOW (SWIVEL)	
	33	1	**148-8354**	2	ELBOW AS	
					(EACH INCLUDES)	
		1	**3K-0360**	1	SEAL-O-RING	
		1	**6V-8398**	1	SEAL-O-RING	
	34	2,3	*148-8364*	2	ELBOW AS	
					(EACH INCLUDES)	
		2,3	**3K-0360**	1	SEAL-O-RING	
		2,3	**6V-8398**	1	SEAL-O-RING	
		2,3	**6V-8625**	1	ELBOW	

245-1569 LINES GP-AUTOMATIC LUBRICATION *(contd.)* i02288024

NOTE	REF NO	GRAPHIC REF	PART NUMBER	QTY	PART NAME 1 2 3 4 5 6 (PRODUCT LEVEL)	SEE PAGE
	35	2,3	*148-8369*	8	ELBOW AS	
					(EACH INCLUDES)	
		2,3	**3J-7354**	1	SEAL-O-RING	
		2,3	**4J-5477**	1	SEAL-O-RING	
		2,3	**6V-8628**	1	ELBOW	
	36	1	*148-8385*	6	ELBOW AS	
					(EACH INCLUDES)	
		1	**3J-7354**	1	SEAL-O-RING	
		1	**4J-5477**	1	SEAL-O-RING	
		1	**6V-9000**	1	ELBOW	
	37	2,3	*148-8454*	2	TEE AS	
					(EACH INCLUDES)	
		2,3	**6V-8398**	3	SEAL-O-RING	
		2,3	**6V-8789**	1	TEE	
	39	2,3	**2T-2396**	2	ELBOW	
	40	2,3	**3J-5390**	2	PLUG	
	42	2,3	**4J-5477**	2	SEAL-O-RING	
	43	1,2,3	**4K-8864**	6	CLIP	
	44	2,3,4	**6D-3479**	22	CLIP	
	45	4	**6V-1228**	2	CLIP	
	46	2,3	**6V-8398**	2	SEAL-O-RING	
	47	2,3	**7X-0492**	2	ELBOW	
	48	2,3	**8C-6865**	2	CONNECTOR	
	51	1,2,3, 4	**8T-4121**	42	WASHER-HARD (11X21X2.5-MM THK)	
M	53	2,3,4	**8T-4137**	4	BOLT (M10X1.5X20-MM)	
M	54	2,3	**8T-4182**	2	BOLT (M10X1.5X45-MM)	
M	55	2,3	**8T-4184**	8	BOLT (M12X1.75X45-MM)	
M	56	2,3	**8T-4191**	16	BOLT (M10X1.5X16-MM)	
M	57	1,2,3, 4	**8T-4195**	20	BOLT (M10X1.5X30-MM)	
	59	1,2,3	**8T-4223**	8	WASHER-HARD (13.5X25.5X3-MM THK)	
M	61	1	**8T-6385**	12	BOLT (M16X2X180-MM)	
	62	2,3,4	**9X-8250**	18	CLIP	
	63	1	**9X-8257**	24	WASHER (17.5X30X3.5-MM THK)	
	64	1	**269-9373**	1	GUARD AS (LH)	
M	65	1	**176-5311**	8	LOCKNUT (M16X2-THD)	
M	66	1	**8T-1757**	4	NUT (M16X2-THD)	

I-REFER TO HYDRAULIC INFORMATION SYSTEM
M-METRIC PART
Y-SEPARATE ILLUSTRATION

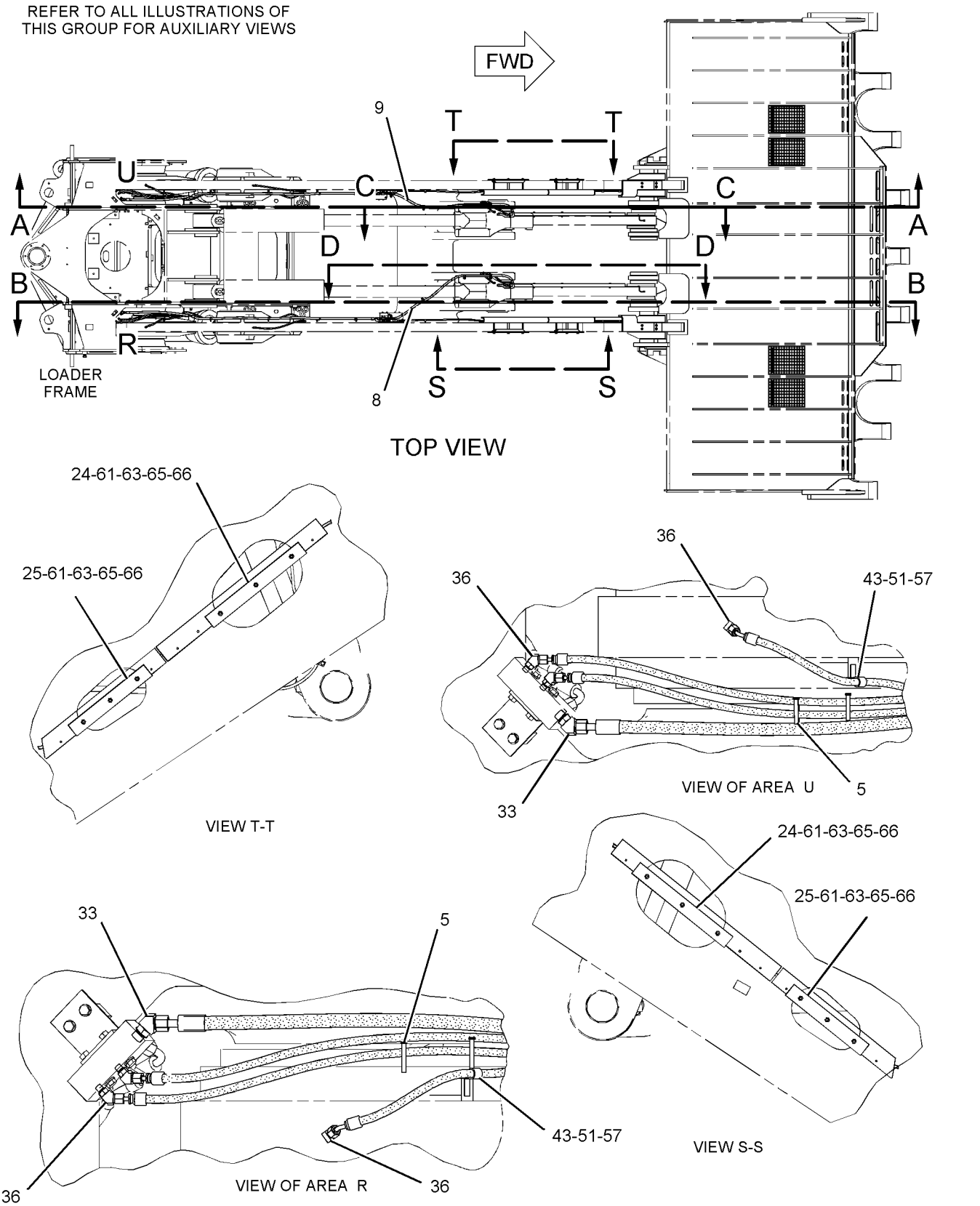

GRAPHIC #1

g01145865

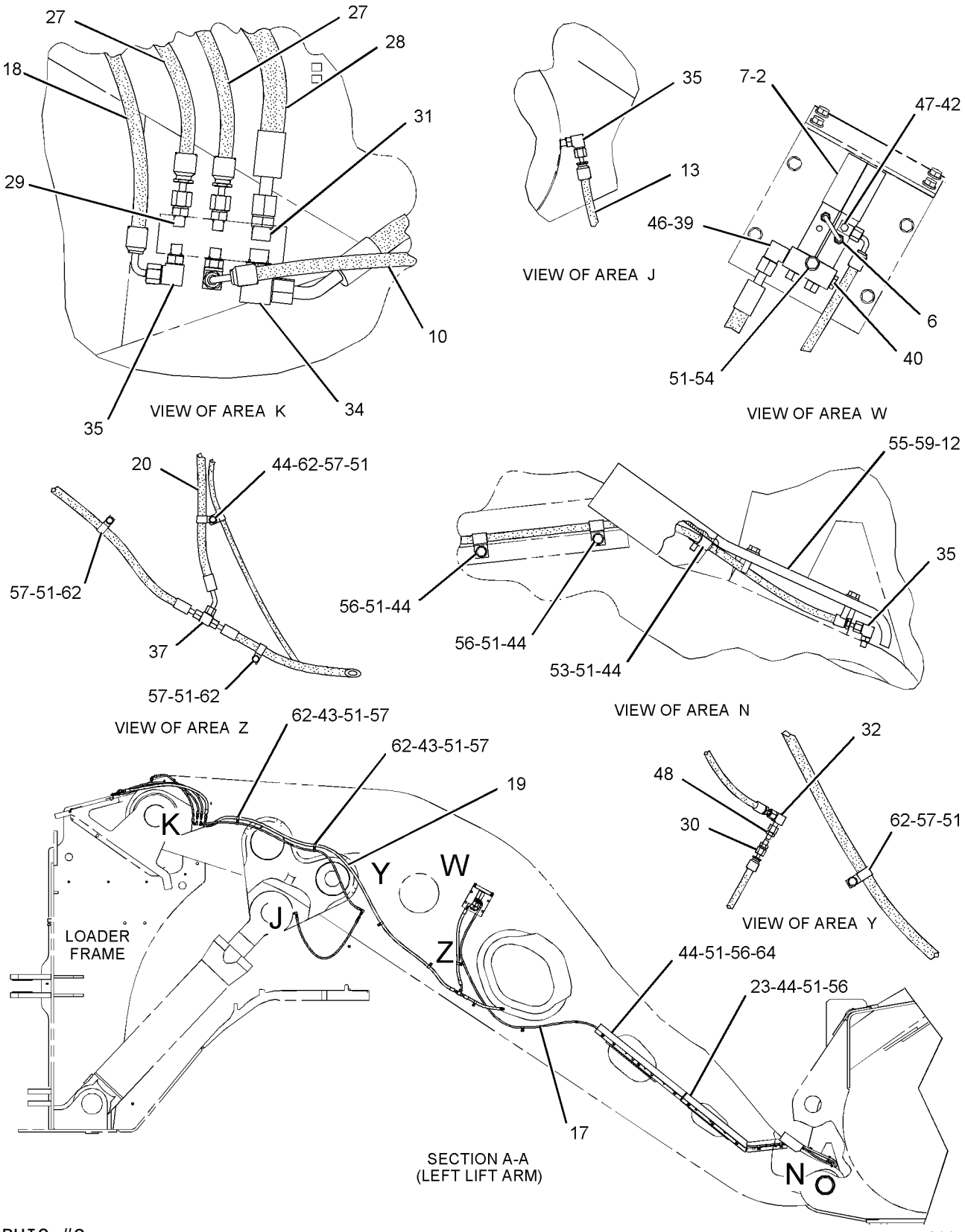

GRAPHIC #2

g01145896

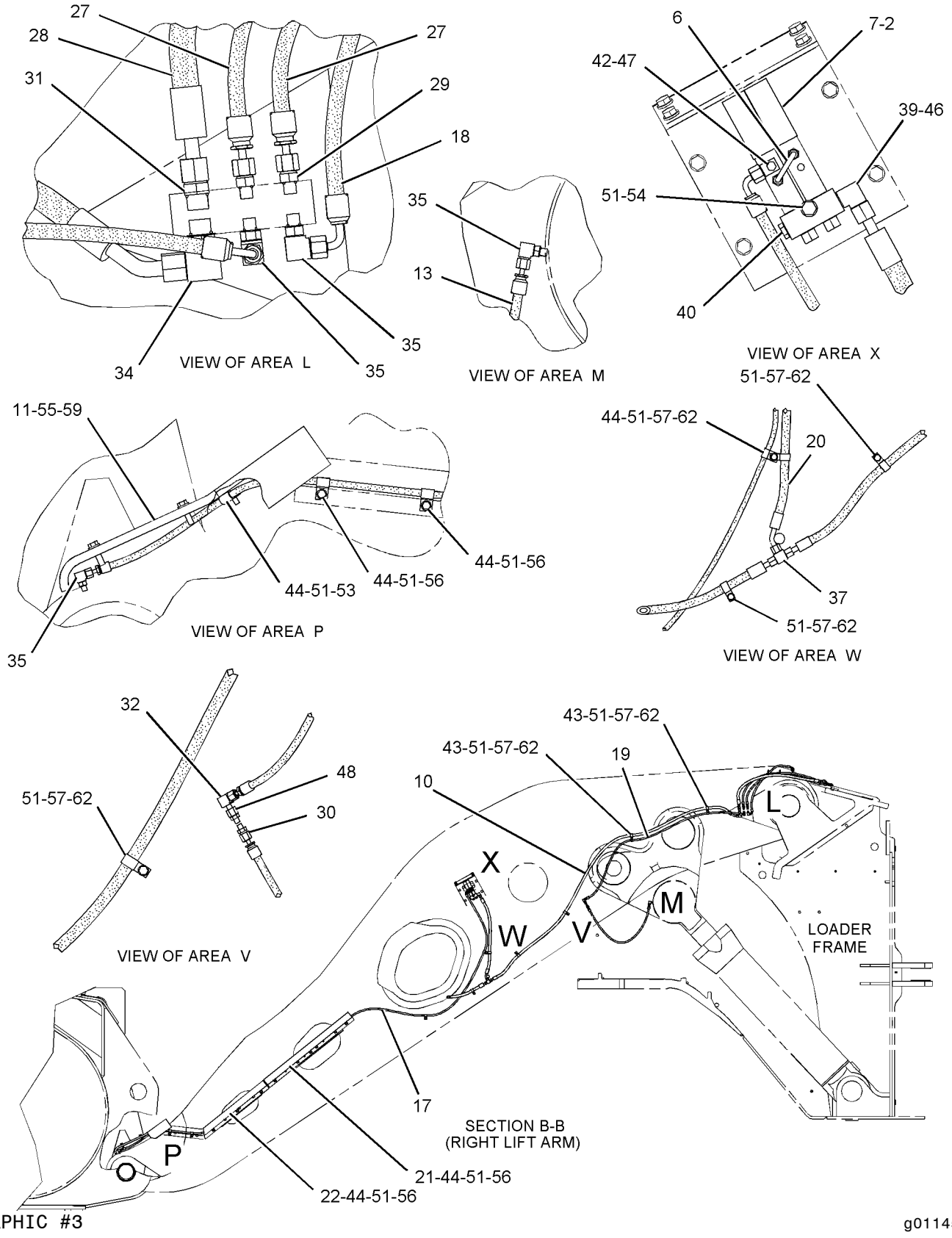

GRAPHIC #3

g01145917

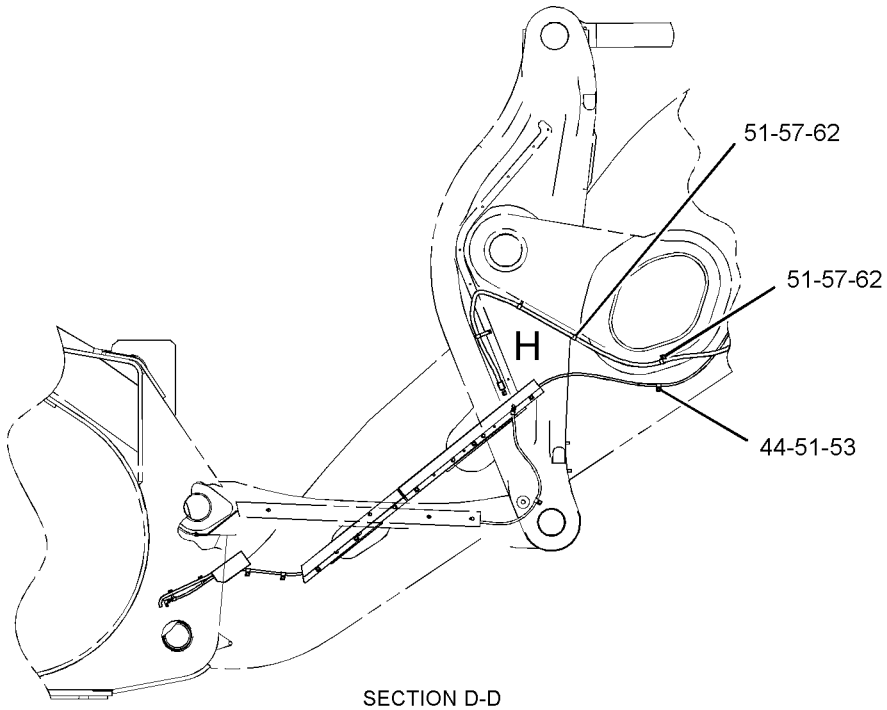

SECTION D-D

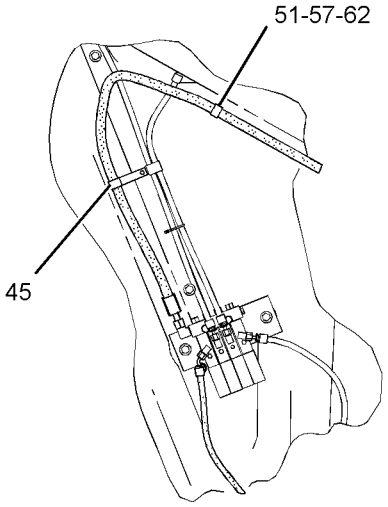

VIEW OF AREA H

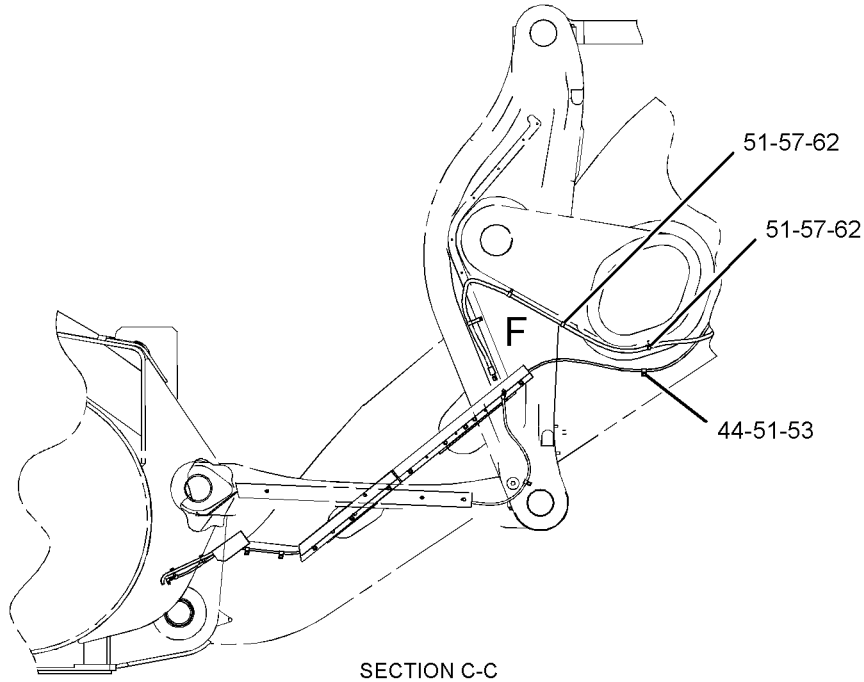

SECTION C-C

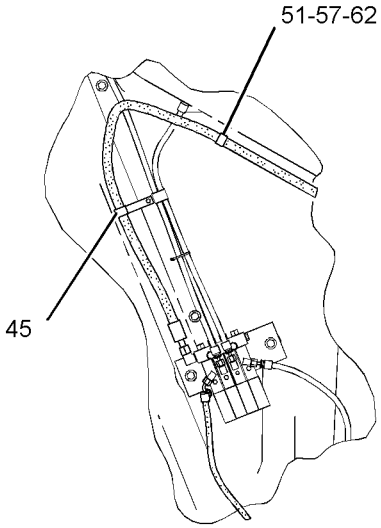

VIEW OF AREA F

GRAPHIC #4 **<END>** g01145924

247-5922 LINES GP-AUTOMATIC LUBRICATION–

LOADER FRAME

S/N: 4421-UP

PART OF 245-8811 CHASSIS AR-FRONT

SMCS-7510, 7540 **i02312769**

NOTE	REF NO	GRAPHIC REF	PART NUMBER	QTY	PART NAME 1 2 3 4 5 6 (PRODUCT LEVEL)	SEE PAGE
	1	3	**8R-9137**	2	ANGLE	
	2	2	**8X-3161**	1	PLATE	
I	3	1	**8X-3476**	2	HOSE AS	
I	4	1	**8X-3480**	2	HOSE AS	
I	5	2	**8X-4691**	2	HOSE AS	
I	6	3	**8X-7657**	2	HOSE AS	
	7	1	**9X-6772**	6	STRAP-CABLE	
Y	8	1	*107-8105*	1	LINES GP-LUBRICATION (DRIVE SHAFT SUPPORT BEARING)	575
I	9	1	**250-4488**	1	HOSE AS	
I	10	1	**250-4489**	1	HOSE AS	
I	11	1	**250-4490**	1	HOSE AS	
I	12	1	**250-4491**	2	HOSE AS	
I	13	1	**250-4492**	2	HOSE AS	
Y	14	2	*250-4494*	1	VALVE & LINES GP-LUBRICATION	592
	15	2	**250-4498**	2	BRACKET	
I	16	3	**250-4499**	2	HOSE AS	
I	17	3	**250-4500**	1	HOSE AS	
I	18	3	**250-4502**	1	HOSE AS	
I	19	3	**250-4503**	1	HOSE AS	
I	20	1	**189-3222**	2	HOSE AS	
	21	2	**250-4513**	1	BLOCK (RH)	
	22	2	**250-4514**	1	BLOCK (LH)	
	23	1	**250-4526**	1	BRACKET (RH)	
	24	1	**250-4527**	1	BRACKET (LH)	
	25	2	**114-1133**	1	PLATE	
	26	1,2	*148-8316*	13	CONNECTOR AS	
					(EACH INCLUDES)	
		1,2	**3J-7354**	1	SEAL-O-RING	
		1,2	**4J-5477**	1	SEAL-O-RING	
		1,2	**6V-8647**	1	CONNECTOR	
	28	3	**148-8354**	2	ELBOW AS	
					(EACH INCLUDES)	
		3	**3K-0360**	1	SEAL-O-RING	
		3	**6V-8398**	1	SEAL-O-RING	
		3	**6V-9002**	1	ELBOW	
	29	2,3	*148-8369*	6	ELBOW AS	
					(EACH INCLUDES)	
		2,3	**3J-7354**	1	SEAL-O-RING	
		2,3	**4J-5477**	1	SEAL-O-RING	
		2,3	**6V-8628**	1	ELBOW	
	30	1	*148-8375*	2	ELBOW GP	
					(EACH INCLUDES)	
		1	**6V-8398**	2	SEAL-O-RING	
		1	**6V-8981**	1	ELBOW	
	31	1	*148-8384*	6	ELBOW AS	
					(EACH INCLUDES)	
		1	**4J-5477**	2	SEAL-O-RING	
		1	**6V-8979**	1	ELBOW	
	32	3	*148-8385*	4	ELBOW AS	
					(EACH INCLUDES)	
		3	**3J-7354**	1	SEAL-O-RING	
		3	**4J-5477**	1	SEAL-O-RING	
		3	**6V-9000**	1	ELBOW	
	33	1	**2P-1279**	6	LOCKNUT (9/16-18-THD)	

247-5922 LINES GP-AUTOMATIC LUBRICATION *(contd.)* i02312769

NOTE	REF NO	GRAPHIC REF	PART NUMBER	QTY	PART NAME 1 2 3 4 5 6 (PRODUCT LEVEL)	SEE PAGE
	34	1	**2R-1939**	5	CLIP	
	35	3	**4D-6434**	2	CLIP	
	36	1	**4D-6466**	3	CLIP	
	38	1,2,3	**4K-8864**	10	CLIP	
	39	1	**4S-1936**	1	CLIP	
	40	2	**5P-6994**	1	CLIP	
	41	1	**6V-1228**	2	CLIP	
	42	1	**6V-9169**	2	NUT-BULKHEAD (13/16-16-THD)	
	44	1,2,3	**8T-4121**	48	WASHER-HARD (11X21X2.5-MM THK)	
M	45	1,2,3	**8T-4133**	12	NUT (M10X1.15-THD)	
M	46	2,3	**8T-4136**	10	BOLT (M10X1.5X25-MM)	
M	47	1,2,3	**8T-4137**	8	BOLT (M10X1.5X20-MM)	
M	48	1,2,3	**8T-4195**	12	BOLT (M10X1.5X30-MM)	
M	49	2	**8T-5005**	4	BOLT (M10X1.5X70-MM)	
M	50	2	**8T-6466**	4	BOLT (M10X1.5X60-MM)	
	51	3	**9X-8250**	2	CLIP	
I	52	1	**250-4538**	1	HOSE AS	
I	53	1	**250-4537**	1	HOSE AS	
I	54	1	**250-4536**	1	HOSE AS	

I-REFER TO HYDRAULIC INFORMATION SYSTEM
M-METRIC PART
Y-SEPARATE ILLUSTRATION

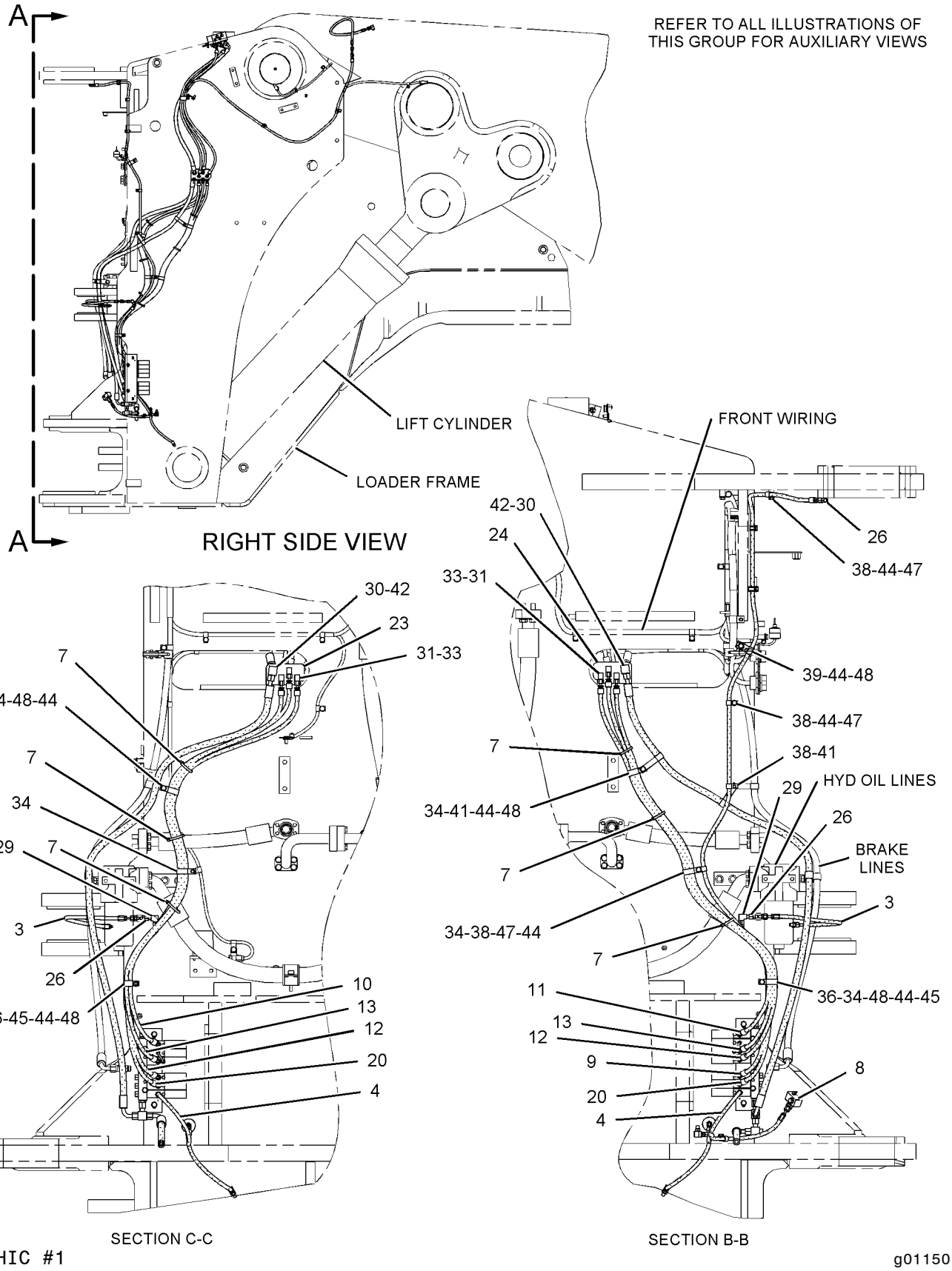

GRAPHIC #1

g01150103

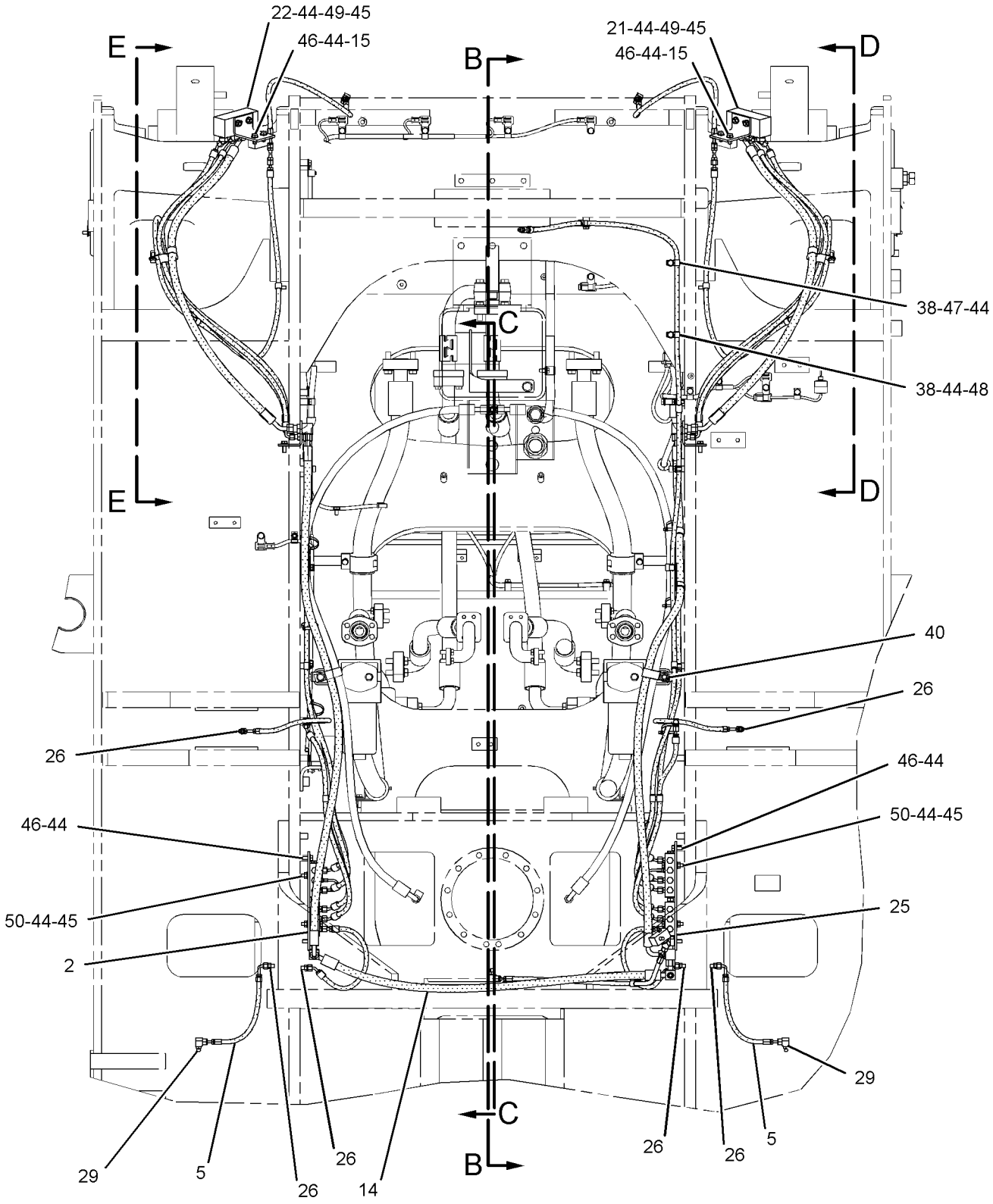

VIEW A-A

REFER TO ALL ILLUSTRATIONS OF THIS GROUP FOR AUXILIARY VIEWS

GRAPHIC #2

g01150104

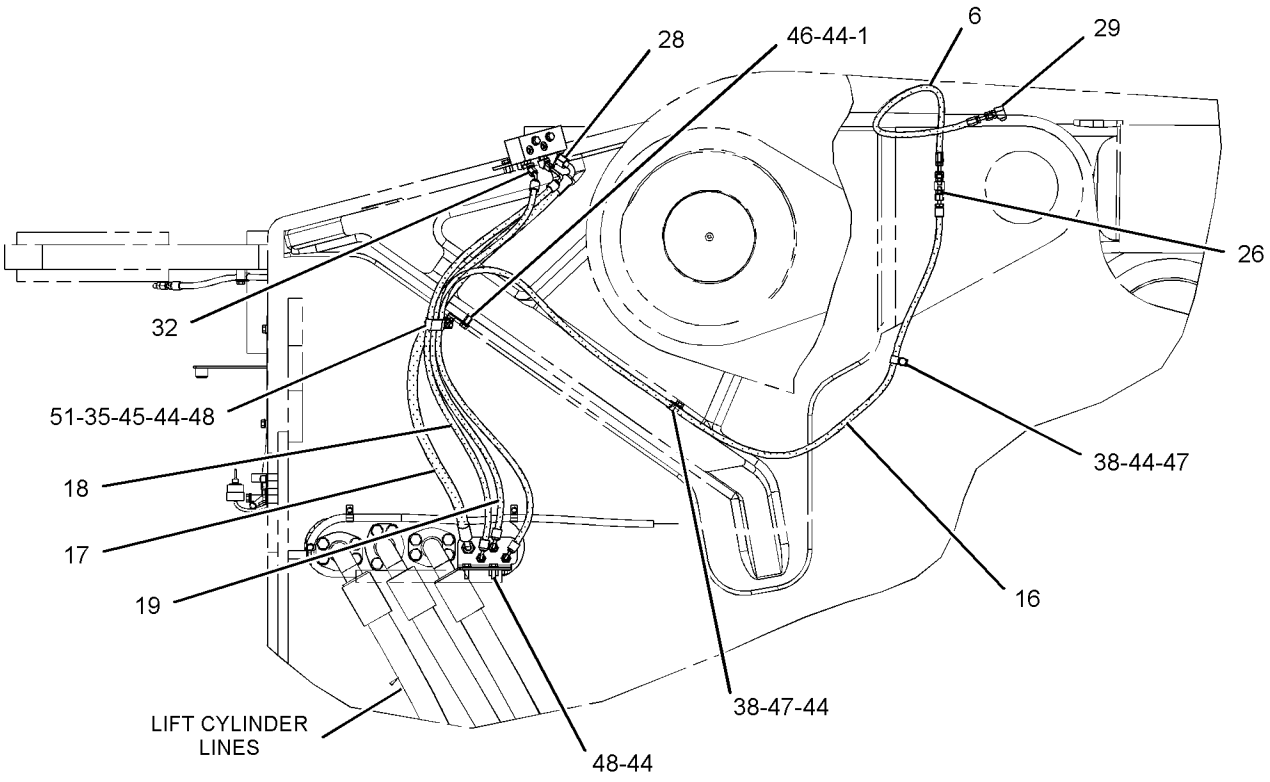

VIEW D-D

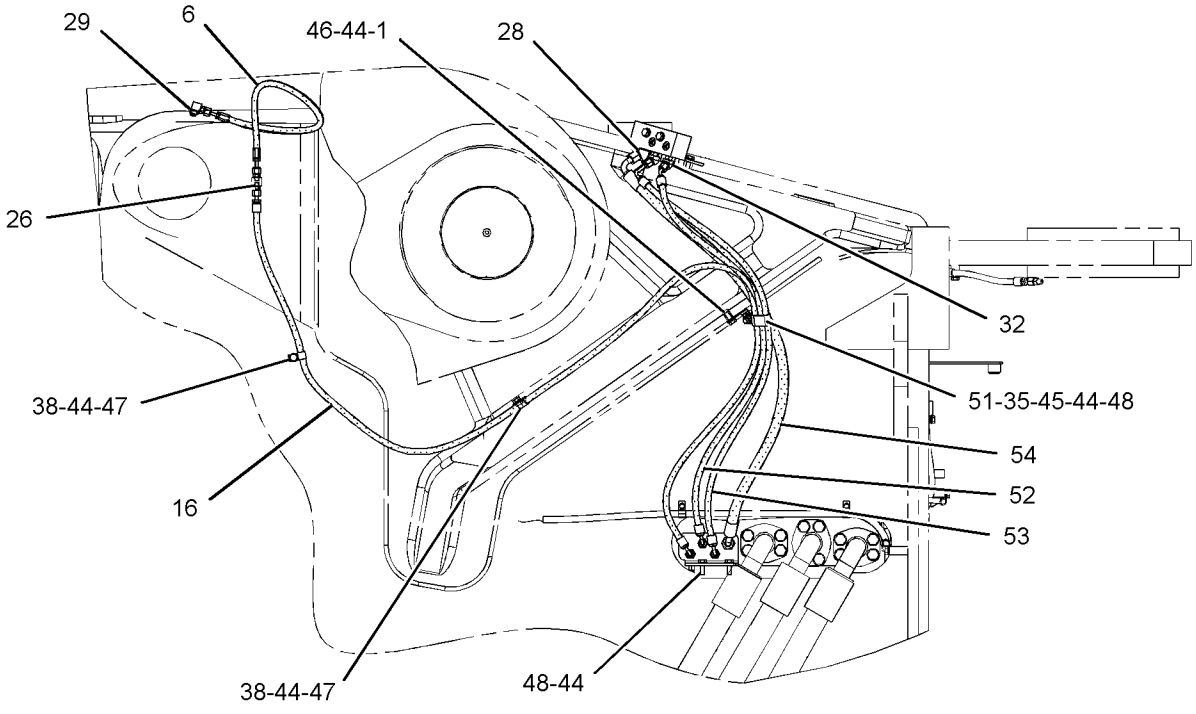

VIEW E-E

GRAPHIC #3 **<END>** g01150105

FRAME AND BODY

247-5923 LINES GP-AUTOMATIC LUBRICATION—REAR FRAME

S/N: 4421-UP

PART OF 245-8812 CHASSIS AR-REAR

SMCS-7510, 7540 **i02282360**

NOTE	REF NO	GRAPHIC REF	PART NUMBER	QTY	PART NAME 1 2 3 4 5 6 (PRODUCT LEVEL)	SEE PAGE
	1	1	**3B-8485**	1	FITTING-GREASE	
	2	2	**6G-2263**	1	SPACER (10.5X19X28.5-MM THK)	
I	3	2	**8X-3151**	1	HOSE AS	
	4	3	**8X-3161**	1	PLATE	
I	5	1	**8X-4773**	2	HOSE AS	
I	6	2	**8X-5331**	2	HOSE AS	
I	7	1	**8X-5332**	2	HOSE AS	
I	8	1,2	**8X-5333**	2	HOSE AS	
	9	3	**118-6878**	1	BRACKET AS	
	10	1,2	**124-3019**	2	BRACKET AS	
	11	3	**142-1657**	1	BRACKET AS	
Y	12	3	**250-4495**	1	VALVE & LINES GP-LUBRICATION	594
I	13	2	**250-4529**	1	HOSE AS	
I	14	1	**250-4539**	1	HOSE AS	
	15	1	*148-8316*	1	CONNECTOR AS	
		1	**3J-7354**	1	SEAL-O-RING	
		1	**4J-5477**	1	SEAL-O-RING	
		1	**6V-8647**	1	CONNECTOR	
	16	1	*148-8320*	1	CONNECTOR AS	
		1	**4J-5477**	1	SEAL-O-RING	
		1	**8C-6865**	1	CONNECTOR	
	17	1,2,3	*148-8369*	7	ELBOW AS	
					(EACH INCLUDES)	
		1,2,3	**3J-7354**	1	SEAL-O-RING	
		1,2,3	**4J-5477**	1	SEAL-O-RING	
		1,2,3	**6V-8628**	1	ELBOW	
	19	1,2	**2R-1939**	14	CLIP	
	20	1	**3J-7354**	1	SEAL-O-RING	
	21	2	**4D-6466**	18	CLIP	
	22	2,3	**4K-8864**	8	CLIP	
	23	1	**5P-5528**	1	ADAPTER-O-RING	
	24	2	**6D-3479**	1	CLIP	
	25	3	**6V-1228**	2	CLIP	
	26	2	**7D-1553**	1	CLIP	
	27	1,2,3	**8T-4121**	44	WASHER-HARD (11X21X2.5-MM THK)	
M	28	1,2,3	**8T-4133**	5	NUT (M10X1.5 THD)	
M	29	2	**8T-4136**	1	BOLT (M10X1.5X25-MM)	
M	30	1,2,3	**8T-4137**	31	BOLT (M10X1.5X20-MM)	
M	31	2,3	**8T-4185**	3	BOLT (M10X1.5X50-MM)	
M	32	3	**8T-4195**	1	BOLT (M10X1.5X30-MM)	
M	33	3	**8T-4196**	1	BOLT (M10X1.5X35-MM)	
M	34	3	**8T-6466**	2	BOLT (M10X1.5X60-MM)	
	35	3	**9X-8250**	20	CLIP	

I-REFER TO HYDRAULIC INFORMATION SYSTEM
M-METRIC PART
Y-SEPARATE ILLUSTRATION

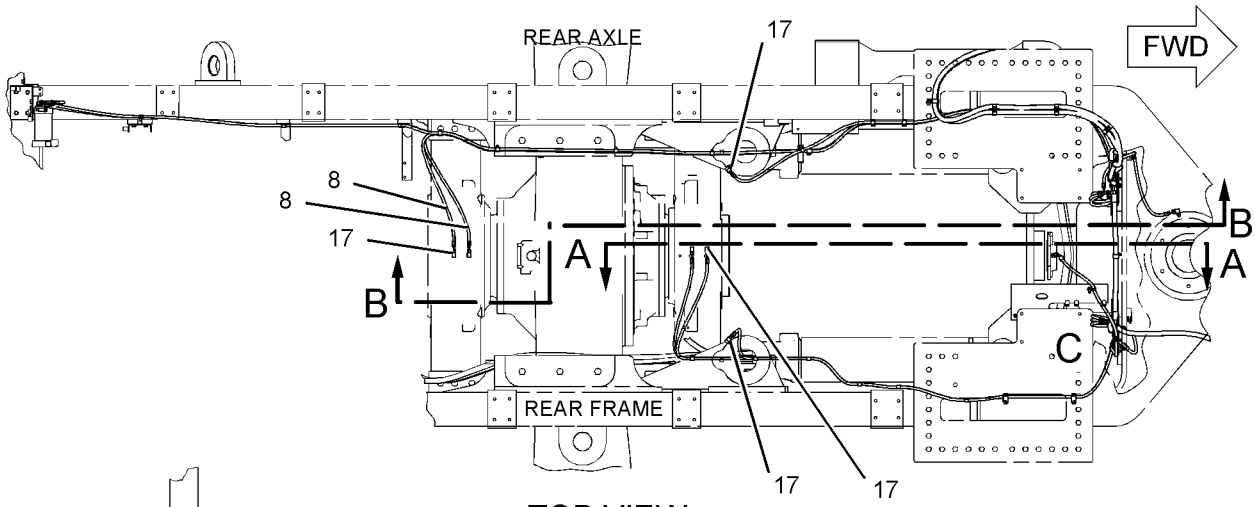

TOP VIEW

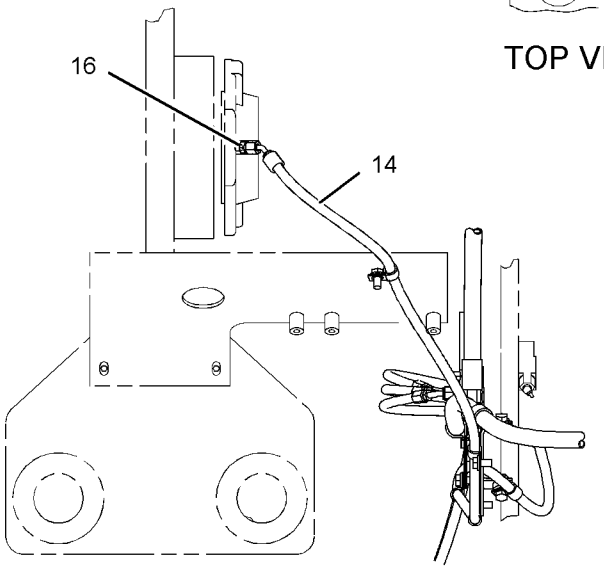

VIEW OF AREA C

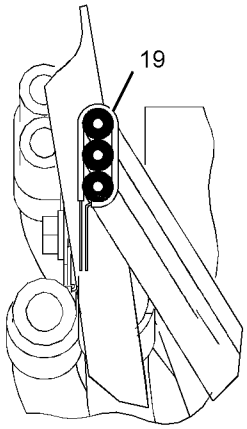

SECTION D-D

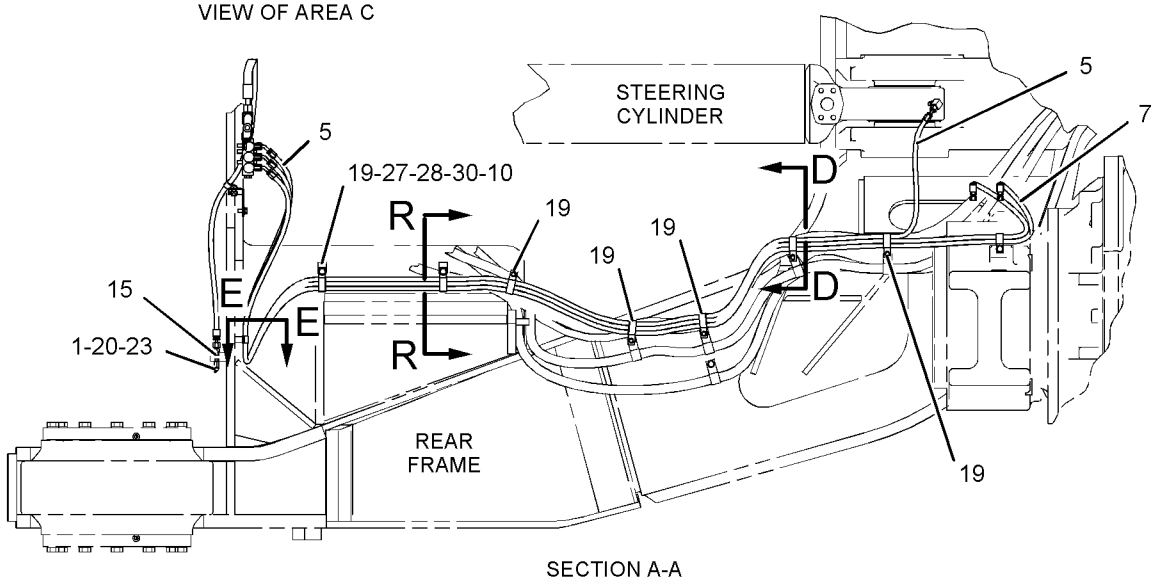

SECTION A-A

GRAPHIC #1

g01144533

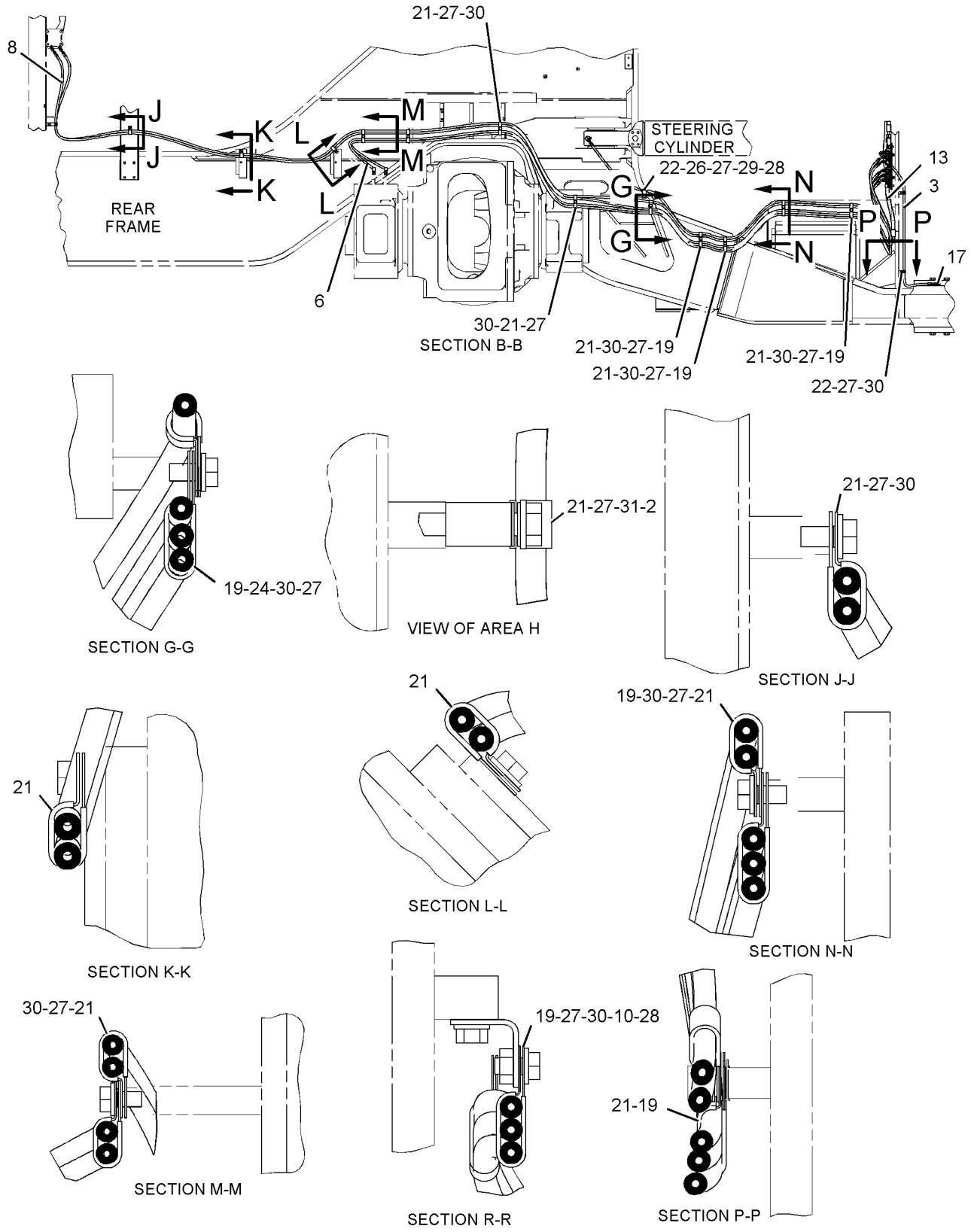

GRAPHIC #2

g01144675

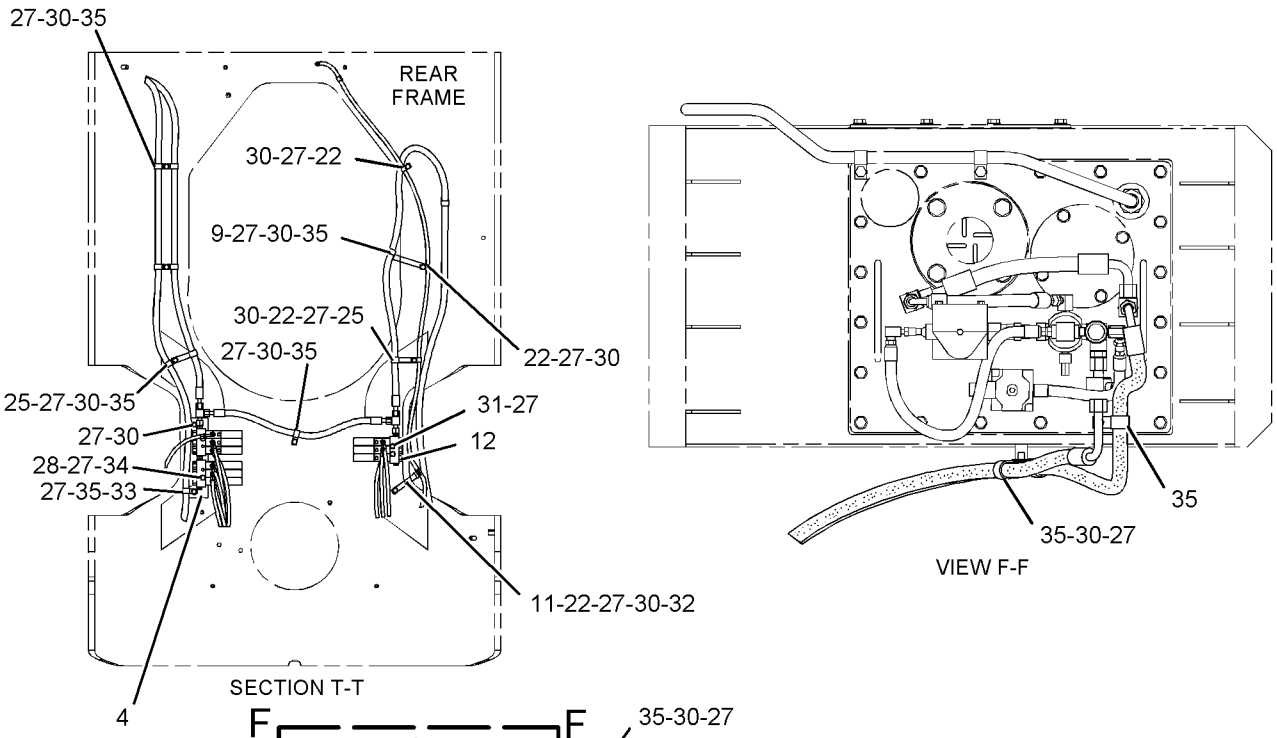

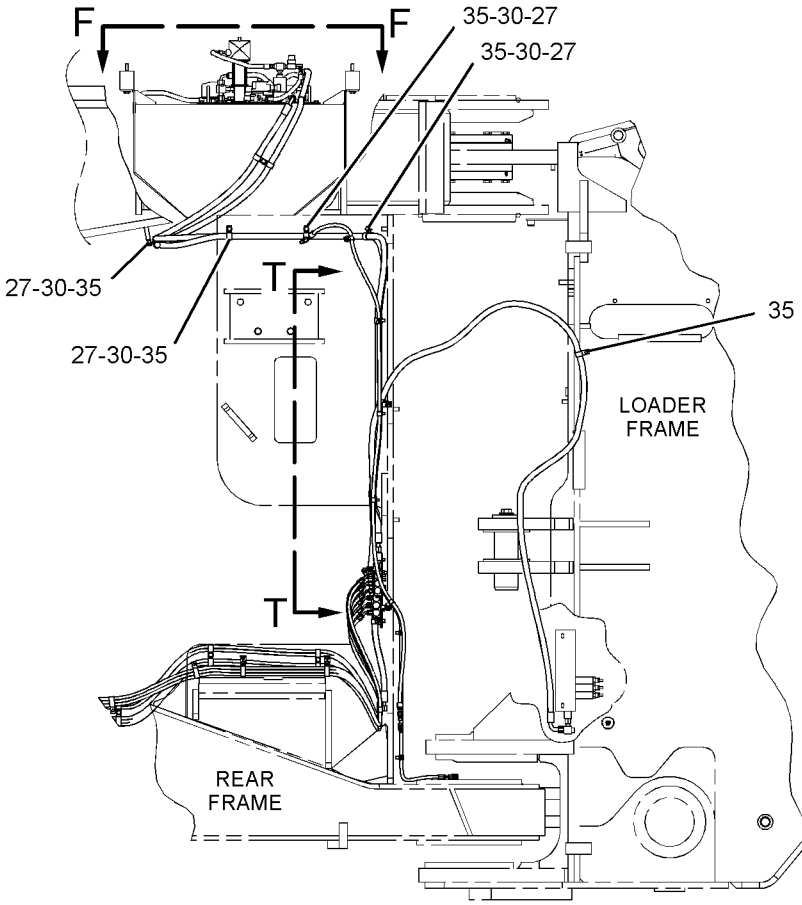

RIGHT SIDE VIEW

GRAPHIC #3 **<END>** g01144829

107-8105 LINES GP-LUBRICATION–
DRIVE SHAFT SUPPORT BEARING
S/N: 4421-UP
PART OF 247-5922 LINES GP-AUTOMATIC LUBRICATION

SMCS-7510, 7540 **i02181204**

NOTE	REF NO	GRAPHIC REF	PART NUMBER	QTY	PART NAME 1 2 3 4 5 6 (PRODUCT LEVEL)	SEE PAGE
	1	1	**108-1174**	1	BLOCK	
	2	1	**3J-7354**	2	SEAL-O-RING	
	3	1	**6V-9000**	1	ELBOW	
	4	1	**4J-5477**	2	SEAL-O-RING	
	5	1	**3B-8485**	1	FITTING-GREASE	
M	6	1	**8T-4182**	1	BOLT (M10X1.5X45-MM)	
	7	1	**8T-4121**	2	WASHER-HARD (11X21X2.5-MM THK)	
	8	1	**4K-8864**	1	CLIP	
M	9	1	**8T-4137**	1	BOLT (M10X1.5X20-MM)	
I	10	1	**8X-7657**	1	HOSE AS	
	11	1	**6V-8628**	1	ELBOW	

I-REFER TO HYDRAULIC INFORMATION SYSTEM
M-METRIC PART

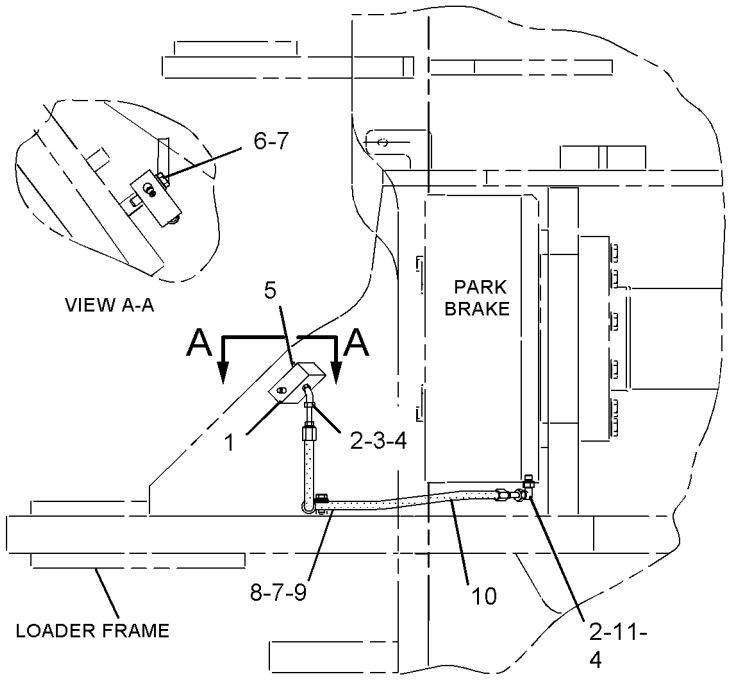

RIGHT SIDE VIEW

GRAPHIC #1 **<END>** g01103778

261-7525 LINES GP-LUBRICATION—BUCKET LINKS

S/N: 4421-UP
PART OF 261-7524 LINK GP-BUCKET
AN ATTACHMENT

SMCS-7510, 7540 **i02285739**

NOTE	REF NO	GRAPHIC REF	PART NUMBER	QTY	PART NAME 1 2 3 4 5 6 (PRODUCT LEVEL)	SEE PAGE
	1	1	**112-9783**	1	ADAPTER	
I	3	1	**269-2846**	2	HOSE AS	
	5	1	**269-2840**	2	GUARD AS	
					(EACH INCLUDES)	
		1	**8V-9708**	3	SPACER (14.3X25.4X35-MM THK)	
	6	1	**4J-5477**	2	SEAL-O-RING	
	8	1	**6D-4636**	6	CLIP	
	9	1	**3S-8665**	2	CLIP	
	10	1	**8T-4121**	2	WASHER-HARD (11X21X2.5-MM THK)	
M	12	1	**8T-4137**	2	BOLT (M10X1.5X20-MM)	
M	13	1	**8T-4648**	6	BOLT (M12X1.75X70-MM)	
	14	1	**8T-4223**	6	WASHER-HARD (13.5X25.5X3-MM THK)	
	15	1	**3K-0360**	2	SEAL-O-RING	

I-REFER TO HYDRAULIC INFORMATION SYSTEM
M-METRIC PART

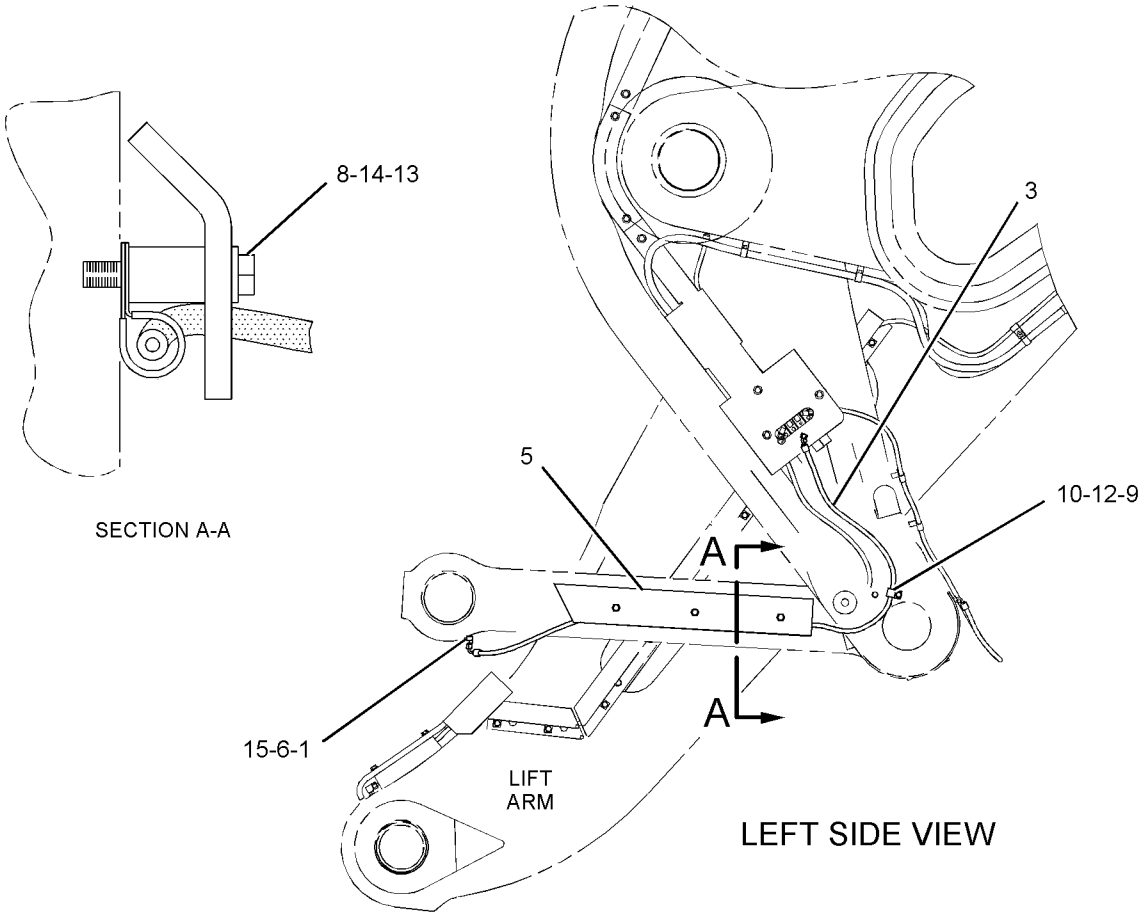

GRAPHIC #1 **<END>** g01145375

261-7527 LINES GP-LUBRICATION–BUCKET LINKS

S/N: 4421-UP
PART OF 261-7526 LINK GP-BUCKET
AN ATTACHMENT

SMCS-7510, 7540 **i02291859**

NOTE	REF NO	GRAPHIC REF	PART NUMBER	QTY	PART NAME 1 2 3 4 5 6 (PRODUCT LEVEL)	SEE PAGE
	1	1	**112-9783**	2	ADAPTER	
I	4	1	**269-2847**	2	HOSE AS	
	5	1	**269-2842**	2	GUARD AS	
					(EACH INCLUDES)	
		1	**8V-9708**	3	SPACER (14.3X25.4X35-MM THK)	
	6	1	**4J-5477**	2	SEAL-O-RING	
	8	1	**3S-8665**	2	CLIP	
	9	1	**6D-4636**	6	CLIP	
	10	1	**8T-4121**	2	WASHER-HARD (11X21X2.5-MM THK)	
M	12	1	**8T-4137**	2	BOLT (M10X1.5X20-MM)	
M	13	1	**8T-4648**	6	BOLT (M12X1.75X70-MM)	
	14	1	**8T-4223**	6	WASHER-HARD (13.5X25.5X3-MM THK)	
	15	1	**3K-0360**	2	SEAL-O-RING	

I-REFER TO HYDRAULIC INFORMATION SYSTEM
M-METRIC PART

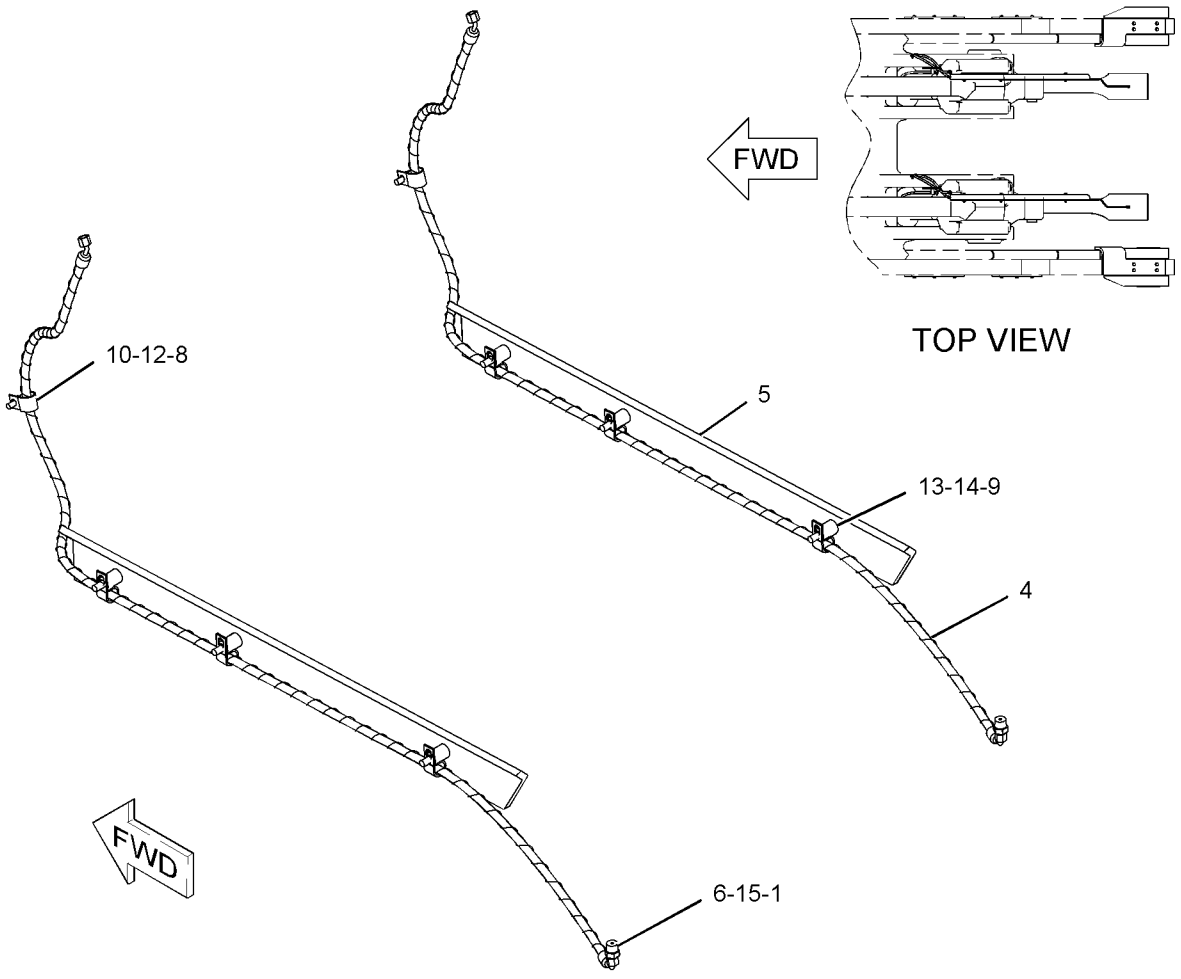

GRAPHIC #1 **<END>** g01148511

261-7529 LINES GP-LUBRICATION—BUCKET LINKS

S/N: 4421-UP
PART OF 261-7528 LINK GP-BUCKET
AN ATTACHMENT

SMCS-7510, 7540 **i02294632**

NOTE	REF NO	GRAPHIC REF	PART NUMBER	QTY	PART NAME 1 2 3 4 5 6 (PRODUCT LEVEL)	SEE PAGE
	1	1	**269-2844**	2	GUARD AS	
I	2	1	**269-2848**	2	HOSE AS	
	3	1	**112-9783**	2	ADAPTER	
	4	1	**3K-0360**	2	SEAL-O-RING	
	5	1	**3S-8665**	2	CLIP	
	6	1	**4J-5477**	2	SEAL-O-RING	
	7	1	**6D-4636**	8	CLIP	
	8	1	**8T-4121**	2	WASHER-HARD (11X21X2.5-MM THK)	
M	9	1	**8T-4137**	2	BOLT (M10X1.5X20-MM)	
	10	1	**8T-4223**	8	WASHER-HARD (13.5X25.5X3-MM THK)	
M	11	1	**8T-4648**	8	BOLT (M12X1.75X70-MM)	

I-REFER TO HYDRAULIC INFORMATION SYSTEM
M-METRIC PART

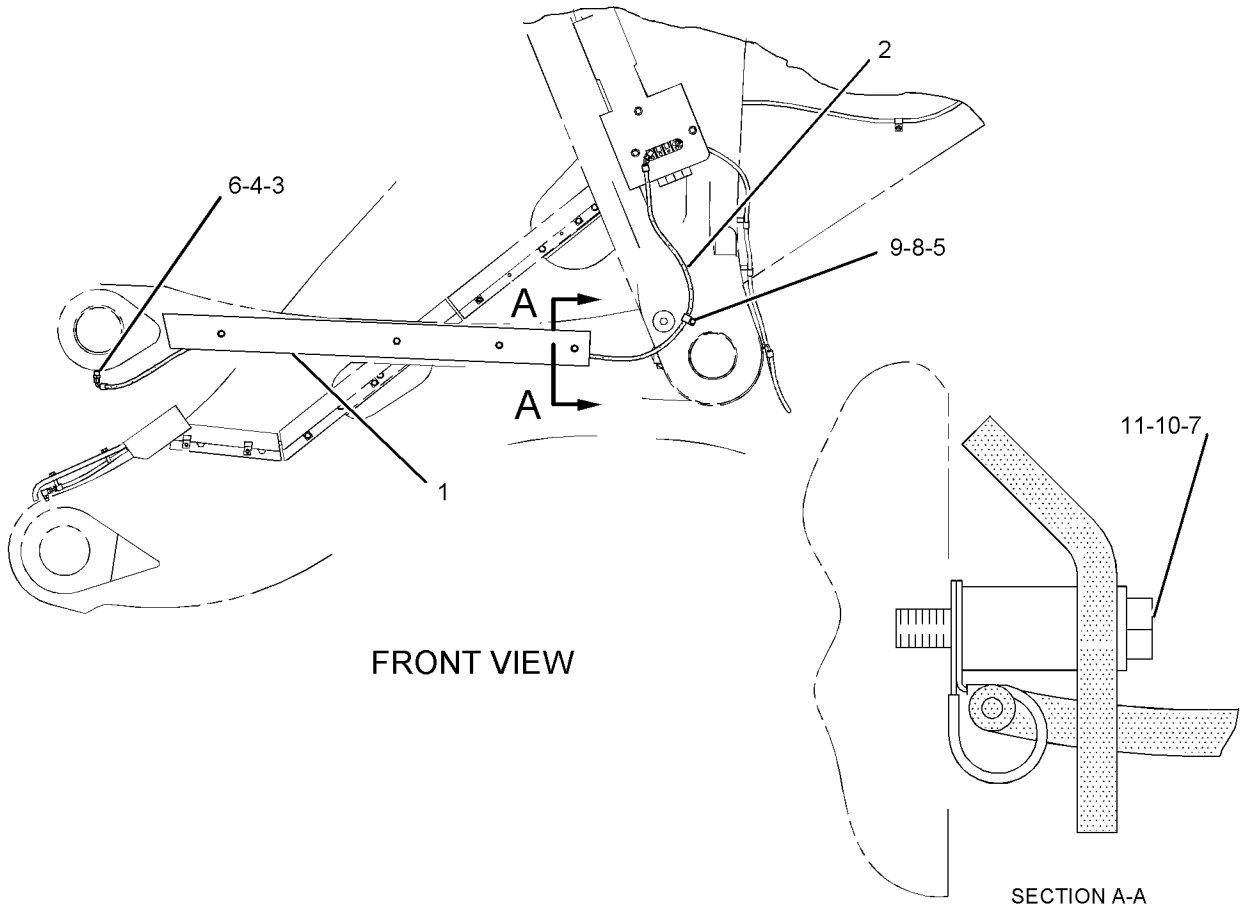

GRAPHIC #1 **<END>** g01144392

8X-0043 LINK GP-STEERING FRAME LOCK

S/N: 4421-UP

PART OF 245-8812 CHASSIS AR-REAR

SMCS-7506 **i01269230**

NOTE	REF NO	GRAPHIC REF	PART NUMBER	QTY	PART NAME 1 2 3 4 5 6 (PRODUCT LEVEL)	SEE PAGE
	1	1	**8X-0672**	1	LINK	
	2	1	**1J-2920**	2	COTTER	
	3	1	**134-5784**	2	PIN	

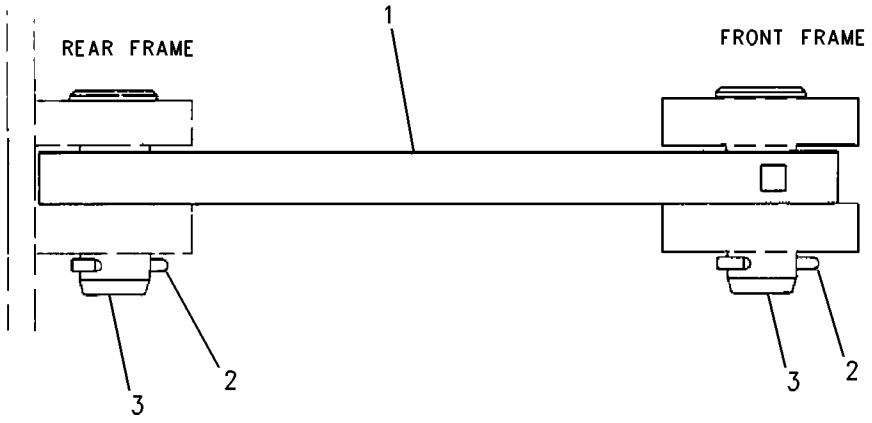

GRAPHIC #1 **<END>** g00674347

FRAME AND BODY

152-8968 LUBRICATION GP-AUTOMATIC

S/N: 4421-UP

PART OF 245-7454 PLATFORM AR

SMCS-7540 **i01282426**

NOTE	REF NO	GRAPHIC REF	PART NUMBER	QTY	PART NAME 1 2 3 4 5 6 (PRODUCT LEVEL)	SEE PAGE
Y	1	1	**155-4809**	1	PUMP GP-LUBRICATION (AUTOMATIC)	586
	2	1	**155-6712**	1	GASKET	
Y	3	1	*155-7409*	1	TANK GP-GREASE (AUTOMATIC LUBRICATION)	591
	4	1	**172-7741**	1	TUBE AS	
	5	1	**5P-1076**	8	WASHER-HARD (13.5X30X4-MM THK)	
	6	1	**6D-4246**	2	CLIP	
	7	1	**6V-9746**	1	SEAL-O-RING	
	8	1	**8T-4121**	20	WASHER-HARD (11X21X2.5-MM THK)	
M	9	1	**8T-4136**	20	BOLT (M10X1.5X25-MM)	
M	10	1	**8T-5041**	8	BOLT (M12X1.75X120-MM)	

M-METRIC PART
Y-SEPARATE ILLUSTRATION

152-8968 **LUBRICATION GP-AUTOMATIC** *(contd.)* **i01282426**

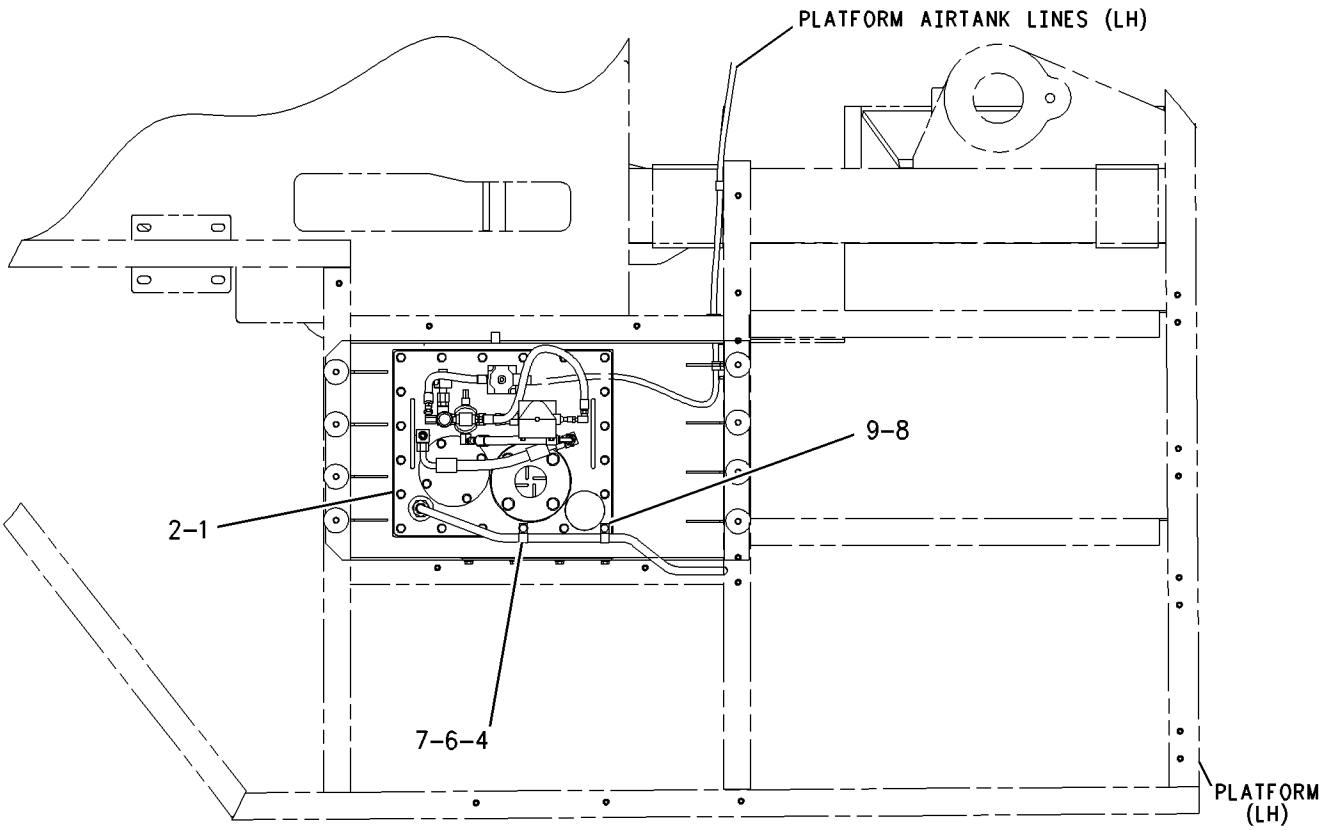

TOP VIEW

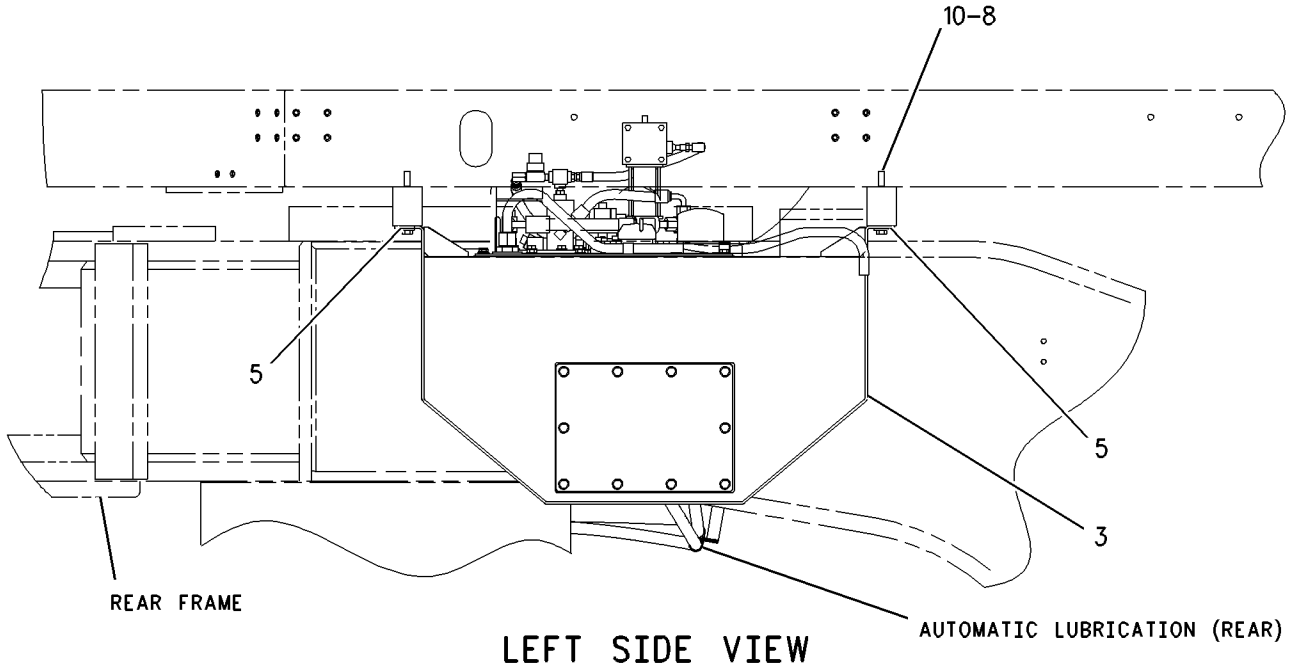

LEFT SIDE VIEW

GRAPHIC #1 **<END>** g00681192

FRAME AND BODY

265-4445 MOUNTING GP-BATTERY

S/N: 4421-UP
PART OF 245-3885 PLATFORM AR
AN ATTACHMENT

SMCS-7257 **i02285789**

NOTE	REF NO	GRAPHIC REF	PART NUMBER	QTY	PART NAME 1 2 3 4 5 6 (PRODUCT LEVEL)	SEE PAGE
	1	1	**265-4444**	1	BOX AS-BATTERY	
M		1	**8T-3490**	3	NUT-WELD (M10X1.5 THD)	
M		1	**8T-3597**	8	NUT-WELD (M12X1.75 THD)	
	2	1	**8F-6437**	13	WASHER (13.5X50.8X4.76-MM THK)	
	3	1	**8T-4121**	10	WASHER-HARD (11X21X2.5-MM THK)	
M	4	1	**8T-4195**	10	BOLT (M10X1.5X30-MM)	

M-METRIC PART

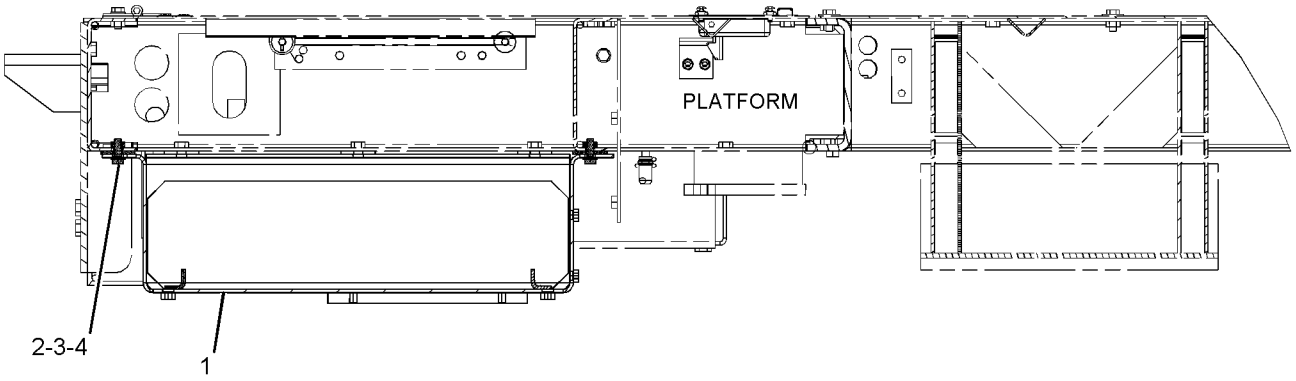

RIGHT SIDE VIEW

GRAPHIC #1 **<END>** g01145634

250-6194 PLATE GP-FIREWALL

S/N: 4421-UP

PART OF 245-8812 CHASSIS AR-REAR

SMCS-7262 **i02357293**

NOTE	REF NO	GRAPHIC REF	PART NUMBER	QTY	PART NAME 1 2 3 4 5 6 (PRODUCT LEVEL)	SEE PAGE
	1	1	**4V-0661**	6	MOUNT	
	2	1	**6W-1594**	6	PLUG	
	3	1	**8R-0126**	6	WASHER (12.2X50X3-MM THK)	
	4	2	**265-3479**	1	SHEET AS	
	5	1	**154-3841**	1	PANEL AS	
	6	1	**154-3842**	1	PANEL AS	
	7	1	**164-4074**	1	BRACKET AS	
	8	1	**164-4075**	3	BRACKET AS	
	9	1	**164-4076**	1	BRACKET AS	
	10	1	**250-5800**	1	FRAME AS	
	11	1	**250-5801**	1	FRAME AS	
	12	2	**250-5802**	1	SHEET AS	
	13	1	**250-5803**	1	FRAME AS	
		1	**090-8247**	4	BLOCK	
M		1	**8T-3490**	18	NUT-WELD (M10X1.5-THD)	
M		1	**8T-3597**	8	NUT-WELD (M12X1.75 THD)	
	14	1	**264-5046**	1	BAFFLE AS	
		1	**4B-4274**	17	WASHER (5.5X13X1.2-MM THK)	
		1	**7D-8635**	17	RIVET	
		1	**148-3542**	1	PLATE AS	
	15	1	**251-2179**	1	SHEET AS	
	16	1	**251-2181**	1	SHEET	
	17	2	**251-2182**	2	SHEET	
	18	1	**5M-2894**	3	WASHER-HARD (10.2X18.5X2.5-MM THK)	
	19	1	**5P-1076**	12	WASHER-HARD (13.5X30X4-MM THK)	
M	20	1	**7X-2553**	16	BOLT (M16X2X40-MM)	
	21	2	**7X-7729**	30	WASHER (11X25X3-MM THK)	
M	22	2	**8T-0722**	30	BOLT-LOCKING (M10X1.5X30-MM)	
	23	1	**8T-4121**	27	WASHER-HARD (11X21X2.5-MM THK)	
M	24	1	**8T-4122**	16	WASHER-HARD (17X32X3.5-MM THK)	
M	25	1	**8T-4133**	6	NUT (M10X1.5 THD)	
M	26	1	**8T-4137**	4	BOLT (M10X1.5X20-MM)	
M	27	1	**8T-4139**	20	BOLT (M12X1.75X30-MM)	
M	28	1	**8T-4195**	23	BOLT (M10X1.5X30-MM)	
	29	2	**8T-4223**	8	WASHER-HARD (13.5X25.5X3-MM THK)	
	30	1	**9B-7237**	3	BOLT (3/8-16X1.25-IN)	
BD	31	1	**5P-7483**		SEAL	

B-USE AS REQUIRED
D-ORDER BY THE METER
M-METRIC PART

250-6194 **PLATE GP-FIREWALL** *(contd.)* **i02357293**

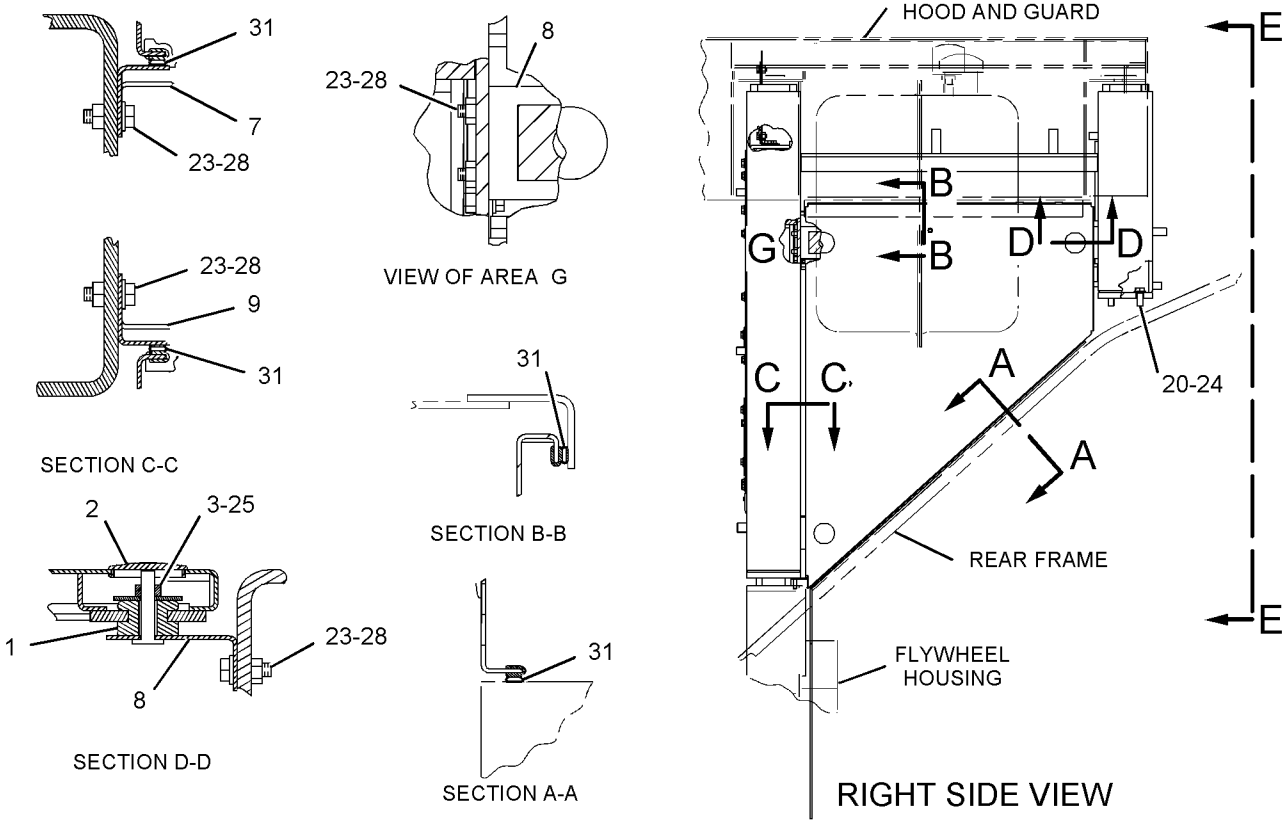

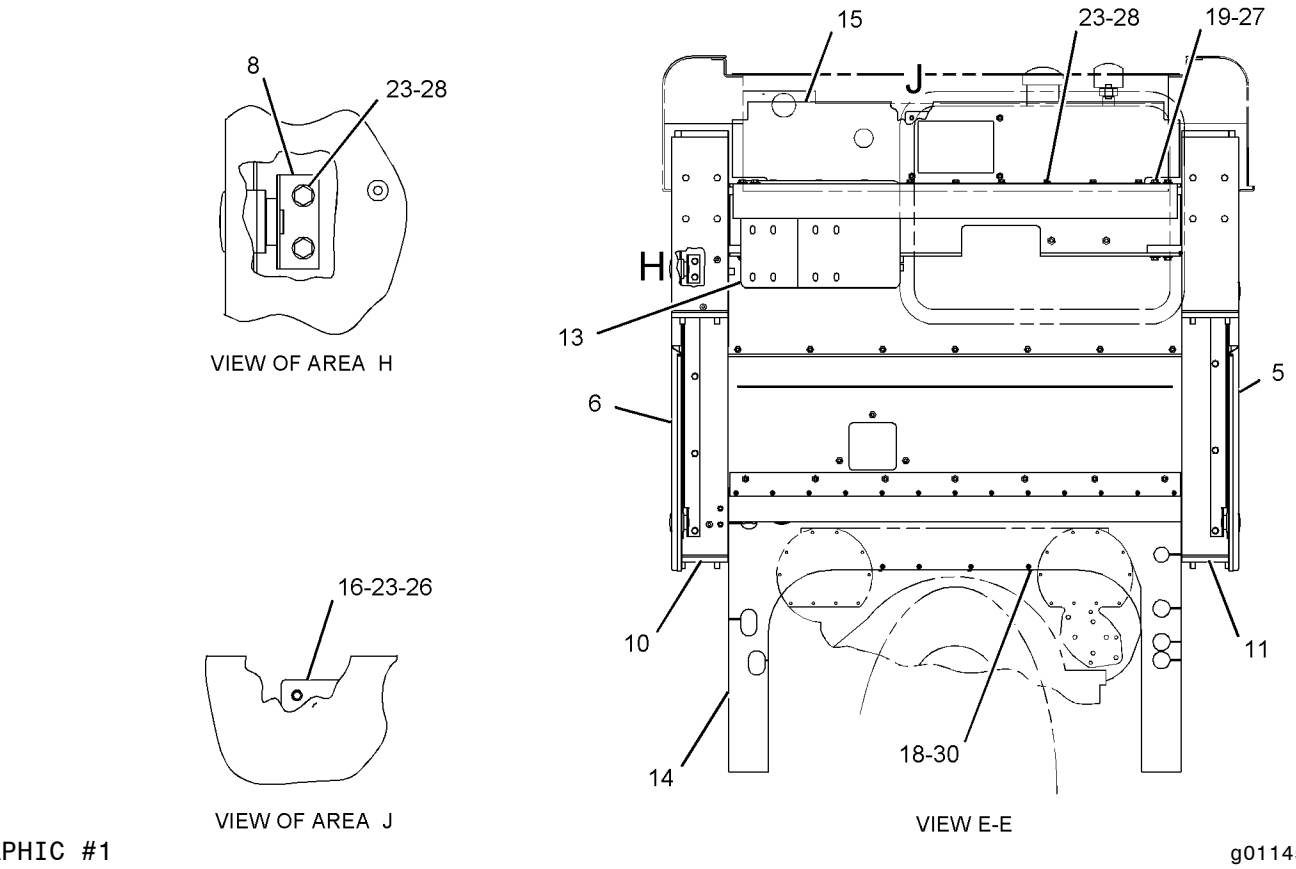

GRAPHIC #1

g01145809

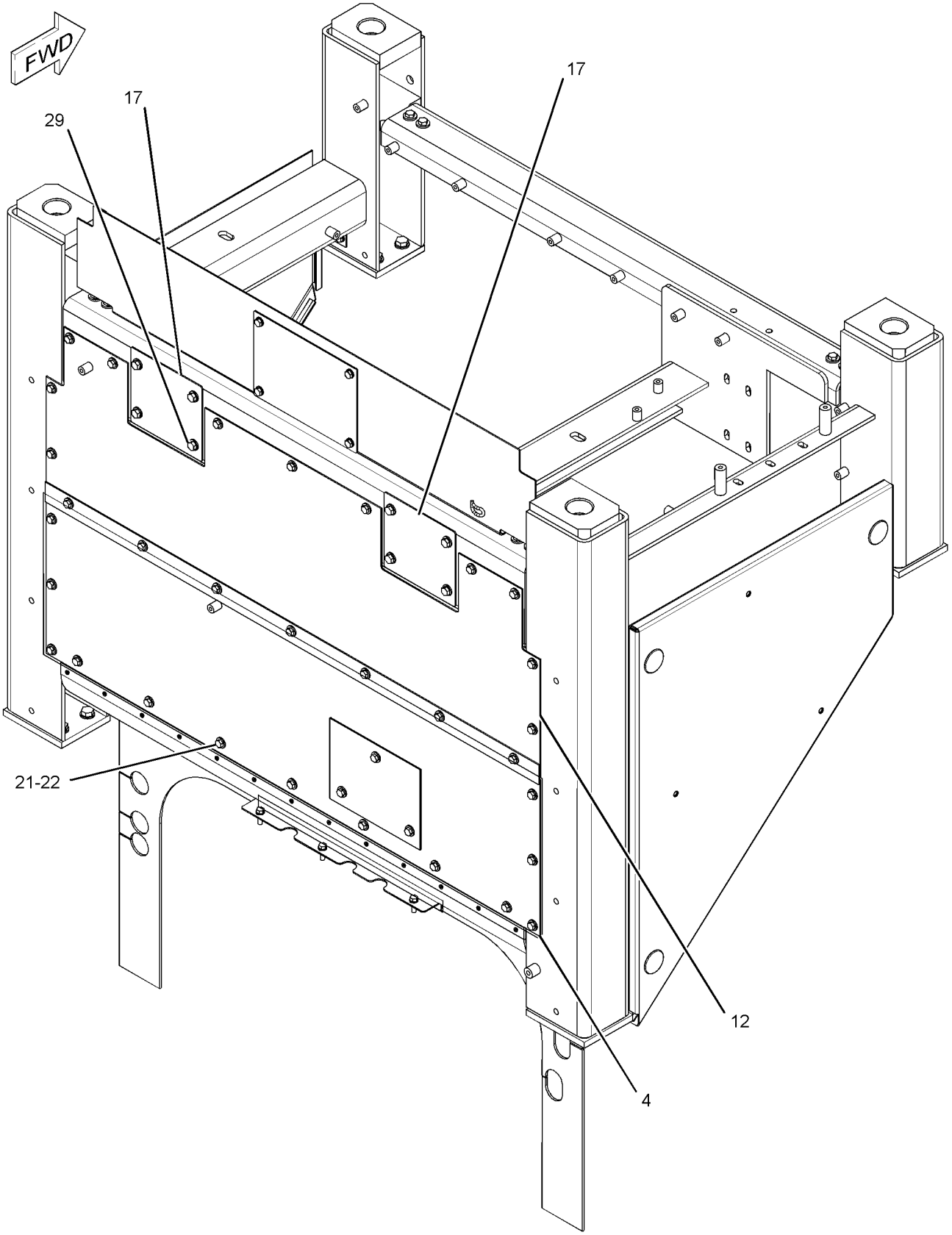

GRAPHIC #2 **<END>** g01145789

155-4809 PUMP GP-LUBRICATION—AUTOMATIC

S/N: 4421-UP

PART OF 152-8968 LUBRICATION GP-AUTOMATIC

SMCS-7516 **i02289059**

NOTE	REF NO	GRAPHIC REF	PART NUMBER	QTY	PART NAME 1 2 3 4 5 6 (PRODUCT LEVEL)	SEE PAGE
	1	1	**4M-8973**	1	ELBOW	
	2	1	**5H-4778**	2	ELBOW	
	3	1	**5K-1568**	1	CAP-FILLER	
	4	1	**5P-8998**	1	FITTING	
L	5	1	**221-9576**	1	VALVE GP-SOLENOID (AUTOLUBE AIR CONTROL)	
		1	**221-9577**	1	COIL AS	
		1	**102-8802**	1	KIT-RECEPTACLE (2-PIN)	
					(INCLUDES RECEPTACLE AS AND WEDGE)	
		1	**5D-5569**	1	CONNECTOR	
		1	**8T-8729**	2	PIN-CONNECTOR	
	6	1	**6E-5444**	1	VALVE GP-CHECK (LUBRICATION PUMP)	
	7	1	**8C-6872**	1	CONNECTOR	
	8	1	**8D-4773**	1	REGULATOR	
I	9	1	**8W-8564**	1	HOSE AS	
J	10	1	**8X-2317**	1	PUMP AS	
	11	1	**8X-2318**	1	GASKET	
	12	1	**8X-2320**	1	VALVE AS-VENT	
		1	**8X-2319**	1	SEAL-U-CUP	
		1	**8X-3315**	1	PACKING	
	13	1	**8X-2321**	1	VALVE-CHECK	
		1	**3B-1925**	1	WASHER (0.766X1X0.064-IN THK)	
		1	**7W-3556**	1	WASHER (14.27X20.57X1.5-MM THK)	
	14	1	**8X-2323**	1	UNLOADER	
	15	1	**8X-3316**	1	FITTING	
	16	1	**8X-4186**	2	WASHER (32X60X3-MM THK)	
	17	1	**172-7884**	1	PLATE	
	18	1	**9X-2474**	1	ADAPTER	
	19	1	**006-0210**	1	TEE (PIPE)	
	20	1	**031-9746**	1	ELBOW	
I	21	1	**155-4811**	1	HOSE AS	
	22	1	**155-7449**	1	PLATE AS	
M		1	**8T-3490**	4	NUT-WELD (M10X1.5-THD)	
M		1	**9X-6269**	4	NUT-WELD (M16X2X13-MM OAL)	
	23	1	**156-1714**	1	GASKET	
I	24	1	**183-2985**	1	HOSE AS	
	25	1	**172-7743**	2	TUBE AS	
	26	1	**172-7744**	1	PLATE AS	
	27	1	**8X-8062**	1	PLATE	
I	28	1	**172-7893**	1	HOSE AS	
	29	1	**173-7742**	1	GASKET	
	30	1	**164-5586**	1	TEE AS	
	31	1	**2P-1293**	1	LOCKNUT (1-3/16-12-THD)	
	32	1	**3B-6768**	1	BUSHING-REDUCER	
	33	1	**3B-7262**	1	NIPPLE-PIPE	
	34	1	**4M-0061**	2	BOLT (5/16-18X0.75-IN)	
	35	1	**4M-5281**	6	BOLT (1/4-20X0.75-IN)	
	36	1	**4M-5317**	1	BUSHING-REDUCING	
	38	1	**6V-8398**	9	SEAL-O-RING	
	39	1	**6V-8995**	2	UNION	
	40	1	**6V-8997**	1	UNION	
	41	1	**6V-9169**	3	NUT-BULKHEAD (13/16-16-THD)	
	42	1	**6V-9837**	2	TEE-SWIVEL	
	43	1	**8T-4121**	4	WASHER-HARD (11X21X2.5-MM THK)	
M	44	1	**8T-4136**	4	BOLT (M10X1.5X25-MM)	
M	45	1	**8T-4193**	4	BOLT (M16X2X50-MM)	
	46	1	**8T-4205**	6	WASHER-HARD (7.2X14.5X2-MM THK)	

155-4809 PUMP GP-LUBRICATION *(contd.)* i02289059

NOTE	REF NO	GRAPHIC REF	PART NUMBER	QTY	PART NAME 1 2 3 4 5 6 (PRODUCT LEVEL)	SEE PAGE
	47	1	**8T-4224**	2	WASHER-HARD (8.8X16X2-MM THK)	
	48	1	**9T-1119**	1	BREATHER (LUBRICATION PUMP)	
	49	1	**9X-8257**	4	WASHER (17.5X30X3.5-MM THK)	
					AVAILABLE REPAIR KIT(S):	
J			**8X-2325**	1	KIT-PUMP	
					(INCLUDES O-RINGS, GASKETS, RODS, SPRING, PIN, PACKING, U CUP, CHECK, CHECK SEAT, SEAT, PLUNGER, WASHER & BALL)	
L			**221-9578**	1	KIT-VALVE	
					(INCLUDES O-RING, PLUNGER, SPRING AND 4 SCREWS)	
J			**8X-2326**	1	KIT-TUBE (LUBRICATION PUMP)	
					(INCLUDES CHECK, CHECK SEAT, SEAT, WASHER, PLUNGER, ROD, GASKET, PACKING & BALL)	

I-REFER TO HYDRAULIC INFORMATION SYSTEM
J-KIT MARKED J SERVICES PART MARKED J
L-KIT MARKED L SERVICES PART MARKED L
M-METRIC PART

155-4809 PUMP GP-LUBRICATION *(contd.)* i02289059

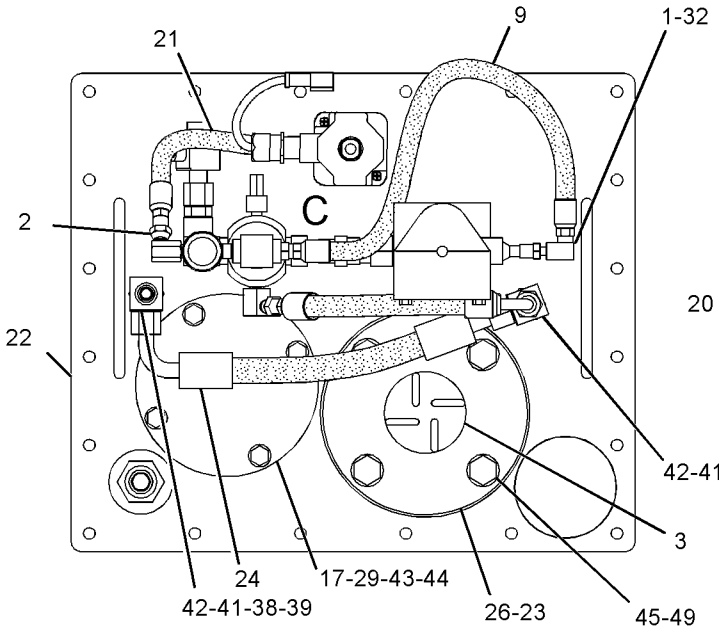

VIEW A-A

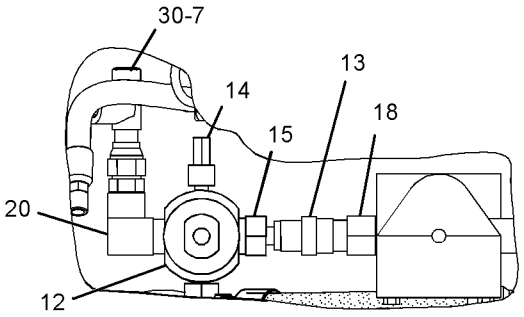

VIEW OF AREA C

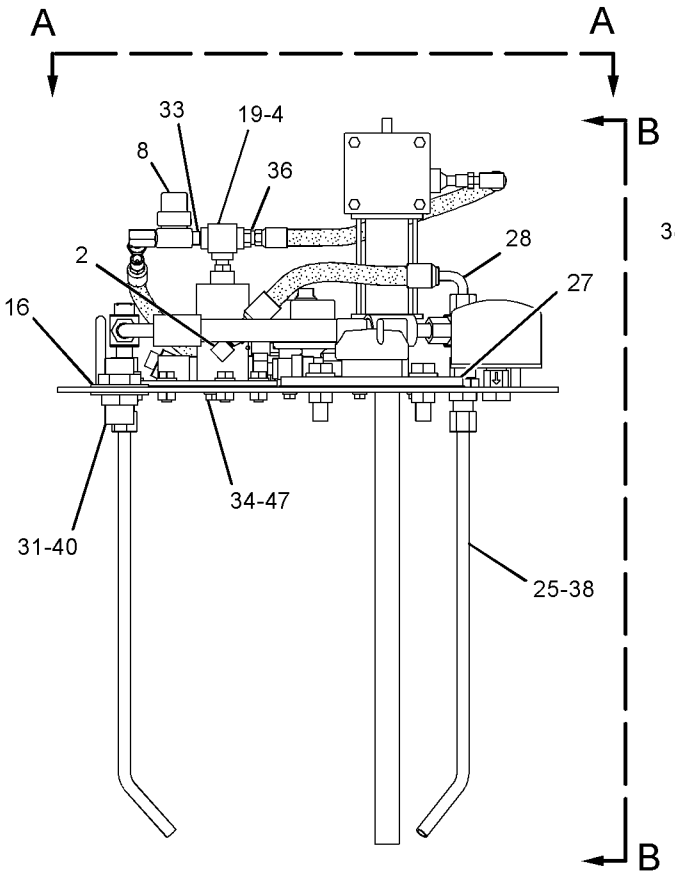

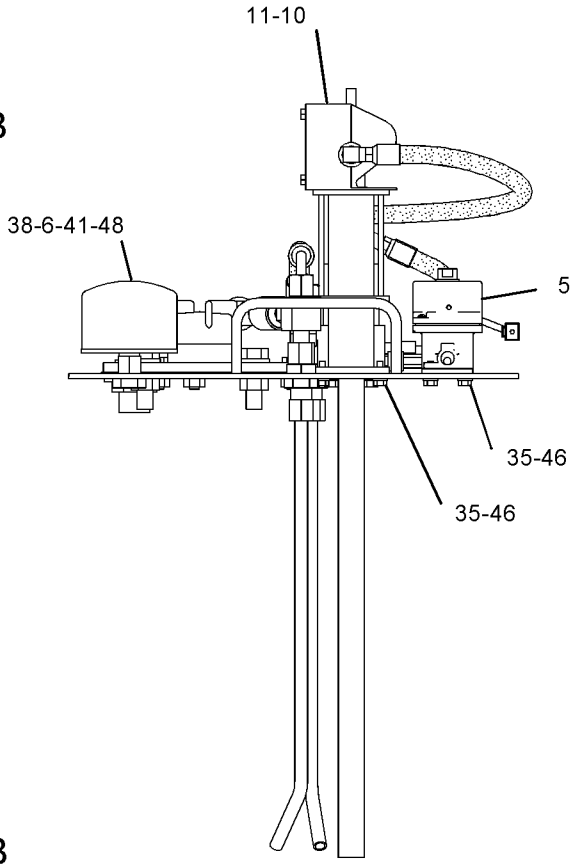

VIEW B-B

GRAPHIC #1 **<END>** g01146333

FRAME AND BODY

246-6235 STEP GP

S/N: 4421-UP

PART OF 245-8813 INSTALLATION AR-FIELD

SMCS-7254 **i02149250**

NOTE	REF NO	GRAPHIC REF	PART NUMBER	QTY	PART NAME 1 2 3 4 5 6 (PRODUCT LEVEL)	SEE PAGE
Y	1	1	**246-6236**	2	STEP GP	590
	2	1	**246-6239**	2	STEP AS	
	3	1	**5P-1076**	16	WASHER-HARD (13.5X30X4-MM THK)	
M	4	1	**8T-4183**	8	BOLT (M12X1.75X40-MM)	
M	5	1	**8T-4184**	8	BOLT (M12X1.75X45-MM)	

M-METRIC PART
Y-SEPARATE ILLUSTRATION

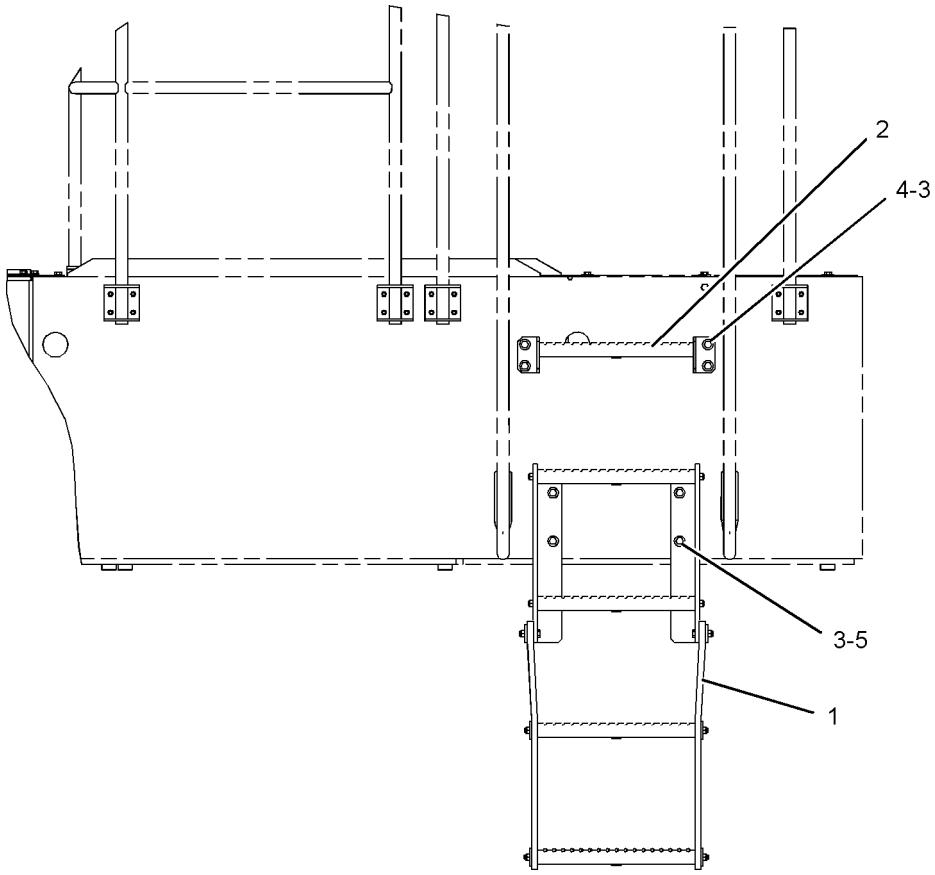

RIGHT SIDE VIEW

GRAPHIC #1

<END>

g01091065

246-6236 STEP GP

S/N: 4421-UP

PART OF 246-6235 STEP GP

SMCS-7254 **i02149772**

NOTE	REF NO	GRAPHIC REF	PART NUMBER	QTY	PART NAME 1 2 3 4 5 6 (PRODUCT LEVEL)	SEE PAGE
	1	1	**4V-9803**	4	PLATE	
	2	1	**112-4558**	2	PLATE	
	3	1	**188-0869**	4	STEP AS	
	4	1	**246-6237**	1	BRACKET (RH)	
	5	1	**246-6238**	1	BRACKET (LH)	
	6	1	**247-2894**	2	BELT (STEP)	
M	7	1	**6V-7687**	20	LOCKNUT (M12X1.75-THD)	
M	8	1	**8T-4139**	8	BOLT (M12X1.75X30-MM)	
M	9	1	**8T-4183**	8	BOLT (M12X1.75X40-MM)	
M	10	1	**8T-4194**	4	BOLT (M12X1.75X50-MM)	

M-METRIC PART

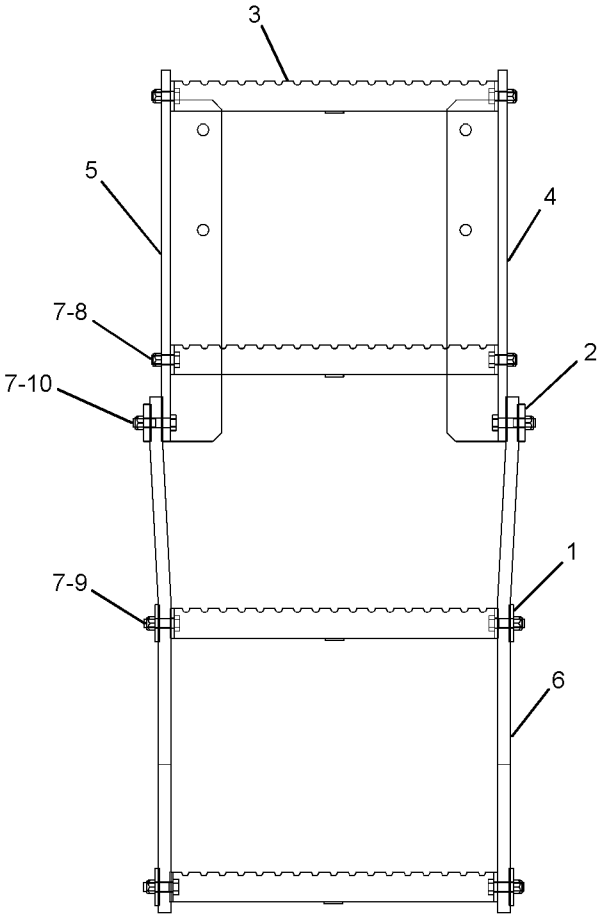

RIGHT SIDE VIEW

GRAPHIC #1

<END>

g01091698

FRAME AND BODY

155-7409 TANK GP-GREASE

S/N: 4421-UP

PART OF 152-8968 LUBRICATION GP-AUTOMATIC

SMCS-7540 **i00991779**

NOTE	REF NO	GRAPHIC REF	PART NUMBER	QTY	PART NAME 1 2 3 4 5 6 (PRODUCT LEVEL)	SEE PAGE
	1	1	**155-4803**	1	COVER	
	2	1	**155-4807**	1	TANK AS	
	3	1	**155-6710**	1	GASKET	
	4	1	**8T-4121**	10	WASHER-HARD (11X21X2.5-MM THK)	
M	5	1	**8T-4136**	10	BOLT (M10X1.5X25-MM)	

M-METRIC PART

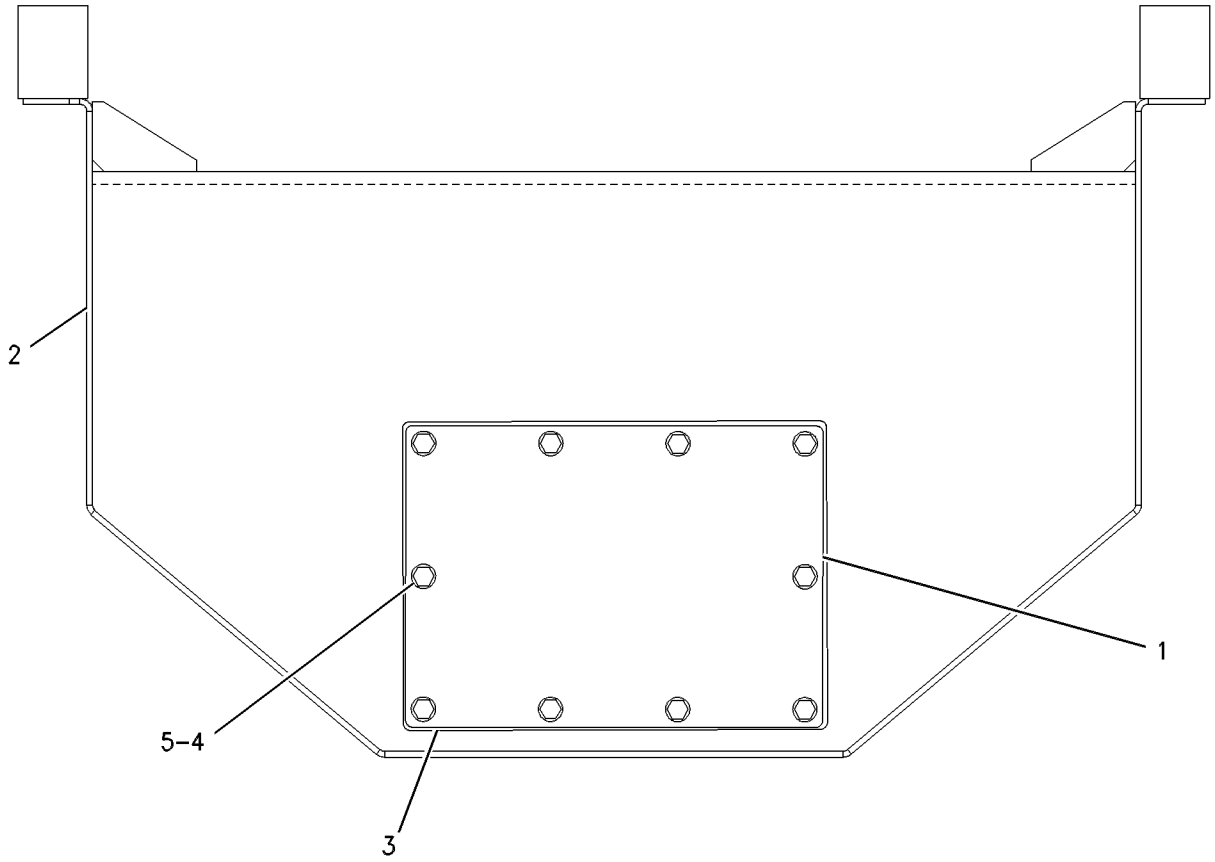

LEFT SIDE VIEW

GRAPHIC #1 **<END>** g00509786

250-4494 VALVE & LINES GP-LUBRICATION

S/N: 4421-UP

PART OF 247-5922 LINES GP-AUTOMATIC LUBRICATION

SMCS-7540 **i02158379**

NOTE	REF NO	GRAPHIC REF	PART NUMBER	QTY	PART NAME 1 2 3 4 5 6 (PRODUCT LEVEL)	SEE PAGE
Y	1	1	**5T-5009**	3	VALVE GP-LUBE DISTRIBUTION (3-INJECTOR)	596
	2	1	**5T-5012**	13	CAP-PROTECTION	
Y	3	1	**8W-2597**	1	VALVE GP-LUBE DISTRIBUTION (4-INJECTOR)	597
I	4	1	**114-6059**	1	HOSE AS	
	5	1	**114-6060**	2	TUBE AS	
I	6	1	**250-4501**	2	HOSE AS	
	7	1	**004-6683**	2	FITTING	
	8	1	*148-8320*	11	CONNECTOR AS	
		1	**8C-6865**	1	CONNECTOR	
		1	**4J-5477**	1	SEAL-O-RING	
	9	1	*148-8444*	1	TEE AS-SWIVEL	
		1	**6V-8398**	2	SEAL-O-RING	
		1	**6V-9837**	1	TEE-SWIVEL	
	10	1	*150-4037*	2	TEE AS	
					(EACH INCLUDES)	
		1	**6V-8398**	2	SEAL-O-RING	
		1	**6V-9844**	1	TEE-SWIVEL	
	11	1	*171-6731*	2	CONNECTOR AS	
					(EACH INCLUDES)	
		1	**6V-8398**	1	SEAL-O-RING	
		1	**8C-6871**	1	CONNECTOR	
	12	1	**3J-5390**	2	PLUG	

I-REFER TO HYDRAULIC INFORMATION SYSTEM
Y-SEPARATE ILLUSTRATION

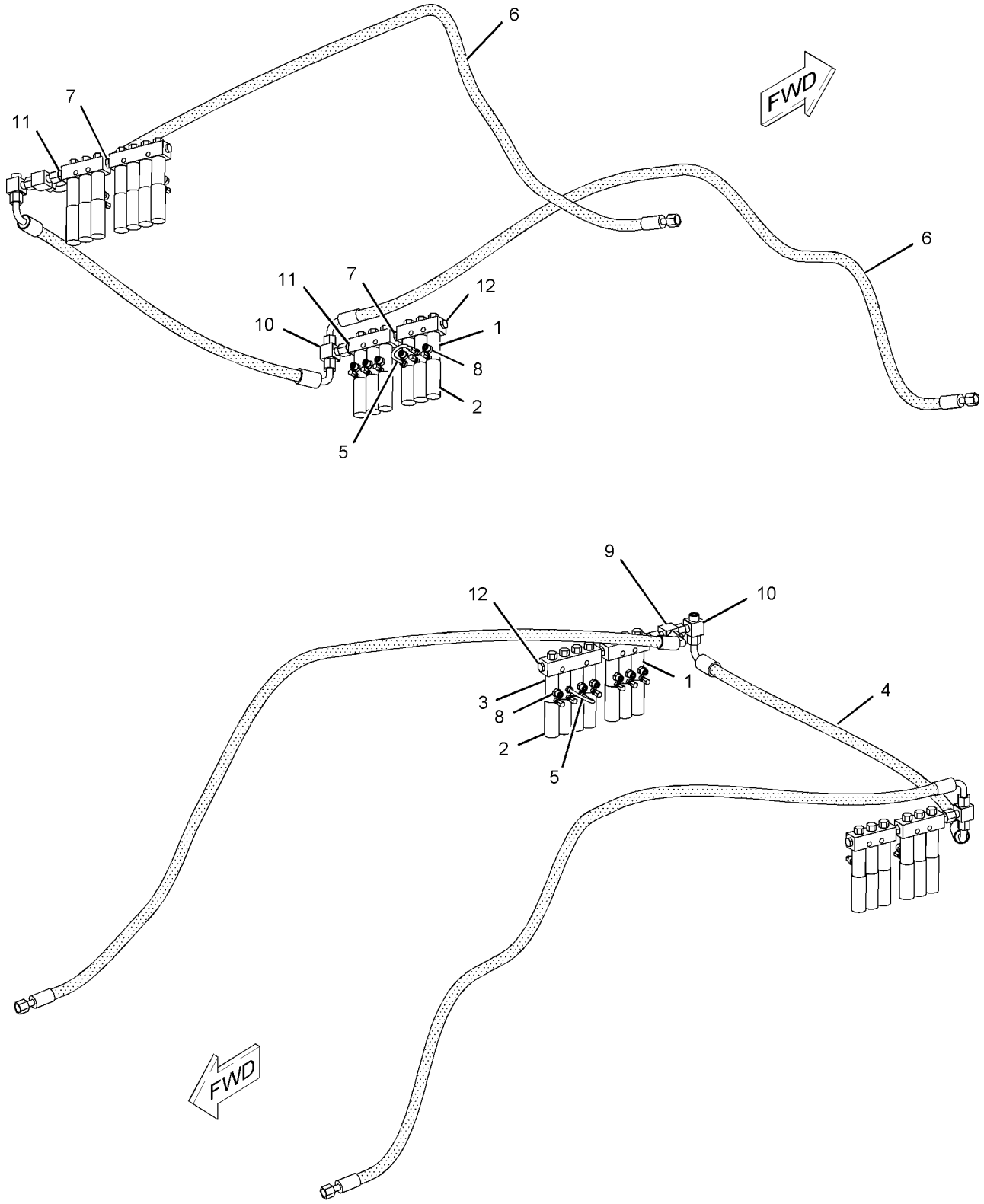

GRAPHIC #1 **<END>** g01091535

FRAME AND BODY

250-4495 VALVE & LINES GP-LUBRICATION

S/N: 4421-UP

PART OF 247-5923 LINES GP-AUTOMATIC LUBRICATION

SMCS-7540 **i02282396**

NOTE	REF NO	GRAPHIC REF	PART NUMBER	QTY	PART NAME 1 2 3 4 5 6 (PRODUCT LEVEL)	SEE PAGE
Y	1	1	**5T-5009**	3	VALVE GP-LUBE DISTRIBUTION (3-INJECTOR)	596
	2	1	**5T-5012**	9	CAP-PROTECTION	
I	3	1	**8X-5337**	1	HOSE AS	
I	4	1	**9R-4638**	1	HOSE AS	
I	5	1	**250-4528**	1	HOSE AS	
	6	1	**004-6683**	1	FITTING	
	7	1	*148-8320*	9	CONNECTOR AS	
					(EACH INCLUDES)	
		1	**4J-5477**	1	SEAL-O-RING	
		1	**8C-6865**	1	CONNECTOR	
	8	1	*148-8444*	2	TEE AS-SWIVEL	
					(EACH INCLUDES)	
		1	**6V-8398**	2	SEAL-O-RING	
		1	**6V-9837**	1	TEE-SWIVEL	
	9	1	*171-6731*	2	CONNECTOR AS	
					(EACH INCLUDES)	
		1	**6V-8398**	1	SEAL-O-RING	
		1	**8C-6871**	1	CONNECTOR	
	10	1	**3J-5390**	2	PLUG	

I-REFER TO HYDRAULIC INFORMATION SYSTEM
Y-SEPARATE ILLUSTRATION

250-4495 **VALVE & LINES GP-LUBRICATION** *(contd.)* **i02282396**

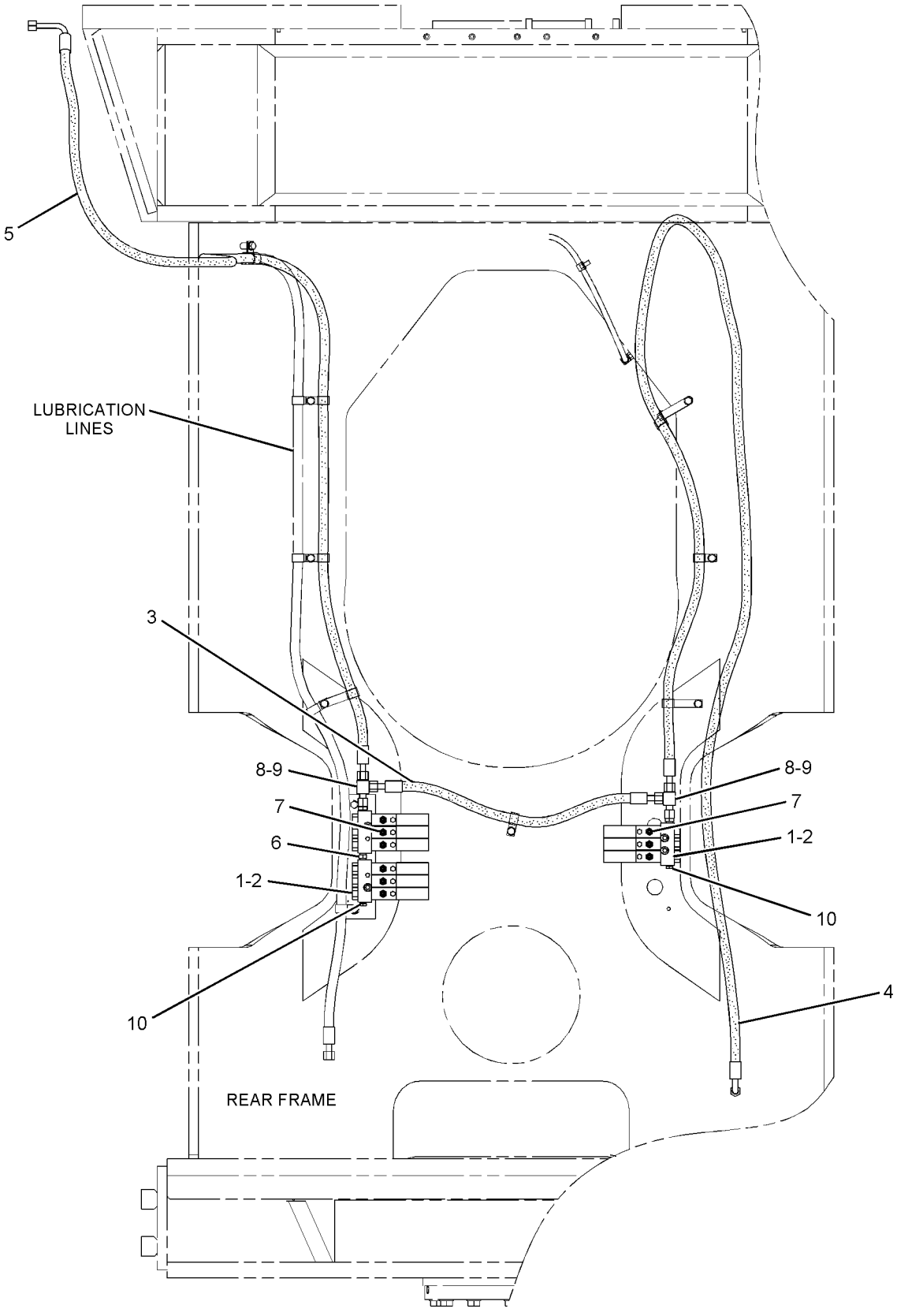

REAR VIEW

GRAPHIC #1 **<END>** g01147190

5T-5009 VALVE GP-LUBE DISTRIBUTION–3-INJECTOR

S/N: 4421-UP

PART OF 250-4494, 250-4495 VALVE & LINES GP-LUBRICATION

SMCS-7540 **i02113022**

NOTE	REF NO	GRAPHIC REF	PART NUMBER	QTY	PART NAME 1 2 3 4 5 6 (PRODUCT LEVEL)	SEE PAGE
J	1	1	**5T-5045**	3	INJECTOR GP-LUBRICATION	
					(EACH INCLUDES)	
	2	1	**8X-1106**	1	FITTING AS-GREASE (1/8-27-THD)	
	3	1	**191-0554**	1	PACKING	
					AVAILABLE REPAIR KIT(S):	
J			**8W-2555**	1	KIT-INJECTOR (LUBE)	
					(INCLUDES PLUNGER, PISTON ROD, SPRING, & PACKING)	
J-KIT MARKED J SERVICES PART MARKED J						

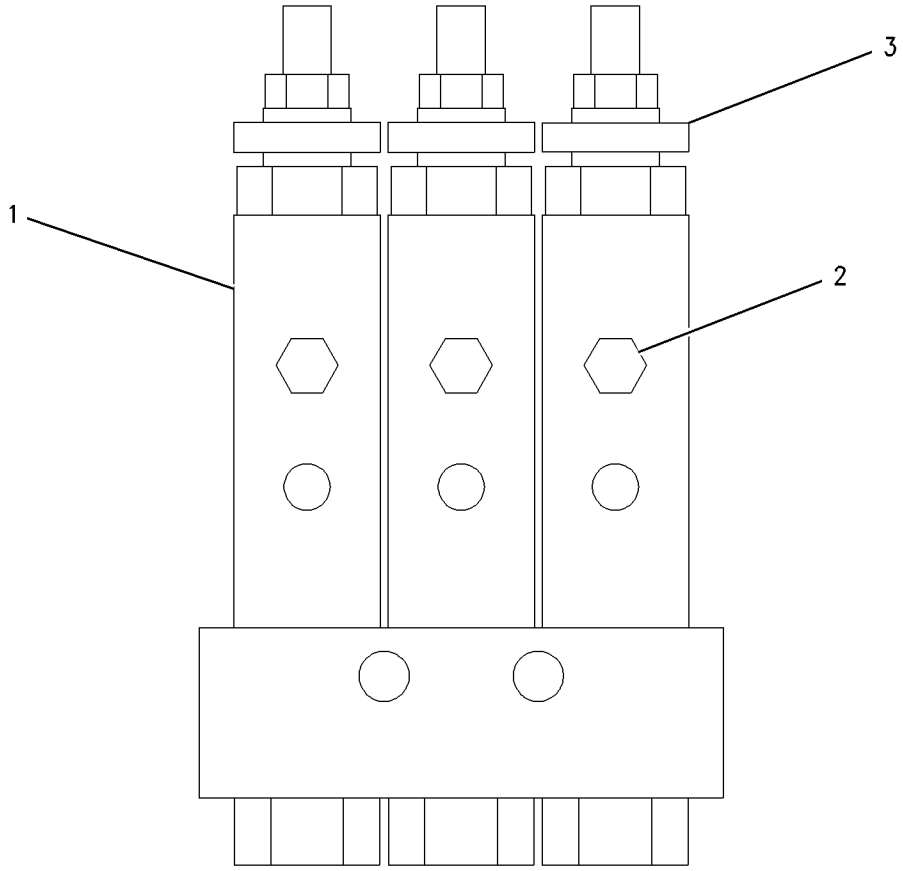

GRAPHIC #1 **<END>** g00752550

8W-2597 VALVE GP-LUBE DISTRIBUTION–4-INJECTOR

S/N: 4421-UP

PART OF 245-1567 LINES GP-AUTOMATIC LUBRICATION, 250-4494 VALVE & LINES GP-LUBRICATION

ALSO AN ATTACHMENT

SMCS-7540 **i02113084**

NOTE	REF NO	GRAPHIC REF	PART NUMBER	QTY	PART NAME 1 2 3 4 5 6 (PRODUCT LEVEL)	SEE PAGE
J	1	1	**5T-5045**	4	INJECTOR GP-LUBRICATION	
					(EACH INCLUDES)	
	1A	1	**8X-1106**	1	FITTING AS-GREASE (1/8-27-THD)	
	2	1	**191-0554**	4	PACKING	
					AVAILABLE REPAIR KIT(S):	
J			**8W-2555**	1	KIT-INJECTOR (LUBE)	
					(INCLUDES PLUNGER, PISTON ROD, SPRING & PACKING)	

J-KIT MARKED J SERVICES PART MARKED J

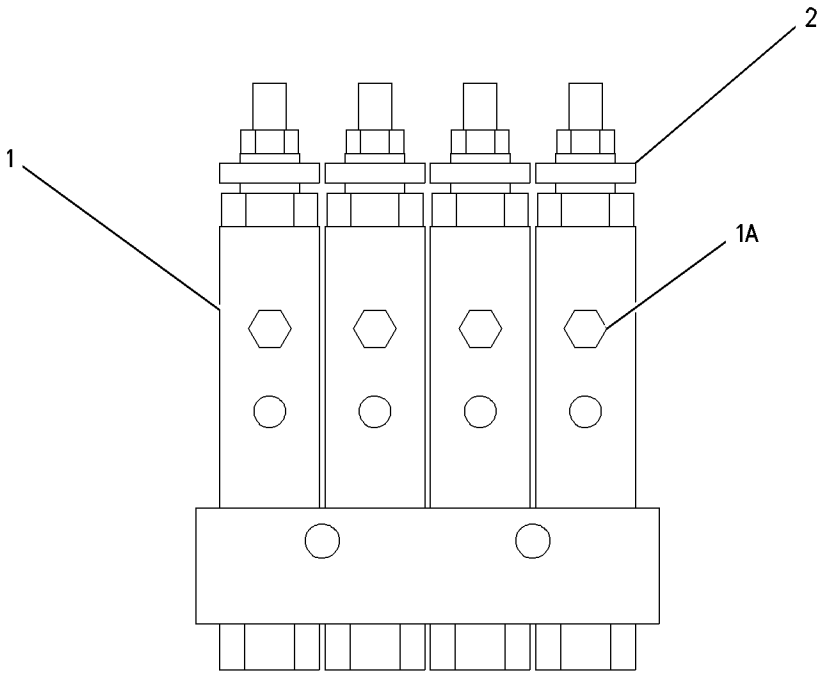

GRAPHIC #1 **<END>** g00752264

141-2107 VALVE GP-LUBE DISTRIBUTION–2-INJECTOR

S/N: 4421-UP

PART OF 245-1566, 245-1568, 245-1569 LINES GP-AUTOMATIC LUBRICATION AN ATTACHMENT

SMCS-7540 **i02113124**

NOTE	REF NO	GRAPHIC REF	PART NUMBER	QTY	PART NAME 1 2 3 4 5 6 (PRODUCT LEVEL)	SEE PAGE
J	1	1	**5T-5045**	2	INJECTOR GP-LUBRICATION	
					(EACH INCLUDES)	
	2	1	**8X-1106**	1	FITTING AS-GREASE (1/8-27-THD)	
	3	1	**191-0554**	2	PACKING	
					AVAILABLE REPAIR KIT(S):	
J			**8W-2555**	1	KIT-INJECTOR (LUBE)	
					(INCLUDES PLUNGER, PISTON, ROD, SPRING & PACKING)	

J-KIT MARKED J SERVICES PART MARKED J

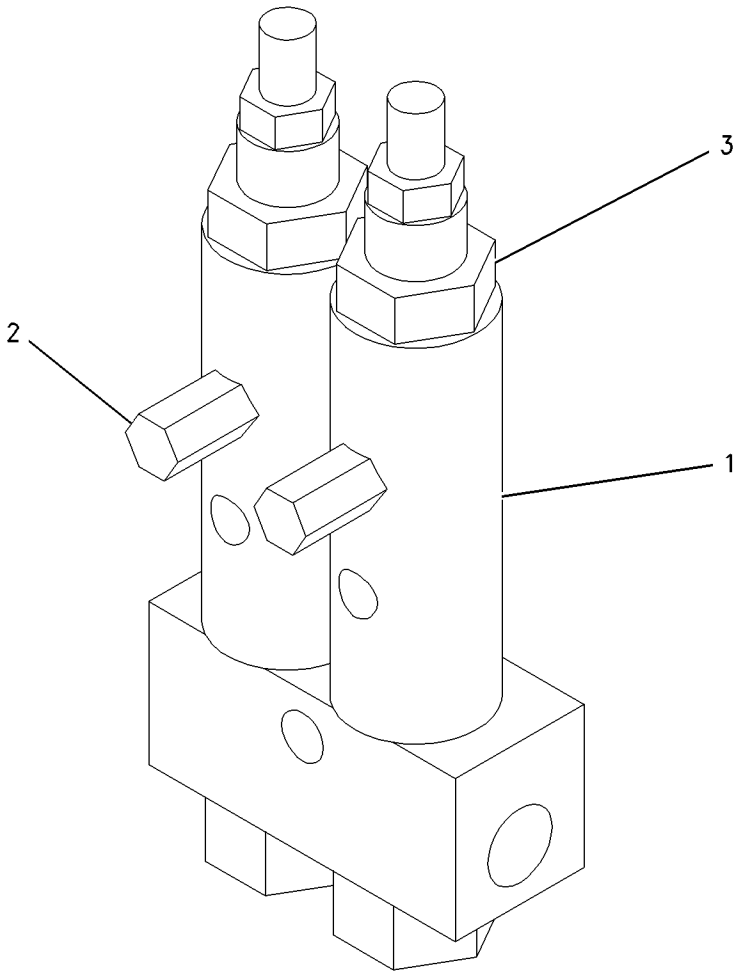

GRAPHIC #1 **<END>** g00804476

FRAME AND BODY

262-7811 WALKWAY GP

S/N: 4421-UP

PART OF 245-8813 INSTALLATION AR-FIELD

SMCS-7255 **i02285750**

NOTE	REF NO	GRAPHIC REF	PART NUMBER	QTY	PART NAME 1 2 3 4 5 6 (PRODUCT LEVEL)	SEE PAGE
	1	1	**264-7377**	1	GRATE AS (LH)	
	2	1	**264-7378**	1	GRATE AS (RH)	
	3	1	**264-7392**	2	BRACKET AS	
M		1	**8T-3597**	2	NUT-WELD (M12X1.75-THD)	
	4	1	**264-7393**	2	BRACKET AS	
M		1	**8T-3597**	2	NUT-WELD (M12X1.75-THD)	
	5	1	**5P-1076**	16	WASHER-HARD (13.5X30X4-MM THK)	
M	6	1	**8T-4139**	16	BOLT (M12X1.75X30-MM)	

M-METRIC PART

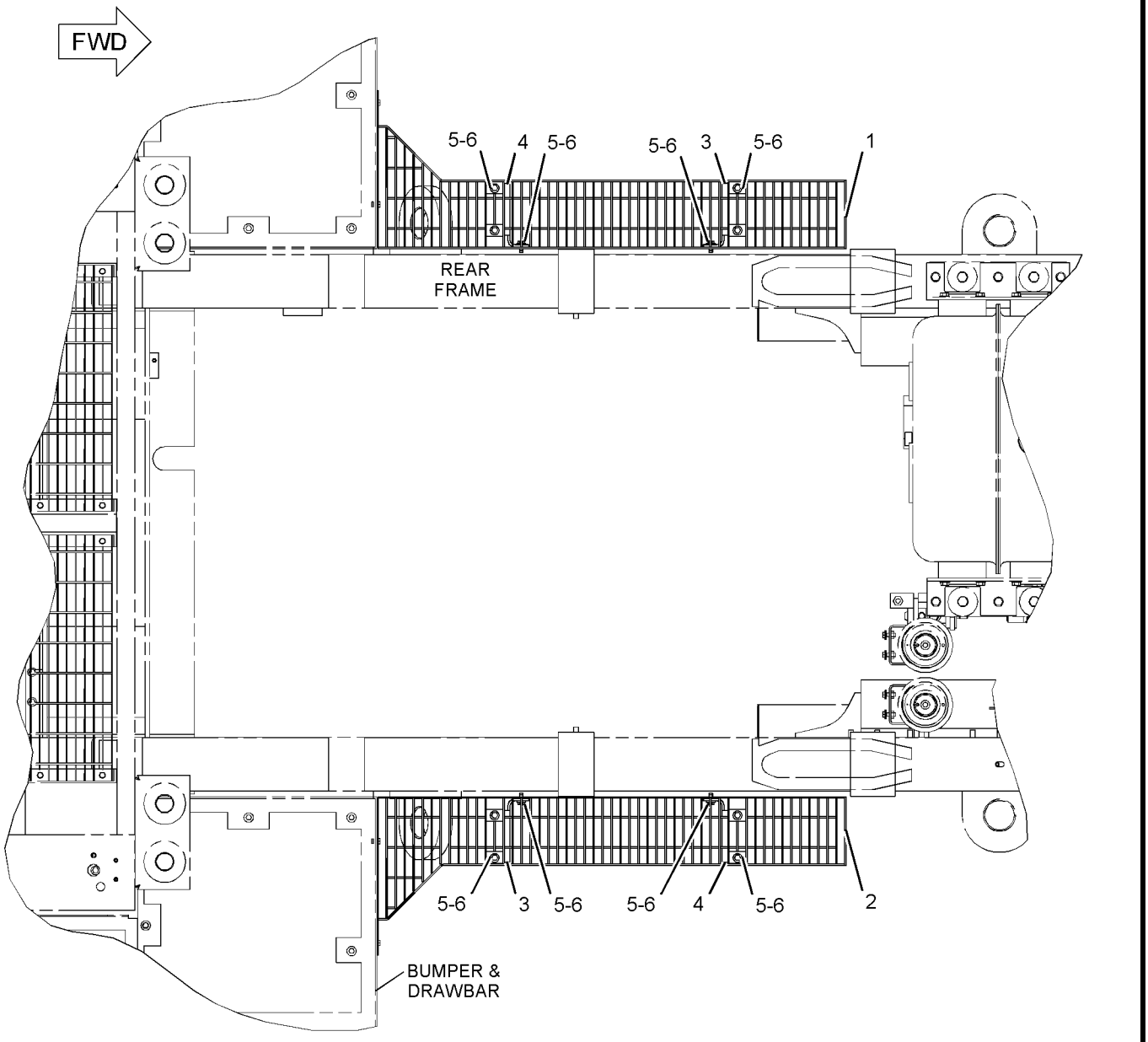

TOP VIEW

GRAPHIC #1 **<END>** g01145279

BRAKING SYSTEM

245-1310 ACCUMULATOR & MTG GP-BRAKE

S/N: 4421-UP

PART OF 245-0715 LINES GP-ACCUMULATOR

SMCS-4263 **i02286577**

NOTE	REF NO	GRAPHIC REF	PART NUMBER	QTY	PART NAME 1 2 3 4 5 6 (PRODUCT LEVEL)	SEE PAGE
	1	1	**8F-0492**	1	SPACER (0.531X1.125X0.625-IN THK)	
	2	1	**9T-6005**	1	VALVE GP-CHECK (BRAKE PUMP)	
	3	1	**104-7108**	2	VALVE GP-CHECK (BRAKE ACCUMULATOR)	
	4	1	**127-9323**	1	BRACKET AS	
M		1	**8T-3490**	1	NUT-WELD (M10X1.5-THD)	
	5	1	*150-3032*	1	ELBOW AS	
		1	**6V-9746**	1	SEAL-O-RING	
		1	**8C-8762**	1	ELBOW	
	6	1	*172-5277*	2	TEE AS	
					(EACH INCLUDES)	
		1	**3D-2824**	1	SEAL-O-RING	
		1	**6V-9746**	1	SEAL-O-RING	
		1	**8T-8901**	1	TEE-O-RING PORT	
Y	7	1	*219-4707*	2	ACCUMULATOR GP-BRAKE (CHARGED)	604
	8	1	**220-2105**	1	BRACKET AS	
M		1	**8T-3597**	4	NUT-WELD (M12X1.75 THD)	
		1	**117-8721**	2	LUG (M10X1.5)	
	9	1	**220-2106**	1	BRACKET AS	
M		1	**8T-3490**	2	NUT-WELD (M10X1.5-THD)	
	10	1	**245-1844**	1	TUBE AS	
	11	1	**245-1847**	1	TUBE AS	
	12	1	**250-0262**	1	BLOCK	
	13	1	**250-0263**	1	TUBE AS	
	14	1	**250-0264**	1	TUBE AS	
I	15	1	**250-0267**	1	HOSE AS	
	16	1	**263-1724**	1	BRACKET	
	17	1	**267-7351**	2	PLATE	
	18	1	*148-8327*	1	CONNECTOR AS	
		1	**3D-2824**	1	SEAL-O-RING	
		1	**6V-8637**	1	CONNECTOR	
		1	**6V-9746**	1	SEAL-O-RING	
	19	1	*148-8328*	4	CONNECTOR AS	
					(EACH INCLUDES)	
		1	**3D-2824**	1	SEAL-O-RING	
		1	**6V-8398**	1	SEAL-O-RING	
		1	**6V-8633**	1	CONNECTOR	
	20	1	*155-7321*	1	ADAPTER GP	
		1	**3D-2824**	1	SEAL-O-RING	
		1	**6V-1722**	1	ADAPTER-O-RING	
	21	1	**160-0010**	2	U-BOLT	
	22	1	*172-4621*	2	ADAPTER GP	
					(EACH INCLUDES)	
		1	**6V-0301**	1	ADAPTER	
		1	**7M-8485**	1	SEAL-O-RING	
	23	1	**3K-0360**	1	SEAL-O-RING	
	24	1	**5P-1076**	4	WASHER-HARD (13.5X30X4-MM THK)	
	25	1	**5P-4295**	2	CLIP	
	26	1	**6V-8398**	3	SEAL-O-RING	
	27	1	**6V-9746**	2	SEAL-O-RING	
M	28	1	**7X-2552**	3	BOLT (M16X2X30-MM)	
M	29	1	**7X-2553**	4	BOLT (M16X2X40-MM)	
	30	1	**8T-4121**	12	WASHER-HARD (11X21X2.5-MM THK)	
M	31	1	**8T-4132**	4	NUT (M16X2-THD)	
M	32	1	**8T-4133**	2	NUT (M10X1.5 THD)	
M	33	1	**8T-4136**	6	BOLT (M10X1.5X25-MM)	
M	34	1	**8T-4137**	1	BOLT (M10X1.5X20-MM)	

245-1310 **ACCUMULATOR & MTG GP-BRAKE** *(contd.)* **i02286577**

NOTE	REF NO	GRAPHIC REF	PART NUMBER	QTY	PART NAME 1 2 3 4 5 6 (PRODUCT LEVEL)	SEE PAGE
M	35	1	**8T-4139**	4	BOLT (M12X1.75X30-MM)	
M	36	1	**8T-4196**	1	BOLT (M10X1.5X35-MM)	
M	37	1	**8T-4198**	2	BOLT (M10X1.5X100-MM)	
	38	1	**9X-8257**	11	WASHER (17.5X30X3.5-MM THK)	

I-REFER TO HYDRAULIC INFORMATION SYSTEM
M-METRIC PART
Y-SEPARATE ILLUSTRATION

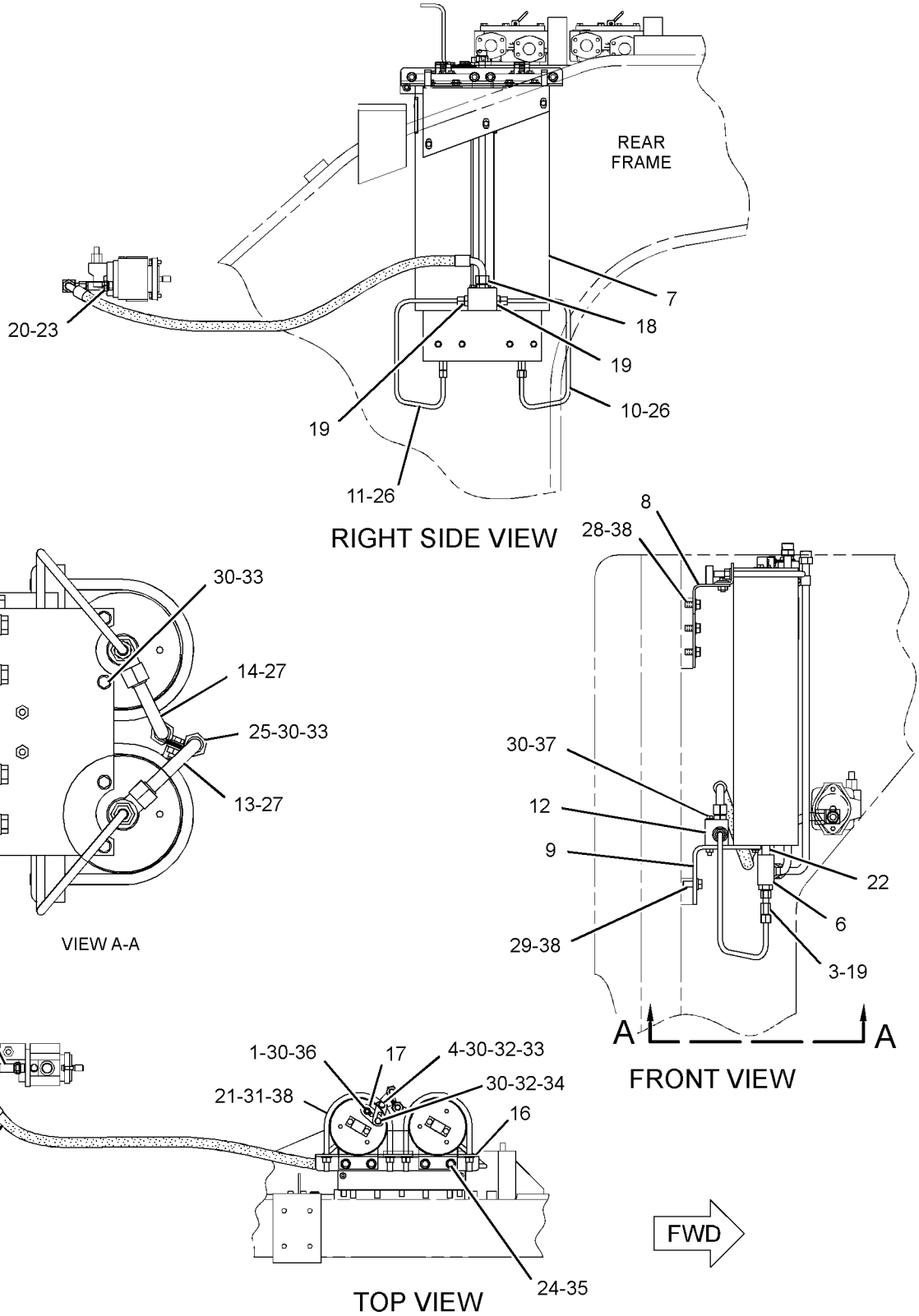

GRAPHIC #1

<END>

g01150306

219-4707 ACCUMULATOR GP-BRAKE–CHARGED

S/N: 4421-UP

PART OF 245-1310 ACCUMULATOR & MTG GP-BRAKE

FIELD REPLACEMENT ORDER 219-8034–PAGE 605

SMCS-4263 **i02279585**

NOTE	REF NO	GRAPHIC REF	PART NUMBER	QTY	PART NAME 1 2 3 4 5 6 (PRODUCT LEVEL)	SEE PAGE
	1	1	**158-2306**	1	VALVE-GAS	
	2	1	**241-0037**	1	FILM-WARNING (HIGH PRESSURE, READ MANUAL)	
					AVAILABLE REPAIR KIT(S):	
			170-0494	1	KIT-SEAL	

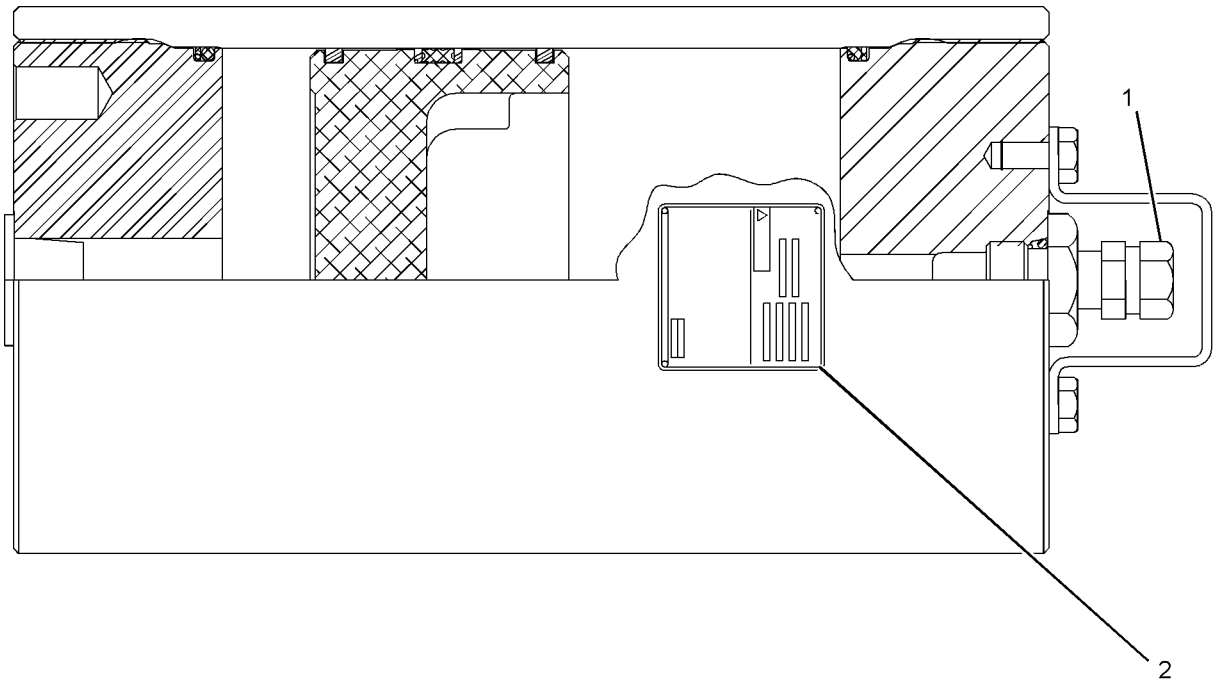

GRAPHIC #1 **<END>** g01141366

219-8034 ACCUMULATOR GP-BRAKE–UNCHARGED

S/N: 4421-UP

FIELD REPLACEMENT FOR 219-4707–PAGE 604

FIELD INSTALLATION

SMCS-4263 **i02150973**

NOTE	REF NO	GRAPHIC REF	PART NUMBER	QTY	PART NAME 1 2 3 4 5 6 (PRODUCT LEVEL)	SEE PAGE
					(NO SERVICED PARTS)	

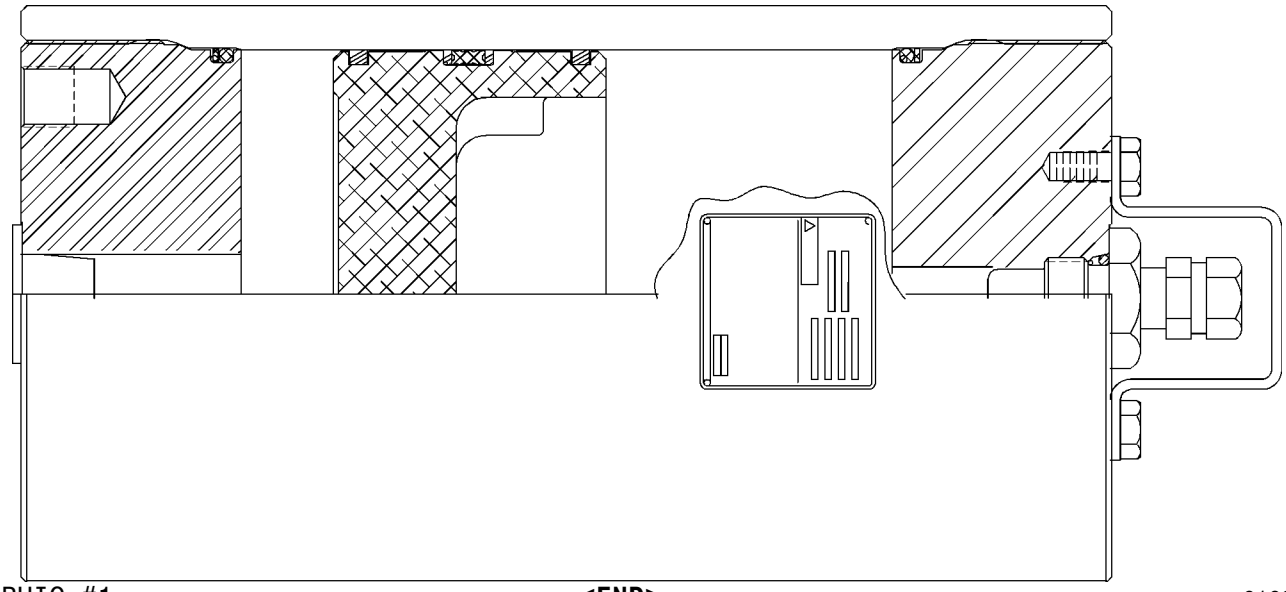

GRAPHIC #1 **<END>** g01093948

BRAKING SYSTEM

101-8346 AIR DRYER GP

S/N: 4421-UP
PART OF 245-3881 PLATFORM AR
AN ATTACHMENT

SMCS-4285 **i01224349**

NOTE	REF NO	GRAPHIC REF	PART NUMBER	QTY	PART NAME 1 2 3 4 5 6 (PRODUCT LEVEL)	SEE PAGE
Y	1	1	**101-8352**	1	AIR DRYER GP	607
M	2	1	**8T-4956**	4	BOLT (M12X1.75X35MM)	
	3	1	**5P-1076**	4	WASHER-HARD (4MM THK)	

M-METRIC PART
Y-SEPARATE ILLUSTRATION

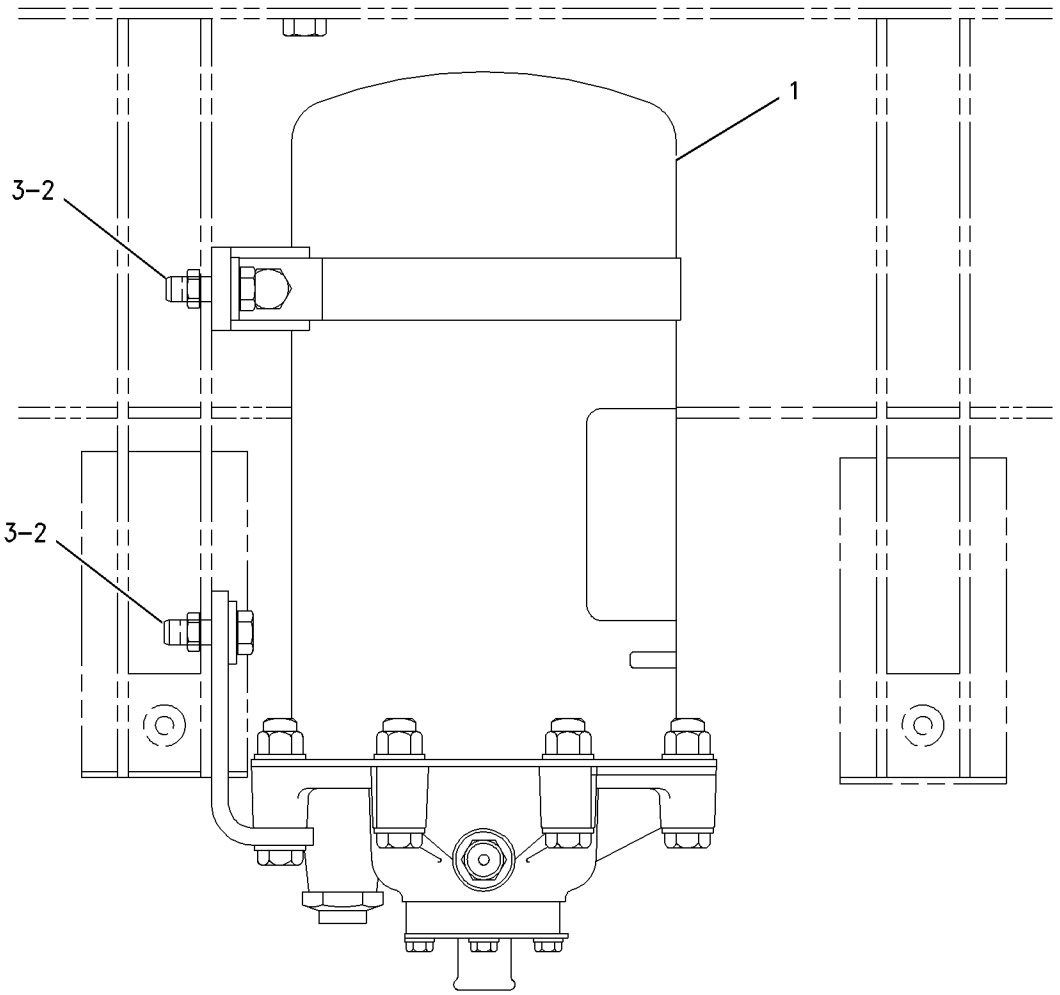

GRAPHIC #1 **<END>** g00654465

101-8352 AIR DRYER GP

S/N: 4421-UP
PART OF 101-8346 AIR DRYER GP
FIELD REPLACEMENT ORDER 166-7416 AIR DRYER AS AN ATTACHMENT

SMCS-4285 **i02096846**

NOTE	REF NO	GRAPHIC REF	PART NUMBER	QTY	PART NAME 1 2 3 4 5 6 (PRODUCT LEVEL)	SEE PAGE
F			**121-5897**	1	VALVE GP-PURGE (AIR DRYER)	
					AVAILABLE REPAIR KIT(S):	
			107-5869	1	CARTRIDGE-DESICCANT (AIR DRYER)	
			121-5895	1	KIT-PURGE VALVE (AIR DRYER)	
			121-5898	1	KIT-VALVE (AIR DRYER)	
			121-5899	1	BRACKET GP-MOUNTING (AIR DRYER)	
			231-7579	1	KIT-HEATER (AIR DRYER)	
F-NOT SHOWN						

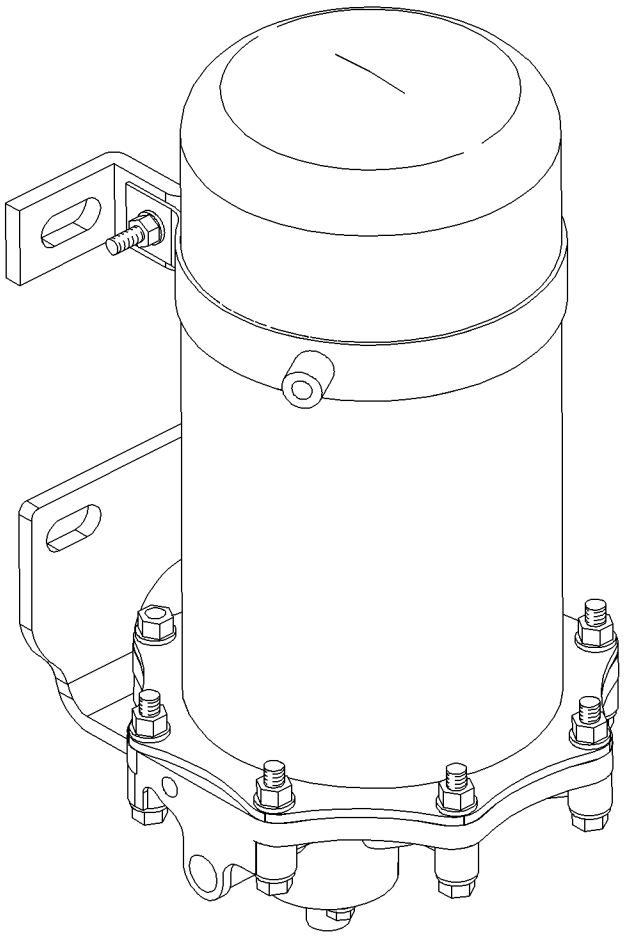

GRAPHIC #1 **<END>** g00907889

BRAKING SYSTEM

205-9236 BASE GP-FOOT BRAKE—PEDAL, LH

S/N: 4421-UP

PART OF 250-9458 CONTROL GP-FOOT BRAKE

SMCS-4269 **i01851867**

NOTE	REF NO	GRAPHIC REF	PART NUMBER	QTY	PART NAME 1 2 3 4 5 6 (PRODUCT LEVEL)	SEE PAGE
	1	1	**4E-9664**	1	PIN	
	2	1	**009-3101**	3	RING-RETAINING	
	3	1	**105-6117**	1	SWITCH AS-LIMIT (STOP LIGHT)	
	4	1	**113-7752**	1	PEDAL-BRAKE	
	5	1	**115-2247**	1	SPRING	
	6	1	**146-1892**	1	HARNESS AS-BRAKE (STOP LIGHT)	
		1	**155-2270**	1	KIT-CONNECTING PLUG (2-PIN)	
Y	7	1	**214-4863**	1	SENSOR GP-POSITION (ROTARY) (LEFT BRAKE PEDAL)	271
M	8	1	**153-6273**	1	SETSCREW	
	9	1	**163-3926**	1	ROLLER	
	10	1	**200-2217**	1	COVER	
	11	1	**200-2218**	1	BRACKET AS-ADJUSTABLE SWITCH (STOP LIGHT LIMIT)	
	12	1	**200-2219**	6	BOLT	
	13	1	**200-2220**	1	SEAL	
	14	1	**206-7316**	1	PIN	
M	15	1	**125-3295**	2	SCREW-PAN HEAD (M2.5X0.45X12-MM)	
M	16	1	**8T-2899**	2	SCREW-MACHINE (M2.5X0.45X6)	

M-METRIC PART
Y-SEPARATE ILLUSTRATION

205-9236 BASE GP-FOOT BRAKE *(contd.)* **i01851867**

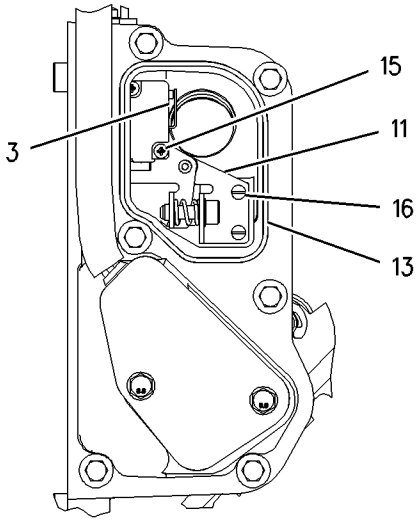

VIEW OF AREA A

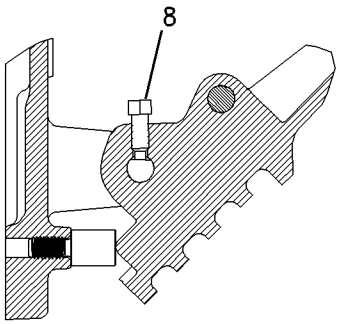

VIEW C-C

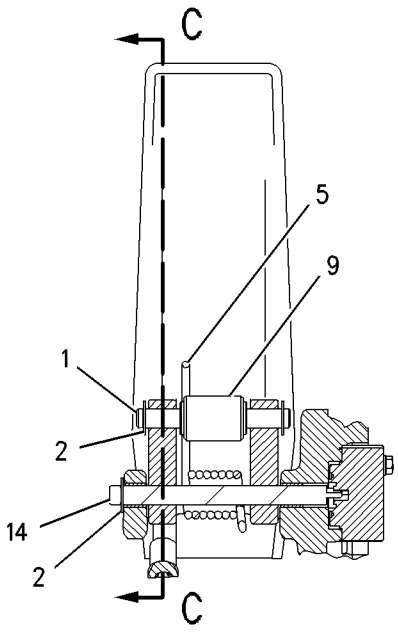

VIEW B-B

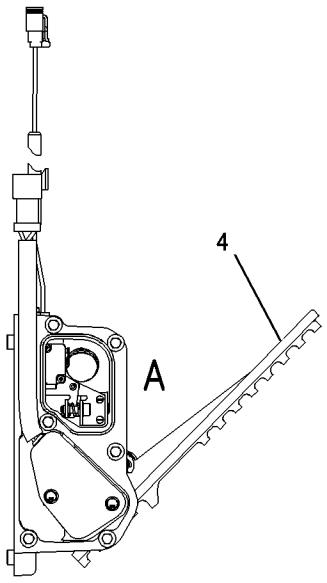

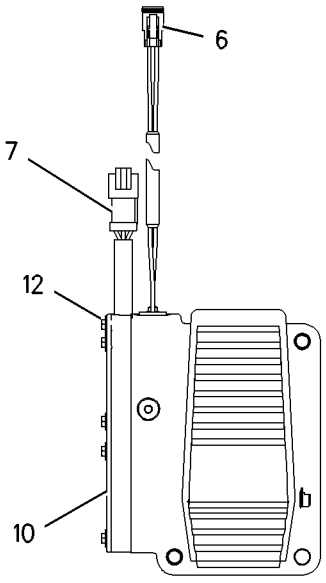

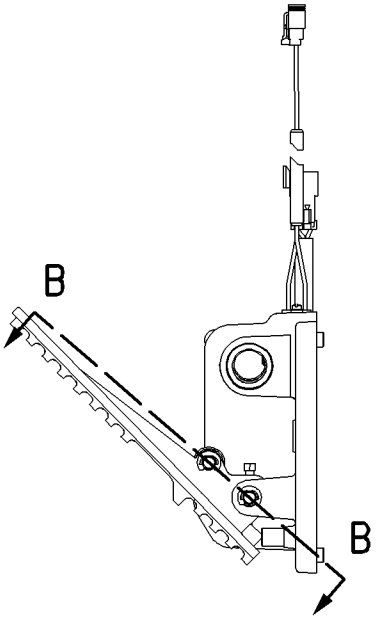

GRAPHIC #1 **<END>** g00869046

BRAKING SYSTEM

251-4629 BASE GP-FOOT BRAKE—PEDAL, RH

S/N: 4421-UP

PART OF 250-9458 CONTROL GP-FOOT BRAKE

SMCS-4269 **i02148434**

NOTE	REF NO	GRAPHIC REF	PART NUMBER	QTY	PART NAME 1 2 3 4 5 6 (PRODUCT LEVEL)	SEE PAGE
					(NO SERVICED PARTS)	

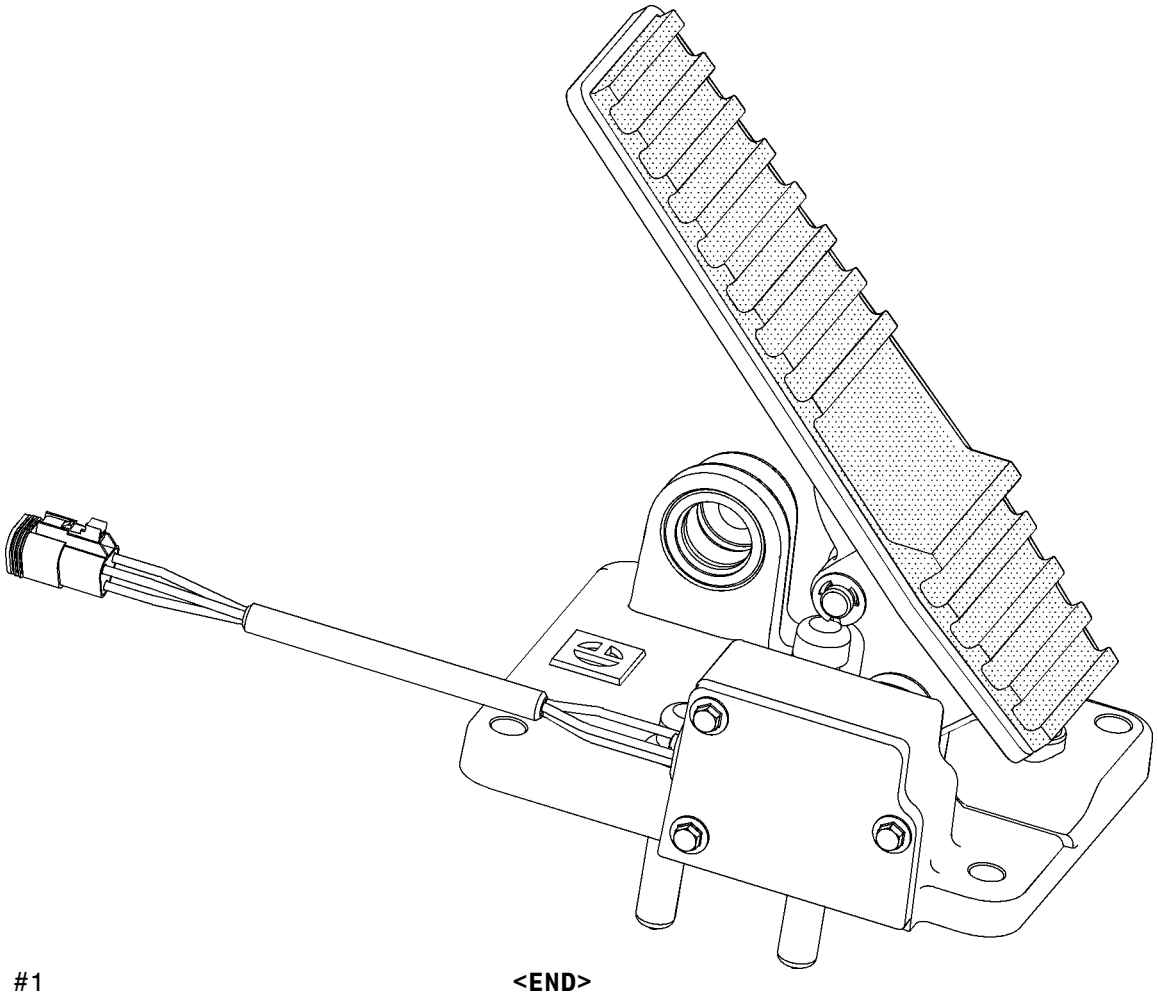

GRAPHIC #1 **<END>** g01091256

116-1339 BRAKE GP-PARKING

S/N: 4421-UP

PART OF 245-8811 CHASSIS AR-FRONT

SMCS-4267 **i00712930**

NOTE	REF NO	GRAPHIC REF	PART NUMBER	QTY	PART NAME 1 2 3 4 5 6 (PRODUCT LEVEL)	SEE PAGE
	1	1	**2G-5459**	2	SCREW-PURGE	
M	2	1	**8T-7013**	4	BOLT (M16X2X220 MM)	
	3	1	**5P-8247**	8	WASHER-HARD (3.5MM THK)	
	4	1	**116-1345**	4	ROD	
M	5	1	**8T-0281**	4	BOLT (M16X2.0X80MM)	
	6	1	**116-2387**	4	DISC-FRICTION	
	7	1	**100-4910**	3	PLATE-SEPARATOR	
	8	1	**100-2715**	1	PLATE-PRESSURE	
	9	1	**7S-3997**	19	SPRING	
	10	1	**100-2720**	4	PIN-REACTION	
	11	1	**100-2719**	1	PLATE-END	
M	12	1	**8T-5002**	4	BOLT (M16X2.0X180MM)	
C	13	1	**149-0593**	2	CYLINDER	
C	14	1	**5J-5402**	4	SEAL AS	
C	16	1	**149-0589**	2	PISTON	
	17	1	**100-2721**	1	ANCHOR-BRAKE	

C-CHANGE FROM PREVIOUS TYPE
M-METRIC PART

116-1339 **BRAKE GP-PARKING** *(contd.)* **i00712930**

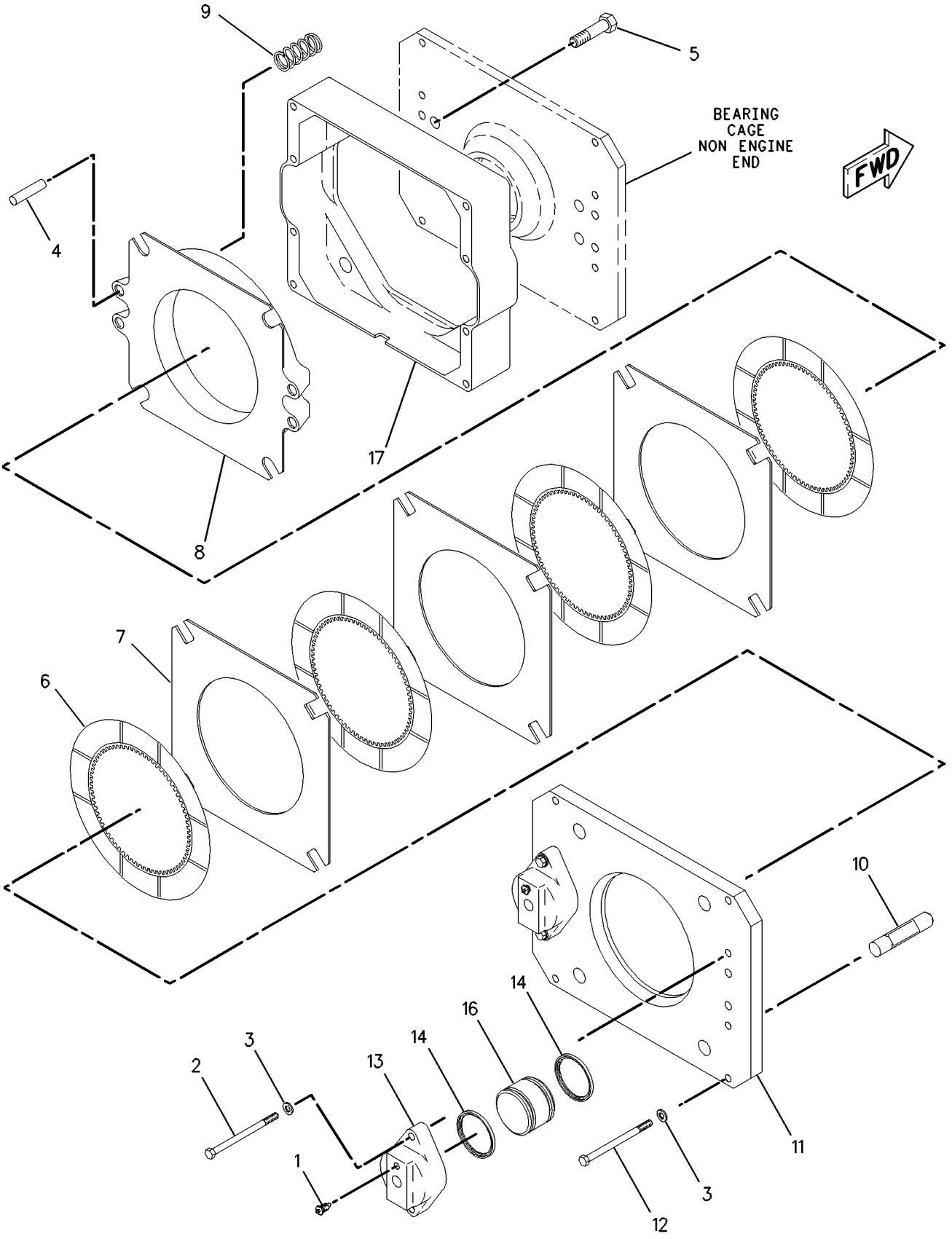

GRAPHIC #1 **<END>** g00325006

250-9458 CONTROL GP-FOOT BRAKE

S/N: 4421-UP

PART OF 242-0341 CAB AR

SMCS-4269 **i02148407**

NOTE	REF NO	GRAPHIC REF	PART NUMBER	QTY	PART NAME 1 2 3 4 5 6 (PRODUCT LEVEL)	SEE PAGE
Y	1	1	**205-9236**	1	BASE GP-FOOT BRAKE (PEDAL, LH)	608
Y	2	1	**251-4629**	1	BASE GP-FOOT BRAKE (PEDAL, RH)	610
	3	1	**251-4630**	1	SHAFT AS	
M	4	1	**8T-7547**	6	BOLT (M8X1.25X30-MM)	

M-METRIC PART
Y-SEPARATE ILLUSTRATION

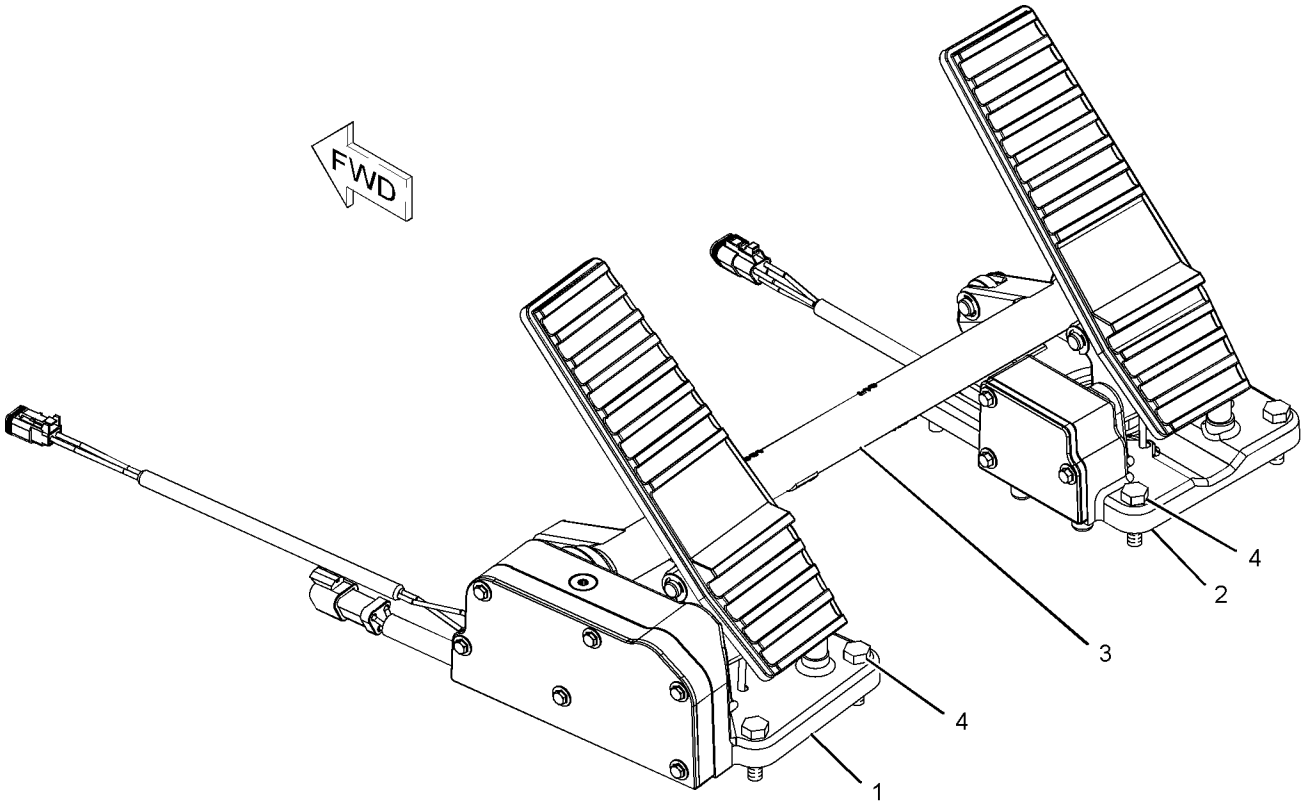

GRAPHIC #1 **<END>** g01090894

BRAKING SYSTEM

242-1902 CONTROL GP-PARKING BRAKE

S/N: 4421-UP

PART OF 242-0341 CAB AR

SMCS-4282, 4284 **i02148158**

NOTE	REF NO	GRAPHIC REF	PART NUMBER	QTY	PART NAME 1 2 3 4 5 6 (PRODUCT LEVEL)	SEE PAGE
	1	1	**3S-2093**	5	STRAP-CABLE	
	2	1	**9U-0830**	1	END-YOKE ROD	
	3	1	**096-0067**	1	PIN-CLEVIS	
	4	1	**122-1671**	1	KNOB	
	5	1	**251-4738**	1	CABLE AS-PARKING BRAKE CONTROL	
	6	1	**5B-9192**	1	PIN-COTTER	
M	7	1	**5C-2874**	1	NUT (M5X0.8-THD)	
M	8	1	**5C-2890**	1	NUT (M6X1-THD)	
M	9	1	**5C-7261**	2	NUT (M8X1.25-THD)	
	10	1	**8T-4224**	2	WASHER-HARD (8.8X16X2-MM THK)	
	11	1	**9U-0178**	1	BRACKET	
	12	1	**9U-0200**	1	BLOCK	

M-METRIC PART

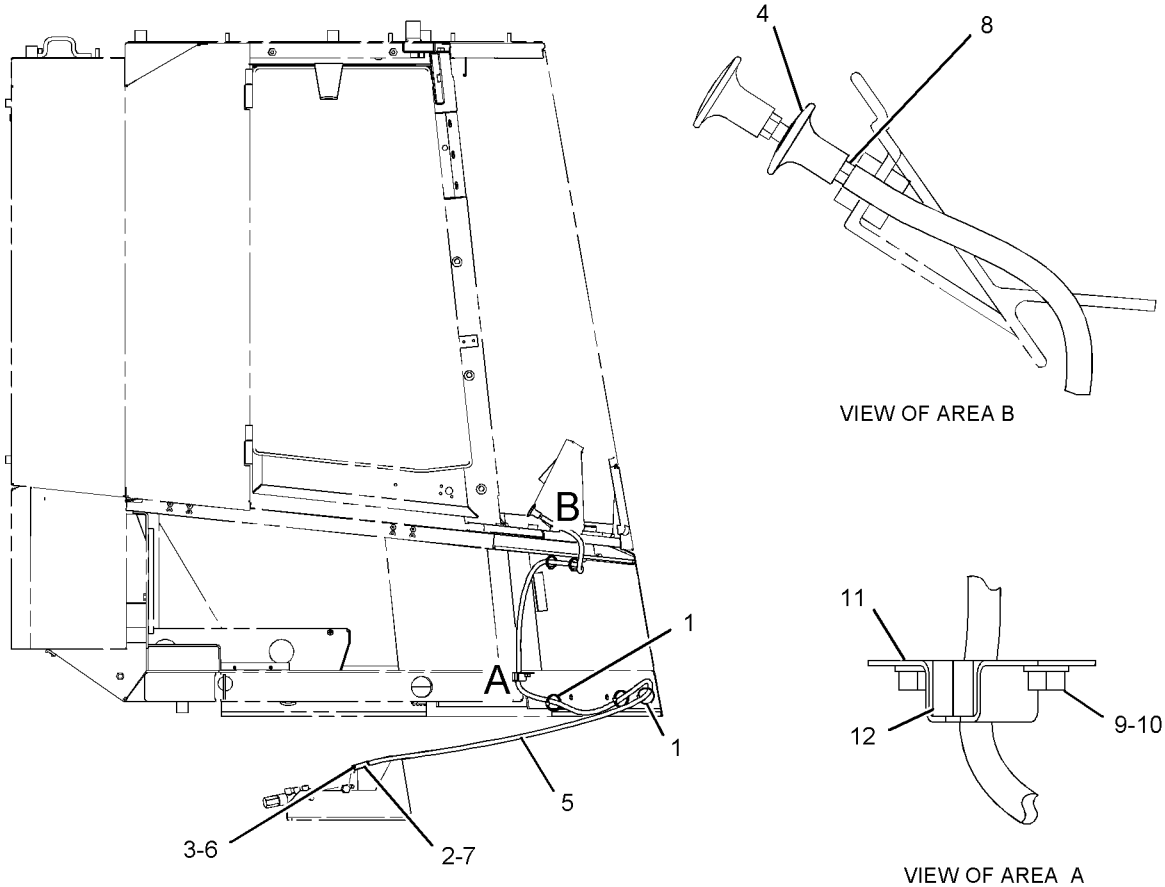

GRAPHIC #1 **<END>** g01091033

245-0690 CONTROL GP-SERVICE BRAKE

S/N: 4421-UP

PART OF 245-0700 HYDRAULIC AR-REAR

SMCS-4257, 4258, 4263, 4265, 4269, 4280 **i02300353**

NOTE	REF NO	GRAPHIC REF	PART NUMBER	QTY	PART NAME 1 2 3 4 5 6 (PRODUCT LEVEL)	SEE PAGE
	1	1	**6B-6205**	1	SPACER (0.438X0.875X1.281-IN THK)	
I	2	1	**8W-5059**	1	HOSE AS	
I	3	1	**8W-7794**	1	HOSE AS	
I	4	1	**8W-7799**	1	HOSE AS	
	5	1	**115-8035**	1	MANIFOLD-BRAKE	
	6	2	**134-8297**	1	BRACKET AS	
M		2	**8T-3490**	1	NUT-WELD (M10X1.5-THD)	
	7	2	**136-9699**	1	BRACKET AS	
M		2	**8T-3490**	1	NUT-WELD (M10X1.5-THD)	
	8	1	*148-8430*	2	TEE AS	
					(EACH INCLUDES)	
		1	**6V-9746**	1	SEAL-O-RING	
		1	**7X-0873**	1	TEE	
	9	2	*150-4027*	1	TEE AS	
		2	**3E-2310**	1	TEE	
		2	**3J-1907**	1	SEAL-O-RING	
		2	**6V-8397**	1	SEAL-O-RING	
	10	1,2	**175-3244**	2	SWITCH AS-PRESSURE (SERVICE BRAKE OIL)	
					(EACH INCLUDES)	
		1,2	**102-8803**	1	KIT-RECEPTACLE (3-PIN)	
					(INCLUDES RECEPTACLE AS AND WEDGE)	
	11	1	*180-9286*	2	CONNECTOR GP	
					(EACH INCLUDES)	
		1	**3D-2824**	1	SEAL-O-RING	
		1	**3E-2345**	1	TEE-O-RING	
		1	**6V-9746**	1	SEAL-O-RING	
	12	1	**243-2652**	1	VALVE AS-CHECK (BRAKE MANIFOLD)	
		1	**3K-0360**	1	SEAL-O-RING	
		1	**6V-8397**	1	SEAL-O-RING	
	13	2	**247-1295**	1	VALVE GP-BRAKE CONTROL (SERVICE)	
M	13A	2	**8T-6685**	2	BOLT (M10X1.5X110-MM)	
	13B	2	**8T-4121**	2	WASHER-HARD (11X21X2.5-MM THK)	
	13C	2	**269-2200**	1	KIT-SEAL	
	14	1	*260-9204*	2	ELBOW AS	
					(EACH INCLUDES)	
		1	**6V-9746**	1	SEAL-O-RING	
		1	**7M-8485**	1	SEAL-O-RING	
	15	1	**264-3827**	1	BLOCK	
I	16	1	**264-3828**	1	HOSE AS	
I	17	1	**264-3829**	2	HOSE AS	
	18	1,2	**130-5300**	2	CLIP	
	19	1	*148-8306*	1	ADAPTER AS	
		1	**5P-5777**	1	ADAPTER-O-RING	
		1	**7M-8485**	1	SEAL-O-RING	
	20	1,2	*148-8325*	3	CONNECTOR AS	
					(EACH INCLUDES)	
		1,2	**3J-1907**	2	SEAL-O-RING	
		1,2	**4J-5477**	2	SEAL-O-RING	
		1,2	**6V-8641**	2	CONNECTOR	
	21	1	*148-8339*	1	CONNECTOR AS	
		1	**6V-8716**	1	CONNECTOR	
		1	**6V-9746**	1	SEAL-O-RING	
		1	**7M-8485**	1	SEAL-O-RING	
	22	1,2	*148-8347*	8	ELBOW AS	
					(EACH INCLUDES)	
		1,2	**3D-2824**	1	SEAL-O-RING	

245-0690 **CONTROL GP-SERVICE BRAKE** *(contd.)* **i02300353**

NOTE	REF NO	GRAPHIC REF	PART NUMBER	QTY	PART NAME 1 2 3 4 5 6 (PRODUCT LEVEL)	SEE PAGE
		1,2	**6V-9007**	1	ELBOW	
		1,2	**6V-9746**	1	SEAL-O-RING	
	23	1	*148-8357*	1	ELBOW AS	
		1	**5K-9090**	1	SEAL-O-RING	
		1	**6V-9008**	1	ELBOW	
		1	**7M-8485**	1	SEAL-O-RING	
	24	1	*148-8360*	2	ELBOW AS	
					(EACH INCLUDES)	
		1	**6V-9182**	1	ELBOW	
		1	**6V-9746**	1	SEAL-O-RING	
		1	**7M-8485**	1	SEAL-O-RING	
	25	2	*148-8368*	1	ELBOW AS	
		2	**3J-1907**	1	SEAL-O-RING	
		2	**4J-5477**	1	SEAL-O-RING	
		2	**6V-8627**	1	ELBOW	
	26	2	*148-8407*	2	PLUG AS	
					(EACH INCLUDES)	
		2	**3J-1907**	1	SEAL-O-RING	
		2	**9S-4191**	1	PLUG-O RING	
	27	1	*153-6242*	1	CONNECTOR AS	
		1	**6V-9746**	1	SEAL-O-RING	
		1	**7M-8485**	1	SEAL-O-RING	
		1	**8T-0197**	1	CONNECTOR	
	28	2	**162-0177**	4	PLUG AS	
					(EACH INCLUDES)	
		2	**3J-1907**	1	SEAL-O-RING	
		2	**9S-8004**	1	PLUG	
	29	1	**194-2903**	1	ELBOW AS	
	30	1	**3J-1907**	2	SEAL-O-RING	
	31	1	**5P-7466**	2	CLIP (SLOT)	
	32	1	**5P-7467**	2	CLIP (TAB)	
	33	1	**5P-8112**	2	GROMMET	
	34	1,2	**6V-9828**	4	CAP AS	
	35	1,2	**6V-9829**	2	CAP AS	
	36	1	**6V-9832**	4	CAP AS	
	37	1	**6V-9833**	1	CAP AS	
	38	1	**7G-3832**	2	GROMMET	
	39	1	**7G-3833**	2	CLIP (TAB)	
	40	1	**7G-3834**	2	CLIP (SLOT)	
	41	1	**7X-7729**	3	WASHER (11X25X3-MM THK)	
	42	1,2	**8T-4121**	6	WASHER-HARD (11X21X2.5-MM THK)	
M	43	1	**8T-4133**	4	NUT (M10X1.15-THD)	
M	44	1,2	**8T-4136**	2	BOLT (M10X1.5X25-MM)	
M	45	1	**8T-4172**	1	BOLT (M10X1.5X80-MM)	
	46	2	**8T-4223**	1	WASHER-HARD (13.5X25.5X3-MM THK)	
M	47	1	**8T-6685**	2	BOLT (M10X1.5X110-MM)	
M	48	2	**8T-6868**	3	BOLT (M12X1.75X80-MM)	

I-REFER TO HYDRAULIC INFORMATION SYSTEM
M-METRIC PART

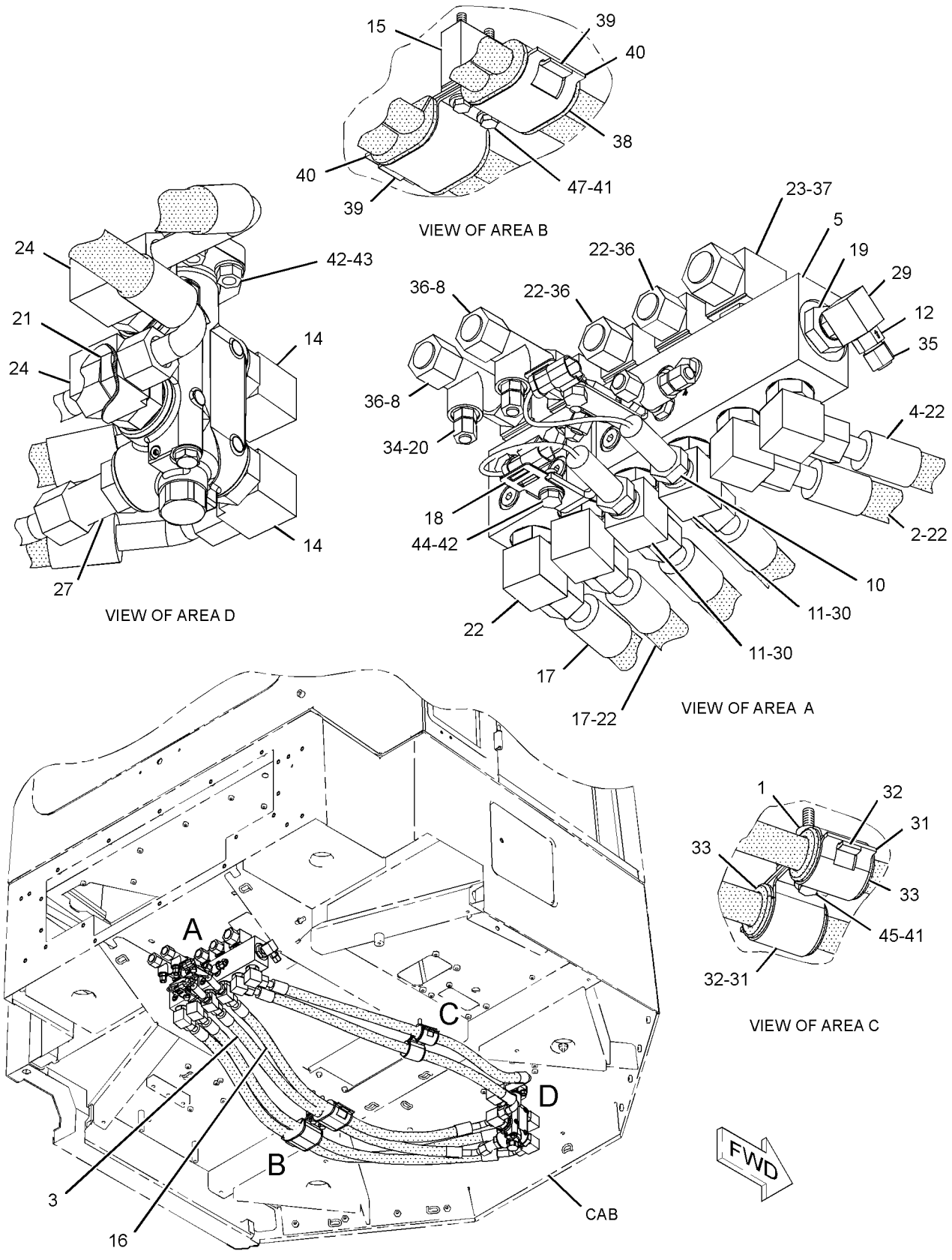

GRAPHIC #1 g01151816

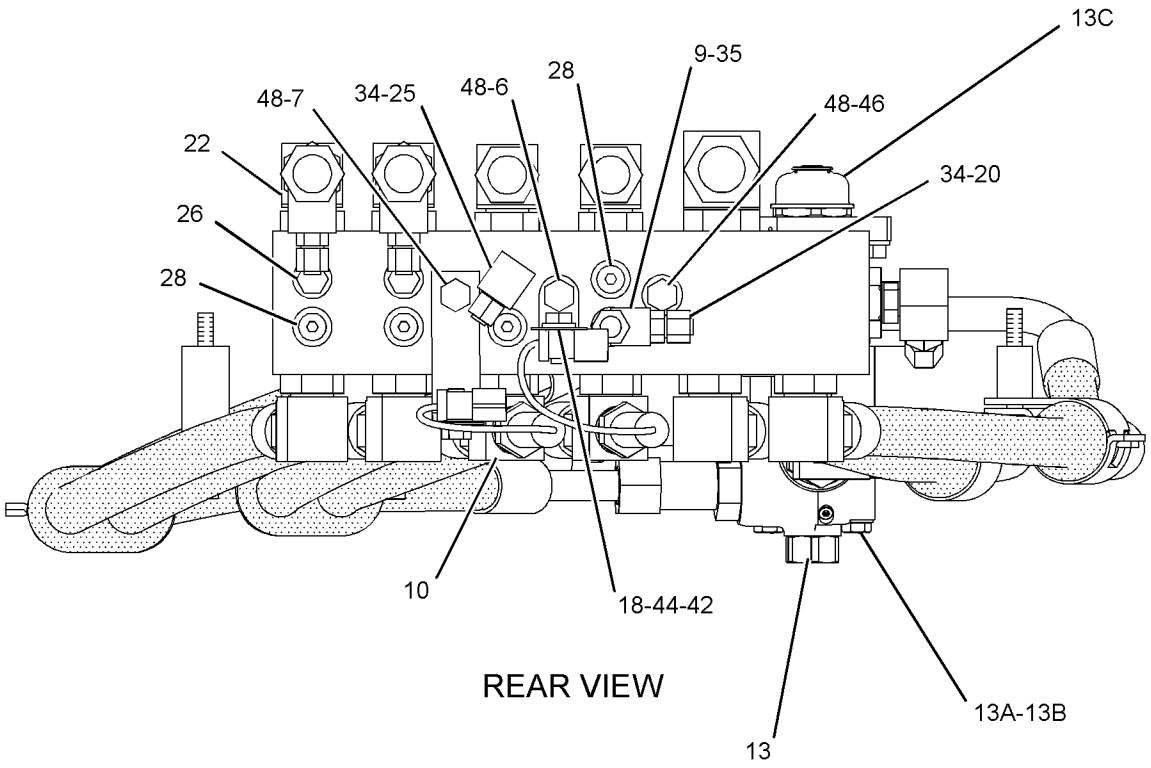

REAR VIEW

GRAPHIC #2 **<END>** g01151815

245-0715 LINES GP-ACCUMULATOR–BRAKE

S/N: 4421-UP

PART OF 245-0700 HYDRAULIC AR-REAR

SMCS-4257, 4263 **i02290331**

NOTE	REF NO	GRAPHIC REF	PART NUMBER	QTY	PART NAME 1 2 3 4 5 6 (PRODUCT LEVEL)	SEE PAGE
	1	2	**105-1866**	1	CLIP	
	2	1	**160-0564**	1	BRACKET AS	
M		1	**8T-3490**	1	NUT-WELD (M10X1.5-THD)	
I	3	1	**244-7239**	1	HOSE AS	
I	4	1	**245-0694**	1	HOSE AS	
I	5	1	**245-0702**	1	HOSE AS	
Y	6	1	*245-1310*	1	ACCUMULATOR & MTG GP-BRAKE	601
I	7	1	**249-3715**	1	HOSE AS	
	8	1	**263-1716**	1	TUBE AS	
I	9	1	**263-9757**	1	HOSE AS	
I	10	1	**168-8497**	1	HOSE AS	
	11	1	**4J-0520**	1	SEAL-O-RING	
	12	1	**4J-5267**	1	SEAL-O-RING	
	13	1	**5K-9090**	2	SEAL-O-RING	
	14	1,2	**5P-7466**	5	CLIP (SLOT)	
	15	1,2	**5P-7467**	5	CLIP (TAB)	
	16	1	**5P-7470**	1	CLIP (SLOT)	
	17	1	**5P-7471**	1	CLIP (TAB)	
	18	1	**5P-7703**	1	GROMMET	
	19	1,2	**5P-8112**	5	GROMMET	
	20	2	**6D-4636**	1	CLIP	
	21	2	**6V-1867**	1	CLIP (SLOT)	
	22	2	**6V-1868**	1	CLIP (TAB)	
	23	2	**6V-1869**	1	GROMMET	
	24	2	**7G-3832**	2	GROMMET	
	25	2	**7G-3833**	2	CLIP (TAB)	
	26	2	**7G-3834**	2	CLIP (SLOT)	
M	28	2	**7X-2544**	1	BOLT (M10X1.5X104-MM)	
	29	2	**7Y-3283**	1	SPACER (13.88X21.34X95-MM THK)	
	30	1	**8C-3205**	2	FLANGE-HALF	
	31	1	**8C-3206**	2	FLANGE-HALF	
	32	1	**8T-1889**	2	CLIP (SLOT)	
	33	1	**8T-1890**	2	CLIP (TAB)	
	34	1,2	**8T-4121**	16	WASHER-HARD (11X21X2.5-MM THK)	
M	35	1,2	**8T-4133**	2	NUT (M10X1.5 THD)	
M	36	1	**8T-4136**	1	BOLT (M10X1.5X25-MM)	
M	37	1	**8T-4182**	4	BOLT (M10X1.5X45-MM)	
M	38	1,2	**8T-4183**	3	BOLT (M12X1.75X40-MM)	
M	39	1	**8T-4195**	3	BOLT (M10X1.5X30-MM)	
M	40	1	**8T-4196**	5	BOLT (M10X1.5X35-MM)	
	41	1,2	**8T-4223**	10	WASHER-HARD (13.5X25.5X3-MM THK)	
M	42	1,2	**8T-4244**	5	NUT (M12X1.75-THD)	
M	43	2	**8T-4956**	2	BOLT (M12X1.75X35-MM)	

I-REFER TO HYDRAULIC INFORMATION SYSTEM
M-METRIC PART
Y-SEPARATE ILLUSTRATION

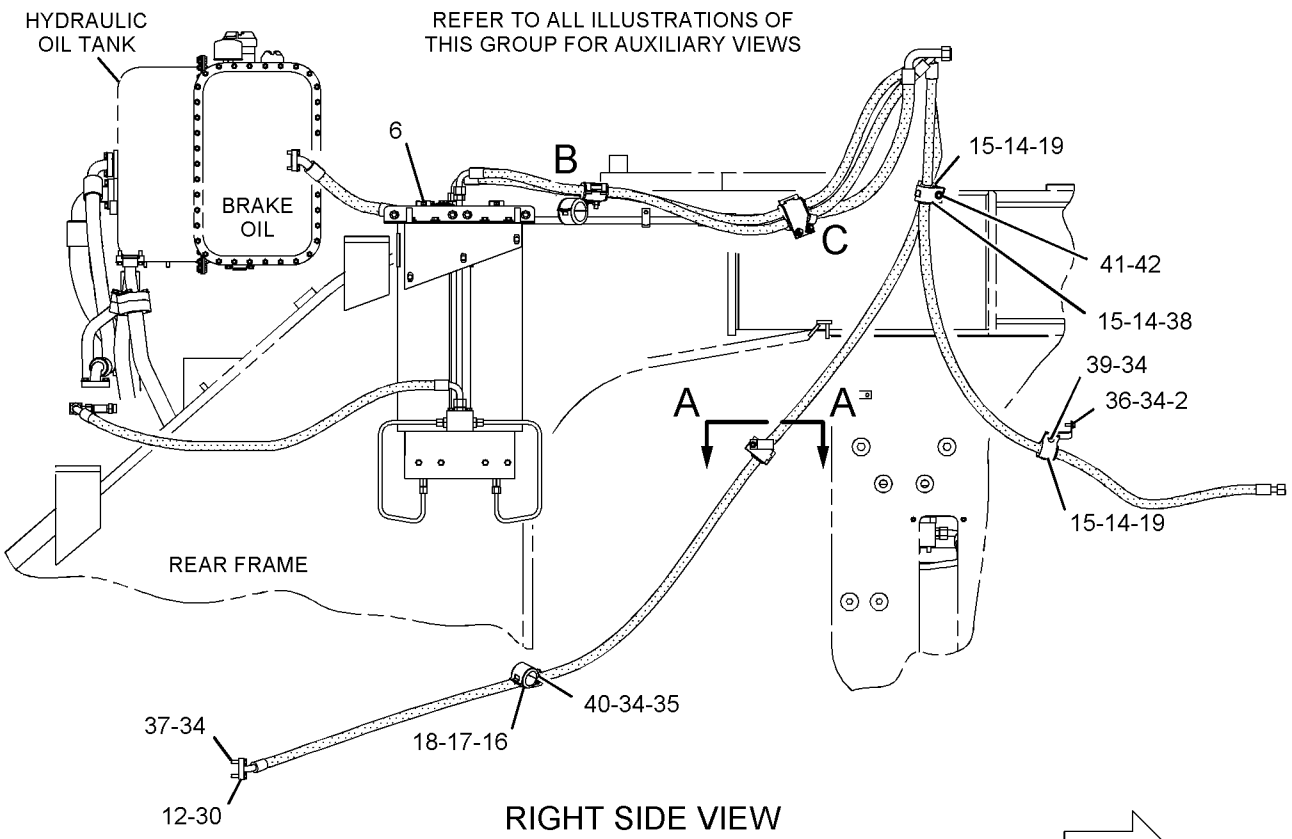

RIGHT SIDE VIEW

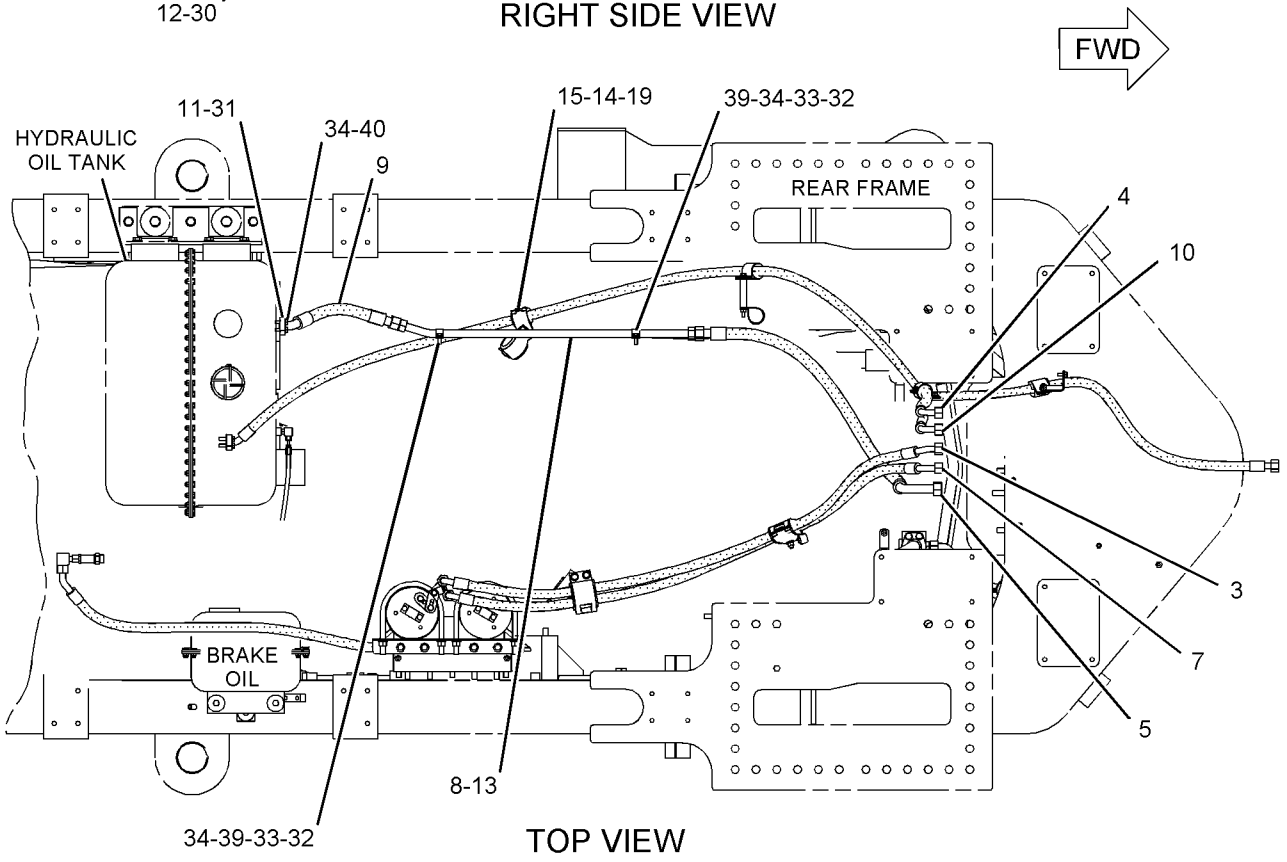

TOP VIEW

GRAPHIC #1 g01147272

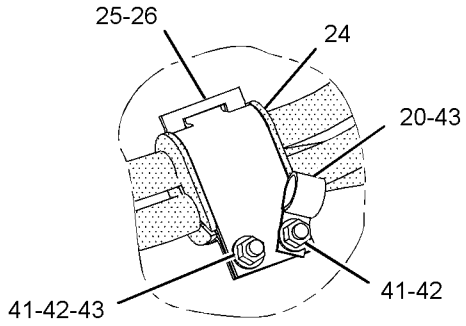

VIEW OF AREA C

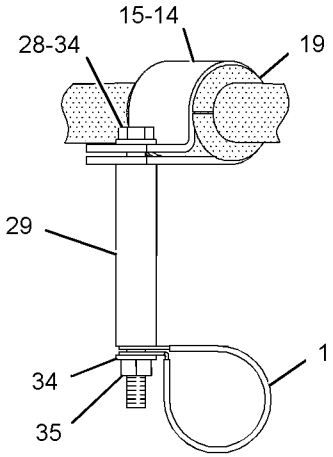

SECTION A-A

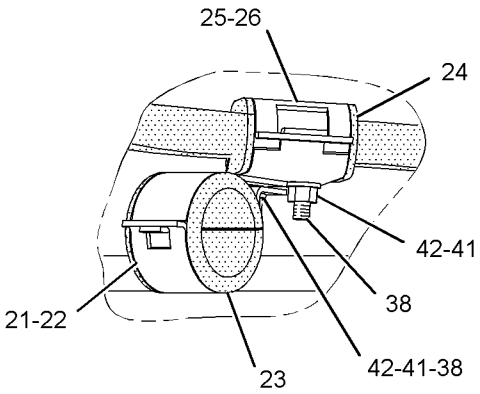

VIEW OF AREA B

GRAPHIC #2 **<END>** g01147424

BRAKING SYSTEM

245-1830 LINES GP-AIR TANK–PLATFORM, RH

S/N: 4421-UP
PART OF 245-3881 PLATFORM AR
AN ATTACHMENT

SMCS-4272 **i02288046**

NOTE	REF NO	GRAPHIC REF	PART NUMBER	QTY	PART NAME 1 2 3 4 5 6 (PRODUCT LEVEL)	SEE PAGE
	1	1,2	**2D-7325**	2	TEE-PIPE	
	2	1	**2D-8910**	1	ELBOW	
	3	1	**2H-3940**	1	ELBOW	
	4	1	**3D-6370**	1	ELBOW	
	5	1	**3R-4825**	1	VALVE AS-CONTROL (AIR TANK DRAIN)	
		1	**2K-3455**	1	PIN-SPRING	
		1	**3H-0442**	1	SEAL-O-RING	
		1	**3R-5862**	1	BUTTON	
		1	**4D-1135**	1	SEAT-SPRING	
		1	**4D-1138**	1	VALVE-INLET	
		1	**4J-3957**	1	SPRING	
	6	1	**4D-0487**	1	VALVE AS-CHECK (AIR TANK)	
	7	1	**4D-1544**	1	CLIP	
	8	1	**4H-6147**	3	CONNECTOR	
	9	2	**6B-9664**	1	VALVE-AIR RELIEF (AIR TANK)	
	10	2	**7K-1181**	1	STRAP-CABLE	
	11	1	**8X-5781**	1	CHANNEL	
	12	1	**004-5933**	1	TEE-PIPE	
	13	1	**033-2177**	1	TEE-PIPE	
Y	14	1	**185-0008**	2	VALVE GP-SOLENOID (AIR HORN)	657
	15	2	**251-1066**	1	HOSE AS	
	16	1	**251-1067**	1	HOSE AS	
	17	2	**251-1068**	1	HOSE AS	
	18	1	**251-1069**	1	HOSE AS	
	19	1	**3B-7738**	2	FITTING	
	20	1	**4H-2558**	2	GROMMET	
	21	1	**4J-3914**	1	ELBOW	
	22	1	**4S-7606**	1	ELBOW	
	23	1	**6K-8178**	3	CLIP	
	24	1	**8T-4121**	6	WASHER-HARD (11X21X2.5-MM THK)	
	25	1	**8T-4123**	1	WASHER-PLATED (22X35X3.5-MM THK)	
M	26	1	**8T-4133**	1	NUT (M10X1.5 THD)	
M	27	1	**8T-4136**	4	BOLT (M10X1.5X25-MM)	
M	28	1	**8T-4195**	2	BOLT (M10X1.5X30-MM)	
	29	1	**9B-3523**	1	BUSHING	
	30	1	**4D-2560**	1	CONNECTOR-PIPE	
	31	1	**265-8009**	1	PLATE	

M-METRIC PART
Y-SEPARATE ILLUSTRATION

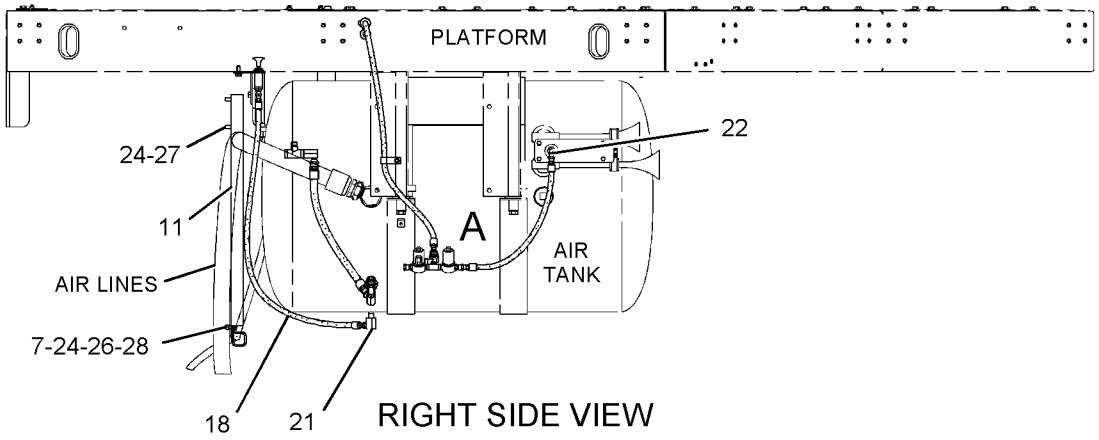

RIGHT SIDE VIEW

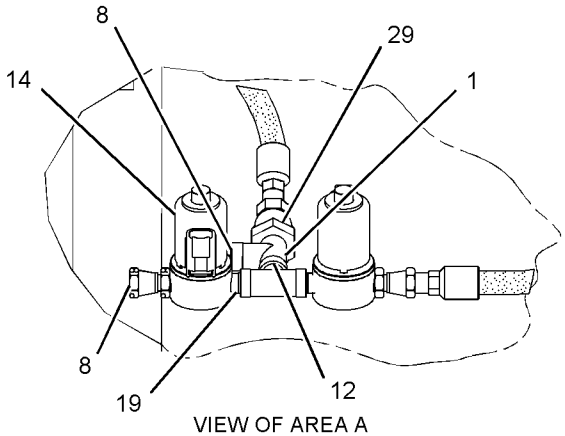

VIEW OF AREA A

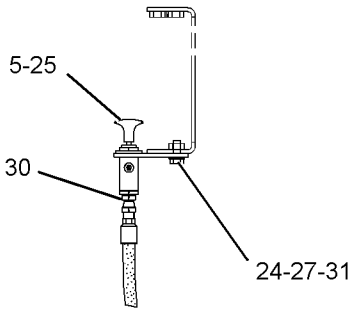

SECTION B-B

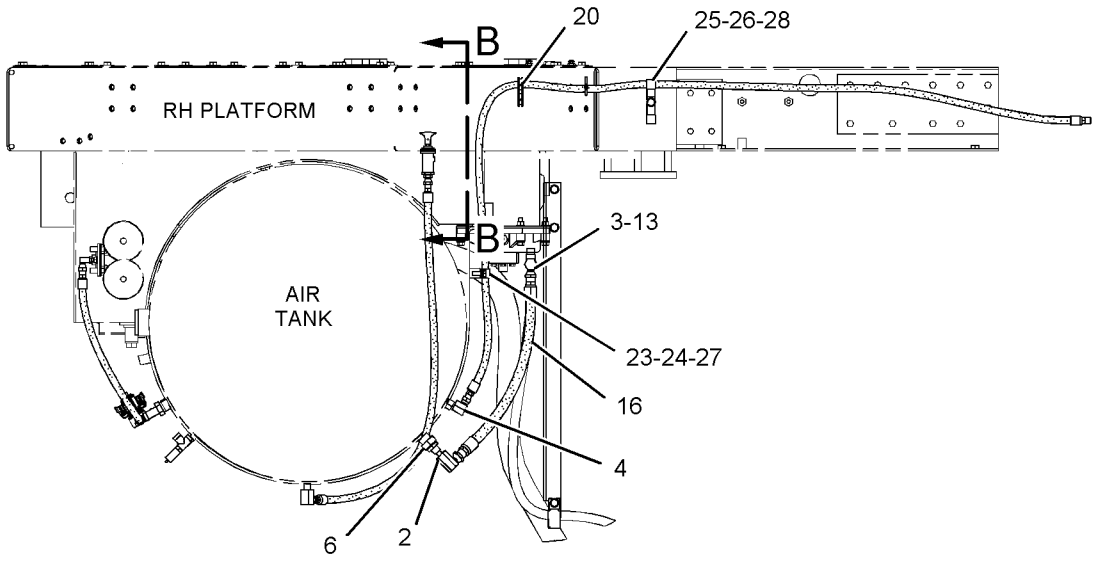

VIEW C-C

GRAPHIC #1 g01146039

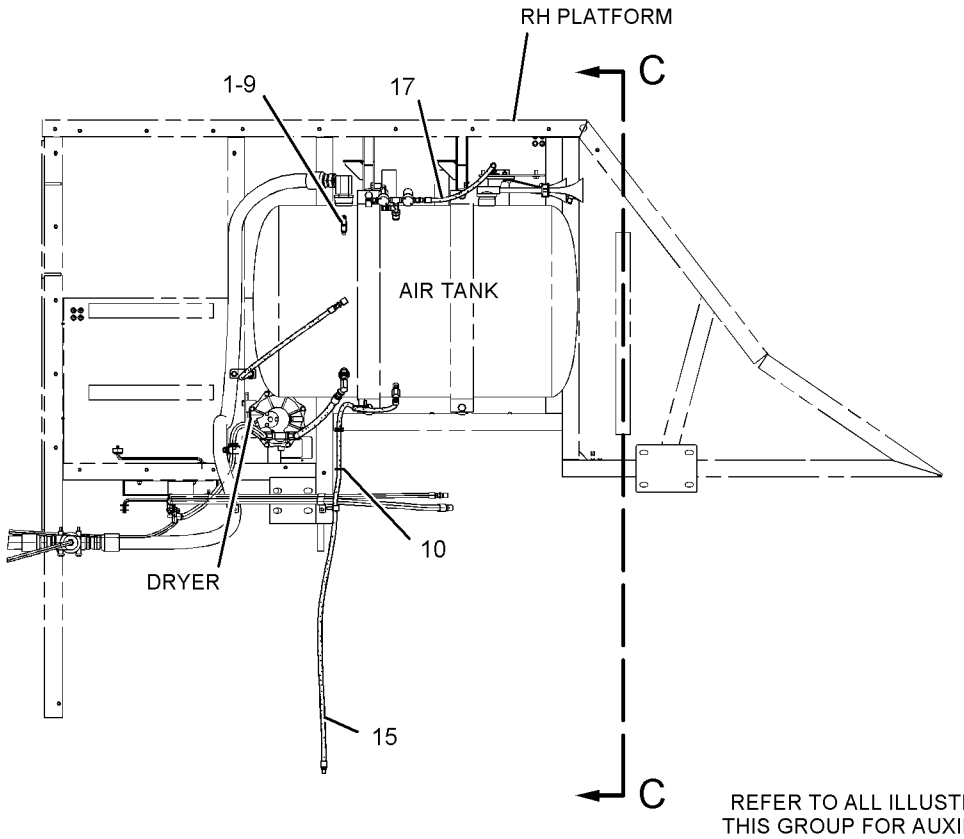

VIEW B-B

GRAPHIC #2 **<END>** g01146040

251-0100 LINES GP-AIR TANK—PLATFORM, LH

S/N: 4421-UP

PART OF 245-7454 PLATFORM AR

SMCS-4272 **i02148427**

NOTE	REF NO	GRAPHIC REF	PART NUMBER	QTY	PART NAME 1 2 3 4 5 6 (PRODUCT LEVEL)	SEE PAGE
	1	1	**9M-8406**	1	CLIP	
	2	1	**5T-8285**	1	JUNCTION BLOCK	
I	3	1	**251-1065**	1	HOSE AS	
	4	1	**7K-1181**	2	STRAP-CABLE	
I	5	1	**251-1064**	1	HOSE AS	
	6	1	**4H-2558**	4	GROMMET	
	7	1	**4H-6147**	2	CONNECTOR	
	8	1	**4S-7606**	1	ELBOW	
	9	1	**5H-4778**	1	ELBOW	
	10	1	**5K-8451**	2	CLIP	
	11	1	**5M-6213**	1	PLUG-PIPE	
	12	1	**6K-8178**	8	CLIP	
	13	1	**8T-4121**	9	WASHER-HARD (11X21X2.5-MM THK)	
M	14	1	**8T-4133**	2	NUT (M10X1.5 THD)	
M	15	1	**8T-4136**	6	BOLT (M10X1.5X25-MM)	
M	16	1	**8T-4186**	2	BOLT (M10X1.5X40-MM)	
M	17	1	**8T-4195**	1	BOLT (M10X1.5X30-MM)	

I-REFER TO HYDRAULIC INFORMATION SYSTEM
M-METRIC PART

251-0100 **LINES GP-AIR TANK** *(contd.)* **i02148427**

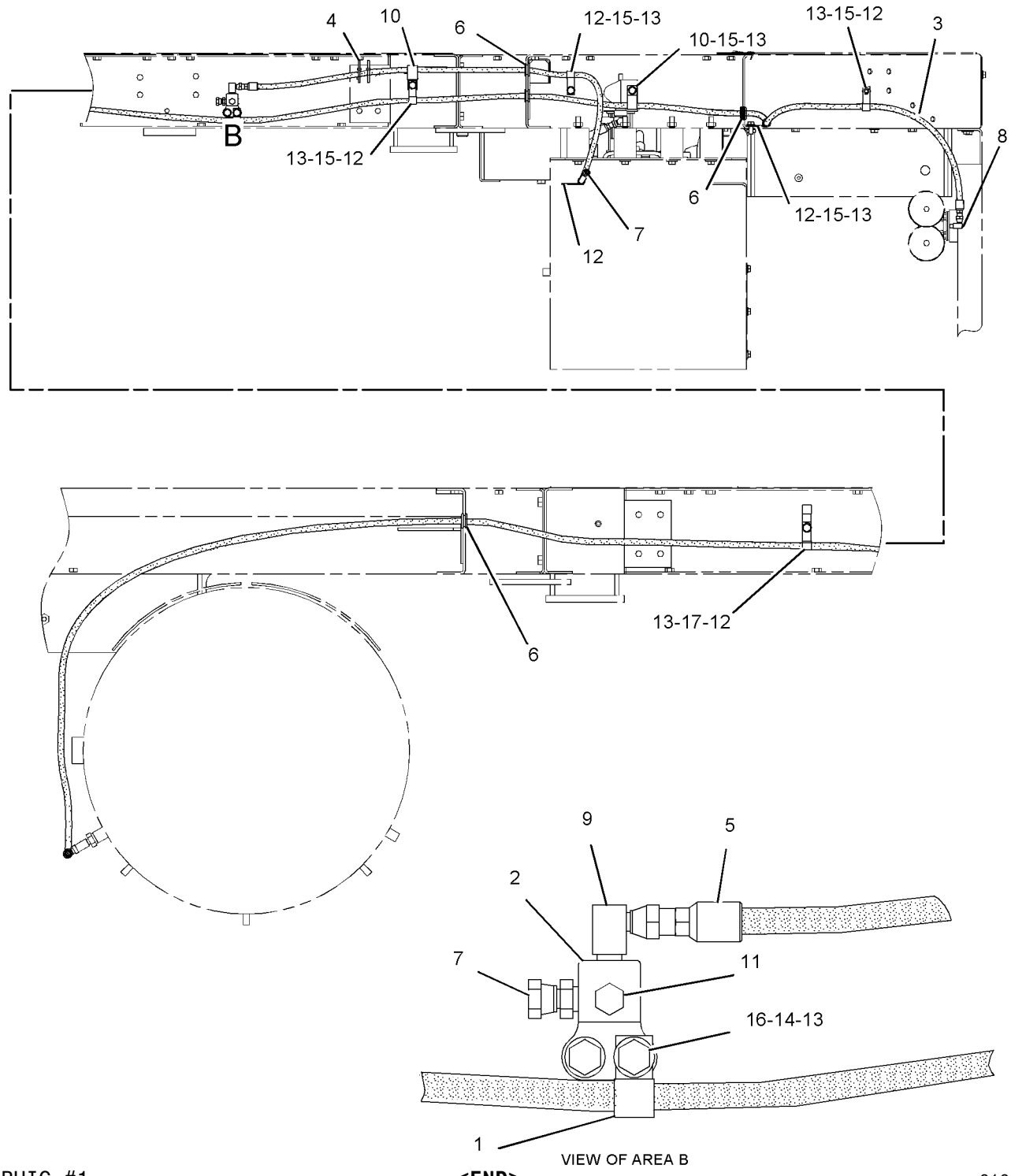

GRAPHIC #1

<END>

g01090311

138-4339 LINES GP-BRAKE COOLING—FRONT AXLE

S/N: 4421-UP

PART OF 245-8813 INSTALLATION AR-FIELD

SMCS-4257 **i02282417**

NOTE	REF NO	GRAPHIC REF	PART NUMBER	QTY	PART NAME 1 2 3 4 5 6 (PRODUCT LEVEL)	SEE PAGE
	1	1	**134-2420**	1	TUBE AS	
	2	1	**134-2421**	1	TUBE AS	
	3	1	**134-2422**	1	TUBE AS	
	4	1	**134-2423**	1	TUBE AS	
	5	1	**136-0426**	4	FLANGE	
	6	1	**136-0427**	2	PLATE AS	
					(EACH INCLUDES)	
M		1	**8T-3597**	2	NUT-WELD (M12X1.75 THD)	
	7	1	**136-0428**	1	BRACKET	
	8	1	**136-0445**	1	MANIFOLD	
	9	1	**136-0454**	1	TUBE AS	
	10	1	**136-0502**	1	TUBE AS	
	11	1	**164-2165**	1	TUBE AS	
	12	1	**164-2166**	1	TUBE AS	
Y	13	1	**164-3306**	2	SCREEN GP-HYDRAULIC (BRAKE COOLING)	649
Y	14	1	**176-6448**	2	VALVE GP-CHECK (BRAKE COOLING)	655
	15	1	**185-0004**	2	CONNECTOR AS	
					(EACH INCLUDES)	
		1	**2S-4078**	1	SEAL-O-RING	
		1	**6V-8400**	1	SEAL-O-RING	
		1	**9X-6015**	1	CONNECTOR	
	16	1	**268-1496**	1	CONNECTOR AS	
		1	**3D-2824**	1	SEAL-O-RING	
		1	**6V-9746**	1	SEAL-O-RING	
	17	1	**114-1374**	2	SUPPORT	
	18	1	*148-8323*	2	CONNECTOR GP	
					(EACH INCLUDES)	
		1	**2S-4078**	1	SEAL-O-RING	
		1	**5K-9090**	1	SEAL-O-RING	
		1	**6V-9875**	1	CONNECTOR	
	19	1,1	*148-8327*	2	CONNECTOR AS	
					(EACH INCLUDES)	
		1,1	**3D-2824**	1	SEAL-O-RING	
		1,1	**6V-8637**	1	CONNECTOR	
		1,1	**6V-9746**	1	SEAL-O-RING	
	20	1	*148-8335*	1	CONNECTOR AS	
		1	**5K-9090**	1	SEAL-O-RING	
		1	**6V-8635**	1	CONNECTOR	
		1	**7M-8485**	1	SEAL-O-RING	
	21	1	*148-8352*	1	ELBOW GP	
		1	**5K-9090**	1	SEAL-O-RING	
		1	**6V-9854**	1	ELBOW (SWIVEL)	
	22	1	*148-8357*	1	ELBOW AS	
		1	**5K-9090**	1	SEAL-O-RING	
		1	**6V-9008**	1	ELBOW	
		1	**7M-8485**	1	SEAL-O-RING	
	23	1	*165-4927*	4	CONNECTOR AS	
					(EACH INCLUDES)	
		1	**2T-2991**	1	CONNECTOR	
		1	**4K-1388**	1	SEAL-O-RING	
		1	**6V-9746**	1	SEAL-O-RING	
	24	1	*165-4933*	2	ELBOW AS	
					(EACH INCLUDES)	
		1	**6V-8990**	1	ELBOW	
		1	**6V-9746**	2	SEAL-O-RING	
	25	1	**185-0002**	2	REDUCER AS	

138-4339 **LINES GP-BRAKE COOLING** *(contd.)* **i02282417**

NOTE	REF NO	GRAPHIC REF	PART NUMBER	QTY	PART NAME 1 2 3 4 5 6 (PRODUCT LEVEL)	SEE PAGE
	26	1	**2P-1293**	2	LOCKNUT (1-3/16-12 THD)	
	27	1	**3D-2824**	1	SEAL-O-RING	
	28	1	**4J-0527**	4	SEAL-O-RING	
	29	1	**5K-9660**	2	CLIP	
	30	1,1	**6V-9746**	3	SEAL-O-RING	
	31	1	**8T-4121**	8	WASHER-HARD (11X21X2.5-MM THK)	
M	32	1	**8T-4137**	8	BOLT (M10X1.5X20-MM)	
M	33	1	**8T-4176**	4	BOLT (M12X1.75X90-MM)	
M	34	1	**8T-4194**	16	BOLT (M12X1.75X50-MM)	
	35	1	**8T-4223**	20	WASHER-HARD (13.5X25.5X3-MM THK)	
	36	1	**9X-6578**	2	NUT-FACE SEAL (1-11/16-12-THD)	

M-METRIC PART
Y-SEPARATE ILLUSTRATION

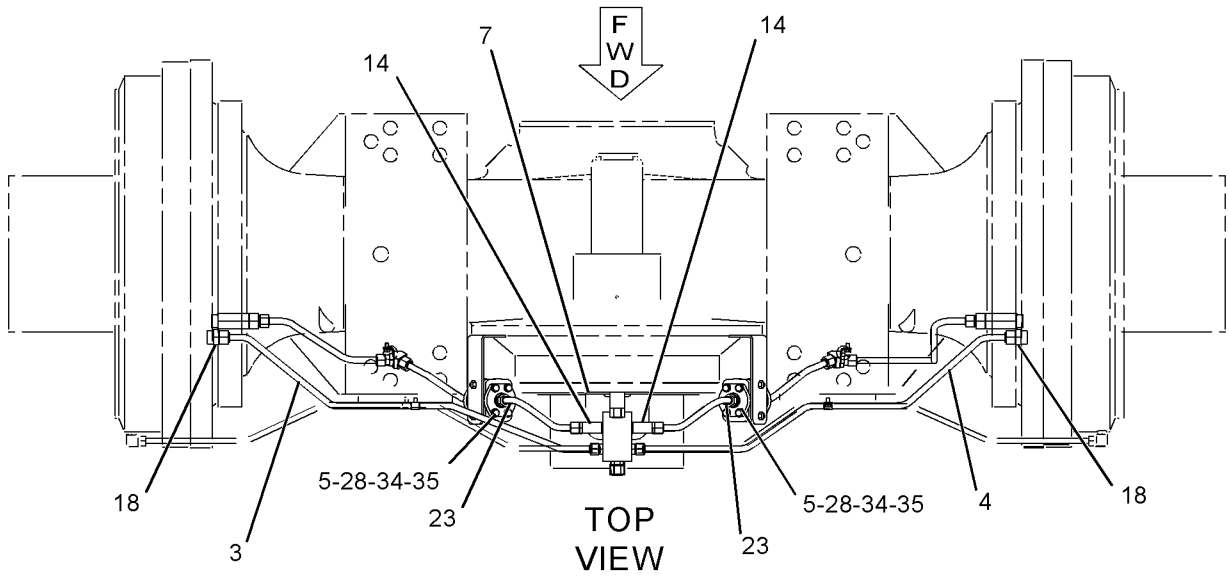

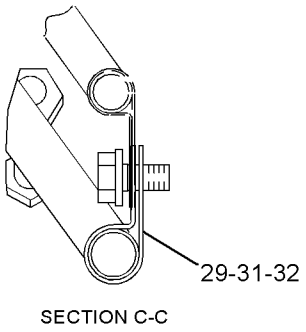

SECTION C-C

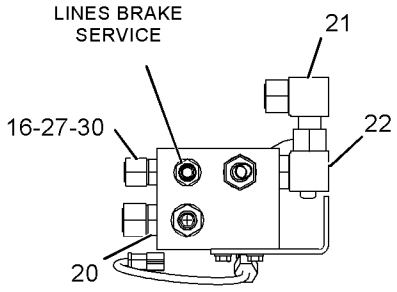

SECTION A-A

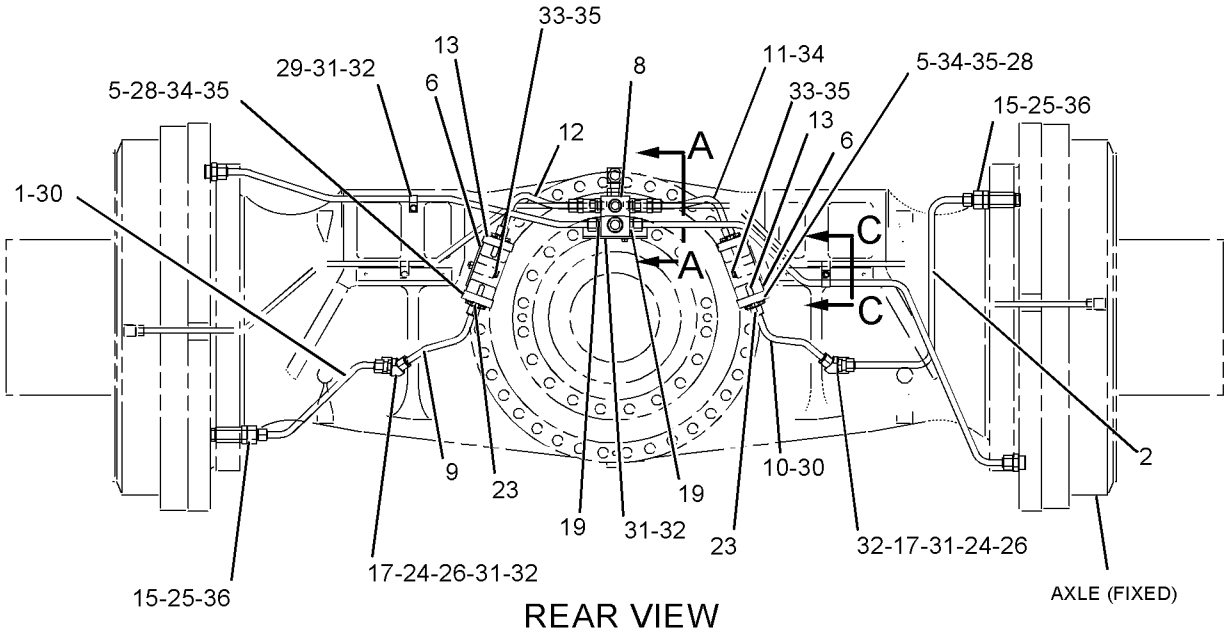

REAR VIEW

GRAPHIC #1 **<END>** g01145241

BRAKING SYSTEM

138-4340 LINES GP-BRAKE COOLING—REAR AXLE

S/N: 4421-UP

PART OF 245-8813 INSTALLATION AR-FIELD

SMCS-4257 **i02282421**

NOTE	REF NO	GRAPHIC REF	PART NUMBER	QTY	PART NAME 1 2 3 4 5 6 (PRODUCT LEVEL)	SEE PAGE
	1	1	**134-2426**	1	TUBE AS	
	2	1	**134-2427**	1	TUBE AS	
	3	1	**136-0426**	4	FLANGE	
	4	1	**136-2131**	2	BRACKET AS	
					(EACH INCLUDES)	
M		1	**8T-3597**	2	NUT-WELD (M12X1.75 THD)	
	5	1	**136-2650**	1	TUBE AS	
	6	1	**136-2653**	1	TUBE AS	
Y	7	1	**164-3306**	2	SCREEN GP-HYDRAULIC (BRAKE COOLING)	649
Y	8	1	**176-6448**	2	VALVE GP-CHECK (BRAKE COOLING)	655
C	9	1	**185-0004**	2	CONNECTOR AS	
C	10	1	**262-1943**	1	TUBE AS	
C	11	1	**262-1944**	1	TUBE AS	
C	12	1	**262-1945**	1	TUBE AS	
C	13	1	**262-1946**	1	TUBE AS	
	14	1	**114-1374**	2	SUPPORT	
	15	1	*148-8323*	2	CONNECTOR GP	
					(EACH INCLUDES)	
		1	**2S-4078**	1	SEAL-O-RING	
		1	**5K-9090**	1	SEAL-O-RING	
		1	**6V-9875**	1	CONNECTOR	
	16	1	*148-8327*	2	CONNECTOR AS	
					(EACH INCLUDES)	
		1	**3D-2824**	1	SEAL-O-RING	
		1	**6V-8637**	1	CONNECTOR	
		1	**6V-9746**	1	SEAL-O-RING	
	17	1	*165-4927*	4	CONNECTOR AS	
					(EACH INCLUDES)	
		1	**2T-2991**	1	CONNECTOR	
		1	**4K-1388**	1	SEAL-O-RING	
		1	**6V-9746**	1	SEAL-O-RING	
	18	1	*165-4933*	2	ELBOW AS	
					(EACH INCLUDES)	
		1	**6V-8990**	1	ELBOW	
		1	**6V-9746**	2	SEAL-O-RING	
	19	1	*185-0002*	2	REDUCER AS	
					(EACH INCLUDES)	
		1	**6V-8947**	1	REDUCER	
		1	**6V-9746**	1	SEAL-O-RING	
	20	1	**1S-0994**	4	CLIP	
	21	1	**2P-1293**	2	LOCKNUT (1-3/16-12 THD)	
	22	1	**4J-0527**	4	SEAL-O-RING	
	23	1	**8T-4121**	6	WASHER-HARD (11X21X2.5-MM THK)	
M	24	1	**8T-4137**	6	BOLT (M10X1.5X20-MM)	
M	25	1	**8T-4176**	4	BOLT (M12X1.75X90-MM)	
M	26	1	**8T-4194**	16	BOLT (M12X1.75X50-MM)	
	27	1	**8T-4223**	20	WASHER-HARD (13.5X25.5X3-MM THK)	
	28	1	**9X-6578**	2	NUT-FACE SEAL (1-11/16-12-THD)	

C-CHANGE FROM PREVIOUS TYPE
M-METRIC PART
Y-SEPARATE ILLUSTRATION

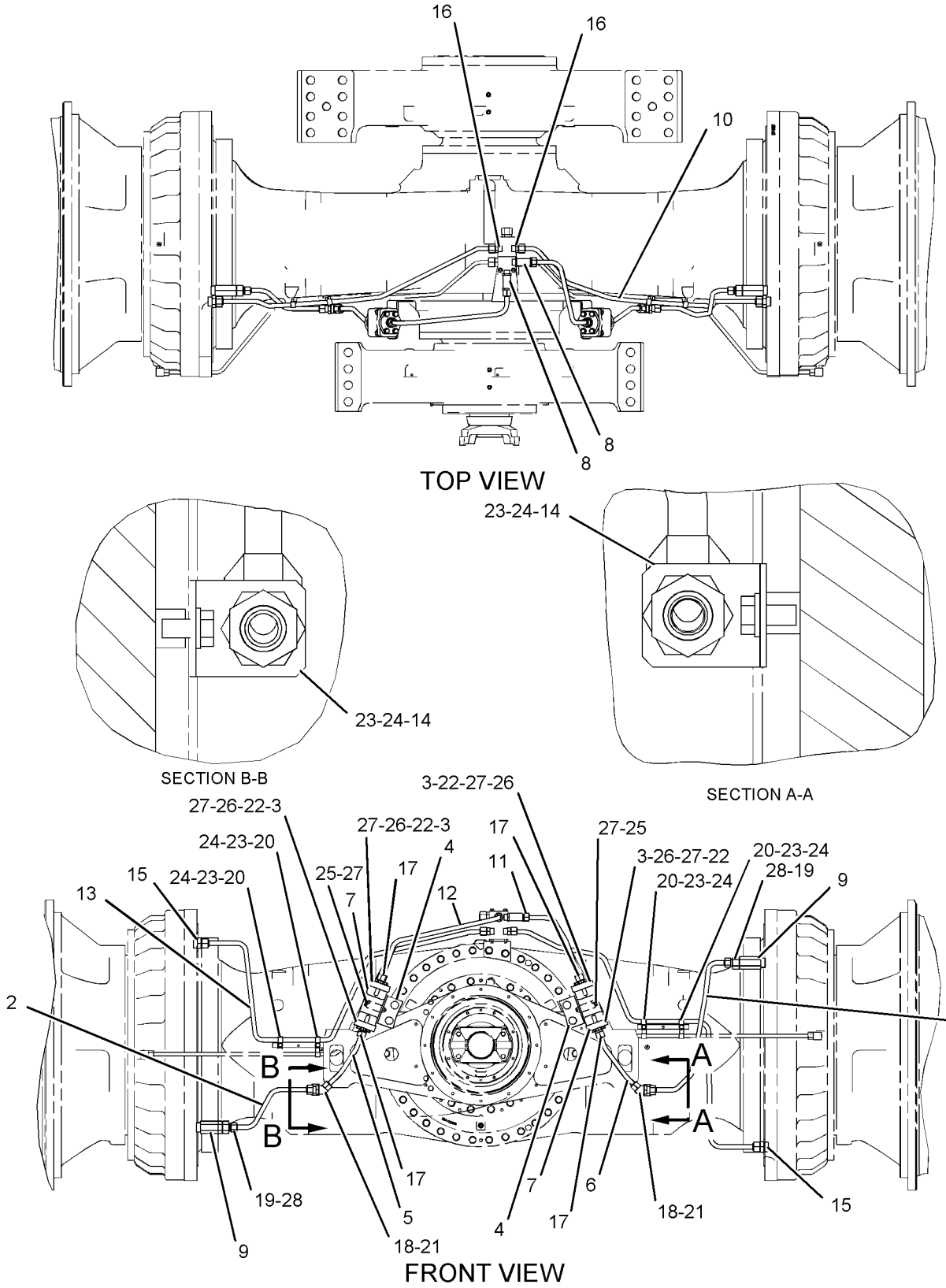

GRAPHIC #1 **<END>** g01145003

BRAKING SYSTEM

244-7280 LINES GP-BRAKE COOLING–FRONT

S/N: 4421-UP

PART OF 244-7300 HYDRAULIC AR-FRONT

SMCS-4257 **i02148443**

NOTE	REF NO	GRAPHIC REF	PART NUMBER	QTY	PART NAME 1 2 3 4 5 6 (PRODUCT LEVEL)	SEE PAGE
I	1	1	**130-7609**	1	HOSE AS	
I	2	1	**164-9812**	1	HOSE AS	
	3	1	**235-0626**	1	BRACKET AS	
M		1	**8T-3597**	4	NUT-WELD (M12X1.75-THD)	
I	4	1	**235-0628**	1	HOSE AS	
I	5	1	**235-0629**	1	HOSE AS	
	6	1	**249-2431**	1	PLATE	
	7	1	**250-7183**	1	GUARD AS	
M		1	**8T-3490**	1	NUT-WELD (M10X1.5-THD)	
		1	**8Y-3795**	1	BOSS (M10X1.5X39-MM)	
		1	**250-7182**	1	PLATE	
	8	1	*155-2026*	1	UNION AS	
		1	**5K-9090**	2	SEAL-O-RING	
		1	**6V-8998**	1	UNION	
	9	1	*155-6344*	2	ELBOW AS	
					(EACH INCLUDES)	
		1	**5K-9090**	2	SEAL-O-RING	
		1	**6V-8991**	1	ELBOW	
	10	1	*164-5577*	1	ELBOW GP	
		1	**5K-9090**	2	SEAL-O-RING	
		1	**6V-8984**	1	ELBOW	
	11	1	**5P-1076**	4	WASHER-HARD (13.5X30X4-MM THK)	
	12	1	**5P-7468**	2	CLIP (SLOT)	
	13	1	**5P-7469**	2	CLIP (TAB)	
	14	1	**5P-8444**	2	GROMMET	
	15	1	**6V-9172**	4	NUT (1-7/16-12-THD)	
M	16	1	**8T-4122**	3	WASHER-HARD (17X32X3.5-MM THK)	
M	17	1	**8T-4184**	4	BOLT (M12X1.75X45-MM)	
M	18	1	**8T-4192**	4	BOLT (M12X1.75X25-MM)	
	19	1	**8T-4223**	10	WASHER-HARD (13.5X25.5X3-MM THK)	
M	20	1	**8T-4244**	4	NUT (M12X1.75-THD)	
M	21	1	**8T-4779**	3	BOLT (M16X2X35-MM)	
M	22	1	**8T-4956**	2	BOLT (M12X1.75X35-MM)	
	23	1	**8X-5392**	1	ANGLE	

I-REFER TO HYDRAULIC INFORMATION SYSTEM
M-METRIC PART

244-7280 **LINES GP-BRAKE COOLING** *(contd.)* **i02148443**

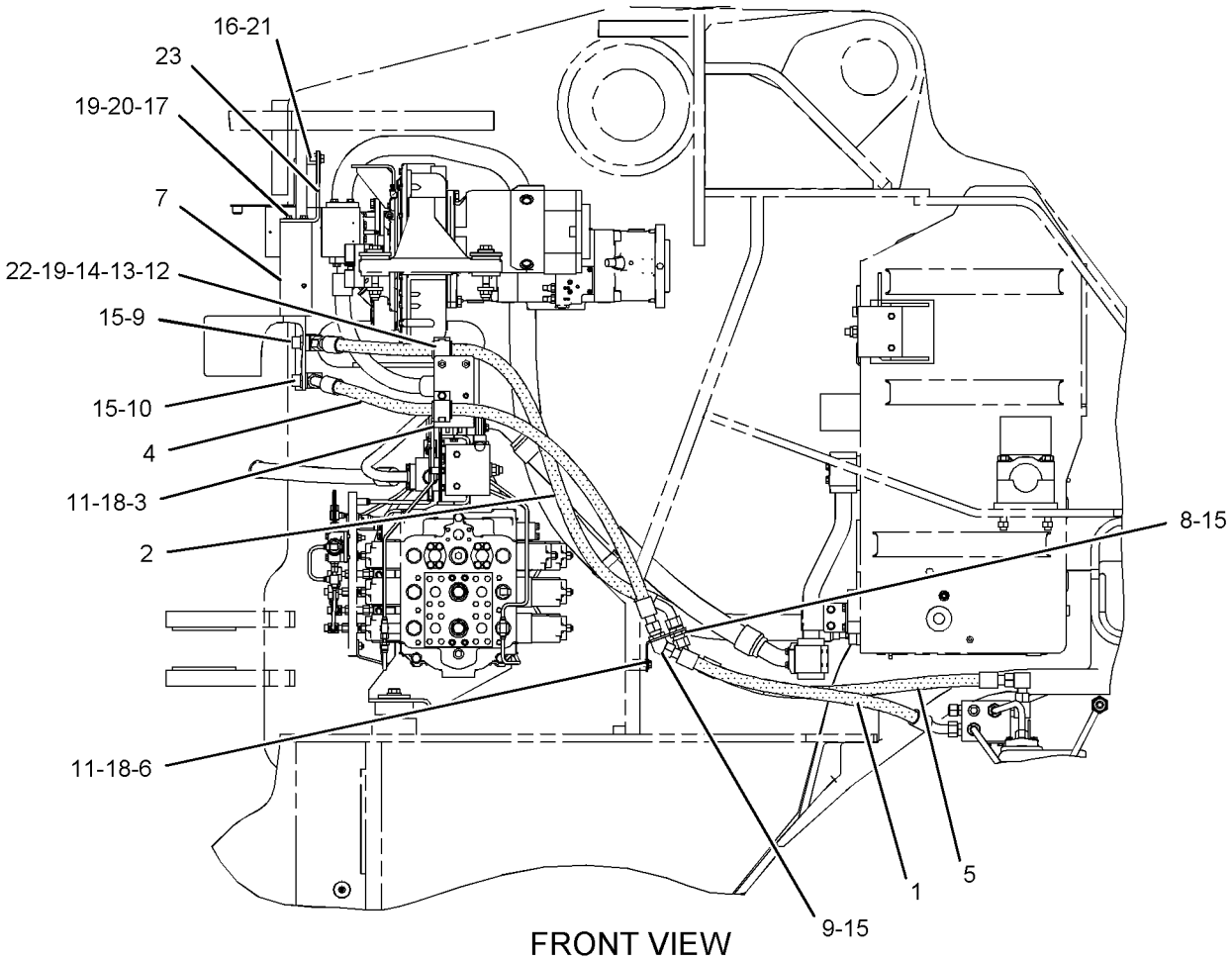

FRONT VIEW

GRAPHIC #1

<END>

g01091281

BRAKING SYSTEM

245-1270 LINES GP-BRAKE COOLING—REAR

S/N: 4421-UP

PART OF 245-0700 HYDRAULIC AR-REAR

SMCS-4257 **i02290291**

NOTE	REF NO	GRAPHIC REF	PART NUMBER	QTY	PART NAME 1 2 3 4 5 6 (PRODUCT LEVEL)	SEE PAGE
	1	2	**103-0618**	1	BLOCK	
	2	2	**8X-5344**	1	BLOCK	
I	3	2	**8X-5356**	2	HOSE AS	
	4	2	**8X-5368**	1	PLATE	
	5	2	**103-0619**	1	BLOCK	
I	6	1	**103-2017**	1	HOSE AS	
	7	2	**122-3359**	1	VALVE GP-CHECK (BRAKE OIL COOLING BYPASS)	
	8	2	**130-0528**	1	PLATE	
	9	2	**148-7564**	1	ADAPTER	
	10	2	**197-3295**	2	FLANGE-HALF	
	11	2	**245-1834**	1	TUBE AS	
I	12	2	**245-1839**	1	HOSE AS	
I	13	2	**245-1843**	1	HOSE AS	
	14	2	**245-3234**	1	TUBE AS	
I	15	2	**246-2292**	1	HOSE AS	
	16	3	**250-0268**	1	BRACKET AS	
M		3	**8T-3597**	1	NUT-WELD (M12X1.75-THD)	
	17	2	**265-3183**	2	BRACKET	
I	18	2	**265-3184**	1	HOSE AS	
I	19	2	**265-3185**	1	HOSE AS	
I	20	2	**265-3186**	1	HOSE AS	
	21	2	**148-8325**	1	CONNECTOR AS	
		2	**3J-1907**	1	SEAL-O-RING	
		2	**4J-5477**	1	SEAL-O-RING	
		2	**6V-8641**	1	CONNECTOR	
	22	1,2	*148-8335*	3	CONNECTOR AS	
					(EACH INCLUDES)	
		1,2	**5K-9090**	1	SEAL-O-RING	
		1,2	**6V-8635**	1	CONNECTOR	
		1,2	**7M-8485**	1	SEAL-O-RING	
	23	2	*148-8357*	1	ELBOW AS	
		2	**5K-9090**	1	SEAL-O-RING	
		2	**6V-9008**	1	ELBOW	
		2	**7M-8485**	1	SEAL-O-RING	
	24	2	*148-8429*	1	TEE AS	
		2	**5K-9090**	2	SEAL-O-RING	
		2	**6V-9840**	1	TEE-SWIVEL	
	25	1	*150-3073*	1	PLUG AS	
		1	**5K-9090**	1	SEAL-O-RING	
		1	**6V-9512**	1	PLUG (1-7/16-12-THD)	
	26	1	*155-2026*	2	UNION AS	
		1	**5K-9090**	2	SEAL-O-RING	
		1	**6V-8998**	1	UNION	
	27	2	*164-4180*	1	PLUG AS	
		2	**7M-8485**	1	SEAL-O-RING	
		2	**9S-4181**	1	PLUG	
	28	2	**1P-3704**	1	SEAL-RECTANGULAR	
	29	2	**1P-4579**	4	FLANGE-HALF	
	30	2	**1P-4582**	2	FLANGE-HALF	
	31	2	**2S-7010**	1	CLIP	
	32	2	**4J-0522**	2	SEAL-O-RING	
	33	2	**4J-0524**	4	SEAL-O-RING	
	34	2	**4J-0527**	1	SEAL-O-RING	
	35	2	**4L-3641**	6	CLIP	
	36	2	**5K-9090**	3	SEAL-O-RING	
	37	1	**5P-1076**	2	WASHER-HARD (13.5X30X4-MM THK)	

245-1270 **LINES GP-BRAKE COOLING** *(contd.)* **i02290291**

NOTE	REF NO	GRAPHIC REF	PART NUMBER	QTY	PART NAME 1 2 3 4 5 6 (PRODUCT LEVEL)	SEE PAGE
	38	1,2,3	**5P-7468**	10	CLIP (SLOT)	
	39	1,2,3	**5P-7469**	10	CLIP (TAB)	
	40	2	**5P-7470**	3	CLIP (SLOT)	
	41	2	**5P-7471**	3	CLIP (TAB)	
	42	2	**5P-8182**	3	GROMMET	
	43	1,2,3	**5P-8444**	10	GROMMET	
	44	1	**6V-9172**	2	NUT (1-7/16-12-THD)	
	45	2	**7D-7233**	1	CLIP	
	46	2	**7E-5639**	1	SPACER (13.88X21.34X25-MM THK)	
	47	2	**7M-8485**	1	SEAL-O-RING	
M	48	2,3	**7X-2550**	1	BOLT (M12X1.75X110-MM)	
	49	2	**7X-3392**	4	WASHER-HARD (13.5X22.5X3-MM THK)	
	50	3	**7X-7729**	1	WASHER (11X25X3-MM THK)	
M	51	2	**8C-8729**	4	BOLT-SOCKET HEAD (M12X1.75X80-MM)	
	52	3	**8S-5107**	1	SPACER (0.622X0.84X2-IN THK)	
	53	2	**8T-4121**	16	WASHER-HARD (11X21X2.5-MM THK)	
M	54	2	**8T-4133**	5	NUT (M10X1.15-THD)	
M	55	2	**8T-4136**	1	BOLT (M10X1.5X25-MM)	
M	56	2	**8T-4137**	6	BOLT (M10X1.5X20-MM)	
M	57	1,2	**8T-4139**	4	BOLT (M12X1.75X30-MM)	
M	58	2	**8T-4176**	4	BOLT (M12X1.75X90-MM)	
M	59	1,2,3	**8T-4183**	11	BOLT (M12X1.75X40-MM)	
M	60	3	**8T-4195**	1	BOLT (M10X1.5X30-MM)	
M	61	2	**8T-4196**	4	BOLT (M10X1.5X35-MM)	
	62	1,2,3	**8T-4223**	24	WASHER-HARD (13.5X25.5X3-MM THK)	
M	63	2,3	**8T-4244**	2	NUT (M12X1.75-THD)	
M	64	2	**8T-4910**	4	BOLT (M12X1.75X60-MM)	
M	66	2	**8T-5041**	4	BOLT (M12X1.75X120-MM)	

I-REFER TO HYDRAULIC INFORMATION SYSTEM
M-METRIC PART

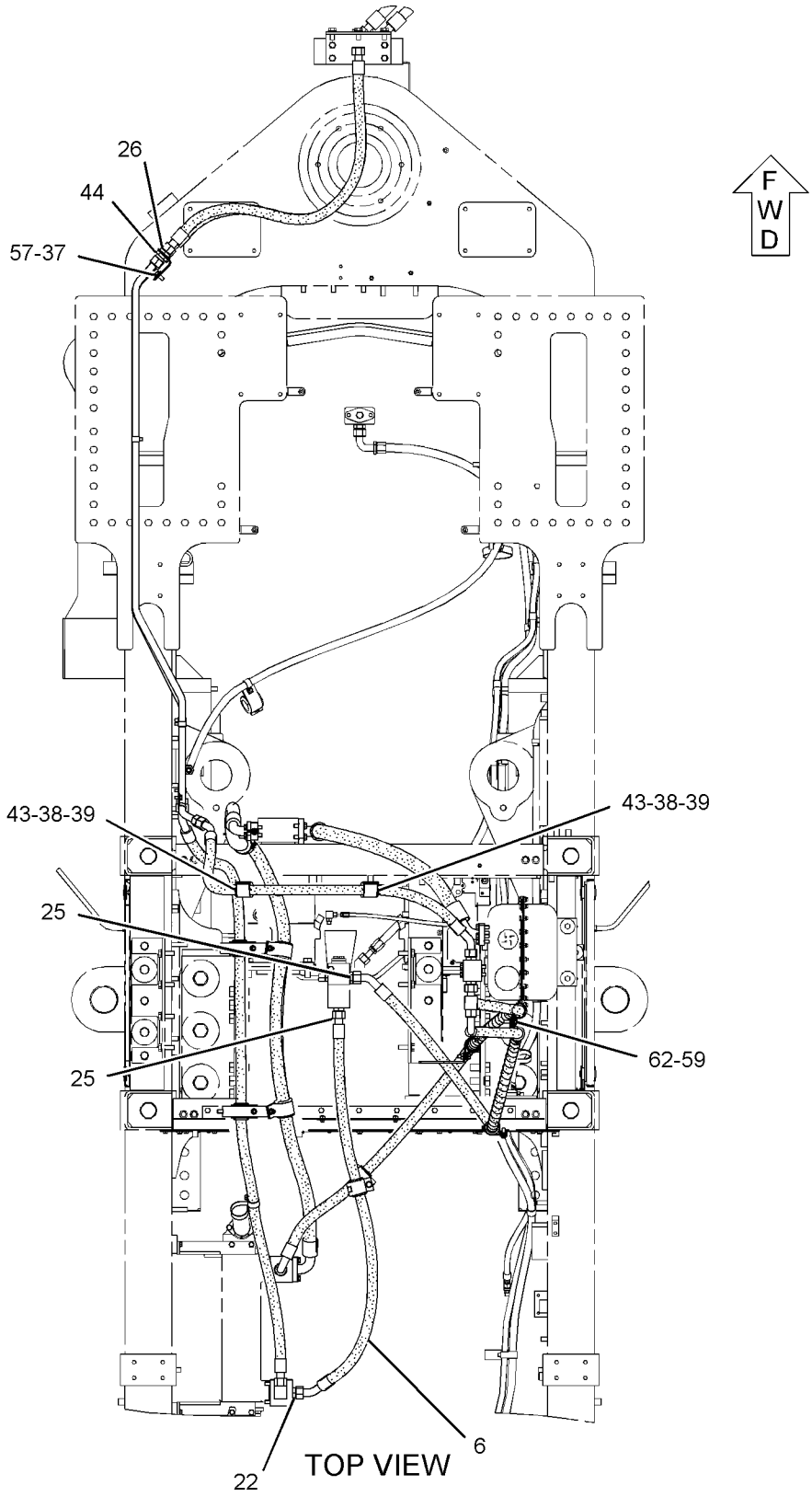

GRAPHIC #1 g01150208

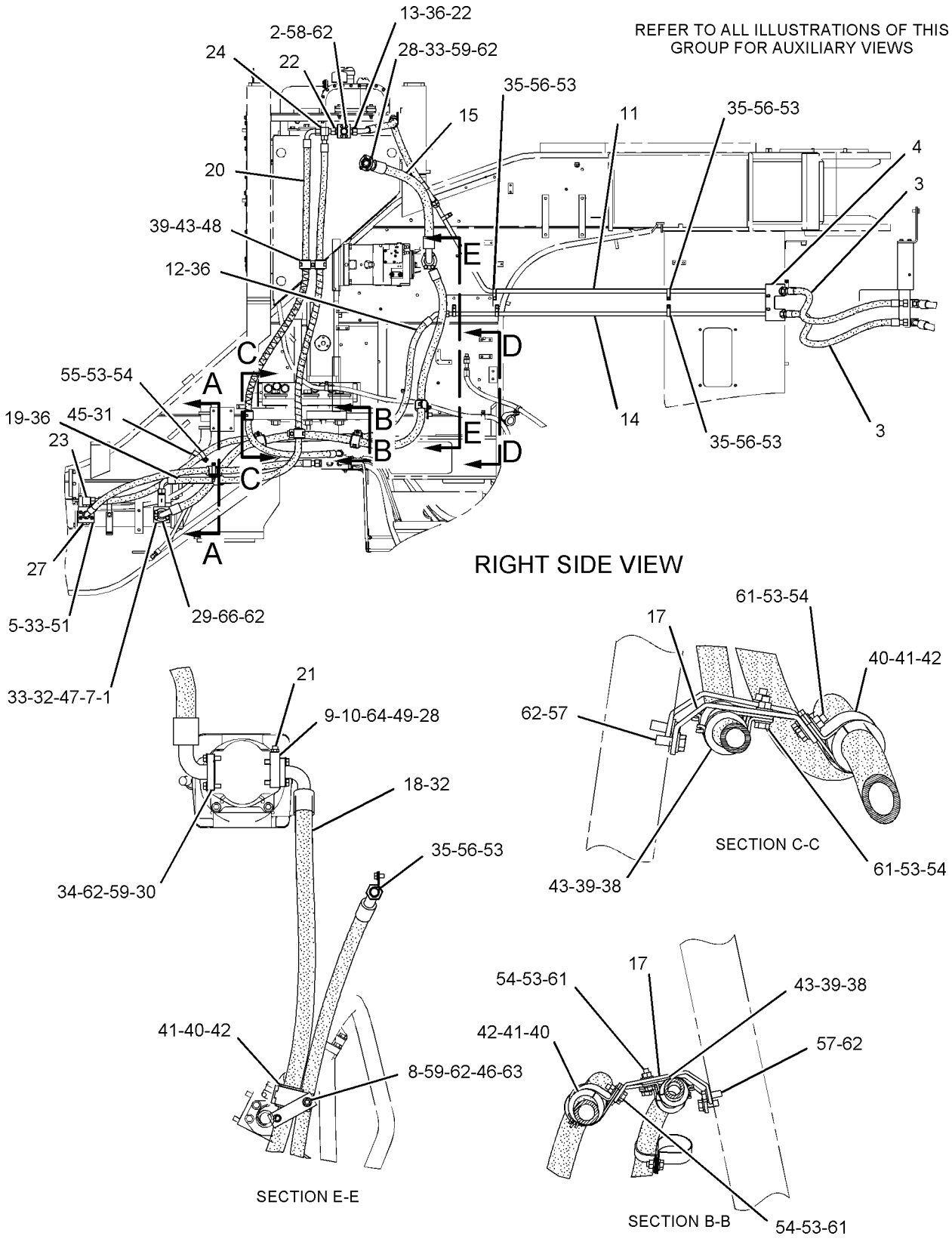

GRAPHIC #2 g01150209

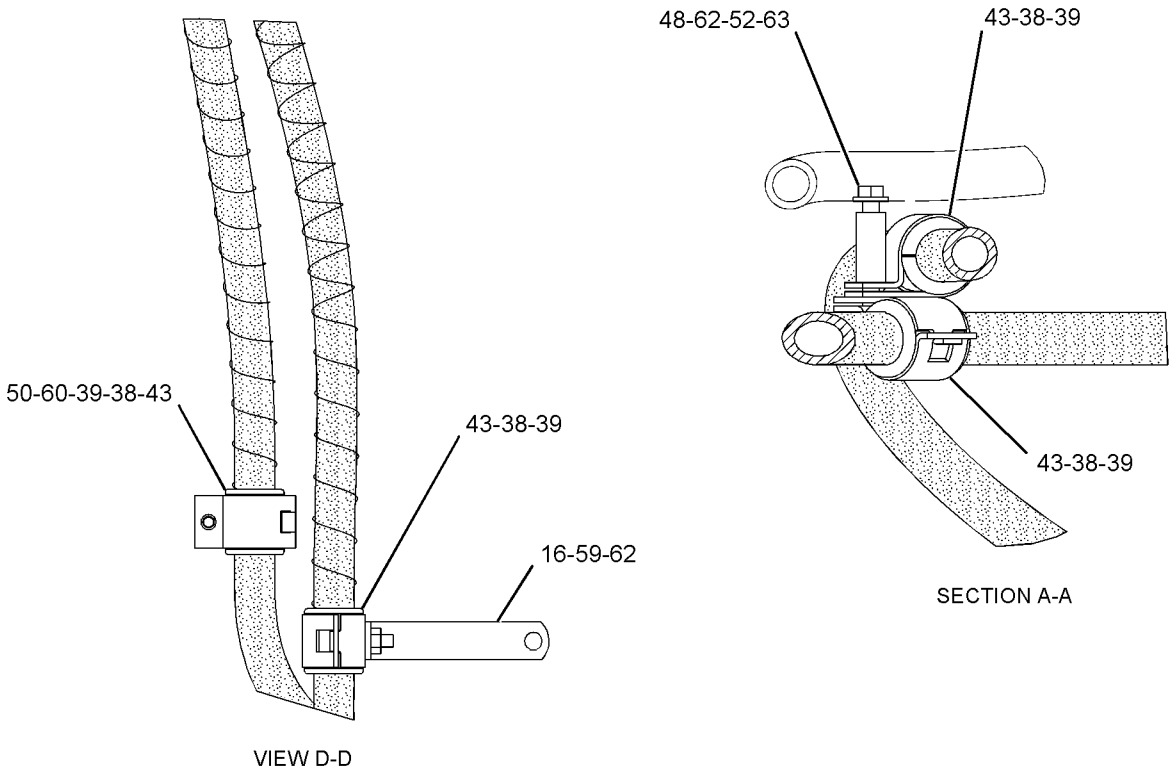

GRAPHIC #3 **<END>** g01150271

244-7297 LINES GP-PARKING BRAKE–FRONT

S/N: 4421-UP

PART OF 244-7300 HYDRAULIC AR-FRONT

SMCS-4257 **i02282505**

NOTE	REF NO	GRAPHIC REF	PART NUMBER	QTY	PART NAME 1 2 3 4 5 6 (PRODUCT LEVEL)	SEE PAGE
	1	1	**122-4026**	1	SPACER (13X25X25-MM THK)	
	2	1	*148-8420*	1	TEE GP	
		1	**3K-0360**	1	SEAL-O-RING	
		1	**6V-8398**	1	SEAL-O-RING	
		1	**8T-6338**	1	TEE-O-RING PORT	
I	3	1	**245-0678**	2	HOSE AS	
	4	1	*148-8340*	1	CONNECTOR AS	
		1	**3K-0360**	1	SEAL-O-RING	
		1	**6V-8398**	1	SEAL-O-RING	
		1	**6V-8639**	1	CONNECTOR	
	5	1	*148-8457*	1	UNION AS	
		1	**6V-8398**	2	SEAL-O-RING	
		1	**6V-8995**	1	UNION	
	6	1	*150-4037*	1	TEE AS	
		1	**6V-8398**	2	SEAL-O-RING	
		1	**6V-9844**	1	TEE-SWIVEL	
	7	1	**5P-6994**	1	CLIP	
	8	1	**6D-4636**	1	CLIP	
	9	1,1	**6D-1641**	2	CLIP	
	10	1	**6V-9169**	1	NUT-BULKHEAD (13/16-16-THD)	
	11	1	**8T-4121**	2	WASHER-HARD (11X21X2.5-MM THK)	
M	12	1	**8T-4136**	1	BOLT (M10X1.5X25-MM)	
M	13	1	**8T-4192**	1	BOLT (M12X1.75X25-MM)	
M	14	1	**8T-4195**	1	BOLT (M10X1.5X30-MM)	
	15	1	**8T-4223**	2	WASHER-HARD (13.5X25.5X3-MM THK)	
M	16	1	**8T-4910**	1	BOLT (M12X1.75X60-MM)	
	17	1	**9X-8250**	1	CLIP	

I-REFER TO HYDRAULIC INFORMATION SYSTEM
M-METRIC PART

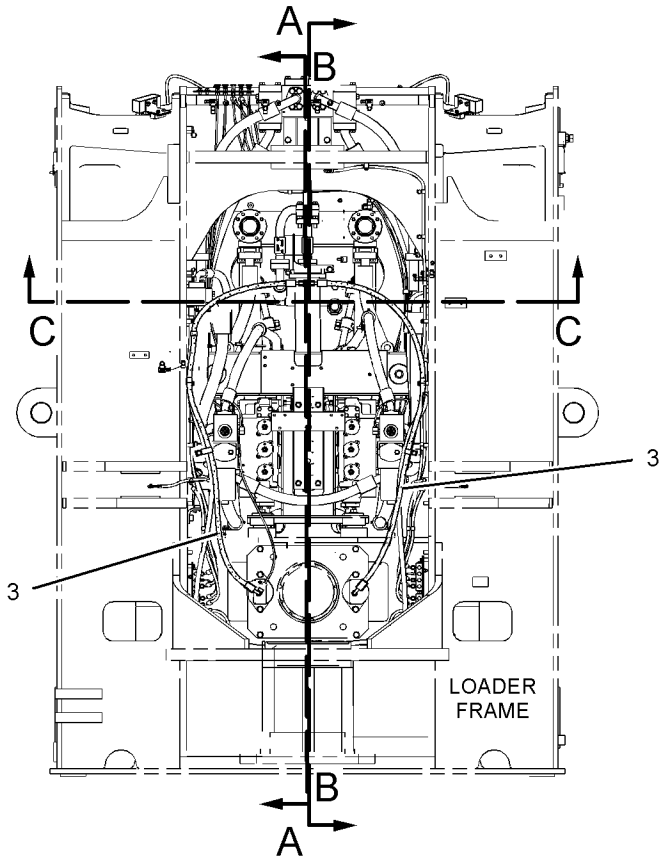

REAR VIEW

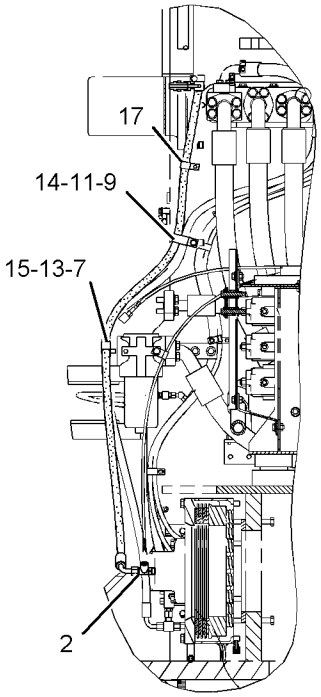

SECTION B-B

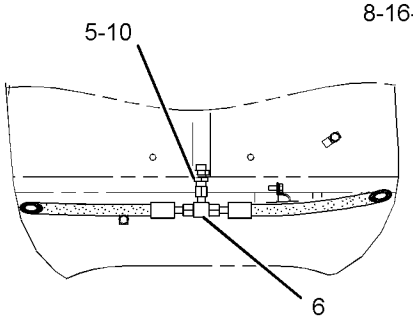

SECTION C-C

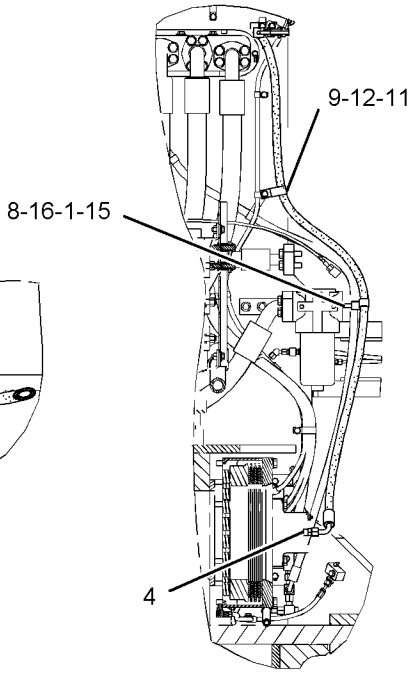

SECTION A-A

GRAPHIC #1 **<END>** g01142653

8X-1720 LINES GP-SERVICE BRAKE–REAR

S/N: 4421-UP

PART OF 245-8813 INSTALLATION AR-FIELD

SMCS-4257 **i02279595**

NOTE	REF NO	GRAPHIC REF	PART NUMBER	QTY	PART NAME 1 2 3 4 5 6 (PRODUCT LEVEL)	SEE PAGE
	1	1	**253-4784**	1	ADAPTER	
C	2	1	**262-1941**	1	TUBE AS	
C	3	1	**262-1942**	1	TUBE AS	
	4	1	**8X-4860**	1	BLOCK	
C	5	1	**261-9572**	1	PLATE AS	
	6	1	*148-8315*	2	CONNECTOR AS	
					(EACH INCLUDES)	
		1	**2M-9780**	1	SEAL-O-RING	
		1	**6V-8642**	1	CONNECTOR	
		1	**7J-9108**	1	SEAL-O-RING	
	7	1	*148-8335*	2	CONNECTOR AS	
					(EACH INCLUDES)	
		1	**5K-9090**	1	SEAL-O-RING	
		1	**6V-8635**	1	CONNECTOR	
		1	**7M-8485**	1	SEAL-O-RING	
	8	1	*148-8390*	2	ELBOW AS	
					(EACH INCLUDES)	
		1	**2M-9780**	1	SEAL-O-RING	
		1	**6V-8626**	1	ELBOW	
		1	**7J-9108**	1	SEAL-O-RING	
	10	1	**4J-5267**	1	SEAL-O-RING	
	11	1	**6K-8178**	4	CLIP	
CM	13	1	**7X-2544**	2	BOLT (M10X1.5X104-MM)	
	14	1	**8T-4121**	6	WASHER-HARD (11X21X2.5-MM THK)	

C-CHANGE FROM PREVIOUS TYPE
M-METRIC PART

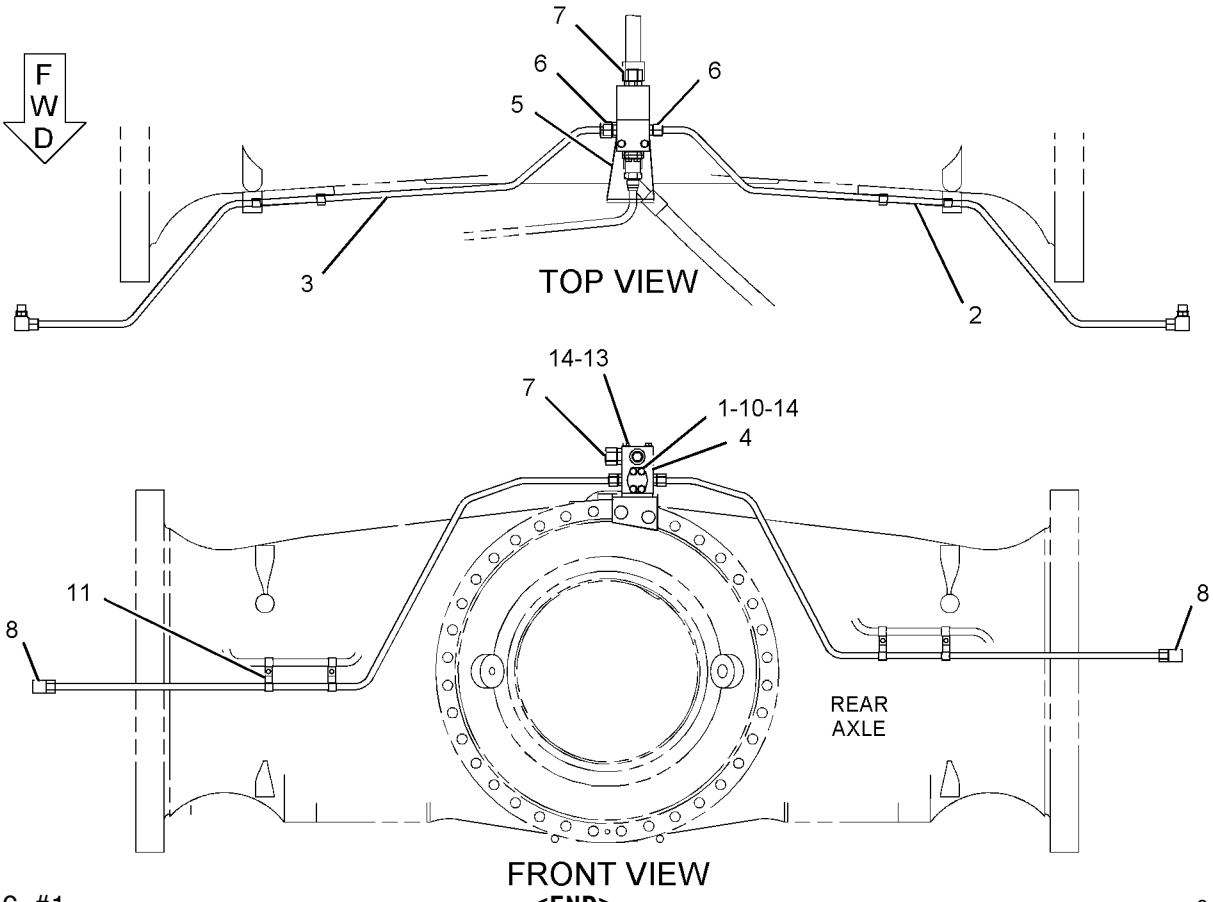

GRAPHIC #1

<END>

g01146648

152-8971 LINES GP-SERVICE BRAKE–FRONT

S/N: 4421-UP

PART OF 245-8813 INSTALLATION AR-FIELD

SMCS-4257 **i01939942**

NOTE	REF NO	GRAPHIC REF	PART NUMBER	QTY	PART NAME 1 2 3 4 5 6 (PRODUCT LEVEL)	SEE PAGE
	1	1	**134-2424**	1	TUBE AS	
	2	1	**134-2425**	1	TUBE AS	
	3	1	*148-8315*	2	CONNECTOR AS	
					(EACH INCLUDES)	
		1	**2M-9780**	1	SEAL-O-RING	
		1	**6V-8642**	1	CONNECTOR	
		1	**7J-9108**	1	SEAL-O-RING	
	4	1	*148-8390*	2	ELBOW AS	
					(EACH INCLUDES)	
		1	**2M-9780**	1	SEAL-O-RING	
		1	**6V-8626**	1	ELBOW	
		1	**7J-9108**	1	SEAL-O-RING	
	5	1	**8F-8513**	2	CLIP	
	6	1	**8T-4121**	1	WASHER-HARD (11X21X2.5-MM THK)	
M	7	1	**8T-4137**	1	BOLT (M10X1.5X20-MM)	

M-METRIC PART

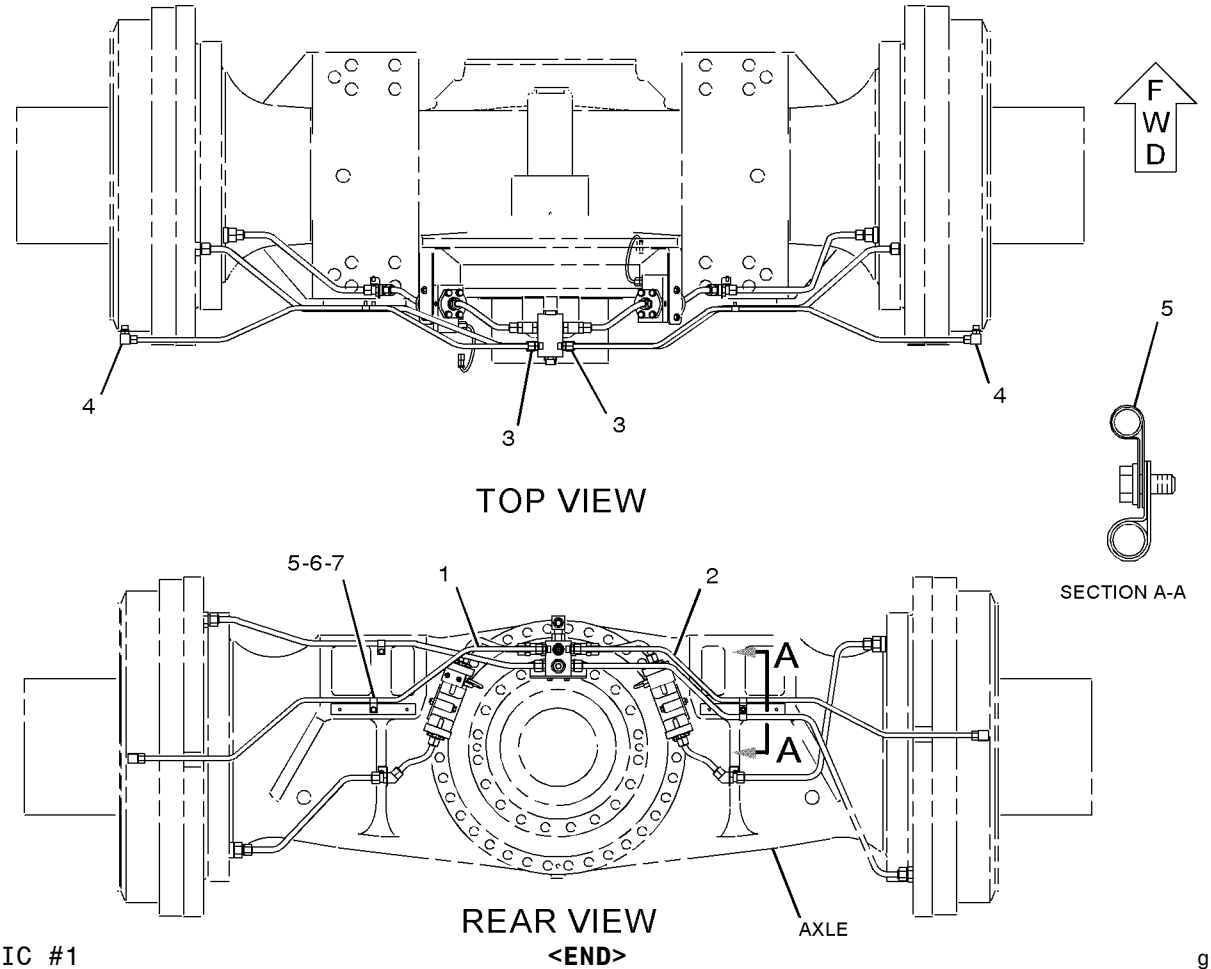

GRAPHIC #1

<END>

g01035403

BRAKING SYSTEM

245-1850 LINES GP-SERVICE BRAKE–FRONT

S/N: 4421-UP

PART OF 244-7300 HYDRAULIC AR-FRONT

SMCS-4257 **i02148575**

NOTE	REF NO	GRAPHIC REF	PART NUMBER	QTY	PART NAME 1 2 3 4 5 6 (PRODUCT LEVEL)	SEE PAGE
I	1	1	**235-0631**	1	HOSE AS	
I	2	1	**244-7317**	1	HOSE AS	
	3	1	*148-8455*	1	UNION AS	
		1	**6V-8997**	1	UNION	
		1	**6V-9746**	2	SEAL-O-RING	
	4	1	*165-4933*	1	ELBOW AS	
		1	**6V-8990**	1	ELBOW	
		1	**6V-9746**	2	SEAL-O-RING	
	5	1	**2P-1293**	2	LOCKNUT (1-3/16-12 THD)	
	6	1	**5P-7466**	1	CLIP (SLOT)	
	7	1	**5P-7467**	1	CLIP (TAB)	
	8	1	**5P-8112**	1	GROMMET	
	9	1	**6V-9511**	1	PLUG (1-3/16-12 THD)	
	10	1	**6V-9746**	1	SEAL-O-RING	
M	11	1	**8T-4183**	1	BOLT (M12X1.75X40-MM)	
	12	1	**8T-4223**	1	WASHER-HARD (13.5X25.5X3-MM THK)	

I-REFER TO HYDRAULIC INFORMATION SYSTEM
M-METRIC PART

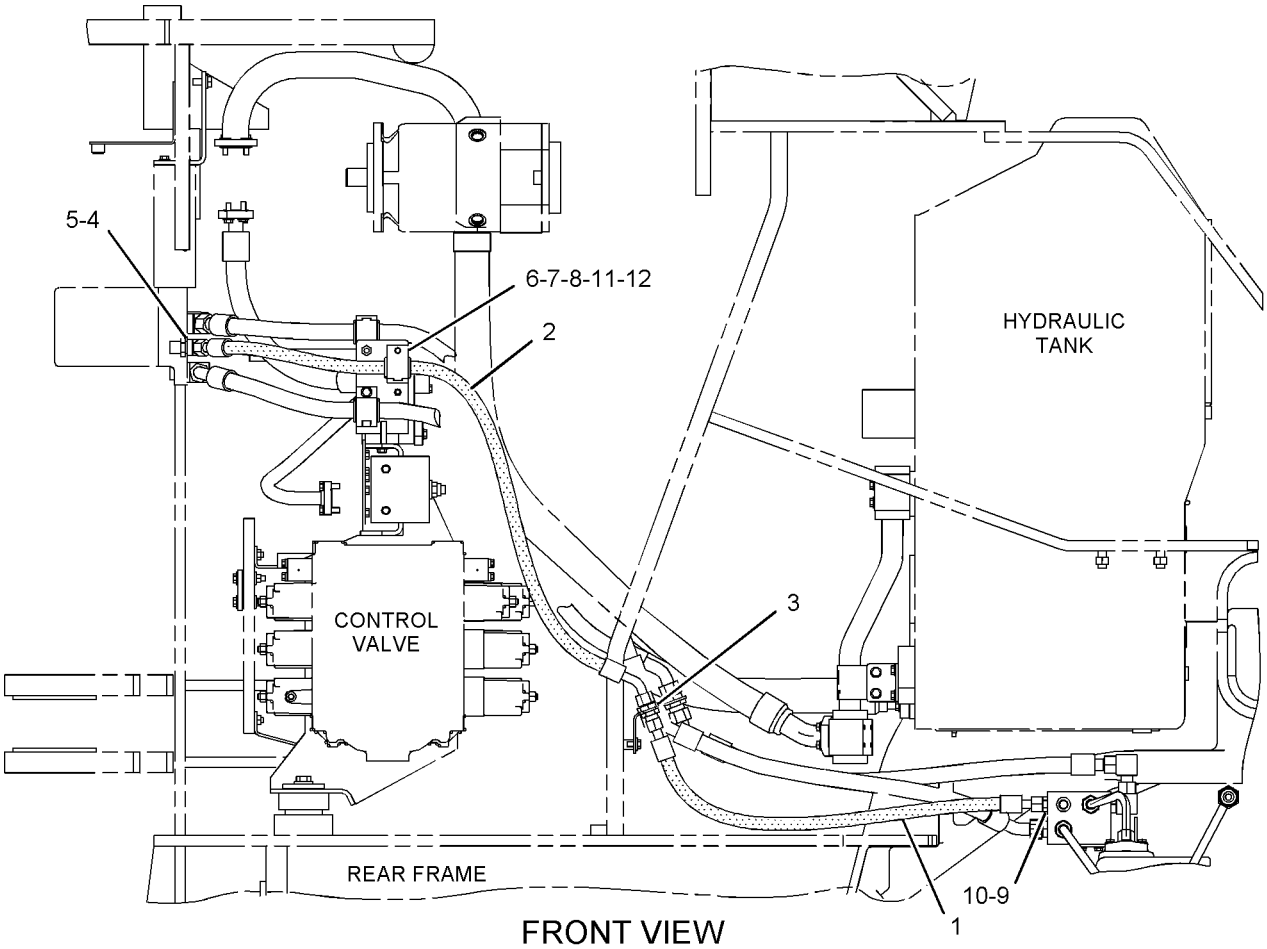

FRONT VIEW

GRAPHIC #1

<END>

g01091920

8X-0083 PUMP & MTG GP-BRAKE

S/N: 4421-UP

PART OF 245-0700 HYDRAULIC AR-REAR

SMCS-4268 **i02169284**

NOTE	REF NO	GRAPHIC REF	PART NUMBER	QTY	PART NAME 1 2 3 4 5 6 (PRODUCT LEVEL)	SEE PAGE
YR	1	1	**102-4226**	1	PUMP GP-PISTON (BRAKE)	646
M	2	1	**8T-4195**	2	BOLT (M10X1.5X30-MM)	
		1	**8T-4121**	2	WASHER-HARD (11X21X2.5-MM THK)	
	3	1	**6D-1004**	1	GASKET	
	4	1	**9S-4191**	1	PLUG-O RING	
	5	1	**3J-1907**	1	SEAL-O-RING	

M-METRIC PART
R-REMFG PART MAY BE AVAILABLE
Y-SEPARATE ILLUSTRATION

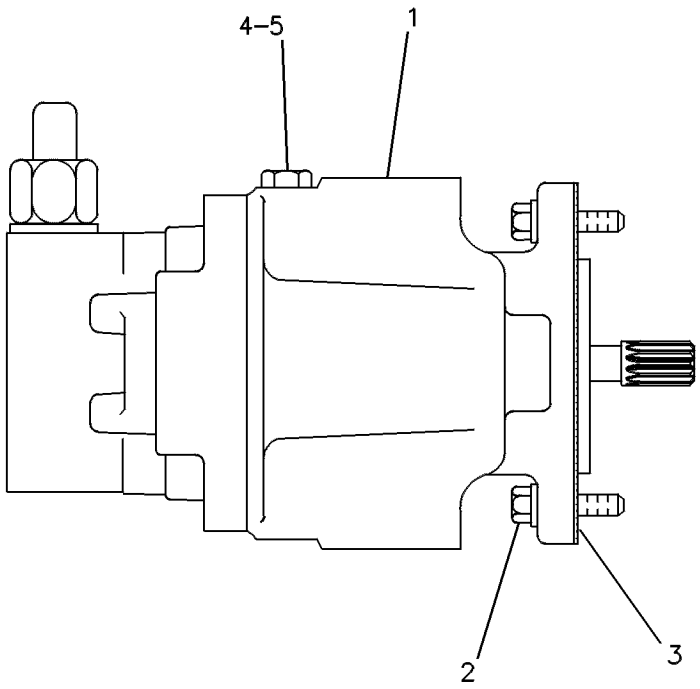

GRAPHIC #1 **<END>** g00085318

102-4226 PUMP GP-PISTON—BRAKE*R

S/N: 4421-UP

PART OF 8X-0083 PUMP & MTG GP-BRAKE

SMCS-4268, 4306, 5070 **i02164316**

NOTE	REF NO	GRAPHIC REF	PART NUMBER	QTY	PART NAME 1 2 3 4 5 6 (PRODUCT LEVEL)	SEE PAGE
	1	1	**3G-3721**	4	SCREW	
J	2	1	**2D-6392**	1	SEAL-O-RING	
	3	1	**4T-1905**	1	PISTON-CONTROL	
	4	1	**4T-1908**	1	SWASHPLATE	
	5	1	**6V-5341**	1	PIN-SPRING	
	6	1	**4T-1907**	1	BUTTON-PIVOT	
	7	1	**4T-1906**	1	COLLAR-SPRING	
	8	1	**4T-1916**	1	SPRING	
	9	1	**1S-8560**	2	RACE-THRUST BEARING	
	10	1	**5L-1100**	1	BEARING-THRUST	
J	11	1	**101-9613**	1	SEAL-SHAFT	
J	12	1	**2R-1230**	1	RING-RETAINING	
	13	1	**104-5967**	1	SHAFT-PUMP	
J	14	1	**001-5600**	2	RING-SNAP	
	15	1	**4T-1915**	1	WASHER (33.5X41.02X1.78-MM THK)	
J	16	1	**3E-6747**	2	SEAL-O-RING	
	17	1	**4T-1897**	2	RACE-BEARING	
	18	1	**104-5060**	1	HOUSING AS-PUMP	
	19	1	**4L-6944**	1	BEARING AS-NEEDLE	
J	20	1	**4T-1902**	1	GASKET	
	21	1	**1B-7182**	4	BOLT (5/16-18X1.25-IN)	
J	22	1	**8N-7294**	2	RETAINER-PIN	
Y	23	1	**4T-1909**	1	VALVE GP-PUMP CONTROL (PRESSURE COMPENSATOR) (BRAKE)	656
J	24	1	**3G-7426**	1	GASKET	
	25	1	**4T-1904**	1	PLATE AS	
		1	**107-3203**	1	PIN-GUIDE	
	26	1	**7F-7983**	1	BEARING AS-NEEDLE	
	27	1	**4T-1901**	2	COVER-TRUNNION	
	28	1	**4F-2926**	2	BEARING AS-NEEDLE	
Y	29	1	**9T-4219**	1	ROTATING GP-PUMP	648
					AVAILABLE REPAIR KIT(S):	
J			**104-5061**	1	KIT-PUMP SEAL	

J-KIT MARKED J INCLUDES PART(S) MARKED J
Y-SEPARATE ILLUSTRATION

102-4226 PUMP GP-PISTON *(contd.)* **i02164316**

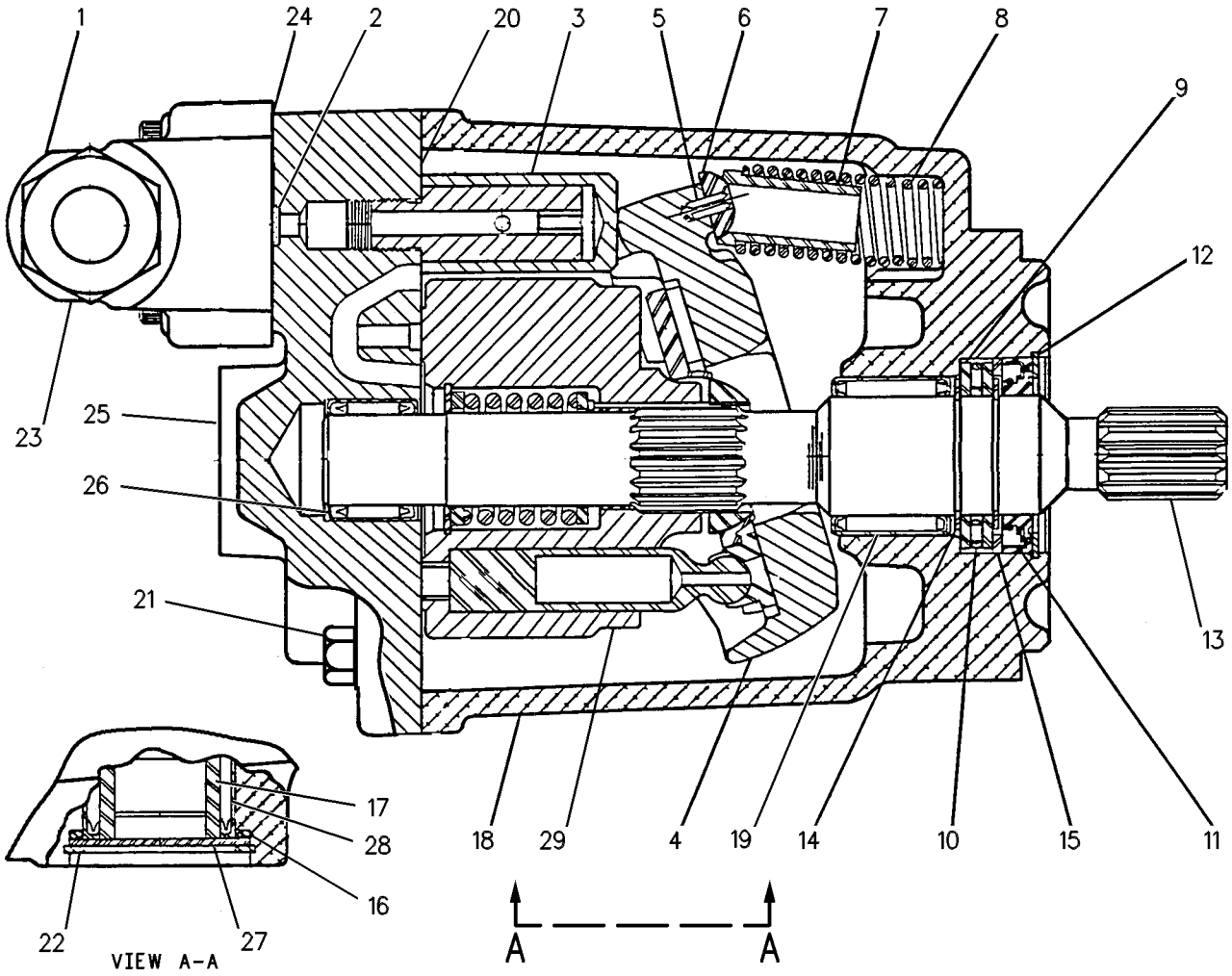

GRAPHIC #1 **<END>** g00084240

9T-4219 ROTATING GP-PUMP–BRAKE

S/N: 4421-UP

PART OF 102-4226 PUMP GP-PISTON

SMCS-5070 **i01294601**

NOTE	REF NO	GRAPHIC REF	PART NUMBER	QTY	PART NAME 1 2 3 4 5 6 (PRODUCT LEVEL)	SEE PAGE
	1	1	**8J-6273**	1	RING-RETAINING	
	2	1	**9T-4538**	2	WASHER	
	3	1	**9T-4539**	1	RETAINER	
	4	1	**9T-4541**	1	SPRING	
	5	1	**9T-4537**	3	PIN	
	6	1	**9T-4540**	1	PLATE-RETRACTION	
	7	1	**9T-4536**	1	WASHER-SPHERICAL	

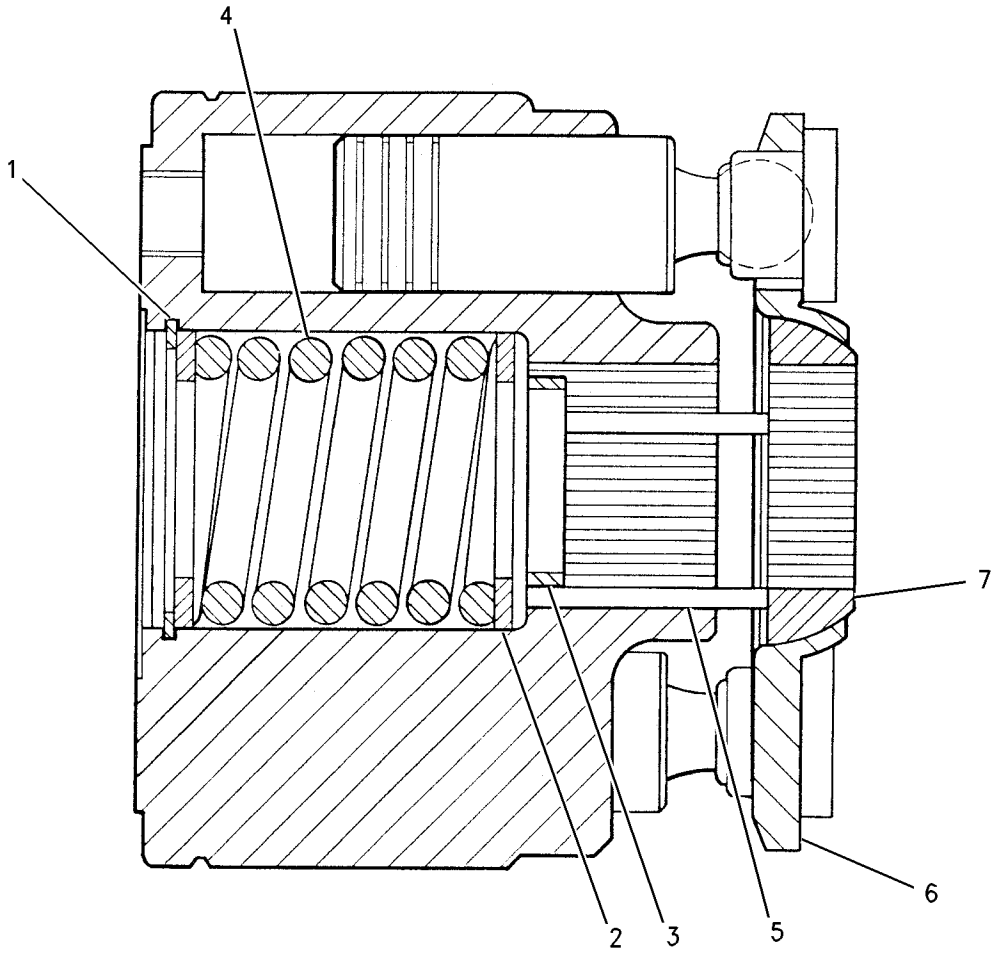

GRAPHIC #1 **<END>** g00686049

164-3306 SCREEN GP-HYDRAULIC–BRAKE COOLING

S/N: 4421-UP

PART OF 138-4339, 138-4340 LINES GP-BRAKE COOLING

SMCS-4295 **i02372714**

NOTE	REF NO	GRAPHIC REF	PART NUMBER	QTY	PART NAME 1 2 3 4 5 6 (PRODUCT LEVEL)	SEE PAGE
	1	1	**9T-1364**	1	KIT-SCREEN	
					(INCLUDES SCREEN,SPRING,WASHER AND RING)	
	2	1	**008-3214**	1	RING-RETAINING (INTERNAL)	

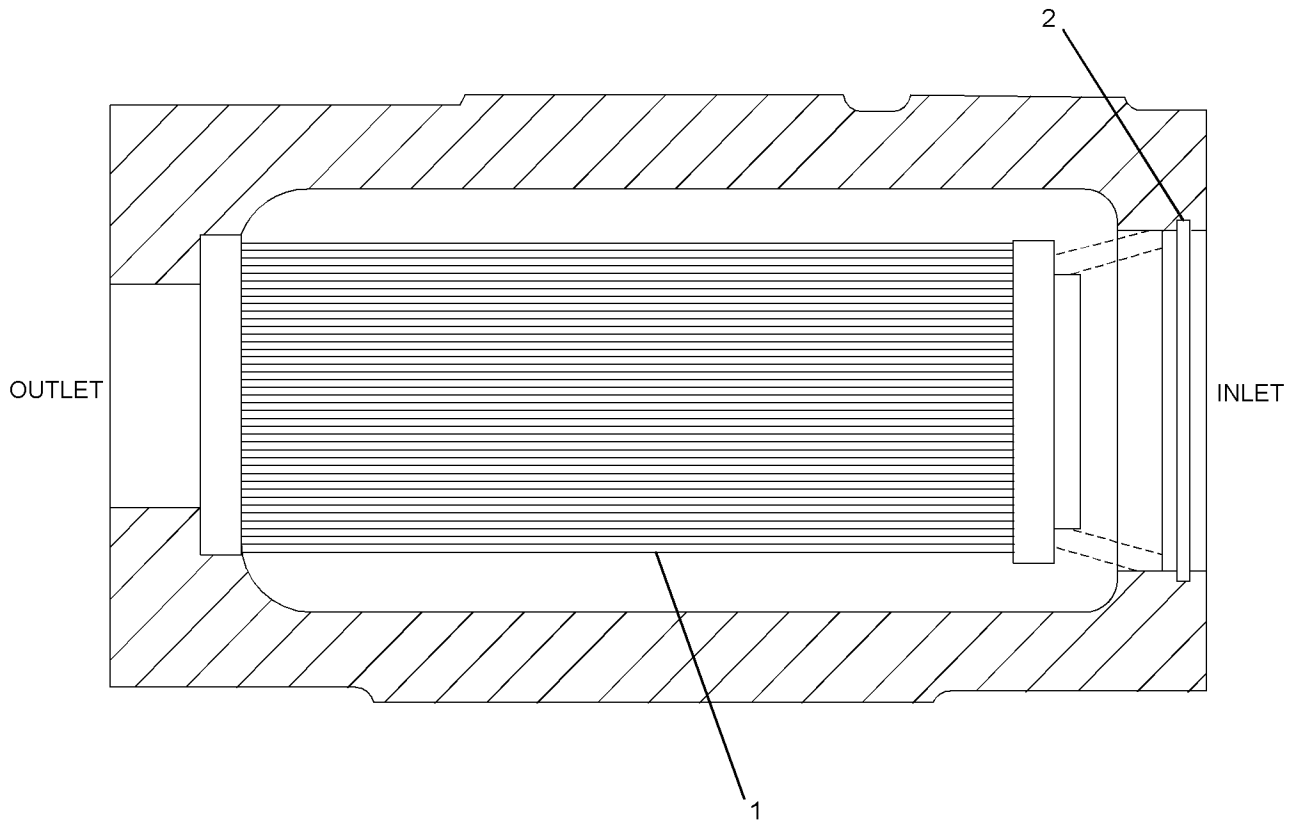

GRAPHIC #1 **<END>** g01183548

BRAKING SYSTEM

252-4400 TANK GP-AIR—STARTING

S/N: 4421-UP
PART OF 246-2275 VESSEL AR
AN ATTACHMENT

SMCS-4272, 5505, 7428 **i02291591**

NOTE	REF NO	GRAPHIC REF	PART NUMBER	QTY	PART NAME 1 2 3 4 5 6 (PRODUCT LEVEL)	SEE PAGE
B	1	1	**4E-7099**	4	PLATE	
	2	1	**9R-8906**	4	BOSS	
	3	1	**9X-8257**	4	WASHER (17.5X30X3.5-MM THK)	
	4	1	**125-6241**	1	TANK-AIR	
	5	1	**252-4398**	1	STRAP	
	6	1	**252-4399**	1	STRAP AS	
	7	1	**4H-9027**	1	PLUG-PIPE	
M	8	1	**7X-2554**	4	BOLT (M16X2X70-MM)	

B-USE AS REQUIRED
M-METRIC PART

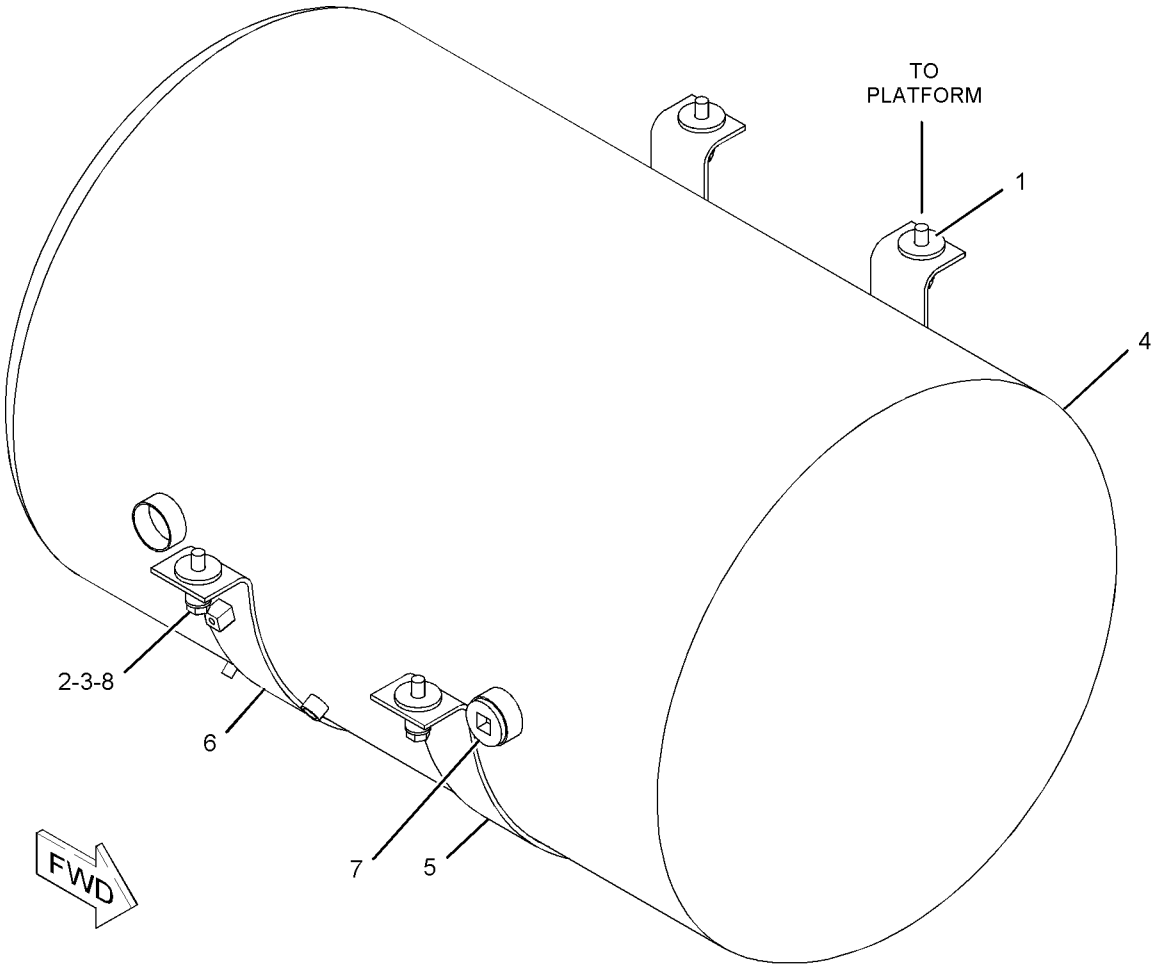

GRAPHIC #1 **<END>** g01094738

266-4220 TANK GP-AIR

S/N: 4421-UP
PART OF 246-2285 VESSEL AR
AN ATTACHMENT

SMCS-4272, 5505, 7428 **i02291684**

NOTE	REF NO	GRAPHIC REF	PART NUMBER	QTY	PART NAME 1 2 3 4 5 6 (PRODUCT LEVEL)	SEE PAGE
	1	1	**4E-7099**	4	PLATE	
	2	1	**5T-1049**	1	TANK-AIR	
	3	1	**9R-8906**	4	BOSS	
	4	1	**9X-8257**	4	WASHER (17.5X30X3.5-MM THK)	
M	5	1	**7X-2554**	4	BOLT (M16X2X70-MM)	
	6	1	**252-4399**	1	STRAP AS	
	6A	1	**5G-6973**	2	LUG	
	7	1	**4H-9027**	1	PLUG-PIPE	

M-METRIC PART

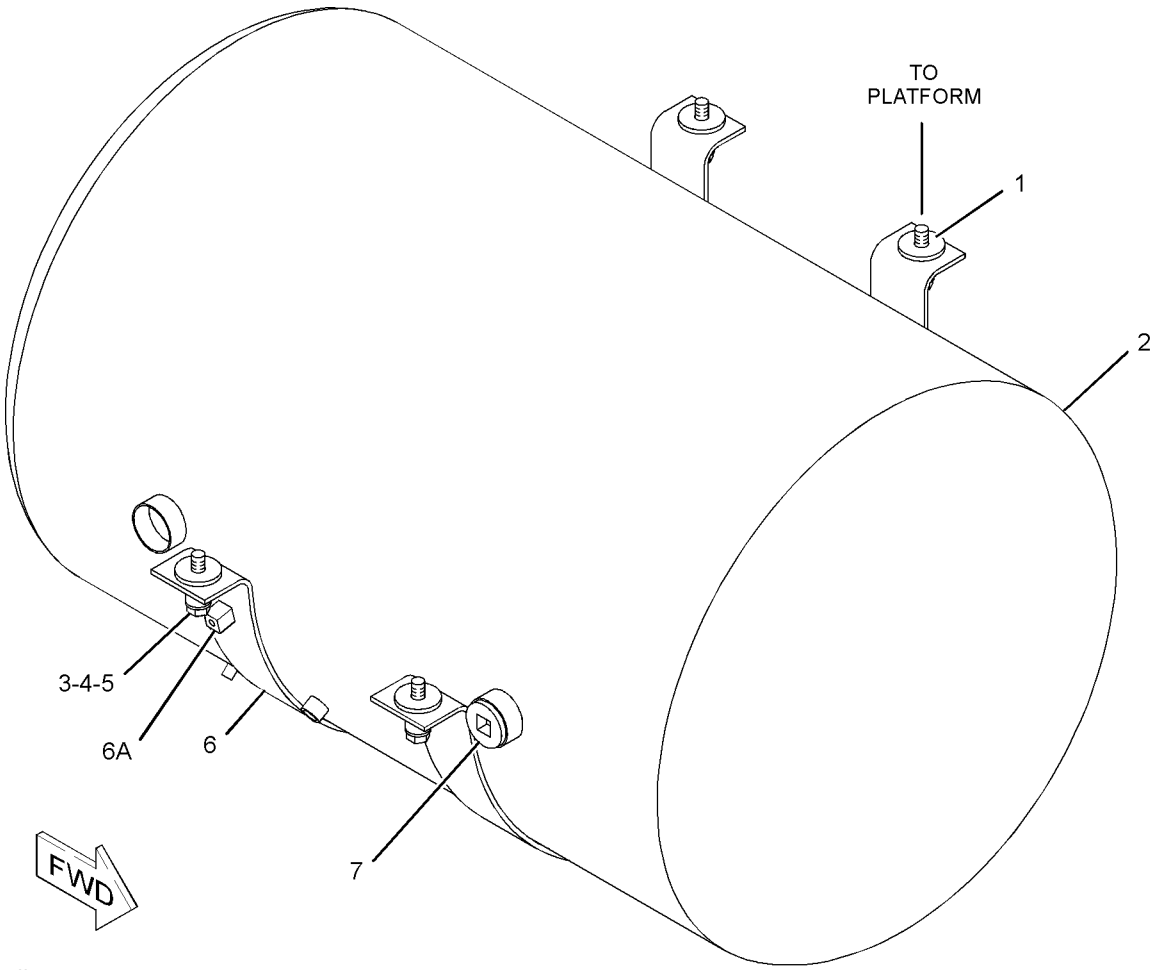

GRAPHIC #1 **<END>** g01152632

250-5830 VALVE & MTG GP-BRAKE CONTROL—PARKING

S/N: 4421-UP

PART OF 245-0700 HYDRAULIC AR-REAR

SMCS-4265, 4282 **i02328010**

NOTE	REF NO	GRAPHIC REF	PART NUMBER	QTY	PART NAME 1 2 3 4 5 6 (PRODUCT LEVEL)	SEE PAGE
	1	1	**1A-4790**	4	WASHER (16.7X31.8X1.6-MM THK)	
	2	1	**2V-7859**	1	BEARING	
	3	1	**3B-4607**	1	PIN-COTTER	
	4	1	**4B-2913**	1	PIN-CLEVIS	
	5	1	**4V-1541**	1	COLLAR	
	6	1	**5P-6724**	1	BEARING-ROLLER	
	7	1	**7I-4078**	1	LEVER AS	
	8	1	**8T-0741**	2	SEAL-LIP TYPE	
	9	1	**103-3587**	1	BRACKET AS	
Y	10	1	**106-1774**	1	VALVE GP-BRAKE CONTROL (PARKING)	654
	11	1	*148-8443*	1	TEE GP	
		1	**3J-1907**	1	SEAL-O-RING	
		1	**6V-8397**	1	SEAL-O-RING	
		1	**7X-2459**	1	TEE-O-RING	
	12	1	**223-8425**	1	BLOCK AS	
	13	1	**223-8470**	1	STRIP	
I	14	1	**227-2001**	1	HOSE AS	
I	15	1	**245-0722**	1	HOSE AS	
I	16	1	**245-0723**	1	HOSE AS	
	17	1	*148-8336*	1	CONNECTOR AS	
		1	**3J-1907**	1	SEAL-O-RING	
		1	**6V-8397**	1	SEAL-O-RING	
		1	**6V-8636**	1	CONNECTOR	
	18	1	**148-8353**	1	ELBOW AS	
		1	**3J-1907**	1	SEAL-O-RING	
		1	**6V-8397**	1	SEAL-O-RING	
		1	**6V-9001**	1	ELBOW	
	20	1	**1S-0994**	3	CLIP	
M	21	1	**5C-2890**	4	NUT (M6X1-THD)	
	23	1	**8T-4121**	2	WASHER-HARD (11X21X2.5-MM THK)	
M	24	1	**8T-4133**	1	NUT (M10X1.15-THD)	
M	25	1	**8T-4189**	2	BOLT (M8X1.25X20-MM)	
M	26	1	**8T-4192**	2	BOLT (M12X1.75X25-MM)	
M	27	1	**8T-4195**	1	BOLT (M10X1.5X30-MM)	
	28	1	**8T-4223**	2	WASHER-HARD (13.5X25.5X3-MM THK)	
	29	1	**8T-4224**	2	WASHER-HARD (8.8X16X2-MM THK)	
M	30	1	**8T-4971**	2	BOLT (M6X1X30-MM)	

I-REFER TO HYDRAULIC INFORMATION SYSTEM
M-METRIC PART
Y-SEPARATE ILLUSTRATION

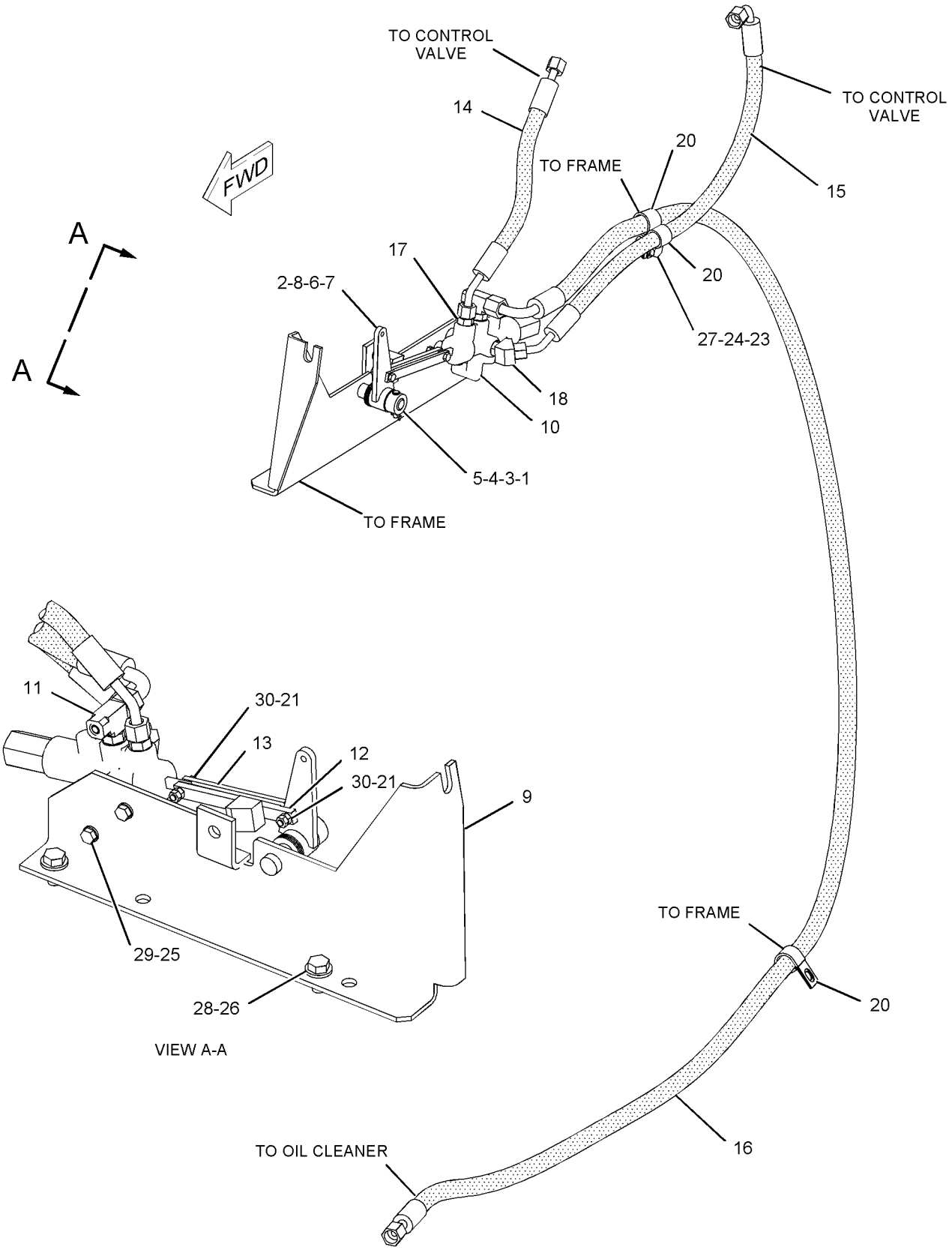

GRAPHIC #1 **<END>** g01143574

106-1774 VALVE GP-BRAKE CONTROL–PARKING

S/N: 4421-UP

PART OF 250-5830 VALVE & MTG GP-BRAKE CONTROL

SMCS-4265, 4282 **i02216715**

NOTE	REF NO	GRAPHIC REF	PART NUMBER	QTY	PART NAME 1 2 3 4 5 6 (PRODUCT LEVEL)	SEE PAGE
	1	1	**4J-7533**	2	SEAL-O-RING	
	2	1	**9S-8001**	2	PLUG	
	3	1	**257-7676**	1	KIT-REPAIR	
					(INCLUDES BOOT, SEALS, RETAINING, DETENT BALLS AND SPRINGS)	

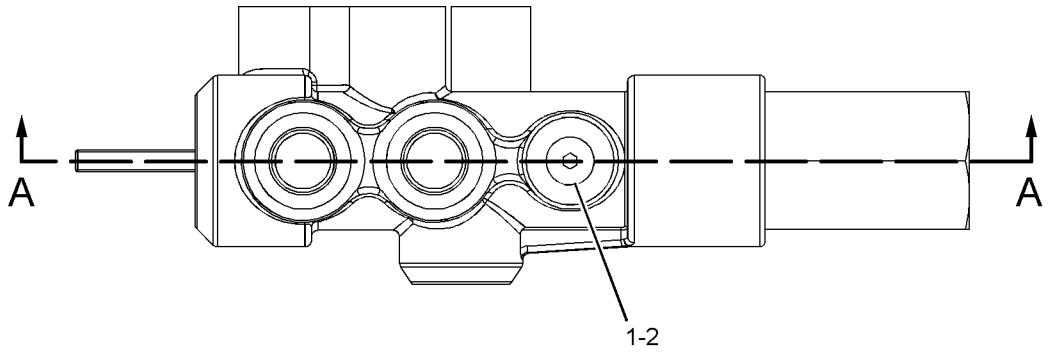

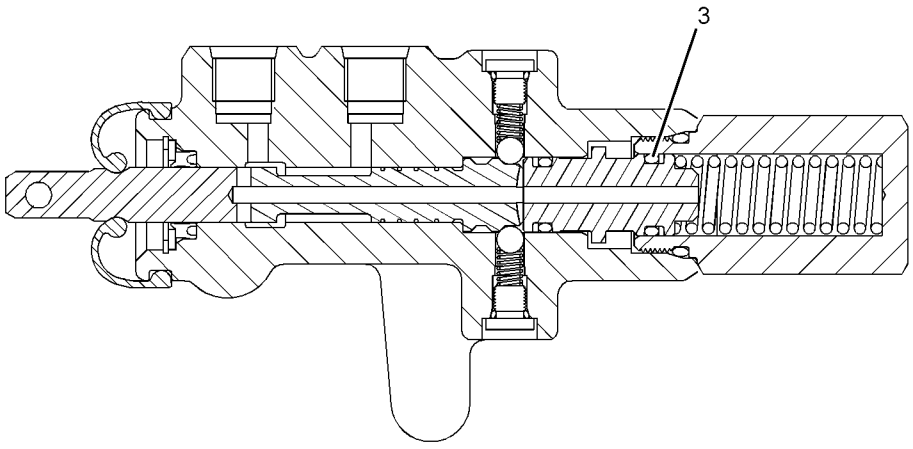

SECTION A-A

GRAPHIC #1 **<END>** g01118794

176-6448 VALVE GP-CHECK–BRAKE COOLING

S/N: 4421-UP

PART OF 138-4339, 138-4340 LINES GP-BRAKE COOLING

SMCS-4275, 5067 **i01871153**

NOTE	PART NUMBER	QTY	PART NAME 1 2 3 4 5 6 (PRODUCT LEVEL)	SEE PAGE
	3D-2824	1	SEAL-O-RING	
	6V-9746	1	SEAL-O-RING	
	9T-3752	1	VALVE AS-CHECK (STEERING)	

<END>

4T-1909 VALVE GP-PUMP CONTROL–PRESSURE COMPENSATOR–BRAKE

S/N: 4421-UP

PART OF 102-4226 PUMP GP-PISTON

SMCS-5455 **i01142185**

NOTE	REF NO	GRAPHIC REF	PART NUMBER	QTY	PART NAME 1 2 3 4 5 6 (PRODUCT LEVEL)	SEE PAGE
	1	1	**9S-8007**	1	PLUG-O-RING (3/8-24 THD)	
	2	1	**4T-1910**	1	CAP	
	3	1	**5P-8356**	1	SEAL-O-RING (21.89MM ID)	
	4	1	**3G-5423**	1	SPRING	
	5	1	**4T-1911**	1	CAP-SPRING	
	6	1	**3P-0647**	1	SEAL-O-RING (13.94MM ID)	
	7	1	**6F-0612**	1	NUT-JAM (1/4-28 THD)	
	8	1	**4T-1914**	1	SETSCREW-HEX SOCKET	
	9	1	**9T-4226**	1	CAP	
	10	1	**4T-1913**	1	CAP-SPRING	
	11	1	**7J-0204**	1	SEAL-O-RING (7.65MM ID)	

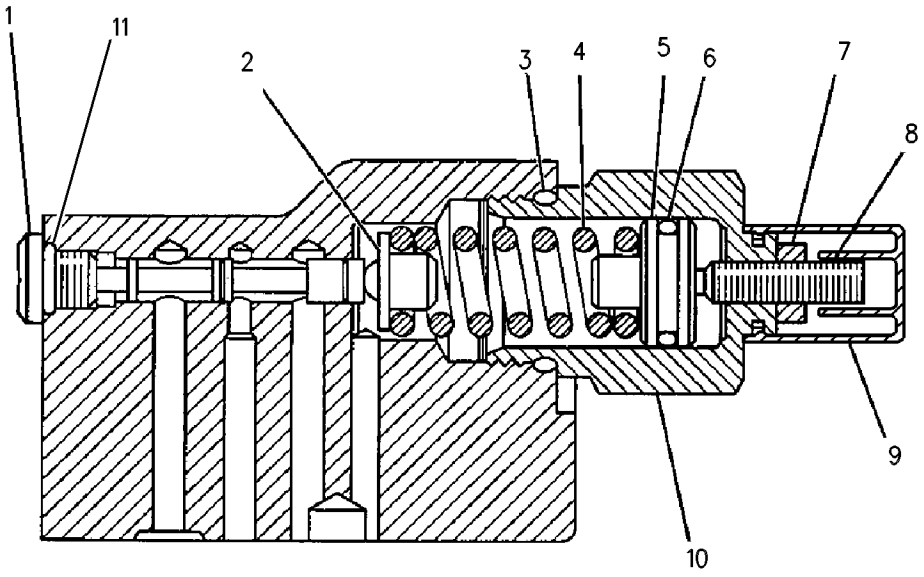

GRAPHIC #1 **<END>** g00605683

185-0008 VALVE GP-SOLENOID–AIR HORN

S/N: 4421-UP
24 VOLT
PART OF 245-1830 LINES GP-AIR TANK
AN ATTACHMENT

SMCS-4804, 4805, 5479 **i02155671**

NOTE	REF NO	GRAPHIC REF	PART NUMBER	QTY	PART NAME 1 2 3 4 5 6 (PRODUCT LEVEL)	SEE PAGE
	1	1	**156-5970**	1	NUT (1/2-20-2B THD)	
	2	1	**164-2108**	1	WASHER (13.03X25.4X2.38-MM THK)	
	3	1	**226-9637**	1	COIL AS	

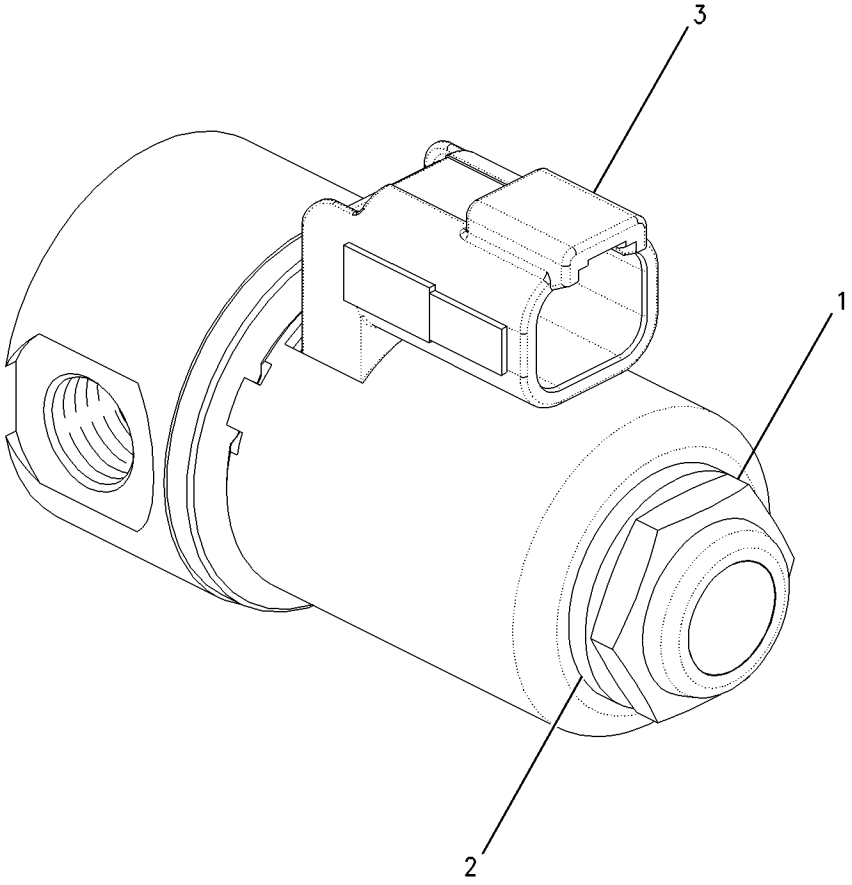

GRAPHIC #1 **<END>** g00925213

STEERING SYSTEM

164-6941 ACTUATOR GP-PUMP

S/N: 4421-UP

PART OF 224-2561 ACTUATOR GP-PUMP

SMCS-5078 **i01063502**

NOTE	REF NO	GRAPHIC REF	PART NUMBER	QTY	PART NAME 1 2 3 4 5 6 (PRODUCT LEVEL)	SEE PAGE
	1	1	**164-7141**	1	PISTON	
	2	1	**164-7145**	1	BUSHING	
	3	1	**6E-3869**	1	SPRING	
B	4	1	**164-7142**	1	ROD (159.2-MM)	
B	5	1	**164-7143**	1	ROD (159.4-MM)	
B	6	1	**164-7144**	1	ROD (159-MM)	

B-USE AS REQUIRED

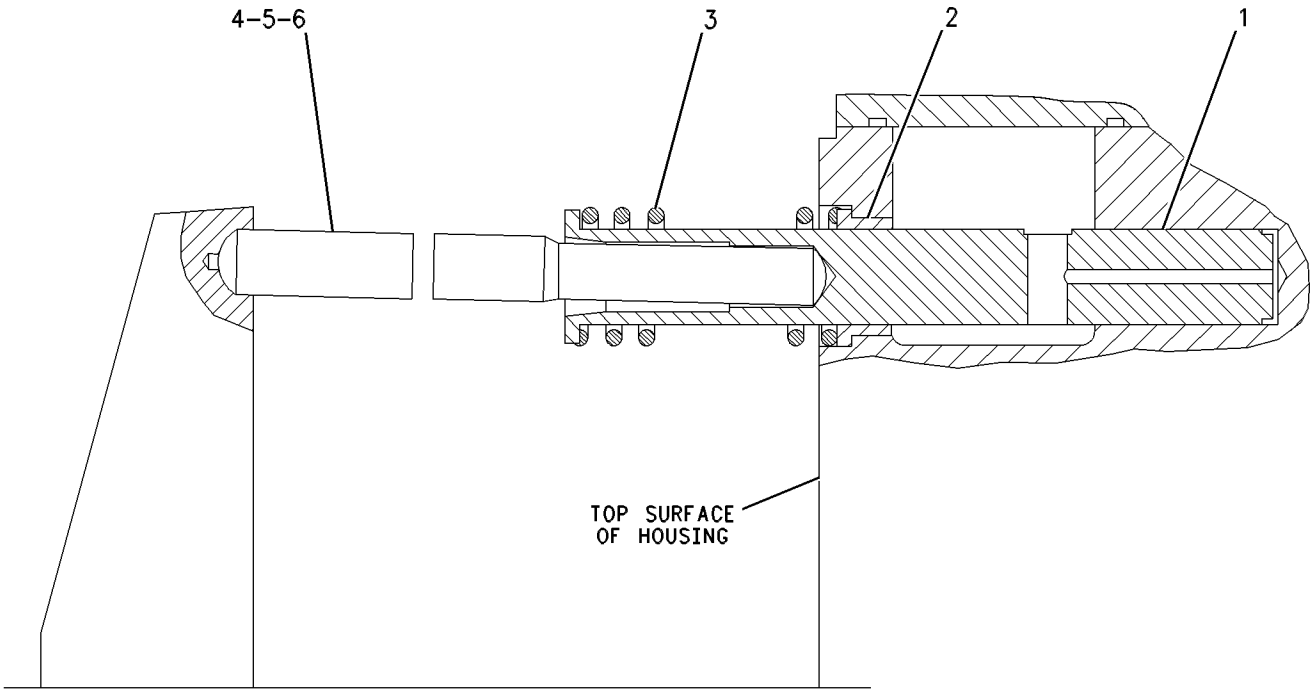

GRAPHIC #1 **<END>** g00554630

224-2561 ACTUATOR GP-PUMP

S/N: 4421-UP

PART OF 263-5064, 263-5065 PUMP GP-PISTON

SMCS-5078 **i02064386**

NOTE	REF NO	GRAPHIC REF	PART NUMBER	QTY	PART NAME 1 2 3 4 5 6 (PRODUCT LEVEL)	SEE PAGE
	1	1	**224-2562**	1	PISTON	
	2	1	**165-9399**	1	ROD	
	3	1	**6E-3369**	1	FLANGE	
Y	4	1	**164-6941**	1	ACTUATOR GP-PUMP	658

Y-SEPARATE ILLUSTRATION

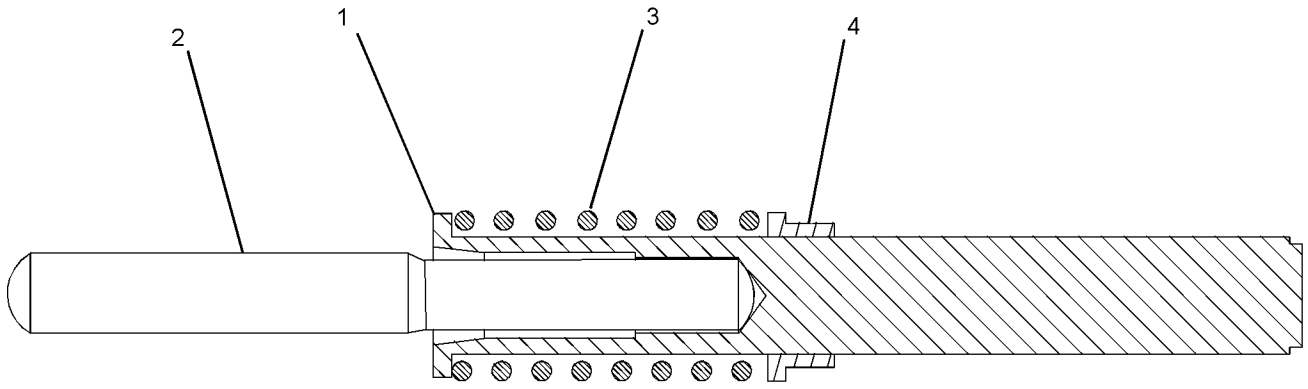

GRAPHIC #1

<END>

g01062059

STEERING SYSTEM

249-4488 ACTUATOR GP-PUMP

S/N: 4421-UP

PART OF 263-5064, 263-5065 PUMP GP-PISTON

SMCS-5078 **i02069493**

NOTE	REF NO	GRAPHIC REF	PART NUMBER	QTY	PART NAME 1 2 3 4 5 6 (PRODUCT LEVEL)	SEE PAGE
	1	1	**249-4489**	1	PISTON	
	2	1	**6E-3872**	1	SPRING	
B	3	1	**165-9402**	1	ROD (152.2-MM)	
B		1	**165-9403**	1	ROD (151.8-MM)	
B		1	**165-9404**	1	ROD	
B		1	**165-9405**	1	ROD (152.4-MM)	

B-USE AS REQUIRED

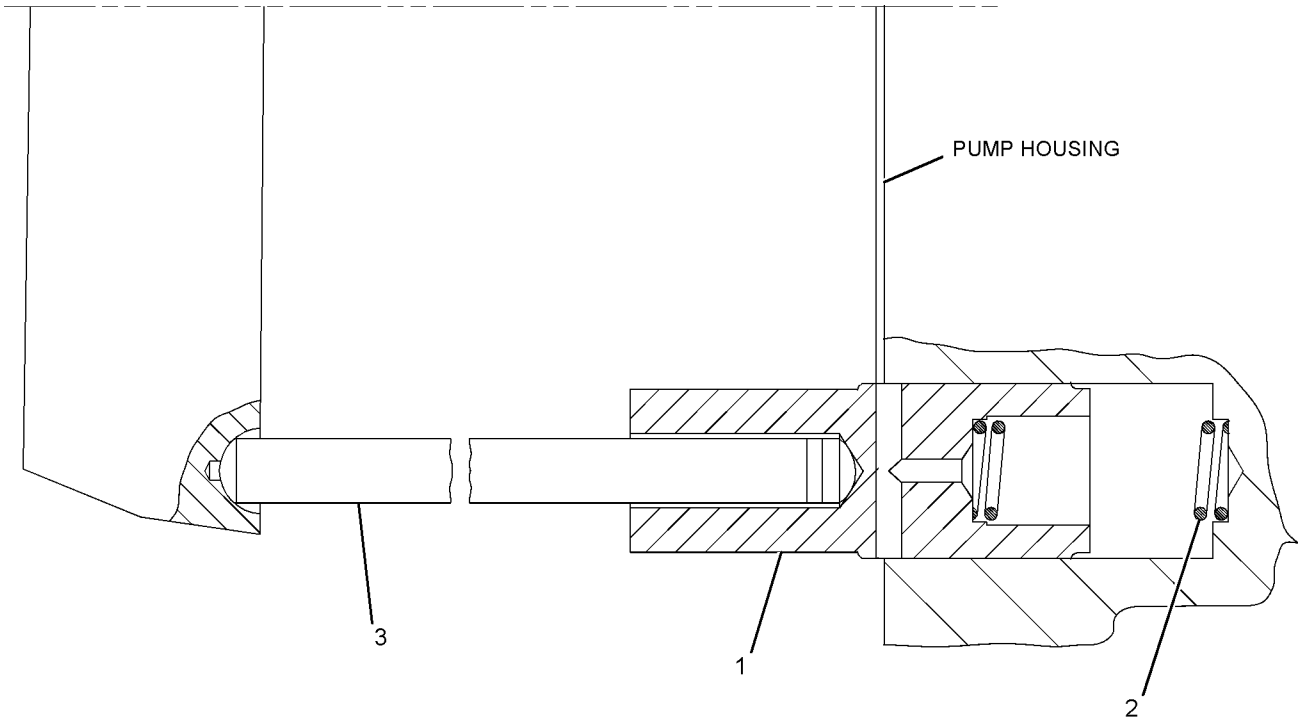

GRAPHIC #1 **<END>** g01060774

164-6987 BARREL GP-PUMP–STEERING

S/N: 4421-UP

PART OF 164-6938 ROTATING GP-PUMP

SMCS-5070 **i01063492**

NOTE	REF NO	GRAPHIC REF	PART NUMBER	QTY	PART NAME 1 2 3 4 5 6 (PRODUCT LEVEL)	SEE PAGE
	1	1	**164-8165**	9	PISTON AS	
	2	1	**164-8166**	1	BARREL AS	
	3	1	**164-8167**	1	PLATE-RETAINER	
	4	1	**164-8168**	1	BALL	
B	5	1	**164-8169**	2	SHIM (0.5MM THK)	
B	6	1	**164-8170**	2	SHIM (0.75MM THK)	
	7	1	**164-8171**	20	SPRING	

B-USE AS REQUIRED

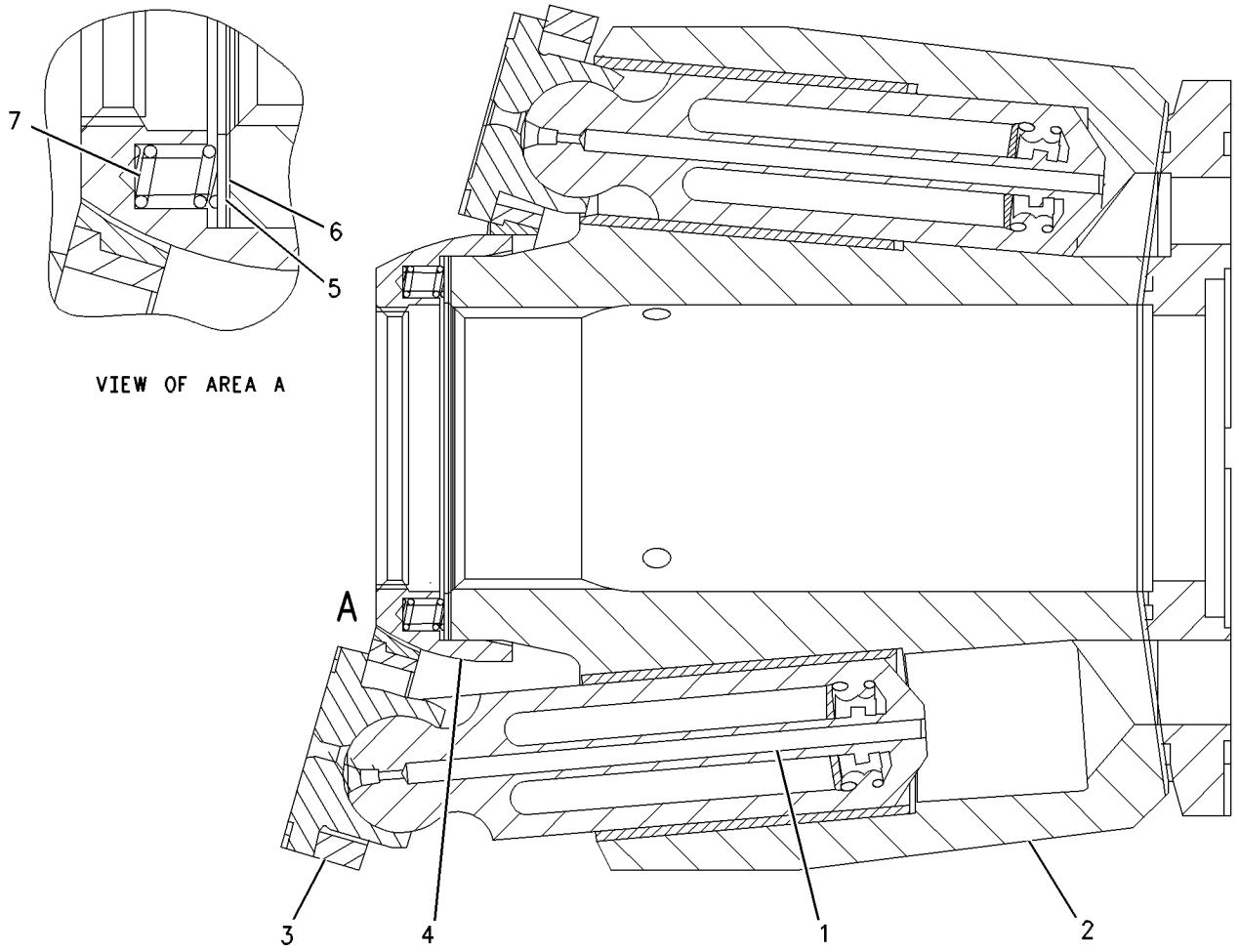

GRAPHIC #1 **<END>** g00554143

STEERING SYSTEM

236-5240 CONTROL GP-STEERING

S/N: 4421-UP

PART OF 242-0341 CAB AR

SMCS-4304, 4309, 4310, 4338 **i02363157**

NOTE	REF NO	GRAPHIC REF	PART NUMBER	QTY	PART NAME 1 2 3 4 5 6 (PRODUCT LEVEL)	SEE PAGE
E	1	1	**160-2243**		SLEEVE-ABRASION (94-CM EACH)	
E	1A	1	**160-2243**		SLEEVE-ABRASION (91-CM EACH)	
	2	1	**4E-3439**	1	MANIFOLD	
	3	1	**4E-3441**	1	PAD	
I	4	1	**4E-6867**	2	HOSE AS	
I	5	1	**098-6814**	2	HOSE AS	
	6	1	**163-8811**	8	CLAMP	
Y	7	1	**249-5615**	1	VALVE GP-PILOT (STIC STEERING)	727
	8	1	**136-3607**	2	ELBOW	
	9	1	**3K-0360**	12	SEAL-O-RING	
	10	1	**6D-4247**	2	CLIP	
	11	1	**6V-8398**	8	SEAL-O-RING	
	12	1	**6V-8625**	2	ELBOW	
	13	1	**6V-8639**	8	CONNECTOR	
	14	1	**8T-4121**	5	WASHER-HARD (11X21X2.5-MM THK)	
M	15	1	**8T-4136**	2	BOLT (M10X1.5X25-MM)	
M	16	1	**8T-4195**	3	BOLT (M10X1.5X30-MM)	
	17	1	**9X-2304**	1	CONNECTOR	

E-ORDER BY THE CENTIMETER
I-REFER TO HYDRAULIC INFORMATION SYSTEM
M-METRIC PART
Y-SEPARATE ILLUSTRATION

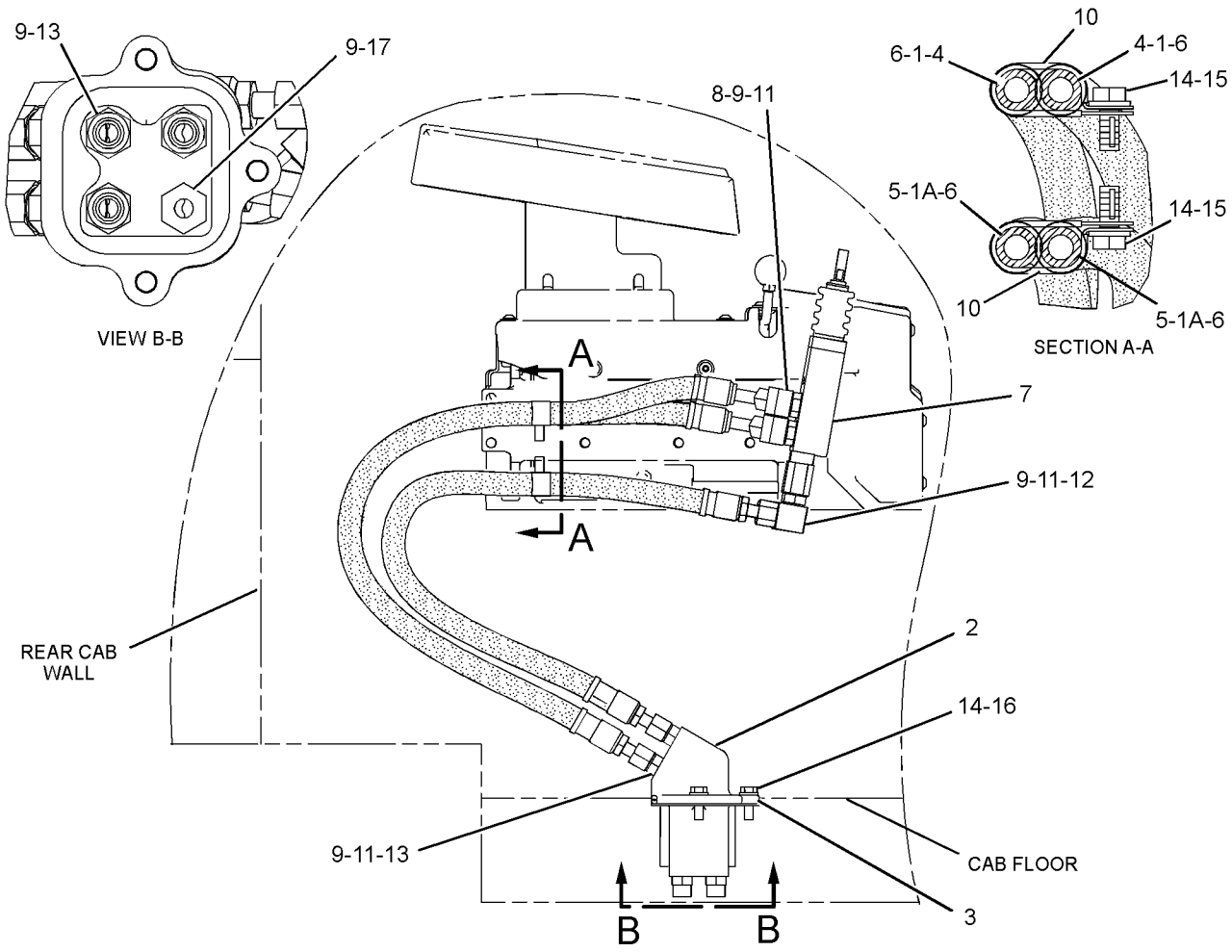

GRAPHIC #1 **<END>** g01180295

8X-0070 CYLINDER & MTG GP-STEERING

S/N: 4421-UP

PART OF 245-0700 HYDRAULIC AR-REAR

SMCS-4303 **i02168851**

NOTE	REF NO	GRAPHIC REF	PART NUMBER	QTY	PART NAME 1 2 3 4 5 6 (PRODUCT LEVEL)	SEE PAGE
Y	1	1	**9T-9019**	1	CYLINDER GP-STEERING (RH)	667
	2	1	**8X-0763**	2	PIN AS	
M	3	1	**8T-0380**	2	BOLT (M24X3X60-MM)	
	4	1	**4F-6464**	2	WASHER-HARD (26.2X60.3X5-MM THK)	
	5	1	**4V-1718**	2	SPACER (27.5X50X17-MM THK)	
Y	6	1	**6E-0529**	1	CYLINDER GP-STEERING (LH)	665

M-METRIC PART
Y-SEPARATE ILLUSTRATION

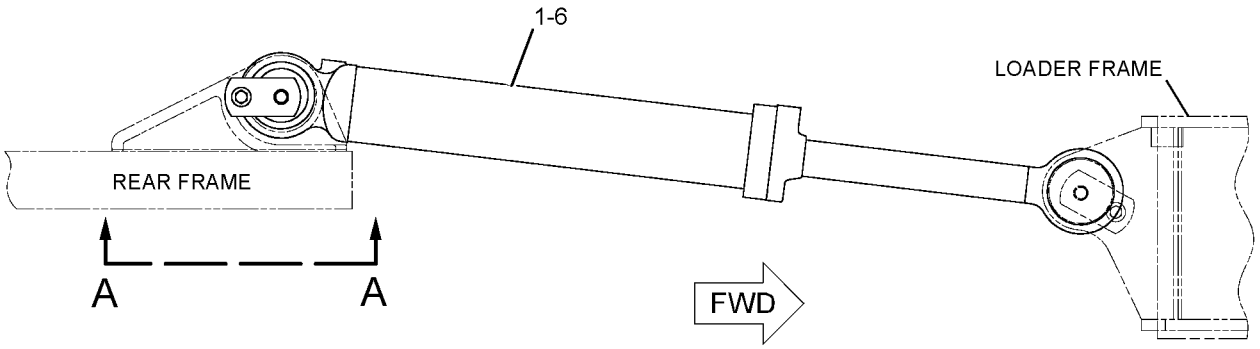

TOP VIEW

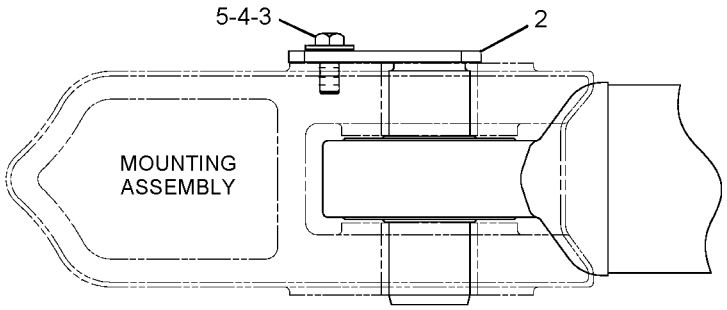

VIEW A-A

GRAPHIC #1 **<END>** g01099012

STEERING SYSTEM

6E-0529 CYLINDER GP-STEERING—LH

S/N: 4421-UP
196.9 MM (7.75 IN) BORE X 1120 MM (44.1 IN) STROKE
PART OF 8X-0070 CYLINDER & MTG GP-STEERING

SMCS-4303 **i02155638**

NOTE	REF NO	GRAPHIC REF	PART NUMBER	QTY	PART NAME 1 2 3 4 5 6 (PRODUCT LEVEL)	SEE PAGE
JL	1	1	**167-2218**	1	SEAL AS-BUFFER	
JL	2	1	**167-2333**	1	SEAL-U-CUP	
JL	3	1	**225-3288**	1	SEAL-WIPER	
R	4	1	**6E-0526**	1	ROD AS	
		1	**4T-1684**	1	BEARING	
		1	**8J-5962**	1	SEAL AS	
	5	1	**126-9414**	1	HEAD	
M	6	1	**6V-8132**	8	BOLT (M24X3X120-MM)	
	7	1	**6V-8237**	8	WASHER (26X44X4-MM THK)	
JL	8	1	**8T-6748**	1	RING-WEAR	
J	9	1	**5K-1787**	1	SEAL-O-RING	
J	10	1	**158-3029**	1	RING-BACKUP	
	11	1	**6E-0524**	1	PISTON	
J	12	1	**8T-1792**	1	SEAL AS	
J	13	1	**9J-5037**	1	RING-WEAR	
	14	1	**7J-9250**	1	LOCKNUT (3-1/4X12-THD)	
R	15	1	**6E-0530**	1	CYLINDER AS-LH	
		1	**4T-1684**	1	BEARING	
		1	**8J-5962**	2	SEAL AS	
	16	1	**9S-4182**	2	PLUG	
	17	1	**3J-7354**	2	SEAL-O-RING	
					AVAILABLE REPAIR KIT(S):	
J			**130-9763**	1	KIT-HYDRAULIC CYLINDER SEAL (CYLINDER-1)	
					(KIT INCLUDES 6-SEALS & 4-RINGS)	
L			**130-9771**	1	KIT-SEAL (CYLINDER-2)	
					(KIT INCLUDES 6-SEALS & 2-RINGS)	

J-KIT MARKED J INCLUDES PARTS MARKED J
L-KIT MARKED L INCLUDES PARTS MARKED L
M-METRIC PART
R-REMFG PART MAY BE AVAILABLE

6E-0529 CYLINDER GP-STEERING *(contd.)* i02155638

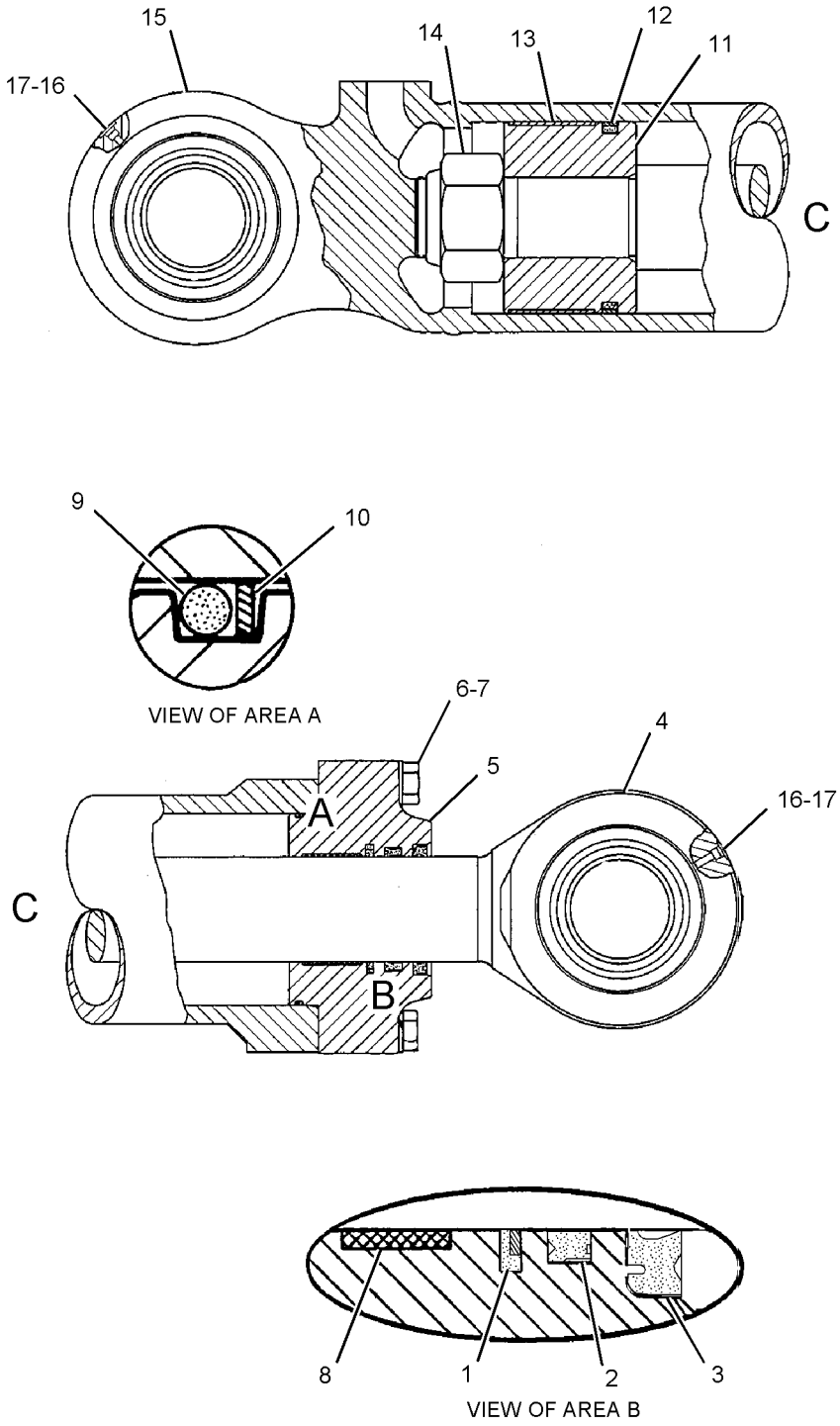

GRAPHIC #1 **<END>** g01093758

9T-9019 CYLINDER GP-STEERING—RH

S/N: 4421-UP

196.85 MM (7.75 IN) BORE X 1120 MM (44.09 IN) STROKE

PART OF 8X-0070 CYLINDER & MTG GP-STEERING

SMCS-4303 **i02279580**

NOTE	REF NO	GRAPHIC REF	PART NUMBER	QTY	PART NAME 1 2 3 4 5 6 (PRODUCT LEVEL)	SEE PAGE
JL	1	1	**167-2218**	1	SEAL AS-BUFFER	
JL	2	1	**167-2333**	1	SEAL-U-CUP	
JL	3	1	**225-3288**	1	SEAL-WIPER	
R	4	1	**6E-0526**	1	ROD AS	
		1	**4T-1684**	1	BEARING	
		1	**8J-5962**	2	SEAL AS	
	5	1	**126-9414**	1	HEAD	
M	6	1	**6V-8132**	8	BOLT (M24X3X120-MM)	
	7	1	**6V-8237**	8	WASHER (26X44X4-MM THK)	
JL	8	1	**8T-6748**	1	RING-WEAR	
J	9	1	**5K-1787**	1	SEAL-O-RING	
J	10	1	**158-3029**	1	RING-BACKUP	
	11	1	**6E-0524**	1	PISTON	
J	12	1	**8T-1792**	1	SEAL AS	
J	13	1	**9J-5037**	1	RING-WEAR	
	14	1	**7J-9250**	1	LOCKNUT (3-1/4X12-THD)	
R	15	1	**6E-0521**	1	CYLINDER AS-RH	
		1	**245-9699**	1	CAP AS	
	16	1	**3J-7354**	2	SEAL-O-RING	
	17	1	**9S-4182**	2	PLUG	
					AVAILABLE REPAIR KIT(S):	
J			**246-3431**	1	KIT-SEAL (CYLINDER-1)	
					(KIT INCLUDES 6-SEALS & 4-RINGS)	
L			**246-3432**	1	KIT-SEAL (CYLINDER-2)	
					(KIT INCLUDES 6-SEALS & 2-RINGS)	

J-KIT MARKED J SERVICES PARTS MARKED J
L-KIT MARKED L SERVICES PARTS MARKED L
M-METRIC PART
R-REMFG PART MAY BE AVAILABLE

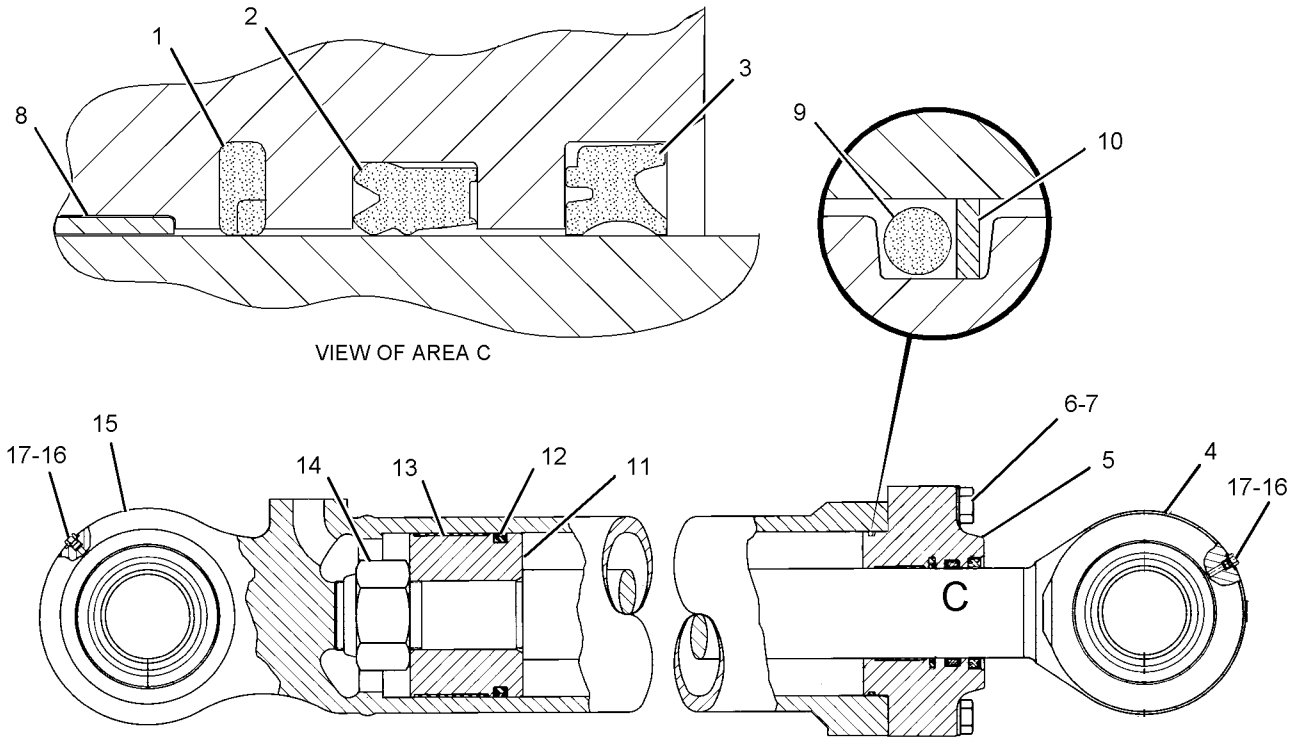

GRAPHIC #1 **<END>** g01141138

250-5850 FILTER & MTG GP-CASE DRAIN—STEERING PUMP

S/N: 4421-UP

PART OF 245-8813 INSTALLATION AR-FIELD

SMCS-5091 **i02285877**

NOTE	REF NO	GRAPHIC REF	PART NUMBER	QTY	PART NAME 1 2 3 4 5 6 (PRODUCT LEVEL)	SEE PAGE
Y	1	1	**115-2129**	2	FILTER GP-OIL (STEERING PUMP CASE DRAIN)	675
	2	1	**250-5847**	1	BRACKET AS	
M		1	**111-0483**	1	BOSS (M10X1.5-MM-THD)	
	3	1	*148-8339*	1	CONNECTOR AS	
		1	**6V-8716**	1	CONNECTOR	
		1	**6V-9746**	1	SEAL-O-RING	
		1	**7M-8485**	1	SEAL-O-RING	
	4	1	*148-8360*	3	ELBOW AS	
					(EACH INCLUDES)	
		1	**6V-9182**	1	ELBOW	
		1	**6V-9746**	1	SEAL-O-RING	
		1	**7M-8485**	1	SEAL-O-RING	
	5	1	**8T-4121**	8	WASHER-HARD (11X21X2.5-MM THK)	
M	6	1	**8T-4137**	5	BOLT (M10X1.5X20-MM)	
M	7	1	**8T-4139**	4	BOLT (M12X1.75X30-MM)	
	8	1	**8T-4223**	4	WASHER-HARD (13.5X25.5X3-MM THK)	
M	9	1	**8T-4136**	3	BOLT (M10X1.5X25-MM)	

M-METRIC PART
Y-SEPARATE ILLUSTRATION

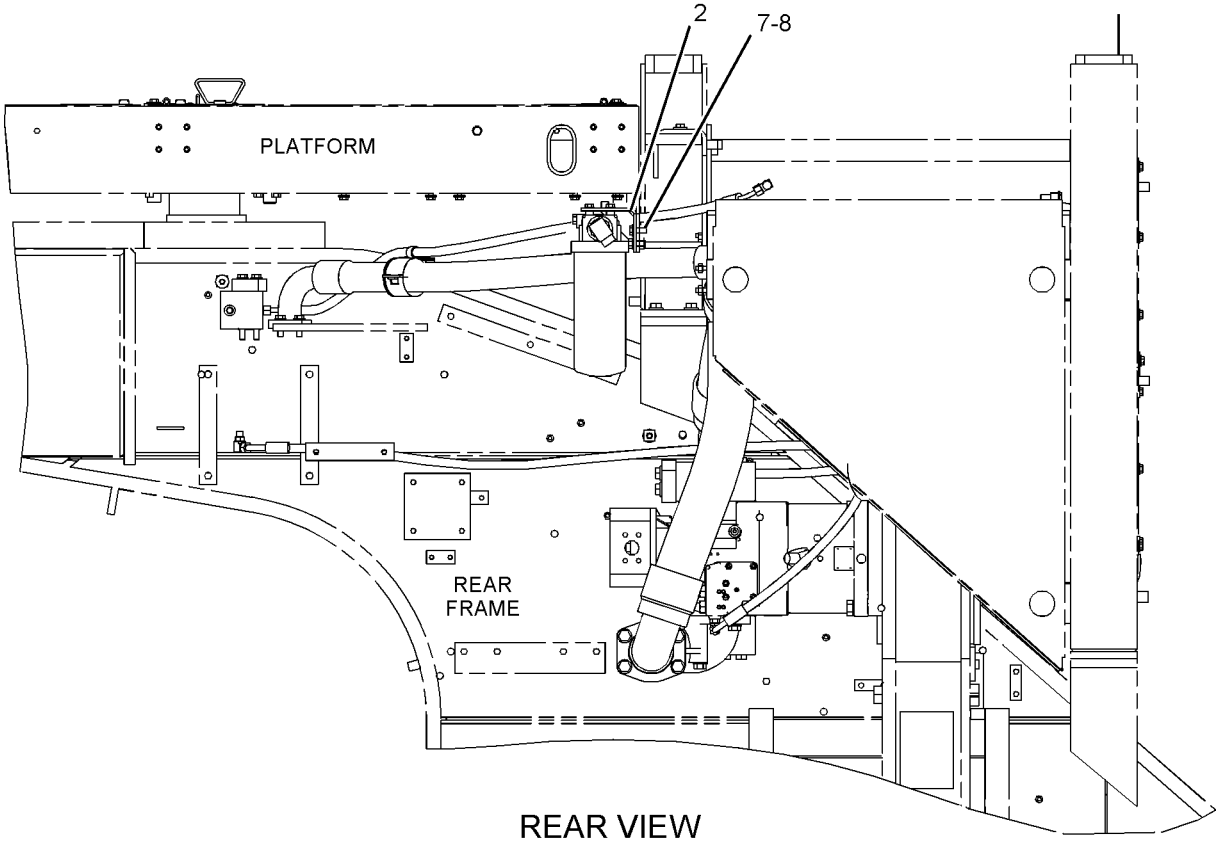

REAR VIEW

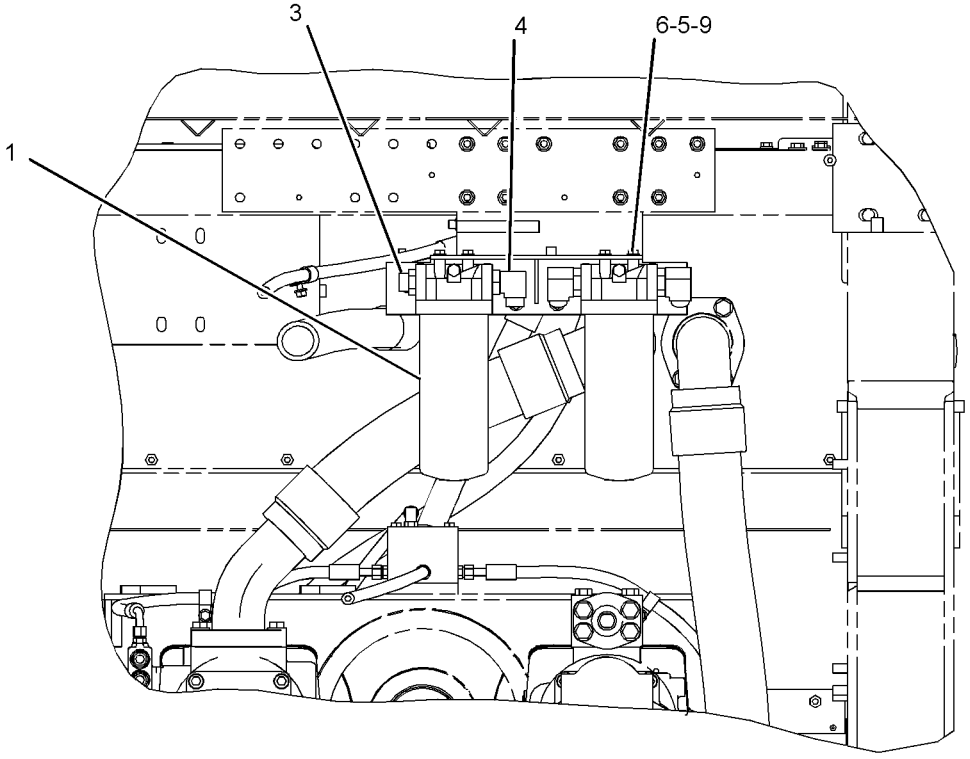

LEFT SIDE VIEW

GRAPHIC #1

<END>

g01144068

8X-0072 FILTER & MTG GP-STEER & IMPL

S/N: 4421-UP

PART OF 245-0700 HYDRAULIC AR-REAR

SMCS-5068 **i02255721**

NOTE	REF NO	GRAPHIC REF	PART NUMBER	QTY	PART NAME 1 2 3 4 5 6 (PRODUCT LEVEL)	SEE PAGE
Y	1	1	**6E-0874**	1	FILTER GP-OIL (STEERING, BRAKE COOLER SCREEN)	673
Y	1A	1	**6E-0874**	1	FILTER GP-OIL (HYDRAULIC COOLER SCREEN)	673
M	2	1	**8T-4956**	8	BOLT (M12X1.75X35-MM)	
	3	1	**5P-1076**	8	WASHER-HARD (13.5X30X4-MM THK)	

M-METRIC PART
Y-SEPARATE ILLUSTRATION

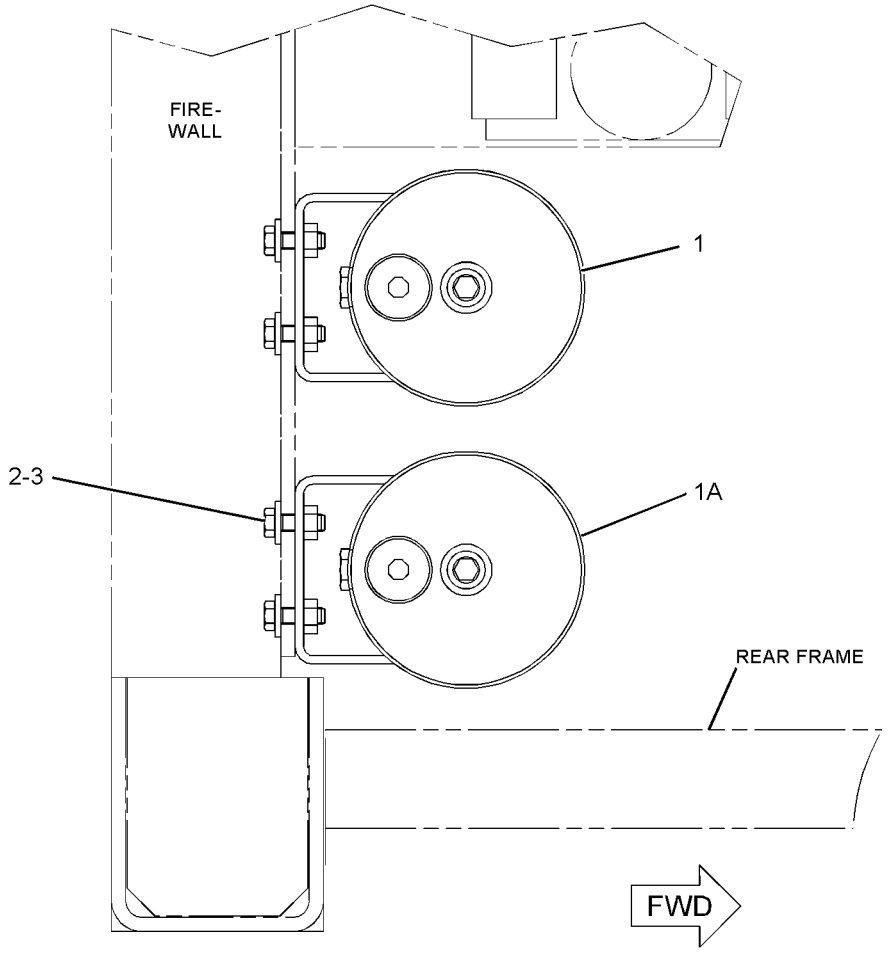

TOP VIEW

GRAPHIC #1 **<END>** g01097088

STEERING SYSTEM

245-0719 FILTER & MTG GP-STEERING–

HIGH PRESSURE SCREENS

S/N: 4421-UP

PART OF 245-8813 INSTALLATION AR-FIELD

SMCS-431F, 5068 **i02288784**

NOTE	REF NO	GRAPHIC REF	PART NUMBER	QTY	PART NAME 1 2 3 4 5 6 (PRODUCT LEVEL)	SEE PAGE
	1	1	**250-5840**	1	BRACKET AS	
M		1	**8T-3851**	1	BOSS-WELD (M10X1.5X17.5-MM)	
Y	2	1	**251-2451**	2	SCREEN GP-HIGH PRESSURE (STEERING)	711
	3	1	**8T-4223**	4	WASHER-HARD (13.5X25.5X3-MM THK)	
	4	1	**9X-8257**	16	WASHER (17.5X30X3.5-MM THK)	
	5	1	**5P-8077**	8	FLANGE-HALF	
M	7	1	**8T-4139**	4	BOLT (M12X1.75X30-MM)	
M	8	1	**8T-4140**	16	BOLT (M16X2X60-MM)	
M	9	1	**8T-4195**	4	BOLT (M10X1.5X30-MM)	
	10	1	*148-8407*	2	PLUG AS	
					(EACH INCLUDES)	
		1	**3J-1907**	1	SEAL-O-RING	
		1	**9S-4191**	1	PLUG-O RING	
	11	1	**5P-1076**	4	WASHER-HARD (13.5X30X4-MM THK)	
	12	1	**7X-7729**	4	WASHER (11X25X3-MM THK)	
M	13	1	**8T-4956**	4	BOLT (M12X1.75X35-MM)	

M-METRIC PART
Y-SEPARATE ILLUSTRATION

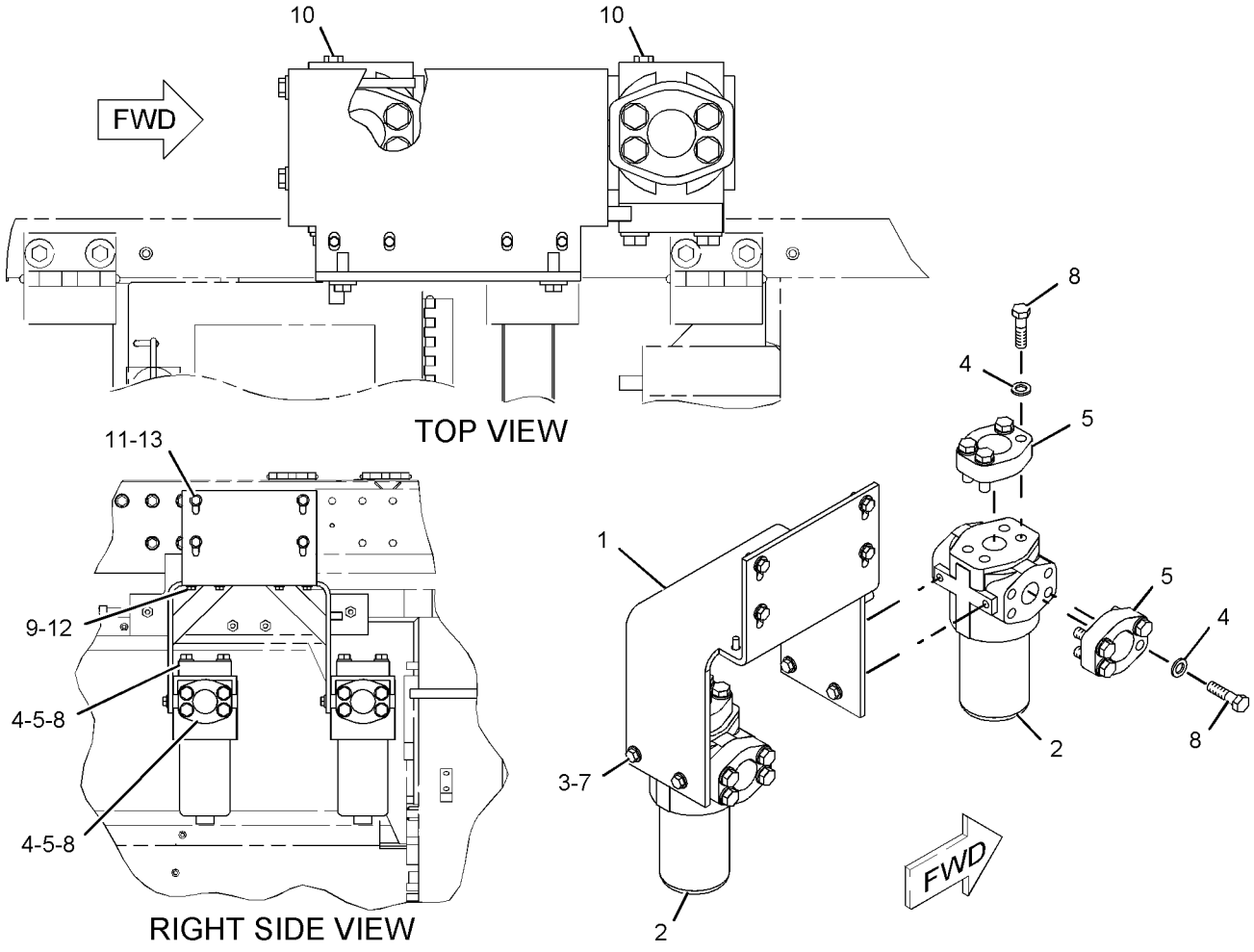

GRAPHIC #1 **<END>** g01145973

6E-0874 FILTER GP-OIL—COOLER SCREEN

S/N: 4421-UP

PART OF 8X-0072 FILTER & MTG GP-STEER & IMPL

SMCS-5068 **i02255722**

NOTE	REF NO	GRAPHIC REF	PART NUMBER	QTY	PART NAME 1 2 3 4 5 6 (PRODUCT LEVEL)	SEE PAGE
	1	1	**9S-4182**	1	PLUG	
		1	**3J-7354**	1	SEAL-O-RING	
	2	1	**6E-4983**	1	HOUSING AS	
	3	1	**119-4743**	1	COVER-FILTER	
	4	1	**8T-6444**	1	SEAL-O-RING	
	5	1	**6F-4855**	1	SEAL-O-RING	
	6	1	**7J-5586**	1	BOLT-FILTER	
	7	1	**5P-8248**	1	WASHER-HARD (20X36.5X3.5-MM THK)	
	8	1	**1U-4692**	1	PLUG-THREADED O-RING	
		1	**2M-9780**	1	SEAL-O-RING	
		1	**4D-2297**	1	SEAL-O-RING	
	9	1	**6P-3860**	1	SPRING (OUTER)	
	10	1	**6J-3795**	1	SCREEN AS	
	11	1	**4J-1704**	1	SEAT-VALVE	
	12	1	**2J-0918**	1	VALVE	
	13	1	**5J-2926**	1	SPRING (INNER)	
	14	1	**2J-0917**	1	RETAINER	
	15	1	**1H-1200**	1	PIN-SPRING	
	16	1	**132-8876**	2	FILTER ELEMENT AS-OIL (STEERING, BRAKE)	
	17	1	**7J-5925**	1	PIN-COTTER	

6E-0874 FILTER GP-OIL *(contd.)* **i02255722**

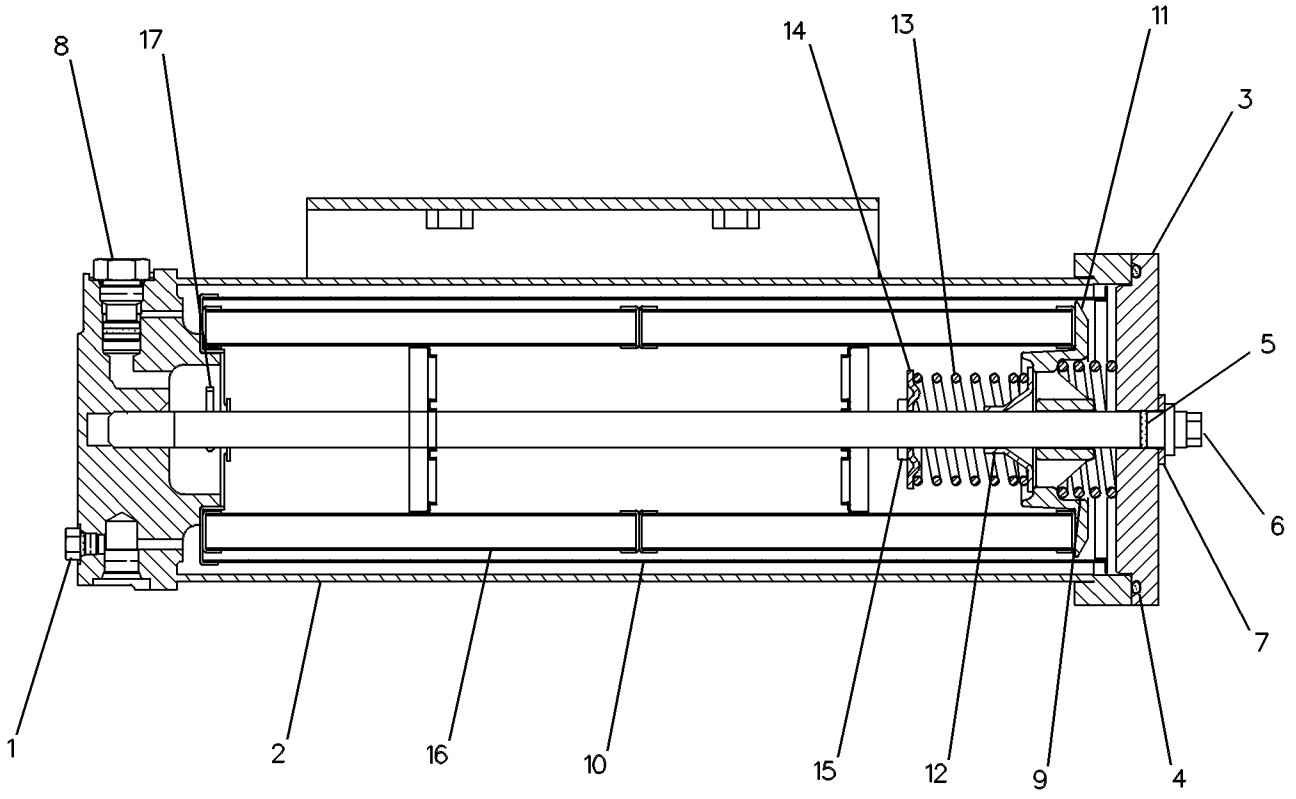

GRAPHIC #1 **<END>** g00085460

115-2129 FILTER GP-OIL

S/N: 4421-UP

PART OF 250-5850 FILTER & MTG GP-CASE DRAIN, 264-3509 FILTER & MTG GP-PLT & PUMP DR, 244-7315 LINES GP-CASE DRAIN

SMCS-5068, 5091, 5092 **i02166996**

NOTE	REF NO	GRAPHIC REF	PART NUMBER	QTY	PART NAME 1 2 3 4 5 6 (PRODUCT LEVEL)	SEE PAGE
	1	1	**126-1817**	1	FILTER AS-OIL (HYDRAULIC, HIGH EFFICIENCY)	
	2	1	**117-7773**	1	SWITCH AS-PRESSURE	
		1	**3E-3365**	1	WEDGE-RECEPTACLE LOCK (2-PIN)	
		1	**102-8802**	1	KIT-RECEPTACLE (2-PIN)	
					(INCLUDES RECEPTACLE AS AND WEDGE)	
		1	**8T-8729**	2	PIN-CONNECTOR	
E		1	**9X-1813**		SLEEVE (14CM)	
	3	1	**3J-1907**	1	SEAL-O-RING	
	4	1	**5F-9144**	1	SEAL-O-RING	

E-ORDER BY THE CENTIMETER

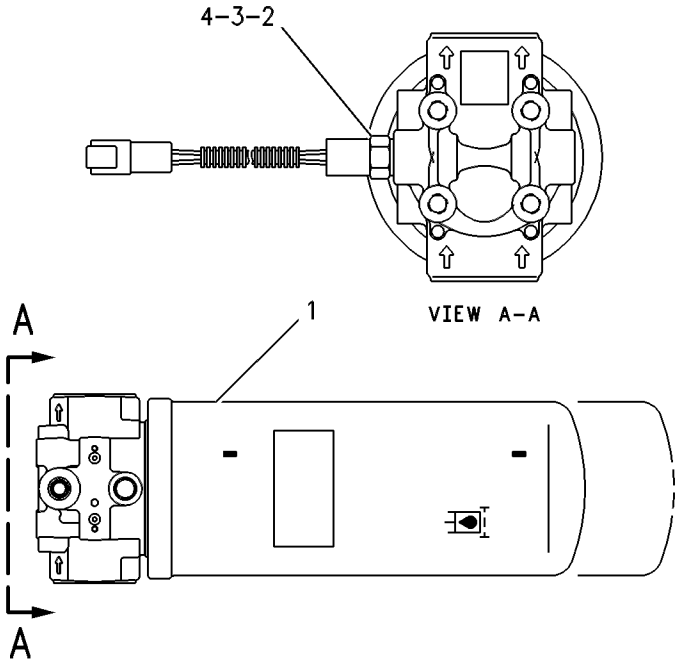

GRAPHIC #1 **<END>** g00255748

STEERING SYSTEM

164-6939 HEAD GP-PUMP–STEERING

S/N: 4421-UP

PART OF 263-5064, 263-5065 PUMP GP-PISTON

SMCS-5070 **i01144367**

NOTE	REF NO	GRAPHIC REF	PART NUMBER	QTY	PART NAME 1 2 3 4 5 6 (PRODUCT LEVEL)	SEE PAGE
	1	1	**6E-3866**	1	SEAT-VALVE	
	2	1	**164-7083**	1	HEAD	
	3	1	**9S-8004**	2	PLUG	
	4	1	**6E-3873**	1	PLUG-ORIFICE	
	5	1	**9T-3940**	10	PLUG-BREAK OFF	
	6	1	**087-4772**	2	PLUG	
	7	1	**5I-4277**	1	ORIFICE	
	8	1	**5I-4341**	2	DOWEL	
	9	1	**164-7084**	1	PIN	
	10	1	**6E-3874**	1	BEARING (RACE & ROLLER AS)(OUTER)	
	11	1	**3J-1907**	2	SEAL-O-RING	

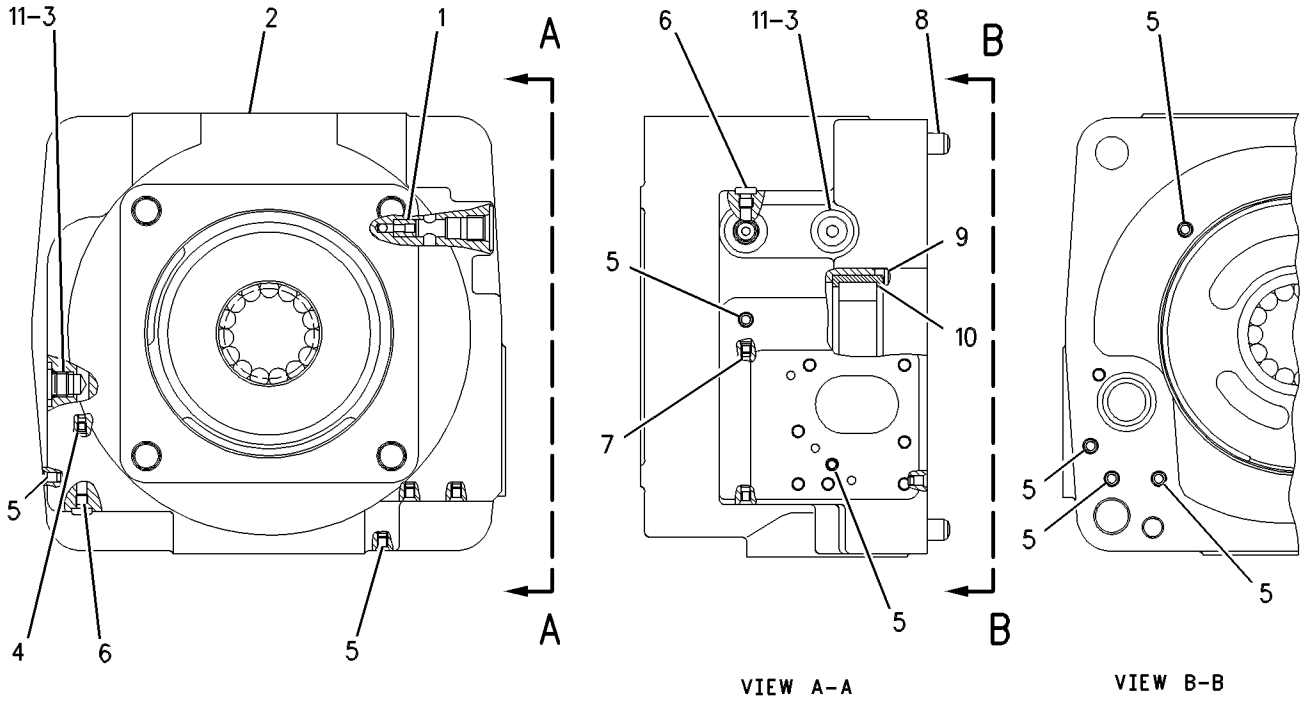

GRAPHIC #1 **<END>** g00608640

STEERING SYSTEM

245-1295 LINES GP-SECONDARY STEERING

S/N: 4421-UP

PART OF 245-0700 HYDRAULIC AR-REAR

SMCS-4304 **i02150967**

NOTE	REF NO	GRAPHIC REF	PART NUMBER	QTY	PART NAME 1 2 3 4 5 6 (PRODUCT LEVEL)	SEE PAGE
	1	2	**245-1826**	1	TUBE AS	
I	2	1	**245-1827**	1	HOSE AS	
I	3	1	**245-1828**	1	HOSE AS	
I	4	1	**245-1829**	1	HOSE AS	
	5	1	**245-1831**	1	HOSE AS	
I	6	1	**245-1832**	1	HOSE AS	
	7	1	*148-8378*	1	ELBOW AS	
		1	**3J-1907**	1	SEAL-O-RING	
		1	**6V-8397**	1	SEAL-O-RING	
		1	**6V-8724**	1	ELBOW	
	8	2	*148-8428*	1	TEE AS	
		2	**3K-0360**	1	SEAL-O-RING	
		2	**6V-8398**	2	SEAL-O-RING	
		2	**6V-8782**	1	TEE	
	9	1	*150-3036*	1	ELBOW AS	
		1	**3J-1907**	1	SEAL-O-RING	
		1	**6V-8397**	1	SEAL-O-RING	
		1	**8T-1905**	1	ELBOW	
	10	2	*150-4043*	1	CONNECTOR AS	
		2	**3J-1907**	1	SEAL-O-RING	
		2	**6V-8398**	1	SEAL-O-RING	
		2	**6V-9873**	1	CONNECTOR	
	11	1	**1P-3703**	2	SEAL-RECTANGULAR	
	12	1	**1P-4578**	2	FLANGE-HALF	
	13	2	**1P-4582**	2	FLANGE-HALF	
	14	2	**1P-4584**	2	FLANGE-HALF	
	15	1	**4J-0520**	1	SEAL-O-RING	
	16	1	**4J-0522**	1	SEAL-O-RING	
	17	1	**4J-0527**	1	SEAL-O-RING	
	18	1,2	**5P-7462**	6	CLIP (SLOT)	
	19	1,2	**5P-7463**	6	CLIP (TAB)	
	20	1	**5P-7464**	1	CLIP (SLOT)	
	21	1	**5P-7465**	1	CLIP (TAB)	
	22	2	**5P-7468**	5	CLIP (SLOT)	
	23	2	**5P-7469**	5	CLIP (TAB)	
	24	2	**5P-8444**	5	GROMMET	
	25	1	**6J-2680**	1	SEAL-O-RING	
	26	1,2	**6V-0400**	4	FLANGE-HALF	
	27	1,2	**6V-0683**	6	GROMMET	
	28	1	**6V-1249**	1	GROMMET	
	29	1,2	**6V-1572**	3	CLIP (SLOT)	
	30	1,2	**6V-1573**	3	CLIP (TAB)	
	31	2	**6V-1867**	5	CLIP (SLOT)	
	32	2	**6V-1868**	5	CLIP (TAB)	
	33	2	**6V-1869**	5	GROMMET	
	34	1,2	**6V-1875**	3	GROMMET	
	35	1	**8C-3206**	2	FLANGE-HALF	
	36	1,2	**8T-4121**	10	WASHER-HARD (11X21X2.5-MM THK)	
M	37	1,2	**8T-4133**	3	NUT (M10X1.15-THD)	
M	38	1,2	**8T-4183**	8	BOLT (M12X1.75X40-MM)	
M	39	1,2	**8T-4184**	5	BOLT (M12X1.75X45-MM)	
M	40	1	**8T-4185**	1	BOLT (M10X1.5X50-MM)	
M	41	1,2	**8T-4194**	9	BOLT (M12X1.75X50-MM)	
M	42	1	**8T-4196**	4	BOLT (M10X1.5X35-MM)	
	43	1,2	**8T-4223**	28	WASHER-HARD (13.5X25.5X3-MM THK)	
M	44	1,2	**8T-4244**	4	NUT (M12X1.75-THD)	

245-1295 **LINES GP-SECONDARY STEERING** *(contd.)* **i02150967**

NOTE	REF NO	GRAPHIC REF	PART NUMBER	QTY	PART NAME 1 2 3 4 5 6 (PRODUCT LEVEL)	SEE PAGE
M	45	2	**8T-4910**	2	BOLT (M12X1.75X60-MM)	
M	46	2	**8T-6466**	1	BOLT (M10X1.5X60-MM)	

I-REFER TO HYDRAULIC INFORMATION SYSTEM
M-METRIC PART

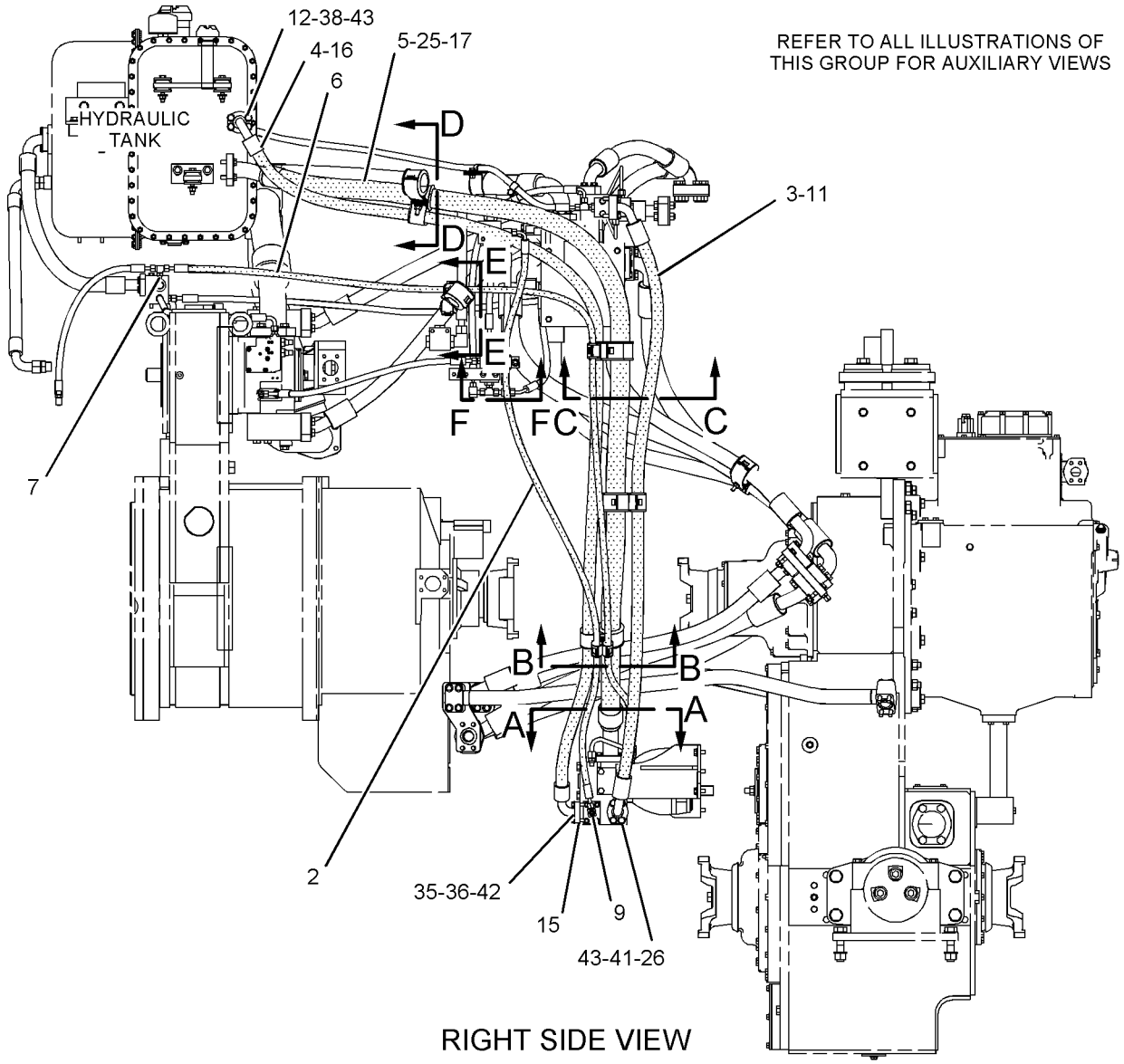

RIGHT SIDE VIEW

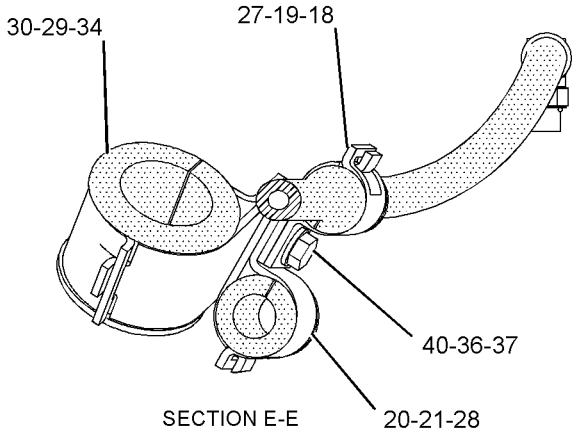

SECTION E-E

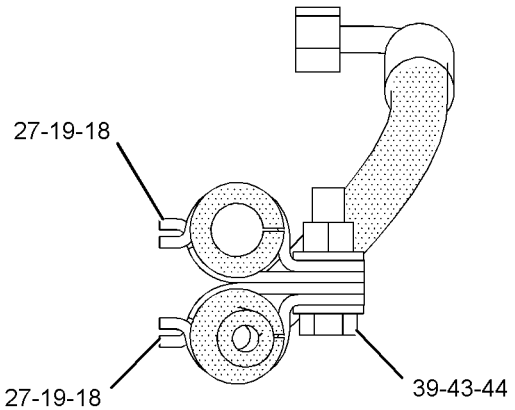

SECTION F-F

GRAPHIC #1

g01091845

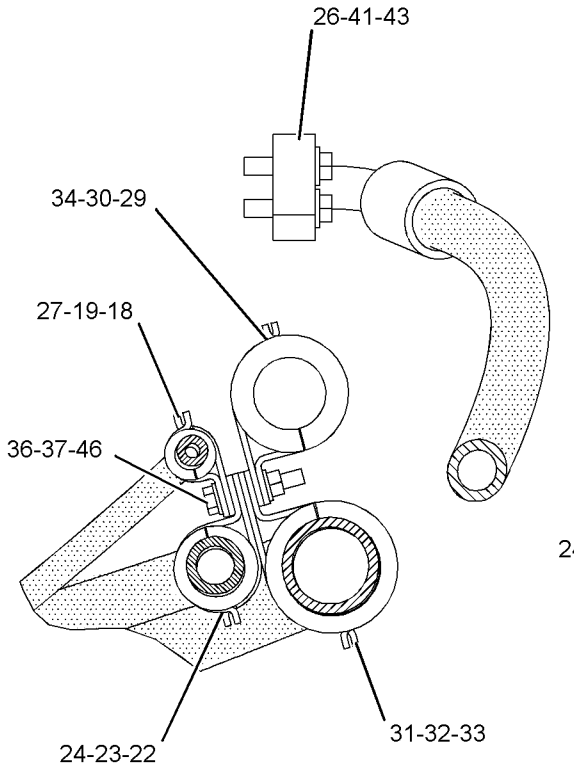

SECTION C-C

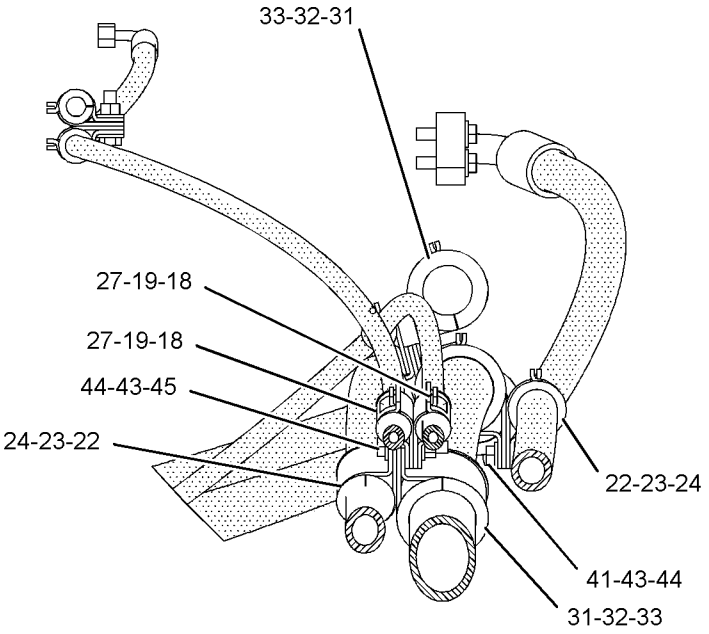

SECTION A-A

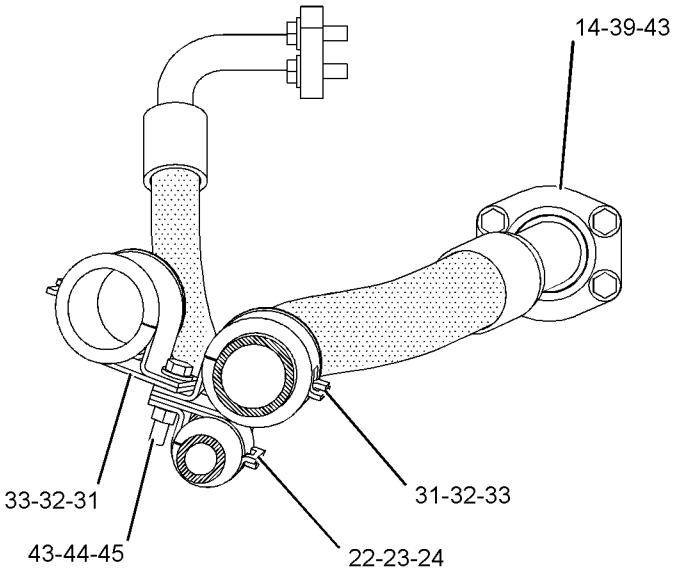

SECTION D-D

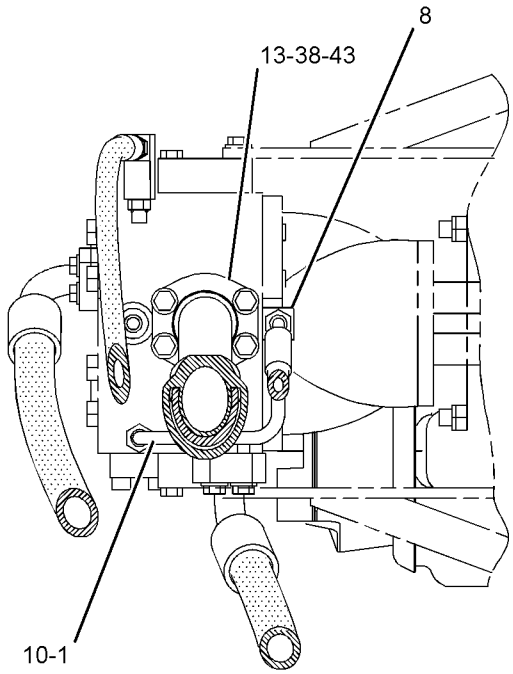

SECTION B-B

GRAPHIC #2 **<END>** g01091846

245-1275 LINES GP-STEER & BRAKE COOLER–

REAR FRAME TO COOLER

S/N: 4421-UP

PART OF 245-0700 HYDRAULIC AR-REAR

SMCS-1365, 4133, 4346 **i02291006**

NOTE	REF NO	GRAPHIC REF	PART NUMBER	QTY	PART NAME 1 2 3 4 5 6 (PRODUCT LEVEL)	SEE PAGE
	1	2	**8X-8724**	1	SPACER	
	2	1	**135-4500**	1	BRACKET	
	3	2	**197-3295**	4	FLANGE-HALF	
	4	2	**264-8073**	1	TUBE AS	
	5	2	**264-8074**	1	TUBE AS	
I	6	2	**264-8077**	1	HOSE AS	
I	7	1	**264-8078**	1	HOSE AS	
	8	1,2	**1P-4579**	8	FLANGE-HALF	
	9	2	**4J-0522**	2	SEAL-O-RING	
	10	1,2	**4J-0524**	4	SEAL-O-RING	
	11	2	**5P-7470**	2	CLIP (SLOT)	
	12	2	**5P-7471**	2	CLIP (TAB)	
	13	2	**5P-8182**	2	GROMMET	
	14	2	**7S-8920**	2	CLIP (SLOT)	
	15	2	**7S-8921**	2	CLIP (TAB)	
	16	2	**7X-3392**		WASHER-HARD (13.5X22.5X3-MM THK)	
	17	2	**8K-2665**	2	CLAMP-HALF	
M	18	1,2	**8T-4139**	4	BOLT (M12X1.75X30-MM)	
M	19	1,2	**8T-4183**	17	BOLT (M12X1.75X40-MM)	
	20	1,2	**8T-4223**	26	WASHER-HARD (13.5X25.5X3-MM THK)	
M	21	2	**8T-4244**	3	NUT (M12X1.75-THD)	
M	22	2	**8T-4910**	2	BOLT (M12X1.75X60-MM)	
M	23	2	**8T-4956**	8	BOLT (M12X1.75X35-MM)	

I-REFER TO HYDRAULIC INFORMATION SYSTEM
M-METRIC PART

REFER TO ALL ILLUSTRATIONS
OF THIS GROUP FOR AUXILIARY VIEWS

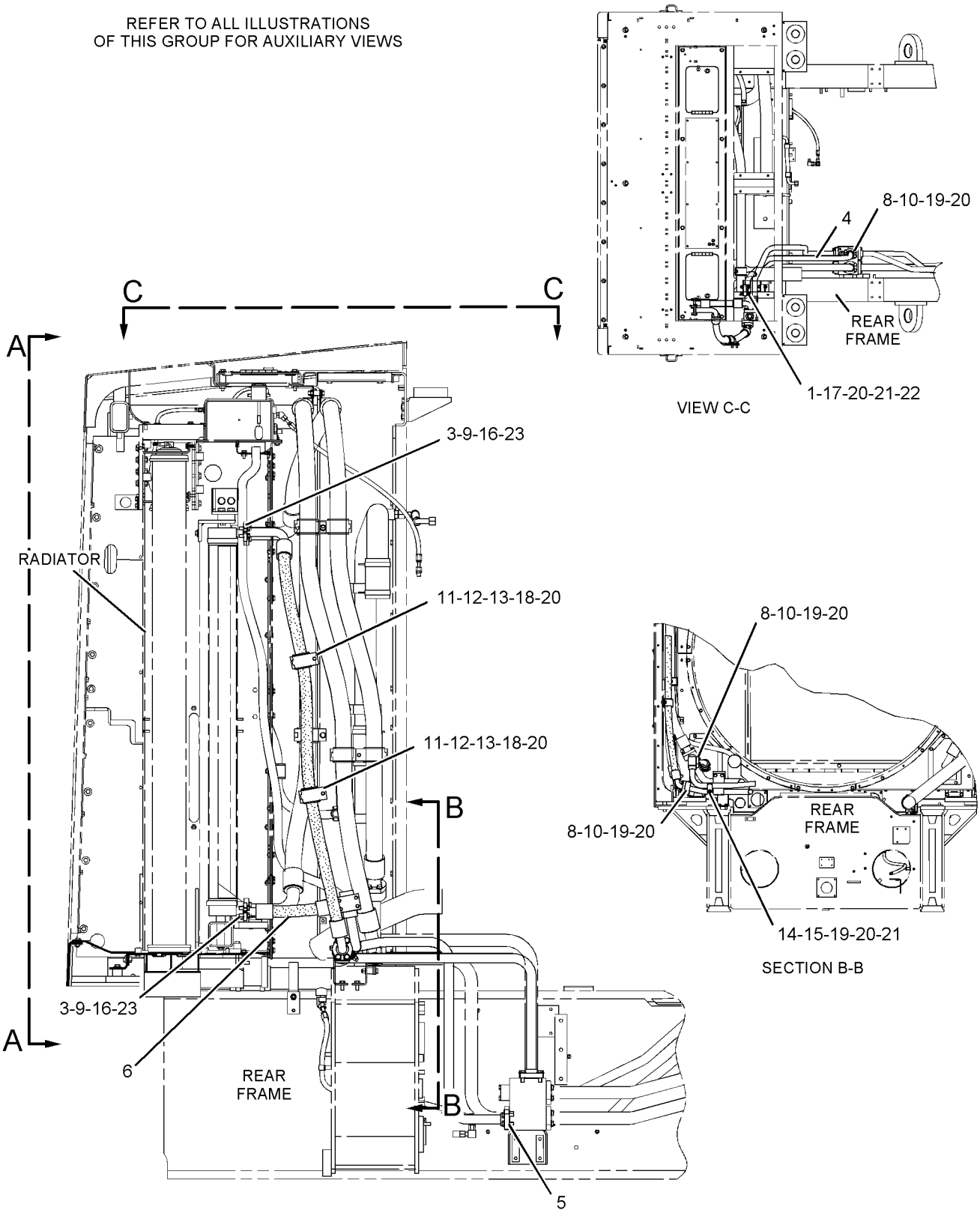

GRAPHIC #1

g01147365

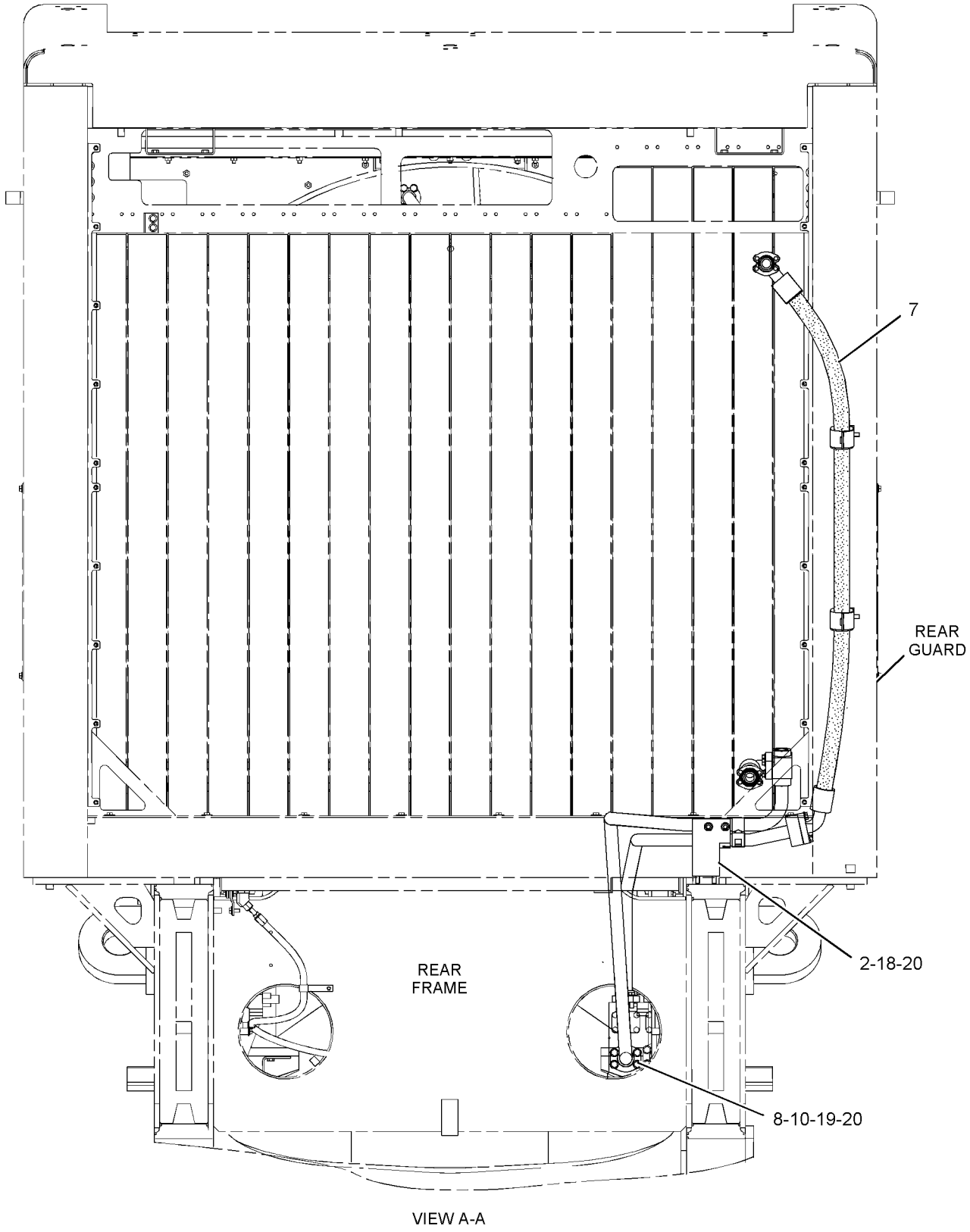

VIEW A-A

GRAPHIC #2 **<END>** g01147296

STEERING SYSTEM

245-1280 LINES GP-STEER & BRAKE COOLER—REAR FRAME

S/N: 4421-UP

PART OF 245-0700 HYDRAULIC AR-REAR

SMCS-1365, 4133, 4346 **i02354638**

NOTE	REF NO	GRAPHIC REF	PART NUMBER	QTY	PART NAME 1 2 3 4 5 6 (PRODUCT LEVEL)	SEE PAGE
	1	2	**164-5590**	1	VALVE AS-FLUID SAMPLING (HYDRAULIC OIL)	
	2	2	**8C-3451**	1	CAP-DUST	
	3	2	**8K-3235**	2	SPACER (22-MM THK)	
	4	2	**8X-4352**	1	SPACER	
	5	2	**8X-4660**	1	FLANGE	
	6	2	**8X-4798**	1	BRACKET	
I	7	2	**264-6661**	1	HOSE AS	
I	8	2	**8X-4809**	1	HOSE AS	
	9	2	**103-5920**	1	BRACKET	
I	10	2	**245-1288**	1	HOSE AS	
	11	1	**264-8070**	1	TUBE AS	
	12	1	**264-8069**	1	TUBE AS	
	13	1	**245-1292**	1	TUBE AS	
	14	1	**250-0261**	1	TUBE AS	
	17	1,2	**1P-4579**	14	FLANGE-HALF	
	18	2	**1P-4582**	4	FLANGE-HALF	
	20	2	**4J-0522**	3	SEAL-O-RING	
	21	1,2	**4J-0524**	8	SEAL-O-RING	
	22	2	**4J-0527**	2	SEAL-O-RING	
	23	2	**7D-1553**	1	CLIP	
	25	1,2	**8K-2665**	8	CLAMP-HALF	
M	29	2	**8T-4139**	2	BOLT (M12X1.75X30-MM)	
M	30	1,2	**8T-4183**	32	BOLT (M12X1.75X40-MM)	
M	31	2	**8T-4184**	2	BOLT (M12X1.75X45-MM)	
M	32	2	**8T-4192**	2	BOLT (M12X1.75X25-MM)	
	33	1,2	**8T-4223**	52	WASHER-HARD (13.5X25.5X3-MM THK)	
M	34	2	**8T-4244**	6	NUT (M12X1.75-THD)	
M	35	2	**8T-4648**	12	BOLT (M12X1.75X70-MM)	
M	36	2	**8T-4910**	4	BOLT (M12X1.75X60-MM)	
	37	2	**7X-3392**	8	WASHER-HARD (13.5X22.5X3-MM THK)	
	38	2	**1P-3706**	1	SEAL-RECTANGULAR	
	39	2	**197-3295**	4	FLANGE-HALF	
	40	1	*148-8368*	1	ELBOW AS	
		1	**3J-1907**	1	SEAL-O-RING	
		1	**4J-5477**	1	SEAL-O-RING	
		1	**6V-8627**	1	ELBOW	
	41	2	**8W-5179**	1	ADAPTER	

I-REFER TO HYDRAULIC INFORMATION SYSTEM
M-METRIC PART

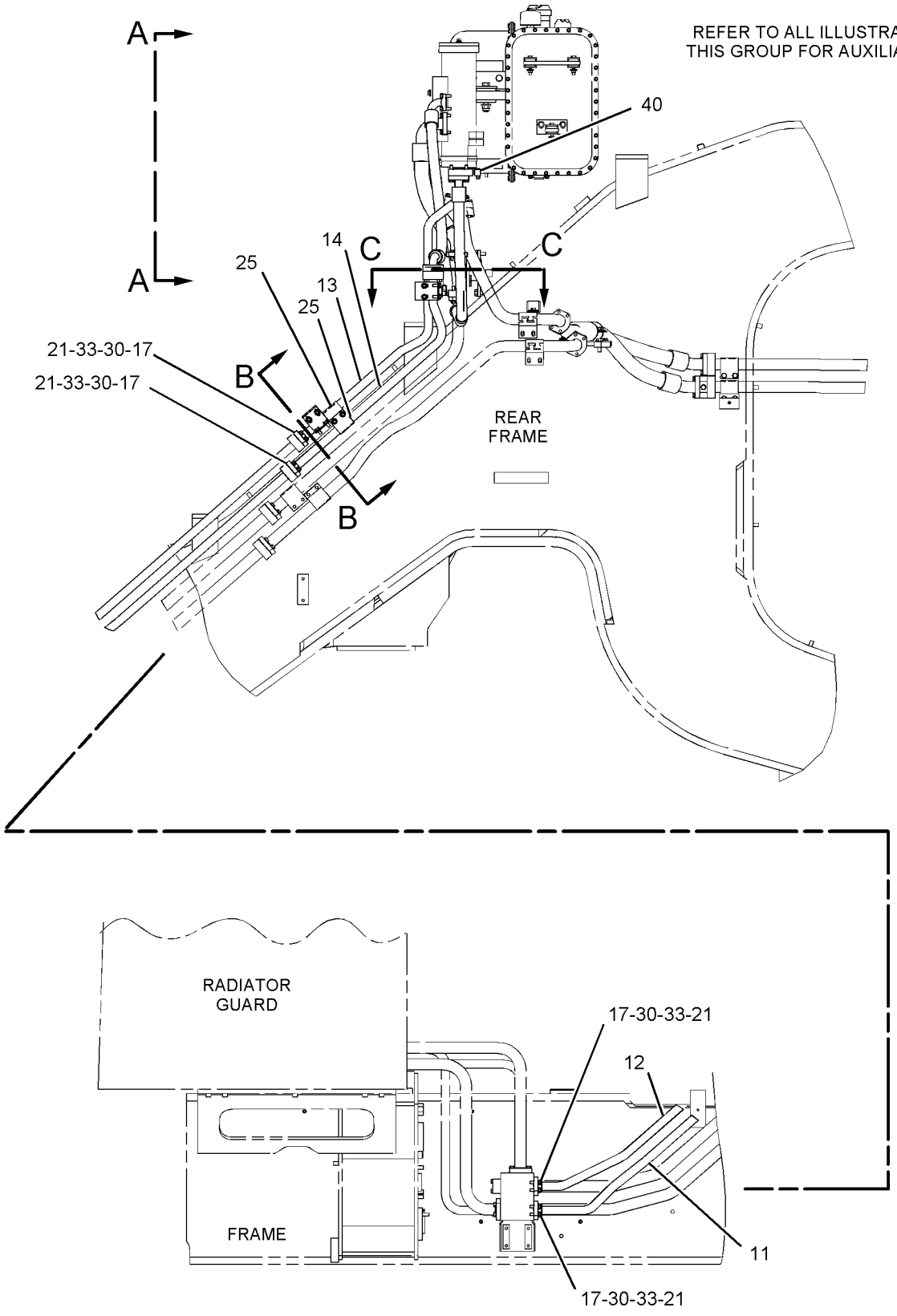

RIGHT SIDE VIEW

GRAPHIC #1

g01144031

245-1280 **LINES GP-STEER & BRAKE COOLER** *(contd.)* **i02354638**

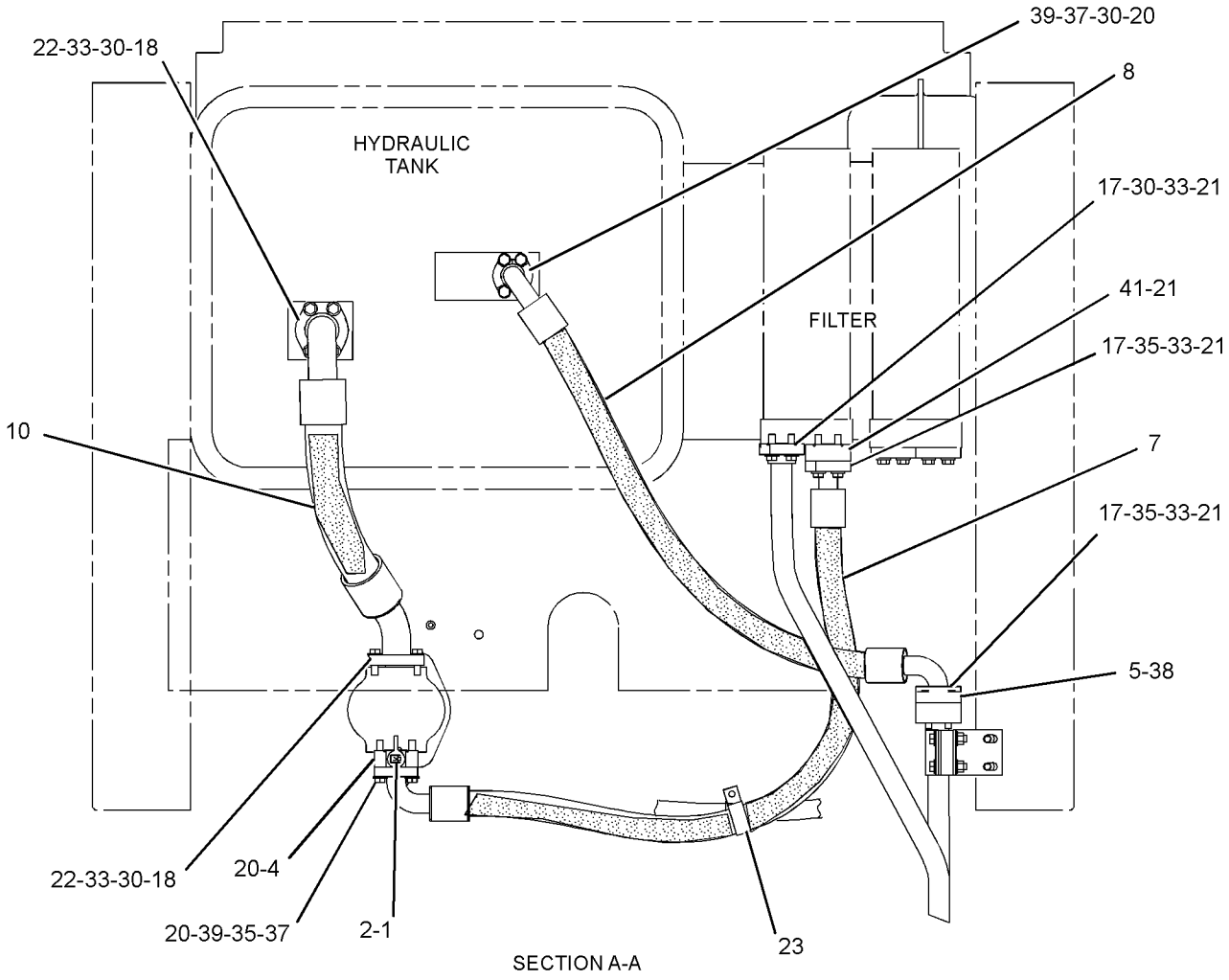

SECTION A-A

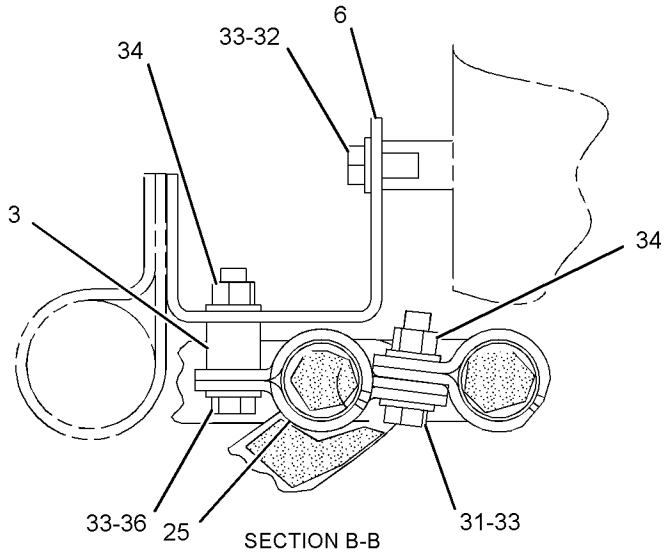

SECTION B-B

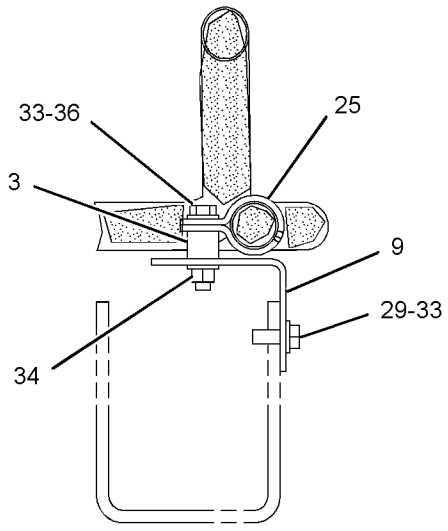

SECTION C-C

GRAPHIC #2 **<END>** g01175896

STEERING SYSTEM

245-1260 LINES GP-STEERING—MAIN PUMP, REAR

S/N: 4421-UP

PART OF 245-0700 HYDRAULIC AR-REAR

SMCS-4304 **i02290696**

NOTE	REF NO	GRAPHIC REF	PART NUMBER	QTY	PART NAME 1 2 3 4 5 6 (PRODUCT LEVEL)	SEE PAGE
Y	1	3	**6E-1252**	2	VALVE GP-CHECK (STEERING PUMP)	720
	2	2	**8X-2996**	1	ELBOW	
	3	1	**8X-3187**	1	BLOCK	
	4	1	**8X-3188**	1	BLOCK	
I	5	2	**8X-3193**	1	HOSE AS	
I	6	1,2	**8X-3194**	1	HOSE AS	
I	7	2	**245-1269**	1	HOSE AS	
I	8	1	**245-1271**	1	HOSE AS	
I	9	2	**245-1273**	1	HOSE AS	
I	10	2	**245-1274**	1	HOSE AS	
I	11	2	**100-7444**	1	HOSE AS	
I	12	1	**264-3826**	1	HOSE AS	
I	13	3	**242-3539**	1	HOSE AS	
I	14	1	**219-5098**	1	HOSE AS	
	15	1	*148-8321*	1	CONNECTOR AS	
		1	**3J-1907**	1	SEAL-O-RING	
		1	**6V-8397**	1	SEAL-O-RING	
		1	**8C-0564**	1	CONNECTOR	
	16	2	*148-8329*	1	CONNECTOR AS	
		2	**4K-1388**	1	SEAL-O-RING	
		2	**5K-9090**	1	SEAL-O-RING	
		2	**8T-6453**	1	CONNECTOR	
	17	1	*148-8335*	1	CONNECTOR AS	
		1	**5K-9090**	1	SEAL-O-RING	
		1	**6V-8635**	1	CONNECTOR	
		1	**7M-8485**	1	SEAL-O-RING	
	18	1,3	*148-8336*	3	CONNECTOR AS	
					(EACH INCLUDES)	
		1,3	**3J-1907**	1	SEAL-O-RING	
		1,3	**6V-8397**	1	SEAL-O-RING	
		1,3	**6V-8636**	1	CONNECTOR	
	19	2,3	*148-8378*	5	ELBOW AS	
					(EACH INCLUDES)	
		2,3	**3J-1907**	1	SEAL-O-RING	
		2,3	**6V-8397**	1	SEAL-O-RING	
		2,3	**6V-8724**	1	ELBOW	
	20	2	*148-8435*	1	TEE AS	
		2	**3J-1907**	1	SEAL-O-RING	
		2	**6V-8397**	2	SEAL-O-RING	
		2	**6V-8781**	1	TEE-FACE SEAL	
	21	1,3	**1P-3705**	3	SEAL-RECTANGULAR	
	23	1,2	**1P-4582**	4	FLANGE-HALF	
	24	1	**1P-5767**	2	FLANGE-HALF	
	25	2,3	**1P-7016**	6	FLANGE-HALF	
	26	1	**1P-7017**	2	FLANGE-HALF	
	27	1	**1S-0994**	2	CLIP	
	28	2,3	**2H-3934**	3	SEAL-O-RING	
	29	1,2	**4J-0522**	2	SEAL-O-RING	
	30	1,2	**4J-0527**	2	SEAL-O-RING	
	32	3	**5P-8077**	4	FLANGE-HALF	
	34	2	**6V-1867**	1	CLIP (SLOT)	
	35	2	**6V-1868**	1	CLIP (TAB)	
	36	2	**6V-1869**	1	GROMMET	
M	37	2	**7X-2475**	2	BOLT (M16X2X130-MM)	
M	38	2	**7X-2553**	2	BOLT (M16X2X40-MM)	
	39	1,2	**8T-4121**	3	WASHER-HARD (11X21X2.5-MM THK)	

245-1260 **LINES GP-STEERING** *(contd.)* **i02290696**

NOTE	REF NO	GRAPHIC REF	PART NUMBER	QTY	PART NAME 1 2 3 4 5 6 (PRODUCT LEVEL)	SEE PAGE
M	40	1,2,3	**8T-4122**	28	WASHER-HARD (17X32X3.5-MM THK)	
M	41	2	**8T-4133**	1	NUT (M10X1.15-THD)	
M	42	1	**8T-4136**	1	BOLT (M10X1.5X25-MM)	
M	43	3	**8T-4140**	8	BOLT (M16X2X60-MM)	
M	44	1,2	**8T-4183**	16	BOLT (M12X1.75X40-MM)	
M	45	1,2,3	**8T-4193**	16	BOLT (M16X2X50-MM)	
	46	1,2	**8T-4223**	12	WASHER-HARD (13.5X25.5X3-MM THK)	
M	47	1	**8T-5412**	4	BOLT (M12X1.75X140-MM)	
M	48	1	**8T-6685**	2	BOLT (M10X1.5X110-MM)	
	49	2	**8T-9527**	1	SEAL-O-RING	
	50	1	**4H-9105**	1	SEAL-O-RING	
	51	1,2	**197-3295**	4	FLANGE-HALF	
M	52	2	**8T-4195**	1	BOLT (M10X1.5X30-MM)	
	53	1,2	**7X-3392**	8	WASHER-HARD (13.5X22.5X3-MM THK)	

I-REFER TO HYDRAULIC INFORMATION SYSTEM
M-METRIC PART
Y-SEPARATE ILLUSTRATION

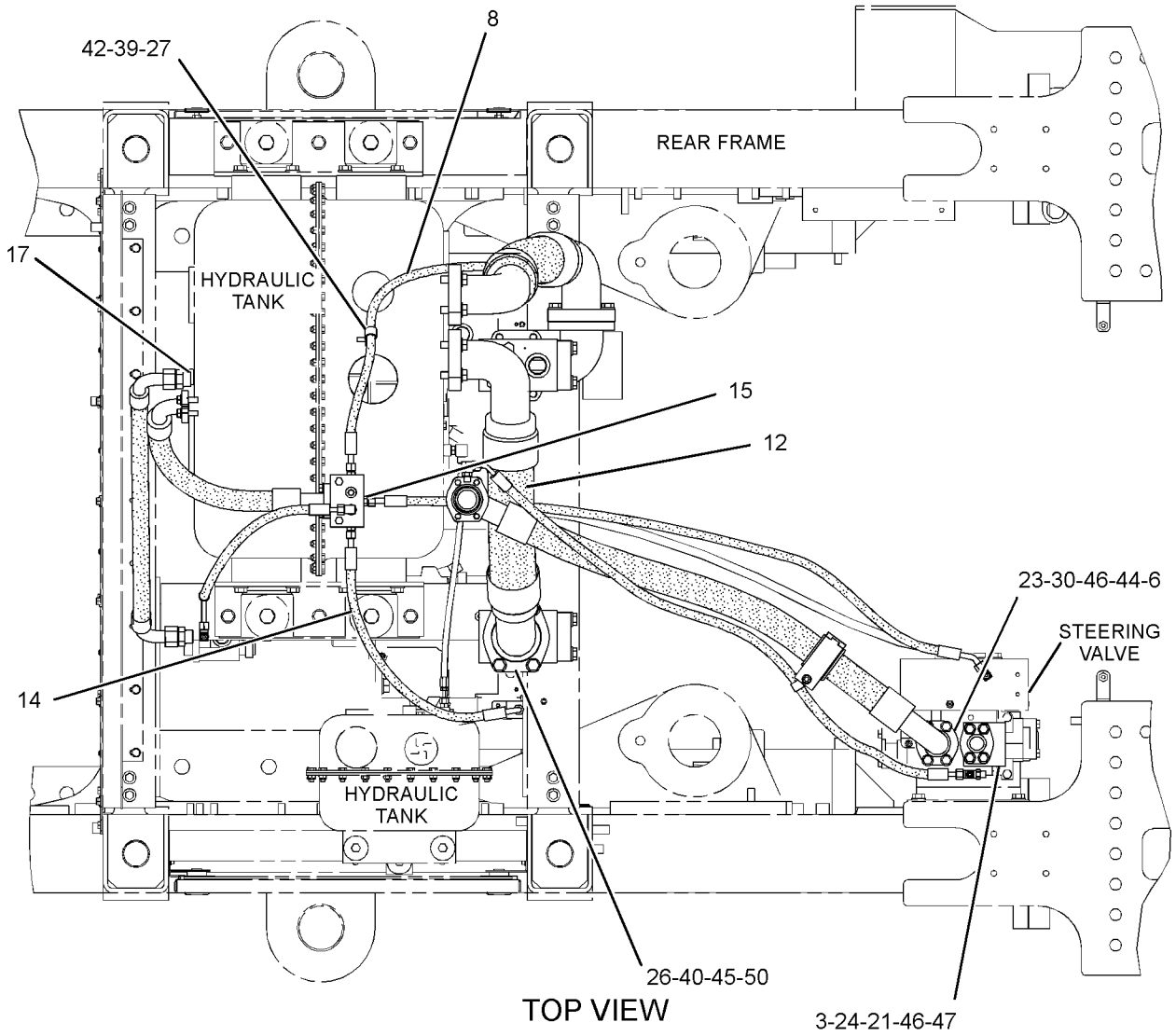

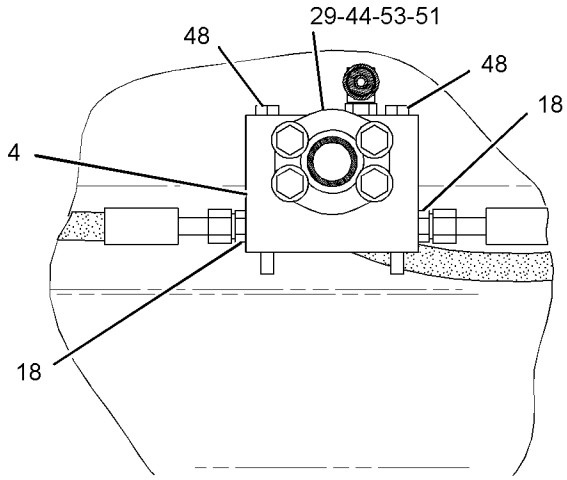

REFER TO ALL ILLUSTRATIONS OF THIS GROUP FOR AUXILIARY VIEWS

GRAPHIC #1

g01150029

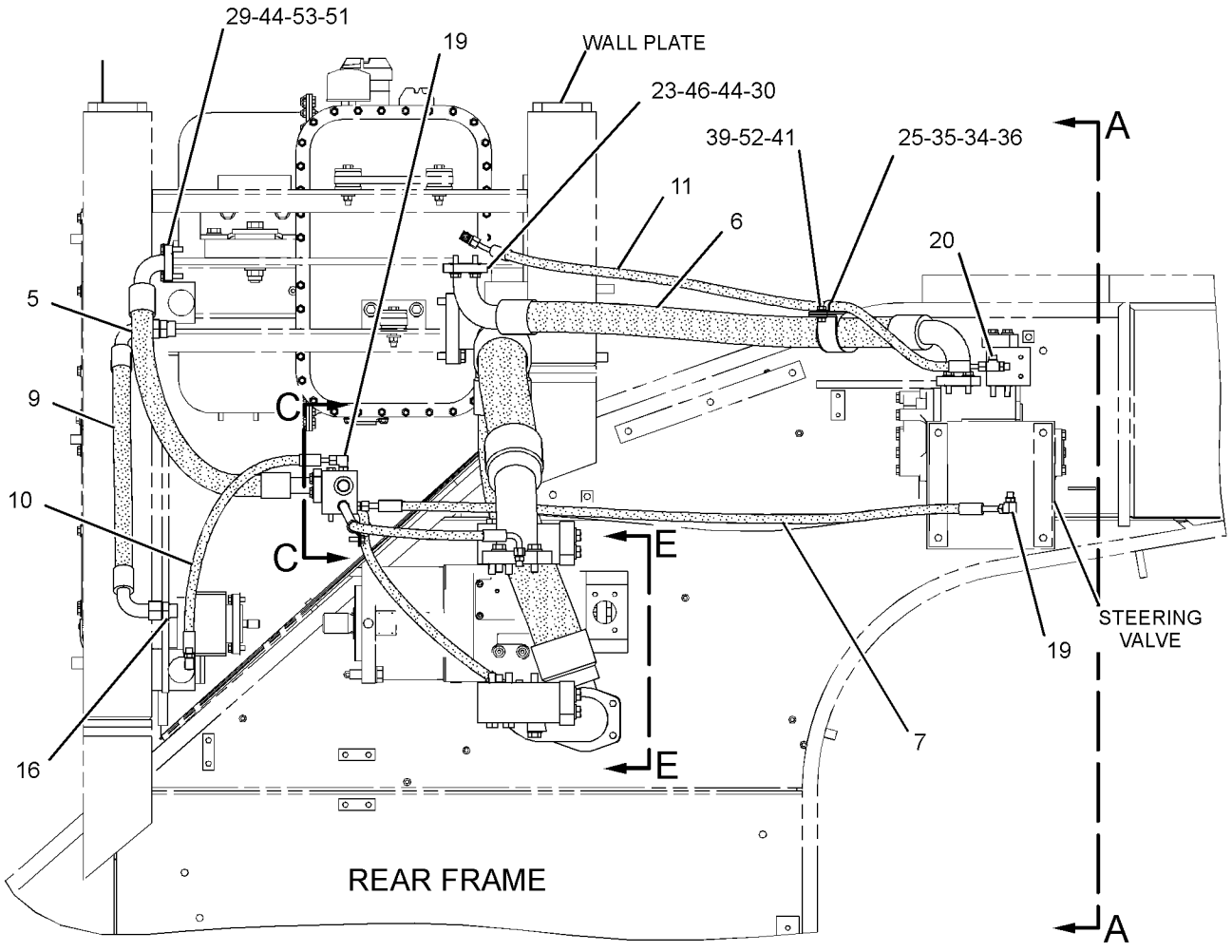

FRONT VIEW

REFER TO ALL ILLUSTRATIONS OF THIS GROUP FOR AUXILIARY VIEWS

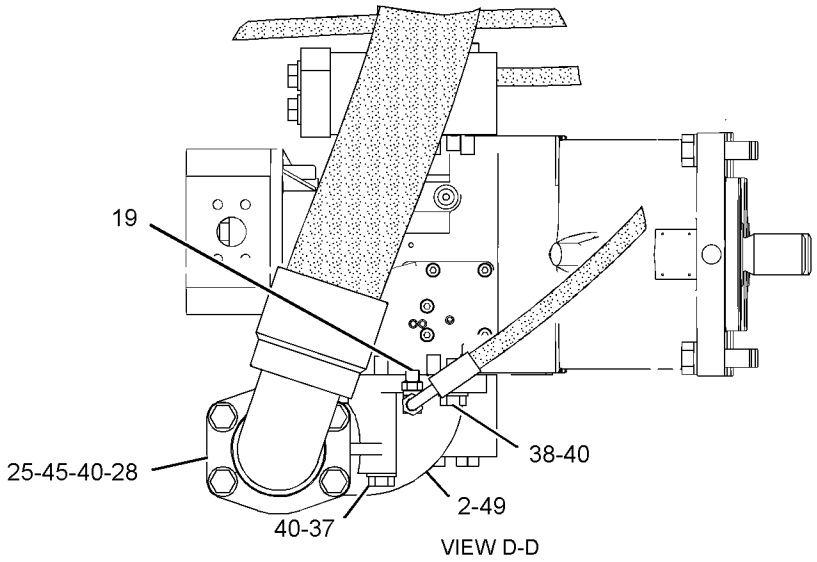

VIEW D-D

GRAPHIC #2

g01150030

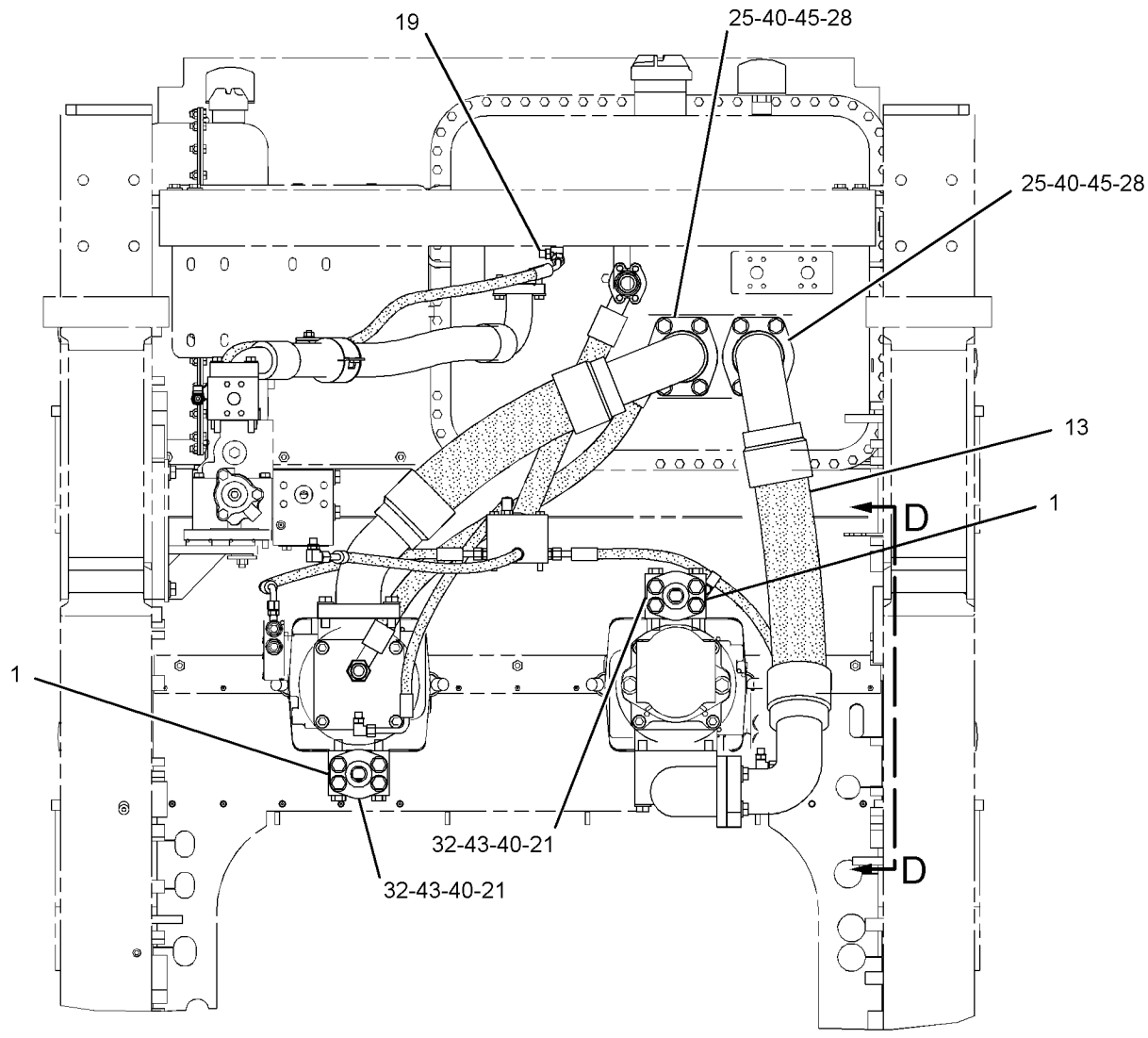

VIEW A-A

REFER TO ALL ILLUSTRATIONS OF THIS GROUP FOR AUXILIARY VIEWS

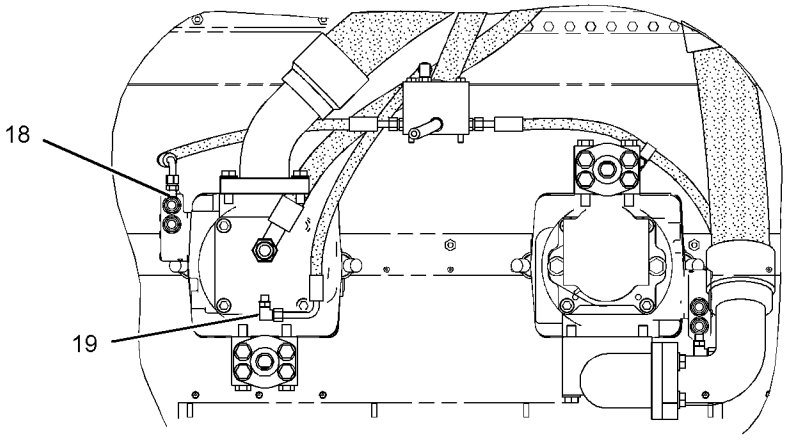

SECTION E-E

GRAPHIC #3 **<END>** g01150031

STEERING SYSTEM

245-1290 LINES GP-STEERING

S/N: 4421-UP

PART OF 245-0700 HYDRAULIC AR-REAR

SMCS-4304 **i02330280**

NOTE	REF NO	GRAPHIC REF	PART NUMBER	QTY	PART NAME 1 2 3 4 5 6 (PRODUCT LEVEL)	SEE PAGE
Y	1	3	**1U-2226**	2	VALVE GP-SELECTOR & PRESS CONT (STEERING)	737
I	3	3	**8E-3082**	1	HOSE AS	
	4	1	**8X-3000**	1	TUBE AS	
	5	3	**8X-5974**	1	MANIFOLD	
	6	3	**8X-6029**	1	BLOCK	
I	7	3	**8X-6640**	1	HOSE AS	
I	8	3	**9U-2285**	1	HOSE AS	
	9	3	*164-5650*	1	CONNECTOR AS	
		3	**3J-1907**	1	SEAL-O-RING	
		3	**6V-8397**	1	SEAL-O-RING	
		3	**143-4218**	1	CONNECTOR	
	10	3	**110-0778**	1	FITTING-ORIFICE	
	11	3	*150-4027*	1	TEE AS	
		3	**3E-2310**	1	TEE	
		3	**3J-1907**	1	SEAL-O-RING	
		3	**6V-8397**	1	SEAL-O-RING	
	12	1	**164-2136**	1	TUBE AS	
	13	3	**226-0932**	1	BRACKET AS	
I	14	2	**245-7307**	2	HOSE AS	
I	15	3	**244-7278**	1	HOSE AS	
	16	2	**245-1303**	1	TUBE AS	
	17	2	**245-1304**	1	TUBE AS	
I	19	2	**245-1307**	1	HOSE AS	
I	20	2	**245-1308**	1	HOSE AS	
I	21	2	**245-1309**	1	HOSE AS	
I	22	2	**245-1312**	2	HOSE AS	
I	23	2	**245-1314**	1	HOSE AS	
	24	2	**245-1316**	2	MANIFOLD	
I	25	2	**245-1317**	1	HOSE AS	
	26	1	**245-1318**	1	MANIFOLD	
I	27	3	**245-1319**	1	HOSE AS	
	29	1	*164-5567*	2	FITTING GP-COUPLING	
					(EACH INCLUDES)	
		1	**3J-1907**	1	SEAL-O-RING	
		1	**6V-3965**	1	FITTING AS (QUICK DISCONNECT)	
	30	1,3	*148-8336*	6	CONNECTOR AS	
					(EACH INCLUDES)	
		1,3	**3J-1907**	1	SEAL-O-RING	
		1,3	**6V-8397**	1	SEAL-O-RING	
		1,3	**6V-8636**	1	CONNECTOR	
	31	3	*148-8347*	1	ELBOW AS	
		3	**3D-2824**	1	SEAL-O-RING	
		3	**6V-9007**	1	ELBOW	
		3	**6V-9746**	1	SEAL-O-RING	
	32	3	*148-8360*	1	ELBOW AS	
		3	**6V-9182**	1	ELBOW	
		3	**6V-9746**	1	SEAL-O-RING	
		3	**7M-8485**	1	SEAL-O-RING	
	33	1,3	*148-8367*	2	ELBOW AS	
					(EACH INCLUDES)	
		1,3	**6V-8397**	1	SEAL-O-RING	
		1,3	**6V-9850**	1	ELBOW	
	34	3	*148-8433*	1	TEE AS	
		3	**6V-8397**	2	SEAL-O-RING	
		3	**6V-9836**	1	TEE-SWIVEL	

245-1290 **LINES GP-STEERING** *(contd.)* **i02330280**

NOTE	REF NO	GRAPHIC REF	PART NUMBER	QTY	PART NAME 1 2 3 4 5 6 (PRODUCT LEVEL)	SEE PAGE
	35	1,3	*148-8435*	2	TEE AS	
					(EACH INCLUDES)	
		1,3	**3J-1907**	1	SEAL-O-RING	
		1,3	**6V-8397**	2	SEAL-O-RING	
		1,3	**6V-8781**	1	TEE-FACE SEAL	
	36	3	*148-8439*	1	TEE AS	
		3	**3J-1907**	1	SEAL-O-RING	
		3	**6V-8397**	2	SEAL-O-RING	
		3	**6V-8774**	1	TEE	
	37	3	*155-7321*	1	ADAPTER GP	
		3	**3D-2824**	1	SEAL-O-RING	
		3	**6V-1722**	1	ADAPTER-O-RING	
	38	3	**164-4180**	1	PLUG AS	
		3	**7M-8485**	1	SEAL-O-RING	
		3	**9S-4181**	1	PLUG	
	39	2	**1P-3704**	8	SEAL-RECTANGULAR	
	40	1,2	**1P-3705**	12	SEAL-RECTANGULAR	
	41	2	**1P-5767**	16	FLANGE-HALF	
	42	3	**1S-0994**	2	CLIP	
	43	3	**3K-0360**	1	SEAL-O-RING	
	44	1,2	**5P-8077**	16	FLANGE-HALF	
	45	1,3	**6V-1572**	2	CLIP (SLOT)	
	46	1,3	**6V-1573**	2	CLIP (TAB)	
	47	1,3	**6V-1574**	1	GROMMET	
	48	1	**6V-1875**	1	GROMMET	
	50	1,3	**8T-4121**	14	WASHER-HARD (11X21X2.5-MM THK)	
M	51	1,3	**8T-4133**	2	NUT (M10X1.15-THD)	
M	52	2	**8T-4140**	24	BOLT (M16X2X60-MM)	
M	53	3	**8T-4172**	2	BOLT (M10X1.5X80-MM)	
M	54	2	**8T-4176**	8	BOLT (M12X1.75X90-MM)	
M	56	1,3	**8T-4185**	21	BOLT (M10X1.5X50-MM)	
M	57	2	**8T-4194**	12	BOLT (M12X1.75X50-MM)	
M	58	3	**8T-4195**	3	BOLT (M10X1.5X30-MM)	
	59	2	**8T-4223**	52	WASHER-HARD (13.5X25.5X3-MM THK)	
M	62	3	**8T-6466**	2	BOLT (M10X1.5X60-MM)	
	63	1,2	**9X-8257**	32	WASHER (17.5X30X3.5-MM THK)	
	64	1	**6V-0852**	2	CAP-DUST	
	65	1	**245-3230**	1	MANIFOLD	
M	66	2	**8T-6868**	8	BOLT (M12X1.75X80-MM)	
M	67	2	**8T-4183**	8	BOLT (M12X1.75X40-MM)	
M	68	1	**7X-2554**	8	BOLT (M16X2X70-MM)	
	69	1	**1P-3706**	2	SEAL-RECTANGULAR	

I-REFER TO HYDRAULIC INFORMATION SYSTEM
M-METRIC PART
Y-SEPARATE ILLUSTRATION

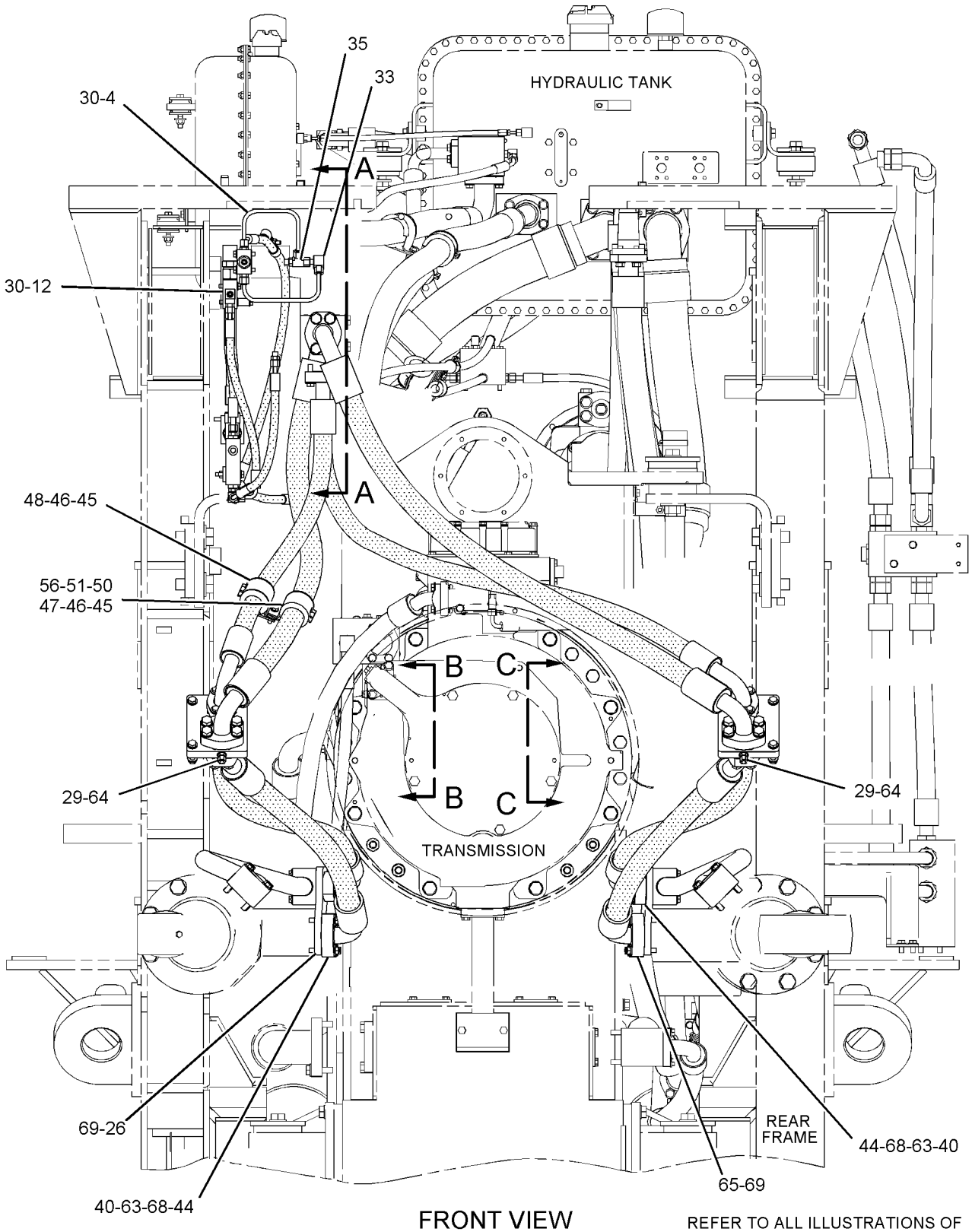

GRAPHIC #1

g01144147

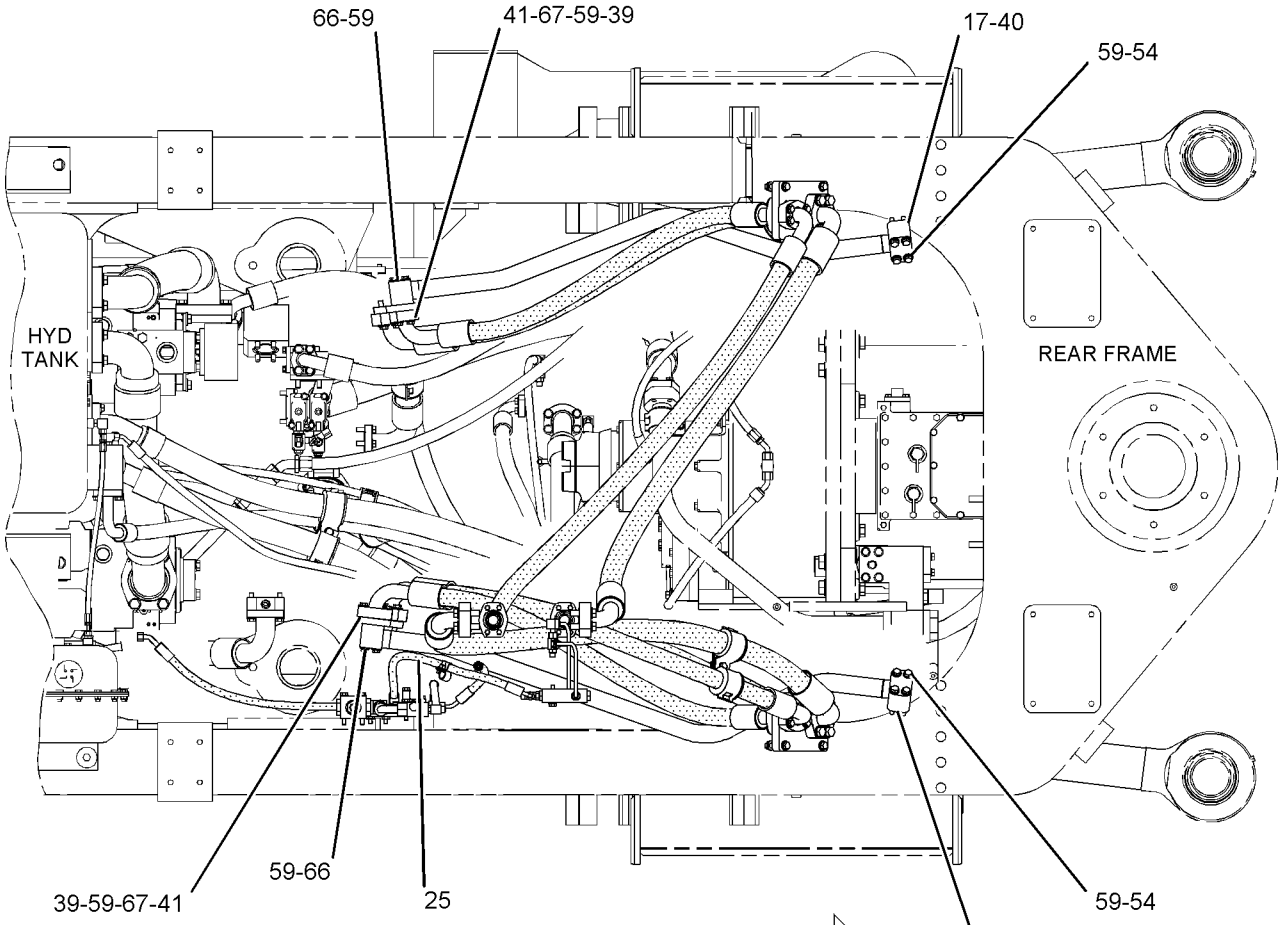

TOP VIEW

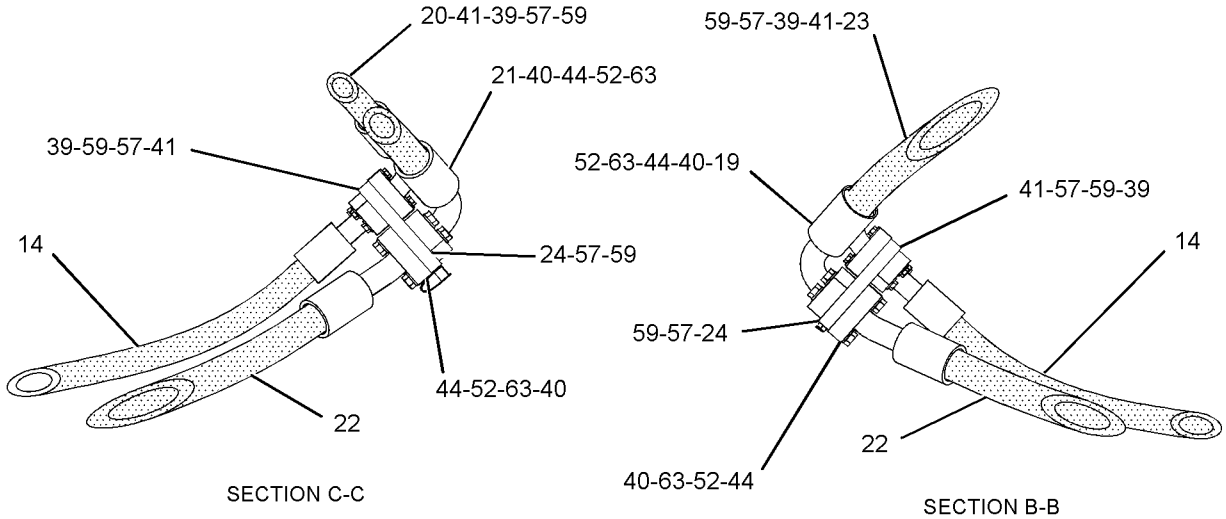

SECTION C-C

SECTION B-B

GRAPHIC #2

g01144163

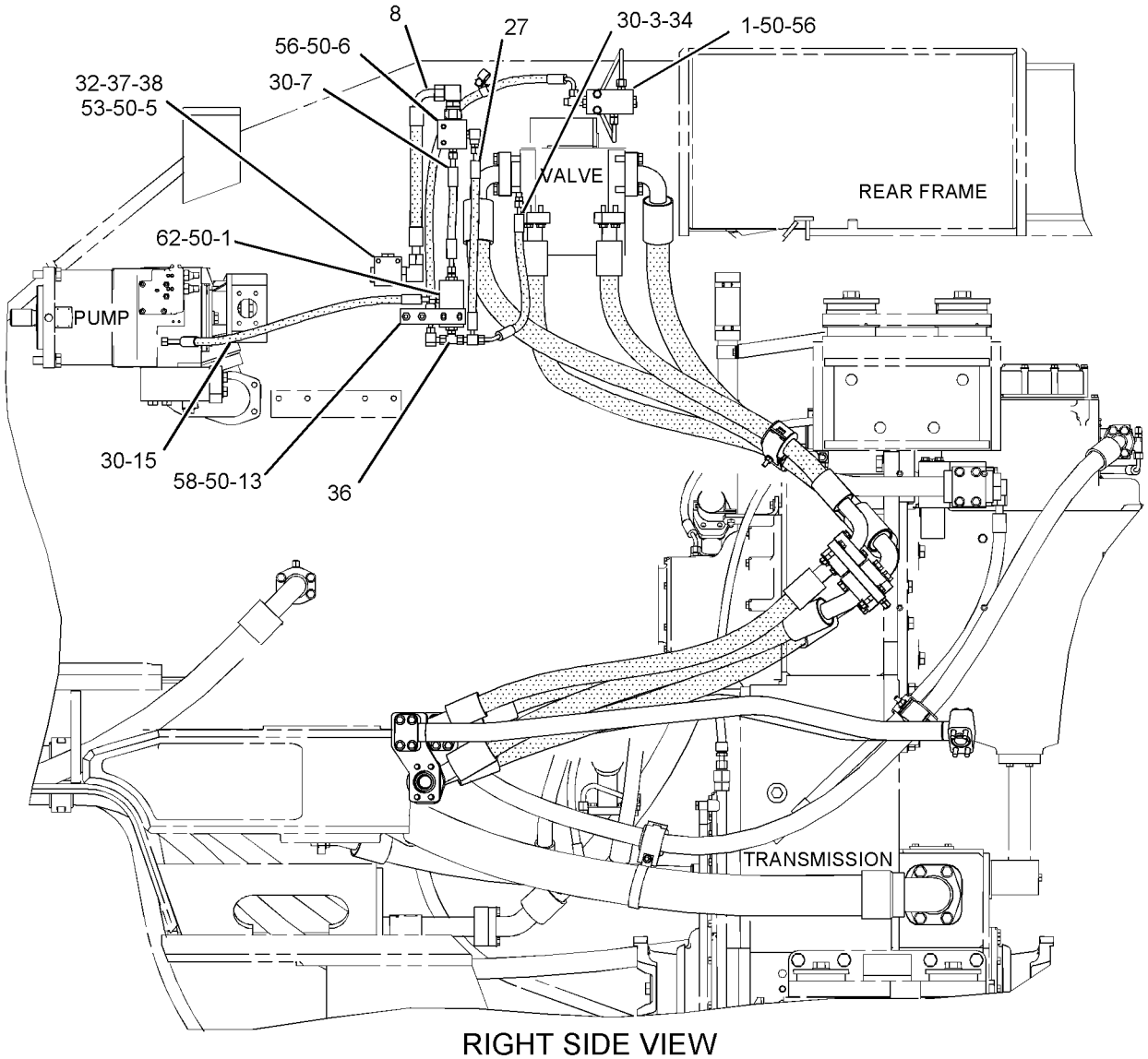

RIGHT SIDE VIEW

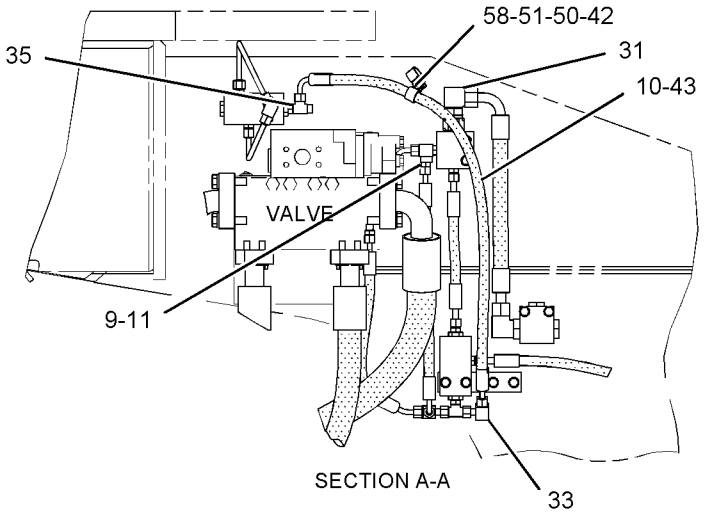

GRAPHIC #3 **<END>** g01144211

246-1030 LINES GP-STEERING NEUTRALIZER—REAR FRAME

S/N: 4421-UP

PART OF 245-0700 HYDRAULIC AR-REAR

SMCS-4304, 4330 **i02288365**

NOTE	REF NO	GRAPHIC REF	PART NUMBER	QTY	PART NAME 1 2 3 4 5 6 (PRODUCT LEVEL)	SEE PAGE
	1	1	**3V-5541**	1	MANIFOLD	
	2	2	**8X-3903**	1	BRACKET AS	
M		2	**8T-3597**	1	NUT-WELD (M12X1.75 THD)	
I	3	1	**246-1029**	1	HOSE AS	
I	4	1	**246-1031**	1	HOSE AS	
I	5	1	**246-1044**	1	HOSE AS	
I	6	1	**263-9994**	1	HOSE AS	
	7	1	**264-8079**	1	TUBE AS	
	8	1	*148-8307*	1	ADAPTER AS	
		1	**3J-1907**	1	SEAL-O-RING	
		1	**5P-8874**	1	ADAPTER	
	9	1	*148-8324*	1	CONNECTOR GP	
		1	**3K-0360**	1	SEAL-O-RING	
		1	**6V-9746**	1	SEAL-O-RING	
		1	**6V-9874**	1	CONNECTOR	
	10	1	*148-8340*	2	CONNECTOR AS	
					(EACH INCLUDES)	
		1	**3K-0360**	1	SEAL-O-RING	
		1	**6V-8398**	1	SEAL-O-RING	
		1	**6V-8639**	1	CONNECTOR	
	11	2	*148-8365*	2	ELBOW AS	
					(EACH INCLUDES)	
		2	**3J-1907**	1	SEAL-O-RING	
		2	**6V-8398**	1	SEAL-O-RING	
		2	**8T-6876**	1	ELBOW	
	12	2	*174-3181*	1	ELBOW AS	
		2	**3J-1907**	1	SEAL-O-RING	
		2	**6V-8398**	1	SEAL-O-RING	
		2	**8T-7521**	1	ELBOW	
	13	2	**4J-0520**	1	SEAL-O-RING	
	14	2	**4W-3588**	1	BRACKET	
	15	2	**5P-7462**	4	CLIP (SLOT)	
	16	2	**5P-7463**	4	CLIP (TAB)	
	17	1,2	**6D-1641**	2	CLIP	
	18	2	**6D-4636**	1	CLIP	
	19	2	**6V-0683**	4	GROMMET	
	20	1	**6V-9746**	1	SEAL-O-RING	
	21	2	**8C-3206**	2	FLANGE-HALF	
	22	1,2	**8T-4121**	12	WASHER-HARD (11X21X2.5-MM THK)	
M	23	2	**8T-4133**	1	NUT (M10X1.5 THD)	
M	24	1	**8T-4136**	1	BOLT (M10X1.5X25-MM)	
M	25	1	**8T-4137**	2	BOLT (M10X1.5X20-MM)	
M	26	2	**8T-4192**	1	BOLT (M12X1.75X25-MM)	
M	27	2	**8T-4195**	4	BOLT (M10X1.5X30-MM)	
M	28	2	**8T-4196**	5	BOLT (M10X1.5X35-MM)	
	29	1,2	**8T-4223**	3	WASHER-HARD (13.5X25.5X3-MM THK)	
M	30	1	**8T-4648**	2	BOLT (M12X1.75X70-MM)	
	31	1,2	**9X-8250**	2	CLIP	

I-REFER TO HYDRAULIC INFORMATION SYSTEM
M-METRIC PART

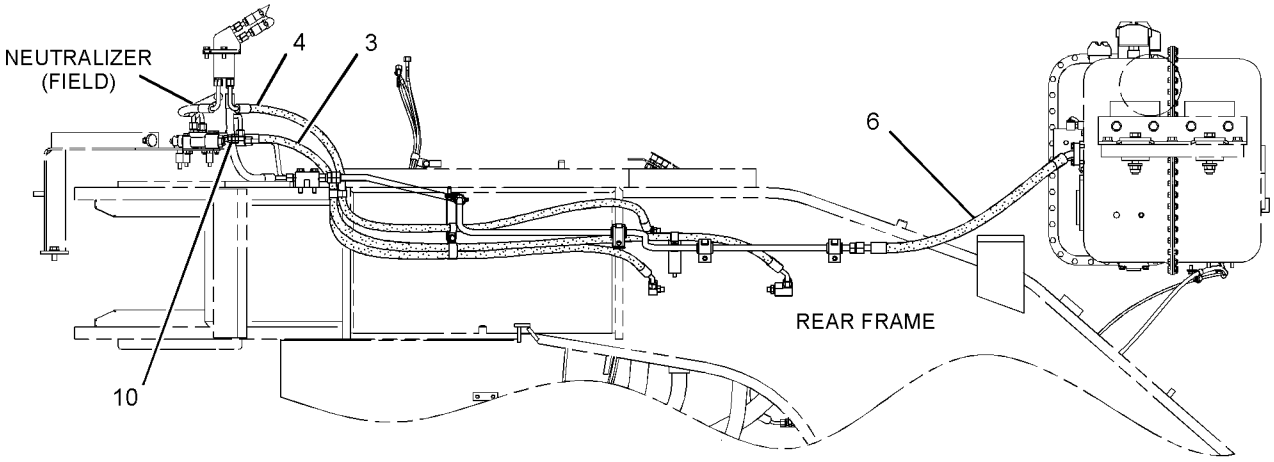

LEFT SIDE VIEW

REFER TO ALL ILLUSTRATIONS OF
THIS GROUP FOR AUXILIARY VIEWS

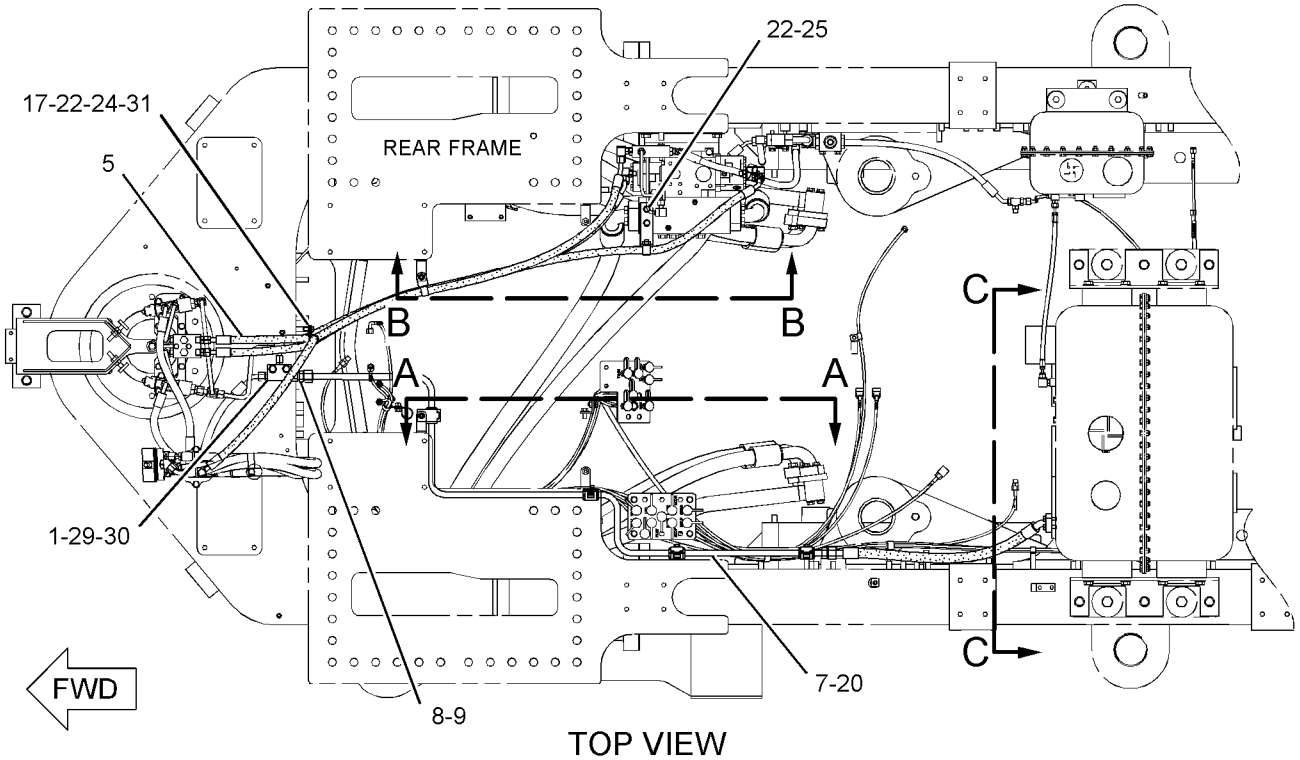

TOP VIEW

GRAPHIC #1 g01146083

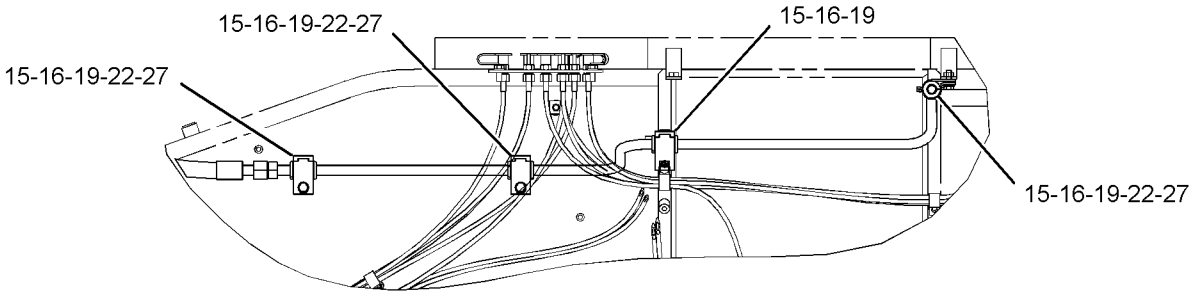

SECTION A-A

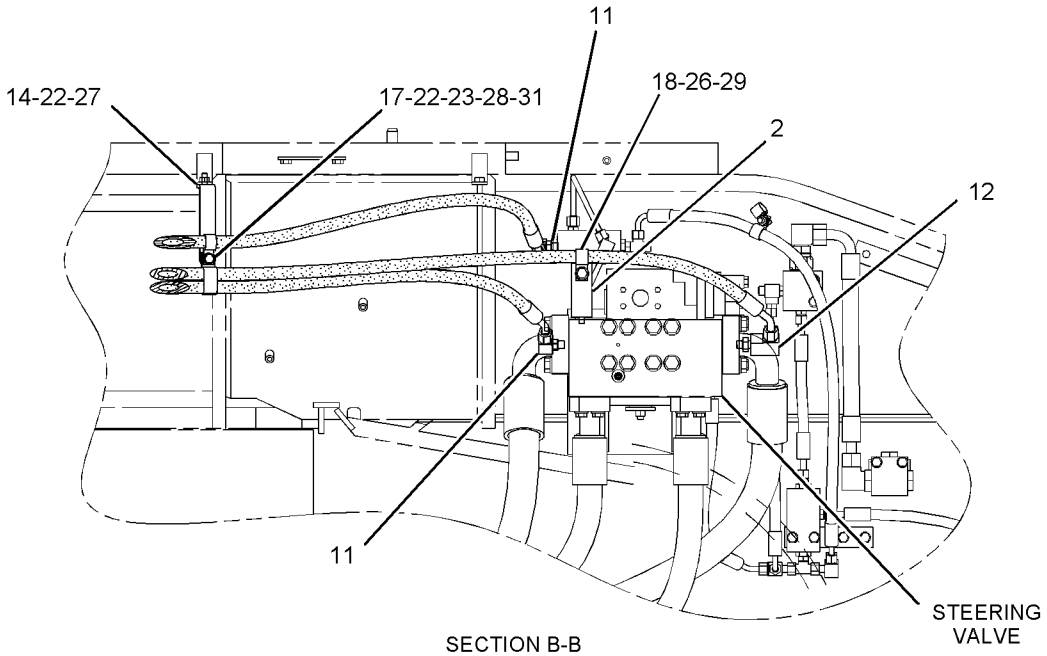

SECTION B-B

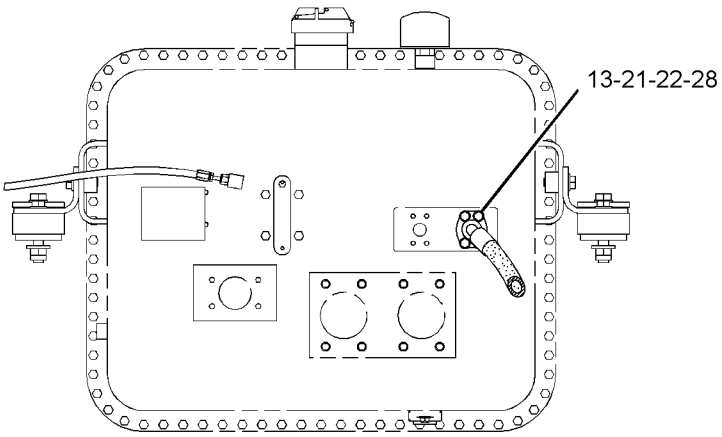

SECTION C-C

GRAPHIC #2 **<END>** g01146082

STEERING SYSTEM

235-1260 PUMP & MTG GP-SECONDARY STEER

S/N: 4421-UP

PART OF 234-2835 VALVE & MTG GP-SECONDARY STEER

SMCS-4324 **i02169112**

NOTE	REF NO	GRAPHIC REF	PART NUMBER	QTY	PART NAME 1 2 3 4 5 6 (PRODUCT LEVEL)	SEE PAGE
Y	1	1	**6E-0868**	1	PUMP GP-GEAR (SECONDARY STEERING)	704
	2	1	**5F-3106**	1	SEAL-O-RING	
M	3	1	**8T-4122**	2	WASHER-HARD (17X32X3.5-MM THK)	
M	4	1	**8T-4132**	2	NUT (M16X2-THD)	

M-METRIC PART
Y-SEPARATE ILLUSTRATION

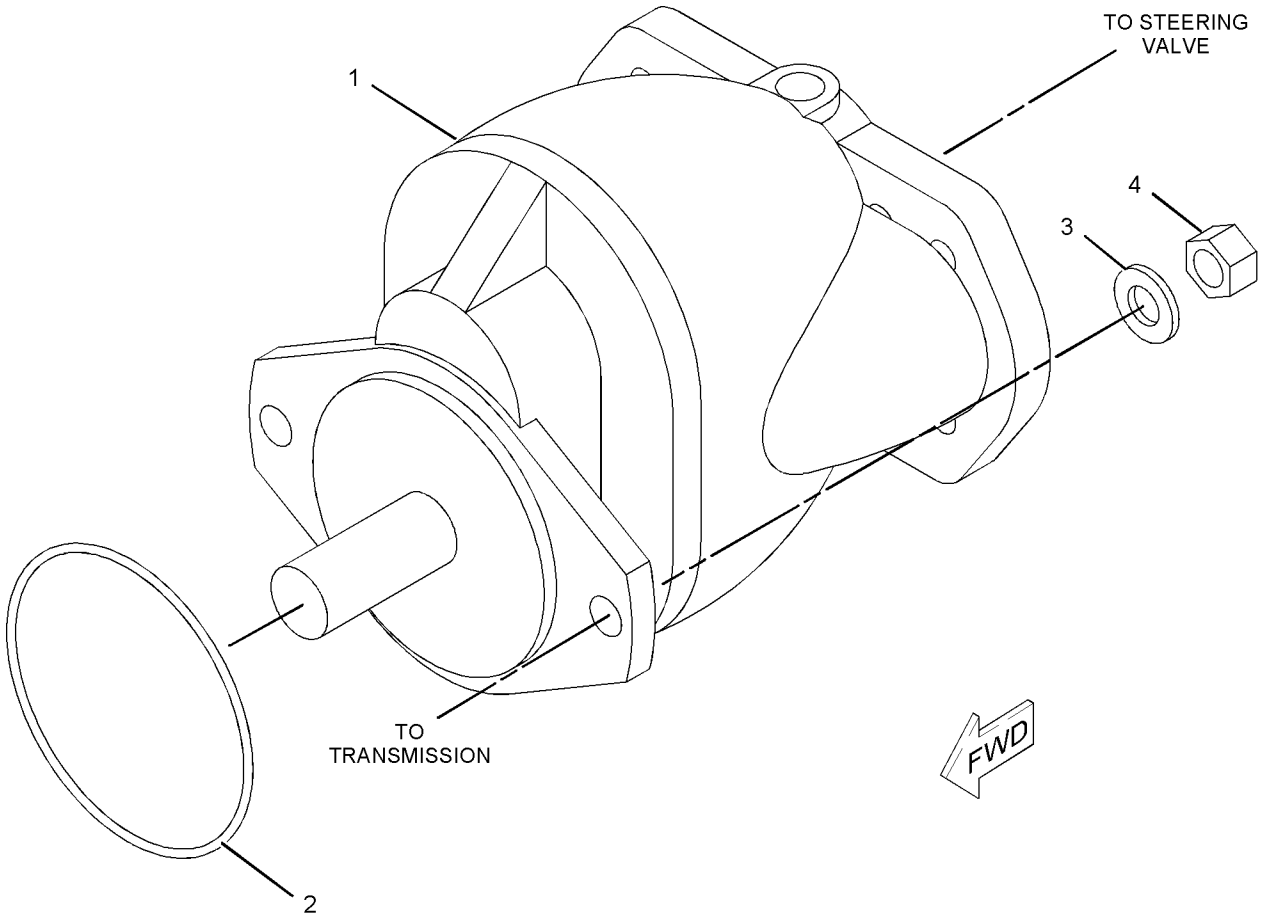

GRAPHIC #1 **<END>** g01093578

245-0695 PUMP & MTG GP-STEERING & BRAKE

S/N: 4421-UP

PART OF 245-0700 HYDRAULIC AR-REAR

SMCS-5073 **i02290040**

NOTE	REF NO	GRAPHIC REF	PART NUMBER	QTY	PART NAME 1 2 3 4 5 6 (PRODUCT LEVEL)	SEE PAGE
Y	1	1	**116-7341**	1	PUMP GP-GEAR (BRAKE COOLING)	705
Y	2	1	**263-5064**	1	PUMP GP-PISTON (STEERING, LH)	706
Y	3	1	**263-5065**	1	PUMP GP-PISTON (STEERING, RH)	708
	4	1	**6F-4718**	2	SEAL-O-RING	
	5	1	**7J-6285**	1	SEAL-O-RING	
	6	1	**7X-0515**	2	WASHER-HARD (17X35X5-MM THK)	
M	7	1	**7X-2563**	8	BOLT (M20X2.5X60-MM)	
	8	1	**8T-4123**	8	WASHER-PLATED (22X35X3.5-MM THK)	
M	9	1	**8T-4779**	2	BOLT (M16X2X35-MM)	

M-METRIC PART
Y-SEPARATE ILLUSTRATION

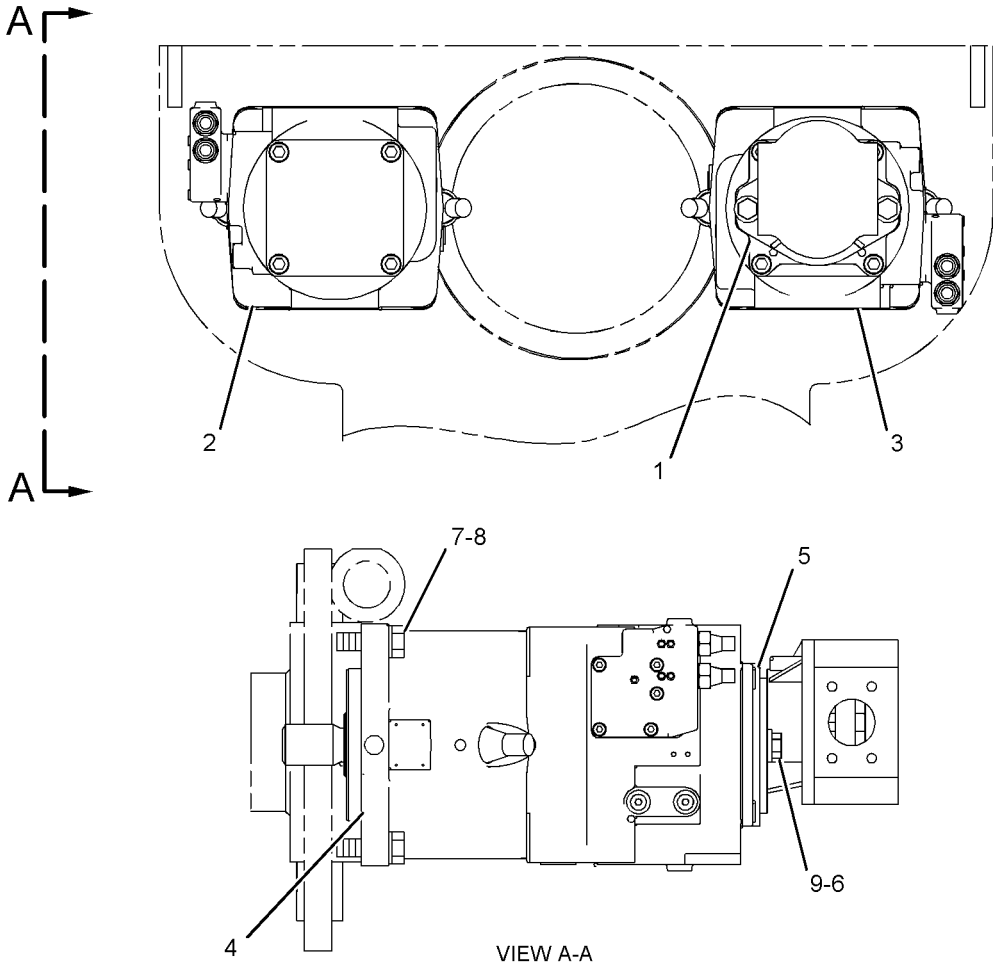

GRAPHIC #1 **<END>** g01092422

STEERING SYSTEM

8X-0082 PUMP & MTG GP-STER & BRAKE CLR

S/N: 4421-UP

PART OF 245-0700 HYDRAULIC AR-REAR

SMCS-4268, 4306 **i02279578**

NOTE	REF NO	GRAPHIC REF	PART NUMBER	QTY	PART NAME 1 2 3 4 5 6 (PRODUCT LEVEL)	SEE PAGE
Y	1	1	**6E-0867**	1	PUMP GP-GEAR (STEERING, BRAKE OIL COOLER)	703
	2	1	**5F-3106**	1	SEAL-O-RING	
M	3	1	**7X-2553**	2	BOLT (M16X2X40-MM)	
M	4	1	**8T-4122**	2	WASHER-HARD (17X32X3.5-MM THK)	

M-METRIC PART
Y-SEPARATE ILLUSTRATION

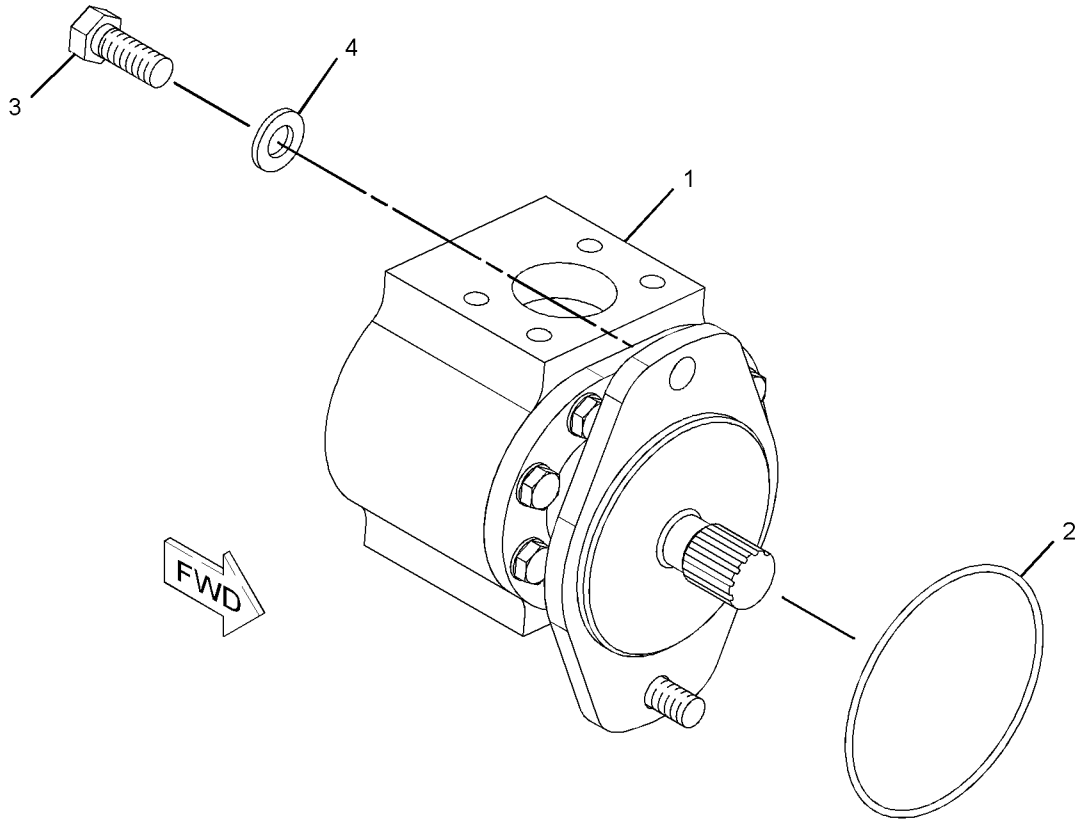

GRAPHIC #1 **<END>** g01141428

STEERING SYSTEM

6E-0867 PUMP GP-GEAR–STEERING, BRAKE OIL COOLER

S/N: 4421-UP

PART OF 8X-0082 PUMP & MTG GP-STER & BRAKE CLR

SMCS-4268, 4306, 5073 **i01011263**

NOTE	REF NO	GRAPHIC REF	PART NUMBER	QTY	PART NAME 1 2 3 4 5 6 (PRODUCT LEVEL)	SEE PAGE
	1	1	**5P-7213**	8	WASHER-HARD (13.5X20.5X2-MM THK)	
	2	1	**0S-1585**	8	BOLT (1/2-13X1.50-IN)	
J	3	1	**6V-1899**	2	SEAL-LIP TYPE	
	4	1	**008-3214**	1	RING-RETAINING (INTERNAL)	
	5	1	**6J-2386**	2	DOWEL	
	6	1	**4T-8761**	1	GEAR-IDLER	
	7	1	**4T-8729**	2	PLATE-PRESSURE	
	8	1	**4T-9298**	4	BUSHING-TERMINAL	
	9	1	**4T-9426**	1	PLATE-ISOLATION	
	10	1	**4T-9425**	1	PLATE-ISOLATION	
	11	1	**6E-2943**	1	PLUG	
	12	1	**9T-1258**	1	SHAFT-DRIVE	
	13	1	**6E-2817**	1	BODY AS	
	14	1	**9T-2839**	1	FLANGE AS-LH	
					AVAILABLE REPAIR KIT(S):	
J			**115-7175**		KIT-SEAL	

J-REPAIR KIT MARKED J INCLUDES PART(S) MARKED J

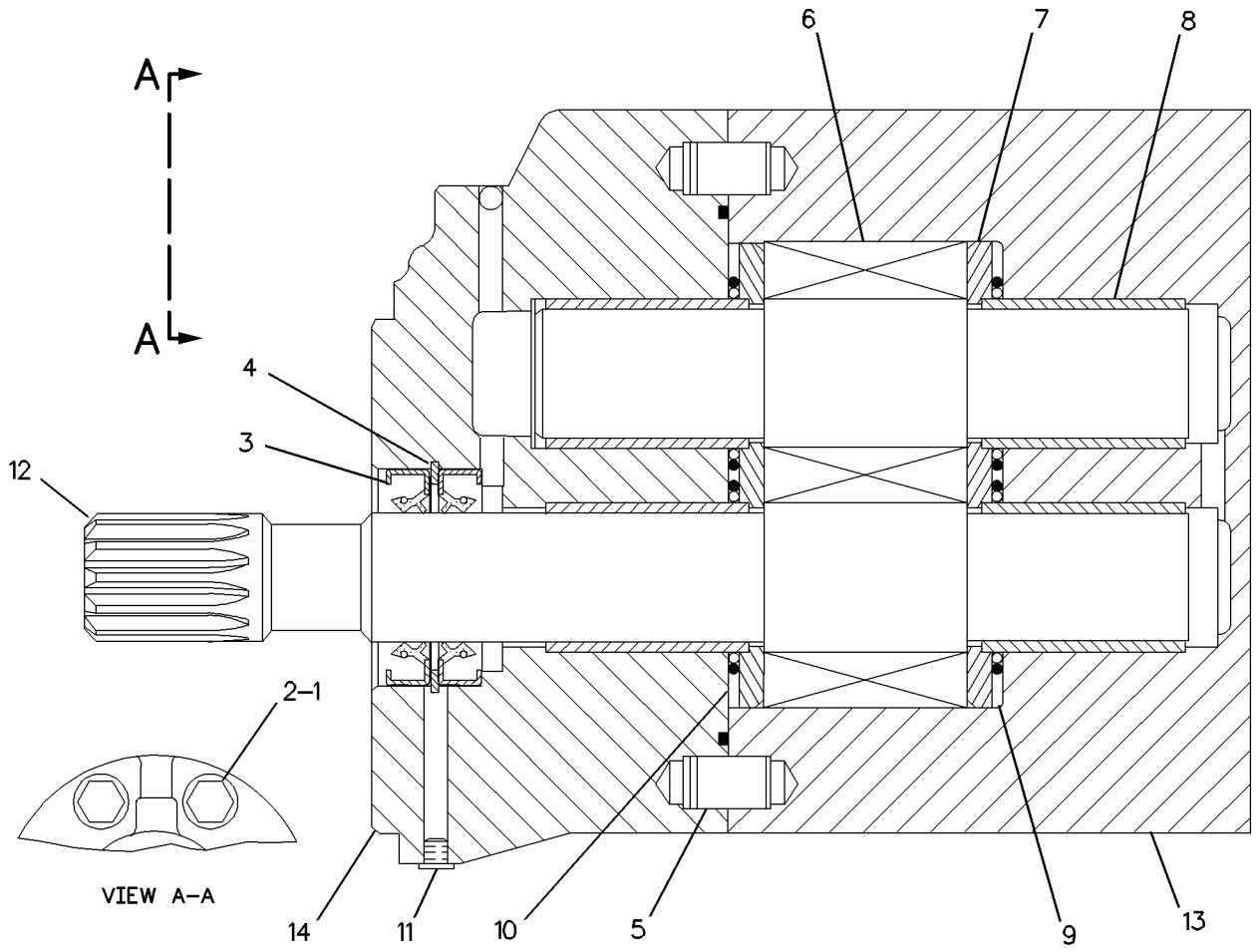

GRAPHIC #1 **<END>** g00082910

STEERING SYSTEM

6E-0868 PUMP GP-GEAR–SECONDARY STEERING

S/N: 4421-UP

PART OF 235-1260 PUMP & MTG GP-SECONDARY STEER

SMCS-4268, 4306, 5073 **i01133181**

NOTE	REF NO	GRAPHIC REF	PART NUMBER	QTY	PART NAME 1 2 3 4 5 6 (PRODUCT LEVEL)	SEE PAGE
	1	1	**6V-5806**	2	SEAL-LIP	
	2	1	**008-3214**	1	RING-RETAINING	
	3	1	**9T-3427**	1	BUSHING-TERMINAL	
	4	1	**6J-2386**	2	DOWEL	
	5	1	**1U-4737**	1	WASHER (1.5MM THK)	
	6	1	**6E-2943**	1	PLUG	
	7	1	**1A-1135**	8	BOLT (5/8-11X2IN)	
		1	**4B-1550**	8	WASHER (1.6MM THK)	
	8	1	**6E-5299**	1	PLATE-PRESSURE	
	9	1	**6E-5300**	1	PLATE-PRESSURE	
	10	1	**6E-4988**	1	SHAFT-GOVERNOR CONTROL	
	11	1	**6E-4989**	1	FLANGE AS	
	12	1	**6E-4991**	1	BODY AS	
	13	1	**6E-4992**	1	GEAR	
	14	1	**9T-3428**	3	BUSHING-TERMINAL	
					AVAILABLE REPAIR KIT(S):	
			6E-4994	1	KIT-SEAL	

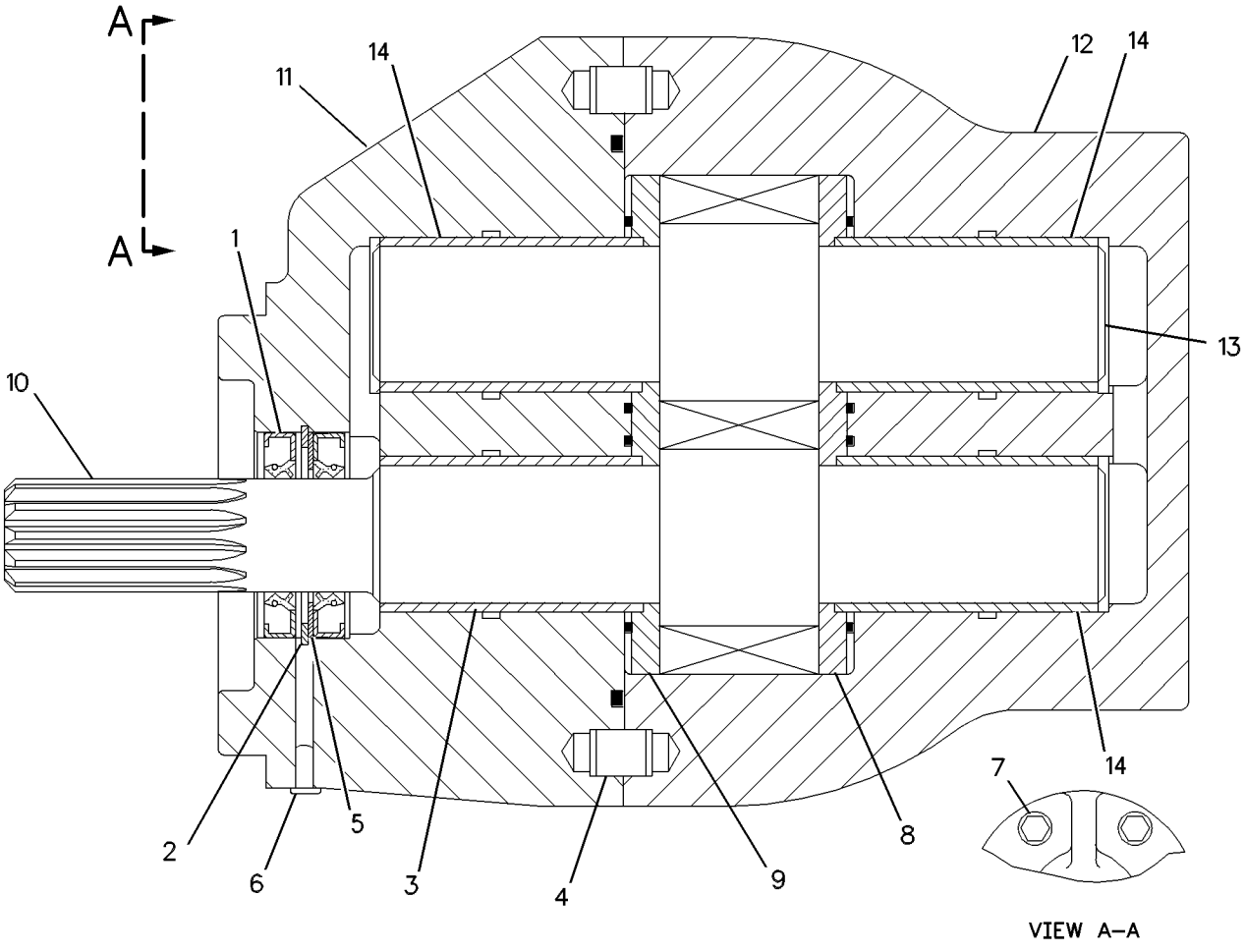

GRAPHIC #1 **<END>** g00599770

STEERING SYSTEM

116-7341 PUMP GP-GEAR–BRAKE COOLING

S/N: 4421-UP

PART OF 245-0695 PUMP & MTG GP-STEERING & BRAKE

SMCS-4268, 4306, 5073 **i01137449**

NOTE	REF NO	GRAPHIC REF	PART NUMBER	QTY	PART NAME 1 2 3 4 5 6 (PRODUCT LEVEL)	SEE PAGE
	1	1	**133-9732**	1	GEAR-DRIVE	
J	2	1	**133-6578**	1	SEAL-O-RING	
J	3	1	**6V-1899**	2	SEAL-LIP TYPE	
	4	1	**9T-1267**	1	GEAR-IDLER	
	5	1	**133-9733**	1	FLANGE AS	
	6	1	**6J-2386**	2	DOWEL	
	7	1	**133-9734**	1	BODY AS	
	8	1	**4T-8729**	2	PLATE-PRESSURE	
	9	1	**4T-9298**	4	BUSHING-TERMINAL	
	10	1	**4T-9426**	1	PLATE-ISOLATION	
	11	1	**4T-9425**	1	PLATE-ISOLATION	
	12	1	**6E-2943**	1	PLUG	
	13	1	**5P-7213**	8	WASHER-HARD (13.5X20.5X2-MM THK)	
	14	1	**0S-1595**	8	BOLT (1/2-13X1.25-IN)	
	15	1	**008-3214**	1	RING-RETAINING (INTERNAL)	
					AVAILABLE REPAIR KIT(S):	
J			**115-7175**	1	KIT-SEAL (GEAR PUMP)	

J-KIT MARKED J INCLUDES PARTS MARKED J

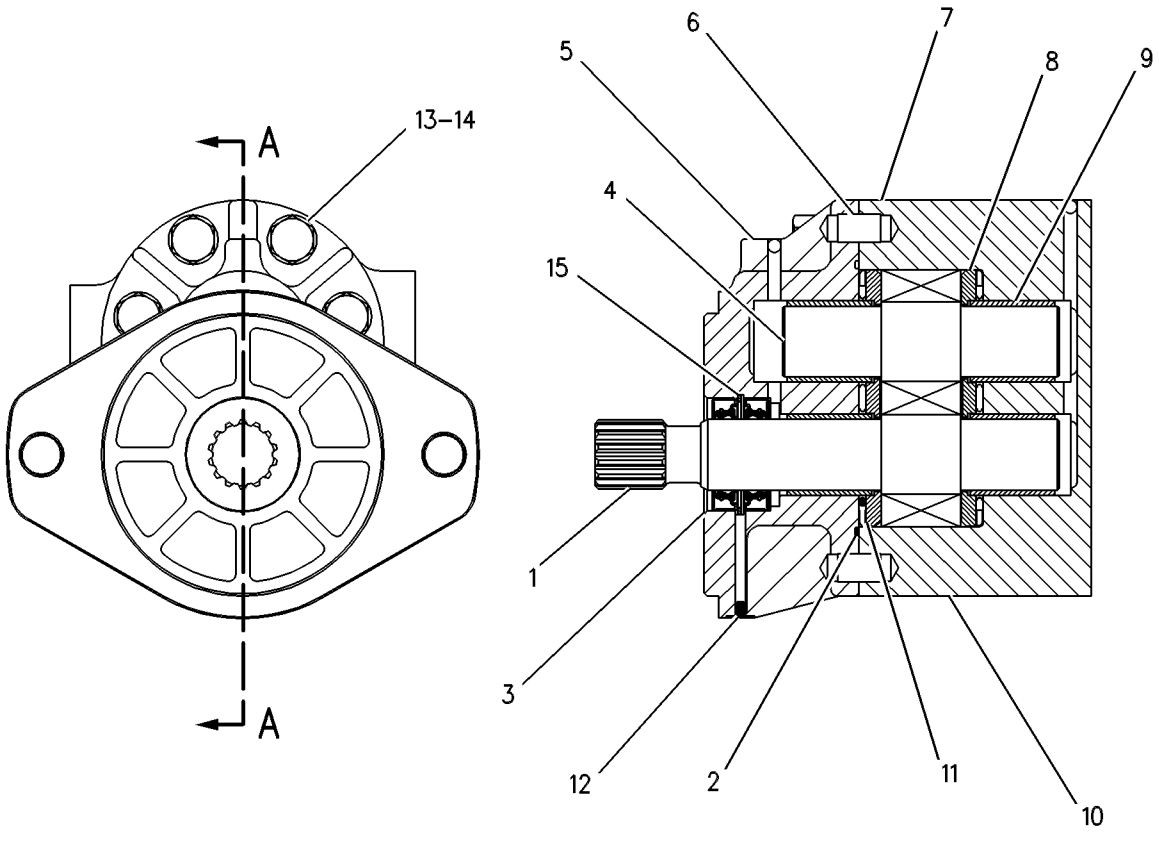

GRAPHIC #1 **<END>** g00277039

263-5064 PUMP GP-PISTON—STEERING, LH

S/N: 4421-UP

PART OF 245-0695 PUMP & MTG GP-STEERING & BRAKE

SMCS-4268, 4306, 5070 **i02285776**

NOTE	REF NO	GRAPHIC REF	PART NUMBER	QTY	PART NAME 1 2 3 4 5 6 (PRODUCT LEVEL)	SEE PAGE
	1	1	**170-9900**	2	PIN	
Y	2	1	**164-6938**	1	ROTATING GP-PUMP	710
	3	1	**099-5845**	3	PLUG	
	4	1	**170-9907**	2	PLUG	
	5	1	**145-3171**	1	LOCKNUT-SEAL	
	6	1	**145-3169**	1	PIN-THREADED	
	7	1	**234-9503**	1	SEAL-O-RING	
Y	8	1	**6E-1024**	1	VALVE GP-PUMP CONTROL (PRESSURE, FLOW COMPENSATOR)	730
	9	1	**117-5716**	4	PIN	
M	10	1	**9T-3928**	4	PLUG AS	
					(EACH INCLUDES)	
		1	**187-8001**	1	SEAL	
Y	11	1	**164-6939**	1	HEAD GP-PUMP	676
	12	1	**179-6937**	1	COVER	
	13	1	**096-8058**	2	RING-RETAINING	
Y	14	1	**249-4488**	1	ACTUATOR GP-PUMP	660
	15	1	**9S-9334**	2	PLUG	
	16	1	**7M-8485**	2	SEAL-O-RING	
M	17	1	**177-0359**	4	BOLT-SOCKET HEAD (M22X25X90-MM)	
	18	1	**2H-3935**	1	SEAL-O-RING	
	19	1	**164-6944**	1	IMPELLER	
Y	20	1	**224-2561**	1	ACTUATOR GP-PUMP	659
M	21	1	**9X-8484**	4	BOLT-SHALLOW HEAD	
	22	1	**262-9147**	1	PIN-THREADED	
	23	1	**6E-3283**	1	LOCKNUT	

M-METRIC PART
Y-SEPARATE ILLUSTRATION

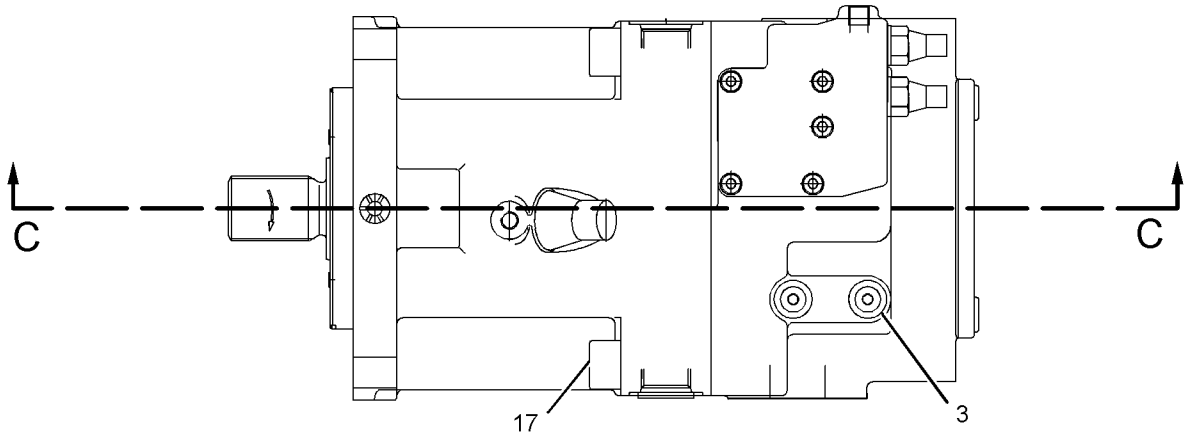

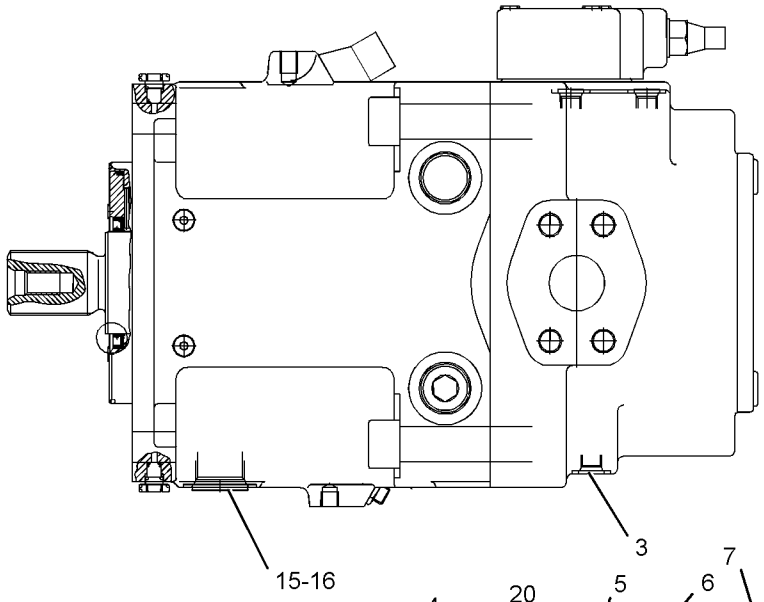

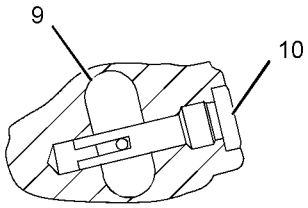

SECTION A-A

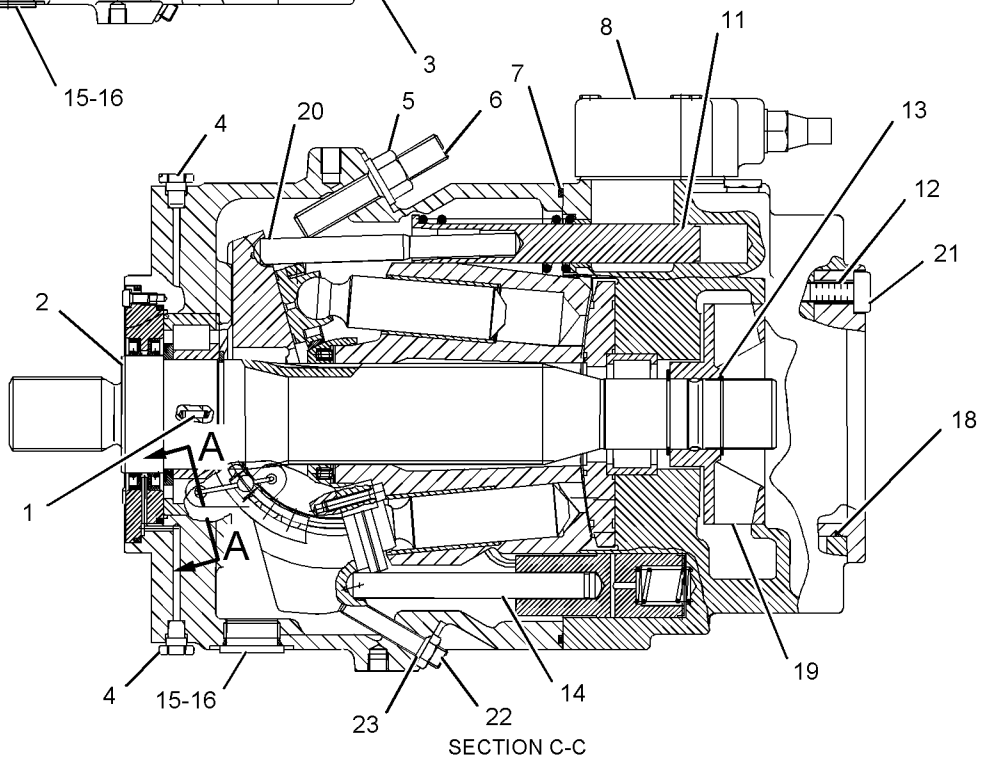

SECTION C-C

GRAPHIC #1 **<END>** g01147702

263-5065 PUMP GP-PISTON—STEERING, RH

S/N: 4421-UP

PART OF 245-0695 PUMP & MTG GP-STEERING & BRAKE

SMCS-4268, 4306, 5070 **i02285777**

NOTE	REF NO	GRAPHIC REF	PART NUMBER	QTY	PART NAME 1 2 3 4 5 6 (PRODUCT LEVEL)	SEE PAGE
	1	1	**170-9900**	2	PIN	
Y	2	1	**164-6938**	1	ROTATING GP-PUMP	710
Y	3	1	**224-2561**	1	ACTUATOR GP-PUMP	659
	4	1	**170-9907**	2	PLUG	
	5	1	**145-3171**	1	LOCKNUT-SEAL	
	6	1	**145-3169**	1	PIN-THREADED	
	7	1	**234-9503**	1	SEAL-O-RING	
Y	8	1	**6E-1024**	1	VALVE GP-PUMP CONTROL (PRESSURE, FLOW COMPENSATOR)	730
	9	1	**117-5716**	4	PIN	
M	10	1	**9T-3928**	4	PLUG AS	
		1	**187-8001**	1	SEAL	
Y	11	1	**164-6939**	1	HEAD GP-PUMP	676
	12	1	**221-0358**	1	FLANGE	
	13	1	**096-8058**	2	RING-RETAINING	
	14	1	**7J-6285**	1	SEAL-O-RING	
	15	1	**9S-9334**	2	PLUG	
	16	1	**7M-8485**	2	SEAL-O-RING	
M	17	1	**177-0359**	4	BOLT-SOCKET HEAD (M22X25X90-MM)	
	18	1	**2H-3935**	1	SEAL-O-RING	
	19	1	**164-6944**	1	IMPELLER	
	20	1	**6E-1540**	1	COUPLING	
M	21	1	**9X-8485**	4	BOLT-SHALLOW HEAD	
	22	1	**099-5845**	3	PLUG	
Y	23	1	**249-4488**	1	ACTUATOR GP-PUMP	660
	24	1	**262-9147**	1	PIN-THREADED	
	25	1	**6E-3283**	1	LOCKNUT	

M-METRIC PART
Y-SEPARATE ILLUSTRATION

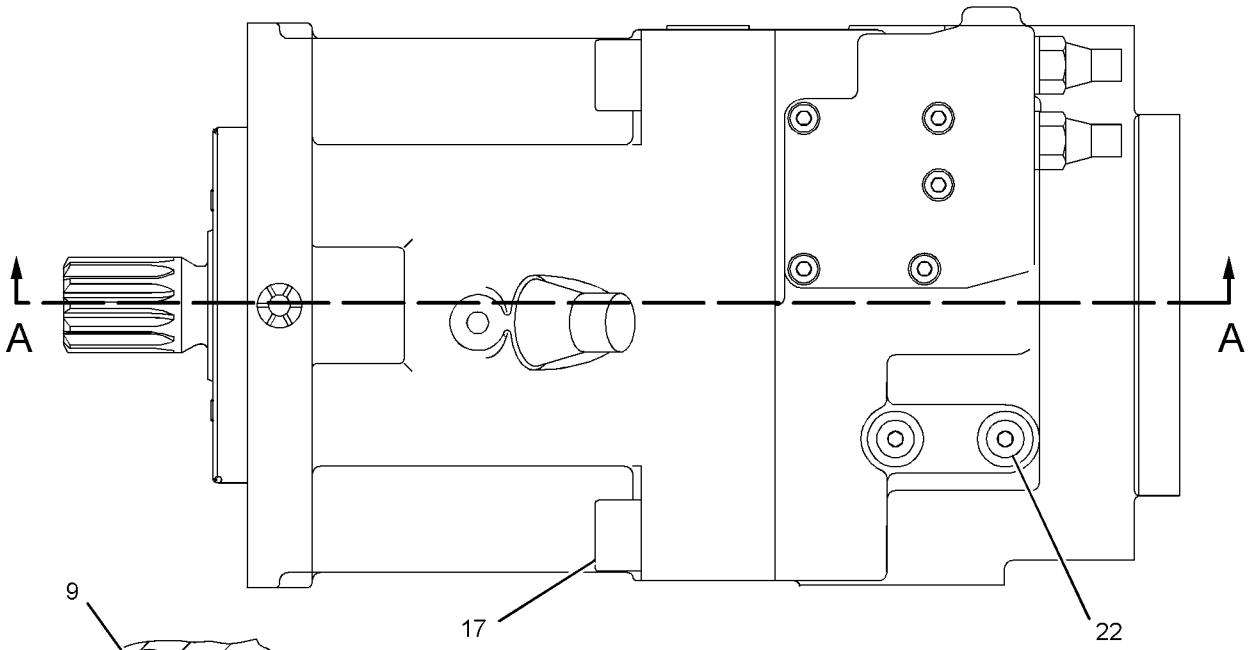

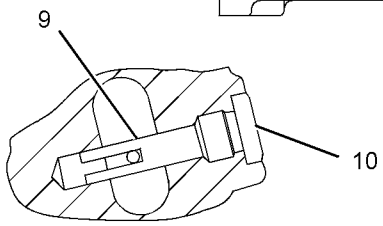

SECTION B-B

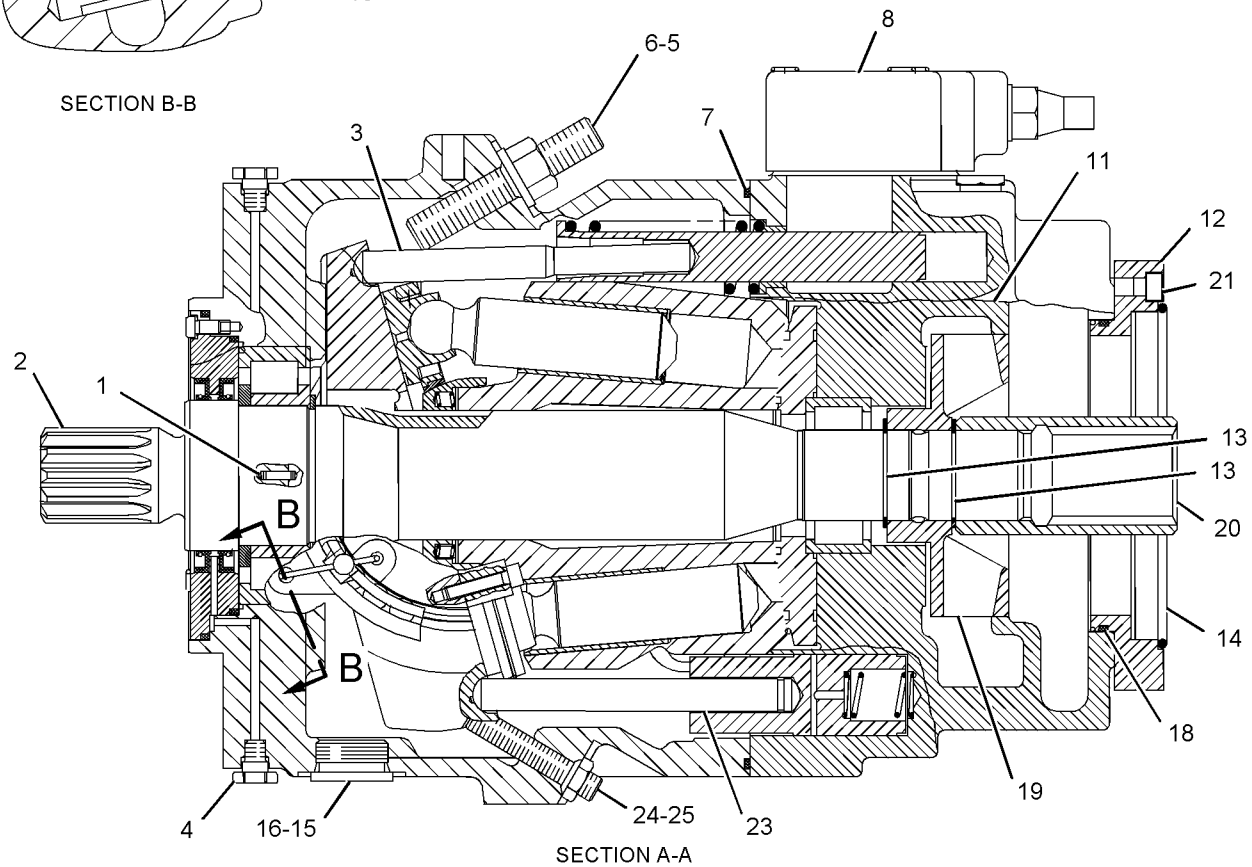

SECTION A-A

GRAPHIC #1 **<END>** g01148775

STEERING SYSTEM

164-6938 ROTATING GP-PUMP—STEERING

S/N: 4421-UP

PART OF 263-5064, 263-5065 PUMP GP-PISTON

SMCS-5070 **i01682070**

NOTE	REF NO	GRAPHIC REF	PART NUMBER	QTY	PART NAME 1 2 3 4 5 6 (PRODUCT LEVEL)	SEE PAGE
	1	1	**164-6983**	1	SHAFT	
M	2	1	**8U-7051**	4	SCREW (M6X1X12-MM)	
	3	1	**4I-5957**	4	RING	
	4	1	**4I-5956**	1	COVER	
	5	1	**6E-3840**	4	ROD	
	6	1	**164-6984**	4	ROLLER	
	7	1	**164-6989**	1	BEARING AS	
	8	1	**164-6982**	1	SWASHPLATE	
	9	1	**164-6985**	1	LINER AS	
	10	1	**164-6986**	2	RETAINER	
M	11	1	**8T-8442**	4	BOLT-SOCKET HEAD (M6X1X30-MM)	
Y	12	1	**164-6987**	1	BARREL GP-PUMP (FAN DRIVE)	661
	13	1	**095-0929**	1	RING-RETAINING	
	14	1	**164-6988**	1	BEARING AS	
	15	1	**5F-3999**	1	SEAL-O-RING	
	16	1	**5H-3252**	1	SEAL-O-RING	
	17	1	**124-9849**	2	SEAL-SHAFT	

M-METRIC PART
Y-SEPARATE ILLUSTRATION

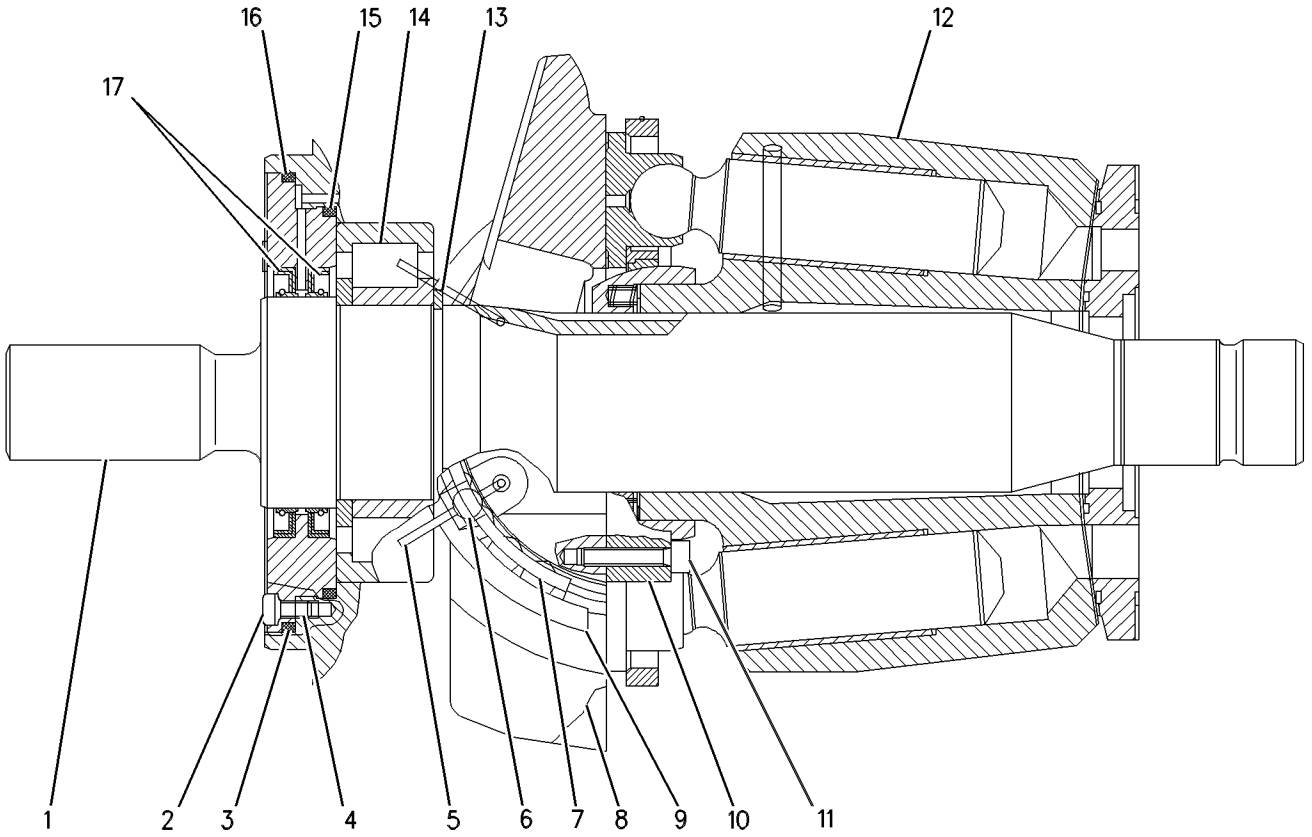

GRAPHIC #1 **<END>** g00553736

251-2451 SCREEN GP-HIGH PRESSURE–HYDRAULIC, STEERING

S/N: 4421-UP

PART OF 245-0719 FILTER & MTG GP-STEERING, 244-7310 LINES GP-HYDRAULIC

SMCS-4295, 431F, 5068 **i02148625**

NOTE	REF NO	GRAPHIC REF	PART NUMBER	QTY	PART NAME 1 2 3 4 5 6 (PRODUCT LEVEL)	SEE PAGE
	1	1	**104-3895**	1	SCREEN AS	
	2	1	**197-0018**	1	RING-BACKUP	
	3	1	**197-0024**	1	HOUSING AS-SCREEN	
	4	1	**197-0027**	1	PLUG	
	5	1	**1H-8128**	1	SEAL-O-RING	
	6	1	**7M-8485**	1	SEAL-O-RING	
	7	1	**9S-4181**	1	PLUG	

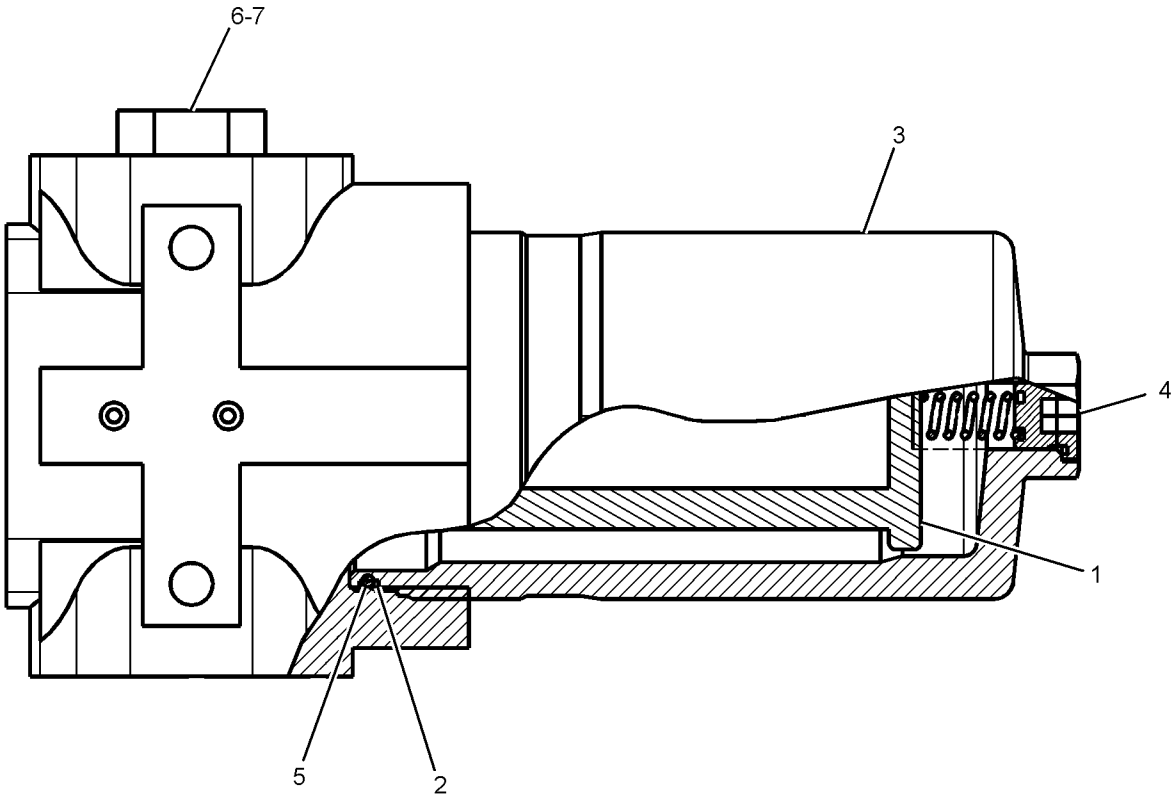

GRAPHIC #1 **<END>** g01096776

STEERING SYSTEM

245-1265 VALVE & LINES GP-STEERING NEUT

S/N: 4421-UP

PART OF 245-0700 HYDRAULIC AR-REAR

SMCS-4330 **i02290257**

NOTE	REF NO	GRAPHIC REF	PART NUMBER	QTY	PART NAME 1 2 3 4 5 6 (PRODUCT LEVEL)	SEE PAGE
Y	1	1	**149-4617**	1	VALVE GP-CHECK (STEERING QUAD)	721
Y	2	1	**154-8015**	1	VALVE & MTG GP-STEERING NEUT	718
	3	1	**154-8137**	1	TUBE AS	
	4	1	**154-8347**	2	TUBE AS	
I	5	1	**245-1282**	1	HOSE AS	
I	6	1	**245-1283**	1	HOSE AS	
I	7	1	**245-1284**	1	HOSE AS	
	8	1	**250-5831**	1	TUBE AS	
	9	1	*148-8332*	1	CONNECTOR AS	
		1	**1J-9671**	1	SEAL-O-RING	
		1	**6V-8397**	1	SEAL-O-RING	
		1	**8T-5043**	1	CONNECTOR	
	10	1	*148-8364*	2	ELBOW AS	
					(EACH INCLUDES)	
		1	**3K-0360**	1	SEAL-O-RING	
		1	**6V-8398**	1	SEAL-O-RING	
		1	**6V-8625**	1	ELBOW	
	11	1	*148-8365*	1	ELBOW AS	
		1	**3J-1907**	1	SEAL-O-RING	
		1	**6V-8398**	1	SEAL-O-RING	
		1	**8T-6876**	1	ELBOW	
	12	1	*148-8444*	1	TEE AS-SWIVEL	
		1	**6V-8398**	2	SEAL-O-RING	
		1	**6V-9837**	1	TEE-SWIVEL	
	13	1	*150-4043*	4	CONNECTOR AS	
					(EACH INCLUDES)	
		1	**3J-1907**	1	SEAL-O-RING	
		1	**6V-8398**	1	SEAL-O-RING	
		1	**6V-9873**	1	CONNECTOR	
	14	1	*164-5544*	1	ELBOW GP	
		1	**3E-2333**	1	ELBOW	
		1	**6V-8398**	1	SEAL-O-RING	
	15	1	**8T-4224**	2	WASHER-HARD (8.8X16X2-MM THK)	
M	16	1	**8T-6870**	2	BOLT (M8X1.25X70-MM)	
	17	1	**6V-8398**	3	SEAL-O-RING	
	18	1	*153-6258*	2	CONNECTOR AS	
					(EACH INCLUDES)	
		1	**3J-1907**	1	SEAL-O-RING	
		1	**6V-8398**	1	SEAL-O-RING	
		1	**8T-5050**	1	CONNECTOR	

I-REFER TO HYDRAULIC INFORMATION SYSTEM
M-METRIC PART
Y-SEPARATE ILLUSTRATION

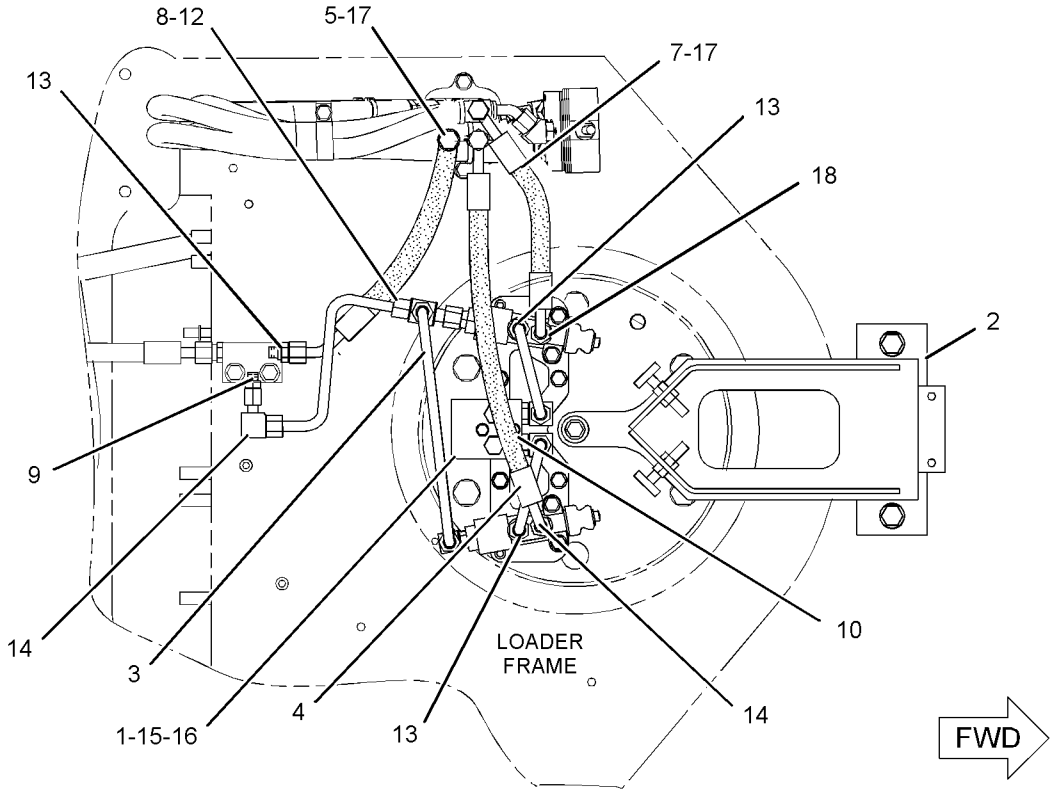

TOP VIEW

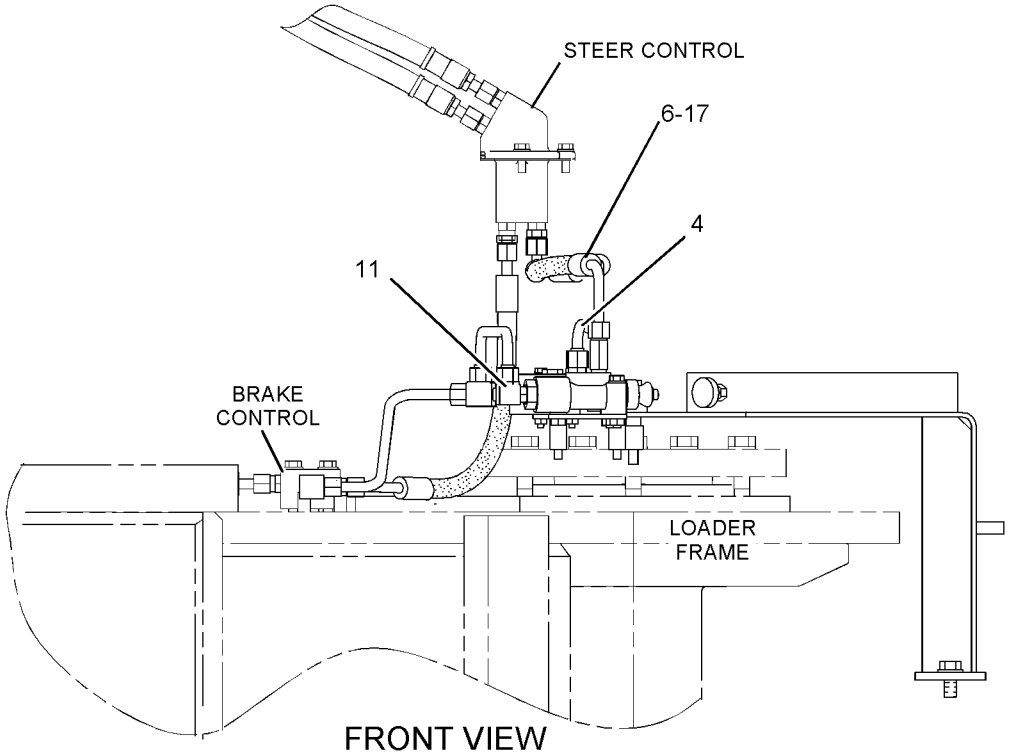

FRONT VIEW

GRAPHIC #1

<END>

g01147184

STEERING SYSTEM

234-2835 VALVE & MTG GP-SECONDARY STEER

S/N: 4421-UP

PART OF 245-0700 HYDRAULIC AR-REAR

SMCS-4339 **i02150885**

NOTE	REF NO	GRAPHIC REF	PART NUMBER	QTY	PART NAME 1 2 3 4 5 6 (PRODUCT LEVEL)	SEE PAGE
Y	1	1	**163-5465**	1	VALVE GP-DIVERTER (SECONDARY STEERING)	724
	2	1	**234-2819**	2	BRACKET AS	
Y	3	1	**235-1260**	1	PUMP & MTG GP-SECONDARY STEER	700
M	4	1	**172-9966**	4	BOLT (M12X1.75X65-MM)	
	5	1	**1P-3708**	2	SEAL-RECTANGULAR	
M	6	1	**8T-4139**	4	BOLT (M12X1.75X30-MM)	
	7	1	**8T-4223**	8	WASHER-HARD (13.5X25.5X3-MM THK)	
M	8	1	**8T-6385**	8	BOLT (M16X2X180-MM)	

M-METRIC PART
Y-SEPARATE ILLUSTRATION

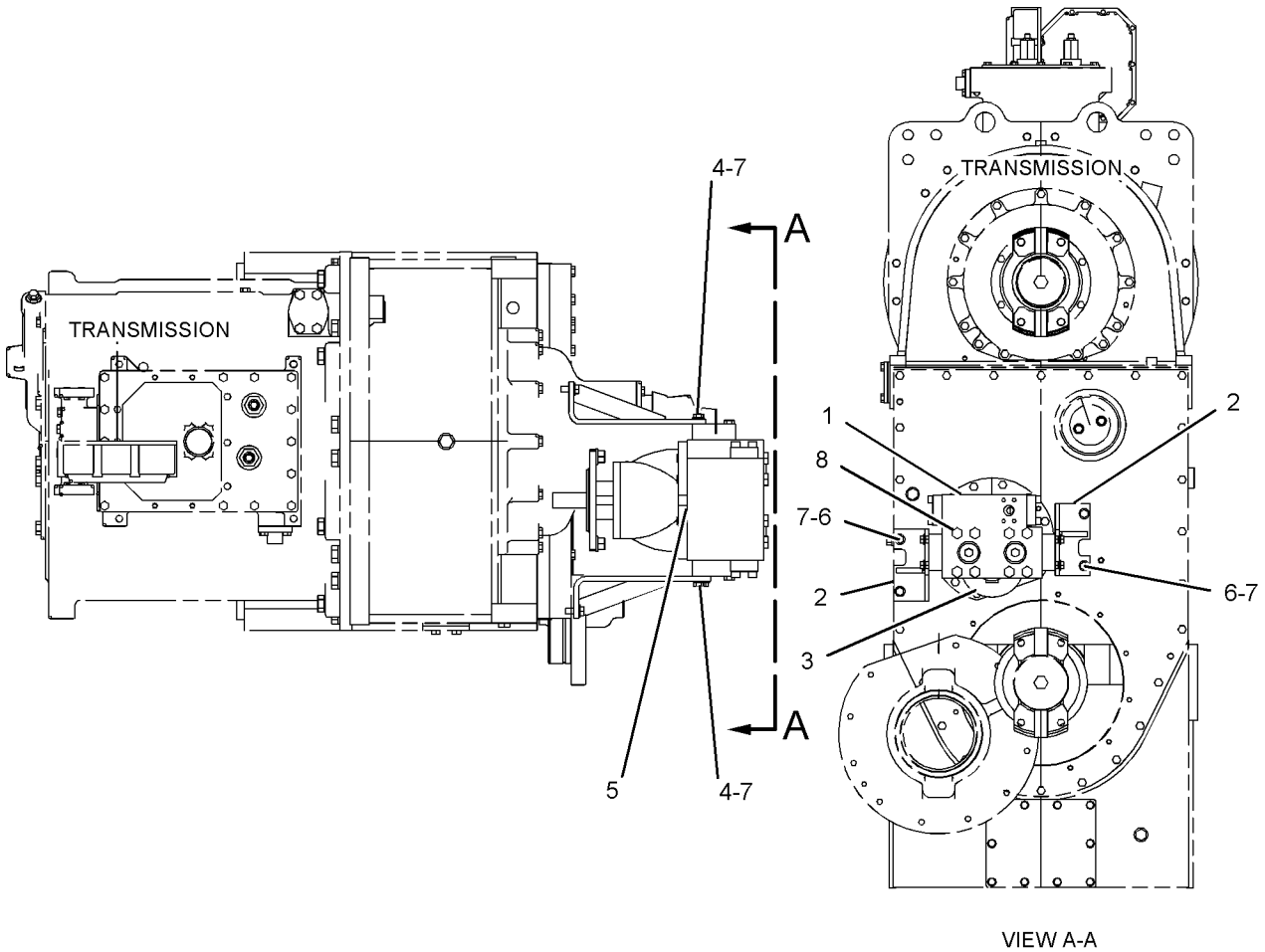

VIEW A-A

GRAPHIC #1 **<END>** g01092601

STEERING SYSTEM

152-8947 VALVE & MTG GP-STEERING

S/N: 4421-171

PART OF 245-0700 HYDRAULIC AR-REAR

SMCS-4307, 4312, 4343 **i00984126**

NOTE	REF NO	GRAPHIC REF	PART NUMBER	QTY	PART NAME 1 2 3 4 5 6 (PRODUCT LEVEL)	SEE PAGE
	1	1	**7T-8331**	3	MOUNTING	
	2	1	**7X-0599**	3	WASHER-HARD (13X20X2-MM THK)	
	3	1	**8X-3028**	1	PLATE	
	4	1	**8X-3034**	1	BRACKET AS	
Y	5	1	**154-5236**	1	VALVE GP-STEERING	739
M	6	1	**095-0673**	3	BOLT-SOCKET HEAD (M12X1.75X60-MM)	
	7	1	**7G-8839**	3	SPACER (13.5X57X6-MM THK)	
M	8	1	**7X-2552**	4	BOLT (M16X2X30-MM)	
M	9	1	**8T-4122**	4	WASHER-HARD (17X32X3.5-MM THK)	
M	10	1	**8T-4244**	3	NUT (M12X1.75-THD)	
M	11	1	**8T-5041**	1	BOLT (M12X1.75X120-MM)	
M	12	1	**8T-5412**	2	BOLT (M12X1.75X140-MM)	

M-METRIC PART
Y-SEPARATE ILLUSTRATION

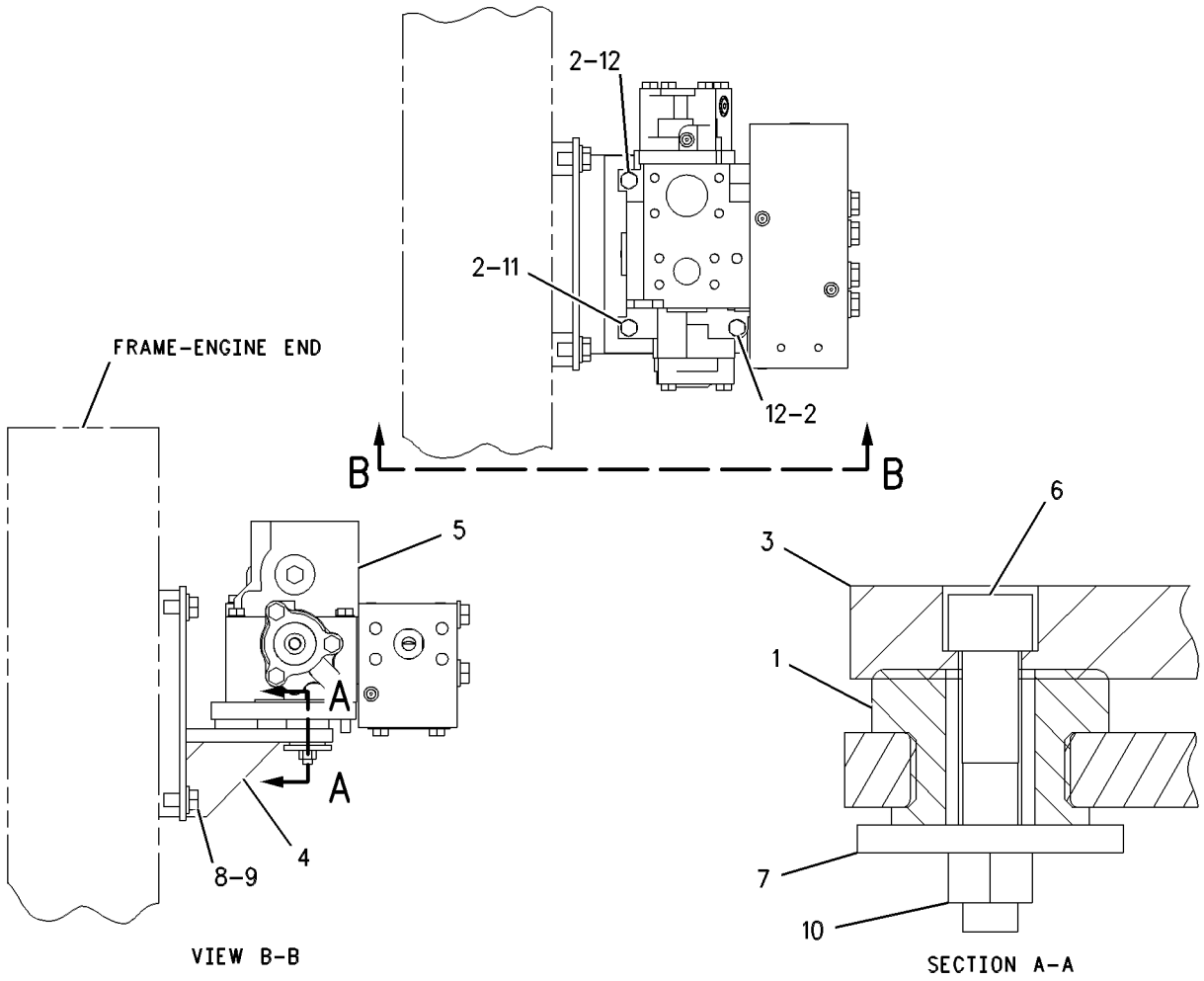

GRAPHIC #1 **<END>** g00504270

STEERING SYSTEM

277-5434 VALVE & MTG GP-STEERING

S/N: 442172-UP

PART OF 245-0700 HYDRAULIC AR-REAR

SMCS-4307, 4312, 4343 **i02412490**

NOTE	REF NO	GRAPHIC REF	PART NUMBER	QTY	PART NAME 1 2 3 4 5 6 (PRODUCT LEVEL)	SEE PAGE
	1	1	**7T-8331**	3	MOUNTING	
	2	1	**7X-0599**	3	WASHER-HARD (13X20X2-MM THK)	
	3	1	**8X-3028**	1	PLATE	
Y	4	1	**154-5236**	1	VALVE GP-STEERING	739
	5	1	**277-4741**	1	BRACKET AS	
M	6	1	**095-0673**	3	BOLT-SOCKET HEAD (M12X1.75X60-MM)	
	7	1	**7G-8839**	3	SPACER (13.5X57X6-MM THK)	
M	8	1	**7X-2552**	4	BOLT (M16X2X30-MM)	
M	9	1	**8T-4122**	4	WASHER-HARD (17X32X3.5-MM THK)	
M	10	1	**8T-4244**	3	NUT (M12X1.75-THD)	
M	11	1	**8T-5041**	1	BOLT (M12X1.75X120-MM)	
M	12	1	**8T-5412**	2	BOLT (M12X1.75X140-MM)	

M-METRIC PART
Y-SEPARATE ILLUSTRATION

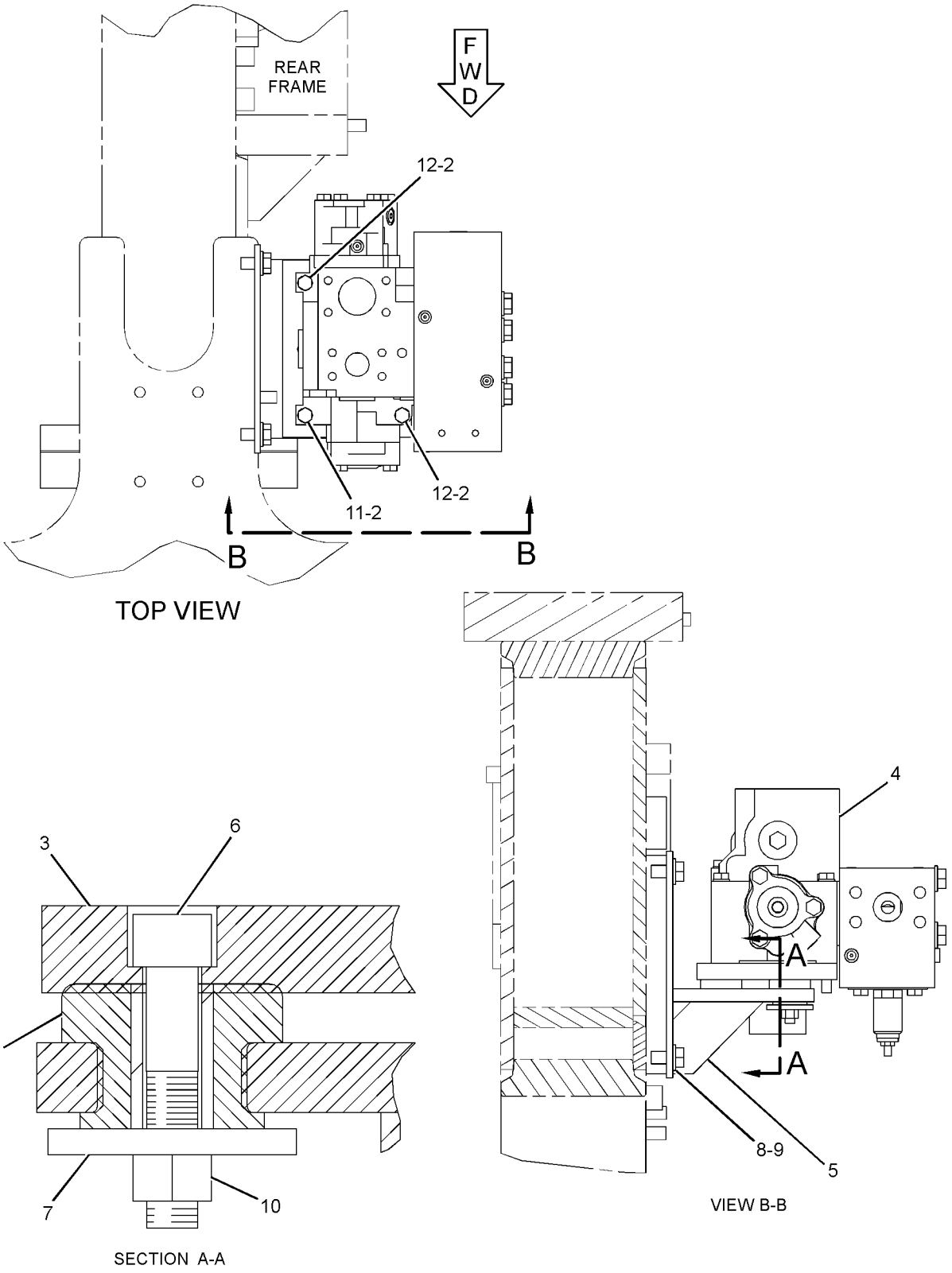

GRAPHIC #1 **<END>** g01213135

STEERING SYSTEM

154-8015 VALVE & MTG GP-STEERING NEUT

S/N: 4421-UP

PART OF 245-1265 VALVE & LINES GP-STEERING NEUT

SMCS-4330 **i01939971**

NOTE	REF NO	GRAPHIC REF	PART NUMBER	QTY	PART NAME 1 2 3 4 5 6 (PRODUCT LEVEL)	SEE PAGE
	1	1	**215-3579**	1	SLEEVE	
	2	1	**8X-3186**	1	BRACKET AS	
M	2A	1	**8T-3597**	2	NUT-WELD (M12X1.75-THD)	
	3	1	**8X-3467**	2	STUD AS	
					(EACH INCLUDES)	
		1	**2H-2722**	1	LUG	
	4	1	**9R-2216**	1	BOSS	
Y	5	1	**9T-7426**	2	VALVE GP-STEERING NEUTRALIZER	742
	6	1	**155-1583**	1	PLATE AS	
M	6A	1	**8T-3490**	6	NUT-WELD (M10X1.5-THD)	
M	6B	1	**8T-3612**	2	NUT-WELD (M8X1.25-THD)	
	7	1	**5H-6822**	1	BEARING	
M	8	1	**7X-2549**	1	BOLT (M12X1.75X100-MM)	
	9	1	**8T-4121**	8	WASHER-HARD (11X21X2.5-MM THK)	
M	10	1	**8T-4122**	2	WASHER-HARD (17X32X3.5-MM THK)	
M	11	1	**8T-4779**	2	BOLT (M16X2X35-MM)	
	12	1	**8T-4223**	1	WASHER-HARD (13.5X25.5X3-MM THK)	
M	13	1	**8T-4244**	2	NUT (M12X1.75-THD)	
M	14	1	**8T-6466**	8	BOLT (M10X1.5X60-MM)	

M-METRIC PART
Y-SEPARATE ILLUSTRATION

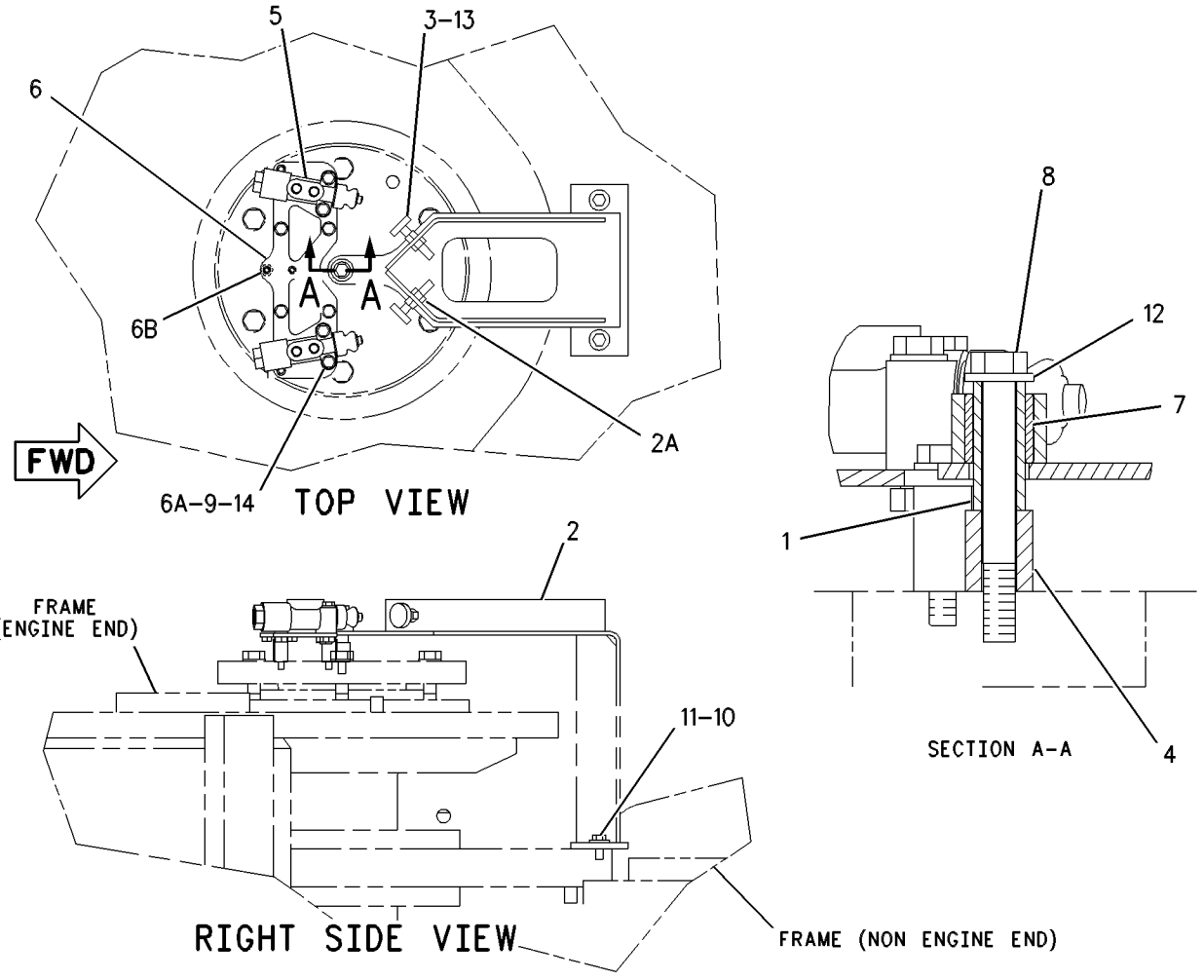

GRAPHIC #1 **<END>** g00410630

6E-1252 VALVE GP-CHECK–STEERING PUMP DISCHARGE

S/N: 4421-UP

PART OF 245-1260 LINES GP-STEERING

SMCS-4275, 5067 **i01269567**

NOTE	REF NO	GRAPHIC REF	PART NUMBER	QTY	PART NAME 1 2 3 4 5 6 (PRODUCT LEVEL)	SEE PAGE
	1	1	**6E-1286**	1	BODY	
	2	1	**1U-0323**	1	PLUG AS	
	3	1	**1U-0322**	1	BEARING-SLEEVE	
	4	1	**3G-2683**	1	PLUG	
	5	1	**9S-6130**	1	PLUG	
	6	1	**2S-4078**	2	SEAL-O-RING	
	7	1	**7S-8491**	1	SPRING	
	8	1	**7J-7423**	1	VALVE	
M	9	1	**8T-4173**	4	BOLT (M16X2X110-MM)	

M-METRIC PART

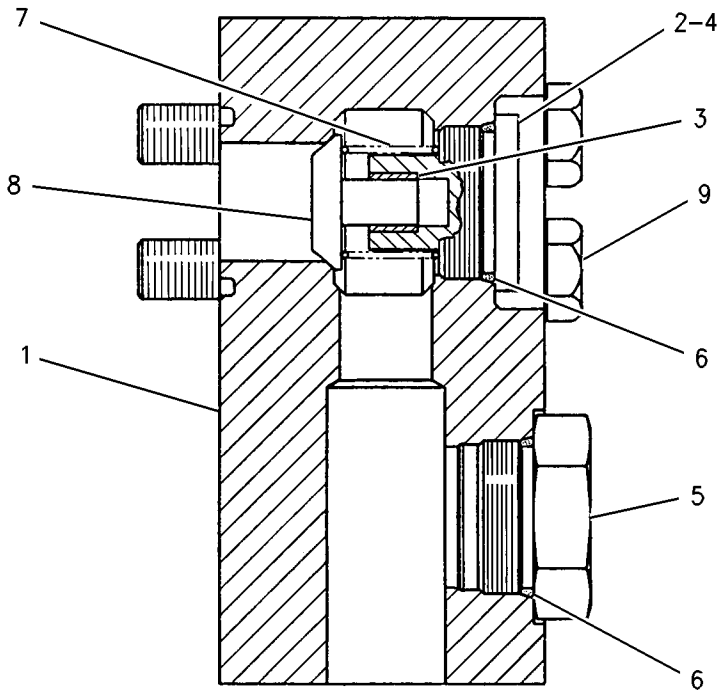

GRAPHIC #1 **<END>** g00674880

149-4617 VALVE GP-CHECK–STEERING QUAD

S/N: 4421-UP

PART OF 245-1265 VALVE & LINES GP-STEERING NEUT

SMCS-4275, 5067 **i02387055**

NOTE	REF NO	GRAPHIC REF	PART NUMBER	QTY	PART NAME 1 2 3 4 5 6 (PRODUCT LEVEL)	SEE PAGE
Y	1	1	**176-9369**	2	VALVE GP-CHECK (STEERING)	722
Y	2	1	**176-9370**	2	VALVE GP-CHECK (STEERING)	723

Y-SEPARATE ILLUSTRATION

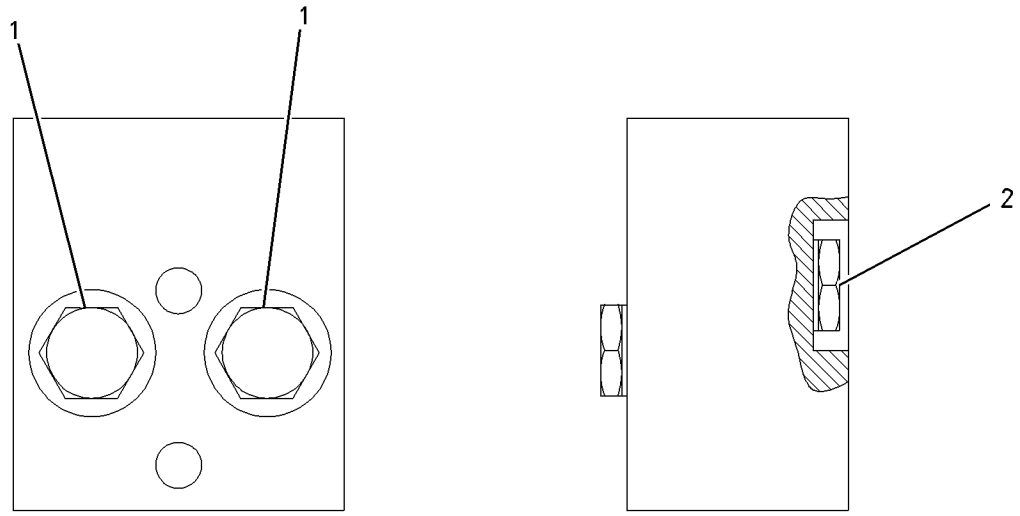

GRAPHIC #1 **<END>** g00696391

STEERING SYSTEM

176-9369 VALVE GP-CHECK–STEERING

S/N: 4421-UP

PART OF 149-4617 VALVE GP-CHECK

SMCS-4275, 5067 **i01432567**

NOTE	REF NO	GRAPHIC REF	PART NUMBER	QTY	PART NAME 1 2 3 4 5 6 (PRODUCT LEVEL)	SEE PAGE
	1	1	**3K-0360**	1	SEAL-O-RING	
	2	1	**161-6154**	1	SEAL-O-RING	
	3	1	**6E-0381**	1	RING-BACKUP	

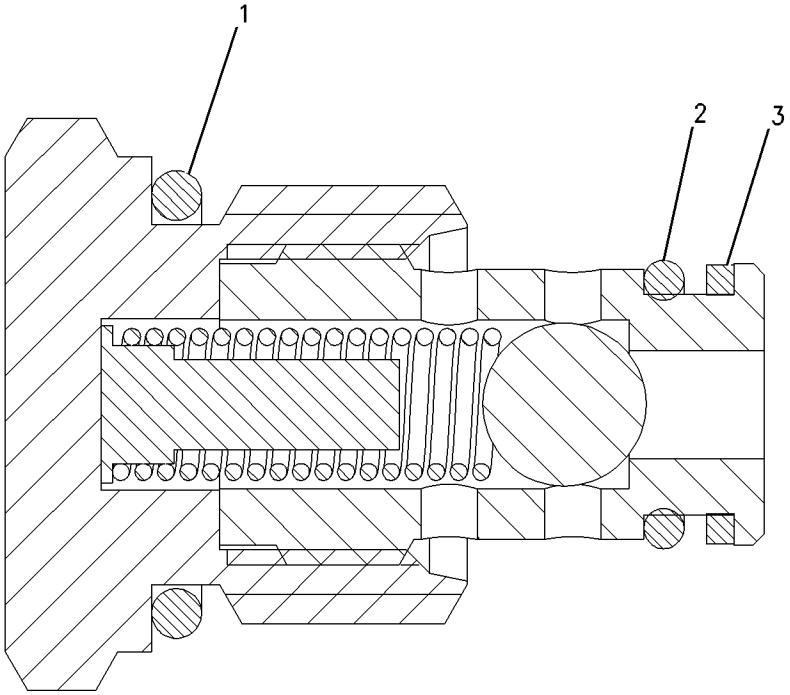

GRAPHIC #1 **<END>** g00707403

176-9370 VALVE GP-CHECK–STEERING

S/N: 4421-UP

PART OF 149-4617 VALVE GP-CHECK

SMCS-4275, 5067 **i01426282**

NOTE	REF NO	GRAPHIC REF	PART NUMBER	QTY	PART NAME 1 2 3 4 5 6 (PRODUCT LEVEL)	SEE PAGE
	1	1	**3K-0360**	1	SEAL-O-RING	
	2	1	**161-6154**	1	SEAL-O-RING	
	3	1	**6E-0381**	1	RING-BACKUP	

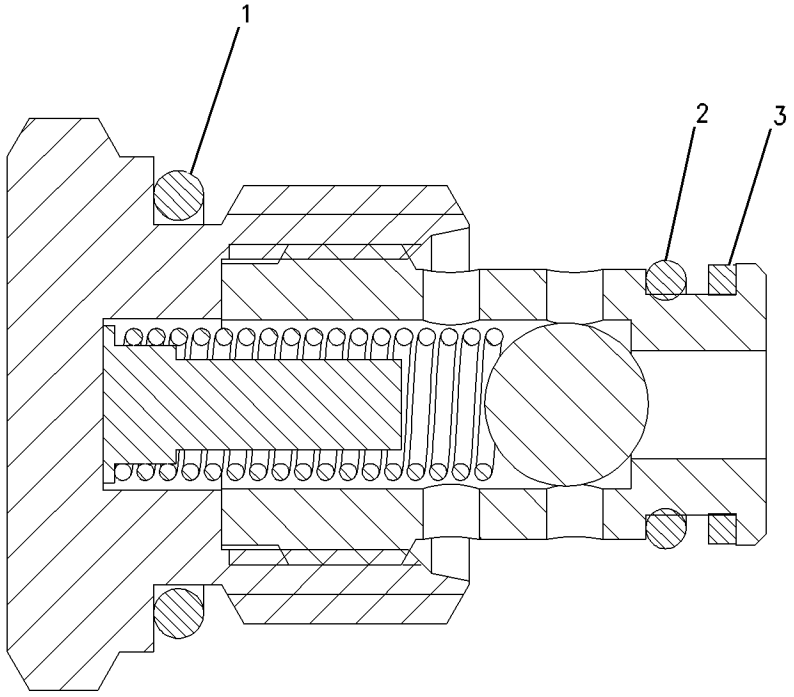

GRAPHIC #1 **<END>** g00707403

STEERING SYSTEM

163-5465 VALVE GP-DIVERTER—SECONDARY STEERING

S/N: 4421-UP

PART OF 234-2835 VALVE & MTG GP-SECONDARY STEER

SMCS-4339 **i01885567**

NOTE	REF NO	GRAPHIC REF	PART NUMBER	QTY	PART NAME 1 2 3 4 5 6 (PRODUCT LEVEL)	SEE PAGE
M	1	1	**8T-1159**	2	BOLT-SOCKET HEAD (M10X1.5X25-MM)	
	2	1	**5G-4313**	2	SPACER (10.34X15.88X12-MM THK)	
	3	1	**1P-3705**	2	SEAL-RECTANGULAR	
	4	1	**6E-1274**	2	COVER	
M	5	1	**8T-4194**	8	BOLT (M12X1.75X50-MM)	
	6	1,2	**1U-0323**	3	PLUG AS	
					(EACH INCLUDES)	
	6A	1,2	**1U-0322**	1	BEARING-SLEEVE	
	6B	1,2	**3G-2683**	1	PLUG	
	7	1,2	**2S-4078**	3	SEAL-O-RING	
	8	1,2	**9T-1614**	3	VALVE	
	9	1,2	**3N-1315**	3	SPRING	
	10	2	**163-4826**	1	COVER	
M	12	2	**8T-0273**	8	BOLT-SOCKET HEAD (M12X1.75X40-MM)	
	13	2	**1P-3704**	2	SEAL-RECTANGULAR	
	14	2	**6E-1275**	1	COVER	
	15	2	**7N-2044**	1	DOWEL	
Y	16	2	**9J-0460**	1	VALVE GP-RELIEF (SECONDARY STEERING)	735
	17	1,2	**9S-8008**	2	PLUG	
	18	1,2	**3D-2824**	2	SEAL-O-RING	
	19	1	**3G-1700**	2	SPRING	
	20	1	**8J-6273**	2	RING-RETAINING	
	21	1	**6E-1273**	4	RETAINER	
	22	1	**4B-9783**	2	BALL	
	23	2	**6E-1299**	1	SPRING	
	26	2	**4D-2886**	1	CLIP	
M	27	1	**8T-6385**	8	BOLT (M16X2X180-MM)	
	28	1	**6E-3511**	1	GASKET	
	29	1	**6E-3512**	1	COVER	
M	30	1	**8T-4132**	8	NUT (M16X2-THD)	
	31	2	*7J-3555*	1	COVER	
	32	2	**3J-6933**	1	GASKET	
M	33	2	**8T-4179**	4	BOLT (M12X1.75X20-MM)	
	34	2	**7J-7666**	1	COVER	
	35	2	**7J-7667**	1	GASKET	
	36	2	**7J-3554**	1	COVER	
	37	2	**2D-0094**	1	GASKET	
M	38	2	**8T-4137**	2	BOLT (M10X1.5X20-MM)	
	39	1,2	**9S-4191**	2	PLUG-O RING	
	40	1,2	**3J-1907**	2	SEAL-O-RING	

M-METRIC PART
Y-SEPARATE ILLUSTRATION

REFER TO ALL ILLUSTRATIONS OF
THIS GROUP FOR AUXILIARY VIEWS

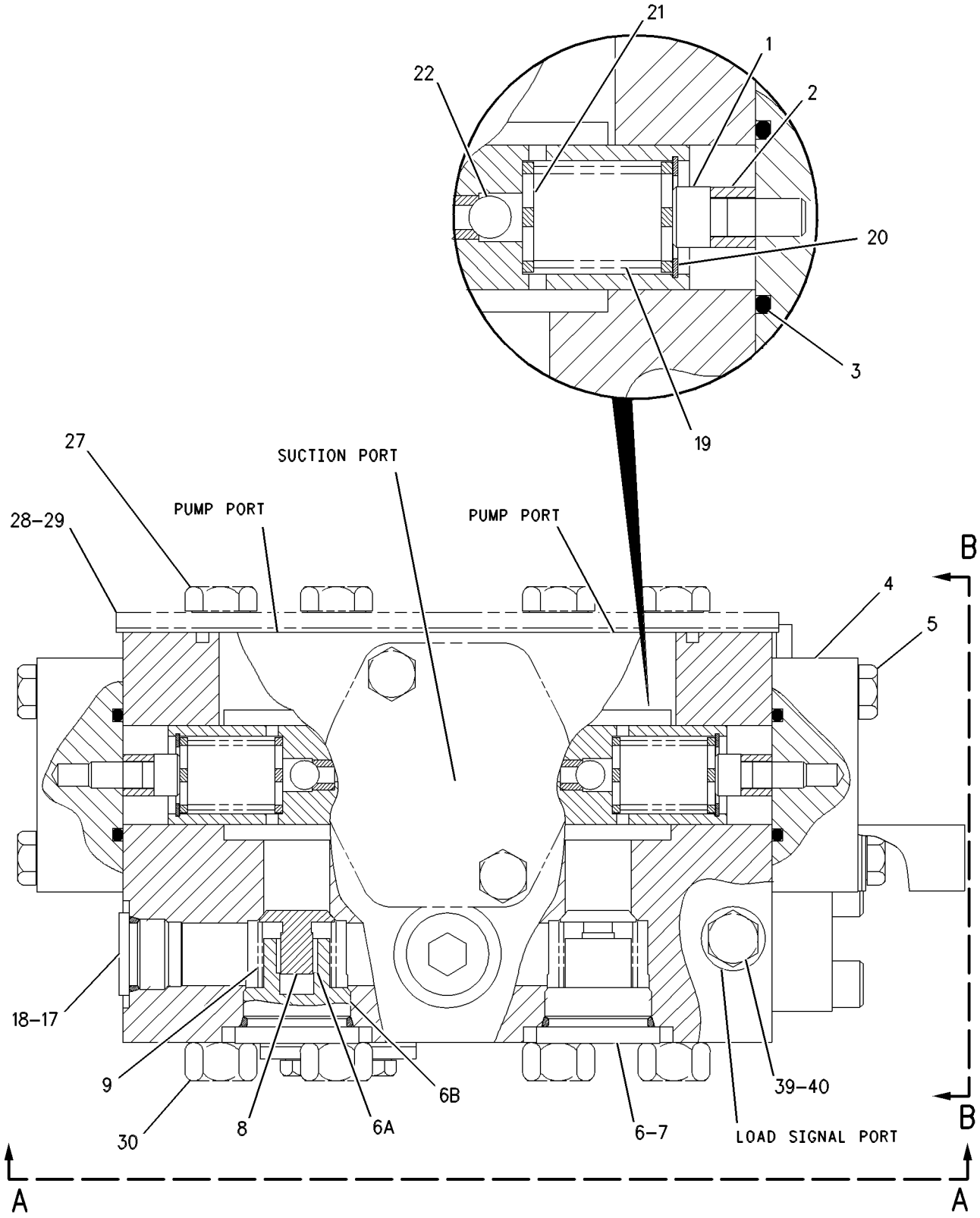

GRAPHIC #1 g00506004

163-5465 VALVE GP-DIVERTER *(contd.)* i01885567

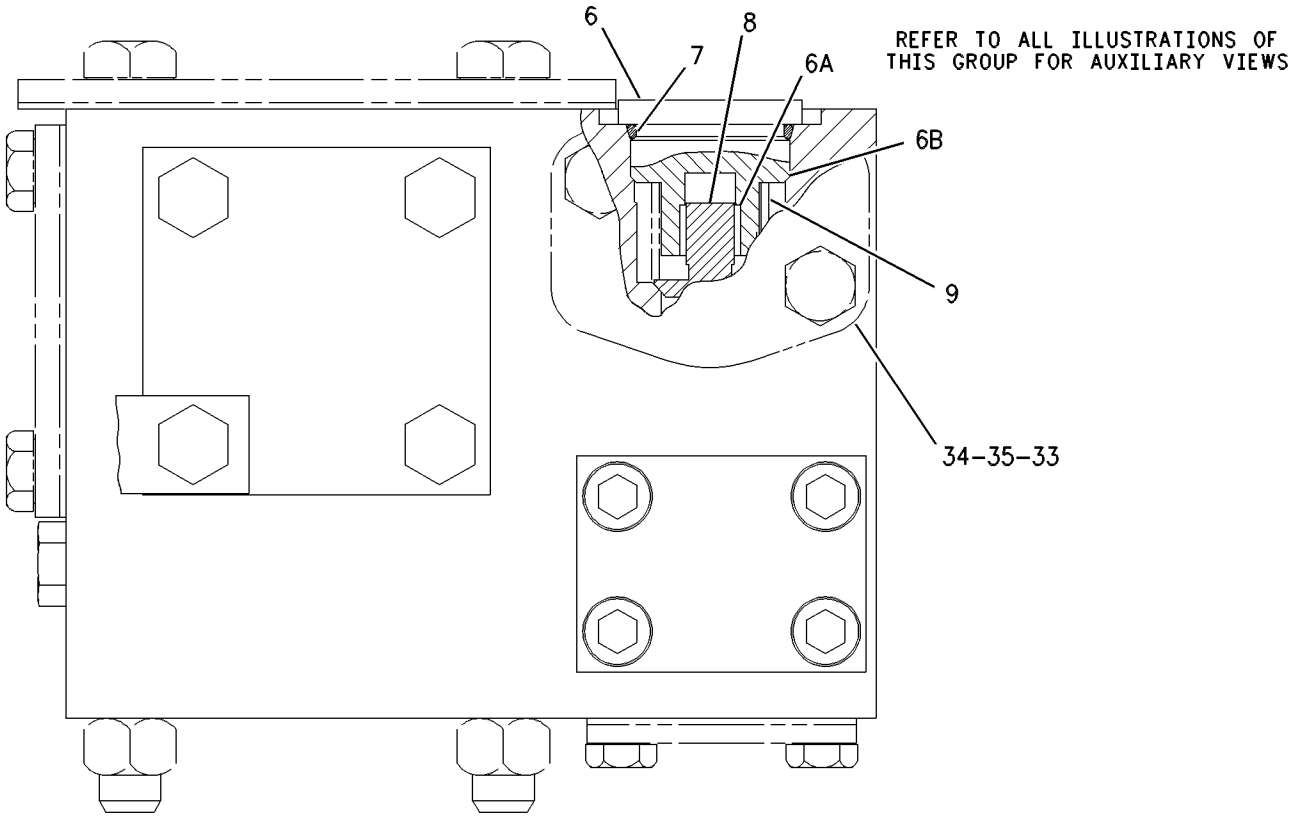

VIEW B-B

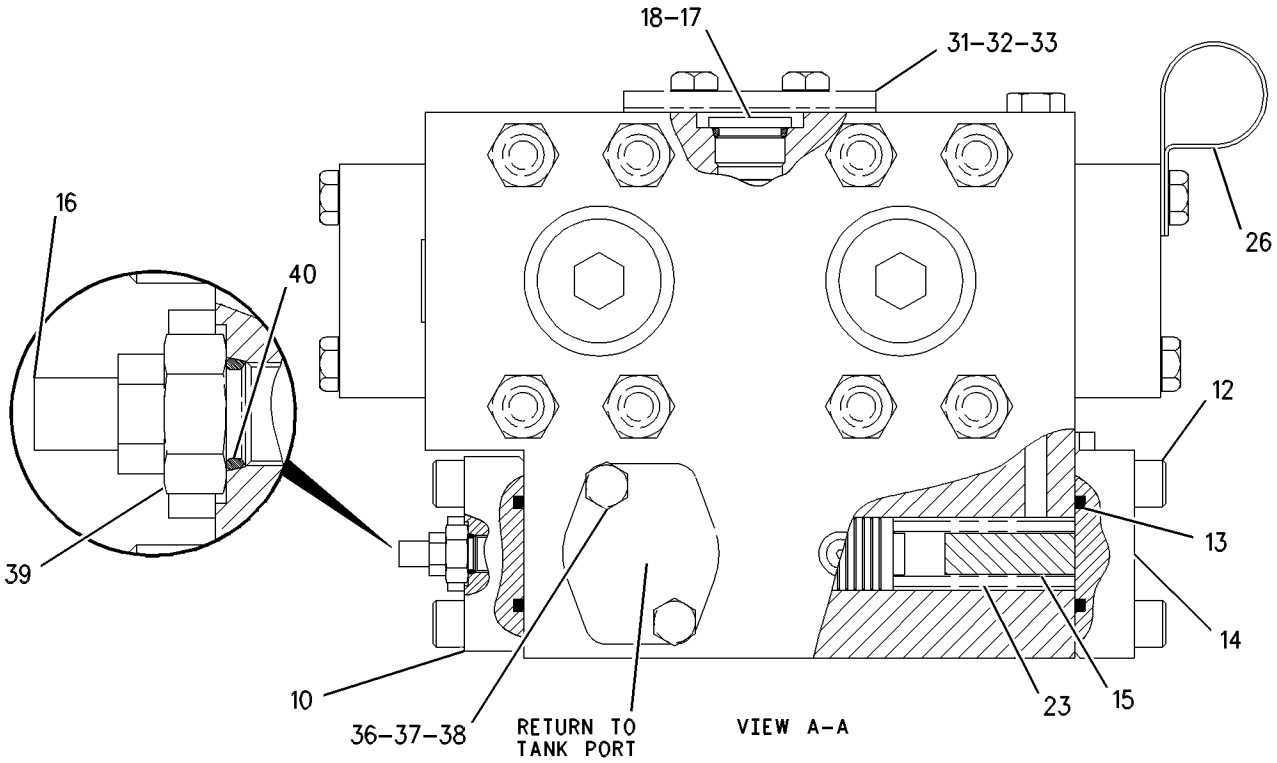

VIEW A-A

GRAPHIC #2 **<END>** g00506005

249-5615 VALVE GP-PILOT–STIC STEERING

S/N: 4421-UP

PART OF 236-5240 CONTROL GP-STEERING

SMCS-4342 **i02155003**

NOTE	REF NO	GRAPHIC REF	PART NUMBER	QTY	PART NAME 1 2 3 4 5 6 (PRODUCT LEVEL)	SEE PAGE
	1	1	**104-4272**	1	BOOT	
	2	1	**104-4273**	1	CLAMP	
	3	1	**104-4256**	1	BRACKET	
	4	1	**104-4255**	1	HANDLE	
	5	1	**104-4270**	2	LINK-CONNECTING	
	6	1	**9F-6641**	1	BOLT (5/16-18X1.25-IN)	
	7	1	**104-4274**	1	SPACER	
	8	1	**104-4271**	1	DOWEL	
	9	1	**8M-6802**	2	SCREW-HEX SOCKET (1/4-20X1-IN)	
Y	10	1	**147-1238**	2	VALVE GP-PILOT CARTRIDGE	729
Y	11	1	**147-1237**	2	VALVE GP-PILOT CARTRIDGE	728
	12	1	**249-5616**	1	BRACKET	
B	13	1	**103-6319**	2	SHIM (20.32-MM)	

B-USE AS REQUIRED
Y-SEPARATE ILLUSTRATION

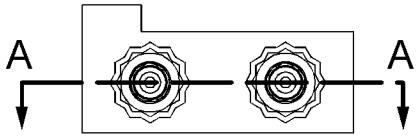

BOTTOM VIEW

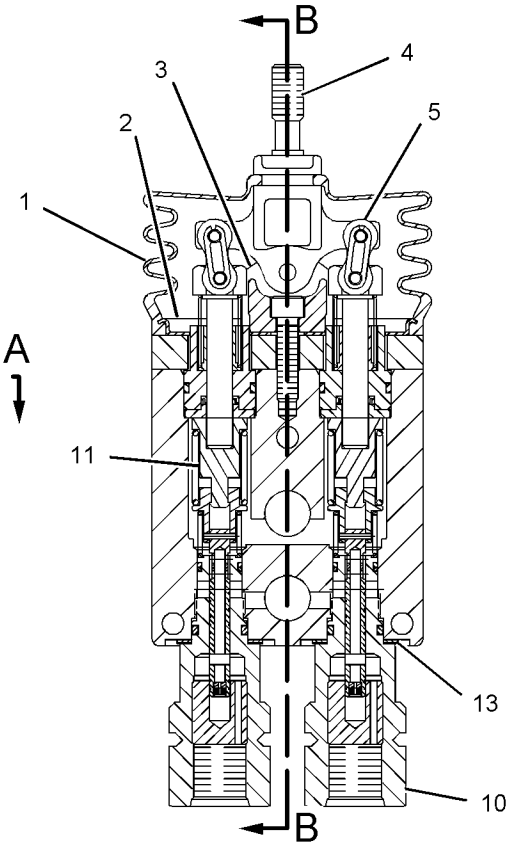

SECTION A-A

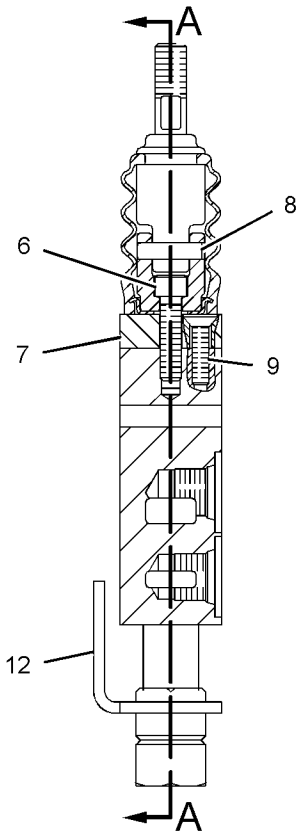

SECTION B-B

GRAPHIC #1

<END>

g01093767

STEERING SYSTEM

147-1237 VALVE GP-PILOT CARTRIDGE

S/N: 4421-UP

PART OF 249-5615 VALVE GP-PILOT

SMCS-4342 **i01563164**

NOTE	REF NO	GRAPHIC REF	PART NUMBER	QTY	PART NAME 1 2 3 4 5 6 (PRODUCT LEVEL)	SEE PAGE
	1	1	**103-7410**	1	PLUNGER	
	2	1	**5P-8356**	1	SEAL-O-RING	
J	3	1	**147-3061**	1	SEAL-SPOOL	
	4	1	**6E-0763**	1	RETAINER	
	5	1	**103-7407**	1	SPRING	
	6	1	**6E-3769**	1	PIN	
	7	1	**6E-3767**	1	SPRING	
					AVAILABLE REPAIR KIT(S):	
J			**1G-5928**	1	KIT-PLUNGER SEAL	
					(INCLUDES SEAL-O-RING)	

J-REPAIR KIT(S) MARKED J SERVICES PART(S) MARKED J

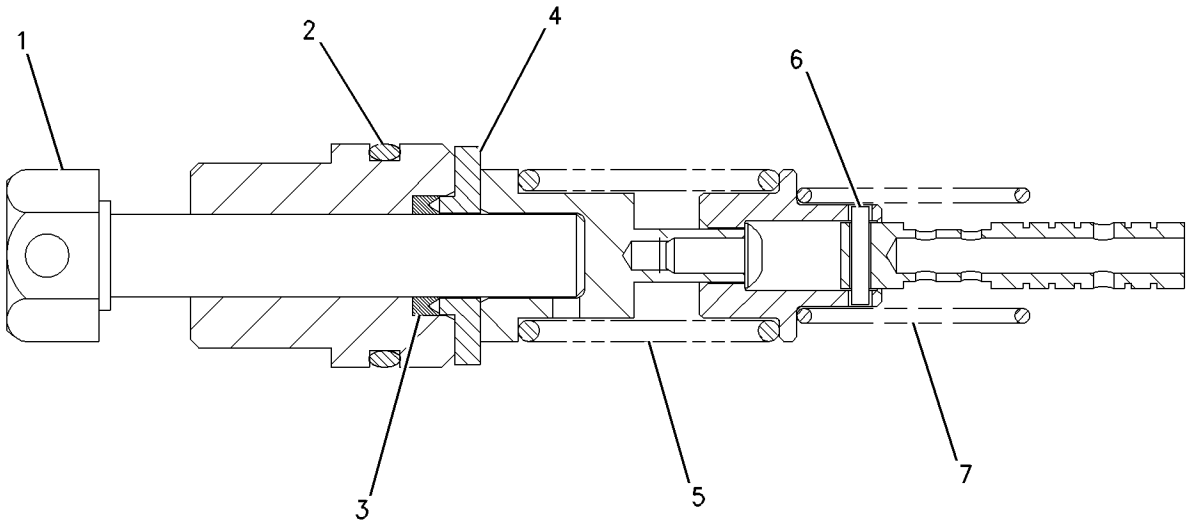

GRAPHIC #1 **<END>** g00751333

147-1238 VALVE GP-PILOT CARTRIDGE

S/N: 4421-UP

PART OF 249-5615 VALVE GP-PILOT

SMCS-4342 **i02187502**

NOTE	REF NO	GRAPHIC REF	PART NUMBER	QTY	PART NAME 1 2 3 4 5 6 (PRODUCT LEVEL)	SEE PAGE
B	1	1	**103-6318**	1	SHIM	
	2	1	**095-1519**	1	SEAL-O-RING	
	3	1	**6V-5758**	1	SEAL-O-RING	
	4	1	**6E-0770**	1	RING-BACKUP	
B	5	1	**103-6319**	1	SHIM	

B-USE AS REQUIRED

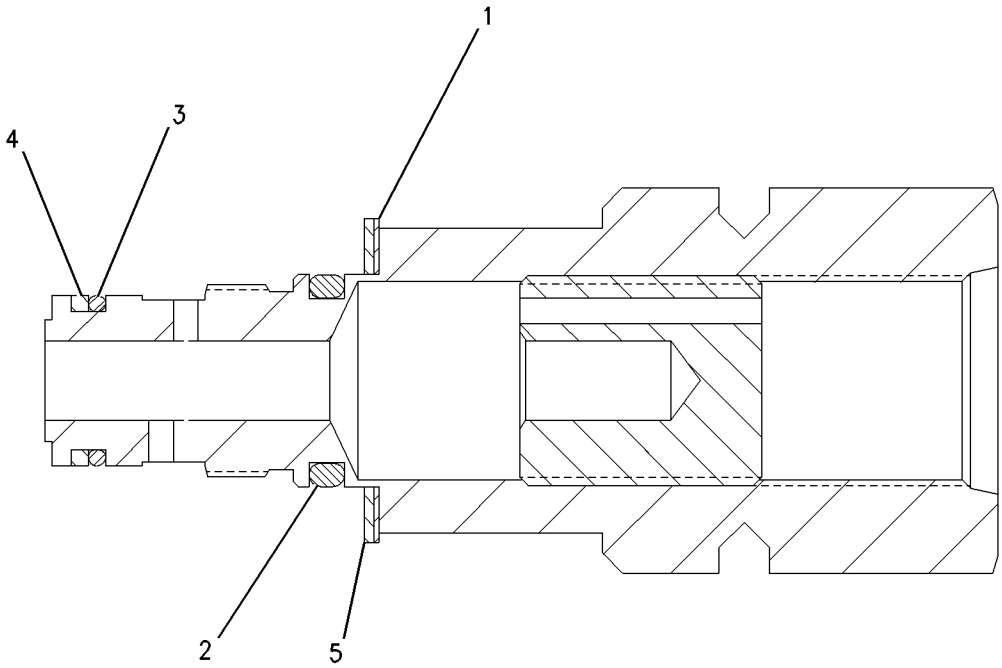

GRAPHIC #1 **<END>** g00751167

6E-1024 VALVE GP-PUMP CONTROL–
PRESSURE, FLOW COMPENSATOR–STEERING
S/N: 4421-UP
PART OF 263-5064, 263-5065 PUMP GP-PISTON

SMCS-5455 **i02100218**

NOTE	REF NO	GRAPHIC REF	PART NUMBER	QTY	PART NAME 1 2 3 4 5 6 (PRODUCT LEVEL)	SEE PAGE
M	1	1	**3E-8025**	5	BOLT-HEX SOCKET (M8X1.25X50-MM)	
	2	1	**5P-5874**	3	SEAL-O-RING	
	3	1	**6E-5412**	1	SEAL-O-RING	
	4	1	**236-4704**	1	HOUSING	
	5	1	**120-4394**	5	PLUG-BREAK OFF	
Y	6	1	**6E-3850**	1	VALVE GP-PUMP CONTROL (FLOW COMPENSATOR) (STEERING)	731
Y	7	1	**6E-3857**	1	VALVE GP-PUMP CONTROL (PRESSURE COMPENSATOR) (STEERING)	732

M-METRIC PART
Y-SEPARATE ILLUSTRATION

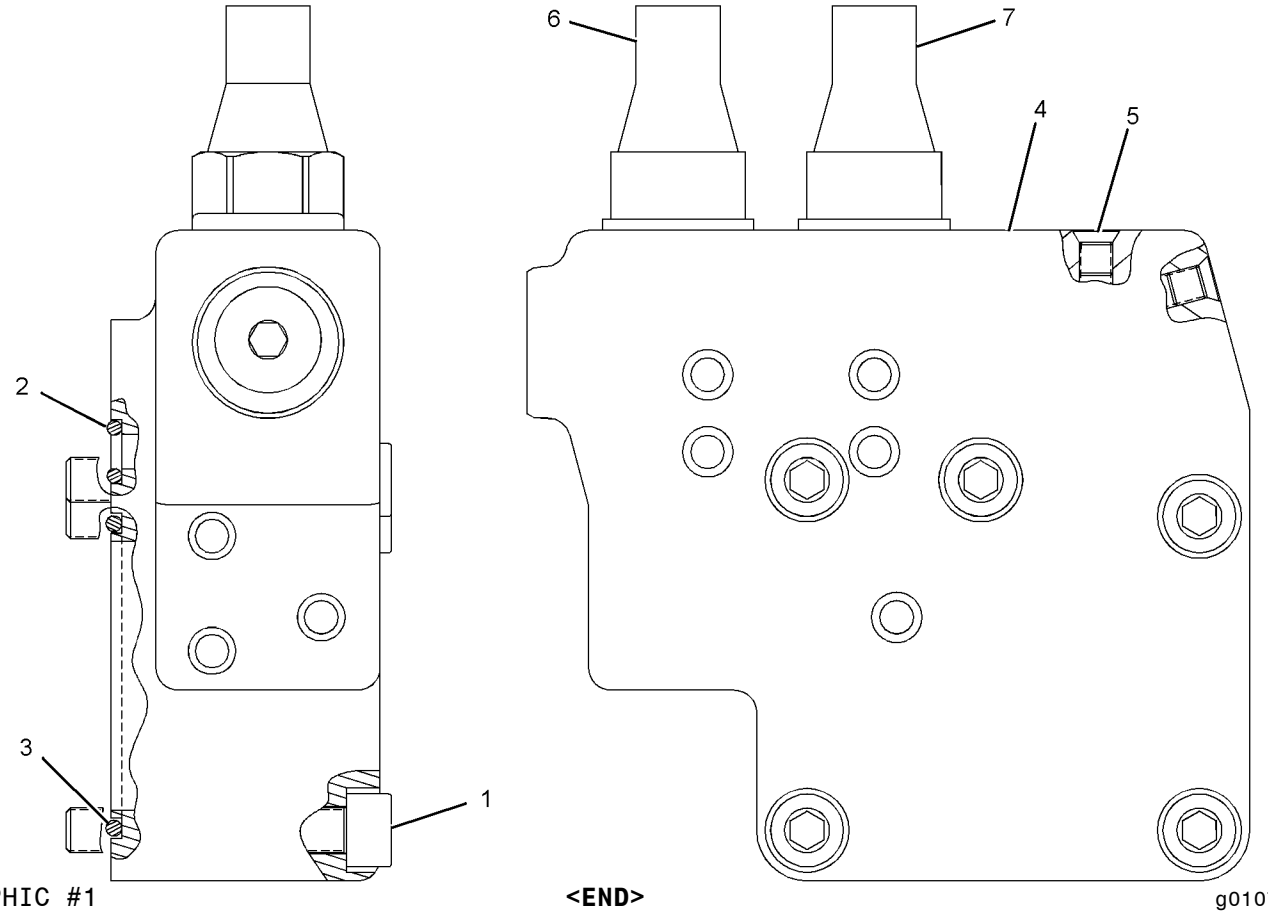

GRAPHIC #1 **<END>** g01071007

6E-3850 VALVE GP-PUMP CONTROL–FLOW COMPENSATOR–STEERING

S/N: 4421-UP

PART OF 6E-1024 VALVE GP-PUMP CONTROL

SMCS-5455 **i01830274**

NOTE	REF NO	GRAPHIC REF	PART NUMBER	QTY	PART NAME 1 2 3 4 5 6 (PRODUCT LEVEL)	SEE PAGE
	1	1	**6E-5582**	1	PLUG	
	2	1	**6E-5583**	1	SETSCREW	
M	3	1	**6E-1607**	1	LOCKNUT-SEALING	
	4	1	**6E-3855**	1	SPRING (INNER)	
	5	1	**6E-3852**	2	RETAINER-SPRING	
	6	1	**6E-3851**	1	PISTON	
	7	1	**165-9383**	1	SPRING (OUTER)	
	8	1	**6V-3922**	1	SEAL-O-RING	

M-METRIC PART

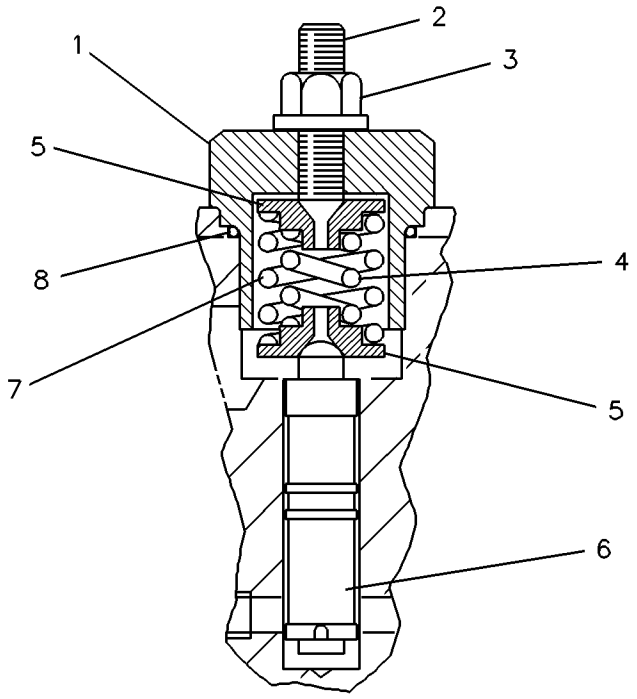

GRAPHIC #1 **<END>** g00082862

6E-3857 VALVE GP-PUMP CONTROL–PRESSURE COMPENSATOR–STEERING

S/N: 4421-UP

PART OF 6E-1024 VALVE GP-PUMP CONTROL

SMCS-5455 **i01830281**

NOTE	REF NO	GRAPHIC REF	PART NUMBER	QTY	PART NAME 1 2 3 4 5 6 (PRODUCT LEVEL)	SEE PAGE
	1	1	**6V-3922**	1	SEAL-O-RING	
	2	1	**6E-5582**	1	PLUG	
M	3	1	**6E-1607**	1	LOCKNUT-SEALING	
	4	1	**117-7524**	1	SETSCREW	
	5	1	**6E-3861**	2	RETAINER-SPRING	
	6	1	**200-6867**	1	PISTON	
	7	1	**179-6922**	1	SPRING	

M-METRIC PART

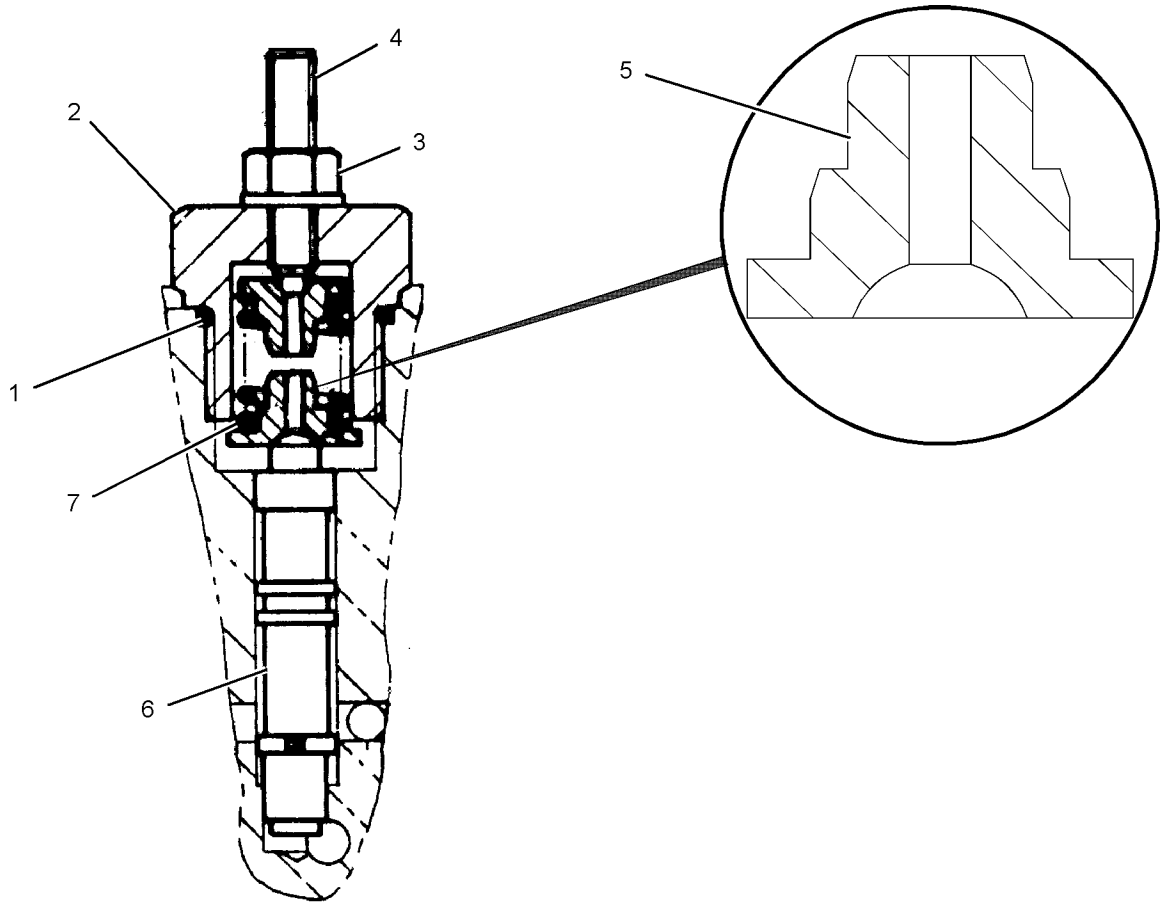

GRAPHIC #1 **<END>** g01008466

4T-1573 VALVE GP-RELIEF–SECONDARY STEERING

S/N: 4421-UP
PILOT OPERATED
PART OF 9J-0460 VALVE GP-RELIEF

SMCS-4322, 5069, 7428 **i01269472**

NOTE	REF NO	GRAPHIC REF	PART NUMBER	QTY	PART NAME 1 2 3 4 5 6 (PRODUCT LEVEL)	SEE PAGE
	1	1	**6V-5142**	1	SEAL-O-RING (15.6MM ID)	
	2	1	**061-7539**	1	SEAL-O-RING	
	3	1	**1B-4430**	1	NUT-JAM (1/2-20 THD)	
	4	1	**9J-6367**	1	RING-BACKUP	

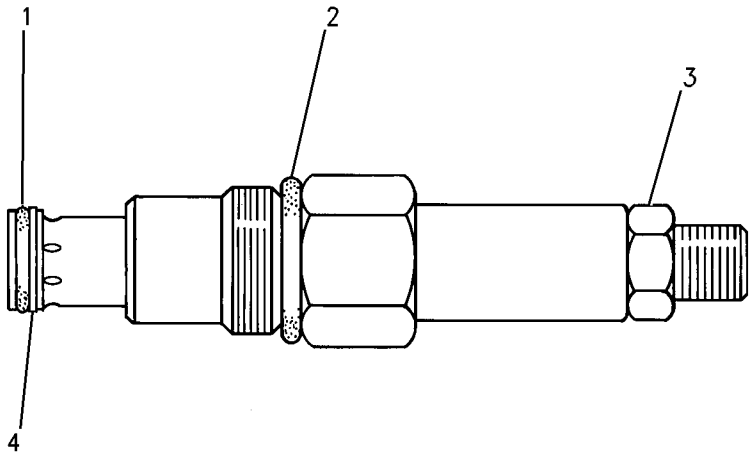

GRAPHIC #1 **<END>** g00674911

4T-9948 VALVE GP-RELIEF—SECONDARY STEERING

S/N: 4421-UP
PILOT OPERATED
PART OF 9J-0460 VALVE GP-RELIEF

SMCS-4322, 5069, 7428 **i00103501**

NOTE	REF NO	GRAPHIC REF	PART NUMBER	QTY	PART NAME 1 2 3 4 5 6 (PRODUCT LEVEL)	SEE PAGE
	1	1	**6V-5142**	1	SEAL-O-RING (15.6MM ID)	
	2	1	**9J-6367**	1	RING-BACKUP	
	3	1	**061-7539**	1	SEAL-O-RING	
M	4	1	**4T-8691**	1	NUT	
M	5	1	**4T-8690**	1	SCREW	

M-METRIC PART

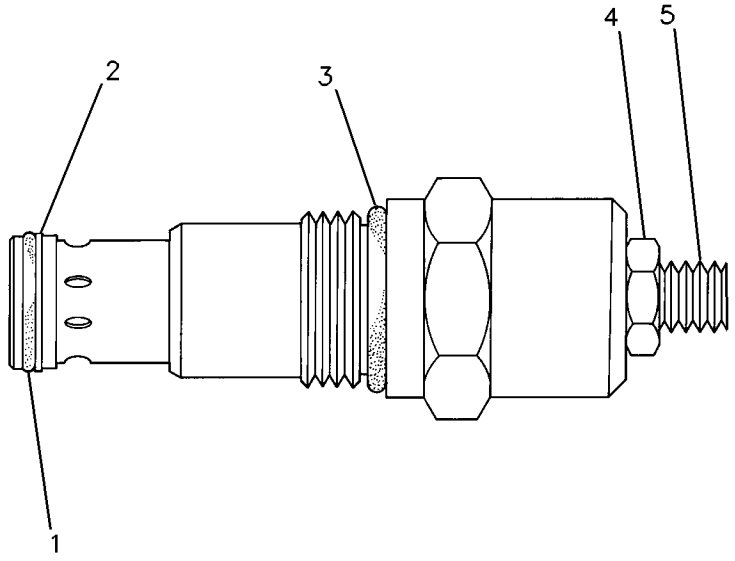

GRAPHIC #1 **<END>** g00081748

9J-0460 VALVE GP-RELIEF—SECONDARY STEERING

S/N: 4421-UP
PILOT OPERATED
PART OF 163-5465 VALVE GP-DIVERTER

SMCS-4322, 5069, 7428 **i01020485**

NOTE	PART NUMBER	QTY	PART NAME 1 2 3 4 5 6 (PRODUCT LEVEL)	SEE PAGE
Y	*4T-1573*	1	VALVE GP-RELIEF	733
			—OR—	
Y	*4T-9948*	1	VALVE GP-RELIEF	734
			AVAILABLE REPAIR KIT(S):	
	4T-2496	1	KIT-SEAL	
			(INCLUDES NUTS, RINGS, BOLTS, SCREW & SEALS)	

Y-SEPARATE ILLUSTRATION

<END>

9J-8225 VALVE GP-RELIEF–PUMP BACKUP

S/N: 4421-UP

PART OF 154-5236 VALVE GP-STEERING

SMCS-4322, 5069, 7428 **i01077915**

NOTE	REF NO	GRAPHIC REF	PART NUMBER	QTY	PART NAME 1 2 3 4 5 6 (PRODUCT LEVEL)	SEE PAGE
	1	1	**1J-8497**	1	VALVE	
	2	1	**6J-0428**	1	SEAT-PILOT	

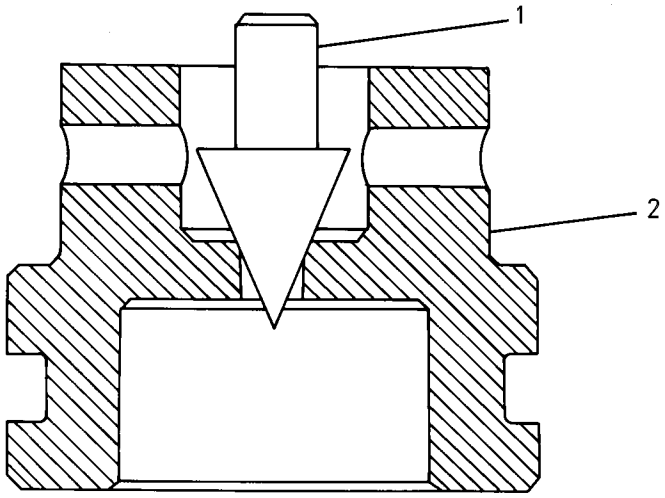

GRAPHIC #1 **<END>** g00565285

1U-2226 VALVE GP-SELECTOR & PRESS CONT–STEERING

S/N: 4421-UP

PART OF 245-1290 LINES GP-STEERING

SMCS-4349 **i01552132**

NOTE	REF NO	GRAPHIC REF	PART NUMBER	QTY	PART NAME 1 2 3 4 5 6 (PRODUCT LEVEL)	SEE PAGE
	1	1	**7S-8553**	1	SPRING	
	2	1	**5S-7001**	2	SPACER (.91MM THK)	
	3	1	**108-3866**	2	ADAPTER	
	4	1	**2M-9780**	2	SEAL-O-RING	
	5	1	**5S-7018**	3	SPACER (14.15X7.54X.25MM THK)	
B	6	1	**180-9935**	1	SHIM (2.7MM THK)	

B-USE AS REQUIRED

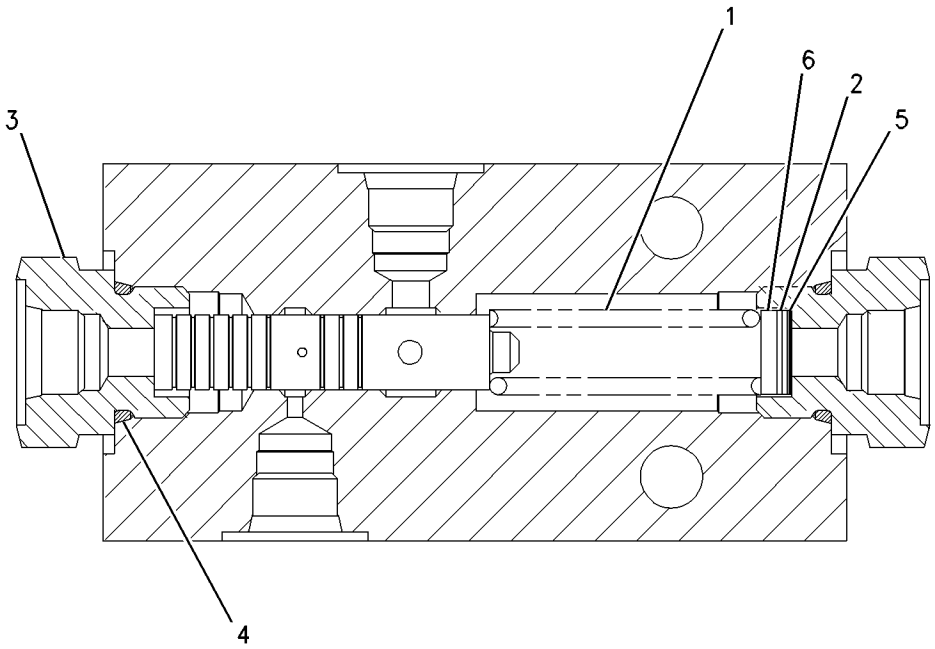

GRAPHIC #1 **<END>** g00674728

STEERING SYSTEM

4T-1860 VALVE GP-SHUTTLE

S/N: 4421-UP

PART OF 154-5236 VALVE GP-STEERING

SMCS-4289 **i02380627**

NOTE	REF NO	GRAPHIC REF	PART NUMBER	QTY	PART NAME 1 2 3 4 5 6 (PRODUCT LEVEL)	SEE PAGE
Z	1	1		1	SEAT	
	2	1	**1M-6718**	1	BALL	
Z	3	1		1	VALVE	
	4	1	**6V-5324**	1	SEAL-O-RING	
	5	1	**147-6603**	1	SEAL-O-RING	
	6	1	**3J-1907**	1	SEAL-O-RING	
	7	1	**147-6604**	2	RING-BACKUP	
	8	1	**147-6605**	2	RING-BACKUP	

Z-NOT SERVICED SEPARATELY

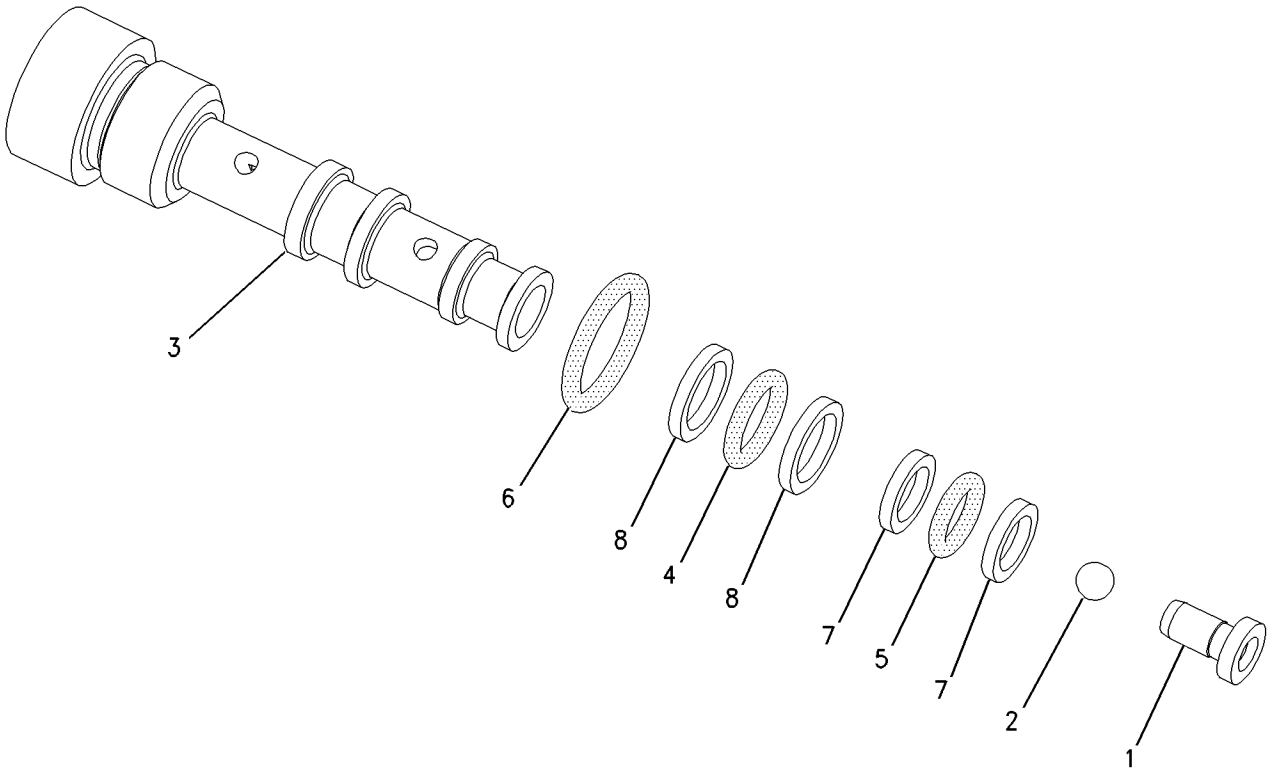

GRAPHIC #1 **<END>** g00775006

154-5236 VALVE GP-STEERING

S/N: 4421-UP

PART OF 152-8947, 277-5434 VALVE & MTG GP-STEERING

SMCS-4307 **i02299782**

NOTE	REF NO	GRAPHIC REF	PART NUMBER	QTY	PART NAME 1 2 3 4 5 6 (PRODUCT LEVEL)	SEE PAGE
M	1	2	**8T-5412**	4	BOLT (M12X1.75X140-MM)	
	2	1	**6E-0859**	1	VALVE GP-RELIEF (STEERING CYLINDER CROSSOVER)	
	3	1	**6E-0878**	1	VALVE	
	4	1	**6E-4040**	1	SPRING	
	5	1	**6E-4041**	2	RETAINER	
	6	1	**6E-4046**	1	SPACER (13.5X22.5X78-MM THK)	
	7	2	**6L-9716**	2	PLUG-PIPE	
B	8	1	**8B-3115**	3	SHIM (0.25-MM THK)	
	9	1	**8J-2634**	1	SPRING	
	10	1	**8J-2635**	1	SPRING	
	11	1	**8J-3659**	1	STOP AS	
Y	12	1	**9J-8225**	1	VALVE GP-RELIEF (PUMP BACKUP)	736
	13	1	**9T-7202**	1	RETAINER AS	
	14	1	**9T-7266**	1	NUT (3/4-16-THD)	
	15	1	**103-8681**	1	COVER	
M	16	1	**8T-4122**	8	WASHER-HARD (17X32X3.5-MM THK)	
M	17	2	**8T-4176**	2	BOLT (M12X1.75X90-MM)	
	18	2	**138-3656**	1	COVER	
M	19	1	**8T-4184**	3	BOLT (M12X1.75X45-MM)	
	20	1	**103-8679**	1	SPRING	
	21	2	*148-8395*	1	PLUG AS	
		2	**3K-0360**	1	SEAL-O-RING	
		2	**9S-8005**	1	PLUG-O RING	
	22	1	**148-8409**	1	PLUG AS	
		1	**3D-2824**	1	SEAL-O-RING	
		1	**9S-8008**	1	PLUG	
	23	2	*155-3624*	1	PLUG AS	
		2	**3J-7354**	1	SEAL-O-RING	
		2	**9S-4182**	1	PLUG	
	24	1,2	**173-3993**	6	PLUG AS	
					(EACH INCLUDES)	
		1,2	**4J-7533**	1	SEAL-O-RING	
		1,2	**9S-8001**	1	PLUG	
	25	1	**1P-3705**	2	SEAL-RECTANGULAR	
	26	1	**2S-4078**	1	SEAL-O-RING	
	27	1	**4J-0524**	1	SEAL-O-RING	
	28	1	**4J-0526**	1	SEAL-O-RING	
	29	1	**4J-0528**	2	SEAL-O-RING	
	30	1,2	**4J-5309**	3	SEAL-O-RING	
Y	31	1	**4T-1860**	1	VALVE GP-SHUTTLE	738
	32	1	**5P-1076**	2	WASHER-HARD (13.5X30X4-MM THK)	
	33	1	**6E-0875**	1	MANIFOLD	
M	34	1	**7X-2550**	1	BOLT (M12X1.75X110-MM)	
M	35	1	**7X-2557**	8	BOLT (M16X2X140-MM)	

B-USE AS REQUIRED
M-METRIC PART
Y-SEPARATE ILLUSTRATION

154-5236 VALVE GP-STEERING *(contd.)* i02299782

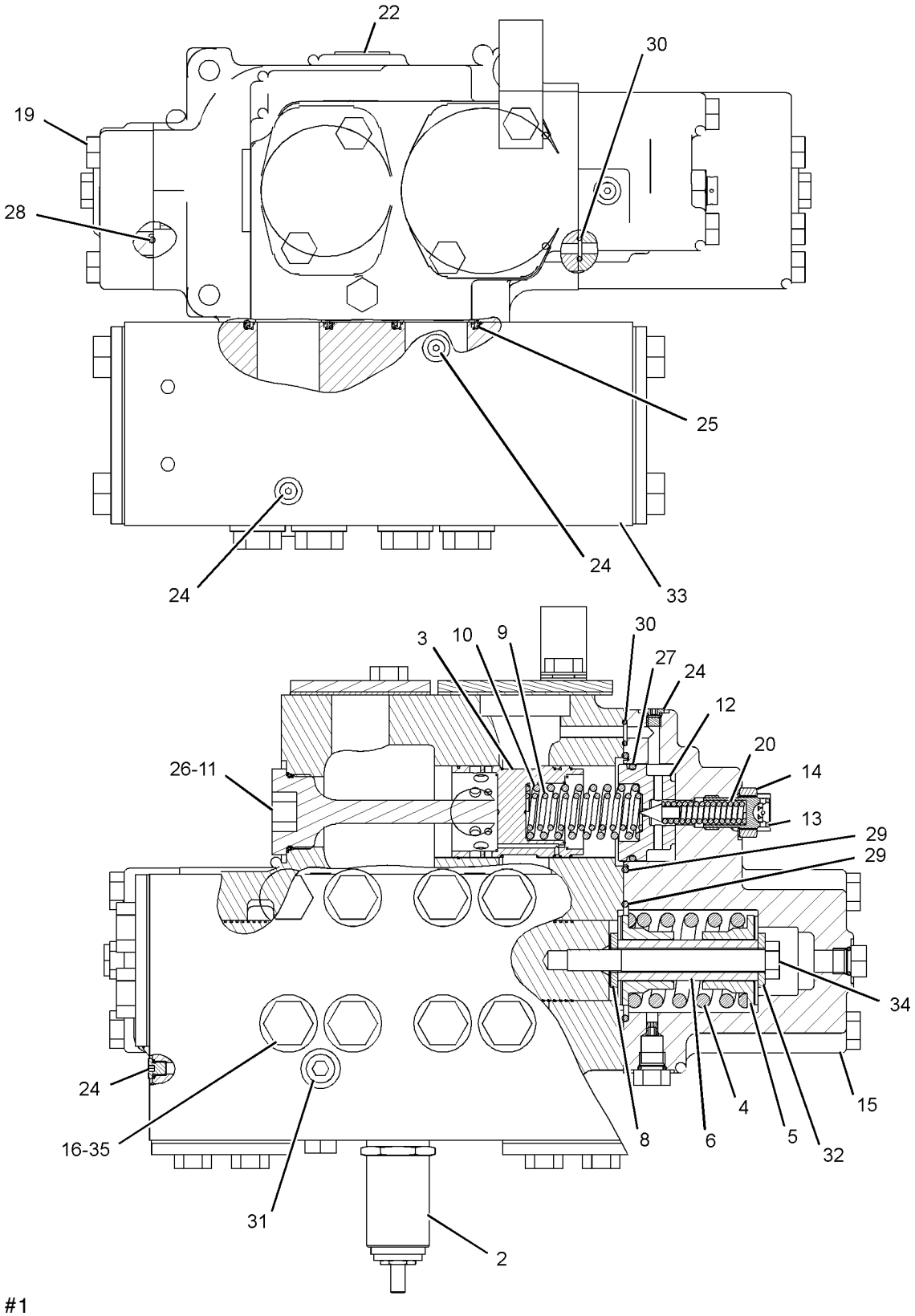

GRAPHIC #1 g01152265

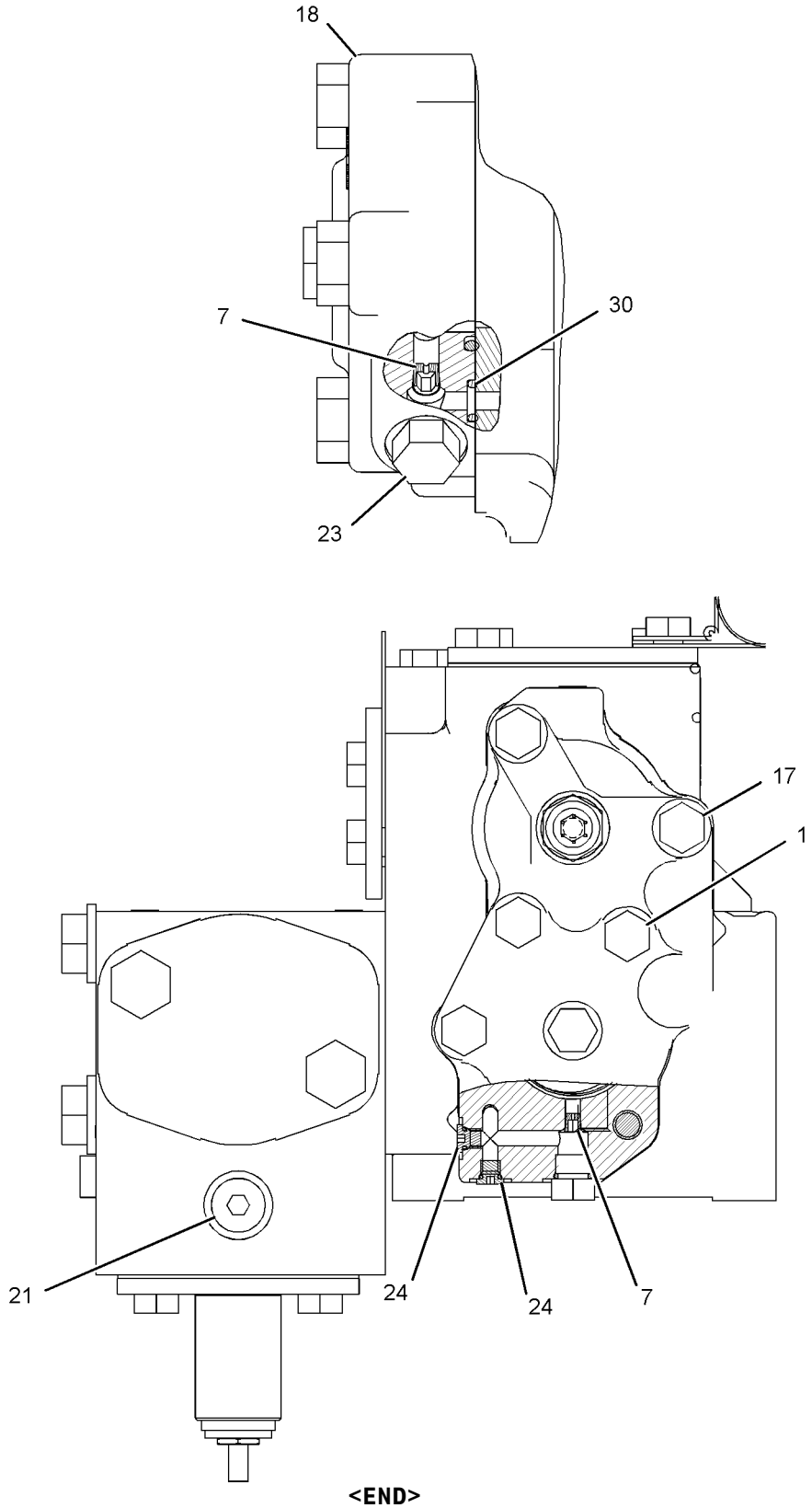

GRAPHIC #2 **<END>** g01152264

9T-7426 VALVE GP-STEERING NEUTRALIZER

S/N: 4421-UP

PART OF 154-8015 VALVE & MTG GP-STEERING NEUT

SMCS-4330 **i00174378**

NOTE	REF NO	GRAPHIC REF	PART NUMBER	QTY	PART NAME 1 2 3 4 5 6 (PRODUCT LEVEL)	SEE PAGE
C	1	1	**6V-1949**	1	SEAL-LIP TYPE	
	2	1	**5F-9035**	1	SPRING	
	3	1	**3D-2824**	1	SEAL-O-RING	
	4	1	**6J-4568**	1	BOOT	

C-CHANGE FROM PREVIOUS TYPE

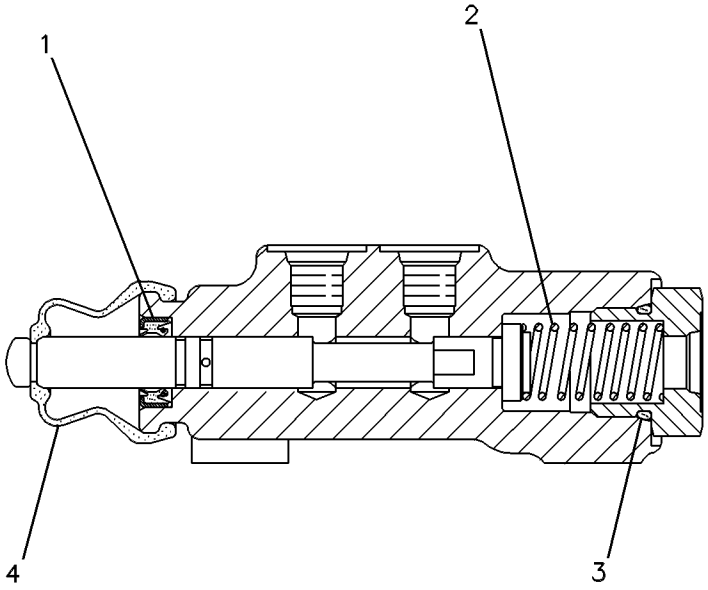

GRAPHIC #1 **<END>** g00122383

HYDRAULIC SYSTEM

250-9930 CONTROL GP-HYDRAULIC LOCKOUT

S/N: 4421-UP

PART OF 242-0341 CAB AR

SMCS-5001 **i02181937**

NOTE	REF NO	GRAPHIC REF	PART NUMBER	QTY	PART NAME 1 2 3 4 5 6 (PRODUCT LEVEL)	SEE PAGE
	1	1	**4E-2401**	1	KNOB	
	2	1	**4E-9265**	1	ROD	
	3	1	**4E-9268**	1	SHAFT AS	
		1	**4S-6525**	2	DOWEL	
	4	1	**9C-4554**	1	SPRING (OUTER)	
	5	1	**9C-4555**	1	SPRING (INNER)	
	6	1	**9U-0387**	1	SUPPORT AS	
M		1	**6V-9632**	2	NUT-WELD (M6X1-THD)	
	7	1	**9U-0393**	1	LEVER AS (HYDRAULIC LOCKOUT)	
	8	1	**9U-0397**	1	PLATE	
	9	1	**130-4622**	1	GATE	
	10	1	**250-9933**	1	SUPPORT AS	
M		1	**6V-9632**	6	NUT-WELD (M6X1-THD)	
	11	1	**3B-4607**	2	PIN-COTTER	
M	12	1	**5C-7261**	3	NUT (M8X1.25-THD)	
	13	1	**6V-7646**	1	WASHER-HARD (7.2X25X2-MM THK)	
	14	1	**8F-4610**	1	RING-RETAINING	
M	15	1	**8T-4134**	1	NUT (M6X1 THD)	
M	16	1	**8T-4189**	3	BOLT (M8X1.25X20-MM)	
	17	1	**8T-4224**	4	WASHER-HARD (8.8X16X2-MM THK)	
M	18	1	**8T-7963**	1	LOCKNUT (M8X1.25 THD)	
	19	1	**9T-5241**	2	WASHER (9.53X18X1-MM THK)	
M	20	1	**9X-2042**	1	SCREW-TRUSS HEAD (M6X1X12-MM)	

M-METRIC PART

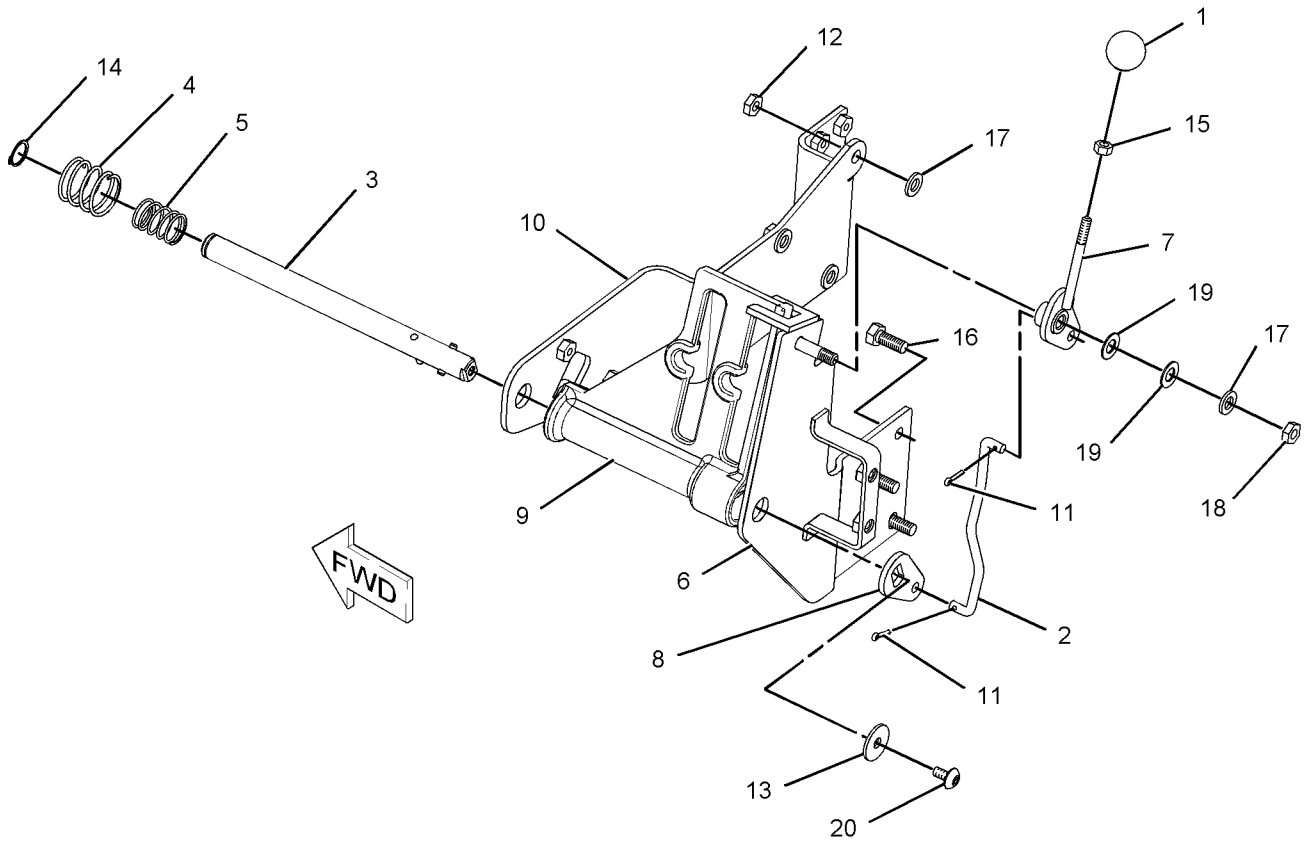

GRAPHIC #1 **<END>** g01091032

HYDRAULIC SYSTEM

247-6476 CONTROL GP-PILOT OPERATED HYD–2-FUNCTION

S/N: 4421-UP

PART OF 242-0341 CAB AR

SMCS-5063 **i02312785**

NOTE	REF NO	GRAPHIC REF	PART NUMBER	QTY	PART NAME 1 2 3 4 5 6 (PRODUCT LEVEL)	SEE PAGE
	1	1	**4E-3440**	1	MANIFOLD	
	2	1	**4E-3445**	1	SEAL	
	3	1	**4E-9854**	1	LEVER AS-TILT	
	4	1	**4E-9855**	1	LEVER AS-LIFT	
I	5	1	**6Y-1532**	3	HOSE AS	
	6	1	**8R-9202**	2	KNOB	
	7	1	**9P-4609**	1	ACTUATOR-MAGNETIC	
I	8	1	**103-1743**	3	HOSE AS	
	9	1	**130-4623**	1	COVER	
	10	1	**162-0223**	1	SWITCH AS (LOWER DETENT PROXIMITY)	
		1	**3E-3374**	1	WEDGE-PLUG LOCK (4-PIN)	
		1	**186-3736**	3	SOCKET-CONNECTOR (16-GA TO 18-GA)	
		1	**9G-3695**	1	PLUG (GROMMET SEALING)	
E		1	**9X-1813**		SLEEVE (24-CM)	
		1	**176-2947**	1	PLUG KIT-CONN	
					(INCLUDES PLUG AS AND WEDGE)	
	11	1	**163-8811**	12	CLAMP	
Y	12	1	**6E-3796**	1	VALVE GP-PILOT (LIFT, TILT)	873
	13	1	**248-2906**	1	BRACKET	
	14	1	**249-3779**	1	BRACKET	
	15	1	**103-6262**	4	SCREW-MACHINE (4-40X0.63-IN)	
	16	1	**142-2928**	4	LOCKNUT (4-40-THD)	
	17	1	*148-8342*	1	CONNECTOR AS	
		1	**3K-0360**	1	SEAL-O-RING	
		1	**6V-8632**	1	CONNECTOR	
		1	**7J-9108**	1	SEAL-O-RING	
M	18	1	**170-5632**	2	BOLT (M4X0.7X16-MM)	
	19	1	**1B-8701**	2	KEY-WOODRUFF	
	20	1	**2M-4009**	1	PLUG-BUTTON	
	21	1	**3K-0360**	21	SEAL-O-RING	
M	22	1	**5I-3054**	2	NUT (M4X0.7-THD)	
	23	1	**5I-3055**	4	WASHER	
	24	1	**6V-8398**	12	SEAL-O-RING	
	25	1	**6V-8639**	17	CONNECTOR	
	26	1	**8T-4121**	3	WASHER-HARD (11X21X2.5-MM THK)	
M	27	1	**8T-4136**	2	BOLT (M10X1.5X25-MM)	
M	28	1	**8T-4195**	3	BOLT (M10X1.5X30-MM)	
M	29	1	**8T-4244**	2	NUT (M12X1.75-THD)	
	30	1	**9S-4185**	4	PLUG	
G	31	1	**160-2243**	3	SLEEVE-ABRASION (27.56-IN EACH)	
G	31A	1	**160-2243**	3	SLEEVE-ABRASION (19.69-IN EACH)	
	32	1	**130-7920**	1	FILM-IDENTIFICATION (HYDRAULIC CONTROLS)	

E-ORDER BY THE CENTIMETER
G-ORDER BY THE INCH
I-REFER TO HYDRAULIC INFORMATION SYSTEM
M-METRIC PART
Y-SEPARATE ILLUSTRATION

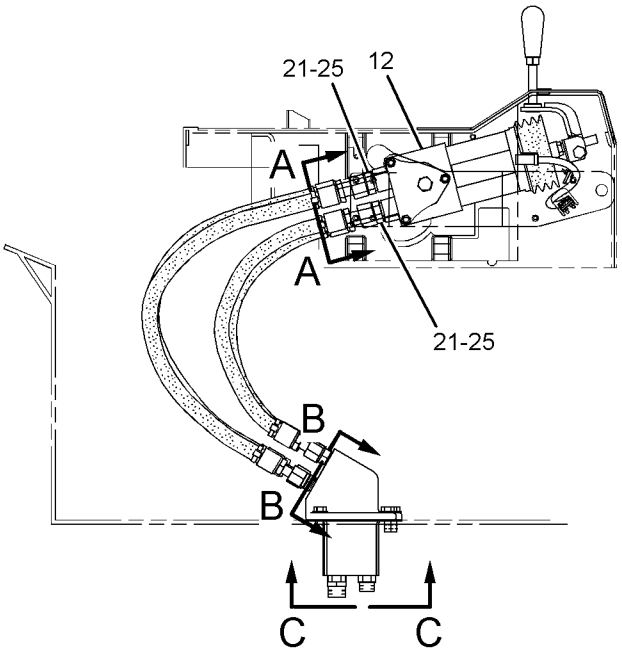

RIGHT SIDE VIEW

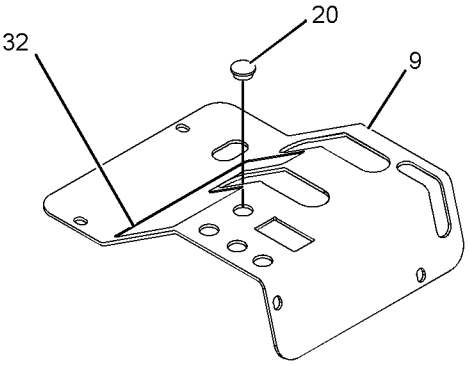

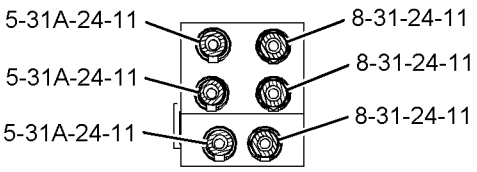

SECTION A-A

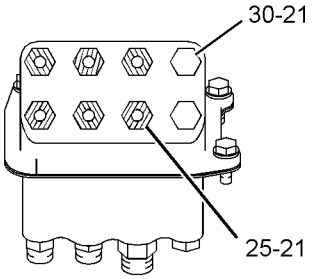

SECTION B-B

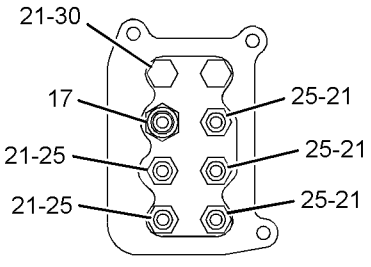

VIEW C-C

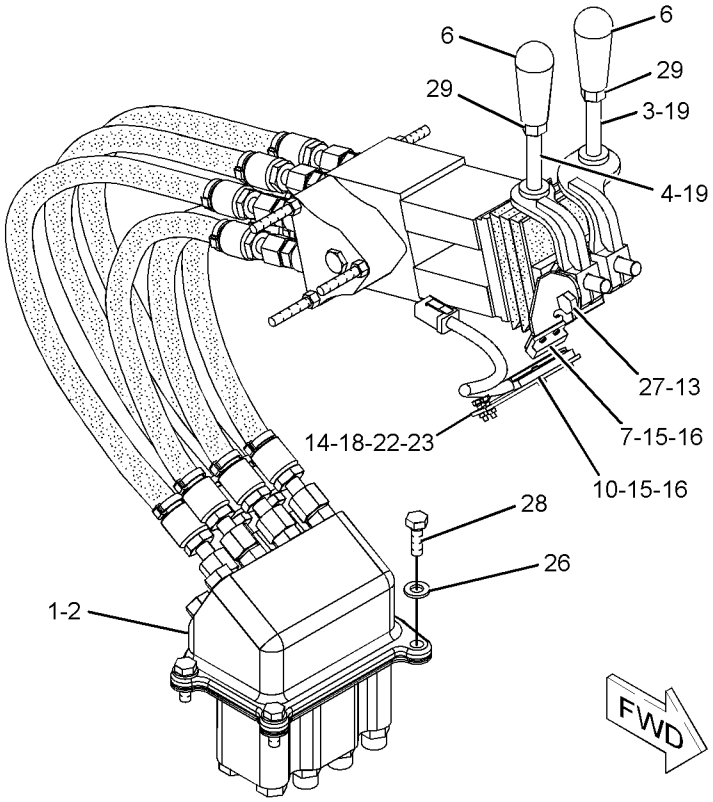

GRAPHIC #1 **<END>** g01145505

HYDRAULIC SYSTEM

179-3642 COOLER GP-HYDRAULIC OIL–

HYDRAULIC, STEERING, BRAKE

S/N: 4421-UP

PART OF 250-7957 INSTALLATION AR-ENGINE

SMCS-1374 **i02156001**

NOTE	REF NO	GRAPHIC REF	PART NUMBER	QTY	PART NAME 1 2 3 4 5 6 (PRODUCT LEVEL)	SEE PAGE
	1	1	**179-3656**	1	FRAME AS	
	2	1	**179-3657**	2	BRACKET AS	
	3	1	**186-0058**	1	COOLER-HYDRAULIC	
	4	1	**186-0059**	1	COOLER-STEERING & BRAKE	
	5	1	**5P-1076**	12	WASHER-HARD (13.5X30X4-MM THK)	
M	7	1	**8T-4193**	6	BOLT (M16X2X50-MM)	
M	8	1	**8T-4956**	6	BOLT (M12X1.75X35-MM)	
M	9	1	**8T-4779**	4	BOLT (M16X2X35-MM)	
M	10	1	**8T-5001**	6	BOLT (M12X1.75X130-MM)	
	11	1	**9X-8257**	10	WASHER (17.5X30X3.5-MM THK)	

M-METRIC PART

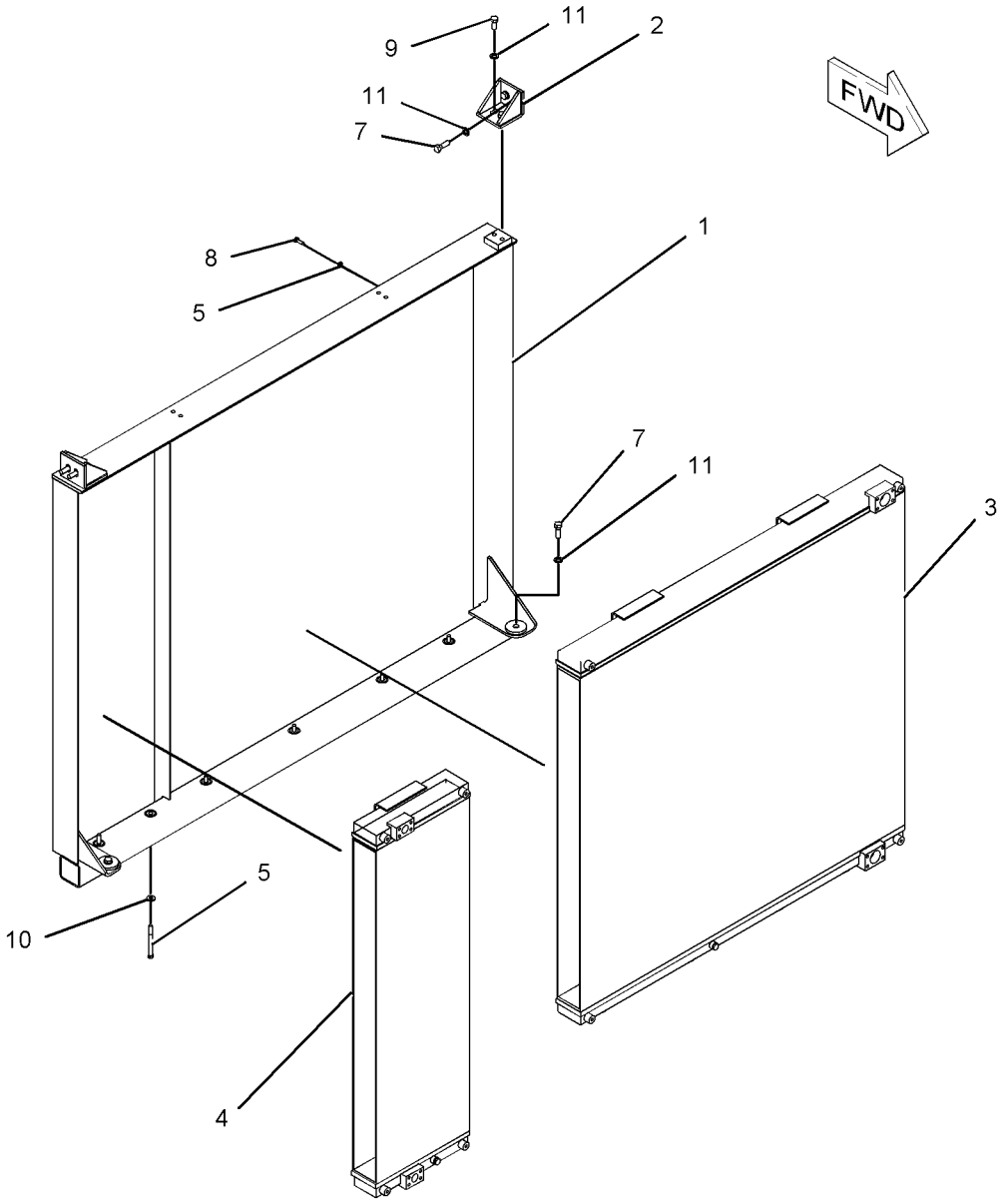

GRAPHIC #1 **<END>** g01093400

251-3145 CYLINDER AR-LIFT—STANDARD LIFT MACHINES

S/N: 4421-UP
PART OF 245-8805 LIFT AR
AN ATTACHMENT

SMCS-5102 **i02163412**

NOTE	PART NUMBER	QTY	PART NAME 1 2 3 4 5 6 (PRODUCT LEVEL)	SEE PAGE
Y	**193-4076**	2	CYLINDER GP-LIFT (STANDARD LIFT MACHINES)	751
Y	*245-1860*	1	LINES GP-LIFT CYLINDER (LOADER FRAME)	807
Y	*245-1865*	1	LINES GP-LIFT CYLINDER (CYLINDER TUBE MOUNTED)	809
Y	*8X-1713*	1	MOUNTING GP-LIFT CYLINDER	833

Y-SEPARATE ILLUSTRATION

<END>

251-3148 CYLINDER AR-LIFT—HIGH LIFT MACHINES

S/N: 4421-UP
PART OF 245-8806 LIFT AR
AN ATTACHMENT

SMCS-5102 **i02163410**

NOTE	PART NUMBER	QTY	PART NAME 1 2 3 4 5 6 (PRODUCT LEVEL)	SEE PAGE
Y	**193-4075**	2	CYLINDER GP-LIFT (HIGH LIFT MACHINES)	749
Y	*245-1325*	1	LINES GP-LIFT CYLINDER (CYLINDER TUBE MOUNTED)	806
Y	*245-1860*	1	LINES GP-LIFT CYLINDER (LOADER FRAME)	807
Y	*8X-1713*	1	MOUNTING GP-LIFT CYLINDER	833

Y-SEPARATE ILLUSTRATION

<END>

251-3150 CYLINDER AR-LIFT—SUPER HIGH LIFT MACHINES

S/N: 4421-UP
PART OF 245-8807 LIFT AR
AN ATTACHMENT

SMCS-5102 **i02163407**

NOTE	PART NUMBER	QTY	PART NAME 1 2 3 4 5 6 (PRODUCT LEVEL)	SEE PAGE
Y	**247-4565**	2	CYLINDER GP-LIFT (SUPER HIGH LIFT MACHINES)	753
Y	*245-1325*	1	LINES GP-LIFT CYLINDER (CYLINDER TUBE MOUNTED)	806
Y	*251-3110*	1	LINES GP-LIFT CYLINDER (LOADER FRAME)	810
Y	*8X-1713*	1	MOUNTING GP-LIFT CYLINDER	833

Y-SEPARATE ILLUSTRATION

<END>

251-3146 CYLINDER AR-TILT—STANDARD LIFT MACHINES

S/N: 4421-UP
PART OF 245-8805 LIFT AR
AN ATTACHMENT

SMCS-5104 **i02163413**

NOTE	PART NUMBER	QTY	PART NAME 1 2 3 4 5 6 (PRODUCT LEVEL)	SEE PAGE
Y	**112-3171**	1	CYLINDER GP-TILT (STANDARD LIFT MACHINES, RH)	755
Y	**112-3172**	1	CYLINDER GP-TILT (STANDARD LIFT MACHINES, LH)	757
Y	*245-1820*	1	LINES GP-TILT CYLINDER (CYLINDER TUBE MOUNTED)	826
Y	*245-1870*	1	LINES GP-TILT CYLINDER (LOADER FRAME)	827

Y-SEPARATE ILLUSTRATION

<END>

251-3149 CYLINDER AR-TILT—HIGH LIFT MACHINES

S/N: 4421-UP
PART OF 245-8806 LIFT AR
AN ATTACHMENT

SMCS-5104 **i02163411**

NOTE	PART NUMBER	QTY	PART NAME 1 2 3 4 5 6 (PRODUCT LEVEL)	SEE PAGE
Y	**219-6272**	1	CYLINDER GP-TILT (HIGH LIFT MACHINES, LH)	759
Y	**219-6273**	1	CYLINDER GP-TILT (HIGH LIFT MACHINES, RH)	761
Y	*245-1820*	1	LINES GP-TILT CYLINDER (CYLINDER TUBE MOUNTED)	826
Y	*245-1870*	1	LINES GP-TILT CYLINDER (LOADER FRAME)	827

Y-SEPARATE ILLUSTRATION

<END>

251-3151 CYLINDER AR-TILT—SUPER HIGH LIFT MACHINES

S/N: 4421-UP
PART OF 245-8807 LIFT AR
AN ATTACHMENT

SMCS-5104 **i02163408**

NOTE	PART NUMBER	QTY	PART NAME 1 2 3 4 5 6 (PRODUCT LEVEL)	SEE PAGE
Y	**247-4566**	1	CYLINDER GP-TILT (SUPER HIGH LIFT MACHINES, LH)	763
Y	**251-2005**	1	CYLINDER GP-TILT (SUPER HIGH LIFT MACHINES, RH)	765
Y	*245-1870*	1	LINES GP-TILT CYLINDER (LOADER FRAME)	827
Y	*251-3115*	1	LINES GP-TILT CYLINDER (CYLINDER TUBE MOUNTED)	828

Y-SEPARATE ILLUSTRATION

<END>

193-4075 CYLINDER GP-LIFT—HIGH LIFT MACHINES

S/N: 4421-UP
317.5MM BORE X 1705MM STROKE
PART OF 251-3148 CYLINDER AR-LIFT
AN ATTACHMENT

SMCS-5102 **i02155670**

NOTE	REF NO	GRAPHIC REF	PART NUMBER	QTY	PART NAME 1 2 3 4 5 6 (PRODUCT LEVEL)	SEE PAGE
R	1	1	**193-4078**	1	CYLINDER AS	
		1	**101-1462**	1	CAP AS	
		1	**8X-0742**	1	BEARING-SLEEVE	
M	2	1	**8T-0370**	2	BOLT (M30X3.5X140-MM)	
	3	1	**6E-0308**	2	RING-WEAR	
	4	1	**192-1453**	1	SEAL AS	
	5	1	**193-4082**	1	PISTON	
	6	1	**6V-3263**	1	SEAL-O-RING	
	7	1	**157-7245**	1	RING-BACKUP	
	8	1	**193-4077**	1	HEAD	
R	9	1	**193-4081**	1	ROD AS	
		1	**6E-0487**	1	BEARING-SLEEVE	
	10	1	**225-3299**	1	SEAL-WIPER	
	11	1	**167-2354**	1	SEAL-U-CUP	
	12	1	**167-2239**	1	SEAL AS-BUFFER	
	13	1	**6E-0245**	1	RING-WEAR	
M	14	1	**8T-0283**	12	BOLT (M30X3.5X110-MM)	
	15	1	**9X-8399**	14	WASHER (33X56X6-MM THK)	
	18	1	**6V-6583**	7	BOLT-12 POINT HEAD (1-1/2X12X127-MM)	
	19	1	**101-0007**	7	WASHER-HARD	
	20	1	**9S-4182**	2	PLUG	
	21	1	**3J-7354**	2	SEAL-O-RING	
	22	1	**2M-3818**	1	SEAL-O-RING	
	23	1	**192-2056**		RING-BACKUP	

M-METRIC PART
R-REMFG PART MAY BE AVAILABLE

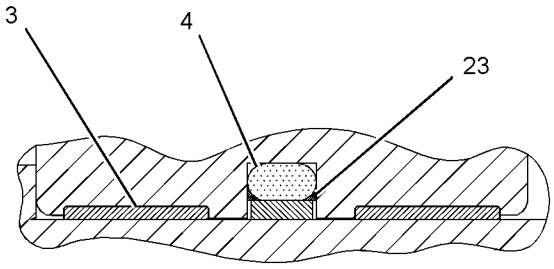

VIEW OF AREA C

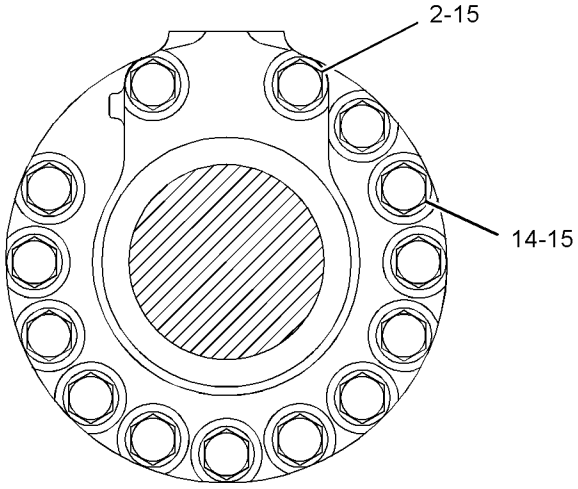

SECTION A-A

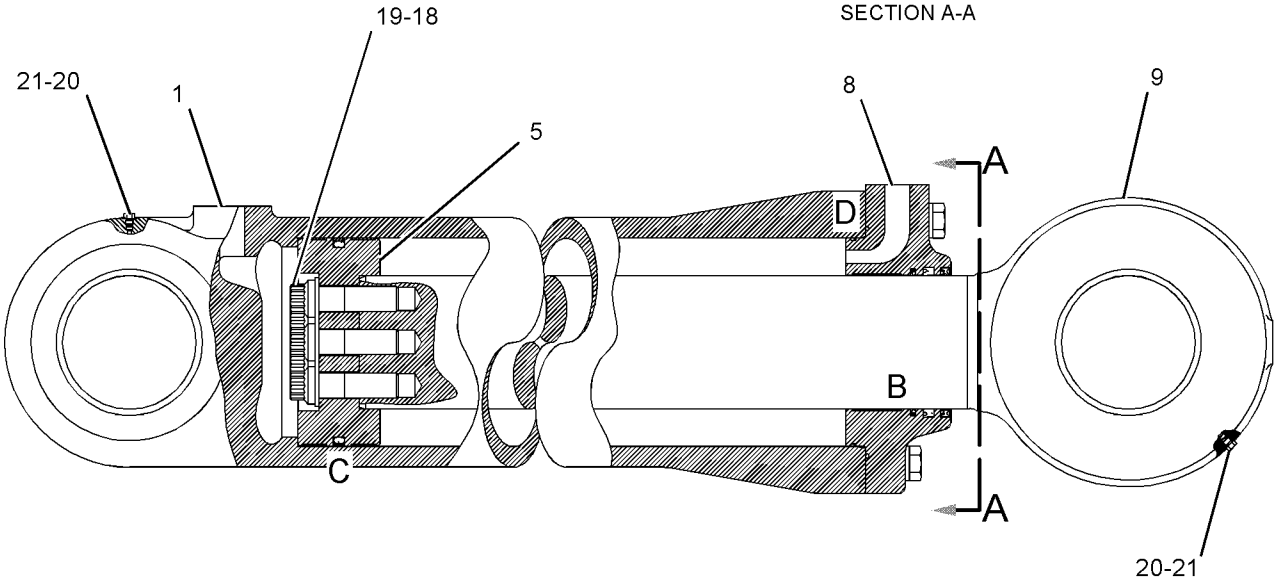

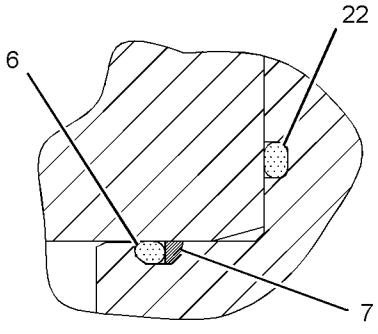

VIEW OF AREA D

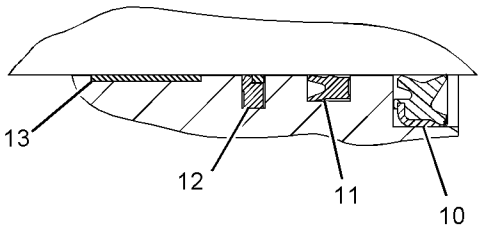

VIEW OF AREA B

GRAPHIC #1 **<END>** g01093996

193-4076 CYLINDER GP-LIFT—STANDARD LIFT MACHINES

S/N: 4421-UP
317.5MM BORE X 1660MM STROKE
PART OF 251-3145 CYLINDER AR-LIFT
AN ATTACHMENT

SMCS-5102 **i02155669**

NOTE	REF NO	GRAPHIC REF	PART NUMBER	QTY	PART NAME 1 2 3 4 5 6 (PRODUCT LEVEL)	SEE PAGE
	1	1	**193-4079**	1	CYLINDER AS	
		1	**101-1462**	1	CAP AS	
		1	**8X-0742**	1	BEARING-SLEEVE	
M	2	1	**8T-0370**	2	BOLT (M30X3.5X140-MM)	
	3	1	**6E-0308**	2	RING-WEAR	
	4	1	**192-1453**	1	SEAL AS	
	5	1	**193-4082**	1	PISTON	
	6	1	**6V-3263**	1	SEAL-O-RING	
	7	1	**157-7245**	1	RING-BACKUP	
	8	1	**193-4077**	1	HEAD	
R	9	1	**193-4080**	1	ROD AS	
		1	**6E-0487**	1	BEARING-SLEEVE	
	10	1	**225-3299**	1	SEAL-WIPER	
	11	1	**167-2354**	1	SEAL-U-CUP	
	12	1	**167-2239**	1	SEAL AS-BUFFER	
	13	1	**6E-0245**	1	RING-WEAR	
M	14	1	**8T-0283**	12	BOLT (M30X3.5X110-MM)	
	15	1	**9X-8399**	14	WASHER (33X56X6-MM THK)	
	18	1	**6V-6583**	7	BOLT-12 POINT HEAD (1-1/2X12X127-MM)	
	19	1	**101-0007**	7	WASHER-HARD	
	20	1	**9S-4182**	2	PLUG	
	21	1	**3J-7354**	2	SEAL-O-RING	
	22	1	**2M-3818**	1	SEAL-O-RING	
	23	1	**192-2056**	2	RING-BACKUP	

M-METRIC PART
R-REMFG PART MAY BE AVAILABLE

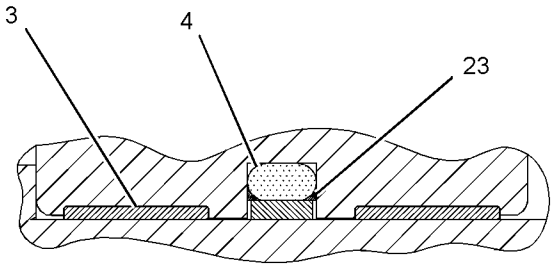

VIEW OF AREA C

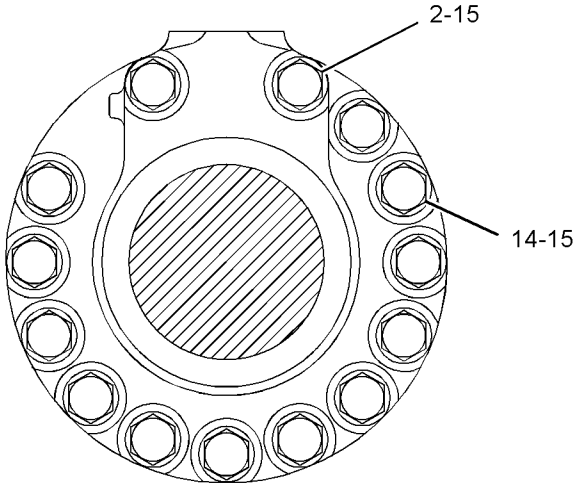

SECTION A-A

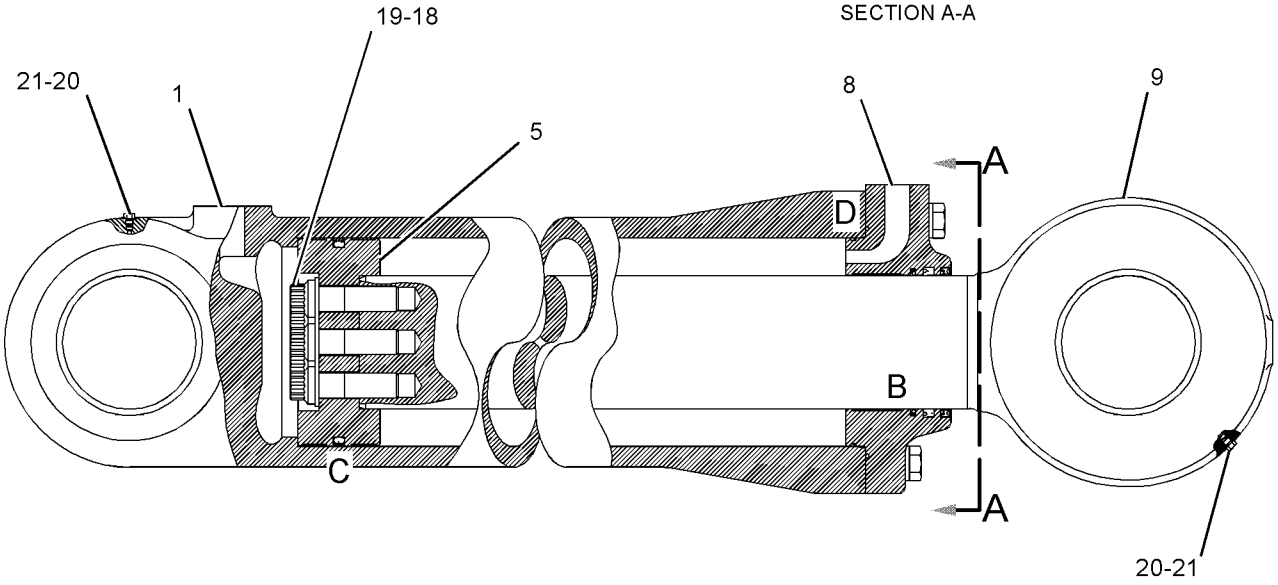

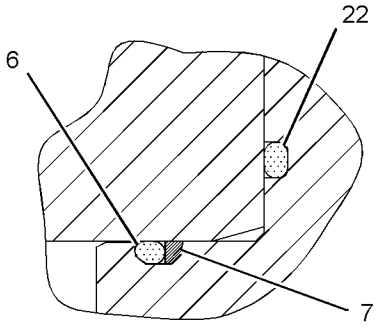

VIEW OF AREA D

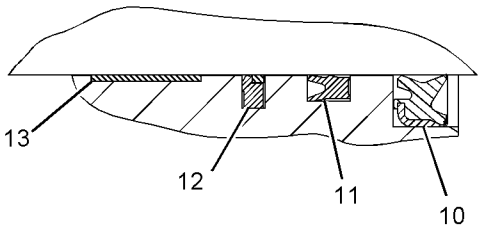

VIEW OF AREA B

GRAPHIC #1

<END>

g01094162

247-4565 CYLINDER GP-LIFT—SUPER HIGH LIFT MACHINES

S/N: 4421-UP
342.9-MM BORE X 1705-MM STROKE
PART OF 251-3150 CYLINDER AR-LIFT
AN ATTACHMENT

SMCS-5102 **i02154558**

NOTE	REF NO	GRAPHIC REF	PART NUMBER	QTY	PART NAME 1 2 3 4 5 6 (PRODUCT LEVEL)	SEE PAGE
	1	1	**9F-2167**	1	SCREW-PURGE	
	2	1	**249-5204**	1	CYLINDER AS	
		1	**8X-0742**	1	BEARING-SLEEVE	
	3	1	**249-5205**	1	PISTON	
	4	1	**249-5212**	1	ROD AS	
		1	**6E-0487**	1	BEARING-SLEEVE	
	5	1	**249-5219**	1	HEAD	
	6	1	**251-6155**	8	BOLT-SOCKET HEAD (1-1/2-12X4.41-IN)	
M	7	1	**101-3672**	12	BOLT (M36X4X120-MM)	
J	8	1	**108-6216**	1	RING-WEAR	
J	9	1	**121-4188**	2	RING-WEAR	
J	10	1	**157-7246**	1	RING-BACKUP	
J	11	1	**167-2240**	1	SEAL AS-BUFFER	
	12	1	**167-2356**	1	SEAL-U-CUP	
J	13	1	**192-1445**	1	SEAL AS	
J	14	1	**225-3300**	1	SEAL-WIPER	
	15	1	**252-5740**	8	WASHER-HARD (40X57.2X6-MM THK)	
J	16	1	**4D-4508**	1	SEAL-O-RING	
M	17	1	**7Y-5253**	2	BOLT (M36X4X160-MM)	
	18	1	**9X-8259**	14	WASHER (39X66X6-MM THK)	
					AVAILABLE REPAIR KIT(S):	
J			**245-6823**	1	KIT-SEAL	

J-KIT MARKED J SERVICES PARTS MARKED J
M-METRIC PART

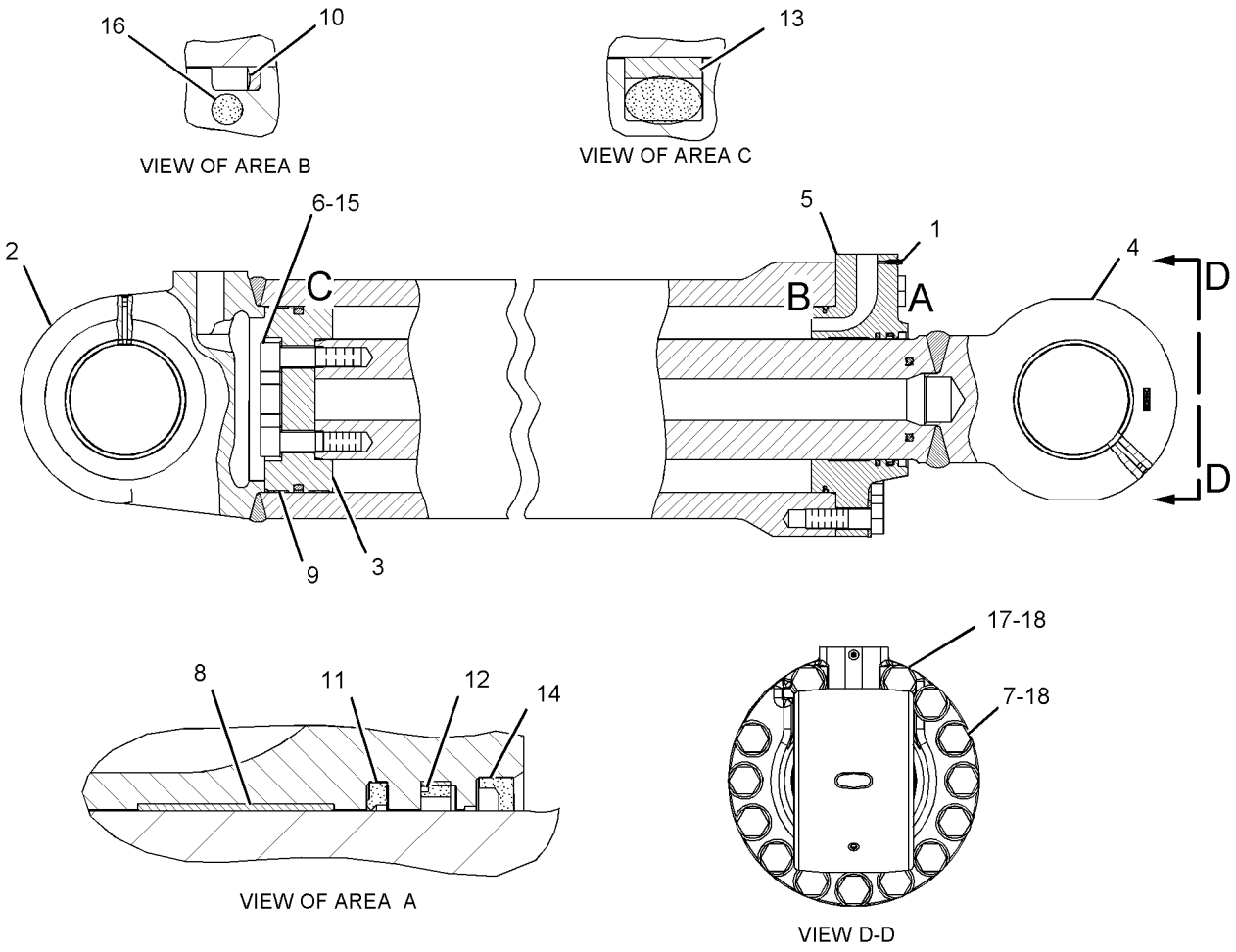

GRAPHIC #1 **<END>** g01095783

112-3171 CYLINDER GP-TILT–STANDARD LIFT MACHINES, RH

S/N: 4421-UP
266.7 MM (10.5 IN) BORE X 1140 MM (44.9 IN) STROKE
PART OF 251-3146 CYLINDER AR-TILT
AN ATTACHMENT

SMCS-5104 **i01945005**

NOTE	REF NO	GRAPHIC REF	PART NUMBER	QTY	PART NAME 1 2 3 4 5 6 (PRODUCT LEVEL)	SEE PAGE
R	1	1	**159-0888**	1	CYLINDER AS	
	1A	1	**6E-1776**	1	CAP AS	
	1B	1	**1V-7038**	1	BEARING-SLEEVE	
	2	1	**3G-5022**	1	LOCKNUT (4 1/2-12-THD)	
C	3	1	**229-9443**	1	RING-WEAR	
	4	1	**192-1455**	1	SEAL AS	
C	5	1	**229-9549**	1	PISTON	
	6	1	**5P-2236**	1	SEAL-O-RING	
	7	1	**164-7477**	1	HEAD	
CR	8	1	**230-0973**	1	ROD AS	
	8A	1	**1V-7038**	1	BEARING-SLEEVE	
	9	1	**9X-7420**	1	RING-WEAR	
	10	1	**167-2725**	1	SEAL AS-BUFFER	
	11	1	**167-2938**	1	SEAL-U-CUP	
	12	1	**225-3291**	1	SEAL-WIPER	
	14	1	**157-7244**	1	RING-BACKUP	
M	15	1	**101-0767**	2	BOLT (M36X4X150-MM)	
	16	1	**3S-6162**	8	WASHER-HARD (40.5X67X6-MM THK)	
M	17	1	**101-3672**	6	BOLT (M36X4X120-MM)	
	18	1	**9S-4182**	2	PLUG	
	19	1	**3J-7354**	2	SEAL-O-RING	
	20	1	**8L-9241**	1	SEAL-O-RING	

C-CHANGE FROM PREVIOUS TYPE
M-METRIC PART
R-REMFG PART MAY BE AVAILABLE

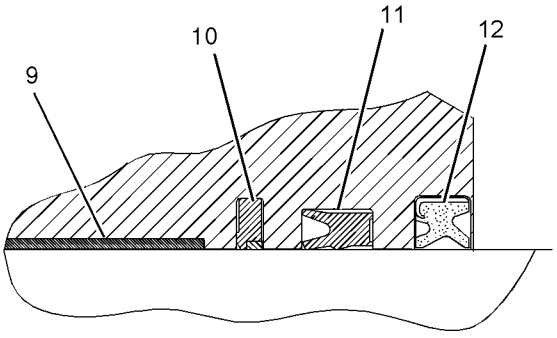

VIEW OF AREA A

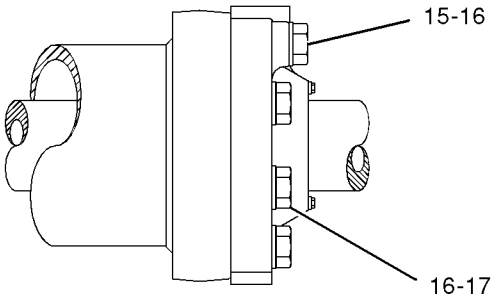

VIEW B-B

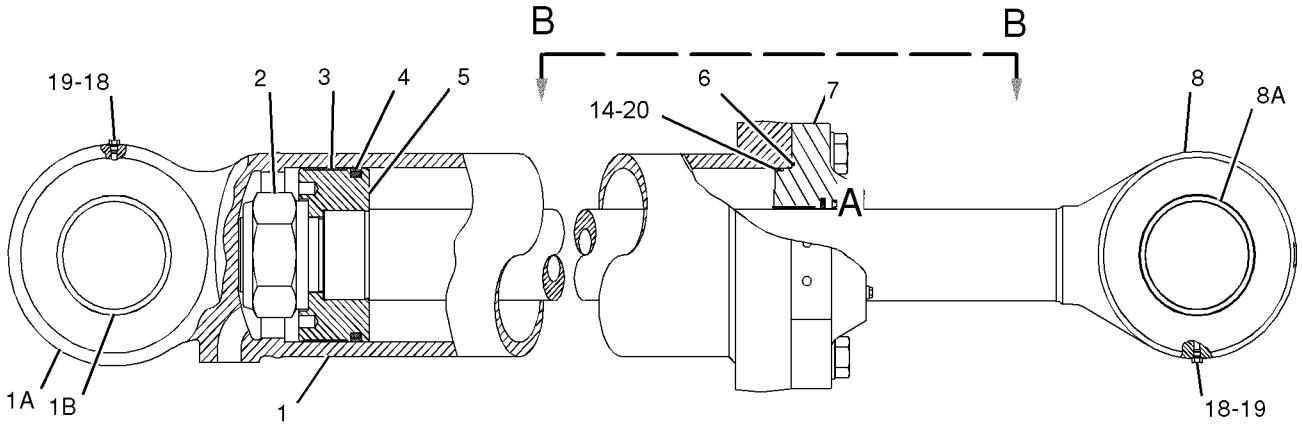

GRAPHIC #1 **<END>** g01012344

112-3172 CYLINDER GP-TILT–STANDARD LIFT MACHINES, LH

S/N: 4421-UP
266.7 MM (10.5 IN) BORE X 1140 MM (44.9 IN) STROKE
PART OF 251-3146 CYLINDER AR-TILT
AN ATTACHMENT

SMCS-5104 **i01945007**

NOTE	REF NO	GRAPHIC REF	PART NUMBER	QTY	PART NAME 1 2 3 4 5 6 (PRODUCT LEVEL)	SEE PAGE
R	1	1	**159-0888**	1	CYLINDER AS	
	1A	1	**6E-1776**	1	CAP AS	
	1B	1	**1V-7038**	1	BEARING-SLEEVE	
	2	1	**3G-5022**	1	LOCKNUT (4 1/2-12-THD)	
C	3	1	**229-9443**	1	RING-WEAR	
	4	1	**192-1455**	1	SEAL AS	
C	5	1	**229-9549**	1	PISTON	
	6	1	**5P-2236**	1	SEAL-O-RING	
	7	1	**164-7477**	1	HEAD	
CR	8	1	**230-0973**	1	ROD AS	
	8A	1	**1V-7038**	1	BEARING-SLEEVE	
	9	1	**9X-7420**	1	RING-WEAR	
	10	1	**167-2725**	1	SEAL AS-BUFFER	
	11	1	**167-2938**	1	SEAL-U-CUP	
	12	1	**225-3291**	1	SEAL-WIPER	
	14	1	**157-7244**	1	RING-BACKUP	
M	15	1	**101-0767**	2	BOLT (M36X4X150-MM)	
	16	1	**3S-6162**	8	WASHER-HARD (40.5X67X6-MM THK)	
M	17	1	**101-3672**	6	BOLT (M36X4X120-MM)	
	18	1	**9S-4182**	2	PLUG	
	19	1	**3J-7354**	2	SEAL-O-RING	
	20	1	**8L-9241**	1	SEAL-O-RING	

C-CHANGE FROM PREVIOUS TYPE
M-METRIC PART
R-REMFG PART MAY BE AVAILABLE

112-3172 CYLINDER GP-TILT *(contd.)* i01945007

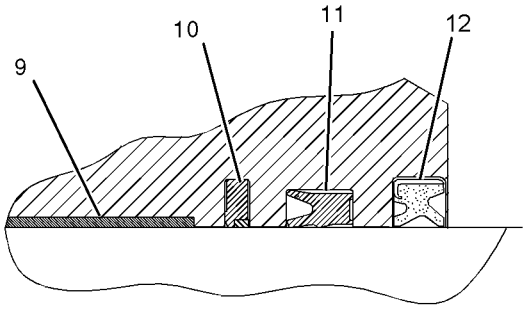

VIEW OF AREA A

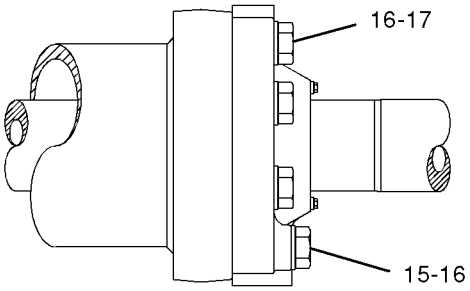

VIEW B-B

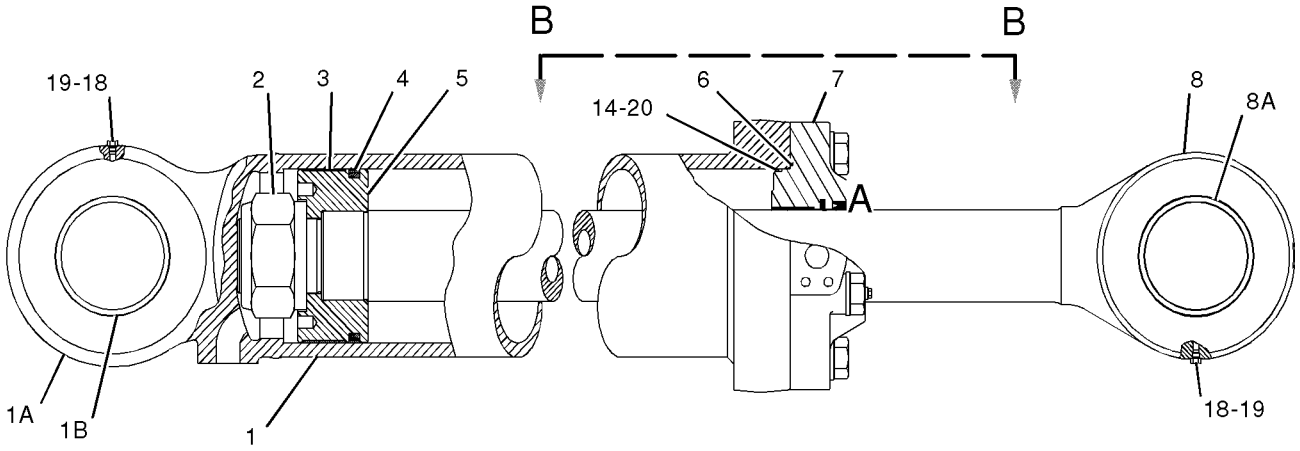

GRAPHIC #1 **<END>** g01012356

219-6272 CYLINDER GP-TILT—HIGH LIFT MACHINES, LH

S/N: 4421-UP
PART OF 251-3149 CYLINDER AR-TILT
AN ATTACHMENT

SMCS-5104 **i01945710**

NOTE	REF NO	GRAPHIC REF	PART NUMBER	QTY	PART NAME 1 2 3 4 5 6 (PRODUCT LEVEL)	SEE PAGE
R	1	1	**159-0888**	1	CYLINDER AS	
		1	**6E-1776**	1	CAP AS	
	2	1	**3G-5022**	1	LOCKNUT (4 1/2-12-THD)	
	3	1	**229-9443**	1	RING-WEAR	
	4	1	**192-1455**	1	SEAL AS	
	5	1	**229-9549**	1	PISTON	
	6	1	**5P-2236**	1	SEAL-O-RING	
	7	1	**164-7477**	1	HEAD	
		1	**167-2493**	1	SEAL-WIPER	
R	8	1	**219-6274**	1	ROD AS	
		1	**1V-7038**	1	BEARING-SLEEVE	
	9	1	**9X-7420**	1	RING-WEAR	
	10	1	**167-2725**	1	SEAL AS-BUFFER	
	11	1	**167-2938**	1	SEAL-U-CUP	
	12	1	**225-3291**	1	SEAL-WIPER	
M	13	1	**101-0767**	2	BOLT (M36X4X150-MM)	
	14	1	**3S-6162**	8	WASHER-HARD (40.5X67X6-MM THK)	
M	15	1	**101-3672**	6	BOLT (M36X4X120-MM)	
	16	1	**9S-4182**	2	PLUG	
	17	1	**3J-7354**	2	SEAL-O-RING	
	18	1	**8L-9241**	1	SEAL-O-RING	
	19	1	**157-7244**	1	RING-BACKUP	

M-METRIC PART
R-REMFG PART MAY BE AVAILABLE

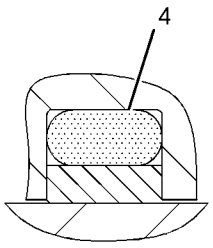

VIEW OF AREA B

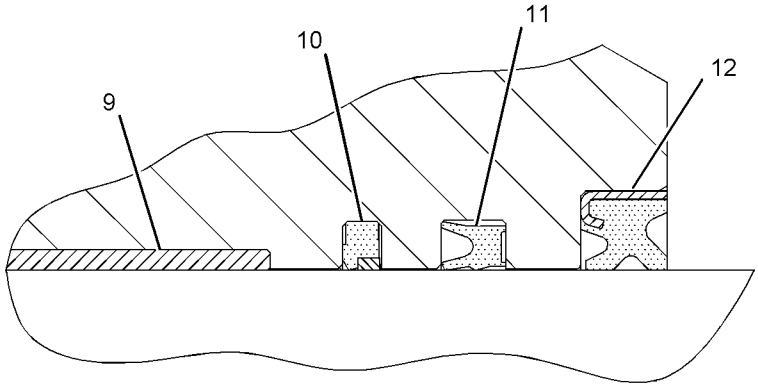

VIEW OF AREA A

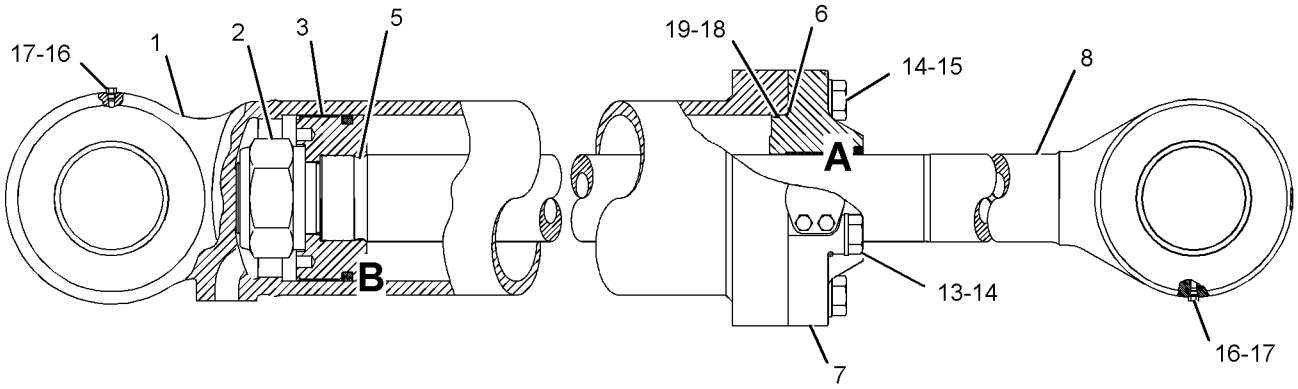

GRAPHIC #1 **<END>** g01080467

219-6273 CYLINDER GP-TILT—HIGH LIFT MACHINES, RH

S/N: 4421-UP
266.7-MM BORE X 1140-MM STROKE
PART OF 251-3149 CYLINDER AR-TILT
AN ATTACHMENT

SMCS-5104 **i01945665**

NOTE	REF NO	GRAPHIC REF	PART NUMBER	QTY	PART NAME 1 2 3 4 5 6 (PRODUCT LEVEL)	SEE PAGE
R	1	1	**159-0888**	1	CYLINDER AS	
	1A	1	**6E-1776**	1	CAP AS	
	1B	1	**1V-7038**	1	BEARING-SLEEVE	
	2	1	**3G-5022**	1	LOCKNUT (4 1/2-12-THD)	
	3	1	**229-9443**	1	RING-WEAR	
	4	1	**192-1455**	1	SEAL AS	
	5	1	**229-9549**	1	PISTON	
	6	1	**5P-2236**	1	SEAL-O-RING	
	7	1	**164-7477**	1	HEAD	
R	8	1	**219-6274**	1	ROD AS	
	8A	1	**1V-7038**	1	BEARING-SLEEVE	
	9	1	**9X-7420**	1	RING-WEAR	
	10	1	**167-2725**	1	SEAL AS-BUFFER	
	11	1	**167-2938**	1	SEAL-U-CUP	
	12	1	**225-3291**	1	SEAL-WIPER	
M	13	1	**101-0767**	2	BOLT (M36X4X150-MM)	
	14	1	**3S-6162**	8	WASHER-HARD (40.5X67X6-MM THK)	
M	15	1	**101-3672**	6	BOLT (M36X4X120-MM)	
	16	1	**9S-4182**	2	PLUG	
	17	1	**3J-7354**	2	SEAL-O-RING	
	18	1	**8L-9241**	1	SEAL-O-RING	
	19	1	**157-7244**	1	RING-BACKUP	

M-METRIC PART
R-REMFG PART MAY BE AVAILABLE

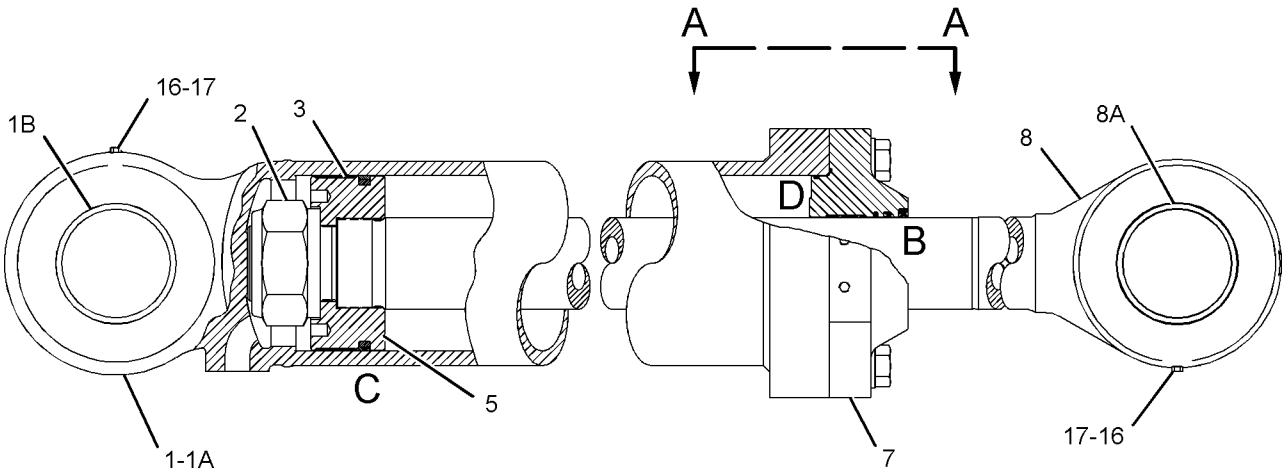

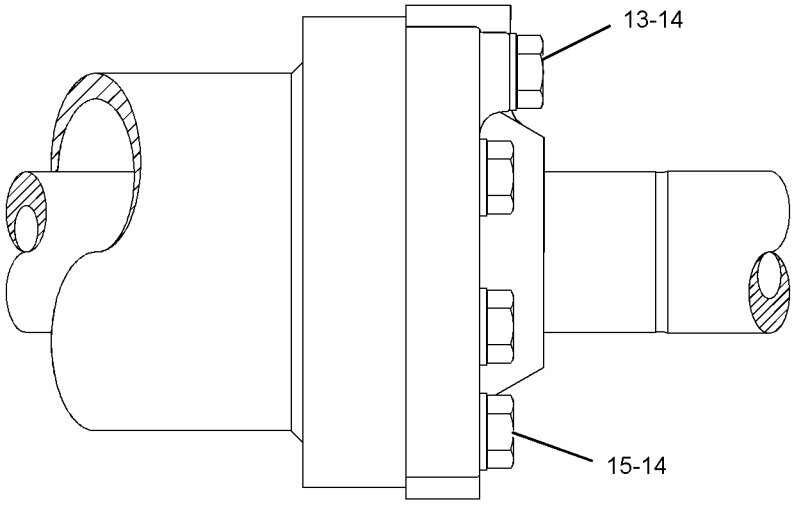

VIEW A-A

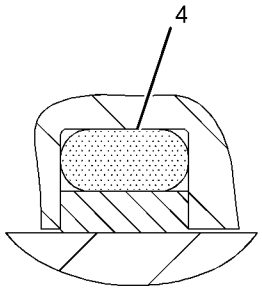

VIEW OF AREA C

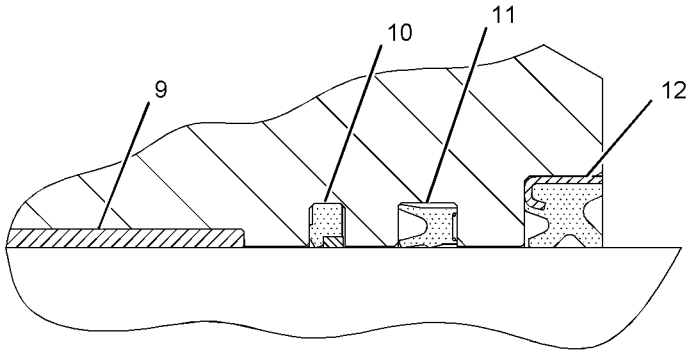

VIEW OF AREA B

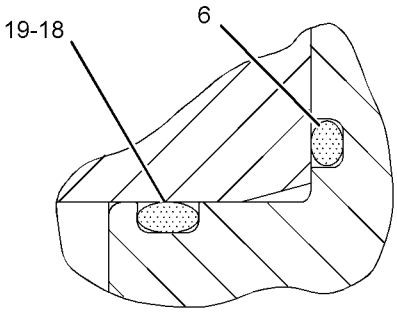

VIEW OF AREA D

GRAPHIC #1 **<END>** g01050376

247-4566 CYLINDER GP-TILT–SUPER HIGH LIFT MACHINES, LH

S/N: 4421-UP
266.7-MM BORE X 1040-MM STROKE
PART OF 251-3151 CYLINDER AR-TILT
AN ATTACHMENT

SMCS-5104 **i02154560**

NOTE	REF NO	GRAPHIC REF	PART NUMBER	QTY	PART NAME 1 2 3 4 5 6 (PRODUCT LEVEL)	SEE PAGE
	1	1	**248-5428**	1	CYLINDER AS	
		1	**1V-7038**	1	BEARING-SLEEVE	
	2	1	**248-5430**	1	PISTON	
	3	1	**248-5431**	1	ROD AS	
		1	**1V-7038**	1	BEARING-SLEEVE	
	4	1	**248-5437**	1	HEAD	
	5	1	**157-7244**	1	RING-BACKUP	
	6	1	**167-2230**	1	SEAL AS-BUFFER	
	7	1	**167-2415**	1	SEAL-U-CUP	
	8	1	**192-1455**	1	SEAL AS	
	9	1	**1F-6762**	6	BOLT (1 1/2-12X4.5-IN)	
	10	1	**225-3295**	1	SEAL-WIPER	
	11	1	**229-9443**	1	RING-WEAR	
	12	1	**3G-5022**	1	LOCKNUT (4 1/2-12-THD)	
	13	1	**3J-7354**	2	SEAL-O-RING	
	14	1	**3S-6162**	8	WASHER-HARD (40.5X67X6-MM THK)	
	15	1	**5F-9891**	2	BOLT (1 1/2-12X6-IN)	
	16	1	**5P-2236**	1	SEAL-O-RING	
	17	1	**8C-9102**	1	RING-WEAR	
	18	1	**8L-9241**	1	SEAL-O-RING	
	19	1	**9S-4182**	2	PLUG	

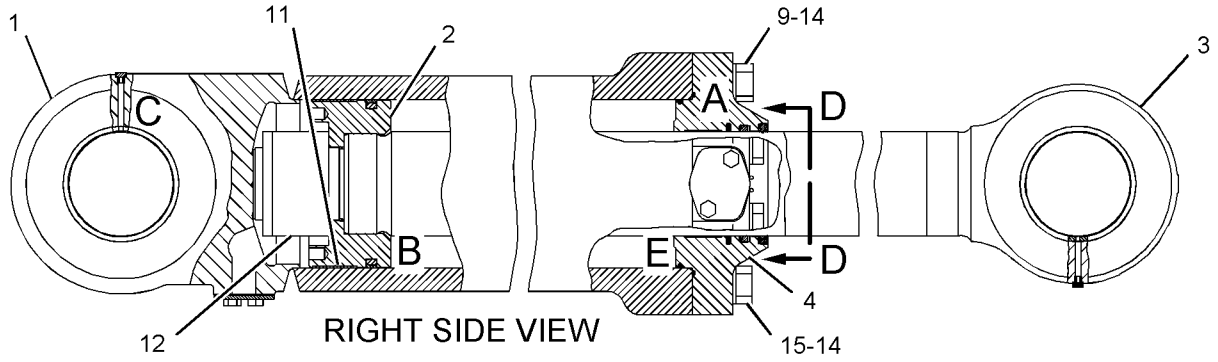

RIGHT SIDE VIEW

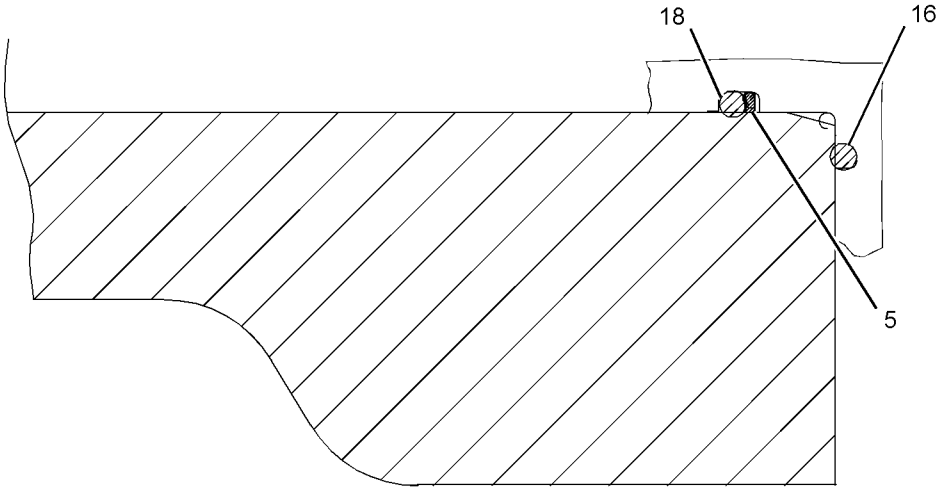

VIEW OF AREA E

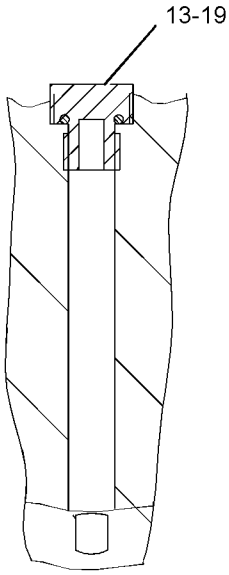

VIEW OF AREA C

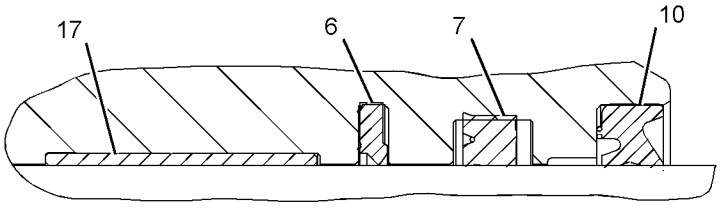

VIEW OF AREA A

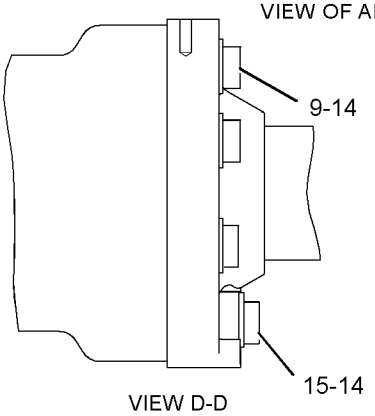

VIEW D-D

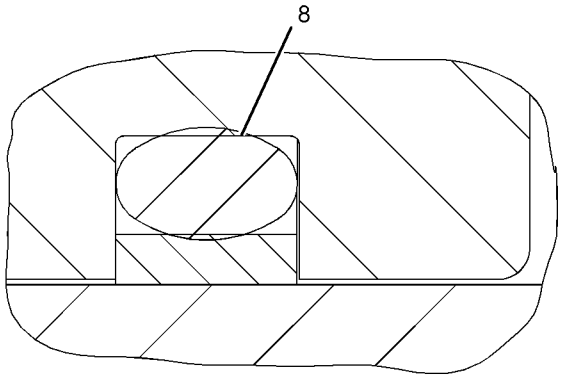

VIEW OF AREA B

GRAPHIC #1 **<END>** g01095777

251-2005 CYLINDER GP-TILT–SUPER HIGH LIFT MACHINES, RH

S/N: 4421-UP
266.7-MM BORE X 1040-MM STROKE
PART OF 251-3151 CYLINDER AR-TILT
AN ATTACHMENT

SMCS-5104 **i02328197**

NOTE	REF NO	GRAPHIC REF	PART NUMBER	QTY	PART NAME 1 2 3 4 5 6 (PRODUCT LEVEL)	SEE PAGE
	1	1	**248-5428**	1	CYLINDER AS	
		1	**1V-7038**	1	BEARING-SLEEVE	
	2	1	**248-5430**	1	PISTON	
	3	1	**248-5431**	1	ROD AS	
		1	**1V-7038**	1	BEARING-SLEEVE	
	4	1	**248-5437**	1	HEAD	
	5	1	**157-7244**	1	RING-BACKUP	
	6	1	**167-2230**	1	SEAL AS-BUFFER	
	7	1	**167-2415**	1	SEAL-U-CUP	
	8	1	**192-1455**	1	SEAL AS	
	9	1	**1F-6762**	6	BOLT (1-1/2-12X4.5-IN)	
	10	1	**225-3295**	1	SEAL-WIPER	
	11	1	**229-9443**	1	RING-WEAR	
	12	1	**3G-5022**	1	LOCKNUT (4 1/2-12-THD)	
	13	1	**3J-7354**	2	SEAL-O-RING	
	14	1	**3S-6162**	8	WASHER-HARD (40.5X67X6-MM THK)	
	15	1	**5F-9891**	2	BOLT (1-1/2-12X6-IN)	
	16	1	**5P-2236**	1	SEAL-O-RING	
	17	1	**8C-9102**	1	RING-WEAR	
	18	1	**8L-9241**	1	SEAL-O-RING	
	19	1	**9S-4182**	2	PLUG	

251-2005 CYLINDER GP-TILT *(contd.)* **i02328197**

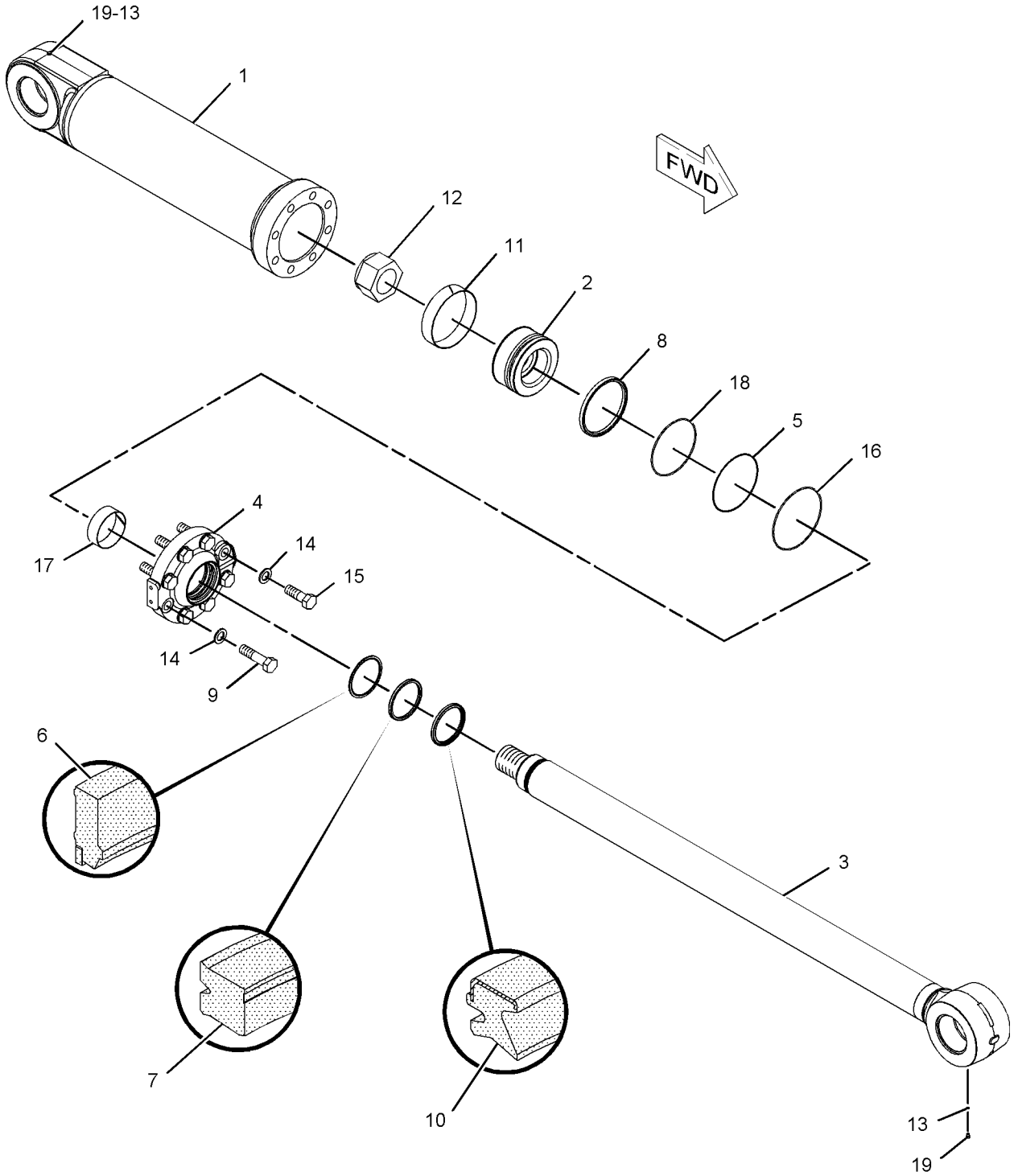

GRAPHIC #1 **<END>** g01095904

HYDRAULIC SYSTEM

244-7290 FILLER GP-HYDRAULIC OIL—IMPLEMENT TANK

S/N: 4421-UP

PART OF 244-7300 HYDRAULIC AR-FRONT

SMCS-5056 **i02334604**

NOTE	REF NO	GRAPHIC REF	PART NUMBER	QTY	PART NAME 1 2 3 4 5 6 (PRODUCT LEVEL)	SEE PAGE
	1	1	**2D-4202**	1	PLATE	
	2	1	**5J-7438**	1	STRAINER AS	
	2A	1	**5F-3488**	1	END-STRAINER	
	3	1	**7H-1447**	1	CAP-FILLER (HYDRAULIC OIL)	
	4	1	**7X-7958**	2	CLAMP-HOSE	
	5	1	**8X-7517**	1	BRACKET AS	
M		1	**8T-3490**	1	NUT-WELD (M10X1.5-THD)	
	6	1	**9T-0818**	1	VALVE-BREAKER RELIEF	
	7	1	**117-6712**	1	BLOCK	
	8	1	**117-6713**	1	BLOCK	
	9	1	**118-0166**	1	FITTING AS (QUICK DISCONNECT)	
		1	**118-0165**	1	CAP-FILLER	
	10	1	**147-4410**	1	HOSE	
	11	1	**147-9560**	1	GAUGE-SIGHT	
I	12	1	**165-9996**	1	HOSE AS	
I	13	1	**199-6859**	1	HOSE AS	
	14	1	**251-0094**	1	TUBE AS	
I	15	1	**251-0095**	1	HOSE AS	
I	16	1	**251-0096**	1	HOSE AS	
I	17	1	**251-0097**	1	HOSE AS	
	18	1	**251-0098**	1	ANGLE	
	19	1	**251-0099**	1	TUBE AS	
	20	1	**254-6064**	1	TUBE AS	
	21	1	**272-7982**	1	BRACKET	
	22	1	**117-8568**	1	NUT-BULKHEAD (1-7/8-12-THD)	
	23	1	*148-8352*	1	ELBOW AS	
		1	**5K-9090**	1	SEAL-O-RING	
		1	**6V-9854**	1	ELBOW (SWIVEL)	
	24	1	*148-8357*	3	ELBOW AS	
					(EACH INCLUDES)	
		1	**5K-9090**	1	SEAL-O-RING	
		1	**6V-9008**	1	ELBOW	
		1	**7M-8485**	1	SEAL-O-RING	
	25	1	*148-8362*	1	ELBOW AS	
		1	**3D-2824**	1	SEAL-O-RING	
		1	**5K-9090**	1	SEAL-O-RING	
		1	**8T-6684**	1	ELBOW (90-DEG)	
	26	1	*148-8391*	1	ELBOW AS	
		1	**2S-4078**	1	SEAL-O-RING	
		1	**5K-9090**	1	SEAL-O-RING	
		1	**8T-8987**	1	ELBOW	
	27	1	*148-8429*	1	TEE AS	
		1	**5K-9090**	2	SEAL-O-RING	
		1	**6V-9840**	1	TEE-SWIVEL	
	28	1	*148-8431*	1	TEE GP	
		1	**5K-9090**	2	SEAL-O-RING	
		1	**6V-8785**	1	TEE	
		1	**7M-8485**	1	SEAL-O-RING	
	29	1	**259-8973**	1	CLIP	
	30	1	**259-8974**	1	CLIP	
	31	1	**1P-4582**	2	FLANGE-HALF	
	32	1	**3D-2824**	1	SEAL-O-RING	
	33	1	**4J-0520**	2	SEAL-O-RING	
	34	1	**4J-0527**	1	SEAL-O-RING	
	35	1	**5K-9090**	2	SEAL-O-RING	
	36	1	**5P-7468**	3	CLIP (SLOT)	

244-7290 **FILLER GP-HYDRAULIC OIL** *(contd.)* **i02334604**

NOTE	REF NO	GRAPHIC REF	PART NUMBER	QTY	PART NAME 1 2 3 4 5 6 (PRODUCT LEVEL)	SEE PAGE
	37	1	**5P-7469**	3	CLIP (TAB)	
	38	1	**5P-8444**	3	GROMMET	
	39	1	**6H-9361**	1	RING-RETAINING	
	40	1	**6V-2235**	1	CLIP	
	41	1	**6V-3378**	1	CLIP	
	42	1	**7C-4354**	3	CLIP	
	43	1	**7D-7233**	2	CLIP	
	44	1	**7X-7729**	2	WASHER (11X25X3-MM THK)	
	45	1	**8C-3206**	4	FLANGE-HALF	
	46	1	**8T-2275**	1	BALL	
	47	1	**8T-2561**	1	WASHER-HARD (10.5X28.5X5-MM THK)	
	48	1	**8T-4121**	15	WASHER-HARD (11X21X2.5-MM THK)	
M	49	1	**8T-4133**	2	NUT (M10X1.15-THD)	
M	50	1	**8T-4136**	4	BOLT (M10X1.5X25-MM)	
M	51	1	**8T-4139**	2	BOLT (M12X1.75X30-MM)	
M	52	1	**8T-4183**	4	BOLT (M12X1.75X40-MM)	
M	53	1	**8T-4192**	1	BOLT (M12X1.75X25-MM)	
M	54	1	**8T-4195**	3	BOLT (M10X1.5X30-MM)	
M	55	1	**8T-4196**	9	BOLT (M10X1.5X35-MM)	
	56	1	**8T-4223**	9	WASHER-HARD (13.5X25.5X3-MM THK)	
M	57	1	**8T-6868**	2	BOLT (M12X1.75X80-MM)	
	58	1	**9H-6454**	1	GASKET	

I-REFER TO HYDRAULIC INFORMATION SYSTEM
M-METRIC PART

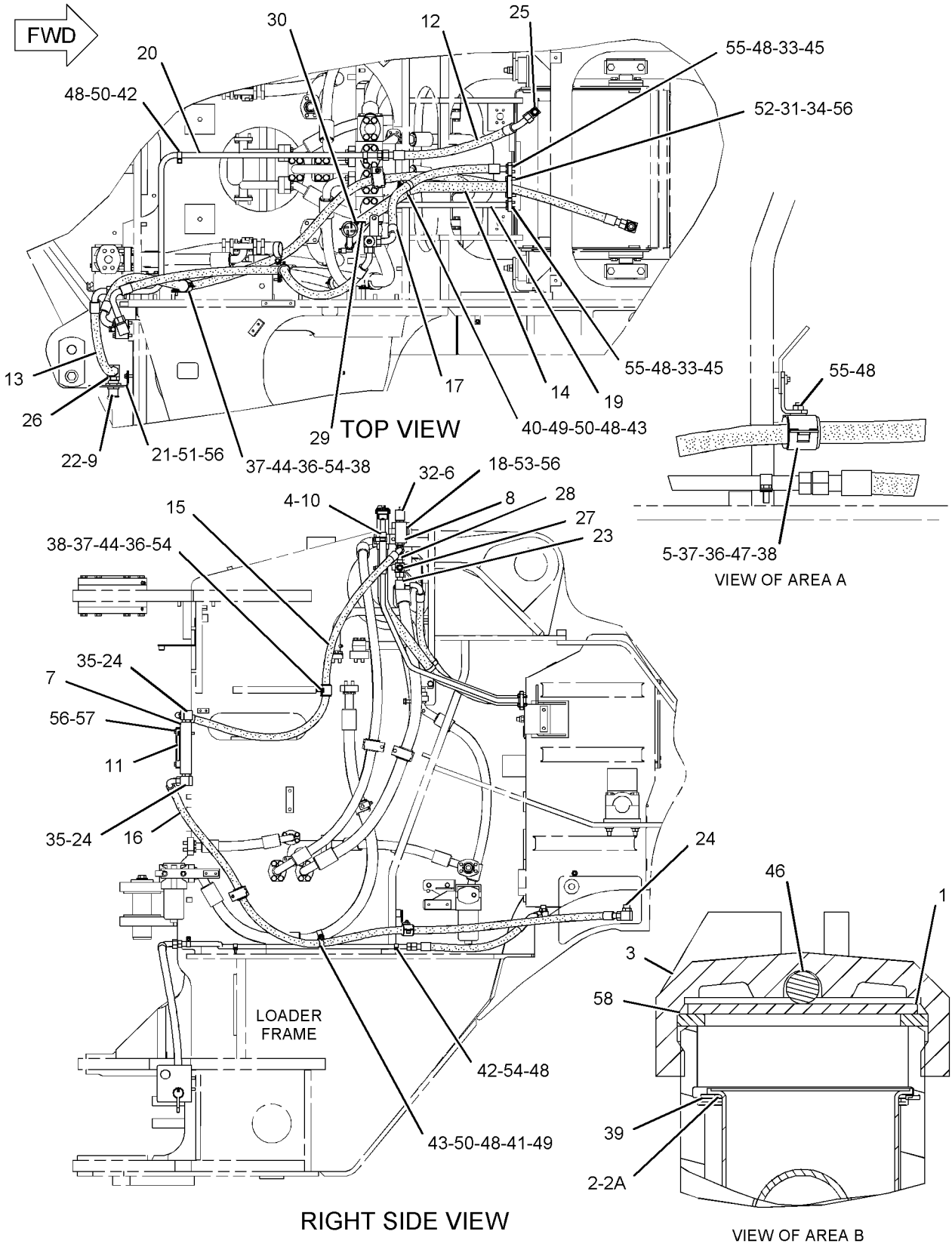

GRAPHIC #1 **<END>** g01143487

HYDRAULIC SYSTEM

264-3509 FILTER & MTG GP-PLT & PUMP DR

S/N: 4421-UP

PART OF 244-7300 HYDRAULIC AR-FRONT

SMCS-3004, 5068 **i02285773**

NOTE	REF NO	GRAPHIC REF	PART NUMBER	QTY	PART NAME 1 2 3 4 5 6 (PRODUCT LEVEL)	SEE PAGE
	1	1	**8F-0492**	4	SPACER (0.531X1.125X0.625-IN THK)	
Y	2	1	**108-1095**	1	FILTER GP-OIL (FRONT PUMP DRIVE)	771
Y	3	1	**115-2129**	1	FILTER GP-OIL (IMPLEMENT PILOT)	675
	4	1	**264-6672**	1	BRACKET AS	
M		1	**8T-3490**	2	NUT-WELD (M10X1.5-THD)	
	5	1	**8T-4121**	8	WASHER-HARD (11X21X2.5-MM THK)	
M	6	1	**8T-4184**	4	BOLT (M12X1.75X45-MM)	
M	7	1	**8T-4195**	8	BOLT (M10X1.5X30-MM)	
	8	1	**8T-4223**	4	WASHER-HARD (13.5X25.5X3-MM THK)	

M-METRIC PART
Y-SEPARATE ILLUSTRATION

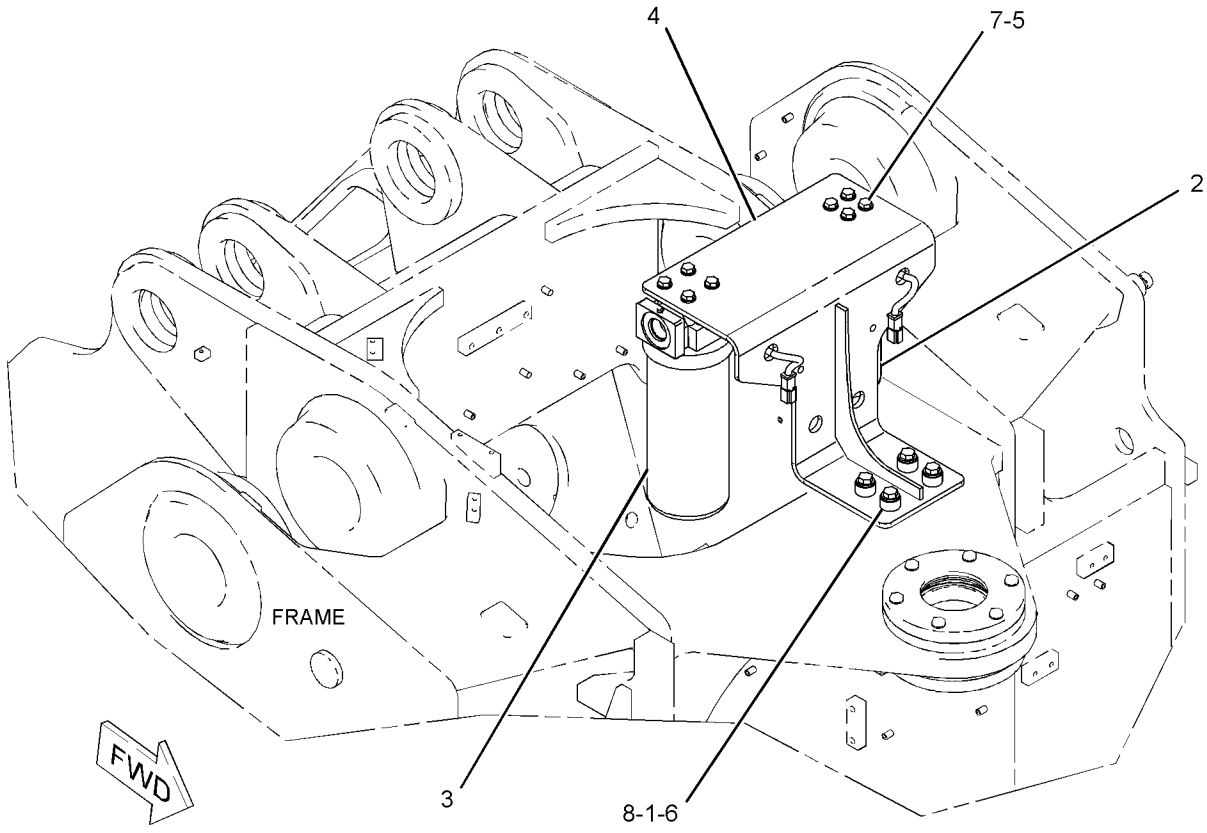

GRAPHIC #1 **<END>** g01144883

108-1095 FILTER GP-OIL–FRONT PUMP DRIVE

S/N: 4421-UP

PART OF 264-3509 FILTER & MTG GP-PLT & PUMP DR

SMCS-5068, 5091, 5092 **i02312796**

NOTE	REF NO	GRAPHIC REF	PART NUMBER	QTY	PART NAME 1 2 3 4 5 6 (PRODUCT LEVEL)	SEE PAGE
	1	1	**1G-8878**	1	FILTER ELEMENT (PUMP DRIVE)	
	2	1	**227-6744**	1	SWITCH GP-PRESSURE (OIL FILTER BYPASS) (PUMP DRIVE FILTER BYPASS)	
	3	1	**8T-8729**	2	PIN-CONNECTOR	
BE	4	1	**9X-1813**		SLEEVE	
	5	1	**102-8802**	1	KIT-RECEPTACLE (2-PIN)	
					(INCLUDES RECEPTACLE AS AND WEDGE)	
	6	1	**3E-3365**	1	WEDGE-RECEPTACLE LOCK (2-PIN)	
	7	1	**3J-1907**	1	SEAL-O-RING	
	8	1	**5F-9144**	1	SEAL-O-RING	

B-USE AS REQUIRED
E-ORDER BY THE CENTIMETER

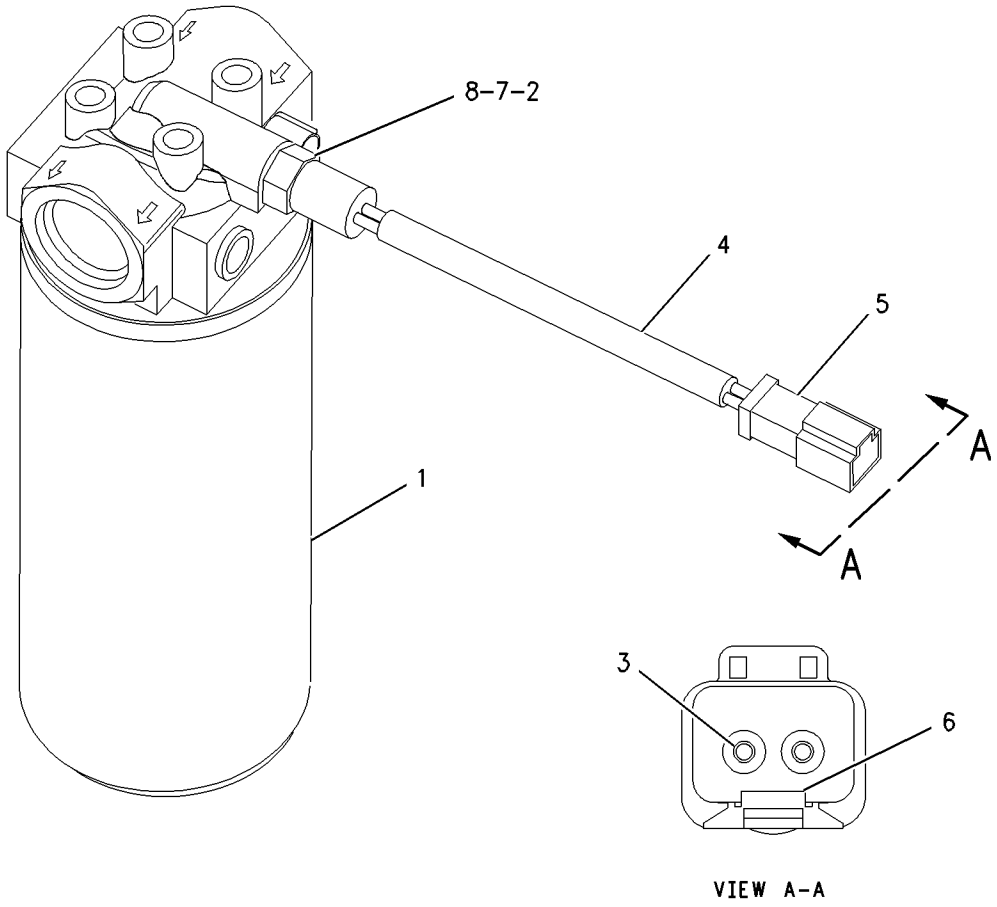

VIEW A-A

GRAPHIC #1 **<END>** g00666996

HYDRAULIC SYSTEM

253-1553 HEAD GP-PUMP

S/N: 4421-UP

PART OF 245-8893 PUMP GP-PISTON

SMCS-5070 **i02148628**

NOTE	REF NO	GRAPHIC REF	PART NUMBER	QTY	PART NAME 1 2 3 4 5 6 (PRODUCT LEVEL)	SEE PAGE
M	1	1	**123-2017**	1	PLUG	
	2	1	**200-0953**	1	HEAD	
	3	1	**099-5845**	4	PLUG	
	4	1	**6E-3873**	1	PLUG-ORIFICE	
J	5	1	**120-4394**	10	PLUG-BREAK OFF	
	6	1	**200-0954**	1	COUPLING	
	7	1	**5I-4277**	1	ORIFICE	
	8	1	**5I-4341**	4	DOWEL	
	9	1	**179-6918**	2	DOWEL	
	10	1	**5I-4374**	2	BEARING-ROLLER	
	11	1	**3J-1907**	4	SEAL-O-RING	
	12	1	**215-6409**	1	BUSHING	
	13	1	**200-0955**	1	BLOCK	
M	14	1	**9T-3928**	4	PLUG AS	
					(EACH INCLUDES)	
		1	**187-8001**	1	SEAL	
	15	1	**215-1351**	1	RING-RETAINING	
	16	1	**253-3376**	2	PIN-THREADED	

J-ONE DOUBLE ENDED BREAK-OFF PLUG YIELDS TWO USABLE PLUGS
M-METRIC PART

253-1553 HEAD GP-PUMP *(contd.)* **i02148628**

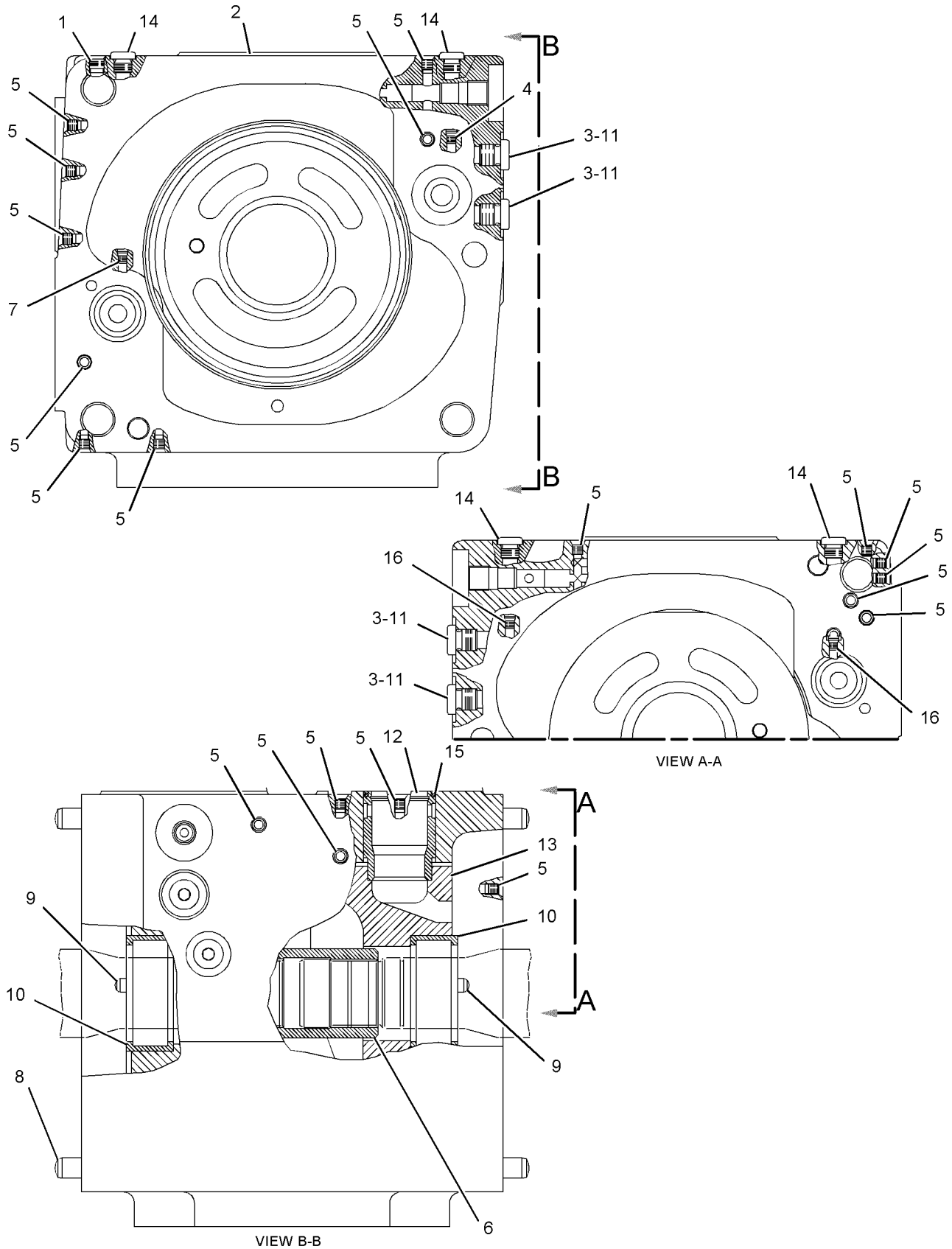

GRAPHIC #1 **<END>** g01090273

HYDRAULIC SYSTEM

244-7300 HYDRAULIC AR-FRONT

S/N: 4421-UP

PART OF 245-8811 CHASSIS AR-FRONT

SMCS-5050 **i02282506**

NOTE	PART NUMBER	QTY	PART NAME 1 2 3 4 5 6 (PRODUCT LEVEL)	SEE PAGE
Y	*264-0445*	1	OIL CHANGE GP-HIGH SPEED (FRONT PUMP DRIVE)	91
Y	*244-7290*	1	FILLER GP-HYDRAULIC OIL (IMPLEMENT TANK)	767
Y	*264-3509*	1	FILTER & MTG GP-PLT & PUMP DR	770
Y	*264-0000*	1	GAUGE GP-OIL LEVEL (DIPSTICK)	79
Y	*244-7280*	1	LINES GP-BRAKE COOLING (FRONT)	632
Y	*244-7315*	1	LINES GP-CASE DRAIN (IMPLEMENT PUMP)	780
Y	*245-1890*	1	LINES GP-DIAGNOSTIC (REMOTE PRESSURE TAPS, FRONT)	1082
Y	*244-7310*	1	LINES GP-HYDRAULIC (HIGH PRESSURE SCREENS)	789
Y	*244-7330*	1	LINES GP-HYDRAULIC (FRONT)	792
Y	*244-7285*	1	LINES GP-HYDRAULIC OIL COOLER	797
Y	*244-7240*	1	LINES GP-LIFT CYLINDER	804
Y	*244-7297*	1	LINES GP-PARKING BRAKE (FRONT)	639
Y	*251-7549*	1	LINES GP-PAYLOAD MONITOR HYD	811
Y	*244-7245*	1	LINES GP-PILOT (FRONT)	813
Y	*244-7320*	1	LINES GP-POWER TAKE-OFF (PUMP DRIVE)	428
Y	*245-1850*	1	LINES GP-SERVICE BRAKE (FRONT)	644
Y	*244-7250*	1	LINES GP-TILT CYLINDER	824
Y	*8X-0065*	1	PUMP & MTG GP-DRIVE LUBE	452
Y	*244-7325*	1	PUMP & MTG GP-IMPLEMENT	834
Y	*244-7255*	1	PUMP & MTG GP-PILOT & COOLER	835
Y	*244-7260*	1	TANK & MTG GP-HYDRAULIC (IMPLEMENT)	849
Y	*244-7270*	1	VALVE & MTG GP-MAIN CONTROL	859

Y-SEPARATE ILLUSTRATION

<END>

HYDRAULIC SYSTEM

245-0700 HYDRAULIC AR-REAR

S/N: 4421-UP

PART OF 245-8812 CHASSIS AR-REAR

SMCS-5050 **i02412463**

NOTE	PART NUMBER	QTY	PART NAME 1 2 3 4 5 6 (PRODUCT LEVEL)	SEE PAGE
Y	*245-0690*	1	CONTROL GP-SERVICE BRAKE	615
Y	*8X-0070*	1	CYLINDER & MTG GP-STEERING	664
Y	*8X-0072*	1	FILTER & MTG GP-STEER & IMPL	671
Y	*245-1270*	1	LINES GP-BRAKE COOLING (REAR)	634
Y	*245-0730*	1	LINES GP-CASE DRAIN (STEERING)	782
Y	*245-3250*	1	LINES GP-DIAGNOSTIC (REMOTE PRESSURE TAPS, REAR)	1085
Y	*8X-0073*	1	LINES GP-DRAIN (ENGINE OIL PAN, COOLERS, TMSN)	784
Y	*245-0720*	1	LINES GP-HYDRAULIC	796
Y	*245-1260*	1	LINES GP-STEERING (MAIN PUMP, REAR)	687
Y	*245-0735*	1	LINES GP-HYDRAULIC OIL COOLER (REAR FRAME)	799
Y	*245-0740*	1	LINES GP-HYDRAULIC OIL COOLER (REAR FRAME TO COOLER)	802
Y	*245-0710*	1	LINES GP-PILOT (REAR)	820
Y	*245-1295*	1	LINES GP-SECONDARY STEERING	677
Y	*245-0715*	1	LINES GP-ACCUMULATOR (BRAKE)	619
Y	*245-1275*	1	LINES GP-STEER & BRAKE COOLER (REAR FRAME TO COOLER)	681
Y	*245-1280*	1	LINES GP-STEER & BRAKE COOLER (REAR FRAME)	684
Y	*245-1290*	1	LINES GP-STEERING	692
Y	*246-1030*	1	LINES GP-STEERING NEUTRALIZER (REAR FRAME)	697
Y	*245-1265*	1	VALVE & LINES GP-STEERING NEUT	712
Y	*245-1285*	1	LINES GP-TRANSMISSION OIL	431
Y	*8X-0083*	1	PUMP & MTG GP-BRAKE	645
Y	*245-0695*	1	PUMP & MTG GP-STEERING & BRAKE	701
Y	*8X-0082*	1	PUMP & MTG GP-STER & BRAKE CLR	702
Y	*251-2240*	1	PUMP GP-TRANSMISSION (CHARGE)	455
Y	*235-0624*	1	TANK & MTG GP-HYDRAULIC (STEERING, BRAKE, BRAKE COOLING)	847
Y	*250-5830*	1	VALVE & MTG GP-BRAKE CONTROL (PARKING)	652
Y	*234-2835*	1	VALVE & MTG GP-SECONDARY STEER	714
Y	*152-8947*	1	VALVE & MTG GP-STEERING	715
			S/N: 4421-171	
Y	*277-5434*	1	VALVE & MTG GP-STEERING	716
			S/N: 442172-UP	

Y-SEPARATE ILLUSTRATION

<END>

HYDRAULIC SYSTEM

251-3143 KICKOUT & POSITIONER GP–TILT

S/N: 4421-UP
PART OF 245-8805, 245-8806 LIFT AR
AN ATTACHMENT

SMCS-5109, 5112 **i02153500**

NOTE	REF NO	GRAPHIC REF	PART NUMBER	QTY	PART NAME 1 2 3 4 5 6 (PRODUCT LEVEL)	SEE PAGE
	1	1	**2A-6833**	1	CLAMP AS	
	2	1	**2A-6834**	1	BLOCK	
	3	1	**2A-6836**	1	TUBE AS	
	4	1	**3V-6909**	1	BLOCK	
	5	1	**5T-1831**	2	CLAMP	
	6	1	**8X-1519**	1	MAGNET AS	
	7	1	**8X-1525**	1	COVER AS	
M		1	**6V-8224**	2	NUT-WELD (M10X1.15-THD)	
	8	1	**117-7464**	1	BRACKET AS	
		1	**5T-1831**	2	CLAMP	
	9	1	**125-2706**	1	PLATE AS	
M		1	**8T-3490**	1	NUT-WELD (M10X1.5-THD)	
	10	1	**125-8534**	1	PLATE AS	
M		1	**8T-3490**	1	NUT-WELD (M10X1.5-THD)	
Y	11	1	**176-5459**	1	CONTROL GP-POSITION (BUCKET)	216
	12	1	**247-2788**	1	HARNESS AS-CONTROL (BUCKET POSITIONER)	
		1	**102-8803**	2	KIT-RECEPTACLE (3-PIN)	
					(INCLUDES RECEPTACLE ASSEMBLY AND WEDGE)	
		1	**8T-8737**	3	PLUG-SEAL	
		1	**155-2260**	1	KIT-CONNECTING PLUG (3-PIN)	
					(INCLUDES PLUG ASSEMBLY AND WEDGE)	
Y	13	1	**251-6744**	1	MOUNTING GP-SENSOR (BUCKET POSITIONER)	264
	14	1	**5P-2369**	1	CLIP	
	15	1	**5P-9297**	1	CLIP	
	16	1	**6K-8178**	1	CLIP	
	17	1	**6V-3378**	5	CLIP	
M	18	1	**7X-2549**	4	BOLT (M12X1.75X100-MM)	
	19	1	**8T-4121**	20	WASHER-HARD (11X21X2.5-MM THK)	
M	20	1	**8T-4122**	4	WASHER-HARD (17X32X3.5-MM THK)	
M	21	1	**8T-4133**	6	NUT (M10X1.15-THD)	
M	22	1	**8T-4136**	9	BOLT (M10X1.5X25-MM)	
M	23	1	**8T-4137**	3	BOLT (M10X1.5X20-MM)	
M	24	1	**8T-4195**	2	BOLT (M10X1.5X30-MM)	
	25	1	**8T-4223**	10	WASHER-HARD (13.5X25.5X3-MM THK)	
	26	1	**8T-4224**	2	WASHER-HARD (8.8X16X2-MM THK)	
M	27	1	**8T-4244**	6	NUT (M12X1.75-THD)	
M	28	1	**8T-4779**	4	BOLT (M16X2X35-MM)	
M	29	1	**8T-6912**	2	BOLT (M8X1.25X50-MM)	
	30	1	**9M-8406**	7	CLIP	

M-METRIC PART
Y-SEPARATE ILLUSTRATION

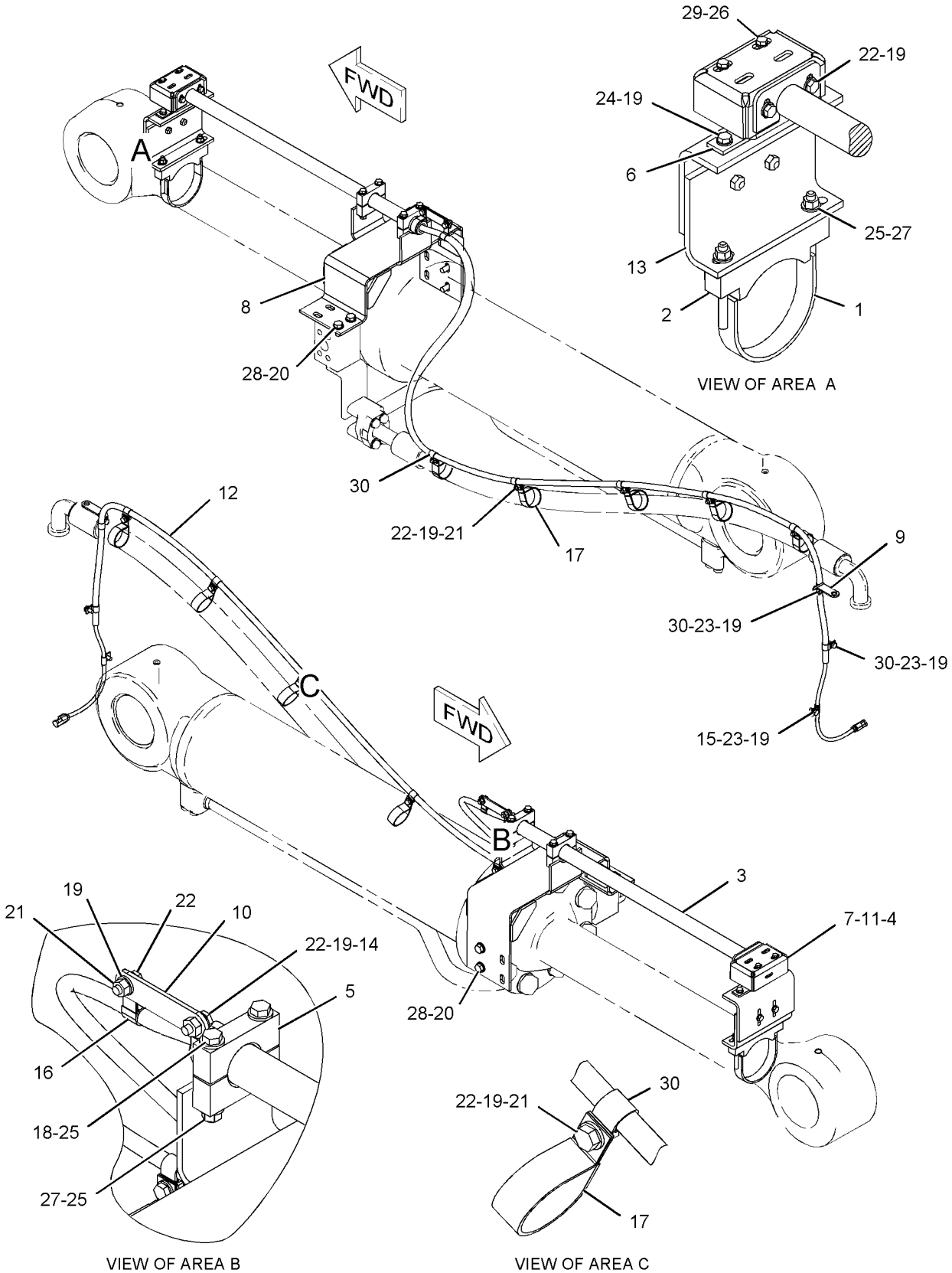

GRAPHIC #1 **<END>** g01096291

HYDRAULIC SYSTEM

251-3144 KICKOUT & POSITIONER GP–TILT

S/N: 4421-UP
PART OF 245-8807 LIFT AR
AN ATTACHMENT

SMCS-5109, 5112 **i02154618**

NOTE	REF NO	GRAPHIC REF	PART NUMBER	QTY	PART NAME 1 2 3 4 5 6 (PRODUCT LEVEL)	SEE PAGE
	1	1	**2A-6836**	1	TUBE AS	
	2	1	**3V-6909**	1	BLOCK	
	3	1	**5T-1831**	2	CLAMP	
	4	1	**8X-1519**	1	MAGNET AS	
	5	1	**8X-1525**	1	COVER AS	
M		1	**6V-8224**	2	NUT-WELD (M10X1.15-THD)	
	6	1	**117-7464**	1	BRACKET AS	
		1	**5T-1831**	2	CLAMP	
	7	1	**125-2706**	1	PLATE AS	
M		1	**8T-3490**	1	NUT-WELD (M10X1.5-THD)	
	8	1	**125-8534**	1	PLATE AS	
M		1	**8T-3490**	1	NUT-WELD (M10X1.5-THD)	
Y	9	1	**176-5459**	1	CONTROL GP-POSITION (BUCKET)	216
	10	1	**247-2788**	1	HARNESS AS-CONTROL (BUCKET POSITIONER)	
		1	**102-8803**	2	KIT-RECEPTACLE (3-PIN)	
					(EACH KIT INCLUDES RECEPTACLE ASSEMBLY AND WEDGE)	
		1	**8T-8737**	3	PLUG-SEAL	
		1	**155-2260**	1	KIT-CONNECTING PLUG (3-PIN)	
					(INCLUDES PLUG ASSEMBLY AND WEDGE)	
Y	11	1	**251-6744**	1	MOUNTING GP-SENSOR (BUCKET POSITIONER)	264
	12	1	**251-6745**	1	CLAMP AS	
	13	1	**251-6751**	1	BLOCK	
	14	1	**5P-2369**	1	CLIP	
	15	1	**5P-9297**	1	CLIP	
	16	1	**6K-8178**	1	CLIP	
	17	1	**6V-3378**	5	CLIP	
M	18	1	**7X-2549**	4	BOLT (M12X1.75X100-MM)	
	19	1	**8T-4121**	20	WASHER-HARD (11X21X2.5-MM THK)	
M	20	1	**8T-4122**	4	WASHER-HARD (17X32X3.5-MM THK)	
M	21	1	**8T-4133**	6	NUT (M10X1.15-THD)	
M	22	1	**8T-4136**	9	BOLT (M10X1.5X25-MM)	
M	23	1	**8T-4137**	3	BOLT (M10X1.5X20-MM)	
M	24	1	**8T-4195**	2	BOLT (M10X1.5X30-MM)	
	25	1	**8T-4223**	10	WASHER-HARD (13.5X25.5X3-MM THK)	
	26	1	**8T-4224**	2	WASHER-HARD (8.8X16X2-MM THK)	
M	27	1	**8T-4244**	6	NUT (M12X1.75-THD)	
M	28	1	**8T-4779**	4	BOLT (M16X2X35-MM)	
M	29	1	**8T-6912**	2	BOLT (M8X1.25X50-MM)	
	30	1	**9M-8406**	7	CLIP	

M-METRIC PART
Y-SEPARATE ILLUSTRATION

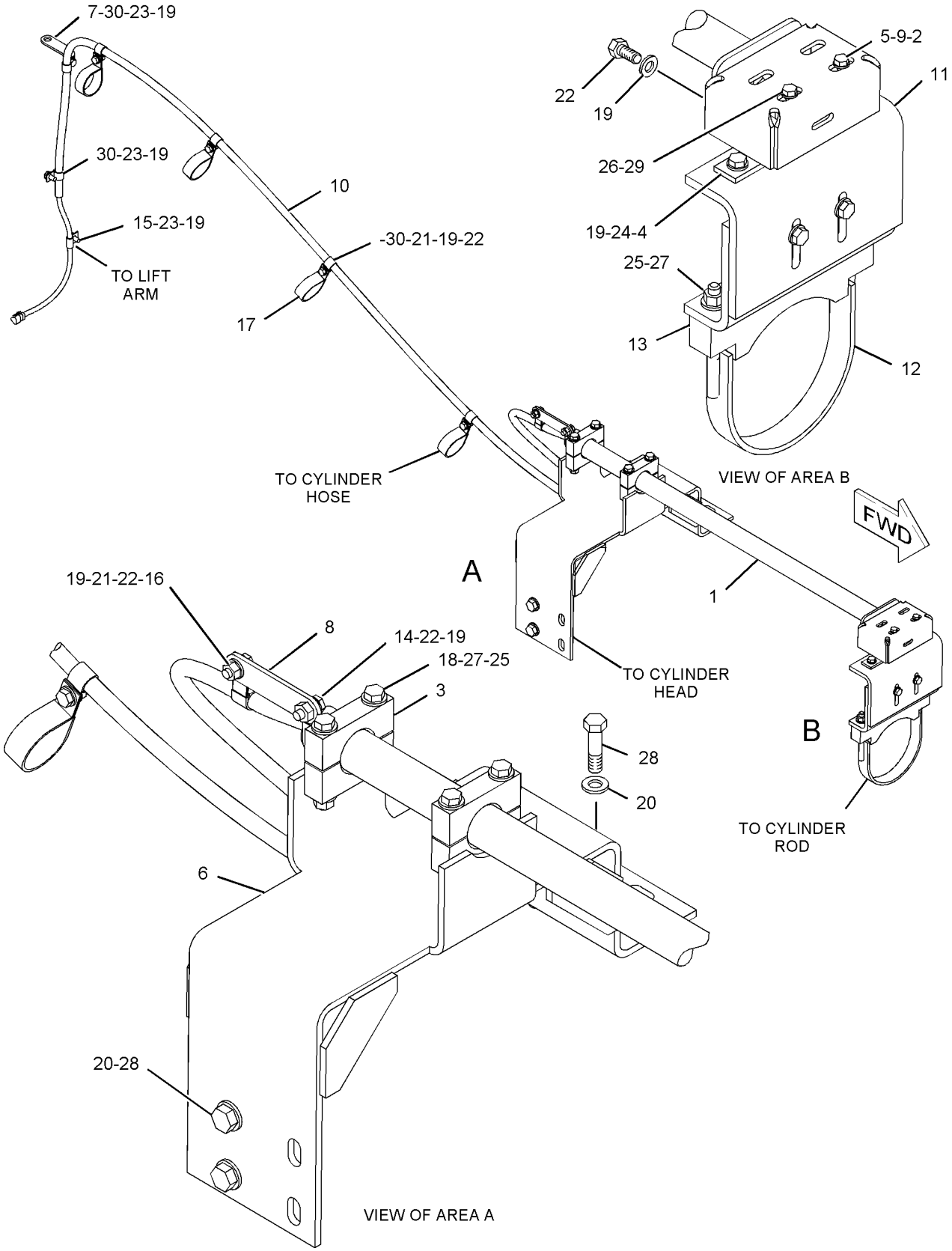

GRAPHIC #1

<END>

g01096378

HYDRAULIC SYSTEM

244-7315 LINES GP-CASE DRAIN—IMPLEMENT PUMP

S/N: 4421-UP

PART OF 244-7300 HYDRAULIC AR-FRONT

SMCS-5057, 5091 **i02282508**

NOTE	REF NO	GRAPHIC REF	PART NUMBER	QTY	PART NAME 1 2 3 4 5 6 (PRODUCT LEVEL)	SEE PAGE
Y	1	1	**115-2129**	4	FILTER GP-OIL (IMPLEMENT PUMP CASE DRAIN)	675
I	2	1	**160-0363**	1	HOSE AS	
	3	1	**167-7763**	1	BRACKET AS	
M		1	**8T-3597**	1	NUT-WELD (M12X1.75-THD)	
I	4	1	**192-9975**	1	HOSE AS	
I	5	1	**195-4479**	1	HOSE AS	
I	6	1	**203-1926**	1	HOSE AS	
I	7	1	**204-4415**	1	HOSE AS	
I	8	1	**244-7322**	2	HOSE AS	
I	9	1	**264-8331**	1	HOSE AS	
	10	1	**264-8336**	1	BRACKET AS	
M		1	**8T-3490**	5	NUT-WELD (M10X1.5-THD)	
	11	1	*148-8339*	3	CONNECTOR AS	
					(EACH INCLUDES)	
		1	**6V-8716**	1	CONNECTOR	
		1	**6V-9746**	1	SEAL-O-RING	
		1	**7M-8485**	1	SEAL-O-RING	
	12	1	*148-8347*	3	ELBOW AS	
					(EACH INCLUDES)	
		1	**3D-2824**	1	SEAL-O-RING	
		1	**6V-9007**	1	ELBOW	
		1	**6V-9746**	1	SEAL-O-RING	
	13	1	*148-8360*	8	ELBOW AS	
					(EACH INCLUDES)	
		1	**6V-9182**	1	ELBOW	
		1	**6V-9746**	1	SEAL-O-RING	
		1	**7M-8485**	1	SEAL-O-RING	
	14	1	*148-8408*	1	PLUG AS	
		1	**3D-2824**	1	SEAL-O-RING	
		1	**9S-4183**	1	PLUG	
	15	1	*150-4033*	2	TEE AS	
					(EACH INCLUDES)	
		1	**6V-9746**	2	SEAL-O-RING	
		1	**6V-9846**	1	TEE-SWIVEL	
	16	1	**177-8839**	1	CLIP	
	17	1	**8T-4121**	16	WASHER-HARD (11X21X2.5-MM THK)	
M	18	1	**8T-4137**	16	BOLT (M10X1.5X20-MM)	
M	21	1	**8T-4139**	4	BOLT (M12X1.75X30-MM)	
M	22	1	**8T-4192**	2	BOLT (M12X1.75X25-MM)	
	23	1	**8T-4223**	6	WASHER-HARD (13.5X25.5X3-MM THK)	

I-REFER TO HYDRAULIC INFORMATION SYSTEM
M-METRIC PART
Y-SEPARATE ILLUSTRATION

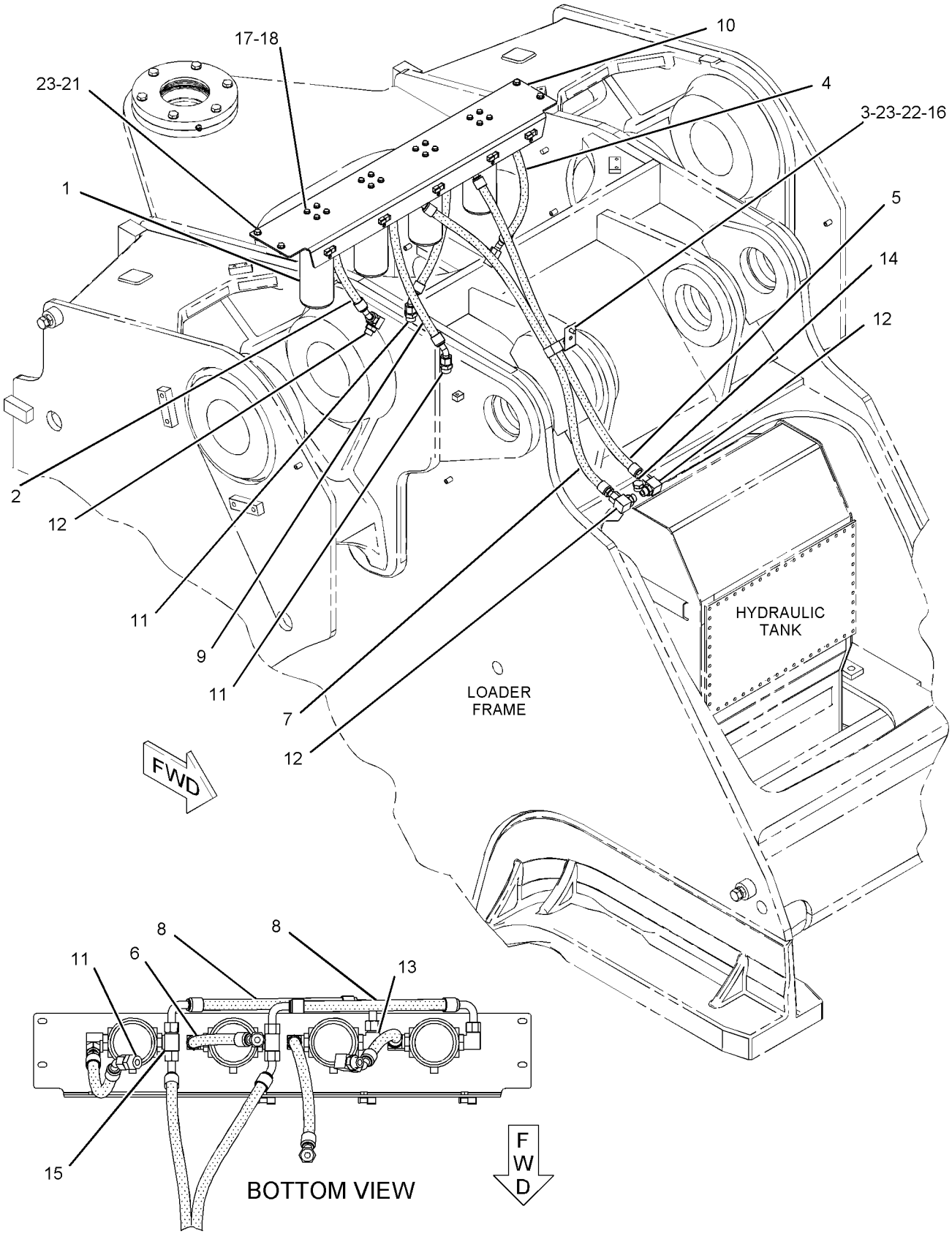

GRAPHIC #1 **<END>** g01145935

HYDRAULIC SYSTEM

245-0730 LINES GP-CASE DRAIN–STEERING

S/N: 4421-UP

PART OF 245-0700 HYDRAULIC AR-REAR

SMCS-5057, 5091 **i02150900**

NOTE	REF NO	GRAPHIC REF	PART NUMBER	QTY	PART NAME 1 2 3 4 5 6 (PRODUCT LEVEL)	SEE PAGE
I	1	1	**250-5848**	1	HOSE AS	
I	2	1	**250-5849**	1	HOSE AS	
I	3	1	**250-5851**	1	HOSE AS	
I	4	1	**250-5852**	1	HOSE AS	
	5	1	*148-8327*	2	CONNECTOR AS	
		1	**3D-2824**	1	SEAL-O-RING	
		1	**6V-8637**	1	CONNECTOR	
		1	**6V-9746**	1	SEAL-O-RING	
	6	1	*148-8339*	2	CONNECTOR AS	
		1	**6V-8716**	1	CONNECTOR	
		1	**6V-9746**	1	SEAL-O-RING	
		1	**7M-8485**	1	SEAL-O-RING	
	7	1	**1S-0994**	1	CLIP	
	8	1	**5P-7466**	1	CLIP (SLOT)	
	9	1	**5P-7467**	1	CLIP (TAB)	
	10	1	**5P-8112**	1	GROMMET	
	13	1	**8T-4121**	2	WASHER-HARD (11X21X2.5-MM THK)	
M	14	1	**8T-4133**	1	NUT (M10X1.5 THD)	
M	15	1	**8T-4195**	1	BOLT (M10X1.5X30-MM)	

I-REFER TO HYDRAULIC INFORMATION SYSTEM
M-METRIC PART

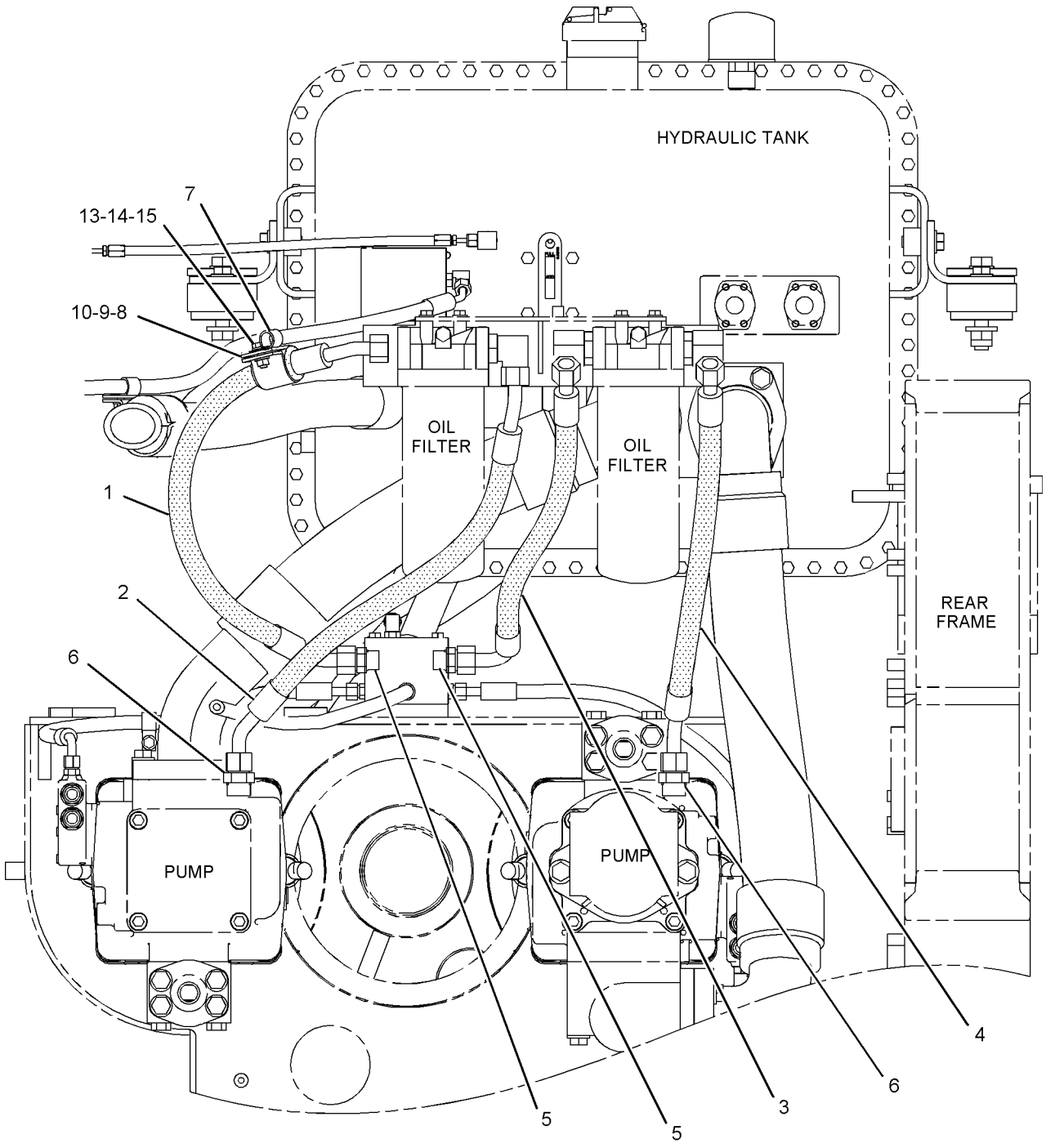

FRONT VIEW

GRAPHIC #1

<END>

g01092282

HYDRAULIC SYSTEM

8X-0073 LINES GP-DRAIN–
ENGINE OIL PAN, COOLERS, TRANSMISSION
S/N: 4421-UP
REAR
PART OF 245-0700 HYDRAULIC AR-REAR

SMCS-1307, 3016, 5057 **i00095821**

NOTE	REF NO	GRAPHIC REF	PART NUMBER	QTY	PART NAME 1 2 3 4 5 6 (PRODUCT LEVEL)	SEE PAGE
	1	1	**1H-9779**	2	CONNECTOR-HOSE	
	2	1	**2S-3440**	2	CLAMP-HOSE	
	3	1	**3B-6555**	1	ELBOW	
	4	1	**3B-7259**	2	ELBOW	
E	5	1	**5P-0765**		HOSE (14 CM)	
E	6	1	**5P-1255**		HOSE	
C	7	1	**6B-8129**	2	NIPPLE-PIPE	
C	8	1	**9M-0164**	2	CLAMP-HOSE	
	9	1	**6V-3830**	1	SEAL-O-RING	
CM	10	1	**8T-4176**	2	BOLT (M12X1.75X90-MM)	
	11	1	**8T-4223**	2	WASHER-HARD (13.5X25.5X3-MM THK)	
	12	1	**4P-0519**	1	ADAPTER AS-DRAIN	
		1	**109-5840**	1	ADAPTER-PLUG	
	13	1	**109-5839**	1	PLUG-OIL DRAIN	
E	14	1	**5P-1255**		HOSE	
E	15	1	**5P-0765**		HOSE (14 CM)	

C-CHANGE FROM PREVIOUS TYPE
E-ORDER BY THE CENTIMETER
M-METRIC PART

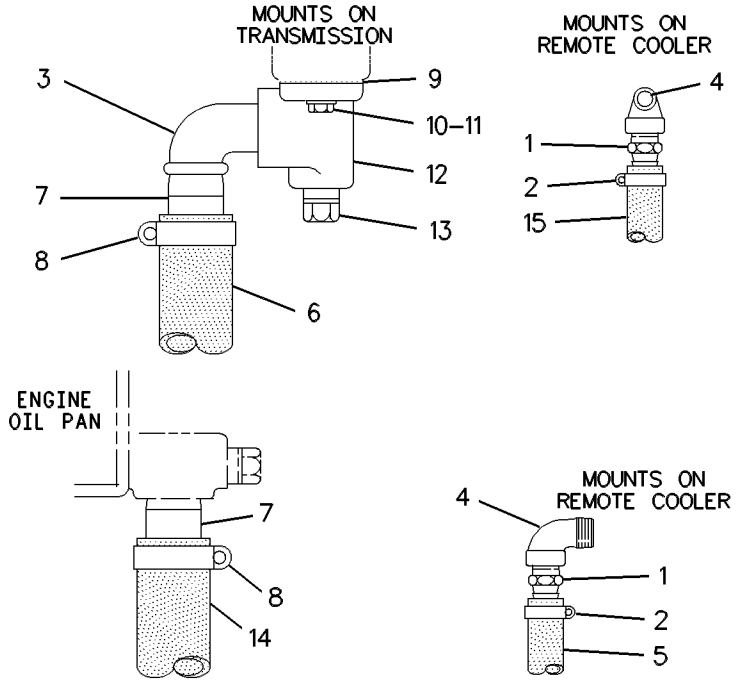

GRAPHIC #1 **<END>** g00104969

HYDRAULIC SYSTEM

244-7265 LINES GP-EXPANSION TANK–AIR

S/N: 4421-UP

PART OF 245-8812 CHASSIS AR-REAR

SMCS-5057, 5505 **i02289255**

NOTE	REF NO	GRAPHIC REF	PART NUMBER	QTY	PART NAME 1 2 3 4 5 6 (PRODUCT LEVEL)	SEE PAGE
I	1	1	**5Q-9075**	1	HOSE AS	
	2	1	**128-8678**	2	SPACER	
	3	1	**138-4409**	1	SPACER (35-MM LGX22 DIA)	
	4	1	**144-4613**	1	ANGLE AS	
M		1	**8T-3490**	1	NUT-WELD (M10X1.5-THD)	
I	7	1	**221-3481**	1	HOSE AS	
	10	1	**266-4213**	1	TUBE AS	
	11	1	**266-4214**	1	TUBE AS	
	12	1	**266-4216**	1	TUBE AS	
	13	1	**266-4217**	1	TUBE AS	
	14	1	**266-4218**	1	BRACKET	
	15	1	**266-4219**	1	PLATE	
	16	1	**266-4221**	1	BRACKET AS	
M		1	**8T-3597**	4	NUT-WELD (M12X1.75-THD)	
I	17	1	**266-4223**	1	HOSE AS	
	20	1	*148-8392*	2	ELBOW AS	
					(EACH INCLUDES)	
		1	**6V-9746**	1	SEAL-O-RING	
		1	**6V-9853**	1	ELBOW	
	21	1	*148-8437*	1	TEE AS	
		1	**5K-9090**	1	SEAL-O-RING	
		1	**6V-9746**	2	SEAL-O-RING	
		1	**8T-1012**	1	TEE-FACE SEAL	
	22	1	**148-8450**	1	TEE AS	
		1	**3E-7443**	1	TEE-UNION	
		1	**5K-9090**	1	SEAL-O-RING	
		1	**6V-9746**	2	SEAL-O-RING	
	23	1	*164-5577*	1	ELBOW GP	
		1	**5K-9090**	2	SEAL-O-RING	
		1	**6V-8984**	1	ELBOW	
	24	1	**2P-1293**	1	LOCKNUT (1-3/16-12-THD)	
	26	1	**4D-7388**	1	CLIP	
	27	1	**5K-9660**	7	CLIP	
	29	1	**6V-1889**	1	CLIP	
	30	1	**6V-9172**	1	NUT (1-7/16-12-THD)	
	31	1	**6V-9746**	3	SEAL-O-RING	
	32	1	**6V-9833**	1	CAP AS	
	34	1	**8T-4121**	10	WASHER-HARD (11X21X2.5-MM THK)	
M	35	1	**8T-4136**	1	BOLT (M10X1.5X25-MM)	
M	36	1	**8T-4137**	5	BOLT (M10X1.5X20-MM)	
M	37	1	**8T-4139**	4	BOLT (M12X1.75X30-MM)	
M	38	1	**8T-4185**	1	BOLT (M10X1.5X50-MM)	
M	39	1	**8T-4186**	2	BOLT (M10X1.5X40-MM)	
M	40	1	**8T-4195**	1	BOLT (M10X1.5X30-MM)	
	41	1	**8T-4223**	4	WASHER-HARD (13.5X25.5X3-MM THK)	

I-REFER TO HYDRAULIC INFORMATION SYSTEM
M-METRIC PART

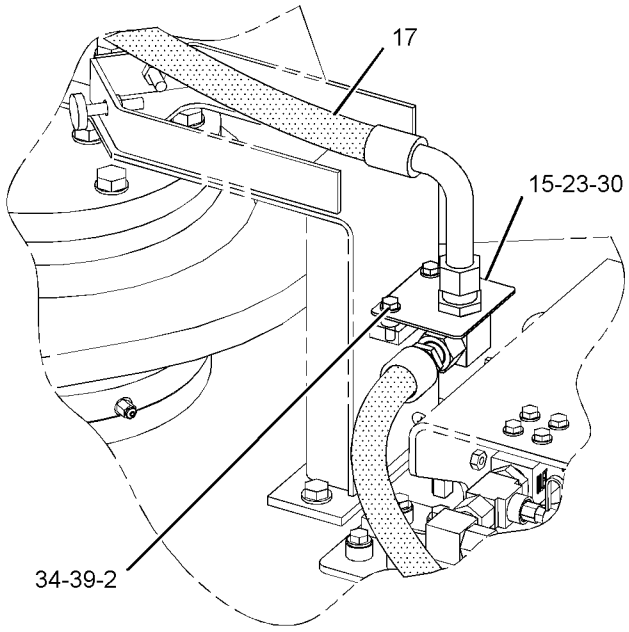

VIEW OF AREA A

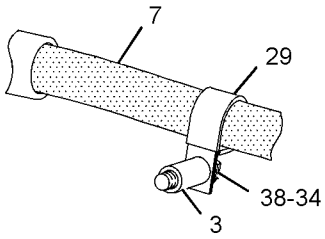

VIEW OF AREA C

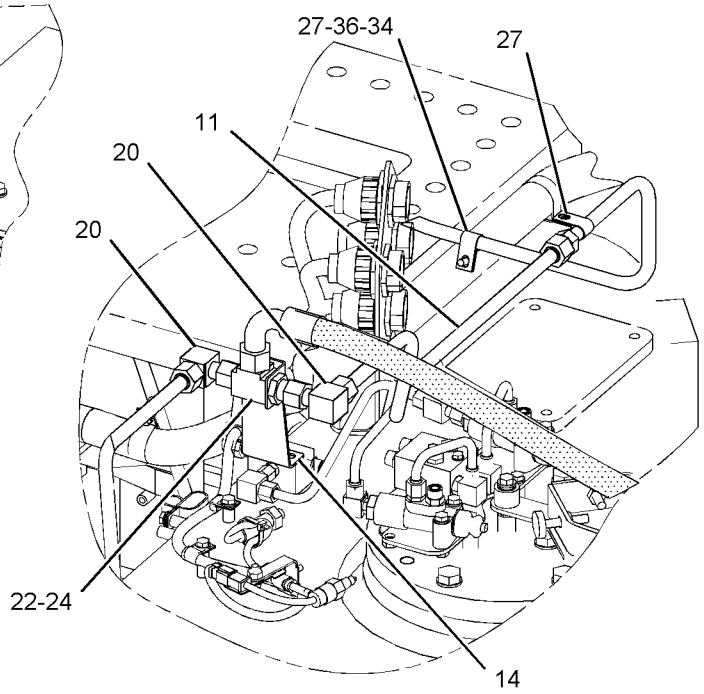

VIEW OF AREA B

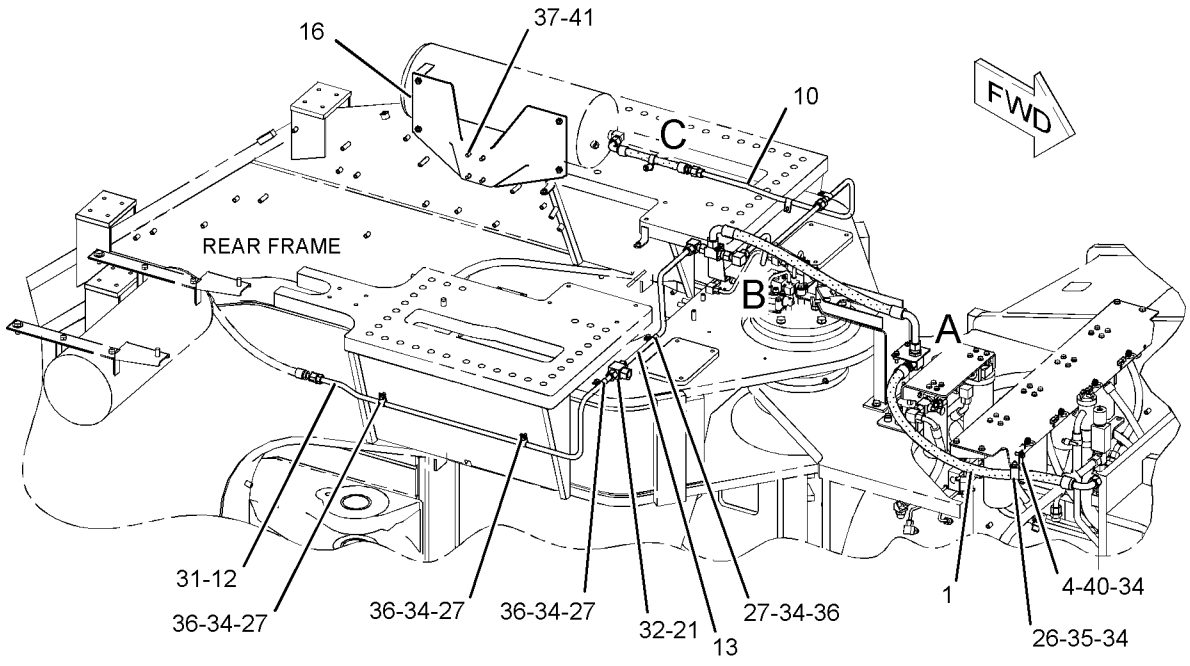

GRAPHIC #1 **<END>** g01146349

HYDRAULIC SYSTEM

266-4228 LINES GP-EXPANSION TANK—ELECTRIC START

S/N: 4421-UP

PART OF 250-2821 STARTING AR-ELECTRIC

AN ATTACHMENT

SMCS-5057, 5505 **i02288597**

NOTE	REF NO	GRAPHIC REF	PART NUMBER	QTY	PART NAME 1 2 3 4 5 6 (PRODUCT LEVEL)	SEE PAGE
	1	1	*184-2421*	1	CONNECTOR AS	
		1	**6V-9746**	1	SEAL-O-RING	
		1	**8C-6874**	1	CONNECTOR	
I	2	1	**221-3481**	1	HOSE AS	
	3	1	*225-5161*	1	ELBOW AS	
		1	**6V-9746**	1	SEAL-O-RING	
		1	**9X-2398**	1	ELBOW	
	4	1	**3J-5389**	2	PLUG	
	5	1	**5M-6213**	2	PLUG-PIPE	
M	6	1	**8T-4139**	4	BOLT (M12X1.75X30-MM)	
M	7	1	**8T-4192**	4	BOLT (M12X1.75X25-MM)	
	8	1	**8T-4223**	8	WASHER-HARD (13.5X25.5X3-MM THK)	

I-REFER TO HYDRAULIC INFORMATION SYSTEM
M-METRIC PART

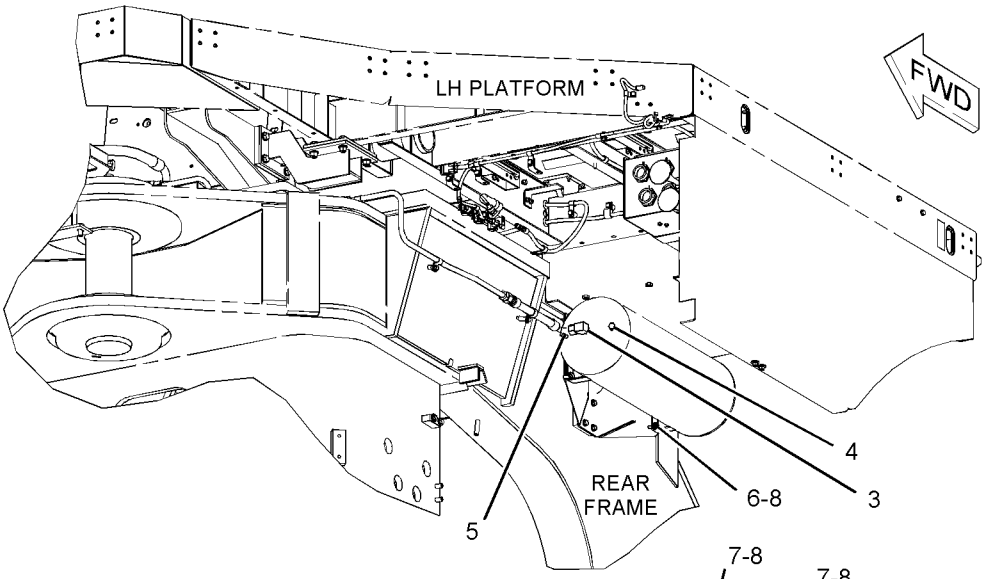

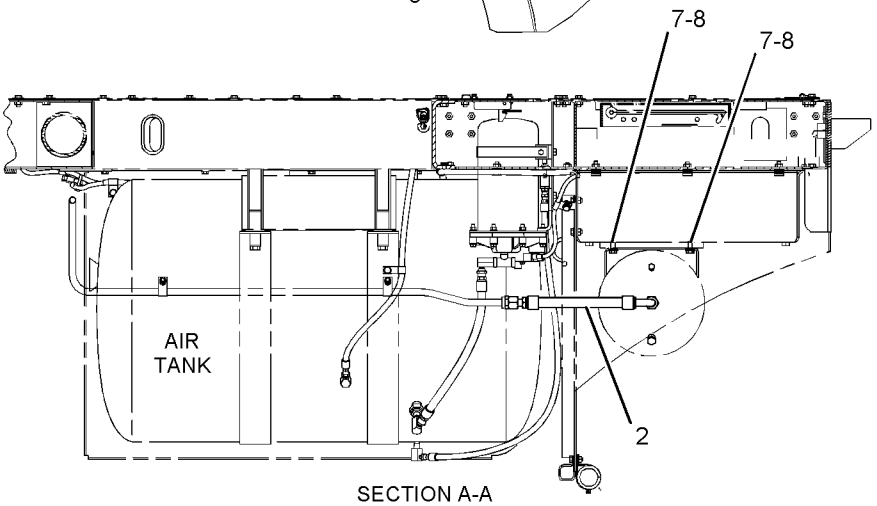

SECTION A-A

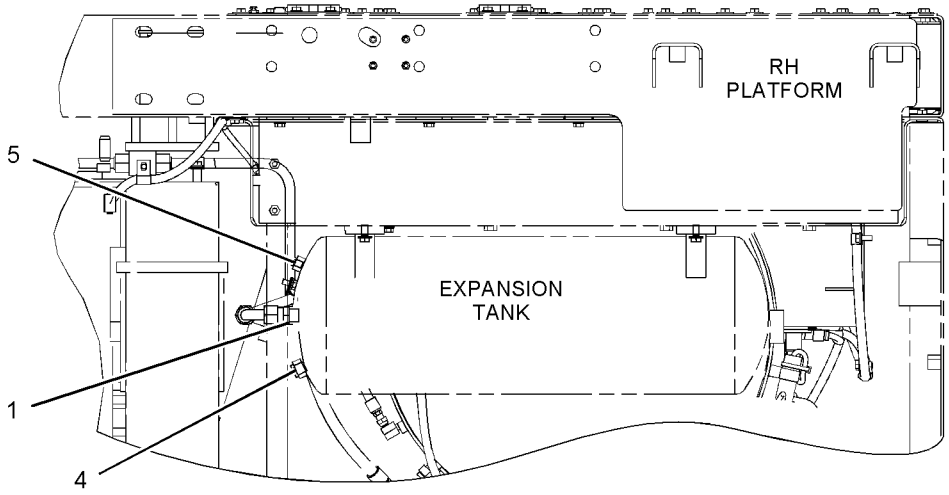

LEFT SIDE VIEW

GRAPHIC #1 **<END>** g01145750

HYDRAULIC SYSTEM

244-7310 LINES GP-HYDRAULIC—HIGH PRESSURE SCREENS

S/N: 4421-UP

PART OF 244-7300 HYDRAULIC AR-FRONT

SMCS-5057 **i02282507**

NOTE	REF NO	GRAPHIC REF	PART NUMBER	QTY	PART NAME 1 2 3 4 5 6 (PRODUCT LEVEL)	SEE PAGE
	1	2	**7I-8640**	4	CLAMP-HALF	
	2	2	**159-8091**	2	BRACKET	
	3	2	**171-4430**	2	BRACKET AS	
					(EACH INCLUDES)	
M		2	**8T-3597**	1	NUT-WELD (M12X1.75-THD)	
	4	1	**235-1262**	1	ELBOW	
	5	1	**235-1263**	1	ELBOW	
	6	1	**235-1264**	1	TUBE AS	
	7	1,2	**235-1266**	3	ADAPTER	
	8	1	**235-1268**	1	TUBE AS	
I	9	1	**244-7289**	1	HOSE AS	
I	10	1	**244-7291**	1	HOSE AS	
I	11	2	**244-7292**	1	HOSE AS	
I	12	2	**244-7293**	1	HOSE AS	
I	13	2	**244-7294**	2	HOSE AS	
I	14	2	**244-7296**	2	HOSE AS	
	15	2	**244-7302**	2	BRACKET AS	
	16	2	**244-7306**	1	BRACKET AS	
	17	2	**245-3249**	2	TUBE	
Y	18	1	**251-2451**	4	SCREEN GP-HIGH PRESSURE (IMPLEMENT)	711
	19	1	*148-8407*	4	PLUG AS	
					(EACH INCLUDES)	
		1	**3J-1907**	1	SEAL-O-RING	
		1	**9S-4191**	1	PLUG-O RING	
	20	1	**1P-3703**	2	SEAL-RECTANGULAR	
	21	1,2	**1P-3704**	6	SEAL-RECTANGULAR	
	22	1,2	**1P-3705**	13	SEAL-RECTANGULAR	
	23	1	**1P-3706**	2	SEAL-RECTANGULAR	
	24	1,2	**1P-5767**	12	FLANGE-HALF	
	25	2	**5P-1076**	10	WASHER-HARD (13.5X30X4-MM THK)	
	26	1,2	**5P-8077**	20	FLANGE-HALF	
	27	2	**6V-1572**	4	CLIP (SLOT)	
	28	2	**6V-1573**	4	CLIP (TAB)	
	29	2	**6V-1574**	4	GROMMET	
M	30	2	**7X-2549**	8	BOLT (M12X1.75X100-MM)	
M	31	2	**7X-2553**	4	BOLT (M16X2X40-MM)	
M	32	2	**7X-2556**	8	BOLT (M16X2X100-MM)	
	33	1	**7X-3392**	8	WASHER-HARD (13.5X22.5X3-MM THK)	
	34	2	**8T-4121**	8	WASHER-HARD (11X21X2.5-MM THK)	
M	35	1,2	**8T-4122**	54	WASHER-HARD (17X32X3.5-MM THK)	
M	36	2	**8T-4132**	1	NUT (M16X2-THD)	
M	37	2	**8T-4133**	2	NUT (M10X1.15-THD)	
M	38	2	**8T-4136**	2	BOLT (M10X1.5X25-MM)	
M	39	1	**8T-4956**	8	BOLT (M12X1.75X35-MM)	
M	40	1,2	**8T-4140**	33	BOLT (M16X2X60-MM)	
M	41	1	**8T-4174**	4	BOLT (M16X2X120-MM)	
M	42	2	**8T-4192**	8	BOLT (M12X1.75X25-MM)	
M	43	1	**8T-4193**	4	BOLT (M16X2X50-MM)	
M	44	1,2	**8T-4194**	24	BOLT (M12X1.75X50-MM)	
M	45	2	**8T-4196**	4	BOLT (M10X1.5X35-MM)	
	46	1,2	**8T-4223**	32	WASHER-HARD (13.5X25.5X3-MM THK)	

I-REFER TO HYDRAULIC INFORMATION SYSTEM
M-METRIC PART
Y-SEPARATE ILLUSTRATION

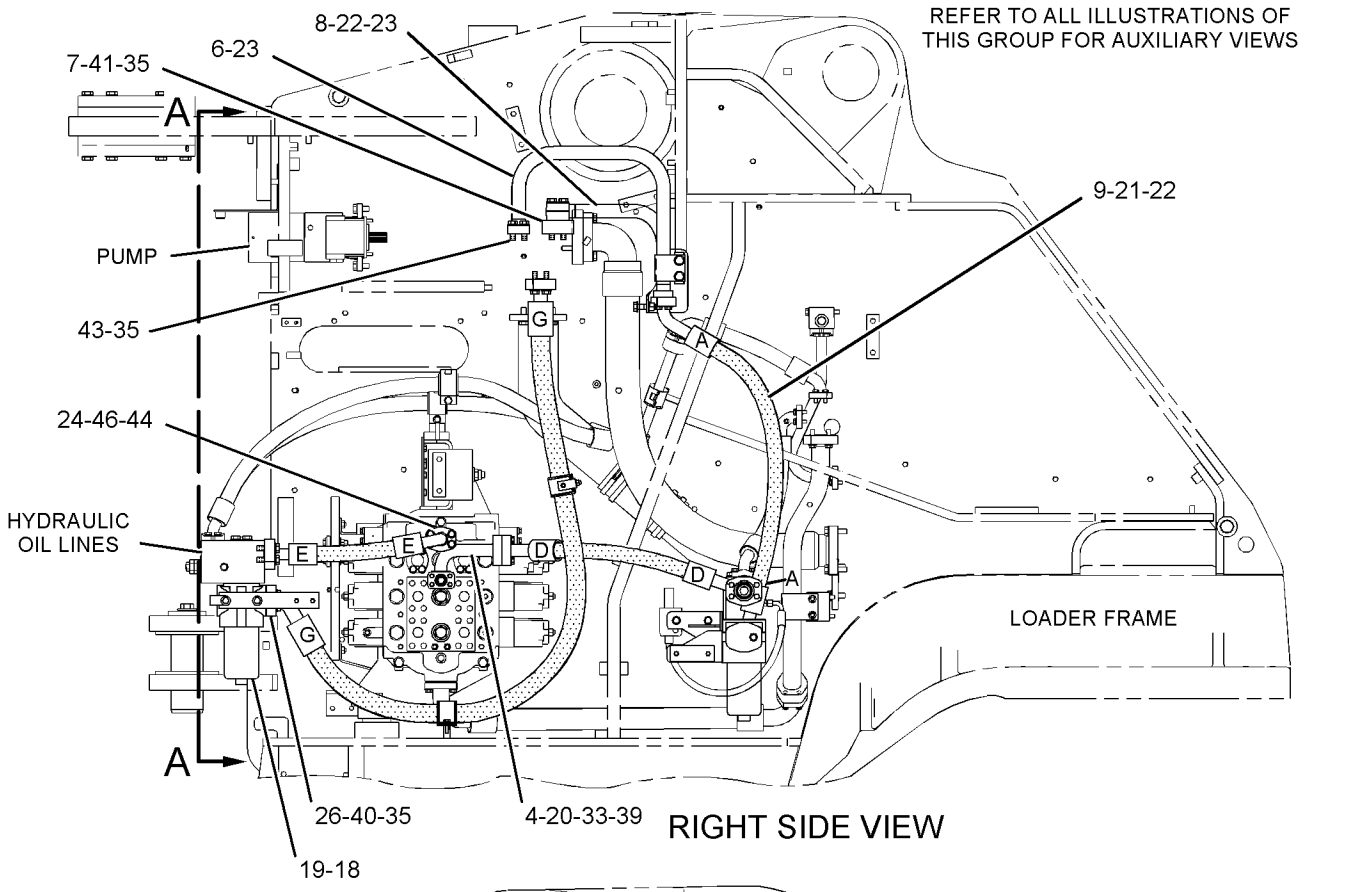

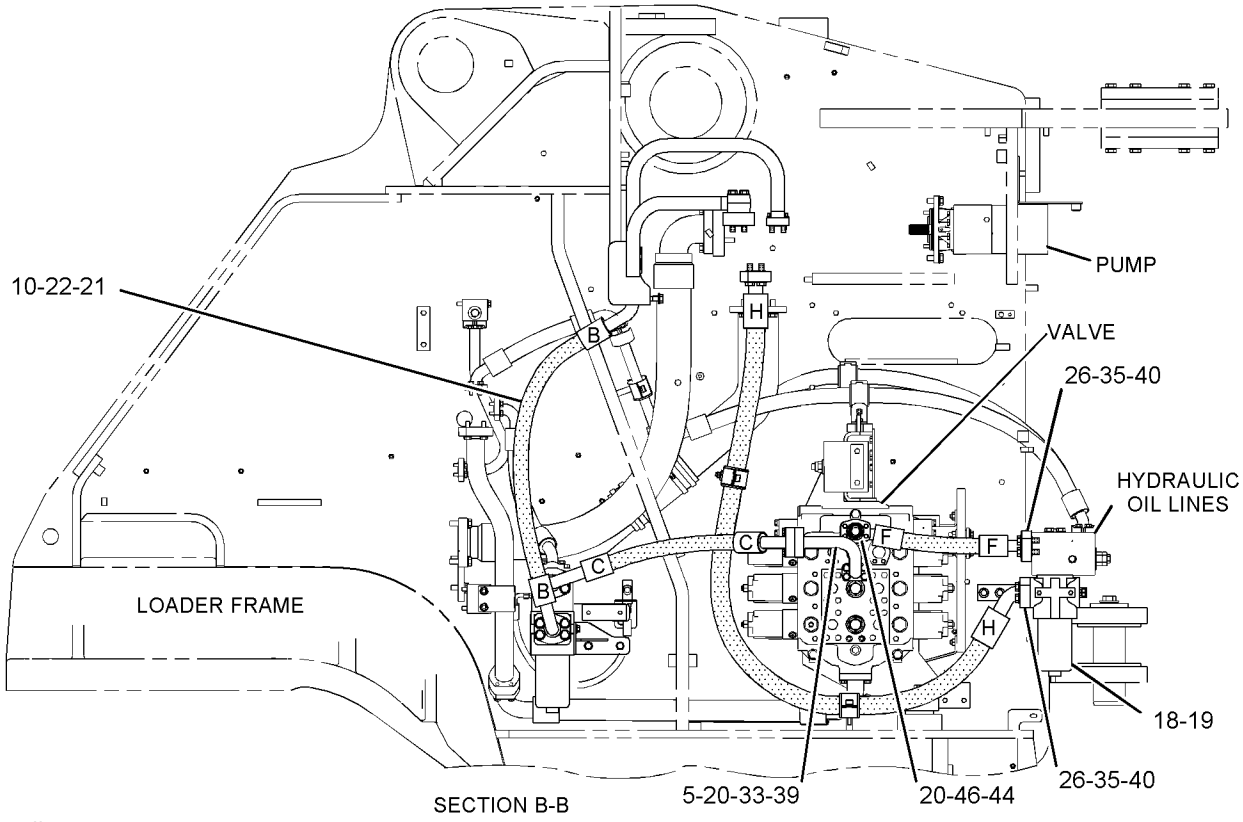

GRAPHIC #1

g01143986

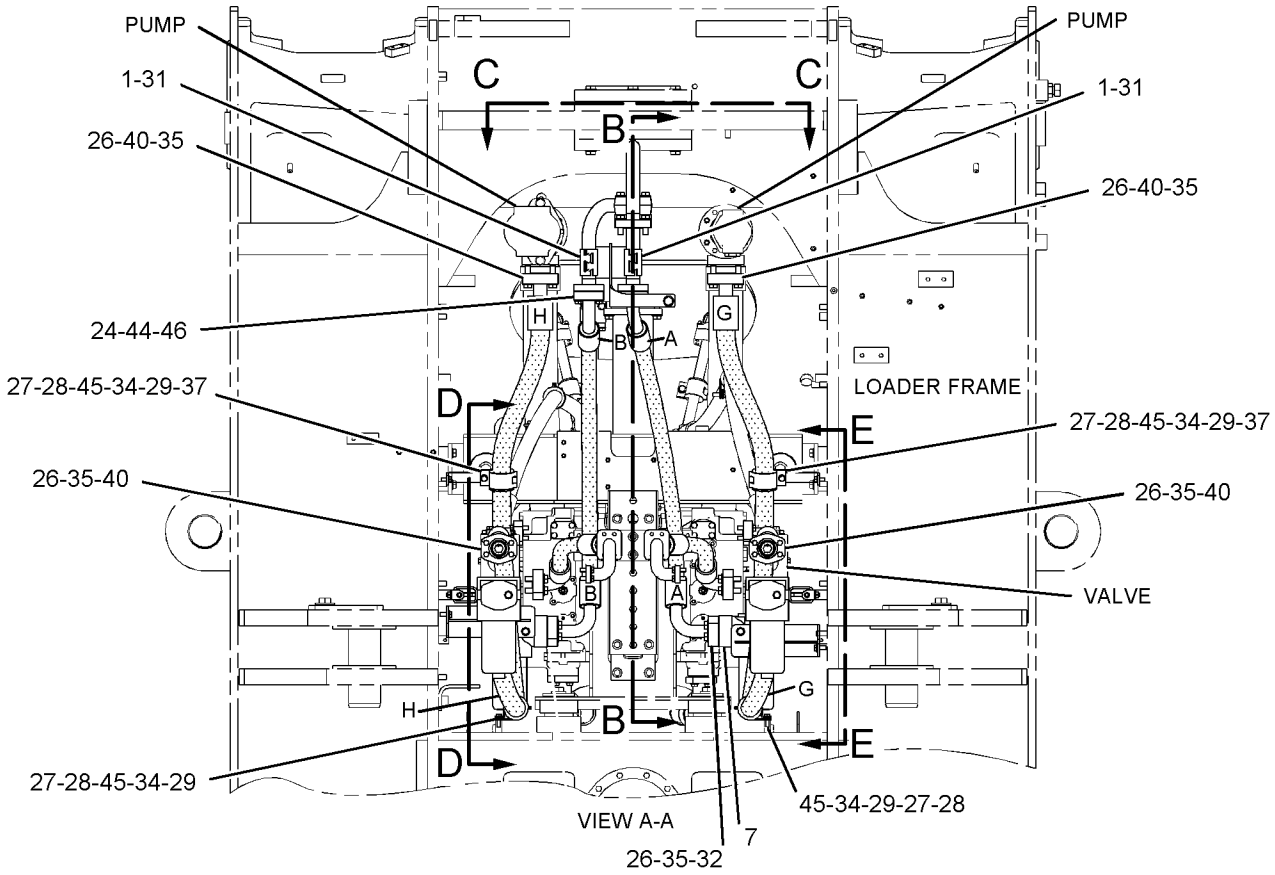

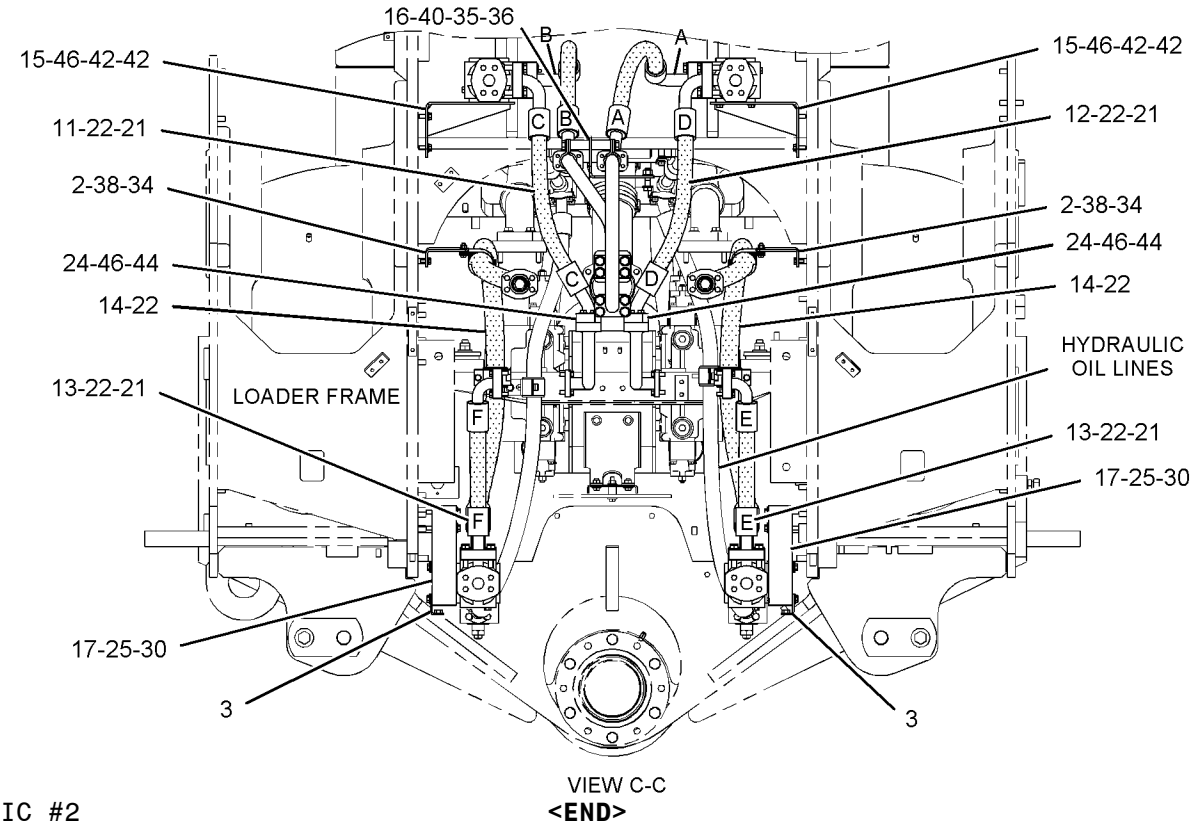

GRAPHIC #2 **<END>** g01143992

HYDRAULIC SYSTEM

244-7330 LINES GP-HYDRAULIC–FRONT

S/N: 4421-UP

PART OF 244-7300 HYDRAULIC AR-FRONT

SMCS-5057 **i02420171**

NOTE	REF NO	GRAPHIC REF	PART NUMBER	QTY	PART NAME 1 2 3 4 5 6 (PRODUCT LEVEL)	SEE PAGE
I	1	1,2	**8X-0657**	2	HOSE AS	
	3	2	**8X-0670**	1	BLOCK	
	4	1	**8X-2997**	2	PLATE	
M	5	1	**9X-8485**	8	BOLT-SHALLOW HEAD	
	6	2	**155-4791**	1	BRACKET AS	
M		2	**8T-3490**	1	NUT-WELD (M10X1.5-THD)	
	7	2	**273-0321**	1	HOSE	
I	8	2	**192-8987**	1	HOSE AS	
	9	2	**197-3295**	18	FLANGE-HALF	
I	10	1	**244-7318**	1	HOSE AS	
	11	2	**244-7324**	1	TUBE AS	
I	12	1	**244-7326**	1	HOSE AS	
	13	2	**244-7332**	1	TUBE AS	
	14	2	**244-7333**	1	TUBE AS	
	15	2	**244-7334**	2	TUBE AS	
I	16	2	**244-7336**	1	HOSE AS	
I	17	2	**244-7338**	1	HOSE AS	
I	18	1	**244-7339**	1	HOSE AS	
I	19	1	**244-7342**	1	HOSE AS	
I	20	2	**244-7343**	1	HOSE AS	
I	21	2	**244-7344**	1	HOSE AS	
	22	1	**245-0674**	1	TUBE AS	
	23	2	**245-0676**	1	TUBE AS	
Y	24	2	**247-2973**	4	VALVE GP-CHECK & RELIEF (MAIN HYDRAULIC)	864
	25	2	**230-9804**	1	BRACKET AS	
	26	2	**250-6554**	2	BRACKET	
	27	2	*148-8318*	1	CONNECTOR AS	
		2	**3K-0360**	1	SEAL-O-RING	
		2	**6V-8397**	1	SEAL-O-RING	
		2	**6V-8634**	1	CONNECTOR	
	28	2	*148-8407*	4	PLUG AS	
					(EACH INCLUDES)	
		2	**3J-1907**	1	SEAL-O-RING	
		2	**9S-4191**	1	PLUG-O RING	
	29	2	**1P-3706**	4	SEAL-RECTANGULAR	
	30	1	**1P-3709**	2	SEAL-RECTANGULAR	
	31	2	**1P-4578**	10	FLANGE-HALF	
	32	2	**1P-4582**	8	FLANGE-HALF	
	34	1,2	**1P-7016**	8	FLANGE-HALF	
	35	2	*222-6869*	1	CONNECTOR AS	
		2	**3J-1907**	1	SEAL-O-RING	
		2	**6V-8397**	1	SEAL-O-RING	
		2	**9X-2614**	1	CONNECTOR	
	36	1,2	**2H-3934**	6	SEAL-O-RING	
	37	1,2	**2H-3935**	2	SEAL-O-RING	
	38	2	**4J-0522**	14	SEAL-O-RING	
	39	2	**4J-0527**	4	SEAL-O-RING	
	40	2	**5P-7468**	2	CLIP (SLOT)	
	41	2	**5P-7469**	2	CLIP (TAB)	
	42	2	**5P-7470**	2	CLIP (SLOT)	
	43	2	**5P-7471**	2	CLIP (TAB)	
	44	2	**5P-8182**	2	GROMMET	
	45	2	**6V-1874**	2	GROMMET	
	46	2	**6V-8519**	4	CLAMP-HALF	
M	47	2	**7X-2549**	2	BOLT (M12X1.75X100-MM)	
M	48	2	**7X-2559**	16	BOLT (M16X2X160-MM)	

244-7330 **LINES GP-HYDRAULIC** *(contd.)* **i02420171**

NOTE	REF NO	GRAPHIC REF	PART NUMBER	QTY	PART NAME 1 2 3 4 5 6 (PRODUCT LEVEL)	SEE PAGE
	49	2	**7X-3392**	32	WASHER-HARD (13.5X22.5X3-MM THK)	
	50	2	**7X-7729**	1	WASHER (11X25X3-MM THK)	
	51	2	**8T-4121**	21	WASHER-HARD (11X21X2.5-MM THK)	
M	52	1,2	**8T-4122**	40	WASHER-HARD (17X32X3.5-MM THK)	
M	53	2	**8T-4136**	1	BOLT (M10X1.5X25-MM)	
M	54	2	**8T-4139**	1	BOLT (M12X1.75X30-MM)	
M	55	1,2	**8T-4140**	16	BOLT (M16X2X60-MM)	
M	56	2	**8T-4183**	20	BOLT (M12X1.75X40-MM)	
M	57	2	**8T-4192**	6	BOLT (M12X1.75X25-MM)	
M	58	1	**8T-4910**	8	BOLT (M12X1.75X60-MM)	
M	59	2	**8T-4195**	1	BOLT (M10X1.5X30-MM)	
M	60	2	**8T-4196**	20	BOLT (M10X1.5X35-MM)	
	61	1,2	**8T-4223**	42	WASHER-HARD (13.5X25.5X3-MM THK)	
M	62	2	**8T-4244**	4	NUT (M12X1.75-THD)	
M	63	2	**8T-4956**	33	BOLT (M12X1.75X35-MM)	
	64	2	**8T-4987**	4	CLAMP-HOSE	
M	65	1,2	**8T-7338**	8	BOLT (M16X2X45-MM)	
M	66	2	**6V-8200**	4	BOLT-SOCKET HEAD (M12X1.75X35-MM)	

I-REFER TO HYDRAULIC INFORMATION SYSTEM
M-METRIC PART
Y-SEPARATE ILLUSTRATION

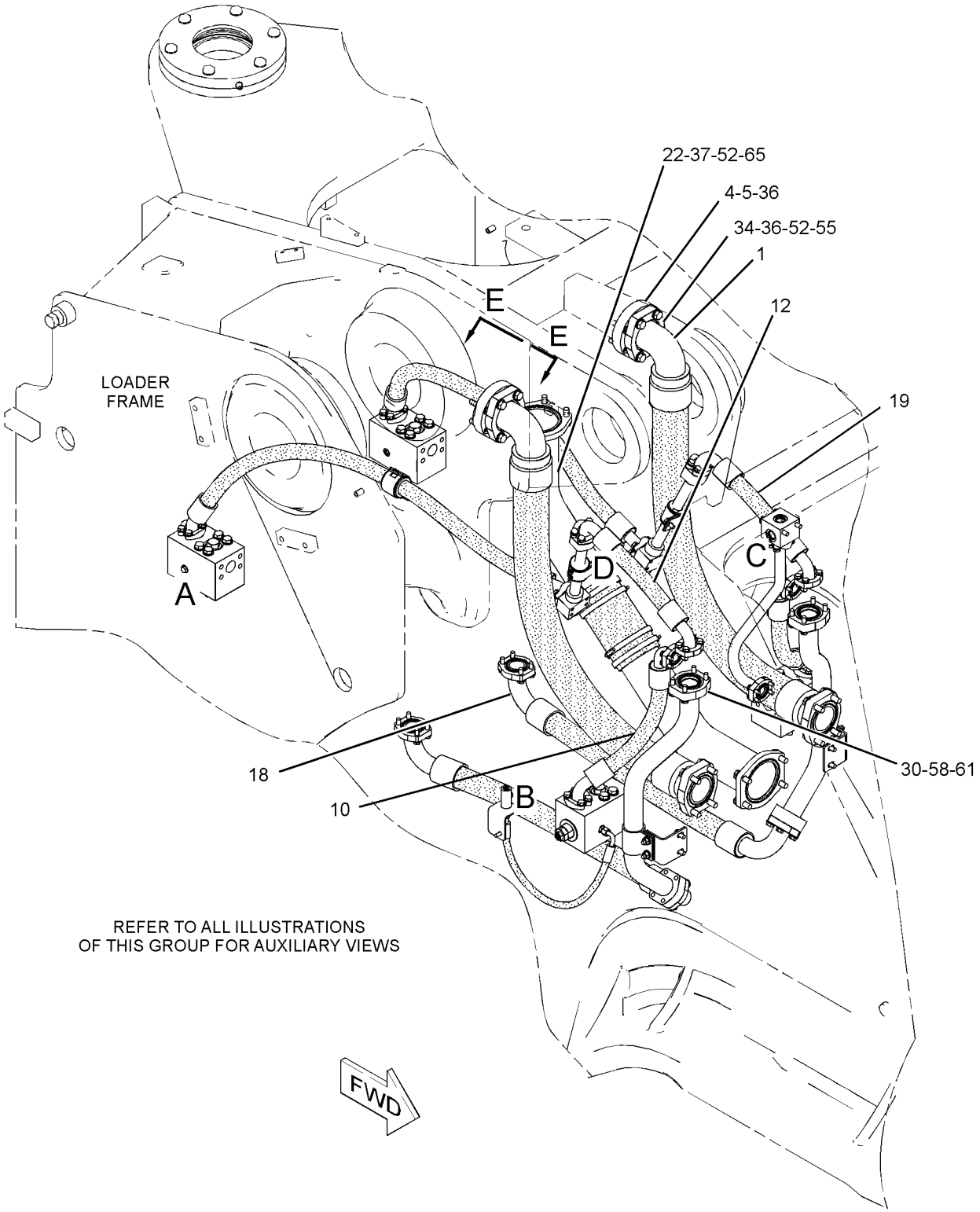

GRAPHIC #1 g01214105

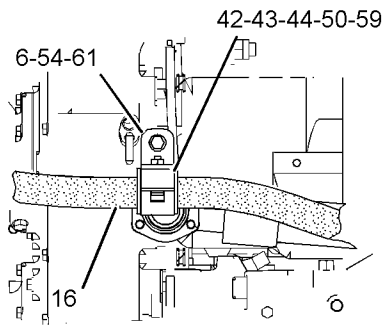

VIEW E-E

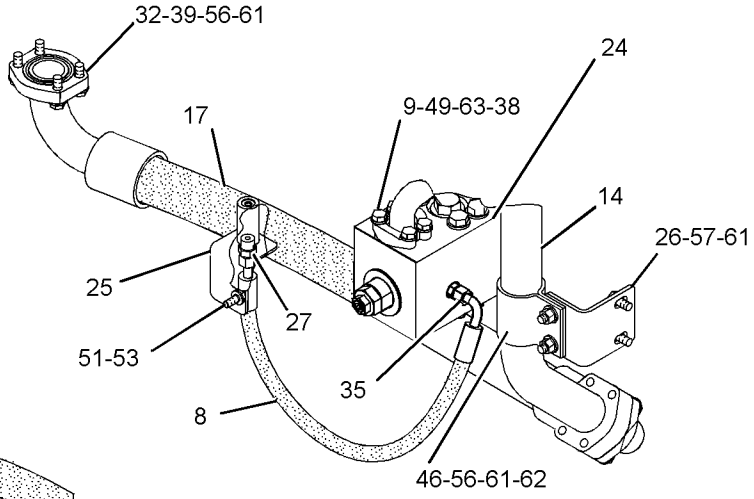

VIEW OF AREA B

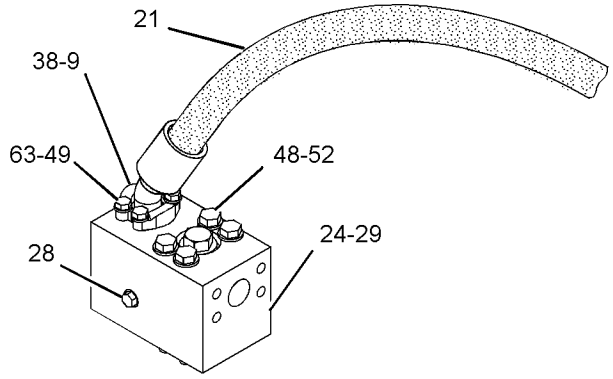

VIEW OF AREA A

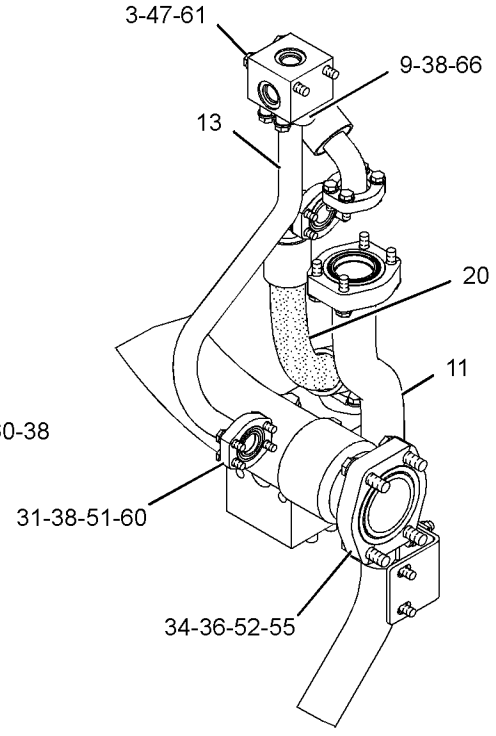

VIEW OF AREA C

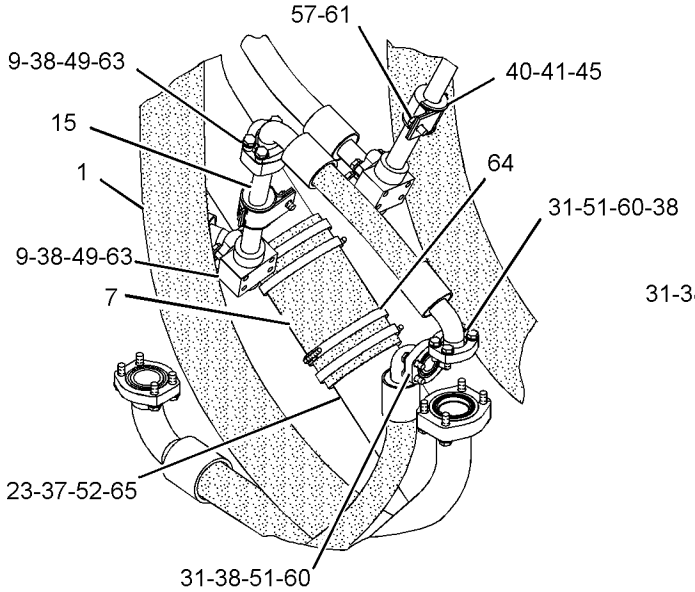

VIEW OF AREA D

GRAPHIC #2 **<END>** g01209493

HYDRAULIC SYSTEM

245-0720 LINES GP-HYDRAULIC

S/N: 4421-UP

PART OF 245-0700 HYDRAULIC AR-REAR

SMCS-5057 **i02150899**

NOTE	REF NO	GRAPHIC REF	PART NUMBER	QTY	PART NAME 1 2 3 4 5 6 (PRODUCT LEVEL)	SEE PAGE
I	1	1	**250-5841**	1	HOSE AS	
I	2	1	**250-5842**	1	HOSE AS	
I	3	1	**250-5843**	1	HOSE AS	
I	4	1	**250-5844**	1	HOSE AS	
	5	1	**1P-3704**	2	SEAL-RECTANGULAR	
	6	1	**1P-3705**	10	SEAL-RECTANGULAR	

I-REFER TO HYDRAULIC INFORMATION SYSTEM

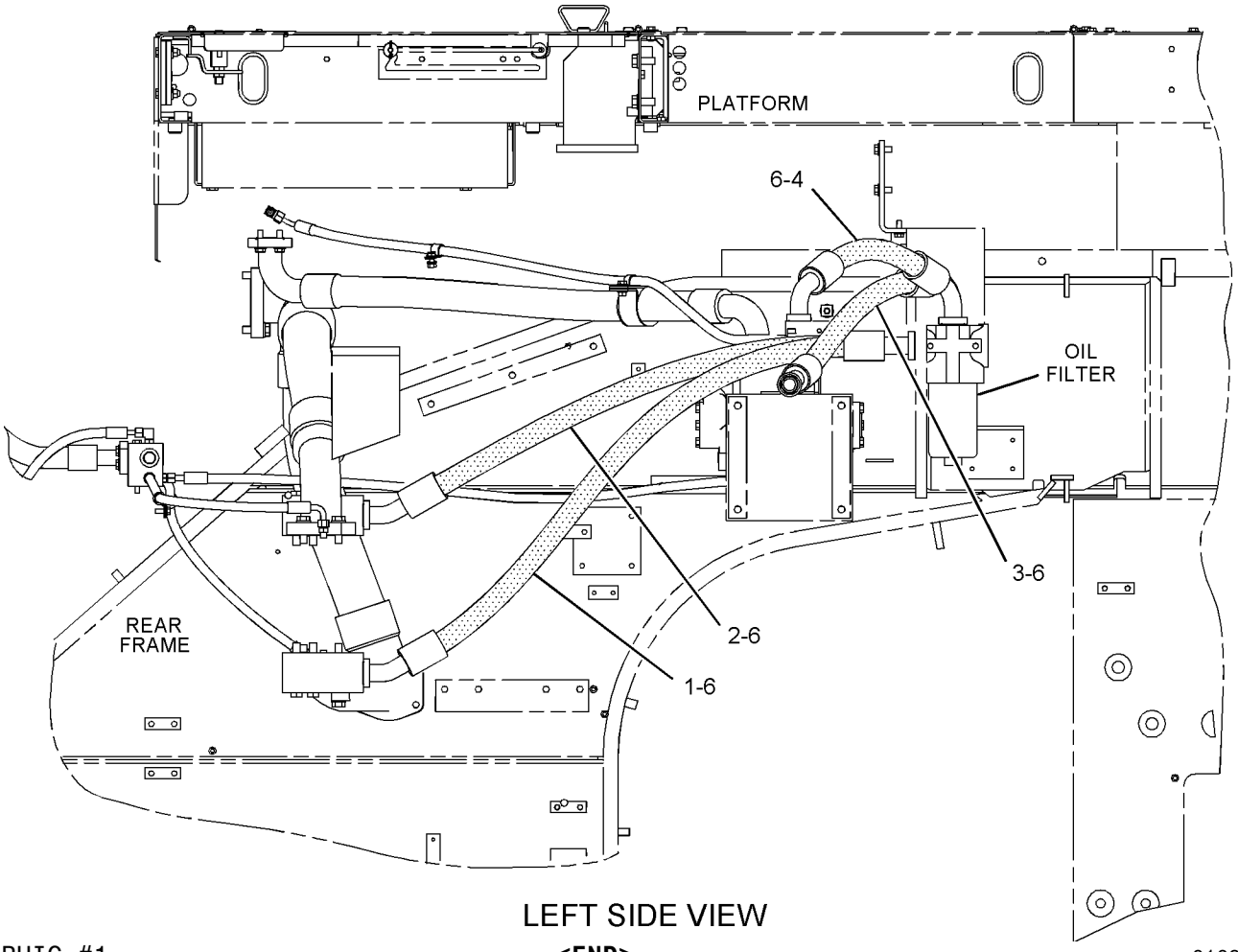

LEFT SIDE VIEW

GRAPHIC #1 **<END>** g01092372

HYDRAULIC SYSTEM

244-7285 LINES GP-HYDRAULIC OIL COOLER

S/N: 4421-UP

PART OF 244-7300 HYDRAULIC AR-FRONT

SMCS-1374, 5057 **i02282324**

NOTE	REF NO	GRAPHIC REF	PART NUMBER	QTY	PART NAME 1 2 3 4 5 6 (PRODUCT LEVEL)	SEE PAGE
	1	1	**159-8091**	1	BRACKET	
	2	1	**195-0468**	1	BRACKET	
	3	1	**195-0470**	1	TUBE AS	
	4	1	**197-3295**	6	FLANGE-HALF	
I	5	1	**244-7279**	1	HOSE AS	
	6	1	**244-7281**	1	TUBE AS	
Y	7	1	**245-4891**	1	VALVE GP-RELIEF (HYDRAULIC OIL COOLER BYPASS)	888
I	8	1	**249-5504**	1	HOSE AS	
	9	1	**249-5505**	1	HOSE AS	
	10	1	**249-5718**	1	TUBE AS	
		1	**6V-0425**	2	PLUG	
	11	1	**250-6554**	1	BRACKET	
	12	1	**031-5183**	2	SPACER	
	13	1	**1P-3708**	1	SEAL-RECTANGULAR	
	14	1	**1P-4579**	2	FLANGE-HALF	
	15	1	**1P-4582**	4	FLANGE-HALF	
	16	1	**1P-4584**	4	FLANGE-HALF	
	17	1	**2S-7433**	2	BOLT	
	18	1	**2V-0600**	2	CLAMP-HALF	
	19	1	**4J-0522**	3	SEAL-O-RING	
	20	1	**4J-0524**	1	SEAL-O-RING	
	21	1	**4J-0527**	2	SEAL-O-RING	
	22	1	**5H-8848**	1	SEAL-O-RING	
	23	1	**6J-2680**	2	SEAL-O-RING	
	24	1	**6V-1581**	2	CLIP (SLOT)	
	25	1	**6V-1582**	2	CLIP (TAB)	
	26	1	**6V-5386**	1	CLIP	
M	27	1	**7X-2549**	4	BOLT (M12X1.75X100-MM)	
	28	1	**7X-3392**	4	WASHER-HARD (13.5X22.5X3-MM THK)	
	29	1	**8T-4121**	7	WASHER-HARD (11X21X2.5-MM THK)	
M	30	1	**8T-4133**	3	NUT (M10X1.15-THD)	
M	31	1	**8T-4137**	1	BOLT (M10X1.5X20-MM)	
M	32	1	**8T-4139**	2	BOLT (M12X1.75X30-MM)	
M	33	1	**8T-4183**	22	BOLT (M12X1.75X40-MM)	
M	34	1	**8T-4192**	2	BOLT (M12X1.75X25-MM)	
M	35	1	**8T-4194**	8	BOLT (M12X1.75X50-MM)	
M	36	1	**8T-4196**	3	BOLT (M10X1.5X35-MM)	
	37	1	**8T-4223**	44	WASHER-HARD (13.5X25.5X3-MM THK)	
M	38	1	**8T-4244**	2	NUT (M12X1.75-THD)	
M	39	1	**8T-4910**	8	BOLT (M12X1.75X60-MM)	
	40	1	**097-4896**	8	SPACER (12X20X23-MM THK)	

I-REFER TO HYDRAULIC INFORMATION SYSTEM
M-METRIC PART
Y-SEPARATE ILLUSTRATION

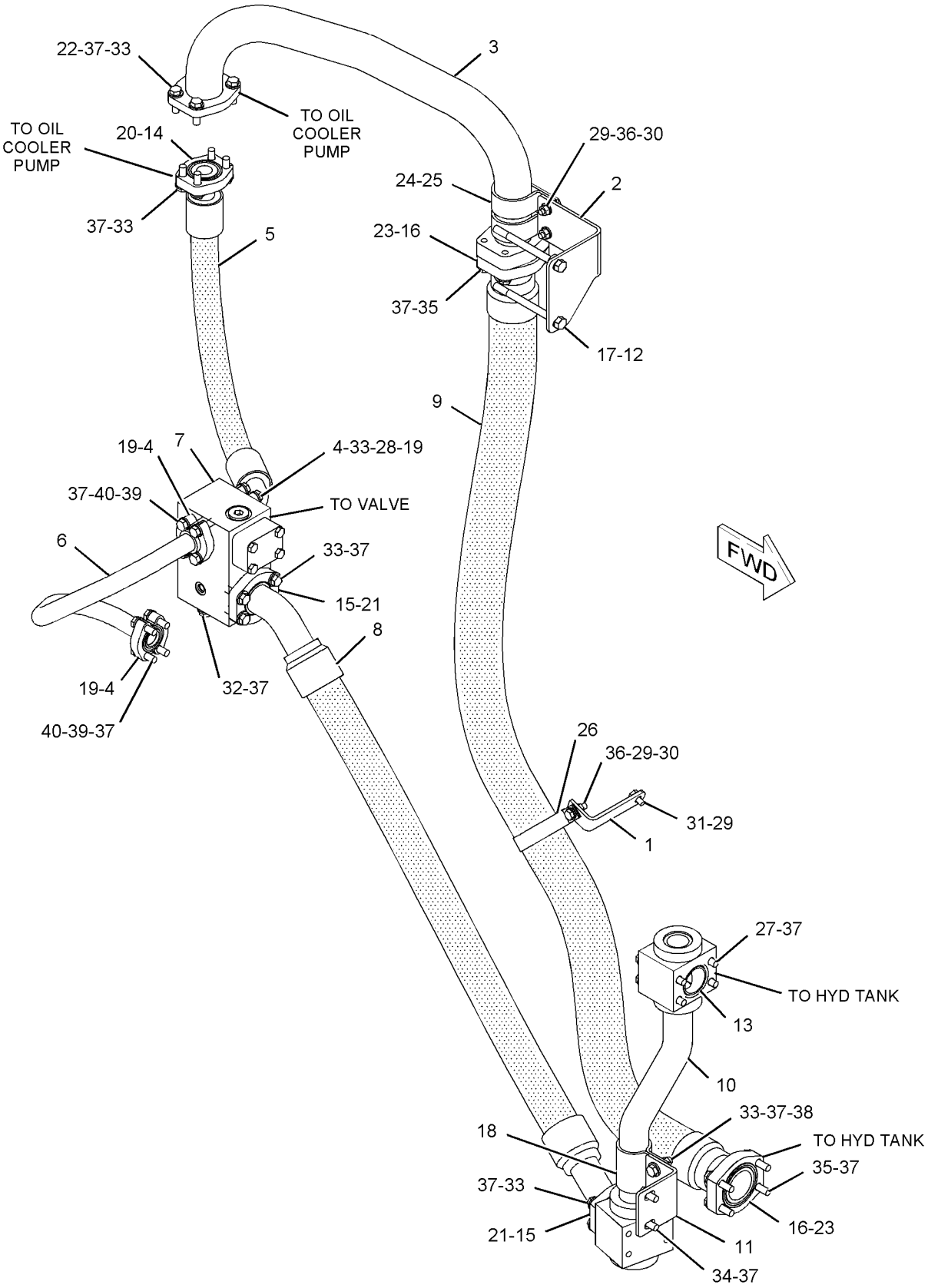

GRAPHIC #1 **<END>** g01144956

HYDRAULIC SYSTEM

245-0735 LINES GP-HYDRAULIC OIL COOLER—REAR FRAME

S/N: 4421-UP

PART OF 245-0700 HYDRAULIC AR-REAR

SMCS-1374, 5057 **i02280933**

NOTE	REF NO	GRAPHIC REF	PART NUMBER	QTY	PART NAME 1 2 3 4 5 6 (PRODUCT LEVEL)	SEE PAGE
	1	1	**8W-5179**	1	ADAPTER	
	2	2	**8X-4357**	1	BAR	
	3	1	**8X-8724**	9	SPACER	
	4	1	**8X-9384**	2	BRACKET	
	5	1	**123-5169**	1	BRACKET AS	
M		1	**8T-3490**	2	NUT-WELD (M10X1.5-THD)	
	6	1	**187-0578**	1	ADAPTER	
I	7	2	**245-0732**	2	HOSE AS	
I	8	2	**245-0734**	2	HOSE AS	
	9	1	**245-0736**	1	TUBE AS	
	10	1	**245-0737**	2	TUBE AS	
	11	1	**245-0738**	1	TUBE AS	
	12	1	**245-0739**	1	TUBE AS	
	13	1	**250-0260**	2	TUBE AS	
	14	2	**261-9574**	1	PLATE	
	15	1	**263-9999**	1	BRACKET	
Y	16	1	**264-6867**	1	VALVE GP-RELIEF	890
	17	1	**264-8071**	1	TUBE AS	
	18	1	**264-8072**	1	TUBE AS	
	19	1	*148-8368*	1	ELBOW AS	
		1	**3J-1907**	1	SEAL-O-RING	
		1	**4J-5477**	1	SEAL-O-RING	
		1	**6V-8627**	1	ELBOW	
	20	1	**1P-3706**	2	SEAL-RECTANGULAR	
	21	1	**1P-4579**	4	FLANGE-HALF	
	22	1,2	**1P-4582**	24	FLANGE-HALF	
	23	1	**246-7996**	20	CLIP-HALF	
	24	1	**3J-1907**	1	SEAL-O-RING	
	25	1	**4J-0524**	3	SEAL-O-RING	
	26	1,2	**4J-0527**	13	SEAL-O-RING	
	27	1	**5P-1076**	7	WASHER-HARD (13.5X30X4-MM THK)	
	28	1	**5P-7466**	1	CLIP (SLOT)	
	29	1	**5P-7467**	1	CLIP (TAB)	
	30	1	**5P-8112**	1	GROMMET	
	31	2	**6V-1870**	1	CLIP (SLOT)	
	32	2	**6V-1871**	1	CLIP (TAB)	
	33	2	**6V-1872**	1	GROMMET	
M	34	1	**7X-2549**	1	BOLT (M12X1.75X100-MM)	
M	35	1	**7Y-7992**	4	BOLT (M12X1.75X75-MM)	
	36	1	**8B-0544**	1	SPACER (1-IN THK)	
	37	2	**8T-4121**	2	WASHER-HARD (11X21X2.5-MM THK)	
M	38	2	**8T-4122**	1	WASHER-HARD (17X32X3.5-MM THK)	
M	39	2	**8T-4133**	2	NUT (M10X1.15-THD)	
M	40	1,2	**8T-4139**	15	BOLT (M12X1.75X30-MM)	
M	41	1,2	**8T-4183**	40	BOLT (M12X1.75X40-MM)	
M	42	2	**8T-4193**	1	BOLT (M16X2X50-MM)	
M	43	1	**8T-4194**	2	BOLT (M12X1.75X50-MM)	
M	44	2	**8T-4195**	2	BOLT (M10X1.5X30-MM)	
	45	1,2	**8T-4223**	86	WASHER-HARD (13.5X25.5X3-MM THK)	
M	46	1	**8T-4244**	4	NUT (M12X1.75-THD)	
M	47	1	**8T-4648**	4	BOLT (M12X1.75X70-MM)	
M	48	1	**8T-4910**	23	BOLT (M12X1.75X60-MM)	
	49	1	**9S-4191**	1	PLUG-O RING	

I-REFER TO HYDRAULIC INFORMATION SYSTEM
M-METRIC PART
Y-SEPARATE ILLUSTRATION

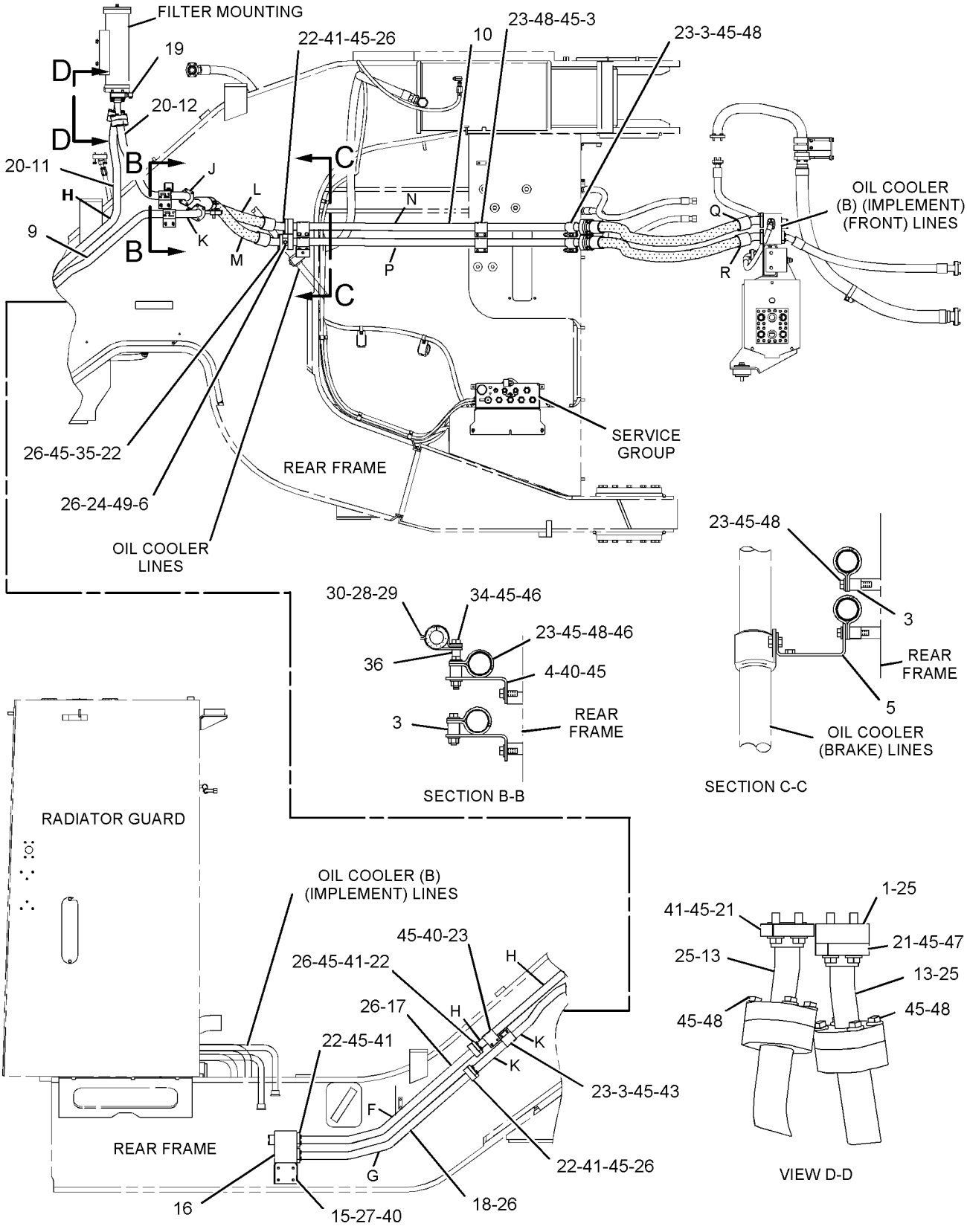

GRAPHIC #1

g01150273

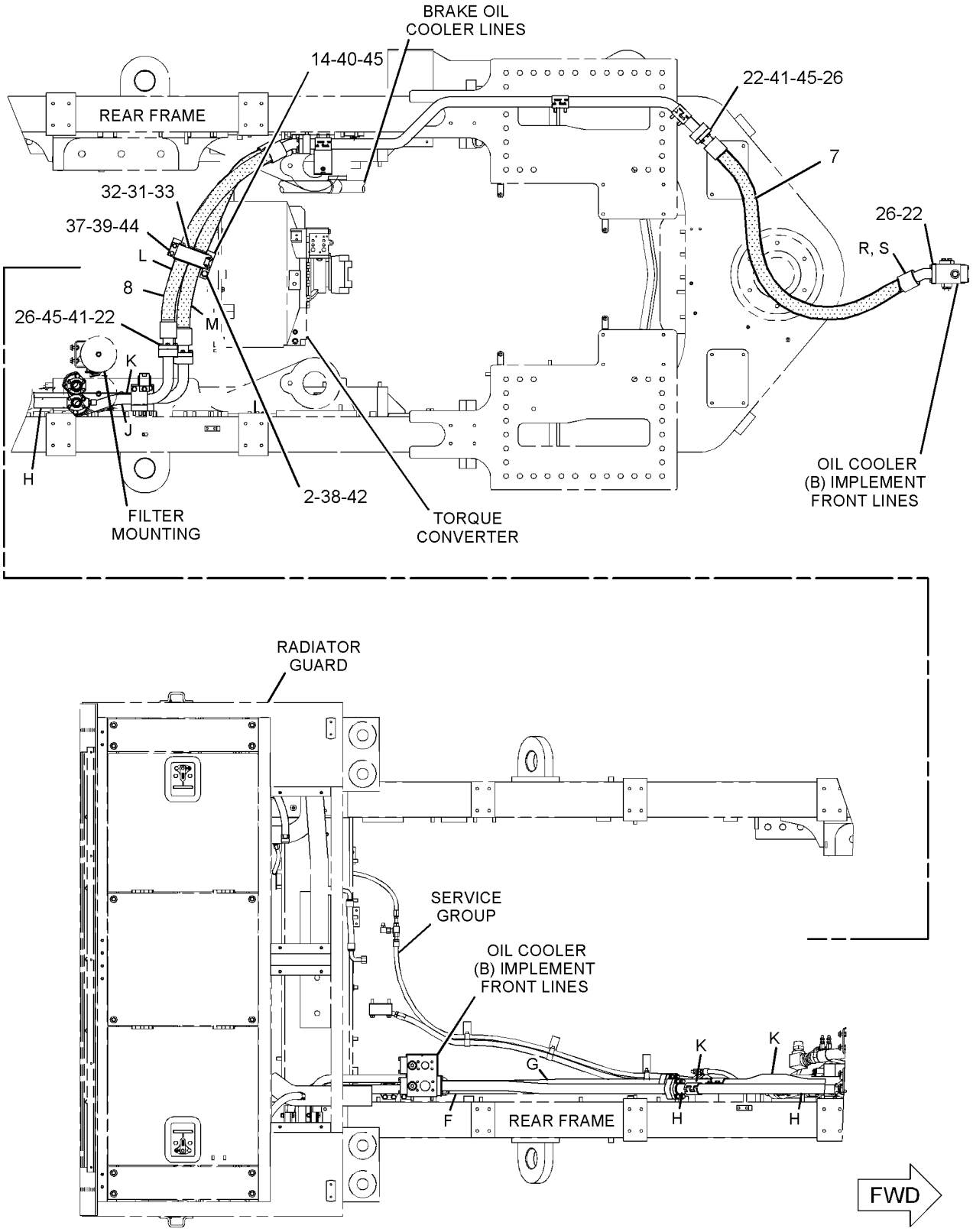

TOP VIEW

GRAPHIC #2

<END>

g01150274

HYDRAULIC SYSTEM

245-0740 LINES GP-HYDRAULIC OIL COOLER–

REAR FRAME TO COOLER

S/N: 4421-UP

PART OF 245-0700 HYDRAULIC AR-REAR

SMCS-1374, 5057 **i02288618**

NOTE	REF NO	GRAPHIC REF	PART NUMBER	QTY	PART NAME 1 2 3 4 5 6 (PRODUCT LEVEL)	SEE PAGE
	1	1	**8X-8724**	2	SPACER	
	2	1	**250-0266**	1	BRACKET	
	3	1	**264-8075**	1	TUBE AS	
	4	1	**264-8076**	1	TUBE AS	
I	5	1	**264-8080**	1	HOSE AS	
I	6	1	**264-8081**	1	HOSE AS	
	7	1	**081-6344**	2	SPACER (13.3X21.3X25-MM THK)	
	8	1	**1P-4582**	12	FLANGE-HALF	
	9	1	**246-7996**	4	CLIP-HALF	
	10	1	**4J-0527**	6	SEAL-O-RING	
	11	1	**6V-1867**	11	CLIP (SLOT)	
	12	1	**6V-1868**	11	CLIP (TAB)	
	13	1	**6V-1869**	11	GROMMET	
M	14	1	**8T-4139**	7	BOLT (M12X1.75X30-MM)	
M	15	1	**8T-4183**	26	BOLT (M12X1.75X40-MM)	
	16	1	**8T-4223**	43	WASHER-HARD (13.5X25.5X3-MM THK)	
M	17	1	**8T-4244**	4	NUT (M12X1.75-THD)	
M	18	1	**8T-4910**	6	BOLT (M12X1.75X60-MM)	

I-REFER TO HYDRAULIC INFORMATION SYSTEM
M-METRIC PART

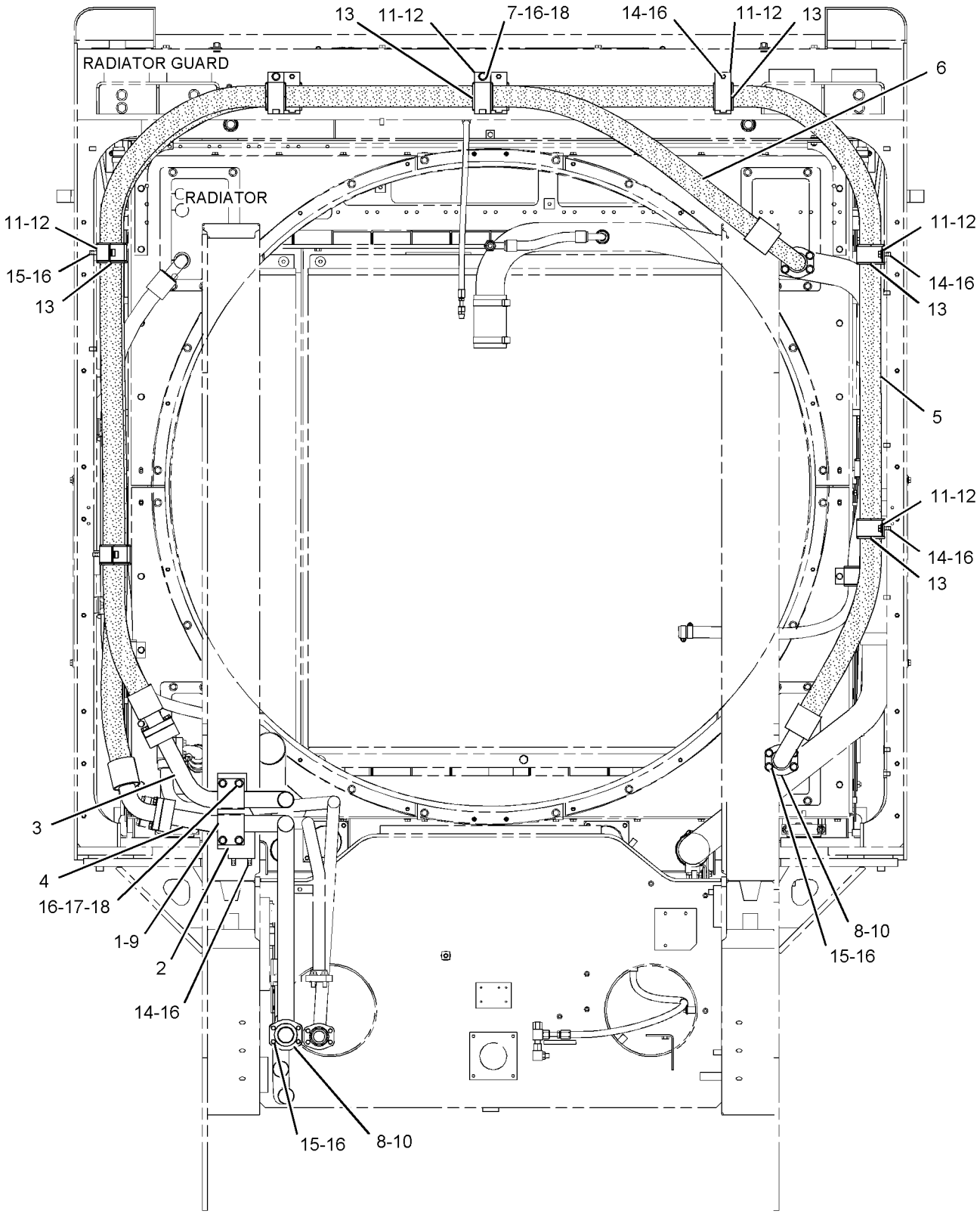

FRONT VIEW

GRAPHIC #1 **<END>** g01146213

HYDRAULIC SYSTEM

244-7240 LINES GP-LIFT CYLINDER

S/N: 4421-UP

PART OF 244-7300 HYDRAULIC AR-FRONT

SMCS-5057, 5102 **i02353533**

NOTE	REF NO	GRAPHIC REF	PART NUMBER	QTY	PART NAME 1 2 3 4 5 6 (PRODUCT LEVEL)	SEE PAGE
	1	1	**8X-1555**	2	BLOCK	
	2	1	**235-0639**	2	BLOCK	
I	3	1	**244-7238**	2	HOSE AS	
I	4	1	**246-9920**	2	HOSE AS	
I	5	1	**246-9921**	2	HOSE AS	
	7	1	**246-9923**	2	BLOCK	
	8	1	**246-9924**	1	BLOCK	
I	9	1	**246-9925**	2	HOSE AS	
I	10	1	**246-9926**	1	HOSE AS	
	11	1	*148-8407*	2	PLUG AS	
					(EACH INCLUDES)	
		1	**3J-1907**	1	SEAL-O-RING	
		1	**9S-4191**	1	PLUG-O RING	
	12	1	**1P-3703**	2	SEAL-RECTANGULAR	
	13	1	**1P-3704**	4	SEAL-RECTANGULAR	
	14	1	**1P-3705**	13	SEAL-RECTANGULAR	
	15	1	**1P-3706**	4	SEAL-RECTANGULAR	
	16	1	**1P-5767**	8	FLANGE-HALF	
	17	1	**5P-1076**	4	WASHER-HARD (13.5X30X4-MM THK)	
	18	1	**5P-8077**	24	FLANGE-HALF	
	19	1	**6V-0400**	4	FLANGE-HALF	
M	20	1	**8T-4122**	48	WASHER-HARD (17X32X3.5-MM THK)	
M	21	1	**8T-4140**	28	BOLT (M16X2X60-MM)	
M	22	1	**8T-4194**	24	BOLT (M12X1.75X50-MM)	
	23	1	**8T-4223**	24	WASHER-HARD (13.5X25.5X3-MM THK)	
M	24	1	**8T-5412**	4	BOLT (M12X1.75X140-MM)	
M	25	1	**8T-6385**	20	BOLT (M16X2X180-MM)	

I-REFER TO HYDRAULIC INFORMATION SYSTEM
M-METRIC PART

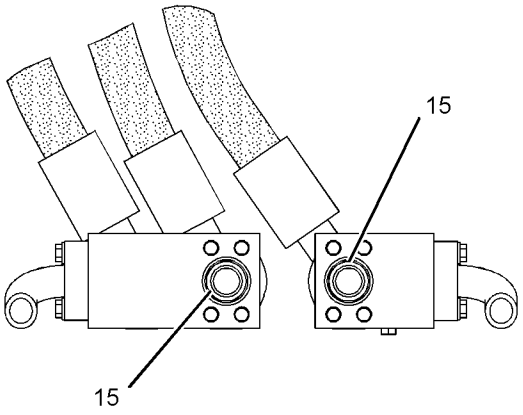

SECTION B-B

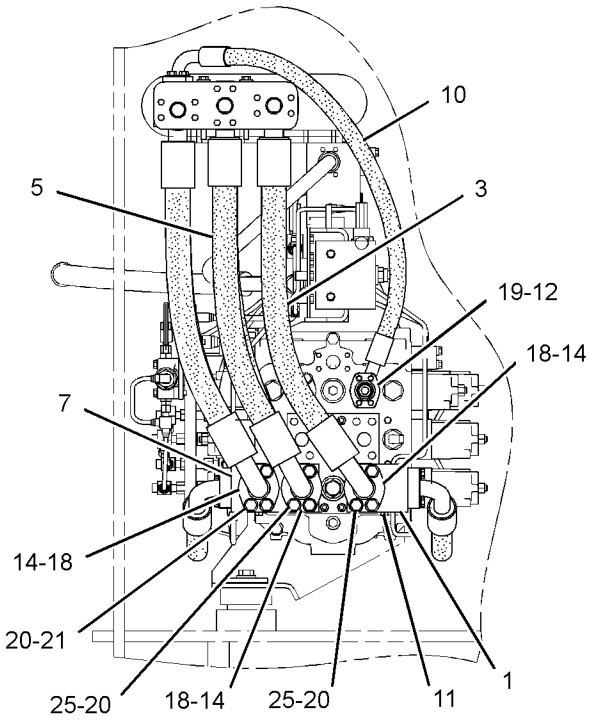

RIGHT SIDE VIEW

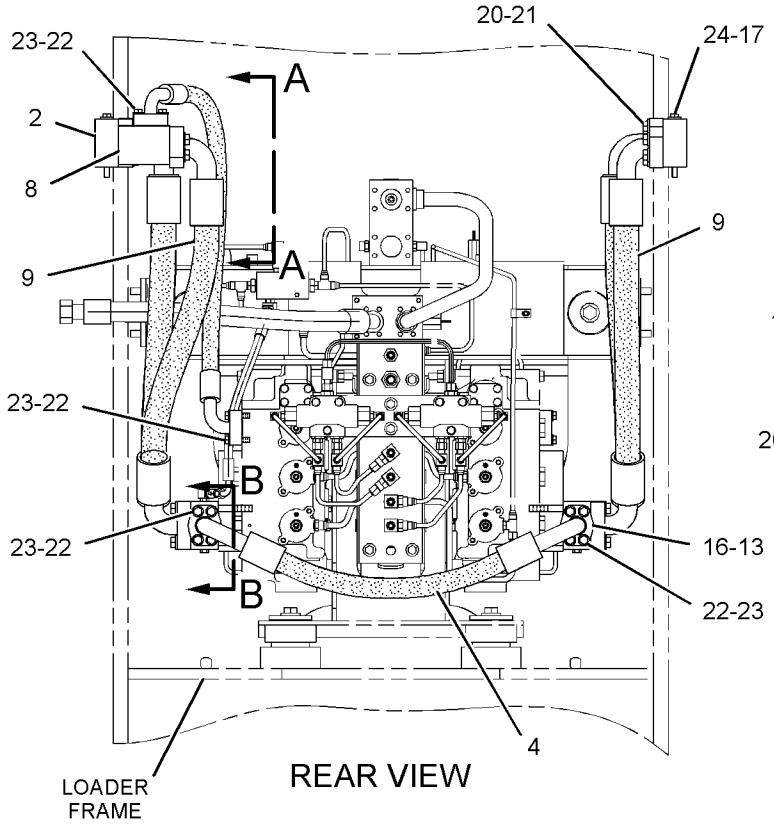

REAR VIEW

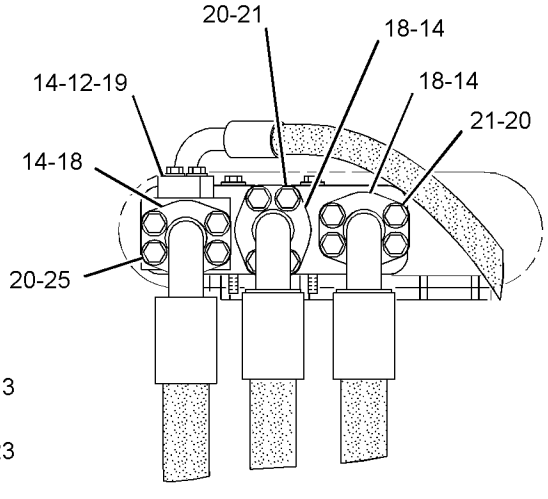

VIEW A-A

GRAPHIC #1 **<END>** g01175478

HYDRAULIC SYSTEM

245-1325 LINES GP-LIFT CYLINDER—CYLINDER TUBE MOUNTED

S/N: 4421-UP
PART OF 251-3148, 251-3150 CYLINDER AR-LIFT
AN ATTACHMENT

SMCS-5057, 5102 **i02154505**

NOTE	REF NO	GRAPHIC REF	PART NUMBER	QTY	PART NAME 1 2 3 4 5 6 (PRODUCT LEVEL)	SEE PAGE
	1	1	**245-1874**	2	TUBE AS	
	2	1	**1P-3706**	2	SEAL-RECTANGULAR	
M	3	1	**7X-2556**	8	BOLT (M16X2X100-MM)	

M-METRIC PART

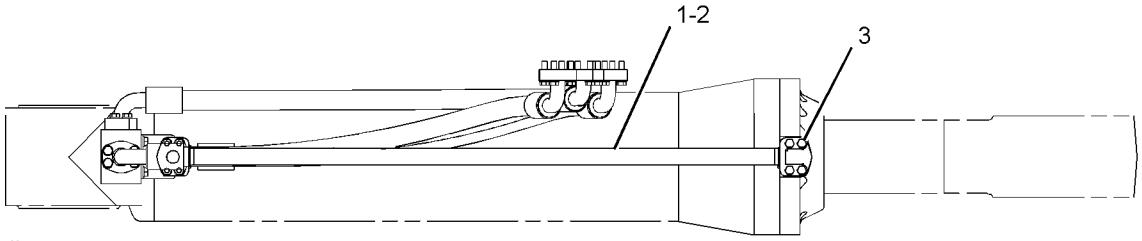

GRAPHIC #1 **<END>** g01093348

HYDRAULIC SYSTEM

245-1860 LINES GP-LIFT CYLINDER–LOADER FRAME

S/N: 4421-UP

PART OF 251-3145, 251-3148 CYLINDER AR-LIFT

AN ATTACHMENT

SMCS-5057, 5102 **i02153521**

NOTE	REF NO	GRAPHIC REF	PART NUMBER	QTY	PART NAME 1 2 3 4 5 6 (PRODUCT LEVEL)	SEE PAGE
I	1	1	**242-3530**	1	HOSE AS	
I	2	1	**242-3531**	1	HOSE AS	
I	3	1	**242-3535**	1	HOSE AS	
	4	1	**245-1859**	2	BLOCK	
I	5	1	**245-1861**	2	HOSE AS	
I	6	1	**245-1862**	1	HOSE AS	
	7	1	**245-1864**	2	BRACKET	
	8	1	**1P-3705**	12	SEAL-RECTANGULAR	
	9	1	**1P-3706**	2	SEAL-RECTANGULAR	
	10	1	**5P-8077**	24	FLANGE-HALF	
M	11	1	**7X-2552**	8	BOLT (M16X2X30-MM)	
M	12	1	**7X-2560**	8	BOLT (M16X2X220-MM)	
M	13	1	**8T-4140**	40	BOLT (M16X2X60-MM)	
	14	1	**9X-8257**	56	WASHER (17.5X30X3.5-MM THK)	

I-REFER TO HYDRAULIC INFORMATION SYSTEM
M-METRIC PART

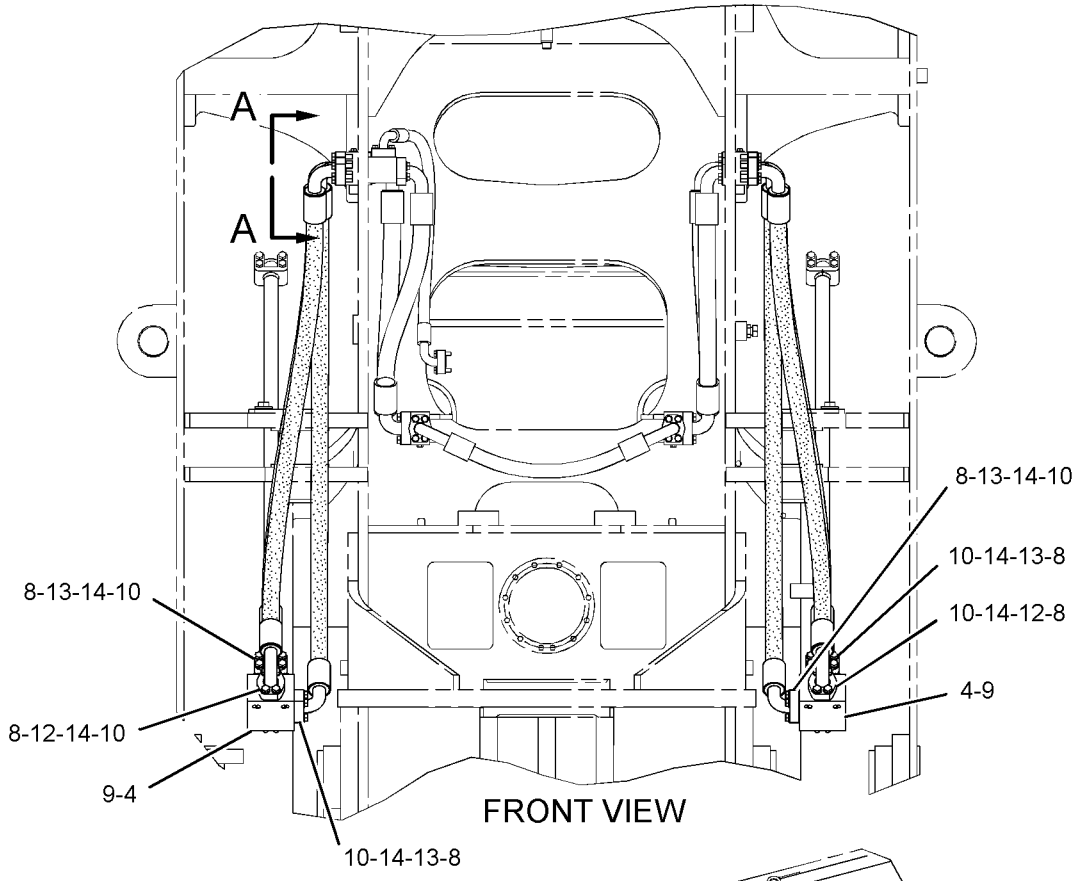

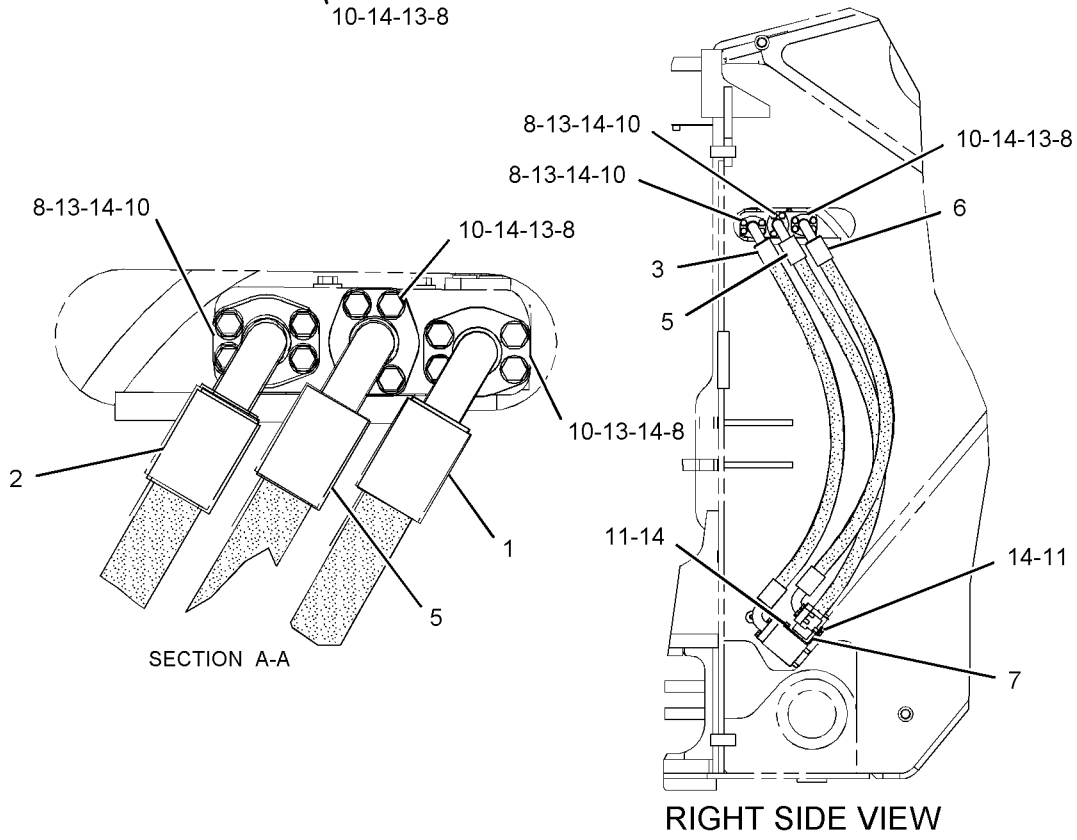

GRAPHIC #1 **<END>** g01095561

HYDRAULIC SYSTEM

245-1865 LINES GP-LIFT CYLINDER–CYLINDER TUBE MOUNTED

S/N: 4421-UP
PART OF 251-3145 CYLINDER AR-LIFT
AN ATTACHMENT

SMCS-5057, 5102 **i02153522**

NOTE	REF NO	GRAPHIC REF	PART NUMBER	QTY	PART NAME 1 2 3 4 5 6 (PRODUCT LEVEL)	SEE PAGE
	1	1	**245-1867**	2	TUBE AS	
	2	1	**1P-3706**	2	SEAL-RECTANGULAR	
M	3	1	**7X-2556**	8	BOLT (M16X2X100-MM)	

M-METRIC PART

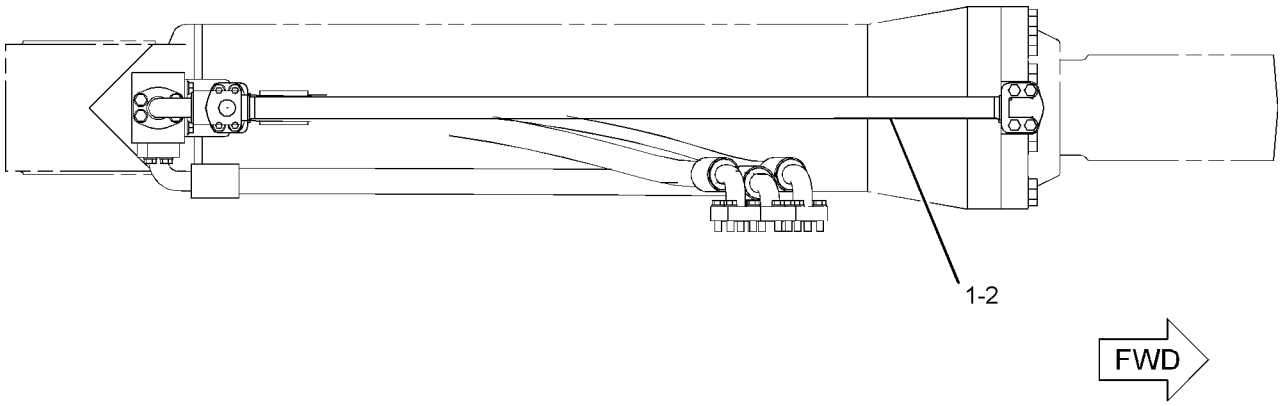

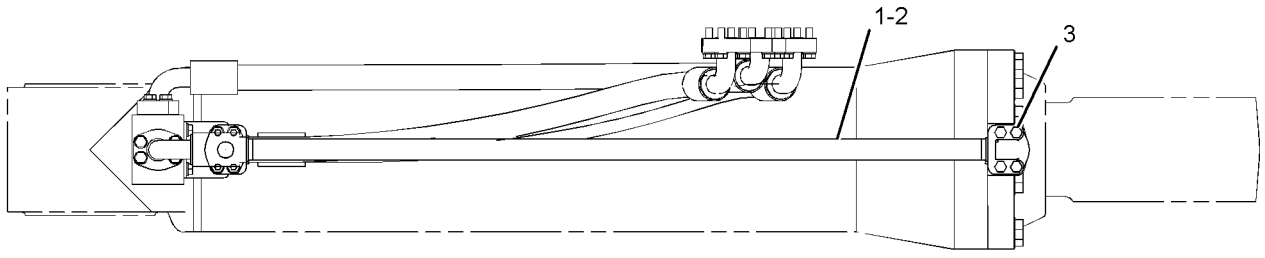

TOP VIEW

GRAPHIC #1 **<END>** g01095584

HYDRAULIC SYSTEM

251-3110 LINES GP-LIFT CYLINDER—LOADER FRAME

S/N: 4421-UP
SUPER HIGH LIFT MACHINES
PART OF 251-3150 CYLINDER AR-LIFT
AN ATTACHMENT

SMCS-5057, 5102 **i02154559**

NOTE	REF NO	GRAPHIC REF	PART NUMBER	QTY	PART NAME 1 2 3 4 5 6 (PRODUCT LEVEL)	SEE PAGE
M	1	1	**113-7430**	8	BOLT-SOCKET HEAD (M20X2.5X150-MM)	
I	2	1	**242-3530**	1	HOSE AS	
I	3	1	**242-3531**	1	HOSE AS	
I	4	1	**242-3535**	1	HOSE AS	
I	5	1	**245-1861**	2	HOSE AS	
I	6	1	**245-1862**	1	HOSE AS	
	7	1	**245-1864**	2	BRACKET	
	8	1	**251-3112**	2	BLOCK	
	9	1	**1P-3705**	12	SEAL-RECTANGULAR	
	10	1	**1P-3709**	2	SEAL-RECTANGULAR	
	11	1	**5P-8077**	24	FLANGE-HALF	
M	12	1	**7X-2552**	8	BOLT (M16X2X30-MM)	
M	13	1	**8T-4140**	48	BOLT (M16X2X60-MM)	
	14	1	**9X-8257**	56	WASHER (17.5X30X3.5-MM THK)	

I-REFER TO HYDRAULIC INFORMATION SYSTEM
M-METRIC PART

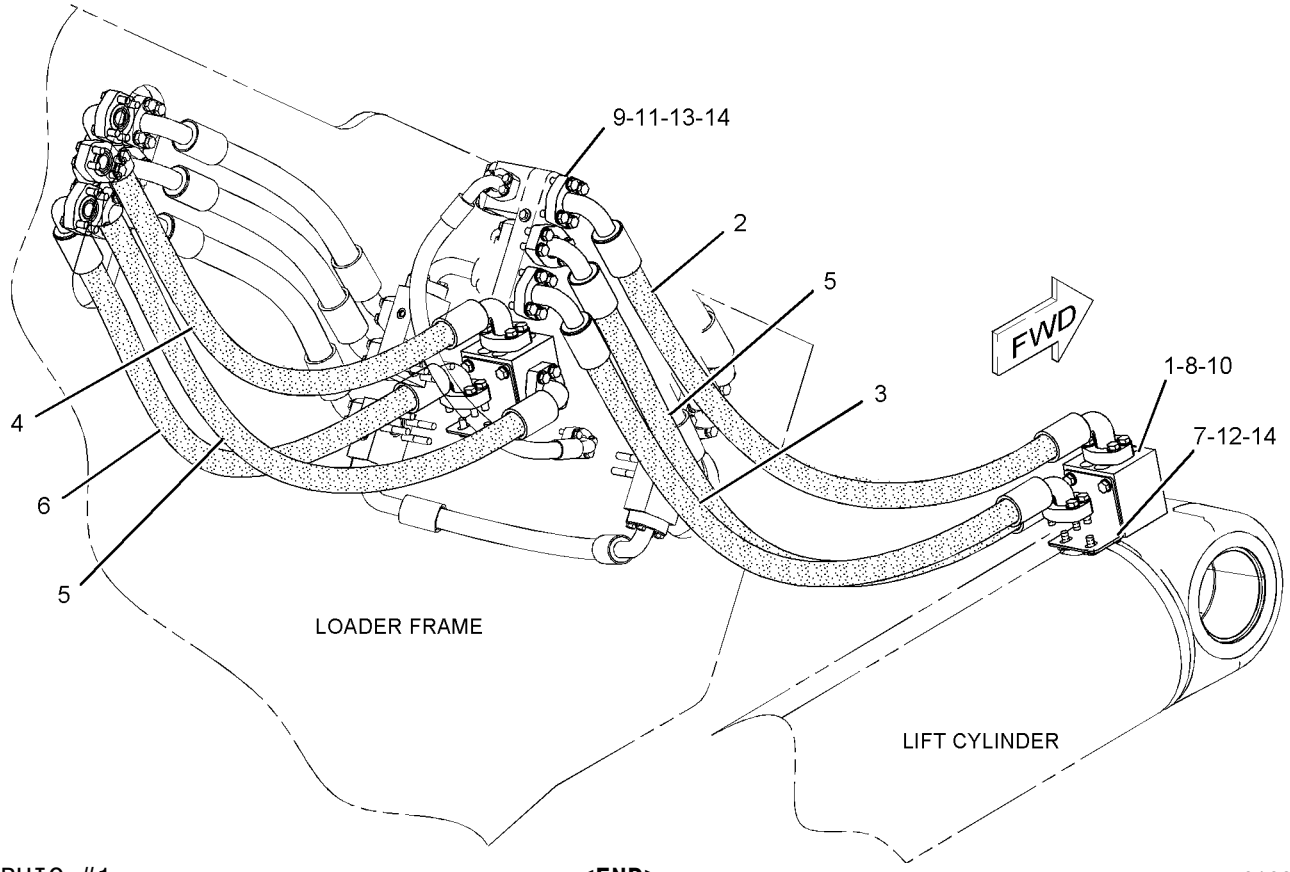

GRAPHIC #1 **<END>** g01096546

251-7549 LINES GP-PAYLOAD MONITOR HYD

S/N: 4421-UP

PART OF 244-7300 HYDRAULIC AR-FRONT

SMCS-5057 **i02285834**

NOTE	REF NO	GRAPHIC REF	PART NUMBER	QTY	PART NAME 1 2 3 4 5 6 (PRODUCT LEVEL)	SEE PAGE
	1	1	**230-9804**	1	BRACKET AS	
I	2	1	**251-7628**	1	HOSE AS	
	3	1	*148-8318*	1	CONNECTOR AS	
		1	**3K-0360**	1	SEAL-O-RING	
		1	**6V-8397**	1	SEAL-O-RING	
		1	**6V-8634**	1	CONNECTOR	
	4	1	*148-8407*	1	PLUG AS	
		1	**3J-1907**	1	SEAL-O-RING	
		1	**9S-4191**	1	PLUG-O RING	
	5	1	*222-6869*	1	CONNECTOR AS	
		1	**3J-1907**	1	SEAL-O-RING	
		1	**6V-8397**	1	SEAL-O-RING	
		1	**9X-2614**	1	CONNECTOR	
	6	1	**5P-7462**	1	CLIP (SLOT)	
	7	1	**5P-7463**	1	CLIP (TAB)	
	8	1	**6V-0683**	1	GROMMET	
	9	1	**8T-4121**	1	WASHER-HARD (11X21X2.5-MM THK)	
M	10	1	**8T-4137**	1	BOLT (M10X1.5X20-MM)	
M	11	1	**8T-4139**	1	BOLT (M12X1.75X30-MM)	
	12	1	**8T-4223**	1	WASHER-HARD (13.5X25.5X3-MM THK)	

I-REFER TO HYDRAULIC INFORMATION SYSTEM
M-METRIC PART

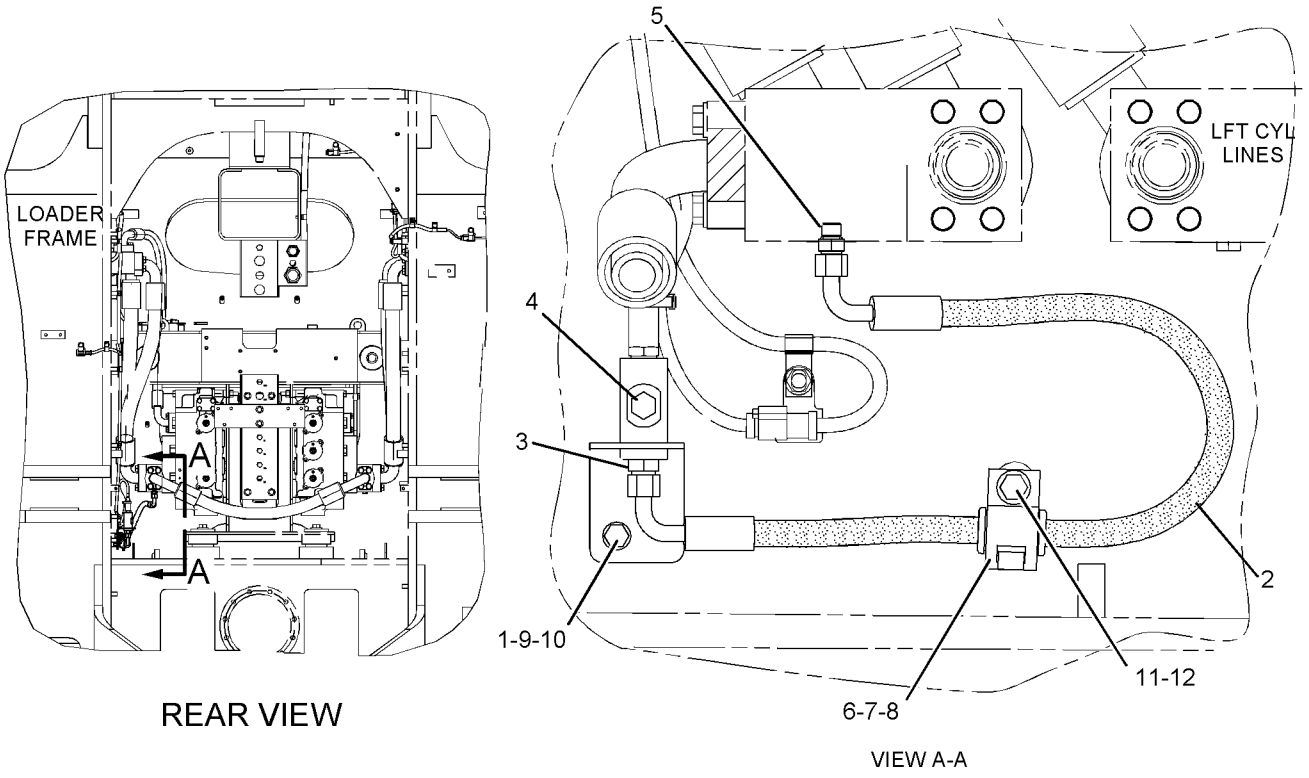

GRAPHIC #1 **<END>** g01144205

HYDRAULIC SYSTEM

244-7245 LINES GP-PILOT–FRONT

S/N: 4421-UP

PART OF 244-7300 HYDRAULIC AR-FRONT

SMCS-5057, 5059 **i02333707**

NOTE	REF NO	GRAPHIC REF	PART NUMBER	QTY	PART NAME 1 2 3 4 5 6 (PRODUCT LEVEL)	SEE PAGE
	1	1	**6E-5444**	1	VALVE GP-CHECK (PILOT)	
	2	3	**6V-0852**	1	CAP-DUST	
	3	1	**7T-9745**	1	MANIFOLD-VALVE	
	4	2	**122-5855**	1	SPACER (11.5X20X26-MM THK)	
	5	1	**135-2755**	1	ADAPTER	
Y	6	3	**140-8243**	2	VALVE GP-SELECTOR (HYDRAULIC)	891
	7	3	**143-1002**	1	TUBE AS	
Y	8	1	**147-1223**	1	VALVE GP-SOLENOID (24-VOLT) (LOAD SENSING SIGNAL)	893
	9	3	**164-5596**	1	TEE AS	
Y	10	1	**164-7474**	1	VALVE GP-CHECK (PILOT)	863
	11	1	**197-3295**	2	FLANGE-HALF	
I	12	2	**224-9270**	1	HOSE AS	
	13	2	**244-7242**	1	TUBE AS	
	14	2	**244-7243**	1	TUBE AS	
	15	1	**244-7244**	1	TUBE AS	
	16	1	**244-7247**	1	TUBE AS	
	17	3	**244-7248**	3	TUBE AS	
	18	1	**244-7249**	2	TUBE AS	
	19	1	**244-7251**	2	TUBE AS	
	20	3	**244-7252**	4	TUBE AS	
	21	2	**244-7253**	1	TUBE AS	
	22	3	**244-7254**	1	TUBE AS	
	23	3	**244-7256**	1	TUBE AS	
	24	3	**244-7257**	1	TUBE AS	
	25	3	**244-7258**	1	TUBE AS	
	26	3	**244-7259**	1	TUBE AS	
Y	27	1	**245-4788**	1	VALVE GP-RELIEF (PILOT)	886
	28	2	**246-0923**	1	VALVE GP-SEQUENCE (FLOAT)	
	29	2	**246-6294**	1	TUBE AS	
	30	1	**246-6295**	1	TUBE AS	
	31	3	**246-6297**	1	TUBE AS	
	32	2	**246-6298**	1	TUBE AS	
	33	2	**246-6300**	1	TUBE AS	
	34	2	**246-6301**	1	TUBE AS	
	35	1	**246-8485**	1	TUBE AS	
	36	1	**251-3226**	1	TUBE AS	
	37	1	**251-3232**	1	TUBE AS	
I	38	1	**251-3234**	1	HOSE AS	
	39	1	**251-4091**	1	PLATE AS	
I	40	3	**264-4286**	1	HOSE AS	
I	41	3	**264-4291**	1	HOSE AS	
I	42	2	**264-4303**	1	HOSE AS	
I	43	2	**264-4318**	1	HOSE AS	
	44	2	**264-4405**	1	TUBE AS	
	45	2	**264-4406**	1	TUBE AS	
I	46	1	**264-5079**	1	HOSE AS	
	47	1	**264-9747**	1	TUBE AS	
Y	48	1	**119-5988**	1	VALVE GP-SELECTOR & PRESS CONT (DEAD ENGINE LOWER)	892
	49	1	**119-7276**	1	BLOCK	
	50	3	*148-8305*	1	ADAPTER AS	
		3	**3J-1907**	1	SEAL-O-RING	
		3	**5P-9617**	1	ADAPTER	
	51	2	*148-8318*	3	CONNECTOR AS	
					(EACH INCLUDES)	

244-7245 **LINES GP-PILOT** ***(contd.)*** **i02333707**

NOTE	REF NO	GRAPHIC REF	PART NUMBER	QTY	PART NAME 1 2 3 4 5 6 (PRODUCT LEVEL)	SEE PAGE
		2	**3K-0360**	1	SEAL-O-RING	
		2	**6V-8397**	1	SEAL-O-RING	
		2	**6V-8634**	1	CONNECTOR	
	52	3	*148-8319*	2	CONNECTOR AS	
					(EACH INCLUDES)	
		3	**2M-9780**	1	SEAL-O-RING	
		3	**6V-8397**	1	SEAL-O-RING	
		3	**6V-8715**	1	CONNECTOR	
	53	2	*148-8335*	1	CONNECTOR AS	
		2	**5K-9090**	1	SEAL-O-RING	
		2	**6V-8635**	1	CONNECTOR	
		2	**7M-8485**	1	SEAL-O-RING	
	54	1	*148-8339*	1	CONNECTOR AS	
					(EACH INCLUDES)	
		1	**6V-8716**	1	CONNECTOR	
		1	**6V-9746**	1	SEAL-O-RING	
		1	**7M-8485**	1	SEAL-O-RING	
	55	1	*148-8353*	1	ELBOW AS	
		1	**3J-1907**	1	SEAL-O-RING	
		1	**6V-8397**	1	SEAL-O-RING	
		1	**6V-9001**	1	ELBOW	
	56	1	*148-8360*	1	ELBOW AS	
		1	**6V-9182**	1	ELBOW	
		1	**6V-9746**	1	SEAL-O-RING	
		1	**7M-8485**	1	SEAL-O-RING	
	57	1	*148-8361*	2	ELBOW AS	
					(EACH INCLUDES)	
		1	**3J-7354**	1	SEAL-O-RING	
		1	**6V-8397**	1	SEAL-O-RING	
		1	**6V-9200**	1	ELBOW	
	58	1,3	*148-8367*	2	ELBOW AS	
		1,3	**6V-8397**	1	SEAL-O-RING	
		1,3	**6V-9850**	1	ELBOW	
	59	1	*148-8370*	4	ELBOW AS	
					(EACH INCLUDES)	
		1	**6V-8398**	1	SEAL-O-RING	
		1	**6V-9851**	1	ELBOW	
	60	1,2,3	*148-8378*	9	ELBOW AS	
					(EACH INCLUDES)	
		1,2,3	**3J-1907**	1	SEAL-O-RING	
		1,2,3	**6V-8397**	1	SEAL-O-RING	
		1,2,3	**6V-8724**	1	ELBOW	
	61	1	*148-8407*	1	PLUG AS	
		1	**3J-1907**	1	SEAL-O-RING	
		1	**9S-4191**	1	PLUG-O RING	
	62	1,3	*148-8415*	5	REDUCER AS	
					(EACH INCLUDES)	
		1,3	**6V-8397**	1	SEAL-O-RING	
		1,3	**6V-8936**	1	REDUCER	
	63	3	*148-8433*	5	TEE AS	
					(EACH INCLUDES)	
		3	**6V-8397**	2	SEAL-O-RING	
		3	**6V-9836**	1	TEE-SWIVEL	
	64	1,3	*148-8435*	4	TEE AS	
					(EACH INCLUDES)	
		1,3	**3J-1907**	1	SEAL-O-RING	
		1,3	**6V-8397**	2	SEAL-O-RING	
		1,3	**6V-8781**	1	TEE-FACE SEAL	

244-7245 **LINES GP-PILOT** *(contd.)* **i02333707**

NOTE	REF NO	GRAPHIC REF	PART NUMBER	QTY	PART NAME 1 2 3 4 5 6 (PRODUCT LEVEL)	SEE PAGE
	65	2	*148-8439*	2	TEE AS	
					(EACH INCLUDES)	
		2	**3J-1907**	1	SEAL-O-RING	
		2	**6V-8397**	2	SEAL-O-RING	
		2	**6V-8774**	1	TEE	
	66	1,3	*148-8444*	5	TEE AS-SWIVEL	
					(EACH INCLUDES)	
		1,3	**6V-8398**	2	SEAL-O-RING	
		1,3	**6V-9837**	1	TEE-SWIVEL	
	67	1	*148-8455*	1	UNION AS	
		1	**6V-8997**	1	UNION	
		1	**6V-9746**	2	SEAL-O-RING	
	68	1	*148-8457*	3	UNION AS	
					(EACH INCLUDES)	
		1	**6V-8398**	2	SEAL-O-RING	
		1	**6V-8995**	1	UNION	
	69	1	*150-4037*	3	TEE AS	
					(EACH INCLUDES)	
		1	**6V-8398**	2	SEAL-O-RING	
		1	**6V-9844**	1	TEE-SWIVEL	
	70	1,3	*150-4043*	9	CONNECTOR AS	
					(EACH INCLUDES)	
		1,3	**3J-1907**	1	SEAL-O-RING	
		1,3	**6V-8398**	1	SEAL-O-RING	
		1,3	**6V-9873**	1	CONNECTOR	
	71	3	*150-4046*	4	ADAPTER AS	
					(EACH INCLUDES)	
		3	**2M-9780**	1	SEAL-O-RING	
		3	**5P-1404**	1	ADAPTER-O-RING	
	72	1	*150-4049*	1	ELBOW AS	
		1	**6V-9746**	1	SEAL-O-RING	
		1	**7M-8485**	1	SEAL-O-RING	
		1	**8T-4149**	1	ELBOW	
	73	1,2	*155-3502*	3	ADAPTER AS	
					(EACH INCLUDES)	
		1,2	**3E-7403**	1	ADAPTER	
		1,2	**6V-8398**	1	SEAL-O-RING	
	74	2	*155-7329*	1	ELBOW GP	
		2	**3K-0360**	1	SEAL-O-RING	
		2	**5H-8853**	1	SEAL-O-RING	
		2	**6V-8723**	1	ELBOW	
	75	3	*164-5590*	1	VALVE AS-FLUID SAMPLING (HYDRAULIC OIL)	
		3	**3J-7354**	1	SEAL-O-RING	
		3	**8C-3446**	1	VALVE-FLUID SAMPLING	
	76	1	*164-5624*	1	ELBOW GP	
		1	**3J-1907**	1	SEAL-O-RING	
		1	**6V-8398**	1	SEAL-O-RING	
		1	**9X-2085**	1	ELBOW	
	77	1	*169-4273*	2	TEE AS	
					(EACH INCLUDES)	
		1	**6V-8398**	3	SEAL-O-RING	
		1	**7X-7715**	1	TEE	
	78	1	**1P-4578**	2	FLANGE-HALF	
	79	1	**2P-1293**	1	LOCKNUT (1-3/16-12-THD)	
	80	3	**3J-1907**	4	SEAL-O-RING	
	81	1	**3K-0360**	1	SEAL-O-RING	
	82	3	**4I-6206**	4	CONNECTOR	
	83	1	**4J-0522**	2	SEAL-O-RING	
	84	2	**5K-9090**	4	SEAL-O-RING	

244-7245 **LINES GP-PILOT** *(contd.)* **i02333707**

NOTE	REF NO	GRAPHIC REF	PART NUMBER	QTY	PART NAME 1 2 3 4 5 6 (PRODUCT LEVEL)	SEE PAGE
	85	1,2	**5P-7464**	4	CLIP (SLOT)	
	86	1,2	**5P-7465**	4	CLIP (TAB)	
	87	2	**6V-3265**	1	CLIP	
	88	1,2	**6V-7359**	4	GROMMET	
	89	3	**6V-8397**	4	SEAL-O-RING	
	90	1	**6V-8398**	2	SEAL-O-RING	
	91	1	**6V-9169**	5	NUT-BULKHEAD (13/16-16-THD)	
M	92	2	**7X-2534**	2	BOLT (M6X1X50-MM)	
	93	1	**7X-3392**	4	WASHER-HARD (13.5X22.5X3-MM THK)	
	94	1,2,3	**8T-4121**	18	WASHER-HARD (11X21X2.5-MM THK)	
M	95	1	**8T-4137**	2	BOLT (M10X1.5X20-MM)	
M	96	2	**8T-4185**	1	BOLT (M10X1.5X50-MM)	
M	97	1	**8T-4189**	2	BOLT (M8X1.25X20-MM)	
M	98	1	**8T-4196**	4	BOLT (M10X1.5X35-MM)	
M	99	1	**8T-4198**	3	BOLT (M10X1.5X100-MM)	
	100	1,2	**8T-4223**	4	WASHER-HARD (13.5X25.5X3-MM THK)	
	101	1	**8T-4224**	2	WASHER-HARD (8.8X16X2-MM THK)	
M	102	1,2	**8T-4956**	8	BOLT (M12X1.75X35-MM)	
M	103	1,3	**8T-5005**	8	BOLT (M10X1.5X70-MM)	
M	104	1	**8T-6912**	2	BOLT (M8X1.25X50-MM)	
	105	1	**8X-1535**	1	PLATE	
	106	2	**9X-8256**	2	WASHER (6.6X12X2-MM THK)	

I-REFER TO HYDRAULIC INFORMATION SYSTEM
M-METRIC PART
Y-SEPARATE ILLUSTRATION

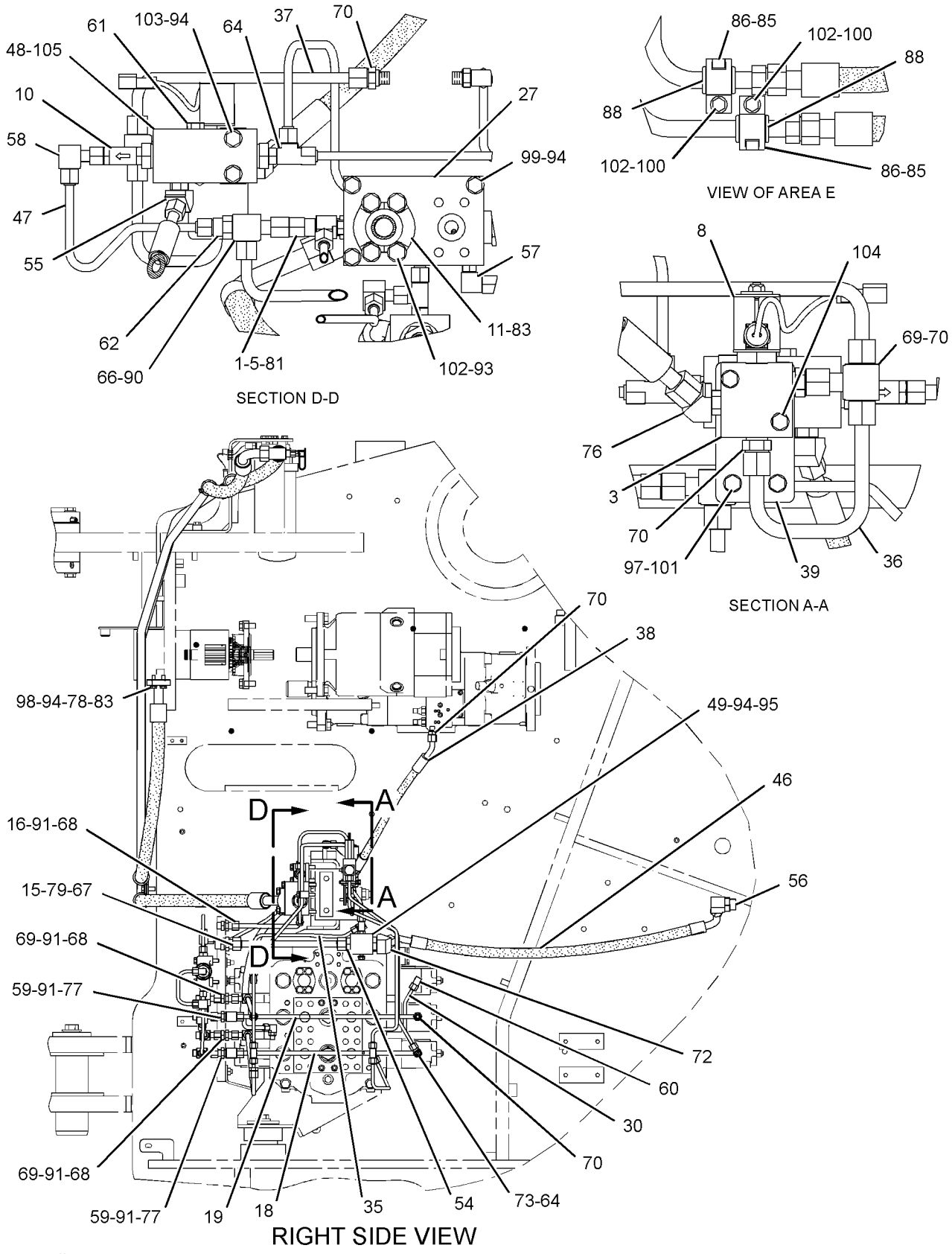

GRAPHIC #1 g01164842

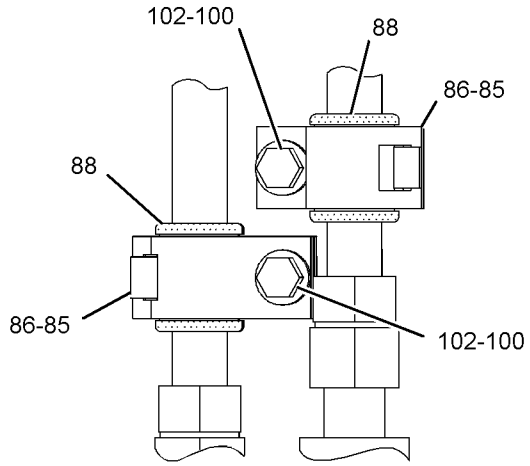

VIEW OF AREA F

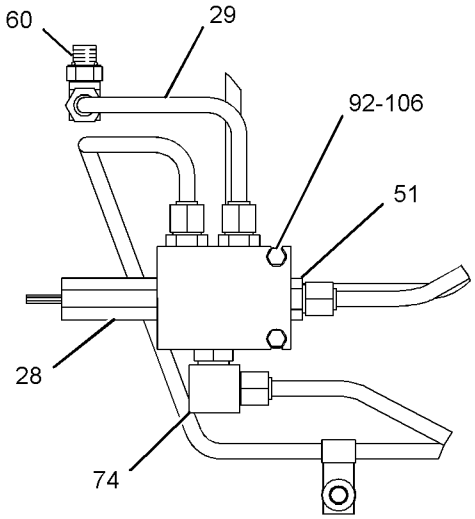

SECTION G-G

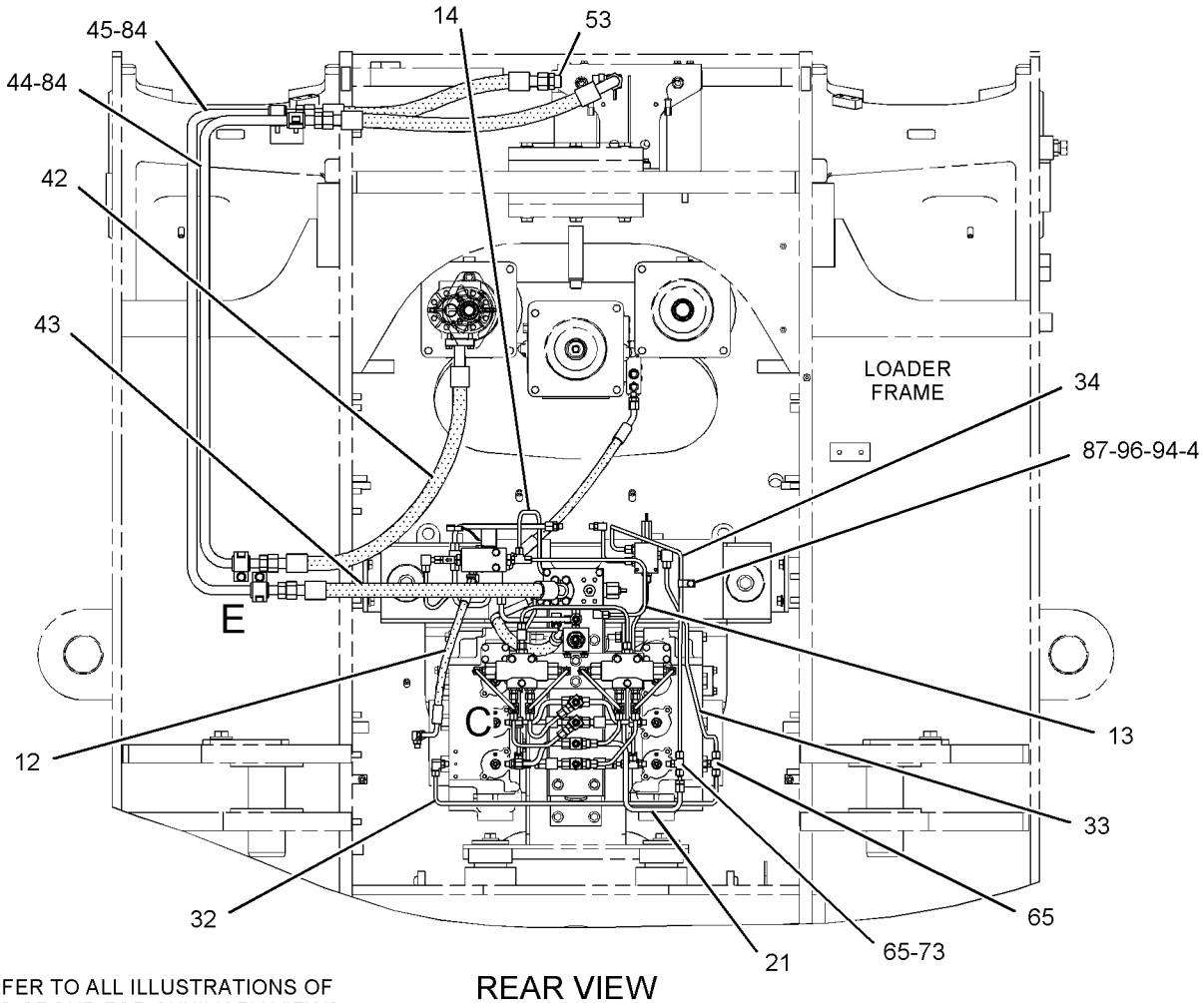

REFER TO ALL ILLUSTRATIONS OF
THIS GROUP FOR AUXILIARY VIEWS

REAR VIEW

GRAPHIC #2

g01145718

244-7245 **LINES GP-PILOT** *(contd.)* **i02333707**

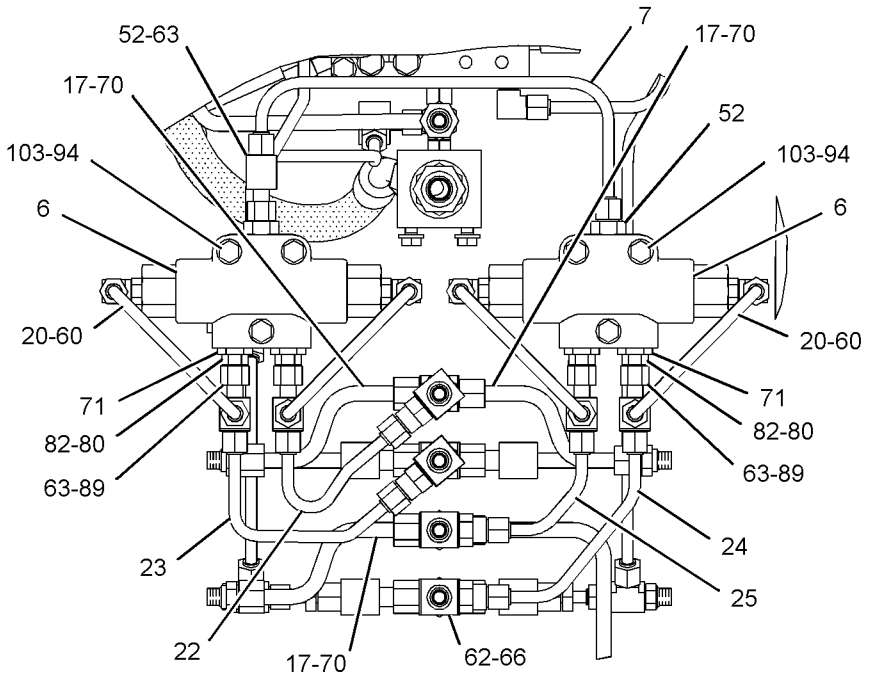

VIEW OF AREA C

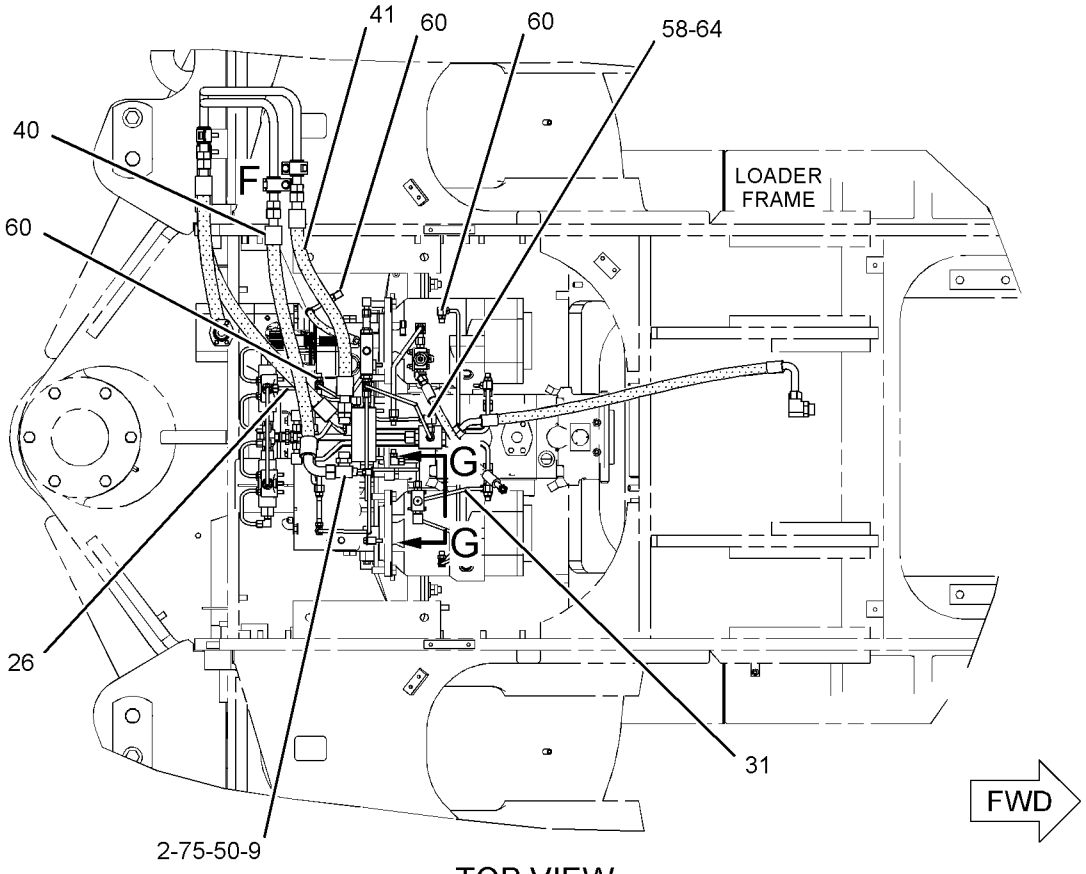

TOP VIEW

GRAPHIC #3

<END>

g01145719

HYDRAULIC SYSTEM

245-0710 LINES GP-PILOT–REAR

S/N: 4421-UP

PART OF 245-0700 HYDRAULIC AR-REAR

SMCS-5057, 5059 **i02290079**

NOTE	REF NO	GRAPHIC REF	PART NUMBER	QTY	PART NAME 1 2 3 4 5 6 (PRODUCT LEVEL)	SEE PAGE
M	1	1,2	**8T-4136**	11	BOLT (M10X1.5X25-MM)	
M	2	2	**8T-4186**	1	BOLT (M10X1.5X40-MM)	
M	3	1	**8T-5005**	2	BOLT (M10X1.5X70-MM)	
M	4	1	**8T-6466**	10	BOLT (M10X1.5X60-MM)	
	5	1,2	**9X-8250**	6	CLIP	
	6	1	**5V-8913**	10	CLAMP-HALF	
	7	1	**7T-9745**	2	MANIFOLD-VALVE	
	8	1	**8X-7806**	2	CLAMP	
Y	9	2	**152-8385**	1	VALVE GP-SOLENOID (24-VOLT) (LIFT CYL RAISE STOP CONTROL)	894
Y	9A	2	**152-8385**	1	VALVE GP-SOLENOID (24-VOLT) (LOWER KICKOUT CUSHION CONTROL)	894
	10	1	*150-3058*	1	TEE AS	
		1	**3J-1907**	1	SEAL-O-RING	
		1	**8C-8431**	1	TEE	
	11	2	*215-3191*	1	REDUCER AS	
		2	**4J-5477**	1	SEAL-O-RING	
		2	**6V-8937**	1	REDUCER-O-RING	
	12	1	**260-9228**	1	CONNECTOR AS	
		1	**3J-1907**		SEAL-O-RING	
		1	**6V-8398**	1	SEAL-O-RING	
		1	**260-9227**	1	CONNECTOR	
	13	1	**234-2836**	1	TUBE AS	
M	14	1,2	**8T-4133**	3	NUT (M10X1.15-THD)	
I	15	1	**245-0703**	1	HOSE AS	
I	16	1	**245-0704**	5	HOSE AS	
I	18	1	**245-0706**	1	HOSE AS	
I	19	1	**263-9995**	1	HOSE AS	
I	20	2	**245-0708**	1	HOSE AS	
	21	1	**245-0709**	1	PLATE AS	
		1	**7T-1099**	1	LINK	
M		1	**8T-3490**	4	NUT-WELD (M10X1.5-THD)	
M		1	**8T-3612**	2	NUT-WELD (M8X1.25-THD)	
		1	**9R-2613**	2	BOSS-WELD (M10X1.5X25-MM OAL)	
	22	1	**245-0713**	1	PLATE	
I	23	1	**263-9996**	1	HOSE AS	
	24	1	**245-3780**	1	BRACKET AS	
M		1	**8T-3490**	12	NUT-WELD (M10X1.5-THD)	
I	25	2	**263-9997**	1	HOSE AS	
I	26	1	**245-4671**	1	HOSE AS	
I	27	2	**245-4672**	1	HOSE AS	
I	28	2	**245-4673**	1	HOSE AS	
I	29	2	**245-4674**	1	HOSE AS	
	30	1	**148-6757**	1	TEE-UNION	
	31	1,2	*148-8370*	5	ELBOW AS	
					(EACH INCLUDES)	
		1,2	**6V-8398**	1	SEAL-O-RING	
		1,2	**6V-9851**	1	ELBOW	
	32	1	*148-8392*	1	ELBOW AS	
		1	**6V-9746**	1	SEAL-O-RING	
		1	**6V-9853**	1	ELBOW	
	33	2	*148-8393*	1	ELBOW GP	
		2	**6V-9852**	1	ELBOW (SWIVEL)	
		2	**7J-9108**	1	SEAL-O-RING	
	34	1	*148-8407*	1	PLUG AS	
		1	**3J-1907**	1	SEAL-O-RING	

245-0710 **LINES GP-PILOT** *(contd.)* **i02290079**

NOTE	REF NO	GRAPHIC REF	PART NUMBER	QTY	PART NAME 1 2 3 4 5 6 (PRODUCT LEVEL)	SEE PAGE
		1	**9S-4191**	1	PLUG-O RING	
	35	1	*148-8444*	1	TEE AS-SWIVEL	
		1	**6V-8398**	2	SEAL-O-RING	
		1	**6V-8397**	1	SEAL-O-RING	
	36	1	*148-8457*	4	UNION AS	
					(EACH INCLUDES)	
		1	**6V-8398**	2	SEAL-O-RING	
		1	**6V-8995**	1	UNION	
	37	1	*150-4043*	4	CONNECTOR AS	
					(EACH INCLUDES)	
		1	**3J-1907**	1	SEAL-O-RING	
		1	**6V-8398**	1	SEAL-O-RING	
		1	**6V-9873**	1	CONNECTOR	
	38	1	*148-8365*	1	ELBOW AS	
		1	**3J-1907**	1	SEAL-O-RING	
		1	**6V-8398**	1	SEAL-O-RING	
		1	**8T-6876**	1	ELBOW	
	39	1	**164-6862**	1	TEE GP	
		1	**6V-9160**	1	TEE-FACE SEAL	
		1	**6V-9746**	3	SEAL-O-RING	
	40	1	**2P-1293**	1	LOCKNUT (1-3/16-12-THD)	
	41	1,2	**4S-4455**	2	CLIP	
	42	1	**5P-4116**	6	WASHER-HARD (8.8X20.5X2-MM THK)	
	43	2	**5P-7470**	1	CLIP (SLOT)	
	44	2	**5P-7471**	1	CLIP (TAB)	
	45	2	**5P-8182**	1	GROMMET	
	46	2	**6D-1641**	2	CLIP	
	47	1	**6V-2235**	1	CLIP	
	48	1	**6V-8398**	2	SEAL-O-RING	
	49	2	**6V-8555**	1	NUT-FACE SEAL (1-14-THD)	
	50	1	**6V-9169**	5	NUT-BULKHEAD (13/16-16-THD)	
	51	1	**7J-9108**	1	SEAL-O-RING	
M	52	1	**7X-2538**	2	BOLT (M8X1.25X100-MM)	
	53	1,2	**8T-4121**	9	WASHER-HARD (11X21X2.5-MM THK)	
	54	1	*148-8418*	1	REDUCER GP	
		1	**6V-8398**	1	SEAL-O-RING	
		1	**6V-8942**	1	REDUCER-O-RING	
	55	1	**9X-6580**	1	NUT (1-3/16-12-THD)	
M	56	1	**8T-4196**	1	BOLT (M10X1.5X35-MM)	
	57	1	**6V-1228**	1	CLIP	
	58	1	**6D-4636**	1	CLIP	

I-REFER TO HYDRAULIC INFORMATION SYSTEM
M-METRIC PART
Y-SEPARATE ILLUSTRATION

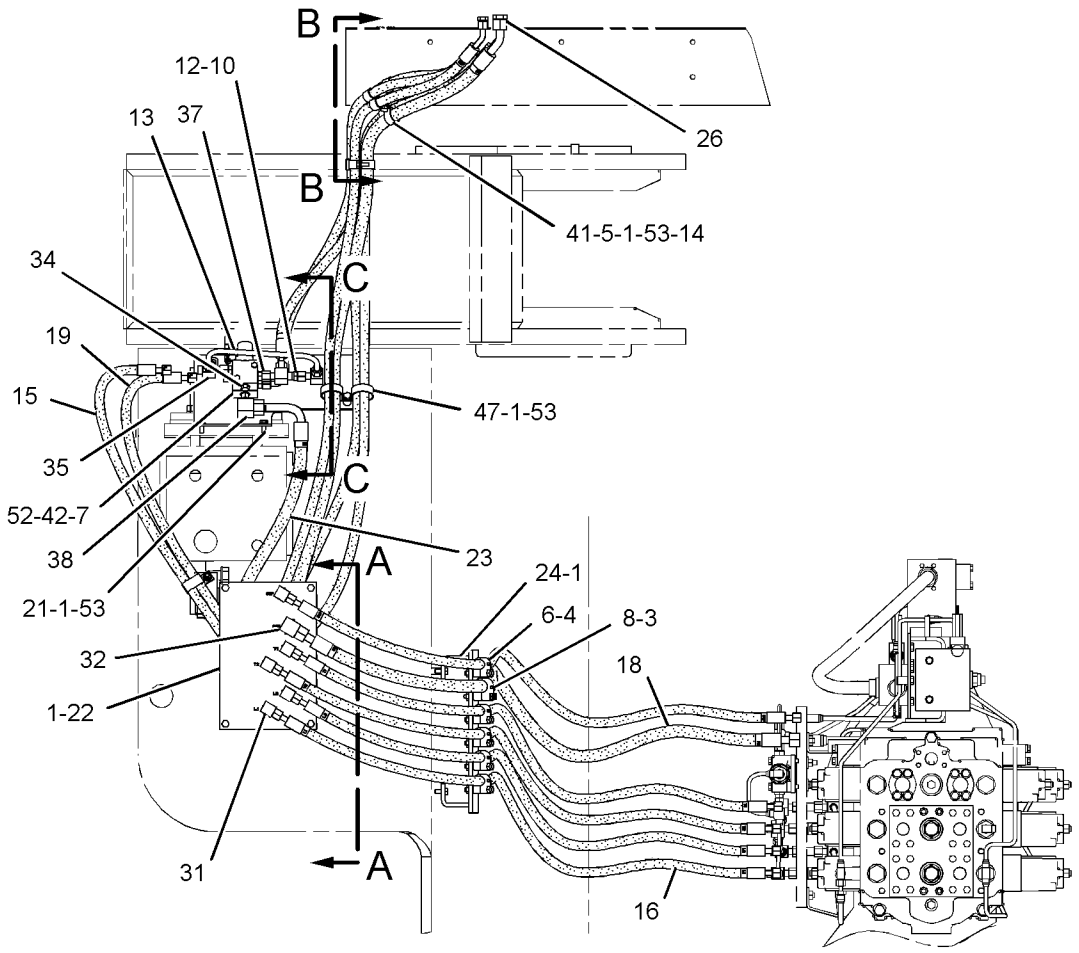

RIGHT SIDE VIEW

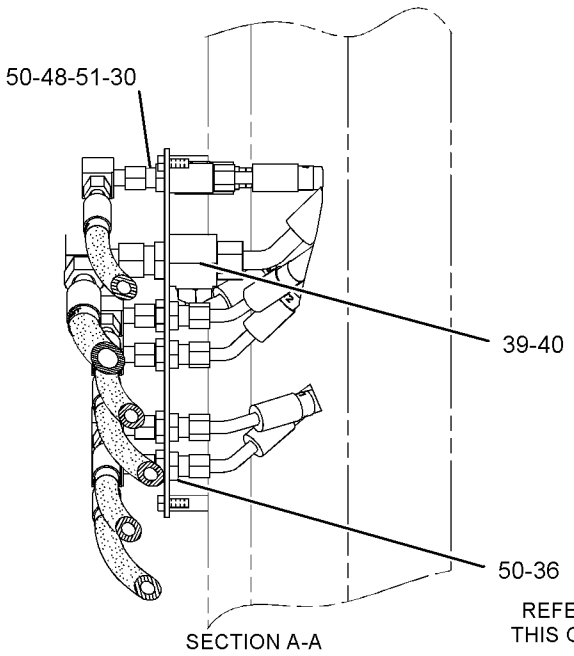

SECTION A-A

REFER TO ALL ILLUSTRATIONS OF THIS GROUP FOR AUXILIARY VIEWS.

GRAPHIC #1

g01094340

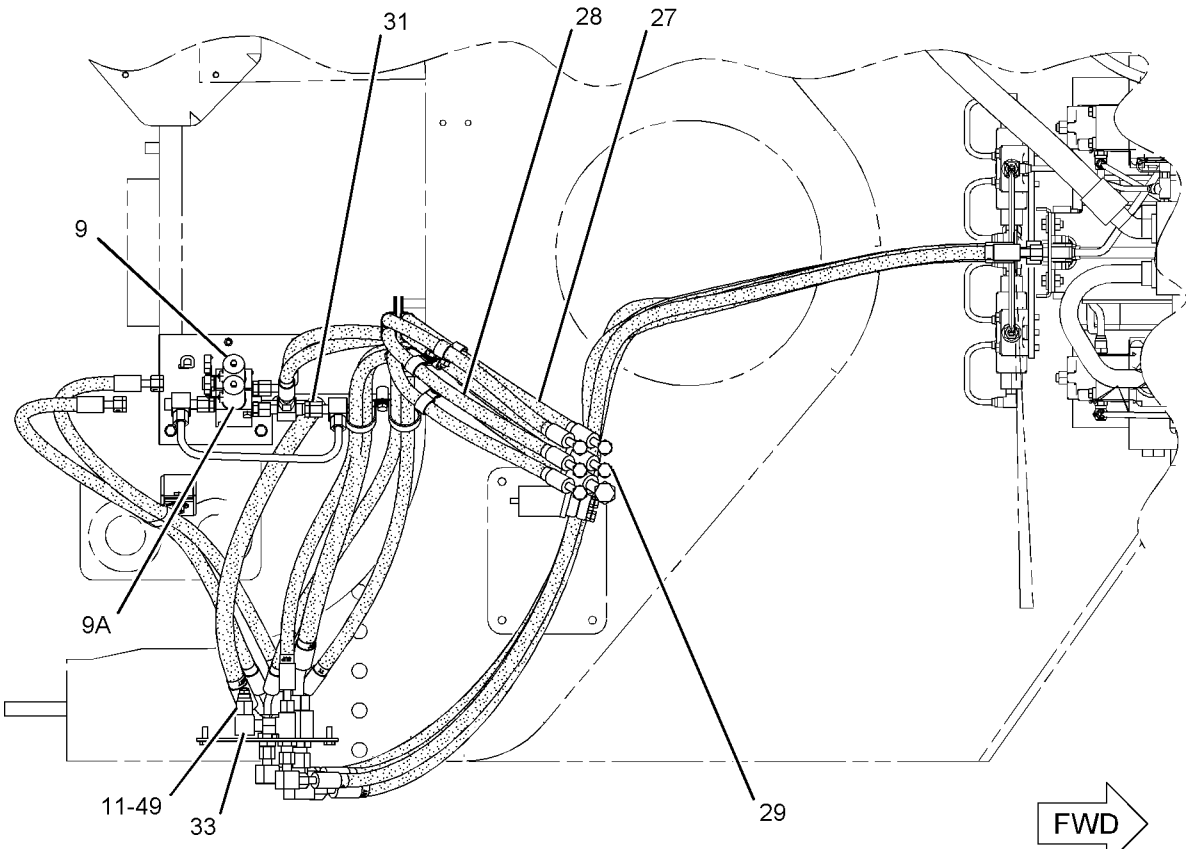

TOP VIEW

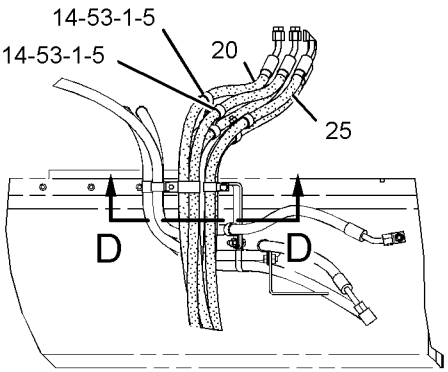

VIEW B-B

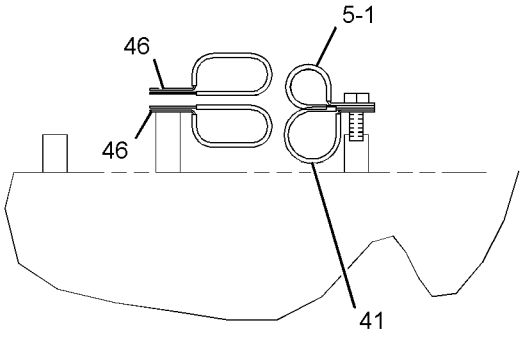

SECTION D-D

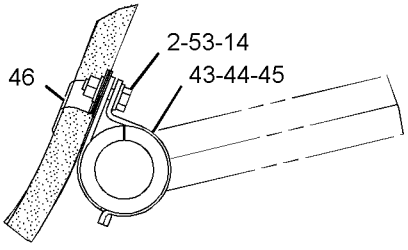

SECTION C-C

GRAPHIC #2

<END>

g01094341

HYDRAULIC SYSTEM

244-7250 LINES GP-TILT CYLINDER

S/N: 4421-UP

PART OF 244-7300 HYDRAULIC AR-FRONT

SMCS-5057, 5104 **i02282200**

NOTE	REF NO	GRAPHIC REF	PART NUMBER	QTY	PART NAME 1 2 3 4 5 6 (PRODUCT LEVEL)	SEE PAGE
	1	1	**8X-1343**	2	BLOCK	
I	2	1	**244-7262**	1	HOSE AS	
I	3	1	**244-7316**	1	HOSE AS	
I	4	1	**244-7321**	1	HOSE AS	
I	5	1	**245-0677**	1	HOSE AS	
	6	1	**246-2264**	1	MANIFOLD	
	7	1	**251-7254**	1	BRACKET AS	
	8	1	**1P-3705**	16	SEAL-RECTANGULAR	
	9	1	**5P-0049**	4	COVER	
M	10	1	**8T-4173**	16	BOLT (M16X2X110-MM)	
M	11	1	**8T-4779**	5	BOLT (M16X2X35-MM)	
	12	1	**5P-8077**	24	FLANGE-HALF	
	13	1	**6V-1572**	4	CLIP (SLOT)	
	14	1	**6V-1573**	4	CLIP (TAB)	
	15	1	**6V-1574**	2	GROMMET	
	16	1	**6V-1875**	2	GROMMET	
M	17	1	**7X-2557**	7	BOLT (M16X2X140-MM)	
M	18	1	**7X-2558**	1	BOLT (M16X2X150-MM)	
	19	1	**7X-7729**	4	WASHER (11X25X3-MM THK)	
M	20	1	**8T-4122**	61	WASHER-HARD (17X32X3.5-MM THK)	
M	21	1	**8T-4136**	2	BOLT (M10X1.5X25-MM)	
M	22	1	**8T-4140**	32	BOLT (M16X2X60-MM)	
M	23	1	**8T-4195**	2	BOLT (M10X1.5X30-MM)	

I-REFER TO HYDRAULIC INFORMATION SYSTEM
M-METRIC PART

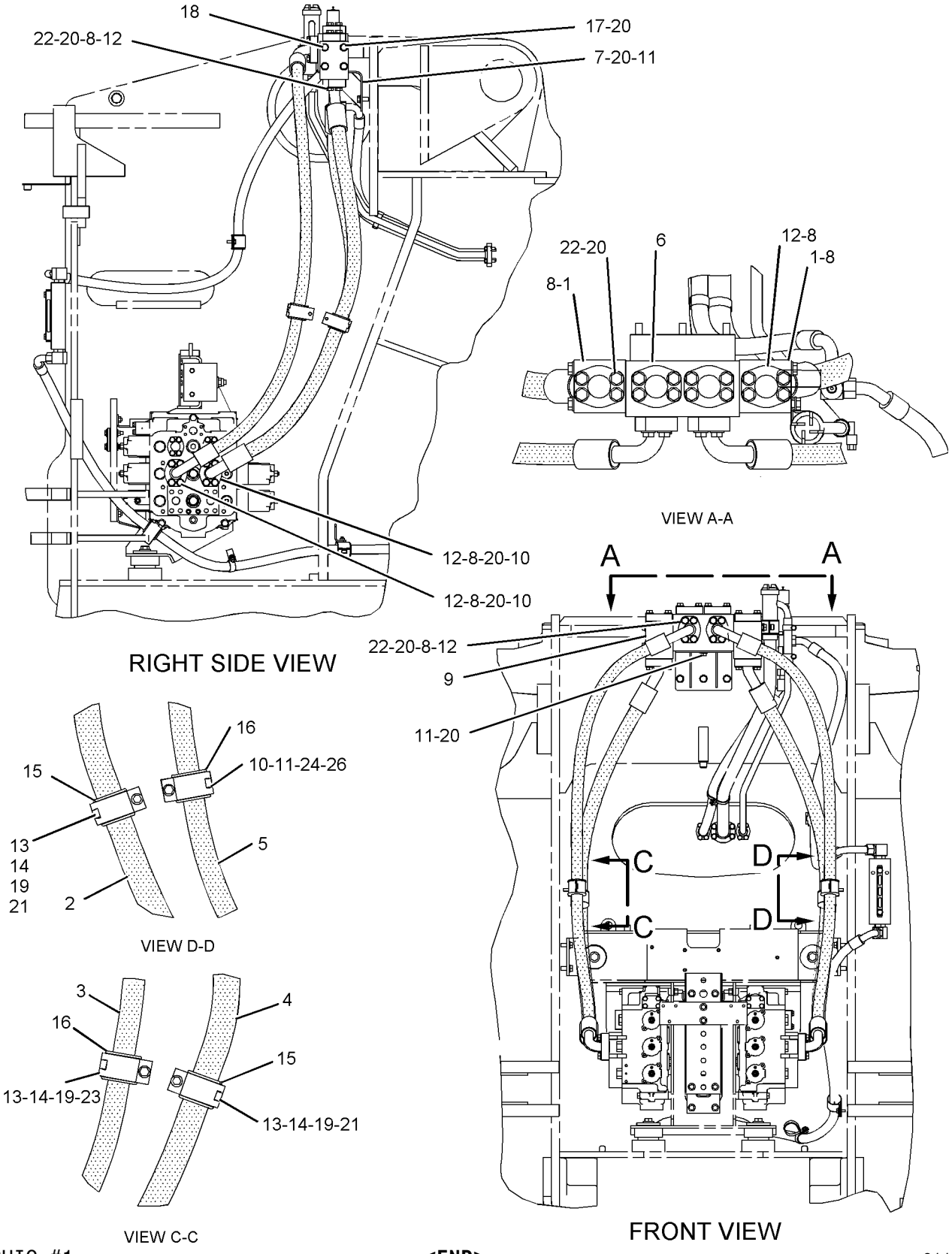

GRAPHIC #1 **<END>** g01142214

245-1820 LINES GP-TILT CYLINDER–CYLINDER TUBE MOUNTED

S/N: 4421-UP
PART OF 251-3146, 251-3149 CYLINDER AR-TILT
AN ATTACHMENT

SMCS-5057, 5104 **i02153519**

NOTE	REF NO	GRAPHIC REF	PART NUMBER	QTY	PART NAME 1 2 3 4 5 6 (PRODUCT LEVEL)	SEE PAGE
	1	1	**8X-1341**	2	BLOCK	
	2	1	**251-3111**	2	BRACKET	
	3	1	**251-3114**	1	TUBE AS	
	4	1	**251-3116**	1	TUBE AS	
	6	1	**1P-3706**	4	SEAL-RECTANGULAR	
	8	1	**5P-8077**	4	FLANGE-HALF	
M	9	1	**7X-2553**	8	BOLT (M16X2X40-MM)	
M	10	1	**8T-4140**	8	BOLT (M16X2X60-MM)	
M	11	1	**8T-4173**	8	BOLT (M16X2X110-MM)	
	12	1	**9X-8257**	24	WASHER (17.5X30X3.5-MM THK)	

M-METRIC PART

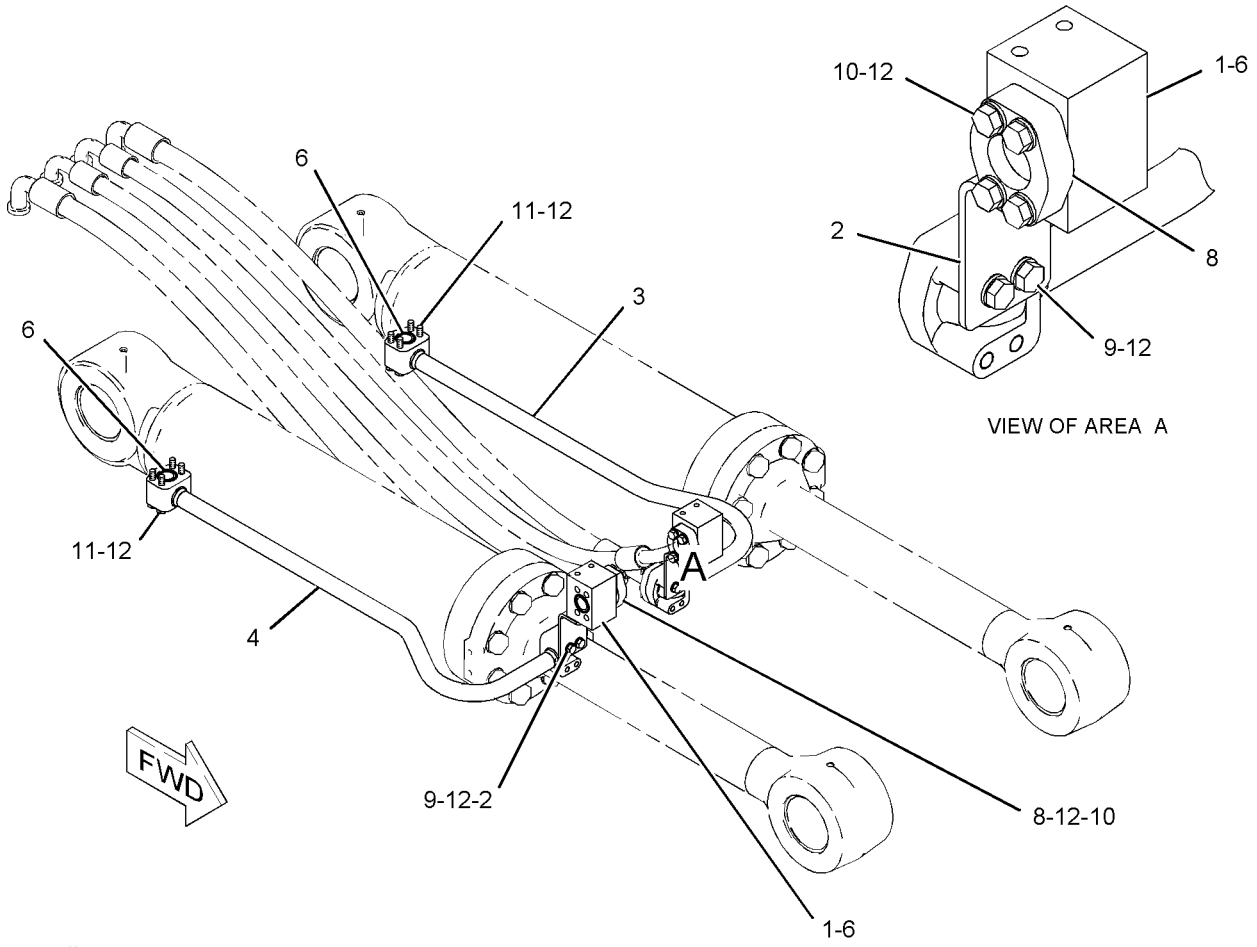

GRAPHIC #1 **<END>** g01095573

245-1870 LINES GP-TILT CYLINDER–LOADER FRAME

S/N: 4421-UP

PART OF 251-3146, 251-3149, 251-3151 CYLINDER AR-TILT

AN ATTACHMENT

SMCS-5057, 5104 **i02153520**

NOTE	REF NO	GRAPHIC REF	PART NUMBER	QTY	PART NAME 1 2 3 4 5 6 (PRODUCT LEVEL)	SEE PAGE
I	1	1	**245-1869**	1	HOSE AS	
I	2	1	**245-1871**	1	HOSE AS	
I	3	1	**251-4503**	2	HOSE AS	
	4	1	**1P-3705**	8	SEAL-RECTANGULAR	
	5	1	**5P-8077**	4	FLANGE-HALF	
M	6	1	**8T-4122**	8	WASHER-HARD (17X32X3.5-MM THK)	
M	7	1	**8T-4140**	8	BOLT (M16X2X60-MM)	

I-REFER TO HYDRAULIC INFORMATION SYSTEM
M-METRIC PART

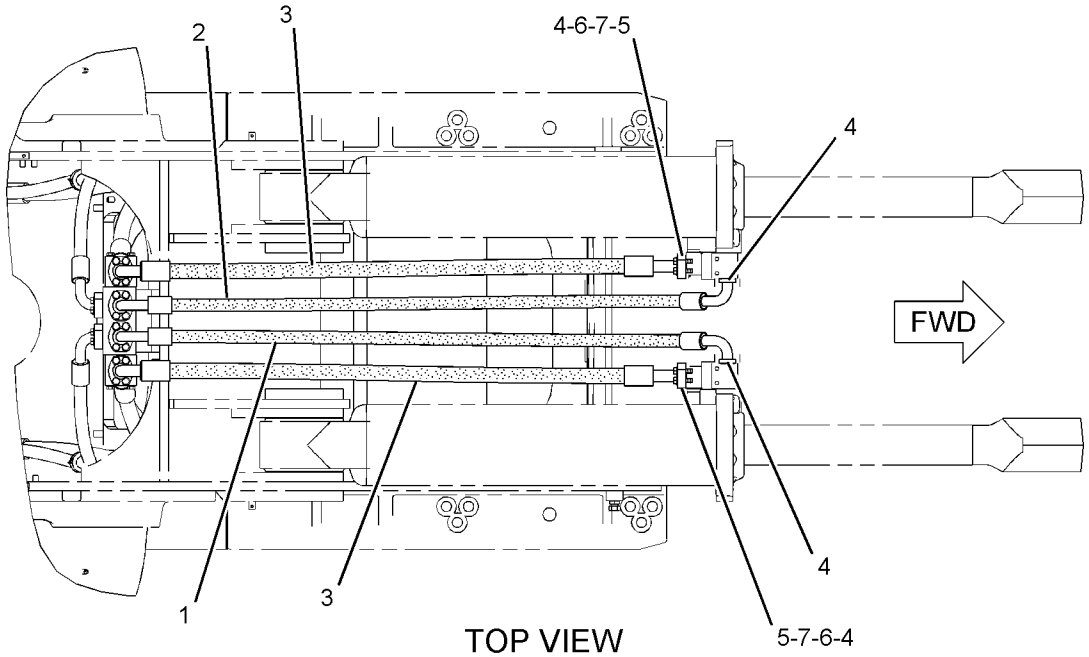

TOP VIEW

GRAPHIC #1

<END>

g01095587

HYDRAULIC SYSTEM

251-3115 LINES GP-TILT CYLINDER–

SUPER HIGH LIFT MACHINES

S/N: 4421-UP

PART OF 251-3151 CYLINDER AR-TILT

AN ATTACHMENT

SMCS-5057, 5104 **i02154562**

NOTE	REF NO	GRAPHIC REF	PART NUMBER	QTY	PART NAME 1 2 3 4 5 6 (PRODUCT LEVEL)	SEE PAGE
	1	1	**8X-1341**	2	BLOCK	
	2	1	**251-3111**	2	BRACKET	
	3	1	**251-3114**	1	TUBE AS	
	4	1	**251-3116**	1	TUBE AS	
	5	1	**1P-3705**	2	SEAL-RECTANGULAR	
	6	1	**1P-3706**	4	SEAL-RECTANGULAR	
	7	1	**5P-0049**	2	COVER	
	8	1	**5P-8077**	4	FLANGE-HALF	
M	9	1	**7X-2553**	8	BOLT (M16X2X40-MM)	
M	10	1	**7X-2559**	8	BOLT (M16X2X160-MM)	
M	11	1	**8T-4173**	8	BOLT (M16X2X110-MM)	
	12	1	**9X-8257**	24	WASHER (17.5X30X3.5-MM THK)	

M-METRIC PART

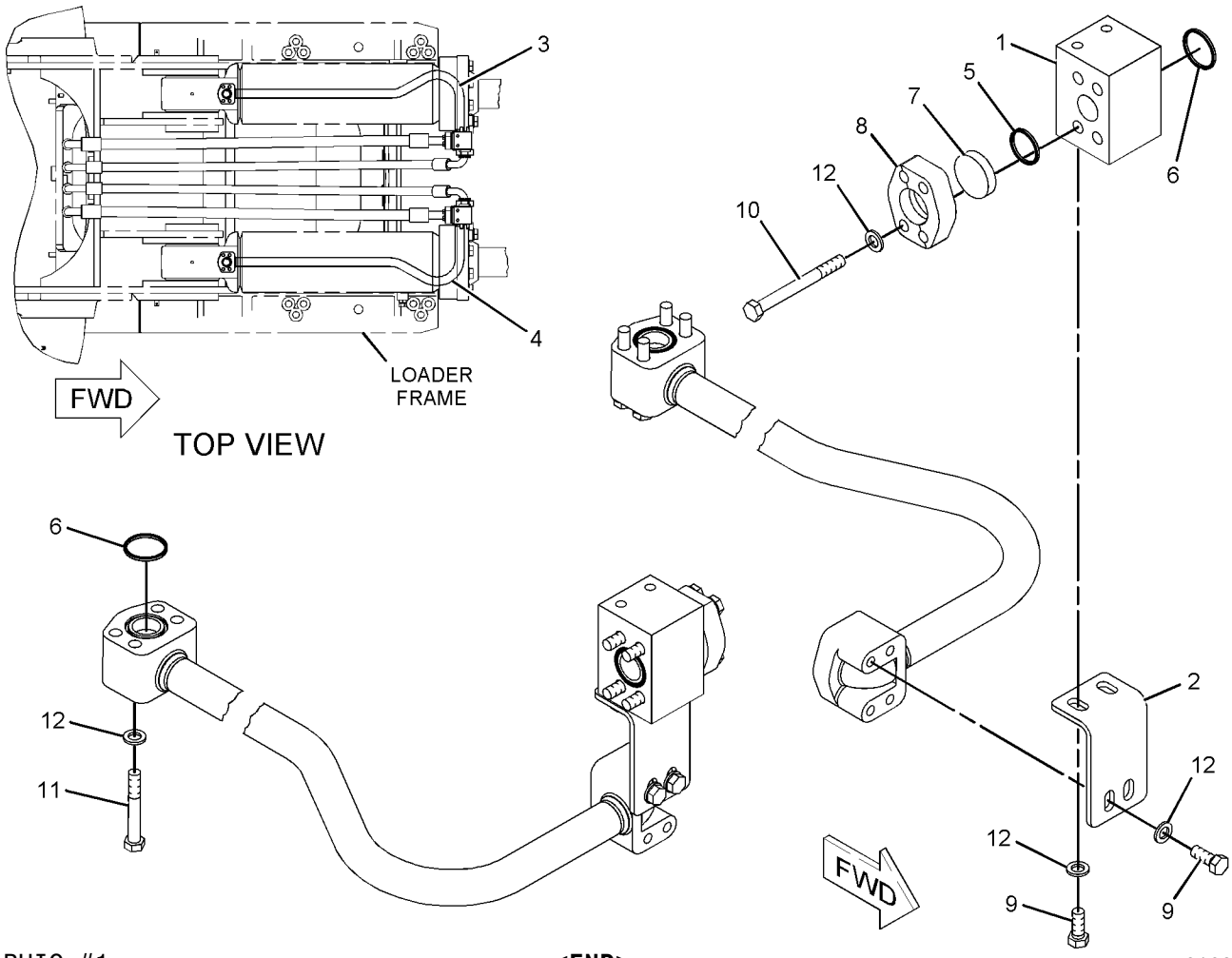

GRAPHIC #1 **<END>** g01096683

224-8604 MAGNET GP-PILOT VALVE

S/N: 4421-UP

PART OF 108-0222 VALVE GP-PILOT

SMCS-5059 **i02010907**

NOTE	REF NO	GRAPHIC REF	PART NUMBER	QTY	PART NAME 1 2 3 4 5 6 (PRODUCT LEVEL)	SEE PAGE
	1	1	**147-3064**	1	BODY-MAGNET	
	2	1	**109-1739**	2	COIL AS	
					(EACH INCLUDES)	
		1	**1S-9593**	3	STRAP-CABLE	
		1	**186-3735**	2	PIN-CONNECTOR (16-GA TO 18-GA)	
	3	1	**122-8874**	2	SPRING	
	4	1	**107-4990**	2	CLAPPER	
	5	1	**147-3063**	2	BUSHING	
	6	1	**135-6145**	1	GASKET	
	7	1	**147-3062**	1	GASKET-LOWER	

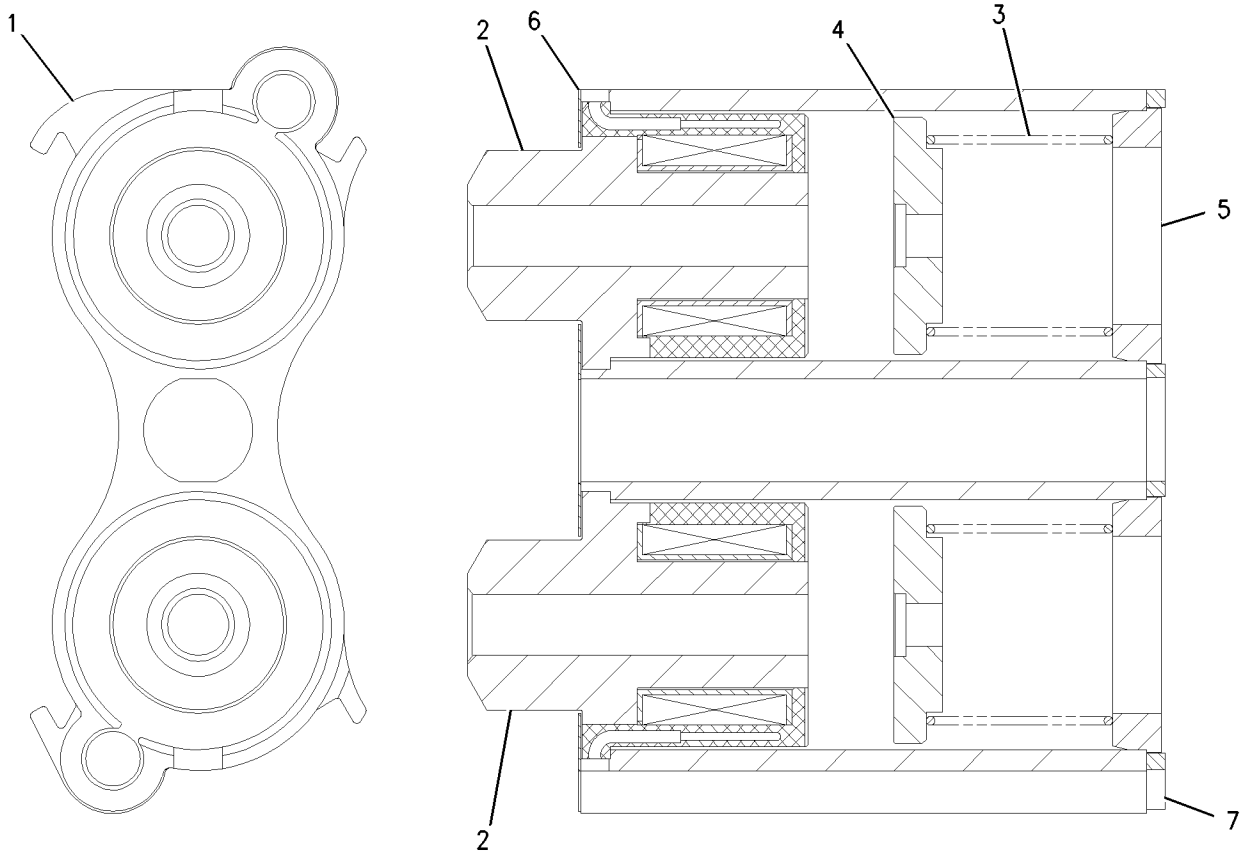

GRAPHIC #1 **<END>** g00986377

HYDRAULIC SYSTEM

226-2758 MAGNET GP-PILOT VALVE

S/N: 4421-UP

PART OF 108-0221 VALVE GP-PILOT

SMCS-5059 **i02399256**

NOTE	REF NO	GRAPHIC REF	PART NUMBER	QTY	PART NAME 1 2 3 4 5 6 (PRODUCT LEVEL)	SEE PAGE
	1	1	**147-3064**	1	BODY-MAGNET	
	2	1	**109-1739**	1	COIL AS	
		1	**1S-9593**	3	STRAP-CABLE	
		1	**186-3735**	2	PIN-CONNECTOR (16-GA TO 18-GA)	
	3	1	**9T-6603**	2	SPRING	
	4	1	**107-4990**	2	CLAPPER	
	5	1	**147-3063**	2	BUSHING	
	6	1	**135-6145**	1	GASKET	
	7	1	**147-3062**	1	GASKET-LOWER	
	8	1	**107-4092**	1	SLEEVE	

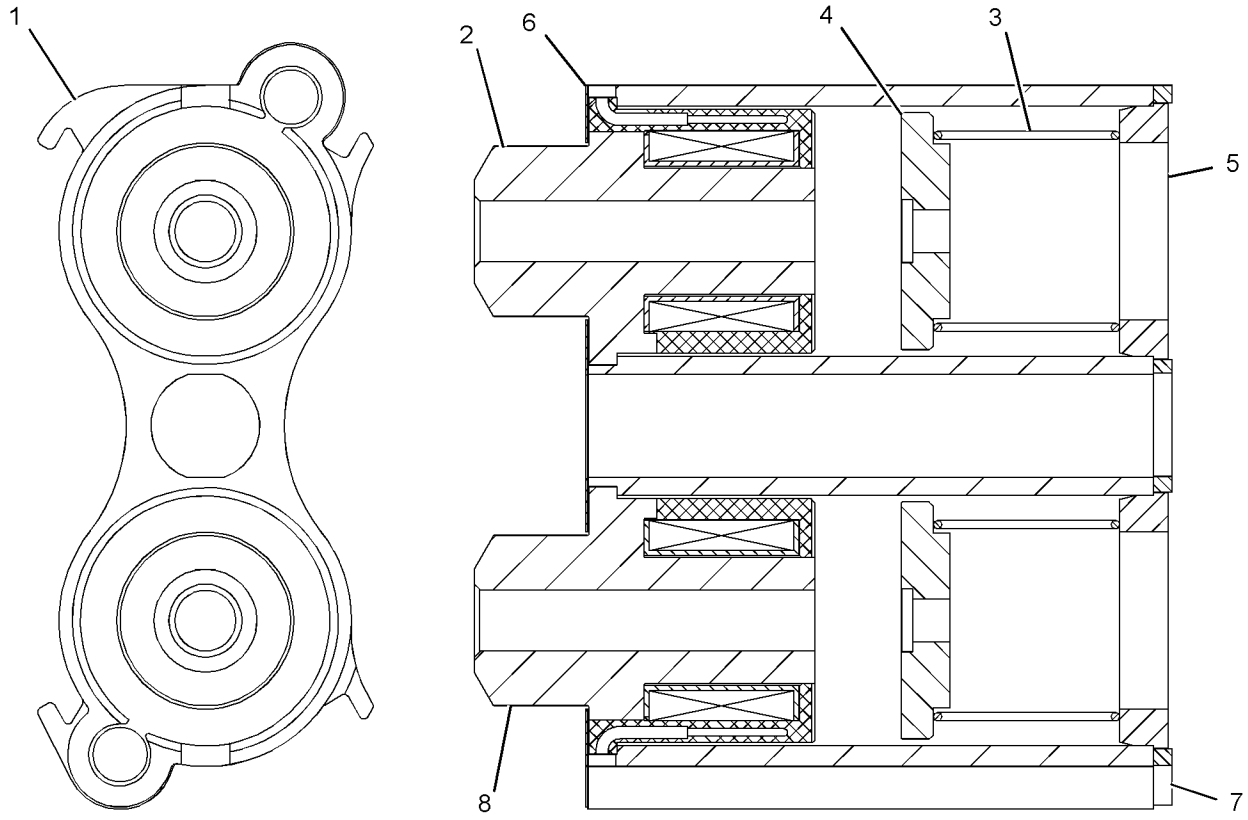

GRAPHIC #1 **<END>** g01198313

266-4229 MOUNTING GP-EXPANSION TANK—AIR STARTING

S/N: 4421-UP

PART OF 250-2820, 263-1827 STARTING AR-AIR

AN ATTACHMENT

SMCS-5505 **i02291685**

NOTE	REF NO	GRAPHIC REF	PART NUMBER	QTY	PART NAME 1 2 3 4 5 6 (PRODUCT LEVEL)	SEE PAGE
	1	1	*184-2421*	1	CONNECTOR AS	
		1	**6V-9746**	1	SEAL-O-RING	
		1	**8C-6874**	1	CONNECTOR	
I	2	1	**215-6311**	1	HOSE AS	
	3	1	*225-5161*	1	ELBOW AS	
		1	**6V-9746**	1	SEAL-O-RING	
		1	**9X-2398**	1	ELBOW	
	4	1	**266-4226**	2	BRACKET AS	
					(EACH INCLUDES)	
M		1	**8T-3597**	2	NUT-WELD (M12X1.75-THD)	
	5	1	**090-8865**	4	SPACER (17X40X3-MM THK)	
	6	1	**3J-5389**	2	PLUG	
	7	1	**5M-6213**	2	PLUG-PIPE	
M	8	1	**7X-2553**	4	BOLT (M16X2X40-MM)	
M	9	1	**8T-4139**	8	BOLT (M12X1.75X30-MM)	
	10	1	**8T-4223**	8	WASHER-HARD (13.5X25.5X3-MM THK)	

I-REFER TO HYDRAULIC INFORMATION SYSTEM
M-METRIC PART

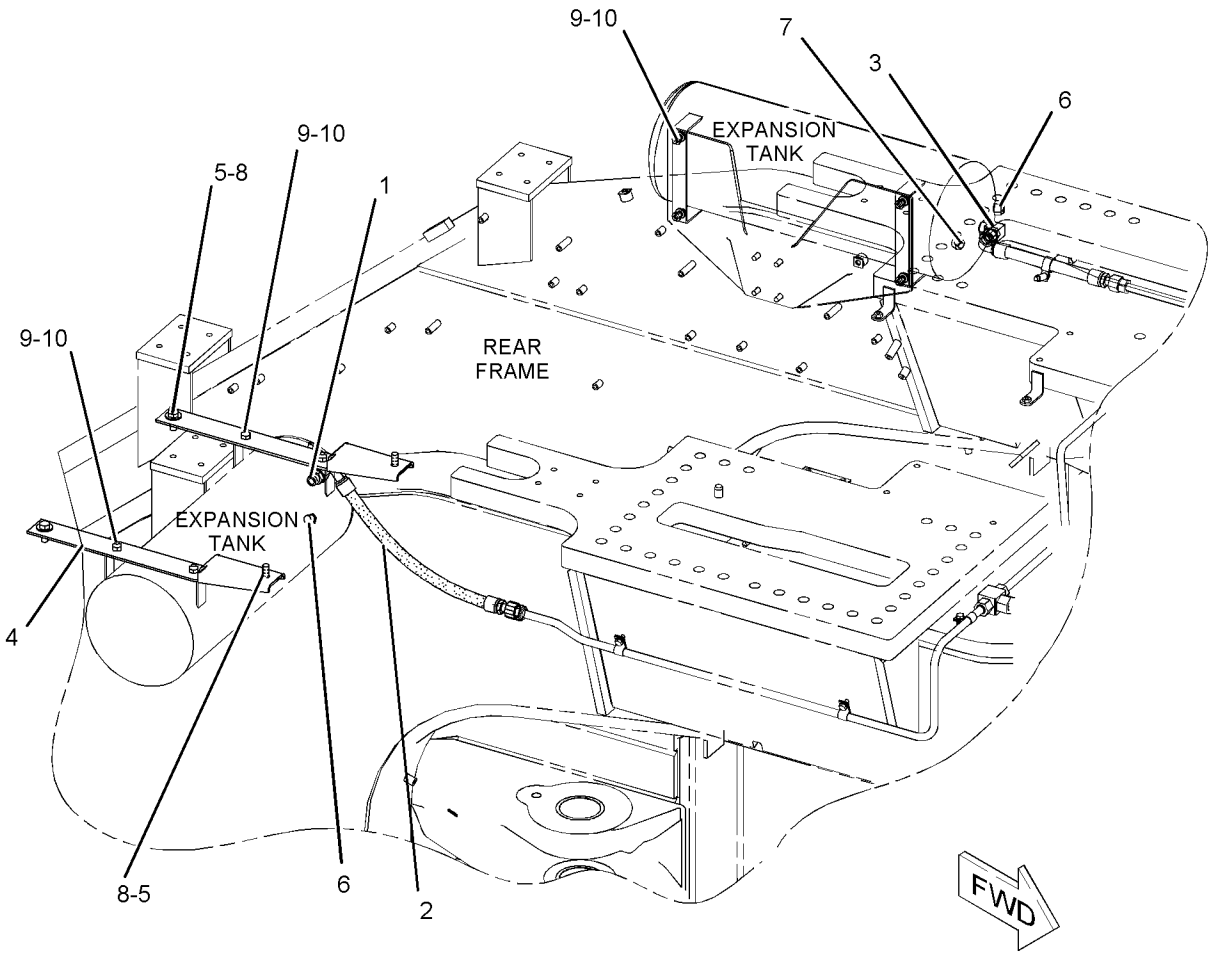

GRAPHIC #1 **<END>** g01147785

8X-1713 MOUNTING GP-LIFT CYLINDER

S/N: 4421-UP

PART OF 251-3145, 251-3148, 251-3150 CYLINDER AR-LIFT AN ATTACHMENT

SMCS-5102 **i00862823**

NOTE	REF NO	GRAPHIC REF	PART NUMBER	QTY	PART NAME 1 2 3 4 5 6 (PRODUCT LEVEL)	SEE PAGE
M	1	1	**3E-8011**	2	BOLT (M30X3.5X760 MM)	
M	2	1	**8T-1583**	2	NUT (M30X3.50 THD)	
	3	1	**3S-7023**	4	WASHER (6.0MM THK)	
	4	1	**154-7204**	4	COLLET	
	5	1	**8X-0660**	2	PIN	
	6	1	**7X-4786**	4	SEAL-LIP	

M-METRIC PART

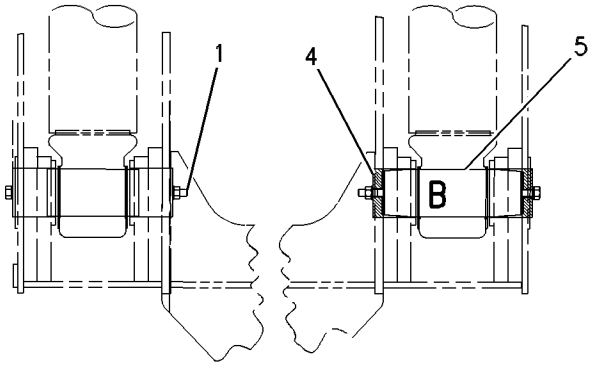

VIEW A-A

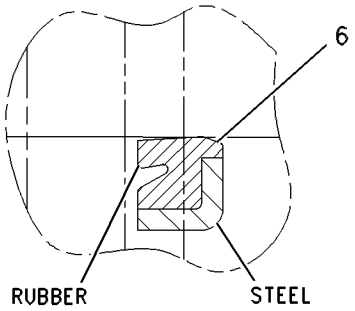

VIEW OF AREA B

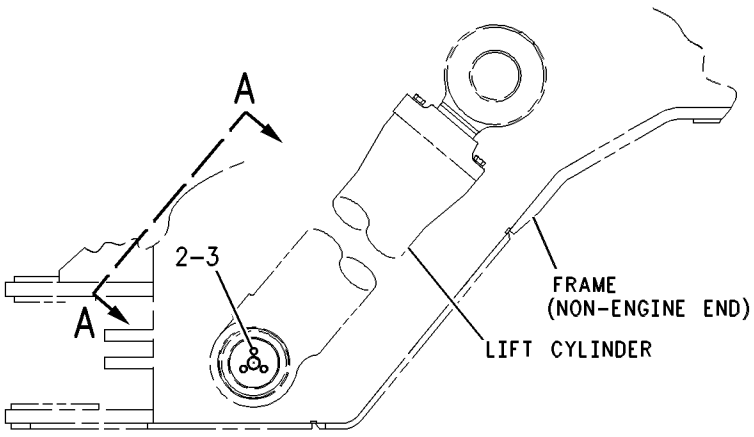

GRAPHIC #1 **<END>** g00437260

HYDRAULIC SYSTEM

244-7325 PUMP & MTG GP-IMPLEMENT

S/N: 4421-UP

PART OF 244-7300 HYDRAULIC AR-FRONT

SMCS-5084 **i02289533**

NOTE	REF NO	GRAPHIC REF	PART NUMBER	QTY	PART NAME 1 2 3 4 5 6 (PRODUCT LEVEL)	SEE PAGE
YR	1	1	**124-3761**	2	PUMP GP-PISTON (IMPLEMENT, FIXED DISPLACEMENT)	840
Y	2	1	**245-8893**	1	PUMP GP-PISTON (IMPL, VARIABLE DISPLACEMENT)	842
	3	1	**6F-4718**	3	SEAL-O-RING	
M	4	1	**7X-2563**	12	BOLT (M20X2.5X60-MM)	
	5	1	**8T-4123**	12	WASHER-PLATED (22X35X3.5-MM THK)	

M-METRIC PART
R-REMFG PART MAY BE AVAILABLE
Y-SEPARATE ILLUSTRATION

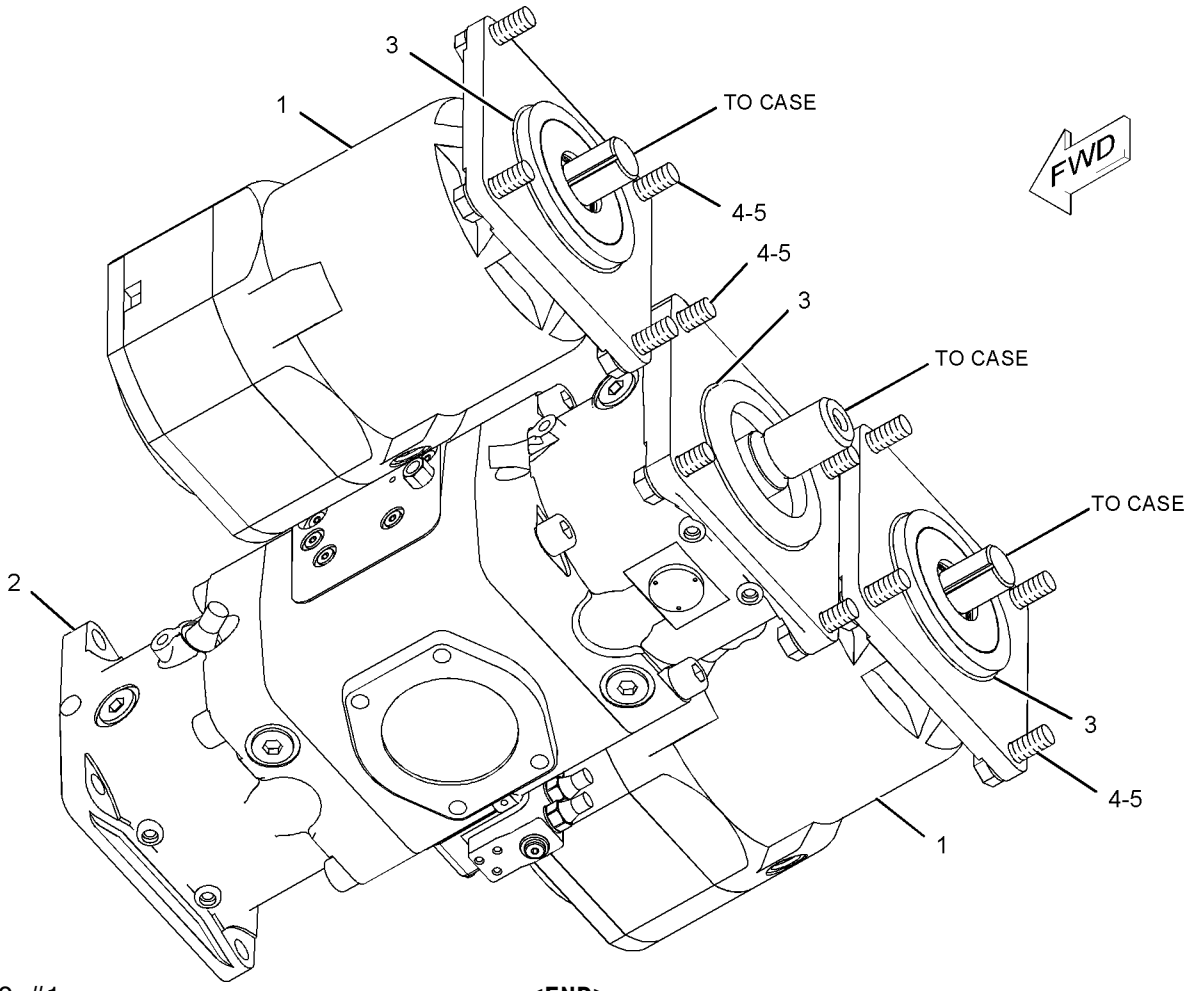

GRAPHIC #1 **<END>** g01091864

HYDRAULIC SYSTEM

244-7255 PUMP & MTG GP-PILOT & COOLER

S/N: 4421-UP

PART OF 244-7300 HYDRAULIC AR-FRONT

SMCS-5073 **i02148440**

NOTE	REF NO	GRAPHIC REF	PART NUMBER	QTY	PART NAME 1 2 3 4 5 6 (PRODUCT LEVEL)	SEE PAGE
Y	1	1	**245-0963**	1	PUMP GP-GEAR (PILOT SYSTEM, HYD OIL COOLER)	836
	2	1	**5F-3106**	1	SEAL-O-RING	
M	3	1	**7X-2553**	2	BOLT (M16X2X40-MM)	
M	4	1	**8T-4122**	2	WASHER-HARD (17X32X3.5-MM THK)	

M-METRIC PART
Y-SEPARATE ILLUSTRATION

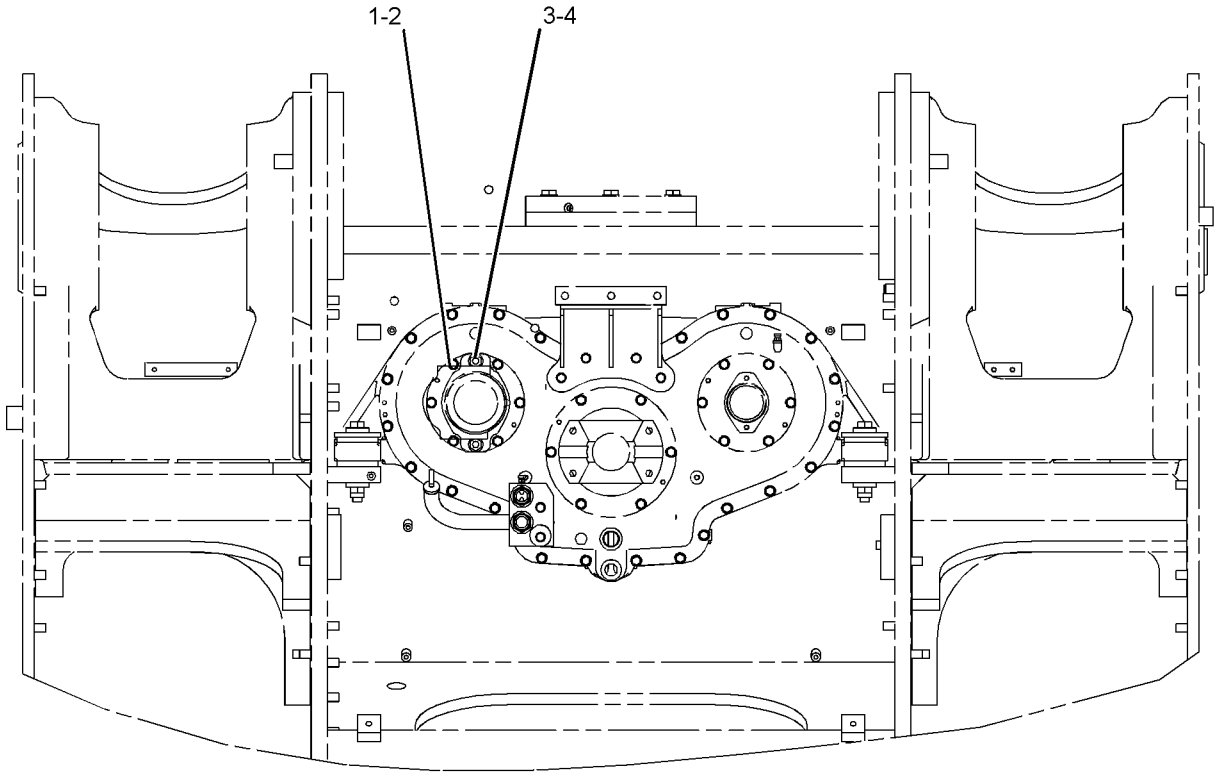

FRONT VIEW

GRAPHIC #1 **<END>** g01091108

245-0963 PUMP GP-GEAR–PILOT SYSTEM, HYD OIL COOLER

S/N: 4421-UP

PART OF 244-7255 PUMP & MTG GP-PILOT & COOLER

SMCS-5073 **i02163073**

NOTE	REF NO	GRAPHIC REF	PART NUMBER	QTY	PART NAME 1 2 3 4 5 6 (PRODUCT LEVEL)	SEE PAGE
Y	1	1	*248-6240*	1	PUMP GP-GEAR (FRONT SECTION) (HYD OIL COOLER, PILOT SYSTEM)	837
Y	2	1	*248-6241*	1	PUMP GP-GEAR (REAR SECTION) (PILOT SYSTEM)	839
	3	1	**3H-7654**	8	WASHER-HARD (13.5X22.5X3-MM THK)	
	4	1	**6B-6684**	8	NUT-FULL (1/2-20-THD)	
	5	1	**248-6243**	8	STUD	
					AVAILABLE REPAIR KIT(S):	
			248-6244	1	KIT-SEAL	
					(INCLUDES ISOLATION PLATES, RETAINING RING, BACKUP RING, E-RING, O-RINGS, SHAFT SEALS, SNAP RINGS, AND BREATHER PLUG)	

Y-SEPARATE ILLUSTRATION

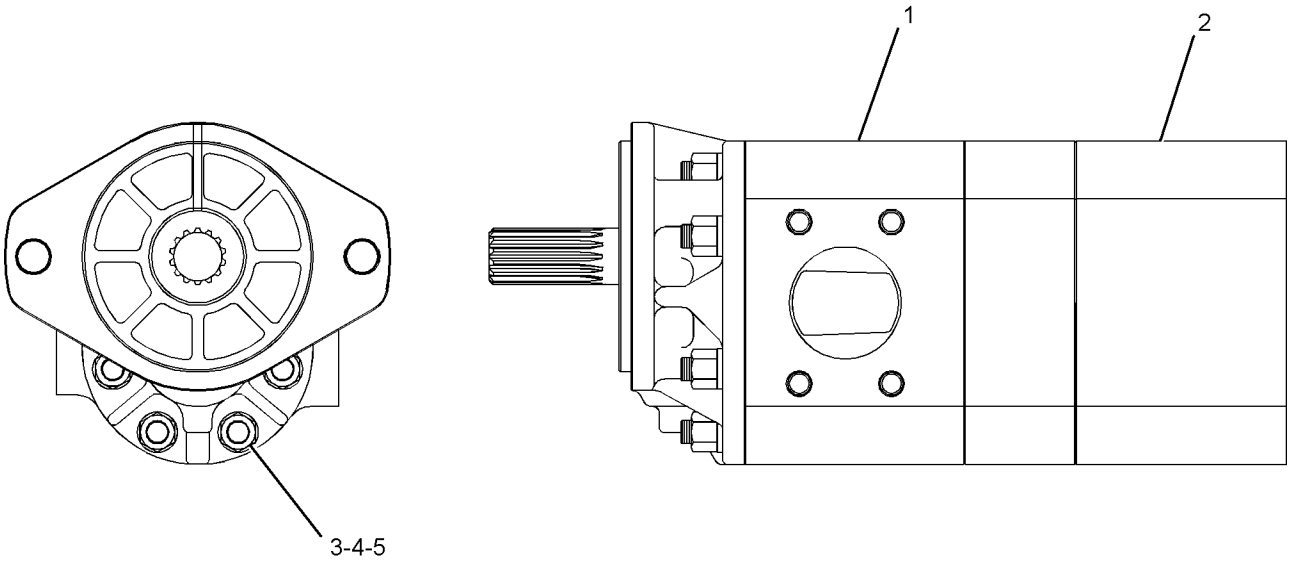

GRAPHIC #1 **<END>** g01093186

248-6240 PUMP GP-GEAR–FRONT SECTION–
HYD OIL COOLER, PILOT SYSTEM
S/N: 4421-UP
PART OF 245-0963 PUMP GP-GEAR

SMCS-5073 **i02148622**

NOTE	REF NO	GRAPHIC REF	PART NUMBER	QTY	PART NAME 1 2 3 4 5 6 (PRODUCT LEVEL)	SEE PAGE
	1	1	**4T-9298**	4	BUSHING-TERMINAL	
	2	1	**6E-2509**	1	SHAFT	
	3	1	**6E-2510**	1	GEAR	
	4	1	**4T-8729**	2	PLATE-PRESSURE	
J	5	1	**4T-9425**	1	PLATE-ISOLATION	
J	6	1	**4T-9426**	1	PLATE-ISOLATION	
	7	1	**133-6578**	1	SEAL-O-RING	
	8	1	**6V-7350**	1	SEAL-O-RING	
	9	1	**033-6042**	8	SEAL-O-RING	
J	10	1	**139-3213**	1	SEAL	
	11	1	**008-3214**	1	RING-RETAINING (INTERNAL)	
	12	1	**5S-1522**	1	RING-SNAP	
	13	1	**7J-4772**	1	COUPLING-SPLINE	
	14	1	**6J-2386**	4	DOWEL	
J	15	1	**6E-2943**	1	PLUG	
					AVAILABLE REPAIR KIT(S):	
			248-6244	1	KIT-SEAL	
					(INCLUDES RETAINING RING, BACKUP RING, E-RING, O-RINGS, AND SNAP RINGS)	

J-KIT MARKED J INCLUDES PARTS MARKED J

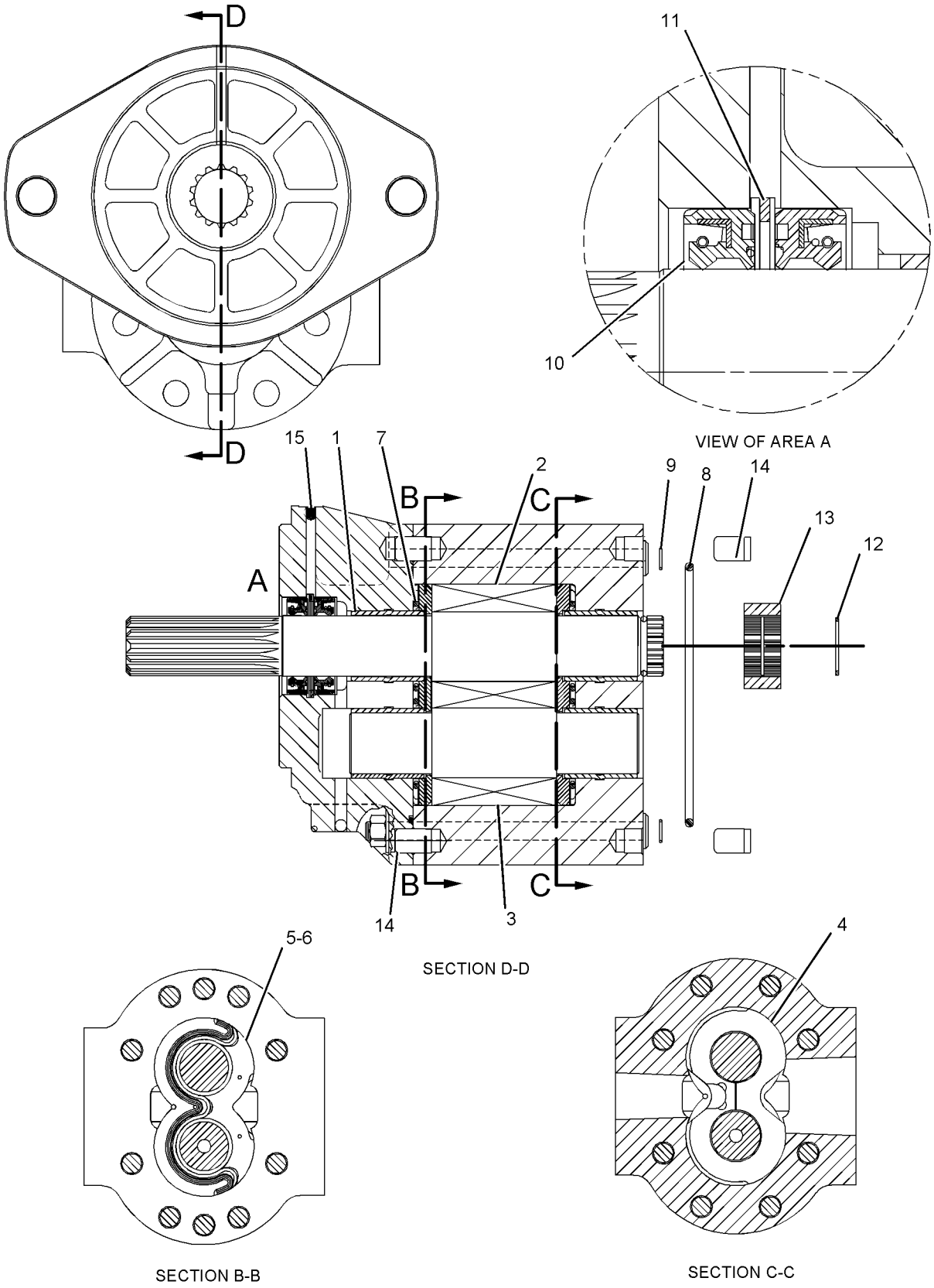

GRAPHIC #1 **<END>** g01092465

248-6241 PUMP GP-GEAR–REAR SECTION–PILOT SYSTEM

S/N: 4421-UP

PART OF 245-0963 PUMP GP-GEAR

SMCS-5073 **i02148624**

NOTE	REF NO	GRAPHIC REF	PART NUMBER	QTY	PART NAME 1 2 3 4 5 6 (PRODUCT LEVEL)	SEE PAGE
	1	1	**4T-9298**	4	BUSHING-TERMINAL	
	2	1	**9T-1294**	1	SHAFT-DRIVE	
	3	1	**9T-1269**	1	GEAR-IDLER	
	4	1	**4T-8729**	2	PLATE-PRESSURE	
J	5	1	**4T-9425**	1	PLATE-ISOLATION	
J	6	1	**4T-9426**	1	PLATE-ISOLATION	
	7	1	**6V-7350**	2	SEAL-O-RING	
	8	1	**033-6042**	8	SEAL-O-RING	
	9	1	**5S-1522**	1	RING-SNAP	
	10	1	**7J-4772**	1	COUPLING-SPLINE	
	11	1	**6J-2386**	4	DOWEL	
					AVAILABLE REPAIR KIT(S):	
J			**248-6244**	1	KIT-SEAL	
					(INCLUDES RINGS, SHAFT SEAL, AND BREATHER PLUG)	

J-KIT MARKED J INCLUDES PARTS MARKED J

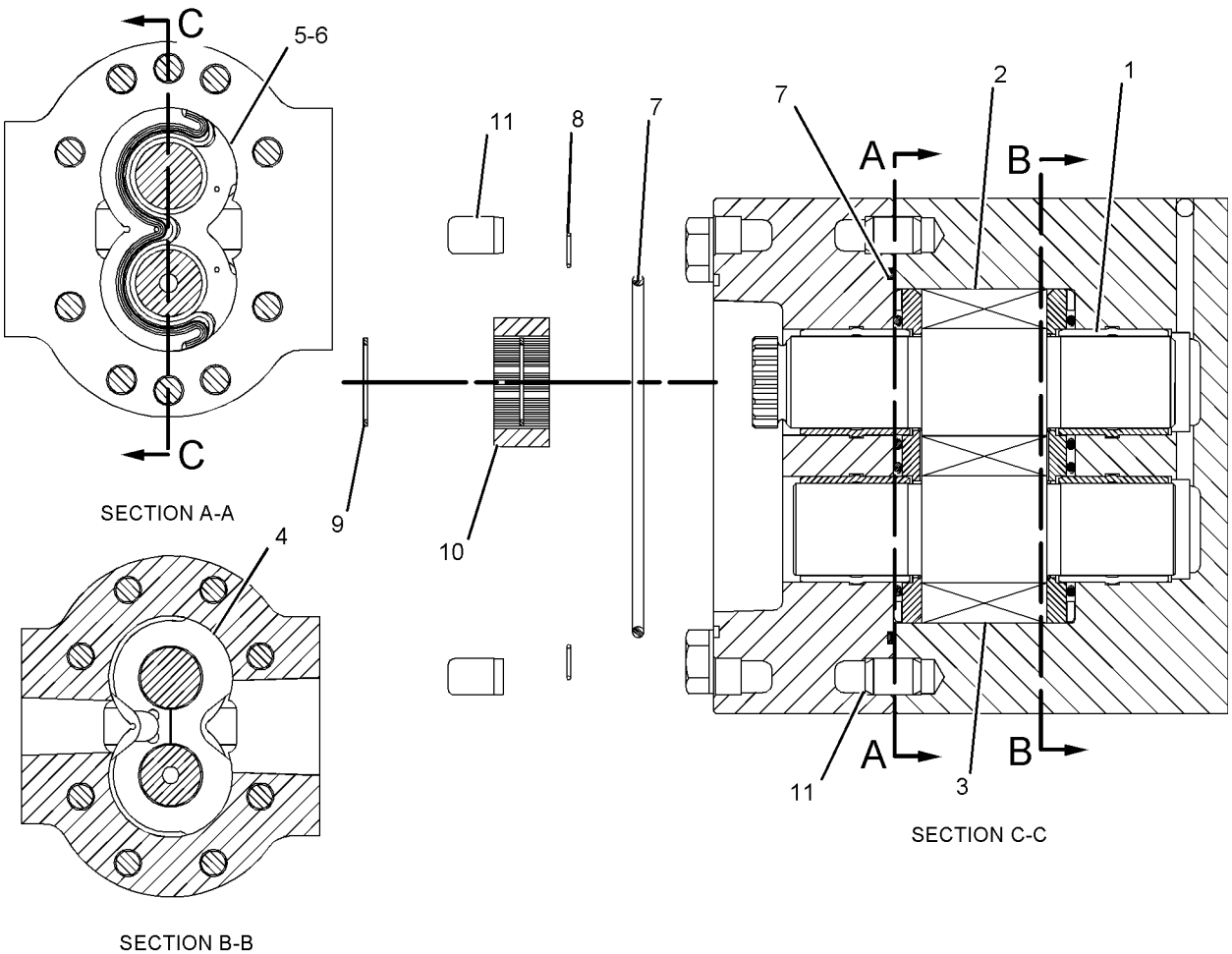

GRAPHIC #1 **<END>** g01092493

HYDRAULIC SYSTEM

124-3761 PUMP GP-PISTON–IMPLEMENT, FIXED DISPLACEMENT*R

S/N: 4421-UP

PART OF 244-7325 PUMP & MTG GP-IMPLEMENT

SMCS-5070 **i01269566**

NOTE	REF NO	GRAPHIC REF	PART NUMBER	QTY	PART NAME 1 2 3 4 5 6 (PRODUCT LEVEL)	SEE PAGE
B	1	1	**6E-5741**	2	SHIM (0.12-MM THK)	
B	2	1	**6E-5572**	2	SHIM (0.3-MM THK)	
	3	1	**8J-0101**	1	PLATE	
	4	1	**1D-4572**	10	BOLT (1/2-13X5.5-IN)	
	5	1	**5P-8245**	10	WASHER-HARD (13.5X25.5X3-MM THK)	
	6	1	**112-5383**	1	COVER	
	7	1	**7J-9017**	1	SEAL	
	8	1	**4B-4158**	4	SCREW-DRIVE (3/16-12X.25-IN)	
	9	1	**6E-2943**	1	PLUG	
	10	1	**1B-8708**	1	KEY-WOODRUFF	
	11	1	**5B-5821**	3	DOWEL	
R	12	1	**6E-1875**	1	PLATE-PORT	
	13	1	**3G-1716**	1	GASKET	
	14	1	**124-3768**	1	BODY	
R	15	1	**9J-8667**	1	BARREL AS	
	16	1	**1K-6985**	1	RING-RETAINING	
	17	1	**8J-2043**	1	SPRING	
	18	1	**8J-0237**	2	SPACER	
	19	1	**034-4160**	8	BOLT-LOCKING (5/16-18X1-IN)	
	20	1	**9M-1974**	8	WASHER-HARD (8.8X16X2-MM THK)	
	21	1	**3G-5750**	2	BEARING-PLATE	
B	22	1	**8J-0218**	6	SHIM (0.127-MM THK)	
B	23	1	**8J-0217**	4	SHIM (0.051-MM THK)	
	24	1	**4T-7023**	1	PLATE-RETRACTION	
	25	1	**3G-4779**	1	PLATE-WEAR	
	26	1	**3G-2349**	1	CAMSHAFT	
	27	1	**1S-9292**	1	DOWEL	
	28	1	**7J-8894**	1	CUP-BEARING	
	29	1	**7J-8893**	1	CONE-BEARING	
	30	1	**3G-1718**	1	RETAINER-SEAL	
	31	1	**6D-7889**	2	SEAL-O-RING	
	32	1	**3G-1719**	1	SHAFT	
	33	1	**1U-1655**	2	SEAL-LIP TYPE	
	34	1	**4B-3835**	3	BOLT-HEAD (3/8-16X3.25-IN)	
	35	1	**4B-5167**	3	WASHER (3.26-MM THK)	
	36	1	**5F-3144**	2	SEAL-O-RING	
R	37	1	**4T-3122**	9	PISTON AS	
	38	1	**1A-2223**	2	DOWEL	
	39	1	**3P-1210**	1	CONE-BEARING	
	40	1	**8J-0412**	1	CUP-BEARING	
B	41	1	**2J-2866**	5	SHIM (0.12-MM THK)	
	42	1	**124-3760**	1	HEAD-PUMP	
	43	1	**3G-1713**	1	IMPELLER-CLOCKWISE ROTATION	
	44	1	**4F-7388**	1	SEAL-O-RING	
	45	1	**4T-9380**	1	INSERT	
	46	1	**159-8522**	1	LOCKNUT	

B-USE AS REQUIRED
R-REMFG PART MAY BE AVAILABLE

124-3761 PUMP GP-PISTON *(contd.)* **i01269566**

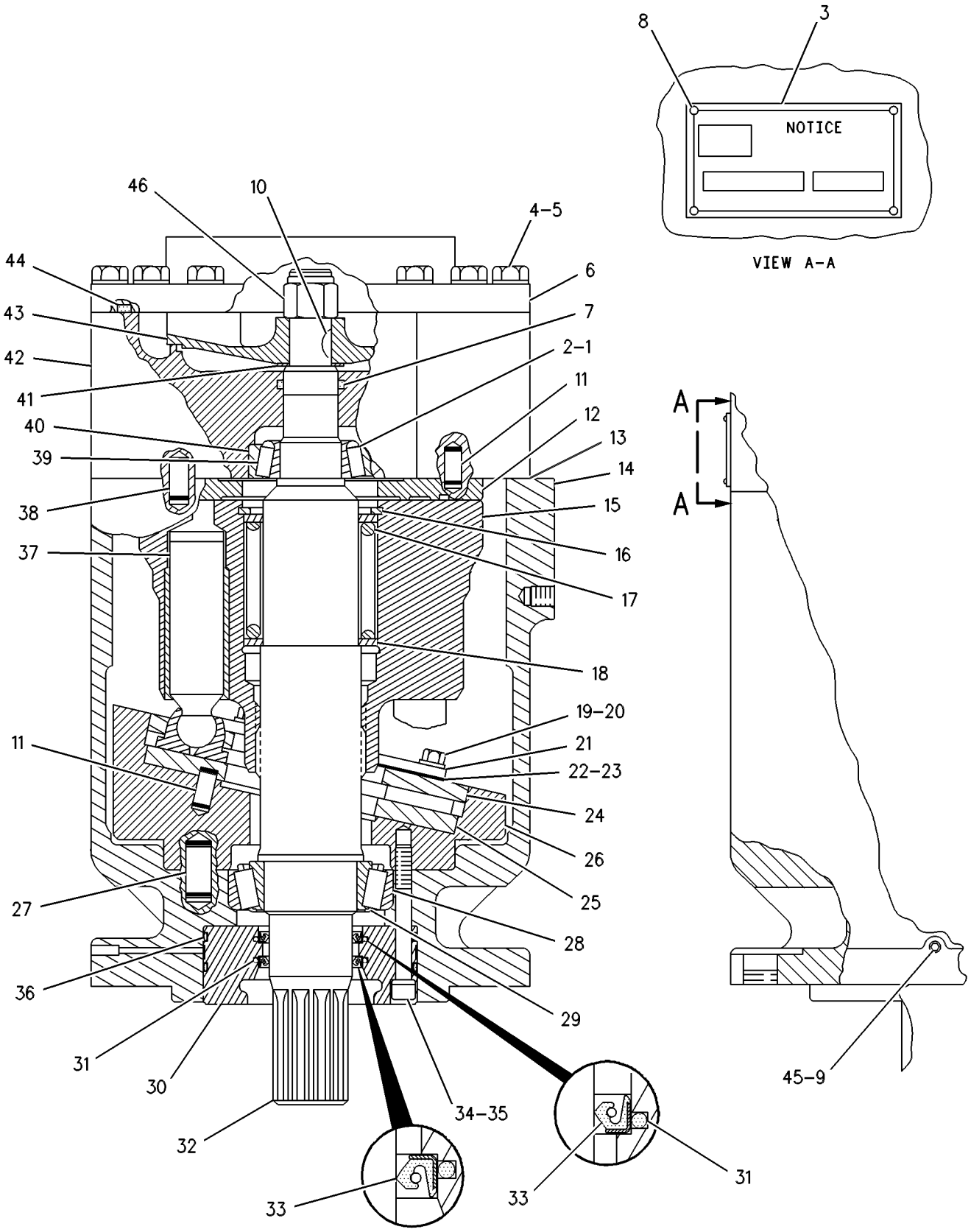

GRAPHIC #1 **<END>** g00276750

HYDRAULIC SYSTEM

245-8893 PUMP GP-PISTON–IMPL, VARIABLE DISPLACEMENT

S/N: 4421-UP

PART OF 244-7325 PUMP & MTG GP-IMPLEMENT

SMCS-5070 **i02334681**

NOTE	REF NO	GRAPHIC REF	PART NUMBER	QTY	PART NAME 1 2 3 4 5 6 (PRODUCT LEVEL)	SEE PAGE
Y	1	1	**253-1551**	1	ROTATING GP-PUMP (IMPLEMENT)	844
	2	1	**170-9900**	4	PIN	
	3	1	**200-0946**	1	BODY	
	4	1	**170-9907**	2	PLUG	
	5	1	**145-3171**	4	LOCKNUT-SEAL	
	6	1	**241-6915**	1	PIN-THREADED	
	7	1	**6V-5201**	2	RING-RETAINING	
Y	8	1	**272-2348**	1	VALVE GP-PUMP CONTROL (PRESSURE, FLOW COMPENSATOR) (IMPLEMENT)	881
	9	1	**8F-6230**	2	SEAL-O-RING	
	10	1	**200-0947**	1	BODY	
Y	11	1	**253-1552**	1	ROTATING GP-PUMP (IMPLEMENT)	845
M	12	1	**9X-2404**	8	BOLT-SOCKET HEAD (M20X2.5X90-MM)	
	13	1	**081-3959**	2	PLUG	
Y	14	1	**253-1553**	1	HEAD GP-PUMP	772
	15	1	**200-0945**	1	IMPELLER	
	16	1	**5P-5874**	3	SEAL-O-RING	
	17	1	**241-6916**	2	PIN-THREADED	
	18	1	**145-3169**	1	PIN-THREADED	
	19	1	**200-0963**	2	COVER	
M	20	1	**155-4098**	6	SCREW-BUTTON HEAD (M3X0.5X1-MM)	
	21	1	**9X-7722**	2	SEAL-O-RING	
	22	1	**145-3791**	1	PISTON	
	23	1	**6E-5412**	1	SEAL-O-RING	
	24	1	**5I-4306**	1	SPRING	
	25	1	**112-4630**	4	SCREW	
	26	1	**4K-1388**	4	SEAL-O-RING	
	27	1	**099-5845**	2	PLUG	
	28	1	**3J-1907**	2	SEAL-O-RING	
	29	1	**179-6928**	1	PISTON	
	30	1	**145-3780**	1	ROD	
	31	1	**5I-4303**	2	SPRING	
	32	1	**145-3783**	2	SLEEVE	
M	33	1	**9T-3928**	8	PLUG AS	
					(EACH INCLUDES)	
		1	**187-8001**	1	SEAL	
	34	1	**117-5716**	8	PIN	
	35	1	**236-4637**	1	COVER	
M	36	1	**8T-1158**	5	BOLT-SOCKET HEAD (M8X1.25X20-MM)	
	37	1	**145-3792**	1	ROD (128.2-MM LONG)	
	38	1	**145-3793**	1	ROD (128-MM LONG)	
	39	1	**145-3794**	1	ROD (127.8-MM LONG)	
	40	1	**179-6933**	1	ROD (128.4-MM LONG)	

M-METRIC PART
Y-SEPARATE ILLUSTRATION

245-8893 PUMP GP-PISTON *(contd.)* **i02334681**

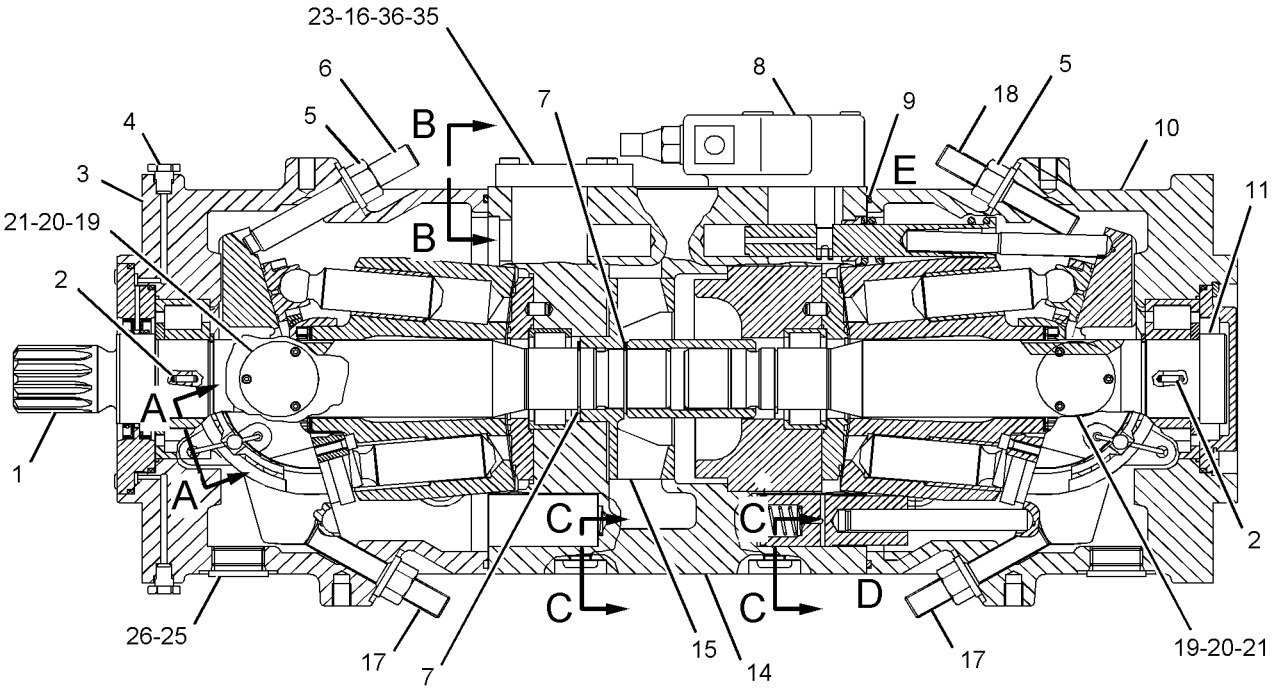

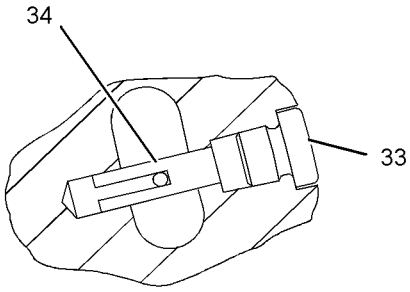

SECTION A-A

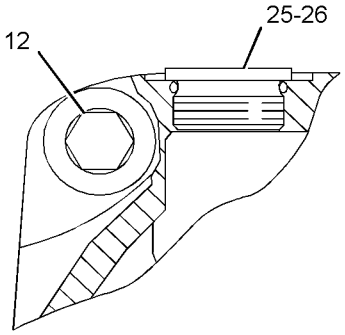

SECTION B-B

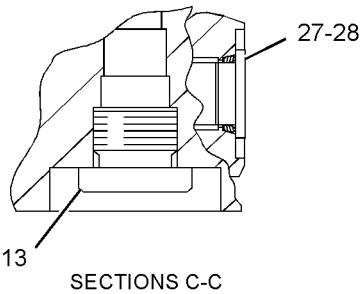

SECTIONS C-C

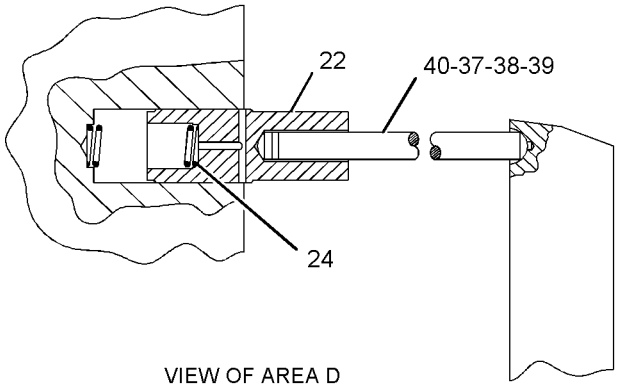

VIEW OF AREA D

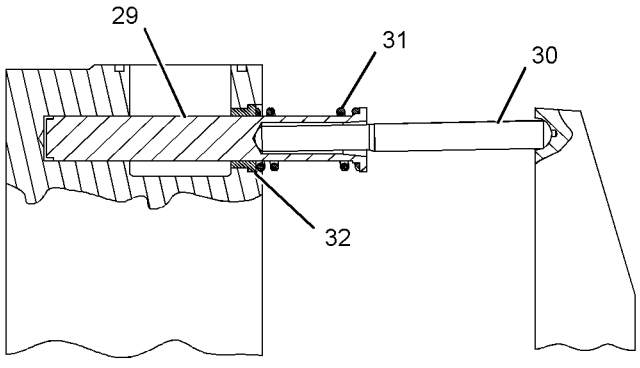

VIEW OF AREA E

GRAPHIC #1 **<END>** g01093495

HYDRAULIC SYSTEM

253-1551 ROTATING GP-PUMP—IMPLEMENT

S/N: 4421-UP

PART OF 245-8893 PUMP GP-PISTON

SMCS-1387, 5070, 5084 **i02148627**

NOTE	REF NO	GRAPHIC REF	PART NUMBER	QTY	PART NAME 1 2 3 4 5 6 (PRODUCT LEVEL)	SEE PAGE
	1	1	**236-1835**	1	SHAFT-DRIVE	
M	2	1	**2Y-5855**	4	BOLT	
	3	1	**4I-5957**	4	RING	
	4	1	**5I-4267**	1	COVER	
	5	1	**6E-3840**	4	ROD	
	6	1	**145-3773**	4	ROLLER	
	7	1	**145-3776**	1	CAGE	
	8	1	**200-0948**	1	SWASHPLATE	
	9	1	**145-3774**	1	LINER-BEARING	
	10	1	**145-3775**	2	RETAINER	
M	11	1	**8T-8442**	4	BOLT-SOCKET HEAD (M6X1X30-MM)	
	12	1	**179-6911**	1	BARREL AS	
	13	1	**179-6910**	9	PISTON AS	
	14	1	**179-6913**	1	RETAINER	
B	15	1	**179-6915**	2	SHIM (0.5-MM THK)	
B	16	1	**179-6914**	2	SHIM (0.75-MM THK)	
	17	1	**179-6912**	1	PLATE	
	18	1	**179-6916**	20	SPRING	
	19	1	**095-0927**	1	RING-RETAINING	
	20	1	**5I-4275**	1	BEARING-ROLLER	
	21	1	**2J-8163**	1	SEAL-O-RING	
	22	1	**5H-3252**	1	SEAL-O-RING	
	23	1	**124-9913**	2	SEAL-SHAFT	

B-USE AS REQUIRED
M-METRIC PART

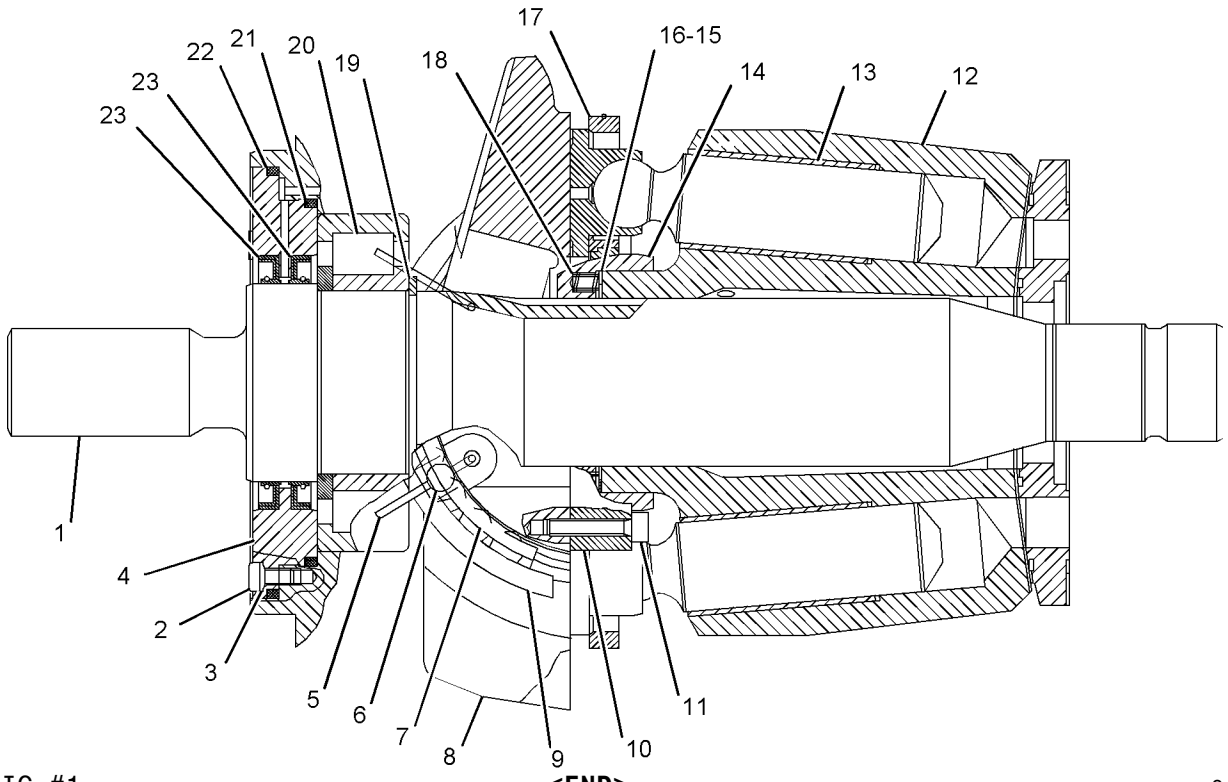

GRAPHIC #1 **<END>** g01097453

253-1552 ROTATING GP-PUMP–IMPLEMENT

S/N: 4421-UP

PART OF 245-8893 PUMP GP-PISTON

SMCS-1387, 5070, 5084 **i02148833**

NOTE	REF NO	GRAPHIC REF	PART NUMBER	QTY	PART NAME 1 2 3 4 5 6 (PRODUCT LEVEL)	SEE PAGE
M	1	1	**8T-8442**	4	BOLT-SOCKET HEAD (M6X1X30-MM)	
	2	1	**200-0952**	1	COVER	
	3	1	**145-3776**	1	CAGE	
	4	1	**145-3773**	4	ROLLER	
	5	1	**200-0948**	1	SWASHPLATE	
	6	1	**200-0951**	1	SHAFT	
	7	1	**145-3774**	1	LINER-BEARING	
	8	1	**145-3775**	2	RETAINER	
	9	1	**179-6910**	9	PISTON AS	
	10	1	**200-0950**	1	BARREL AS	
	11	1	**179-6912**	1	PLATE	
	12	1	**179-6913**	1	RETAINER	
B	13	1	**179-6914**	2	SHIM (0.75-MM THK)	
B	14	1	**179-6915**	2	SHIM (0.5-MM THK)	
	15	1	**179-6916**	20	SPRING	
	16	1	**095-0927**	1	RING-RETAINING	
	17	1	**3E-4334**	1	RING-RETAINING	
	18	1	**2J-8163**	1	SEAL-O-RING	
	19	1	**5I-4275**	1	BEARING-ROLLER	
	20	1	**6E-3840**	4	ROD	

B-USE AS REQUIRED
M-METRIC PART

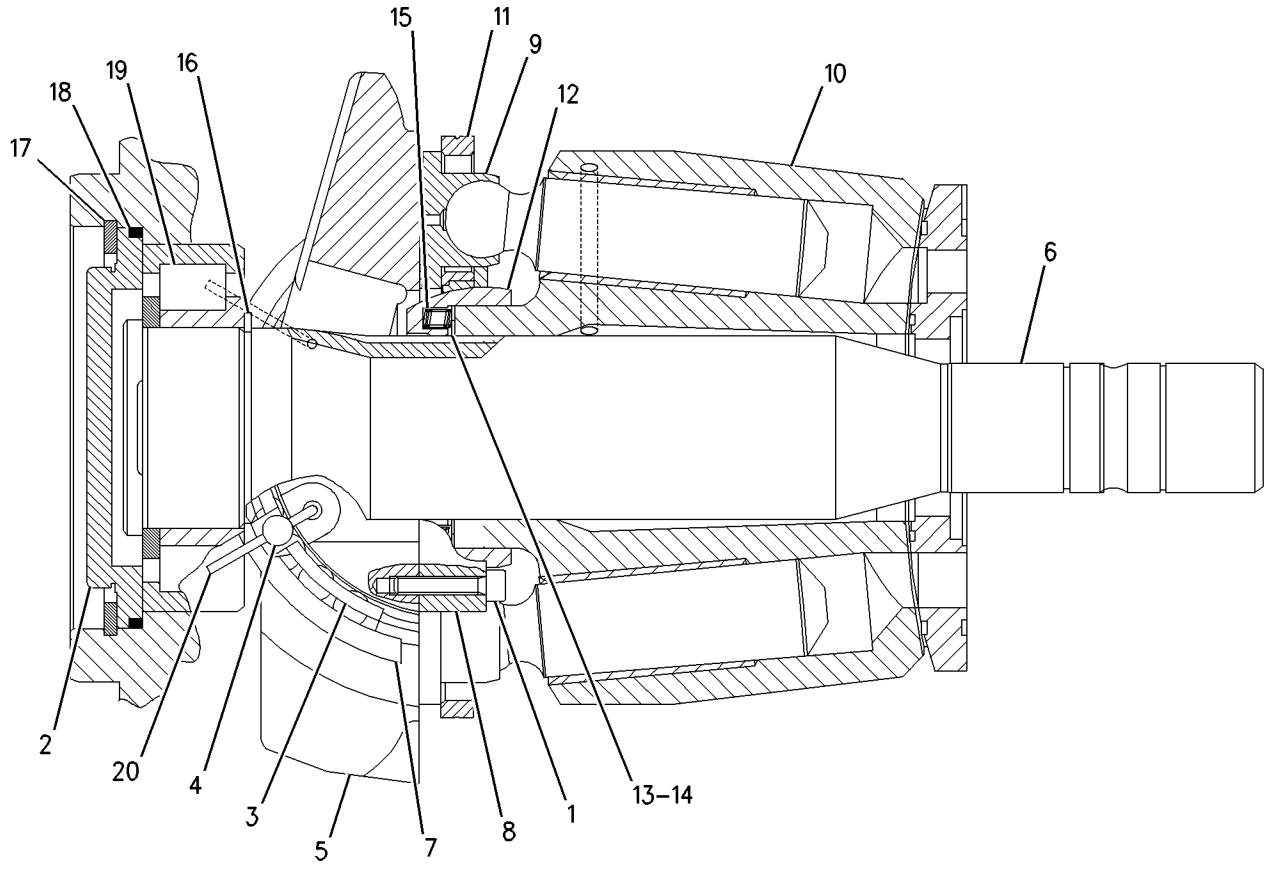

GRAPHIC #1 **<END>** g00847700

235-0624 TANK & MTG GP-HYDRAULIC–
STEERING, BRAKE, BRAKE COOLING
S/N: 4421-UP
PART OF 245-0700 HYDRAULIC AR-REAR

SMCS-5056 **i02288679**

NOTE	REF NO	GRAPHIC REF	PART NUMBER	QTY	PART NAME 1 2 3 4 5 6 (PRODUCT LEVEL)	SEE PAGE
	1	1	**6T-6080**	8	MOUNT-RUBBER	
	2	1	**7T-8331**	3	MOUNTING	
	3	1	**8X-3157**	2	PLATE	
	4	1	**8X-3184**	1	BRACKET AS	
I	5	1	**8X-8132**	1	HOSE AS	
	6	1	**105-4513**	2	BRACKET	
Y	7	1	*248-2583*	1	TANK GP-HYDRAULIC (STEERING, BRAKE)	852
Y	8	1	*248-2584*	1	TANK GP-HYDRAULIC (BRAKE COOLING)	855
M	9	1	**8T-6868**	3	BOLT (M12X1.75X80-MM)	
	10	1	**8X-0674**	4	WASHER (22X100X10-MM THK)	
	11	1	**9T-1119**	2	BREATHER	
	12	1	**5P-1076**	5	WASHER-HARD (13.5X30X4-MM THK)	
M	13	1	**6V-7687**	3	LOCKNUT (M12X1.75-THD)	
M	14	1	**6V-7688**	4	LOCKNUT (M20X2.5-THD)	
	15	1	*148-8368*	1	ELBOW AS	
		1	**3J-1907**	1	SEAL-O-RING	
		1	**4J-5477**	1	SEAL-O-RING	
		1	**6V-8627**	1	ELBOW	
	16	1	*148-8328*	2	CONNECTOR AS	
					(EACH INCLUDES)	
		1	**3D-2824**	1	SEAL-O-RING	
		1	**6V-8398**	1	SEAL-O-RING	
		1	**6V-8633**	1	CONNECTOR	
	17	1	*148-8325*	1	CONNECTOR AS	
		1	**3J-1907**	1	SEAL-O-RING	
		1	**4J-5477**	1	SEAL-O-RING	
		1	**6V-8641**	1	CONNECTOR	
	18	1	**7G-8839**	6	SPACER (13.5X57X6-MM THK)	
M	19	1	**8T-0070**	4	BOLT (M20X2.5X120-MM)	
M	20	1	**8T-4122**	14	WASHER-HARD (17X32X3.5-MM THK)	
	21	1	**8T-4123**	4	WASHER-PLATED (22X35X3.5-MM THK)	
M	22	1	**8T-4192**	2	BOLT (M12X1.75X25-MM)	
M	23	1	**8T-4193**	14	BOLT (M16X2X50-MM)	
	24	1	**8T-5439**	4	WASHER (21.5X45X6-MM THK)	

I-REFER TO HYDRAULIC INFORMATION SYSTEM
M-METRIC PART
Y-SEPARATE ILLUSTRATION

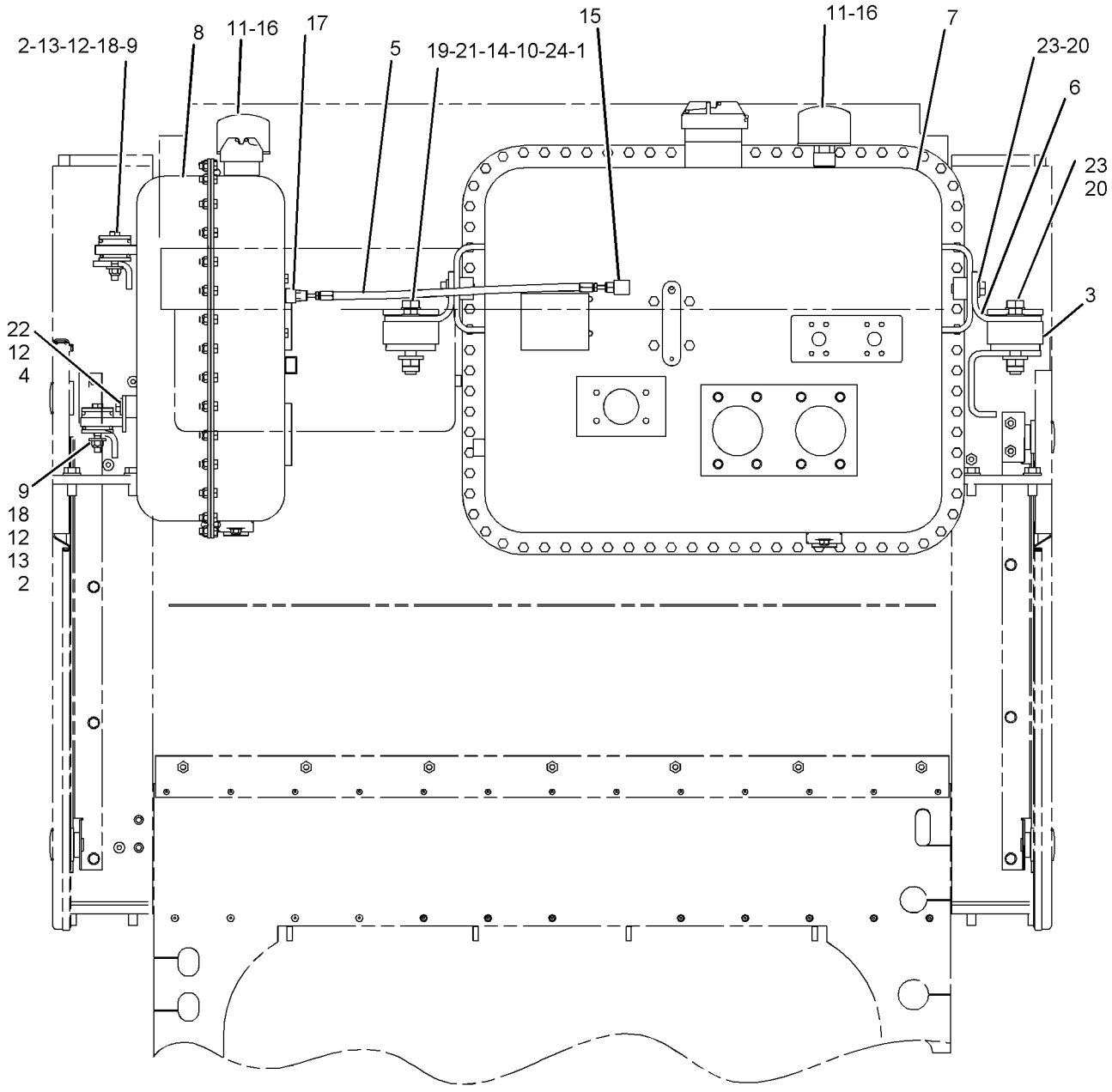

RIGHT SIDE VIEW

GRAPHIC #1

<END>

g01145666

HYDRAULIC SYSTEM

244-7260 TANK & MTG GP-HYDRAULIC—IMPLEMENT

S/N: 4421-UP

PART OF 244-7300 HYDRAULIC AR-FRONT

SMCS-5056 **i02282263**

NOTE	REF NO	GRAPHIC REF	PART NUMBER	QTY	PART NAME 1 2 3 4 5 6 (PRODUCT LEVEL)	SEE PAGE
	1	1	**4W-5385**	2	BLOCK-SUPPORT	
	2	1	**6T-6080**	4	MOUNT-RUBBER	
	3	1	**7C-3567**	2	MOUNT AS	
	4	1	**8X-0687**	2	BRACKET AS	
	5	1	**8X-0688**	2	BRACKET	
	6	1	**237-5179**	2	CAP-MOUNT	
Y	7	1	*248-2585*	1	TANK GP-HYDRAULIC (IMPLEMENT)	857
M	8	1	**7X-2553**	12	BOLT (M16X2X40-MM)	
M	9	1	**8T-4122**	12	WASHER-HARD (17X32X3.5-MM THK)	
M	10	1	**6V-7688**	2	LOCKNUT (M20X2.5-THD)	
M	11	1	**7X-2532**	2	BOLT (M20X2.5X130-MM)	
M	12	1	**7X-2570**	4	BOLT (M20X2.5X220-MM)	
	13	1	**8T-3282**	4	WASHER-HARD (22X35X3.5-MM THK)	
	14	1	**8T-5439**	4	WASHER (21.5X45X6-MM THK)	
M	15	1	**8T-4131**	4	NUT (M20X2.5-THD)	
	16	1	**8X-0674**	2	WASHER (22X100X10-MM THK)	

M-METRIC PART
Y-SEPARATE ILLUSTRATION

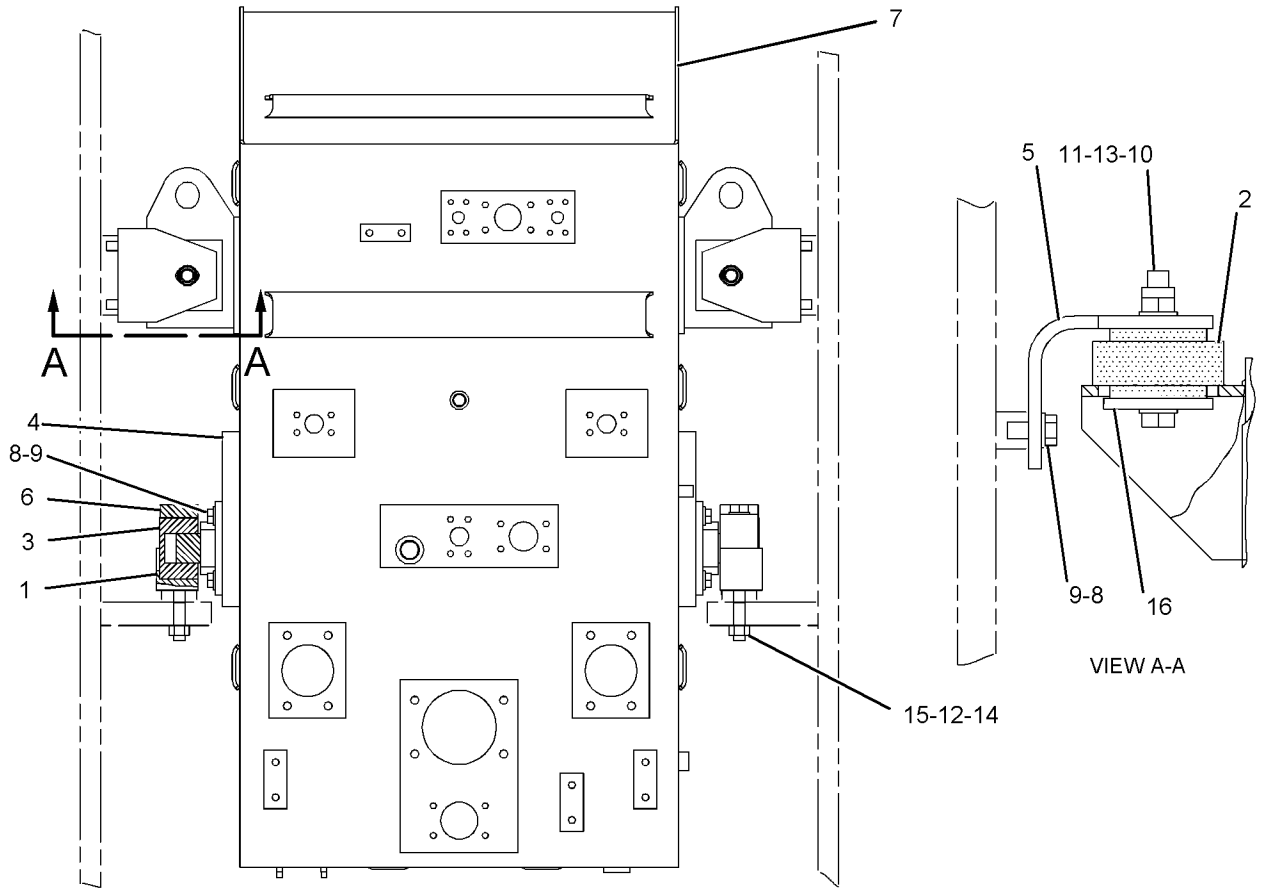

LEFT SIDE VIEW

GRAPHIC #1 **<END>** g01091115

HYDRAULIC SYSTEM

245-1840 TANK GP-EXPANSION—AIR

S/N: 4421-UP

PART OF 252-8762, 254-7028 CONVERSION AR-CERTIFICATION AN ATTACHMENT

SMCS-5505 **i02288067**

NOTE	REF NO	GRAPHIC REF	PART NUMBER	QTY	PART NAME 1 2 3 4 5 6 (PRODUCT LEVEL)	SEE PAGE
	1	1	**251-1073**	1	TANK AS-EXPANSION	
	2	1	**251-1074**	4	BRACKET	
I	3	1	**266-4224**	1	HOSE AS	
	4	1	*148-8355*	1	ELBOW AS	
		1	**5K-9090**	1	SEAL-O-RING	
		1	**6V-9005**	1	ELBOW	
		1	**7M-8485**	1	SEAL-O-RING	
	5	1	**220-0812**	1	VALVE-BREAKER RELIEF	
	6	1	**7X-7729**	16	WASHER (11X25X3-MM THK)	
M	7	1	**8T-4136**	16	BOLT (M10X1.5X25-MM)	

I-REFER TO HYDRAULIC INFORMATION SYSTEM
M-METRIC PART

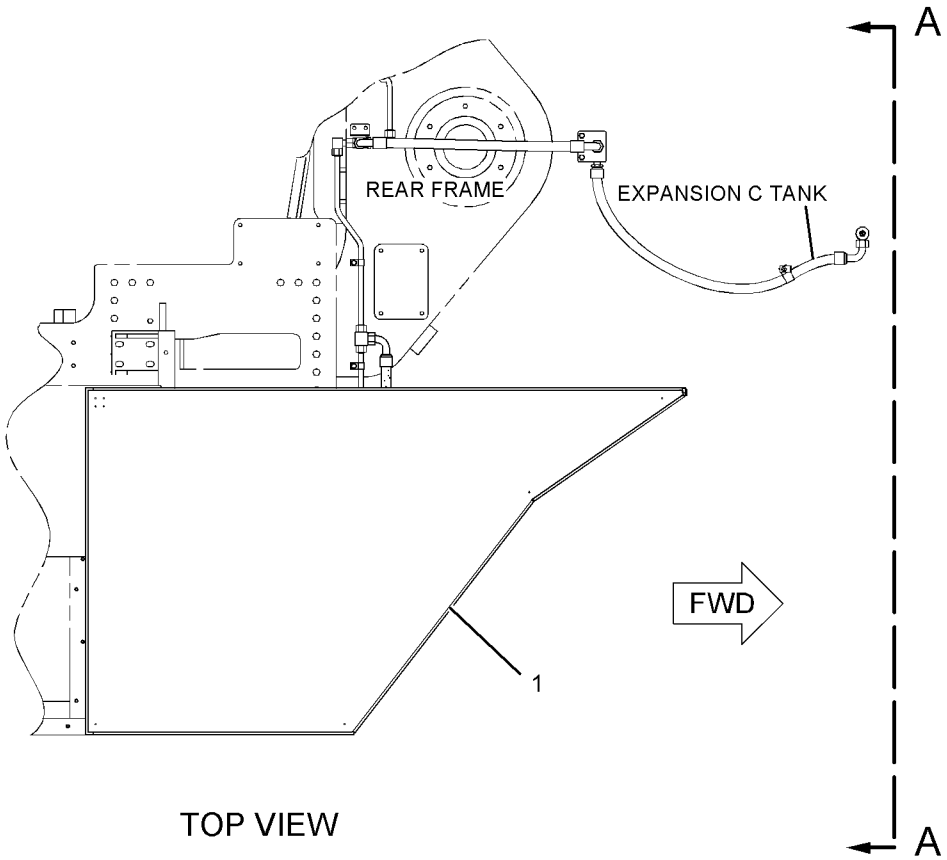

TOP VIEW

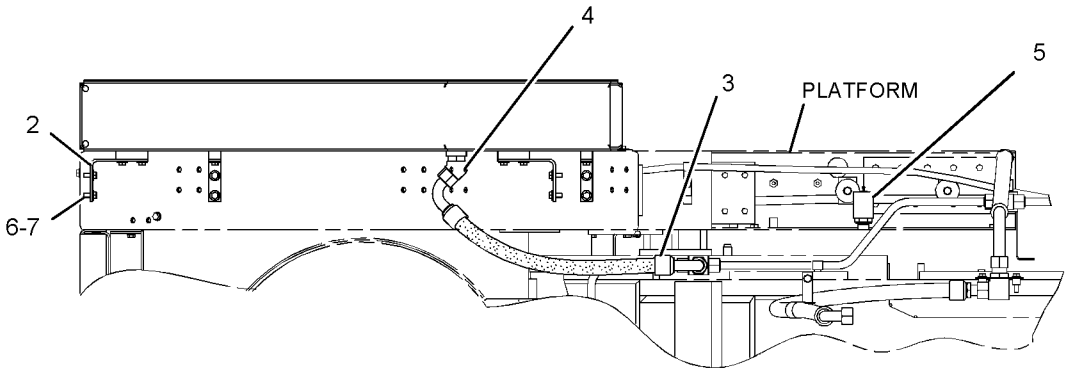

VIEW A-A

GRAPHIC #1 **<END>** g01145246

HYDRAULIC SYSTEM

248-2583 TANK GP-HYDRAULIC–STEERING, BRAKE

S/N: 4421-UP

PART OF 235-0624 TANK & MTG GP-HYDRAULIC

SMCS-5056 **i02286798**

NOTE	REF NO	GRAPHIC REF	PART NUMBER	QTY	PART NAME 1 2 3 4 5 6 (PRODUCT LEVEL)	SEE PAGE
	1	1	*3G-4090*	34	SEALANT	
	2	1	**7B-3039**	1	SPRING	
	3	1	**6V-5839**	6	WASHER (11X21X2.5-MM THK)	
M	4	1,2	**6V-7744**	93	LOCKNUT (M10X1.15-THD)	
	5	1	**5M-2057**	1	SEAL-O-RING	
	6	1	**9J-7031**	1	PLUG-DRAIN	
	7	1	**8J-8782**	1	BODY-DRAIN VALVE	
	8	1	**5F-8000**	1	SEAL-O-RING	
	9	1	**8J-8783**	1	VALVE	
	10	1	**1U-2827**	1	GUIDE-VALVE	
M	11	2	**7X-7478**	4	BOLT-LOCKING (M12X1.75X35-MM)	
	12	2	**6E-1191**	1	TUBE AS	
	13	2	**3P-0439**	1	SEAL-O-RING	
	14	2	**6E-1190**	1	TUBE AS	
	15	2	**4J-0522**	1	SEAL-O-RING	
	16	2	**9T-9221**	4	STRAINER AS	
		2	**6E-6549**	1	PLATE	
M		2	**6V-3822**	1	BOLT (M10X1.5X35-MM)	
M	17	2	**6V-7732**	8	BOLT (M10X1.5X25-MM)	
	18	2	**9T-9232**	1	BAFFLE AS	
M		2	**6V-3822**	1	BOLT (M10X1.5X35-MM)	
	19	2	**9T-4689**	1	TUBE AS	
	20	2	**6H-3977**	1	SEAL-O-RING	
	21	2	**248-6365**	1	TANK AS-HYDRAULIC	
M	22	2	**8T-4136**	80	BOLT (M10X1.5X25-MM)	
	23	2	**9T-9880**	1	TANK AS	
	24	2	**9T-9226**	1	PLATE	
	25	2	**7J-2656**	4	SCREEN GP	
	26	2	**4T-8698**	4	WASHER (12.2X62X3.5-MM THK)	
	27	2	**9T-9227**	2	SCREEN AS (HYDRAULIC TANK)	
	28	1	**7B-2805**	1	RING-LOCK	
	29	1	**4J-3754**	1	CAP-FILLER	
	30	1	**8T-2275**	1	BALL	
	31	1	**4J-3816**	1	PLATE	
	32	1	**3D-6678**	1	STRAINER AS	
	33	1	**4J-3815**	1	GASKET	
	34	1	**6J-1081**	1	GLASS-SIGHT	
	35	1	**5H-6005**	4	SEAL-O-RING	
	36	1	**8J-8543**	1	PLATE	
	37	1	**6J-1080**	1	GROMMET	
	38	1	**9T-4105**	1	RETAINER	
	39	2	**1H-7339**	1	SEAL-O-RING	
	40	2	**4J-0523**	4	SEAL-O-RING	
M	41	1	**9X-2125**	4	BOLT-LOCKING (M10X1.5X25-MM)	

M-METRIC PART

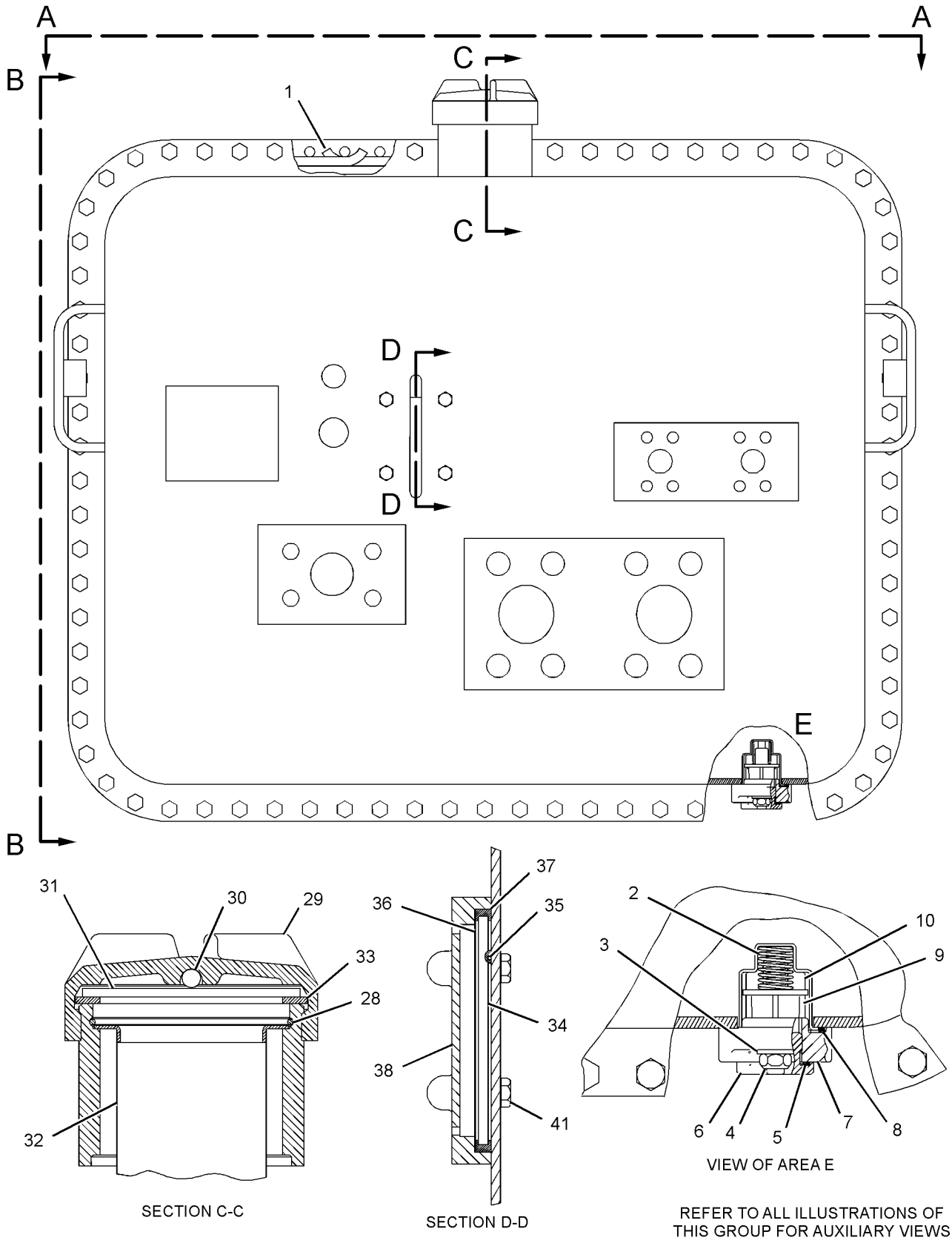

GRAPHIC #1

g01153627

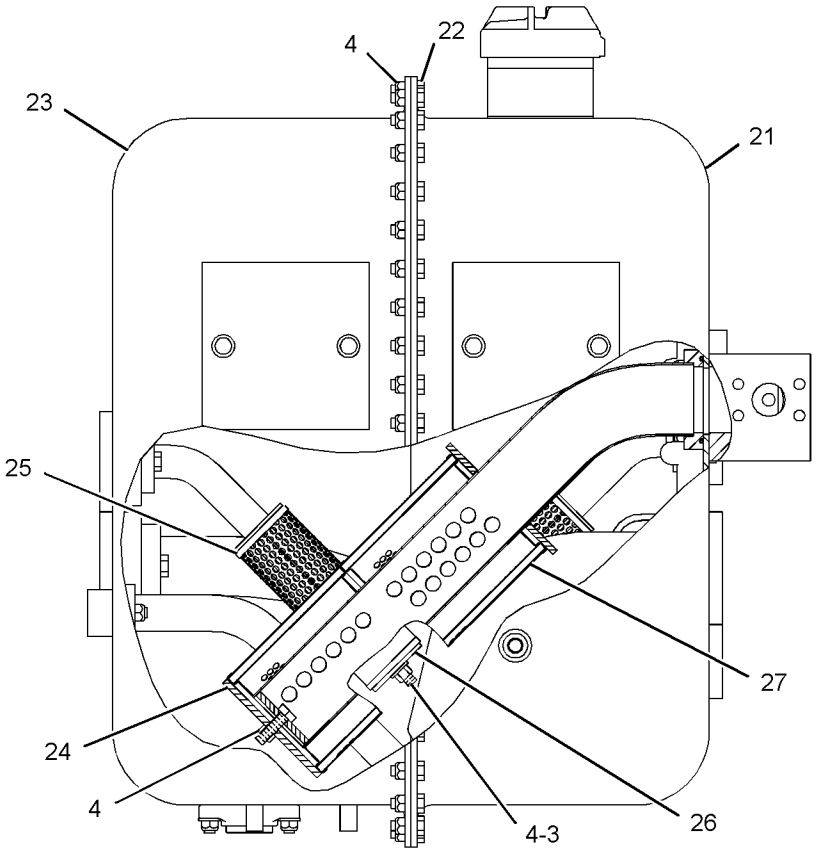

VIEW B-B

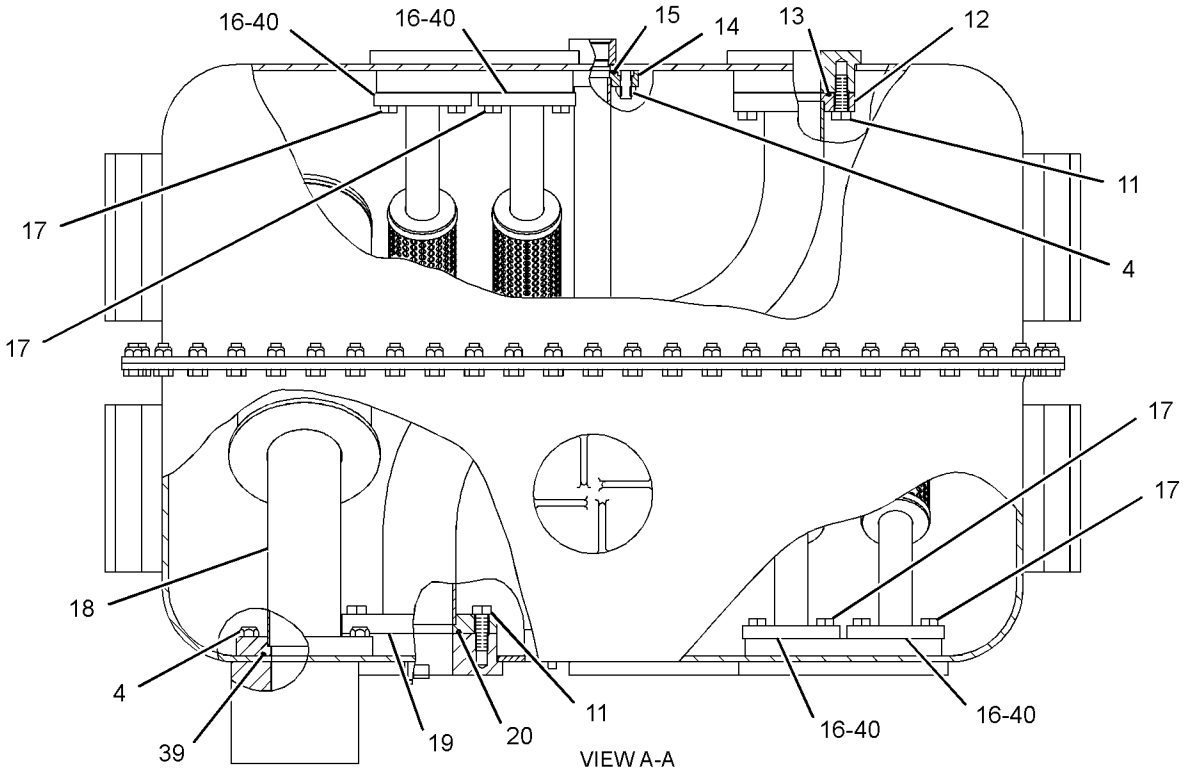

VIEW A-A

GRAPHIC #2 **<END>** g01153629

248-2584 TANK GP-HYDRAULIC—BRAKE COOLING

S/N: 4421-UP

PART OF 235-0624 TANK & MTG GP-HYDRAULIC

SMCS-5056 **i02332519**

NOTE	REF NO	GRAPHIC REF	PART NUMBER	QTY	PART NAME 1 2 3 4 5 6 (PRODUCT LEVEL)	SEE PAGE
	1	1	**6E-1285**	1	TANK AS-HYDRAULIC (BRAKE COOLING)	
M	2	1	**6V-7744**	40	LOCKNUT (M10X1.15-THD)	
M	3	1	**8T-4136**	38	BOLT (M10X1.5X25-MM)	
	4	1	**4J-0523**	2	SEAL-O-RING	
	5	1	**6E-1058**	1	TUBE AS	
	6	1	**6E-1059**	1	BAFFLE AS	
	7	1	**248-6367**	1	TANK AS-HYDRAULIC	
D	8	1	**5P-9119**		SEALANT (ADHESIVE BACKED) (1-M)	
	9	1	**1U-2827**	1	GUIDE-VALVE	
	10	1	**8J-8783**	1	VALVE	
	11	1	**7B-3039**	1	SPRING	
	12	1	**8T-3298**	1	SEAL-RECTANGULAR	
	13	1	**5M-2057**	1	SEAL-O-RING	
	14	1	**9J-7031**	1	PLUG-DRAIN	
	15	1	**8T-4121**	2	WASHER-HARD (11X21X2.5-MM THK)	
	16	1	**8J-8782**	1	BODY-DRAIN VALVE	
	17	1	**9R-2630**	1	RETAINER	
	18	1	**3G-5980**	1	PLATE	
	19	1	**4J-8251**	1	GROMMET	
	20	1	**5H-6005**	2	SEAL-O-RING	
	21	1	**4J-8252**	1	GAUGE-SIGHT	
M	22	1	**6V-7732**	4	BOLT (M10X1.5X25-MM)	
	23	1	**3G-0361**	1	GASKET	
	24	1	**9J-3047**	1	STRAINER (FILLER)	
	25	1	**2D-4202**	1	PLATE	
	26	1	**8T-2275**	1	BALL	
	27	1	**7H-1447**	1	CAP-FILLER	
	28	1	**9H-6454**	1	GASKET	
M	29	1	**9X-2125**	2	BOLT-LOCKING (M10X1.5X25-MM)	

D-ORDER BY THE METER
M-METRIC PART

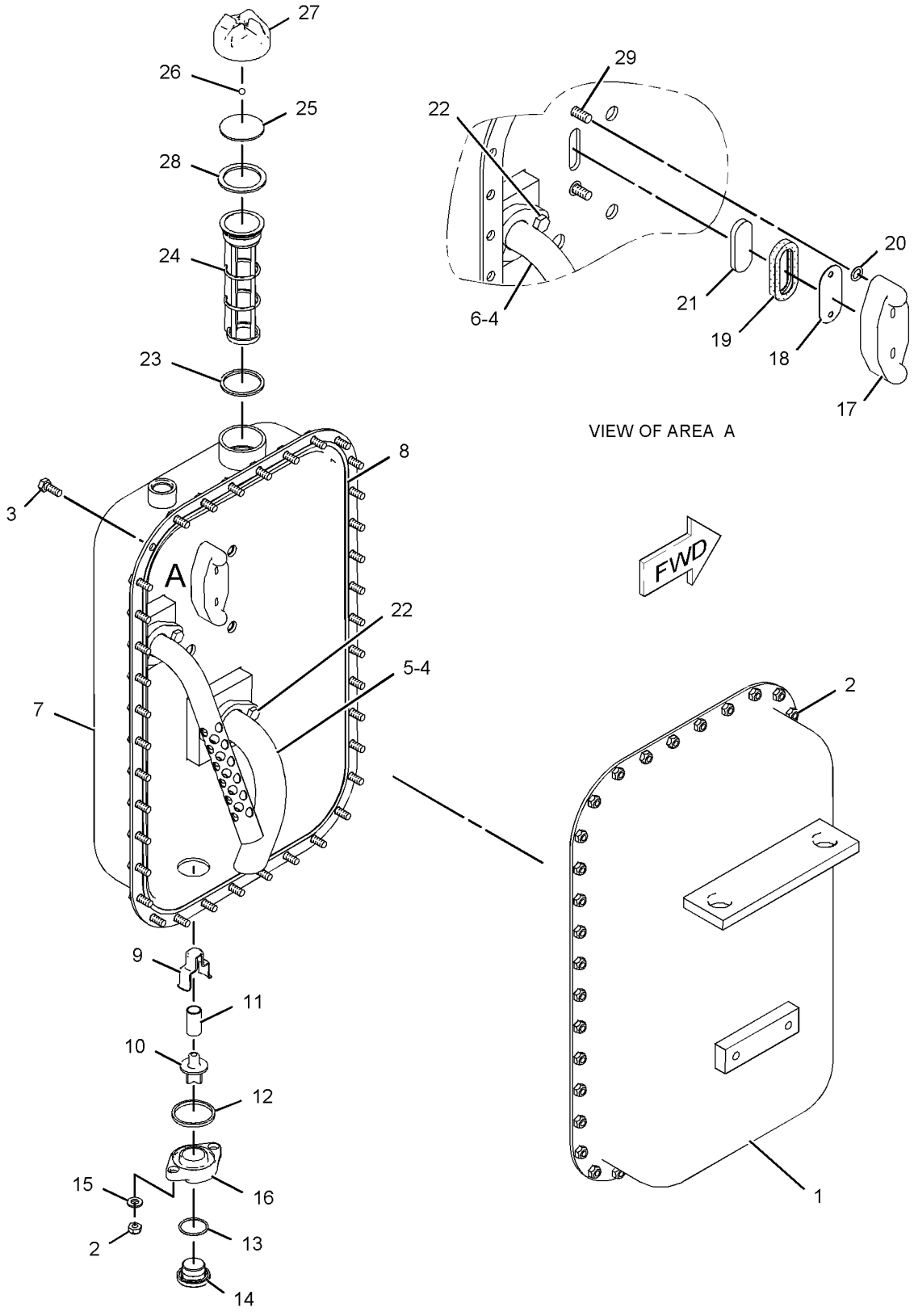

GRAPHIC #1 **<END>** g01146557

248-2585 TANK GP-HYDRAULIC—IMPLEMENT

S/N: 4421-UP

PART OF 244-7260 TANK & MTG GP-HYDRAULIC

SMCS-5056 **i02333601**

NOTE	REF NO	GRAPHIC REF	PART NUMBER	QTY	PART NAME 1 2 3 4 5 6 (PRODUCT LEVEL)	SEE PAGE
	1	1	**244-7160**	1	BLOCK	
	5	1	**8T-3298**	1	SEAL-RECTANGULAR	
	7	1	**9T-9226**	3	PLATE	
	8	1	**9T-9227**	5	SCREEN AS (HYDRAULIC TANK)	
	9	1	**102-3479**	1	COVER	
	10	1	**102-3482**	1	GASKET	
	11	1	**251-1260**	1	TANK AS-HYDRAULIC	
		1	**1K-4455**	11	BAR	
		1	**251-1261**	1	TUBE AS	
	12	1	**251-4234**	2	TUBE AS	
	13	1	**251-4236**	1	TUBE AS	
	14	1	**251-4238**	1	TUBE AS	
	15	1	**1H-7339**	2	SEAL-O-RING	
	16	1	**1H-9696**	1	SEAL-O-RING	
	17	1	**1P-4578**	10	FLANGE-HALF	
M	18	1	**3E-8004**	4	BOLT (M12X1.75X45-MM)	
	19	1	**4T-8698**	1	WASHER (12.2X62X3.5-MM THK)	
	21	1	**5P-8245**	4	WASHER-HARD (13.5X25.5X3-MM THK)	
	23	1	**4J-0527**	1	SEAL-O-RING	
	24	1	**6V-5839**	2	WASHER (11X21X2.5-MM THK)	
M	25	1	**6V-7732**	56	BOLT (M10X1.5X25-MM)	
M	26	1	**6V-7744**	6	LOCKNUT (M10X1.5-THD)	
	27	1	**7J-2656**	1	SCREEN GP	
M	28	1	**8T-0722**	10	BOLT-LOCKING (M10X1.5X30-MM)	
	29	1	**8T-4121**	22	WASHER-HARD (11X21X2.5-MM THK)	
M	30	1	**8T-4196**	20	BOLT (M10X1.5X35-MM)	

M-METRIC PART

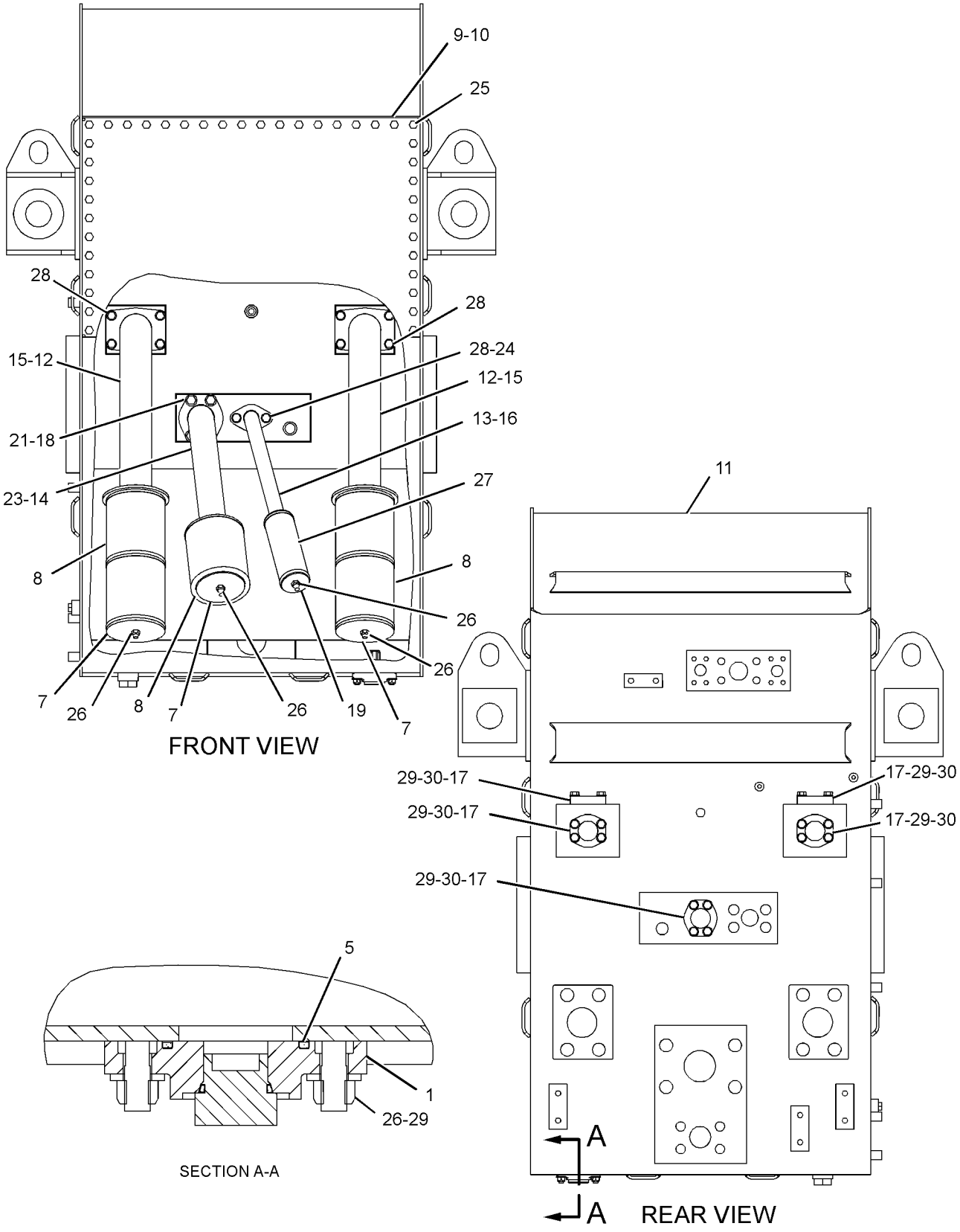

GRAPHIC #1 **<END>** g01164780

HYDRAULIC SYSTEM

244-7270 VALVE & MTG GP-MAIN CONTROL

S/N: 4421-UP

PART OF 244-7300 HYDRAULIC AR-FRONT

TYPE 1

SMCS-5051 **i02148442**

NOTE	REF NO	GRAPHIC REF	PART NUMBER	QTY	PART NAME 1 2 3 4 5 6 (PRODUCT LEVEL)	SEE PAGE
	1	1	**6T-6080**	8	MOUNT-RUBBER	
	2	1	**8X-0688**	2	BRACKET	
	3	1	**8X-0722**	1	BRACKET AS	
M		1	**8T-3597**	2	NUT-WELD (M12X1.75-THD)	
	4	1	**8X-0723**	1	BRACKET AS	
M		1	**8T-3597**	2	NUT-WELD (M12X1.75-THD)	
	5	1	**122-4026**	2	SPACER (13X25X25-MM THK)	
	6	1	**140-9359**	1	PLATE	
Y	7	1	**241-4821**	1	VALVE GP-MAIN CONTROL (LH)	865
Y	8	1	**241-4822**	1	VALVE GP-MAIN CONTROL (RH)	869
	9	1	**244-7275**	1	BRACKET AS	
	10	1	**246-8905**	1	CHANNEL	
	11	1	**5P-1076**	12	WASHER-HARD (13.5X30X4-MM THK)	
M	12	1	**6V-7688**	2	LOCKNUT (M20X2.5-THD)	
M	13	1	**7X-2532**	2	BOLT (M20X2.5X130-MM)	
M	14	1	**7X-2553**	2	BOLT (M16X2X40-MM)	
M	15	1	**7X-2566**	2	BOLT (M20X2.5X110-MM)	
M	16	1	**8T-4132**	6	NUT (M16X2-THD)	
M	17	1	**8T-4139**	8	BOLT (M12X1.75X30-MM)	
M	18	1	**8T-4244**	2	NUT (M12X1.75-THD)	
M	19	1	**8T-4648**	2	BOLT (M12X1.75X70-MM)	
	20	1	**8T-5439**	6	WASHER (21.5X45X6-MM THK)	
M	21	1	**8T-6382**	2	BOLT (M16X2X260-MM)	
M	22	1	**8T-6385**	4	BOLT (M16X2X180-MM)	
M	23	1	**8T-7338**	2	BOLT (M16X2X45-MM)	
	24	1	**8X-0674**	4	WASHER (22X100X10-MM THK)	
	25	1	**9X-8257**	10	WASHER (17.5X30X3.5-MM THK)	

M-METRIC PART
Y-SEPARATE ILLUSTRATION

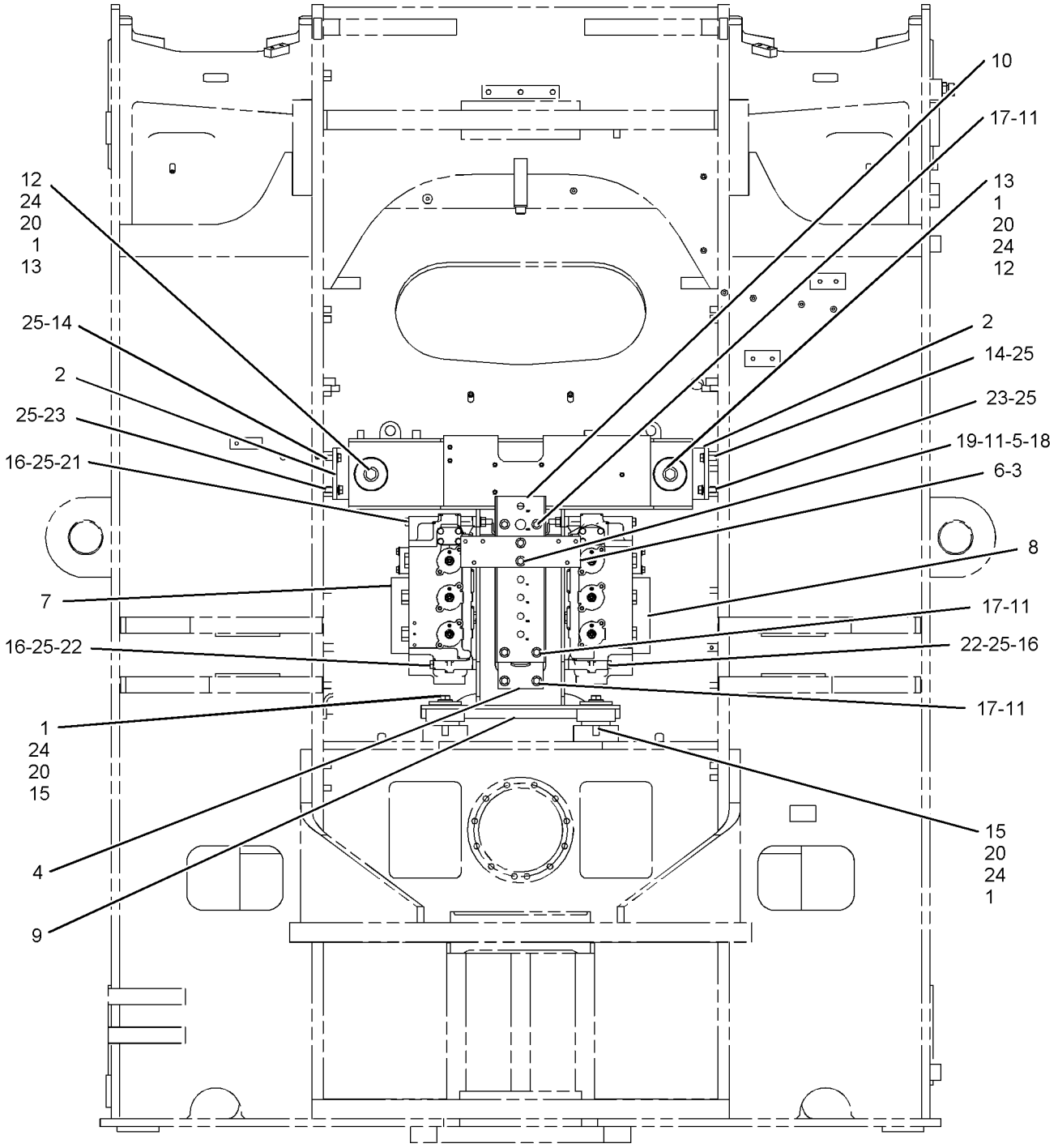

REAR VIEW

GRAPHIC #1 **<END>** g01091491

244-7270 VALVE & MTG GP-MAIN CONTROL

S/N: 4421-UP
PART OF 244-7300 HYDRAULIC AR-FRONT
TYPE 2

SMCS-5051 **i02377367**

NOTE	REF NO	GRAPHIC REF	PART NUMBER	QTY	PART NAME 1 2 3 4 5 6 (PRODUCT LEVEL)	SEE PAGE
	1	1	**6T-6080**	8	MOUNT-RUBBER	
	2	1	**8X-0688**	2	BRACKET	
	3	1	**8X-0722**	1	BRACKET AS	
M		1	**8T-3597**	2	NUT-WELD (M12X1.75-THD)	
	4	1	**8X-0723**	1	BRACKET AS	
M		1	**8T-3597**	2	NUT-WELD (M12X1.75-THD)	
	5	1	**122-4026**	2	SPACER (13X25X25-MM THK)	
	6	1	**140-9359**	1	PLATE	
Y	7	1	**241-4821**	1	VALVE GP-MAIN CONTROL (LH)	865
Y	8	1	**241-4822**	1	VALVE GP-MAIN CONTROL (RH)	869
	9	1	**244-7275**	1	BRACKET AS	
C	10	1	**272-9914**	1	CHANNEL AS	
C	11	1	**5P-1076**	10	WASHER-HARD (13.5X30X4-MM THK)	
M	12	1	**6V-7688**	2	LOCKNUT (M20X2.5-THD)	
M	13	1	**7X-2532**	2	BOLT (M20X2.5X130-MM)	
M	14	1	**7X-2553**	2	BOLT (M16X2X40-MM)	
M	15	1	**7X-2566**	2	BOLT (M20X2.5X110-MM)	
M	16	1	**8T-4132**	6	NUT (M16X2-THD)	
M	17	1	**8T-4139**	8	BOLT (M12X1.75X30-MM)	
CM	19	1	**8T-4910**	2	BOLT (M12X1.75X60-MM)	
	20	1	**8T-5439**	6	WASHER (21.5X45X6-MM THK)	
M	21	1	**8T-6382**	2	BOLT (M16X2X260-MM)	
M	22	1	**8T-6385**	4	BOLT (M16X2X180-MM)	
M	23	1	**8T-7338**	2	BOLT (M16X2X45-MM)	
	24	1	**8X-0674**	4	WASHER (22X100X10-MM THK)	
	25	1	**9X-8257**	10	WASHER (17.5X30X3.5-MM THK)	

C-CHANGE FROM PREVIOUS TYPE
M-METRIC PART
Y-SEPARATE ILLUSTRATION

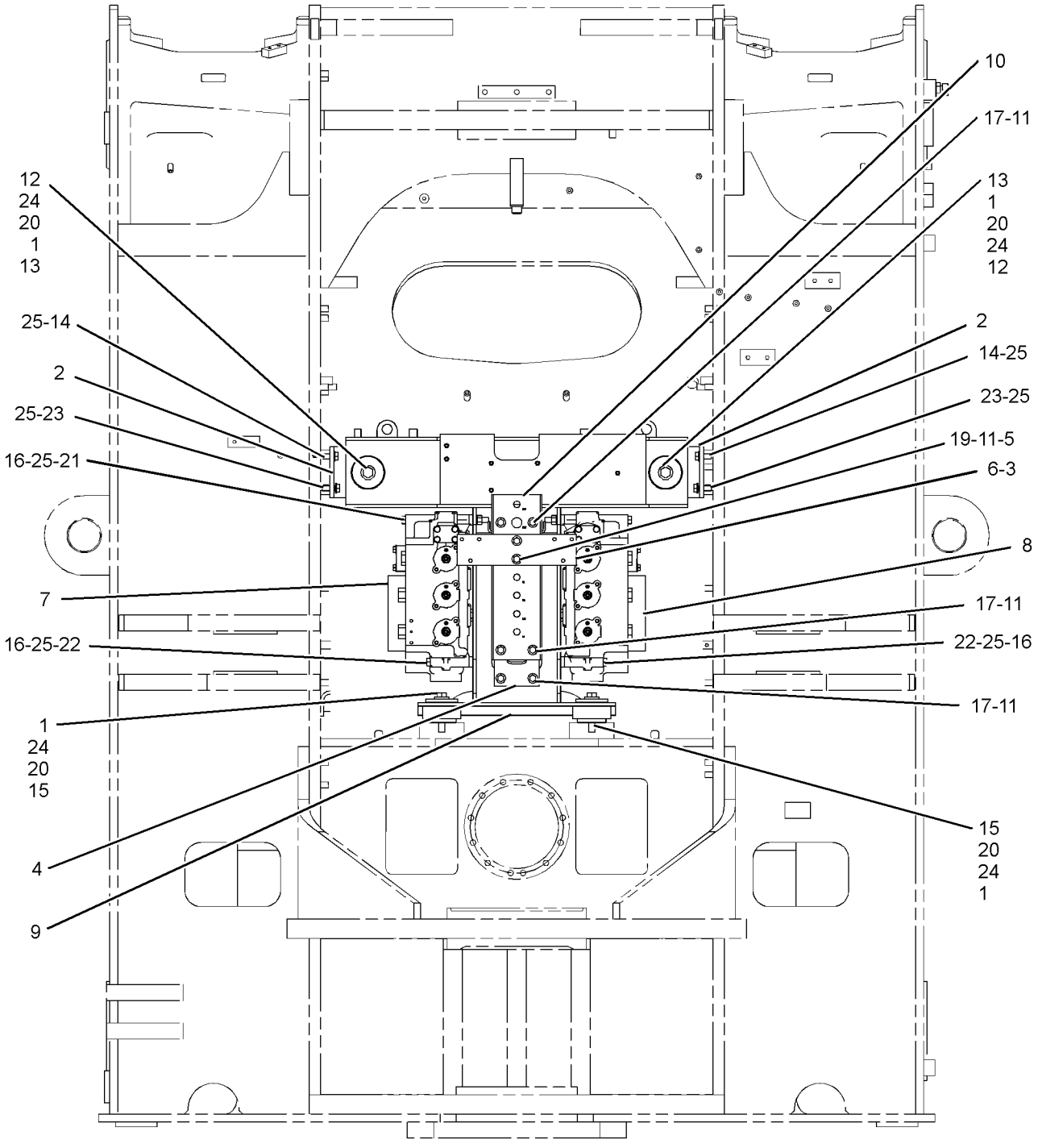

REAR VIEW

GRAPHIC #1 **<END>** g01186430

164-7474 VALVE GP-CHECK–PILOT

S/N: 4421-UP

PART OF 244-7245 LINES GP-PILOT

SMCS-5067 **i02399246**

NOTE	PART NUMBER	QTY	PART NAME 1 2 3 4 5 6 (PRODUCT LEVEL)	SEE PAGE
	3J-1907	1	SEAL-O-RING	
	6V-8397	1	SEAL-O-RING	
	9T-3096	1	VALVE GP-CHECK	

<END>

HYDRAULIC SYSTEM

247-2973 VALVE GP-CHECK & RELIEF—MAIN HYDRAULIC

S/N: 4421-UP

PART OF 244-7330 LINES GP-HYDRAULIC

SMCS-5453 **i02148612**

NOTE	REF NO	GRAPHIC REF	PART NUMBER	QTY	PART NAME 1 2 3 4 5 6 (PRODUCT LEVEL)	SEE PAGE
	1	1	**9L-9188**	1	SPRING-VALVE	
	2	1	**102-4156**	1	VALVE	
	3	1	**111-5824**	1	SLEEVE	
Y	4	1	**143-8912**	1	VALVE GP-RELIEF (MAIN)	885
	5	1	**247-2974**	1	BODY	
	7	1	**102-4158**	1	PLUG AS	
		1	**3G-5003**	1	BEARING-SLEEVE	
		1	**102-4157**	1	PLUG	
	8	1	**2S-4078**	1	SEAL-O-RING	
	10	1	**8F-6711**	1	SEAL-O-RING	

Y-SEPARATE ILLUSTRATION

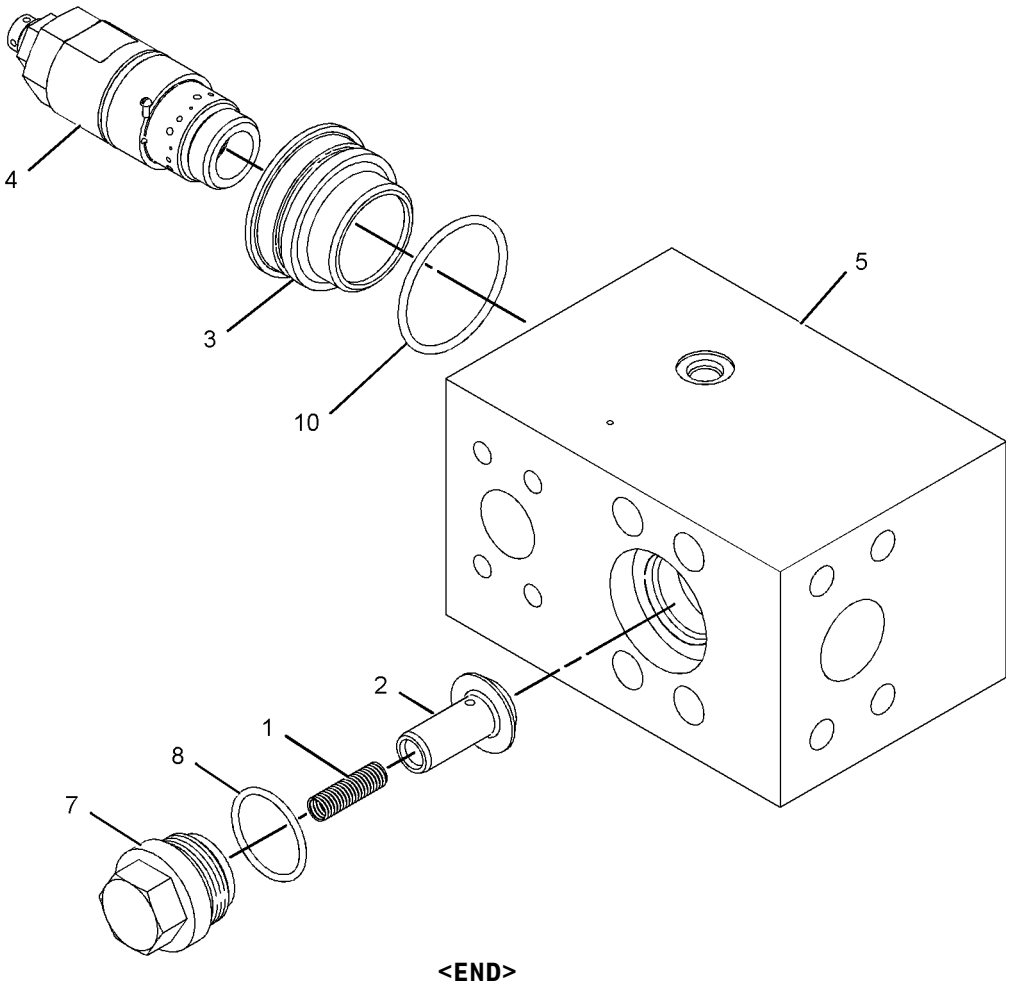

GRAPHIC #1 **<END>** g01094530

HYDRAULIC SYSTEM

241-4821 VALVE GP-MAIN CONTROL–LH

S/N: 4421-UP

PART OF 244-7270 VALVE & MTG GP-MAIN CONTROL

SMCS-5051 **i02172571**

NOTE	REF NO	GRAPHIC REF	PART NUMBER	QTY	PART NAME 1 2 3 4 5 6 (PRODUCT LEVEL)	SEE PAGE
	2	1	**6E-1291**	1	VALVE	
	4	1	**6E-1316**	1	MANIFOLD	
	5	1	**7J-7852**	2	SPRING	
	6	1,2	**8J-0324**	3	PLUG	
	7	2	**8J-3596**	2	HOUSING-SPRING	
	8	2	**9F-2167**	6	SCREW-PURGE (3/8-24-THD)	
	9	1,2	**9R-5008**	20	SPACER (11X20X6-MM THK)	
	10	2	**9T-1827**	4	RETAINER-SPRING	
	11	2	**9T-1837**	5	PLUNGER AS	
					(EACH INCLUDES)	
		2	**9J-2411**	1	WASHER	
	12	2	**9T-1897**	3	HOUSING-SPRING	
	13	2	**9T-1899**	3	HOUSING-SPRING	
	14	2	**9T-2541**	3	SPRING	
Y	15	1	**9T-9197**	1	VALVE GP-RELIEF (LINE, TILT CYL ROD END PORT)	883
	16	1	**102-4156**	2	VALVE	
	17	2	**113-8263**	3	PISTON	
	18	2	**114-6602**	3	HOUSING	
	19	2	**132-5532**	2	SPRING	
Y	22	1	**142-4281**	1	VALVE GP-RELIEF (LINE, TILT CYL HEAD END PORT)	884
	24	2	**245-8364**	2	RETAINER	
	25	2	**245-8365**	1	STEM	
Y	26	1	**248-0020**	1	VALVE GP-RELIEF (LINE, LIFT CYL HEAD END PORT)	889
	27	2	**096-4306**	1	SPACER	
	28	1	**102-4158**	2	PLUG AS	
					(EACH INCLUDES)	
		1	**3G-5003**	1	BEARING-SLEEVE	
		1	**102-4157**	1	PLUG	
	29	2	*148-8407*	1	PLUG AS	
		2	**3J-1907**	1	SEAL-O-RING	
		2	**9S-4191**	1	PLUG-O RING	
	30	1	**153-5294**	1	PLUG	
	31	2	**162-0177**	3	PLUG AS	
					(EACH INCLUDES)	
		2	**3J-1907**	1	SEAL-O-RING	
		2	**9S-8004**	1	PLUG	
	32	1,2	*183-7262*	4	PLUG AS	
					(EACH INCLUDES)	
		1,2	**2S-4078**	1	SEAL-O-RING	
		1,2	**9S-8010**	1	PLUG	
	33	2	**1H-5728**	9	SEAL-O-RING	
	34	1,2	**1P-3703**	3	SEAL-RECTANGULAR	
	35	2	**1P-3705**	4	SEAL-RECTANGULAR	
	36	1	**2S-4078**	2	SEAL-O-RING	
	37	1	**3D-2824**	1	SEAL-O-RING	
	38	2	**3J-1907**	5	SEAL-O-RING	
	39	2	**4J-0522**	2	SEAL-O-RING	
	40	1	**5P-0047**	1	COVER	
	41	1,2	**6V-0400**	4	FLANGE-HALF	
	42	2	**7H-3606**	5	NUT (9/16-18-THD)	
	43	1	**7J-7853**	1	VALVE	
	44	1,2	**7M-8485**	6	SEAL-O-RING	
	45	1	**8J-0426**	1	PLUG	
	46	1	**8J-4645**	2	PLUG	

241-4821 VALVE GP-MAIN CONTROL *(contd.)* i02172571

NOTE	REF NO	GRAPHIC REF	PART NUMBER	QTY	PART NAME 1 2 3 4 5 6 (PRODUCT LEVEL)	SEE PAGE
M	47	2	**8T-4172**	8	BOLT (M10X1.5X80-MM)	
M	48	1,2	**8T-4184**	8	BOLT (M12X1.75X45-MM)	
	49	1,2	**8T-4223**	8	WASHER-HARD (13.5X25.5X3-MM THK)	
M	50	1	**8T-6408**	6	BOLT (M10X1.5X160-MM)	
M	51	1	**8T-6685**	6	BOLT (M10X1.5X110-MM)	
M	52	1	**8T-7811**	4	BOLT-SOCKET HEAD (M12X1.75X50-MM)	
	53	2	**9J-4782**	6	PROTECTOR	
	54	1	**9L-9188**	2	SPRING-VALVE	
	55	2	**9T-1838**	5	RETAINER-SPRING	
	56	2	**9T-1848**	5	SPRING	
	57	2	**9T-4735**	3	SPRING	

M-METRIC PART
Y-SEPARATE ILLUSTRATION

241-4821 VALVE GP-MAIN CONTROL *(contd.)* i02172571

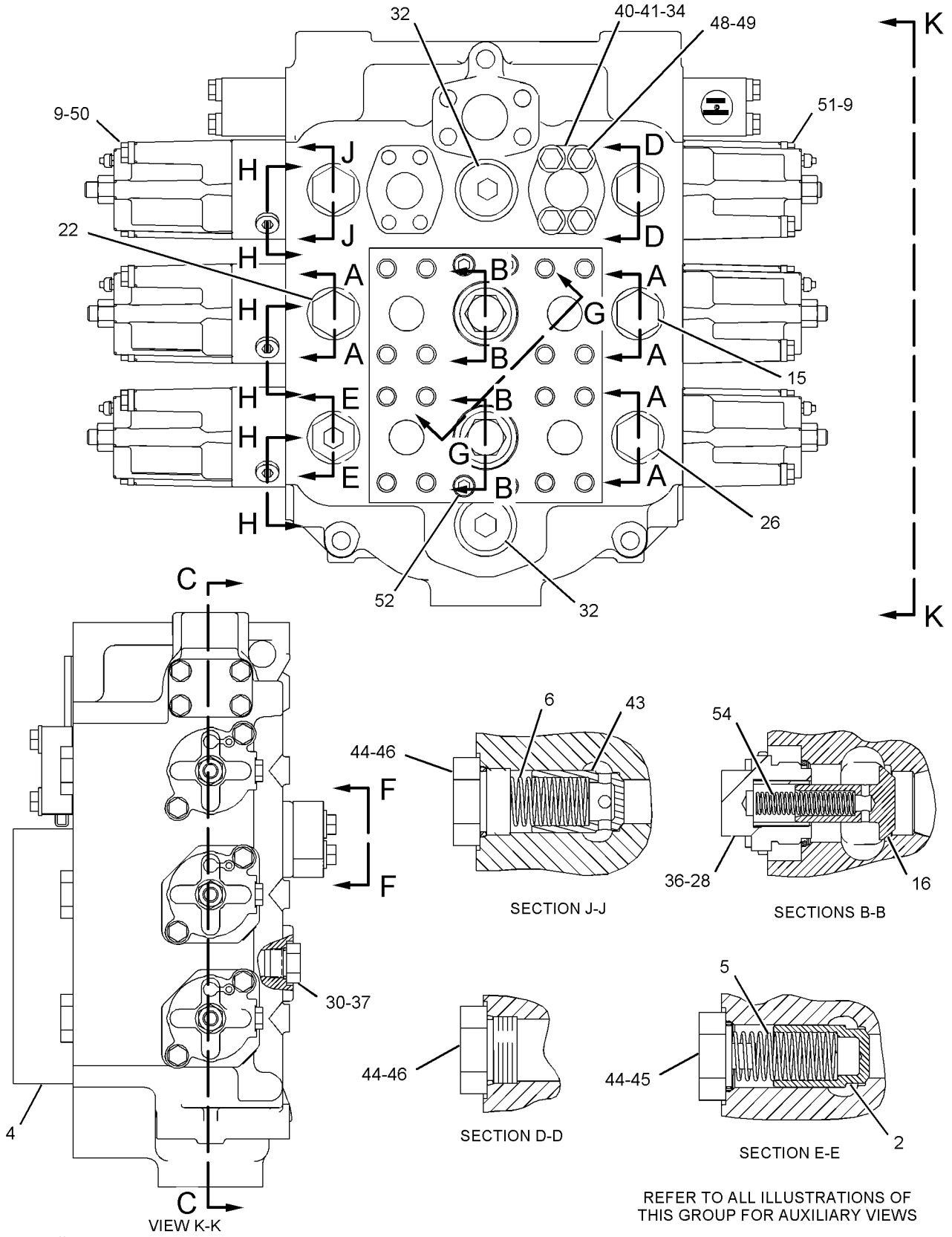

GRAPHIC #1

g01094160

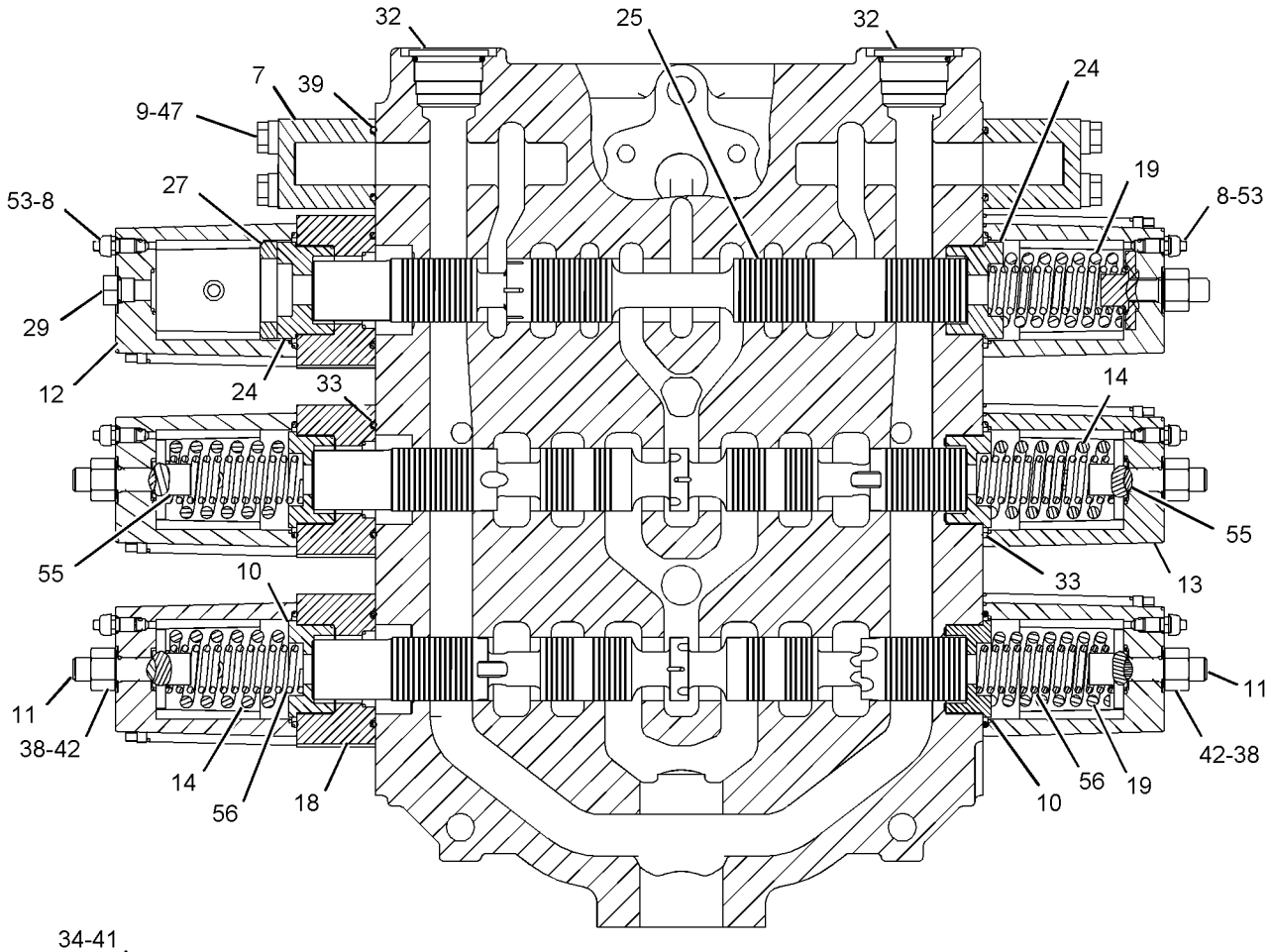

SECTION C-C

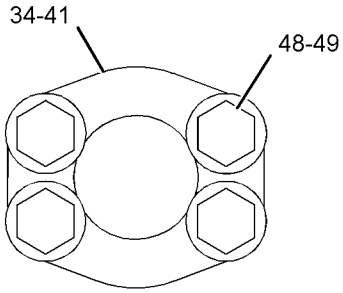

VIEW F-F

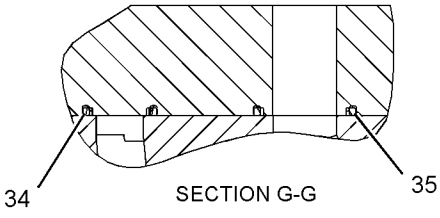

SECTION G-G

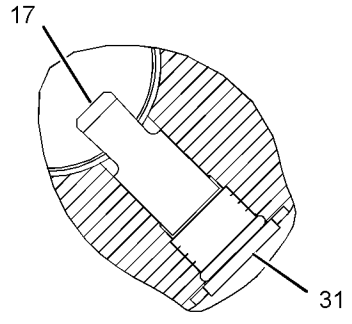

SECTION H-H

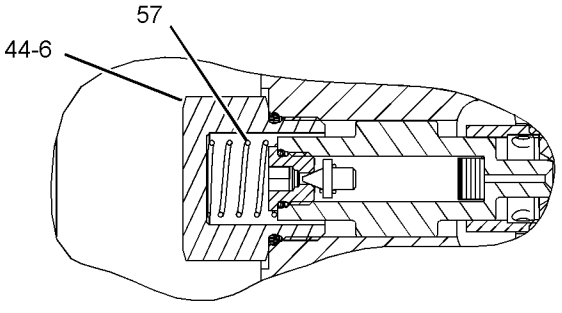

SECTION A-A

GRAPHIC #2 **<END>** g01094161

HYDRAULIC SYSTEM

241-4822 VALVE GP-MAIN CONTROL–RH

S/N: 4421-UP

PART OF 244-7270 VALVE & MTG GP-MAIN CONTROL

SMCS-5051 **i02167268**

NOTE	REF NO	GRAPHIC REF	PART NUMBER	QTY	PART NAME 1 2 3 4 5 6 (PRODUCT LEVEL)	SEE PAGE
	2	2	*6E-1292*	1	BODY-CONTROL	
	3	1	**6E-1316**	1	MANIFOLD	
	4	2	*6E-1873*	1	STEM	
	5	1,2	**7J-7852**	4	SPRING	
	6	2	**8J-3596**	2	HOUSING-SPRING	
	7	2	**9F-2167**	6	SCREW-PURGE (3/8-24-THD)	
	8	1,2	**9R-5008**	20	SPACER (11X20X6-MM THK)	
	9	2	**9T-1827**	4	RETAINER-SPRING	
	10	2	**9T-1837**	6	PLUNGER AS	
					(EACH INCLUDES)	
		2	**9J-2411**	1	WASHER	
	11	2	**9T-1897**	2	HOUSING-SPRING	
	12	2	**9T-1899**	4	HOUSING-SPRING	
	13	2	**9T-2541**	3	SPRING	
	14	1	**102-4156**	2	VALVE	
	15	2	**113-8263**	2	PISTON	
	16	2	**114-6602**	2	HOUSING	
	17	1	**119-0913**	1	VALVE	
	18	2	**132-5532**	2	SPRING	
	19	2	*133-8677*	1	STEM-TILT	
	20	2	*133-8678*	1	STEM-LIFT	
	22	1	**102-4158**	2	PLUG AS	
					(EACH INCLUDES)	
		1	**3G-5003**	1	BEARING-SLEEVE	
		1	**102-4157**	1	PLUG	
	23	1	**153-5294**	1	PLUG	
	24	2	**162-0177**	2	PLUG AS	
					(EACH INCLUDES)	
		2	**3J-1907**	1	SEAL-O-RING	
		2	**9S-8004**	1	PLUG	
	25	1,2	*183-7262*	4	PLUG AS	
					(EACH INCLUDES)	
		1,2	**2S-4078**	1	SEAL-O-RING	
		1,2	**9S-8010**	1	PLUG	
	26	2	**1H-5728**	8	SEAL-O-RING	
	27	1,2	**1P-3703**	4	SEAL-RECTANGULAR	
	28	2	**1P-3705**	4	SEAL-RECTANGULAR	
	29	1	**2S-4078**	2	SEAL-O-RING	
	30	1	**3D-2824**	1	SEAL-O-RING	
	31	2	**3J-1907**	6	SEAL-O-RING	
	32	2	**4J-0522**	2	SEAL-O-RING	
	33	2	**5F-6562**	1	WASHER-HARD (28X44.5X4-MM THK)	
	34	1	**5P-0047**	2	COVER	
	35	1,2	**6V-0400**	6	FLANGE-HALF	
	36	2	**7H-3606**	6	NUT (9/16-18-THD)	
	37	1,2	**7J-7853**	3	VALVE	
	38	1,2	**7M-8485**	6	SEAL-O-RING	
	39	1,2	**8J-0426**	3	PLUG	
	40	1	**8J-4645**	3	PLUG	
M	41	2	**8T-4172**	8	BOLT (M10X1.5X80-MM)	
M	42	1,2	**8T-4184**	12	BOLT (M12X1.75X45-MM)	
	43	1,2	**8T-4223**	12	WASHER-HARD (13.5X25.5X3-MM THK)	
M	44	1	**8T-6408**	4	BOLT (M10X1.5X160-MM)	
M	45	1	**8T-6685**	8	BOLT (M10X1.5X110-MM)	
M	46	1	**8T-7811**	4	BOLT-SOCKET HEAD (M12X1.75X50-MM)	
	47	2	**9J-4782**	6	PROTECTOR	

241-4822 VALVE GP-MAIN CONTROL *(contd.)* i02167268

NOTE	REF NO	GRAPHIC REF	PART NUMBER	QTY	PART NAME 1 2 3 4 5 6 (PRODUCT LEVEL)	SEE PAGE
	48	1	**9L-9188**	2	SPRING-VALVE	
	49	2	**9T-1838**	4	RETAINER-SPRING	
	50	2	**9T-1848**	4	SPRING	

M-METRIC PART

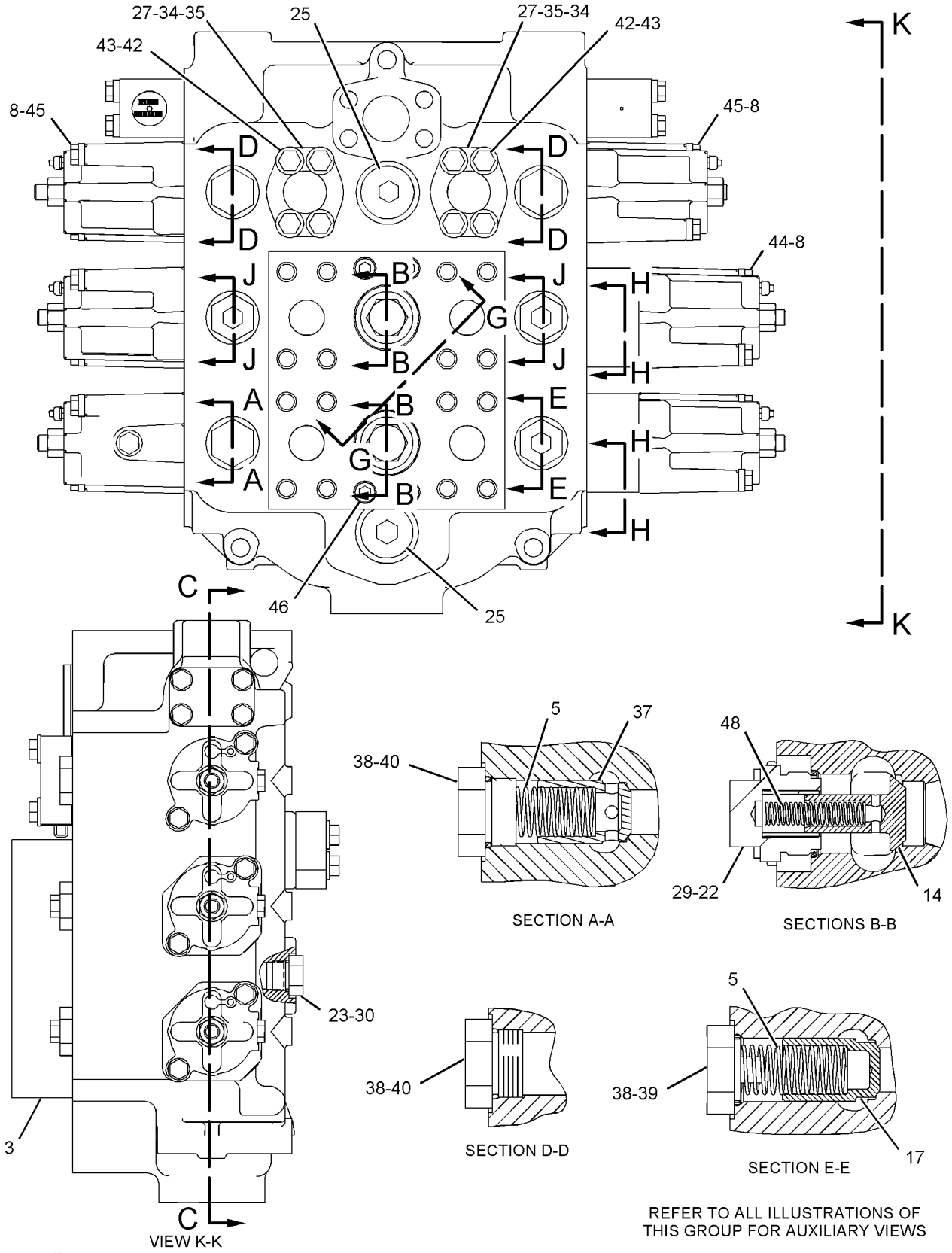

GRAPHIC #1

g01093905

241-4822 VALVE GP-MAIN CONTROL *(contd.)* i02167268

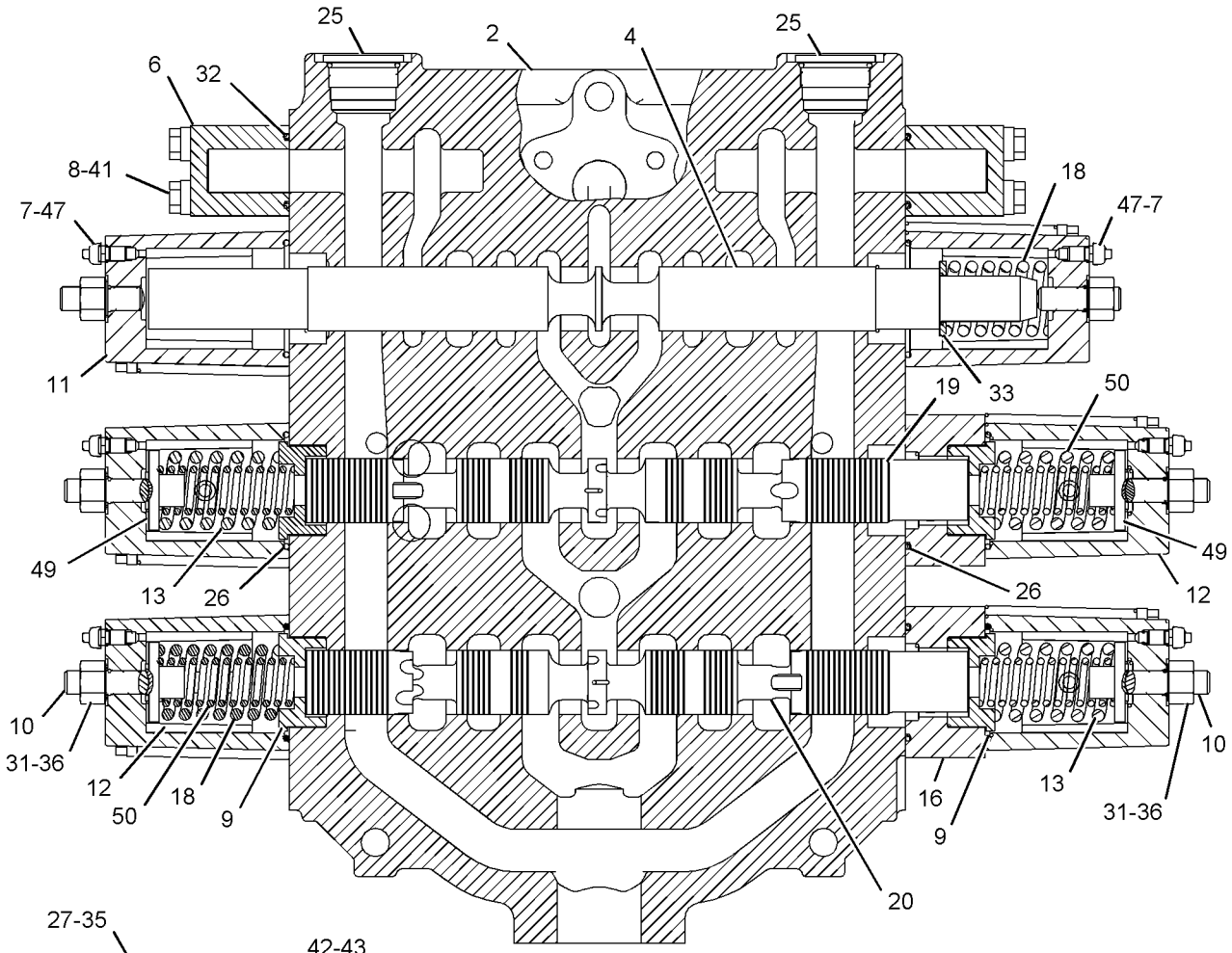

SECTION C-C

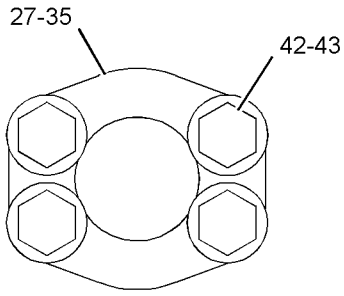

VIEW F-F

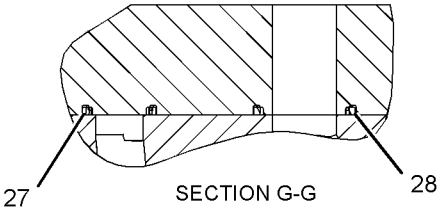

SECTION G-G

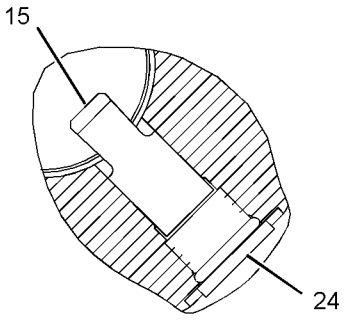

SECTION H-H

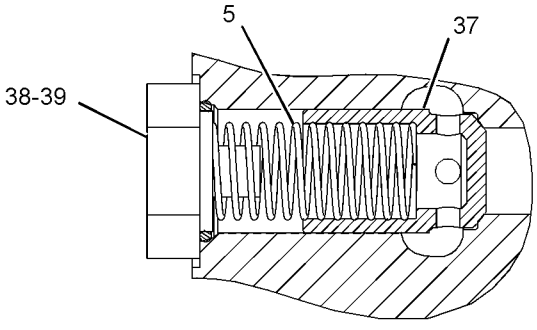

SECTION J-J

GRAPHIC #2 **<END>** g01093906

6E-3796 VALVE GP-PILOT–LIFT, TILT

S/N: 4421-UP

PART OF 247-6476 CONTROL GP-PILOT OPERATED HYD

SMCS-5059 **i01411179**

NOTE	REF NO	GRAPHIC REF	PART NUMBER	QTY	PART NAME 1 2 3 4 5 6 (PRODUCT LEVEL)	SEE PAGE
	1	1	**6V-3683**	2	SEAL-O-RING	
	2	1	**5P-6718**	2	SEAL-O-RING	
	3	1	**102-8805**	1	KIT-RECEPTACLE (6-PIN)	
					(INCLUDES WEDGE AND RECEPTACLE AS)	
M	4	1	**5P-7970**	6	NUT (M8X1.25-THD)	
	5	1	**108-0220**	3	ROD	
Y	6	1	**108-0221**	1	VALVE GP-PILOT (TILT)	874
Y	7	1	**108-0222**	1	VALVE GP-PILOT (LIFT)	875
	8	1	**9S-4185**	1	PLUG	
	9	1	**3K-0360**	1	SEAL-O-RING	
	10	1	**9S-8004**	1	PLUG	
	11	1	**3J-1907**	1	SEAL-O-RING	

M-METRIC PART
Y-SEPARATE ILLUSTRATION

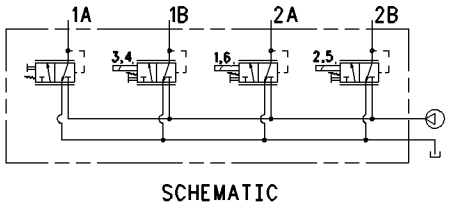

SCHEMATIC

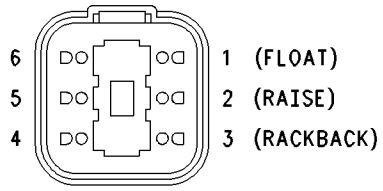

VIEW B-B

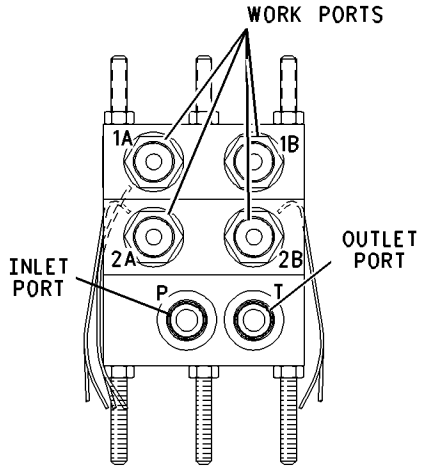

VIEW A-A

GRAPHIC #1 **<END>** g00742810

108-0221 VALVE GP-PILOT–TILT

S/N: 4421-UP

PART OF 6E-3796 VALVE GP-PILOT

SMCS-5059 **i01979230**

NOTE	REF NO	GRAPHIC REF	PART NUMBER	QTY	PART NAME 1 2 3 4 5 6 (PRODUCT LEVEL)	SEE PAGE
Y	1	1	**116-3101**	2	VALVE GP-PILOT CARTRIDGE	879
	4	1	**116-7644**	1	BOLT-PIVOT	
	5	1	**104-4273**	1	CLAMP	
	6	1	**107-4029**	1	BRACKET-PIVOT	
	7	1	**104-4272**	1	BOOT	
	8	1	**116-6253**	1	NUT	
	9	1	**107-4043**	1	PLATE	
	10	1	**116-6254**	1	NUT-JAM	
CY	12	1	**226-2758**	1	MAGNET GP-PILOT VALVE	830
	13	1	**107-4061**	2	PLUNGER AS	
	17	1	**107-5012**	1	SCREW-HEX SOCKET	
	18	1	**6E-0755**	1	PIN-PIVOT	
	19	1	**7S-9930**	1	RING-RETAINING	
	20	1	**107-5011**	2	SCREW-HEX SOCKET	
Y	23	1	**116-3045**	2	VALVE GP-PILOT CARTRIDGE	878
	24	1	**6E-4536**	1	PLATE	

C-CHANGE FROM PREVIOUS TYPE
Y-SEPARATE ILLUSTRATION

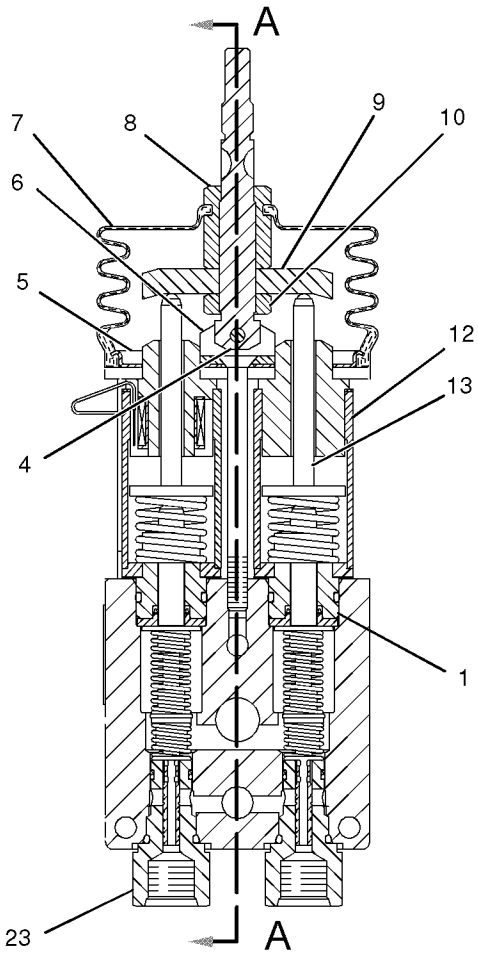

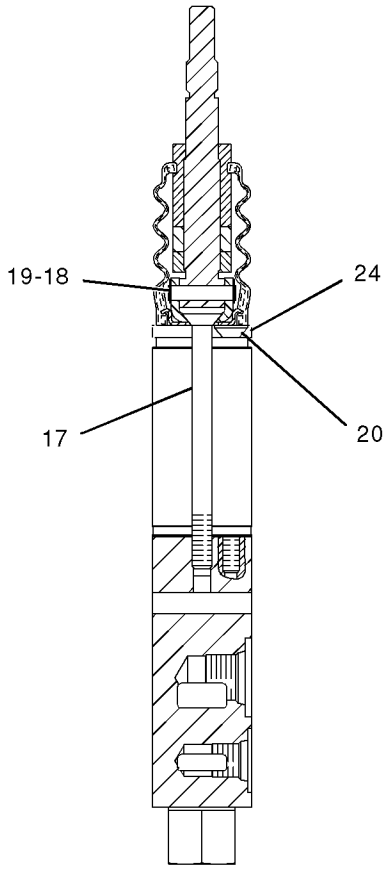

SECTION A-A

GRAPHIC #1 **<END>** g01026706

108-0222 VALVE GP-PILOT–LIFT

S/N: 4421-UP

PART OF 6E-3796 VALVE GP-PILOT

SMCS-5059 **i01979231**

NOTE	REF NO	GRAPHIC REF	PART NUMBER	QTY	PART NAME 1 2 3 4 5 6 (PRODUCT LEVEL)	SEE PAGE
Y	1	1	**112-3628**	1	VALVE GP-PILOT CARTRIDGE	876
	4	1	**116-7644**	1	BOLT-PIVOT	
	5	1	**104-4273**	1	CLAMP	
	6	1	**107-4029**	1	BRACKET-PIVOT	
	7	1	**104-4272**	1	BOOT	
	8	1	**116-6253**	1	NUT	
	9	1	**107-4043**	1	PLATE	
	10	1	**116-6254**	1	NUT-JAM	
Y	11	1	**112-7106**	1	VALVE GP-PILOT CARTRIDGE	877
CY	12	1	**224-8604**	2	MAGNET GP-PILOT VALVE	829
	13	1	**107-4061**	2	PLUNGER AS	
	17	1	**107-5012**	1	SCREW-HEX SOCKET	
	18	1	**6E-0755**	1	PIN-PIVOT	
C	19	1	**7S-9930**	1	RING-RETAINING	
	20	1	**107-5011**	2	SCREW-HEX SOCKET	
Y	23	1	**116-3045**	2	VALVE GP-PILOT CARTRIDGE	878
	24	1	**6E-4536**	1	PLATE	
	25	1	**6E-5379**	1	SPRING	

C-CHANGE FROM PREVIOUS TYPE
Y-SEPARATE ILLUSTRATION

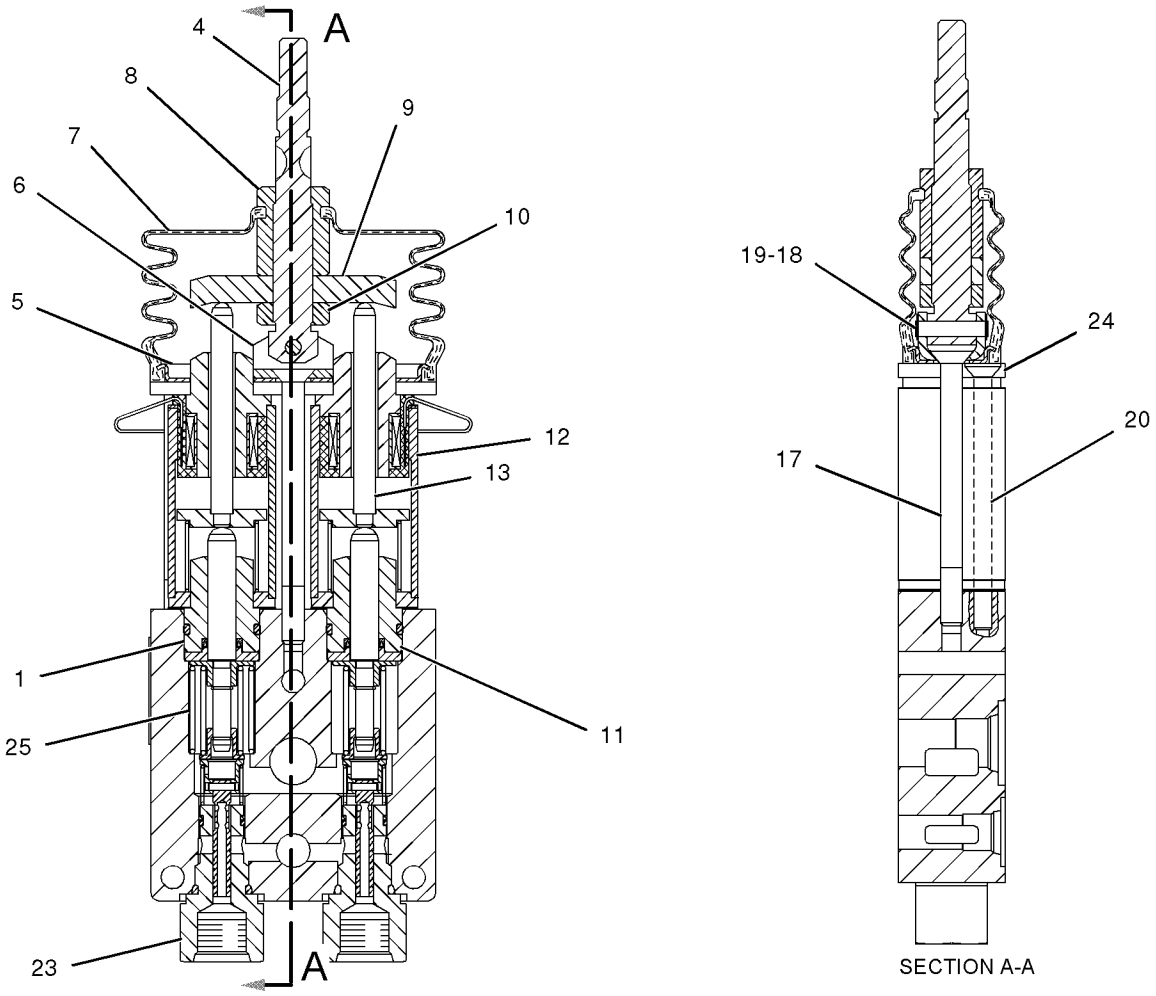

GRAPHIC #1 **<END>** g01026679

HYDRAULIC SYSTEM

112-3628 VALVE GP-PILOT CARTRIDGE

S/N: 4421-UP

PART OF 108-0222 VALVE GP-PILOT

SMCS-5059 **i01125385**

NOTE	REF NO	GRAPHIC REF	PART NUMBER	QTY	PART NAME 1 2 3 4 5 6 (PRODUCT LEVEL)	SEE PAGE
	1	1	**109-4858**	1	PLUNGER	
	2	1	**8H-5505**	1	WASHER-PLATED	
	3	1	**5P-8356**	1	SEAL-O-RING (21.89MM ID)	
	4	1	**6E-3414**	1	SEAL-U-CUP WIPER	
	5	1	**6E-0763**	1	RETAINER	
	6	1	**6E-0766**	2	RING-RETAINING	
	7	1	**107-3846**	1	SEAT-SPRING	
	8	1	**114-1269**	1	SPRING	
	9	1	**6E-0764**	1	SEAT-SPRING	
	10	1	**6E-0761**	1	RETAINER	
	11	1	**109-4859**	1	SPRING	
	12	1	**6E-0759**	1	CAP	
	13	1	**6E-0758**	1	NUT	
					AVAILABLE REPAIR KIT(S):	
			1G-5928	1	KIT-PLUNGER SEAL	

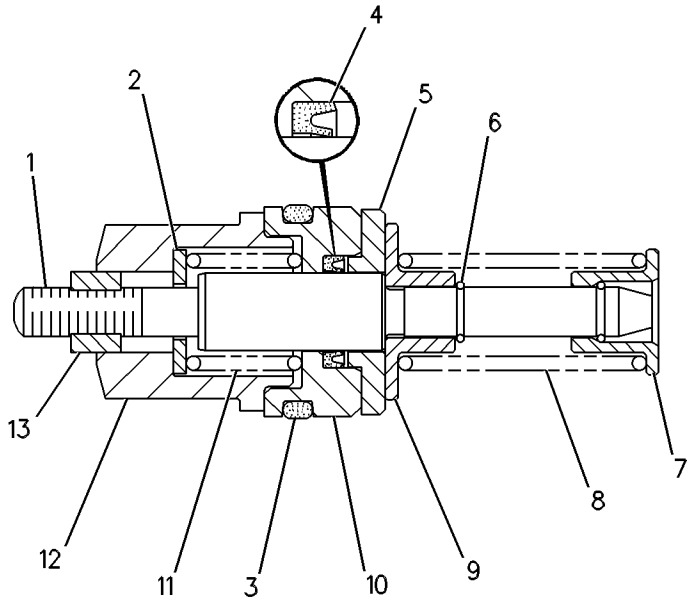

GRAPHIC #1 **<END>** g00121313

HYDRAULIC SYSTEM

112-7106 VALVE GP-PILOT CARTRIDGE

S/N: 4421-UP

PART OF 108-0222 VALVE GP-PILOT

SMCS-5059 **i01125404**

NOTE	REF NO	GRAPHIC REF	PART NUMBER	QTY	PART NAME 1 2 3 4 5 6 (PRODUCT LEVEL)	SEE PAGE
	1	1	**109-4858**	1	PLUNGER	
	2	1	**8H-5505**	1	WASHER-PLATED	
	3	1	**5P-8356**	1	SEAL-O-RING (21.89MM ID)	
	4	1	**6E-3414**	1	SEAL-U-CUP WIPER	
	5	1	**6E-0763**	1	RETAINER	
	6	1	**6E-0766**	2	RING-RETAINING	
	7	1	**107-3846**	1	SEAT-SPRING	
	8	1	**116-6201**	1	SPRING	
	9	1	**6E-0764**	1	SEAT-SPRING	
	10	1	**6E-0761**	1	RETAINER	
	11	1	**109-4859**	1	SPRING	
	12	1	**6E-0759**	1	CAP	
	13	1	**6E-0758**	1	NUT	
					AVAILABLE REPAIR KIT(S):	
			1G-5928	1	KIT-PLUNGER SEAL	

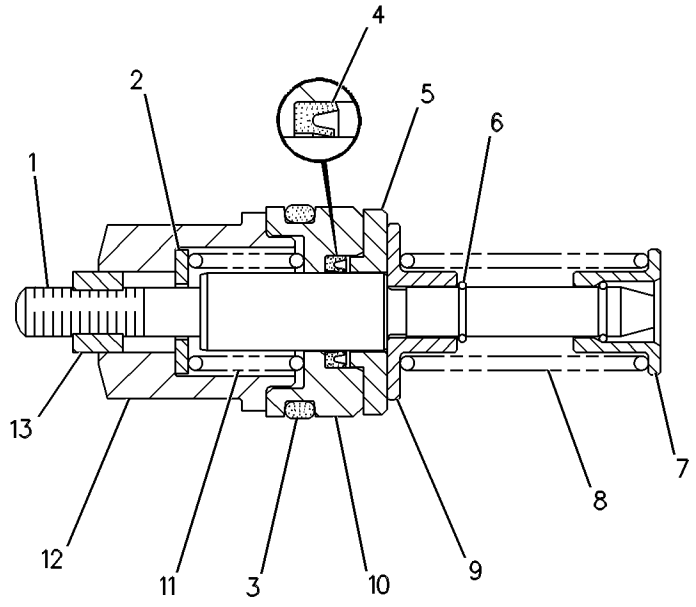

GRAPHIC #1 **<END>** g00121313

HYDRAULIC SYSTEM

116-3045 VALVE GP-PILOT CARTRIDGE

S/N: 4421-UP

PART OF 108-0221, 108-0222 VALVE GP-PILOT

SMCS-5059 **i01125476**

NOTE	REF NO	GRAPHIC REF	PART NUMBER	QTY	PART NAME 1 2 3 4 5 6 (PRODUCT LEVEL)	SEE PAGE
J	1	1	**033-6028**	1	SEAL-O-RING (16.36MM ID)	
J	2	1	**6V-5758**	1	SEAL-O-RING (12.42MM ID)	
J	3	1	**6E-0770**	1	RING-BACKUP	
	4	1	**6E-3767**	1	SPRING	
	5	1	**116-3044**	1	SEAT-SPRING	
	6	1	**6E-3769**	1	PIN	
					AVAILABLE REPAIR KIT(S):	
J			**1G-5927**	1	KIT-METERING CAP SEAL	
J-KIT MARKED J INCLUDES PART(S) MARKED J						

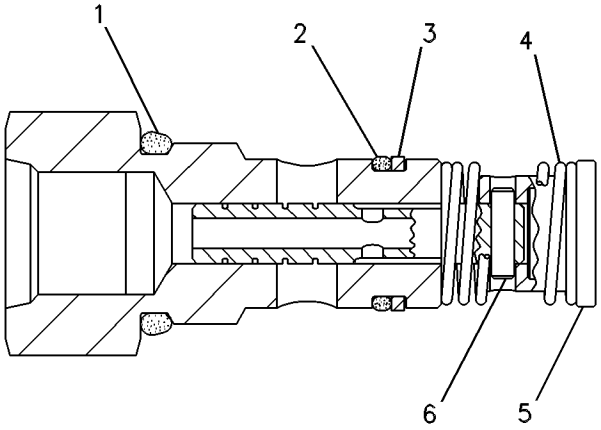

GRAPHIC #1 **<END>** g00120804

116-3101 VALVE GP-PILOT CARTRIDGE

S/N: 4421-UP

PART OF 108-0221 VALVE GP-PILOT

SMCS-5059 **i01099191**

NOTE	REF NO	GRAPHIC REF	PART NUMBER	QTY	PART NAME 1 2 3 4 5 6 (PRODUCT LEVEL)	SEE PAGE
	1	1	**116-6200**	1	PLUNGER	
J	2	1	**5P-8356**	1	SEAL-O-RING (21.89MM ID)	
	3	1	**6E-0763**	1	RETAINER	
	4	1	**6E-0766**	2	RING-RETAINING	
	5	1	**107-3846**	1	SEAT-SPRING	
	6	1	**116-6201**	1	SPRING	
	7	1	**6E-0764**	1	SEAT-SPRING	
J	8	1	**6E-3414**	1	SEAL-U-CUP WIPER	
	9	1	**6E-4521**	1	CAP	
					AVAILABLE REPAIR KIT(S):	
J			**1G-5928**	1	KIT-PLUNGER SEAL	

J-KIT MARKED J INCLUDES PART(S) MARKED J

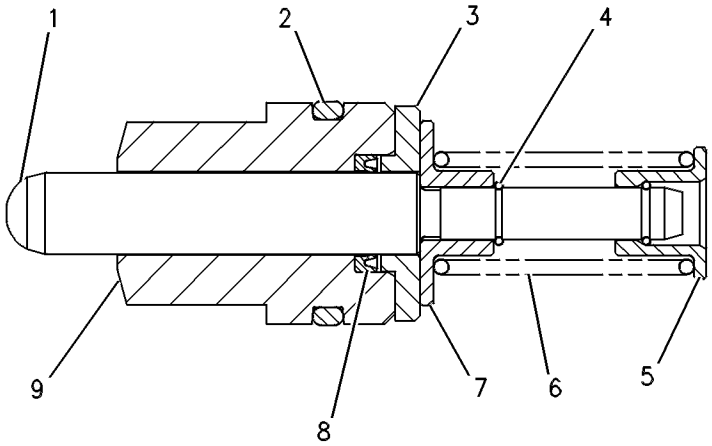

GRAPHIC #1 **<END>** g00120270

253-3425 VALVE GP-PUMP CONTROL—PRESSURE COMPENSATOR—IMPLEMENT

S/N: 4421-UP

PART OF 272-2348 VALVE GP-PUMP CONTROL

SMCS-5455 **i02148629**

NOTE	REF NO	GRAPHIC REF	PART NUMBER	QTY	PART NAME 1 2 3 4 5 6 (PRODUCT LEVEL)	SEE PAGE
	1	1	**6V-3922**	1	SEAL-O-RING	
	2	1	**117-5899**	1	PLUG	
	3	1	**204-1455**	1	LOCK	
	4	1	**117-7524**	1	SETSCREW	
	5	1	**6E-3861**	2	RETAINER-SPRING	
	6	1	**117-7522**	1	SPRING	

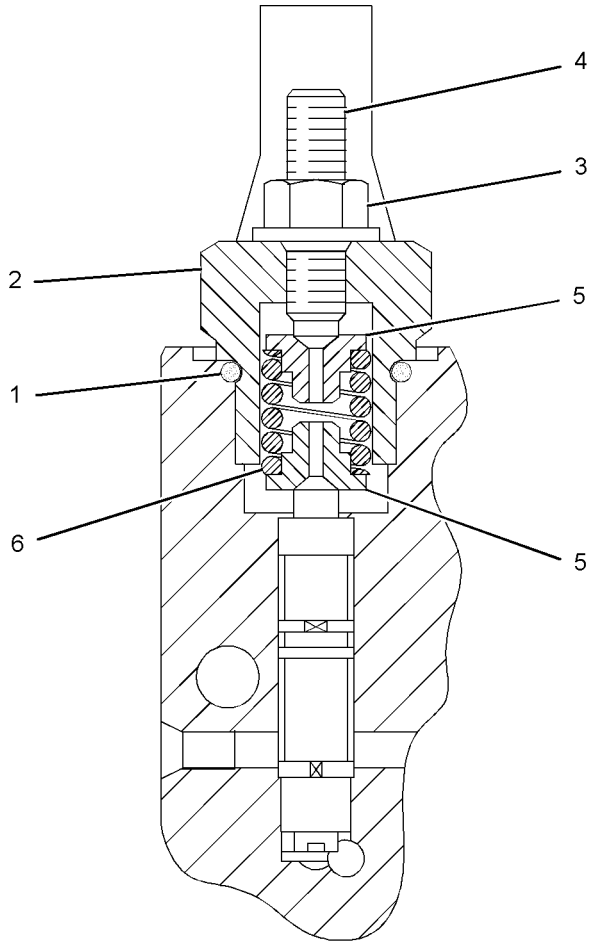

GRAPHIC #1 **<END>** g01090074

272-2348 VALVE GP-PUMP CONTROL–
PRESSURE, FLOW COMPENSATOR–IMPLEMENT
S/N: 4421-UP
PART OF 245-8893 PUMP GP-PISTON

SMCS-5455 **i02334717**

NOTE	REF NO	GRAPHIC REF	PART NUMBER	QTY	PART NAME 1 2 3 4 5 6 (PRODUCT LEVEL)	SEE PAGE
Y	1	1	**253-3425**	1	VALVE GP-PUMP CONTROL (PRESSURE COMPENSATOR)	880
Y	2	1	**272-2360**	1	VALVE GP-PUMP CONTROL (PRESSURE COMPENSATOR)	882
J	3	1	**120-4394**	5	PLUG-BREAK OFF	
	4	1	**5P-5874**	3	SEAL-O-RING	
	5	1	**6E-5412**	1	SEAL-O-RING	
M	6	1	**3E-8025**	5	BOLT-SOCKET HEAD (M8X1.25X50-MM)	

J-ONE DOUBLE ENDED BREAK OFF PLUG YIELDS 2 USABLE PLUGS
M-METRIC PART
Y-SEPARATE ILLUSTRATION

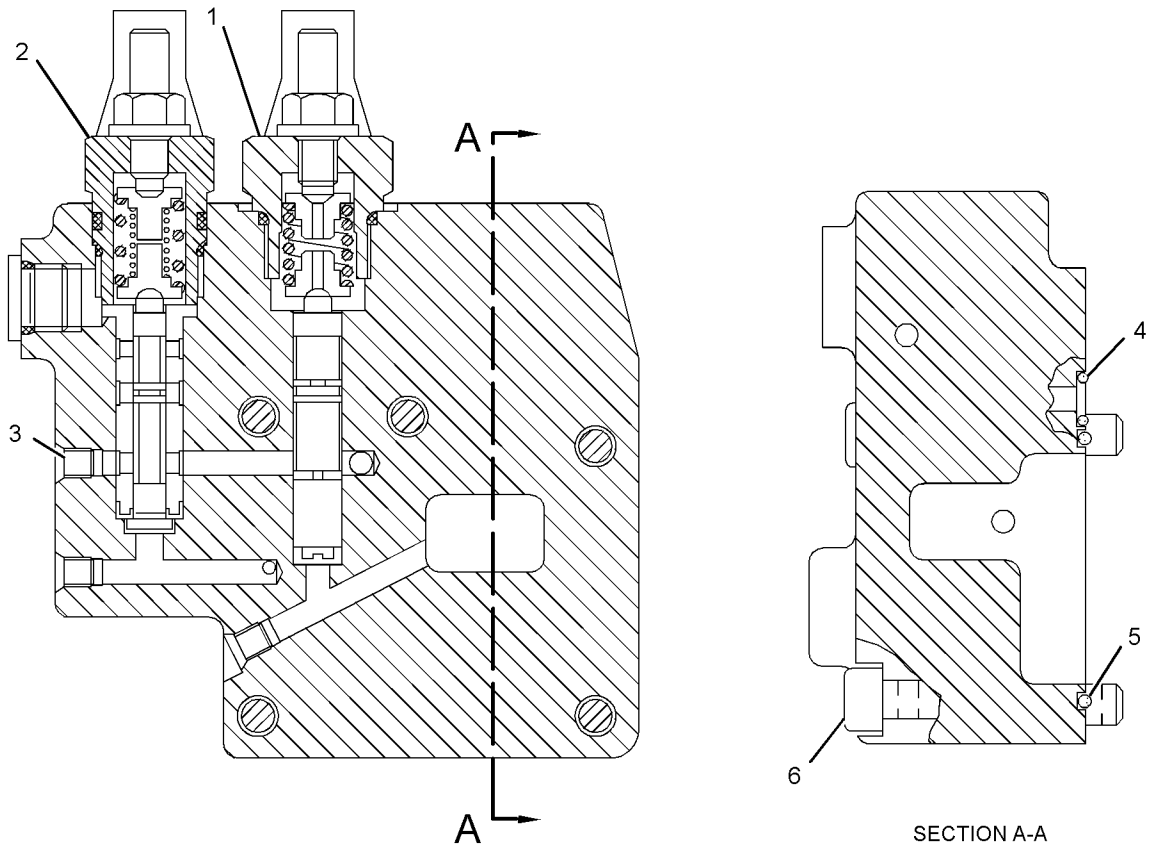

SECTION A-A

GRAPHIC #1 **<END>** g01191104

272-2360 VALVE GP-PUMP CONTROL–PRESSURE COMPENSATOR–IMPLEMENT

S/N: 4421-UP

PART OF 272-2348 VALVE GP-PUMP CONTROL

SMCS-5455 **i02334732**

NOTE	REF NO	GRAPHIC REF	PART NUMBER	QTY	PART NAME 1 2 3 4 5 6 (PRODUCT LEVEL)	SEE PAGE
	1	1	**6V-3922**	1	SEAL-O-RING	
	2	1	**165-9383**	1	SPRING (OUTER)	
	3	1	**117-5899**	1	PLUG	
	4	1	**6E-5583**	1	SETSCREW	
	5	1	**6E-3852**	2	RETAINER-SPRING	
	6	1	**204-1455**	1	LOCK	
	7	1	**6E-3855**	1	SPRING (INNER)	

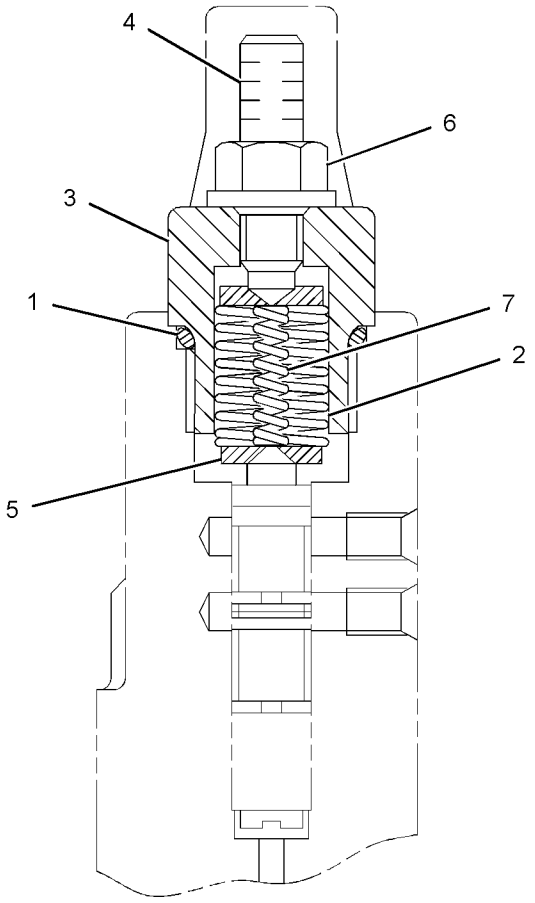

GRAPHIC #1 **<END>** g01166442

9T-9197 VALVE GP-RELIEF–LINE

S/N: 4421-UP

PART OF 241-4821 VALVE GP-MAIN CONTROL

SMCS-5069, 5117 **i01886344**

NOTE	REF NO	GRAPHIC REF	PART NUMBER	QTY	PART NAME 1 2 3 4 5 6 (PRODUCT LEVEL)	SEE PAGE
	1	1	**8J-0323**	1	SEAT	
	2	1	**3J-1907**	1	SEAL-O-RING	
	3	1	**8J-0331**	1	VALVE	
	4	1	**8J-0322**	1	SPRING	
B	5	1	**5J-6153**	5	SHIM (0.193-MM THK)	
B	6	1	**6J-8696**	5	SHIM (1.22-MM THK)	
	7	1	**9T-0356**	1	VALVE GP	

B-USE AS REQUIRED

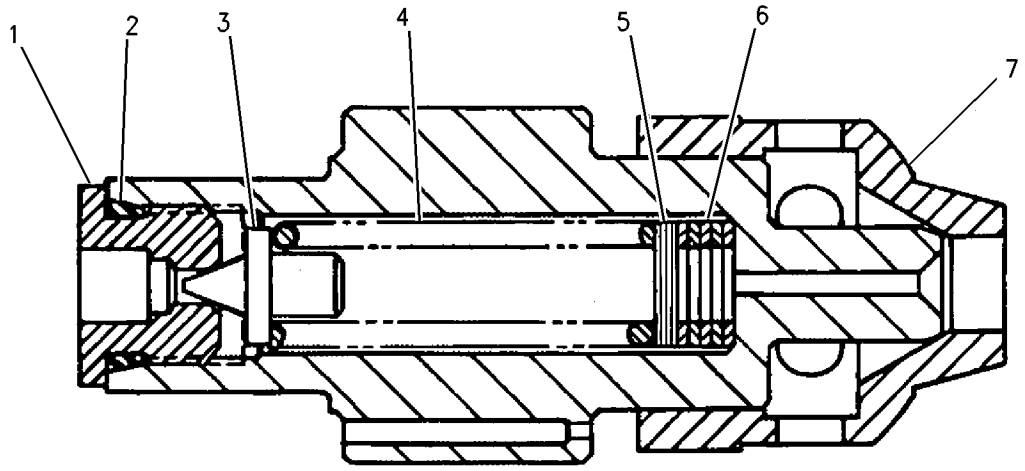

GRAPHIC #1 **<END>** g00674852

HYDRAULIC SYSTEM

142-4281 VALVE GP-RELIEF–LINE

S/N: 4421-UP

PART OF 241-4821 VALVE GP-MAIN CONTROL

SMCS-5069, 5117 **i01886365**

NOTE	REF NO	GRAPHIC REF	PART NUMBER	QTY	PART NAME 1 2 3 4 5 6 (PRODUCT LEVEL)	SEE PAGE
	1	1	**8J-0323**	1	SEAT	
	2	1	**3J-1907**	1	SEAL-O-RING	
	3	1	**8J-0331**	1	VALVE	
	4	1	**142-4286**	1	SPRING	
B	5	1	**5J-6153**	2	SHIM (0.193-MM THK)	
B	6	1	**6J-8696**	5	SHIM (1.22-MM THK)	
	7	1	**9T-0356**	1	VALVE GP	
B	8	1	**4T-6073**	2	SHIM (0.13-MM THK)	

B-USE AS REQUIRED

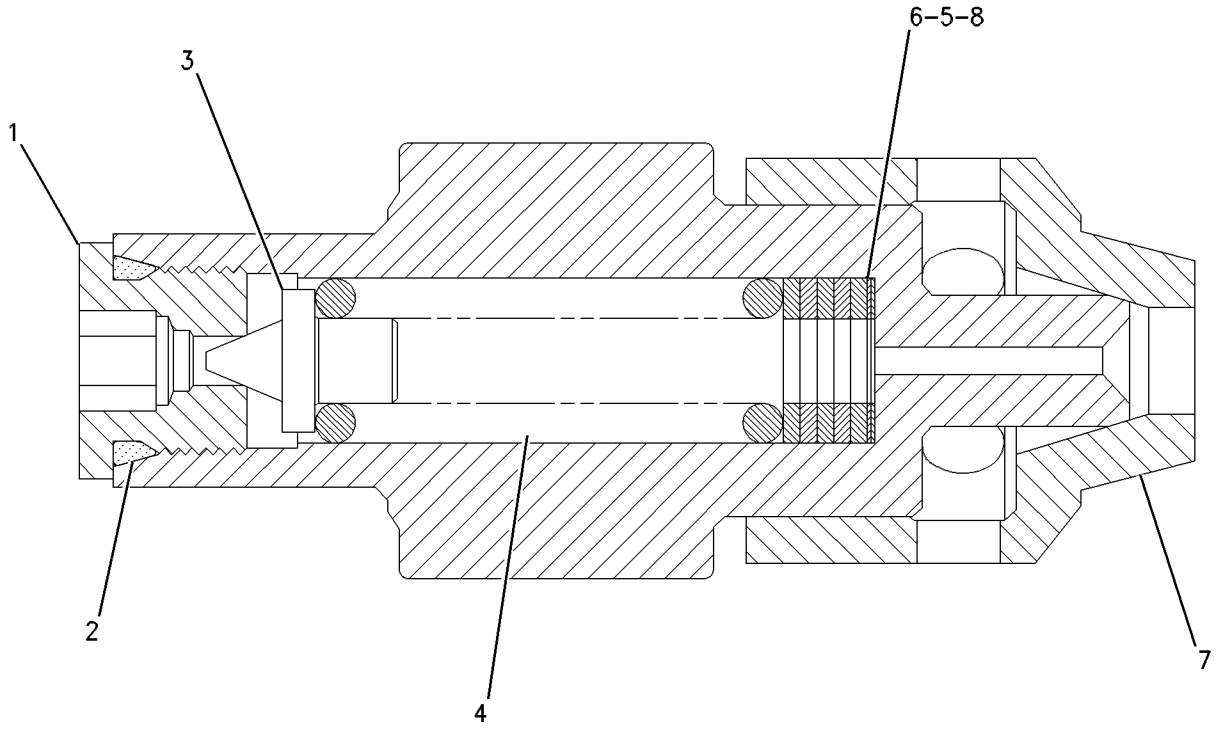

GRAPHIC #1 **<END>** g00291813

143-8912 VALVE GP-RELIEF–MAIN

S/N: 4421-UP

PART OF 247-2973 VALVE GP-CHECK & RELIEF

SMCS-5069, 5117 **i02169308**

NOTE	REF NO	GRAPHIC REF	PART NUMBER	QTY	PART NAME 1 2 3 4 5 6 (PRODUCT LEVEL)	SEE PAGE
	1	1	**7M-8485**	2	SEAL-O-RING	
	2	1	**4J-0522**	1	SEAL-O-RING	
	3	1	**142-4286**	1	SPRING	
	4	1	**3K-0360**	1	SEAL-O-RING	
	5	1	**4Y-5812**	1	PLATE	
	6	1	**6E-5510**	1	RETAINER AS	
	7	1	**9X-6395**	1	NUT (3/4-16-THD)	
	8	1	**6E-1127**	1	CAP	
	9	1	**8J-0331**	1	VALVE	
	10	1	**6E-6138**	1	VALVE GP-RELIEF (MAIN)	
		1	**8H-3532**	1	SPRING-VALVE	
	11	1	**099-3047**	2	DOWEL	

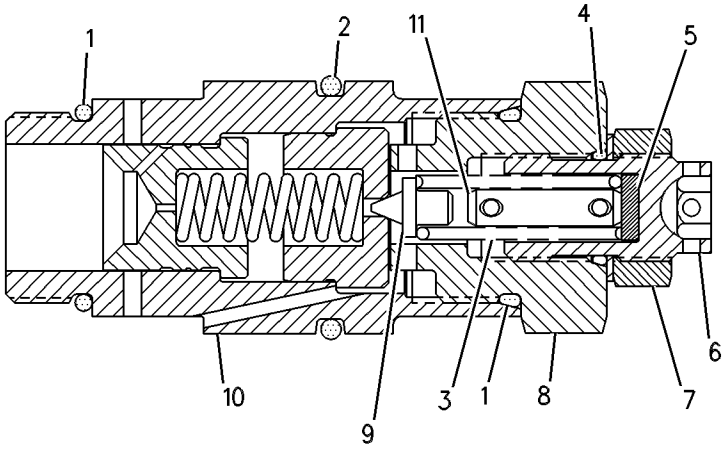

GRAPHIC #1 **<END>** g00272348

HYDRAULIC SYSTEM

245-4788 VALVE GP-RELIEF–PILOT

S/N: 4421-UP

PART OF 244-7245 LINES GP-PILOT

SMCS-5069, 5117 **i02148601**

NOTE	REF NO	GRAPHIC REF	PART NUMBER	QTY	PART NAME 1 2 3 4 5 6 (PRODUCT LEVEL)	SEE PAGE
Y	1	1	*245-4789*	1	VALVE GP-RELIEF (PILOT)	887
	2	1	**245-6754**	1	BODY	

Y-SEPARATE ILLUSTRATION

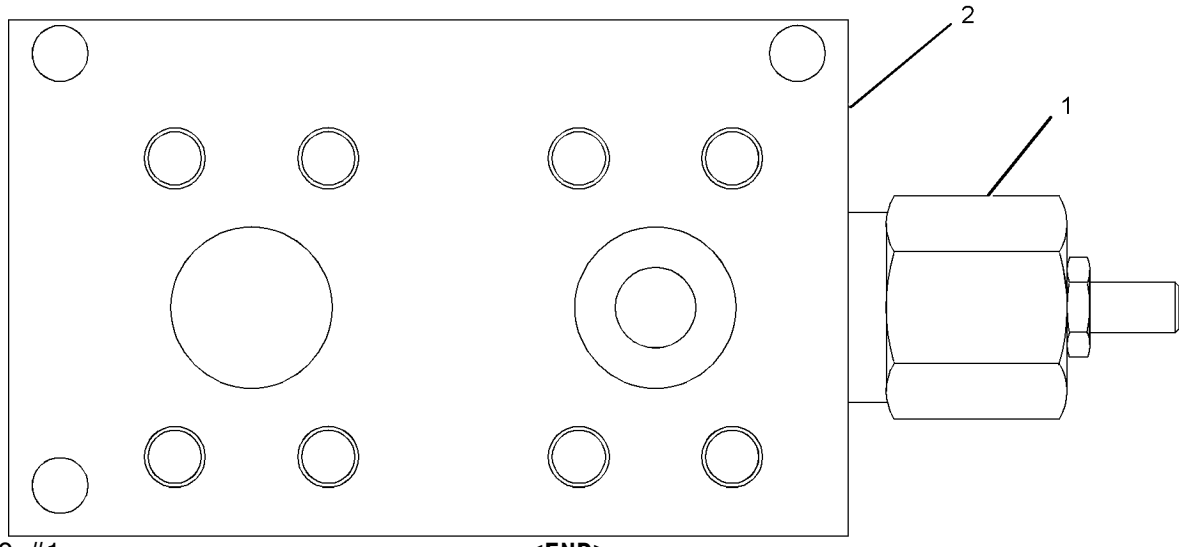

GRAPHIC #1 **<END>** g01094184

245-4789 VALVE GP-RELIEF–PILOT

S/N: 4421-UP

PART OF 245-4788 VALVE GP-RELIEF

SMCS-5069, 5117 **i02333507**

NOTE	REF NO	GRAPHIC REF	PART NUMBER	QTY	PART NAME 1 2 3 4 5 6 (PRODUCT LEVEL)	SEE PAGE
					AVAILABLE REPAIR KIT(S):	
			239-6336	1	KIT-SEAL	

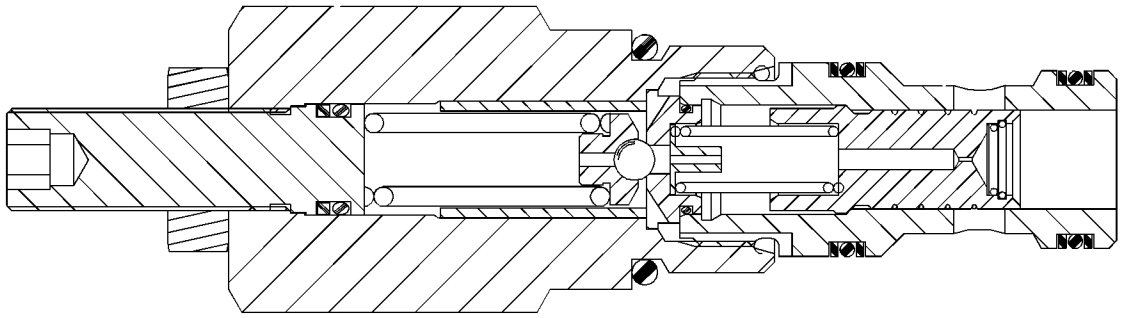

GRAPHIC #1 **<END>** g01164705

245-4891 VALVE GP-RELIEF–HYDRAULIC OIL COOLER BYPASS

S/N: 4421-UP

PART OF 244-7285 LINES GP-HYDRAULIC OIL COOLER

SMCS-5069, 5117 **i02148608**

NOTE	REF NO	GRAPHIC REF	PART NUMBER	QTY	PART NAME 1 2 3 4 5 6 (PRODUCT LEVEL)	SEE PAGE
	1	1	**5T-7628**	1	SPACER	
	2	1	**9T-7826**	1	SPRING	
M	3	1	**8T-6466**	4	BOLT (M10X1.5X60-MM)	
	4	1	**245-4890**	1	BODY	
M	5	1	**8T-0342**	1	BOLT-SOCKET HEAD (M10X1.5X80-MM)	
	6	1	**5F-8000**	1	SEAL-O-RING	
	7	1	**6E-4475**	1	COVER	

M-METRIC PART

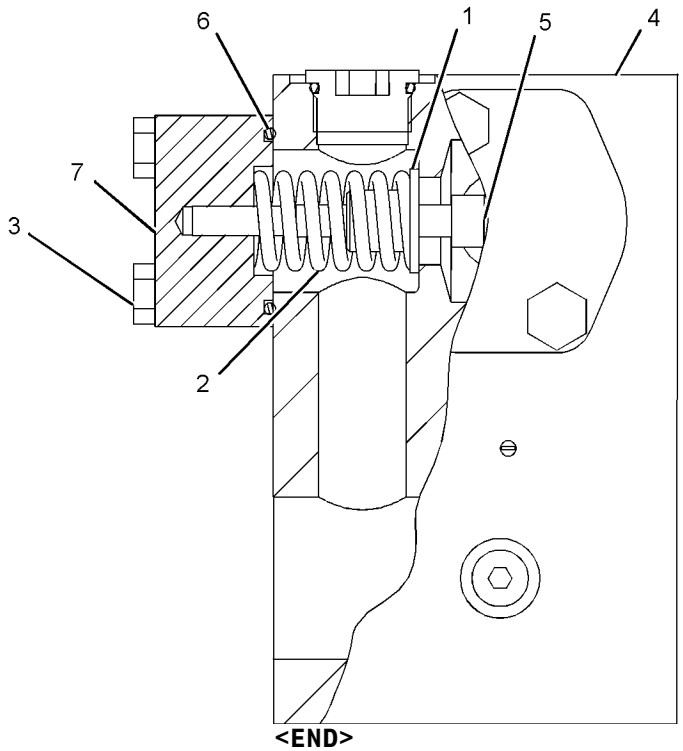

GRAPHIC #1 **<END>** g01093320

248-0020 VALVE GP-RELIEF–LINE

S/N: 4421-UP

PART OF 241-4821 VALVE GP-MAIN CONTROL

SMCS-5069, 5117 **i02148617**

NOTE	REF NO	GRAPHIC REF	PART NUMBER	QTY	PART NAME 1 2 3 4 5 6 (PRODUCT LEVEL)	SEE PAGE
	1	1	**8J-0331**	1	VALVE	
	2	1	**142-4286**	1	SPRING	
	3	1	**3J-1907**	1	SEAL-O-RING	
	4	1	**4T-6073**	2	SHIM (0.13-MM THK)	
	5	1	**5J-6153**	2	SHIM (0.193-MM THK)	
	6	1	**6J-8696**	5	SHIM (1.22-MM THK)	
	7	1	**8J-0323**	1	SEAT	
	8	1	**9T-0356**	1	VALVE GP	

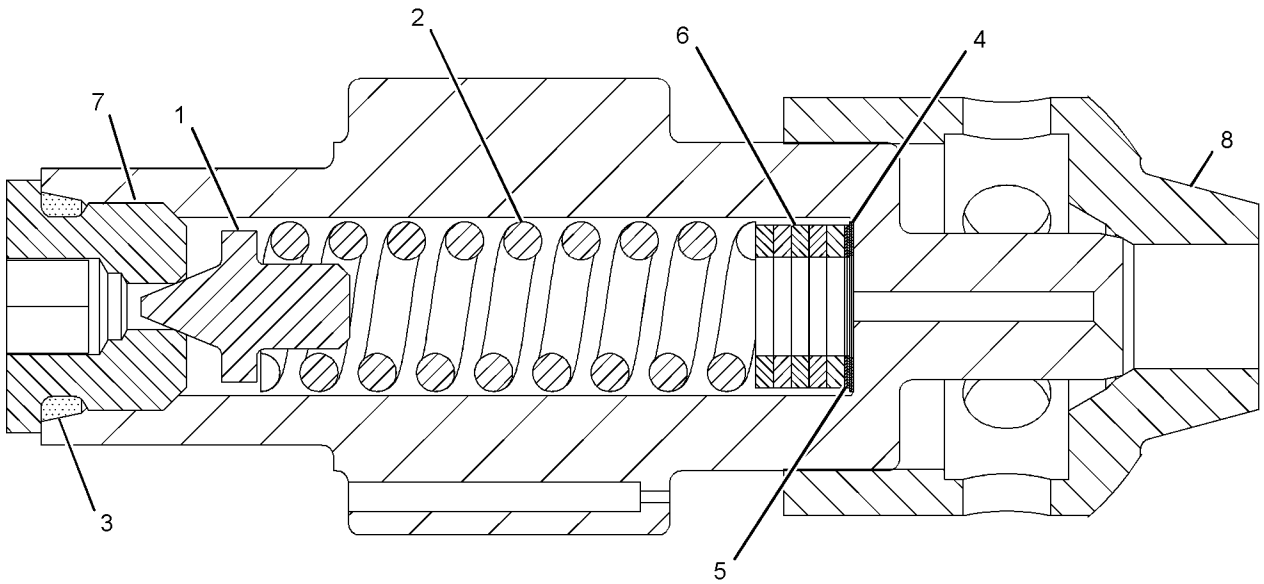

GRAPHIC #1 **<END>** g01093485

HYDRAULIC SYSTEM

264-6867 VALVE GP-RELIEF

S/N: 4421-UP

PART OF 245-0735 LINES GP-HYDRAULIC OIL COOLER

SMCS-5069, 5117 **i02279672**

NOTE	REF NO	GRAPHIC REF	PART NUMBER	QTY	PART NAME 1 2 3 4 5 6 (PRODUCT LEVEL)	SEE PAGE
	1	1	*3R-2437*	2	PLUG AS	
					(EACH INCLUDES)	
		1	**4K-1388**	1	SEAL-O-RING	
		1	**9S-8009**	1	PLUG	
	3	1	**5T-7628**	2	SPACER	
	5	1	**264-6866**	1	BODY	
	6	1	**5F-8000**	2	SEAL-O-RING	
	7	1	**6E-4475**	2	COVER	
	8	1	**6E-4812**	2	SPRING	
M	9	1	**8T-0342**	2	BOLT-SOCKET HEAD (M10X1.5X80-MM)	
M	10	1	**8T-6466**	8	BOLT (M10X1.5X60-MM)	

M-METRIC PART

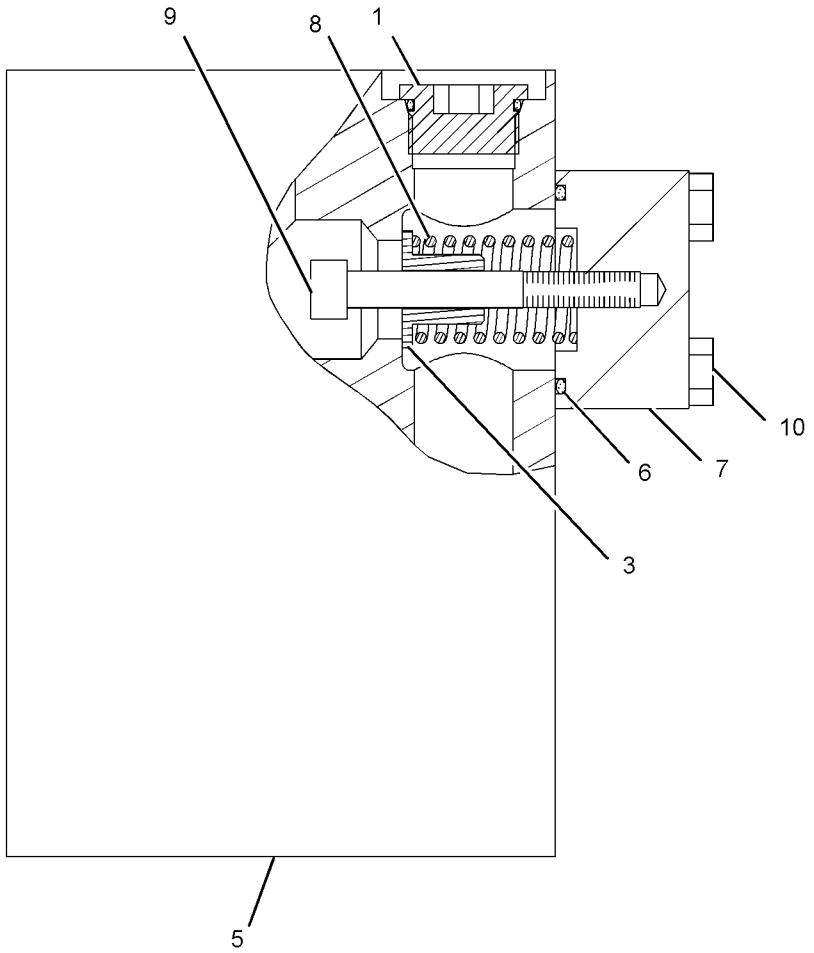

GRAPHIC #1 **<END>** g01145978

HYDRAULIC SYSTEM

140-8243 VALVE GP-SELECTOR–HYDRAULIC

S/N: 4421-UP

PART OF 244-7245 LINES GP-PILOT

SMCS-5065 **i00646193**

NOTE	REF NO	GRAPHIC REF	PART NUMBER	QTY	PART NAME 1 2 3 4 5 6 (PRODUCT LEVEL)	SEE PAGE
	1	1	**8J-2645**	1	BODY-VALVE SELECTOR	
	2	1	**139-9324**	1	STEM	
	3	1	**6E-3184**	2	PLUG	
	4	1	**9J-5490**	2	SPRING	
	5	1	**7M-8485**	2	SEAL-O-RING	

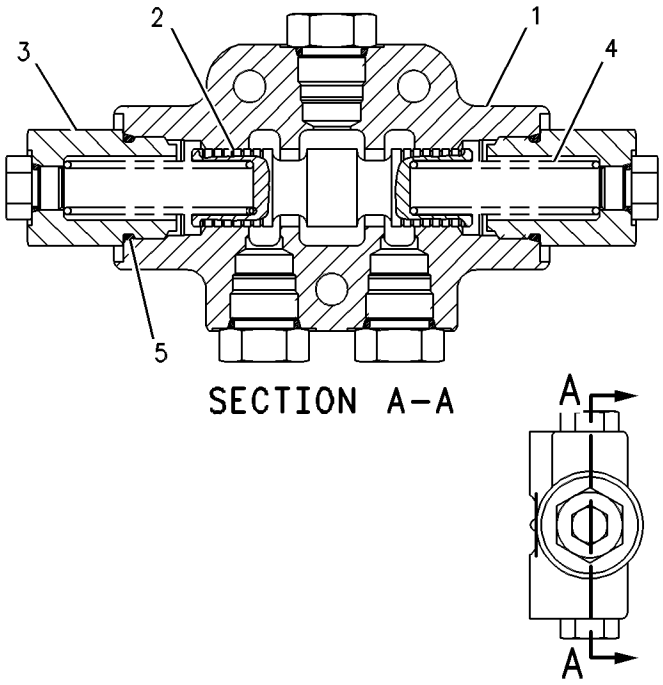

GRAPHIC #1 **<END>** g00288231

119-5988 VALVE GP-SELECTOR & PRESS CONT–

DEAD ENGINE, LIFT ARM LOWER

S/N: 4421-UP

PART OF 244-7245 LINES GP-PILOT

SMCS-5065, 5117 **i01264616**

NOTE	REF NO	GRAPHIC REF	PART NUMBER	QTY	PART NAME 1 2 3 4 5 6 (PRODUCT LEVEL)	SEE PAGE
B	1	1	**5S-7018**	3	SPACER (7.54X14.15X0.25-MM THK)	
	2	1	**7S-8553**	1	SPRING	
B	3	1	**5S-7001**	2	SPACER (7.54X14.15X0.9-MM THK)	
	4	1	**108-3866**	2	ADAPTER	
	5	1	**2M-9780**	2	SEAL-O-RING	

B-USE AS REQUIRED

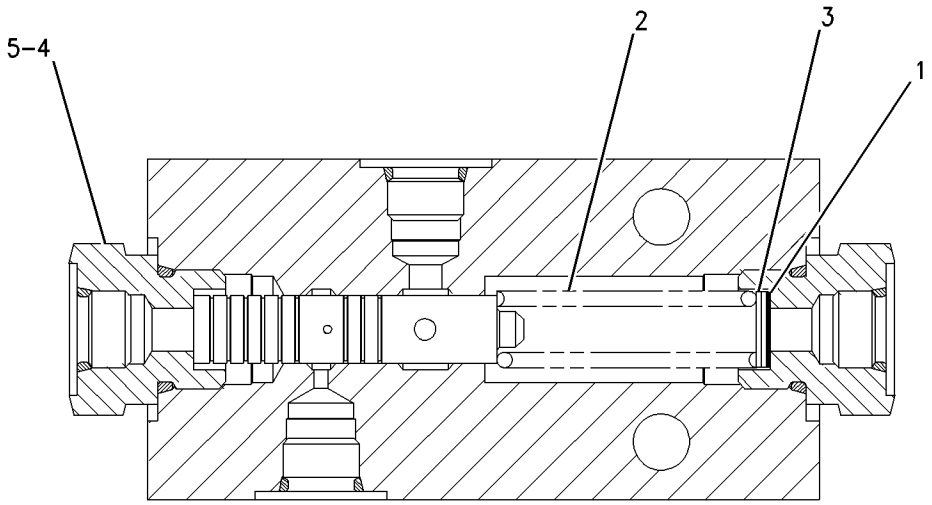

GRAPHIC #1 **<END>** g00672362

147-1223 VALVE GP-SOLENOID–LOAD SENSING SIGNAL

S/N: 4421-UP
24 VOLT
PART OF 244-7245 LINES GP-PILOT

SMCS-5132, 5479 **i01882792**

NOTE	REF NO	GRAPHIC REF	PART NUMBER	QTY	PART NAME 1 2 3 4 5 6 (PRODUCT LEVEL)	SEE PAGE
	1	1	**152-8332**	1	CARTRIDGE AS-VALVE	
	2	1	**189-0189**	1	COIL AS	
		1	**1S-9593**	2	STRAP-CABLE	
		1	**102-8802**	1	KIT-RECEPTACLE (2-PIN)	
					(INCLUDES RECEPTACLE AS & WEDGE)	
		1	**186-3735**	2	PIN-CONNECTOR (16-GA TO 18-GA)	
		1	**3E-3365**	1	WEDGE-RECEPTACLE LOCK (2-PIN)	
	3	1	**111-0343**	1	LOCKNUT (5/16-18-THD)	
	4	1	**8C-9987**	1	WASHER (8.3X28X2.5-MM THK)	
					AVAILABLE REPAIR KIT(S):	
			7T-9766	1	KIT-SEAL (SOLENOID VALVE)	
					(INCLUDES SEALS & RINGS)	

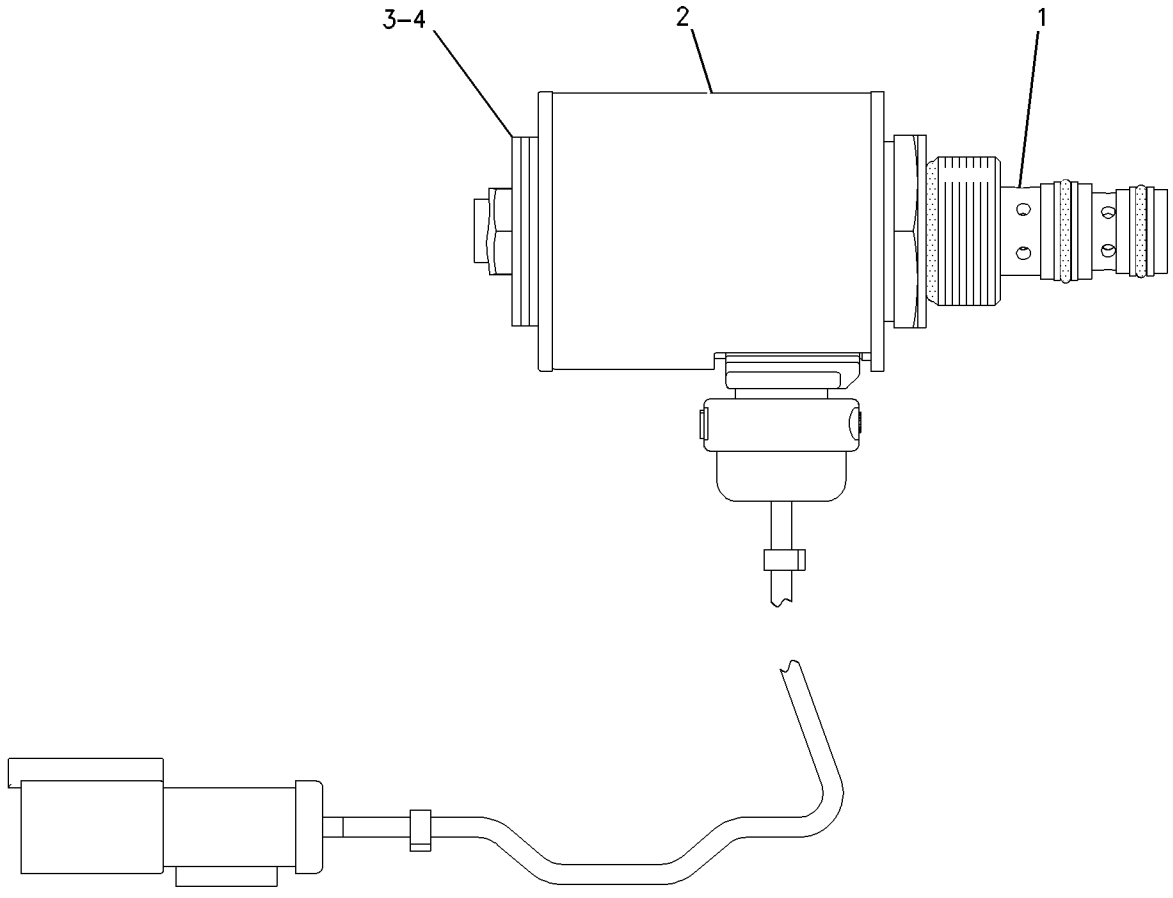

GRAPHIC #1 **<END>** g00836016

152-8385 VALVE GP-SOLENOID—LOWER, RAISE CONTROL

S/N: 4421-UP
24-VOLT DC
PART OF 245-0710 LINES GP-PILOT

SMCS-5132, 5479 **i01882797**

NOTE	REF NO	GRAPHIC REF	PART NUMBER	QTY	PART NAME 1 2 3 4 5 6 (PRODUCT LEVEL)	SEE PAGE
	1	1	**152-8383**	1	CARTRIDGE AS	
	1A	1	**8C-9987**	1	WASHER (8.3X28X2.5-MM THK)	
	1B	1	**111-0343**	1	LOCKNUT (5/16-18-THD)	
	2	1	**189-0189**	1	COIL AS (24 VDC)	
B	2A	1	**1S-9593**	2	STRAP-CABLE	
	2B	1	**102-8802**	1	KIT-RECEPTACLE (2-PIN)	
					(INCLUDES RECEPTACLE AS & WEDGE)	
		1	**3E-3365**	1	WEDGE-RECEPTACLE LOCK (2-PIN)	
		1	**186-3735**	2	PIN-CONNECTOR (16-GA TO 18-GA)	
					AVAILABLE REPAIR KIT(S):	
			8J-9348		KIT-SEAL (SOLENOID VALVE)	
					(INCLUDES SEALS AND O-RINGS)	

B-USE AS REQUIRED

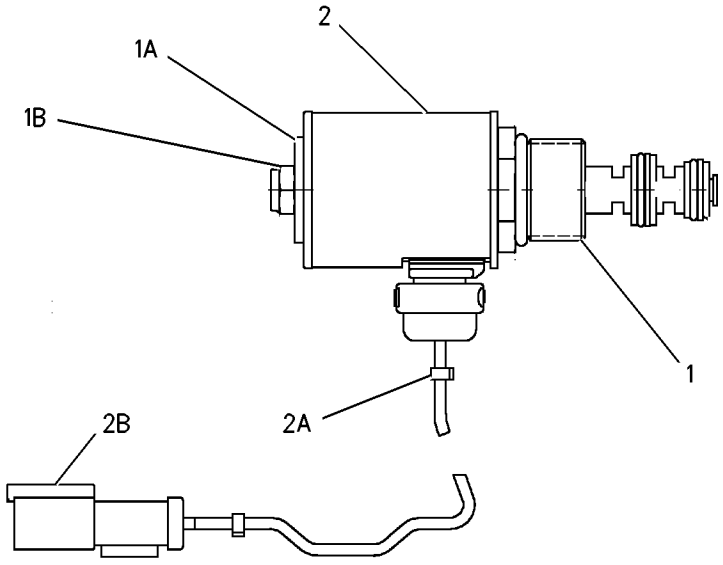

GRAPHIC #1 **<END>** g00837831

HYDRAULIC SYSTEM

246-2275 VESSEL AR

S/N: 4421-UP

AN ATTACHMENT

SMCS-1354, 5505 **i02291677**

NOTE	PART NUMBER	QTY	PART NAME 1 2 3 4 5 6 (PRODUCT LEVEL)	SEE PAGE
Y	*252-4400*	1	TANK GP-AIR (STARTING)	650
	266-4231	1	TANK AR-EXPANSION (AIR)	
	227-5147	2	TANK-EXPANSION (AIR)	

Y-SEPARATE ILLUSTRATION

<END>

246-2285 VESSEL AR

S/N: 4421-UP

AN ATTACHMENT

SMCS-1354, 5505 **i02300966**

NOTE	PART NUMBER	QTY	PART NAME 1 2 3 4 5 6 (PRODUCT LEVEL)	SEE PAGE
Y	*266-4220*	1	TANK GP-AIR (STARTING)	651
	266-4238	1	TANK GP-EXPANSION (AIR)	
	261-6416	2	TANK-EXPANSION (AIR)	

Y-SEPARATE ILLUSTRATION

<END>

245-1550 ARM & BEARING AS—STANDARD LIFT MACHINES

S/N: 4421-UP
PART OF 246-6277 ARM AR-LIFT
AN ATTACHMENT

SMCS-6118, 6119, 7069 **i02289214**

NOTE	REF NO	GRAPHIC REF	PART NUMBER	QTY	PART NAME 1 2 3 4 5 6 (PRODUCT LEVEL)	SEE PAGE
	1	1	**178-6241**	2	BEARING	
	2	1	**245-1557**	2	BEARING-SLEEVE	
	3	1	**2R-1920**	2	BLOCK	
	4	1	**8X-6990**	2	BLOCK	
	5	1	**111-9758**	1	PLATE	
	6	1	**185-0742**	2	GUARD AS	
					(EACH INCLUDES)	
		1	**8T-4121**	18	WASHER-HARD (11X21X2.5-MM THK)	
M		1	**8T-4136**	18	BOLT (M10X1.5X25-MM)	
	7	1	**188-0307**	1	GUARD (LH)	
	8	1	**188-0308**	1	GUARD (RH)	
	9	1	**188-3386**	4	BLOCK	
	10	1	**8Y-3795**	12	BOSS (M10X1.5X39-MM)	
	11	1	**9R-2613**	8	BOSS-WELD (M10X1.5X25-MM OAL)	

M-METRIC PART

245-1550 **ARM & BEARING AS** *(contd.)* **i02289214**

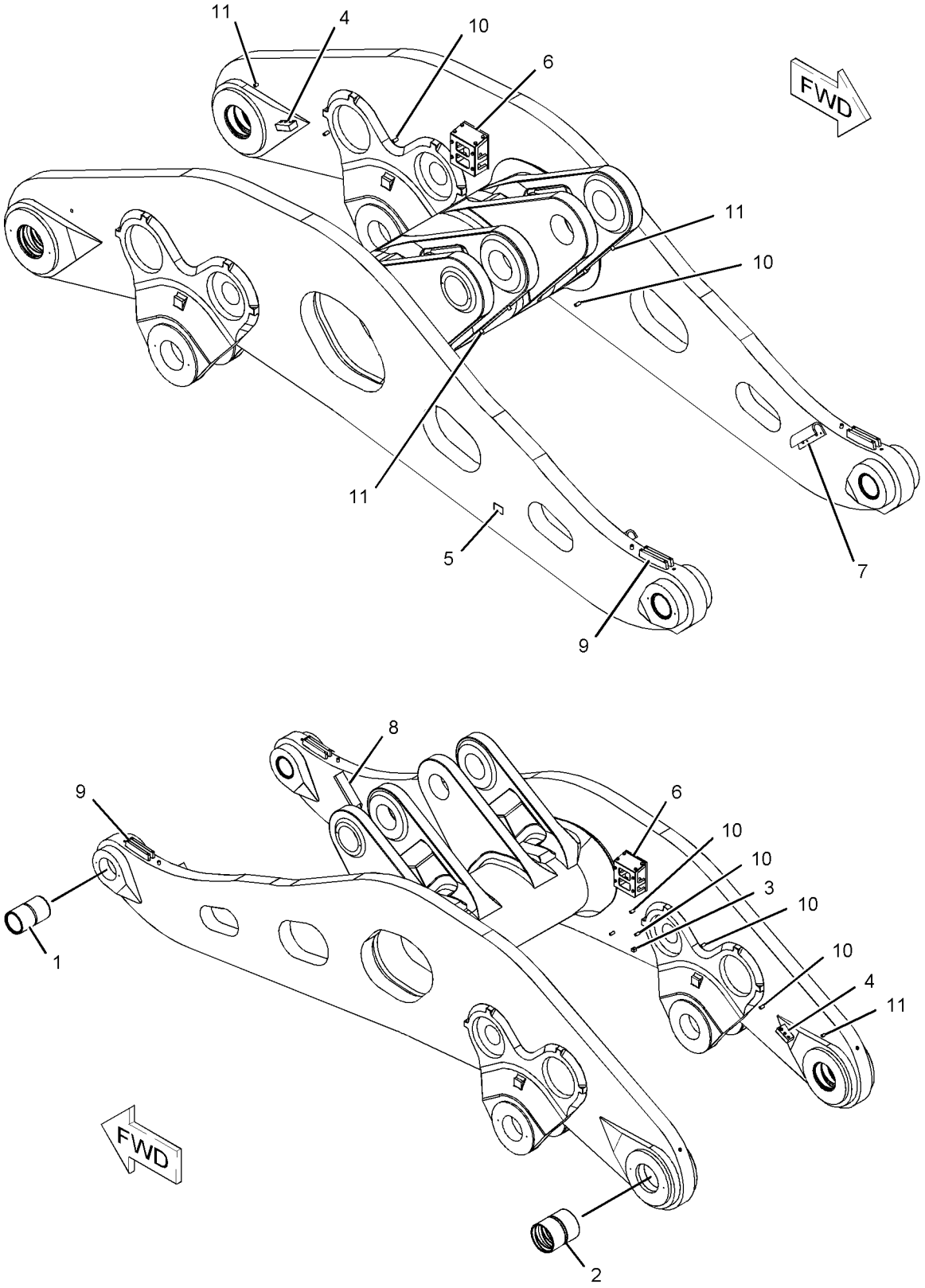

GRAPHIC #1 **<END>** g01146340

245-1560 ARM & BEARING AS—HIGH LIFT MACHINES

S/N: 4421-UP
PART OF 246-6278 ARM AR-LIFT
AN ATTACHMENT

SMCS-6118, 6119, 7069 **i02287962**

NOTE	REF NO	GRAPHIC REF	PART NUMBER	QTY	PART NAME 1 2 3 4 5 6 (PRODUCT LEVEL)	SEE PAGE
	1	1	**178-6241**	2	BEARING	
	2	1	**245-1557**	2	BEARING-SLEEVE	
	3	1	**245-1561**	1	ARM AS-LIFT (HIGH)	
	3A	1	**2R-1920**	2	BLOCK	
Z	3B	1		1	CROSSMEMBER	
	3C	1	**8X-6990**	2	BLOCK	
	3D	1	**8Y-3795**	10	BOSS (M10X1.5X39-MM)	
	3E	1	**9R-2613**	8	BOSS-WELD (M10X1.5X25-MM OAL)	
	3F	1	**9R-2821**	2	BOSS (M10X15-MM)	
	3G	1	**111-9758**	1	PLATE	
	3H	1	**185-0742**	2	GUARD AS	
					(EACH INCLUDES)	
		1	**8T-4121**	18	WASHER-HARD (11X21X2.5-MM THK)	
M		1	**8T-4136**	18	BOLT (M10X1.5X25-MM)	
	3J	1	**188-0314**	1	GUARD	
	3K	1	**188-0315**	1	GUARD	
	3L	1	**188-3386**	4	BLOCK	
	3M	1	**8X-0750**	4	BRACKET	
	3N	1	**245-1554**	4	PLATE	
	3P	1	**245-1555**	4	BOSS	
	3R	1	**245-1556**	4	BOSS	

M-METRIC PART
Z-NOT SERVICED SEPARATELY

245-1560 ARM & BEARING AS *(contd.)* **i02287962**

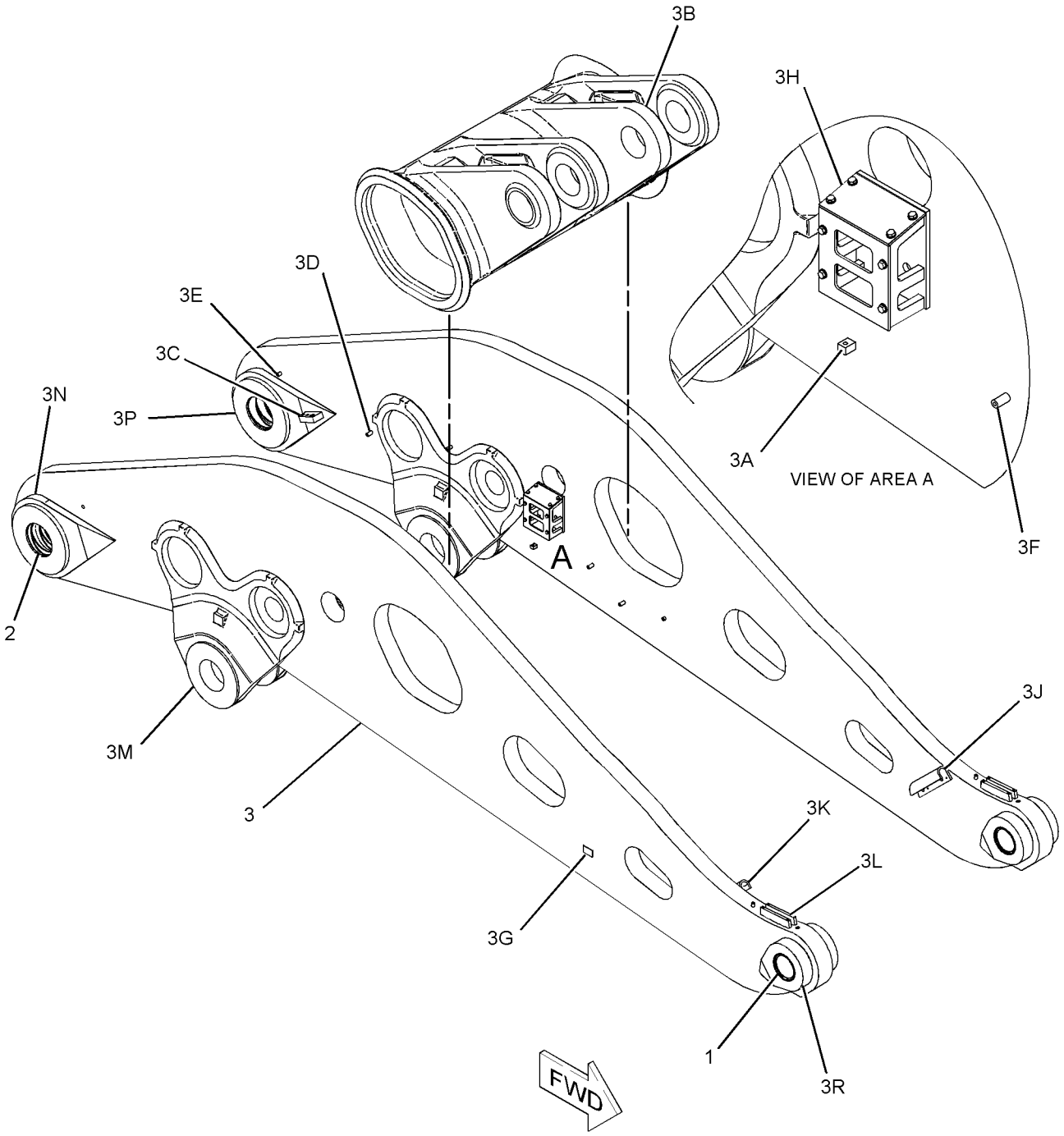

GRAPHIC #1 **<END>** g01095081

245-1570 ARM & BEARING AS—SUPER HIGH LIFT MACHINES

S/N: 4421-UP
PART OF 246-6279 ARM AR-LIFT
AN ATTACHMENT

SMCS-6118, 6119, 7069 **i02154523**

NOTE	REF NO	GRAPHIC REF	PART NUMBER	QTY	PART NAME 1 2 3 4 5 6 (PRODUCT LEVEL)	SEE PAGE
	1	1	**178-6241**	2	BEARING	
	2	1	**245-1557**	2	BEARING-SLEEVE	
	3	1	**245-1571**	1	ARM AS (SUPER HIGH LIFT MACHINES) (SUPER HIGH REACH)	
	3A	1	**2R-1920**	2	BLOCK	
	3B	1	**8X-0746**	1	CROSSMEMBER	
	3C	1	**8X-6990**	2	BLOCK	
	3D	1	**111-9758**	1	PLATE	
	3E	1	**185-0742**	2	GUARD AS	
					(EACH INCLUDES)	
		1	**8T-4121**	18	WASHER-HARD (11X21X2.5-MM THK)	
M		1	**8T-4136**	18	BOLT (M10X1.5X25-MM)	
	3F	1	**188-3386**	4	BLOCK	
	3G	1	**250-4515**	1	GUARD (RH)	
	3H	1	**250-4516**	1	GUARD (LH)	
	3J	1	**8Y-3795**	12	BOSS (M10X1.5X39-MM)	
	3K	1	**9R-2613**	12	BOSS-WELD (M10X1.5X25-MM OAL)	
	3L	1	**8X-0750**	4	BRACKET	
	3M	1	**245-1554**	4	PLATE	
	3N	1	**245-1555**	4	BOSS	
	3P	1	**245-1556**	4	BOSS	

M-METRIC PART

245-1570 ARM & BEARING AS *(contd.)* **i02154523**

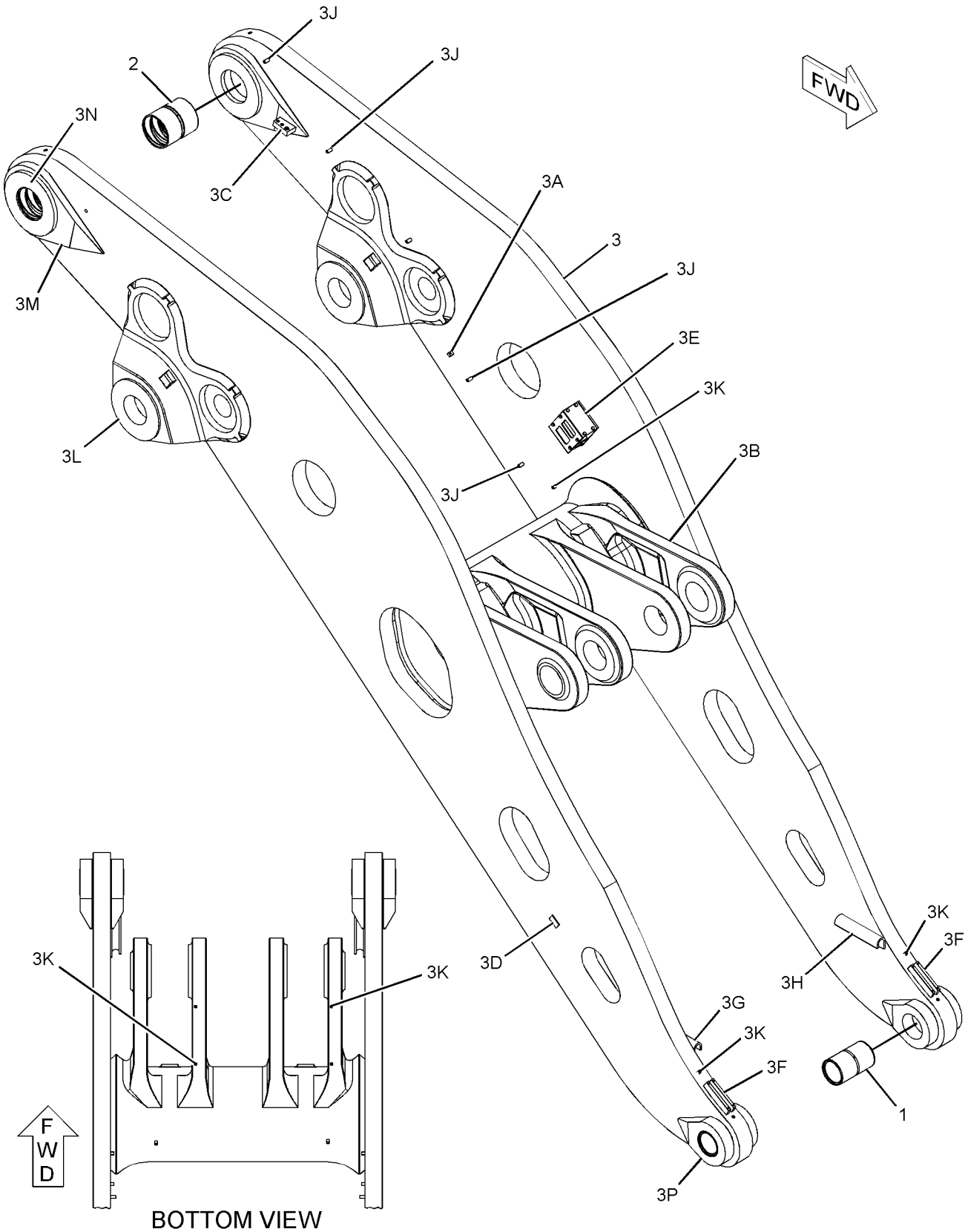

GRAPHIC #1 **<END>** g01096955

IMPLEMENTS

246-6277 ARM AR-LIFT

S/N: 4421-UP
PART OF 245-8805 LIFT AR
AN ATTACHMENT

SMCS-6119 **i02286910**

NOTE	REF NO	GRAPHIC REF	PART NUMBER	QTY	PART NAME 1 2 3 4 5 6 (PRODUCT LEVEL)	SEE PAGE
	1	1	**7X-3229**	8	FILM-INSTRUCTION (LIFT EYE, TIE-DOWN)	
	2	1	**8T-7038**	12	FILM-WARNING (DO NOT LIFT)	
Y	3	1	*207-5272*	1	PIN & SEAL GP-LINKAGE	912
	4	1	**245-1546**	2	LEVER & BEARING AS	
					(EACH INCLUDES)	
M		1	**8T-3851**	3	BOSS-WELD (M10X1.5X17.5-MM)	
		1	**8X-0743**	1	BEARING-SLEEVE	
Y	5	1	**245-1550**	1	ARM & BEARING AS (STANDARD LIFT MACHINES)	896
Y	6	1	*245-1566*	1	LINES GP-AUTOMATIC LUBRICATION (LOADER FRAME)	548
Y	7	1	*245-1567*	1	LINES GP-AUTOMATIC LUBRICATION (LIFT CYLINDER)	552

M-METRIC PART
Y-SEPARATE ILLUSTRATION

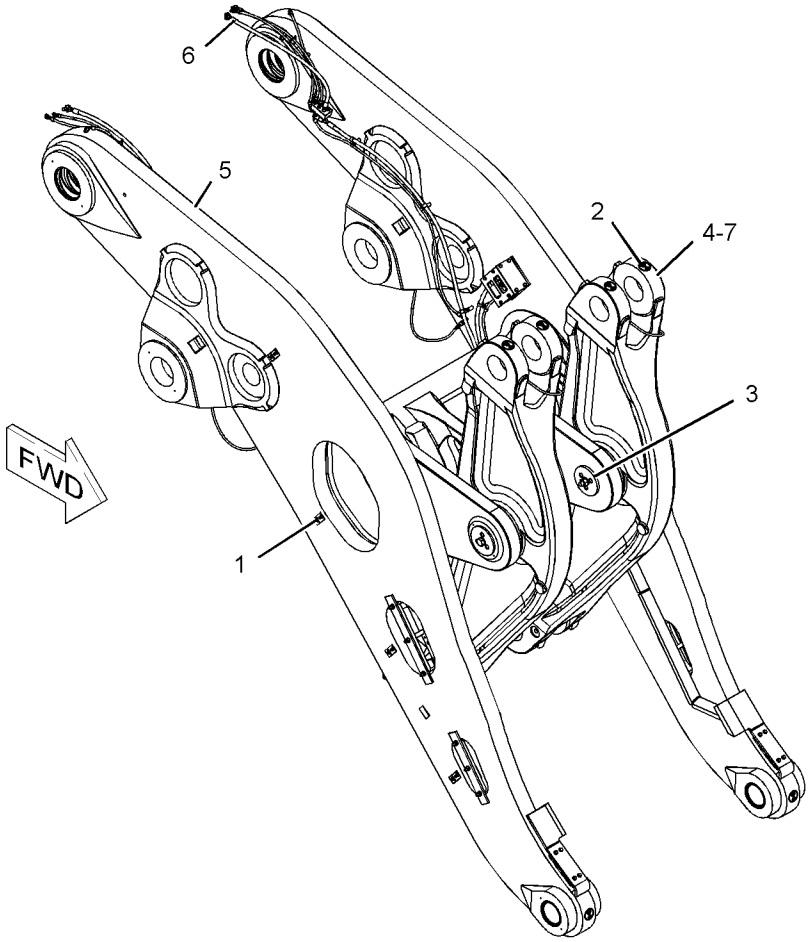

GRAPHIC #1 **<END>** g01145261

246-6278 ARM AR-LIFT—HIGH LIFT MACHINES

S/N: 4421-UP
PART OF 245-8806 LIFT AR
AN ATTACHMENT

SMCS-6119 **i02282514**

NOTE	REF NO	GRAPHIC REF	PART NUMBER	QTY	PART NAME 1 2 3 4 5 6 (PRODUCT LEVEL)	SEE PAGE
	1	1	**7X-3229**	10	FILM-INSTRUCTION (LIFT EYE, TIE-DOWN)	
					ON ARM AND BEARING AS. NEXT TO FRONT SLOTS, NEXT TO CENTER CROSS TUBE OPENING AND NEXT	
					TO HOLE IN LIFT CYLINDER MOUNTING CASTING.	
	2	1	**8T-7038**	12	FILM-WARNING (DO NOT LIFT)	
					ON ARM AND BEARING AS. NEXT TO EACH END TO PIN	
					BORES, NEXT TO LIFT CYLINDER PIN BORES, AND ON EACH END OF TILT BRACKETS NEXT TO PIN BORES.	
Y	3	1	*207-5272*	1	PIN & SEAL GP-LINKAGE	912
	4	1	**245-1546**	2	LEVER & BEARING AS	
					(EACH INCLUDES)	
		1	**8X-0743**	1	BEARING-SLEEVE	
Y	5	1	**245-1560**	1	ARM & BEARING AS (HIGH LIFT MACHINES)	898
Y	6	1	*245-1567*	1	LINES GP-AUTOMATIC LUBRICATION (LIFT CYLINDER)	552
Y	7	1	*245-1568*	1	LINES GP-AUTOMATIC LUBRICATION (TILT CYLINDER)	555

Y-SEPARATE ILLUSTRATION

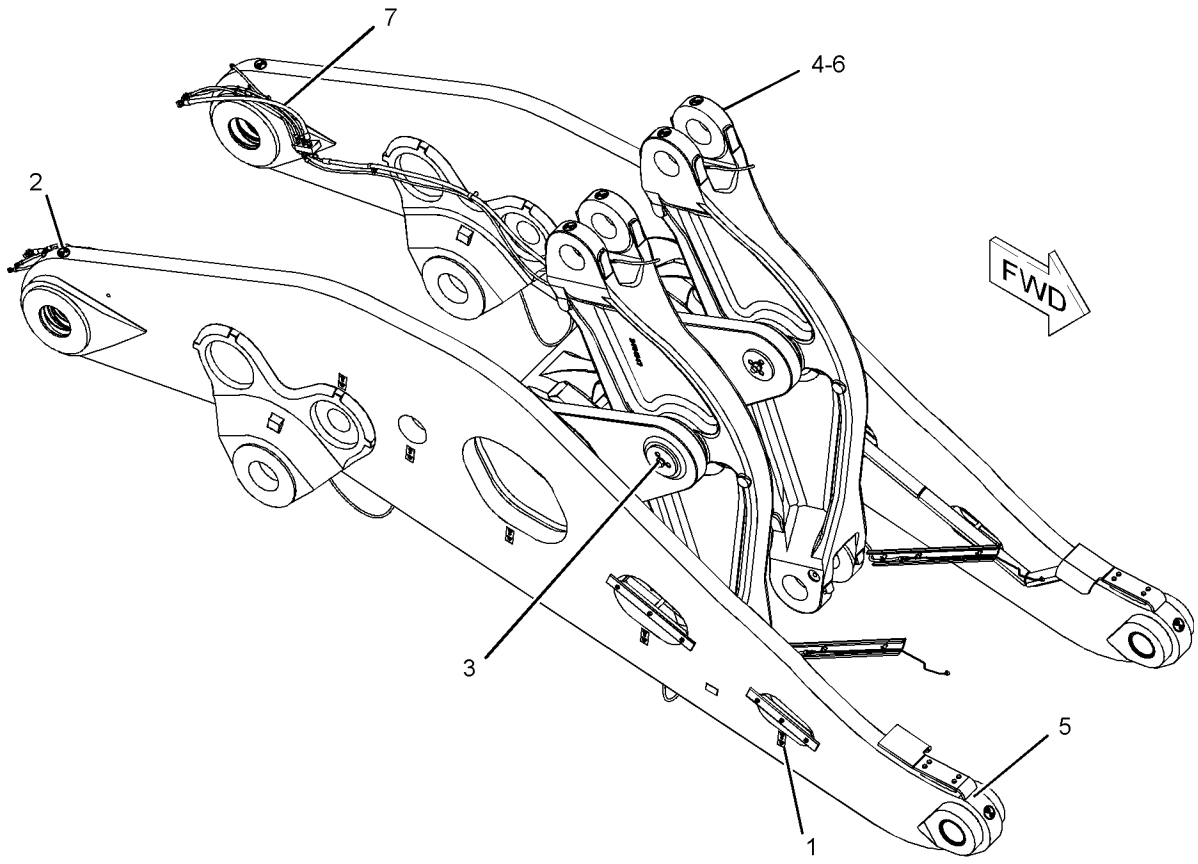

GRAPHIC #1 **<END>** g01093591

IMPLEMENTS

246-6279 ARM AR-LIFT—SUPER HIGH LIFT MACHINES

S/N: 4421-UP
PART OF 245-8807 LIFT AR
AN ATTACHMENT

SMCS-6119 **i02291594**

NOTE	REF NO	GRAPHIC REF	PART NUMBER	QTY	PART NAME 1 2 3 4 5 6 (PRODUCT LEVEL)	SEE PAGE
	1	1	**7X-3229**	10	FILM-INSTRUCTION (LIFT EYE, TIE-DOWN)	
					ON ARM AS - BRG & NEXT TO SLOTS, NEXT TO CENTER CROSS TUBE OPENING AND NEXT TO (2) HOLES IN THE LIFT CYLINDER MOUNTING	
					CASTING.	
	2	1	**8T-7038**	14	FILM-WARNING (DO NOT LIFT)	
					ON ARM AS - BRG & NEXT TO EACH END TO PIN BORES, NEXT TO LIFT CYLINDER PIN BORES, AND ON EACH END OF TILT BRACKETS NEXT	
					TO PIN BORES.	
Y	3	1	*207-5272*	1	PIN & SEAL GP-LINKAGE	912
	4	1	**245-1546**	2	LEVER & BEARING AS	
					(EACH INCLUDES)	
		1	**8X-0743**	1	BEARING-SLEEVE	
Y	5	1	*245-1567*	1	LINES GP-AUTOMATIC LUBRICATION (LIFT CYLINDER)	552
Y	6	1	*245-1569*	1	LINES GP-AUTOMATIC LUBRICATION (LOADER FRAME)	560
Y	7	1	**245-1570**	1	ARM & BEARING AS (SUPER HIGH LIFT MACHINES)	900

Y-SEPARATE ILLUSTRATION

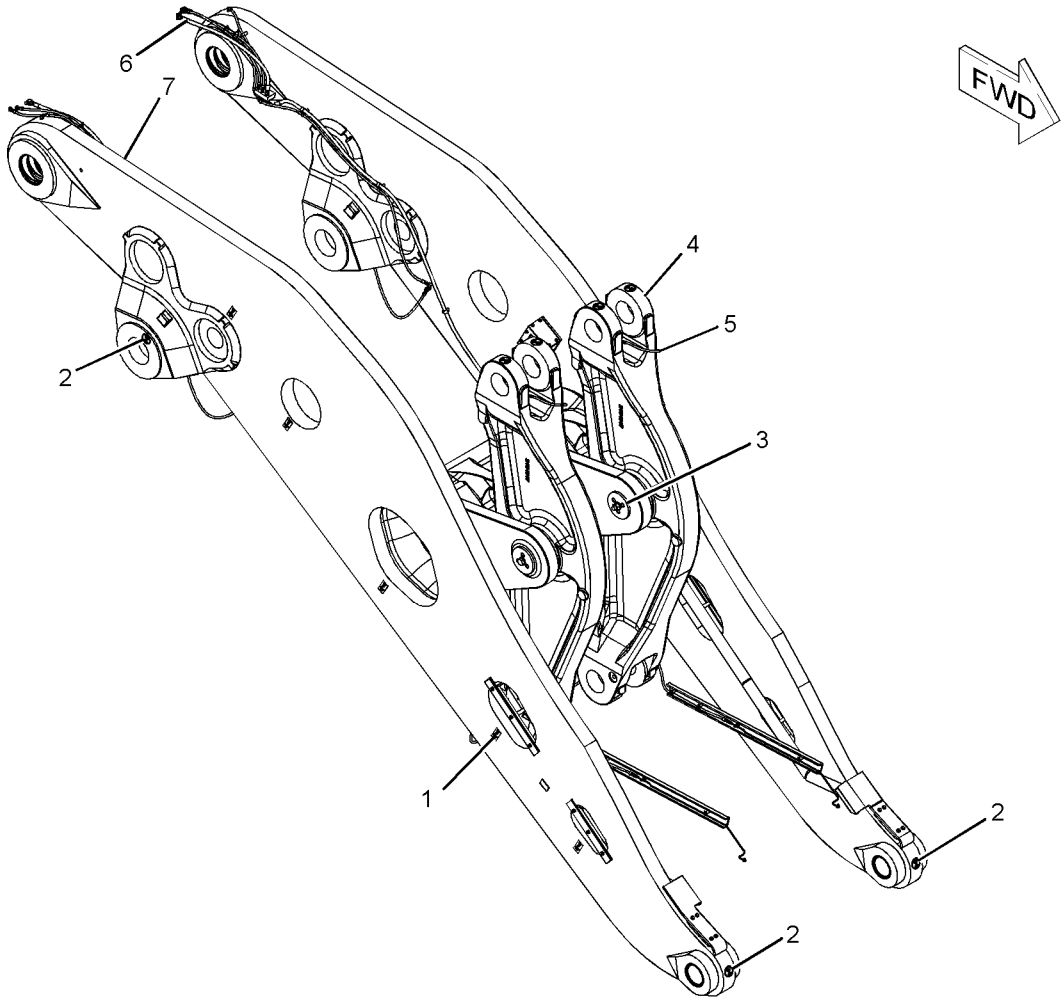

GRAPHIC #1 **<END>** g01093636

245-8805 LIFT AR—STANDARD LIFT MACHINES

S/N: 4421-UP
AN ATTACHMENT

SMCS-6000 **i02288092**

NOTE	PART NUMBER	QTY	PART NAME 1 2 3 4 5 6 (PRODUCT LEVEL)	SEE PAGE
Y	*246-6277*	1	ARM AR-LIFT (STANDARD LIFT MACHINES)	902
Y	*246-6220*	1	BUMPER & DRAWBAR AR	501
Y	*251-3145*	1	CYLINDER AR-LIFT (STANDARD LIFT MACHINES)	747
Y	*251-3146*	1	CYLINDER AR-TILT (STANDARD LIFT MACHINES)	748
Y	*8X-1379*	1	FASTENER GP-DRAWBAR & BUMPER	512
Y	*251-3143*	1	KICKOUT & POSITIONER GP (TILT)	776
Y	*261-7524*	1	LINK GP-BUCKET (STANDARD LIFT MACHINES)	906

Y-SEPARATE ILLUSTRATION

<END>

245-8806 LIFT AR—HIGH LIFT MACHINES

S/N: 4421-UP
AN ATTACHMENT

SMCS-6000 **i02282440**

NOTE	PART NUMBER	QTY	PART NAME 1 2 3 4 5 6 (PRODUCT LEVEL)	SEE PAGE
Y	*246-6278*	1	ARM AR-LIFT (HIGH LIFT MACHINES)	903
Y	*246-6220*	1	BUMPER & DRAWBAR AR	501
Y	*251-3148*	1	CYLINDER AR-LIFT (HIGH LIFT MACHINES)	747
Y	*251-3149*	1	CYLINDER AR-TILT (HIGH LIFT MACHINES)	748
Y	*8X-1379*	1	FASTENER GP-DRAWBAR & BUMPER	512
Y	*251-3143*	1	KICKOUT & POSITIONER GP (TILT)	776
Y	*261-7526*	1	LINK GP-BUCKET (HIGH LIFT MACHINES)	908

Y-SEPARATE ILLUSTRATION

<END>

245-8807 LIFT AR—SUPER HIGH LIFT MACHINES

S/N: 4421-UP
AN ATTACHMENT

SMCS-6000 **i02288213**

NOTE	PART NUMBER	QTY	PART NAME 1 2 3 4 5 6 (PRODUCT LEVEL)	SEE PAGE
Y	*246-6279*	1	ARM AR-LIFT (SUPER HIGH LIFT MACHINES)	904
Y	*248-0986*	1	BUMPER & DRAWBAR AR	502
Y	*251-3150*	1	CYLINDER AR-LIFT (SUPER HIGH LIFT MACHINES)	747
Y	*251-3151*	1	CYLINDER AR-TILT (SUPER HIGH LIFT MACHINES)	748
Y	*266-0893*	1	FASTENER GP-DRAWBAR & BUMPER	513
Y	*251-3144*	1	KICKOUT & POSITIONER GP (TILT)	778
Y	*261-7528*	1	LINK GP-BUCKET (SUPER HIGH LIFT MACHINES)	910

Y-SEPARATE ILLUSTRATION

<END>

261-7524 LINK GP-BUCKET—STANDARD LIFT MACHINES

S/N: 4421-UP
PART OF 245-8805 LIFT AR
AN ATTACHMENT

SMCS-6513 **i02291134**

NOTE	REF NO	GRAPHIC REF	PART NUMBER	QTY	PART NAME 1 2 3 4 5 6 (PRODUCT LEVEL)	SEE PAGE
	1	1	**245-1544**	2	LINK & BEARING AS (STANDARD LIFT MACHINES)	
					(EACH INCLUDES)	
		1	**1V-7038**	2	BEARING-SLEEVE	
Y	2	1	*261-7525*	1	LINES GP-LUBRICATION (BUCKET LINKS)	576

Y-SEPARATE ILLUSTRATION

261-7524 **LINK GP-BUCKET** *(contd.)* **i02291134**

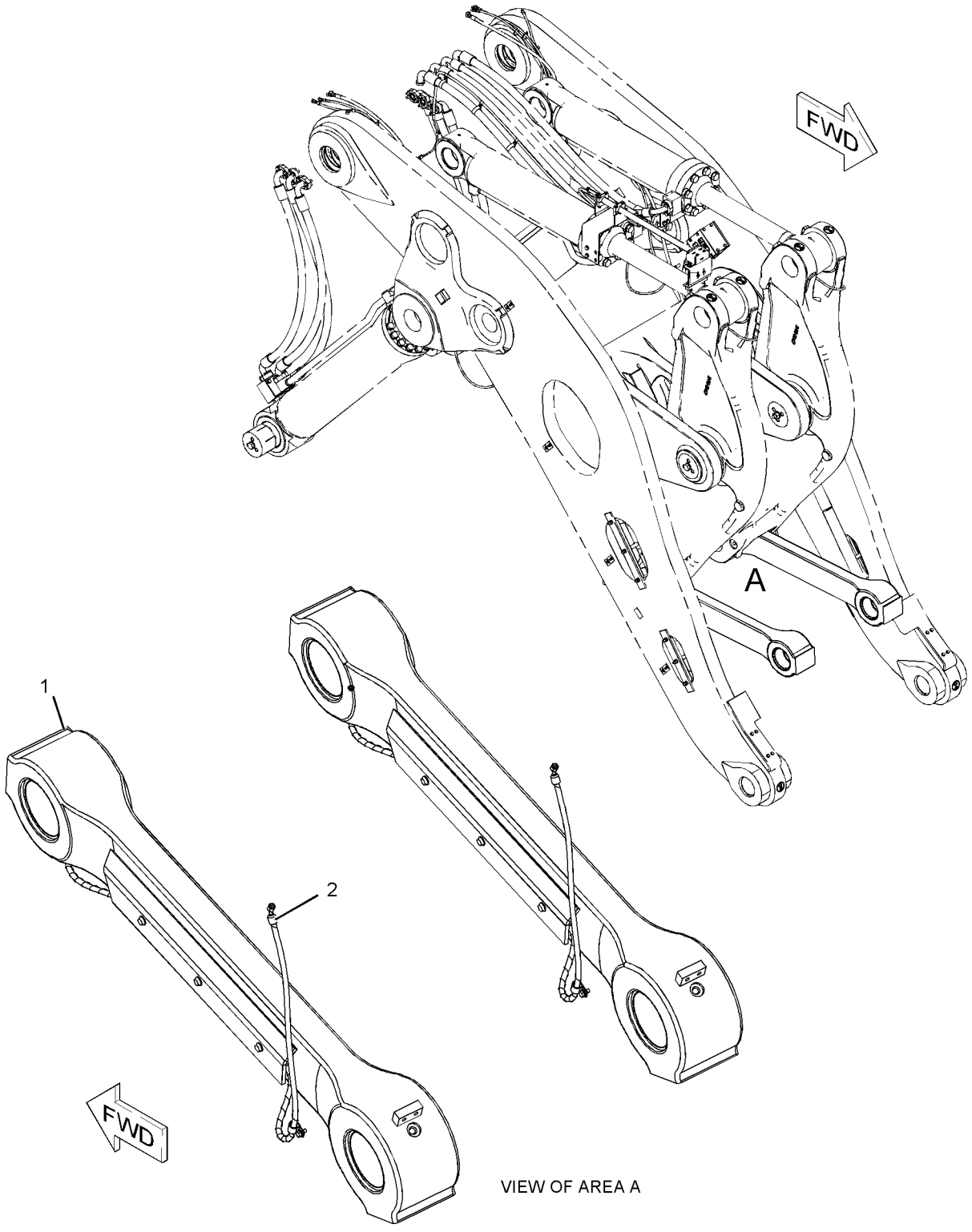

VIEW OF AREA A

GRAPHIC #1 **<END>** g01147187

261-7526 LINK GP-BUCKET—HIGH LIFT MACHINES

S/N: 4421-UP
PART OF 245-8806 LIFT AR
AN ATTACHMENT

SMCS-6513 **i02312803**

NOTE	REF NO	GRAPHIC REF	PART NUMBER	QTY	PART NAME 1 2 3 4 5 6 (PRODUCT LEVEL)	SEE PAGE
	1	1	**245-1548**	2	LINK & BEARING AS (HIGH LIFT MACHINES)	
					(EACH INCLUDES)	
		1	**1V-7038**	2	BEARING-SLEEVE	
		1	**8X-7415**	1	PLATE	
Y	2	1	*261-7527*	1	LINES GP-LUBRICATION (BUCKET LINKS)	577

Y-SEPARATE ILLUSTRATION

261-7526 **LINK GP-BUCKET** *(contd.)* **i02312803**

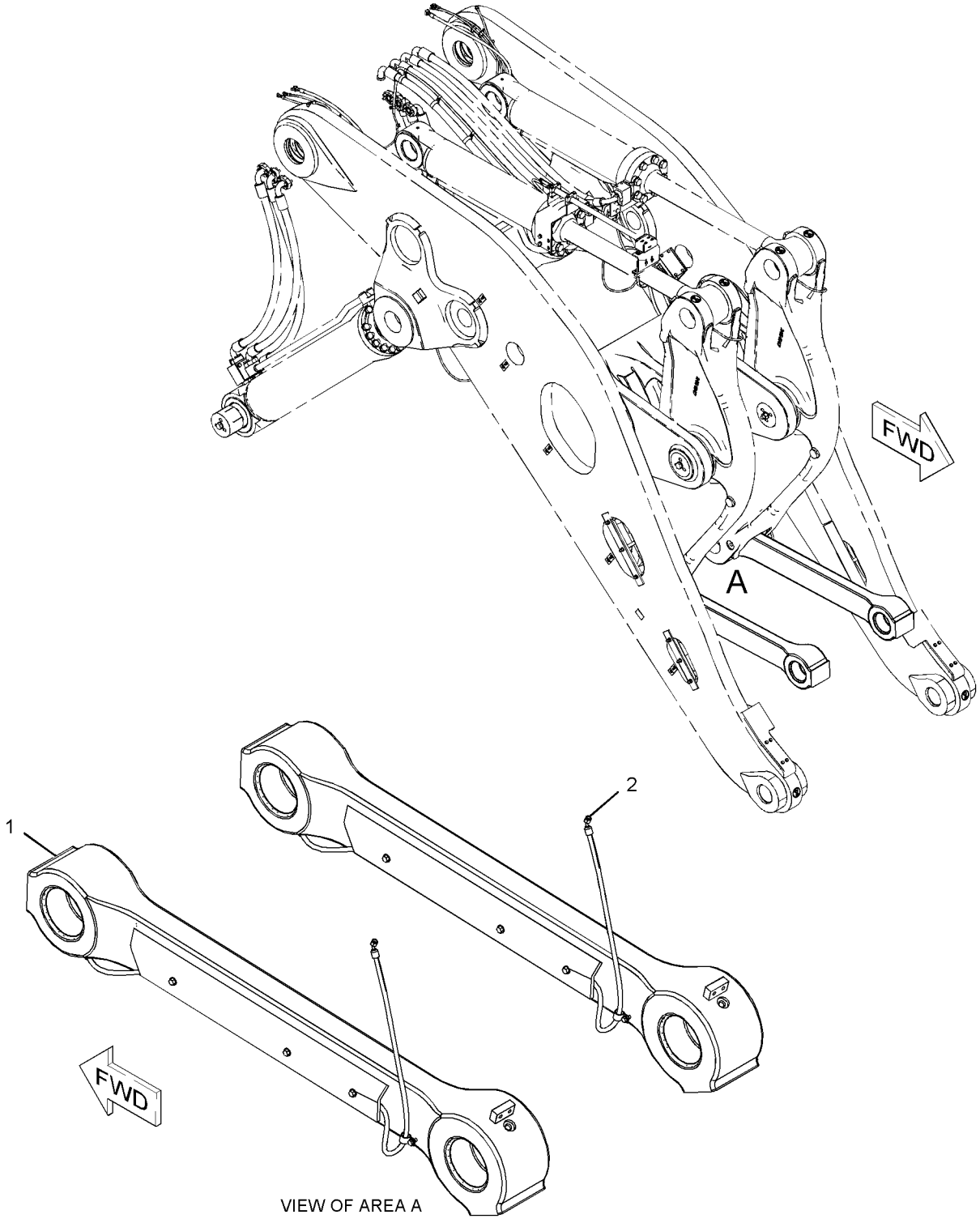

VIEW OF AREA A

GRAPHIC #1 **<END>** g01147091

261-7528 LINK GP-BUCKET—SUPER HIGH LIFT MACHINES

S/N: 4421-UP
PART OF 245-8807 LIFT AR
AN ATTACHMENT

SMCS-6513 **i02312805**

NOTE	REF NO	GRAPHIC REF	PART NUMBER	QTY	PART NAME 1 2 3 4 5 6 (PRODUCT LEVEL)	SEE PAGE
	1	1	**245-1574**	2	LINK & BEARING AS (SUPER HIGH LIFT MACHINES)	
		1	**1V-7038**	2	BEARING-SLEEVE	
Y	2	1	*261-7529*	1	LINES GP-LUBRICATION	578

Y-SEPARATE ILLUSTRATION

261-7528 **LINK GP-BUCKET** *(contd.)* **i02312805**

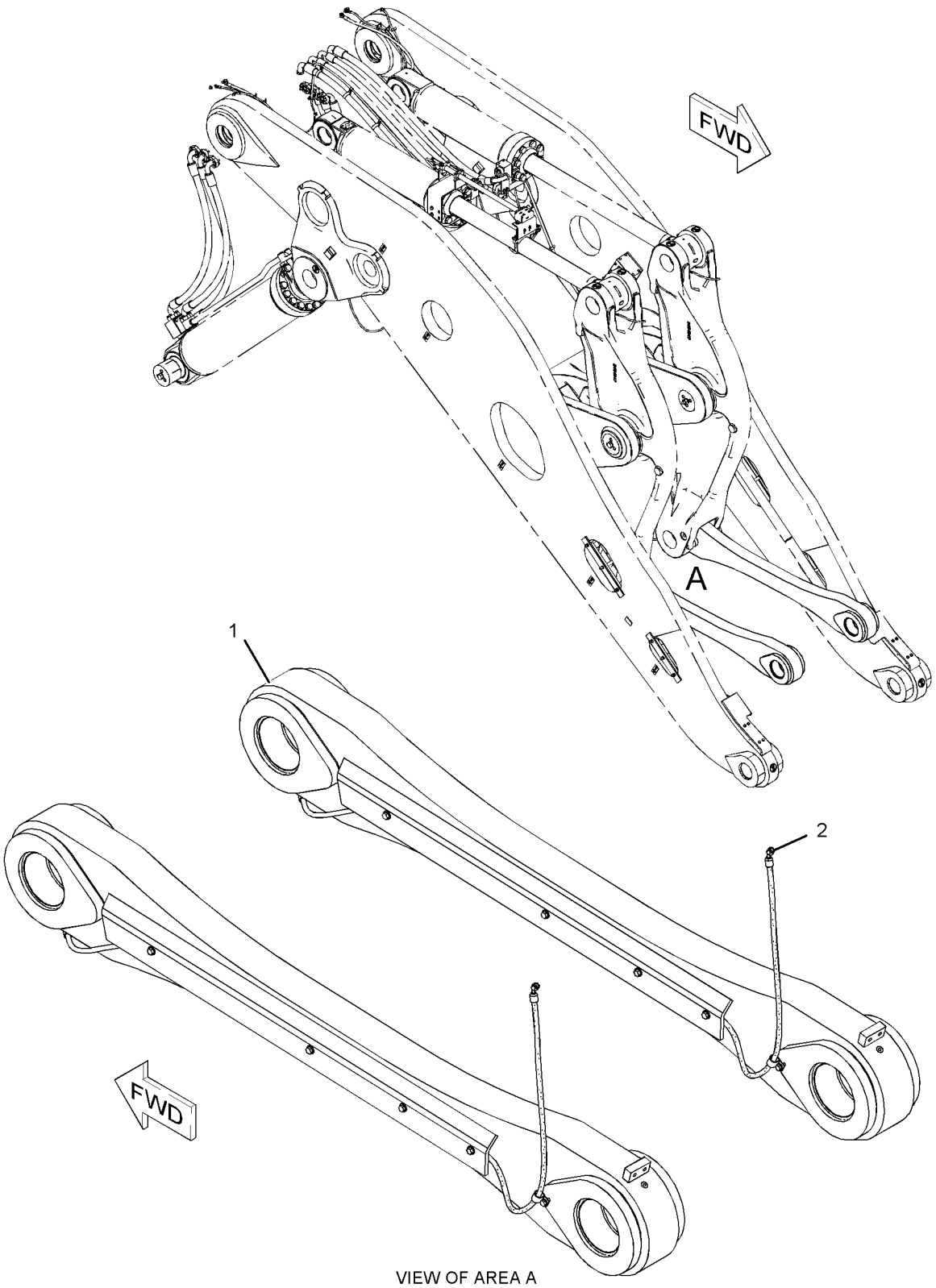

VIEW OF AREA A

GRAPHIC #1 **<END>** g01144337

207-5272 PIN & SEAL GP-LINKAGE

S/N: 4421-UP
PART OF 246-6277, 246-6278, 246-6279 ARM AR-LIFT
AN ATTACHMENT

SMCS-6118 **i01565250**

NOTE	REF NO	GRAPHIC REF	PART NUMBER	QTY	PART NAME 1 2 3 4 5 6 (PRODUCT LEVEL)	SEE PAGE
	1	1	**8X-0659**	2	PIN	
	2	1	**154-7204**	4	COLLET	
M	3	1	**3E-8012**	2	BOLT (M30X3.5X620 MM)	
	4	1	**7X-4786**	4	SEAL-LIP	
M	5	1	**8T-1583**	2	NUT (M30X3.50 THD)	
	6	1	**9X-8399**	4	WASHER (33X56X6MM THK)	

M-METRIC PART

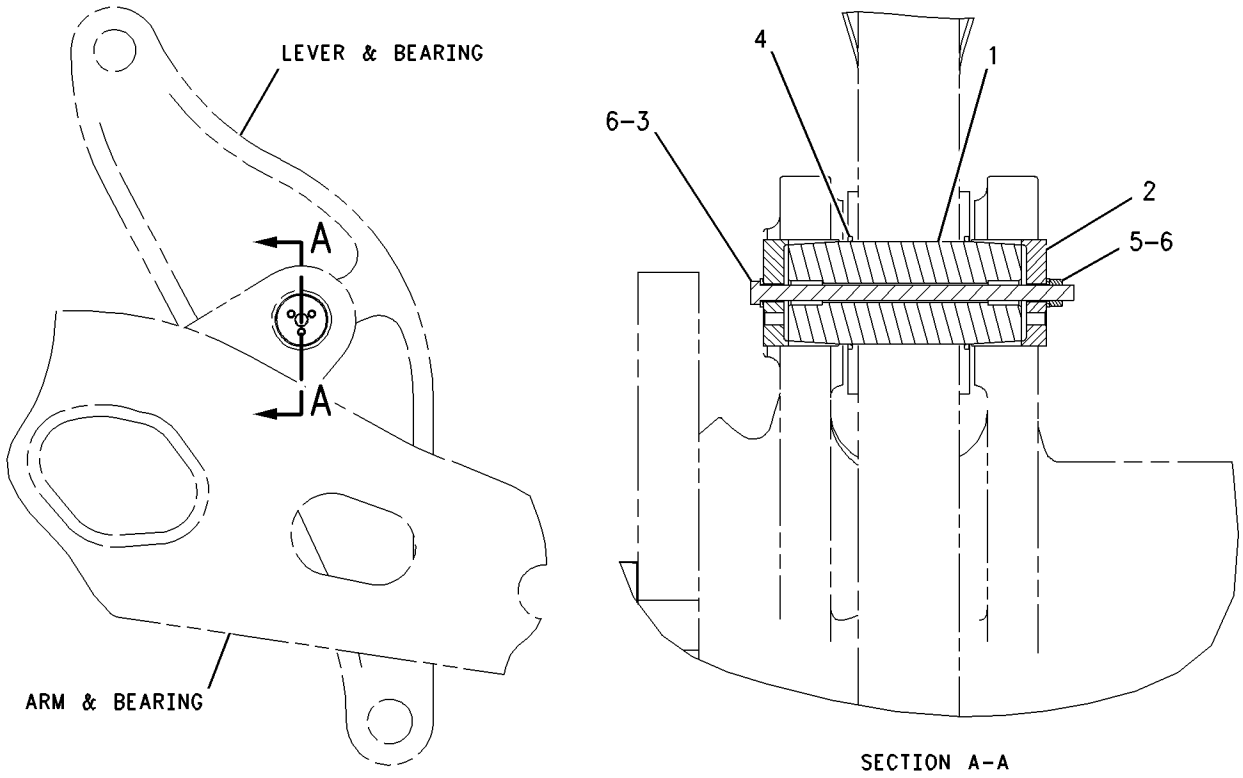

GRAPHIC #1 **<END>** g00814893

245-1565 PIN & SEAL GP-LINKAGE

S/N: 4421-UP

PART OF 245-8813 INSTALLATION AR-FIELD

SMCS-6118 **i02149254**

NOTE	REF NO	GRAPHIC REF	PART NUMBER	QTY	PART NAME 1 2 3 4 5 6 (PRODUCT LEVEL)	SEE PAGE
	1	1	**1V-8031**	6	PIN	
	2	1	**8R-3930**	4	COLLET	
	3	1	**8R-3931**	12	COLLET	
	4	1	**8X-0662**	2	PIN	
B	5	1	**133-2149**	1	SHIM PACK	
					(INCLUDES 6 SHIMS	
	6	1	**156-5916**	2	COLLET	
	7	1	**156-5917**	2	COLLET	
	8	1	**178-6242**	4	COLLAR	
	9	1	**178-6245**	2	PIN AS	
	10	1	**178-6246**	2	PLATE-SEAL	
	11	1	**245-1558**	2	PIN	
	12	1	**245-1559**	2	PIN	
	13	1	**245-3251**	4	COLLET	
B	14	1	**247-4128**	12	SHIM (3-MM THK)	
B	15	1	**247-4129**	6	SHIM (5-MM THK)	
M	16	1	**147-2001**	2	BOLT (M36X4X100-MM)	
	17	1	**178-6248**	2	PLATE	
M	18	1	**3E-8009**	2	BOLT (M30X3.5X500-MM)	
M	19	1	**3E-8010**	6	BOLT (M30X3.5X520-MM)	
M	20	1	**3E-8011**	2	BOLT (M30X3.5X760-MM)	
M	21	1	**3E-8012**	2	BOLT (M30X3.5X620-MM)	
	22	1	**5P-2322**	16	SEAL-LIP TYPE	
	23	1	**7X-4786**	4	SEAL-LIP TYPE	
M	24	1	**8T-1583**	10	NUT (M30X3.5-THD)	
	25	1	**8T-4123**	8	WASHER-PLATED (22X35X3.5-MM THK)	
M	26	1	**8T-4187**	8	BOLT (M20X2.5X80-MM)	
	27	1	**9X-7699**	4	SEAL-LIP TYPE	
	28	1	**9X-7703**	4	SEAL-LIP TYPE	
	29	1	**9X-8259**	2	WASHER (39X66X6-MM THK)	
	30	1	**9X-8399**	22	WASHER (33X56X6-MM THK)	

B-USE AS REQUIRED
M-METRIC PART

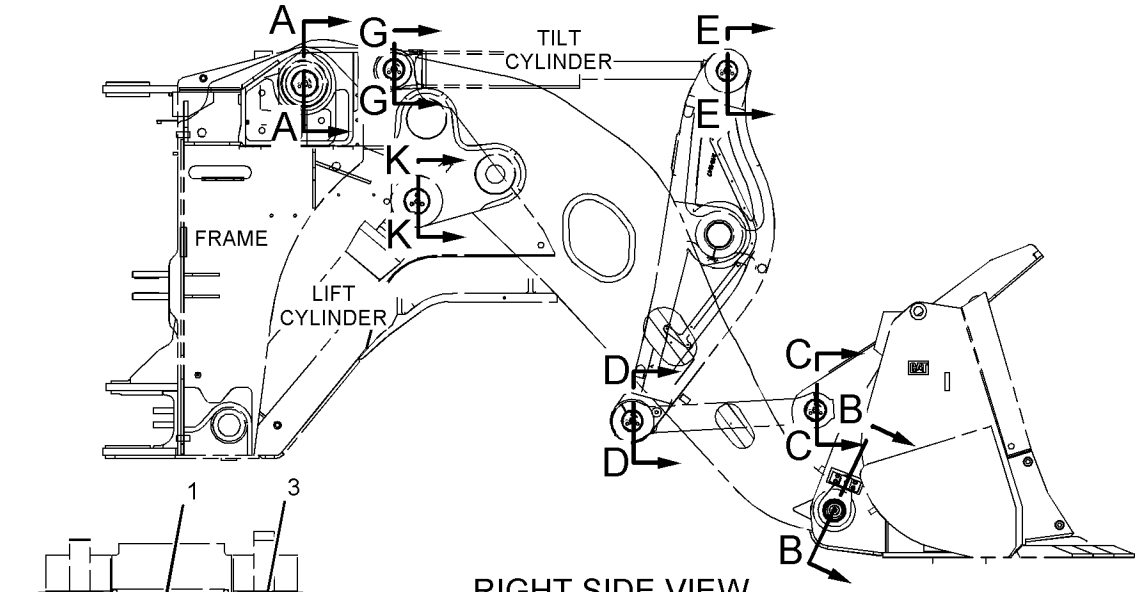

RIGHT SIDE VIEW

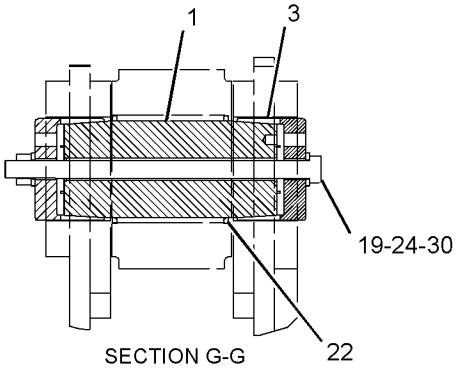

SECTION G-G

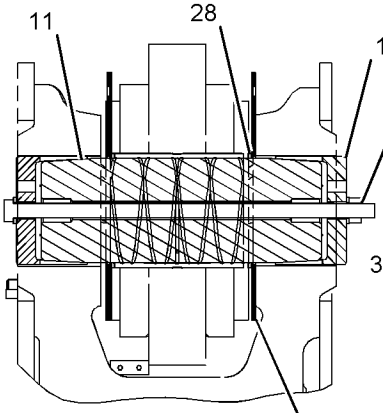

SECTION A-A

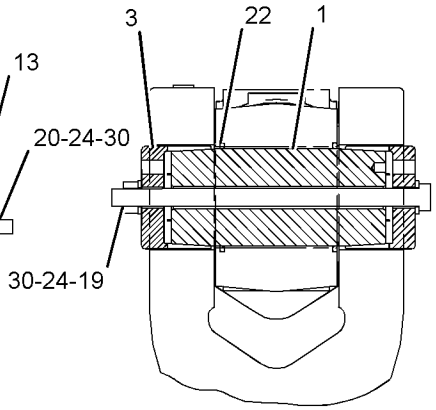

SECTION E-E

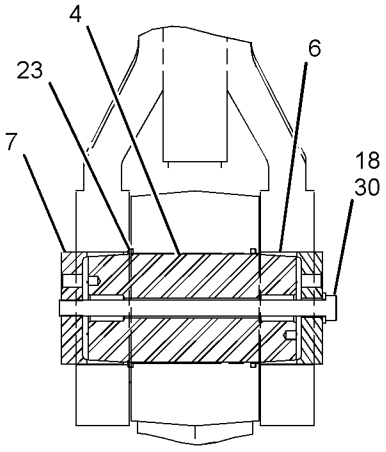

SECTION K-K

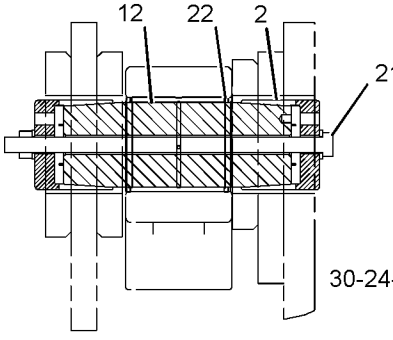

SECTION C-C

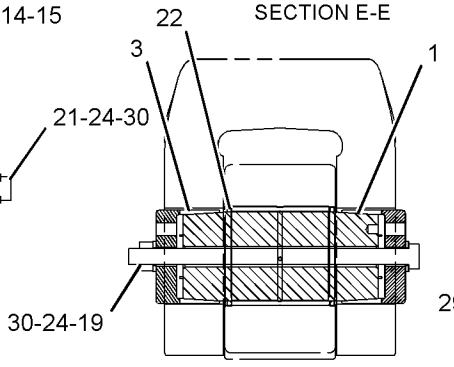

SECTION D-D

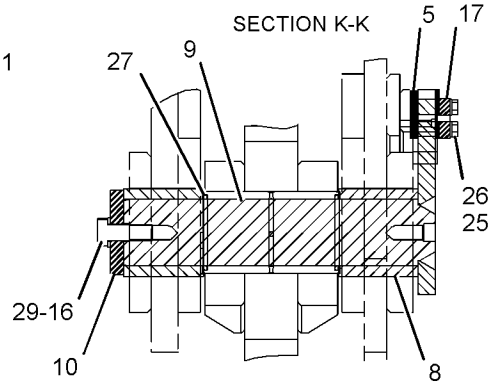

SECTION B-B

GRAPHIC #1

<END>

g01091059

WORK TOOLS

241-9682 BUCKET AS-COAL

S/N: 4421-UP
36-CU M (47-CU YD)
AN ATTACHMENT

SMCS-6132 **i02153524**

NOTE	REF NO	GRAPHIC REF	PART NUMBER	QTY	PART NAME 1 2 3 4 5 6 (PRODUCT LEVEL)	SEE PAGE
	1	1	**178-6247**	2	PLATE	
	2	1	**241-9685**	1	HINGE AS (LIFT, INNER, RH)	
	3	1	**241-9686**	1	HINGE AS (LIFT, INNER, LH)	
	4	1	**241-9688**	2	HINGE AS	
	5	1	**241-9690**	1	HINGE AS (RH)	
	6	1	**241-9691**	1	HINGE AS (LH)	
	7	1	**241-9692**	1	EDGE	
	8	1	**241-9710**	2	PLATE (LH)	
	9	1	**241-9711**	2	PLATE (RH)	
	10	1	**241-9712**	2	PLATE-WEAR	
	11	1	*241-9723*	1	PLATE AS-SIDE (RH)	
		1	**2C-9259**	1	PLATE-IDENTIFICATION	
		1	**241-9721**	1	BAR	
		1	**241-9722**	1	PLATE-WEAR	
	12	1	*241-9724*	1	PLATE AS-SIDE (LH)	
		1	**2C-9259**	1	PLATE-IDENTIFICATION	
		1	**241-9721**	1	BAR	
		1	**241-9722**	1	PLATE-WEAR	
	13	1	**178-6249**	2	BLOCK	

241-9682 **BUCKET AS-COAL** *(contd.)* **i02153524**

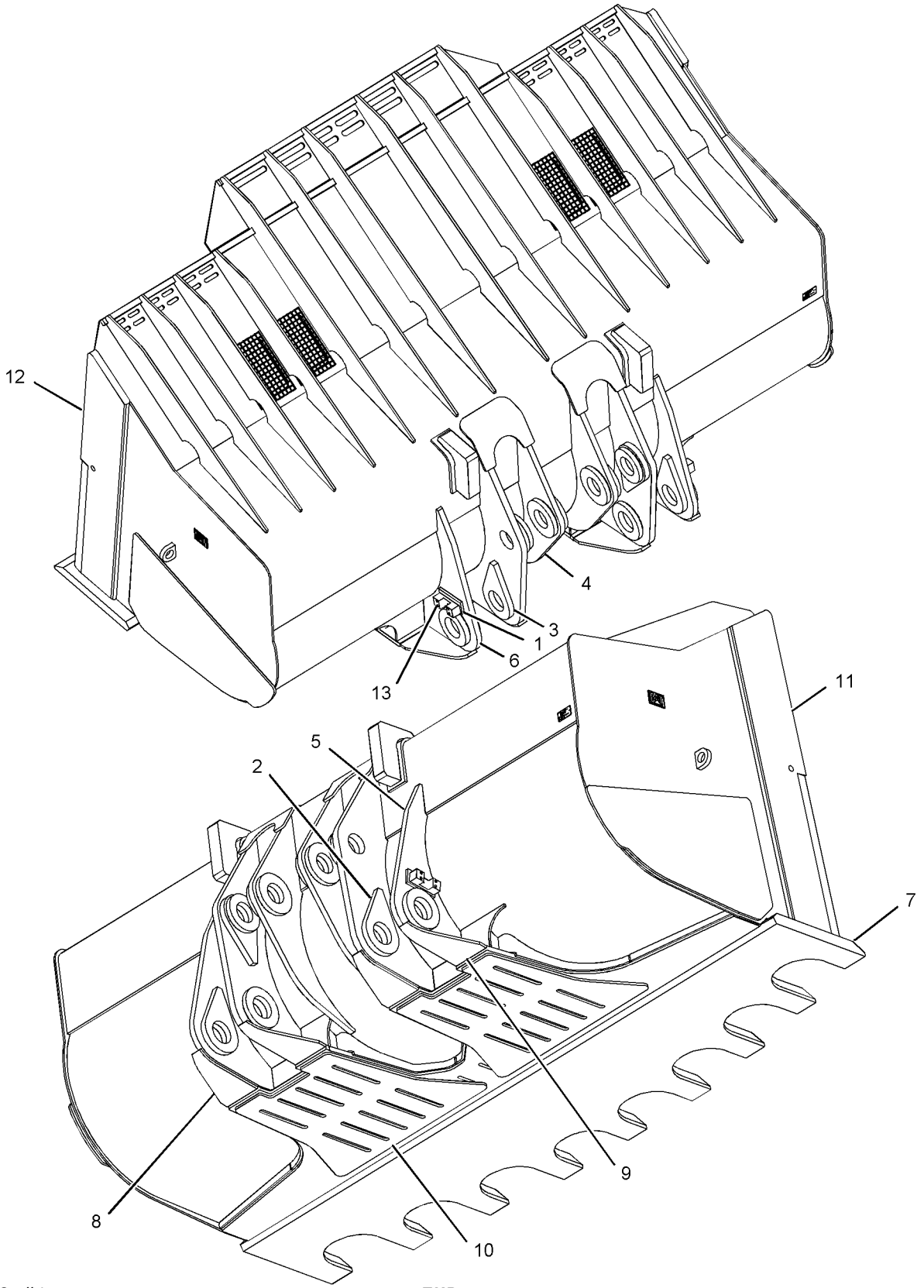

GRAPHIC #1 **<END>** g01095433

WORK TOOLS

257-3693 BUCKET AS-COAL

S/N: 4421-UP
31.5-CU M (41.2-CU YD)
PART OF 257-3692 BUCKET GP-COAL
AN ATTACHMENT

SMCS-6132 **i02294602**

NOTE	REF NO	GRAPHIC REF	PART NUMBER	QTY	PART NAME 1 2 3 4 5 6 (PRODUCT LEVEL)	SEE PAGE
	1	1	**195-0858**	1	HINGE AS (LIFT, OUTER, LH)	
	2	1	**251-4564**	1	HINGE AS (LIFT, INNER, LH)	
	3	1	**251-4563**	2	HINGE AS (TILT)	
	4	1	**251-4565**	1	HINGE AS (LIFT, INNER, RH)	
	5	1	**195-0856**	1	HINGE AS (LIFT, OUTER, RH)	
	6	1	**7I-5848**	1	EDGE AS	
		1	**100-7416**	9	ADAPTER-STRAP	
	7	1	*156-5972*	1	PLATE AS-RH	
		1	**2C-9259**	1	PLATE-IDENTIFICATION (CAT)	
		1	**121-2364**	1	CORNER-RH	
	8	1	*156-5964*	1	PLATE AS-LH	
		1	**2C-9259**	1	PLATE-IDENTIFICATION (CAT)	
		1	**121-2367**	1	CORNER-LH	
	9	1	**134-2972**	2	PLATE-LH	
	10	1	**134-2973**	2	PLATE-RH	
	11	1	**178-6247**	2	PLATE	
	12	1	**178-6249**	2	BLOCK	

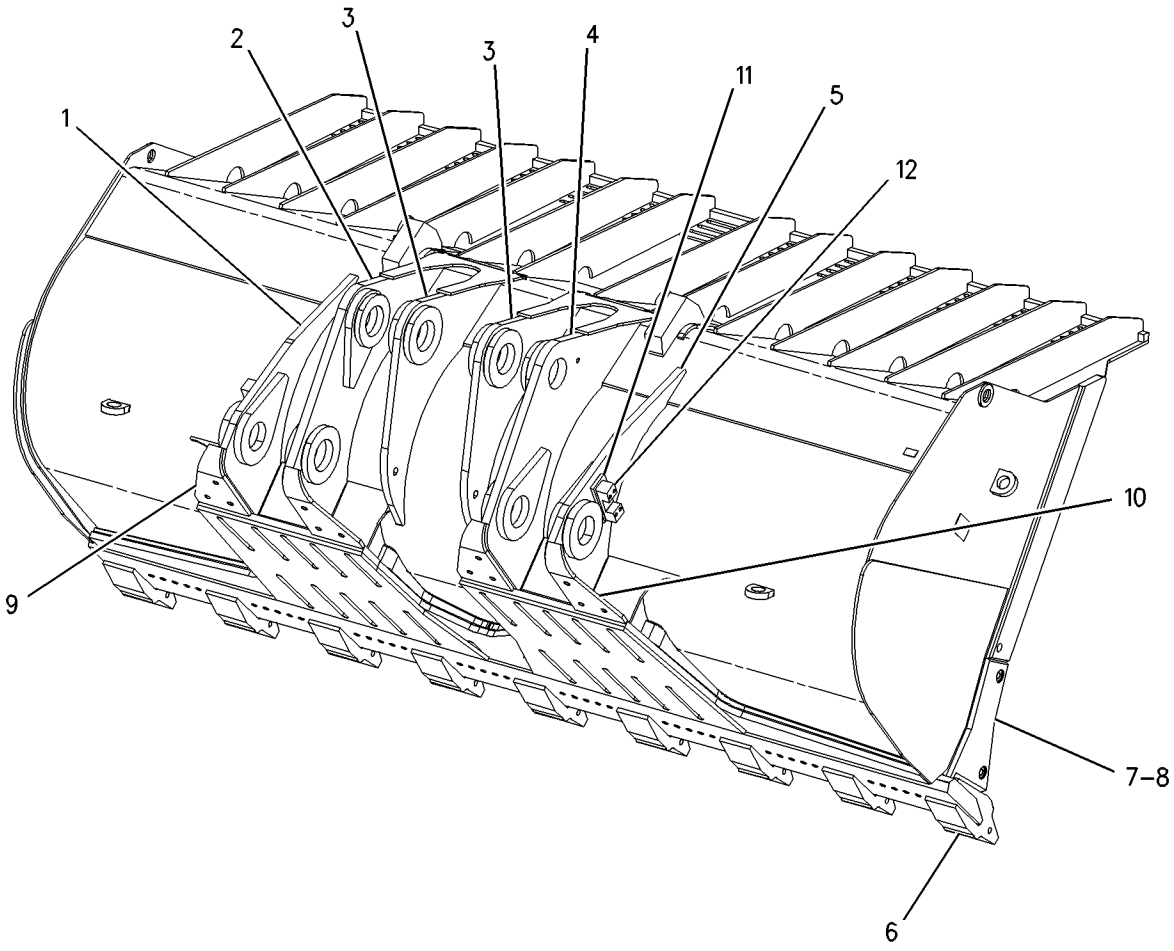

GRAPHIC #1 **<END>** g00743076

251-4561 BUCKET AS-ROCK

S/N: 4421-UP
18 CU M (23.5 CU YD)
PART OF 251-4560 BUCKET GP-ROCK
AN ATTACHMENT

SMCS-6102 **i02154836**

NOTE	REF NO	GRAPHIC REF	PART NUMBER	QTY	PART NAME 1 2 3 4 5 6 (PRODUCT LEVEL)	SEE PAGE
	1	1	**121-6659**	1	EDGE AS	
		1	**6I-8804**	9	ADAPTER	
	2	1	**251-4565**	1	HINGE AS (LIFT-RH-INNER)	
	3	1	**121-8892**	14	PLATE	
	4	1	**251-4563**	2	HINGE AS (TILT)	
	5	1	**251-4564**	1	HINGE AS (LIFT-LH-INNER)	
	6	1	**195-0856**	1	HINGE AS (LIFT-RH-OUTER)	
	7	1	**195-0858**	1	HINGE AS (LIFT-LH-OUTER)	
	8	1	**134-2972**	2	PLATE-LH	
	10	1	**134-2973**	2	PLATE-RH	
	11	1	**178-6247**	2	PLATE	
	12	1	**178-6249**	2	BLOCK	
	13	1	**121-2378**	2	PLATE	
	14	1	**121-8894**	1	PLATE	
	15	1	**161-3612**	1	CORNER-LH	
	16	1	**161-3613**	1	CORNER-RH	
	17	1	**2C-9259**	2	PLATE-IDENTIFICATION	

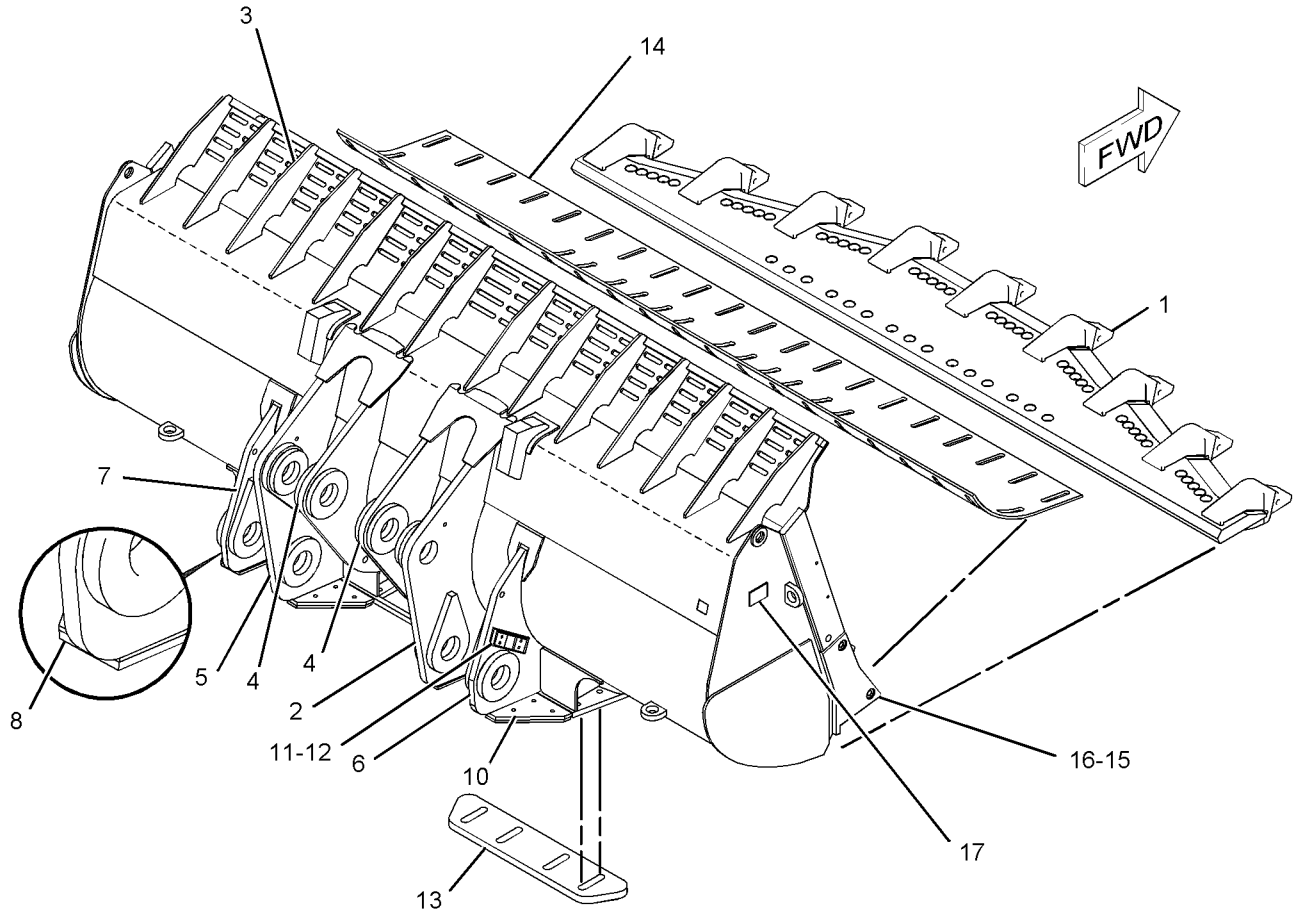

GRAPHIC #1 **<END>** g01093568

WORK TOOLS

257-3683 BUCKET AS-ROCK

S/N: 4421-UP
15-CU M (19.5-CU YD)
PART OF 257-3682 BUCKET GP-ROCK
AN ATTACHMENT

SMCS-6102 **i02294578**

NOTE	REF NO	GRAPHIC REF	PART NUMBER	QTY	PART NAME 1 2 3 4 5 6 (PRODUCT LEVEL)	SEE PAGE
	1	1	**195-0858**	1	HINGE AS (LIFT-LH-OUTER)	
	2	1	**251-4565**	1	HINGE AS (LIFT-LH-INNER)	
	3	1	**251-4563**	2	HINGE AS (TILT)	
	4	1	**251-4564**	1	HINGE AS (LIFT-RH-INNER)	
	5	1	**195-0856**	1	HINGE AS (LIFT-RH-OUTER)	
	6	1	**134-2972**	2	PLATE-LH	
	7	1	**121-2104**	1	EDGE AS-CUTTING	
	7A	1	**6I-8804**	8	ADAPTER	
	8	1	**134-2973**	2	PLATE-RH	
	9	1	**155-9600**	2	PLATE AS-RH	
		1	**2C-9259**	1	PLATE-IDENTIFICATION (CAT)	
		1	**155-9604**	1	PLATE	
		1	**161-3613**	1	CORNER-RH	
	10	1	**156-0507**	1	PLATE AS-LH	
		1	**2C-9259**	1	PLATE-IDENTIFICATION (CAT)	
		1	**155-9604**	1	PLATE	
		1	**161-3612**	1	CORNER-LH	
	11	1	**178-6247**	2	PLATE	
	12	1	**178-6249**	2	BLOCK	
	13	1	**162-0749**	2	PLATE	

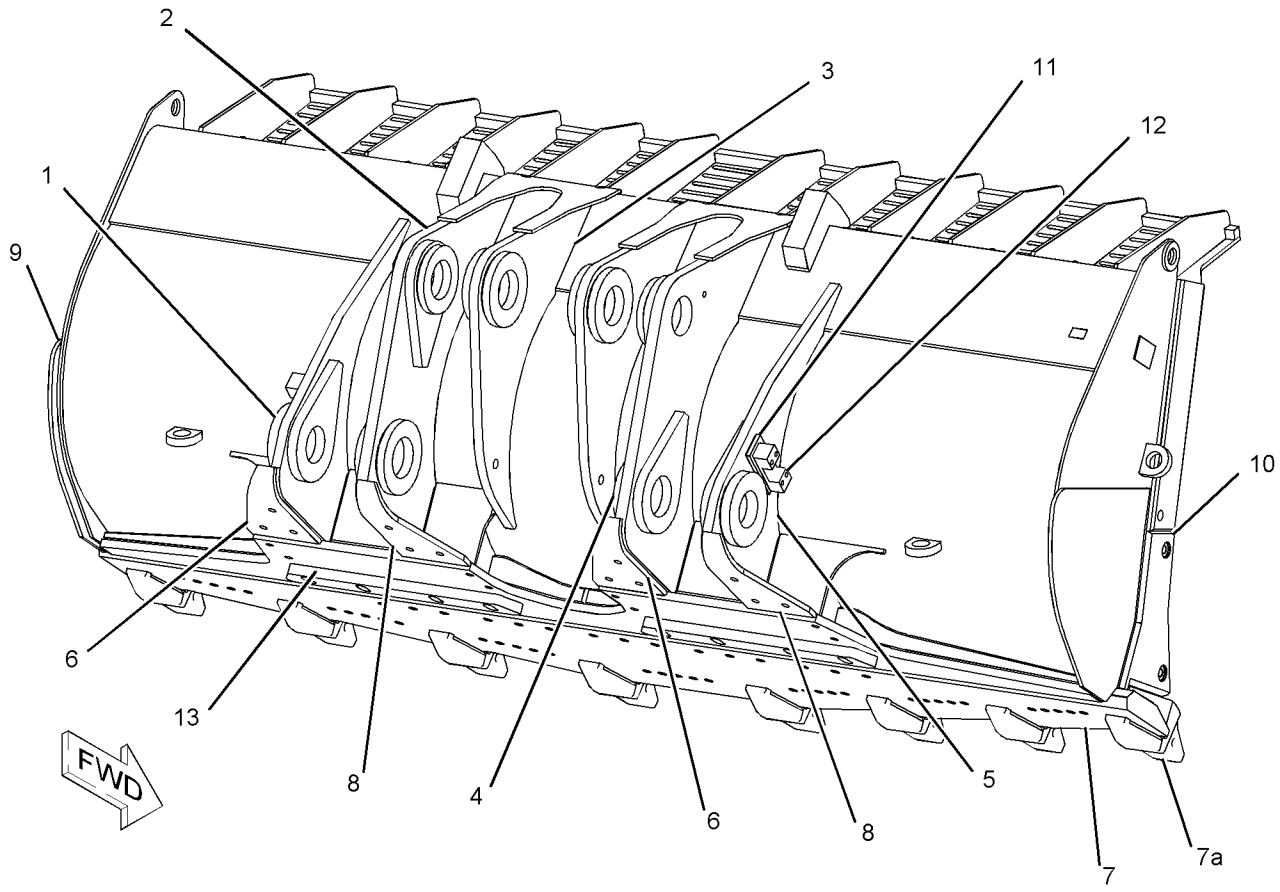

GRAPHIC #1 **<END>** g01149291

WORK TOOLS

257-3685 BUCKET AS-ROCK

S/N: 4421-UP
17.0-CU M (22.5-CU YD)
PART OF 257-3684 BUCKET GP-ROCK
AN ATTACHMENT

SMCS-6102 **i02294579**

NOTE	REF NO	GRAPHIC REF	PART NUMBER	QTY	PART NAME 1 2 3 4 5 6 (PRODUCT LEVEL)	SEE PAGE
	1	1	**195-0858**	1	HINGE AS (LIFT-LH-OUTER)	
	2	1	**251-4565**	1	HINGE AS (LIFT-LH-INNER)	
	3	1	**251-4563**	2	HINGE AS (TILT)	
	4	1	**251-4564**	1	HINGE AS (LIFT-RH-INNER)	
	5	1	**195-0856**	1	HINGE AS (LIFT-RH-OUTER)	
	6	1	**121-2104**	1	EDGE AS-CUTTING	
	6A	1	**6I-8804**	8	ADAPTER	
	8	1	**121-2378**	2	PLATE	
	9	1	**134-2972**	2	PLATE-LH	
	10	1	**134-2973**	2	PLATE-RH	
	11	1	**178-6247**	2	PLATE	
	12	1	**178-6249**	2	BLOCK	
	13	1	**154-9430**	1	PLATE AS-LH	
		1	**2C-9259**	1	PLATE-IDENTIFICATION (CAT)	
		1	**161-3612**	1	CORNER-LH	
	14	1	**154-9434**	1	PLATE AS-RH	
		1	**2C-9259**	1	PLATE-IDENTIFICATION (CAT)	
		1	**161-3613**	1	CORNER-RH	
	15	1	**121-2371**	1	PLATE	

257-3685 **BUCKET AS-ROCK** *(contd.)* **i02294579**

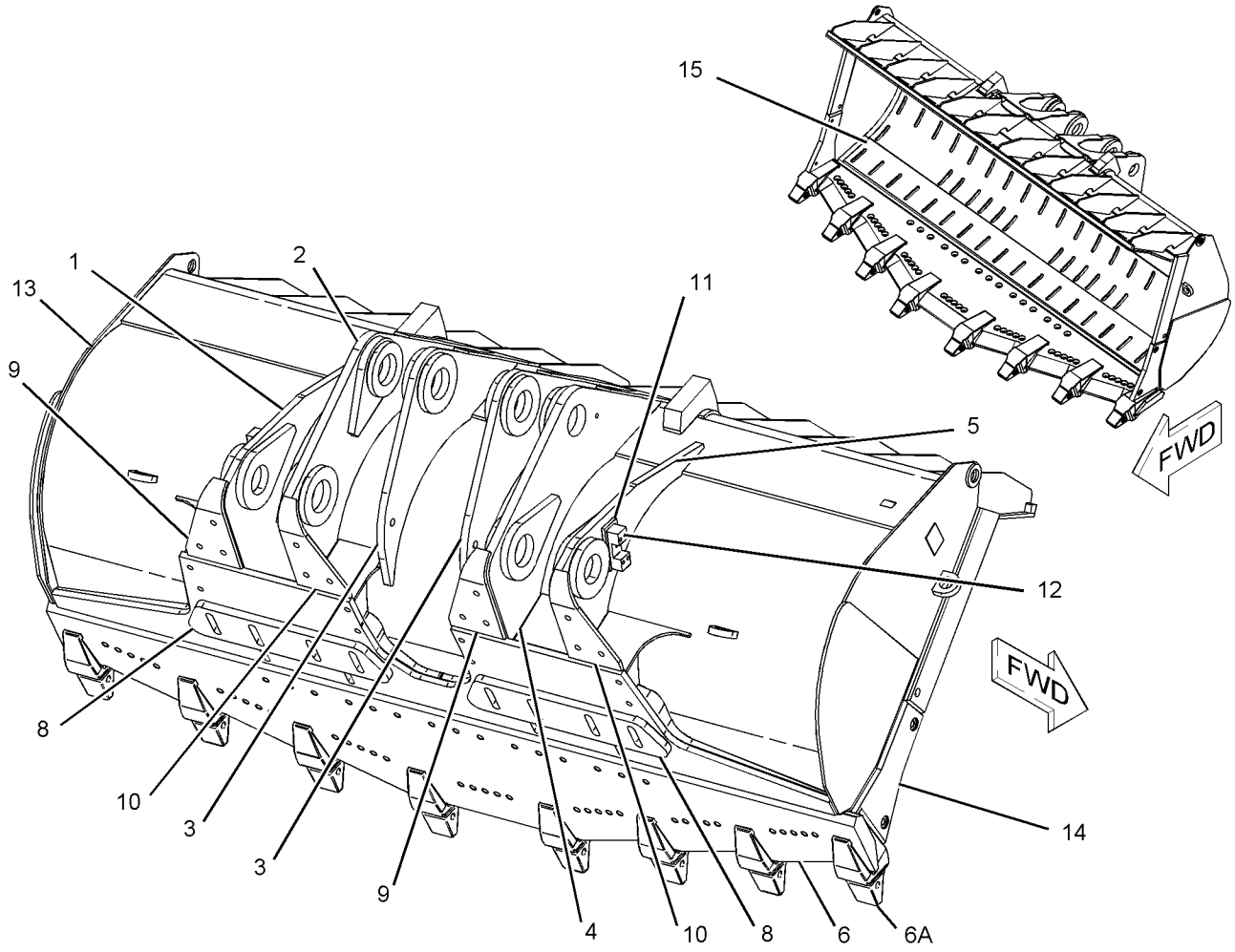

GRAPHIC #1 **<END>** g01149184

WORK TOOLS

257-3687 BUCKET AS-ROCK

S/N: 4421-UP
19.0-CU M (24.9-CU YD)
PART OF 257-3686 BUCKET GP-ROCK
AN ATTACHMENT

SMCS-6102 **i02294591**

NOTE	REF NO	GRAPHIC REF	PART NUMBER	QTY	PART NAME 1 2 3 4 5 6 (PRODUCT LEVEL)	SEE PAGE
	1	1	**195-0858**	1	HINGE AS (LIFT, OUTER, LH)	
	2	1	**251-4565**	1	HINGE AS (LIFT, INNER, LH)	
	3	1	**251-4563**	2	HINGE AS (TILT)	
	4	1	**251-4564**	1	HINGE AS (LIFT, INNER, LH)	
	5	1	**195-0856**	1	HINGE AS (LIFT, OUTER, RH)	
	6	1	**134-2972**	2	PLATE-LH	
	7	1	**121-2104**	1	EDGE AS-CUTTING	
		1	**6I-8804**	8	ADAPTER	
	8	1	**134-2973**	2	PLATE-RH	
	9	1	**143-6755**	2	PLATE	
	10	1	**178-6247**	2	PLATE	
	11	1	**178-6249**	2	BLOCK	
	12	1	**161-8883**	2	PLATE	
	13	1	*155-3603*	1	PLATE AS (LH)	
		1	**2C-9259**	1	PLATE-IDENTIFICATION (CAT)	
		1	**161-3612**	1	CORNER-LH	
	14	1	*155-3561*	1	PLATE AS (RH)	
		1	**2C-9259**	1	PLATE-IDENTIFICATION (CAT)	
		1	**161-3613**	1	CORNER-RH	

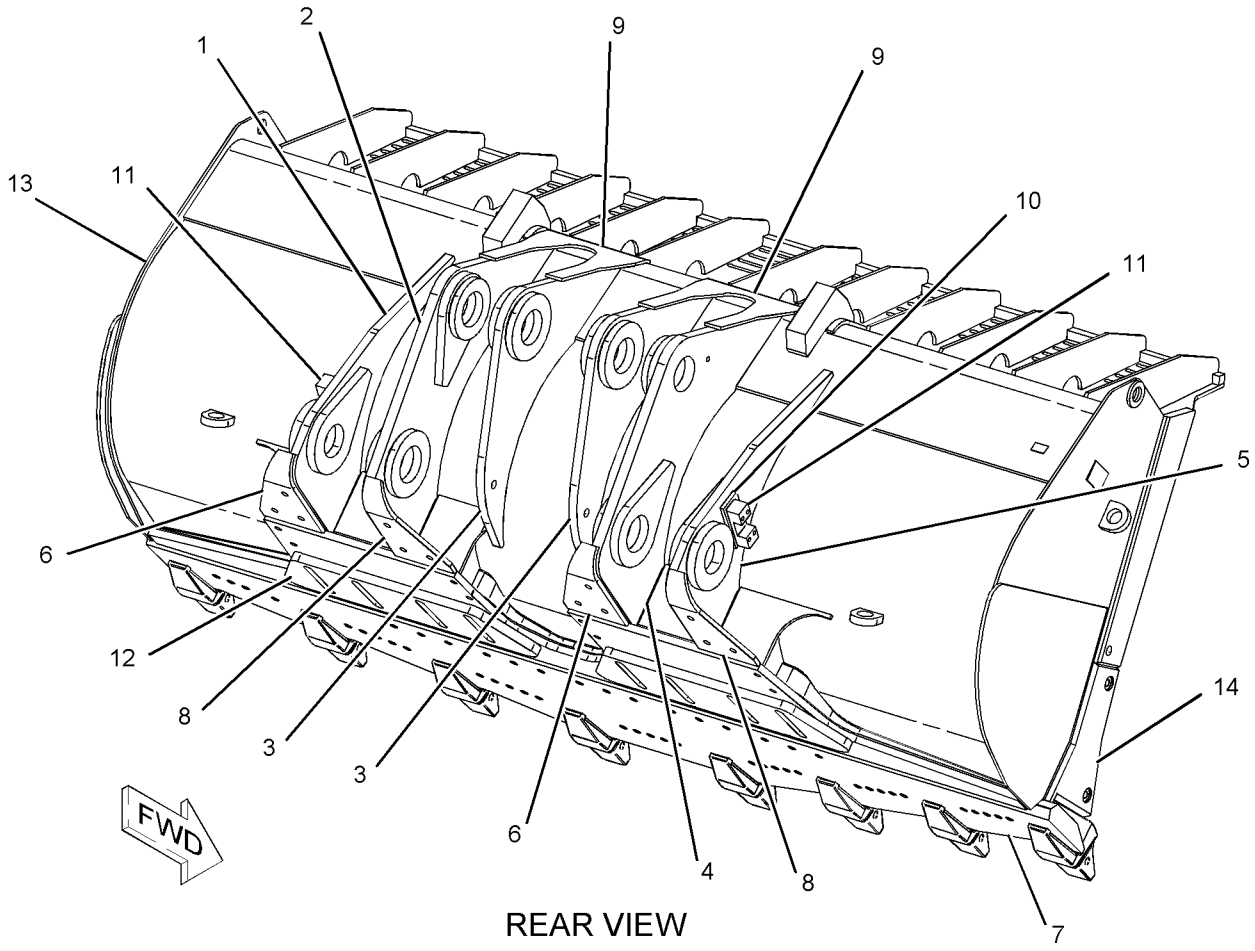

REAR VIEW

GRAPHIC #1 **<END>** g01149164

WORK TOOLS

257-3689 BUCKET AS-ROCK

S/N: 4421-UP
14.0-CU M (18.3-CU YD)
PART OF 257-3688 BUCKET GP-ROCK
AN ATTACHMENT

SMCS-6102 **i02294595**

NOTE	REF NO	GRAPHIC REF	PART NUMBER	QTY	PART NAME 1 2 3 4 5 6 (PRODUCT LEVEL)	SEE PAGE
	1	1	**195-0858**	1	HINGE AS (LIFT, OUTER, LH)	
	2	1	**251-4564**	1	HINGE AS (LIFT, INNER, LH)	
	3	1	**251-4563**	2	HINGE AS (TILT)	
	4	1	**251-4565**	1	HINGE AS (LIFT, INNER, RH)	
	5	1	**195-0856**	1	HINGE AS (LIFT, OUTER, RH)	
	6	1	**121-2104**	1	EDGE AS-CUTTING	
	6A	1	**6I-8804**	8	ADAPTER	
	7	1	**134-2972**	2	PLATE-LH	
	8	1	**134-2973**	2	PLATE-RH	
	9	1	**251-4566**	2	PLATE	
	10	1	**162-0749**	2	PLATE	
	12	1	**178-6249**	2	BLOCK	
	13	1	**178-6247**	2	PLATE	

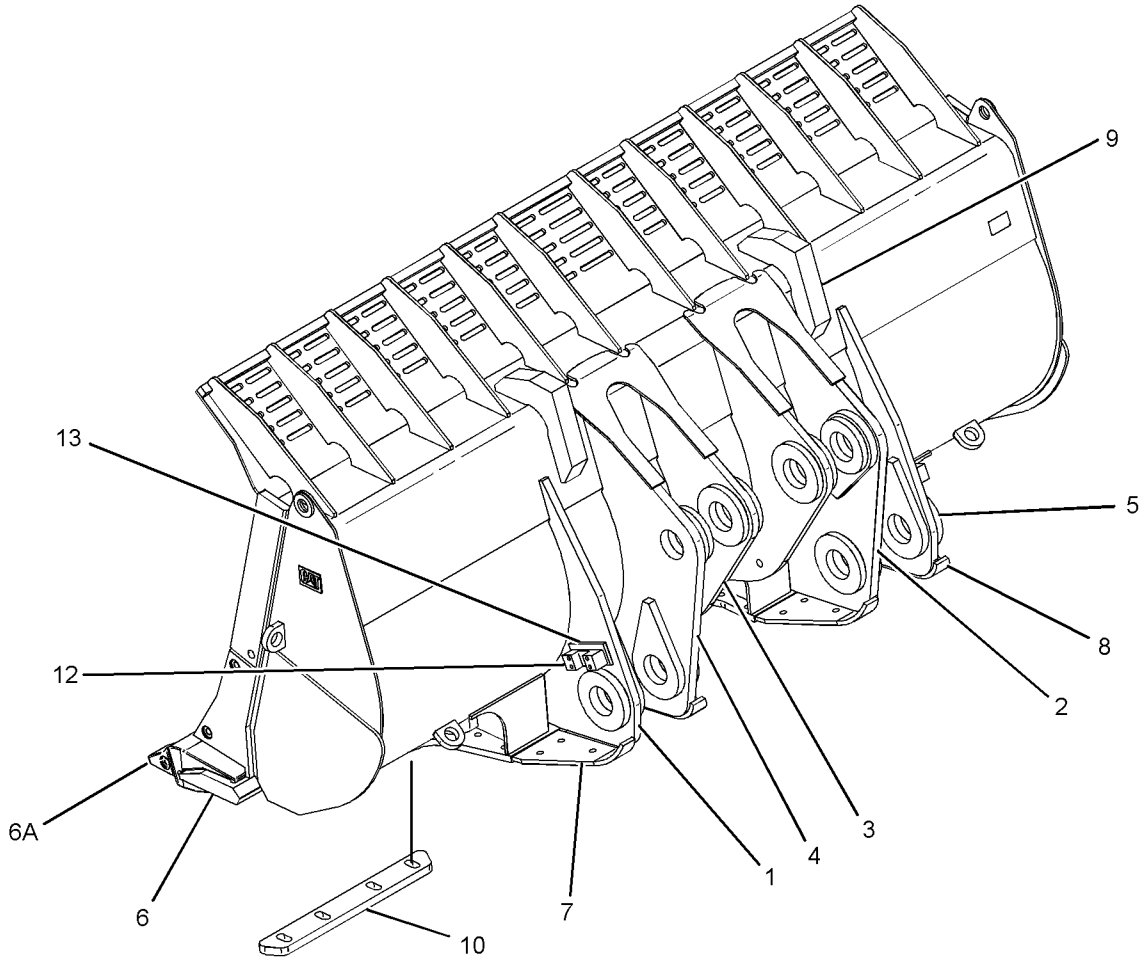

GRAPHIC #1 **<END>** g01149975

WORK TOOLS

257-3691 BUCKET AS-ROCK

S/N: 4421-UP
19.0-CU M (25-CU YD)
PART OF 257-3690 BUCKET GP-ROCK
AN ATTACHMENT

SMCS-6102 **i02294598**

NOTE	REF NO	GRAPHIC REF	PART NUMBER	QTY	PART NAME 1 2 3 4 5 6 (PRODUCT LEVEL)	SEE PAGE
	1	1	**195-0858**	1	HINGE AS (LIFT, OUTER, LH)	
	2	1	**251-4564**	1	HINGE AS (LIFT, INNER, LH)	
	3	1	**251-4563**	2	HINGE AS (TILT)	
	4	1	**251-4565**	1	HINGE AS (LIFT, INNER, RH)	
	5	1	**195-0856**	1	HINGE AS (LIFT, OUTER, RH)	
	6	1	**121-6659**	1	EDGE AS	
		1	**6I-8804**	9	ADAPTER	
	7	1	**134-2972**	2	PLATE-LH	
	8	1	**134-2973**	2	PLATE-RH	
	9	1	**251-4566**	2	PLATE	
	10	1	**161-8883**	2	PLATE	
	11	1	**161-9129**	1	PLATE	
	12	1	**178-6249**	2	BLOCK	
	13	1	**178-6247**	2	PLATE	

REFER TO ALL ILLUSTRATIONS
OF
THIS GROUP FOR AUXILIARY
VIEWS

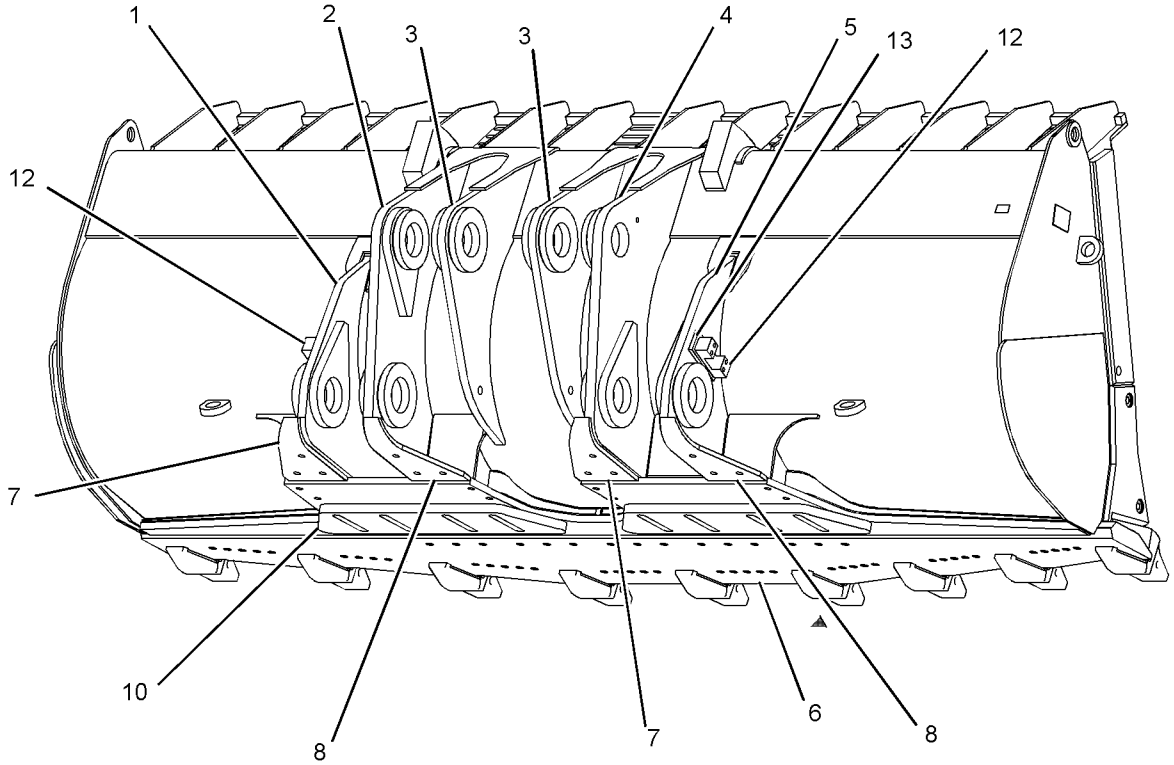

REAR
VIEW

GRAPHIC #1 g01149186

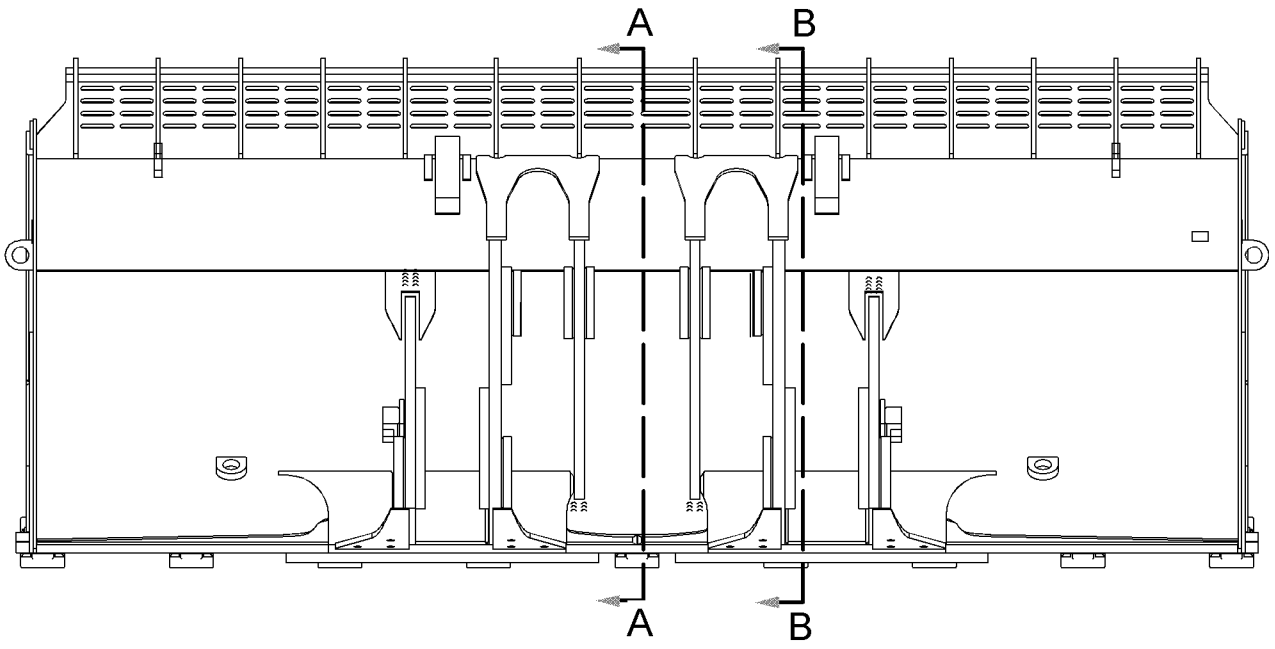

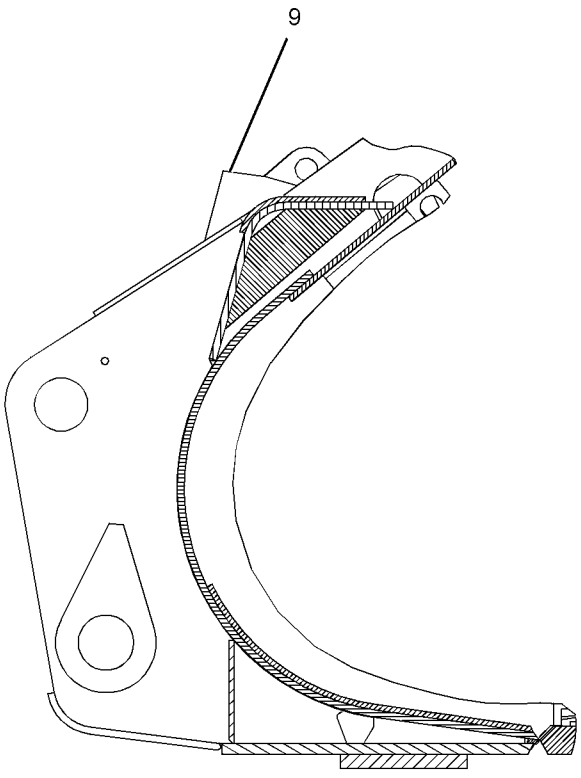

SECTION B-B

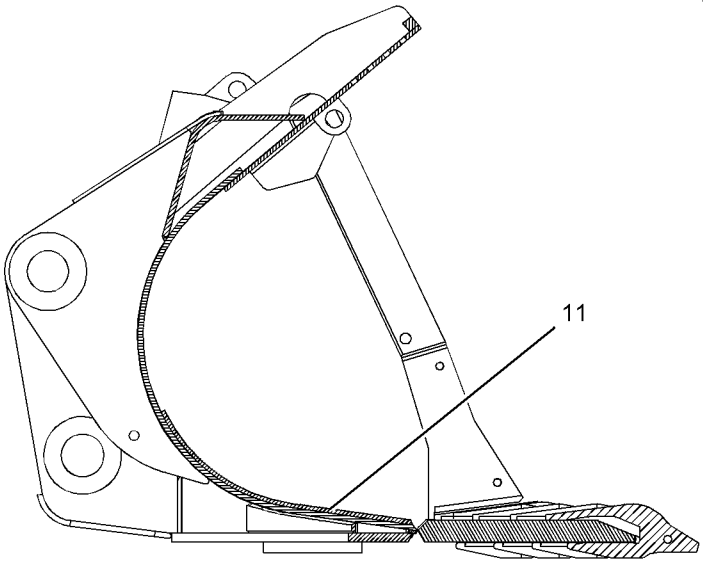

SECTION A-A

REFER TO ALL ILLUSTRATIONS
THIS GROUP FOR AUXILIARY VIEWS

GRAPHIC #2 **<END>** g01149418

WORK TOOLS

257-3692 BUCKET GP-COAL

S/N: 4421-UP
31.5-CU M (41.0-CU YD)
AN ATTACHMENT

SMCS-6132 **i02294516**

NOTE	REF NO	GRAPHIC REF	PART NUMBER	QTY	PART NAME 1 2 3 4 5 6 (PRODUCT LEVEL)	SEE PAGE
	1	1	**4T-4707**	4	RETAINER	
	2	1	**8E-4708**	4	PIN	
	3	1	**109-9030**	8	EDGE-SEGMENT (CENTER)	
	4	1	**125-0800**	2	PROTECTOR-SIDE BAR	
Y	5	1	**257-3693**	1	BUCKET AS-COAL	917
	6	1	**3K-9770**	40	NUT-FULL (1-1/4-7-THD)	
	7	1	**5P-8823**	40	BOLT-PLOW (1-1/4-7X4.13-IN)	

Y-SEPARATE ILLUSTRATION

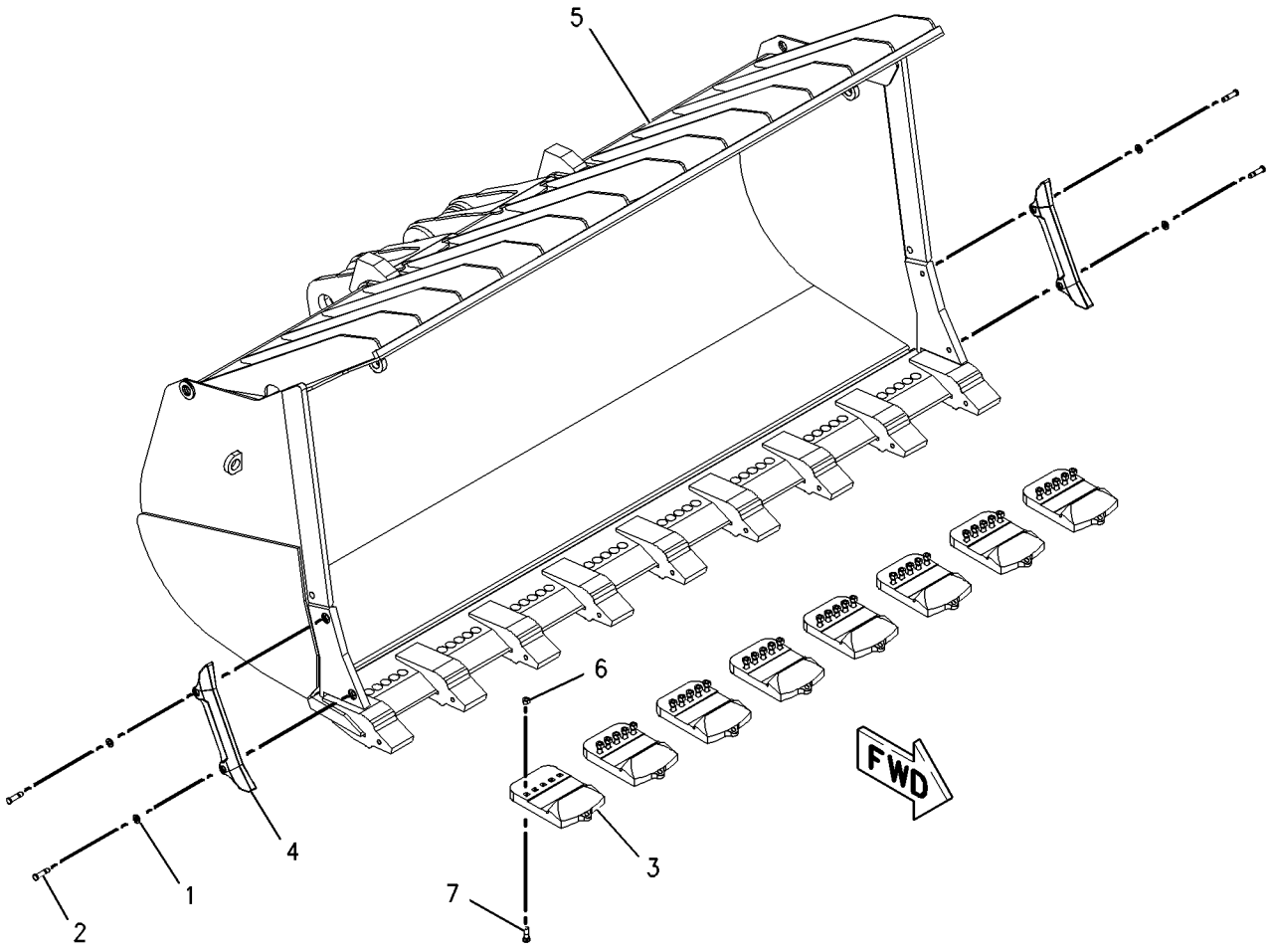

GRAPHIC #1 **<END>** g00947826

WORK TOOLS

251-4560 BUCKET GP-ROCK

S/N: 4421-UP
18-CU M (23.5-CU YD)
FOR USE WITH STANDARD AND HIGH LIFT OPTIONS
AN ATTACHMENT

SMCS-6102 **i02154835**

NOTE	REF NO	GRAPHIC REF	PART NUMBER	QTY	PART NAME 1 2 3 4 5 6 (PRODUCT LEVEL)	SEE PAGE
	1	1	*1U-0739*	4	PIN	
					(EACH INCLUDES)	
		1	**107-8559**	1	RETAINER AS	
		1	**133-0738**	1	PIN	
	2	1	**1U-0740**	2	BIT-ROUTER	
	3	1	**8E-5559**	4	RETAINER AS	
Y	4	1	*144-1285*	1	EDGE GP-CUTTING	936
Y	5	1	**251-4561**	1	BUCKET AS-ROCK	919

Y-SEPARATE ILLUSTRATION

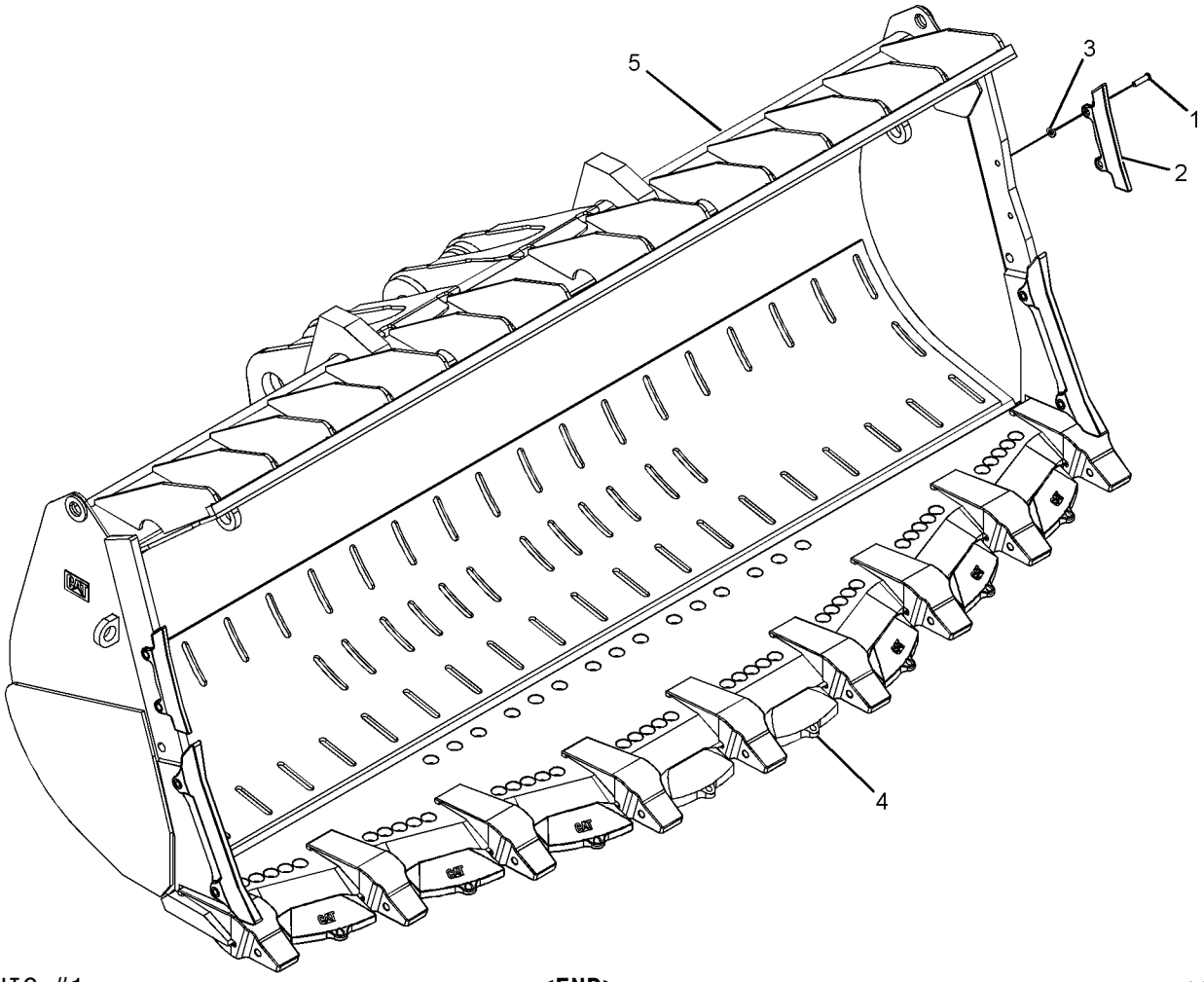

GRAPHIC #1 **<END>** g01094336

WORK TOOLS

257-3682 BUCKET GP-ROCK

S/N: 4421-UP
15-CU M (19.5-CU YD)
FOR USE WITH STANDARD AND HIGH LIFT VERSIONS
AN ATTACHMENT

SMCS-6102 **i02294509**

NOTE	REF NO	GRAPHIC REF	PART NUMBER	QTY	PART NAME 1 2 3 4 5 6 (PRODUCT LEVEL)	SEE PAGE
Y	1	1	*144-1286*	1	EDGE GP-CUTTING	937
Y	2	1	*257-3683*	1	BUCKET AS-ROCK	920

Y-SEPARATE ILLUSTRATION

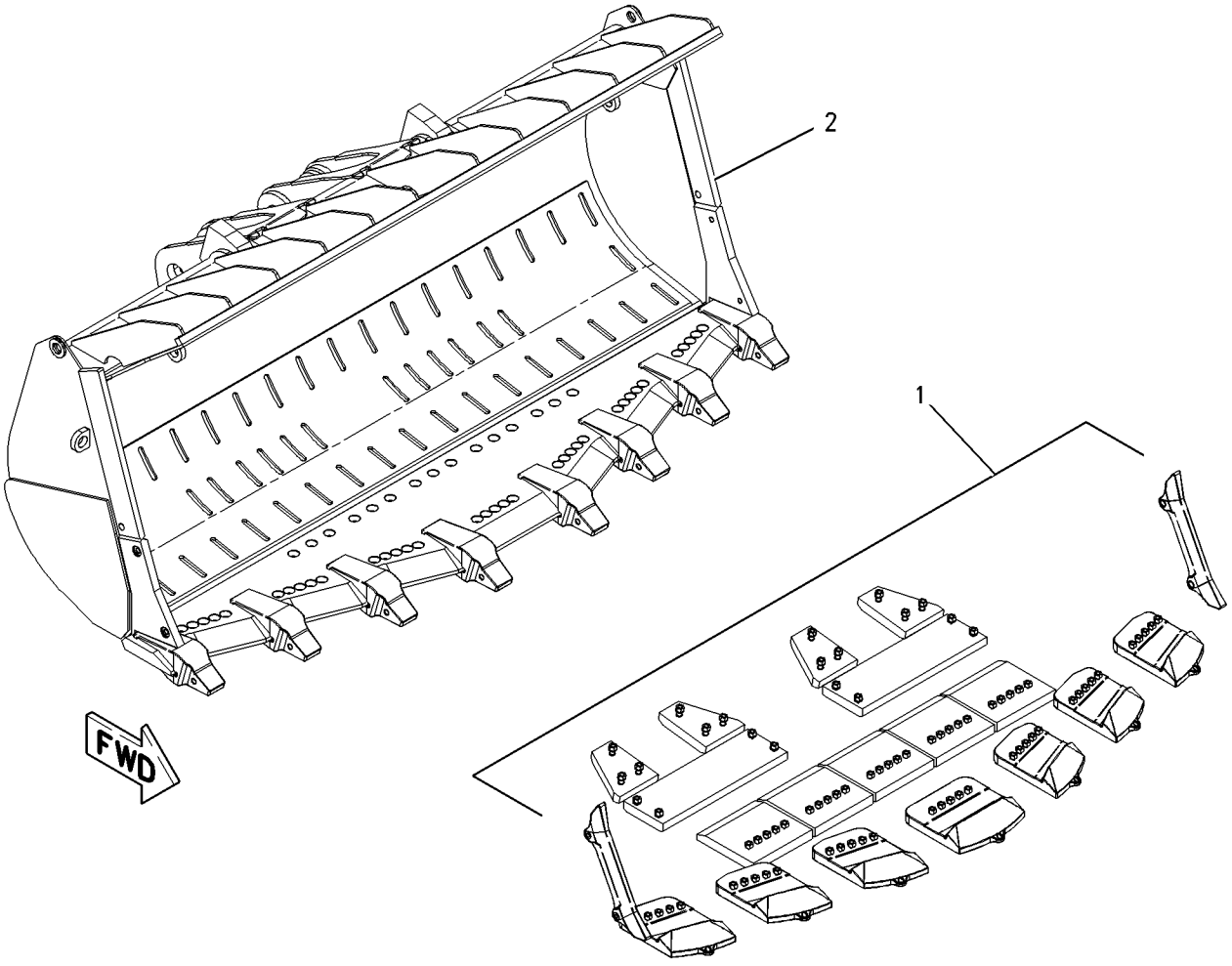

GRAPHIC #1 **<END>** g00947812

257-3684 BUCKET GP-ROCK

S/N: 4421-UP
17.0-CU M (22.5-CU M)
FOR USE WITH STANDARD AND HIGH LIFT VERSIONS
AN ATTACHMENT

SMCS-6102 **i02294511**

NOTE	REF NO	GRAPHIC REF	PART NUMBER	QTY	PART NAME 1 2 3 4 5 6 (PRODUCT LEVEL)	SEE PAGE
Y	1	1	*144-1286*	1	EDGE GP-CUTTING	937
Y	2	1	*257-3685*	1	BUCKET AS-ROCK	922

Y-SEPARATE ILLUSTRATION

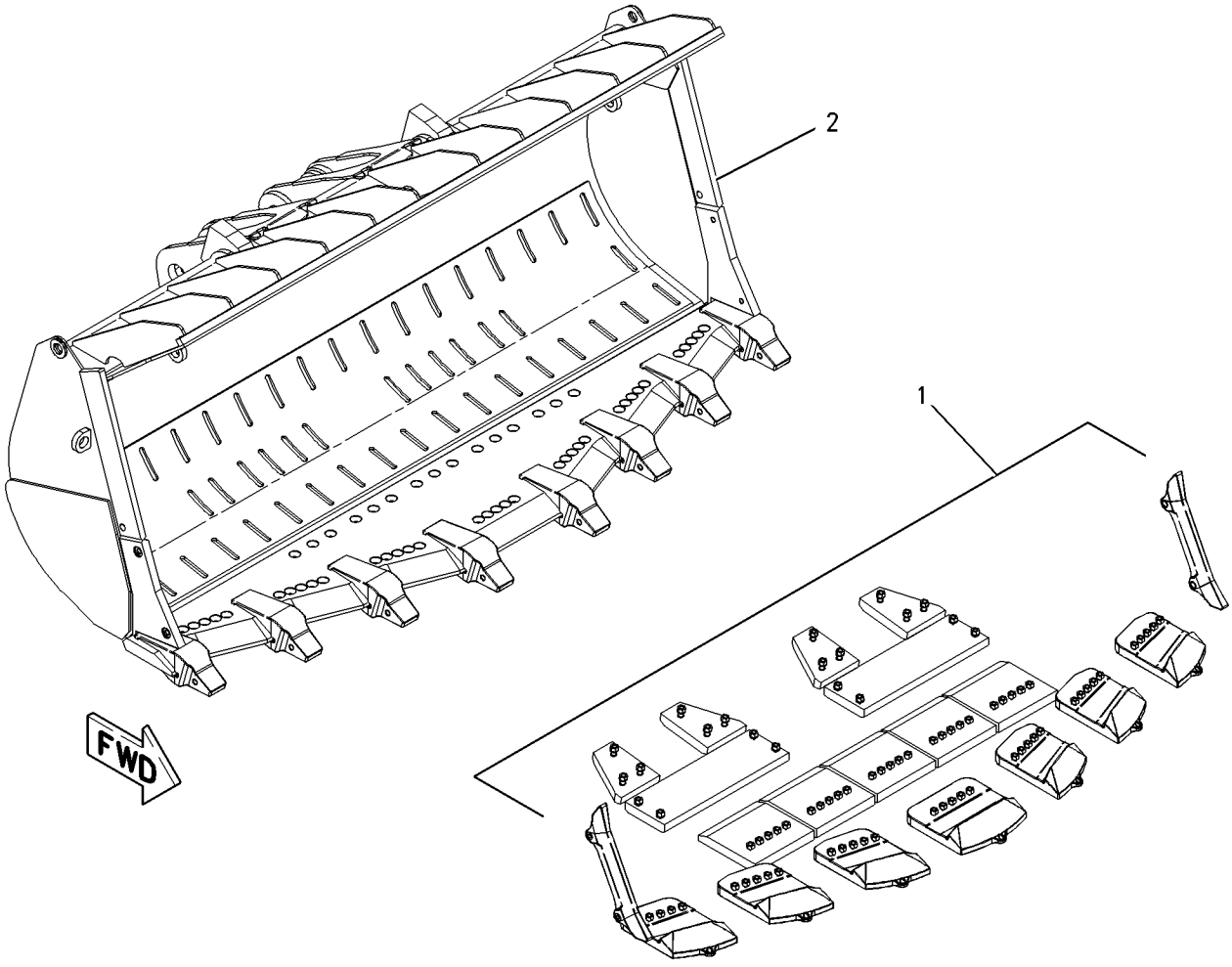

GRAPHIC #1 **<END>** g00947812

WORK TOOLS

257-3686 BUCKET GP-ROCK

S/N: 4421-UP
19.0-CU M (24.9-CU YD)
FOR USE WITH STANDARD AND HIGH LIFT VERSIONS
AN ATTACHMENT

SMCS-6102 **i02294514**

NOTE	REF NO	GRAPHIC REF	PART NUMBER	QTY	PART NAME 1 2 3 4 5 6 (PRODUCT LEVEL)	SEE PAGE
Y	1		*144-1286*	1	EDGE GP-CUTTING	937
Y	2		*257-3687*	1	BUCKET AS-ROCK	924

Y-SEPARATE ILLUSTRATION

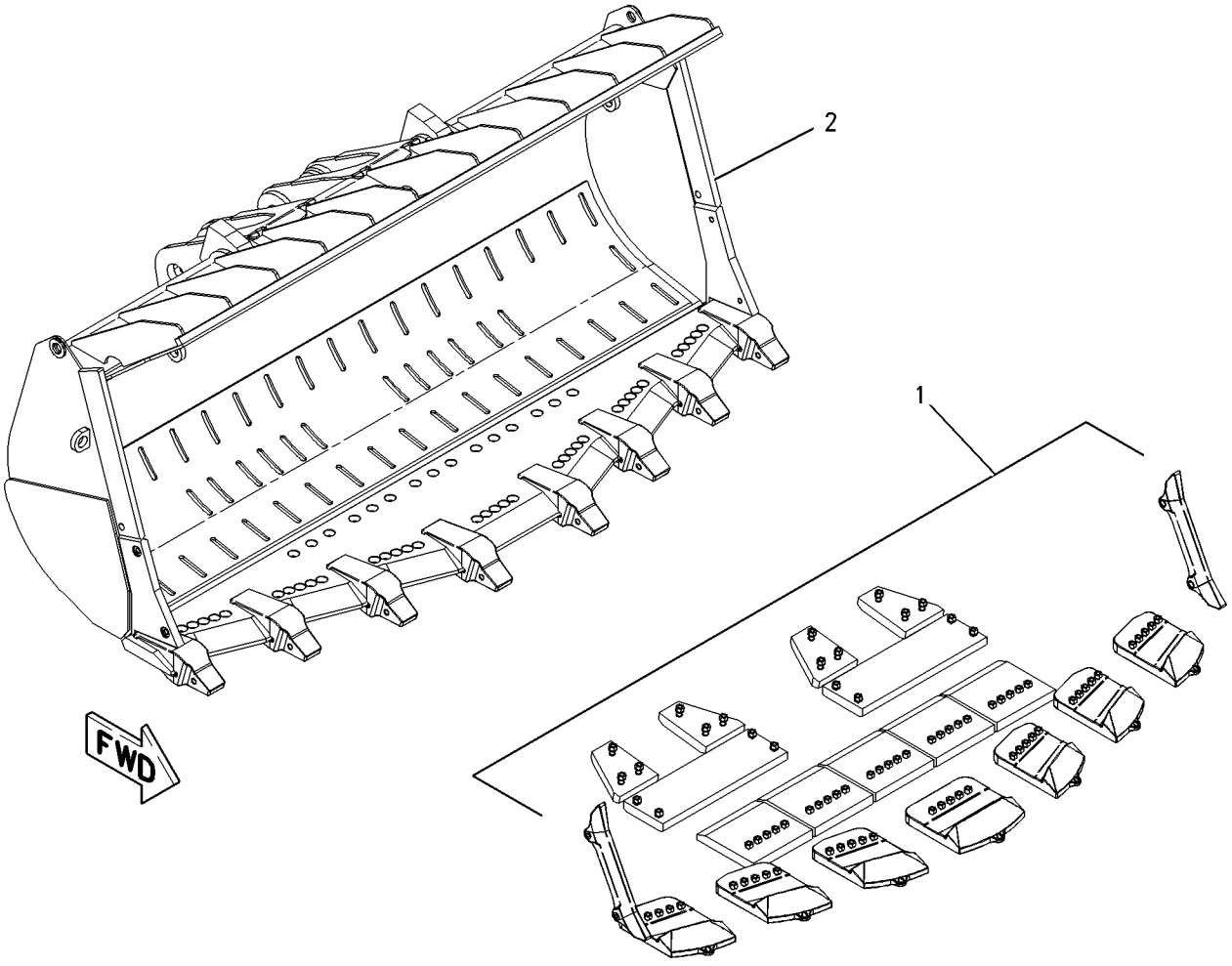

GRAPHIC #1 **<END>** g00947812

WORK TOOLS

257-3688 BUCKET GP-ROCK

S/N: 4421-UP
14.0-CU M (18.3-CU YD)
AN ATTACHMENT

SMCS-6102 **i02294512**

NOTE	REF NO	GRAPHIC REF	PART NUMBER	QTY	PART NAME 1 2 3 4 5 6 (PRODUCT LEVEL)	SEE PAGE
Y	1	1	*144-1286*	1	EDGE GP-CUTTING	937
Y	2	1	**257-3689**	1	BUCKET AS-ROCK	926

Y-SEPARATE ILLUSTRATION

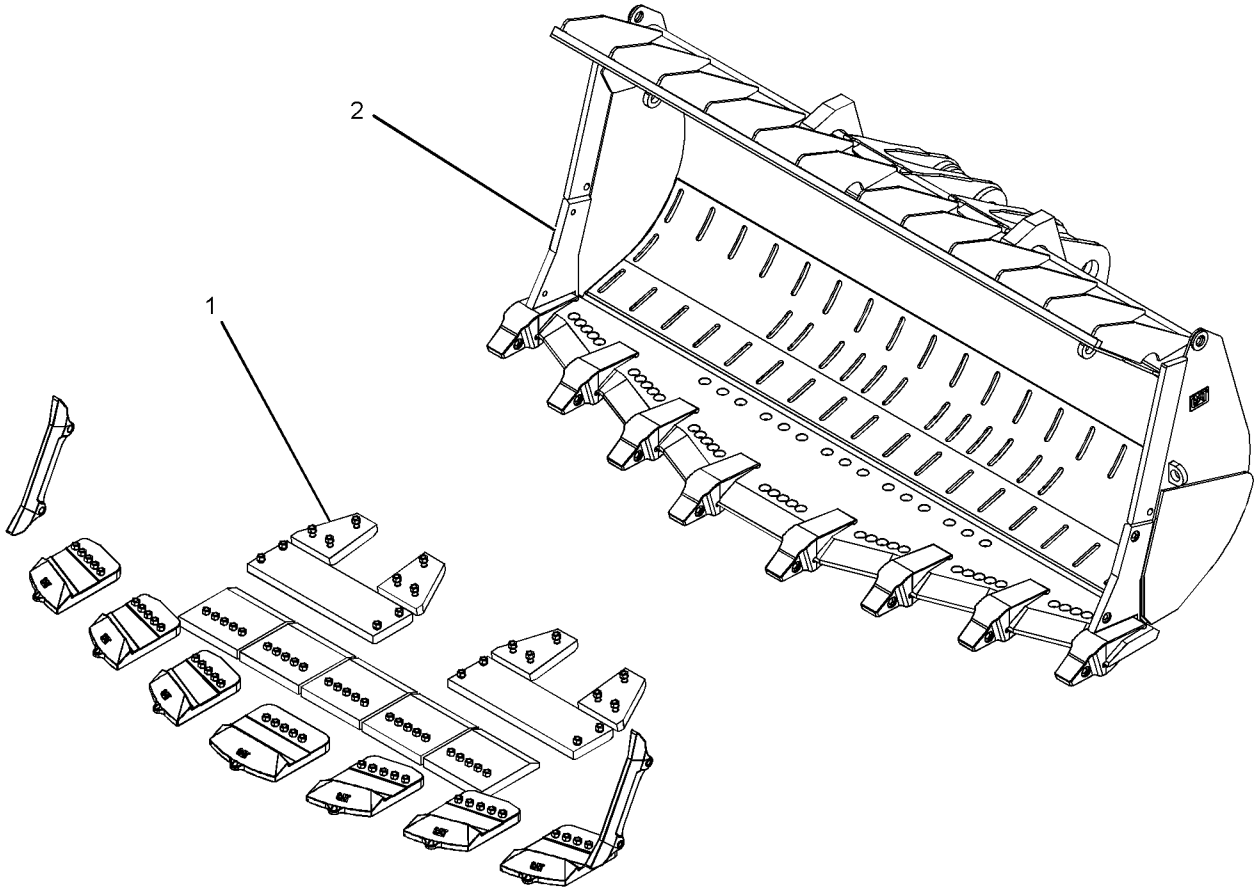

GRAPHIC #1 **<END>** g01150049

WORK TOOLS

257-3690 BUCKET GP-ROCK

S/N: 4421-UP
19-CU M (25-CU YD)
AN ATTACHMENT

SMCS-6102 **i02294515**

NOTE	REF NO	GRAPHIC REF	PART NUMBER	QTY	PART NAME 1 2 3 4 5 6 (PRODUCT LEVEL)	SEE PAGE
Y	1	1	**257-3691**	1	BUCKET AS-ROCK	927
Y	2	1	*144-1285*	1	EDGE GP-CUTTING	936

Y-SEPARATE ILLUSTRATION

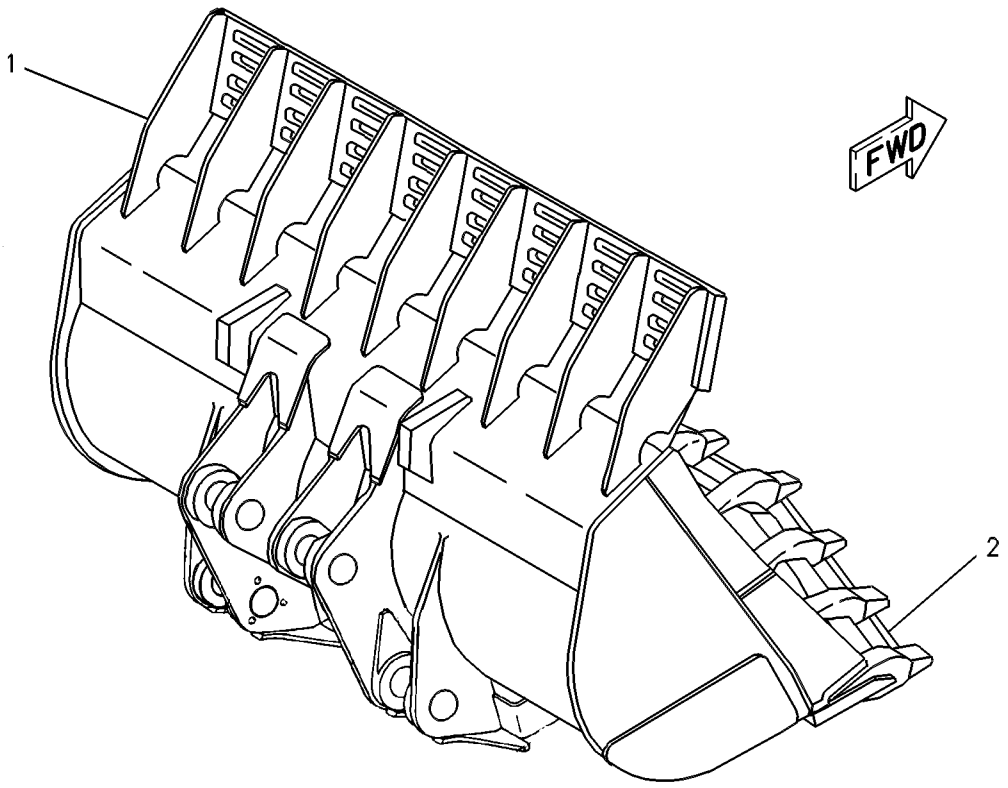

GRAPHIC #1 **<END>** g00088146

WORK TOOLS

144-1285 EDGE GP-CUTTING

S/N: 4421-UP
SIDEBAR PROTECTOR
PART OF 251-4560, 257-3690 BUCKET GP-ROCK
AN ATTACHMENT

SMCS-6801 **i00989272**

NOTE	PART NUMBER	QTY	PART NAME 1 2 3 4 5 6 (PRODUCT LEVEL)	SEE PAGE
	2H-3758	12	BOLT (1 1/4-7X4-IN)	
	5P-8823	55	BOLT-PLOW (1 1/4-7X4.13-IN)	
	6V-8360	8	BOLT-PLOW (1-1/4-7X4.53-IN)	
	109-9030	2	EDGE-SEGMENT (CENTER)	
	117-6805	3	EDGE-SEGMENT (RH)	
	117-6806	3	EDGE-SEGMENT (LH)	
	107-3383	5	EDGE-SEGMENT	
	3K-9770	75	NUT-FULL (1 1/4-7-THD)	
	8E-4708	4	PIN	
	100-4015	2	PLATE-WEAR	
	144-1281	2	PLATE-WEAR	
	144-1282	2	PLATE-WEAR	
	125-0800	2	PROTECTOR-SIDE BAR	
	4T-4707	4	RETAINER	
	4K-0684	20	WASHER-HARD (34X55X6-MM THK)	

<END>

144-1286 EDGE GP-CUTTING

S/N: 4421-UP
SIDEBAR PROTECTOR
PART OF 257-3682, 257-3684, 257-3686, 257-3688 BUCKET GP-ROCK
AN ATTACHMENT

SMCS-6801 **i01049111**

NOTE	REF NO	GRAPHIC REF	PART NUMBER	QTY	PART NAME 1 2 3 4 5 6 (PRODUCT LEVEL)	SEE PAGE
	1	1	**4T-4707**	4	RETAINER	
	2	1	**8E-4708**	4	PIN	
	3	1	**100-4015**	2	PLATE-WEAR	
	4	1	**107-3383**	5	EDGE-SEGMENT	
	5	1	**109-9033**	1	EDGE-SEGMENT (CENTER)	
	6	1	**117-6805**	3	EDGE-SEGMENT (RH) (RH)	
	7	1	**117-6806**	3	EDGE-SEGMENT (LH) (LH)	
	8	1	**125-0800**	2	PROTECTOR-SIDE BAR	
	9	1	**144-1281**	2	PLATE-WEAR	
	10	1	**144-1282**	2	PLATE-WEAR	
	11	1	**2H-3758**	12	BOLT (1 1/4-7X4-IN)	
	12	1	**3K-9770**	70	NUT-FULL (1 1/4-7-THD)	
	13	1	**4K-0684**	20	WASHER-HARD (34X55X6-MM THK)	
	14	1	**5P-8823**	50	BOLT-PLOW (1 1/4-7X4.13-IN)	
	15	1	**6V-8360**	8	BOLT-PLOW (1-1/4-7X4.53-IN)	

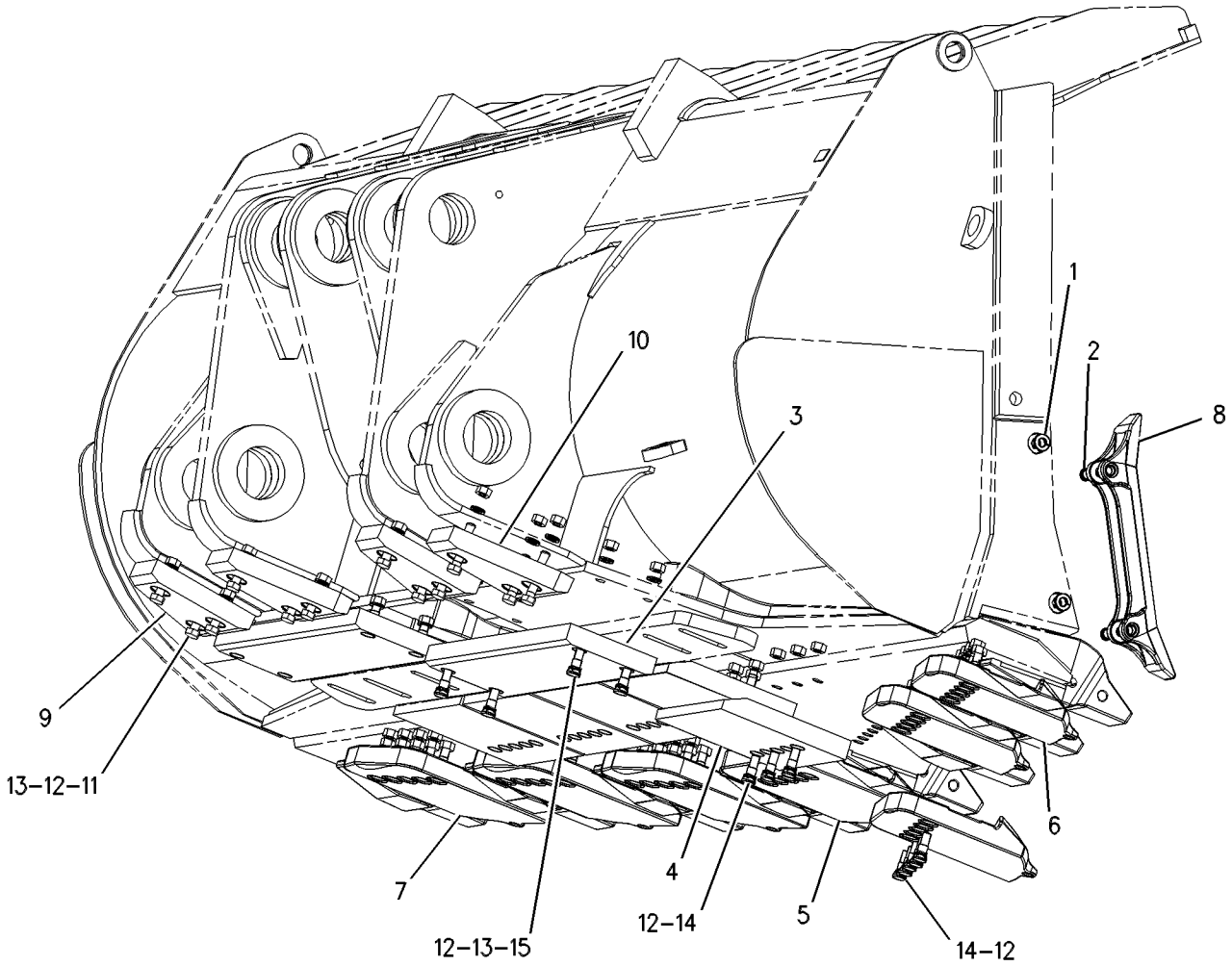

GRAPHIC #1 **<END>** g00552267

WORK TOOLS

208-8820 EDGE GP-CUTTING

S/N: 4421-UP
FOR USE WITH SPADE BASE EDGE AND BASE EDGE ASSEMBLIES
AN ATTACHMENT

SMCS-6801 **i02093673**

NOTE	PART NUMBER	QTY	PART NAME 1 2 3 4 5 6 (PRODUCT LEVEL)	SEE PAGE
	5P-8823	12	BOLT-PLOW (1 1/4-7X4.13-IN)	
	103-1833	2	EDGE-SEGMENT	
	103-1835	1	EDGE-SEGMENT	
	103-1834	1	EDGE-SEGMENT	
	3K-9770	12	NUT-FULL (1 1/4-7-THD)	

<END>

208-8821 EDGE GP-CUTTING

S/N: 4421-UP
FOR USE WITH SPADE BASE EDGE AND BASE EDGE ASSEMBLIES
AN ATTACHMENT

SMCS-6801 **i02093662**

NOTE	PART NUMBER	QTY	PART NAME 1 2 3 4 5 6 (PRODUCT LEVEL)	SEE PAGE
	5P-8823	9	BOLT-PLOW (1 1/4-7X4.13-IN)	
	103-1833	3	EDGE-SEGMENT	
	3K-9770	9	NUT-FULL (1 1/4X7-THD)	

<END>

208-8822 EDGE GP-CUTTING

S/N: 4421-UP
FOR USE WITH SPADE EDGE AND BASE EDGE ASSEMBLIES
AN ATTACHMENT

SMCS-6801 **i02093659**

NOTE	PART NUMBER	QTY	PART NAME 1 2 3 4 5 6 (PRODUCT LEVEL)	SEE PAGE
	5P-8823	15	BOLT-PLOW (1 1/4-7X4.13-IN)	
	103-1833	5	EDGE-SEGMENT	
	3K-9770	15	NUT-FULL (1 1/4X7-THD)	

<END>

WORK TOOLS

208-8829 EDGE GP-CUTTING

S/N: 4421-UP

FOR USE WITH HALF ARROWS USED ON SPADE BASE EDGE AND BASE EDGE ASSEMBLIES AN ATTACHMENT

SMCS-6801 **i02093651**

NOTE	PART NUMBER	QTY	PART NAME 1 2 3 4 5 6 (PRODUCT LEVEL)	SEE PAGE
	5P-8823	12	BOLT-PLOW (1 1/4-7X4.13-IN)	
	107-3383	2	EDGE-SEGMENT	
	103-1835	1	EDGE-SEGMENT	
	103-1834	1	EDGE-SEGMENT	
	3K-9770	12	NUT-FULL (1 1/4-7-THD)	

<END>

208-8830 EDGE GP-CUTTING

S/N: 4421-UP

FOR USE WITH HALF ARROWS USED ON SPADE BASE EDGE AND BASE EDGE AN ATTACHMENT

SMCS-6801 **i02093645**

NOTE	PART NUMBER	QTY	PART NAME 1 2 3 4 5 6 (PRODUCT LEVEL)	SEE PAGE
	5P-8823	9	BOLT-PLOW (1 1/4-7X4.13-IN)	
	107-3383	3	EDGE-SEGMENT	
	3K-9770	9	NUT-FULL (1 1/4-7-THD)	

<END>

208-8831 EDGE GP-CUTTING

S/N: 4421-UP

FOR USE WITH HALF ARROWS USED ON SPADE BASE EDGE AND BASE EDGE ASSEMBLIES AN ATTACHMENT

SMCS-6801 **i02093637**

NOTE	PART NUMBER	QTY	PART NAME 1 2 3 4 5 6 (PRODUCT LEVEL)	SEE PAGE
	5P-8823	15	BOLT-PLOW (1 1/4-7X4.13-IN)	
	103-1833	2	EDGE-SEGMENT	
	107-3383	3	EDGE-SEGMENT	
	3K-9770	15	NUT-FULL (1 1/4-7-THD)	

<END>

WORK TOOLS

208-8832 EDGE GP-CUTTING

S/N: 4421-UP

FOR USE WITH HALF ARROWS USED ON SPADE BASE EDGE AND BASE EDGE ASSEMBLIES

AN ATTACHMENT

SMCS-6801 **i02093649**

NOTE	PART NUMBER	QTY	PART NAME 1 2 3 4 5 6 (PRODUCT LEVEL)	SEE PAGE
	5P-8823	12	BOLT-PLOW (1 1/4-7X4.13-IN)	
	107-3383	2	EDGE-SEGMENT	
	3K-9770	12	NUT-FULL (1 1/4-7-THD)	

<END>

208-8833 EDGE GP-CUTTING

S/N: 4421-UP

FOR USE WITH HALF ARROWS USED ON SPADE BASE EDGE AND BASE EDGE ASSEMBLIES

AN ATTACHMENT

SMCS-6801 **i02093670**

NOTE	PART NUMBER	QTY	PART NAME 1 2 3 4 5 6 (PRODUCT LEVEL)	SEE PAGE
	5P-8823	15	BOLT-PLOW (1 1/4-7X4.13-IN)	
	107-3383	5	EDGE-SEGMENT	
	3K-9770	15	NUT-FULL (1 1/4-7-THD)	

<END>

232-0163 PROTECTOR GP-EDGE

S/N: 4421-UP

AN ATTACHMENT

SMCS-6120 **i02153523**

NOTE	PART NUMBER	QTY	PART NAME 1 2 3 4 5 6 (PRODUCT LEVEL)	SEE PAGE
	209-9311	40	BOLT-PLOW (1-1/4X7X5.52-UNJC THD)	
	109-9030	2	EDGE-SEGMENT (CENTER)	
	117-6805	3	EDGE-SEGMENT (RH)	
	117-6806	3	EDGE-SEGMENT (LH)	
	5P-8362	40	NUT (1 1/4-7-THD)	
	3K-9770	40	NUT-FULL (1 1/4X7-THD)	
	195-7230	2	PLATE-WEAR (CENTER)	
	195-7231	3	PLATE-WEAR (RH)	
	195-7232	3	PLATE-WEAR (LH)	
	4K-0684	160	WASHER-HARD (34X55X6-MM THK)	

<END>

WORK TOOLS

100-5589 TIP GP-ABRASION

S/N: 4421-UP
HEAVY-DUTY
PART OF 204-7042 TIP GP-ABRASION
AN ATTACHMENT

SMCS-6805 **i02110562**

NOTE	REF NO	GRAPHIC REF	PART NUMBER	QTY	PART NAME 1 2 3 4 5 6 (PRODUCT LEVEL)	SEE PAGE
	1	1	**113-4709**	1	RETAINER AS	
	2	1	**113-4708**	1	PIN	
	3	1	**9U-9703**	1	TIP-ABRASION (HEAVY-DUTY)	

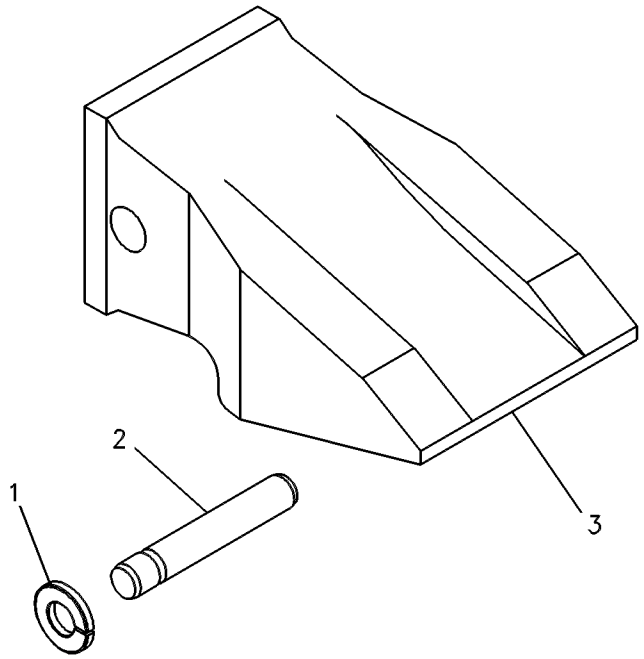

GRAPHIC #1 **<END>** g00105130

WORK TOOLS

101-7273 TIP GP-ABRASION

S/N: 4421-UP
HEAVY DUTY
AN ATTACHMENT

SMCS-6805 **i00097210**

NOTE	PART NUMBER	QTY	PART NAME 1 2 3 4 5 6 (PRODUCT LEVEL)	SEE PAGE
	134-1808	1	PIN-G.E.T.	
	134-1809	1	RETAINER AS-G.E.T.	
	6I-8803	1	TIP-ABRASION	

<END>

204-7042 TIP GP-ABRASION

S/N: 4421-UP
HEAVY DUTY
AN ATTACHMENT

SMCS-6805 **i01545227**

NOTE	PART NUMBER	QTY	PART NAME 1 2 3 4 5 6 (PRODUCT LEVEL)	SEE PAGE
Y	*100-5589*	1	TIP GP-ABRASION	941
Y-SEPARATE ILLUSTRATION				

<END>

WORK TOOLS

132-1066 TIP GP-GENERAL PURPOSE

S/N: 4421-UP

AN ATTACHMENT

SMCS-6805 **i01943603**

NOTE	REF NO	GRAPHIC REF	PART NUMBER	QTY	PART NAME 1 2 3 4 5 6 (PRODUCT LEVEL)	SEE PAGE
	1	1	**136-6782**	1	TIP-GENERAL PURPOSE	
	2	1	**136-6783**	1	PIN AS	

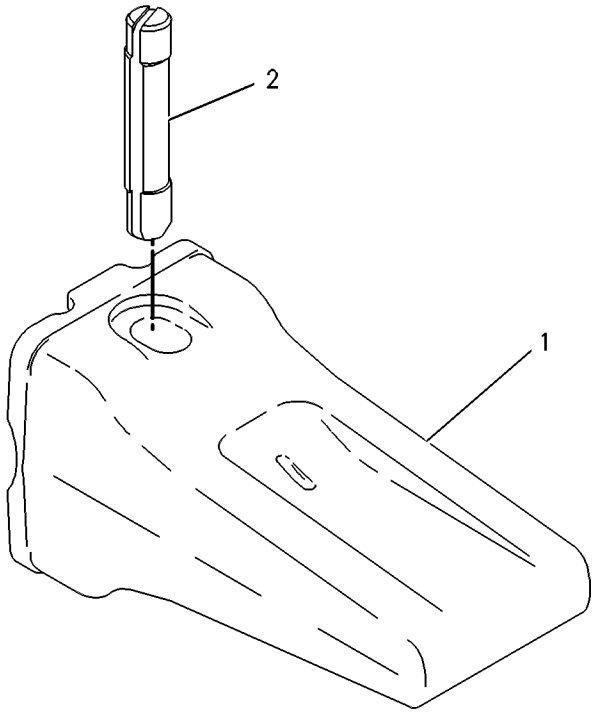

GRAPHIC #1 **<END>** g00267212

100-5588 TIP GP-LONG

S/N: 4421-UP
HEAVY-DUTY
PART OF 204-7041 TIP GP-LONG
AN ATTACHMENT

SMCS-6805 **i02110585**

NOTE	REF NO	GRAPHIC REF	PART NUMBER	QTY	PART NAME 1 2 3 4 5 6 (PRODUCT LEVEL)	SEE PAGE
	1	1	**113-4709**	1	RETAINER AS	
	2	1	**113-4708**	1	PIN	
	3	1	**9U-9702**	1	TIP-LONG (HEAVY-DUTY)	

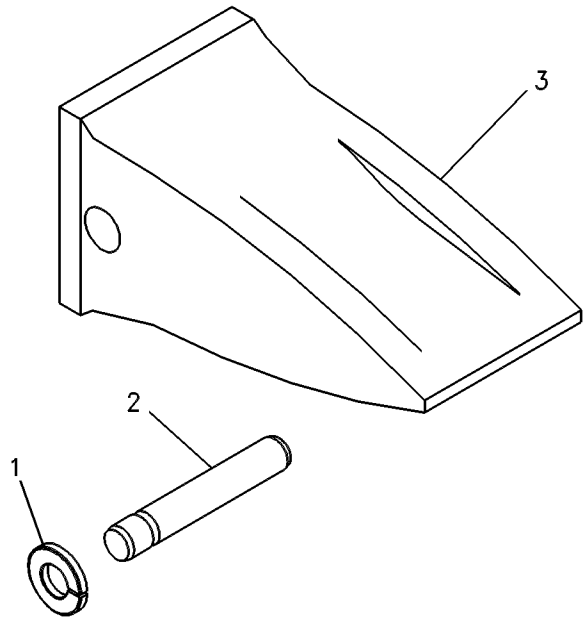

GRAPHIC #1 **<END>** g00374839

WORK TOOLS

101-7269 TIP GP-LONG

S/N: 4421-UP
HEAVY DUTY
AN ATTACHMENT

SMCS-6805 **i00096374**

NOTE	PART NUMBER	QTY	PART NAME 1 2 3 4 5 6 (PRODUCT LEVEL)	SEE PAGE
	134-1808	1	PIN-G.E.T.	
	134-1809	1	RETAINER AS-G.E.T.	
	6I-8802	1	TIP-LONG	

<END>

204-7041 TIP GP-LONG

S/N: 4421-UP
HEAVY DUTY
AN ATTACHMENT

SMCS-6805 **i01545226**

NOTE	PART NUMBER	QTY	PART NAME 1 2 3 4 5 6 (PRODUCT LEVEL)	SEE PAGE
Y	*100-5588*	1	TIP GP-LONG	944
Y-SEPARATE ILLUSTRATION				

<END>

113-9690 TIP GP-PENETRATION

S/N: 4421-UP
AN ATTACHMENT

SMCS-6805 **i00103527**

NOTE	PART NUMBER	QTY	PART NAME 1 2 3 4 5 6 (PRODUCT LEVEL)	SEE PAGE
	134-1808	1	PIN-G.E.T.	
	134-1809	1	RETAINER AS-G.E.T.	
	117-6809	1	TIP-PENETRATION	

<END>

WORK TOOLS

135-9738 TIP GP-PENETRATION

S/N: 4421-UP
V780
AN ATTACHMENT

SMCS-6805 **i02052119**

NOTE	REF NO	GRAPHIC REF	PART NUMBER	QTY	PART NAME 1 2 3 4 5 6 (PRODUCT LEVEL)	SEE PAGE
	1	1	**136-6783**	1	PIN AS	
	2	1	**195-7278**	1	TIP-PENETRATION	

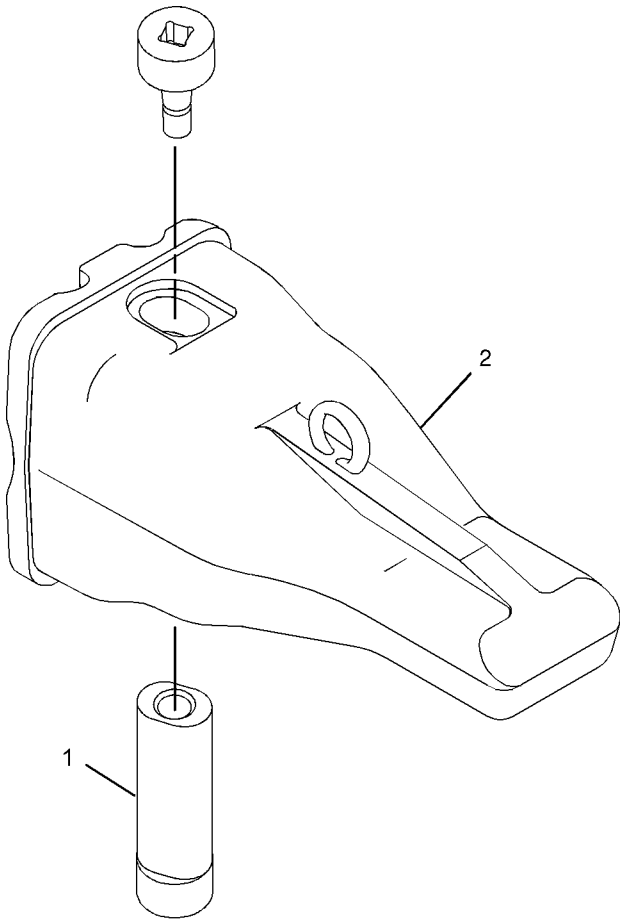

GRAPHIC #1 **<END>** g01057687

WORK TOOLS

195-7276 TIP GP-PENETRATION

S/N: 4421-UP
HEAVY DUTY
AN ATTACHMENT

SMCS-6805 **i02152500**

NOTE	PART NUMBER	QTY	PART NAME 1 2 3 4 5 6 (PRODUCT LEVEL)	SEE PAGE
	134-1808	1	PIN	
	134-1809	1	RETAINER AS	
	135-9800	1	TIP-PENETRATION	

<END>

WORK TOOLS

117-6809 TIP-PENETRATION

S/N: 4421-UP

AN ATTACHMENT

SMCS-6805 **i01294576**

NOTE	REF NO	GRAPHIC REF	PART NUMBER	QTY	PART NAME 1 2 3 4 5 6 (PRODUCT LEVEL)	SEE PAGE
					(NO SERVICED PARTS)	

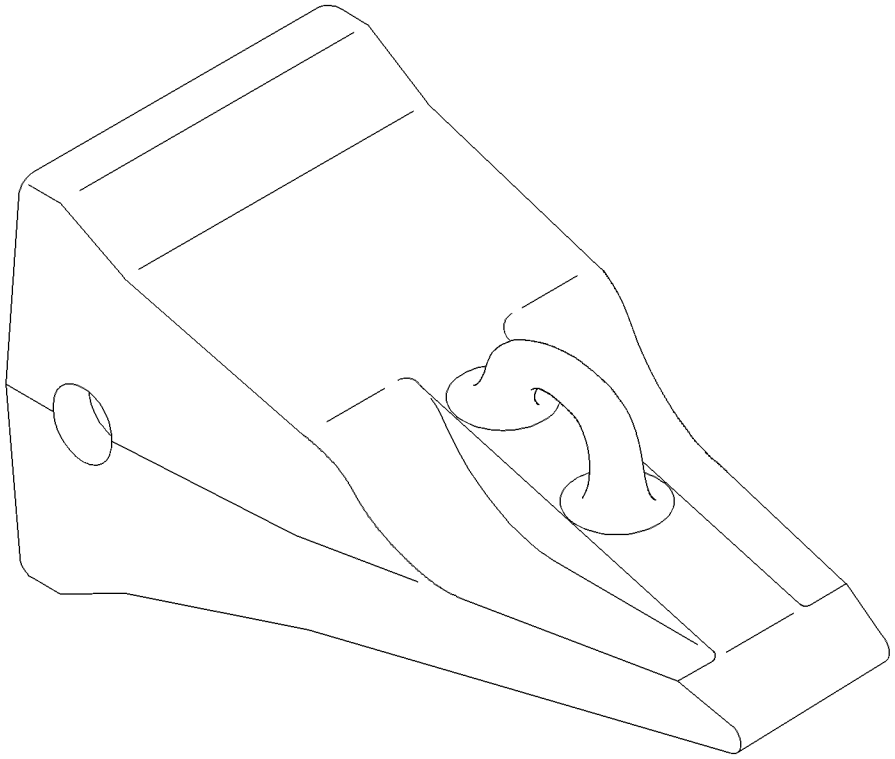

GRAPHIC #1 **<END>** g00398518

WORK TOOLS

8X-0740 WING GP-BUCKET

S/N: 4421-UP

PROVIDES WINGS TO CLEAR EXCESS MATERIAL LEFT IN TIRE PATH

AN ATTACHMENT

SMCS-6120, 6820 **i02155840**

NOTE	REF NO	GRAPHIC REF	PART NUMBER	QTY	PART NAME 1 2 3 4 5 6 (PRODUCT LEVEL)	SEE PAGE
	1	1	**2A-6937**	1	PLATE AS (LH)	
	2	1	**2A-6936**	1	PLATE AS (RH)	

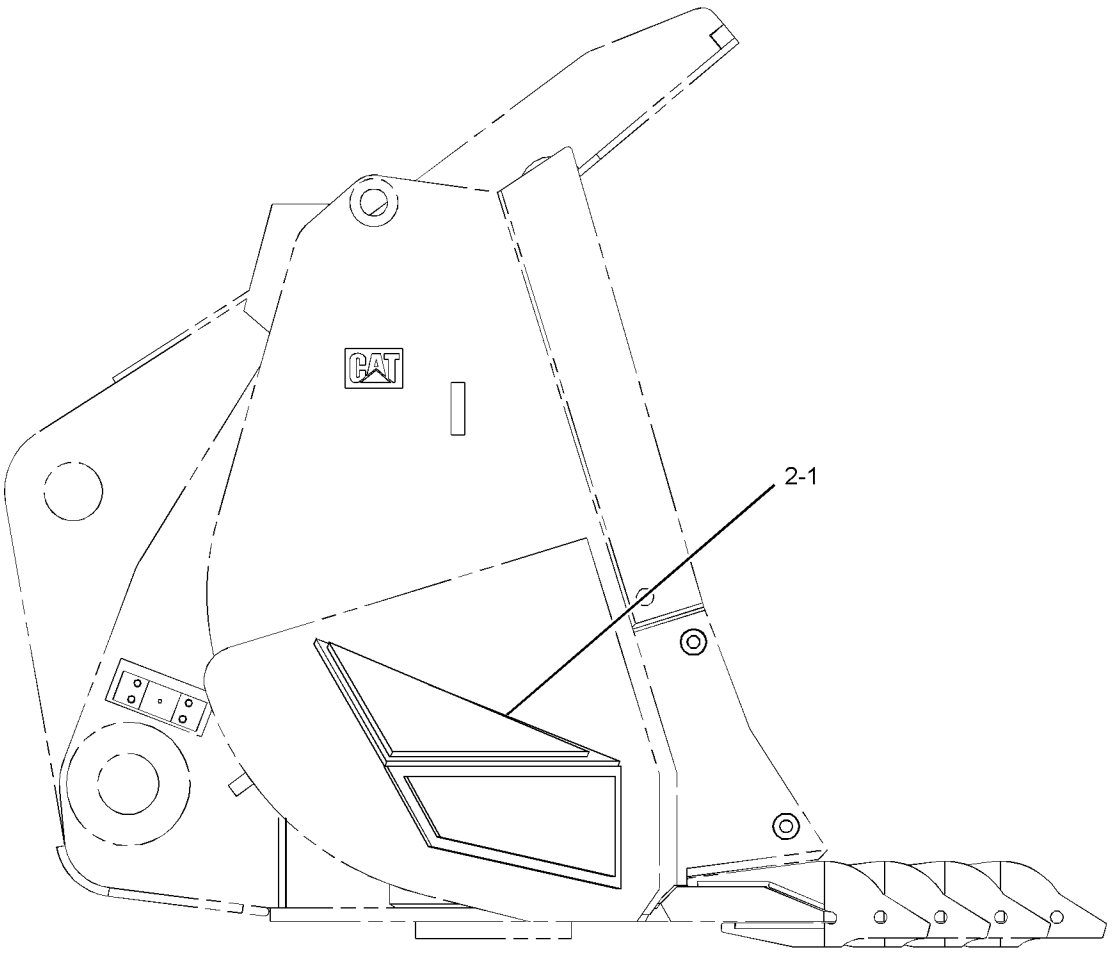

RIGHT SIDE VIEW

GRAPHIC #1

<END>

g01094395

OPERATOR STATION

173-1028 ADJUSTER GP-SEAT

S/N: 4421-UP

PART OF 178-7910 SEAT GP

SMCS-7321 **i02387199**

NOTE	REF NO	GRAPHIC REF	PART NUMBER	QTY	PART NAME 1 2 3 4 5 6 (PRODUCT LEVEL)	SEE PAGE
	1	1	**4V-8256**	4	SPRING	
	2	1	**117-4492**	1	ROD	
	3	1	**136-1544**	1	LATCH AS-LH	
	4	1	**156-5545**	1	LATCH AS-RH	
	5	1	**164-4531**	1	ROD	
	6	1	**170-1112**	1	PLATE AS	
	7	1	**170-1114**	1	HANDLE (SLIDE ADJUSTMENT)	
	8	1	**170-1115**	1	HANDLE (TILT ADJUSTMENT)	
	9	1	**132-0338**	2	WASHER-PLASTIC (13X31.7X0.8-MM THK)	
	10	1	**2K-4973**	2	LOCKNUT (3/8-16 THD)	
	11	1	**7X-0608**	2	WASHER-HARD (10.2X16X2-MM THK)	

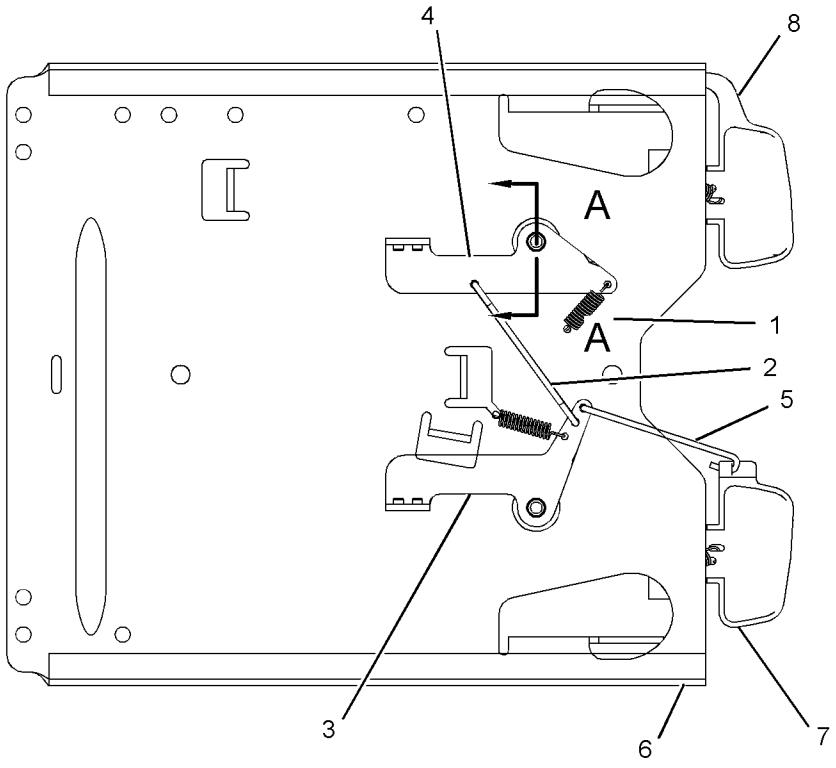

BOTTOM VIEW

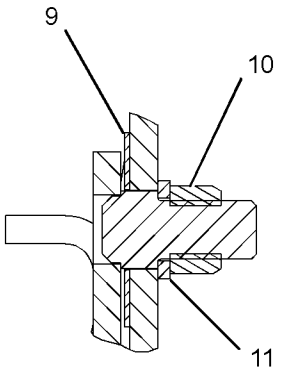

SECTION A-A

GRAPHIC #1 **<END>** g01191495

OPERATOR STATION

237-3970 AIR COMPRESSOR GP-SEAT

S/N: 4421-UP

PART OF 277-8032 SUSPENSION GP-SEAT

SMCS-731S, 7324 **i02012095**

NOTE	REF NO	GRAPHIC REF	PART NUMBER	QTY	PART NAME 1 2 3 4 5 6 (PRODUCT LEVEL)	SEE PAGE
					(NO SERVICED PARTS)	

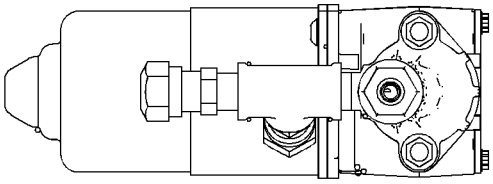

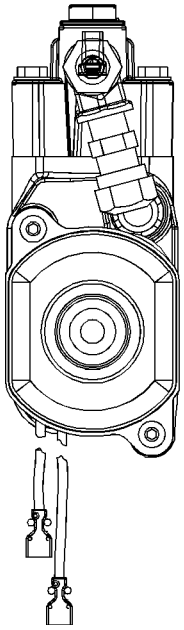

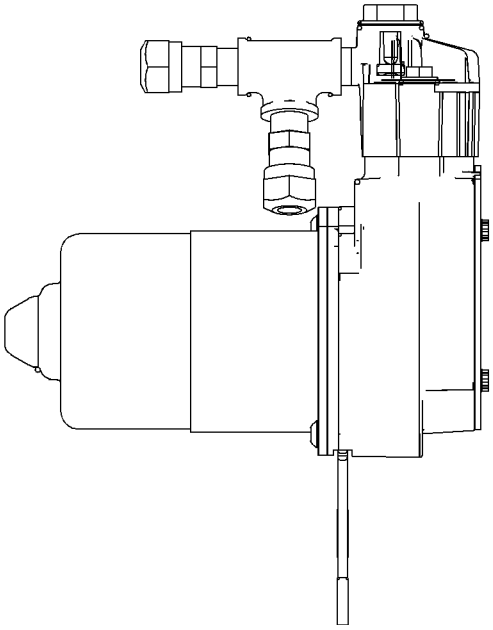

GRAPHIC #1 **<END>** g01040576

OPERATOR STATION

242-8026 AIR CONDITIONER AR

S/N: 4421-UP

PART OF 242-0341 CAB AR

SMCS-7320 **i02286574**

NOTE	PART NUMBER	QTY	PART NAME 1 2 3 4 5 6 (PRODUCT LEVEL)	SEE PAGE
Y	**123-8576**	1	AIR CONDITIONER GP	953
Y	*242-5333*	1	DUCT GP-AIR	980
Y	**250-9455**	1	FILTER GP-CAB AIR	982

Y-SEPARATE ILLUSTRATION

<END>

OPERATOR STATION

123-8576 AIR CONDITIONER GP

S/N: 4421-UP

PART OF 242-8026 AIR CONDITIONER AR

SMCS-7320 **i02279582**

NOTE	REF NO	GRAPHIC REF	PART NUMBER	QTY	PART NAME 1 2 3 4 5 6 (PRODUCT LEVEL)	SEE PAGE
	1	1	**130-3307**	1	COIL AS-HEATER	
	2	1	**3E-6282**	1	COIL AS-EVAPORATOR	
	3	1	**174-1494**	1	MOTOR AS-BLOWER (24-VOLT, A/C, HEATER)	
		1	**3E-3365**	1	WEDGE-RECEPTACLE LOCK (2-PIN)	
		1	**9W-0852**	2	PIN-CONNECTOR (14-GA)	
		1	**102-8802**	1	KIT-RECEPTACLE (2-PIN)	
					(INCLUDES RECEPTACLE AS AND WEDGE)	
	4	1	**8P-5141**	2	PLATE-ORIFICE	
	5	1	**3E-6280**	1	COVER	
	6	1	**3T-6774**	1	GROMMET	
E	7	1	**136-1953**		HOSE (48-CM)	
	8	1	**3E-6147**	1	INSULATION	
	9	1	**3E-7252**	1	INSULATION	
	10	1	**3E-7253**	2	INSULATION	
	11	1	**130-3590**	2	INSULATION	
	12	1	**3E-7255**	2	INSULATION	
	13	1	**3E-7256**	1	INSULATION	
	14	1	**3E-7257**	1	INSULATION	
D	15	1	**5P-5926**		SEAL (0.12-M)	
	16	1	**3E-7258**	1	INSULATION	
D	17	1	**5P-5672**		SEAL (0.3-M)	
	18	1	**5P-3945**	1	CAP	
	19	1	**5P-3950**	1	CAP	
	20	1	**9X-7381**	1	SEAL-O-RING	
	21	1	**9X-7383**	1	SEAL-O-RING	
	22	1	**9X-7384**	1	SEAL-O-RING	
	23	1	**3E-0400**	2	BLOWER AS	
E	24	1	**5P-7070**		INSULATION-STRIP (70-CM)	
	25	1	**5P-6670**	2	FILM-INSTRUCTION (WATER IN, WATER OUT)	
	26	1	**6P-8855**	2	SPACER (0.56X0.625X3-IN THK)	
	27	1	**7K-3176**	1	COUPLING AS-REFRIGERANT	
	28	1	**2H-3924**	2	LOCKWASHER	
	29	1	**5P-3928**	1	COUPLING AS-REFRIGERANT	
		1	**107-4395**	1	VALVE AS	
		1	**107-4396**	1	GASKET	
	30	1	**6V-1668**	2	WASHER (6.5X29.1X3-MM THK)	
	31	1	**3E-6145**	1	TUBE AS	
	32	1	**3E-6144**	1	TUBE AS	
	33	1	**9X-7382**	1	SEAL-O-RING	
	34	1	**3S-2093**	3	STRAP-CABLE	
	35	1	**9X-2488**	4	CLAMP-HOSE	
M	36	1	**8T-4137**	16	BOLT (M10X1.5X20-MM)	
	37	1	**8T-4121**	16	WASHER-HARD (11X21X2.5-MM THK)	
M	38	1	**7X-0490**	1	BOLT (M6X200-MM)	
M	39	1	**8T-4189**	3	BOLT (M8X1.25X20-MM)	
	40	1	**5P-4116**	3	WASHER-HARD (8.8X20.5X2-MM THK)	
	41	1	**6L-7159**	2	SCREW-MACHINE (8-32X0.313-IN)	
	42	1	**3B-4501**	2	LOCKWASHER	
M	43	1	**6V-7728**	1	BOLT (M6X1X45-MM)	
M	44	1	**6V-8837**	4	BOLT (M6X1X16-MM)	
	45	1,1	**8T-4205**	14	WASHER-HARD (7.2X14.5X2-MM THK)	
	46	1	**2H-3925**	2	LOCKWASHER	
M	47	1	**5C-2890**	6	NUT (M6X1-THD)	
C	48	1	**2D-6235**	1	LOCKNUT (1/4-20-THD)	
	49	1	**5B-6565**	2	NUT	
	50	1	**6V-9170**	2	NUT-BULKHEAD (1-14-THD)	

123-8576 AIR CONDITIONER GP *(contd.)* i02279582

NOTE	REF NO	GRAPHIC REF	PART NUMBER	QTY	PART NAME 1 2 3 4 5 6 (PRODUCT LEVEL)	SEE PAGE
	51	1	**8C-4586**	2	CLAMP	
	52	1	**3E-5464**	1	SWITCH AS-TEMPERATURE (REFRIGERANT)	
	53	1	**9G-1950**	1	RESISTOR	
C	54	1	**247-0345**	1	HARNESS AS-HEATER & AIR COND	
		1	**168-9112**	3	SEAL	
		1	**155-2274**	1	KIT-CONNECTING PLUG (6-PIN)	
		1	**155-2271**	1	KIT-CONNECTING PLUG (4-PIN)	
		1	**155-2270**	2	KIT-CONNECTING PLUG (2-PIN)	
					(EACH KIT INCLUDES PLUG AS AND WEDGE)	
		1	**8T-8737**	2	PLUG-SEAL	
		1	**3S-2093**	10	STRAP-CABLE	
	55	1	**130-3304**	1	CASE AS	
		1	**6K-3274**	4	PLATE-RIVET	
M		1	**6V-9632**	2	NUT-WELD (M6X1-THD)	
		1	**7T-1099**	4	LINK	
		1	**033-7291**	4	RIVET	
	56	1	**3E-6277**	1	HOUSING AS	
C	57	1	**239-5535**	1	VALVE AS-FLOW CONTROL (WATER)	
		1	**4B-4863**	4	WASHER (4.7X11X1.2-MM THK)	
		1	**4M-6582**	1	SEAL-O-RING	
		1	**124-0312**	4	SCREW-PAN HEAD (8-16X0.32-IN)	
M	58	1	**8T-4171**	2	BOLT (M6X1X12-MM)	
C	59	1	**242-2455**	1	BRACKET	
	60	1	**247-0283**	1	LOCK-CONNECTOR	
	61	1	**4M-6582**	1	SEAL-O-RING	
C	62	1	**239-9368**	1	RESISTOR AS	
D	63	1	**5P-5908**		SEAL (0.2-M)	
C	64	1	**9X-2185**	4	SCREW (8-15X11.11-MM)	

C-CHANGE FROM PREVIOUS TYPE
D-ORDER BY THE METER
E-ORDER BY THE CENTIMETER
M-METRIC PART

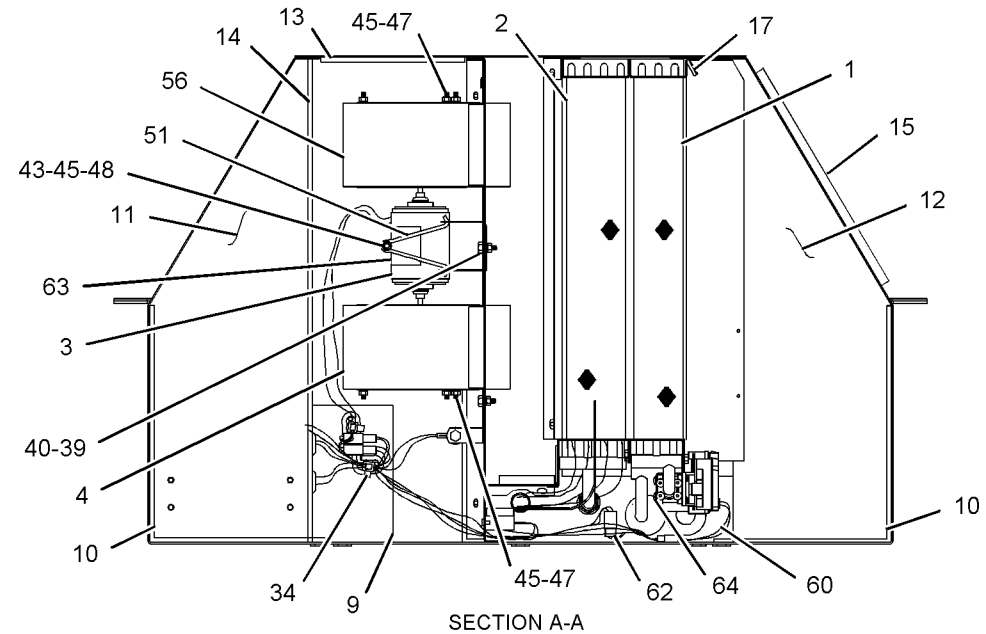

SECTION A-A

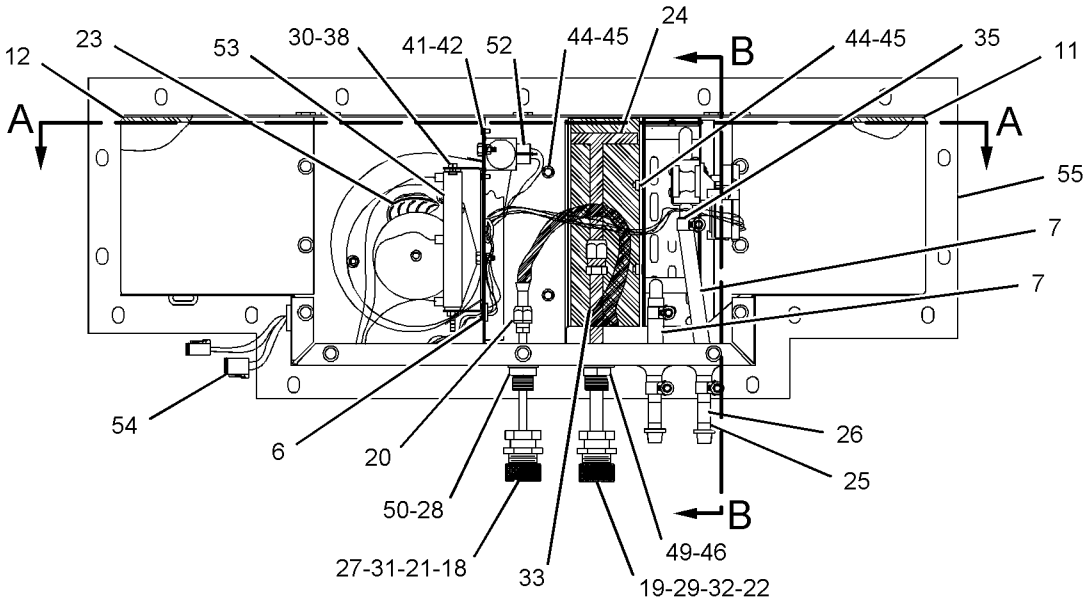

(SHOWN WITH COVER REMOVED)

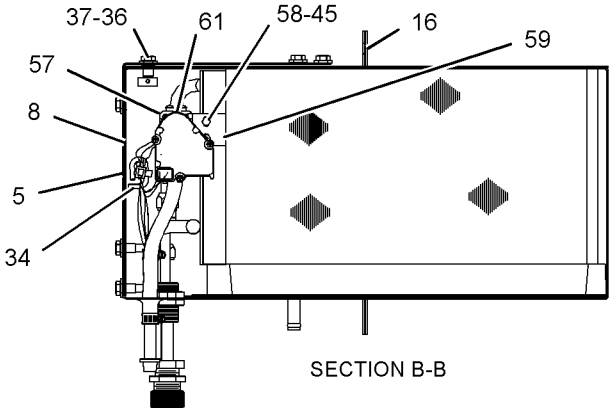

SECTION B-B

GRAPHIC #1 **<END>** g01141322

OPERATOR STATION

214-7635 ARM GP-WINDOW WIPER–FRONT

S/N: 4421-UP

PART OF 242-1901 WIPER & WASHER GP-WINDOW

SMCS-7305 **i02023666**

NOTE	REF NO	GRAPHIC REF	PART NUMBER	QTY	PART NAME 1 2 3 4 5 6 (PRODUCT LEVEL)	SEE PAGE
M	1	1	**191-8921**	4	BOLT-SOCKET HEAD (M6X1X25-MM)	
	2	1	**227-7392**	4	WASHER (6.3X10.3X0.4-MM THK)	
M	3	1	**6V-8225**	4	NUT (M6X1-THD)	
	4	1	**136-3190**	1	NOZZLE AS-WASHER	
	5	1	**136-3188**	3	CLIP	

M-METRIC PART

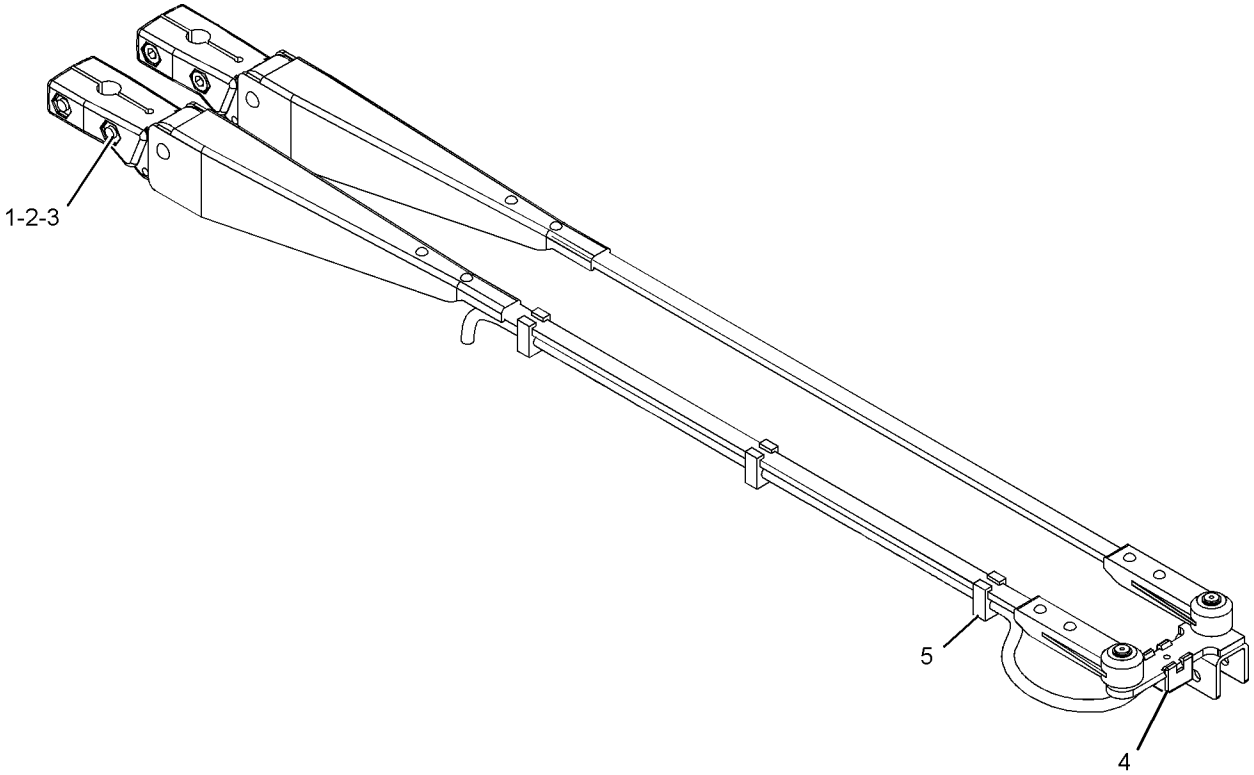

GRAPHIC #1 **<END>** g01021918

OPERATOR STATION

242-1903 BOX GP-STORAGE

S/N: 4421-UP

PART OF 242-0341 CAB AR

SMCS-7268 **i02148166**

NOTE	REF NO	GRAPHIC REF	PART NUMBER	QTY	PART NAME 1 2 3 4 5 6 (PRODUCT LEVEL)	SEE PAGE
	1	1	**3V-7689**	1	HANDLE AS	
	2	1	**164-0427**	1	MAT	
	3	1	**164-0431**	1	SHEET	
	4	1	**242-3493**	1	COVER AS-ACCESS	
	5	1	**242-3494**	1	BOX AS	
Y	6	1	*251-0124*	1	BOX GP-STORAGE	958
	7	1	**8T-4121**	5	WASHER-HARD (11X21X2.5-MM THK)	
M	8	1	**8T-4137**	2	BOLT (M10X1.5X20-MM)	
M	9	1	**8T-4185**	3	BOLT (M10X1.5X50-MM)	
M	10	1	**8T-4189**	8	BOLT (M8X1.25X20-MM)	
	11	1	**8T-4224**	8	WASHER-HARD (8.8X16X2-MM THK)	
	12	1	**8V-7010**	2	BUMPER	

M-METRIC PART
Y-SEPARATE ILLUSTRATION

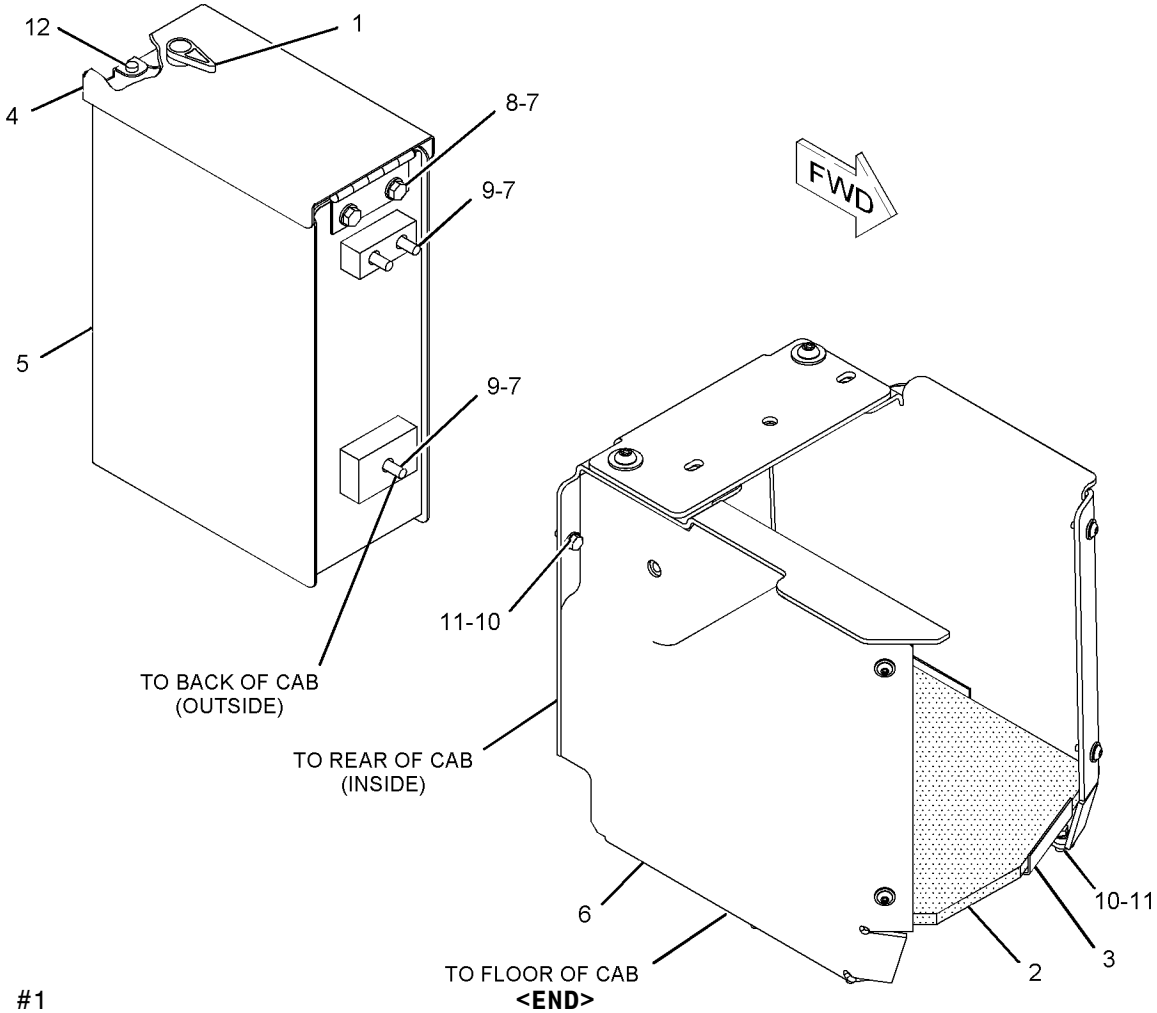

GRAPHIC #1

<END>

g01091204

OPERATOR STATION

251-0124 BOX GP-STORAGE

S/N: 4421-UP

PART OF 242-1903 BOX GP-STORAGE

SMCS-7268 **i02148168**

NOTE	REF NO	GRAPHIC REF	PART NUMBER	QTY	PART NAME 1 2 3 4 5 6 (PRODUCT LEVEL)	SEE PAGE
	1	1	**251-6484**	1	BOX AS (FRONT)	
	2	1	**251-6499**	1	PLATE AS	
M		1	**8T-3490**	1	NUT-WELD (M10X1.5-THD)	
	3	1	**251-0123**	1	BOX AS	
	4	1	**8T-4222**	2	WASHER-PLATED (11X32X2.5-MM THK)	
	5	1	**9X-2038**	4	WASHER (7X19X2-MM THK)	
M	6	1	**9X-2040**	2	SCREW-TRUSS HEAD (M10X1.5X25-MM)	
M	7	1	**9X-2045**	4	SCREW-TRUSS HEAD (M6X1X20-MM)	

M-METRIC PART

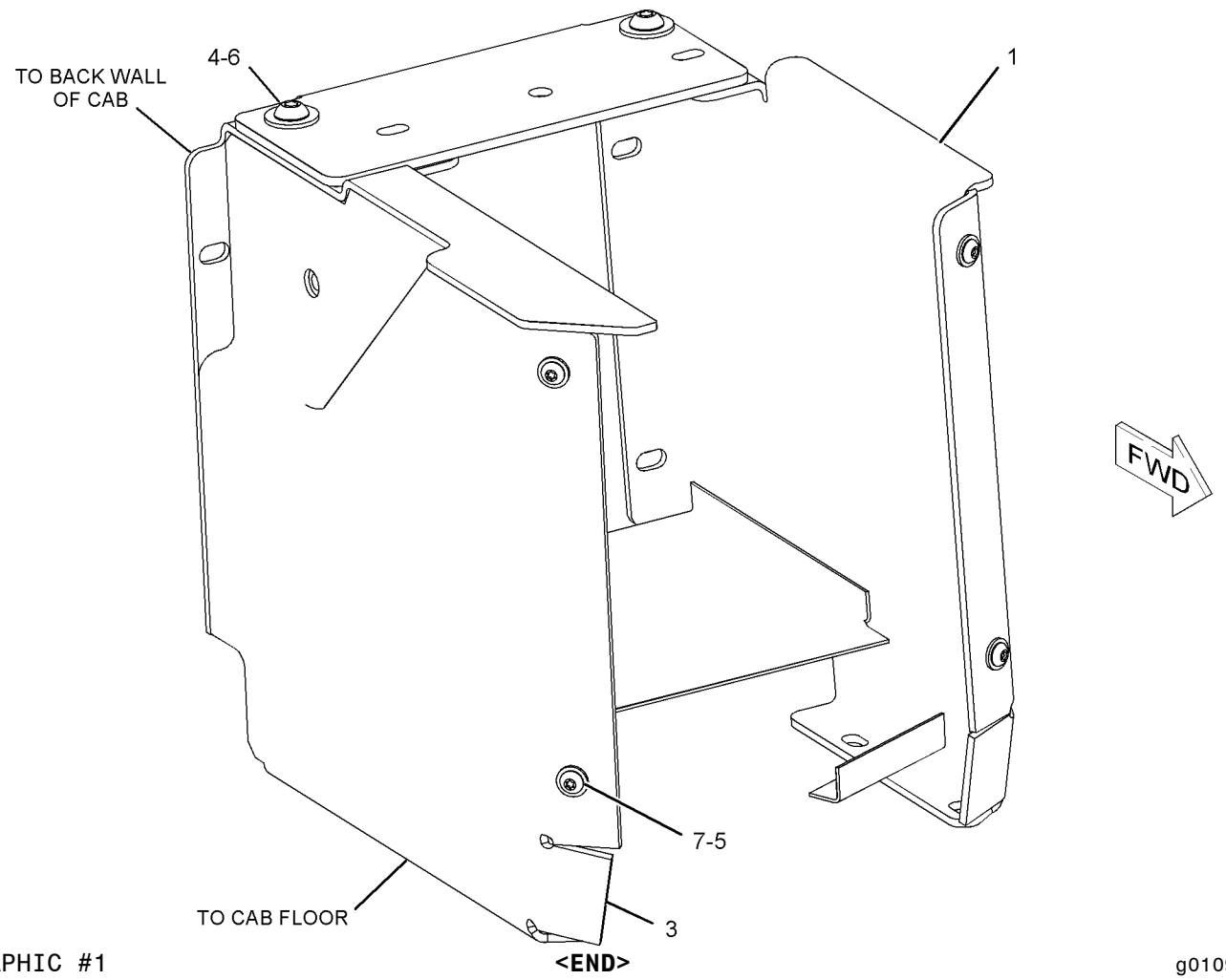

GRAPHIC #1 **<END>** g01091162

OPERATOR STATION

242-0339 CAB & PLATFORM GP

S/N: 4421-UP

PART OF 242-0341 CAB AR

SMCS-7253, 7301 **i02312318**

NOTE	REF NO	GRAPHIC REF	PART NUMBER	QTY	PART NAME 1 2 3 4 5 6 (PRODUCT LEVEL)	SEE PAGE
	1	1	**256-2454**	2	SEAL	
	2	1	**4E-6509**	1	SEAL	
	3	1	**4E-6510**	1	SEAL	
Y	4	1	**123-8701**	1	DOOR GP-CAB (LH)	978
Y	5	1	*242-0340*	1	PLATFORM GP-OPERATOR	1036
Y	6	1	**242-0342**	1	CAB GP	962
	7	1	**250-2980**	1	FRAME GP-DOOR	
	8	1	**8T-4121**	32	WASHER-HARD (11X21X2.5-MM THK)	
M	9	1	**8T-4191**	14	BOLT (M10X1.5X16-MM)	
M	10	1	**8T-4196**	18	BOLT (M10X1.5X35-MM)	
B	11	1	**103-2554**		SEAL (5.1-M)	

B-USE AS REQUIRED
M-METRIC PART
Y-SEPARATE ILLUSTRATION

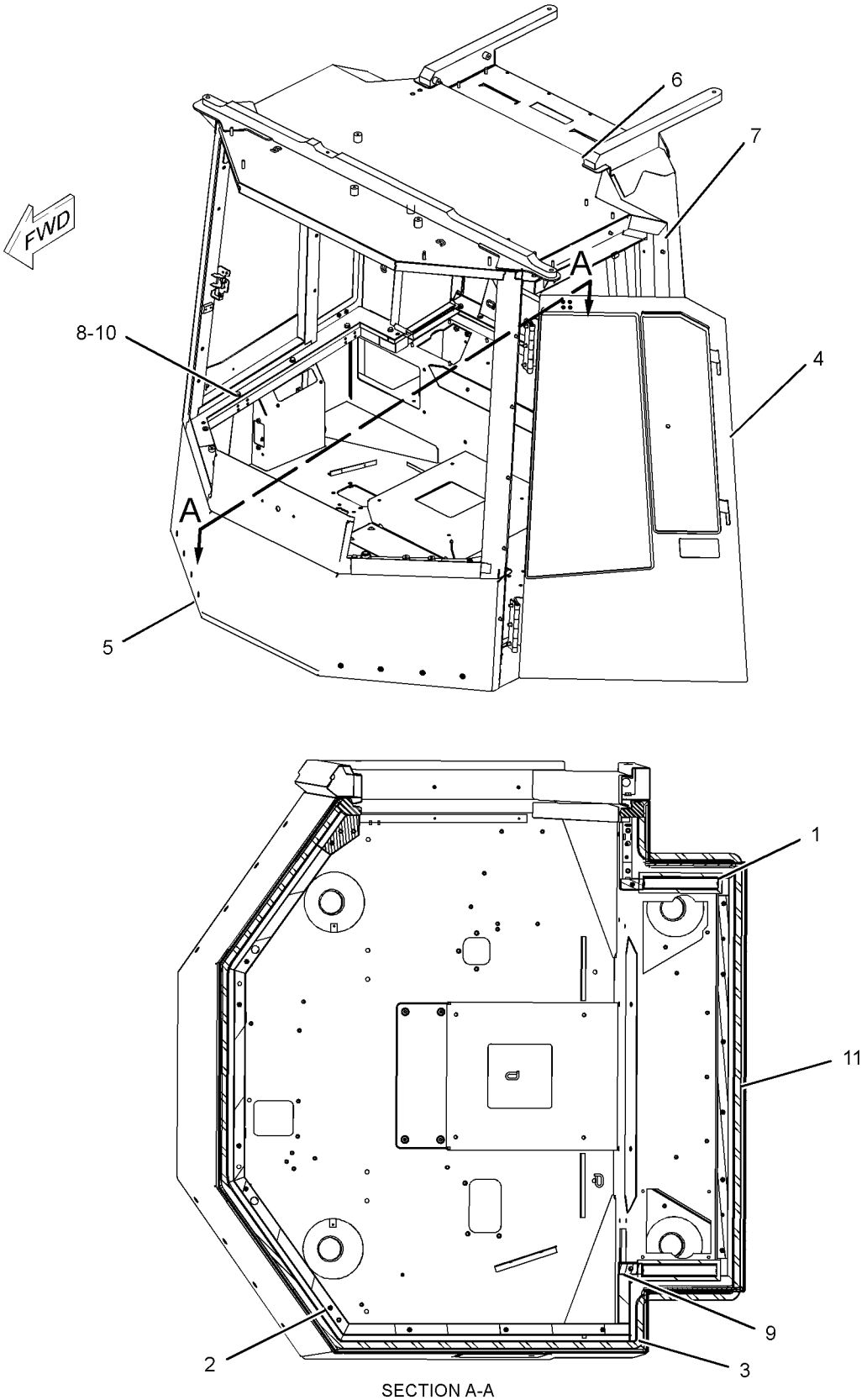

SECTION A-A

GRAPHIC #1 **<END>** g01153560

OPERATOR STATION

242-0341 CAB AR

S/N: 4421-UP

PART OF 242-0338 OPERATOR AR

SMCS-7301 **i02429066**

NOTE	PART NUMBER	QTY	PART NAME 1 2 3 4 5 6 (PRODUCT LEVEL)	SEE PAGE
Y	*242-8026*	1	AIR CONDITIONER AR	952
Y	*242-1903*	1	BOX GP-STORAGE	957
Y	*242-0339*	1	CAB & PLATFORM GP	959
Y	*250-9458*	1	CONTROL GP-FOOT BRAKE	613
Y	*250-9930*	1	CONTROL GP-HYDRAULIC LOCKOUT	743
Y	*242-1902*	1	CONTROL GP-PARKING BRAKE	614
Y	*247-6476*	1	CONTROL GP-PILOT OPERATED HYD (2-FUNCTION)	744
Y	*236-5240*	1	CONTROL GP-STEERING	662
Y	*4E-8413*	1	CONTROL GP-STIC	390
Y	*236-5241*	1	CONTROL GP-STIC LOCKOUT	393
Y	*236-5169*	1	INSTALLATION GP-RADIO	991
Y	*250-9306*	1	LATCH GP-CAB DOOR & WINDOW	993
Y	*250-3018*	1	LINER GP-CAB	996
Y	*9U-2675*	1	MOUNTING GP-ANTENNA (RADIO)	1020
Y	*236-5224*	1	PANEL GP-INSTRUMENT (SIDE)	1028
Y	*246-0710*	1	PANEL GP-INSTRUMENT (FRONT)	1030
Y	*112-5763*	1	PEDAL GP-GOVERNOR (CAB)	1032
Y	*117-1410*	1	SEALING GP-GLASS	1048
Y	*250-9976*	1	SEAT GP	1052
Y	**219-8090**	1	SEAT GP-SUSPENSION	1057
Y	*250-9873*	1	SPRING GP-CAB DOOR	1058
Y	*178-3111*	1	SUPPORT GP-HYDRAULIC CONTROL	1060
Y	*178-3904*	1	SUPPORT GP-SEAT	1063
Y	*171-3897*	1	SUPPORT GP-STEERING CONTROL	1064
Y	*242-1901*	1	WIPER & WASHER GP-WINDOW (FRONT, REAR)	1070
Y	*242-8018*	1	WIPER GP-WINDOW (FRONT QUARTER)	1073
Y	*245-1428*	1	WIRING GP-CAB (PLATFORM)	309

Y-SEPARATE ILLUSTRATION

<END>

OPERATOR STATION

242-0342 CAB GP

S/N: 4421-UP

PART OF 242-0339 CAB & PLATFORM GP

SMCS-7301 **i02286161**

NOTE	REF NO	GRAPHIC REF	PART NUMBER	QTY	PART NAME 1 2 3 4 5 6 (PRODUCT LEVEL)	SEE PAGE
	1	1	**8R-0739**	4	WASHER	
	2	1	**108-1615**	2	HINGE-RH	
	3	1	**115-8388**	1	GLASS (FRONT)	
	4	1	**115-8389**	1	GLASS-CAB (FRONT QUARTER, RH)	
	5	1	**115-8390**	1	GLASS-CAB (FRONT QUARTER, LH)	
	6	1	**115-8391**	1	GLASS (REAR)	
	7	1	**123-3154**	1	GLASS (RIGHT REAR SIDE)	
	8	1	**242-3432**	1	CAB AS	
	9	1	**250-0777**	1	DOOR GP-CAB	
		1	**250-0776**	1	GLASS (CAB DOOR)	
E		1	**3E-3000**		SEAL (308-CM)	
	10	1	**4E-0339**	2	PIN	
M	11	1	**6V-8210**	4	BOLT (M8X1.25X16-MM)	
	12	1	**8T-4224**	4	WASHER-HARD (8.8X16X2-MM THK)	

E-ORDER BY THE CENTIMETER
M-METRIC PART

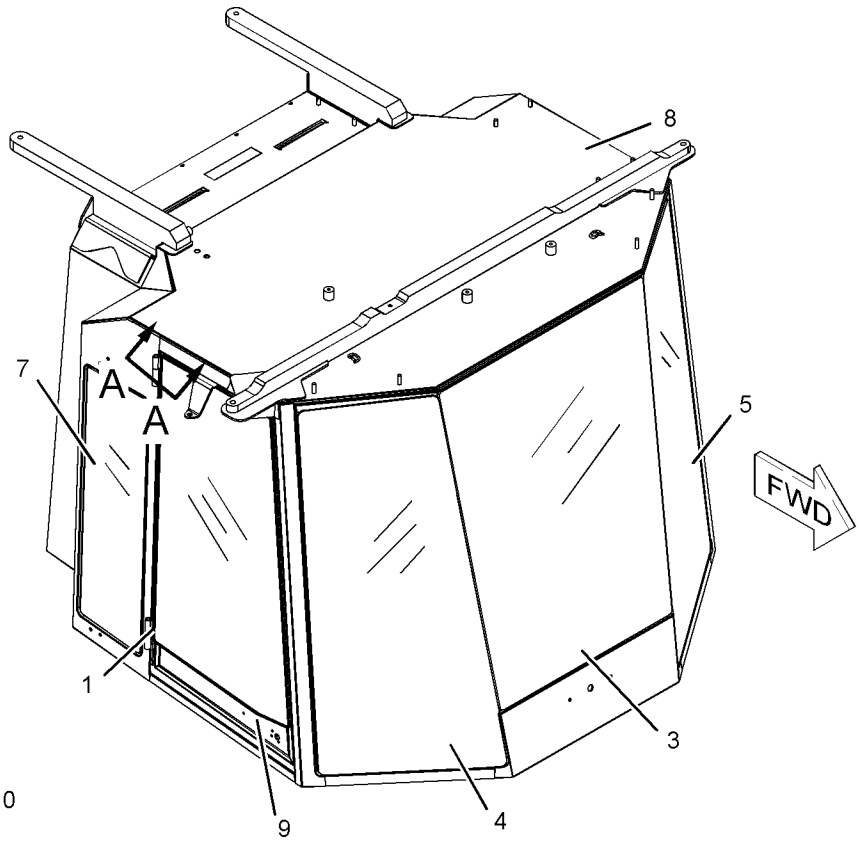

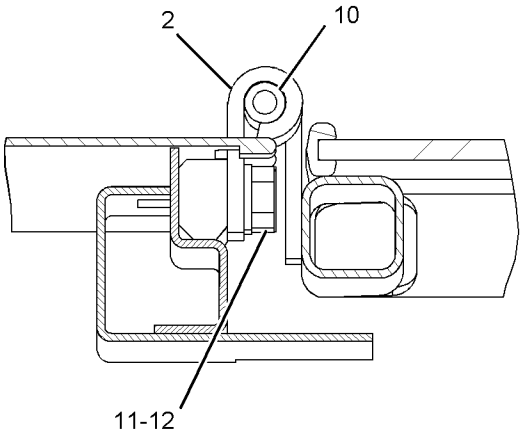

SECTION A-A

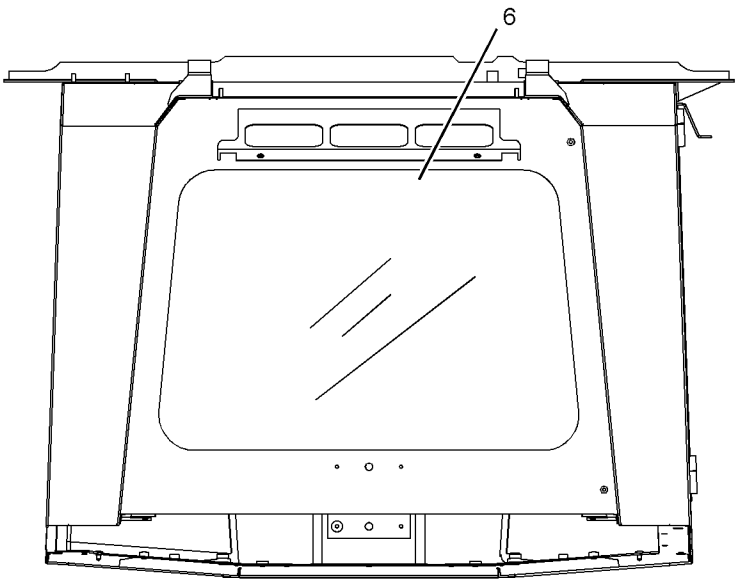

REAR VIEW

GRAPHIC #1 **<END>** g01147267

OPERATOR STATION

160-4378 CLEANING GP-CAB

S/N: 4421-UP

PART OF 245-7454 PLATFORM AR

SMCS-734U **i01565583**

NOTE	REF NO	GRAPHIC REF	PART NUMBER	QTY	PART NAME 1 2 3 4 5 6 (PRODUCT LEVEL)	SEE PAGE
I	1	1	**4S-7527**	1	HOSE AS	
	2	1	**7X-3718**	1	FILM	
	3	1	**8S-1506**	1	COUPLING AS	
	4	1	**8S-4600**	1	FITTING	
	5	1	**9M-7357**	1	COUPLING AS	
M	6	1	**8T-4136**	2	BOLT (M10X1.5X25-MM)	
	7	1	**103-4531**	1	HOSE AS	
	8	1	**162-9679**	1	BOX AS	
	9	1	**2N-1931**	1	ELBOW-PIPE	
	10	1	**4H-2558**	1	GROMMET	
	11	1	**4H-6147**	1	CONNECTOR	
	12	1	**5H-4778**	1	ELBOW	
	13	1	**8T-4121**	2	WASHER-HARD (11X21X2.5-MM THK)	

I-REFER TO HYDRAULIC INFORMATION SYSTEM
M-METRIC PART

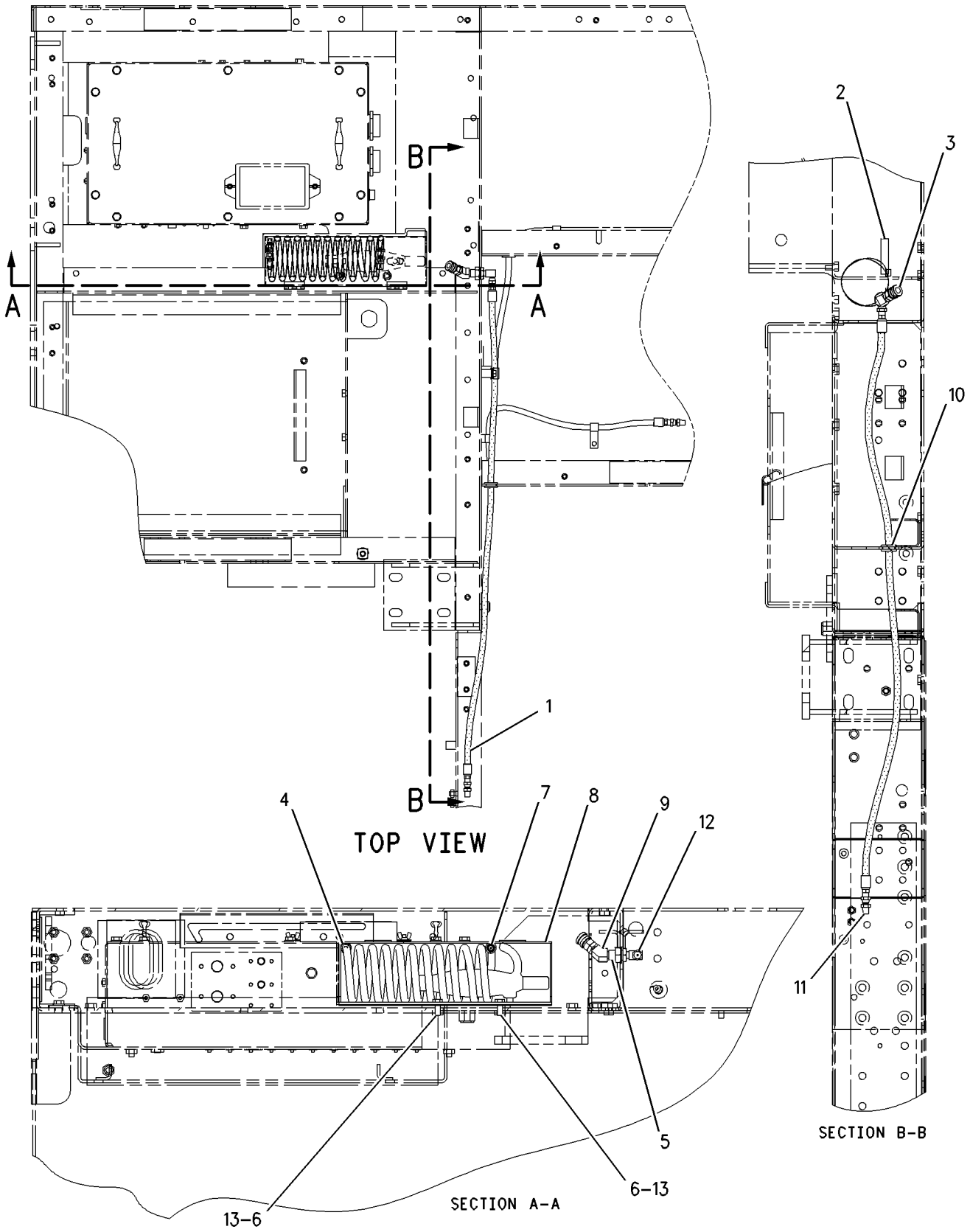

GRAPHIC #1 **<END>** g00821856

OPERATOR STATION

230-1081 COMPRESSOR & MTG GP-REFRIG

S/N: 8WM1-UP

PART OF 240-7750 ENGINE AR

SMCS-1802 **i02302147**

NOTE	REF NO	GRAPHIC REF	PART NUMBER	QTY	PART NAME 1 2 3 4 5 6 (PRODUCT LEVEL)	SEE PAGE
	1	1	**8N-9885**	1	GASKET-DRIVE HOUSING	
	2	2	**133-3544**	1	BELT TIGHTENER	
Y	3	1	**144-5612**	1	IDLER GP-BELT	55
	4	1	**186-4195**	1	BELT-SERPENTINE (REFRIGERANT COMPRESSOR)	
Y	5	1	**217-4448**	1	COMPRESSOR GP-REFRIGERANT	969
C	6	2	**267-4463**	1	BRACKET AS	
		2	**4K-9097**	2	NUT-WELD (5/16-18-THD)	
	7	2	**240-7772**	2	BRACKET	
	8	1	**240-7773**	1	BRACKET	
	9	1	**246-5574**	1	PLATE AS	
	10	2	**246-5575**	1	GUARD-BELT	
C	11	2	**267-4462**	1	BRACKET AS	
		2	**4K-9097**	4	NUT-WELD (5/16-18-THD)	
	13	2	**0S-1588**	4	BOLT (3/8-16X1.25-IN)	
	14	2	**0S-1595**	3	BOLT (1/2-13X1.25-IN)	
	15	2	**0S-1619**	1	BOLT (3/8-16X3-IN)	
	16	2	**1A-7669**	1	BOLT (1/2-13X7-IN)	
C	19	2	**1B-2790**	3	BOLT (5/16-18X1.375-IN)	
C	20	1	**1B-7182**	3	BOLT (5/16-18X1.25-IN)	
	21	2	**3B-1915**	3	BOLT (3/8-16X1-3/8-IN)	
	22	1,2	**3H-5932**	2	BOLT (5/16-18X4.5-IN)	
	23	1	**4B-3903**	2	BOLT (5/16-18X4-IN)	
	24	2	**5M-2894**	8	WASHER-HARD (10.2X18.5X2.5-MM THK)	
	25	2	**5P-8245**	4	WASHER-HARD (13.5X25.5X3-MM THK)	
	27	1,2	**5S-0003**	10	NUT (5/16-18-THD)	
	28	1,2	**9M-1974**	20	WASHER-HARD (8.8X16X2-MM THK)	

C-CHANGE FROM PREVIOUS TYPE
Y-SEPARATE ILLUSTRATION

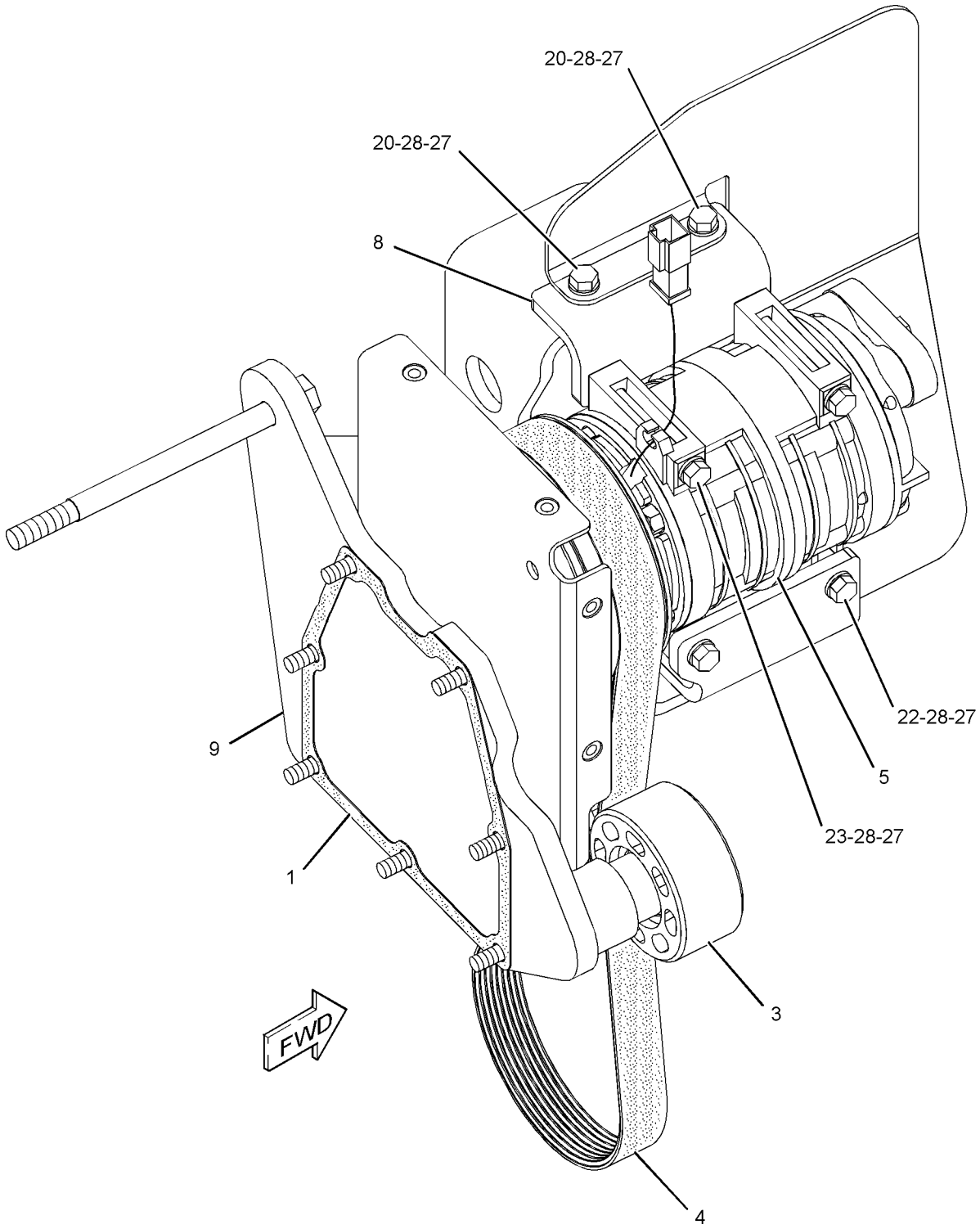

GRAPHIC #1 g01153474

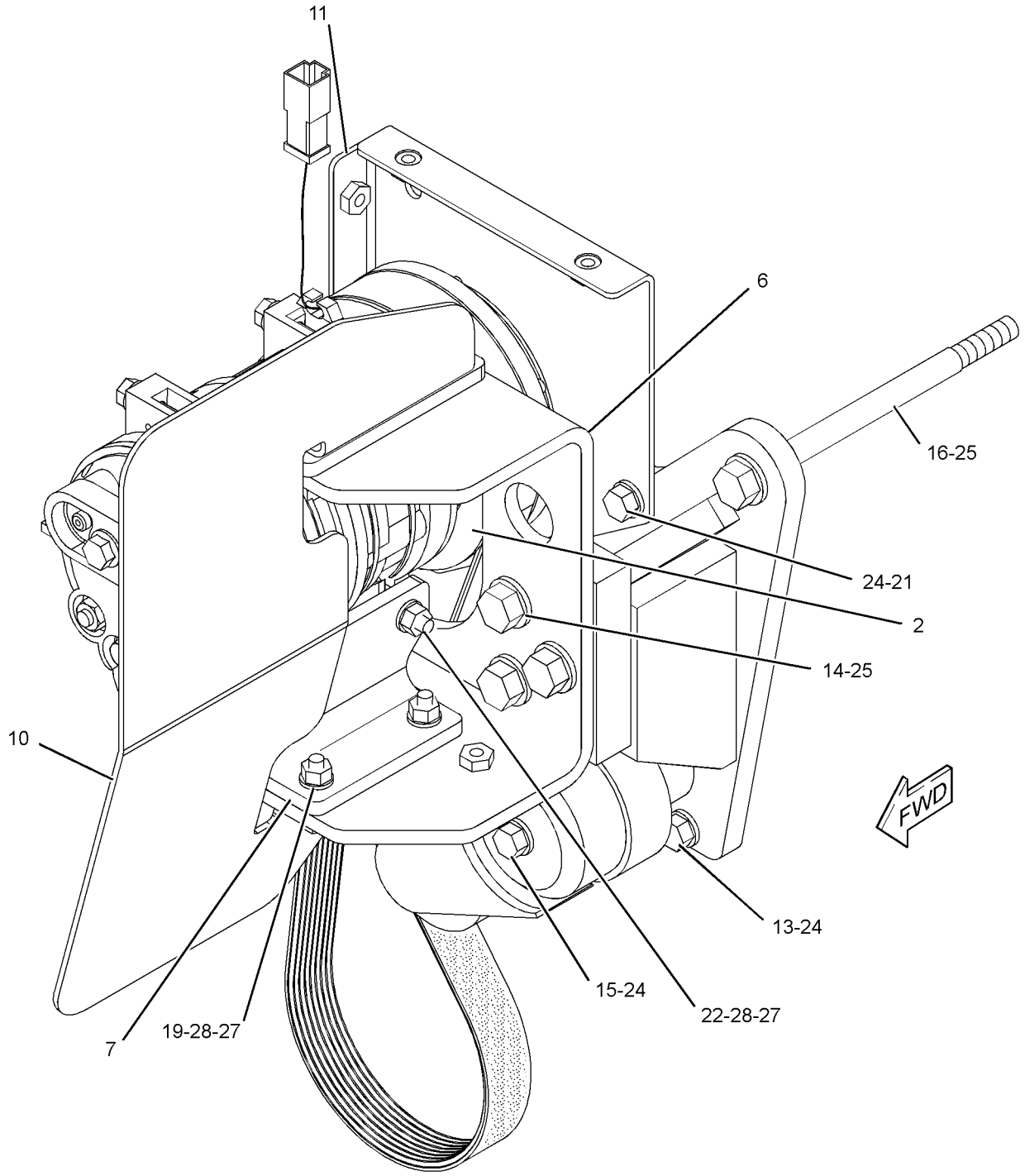

GRAPHIC #2 **<END>** g01153476

OPERATOR STATION

217-4448 COMPRESSOR GP-REFRIGERANT

S/N: 8WM1-UP

PART OF 230-1081 COMPRESSOR & MTG GP-REFRIG

SMCS-1802 **i02150198**

NOTE	REF NO	GRAPHIC REF	PART NUMBER	QTY	PART NAME 1 2 3 4 5 6 (PRODUCT LEVEL)	SEE PAGE
	1	1	**102-8802**	1	KIT-RECEPTACLE (2-PIN)	
					(INCLUDES RECEPTACLE & WEDGE)	
	2	1	**229-4896**	2	SEAL-O-RING	
	3	1	**229-7356**	1	VALVE AS-RELIEF	
		1	**9X-7385**	1	SEAL-O-RING	

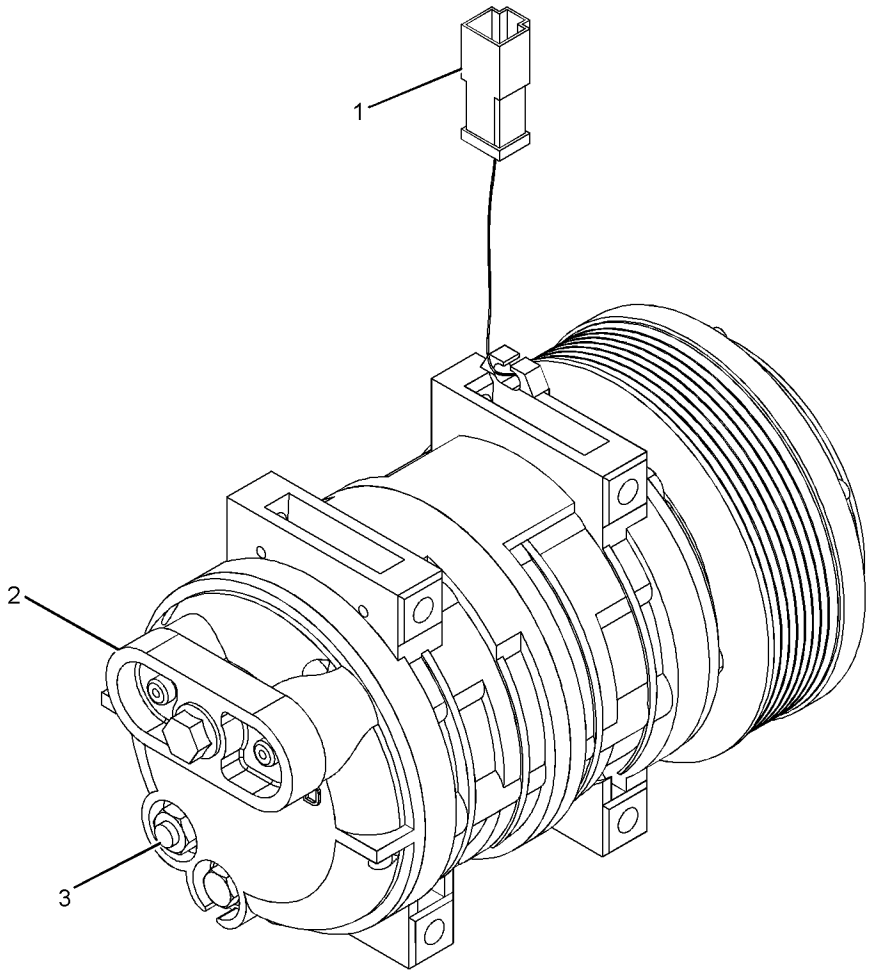

GRAPHIC #1 **<END>** g01092401

OPERATOR STATION

249-6834 CONDENSER & MTG GP-REFRIGERANT

S/N: 4421-UP

PART OF 250-7957 INSTALLATION AR-ENGINE

SMCS-1805 **i02150839**

NOTE	REF NO	GRAPHIC REF	PART NUMBER	QTY	PART NAME 1 2 3 4 5 6 (PRODUCT LEVEL)	SEE PAGE
	1	1	**179-6371**	1	CONDENSER	
	2	1	**8T-4121**	4	WASHER-HARD (11X21X2.5-MM THK)	
M	3	1	**8T-4196**	4	BOLT (M10X1.5X35-MM)	

M-METRIC PART

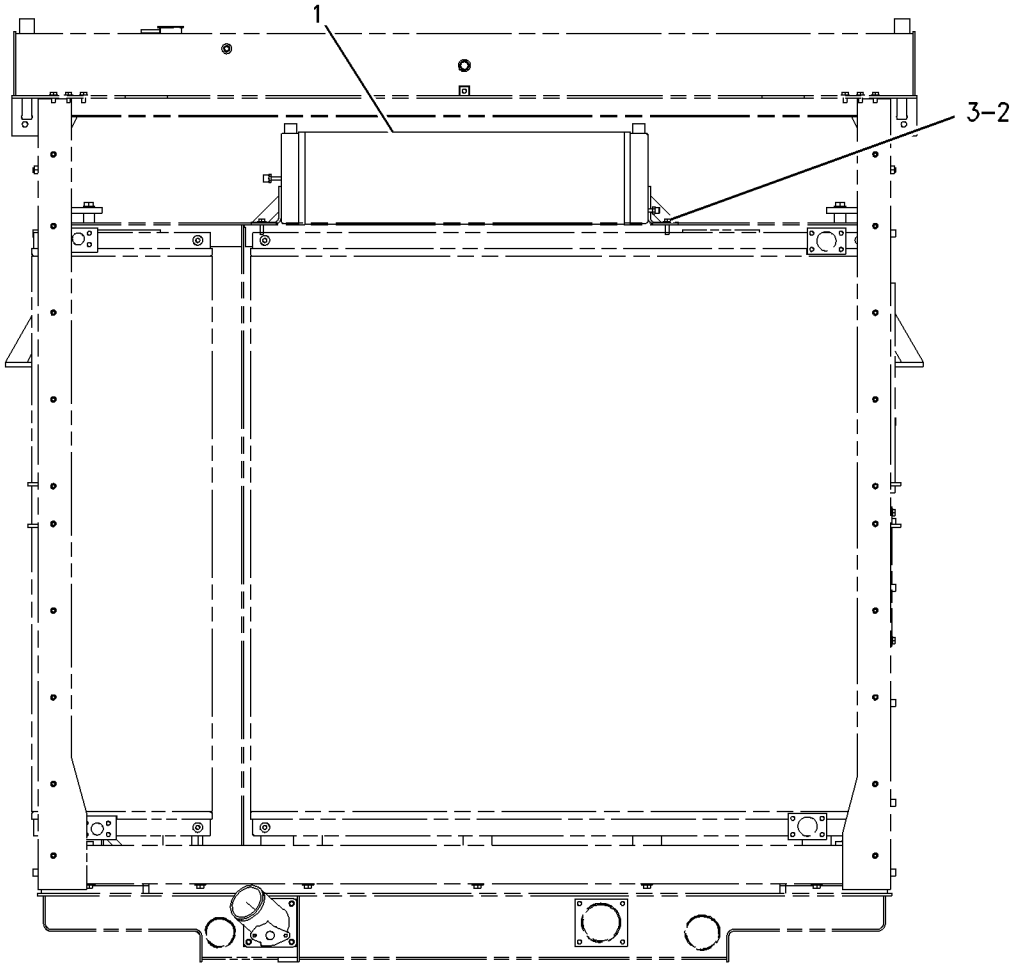

FRONT VIEW

GRAPHIC #1 **<END>** g00682597

OPERATOR STATION

160-4891 CONTROL GP-UNPRGMED MONITOR–VIMS

S/N: 4421-UP

PART OF 265-4124 WIRING GP-MONITOR

SMCS-7610 **i02064374**

NOTE	REF NO	GRAPHIC REF	PART NUMBER	QTY	PART NAME 1 2 3 4 5 6 (PRODUCT LEVEL)	SEE PAGE
	1	1	**7X-6315**	1	STRAP AS-GROUND	
	2	1	**184-2472**	1	SCREW-PAN HEAD (NO 8-32X9.52-MM)	
	3	1	**134-4126**	1	WASHER (4.52X8.28X0.76-MM THK)	
	4	1	**143-8480**	1	BATTERY GP-ELECTRONIC CONTROL (ROAD ANALYSIS/VIMS MAIN MODULE)	
M	5	1	**3E-6900**	1	BOLT (M5X0.8X12-MM)	

M-METRIC PART

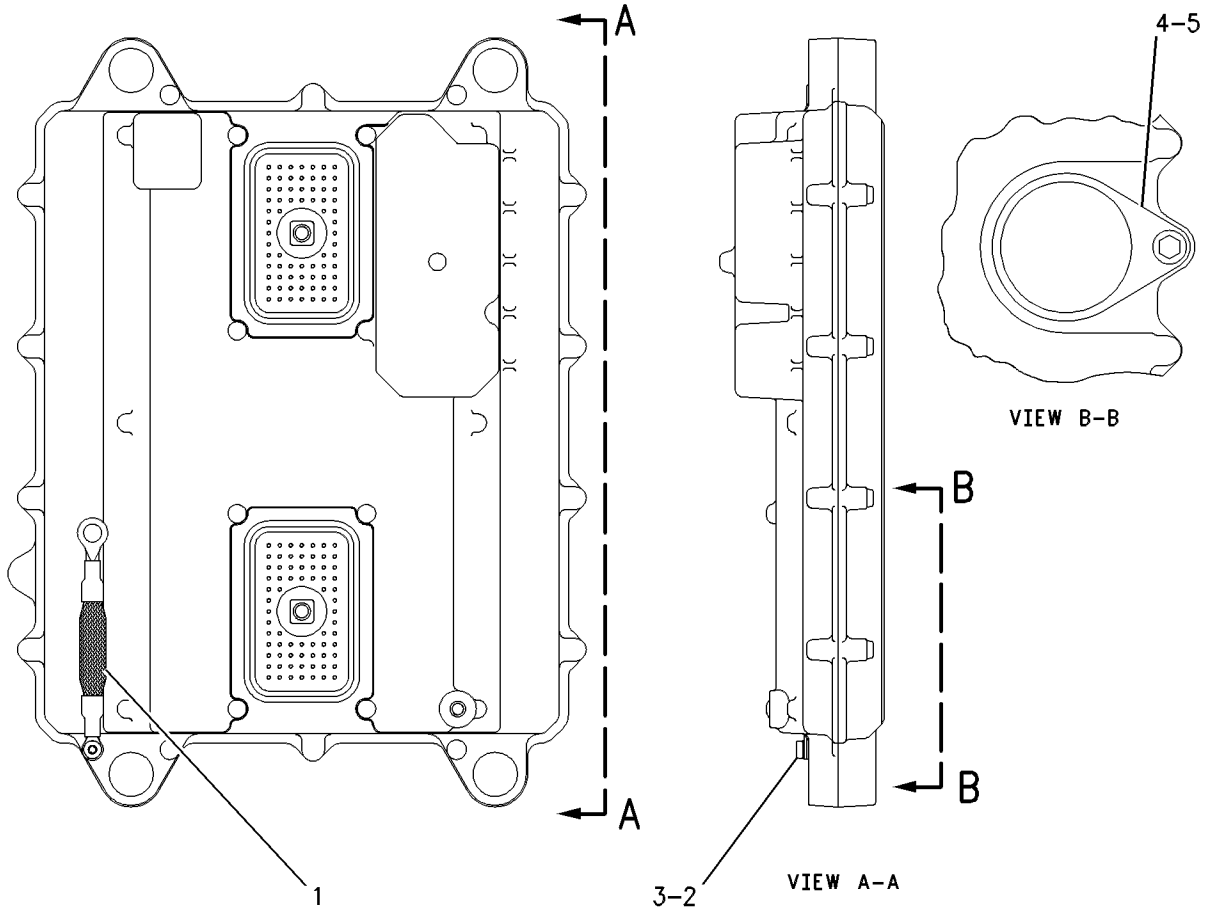

GRAPHIC #1 **<END>** g00582613

OPERATOR STATION

242-0389 COVER GP-CAB

S/N: 4421-UP

PART OF 242-0338 OPERATOR AR

SMCS-7301 **i02148116**

NOTE	REF NO	GRAPHIC REF	PART NUMBER	QTY	PART NAME 1 2 3 4 5 6 (PRODUCT LEVEL)	SEE PAGE
	1	1	**4E-8984**	2	COVER AS	
	2	1	**4E-8996**	1	COVER	
	3	1	**4E-9056**	1	GASKET	
	4	1	**242-3488**	2	COVER	
	5	1	**242-3489**	2	GASKET	
M	6	1	**5C-7261**	4	NUT (M8X1.25-THD)	
M	7	1	**8T-4200**	8	BOLT (M8X1.25X16-MM)	
	8	1	**8T-4224**	12	WASHER-HARD (8.8X16X2-MM THK)	
M	9	1	**9X-2045**	2	SCREW-TRUSS HEAD (M6X1X20-MM)	

M-METRIC PART

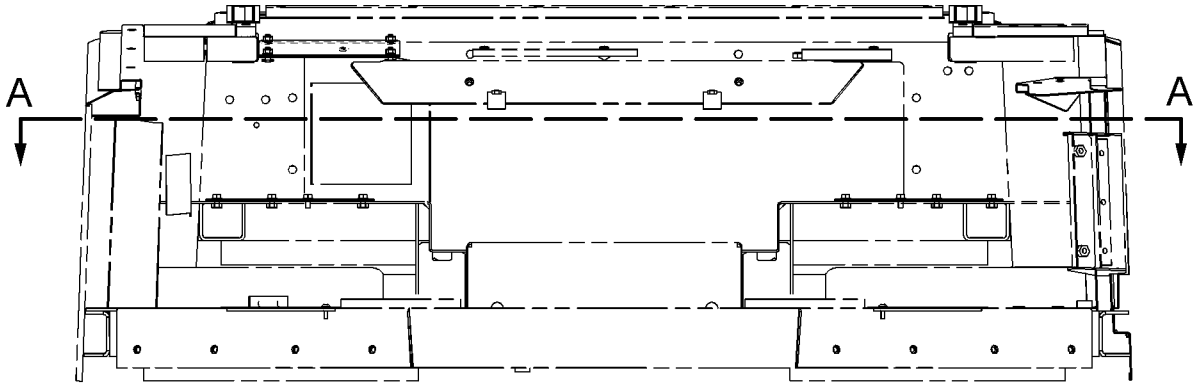

FRONT VIEW

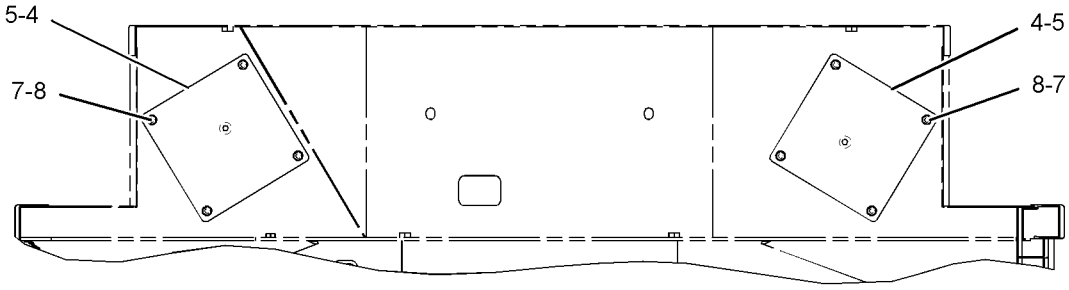

SECTION A-A

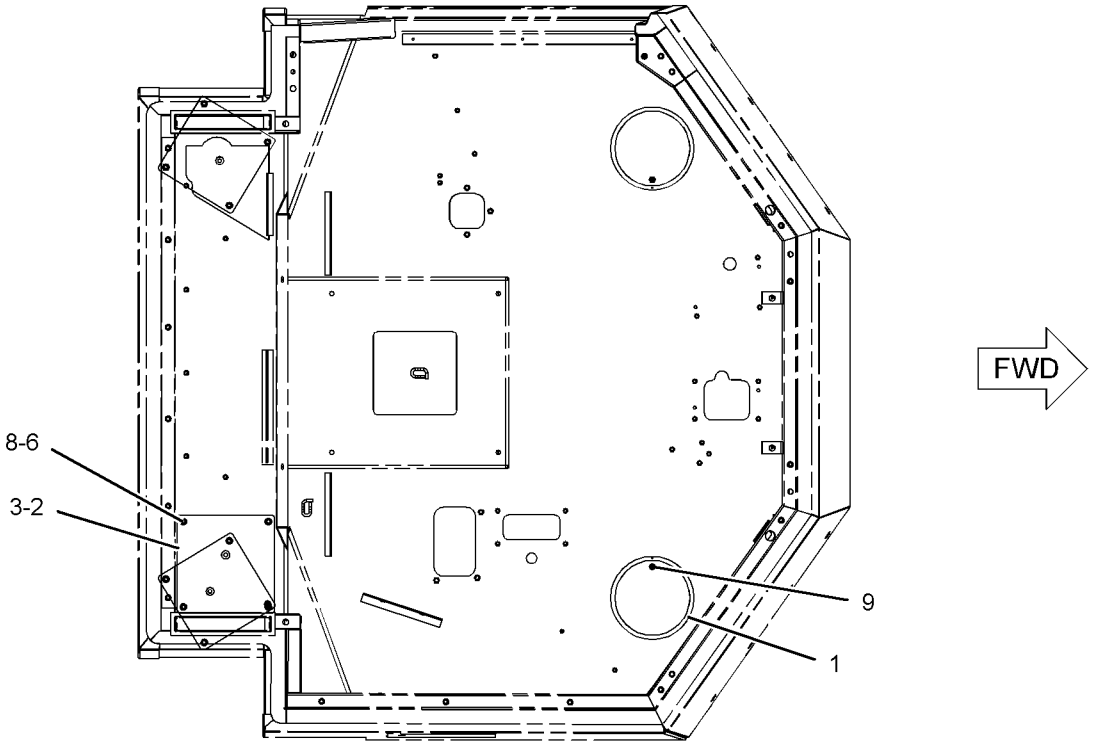

TOP VIEW

GRAPHIC #1

<END>

g01091247

OPERATOR STATION

249-8664 COVER GP-PLATFORM

S/N: 4421-UP
PART OF 245-3880 PLATFORM AR
AN ATTACHMENT

SMCS-7253 **i02154414**

NOTE	REF NO	GRAPHIC REF	PART NUMBER	QTY	PART NAME 1 2 3 4 5 6 (PRODUCT LEVEL)	SEE PAGE
	1	1	**252-4390**	1	COVER AS	
	2	1	**8T-4121**	8	WASHER-HARD (11X21X2.5-MM THK)	
M	3	1	**8T-4136**	8	BOLT (M10X1.5X25-MM)	

M-METRIC PART

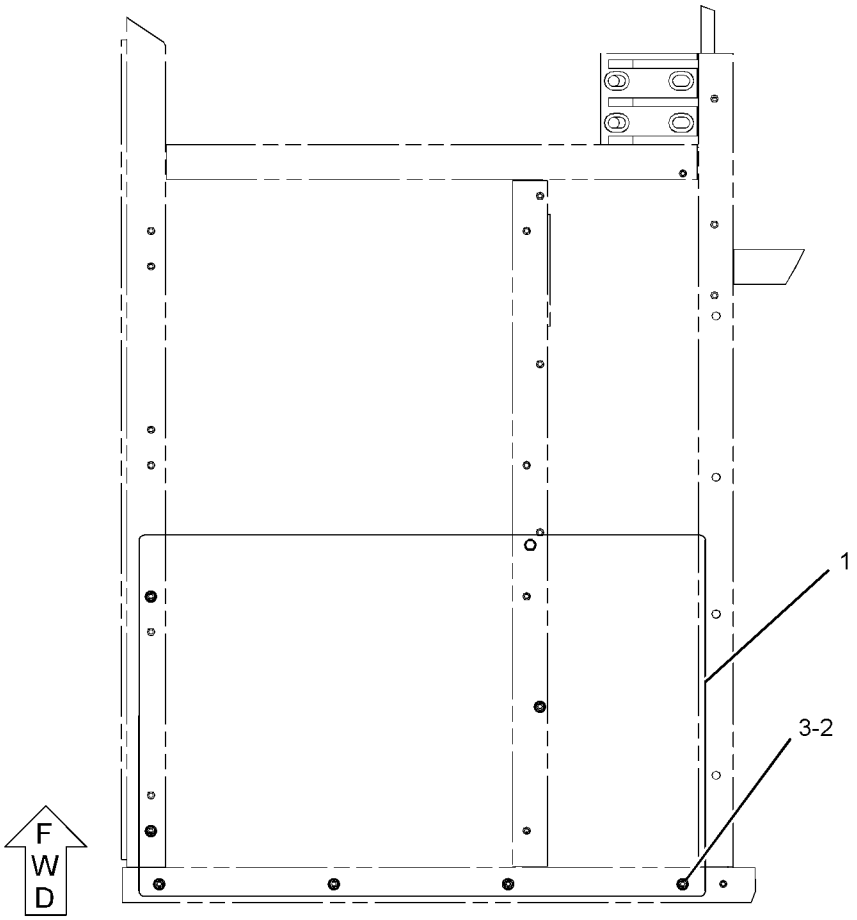

TOP VIEW

GRAPHIC #1

<END>

g01094019

OPERATOR STATION

249-8668 COVER GP-PLATFORM

S/N: 4421-UP
PART OF 245-3885 PLATFORM AR
AN ATTACHMENT

SMCS-7253 **i02181245**

NOTE	REF NO	GRAPHIC REF	PART NUMBER	QTY	PART NAME 1 2 3 4 5 6 (PRODUCT LEVEL)	SEE PAGE
	1	1	**8X-4819**	1	CHANNEL	
	2	1	**8X-5353**	1	ROD AS	
		1	**2D-6416**	2	WASHER (0.438X1.25X0.12-IN THK)	
	3	1	**249-8669**	1	ANGLE	
	4	1	**250-6190**	1	DOOR AS	
		1	**6V-2370**	4	RIVET-POP	
		1	**9X-2299**	1	LATCH AS	
M	5	1	**5Y-1013**	2	NUT (M8X1.25)	
	6	1	**7J-5925**	2	PIN-COTTER	
	7	1	**8T-4121**	8	WASHER-HARD (11X21X2.5-MM THK)	
M	8	1	**8T-4133**	2	NUT (M10X1.5 THD)	
M	9	1	**8T-4136**	6	BOLT (M10X1.5X25-MM)	
	10	1	**8T-4222**	2	WASHER-PLATED (11X32X2.5-MM THK)	
	11	1	**8T-4224**	2	WASHER-HARD (8.8X16X2-MM THK)	
	12	1	**8X-4376**	2	PLATE	

M-METRIC PART

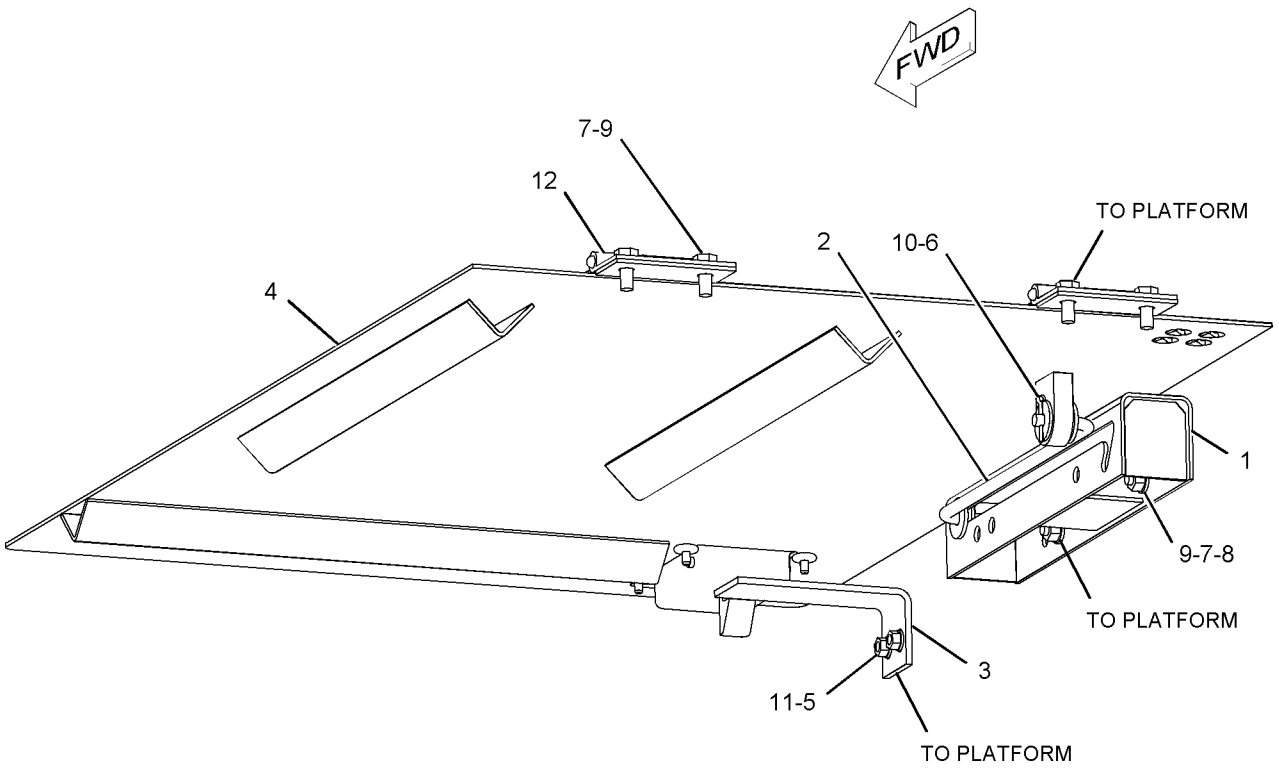

GRAPHIC #1 **<END>** g01094380

OPERATOR STATION

250-6230 COVER GP-PLATFORM–REAR CAB

S/N: 4421-UP

PART OF 245-8813 INSTALLATION AR-FIELD

SMCS-7253 **i02285871**

NOTE	REF NO	GRAPHIC REF	PART NUMBER	QTY	PART NAME 1 2 3 4 5 6 (PRODUCT LEVEL)	SEE PAGE
	1	1	**252-4391**	1	PLATE	
	2	1	**8T-4121**	4	WASHER-HARD (11X21X2.5-MM THK)	
M	3	1	**8T-4137**	6	BOLT (M10X1.5X20-MM)	
	4	1	**115-6433**	2	WASHER (11X50X6-MM THK)	

M-METRIC PART

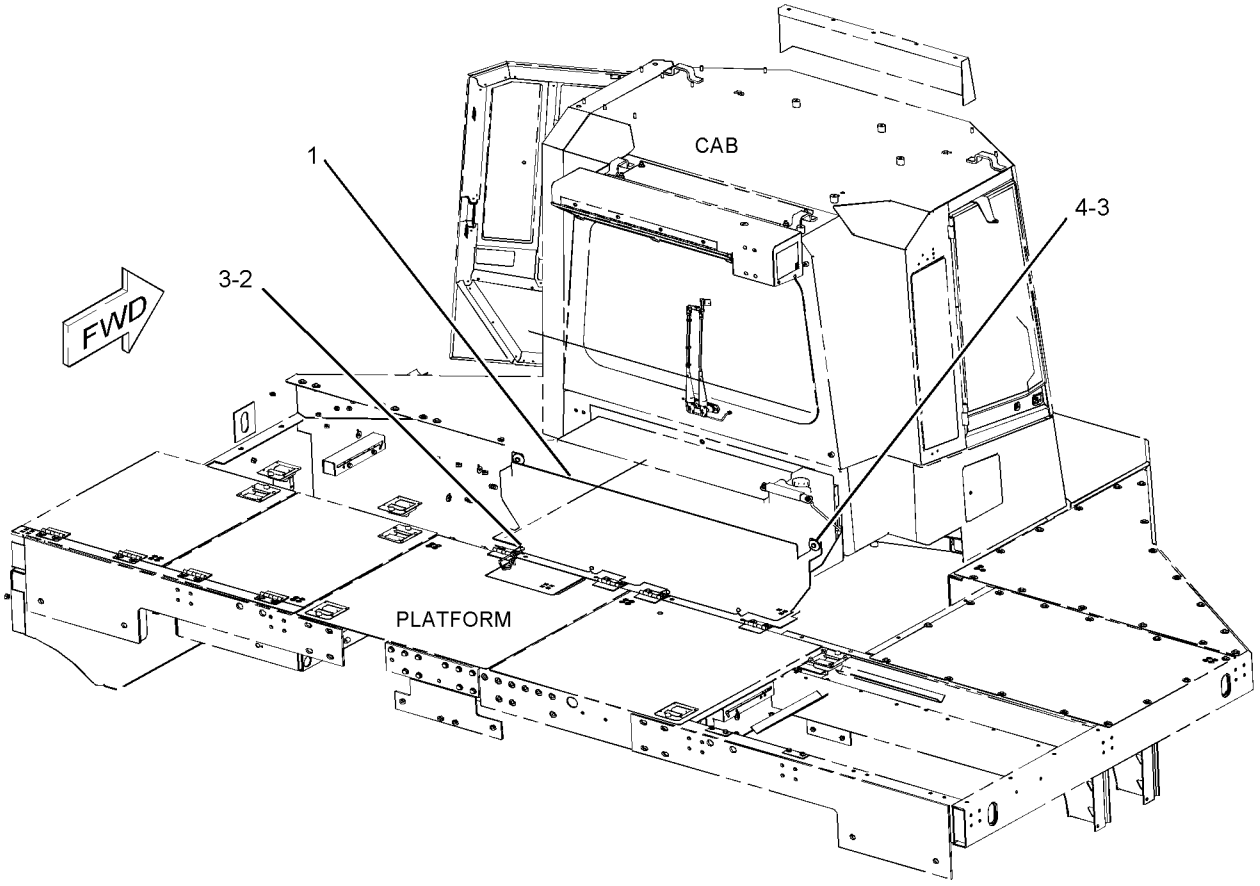

GRAPHIC #1 **<END>** g01144573

OPERATOR STATION

239-9532 DISPLAY GP-MONITOR—NAVIGATOR

S/N: 4421-UP
PART OF 257-5849 INSTALLATION GP-GRADE CONTROL
AN ATTACHMENT

SMCS-7490 **i02284366**

NOTE	REF NO	GRAPHIC REF	PART NUMBER	QTY	PART NAME 1 2 3 4 5 6 (PRODUCT LEVEL)	SEE PAGE
	1	1	**239-9531**	1	DISPLAY GP-MONITOR (NAVIGATOR)	

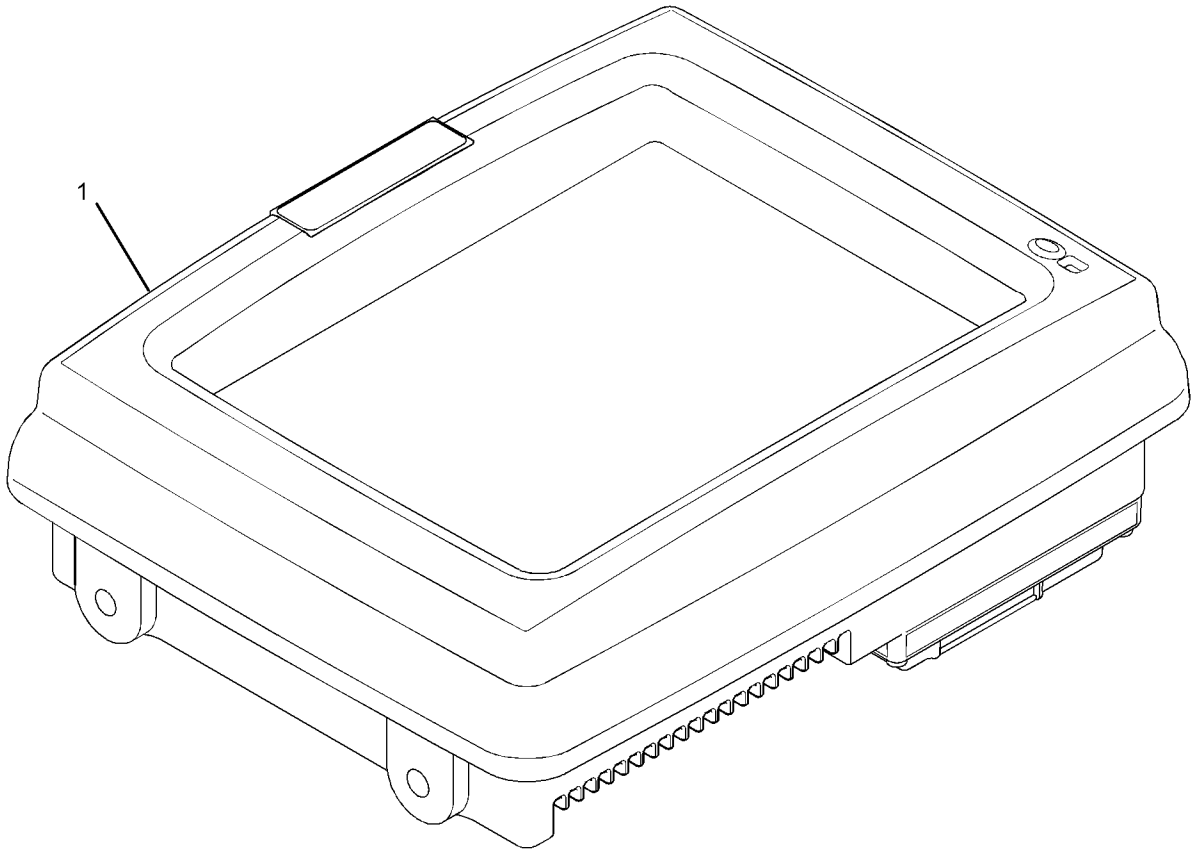

GRAPHIC #1 **<END>** g01158148

OPERATOR STATION

123-8701 DOOR GP-CAB—LH

S/N: 4421-UP

PART OF 242-0339 CAB & PLATFORM GP

SMCS-7308 **i02336464**

NOTE	REF NO	GRAPHIC REF	PART NUMBER	QTY	PART NAME 1 2 3 4 5 6 (PRODUCT LEVEL)	SEE PAGE
M	1	1	**9X-2044**	4	SCREW-TRUSS HEAD (M6X1X16-MM)	
	2	1	**4E-7449**	1	DOOR AS	
BE		1	**3E-3000**		SEAL	
		1	**4E-5718**	1	GLASS	
		1	**4E-5705**	1	HANDHOLD	
	3	1	**4E-7450**	2	HINGE AS	
	4	1	**4E-5720**	1	FRAME AS	
BE		1	**3E-3000**		SEAL	
		1	**4E-5719**	1	GLASS-CAB (DOOR)	
	5	1	**4E-5724**	2	WASHER	
	6	1	**4E-5722**	2	HINGE	
	7	1	**9X-6165**	4	WASHER (6.5X22X2.5-MM THK)	
M	8	1	**8T-4196**	6	BOLT (M10X1.5X35-MM)	
	9	1	**8T-4121**	12	WASHER-HARD (11X21X2.5-MM THK)	
M	10	1	**8T-4137**	6	BOLT (M10X1.5X20-MM)	
D	11	1	**6V-0352**		SEAL (0.2-M)	

B-USE AS REQUIRED
D-ORDER BY THE METER
E-ORDER BY THE CENTIMETER
M-METRIC PART

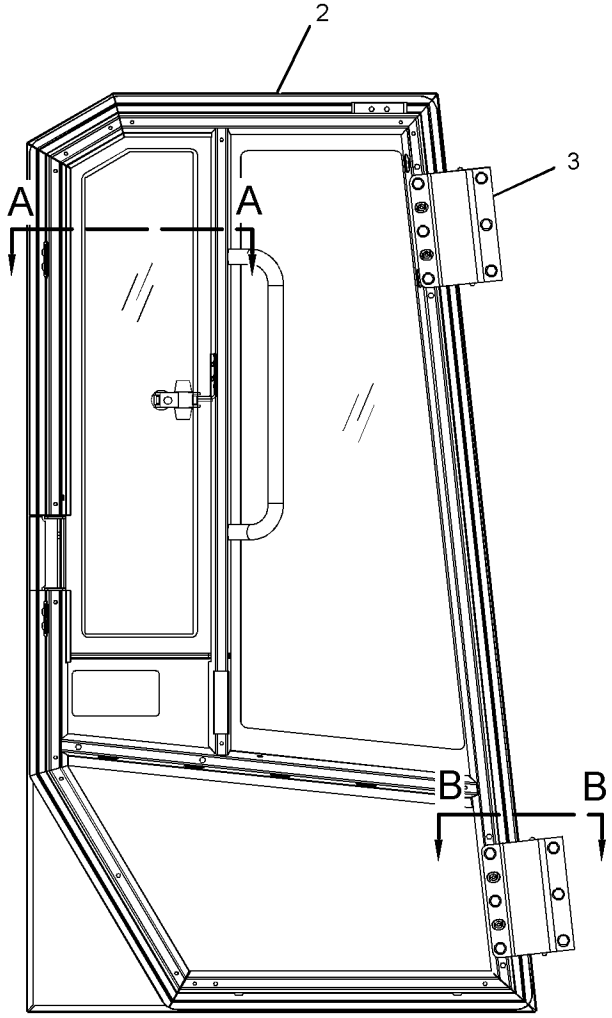

RIGHT SIDE VIEW
(INSIDE LEFT DOOR)

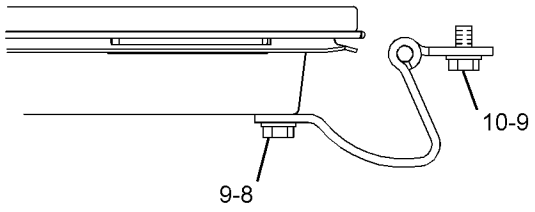

SECTION B-B

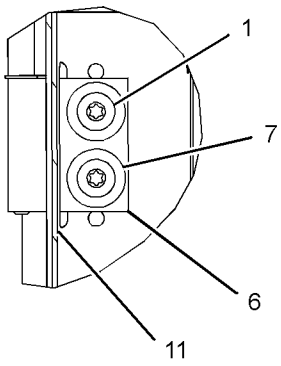

SECTION C-C

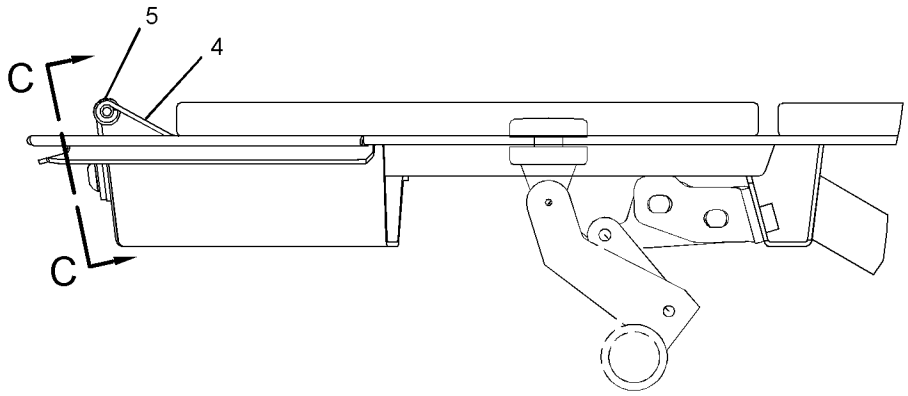

SECTION A-A

GRAPHIC #1 **<END>** g01201828

OPERATOR STATION

242-5333 DUCT GP-AIR

S/N: 4421-UP

PART OF 242-8026 AIR CONDITIONER AR

SMCS-734D **i02286362**

NOTE	REF NO	GRAPHIC REF	PART NUMBER	QTY	PART NAME 1 2 3 4 5 6 (PRODUCT LEVEL)	SEE PAGE
	1	1	**4E-9152**	1	PLATE	
	2	1	**5D-1026**	1	CLAMP-HOSE	
	3	1	**7T-4306**	2	LOUVER AS	
	4	1	**123-8715**	1	DUCT	
	5	1	**123-8716**	1	DUCT	
	6	1	**242-5331**	1	DUCT	
	7	1	**8R-0126**	2	WASHER (12.2X50X3-MM THK)	
	8	1	**8T-4121**	20	WASHER-HARD (11X21X2.5-MM THK)	
M	9	1	**8T-4137**	18	BOLT (M10X1.5X20-MM)	
M	10	1	**8T-4189**	2	BOLT (M8X1.25X20-MM)	
M	11	1	**8T-4191**	2	BOLT (M10X1.5X16-MM)	
D	12	1	**5P-5969**		SEAL (1.9-M)	
E	13	1	**8T-9005**		SEAL (440-CM)	
D	14	1	**5P-6129**		TUBE (1.8-M)	

D-ORDER BY THE METER
E-ORDER BY THE CENTIMETER
M-METRIC PART

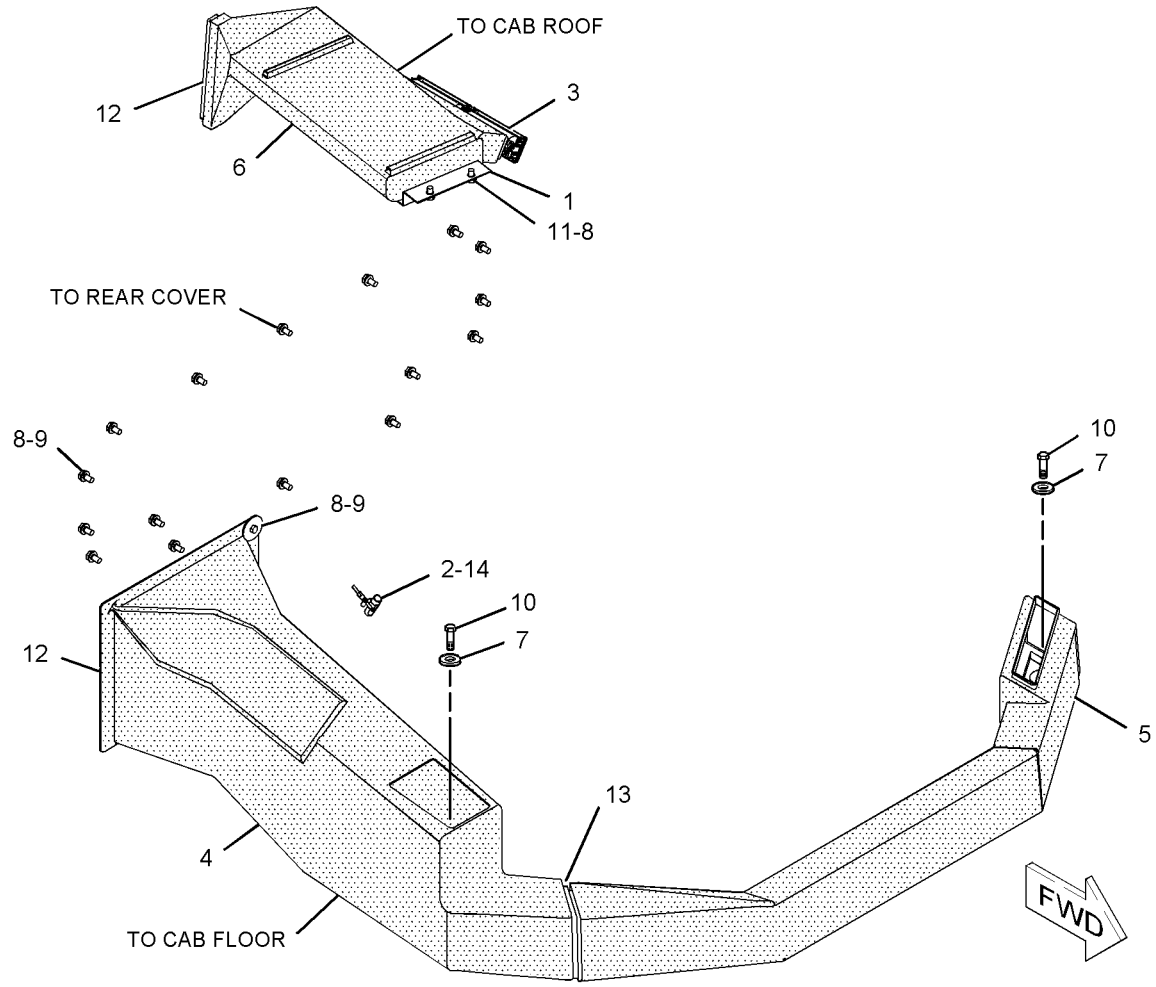

GRAPHIC #1 **<END>** g01144708

OPERATOR STATION

165-4012 FASTENER GP-ROPS

S/N: 4421-UP

PART OF 245-8813 INSTALLATION AR-FIELD

SMCS-7301 **i02289017**

NOTE	REF NO	GRAPHIC REF	PART NUMBER	QTY	PART NAME 1 2 3 4 5 6 (PRODUCT LEVEL)	SEE PAGE
	1	1	**118-5584**	60	SPACER (9-MM THK)	
M	2	1	**3E-9850**	60	BOLT (M30X3.5X220-MM)	
	3	1	**7X-0593**	60	WASHER-HARD (34X57X6-MM THK)	

M-METRIC PART

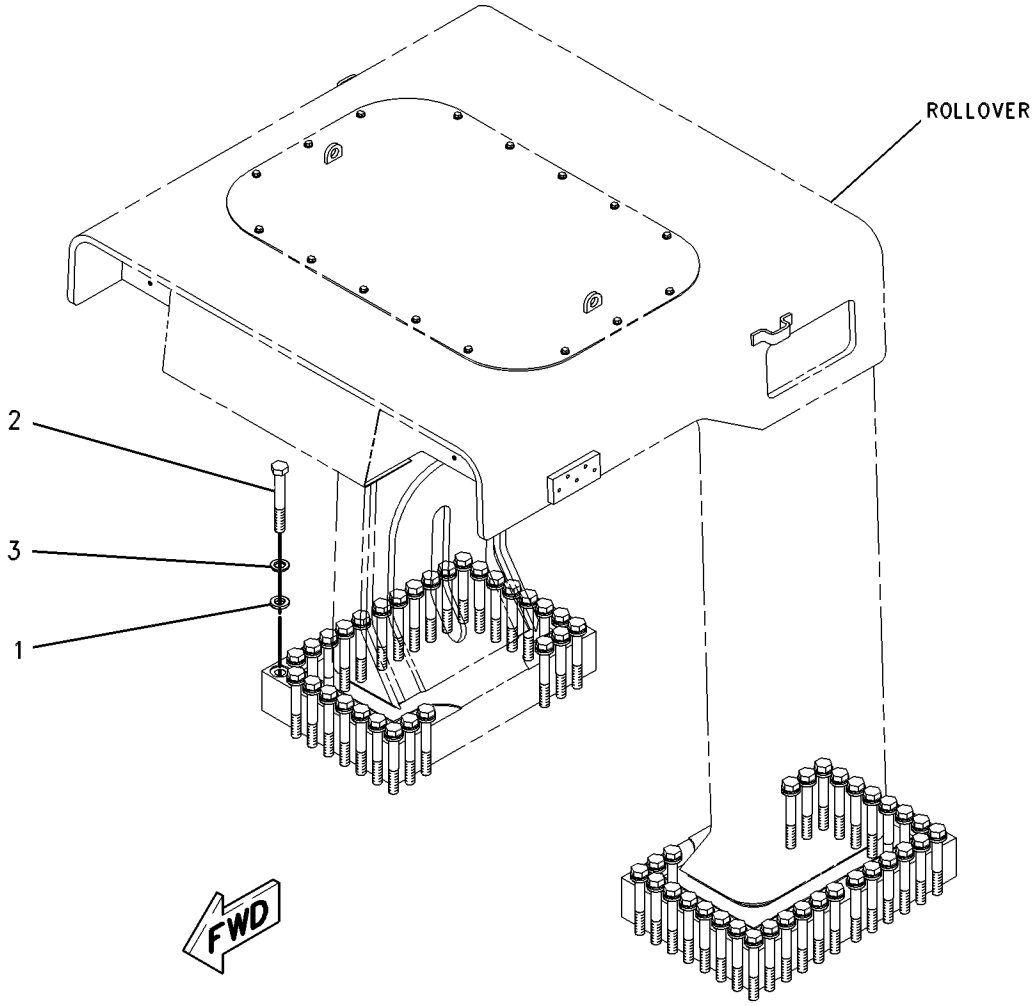

GRAPHIC #1 **<END>** g00592901

OPERATOR STATION

250-9455 FILTER GP-CAB AIR

S/N: 4421-UP

PART OF 242-8026 AIR CONDITIONER AR

SMCS-7342 **i02356832**

NOTE	REF NO	GRAPHIC REF	PART NUMBER	QTY	PART NAME 1 2 3 4 5 6 (PRODUCT LEVEL)	SEE PAGE
	1	1	**2R-2376**	1	WASHER (7X16X0.8-MM THK)	
	2	2	**3V-7689**	3	HANDLE AS	
	3	1	**3W-3465**	1	SCREW	
	4	1	**9X-8216**	1	FILTER-CAB AIR	
	5	1	**133-9399**	1	GROMMET	
	7	2	**199-7856**	1	SHEET AS	
	8	2	**251-6553**	1	SHEET AS	
	9	1	**251-6556**	1	SHEET	
	10	2	**251-6557**	1	DOOR AS	
E		2	**3E-6602**		SEAL (180-CM)	
		2	**4E-7412**	1	HINGE	
M	11	2	**129-3178**	1	LOCKNUT (M6X1 THD)	
	12	2	**2M-4009**	4	PLUG-BUTTON	
	13	2	**2V-3726**	1	BUMPER	
	14	1	**3E-4353**	4	WASHER-HARD (11X25X3-MM THK)	
	15	2	**3N-4809**	2	PLUG-BUTTON	
	16	1	**6V-1668**	1	WASHER (6.5X29.1X3-MM THK)	
M	17	2	**7X-2535**	1	BOLT (M6X1X60-MM)	
	18	2	**8T-4121**	4	WASHER-HARD (11X21X2.5-MM THK)	
M	19	1	**8T-4133**	4	NUT (M10X1.5 THD)	
M	20	2	**8T-4137**	4	BOLT (M10X1.5X20-MM)	
	21	2	**8T-4223**	3	WASHER-HARD (13.5X25.5X3-MM THK)	
M	22	2	**9X-2042**	7	SCREW-TRUSS HEAD (M6X1X12-MM)	
	23	2	**9X-8256**	1	WASHER (6.6X12X2-MM THK)	
E	24	2	**3E-6602**		SEAL (83.5-CM EACH)	
D	25	2	**6V-0352**		SEAL (0.19-M)	
D	25A	2	**6V-0352**		SEAL (0.17-M)	

D-ORDER BY THE METER
E-ORDER BY THE CENTIMETER
M-METRIC PART

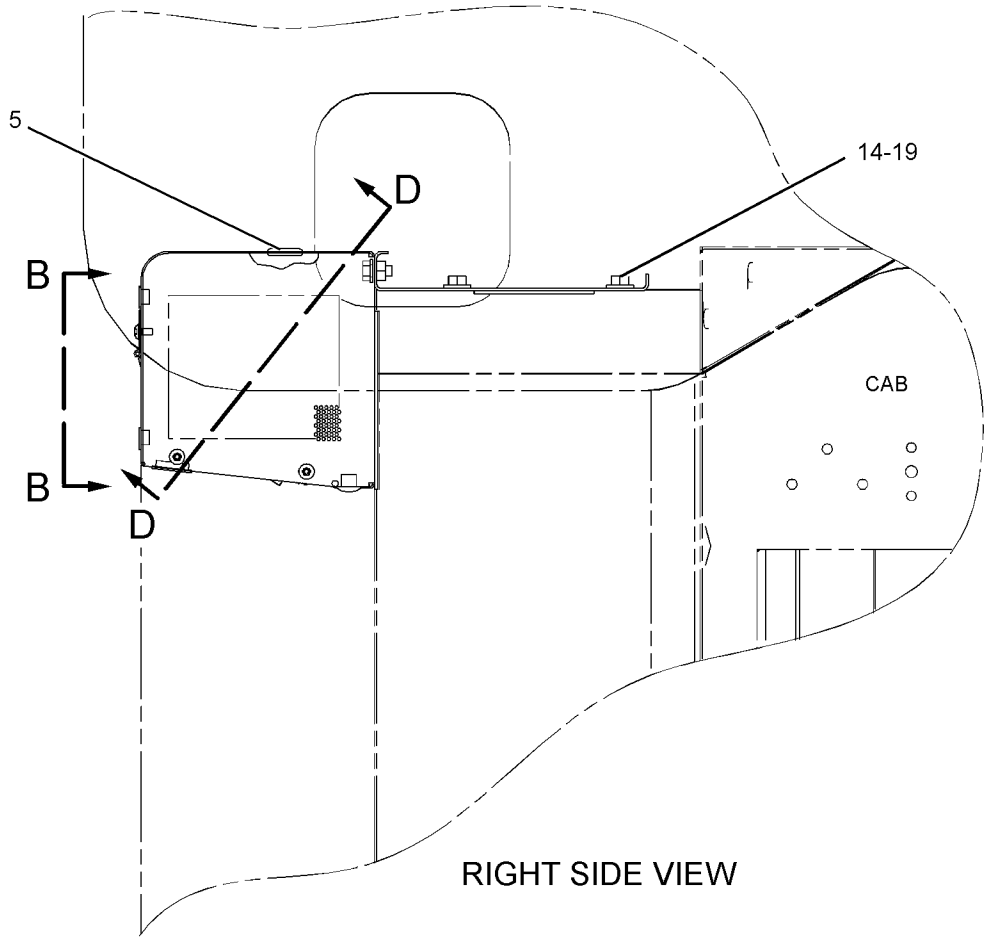

RIGHT SIDE VIEW

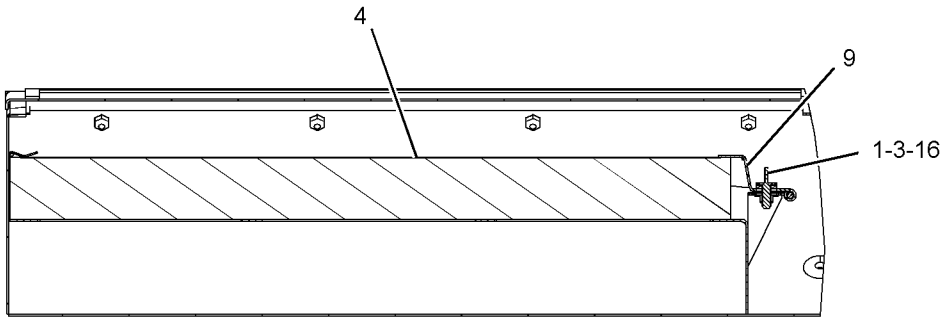

SECTION D-D

GRAPHIC #1 g01177197

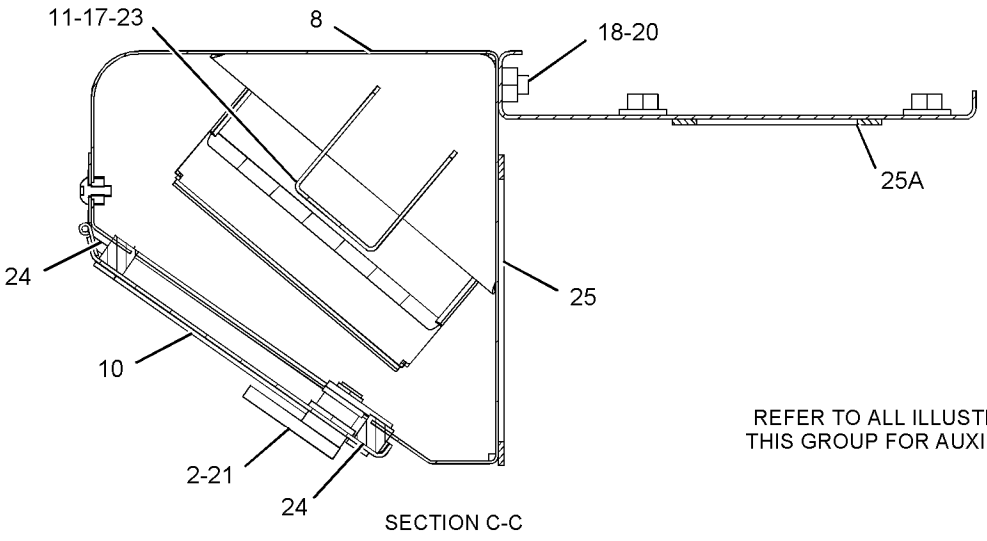

SECTION C-C

REFER TO ALL ILLUSTRATIONS OF THIS GROUP FOR AUXILIARY VIEWS

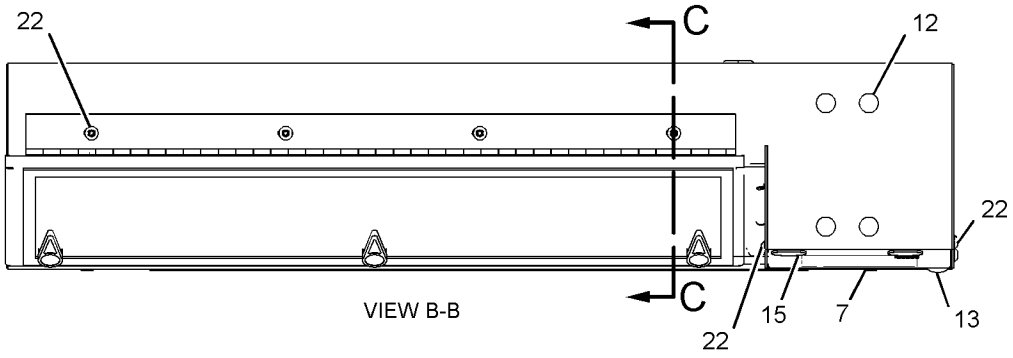

VIEW B-B

GRAPHIC #2 **<END>** g01146224

OPERATOR STATION

246-6240 HANDHOLD GP

S/N: 4421-UP

PART OF 245-8813 INSTALLATION AR-FIELD

SMCS-7256 **i02282512**

NOTE	REF NO	GRAPHIC REF	PART NUMBER	QTY	PART NAME 1 2 3 4 5 6 (PRODUCT LEVEL)	SEE PAGE
	1	1	**264-7649**	1	HANDHOLD AS (LH)	
		1	**8X-2041**	2	FLANGE	
	2	1	**261-7181**	2	HANDHOLD AS	
	3	1	**264-7648**	1	HANDHOLD AS (RH)	
		1	**8X-2041**	2	FLANGE	
	4	1	**264-7643**	1	HANDHOLD AS (LH)	
	5	1	**264-4422**	2	HANDHOLD AS	
	6	1	**264-7642**	1	HANDHOLD AS	
	7	1	**264-4671**	2	HANDHOLD AS	
	8	1	**264-4670**	2	HANDHOLD AS	
	9	1	**261-7180**	2	HANDHOLD AS	
	10	1	**7I-5024**	1	HANDHOLD AS	
		1	**8X-2041**	1	FLANGE	
	11	1	**7I-5025**	1	HANDHOLD AS	
		1	**8X-2041**	1	FLANGE	
	12	1	**246-6242**	2	HANDLE AS	
	13	1	**246-6243**	2	HANDLE AS	
	14	1	**247-2900**	1	HANDHOLD AS	
	15	1	**247-2901**	2	HANDHOLD AS	
	16	1	**247-2902**	2	HANDHOLD AS	
	17	1	**251-2202**	1	HANDHOLD AS	
		1	**8X-2041**	3	FLANGE	
	18	1	**251-2201**	1	HANDHOLD AS	
		1	**8X-2041**	3	FLANGE	
	20	1	**251-2208**	2	HANDHOLD AS	

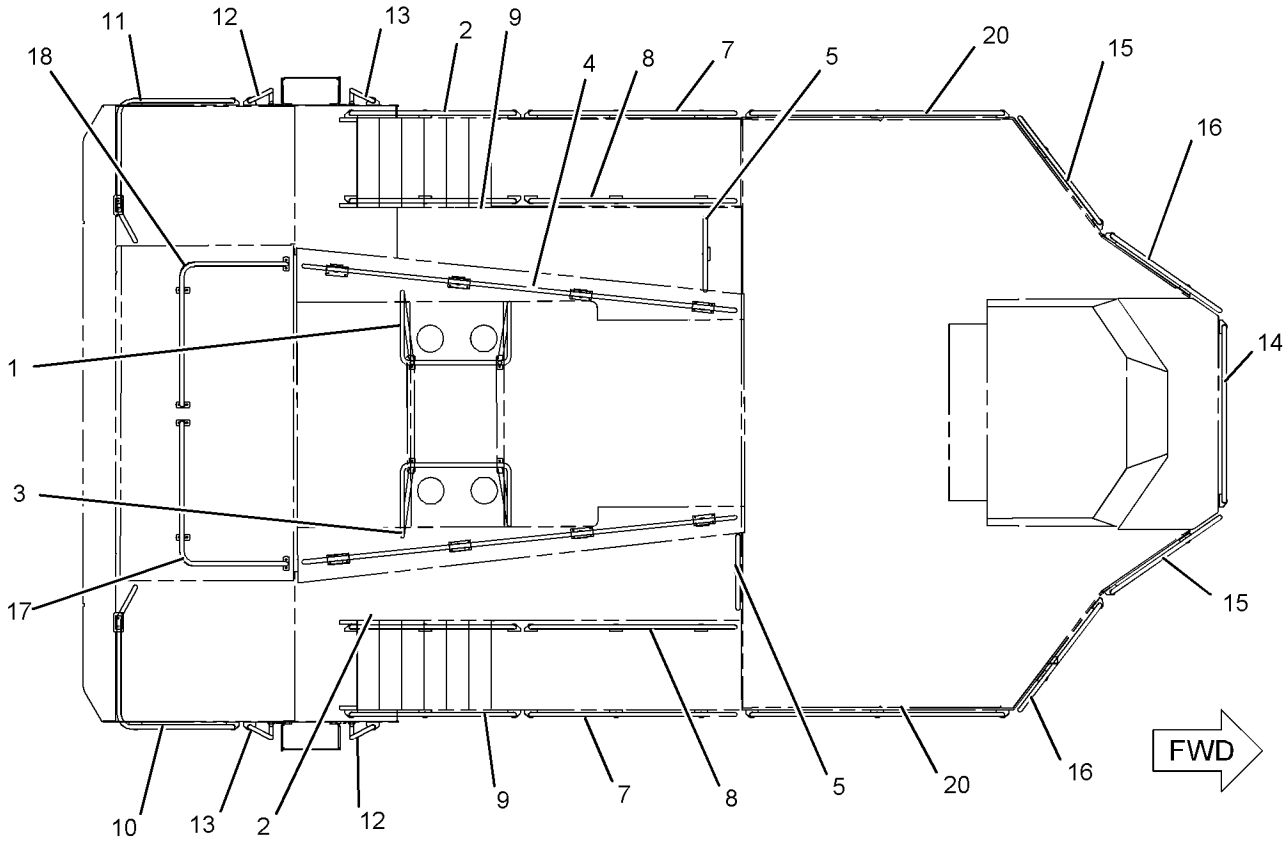

TOP VIEW

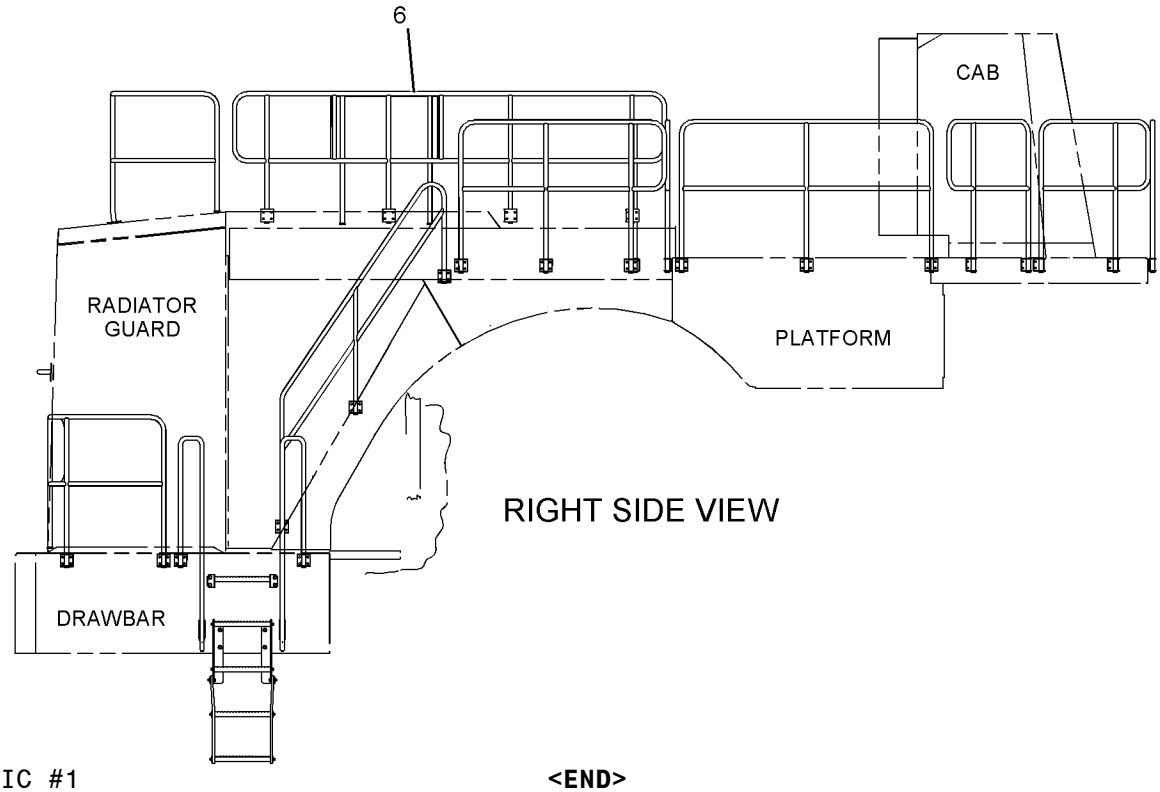

RIGHT SIDE VIEW

GRAPHIC #1 **<END>** g01143496

OPERATOR STATION

5D-6998 HORN GP-AIR

S/N: 4421-UP
PART OF 247-4404, 251-2022 HORN GP-AIR
ALSO AN ATTACHMENT

SMCS-7402 **i02116546**

NOTE	REF NO	GRAPHIC REF	PART NUMBER	QTY	PART NAME 1 2 3 4 5 6 (PRODUCT LEVEL)	SEE PAGE
	1	1	**5D-6994**	1	HORN (LH)	
	2	1	**5D-6993**	1	HORN (RH)	
	3	1	**5D-6997**	1	PAD	
	4	1	**4B-5275**	1	WASHER (17.5X 4.4X3.5-MM THK)	
	5	1	**5D-6996**	1	ADAPTER	
	6	1	**9S-1354**	1	NUT (5/8-18-THD)	
	7	1	**6F-0253**	1	LOCKWASHER	
	8	1	**157-8087**	2	COVER	
					AVAILABLE REPAIR KIT(S):	
			2G-6664	2	KIT-DIAPHRAGM (HORN)	
					(EACH INCLUDES)(DIAPHRAGM, SEAL, DECAL, SCREWS, NUTS, GASKET, & INSTRUCTION SHEET)	

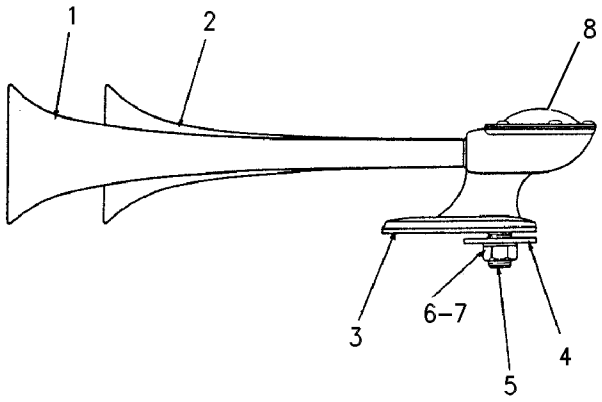

GRAPHIC #1 **<END>** g00479378

OPERATOR STATION

247-4404 HORN GP-AIR—LH

S/N: 4421-UP

PART OF 245-7454 PLATFORM AR

SMCS-7402 **i02148425**

NOTE	REF NO	GRAPHIC REF	PART NUMBER	QTY	PART NAME 1 2 3 4 5 6 (PRODUCT LEVEL)	SEE PAGE
	1	1	**5D-7132**	2	CLAMP	
	2	1	**5D-7133**	1	BRACKET	
	3	1	**251-2023**	1	PLATE	
	4	1	**2H-9523**	1	GROMMET	
	5	1	**2H-9524**	1	GROMMET	
M	6	1	**5C-2890**	2	NUT (M6X1-THD)	
M	7	1	**5C-7261**	1	NUT (M8X1.25-THD)	
Y	8	1	**5D-6998**	1	HORN GP-AIR	987
M	9	1	**7X-2533**	2	BOLT (M6X1X35-MM)	
M	10	1	**7X-2537**	1	BOLT (M8X1.25X35-MM)	
M	11	1	**8T-4192**	4	BOLT (M12X1.75X25-MM)	
	12	1	**8T-4205**	2	WASHER-HARD (7.2X14.5X2-MM THK)	
	13	1	**8T-4223**	4	WASHER-HARD (13.5X25.5X3-MM THK)	
	14	1	**8T-4224**	1	WASHER-HARD (8.8X16X2-MM THK)	

M-METRIC PART
Y-SEPARATE ILLUSTRATION

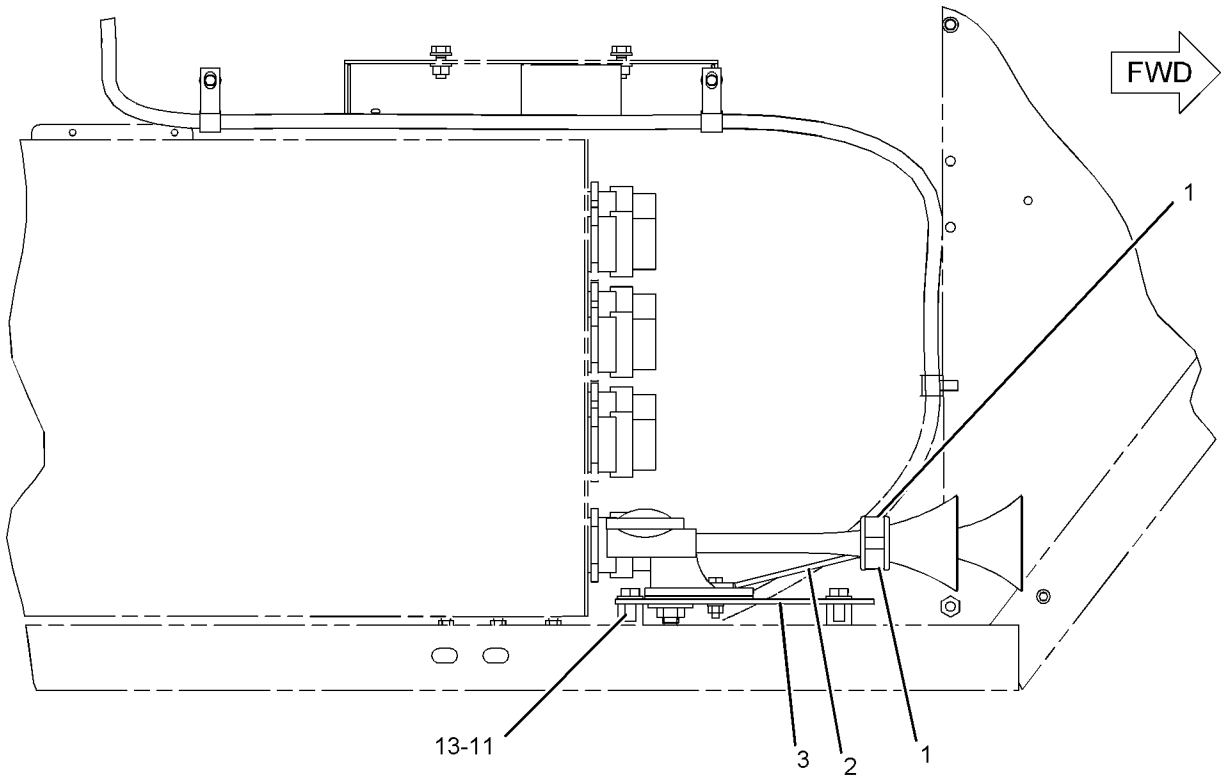

BOTTOM VIEW

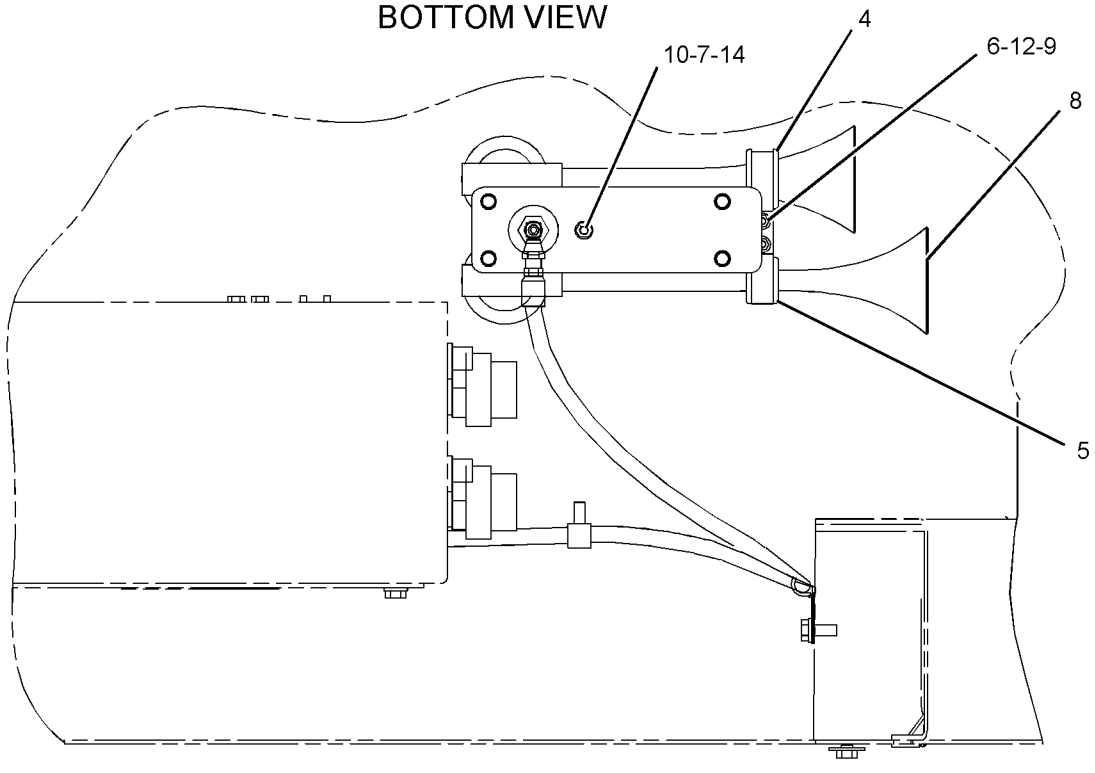

LEFT SIDE VIEW

GRAPHIC #1

<END>

g01091573

OPERATOR STATION

251-2022 HORN GP-AIR—RH

S/N: 4421-UP
PART OF 245-3881 PLATFORM AR
AN ATTACHMENT

SMCS-7402 **i02154419**

NOTE	REF NO	GRAPHIC REF	PART NUMBER	QTY	PART NAME 1 2 3 4 5 6 (PRODUCT LEVEL)	SEE PAGE
	1	1	**5D-7132**	2	CLAMP	
	2	1	**5D-7133**	1	BRACKET	
	3	1	**251-2023**	1	PLATE	
	4	1	**2H-9523**	1	GROMMET	
	5	1	**2H-9524**	1	GROMMET	
M	6	1	**5C-2890**	2	NUT (M6X1-THD)	
M	7	1	**5C-7261**	1	NUT (M8X1.25-THD)	
Y	8	1	**5D-6998**	1	HORN GP-AIR	987
M	9	1	**7X-2533**	2	BOLT (M6X1X35-MM)	
M	10	1	**7X-2537**	1	BOLT (M8X1.25X35-MM)	
M	11	1	**8T-4192**	4	BOLT (M12X1.75X25-MM)	
	12	1	**8T-4205**	2	WASHER-HARD (7.2X14.5X2-MM THK)	
	13	1	**8T-4223**	4	WASHER-HARD (13.5X25.5X3-MM THK)	
	14	1	**8T-4224**	1	WASHER-HARD (8.8X16X2-MM THK)	

M-METRIC PART
Y-SEPARATE ILLUSTRATION

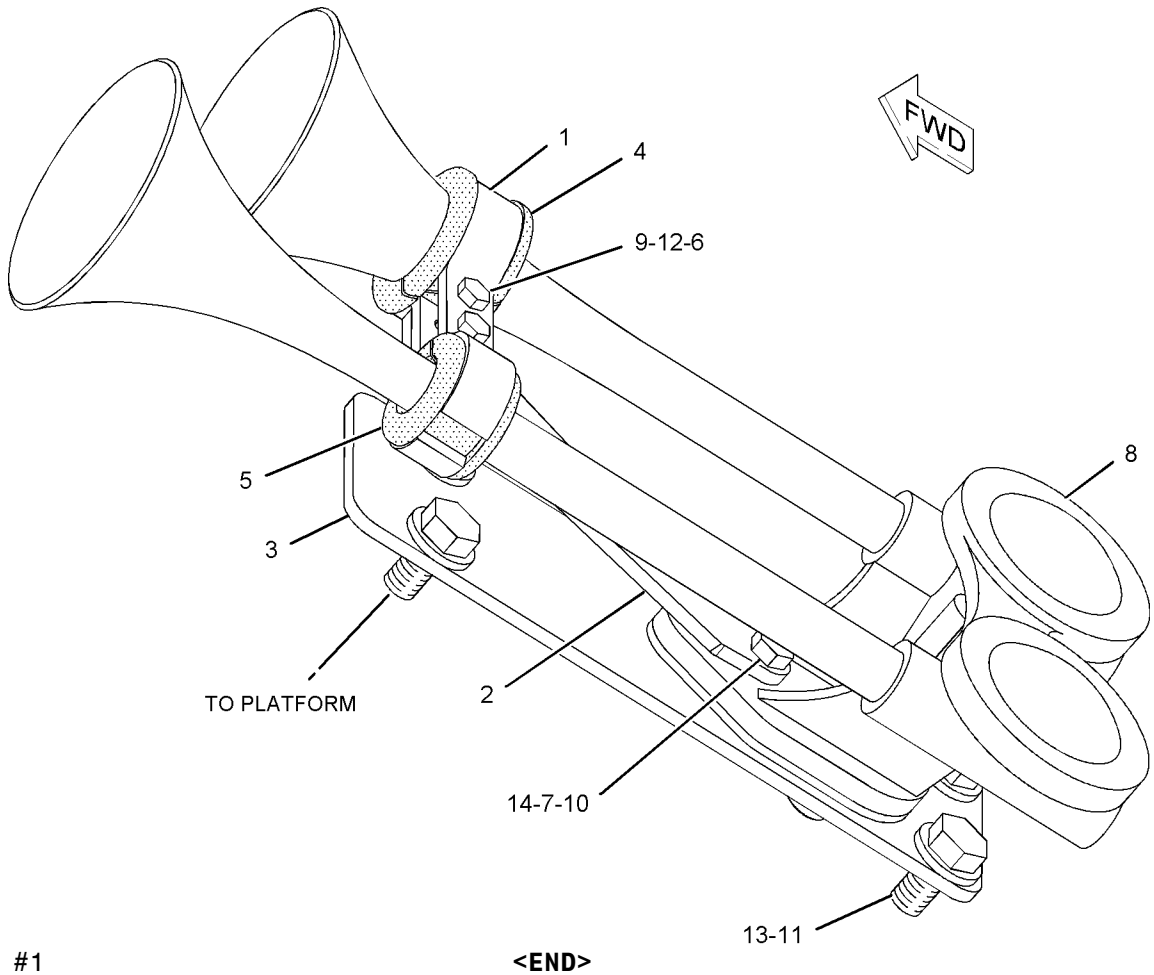

GRAPHIC #1 **<END>** g01094703

OPERATOR STATION

236-5169 INSTALLATION GP-RADIO

S/N: 4421-UP

PART OF 242-0341 CAB AR

SMCS-7338 **i02025069**

NOTE	REF NO	GRAPHIC REF	PART NUMBER	QTY	PART NAME 1 2 3 4 5 6 (PRODUCT LEVEL)	SEE PAGE
	1	1	**1V-6341**	4	SEAL	
M	2	1	**3E-6924**	6	SCREW-TRUSS HEAD (M6X1X50-MM)	
	3	1	**4E-8030**	1	BRACKET AS	
		1	**7T-1099**	2	LINK	
	4	1	**4E-8035**	1	PANEL-TRIM	
	5	1	**4E-8038**	1	HANGER AS	
	6	1	**4E-8917**	1	PLATE AS	
M		1	**6V-9632**	6	NUT-WELD (M6X1-THD)	
	7	1	**4E-9151**	1	CLAMP	
	8	1	**6B-4196**	4	WASHER-THRUST (16.25X26.97X2.36-MM THK)	
	9	1	**6T-7695**	2	SPEAKER AS-RADIO	
	10	1	**9U-2327**	2	CONNECTOR	
	11	1	**9U-2328**	1	CABLE AS-COAXIAL	
	12	1	**9U-2329**	1	CABLE AS-COAXIAL	
	13	1	**9U-8263**	1	COVER	
	14	1	**6V-2687**	8	SCREW-PAN HEAD (10-24X1-IN)	
M	15	1	**7Y-3173**	2	SCREW-BUTTON HEAD (M4X0.7X12-MM)	
	16	1	**8T-4121**	8	WASHER-HARD (11X21X2.5-MM THK)	
M	17	1	**8T-4191**	8	BOLT (M10X1.5X16-MM)	

M-METRIC PART

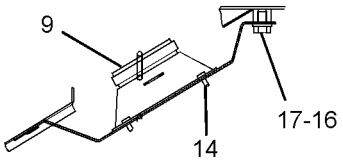

SECTION B-B

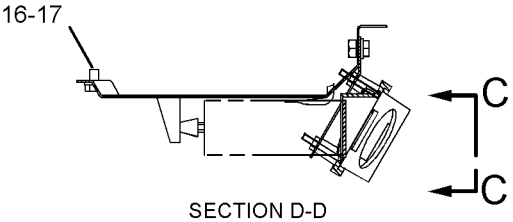

SECTION D-D

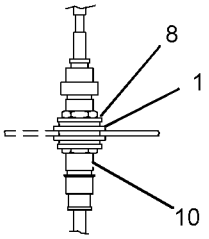

VIEW F-F

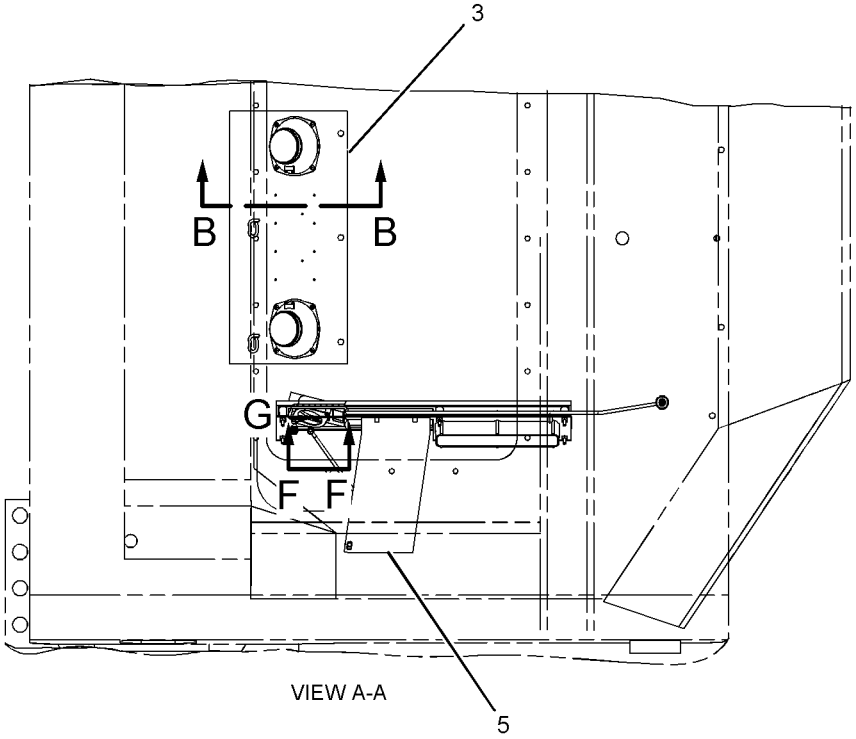

VIEW A-A

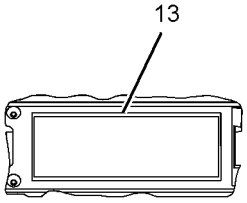

VIEW C-C

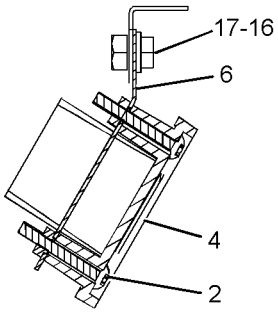

SECTION E-E

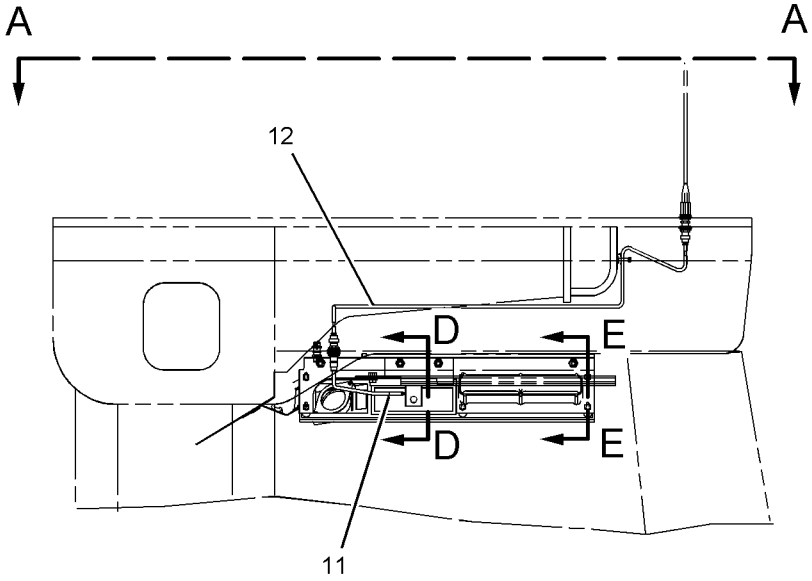

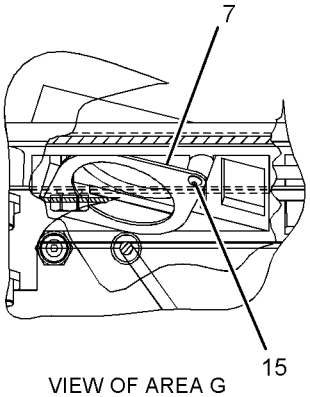

VIEW OF AREA G

GRAPHIC #1 **<END>** g01049828

OPERATOR STATION

250-9306 LATCH GP-CAB DOOR & WINDOW

S/N: 4421-UP

PART OF 242-0341 CAB AR

SMCS-7308, 7310 **i02283728**

NOTE	REF NO	GRAPHIC REF	PART NUMBER	QTY	PART NAME 1 2 3 4 5 6 (PRODUCT LEVEL)	SEE PAGE
	1	2	**4E-5725**	1	PLATE	
	2	2	**4E-5726**	1	PLATE AS	
M		2	**6V-9632**	2	NUT-WELD (M6X1-THD)	
	3	2	**4E-7451**	2	PLATE	
	4	2	**4E-7748**	1	BRACKET AS	
M		2	**6V-9632**	2	NUT-WELD (M6X1-THD)	
	5	2	**4E-7749**	1	COVER	
	6	1	**4E-7839**	1	BRACKET AS	
M		1	**8T-3612**	1	NUT-WELD (M8X1.25-THD)	
	7	2	**4E-9536**	4	PLATE	
	8	2	**4E-9537**	2	PLATE	
	9	1,2	**6V-7636**	4	PIN AS-SPRING	
	10	2	**7X-2497**	1	HANDLE-DOOR	
	11	2	**8C-7529**	1	STRIKER AS-LATCH	
B	12	2	**8T-0318**	2	SHIM (0.8-MM THK)	
	13	1	**8T-4157**	1	STRIKER AS	
		1	**8T-4158**	1	WASHER	
	14	2	**8T-4747**	2	BRACKET	
	15	2	**8Y-5748**	1	LATCH AS	
	16	2	**8Y-5749**	1	ROD AS	
	17	2	**8Y-8294**	1	LATCH AS-WINDOW	
	18	2	**8Y-8296**	1	HANDLE AS	
		2	**8Y-4501**	1	SPRING-HANDLE	
	19	2	**8Y-8318**	1	LINK-CONNECTING	
	20	2	**8Y-8320**	1	LATCH AS-DOOR	
M	21	2	**9X-2546**	2	BOLT (M6X1X20-MM)	
	22	1	**108-5471**	1	CLEVIS	
	23	2	**145-4484**	1	STRIKER	
	24	1	**242-9508**	1	LATCH AS	
	25	2	**250-0769**	1	LATCH AS	
	26	1	**250-0770**	1	LINK-TAG	
	27	1	**250-0771**	1	LINKAGE AS	
	28	1	**250-4568**	1	GASKET	
M	30	1	**096-4884**	1	LOCKNUT (M12X1.75-THD)	
	31	2	**109-6945**	1	PIN-SPRING	
M	32	1	**3E-8020**	5	SCREW-TRUSS HEAD (M6X1X25-MM)	
	34	1	**4E-1384**	1	BUMPER-CONICAL	
M	35	2	**5C-2890**	2	NUT (M6X1-THD)	
M	36	1,2	**5C-7261**	2	NUT (M8X1.25-THD)	
M	37	1,2	**5C-9553**	7	BOLT (M6X1X16-MM)	
M	38	2	**8T-4180**	4	SCREW-MACHINE (M5X0.8X20-MM)	
	39	2	**6V-8801**	1	NUT (3/8-16-THD)	
	40	2	**7X-0546**	1	WASHER-HARD (12X25.5X2-MM THK)	
	41	2	**7X-3310**	1	KNOB-BALL	
M	42	2	**8C-3210**	1	BOLT (M6X1X16-MM)	
M	43	2	**8T-4181**	8	BOLT (M6X1X20-MM)	
	44	1,2	**8T-4205**	13	WASHER-HARD (7.2X14.5X2-MM THK)	
	45	1	**8T-4223**	1	WASHER-HARD (13.5X25.5X3-MM THK)	
	46	2	**8T-4896**	1	WASHER-HARD (10.2X18.5X2.5-MM THK)	
M	47	1	**9X-2042**	1	SCREW-TRUSS HEAD (M6X1X12-MM)	
M	48	1,2	**9X-2044**	9	SCREW-TRUSS HEAD (M6X1X16-MM)	
M	49	1	**9X-2045**	4	SCREW-TRUSS HEAD (M6X1X20-MM)	
E	50	1	**103-2554**		SEAL (350-CM)	
E	50A	2	**103-2554**		SEAL (240-CM)	
E	50B	2	**103-2554**		SEAL (450-CM)	
	51	2	**5P-0537**	4	WASHER-HARD (7.2X14.5X2-MM THK)	

250-9306 **LATCH GP-CAB DOOR & WINDOW** *(contd.)* **i02283728**

B-USE AS REQUIRED
E-ORDER BY THE CENTIMETER
M-METRIC PART

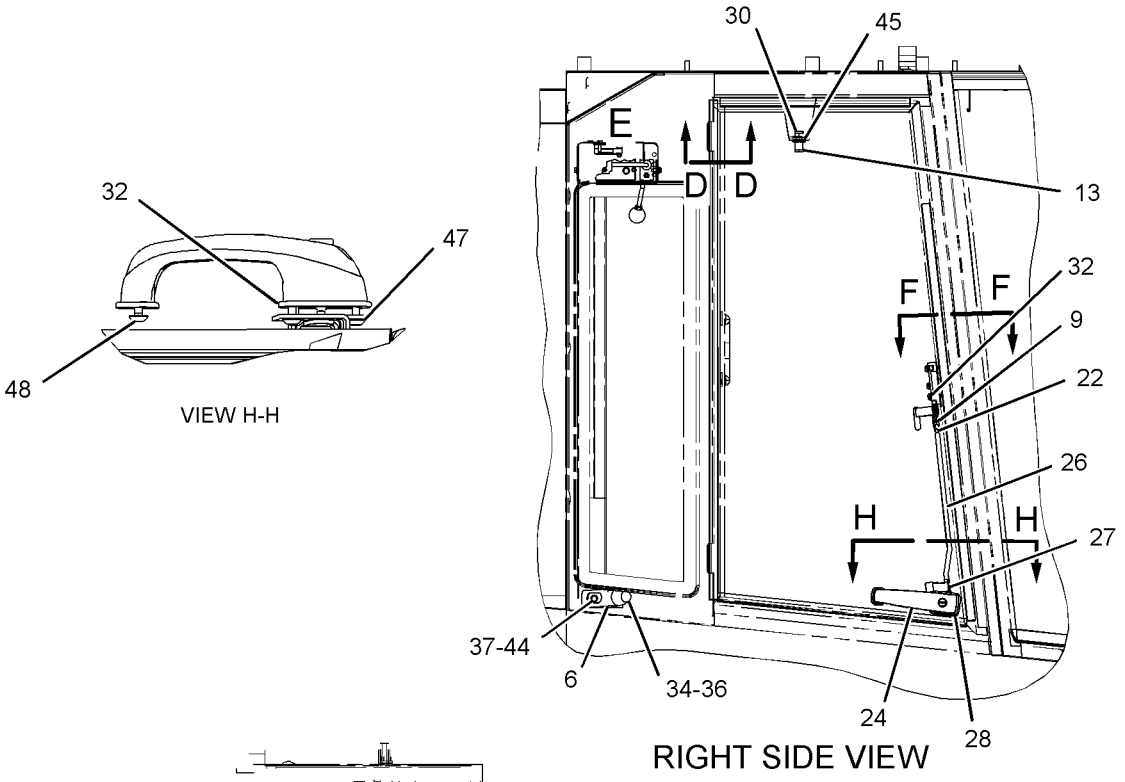

RIGHT SIDE VIEW

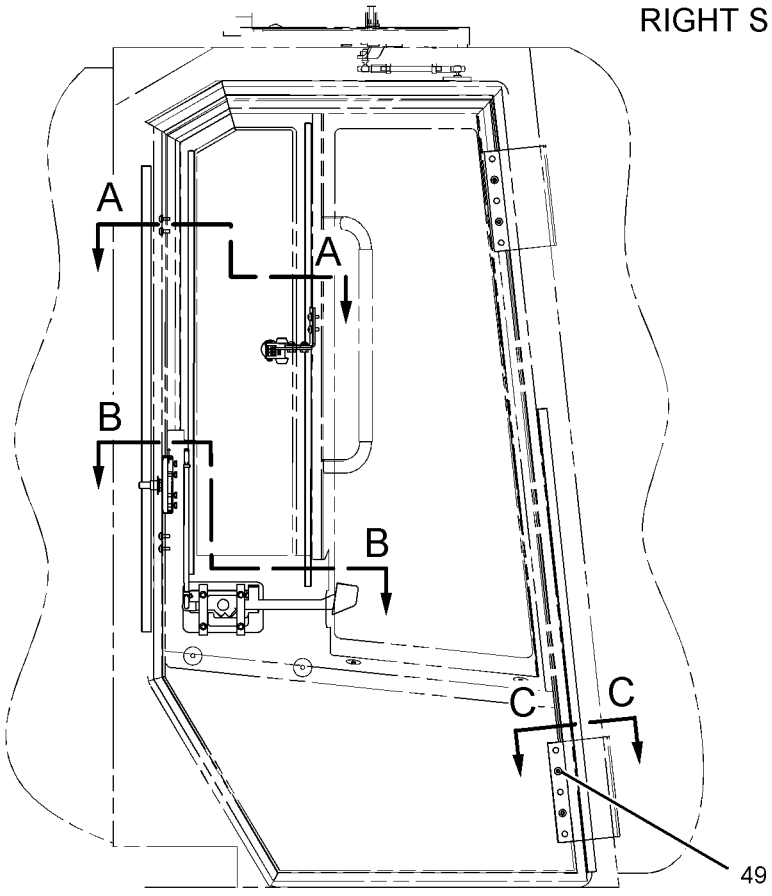

LEFT SIDE VIEW

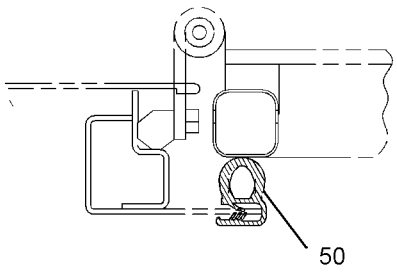

SECTION D-D

REFER TO ALL ILLUSTRATIONS
OF THIS GROUP FOR AUXILIARY VIEWS

GRAPHIC #1 g01147188

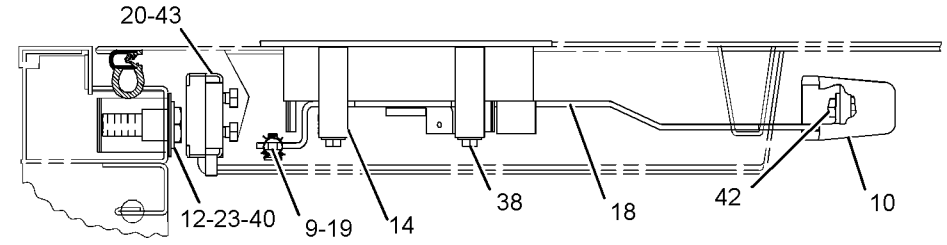

SECTION A-A

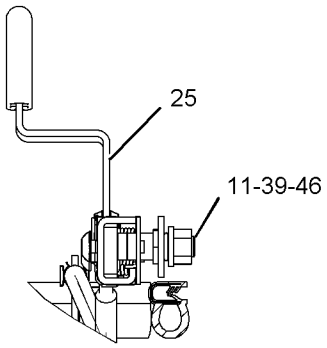

SECTION F-F

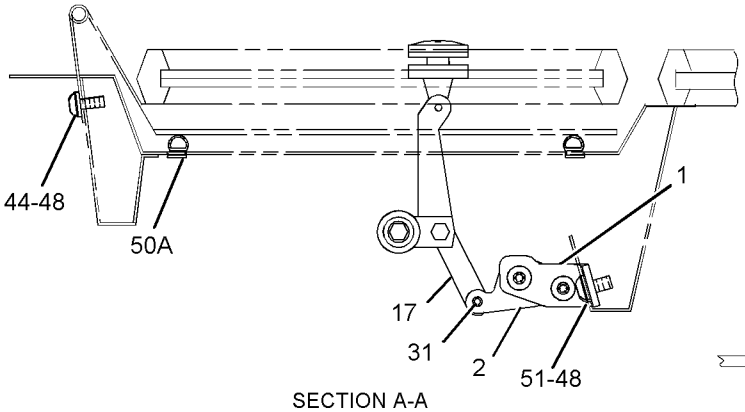

SECTION A-A

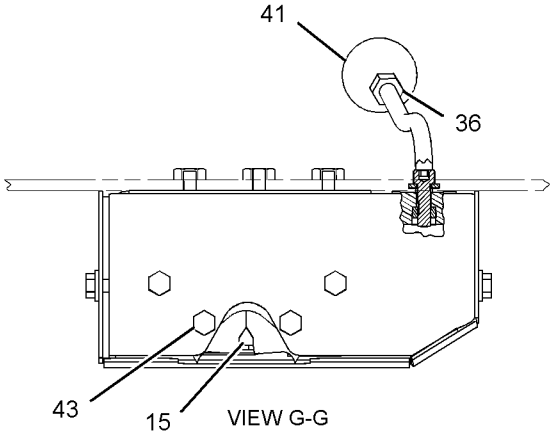

VIEW G-G

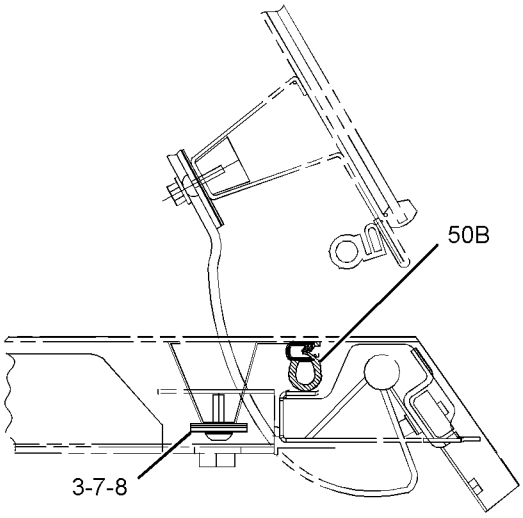

SECTION C-C

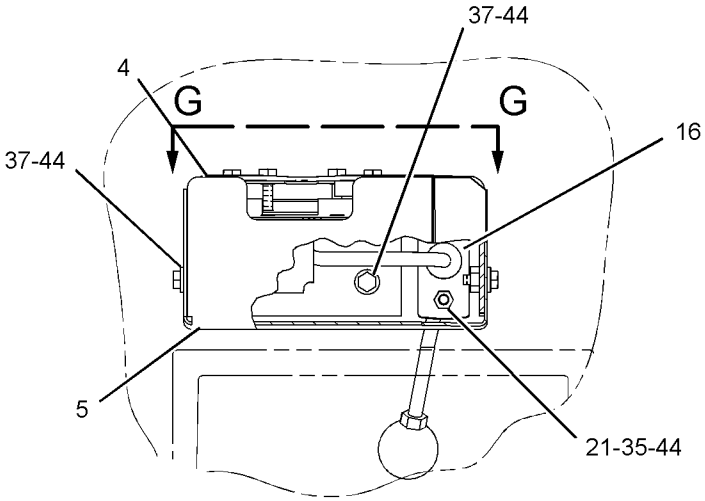

VIEW OF AREA E

GRAPHIC #2 **<END>** g01143094

OPERATOR STATION

250-3018 LINER GP-CAB

S/N: 4421-UP

PART OF 242-0341 CAB AR

SMCS-7329 **i02285104**

NOTE	REF NO	GRAPHIC REF	PART NUMBER	QTY	PART NAME 1 2 3 4 5 6 (PRODUCT LEVEL)	SEE PAGE
Y	1	3	**3E-6389**	1	LAMP GP-DOME (24-VOLT, WITH SWITCH)	236
	2	1,3	**3S-2093**	3	STRAP-CABLE	
	3	1	**4E-1411**	1	BUSHING-TERMINAL	
	4	3	**4E-7204**	1	COVER AS	
		3	**2R-2376**	2	WASHER (7X16X0.8-MM THK)	
		3	**7K-3262**	2	SCREW (THUMB)	
	5	3	**4E-7205**	1	SEAL	
	6	1	**266-3600**	1	HANGER AS (REAR)	
	7	1	**266-3597**	1	HANGER AS	
	8	1	**4E-9640**	1	HANDLE	
	9	3	**6V-8928**	1	HOOK-COAT	
	10	2	**7T-4306**	2	LOUVER AS	
M	11	3	**8T-5027**	2	NUT (M6X1-THD)	
	12	1	**8Y-6352**	3	LOUVER AS	
	13	1	**8Y-6388**	10	LOUVER AS	
	14	3	**9U-1217**	1	COVER	
	15	1	**9U-1301**	1	HANDHOLD-LH	
	16	1,2	**9U-1860**	2	BRACKET	
	17	2	**9U-1866**	2	ANGLE	
	18	3	**9U-2330**	2	MOUNT-ANTENNA	
	19	3	**9U-2331**	1	ANTENNA AS (AM/FM)	
	20	3	**9U-2332**	1	ANTENNA AS (CB)	
	21	1	**9U-2670**	1	HANDHOLD-RH	
	22	3	**9X-8216**	1	FILTER-CAB AIR	
BE	23	3	**103-2543**		SEAL	
	24	2	**123-8687**	1	PANEL	
	25	1	**123-8690**	1	LINER-CAB	
	26	1	**123-8696**	1	INSULATION	
	27	1	**123-8702**	1	PANEL AS-SOUND SUPPRESSION	
		1	**4E-8293**	3	FASTENER	
	28	1	**123-8703**	1	PANEL-TRIM	
	29	2	**123-8721**	1	DUCT	
	30	1	**123-8722**	1	DUCT AS	
		1	**7K-4201**	2	NUT-SPEED	
		1	**9N-1995**	4	RIVET-POP	
	31	3	**123-8724**	1	INSULATION-LH	
	32	3	**123-8725**	1	INSULATION-RH	
	33	1	**138-8630**	1	DUCT AS	
M		1	**8T-5027**	2	NUT (M6X1-THD)	
M		1	**9X-2045**	2	SCREW-TRUSS HEAD (M6X1X20-MM)	
		1	**123-8720**	1	DUCT	
		1	**136-7403**	1	INSULATION	
		1	**136-7406**	2	INSULATION	
	34	1	**146-2614**	3	BUTTON	
	35	3	**146-3095**	1	PANEL AS	
	36	1	**146-3096**	1	LINER-CAB	
	37	1	**178-4323**	1	CAP	
	38	1	**198-4419**	1	INSULATION	
	39	1	**205-3076**	1	COVER AS	
		1	**110-7524**	1	BUTTON	
	40	1	**213-4262**	1	SEAL AS	
	41	1	**250-0765**	1	COVER	
	42	1	**250-4570**	1	COVER	
	43	3	**251-4645**	1	PANEL-REAR	
	44	1	**251-4646**	1	HEADLINER	
	45	3	**251-6492**	1	STRIP	

250-3018 **LINER GP-CAB** *(contd.)* **i02285104**

NOTE	REF NO	GRAPHIC REF	PART NUMBER	QTY	PART NAME 1 2 3 4 5 6 (PRODUCT LEVEL)	SEE PAGE
	46	1	**104-2091**	20	SCREW-FLAT HEAD (6-20X0.5-IN)	
	47	1	**123-8685**	1	PANEL AS-TRIM	
M	48	1	**127-2170**	3	SCREW-TRUSS HEAD (M8X1.25X20-MM)	
	49	1	**250-0767**	1	COVER	
	50	3	**251-4245**	1	FLOOR MAT	
M	51	2	**5C-2890**	1	NUT (M6X1-THD)	
M	52	1,2	**5C-9553**	4	BOLT (M6X1X16-MM)	
	53	1	**5L-6766**	1	PLUG	
	54	1,2	**5P-0537**	4	WASHER-HARD (7.2X14.5X2-MM THK)	
	55	3	**6V-2687**	2	SCREW-PAN HEAD (10-24X1-IN)	
	56	1,2,3	**8T-4121**	18	WASHER-HARD (11X21X2.5-MM THK)	
M	57	1	**8T-4133**	4	NUT (M10X1.15-THD)	
M	58	1	**8T-4183**	2	BOLT (M12X1.75X40-MM)	
M	59	3	**8T-4189**	6	BOLT (M8X1.25X20-MM)	
M	60	2,3	**8T-4191**	6	BOLT (M10X1.5X16-MM)	
M	61	2	**8T-4196**	2	BOLT (M10X1.5X35-MM)	
	62	3	**8T-4205**	2	WASHER-HARD (7.2X14.5X2-MM THK)	
	63	1	**8T-4223**	2	WASHER-HARD (13.5X25.5X3-MM THK)	
	64	3	**8T-4896**	6	WASHER-HARD (10.2X18.5X2.5-MM THK)	
	65	1	**9D-3767**	4	PLUG-BUTTON	
M	66	3	**9X-1046**	3	SCREW (M4X0.7X18-MM)	
M	67	3	**9X-2040**	2	SCREW-TRUSS HEAD (M10X1.5X25-MM)	
M	68	1	**9X-2041**	8	SCREW-TRUSS HEAD (M10X1.5X20-MM)	
M	69	1,2	**9X-2042**	13	SCREW-TRUSS HEAD (M6X1X12-MM)	
M	70	1	**9X-2044**	6	SCREW-TRUSS HEAD (M6X1X16-MM)	
M	71	3	**9X-2045**	3	SCREW-TRUSS HEAD (M6X1X20-MM)	
BD	72	1	**6V-3987**		SEAL	
BD	73	2	**090-4808**		SEAL	
	74	1	**4E-8722**	3	NUT	
M	75	3	**111-4627**	6	SCREW-MACHINE (M6X1X30-MM)	

B-USE AS REQUIRED
D-ORDER BY THE METER
E-ORDER BY THE CENTIMETER
M-METRIC PART
Y-SEPARATE ILLUSTRATION

250-3018 **LINER GP-CAB** *(contd.)* **i02285104**

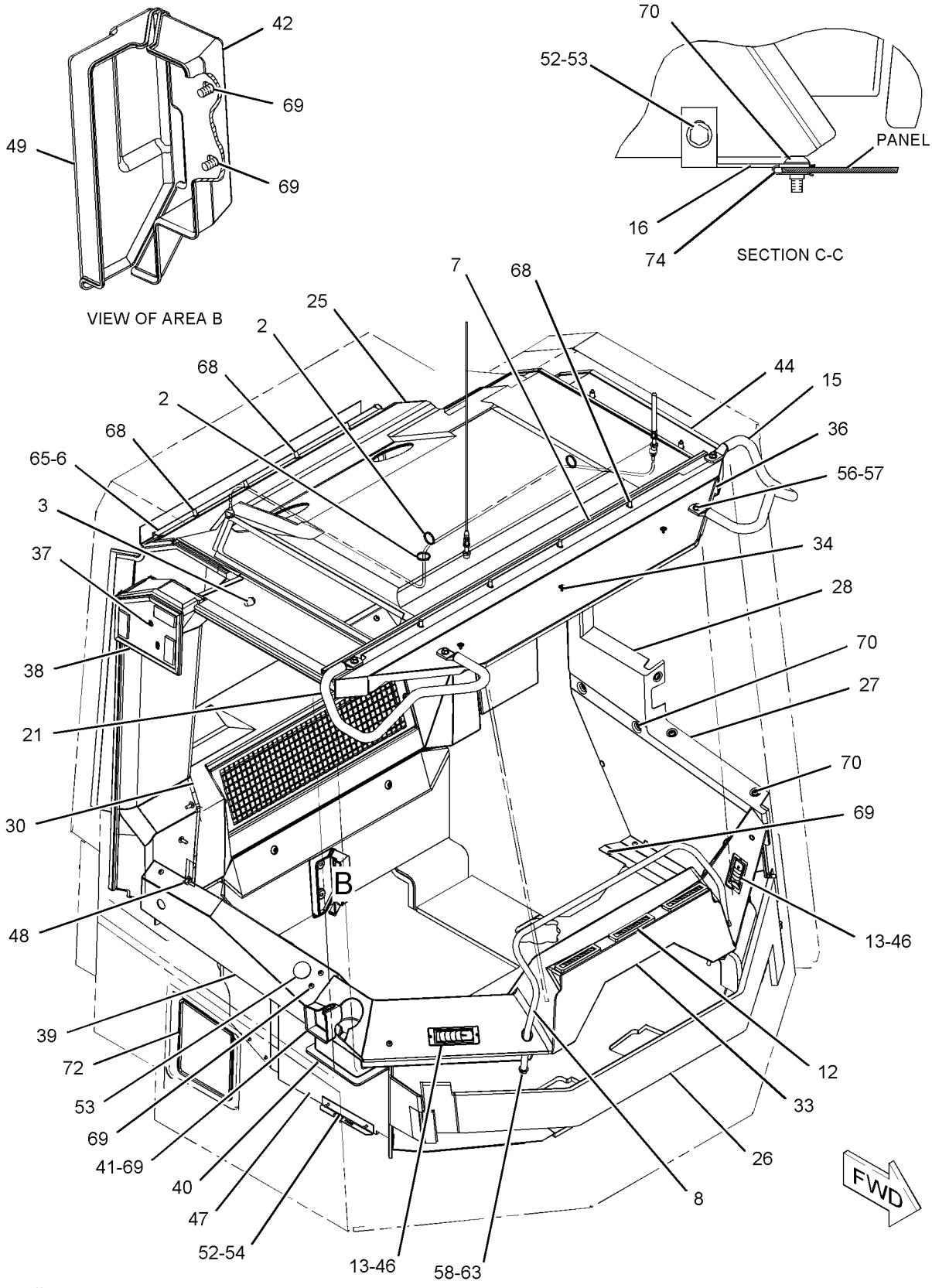

GRAPHIC #1 g01146572

REFER TO ALL ILLUSTRATIONS OF
THIS GROUP FOR AUXILIARY VIEWS

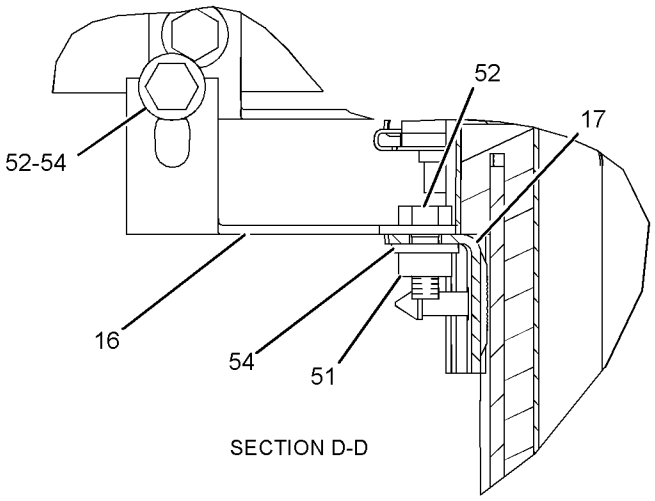

SECTION D-D

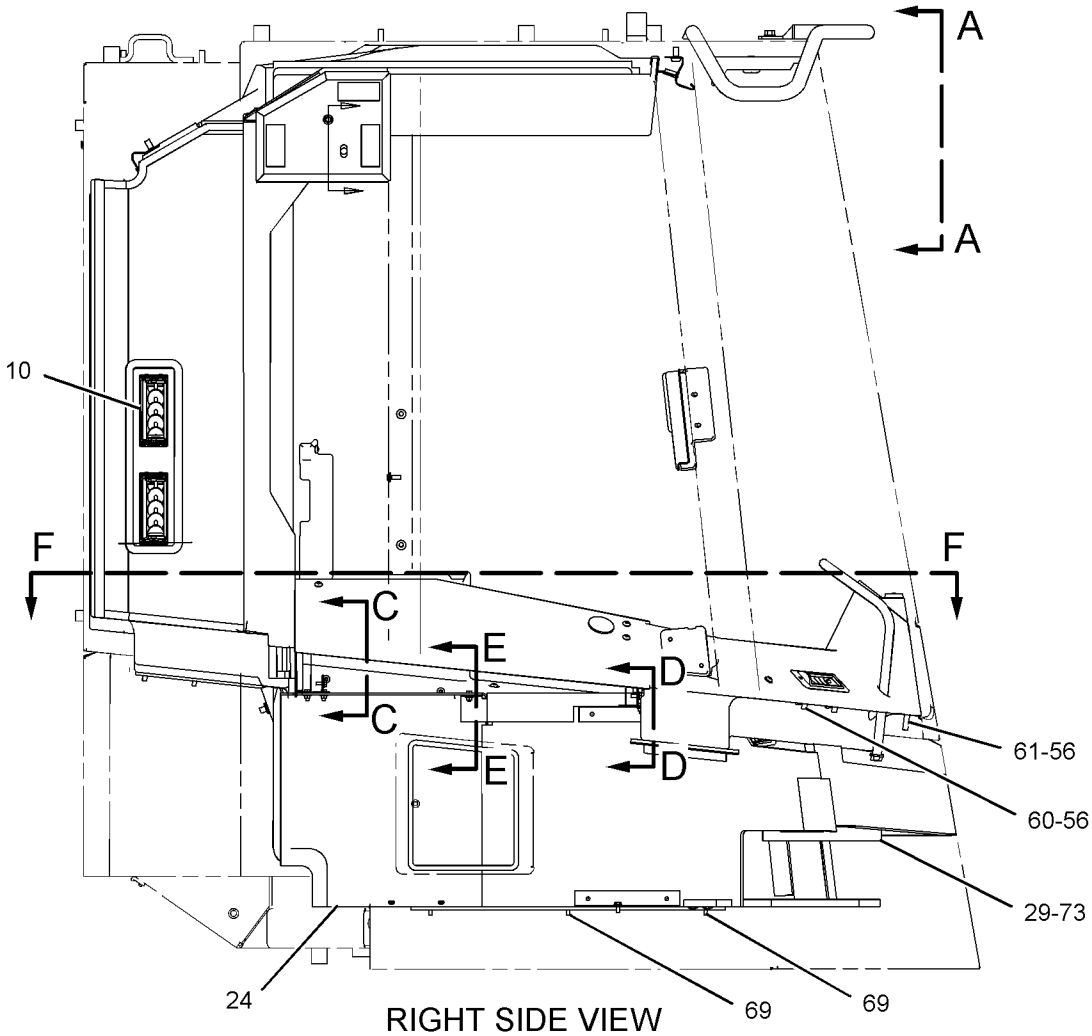

RIGHT SIDE VIEW

GRAPHIC #2

g01146573

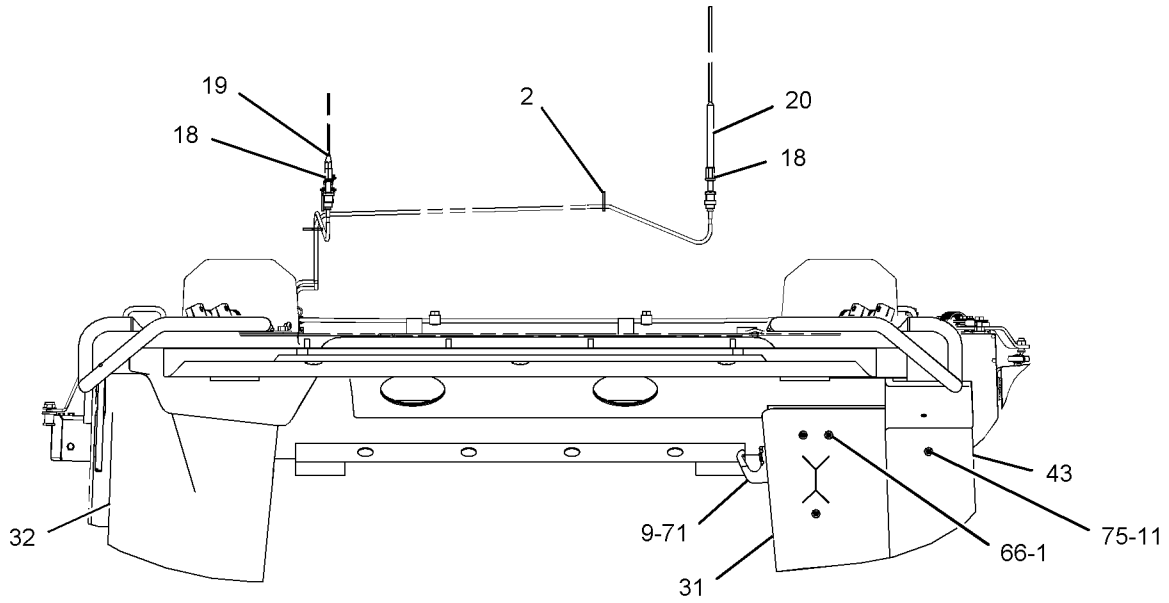

VIEW A-A

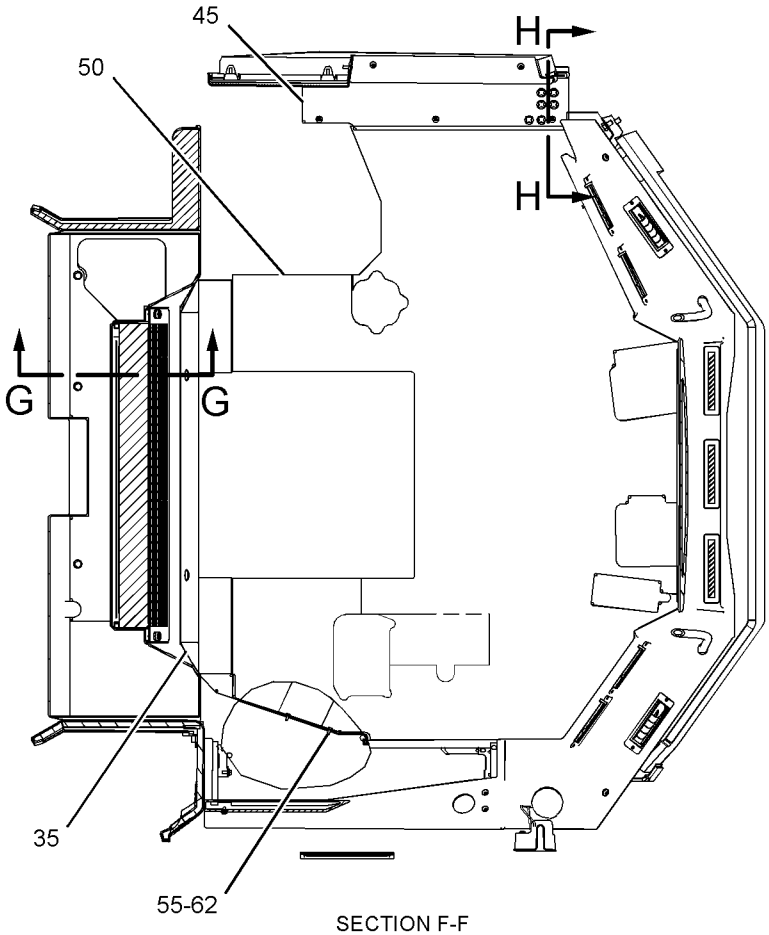

SECTION F-F

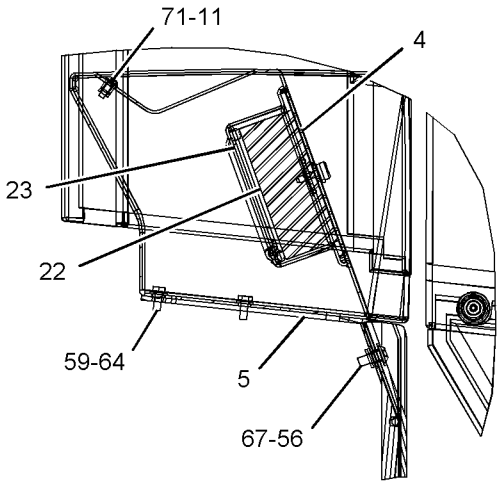

SECTION G-G

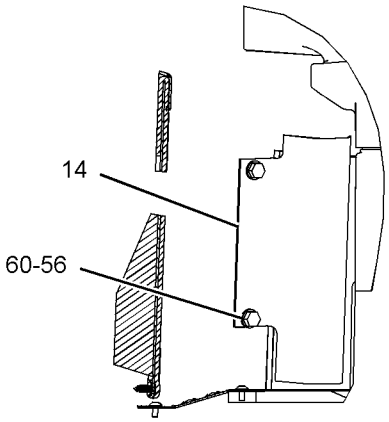

SECTION H-H

GRAPHIC #3 **<END>** g01146571

OPERATOR STATION

245-0675 LINES GP-AIR CONDITIONER—REAR

S/N: 4421-UP

PART OF 245-8812 CHASSIS AR-REAR

SMCS-1808 **i02288688**

NOTE	REF NO	GRAPHIC REF	PART NUMBER	QTY	PART NAME 1 2 3 4 5 6 (PRODUCT LEVEL)	SEE PAGE
	1	2	**3E-4061**	1	FITTING AS-AIR CONDITIONER	
	2	1,2	**4S-6668**	4	CLIP	
	3	1	**5P-3929**	1	COUPLING AS-REFRIGERANT	
		1	**8F-9206**	1	SEAL-O-RING	
		1	**107-4397**	1	VALVE AS	
	4	1	**5P-3946**	1	PLUG	
	5	1	**5P-3948**	1	COUPLING AS-REFRIGERANT	
		1	**7F-8607**	1	SEAL-O-RING	
		1	**107-4399**	1	VALVE AS	
	6	3	**6G-2263**	3	SPACER (10.5X19X28.5-MM THK)	
	7	1	**8B-9294**	1	SPACER (13.5X38X30-MM THK)	
	8	3	**8X-5388**	2	BRACKET	
	9	1,2	**092-6025**	2	CLIP	
	11	2	**114-5333**	1	SWITCH AS-PRESSURE (REFRIGERANT)	
		2	**102-8802**	1	KIT-RECEPTACLE (2-PIN)	
					(INCLUDES RECEPTACLE AS AND WEDGE)	
		2	**3E-3365**	1	WEDGE-RECEPTACLE LOCK (2-PIN)	
		2	**186-3735**	2	PIN-CONNECTOR (16-GA TO 18-GA)	
BE		2	**9X-1386**		SLEEVE	
			7X-7729	1	WASHER (11X25X3-MM THK)	
	12	1	**116-6202**	2	BOOT	
	13	2	**118-6878**	2	BRACKET AS	
					(EACH INCLUDES)	
M		2	**8T-3490**	1	NUT-WELD (M10X1.5-THD)	
	14	1	**124-3019**	1	BRACKET AS	
					(EACH INCLUDES)	
M		1	**8T-3490**	1	NUT-WELD (M10X1.5-THD)	
			169-0410	1	BRACKET AS	
	15	2	**147-3150**	2	ANGLE AS	
					(EACH INCLUDES)	
M		2	**8T-3490**	1	NUT-WELD (M10X1.5-THD)	
	16	1	**186-3330**	1	ACCUMULATOR GP-REFRIGERANT	
I	17	2	**246-2085**	1	HOSE AS	
I	18	2	**246-2086**	1	HOSE AS	
I	19	1	**246-2087**	1	HOSE AS	
	20	1	**246-2088**	1	HOSE AS	
I	21	1	**246-2089**	1	HOSE AS	
	22	3	**253-4782**	1	TUBE AS	
	23	3	**253-4783**	1	TUBE AS	
I	24	1	**266-4227**	1	HOSE AS	
	25	1	**130-3374**	2	CLIP	
	26	3	**1B-3057**	1	CLIP	
	27	2	**1P-6356**	1	PLATE	
	28	1,2	**1P-7009**	2	CLIP	
	29	2	**3E-4054**	1	FITTING AS-AIR CONDITIONER	
		2	**3E-4051**	1	CAP-SEAL	
		2	**3E-4057**	1	VALVE AS	
	30	1,3	**4K-8302**	3	CLIP	
	31	2	**4L-9337**	1	BOLT (3/8-16X1.5-IN)	
	32	1	**5P-3951**	1	PLUG	
	33	2	**5P-7462**	2	CLIP (SLOT)	
	34	2	**5P-7463**	2	CLIP (TAB)	
	35	2	**5P-7468**	2	CLIP (SLOT)	
	36	2	**5P-7469**	2	CLIP (TAB)	
	37	2	**5S-7379**	2	BOLT (3/8-16X0.875-IN)	
	38	2	**6D-4246**	1	CLIP	

245-0675 **LINES GP-AIR CONDITIONER** *(contd.)* **i02288688**

NOTE	REF NO	GRAPHIC REF	PART NUMBER	QTY	PART NAME 1 2 3 4 5 6 (PRODUCT LEVEL)	SEE PAGE
	39	2	**6V-0683**	2	GROMMET	
	40	1	**6V-1228**	1	CLIP	
	41	2	**6V-5039**	1	CLIP (SLOT)	
	42	2	**6V-5040**	1	CLIP (TAB)	
	43	3	**7S-3916**	1	CLIP (TAB)	
	44	3	**7S-3919**	1	CLIP (SLOT)	
	45	3	**7V-6571**	1	GROMMET	
	46	3	**8F-8513**	1	CLIP	
	47	1,2,3	**8T-4121**	32	WASHER-HARD (11X21X2.5-MM THK)	
M	48	1,2,3	**8T-4133**	6	NUT (M10X1.5 THD)	
M	49	2,3	**8T-4136**	5	BOLT (M10X1.5X25-MM)	
M	50	1,2	**8T-4137**	4	BOLT (M10X1.5X20-MM)	
M	51	1	**8T-4185**	3	BOLT (M10X1.5X50-MM)	
M	52	2,3	**8T-4186**	7	BOLT (M10X1.5X40-MM)	
M	53	1,2	**8T-4195**	4	BOLT (M10X1.5X30-MM)	
M	54	1	**8T-4196**	1	BOLT (M10X1.5X35-MM)	
	55	2	**8T-4896**	3	WASHER-HARD (10.2X18.5X2.5-MM THK)	
M	56	3	**8T-5005**	1	BOLT (M10X1.5X70-MM)	
M	57	2	**8T-6466**	1	BOLT (M10X1.5X60-MM)	
	58	2	**8T-9518**	2	GROMMET	
	59	1,2	**9M-8406**	3	CLIP	
	60	2	**9X-7378**	1	SEAL-O-RING	
	61	1,3	**9X-7380**	3	SEAL-O-RING	
	62	2,3	**9X-7381**	2	SEAL-O-RING	
	63	2,3	**9X-7382**	3	SEAL-O-RING	
	64	1	**9X-7383**	3	SEAL-O-RING	
	65	1	**9X-7384**	1	SEAL-O-RING	
	66	2	**9X-7385**	2	SEAL-O-RING	
	67	1,2,3	**9X-8250**	5	CLIP	

B-USE AS REQUIRED
E-ORDER BY THE CENTIMETER
I-REFER TO HYDRAULIC INFORMATION SYSTEM
M-METRIC PART

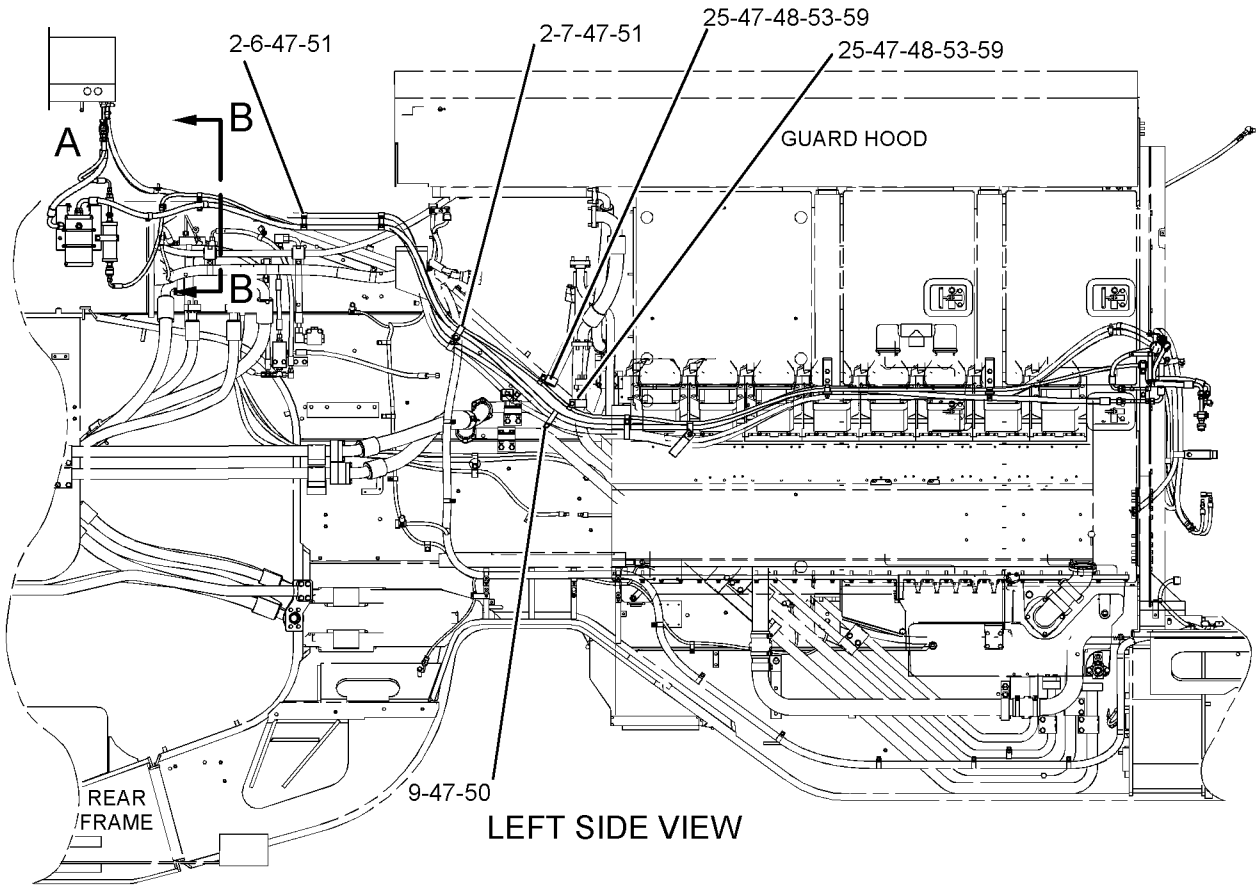

REFER TO ALL ILLUSTRATIONS OF
THIS GROUP FOR AUXILIARY VIEWS

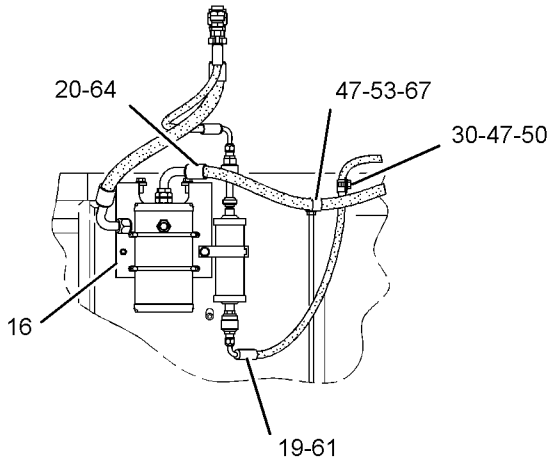

VIEW OF AREA A

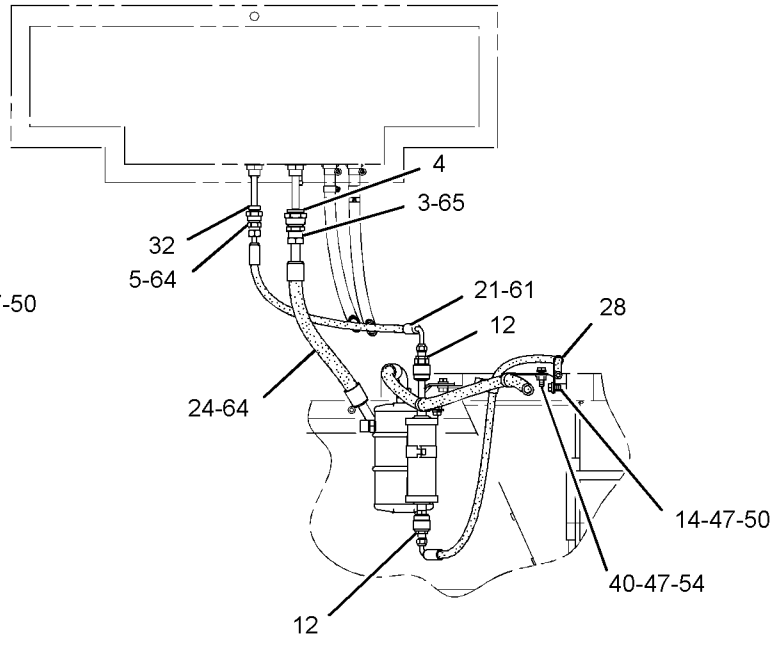

SECTION B-B

GRAPHIC #1 g01146344

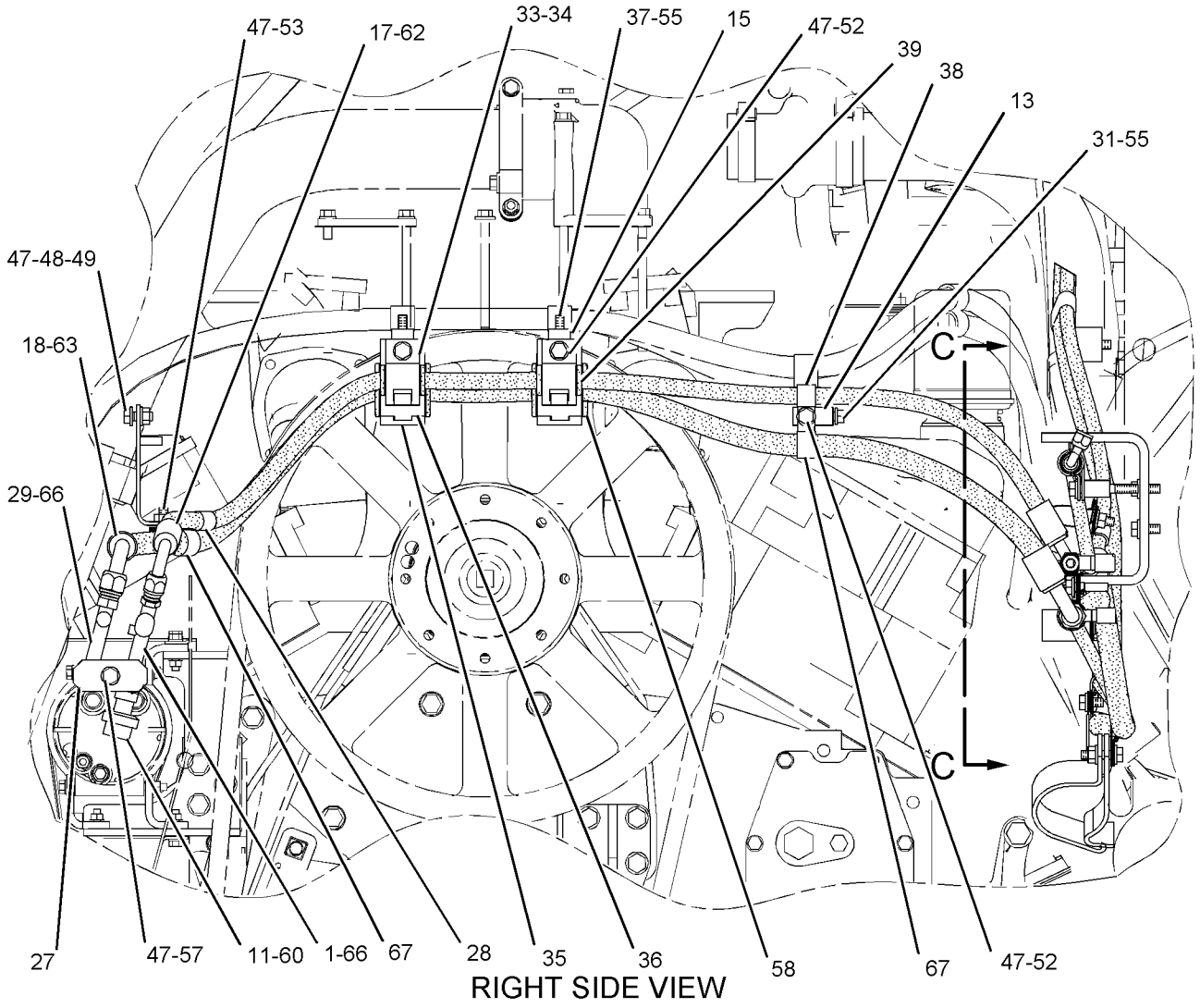

RIGHT SIDE VIEW

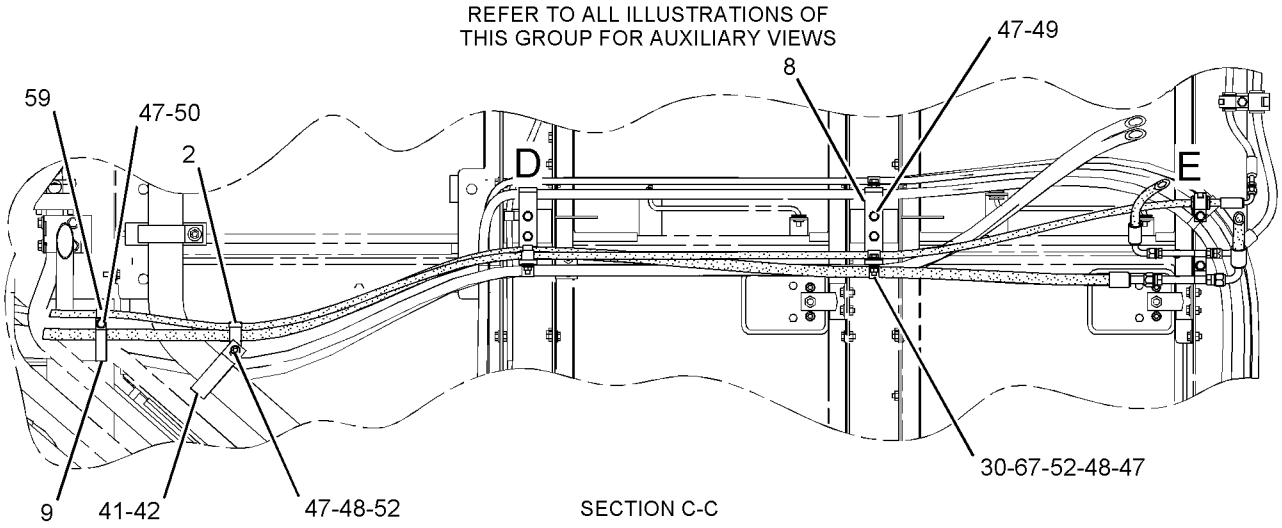

SECTION C-C

GRAPHIC #2

g01146373

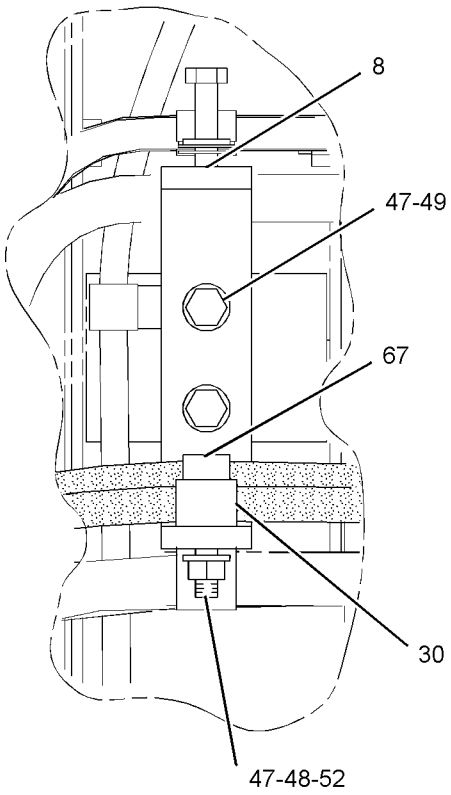

VIEW OF AREA D

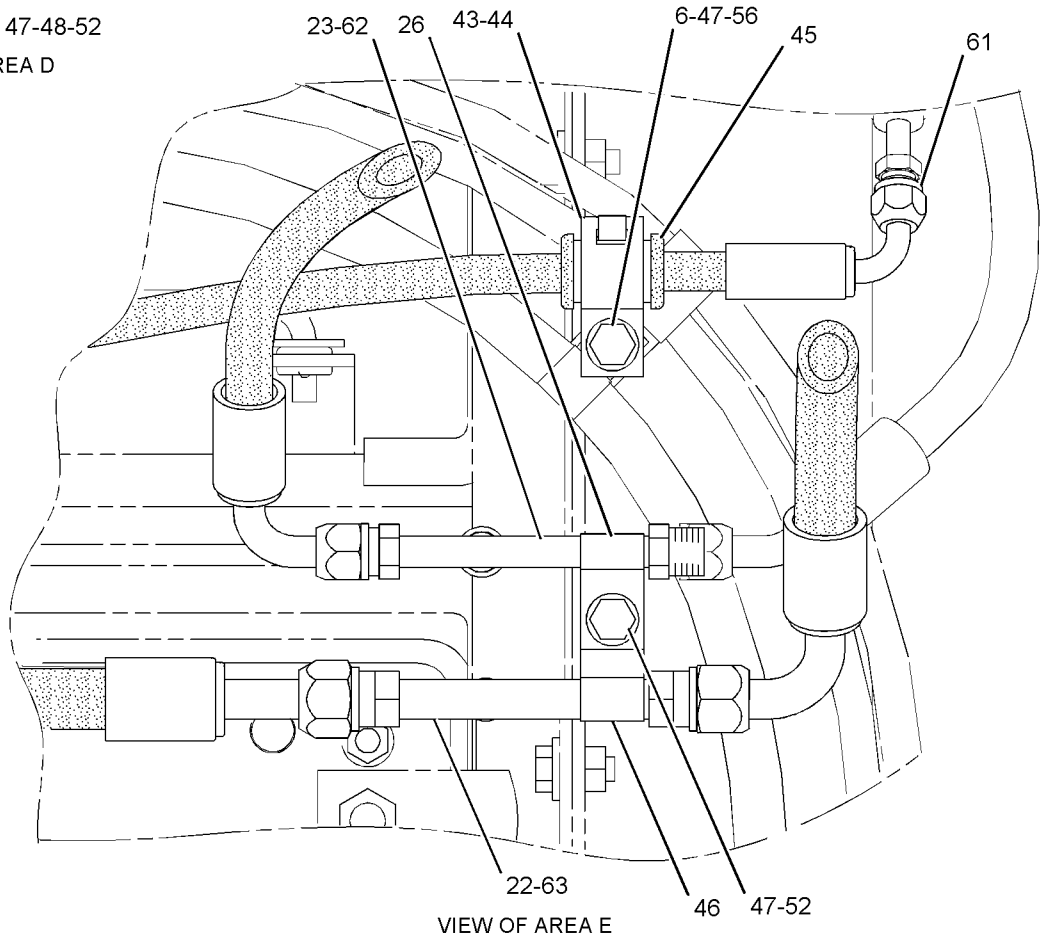

VIEW OF AREA E

GRAPHIC #3 **<END>** g01146549

OPERATOR STATION

245-0680 LINES GP-AIR CONDITIONER—RADIATOR

S/N: 4421-UP

PART OF 245-8812 CHASSIS AR-REAR

SMCS-1808 **i02395470**

NOTE	REF NO	GRAPHIC REF	PART NUMBER	QTY	PART NAME 1 2 3 4 5 6 (PRODUCT LEVEL)	SEE PAGE
I	1	1	**246-2083**	1	HOSE AS	
	2	1	**246-2084**	1	HOSE AS	
	3	1	**2V-8259**	1	GROMMET	
	4	1	**5P-6264**	1	GROMMET	
	5	1	**5P-7462**	2	CLIP (SLOT)	
	6	1	**5P-7463**	2	CLIP (TAB)	
	7	1	**6K-8178**	2	CLIP	
	8	1	**6V-0683**	2	GROMMET	
	9	1	**7S-3916**	2	CLIP (TAB)	
	10	1	**7S-3919**	2	CLIP (SLOT)	
	11	1	**7V-6571**	2	GROMMET	
	12	1	**8T-4121**	4	WASHER-HARD (11X21X2.5-MM THK)	
M	13	1	**8T-4136**	4	BOLT (M10X1.5X25-MM)	
	15	1	**9X-7380**	1	SEAL-O-RING	
	16	1	**9X-7381**	2	SEAL-O-RING	

I-REFER TO HYDRAULIC INFORMATION SYSTEM
M-METRIC PART

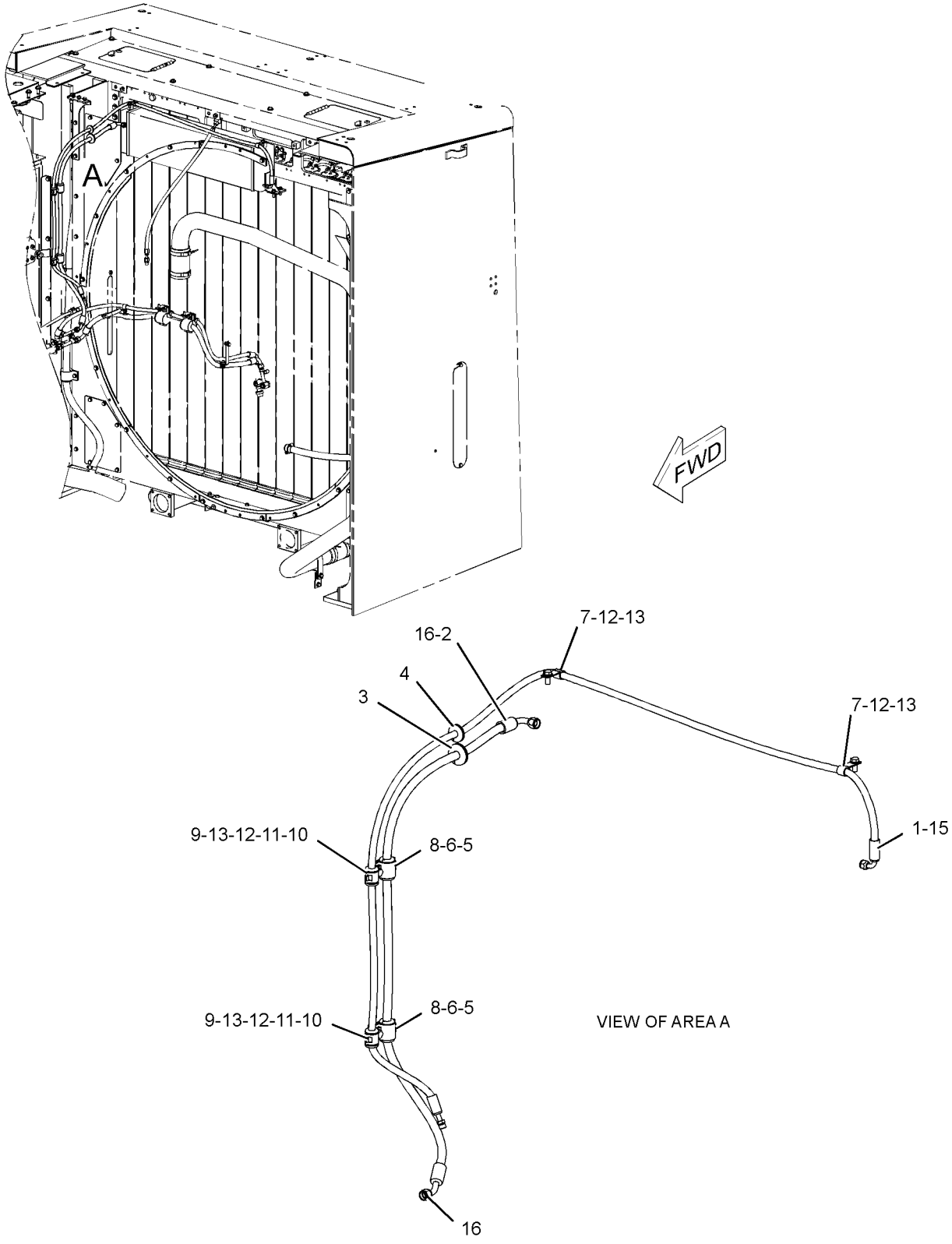

GRAPHIC #1 **<END>** g01196301

OPERATOR STATION

244-7345 LINES GP-CAB HEATER–REAR

S/N: 4421-UP

PART OF 245-8812 CHASSIS AR-REAR

SMCS-7304 **i02289609**

NOTE	REF NO	GRAPHIC REF	PART NUMBER	QTY	PART NAME 1 2 3 4 5 6 (PRODUCT LEVEL)	SEE PAGE
E	1	1	**5P-0767**		HOSE (787.3-CM)	
E	1A	1	**5P-0767**		HOSE (797.7-CM)	
M	2	1	**8T-4195**	1	BOLT (M10X1.5X30-MM)	
	3	1	**5D-1026**	4	CLAMP-HOSE	
	4	1	**8F-8151**	2	VALVE AS-SHUTOFF (CAB HEATER)	
	6	1	**103-0892**	1	GROMMET	
	12	1	**6V-6782**	1	CLIP (SLOT)	
	13	1	**6V-6783**	1	CLIP (TAB)	
	14	1	**8T-4121**	4	WASHER-HARD (11X21X2.5-MM THK)	
M	15	1	**8T-4133**	1	NUT (M10X1.15-THD)	
M	16	1	**8T-4136**	1	BOLT (M10X1.5X25-MM)	
M	17	1	**8T-4137**	1	BOLT (M10X1.5X20-MM)	
M	18	1	**8T-4186**	1	BOLT (M10X1.5X40-MM)	
	19	1	**116-4491**	1	BRACKET AS	
M		1	**8T-3490**	1	NUT-WELD (M10X1.5-THD)	
	20	1	**9X-8250**	1	CLIP	
	21	1	**8T-7008**	1	BOLT (3/8-16X3-IN)	
	22	1	**8T-4896**	2	WASHER-HARD (10.2X18.5X2.5-MM THK)	
	23	1	**6V-1228**	2	CLIP	
	24	1	**6G-2263**	1	SPACER (10.5X19X28.5-MM THK)	
	25	1	**6D-1641**	14	CLIP	
	26	1	**5S-7382**	1	BOLT (3/8-16X1.375-IN)	

E-ORDER BY THE CENTIMETER
M-METRIC PART

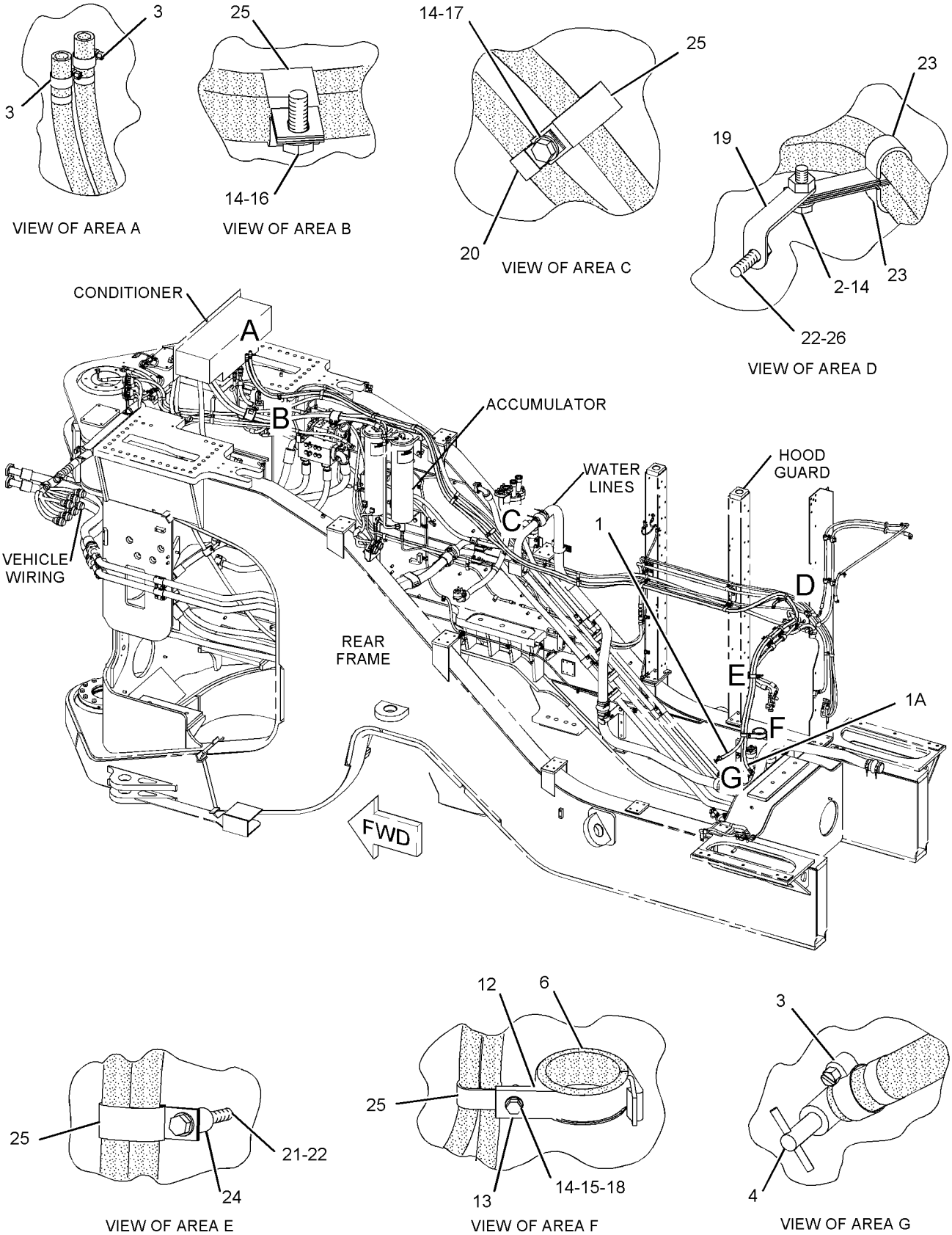

GRAPHIC #1 **<END>** g01150222

OPERATOR STATION

107-0257 MIRROR GP-LH

S/N: 4421-UP

PART OF 245-8813 INSTALLATION AR-FIELD

SMCS-7319 **i02282414**

NOTE	REF NO	GRAPHIC REF	PART NUMBER	QTY	PART NAME 1 2 3 4 5 6 (PRODUCT LEVEL)	SEE PAGE
	1	1	**5P-6879**	1	MIRROR	
	2	1	**7I-3722**	2	CLIP	
	3	1	**8V-8908**	1	PLATE AS	
C	4	1	**106-4149**	2	BRACKET	
C	5	1	**264-6800**	1	PLATE	
C	6	1	**264-6871**	1	TUBE	
C	7	1	**264-7428**	1	TUBE	
C	8	1	**164-7429**	1	ANGLE	
CM	9	1	**8T-4133**	3	NUT (M10X1.5 THD)	
CM	10	1	**8T-4182**	2	BOLT (M10X1.5X45-MM)	
CM	11	1	**8T-4195**	2	BOLT (M10X1.5X30-MM)	
	12	1	**8T-4223**	8	WASHER-HARD (13.5X25.5X3-MM THK) (25.5MM OD)	
M	13	1	**8T-4648**	3	BOLT (M12X1.75X70-MM)	
	14	1	**8T-4896**	9	WASHER-HARD (10.2X18.5X2.5-MM THK) (18.5MM OD)	
CM	15	1	**8T-4910**	3	BOLT (M12X1.75X60-MM)	
M	16	1	**8T-4956**	2	BOLT (M12X1.75X35-MM)	
CM	17	1	**8T-5005**	3	BOLT (M10X1.5X70-MM)	
CM	18	1	**8T-6466**	1	BOLT (M10X1.5X60-MM)	

C-CHANGE FROM PREVIOUS TYPE
M-METRIC PART

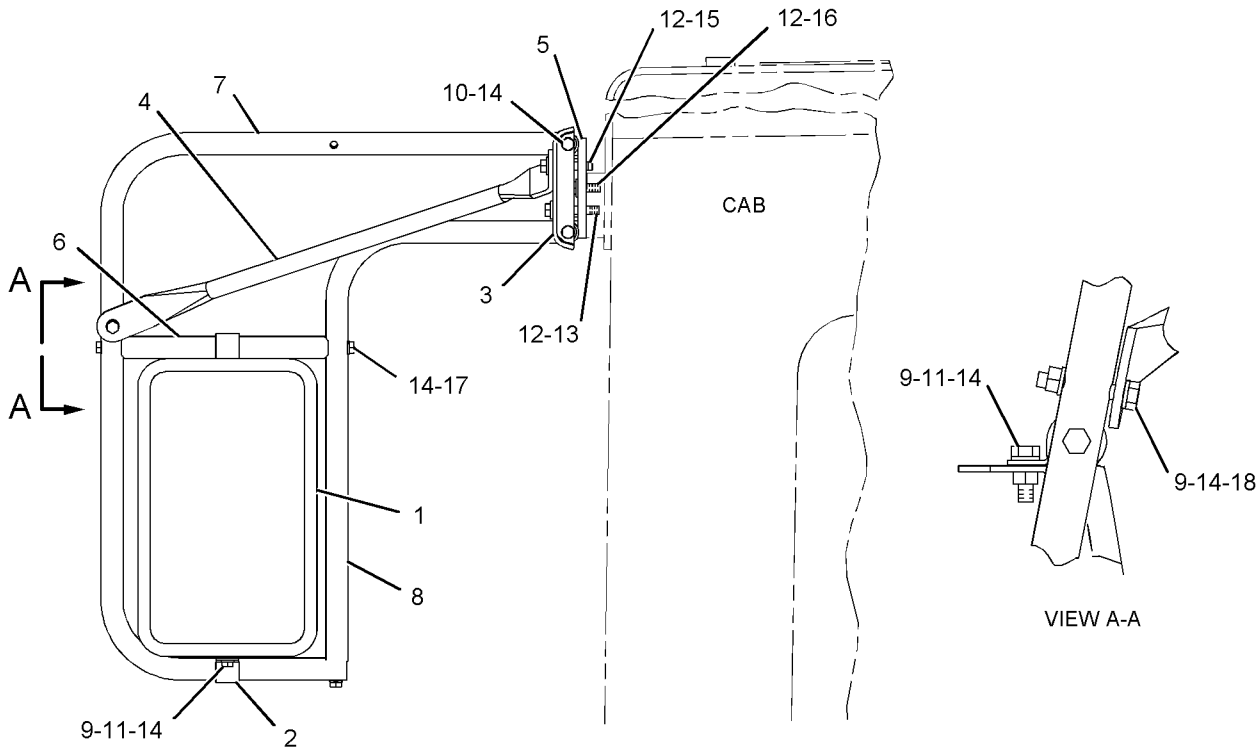

REAR VIEW

GRAPHIC #1 **<END>** g01145770

OPERATOR STATION

107-0256 MIRROR GP-RH

S/N: 4421-UP

PART OF 245-8813 INSTALLATION AR-FIELD

SMCS-7319 **i02282403**

NOTE	REF NO	GRAPHIC REF	PART NUMBER	QTY	PART NAME 1 2 3 4 5 6 (PRODUCT LEVEL)	SEE PAGE
	1	1	**5P-6879**	1	MIRROR	
	2	1	**7I-3722**	2	CLIP	
	3	1	**8V-8908**	1	PLATE AS	
	4	1	**106-4144**	1	BRACKET	
C	5	1	**264-6800**	1	PLATE	
C	6	1	**264-6871**	1	TUBE	
C	7	1	**264-7424**	1	TUBE	
C	8	1	**264-7427**	1	TUBE	
CM	9	1	**8T-4133**	3	NUT (M10X1.5 THD)	
CM	10	1	**8T-4182**	2	BOLT (M10X1.5X45-MM)	
CM	11	1	**8T-4195**	2	BOLT (M10X1.5X30-MM)	
	12	1	**8T-4223**	8	WASHER-HARD (13.5X25.5X3-MM THK)	
M	13	1	**8T-4648**	3	BOLT (M12X1.75X70-MM)	
	14	1	**8T-4896**	9	WASHER-HARD (10.2X18.5X2.5-MM THK)	
CM	15	1	**8T-4910**	3	BOLT (M12X1.75X60-MM)	
M	16	1	**8T-4956**	2	BOLT (M12X1.75X35-MM)	
M	17	1	**8T-5005**	3	BOLT (M10X1.5X70-MM)	
CM	18	1	**8T-6466**	1	BOLT (M10X1.5X60-MM)	

C-CHANGE FROM PREVIOUS TYPE
M-METRIC PART

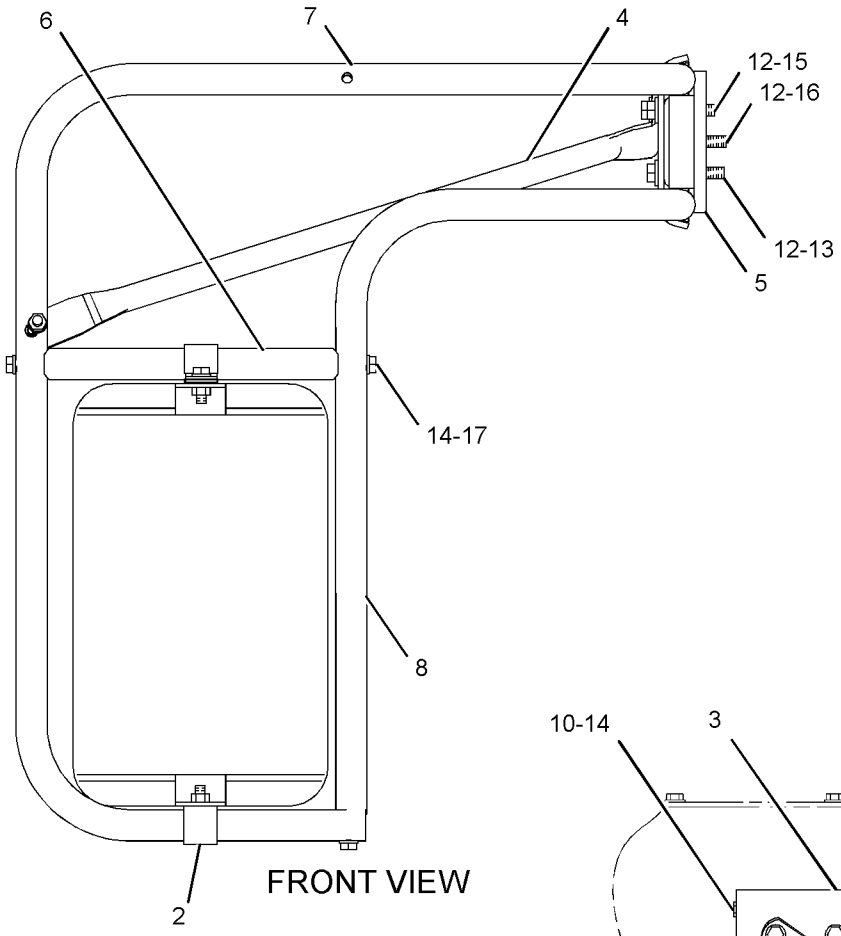

FRONT VIEW

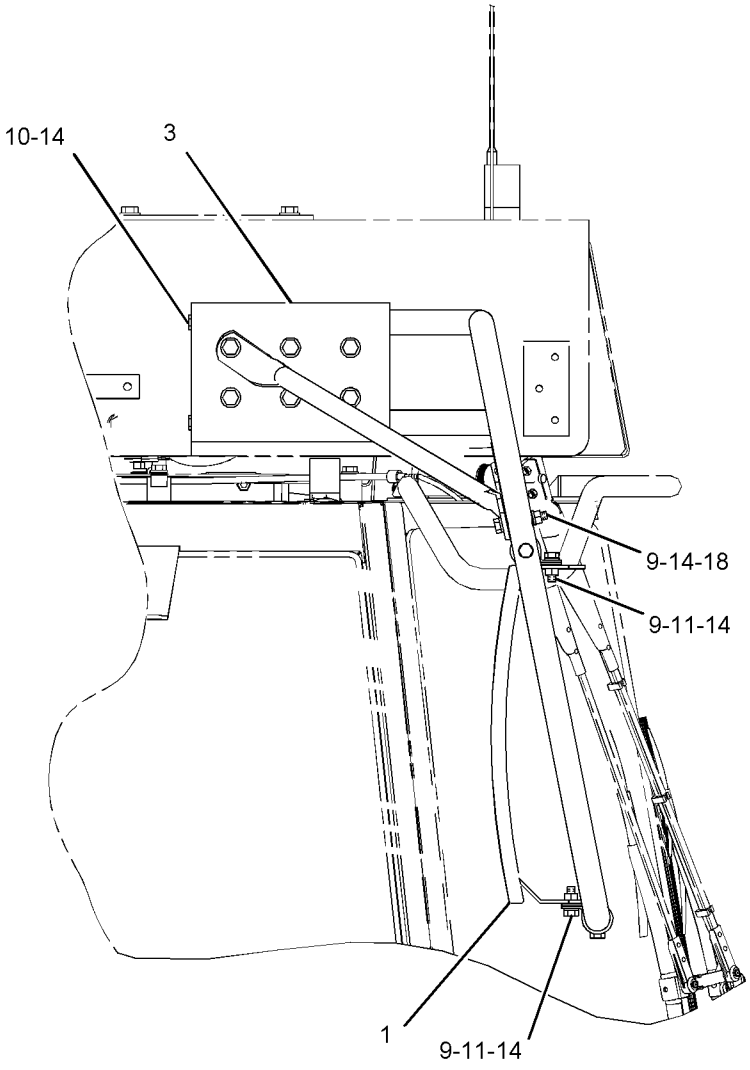

RIGHT SIDE VIEW

GRAPHIC #1 **<END>** g01145391

OPERATOR STATION

179-1730 MODULE GP-MESSAGE CENTER

S/N: 4421-UP

PART OF 245-1428 WIRING GP-CAB

SMCS-7601 **i01700597**

NOTE	PART NUMBER	QTY	PART NAME 1 2 3 4 5 6 (PRODUCT LEVEL)	SEE PAGE
	186-1681	1	CONTROL AS-ELECTRONIC	
	102-8802	1	KIT-RECEPTACLE (2-PIN)	
			(INCLUDES RECEPTACLE AS & WEDGE)	
	102-8805	1	KIT-RECEPTACLE (6-PIN)	
			(INCLUDES RECEPTACLE AS & WEDGE)	

<END>

149-3255 MODULE GP-MONITOR KEYPAD

S/N: 4421-UP

PART OF 245-1428 WIRING GP-CAB

SMCS-7601 **i01185474**

NOTE	PART NUMBER	QTY	PART NAME 1 2 3 4 5 6 (PRODUCT LEVEL)	SEE PAGE
	102-8804	1	KIT-RECEPTACLE (4-PIN)	
			(INCLUDES WEDGE)	
	8T-8729	3	PIN-CONNECTOR	
	8T-8737	1	PLUG-SEAL	
	3E-3377	1	WEDGE-RECEPTACLE LOCK (4-PIN)	

<END>

166-6928 MODULE GP-QUAD GAUGE

S/N: 4421-UP

PART OF 245-1428 WIRING GP-CAB

SMCS-7450, 7451, 7490, 7601 **i02023668**

NOTE	REF NO	GRAPHIC REF	PART NUMBER	QTY	PART NAME 1 2 3 4 5 6 (PRODUCT LEVEL)	SEE PAGE
	1	1	**102-8805**	1	KIT-RECEPTACLE (6-PIN)	
					(INCLUDES RECEPTACLE AS & WEDGE)	
	2	1	**8T-8729**	6	PIN-CONNECTOR	

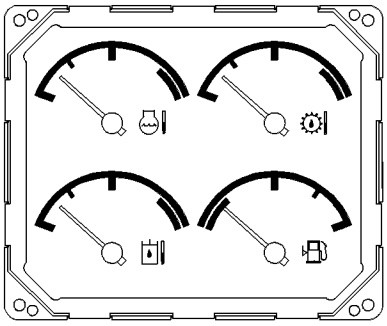

VIEW B-B

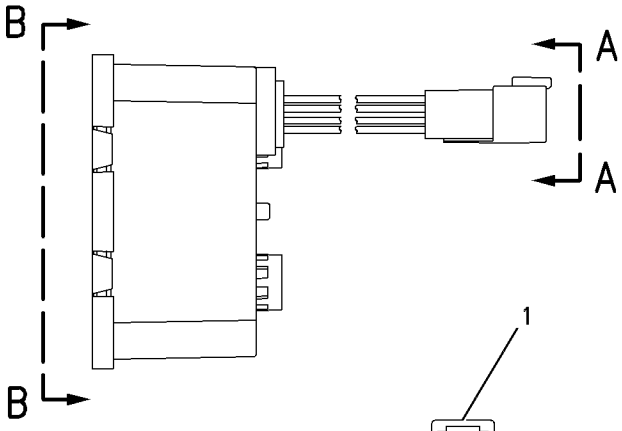

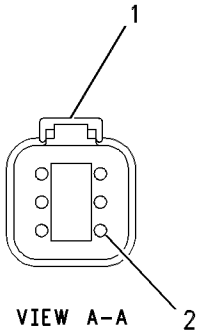

VIEW A-A

GRAPHIC #1 **<END>** g00587276

OPERATOR STATION

155-5784 MOTOR GP-WINDOW WIPER–REAR

S/N: 4421-UP
24-VOLT
PART OF 242-1901 WIPER & WASHER GP-WINDOW

SMCS-7305 **i02070031**

NOTE	REF NO	GRAPHIC REF	PART NUMBER	QTY	PART NAME 1 2 3 4 5 6 (PRODUCT LEVEL)	SEE PAGE
	1	1	**102-8805**	1	KIT-RECEPTACLE (6-PIN)	
					(INCLUDES RECEPTACLE AS & WEDGE)	
	2	1	**8T-8737**	1	PLUG-SEAL	
	3	1	**186-3735**	5	PIN-CONNECTOR (16-GA TO 18-GA)	

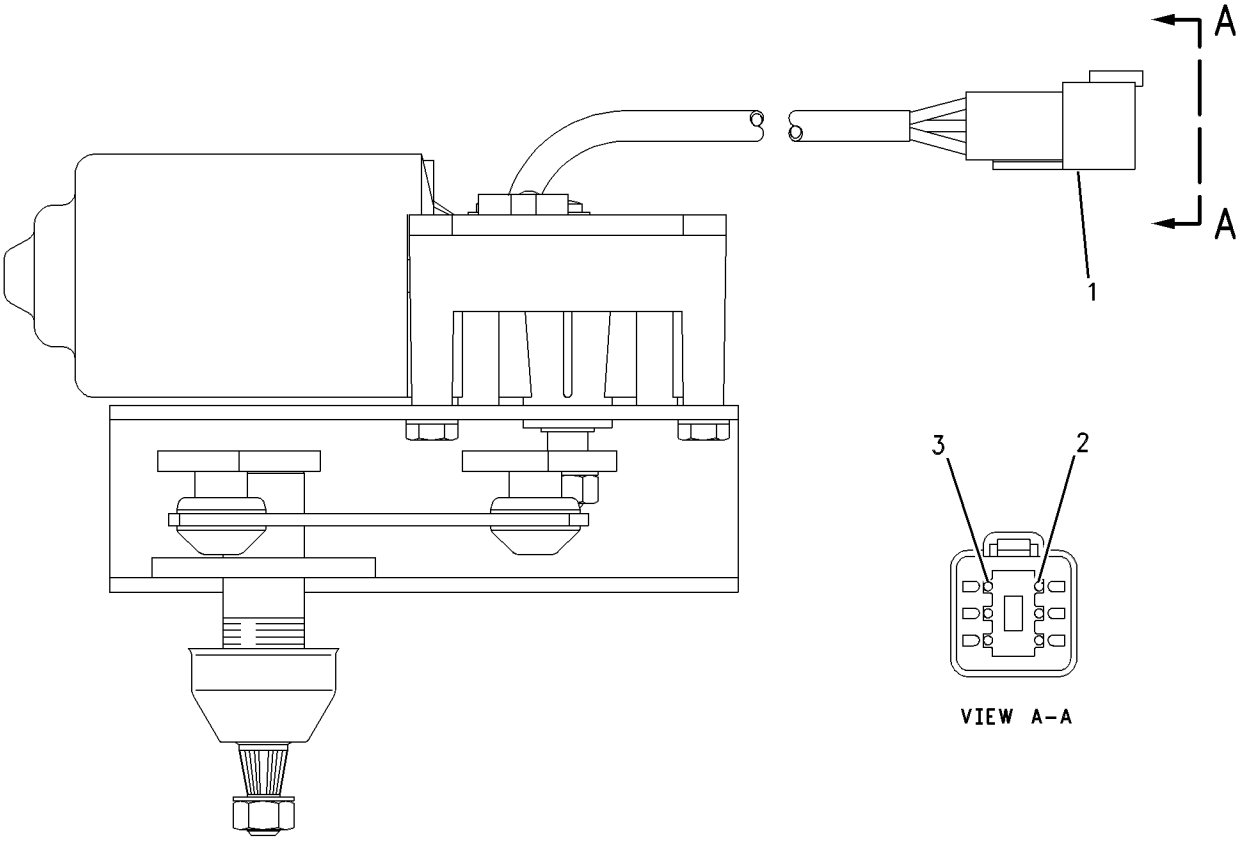

GRAPHIC #1 **<END>** g00615271

OPERATOR STATION

185-2154 MOTOR GP-WINDOW WIPER–FRONT

S/N: 4421-UP

PART OF 242-1901 WIPER & WASHER GP-WINDOW

SMCS-7305 **i02148154**

NOTE	REF NO	GRAPHIC REF	PART NUMBER	QTY	PART NAME 1 2 3 4 5 6 (PRODUCT LEVEL)	SEE PAGE
	1	1	**102-8805**	1	KIT-RECEPTACLE (6-PIN)	
					(INCLUDES RECEPTACLE AS AND WEDGE)	
	2	1	**8T-8737**	1	PLUG-SEAL	
	3	1	**186-3735**	5	PIN-CONNECTOR (16-GA TO 18-GA)	

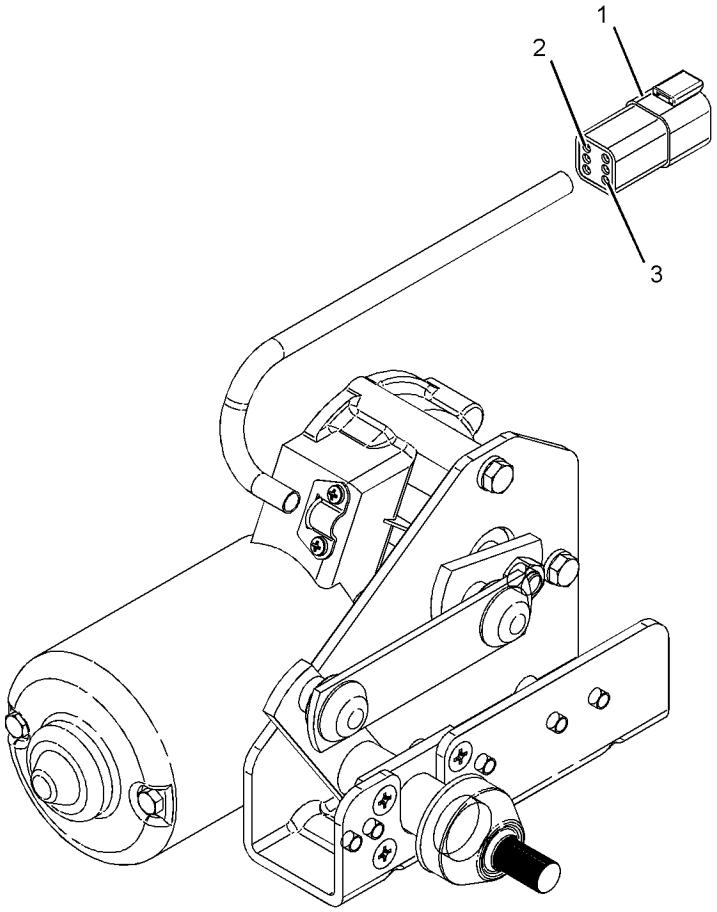

GRAPHIC #1

<END>

g01091515

OPERATOR STATION

190-3445 MOTOR GP-WINDOW WIPER—FRONT QUARTER, RH

S/N: 4421-UP

PART OF 242-8018 WIPER GP-WINDOW

SMCS-7305 **i02357404**

NOTE	REF NO	GRAPHIC REF	PART NUMBER	QTY	PART NAME 1 2 3 4 5 6 (PRODUCT LEVEL)	SEE PAGE
	1	1	**102-8805**	1	KIT-RECEPTACLE (6-PIN)	
					(INCLUDES RECEPTACLE AS AND WEDGE)	
	2	1	**8T-8737**	1	PLUG-SEAL	
	3	1	**186-3735**	5	PIN-CONNECTOR (16-GA TO 18-GA)	
	4	1	**206-5823**	2	CAP (WIPER)	
	5	1	**135-0611**	1	MOTOR GP-WINDOW WIPER (24-VOLT, 2-SPEED)	

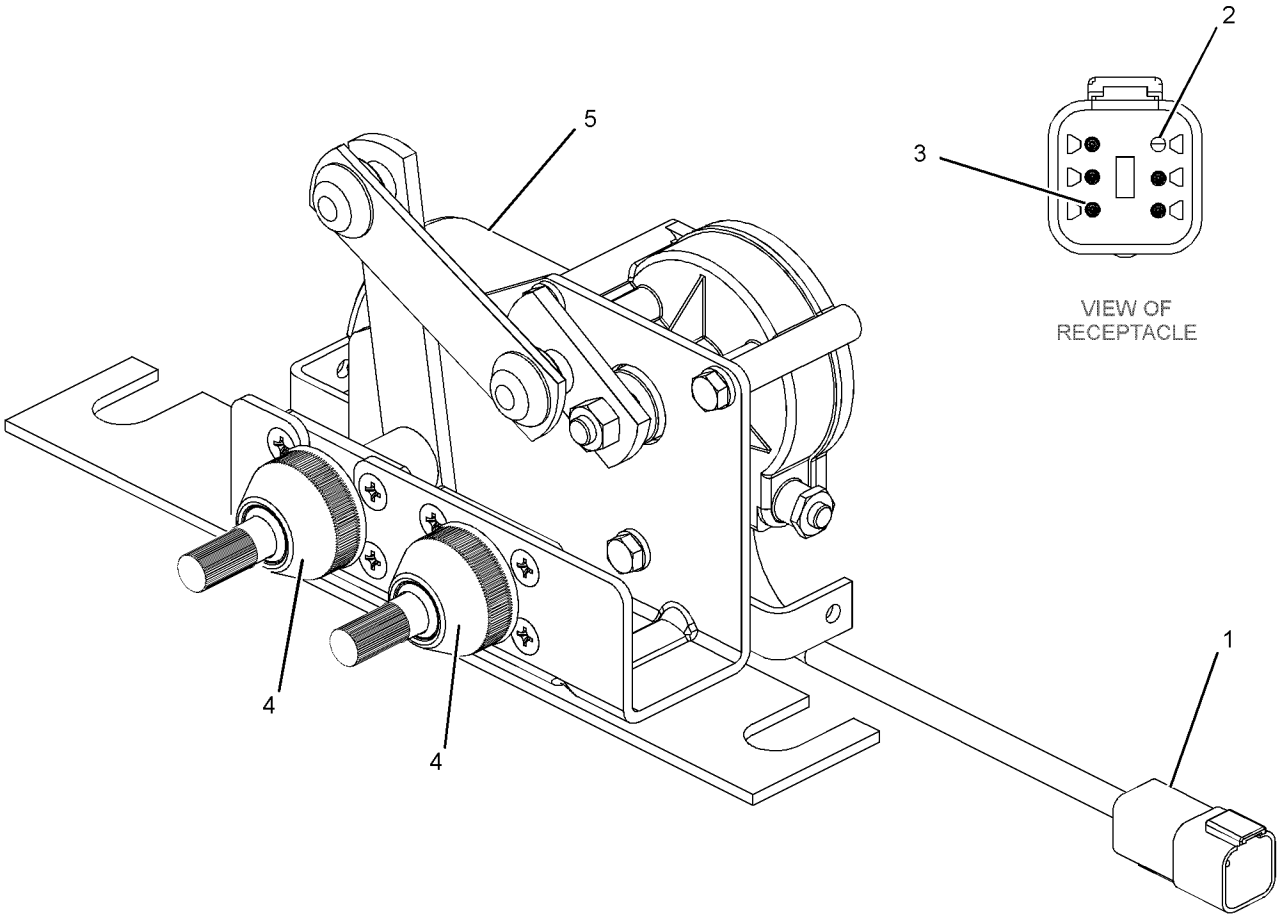

GRAPHIC #1 **<END>** g01177552

OPERATOR STATION

190-3446 MOTOR GP-WINDOW WIPER—FRONT QUARTER, LH

S/N: 4421-UP

PART OF 242-8018 WIPER GP-WINDOW

SMCS-7305 **i02357399**

NOTE	REF NO	GRAPHIC REF	PART NUMBER	QTY	PART NAME 1 2 3 4 5 6 (PRODUCT LEVEL)	SEE PAGE
	1	1	**102-8805**	1	KIT-RECEPTACLE (6-PIN)	
					(INCLUDES RECEPTACLE AS AND WEDGE)	
	2	1	**206-5823**	2	CAP (WIPER)	
	3	1	**186-3735**	5	PIN-CONNECTOR (16-GA TO 18-GA)	
	4	1	**8T-8737**	1	PLUG-SEAL	
	5	1	**222-5376**	1	MOTOR GP-WINDOW WIPER (24-VOLT, 2-SPEED)	

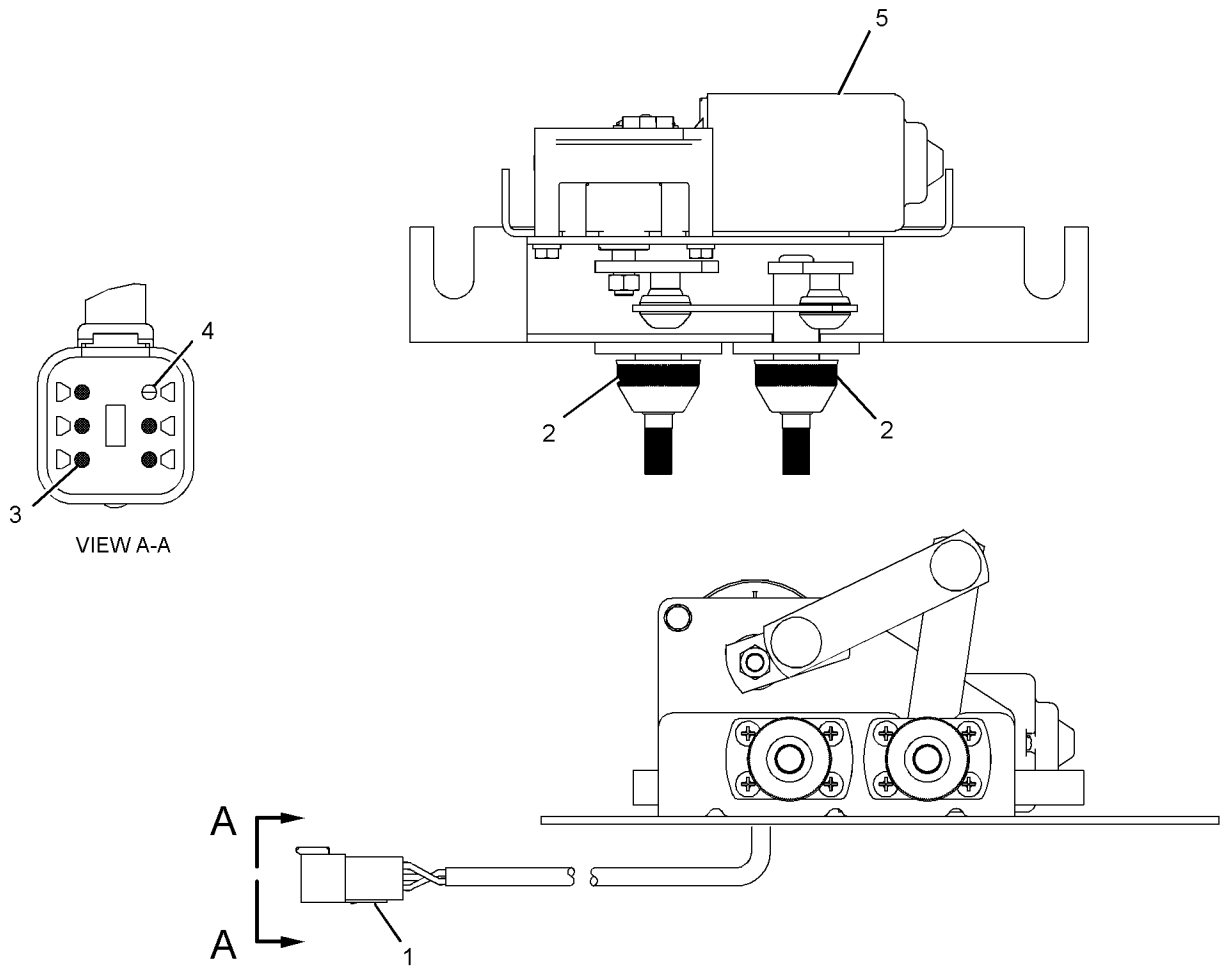

GRAPHIC #1 **<END>** g01177545

OPERATOR STATION

9U-2675 MOUNTING GP-ANTENNA–RADIO

S/N: 4421-UP

PART OF 242-0341 CAB AR

SMCS-7338, 7606 **i02115121**

NOTE	REF NO	GRAPHIC REF	PART NUMBER	QTY	PART NAME 1 2 3 4 5 6 (PRODUCT LEVEL)	SEE PAGE
	1	1	**9U-2334**	1	CABLE AS-COAXIAL	
	2	1	**131-0722**	1	CABLE AS-COAXIAL	
	3	1	**7K-1181**	1	STRAP-CABLE	

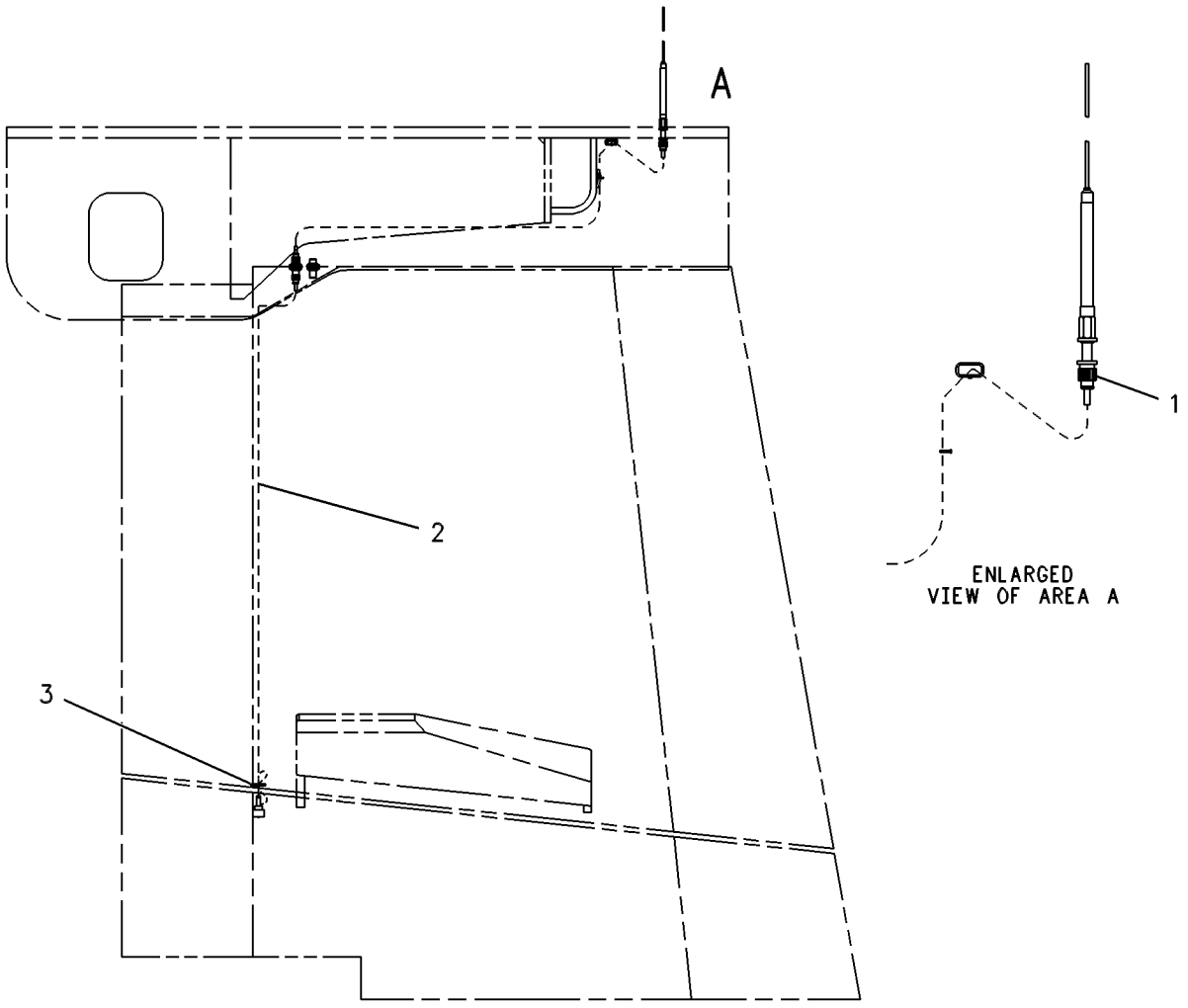

GRAPHIC #1 **<END>** g00121415

OPERATOR STATION

252-6457 MOUNTING GP-MONITOR–CAES

S/N: 4421-UP
PART OF 264-9725 INSTALLATION AR-CAES
AN ATTACHMENT

SMCS-7604 **i02334113**

NOTE	REF NO	GRAPHIC REF	PART NUMBER	QTY	PART NAME 1 2 3 4 5 6 (PRODUCT LEVEL)	SEE PAGE
	1	1	**167-8712**		ALARM (CAES)	
	2	1	**245-1435**	1	HARNESS AS-MONITOR (CAES)	
		1	**102-8802**	1	KIT-RECEPTACLE (2-PIN)	
		1	**102-8801**	1	KIT-RECEPTACLE (12-PIN)	
					(EACH KIT INCLUDES RECEPTACLE AS AND WEDGE)	
		1	**9X-6772**	2	STRAP-CABLE	
		1	**155-2265**	1	KIT-CONNECTING PLUG (8-PIN)	
		1	**155-2270**	1	KIT-CONNECTING PLUG (2-PIN)	
		1	**155-2274**	1	KIT-CONNECTING PLUG (6-PIN)	
					(EACH KIT INCLUDES PLUG AS AND WEDGE)	
	3	1	**250-1814**	1	BRACKET	
	4	1	**250-1815**	1	BRACKET	
M	5	1	**127-2170**	3	SCREW-TRUSS HEAD (M8X1.25X20-MM)	
	6	1	**9N-0869**	3	WASHER-HARD (8.8X25.5X2-MM THK)	

M-METRIC PART

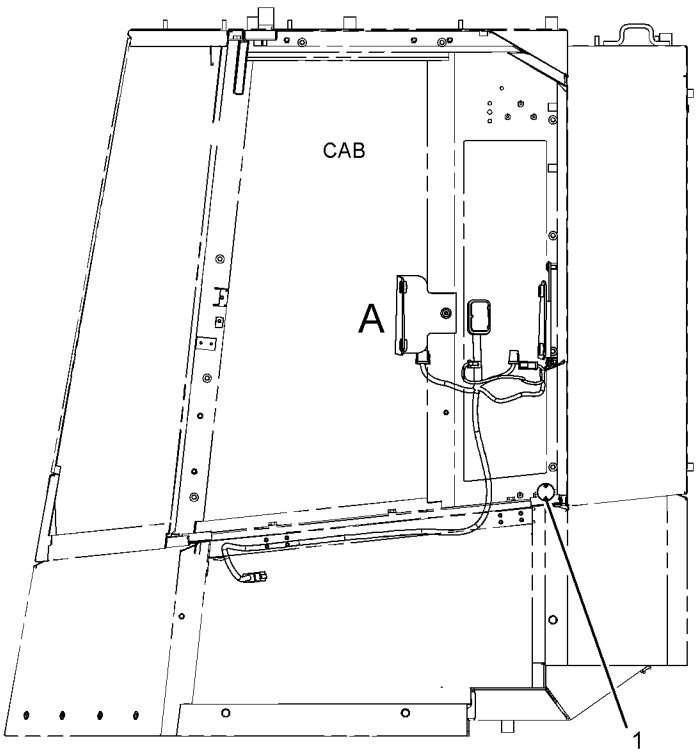

LEFT SIDE VIEW

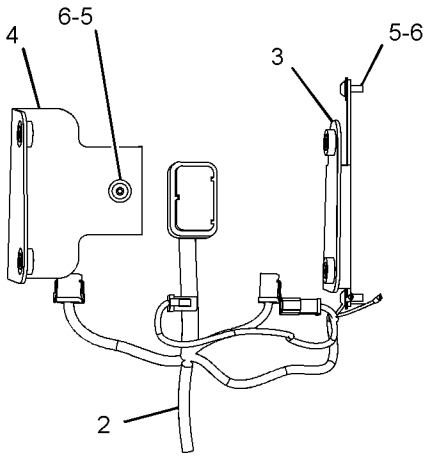

VIEW OF AREA A

GRAPHIC #1 **<END>** g01165619

OPERATOR STATION

237-5874 MOUNTING GP-PLATFORM

S/N: 4421-UP

PART OF 242-0338 OPERATOR AR

SMCS-7253 **i02148113**

NOTE	REF NO	GRAPHIC REF	PART NUMBER	QTY	PART NAME 1 2 3 4 5 6 (PRODUCT LEVEL)	SEE PAGE
	1	1	**9W-7385**	2	SLEEVE	
	2	1	**9W-7388**	4	WASHER (26X144X12-MM THK)	
	3	1	**9W-9941**	2	MOUNT AS	
	4	1	**237-5875**	1	SUPPORT AS (RH)	
	5	1	**240-0557**	1	SUPPORT AS (LH)	
M	6	1	**118-4977**	8	BOLT (M16X2X65-MM)	
M	7	1	**8C-3290**	2	BOLT (M24X3X150-MM)	
M	8	1	**8T-4122**	8	WASHER-HARD (17X32X3.5-MM THK)	
	9	1	**8T-4167**	2	WASHER-HARD (26X44X4-MM THK)	

M-METRIC PART

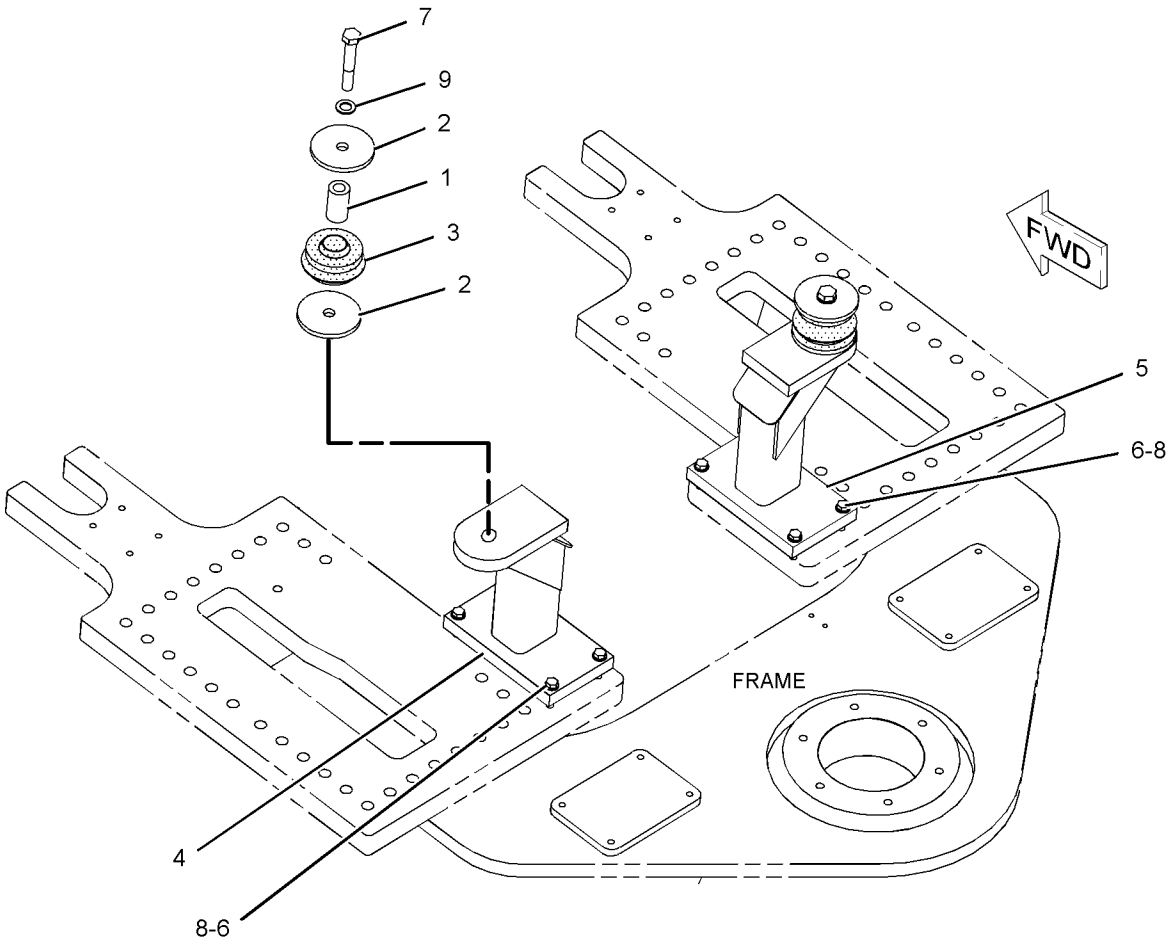

GRAPHIC #1 **<END>** g01091078

OPERATOR STATION

249-9177 MOUNTING GP-PLATFORM–CAB ACCESS

S/N: 4421-UP

PART OF 245-8813 INSTALLATION AR-FIELD

SMCS-7253 **i02282388**

NOTE	REF NO	GRAPHIC REF	PART NUMBER	QTY	PART NAME 1 2 3 4 5 6 (PRODUCT LEVEL)	SEE PAGE
	1	1	**8X-7569**	1	PLATE AS (LH)	
	2	1	**8X-7570**	1	PLATE AS (RH)	
	3	1	**262-4444**	1	SHEET	
	4	1	**262-4445**	1	SHEET	
	5	1	**090-8865**	16	SPACER (17X40X3-MM THK)	
	6	1	**5P-1076**	12	WASHER-HARD (13.5X30X4-MM THK)	
M	7	1	**7X-2553**	8	BOLT (M16X2X40-MM)	
	8	1	**8T-4121**	12	WASHER-HARD (11X21X2.5-MM THK)	
M	9	1	**8T-4122**	8	WASHER-HARD (17X32X3.5-MM THK)	
M	10	1	**8T-4132**	8	NUT (M16X2-THD)	
M	11	1	**8T-4136**	12	BOLT (M10X1.5X25-MM)	
M	12	1	**8T-4139**	8	BOLT (M12X1.75X30-MM)	
M	13	1	**8T-4184**	9	BOLT (M12X1.75X45-MM)	
M	14	1	**8T-4193**	8	BOLT (M16X2X50-MM)	
	15	1	**8T-4223**	18	WASHER-HARD (13.5X25.5X3-MM THK)	
M	16	1	**8T-4244**	13	NUT (M12X1.75-THD)	

M-METRIC PART

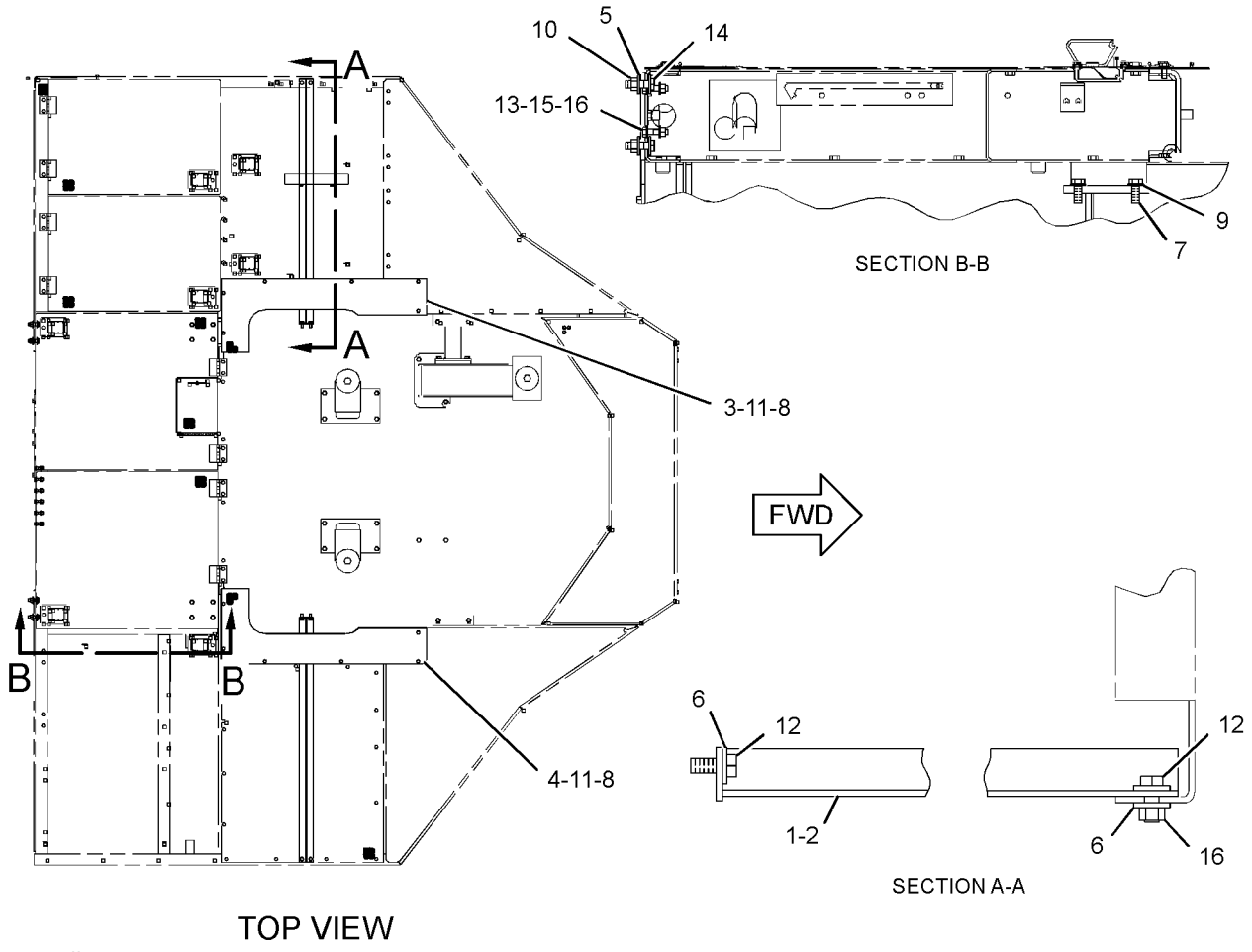

GRAPHIC #1 **<END>** g01147911

OPERATOR STATION

268-9420 MOUNTING GP-PLATFORM

S/N: 4421-UP

PART OF 245-8812 CHASSIS AR-REAR

SMCS-7253 **i02291674**

NOTE	REF NO	GRAPHIC REF	PART NUMBER	QTY	PART NAME 1 2 3 4 5 6 (PRODUCT LEVEL)	SEE PAGE
	1	1	**8X-3900**	2	BRACKET AS	
	2	1	**9W-7385**	2	SLEEVE	
	3	1	**9W-7388**	4	WASHER (26X144X12-MM THK)	
	4	1	**9W-9941**	2	MOUNT AS	
	5	1	**237-5876**	1	SUPPORT AS (RH)	
	6	1	**237-5877**	1	SUPPORT AS (LH)	
M	7	1	**118-4977**	8	BOLT (M16X2X65-MM)	
M	8	1	**7X-2552**	8	BOLT (M16X2X30-MM)	
M	9	1	**8C-3290**	2	BOLT (M24X3X150-MM)	
M	10	1	**8T-4122**	32	WASHER-HARD (17X32X3.5-MM THK)	
M	11	1	**8T-4132**	8	NUT (M16X2-THD)	
	12	1	**8T-4167**	2	WASHER-HARD (26X44X4-MM THK)	
M	13	1	**8T-4193**	8	BOLT (M16X2X50-MM)	

M-METRIC PART

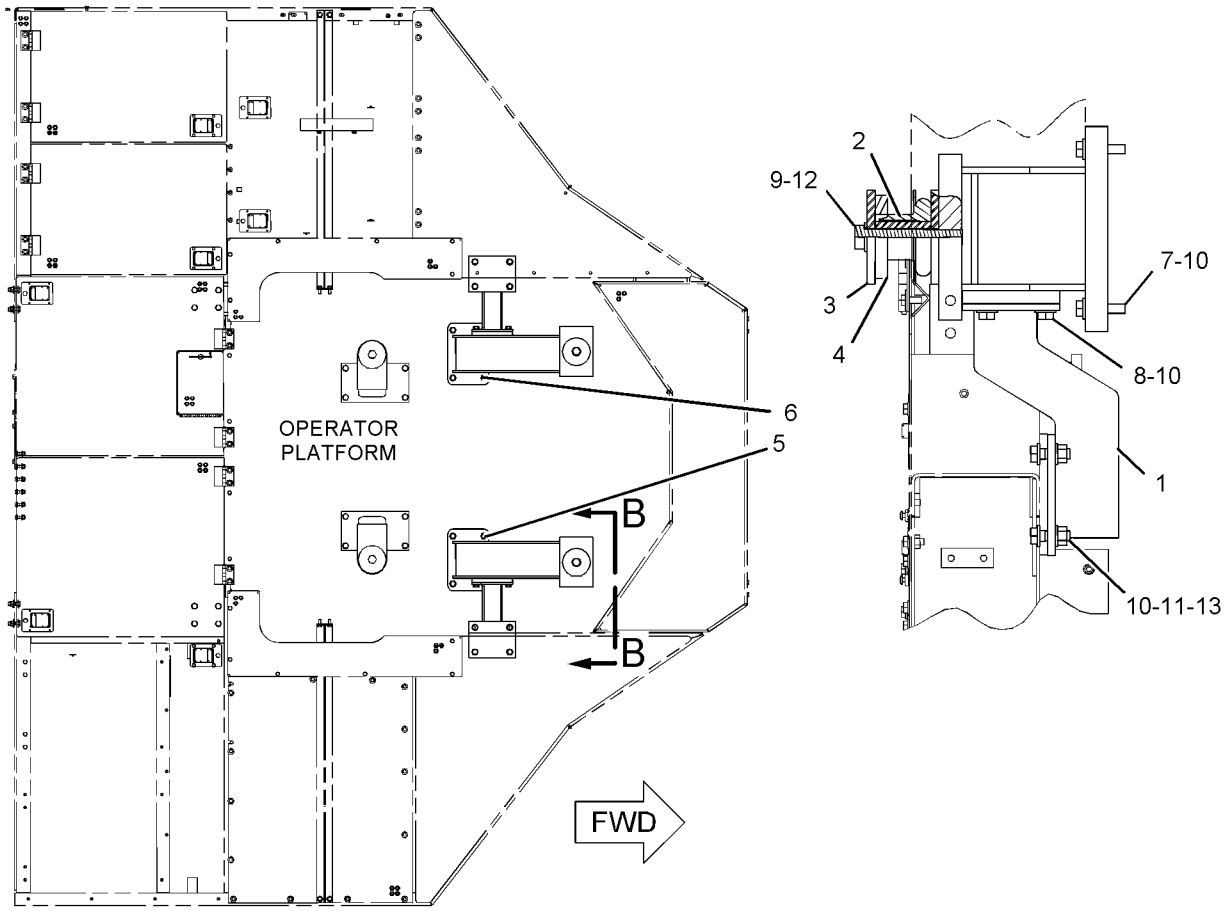

TOP VIEW

GRAPHIC #1 **<END>** g01147922

OPERATOR STATION

109-8214 MOUNTING GP-PLATFORM BRACKET

S/N: 4421-UP
PART OF 245-3880 PLATFORM AR
AN ATTACHMENT

SMCS-7253 **i00776426**

NOTE	REF NO	GRAPHIC REF	PART NUMBER	QTY	PART NAME 1 2 3 4 5 6 (PRODUCT LEVEL)	SEE PAGE
	1	1	**109-8213**	1	PLATE AS	
M		1	**8T-3490**	3	NUT-WELD (M10X1.5 THD)	
M	2	1	**8T-4137**	5	BOLT (M10X1.5X20-MM)	
	3	1	**8T-4121**	5	WASHER-HARD (11X21X2.5-MM THK)	

M-METRIC PART

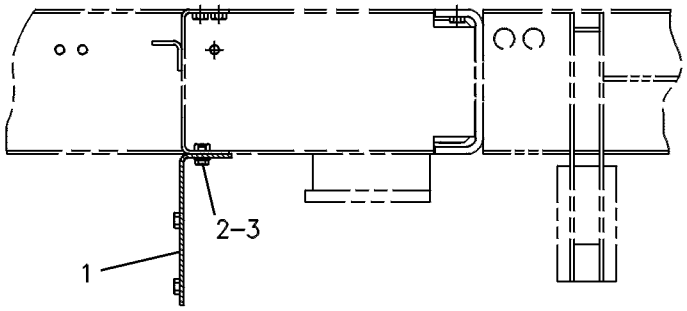

SIDE VIEW

GRAPHIC #1 **<END>** g00084404

OPERATOR STATION

242-0338 OPERATOR AR

S/N: 4421-UP

PART OF 245-8810 COMMON AR

SMCS-7301 **i02148106**

NOTE	PART NUMBER	QTY	PART NAME 1 2 3 4 5 6 (PRODUCT LEVEL)	SEE PAGE
Y	*242-0341*	1	CAB AR	961
Y	*242-0389*	1	COVER GP-CAB	972
Y	*237-5874*	1	MOUNTING GP-PLATFORM	1022

Y-SEPARATE ILLUSTRATION

<END>

OPERATOR STATION

178-7911 PAN GP-BACKREST—CLOTH

S/N: 4421-UP

PART OF 178-7910 SEAT GP

SMCS-7312 **i02070088**

NOTE	REF NO	GRAPHIC REF	PART NUMBER	QTY	PART NAME 1 2 3 4 5 6 (PRODUCT LEVEL)	SEE PAGE
	1	1	**164-4883**	1	KNOB-LUMBAR	
	2	1	**233-6745**	1	CUSHION AS (CLOTH)	
	3	1	**178-7912**	1	PAN AS	
	3A	1	**4K-9429**	2	RIVET-POP	
	3B	1	**136-1543**	1	PLATE AS-LUMBAR	
	3C	1	**177-4930**	1	PAN AS-BACK	
	4	1	**8T-7566**	1	PIN-SPRING	
	5	1	**250-4628**	3	PLUG	

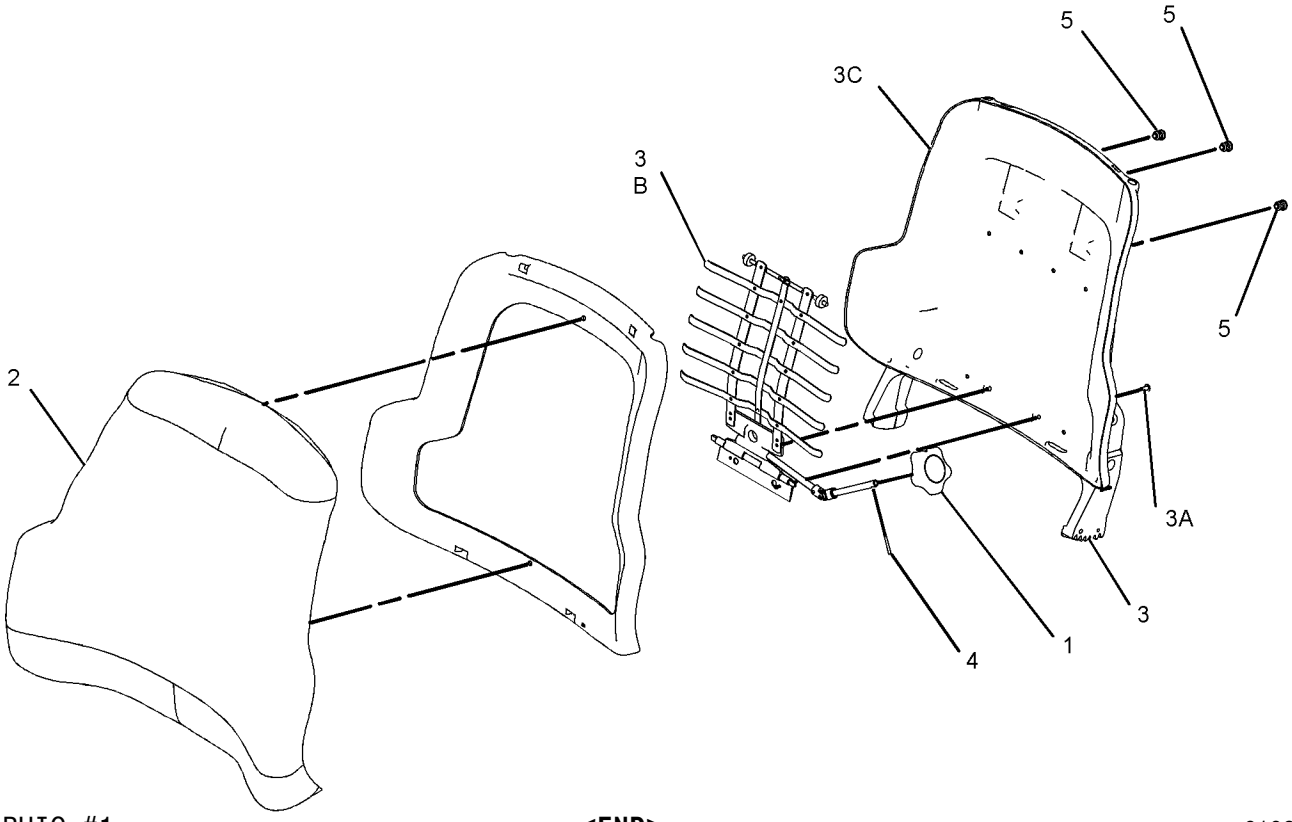

GRAPHIC #1 **<END>** g01060544

OPERATOR STATION

236-5224 PANEL GP-INSTRUMENT–SIDE

S/N: 4421-UP

PART OF 242-0341 CAB AR

SMCS-7451 **i02025122**

NOTE	REF NO	GRAPHIC REF	PART NUMBER	QTY	PART NAME 1 2 3 4 5 6 (PRODUCT LEVEL)	SEE PAGE
	1	2	**4E-9055**	1	GASKET	
	2	2	**126-5131**	1	COVER	
	3	2	**213-3056**	1	BRACKET AS	
M		2	**6V-9632**	3	NUT-WELD (M6X1-THD)	
	4	2	**213-3057**	1	BRACKET AS	
M		2	**6V-9632**	5	NUT-WELD (M6X1-THD)	
	5	2	**241-6416**	1	PANEL AS	
M		2	**6A-7844**	4	NUT-WELD	
	6	2	**241-8244**	1	FILM-DASH	
M	7	2	**8T-4138**	8	BOLT (M6X1X20-MM)	
M	8	2	**8T-4189**	4	BOLT (M8X1.25X20-MM)	
	9	2	**8T-4205**	8	WASHER-HARD (7.2X14.5X2-MM THK)	
	10	2	**8T-4224**	4	WASHER-HARD (8.8X16X2-MM THK)	
M	11	2	**9X-2044**	4	SCREW-TRUSS HEAD (M6X1X16-MM)	

M-METRIC PART

REFER TO ALL ILLUSTRATIONS OF THIS GROUP FOR AUXILIARY VIEWS

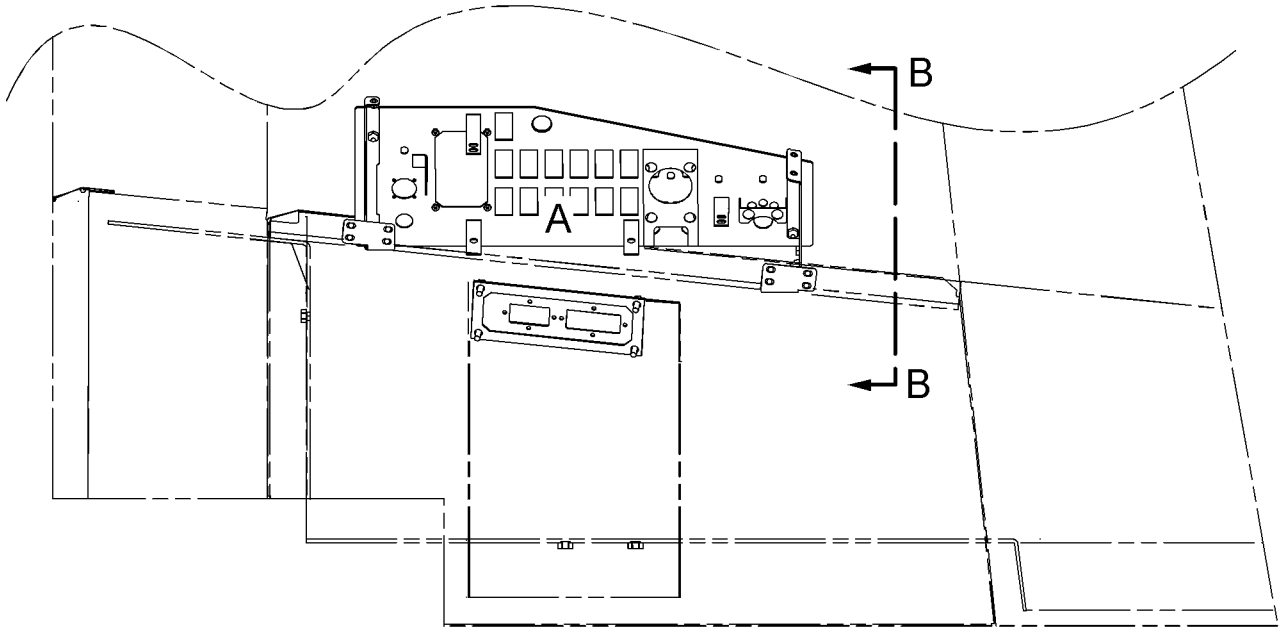

RIGHT SIDE VIEW

GRAPHIC #1 g01049292

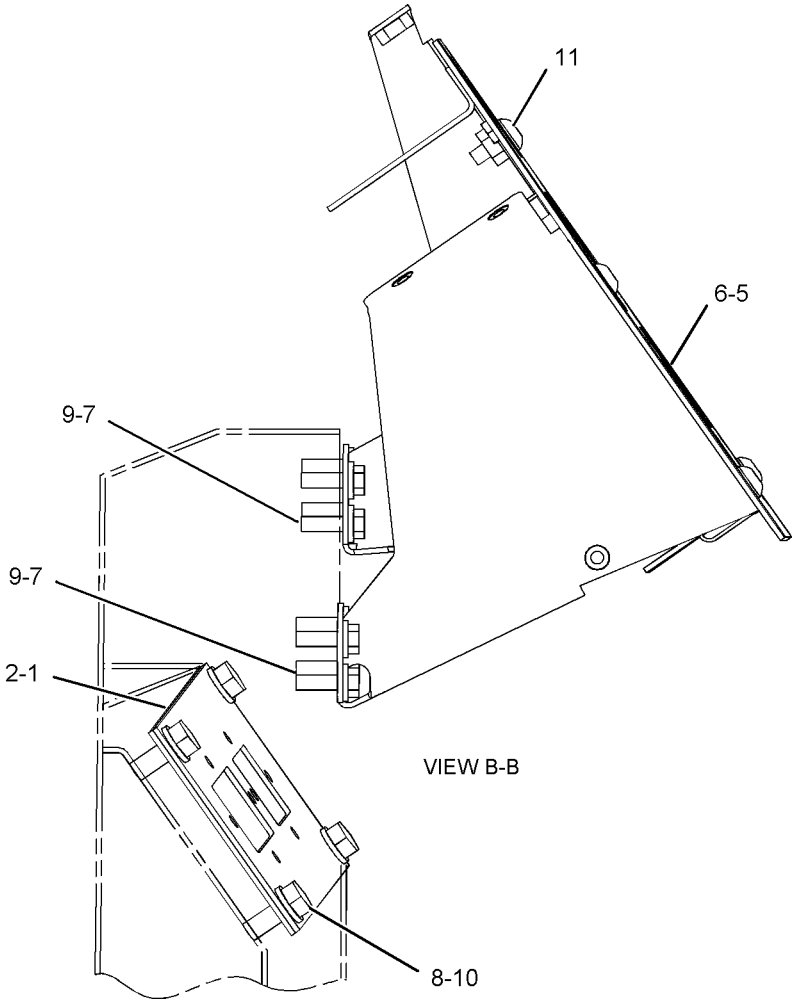

VIEW B-B

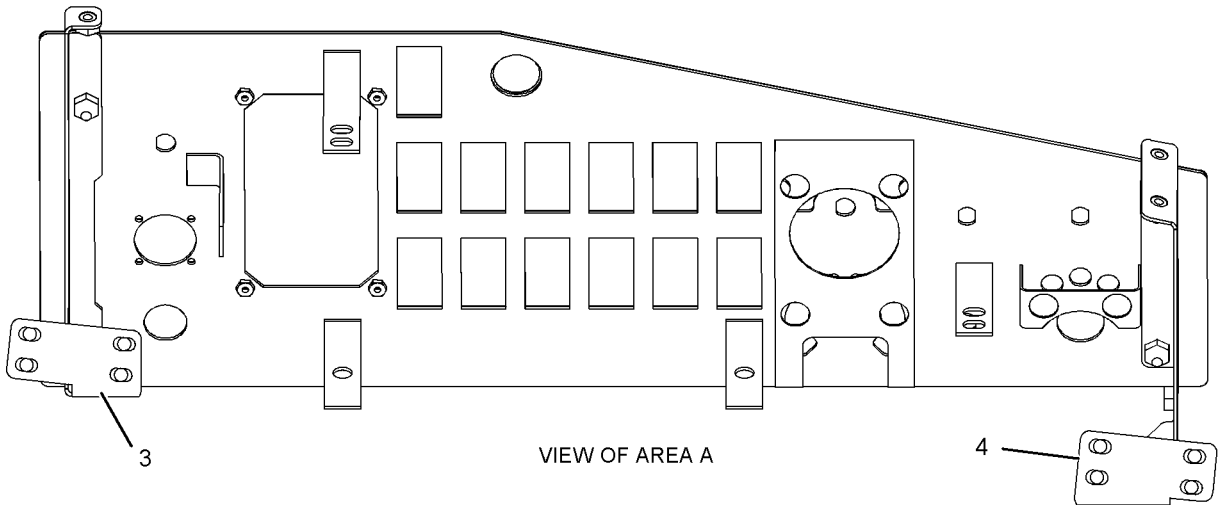

VIEW OF AREA A

GRAPHIC #2 **<END>** g01049304

OPERATOR STATION

246-0710 PANEL GP-INSTRUMENT–FRONT

S/N: 4421-UP

PART OF 242-0341 CAB AR

SMCS-7451 **i02354908**

NOTE	REF NO	GRAPHIC REF	PART NUMBER	QTY	PART NAME 1 2 3 4 5 6 (PRODUCT LEVEL)	SEE PAGE
	1	1	**4E-8537**	1	PANEL-INSTRUMENT	
	2	1	**129-7700**	1	PANEL	
	3	1	**4E-8937**	1	BRACKET AS	
M		1	**6V-9632**	2	NUT-WELD (M6X1-THD)	
	4	1	**4E-8940**	1	BRACKET AS	
M		1	**6V-9632**	2	NUT-WELD (M6X1-THD)	
	5	1	**100-5568**	1	BEZEL	
	6	1	**106-4454**	1	PLATE	
	7	1	**141-8143**	1	PANEL	
	8	1	**141-8144**	1	PLATE AS	
M		1	**6V-9632**	2	NUT-WELD (M6X1-THD)	
	9	1	**141-8145**	1	PLATE AS (LH)	
	10	1	**141-8146**	1	PLATE AS (RH)	
	11	1	**188-0540**	1	FILM-PANEL (RH)	
	12	1	**251-7641**	1	FILM-PANEL (LH)	
M	13	1	**5C-9553**	2	BOLT (M6X1X16-MM)	
	14	1	**6V-5839**	2	WASHER (11X21X2.5-MM THK)	
M	15	1	**7X-3319**	6	SCREW-HEX SOCKET (M4X0.7X6-MM)	
M	16	1	**7Y-7256**	4	SCREW-TRUSS HEAD (M4X0.7-MM)	
M	17	1	**8T-4191**	2	BOLT (M10X1.5X16-MM)	
	18	1	**8T-4205**	2	WASHER-HARD (7.2X14.5X2-MM THK)	
M	19	1	**9X-2042**	4	SCREW-TRUSS HEAD (M6X1X12-MM)	
M	20	1	**9X-2045**	7	SCREW-TRUSS HEAD (M6X1X20-MM)	
M	21	1	**9X-2046**	4	SCREW-TRUSS HEAD (M6X1X35-MM)	
	22	1	**9X-8256**	8	WASHER (6.6X12X2-MM THK)	
	23	1	**130-5300**	2	CLIP	

M-METRIC PART

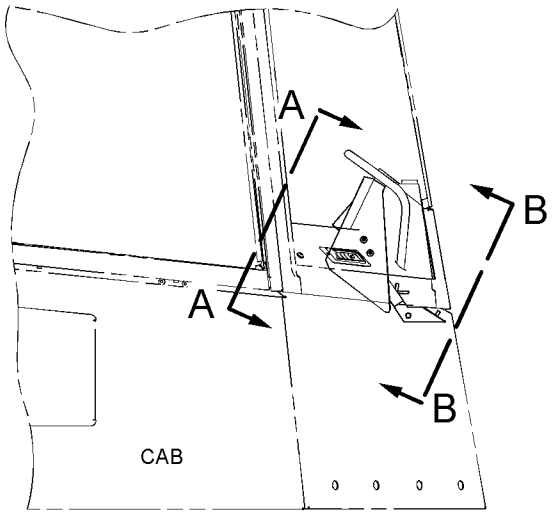

RIGHT SIDE VIEW

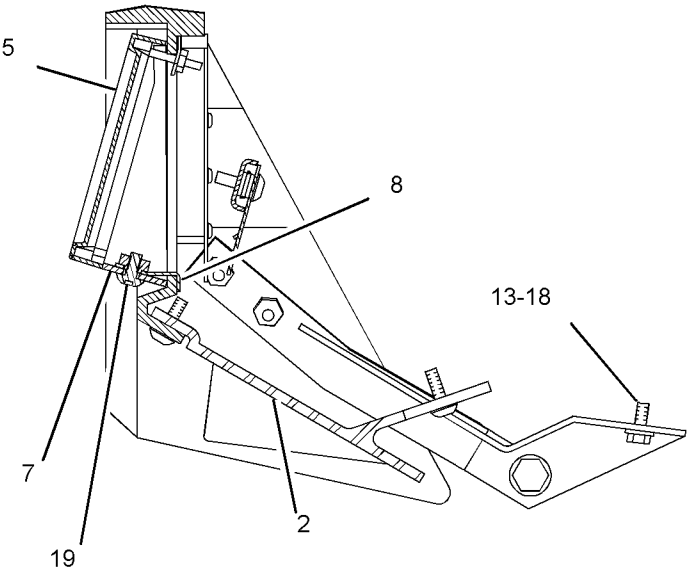

SECTION C-C

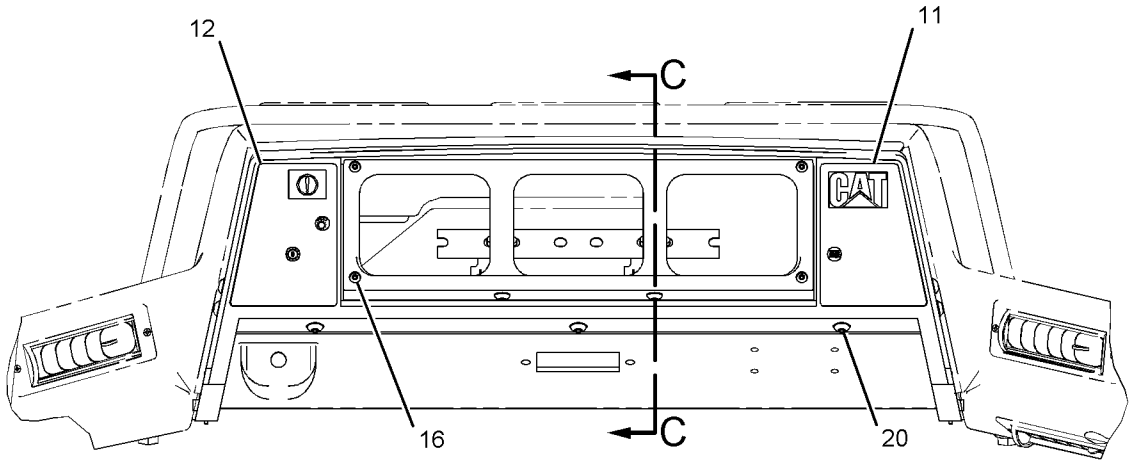

VIEW A-A

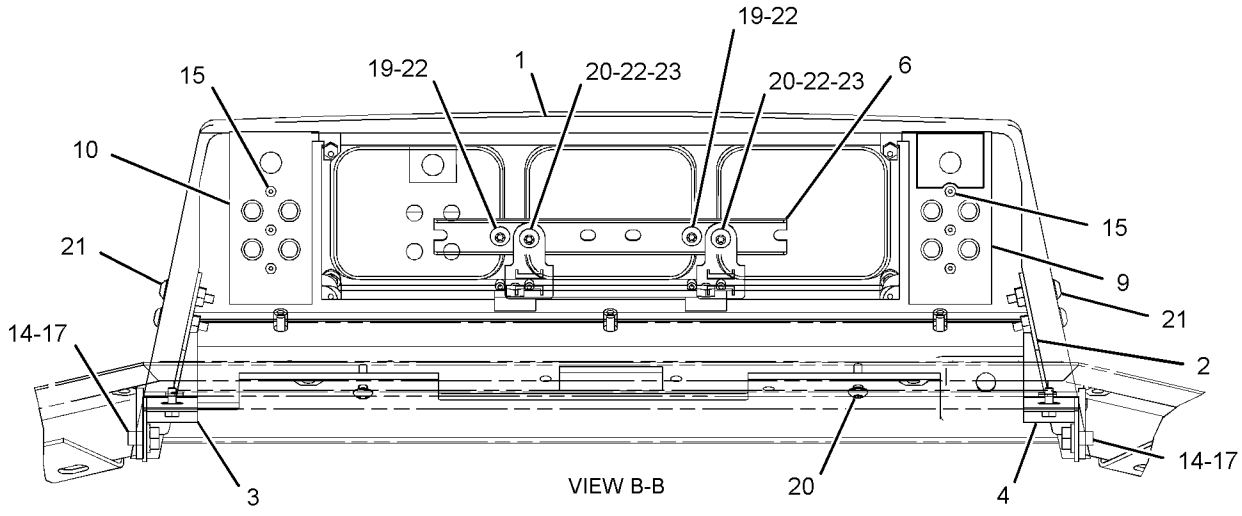

VIEW B-B

GRAPHIC #1

<END>

g01146264

OPERATOR STATION

112-5763 PEDAL GP-GOVERNOR

S/N: 4421-UP

PART OF 242-0341 CAB AR

SMCS-1276 **i00970414**

NOTE	REF NO	GRAPHIC REF	PART NUMBER	QTY	PART NAME 1 2 3 4 5 6 (PRODUCT LEVEL)	SEE PAGE
Y	1	1	**113-4799**	1	PEDAL GP-GOVERNOR	1033
M	2	1	**8T-4189**	4	BOLT (M8X1.25X20MM)	
	3	1	**8T-4224**	4	WASHER-HARD (2MM THK)	

M-METRIC PART
Y-SEPARATE ILLUSTRATION

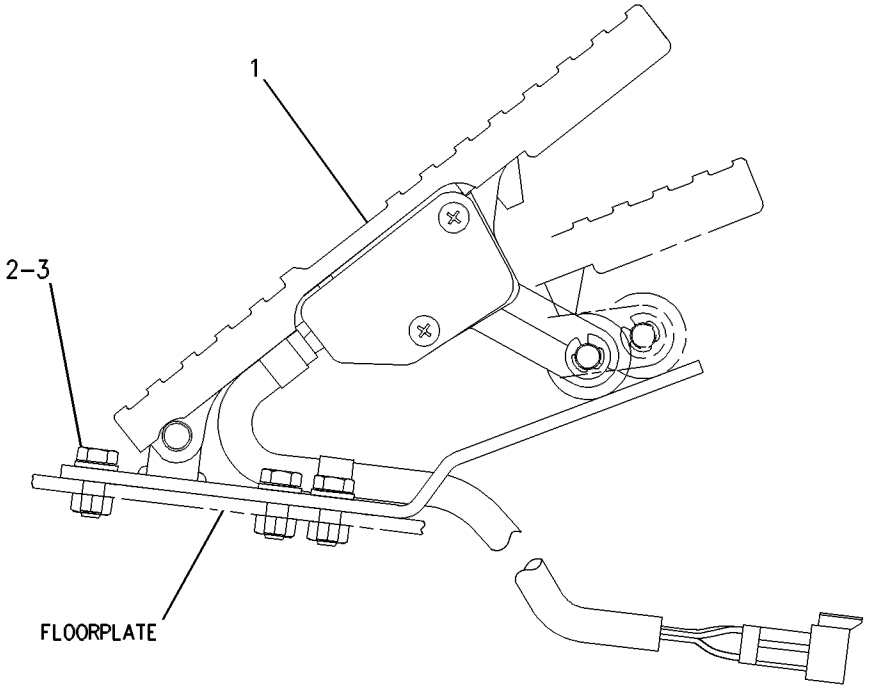

RIGHT SIDE VIEW

GRAPHIC #1 **<END>** g00523289

OPERATOR STATION

113-4799 PEDAL GP-GOVERNOR

S/N: 4421-UP

PART OF 112-5763 PEDAL GP-GOVERNOR

SMCS-1276 **i02234586**

NOTE	REF NO	GRAPHIC REF	PART NUMBER	QTY	PART NAME 1 2 3 4 5 6 (PRODUCT LEVEL)	SEE PAGE
	1	1	**123-9431**	1	COVER	
	2	1	**160-6354**	1	PLATE AS	
CY	3	1	**204-7949**	1	SENSOR GP-POSITION (ROTARY) (THROTTLE)	270
	4	1	**140-2961**	1	KIT-ROLLER (GOVERNOR PEDAL)	
					(INCLUDES ROLLERS)	
	5	1	**140-2962**	1	KIT-TREADLE PIN (GOVERNOR PEDAL)	
					(INCLUDES SNAP RINGS, BUSHINGS, TREADLE PINS, & INSTRUCTIONS)	
	6	1	**140-2963**	2	SCREW	
	7	1	**160-6365**	2	SCREW	
	8	1	**160-6366**	2	CLIP	
	9	1	**6V-0894**	1	SEAL-O-RING	

C-CHANGE FROM PREVIOUS TYPE
Y-SEPARATE ILLUSTRATION

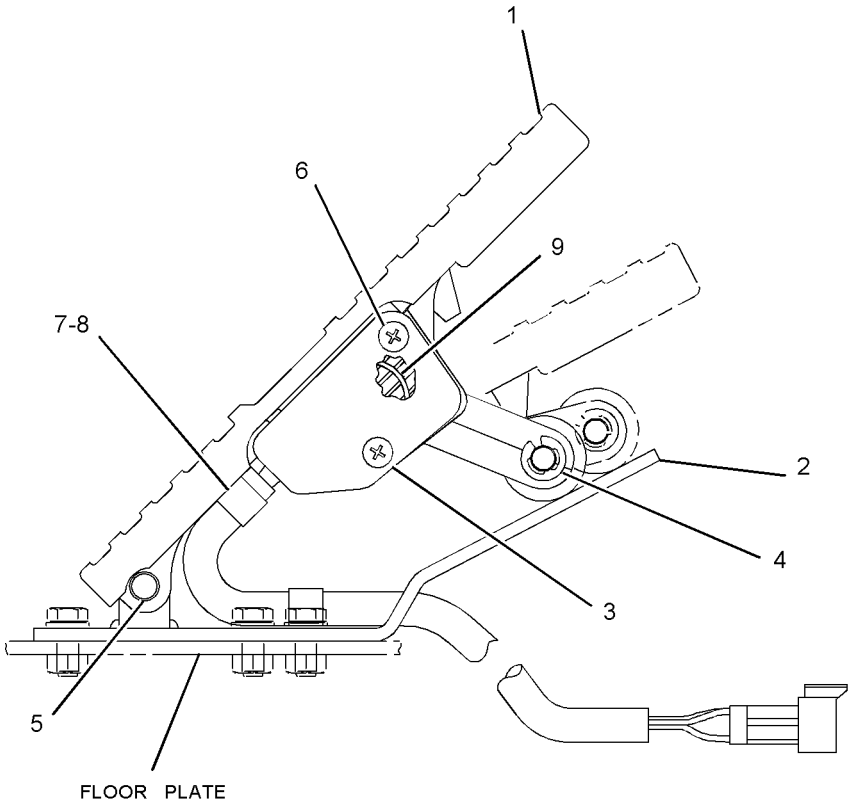

RIGHT SIDE VIEW

GRAPHIC #1

<END>

g01068873

OPERATOR STATION

245-3880 PLATFORM AR—AIR STARTING, RH

S/N: 4421-UP
PART OF 250-2819, 250-2820, 263-1827 STARTING AR-AIR
AN ATTACHMENT

SMCS-7253 **i02397208**

NOTE	PART NUMBER	QTY	PART NAME 1 2 3 4 5 6 (PRODUCT LEVEL)	SEE PAGE
Y	*249-8664*	1	COVER GP-PLATFORM	974
Y	*109-8214*	1	MOUNTING GP-PLATFORM BRACKET	1025
Y	*245-3881*	1	PLATFORM AR (RH)	1034
	5P-7470	2	CLIP (SLOT)	
	5P-7471	2	CLIP (TAB)	
	5P-7703	2	GROMMET	

Y-SEPARATE ILLUSTRATION

<END>

245-3881 PLATFORM AR—RH

S/N: 4421-UP
PART OF 245-3880, 245-3885 PLATFORM AR
AN ATTACHMENT

SMCS-7253 **i02294640**

NOTE	PART NUMBER	QTY	PART NAME 1 2 3 4 5 6 (PRODUCT LEVEL)	SEE PAGE
Y	*101-8346*	1	AIR DRYER GP	606
Y	*265-4449*	1	FILM GP (RH)	1079
Y	*251-2022*	1	HORN GP-AIR (RH)	990
Y	*245-1830*	1	LINES GP-AIR TANK (PLATFORM, RH)	622
Y	*245-3882*	1	PLATFORM GP-OPERATOR (CAB ACCESS, RH)	1037
Y	*247-4011*	1	WIRING GP-PLATFORM (AIR START, RH)	365
	7X-3229	4	FILM-INSTRUCTION (LIFT EYE, TIE-DOWN)	

Y-SEPARATE ILLUSTRATION

<END>

245-3885 PLATFORM AR—ELECTRIC START, RH

S/N: 4421-UP
PART OF 250-2821 STARTING AR-ELECTRIC
AN ATTACHMENT

SMCS-7253 **i02397210**

NOTE	PART NUMBER	QTY	PART NAME 1 2 3 4 5 6 (PRODUCT LEVEL)	SEE PAGE
Y	*108-8169*	1	BATTERY GP	200
Y	*249-8668*	1	COVER GP-PLATFORM	975
Y	*265-4445*	1	MOUNTING GP-BATTERY	582
Y	*245-3881*	1	PLATFORM AR (RH)	1034
Y	*247-4398*	1	WIRING GP-PLATFORM (ELECTRIC START, RH)	367
	127-8859	1	FILM-WARNING (JUMP START, READ OMM)	
	3J-5389	1	PLUG	

Y-SEPARATE ILLUSTRATION

<END>

OPERATOR STATION

245-7454 PLATFORM AR–LH

S/N: 4421-UP

PART OF 245-8810 COMMON AR

SMCS-7253 **i02287862**

NOTE	PART NUMBER	QTY	PART NAME 1 2 3 4 5 6 (PRODUCT LEVEL)	SEE PAGE
Y	*244-3646*	1	BATTERY & WIRING GP	197
Y	*108-8165*	1	BATTERY GP	199
Y	*160-4378*	1	CLEANING GP-CAB	964
Y	*122-6126*	1	FILM GP (LH)	1077
Y	*247-4404*	1	HORN GP-AIR (LH)	988
Y	*251-0100*	1	LINES GP-AIR TANK (PLATFORM, LH)	625
Y	*152-8968*	1	LUBRICATION GP-AUTOMATIC (PLATFORM)	580
Y	*245-7453*	1	PLATFORM GP-OPERATOR (CAB ACCESS, LH)	1039
Y	*247-4010*	1	WIRING GP-PLATFORM (AUTOMATIC LUBRICATION, LH)	363
	7X-3229	4	FILM-INSTRUCTION (LIFT EYE, TIE-DOWN LOCATION)	
	102-9035	1	FILM-WARNING (CABLE CONNECTION)	
			ON THE UNDERSIDE OF LH BATTERY BOX DOOR	
	246-2641	1	PADLOCK GP	
			(INCLUDES KEY)	

Y-SEPARATE ILLUSTRATION

<END>

OPERATOR STATION

242-0340 PLATFORM GP-OPERATOR

S/N: 4421-UP

PART OF 242-0339 CAB & PLATFORM GP

SMCS-7253 **i02148144**

NOTE	REF NO	GRAPHIC REF	PART NUMBER	QTY	PART NAME 1 2 3 4 5 6 (PRODUCT LEVEL)	SEE PAGE
	1	1	**4E-8995**	1	DOOR AS	
		1	**6W-8906**	1	LATCH AS	
		1	**8R-6128**	1	HINGE	
	2	1	**242-2527**	1	PLATFORM AS	
M		1	**8T-4189**	1	BOLT (M8X1.25X20-MM)	
		1	**8T-4224**	1	WASHER-HARD (8.8X16X2-MM THK)	
		1	**9D-3767**	1	PLUG-BUTTON	
		1	**145-6620**	1	GASKET	
		1	**145-6621**	1	PLATE	
	3	1	**250-1812**	1	PANEL-ACCESS	
	4	1	**5P-4116**	4	WASHER-HARD (8.8X20.5X2-MM THK)	
M	5	1	**7Y-9099**	4	SCREW-TRUSS HEAD	
M	6	1	**9X-2042**	2	SCREW-TRUSS HEAD	

M-METRIC PART

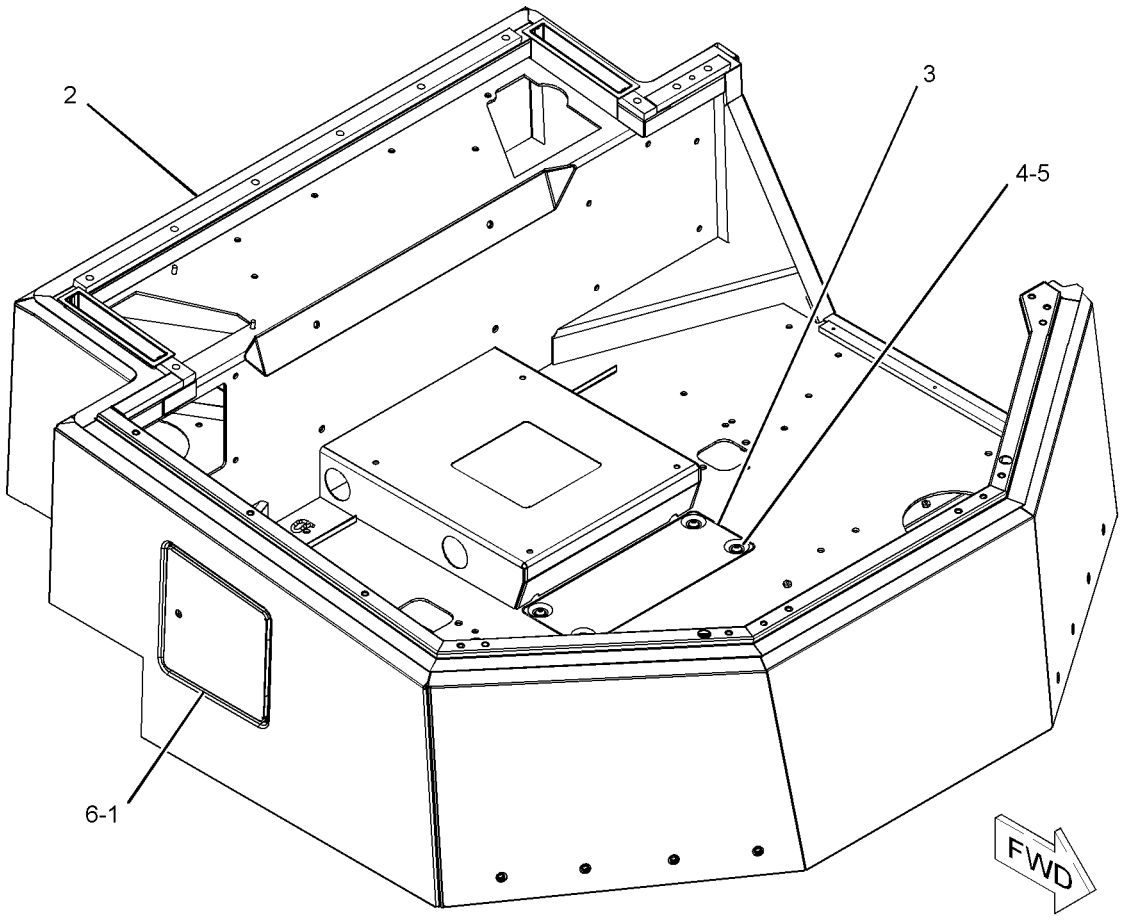

GRAPHIC #1 **<END>** g01091224

OPERATOR STATION

245-3882 PLATFORM GP-OPERATOR–CAB ACCESS, RH

S/N: 4421-UP

PART OF 245-3881 PLATFORM AR

AN ATTACHMENT

SMCS-7253 **i02411257**

NOTE	REF NO	GRAPHIC REF	PART NUMBER	QTY	PART NAME 1 2 3 4 5 6 (PRODUCT LEVEL)	SEE PAGE
	1	1	**8X-4819**	2	CHANNEL	
	2	1	**8X-5353**	2	ROD AS	
					(EACH INCLUDES)	
		1	**2D-6416**	2	WASHER (0.438X1.25X0.12-IN THK)	
	3	1	**245-3883**	1	PLATFORM AS (RH)	
		1	**090-8247**	1	BLOCK	
		1	**9R-2613**	10	BOSS-WELD (M10X1.5X25-MM OAL)	
	4	1	**264-5039**	1	PLATE AS (RH)	
	5	1	**249-8662**	1	DOOR AS	
		1	**6V-2370**	4	RIVET-POP	
		1	**8X-3869**	2	HINGE	
		1	**9X-2299**	1	LATCH AS	
	6	1	**249-8669**	2	ANGLE	
	7	1	**252-4394**	1	COVER AS	
M	8	1	**5Y-1013**	4	NUT (M8X1.25)	
	9	1	**7J-5925**	4	PIN-COTTER	
	10	1	**8T-4121**	17	WASHER-HARD (11X21X2.5-MM THK)	
M	11	1	**8T-4133**	3	NUT (M10X1.15-THD)	
M	12	1	**8T-4136**	37	BOLT (M10X1.5X25-MM)	
	13	1	**8T-4222**	34	WASHER-PLATED (11X32X2.5-MM THK)	
	14	1	**8T-4224**	4	WASHER-HARD (8.8X16X2-MM THK)	
	15	1	**8X-4376**	2	PLATE	
	16	1	**265-4442**	1	PLATE AS (RH)	
		1	**8X-5952**	2	BLOCK	
		1	**9R-2613**	4	BOSS-WELD (M10X1.5X25-MM OAL)	
M	17	1	**8T-4195**	8	BOLT (M10X1.5X30-MM)	

M-METRIC PART

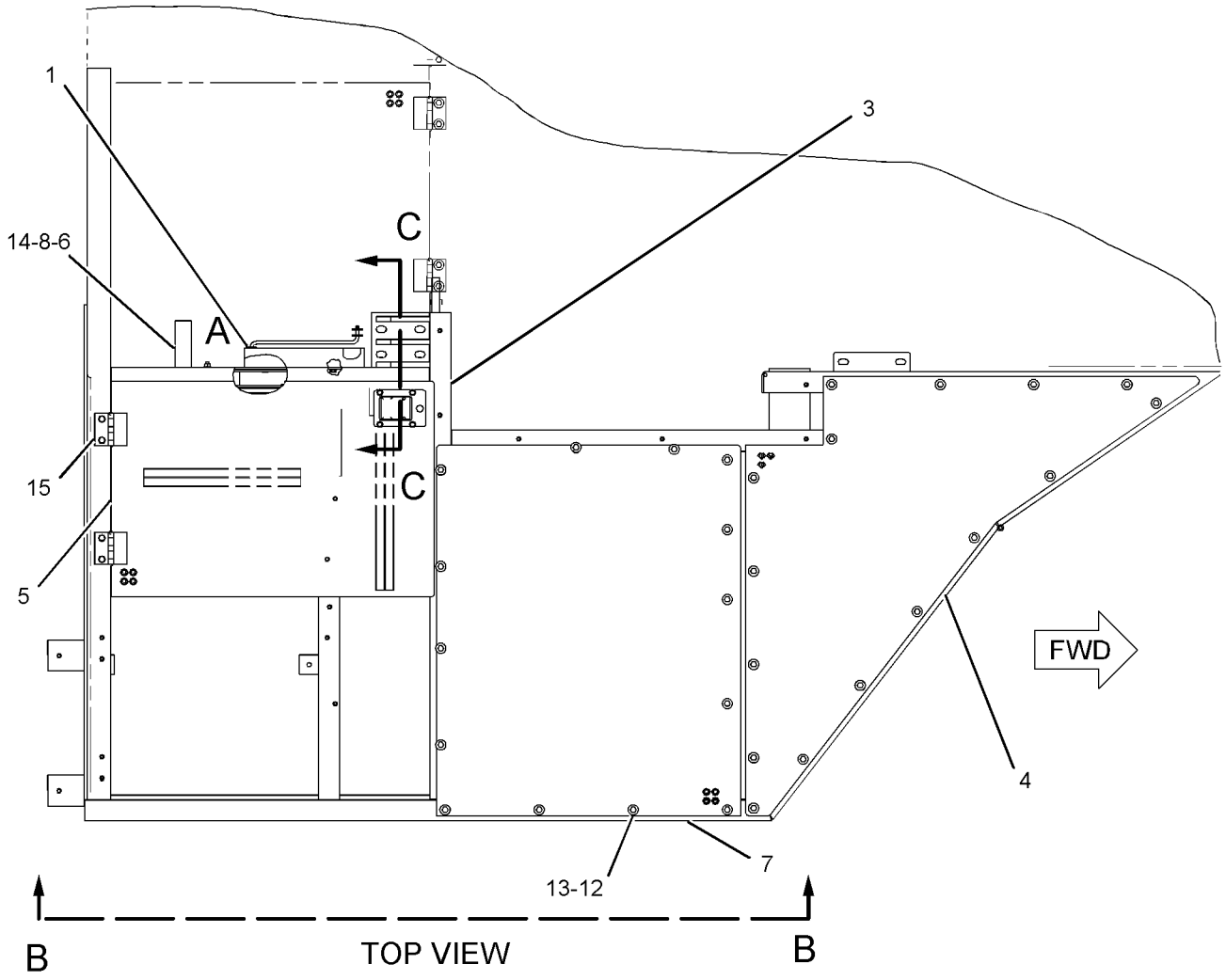

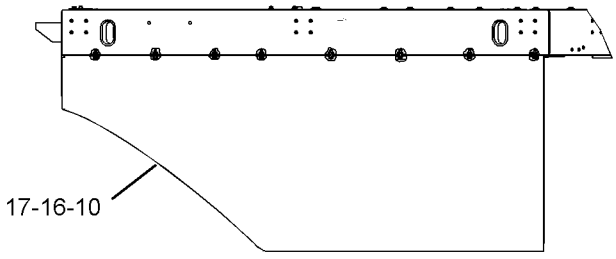

VIEW B-B

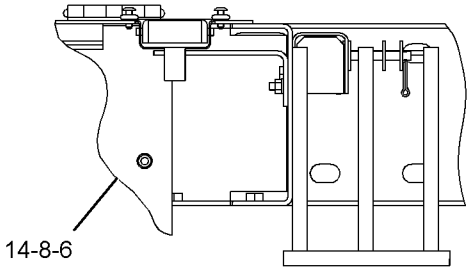

SECTION C-C

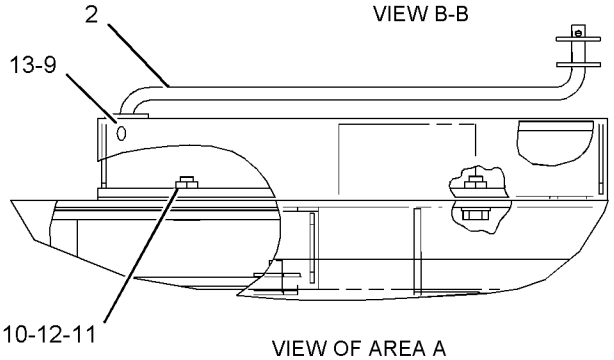

VIEW OF AREA A

GRAPHIC #1 **<END>** g01145518

OPERATOR STATION

245-7453 PLATFORM GP-OPERATOR–CAB ACCESS, LH

S/N: 4421-UP

PART OF 245-7454 PLATFORM AR

SMCS-7253 **i02288148**

NOTE	REF NO	GRAPHIC REF	PART NUMBER	QTY	PART NAME 1 2 3 4 5 6 (PRODUCT LEVEL)	SEE PAGE
	1	2	**8X-4489**	1	TREAD	
	2	2	**8X-4819**	5	CHANNEL	
	3	2	**8X-5353**	6	ROD AS	
					(EACH INCLUDES)	
		2	**2D-6416**	2	WASHER (0.438X1.25X0.12-IN THK)	
	4	1	**263-8879**	1	PLATE AS	
M		1	**8T-3490**	4	NUT-WELD (M10X1.5-THD)	
M		1	**8T-3597**	4	NUT-WELD (M12X1.75-THD)	
	5	1	**245-7452**	1	PLATFORM AS (LH)	
	6	2	**249-8669**	5	ANGLE	
	7	1	**250-1974**	2	COVER AS	
					(EACH INCLUDES)	
		1	**6V-2370**	4	RIVET-POP	
		1	**8X-3869**	2	HINGE	
		1	**9X-2299**	1	LATCH AS	
	8	1	**250-1979**	1	DOOR AS	
		1	**6V-2370**	4	RIVET-POP	
		1	**8V-6072**	1	LATCH AS (D-RING)	
		1	**8X-3869**	2	HINGE	
		1	**9X-2299**	1	LATCH AS	
	9	2	**250-6197**	2	DOOR AS	
					(EACH INCLUDES)	
		2	**6V-2370**	4	RIVET-POP	
		2	**8X-3869**	2	HINGE	
		2	**9X-2299**	1	LATCH AS	
	10	1	**250-6199**	1	DOOR AS	
		1	**8X-3869**	2	HINGE	
		1	**9X-2299**	1	LATCH AS	
	11	1	**250-6201**	1	PLATE AS (LH)	
		1	**8X-5952**	2	BLOCK	
	12	1	**263-8876**	1	PLATE AS	
M		1	**8T-3490**	4	NUT-WELD (M10X1.5-THD)	
M		1	**8T-3597**	4	NUT-WELD (M12X1.75-THD)	
	13	2	**252-4389**	1	PLATE AS	
		2	**9R-2613**	3	BOSS-WELD (M10X1.5X25-MM OAL)	
	14	1	**252-4405**	1	CHANNEL AS	
M		1	**8T-3490**	18	NUT-WELD (M10X1.5-THD)	
M		1	**8T-3597**	4	NUT-WELD (M12X1.75-THD)	
M	15	2	**5Y-1013**	10	NUT (M8X1.25)	
	16	2	**7J-5925**	12	PIN-COTTER	
M	17	1	**7X-2553**	8	BOLT (M16X2X40-MM)	
	18	1	**7X-7729**	6	WASHER (11X25X3-MM THK)	
	19	1,2	**8T-4121**	18	WASHER-HARD (11X21X2.5-MM THK)	
M	20	1	**8T-4122**	8	WASHER-HARD (17X32X3.5-MM THK)	
M	21	2	**8T-4133**	8	NUT (M10X1.15-THD)	
M	22	1,2	**8T-4136**	38	BOLT (M10X1.5X25-MM)	
M	23	1	**8T-4139**	8	BOLT (M12X1.75X30-MM)	
M	24	2	**8T-4184**	10	BOLT (M12X1.75X45-MM)	
M	25	2	**8T-4195**	1	BOLT (M10X1.5X30-MM)	
	26	1,2	**8T-4222**	37	WASHER-PLATED (11X32X2.5-MM THK)	
	27	1,2	**8T-4223**	34	WASHER-HARD (13.5X25.5X3-MM THK)	
	28	2	**8T-4224**	10	WASHER-HARD (8.8X16X2-MM THK)	
M	29	2	**8T-4244**	10	NUT (M12X1.75-THD)	
	30	1	**263-8874**	1	DOOR AS	
		1	**8V-6072**	2	LATCH AS (D-RING)	
	31	1	**263-8871**	1	STEP AS	

245-7453 **PLATFORM GP-OPERATOR** *(contd.)* **i02288148**

NOTE	REF NO	GRAPHIC REF	PART NUMBER	QTY	PART NAME 1 2 3 4 5 6 (PRODUCT LEVEL)	SEE PAGE
M		1	**8T-3490**	4	NUT-WELD (M10X1.5-THD)	
	32	2	**262-4448**	2	BRACKET	
	33	1	**262-4447**	1	CHANNEL AS	
M		1	**8T-4967**	2	STUD-WELD (M10X1.5X23-MM OAL)	
M	34	1,2	**8T-4183**	14	BOLT (M12X1.75X40-MM)	
M	35	1	**6V-8949**	2	NUT (M10X1.5-6H-THD)	
	36	1,2	**5P-1076**	8	WASHER-HARD (13.5X30X4-MM THK)	

M-METRIC PART

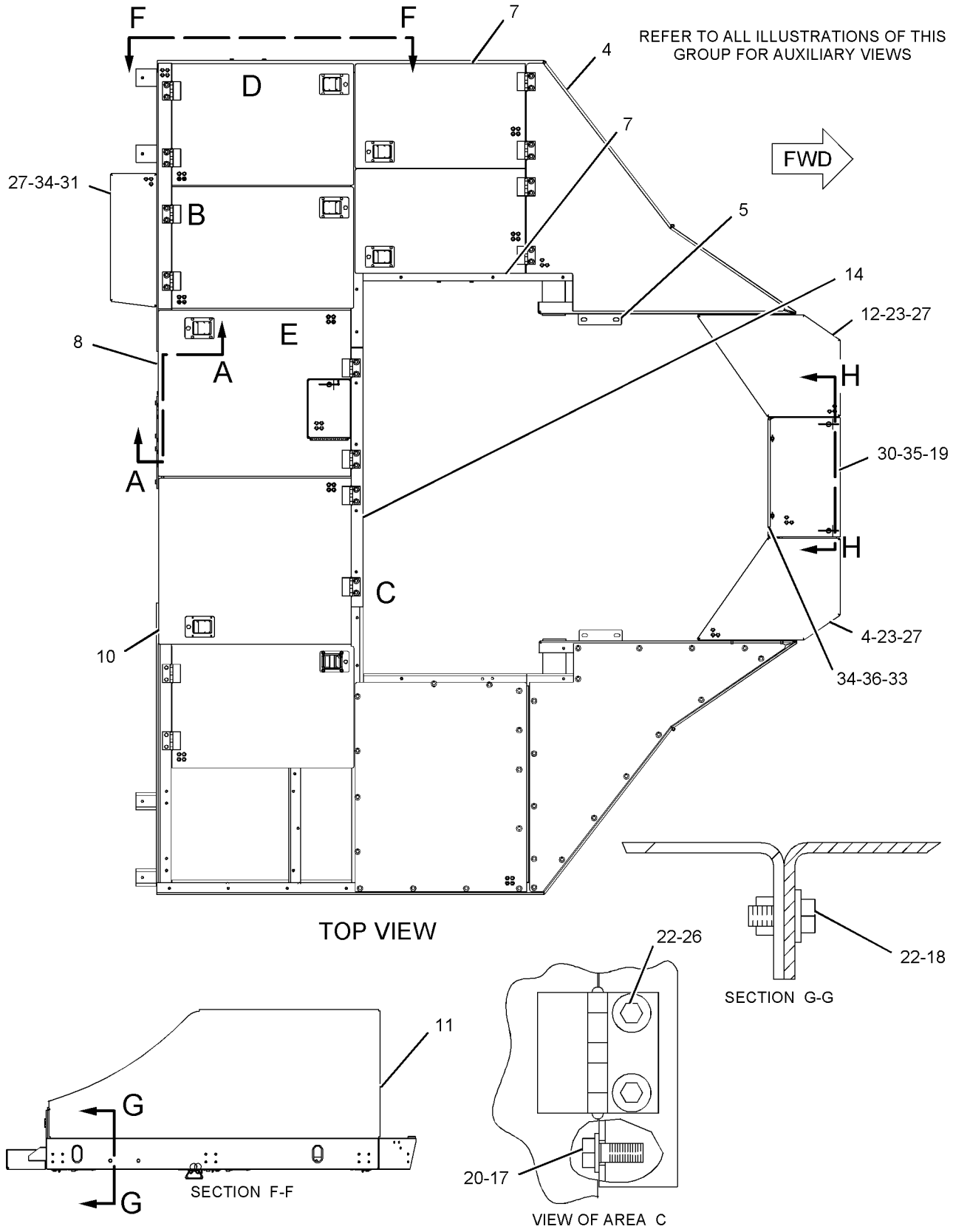

GRAPHIC #1

g01145940

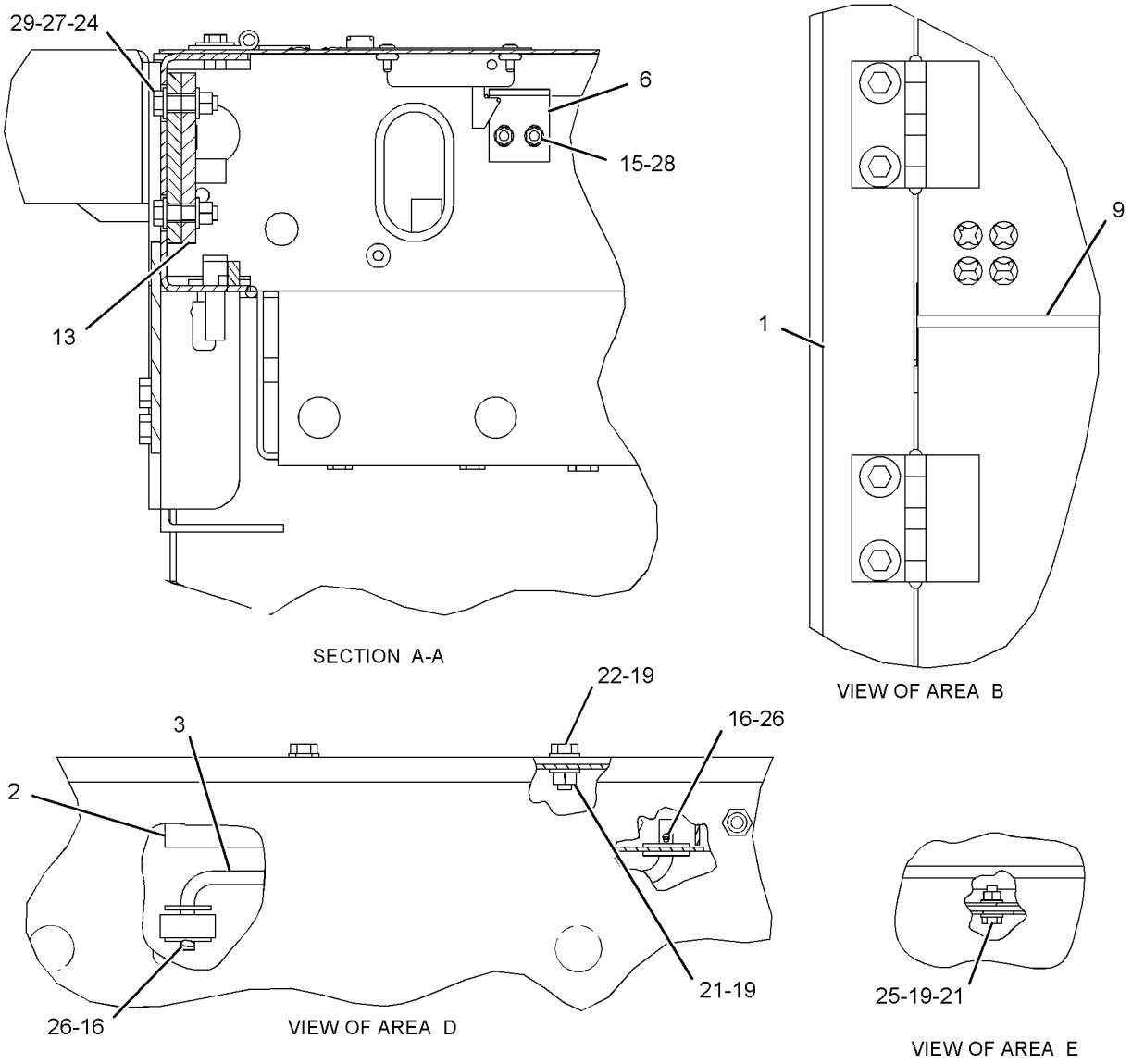

GRAPHIC #2

<END>

g01145939

OPERATOR STATION

258-0959 PRECLEANER AR-CAB AIR

S/N: 4421-UP

AN ATTACHMENT

SMCS-7311, 7342 **i02154890**

NOTE	PART NUMBER	QTY	PART NAME 1 2 3 4 5 6 (PRODUCT LEVEL)	SEE PAGE
Y	*232-2597*	1	PRECLEANER GP-CAB AIR	1044

Y-SEPARATE ILLUSTRATION

<END>

OPERATOR STATION

232-2597 PRECLEANER GP-CAB AIR

S/N: 4421-UP

PART OF 258-0959 PRECLEANER AR-CAB AIR

AN ATTACHMENT

SMCS-7311, 7316 **i02225882**

NOTE	REF NO	GRAPHIC REF	PART NUMBER	QTY	PART NAME 1 2 3 4 5 6 (PRODUCT LEVEL)	SEE PAGE
	1	1	**201-3300**	1	MOTOR GP-BLOWER (CAB AIR)	
		1	**102-8802**	1	KIT-RECEPTACLE (2-PIN)	
					(INCLUDES RECEPTACLE AS AND WEDGE)	
		1	**186-3735**	2	PIN-CONNECTOR (16-GA TO 18-GA)	
		1	**197-1932**	1	MOTOR AS (24V DC)	
	2	1	**9X-2038**	4	WASHER (7X19X2-MM THK)	
M	3	1	**9X-2042**	4	SCREW-TRUSS HEAD (M6X1X12-MM)	

M-METRIC PART

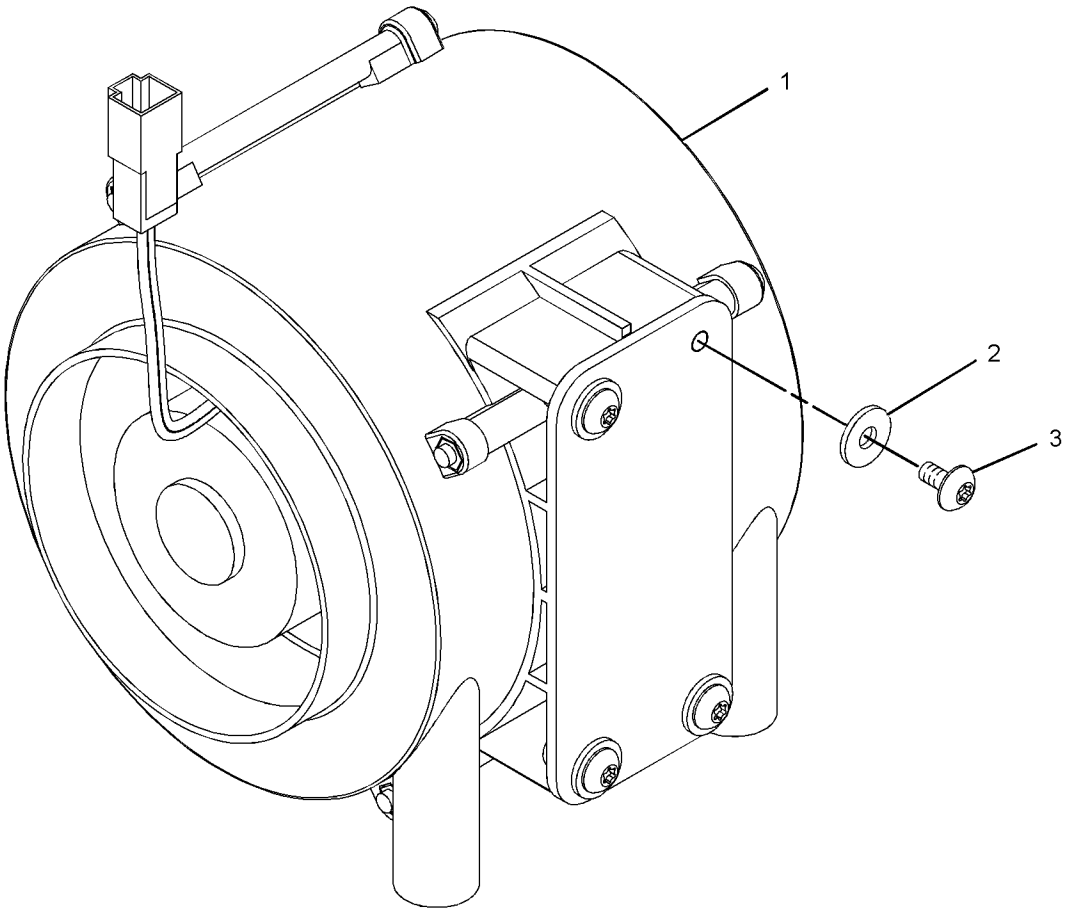

GRAPHIC #1 **<END>** g01153496

OPERATOR STATION

210-2270 RECLINER GP-SEAT

S/N: 4421-UP

PART OF 178-7910 SEAT GP

SMCS-7312 **i02348953**

NOTE	REF NO	GRAPHIC REF	PART NUMBER	QTY	PART NAME 1 2 3 4 5 6 (PRODUCT LEVEL)	SEE PAGE
	1	1	**177-1862**	1	BRACKET (SEAT BELT)	
	2	1	**210-2262**	1	BRACKET AS	
	3	1	**210-2263**	1	BRACKET AS	
	4	1	**210-2266**	1	GEAR (14-TEETH)	
	5	1	**210-2268**	1	SHAFT AS	
	6	1	**217-7933**	1	LATCH	
	7	1	**236-5197**	1	SPRING	
	8	1	**031-0214**	1	BOLT-LOCKING (1/4-20X0.5-IN)	
	9	1	**101-2867**	1	WASHER-HARD (7.2X25X2-MM THK)	
	10	1	**4M-6425**	1	BOLT (5/16-18X1-IN)	
	11	1	**5M-2894**	1	WASHER-HARD (10.2X18.5X2.5-MM THK)	
	12	1	**5S-7383**	1	BOLT (3/8-16X1.75-IN)	
	13	1	**8T-4224**	1	WASHER-HARD (8.8X16X2-MM THK)	

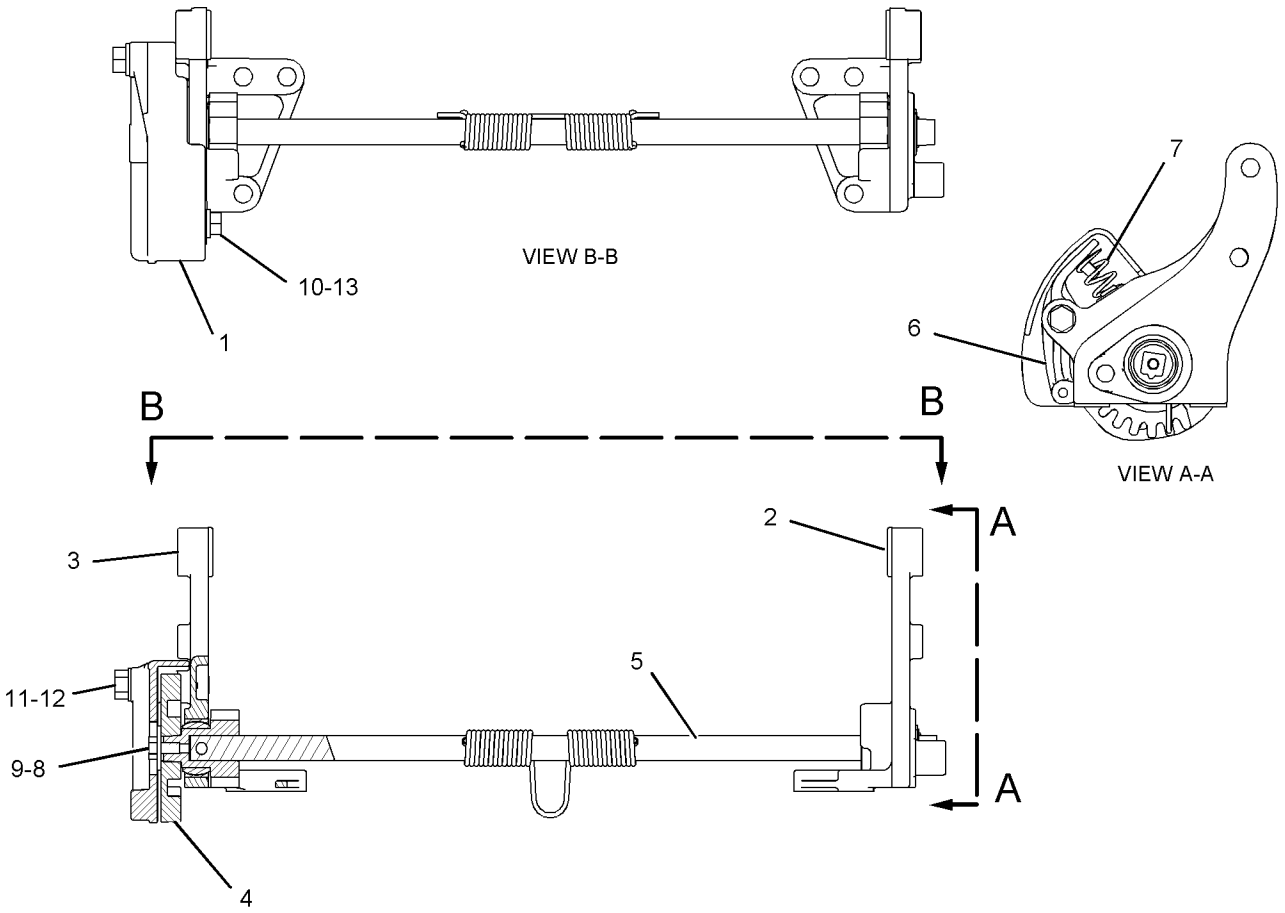

GRAPHIC #1 **<END>** g01040293

OPERATOR STATION

247-5919 ROPS AR

S/N: 4421-UP

PART OF 245-8810 COMMON AR

SMCS-7323 **i02282357**

NOTE	PART NUMBER	QTY	PART NAME 1 2 3 4 5 6 (PRODUCT LEVEL)	SEE PAGE
Y	*247-5920*	1	ROPS GP	1047
Y	*247-4405*	1	WIRING GP-ROPS	378
	7X-3229	2	FILM-INSTRUCTION (LIFT EYE, TIE-DOWN)	
			NEAR TOP OF CANOPY ON BOTH SIDES OF ROPS, AT THE STRAPS	
	104-4453	1	FILM-STRIPE (CATERPILLAR)	
			ON FRONT SURFACE OF CANOPY	

Y-SEPARATE ILLUSTRATION

<END>

OPERATOR STATION

247-5920 ROPS GP

S/N: 4421-UP

PART OF 247-5919 ROPS AR

SMCS-7323 **i02149314**

NOTE	REF NO	GRAPHIC REF	PART NUMBER	QTY	PART NAME 1 2 3 4 5 6 (PRODUCT LEVEL)	SEE PAGE
	1	1	**8X-3525**	1	COVER AS	
		1	**8D-9606**	2	EYE-LIFTING	
	2	1	**247-5921**	1	CANOPY AS	
M	3	1	**8T-4139**	16	BOLT (M12X1.75X30-MM)	
	4	1	**8T-4223**	16	WASHER-HARD (13.5X25.5X3-MM THK)	

M-METRIC PART

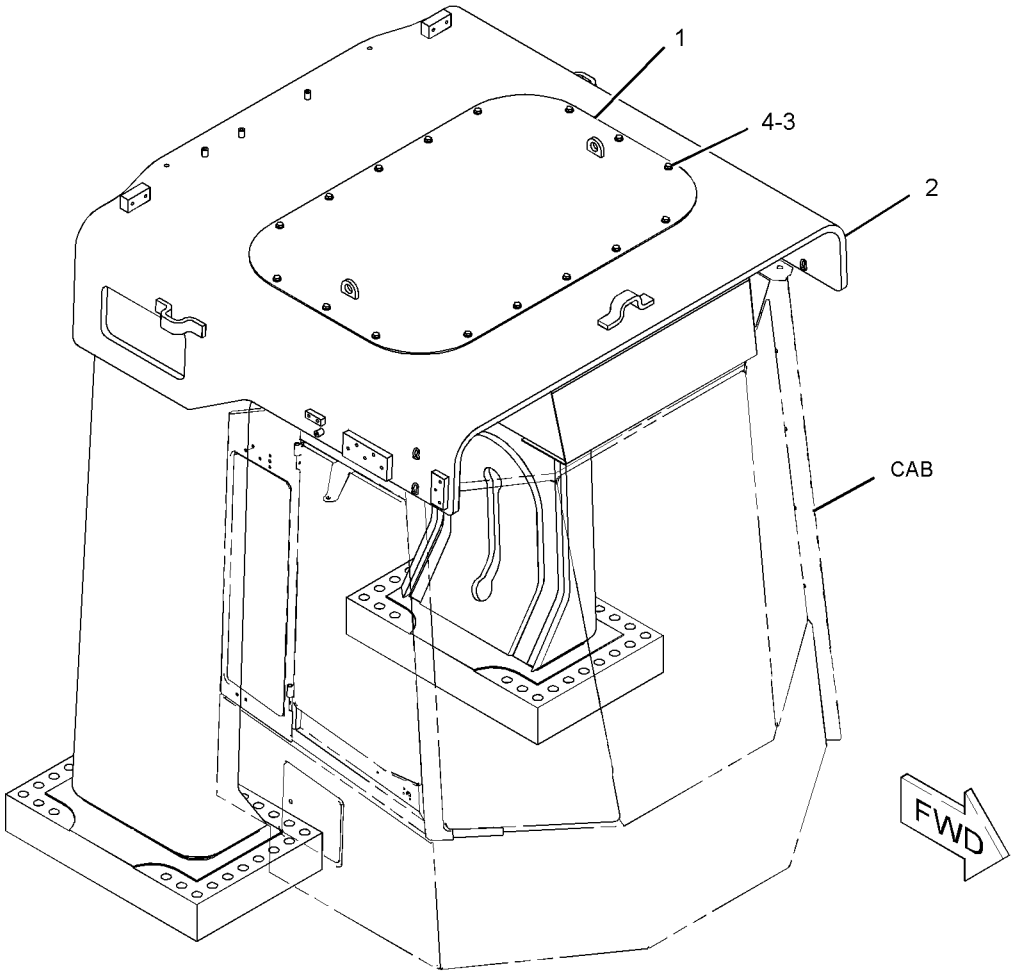

GRAPHIC #1 **<END>** g01095764

OPERATOR STATION

117-1410 SEALING GP-GLASS

S/N: 4421-UP

PART OF 242-0341 CAB AR

SMCS-7310, 7340 **i01057779**

NOTE	PART NUMBER	QTY	PART NAME 1 2 3 4 5 6 (PRODUCT LEVEL)	SEE PAGE
	119-0781	1	ADHESIVE	

<END>

OPERATOR STATION

178-7910 SEAT GP–CLOTH

S/N: 4421-UP

PART OF 185-9726 SEAT GP

SMCS-7312 **i02103087**

NOTE	REF NO	GRAPHIC REF	PART NUMBER	QTY	PART NAME 1 2 3 4 5 6 (PRODUCT LEVEL)	SEE PAGE
	1	1	**218-0861**	1	PAN AS	
	1A	1	**8T-9082**	5	RIVET-POP	
	1B	1	**217-9049**	1	CUSHION AS	
	2	1	**143-1288**	8	LOCKNUT-FLANGE (3/8-16-THD)	
	3	1	**171-1230**	6	SCREW-BUTTON HEAD (3/8-16X1-IN)	
	4	1	**171-6682**	1	BAR	
	5	1	**172-2416**	2	PIN	
Y	6	1	*173-1028*	1	ADJUSTER GP-SEAT	950
	7	1	**177-1863**	2	BOLT-PIVOT (3/8-16X2.89-IN)	
CY	8	1	*210-2270*	1	RECLINER GP-SEAT	1045
Y	9	1	*178-7911*	1	PAN GP-BACKREST	1027
	10	1	**184-2298**	1	ROD	
	11	1	**184-2299**	4	WASHER (7X25.4X2.54-MM THK) (2.54MM THK)	
	12	1	**095-0843**	2	PIN-COTTER	
	14	1	**5V-1496**	2	RETAINER	
	15	1	**6V-7646**	2	WASHER-HARD (7.2X25X2-MM THK)	
	16	1	**8T-0328**	1	WASHER-HARD (5.5X10X1-MM THK)	
	17	1	**8T-4205**	1	WASHER-HARD (7.2X14.5X2-MM THK)	
	18	1	**8Y-6277**	2	SPACER (10.5X28.6X10-MM THK)	

C-CHANGE FROM PREVIOUS TYPE
Y-SEPARATE ILLUSTRATION

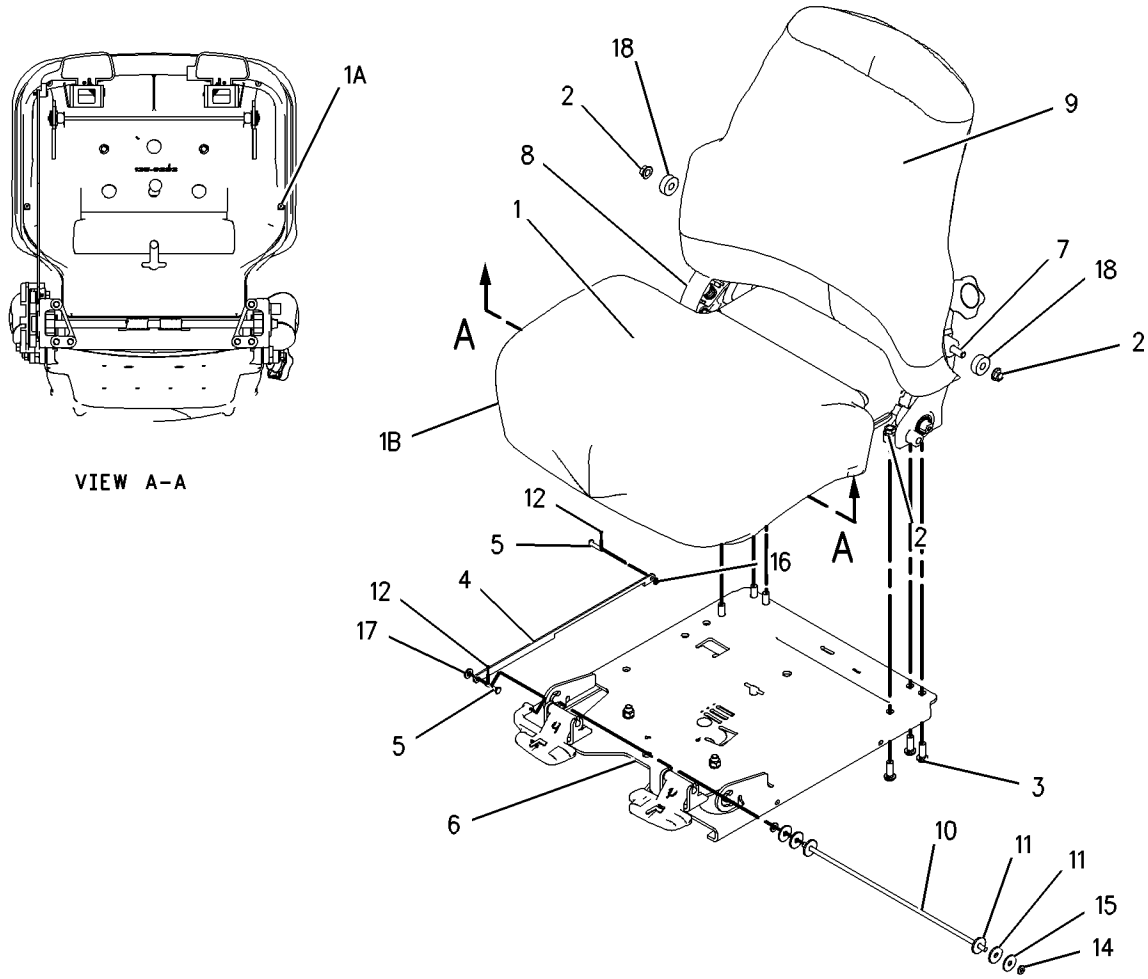

GRAPHIC #1 **<END>** g00739610

OPERATOR STATION

185-9726 SEAT GP–CLOTH

S/N: 4421-UP

PART OF 219-8090 SEAT GP-SUSPENSION

SMCS-7312 **i02094203**

NOTE	REF NO	GRAPHIC REF	PART NUMBER	QTY	PART NAME 1 2 3 4 5 6 (PRODUCT LEVEL)	SEE PAGE
C	1	1	**229-1494**	1	EXTENSION GP-BACKREST (CLOTH)	
	1A	1	**117-4491**	1	ROD	
	2	1	**177-4937**	1	SPACER (11.7X19.8X20.3-MM THK)	
Y	3	1	**178-7910**	1	SEAT GP (CLOTH)	1049
C	4	1	**205-6388**	1	BOLT (7/16-20X44.45-MM)	
C	5	1	**0T-0244**	1	BOLT (7/16-20X1.25-IN)	
C	6	1	**222-0345**	1	SEAT BELT GP	

C-CHANGE FROM PREVIOUS TYPE
Y-SEPARATE ILLUSTRATION

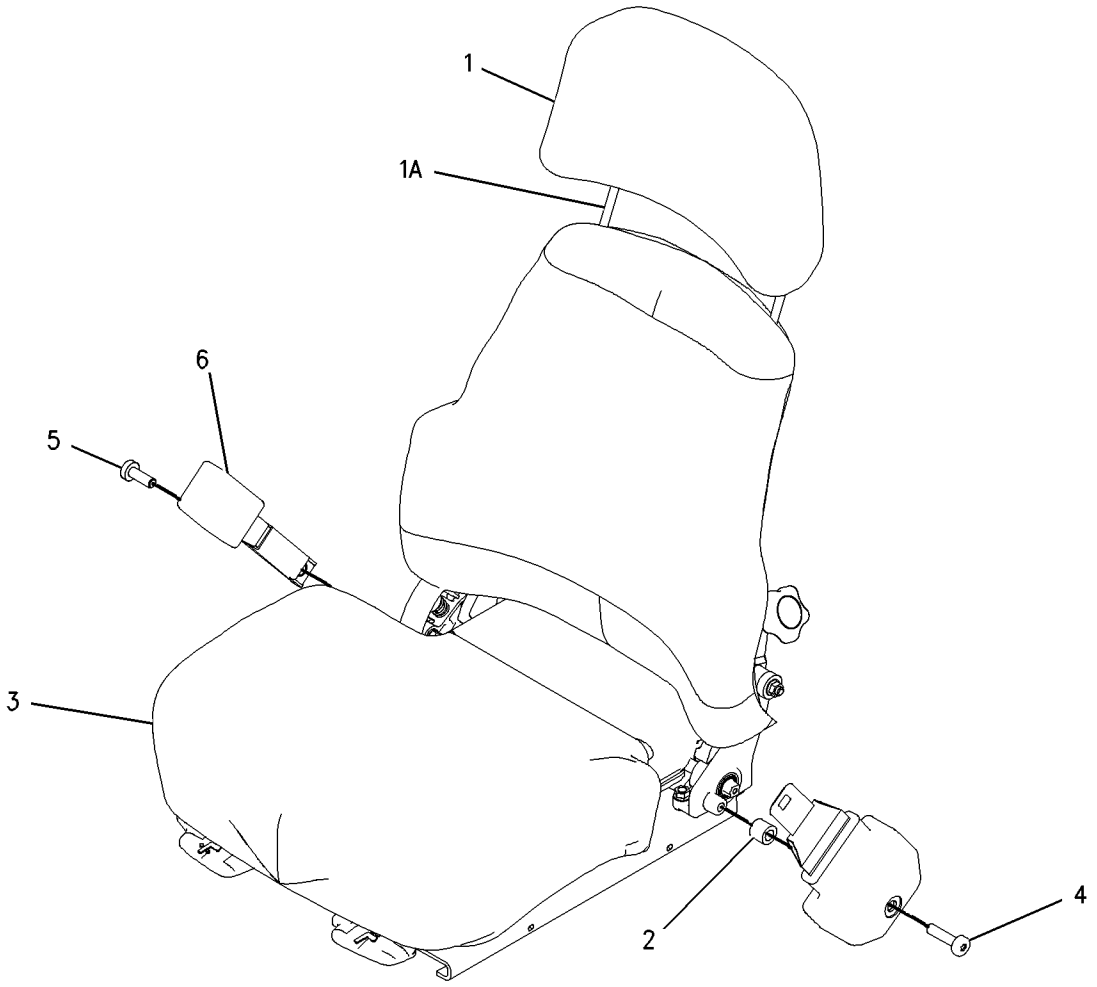

GRAPHIC #1 **<END>** g00672937

OPERATOR STATION

250-9976 SEAT GP

S/N: 4421-UP

PART OF 242-0341 CAB AR

SMCS-7312 **i02282431**

NOTE	REF NO	GRAPHIC REF	PART NUMBER	QTY	PART NAME 1 2 3 4 5 6 (PRODUCT LEVEL)	SEE PAGE
Y	1	1	**248-7511**	1	SEAT GP-COMPANION	1054
	2	1	**206-1749**	1	SEAT BELT GP	
	3	1	**8T-4222**	3	WASHER-PLATED (11X32X2.5-MM THK)	
	4	1	**8T-8916**	2	BOLT (7/16-14X1.5-IN)	
M	6	1	**9X-2039**	3	SCREW-TRUSS HEAD (M10X1.5X35-MM)	

M-METRIC PART
Y-SEPARATE ILLUSTRATION

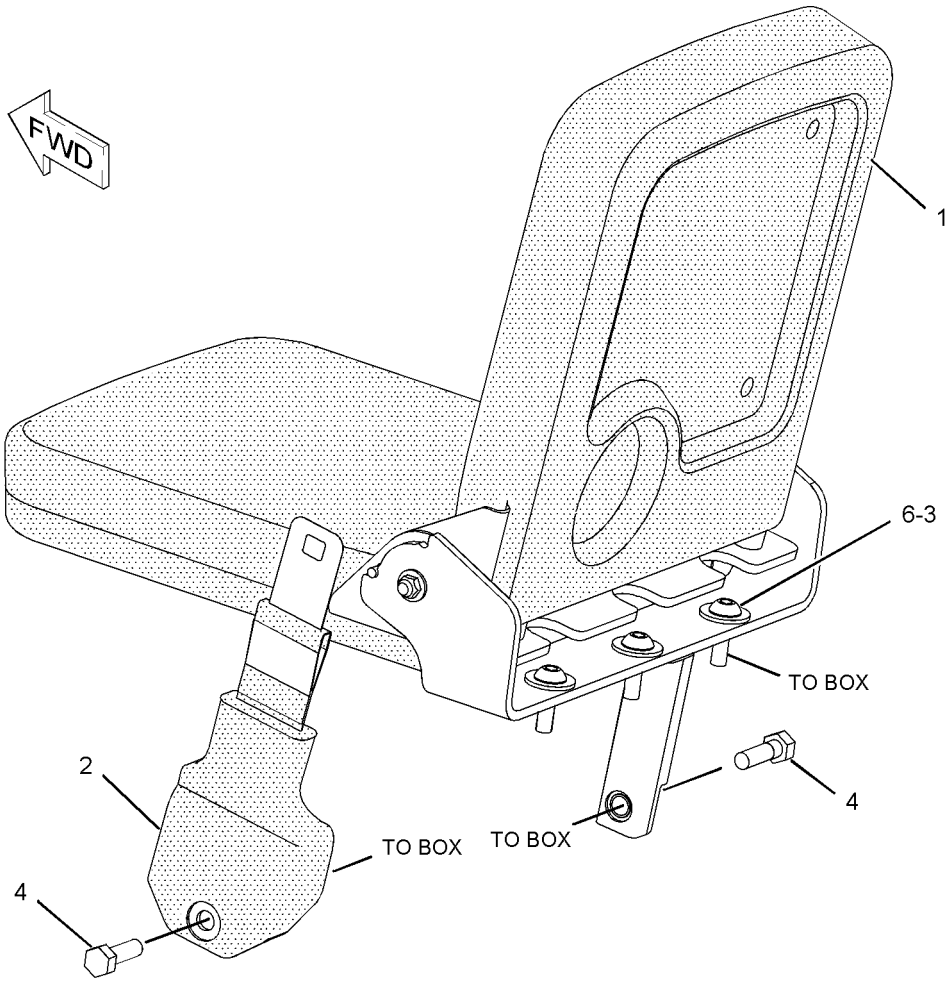

GRAPHIC #1 **<END>** g01142323

OPERATOR STATION

248-7500 SEAT GP-COMPANION

S/N: 4421-UP

PART OF 248-7511 SEAT GP-COMPANION

SMCS-7312 **i02286576**

NOTE	REF NO	GRAPHIC REF	PART NUMBER	QTY	PART NAME 1 2 3 4 5 6 (PRODUCT LEVEL)	SEE PAGE
	1	1	**114-9125**	1	HOLDER-CUP	
	2	1	**248-7505**	1	CUSHION AS	
	3	1	**248-7508**	1	COVER	
	4	1	**174-5807**	4	RIVET-POP	
	5	1	**266-3154**	1	PAN AS	

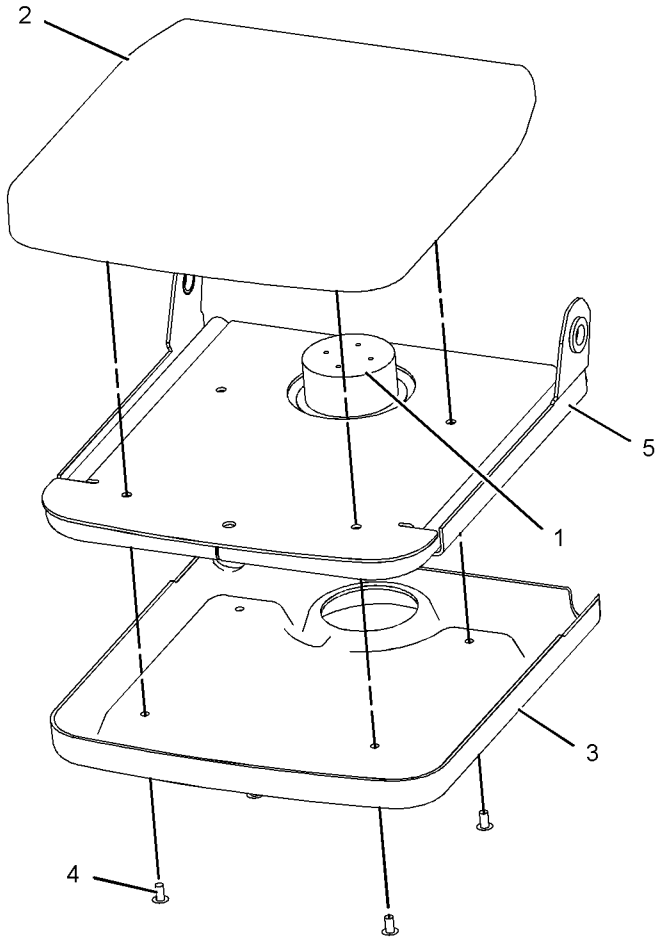

GRAPHIC #1 **<END>** g01145276

OPERATOR STATION

248-7511 SEAT GP-COMPANION

S/N: 4421-UP
PART OF 250-9976 SEAT GP
TYPE 1

SMCS-7312 **i02286488**

NOTE	REF NO	GRAPHIC REF	PART NUMBER	QTY	PART NAME 1 2 3 4 5 6 (PRODUCT LEVEL)	SEE PAGE
Y	1	1	**248-7500**	1	SEAT GP-COMPANION	1053
	2	1	**248-7509**	2	SPACER	
	3	1	**248-7513**	1	BRACKET AS	
Y	4	1	**255-2713**	1	SEAT GP-COMPANION	1056
	5	1	**5P-4116**	2	WASHER-HARD (8.8X20.5X2-MM THK)	
M	6	1	**6V-9189**	2	LOCKNUT (M8X1.25-THD)	
M	7	1	**166-1222**	2	SCREW-BUTTON HEAD (M8X1.25X30-MM)	
	8	1	**4L-7125**	2	LOCKWASHER	
M	9	1	**5C-2890**	2	NUT (M6X1-THD)	
	10	1	**266-3156**	2	PIN	
	11	1	**266-3153**	2	SPRING	
	12	1	**7X-0579**	2	WASHER-HARD (8.8X25.5X2-MM THK)	
	13	1	**7X-0608**	2	WASHER-HARD (10.2X16X2-MM THK)	

M-METRIC PART
Y-SEPARATE ILLUSTRATION

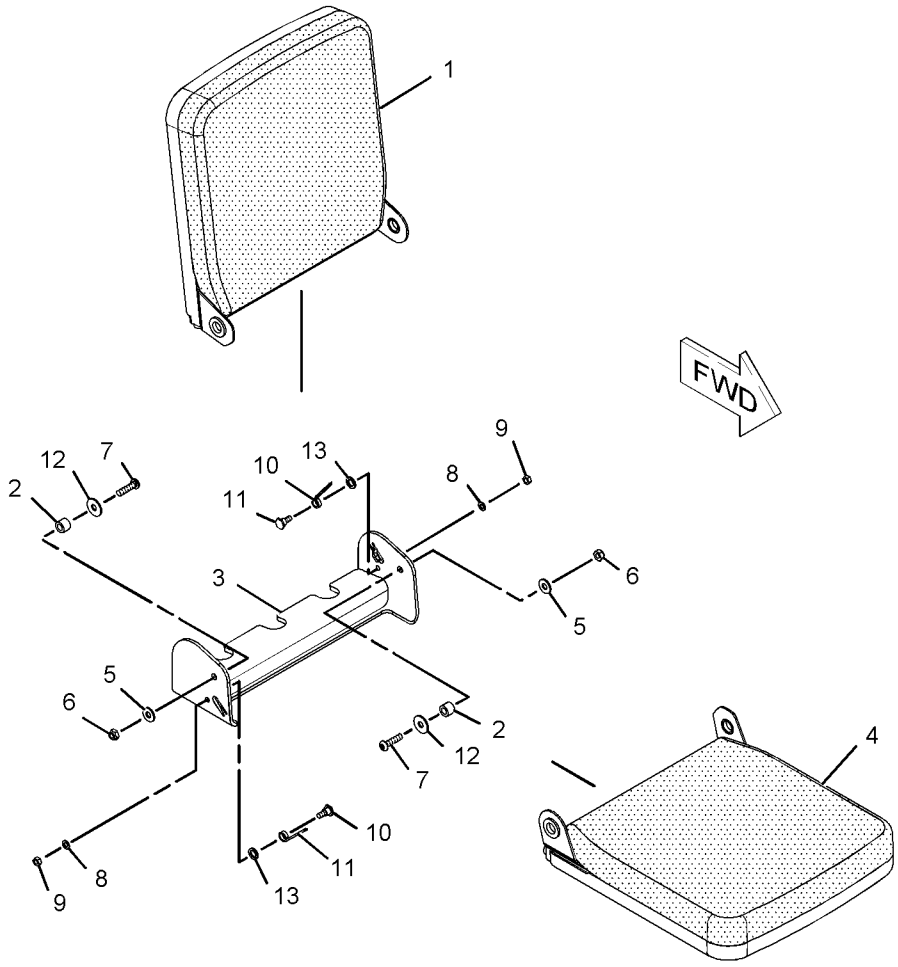

GRAPHIC #1 **<END>** g01147479

OPERATOR STATION

248-7511 SEAT GP-COMPANION

S/N: 4421-UP
PART OF 250-9976 SEAT GP
TYPE 2

SMCS-7312 **i02429926**

NOTE	REF NO	GRAPHIC REF	PART NUMBER	QTY	PART NAME 1 2 3 4 5 6 (PRODUCT LEVEL)	SEE PAGE
Y	1	1	**248-7500**	1	SEAT GP-COMPANION	1053
	2	1	**248-7509**	2	SPACER	
	3	1	**248-7513**	1	BRACKET AS	
Y	4	1	**255-2713**	1	SEAT GP-COMPANION	1056
C	5	1	**279-5626**	2	WASHER-SPRING	
C	6	1	**260-6707**	2	BOLT-SOCKET HEAD	
C	7	1	**6V-5839**	2	WASHER (11X21X2.5-MM THK)	
CM	8	1	**6V-7744**	2	LOCKNUT (M10X1.15-THD)	

C-CHANGE FROM PREVIOUS TYPE
M-METRIC PART
Y-SEPARATE ILLUSTRATION

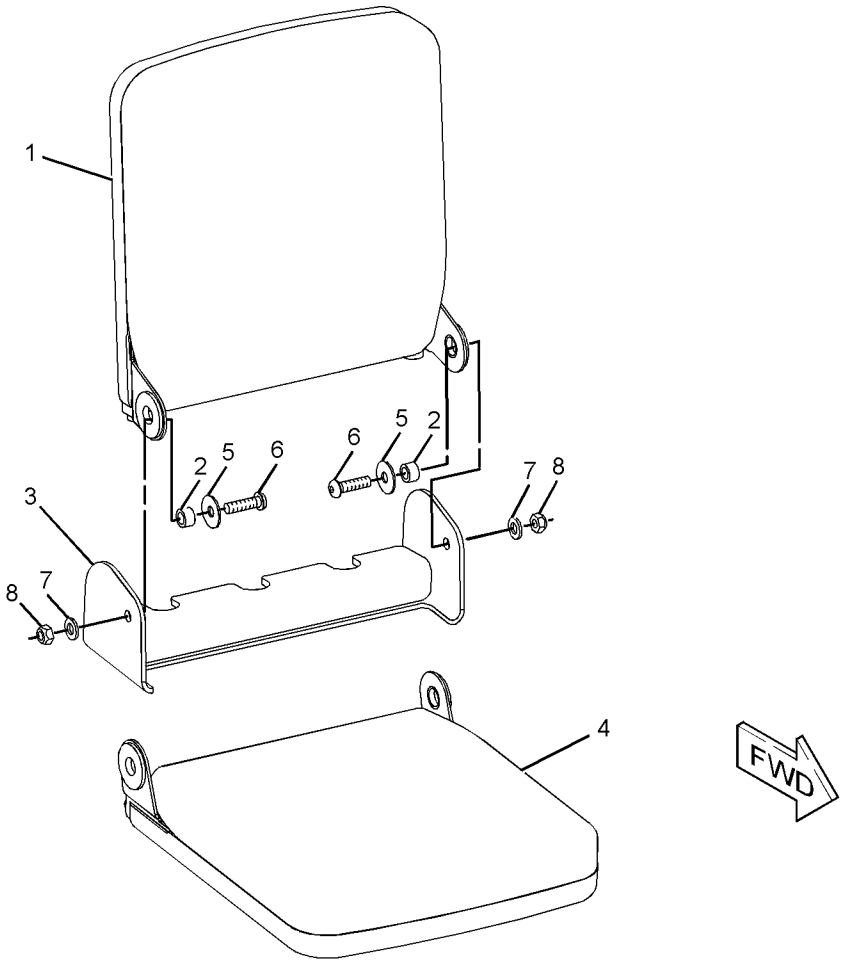

GRAPHIC #1 **<END>** g01212696

OPERATOR STATION

255-2713 SEAT GP-COMPANION

S/N: 4421-UP

PART OF 248-7511 SEAT GP-COMPANION

SMCS-7312 **i02279660**

NOTE	REF NO	GRAPHIC REF	PART NUMBER	QTY	PART NAME 1 2 3 4 5 6 (PRODUCT LEVEL)	SEE PAGE
	1	1	**255-2712**	1	COVER	
	2	1	**255-2714**	1	CUSHION AS	
	3	1	**266-3154**	1	PAN AS	
	4	1	**174-5807**	4	RIVET-POP	

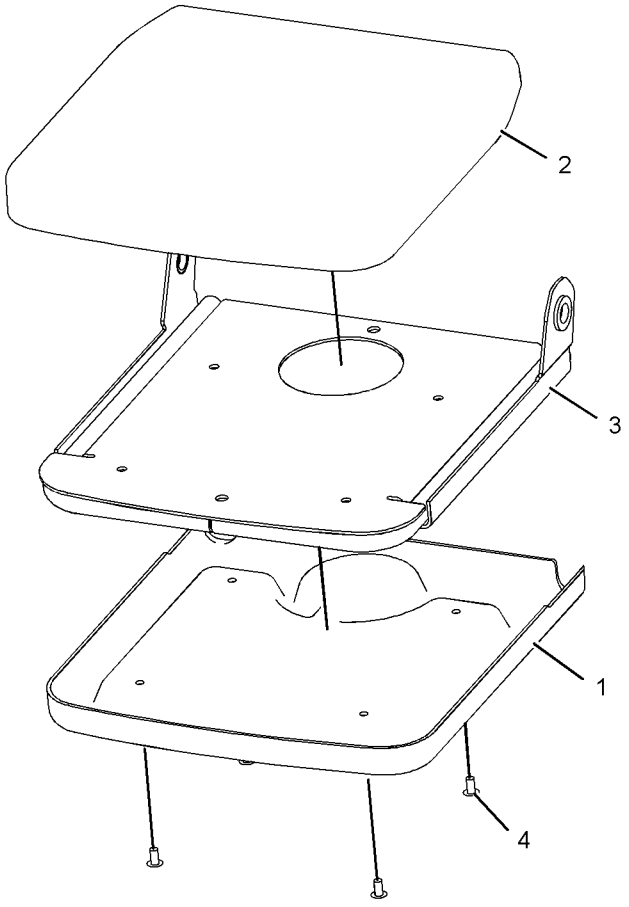

GRAPHIC #1 **<END>** g01145701

OPERATOR STATION

219-8090 SEAT GP-SUSPENSION

S/N: 4421-UP

PART OF 242-0341 CAB AR

SMCS-7324, 7336 **i02409873**

NOTE	REF NO	GRAPHIC REF	PART NUMBER	QTY	PART NAME 1 2 3 4 5 6 (PRODUCT LEVEL)	SEE PAGE
JZ	1	1		4	BLOCK-SLIDER	
J	2	1	**173-5787**	4	SETSCREW (1/4-20-THD)	
Y	3	1	**185-9726**	1	SEAT GP (CLOTH)	1051
Y	4	1	**277-8032**	1	SUSPENSION GP-SEAT	1067
J	5	1	**203-7703**	2	WASHER-HARD (10.2X22.22X2.38-MM THK)	
J	6	1	**4F-4879**	1	BOLT (3/8-16X0.5-IN)	
					AVAILABLE REPAIR KIT(S):	
J			**173-7035**		KIT-SLIDER BLOCK	

J-KIT MARKED J INCLUDES PARTS MARKED J
Y-SEPARATE ILLUSTRATION
Z-NOT SERVICED SEPARATELY

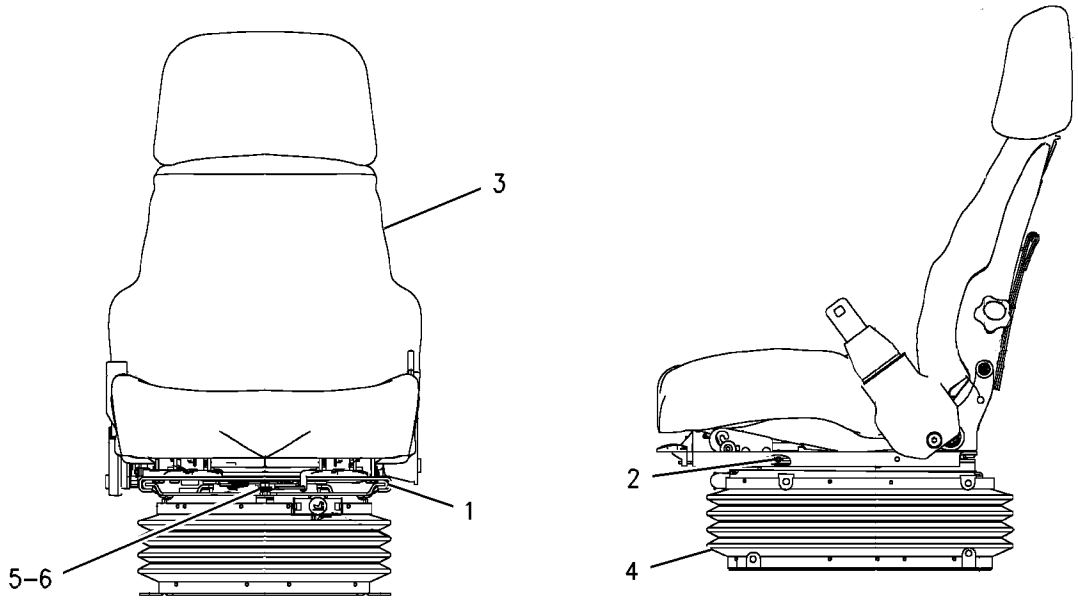

GRAPHIC #1 **<END>** g00909437

OPERATOR STATION

250-9873 SPRING GP-CAB DOOR

S/N: 4421-UP

PART OF 242-0341 CAB AR

SMCS-7308 **i02302744**

NOTE	REF NO	GRAPHIC REF	PART NUMBER	QTY	PART NAME 1 2 3 4 5 6 (PRODUCT LEVEL)	SEE PAGE
	1	1	**4D-9128**	1	WASHER	
	2	1	**4E-8318**	1	BEARING	
	3	1	**4E-8319**	1	BRACKET	
	4	1	**4E-8325**	1	CAM AS	
	5	1	**4E-8329**	1	SPACER (10.5X16.545X34-MM THK)	
	6	1	**4E-8338**	1	LEVER AS	
		1	**2K-2140**	1	SPACER (0.875X1.5X0.63-IN THK)	
	7	1	**4E-8340**	1	SPRING	
	8	1	**4H-3820**	1	SPRING-LATCH	
	9	1	**5P-0372**	1	LOCK PIN	
	10	1	**6D-3886**	1	BALL BEARING	
	11	1	**7P-4937**	1	BOSS	
	12	1	**8T-4766**	2	ROD END	
	13	1	**9R-5008**	4	SPACER (11X20X6-MM THK)	
	14	1	**113-9789**	1	ROD	
	15	1	**250-9876**	1	SHEET AS	
	16	1	**2D-9535**	1	GROMMET	
	17	1	**8N-5001**	1	EYEBOLT	
	18	1	**4E-8320**	1	PIN	
M	19	1	**5C-7261**	3	NUT (M8X1.25-THD)	
M	20	1	**6V-7357**	1	BOLT (M6X1X25-MM)	
M	21	1	**8T-3647**	1	BOLT (M8X1.25X80-MM)	
	22	1	**8T-4121**	8	WASHER-HARD (11X21X2.5-MM THK)	
M	23	1	**8T-4133**	9	NUT (M10X1.5 THD)	
M	24	1	**8T-4136**	5	BOLT (M10X1.5X25-MM)	
	25	1	**8T-4205**	1	WASHER-HARD (7.2X14.5X2-MM THK)	
	26	1	**8T-4222**	1	WASHER-PLATED (11X32X2.5-MM THK)	
	27	1	**8T-4224**	2	WASHER-HARD (8.8X16X2-MM THK)	
M	28	1	**8T-4908**	1	BOLT (M8X1.25X25-MM)	

M-METRIC PART

250-9873 **SPRING GP-CAB DOOR** *(contd.)* **i02302744**

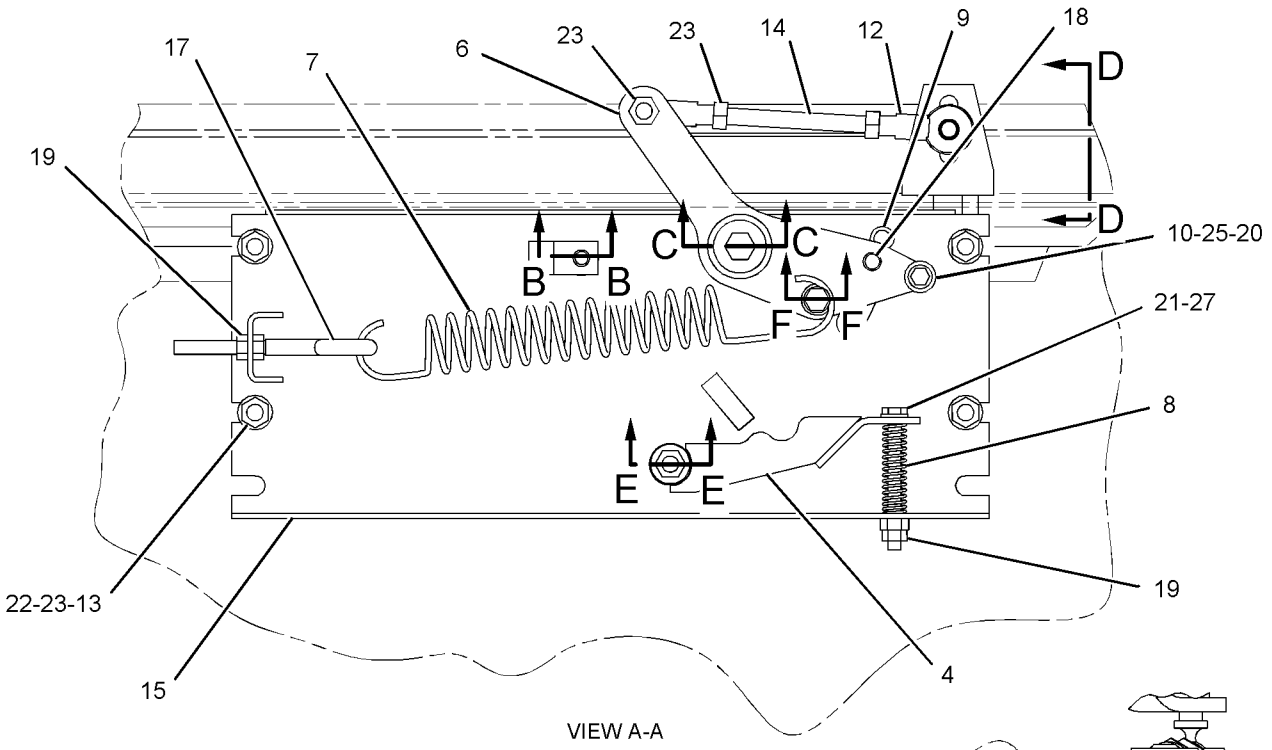

VIEW A-A

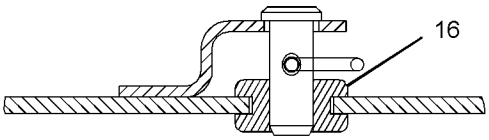

SECTION B-B

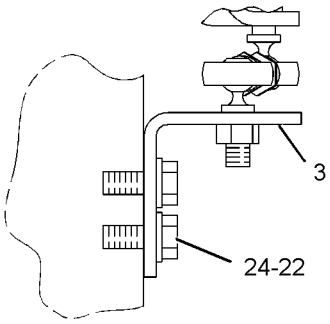

SECTION D-D

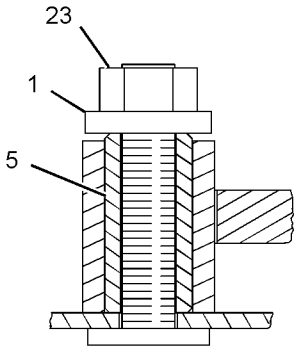

SECTION E-E

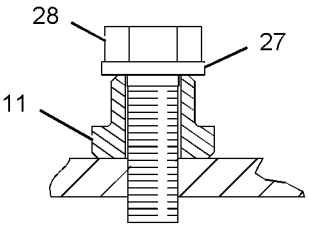

SECTION F-F

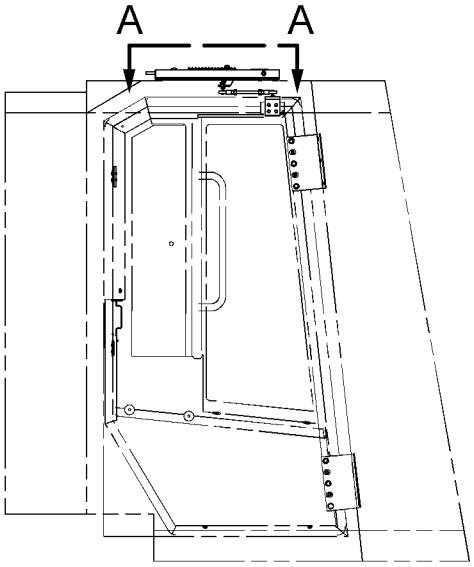

RIGHT SIDE VIEW

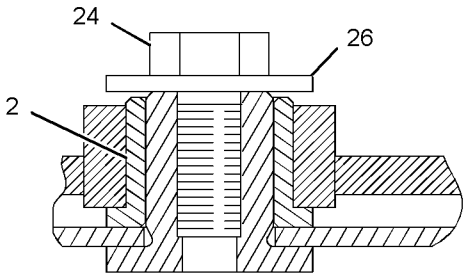

SECTION C-C

GRAPHIC #1 **<END>** g01142340

OPERATOR STATION

178-3111 SUPPORT GP-HYDRAULIC CONTROL

S/N: 4421-UP

PART OF 242-0341 CAB AR

SMCS-5258 **i02335869**

NOTE	REF NO	GRAPHIC REF	PART NUMBER	QTY	PART NAME 1 2 3 4 5 6 (PRODUCT LEVEL)	SEE PAGE
	1	1	**3K-4897**	1	PIN-SPRING	
	2	1	**9X-2027**	1	WASHER (11X18X2-MM THK)	
	3	1	**4E-6523**	1	SUPPORT-SLIDE	
	4	1	**4E-6526**	1	CUSHION AS (RH)	
	5	1	**4E-8722**	4	NUT	
	6	2	**4E-9173**	2	SHAFT-CONTROL	
	7	1	**4E-9174**	2	BEARING	
	8	2	**5P-5454**	1	ASHTRAY	
	9	2	**5P-5824**	1	HOLDER	
M	10	1	**6V-9327**	4	SETSCREW-SOCKET	
	11	1	**7V-0445**	1	SPRING	
	12	1	**7X-3310**	1	KNOB-BALL	
	13	2	**7X-0575**	4	WASHER-HARD (10.2X22.5X5-MM THK)	
	14	1	**9U-0952**	1	PIN	
	15	1	**9U-0953**	1	GUIDE	
	16	1	**9U-0954**	1	STUD	
	17	1	**9U-0955**	1	PIN	
	18	1	**9U-0958**	1	SLIDER	
	19	1	**9U-3925**	4	RING-RETAINING	
	20	2	**9U-3926**	6	STOP	
	21	2	**9U-3927**	1	BEARING	
	22	1	**9U-4551**	1	LEVER AS	
B	23	2	**137-6841**	2	SHIM (0.2-MM THK)	
	24	2	**211-4942**	2	KNOB AS	
	25	1	**176-3894**	1	BRACKET AS	
	26	1	**176-3895**	1	BRACKET AS	
	27	1	**208-1014**	1	COVER	
	28	1	**9X-2038**	2	WASHER (7X19X2-MM THK)	
	29	2	**178-3114**	1	CUSHION AS	
M	30	1	**5C-7261**	1	NUT (M8X1.25-THD)	
M	31	2	**5C-9553**	4	BOLT (M6X1X16-MM)	
M	32	1	**8T-4189**	1	BOLT (M8X1.25X20-MM)	
M	33	2	**8T-4195**	4	BOLT (M10X1.5X30-MM)	
M	34	1	**8T-4200**	2	BOLT (M8X1.25X16-MM)	
	35	2	**8T-4205**	4	WASHER-HARD (7.2X14.5X2-MM THK)	
	36	1	**8T-4224**	3	WASHER-HARD (8.8X16X2-MM THK)	
M	37	1	**8T-4908**	1	BOLT (M8X1.25X25-MM)	
M	38	1	**9X-2044**	12	SCREW-TRUSS HEAD (M6X1X16-MM)	
	39	1	**208-1015**	1	BRACKET AS	
M		1	**6V-9632**	1	NUT-WELD (M6X1-THD)	
	40	1	**203-0328**	1	SPACER (16X19X9-MM THK)	

B-USE AS REQUIRED
M-METRIC PART

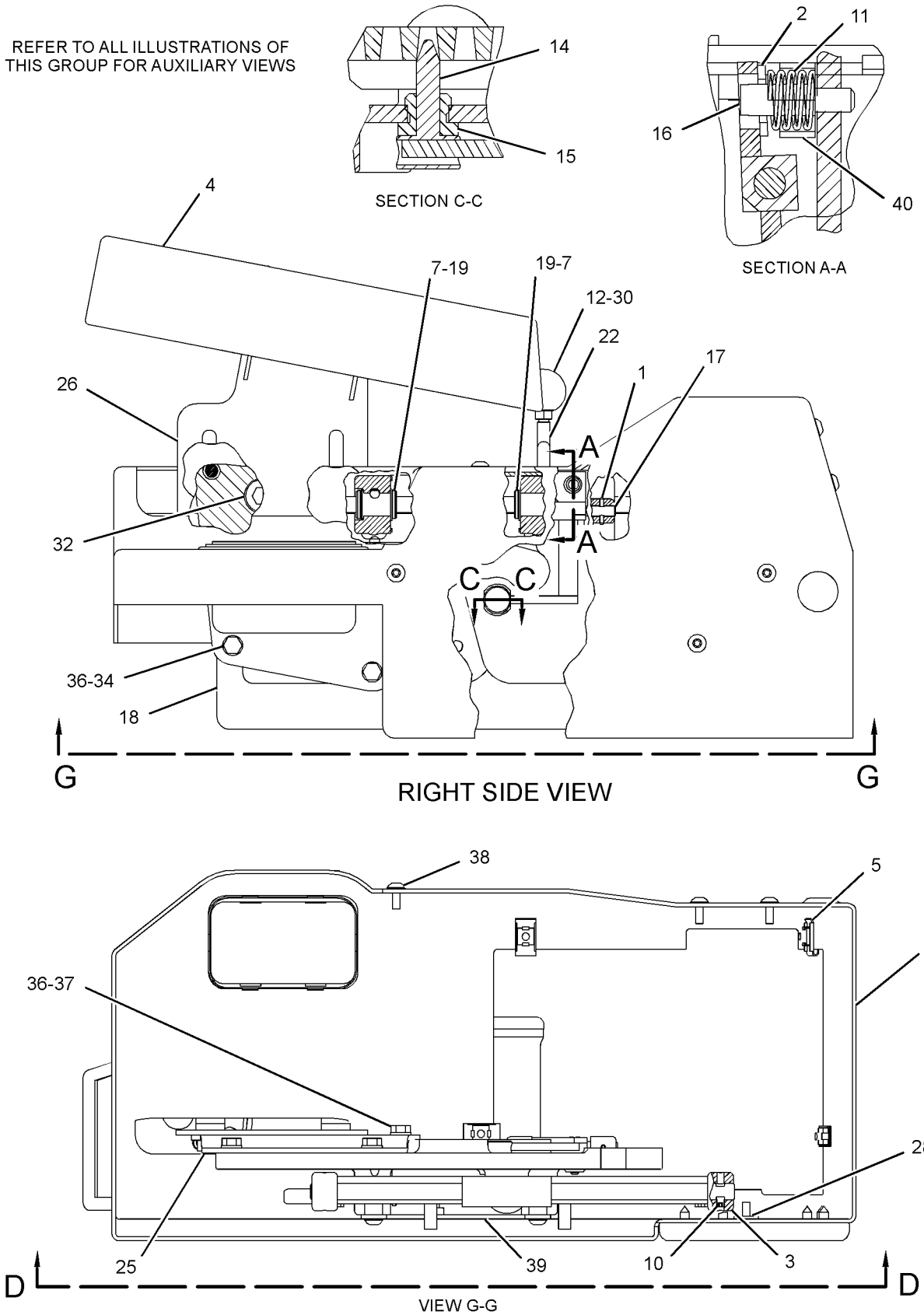

GRAPHIC #1

g01203127

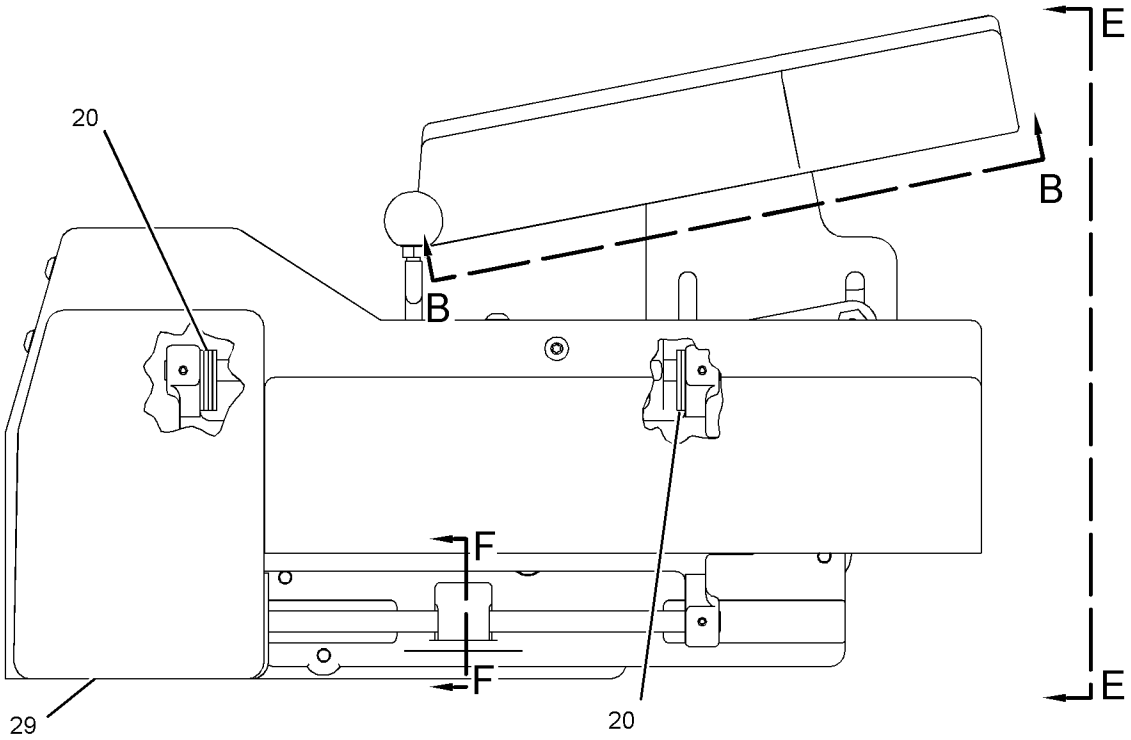

SECTION D-D

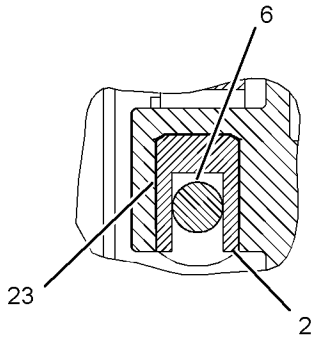

SECTION F-F

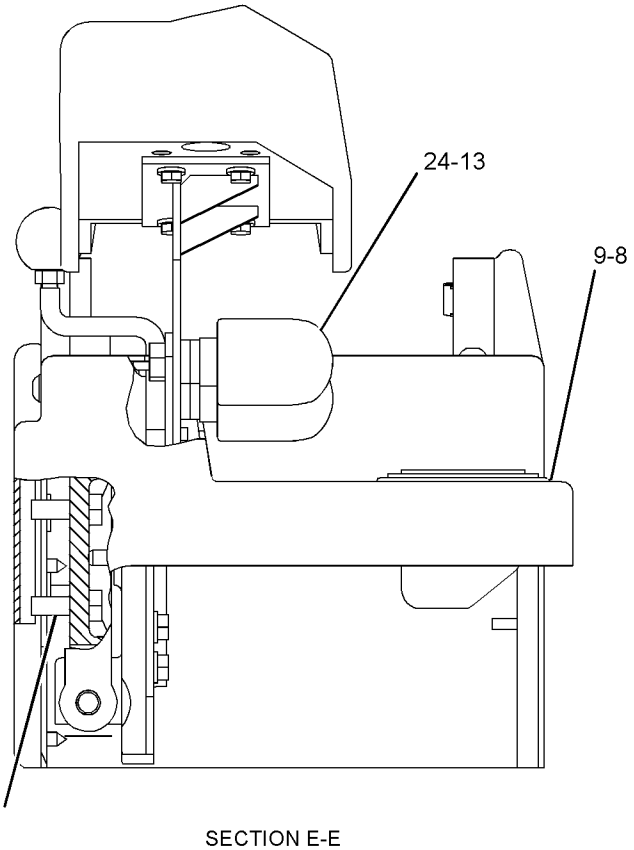

SECTION E-E

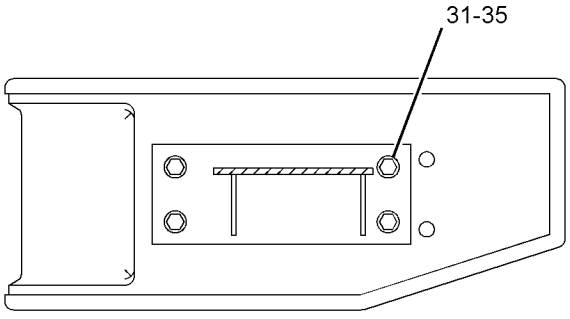

SECTION B-B

GRAPHIC #2 **<END>** g01203129

OPERATOR STATION

178-3904 SUPPORT GP-SEAT

S/N: 4421-UP

PART OF 242-0341 CAB AR

SMCS-7321 **i02085764**

NOTE	REF NO	GRAPHIC REF	PART NUMBER	QTY	PART NAME 1 2 3 4 5 6 (PRODUCT LEVEL)	SEE PAGE
	1	1	**178-3905**	1	BRACKET AS	
M		1	**6V-9632**	2	NUT-WELD (M6X1-THD)	
C	2	1	**171-9683**	1	BRACKET AS	
M	3	1	**168-4510**	4	BOLT (M10X1.5X70-MM)	
	4	1	**8T-4121**	4	WASHER-HARD (11X21X2.5-MM THK)	

C-CHANGE FROM PREVIOUS TYPE
M-METRIC PART

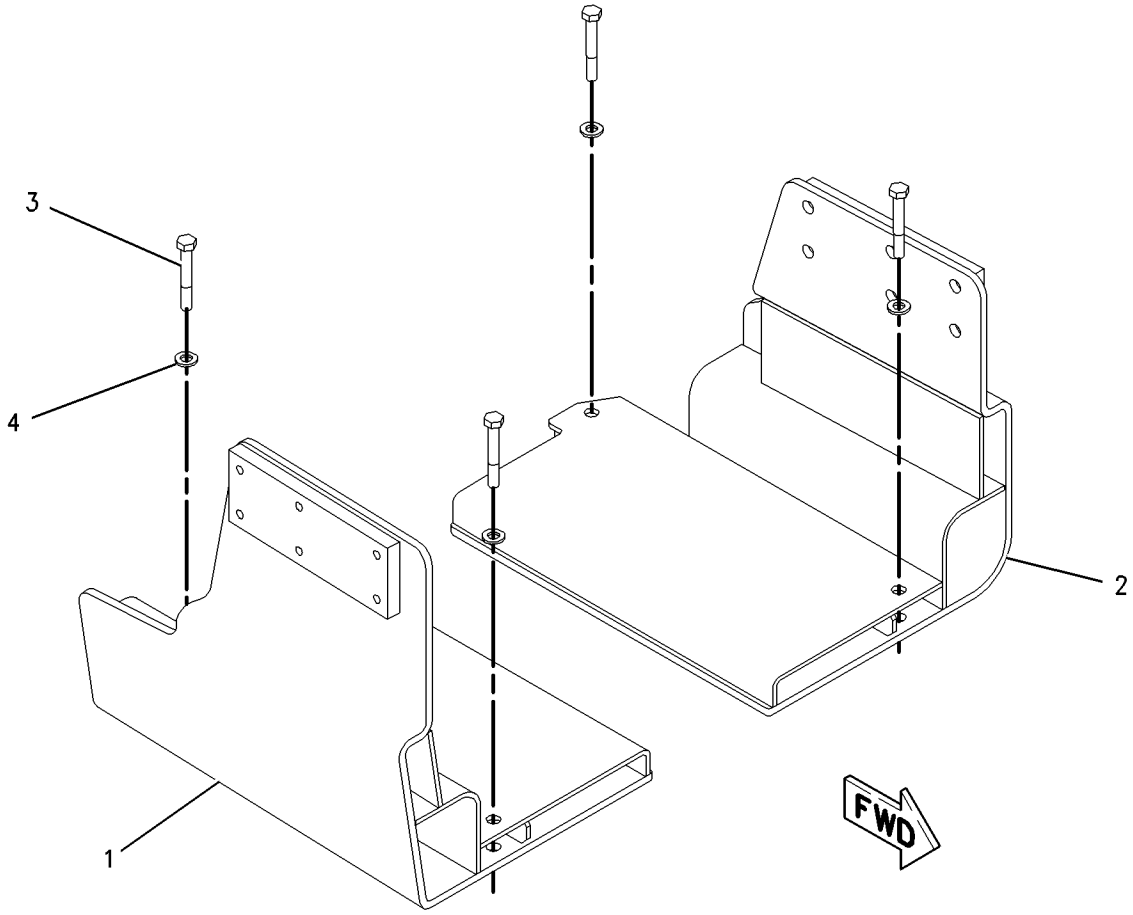

GRAPHIC #1 **<END>** g00851604

OPERATOR STATION

171-3897 SUPPORT GP-STEERING CONTROL

S/N: 4421-UP

PART OF 242-0341 CAB AR

SMCS-5258 **i02346760**

NOTE	REF NO	GRAPHIC REF	PART NUMBER	QTY	PART NAME 1 2 3 4 5 6 (PRODUCT LEVEL)	SEE PAGE
	1	2	**3G-4711**	1	SPRING	
B	2	2	**4B-4276**	8	WASHER (7X16X1.6-MM THK)	
	3	1	**4E-6335**	1	CUSHION AS (LH)	
	4	2	**4E-6439**	1	LEVER AS	
	5	2	**4E-6444**	1	ROD	
	6	2	**4E-6445**	1	PIN	
	7	2	**4E-6446**	1	GUIDE	
	8	2	**4E-6523**	1	SUPPORT-SLIDE	
	9	2	**4E-7163**	1	SLIDER	
	10	1	**4E-8722**	5	NUT	
	11	2	**4E-9173**	2	SHAFT-CONTROL	
	12	2	**4E-9174**	2	BEARING	
	13	2	**6E-0923**	1	SPACER (15.2-MM THK)	
	14	2	**9U-3925**	4	RING-RETAINING	
	15	2	**9U-3926**	6	STOP	
	16	2	**9U-3927**	1	BEARING	
B	17	2	**137-6841**	2	SHIM (0.2-MM THK)	
	18	1	**166-4731**	1	HOUSING	
	19	1	**166-4732**	1	HOUSING	
	20	1	**170-0696**	1	BRACKET AS	
M	20A	1	**6V-9632**	2	NUT-WELD (M6X1-THD)	
	21	1	**170-0971**	1	CUSHION AS	
	22	1	**170-0977**	1	BRACKET AS	
	23	2	**170-0979**	1	PLATE AS	
M	23A	2	**8T-3490**	2	NUT-WELD (M10X1.5-THD)	
	24	1	**211-4942**	2	KNOB AS	
	25	1	**170-8540**	1	BRACKET AS	
M	25A	1	**6V-9632**	2	NUT-WELD (M6X1-THD)	
	26	2	**013-8502**	1	LOCKWASHER	
M	27	2	**095-0758**	1	SCREW-MACHINE (M6X1X14-MM)	
M	28	2	**098-5747**	1	NUT-THIN (M16X2-THD)	
	29	2	**1J-5799**	1	PIN-SPRING	
M	30	1	**5C-7261**	1	NUT (M8X1.25-THD)	
M	31	2	**6V-9327**	4	SETSCREW-SOCKET	
M	32	2	**7X-2534**	1	BOLT (M6X1X50-MM)	
	33	1	**7X-3310**	1	KNOB-BALL	
M	34	2	**8T-4134**	1	NUT (M6X1-THD)	
M	35	1	**8T-4138**	4	BOLT (M6X1X20-MM)	
M	36	1	**8T-4189**	2	BOLT (M8X1.25X20-MM)	
M	37	2	**8T-4195**	6	BOLT (M10X1.5X30-MM)	
M	38	2	**8T-4200**	2	BOLT (M8X1.25X16-MM)	
	39	1	**8T-4205**	4	WASHER-HARD (7.2X14.5X2-MM THK)	
	40	1,2	**8T-4224**	4	WASHER-HARD (8.8X16X2-MM THK)	
M	41	2	**8T-4244**	1	NUT (M12X1.75-THD)	
	42	1	**9X-2038**	11	WASHER (7X19X2-MM THK)	
M	43	1	**9X-2043**	11	SCREW-TRUSS HEAD (M6X1X14-MM)	

B-USE AS REQUIRED
M-METRIC PART

171-3897 **SUPPORT GP-STEERING CONTROL** *(contd.)* **i02346760**

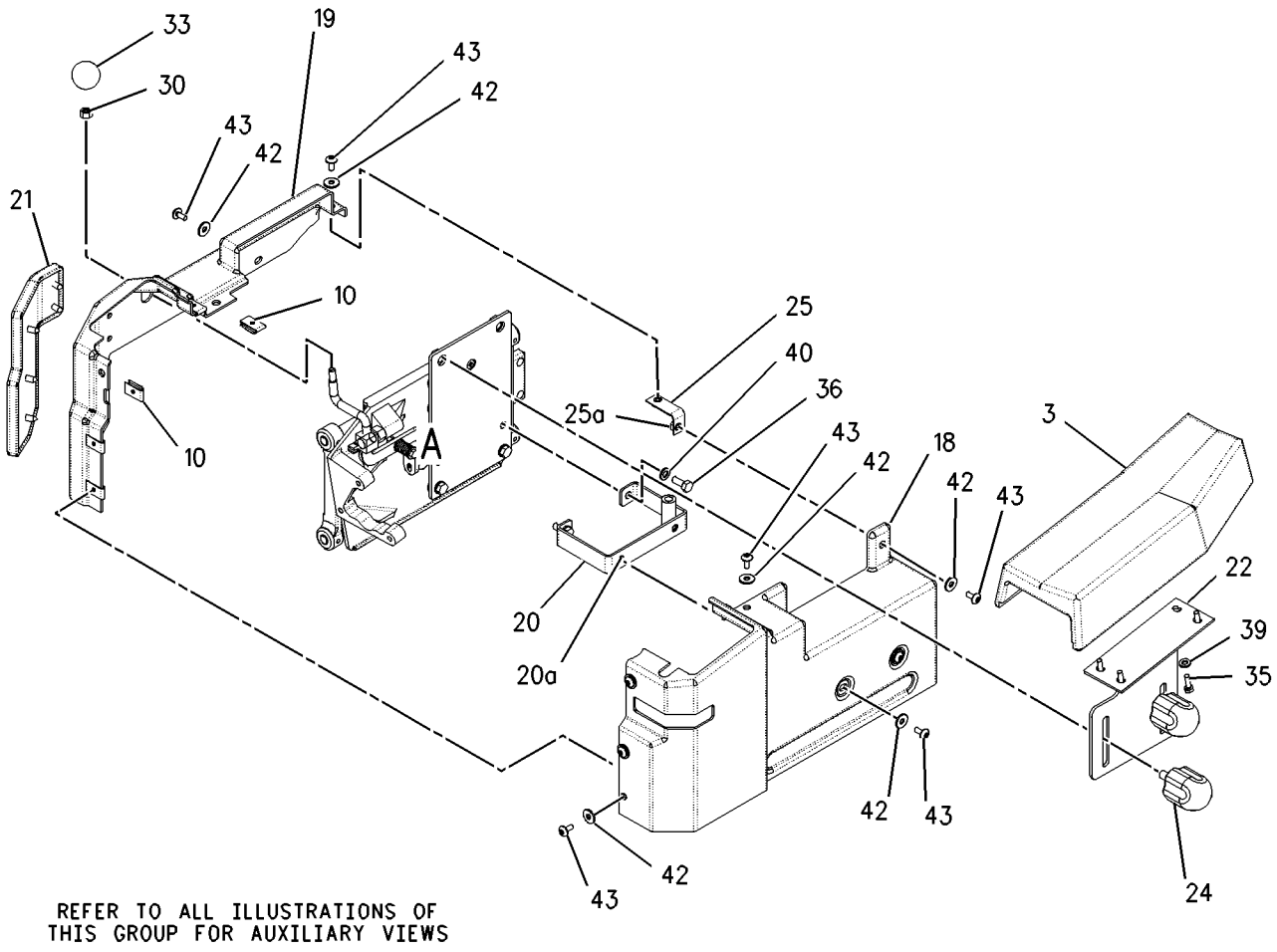

GRAPHIC #1 g00835251

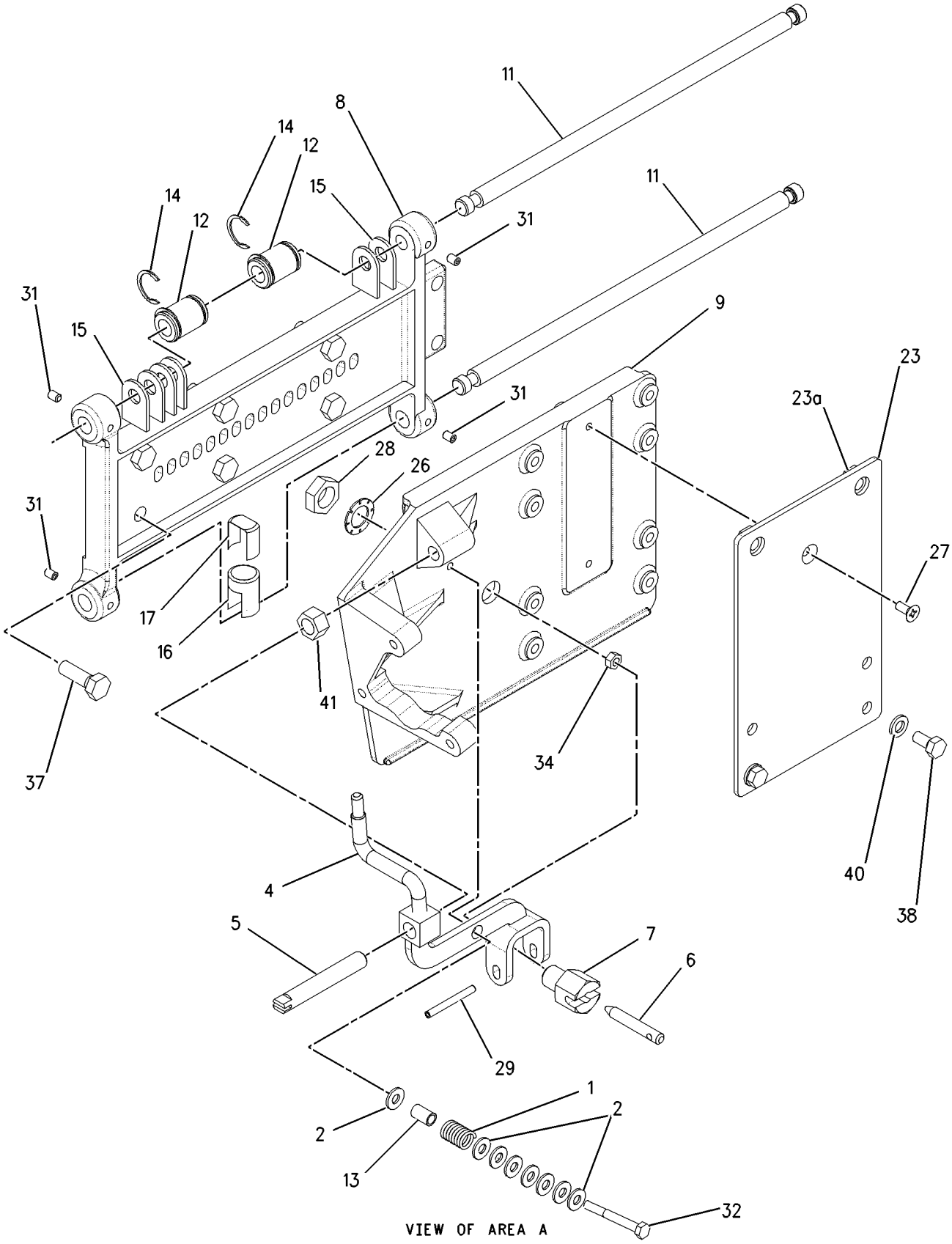

GRAPHIC #2 **<END>** g00742840

OPERATOR STATION

277-8032 SUSPENSION GP-SEAT—AIR

S/N: 4421-UP

PART OF 219-8090 SEAT GP-SUSPENSION

SMCS-7324 **i02396917**

NOTE	REF NO	GRAPHIC REF	PART NUMBER	QTY	PART NAME 1 2 3 4 5 6 (PRODUCT LEVEL)	SEE PAGE
	1	1	**3P-9900**	5	WASHER (10.5X30X3-MM THK)	
	2	1	**4B-4278**	2	WASHER (10.2X20.5X1.6-MM THK)	
	3	1	**4V-8577**	12	BEARING	
	4	1	**8L-8413**	1	STRAP-CABLE	
	5	1	**101-0003**	33	FASTENER	
	6	1	**145-0326**	1	FILM-INSTRUCTION (SEAT ADJUSTMENT)	
	7	1	**164-1234**	1	PLATE	
	8	1	**169-7380**	1	BOLT-SOCKET HEAD (3/8-16X0.375-IN)	
	9	1	**186-5107**	2	SCREW (NO 8X1.25-IN)	
	10	1	**192-7752**	4	SHAFT AS	
	11	1	**192-7755**	1	HOUSING AS	
	12	1	**192-7760**	1	SHAFT	
	13	1	**192-7767**	1	SCISSORS AS	
	14	1	**192-7783**	1	TOGGLE AS	
	15	1	**192-7787**	1	TOGGLE AS	
	16	1	**192-7790**	1	HOUSING AS	
	17	1	**192-7795**	1	BOOT	
	18	1	**192-7805**	1	HARNESS AS-VALVE (SEAT AIR COMPRESSOR)	
		1	**102-8802**	1	KIT-RECEPTACLE (2-PIN)	
	19	1	**192-7810**	1	SPRING AS-AIR	
		1	**5P-4423**	1	ELBOW	
	20	1	**192-7812**	1	BOLT-SHOULDER	
	21	1	**192-7820**	3	BUMPER	
	22	1	**192-7822**	1	SHAFT	
	23	1	**237-3943**	1	BRACKET	
Y	24	1	**237-3970**	1	AIR COMPRESSOR GP-SEAT	951
	25	1	**1H-8296**	1	SCREW-MACHINE (3/8-16X0.52-IN)	
	26	1	**2K-4973**	8	LOCKNUT (3/8-16-THD)	
	27	1	**3J-4818**	1	LOCKWASHER	
M	28	1	**5C-2890**	3	NUT (M6X1-THD)	
	29	1	**8T-9371**	1	BOLT (3/8-16X0.5-IN)	
E	30	1	**211-5358**		CONDUIT (26.7-CM)	
E	30A	1	**211-5358**		CONDUIT (35.6-CM)	
D	31	1	**5P-6010**		TUBE (0.267-M)	
D	31A	1	**5P-6010**		TUBE (0.356-M)	
					AVAILABLE REPAIR KIT(S):	
			192-7799	1	KIT-AIR VALVE	
					(INCLUDES FITTING, LOCKWASHER, NUT, VALVE & KNOB AS)	
			192-7848	1	KIT-SHOCK ABSORBER	
					(SHOCK ABSORBER, BEARINGS, WASHERS, BOLTS, LOCKNUT, & LOCKWASHER)	
			211-9294	1	KIT-TETHER	
					(INCLUDES TETHER)	

D-ORDER BY THE METER
E-ORDER BY THE CENTIMETER
M-METRIC PART
Y-SEPARATE ILLUSTRATION

277-8032 **SUSPENSION GP-SEAT** *(contd.)* **i02396917**

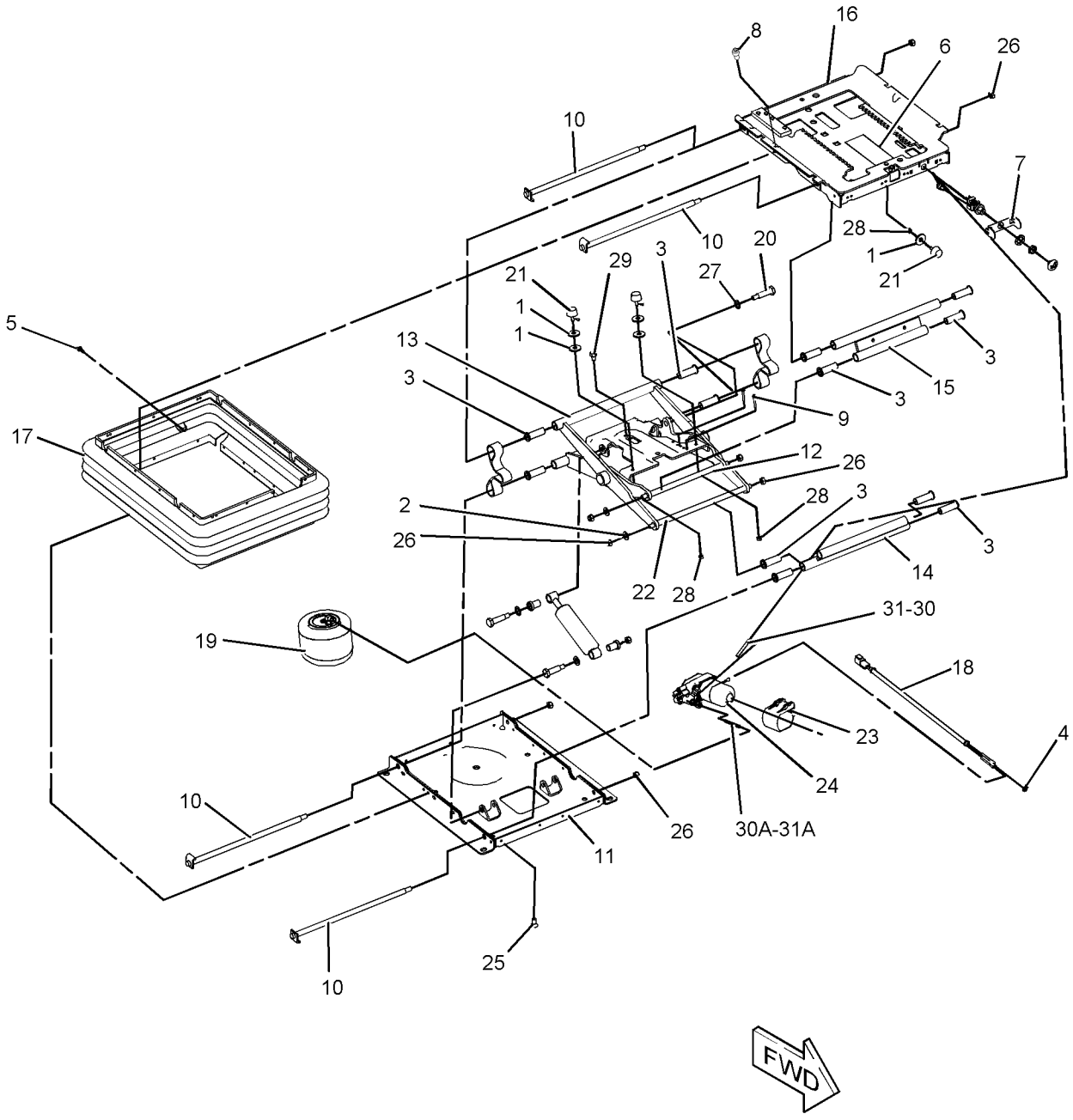

GRAPHIC #1 **<END>** g01218573

OPERATOR STATION

242-1915 WASHER GP-WINDOW

S/N: 4421-UP

PART OF 242-1901 WIPER & WASHER GP-WINDOW

SMCS-7306 **i02148157**

NOTE	REF NO	GRAPHIC REF	PART NUMBER	QTY	PART NAME 1 2 3 4 5 6 (PRODUCT LEVEL)	SEE PAGE
	1	1	**7T-8890**	4	PUMP AS-WASHER	
	2	1	**8E-8292**	1	CAP-VENTED (WINDOW WASHER)	
	3	1	**8T-5913**	4	SCREEN-FILTER	
	4	1	**8T-5914**	4	GROMMET	
	5	1	**242-1921**	1	RESERVOIR	

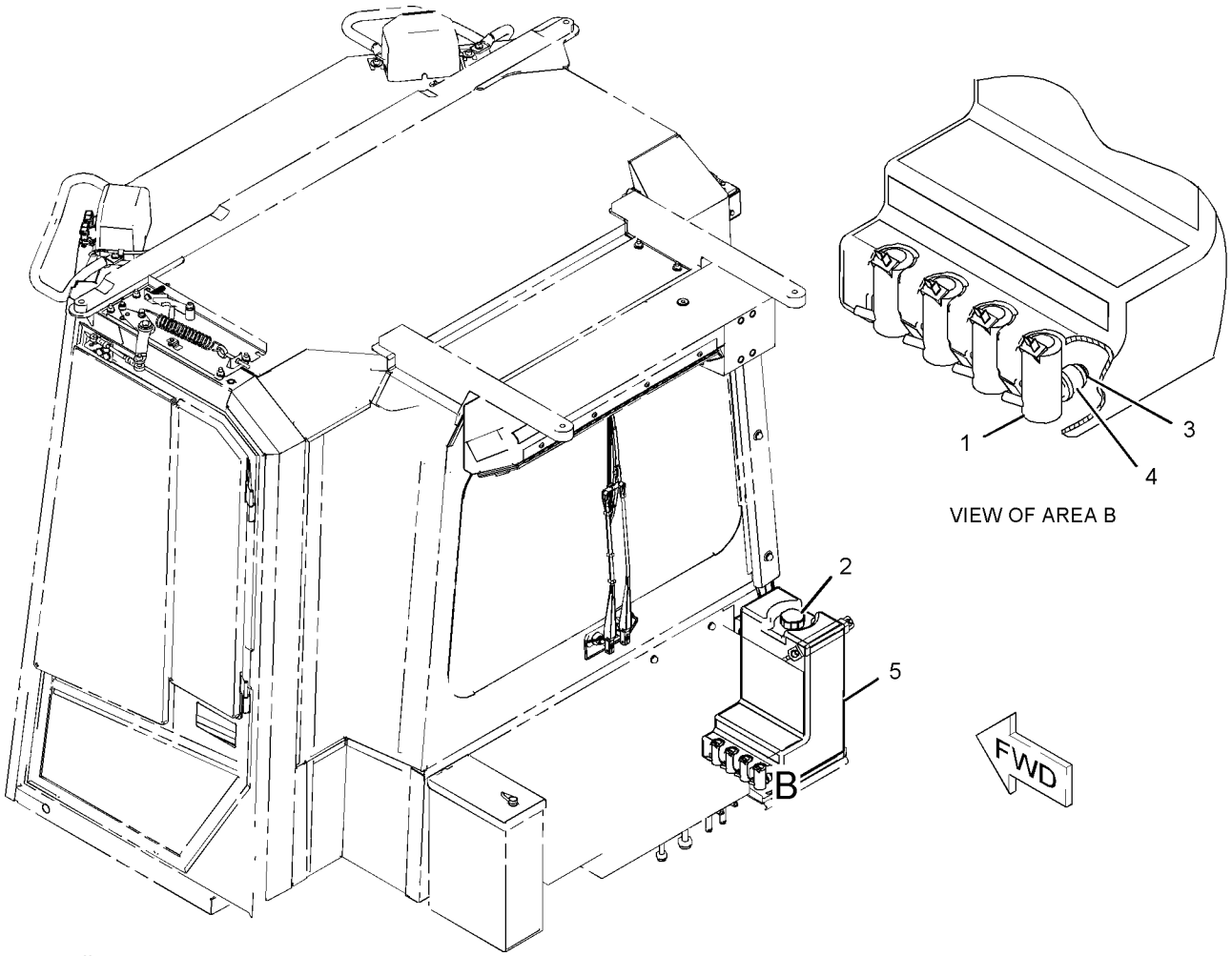

GRAPHIC #1 **<END>** g01091336

OPERATOR STATION

242-1901 WIPER & WASHER GP-WINDOW—FRONT, REAR

S/N: 4421-UP

PART OF 242-0341 CAB AR

SMCS-7305, 7306 **i02334611**

NOTE	REF NO	GRAPHIC REF	PART NUMBER	QTY	PART NAME 1 2 3 4 5 6 (PRODUCT LEVEL)	SEE PAGE
	1	1	**3S-2093**	6	STRAP-CABLE	
	2	1	**6V-5851**	1	BLADE AS-WIPER (FRONT)	
	3	1	**6V-7419**	1	BLADE AS-WIPER (FRONT)	
	4	1	**8T-5400**	4	CONNECTOR	
	5	1	**9N-1713**	2	WASHER	
	6	1	**9U-0838**	1	MAT	
	7	1	**155-5779**	2	WIPER PIVOT AS	
Y	8	1	**155-5784**	1	MOTOR GP-WINDOW WIPER (24-VOLT) (REAR)	1016
Y	9	1	**185-2154**	1	MOTOR GP-WINDOW WIPER (24-VOLT) (FRONT)	1017
	10	1	**185-2155**	1	ARM AS-WIPER	
Y	11	1	**214-7635**	1	ARM GP-WINDOW WIPER (FRONT)	956
	12	1	**242-1912**	1	SHEET AS	
M		1	**8T-3490**	1	NUT-WELD (M10X1.5-THD)	
		1	**8Y-3925**	1	BOSS (3/8-16X1.2-IN)	
	13	1	**242-1913**	1	ANGLE AS	
	14	1	**242-1914**	1	ROD	
Y	15	1	*242-1915*	1	WASHER GP-WINDOW	1069
	16	1	**5P-8525**	1	GROMMET	
	17	1	**6V-3265**	1	CLIP	
M	19	1	**6V-7357**	2	BOLT (M6X1X25-MM)	
	20	1	**7N-3718**	2	CLIP	
	21	1	**8T-4121**	10	WASHER-HARD (11X21X2.5-MM THK)	
M	22	1	**8T-4133**	4	NUT (M10X1.15-THD)	
M	23	1	**8T-4137**	2	BOLT (M10X1.5X20-MM)	
M	24	1	**8T-4191**	4	BOLT (M10X1.5X16-MM)	
E	25	1	**144-0195**		HOSE (83-CM EACH)	
E	25A	1	**144-0195**		HOSE (122-CM)	
E	25B	1	**144-0195**		HOSE (234-CM)	

E-ORDER BY THE CENTIMETER
M-METRIC PART
Y-SEPARATE ILLUSTRATION

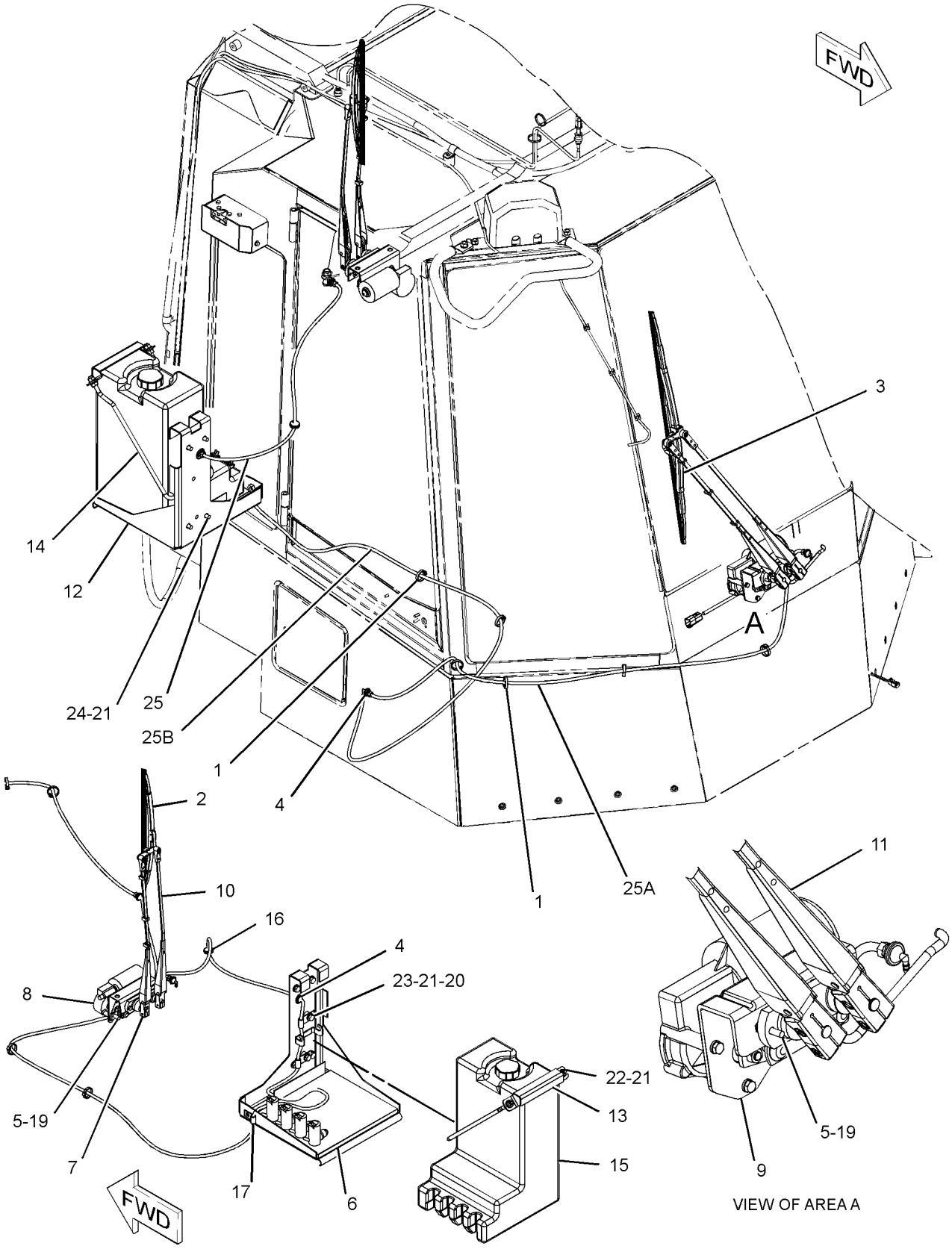

GRAPHIC #1 **<END>** g01165417

OPERATOR STATION

214-7636 WIPER GP-WINDOW

S/N: 4421-UP

PART OF 242-8018 WIPER GP-WINDOW

SMCS-7305 **i01964448**

NOTE	REF NO	GRAPHIC REF	PART NUMBER	QTY	PART NAME 1 2 3 4 5 6 (PRODUCT LEVEL)	SEE PAGE
M	1	1	**191-8921**	4	BOLT-SOCKET HEAD (M6X1X25MM)	
	2	1	**227-7392**	4	WASHER (6.3X10.3X0.4MM THK)	
M	3	1	**6V-8225**	4	NUT (M6X1 THD)	
	4	1	**136-3190**	1	NOZZLE AS-WASHER	
	5	1	**136-3188**	3	CLIP	

M-METRIC PART

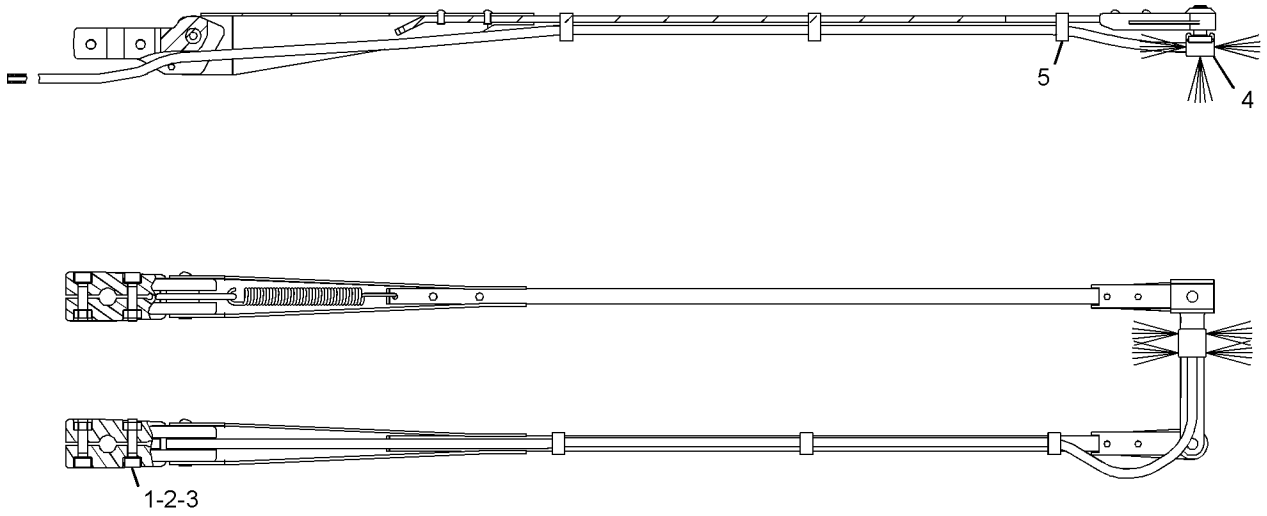

GRAPHIC #1 **<END>** g01040138

242-8018 WIPER GP-WINDOW—FRONT QUARTER

S/N: 4421-UP

PART OF 242-0341 CAB AR

SMCS-7305 **i02334529**

NOTE	REF NO	GRAPHIC REF	PART NUMBER	QTY	PART NAME 1 2 3 4 5 6 (PRODUCT LEVEL)	SEE PAGE
	1	2,3	**3V-3263**	4	CONNECTOR	
	2	2	**6V-7419**	2	BLADE AS-WIPER	
Y	3	2	**190-3445**	1	MOTOR GP-WINDOW WIPER (RIGHT FRONT QUARTER)	1018
Y	4	2	**190-3446**	1	MOTOR GP-WINDOW WIPER (LEFT FRONT QUARTER)	1019
	5	2	**204-3561**	2	COVER	
Y	6	2	**214-7636**	2	WIPER GP-WINDOW	1072
	7	1	**9U-0124**	1	CHANNEL	
	8	1	**9U-0125**	1	STRIP AS	
	9	1,3	**119-5708**	2	CLIP	
	10	3	**2V-3216**	2	CLIP	
	11	2	**4K-8864**	3	CLIP	
	12	1,3	**5P-9297**	10	CLIP	
	13	2	**6V-3265**	6	CLIP	
	14	2	**7N-3718**	1	CLIP	
	15	1,2,3	**8T-4121**	13	WASHER-HARD (11X21X2.5-MM THK)	
M	16	3	**8T-4133**	4	NUT (M10X1.5 THD)	
M	17	2,3	**8T-4137**	5	BOLT (M10X1.5X20-MM)	
M	18	1	**8T-4191**	3	BOLT (M10X1.5X16-MM)	
	19	3	**8T-4222**	4	WASHER-PLATED (11X32X2.5-MM THK)	
M	20	3	**9X-2042**	4	SCREW-TRUSS HEAD (M6X1X12-MM)	
E	21	2	**144-0195**		HOSE (96.8-CM)	
E	21A	2	**144-0195**		HOSE (84.5-CM)	
E	21B	3	**144-0195**		HOSE (355.4-CM)	
E	21C	3	**144-0195**		HOSE (408.3-CM)	
M	22	1,3	**8T-4136**	5	BOLT (M10X1.5X25-MM)	

E-ORDER BY THE CENTIMETER
M-METRIC PART
Y-SEPARATE ILLUSTRATION

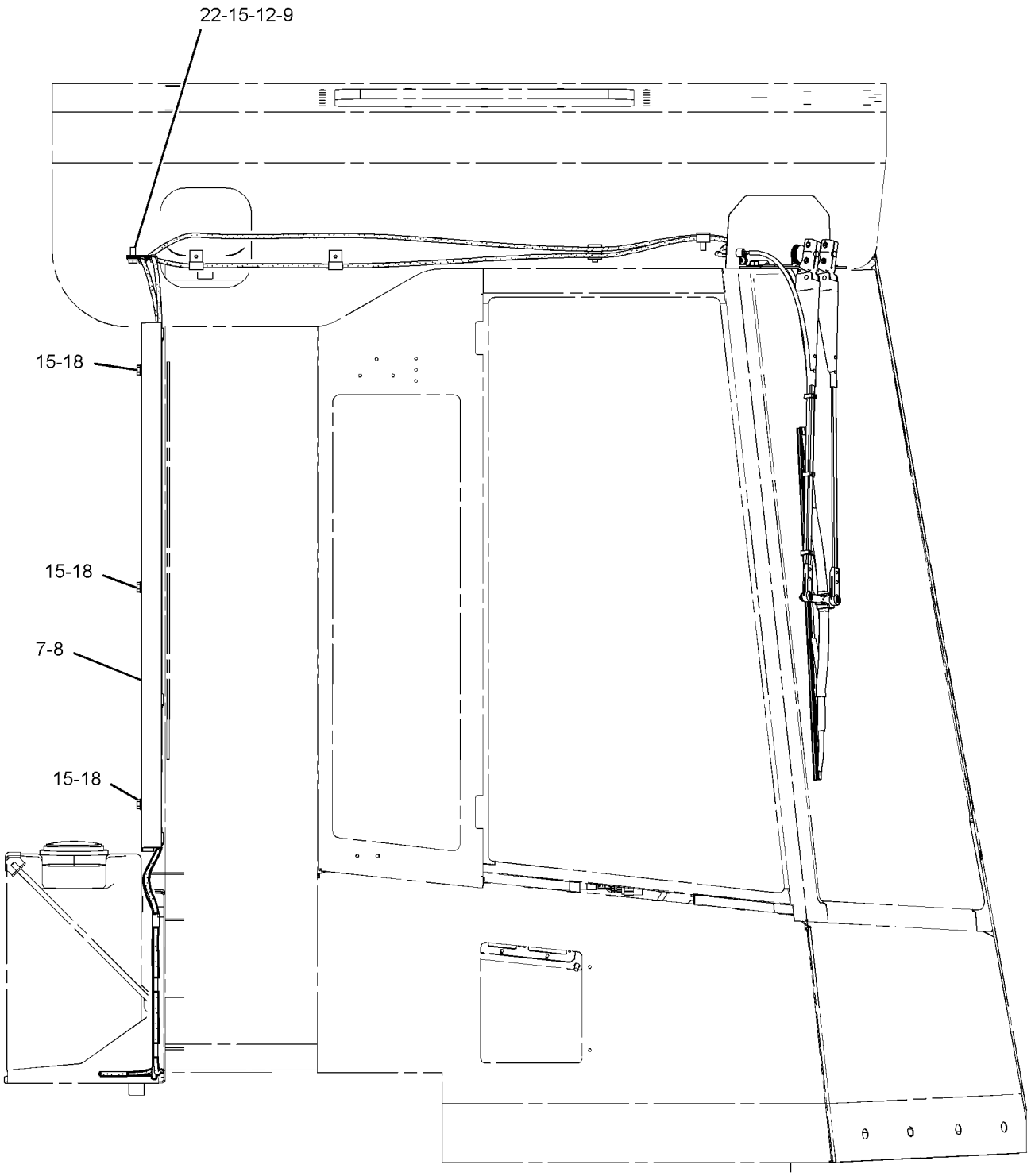

RIGHT SIDE VIEW

GRAPHIC #1 g01167584

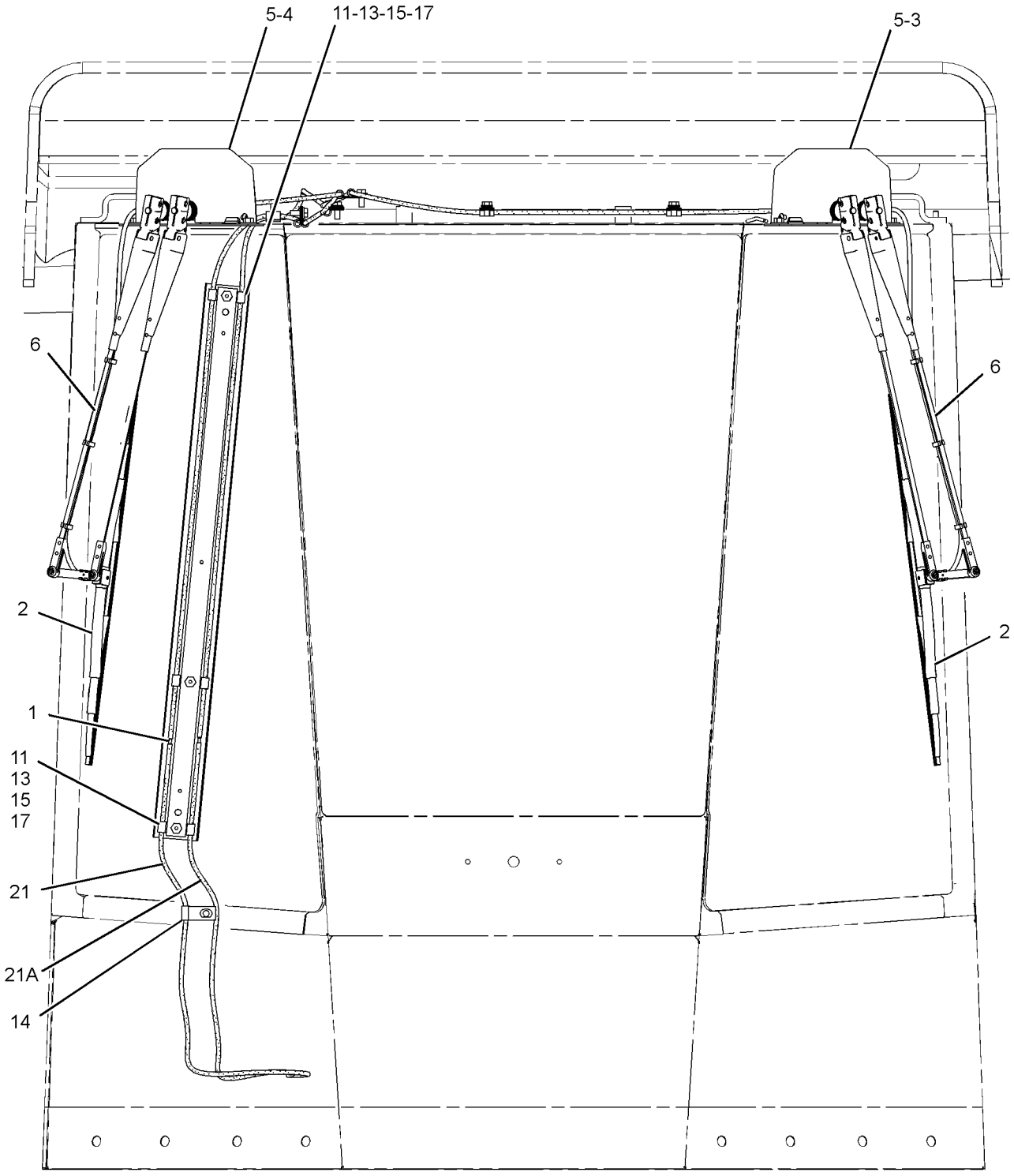

FRONT VIEW

GRAPHIC #2 g01167585

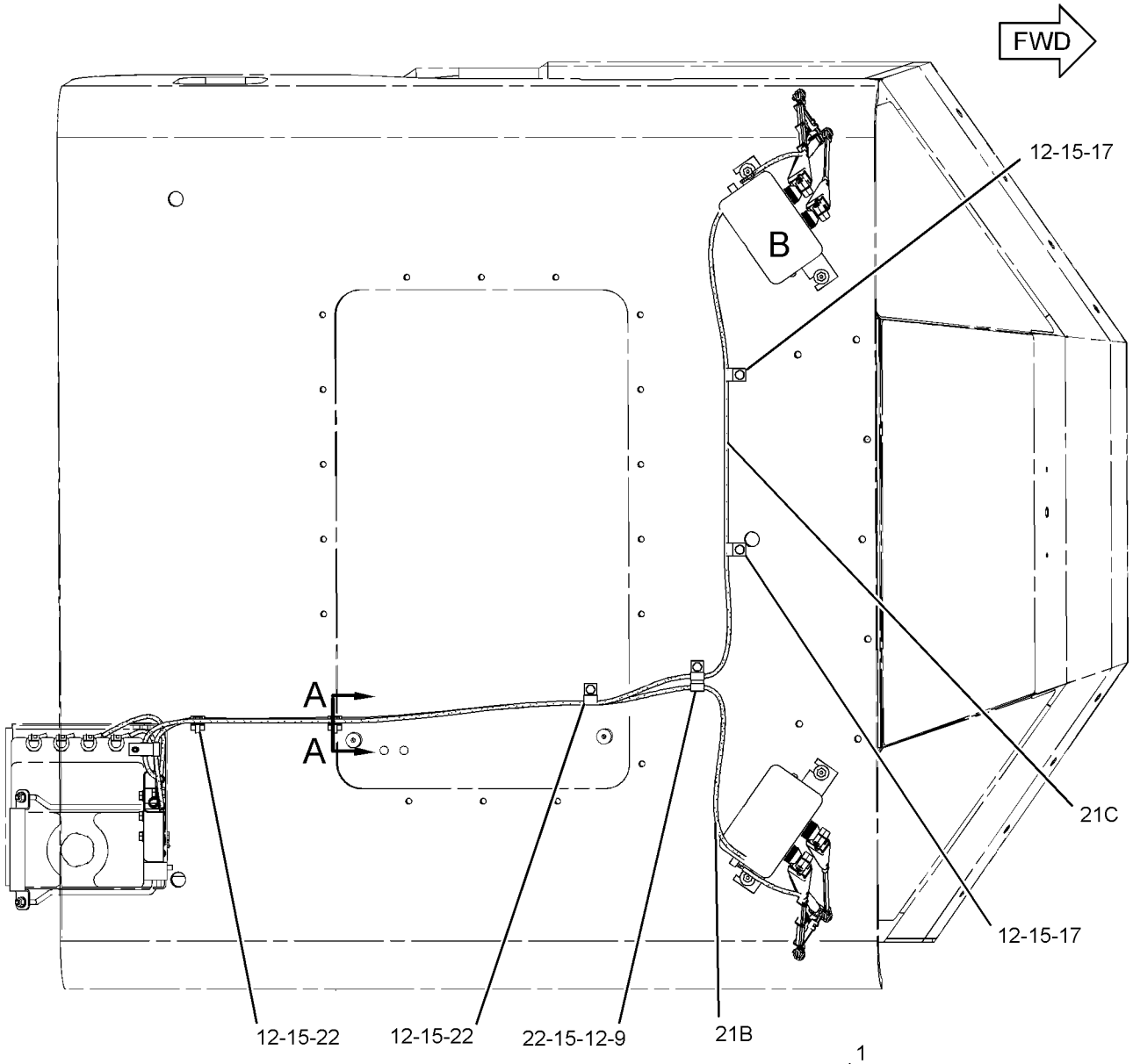

TOP VIEW

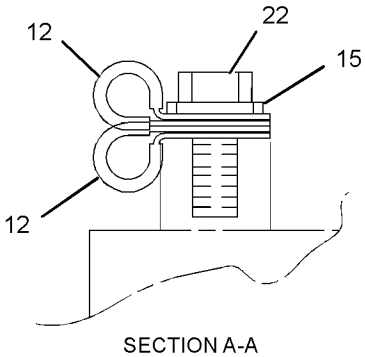

SECTION A-A

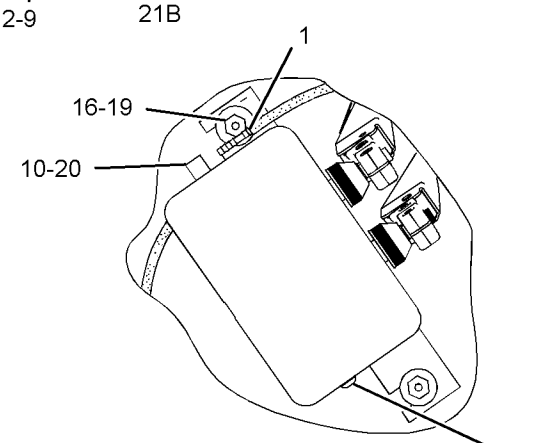

VIEW OF AREA B

GRAPHIC #3 **<END>** g01167586

SERVICE EQUIPMENT AND SUPPLIES

122-6126 FILM GP–LH

S/N: 4421-UP

PART OF 245-7454 PLATFORM AR

SMCS-7405, 7557 **i02148423**

NOTE	REF NO	GRAPHIC REF	PART NUMBER	QTY	PART NAME 1 2 3 4 5 6 (PRODUCT LEVEL)	SEE PAGE
	1	1	**104-4452**	1	FILM AS	
BE	1A	1	**104-6457**		FILM	

B-USE AS REQUIRED
E-ORDER BY THE CENTIMETER

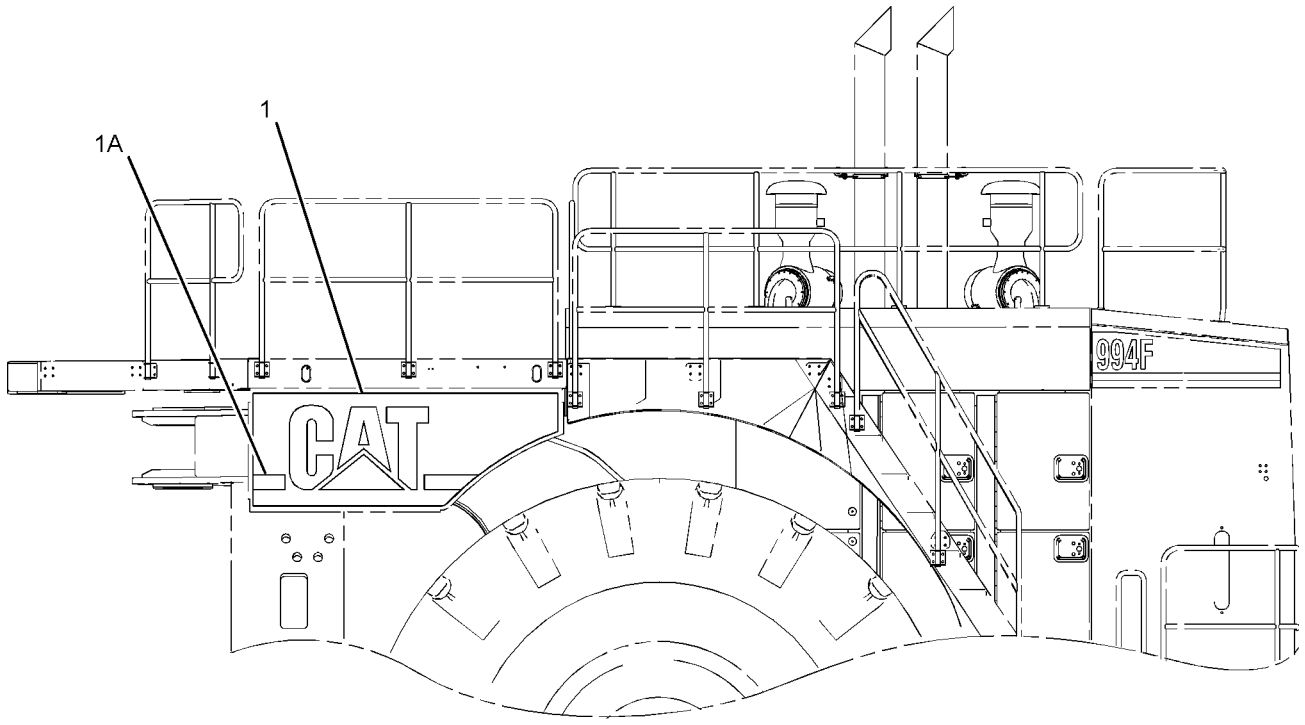

LEFT SIDE VIEW

GRAPHIC #1 **<END>** g01093180

SERVICE EQUIPMENT AND SUPPLIES

236-7530 FILM GP—PAYLOAD CONTROL

S/N: 4421-UP

AN ATTACHMENT

SMCS-7405, 7557 **i02153525**

NOTE	REF NO	GRAPHIC REF	PART NUMBER	QTY	PART NAME 1 2 3 4 5 6 (PRODUCT LEVEL)	SEE PAGE
	1	1	**236-8117**	1	FILM-INFORMATION (PAYLOAD CONTROL)	

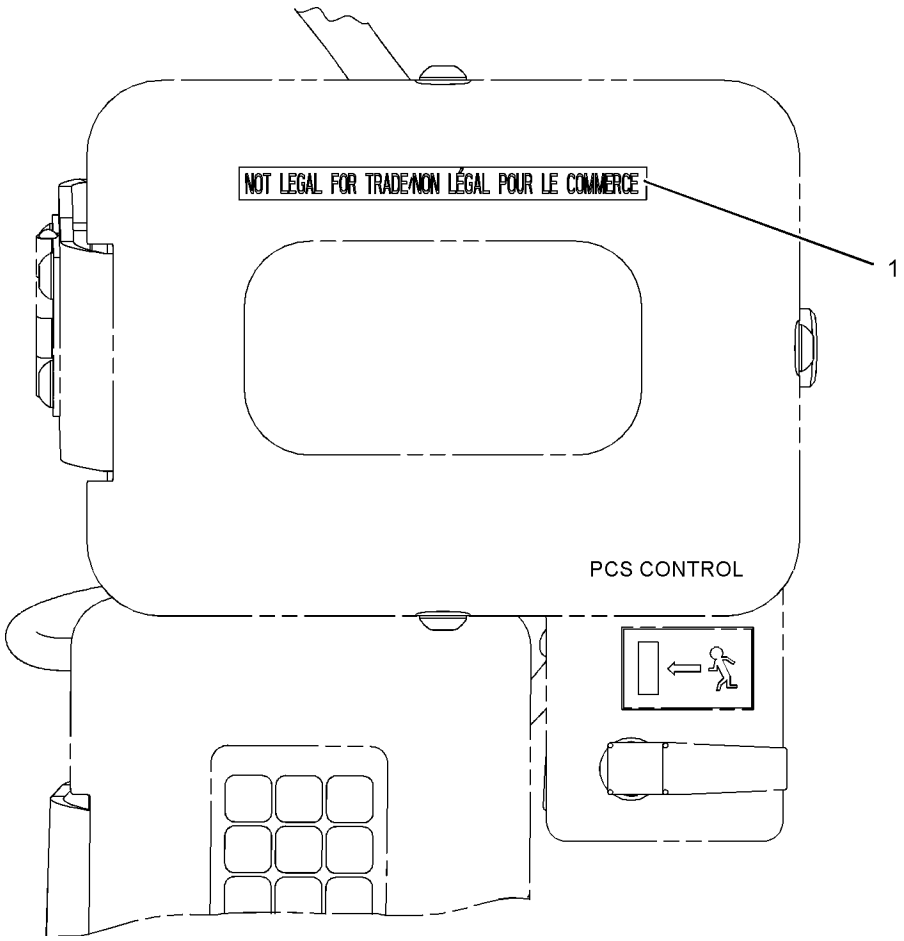

GRAPHIC #1 **<END>** g01095710

SERVICE EQUIPMENT AND SUPPLIES

265-4449 FILM GP–RH

S/N: 4421-UP
PART OF 245-3881 PLATFORM AR
AN ATTACHMENT

SMCS-7405, 7557 **i02300877**

NOTE	REF NO	GRAPHIC REF	PART NUMBER	QTY	PART NAME 1 2 3 4 5 6 (PRODUCT LEVEL)	SEE PAGE
	1	1	**265-7879**	1	FILM	

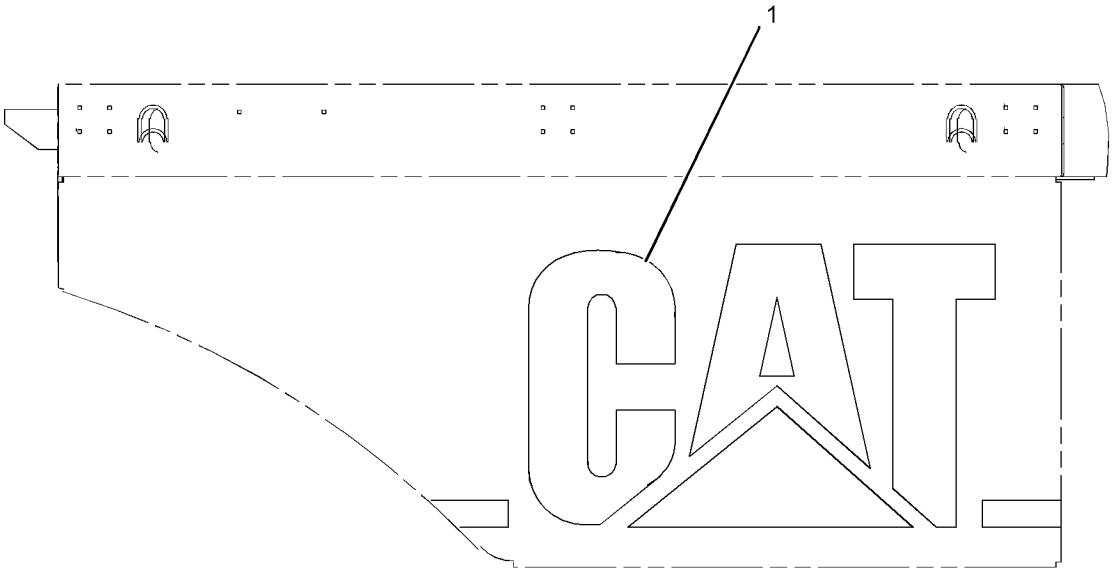

RIGHT SIDE VIEW

GRAPHIC #1 **<END>** g01152205

SERVICE EQUIPMENT AND SUPPLIES

265-7881 FILM GP

S/N: 4421-UP

PART OF 245-8804 PLATE & FILM GP

SMCS-7405, 7557 **i02353492**

NOTE	REF NO	GRAPHIC REF	PART NUMBER	QTY	PART NAME 1 2 3 4 5 6 (PRODUCT LEVEL)	SEE PAGE
	1	1	**265-7880**	2	FILM-IDENTIFICATION (994F)	
E	2	1	**100-7788**	2	FILM (485-CM EACH)	
E	3	1	**265-7877**	2	FILM-STRIPE (YELLOW) (172-CM EACH)	
	4	1	**208-5828**	2	FILM-CATERPILLAR	

E-ORDER BY THE CENTIMETER

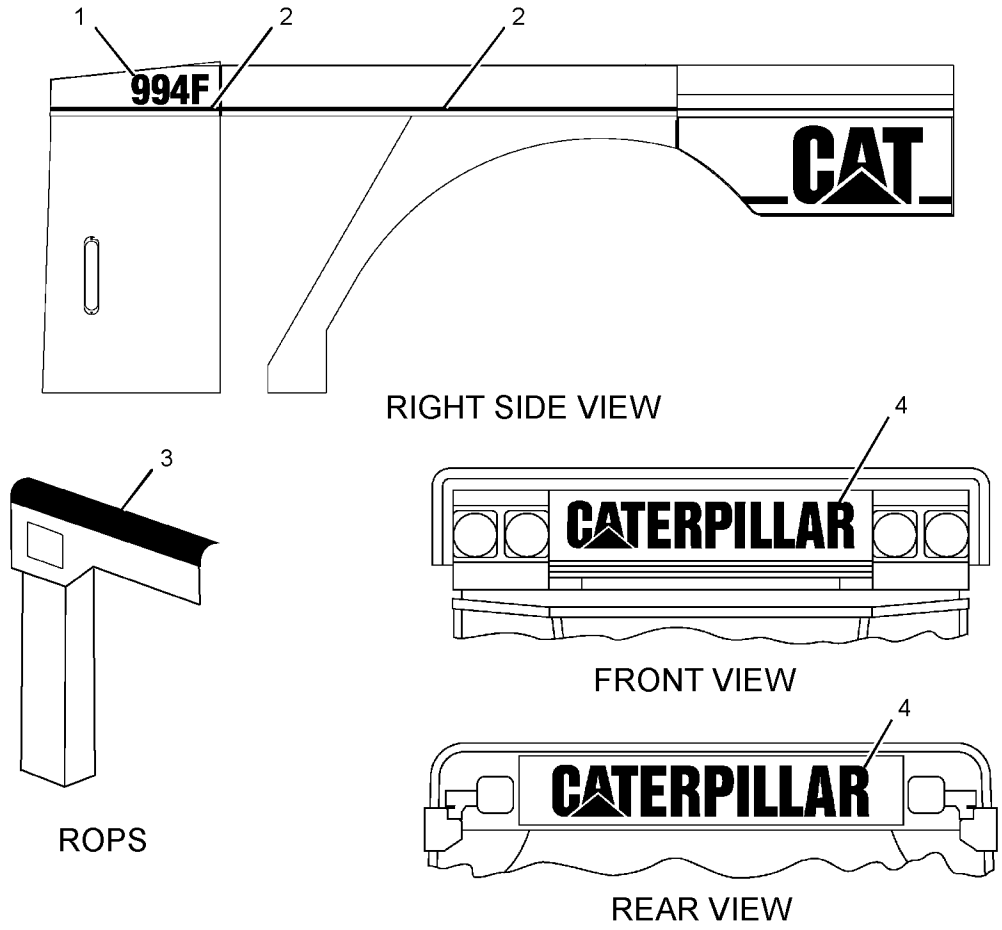

GRAPHIC #1 **<END>** g01219022

SERVICE EQUIPMENT AND SUPPLIES

252-8079 FILM GP-INTERNATIONAL

S/N: 4421-UP

AN ATTACHMENT

SMCS-7557 **i02195317**

NOTE	PART NUMBER	QTY	PART NAME 1 2 3 4 5 6 (PRODUCT LEVEL)	SEE PAGE
	222-7944	2	FILM-WARNING (DO NOT OPERATE, READ OMM)	
			ON EACH SIDE ON TOP OF ENGINE VALVE COVER #1 FROM THE REAR	
	226-1240	2	FILM-WARNING (CRUSH HAZARD, STAY BACK)	
			BOTH SIDES OF NON ENGINE END FRAME AT EYE LEVEL HEIGHT AT ARTICULATED HITCH	
	226-1274	1	FILM-WARNING (CRUSH HAZARD, READ OMM)	
			AT EYE LEVEL NEAR ARTICULATION LOCK	
	227-7391	1	FILM-WARNING (SEAT BELT)	
			ON RIGHT ARMREAST HOUSING VERTICAL SURFACE BELOW THE ARMREST ADJUSTMENT KNOB	
	228-2616	1	FILM-WARNING (UNIVERSAL)	
			ON CONTROL CONSOLE BEHIND LIFT LEVER	

<END>

252-8078 FILM GP-U.S.

S/N: 4421-UP

AN ATTACHMENT

SMCS-7557 **i02194612**

NOTE	PART NUMBER	QTY	PART NAME 1 2 3 4 5 6 (PRODUCT LEVEL)	SEE PAGE
	226-1242	2	FILM-WARNING (CRUSH HAZARD, STAY BACK)	
			ON BOTH SIDES OF NON ENGINE END FRAME AT EYE LEVEL HEIGHT AT ARTICULATED HITCH	
	226-1275	1	FILM-WARNING (CRUSH HAZARD, READ MANUAL)	
			AT EYE LEVEL NEAR ARTICULATION LOCK	
	227-7390	1	FILM-WARNING (SEAT BELT)	
			ON RIGHT ARMREST HOUSING VERTICAL SURFACE BELOW THE ARMREST ADJUSTMENT KNOB	
	228-2615	1	FILM-WARNING (UNIVERSAL)	
			ON CONTROL CONSOLE BEHIND LIFT LEVER	
	228-3581	2	FILM-WARNING (READ OMM)	
			ONE ON EACH SIDE ON TOP OF ENGINE VALVE COVER #1 FROM THE REAR	

<END>

SERVICE EQUIPMENT AND SUPPLIES

245-1890 LINES GP-DIAGNOSTIC–
REMOTE PRESSURE TAPS, FRONT
S/N: 4421-UP
PART OF 244-7300 HYDRAULIC AR-FRONT

SMCS-7554 **i02182189**

NOTE	REF NO	GRAPHIC REF	PART NUMBER	QTY	PART NAME 1 2 3 4 5 6 (PRODUCT LEVEL)	SEE PAGE
	1	2	**6V-0852**	9	CAP-DUST	
	2	2	**9U-1371**	1	BRACKET AS	
M		2	**8T-3490**	1	NUT-WELD (M10X1.5-THD)	
	3	1	**125-2706**	2	PLATE AS	
M		1	**8T-3490**	1	NUT-WELD (M10X1.5-THD)	
	4	2	**185-6250**	9	FITTING AS	
	5	1	**245-1889**	1	HOSE AS	
	6	1	**245-1891**	1	HOSE AS	
	7	1,2	**245-3225**	1	HOSE AS	
	8	1	**245-3226**	1	HOSE AS	
	9	1	**245-3227**	1	HOSE AS	
	10	2	**245-3228**	1	HOSE AS	
	11	1	**245-3229**	1	HOSE AS	
	12	2	**245-3231**	1	HOSE AS	
	13	2	**245-3232**	1	HOSE AS	
	14	1	**245-3233**	1	PLATE	
	15	2	*148-8325*	1	CONNECTOR AS	
					(EACH INCLUDES)	
		2	**3J-1907**	2	SEAL-O-RING	
		2	**4J-5477**	2	SEAL-O-RING	
		2	**6V-8641**	2	CONNECTOR	
	16	1,2	*148-8368*	4	ELBOW AS	
					(EACH INCLUDES)	
		1,2	**3J-1907**	1	SEAL-O-RING	
		1,2	**4J-5477**	1	SEAL-O-RING	
		1,2	**6V-8627**	1	ELBOW	
	17	1,2	*150-3033*	4	ELBOW AS	
					(EACH INCLUDES)	
		1,2	**3J-1907**	1	SEAL-O-RING	
		1,2	**4J-5477**	1	SEAL-O-RING	
		1,2	**8T-0164**	1	ELBOW	
	18	2	**170-4735**	9	RING-RETAINING	
	19	2	**067-2551**	1	CLIP	
	20	2	*187-2120*	2	ELBOW AS	
					(EACH INCLUDES)	
		2	**4J-5477**	1	SEAL-O-RING	
		2	**8C-8408**	1	ELBOW	
	21	2	**4J-5477**	9	SEAL-O-RING	
	22	2	**5P-1076**	2	WASHER-HARD (13.5X30X4-MM THK)	
	23	1	**5P-9085**	1	CLIP	
	24	2	**6D-4244**	4	CLIP	
	25	1	**6K-8178**	1	CLIP	
	26	1	**6V-2383**	1	CLIP	
	27	2	**6V-3378**	1	CLIP	
	28	2	**7D-1553**	2	CLIP	
	29	2	**7D-7233**	1	CLIP	
	30	1,2	**8T-4121**	12	WASHER-HARD (11X21X2.5-MM THK)	
M	31	2	**8T-4133**	4	NUT (M10X1.15-THD)	
M	32	2	**8T-4136**	6	BOLT (M10X1.5X25-MM)	
M	33	1	**8T-4137**	2	BOLT (M10X1.5X20-MM)	
M	34	1,2	**8T-4179**	3	BOLT (M12X1.75X20-MM)	
	35	1	**8T-4223**	1	WASHER-HARD (13.5X25.5X3-MM THK)	
	36	1	**7S-4244**	1	CLIP	
	37	1	**7X-7729**	1	WASHER (11X25X3-MM THK)	

M-METRIC PART

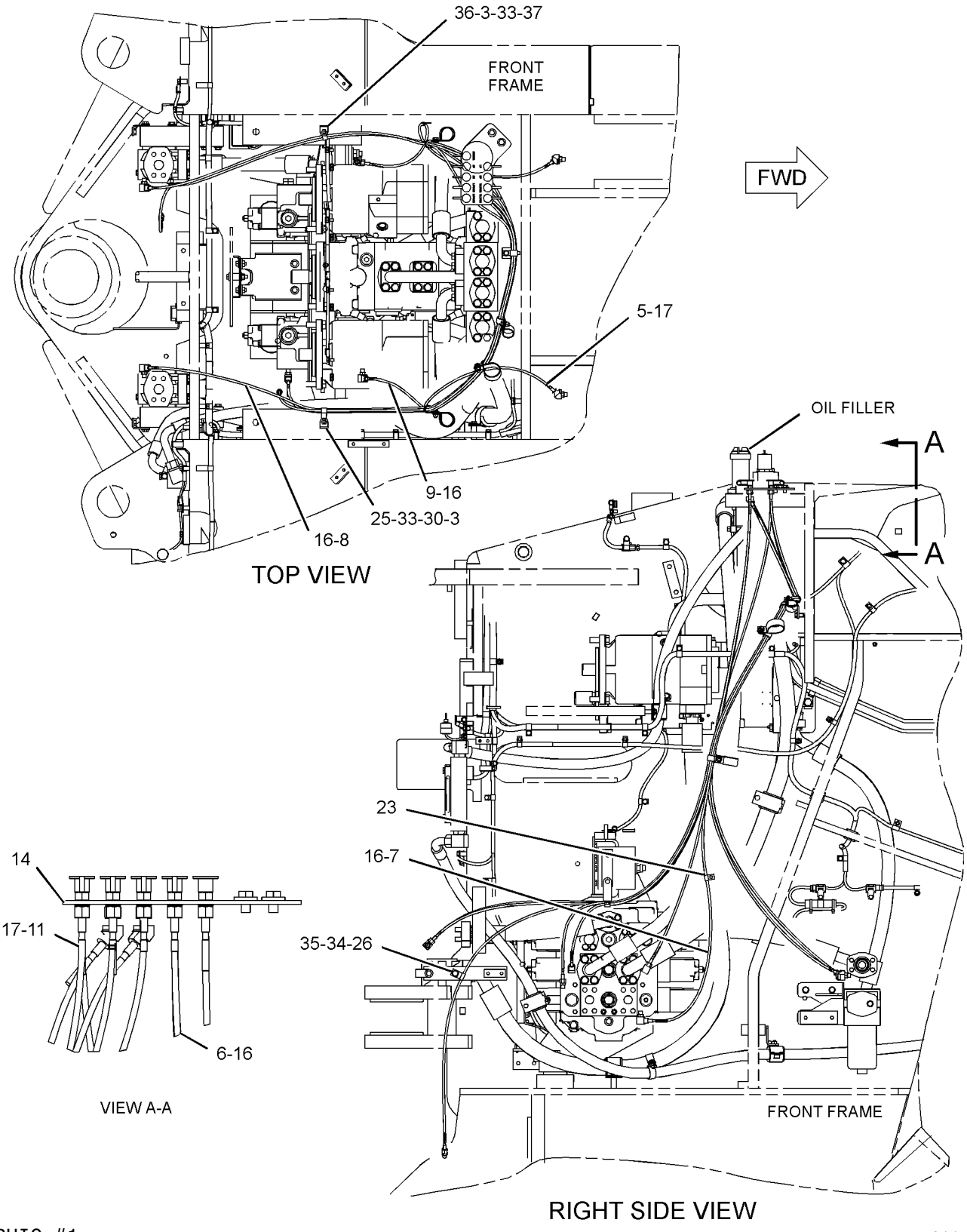

GRAPHIC #1

g01152165

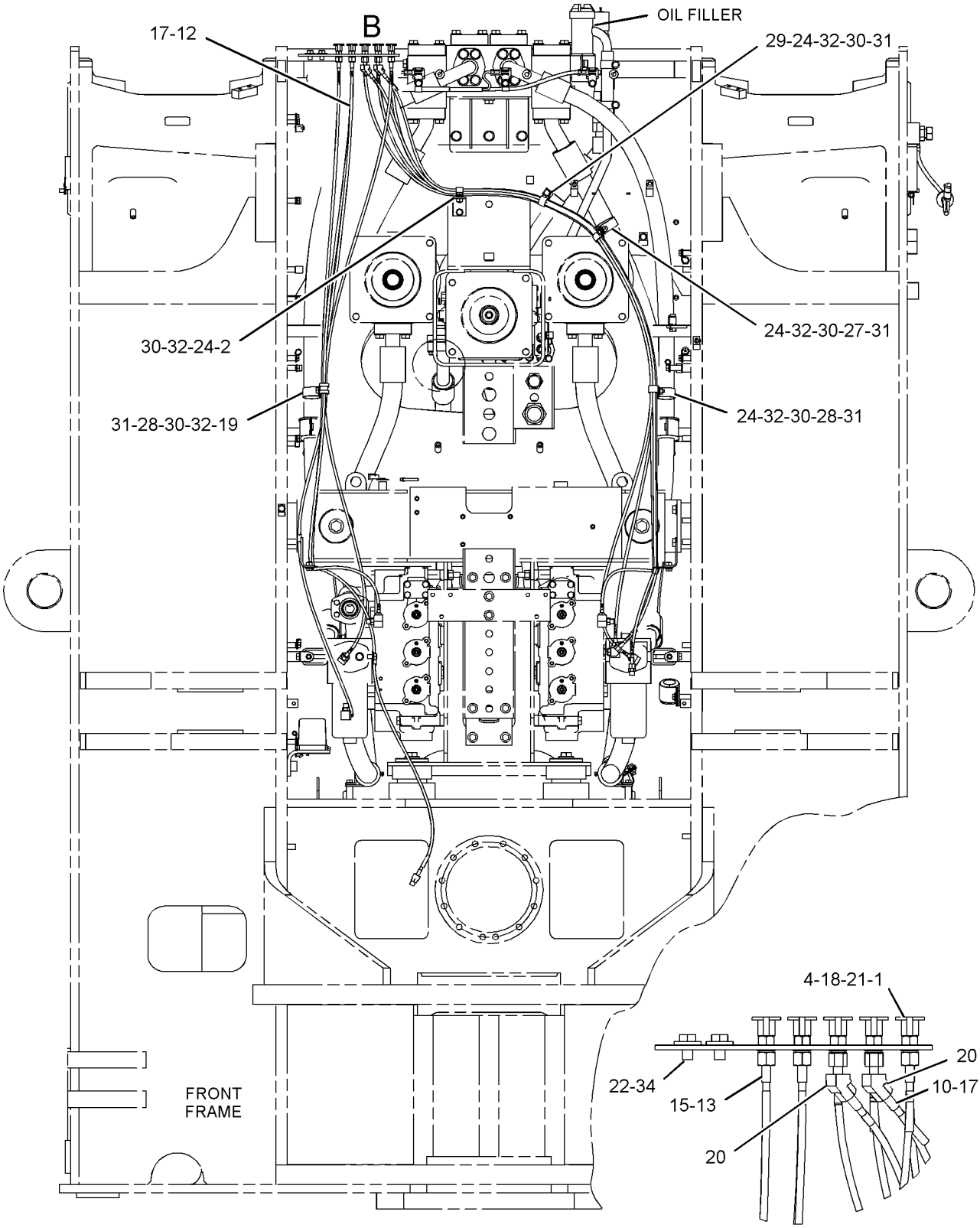

GRAPHIC #2

<END>

g01152166

SERVICE EQUIPMENT AND SUPPLIES

245-3250 LINES GP-DIAGNOSTIC–
REMOTE PRESSURE TAPS, REAR
S/N: 4421-UP
PART OF 245-0700 HYDRAULIC AR-REAR

SMCS-7554 **i02182186**

NOTE	REF NO	GRAPHIC REF	PART NUMBER	QTY	PART NAME 1 2 3 4 5 6 (PRODUCT LEVEL)	SEE PAGE
	1	1,2	**6V-0852**	17	CAP-DUST	
	2	1	**121-1340**	1	ANGLE AS	
M		1	**8T-3490**	1	NUT-WELD (M10X1.5-THD)	
	3	1,3	**124-3019**	3	BRACKET AS	
					(EACH INCLUDES)	
M		1,3	**8T-3490**	1	NUT-WELD (M10X1.5-THD)	
	4	1,2	**185-6250**	17	FITTING AS	
	5	3	**245-3235**	1	HOSE AS	
	6	1	**245-3236**	1	HOSE AS	
	7	1	**245-3237**	1	HOSE AS	
	8	1	**245-3238**	1	HOSE AS	
	9	2	**245-3239**	1	HOSE AS	
	10	2	**245-3240**	1	PLATE	
	11	3	**245-3241**	1	HOSE AS	
	12	3	**245-3242**	1	HOSE AS	
	13	3	**245-3245**	1	HOSE AS	
	14	3	**245-3246**	1	HOSE AS	
	15	3	**245-3247**	1	HOSE AS	
	16	3	**245-3248**	1	HOSE AS	
	17	1	**265-5119**	1	BRACKET	
	18	3	**265-6960**	1	HOSE AS	
	19	3	**265-6961**	1	HOSE AS	
	20	3	**265-6962**	1	HOSE AS	
	21	3	**265-6963**	1	HOSE AS	
	22	3	**265-6965**	1	HOSE AS	
	23	2	**265-6966**	1	HOSE AS	
	24	2	**097-4896**	1	SPACER (12X20X23-MM THK)	
	25	1,3	*148-8325*	6	CONNECTOR AS	
					(EACH INCLUDES)	
		1,3	**3J-1907**	2	SEAL-O-RING	
		1,3	**4J-5477**	2	SEAL-O-RING	
		1,3	**6V-8641**	2	CONNECTOR	
	26	3	*148-8368*	1	ELBOW AS	
		3	**3J-1907**	1	SEAL-O-RING	
		3	**4J-5477**	1	SEAL-O-RING	
		3	**6V-8627**	1	ELBOW	
	27	2	*148-8413*	1	REDUCER AS	
		2	**4J-5477**	1	SEAL-O-RING	
		2	**6V-8934**	1	REDUCER AS	
	28	2	*148-8439*	1	TEE AS	
		2	**3J-1907**	1	SEAL-O-RING	
		2	**6V-8397**	2	SEAL-O-RING	
		2	**6V-8774**	1	TEE	
	29	1	*150-3033*	2	ELBOW AS	
					(EACH INCLUDES)	
		1	**3J-1907**	1	SEAL-O-RING	
		1	**4J-5477**	1	SEAL-O-RING	
		1	**8T-0164**	1	ELBOW	
	30	1,2	**170-4735**	17	RING-RETAINING	
	31	3	*187-2120*	1	ELBOW AS	
		3	**4J-5477**	1	SEAL-O-RING	
		3	**8C-8408**	1	ELBOW	
	32	3	**189-8772**	1	SPACER (11X16X35-MM THK)	
	33	1,3	**1S-0994**	6	CLIP	
	34	1,2	**4J-5477**	17	SEAL-O-RING	

245-3250 **LINES GP-DIAGNOSTIC** *(contd.)* **i02182186**

NOTE	REF NO	GRAPHIC REF	PART NUMBER	QTY	PART NAME 1 2 3 4 5 6 (PRODUCT LEVEL)	SEE PAGE
	35	1,2	**4K-8864**	4	CLIP	
	36	1	**4S-1962**	1	CLIP	
	37	3	**4S-4455**	2	CLIP	
	38	1,3	**5P-9085**	4	CLIP	
	39	1,2	**6D-4244**	2	CLIP	
	40	1	**6D-4636**	1	CLIP	
	41	3	**7D-1553**	1	CLIP	
	42	1,2,3	**8T-4121**	23	WASHER-HARD (11X21X2.5-MM THK)	
M	43	1,3	**8T-4133**	5	NUT (M10X1.15-THD)	
M	44	1,2,3	**8T-4136**	7	BOLT (M10X1.5X25-MM)	
M	45	1,3	**8T-4137**	9	BOLT (M10X1.5X20-MM)	
M	46	2	**8T-4182**	1	BOLT (M10X1.5X45-MM)	
M	47	3	**8T-4185**	1	BOLT (M10X1.5X50-MM)	
M	48	1	**8T-4192**	1	BOLT (M12X1.75X25-MM)	
	49	1	**8T-4223**	1	WASHER-HARD (13.5X25.5X3-MM THK)	

M-METRIC PART

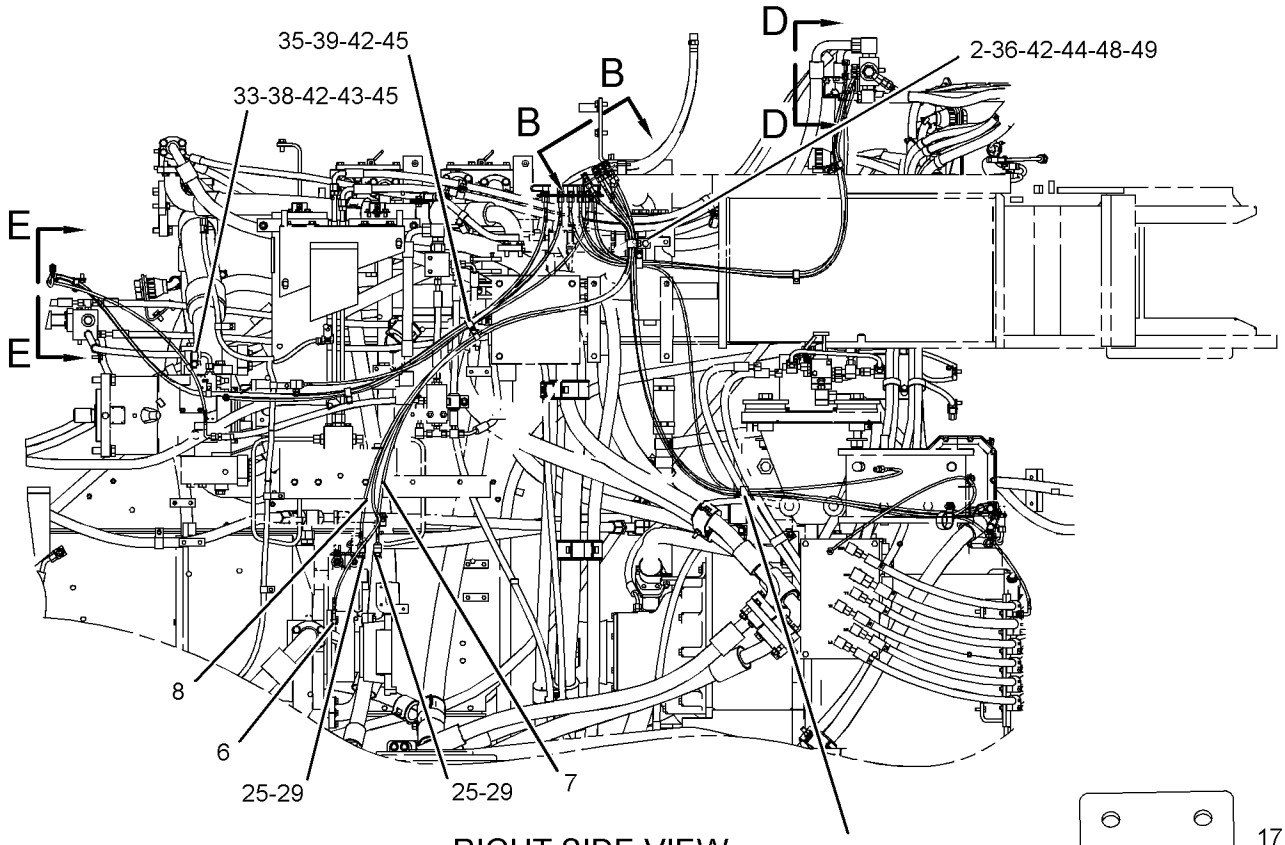

RIGHT SIDE VIEW

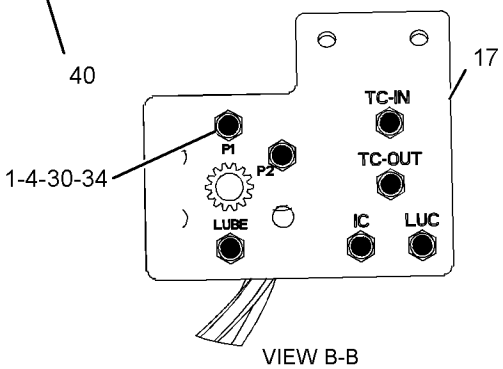

VIEW B-B

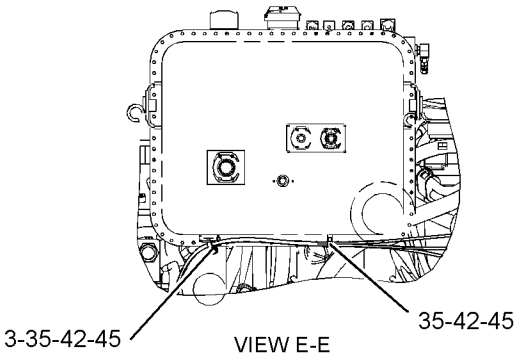

VIEW E-E

	REMOTE PRESSURE TAPS DESCRIPTION
TC-IN	TORQUE CONVERTER INLET PRESSURE
TC-OUT	TORQUE CONVERTER OUTLET PRESSURE
IC	IMPELLER CLUTCH CONTROL PRESSURE
LUC	LOCK-UP CLUTCH CONTROL PRESSURE
P1	PUMP/SPEED CLUTCH PRESSURE
P2	DIRECTIONAL CLUTCH PRESSURE
LUBE	TRA NSMISSION LUBE PRESSURE
IP-CLR	IMPLEMENT COOLING PUMP PRESSURE
BP-CLR	BRAKE COOLING PUMP PRESSURE
STR-CLR	STEERING COOLING PUMP PRESSURE
PILOT	IMPLEMENT PILOT PRESSURE
ACC-R	REAR BRAKE ACCUMULATOR PRESSURE
ACC-F	FRONT BRAKE ACCUMULATOR PRESSURE
BRK-F	FRONT BRAKE PRESSURE
BRK-R	REAR BRAKE PRESSURE
R-STR	RIGHT STEERING PUMP PRESSURE
L-STR	LEFT STEERING PUMP PRESSURE

REFER TO ALL ILLUSTRATIONS
OF THIS GROUP FOR AUXILIARY VIEWS

GRAPHIC #1

g01152425

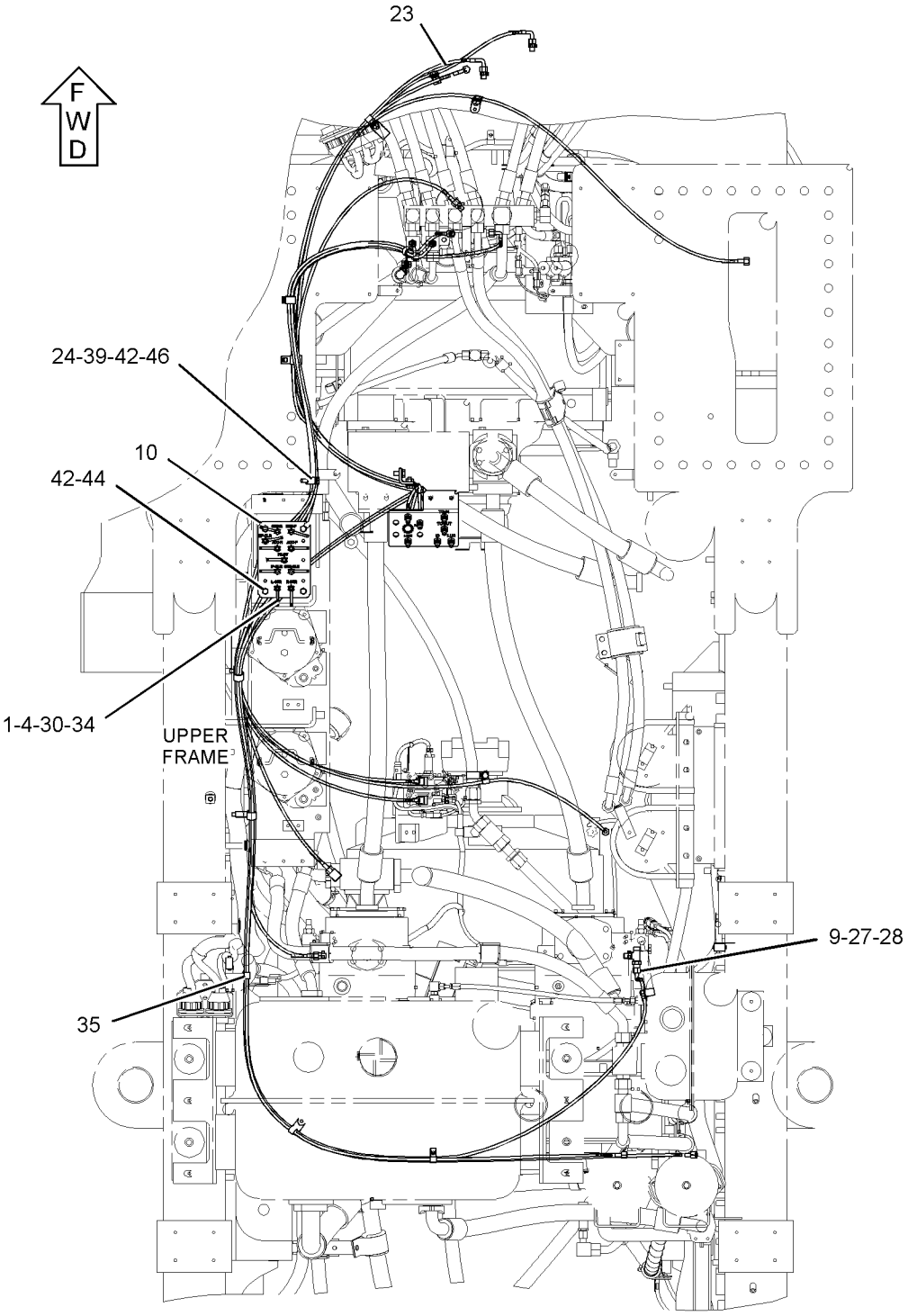

TOP VIEW

GRAPHIC #2

g01152434

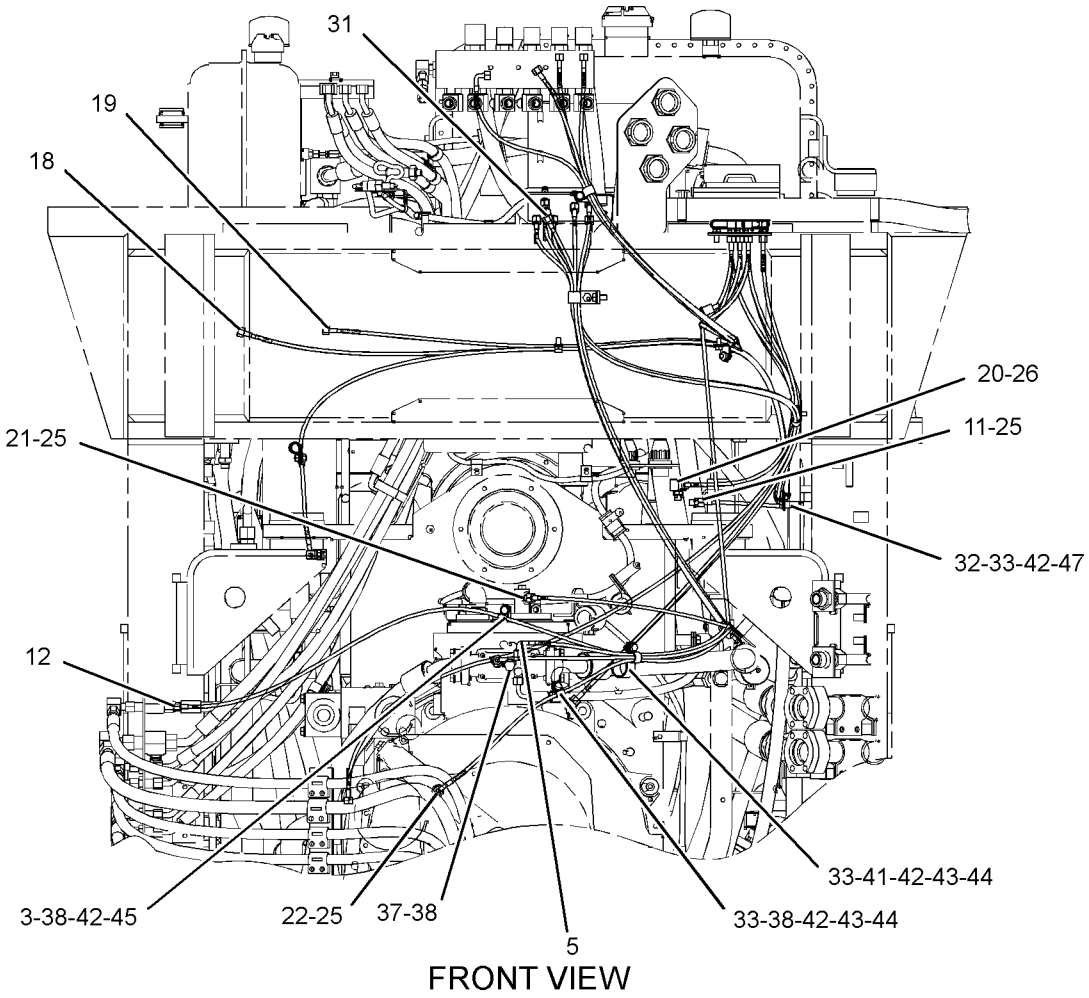

FRONT VIEW

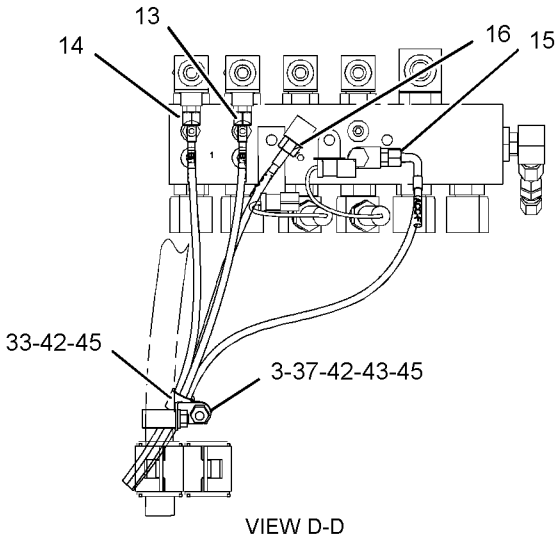

VIEW D-D

GRAPHIC #3 **<END>** g01152435

102-9939 PLATE & FILM GP

S/N: 8WM1-UP

PART OF 240-7750 ENGINE AR

SMCS-7405, 7557 **i00563643**

NOTE	PART NUMBER	QTY	PART NAME 1 2 3 4 5 6 (PRODUCT LEVEL)	SEE PAGE
	3N-3790	1	PLATE-SERIAL NUMBER (ENGINE)	
	7B-3028	2	SCREW-DRIVE (#4X3/16IN)	
			<END>	

245-8804 PLATE & FILM GP

S/N: 4421-UP

PART OF 245-8810 COMMON AR

SMCS-7405, 7557 **i02379302**

NOTE	PART NUMBER	QTY	PART NAME 1 2 3 4 5 6 (PRODUCT LEVEL)	SEE PAGE
Y	*265-7881*	1	FILM GP	1080
	5P-1175	1	FILM-IDENTIFICATION (ENGINE OIL FILL)	
			INSTALL ON OIL FILL PIPE ON RH SIDE OF ENGINE COMPARTMENT	
	233-5070	1	FILM-IDENTIFICATION (PRELUBRICATION PUMP)	
			ON SWITCH PLATE IN PLATFORM ASSEMBLY WHEN VEHICLE IS EQUIPPED WITH PRELUBE GP-ENGINE	
	253-3559	1	FILM-IDENTIFICATION (HEATER, 240-VOLT)	
			ON ELECTRIC FUSE BOX IN ENGINE COMPARTMENT WHEN VEHICLE IS EQUIPPED WITH 240V HEATER	
	8C-5346	7	FILM-IDENTIFICATION (HYDRAULIC OIL FILTER)	
			ON SIDE OF IMPL OIL FILTER	
			1-IN FRONT OF FIREWALL ON RH SIDE OF CHASSIS. NEXT TO STEERING OIL FILTER	
			1-ON UPPER RIGHT REAR. NON ENGINE FRAME. ABOVE IMPLEMENT OIL TANK SIGHT GAGE	
			1-ON CENTER LINE OF NON ENGINE END FRAME BEWTEEN HYDRAULIC TANK AND IMPL PUMP DRIVES	
			1-ON LH UPPER INNER NON ENGINE END FRAME PLATE	
			1-ON RH UPPER INNER NON ENGINE END FRAME PLATE	
			1-ON INNER LH REAR NON ENGINE FRAME IN FRONT OF STEERING CYLINDER MOUNT	
			1-ON INNER RH REAR NON ENGINE END FRAME IN FRONT OF STEERING CYLINDER MOUNT	
	3E-8102	1	FILM-IDENTIFICATION (STEERING OIL FILTER) (STEERING OIL)	
			ON SIDE OF STEERING FILTER	
	253-3558	1	FILM-IDENTIFICATION (DRIVE SHAFT LUBRICATION)	
			ON LOWER FRONT RIGHT HAND SIDE OF ENGINE END FRAME BUTTERFLY PLATE, NEXT TO DRIVE SHAFT BORE	
	268-6421	1	FILM-IDENTIFICATION (SERVICE CENTER)	
			ON SERVICE CENTER FILL PORT PANEL ON RH SIDE OF ENGINE END FRAME	
	1P-2807	4	FILM-INFORMATION (LIFT EYE LOCATION)	
			2-ON FRONT CHASSIS - ON OUTSIDE SURFACE ABOVE "A" PINS	
			2-ON BUCKET AS - ON OUTSIDE FACE OF FOURTH RIB FROM EACH END TO RELIEF NOTCH	
	7X-7644	24	FILM-INFORMATION (TIE-DOWN)	
			2-ON REAR CHASSIS - NEXT TO TIE-DOWN EYES ABOVE REAR AXLE OPENING	
			2-ON FRONT CHASSIS - NEXT TO TIE-DOWN EYES ON REAR SIDES	

245-8804 **PLATE & FILM GP** ***(contd.)*** **i02379302**

NOTE	PART NUMBER	QTY	PART NAME 1 2 3 4 5 6 (PRODUCT LEVEL)	SEE PAGE
			3-ON FRONT SHIPPING BLOCK - NEXT TO TIE-DOWN EYES	
			3-ON REAR (RAIL) SHIPPING BLOCK - NEXT TO TIE-DOWN EYES	
			4-ON BUCKET AS - NEXT TO HOLE IN UPPER OUTER HINGE PLATES	
			4-ON BUCKET AS - NEXT TO SHIPPING TIE-DOWN EYES ON UPPER REAR WRAPPER PLATE AND UPPER FRONT WRAPPER PLATE	
			6-ON BUCKET AS - NEXT TO 3 HOLES IN EACH END PLATE AS	
	252-8080	1	FILM-INFORMATION (ROPS, FOPS, READ OMM)	
			CENTER ON OUTSIDE OF LH ROPS POST AT EYE LEVEL	
	201-2733	1	FILM-INFORMATION (INPUT/OUTPUT)	
			BELOW SERVICE TOOL PORT (LH) ON THE RH DASH PANEL IN CAB	
	6V-2679	1	FILM-INSTRUCTION (WIPER)	
			ON TOP OF CAB WASHER BOTTLE COVER. KEEP CENTER BREATHER HOLE UNCOVERED	
	7X-3229	2	FILM-INSTRUCTION (LIFT EYE, TIE-DOWN LOCATION)	
			2-ON REAR CHASSIS - NEXT TO LOWER REAR LIFTING EYES	
	9X-5617	1	FILM-INSTRUCTION (KICKOUT CONTROL)	
			FILM ON LIFT KICKOUT CONTROL MODULE ON UPPER RH NON-ENGINE END FRAME	
	138-7126	1	FILM-INSTRUCTION (SIGHT GLASS)	
			ON TUBE AS ALIGNING MARKS WITH SIGHT GLASS MARKS	
	138-7127	1	FILM-INSTRUCTION (SIGHT GLASS)	
			ON TUBE AS ALIGNING MARKS WITH SIGHT GLASS MARKS	
	138-7128	1	FILM-INSTRUCTION (SIGHT GLASS)	
			ON TUBE AS ALIGNING MARKS WITH SIGHT GLASS MARKS	
	269-8877	1	FILM-INSTRUCTION (FRONT PUMP DRIVE, DRAIN/FILL)	
			ON SERVICE CENTER FILL PORT PANEL ON RH SIDE OF NON ENGINE END FRAME	
	8T-7038	16	FILM-WARNING (DO NOT LIFT)	
			2-ON FRONT CHASSIS - ON LIFT CYLINDER ROD ENDS NEXT TO PIN BORES	
			2-ON UPPER FRONT CHASSIS - NEXT TO "G" PIN BORES	
			2-ON FRONT CHASSIS - NEXT TO FRONT HOLES OF FRAME PLATES	
			8-ON REAR OF BUCKET AS - ON INSIDE AND OUTSIDE NEXT TO PIN BORES	
			2-ON REAR CHASSIS - NEXT TO TIE DOWN EYES ABOVE REAR AXLE OPENING	
	219-0305	1	FILM-WARNING (NO WELD, NO DRILL, READ OMM)	
			CENTER OUTSIDE OF LH ROPS POST AT EYE LEVEL	
	239-6986	1	PLATE-PRODUCT IDENTIFICATION	
			PLATE 100-MM FORWAD AND 950-MM UP FROM BOTTOM REAR OF LH NON ENGINE END FRAME SIDE PLATE. FOR CONCEALED PIN SEE CHART	
A	**3N-3790**	1	PLATE-SERIAL NUMBER (ENGINE)	
			ON LH SIDE OF BLOCK NEAR REAR FACE ON CAMSHAFT COMPARTMENT USING DRIVE SCREWS	

A-NOT PART OF THIS GROUP

245-8804 **PLATE & FILM GP** ***(contd.)*** **i02379302**

Y-SEPARATE ILLUSTRATION

<END>

SERVICE EQUIPMENT AND SUPPLIES

245-1315 SERVICE CENTER GP

S/N: 4421-UP

PART OF 245-8812 CHASSIS AR-REAR

SMCS-7513 **i02282432**

NOTE	REF NO	GRAPHIC REF	PART NUMBER	QTY	PART NAME 1 2 3 4 5 6 (PRODUCT LEVEL)	SEE PAGE
	1	2	**1Q-5459**	2	RECEIVER	
	2	2	**1Q-5461**	4	RECEIVER	
	3	2	**1Q-5468**	4	CAP	
	4	2	**5P-3587**	2	CAP-DUST	
	5	2	**7D-5208**	1	FITTING (QUICK DISCONNECT, FEMALE)	
	6	2	**8T-0854**	1	GAUGE GP-PRESSURE (0 TO 1,000-KPA (0 TO 145-PSI))	
	7	1	**8X-8130**	1	BLOCK	
	8	2	**9S-9271**	2	COUPLER-MALE	
	9	2	**9S-9272**	2	CAP AS	
	10	2	**002-6454**	1	NIPPLE-PIPE	
	11	1	**103-1096**	1	BLOCK	
	12	1	**106-9106**	1	FILM-IDENTIFICATION	
	13	2	**134-7435**	1	FITTING-GREASE	
I	14	1	**251-6527**	1	HOSE AS	
I	15	1	**251-6529**	1	HOSE AS	
I	16	1	**251-6540**	1	HOSE AS	
I	17	1	**252-2649**	1	HOSE AS	
I	18	1	**252-2650**	1	HOSE AS	
	19	1,2	**265-3300**	1	SERVICE CENTER GP (AUTO LUBRICATION, FAST FILL)	
	20	1	**265-3309**	1	COVER AS	
M		1	**8T-3612**	4	NUT-WELD (M8X1.25-THD)	
	21	1	**265-3310**	1	DOOR AS	
		1	**109-0903**	2	HINGE	
		1	**177-1570**	1	LATCH AS (MINI T)	
		1	**217-0733**	1	LOCK AS	
		1	**206-6969**	1	PAWL	
I	22	1	**265-5115**	1	HOSE AS	
I	23	1	**265-5116**	1	HOSE AS	
I	24	1	**265-5117**	1	HOSE AS	
	25	1	**125-7131**	1	CLIP	
	26	1	*148-8324*	1	CONNECTOR GP	
		1	**3K-0360**	1	SEAL-O-RING	
		1	**6V-9746**	1	SEAL-O-RING	
		1	**6V-9874**	1	CONNECTOR	
	27	1	*148-8327*	1	CONNECTOR AS	
		1	**3D-2824**	1	SEAL-O-RING	
		1	**6V-8637**	1	CONNECTOR	
		1	**6V-9746**	1	SEAL-O-RING	
	28	1	*148-8347*	1	ELBOW AS	
		1	**3D-2824**	1	SEAL-O-RING	
		1	**6V-9007**	1	ELBOW	
		1	**6V-9746**	1	SEAL-O-RING	
	29	1	*148-8359*	1	ELBOW AS	
		1	**3K-0360**	1	SEAL-O-RING	
		1	**6V-9746**	1	SEAL-O-RING	
		1	**6V-9877**	1	ELBOW	
	30	1	*148-8370*	1	ELBOW AS	
		1	**6V-8398**	1	SEAL-O-RING	
		1	**6V-9851**	1	ELBOW	
	31	1	*148-8422*	1	TEE AS	
		1	**5K-9090**	1	SEAL-O-RING	
		1	**6V-9746**	1	SEAL-O-RING	
		1	**7M-8485**	1	SEAL-O-RING	
		1	**8T-6356**	1	TEE-O-RING PORT	

245-1315 **SERVICE CENTER GP** *(contd.)* **i02282432**

NOTE	REF NO	GRAPHIC REF	PART NUMBER	QTY	PART NAME 1 2 3 4 5 6 (PRODUCT LEVEL)	SEE PAGE
	32	1	*153-6257*	1	UNION AS	
		1	**6V-8398**	2	SEAL-O-RING	
		1	**6V-9808**	1	UNION	
	33	1	*164-5624*	1	ELBOW GP	
		1	**3J-1907**	1	SEAL-O-RING	
		1	**6V-8398**	1	SEAL-O-RING	
		1	**9X-2085**	1	ELBOW	
	34	1	*171-6723*	1	ELBOW AS	
		1	**6V-9746**	1	SEAL-O-RING	
		1	**8T-8899**	1	ELBOW	
	35	1	**1S-0994**	3	CLIP	
	36	1	**2M-9189**	2	GASKET	
	37	1,2	**3P-2404**	13	CLIP	
	38	1,2	**5P-1076**	12	WASHER-HARD (13.5X30X4-MM THK)	
	39	1	**5P-6994**	3	CLIP	
	40	2	**5P-7470**	1	CLIP (SLOT)	
	41	2	**5P-7471**	1	CLIP (TAB)	
	42	2	**5P-8182**	1	GROMMET	
	43	1	**6D-4636**	3	CLIP	
	44	1,2	**6D-7573**	9	CLIP	
	45	1,2	**6V-1889**	9	CLIP	
	46	1	**6V-2235**	1	CLIP	
	47	1	**6V-5039**	3	CLIP (SLOT)	
	48	1	**6V-5040**	3	CLIP (TAB)	
	49	1,2	**8T-4121**	25	WASHER-HARD (11X21X2.5-MM THK)	
M	50	1,2	**8T-4133**	3	NUT (M10X1.15-THD)	
M	51	1,2	**8T-4136**	20	BOLT (M10X1.5X25-MM)	
M	52	1	**8T-4139**	4	BOLT (M12X1.75X30-MM)	
M	53	1	**8T-4184**	3	BOLT (M12X1.75X45-MM)	
M	54	1,2	**8T-4192**	11	BOLT (M12X1.75X25-MM)	
M	55	1,2	**8T-4195**	3	BOLT (M10X1.5X30-MM)	
	56	1	**8T-4223**	11	WASHER-HARD (13.5X25.5X3-MM THK)	
M	57	1	**8T-4244**	3	NUT (M12X1.75-THD)	
	58	1	**8T-8920**	2	BOLT (1/2-13X3.25-IN)	

I-REFER TO HYDRAULIC INFORMATION SYSTEM
M-METRIC PART

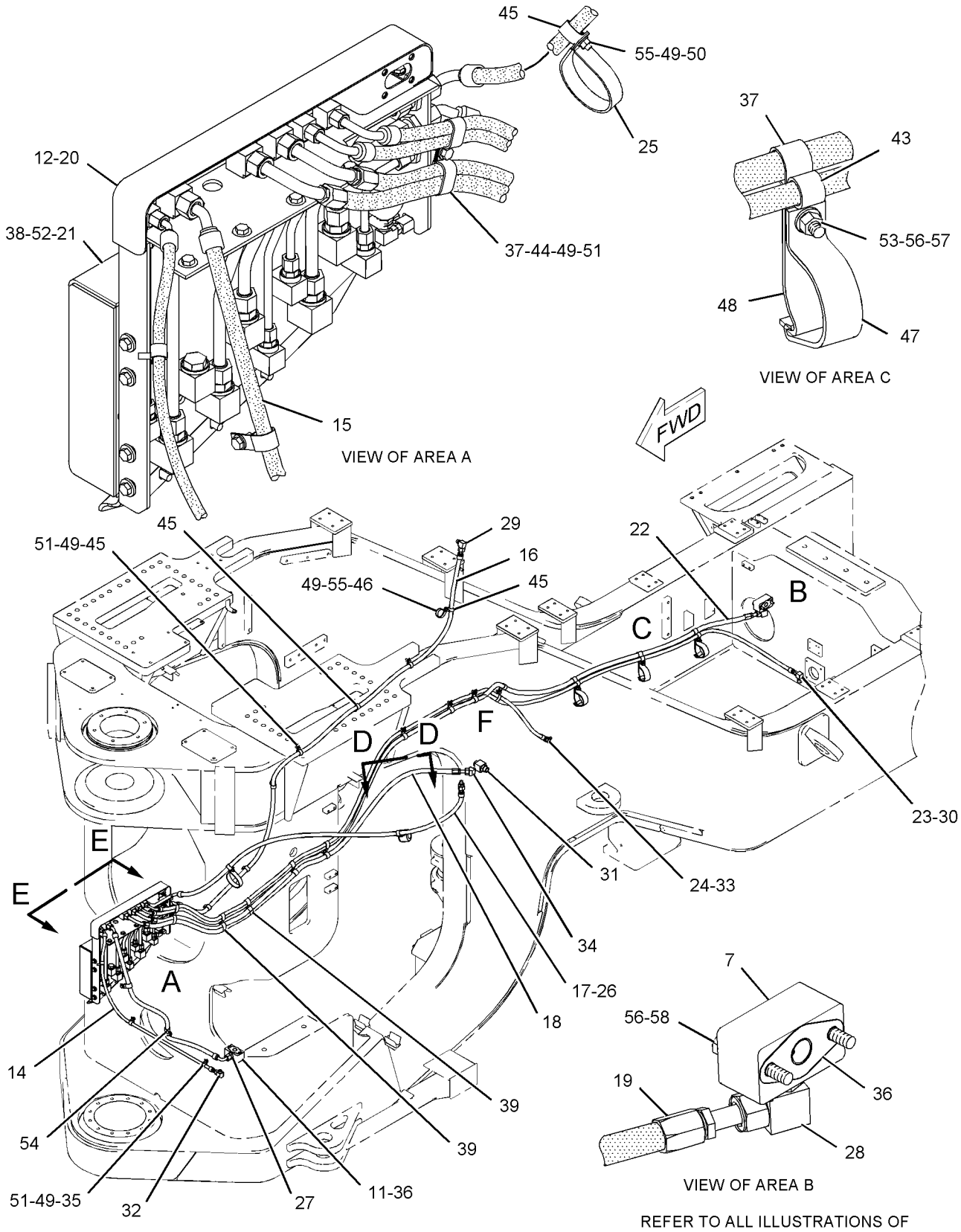

REFER TO ALL ILLUSTRATIONS OF THIS GROUP FOR AUXILIARY VIEWS

GRAPHIC #1

g01147834

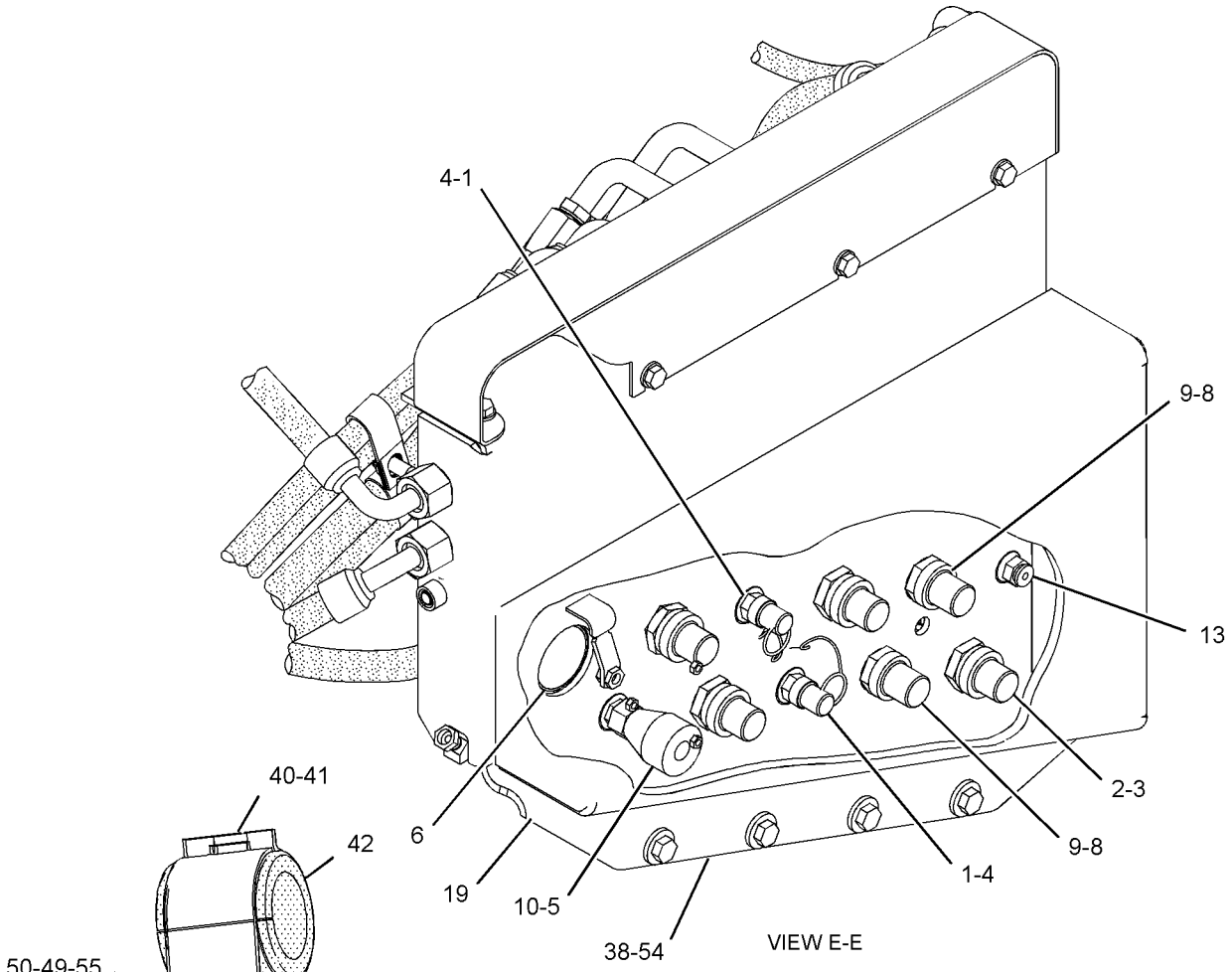

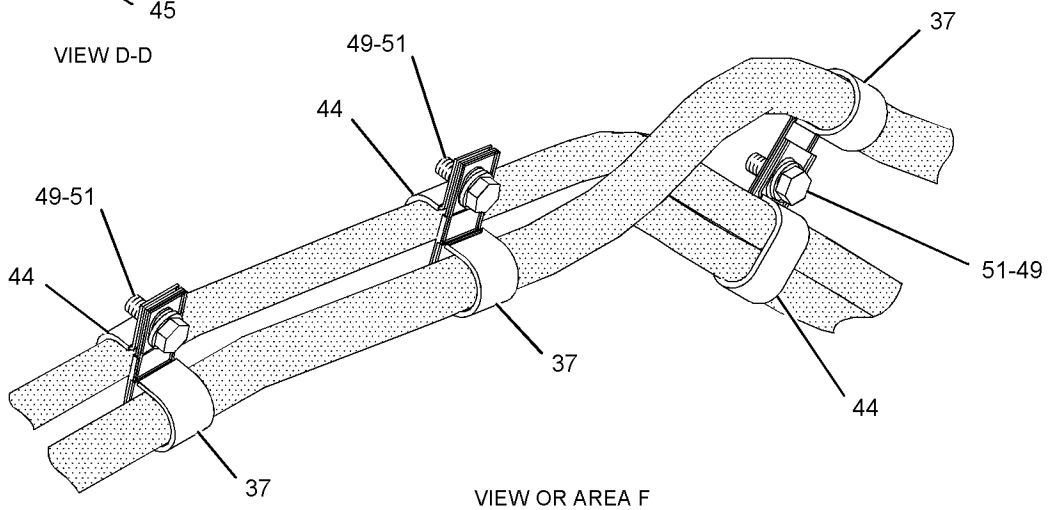

GRAPHIC #2

<END>

g01147836

PART NUMBER INDEX

Part	Page
0	
0L-1143	78
	80
	86
	185
0L-1178	129
0L-1351	13
	31
	34
	47
	61
	123
	148
	185
	325
0L-1352	8
0L-2070	11
	70
	123
	125
	137
	179
	445
0S-0484	105
0S-0509	13
	49
	56
	129
	162
	173
	282
	285
	325
	445
0S-1566	293
0S-1571	38
	59
	61
	75
	80
	129
	137
0S-1585	94
	129
	703
0S-1587	9
	54
	105
	129
0S-1588	14
	49
	61
	74
	78
	80
	86
	135
	162
	282
	285
	325
	479
	966
0S-1590	45
	70
	94
	103
	113
	129
	162
0S-1591	15
	75
	80
	103
	129
	135
	162
	167
	168
	445
0S-1594	11
	14
	15
	31
	34
	45
	75
	80
	86
	112
	123
	125
	127
	129
	135
	137
	141
	143
	162
	282
	285
	325
	422
	445
	493
0S-1595	11
	14
	22
	52
	129
	705
	966
0S-1602	480
0S-1608	86
	123
	125
0S-1615	70
0S-1617	8
	11
	86
0S-1618	51
	127
	145
0S-1619	103
	162
	966
0S-1620	325
0S-1621	32
	325
0T-0055	15
	36
	45
	86
0T-0065	129
0T-0102	22
	84
0T-0244	1051
0T-0573	32
	57
	80
0T-0768	479
1	
1A-0168	59
1A-1135	704
1A-1460	52
	59
	116
	129
1A-2029	17
	22
	40
	49
	61
	75
	103
	112
	113
	129
	135
	137
	141
	143
	162
	173
1A-2223	840
1A-2358	424
1A-2519	536
1A-4790	652
1A-5183	135
1A-5822	477
1A-5964	80
	137
1A-7669	966
1A-8651	51
1A-9579	19
	72
	73
1B-2524	445
1B-2578	304
1B-2790	22
	57
	966
1B-3057	1001
1B-3573	95
1B-4218	54
1B-4367	47
1B-4430	733
1B-7182	127
	646
	966
1B-8701	744
1B-8708	840
1B-8714	455
1B-8736	454
1B-9575	206
1D-4164	543
1D-4539	179
	182
	183
	185
1D-4541	179
1D-4566	68
	291
1D-4569	445
1D-4572	399
	840
1D-4574	52
1D-4586	59
1D-4593	54
1D-4595	129
1D-4597	52
	325
1D-4706	135
1D-4717	168
1F-0748	129
1F-0750	51
	173
	282
	285
1F-1006	477
1F-6762	763
	765
1F-7958	15
	59
	325
1G-5927	878
1G-5928	728
	876
	877
	879
1G-8878	771
1H-1023	295
1H-1200	673
1H-2629	295
1H-3244	195
	354
1H-3338	303
1H-5514	173
1H-5728	387
	865
	869
1H-7339	852
	857
1H-8128	191
	420
	711
1H-8278	422
	468
1H-8296	1067
1H-8306	190
	191
	193
1H-9696	188
	857
1H-9779	784
1J-2859	425
1J-2920	579
1J-4034	38
1J-5799	1064

► **PRIMARY REFERENCE**

PART NUMBER INDEX

Part	Page
1J-8497	736
1J-9671	84
	191
	712
1K-4455	857
1K-4649	224
1K-6853	385
	473
1K-6985	840
1K-9005	79
	409
1L-0766	208
	212
1L-1722	208
	212
1L-3769	175
1L-5316	145
1L-8497	289
1M-3909	454
1M-4543	197
1M-6573	401
1M-6718	738
1M-9968	295
1M-9971	296
1N-2914	14
1N-3006	129
1N-3150	61
1N-3193	103
1N-3225	103
1N-3333	80
1N-4381	103
1N-4636	188
1N-4637	94
1N-4666	61
1N-5410	444
1P-1367	75
1P-2636	405
	409
1P-2662	405
	409
1P-2807	1090
1P-3703	677
	789
	804
	865
	869
1P-3704	634
	693
	724
	789
	796
	804
1P-3705	687
	693
	724
	739
	789
	796
	804
	807
	810
	824
	827
	828
	865
	869
1P-3706	433
	684
	693
	789
	792
	799
	804
	806
	807
	809
	826
	828
1P-3707	433
1P-3708	413
	433
	714
	797
1P-3709	433
	792
	810
1P-3958	444
1P-4278	146
1P-4578	677
	792
	815
	857
1P-4579	433
	634
	681
	684
	797
	799
1P-4582	191
	433
	634
	677
	684
	687
	767
	792
	797
	799
	802
1P-4584	677
	797
1P-4695	424
1P-4696	424
1P-5411	396
1P-5412	396
1P-5767	687
	693
	789
	804
1P-6356	1001
1P-7009	1001
1P-7016	433
	687
	792
1P-7017	687
1P-7625	179
1P-9390	157
1P-9699	493
1Q-5459	1093
1Q-5461	1093
1Q-5468	1093
1R-0750	187
1R-0755	173
1S-0994	107
	119
	197
	333
	336
	338
	375
	378
	413
	630
	652
	687
	693
	782
	1085
	1094
1S-1015	197
	227
	433
1S-6478	479
1S-7106	75
1S-7251	197
	298
	320
1S-7446	295
1S-8480	444
1S-8560	646
1S-9110	444
1S-9292	840
1S-9593	492
	829
	830
	893
	894
1T-0132	143
	425
1T-0416	495
1T-0550	422
1T-0720	36
	49
	162
1T-0765	143
1T-0766	444
1T-0808	444
1T-1897	480
1U-0322	720
	724
1U-0323	720
	724
1U-0739	930
1U-0740	930
1U-1655	840
1U-2226	692
	▶737
1U-2827	852
	855
1U-4692	673
1U-4737	704
1U-9804	547
1V-1984	370
1V-6137	384
1V-6341	52
1V-6659	384
	385
1V-7038	755
	757
	759
	761
	763
	765
	906
	908
	910
1V-8031	913
1W-0410	6
	▶143
1W-1475	129
1W-1563	61
1W-1564	61
1W-1565	61
1W-1568	61
1W-2060	61
1W-2447	80
1W-2644	173
1W-2925	179
1W-3601	117
	147
1W-4935	129
1W-4954	15
1W-6005	94
	105
1W-6114	61
1W-6523	498
1W-7559	173
1W-7990	86
1W-8129	89
1W-8805	103
2	
2A-1531	325
2A-3398	409
	477
2A-3746	444
2A-4429	27
2A-4639	38
	129
	162
	173
2A-5220	54
2A-5546	173
2A-6833	776
2A-6834	776
2A-6836	776
	778
2A-6936	949
2A-6937	949
2B-0947	129
	382
2B-2404	405
2B-2694	86
2B-2695	8
	36
	51
	75

▶ **PRIMARY REFERENCE**

PART NUMBER INDEX

Part	Page	Part	Page	Part	Page	Part	Page
	325		792		413		739
	488	2H-3940	208		425		767
2C-9259	915		212		432		864
	917		260		641		865
	919		622		643		869
	920	2H-9445	445		673	2S-4872	488
	922	2H-9523	988		737		489
	924		990		814	2S-7010	634
2D-0094	724	2H-9524	988		815	2S-7056	34
2D-1290	247		990		892	2S-7433	797
2D-2508	440	2J-0157	175	2N-0931	135	2S-9750	493
	441	2J-0917	673	2N-1931	964	2T-1922	227
	462	2J-0918	673	2N-2765	162	2T-2396	119
	463	2J-2866	840		172		549
2D-4202	767	2J-3506	59	2N-2766	164		552
	855	2J-5608	433	2N-3253	405		556
2D-6235	74	2J-6274	15		409		561
	953	2J-7227	424	2N-3254	405	2T-2991	627
2D-6392	295	2J-8163	295	2N-8374	11		630
	646		383	2N-8630	129	2T-3019	333
2D-6416	541		844	2P-1279	498		360
	975		845		566		370
	1037	2J-8914	424	2P-1293	107	2V-0099	309
	1039	2K-0337	455		342	2V-0460	11
2D-6506	499	2K-2140	1058		586	2V-0600	433
2D-6642	11	2K-3455	622		628		797
	389	2K-4472	418		630	2V-2072	464
	424		420		644	2V-3216	1073
	493	2K-4821	195		785	2V-3726	982
2D-7325	622	2K-4973	80		815	2V-4387	393
2D-8009	454		157		821	2V-4869	146
2D-8364	499		950	2P-1296	123	2V-5906	422
2D-8540	468		1067		125		479
2D-8910	622	2K-8198	173	2P-1326	123	2V-7859	652
2D-9535	1058	2K-9062	384		125	2V-8259	378
2D-9572	425		385	2P-2975	320		1006
2F-6678	295	2L-0273	96	2P-4005	75	2W-0598	179
2F-7306	117	2L-6679	295	2P-4304	75	2W-0752	14
2F-9064	403	2L-8049	225	2P-4339	309		86
2G-4553	499	2L-8057	225	2P-7636	86		89
2G-4563	472	2L-8071	225		123	2W-1053	80
2G-5459	611	2L-8081	225		125	2W-1055	80
2G-6664	987	2M-0849	29	2R-1230	646	2W-1635	80
2G-8767	320	2M-2742	11	2R-1920	896	2W-1969	80
	367	2M-3818	477		898	2W-2288	20
2H-2722	718		749		900	2W-2609	137
2H-3429	175		751	2R-1939	567	2W-2895	45
	296	2M-4009	744		571	2W-2940	22
	489		982	2R-2376	982	2W-3146	127
2H-3744	69	2M-7041	493		996	2W-3150	119
2H-3758	936	2M-9189	96	2S-0115	445	2W-3973	179
	937		99	2S-0696	488	2W-6059	129
2H-3855	325		1094		489	2W-6078	289
2H-3920	306	2M-9780	61	2S-2923	9	2W-6081	289
	309		93	2S-3440	146	2W-6082	289
2H-3922	300		109		784	2W-7226	80
2H-3924	953		176	2S-4078	91	2W-7940	503
2H-3925	953		179		432		506
2H-3932	439		185		433	2W-9729	6
2H-3933	468		325		445		▶144
2H-3934	433		326		499	2Y-1834	552
	687		333		627	2Y-3812	370
	792		336		630	2Y-5855	844
2H-3935	706		360		720		
	708		387		724		

▶ **PRIMARY REFERENCE**

PART NUMBER INDEX

Part	Page
3	
3A-3692	326
3B-0551	190
	191
	193
3B-0623	24
3B-0645	24
3B-1915	38
	42
	61
	78
	86
	123
	125
	137
	144
	173
	966
3B-1925	586
3B-3638	225
3B-4501	953
3B-4505	8
	289
3B-4607	652
	743
3B-4617	11
3B-6552	38
	160
	208
	212
	260
3B-6555	784
3B-6768	586
3B-7259	784
3B-7262	586
3B-7738	622
3B-7764	154
3B-8153	11
3B-8453	143
3B-8485	571
	575
3B-8489	472
	473
	474
3B-8686	11
	38
3C-6969	375
3D-0490	15
3D-2824	17
	96
	99
	107
	119
	145
	146
	147
	177
	299
	418
	420
	428
	432
	445
	498
	601
	615
	627
	628
	630
	655
	692
	693
	724
	739
	742
	767
	780
	782
	847
	865
	869
	1093
3D-3295	439
3D-6370	622
3D-6678	852
3D-7587	208
	212
3D-8317	405
	489
	493
3D-9799	354
3E-0109	309
3E-0155	▶306
	309
3E-0400	953
3E-2310	615
	692
3E-2333	712
3E-2345	615
3E-3000	962
	978
3E-3362	203
	492
3E-3365	194
	265
	278
	299
	302
	307
	312
	325
	333
	369
	377
	675
	771
	893
	894
	953
	1001
3E-3368	273
	275
	277
3E-3371	173
	203
	236
	268
	269
	270
	271
	274
	276
	279
	281
	310
	340
3E-3374	744
3E-3377	340
	1014
3E-3383	309
3E-3386	309
3E-3389	306
	391
3E-4051	1001
3E-4054	1001
3E-4057	1001
3E-4061	1001
3E-4334	845
3E-4352	86
3E-4353	982
3E-4371	425
	444
3E-4887	69
3E-4888	69
3E-5136	309
3E-5165	309
3E-5169	375
3E-5181	340
3E-5239	353
3E-5275	309
3E-5464	954
3E-5519	354
3E-6144	953
3E-6145	953
3E-6147	953
3E-6277	954
3E-6280	953
3E-6282	953
3E-6328	▶194
	309
3E-6389	▶236
	309
	996
3E-6602	982
3E-6747	646
3E-6900	971
3E-6908	393
3E-6924	991
3E-7252	953
3E-7253	953
3E-7255	953
3E-7256	953
3E-7257	953
3E-7258	953
3E-7403	815
3E-7404	133
3E-7443	785
3E-7768	296
3E-7771	295
3E-7996	311
3E-8004	857
3E-8009	913
3E-8010	913
3E-8011	833
	913
3E-8012	912
	913
3E-8020	993
3E-8025	730
	881
3E-8048	269
3E-8082	147
	148
3E-8102	1090
3E-9850	981
3F-0379	295
3F-3442	445
3F-5792	15
	425
3F-6795	52
3F-6808	52
3F-9556	195
3G-0361	855
3G-1700	724
3G-1713	840
3G-1716	840
3G-1718	840
3G-1719	840
3G-2349	840
3G-2683	720
	724
3G-3721	646
3G-4090	852
3G-4711	1064
3G-4779	840
3G-5003	864
	865
	869
3G-5022	755
	757
	759
	761
	763
	765
3G-5423	656
3G-5750	840
3G-5980	855
3G-7426	646
3H-0442	622
3H-3244	320
3H-5932	185
	966
3H-7654	61
	326
	836
3J-1907	84
	89
	119
	133
	139
	141
	147
	185
	333
	336
	342
	363
	369
	370

▶ **PRIMARY REFERENCE**

PART NUMBER INDEX

Part	Page	Part	Page	Part	Page	Part	Page
	380	3J-7354	24		555		1094
	387		89		560	3P-3461	387
	418		111		566	3P-4053	493
	420		137		576	3P-6061	143
	428		139		577	3P-7149	444
	431		147		578	3P-7447	444
	432		179		601	3P-7558	444
	471		365		615	3P-7564	444
	477		369		639	3P-7566	444
	486		405		662	3P-7570	445
	487		418		677	3P-7575	444
	493		420		693	3P-7586	444
	615		429		697	3P-7601	444
	616		433		712	3P-7612	445
	634		498		722	3P-7832	445
	645		527		723	3P-8485	489
	652		529		739	3P-9900	1067
	672		548		744	3R-2437	890
	675		549		792	3R-4825	622
	676		552		811	3R-5862	622
	677		555		814	3R-8801	295
	684		556		815	3S-0004	454
	687		560		873	3S-0036	444
	692		561		885	3S-0142	480
	693		566		1093	3S-1282	480
	697		571	3K-0835	310	3S-1307	45
	712		575		391		47
	724		665	3K-2559	445	3S-2093	309
	738		667	3K-2889	59		331
	771		673	3K-4897	1060		495
	772		739	3K-6113	480		614
	789		749	3K-6905	79		953
	792		751		325		954
	799		755		409		996
	804		757	3K-9608	468		1070
	811		759	3K-9616	468	3S-2708	445
	813		761	3K-9770	929	3S-3875	425
	814		763		936	3S-6115	208
	815		765		937		212
	820		814		938	3S-6162	412
	821		815		939		755
	842	3J-7719	289		940		757
	847	3J-9196	70	3L-3380	295		759
	863	3K-0158	527	3L-5893	146		761
	865	3K-0360	84	3L-6513	96		763
	869		93		99		765
	873		96	3L-7634	197	3S-6605	445
	883		99		320	3S-7023	498
	884		119		367		512
	889		173	3N-1315	724		513
	1082		176	3N-3763	296		833
	1085		179	3N-3790	1090	3S-8035	444
	1094		326		1091	3S-8664	333
3J-4818	1067		342	3N-4809	982	3S-8665	312
3J-5389	787		369	3P-0439	852		552
	831		370	3P-0647	656		576
	1034		413	3P-0654	61		577
3J-5390	549		418	3P-0655	80		578
	552		420	3P-0657	103	3S-9557	312
	556		425	3P-0764	80	3S-9643	118
	561		428	3P-1210	840	3S-9847	420
	592		432	3P-1669	409	3T-0203	341
	594		433	3P-1896	17	3T-0204	335
3J-6933	724		548	3P-1932	433		341
3J-7352	147		552	3P-2404	227	3T-2511	355

► **PRIMARY REFERENCE**

PART NUMBER INDEX

Part	Page
3T-3410	341
	354
3T-3412	311
	341
3T-3418	295
3T-3422	295
3T-3423	295
3T-3424	295
3T-3434	296
3T-4688	225
3T-4709	295
3T-4710	295
3T-4711	295
3T-6774	953
3T-7857	541
3T-9494	295
	296
3T-9524	295
3T-9525	295
3V-3263	1073
3V-3308	11
3V-5541	697
3V-6557	409
3V-6909	776
	778
3V-7689	957
	982
3W-3465	982
4	
4B-1021	541
4B-1240	354
4B-1326	265
4B-1550	704
4B-2043	374
4B-2049	296
4B-2051	338
4B-2363	61
4B-2913	652
4B-3140	15
	80
4B-3388	45
4B-3835	840
4B-3903	966
4B-4158	840
4B-4274	354
	583
4B-4276	1064
4B-4278	1067
4B-4281	326
4B-4550	11
	38
	384
	385
	472
	527
	529
4B-4863	954
4B-5167	840
4B-5275	987
4B-8407	15
4B-9782	145
	444
4B-9783	724
4B-9784	405
	424
	477
4B-9880	489
	493
4D-0487	622
4D-0514	540
4D-1135	622
4D-1138	622
4D-1326	11
	304
4D-1544	622
4D-2297	673
4D-2560	260
	622
4D-2847	208
	212
4D-2886	724
4D-3118	289
4D-4508	405
	753
4D-6243	212
4D-6434	567
4D-6466	567
	571
4D-7388	785
4D-7534	403
4D-7536	403
4D-7735	375
4D-7794	312
	393
4D-7969	208
4D-8123	336
	342
	363
	380
4D-8148	389
	445
4D-8948	342
4D-9128	1058
4D-9976	208
	212
4E-0339	962
4E-1384	993
4E-1411	996
4E-2401	743
4E-3439	662
4E-3440	744
4E-3441	662
4E-3445	744
4E-5705	978
4E-5718	978
4E-5719	978
4E-5720	978
4E-5722	978
4E-5724	978
4E-5725	993
4E-5726	993
4E-6335	1064
4E-6439	1064
4E-6444	1064
4E-6445	1064
4E-6446	1064
4E-6509	959
4E-6510	959
4E-6523	1060
	1064
4E-6526	1060
4E-6867	662
4E-7099	650
	651
4E-7163	1064
4E-7204	996
4E-7205	996
4E-7412	982
4E-7449	978
4E-7450	978
4E-7451	993
4E-7520	390
4E-7627	390
4E-7628	390
4E-7748	993
4E-7749	993
4E-7839	993
4E-7924	409
4E-8030	991
4E-8035	991
4E-8038	991
4E-8266	205
	231
4E-8293	996
4E-8318	1058
4E-8319	1058
4E-8320	1058
4E-8325	1058
4E-8329	1058
4E-8338	1058
4E-8340	1058
4E-8413	▶390
	961
4E-8537	1030
4E-8557	393
4E-8560	393
4E-8561	393
4E-8722	997
	1060
	1064
4E-8917	991
4E-8937	1030
4E-8940	1030
4E-8975	255
4E-8976	255
4E-8984	972
4E-8995	1036
4E-8996	972
4E-9055	309
	1028
4E-9056	972
4E-9151	991
4E-9152	980
4E-9173	1060
	1064
4E-9174	1060
	1064
4E-9265	743
4E-9268	743
4E-9536	993
4E-9537	993
4E-9640	996
4E-9664	608
4E-9854	744
4E-9855	744
4E-9924	255
	257
4E-9925	255
	257
4F-2294	305
4F-2926	646
4F-3714	395
4F-3765	61
	78
4F-4879	1057
4F-6464	527
	664
4F-7387	143
4F-7388	840
4F-7391	445
4F-9351	103
4H-2558	542
	622
	625
	964
4H-3820	1058
4H-6112	413
4H-6147	208
	212
	622
	625
	964
4H-7869	291
	292
	293
4H-7925	445
4H-9027	650
	651
4H-9105	688
4I-3723	520
4I-5956	710
4I-5957	710
	844
4I-6206	815
4I-8933	433
4J-0520	619
	677
	697
	767
4J-0521	489
4J-0522	433
	634
	677
	681
	684
	687
	792
	797
	815
	852
	865
	869
	885
4J-0523	852
	855
4J-0524	433
	634

▶ **PRIMARY REFERENCE**

PART NUMBER INDEX

Part	Page	Part	Page	Part	Page	Part	Page
	681		937	4N-1320	129		1086
	684		940	4N-1650	13	4S-4455	91
	739	4K-1388	627	4N-3841	325		342
	797		630	4N-5834	145		365
	799		687	4N-9680	9		370
4J-0526	739		842	4P-0252	14		821
4J-0527	191		890	4P-0519	784		1086
	433	4K-6498	338	4P-0607	146	4S-5367	11
	628	4K-6804	464	4P-0685	119	4S-5879	422
	630	4K-8302	552	4P-0692	57	4S-5882	11
	634		1001		86	4S-5898	162
	677	4K-8603	477		179	4S-6525	743
	684	4K-8864	208	4P-0693	123	4S-6668	208
	687		212		125		212
	767		247		179		260
	792		260	4P-0707	78		1001
	797		336	4P-0853	5	4S-7527	964
	799		549		▶31	4S-7606	260
	802		556	4P-1654	127		622
	857		561	4P-1661	5		625
4J-0528	739		567		▶397	4S-8537	444
4J-1704	673		571	4P-3485	179		445
4J-3754	852		575	4P-3896	127	4S-8541	444
4J-3815	852		1073	4P-3897	127		445
4J-3816	852		1086	4P-3966	8	4S-9134	455
4J-3914	622	4K-9097	185	4P-3977	8	4T-1573	▶733
4J-3957	622		966	4P-4460	86		735
4J-5267	619	4K-9429	1027	4P-4642	56	4T-1684	665
	641	4L-2729	295	4P-4917	103		667
4J-5309	739	4L-3641	634	4P-5211	59	4T-1860	▶738
4J-5477	89	4L-4986	418	4P-5217	52		739
	111	4L-6454	139	4P-5218	52	4T-1897	646
	405	4L-6499	304	4P-5426	5	4T-1901	646
	432	4L-6944	646		▶54	4T-1902	646
	498	4L-7125	1054	4P-5500	103	4T-1904	646
	548	4L-9337	84	4P-5752	135	4T-1905	646
	549		167	4P-6006	146	4T-1906	646
	552		1001	4P-7048	185	4T-1907	646
	555	4L-9564	464	4P-7276	116	4T-1908	646
	556		479	4P-7428	326	4T-1909	646
	560	4M-0061	586	4P-7429	326		▶656
	561	4M-1708	444	4P-7581	84	4T-1910	656
	566	4M-1827	296		89	4T-1911	656
	571	4M-1828	295		312	4T-1913	656
	575	4M-1829	295		326	4T-1914	656
	576	4M-1831	295		331	4T-1915	646
	577	4M-1853	296		355	4T-1916	646
	578	4M-1854	296	4P-7680	164	4T-2496	735
	592	4M-1896	296	4P-7850	89	4T-3122	840
	594	4M-2381	489	4P-8134	38	4T-4707	929
	615		493		89		936
	616	4M-2442	38		284		937
	634		42		326	4T-6073	884
	684	4M-3248	94		355		889
	799		105	4P-8158	139	4T-7023	840
	820	4M-5281	586	4P-8222	139	4T-8690	734
	847	4M-5317	586	4P-8223	139	4T-8691	734
	1082	4M-5397	444	4P-8366	119	4T-8698	852
	1085	4M-6425	1045	4P-9853	61		857
4J-7533	654	4M-6582	954	4S-1936	365	4T-8729	703
	739	4M-7470	542		567		705
4J-8251	855	4M-8973	586	4S-1962	197		837
4J-8252	855	4N-0683	22		312		839
4K-0367	52	4N-0933	15		320	4T-8761	703
4K-0684	936	4N-0996	61		367	4T-9298	703

▶ **PRIMARY REFERENCE**

PART NUMBER INDEX

Part	Page
	705
	837
	839
4T-9380	840
4T-9425	703
	705
	837
	839
4T-9426	703
	705
	837
	839
4T-9948	▶734
	735
4V-0661	536
	541
	583
4V-1541	652
4V-1718	527
	664
4V-8256	950
4V-8577	1067
4V-9803	590
4W-0327	129
4W-0530	133
	137
	139
4W-0531	133
	137
	139
4W-1807	179
4W-3027	72
	73
4W-3034	72
	73
4W-3100	135
4W-3588	333
	697
4W-3864	141
4W-4586	47
4W-4813	21
	22
4W-5015	14
4W-5385	849
4W-5596	80
4W-5727	38
4W-5890	80
4W-5940	173
4W-5977	179
4W-6633	▶289
	291
4W-6634	287
	▶291
4W-6664	13
4W-7711	129
4W-7714	129
4W-7725	119
4W-8934	129
4W-9977	171
4W-9992	129
4Y-5812	885

5

Part	Page
5A-4252	197
	367
5B-0213	25
5B-2183	541
5B-2638	135
	179
5B-5821	13
	409
	840
5B-6565	953
5B-7660	208
	212
5B-7890	25
5B-9192	614
5B-9318	11
5B-9603	137
5C-2874	338
	614
5C-2890	255
	257
	303
	312
	614
	652
	953
	988
	990
	993
	997
	1054
	1067
5C-6565	166
	338
5C-7261	240
	249
	266
	284
	338
	393
	515
	614
	743
	972
	988
	990
	993
	1058
	1060
	1064
5C-7423	393
5C-9553	109
	393
	993
	997
	1030
	1060
5D-1026	980
	1008
5D-3954	52
5D-5569	586
5D-5957	162
5D-6176	387
5D-6297	529
5D-6298	529
5D-6428	445
5D-6993	987
5D-6994	987
5D-6996	987
5D-6997	987
5D-6998	▶987
	988
	990
5D-7132	988
	990
5D-7133	988
	990
5D-7523	382
	477
5D-9514	52
5F-0304	15
5F-2465	527
5F-3092	422
	425
5F-3106	700
	702
	835
5F-3144	38
	840
5F-3488	767
5F-3999	710
5F-4899	80
	129
	139
	179
5F-5434	9
5F-6562	69
	869
5F-7054	425
5F-8000	852
	888
	890
5F-9035	742
5F-9144	675
	771
5F-9657	22
	405
5F-9891	763
	765
5G-4313	724
5G-6973	542
	651
5G-8759	4
5H-0793	480
5H-2824	409
5H-3252	710
	844
5H-4744	79
	431
5H-4778	208
	212
	260
	586
	625
	964
5H-6005	852
	855
5H-6734	144
	191
5H-6822	718
5H-8848	797
5H-8853	815
5H-8991	498
5I-3054	744
5I-3055	744
5I-3333	520
	524
5I-4267	844
5I-4275	844
	845
5I-4277	676
	772
5I-4303	842
5I-4306	842
5I-4341	676
	772
5I-4374	772
5J-2926	673
5J-2974	413
5J-3941	401
5J-5314	296
5J-5402	611
5J-6153	883
	884
	889
5J-7438	767
5K-1568	586
5K-1787	665
	667
5K-3294	147
5K-3968	468
5K-4778	331
	342
	549
5K-5068	160
5K-8451	260
	625
5K-9090	91
	413
	428
	503
	506
	616
	619
	627
	630
	632
	634
	641
	687
	767
	785
	814
	815
	850
	1093
5K-9660	628
	785
5L-1100	646
5L-1761	188
	495
5L-5032	445
5L-6766	997
5M-2057	11

▶ **PRIMARY REFERENCE**

PART NUMBER INDEX

Part	Page	Part	Page	Part	Page	Part	Page
	852	5N-1940	143		177	5P-2618	191
	855	5N-2611	141		197	5P-2645	137
5M-2894	13	5N-4383	141		342	5P-3166	179
	14	5N-5534	338		367	5P-3345	164
	15	5N-5536	338		425	5P-3587	1093
	17	5N-8363	289		433	5P-3723	405
	22	5N-8365	289		503	5P-3729	265
	25	5N-8367	289		506	5P-3875	164
	32	5N-8368	289		514	5P-3928	953
	36	5N-8372	289		515	5P-3929	1001
	38	5N-8373	289		538	5P-3945	953
	40	5N-8374	289		542	5P-3946	1001
	45	5N-8375	289		552	5P-3948	1001
	49	5N-8377	289		580	5P-3950	953
	57	5N-8378	289		583	5P-3951	1001
	61	5N-8379	289		589	5P-3961	164
	70	5N-8380	289		599	5P-4115	235
	74	5N-8381	289		601	5P-4116	370
	75	5N-8383	289		606		821
	78	5N-8384	289		632		953
	80	5N-8387	289		634		1036
	86	5N-8388	289		671		1054
	89	5N-8390	289		672	5P-4295	413
	94	5N-8403	289		739		601
	103	5N-8424	289		746	5P-4318	185
	112	5N-8425	289		789	5P-4325	158
	123	5N-8427	289		799	5P-4423	1067
	125	5N-8428	289		804	5P-4479	57
	127	5N-9574	289		847	5P-4484	384
	129	5P-0047	865		859		385
	135		869		861	5P-4626	52
	137	5P-0049	824		1023	5P-4868	72
	143		828		1040		73
	148	5P-0076	13		1082		77
	162		61		1094	5P-4892	61
	164	5P-0372	1058	5P-1175	1090		80
	173	5P-0537	70	5P-1255	784	5P-4900	86
	179		173	5P-1261	77	5P-4946	385
	185		243	5P-1262	133	5P-5454	1060
	282		993	5P-1269	119	5P-5528	527
	285		997	5P-1293	413		529
	326	5P-0597	72	5P-1404	387		571
	395		73		815	5P-5672	953
	445	5P-0598	284	5P-1465	147	5P-5700	61
	479	5P-0745	197	5P-1471	158	5P-5777	615
	493	5P-0747	298	5P-1669	444	5P-5824	1060
	583		320	5P-1670	444	5P-5846	80
	966	5P-0761	197	5P-1717	291		96
	1045		367	5P-1945	123		99
5M-3034	296	5P-0764	146		125	5P-5855	61
5M-3320	454	5P-0765	784	5P-1979	425	5P-5874	730
5M-6213	147	5P-0767	1008	5P-1981	498		842
	625	5P-0840	17	5P-2231	84		881
	787		22	5P-2236	755	5P-5908	954
	831		31		757	5P-5926	953
5M-6214	160		34		759	5P-5969	980
	397		36		761	5P-6008	340
	495	5P-1075	56		763	5P-6010	1067
5M-7925	444		173		765	5P-6047	479
5M-7937	11	5P-1076	107	5P-2322	913	5P-6129	980
5M-9622	489		139	5P-2369	776	5P-6261	488
5M-9623	489		147		778		489
5M-9624	489		152	5P-2424	382	5P-6264	1006
	493		159	5P-2523	424	5P-6414	473
5N-1939	143		166	5P-2525	424	5P-6651	445

► **PRIMARY REFERENCE**

PART NUMBER INDEX

Part	Page
5P-6670	953
5P-6718	873
5P-6724	652
5P-6726	444
5P-6727	445
5P-6868	405
	409
5P-6879	1010
	1012
5P-6944	369
5P-6994	567
	639
	1094
5P-7070	953
5P-7154	123
	125
5P-7213	453
	703
	705
5P-7462	433
	677
	697
	811
	1001
	1006
5P-7463	433
	677
	697
	811
	1001
	1006
5P-7464	96
	99
	227
	433
	677
	816
5P-7465	96
	99
	227
	433
	677
	816
5P-7466	79
	326
	433
	616
	619
	644
	782
	799
5P-7467	79
	326
	433
	616
	619
	644
	782
	799
5P-7468	147
	159
	342
	433
	515
	632
	635
	677
	767
	792
	1001
5P-7469	147
	159
	342
	433
	515
	632
	635
	677
	768
	792
	1001
5P-7470	208
	212
	338
	433
	619
	635
	681
	792
	821
	1034
	1094
5P-7471	208
	212
	338
	433
	619
	635
	681
	792
	821
	1034
	1094
5P-7483	543
	583
5P-7530	70
5P-7648	336
5P-7703	208
	212
	338
	433
	619
	1034
5P-7817	80
	84
5P-7854	312
	413
	503
	506
5P-7958	310
	374
5P-7970	873
5P-8065	488
5P-8068	61
5P-8077	672
	687
	693
	789
	804
	807
	810
	824
	826
	827
	828
5P-8112	79
	326
	433
	616
	619
	644
	782
	799
5P-8182	433
	635
	681
	792
	821
	1094
5P-8210	22
5P-8245	9
	11
	14
	15
	22
	36
	38
	42
	45
	52
	59
	68
	75
	95
	116
	129
	206
	291
	326
	370
	382
	385
	387
	401
	405
	439
	445
	477
	479
	498
	840
	857
	966
5P-8247	51
	52
	59
	195
	425
	464
	468
	471
	479
	499
	611
5P-8248	42
	47
	59
	425
	673
5P-8249	21
5P-8250	38
5P-8356	656
	728
	876
	877
	879
5P-8362	940
5P-8444	342
	632
	635
	677
	768
5P-8500	74
	78
5P-8502	74
	78
5P-8525	1070
5P-8823	929
	936
	937
	938
	939
	940
5P-8839	44
5P-8874	697
5P-8939	197
	320
	367
5P-8940	162
5P-8998	586
5P-9085	251
	252
	259
	336
	342
	380
	1082
	1086
5P-9119	855
5P-9147	425
5P-9297	331
	333
	336
	342
	349
	351
	360
	370
	776
	778
	1073
5P-9299	342
	372
	378
5P-9514	289
5P-9617	428
	813
5P-9890	86
5Q-9075	785
5R-5927	514

► **PRIMARY REFERENCE**

PART NUMBER INDEX

Part	Page
5R-7136	32
	36
	45
5R-7137	36
	45
	52
5S-0003	179
	966
5S-1522	837
	839
5S-2106	11
5S-4245	312
5S-4246	391
5S-4437	493
5S-5880	444
5S-7001	737
	892
5S-7018	737
	892
5S-7348	201
5S-7349	195
	233
5S-7379	1001
5S-7382	96
	99
	119
	1008
5S-7383	1045
5S-7816	489
5T-1049	651
5T-1831	776
	778
5T-4789	38
5T-4896	411
5T-5009	592
	594
	▶596
5T-5012	548
	552
	555
	560
	592
	594
5T-5045	596
	597
	598
5T-5185	403
5T-6374	179
5T-7628	888
	890
5T-8285	625
5T-8877	431
5T-9482	473
	474
5T-9796	440
	441
	462
	463
5T-9797	441
	462
	463
5T-9866	440
	441
	462
	463
5V-1496	1049
5V-5669	439
5V-5670	439
5V-6103	552
5V-8913	820
5V-9221	75
	552
5Y-1013	975
	1037
	1039

6

Part	Page
6A-5591	130
	387
	400
	406
6A-7844	1028
6B-1557	395
6B-4196	991
6B-4540	312
6B-5072	80
6B-5262	477
6B-6205	615
6B-6684	836
6B-8129	784
6B-8865	38
6B-9081	227
6B-9202	80
6B-9664	622
6C-9149	404
6D-1004	645
6D-1641	177
	639
	697
	821
	1008
6D-3479	312
	336
	351
	365
	370
	372
	549
	556
	561
	571
6D-3886	1058
6D-3888	409
6D-4244	99
	208
	212
	342
	355
	378
	1082
	1086
6D-4246	91
	119
	147
	378
	580
	1001
6D-4247	662
6D-4636	342
	576
	577
	578
	619
	639
	697
	821
	1086
	1094
6D-6433	555
	560
6D-7573	338
	1094
6D-7690	405
6D-7889	840
6D-9157	161
	418
	420
6E-0245	749
	751
6E-0308	749
	751
6E-0381	722
	723
6E-0487	749
	751
	753
6E-0521	667
6E-0524	665
	667
6E-0526	665
	667
6E-0529	664
	▶665
6E-0530	665
6E-0755	874
	875
6E-0758	876
	877
6E-0759	876
	877
6E-0761	876
	877
6E-0763	728
	876
	877
	879
6E-0764	876
	877
	879
6E-0766	876
	877
	879
6E-0770	729
	878
6E-0859	739
6E-0867	702
	▶703
6E-0868	700
	▶704
6E-0874	671
	▶673
6E-0875	739
6E-0878	739
6E-0923	1064
6E-1024	706
	708
	▶730
6E-1058	855
6E-1059	855
6E-1127	885
6E-1190	852
6E-1191	852
6E-1252	687
	▶720
6E-1273	724
6E-1274	724
6E-1275	724
6E-1285	855
6E-1286	720
6E-1291	865
6E-1292	869
6E-1299	724
6E-1316	865
	869
6E-1540	708
6E-1607	731
	732
6E-1776	755
	757
	759
	761
6E-1873	869
6E-1875	840
6E-2509	837
6E-2510	837
6E-2817	703
6E-2943	703
	704
	705
	837
	840
6E-3184	891
6E-3283	706
	708
6E-3369	659
6E-3414	876
	877
	879
6E-3511	724
6E-3512	724
6E-3767	728
	878
6E-3769	728
	878
6E-3796	744
	▶873
6E-3840	710
	844
	845
6E-3850	730
	▶731
6E-3851	731
6E-3852	731
	882
6E-3855	731
	882
6E-3857	730
	▶732

▶ **PRIMARY REFERENCE**

PART NUMBER INDEX

Part	Page	Part	Page	Part	Page	Part	Page
6E-3861	732	6G-9333	109		889		375
	880	6H-3977	852	6K-1909	139	6T-3642	355
6E-3866	676	6H-6698	137	6K-1972	57	6T-3643	353
6E-3869	658	6H-9361	768	6K-2430	464	6T-6080	404
6E-3872	660	6I-0723	61	6K-3274	954		541
6E-3873	676	6I-0724	61	6K-3607	185		847
	772	6I-0761	11	6K-3771	36		849
6E-3874	676	6I-0804	86		45		859
6E-4040	739	6I-0805	86	6K-5535	86		861
6E-4041	739	6I-0812	86	6K-5536	86	6T-7695	991
6E-4046	739	6I-1418	206	6K-6307	432	6T-9222	418
6E-4475	888		353	6K-8178	622		420
	890	6I-2431	152		625	6V-0301	601
6E-4521	879	6I-2435	152		641	6V-0352	978
6E-4536	874	6I-2509	156		776		982
	875	6I-2510	156		778	6V-0387	8
6E-4812	890	6I-4225	146		1006	6V-0400	677
6E-4983	673		538		1082		804
6E-4988	704	6I-4467	156	6K-8420	123		865
6E-4989	704	6I-4950	118		125		869
6E-4991	704	6I-8426	479		148	6V-0422	431
6E-4992	704	6I-8427	479	6L-1883	9	6V-0425	797
6E-4994	704	6I-8563	431	6L-3005	162	6V-0439	499
6E-5102	353		▶493	6L-5955	208	6V-0484	493
6E-5299	704	6I-8564	493	6L-7159	953	6V-0683	433
6E-5300	704	6I-8575	479	6L-7527	413		677
6E-5379	875	6I-8597	479	6L-8598	393		697
6E-5412	730	6I-8802	945	6L-8617	146		811
	842	6I-8803	942	6L-9716	739		1002
	881	6I-8804	919	6M-1622	385		1006
6E-5444	586		920	6M-9613	95	6V-0852	110
	813		922	6N-0634	8		369
6E-5510	885		924	6N-1127	173		387
6E-5572	840		926	6N-1604	229		428
6E-5582	731		927	6N-3279	296		493
	732	6I-9495	479	6N-3826	295		693
6E-5583	731	6I-9496	479	6N-4414	173		813
	882	6I-9497	479	6N-5926	325		1082
6E-5741	840	6I-9498	479	6N-7523	276		1085
6E-6138	885	6I-9519	488	6N-8599	116	6V-0889	▶295
6E-6549	852		489	6N-9590	119		298
6F-0155	444	6I-9790	424	6P-3236	309	6V-0894	1033
6F-0253	310		444	6P-3860	673	6V-0973	61
	391	6J-0428	736	6P-4943	489		477
	987	6J-1080	852	6P-4977	395	6V-1228	549
6F-0295	413	6J-1081	852	6P-4978	489		556
6F-0612	656	6J-2245	70	6P-7985	422		561
6F-3930	440	6J-2386	703	6P-8855	953		567
	441		704	6P-9783	489		571
	462		705	6P-9784	489		821
	463		837	6P-9785	489		1002
6F-4718	701		839	6P-9786	489		1008
	834	6J-2680	137	6S-1061	320	6V-1249	96
6F-4855	673		139	6T-0363	295		99
6F-4868	61		677	6T-0371	295		227
6F-6673	489		797	6T-0372	295		336
6F-7045	300	6J-3134	440	6T-0465	197		433
6F-8146	433		441	6T-3631	173		677
6G-2256	320		462		374	6V-1322	295
6G-2263	320		463		375	6V-1394	289
	367	6J-3795	673	6T-3632	173	6V-1572	80
	413	6J-4568	742		374		96
	571	6J-7855	289		375		99
	1001	6J-8696	883	6T-3633	173		413
	1008		884		374		677

▶ **PRIMARY REFERENCE**

PART NUMBER INDEX

Part	Page	Part	Page	Part	Page	Part	Page
	693		768	6V-4245	79		464
	789		821		409		499
	824		1094	6V-4248	389		852
6V-1573	80	6V-2370	975		422		857
	96		1037	6V-4298	338		1030
	99		1039	6V-4314	61		1055
	414	6V-2383	1082		74	6V-5842	387
	677	6V-2499	152	6V-4315	61		425
	693	6V-2679	1091	6V-4356	147		464
	789	6V-2687	312	6V-4357	147	6V-5844	387
	824		991	6V-4365	395	6V-5845	527
6V-1574	80		997		425		529
	693	6V-2722	202	6V-4429	499		540
	789	6V-3263	749	6V-4589	80	6V-5851	1070
	824		751		84	6V-6228	10
6V-1581	103	6V-3265	308		86	6V-6457	309
	137		336		123	6V-6458	444
	797		342		125	6V-6560	405
6V-1582	103		816	6V-5039	96	6V-6583	749
	137		1070		99		751
	797		1073		107	6V-6609	130
6V-1668	953	6V-3341	336		119	6V-6640	425
	982		360		139	6V-6703	217
6V-1720	444	6V-3348	17		1002		223
6V-1722	601		22		1094	6V-6716	378
	693		31	6V-5040	96	6V-6765	422
6V-1820	387		34		99	6V-6782	129
	401		45		107		135
6V-1867	433	6V-3378	768		119		1008
	619		776		139	6V-6783	129
	677		778		1002		135
	687		1082		1094		1008
	802	6V-3510	342	6V-5048	75	6V-6809	135
6V-1868	433	6V-3531	477		80	6V-7350	837
	619	6V-3532	387		161		839
	677	6V-3537	22		326	6V-7357	1058
	687	6V-3668	387	6V-5049	115		1070
	802	6V-3683	873		179	6V-7359	227
6V-1869	433	6V-3822	852		326		816
	619	6V-3823	389	6V-5050	84	6V-7419	1070
	677		425		229		1073
	687	6V-3830	784	6V-5066	129	6V-7420	413
	802	6V-3908	80		135	6V-7636	993
6V-1870	799	6V-3916	289	6V-5101	61	6V-7646	743
6V-1871	799	6V-3917	162		162		1049
6V-1872	799	6V-3922	325	6V-5142	733	6V-7673	385
6V-1874	159		731		734		425
	433		732	6V-5201	842	6V-7681	95
	515		880	6V-5220	393	6V-7687	197
	792		882	6V-5324	738		367
6V-1875	96	6V-3935	289	6V-5341	646		390
	99	6V-3937	289	6V-5386	797		590
	414	6V-3938	289	6V-5645	355		847
	677	6V-3939	289	6V-5683	147	6V-7688	404
	693	6V-3940	289	6V-5684	425		847
	824	6V-3959	289	6V-5686	468		849
6V-1889	177	6V-3964	51		471		859
	178	6V-3965	110	6V-5758	729		861
	785		387		878	6V-7728	953
	1094		486	6V-5778	452	6V-7732	499
6V-1899	703		487	6V-5806	704		852
	705		493	6V-5839	387		855
6V-1949	742		692		389		857
6V-2235	107	6V-3971	289		401	6V-7742	387
	342	6V-3987	997		425	6V-7744	517

► **PRIMARY REFERENCE**

PART NUMBER INDEX

Part	Page	Part	Page	Part	Page	Part	Page
	852		548	6V-8633	601	6V-8729	549
	855		549		847	6V-8773	405
	857		552	6V-8634	432	6V-8774	693
	1055		555		792		815
6V-7981	425		556		811		1085
6V-8097	401		560		814	6V-8775	119
	498		561	6V-8635	428		413
6V-8132	540		566		503		425
	665		586		506		428
	667		592		627	6V-8780	406
6V-8154	464		594		634	6V-8781	687
6V-8185	354		601		641		693
6V-8187	354		639		687		814
6V-8188	295		662		814	6V-8782	428
	355		677	6V-8636	652		677
6V-8189	93		697		687	6V-8785	767
	195		712		692	6V-8789	549
6V-8197	439		744	6V-8637	146		556
6V-8198	403		814		601		561
6V-8200	793		815		627	6V-8801	89
6V-8210	962		816		630		167
6V-8224	776		820		782		247
	778		821		1093		355
6V-8225	243		847	6V-8638	227		993
	956		1093		413	6V-8837	953
	1072		1094	6V-8639	425	6V-8928	996
6V-8237	385	6V-8400	93		548	6V-8934	1085
	498		96		555	6V-8936	814
	665		99		560	6V-8937	820
	667		431		639	6V-8942	821
6V-8360	936		432		662	6V-8943	227
	937		433		697	6V-8944	413
6V-8362	309		627		744	6V-8947	630
6V-8363	338	6V-8490	205	6V-8640	176	6V-8949	1040
6V-8369	306		231	6V-8641	89	6V-8978	79
	309	6V-8519	792		432	6V-8979	566
6V-8376	353	6V-8555	821		615	6V-8981	566
	355	6V-8625	549		634	6V-8983	107
6V-8378	304		560		847	6V-8984	632
6V-8397	139		662		1082		785
	147		712		1085	6V-8985	433
	431	6V-8626	109	6V-8642	84	6V-8990	627
	432		641		641		630
	615		643		643		644
	652	6V-8627	84	6V-8647	111	6V-8991	632
	677		616		406	6V-8995	586
	687		684		498		639
	692		799		548		815
	693		847		552		821
	712		1082		555	6V-8997	586
	792		1085		560		644
	811	6V-8628	89		566		815
	814		405		571	6V-8998	632
	815		549	6V-8675	405		634
	816		552	6V-8713	84	6V-9000	89
	821		556	6V-8715	814		549
	863		561	6V-8716	615		552
	1085		566		669		556
6V-8398	119		571		780		561
	147		575		782		566
	227	6V-8629	432		814		575
	413	6V-8632	93	6V-8723	815	6V-9001	139
	425		176	6V-8724	677		147
	428		227		687		652
	432		744		814		814

PART NUMBER INDEX

Part	Page
6V-9002	548
	555
	566
6V-9004	428
6V-9005	850
6V-9007	177
	432
	616
	692
	780
	1093
6V-9008	503
	506
	616
	627
	634
	767
6V-9009	432
6V-9023	96
	99
6V-9027	55
	127
	155
6V-9160	821
6V-9167	540
6V-9169	567
	586
	639
	816
	821
6V-9170	953
6V-9172	632
	635
	785
6V-9173	433
6V-9182	616
	669
	692
	780
	814
6V-9189	239
	245
	246
	247
	250
	518
	1054
6V-9200	139
	814
6V-9327	1060
	1064
6V-9497	309
6V-9511	644
6V-9512	634
6V-9632	205
	231
	233
	310
	349
	351
	353
	743
	954
	991
	993
6V-9667	422
	425
	479
	540
6V-9671	375
6V-9746	91
	107
	146
	176
	177
	428
	429
	432
	580
	601
	615
	616
	627
	628
	630
	644
	655
	669
	692
	697
	780
	782
	785
	787
	814
	815
	820
	821
	831
	1093
	1094
6V-9769	127
6V-9808	1094
6V-9828	434
	616
6V-9829	616
6V-9830	147
6V-9832	616
6V-9833	616
	785
6V-9836	692
	814
6V-9837	119
	147
	586
	592
	594
	712
	815
6V-9840	634
	767
6V-9844	592
	639
	815
6V-9846	780
6V-9847	413
6V-9849	89
	548
	555
	560
6V-9850	692
	814
6V-9851	147
	428
	814
	820
	1093
6V-9852	96
	99
	820
6V-9853	428
	785
	820
6V-9854	627
	767
6V-9855	432
6V-9873	119
	428
	677
	712
	815
	821
6V-9874	697
	1093
6V-9875	627
	630
6V-9877	1093
6W-1594	541
	583
6W-8259	403
6W-8399	401
6W-8400	401
6W-8401	439
6W-8906	1036
6Y-0718	488
6Y-0723	▶488
	495
6Y-0724	489
6Y-0725	488
	489
6Y-0726	488
	489
6Y-0727	489
6Y-0729	488
6Y-0744	489
6Y-1532	744
6Y-2762	495
6Y-3608	480
6Y-5877	444
6Y-6605	405
6Y-6607	405
6Y-6608	405
6Y-6610	405
6Y-6613	405
6Y-6614	424
6Y-6615	405
6Y-6616	424
6Y-6624	422
6Y-6625	422
6Y-6636	422
6Y-6638	424
6Y-6639	405
6Y-6640	422
6Y-6650	422
6Y-6657	405
6Y-6658	382
6Y-6659	405
6Y-6667	405
6Y-6675	405
6Y-6677	405
6Y-6678	405
6Y-6681	424
6Y-6683	405
6Y-6684	405
6Y-6685	405
6Y-6691	405
6Y-6697	▶382
	451
6Y-6701	406
6Y-6705	406
6Y-6706	406
6Y-6707	406
6Y-6708	405
6Y-6815	338
6Y-6976	387
6Y-7191	479
6Y-7195	479
6Y-7196	479
6Y-7197	479
6Y-7198	479
6Y-7202	479
6Y-7260	444
6Y-7261	446
6Y-7441	401
6Y-7651	38
6Y-7652	38
6Y-8061	479
6Y-8137	479
6Y-8167	479
6Y-8198	479
6Y-8239	424
6Y-8241	424
6Y-8242	424
6Y-8249	422
6Y-8655	422
6Y-8813	498
6Y-8853	422
6Y-9347	455
6Y-9348	479
6Y-9980	69
	442
	7
7B-1251	372
	377
7B-1597	129
7B-2805	852
7B-3028	424
	1090
7B-3039	852
	855
7B-3235	29
	59

▶ **PRIMARY REFERENCE**

PART NUMBER INDEX

Part	Page
	446
	480
7B-3395	212
7C-3258	36
	45
7C-3260	36
	45
7C-3567	849
7C-4164	31
7C-4165	31
	34
7C-4354	91
	342
	768
7C-4355	414
7C-5694	74
7C-6209	20
7C-7677	179
7C-7678	179
7C-7682	179
7C-7683	179
7C-7909	162
7C-7910	162
7C-8199	162
7C-9217	80
7C-9597	137
7D-1553	342
	434
	571
	684
	1082
	1086
7D-1728	282
	285
7D-4533	536
7D-4903	260
7D-5208	1093
7D-7233	119
	342
	635
	768
	1082
7D-7735	338
7D-8635	583
7E-0275	36
	45
7E-0836	130
7E-0949	86
7E-1397	162
	166
7E-2580	184
7E-2632	61
7E-4202	38
7E-4721	68
7E-4722	6
	▶68
7E-4838	59
7E-4840	59
7E-5324	47
7E-5326	325
7E-5330	86
7E-5335	86
7E-5337	5
	▶86
7E-5338	86
7E-5639	49
	556
	635
7E-6016	112
	325
7E-6017	112
7E-6051	29
7E-6140	5
	▶29
7E-6508	70
7E-6712	161
7E-6713	5
	▶229
7E-6719	▶175
	177
7E-6854	38
7E-6872	5
	▶56
7E-7521	5
	▶36
7E-7555	133
7E-7586	129
7E-7587	175
7E-8413	75
7E-8923	8
7E-8925	8
7E-8926	8
7E-9136	146
7E-9137	146
7E-9171	119
7E-9221	5
	▶127
7E-9437	14
7E-9584	135
7E-9755	119
7E-9780	141
7E-9784	15
7E-9829	119
7E-9831	119
7E-9832	119
7E-9994	119
7E-9995	119
7F-0560	202
	355
7F-1866	94
7F-2060	123
	125
7F-2742	8
7F-3488	295
7F-3491	295
7F-3525	295
7F-7983	646
7F-8607	1001
7F-8671	289
7F-8698	184
7F-9090	75
	173
7G-1593	389
7G-1594	389
7G-3467	444
7G-3737	387
7G-3832	616
	619
7G-3833	616
	619
7G-3834	616
	619
7G-4842	489
7G-6713	75
7G-7053	336
7G-7917	225
	354
7G-7919	354
7G-8478	145
7G-8839	715
	716
	847
7G-9922	479
7H-1447	767
	855
7H-3171	480
7H-3606	865
	869
7H-9678	175
7I-3647	468
7I-3652	381
7I-3722	1010
	1012
7I-4078	652
7I-5024	985
7I-5025	985
7I-5115	▶405
	451
7I-5535	498
7I-5759	529
7I-5848	917
7I-5883	506
7I-5922	542
7I-8640	789
7J-0204	111
	495
	656
7J-2656	852
	857
7J-3554	724
7J-3555	724
7J-4772	837
	839
7J-5586	673
7J-5925	541
	673
	975
	1037
	1039
7J-6285	701
	708
7J-7423	720
7J-7666	724
7J-7667	724
7J-7852	865
	869
7J-7853	865
	869
7J-8581	320
7J-8611	413
7J-8893	840
7J-8894	840
7J-9017	840
7J-9108	93
	96
	99
	107
	109
	176
	178
	227
	333
	641
	643
	744
	820
	821
7J-9250	665
	667
7K-1181	284
	309
	552
	622
	625
	1020
7K-1659	247
7K-3176	953
7K-3262	996
7K-3377	179
7K-4201	996
7K-4370	38
7L-2894	295
7L-7524	135
7M-0324	295
7M-0325	295
7M-0326	295
7M-0327	295
7M-1674	157
7M-1808	80
7M-5130	445
7M-5334	527
7M-5839	477
7M-8480	445
7M-8485	79
	109
	147
	384
	385
	428
	429
	503
	506
	601
	615
	616
	627
	634
	635
	641
	669
	687
	692
	693
	706
	708
	711
	767
	780
	782
	814

▶ **PRIMARY REFERENCE**

PART NUMBER INDEX

Part	Page	Part	Page	Part	Page	Part	Page
	815	7N-5641	22	7T-9123	296	7X-0851	266
	850	7N-5973	167	7T-9302	306	7X-0873	615
	865	7N-5974	▶167		309	7X-0909	425
	869		168	7T-9745	813	7X-1062	282
	885	7N-6494	298		820	7X-2031	276
	891	7N-6806	179	7T-9766	893	7X-2393	515
	1093	7N-7057	38	7V-0445	1060	7X-2429	433
7M-8651	295	7N-7539	36	7V-0638	503	7X-2459	431
7M-9918	171	7N-7559	86		506		652
7N-0296	284	7N-7628	123	7V-0916	57	7X-2465	442
7N-0718	197	7N-7697	80	7V-4240	173	7X-2475	687
	▶300	7N-7878	123	7V-6480	265	7X-2489	538
7N-1628	175		125	7V-6571	1002	7X-2497	993
7N-1639	146	7N-8527	105		1006	7X-2532	542
7N-1961	25	7N-9044	129	7V-9275	353		849
7N-2003	20	7N-9943	236	7W-0050	94		859
7N-2043	64	7P-4937	1058	7W-0117	61		861
	66	7S-2962	424	7W-0650	161	7X-2533	241
	94	7S-3687	167	7W-1102	31		988
7N-2044	22		168	7W-1930	113		990
	724	7S-3916	1002	7W-2122	179	7X-2534	816
7N-2046	21		1006	7W-3145	162		1064
7N-2047	22	7S-3919	1002	7W-3556	586	7X-2535	982
	36		1006	7W-3813	6	7X-2537	988
	45	7S-3997	611		▶67		990
	52	7S-4244	1082	7W-5300	227	7X-2538	821
7N-2326	56	7S-6892	479	7W-6492	61	7X-2539	208
7N-2328	56	7S-6978	454		141		212
7N-2405	64	7S-6997	488	7W-7071	133	7X-2543	320
	66	7S-8491	720	7W-7417	160	7X-2544	619
7N-2597	59	7S-8553	737	7W-8106	107		641
7N-3049	54		892	7W-8145	164	7X-2546	533
7N-3170	15	7S-8554	387	7W-8460	11	7X-2549	396
7N-3216	13	7S-8767	129	7W-9834	57		434
7N-3218	13	7S-8780	119	7X-0440	93		718
7N-3297	127	7S-8920	681	7X-0490	953		776
7N-3368	127	7S-8921	681	7X-0492	549		778
7N-3718	1070	7S-9323	175		552		789
	1073	7S-9930	874		556		792
7N-4319	15		875		561		797
7N-4320	15	7T-0020	236	7X-0515	503		799
7N-4756	145	7T-0282	479		506	7X-2550	413
7N-4758	145	7T-1099	259		538		434
7N-4782	70		374		701		635
7N-4927	118		820	7X-0546	993		739
7N-4928	135		954	7X-0562	295	7X-2551	405
7N-4930	112		991	7X-0575	1060		434
7N-4932	129	7T-1666	480	7X-0579	1054	7X-2552	266
7N-4939	129	7T-1667	480	7X-0590	107		601
7N-4940	129	7T-1955	480	7X-0593	981		715
7N-4945	14	7T-1957	480	7X-0599	715		716
	129	7T-2055	477		716		807
7N-4951	17	7T-2056	479	7X-0603	518		810
7N-4952	17	7T-2058	479	7X-0608	950		1024
7N-5057	94	7T-2452	479		1054	7X-2553	542
7N-5080	162	7T-4306	980	7X-0613	208		547
7N-5094	86		996		212		583
7N-5239	45	7T-4925	367	7X-0618	396		601
7N-5244	31	7T-6799	310	7X-0620	304		687
7N-5245	45		374		338		702
7N-5246	45	7T-8331	107	7X-0750	524		789
7N-5413	80		715	7X-0752	524		826
7N-5416	80		716	7X-0772	119		828
7N-5449	94		847	7X-0818	266		831
7N-5487	184	7T-8890	1069		355		835

▶ **PRIMARY REFERENCE**

PART NUMBER INDEX

Part	Page
	849
	859
	861
	1023
	1039
7X-2554	503
	506
	650
	651
	693
7X-2556	789
	806
	809
7X-2557	739
	824
7X-2558	824
7X-2559	792
	828
7X-2560	807
7X-2563	442
	514
	701
	834
7X-2565	538
7X-2566	859
	861
7X-2567	442
7X-2570	849
7X-3229	501
	502
	902
	903
	904
	1034
	1035
	1046
	1091
7X-3310	993
	1060
	1064
7X-3311	69
7X-3319	1030
7X-3349	338
7X-3373	296
7X-3391	406
7X-3392	434
	635
	681
	684
	688
	789
	793
	797
	816
7X-3718	964
7X-4780	336
7X-4781	498
7X-4786	833
	912
	913
7X-4801	498
7X-4805	22
7X-6085	201
7X-6315	215
	217
	218
	221
	223
	971
7X-6412	338
7X-6413	338
7X-7478	852
7X-7644	1090
7X-7700	190
	191
7X-7715	815
7X-7729	96
	99
	116
	119
	147
	152
	212
	308
	342
	414
	416
	434
	503
	506
	517
	518
	531
	543
	583
	616
	635
	672
	768
	793
	824
	850
	1001
	1039
	1082
7X-7730	38
7X-7731	22
	57
	61
7X-7925	21
7X-7958	767
7X-7962	542
7Y-1976	147
7Y-2522	524
7Y-3173	391
	991
7Y-3283	355
	619
7Y-5253	753
7Y-7256	312
	1030
7Y-7992	799
7Y-8169	318
7Y-9099	1036
8B-0544	179
	799
8B-3115	739
8B-6375	445
8B-7624	289
8B-9294	1001
8B-9840	538
8C-0564	687
8C-0596	96
	99
8C-0623	424
8C-3089	296
8C-3205	619
8C-3206	619
	677
	697
	768
8C-3210	993
8C-3222	385
	401
	439
8C-3290	1022
	1024
8C-3334	340
	342
	369
8C-3370	413
8C-3411	498
	512
	513
8C-3442	393
8C-3445	75
8C-3446	75
	429
	433
	815
8C-3447	434
8C-3451	684
8C-3468	509
8C-3751	99
8C-4032	411
8C-4436	133
8C-4586	954
8C-5236	145
8C-5240	384
	385
8C-5346	1090
8C-5607	205
	231
	233
	349
	351
8C-5608	205
	231
	233
	241
	349
	351
8C-6354	310
8C-6358	202
8C-6364	355
8C-6857	42
8C-6865	548
	555
	560
	561
	571
	592
	594
8C-6871	592
	594
8C-6872	119
	586
8C-6873	227
8C-6874	787
	831
8C-7329	360
8C-7507	338
8C-7508	391
8C-7529	993
8C-7562	403
	499
8C-8408	1082
	1085
8C-8431	820
8C-8451	205
	231
	233
	349
	351
8C-8723	442
8C-8729	635
8C-8762	601
8C-9102	763
	765
8C-9660	296
	391
8C-9987	893
	894
8D-1470	320
	367
8D-4771	401
8D-4773	586
8D-7942	70
8D-9059	326
8D-9537	374
8D-9606	1047
8D-9671	147
8E-0209	405
8E-0210	405
8E-0211	405
8E-0212	406
8E-0213	405
8E-0214	405
8E-0215	406
8E-0216	406
8E-0217	406
8E-0218	406
8E-0219	405
8E-0220	406
8E-0985	444
8E-1171	454
8E-1218	422
8E-1711	489
8E-3082	692
8E-4708	929
	936
	937
8E-5559	930
8E-6433	489
8E-6784	479
8E-6992	479

8

► PRIMARY REFERENCE

PART NUMBER INDEX

Part	Page	Part	Page	Part	Page	Part	Page
8E-6993	479	8J-2635	739		336	8N-4387	10
8E-7217	424	8J-2645	891		342	8N-4617	156
8E-7366	400	8J-3596	865		370	8N-4707	21
8E-7683	420		869		378	8N-5001	1058
8E-8292	1069	8J-3659	739		413	8N-6151	6
8E-8310	444	8J-4645	865	8M-2933	141		▶188
8E-8316	422		869	8M-3175	61	8N-6423	144
	444	8J-5962	665	8M-3837	409	8N-7174	5
8E-8328	480		667	8M-4432	395		▶45
8E-8393	489	8J-6273	648	8M-4443	477	8N-7197	70
8E-9103	424		724	8M-4446	493	8N-7257	146
8F-0492	601	8J-8543	852	8M-4986	387	8N-7294	646
	770	8J-8782	852		434	8N-7296	64
8F-1434	296		855	8M-4992	387		66
	304	8J-8783	852	8M-5249	493	8N-7639	127
8F-1586	401		855	8M-5254	477	8N-7641	129
8F-2804	406	8J-8879	401	8M-6678	312	8N-8056	22
8F-4610	743	8J-9348	894	8M-6802	727	8N-8446	291
8F-6230	446	8K-2396	179	8M-7065	57		293
	842	8K-2665	434	8M-7066	119	8N-8451	291
8F-6437	582		681	8M-7160	424		293
8F-6711	864		684	8M-8157	434	8N-8452	291
8F-8151	1008	8K-3235	684	8M-8489	454	8N-8846	146
8F-8513	643	8K-5271	529	8M-8514	477	8N-9409	11
	1002	8K-5443	405	8M-9024	61	8N-9410	11
8F-8544	179	8L-2746	84	8N-0386	129	8N-9419	11
8F-8733	409	8L-2779	489	8N-0869	197	8N-9528	127
8F-9206	1001	8L-2786	86	8N-0896	44	8N-9885	17
8G-0841	514		114	8N-1513	341		966
8H-0901	405		123		354	8N-9992	14
8H-0902	405		125	8N-1514	225	8N-9993	14
8H-2778	175		277		311		89
8H-3127	276		326		341	8P-0618	387
8H-3128	141	8L-5008	11	8N-1515	354	8P-1722	424
8H-3532	885	8L-5449	353	8N-1516	341	8P-3133	444
8H-5303	300	8L-5922	395	8N-1517	341	8P-3251	424
8H-5306	300	8L-6557	291		354	8P-5141	953
8H-5505	876	8L-8413	367	8N-1518	225	8P-6292	446
	877		1067		341	8P-7236	444
8H-7202	175	8L-9241	755	8N-1519	335	8P-7242	444
8H-7521	425		757		341	8P-7243	444
8H-8754	119		759		354	8P-8540	257
	146		761	8N-1520	311	8P-9296	489
8H-9513	493		763		341	8P-9569	446
8H-9789	11		765	8N-1521	225	8R-0126	541
8I-1362	147	8M-0505	179		311		583
8J-0101	840	8M-0506	185		336		980
8J-0135	57	8M-1013	489		341	8R-0721	107
8J-0217	840		493	8N-1522	335	8R-0739	962
8J-0218	840	8M-2530	47		341	8R-2186	146
8J-0237	840	8M-2770	84	8N-1535	336	8R-3930	913
8J-0322	883		147		341	8R-3931	913
8J-0323	883		247	8N-1536	335	8R-4208	451
	884		336		341		▶468
	889		342	8N-1541	225	8R-4724	468
8J-0324	865		378	8N-1543	225	8R-4725	468
8J-0331	883	8M-2771	326	8N-1545	225	8R-5645	▶255
	884	8M-2772	191	8N-1549	225		256
	885		282	8N-1991	80	8R-5702	385
	889		285	8N-1992	80	8R-5706	385
8J-0412	840		318	8N-2012	6	8R-5708	385
8J-0426	865		342		▶103	8R-5716	385
	869		363	8N-2929	80	8R-5718	384
8J-2043	840		375	8N-3639	129	8R-5720	385
8J-2634	739	8M-2773	139	8N-3640	129	8R-5724	385

▶ **PRIMARY REFERENCE**

PART NUMBER INDEX

Part	Page	Part	Page	Part	Page	Part	Page
8R-5960	498	8T-0197	616	8T-2153	45		718
8R-6128	1036	8T-0231	480	8T-2275	768		767
8R-6182	401	8T-0269	390		852		770
8R-6183	401	8T-0273	724		855		776
8R-6184	401	8T-0281	409	8T-2501	84		778
8R-6185	401		470	8T-2561	768		780
8R-6578	498		472	8T-2899	608		785
8R-6931	498		611	8T-2928	21		792
8R-6932	498	8T-0283	749		22		799
8R-6933	498		751	8T-2929	21		820
8R-6934	498	8T-0289	338		22		958
8R-6937	498	8T-0315	432	8T-3282	387		1001
8R-6938	498	8T-0318	993		477		1008
8R-6940	384	8T-0328	296		527		1025
	385		355		529		1039
8R-6941	498		1049		849		1040
8R-6942	498	8T-0342	888	8T-3298	855		1064
8R-6943	498		890		857		1070
8R-6944	498	8T-0360	464	8T-3312	428		1082
8R-6945	498		468	8T-3490	4		1085
8R-6946	498	8T-0370	513		96	8T-3518	202
8R-6947	498		749		99	8T-3519	202
8R-6948	498		751		116	8T-3597	4
8R-7034	475	8T-0380	401		146		99
8R-7036	473		527		177		107
	▶475		664		197		161
	483	8T-0404	107		212		320
	484	8T-0441	107		246		340
8R-7163	499	8T-0643	425		247		431
8R-8510	470	8T-0644	387		249		503
	▶472	8T-0646	422		250		506
8R-8513	464	8T-0650	398		252		514
8R-9137	253	8T-0657	404		257		533
	282	8T-0667	498		264		542
	285	8T-0669	385		320		552
	340	8T-0672	401		331		555
	566	8T-0722	583		335		560
8R-9202	744		857		340		582
8R-9312	383	8T-0723	390		349		583
	464	8T-0741	652		351		599
8S-0527	422	8T-0854	1093		353		601
8S-0768	369	8T-1012	785		360		627
8S-0948	119	8T-1158	842		363		630
	178	8T-1159	724		365		632
	185	8T-1578	541		369		634
	197	8T-1583	69		374		697
	375		440		378		718
8S-1506	964		441		380		780
8S-2331	47		833		413		785
8S-2332	292		912		416		789
	298		913		425		831
8S-2634	320	8T-1686	84		432		859
8S-4600	964		413		503		861
8S-4784	420		432		506		1039
8S-5107	635	8T-1757	549		533	8T-3611	432
8S-5655	405		556		536	8T-3612	284
8S-9089	61		561		541		369
	453	8T-1792	665		542		718
8S-9191	86		667		582		820
	113	8T-1889	619		583		993
8T-0070	847	8T-1890	619		586		1093
8T-0099	22	8T-1905	677		601	8T-3635	353
8T-0122	162	8T-1919	133		615	8T-3647	1058
8T-0164	1082		137		619	8T-3734	520
	1085		139		632	8T-3851	520

▶ **PRIMARY REFERENCE**

PART NUMBER INDEX

Part	Page	Part	Page	Part	Page	Part	Page
	524		429		855		913
	672		434		857	8T-4131	543
	902		452		896		849
8T-4001	442		468		898	8T-4132	425
8T-4121	79		477		900		601
	91		503		953		700
	96		506		957		724
	99		515		959		789
	107		518		964		859
	116		531		970		861
	119		533		974		1023
	133		536		975		1024
	147		538		976	8T-4133	4
	152		543		978		91
	158		549		980		96
	159		552		982		99
	177		556		991		107
	178		561		997		116
	191		567		1002		119
	197		571		1006		133
	205		575		1008		147
	208		576		1023		260
	212		577		1025		308
	231		578		1037		312
	233		580		1039		333
	235		582		1058		342
	239		583		1063		393
	245		586		1070		414
	246		591		1073		434
	247		601		1082		517
	249		615		1086		518
	250		616		1094		543
	251		619	8T-4122	370		552
	252		622		434		567
	253		625		543		571
	255		628		583		583
	257		630		632		601
	259		635		688		616
	260		639		700		619
	264		641		702		622
	266		643		715		625
	284		645		716		635
	308		652		718		652
	312		662		739		677
	318		669		776		688
	320		677		778		693
	331		687		789		697
	333		693		793		768
	336		697		799		776
	338		718		804		778
	342		744		824		782
	349		768		827		789
	351		770		835		797
	355		776		847		799
	360		778		849		820
	363		780		1022		975
	365		782		1023		982
	367		785		1024		997
	370		789		1039		1002
	372		793	8T-4123	442		1008
	375		797		540		1010
	378		799		622		1012
	380		811		701		1037
	409		816		834		1039
	414		821		847		1058

► **PRIMARY REFERENCE**

PART NUMBER INDEX

Part	Page	Part	Page	Part	Page	Part	Page
	1070		601		336		159
	1073		616		338		177
	1082		619		342		224
	1086		622		349		252
	1094		625		351		342
8T-4134	377		635		355		377
	743		639		360		405
	1064		662		363		414
8T-4136	91		669		367		416
	99		688		370		434
	116		697		372		514
	119		744		375		515
	133		768		378		533
	147		776		380		538
	152		778		503		543
	158		785		506		583
	159		789		510		590
	191		793		531		599
	197		820		538		602
	208		824		543		635
	212		850		549		669
	233		852		556		672
	235		855		561		681
	245		896		567		684
	246		898		571		714
	247		900		575		768
	250		964		576		780
	252		974		577		785
	253		975		578		787
	266		1002		583		793
	312		1006		601		797
	318		1008		628		799
	331		1023		630		802
	333		1037		635		811
	336		1039		643		831
	342		1058		669		859
	349		1073		697		861
	351		1082		724		1023
	355		1086		776		1039
	360		1094		778		1047
	365	8T-4137	91		780		1094
	370		96		785	8T-4140	434
	375		99		797		672
	378		119		811		688
	380		147		816		693
	414		152		953		789
	434		177		957		793
	455		178		976		804
	477		197		978		807
	503		205		980		810
	506		208		982		824
	515		212		1002		826
	517		231		1008		827
	518		233		1025	8T-4149	815
	531		249		1070	8T-4157	993
	533		251		1073	8T-4158	993
	536		252		1082	8T-4167	442
	538		259		1086		540
	543		260	8T-4138	390		1022
	552		284		1028		1024
	567		308		1064	8T-4171	954
	571		312	8T-4139	77	8T-4172	434
	580		318		139		616
	586		320		152		693
	591		333		158		866

► PRIMARY REFERENCE

PART NUMBER INDEX

Part	Page
	869
8T-4173	720
	824
	826
	828
8T-4174	789
8T-4176	628
	630
	635
	693
	739
	784
8T-4177	355
	393
8T-4178	320
8T-4179	208
	212
	365
	724
	1082
8T-4180	993
8T-4181	993
8T-4182	342
	378
	549
	556
	561
	575
	619
	1010
	1012
	1086
8T-4183	107
	119
	152
	166
	208
	227
	247
	425
	434
	503
	506
	515
	589
	590
	619
	635
	644
	677
	681
	684
	688
	693
	768
	793
	797
	799
	802
	997
	1040
8T-4184	139
	157
	191
	434
	515
	543
	549
	556
	561
	589
	632
	677
	684
	739
	770
	866
	869
	1023
	1039
	1094
8T-4185	99
	318
	375
	414
	434
	556
	571
	677
	693
	785
	816
	957
	1002
	1086
8T-4186	79
	96
	119
	152
	375
	434
	503
	506
	517
	518
	549
	625
	785
	820
	1002
	1008
8T-4187	913
8T-4189	239
	284
	312
	320
	342
	370
	652
	743
	816
	953
	957
	980
	997
	1028
	1032
	1036
	1060
	1064
8T-4190	370
8T-4191	312
	331
	405
	549
	556
	561
	959
	980
	991
	997
	1030
	1070
	1073
8T-4192	96
	139
	147
	152
	166
	320
	338
	342
	363
	380
	434
	533
	552
	632
	639
	652
	684
	697
	768
	780
	787
	789
	793
	797
	847
	988
	990
	1086
	1094
8T-4193	586
	688
	746
	789
	799
	847
	1023
	1024
8T-4194	79
	227
	434
	468
	536
	590
	628
	630
	677
	693
	724
	789
	797
	799
	804
8T-4195	4
	96
	99
	107
	116
	119
	147
	152
	161
	177
	212
	247
	255
	257
	260
	320
	333
	355
	395
	409
	414
	416
	434
	452
	468
	515
	538
	543
	549
	556
	561
	567
	571
	582
	583
	619
	622
	625
	635
	639
	645
	652
	662
	672
	688
	693
	697
	744
	768
	770
	776
	778
	782
	785
	793
	799
	824
	1002
	1008
	1010
	1012
	1037
	1039
	1060

► **PRIMARY REFERENCE**

PART NUMBER INDEX

Part	Page
	1064
	1094
8T-4196	96
	116
	133
	147
	264
	342
	409
	434
	515
	571
	602
	619
	635
	677
	697
	768
	789
	793
	797
	816
	821
	857
	959
	970
	978
	997
	1002
8T-4198	602
	816
8T-4200	312
	338
	972
	1060
	1064
8T-4205	99
	147
	195
	205
	208
	212
	231
	233
	255
	257
	295
	312
	354
	377
	586
	953
	988
	990
	993
	997
	1028
	1030
	1049
	1058
	1060
	1064
8T-4222	224
	312
	503
	506
	538
	543
	958
	975
	1037
	1039
	1052
	1058
	1073
8T-4223	1
	77
	79
	96
	100
	139
	147
	158
	191
	197
	208
	212
	224
	227
	247
	252
	298
	320
	338
	342
	363
	365
	367
	377
	380
	382
	405
	414
	416
	434
	468
	477
	503
	506
	515
	533
	547
	549
	552
	556
	561
	576
	577
	578
	583
	616
	619
	628
	630
	632
	635
	639
	644
	652
	669
	672
	677
	681
	684
	688
	693
	697
	714
	718
	768
	770
	776
	778
	780
	784
	785
	787
	789
	793
	797
	799
	802
	804
	811
	816
	831
	866
	869
	982
	988
	990
	993
	997
	1010
	1012
	1023
	1039
	1047
	1082
	1086
	1094
8T-4224	195
	240
	245
	246
	247
	249
	250
	266
	284
	312
	320
	338
	355
	393
	515
	587
	614
	652
	712
	743
	776
	778
	816
	957
	962
	972
	975
	988
	990
	1028
	1032
	1036
	1037
	1039
	1045
	1058
	1060
	1064
8T-4244	1
	77
	100
	139
	158
	197
	208
	224
	227
	363
	367
	434
	515
	547
	619
	632
	635
	677
	681
	684
	715
	716
	718
	744
	776
	778
	793
	797
	799
	802
	859
	1023
	1039
	1064
	1094
8T-4648	147
	434
	514
	547
	552
	576
	577
	578
	684
	697
	799
	859
	1010
	1012
8T-4747	993
8T-4766	1058

► **PRIMARY REFERENCE**

PART NUMBER INDEX

Part	Page	Part	Page	Part	Page	Part	Page
8T-4779	139		1012		724		22
	538	8T-4967	353		804		52
	632		1040		859	8T-6764	8
	701	8T-4971	652		861		42
	718	8T-4986	503	8T-6408	866		129
	746		506		869		141
	776	8T-4987	161	8T-6411	255		162
	778		793		257	8T-6765	15
	824	8T-4988	161		375		54
8T-4835	382	8T-4989	161	8T-6430	511		80
8T-4896	84	8T-5001	434		535		112
	89		477	8T-6444	673		135
	96		533	8T-6453	687		145
	100		552	8T-6462	284		164
	119		746	8T-6466	107	8T-6767	129
	139	8T-5002	611		224		135
	157	8T-5005	79		320		326
	247		119		367	8T-6854	454
	355		454		409	8T-6868	147
	993		567		434		241
	997		816		503		413
	1002		820		506		434
	1008		1002		552		503
	1010		1010		567		507
	1012		1012		571		538
8T-4897	4	8T-5027	996		678		616
	510	8T-5041	580		693		693
8T-4908	1058		635		718		768
	1060		715		820		847
8T-4910	107		716		888	8T-6869	245
	434	8T-5043	712		890		246
	543	8T-5044	422		1002		247
	552	8T-5050	712		1010		249
	635	8T-5092	434		1012		250
	639	8T-5389	179	8T-6684	767		355
	678	8T-5400	1070	8T-6685	429		370
	681	8T-5412	688		615	8T-6870	712
	684		715		616	8T-6876	147
	793		716		688		697
	797		739		866		712
	799		804		869		821
	802	8T-5429	119	8T-6703	158	8T-6911	520
	861		428	8T-6748	665	8T-6912	240
	1010	8T-5436	355		667		776
	1012		434	8T-6757	9		778
8T-4935	520	8T-5439	511		31		816
	524		514		34	8T-7008	1008
8T-4956	100		535	8T-6758	54	8T-7013	611
	147		543		75	8T-7038	902
	418		847		129		903
	420		849		173		904
	434		859	8T-6759	27		1091
	477		861		31	8T-7087	147
	547	8T-5677	340		34	8T-7338	793
	606	8T-5878	442		36		859
	619	8T-5913	1069	8T-6760	130		861
	632	8T-5914	1069	8T-6761	61	8T-7521	119
	671	8T-6338	639	8T-6762	22		697
	672	8T-6356	1093		54	8T-7547	266
	681	8T-6382	859		75		518
	746		861		80		613
	789	8T-6385	549		112	8T-7566	1027
	793		556		127	8T-7811	866
	816		561		162		869
	1010		714	8T-6763	17	8T-7930	434

► **PRIMARY REFERENCE**

PART NUMBER INDEX

Part	Page	Part	Page	Part	Page	Part	Page
8T-7934	116		1067		288		664
8T-7963	743	8T-9379	89	8X-0123	462	8X-1106	596
8T-8442	710		434	8X-0132	383		597
	844	8T-9383	298		▶384		598
	845	8T-9518	1002	8X-0134	383	8X-1316	▶440
8T-8729	203	8T-9527	688		▶385		456
	236	8T-9533	499	8X-0136	540		457
	265	8T-9655	185	8X-0137	529	8X-1341	826
	274		206	8X-0138	529		828
	276		355	8X-0139	540	8X-1343	824
	391	8U-7051	710	8X-0145	540	8X-1379	▶512
	586	8V-5386	468	8X-0146	540		905
	675	8V-6072	1039	8X-0147	527	8X-1389	428
	771	8V-7010	957	8X-0148	527	8X-1400	503
	1014	8V-8908	1010		540		506
	1015		1012	8X-0149	540	8X-1401	503
8T-8730	203	8V-9708	576	8X-0432	474		506
	216		577		475	8X-1519	776
	272	8W-0266	548	8X-0559	498		778
8T-8731	272	8W-0335	458	8X-0657	792	8X-1525	776
8T-8732	280		459	8X-0659	912		778
8T-8737	225		460	8X-0660	833	8X-1535	816
	231		461	8X-0662	913	8X-1555	804
	247	8W-0338	440	8X-0670	792	8X-1573	177
	306		441	8X-0672	579	8X-1574	177
	309		462	8X-0674	404	8X-1575	178
	331		463		541	8X-1576	178
	335	8W-0932	367		847	8X-1667	520
	340	8W-0933	367		849	8X-1668	520
	341	8W-2555	596		859	8X-1669	520
	349		597		861	8X-1713	747
	351		598	8X-0676	442		▶833
	354	8W-2597	552	8X-0687	849	8X-1720	4
	360		592	8X-0688	849		▶641
	380		▶597		859	8X-1736	3
	776	8W-4479	197		861		▶511
	778	8W-5059	615	8X-0692	409	8X-1741	3
	954	8W-5179	684	8X-0693	409		▶412
	1014		799	8X-0694	409	8X-2041	985
	1016	8W-7794	615	8X-0695	409	8X-2317	586
	1017	8W-7799	615	8X-0696	409	8X-2318	586
	1018	8W-8564	586	8X-0700	69	8X-2319	586
	1019	8X-0026	3	8X-0701	69	8X-2320	586
8T-8827	99		▶537	8X-0702	442	8X-2321	586
	225	8X-0029	2	8X-0721	535	8X-2323	586
8T-8874	353		▶540	8X-0722	859	8X-2325	587
8T-8899	1094	8X-0039	2		861	8X-2326	587
8T-8901	601		▶177	8X-0723	859	8X-2509	458
8T-8915	89	8X-0043	2		861		459
8T-8916	1052		▶579	8X-0724	535		460
8T-8918	291	8X-0065	▶452	8X-0725	537		461
8T-8919	434		774	8X-0726	537	8X-2699	440
8T-8920	96	8X-0070	▶664	8X-0740	▶949		462
	100		775	8X-0742	749		463
	1094	8X-0072	▶671		751	8X-2700	440
8T-8987	91		775		753		441
	767	8X-0073	775	8X-0743	902		462
8T-9005	980		▶784		903		463
8T-9006	219	8X-0082	▶702		904	8X-2996	687
8T-9082	1049		775	8X-0746	900	8X-2997	792
8T-9364	100	8X-0083	▶645	8X-0750	898	8X-3000	692
	208		775		900	8X-3028	715
	212	8X-0093	451	8X-0758	529		716
	235		▶470	8X-0759	527	8X-3034	715
8T-9371	84	8X-0118	▶226	8X-0763	527	8X-3151	571

▶ PRIMARY REFERENCE

PART NUMBER INDEX

Part	Page
8X-3157	847
8X-3161	566
	571
8X-3178	506
	541
8X-3182	552
8X-3183	552
8X-3184	847
8X-3186	718
8X-3187	687
8X-3188	687
8X-3193	687
8X-3194	687
8X-3219	431
8X-3315	586
8X-3316	586
8X-3467	718
8X-3476	566
8X-3480	566
8X-3489	552
8X-3497	548
	552
	555
8X-3504	431
8X-3525	1047
8X-3533	383
	▶439
8X-3540	520
	524
8X-3869	541
	1037
	1039
8X-3900	1024
8X-3903	697
8X-3910	541
8X-4116	520
8X-4161	498
8X-4186	586
8X-4352	684
8X-4357	799
8X-4376	975
	1037
8X-4489	1039
8X-4522	541
8X-4660	431
	684
8X-4669	541
8X-4691	566
8X-4711	338
	524
8X-4714	524
8X-4773	571
8X-4776	384
8X-4798	684
8X-4809	684
8X-4819	975
	1037
	1039
8X-4845	541
8X-4855	541
8X-4860	641
8X-4886	431
8X-5331	571
8X-5332	571
8X-5333	571
8X-5337	594
8X-5340	541
8X-5344	634
8X-5353	541
	975
	1037
	1039
8X-5356	634
8X-5368	634
8X-5372	385
8X-5388	1001
8X-5392	632
8X-5754	541
8X-5769	541
8X-5770	541
8X-5771	541
8X-5774	541
8X-5775	541
8X-5776	541
8X-5777	541
8X-5781	622
8X-5803	363
8X-5816	208
	212
8X-5820	208
	212
8X-5952	1037
	1039
8X-5974	692
8X-6020	338
8X-6029	692
8X-6046	338
8X-6048	338
8X-6050	338
8X-6058	338
8X-6166	400
8X-6631	338
8X-6633	338
8X-6634	338
8X-6635	338
8X-6636	338
8X-6640	692
8X-6641	338
8X-6643	338
8X-6645	338
8X-6662	541
8X-6990	896
	898
	900
8X-7075	503
	506
8X-7415	520
	908
8X-7517	369
	767
8X-7522	431
8X-7569	1023
8X-7570	1023
8X-7611	541
8X-7657	566
	575
8X-7806	820
8X-7847	197
	367
8X-7858	471
8X-8062	586
8X-8130	96
	99
	1093
8X-8132	847
8X-8244	405
8X-8248	451
	▶471
8X-8724	681
	799
	802
8X-8854	531
8X-9384	799
8Y-3795	520
	632
	896
	898
	900
8Y-3925	1070
8Y-4000	541
8Y-4501	993
8Y-5748	993
8Y-5749	993
8Y-6277	1049
8Y-6335	309
8Y-6352	996
8Y-6364	74
	78
8Y-6368	541
	542
8Y-6388	996
8Y-8294	993
8Y-8296	993
8Y-8318	993
8Y-8320	993
9	
9B-3523	622
9B-7233	309
	353
	355
	374
9B-7237	89
	119
	583
9C-3493	409
9C-4554	743
9C-4555	743
9C-7863	520
9D-0630	191
9D-1829	504
	507
9D-3374	374
9D-3767	997
	1036
9D-3769	147
9D-4439	353
9F-2167	498
	753
	865
	869
9F-2247	495
9F-2773	162
9F-5599	295
9F-5644	300
9F-6641	727
9F-7707	70
9F-8122	38
9F-9327	338
9G-0003	197
	367
9G-0004	197
	367
9G-1950	954
9G-2758	197
9G-3695	225
	375
	744
9G-4101	295
9G-4336	99
9G-4344	99
9G-5127	109
9G-8909	342
9G-9557	446
9G-9882	355
9H-1031	401
	403
9H-3757	295
9H-5537	444
9H-6454	768
	855
9H-8260	54
	326
9J-0460	724
	▶735
9J-2411	865
	869
9J-3047	855
9J-4782	866
	869
9J-5037	665
	667
9J-5490	891
9J-6367	733
	734
9J-7031	852
	855
9J-8225	▶736
	739
9J-8667	840
9K-0700	247
9K-4454	401
9K-7951	440
	441
	462
	463
9L-1366	552
9L-2662	15
9L-4234	15
9L-5254	57
9L-6770	195
9L-9132	49
	86
	129
	135
9L-9188	864
	866
	870

▶ **PRIMARY REFERENCE**

PART NUMBER INDEX

Part	Page
9M-0164	413
	784
9M-0378	9
9M-0402	9
9M-1974	8
	9
	11
	19
	22
	36
	45
	57
	72
	73
	75
	127
	145
	173
	179
	206
	326
	495
	840
	966
9M-2151	144
	157
9M-2342	175
9M-2744	401
9M-3116	119
9M-3786	141
9M-4007	479
9M-4355	95
9M-4584	86
	123
	125
	179
9M-4594	80
9M-4972	342
9M-6267	387
9M-6522	57
9M-7269	38
	42
9M-7357	964
9M-7609	295
9M-8406	208
	212
	312
	625
	776
	778
	1002
9M-9545	479
9M-9647	387
9N-0869	86
	182
	183
	185
	206
	355
	1021
9N-1216	552
9N-1713	1070
9N-1909	119
	325
9N-1995	996
9N-2038	171
9N-4053	179
9N-4104	480
9P-3041	489
9P-4609	744
9P-7118	479
9P-7121	190
	191
9R-1733	524
9R-2216	718
9R-2613	177
	252
	259
	266
	374
	416
	442
	503
	506
	520
	524
	541
	542
	820
	896
	898
	900
	1037
	1039
9R-2630	855
9R-2821	898
9R-3845	442
	524
9R-4638	594
9R-5008	86
	865
	869
	1058
9R-8906	650
	651
9R-9866	353
9S-1354	70
	987
9S-2544	295
9S-4181	79
	384
	385
	634
	693
	711
9S-4182	80
	127
	155
	179
	418
	420
	665
	667
	673
	739
	749
	751
	755
	757
	759
	761
	763
	765
9S-4183	17
	418
	420
	780
9S-4185	114
	130
	173
	425
	744
	873
9S-4190	61
	185
	425
9S-4191	17
	22
	115
	119
	133
	141
	387
	418
	420
	433
	477
	616
	645
	672
	724
	789
	792
	799
	804
	811
	814
	821
	865
9S-6130	720
9S-7583	431
9S-8001	654
	739
9S-8002	24
9S-8004	471
	616
	676
	865
	869
	873
9S-8005	173
	418
	420
	739
9S-8007	495
	656
9S-8008	418
	420
	446
	498
	724
	739
9S-8009	890
9S-8010	446
	865
9S-8752	61
	75
	78
	80
	86
	129
	135
	137
	144
	173
	179
	185
	282
	285
	326
9S-8893	44
9S-9271	1093
9S-9272	1093
9S-9334	706
	708
9T-0356	883
	884
	889
9T-0436	452
	▶453
9T-0818	767
9T-1015	453
9T-1119	587
	847
9T-1258	703
9T-1267	705
9T-1269	839
9T-1294	839
9T-1364	649
9T-1614	724
9T-1827	865
	869
9T-1837	865
	869
9T-1838	866
	870
9T-1848	866
	870
9T-1897	865
	869
9T-1899	865
	869
9T-2541	865
	869
9T-2839	703
9T-3096	863
9T-3427	704
9T-3428	704
9T-3752	655
9T-3928	706
	708
	772
	842
9T-3940	676
9T-4105	852
9T-4219	646
	▶648
9T-4226	656
9T-4536	648

▶ PRIMARY REFERENCE

PART NUMBER INDEX

Part	Page	Part	Page	Part	Page	Part	Page
9T-4537	648	9U-3926	1060		272		1039
9T-4538	648		1064		273	9X-2304	662
9T-4539	648	9U-3927	1060		274	9X-2398	787
9T-4540	648		1064		275		831
9T-4541	648	9U-4551	1060		276	9X-2404	842
9T-4689	852	9U-4989	309		277	9X-2474	586
9T-4735	866	9U-4990	309		279	9X-2488	953
9T-5241	743	9U-8263	991		280	9X-2546	993
9T-6005	601	9U-9011	479		281	9X-2608	498
9T-6603	830	9U-9012	480		299	9X-2614	792
9T-7202	739	9U-9702	944		303		811
9T-7266	739	9U-9703	941		325	9X-3401	269
9T-7426	718	9V-4373	403		333	9X-3402	225
	▶742	9V-9840	403		340	9X-3463	237
9T-7826	888	9W-0742	197		369		238
9T-8844	96		▶202		675		240
	99		320		744	9X-3495	340
9T-9019	664	9W-0844	225		771		369
	▶667	9W-0852	306	9X-2027	1060	9X-3990	139
9T-9197	865		309	9X-2038	958	9X-3997	161
	▶883		953		1044	9X-4244	240
9T-9221	852	9W-1441	353		1060	9X-4245	320
9T-9226	852	9W-1442	353		1064	9X-4504	197
	857	9W-3797	226	9X-2039	1052		320
9T-9227	852	9W-4162	424	9X-2040	958	9X-4519	320
	857	9W-4163	425		997	9X-4594	141
9T-9232	852	9W-4361	247	9X-2041	997	9X-5583	197
9T-9880	852	9W-5531	424	9X-2042	312		367
9U-0124	1073	9W-5567	489		355	9X-5617	216
9U-0125	1073	9W-5568	489		381		1091
9U-0178	614	9W-5766	405		743	9X-5632	197
9U-0200	614	9W-6991	479		982		320
9U-0387	743	9W-7385	442		993	9X-5699	197
9U-0393	743		1022		997	9X-6015	627
9U-0397	743		1024		1030	9X-6165	205
9U-0830	614	9W-7388	442		1036		231
9U-0838	1070		1022		1044		233
9U-0952	1060		1024		1073		241
9U-0953	1060	9W-7924	405	9X-2043	1064		349
9U-0954	1060	9W-8095	442	9X-2044	312		351
9U-0955	1060	9W-9100	444		355		978
9U-0958	1060	9W-9143	444		978	9X-6269	586
9U-1217	996	9W-9941	1022		993	9X-6278	197
9U-1301	996		1024		997	9X-6395	885
9U-1371	1082	9W-9958	442		1028	9X-6458	86
9U-1469	320	9X-0141	311		1060		135
	367	9X-0196	311	9X-2045	312		162
9U-1860	996	9X-0258	338		958	9X-6480	464
9U-1866	996	9X-0259	338		972		466
9U-2277	325	9X-0261	369		993		467
9U-2285	692	9X-0262	161		996		473
9U-2327	991		325		997		474
9U-2328	991	9X-0352	70		1030		483
9U-2329	991	9X-0435	365	9X-2046	1030		484
9U-2330	996	9X-0941	420	9X-2085	815	9X-6578	628
9U-2331	996	9X-1046	997		1094		630
9U-2332	996	9X-1054	354	9X-2125	852	9X-6579	414
9U-2334	1020	9X-1292	229		855	9X-6580	821
9U-2670	996	9X-1343	311	9X-2185	954	9X-6618	69
9U-2675	961	9X-1386	278	9X-2198	412	9X-6760	197
	▶1020		340	9X-2199	384	9X-6766	320
9U-3295	403		1001	9X-2205	190	9X-6772	38
9U-3749	498	9X-1813	203		191		84
9U-3925	1060		268	9X-2299	975		89
	1064		269		1037		161

▶ **PRIMARY REFERENCE**

PART NUMBER INDEX

Part	Page	Part	Page	Part	Page	Part	Page
	225		697	9X-9365	250	030-8294	489
	231		820	9X-9751	226	031-0214	1045
	252		1002	9X-9752	226	031-5183	797
	311		1008	9X-9753	226	031-9746	586
	318	9X-8256	109	9X-9754	338	032-1267	129
	325		312	9X-9825	298	032-1268	129
	331		816	9X-9896	241	032-1269	57
	333		982	9Y-0047	86	032-3180	477
	335		1030		182	032-3237	185
	336	9X-8257	139		183	033-2177	622
	340		266	9Y-0635	25	033-6028	878
	341		547	9Y-0646	287	033-6031	72
	351		549		▶292		73
	353		556	9Y-2647	38	033-6033	84
	354		561	9Y-4090	127		276
	360		587	9Y-5010	38	033-6042	17
	363		602	9Y-5041	129		837
	365		650	9Y-5814	86		839
	369		651	9Y-8387	75	033-7291	954
	374		672	9Y-8388	75	033-8248	231
	378		693	9Y-8389	173		333
	380		746	9Y-8465	38		336
	548		807	9Y-8890	▶115		342
	555		810		133		349
	560		826	9Y-8902	5		351
	566		828		▶80		360
	1021		859	9Y-9202	5		365
9X-6857	225		861		▶44		378
9X-7147	311	9X-8258	442	9Y-9212	7		380
9X-7148	311	9X-8259	753		▶69	034-4160	840
9X-7344	256		913	9Y-9236	109	035-2297	409
9X-7371	32	9X-8267	233		146	036-9821	295
9X-7378	42		349	9Y-9385	11	036-9823	295
	1002		351	9Y-9438	44	039-4317	289
9X-7380	1002	9X-8268	398			039-4966	208
	1006	9X-8399	69				212
9X-7381	953		384	**0**		039-6937	74
	1002		385			045-4065	296
	1006		401	001-5600	646	053-4679	105
9X-7382	953		439	002-6454	1093	053-5065	59
	1002		440	003-8581	86	061-6717	57
9X-7383	953		441		179	061-7538	84
	1002		749	004-5933	622	061-7539	733
9X-7384	953		751	004-6683	592		734
	1002		912		594	061-8827	123
9X-7385	969		913	006-0210	586		148
	1002	9X-8483	499	006-1800	40	061-9456	80
9X-7420	755	9X-8484	706	006-5707	61	061-9458	91
	757	9X-8485	708	008-3214	649	061-9593	227
	759		792		703	065-3758	479
	761	9X-8600	190		704	067-2551	247
9X-7699	913		191		705		1082
9X-7703	913	9X-8872	14		837	068-4772	139
9X-7722	842	9X-8873	52	009-3101	608	068-6405	442
9X-7849	243		75	012-0380	303	081-3959	842
9X-8139	243	9X-8874	206	013-8502	1064	081-5622	111
9X-8194	338	9X-8875	293	014-0816	309	081-6344	428
9X-8216	982	9X-8877	479	030-4605	425		802
	996	9X-8879	36	030-7946	325	087-4772	676
9X-8250	549		45	030-7949	86	090-4808	997
	556	9X-8880	479		123	090-8247	583
	561	9X-8881	291		125		1037
	567	9X-8883	479		179	090-8865	831
	571	9X-8887	47	030-7972	179		1023
	639	9X-8917	391	030-7982	179	092-6025	1001

▶ **PRIMARY REFERENCE**

PART NUMBER INDEX

Part	Page
095-0673	715
	716
095-0758	1064
095-0843	1049
095-0927	844
	845
095-0929	710
095-1519	729
096-0067	614
096-4306	865
096-4884	993
096-5962	391
096-6166	312
096-8058	706
	708
097-4896	378
	797
	1085
098-5747	1064
098-6000	425
098-6814	662
098-9852	325
099-3001	378
099-3047	885
099-5845	706
	708
	772
	842
1	
100-2715	611
100-2719	611
100-2720	611
100-2721	611
100-3122	146
100-3204	266
100-3237	86
	182
	183
	320
100-3877	70
100-3878	70
100-3879	70
100-3880	70
100-4015	936
	937
100-4083	492
100-4311	▶272
	369
100-4817	116
100-4910	611
100-5568	1030
100-5588	▶944
	945
100-5589	▶941
	942
100-7416	917
100-7444	687
100-7603	84
100-7788	1080
100-8007	5
	▶113
100-8008	113
	▶114
100-8075	75
	80
101-0003	1067
101-0007	749
	751
101-0767	755
	757
	759
	761
101-0830	5
	▶25
101-0831	5
	▶19
101-0852	217
	223
101-1173	▶21
	22
101-1198	22
101-1364	47
101-1365	47
101-1366	47
101-1367	47
101-1368	47
101-1369	47
101-1370	47
101-1372	47
101-1462	749
	751
101-2862	61
101-2867	1045
101-3327	542
101-3328	542
101-3329	542
101-3672	753
	755
	757
	759
	761
101-3756	3
	▶176
101-3787	246
101-4000	199
	200
101-4197	19
101-4199	72
	73
101-5306	536
101-7269	▶945
101-7273	▶942
101-7404	191
101-8346	▶606
	1034
101-8352	606
	▶607
101-8418	245
101-9048	▶462
101-9445	498
101-9613	646
102-1529	353
102-2240	▶279
	325
102-3478	431
102-3479	857
102-3482	857
102-3730	480
102-3733	480
102-4156	864
	865
	869
102-4157	864
	865
	869
102-4158	864
	865
	869
102-4226	645
	▶646
102-6293	38
102-8618	479
102-8634	54
102-8801	310
	311
	333
	335
	341
	363
	365
	372
	374
	378
	1021
102-8802	42
	194
	225
	243
	265
	278
	299
	302
	303
	307
	308
	310
	311
	312
	325
	333
	335
	340
	341
	342
	354
	363
	365
	369
	374
	377
	378
	495
	586
	675
	771
	893
	894
	953
	969
	1001
	1014
102-8803	42
	173
	201
	203
	225
	236
	242
	268
	269
	270
	271
	274
	276
	279
	281
	309
	310
	311
	335
	340
	341
	351
	360
	363
	374
	375
	378
	380
	615
	776
	778
102-8804	310
	311
	333
	340
	341
	342
	360
	374
	375
	1014
102-8805	247
	309
	311
	331
	335
	336
	341
	374
	873
	1014
	1015
	1016
	1017
	1018
	1019
102-8806	306
	311
102-8813	277
102-8970	533
102-8971	533
102-9035	1035

▶ **PRIMARY REFERENCE**

PART NUMBER INDEX

Part	Page
102-9792	5
	▶38
102-9793	5
	▶11
102-9928	38
102-9939	6
	▶1090
103-0010	533
103-0618	634
103-0619	634
103-0620	133
103-0888	5
	▶129
103-0892	130
	135
	1008
103-0893	130
103-1096	1093
103-1684	117
103-1743	744
103-1833	938
	939
103-1834	938
	939
103-1835	938
	939
103-2017	634
103-2543	355
	996
103-2554	959
	993
103-3587	652
103-4531	964
103-5920	684
103-6003	133
103-6262	744
103-6318	729
103-6319	727
	729
103-7407	728
103-7410	728
103-8679	739
103-8681	739
104-2091	997
104-2137	533
104-2138	533
104-2139	533
104-2140	533
104-3895	711
104-4255	727
104-4256	727
104-4270	727
104-4271	727
104-4272	727
	874
	875
104-4273	727
	874
	875
104-4274	727
104-4452	1077
104-4453	1046
104-4751	451
	▶464
104-4754	483
104-4763	84
104-4764	84
104-4766	84
104-4767	15
104-4768	15
104-4771	129
104-4772	11
104-5060	646
104-5061	646
104-5967	646
104-6457	1077
104-6729	395
104-6730	395
104-7108	601
104-7203	458
	459
	461
105-0251	139
105-1866	619
105-2036	464
105-2433	464
105-4277	133
105-4278	133
105-4287	129
105-4288	133
105-4301	80
105-4317	129
105-4324	293
105-4326	287
	▶293
105-4330	7
	▶133
105-4513	847
105-4646	555
105-6117	608
105-7134	464
105-8029	391
105-9073	391
106-0933	472
106-1774	652
	▶654
106-4144	1012
106-4149	1010
106-4155	378
106-4454	309
	1030
106-4572	146
106-4595	5
	▶13
106-4683	133
106-4684	133
	333
106-4685	17
106-7439	464
106-7598	52
106-8704	225
	353
106-9106	1093
106-9867	94
106-9869	94
106-9871	94
106-9872	▶94
	95
106-9873	6
	▶95
107-0256	4
	▶1012
107-0257	4
	▶1010
107-0466	34
107-0744	123
	125
107-0750	57
107-0779	36
107-1964	312
107-3203	646
107-3383	936
	937
	939
	940
107-3727	354
107-3758	155
107-3846	876
	877
	879
107-4029	874
	875
107-4043	874
	875
107-4061	874
	875
107-4092	830
107-4395	953
107-4396	953
107-4397	1001
107-4399	1001
107-4990	829
	830
107-5011	874
	875
107-5012	874
	875
107-5869	607
107-7175	94
107-7197	5
	▶155
107-7326	94
107-7330	64
107-7331	64
107-7332	64
107-7333	64
107-7334	64
107-7335	64
107-8105	566
	▶575
107-8559	930
107-8611	492
107-8769	291
108-0220	873
108-0221	873
	▶874
108-0222	873
	▶875
108-1095	770
	▶771
108-1174	575
108-1434	57
	123
	125
	179
108-1615	962
108-2736	422
108-3866	737
	892
108-5471	993
108-5477	456
108-6170	135
108-6216	753
108-8165	▶199
	1035
108-8169	▶200
	1034
108-9422	378
109-0036	▶535
109-0361	501
	502
109-0365	309
109-0903	1093
109-1529	405
109-1645	378
109-1739	829
	830
109-2332	75
	80
	113
109-4858	876
	877
109-4859	876
	877
109-5605	212
109-5839	784
109-5840	784
109-6511	428
109-6945	993
109-7089	460
109-7411	162
109-8041	40
109-8042	40
109-8043	40
109-8044	40
109-8045	40
109-8046	40
109-8047	40
109-8048	40
109-8051	40
109-8052	40
109-8053	40
109-8054	40
109-8056	40
109-8058	40
109-8060	40
109-8061	40
109-8063	40
109-8065	40
109-8066	40
109-8069	40
109-8085	40
109-8086	42
109-8087	40
109-8088	40
109-8090	40
109-8213	1025
109-8214	▶1025
	1034
109-8314	93

▶ **PRIMARY REFERENCE**

PART NUMBER INDEX

Part	Page	Part	Page	Part	Page	Part	Page
109-9030	929	112-7106	875		770	117-0069	325
	936		▶877		780	117-0070	▶8
	940	112-8372	233	115-2247	608		9
109-9033	937		349	115-3072	342	117-0071	5
109-9667	462		351	115-3082	354		▶9
110-0096	135	112-9783	552	115-3083	354	117-1410	961
110-0778	692		576	115-3525	171		▶1048
110-2079	309		577	115-3580	515	117-2311	309
110-5991	298		578	115-3629	8	117-2983	486
110-6848	354	113-0580	378	115-4877	499	117-3033	227
110-6990	162	113-4708	941	115-4878	498	117-4491	1051
110-6991	25		944	115-4879	499	117-4492	950
110-6994	22	113-4709	941	115-4880	498	117-5716	706
110-7524	996		944	115-6433	976		708
110-7886	306	113-4799	1032	115-7175	703		842
110-8769	225		▶1033		705	117-5899	880
110-9160	431	113-5092	542	115-7854	137		882
111-0343	492	113-5093	542	115-8035	615	117-6712	767
	893	113-5094	542	115-8388	962	117-6713	767
	894	113-5241	542	115-8389	962	117-6805	936
111-0483	669	113-5945	480	115-8390	962		937
111-0879	309	113-7097	▶462	115-8391	962		940
111-1349	94	113-7098	▶463	115-9190	208	117-6806	936
111-3193	479	113-7430	810		212		937
111-3203	485	113-7752	608	115-9191	208		940
111-3820	75	113-8263	865		212	117-6809	945
	80		869	116-1339	1		▶948
111-4374	118	113-8432	67		▶611	117-7464	776
111-4377	116	113-8433	67	116-1342	464		778
111-4399	289	113-9064	541	116-1345	611	117-7522	880
111-4400	78	113-9690	▶945	116-2387	611	117-7524	732
111-4627	997	113-9789	1058	116-2858	464		880
111-5059	155	114-1133	566	116-3044	878	117-7773	675
111-5824	864	114-1269	876	116-3045	874	117-8568	91
111-6119	75	114-1374	627		875		767
111-7421	146		630		▶878	117-8721	416
111-8142	164	114-2040	137	116-3101	874		520
111-8922	479	114-3098	520		▶879		524
111-9373	75	114-3372	47	116-4491	331		601
111-9560	42	114-4231	413		340	118-0165	91
111-9758	520	114-5333	1001		1008		767
	524	114-5477	179	116-6200	879	118-0166	91
	896	114-6059	592	116-6201	877		767
	898	114-6060	548		879	118-0287	489
	900		555	116-6202	1001	118-1277	197
112-3171	748		560	116-6253	874		367
	▶755		592		875	118-1655	64
112-3172	748	114-6602	865	116-6254	874	118-3909	▶280
	▶757		869		875		340
112-3591	162	114-9125	1053	116-7153	▶93	118-4977	1022
112-3628	875	115-0548	164		96		1024
	▶876	115-0549	164		99	118-5584	981
112-4558	590	115-0553	164	116-7341	701	118-6878	335
112-4630	842	115-0554	164		▶705		571
112-4886	473	115-0555	164	116-7472	489		1001
112-5282	486	115-0556	164	116-7474	489	118-7226	▶281
112-5383	840	115-0557	164	116-7644	874		333
112-5763	961	115-0617	247		875		335
	▶1032		250	116-9328	425		369
112-5992	179	115-0761	444	116-9933	325		380
112-6035	5	115-0763	444	117-0040	6	118-8182	492
	▶32	115-0764	444		▶164	118-8274	▶399
112-6036	32	115-0767	444	117-0060	6		451
112-6547	464	115-2129	669		▶61	118-8454	282
	▶483		▶675	117-0068	325		285

▶ **PRIMARY REFERENCE**

PART NUMBER INDEX

Part	Page	Part	Page	Part	Page	Part	Page
118-9901	548	121-6601	399	124-0327	40	126-7574	218
119-0781	1048	121-6602	399	124-1479	312		221
119-0838	10	121-6603	399		365	126-8181	401
119-0839	10	121-6604	399	124-2729	479	126-8182	401
119-0913	869	121-6605	399	124-2730	479	126-9414	665
119-1792	383	121-6606	399	124-2731	455		667
	▶401	121-6659	919	124-2744	479	127-1647	147
119-3662	225		927	124-3019	197	127-2170	997
	269	121-8892	919		349		1021
119-4743	673	121-8894	919		363	127-2176	127
119-5708	331	122-1671	614		365	127-4417	162
	1073	122-3184	57		369	127-4422	9
119-5988	813	122-3188	40		571	127-4465	166
	▶892	122-3211	36		1001	127-4494	7
119-6293	5	122-3359	634		1085		▶166
	▶14	122-4026	639	124-3647	291	127-5400	31
119-6296	61		859	124-3760	840		34
119-6321	5		861	124-3761	834		36
	▶57	122-5855	318		▶840		45
119-6324	57		813	124-3768	840		141
119-6346	84	122-5954	5	124-5513	5	127-8260	13
119-6350	5		▶22		▶72	127-8261	13
	▶17	122-6126	1035	124-7651	501	127-8262	13
119-6363	5		▶1077		502	127-8269	164
	▶74	122-8856	127	124-8395	5	127-8859	1034
119-7276	813	122-8874	829		▶47	127-9323	340
119-8039	399	122-9278	489	124-9633	363		601
120-0258	401	123-2017	772		365	127-9762	401
120-0550	401	123-3154	962	124-9849	710	127-9763	401
	▶403	123-5165	▶456	124-9913	844	128-1663	479
120-0551	403	123-5168	▶456	125-0800	929	128-4845	20
120-3929	292	123-5169	799		936	128-6157	309
	298	123-5170	▶456		937	128-8678	785
120-4339	10	123-6383	309	125-1302	▶303	128-8886	309
120-4394	730	123-6906	61		381	129-0696	288
	772	123-6914	162	125-2706	776		▶338
	881	123-6915	162		778	129-2251	293
120-4512	84	123-6919	30		1082	129-2252	293
120-9027	239		▶84	125-3295	608	129-2253	293
	241	123-6970	162	125-4124	197	129-2254	293
121-1110	99	123-6975	5	125-6241	650	129-3175	384
121-1340	340		▶78	125-6535	296		385
	369	123-6978	78	125-6536	296	129-3178	375
	1085	123-6997	78	125-6537	296		982
121-2104	920	123-8576	952	125-7131	432	129-3180	241
	922		▶953		1093	129-6628	▶277
	924	123-8681	309	125-7876	99		325
	926	123-8685	997	125-8176	509	129-7700	1030
121-2364	917	123-8687	996	125-8534	320	129-7701	310
121-2367	917	123-8690	996		340	129-9459	166
121-2371	922	123-8696	996		776	130-0528	634
121-2378	919	123-8701	959		778	130-2607	24
	922		▶978	125-9751	47	130-2608	24
121-3558	22	123-8702	996	126-0182	▶203	130-3281	169
121-3562	162	123-8703	996		340	130-3304	954
121-4188	753	123-8715	980	126-1133	40	130-3307	953
121-5729	325	123-8716	980		▶276	130-3374	260
121-5734	75	123-8720	996	126-1768	225		1001
121-5736	172	123-8721	996	126-1774	225	130-3590	953
121-5895	607	123-8722	996		231	130-4622	743
121-5897	607	123-8724	996		354	130-4623	744
121-5898	607	123-8725	996	126-1817	675	130-5300	247
121-5899	607	123-9431	1033	126-4167	96		259
121-6599	399	124-0174	365		99		266
121-6600	399	124-0312	954	126-5131	1028		308

▶ **PRIMARY REFERENCE**

PART NUMBER INDEX

Part	Page	Part	Page	Part	Page	Part	Page
	312		420	134-4126	217	137-6924	498
	331	133-3489	353		218	137-8194	6
	333	133-3544	966		221		▶282
	336	133-4081	13		971	137-8627	498
	342	133-4296	401	134-5784	579	137-8628	498
	351		422	134-5788	540	137-8629	499
	360		479	134-7435	1093	138-0588	413
	363	133-5907	40	134-8297	615	138-1240	227
	365	133-5908	40	135-0175	127	138-1436	542
	369	133-5909	40	135-0426	▶242	138-1437	542
	372	133-5913	40		255	138-1440	542
	375	133-5926	61		257	138-1441	542
	380	133-5927	166	135-0611	1018	138-1442	542
	615	133-5935	158	135-2543	99	138-1443	542
	1030	133-5938	166		340	138-1769	146
130-5301	333	133-5946	74	135-2755	813	138-1770	146
	336	133-6503	3	135-3879	3	138-1844	401
	342		▶160		▶159	138-1882	542
	377	133-6578	705	135-4500	681	138-3339	284
130-6469	245		837	135-5145	161	138-3656	739
	246	133-6613	4	135-6104	540	138-4339	4
130-7609	632		▶168	135-6143	282		▶627
130-7920	744	133-8382	127		285	138-4340	4
130-9763	665	133-8528	418	135-6145	829		▶630
130-9771	665	133-8677	869		830	138-4409	785
131-0420	25	133-8678	869	135-7862	282	138-6957	96
131-0421	25	133-9306	27		285		99
131-0722	1020	133-9399	982	135-9738	▶946	138-7126	1091
131-1226	520	133-9658	282	135-9800	947	138-7127	1091
131-1480	99		285	135-9941	325	138-7128	1091
131-1481	99	133-9660	282	136-0426	627	138-7573	409
131-3944	542		285		630		547
131-3945	542	133-9732	705	136-0427	627	138-7575	547
131-3946	542	133-9733	705	136-0428	627	138-7584	458
131-6172	479	133-9734	705	136-0445	627	138-7585	456
132-0338	950	134-1808	942	136-0454	627		▶458
132-0348	383		945	136-0502	627		462
132-1066	▶943		947	136-1543	1027	138-8508	64
132-1183	383	134-1809	942	136-1544	950		66
	473		945	136-1612	77	138-8630	996
132-3469	146		947		158	139-1398	342
132-3470	146	134-2420	627	136-1953	953	139-2116	374
132-3481	116	134-2421	627	136-2131	630	139-2118	374
132-3484	7	134-2422	627	136-2650	630	139-3213	837
	▶116	134-2423	627	136-2653	630	139-8667	265
132-3500	146	134-2424	643	136-3188	956	139-9324	891
132-3503	146	134-2425	643		1072	140-1088	249
132-3505	139	134-2426	630	136-3190	956		250
132-3507	139	134-2427	630		1072	140-2961	1033
132-3509	139	134-2540	225	136-3607	662	140-2962	1033
132-3514	538	134-2972	917	136-4436	529	140-2963	1033
132-3515	146		919	136-4437	540	140-2978	369
132-5532	865		920	136-6782	943	140-7480	233
	869		922	136-6783	943	140-8243	813
132-6469	70		924		946		▶891
132-8876	418		926	136-7403	996	140-9359	859
	420		927	136-7406	996		861
	673	134-2973	917	136-9699	369	140-9597	36
133-0738	930		919		615		45
133-1276	418		920	137-3505	383	141-2107	548
133-1295	416		922		▶498		555
	▶418		924	137-3506	498		560
133-1299	418		926	137-6841	1060		▶598
133-2149	913		927		1064	141-6518	542
133-2199	418	134-3379	222	137-6923	498	141-7094	42

▶ **PRIMARY REFERENCE**

PART NUMBER INDEX

Part	Page
141-7141	32
141-7196	84
141-7981	538
141-8143	1030
141-8144	1030
141-8145	1030
141-8146	1030
142-1657	197
	360
	571
142-2928	744
142-3331	96
142-4159	61
142-4281	865
	▶884
142-4286	884
	885
	889
142-5803	518
143-1002	813
143-1288	1049
143-4218	692
143-5122	42
143-5123	42
143-5128	5
	▶15
143-6755	924
143-7854	560
143-8480	971
143-8912	864
	▶885
144-0178	369
144-0195	1070
	1073
144-1281	936
	937
144-1282	936
	937
144-1285	930
	935
	▶936
144-1286	931
	932
	933
	934
	▶937
144-4613	340
	360
	785
144-5611	55
144-5612	▶55
	966
144-5661	333
144-5692	22
144-5695	64
	66
144-7766	393
144-8122	55
144-8123	55
144-8263	36
	45
144-8266	105
144-8267	103
	▶105
144-8271	105
145-0326	1067
145-0487	353
145-2901	55
145-3169	706
	708
	842
145-3171	706
	708
	842
145-3319	340
145-3773	844
	845
145-3774	844
	845
145-3775	844
	845
145-3776	844
	845
145-3780	842
145-3783	842
145-3791	842
145-3792	842
145-3793	842
145-3794	842
145-4484	993
145-6620	1036
145-6621	1036
145-6749	471
145-8951	393
145-8952	393
145-9987	169
146-0240	173
146-1892	608
146-2614	996
146-3095	996
146-3096	996
146-5067	146
146-5230	369
146-6747	320
146-7383	162
146-8053	▶169
	170
147-0319	▶237
	250
147-0385	331
	342
	365
	369
147-0625	6
	▶184
147-0805	32
147-0842	119
147-1223	813
	▶893
147-1237	727
	▶728
147-1238	727
	▶729
147-1443	225
147-1445	354
147-1446	354
147-2001	913
147-3061	728
147-3062	829
	830
147-3063	829
	830
147-3064	829
	830
147-3150	197
	363
	369
	1001
147-3745	182
	183
147-4410	767
147-5203	159
147-5399	▶492
	495
147-6219	338
147-6223	338
147-6225	338
147-6227	338
147-6603	738
147-6604	738
147-6605	738
147-9560	767
148-0330	422
	444
148-2711	▶398
	451
148-3542	583
148-6490	398
148-6559	444
148-6627	409
148-6628	409
148-6757	820
148-7564	634
148-8305	428
	813
148-8306	615
148-8307	697
148-8313	369
148-8315	641
	643
148-8316	548
	555
	560
	566
	571
148-8318	432
	792
	811
	813
148-8319	814
148-8320	548
	555
	560
	571
	592
	594
148-8321	687
148-8322	176
148-8323	627
	630
148-8324	697
	1093
148-8325	432
	615
	634
	847
	1082
	1085
148-8327	107
	146
	601
	627
	630
	782
	1093
148-8328	601
	847
148-8329	687
148-8332	712
148-8334	432
148-8335	428
	503
	506
	627
	634
	641
	687
	814
148-8336	652
	687
	692
148-8339	615
	669
	780
	782
	814
148-8340	548
	555
	560
	639
	697
148-8342	176
	744
148-8345	413
148-8346	413
	432
148-8347	432
	615
	692
	780
	1093
148-8351	89
	548
	555
	560
148-8352	627
	767
148-8353	146
	652
	814
148-8354	548
	555
	560
	566
148-8355	850
148-8356	432
148-8357	503
	506
	616
	627

▶ **PRIMARY REFERENCE**

PART NUMBER INDEX

Part	Page	Part	Page	Part	Page	Part	Page
	634	148-8407	432	149-6032	20	153-7491	123
	767		616	149-6033	20		125
148-8359	1093		672	149-6034	20	153-7492	123
148-8360	616		789	149-6035	20		125
	669		792	150-3032	601	153-7493	123
	692		804	150-3033	1082		125
	780		811		1085	153-7499	123
	814		814	150-3036	677		125
148-8361	814		820	150-3058	820	153-7500	123
148-8362	767		865	150-3067	549		125
148-8364	548	148-8408	780	150-3073	634	153-7505	123
	560	148-8409	739	150-4027	615		125
	712	148-8412	413		692	153-7506	123
148-8365	147	148-8413	1085	150-4033	780		125
	697	148-8415	814	150-4037	592	153-7909	▶489
	712	148-8418	821		639		495
	821	148-8420	639		815	153-7915	495
148-8367	692	148-8422	1093	150-4043	428	153-7916	495
	814	148-8428	428		677	153-9510	542
148-8368	616		677		712	153-9512	542
	684	148-8429	634		815	153-9963	137
	799		767		821	154-0156	▶400
	847	148-8430	615	150-4046	815		482
	1082	148-8431	767	150-4049	815	154-0901	409
	1085	148-8433	692	151-1398	354	154-0902	409
148-8369	89		814	151-6427	393	154-0903	409
	549	148-8435	687	151-8754	239	154-1586	411
	552		693	151-9270	75	154-1612	▶24
	555		814	152-1005	57		27
	561	148-8436	413	152-8332	893	154-1618	127
	566		428	152-8383	894	154-1619	127
	571	148-8437	785	152-8385	820	154-3841	583
148-8370	147	148-8439	693		▶894	154-3842	583
	428		815	152-8920	2	154-5236	715
	814		1085		▶383		716
	820	148-8443	431	152-8929	7		▶739
	1093		652		▶119	154-6389	70
148-8375	566	148-8444	147	152-8930	2	154-6626	333
148-8376	107		592		▶383	154-7204	833
148-8378	677		594	152-8947	▶715		912
	687		712		775	154-8015	712
	814		815	152-8968	▶580		▶718
148-8381	428		821		1035	154-8137	712
148-8382	107	148-8445	413	152-8971	4	154-8347	712
148-8384	566	148-8450	785		▶643	154-9025	154
148-8385	89	148-8454	549	153-0509	▶265	154-9430	922
	549		556		374	154-9434	922
	552		561	153-2073	▶238	155-0515	123
	556	148-8455	644		245		125
	561		815		246	155-0541	162
	566	148-8457	639		247	155-0544	162
148-8387	432		815		249	155-0545	162
148-8388	432		821		250	155-0726	56
148-8390	109	148-9643	444	153-2838	444	155-1583	718
	641	149-0589	611	153-4906	22	155-2026	632
	643	149-0593	611	153-5294	865		634
148-8391	91	149-1981	24		869	155-2078	325
	767	149-1982	27	153-6237	428	155-2255	231
148-8392	428	149-3255	310	153-6242	616		310
	785		▶1014	153-6257	1094		311
	820	149-4617	712	153-6258	712		312
148-8393	96		▶721	153-6273	608		333
	99	149-5462	144	153-7482	123		336
	820	149-5628	492		125		341
148-8395	739	149-6031	20	153-7485	325		349

▶ **PRIMARY REFERENCE**

PART NUMBER INDEX

Part	Page	Part	Page	Part	Page	Part	Page
	351	155-2271	310		183	160-4337	3
	363		311	156-9755	179		▶245
	365		333		▶182	160-4378	▶964
	369		341	156-9756	179		1035
	374		360		▶183	160-4891	353
	378		374	156-9830	162		▶971
155-2256	311		954	157-0670	154	160-5118	548
155-2260	42	155-2272	333	157-2797	123	160-5910	6
	201		341		148		▶64
	225	155-2274	247	157-2839	118	160-6026	560
	273		310	157-2840	5	160-6354	1033
	275		311		▶118	160-6365	1033
	277		312	157-2841	5	160-6366	1033
	310		331		▶112	160-7689	354
	311		335	157-7190	360	160-7690	225
	312		336	157-7191	375		231
	333		341	157-7244	755	160-8708	380
	335		349		757	160-9811	49
	336		351		759	160-9818	325
	341		374		761	160-9828	40
	351		954		763	161-1703	325
	360		1021		765	161-1704	325
	363	155-2276	216	157-7245	749	161-2513	105
	365	155-3502	815		751	161-3612	919
	369	155-3561	924	157-7246	753		920
	372	155-3603	924	157-8087	987		922
	374	155-3624	739	158-0248	237		924
	380	155-4098	842		238	161-3613	919
	776	155-4791	792	158-0250	237		920
	778	155-4803	591		238		922
155-2265	309	155-4807	591	158-0252	237		924
	311	155-4809	580		238	161-4540	1
	1021		▶586	158-0851	312		▶246
155-2266	225	155-4811	586	158-2306	604	161-6154	722
155-2267	216	155-5271	64	158-3029	665		723
155-2270	42		66		667	161-6322	409
	70	155-5779	1070	158-6634	375	161-6928	5
	111	155-5784	▶1016	159-0888	755		▶20
	203		1070		757	161-8883	924
	225	155-6258	147		759		927
	247	155-6344	632		761	161-9129	927
	305	155-6710	591	159-3550	401	161-9916	413
	310	155-6712	580	159-5968	555	161-9926	161
	311	155-7321	601		560		▶273
	312		693	159-8049	197	162-0177	616
	331	155-7329	815		320		865
	333	155-7409	580	159-8050	320		869
	335		▶591	159-8053	320	162-0223	744
	336	155-7449	586	159-8054	197	162-0303	49
	340	155-9600	920		320	162-0749	920
	341	155-9604	920		367		926
	342	156-0507	920	159-8091	789	162-1966	340
	353	156-1714	586		797	162-3898	22
	354	156-5545	950	159-8522	840	162-8283	40
	360	156-5916	913	159-8664	391	162-9679	964
	363	156-5917	913	159-8665	391	163-1057	433
	365	156-5964	917	159-9322	231	163-1882	310
	369	156-5970	657	160-0010	601	163-1883	310
	372	156-5972	917	160-0011	389	163-1884	360
	374	156-6233	5	160-0363	780	163-2191	96
	378		▶162	160-0564	99		99
	492	156-6261	162		619	163-2192	▶96
	608	156-6277	123	160-2243	662	163-2592	▶40
	954		148		744		42
	1021	156-9748	182	160-3518	391	163-2596	6

▶ PRIMARY REFERENCE

PART NUMBER INDEX

Part	Page	Part	Page	Part	Page	Part	Page
	▶154	164-6987	▶661	167-2239	749	168-9883	424
163-2622	119		710		751	169-0410	1001
163-3926	608	164-6988	710	167-2240	753	169-0417	266
163-4142	139	164-6989	710	167-2333	665		▶269
163-4826	724	164-7083	676		667	169-2677	▶389
163-5465	714	164-7084	676	167-2354	749		424
	▶724	164-7141	658		751	169-2678	424
163-7882	▶268	164-7142	658	167-2356	753	169-2679	424
	325	164-7143	658	167-2415	763	169-2680	424
163-8811	662	164-7144	658		765	169-2681	424
	744	164-7145	658	167-2493	759	169-2682	424
164-0427	957	164-7429	1010	167-2725	755	169-2683	424
164-0431	957	164-7474	813		757	169-4273	815
164-1234	1067		▶863		759	169-7380	1067
164-2108	485	164-7477	755		761	169-7393	147
	486		757	167-2938	755	169-7394	413
	657		759		757	170-0456	393
164-2136	692		761		759	170-0494	604
164-2165	627	164-7556	240		761	170-0696	1064
164-2166	627	164-7577	▶299	167-7763	780	170-0971	1064
164-3306	627		331	167-8058	93	170-0977	1064
	630	164-8165	661	167-8610	233	170-0979	1064
	▶649	164-8166	661		349	170-1112	950
164-4074	583	164-8167	661		351	170-1114	950
164-4075	583	164-8168	661	167-8712	1021	170-1115	950
164-4076	583	164-8169	661	167-8984	▶201	170-1561	459
164-4180	79	164-8170	661		233		460
	634	164-8171	661		351	170-1821	310
	693	164-9812	632	167-9524	485	170-2512	374
164-4531	950	165-3938	433		486	170-3917	▶441
164-4883	1027	165-4012	3		487		456
164-5544	712		▶981	167-9557	179	170-3918	456
164-5567	692	165-4014	385	167-9562	5		▶459
164-5577	632	165-4015	385		▶123		463
	785	165-4927	627	167-9563	59	170-3919	456
164-5586	586		630	167-9574	5		▶460
164-5590	429	165-4933	627		▶52		462
	433		630	168-1915	464	170-4689	441
	684		644		▶473		462
	815	165-6668	64	168-1917	473		463
164-5592	96		66	168-4344	389	170-4735	1082
	99	165-8718	233	168-4345	424		1085
164-5596	813		351	168-4346	424	170-5632	744
164-5597	146	165-9383	731	168-4347	424	170-8540	1064
164-5611	428		882	168-4350	424	170-9900	706
164-5618	284	165-9399	659	168-4351	424		708
164-5624	815	165-9402	660	168-4353	424		842
	1094	165-9403	660	168-4354	424	170-9907	706
164-5650	692	165-9404	660	168-4355	424		708
164-6862	821	165-9405	660	168-4480	387		842
164-6938	706	165-9996	767	168-4481	395	171-1101	389
	708	166-1222	1054	168-4510	1063	171-1230	1049
	▶710	166-4374	145	168-4541	458	171-2210	354
164-6939	▶676	166-4376	145		459	171-2212	354
	706	166-4731	1064		460	171-2934	424
	708	166-4732	1064		461	171-3759	310
164-6941	▶658	166-5944	27	168-6915	422	171-3897	961
	659	166-5945	24	168-6916	422		▶1064
164-6944	706	166-6928	310	168-6920	444	171-4430	320
	708		▶1015	168-6923	444		789
164-6982	710	166-9258	399	168-7800	162	171-4616	▶444
164-6983	710	167-2218	665		172		482
164-6984	710		667	168-8497	619	171-4619	▶422
164-6985	710	167-2230	763	168-9112	954		482
164-6986	710		765	168-9882	424	171-4621	▶387

▶ **PRIMARY REFERENCE**

PART NUMBER INDEX

Part	Page	Part	Page	Part	Page	Part	Page
	482	174-0503	225	177-0359	706	179-3656	746
171-5349	278	174-1494	953		708	179-3657	746
	369	174-3016	378	177-1570	1093	179-4964	369
171-6682	1049	174-3181	697	177-1862	1045	179-5488	146
171-6723	1094	174-3503	409	177-1863	1049	179-5490	146
171-6731	592	174-4312	340	177-2374	391	179-6061	159
	594	174-4895	169	177-4112	391	179-6371	970
171-6803	383	174-5671	424	177-4113	390	179-6864	498
171-6804	383	174-5674	424		▶391	179-6865	498
171-8708	▶301	174-5723	477	177-4122	355	179-6910	844
	325		▶479	177-4930	1027		845
171-8914	59	174-5807	518	177-4937	1051	179-6911	844
171-8936	75		1053	177-6889	40	179-6912	844
171-8937	75		1056	177-6890	40		845
171-8946	49	174-5907	312	177-6894	424	179-6913	844
171-8947	5		342	177-8839	780		845
	▶34		365	177-9953	5	179-6914	844
171-9683	1063		370		▶195		845
172-0208	▶263	174-6381	509	178-0711	520	179-6915	844
	291	174-7580	310		524		845
172-0916	20		374	178-3111	961	179-6916	844
172-0919	64	174-7594	250		▶1060		845
	66	174-9339	40	178-3114	1060	179-6918	772
172-1482	269	174-9347	40	178-3904	961	179-6922	732
172-2416	1049	174-9349	40		▶1063	179-6928	842
172-3511	310	174-9351	40	178-3905	1063	179-6933	842
172-4062	548	174-9372	40	178-4323	996	179-6937	706
172-4235	424	175-0100	499	178-6241	896	179-9392	310
172-4621	601	175-0103	499		898		374
172-4667	445	175-0420	442		900	180-0567	451
172-4668	445	175-3068	445	178-6242	913		▶477
172-4670	445	175-3153	445	178-6245	913	180-3377	416
172-5277	601	175-3213	445	178-6246	913		▶420
172-6024	422	175-3244	615	178-6247	915	180-9286	615
172-6746	422	175-3279	498		917	180-9340	273
172-6747	422	175-3280	498		919		363
172-7196	422	175-3616	110		920	180-9900	310
172-7197	422	175-4291	240		922	180-9935	737
172-7741	580	175-4292	240		924	183-2985	586
172-7743	586	175-5244	77		926	183-3800	548
172-7744	586	175-5246	123		927	183-7142	▶117
172-7884	586		125	178-6248	913		147
172-7893	586	175-5247	123	178-6249	915	183-7262	865
172-8660	▶302		125		917		869
	325	175-5249	123		919	184-2298	1049
	333		125		920	184-2299	1049
	335	175-5270	5		922	184-2421	787
	360		▶125		924		831
172-9389	▶217	176-2947	744		926	184-2472	215
	353	176-3227	105		927		971
172-9966	714	176-3894	1060	178-6365	77	184-3200	▶156
173-1028	▶950	176-3895	1060	178-6366	77		157
	1049	176-5311	549	178-6402	59	184-3214	3
173-2056	110		556	178-7910	▶1049		▶157
	▶485		561		1051	184-3230	86
173-3270	445	176-5459	▶216	178-7911	▶1027	184-6949	431
173-3993	739		776		1049	185-0002	627
173-5787	1057		778	178-7912	1027		630
173-7035	1057	176-6448	627	179-0006	99	185-0004	431
173-7223	369		630		▶304		627
173-7742	586		▶655	179-1730	310		630
173-9607	445	176-9369	721		▶1014	185-0008	622
173-9701	445		▶722	179-3642	7		▶657
174-0004	387	176-9370	721		▶746	185-0742	896
174-0007	387		▶723	179-3648	152		898

▶ **PRIMARY REFERENCE**

PART NUMBER INDEX

Part	Page	Part	Page	Part	Page	Part	Page
	900		374	188-6253	354		▶749
185-2035	424		377	188-8849	237	193-4076	747
185-2036	424		829		238		▶751
185-2038	424		830	189-0189	893	193-4077	749
185-2154	▶1017		893		894		751
	1070		894	189-1024	477	193-4078	749
185-2155	1070		1001	189-1843	477	193-4079	751
185-2297	424		1016	189-3222	566	193-4080	751
185-2298	424		1017	189-5746	▶278	193-4081	749
185-2299	425		1018		325	193-4082	749
185-2300	425		1019	189-8772	1085		751
185-2638	195		1044	190-3445	▶1018	193-8609	445
185-2639	195	186-3736	42		1073	194-2903	616
185-2643	195		111	190-3446	▶1019	194-3811	445
185-2644	195		225		1073	194-3812	445
185-2645	195		277	190-3946	159	194-3814	445
185-2647	195		305	190-3947	159	194-3816	445
185-2648	195		309	190-3948	159	194-3819	445
185-2650	195		310	190-5386	501	194-3820	445
185-2651	195		744		502	194-3821	445
185-2653	195	186-4095	▶274	190-7971	161	194-3822	445
185-2654	195		365	191-0554	596	194-4897	27
185-2655	195	186-4180	263		597	194-4901	27
185-2658	195	186-4193	137		598	194-4902	27
185-3534	425	186-4195	966	191-1782	185	194-5226	275
185-3535	425	186-5107	1067	191-1783	185	194-6254	477
185-3536	425	187-0578	431	191-1862	560	194-6725	▶275
185-3537	425		799	191-4546	445		325
185-3538	425	187-0858	555	191-8921	956	194-8516	477
185-3539	425	187-2120	1082		1072	195-0468	797
185-3540	425		1085	192-1445	753	195-0470	797
185-3541	425	187-2710	487	192-1453	749	195-0856	917
185-6250	1082	187-3478	445		751		919
	1085	187-3480	445	192-1455	755		920
185-9726	▶1051	187-4540	157		757		922
	1057	187-4607	137		759		924
186-0058	746	187-6415	353		761		926
186-0059	746	187-7738	25		763		927
186-1681	1014	187-8001	706		765	195-0858	917
186-3330	1001		708	192-2056	749		919
186-3735	173		772		751		920
	194		842	192-7139	84		922
	225	187-8674	353		▶110		924
	242	187-8675	353	192-7752	1067		926
	243	188-0307	896	192-7755	1067		927
	268	188-0308	896	192-7760	1067	195-0882	340
	270	188-0314	898	192-7767	1067	195-2640	340
	271	188-0315	898	192-7783	1067	195-4479	780
	278	188-0540	1030	192-7787	1067	195-7230	940
	279	188-0556	310	192-7790	1067	195-7231	940
	280	188-0869	590	192-7795	1067	195-7232	940
	281	188-2048	393	192-7799	1067	195-7276	▶947
	299	188-3386	896	192-7805	1067	195-7278	946
	302		898	192-7810	1067	196-1185	369
	303		900	192-7812	1067	196-5052	133
	306	188-3387	548	192-7820	1067		431
	307		555	192-7822	1067	196-5053	133
	308		560	192-7848	1067		431
	309	188-3388	548	192-8987	792	196-7795	498
	310		555	192-9975	780	196-9140	34
	325		560	193-1034	369	196-9531	20
	333	188-3983	310	193-3286	56	197-0018	711
	340	188-3984	310	193-3288	29	197-0024	711
	353	188-4655	445	193-3973	325	197-0027	711
	369	188-5095	191	193-4075	747	197-1932	1044

▶ **PRIMARY REFERENCE**

PART NUMBER INDEX

Part	Page	Part	Page	Part	Page	Part	Page
197-2731	498	204-1455	880	209-4579	139	217-6927	185
197-2732	498		882	209-4588	146		▶187
197-3295	431	204-2281	325	209-5216	292	217-7455	187
	634	204-3561	1073		294	217-7933	1045
	681	204-3611	393	209-5218	14	217-9049	1049
	684	204-4415	780	209-5284	49	218-0861	1049
	688	204-5426	25	209-5296	38	219-0305	1091
	792	204-5427	25	209-6638	239	219-0601	257
	797	204-5480	171	209-9311	940	219-0602	257
	813	204-7041	▶945	210-2262	1045	219-4707	601
197-6453	340	204-7042	▶942	210-2263	1045		▶604
197-6995	27	204-7949	▶270	210-2266	1045	219-5098	687
197-7006	27		1033	210-2268	1045	219-6272	748
197-7008	22	204-8000	325	210-2270	▶1045		▶759
197-7055	27	205-3076	996		1049	219-6273	748
197-7062	27	205-4285	233	210-2542	27		▶761
197-7063	27		349	210-7715	518	219-6274	759
198-4419	996		351	210-8423	▶239		761
198-6570	310	205-4757	173		251	219-6487	▶240
198-6571	310	205-4779	74	211-4337	518		253
199-6592	354	205-4782	86	211-4942	1060	219-8034	▶605
199-6859	767	205-4824	292		1064	219-8090	961
199-7856	982		▶294	211-5358	1067		▶1057
199-7891	195	205-4825	292	211-7826	21	219-9522	244
199-8436	195		294	211-9294	1067		310
		205-4826	292	212-5023	445	219-9529	310
			294	212-8169	▶141	220-0812	850
2		205-4827	292		143	220-2105	601
			294	212-8177	144	220-2106	601
200-0945	842	205-6388	1051		▶145	220-6296	425
200-0946	842	205-9236	▶608	212-8179	141	221-0008	524
200-0947	842		613	212-8180	145	221-0358	708
200-0948	844	206-1749	1052	212-8183	141	221-3404	363
	845	206-2710	206	212-8184	145	221-3405	335
200-0950	845		▶215	213-3056	1028	221-3416	335
200-0951	845	206-5823	1018	213-3057	1028	221-3481	785
200-0952	845		1019	213-4262	996		787
200-0953	772	206-6969	1093	213-4998	241	221-7693	191
200-0954	772	206-7316	608	213-9100	308	221-9208	119
200-0955	772	207-2686	▶170	214-3645	146	221-9278	141
200-0963	842	207-5272	902	214-4863	▶271	221-9576	208
200-2003	70		903		608		212
200-2217	608		904	214-7635	▶956		586
200-2218	608		▶912		1070	221-9577	208
200-2219	608	208-1014	1060	214-7636	▶1072		212
200-2220	608	208-1015	1060		1073		586
200-6867	732	208-2362	14	215-1351	772	221-9578	208
200-8789	354		89	215-1933	241		212
201-2733	1091	208-2363	14	215-3191	820		587
201-3300	1044	208-2364	19	215-3579	718	222-0345	1051
201-3391	401		72	215-6311	831	222-1906	6
201-4257	25		73	215-6409	772		▶185
	▶27	208-5021	377	215-7183	489	222-5152	145
201-7718	498	208-5828	1080	216-2211	119	222-5376	1019
202-4327	353	208-8820	▶938	216-2817	431	222-6869	792
202-6612	240	208-8821	▶938	216-5342	369		811
202-6614	240	208-8822	▶938		▶486	222-7944	1081
202-8058	420	208-8829	▶939	217-0733	1093	223-1696	21
202-9702	418	208-8830	▶939	217-2708	369	223-5120	152
202-9708	420	208-8831	▶939		▶487	223-5121	152
203-0328	1060	208-8832	▶940	217-4448	966	223-8425	652
203-1926	780	208-8833	▶940		▶969	223-8470	652
203-2143	164	209-0381	310	217-6692	72	223-8969	310
203-2163	164	209-0962	27		73	223-8971	310
203-7703	1057	209-4573	139	217-6916	38	223-8973	310

▶ **PRIMARY REFERENCE**

PART NUMBER INDEX

Part	Page
223-8975	244
	312
223-8977	312
223-8982	310
223-9132	185
224-2561	▶659
	706
	708
224-2562	659
224-5495	185
224-8604	▶829
	875
224-9270	813
224-9280	244
	▶257
224-9869	6
	▶70
225-3288	665
	667
225-3291	755
	757
	759
	761
225-3295	763
	765
225-3299	749
	751
225-3300	753
225-5161	787
	831
226-0291	509
226-0322	509
226-0932	692
226-1194	360
226-1240	1081
226-1242	1081
226-1274	1081
226-1275	1081
226-2758	▶830
	874
226-9622	486
226-9629	485
226-9637	657
227-2001	652
227-5147	895
227-6744	771
227-7390	1081
227-7391	1081
227-7392	956
	1072
228-2615	1081
228-2616	1081
228-3581	1081
228-4518	212
228-4519	208
	212
228-4520	212
228-9625	244
229-1494	1051
229-1632	64
	66
229-2106	244
229-3177	378
229-4896	969
229-5431	91
229-7339	291
229-7356	969
229-9443	755
	757
	759
	761
	763
	765
229-9549	755
	757
	759
	761
229-9969	239
229-9972	239
229-9974	239
230-0973	755
	757
230-1060	▶171
	172
230-1061	171
230-1070	61
230-1072	137
230-1077	5
	▶206
230-1078	206
230-1081	5
	▶966
230-1082	5
	▶135
230-1096	291
230-2516	66
230-2519	66
230-2520	66
230-2619	70
230-2620	70
230-2621	70
230-2622	70
230-2633	70
230-3615	146
230-5771	340
230-8152	255
	257
230-9715	255
	257
230-9804	792
	811
231-7579	607
232-0163	▶940
232-1767	191
232-2597	1043
	▶1044
232-4670	▶219
232-4671	219
232-4672	219
232-4673	219
232-4674	219
232-4675	219
233-5070	1090
233-6745	1027
234-2819	714
234-2835	▶714
	775
234-2836	820
234-4182	184
234-9503	706
	708
235-0266	89
	▶111
235-0282	11
235-0624	775
	▶847
235-0626	632
235-0628	632
235-0629	632
235-0631	644
235-0639	804
235-1260	▶700
	714
235-1262	789
235-1263	789
235-1264	789
235-1266	789
235-1268	789
235-2484	32
	59
235-2976	▶190
	501
	502
235-2977	▶191
	501
	502
235-2978	▶193
	501
	502
235-2980	190
235-2981	191
235-2983	193
235-3546	17
	31
	34
	45
235-3548	17
	31
	34
	36
	45
	52
235-3937	▶243
	259
235-6120	503
	506
235-8824	284
	▶307
235-8827	307
236-1835	844
236-4637	842
236-4704	730
236-5169	961
	▶991
236-5197	1045
236-5224	961
	▶1028
236-5240	▶662
	961
236-5241	▶393
	961
236-7530	▶1078
236-8117	1078
236-8722	309
237-0598	6
237-3943	1067
237-3970	▶951
	1067
237-5179	849
237-5874	▶1022
	1026
237-5875	1022
237-5876	1024
237-5877	1024
237-7232	428
238-1851	295
238-5093	445
238-5094	445
238-5095	445
238-5508	489
238-8363	32
238-9127	310
238-9128	310
238-9133	310
239-5535	954
239-6336	887
239-6986	1091
239-8137	451
	▶482
239-8138	▶424
	482
239-9368	954
239-9531	977
239-9532	235
	▶977
239-9954	205
	▶218
	231
240-0557	1022
240-7032	70
240-7177	431
240-7748	5
	▶137
240-7749	137
240-7750	2
	▶5
240-7772	966
240-7773	966
240-7785	179
241-0037	604
241-3283	125
241-3713	96
	99
241-4821	859
	861
	▶865
241-4822	859
	861
	▶869
241-5928	127
241-6416	1028
241-6915	842
241-6916	842
241-8244	1028
241-8368	▶305
	353
241-9682	▶915
241-9685	915
241-9686	915
241-9688	915

▶ **PRIMARY REFERENCE**

PART NUMBER INDEX

Part	Page	Part	Page	Part	Page	Part	Page
241-9690	915	244-1018	431	244-7297	▶639	245-0710	775
241-9691	915	244-1717	235		774		▶820
241-9692	915	244-3646	▶197	244-7300	1	245-0713	820
241-9710	915		1035		▶774	245-0715	▶619
241-9711	915	244-4869	431	244-7302	789		775
241-9712	915	244-4871	431	244-7306	789	245-0719	3
241-9721	915	244-4945	517	244-7310	774		▶672
241-9722	915	244-4946	517		▶789	245-0720	775
241-9723	915	244-4947	517	244-7315	774		▶796
241-9724	915	244-4948	517		▶780	245-0722	652
242-0338	2	244-4949	517	244-7316	824	245-0723	652
	▶1026	244-4950	517	244-7317	644	245-0730	775
242-0339	▶959	244-6889	207	244-7318	792		▶782
	961		▶233	244-7320	▶428	245-0732	799
242-0340	959	244-6900	517		774	245-0734	799
	▶1036	244-7160	857	244-7321	824	245-0735	775
242-0341	▶961	244-7238	804	244-7322	780		▶799
	1026	244-7239	619	244-7324	792	245-0736	799
242-0342	959	244-7240	774	244-7325	774	245-0737	799
	▶962		▶804		▶834	245-0738	799
242-0389	▶972	244-7242	813	244-7326	792	245-0739	799
	1026	244-7243	813	244-7330	774	245-0740	775
242-1868	518	244-7244	813		▶792		▶802
242-1869	518	244-7245	774	244-7332	792	245-0963	835
242-1870	518		▶813	244-7333	792		▶836
242-1875	518	244-7247	813	244-7334	792	245-1260	▶687
242-1886	4	244-7248	813	244-7336	792		775
242-1887	4	244-7249	813	244-7338	792	245-1265	▶712
242-1901	961	244-7250	774	244-7339	792		775
	▶1070		▶824	244-7340	▶260	245-1269	687
242-1902	▶614	244-7251	813		287	245-1270	▶634
	961	244-7252	813	244-7341	431		775
242-1903	▶957	244-7253	813	244-7342	792	245-1271	687
	961	244-7254	813	244-7343	792	245-1272	431
242-1912	1070	244-7255	774	244-7344	792	245-1273	687
242-1913	1070		▶835	244-7345	2	245-1274	687
242-1914	1070	244-7256	813		▶1008	245-1275	▶681
242-1915	▶1069	244-7257	813	244-8721	7		775
	1070	244-7258	813		▶161	245-1280	▶684
242-1921	1069	244-7259	813	244-8722	161		775
242-2455	954	244-7260	774	244-8723	161	245-1282	712
242-2527	1036		▶849	245-0674	792	245-1283	712
242-3432	962	244-7262	824	245-0675	2	245-1284	712
242-3488	972	244-7265	2		▶1001	245-1285	▶431
242-3489	972		▶785	245-0676	792		775
242-3493	957	244-7270	774	245-0677	824	245-1288	684
242-3494	957		▶859	245-0678	639	245-1290	▶692
242-3530	807		▶861	245-0679	431		775
	810	244-7275	859	245-0680	2	245-1292	684
242-3531	807		861		▶1006	245-1295	▶677
	810	244-7278	692	245-0685	▶413		775
242-3535	807	244-7279	797		451	245-1303	692
	810	244-7280	▶632	245-0690	▶615	245-1304	692
242-3539	687		774		775	245-1305	3
242-5331	980	244-7281	797	245-0694	619		▶416
242-5333	952	244-7285	774	245-0695	▶701	245-1307	692
	▶980		▶797		775	245-1308	692
242-8018	961	244-7289	789	245-0700	2	245-1309	692
	▶1073	244-7290	▶767		▶775	245-1310	▶601
242-8026	▶952		774	245-0702	619		619
	961	244-7291	789	245-0703	820	245-1312	692
242-9230	205	244-7292	789	245-0704	820	245-1314	692
242-9508	993	244-7293	789	245-0706	820	245-1315	2
243-2288	127	244-7294	789	245-0708	820		▶1093
243-2652	615	244-7296	789	245-0709	820	245-1316	692

▶ PRIMARY REFERENCE

PART NUMBER INDEX

Part	Page	Part	Page	Part	Page	Part	Page
245-1317	692	245-1820	748	245-3248	1085	246-2085	1001
245-1318	692		▶826	245-3249	789	246-2086	1001
245-1319	692	245-1821	431	245-3250	775	246-2087	1001
245-1320	▶208	245-1822	524		▶1085	246-2088	1001
	287	245-1823	431	245-3251	913	246-2089	1001
245-1323	431	245-1825	431	245-3780	820	246-2264	824
245-1325	747	245-1826	677	245-3880	287	246-2275	▶895
	▶806	245-1827	677		▶1034	246-2285	▶895
245-1326	431	245-1828	677	245-3881	▶1034	246-2291	413
245-1327	431	245-1829	677	245-3882	1034	246-2292	634
245-1328	431	245-1830	▶622		▶1037	246-2641	374
245-1329	431		1034	245-3883	1037		501
245-1330	▶212	245-1831	677	245-3885	288		502
	287	245-1832	677		▶1034		541
245-1428	▶309	245-1834	634	245-4671	820		1035
	961	245-1839	634	245-4672	820	246-3259	503
245-1429	311	245-1840	3	245-4673	820		506
245-1430	311		▶850	245-4674	820	246-3260	503
245-1431	311	245-1843	634	245-4788	813		506
245-1432	311	245-1844	601		▶886	246-3261	191
245-1433	311	245-1847	601	245-4789	886	246-3365	109
245-1435	1021	245-1850	▶644		▶887	246-3431	667
245-1544	906		774	245-4890	888	246-3432	667
245-1546	902	245-1859	807	245-4891	797	246-5553	▶89
	903	245-1860	747		▶888		106
	904		▶807	245-4907	184	246-5563	6
245-1548	908	245-1861	807	245-4908	184		▶172
245-1550	▶896		810	245-6754	886	246-5564	5
	902	245-1862	807	245-6823	753		▶173
245-1554	898		810	245-7307	692	246-5565	5
	900	245-1864	807	245-7452	1039		▶179
245-1555	898		810	245-7453	1035	246-5566	6
	900	245-1865	747		▶1039		▶59
245-1556	898		▶809	245-7454	2	246-5572	135
	900	245-1867	809		▶1035	246-5574	966
245-1557	896	245-1869	827	245-7465	487	246-5575	966
	898	245-1870	748	245-8364	865	246-5577	135
	900		▶827	245-8365	865	246-5579	5
245-1558	913	245-1871	827	245-8804	2		▶49
245-1559	913	245-1874	806		▶1090	246-5580	6
245-1560	▶898	245-1889	1082	245-8805	▶905		▶325
	903	245-1890	774	245-8806	▶905	246-5582	▶225
245-1561	898		▶1082	245-8807	▶905		325
245-1564	4	245-1891	1082	245-8809	2	246-5583	49
	▶266	245-3225	1082		▶451	246-6143	404
245-1565	4	245-3226	1082	245-8810	▶2		▶409
	▶913	245-3227	1082	245-8811	▶1	246-6148	451
245-1566	▶548	245-3228	1082		2		▶467
	902	245-3229	1082	245-8812	▶2	246-6150	4
245-1567	▶552	245-3230	693	245-8813	2		▶466
	902	245-3231	1082		▶3	246-6220	▶501
	903	245-3232	1082	245-8893	834		905
	904	245-3233	1082		▶842	246-6221	501
245-1568	▶555	245-3234	634	245-9699	667		▶503
	903	245-3235	1085	246-0589	146	246-6222	503
245-1569	▶560	245-3236	1085	246-0710	961	246-6234	503
	904	245-3237	1085		▶1030		506
245-1570	▶900	245-3238	1085	246-0923	813	246-6235	4
	904	245-3239	1085	246-1029	697		▶589
245-1571	900	245-3240	1085	246-1030	▶697	246-6236	589
245-1574	910	245-3241	1085		775		▶590
245-1813	431	245-3242	1085	246-1031	697	246-6237	590
245-1816	431	245-3245	1085	246-1044	697	246-6238	590
245-1817	431	245-3246	1085	246-2083	1006	246-6239	589
245-1818	431	245-3247	1085	246-2084	1006	246-6240	3

▶ **PRIMARY REFERENCE**

PART NUMBER INDEX

Part	Page
	▶985
246-6241	3
	▶515
246-6242	985
246-6243	985
246-6277	▶902
	905
246-6278	▶903
	905
246-6279	▶904
	905
246-6294	813
246-6295	813
246-6297	813
246-6298	813
246-6300	813
246-6301	813
246-6720	241
246-7996	799
	802
246-8485	813
246-8905	859
246-9920	804
246-9921	804
246-9923	804
246-9924	804
246-9925	804
246-9926	804
247-0179	197
247-0180	2
	▶340
247-0183	197
247-0283	954
247-0294	▶241
	252
247-0345	954
247-1295	615
247-2781	380
247-2782	380
247-2785	247
247-2786	335
247-2788	776
	778
247-2789	340
247-2793	335
247-2795	340
247-2801	335
247-2807	331
247-2894	590
247-2900	985
247-2901	985
247-2902	985
247-2973	792
	▶864
247-2974	864
247-3796	113
247-4005	1
	▶335
247-4008	2
	▶372
247-4009	2
	▶369
247-4010	▶363
	1035
247-4011	▶365
247-4012	▶374
	501
	502
247-4014	2
	▶377
247-4015	244
	▶259
247-4019	3
	▶224
247-4020	2
	▶308
247-4024	3
	▶247
247-4128	913
247-4129	913
247-4394	3
	▶249
247-4395	3
	▶250
247-4396	2
	▶333
247-4397	▶244
247-4398	▶367
	1034
247-4399	244
	▶251
247-4400	244
	▶252
247-4404	▶988
	1035
247-4405	▶378
	1046
247-4565	747
	▶753
247-4566	748
	▶763
247-5919	2
	▶1046
247-5920	1046
	▶1047
247-5921	1047
247-5922	1
	▶566
247-5923	2
	▶571
247-5930	▶524
	529
247-5935	2
	▶529
247-6476	▶744
	961
247-7770	▶520
	527
247-7774	1
247-7775	1
	▶527
247-8198	▶442
	451
247-8340	10
247-8341	▶10
	70
248-0020	865
	▶889
248-0986	▶502
	905
248-0987	502
	▶506
248-0988	506
248-1407	3
	▶244
248-1410	341
248-2583	847
	▶852
248-2584	847
	▶855
248-2585	849
	▶857
248-2742	461
248-2822	457
	▶461
	463
248-2906	744
248-4768	109
248-5428	763
	765
248-5430	763
	765
248-5431	763
	765
248-5437	763
	765
248-6240	836
	▶837
248-6241	836
	▶839
248-6243	836
248-6244	836
	837
	839
248-6365	852
248-6367	855
248-7500	▶1053
	1054
	1055
248-7505	1053
248-7508	1053
248-7509	1054
	1055
248-7511	1052
	▶1054
	▶1055
248-7513	1054
	1055
249-1034	409
249-2431	632
249-2569	146
249-2570	146
249-3140	109
249-3141	109
249-3148	109
249-3149	107
	▶109
249-3167	107
249-3707	431
249-3711	431
249-3715	619
249-3779	744
249-4488	▶660
	706
249-4489	660
249-5204	753
249-5205	753
249-5212	753
249-5219	753
249-5504	797
249-5505	797
249-5615	662
	▶727
249-5616	727
249-5718	797
249-6777	2
	▶531
249-6778	2
	▶538
249-6779	538
249-6780	7
	▶396
249-6781	7
	▶146
249-6782	146
	▶152
249-6783	538
249-6788	509
249-6790	▶509
	538
249-6792	509
249-6821	152
249-6823	152
249-6825	152
249-6831	152
249-6833	531
249-6834	7
	▶970
249-6838	152
249-6846	146
249-6848	538
249-6850	146
249-6851	146
249-6852	152
249-6853	538
249-6856	146
249-6857	152
249-6858	538
249-6859	538
249-6860	538
249-6861	538
249-6862	538
249-6863	538
249-6867	7
	▶139
249-6868	139
249-7163	542
249-7165	542
249-7166	2
	▶541
249-7584	▶106
249-7832	1
	▶404
249-7833	409
249-8662	1037
249-8664	▶974
	1034
249-8668	▶975

▶ **PRIMARY REFERENCE**

PART NUMBER INDEX

Part	Page	Part	Page	Part	Page	Part	Page
	1034	250-4493	560	250-5847	669	251-1062	260
249-8669	975	250-4494	566	250-5848	782	251-1063	260
	1037		▶592	250-5849	782	251-1064	625
	1039	250-4495	571	250-5850	3	251-1065	625
249-8679	536		▶594		▶669	251-1066	622
249-8680	1	250-4497	552	250-5851	782	251-1067	622
	▶536	250-4498	566	250-5852	782	251-1068	622
249-9177	4	250-4499	566	250-6130	495	251-1069	622
	▶1023	250-4500	566	250-6190	975	251-1073	850
250-0260	799	250-4501	592	250-6194	2	251-1074	850
250-0261	684	250-4502	566		▶583	251-1260	857
250-0262	601	250-4503	566	250-6195	2	251-1261	857
250-0263	601	250-4510	548		▶284	251-1520	89
250-0264	601		555	250-6197	1039	251-1521	89
250-0266	802		560	250-6199	1039	251-1670	89
250-0267	601	250-4512	548	250-6201	1039	251-2005	748
250-0268	634		555	250-6206	542		▶765
250-0765	996		560	250-6208	542	251-2022	▶990
250-0767	997	250-4513	566	250-6230	3		1034
250-0769	993	250-4514	566		▶976	251-2023	988
250-0770	993	250-4515	900	250-6234	542		990
250-0771	993	250-4516	900	250-6554	792	251-2070	353
250-0776	962	250-4519	548		797	251-2132	353
250-0777	962		555	250-7182	632	251-2179	583
250-0912	266		560	250-7183	632	251-2181	583
250-0914	266	250-4520	548	250-7503	533	251-2182	583
250-1313	184		555	250-7666	220	251-2201	985
250-1423	433		560		▶223	251-2202	985
250-1812	1036	250-4523	555	250-7667	220	251-2208	985
250-1814	1021	250-4524	555		▶222	251-2210	503
250-1815	1021	250-4525	555	250-7668	288		506
250-1974	1039	250-4526	566		▶320	251-2238	381
250-1979	1039	250-4527	566	250-7957	2	251-2239	288
250-2297	374	250-4528	594		▶7		▶381
250-2298	374	250-4529	571	250-8298	396	251-2240	▶455
250-2353	▶454	250-4530	548	250-8299	396		775
	455	250-4531	548	250-9279	312	251-2451	672
250-2354	454	250-4532	548	250-9306	961		▶711
250-2357	454	250-4533	548		▶993		789
250-2359	454	250-4534	548	250-9455	952	251-3110	747
250-2361	454	250-4535	548		▶982		▶810
250-2819	▶287	250-4536	567	250-9458	▶613	251-3111	826
250-2820	▶287	250-4537	567		961		828
250-2821	▶288	250-4538	567	250-9873	961	251-3112	810
250-2980	959	250-4539	571		▶1058	251-3114	826
250-3018	961	250-4543	552	250-9876	1058		828
	▶996	250-4568	993	250-9930	▶743	251-3115	748
250-3195	409	250-4570	996		961		▶828
250-3235	353	250-4628	1027	250-9933	743	251-3116	826
250-3248	353	250-5796	106	250-9976	961		828
250-3837	4		▶107		▶1052	251-3143	▶776
	▶380	250-5797	107	251-0094	767		905
250-4474	552	250-5800	583	251-0095	767	251-3144	▶778
250-4475	552	250-5801	583	251-0096	767		905
250-4476	552	250-5802	583	251-0097	767	251-3145	▶747
250-4485	560	250-5803	583	251-0098	767		905
250-4486	548	250-5830	▶652	251-0099	767	251-3146	▶748
	555		775	251-0100	▶625		905
	560	250-5831	712		1035	251-3148	▶747
250-4487	560	250-5834	416	251-0123	958		905
250-4488	566	250-5840	672	251-0124	957	251-3149	▶748
250-4489	566	250-5841	796		▶958		905
250-4490	566	250-5842	796	251-1060	208	251-3150	▶747
250-4491	566	250-5843	796		212		905
250-4492	566	250-5844	796	251-1061	260	251-3151	▶748

▶ **PRIMARY REFERENCE**

PART NUMBER INDEX

Part	Page	Part	Page	Part	Page	Part	Page
	905	251-6557	982	252-5740	753	254-6064	767
251-3226	813	251-6744	▶264	252-6437	387	254-7028	▶3
251-3232	813		776	252-6457	207	255-0779	475
251-3234	813		778		230	255-0780	▶475
251-3254	▶457	251-6745	778		▶1021	255-0782	475
251-4091	813	251-6747	264	252-6464	59	255-0783	▶475
251-4160	318	251-6749	264	252-6498	59	255-0785	▶475
251-4169	318	251-6751	778	252-6508	5	255-0788	▶476
251-4234	857	251-7254	824	252-6962	3	255-0790	▶476
251-4236	857	251-7435	204		▶533	255-2712	1056
251-4238	857		▶318	252-7133	▶205	255-2713	1054
251-4245	997	251-7549	774	252-7818	▶395		1055
251-4503	827		▶811		482		▶1056
251-4560	▶930	251-7628	811	252-7845	205	255-2714	1056
251-4561	▶919	251-7641	1030	252-7888	205	255-8691	189
	930	251-7646	38		231	255-8692	189
251-4563	917	251-8248	318	252-8014	233	256-2454	959
	919	251-8317	353		349	256-8766	189
	920	251-8318	354	252-8078	▶1081	256-9970	4
	922	251-8325	501	252-8079	▶1081	256-9983	518
	924		502	252-8080	1091	256-9984	518
	926	251-8326	501	252-8089	233	257-3682	▶931
	927		502	252-8363	222	257-3683	▶920
251-4564	917	251-8327	501	252-8371	223		931
	919		502	252-8683	2	257-3684	▶932
	920	251-8391	99		▶220	257-3685	▶922
	922	251-8496	99	252-8762	▶3		932
	924	251-9201	341	252-9529	204	257-3686	▶933
	926	251-9204	341	253-0001	▶207	257-3687	▶924
	927	252-0197	3	253-0414	411		933
251-4565	917		▶256	253-0417	3	257-3688	▶934
	919	252-1757	374		▶411	257-3689	▶926
	920	252-1761	501	253-1551	842		934
	922		502		▶844	257-3690	▶935
	924	252-1762	▶204	253-1552	842	257-3691	▶927
	926	252-1763	374		▶845		935
	927	252-1765	375	253-1553	▶772	257-3692	▶929
251-4566	926	252-2649	1093		842	257-3693	▶917
	927	252-2650	1093	253-1580	3		929
251-4629	▶610	252-2653	413		▶514	257-4281	64
	613	252-4389	1039	253-1581	514	257-5849	▶235
251-4630	613	252-4390	974	253-1582	503	257-6347	5
251-4645	996	252-4391	976		506		▶75
251-4646	996	252-4394	1037	253-1583	503	257-7676	654
251-4738	614	252-4398	650		506	258-0959	▶1043
251-5720	431	252-4399	650	253-1587	503	258-6582	510
251-5721	431		651		506	259-3023	▶227
251-5830	4	252-4400	▶650	253-1588	503		288
	▶331		895		506	259-3024	227
251-6155	753	252-4405	1039	253-2111	354	259-3025	227
251-6484	958	252-4406	445	253-2587	351	259-3026	227
251-6492	996	252-5369	431	253-3066	6	259-3027	227
251-6499	958	252-5371	431		▶66	259-3030	541
251-6527	1093	252-5373	431	253-3376	772	259-3031	▶178
251-6529	1093	252-5374	431	253-3425	▶880	259-3078	107
251-6531	413	252-5376	431		881	259-7031	▶517
251-6532	413	252-5377	431	253-3558	1090	259-7032	518
251-6534	413	252-5378	431	253-3559	1090	259-7033	518
251-6535	413	252-5382	432	253-4782	1001	259-7034	518
251-6536	413	252-5657	467	253-4783	1001	259-7035	518
251-6538	413		▶474	253-4784	641	259-7036	518
251-6539	413	252-5659	474	253-7917	395	259-7037	518
251-6540	1093	252-5660	466		▶495	259-7040	518
251-6553	982		▶484	254-1594	425	259-7041	518
251-6556	982	252-5661	484		432	259-7042	518

▶ **PRIMARY REFERENCE**

PART NUMBER INDEX

Part	Page	Part	Page	Part	Page	Part	Page
259-7045	518	263-3400	146	264-4809	432	264-8072	799
259-7046	518	263-3742	341	264-4810	432	264-8073	681
259-7049	518	263-3765	259	264-4811	432	264-8074	681
259-7050	518	263-3882	354	264-4812	432	264-8075	802
259-8973	767	263-5064	701	264-4813	432	264-8076	802
259-8974	767		▶706	264-4852	369	264-8077	681
260-3867	518	263-5065	701	264-4853	369	264-8078	681
260-3868	518		▶708	264-4885	333	264-8079	697
260-3869	518	263-5477	341	264-4999	360	264-8080	802
260-3870	518	263-6179	374	264-5000	360	264-8081	802
260-5784	▶463	263-6180	336	264-5035	161	264-8100	341
260-6707	1055	263-6674	70	264-5039	1037	264-8280	428
260-7652	230	263-6677	70	264-5046	583	264-8281	428
260-7653	230	263-7297	231	264-5048	541	264-8282	428
260-9192	432	263-7301	432	264-5049	541	264-8283	428
260-9193	432	263-7675	208	264-5050	541	264-8284	428
260-9204	615	263-7744	349	264-5079	813	264-8285	428
260-9227	820		351	264-5102	3	264-8286	428
260-9228	820	263-7745	351		▶510	264-8300	428
261-0987	▶99	263-7746	351	264-5936	372	264-8331	780
261-6416	895	263-7748	230	264-6018	320	264-8336	780
261-6916	396		▶351	264-6019	367	264-8862	341
261-7180	985	263-8867	542	264-6020	320	264-9001	252
261-7181	985	263-8871	1039	264-6343	354	264-9725	▶230
261-7189	515	263-8874	1039	264-6623	354	264-9747	813
261-7524	905	263-8876	1039	264-6657	354	264-9805	146
	▶906	263-8879	1039	264-6661	684	264-9806	146
261-7525	▶576	263-9088	231	264-6663	354	265-0983	106
	906	263-9757	619	264-6672	770		▶360
261-7526	905	263-9994	697	264-6800	1010	265-1058	320
	▶908	263-9995	820		1012	265-3183	634
261-7527	▶577	263-9996	820	264-6866	890	265-3184	634
	908	263-9997	820	264-6867	799	265-3185	634
261-7528	905	263-9999	799		▶890	265-3186	634
	▶910	264-0000	▶79	264-6871	1010	265-3187	432
261-7529	▶578		774		1012	265-3188	432
	910	264-0440	79	264-6876	503	265-3190	432
261-9572	641	264-0442	91		506	265-3274	341
261-9574	799	264-0443	91	264-6877	503	265-3294	107
262-1408	354	264-0445	▶91		506	265-3300	1093
262-1941	641		774	264-6945	197	265-3309	1093
262-1942	641	264-1961	331	264-7038	354	265-3310	1093
262-1943	630	264-2280	3	264-7039	354	265-3394	231
262-1944	630		▶547	264-7040	354	265-3479	583
262-1945	630	264-2285	▶288	264-7377	599	265-3948	363
262-1946	630	264-3049	365	264-7378	599	265-4124	4
262-2043	▶221	264-3509	▶770	264-7392	599		▶353
	230		774	264-7393	599	265-4442	1037
262-4377	59	264-3826	687	264-7424	1012	265-4444	582
262-4443	353	264-3827	615	264-7427	1012	265-4445	▶582
262-4444	1023	264-3828	615	264-7428	1010		1034
262-4445	1023	264-3829	615	264-7481	354	265-4449	1034
262-4447	1040	264-3872	197	264-7642	985		▶1079
262-4448	1040	264-3874	197	264-7643	985	265-5107	91
262-7811	4	264-4286	813	264-7648	985	265-5115	1093
	▶599	264-4291	813	264-7649	985	265-5116	1093
262-8065	378	264-4303	813	264-7653	503	265-5117	1093
262-8516	335	264-4318	813		506	265-5118	208
262-9147	706	264-4405	813	264-7654	515		212
	708	264-4406	813	264-7655	515	265-5119	1085
263-1716	619	264-4422	985	264-7787	518	265-5209	320
263-1724	601	264-4646	354	264-7789	518	265-5573	320
263-1789	▶349	264-4670	985	264-8069	684	265-6782	230
263-1827	▶287	264-4671	985	264-8070	684		▶231
263-2540	341	264-4808	432	264-8071	799	265-6960	1085

▶ **PRIMARY REFERENCE**

PART NUMBER INDEX

Part	Page	Part	Page	Part	Page	Part	Page
265-6961	1085		▶158	276-3876	27		
265-6962	1085	267-4459	5	277-4741	716		
265-6963	1085		▶51	277-5434	▶716		
265-6965	1085	267-4460	51		775		
265-6966	1085	267-4461	51	277-8032	1057		
265-7023	454	267-4462	966		▶1067		
265-7024	320	267-4463	966	278-4287	45		
265-7026	▶518	267-4483	6	278-5643	223		
265-7537	70		▶285	279-5626	1055		
265-7538	70	267-4484	5				
265-7877	1080		▶73				
265-7879	1079	267-4603	231				
265-7880	1080	267-4700	▶222				
265-7881	▶1080	267-4701	▶222				
	1090	267-4702	▶222				
265-8009	622	267-4703	▶223				
265-9642	221	267-7351	601				
265-9643	221	268-1496	627				
266-0893	▶513	268-1512	432				
	905	268-1513	432				
266-1682	260	268-1900	188				
266-2486	4		▶189				
266-2490	503	268-6421	1090				
	506	268-9063	318				
266-3153	1054	268-9420	2				
266-3154	1053		▶1024				
	1056	269-2200	615				
266-3156	1054	269-2840	576				
266-3597	996	269-2842	577				
266-3600	996	269-2844	578				
266-4213	785	269-2846	576				
266-4214	785	269-2847	577				
266-4216	785	269-2848	578				
266-4217	785	269-8877	1091				
266-4218	785	269-9372	555				
266-4219	785		560				
266-4220	▶651	269-9373	555				
	895		561				
266-4221	785	269-9374	555				
266-4223	785		560				
266-4224	850	269-9375	555				
266-4226	831		560				
266-4227	1001	269-9376	548				
266-4228	288	269-9377	548				
	▶787	269-9378	548				
266-4229	287	269-9379	548				
	▶831	270-8612	77				
266-4231	895		158				
266-4238	895	270-8613	7				
266-9260	222	271-2073	79				
266-9261	222	271-2074	79				
266-9262	222	272-1148	531				
266-9263	223	272-2348	842				
266-9337	252		▶881				
266-9373	247	272-2360	881				
266-9374	247		▶882				
266-9378	351	272-5959	▶230				
267-4446	288	272-7982	767				
	▶298	272-9800	243				
267-4451	▶30	272-9914	861				
267-4452	30	273-0321	792				
	▶42	273-8707	▶230				
267-4456	3	274-8527	2				
	▶77		▶253				
267-4458	3	276-3875	27				

▶ PRIMARY REFERENCE



© 2005 Caterpillar
All Rights Reserved

Printed in U.S.A.