RUTHZIL TRATOR COMERCIAL DE PEÇAS LTDA 11 97083-6812 ROLANDO

OUTUBRO 2001

Bobcat®

# A220
TURBO

# A220
TURBO
HIGH FLOW

# Parts Manual

## S/N 5196 11001 & Above
## S/N 5197 11001 & Above

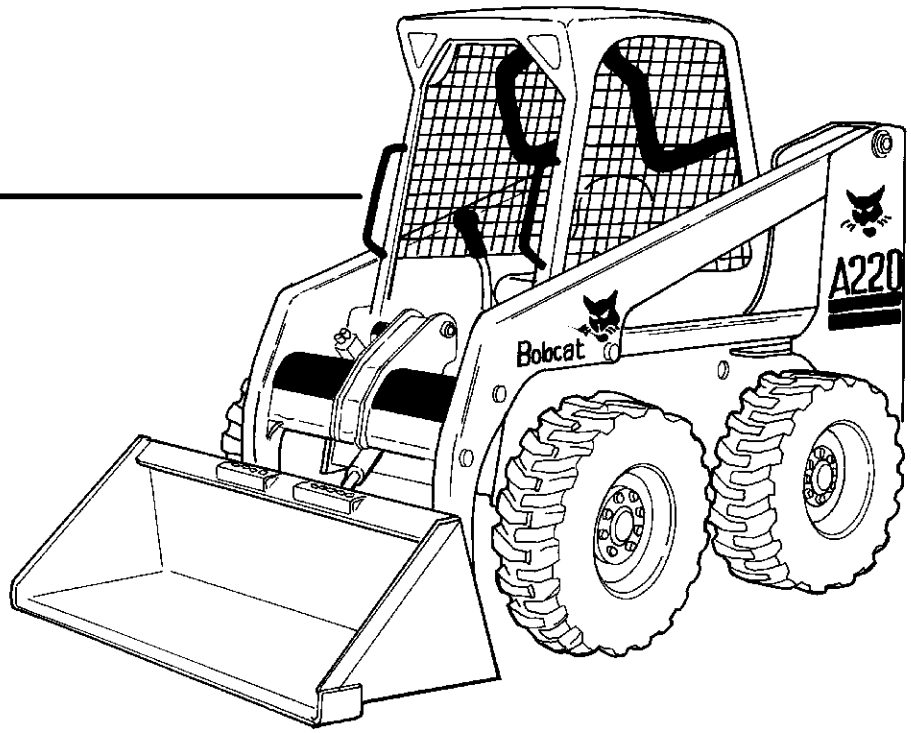


**EQUIPPED WITH BOBCAT INTERLOCK CONTROL SYSTEM (BICS™)**

IR Bobcat

6901502 (10-01)

I.S.A.

© Bobcat Company 2001

# A220 CONTENTS


**MAIN FRAME ..... 10-31**
MAIN FRAME ..... 10-11
OPERATOR CAB ..... 12-15
DELUXE CAB ..... 16-17
SEAT & SEAT BAR ..... 18-19
SEAT ..... 20-21
REAR DOOR ..... 22-23
LIFT ARM & BOB-TACH ..... 24-25
BOB-TACH ..... 26-27
PANELS ..... 28-29
FUEL SYSTEM ..... 30-31
**DRIVE SYSTEM ..... 32-39**
DRIVE TRAIN ..... 32-33
MOTOR CARRIER ..... 34-35
DISC BRAKE ..... 36-37
AXLE ..... 38-39
**HYDRAULIC SYSTEM ..... 40-69**
HYDRAULIC CIRCUITRY ..... 40-47
MANUAL LIFT RELEASE SYSTEM ..... 48-49
AUXILIARY HYDRAULICS ..... 50-53
TILT CYLINDER ..... 54-55
LIFT CYLINDER ..... 56-57
STEERING CYLINDER ..... 58-59
MANUAL LIFT RELEASE VALVE ..... 60-61
HYDRAULIC CONTROL VALVE ..... 62-65
BICS CONTROL VALVE ..... 66-67
BUCKET POSITIONING VALVE ..... 68-69
**HIGH HORSEPOWER HYDRAULICS ..... 70-79**
HIGH HORSEPOWER HYDRAULICS ..... 70-79
**HYDROSTATIC SYSTEM ..... 80-115**
HYDROSTATIC CIRCUITRY ..... 80-89
HYDROSTATIC MOTOR ..... 90-91
HYDROSTATIC MOTOR & BRAKE ..... 92-95
HYDROSTATIC PUMP ..... 96-103
GEAR PUMP ..... 104-105
STEERING VALVE ..... 106-107
2-SPEED VALVE ..... 108-111
HYDROSTATIC OIL FILTER ..... 112-115
**ELECTRICAL SYSTEM ..... 116-125**
CAB ELECTRICAL CIRCUITRY ..... 116-117
ENGINE ELECTRICAL ..... 118-121
ALTERNATOR ..... 122-123
STARTER ..... 124-125
**POWER UNIT ..... 126-167**
COOLING SYSTEM ..... 126-131
ENGINE & ATTACHING PARTS ..... 132-139
THROTTLE ..... 140-141
COOLING FAN DRIVE ASSY. ..... 142-143
ENGINE & GASKET KITS ..... 144-145
MANIFOLD ..... 146-147
CYLINDER HEAD & COVER ..... 148-149
CAMSHAFT ..... 150-151
FRONT COVER ..... 152-153
CRANKCASE ..... 154-155

# A220 CONTENTS (Cont'd)


**POWER UNIT (CONT'D) ..... 126-167**

OIL PAN ..... 156-157
TURBOCHARGER ..... 158-159
PISTON & CRAANKSHAFT ..... 160-161
FUEL INJECTION SYSTEM ..... 162-163
OIL PUMP ..... 164-165
AIR CLEANER ..... 166-167

**ACCESSORIES & OPTIONS ..... 170-222**

ACCESS COVER ..... 170-171
* BACK-UP ALARM ..... 172-173
BEACON ..... 174-175
BLOCK HEATER ..... 176-177
BUCKET POSITIONING KIT ..... 178-179
CAB DOOR ..... 180-189
CAB ENCLOSURE ..... 190-193
CAB WINDOWS ..... 194-195
ELECTRICAL CONTROLS KIT ..... 196-199
EUROPEAN ACCESSORIES ..... 200-203
FIRE EXTINGUISHER ..... 204-205
F.O.P.S. KIT ..... 206-207
HEATER & A/C ..... 208-225
HORN KIT ..... 226-227
LIFT KIT ..... 228-231
* POWER BOB-TACH KIT ..... 232-235
POWER BOB-TACH CYLINDER ..... 236-237
POWER BOB-TACH - VALVE ASSEMBLY ..... 238-241
PURIFIER ..... 242-243
RADIATOR SCREEN KIT ..... 244-245
REAR AUXILIARY HYDRAULICS KIT ..... 246-249
REAR DOOR LOCK ..... 250-251
REAR WIPER ..... 252-253
SEAT ..... 254-257
SEAT BELT ..... 258-263
SEVEN PIN CONNECTOR KIT ..... 264-265
SOUND OPTION ..... 266-267
STROBE LIGHT ..... 268-269
TIRES & RIMS ..... 270-271
BULK ITEMS ..... 272-273

# A220 CONTENTS


**MAIN FRAME ..... 10-31**
MAIN FRAME ..... 10-11
OPERATOR CAB ..... 12-15
DELUXE CAB ..... 16-17
SEAT & SEAT BAR ..... 18-19
SEAT ..... 20-21
REAR DOOR ..... 22-23
LIFT ARM & BOB-TACH ..... 24-25
BOB-TACH ..... 26-27
PANELS ..... 28-29
FUEL SYSTEM ..... 30-31
**DRIVE SYSTEM ..... 32-39**
DRIVE TRAIN ..... 32-33
MOTOR CARRIER ..... 34-35
DISC BRAKE ..... 36-37
AXLE ..... 38-39
**HYDRAULIC SYSTEM ..... 40-69**
HYDRAULIC CIRCUITRY ..... 40-47
MANUAL LIFT RELEASE SYSTEM ..... 48-49
AUXILIARY HYDRAULICS ..... 50-53
TILT CYLINDER ..... 54-55
LIFT CYLINDER ..... 56-57
STEERING CYLINDER ..... 58-59
MANUAL LIFT RELEASE VALVE ..... 60-61
HYDRAULIC CONTROL VALVE ..... 62-65
BICS CONTROL VALVE ..... 66-67
BUCKET POSITIONING VALVE ..... 68-69
**HIGH HORSEPOWER HYDRAULICS ..... 70-79**
HIGH HORSEPOWER HYDRAULICS ..... 70-79
**HYDROSTATIC SYSTEM ..... 80-115**
HYDROSTATIC CIRCUITRY ..... 80-89
HYDROSTATIC MOTOR ..... 90-91
HYDROSTATIC MOTOR & BRAKE ..... 92-95
HYDROSTATIC PUMP ..... 96-103
GEAR PUMP ..... 104-105
STEERING VALVE ..... 106-107
2-SPEED VALVE ..... 108-111
HYDROSTATIC OIL FILTER ..... 112-115
**ELECTRICAL SYSTEM ..... 116-125**
CAB ELECTRICAL CIRCUITRY ..... 116-117
ENGINE ELECTRICAL ..... 118-121
ALTERNATOR ..... 122-123
STARTER ..... 124-125
**POWER UNIT ..... 126-167**
COOLING SYSTEM ..... 126-121
ENGINE & ATTACHING PARTS ..... 132-139
THROTTLE ..... 140-141
COOLING FAN DRIVE ASSY. ..... 142-143
ENGINE & GASKET KITS ..... 144-145
MANIFOLD ..... 146-147
CYLINDER HEAD & COVER ..... 148-149
CAMSHAFT ..... 150-151
FRONT COVER ..... 152-153
CRANKCASE ..... 154-155

# A220 CONTENTS (Cont'd)


**POWER UNIT (CONT'D) ..... 126-167**

OIL PAN ..... 156-157
TURBOCHARGER ..... 158-159
PISTON & CRAANKSHAFT ..... 160-161
FUEL INJECTION SYSTEM ..... 162-163
OIL PUMP ..... 164-165
AIR CLEANER ..... 166-167

**ACCESSORIES & OPTIONS ..... 170-222**

ACCESS COVER ..... 170-171
* BACK-UP ALARM ..... 172-173
BEACON ..... 174-175
BLOCK HEATER ..... 176-177
BUCKET POSITIONING KIT ..... 178-179
CAB DOOR ..... 180-189
CAB ENCLOSURE ..... 190-193
CAB WINDOWS ..... 194-195
ELECTRICAL CONTROLS KIT ..... 196-199
EUROPEAN ACCESSORIES ..... 200-203
FIRE EXTINGUISHER ..... 204-205
F.O.P.S. KIT ..... 206-207
HEATER & A/C ..... 208-225
HORN KIT ..... 226-227
LIFT KIT ..... 228-231
* POWER BOB-TACH KIT ..... 232-235
POWER BOB-TACH CYLINDER ..... 236-237
POWER BOB-TACH - VALVE ASSEMBLY ..... 238-241
PURIFIER ..... 242-243
RADIATOR SCREEN KIT ..... 244-245
REAR AUXILIARY HYDRAULICS KIT ..... 246-249
REAR DOOR LOCK ..... 250-251
REAR WIPER ..... 252-253
SEAT ..... 254-257
SEAT BELT ..... 258-263
SEVEN PIN CONNECTOR KIT ..... 264-265
SOUND OPTION ..... 266-267
STROBE LIGHT ..... 268-269
TIRES & RIMS ..... 270-271
BULK ITEMS ..... 272-273

# MAINTENANCE ITEMS
# MODEL A220

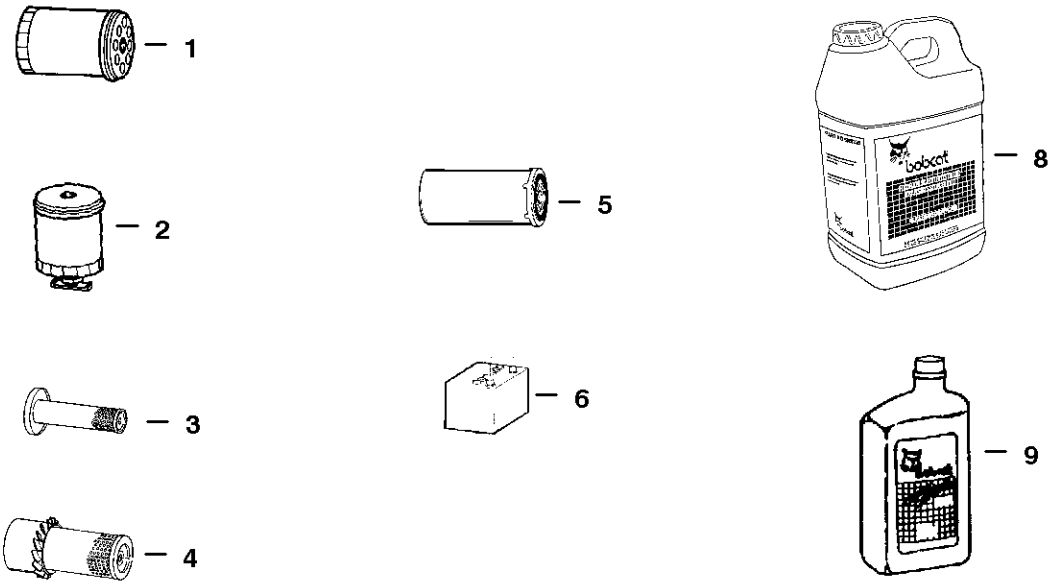


| Ref. | Part Number | Description | Remarks | Page |
|---|---|---|---|---|
| 1 | 6665603 | FILTER | Engine Oil (6 Pack) | 157 |
| 2 . | 6667352 ... | ELEMENT ..... | Fuel | 31 |
| 3 . | 6666376 ... | CARTRIDGE .... | Inner Air Cleaner | 167 |
| 4 . | 6666375 ... | CARTRIDGE .... | Outer Air Cleaner | 167 |
| 5 . | 6661248 ... | ELEMENT ..... | Hydrostatic # 3 Media | 115 |
| 6 . | 6665427 ... | BATTERY ..... | 950 AMP | 118 |
| 7 . | 6661807 | FILTER ..... | Hydrostatic Inline | 113 |
| .. | ( HYDRAULIC RESERVOIR CAPACITY ) | | | 16 QTS. (15,1L) |
| .. | ( HYDRAULIC / HYDROSTATIC SYSTEM ) | | | 40 QTS. (38 L) |
| 8 . | 6563328 ... | FLUID ..... | Hyd./Hydro. - (2) 2.5 Gal. - (5 Gal.) | 273 |
| .... | 6722344 ... | FLUID ..... | Hyd./Hydro. - (5 Gal.) | 273 |
| .... | 6563330 ... | FLUID ..... | Hyd./Hydro. - 55 Gallon Drum | 273 |
| .. | ( ENGINE OIL W/FILTER CAPACITY ) | | | 10 QTS. (23,7 L) |
| .. | ( ENGINE LUBRICATION / COOLING SYSTEM ) | | | 16 QTS. (15,1 L) . |
| 9 . | 6657301 ... | MOTOR OIL .... | 10W30 CE/SG - 1 Qt. | 273 |
| .... | 6657299 ... | MOTOR OIL .... | 15W40 CE/SG - 1 Qt. | 273 |
| .... | 6657303 ... | MOTOR OIL .... | 30 CE/SG - 1 Qt. | 273 |
| .... | 6724558 ... | MOTOR OIL .... | 15W40 CE/SG - 1 Gallon | 273 |
| .... | 6724557 ... | MOTOR OIL .... | 10W30 CE/SG - 1 Gallon | 273 |
| .... | 6724559 ... | MOTOR OIL .... | 30 CE/SG - 1 Gallon | 273 |
| .... | 6674205 ... | MOTOR OIL .... | 10W30 CE/SG - 2.5 Gal. | 273 |
| .... | 6674204 ... | MOTOR OIL .... | 15W40 CE/SG - 2.5 Gal. | 273 |
| .... | 6674206 ... | MOTOR OIL .... | 30 CE/SG - 2.5 Gal. | 273 |

# GENERAL INFORMATION

When using the machine serial number, use the complete number.

Some Serial Number breaks are not available at time of printing. These are listed as & Below or & Above.

The number shown in the quantity column in this manual is the number of parts needed for the illustration on the page. For some parts an "x" will be shown in the quantity column. This "x" indicates that the quantity to be used is "As Needed".

When references L.H. and R.H. are used in this manual, it is done from the operator's seat in the forward operating position.

To find the size and kind of bolt use the Bobcat Standard Microfiche (P/N 6566077).

Some of the illustrations and information found in this parts manual were supplied to Bobcat by machine component companies.

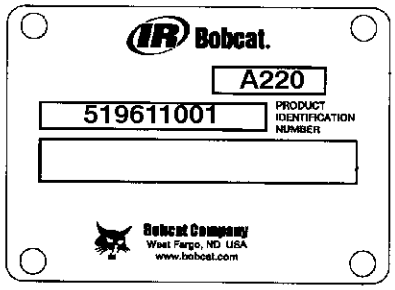

DOMESTIC

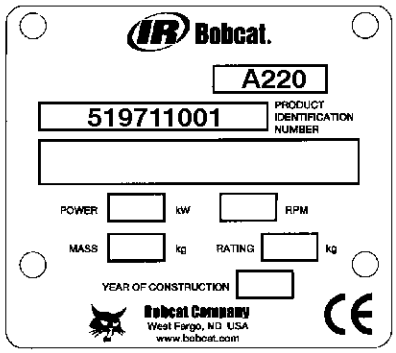

EXPORT

# ABBREVIATIONS & SYMBOLS

SALES = Order from Gwinner Sales Department

NSS = Not Serviced Seperately

NAP = Not Available as Parts

* = Changed or Added Sections, Pages or Part Numbers

Disposition Code Definition (Found in the Remarks Column)

[A] = Use Up

[B] = Use Up on Other Appplication (See PNI)

[C] = File PDR Report With Bobcat Parts Sales

[D] = Part Number Error


| | | |
|---|---|---|
| Explications en francais | Grid Nb | 3 |
| Erklärungen auf deutsch | Grid Nb | 4 |
| Spiegazioni in italiano | Grid Nb | 5 |
| Explicaciones en espanol | Grid Nb | 6 |
| Verklaring in het Nederlands | Grid Nb | 7 |

# NOTE D'INFORMATION

Pour toute référence au numéro de série de l'engin, toujours donner le numéro complet.

Le chiffré apparaissant dans la colonne des quantités de ce manuel représentent le nombre de pièces nécessaires pour l'illustration reprise sur la page. Dans certains cas, on lira un "x" dans la colonne des quantités. Cet "x" indique que la quantité nécessaire est "selon besoin".

Pour toute référence vers la GAUCHE ou la DROITE dans ce manuel, considérer que la personne se trouve assise dans le siège de l'opérateur, en position de fonctionnement en marche avant.

Certaines illustrations et informations reprises dans ce manuel de pièces de rechange ont été fournies à Bobcat par des fabricants de composants.

## ABREVIATIONS & SYMBOLES

| | |
|---|---|
| **SALES** | = Commander au Service Ventes à Bruxelles |
| **NSS** | = Pas vendu séparément |
| **NAP** | = Non disponible comme pièce de rechange |
| * | = Chapitre, page ou numéro de pièce modifié ou supplémentaire |
| **BTI** | = Bobcat Technical Information Bulletin : voir à la fin de la microfiché du modèle concerné ou la microfiche générale reprenant l' ensemble des "BTI". |
| **was 6535403** | = était avant 6535403 |
| **adj. (adjustment)** | = réglage |
| **Assembly** | = ensemble |
| **available W/Ref.** | = disponible avec réf. |
| **bulk/sold per foot** | = en vrac/vendu par pied |
| **does not include** | = ne comprend pas |
| **included with** | = compris dans |
| **I.D.** | = D.I. (diamètre intérieur) |
| **O.D.** | = D.E. (diamètre extérieur) |
| **not in kit** | = pas en kit |
| **W/ - WO/** | = inclus/ - non inclus/ |
| **Qty** | = quantité requise |
| **see page/ref.** | = voir page/réf. |
| **used with ref/** | = utilisé avec réf. |
| **0,05 inch thickness** | = 0,05 pouce d'épaisseur (un pouce = 25.4 mm) |
| **weld on** | = à souder |

# ALLGEMEINE INFORMATIONEN

Bei Angabe der Maschinen-Seriennummer stets die komplette Nummer angeben.

Bei der in der Mengenspalte (Anzahl) in diesem Handbuch angegebenen Zahl handelt es sich um die Anzahl von Teilen, die für die Abbildung auf der betreffenden Seite benötigt werden. Bei manchen Teilen in der Mengenspalte ist ein “x” angegeben. Dieses “x” weist darauf hin, dass sich die Anzahl der verwendeten Teile auf den “Bedarf” bezieht.

Bei Verwendung der Seitenangaben links und rechts in diesem Handbuch gelten diese für die Blickrichtung vom Fahrersitz aus, und zwar in Vorwärts-Betriebsrichtung.

Einige der in diesem Ersatzteilhandbuch aufgeführten Abbildungen und Informationen wurden der Bobcat von den Herstellern von Maschinenbauteilen zur Verfügung gestellt.

## ABKÜRZUNGEN UND SYMBOLE

| | |
|---|---|
| **SALES** | = Bestellung bei der Verkaufsabteilung in Brüssel |
| **NSS** | = Nicht einzeln erhältlich |
| **NAP** | = Nicht als Ersatzteil erhältlich |
| ***** | = Geänderte oder hinzugefügte Abschnitte, Seiten oder Teilenummern |
| **BTI** | = Bobcat Technical Information Bulletin : Siehe am Ende der Mikrokarte des jeweiligen Modells oder der allgemeinen Mikrokarte der BTI. |
| **was 6535403** | = War 6535403 |
| **adj.** | = Einstellung |
| **Assembly** | = Baugruppe |
| **available W/Ref.** | = erhältlich mit der Referenz |
| **bulk/sold per foot** | = Mengenabnahme / Verkauf pro Fuss |
| **does not include** | = beinhaltet nicht |
| **included with** | = enthalten in |
| **I.D.** | = Innendurchmesser |
| **O.D.** | = Aussendurchmesser |
| **not in kit** | = nicht in Bausatz |
| **W/ - WO/** | = mit/ - ohne/ |
| **Qty** | = Anzahl |
| **see page/ref.** | = Siehe Seite / Referenz |
| **used with ref.** | = verwendet mit Referenz |
| **0.05 inch thickness** | = Dicke : 0.05 Zoll (ein Zoll = 25.4 mm) |
| **weld on** | = anschweissen |

# INFORMAZIONI GENERALI

Quando si usa il numero di serie della macchina usare il numero completo.

Il numero mostrato nella colonna della quantità di questo manuale corrisponde al numero di componenti necessari per l'illustrazione della pagina. Per alcuni componenti appare "X" nella colonna delle quantità. Questa "X" indica che la quantità da usare è "come necessario".

See in questo manuale si fa riferimento alla parte destra o sinistra, si intende dal sedile dell'operatore nella posizione in avanti di funzionamento.

Alcune delle illustrazioni e informazioni trovate in questo manuale di componenti sono state fornite alla Bobcat da società di componenti di macchine.

## SIMBOLI E ABBREVIAZIONI

| | |
|---|---|
| **SALES** | = Ordinare al servizio vendite di Bruxelles |
| **NSS** | = Non vendute separatamente |
| **NAP** | = Non disponibile come componente |
| * | = Sezioni, pagine o numeri di componente cambiati o aggiunti |
| **BTI** | = (Bobcat Technical information) Ved. al termine del microfiche del modello relativo oppure microfiche generale |
| **was 6535403** | = era 6535403 |
| **adj. (adjustment)** | = regol. (regolazione) |
| **Assembly** | = Complessivo |
| **available W/ref.** | = disponibile con rif. |
| **bulk/sold per foot** | = alla rinfusa/venduto al piede |
| **does not include** | = non comprende |
| **Included with** | = compreso con |
| **I.D.** | = d. i. |
| **O.D.** | = d. e. |
| **not in kit** | = non fa parte del kit |
| **W/ - WO/** | = con - senza |
| **Qty** | = Qtà |
| **see page/ref** | = ved. pagina/rif. |
| **used with ref.** | = usato con il rif. |
| **0,05 inch thickness** | = spessore 0,05 pollici (un pollice = 25,4 mm) |
| **weld on** | = a saldare |

# INFORMACION GENERAL

Al utilizar el número de serie de la máquina, debe emplearse el número completo.

El número que figura en la columna de “Unidades” en este manual es el número de piezas que se necesitan para la ilustración que consta en la página. En algunas piezas aparece una “x” en la columna de “Unidades”. Esta “x” indica que las unidades a utilizar son “según sea necesario”.

Cuando se empleen las referencias izq. y dcha., éstas se entienden mirando desde el asiento del conductor, en posición de marcha adelante.

Algunas de las ilustraciones y la información que figuran en este manual de piezas han sido facilitadas a Bobcat por empresas de componentes de máquinas.

## ABREVIATURAS Y SIMBOLOS

| | |
|---|---|
| **VENTAS** | = Pedido al Departamento de Ventas de Bruselas |
| **NSS** | = No se vende por separado |
| **NAP** | = No disponible como pieza de repuesto |
| * | = Secciones, páginas o referencias modificadas o añadidas |
| **BTI** | = (Bobcat Tecnical Information) Ver al final de la microficha del modelo afectado o en la microficha general “Boletín de Información Técnica Bobcat”. |
| **was 6535403** | = era anteriormente el 6535403 |
| **adj. (adjustment)** | = ajuste |
| **assembly** | = conjunto |
| **available W/Ref.** | = disponible con la ref. |
| **bulk/sold per foot** | = a granel/vendido por pies |
| **does not include** | = no incluye |
| **included with** | = incluido en |
| **I.D.** | = diámetro interior |
| **O.D.** | = diámetro exterior |
| **not in kit** | = no en el kit |
| **W/ - WO/** | = con/ - sin |
| **Qty** | = Unidades |
| **see page /ref.** | = ver página/ref. |
| **used with ref.** | = empleado con la ref. |
| **0,05 inch thickness** | = 0,05 pulgadas de espesor (1 pulgada = 25,4 mm) |
| **weld on** | = debe ser soldado |

# ALGEMENE INFORMATIE

Als u het serienummer van de machine gebruikt, geef dan het gehele serienummer.

Het cijfer dat voorkomt in de kolom “Aantal”, in deze handleiding, is het aantal onderdelen dat nodig is van de illustratie op de pagina. Voor sommige onderdelen staat er een “x” in de kolom “Aantal”. Deze “x” betekent dat er een aantal “zoals nodig” vereist is.

Wanneer er in deze handleiding naar “links” en naar “rechts” gerefereerd wordt, moet dit verstaan worden voor een bestuurder die in de bestuurdersstoel zit in de voorwaartse bedrijfsstand.

Sommige van de illustraties en informatie in deze onderdelen-handleiding werden door firma’s van machine-componenten geleverd aan Bobcat.

# AFKORTINGEN EN SYMBOLEN

| | |
|---|---|
| **SALES** | = Bestellen bij de Verkoopafdeling te Brussel |
| **NSS** | = Niet afzonderlijk te verkrijgen |
| **NAP** | = Niet beschikbaar als onderdeel |
| * | = Gewijzigde of toegevoegde paragrafen, pagina’s of onderdeelnummers |
| **BTI** | = Bobcat Technical Information Bulletin : Zie einde van de microfiche van het desbetreffende model of einde van de algemene microfiche die het geheel van alle “BTI” herneemt. |
| **was 6535403** | = was vroeger 6535403 |
| **adj. (adjustment)** | = afstelling |
| **Assembly** | = geheel |
| **available W/Ref.** | = beschikbaar met ref. |
| **bulk/sold per foot** | = bulk/aan de meter verkocht |
| **does not include** | = bevat niet |
| **includes with** | = is bevat in |
| **I.D.** | = ϕ inw. (inwendige diameter) |
| **O.D.** | = ϕ uitw. (uitwendige diameter) |
| **not in kit** | = niet in de kit |
| **W/ - WO/** | = met/ - zonder/ |
| **Qty** | = vereiste aantal |
| **see page/ref.** | = zie pagina/ref. |
| **used with ref/** | = gebruikt met ref. |
| **0,05 inch thickness** | = 0.05 inch dik (een inch = 25.4 mm) |
| **weld on** | = te lassen |

# MAIN FRAME

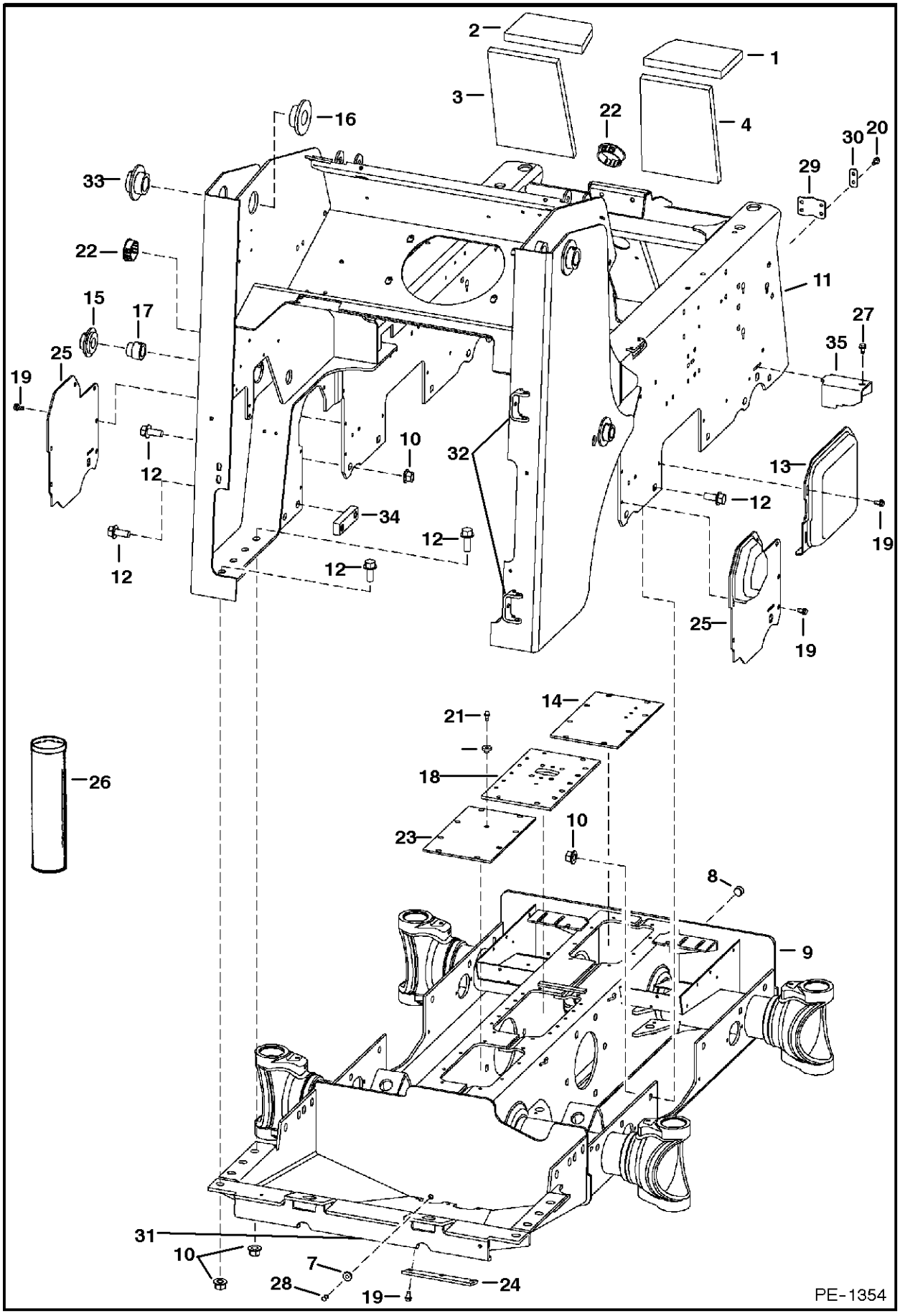
2
1
3
22
4
16
30
20
33
29
22
11
15
17
27
25
35
19
10
32
13
12
34
12
19
12
12
25
19
14
21
26
18
10
23
8
9
31
10
7
28
19
24
PE-1354

# MAIN FRAME

| Ref.N° | Part N° | Description | Remarks | Serial N° | Qty. |
|---|---|---|---|---|---|
| 1 | 6703963 | INSULATION | crossmember | | 1 |
| 2 | 6703964 | INSULATION | crossmember | | 1 |
| 3 | 6703965 | INSULATION | crossmember | | 1 |
| 4 | 6703969 | INSULATION | crossmember | | 1 |
| 5 | 6703967 | INSULATION | fender | | 2 |
| 6 | 6703968 | INSULATION | transmission | | 2 |
| 7 | 6553411 | BUSHING | | | 1 |
| 8 | 6731121 | PLUG | | | 1 |
| 9 | | CHAINCASE | 6See Page DRIVE TRAIN(6) | | 1 |
| 10 | 53D-12 | NUT | | | 18 |
| 11 | 6725574 | MAIN FRAME | | | 1 |
| 12 | 31C-1228 | BOLT | | | 22 |
| 13 | 6719168 | COVER | | | 2 |
| 14 | 6729173 | COVER | See Page DISC BRAKE(1) | | 1 |
| 15 | 6705047 | BUSHING | weldAon | | 2 |
| 16 | 6718544 | BUSHING | weldAon | | 2 |
| 17 | 6713823 | BUSHING | weldAon | | 2 |
| 18 | 6725496 | COVER | See Page DISC BRAKE(1) | | 1 |
| 19 | 84G-3712 | BOLT | | | 24 |
| 20 | 84G-3716 | BOLT | | | 8 |
| 21 | 6670627 | BREATHER | | | 1 |
| 22 | 6718796 | PLUG | horn/ | | 3 |
| 23 | 6700330 | COVER | rear - See Page DISC BRAKE(1) | | 1 |
| 24 | 6700182 | COVER | drain | | 1 |
| 25 | 6726451 | COVER | pump - right | | 1 |
| 25 | 6726452 | COVER | pump - left | | 1 |
| 26 | 6633583 | SEALANT | chaincase cover | | x |
| 27 | 35C-612 | BOLT | | | 4 |
| 28 | 6599645 | PLUG | | | 1 |
| 29 | 6702164 | SPACER | flexible | | 2 |
| 30 | 6579106 | SHIM | | | 4 |
| 31 | 6706485 | HOOK | tie down - weldAon | | 2 |
| 32 | 6708987 | BRACKET | weldAon | | 2 |
| 33 | 6718545 | BUSHING | weldAon | | 2 |
| 34 | 6726867 | BLOCK | | | 2 |
| 35 | 6729031 | COVER | wheel positioning | | 4 |

# OPERATOR CAB

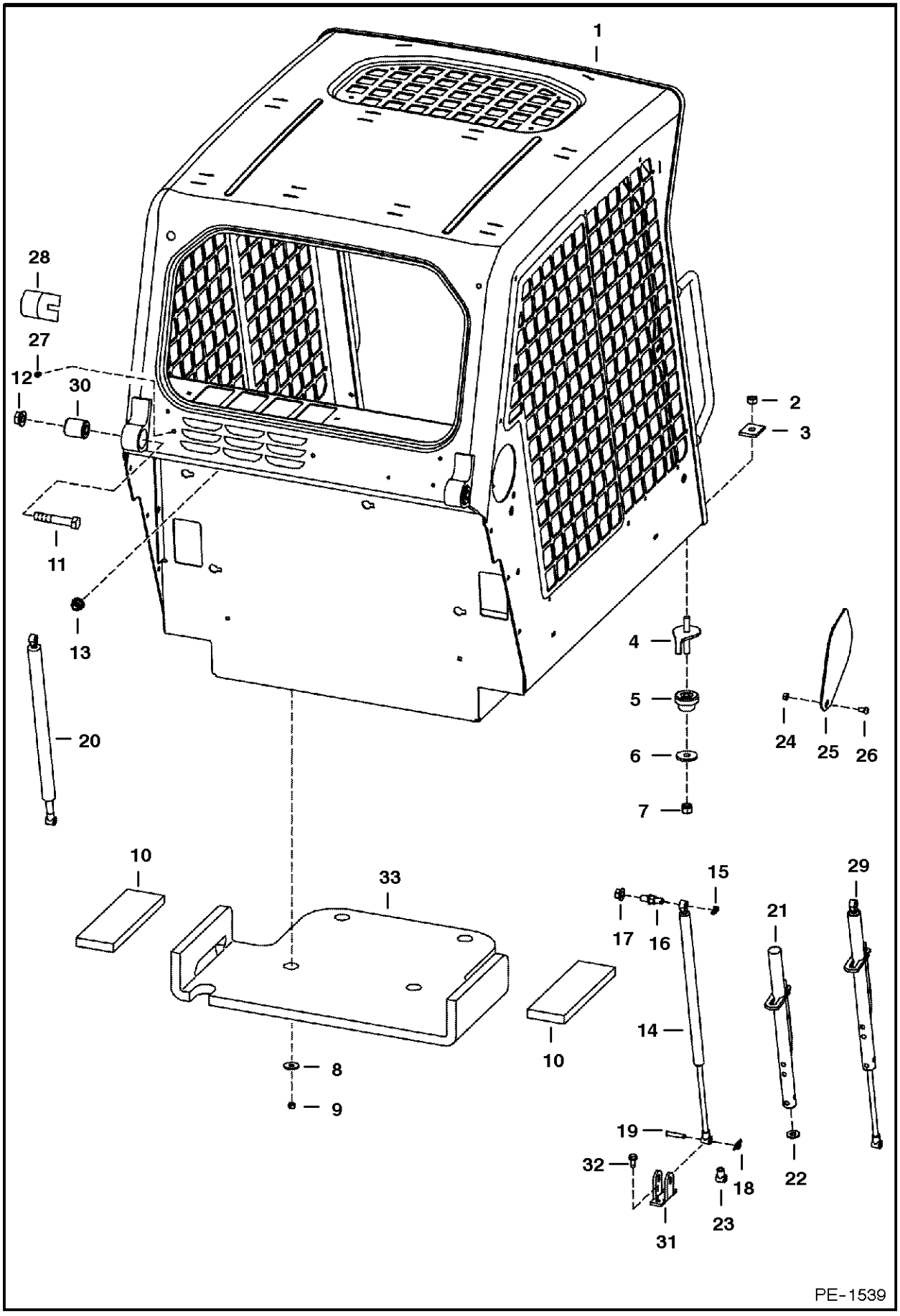

# OPERATOR CAB

| Ref.N° | Part N° | Description | Remarks | Serial N° | Qty. |
|---|---|---|---|---|---|
| 1 | 6719672 | OPERATOR CAB | includes cab decals | | 1 |
| 2 | 59D-8 | NUT | | | 2 |
| 3 | 6553709 | WASHER | rectangular | | 2 |
| 4 | 6702971 | BOLT | | | 2 |
| 5 | 6560633 | MOUNT | | | 2 |
| 6 | 6515817 | WASHER | | | 2 |
| 7 | 85D-8 | NUT | | | 2 |
| 8 | 619021 | WASHER | | | 4 |
| 9 | 59D-5 | NUT | | | 4 |
| 10 | 6729012 | INSULATION | seat pan | | 2 |
| 11 | 17C-1056 | BOLT | | | 2 |
| 12 | 53D-10 | NUT | | | 2 |
| 13 | 53D-6 | NUT | | | 4 |
| 14 | 6675135 | GAS SPRING | R.H. | | 1 |
| 15 | 6675140 | SNAP RING | | | 2 |
| 16 | 6719064 | MOUNT | | | 2 |
| 17 | 97D-8 | NUT | | | 2 |
| 18 | 6631418 | PIN | ring | | 2 |
| 19 | 6567743 | PIN | | | 2 |
| 20 | 6675134 | GAS SPRING | L.H. | | 1 |
| 20 | 6675136 | GAS SPRING | L.H. - for a cab W/ enclosure | | 1 |
| 21 | 6708189 | TUBE | stop - R.H. | | 1 |
| 22 | 6701174 | WASHER | | | 1 |
| 23 | 6675257 | ROD END | | | 1 |
| 24 | 95D-5 | NUT | | | 2 |
| 25 | 6718784 | COVER | | | 2 |
| 26 | 25G-512 | BOLT | | | 2 |
| 27 | 6675033 | INSERT | | | x |
| 28 | 6579613 | STOP | | | 2 |
| 29 | NAP | GAS SPRING | R.H. - W/ latch - Order Ref. OPERATOR CAB(14) & OPERATOR CAB(21)-OPERATOR CAB(23) | | 1 |
| 30 | 6562602 | BUSHING | | | 2 |
| 31 | 6706349 | MOUNT | gas spring | | 2 |
| 32 | 84G-3112 | BOLT | | | 4 |
| 33 | 6729013 | INSULATION | seat pan | | 1 |

# OPERATOR CAB

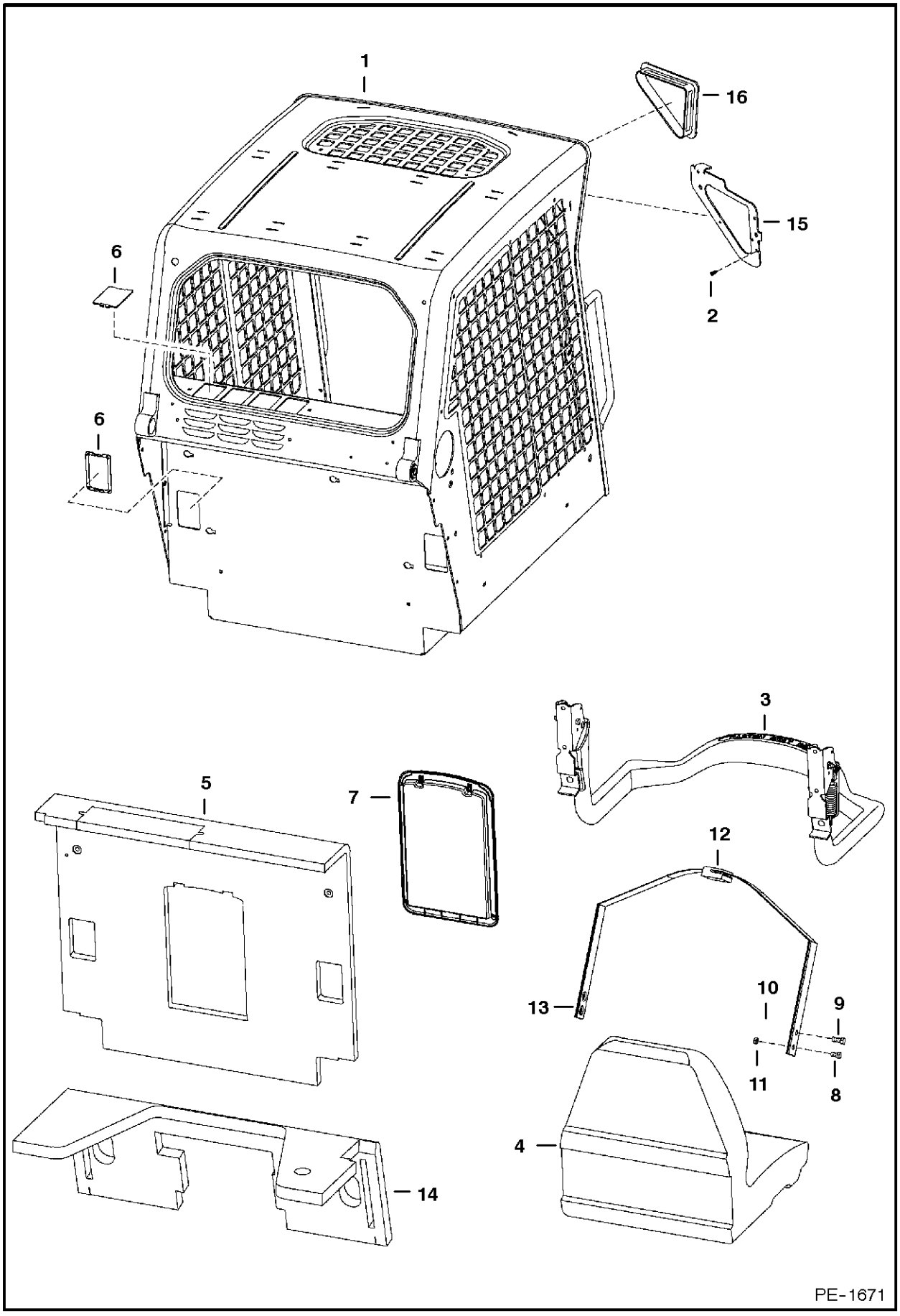

# OPERATOR CAB

| Ref.N° | Part N° | Description | Remarks | Serial N° | Qty. |
|---|---|---|---|---|---|
| 1 | 6719672 | OPERATOR CAB | includes cab decals | | 1 |
| 2 | 6675033 | INSERT | | | 6 |
| 3 | | SEAT BAR | See Page SEAT & SEAT BAR(2) | | 1 |
| 4 | | SEAT | See Page SEAT & SEAT BAR(2) | | 1 |
| 5 | 6717516 | INSULATION | | | 1 |
| 6 | 6718101 | COVER | | | 6 |
| 7 | 6719503 | CONTAINER | manuals | | 1 |
| 7 | 6675524 | CLIP | | | 2 |
| 7 | 6725301 | COVER | | | 1 |
| 7 | 6725303 | FRAME | | | 1 |
| 8 | 17C-612 | BOLT | | | 2 |
| 9 | 17C-716 | BOLT | | | 2 |
| 10 | 85D-7 | NUT | | | 2 |
| 11 | 85D-6 | NUT | | | 2 |
| 12 | 6675074 | SEAT BELT | | | 1 |
| 13 | 6725373 | SPRING PLATE | | | 2 |
| 14 | 6727299 | INSULATION | | | 1 |
| 15 | NSS | FRAME | L.H. - weldAon | | 1 |
| 15 | NSS | FRAME | R.H. - weldAon | | 1 |
| 16 | 6674403 | COVER | no lights | | 2 |

# DELUXE CAB

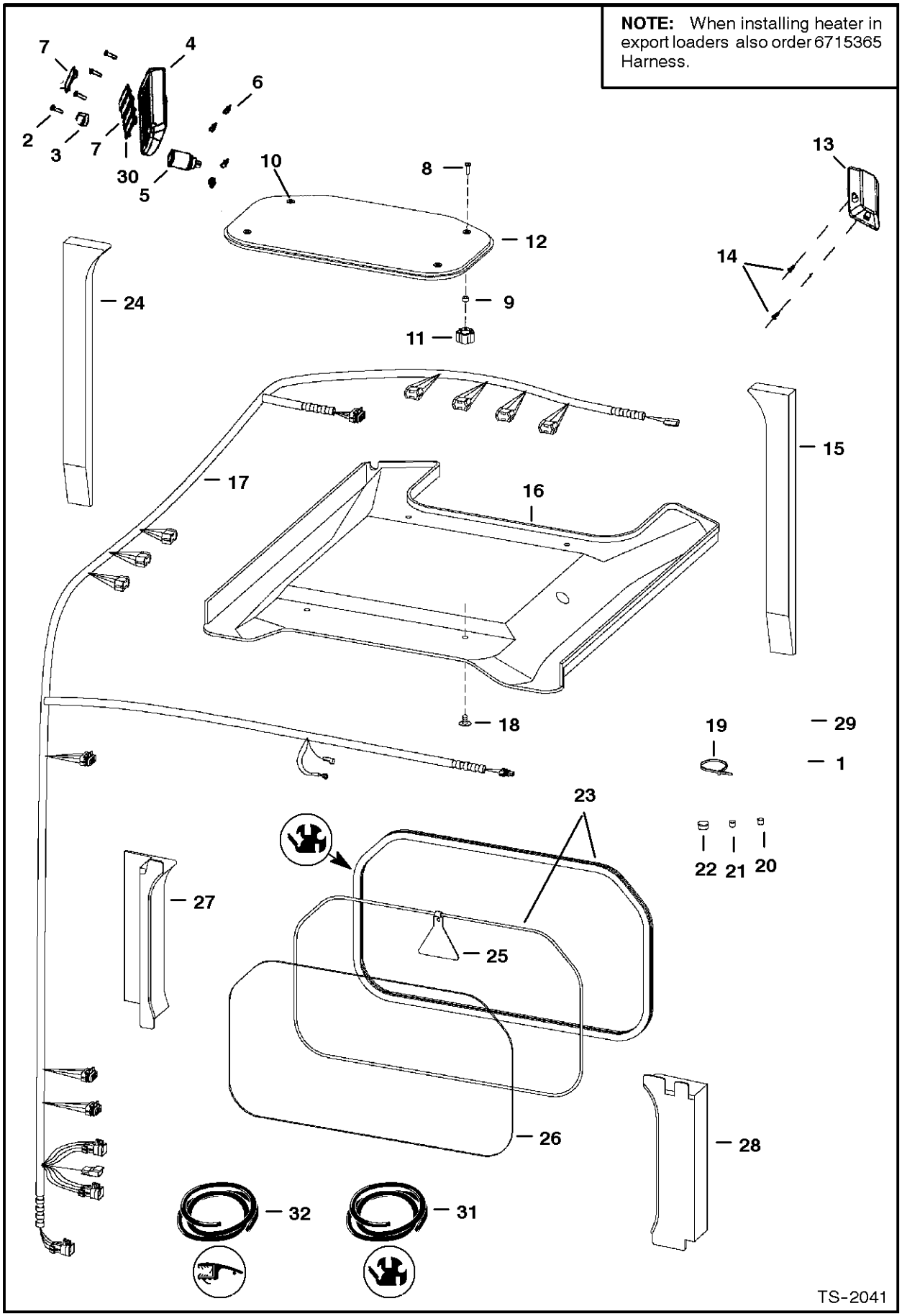
NOTE: When installing heater in export loaders also order 6715365 Harness.
7
4
6
2
3
7
30
5
10
8
12
9
11
13
14
24
17
16
15
18
19
29
1
23
22
21
20
27
25
26
28
32
31
TS-2041

# DELUXE CAB

| Ref.N° | Part N° | Description | Remarks | Serial N° | Qty. |
|---|---|---|---|---|---|
| 1 | 6727299 | INSULATION | cab back | | 1 |
| 2 | 6669224 | BOLT | | | 4 |
| 3 | 6664224 | CAP | | | 1 |
| 4 | 6718580 | PANEL | | | 1 |
| 5 | 6664223 | OUTLET | | | 1 |
| 6 | 6669091 | CLIP | | | 4 |
| 7 | 6719038 | PLUG | | | 5 |
| 8 | 91G-416 | BOLT | | | 4 |
| 9 | 6664085 | BUSHING | nylon | | 4 |
| 10 | 6675545 | GROMMET | | | 4 |
| 11 | 6674741 | KNOB | | | 4 |
| 12 | 6728629 | WINDOW | top - lexan - assy. - W/ seal & grommets | | 1 |
| 13 | 6664368 | DOME LIGHT | dome | | 1 |
| 13 | 6665367 | BULB | | | 1 |
| 14 | 6664221 | RETAINER | snap in | | 2 |
| 15 | 6717520 | INSULATION | | | 1 |
| 16 | 6717515 | INSULATION | headliner | | 1 |
| 17 | 6727190 | HARNESS | 6accessories | | 1 |
| 17 | 6715365 | HARNESS | 6accessories - Export - SEE NOTE | | 1 |
| 18 | 6674895 | RETAINER | snap in | | 4 |
| 19 | 6610510 | NYLON TIE | | | 6 |
| 20 | 5289686 | PLUG | black - 3/8' hole | | 5 |
| 21 | 6649949 | PLUG | 1/2' hole | | 2 |
| 22 | 6657719 | PLUG | 3/4' hole | | 1 |
| 23 | NAP | EXTRUSION | 75.75' (1924mm) long - Order Ref. DELUXE CAB(31) | | x |
| 23 | NAP | CORD | 75.75' (1924mm) long - Order Ref. DELUXE CAB(31) | | x |
| 24 | 6717519 | INSULATION | | | 1 |
| 25 | 6559515 | EXIT TAG | | | 1 |
| 26 | 6717874 | WINDOW | rear | | 1 |
| 27 | 6717517 | INSULATION | | | 1 |
| 28 | 6717518 | INSULATION | | | 1 |
| 29 | 6672348 | PANEL | R.H. - deluxe - keyless | | 1 |
| 30 | 6668742 | SWITCH | travel control - Export | | 1 |
| 31 | 6675387 | SEA; | bulk - sold per foot | | x |
| 31 | 6554149 | CORD | bulk - sold per foot | | x |

# SEAT & SEAT BAR

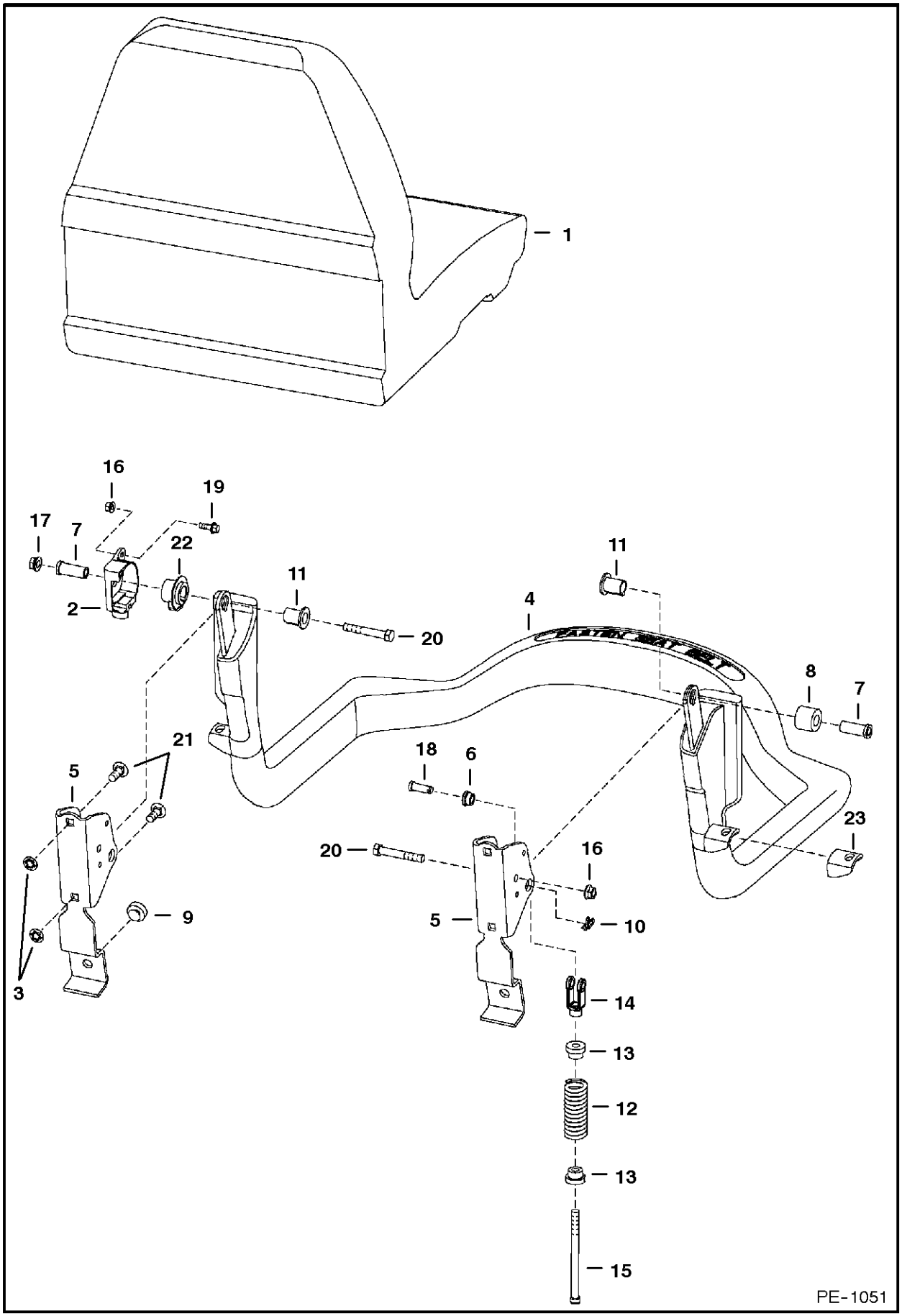

# SEAT & SEAT BAR

| Ref.N° | Part N° | Description | Remarks | Serial N° | Qty. |
|---|---|---|---|---|---|
| 1 | | SEAT | See Page SEAT(1) | | 1 |
| 2 | 6674406 | SENSOR | | | 1 |
| 3 | 6674894 | NUT | | | 4 |
| 4 | 6715860 | SEAT BAR | | | 1 |
| 5 | 6715863 | BRACKET | | | 1 |
| 6 | 6715864 | BUSHING | | | 2 |
| 7 | 6715865 | BUSHING | | | 2 |
| 8 | 6715866 | BUSHING | | | 1 |
| 9 | 6519178 | BUMPER | | | 2 |
| 10 | 6631418 | PIN | ring | | 2 |
| 11 | 6664882 | BUSHING | keyed | | 2 |
| 12 | 6701535 | SPRING | | | 2 |
| 13 | 6710659 | BUSHING | | | 2 |
| 14 | 6713589 | CLEVIS | | | 2 |
| 15 | 6713887 | BOLT | | | 2 |
| 16 | 83D-4 | NUT | | | 1 |
| 17 | 53D-6 | NUT | | | 2 |
| 18 | 4F-6106 | PIN | | | 2 |
| 19 | 35C-412 | BOLT | | | 1 |
| 20 | 17C-640 | BOLT | | | 2 |
| 21 | 10C-616 | BOLT | | | 4 |
| 22 | 6674405 | BUSHING | | | 1 |
| 23 | NAP | MOUNT | Order Ref. SEAT & SEAT BAR(4) | | 2 |

# SEAT
## (Michigan)

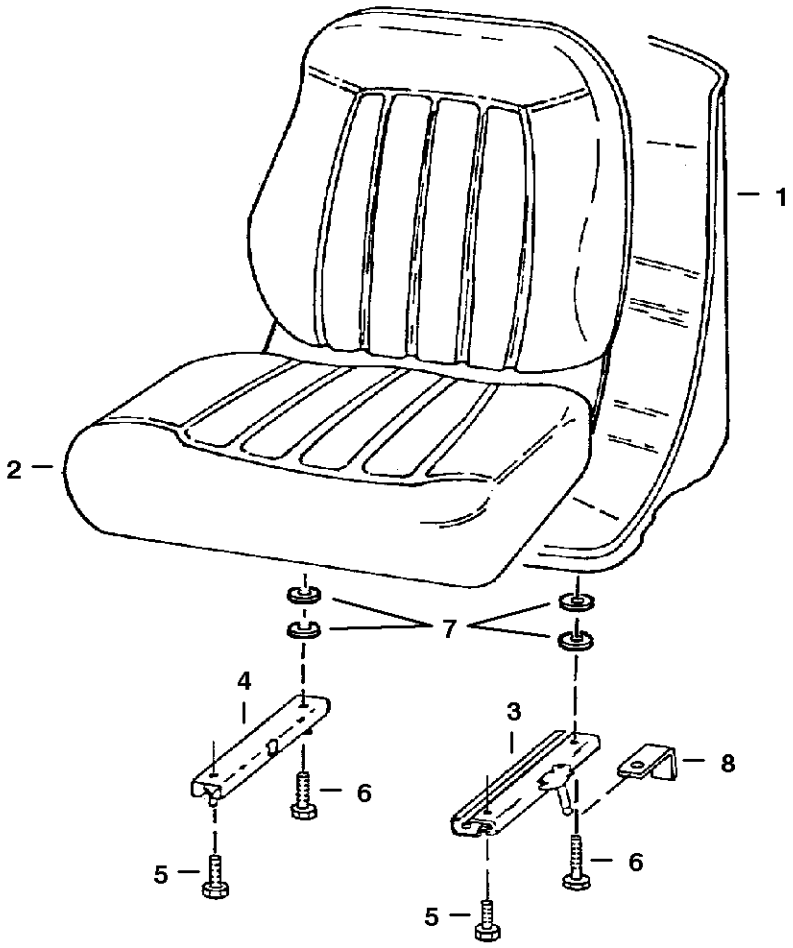


B-14720

# SEAT

| Ref.N° | Part N° | Description | Remarks | Serial N° | Qty. |
|---|---|---|---|---|---|
| 1 | 6669135 | SEAT | W/Ref. SEAT(2)-SEAT(7) | | 1 |
| 2 | 6670160 | CUSHION | W/ edging, clip & grommets (2) | | 1 |
| 2 | NSS | EDGING | | | 1 |
| 2 | NSS | CLIP | | | 1 |
| 3 | 6674013 | TRACK | L.H. - W/ latch | | 1 |
| 4 | 6669089 | TRACK | R.H. - W/O latch | | 1 |
| 5 | 25G-512 | BOLT | | | 2 |
| 6 | 25G-520 | BOLT | | | 2 |
| 7 | 6672715 | SPACER | | | 4 |
| 8 | 6668953 | BRACKET | | | 2 |

# REAR DOOR

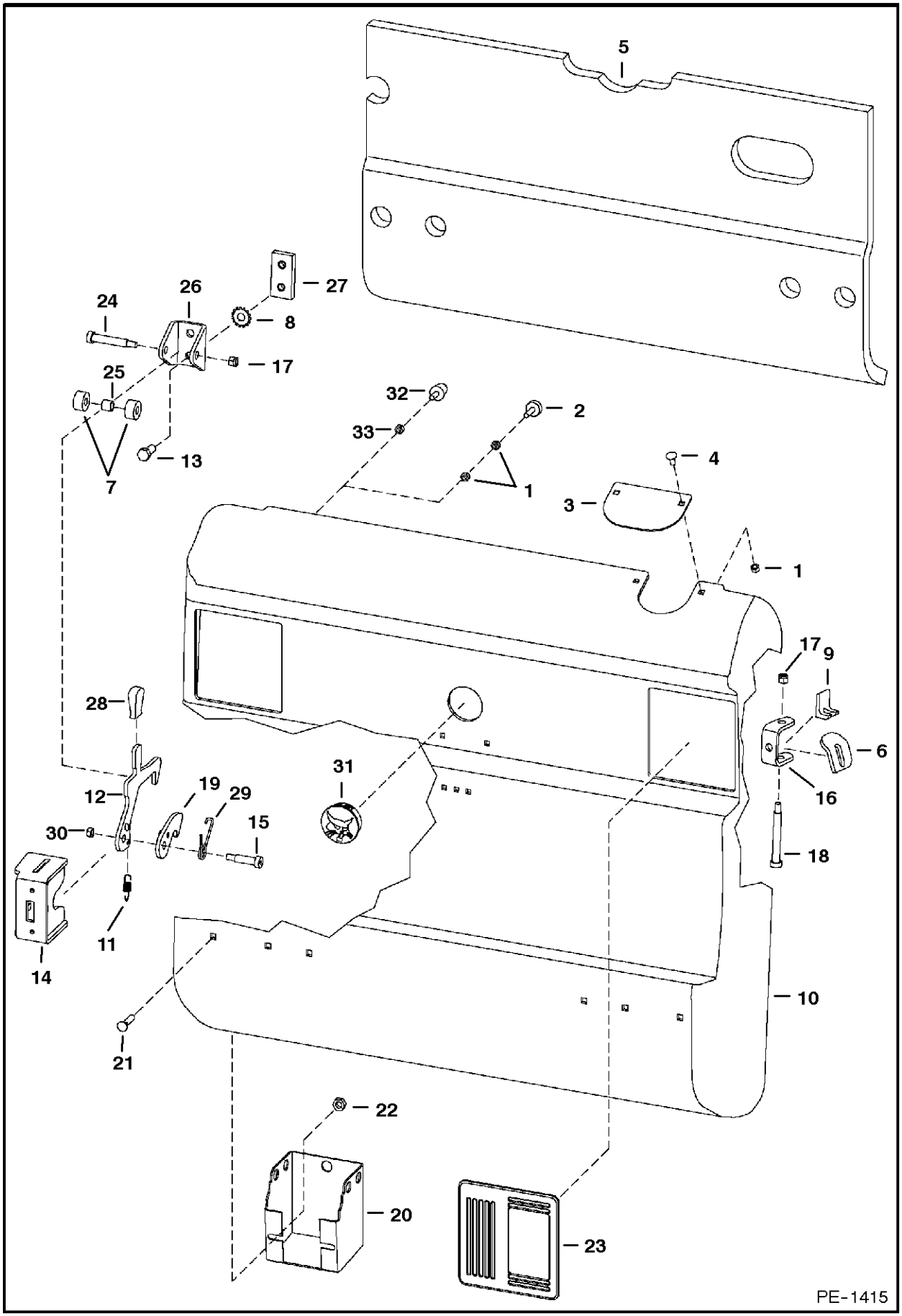
5
27
26
24
8
17
25
32
2
33
13
7
1
4
3
1
17
9
28
6
31
12
19
29
16
30
15
18
11
14
10
21
22
20
23
PE-1415

# REAR DOOR

| Ref.N° | Part N° | Description | Remarks | Serial N° | Qty. |
|---|---|---|---|---|---|
| 1 | 61D-5 | NUT | | | 6 |
| 2 | 6655399 | BUMPER | | | 2 |
| 3 | 6714509 | COVER | exhaust | | 1 |
| 4 | 37C-512 | BOLT | | | 2 |
| 5 | 6715106 | INSULATION | door | | 1 |
| 6 | 6714126 | DOOR STOP | | | 1 |
| 7 | 6809726 | ROLLER | | | 2 |
| 8 | 6675273 | WASHER | lock | | 2 |
| 9 | 6719766 | STOP | | | 1 |
| 10 | 6729991 | REAR DOOR | | | 1 |
| 11 | 6810141 | SPRING | | | 1 |
| 12 | 6729685 | LATCH | | | 1 |
| 13 | 17C-820 | BOLT | | | 2 |
| 14 | 6729939 | LATCH PLATE | weldAon | | 1 |
| 15 | 38C-824 | SCREW | | | 1 |
| 16 | 6711526 | HINGE | weldAon | | 2 |
| 17 | 59D-6 | NUT | | | 3 |
| 18 | 38C-856 | BOLT | | | 2 |
| 19 | 6811910 | LATCH | | | 1 |
| 20 | 6715318 | TOOL HOLDER | Europe | | 1 |
| 21 | 37C-612 | BOLT | | | 2 |
| 22 | 55D-6 | NUT | | | 2 |
| 23 | 6670287 | COVER | | | 2 |
| 24 | 38C-840 | BOLT | carriage | | 1 |
| 25 | 6809734 | BUSHING | striker | | 1 |
| 26 | 6809727 | CHANNEL | | | 1 |
| 27 | 6719525 | BAR | threaded striker | | 1 |
| 28 | 6564452 | GRIP | | | 1 |
| 29 | 6801032 | HANDLE | | | 1 |
| 30 | 85D-6 | NUT | | | 1 |
| 31 | 6718796 | PLUG | backAup alarm | | 1 |

# LIFT ARM & BOB-TACH

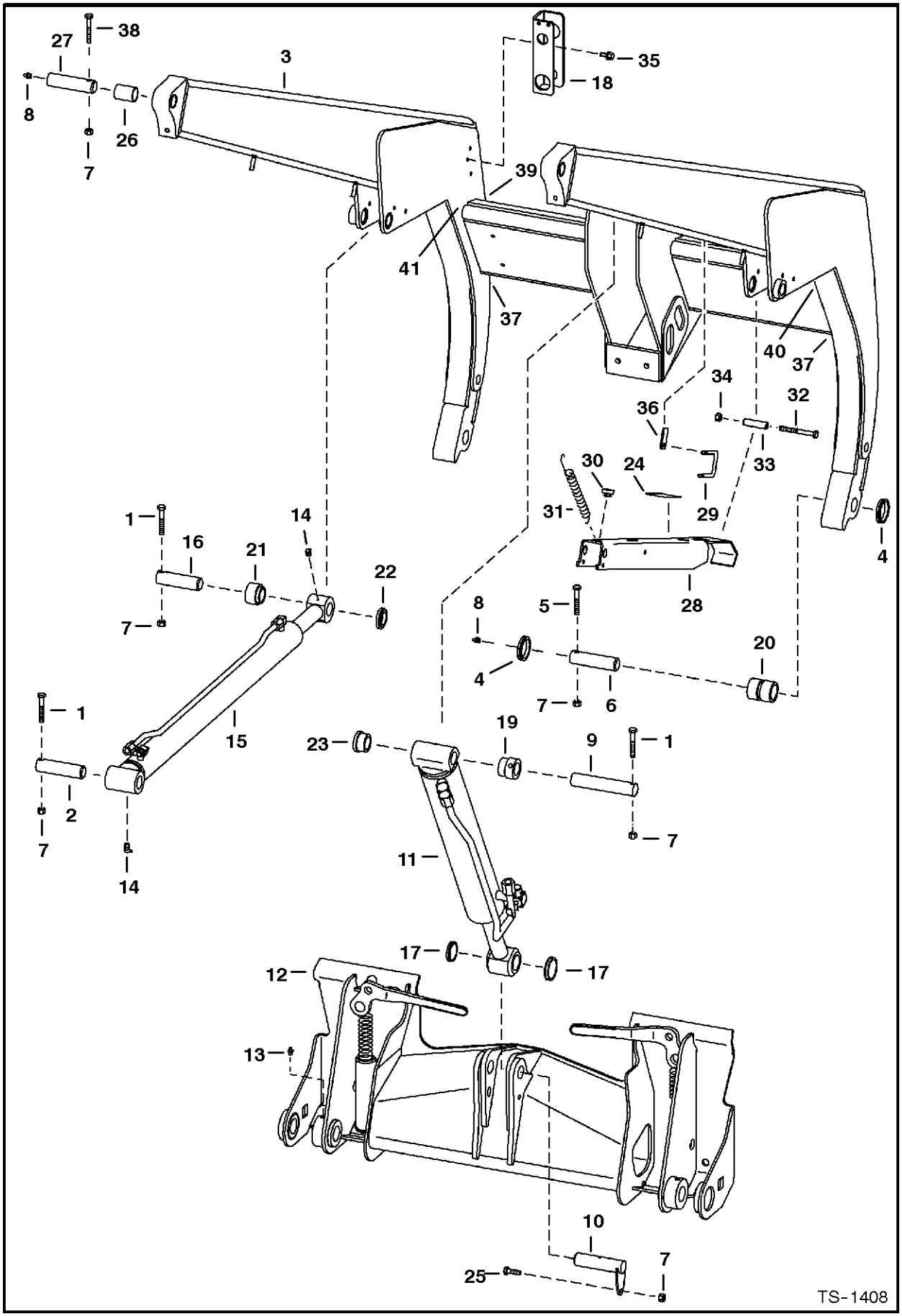

# LIFT ARM & BOB-TACH

| Ref.N° | Part N° | Description | Remarks | Serial N° | Qty. |
|---|---|---|---|---|---|
| 1 | 17C-640 | BOLT | | | 5 |
| 2 | 6702935 | PIN | | | 2 |
| 3 | 6719265 | LIFT ARM | | | 1 |
| 4 | 6631067 | SEAL | | | 4 |
| 5 | 17C-656 | BOLT | | | 2 |
| 6 | 6711334 | PIN | | | 2 |
| 7 | 85D-6 | NUT | | | 10 |
| 8 | 10H-25 | GREASE ZERK | | | 4 |
| 9 | 6704288 | PIN | | | 1 |
| 10 | 6716601 | PIN | W/O grease zerk hole | | 1 |
| 11 | | CYLINDER | tilt - See Page TILT CYLINDER(3) | | 1 |
| 12 | SALES | BOB-TACH | See Page BOB-TACH(3) | | 1 |
| 13 | 743332 | GREASE ZERK | | | 2 |
| 14 | 11H-15 | GREASE ZERK | | | 4 |
| 15 | | CYLINDER | lift - See Page LIFT CYLINDER(1) | | 2 |
| 16 | 6547593 | PIN | | | 2 |
| 17 | 225855 | SEAL | | | 2 |
| 18 | 6714665 | MOUNT | | | 1 |
| 19 | 6704287 | BUSHING | weldAon | | 1 |
| 20 | 6708517 | BUSHING | wear | | 2 |
| 21 | 6555987 | BUSHING | weldAon | | 2 |
| 22 | 6558991 | BUSHING | weldAon | | 2 |
| 23 | 6703363 | BUSHING | weldAon | | 1 |
| 24 | 6704436 | PAD | rubber - self adhesive | | 1 |
| 25 | 17C-620 | BOLT | | | 1 |
| 26 | 6718538 | BUSHING | | | 2 |
| 27 | 6725597 | PIN | | | 2 |
| 28 | 6710166 | LIFT ARM STOP | assy | | 1 |
| 29 | 6714810 | PIN | retainer | | 1 |
| 30 | 6519178 | BUMPER | | | 3 |
| 31 | 6579072 | SPRING | | | 1 |
| 32 | 17C-660 | BOLT | | | 1 |
| 33 | 6700533 | SPACER | | | 1 |
| 34 | 61D-6 | NUT | | | 1 |
| 35 | 84G-3716 | BOLT | | | 2 |
| 36 | 6705091 | TAB | weldAon | | 1 |
| 37 | 6719304 | GUSSET | weldAon | | 2 |
| 38 | 17C-652 | BOLT | | | 2 |
| 39 | 6719215 | BRACE | L.H. - weldAon | | 1 |
| 40 | 6719216 | BRACE | R.H. - weldAon | | 1 |
| 41 | 6719231 | PLATE | boom - weldAon | | 2 |

# BOB-TACH

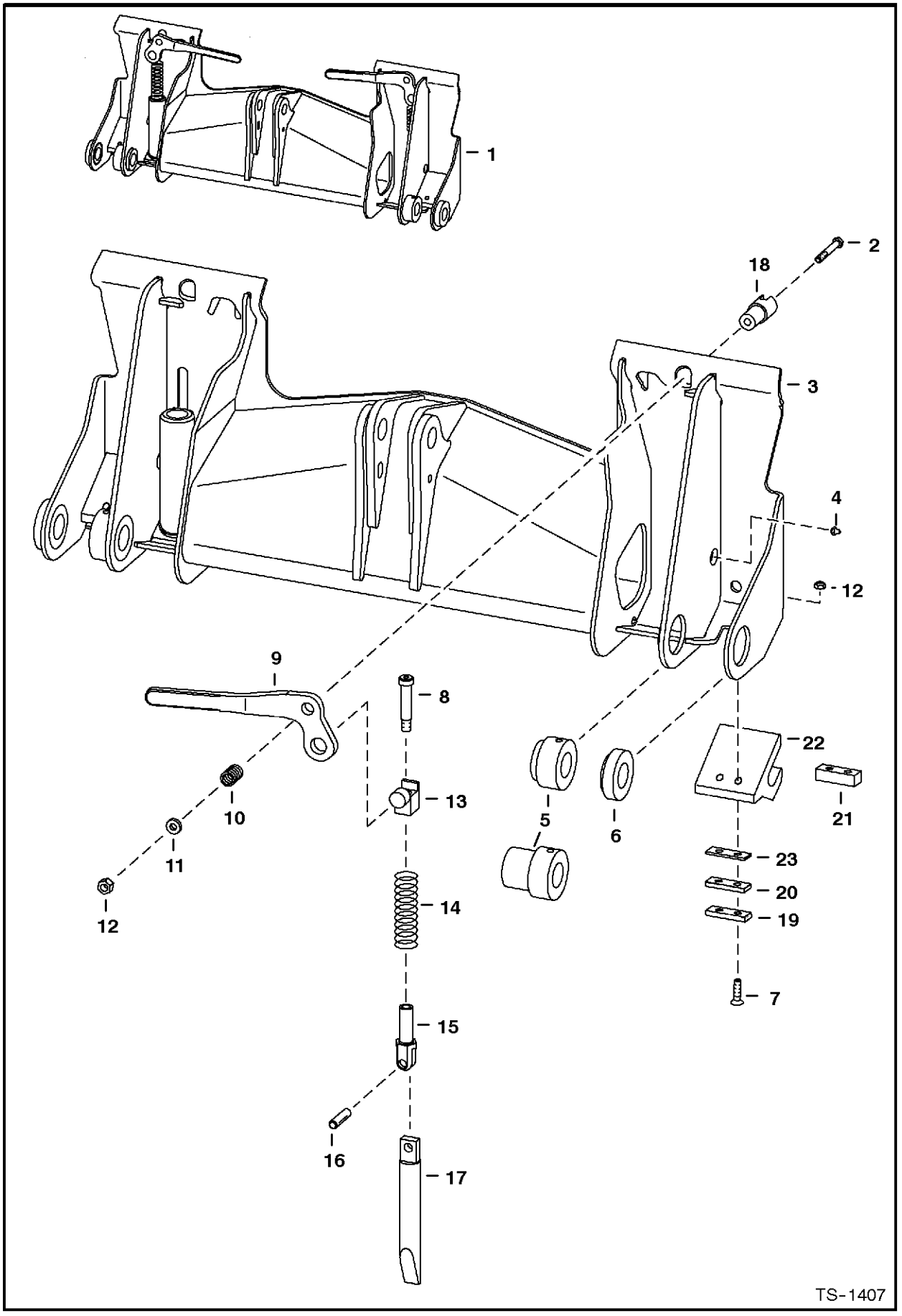

# BOB-TACH

| Ref.N° | Part N° | Description | Remarks | Serial N° | Qty. |
|---|---|---|---|---|---|
| 1 | 6718752 | BOB-TACH | | | 2 |
| 2 | 17C-660 | BOLT | | | 2 |
| 3 | NSS | FRAME | Order Ref. BOB-TACH(1) | | 1 |
| 4 | 10H-35 | GREASE ZERK | | | 2 |
| 5 | 6713156 | BUSHING | weldAon - 5.7' (145mm) long | | 2 |
| 6 | 6711404 | BUSHING | weldAon | | 2 |
| 7 | 9G-620 | BOLT | | | 4 |
| 8 | 38C-1036 | BOLT | shoulder | | 2 |
| 9 | 6702904 | LEVER | R.H. | | 1 |
| 9 | 6702903 | LEVER | L.H. | | 1 |
| 10 | 6713040 | SPRING | | | 2 |
| 11 | 619021 | WASHER | | | 2 |
| 12 | 85D-6 | NUT | | | 2 |
| 13 | 6714576 | PIVOT | | | 2 |
| 14 | 6562018 | SPRING | | | 2 |
| 15 | 6704248 | PIVOT | wedge | | 2 |
| 16 | 14J-5032 | PIN | | | 2 |
| 17 | 6704242 | WEDGE ASSY. | | | 2 |
| 18 | 6702958 | BUSHING | weldAon | | 2 |
| 19 | 6579104 | SHIM | .25' | | 2 |
| 20 | 6579106 | SHIM | .125' | | 2 |
| 21 | 6711516 | STOP | weldAon | | 2 |
| 22 | 6713526 | STOP | weldAon | | 2 |
| 23 | 6707514 | SHIM | .06' | | 2 |

# PANELS

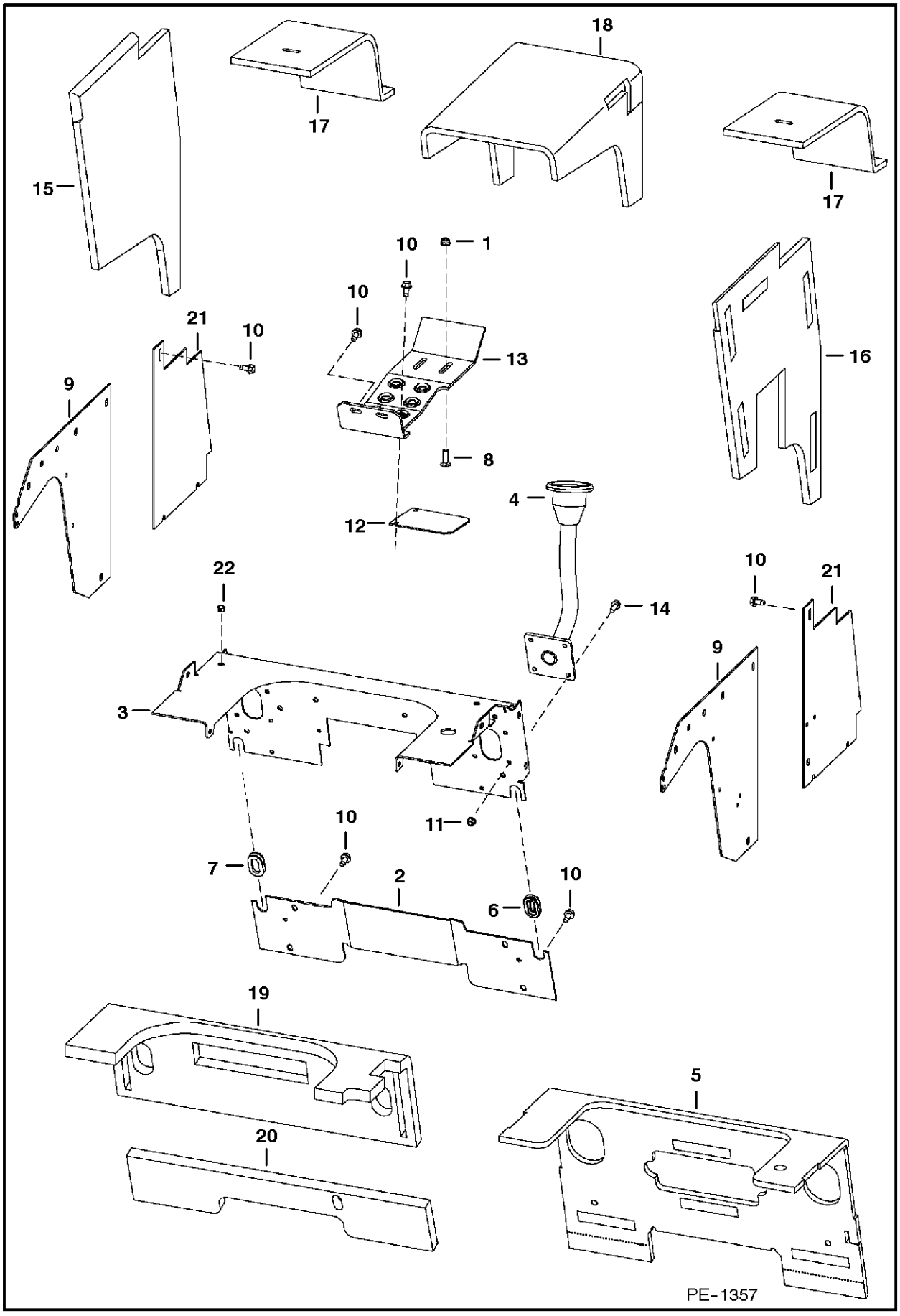
18
17
17
15
10
1
10
21
10
13
16
9
8
4
12
22
14
10
21
9
3
11
10
7
2
10
6
19
5
20
PE-1357

# PANELS

| Ref.N° | Part N° | Description | Remarks | Serial N° | Qty. |
|---|---|---|---|---|---|
| 1 | 57D-6 | NUT | | | 4 |
| 2 | 6718915 | PANEL | | | 1 |
| 3 | 6729899 | PANEL | | | 1 |
| 4 | 6729791 | LEVER | steering - R.H. | | 1 |
| 4 | 6729792 | LEVER | steering - L.H. | | 1 |
| 5 | 6730094 | INSULATION | steering panel | | 1 |
| 6 | 6577961 | GROMMET | | | 1 |
| 7 | 6714726 | PLUG | | | 1 |
| 8 | 37C-620 | BOLT | | | 4 |
| 9 | 6729787 | PANEL | | | 2 |
| 10 | 84G-3712 | BOLT | | | 26 |
| 11 | 89D-5 | NUT | | | 4 |
| 12 | 6729774 | COVER | | | 2 |
| 13 | 6729237 | STEP | | | 2 |
| 14 | 35C-512 | BOLT | | | 4 |
| 15 | 6730098 | INSULATION | | | 1 |
| 16 | 6730097 | INSULATION | | | 1 |
| 17 | 6730095 | INSULATION | pedal | | 2 |
| 18 | 6730096 | INSULATION | | | 1 |
| 19 | 6716800 | INSULATION | panel | | 1 |
| 20 | 6701674 | INSULATION | panel | | 1 |
| 21 | 6729786 | PANEL | | | 2 |
| 22 | 6649949 | PLUG | | | 2 |

# FUEL SYSTEM

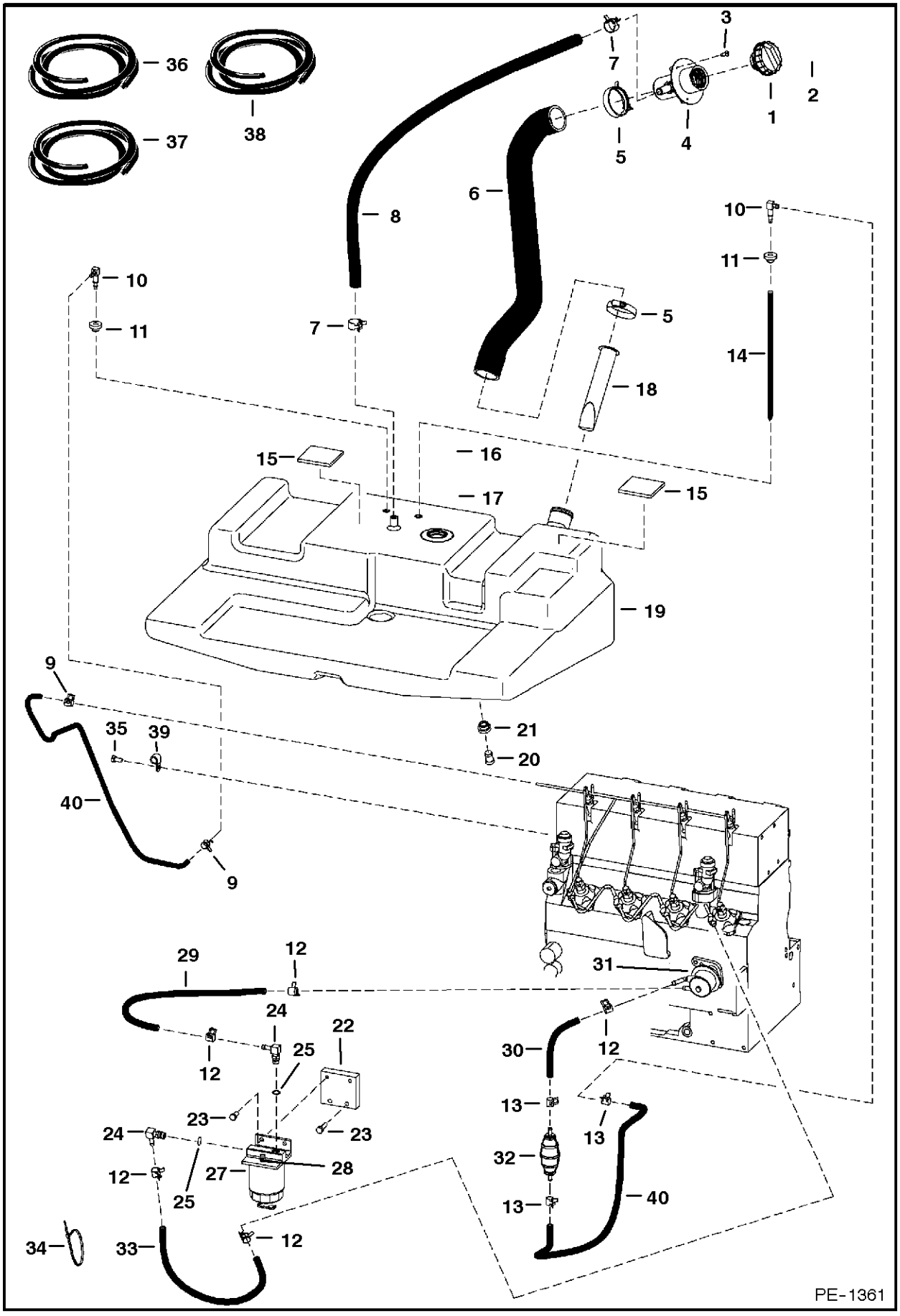
36
37
38
3
7
2
1
4
5
6
8
10
11
14
18
15
16
17
19
9
35
39
40
21
20
29
12
24
22
25
23
27
28
30
31
13
32
33
34
PE-1361

# FUEL SYSTEM

| Ref.N° | Part N° | Description | Remarks | Serial N° | Qty. |
|---|---|---|---|---|---|
| 1 | 6661114 | CAP | green fuel fill - W/Ref. FUEL SYSTEM(2) | | 1 |
| 1 | 6661696 | FUEL CAP | locking - W/Ref. FUEL SYSTEM(2) - Code PK510 | | 1 |
| 2 | 6587458 | KEY SET | Code PK510 | | 1 |
| 3 | 6706517 | SCREW | | | 3 |
| 4 | 6701449 | FILLER TUBE | | | 1 |
| 5 | 42H-32 | CLAMP | | | 2 |
| 6 | 6728141 | HOSE | | | 1 |
| 7 | 42H-10 | CLAMP | | | 2 |
| 8 | NAP | HOSE | 38" (965mm) long - Order Ref. FUEL SYSTEM(36) | | 1 |
| 9 | 5HM-13 | CLAMP | | | 10 |
| 10 | 6598908 | ELBOW | | | 2 |
| 11 | 6553411 | BUSHING | | | 2 |
| 12 | 5HM-14 | CLAMP | | | 5 |
| 13 | 5HM-15 | CLAMP | | | 3 |
| 14 | 6729854 | HOSE | 12' (305mm) long | | 1 |
| 15 | 6578278 | PAD | self adhesive one side | | 2 |
| 16 | 6674209 | SENSOR | fuel - W/Ref. FUEL SYSTEM(17) - See Page ENGINE ELECTRICAL(1) | | 1 |
| 17 | 6717579 | GASKET | rubber | | 1 |
| 18 | 6569219 | SCREEN | | | 1 |
| 19 | 6708527 | TANK | | | 1 |
| 20 | 6717401 | PLUG | .75' (19mm) shoulder | | 1 |
| 21 | 6717402 | BUSHING | 6.54' dia. hole | | 1 |
| 22 | 6710488 | MOUNT | | | 1 |
| 23 | 53CM-830 | BOLT | | | 2 |
| 24 | 6715183 | ELBOW | W/Ref. FUEL SYSTEM(25) - tapered boss face | | 2 |
| 25 | 99K-5 | O-RING | tapered boss face | | 2 |
| 26 | 43C-512 | BOLT | | | 2 |
| 27 | 6667353 | FILTER ASSY | | | 1 |
| 27 | 6667352 | FILTER | | | 1 |
| 27 | 72F-1 | DRAIN COCK | | | 1 |
| 28 | 6658180 | PLUG | plug | | 1 |
| 29 | NAP | HOSE | 613" (330mm) long - Order Ref. FUEL SYSTEM(37) | | 1 |
| 30 | NAP | HOSE | 69.5" (241mm) long - Order Ref. FUEL SYSTEM(38) | | 1 |
| 31 | 6666522 | FUEL PUMP | See Page FUEL INJECTION SYSTEM(9) | | 1 |
| 32 | 6657734 | PUMP | hand primer | | 1 |
| 33 | NAP | HOSE | 176.5" (445mm) long - Order Ref. FUEL SYSTEM(37) | | 1 |
| 34 | 6610510 | NYLON TIE | | | 1 |
| 35 | 1CM-816 | BOLT | | | 1 |
| 36 | 6578172 | HOSE | bulk - Sold Per Foot | | x |
| 37 | 6577822 | HOSE | .375 I.D. - bulk - sold per foot | | x |
| 38 | 6577821 | HOSE | .25" I.D. - bulk - sold per foot | | x |
| 39 | 30H-30 | CLAMP | | | 1 |
| 40 | NAP | HOSE | 629.5' (749mm) long - Order Ref. FUEL SYSTEM(38) | | 2 |

# DRIVE TRAIN

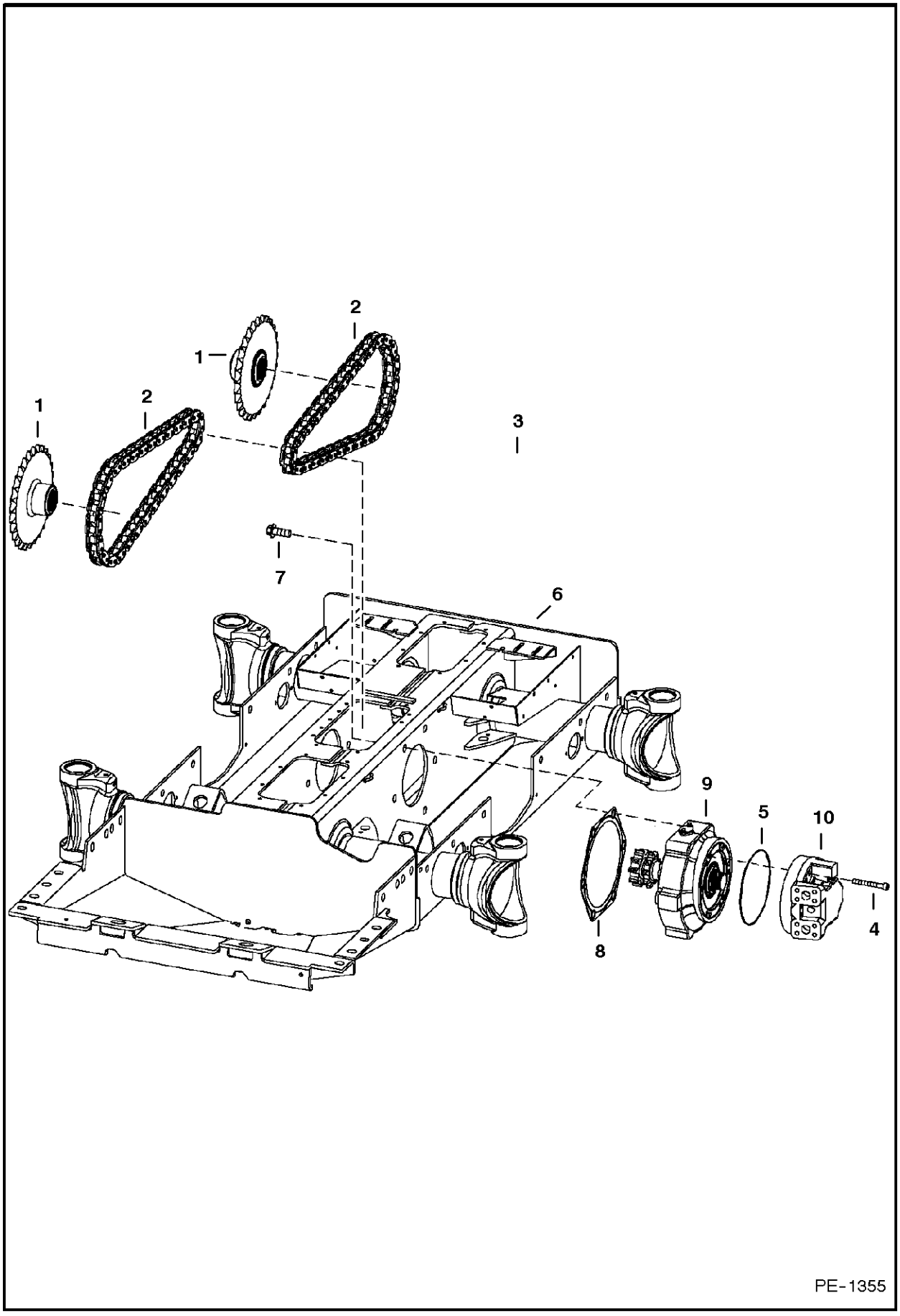

# DRIVE TRAIN

| Ref.N° | Part N° | Description | Remarks | Serial N° | Qty. |
|---|---|---|---|---|---|
| 1 | 6729620 | SPROCKET | | | 4 |
| 2 | 6675327 | CHAIN | endless - 54 pitches - oval shaped links | | 4 |
| 3 | 6675333 | LINK | conn. - Diamond - oval shape | | x |
| 4 | 6717806 | BOLT | | | 20 |
| 5 | 25K-30812 | O-RING | | | 2 |
| 6 | 6725573 | CHAINCASE | | | 1 |
| 7 | 6673642 | BOLT | | | 12 |
| 8 | 6704879 | GASKET | | | 2 |
| 9 | 6729719 | MOUNT ASSY. | drive motor - See Page MOTOR CARRIER(1) | | 2 |
| 10 | 6672821 | MOTOR | See Page HYDROSTATIC MOTOR(3) & HYDROSTATIC MOTOR & BRAKE(4) | | 2 |

## MOTOR CARRIER
## (Drive Motor Mount Assy.)

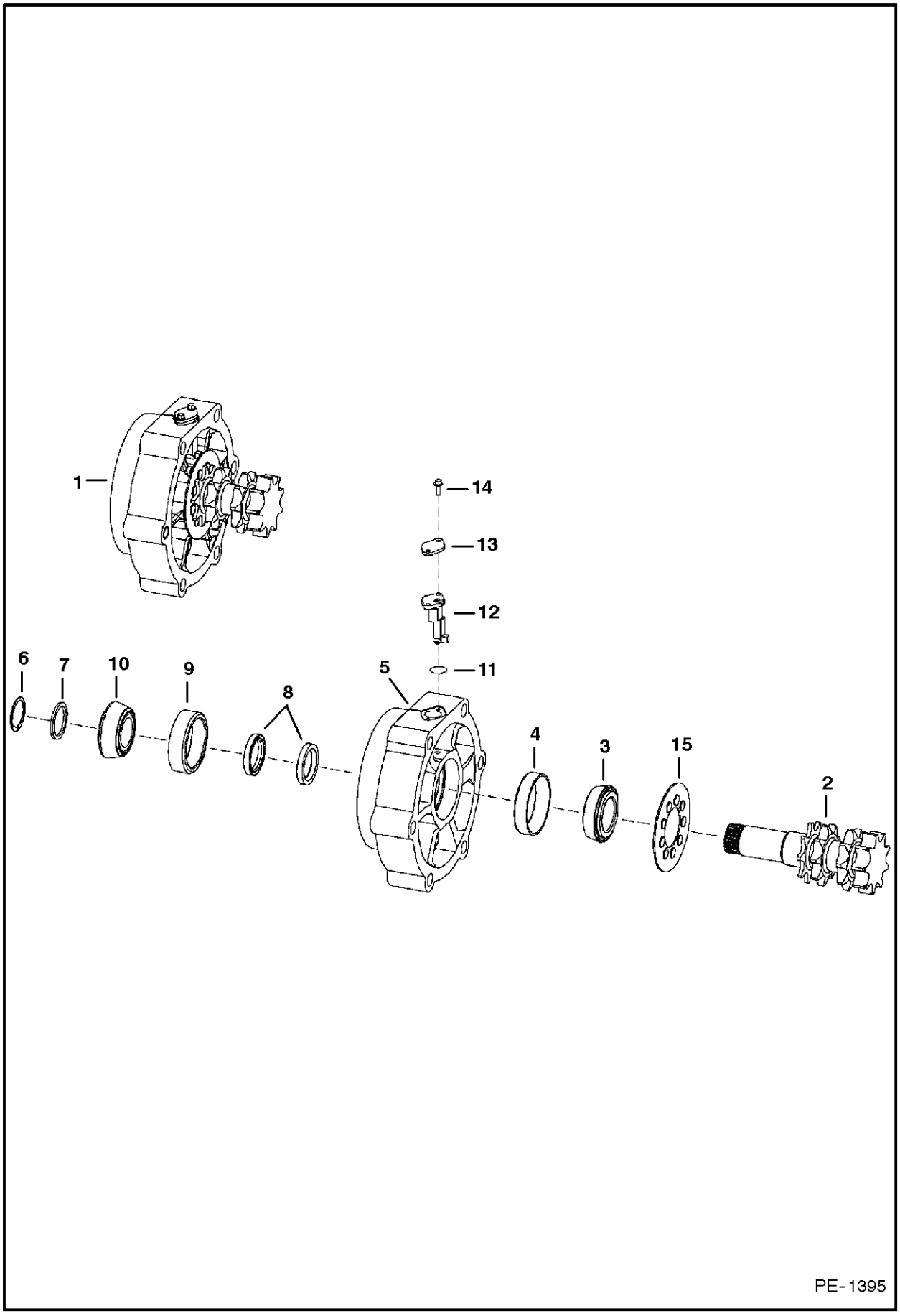

# MOTOR CARRIER

| Ref.N° | Part N° | Description | Remarks | Serial N° | Qty. |
|---|---|---|---|---|---|
| 1 | 6729719 | MOUNT ASSY. | drive motor - Ref. MOTOR CARRIER(2)-MOTOR CARRIER(10) | | 1 |
| 2 | 6729662 | SHAFT | W/ snap ring groove | | 1 |
| 3 | 6664845 | BEARING | | | 2 |
| 4 | 6650120 | RACE | | | 1 |
| 5 | 6729663 | HOUSING | | | 1 |
| 6 | 6664848 | SNAP RING | .118' (3,0mm) thickness | | 1 |
| 7 | 6706817 | SPACER | .152' (3,86mm) thickness | | 1 |
| 8 | 6665755 | SEAL | | | 2 |
| 9 | 6664847 | CUP | | | 1 |
| 10 | 6664846 | BEARING | | | 1 |
| 11 | 25K-20100 | O-RING | | | 1 |
| 12 | 6677181 | SENSOR | wheel speed | | 1 |
| 13 | 6730013 | COVER | | | 1 |
| 14 | 35C-412 | BOLT | | | 2 |
| 15 | 6677366 | WASHER | wheel speed | | 1 |

# DISC BRAKE

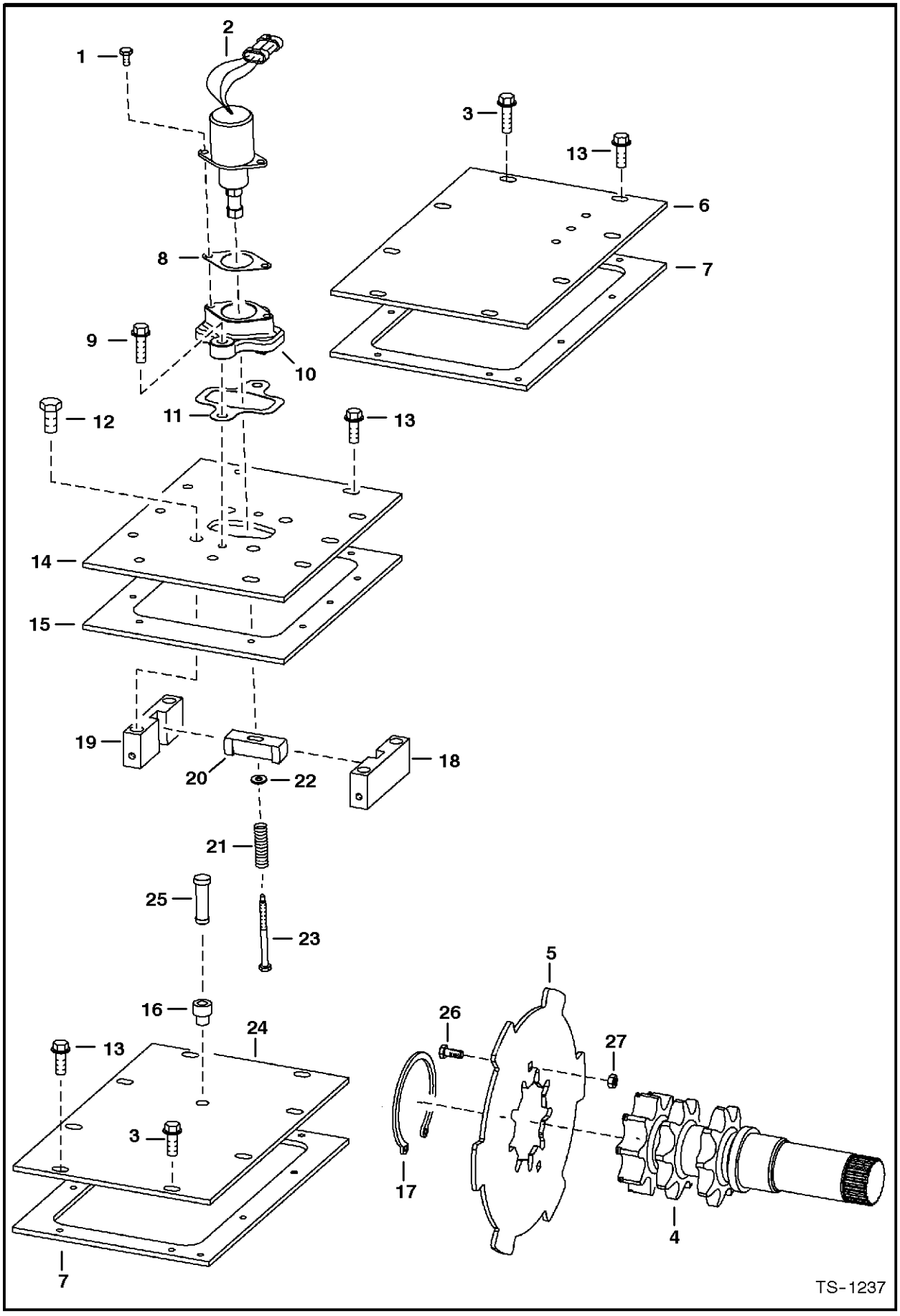
1
2
3
13
6
7
8
9
10
11
12
13
14
15
19
20
22
18
21
25
23
16
24
13
3
7
5
26
27
17
4
TS-1237

# DISC BRAKE

| Ref.N° | Part N° | Description | Remarks | Serial N° | Qty. |
|---|---|---|---|---|---|
| 1 | 17C-412 | BOLT | | | 2 |
| 2 | 6667992 | SOLENOID | | | 1 |
| 3 | 84G-3712 | BOLT | | | 16 |
| 4 | 6729662 | SHAFT | See Page MOTOR CARRIER(2) | | 2 |
| 5 | 6715630 | BRAKE | disc | | 2 |
| 6 | 6729173 | COVER | See Page MAIN FRAME(1) | | 1 |
| 7 | 6703097 | GASKET | | | 2 |
| 8 | 6706737 | GASKET | | | 1 |
| 9 | 84G-3720 | BOLT | | | 2 |
| 10 | 6706718 | MOUNT | | | 1 |
| 11 | 6708016 | GASKET | | | 1 |
| 12 | 47C-820 | BOLT | | | 4 |
| 13 | 84G-3716 | BOLT | | | 18 |
| 14 | 6706683 | COVER | single speed - See Page MAIN FRAME(1) | | 1 |
| 14 | 6725496 | COVER | two speed - See Page MAIN FRAME(1) | | 1 |
| 15 | 6708070 | GASKET | | | 1 |
| 16 | 6553411 | BUSHING | | | 1 |
| 17 | 6662298 | SNAP RING | | | 2 |
| 18 | 6719056 | BLOCK | guide - R.H. | | 1 |
| 19 | 6719057 | BLOCK | guide - L.H. | | 1 |
| 20 | 6714278 | WEDGE | | | 1 |
| 21 | 6708018 | SPRING | | | 1 |
| 22 | 25E-13 | WASHER | | | 1 |
| 23 | 6708267 | BOLT | | | 2 |
| 24 | 6700330 | COVER | See Page MAIN FRAME(1) | | 1 |
| 25 | 6670627 | BREATHER | See Page MAIN FRAME(1) | | 1 |
| 26 | 37C-512 | BOLT | | | 4 |
| 27 | 59D-5 | NUT | | | 4 |

# AXLE

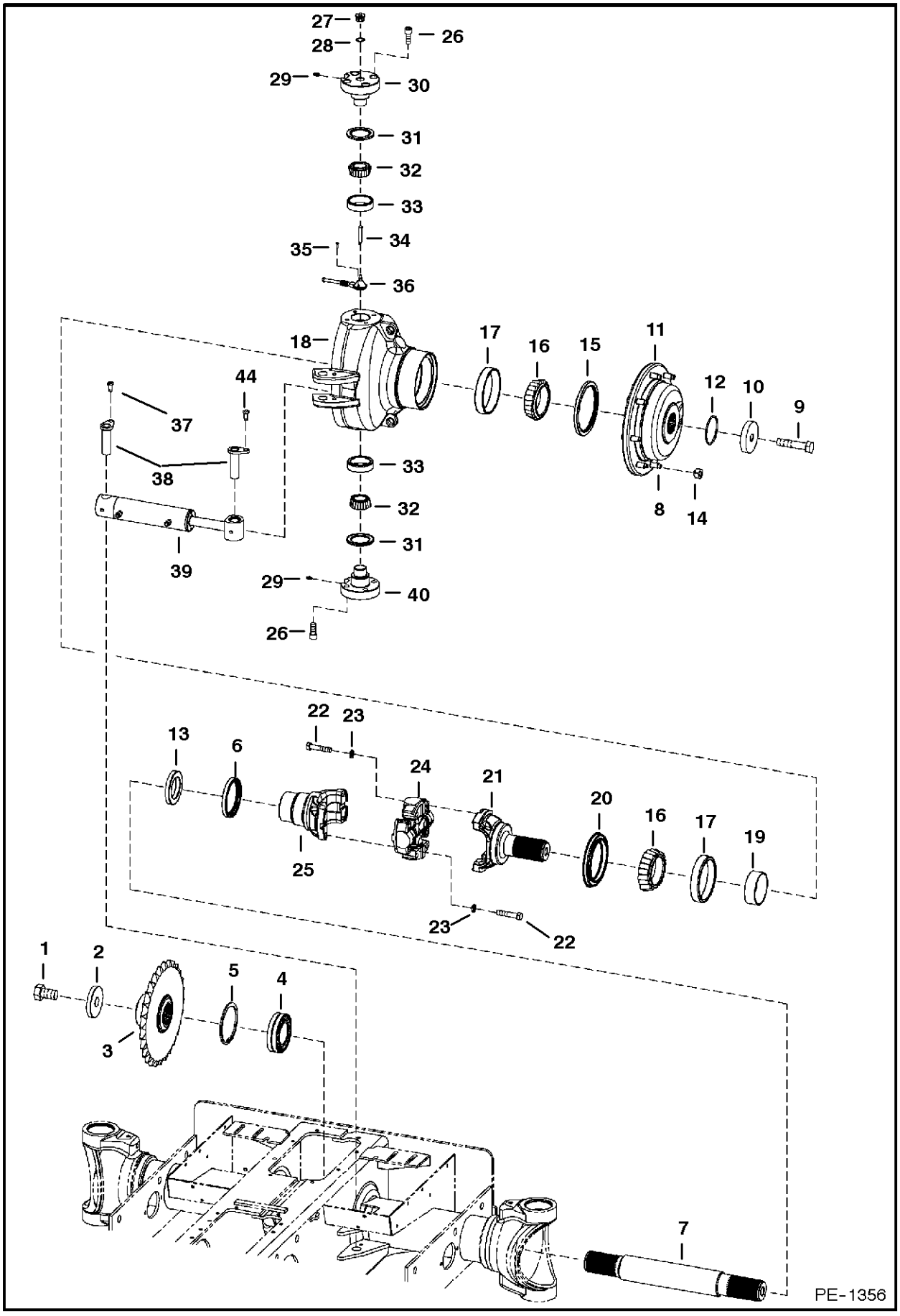
27
28
26
29
30
31
32
33
34
35
36
18
17
16
15
11
12
10
9
44
37
38
33
32
31
39
29
40
26
8
14
22
23
13
6
24
21
20
16
17
19
25
23
22
1
2
5
4
3
7
PE-1356

# AXLE

| Ref.N° | Part N° | Description | Remarks | Serial N° | Qty. |
|---|---|---|---|---|---|
| 1 | 6677199 | BOLT | | | 1 |
| 2 | 6558694 | WASHER | | | 1 |
| 3 | 6729620 | SPROCKET | | | 1 |
| 4 | 6677790 | BEARING | | | 1 |
| 5 | 7JM-110 | SNAP RING | | | 1 |
| 6 | 6677789 | SEAL | inner axle | | 1 |
| 7 | 6727500 | AXLE | W/O wear ring | | 1 |
| 8 | 6709170 | STUD | wheel | | 8 |
| 9 | 18C-1248 | BOLT | | | 3 |
| 10 | 6725204 | WASHER | recessed | | 1 |
| 11 | 6718586 | HUB | W/Ref. AXLE(8) | | 1 |
| 12 | 54K-40300 | O-RING | | | 1 |
| 13 | 6729405 | SPACER | axle | | 1 |
| 14 | 6564669 | NUT | wheel | | 8 |
| 15 | 6677787 | SEAL | | | 1 |
| 16 | 1316482 | BEARING | | | 2 |
| 17 | 1316483 | RACE | | | 2 |
| 18 | 6728513 | HOUSING | | | 1 |
| 19 | 6728145 | SPACER | cone | | 1 |
| 20 | 6677788 | SEAL | | | 1 |
| 21 | 6677792 | YOKE | male | | 1 |
| 22 | 18C-840 | BOLT | | | 8 |
| 23 | 4E-8 | WASHER | lock | | 8 |
| 24 | 6678575 | U-JOINT | | | 1 |
| 25 | 6677793 | YOKE | female - W/Ref. AXLE(24) | | 1 |
| 26 | 73G-820 | BOLT | | | 8 |
| 27 | 90KN-7 | PLUG | W/Ref. AXLE(28) | | 1 |
| 28 | 95K-10 | O-RING | | | x |
| 29 | 10H-35 | GREASE ZERK | | | 2 |
| 30 | 6726481 | KINGPIN | | | 2 |
| 31 | 6677785 | SEAL | | | 2 |
| 32 | 6675085 | BEARING | | | 2 |
| 33 | 6675086 | RACE | | | 2 |
| 34 | 6677365 | SHAFT | wheel positioner | | 1 |
| 35 | 21G-606 | BOLT | | | 2 |
| 36 | 6677182 | SENSOR | wheel positioner | | 1 |
| 37 | 17C-412 | BOLT | | | 2 |
| 38 | 6725386 | PIN | | | 2 |
| 39 | 6809818 | CYLINDER | | | 1 |
| 40 | 6730825 | KINGPIN | | | 1 |

# HYDRAULIC CIRCUITRY
## (W/O Bucket Positioning Valve)

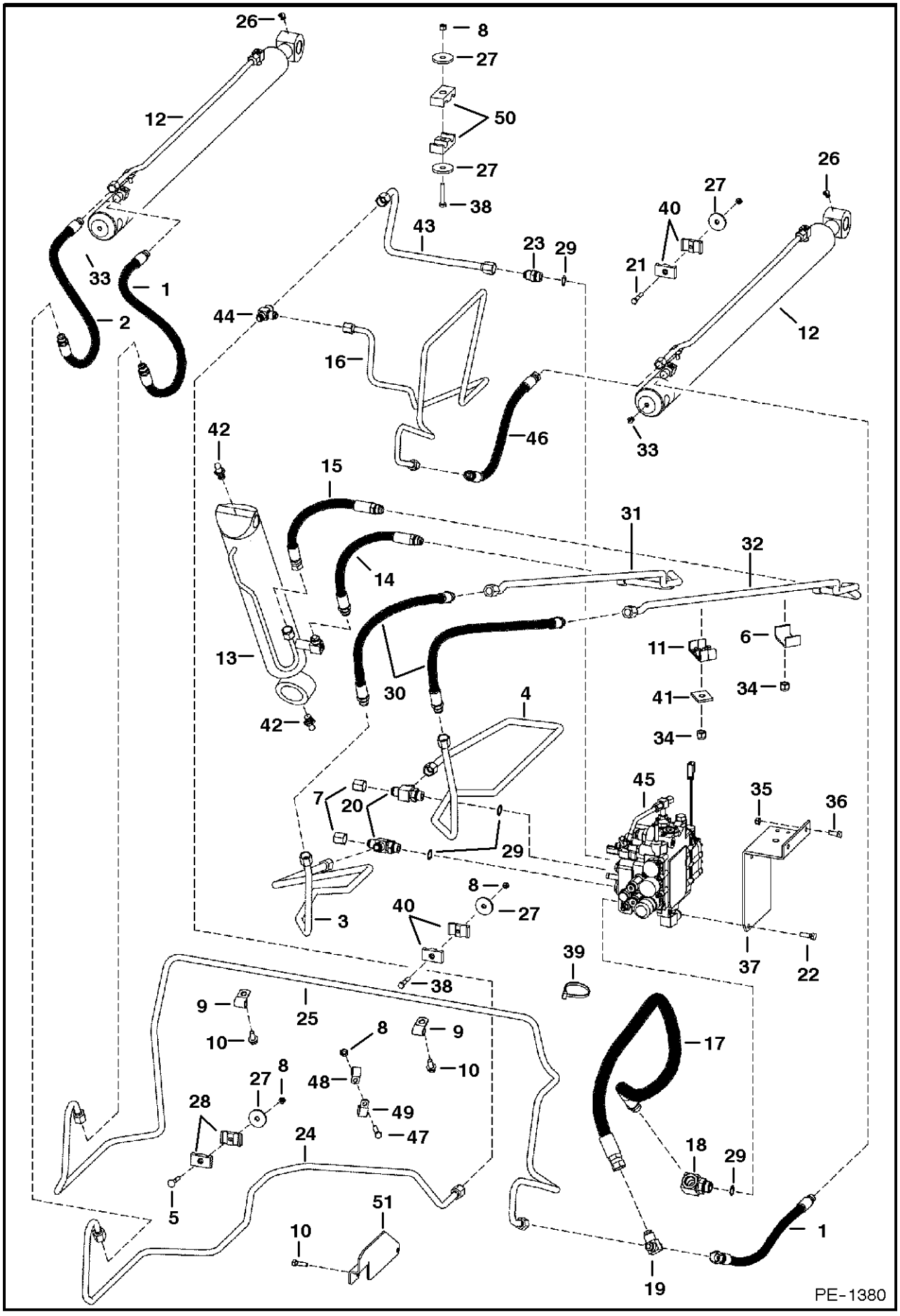

# HYDRAULIC CIRCUITRY

| Ref.N° | Part N° | Description | Remarks | Serial N° | Qty. |
|---|---|---|---|---|---|
| 1 | 6669460 | HOSE | | | 1 |
| 2 | 6669461 | HOSE | | | 1 |
| 3 | 6729780 | TUBE | | | 1 |
| 4 | 6719354 | TUBE | | | 1 |
| 5 | 10C-528 | BOLT | | | 2 |
| 6 | 6718754 | CLAMP | | | 1 |
| 7 | 36K-7 | CAP | | | 2 |
| 8 | 85D-5 | NUT | | | 4 |
| 9 | 30H-32 | CLAMP | | | 2 |
| 10 | 84G-3712 | BOLT | | | 2 |
| 11 | 6717933 | CLAMP | | | 1 |
| 12 | | CYLINDER | lift - See Page LIFT CYLINDER(1) | | 2 |
| 13 | | CYLINDER | tilt - See Page TILT CYLINDER(3) | | 1 |
| 14 | 6578773 | HOSE | | | 1 |
| 15 | 6578774 | HOSE | | | 1 |
| 16 | 6729898 | TUBELINE | lift | | 1 |
| 17 | 6729601 | HOSE | danger - lift arm | | 1 |
| 17 | 6809511 | DECAL | danger | | 2 |
| 18 | 6729357 | ELBOW | W/Ref. HYDRAULIC CIRCUITRY(29) - tapered boss face | | 1 |
| 19 | 6716061 | TEE | | | 1 |
| 20 | 6715294 | TEE | W/Ref. HYDRAULIC CIRCUITRY(29) | | 1 |
| 20 | 97K-10 | O-RING | flared end | | x |
| 21 | 84G-3728 | BOLT | | | 2 |
| 22 | 17C-620 | BOLT | | | 2 |
| 23 | 15KV-7 | ADAPTER | W/Ref. HYDRAULIC CIRCUITRY(29) - tapered boss face | | 2 |
| 23 | 97K-10 | O-RING | flared end | | x |
| 24 | 6729937 | TUBELINE | lift | | 1 |
| 25 | 6729432 | TUBELINE | lift | | 1 |
| 26 | 12H-15 | GREASE ZERK | | | 2 |
| 27 | 872229 | WASHER | | | 5 |
| 28 | 6701892 | CLAMP | | | 4 |
| 29 | 99K-10 | O-RING | tapered boss face | | x |
| 30 | 6669674 | HOSE | | | 2 |
| 31 | 6718161 | TUBE | | | 1 |
| 32 | 6718162 | TUBE | | | 1 |
| 33 | 11H-15 | GREASE ZERK | | | 2 |
| 34 | 59D-8 | NUT | | | 1 |
| 35 | 85D-6 | NUT | | | 2 |
| 36 | 17C-616 | BOLT | | | 2 |
| 37 | 6727750 | BRACKET | | | 1 |
| 38 | 17C-528 | BOLT | | | 3 |
| 39 | 6624289 | STA-STRAP | | | 1 |
| 40 | 6701893 | CLAMP | | | 4 |
| 41 | 6553709 | WASHER | rectangular | | 1 |
| 42 | 10H-25 | GREASE ZERK | | | 2 |
| 43 | 6718878 | TUBE | | | 1 |
| 44 | 6718911 | TEE | | | 1 |
| 45 | | VALVE | See Page HYDRAULIC CONTROL VALVE(4) | | 1 |
| 46 | 6727810 | HOSE | | | 1 |

# HYDRAULIC CIRCUITRY

| Ref.N° | Part N° | Description | Remarks | Serial N° | Qty. |
|---|---|---|---|---|---|
| 47 | 17C-516 | BOLT | | | 1 |
| 48 | 30H-30 | CLAMP | | | 1 |
| 49 | 30H-64 | CLAMP | | | 1 |
| 50 | 6729605 | CLAMP | | | 2 |
| 51 | 6730024 | SHIELD | | | 1 |

# HYDRAULIC CIRCUITRY
## (W/Bucket Positioning Valve)

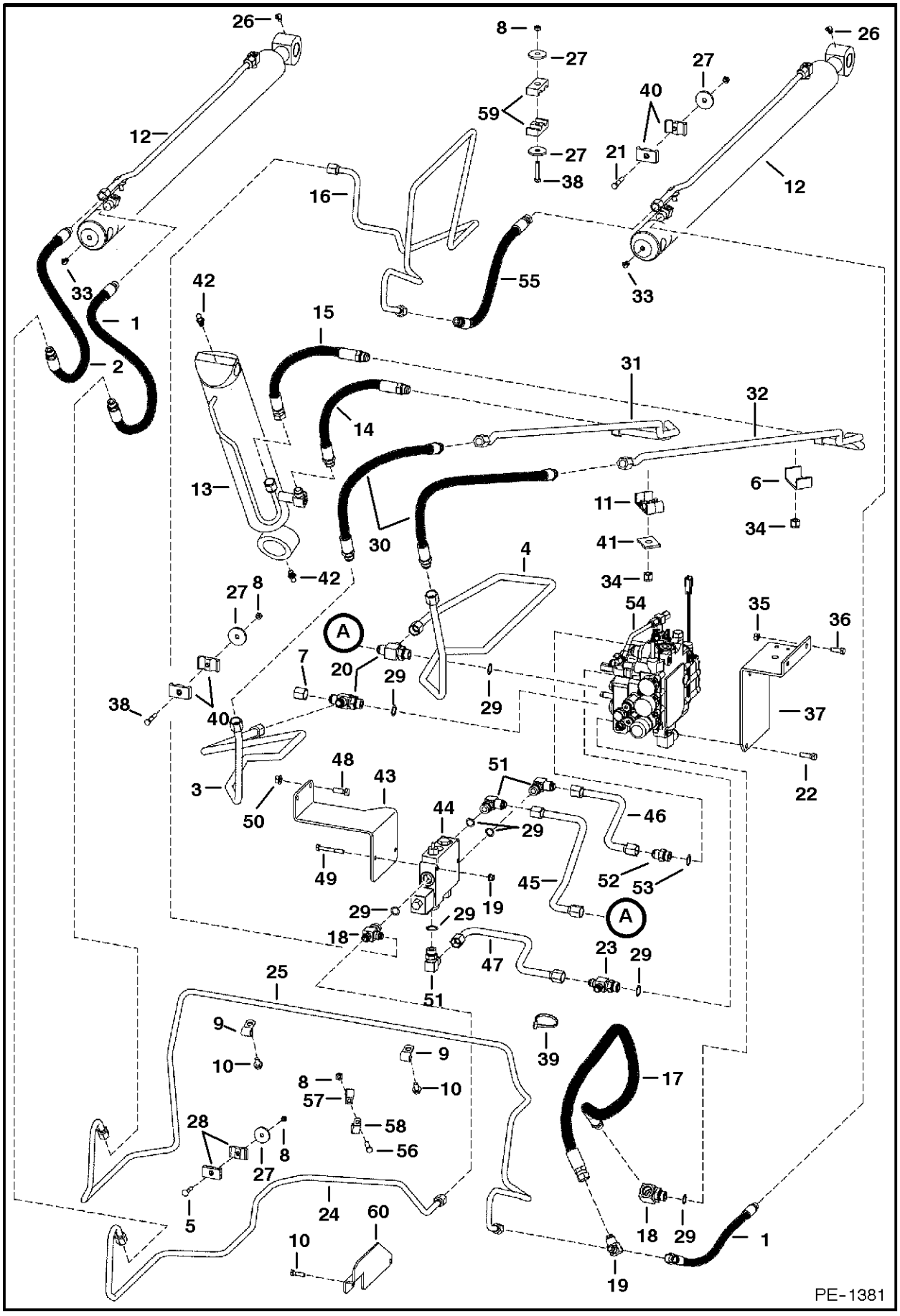

# HYDRAULIC CIRCUITRY

| Ref.N° | Part N° | Description | Remarks | Serial N° | Qty. |
|---|---|---|---|---|---|
| 1 | 6669460 | HOSE | | | 1 |
| 2 | 6669461 | HOSE | | | 1 |
| 3 | 6729780 | TUBE | | | 1 |
| 4 | 6719354 | TUBE | | | 1 |
| 5 | 10C-528 | BOLT | | | 1 |
| 6 | 6718754 | CLAMP | | | 4 |
| 7 | 36K-7 | CAP | | | 2 |
| 8 | 85D-5 | NUT | | | 4 |
| 9 | 30H-32 | CLAMP | | | 2 |
| 10 | 84G-3712 | BOLT | | | 2 |
| 11 | 6717933 | CLAMP | | | 1 |
| 12 | | CYLINDER | lift - See Page LIFT CYLINDER(1) | | 2 |
| 13 | | CYLINDER | tilt - See Page TILT CYLINDER(3) | | 1 |
| 14 | 6578773 | HOSE | | | 1 |
| 15 | 6578774 | HOSE | | | 1 |
| 16 | 6729898 | TUBELINE | lift | | 1 |
| 17 | 6729601 | HOSE | danger - lift arm | | 1 |
| 17 | 6809511 | DECAL | danger | | 2 |
| 18 | 6729357 | ELBOW | W/Ref. HYDRAULIC CIRCUITRY(29) - tapered boss face | | 1 |
| 19 | 6716061 | TEE | | | 4 |
| 20 | 6715294 | TEE | W/Ref. HYDRAULIC CIRCUITRY(29) | | 2 |
| 20 | 97K-10 | O-RING | flared end | | x |
| 21 | 84G-3728 | BOLT | | | 2 |
| 22 | 6717378 | BOLT | | | 2 |
| 23 | 15KV-7 | ADAPTER | W/Ref. HYDRAULIC CIRCUITRY(29) - tapered boss face | | 2 |
| 23 | 97K-10 | O-RING | flared end | | x |
| 24 | 6729937 | TUBELINE | lift | | 1 |
| 25 | 6729432 | TUBELINE | lift | | 1 |
| 26 | 12H-15 | GREASE ZERK | | | 2 |
| 27 | 872229 | WASHER | | | 5 |
| 28 | 6701892 | CLAMP | | | 4 |
| 29 | 99K-10 | O-RING | tapered boss face | | x |
| 30 | 6669674 | HOSE | | | 2 |
| 31 | 6718161 | TUBE | | | 1 |
| 32 | 6718162 | TUBE | | | 1 |
| 33 | 11H-15 | GREASE ZERK | | | 2 |
| 34 | 59D-8 | NUT | | | 1 |
| 35 | 85D-6 | NUT | | | 2 |
| 36 | 17C-616 | BOLT | | | 2 |
| 37 | 6727750 | BRACKET | | | 1 |
| 38 | 17C-528 | BOLT | | | 2 |
| 39 | 6624289 | STA-STRAP | | | 1 |
| 40 | 6701893 | CLAMP | | | 4 |
| 41 | 6553709 | WASHER | rectangular | | 1 |
| 42 | 10H-25 | GREASE ZERK | | | x |
| 43 | 6718726 | MOUNT | | | 1 |
| 44 | | VALVE | bucket positioning - See Page BUCKET POSITIONING VALVE(5) | | 1 |
| 45 | 6729794 | TUBELINE | tilt | | 1 |

# HYDRAULIC CIRCUITRY

| Ref.N° | Part N° | Description | Remarks | Serial N° | Qty. |
|---|---|---|---|---|---|
| 46 | 6718832 | TUBELINE | tilt | | 1 |
| 47 | 6718877 | TUBELINE | lift | | 1 |
| 48 | 17C-632 | BOLT | | | 2 |
| 49 | 17C-540 | BOLT | | | 2 |
| 50 | 83D-6 | NUT | | | 2 |
| 51 | 17KV-7 | ELBOW | W/Ref. HYDRAULIC CIRCUITRY(29) | | 3 |
| 51 | 97K-10 | O-RING | flared end | | x |
| 52 | 15KN-8 | ADAPTER | W/Ref. HYDRAULIC CIRCUITRY(53) | | 2 |
| 52 | 97K-12 | O-RING | flared end | | x |
| 53 | 99K-12 | O-RING | tapered boss face | | x |
| 54 | | VALVE | control - See Page HYDRAULIC CONTROL VALVE(4) | | 1 |
| 55 | 6727810 | HOSE | | | 1 |
| 56 | 17C-516 | BOLT | | | 1 |
| 57 | 30H-30 | CLAMP | | | 1 |
| 58 | 30H-64 | CLAMP | | | 1 |
| 59 | 6729605 | CLAMP | | | 2 |
| 60 | 6730024 | SHIELD | | | 1 |

# MANUAL LIFT RELEASE SYSTEM

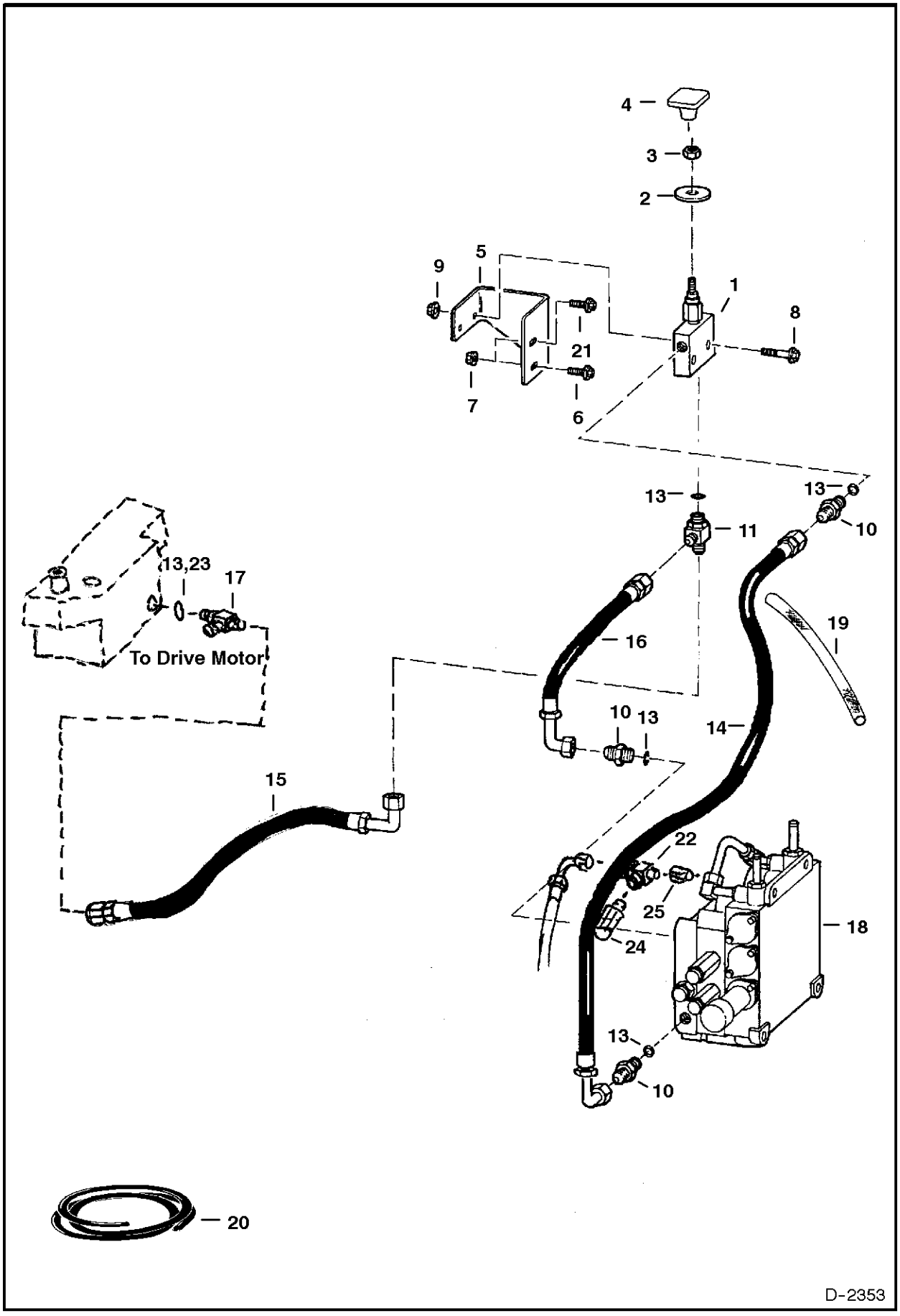

# MANUAL LIFT RELEASE SYSTEM

| Ref.N° | Part N° | Description | Remarks | Serial N° | Qty. |
|---|---|---|---|---|---|
| 1 | 6667844 | VALVE | manual lift - See Page MANUAL LIFT RELEASE VALVE(1) | | 1 |
| 2 | 6707101 | WASHER | neoprene | | 1 |
| 3 | 7D-4 | NUT | for 6667874 | | 1 |
| 4 | 6668913 | KNOB | | | 1 |
| 5 | 6718881 | BRACKET | | | 1 |
| 6 | 35C-624 | BOLT | | | 1 |
| 7 | 83D-6 | NUT | | | 2 |
| 8 | 17C-428 | BOLT | | | 2 |
| 9 | 83D-4 | NUT | | | 2 |
| 10 | 15KV-5 | ADAPTER | W/Ref. MANUAL LIFT RELEASE SYSTEM(13) | | 1 |
| 10 | 97K-6 | O-RING | flared end | | x |
| 11 | 21KV-5 | TEE | W/Ref. MANUAL LIFT RELEASE SYSTEM(13) - tapered boss face | | 1 |
| 12 | 36K-5 | CAP | | | 1 |
| 13 | 99K-6 | O-RING | tapered boss face | | x |
| 14 | 6729602 | HOSE | 21' (533mm) long - W/ danger decals | | 1 |
| 14 | 6809511 | DECAL | danger | | 2 |
| 15 | 6725430 | HOSE | | | 1 |
| 16 | 6706790 | HOSE | | | 1 |
| 17 | 21KV-6 | TEE | W/Ref. MANUAL LIFT RELEASE SYSTEM(13) - flat boss face | | 1 |
| 17 | 97K-8 | O-RING | flared end | | x |
| 18 | | CONTROL VALVE | See Page HYDRAULIC CONTROL VALVE(4) | | 1 |
| 19 | NAP | SHIELD | 21' (533mm) long - Order Ref. MANUAL LIFT RELEASE SYSTEM(20) | | 1 |
| 20 | 6650108 | SHIELD | bulk - 1.35' (33,5mm) I.D. - Sold Per foot | | x |
| 21 | 35C-616 | BOLT | | | 1 |
| 22 | 6718660 | TEE | | | 1 |
| 22 | 97K-6 | O-RING | flared end | | x |
| 23 | 99K-8 | O-RING | | | x |
| 24 | 6563922 | SNUBBER | | | 1 |
| 25 | 6672766 | CHECK VALVE | | | 1 |
| 26 | 6725090 | HOSE | | | 1 |
| 27 | 30H-30 | CLAMP | | | 1 |
| 28 | 30H-32 | CLAMP | | | 1 |

# AUXILIARY HYDRAULICS

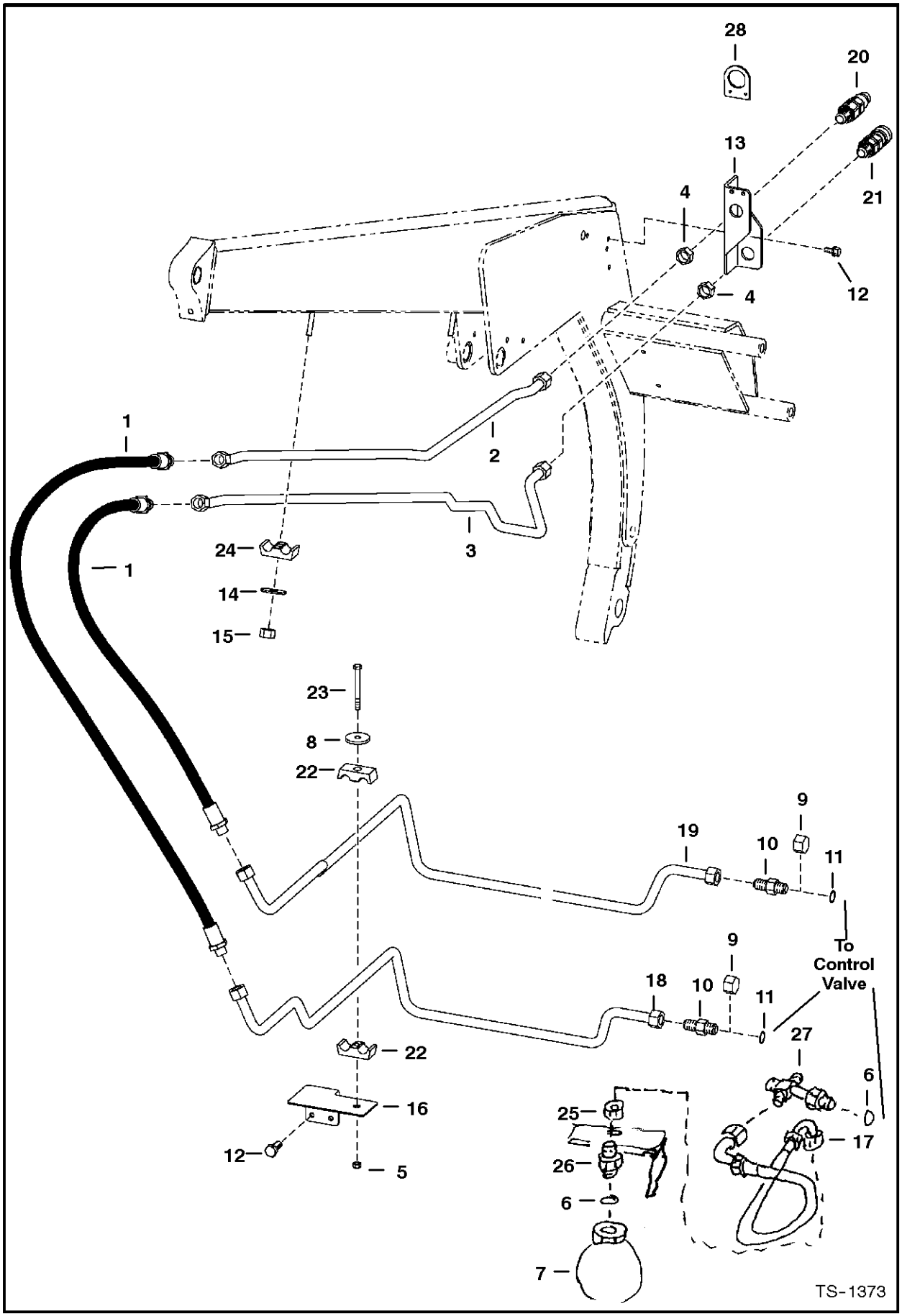

# AUXILIARY HYDRAULICS

| Ref.N° | Part N° | Description | Remarks | Serial N° | Qty. |
|---|---|---|---|---|---|
| 1 | 6729152 | HOSE | | | 2 |
| 2 | 6718158 | TUBELINE | | | 1 |
| 3 | 6718159 | TUBELINE | | | 1 |
| 4 | 86F-8 | NUT | | | 4 |
| 5 | 85D-6 | NUT | | | 1 |
| 6 | 99K-6 | O-RING | tapered boss face | | x |
| 7 | 6676923 | ACCUMULATOR | | | 1 |
| 8 | 872229 | WASHER | | | 1 |
| 9 | 36K-8 | CAP | W/O front aux. option | | 2 |
| 10 | 15KN-8 | ADAPTER | W/Ref. AUXILIARY HYDRAULICS(11) - tapered boss face | | 2 |
| 10 | 97K-12 | O-RING | flared end | | 2 |
| 11 | 99K-12 | O-RING | tapered boss face | | x |
| 12 | 84G-3716 | BOLT | | | 4 |
| 13 | 6714665 | MOUNT | | | 1 |
| 14 | 6553709 | WASHER | rectangular | | 2 |
| 15 | 59D-6 | NUT | | | 2 |
| 16 | 6712599 | BRACKET | | | 1 |
| 17 | 6727971 | HOSE | | | 1 |
| 18 | 6718792 | TUBELINE | | | 1 |
| 19 | 6718793 | TUBELINE | | | 1 |
| 20 | 6676445 | COUPLER | male | | 1 |
| 21 | 6676447 | COUPLER | female | | 1 |
| 22 | 6592506 | CLAMP | | | 2 |
| 23 | 17C-640 | BOLT | | | 1 |
| 24 | 6717933 | CLAMP | 4 tubes | | 2 |
| 25 | 85D-5 | NUT | | | 1 |
| 26 | 6716089 | CONNECTOR | W/Ref. AUXILIARY HYDRAULICS(6) | | 1 |
| 26 | 97K-6 | O-RING | flared end | | x |
| 27 | 6727931 | CROSS | W/Ref. AUXILIARY HYDRAULICS(6) | | 1 |

# AUXILIARY HYDRAULICS
## (S/N 5196 11124, 5197 11004 & Above)

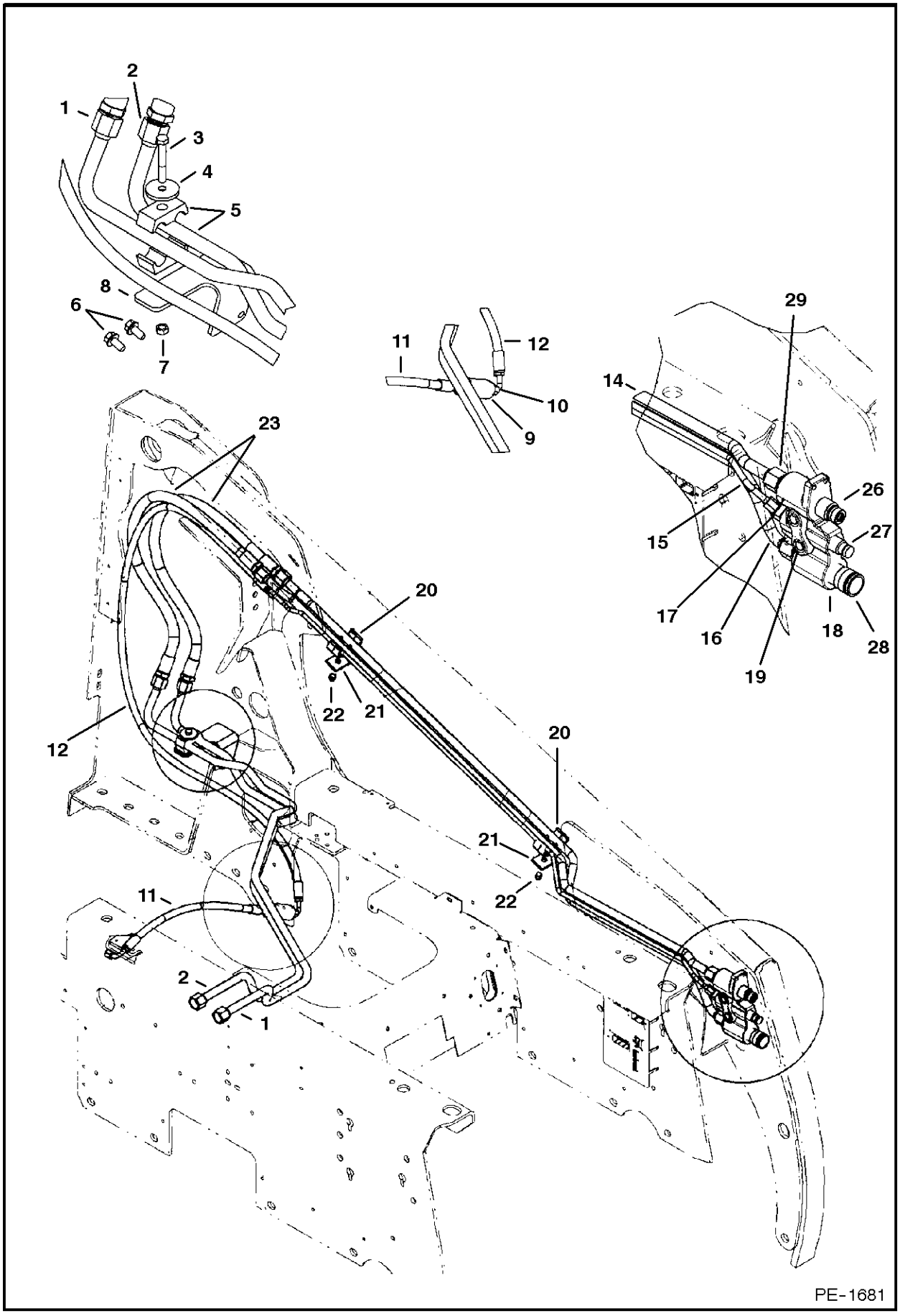

# AUXILIARY HYDRAULICS

| Ref.N° | Part N° | Description | Remarks | Serial N° | Qty. |
|---|---|---|---|---|---|
| 1 | 6718792 | TUBELINE | | | 1 |
| 2 | 6718793 | TUBELINE | | | 1 |
| 3 | 17C-640 | BOLT | | | 1 |
| 4 | 872229 | WASHER | | | 1 |
| 5 | 6592506 | CLAMP | | | 2 |
| 6 | 84G-3712 | BOLT | | | 4 |
| 7 | 85D-6 | NUT | | | 1 |
| 8 | 6712599 | BRACKET | | | 1 |
| 9 | 6661022 | FILTER | See Page HYDROSTATIC OIL FILTER(10) | | 1 |
| 10 | 15KV-5 | ADAPTER | W/Ref. AUXILIARY HYDRAULICS(13) - tapered boss face | | 2 |
| 10 | 97K-6 | O-RING | flared end | | x |
| 11 | 6712885 | HOSE | | | 1 |
| 12 | 6725424 | HOSE | | | 1 |
| 13 | 99K-6 | O-RING | tapered boss face | | x |
| 14 | 6730032 | TUBELINE | | | 1 |
| 15 | 6730031 | TUBELINE | | | 1 |
| 16 | 6730033 | TUBELINE | | | 1 |
| 17 | 18KN-5 | ELBOW | 45 degree - W/Ref. AUXILIARY HYDRAULICS(13) | | 1 |
| 17 | 97K-6 | O-RING | flared end | | x |
| 18 | 6678076 | BLOCK ASSY. | coupler | | 1 |
| 19 | 84G-3740 | BOLT | | | 2 |
| 20 | 6717951 | CLAMP | | | 2 |
| 21 | 6553709 | WASHER | | | 2 |
| 22 | 59D-6 | NUT | | | 2 |
| 23 | 6729152 | HOSE | | | 2 |
| 24 | 6812646 | ADAPTER | W/Ref. AUXILIARY HYDRAULICS(25) - tapered boss face | | 2 |
| 25 | 99K-12 | O-RING | | | x |
| 26 | 6679837 | KIT | male | | 1 |
| 26 | 6679841 | SEAL KIT | | | 1 |
| 27 | 6679838 | KIT | male - casedrain - W/ spring, valve, seal & O-ring | | 1 |
| 27 | 6679840 | SEAL KIT | | | 1 |
| 28 | 6679839 | KIT | female | | 1 |
| 29 | 6679836 | KIT | W/ spring & Ref. AUXILIARY HYDRAULICS(25) | | 2 |

# TILT CYLINDER

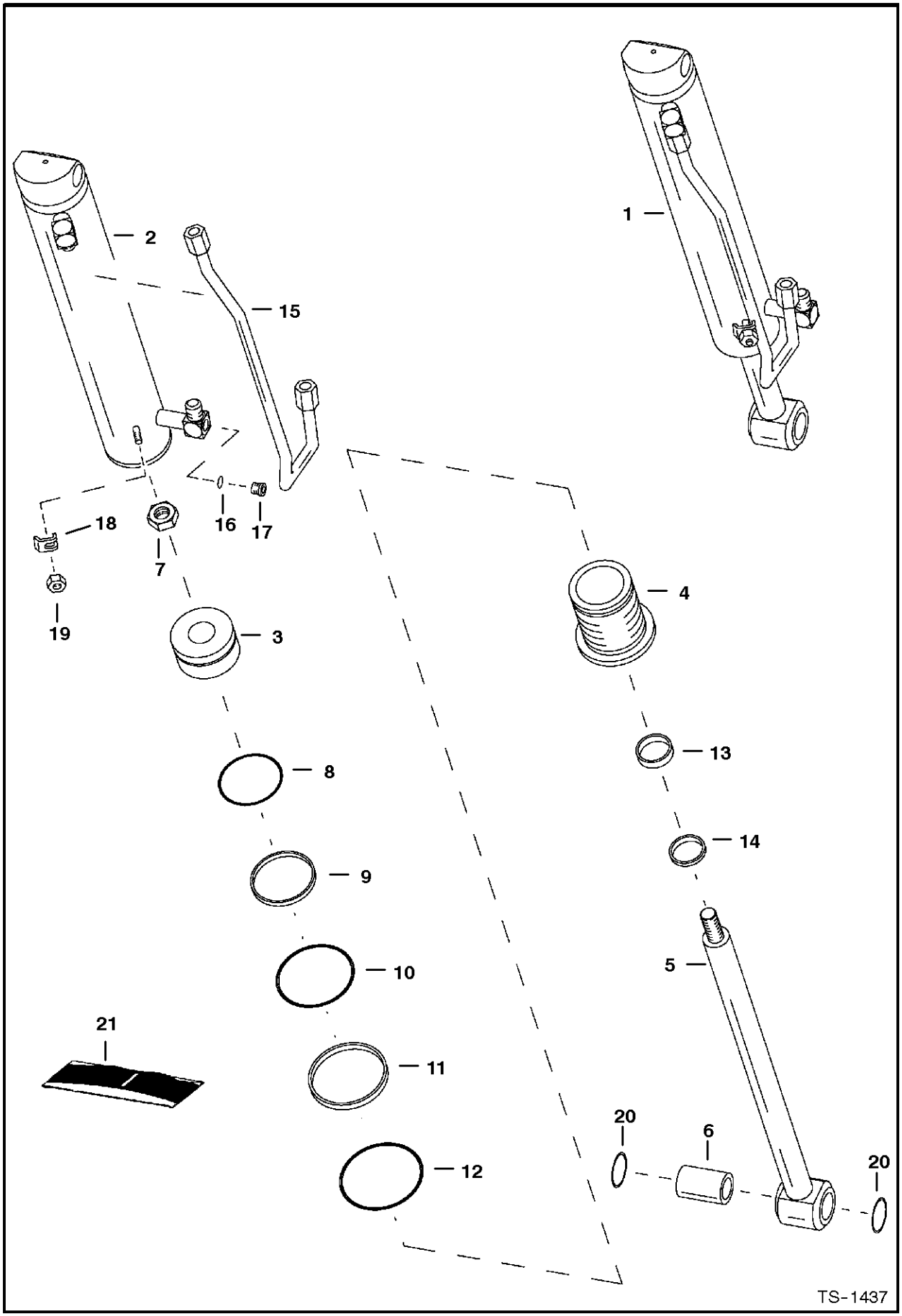

# TILT CYLINDER

| Ref.N° | Part N° | Description | Remarks | Serial N° | Qty. |
|---|---|---|---|---|---|
| 1 | 6804674 | CYLINDER | tilt - Ref. TILT CYLINDER(2)-TILT CYLINDER(20) | | 1 |
| 2 | 6596974 | CASE | 3.5' (89mm) I.D. | | 1 |
| 3 | 6800468 | PISTON | | | 1 |
| 4 | 6800469& | HEAD | | | 1 |
| 5 | 6804678 | ROD | W/Ref. TILT CYLINDER(6) | | 1 |
| 6 | 6805150 | BUSHING | W/ grease hole | | 1 |
| 7 | 6804592 | NUT | | | 1 |
| 8 | 54K-30300 | O-RING | | | 1 |
| 9 | 1530265 | SEAL | | | 1 |
| 10 | 54K-60304 | O-RING | | | 1 |
| 11 | 73K-338 | RING | backAup | | 1 |
| 12 | 58K-238 | O-RING | | | 1 |
| 13 | 6669267 | SEAL | | | 1 |
| 14 | 6669268 | SEAL | wiper | | 1 |
| 15 | 6532590 | TUBE | | | 1 |
| 16 | 95K-6 | O-RING | tapered boss face | | 2 |
| 17 | 90KV-5 | PLUG | W/Ref. TILT CYLINDER(16) - tapered boss face | | 2 |
| 18 | 6562266 | CLAMP | | | 1 |
| 19 | 95D-6 | NUT | | | 1 |
| 20 | 225855 | SEAL | | | 2 |
| 21 | 6804615 | SEAL KIT | Ref. TILT CYLINDER(7)-TILT CYLINDER(14) | | 1 |
| 22 | 10H-35 | GREASE ZERK | | | 1 |

# LIFT CYLINDER

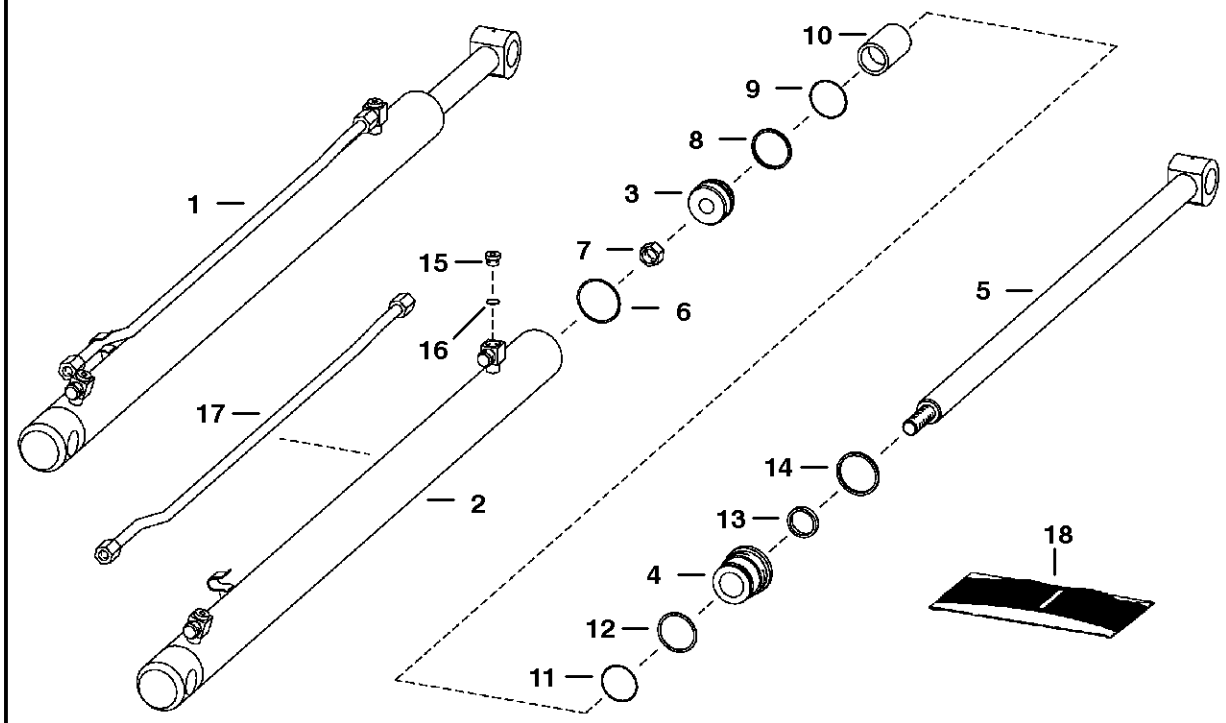


TS-1451

# LIFT CYLINDER

| Ref.N° | Part N° | Description | Remarks | Serial N° | Qty. |
|---|---|---|---|---|---|
| 1 | '6800973 | CYLINDER | 'Ref. LIFT CYLINDER(2)-LIFT CYLINDER(6) | | 1 |
| 2 | 6800975 | CASE | | | 1 |
| 3 | 6667291 | PISTON | W/Ref. LIFT CYLINDER(8) & LIFT CYLINDER(9) - W/ nonAreplaceable wear sleeves | | 1 |
| 4 | 6597009 | HEAD | | | 1 |
| 5 | 6597015 | ROD | | | 1 |
| 6 | 58K-230 | O-RING | | | 1 |
| 7 | 92D-16 | NUT | | | 1 |
| 8 | 1522534 | RING | | | 1 |
| 9 | 54K-30202 | O-RING | | | 1 |
| 10 | 6592776 | SPACER | | | 1 |
| 11 | 54K-40208 | O-RING | | | 1 |
| 12 | 80K-228 | WASHER | backAup | | 1 |
| 13 | 6667327 | SEAL | rod | | 1 |
| 14 | 6666544 | SEAL | wiper | | 1 |
| 15 | 90KV-5 | PLUG | W/Ref. LIFT CYLINDER(16) - tapered boss face | | 2 |
| 16 | 95K-6 | O-RING | tapered boss face | | 2 |
| 17 | 6800974 | TUBE | | | 1 |
| 18 | 6803312 | SEAL KIT | Ref. LIFT CYLINDER(7)-LIFT CYLINDER(14) | | 1 |

# STEERING CYLINDER

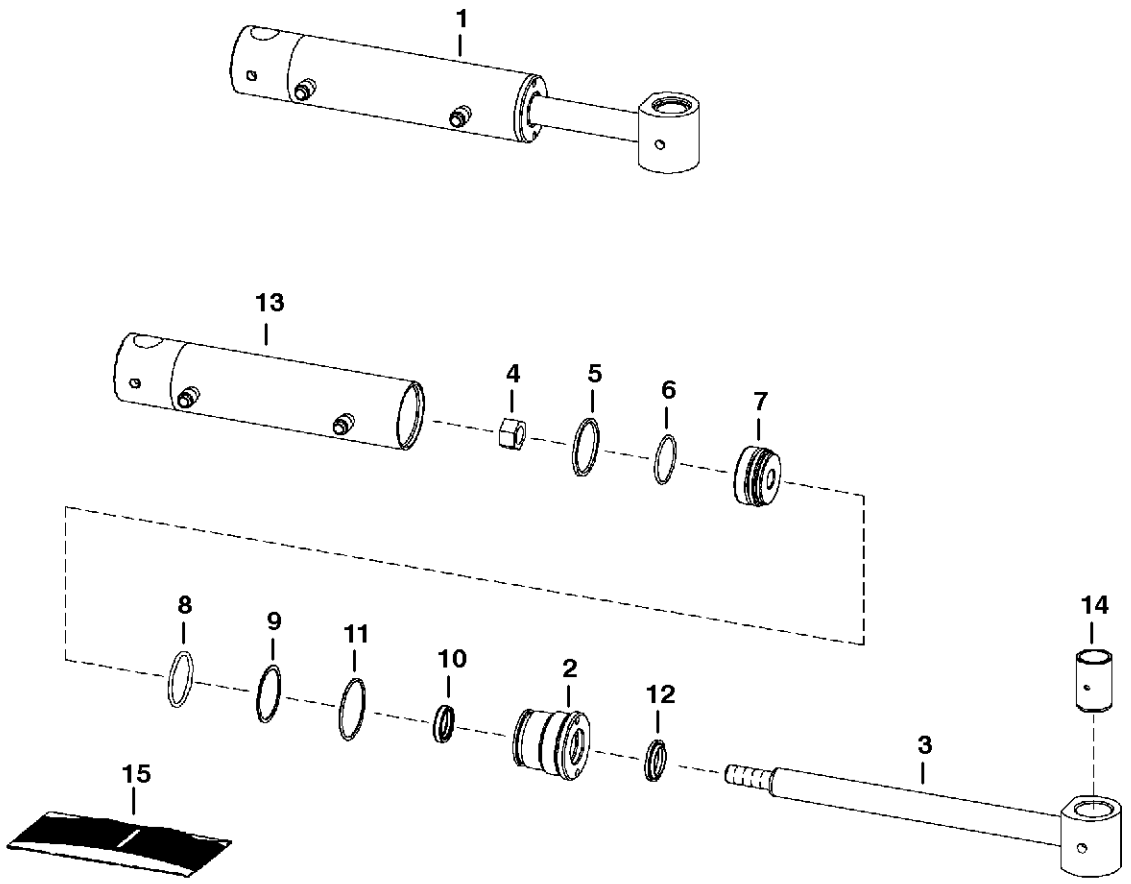


PE-1394

# STEERING CYLINDER

| Ref.N° | Part N° | Description | Remarks | Serial N° | Qty. |
|---|---|---|---|---|---|
| 1 | 6809818 | CYLINDER | Ref. STEERING CYLINDER(2)-STEERING CYLINDER(13) | | 1 |
| 2 | 6538595 | HEAD | | | 1 |
| 3 | 6809819 | SHAFT | | | 1 |
| 4 | 92D-10 | NUT | | | 1 |
| 5 | 6516231 | O-RING | | | 1 |
| 6 | 54K-30118 | RING | | | 1 |
| 7 | 6810684 | PISTON | | | 1 |
| 8 | 54K-40124 | O-RING | | | 1 |
| 9 | 73K-224 | WASHER | backAup | | 1 |
| 10 | 6667323 | SEAL | | | 1 |
| 11 | 58K-136 | O-RING | | | 1 |
| 12 | 6666542 | SEAL | rod | | 1 |
| 13 | 6809671 | CASE | | | 1 |
| 14 | 6809825 | BUSHING | | | 1 |
| 15 | 6803474 | SEAL KIT | seal - Ref. STEERING CYLINDER(4)-STEERING CYLINDER(6) & STEERING CYLINDER(8)-STEERING CYLINDER(12) | | 1 |

# MANUAL LIFT RELEASE VALVE

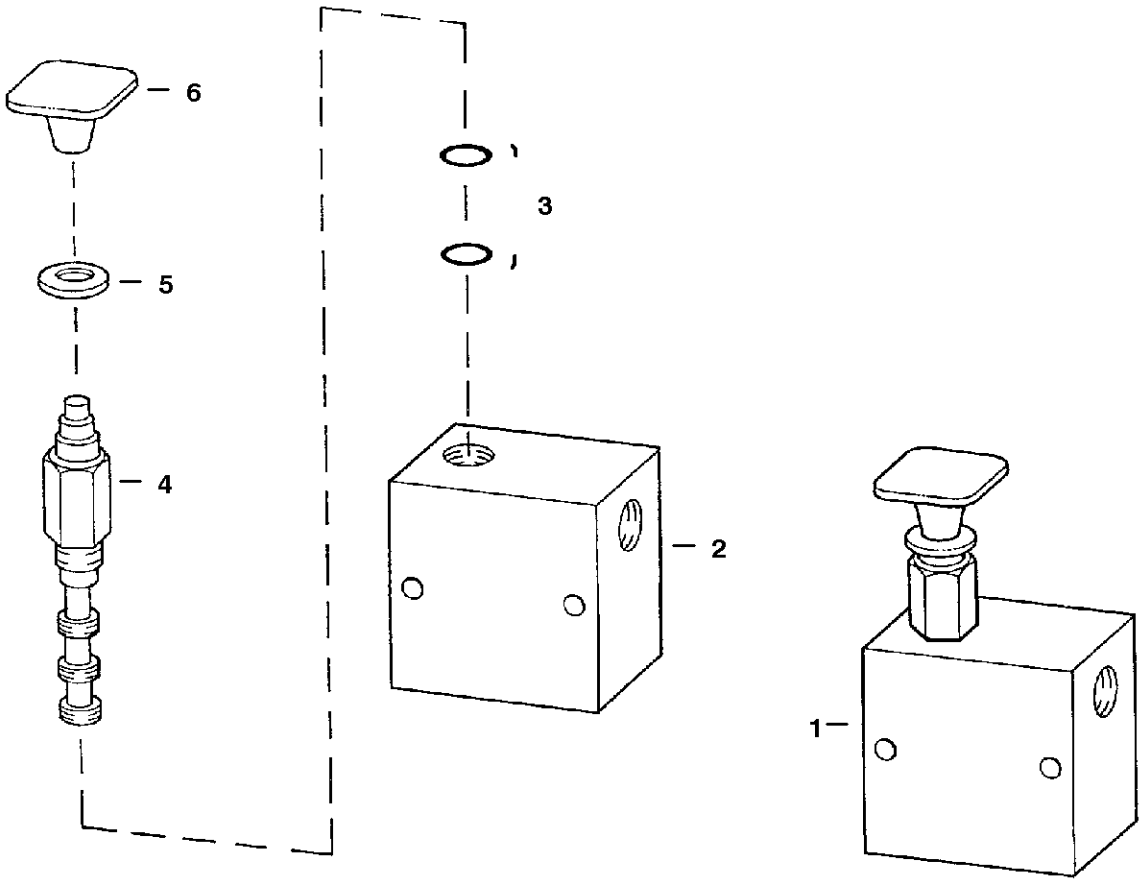


PE-1547

# MANUAL LIFT RELEASE VALVE

| Ref.N° | Part N° | Description | Remarks | Serial N° | Qty. |
|---|---|---|---|---|---|
| 1 | 6667844 | VALVE | Ref. MANUAL LIFT RELEASE VALVE(2)-MANUAL LIFT RELEASE VALVE(4) | | 1 |
| 2 | NSS | BLOCK | | | 1 |
| 3 | 6669087 | SEAL KIT | | | 1 |
| 4 | 6669085 | VALVE | | | 1 |
| 5 | 6707101 | WASHER | neoprene | | 1 |
| 6 | 6668913 | KNOB | red | | 1 |

# HYDRAULIC CONTROL VALVE

**NOTE:** Spools are available for service. The boot end of the lift and tilt spool is stamped W/# 1, 2 or painted red or green respectively. Reference S/L Dated 20 Feb. 1995.

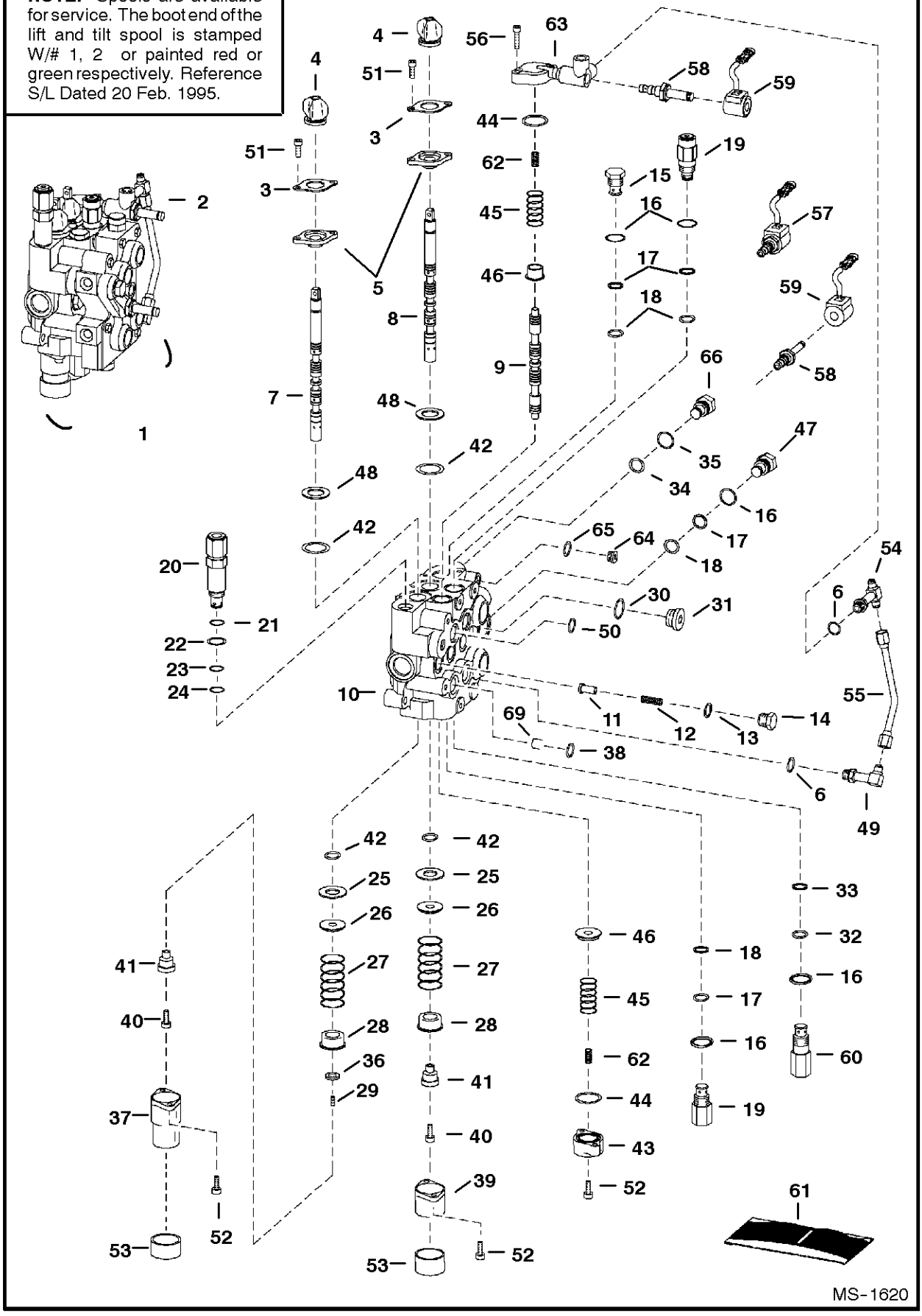

# HYDRAULIC CONTROL VALVE

| Ref.N° | Part N° | Description | Remarks | Serial N° | Qty. |
|---|---|---|---|---|---|
| 1 | 6810246 | VALVE | W/ fittings - Ref. HYDRAULIC CONTROL VALVE(2)-HYDRAULIC CONTROL VALVE(56) | | 1 |
| 2 | 6628571 | VALVE | AHC - BICS control - See Page BICS CONTROL VALVE(1) | | 1 |
| 3 | 6589564 | RETAINER | | | 2 |
| 4 | 6587763 | BOOT | | | 2 |
| 5 | 6589565 | RETAINER | | | 2 |
| 6 | 99K-6 | O-RING | tapered boss face | | x |
| 7 | 6677660 | SPOOL | lift - # 1 - SEE NOTE | | 1 |
| 7 | 6677661 | SPOOL | lift - # 2 -SEE NOTE | | 1 |
| 8 | 6677662 | SPOOL | tilt - # 1 - SEE NOTE | | 1 |
| 8 | 6677663 | SPOOL | tilt - # 2 - SEE NOTE | | 1 |
| 9 | 6588074 | SPOOL | auxiliary - SEE NOTE | | 3 |
| 10 | NSS | BODY | | | 1 |
| 11 | 6592115 | SEAT | load check | | 3 |
| 12 | 6592117 | SPRING | | | 3 |
| 13 | 79K-8 | O-RING | | | 3 |
| 14 | 6592116 | NUT | load check - W/Ref. HYDRAULIC CONTROL VALVE(13) | | 3 |
| 15 | 6667549 | VALVE | antiAcavity check - W/Ref. HYDRAULIC CONTROL VALVE(16)-HYDRAULIC CONTROL VALVE(18) | | 1 |
| 16 | 79K-10 | O-RING | | | 2 |
| 17 | 80K-14 | WASHER | backAup | | 5 |
| 18 | 58K-14 | O-RING | backAup washer required | | 5 |
| 18 | 6677106 | O-RING | backAup washer not required | | 5 |
| 19 | 6673184 | VALVE | port relief - W/Ref. HYDRAULIC CONTROL VALVE(16)-HYDRAULIC CONTROL VALVE(18) | | 2 |
| 20 | 6676198 | VALVE | main relief - W/Ref. HYDRAULIC CONTROL VALVE(21)-HYDRAULIC CONTROL VALVE(24) | | 1 |
| 21 | 58K-17 | O-RING | | | 1 |
| 22 | 6665569 | WASHER | backAup | | 1 |
| 23 | 25K-20016 | O-RING | | | 1 |
| 24 | 6665570 | RING | glide | | 1 |
| 25 | 6595663 | BUSHING | | | 2 |
| 26 | 6587523 | WASHER | | | 2 |
| 27 | 6587580 | SPRING | | | 2 |
| 28 | 6592100 | COLLAR | | | 2 |
| 29 | 6801167 | PLUG | spool | | 1 |
| 30 | 95K-12 | O-RING | | | 1 |
| 31 | 90KV-8 | PLUG | W/Ref. HYDRAULIC CONTROL VALVE(30) - socket head | | 1 |
| 32 | NSS | O-RING | Order Ref. HYDRAULIC CONTROL VALVE(60) - kit | | 1 |
| 33 | NSS | O-RING | Order Ref. HYDRAULIC CONTROL VALVE(60) - kit | | 1 |
| 34 | 58K-12 | O-RING | | | 1 |
| 35 | 79K-7 | O-RING | | | 1 |
| 36 | 54K-20002 | O-RING | | | 1 |
| 37 | 6803092 | BONNET | .625 flange | | 1 |
| 38 | 55K-212 | O-RING | | | 4 |
| 39 | 6587633 | BONNET | | | 1 |
| 40 | 30G-416 | SCREW | | | 2 |
| 41 | 6592109 | ADAPTER | | | 1 |
| 42 | 6665846 | SEAL | lip | | 4 |

# HYDRAULIC CONTROL VALVE

| Ref.N° | Part N° | Description | Remarks | Serial N° | Qty. |
|---|---|---|---|---|---|
| 43 | 6588781 | END CAP | .87' thick | | 2 |
| 44 | 58K-124 | O-RING | | | 2 |
| 45 | 6596332 | SPRING | | | 2 |
| 46 | 6595951 | SLEEVE | | | 2 |
| 47 | 6592720 | PLUG | W/Ref. HYDRAULIC CONTROL VALVE(16)-HYDRAULIC CONTROL VALVE(18) | | 1 |
| 48 | 58K-127 | O-RING | | | 2 |
| 49 | 6727931 | CROSS | W/Ref. HYDRAULIC CONTROL VALVE(6) | | 1 |
| 49 | 97K-6 | O-RING | flared end | | x |
| 50 | 55K-204 | O-RING | | | 1 |
| 51 | 29G-412 | SCREW | | | 4 |
| 52 | 29G-416 | SCREW | 1' long | | 8 |
| 53 | 6662848 | CAP | | | 2 |
| 54 | 6805696 | TEE | W/Ref. HYDRAULIC CONTROL VALVE(6) | | 2 |
| 54 | 97K-6 | O-RING | flared end | | x |
| 55 | 6806496 | TUBELINE | | | 1 |
| 56 | 6800124 | RESTRICTOR | .183/.187 | | 1 |
| 57 | 6677201 | SOLENOID | W/Ref. HYDRAULIC CONTROL VALVE(58) & HYDRAULIC CONTROL VALVE(59) | | 2 |
| 58 | 6676249 | STEM | | | 2 |
| 58 | 6586459 | SEAL KIT | | | x |
| 59 | 6717706 | COIL | W/ nut - pwm - 10 volt | | 2 |
| 60 | 6671632 | VALVE | (port relief & antiAcav. - W/Ref. HYDRAULIC CONTROL VALVE(16), HYDRAULIC CONTROL VALVE(32), HYDRAULIC CONTROL VALVE(33) - 2500 P | | 1 |
| 60 | 6673904 | SEAL KIT | W/Ref. HYDRAULIC CONTROL VALVE(16), HYDRAULIC CONTROL VALVE(32) & HYDRAULIC CONTROL VALVE(33) | | 1 |
| 61 | 6803605 | SEAL KIT | one spool - Ref. HYDRAULIC CONTROL VALVE(4), HYDRAULIC CONTROL VALVE(42) & HYDRAULIC CONTROL VALVE(51) | | x |
| 61 | 6809448 | SEAL KIT | complete - Ref. HYDRAULIC CONTROL VALVE(4), HYDRAULIC CONTROL VALVE(13), HYDRAULIC CONTROL VALVE(16)-HYDRAULIC CONTROL VALVE(18) | | x |
| 61 | 6661328 | SEAL KIT | main relief - Ref. HYDRAULIC CONTROL VALVE(21)-HYDRAULIC CONTROL VALVE(24) | | x |
| 61 | 6809425 | SEAL KIT | Ref. HYDRAULIC CONTROL VALVE(13) & HYDRAULIC CONTROL VALVE(16)-HYDRAULIC CONTROL VALVE(18) | | x |
| 61 | 6586459 | SEAL KIT | W/Ref. HYDRAULIC CONTROL VALVE(16),) HYDRAULIC CONTROL VALVE(32), HYDRAULIC CONTROL VALVE(33)) | | 1 |
| 62 | 6595131 | SPRING | .72' O.D. | | 2 |
| 63 | 6805651 | BLOCK | aux | | 1 |
| 64 | 90KV-5 | PLUG | W/Ref. HYDRAULIC CONTROL VALVE(65) | | 2 |
| 65 | 95K-6 | O-RING | | | 2 |
| 66 | 6806561 | PLUG | W/Ref. HYDRAULIC CONTROL VALVE(34) & HYDRAULIC CONTROL VALVE(35) | | 1 |

# BICS CONTROL VALVE

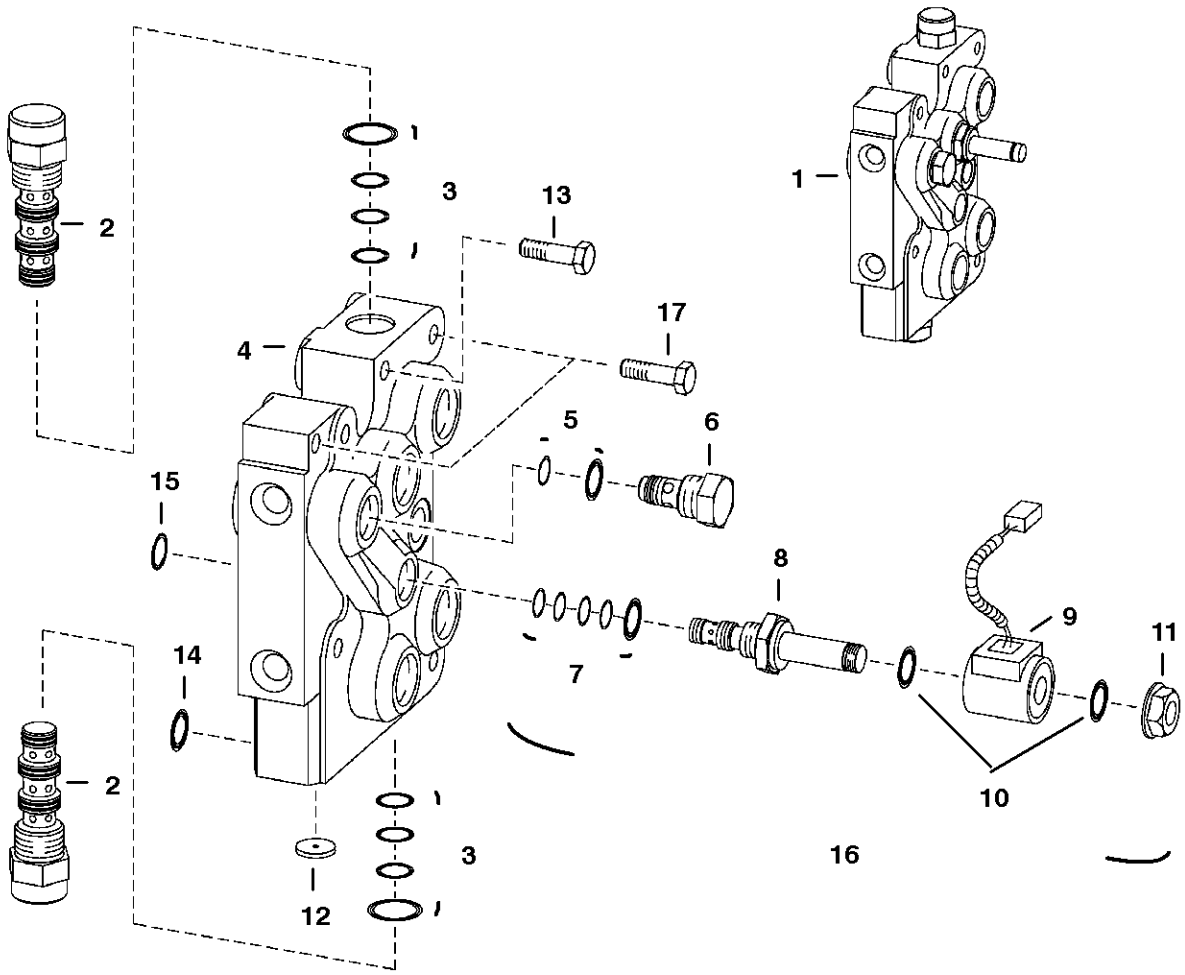


TS-1365

# BICS CONTROL VALVE

| Ref.N° | Part N° | Description | Remarks | Serial N° | Qty. |
|---|---|---|---|---|---|
| 1 | 6628571 | VALVE | Ref. BICS CONTROL VALVE(2)-BICS CONTROL VALVE(8) | | 1 |
| 2 | 6668765 | VALVE | pilot operated | | 2 |
| 3 | 6669734 | SEAL KIT | | | x |
| 4 | NSS | BODY | | | 1 |
| 5 | 6669733 | SEAL KIT | | | x |
| 6 | 6669057 | CHECK VALVE | filter | | 1 |
| 7 | 6669732 | SEAL KIT | | | x |
| 8 | 6667687 | STEM | solenoid valve | | 1 |
| 9 | 6671025 | COIL | | | 1 |
| 10 | 54K-20028 | O-RING | | | 2 |
| 11 | 6668820 | NUT | | | 1 |
| 12 | 6668791 | ORIFICE | | | 1 |
| 13 | 43C-532 | BOLT | | | 4 |
| 14 | 55K-212 | O-RING | | | 4 |
| 15 | 55K-204 | O-RING | | | 1 |
| 16 | 6672471 | SOLENOID | 'assy. - Ref. BICS CONTROL VALVE(7)-BICS CONTROL VALVE(11) | | 1 |
| 17 | 43C-524 | BOLT | | | 2 |

# BUCKET POSITIONING VALVE

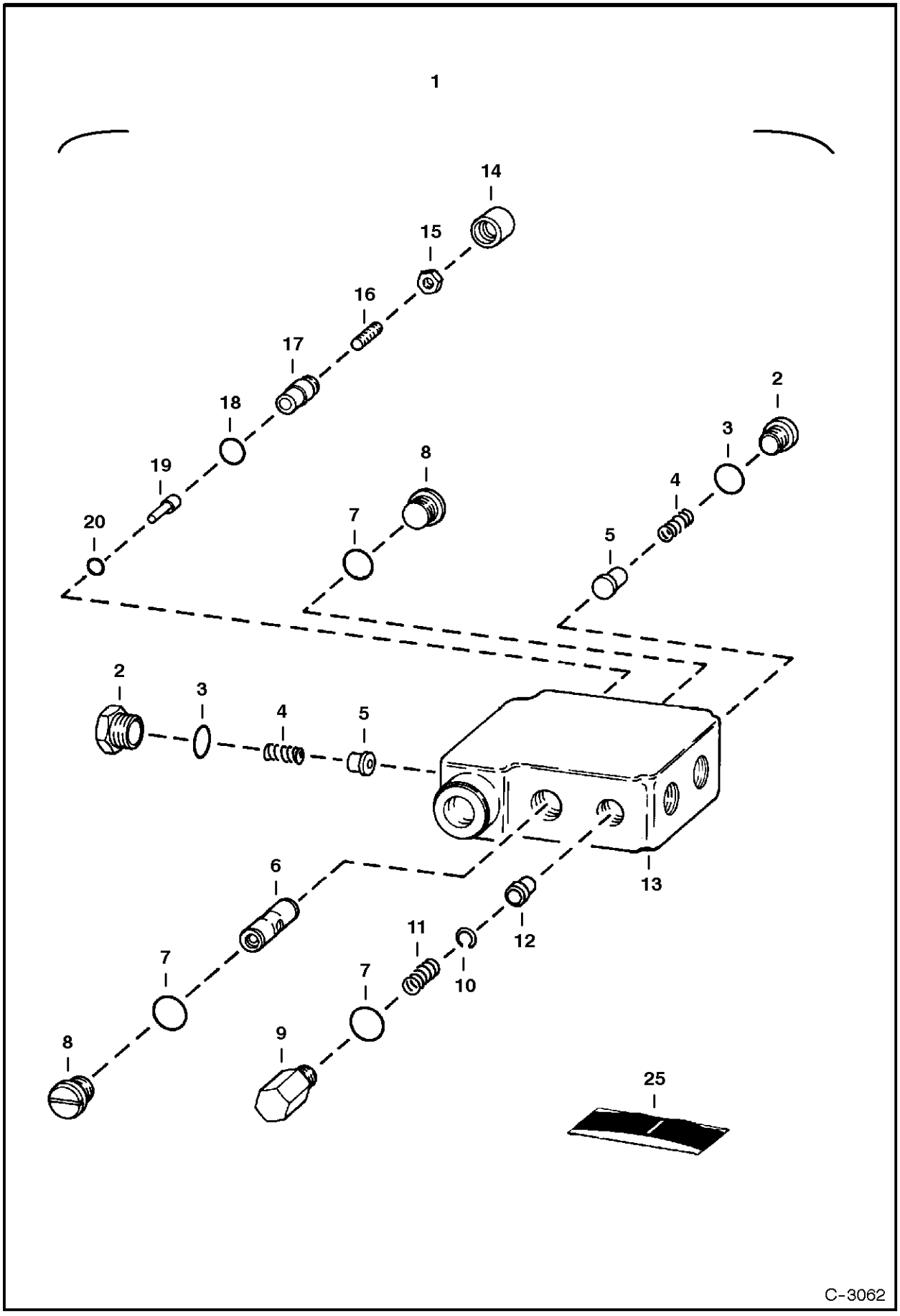

# BUCKET POSITIONING VALVE

| Ref.N° | Part N° | Description | Remarks | Serial N° | Qty. |
|---|---|---|---|---|---|
| 1 | 6666341 | VALVE | Ref. BUCKET POSITIONING VALVE(2)-BUCKET POSITIONING VALVE(20) | | 1 |
| 2 | 6647784 | PLUG | W/Ref. BUCKET POSITIONING VALVE(3) | | 2 |
| 3 | 79K-8 | O-RING | | | 2 |
| 4 | 6647785 | SPRING | | | 2 |
| 5 | 6647783 | LOAD CHECK | | | 2 |
| 6 | NSS | SPOOL | | | 1 |
| 7 | 58K-116 | O-RING | backAup | | 3 |
| 8 | 6647780 | PLUG | W/Ref. BUCKET POSITIONING VALVE(7) | | 2 |
| 9 | 6667176 | PLUG | W/Ref. BUCKET POSITIONING VALVE(7) | | 1 |
| 10 | 6667680 | SNAP RING | | | 1 |
| 11 | 6648294 | SPRING | | | 1 |
| 12 | NSS | SPOOL | | | 1 |
| 13 | NSS | BODY | | | 1 |
| 14 | 6667676 | COVER | | | 1 |
| 15 | 6631561 | NUT | | | 1 |
| 16 | 6648293 | SCREW | | | 1 |
| 17 | 6647778 | CAP | | | 1 |
| 18 | 6634874 | O-RING | | | 1 |
| 19 | 6647777 | PIN | | | 1 |
| 20 | 6667677 | O-RING | | | 1 |
| 21 | 6647786 | SEAL KIT | Ref. BUCKET POSITIONING VALVE(3), BUCKET POSITIONING VALVE(7), BUCKET POSITIONING VALVE(14), BUCKET POSITIONING VALVE(18) & BUCK | | 1 |

# HIGH HORSEPOWER HYDRAULICS
## ( Auxiliary Hydraulics )

**NOTE:** Electrical Attachment Kit is Standard on all High Flow Models. See Page 198

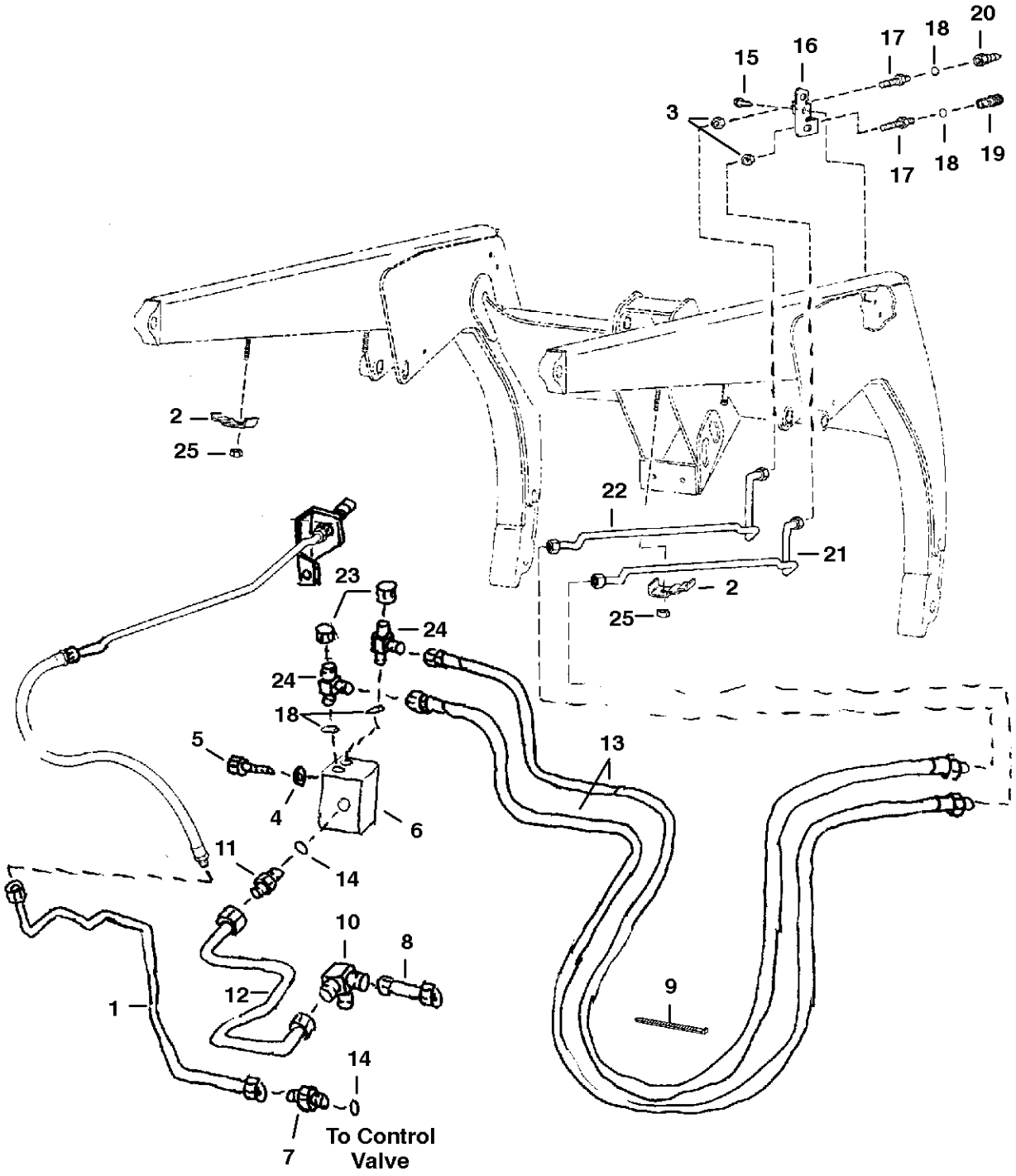


E-2375

# HIGH HORSEPOWER HYDRAULICS

| Ref.N° | Part N° | Description | Remarks | Serial N° | Qty. |
|---|---|---|---|---|---|
| 1 | 6719068 | TUBELINE | | | 1 |
| 2 | 6703216# | CLAMP | | | 4 |
| 3 | 86F-5 | NUT | | | 2 |
| 4 | 25E-17 | WASHER | | | 2 |
| 5 | 17C-612 | BOLT | | | 2 |
| 6 | | VALVE | Control - See Page HIGH HORSEPOWER HYDRAULICS(1) | | 1 |
| 7 | 15KN-8 | ADAPTER | W/Ref. HIGH HORSEPOWER HYDRAULICS(14) - tapered boss face | | 1 |
| 7 | 97K-12 | O-RING | flared end | | 1 |
| 8 | 6719067 | TUBELINE | | | 1 |
| 9 | 6624289 | STA-STRAP | | | 4 |
| 10 | 6719053 | TEE | | | 1 |
| 10 | 97K-10 | O-RING | flared end | | x |
| 11 | 6655572 | VALVE | check - W/Ref. HIGH HORSEPOWER HYDRAULICS(14) | | 1 |
| 12 | 6719069 | TUBELINE | | | 1 |
| 13 | 6719266 | HOSE | | | 2 |
| 14 | 99K-12 | O-RING | tapered boss face | | x |
| 15 | 84G-3716 | BOLT | | | 2 |
| 16 | 6711674 | BRACKET | | | 1 |
| 17 | 6716089 | CONNECTOR | tapered boss face - W/Ref. HIGH HORSEPOWER HYDRAULICS(18) | | 2 |
| 17 | 97K-6 | O-RING | flared end | | 2 |
| 18 | 99K-6 | O-RING | tapered boss face | | x |
| 19 | 6667803 | QUICK COUPLER | female | | 1 |
| 20 | 6667804 | QUICK COUPLER | male | | 1 |
| 21 | 6719165 | TUBELINE | | | 1 |
| 22 | 6719166 | TUBELINE | | | 1 |
| 23 | 36K-5 | CAP | | | 2 |
| 24 | 21KV-5 | TEE | W/Ref. HIGH HORSEPOWER HYDRAULICS(18) - tapered boss face | | 2 |
| 24 | 97K-6 | O-RING | flared end | | x |
| 25 | 59D-6 | NUT | | | x |

**NOTE:** Electrical Attachment Kit is Standard on all High Flow Models.

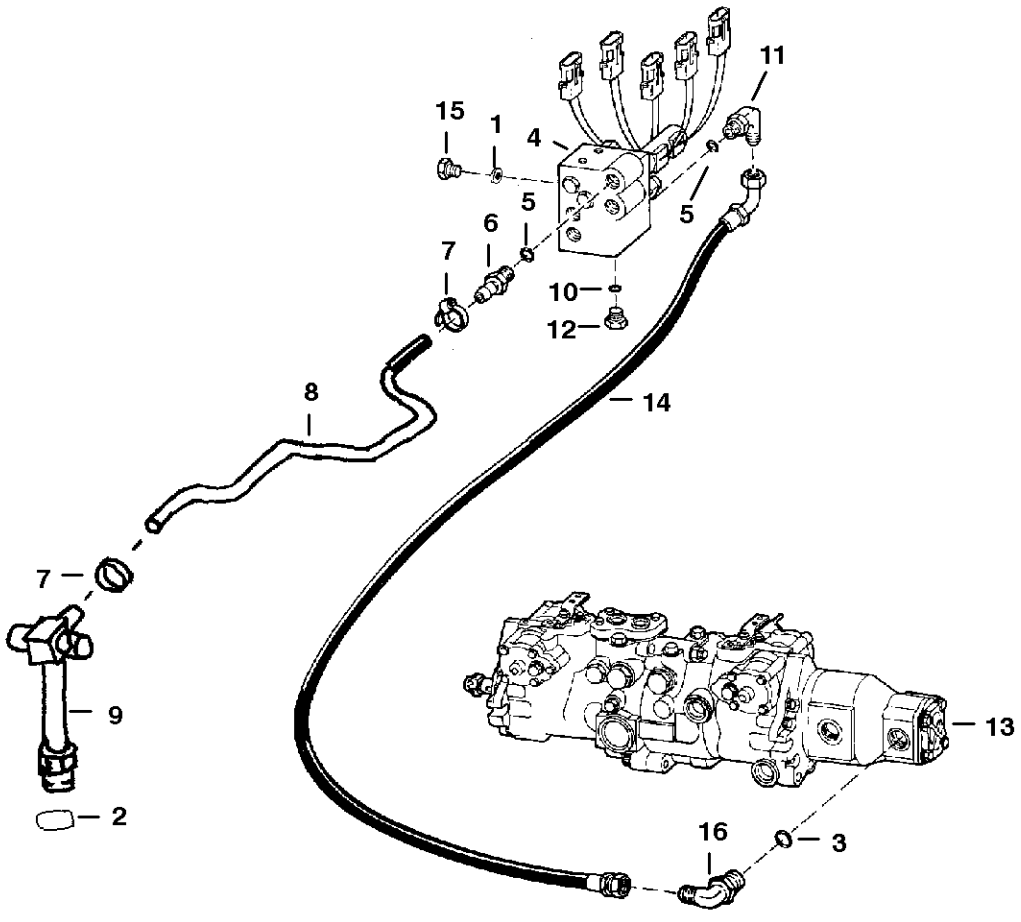


B-24428

# HIGH HORSEPOWER HYDRAULICS

| Ref.N° | Part N° | Description | Remarks | Serial N° | Qty. |
|---|---|---|---|---|---|
| 1 | 25E-17 | WASHER | | | 2 |
| 2 | 99K-16 | O-RING | | | x |
| 3 | 99K-10 | O-RING | tapered boss face | | x |
| 4 | | VALVE | See Page HIGH HORSEPOWER HYDRAULICS(1) | | 1 |
| 5 | 79K-10 | O-RING | flat boss face | | x |
| 6 | 1316263 | ADAPTER | W/Ref. HIGH HORSEPOWER HYDRAULICS(5) | | 1 |
| 7 | 5HM-27 | CLAMP | constant tension | | 2 |
| 8 | 6728802 | HOSE | | | 1 |
| 9 | 6731182 | TEE | W/Ref. HIGH HORSEPOWER HYDRAULICS(2) | | 1 |
| 10 | 99K-6 | O-RING | tapered boss face | | 1 |
| 11 | 6714134 | ELBOW | W/Ref. HIGH HORSEPOWER HYDRAULICS(5) - flat boss face | | 1 |
| 12 | 90KV-5 | PLUG | W/Ref. HIGH HORSEPOWER HYDRAULICS(10) - tapered boss face | | 1 |
| 13 | | PUMP | See Page HYDROSTATIC PUMP(5) | | 1 |
| 14 | 6731194 | HOSE | | | 1 |
| 15 | 17C-612 | BOLT | | | 2 |
| 16 | 17KV-7 | ELBOW | W/Ref. HIGH HORSEPOWER HYDRAULICS(3) - tapered boss face | | 1 |
| 16 | 97K-10 | O-RING | flared end | | 1 |

## HIGH HORSEPOWER HYDRAULICS
## (Manual Lift Release System)

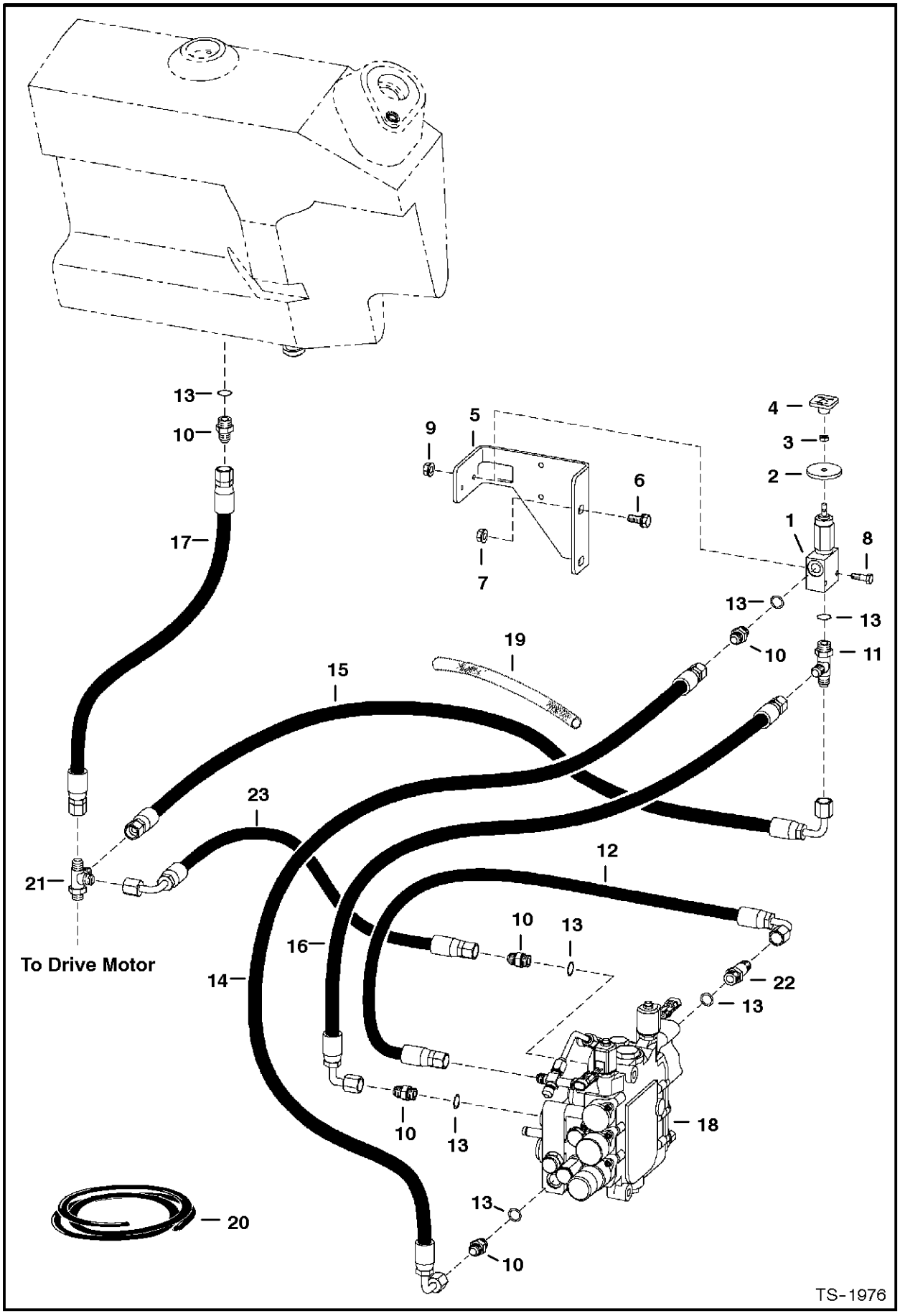

# HIGH HORSEPOWER HYDRAULICS

| Ref.N° | Part N° | Description | Remarks | Serial N° | Qty. |
|---|---|---|---|---|---|
| 1 | 6667844 | VALVE | manual lift - See Page MANUAL LIFT RELEASE VALVE(1) | | 1 |
| 2 | 6707101 | WASHER | neoprene | | 1 |
| 3 | 7D-4 | NUT | for 6664858 | | 1 |
| 4 | 6668913 | KNOB | | | 1 |
| 5 | 6718881 | BRACKET | | | 1 |
| 6 | 35C-620 | BOLT | | | 2 |
| 7 | 83D-6 | NUT | | | 2 |
| 8 | 17C-428 | BOLT | | | 2 |
| 9 | 83D-4 | NUT | | | 2 |
| 10 | 15KV-5 | ADAPTER | W/Ref. MANUAL LIFT RELEASE SYSTEM(13) - tapered boss face | | 5 |
| 10 | 97K-6 | O-RING | flared end | | x |
| 11 | 21KV-5 | TEE | W/Ref. MANUAL LIFT RELEASE SYSTEM(13) - tapered boss face | | 1 |
| 11 | 97K-6 | O-RING | flared end | | x |
| 12 | 6801712 | HOSE | | | 1 |
| 13 | 99K-6 | O-RING | tapered boss face | | x |
| 14 | 6729602 | HOSE | 21' (533mm) long - W/ Danger decals | | 1 |
| 14 | 6809511 | DECAL | Danger | | 2 |
| 15 | 6716464 | HOSE | | | 1 |
| 16 | 6706790 | HOSE | | | 1 |
| 17 | 6716000 | HOSE | | | 1 |
| 18 | | CONTROL VALVE | See Page - HYDRAULIC CONTROL VALVE(4) | | 1 |
| 19 | NAP | SHIELD | 21' (533mm) long - Order Ref. MANUAL LIFT RELEASE SYSTEM(20) | | 1 |
| 20 | 6650108 | SHIELD | bulk - 1.35 (34mm) I.D. - Sold Per foot | | x |
| 21 | 6718031 | CROSS | | | 1 |
| 22 | 16KN-5 | CONNECTOR | W/Ref. MANUAL LIFT RELEASE SYSTEM(13) | | 1 |
| 22 | 97K-6 | O-RING | flared end | | x |
| 23 | 6802851 | HOSE | | | 1 |

## HIGH HORSEPOWER HYDRAULICS
## (Gear Pump)

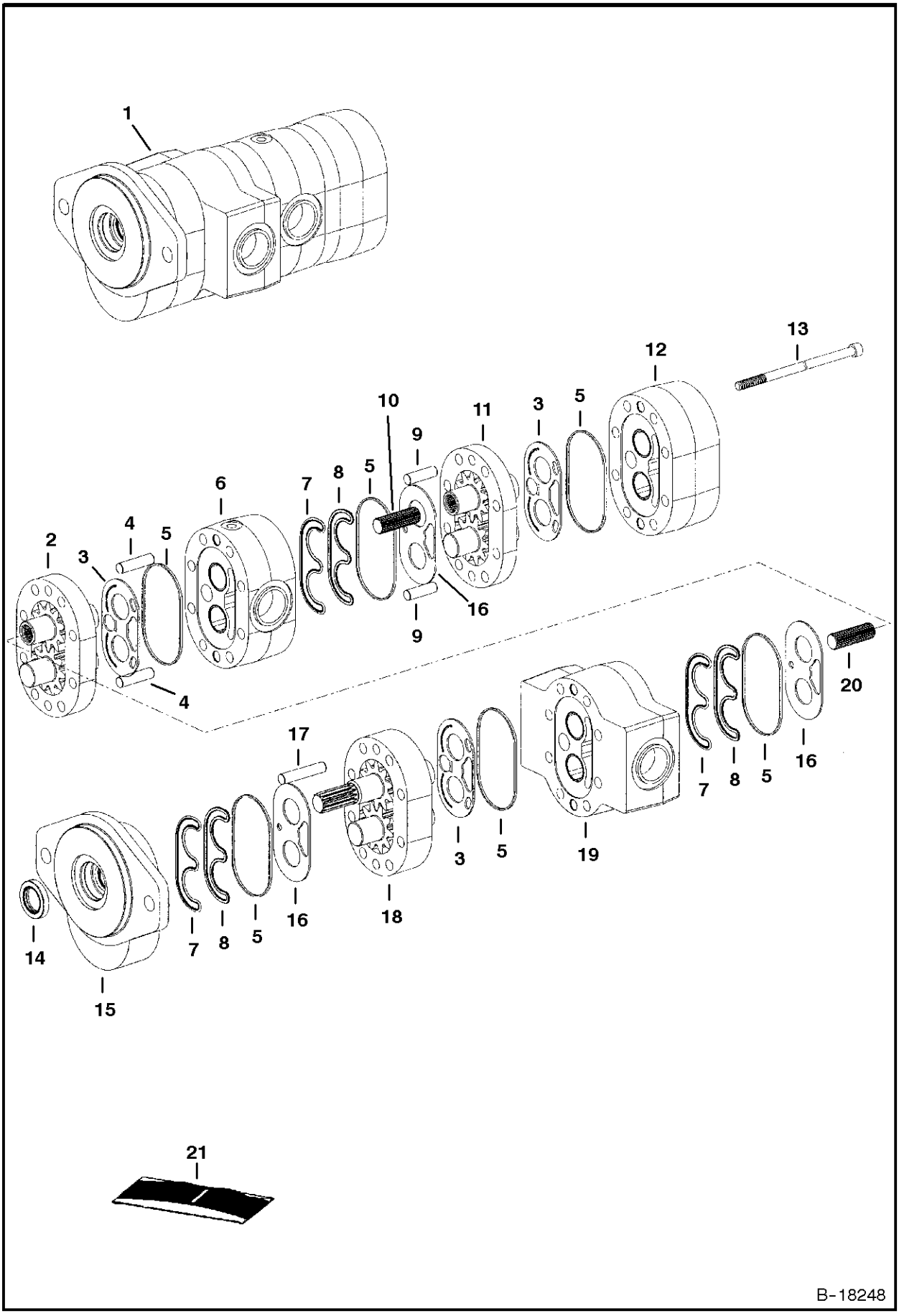

# HIGH HORSEPOWER HYDRAULICS

| Ref.N° | Part N° | Description | Remarks | Serial N° | Qty. |
|---|---|---|---|---|---|
| 1 | 6678530 | PUMP | 163D1188 - for model 4415508 | | 1 |
| 2 | NSS | SECTION | | | 1 |
| 3 | NSS | WEAR PLATE | | | 3 |
| 4 | NSS | PIN | | | 2 |
| 5 | NSS | SEAL | | | 6 |
| 6 | NSS | BODY | | | 1 |
| 7 | NSS | SEAL | backAup | | 3 |
| 8 | NSS | SEAL | load | | 3 |
| 9 | NSS | PIN | | | 2 |
| 10 | NSS | SHAFT | | | 1 |
| 11 | NSS | SECTION | | | 1 |
| 12 | NSS | BODY | | | 1 |
| 13 | NSS | BOLT | | | 8 |
| 14 | NSS | SEAL | shaft | | 1 |
| 15 | NSS | COVER | | | 1 |
| 16 | NSS | WEAR PLATE | | | 3 |
| 17 | NSS | PIN | | | 1 |
| 18 | NSS | SECTION | | | 1 |
| 19 | NSS | BODY | | | 1 |
| 20 | NSS | SHAFT | | | 1 |
| 21 | 6678731 | SEAL KIT | Ref. HIGH HORSEPOWER HYDRAULICS(3), HIGH HORSEPOWER HYDRAULICS(5), HIGH HORSEPOWER HYDRAULICS(7), HIGH HORSEPOWER HYDRAULICS(8), | | 1 |

## HIGH HORSEPOWER HYDRAULICS
## (Control Valve)

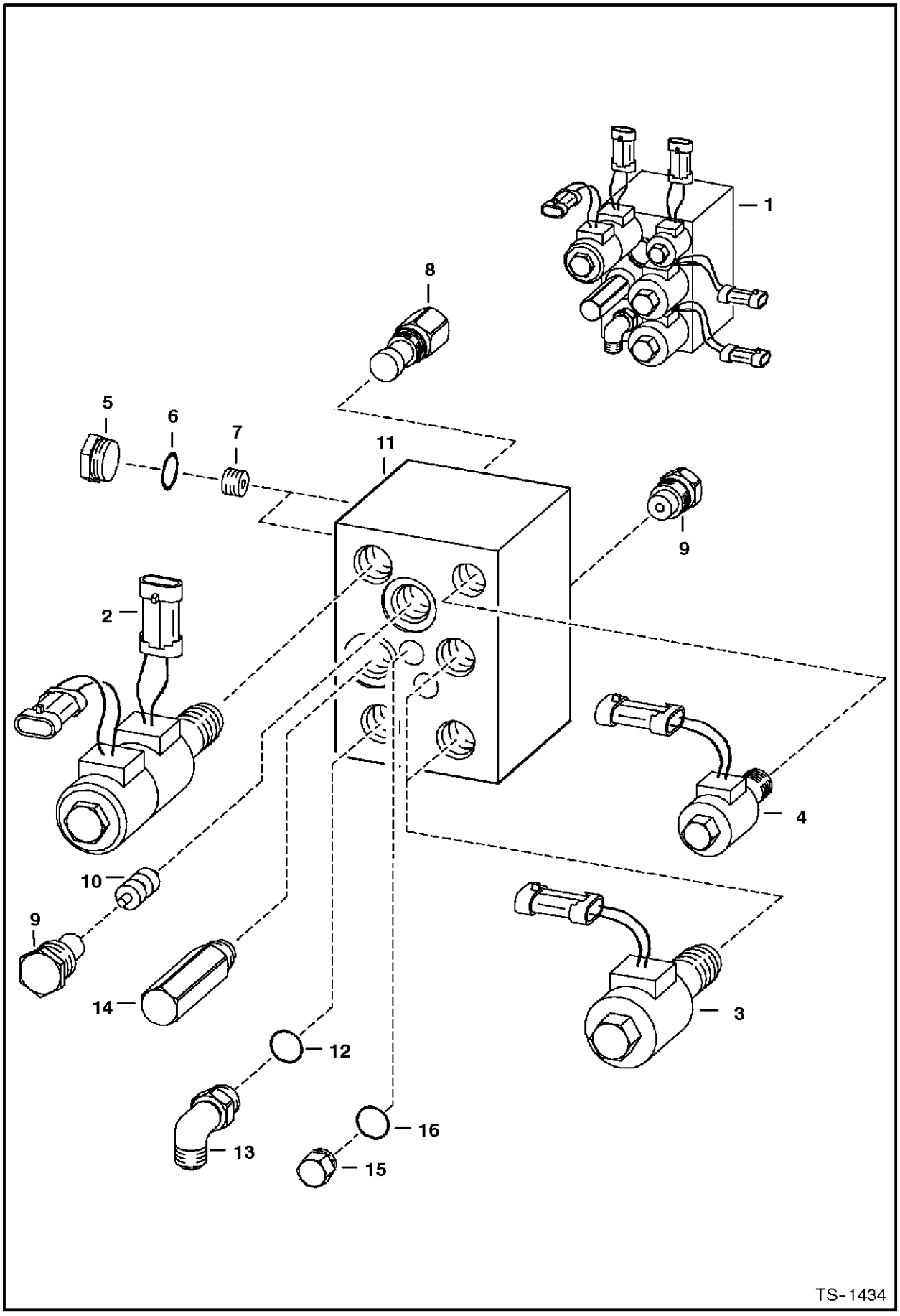

# HIGH HORSEPOWER HYDRAULICS

| Ref.N° | Part N° | Description | Remarks | Serial N° | Qty. |
|---|---|---|---|---|---|
| 1 | 6669203 | VALVE | Ref. HIGH HORSEPOWER HYDRAULICS(2)-HIGH HORSEPOWER HYDRAULICS(12) | | 1 |
| 2 | 6672450 | VALVE ASSY. | solenoid | | 1 |
| 2 | 6664025 | STEM | | | 1 |
| 2 | 6671026 | COIL | %W/ connector | | 2 |
| 2 | 6671628 | NUT | | | 1 |
| 2 | 6679068 | SPACER | | | 1 |
| 2 | 6661448 | SEAL KIT | | | 1 |
| 3 | 6672449 | VALVE ASSY. | solenoid | | 1 |
| 3 | 6664024 | STEM | | | 2 |
| 3 | 6671026 | COIL | W/ connector | | 2 |
| 3 | 6671629 | NUT | | | 2 |
| 3 | 6664032 | SEAL KIT | | | 2 |
| 4 | 6672448 | VALVE ASSY. | solenoid | | 1 |
| 4 | 6665702 | STEM | | | 1 |
| 4 | 6671025 | COIL | W/ connector | | 2 |
| 4 | 6671628 | NUT | | | 1 |
| 4 | 6664033 | SEAL KIT | | | 1 |
| 5 | 6665719 | PLUG | | | 10 |
| 6 | 79K-5 | O-RING | | | x |
| 7 | 6669615 | ORIFICE | .020 | | 2 |
| 8 | 6669729 | SHUTTLE VALVE | | | 1 |
| 8 | 6669736 | SEAL KIT | | | 1 |
| 9 | 6669728 | CHECK VALVE | | | 2 |
| 9 | 6670635 | SEAL KIT | | | 1 |
| 10 | 6673990 | PISTON | | | 1 |
| 11 | NSS | BLOCK | Order Ref. HIGH HORSEPOWER HYDRAULICS(1) | | 1 |
| 12 | 99K-10 | O-RING | tapered boss face | | 1 |
| 13 | 17KV-7 | ELBOW | W/Ref. HIGH HORSEPOWER HYDRAULICS(12) - tapered boss face | | 1 |
| 13 | 97K-10 | O-RING | flared end | | 1 |
| 14 | 6676155 | RELIEF VALVE | 3300 PSI | | 1 |
| 14 | 6669737 | SEAL KIT | | | 1 |
| 15 | 6665719 | PLUG | | | 11 |
| 16 | 99K-5 | O-RING | | | x |

# HYDROSTATIC CIRCUITRY
## (W/Motors)

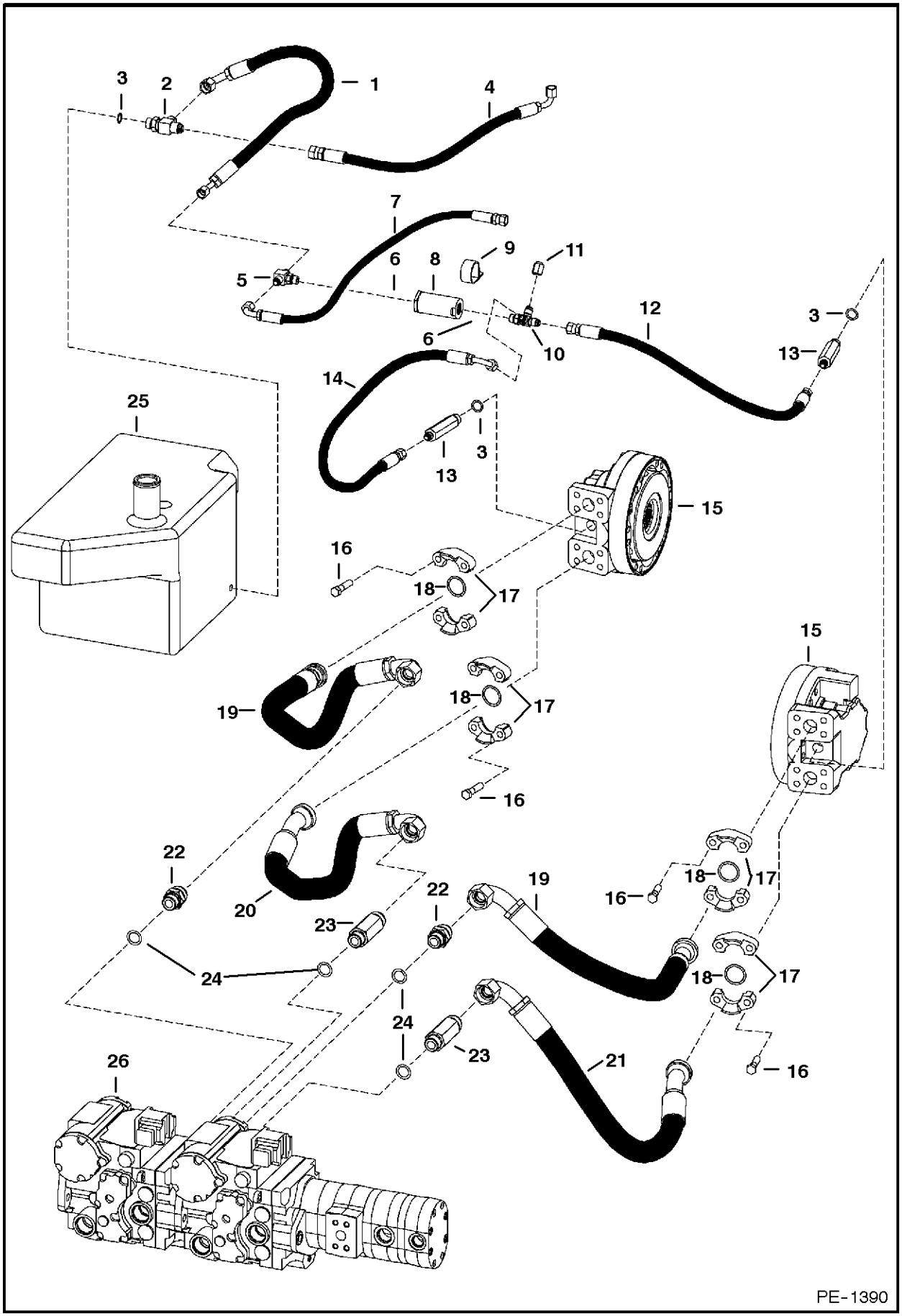

# HYDROSTATIC CIRCUITRY

| Ref.N° | Part N° | Description | Remarks | Serial N° | Qty. |
|---|---|---|---|---|---|
| 1 | 6726453 | HOSE | | | 1 |
| 2 | 21KN-6 | TEE | W/Ref. HYDROSTATIC CIRCUITRY(3) | | 1 |
| 2 | 97K-8 | O-RING | flared end | | x |
| 3 | 99K-8 | O-RING | | | x |
| 4 | 6725430 | HOSE | | | 1 |
| 5 | 19KV-5 | TEE | W/Ref. HYDROSTATIC CIRCUITRY(6) | | 1 |
| 5 | 97K-6 | O-RING | flared end | | x |
| 6 | 99K-6 | O-RING | tapered boss face | | x |
| 7 | 6725431 | HOSE | | | 1 |
| 8 | 6661022 | FILTER | inAline - See Page HYDROSTATIC OIL FILTER(1) | | 1 |
| 9 | 30H-60 | CLIP | | | 1 |
| 10 | 6718031 | CROSS | W/Ref. HYDROSTATIC CIRCUITRY(6) | | 1 |
| 10 | 97K-6 | O-RING | flared end | | x |
| 11 | 36K-5 | CAP | | | 3 |
| 12 | 6725432 | HOSE | | | 1 |
| 13 | 6717306 | ADAPTER | W/Ref. HYDROSTATIC CIRCUITRY(3) | | 2 |
| 13 | 97K-6 | O-RING | flared end | | x |
| 14 | 6725433 | HOSE | | | 1 |
| 15 | | MOTOR | See Page HYDROSTATIC MOTOR(3) & HYDROSTATIC MOTOR & BRAKE(4) | | 2 |
| 16 | 17C-728 | BOLT | | | 16 |
| 17 | 20J-16 | CLAMP | | | 8 |
| 18 | 55K-219 | O-RING | | | 4 |
| 19 | 6673955 | HOSE | | | 1 |
| 20 | 6677768 | HOSE | | | 1 |
| 21 | 6677671 | HOSE | | | 1 |
| 22 | 6715878 | CONNECTOR | W/Ref. HYDROSTATIC CIRCUITRY(24) | | 2 |
| 23 | 6716243 | CONNECTOR | W/Ref. HYDROSTATIC CIRCUITRY(24) | | 2 |
| 24 | 75K-12 | O-RING | | | x |
| 25 | | TANK | See Page HYDROSTATIC CIRCUITRY(1) | | 1 |
| 26 | | PUMP | See Page HYDROSTATIC PUMP(5) | | 1 |

# HYDROSTATIC CIRCUITRY
## (W/Cooler)

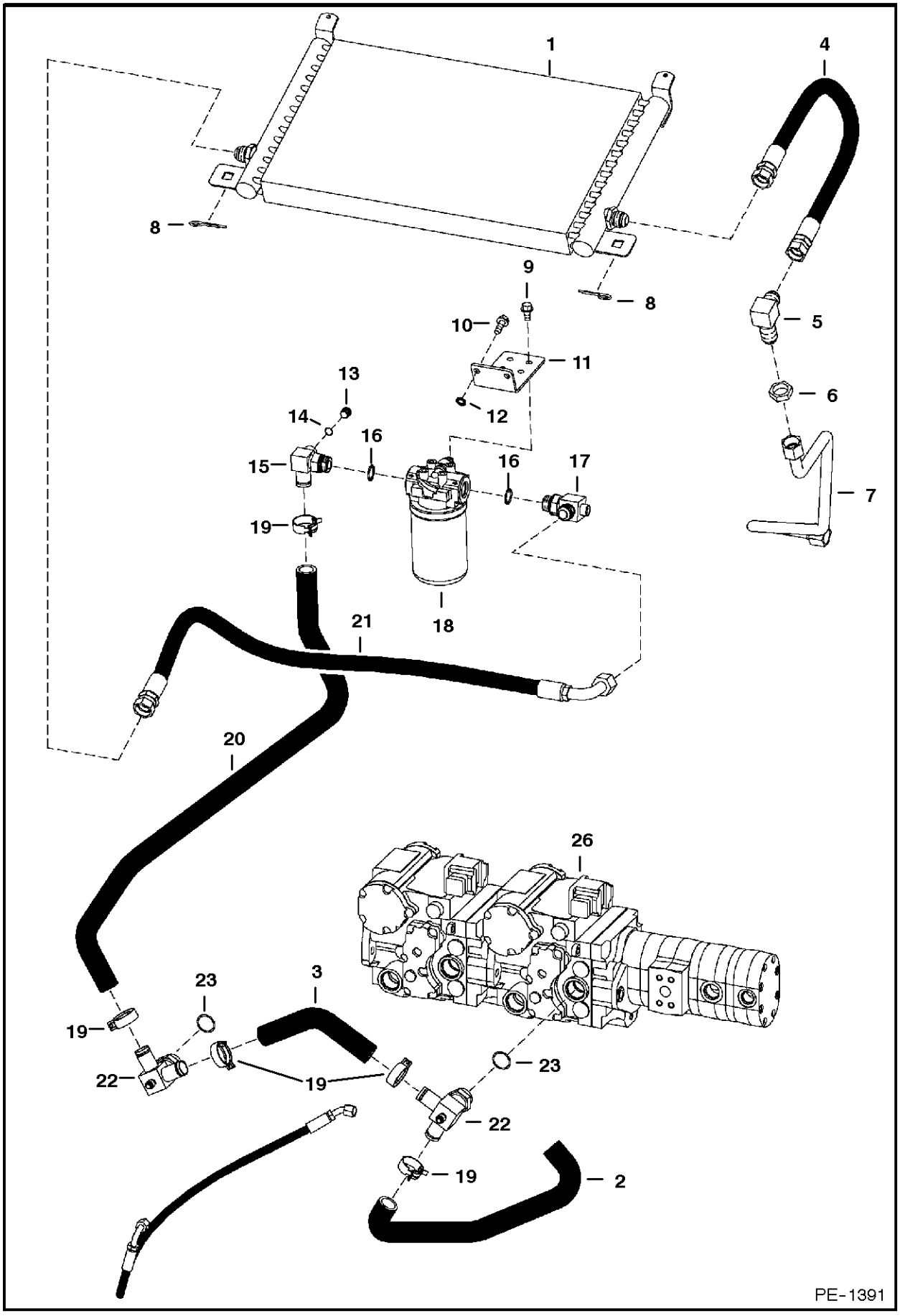

# HYDROSTATIC CIRCUITRY

| Ref.N° | Part N° | Description | Remarks | Serial N° | Qty. |
|---|---|---|---|---|---|
| 1 | 6678194 | COOLER | | | 1 |
| 2 | 6729475 | HOSE | | | 1 |
| 3 | 6729478 | HOSE | | | 1 |
| 4 | 6675829 | HOSE | | | 1 |
| 5 | 6670831 | ELBOW | | | 1 |
| 5 | 97K-12 | O-RING | flared end | | x |
| 6 | 86F-8 | NUT | | | 1 |
| 7 | 6719286 | TUBELINE | | | 1 |
| 8 | 1318565 | PIN | | | 2 |
| 9 | 35C-612 | BOLT | | | 4 |
| 10 | 84G-3716 | BOLT | | | 4 |
| 11 | 6719446 | MOUNT | | | 1 |
| 12 | 6E-6 | WASHER | | | 4 |
| 13 | 90KV-5 | PLUG | W/Ref. HYDROSTATIC CIRCUITRY(14) | | 1 |
| 14 | 95K-6 | O-RING | | | x |
| 15 | 6725032 | ELBOW | W/Ref. HYDROSTATIC CIRCUITRY(16) | | 1 |
| 16 | 79K-12 | O-RING | | | x |
| 17 | 6675778 | TEE | W/Ref. HYDROSTATIC CIRCUITRY(16) | | 1 |
| 18 | 6661247 | FILTER ASSY. | | | 1 |
| 18 | 6661248 | ELEMENT | | | 1 |
| 19 | 5HM-35 | CLAMP | | | 5 |
| 20 | 6726694 | HOSE | | | 1 |
| 21 | 6675830 | HOSE | | | 1 |
| 22 | 6726992 | TEE | W/Ref. HYDROSTATIC CIRCUITRY(23) | | 2 |
| 22 | 97K-6 | O-RING | flared end | | x |
| 23 | 99K-16 | O-RING | | | x |

# HYDROSTATIC CIRCUITRY
## (W/Tank)

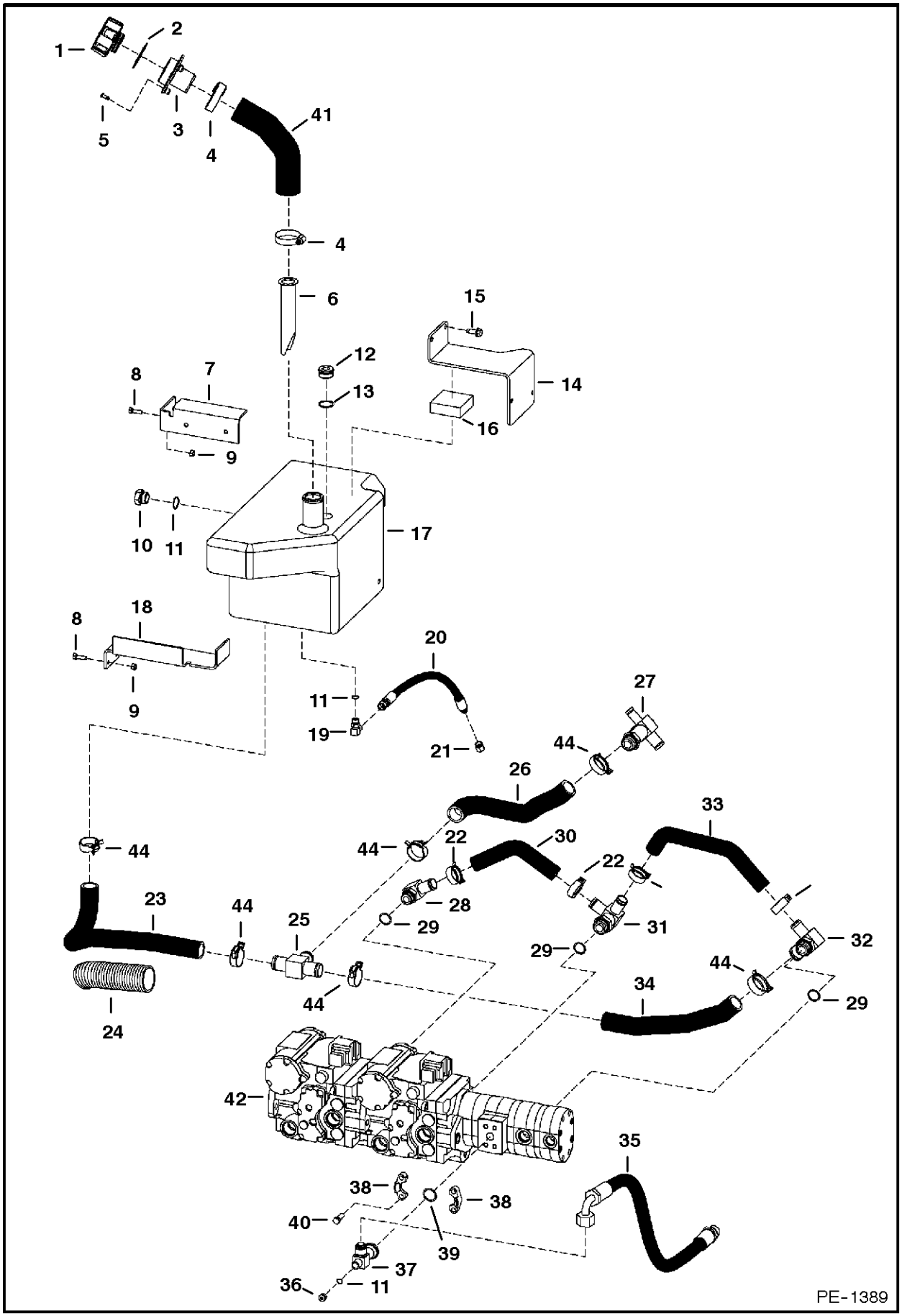

# HYDROSTATIC CIRCUITRY

| Ref.N° | Part N° | Description | Remarks | Serial N° | Qty. |
|---|---|---|---|---|---|
| 1 | 6577785 | CAP | #breather & fill - also Order Ref. HYDROSTATIC CIRCUITRY(2) | | 1 |
| 2 | 6700631 | GASKET | | | 1 |
| 3 | 6727354 | INLET | | | 1 |
| 4 | 6513595 | CLAMP | | | 2 |
| 5 | 6706517 | SCREW | self tapping | | 3 |
| 6 | 6569219 | SCREEN | | | 1 |
| 7 | 6718851 | BRACKET | front | | 1 |
| 8 | 17C-516 | BOLT | | | 4 |
| 9 | 61D-5 | NUT | | | 4 |
| 10 | 6665915 | SIGHT GAUGE | sight - W/Ref. HYDROSTATIC CIRCUITRY(11) | | 1 |
| 11 | 99K-6 | O-RING | tapered boss face | | x |
| 12 | 47K-10 | PLUG | W/Ref. HYDROSTATIC CIRCUITRY(13) | | 1 |
| 13 | 79K-16 | O-RING | | | x |
| 14 | 6718726 | MOUNT | BPV | | 1 |
| 15 | 84G-3716 | BOLT | | | 2 |
| 16 | 6716449 | | | | 1 |
| 17 | 6725422 | TANK | hydraulic oil | | 1 |
| 18 | 6718850 | BRACKET | rear | | 1 |
| 19 | 17KV-5 | ELBOW | W/Ref. HYDROSTATIC CIRCUITRY(11) | | 1 |
| 19 | 97K-6 | O-RING | flared end | | x |
| 20 | 6530859 | HOSE | | | 1 |
| 21 | 36K-5 | CAP | | | 1 |
| 22 | 5HM-35 | CLAMP | | | 8 |
| 23 | 6727424 | HOSE | | | 1 |
| 24 | NAP | SHIELD | $10' (254mm) long - Order Ref. HYDROSTATIC CIRCUITRY(43) | | 1 |
| 25 | 6727064 | TEE | | | 1 |
| 26 | 6727426 | HOSE | | | 1 |
| 27 | 6727070 | TEE | | | 1 |
| 28 | 6727182 | ELBOW | | | x |
| 29 | 75K-16 | O-RING | | | x |
| 30 | 6729478 | HOSE | | | 1 |
| 31 | 6726992 | TEE | W/Ref. HYDROSTATIC CIRCUITRY(29) | | 1 |
| 32 | 6727069 | TEE | W/Ref. HYDROSTATIC CIRCUITRY(29) | | 1 |
| 33 | 6729477 | HOSE | | | 1 |
| 34 | 6729476 | HOSE | | | 1 |
| 35 | 6725425 | HOSE | | | 1 |
| 36 | 90KV-5 | PLUG | W/Ref. HYDROSTATIC CIRCUITRY(11) - tapered boss face | | 1 |
| 37 | 6717662 | TEE | 4bolt flange | | 1 |
| 37 | 97K-12 | O-RING | flared end | | x |
| 38 | 19J-12 | CLAMP | | | 2 |
| 39 | 55K-214 | O-RING | | | 1 |
| 40 | 17C-620 | BOLT | | | 4 |
| 41 | 6718576 | HOSE | | | 1 |
| 42 | | PUMP | See Page HYDROSTATIC PUMP(5) | | 1 |
| 43 | 6705749 | COVER | bulk - sold per foot | | x |
| 44 | 5HM-42 | CLAMP | | | 6 |

# HYDROSTATIC CIRCUITRY
## (Steering Valve)

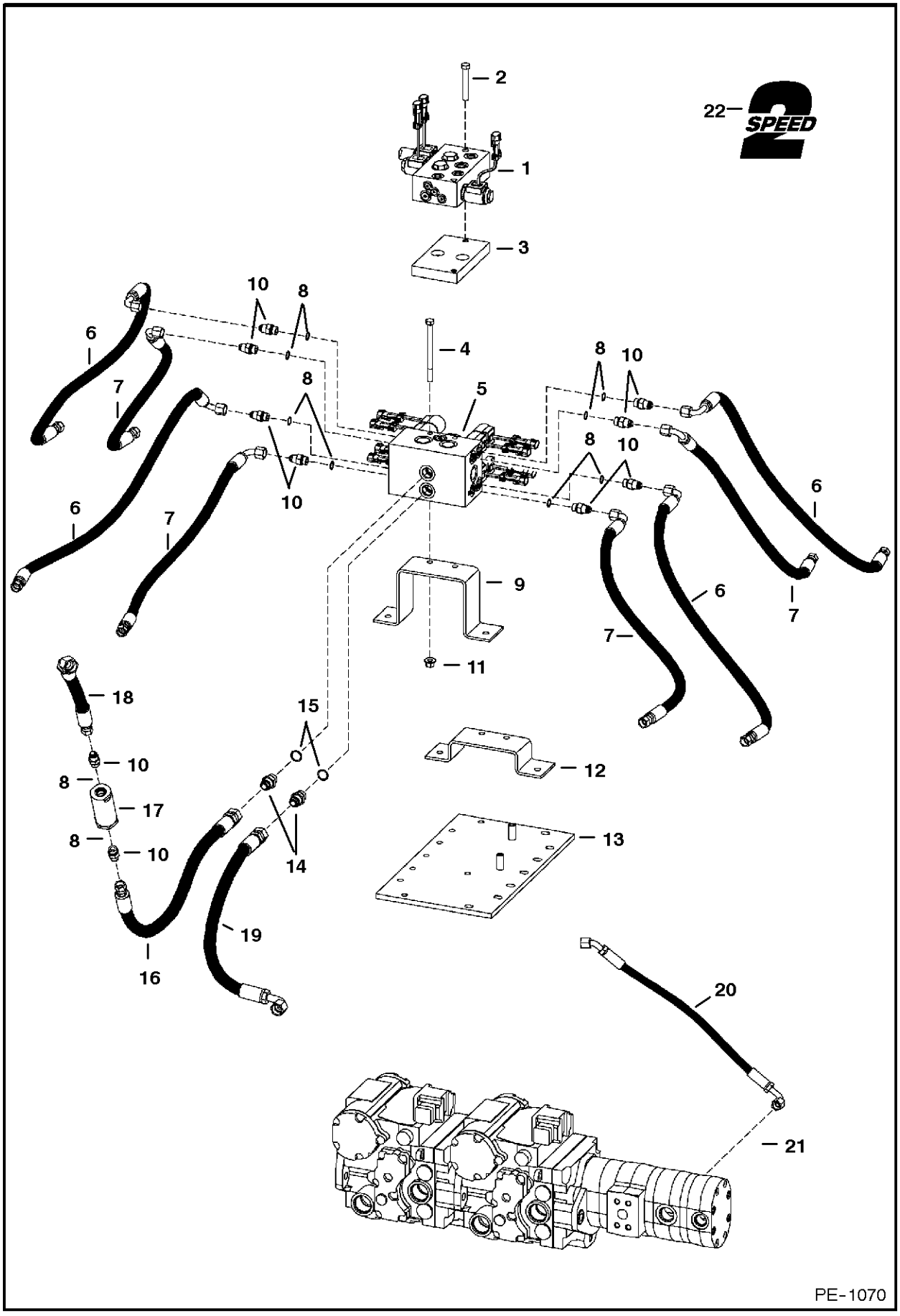

# HYDROSTATIC CIRCUITRY

| Ref.N° | Part N° | Description | Remarks | Serial N° | Qty. |
|---|---|---|---|---|---|
| 1 | | VALVE | 2speed - See Page 2-SPEED VALVE(1) | | 1 |
| 2 | 43C-640 | BOLT | | | 2 |
| 3 | 6729039 | BLOCK | | | 1 |
| 4 | 17C-672 | BOLT | | | 1 |
| 5 | | VALVE | steering - See Page STEERING VALVE(1) | | 1 |
| 6 | 6727423 | HOSE | | | 1 |
| 7 | 6727264 | HOSE | | | 1 |
| 8 | 99K-6 | O-RING | | | x |
| 9 | 6729016 | BRACKET | | | 1 |
| 10 | 15KV-5 | ADAPTER | W/Ref. HYDROSTATIC CIRCUITRY(8) | | 8 |
| 10 | 97K-6 | O-RING | flared end | | x |
| 11 | 83D-6 | NUT | | | x |
| 12 | 6729017 | BRACKET | | | 1 |
| 13 | 6725496 | COVER | | | 1 |
| 14 | 15KV-6 | CONNECTOR | W/Ref. HYDROSTATIC CIRCUITRY(15) | | 2 |
| 14 | 97K-8 | O-RING | flared end | | x |
| 15 | 99K-8 | O-RING | | | x |
| 16 | 6727921 | HOSE | | | 1 |
| 17 | | FILTER | inAline - See Page HYDROSTATIC OIL FILTER(1) | | 1 |
| 18 | 6727433 | HOSE | | | 1 |
| 19 | 6727434 | HOSE | | | 1 |
| 20 | 6727435 | HOSE | | | 1 |
| 21 | 6727069 | TEE | | | 1 |

## HYDROSTATIC CIRCUITRY
## (2-Speed Option)

**DRAWING NOT AVAILABLE AT TIME OF PRINTING**

PE-1690

# HYDROSTATIC CIRCUITRY

| Ref.N° | Part N° | Description | Remarks | Serial N° | Qty. |
|---|---|---|---|---|---|
| 1 | 6809144 | HOSE | | | 1 |
| 2 | 6628613 | HOSE | | | 1 |
| 3 | 6661753 | PLUG | diagnostic | | 1 |
| 4 | | VALVE | 2speed - SeePage 2□□(7) | | 1 |
| 5 | 6677671 | HOSE | | | 1 |
| 6 | 6727264 | HOSE | | | 8 |
| 7 | 6729017 | BRACKET | | | 1 |
| 8 | 6729039 | BLOCK | 2speed | | 1 |
| 9 | 6729590 | HOSE | | | 2 |
| 10 | 6729591 | HOSE | | | 2 |
| 11 | 6801712 | HOSE | | | 2 |
| 12 | 43C-640 | BOLT | | | 2 |
| 13 | 15KV-3 | CONNECTOR | W/Ref. HYDROSTATIC CIRCUITRY(14) | | 2 |
| 13 | 97K-4 | O-RING | flared end | | x |
| 14 | 99K-4 | O-RING | | | x |
| 15 | 15KV-5 | ADAPTER | W/Ref. HYDROSTATIC CIRCUITRY(16) | | 2 |
| 15 | 97K-6 | O-RING | flared end | | x |
| 16 | 99K-6 | O-RING | | | x |
| 17 | 16KN-5 | CONNECTOR | W/Ref. HYDROSTATIC CIRCUITRY(16) | | 2 |
| 17 | 97K-6 | O-RING | flared end | | x |
| 18 | 17KV-3 | ELBOW | W/Ref. HYDROSTATIC CIRCUITRY(14) | | 2 |
| 18 | 97K-4 | O-RING | flared end | | x |
| 19 | 17KV-5 | ELBOW | W/Ref. HYDROSTATIC CIRCUITRY(16) | | 3 |
| 19 | 97K-6 | O-RING | flared end | | x |
| 20 | 19KV-5 | TEE | W/Ref. HYDROSTATIC CIRCUITRY(16) | | 2 |
| 20 | 97K-6 | O-RING | flared end | | x |
| 21 | 21KV-7 | TEE | W/Ref. HYDROSTATIC CIRCUITRY(22) | | 1 |
| 21 | 97K-10 | O-RING | flared end | | x |
| 22 | 99K-10 | O-RING | | | x |
| 23 | 6729078 | DECAL | | | 2 |
| 24 | | MOTOR | See Page HYDROSTATIC MOTOR & BRAKE(4) | | 2 |
| 25 | 6725496 | COVER | | | 1 |

# HYDROSTATIC MOTOR
## (Rexroth)

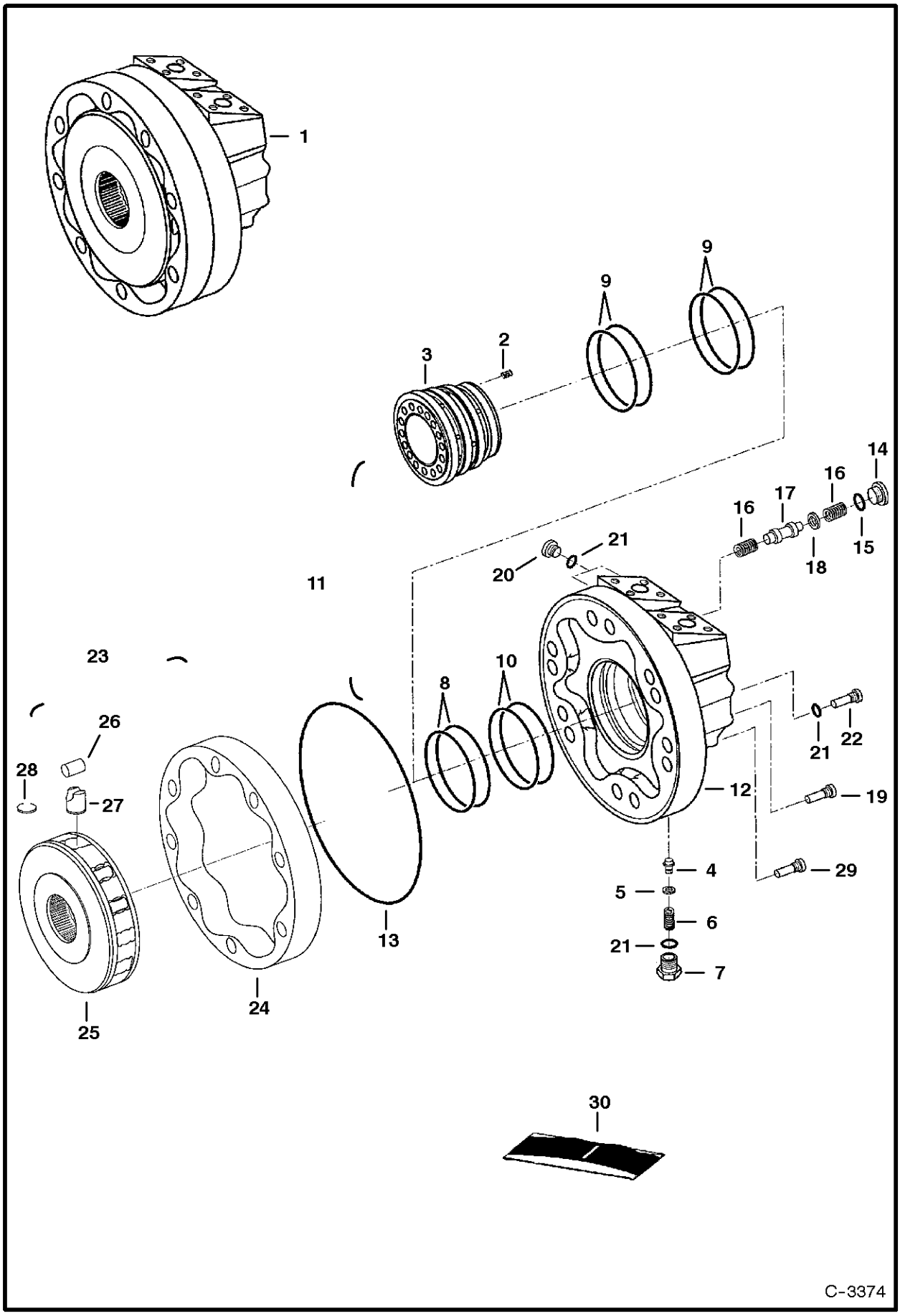

# HYDROSTATIC MOTOR

| Ref.N° | Part N° | Description | Remarks | Serial N° | Qty. |
|---|---|---|---|---|---|
| 1 | 6672821 | MOTOR | 4bolt flange ports - Ref. HYDROSTATIC MOTOR(2)-HYDROSTATIC MOTOR(28) | | 1 |
| 2 | 6674037 | SPRING | | | 6 |
| 3 | 6674184 | DISTRIBUTOR | | | 1 |
| 4 | 6675868 | POPPET | | | 1 |
| 5 | 6674343 | SHIM | | | 1 |
| 6 | 6674344 | SPRING | | | 1 |
| 7 | 6674345 | PLUG | | | 1 |
| 8 | 6675227 | SEAL | W/ O-ring | | 1 |
| 9 | 6675228 | SEAL | W/ O-ring | | 2 |
| 10 | 6676022 | SEAL | W/ O-ring | | 1 |
| 11 | 6674335 | HOUSING ASSY. | rear - Ref. HYDROSTATIC MOTOR(2)-HYDROSTATIC MOTOR(10), HYDROSTATIC MOTOR(14)-HYDROSTATIC MOTOR(18) & HYDROSTATIC MOTOR(20)-HYDR | | 1 |
| 12 | 6674341 | HOUSING | rear | | 1 |
| 13 | 6674029 | O-RING | | | 1 |
| 14 | 6671845 | PLUG | W/Ref. HYDROSTATIC MOTOR(15) | | 1 |
| 15 | 6676023 | O-RING | | | 1 |
| 16 | 6674339 | SPRING | | | 2 |
| 17 | 6674337 | SPOOL | | | 1 |
| 18 | 6674338 | WASHER | | | 1 |
| 19 | 6675021 | BOLT | | | 2 |
| 20 | 6676024 | PLUG | W/Ref. HYDROSTATIC MOTOR(15) | | 1 |
| 21 | 6675869 | O-RING | | | 3 |
| 22 | 6674340 | PIN | locating | | 1 |
| 23 | 6674218 | ROTARY GROUP | Ref. HYDROSTATIC MOTOR(24)-HYDROSTATIC MOTOR(27) | | 1 |
| 24 | 6675024 | CAM | | | 1 |
| 25 | 6674219 | BLOCK | | | 1 |
| 26 | NSS | ROLLER | Order Ref. HYDROSTATIC MOTOR(23) | | 8 |
| 27 | NSS | PISTON | W/Ref. HYDROSTATIC MOTOR(28) - Order Ref. HYDROSTATIC MOTOR(23) | | 8 |
| 28 | NSS | RING | keeper - Order Ref. HYDROSTATIC MOTOR(23) | | 8 |
| 29 | 6675020 | BOLT | | | 10 |
| 30 | 6676021 | SEAL KIT | Ref. HYDROSTATIC MOTOR(8)-HYDROSTATIC MOTOR(10), HYDROSTATIC MOTOR(13), HYDROSTATIC MOTOR(15) & HYDROSTATIC MOTOR(21) | | 1 |

## HYDROSTATIC MOTOR & BRAKE
## (2-Speed Option)

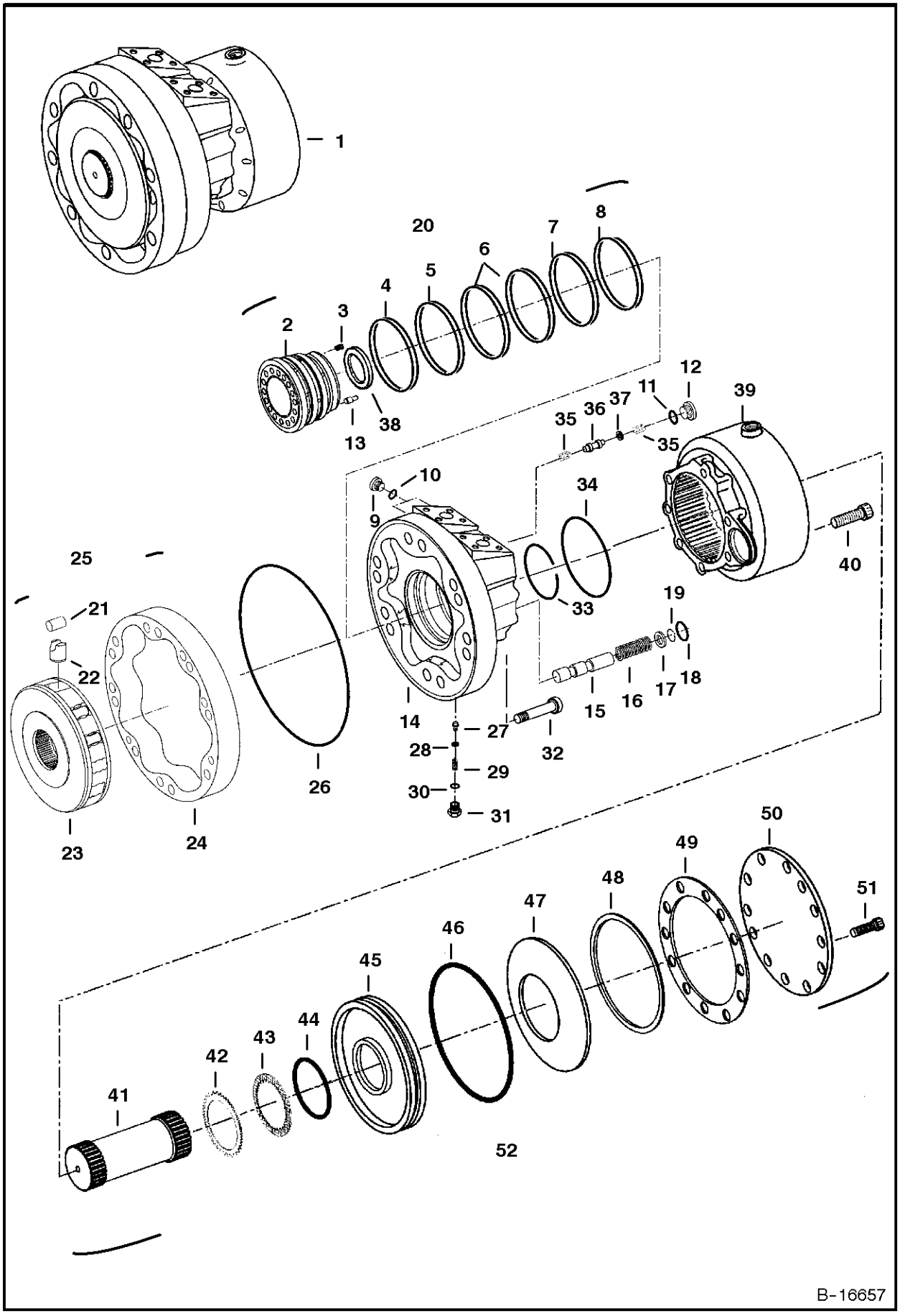

# HYDROSTATIC MOTOR & BRAKE

| Ref.N° | Part N° | Description | Remarks | Serial N° | Qty. |
|---|---|---|---|---|---|
| 1 | 6674738 | MOTOR | Ref. HYDROSTATIC MOTOR & BRAKE(2)-HYDROSTATIC MOTOR & BRAKE(52) | | 1 |
| 2 | 6675876 | DISTRIBUTOR | | | 1 |
| 3 | 6674037 | SPRING | | | 12 |
| 4 | 6675877 | SEAL | W/ O-ring | | 1 |
| 5 | 6675878 | SEAL | W/ O-ring | | 1 |
| 6 | 6675879 | SEAL | W/ O-ring | | 2 |
| 7 | 6675880 | SEAL | W/ O-ring | | 1 |
| 8 | 6675881 | SEAL | W/ O-ring | | 1 |
| 9 | 90KV-3 | PLUG | W/Ref. HYDROSTATIC MOTOR & BRAKE(10) | | 2 |
| 10 | 95K-4 | O-RING | | | 2 |
| 11 | 95K-6 | O-RING | | | 1 |
| 12 | 90KV-5 | PLUG | W/Ref. HYDROSTATIC MOTOR & BRAKE(11) | | 1 |
| 13 | 6675189 | PIN | | | 1 |
| 14 | 6675875 | HOUSING | rear | | 1 |
| 15 | 6675882 | SPOOL | | | 1 |
| 16 | 6676643 | SPRING | red | | 1 |
| 16 | 6676644 | SPRING | yellow | | 1 |
| 16 | 6676645 | SPRING | green | | 1 |
| 16 | 6676646 | SPRING | blue | | 1 |
| 17 | NSS | WASHER | Order 6678204 kit | | 1 |
| 17 | 6678204 | KIT | washer | | 1 |
| 18 | 6675886 | QUAD RING | | | 1 |
| 19 | 6675885 | SNAP RING | | | 1 |
| 20 | 6675861 | REAR HOUSING | assy. - Ref. HYDROSTATIC MOTOR & BRAKE(2)-HYDROSTATIC MOTOR & BRAKE(19) | | 1 |
| 21 | NSS | ROLLER | Order Ref. HYDROSTATIC MOTOR & BRAKE(25) | | 8 |
| 22 | NSS | PISTON | Order Ref. HYDROSTATIC MOTOR & BRAKE(25) | | 8 |
| 23 | NSS | BLOCK | Order Ref. HYDROSTATIC MOTOR & BRAKE(25) | | 1 |
| 24 | 6675874 | CAM | | | 1 |
| 25 | 6675860 | ROTARY GROUP | Ref. HYDROSTATIC MOTOR & BRAKE(21)-HYDROSTATIC MOTOR & BRAKE(24) | | 1 |
| 26 | 6675864 | QUAD RING | | | 1 |
| 27 | 6675868 | POPPET | 1,5mm orifice | | 1 |
| 28 | 6674343 | SHIM | 0,6mm | | 1 |
| 29 | 6674344 | SPRING | | | 1 |
| 30 | 6675869 | O-RING | | | 1 |
| 31 | 6674345 | PLUG | | | 1 |
| 32 | 6675021 | BOLT | holds rotary group | | 2 |
| 33 | 6675865 | SNAP RING | | | 1 |
| 34 | 6675863 | QUAD RING | | | 1 |
| 35 | 6674841 | SPRING | | | 2 |
| 36 | 6675866 | SPOOL | | | 1 |
| 37 | 6675867 | WASHER | | | 1 |
| 38 | 6675898 | BUSHING | | | 1 |
| 39 | 6675887 | HOUSING | | | 1 |
| 40 | 6675896 | BOLT | | | 8 |
| 41 | 6675888 | SHAFT | | | 1 |
| 42 | 6674192 | DISC | outer | | 14 |
| 43 | 6674193 | DISC | inner | | 13 |
| 44 | 6675894 | SEAL | | | 1 |

# HYDROSTATIC MOTOR & BRAKE

| Ref.N° | Part N° | Description | Remarks | Serial N° | Qty. |
|---|---|---|---|---|---|
| 45 | 6675889 | PISTON | brake | | 1 |
| 46 | 6675893 | O-RING | | | 1 |
| 47 | 6675897 | WASHER | | | 1 |
| 48 | 6676647 | WASHER | 0,8mm | | 1 |
| 48 | 6676648 | WASHER | 1,05mm | | 1 |
| 48 | 6676649 | WASHER | 1,9mm | | 1 |
| 48 | 6676650 | WASHER | 2,3mm | | 1 |
| 48 | 6676651 | WASHER | 2,5mm | | 1 |
| 48 | 6676652 | WASHER | 2,9mm | | 1 |
| 49 | 6675892 | GASKET | | | 1 |
| 50 | 6675890 | COVER | | | 1 |
| 51 | 6675895 | BOLT | | | 12 |
| 52 | 6675862 | BRAKE | Ref. HYDROSTATIC MOTOR & BRAKE(38)-HYDROSTATIC MOTOR & BRAKE(51) | | 1 |
| 53 | 6675870 | SEAL KIT | Ref. HYDROSTATIC MOTOR & BRAKE(4)-HYDROSTATIC MOTOR & BRAKE(8), HYDROSTATIC MOTOR & BRAKE(18), HYDROSTATIC MOTOR & BRAKE(26), HY | | 1 |

# HYDROSTATIC PUMP
## (Servo Assisted Steering) (Right Half)

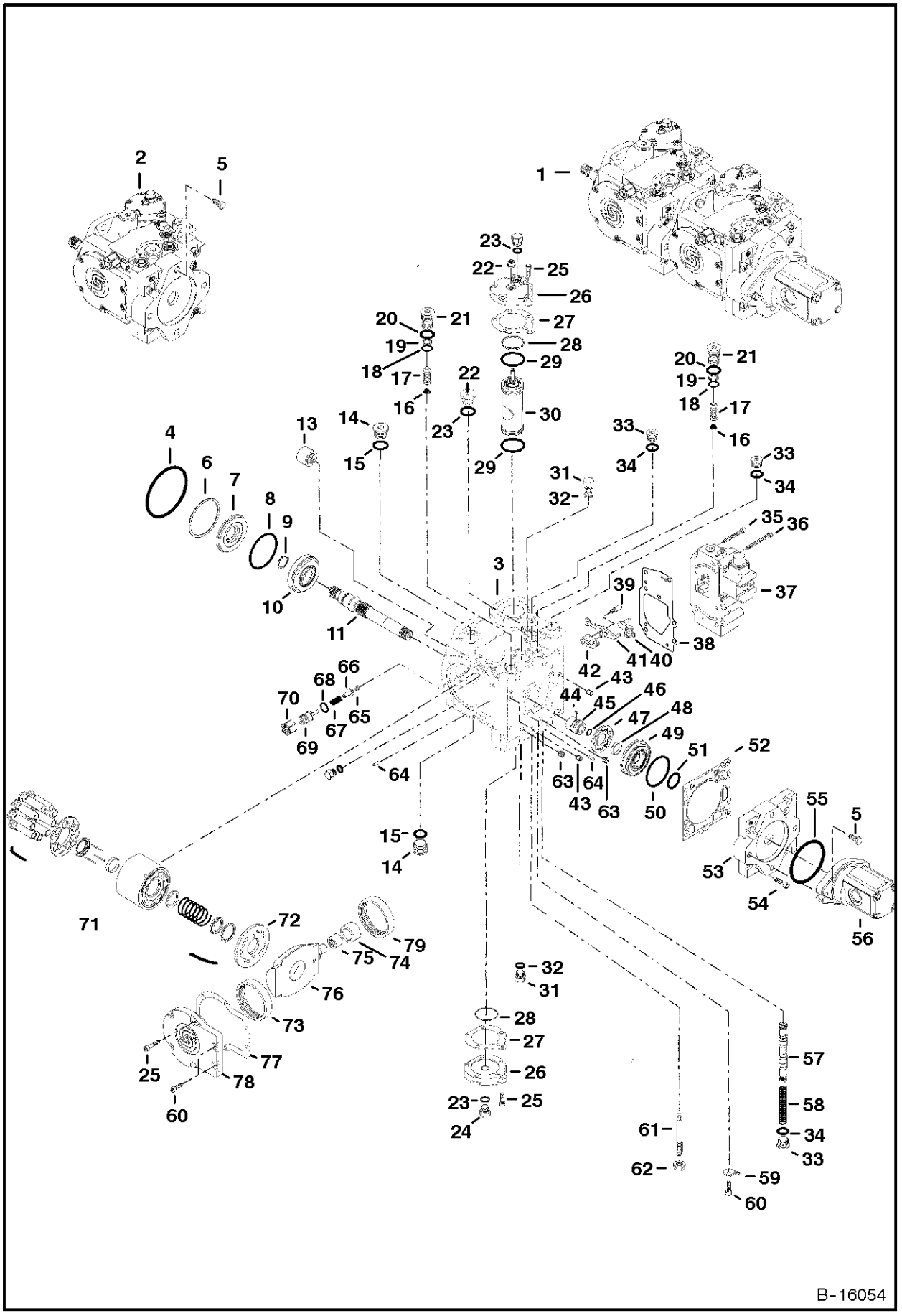

# HYDROSTATIC PUMP

| Ref.N° | Part N° | Description | Remarks | Serial N° | Qty. |
|---|---|---|---|---|---|
| 1 | 6677772 | PUMP | complete W/ gear pump - Model 4415507 - standard flow | | 1 |
| 1 | 6677773 | PUMP | $complete W/ gear pump - Model 4415508 - high flow | | 1 |
| 2 | 6678528 | PUMP | right half - Ref. HYDROSTATIC PUMP(3)-HYDROSTATIC PUMP(78) | | 1 |
| 3 | NSS | HOUSING | W/Ref. HYDROSTATIC PUMP(13), HYDROSTATIC PUMP(63), HYDROSTATIC PUMP(65) & HYDROSTATIC PUMP(79) | | 1 |
| 4 | 6678384 | O-RING | | | 1 |
| 5 | 6678385 | BOLT | | | 4 |
| 6 | 6678354 | SNAP RING | internal | | 1 |
| 7 | 6678332 | SEAL | shaft | | 1 |
| 8 | 6678331 | O-RING | | | 1 |
| 9 | 6678328 | SNAP RING | | | 1 |
| 10 | 6678329 | BEARING | roller | | 1 |
| 11 | 6678389 | SHAFT | | | 1 |
| 12 | 6678390 | SHAFT | assy - Ref. HYDROSTATIC PUMP(9)-HYDROSTATIC PUMP(11) | | 1 |
| 13 | 6650635 | BEARING | needle | | 1 |
| 14 | 6678353 | PLUG | | | 2 |
| 15 | 6662198 | O-RING | | | x |
| 16 | 6678364 | SPRING | | | 2 |
| 17 | 6658300 | VALVE | relief - 5000 PSI (345 bar) | | 2 |
| 18 | 6678366 | O-RING | | | 2 |
| 19 | 6631468 | WASHER | backAup | | 2 |
| 20 | 79K-10 | O-RING | | | 2 |
| 21 | 6678365 | VALVE | byApass | | 2 |
| 22 | 6678338 | NUT | | | 1 |
| 23 | 6661481 | O-RING | | | 2 |
| 24 | 6645086 | PLUG | W/Ref. HYDROSTATIC PUMP(23) | | 2 |
| 25 | 6678352 | SCREW | | | 10 |
| 26 | 6678367 | COVER | servo | | 1 |
| 27 | 6678350 | GASKET | | | 2 |
| 28 | 6678375 | RING | piston | | 2 |
| 29 | 6678374 | O-RING | | | 2 |
| 30 | 6678372 | SERVO | W/Ref. HYDROSTATIC PUMP(28) & HYDROSTATIC PUMP(29) | | 1 |
| 30 | 6678373 | KIT | ring - Ref. HYDROSTATIC PUMP(28) (2) & HYDROSTATIC PUMP(29) (2) | | x |
| 31 | 6645086 | PLUG | W/Ref. HYDROSTATIC PUMP(32) | | 4 |
| 32 | 6661481 | O-RING | | | x |
| 33 | 6667402 | PLUG | W/Ref. HYDROSTATIC PUMP(34) | | 1 |
| 34 | 79K-8 | O-RING | | | x |
| 35 | 6678340 | SCREW | | | 4 |
| 36 | 6678341 | SCREW | | | 3 |
| 37 | 6678339 | CONTROL | W/Ref. HYDROSTATIC PUMP(35) & HYDROSTATIC PUMP(36) | | 1 |
| 38 | 6678344 | GASKET | | | 1 |
| 39 | 6678333 | SCREW | | | 1 |
| 40 | 6678334 | LINK | summing | | 1 |
| 41 | 6678335 | LINK | feedback | | 1 |
| 42 | 6678336 | LINK | neutral adjust | | 1 |
| 43 | 6518460 | PIN | | | 2 |

# HYDROSTATIC PUMP

| Ref.N° | Part N° | Description | Remarks | Serial N° | Qty. |
|---|---|---|---|---|---|
| 44 | 6678358 | KEY | | | 1 |
| 45 | 6678381 | COUPLER | | | 1 |
| 46 | 6678359 | SNAP RING | | | 1 |
| 47 | 6678360 | GEROTOR | | | 1 |
| 48 | 6678858 | BEARING | | | 1 |
| 49 | 6678361 | COVER | gerotor - W/Ref. HYDROSTATIC PUMP(48) | | 1 |
| 50 | 6678362 | O-RING | | | 1 |
| 51 | 6678363 | O-RING | | | 1 |
| 52 | 6678357 | GASKET | | | 1 |
| 53 | 6678383 | COVER | charge pump | | 1 |
| 54 | 6678382 | SCREW | | | 1 |
| 55 | 6678384 | O-RING | | | 1 |
| 56 | | GEAR PUMP | See Page HIGH HORSEPOWER HYDRAULICS(1) & GEAR PUMP(6) | | 1 |
| 57 | 6678342 | SPOOL | | | 1 |
| 58 | 6678343 | SPRING | | | 1 |
| 59 | 6678355 | BRACKET | | | 1 |
| 60 | 6678348 | SCREW | | | 2 |
| 61 | 6678337 | SCREW | neutral adjust | | 1 |
| 62 | 6678338 | NUT | | | 1 |
| 63 | 6518510 | PLUG | pipe | | 2 |
| 64 | 6678347 | PIN | | | 1 |
| 65 | 6678351 | FILTER | screen | | 1 |
| 66 | 6661717 | POPPET | charge relief | | 1 |
| 67 | 6661716 | SPRING | | | 1 |
| 68 | 6678377 | O-RING | | | 1 |
| 69 | 6678376 | ADJUSTER | charge relief | | 1 |
| 70 | 6661718 | NUT | | | 1 |
| 71 | 6678386 | ROTATING PIECE | | | 1 |
| 72 | 6678369 | VALVE PLATE | | | 1 |
| 73 | NSS | BEARING | Order Ref. HYDROSTATIC PUMP(78) | | 2 |
| 74 | 6678379 | CAM | W/Ref. HYDROSTATIC PUMP(75) | | 1 |
| 75 | 6678380 | BEARING | | | 1 |
| 76 | 6678378 | SWASHPLATE | | | 1 |
| 77 | 6678349 | GASKET | | | 1 |
| 78 | 6678346 | COVER | W/Ref. HYDROSTATIC PUMP(73) | | 1 |
| 79 | NSS | BEARING | Order Ref. HYDROSTATIC PUMP(3) | | 1 |

# HYDROSTATIC PUMP
## (Servo Assisted Steering) (Left Half)

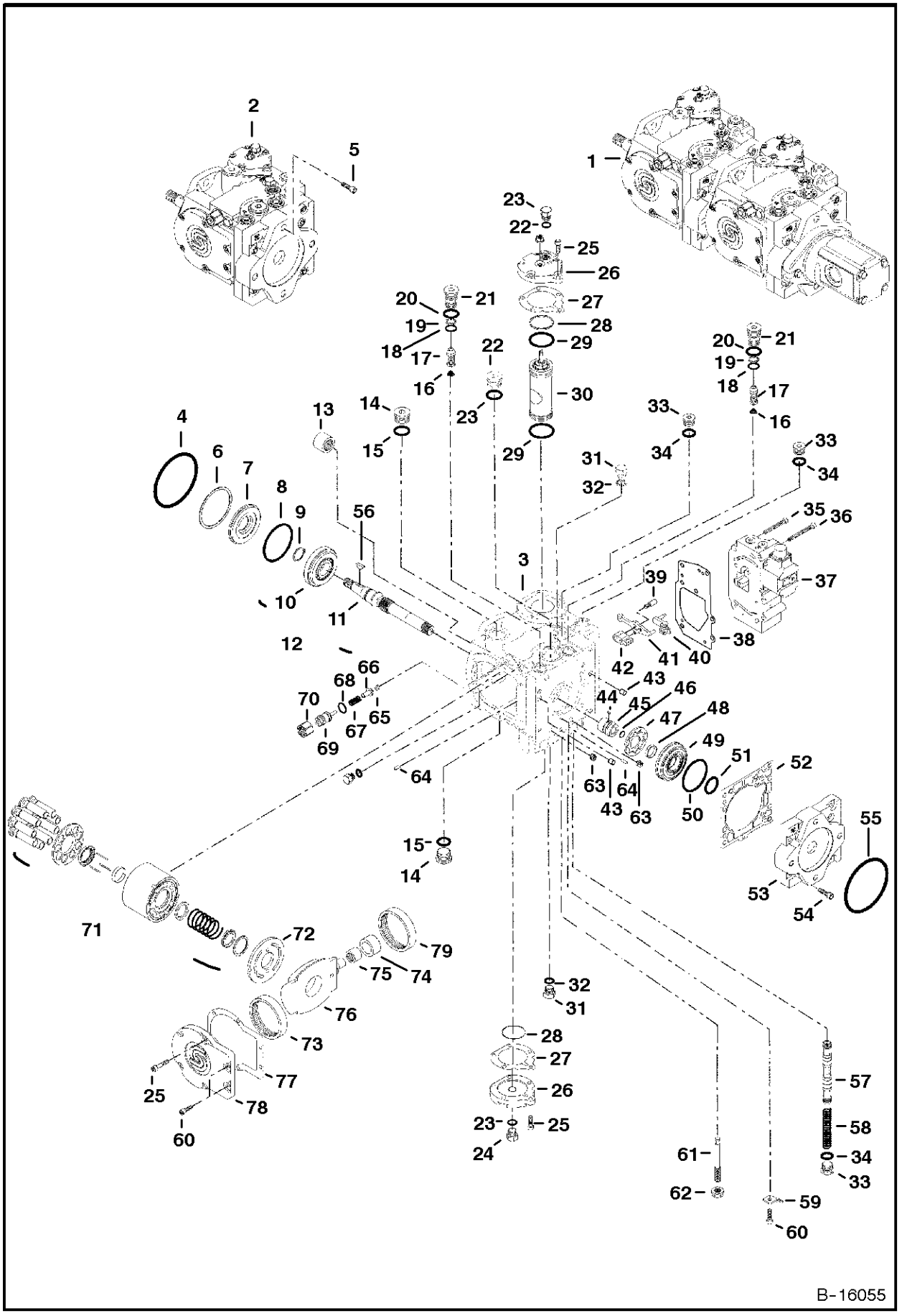

# HYDROSTATIC PUMP

| Ref.N° | Part N° | Description | Remarks | Serial N° | Qty. |
|---|---|---|---|---|---|
| 1 | 6677772 | PUMP | complete W/ gear pump - Model 4415507 - standard flow | | 1 |
| 1 | 6677773 | PUMP | $complete W/ gear pump - Model 4415508 - high flow | | 1 |
| 2 | 6678527 | PUMP | left half - Ref. HYDROSTATIC PUMP(3)-HYDROSTATIC PUMP(78) | | 1 |
| 3 | NSS | HOUSING | W/Ref. HYDROSTATIC PUMP(13), HYDROSTATIC PUMP(63), HYDROSTATIC PUMP(65) & HYDROSTATIC PUMP(79) | | 1 |
| 4 | 6678384 | O-RING | | | 1 |
| 5 | 6678385 | BOLT | | | 4 |
| 6 | 6678354 | SNAP RING | internal | | 1 |
| 7 | 6678332 | SEAL | shaft | | 1 |
| 8 | 6678331 | O-RING | | | 1 |
| 9 | 6678328 | SNAP RING | | | 1 |
| 10 | 6678329 | BEARING | rocker | | 1 |
| 11 | 6678327 | SHAFT | | | 1 |
| 12 | 6678330 | SHAFT | assy - Ref. HYDROSTATIC PUMP(9)-HYDROSTATIC PUMP(11) | | 1 |
| 13 | 6650635 | BEARING | needle | | 1 |
| 14 | 6678353 | PLUG | | | 2 |
| 15 | 6662198 | O-RING | | | x |
| 16 | 6678364 | SPRING | | | 2 |
| 17 | 6658300 | VALVE | relief - 5000 PSI (345 bar) | | 2 |
| 18 | 6678366 | O-RING | | | 2 |
| 19 | 6631468 | WASHER | backAup | | 2 |
| 20 | 79K-10 | O-RING | | | 2 |
| 21 | 6678365 | VALVE | byApass | | 2 |
| 22 | 6678338 | NUT | | | 1 |
| 23 | 6661481 | O-RING | | | 2 |
| 24 | 6645086 | PLUG | | | 2 |
| 25 | 6678352 | SCREW | | | 10 |
| 26 | 6678367 | COVER | servo | | 1 |
| 27 | 6678350 | GASKET | | | 2 |
| 28 | 6678375 | RING | piston | | 2 |
| 29 | 6678374 | O-RING | | | 2 |
| 30 | 6678372 | SERVO | W/Ref. HYDROSTATIC PUMP(28) & HYDROSTATIC PUMP(29) | | 1 |
| 30 | 6678373 | KIT | ring - Ref. HYDROSTATIC PUMP(28) (2) & HYDROSTATIC PUMP(29) (2) | | x |
| 31 | 6645086 | PLUG | W/Ref. HYDROSTATIC PUMP(32) | | 4 |
| 32 | 6661481 | O-RING | | | x |
| 33 | 6667402 | PLUG | W/Ref. HYDROSTATIC PUMP(34) | | 1 |
| 34 | 79K-8 | O-RING | | | x |
| 35 | 6678340 | SCREW | | | 4 |
| 36 | 6678341 | SCREW | | | 3 |
| 37 | 6678339 | CONTROL | W/Ref. HYDROSTATIC PUMP(35) & HYDROSTATIC PUMP(36) | | 1 |
| 38 | 6678344 | GASKET | | | 1 |
| 39 | 6678333 | SCREW | | | 1 |
| 40 | 6678334 | LINK | summing | | 1 |
| 41 | 6678335 | LINK | feedback | | 1 |
| 42 | 6678336 | LINK | neutral adjust | | 1 |
| 43 | 6518460 | PIN | | | 2 |

# HYDROSTATIC PUMP

| Ref.N° | Part N° | Description | Remarks | Serial N° | Qty. |
|---|---|---|---|---|---|
| 44 | 6678358 | KEY | | | 1 |
| 45 | 6678381 | COUPLER | | | 1 |
| 46 | 6678359 | SNAP RING | | | 1 |
| 47 | 6678360 | GEROTOR | | | 1 |
| 48 | 6678858 | BEARING | | | 1 |
| 49 | 6678361 | COVER | gerotor - W/Ref. HYDROSTATIC PUMP(48) | | 1 |
| 50 | 6678362 | O-RING | | | 1 |
| 51 | 6678363 | O-RING | | | 1 |
| 52 | 6678357 | GASKET | | | 1 |
| 53 | 6678383 | COVER | charge pump | | 1 |
| 54 | 6678382 | SCREW | | | 1 |
| 55 | 6678384 | O-RING | | | 1 |
| 56 | 6J-807 | KEY | | | 1 |
| 57 | 6678342 | SPOOL | | | 1 |
| 58 | 6678343 | SPRING | | | 1 |
| 59 | 6678355 | BRACKET | | | 1 |
| 60 | 6678348 | SCREW | | | 2 |
| 61 | 6678337 | SCREW | neutral adjust | | 1 |
| 62 | 6678338 | NUT | | | 1 |
| 63 | 6518510 | PLUG | pipe | | 2 |
| 64 | 6678347 | PIN | | | 1 |
| 65 | 6678351 | FILTER | screen | | 1 |
| 66 | 6661717 | POPPET | charge relief | | 1 |
| 67 | 6661716 | SPRING | | | 1 |
| 68 | 6678377 | O-RING | | | 1 |
| 69 | 6678376 | ADJUSTER | charge relief | | 1 |
| 70 | 6661718 | NUT | | | 1 |
| 71 | 6678386 | ROTATING PIECE | | | 1 |
| 72 | 6678369 | VALVE PLATE | | | 1 |
| 73 | NSS | BEARING | Order Ref. HYDROSTATIC PUMP(78) | | 2 |
| 74 | 6678379 | CAM | W/Ref. HYDROSTATIC PUMP(75) | | 1 |
| 75 | 6678380 | BEARING | | | 1 |
| 76 | 6678378 | SWASHPLATE | | | 1 |
| 77 | 6678349 | GASKET | | | 1 |
| 78 | 6678346 | COVER | W/Ref. HYDROSTATIC PUMP(73) | | 1 |
| 79 | NSS | BEARING | Order Ref. HYDROSTATIC PUMP(3) | | 1 |

# GEAR PUMP

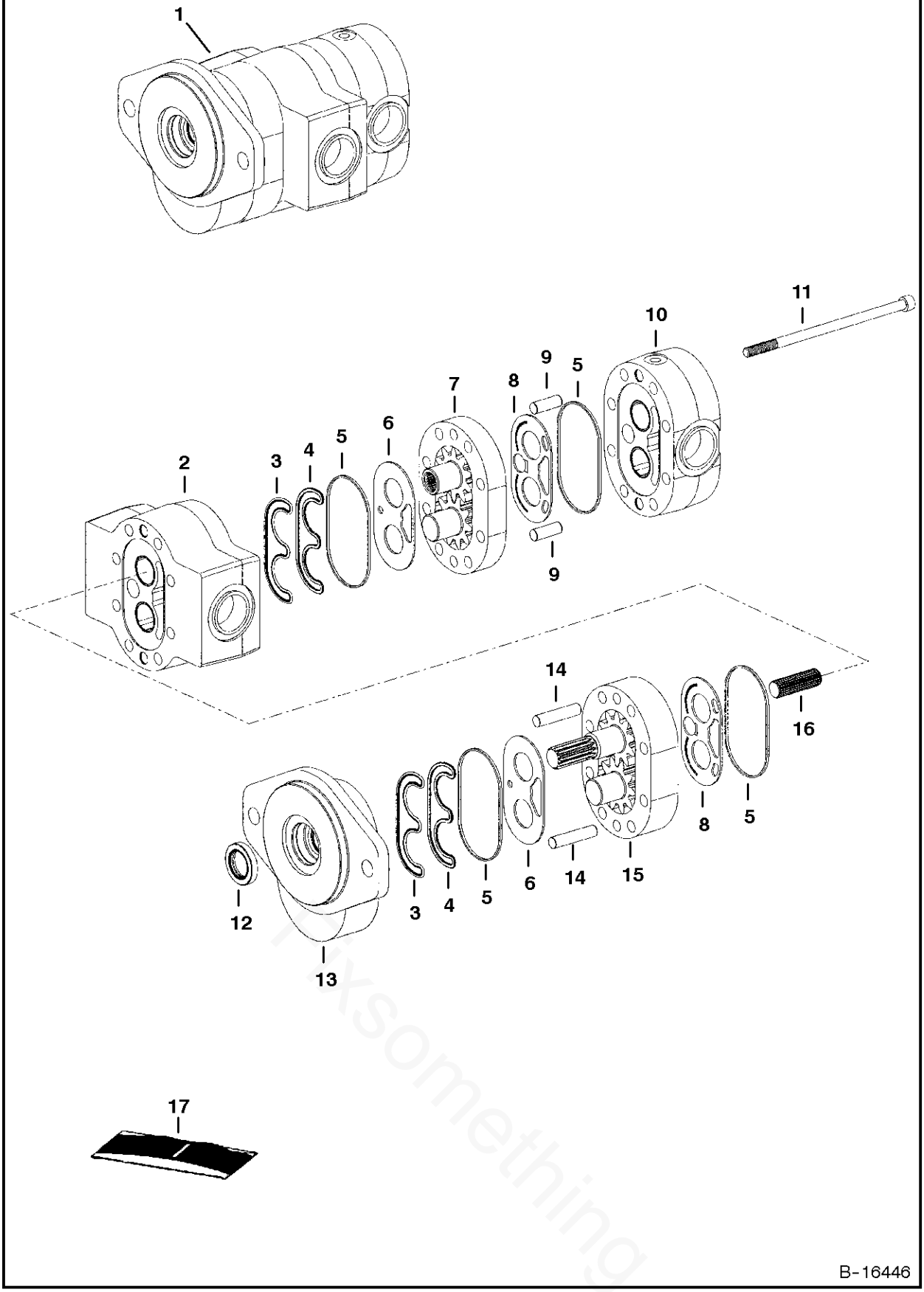


fixsomething

# GEAR PUMP

| Ref.N° | Part N° | Description | Remarks | Serial N° | Qty. |
|---|---|---|---|---|---|
| 1 | 6678529 | PUMP | 163D1187 - for model 4415507 | | 1 |
| 2 | NSS | BODY | | | 1 |
| 3 | NSS | SEAL | backAup | | 2 |
| 4 | NSS | SEAL | load | | 2 |
| 5 | NSS | SEAL | | | 4 |
| 6 | NSS | WEAR PLATE | | | 2 |
| 7 | NSS | SECTION | | | 1 |
| 8 | NSS | WEAR PLATE | | | 2 |
| 9 | NSS | PIN | | | 2 |
| 10 | NSS | BODY | | | 1 |
| 11 | NSS | BOLT | | | 8 |
| 12 | NSS | SEAL | shaft | | 1 |
| 13 | NSS | COVER | | | 1 |
| 14 | NSS | PIN | | | 2 |
| 15 | NSS | SECTION | | | 1 |
| 16 | NSS | SHAFT | | | 1 |
| 17 | 6678730 | SEAL KIT | Ref. GEAR PUMP(3)-GEAR PUMP(6), GEAR PUMP(8 ) & GEAR PUMP(12) | | 1 |

# STEERING VALVE

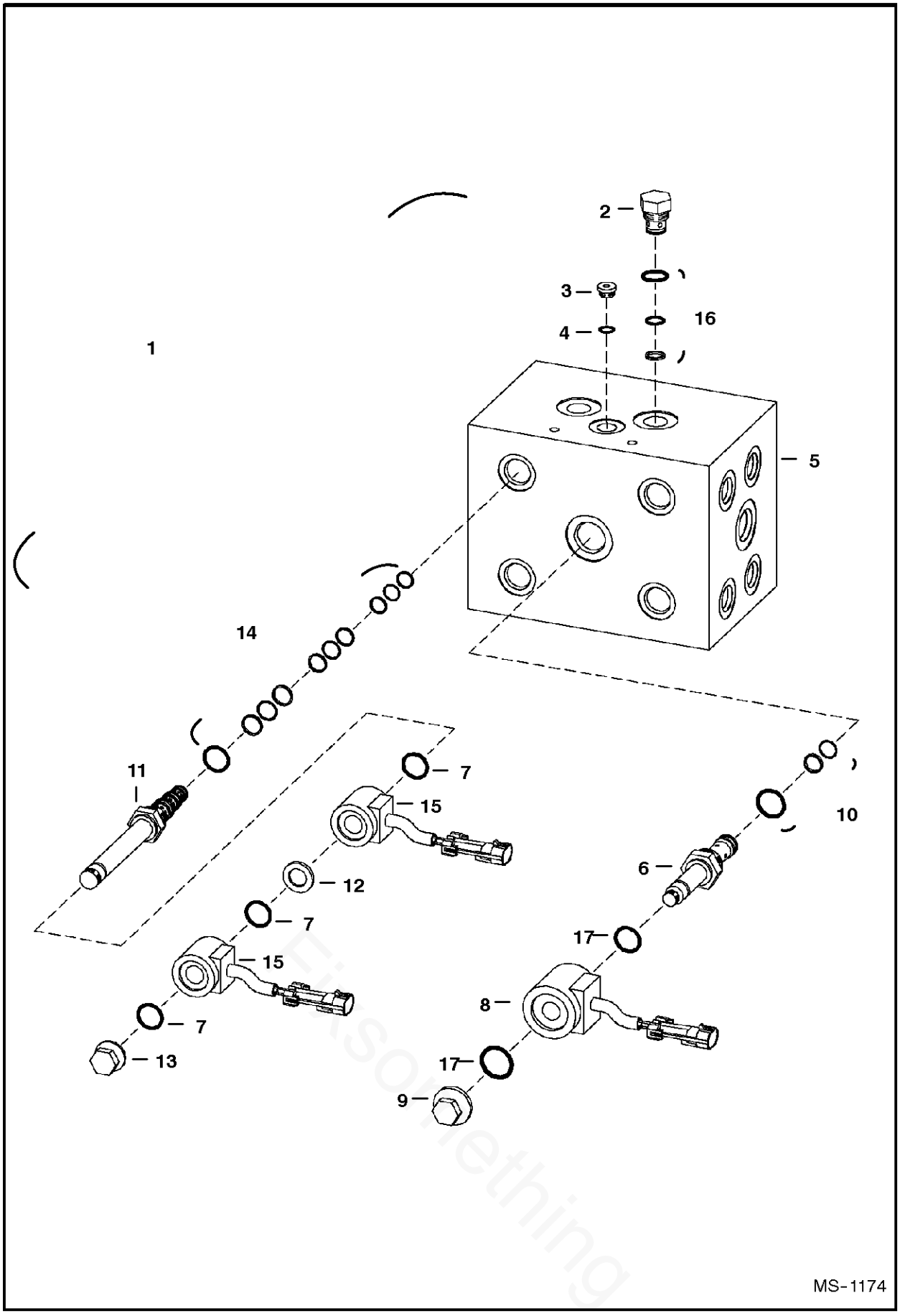


Ericsomething

# STEERING VALVE

| Ref.N° | Part N° | Description | Remarks | Serial N° | Qty. |
|---|---|---|---|---|---|
| 1 | 6677796 | VALVE | | | 1 |
| 2 | 6678655 | CHECK VALVE | W/Ref. STEERING VALVE(16) | | 4 |
| 3 | 90KV-5 | PLUG | W/Ref. STEERING VALVE(4) | | 1 |
| 4 | 95K-6 | O-RING | | | x |
| 5 | NSS | BLOCK | | | 1 |
| 6 | 6678656 | CARTRIDGE | W/Ref. STEERING VALVE(9) | | 1 |
| 7 | 6678664 | O-RING | | | x |
| 8 | 6678658 | COIL | | | 1 |
| 9 | 6678660 | NUT | | | 1 |
| 10 | 6672754 | SEAL KIT | | | x |
| 11 | 6678657 | VALVE | W/Ref. STEERING VALVE(13) | | 4 |
| 12 | 6678665 | SPACER | | | 4 |
| 13 | 6668820 | NUT | | | 4 |
| 14 | 6672756 | SEAL KIT | | | x |
| 15 | 6671025 | COIL | | | 8 |
| 16 | 6669087 | SEAL KIT | | | x |
| 17 | 6678663 | O-RING | | | x |

# 2-SPEED VALVE

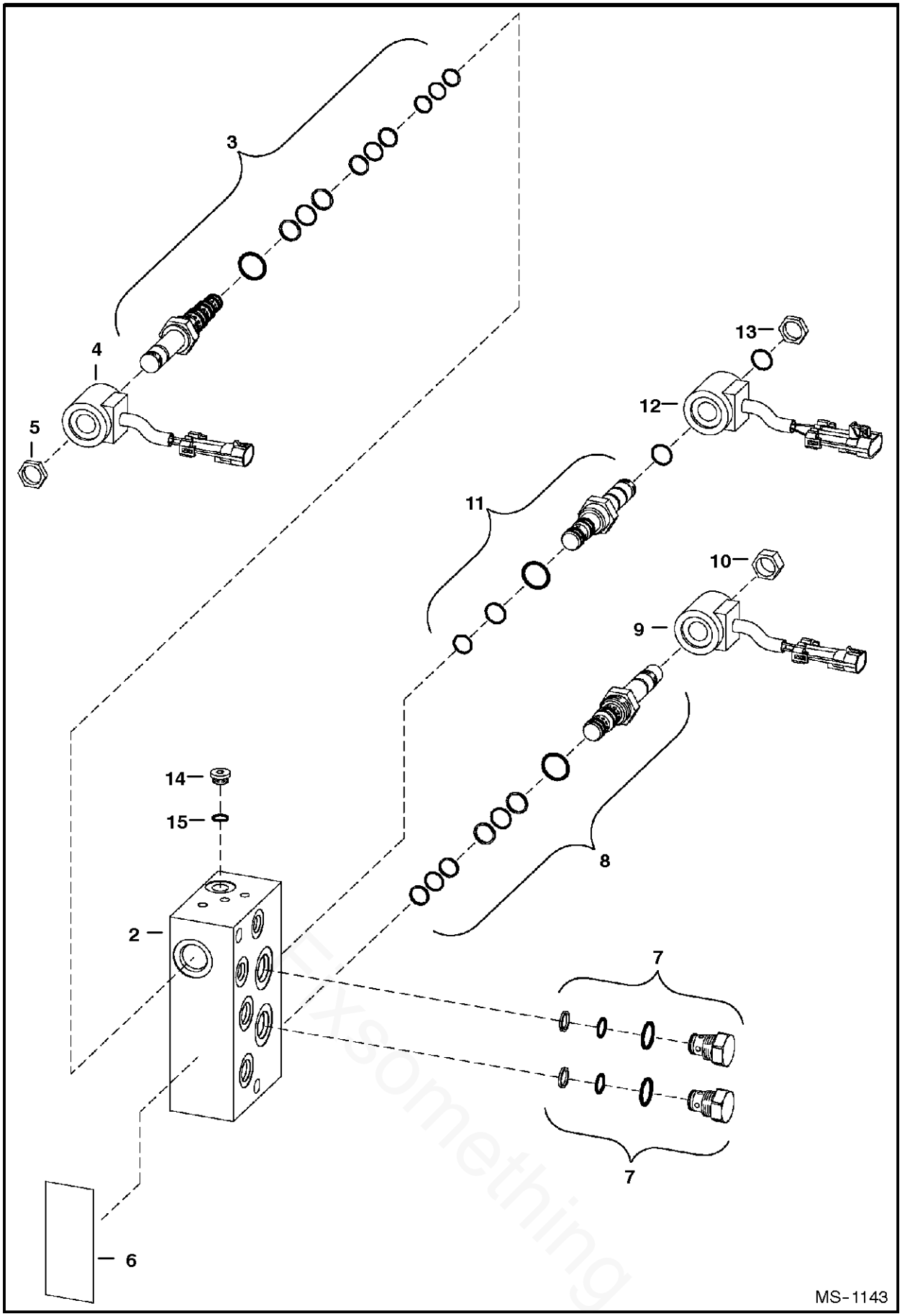


Uxsomething

# 2-SPEED VALVE

| Ref.N° | Part N° | Description | Remarks | Serial N° | Qty. |
|---|---|---|---|---|---|
| 1 | 6676417 | VALVE | assy. - Ref. 2-SPEED VALVE(2)-2-SPEED VALVE(16) | | 1 |
| 2 | NSS | BLOCK | Order Ref. 2-SPEED VALVE(1) | | 1 |
| 3 | 6677982 | CARTRIDGE | makeAup valve - W/coil nut Ref. 2-SPEED VALVE(5) | | 1 |
| 3 | 6672756 | SEAL KIT | | | x |
| 4 | 6676243 | COIL | | | 1 |
| 5 | 6668820 | NUT | | | 1 |
| 6 | 6673185 | DECAL | warning | | 1 |
| 7 | 6675265 | VALVE | | | 2 |
| 7 | 6669087 | SEAL KIT | | | x |
| 8 | 6677981 | CARTRIDGE | brake valve - W/ coil nut Ref. 2-SPEED VALVE(10) | | 1 |
| 8 | 6673188 | SEAL KIT | | | x |
| 9 | 6676242 | COIL | | | 1 |
| 10 | 6677980 | NUT | | | 1 |
| 11 | 6676239 | CARTRIDGE | two speed - W/ coil nut Ref. 2-SPEED VALVE(13) | | 1 |
| 11 | 6676205 | SEAL KIT | | | x |
| 12 | 6676244 | COIL | | | 1 |
| 13 | 6676247 | NUT | | | 1 |
| 14 | 6672762 | PLUG | W/Ref. 2-SPEED VALVE(15) | | 1 |
| 15 | 75K-4 | O-RING | | | x |
| 16 | 6677177 | PLUG | | | 5 |

## * 2-SPEED VALVE

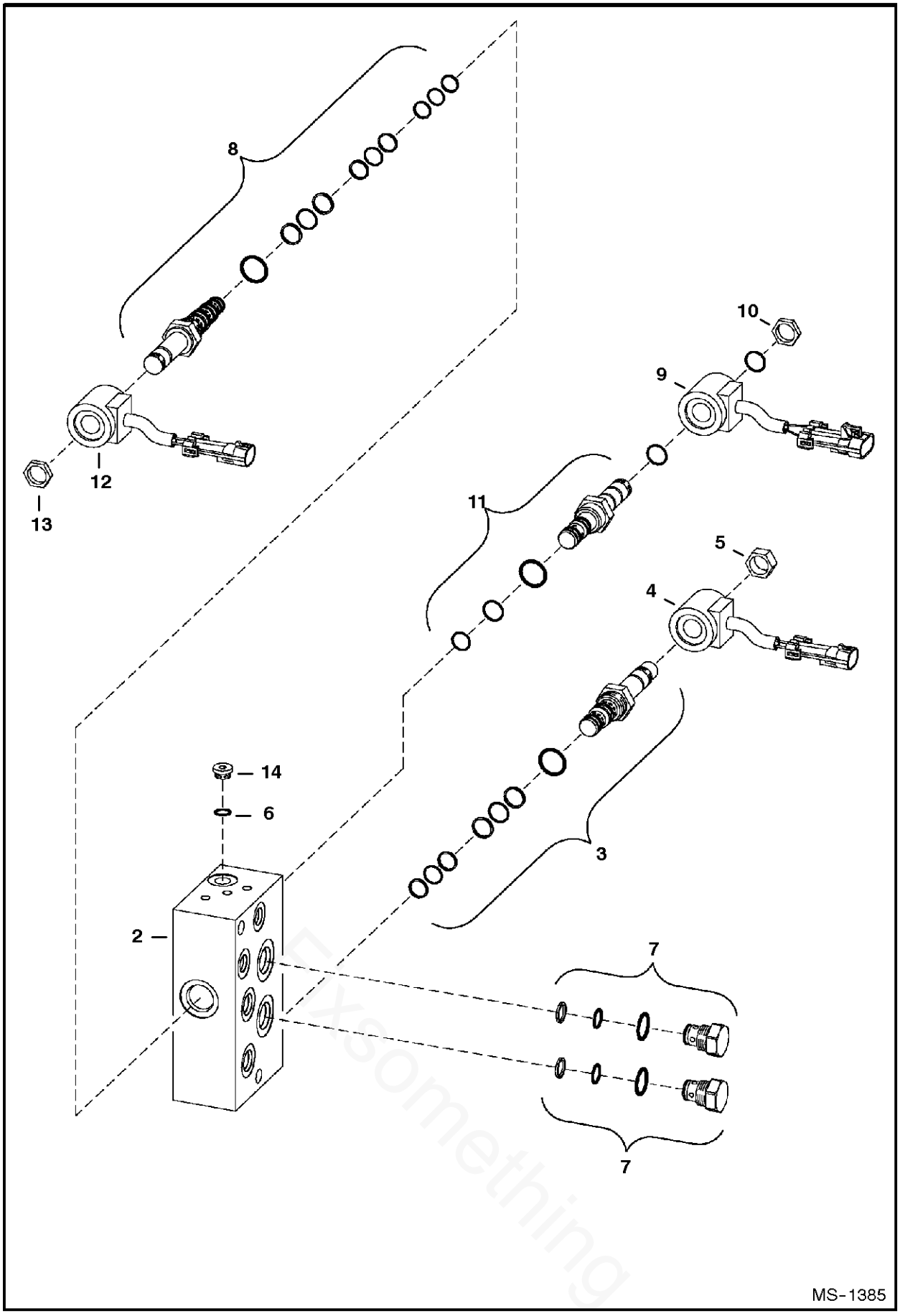


Fixsomething

# * 2-SPEED VALVE

| Ref.N° | Part N° | Description | Remarks | Serial N° | Qty. |
|---|---|---|---|---|---|
| 1 | 6679102 | VALVE | assy. | | 1 |
| 2 | NSS | BLOCK | Order Ref. * 2-SPEED VALVE(1) | | 1 |
| 3 | 6677982 | CARTRIDGE | make up valve - W/Ref. * 2-SPEED VALVE(5) | | 1 |
| 3 | 6672756 | SEAL KIT | | | x |
| 4 | 6676243 | COIL | | | 1 |
| 5 | 6668820 | NUT | | | 1 |
| 6 | 75K-4 | O-RING | | | x |
| 7 | 6675265 | VALVE | | | 2 |
| 7 | 6669087 | SEAL KIT | | | x |
| 8 | 6676239 | CARTRIDGE | brake valve - W/Ref. * 2-SPEED VALVE(10) | | 1 |
| 8 | 6673188 | SEAL KIT | | | x |
| 9 | 6676242 | COIL | | | 1 |
| 10 | 6677980 | NUT | | | 1 |
| 11 | 6680120 | CARTRIDGE | two speed valve - PWM - W/Ref. * 2-SPEED VALVE(13) | | 1 |
| 11 | 6676205 | SEAL KIT | | | x |
| 12 | 6676244 | COIL | | | 1 |
| 13 | 6676247 | NUT | | | 1 |
| 14 | 6672762 | PLUG | W/Ref. * 2-SPEED VALVE(6) | | 1 |

## HYDROSTATIC OIL FILTER
## (In-Line)

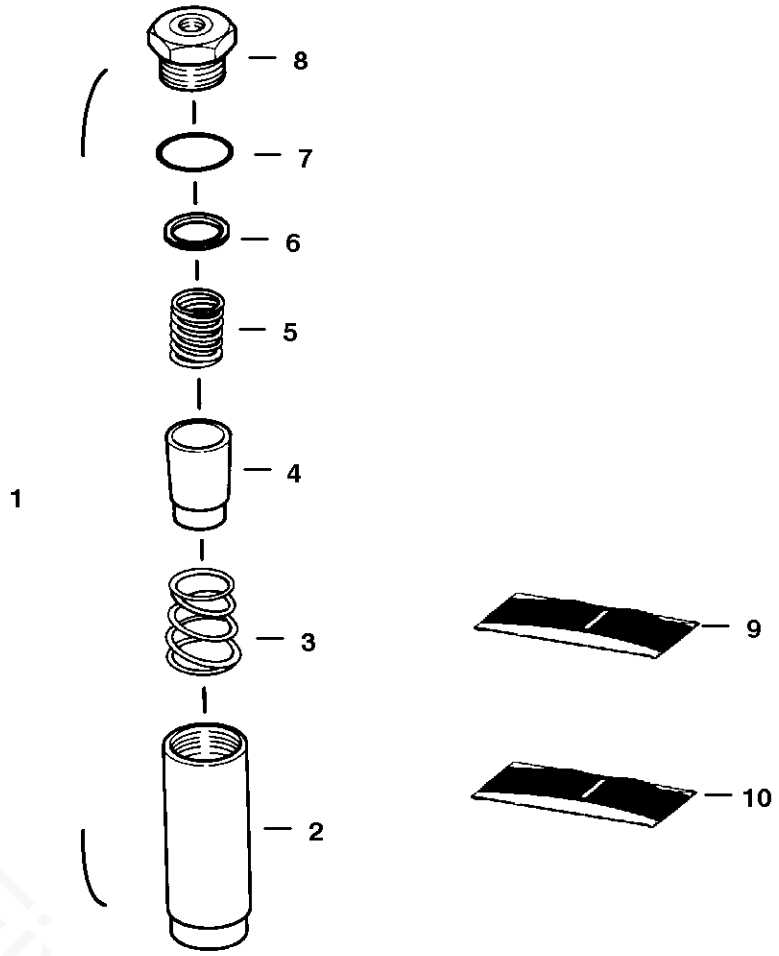


Fixsomething

# HYDROSTATIC OIL FILTER

| Ref.N° | Part N° | Description | Remarks | Serial N° | Qty. |
|---|---|---|---|---|---|
| 1 | 6661022 | FILTER | Ref. HYDROSTATIC OIL FILTER(2) - HYDROSTATIC OIL FILTER(8) | | 1 |
| 2 | NSS | HOUSING | | | 1 |
| 3 | NSS | SPRING | | | 1 |
| 4 | NSS | ELEMENT | | | 1 |
| 5 | NSS | SPRING | | | 1 |
| 6 | NSS | GASKET | | | 1 |
| 7 | NSS | O-RING | | | 1 |
| 8 | NSS | PLUG | | | 1 |
| 9 | 6661807 | KIT | element - Ref. HYDROSTATIC OIL FILTER(4), HYDROSTATIC OIL FILTER(6) & HYDROSTATIC OIL FILTER(7) | | 1 |
| 10 | 6661808 | KIT | spring - Ref. HYDROSTATIC OIL FILTER(3) & HYDROSTATIC OIL FILTER(5) | | 1 |

# HYDROSTATIC OIL FILTER

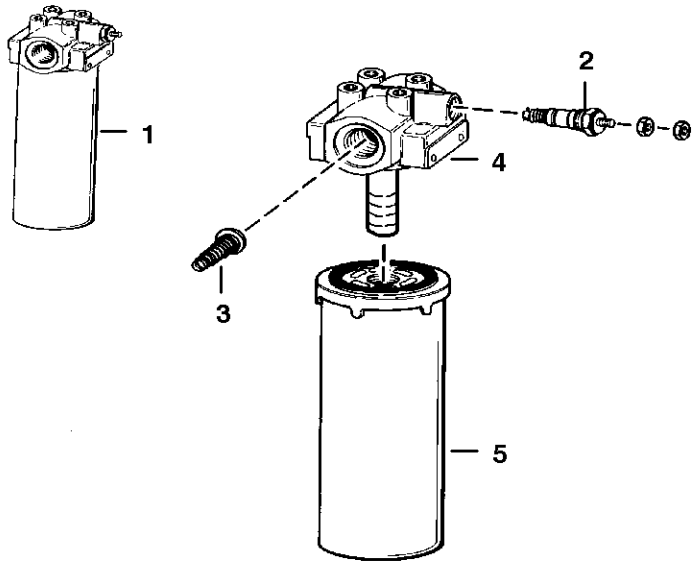


C-2818

Fixsomething

# HYDROSTATIC OIL FILTER

| Ref.N° | Part N° | Description | Remarks | Serial N° | Qty. |
|---|---|---|---|---|---|
| 1 | 6661247 | FILTER ASSY. | W/Ref. HYDROSTATIC OIL FILTER(2)-HYDROSTATIC OIL FILTER(5) (50 PSI byApass & switch) | | 1 |
| 2 | 6660260 | SWITCH | pressure - Normally closed | | 1 |
| 2 | 6599365 | KIT | Nut, washer & OArings for switch | | 1 |
| 3 | NSS | VALVE | byApass (50 PSI - Order Ref. HYDROSTATIC OIL FILTER(1)) | | 1 |
| 4 | NSS | HEAD | W/Internal check valve  Check Valve' printed on head - Order 6661282 Filter Assy. | | 1 |
| 5 | 6661248 | ELEMENT | | | 1 |

# CAB ELECTRICAL CIRCUITRY

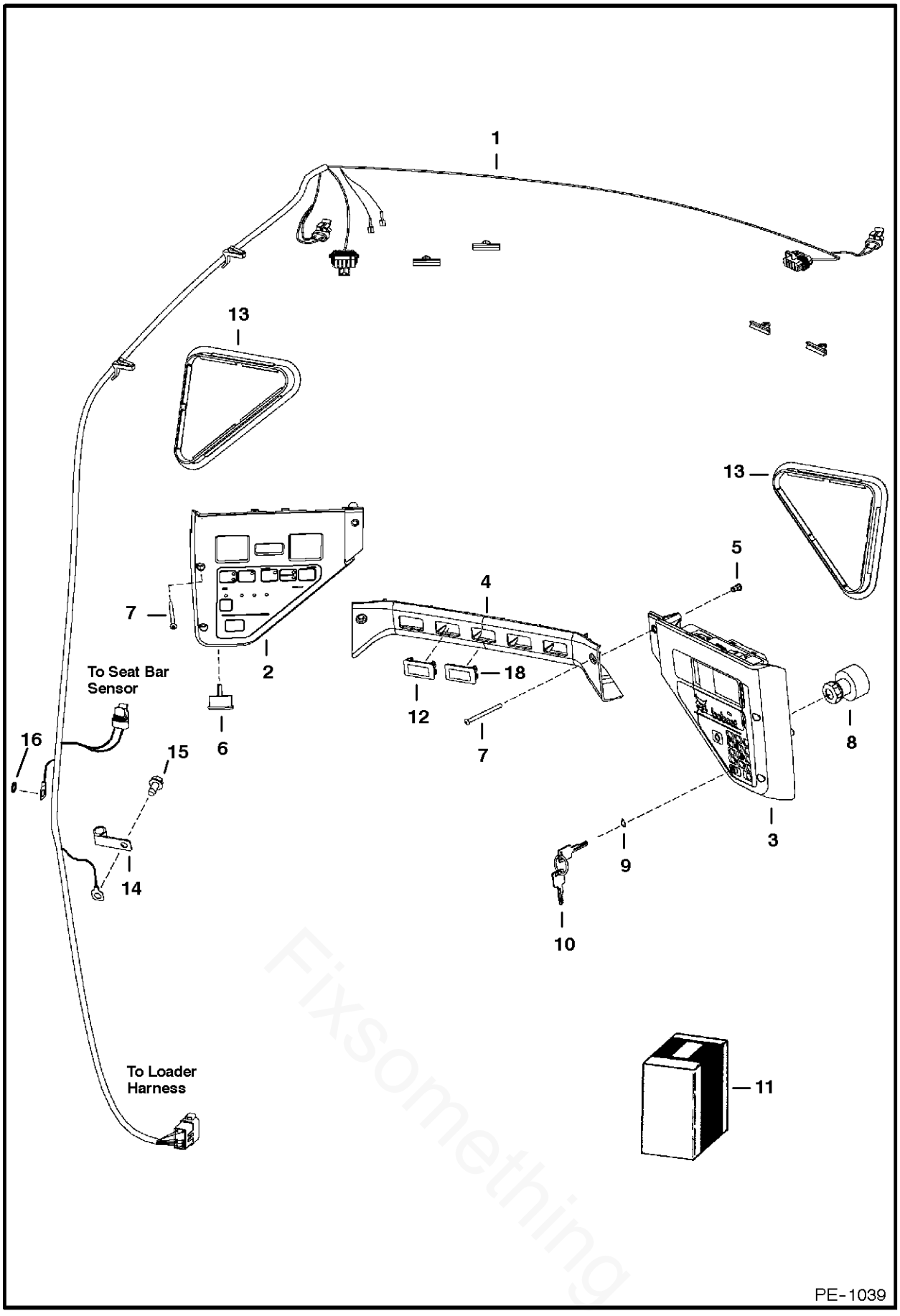


Fixsomething

# CAB ELECTRICAL CIRCUITRY

| Ref.N° | Part N° | Description | Remarks | Serial N° | Qty. |
|---|---|---|---|---|---|
| 1 | 6727178 | HARNESS | | | 1 |
| 2 | 6672346 | PANEL | L.H. | | 1 |
| 2 | 6675982 | PLUG | service part - covers the backlighting service hole | | 1 |
| 2 | 6675337 | BULB | | | 2 |
| 3 | 6677175 | PANEL | R.H. - keyed | | 1 |
| 3 | 6672348 | PANEL | R.H. - deluxe - keyless | | 1 |
| 4 | 6676723 | CROSSMEMBER | | | 1 |
| 5 | 6675033 | INSERT | threaded | | 6 |
| 6 | 6675390 | ALARM | W/nut | | 1 |
| 7 | 6719084 | BOLT | | | 6 |
| 8 | 6675470 | SWITCH | ignition - W/Ref. CAB ELECTRICAL CIRCUITRY(9) & CAB ELECTRICAL CIRCUITRY(10) | | 1 |
| 9 | 6674202 | NUT | | | 2 |
| 10 | 6709527 | KEY | ignition | | 1 |
| 11 | NAP | KIT | keyless ignition - Order 6672348 panel - See Service Manual for proper instructions | | 1 |
| 12 | 6807730 | PLUG | | | x |
| 13 | 6674403 | COVER | | | 2 |
| 14 | 6675171 | CLAMP | | | 1 |
| 15 | 84G-3712 | BOLT | | | 1 |
| 16 | 6E-5 | WASHER | | | 1 |
| 17 | 6676536 | SWITCH | park brake | | 1 |
| 18 | 6676158 | SWITCH | AWS | | 1 |

# ENGINE ELECTRICAL

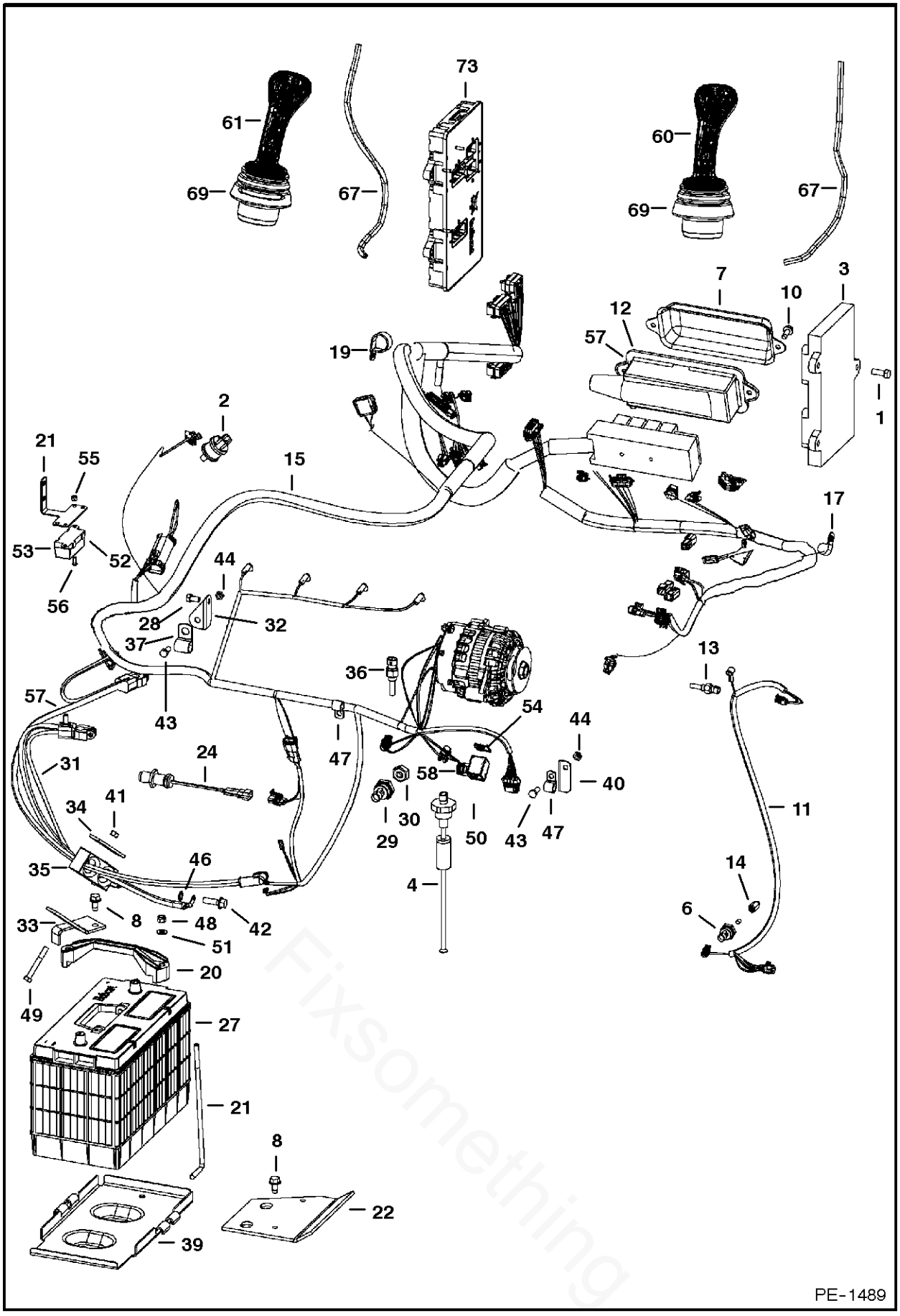


Fixsomething

# ENGINE ELECTRICAL

| Ref.N° | Part N° | Description | Remarks | Serial N° | Qty. |
|---|---|---|---|---|---|
| 1 | 43C-616 | BOLT | | | 3 |
| 2 | 6665371 | SWITCH | vacuum | | 1 |
| 3 | 6676156 | CONTROLLER | AWS | | 1 |
| 4 | 6674209 | SENSOR | fuel - W/ gasket | | 1 |
| 4 | 6717579 | GASKET | | | 1 |
| 5 | 6624289 | STA-STRAP | | | 6 |
| 6 | 6674316 | SWITCH | hyd pressure | | 1 |
| 7 | 6716621 | COVER | fuse box | | 1 |
| 8 | 84G-3712 | BOLT | | | 2 |
| 9 | 6718774 | DECAL | fuse/relay - 2' x 7' (51mm x 178mm) | | 1 |
| 10 | 84G-3112 | BOLT | | | 1 |
| 11 | 6717247 | HARNESS | filter | | 1 |
| 12 | 6725302 | GASKET | fuse cover | | 1 |
| 13 | 6718417 | SENDER | hyd temp | | 1 |
| 14 | 6718948 | ADAPTER | | | 1 |
| 14 | 6675278 | FILTER | | | 1 |
| 15 | 6730297 | HARNESS | | | 1 |
| 16 | 6719422 | HARNESS | fuel sender | | 1 |
| 17 | 30H-35 | CLIP | | | 1 |
| 18 | 6560172 | COVER | terminal | | 1 |
| 19 | 30H-57 | CLAMP | | | 1 |
| 20 | 6569203 | CLAMP | battery | | 1 |
| 21 | 6576280 | BOLT | battery hold down | | 2 |
| 22 | 6579989 | BRACKET | | | 1 |
| 23 | 6675734 | TIE STRAP | button head | | 2 |
| 24 | 6658260 | SENSOR | rpm | | 1 |
| 25 | | ALTERNATOR | See Page ALTERNATOR(2) | | 1 |
| 26 | 6728621 | BRACKET | | | 1 |
| 27 | 6665427 | BATTERY | | | 1 |
| 28 | 1CM-816 | BOLT | | | 1 |
| 29 | 6674315 | SWITCH | engine pressure | | 1 |
| 30 | 6708580 | ADAPTER | | | 1 |
| 30 | 6666699 | SEAL RING | brass 10mm x 15mm | | 1 |
| 31 | 6727803 | CABLE | negative | | 1 |
| 32 | 6714971 | BRACKET | harness | | 2 |
| 33 | 6715131 | BRACE | | | 1 |
| 34 | 6715132 | RETAINER | | | 1 |
| 35 | 6715197 | CLAMP | | | 1 |
| 36 | 6718416 | SENDER | engine temp | | 1 |
| 37 | 30H-44 | CLAMP | | | 1 |
| 38 | 6719141 | CABLE | positive | | 1 |
| 39 | 6712536 | MOUNT | battery | | 1 |
| 40 | 6714974 | HOSE | harness | | 1 |
| 41 | 95D-5 | NUT | | | 1 |
| 42 | 35C-620 | BOLT | battery pan | | 1 |
| 43 | 17C-512 | BOLT | | | 2 |
| 44 | 85D-5 | NUT | | | 2 |
| 45 | | STARTER | See Page STARTER(3) | | 1 |
| 46 | 6E-6 | WASHER | | | 1 |
| 47 | 30H-30 | CLAMP | | | 2 |

# ENGINE ELECTRICAL

| Ref.N° | Part N° | Description | Remarks | Serial N° | Qty. |
|---|---|---|---|---|---|
| 48 | 59D-5 | NUT | | | 2 |
| 49 | 17C-540 | BOLT | | | 1 |
| 50 | 6668761 | BOLT | | | 1 |
| 51 | 25E-15 | WASHER | | | 2 |
| 52 | 6675154 | HOLDER | fuse | | 1 |
| 53 | 6675155 | FUSE | 100 amp | | 1 |
| 54 | 6668760 | SEAL | | | 1 |
| 55 | 59D-4 | NUT | | | 2 |
| 56 | 25G-410 | BOLT | | | 2 |
| 57 | 6718659 | HOUSING | fuse | | 1 |
| 57 | 6654806 | FUSE | 15 amp | | x |
| 57 | 6702444 | FUSE | 25 amp | | x |
| 57 | 6718034 | FUSE | 30 amp | | x |
| 57 | 6674376 | SWITCH | switch | | 7 |
| 58 | 6665659 | CONNECTOR | fuel shutdown | | 1 |
| 59 | 6675559 | SOLENOID | W/ diode | | 1 |
| 60 | 6677562 | JOYSTICK | R.H. | | 1 |
| 61 | 6677563 | JOYSTICK | L.H. | | 1 |
| 62 | 43C-616 | BOLT | | | 6 |
| 63 | 6677897 | PLUG | | | 2 |
| 64 | 6717706 | COIL | 10 volt | | 2 |
| 65 | 6726663 | HARNESS | AWS controls | | 1 |
| 66 | 6678356 | GROMMET | joystick | | 4 |
| 67 | 6729397 | HARNESS | joystick | | 2 |
| 68 | 35C-616 | BOLT | | | 2 |
| 69 | 6678659 | BOLT | | | 8 |
| 70 | 91D-6 | NUT | | | 2 |
| 71 | 6678669 | STRAP | | | 11 |
| 72 | 6678903 | COVER | joystick | | 2 |
| 73 | 6677655 | CONTROLLER | Bobcat | | 1 |

Fixsomething

# ALTERNATOR
## (90 Amp)

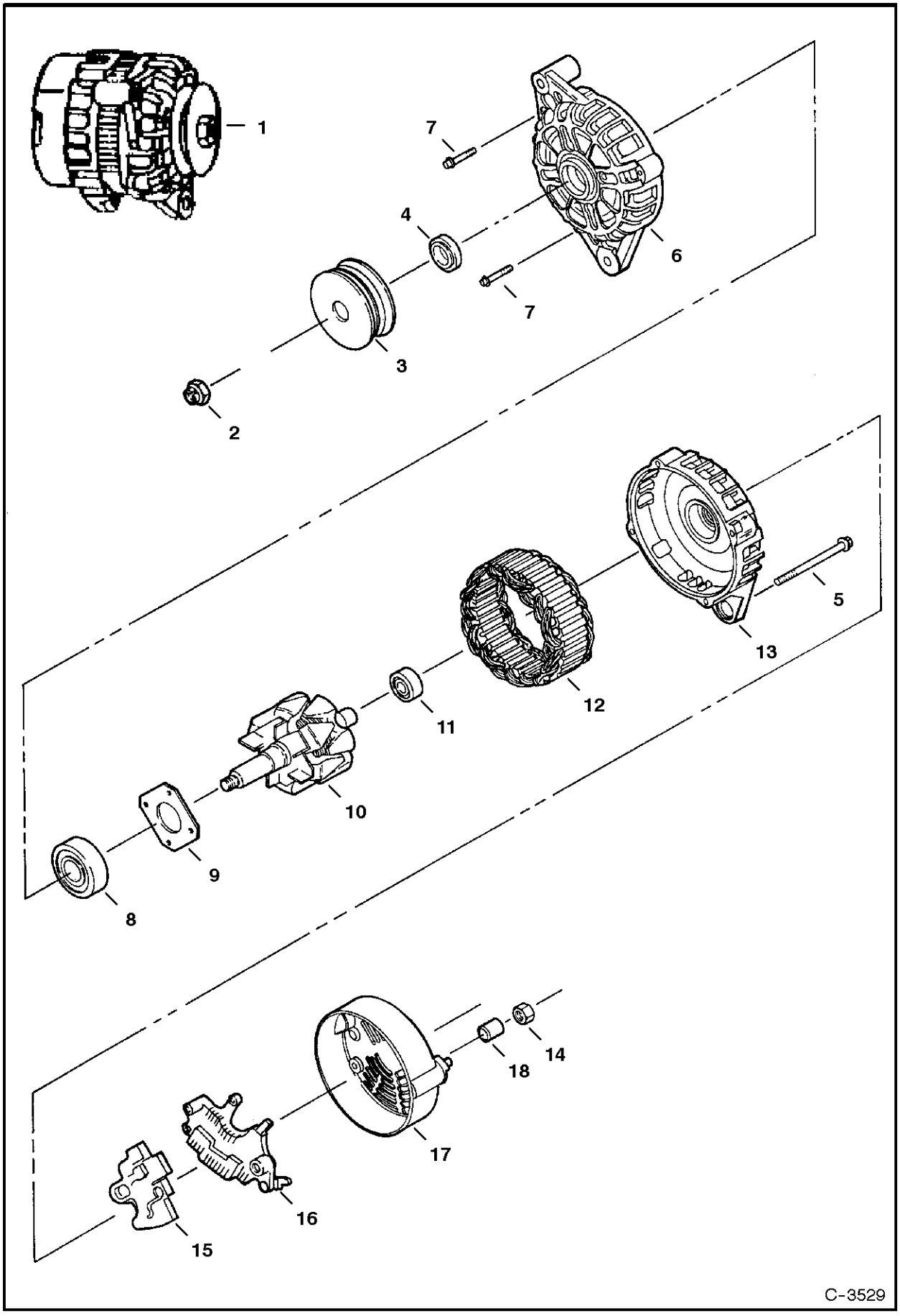

# ALTERNATOR

| Ref.N° | Part N° | Description | Remarks | Serial N° | Qty. |
|---|---|---|---|---|---|
| 1 | 6678205 | ALTERNATOR | 90 amp - Ref. ALTERNATOR(2)-ALTERNATOR(14) | | 1 |
| 2 | 6677497 | NUT | | | 1 |
| 3 | 6677496 | PULLEY | | | 1 |
| 4 | 6677495 | SPACER | | | 1 |
| 5 | 6677494 | BOLT | | | 4 |
| 6 | 6677491 | BRACKET | front | | 1 |
| 7 | 6677817 | BOLT | | | 4 |
| 8 | 6677818 | BEARING | | | 1 |
| 9 | 6677819 | RETAINER | | | 1 |
| 10 | 6677492 | ROTOR ASSY | | | 1 |
| 11 | 6677820 | BEARING | | | 1 |
| 12 | 6677493 | STATOR ASSY | | | 1 |
| 13 | 6677490 | BRACKET | | | 1 |
| 14 | 6677486 | NUT | | | 1 |
| 15 | NSS | %REGULATOR | Order Ref. ALTERNATOR(1) | | 1 |
| 16 | 6677488 | RECTIFIER ASSY | | | 1 |
| 17 | 6677487 | COVER | | | 1 |
| 18 | 6677485 | SPACER | | | 1 |

Fixsomething

# STARTER
## (Nippondenso)

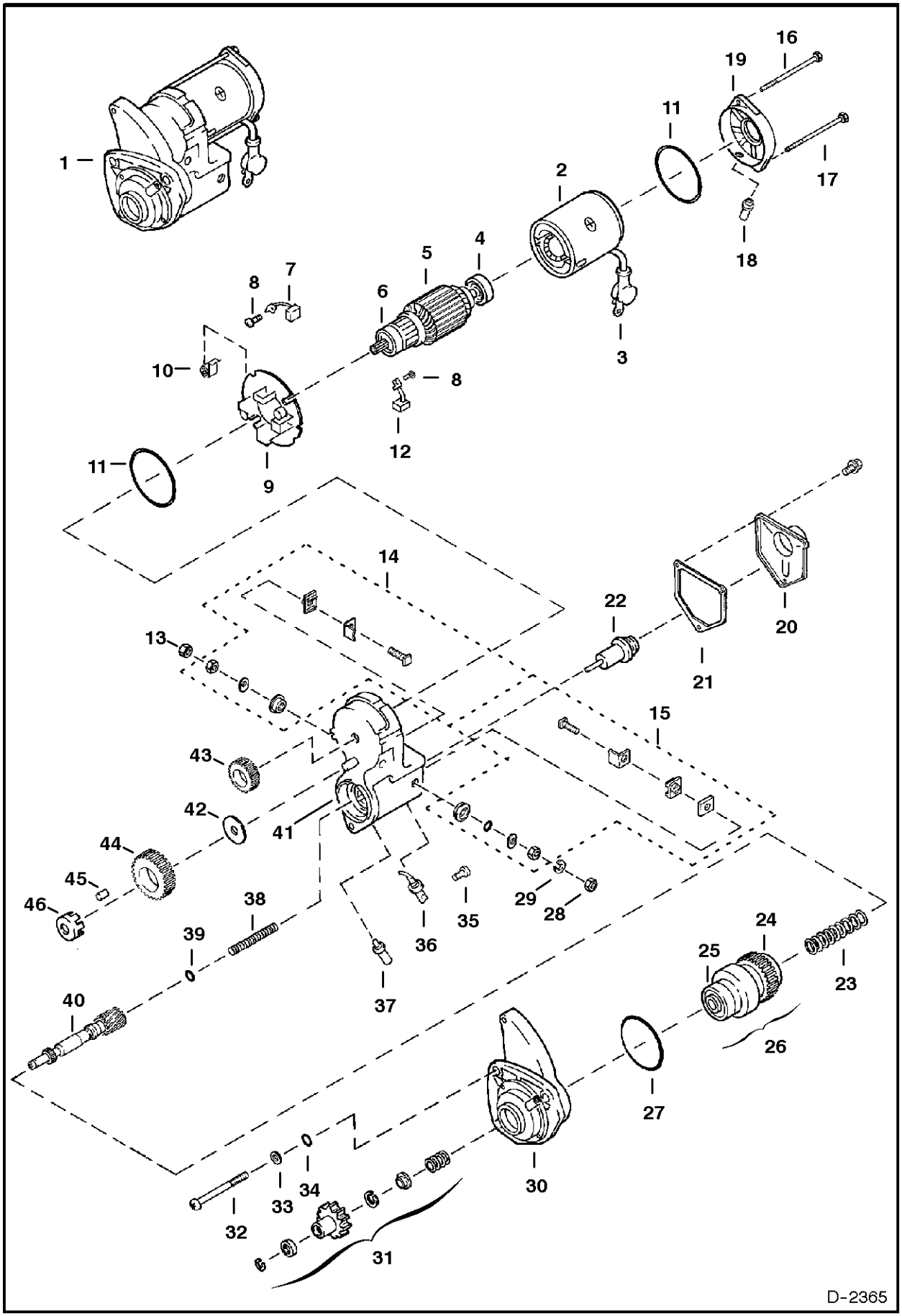

# STARTER

| Ref.N° | Part N° | Description | Remarks | Serial N° | Qty. |
|---|---|---|---|---|---|
| 1 | 6667825 | STARTER | | | 1 |
| 2 | 6669345 | YOKE | | | 1 |
| 3 | 6669365 | BOOT | | | 1 |
| 4 | 6669349 | BEARING | | | 1 |
| 5 | 6669346 | ARMATURE ASSY. | W/Ref. STARTER(4) & STARTER(6) | | 1 |
| 6 | 6669347 | BEARING | | | 1 |
| 6 | 6669348 | BEARING | | | 1 |
| 7 | 6669371 | BRUSHES | | | 2 |
| 8 | 6666634 | BOLT | W/washer | | 4 |
| 9 | 6669361 | HOLDER | brush - W/Ref. STARTER(10) | | 1 |
| 10 | 6669362 | SPRING | brush | | 4 |
| 11 | 6669368 | O-RING | | | 2 |
| 12 | 6669370 | BRUSHES | | | 2 |
| 13 | 6666637 | NUT | | | 1 |
| 14 | 6669358 | KIT | starter | | 1 |
| 15 | 6669357 | KIT | starter | | 1 |
| 16 | 6669367 | BOLT | | | 1 |
| 17 | 6669366 | BOLT | | | 1 |
| 18 | 6669372 | COVER | | | 1 |
| 19 | 6669363 | FRAME | end | | 1 |
| 20 | 6632434 | COVER | solenoid | | 1 |
| 21 | 6632433 | GASKET | switch | | 1 |
| 22 | 6632432 | PLUNGER | | | 1 |
| 23 | 6632441 | SPRING | compresssion | | 1 |
| 24 | NAP | BEARING | Order Ref. STARTER(26) | | 1 |
| 25 | NAP | BEARING | Order Ref. STARTER(26) | | 1 |
| 26 | 6666622 | DRIVE | Ref. STARTER(23)-STARTER(25), STARTER(31) & STARTER(40) | | 1 |
| 27 | 6666632 | O-RING | | | 1 |
| 28 | 6666628 | NUT | | | 1 |
| 29 | 6666630 | WASHER | | | 1 |
| 30 | 6669355 | HOUSING | | | 1 |
| 31 | 6669350 | KIT | starter | | 1 |
| 32 | 6666633 | BOLT | | | 3 |
| 33 | 6666629 | WASHER | | | 3 |
| 34 | 6666631 | O-RING | | | 3 |
| 35 | 6666635 | BOLT | W/washer | | 1 |
| 36 | 6669359 | TERMINAL | | | 1 |
| 37 | 6669360 | BUSHING | drain | | 1 |
| 38 | 6632436 | SPRING | compression oil | | 1 |
| 39 | 6632435 | BALL | steel | | 1 |
| 40 | 6669354 | SHAFT | | | 1 |
| 41 | 6669356 | SWITCH ASSY. | magnetic | | 1 |
| 42 | 6666624 | SNAP RING | | | 1 |
| 43 | 6669369 | PINION | | | 1 |
| 44 | 6669364 | PINION | | | 1 |
| 45 | 6632430 | ROLLER | clutch | | 5 |
| 46 | 6632429 | RETAINER | | | 1 |

Fixsomething

# COOLING SYSTEM

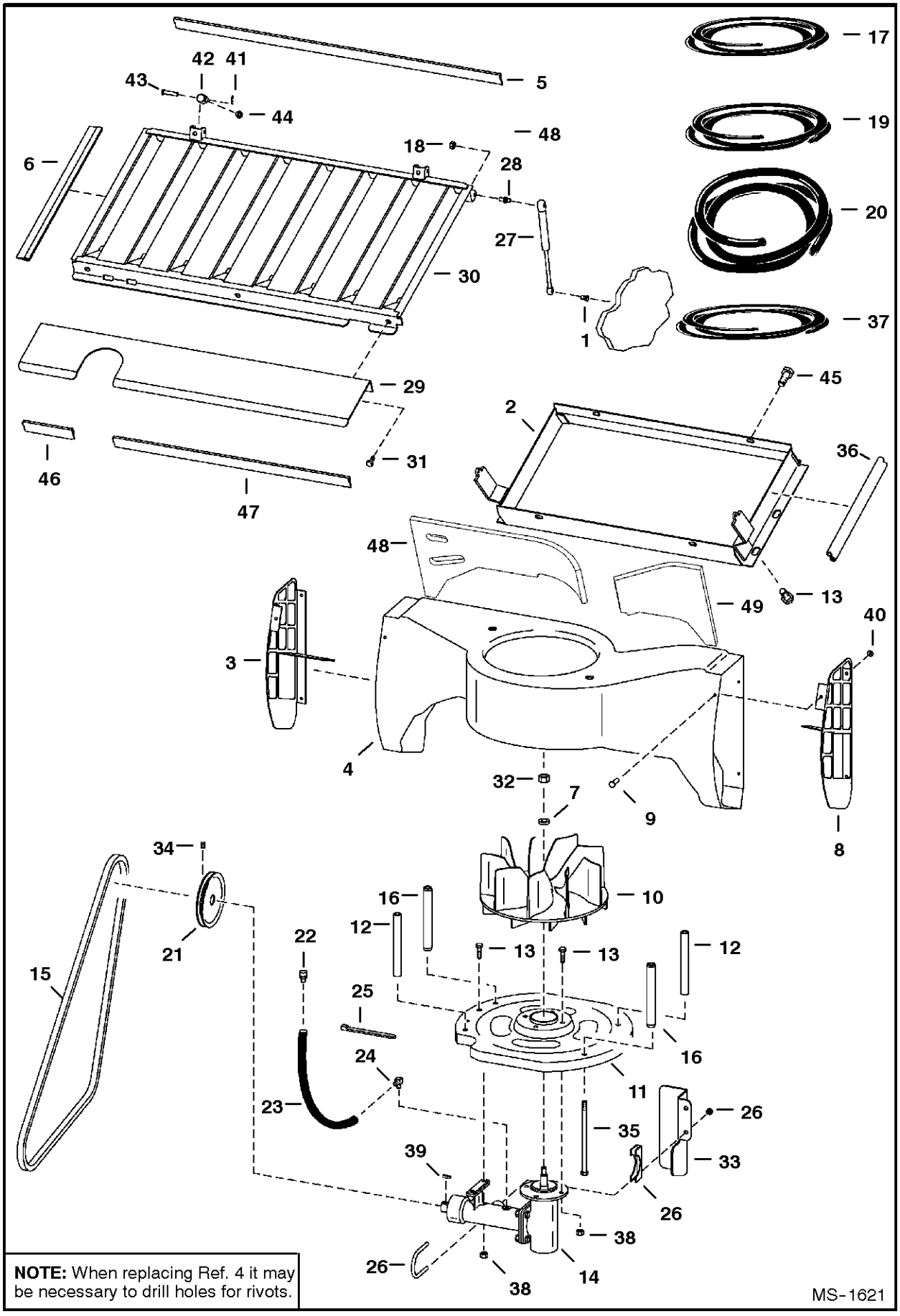

# COOLING SYSTEM

| Ref.N° | Part N° | Description | Remarks | Serial N° | Qty. |
|---|---|---|---|---|---|
| 1 | 6705052 | BALL STUD | weldAon | | 1 |
| 2 | 6718757 | HOUSING | plenum | | 1 |
| 3 | 6716574 | LOUVER | 'L.H. - plastic | | 1 |
| 4 | 6718562 | HOUSING | | | 1 |
| 5 | NAP | MOULDING | 34.5" (876mm) long - Order Ref. COOLING SYSTEM( 19) | | 1 |
| 6 | NAP | MOULDING | '19' (483mm) long - Order Ref. COOLING SYSTEM(17 ) | | 2 |
| 7 | 6701097 | WASHER | | | 1 |
| 8 | 6716572 | LOUVER | R.H. - plastic | | 1 |
| 9 | 6706517 | SCREW | | | 8 |
| 10 | 6715142 | FAN | | | 1 |
| 11 | 6717478 | INLET | 4 Slot | | 1 |
| 12 | 6577382 | SPACER | | | 2 |
| 13 | 17C-616 | BOLT | | | 10 |
| 14 | 6707519 | HOUSING ASSY. | See Page COOLING FAN DRIVE ASSY.(3) | | 1 |
| 15 | 6707648 | BELT | cooling - 43.75'(1111mm) long - See Page HYDROST ATIC CIRCUITRY(2) | S/N 5196 | 1 |
| 15 | 6676345 | BELT | cooling - 44.5' (1130mm) long - See Page HYDROSTA TIC CIRCUITRY(2) | S/N 5197 | 1 |
| 16 | 6704907 | SPACER | | | 2 |
| 17 | 6646705 | MOULDING | bulk - Sold Per Foot | | x |
| 18 | 61D-5 | NUT | | | 1 |
| 19 | 6511855 | FOAM STRIP | bulk - Sold Per Foot | | x |
| 20 | 6577822 | HOSE | bulk - Sold Per Foot | | x |
| 21 | 6725130 | PULLEY | 4' (101,6mm) O.D. - See Page HYDROSTATIC CIRCUITRY(2) | S/N 5196 | 1 |
| 21 | 6712971 | PULLEY | 5' (127mm) O.D. - See Page HYDROSTATIC CIRCUI TRY(2) | S/N 5197 | 1 |
| 22 | 6670627 | BREATHER | | | 1 |
| 23 | NAP | HOSE | 19.5' (495mm) long - Order Ref. COOLING SYSTEM(2 0) | | 1 |
| 24 | 6657376 | ELBOW | | | 1 |
| 25 | 6610510 | NYLON TIE | | | 1 |
| 26 | 6626631 | CLAMP | | | 1 |
| 27 | 6674285 | GAS SPRING | | | 1 |
| 28 | 6649244 | BALL STUD | | | 1 |
| 29 | 6717731 | SHIELD | | | 1 |
| 30 | 6717730 | GRILL | | | 1 |
| 31 | 84G-3112 | BOLT | | | 3 |
| 32 | 96D-8 | NUT | | | 1 |
| 33 | 6719429 | SHIELD | belt | | 1 |
| 34 | 6715143 | SET SCREW | | | 2 |
| 35 | 17C-6116 | BOLT | | | 4 |
| 36 | NAP | SEAL | 14.5' (368mm) long - Order Ref. COOLING SYSTEM(3 7) | | 2 |
| 37 | 6513152 | SEAL | bulk - Sold Per Foot | | x |
| 38 | 61D-6 | NUT | | | 6 |
| 39 | 7J-2208 | KEY | | | 1 |
| 40 | 6579613 | STOP | | | 2 |
| 41 | 6631418 | PIN | | | 2 |
| 42 | 6579326 | MOUNT | | | 2 |
| 43 | 6567743 | PIN | | | 2 |

Fixsomething

# COOLING SYSTEM

| Ref.N° | Part N° | Description | Remarks | Serial N° | Qty. |
|---|---|---|---|---|---|
| 44 | 17C-608 | BOLT | | | 2 |
| 45 | 35C-612 | BOLT | | | 4 |
| 46 | NAP | SEAL | 5.25' (133mm) long - Order Ref. COOLING SYSTEM(19) | | 1 |
| 47 | NAP | SEAL | '23.5' (597mm) long - Order Ref. COOLING SYSTEM(19) | | 1 |
| 48 | 6719332 | INSULATION | blower housing | | 1 |
| 49 | 6719333 | INSULATION | blower housing | | 1 |

# COOLING SYSTEM

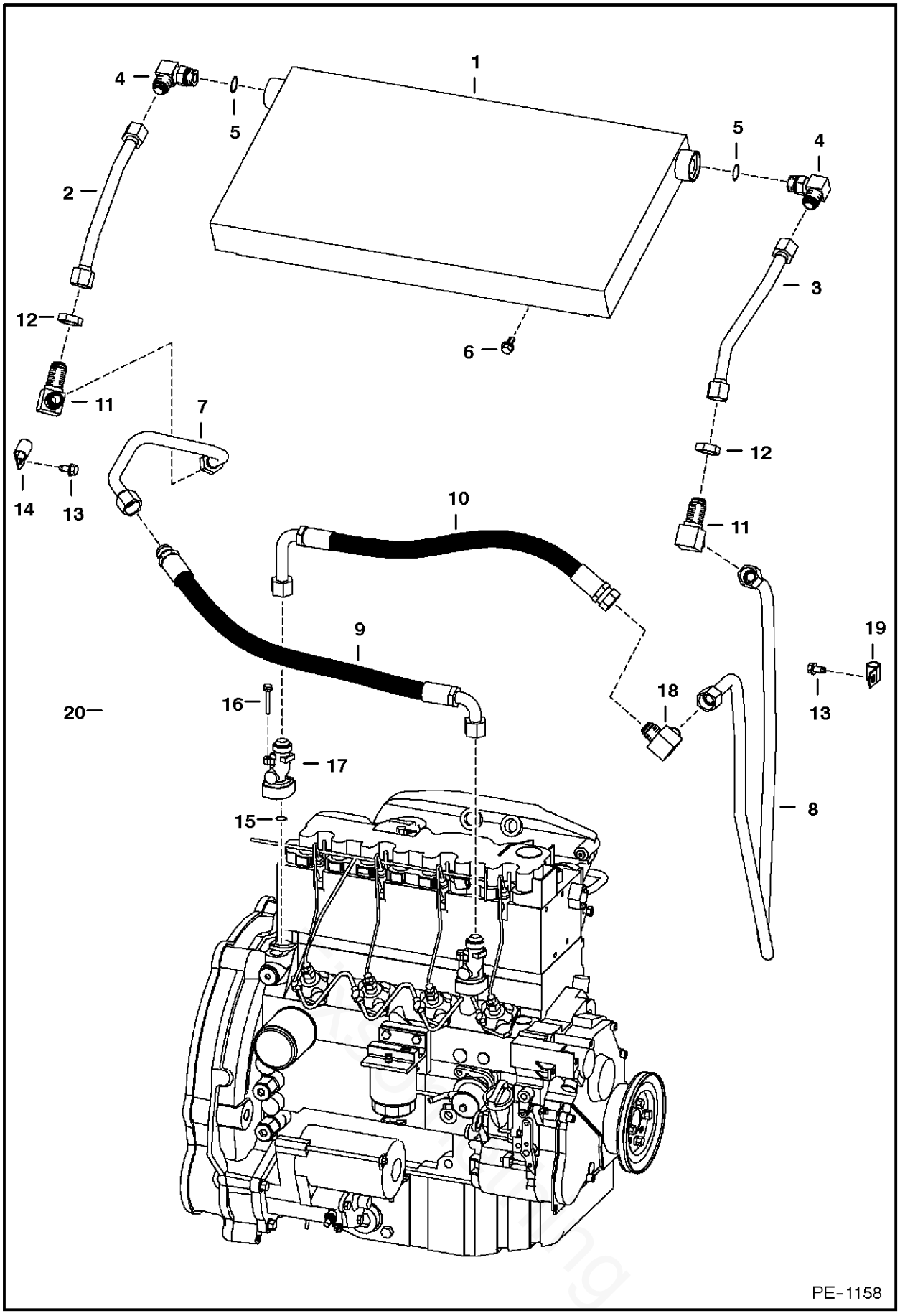

# COOLING SYSTEM

| Ref.N° | Part N° | Description | Remarks | Serial N° | Qty. |
|---|---|---|---|---|---|
| 1 | 6710791 | COOLER | oil | | 1 |
| 2 | 6719206 | TUBE | | | 1 |
| 3 | 6719207 | TUBE | | | 1 |
| 4 | 17KV-8 | ELBOW | W/Ref. COOLING SYSTEM(5) - tapered boss face | | 2 |
| 4 | 97K-12 | O-RING | flared end | | 2 |
| 5 | 99K-12 | O-RING | tapered boss face | | x |
| 6 | 35C-612 | BOLT | | | 4 |
| 7 | 6709914 | TUBE | | | 1 |
| 8 | 6729985 | TUBELINE | | | 1 |
| 9 | 6712143 | HOSE | | | 1 |
| 10 | 6712144 | HOSE | | | 1 |
| 11 | 88FN-8 | ELBOW | tapered boss face | | 2 |
| 11 | 97K-12 | O-RING | flared end | | x |
| 12 | 86F-8 | NUT | | | 2 |
| 13 | 84G-3712 | BOLT | | | 2 |
| 14 | 30H-44 | CLAMP | | | 1 |
| 15 | 6666712 | O-RING | | | 1 |
| 16 | 6666696 | BOLT | | | 1 |
| 17 | 6666762 | ADAPTER | | | 2 |
| 18 | 77F-8 | ELBOW | | | 1 |
| 19 | 30H-65 | CLIP | | | 1 |
| 20 | 6725969 | SPACER | | | 1 |

## ENGINE & ATTACHING PARTS
## (Air Cleaner, Muffler)

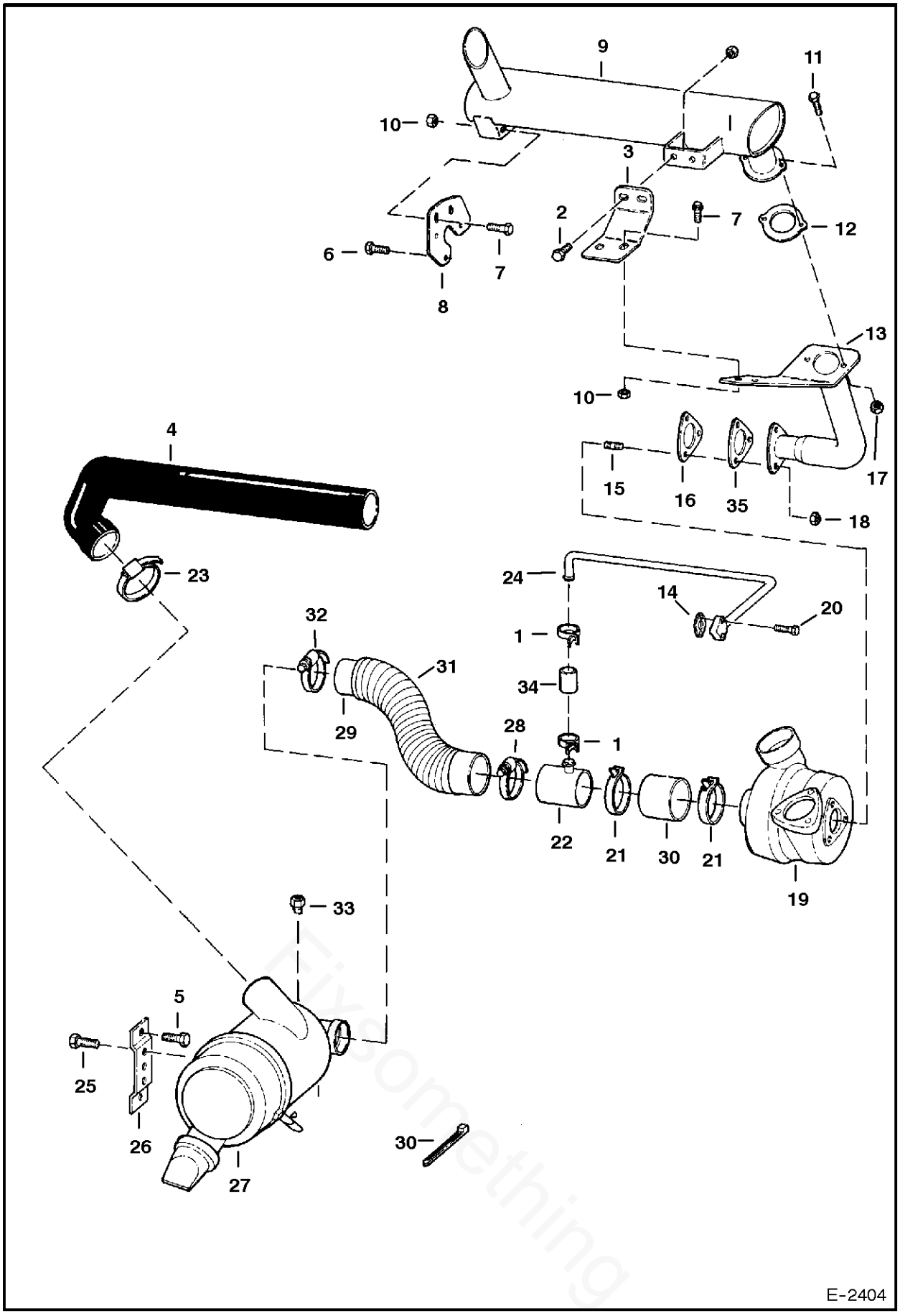


Everything

# ENGINE & ATTACHING PARTS

| Ref.N° | Part N° | Description | Remarks | Serial N° | Qty. |
|---|---|---|---|---|---|
| 1 | 6673963 | CLAMP | | | 2 |
| 2 | 45C-616 | BOLT | | | 4 |
| 3 | 6713787 | BRACKET | | | 1 |
| 4 | 6709958 | HOSE | | | 1 |
| 5 | 84G-3712 | BOLT | | | 2 |
| 6 | 55CM-825 | BOLT | | | 3 |
| 7 | 45C-620 | BOLT | | | 2 |
| 8 | 6717351 | SHIELD | muffler | | 1 |
| 9 | 6675324 | MUFFLER | | | 1 |
| 10 | 83D-6 | NUT | | | 6 |
| 11 | 17C-616 | BOLT | | | 2 |
| 12 | 6713653 | GASKET | exhaust | | 1 |
| 13 | 6717352 | TUBE | exhaust | | 1 |
| 14 | 6672885 | GASKET | | | 1 |
| 15 | 6666407 | STUD | | | 3 |
| 16 | 6665910 | GASKET | | | 1 |
| 17 | 85D-6 | NUT | | | 3 |
| 18 | 6666398 | NUT | | | 3 |
| 19 | 6673173 | TURBOCHARGER | See Page CRANKCASE(8) | | 1 |
| 20 | 6672887 | BOLT | | | 2 |
| 21 | 6666419 | CLAMP | | | 2 |
| 22 | 6673966 | TEE | | | 1 |
| 23 | 42H-52 | CLAMP | | | 1 |
| 24 | 6671625 | TUBELINE | | | 1 |
| 25 | 55CM-816 | BOLT | | | 2 |
| 26 | 6707582 | BRACKET | | | 1 |
| 27 | | AIR CLEANER | See Page AIR CLEANER(1) | | 1 |
| 28 | 42HC-300 | CLAMP | | | 1 |
| 29 | 6717495 | HOSE | | | 1 |
| 30 | 6673964 | HOSE | | | 1 |
| 31 | 6717498 | HOSE | | | 1 |
| 32 | 42HC-350 | CLAMP | | | 1 |
| 33 | 25F-1 | ELBOW | | | 1 |
| 34 | 6673962 | HOSE | | | 1 |
| 35 | 6673169 | FLANGE | | | 1 |

# ENGINE & ATTACHING PARTS
## (Belt Drive System)

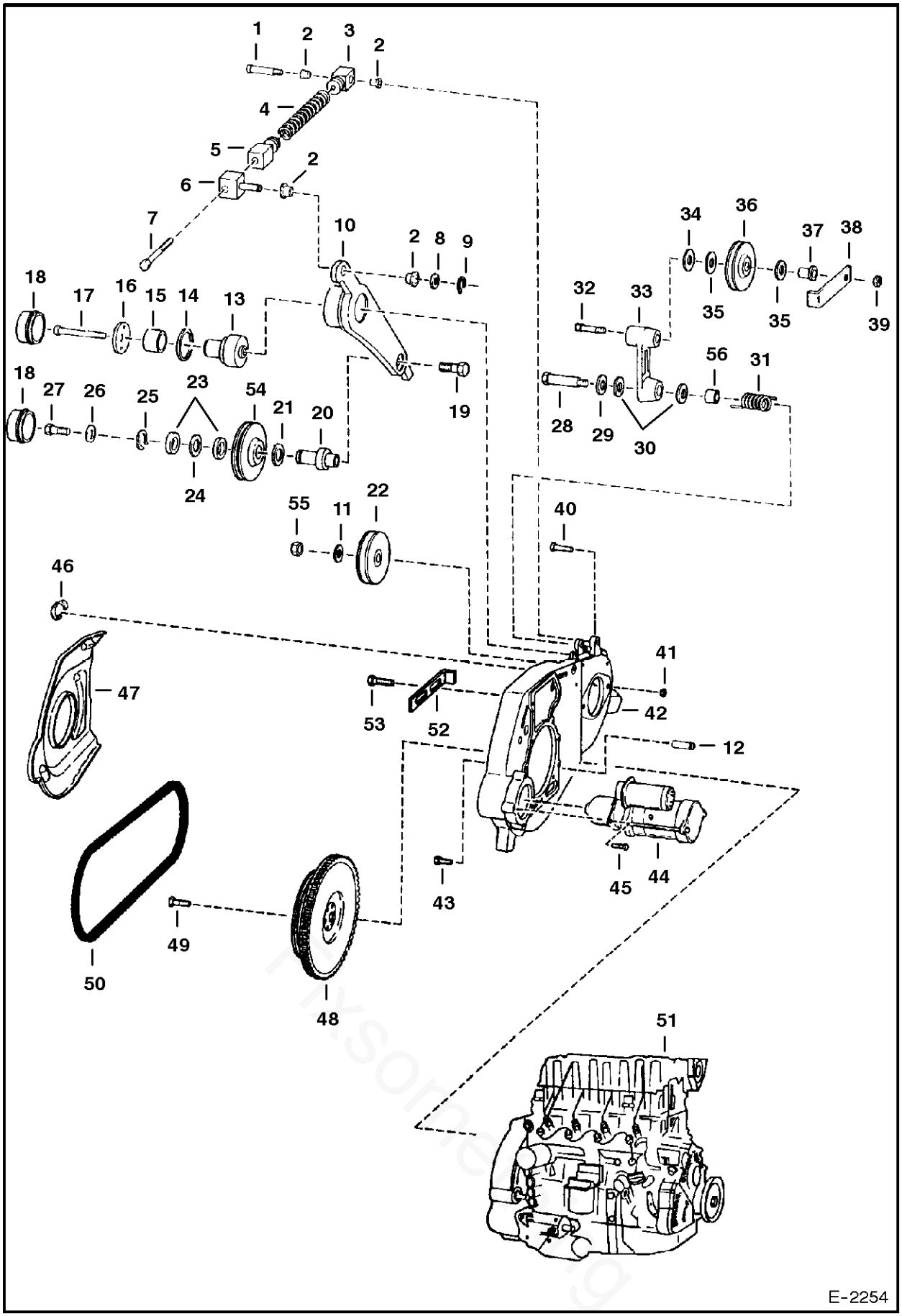

# ENGINE & ATTACHING PARTS

| Ref.N° | Part N° | Description | Remarks | Serial N° | Qty. |
|---|---|---|---|---|---|
| 1 | 38C-828 | BOLT | shoulder | | 1 |
| 2 | 1313116 | BUSHING | | | 4 |
| 3 | 6568424 | ADAPTER | | | 1 |
| 4 | 6569498 | SPRING ASSY | | | 1 |
| 5 | 6568425 | STOP | | | 1 |
| 6 | 6587182 | PIN | | | 1 |
| 7 | 6586710 | BOLT | | | 1 |
| 8 | 25E-21 | WASHER | | | 1 |
| 9 | 6518955 | RETAINER | | | 1 |
| 10 | 6707607 | IDLER | | | 1 |
| 11 | 6576033 | WASHER | | | 1 |
| 12 | 4JM-1216 | ROLL PIN | | | 2 |
| 13 | 6707699 | PIVOT | | | 1 |
| 14 | 6661377 | SEAL | | | 1 |
| 15 | 6587765 | BUSHING | | | 1 |
| 16 | 6707698 | WASHER | | | 1 |
| 17 | 17C-872 | BOLT | | | 1 |
| 18 | 6660967 | CAP | grease | | 2 |
| 19 | 17C-816 | BOLT | | | 1 |
| 20 | 6707654 | IDLER | | | 1 |
| 21 | 6665307 | SEAL | | | 1 |
| 22 | 6713287 | PULLEY | pump | | 1 |
| 23 | 6661229 | BEARING | | | 2 |
| 24 | 6701159 | SHIM | | | 1 |
| 25 | 6665308 | RETAINER | | | 1 |
| 26 | 6707697 | WASHER | | | 1 |
| 27 | 17C-612 | BOLT | | | 1 |
| 28 | 38C-820 | BOLT | | | 1 |
| 29 | 6655781 | BEARING | thrust | | 1 |
| 30 | 6704820 | O-RING | | | 2 |
| 31 | 6700115 | SPRING | | | 1 |
| 32 | 73G-656 | BOLT | | | 1 |
| 33 | 6725212 | IDLER ARM | W/Ref. ENGINE & ATTACHING PARTS(56) | | 1 |
| 34 | 6704444 | WASHER | | | 1 |
| 35 | 6660995 | RING | | | 2 |
| 36 | 6662997 | PULLEY | cooling fan idler | | 1 |
| 37 | 6704443 | BUSHING | | | 1 |
| 38 | 6702474 | RETAINER | | | 1 |
| 39 | 61D-6 | NUT | | | 1 |
| 40 | 17C-832 | BOLT | hydrostatic pump mounting | | 2 |
| 41 | 85D-8 | NUT | hydrostatic pump mounting | | 2 |
| 42 | 6715380 | MOUNT | See Page ENGINE & ATTACHING PARTS(2) | | 1 |
| 43 | 53CM-1230 | BOLT | | | 6 |
| 44 | | STARTER | See Page STARTER(3) | | 1 |
| 45 | 35C-620 | BOLT | | | 3 |
| 46 | 6701160 | CLIP | | | 3 |
| 47 | 6709921 | SHIELD | | | 1 |
| 48 | 6707642 | FLYWHEEL ASSY. | W/ ring gear | | 1 |
| 48 | 6665222 | RING GEAR | | | 1 |
| 49 | 6666452 | BOLT | | | 6 |

# ENGINE & ATTACHING PARTS

| Ref.N° | Part N° | Description | Remarks | Serial N° | Qty. |
|---|---|---|---|---|---|
| 50 | 6662855 | BELT | pump drive | | 1 |
| 51 | | ENGINE | See Page ENGINE & GASKET KITS(4) | | 1 |
| 52 | 6707714 | STOP | | | 1 |
| 53 | 35C-612 | BOLT | | | 2 |
| 54 | 6708445 | PULLEY | drive idler | | 1 |
| 55 | 92D-12 | NUT | | | 1 |
| 56 | 6670682 | BEARING | nylon | | 1 |

Fixsomething

# ENGINE & ATTACHING PARTS
## (Engine Mounts)

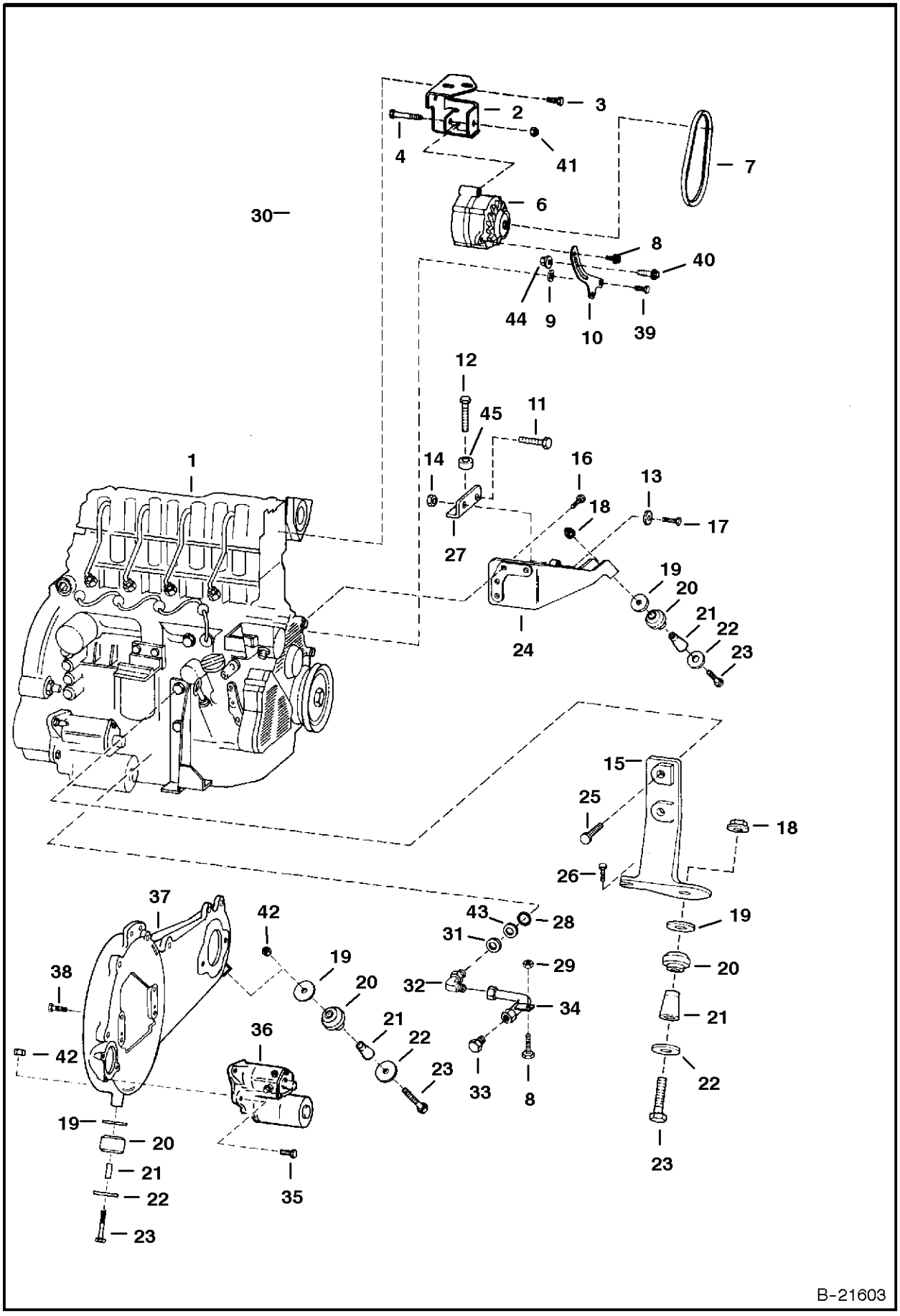


B-21603

# ENGINE & ATTACHING PARTS

| Ref.N° | Part N° | Description | Remarks | Serial N° | Qty. |
|---|---|---|---|---|---|
| 1 | | ENGINE | See Page ENGINE & GASKET KITS(4) | | 1 |
| 2 | 6725429 | MOUNT | | | 1 |
| 3 | 55CM-825 | BOLT | | | 4 |
| 4 | 1CM-8100 | BOLT | | | 1 |
| 5 | 81D-6 | NUT | | | 1 |
| 6 | | ALTERNATOR | See Page ALTERNATOR(2) | | 1 |
| 7 | 6675839 | BELT | alternator | | 1 |
| 8 | 35C-512 | BOLT | | | 2 |
| 9 | 25E-17 | WASHER | | | 2 |
| 10 | 6726485 | BRACKET | | | 1 |
| 11 | 17C-820 | BOLT | | | 1 |
| 12 | 17C-824 | BOLT | | | 1 |
| 13 | 25E-21 | WASHER | | | 1 |
| 14 | 85D-8 | NUT | | | 1 |
| 15 | 6717858 | MOUNT | cast | | 1 |
| 16 | 53CM-1440 | BOLT | | | 4 |
| 17 | 43C-832 | BOLT | hyd. pump mounting | | 1 |
| 18 | 83D-8 | NUT | | | 2 |
| 19 | 6705106 | WASHER | | | 4 |
| 20 | 6668104 | MOUNT | | | 4 |
| 21 | 6715287 | SPACER | tapered | | 4 |
| 22 | 6661787 | WASHER | | | 4 |
| 23 | 43C-852 | BOLT | | | 4 |
| 24 | 6728791 | MOUNT | | | 1 |
| 25 | 53CM-1440 | BOLT | | | 2 |
| 26 | 17C-516 | BOLT | | | 1 |
| 27 | 6729311 | BRACKET | | | 1 |
| 28 | 58K-114 | O-RING | | | x |
| 29 | 97D-5 | NUT | | | 1 |
| 30 | 6729354 | SHIELD | alternator | | 1 |
| 31 | 6669067 | WASHER | | | 1 |
| 32 | 6709168 | ELBOW | W/Ref. ENGINE & ATTACHING PARTS(28) & ENGIN E & ATTACHING PARTS(43)-ENGINE & ATTACHING PARTS(30) | | 1 |
| 33 | 6518121 | PLUG | | | 1 |
| 34 | 6714500 | TUBE | | | 1 |
| 35 | 35C-620 | BOLT | | | 3 |
| 36 | | STARTER | See Page STARTER(3) | | 1 |
| 37 | 6715380 | MOUNT | See Page ENGINE & ATTACHING PARTS(1) | | 1 |
| 38 | 17C-828 | BOLT | hyd. pump mount | | 2 |
| 39 | 1CM-1030 | BOLT | | | 2 |
| 40 | 35C-516 | BOLT | | | 1 |
| 41 | 53DM-8 | NUT | | | 1 |
| 42 | 6652918 | NUT | | | 2 |
| 43 | 6669066 | SEAL RING | | | 1 |
| 44 | 57D-5 | NUT | | | 1 |
| 45 | 6716408 | WASHER | | | 1 |

Fix something

# THROTTLE

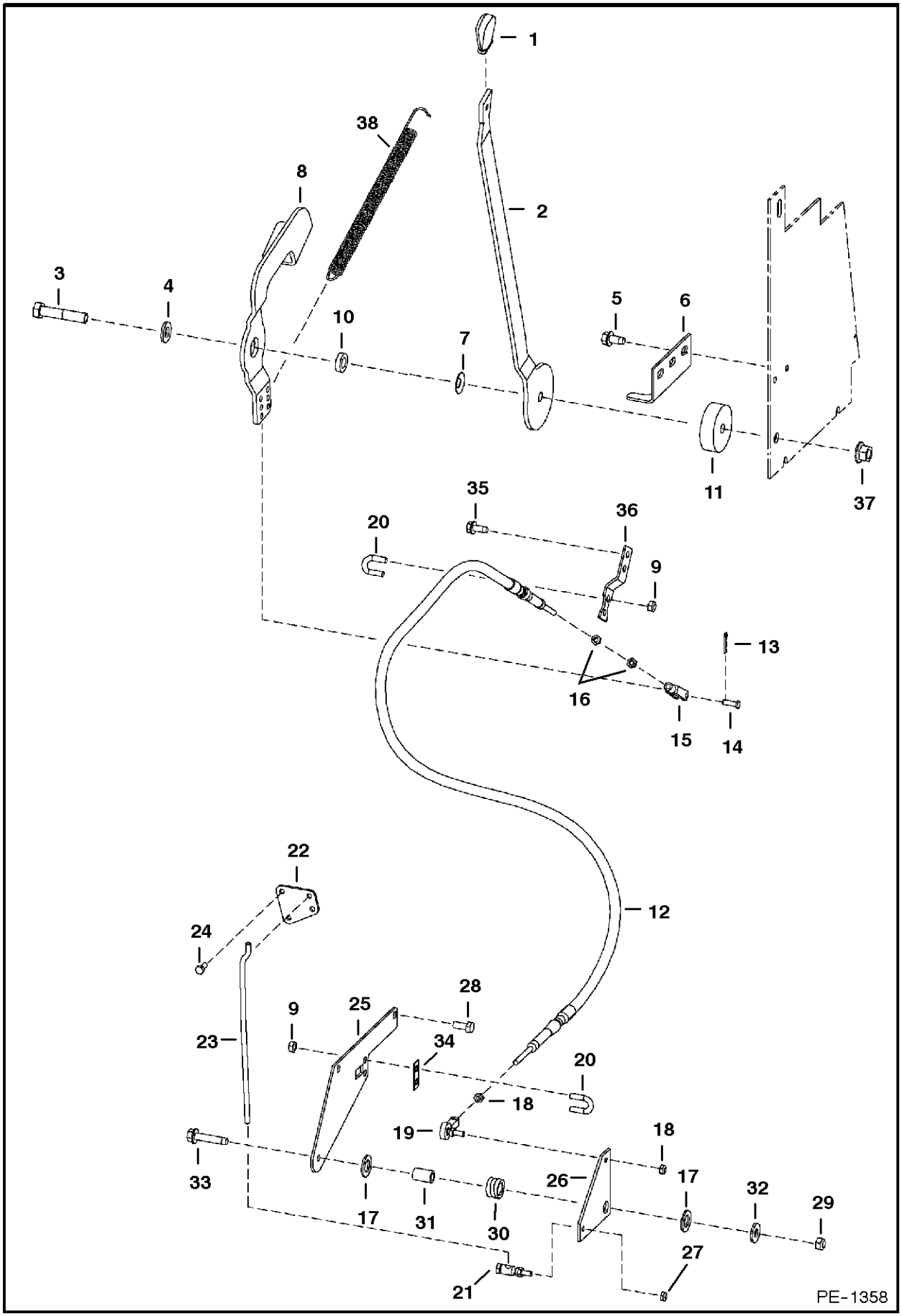
1
2
3
4
5
6
7
8
9
10
11
12
13
14
15
16
17
18
19
20
21
22
23
24
25
26
27
28
29
30
31
32
33
34
35
36
37
38
PE-1358

# THROTTLE

| Ref.N° | Part N° | Description | Remarks | Serial N° | Qty. |
|---|---|---|---|---|---|
| 1 | 6564452 | GRIP | | | 1 |
| 2 | 6729062 | LEVER | | | 1 |
| 3 | 17C-840 | BOLT | shoulder | | 1 |
| 4 | 25E-22 | WASHER | | | 1 |
| 5 | 84G-3712 | BOLT | | | 2 |
| 6 | 6729076 | MOUNT | | | 1 |
| 7 | 6678750 | WASHER | | | 3 |
| 8 | 6729061 | PEDAL | foot | | 1 |
| 9 | 85D-5 | NUT | | | 6 |
| 10 | 6728463 | BUSHING | | | 1 |
| 11 | 6728461 | BUSHING | | | 1 |
| 12 | 6678035 | CABLE | | | 1 |
| 13 | 6513495 | COTTER PIN | | | 1 |
| 14 | 2F-4051 | PIN | | | 1 |
| 15 | 2J-4200 | CLEVIS | | | 1 |
| 16 | 8D-4 | NUT | | | 2 |
| 17 | 6700170 | WASHER | plastic | | 2 |
| 18 | 86D-4 | NUT | | | 2 |
| 19 | 6631036 | BALL JOINT | | | 1 |
| 20 | 6592766 | U-BOLT | | | 2 |
| 21 | 6557291 | BALL JOINT | | | 1 |
| 22 | 6707903 | LEVER | | | 1 |
| 23 | 6707904 | ROD | | | 1 |
| 24 | 53CM-616 | BOLT | | | 2 |
| 25 | 6709052 | MOUNT | | | 1 |
| 26 | 6579742 | BELLCRANK | | | 1 |
| 27 | 85D-4 | NUT | | | 1 |
| 28 | 53CM-820 | BOLT | | | 2 |
| 29 | 85D-6 | NUT | | | 1 |
| 30 | 6704453 | SPRING | | | 1 |
| 31 | 6708314 | BUSHING | | | 1 |
| 32 | 25E-18 | WASHER | | | 1 |
| 33 | 84G-3728 | BOLT | | | 1 |
| 34 | 6713920 | SHIM | .0528' thick | | 1 |
| 35 | 84G-3112 | BOLT | | | 2 |
| 36 | 6729773 | BRACKET | | | 1 |
| 37 | 89D-8 | NUT | | | 1 |
| 38 | 6579072 | SPRING | | | 1 |

fixsomething

# COOLING FAN DRIVE ASSY.

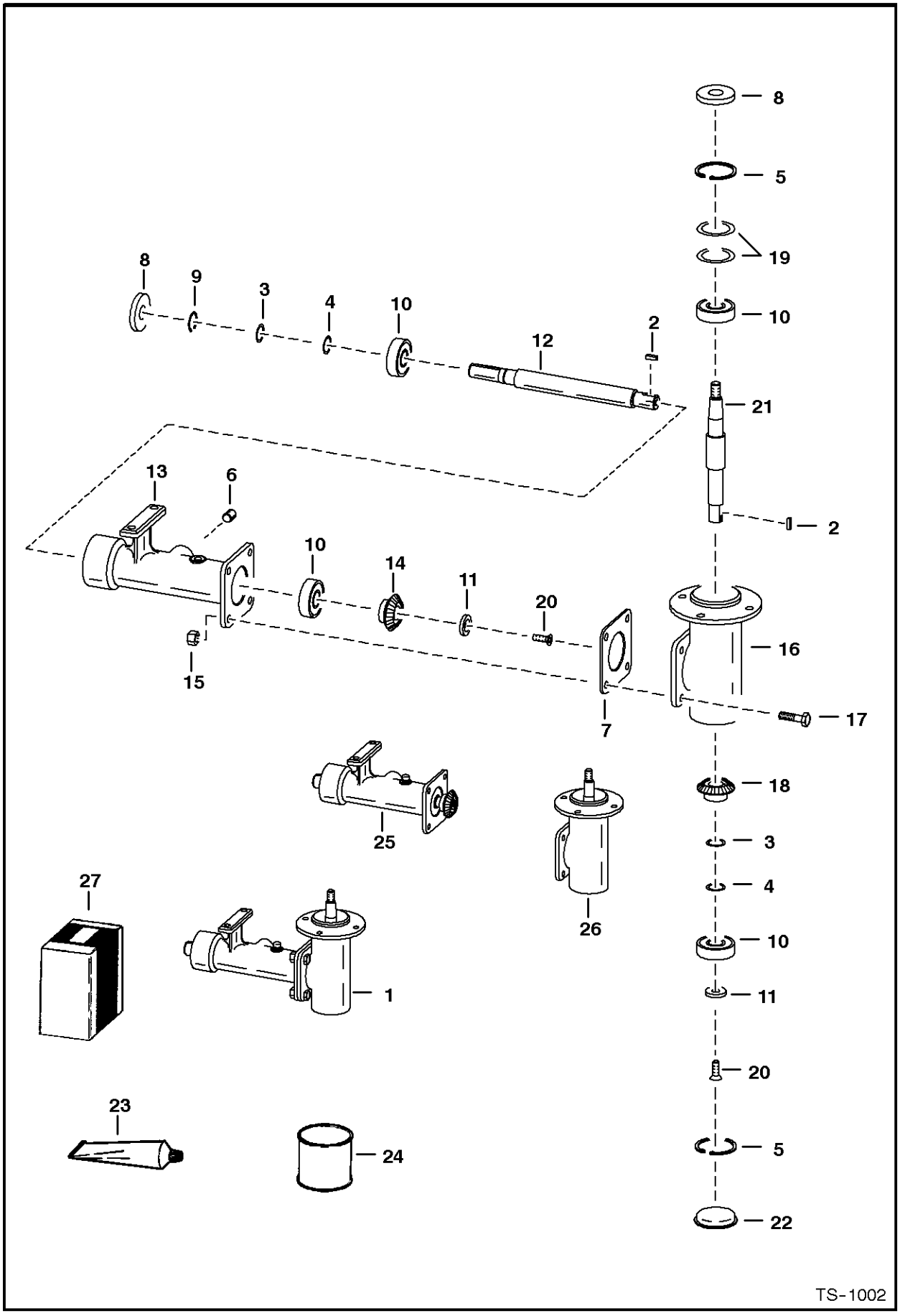

# COOLING FAN DRIVE ASSY.

| Ref.N° | Part N° | Description | Remarks | Serial N° | Qty. |
|---|---|---|---|---|---|
| 1 | 6707519 | HOUSING ASSY. | Ref. COOLING FAN DRIVE ASSY.(2)-COOLING FAN DRIVE ASSY.(22) | | 1 |
| 2 | 7J-2010 | KEY | | | 2 |
| 3 | 6702165 | SHIM | .002' (0,05mm) thickness - 1' (25,4mm) O.D. | | x |
| 4 | 6701159 | SHIM | .005'(0,13 mm) thickness - 1' (25,4mm) O.D. | | x |
| 5 | 6653758 | SNAP RING | | | 2 |
| 6 | 16F-8 | PLUG | | | 1 |
| 7 | 6578284 | SHIM | .003'' (0,08 mm) thickness | | x |
| 8 | 6653702 | SEAL | | | 2 |
| 9 | 6653757 | SNAP RING | | | 1 |
| 10 | 6646627 | BEARING | | | 4 |
| 11 | 6702140 | WASHER | countersink | | 2 |
| 12 | 6707518 | SHAFT | keyed | | 1 |
| 13 | 6579641 | HOUSING | | | 1 |
| 14 | 6702103 | GEAR | keyed | | 1 |
| 15 | 95D-6 | NUT | | | 4 |
| 16 | NSS | HOUSING | 'Order 6702138 housing or Ref. COOLING FAN DRIVE ASSY.(26) | | 1 |
| 17 | 17C-620 | BOLT | | | 4 |
| 18 | 6702102 | GEAR | keyed | | 1 |
| 19 | 6702166 | SHIM | .002'' (0,05mm) thickness - 2' (50,8mm) O.D. | | x |
| 19 | 6702144 | SHIM | .005'' (0,13mm) thickness - 2' (50,8mm) O.D. | | x |
| 20 | 9G-512 | SCREW | | | 2 |
| 21 | 6702135 | SHAFT | keyed | | 1 |
| 22 | 6700782 | CAP | grease | | 1 |
| 23 | 6672486 | SEALANT | polyurethane - Use W/Ref. COOLING FAN DRIVE ASSY.(7) & COOLING FAN DRIVE ASSY.(22) | | x |
| 24 | 6634393 | LUBRICANT | gear - 1 pint | | x |
| 25 | 6708642 | HOUSING ASSY. | half | | 1 |
| 26 | 6707077 | HOUSING ASSY. | half | | 1 |
| 27 | 6669384 | SPEEDY SLEEVE | repair kit | | 1 |

Fixsomething

# ENGINE & GASKET KITS

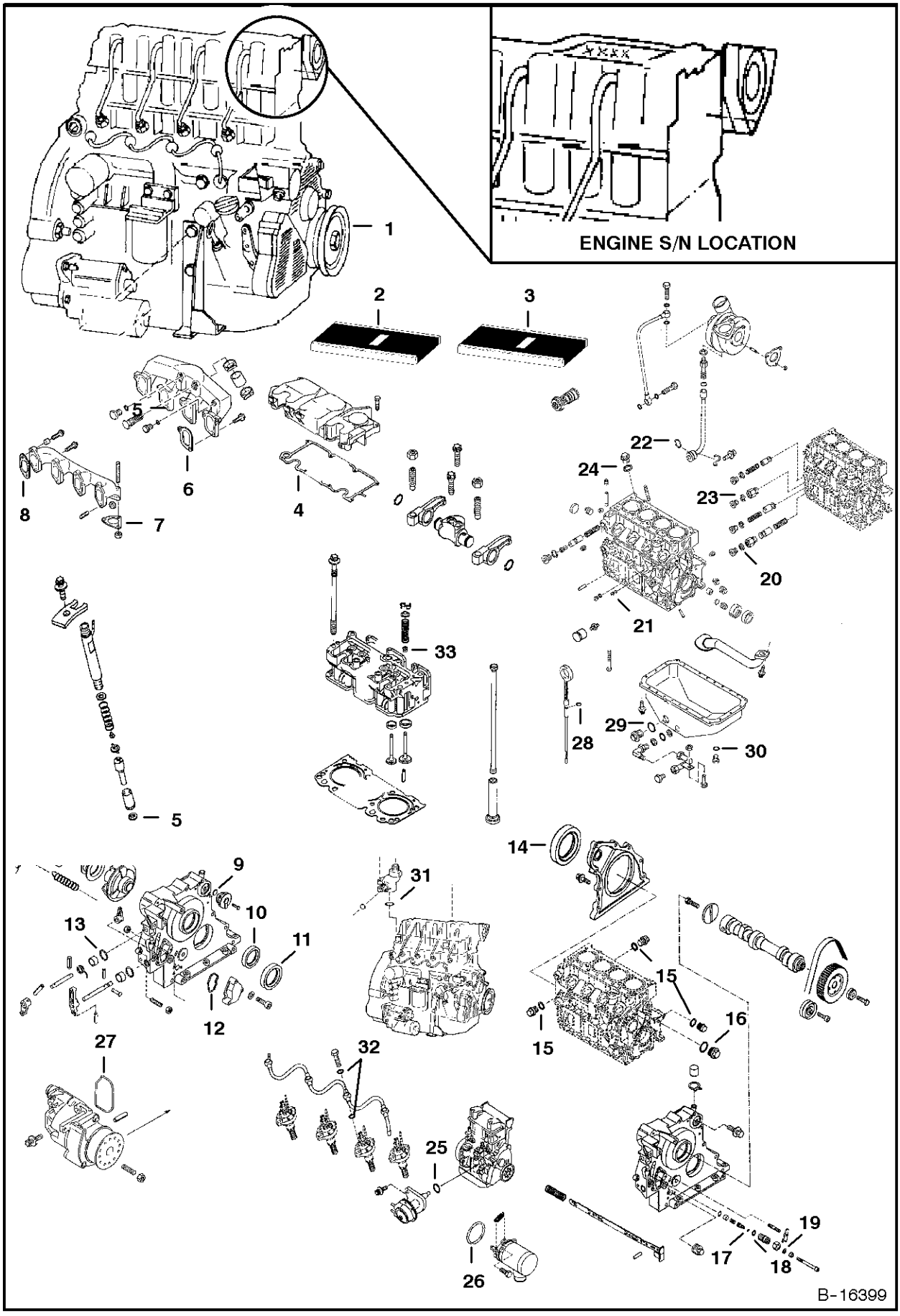

# ENGINE & GASKET KITS

| Ref.N° | Part N° | Description | Remarks | Serial N° | Qty. |
|---|---|---|---|---|---|
| 1 | 6672128 | ENGINE | 'Does not include starter, alternator, flywheel, or flywhe el housing | | 1 |
| 2 | 6679134 | GASKET KIT | upper - Ref. ENGINE & GASKET KITS(4)-ENGINE & GASKET KITS(9) - does not include head gasket | | 1 |
| 3 | 6668899 | GASKET KIT | lower - Ref. ENGINE & GASKET KITS(10)-ENGINE & GASKET KITS(33) | | 1 |
| 4 | 6672489 | GASKET | See Page CYLINDER HEAD & COVER(5) | | 1 |
| 5 | 6666492 | SEAL RING | | | 1 |
| 6 | 6670315 | GASKET | See Page MANIFOLDS(1) | | 1 |
| 7 | 6666473 | GASKET | See Page MANIFOLDS(1) | | 1 |
| 8 | 6666472 | GASKET | See Page MANIFOLDS(1) | | 4 |
| 9 | 6669643 | O-RING | See Page FRONT COVER(7) | | 1 |
| 10 | 6666731 | SEAL | front main - See Page FRONT COVER(7) | | 1 |
| 11 | 6666730 | SEAL | front main - See Page FRONT COVER(7) | | 1 |
| 12 | 6666753 | WASHER | See Page FRONT COVER(7) | | 1 |
| 13 | 6666714 | O-RING | See Page FRONT COVER(7) | | 2 |
| 14 | 6666490 | SEAL | lip - rear main - See Page CAMSHAFT(6) | | 1 |
| 15 | 6666393 | SEAL RING | See Page CYLINDER HEAD & COVER(5) | | 3 |
| 16 | 6666394 | SEAL RING | See Page CAMSHAFT(6) | | 1 |
| 17 | 6666410 | O-RING | See Page CAMSHAFT(6) | | 1 |
| 18 | 6666408 | O-RING | See Page CAMSHAFT(6) | | 1 |
| 19 | 6666426 | SEAL RING | See Page CAMSHAFT(6) | | 1 |
| 20 | 6668887 | O-RING | | | 2 |
| 21 | 6666699 | SEAL RING | | | 1 |
| 22 | 6666401 | O-RING | | | 1 |
| 23 | 6666395 | SEAL RING | | | 4 |
| 24 | 6666393 | SEAL RING | | | 3 |
| 25 | 6666420 | O-RING | | | 1 |
| 26 | 6666409 | O-RING | | | 1 |
| 27 | 6666760 | SEAL RING | | | 1 |
| 28 | 6666439 | O-RING | | | 2 |
| 29 | 6668694 | SEAL | | | 1 |
| 30 | 6666394 | SEAL RING | | | 3 |
| 31 | 6666712 | O-RING | | | 2 |
| 32 | 6668935 | SEAL RING | | | 8 |
| 33 | 6666460 | SEAL | | | 8 |

Fixsomething

# MANIFOLDS

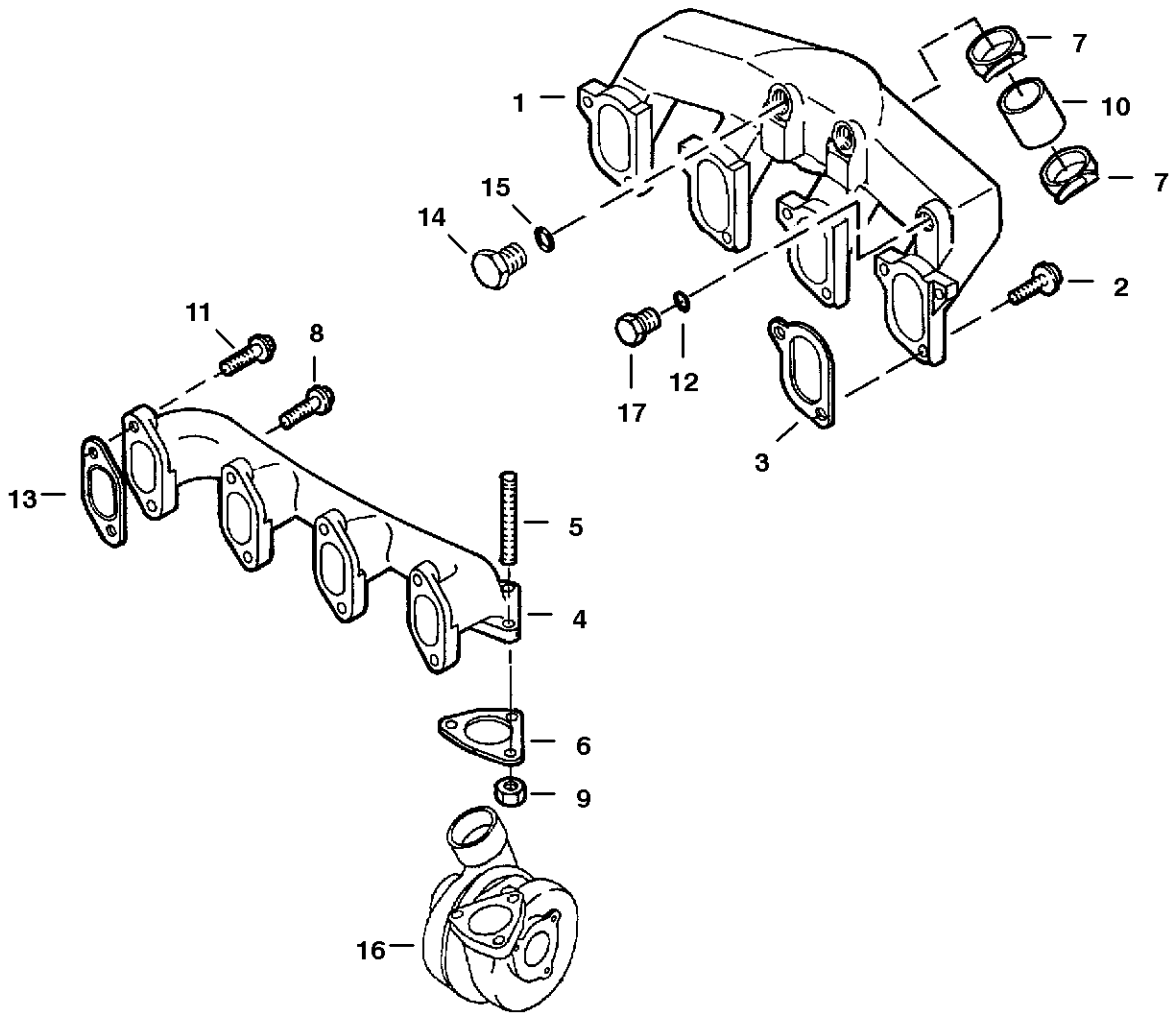


B-17422

# MANIFOLDS

| Ref.N° | Part N° | Description | Remarks | Serial N° | Qty. |
|---|---|---|---|---|---|
| 1 | 6670316 | MANIFOLD | intake | | 1 |
| 2 | 6670313 | BOLT | | | 8 |
| 3 | 6670315 | GASKET | | | 4 |
| 4 | 6673170 | MANIFOLD | exhaust | | 1 |
| 5 | 6672947 | STUD | | | 3 |
| 6 | 6666473 | GASKET | | | 1 |
| 7 | 6666419 | CLAMP | | | 2 |
| 8 | 6673172 | BOLT | | | 1 |
| 9 | 6672948 | NUT | | | 3 |
| 10 | 6670314 | HOSE | 3.25' (83mm) long | | 7 |
| 11 | 6673171 | BOLT | | | 7 |
| 12 | 6672939 | O-RING | | | 1 |
| 13 | 6666472 | GASKET | | | 4 |
| 14 | 6666397 | PLUG | | | 1 |
| 15 | 6668888 | O-RING | | | 1 |
| 16 | 6673173 | TURBOCHARGER | See Page CRANKCASE(8) | | 1 |
| 17 | 6672938 | PLUG | | | 1 |

Fixsomething

# CYLINDER HEAD & COVER

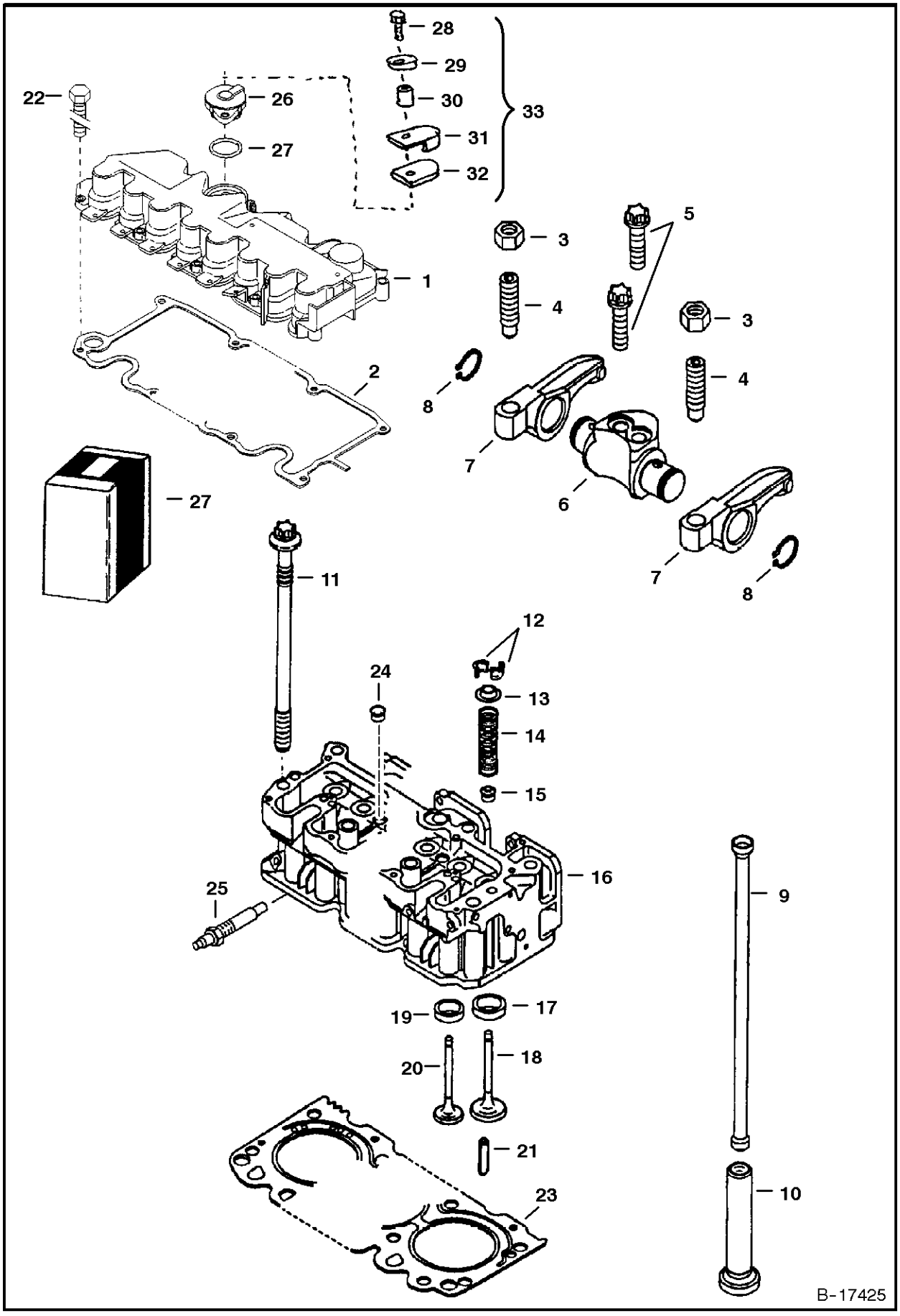

# CYLINDER HEAD & COVER

| Ref.N° | Part N° | Description | Remarks | Serial N° | Qty. |
|---|---|---|---|---|---|
| 1 | 6672770 | COVER | | | 1 |
| 2 | 6672489 | GASKET | | | 1 |
| 3 | 6666450 | NUT | | | 8 |
| 4 | 6666449 | SCREW | adjusting | | 8 |
| 5 | 6672900 | BOLT | | | 8 |
| 6 | 6666474 | ARM | rocker - W/Ref. CYLINDER HEAD & COVER(3), CYLINDER HEAD & COVER(4), CYLINDER HEAD & COVER(7) & CYLINDER HEAD & COVER(8) | | 4 |
| 7 | 6666448 | ARM | rocker | | 8 |
| 8 | 6666388 | SNAP RING | | | 8 |
| 9 | 6666447 | PUSH ROD | | | 8 |
| 10 | 6666504 | TAPPET | | | 8 |
| 11 | 6670820 | BOLT | fully threaded | | 10 |
| 12 | 6666443 | COLLAR | | | 16 |
| 13 | 6668940 | CAP | spring | | 8 |
| 14 | 6668944 | SPRING | | | 8 |
| 15 | 6666460 | SEAL | | | 8 |
| 16 | 6676567 | HEAD | cylinder - W/Ref. CYLINDER HEAD & COVER(12)-CYLINDER HEAD & COVER(20) | | 1 |
| 17 | 6666505 | INSERT | valve seat - intake | | 4 |
| 18 | 6666526 | VALVE | intake | | 4 |
| 19 | 6666481 | INSERT | valve seat - exhaust | | 4 |
| 20 | 6666466 | VALVE | exhaust | | 4 |
| 21 | 6666519 | PIN | | | 2 |
| 22 | 6672771 | BOLT | | | 10 |
| 23 | 6676568 | GASKET | 1 notch | | 1 |
| 23 | 6676571 | GASKET | 2 notch | | 1 |
| 23 | 6676572 | GASKET | 3 notch | | 1 |
| 24 | 6666697 | PLUG | soft | | 3 |
| 25 | 6670989 | GLOW PLUG | | | 4 |
| 26 | 6666749 | BREATHER | | | 1 |
| 27 | 6669643 | O-RING | | | 1 |
| 28 | 6666695 | BOLT | | | 1 |
| 28 | NSS | BOLT | Order Ref. CYLINDER HEAD & COVER(33) | | 1 |
| 29 | NSS | WASHER | Order Ref. CYLINDER HEAD & COVER(33) | | 1 |
| 30 | NSS | SPACER | Order Ref. CYLINDER HEAD & COVER(33) | | 1 |
| 31 | NSS | SHIELD | Order Ref. CYLINDER HEAD & COVER(33) | | 1 |
| 32 | NSS | INSULATION | Order Ref. CYLINDER HEAD & COVER(33) | | 1 |
| 33 | 6673967 | KIT | Ref. CYLINDER HEAD & COVER(28)-CYLINDER HEAD & COVER(32) | | 1 |

# CAMSHAFT

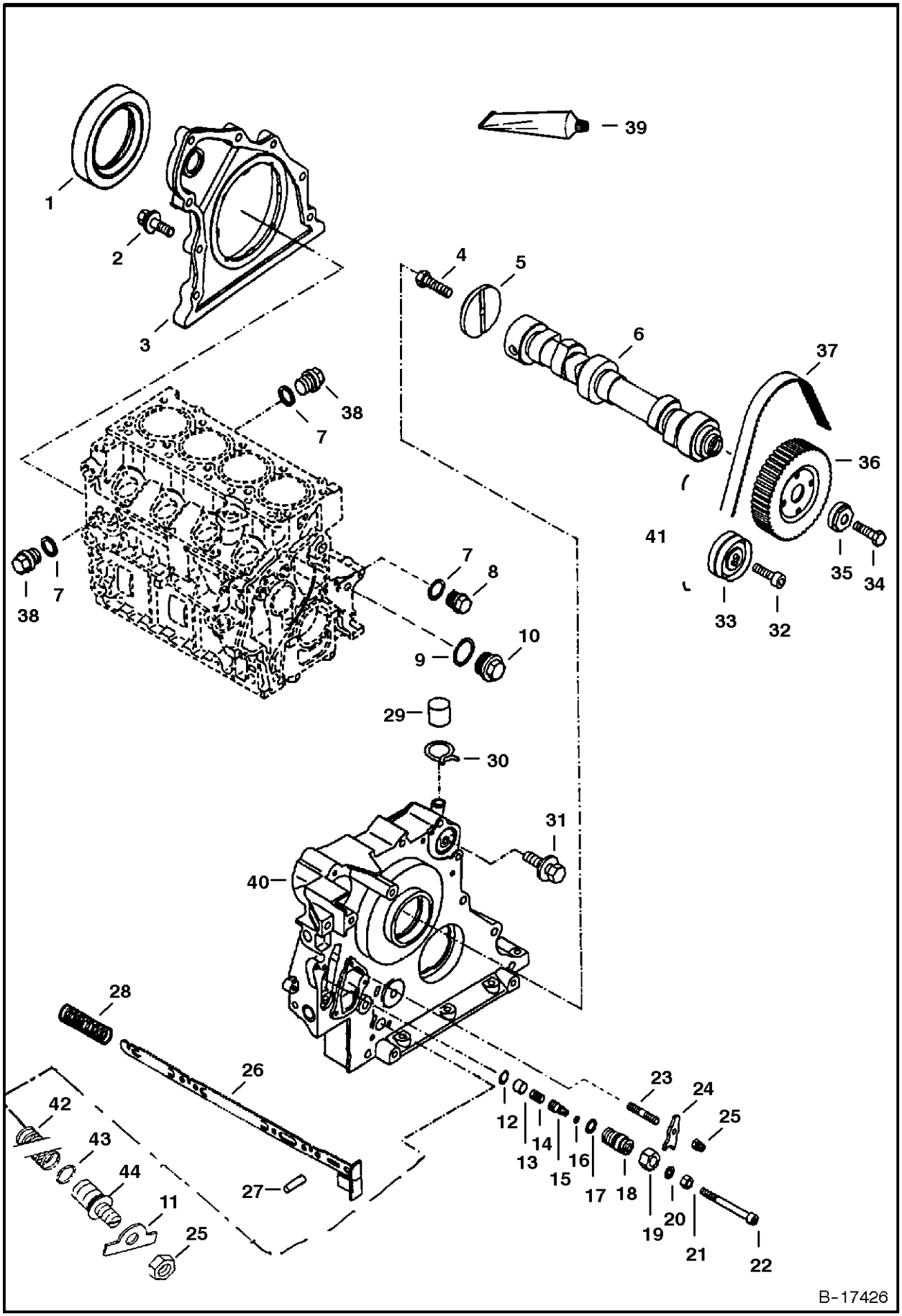
1
2
3
39
4
5
6
37
36
41
35
34
33
32
38
7
8
9
10
29
30
31
40
28
26
27
42
43
44
11
25
12
13
14
15
16
17
18
19
20
21
22
23
24
25
B-17426

# CAMSHAFT

| Ref.N° | Part N° | Description | Remarks | Serial N° | Qty. |
|---|---|---|---|---|---|
| 1 | 6666490 | SEAL | lip - rear main | | 1 |
| 2 | 6666412 | BOLT | | | 8 |
| 3 | 6666491 | COVER | rear - use W/Ref. CAMSHAFT(39) | | 1 |
| 4 | 6666402 | BOLT | | | 1 |
| 5 | 6666469 | WASHER | thrust | | 1 |
| 6 | 6673154 | CAMSHAFT | | | 1 |
| 7 | 6666393 | SEAL RING | | | 3 |
| 8 | 1KM-10 | PLUG | | | 1 |
| 9 | 6666394 | SEAL RING | | | 1 |
| 10 | 6666399 | PLUG | | | 1 |
| 11 | 6673166 | WASHER | | | 1 |
| 12 | 6666389 | CIR CLIP | | | 1 |
| 13 | 6666476 | STOP | limit | | 1 |
| 14 | 6666483 | SPRING | | | 1 |
| 15 | 6666489 | SCREW | | | 1 |
| 16 | 6666410 | O-RING | | | 1 |
| 17 | 6666408 | O-RING | | | 1 |
| 18 | 6666480 | SCREW | adjusting | | 1 |
| 19 | 6666450 | NUT | | | 1 |
| 20 | 6666426 | SEAL RING | | | 1 |
| 21 | 6673162 | NUT | | | 1 |
| 22 | 6672942 | SET SCREW | | | 1 |
| 23 | 6666406 | STUD | | | 1 |
| 24 | 6666475 | CLAW | | | 1 |
| 25 | 6513908 | NUT | | | 1 |
| 26 | 6673163 | ROD | | | 1 |
| 27 | 6666496 | PIN | locating | | 1 |
| 28 | 6666465 | SPRING | | | 1 |
| 29 | 6666761 | CAP | | | 1 |
| 30 | 6666701 | CLAMP | | | 1 |
| 31 | 6666707 | BOLT | | | 11 |
| 32 | 6666715 | BOLT | | | 1 |
| 33 | NAP | PULLEY | tension - Order Ref. CAMSHAFT(41) | | 1 |
| 34 | 6666711 | BOLT | | | 1 |
| 35 | 6666720 | WASHER | | | 1 |
| 36 | 6666725 | PULLEY | | | 1 |
| 37 | NAP | BELT | Order Ref. CAMSHAFT(41) | | 1 |
| 38 | 6666690 | PLUG | | | 2 |
| 39 | 6632823 | GASKET | liquid - between Ref. CAMSHAFT(3) & block also between Ref. CAMSHAFT(40) & block | | x |
| 40 | 6666748 | COVER | front - See Page FRONT COVER(7) | | 1 |
| 41 | 6670555 | REPAIR KIT | Ref. CAMSHAFT(32), CAMSHAFT(33) & CAMSHAFT(37) | | 1 |
| 42 | 6673167 | SPRING | | | 1 |
| 43 | 6673165 | O-RING | | | 1 |
| 44 | 6673164 | CAPSULE | | | 1 |

Five Seasons Marine

# FRONT COVER

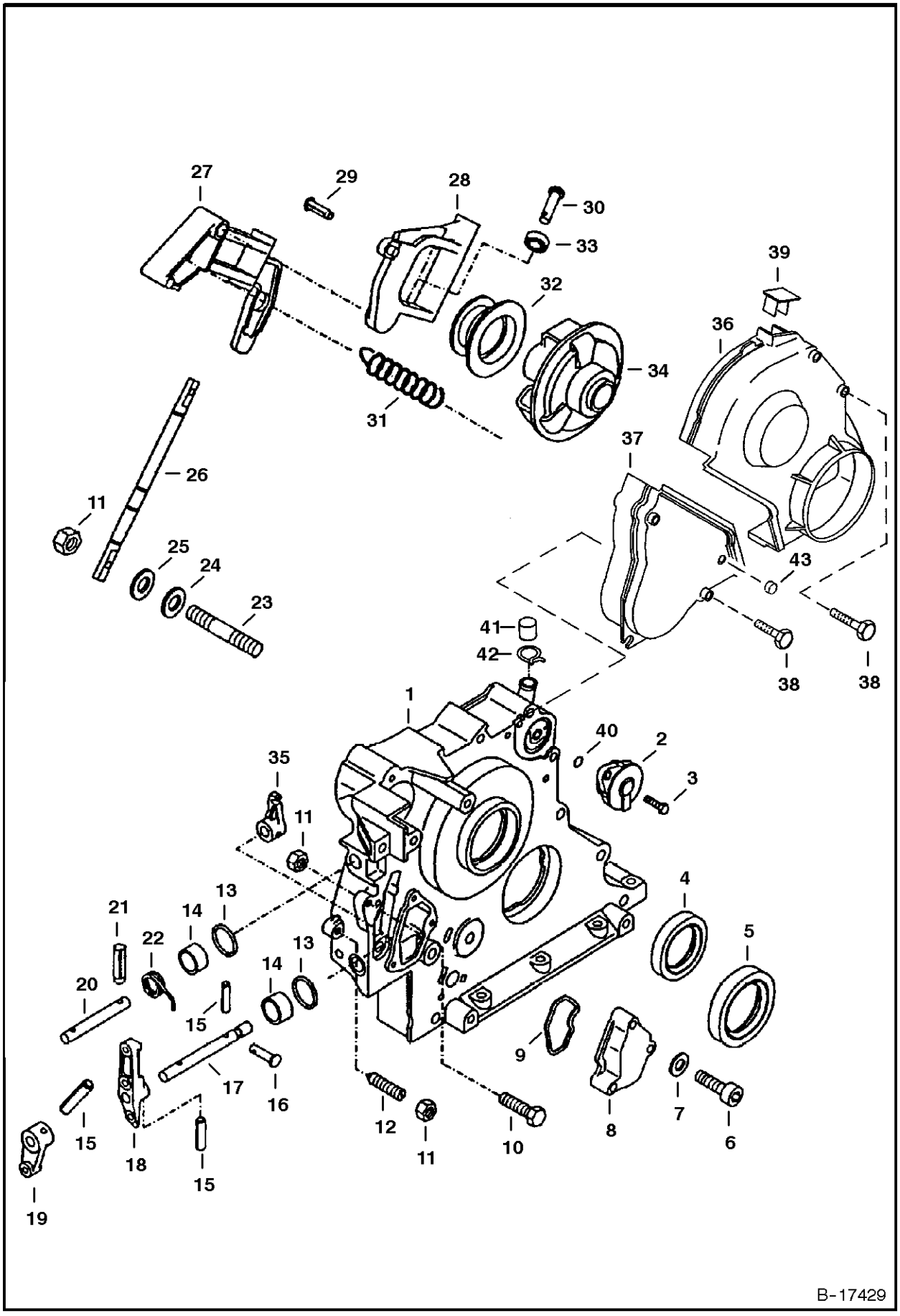
27
29
28
30
33
39
32
36
34
31
26
37
11
25
24
23
43
41
42
38
38
1
40
2
35
3
11
4
13
21
14
22
13
14
5
20
15
9
17
16
12
11
10
8
7
6
15
18
15
19
B-17429

# FRONT COVER

| Ref.N° | Part N° | Description | Remarks | Serial N° | Qty. |
|---|---|---|---|---|---|
| 1 | 6666748 | COVER | front | | 1 |
| 2 | 6666749 | BREATHER | vent - W/Ref. FRONT COVER(40) | | 1 |
| 3 | 6666695 | BOLT | | | 1 |
| 4 | 6666731 | SEAL | front main | | 1 |
| 5 | 6666730 | SEAL | front main | | 1 |
| 6 | 6666710 | SCREW | | | 3 |
| 7 | 6672943 | WASHER | | | 3 |
| 8 | 6666757 | COVER | | | 1 |
| 9 | 6666753 | WASHER | | | 1 |
| 10 | 6666684 | BOLT | | | 1 |
| 11 | com391}H~10{ M | | | | x |
| 12 | 6666698 | SET SCREW | | | 1 |
| 13 | 6666714 | O-RING | | | 2 |
| 14 | 6666732 | SLEEVE | | | 2 |
| 15 | 6666688 | PIN | | | 3 |
| 16 | 6666694 | PIN | clevis | | 1 |
| 17 | 6666729 | SHAFT | lever | | 1 |
| 18 | 6672945 | ARM | lever | | 1 |
| 19 | 6666721 | LEVER | shutAoff | | 1 |
| 20 | 6666726 | SHAFT | lever | | 1 |
| 21 | 6666686 | PIN | notched | | 1 |
| 22 | 6666727 | SPRING | | | 1 |
| 23 | 6666700 | STUD | | | 2 |
| 24 | 6666717 | WASHER | | | 2 |
| 25 | 6666723 | WASHER | | | 3 |
| 26 | 6666740 | SHAFT | | | 1 |
| 27 | 6672946 | ARM | lever | | 1 |
| 28 | 6666745 | LEVER | roller - W/Ref. FRONT COVER(29)-FRONT COVER(33) | | 1 |
| 29 | 6666687 | NAIL | notched | | 1 |
| 30 | 6666713 | PIN | | | 2 |
| 31 | 6673168 | SPRING | | | 1 |
| 32 | 6666744 | SLEEVE | | | 1 |
| 33 | 6666692 | BEARING | ball | | 2 |
| 34 | 6672705 | METER | 'unit | | 1 |
| 35 | 6666733 | ARM | lever | | 1 |
| 36 | 6668763 | SHIELD | | | 1 |
| 37 | 6673153 | SHIELD | W/Ref. FRONT COVER(43) | | 1 |
| 38 | 6672898 | BOLT | | | 4 |
| 39 | 6668904 | CAP | | | 1 |
| 40 | 6669643 | O-RING | | | 1 |
| 41 | 6672886 | CAP | | | 1 |
| 42 | 6666701 | CLAMP | | | 1 |
| 43 | 6672899 | PLUG | | | 1 |

Fixsomething

# CRANKCASE

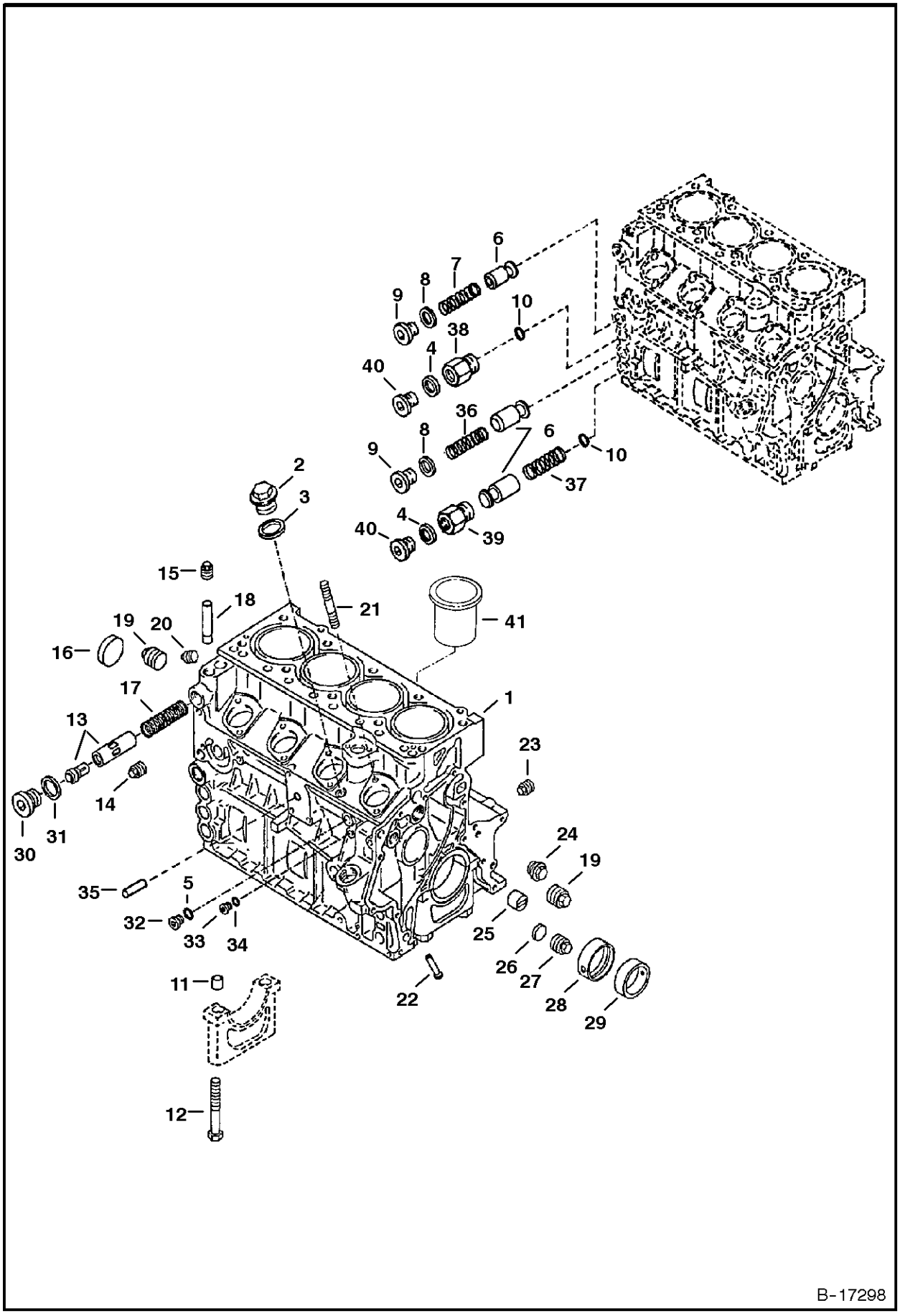
1
2
3
4
5
6
7
8
9
10
11
12
13
14
15
16
17
18
19
20
21
22
23
24
25
26
27
28
29
30
31
32
33
34
35
36
37
38
39
40
41
B-17298

# CRANKCASE

| Ref.N° | Part N° | Description | Remarks | Serial N° | Qty. |
|---|---|---|---|---|---|
| 1 | NAP | BLOCK | Order complete engine - See Page ENGINE & GASKE T KITS(4) | | 1 |
| 2 | 6666690 | PLUG | | | 1 |
| 3 | 6666393 | SEAL RING | | | 1 |
| 4 | 6668887 | O-RING | | | 2 |
| 5 | 6666394 | SEAL RING | | | 3 |
| 6 | 6666510 | VALVE | | | 3 |
| 7 | 6668941 | SPRING | Yellow - .047" (1.2mm) dia. wire 3.15" (80mm) long | | 1 |
| 8 | 6666395 | SEAL RING | | | 2 |
| 9 | 6666387 | PLUG | | | 4 |
| 10 | NSS | O-RING | | | x |
| 11 | 6666722 | DOWEL | | | 10 |
| 12 | 6666719 | BOLT | | | 10 |
| 13 | 6668945 | THERMOSTAT | eng. oil temp. | | 1 |
| 14 | 6666703 | PLUG | | | 1 |
| 15 | 6666702 | PLUG | | | 1 |
| 16 | 6666716 | PLUG | soft | | 1 |
| 17 | 6668941 | SPRING | | | 1 |
| 18 | 6666741 | TUBE | | | 1 |
| 19 | 6672873 | PLUG | | | 2 |
| 20 | 6672874 | PLUG | | | 1 |
| 21 | 6666709 | STUD | | | 8 |
| 22 | 6666746 | NOZZLE | piston cooling | | 8 |
| 23 | 6672872 | PLUG | | | 1 |
| 24 | 6666751 | PLUG | | | 1 |
| 25 | 6666718 | SLEEVE | guide | | 2 |
| 26 | 6666697 | PLUG | soft | | 1 |
| 27 | 6672878 | PLUG | | | 1 |
| 28 | 6666738 | BEARING | wrapped bushing | | 2 |
| 29 | 6666737 | BEARING | wrapped bushing | | 3 |
| 30 | 6672877 | PLUG | | | 1 |
| 31 | 6666395 | SEAL RING | | | 1 |
| 32 | 6666689 | PLUG | | | 1 |
| 33 | 6666690 | PLUG | | | 1 |
| 34 | 6666699 | SEAL RING | | | 1 |
| 35 | 6668905 | PIN | | | 1 |
| 36 | 6668903 | SPRING | Red - .055" (1,4mm) dia. wire 3.07 (78mm) long | | 1 |
| 37 | 6668902 | SPRING | Blue - .039" (1,0mm) dia. wire 2.44" (62mm) long | | 1 |
| 38 | 6668900 | ADAPTER | W/Ref. CRANKCASE(10) | | 1 |
| 39 | 6668901 | ADAPTER | W/Ref. CRANKCASE(10) | | 1 |
| 40 | 6668889 | PLUG | | | 2 |
| 41 | 6672879 | LINER | for blocks W/ liners | | 1 |

Fixed mething

# OIL PAN

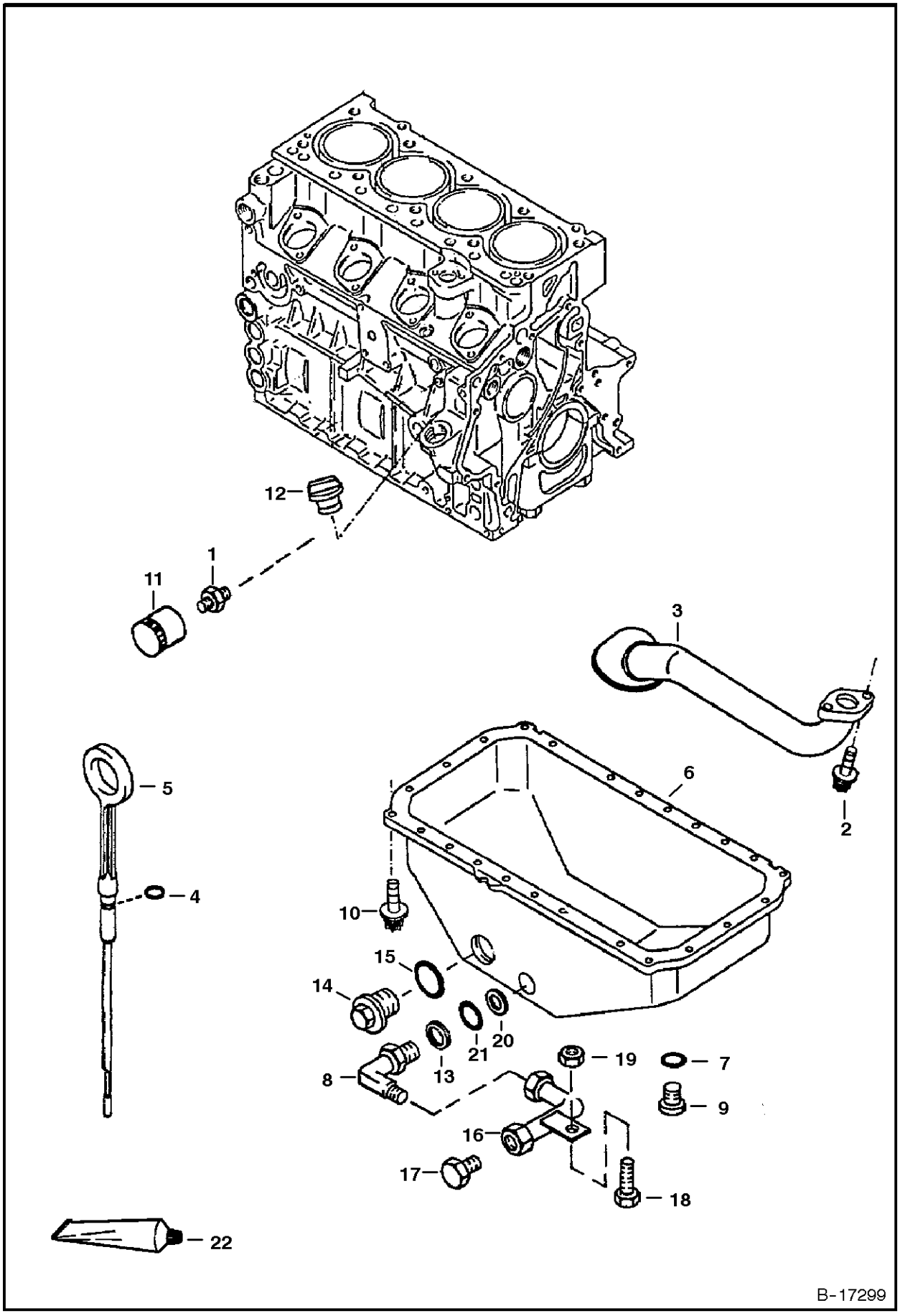

# OIL PAN

| Ref.N° | Part N° | Description | Remarks | Serial N° | Qty. |
|---|---|---|---|---|---|
| 1 | 6668897 | ADAPTER | | | 1 |
| 2 | 6668938 | BOLT | | | 2 |
| 3 | 6666508 | TUBE | oil suction | | 1 |
| 4 | 25K-30012 | O-RING | .55' (14mm) O.D. | | 2 |
| 5 | 6669531 | DIPSTICK | W/ .55' (14mm) O.D. O-ring | | 1 |
| 6 | 6677832 | OIL PAN& | W/Ref. CRANKCASE(5), OIL PAN(9), OIL PAN(10), OIL PAN(14)-OIL PAN(15) | | 1 |
| 7 | 6666394 | SEAL RING | | | x |
| 8 | 6709168 | ELBOW | W/Ref. OIL PAN(13), OIL PAN(20) & OIL PAN(21) | | 1 |
| 9 | 6666400 | PLUG | | | 1 |
| 10 | 6677831 | BOLT | | | 26 |
| 11 | 6665603 | OIL FILTER | engine | | 1 |
| 12 | 6666530 | CAP | oil fill | | 1 |
| 13 | 6669067 | WASHER | | | 1 |
| 14 | 6666397 | PLUG | | | 1 |
| 15 | 2FM-22270 | SEAL | | | 1 |
| 16 | 6714500 | TUBE | oil drain | | 1 |
| 17 | 6518121 | PLUG | oil drain | | 1 |
| 18 | 35C-512 | BOLT | | | 1 |
| 19 | 97D-5 | NUT | | | 1 |
| 20 | 58K-114 | O-RING | | | 1 |
| 21 | 6669066 | SEAL RING | | | 1 |
| 22 | 6632823 | GASKET | liquid - use between Ref. OIL PAN(6) & 'block - also use between Ref. OIL PAN(3) & block | | x |

Fixsomething

# TURBOCHARGER

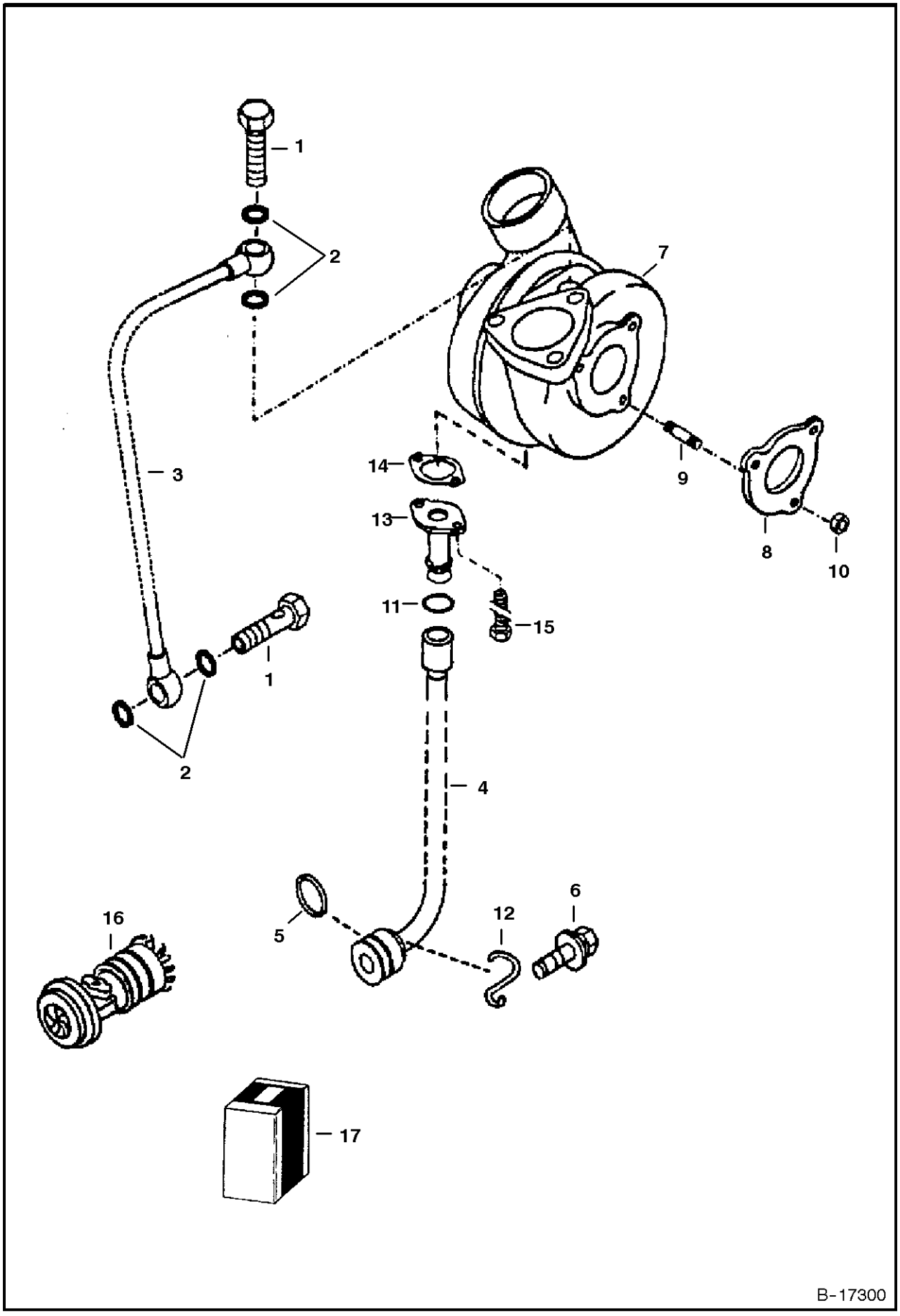

# TURBOCHARGER

| Ref.N° | Part N° | Description | Remarks | Serial N° | Qty. |
|---|---|---|---|---|---|
| 1 | 6666396 | SCREW | | | 2 |
| 2 | 2FM-12155 | SEAL RING | | | 4 |
| 3 | 6668948 | TUBE | oil lubricating | | 1 |
| 4 | 6668106 | TUBE | oil return | | 1 |
| 5 | 6666401 | O-RING | | | 1 |
| 6 | 6668938 | BOLT | | | 1 |
| 7 | 6677575 | TURBOCHARGER | | | 1 |
| 8 | 6665910 | GASKET | | | 1 |
| 9 | 6666407 | STUD | | | 3 |
| 10 | 6666398 | NUT | | | 3 |
| 11 | 6668109 | O-RING | | | 1 |
| 12 | 6666509 | RETAINER | Was 6673155 [A] | | 1 |
| 13 | 6677576 | FLANGE | | | 1 |
| 14 | 6677577 | GASKET | | | 1 |
| 15 | 6677578 | BOLT | | | 2 |
| 16 | NAP | CORE | turbocharger - Order Ref. TURBOCHARGER(7) | | 1 |
| 17 | 6668895 | REPAIR KIT | turbocharger - includes clip, O-ring, (3) bolts & bracket | | 1 |

Fixsomething

# PISTON & CRANKSHAFT

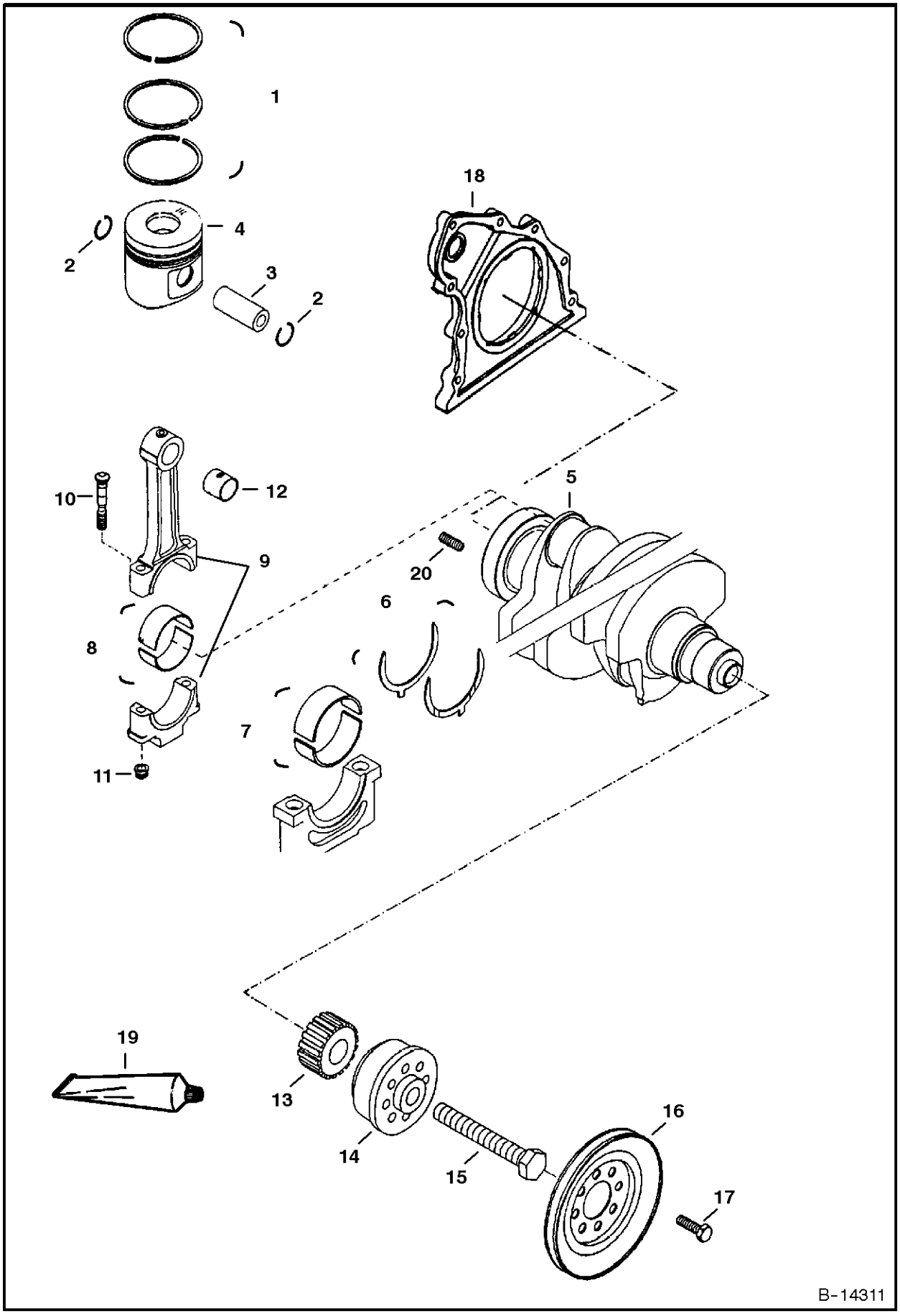

# PISTON & CRANKSHAFT

| Ref.N° | Part N° | Description | Remarks | Serial N° | Qty. |
|---|---|---|---|---|---|
| 1 | 6672896 | RING SET | | | 4 |
| 2 | 6666404 | SNAP RING | | | 8 |
| 3 | 6666470 | PIN | | | 4 |
| 4 | 6673152 | PISTON | W/Ref. PISTON & CRANKSHAFT(1)-PISTON & CRANKSHAFT(3) | | 4 |
| 5 | 6673150 | CRANKSHAFT | | | 1 |
| 6 | 6666456 | WASHER | | | 1 |
| 7 | 6669395 | MAIN BEARING | 2.7559' (70,00mm) | | 5 |
| 7 | 6669396 | MAIN BEARING | 2.7657' (70,25mm) | | 5 |
| 7 | 6669397 | MAIN BEARING | 2.7755' (70,50mm) | | 5 |
| 8 | 6672889 | BEARING | 2.165' (55,00mm) | | 4 |
| 8 | 6666458 | BEARING | 2.155' (54,75mm) | | 4 |
| 8 | 6666459 | BEARING | 2.145' (54,50mm) | | 4 |
| 9 | 6668943 | ROD | connecting - W/Ref. PISTON & CRANKSHAFT(10)-PISTON & CRANKSHAFT(12) | | 4 |
| 10 | 6668942 | BOLT | | | 8 |
| 11 | 6666442 | NUT | | | 8 |
| 12 | 6666463 | BUSHING | | | 4 |
| 13 | 6666471 | PULLEY | | | 1 |
| 14 | 6666482 | FLANGE | | | 1 |
| 15 | 6666444 | BOLT | | | 1 |
| 16 | 6666446 | PULLEY | | | 1 |
| 17 | 6666433 | BOLT | | | 4 |
| 18 | 6666491 | COVER | rear | | x |
| 19 | 6632823 | GASKET | liquid - use between Ref. PISTON & CRANKSHAFT(18) & block | | x |
| 20 | 6672890 | INSERT | | | 1 |

Fixsomething

# FUEL INJECTION SYSTEM

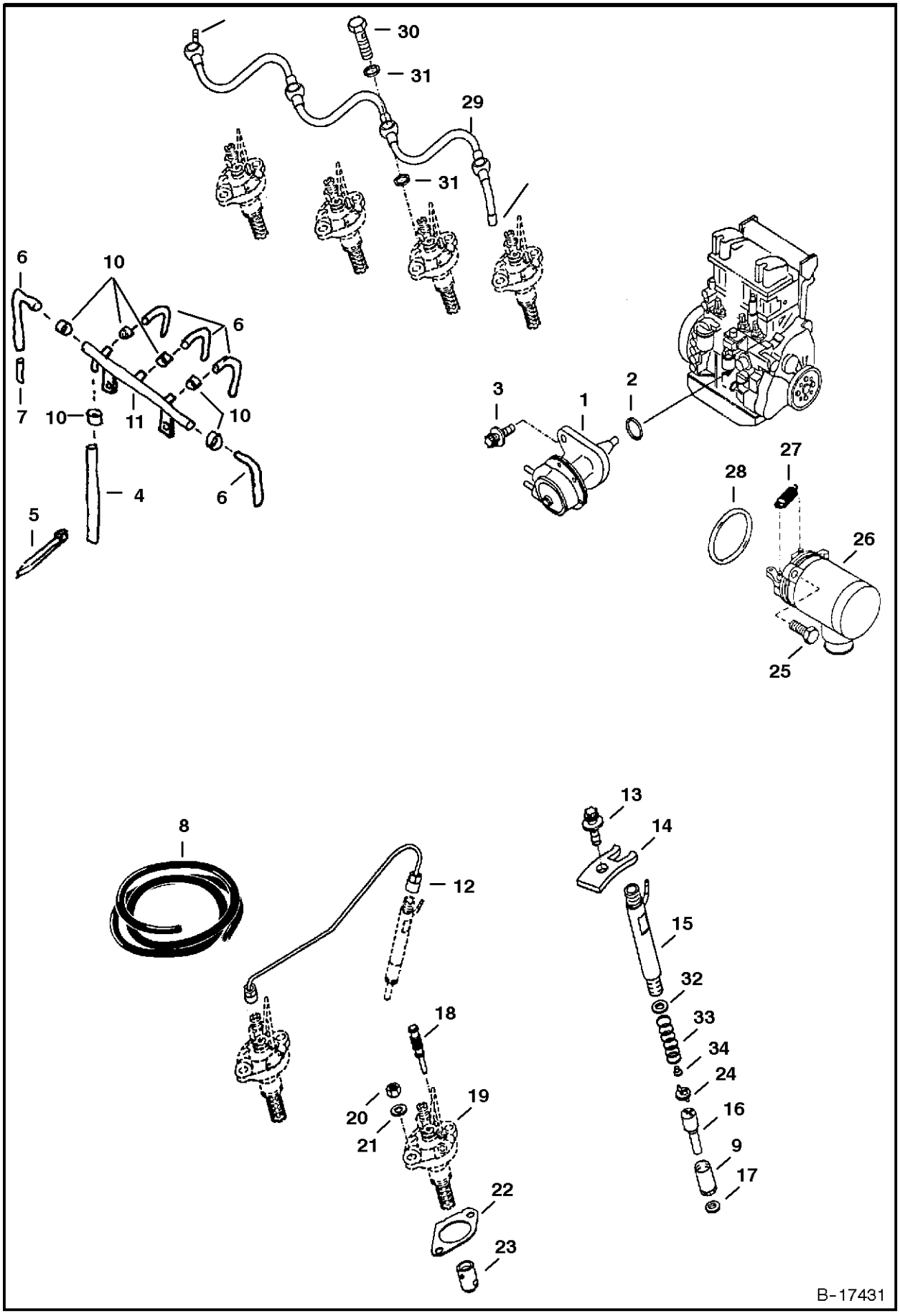

# FUEL INJECTION SYSTEM

| Ref.N° | Part N° | Description | Remarks | Serial N° | Qty. |
|---|---|---|---|---|---|
| 1 | 6677830 | PUMP | fuel | | 1 |
| 1 | 6668906 | REPAIR KIT | 'fuel pump - screen, OAring, screw | | 1 |
| 2 | 6666420 | O-RING | | | 1 |
| 3 | 6673159 | BOLT | | | 2 |
| 4 | 6675460 | HOSE | | | 1 |
| 5 | 6672934 | STA-STRAP | | | 1 |
| 6 | NSS | HOSE | Order Ref. FUEL INJECTION SYSTEM(8) | | 5 |
| 7 | 6666418 | ADAPTER | | | 1 |
| 8 | 6666416 | HOSE | 1 meter long (39') | | 1 |
| 9 | 6668894 | NUT | nozzle cap | | 1 |
| 10 | 6673160 | CLAMP | | | 6 |
| 11 | 6675461 | FUEL LINE | assy. - Ref. FUEL INJECTION SYSTEM(10) & FUEL INJECTION SYSTEM(4)-FUEL INJECTION SYSTEM( 6) | | 1 |
| 12 | 6666531 | TUBE | | | 4 |
| 13 | 6672902 | BOLT | | | 4 |
| 14 | 6666501 | CLAMP | | | 4 |
| 15 | 6673157 | INJECTOR | includes Ref. FUEL INJECTION SYSTEM(16), FUEL INJECTION SYSTEM(17) & FUEL INJECTION SYSTEM(32)-FUEL INJECTION SYSTEM(9) | | 4 |
| 16 | 6673158 | NOZZLE | | | 4 |
| 17 | 6666492 | SEAL RING | | | 4 |
| 18 | 6666527 | ADAPTER | | | 4 |
| 19 | 6673156 | INJECTOR | pump | | 4 |
| 20 | 1DM-8 | NUT | | | 8 |
| 21 | 6666453 | WASHER | | | 8 |
| 22 | 6666512 | SHIM | .2 mm | | x |
| 22 | 6666513 | SHIM | .3 mm | | x |
| 22 | 6666514 | SHIM | .4 mm | | x |
| 22 | 6666515 | SHIM | .5 mm | | x |
| 22 | 6666516 | SHIM | .6 mm | | x |
| 22 | 6666517 | SHIM | .7 mm | | x |
| 22 | 6666518 | SHIM | .8 mm | | x |
| 23 | 6666493 | TAPPET | | | 4 |
| 24 | 6668893 | SPACER | | | 1 |
| 25 | 6666403 | BOLT | | | 2 |
| 26 | 6668950 | SOLENOID | shutAoff - W/Ref. FUEL INJECTION SYSTEM(27) | | 1 |
| 27 | 6666495 | SPRING | | | 1 |
| 28 | 6666409 | O-RING | | | 1 |
| 29 | 6666763 | FUEL LINE | | | 1 |
| 30 | 6514745 | SCREW | hollow | | 4 |
| 31 | 6672933 | SEAL RING | brass | | 8 |
| 32 | 6668890 | SHIM | | | x |
| 33 | 6668891 | SPRING | | | 1 |
| 34 | 6668892 | BOLT | thrust | | 1 |

Fixsomething

# OIL PUMP

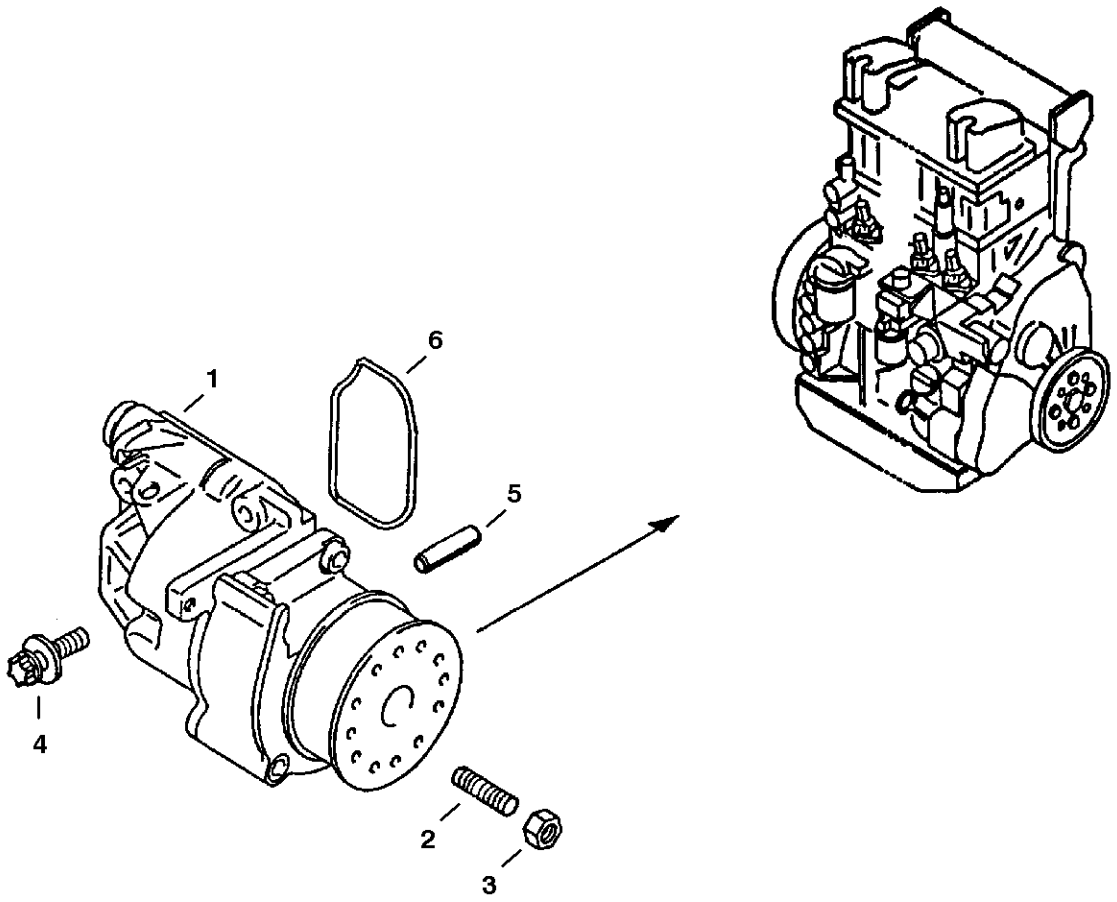

# OIL PUMP

| Ref.N° | Part N° | Description | Remarks | Serial N° | Qty. |
|---|---|---|---|---|---|
| 1 | 6669530 | PUMP | oil - W/ .55' (14mm) dipstick hole I.D. - W/Ref. OIL PUMP(2) & OIL PUMP(3) | | 1 |
| 2 | 6668936 | SET SCREW | | | 1 |
| 3 | 1DM-6 | NUT | | | 1 |
| 4 | 6666708 | BOLT | | | 4 |
| 5 | 6666750 | PIN | | | 2 |
| 6 | 6666760 | SEAL RING | | | 1 |
| 7 | | DIPSTICK | See Page CRANKCASE(8) | | 1 |

Fixsomething

# AIR CLEANER

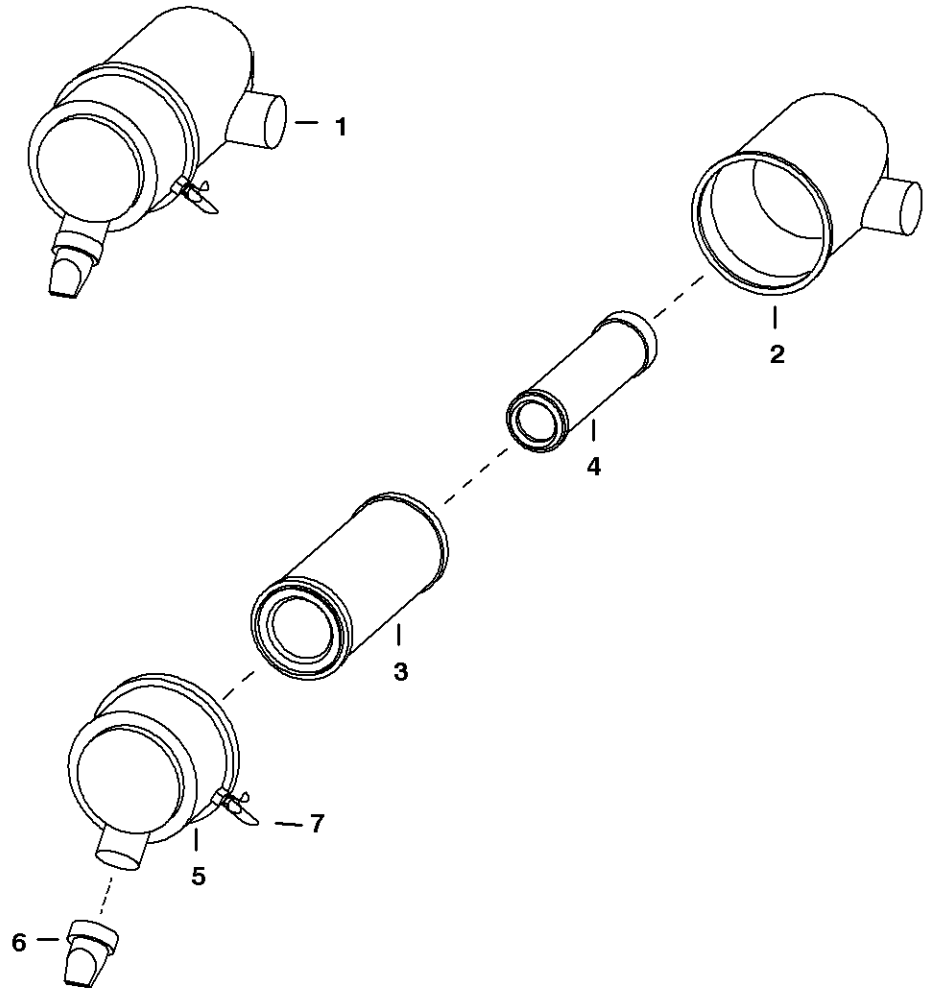


TS-1241

# AIR CLEANER

| Ref.N° | Part N° | Description | Remarks | Serial N° | Qty. |
|---|---|---|---|---|---|
| 1 | 6674837 | AIR CLEANER | | | 1 |
| 2 | NSS | TANK | Order Ref. AIR CLEANER(1) | | 1 |
| 3 | 6666375 | CARTRIDGE | outer | | 1 |
| 4 | 6666376 | CARTRIDGE | inner | | 1 |
| 5 | 6666377 | COVER | W/Ref. AIR CLEANER(7) | | 1 |
| 6 | 6666378 | VALVE | evacuator - 2' I.D. | | 1 |
| 7 | 6670298 | CLIP | | | 3 |

Fixsomething

## ACCESS COVER
## (Cleanout - Lower Front of Chaincase)

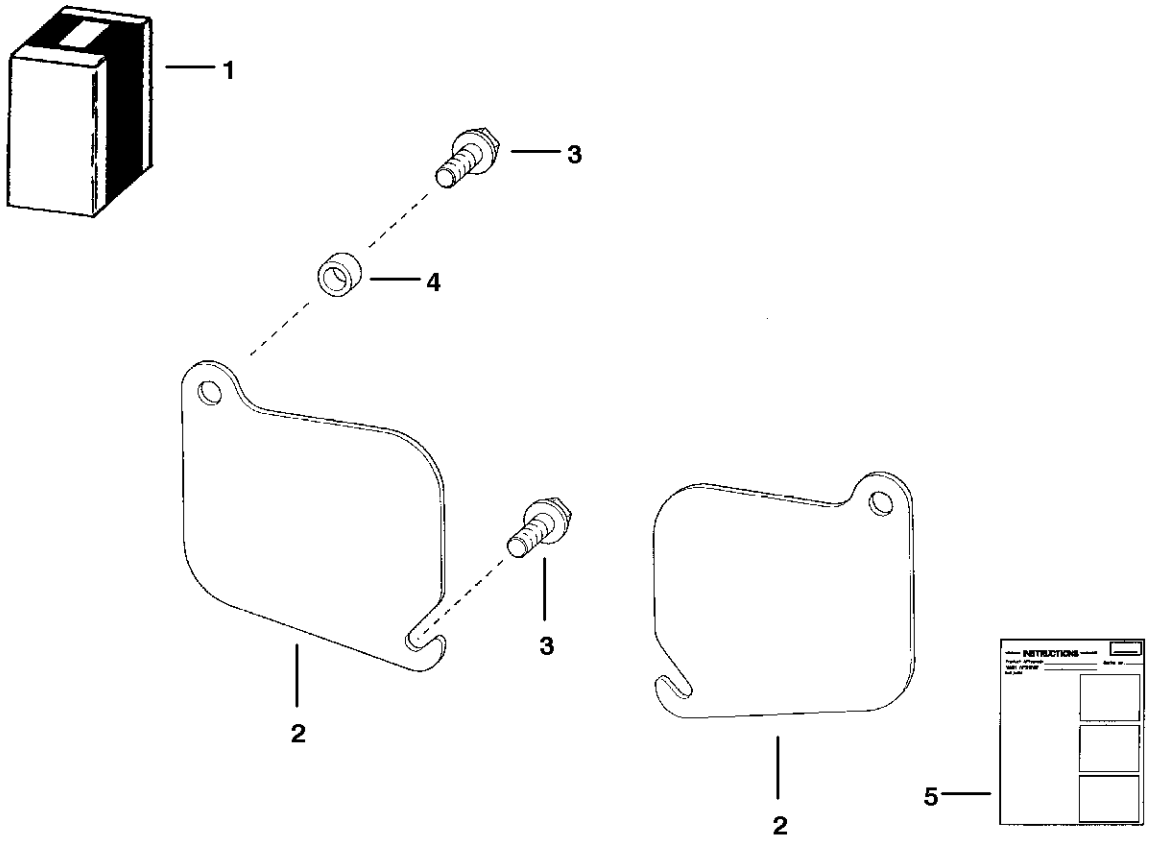


TS-1049

# ACCESS COVER

| Ref.N° | Part N° | Description | Remarks | Serial N° | Qty. |
|---|---|---|---|---|---|
| 1 | 6577880 | KIT | Ref. ACCESS COVER(2)-ACCESS COVER(5) | | 1 |
| 2 | 6577812 | COVER | | | 2 |
| 3 | 84G-3720 | BOLT | | | 4 |
| 4 | 6562619 | BUSHING | | | 2 |
| 5 | 6570931 | INSTRUCTIONS | | | 1 |

Fixsomething

# * BACK-UP ALARM

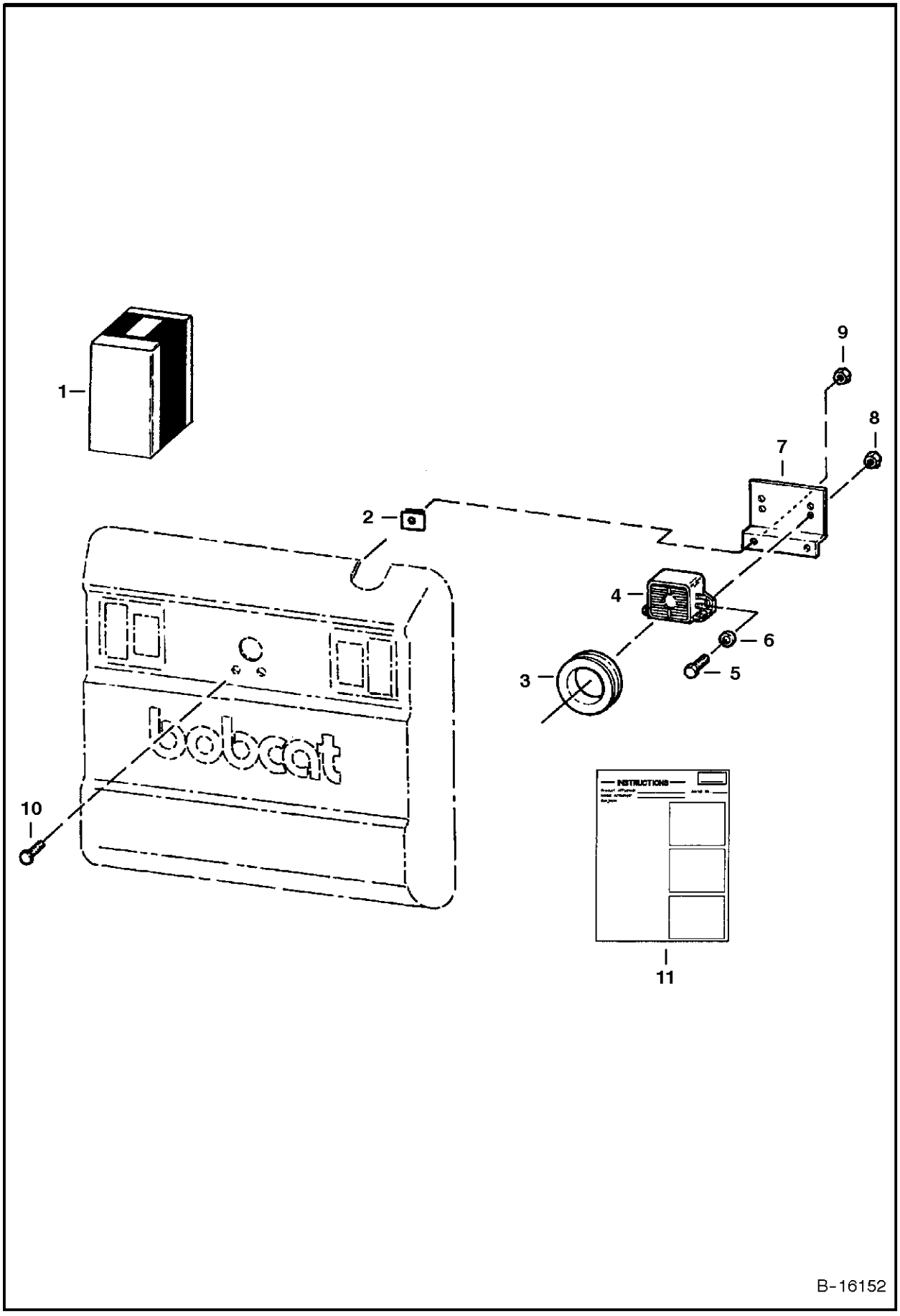

# * BACK-UP ALARM

| Ref.N° | Part N° | Description | Remarks | Serial N° | Qty. |
|---|---|---|---|---|---|
| 1 | 6732235 | KIT | Ref. * BACK-UP ALARM(2)-* BACK-UP ALARM(11) | | 1 |
| 2 | 774220 | NUT | spring | | 2 |
| 3 | 6577545 | GROMMET | | | 1 |
| 4 | 6599931 | ALARM | | | 1 |
| 5 | 17C-410 | BOLT | | | 2 |
| 6 | 25E-13 | WASHER | | | 2 |
| 7 | 6707726 | MOUNT | | | 1 |
| 8 | 83D-4 | NUT | | | 2 |
| 9 | 61D-5 | NUT | | | 2 |
| 10 | 37C-512 | BOLT | | | 2 |
| 11 | 6901690 | INSTRUCTIONS | | | 1 |

Fixsomething

# BEACON

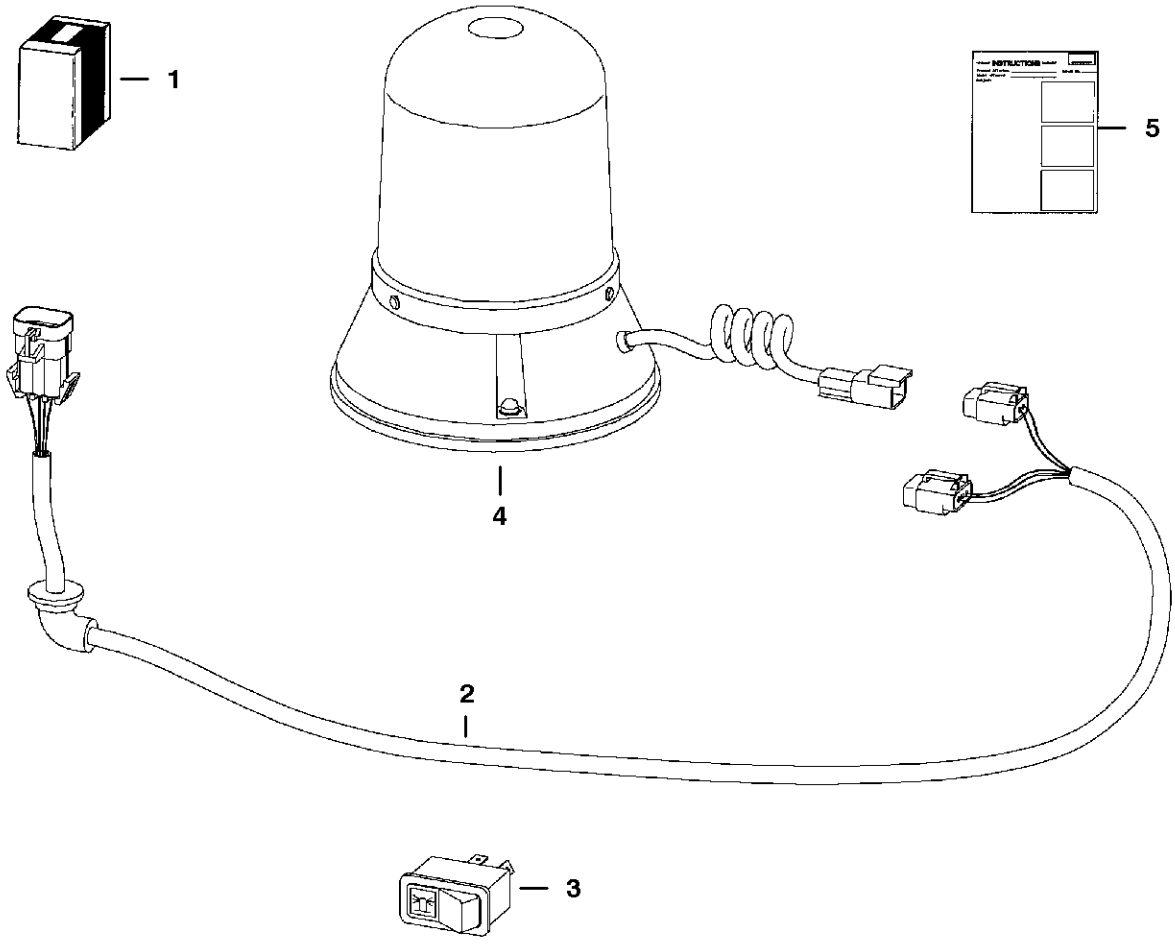


TS-1978

# BEACON

| Ref.N° | Part N° | Description | Remarks | Serial N° | Qty. |
|---|---|---|---|---|---|
| 1 | 6719854 | KIT | rotating beacon | | 1 |
| 2 | 6718872 | HARNESS | | | 1 |
| 3 | 6665317 | SWITCH | | | 1 |
| 4 | 6675523 | BEACON | | | 1 |
| 4 | 6666571 | BULB | | | 1 |
| 5 | 6900991 | INSTRUCTIONS | | | 1 |

Fixsomething

# BLOCK HEATER
## (Oil Pan Installed) (120 Volt)

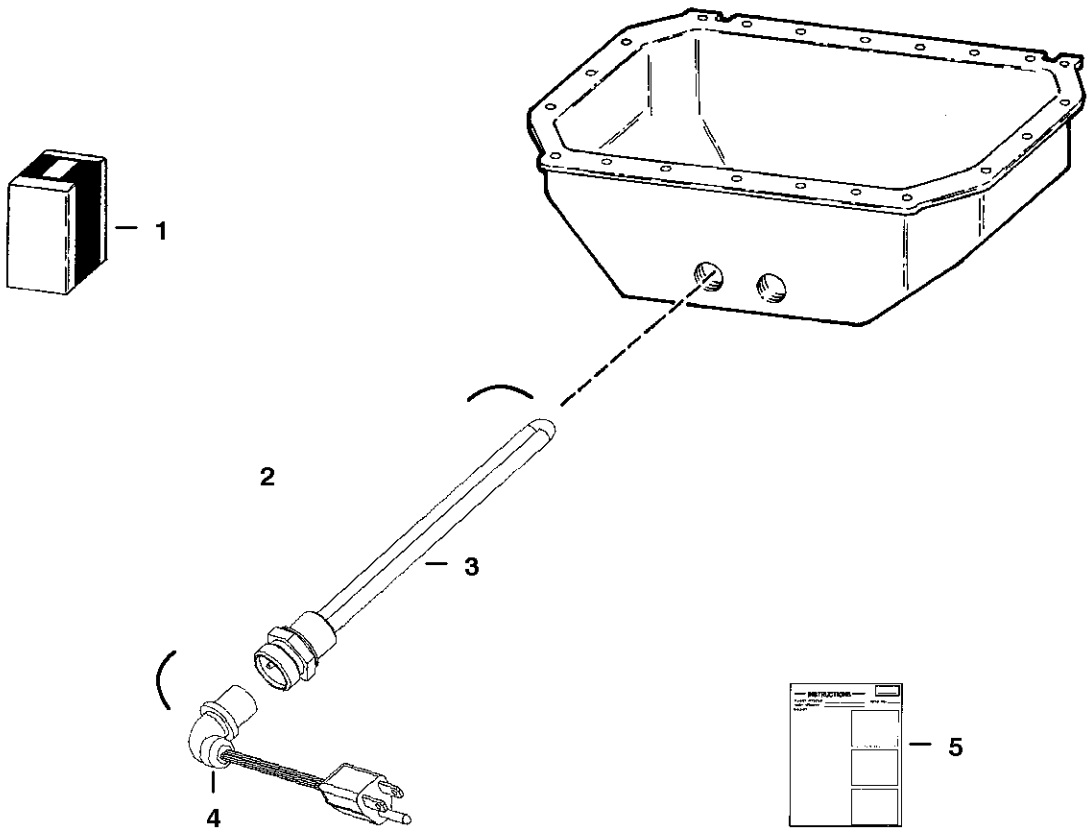


MS-1323

# BLOCK HEATER

| Ref.N° | Part N° | Description | Remarks | Serial N° | Qty. |
|---|---|---|---|---|---|
| 1 | 6725971 | KIT | Ref. BLOCK HEATER(2)-BLOCK HEATER(5) | | 1 |
| 2 | 6675695 | HEATER ASSY | | | 1 |
| 3 | 6675708 | ELEMENT | W/ 22mm thread | | 1 |
| 4 | 6709509 | CORD SET | | | 1 |
| 5 | 6724397 | INSTRUCTIONS | | | 1 |

Fixsomething

# BUCKET POSITIONING KIT

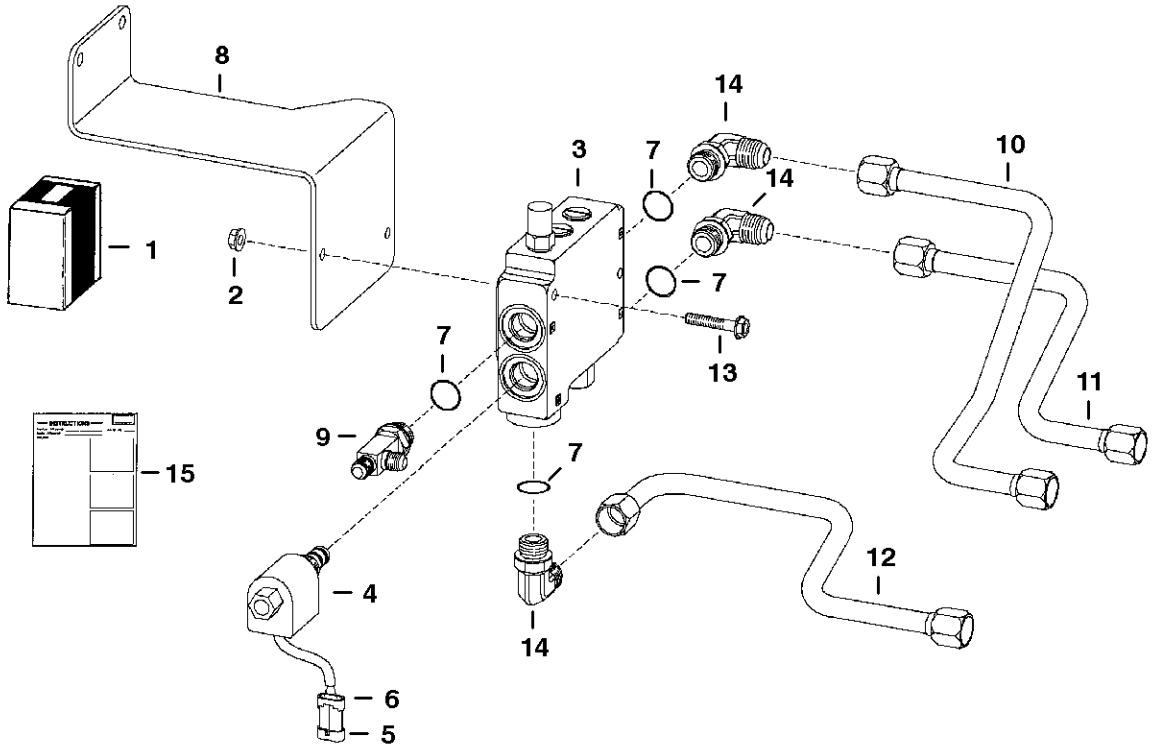


B-18029

# BUCKET POSITIONING KIT

| Ref.N° | Part N° | Description | Remarks | Serial N° | Qty. |
|---|---|---|---|---|---|
| 1 | 6730045 | KIT | Ref. BUCKET POSITIONING KIT(2)-BUCKET POSITIONING KIT(4) & BUCKET POSITIONING KIT(9)-BUCKET POSITIONING KIT(15) | | 1 |
| 2 | 83D-5 | NUT | | | 2 |
| 3 | 6666341 | VALVE | BPV - See Page BUCKET POSITIONING VALVE(5) | | 1 |
| 4 | 6672863 | SOLENOID | W/Ref. BUCKET POSITIONING KIT(5) & BUCKET POSITIONING KIT(6) | | 1 |
| 4 | 6671527 | NUT | | | 1 |
| 4 | 6670634 | SEAL KIT | | | 1 |
| 5 | 6641179 | CONNECTOR | 2pin | | 1 |
| 6 | 6641180 | LOCK | 2pin | | 1 |
| 7 | 99K-10 | O-RING | | | x |
| 8 | 6718726 | MOUNT | BPV - not in kit | | 1 |
| 9 | 6715187 | TEE | W/Ref. BUCKET POSITIONING KIT(7) | | 1 |
| 9 | 97K-10 | O-RING | flared end | | x |
| 10 | 6729794 | TUBELINE | | | 1 |
| 11 | 6718832 | TUBELINE | | | 1 |
| 12 | 6718877 | TUBELINE | | | 1 |
| 13 | 17C-540 | BOLT | | | 2 |
| 14 | 17KV-7 | ELBOW | 90 | | 3 |
| 14 | 97K-10 | O-RING | flared end | | x |
| 15 | 6900880 | INSTRUCTIONS | | | 1 |

Fixsomething

# CAB DOOR

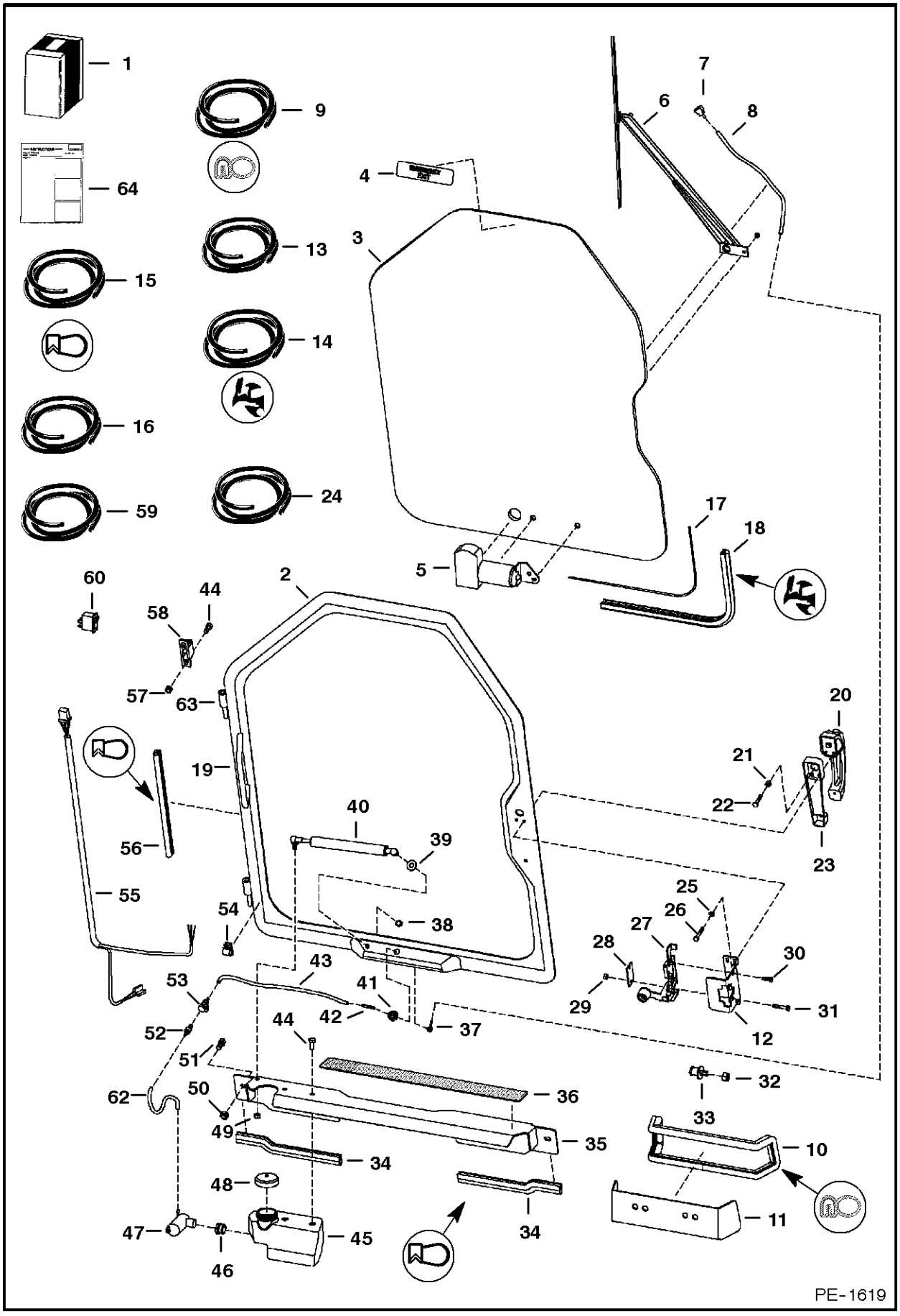

1
9
64
13
15
14
16
24
59
7
6
8
4
3
17
18
5
60
44
2
58
57
63
20
21
19
22
40
39
56
23
55
25
26
54
38
27
28
30
43
53
41
29
31
42
37
44
12
52
51
32
62
50
36
33
49
35
10
34
48
34
11
47
45
46
PE-1619

# CAB DOOR

| Ref.N° | Part N° | Description | Remarks | Serial N° | Qty. |
|---|---|---|---|---|---|
| 1 | 6718808 | KIT | door | | 1 |
| 2 | 6726435 | DOOR | 1 | | 1 |
| 3 | 6717360 | WINDOW | .25' thick - glass - See Page CAB DOOR(1) | | 1 |
| 4 | 6707852 | DECAL | exit | | 1 |
| 5 | | MOTOR | See Page CAB DOOR(1) | | 1 |
| 6 | | ARM | wiper - See Page CAB DOOR(1) | | 1 |
| 7 | | NOZZLE | See Page CAB DOOR(1) | | 1 |
| 8 | | HOSE | See Page CAB DOOR(1) | | 1 |
| 9 | 6555351 | SEAL | bulk - Sold Per Foot | | x |
| 10 | NAP | SEAL | 140' (1016mm) long - Order Ref. CAB DOOR(9) | | 1 |
| 11 | 6725200 | PLATE | | | 1 |
| 12 | 6717369 | BRACKET | latch | | 1 |
| 13 | 6676918 | HOSE | 150' (15,240mm) long roll - .125' I.D. - black | | x |
| 14 | 6665568 | SEAL | bulk - Sold Per Foot | | x |
| 15 | 6675558 | SEAL | bulk - Sold Per Foot | | x |
| 16 | 6554149 | CORD | bulk - Sold Per Foot | | x |
| 17 | NAP | CORD | window - 113.3' (2878mm) - Order Ref. CAB DOOR(16) | | 1 |
| 18 | NAP | SEAL | window - 113.3' (2878mm) - Order Ref. CAB DOOR(14) | | 1 |
| 19 | 6718521 | HANDLE | grab | | 1 |
| 20 | 6674667 | HANDLE | | | 1 |
| 20 | 6709527 | KEY | ignition & rear door | | 1 |
| 21 | 61D-4 | NUT | | | 1 |
| 22 | 17C-420 | BOLT | | | 1 |
| 23 | 6717146 | SPACER | handle | | 1 |
| 24 | 6708310 | HOSE | bulk - Sold Per Foot - .149' I.D. - clear | | x |
| 25 | 6EM-60 | WASHER | | | 3 |
| 26 | 1CM-640 | BOLT | | | 3 |
| 27 | 6674666 | LATCH | | | 1 |
| 28 | 6718520 | COVER | latch | | 1 |
| 29 | 4DM-6 | NUT | | | 2 |
| 30 | 1CM-620 | BOLT | | | 2 |
| 31 | 1CM-635 | BOLT | | | 2 |
| 32 | 91D-7 | NUT | | | 1 |
| 33 | 6654170 | STRIKER BOLT | | | 1 |
| 34 | NAP | SEAL | threshold - 11' (279mm) - Order Ref. CAB DOOR(15) | | 2 |
| 35 | 6725042 | SHIELD | | | 1 |
| 36 | 6542731 | SAFETY TREAD | | | 1 |
| 37 | 6676500 | ELBOW | | | 1 |
| 38 | 46D-5 | NUT | acorn | | 1 |
| 39 | 25E-16 | WASHER | | | 1 |
| 40 | 6674938 | GAS SPRING | | | 1 |
| 40 | 6678548 | SOCKET | ball | | 2 |
| 40 | 6649244 | BALL STUD | | | 2 |
| 40 | 6649245 | CLIP | spring | | 2 |
| 41 | 6676499 | GROMMET | wiper | | 1 |
| 42 | 6676917 | ELBOW | | | 1 |
| 43 | NAP | HOSE | 18.25' (464mm) long - Order Ref. CAB DOOR(59) | | 1 |
| 44 | 17C-512 | BOLT | | | 6 |
| 45 | 6730830 | TANK | washer | | 1 |

Fixsomething

# CAB DOOR

| Ref.N° | Part N° | Description | Remarks | Serial N° | Qty. |
|---|---|---|---|---|---|
| 46 | 6666766 | GROMMET | | | 1 |
| 47 | 6664554 | PUMP | washer bottle | | 1 |
| 48 | 6674993 | CAP | vented | | 1 |
| 49 | 61D-5 | NUT | | | 5 |
| 50 | 61D-6 | NUT | | | 2 |
| 51 | 17C-612 | BOLT | | | 2 |
| 52 | 6675299 | COUPLER | insert | | 1 |
| 53 | 6675298 | COUPLER | body | | 1 |
| 54 | 6675378 | CLIP | | | 1 |
| 55 | 6729739 | HARNESS | wiper | | 1 |
| 56 | NAP | SEAL | 127.3' (3233mm) - Order Ref. CAB DOOR(15) | | 1 |
| 57 | 59D-5 | NUT | | | 4 |
| 58 | 6717593 | HINGE | base | | 2 |
| 59 | 6676003 | HOSE | bulk - Sold Per Foot - .109' I.D. - black | | x |
| 60 | 6665707 | SWITCH | front wiper | | 1 |
| 61 | 6664097 | COVER | wiper | | 1 |
| 62 | NAP | HOSE | washer - 4.25' (108mm) long - Order Ref. CAB DOOR(24) | | 1 |
| 63 | 6718376 | HINGE | door | | 2 |
| 64 | 6901013 | INSTRUCTIONS | | | 1 |

# CAB DOOR
## (Window & Wiper)

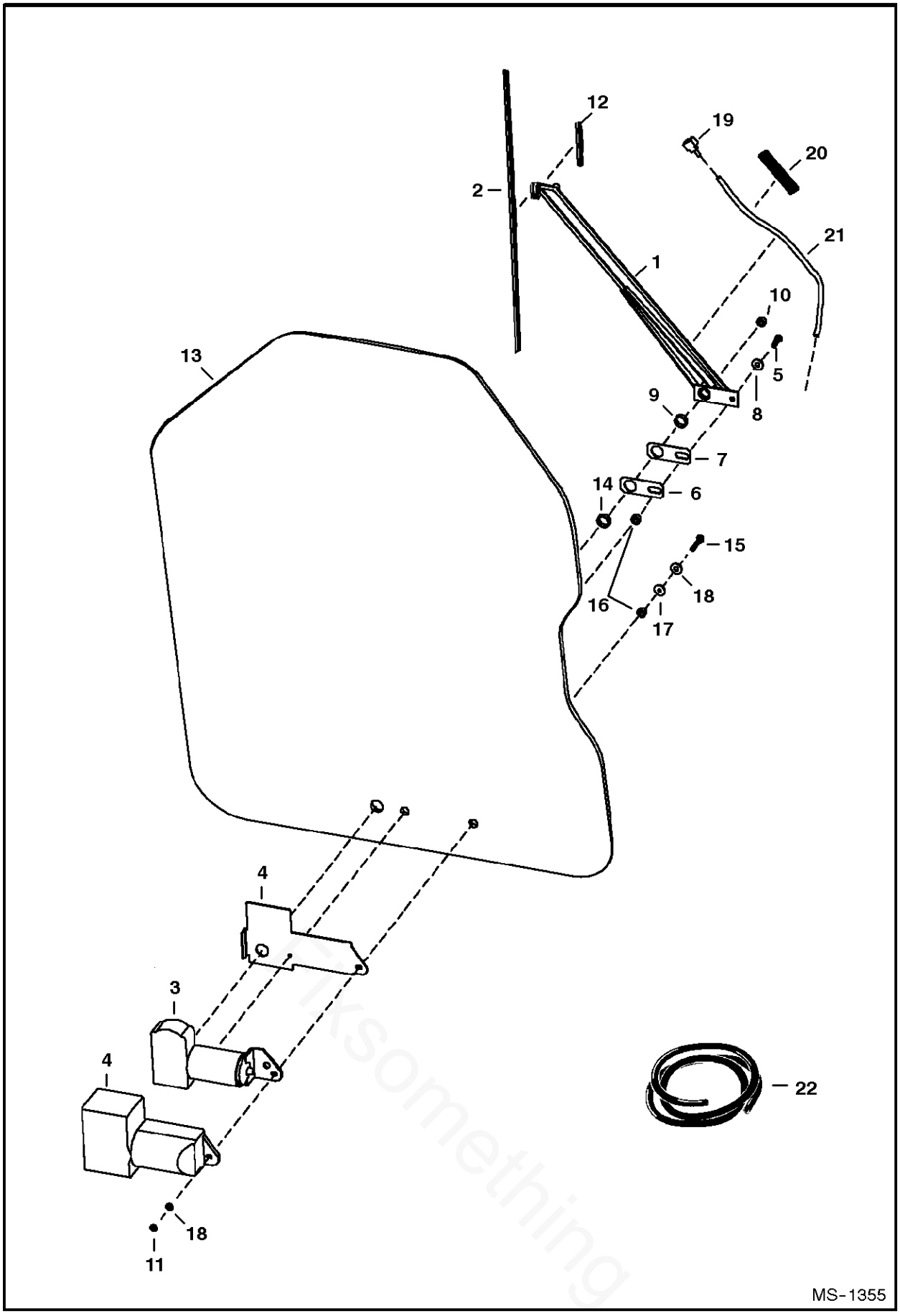


Yiksomething

# CAB DOOR

| Ref.N° | Part N° | Description | Remarks | Serial N° | Qty. |
|---|---|---|---|---|---|
| 1 | 6677833 | ARM ASSY | W/Ref. CAB DOOR(19)-CAB DOOR(21) | | 1 |
| 2 | 6677834 | BLADE | | | 1 |
| 3 | 6677835 | COVER | W/threaded shaft end & built in fuse - SEE NOTE | | 1 |
| 4 | 6677836 | MOTOR | | | 1 |
| 5 | 6677837 | BOLT | | | 1 |
| 6 | 6677839 | GASKET | | | 1 |
| 7 | 6677840 | SWIVEL ASSY | | | 1 |
| 8 | 6677841 | WASHER | tooth lock | | 1 |
| 9 | 6677842 | NUT | | | 1 |
| 10 | 6677843 | NUT | | | 1 |
| 11 | 6677844 | NUT | | | 2 |
| 12 | 6677845 | ADAPTER | arm | | 1 |
| 13 | 6729776 | WINDOW | .25' thick glass W/1.00' dia. wiper motor shaft hole | | 1 |
| 14 | 6677847 | GROMMET | rubber - Use W/Ref. CAB DOOR(3) & Ref. CAB DOOR(13) | | 1 |
| 15 | 6678198 | BOLT | | | 1 |
| 16 | 6664085 | BUSHING | nylon | | 2 |
| 17 | 6801059 | WASHER | neoprene | | 1 |
| 18 | 6678739 | WASHER | steel | | 2 |
| 19 | 6678920 | NOZZLE | For Ref. CAB DOOR(1) | | 1 |
| 20 | 6678921 | GUIDE | hose | | 1 |
| 21 | NAP | HOSE | 18' (458mm) long - Order Ref. CAB DOOR(22) | | x |
| 22 | 6676003 | HOSE | bulk - Sold Per Foot - .109' I.D. - black | | x |

# CAB DOOR
## (Special Applications)

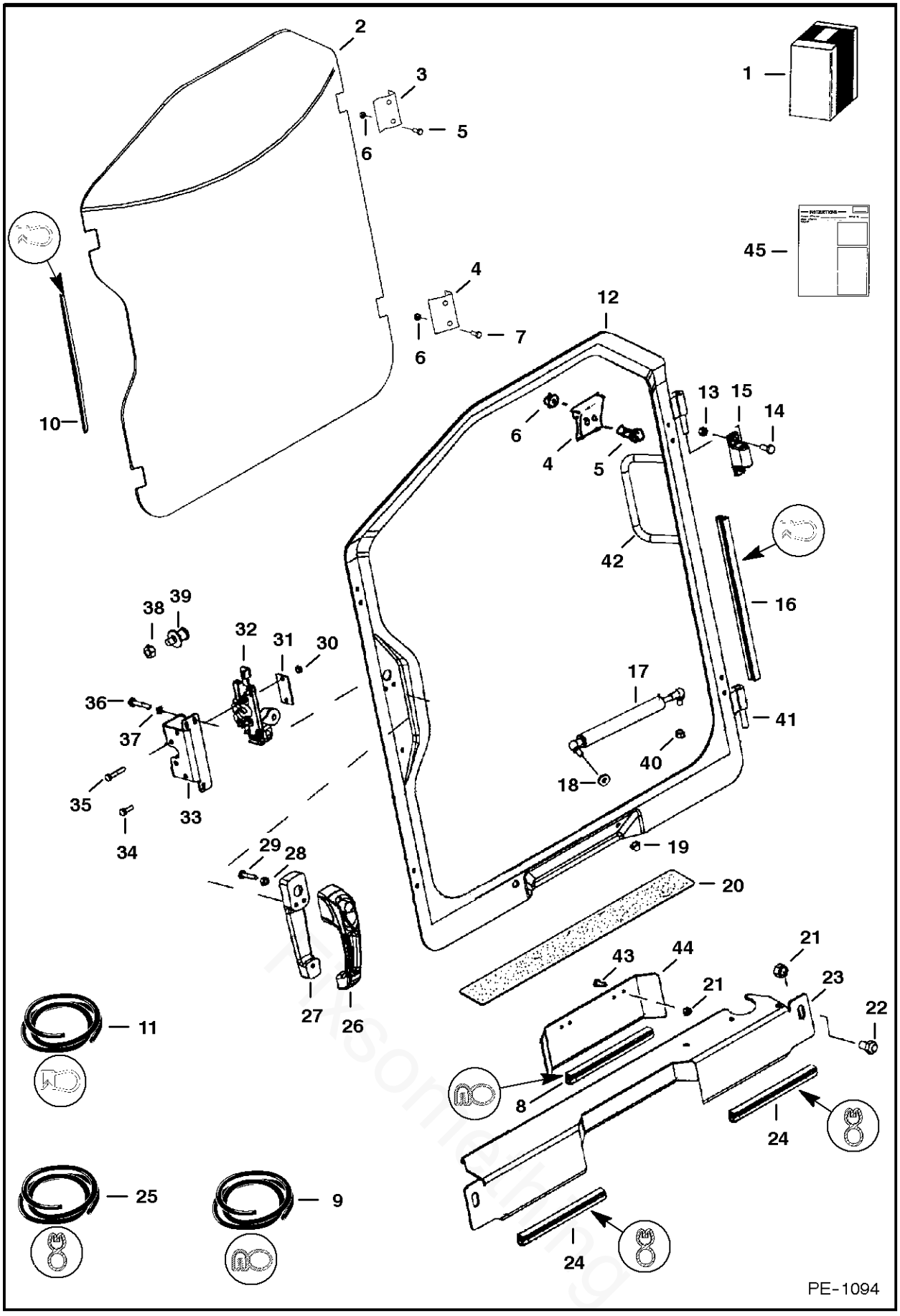


Parsonline

# CAB DOOR

| Ref.N° | Part N° | Description | Remarks | Serial N° | Qty. |
|---|---|---|---|---|---|
| 1 | 6725941 | KIT | door | | 1 |
| 2 | 6725935 | WINDOW | .5' thick polycarbonate | | 1 |
| 3 | 6725938 | CLAMP | | | 2 |
| 4 | 6725937 | CLAMP | | | 3 |
| 5 | 17C-628 | BOLT | | | 6 |
| 6 | 95D-6 | NUT | | | 10 |
| 7 | 17C-624 | BOLT | | | 4 |
| 8 | NAP | SEAL | 140' (1016mm) long - Order Ref. CAB DOOR(9) | | 1 |
| 9 | 6555351 | SEAL | bulk - Sold Per Foot | | x |
| 10 | NAP | SEAL | 115' (2921mm) long - Order Ref. CAB DOOR(11)1 | | 1 |
| 11 | 6675558 | SEAL | bulk - sold per foot | | x |
| 12 | 6726932 | DOOR | W/Ref. CAB DOOR(41) & CAB DOOR(42) | | 1 |
| 13 | 59D-5 | NUT | | | 4 |
| 14 | 17C-512 | BOLT | | | 6 |
| 15 | 6717593 | HINGE | base | | 2 |
| 16 | NAP | SEAL | 127' (3233mm) long - Order Ref. CAB DOOR(11) | | 1 |
| 17 | 6674938 | GAS SPRING | | | 1 |
| 18 | 25E-16 | WASHER | | | 1 |
| 19 | 46D-5 | NUT | acorn | | 1 |
| 20 | 6542731 | SAFETY TREAD | | | 1 |
| 21 | 55D-6 | NUT | | | 4 |
| 22 | 17C-612 | BOLT | | | 2 |
| 23 | 6725042 | SHIELD | | | 1 |
| 24 | NAP | SEAL | 111' (279mm) long - Order Ref. CAB DOOR(25) | | 2 |
| 25 | 6513152 | SEAL | bulk - sold per foot | | x |
| 26 | 6674667 | HANDLE | | | 1 |
| 26 | 6709527 | KEY | ign. & rear door | | 1 |
| 27 | 6717146 | SPACER | handle | | 1 |
| 28 | 61D-4 | NUT | | | 1 |
| 29 | 17C-420 | BOLT | | | 1 |
| 30 | 4DM-6 | NUT | | | 2 |
| 31 | 6718520 | COVER | latch | | 1 |
| 32 | 6674666 | LATCH | | | 1 |
| 33 | 6717369 | BRACKET | latch | | 1 |
| 34 | 1CM-620 | BOLT | | | 2 |
| 35 | 1CM-635 | BOLT | | | 2 |
| 36 | 1CM-640 | BOLT | | | 3 |
| 37 | 6EM-60 | WASHER | | | 3 |
| 38 | 91D-7 | NUT | | | 1 |
| 39 | 6654170 | STRIKER BOLT | | | 1 |
| 40 | 61D-5 | NUT | | | 5 |
| 41 | 6718376 | HINGE | door | | 2 |
| 42 | 6718521 | HANDLE | grab | | 1 |
| 43 | 35C-620 | BOLT | | | 2 |
| 44 | 6725200 | PLATE | | | 1 |
| 45 | 6901013 | INSTRUCTIONS | | | 1 |

# CAB DOOR
## (Lexan Window)

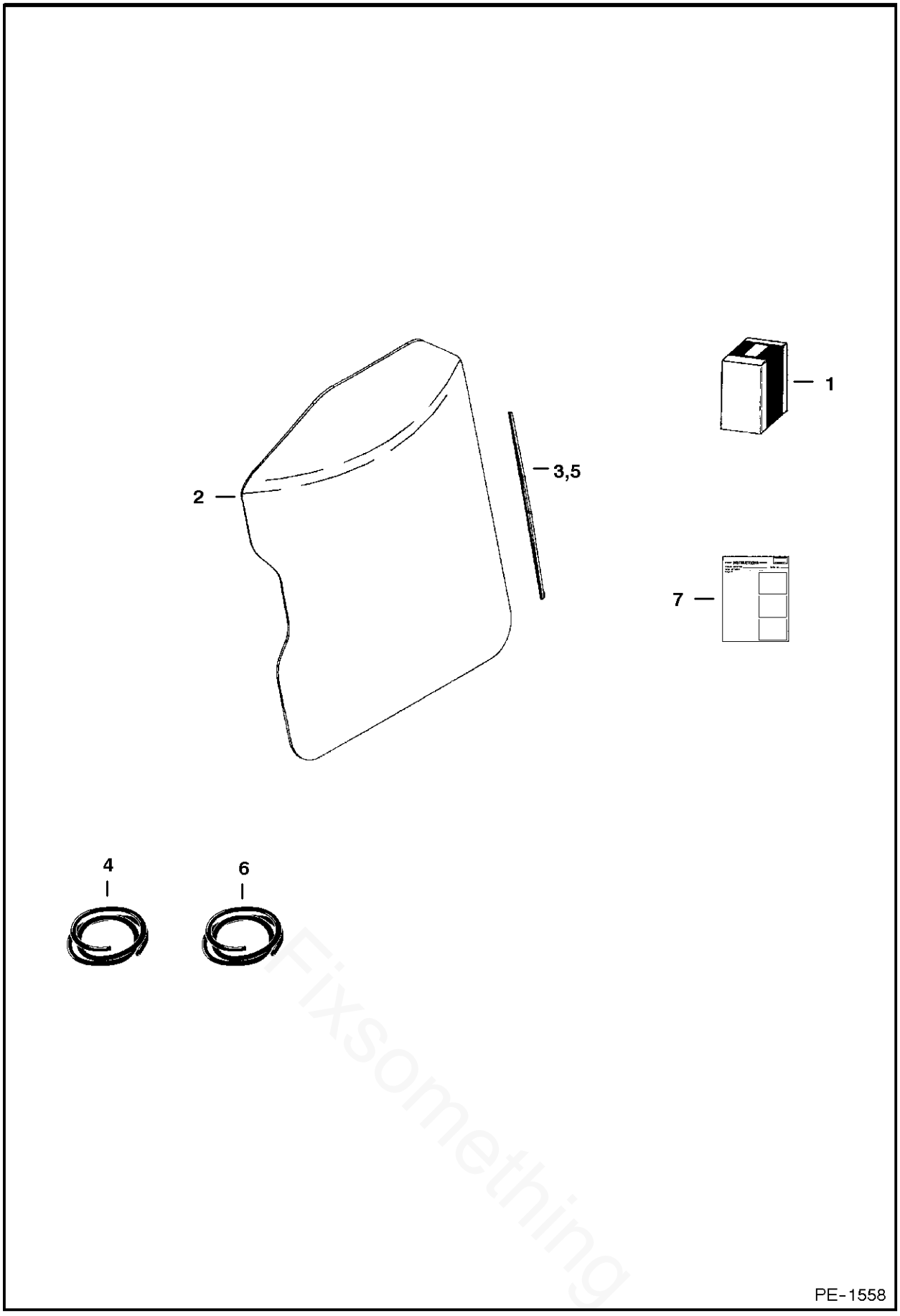


Fixsomething

# CAB DOOR

| Ref.N° | Part N° | Description | Remarks | Serial N° | Qty. |
|---|---|---|---|---|---|
| 1 | 6726427 | KIT | Ref. CAB DOOR(2)-CAB DOOR(7) | | 1 |
| 2 | 6675215 | WINDOW | lexan | | 1 |
| 3 | NAP | SEAL | 113.3' (2878mm) long - Order Ref. CAB DOOR(4) | | 1 |
| 4 | 6665568 | SEAL | bulk - Sold Per Foot | | x |
| 5 | NAP | CORD | 113.3' (2878mm) long - Order Ref. CAB DOOR(6) | | 1 |
| 6 | 6554149 | CORD | bulk - Sold Per Foot | | x |
| 7 | 6901036 | INSTRUCTIONS | | | 1 |

# CAB ENCLOSURE

**NOTE:** For Cab Enclosure Kit Order from Gwinner SALES # 6719667.
For Special Applications Kit Order from Gwinner SALES # 6719390.

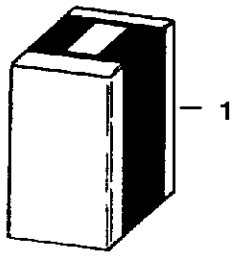


B-16410

Fixsomething

# CAB ENCLOSURE

| Ref.N° | Part N° | Description | Remarks | Serial N° | Qty. |
|---|---|---|---|---|---|
| 1 | SALES | KIT | 1cab enclosure - SEE NOTE - includes items on Page CAB DOOR(1) & CAB WINDOWS(2) | | 1 |
| 1 | SALES | KIT | special applications cab enclosure- SEE NOTE - includes items on Page CAB DOOR(1) & CAB WINDOWS(2) | | 1 |

## CAB ENCLOSURE
## (Envelope)

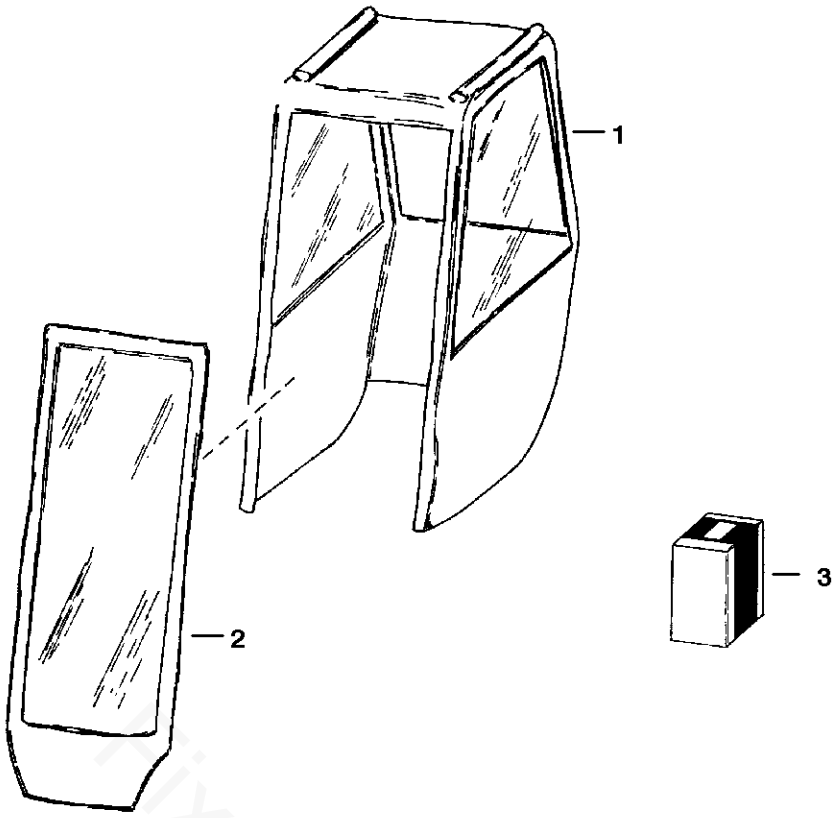


B-1413

Fixsomething

# CAB ENCLOSURE

| Ref.N° | Part N° | Description | Remarks | Serial N° | Qty. |
|---|---|---|---|---|---|
| 1 | 6675544 | VINYLCAB | fits over cab - W/Ref. CAB ENCLOSURE(2) & CAB ENCLOSURE(3) | | 1 |
| 2 | 6675590 | DOOR | vinyl | | 1 |
| 3 | 6675591 | HINGE KIT | | | 1 |

# CAB WINDOWS
## (Top, Rear & Side)

**NOTE:** Order Top & Rear WIndow Kit from Gwinner Sales # 6718805.
Order Side Window Kit from Gwinner Sales # 6718806.

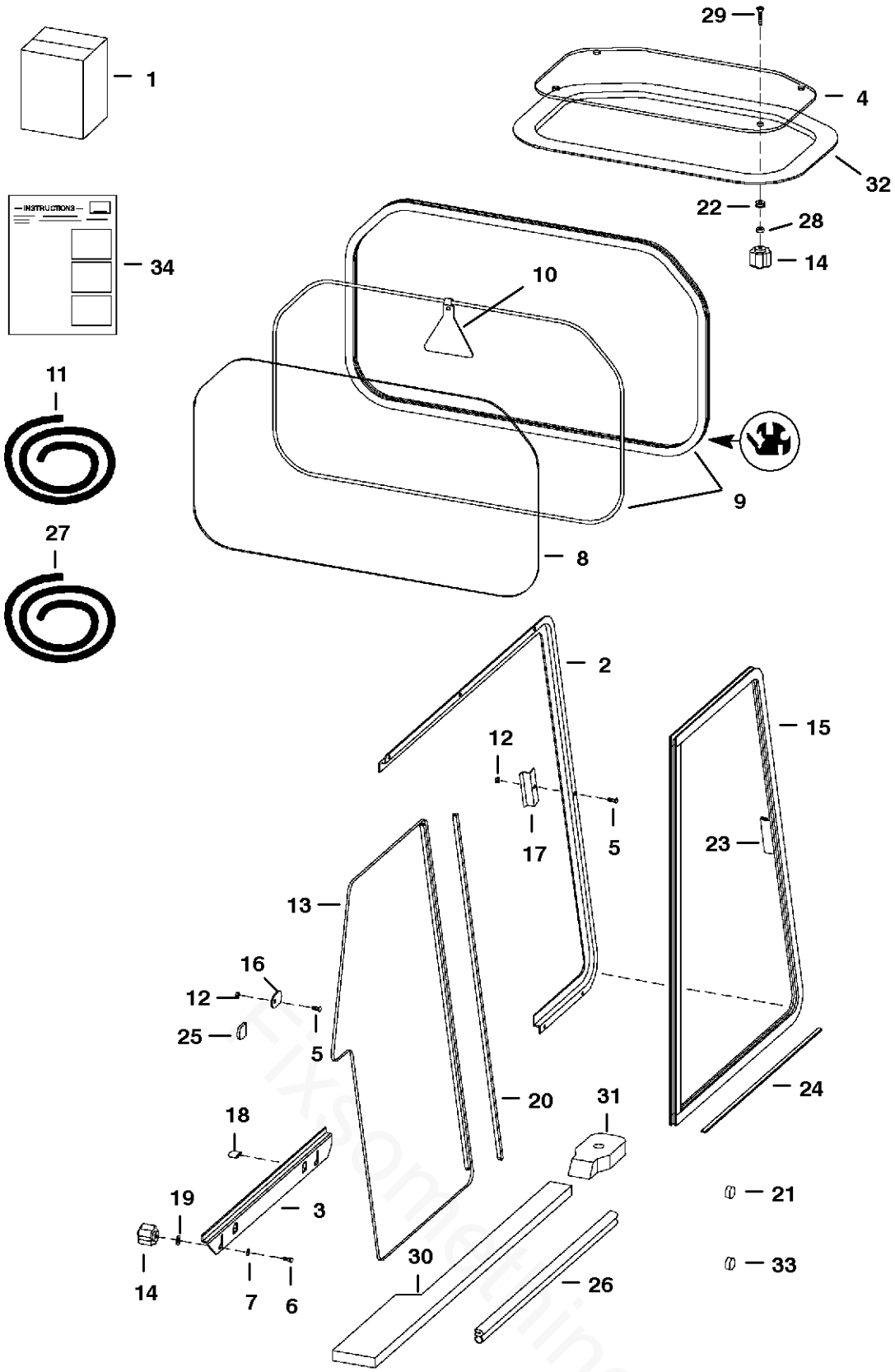


MS-1375

Fixsomething

# CAB WINDOWS

| Ref.N° | Part N° | Description | Remarks | Serial N° | Qty. |
|---|---|---|---|---|---|
| 1 | SALES | KIT | top & rear window - SEE NOTE | | 1 |
| 1 | SALES | KIT | side window - SEE NOTE | | 1 |
| 2 | 6717870 | TRACK | L.H. side | | 1 |
| 2 | 6717872 | TRACK | R.H. side | | 1 |
| 3 | 6717871 | TRACK | L.H. bottom | | 1 |
| 3 | 6717873 | TRACK | R.H. bottom | | 1 |
| 4 | 6728629 | WINDOW | top - W/ seal & grommets - lexan | | 1 |
| 5 | 10C-410 | BOLT | carriage | | 18 |
| 6 | 10C-416 | BOLT | carriage | | 4 |
| 7 | 25E-14 | WASHER | | | 4 |
| 8 | 6717874 | WINDOW | rear | | 1 |
| 8 | 6719413 | WINDOW | rear - lexan | | 1 |
| 9 | NAP | SEAL | 75.75' (1924mm) long - Order Ref. CAB WINDOWS(11) | | x |
| 9 | NAP | CORD | 75.75' (1924mm) long - Order Ref. CAB WINDOWS(11) | | x |
| 10 | 6559515 | EXIT TAG | | | 1 |
| 11 | 6675387 | SEA; | bulk - sold per foot | | x |
| 11 | 6554149 | CORD | bulk - sold per foot | | x |
| 12 | 59D-4 | NUT | | | 18 |
| 13 | 6674520 | WINDOW | L.H. rear | | 1 |
| 13 | 6674522 | WINDOW | R.H. rear | | 1 |
| 14 | 6674741 | KNOB | | | 8 |
| 15 | 6674519 | WINDOW | L.H. front | | 1 |
| 15 | 6674521 | WINDOW | R.H. front | | 1 |
| 16 | 6719063 | STOP | | | 2 |
| 17 | 6719037 | STRIKER | | | 2 |
| 18 | 6719065 | COVER | tab | | 4 |
| 19 | 6675212 | RETAINER | bolt | | 4 |
| 20 | 6675833 | SEAL | rear window dual wiper W/ tape | | 2 |
| 21 | 6657719 | PLUG | for .75' dia. hole | | 2 |
| 22 | 6675545 | GROMMET | | | 4 |
| 23 | 6678283 | HANDLE | side window W/ tape & instructions | | 2 |
| 24 | 6676927 | FELT STRIP | 20.38' (518mm) long | | 2 |
| 25 | 6677198 | CAP | tab | | 2 |
| 26 | NAP | SEAL | 24' (610mm) long - Order Ref. CAB WINDOWS(27) | | 2 |
| 27 | 6555351 | SEAL | bulk - sold per foot | | x |
| 28 | 6664085 | BUSHING | nylon | | 4 |
| 29 | 91G-416 | BOLT | | | 4 |
| 30 | 6729010 | SEAL | cab - main frame - L.H. - foam | | 1 |
| 30 | 6729009 | SEAL | cab - main frame - R.H. - foam | | 1 |
| 31 | 6729011 | SEAL | cab mount | | 2 |
| 32 | NAP | SEAL | Order Ref. CAB WINDOWS(4) | | 1 |
| 33 | 6677973 | PLUG | for .22' dia hole | | 2 |
| 34 | 6901013 | INSTRUCTIONS | top & rear window | | 1 |
| 34 | 6900853 | INSTRUCTIONS | side windows | | 1 |

# ELECTRICAL CONTROLS KIT
## (Electrical Attachments)

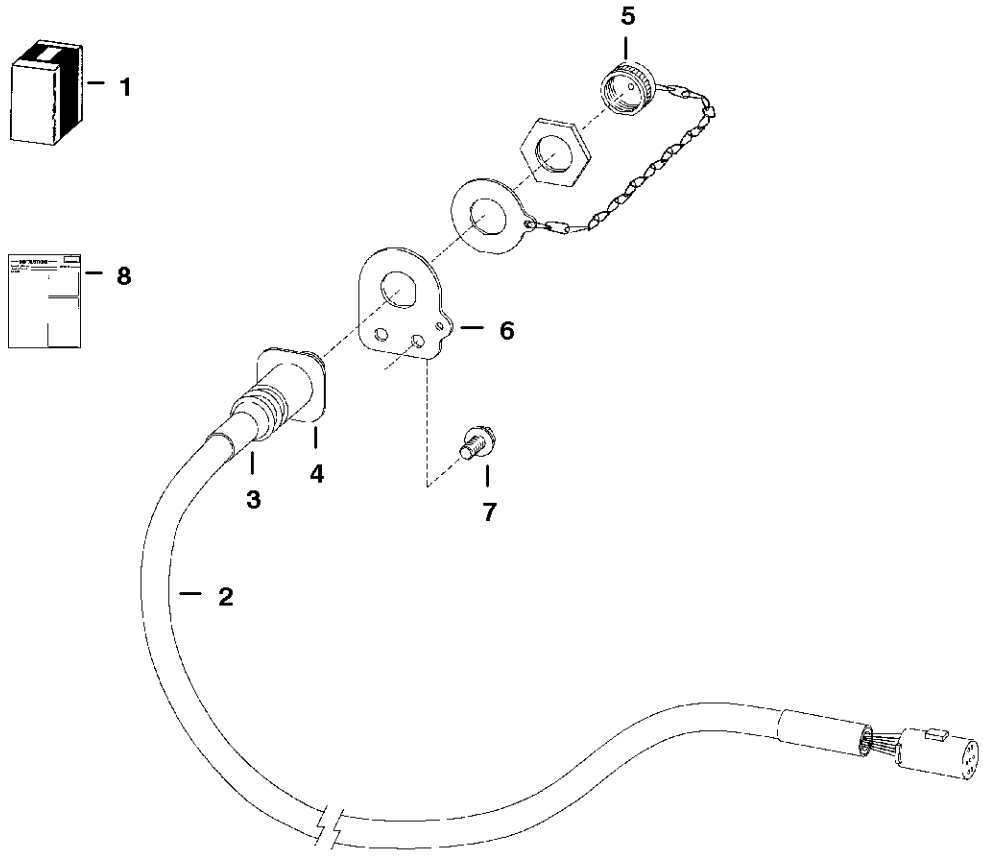


**NOTE:** This kit will be used for chipper and mixer attachments.

TS-1935

Fixsomething

# ELECTRICAL CONTROLS KIT

| Ref.N° | Part N° | Description | Remarks | Serial N° | Qty. |
|---|---|---|---|---|---|
| 1 | 6718812 | KIT | Ref. ELECTRICAL CONTROLS KIT(2)-ELECTRICAL CONTROLS KIT(8) | | 1 |
| 2 | 6718426 | HARNESS | | | 1 |
| 3 | 6674799 | ADAPTER | heat shrink | | 1 |
| 4 | 6674802 | CONNECTOR | 7pin - See Page SEVEN PIN CONNECTOR KIT(16) | | 1 |
| 4 | 6669549 | SOCKET | small | | 4 |
| 4 | 6677136 | SOCKET | large - 12 ga. | | 3 |
| 5 | 6675026 | CAP | | | 1 |
| 6 | 6718750 | MOUNT | | | 1 |
| 7 | 84G-3112 | BOLT | | | 2 |
| 8 | 6900855 | INSTRUCTIONS | | | 1 |

## ELECTRICAL CONTROLS KIT
## (To Run "G" Series Attachments & Old Attachments)

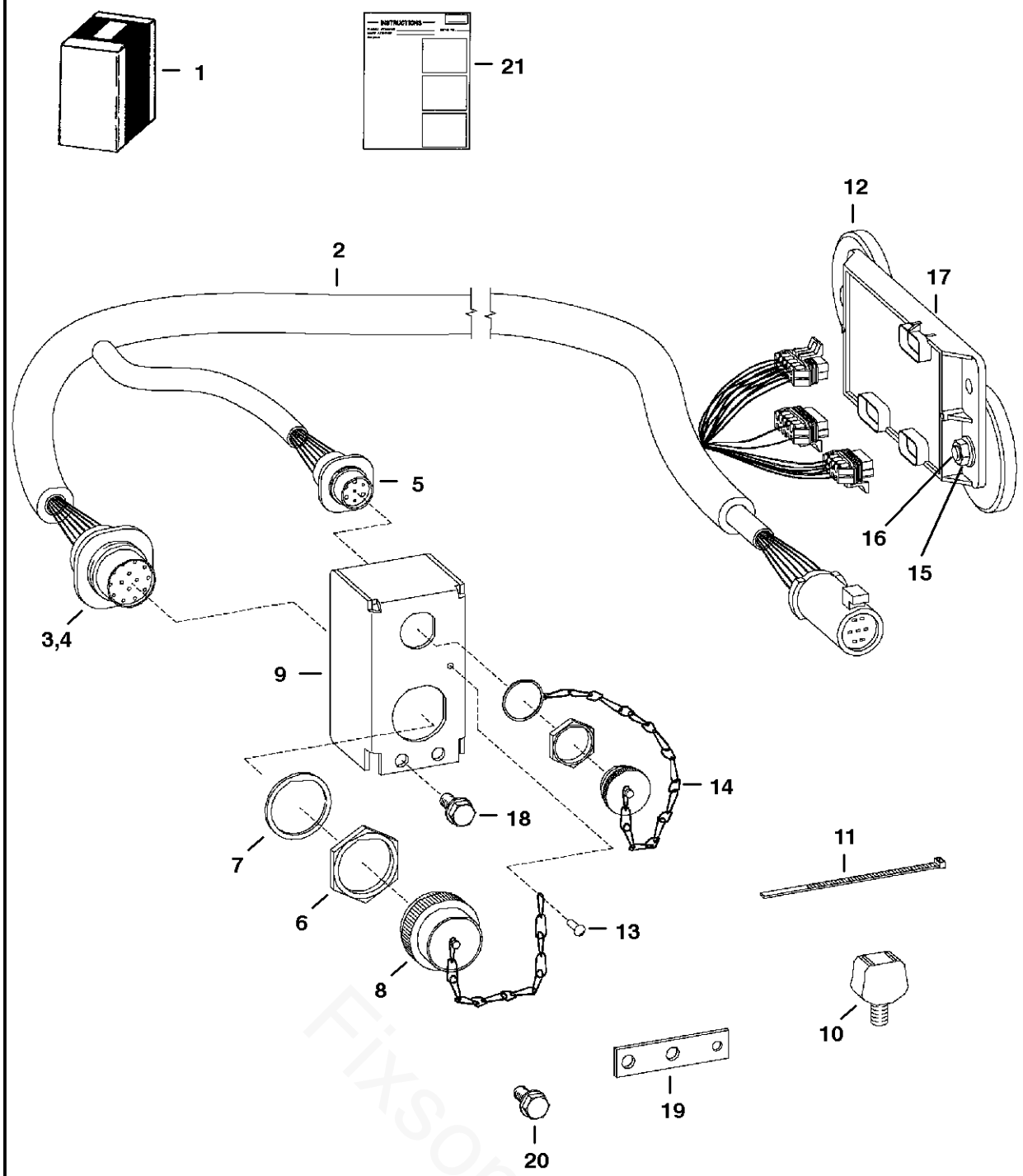


Fixsomething

# ELECTRICAL CONTROLS KIT

| Ref.N° | Part N° | Description | Remarks | Serial N° | Qty. |
|---|---|---|---|---|---|
| 1 | 6727739 | KIT | | | 1 |
| 2 | 6729380 | HARNESS | W/Ref. ELECTRICAL CONTROLS KIT(3)-ELECTRIC AL CONTROLS KIT(8) & ELECTRICAL CONTROLS KIT(14) | | 1 |
| 3 | 6667569 | CONNECTOR | Also Order (14) of Ref. ELECTRICAL CONTROLS KIT(4) | | 1 |
| 4 | 6664040 | PIN | male | | x |
| 5 | 6674802 | CONNECTOR | 7pin - See Page SEVEN PIN CONNECTOR KIT(16) | | 1 |
| 5 | 6669549 | SOCKET | small | | 4 |
| 5 | 6677136 | SOCKET | large - 12 ga. | | 3 |
| 6 | 6664037 | WASHER | | | 2 |
| 7 | 6664036 | NUT | | | 2 |
| 8 | 6664035 | CAP | | | 1 |
| 9 | 6726945 | MOUNT | | | 1 |
| 10 | 6675281 | MOUNT | 773G only | | 1 |
| 11 | 6624289 | STA-STRAP | | | 8 |
| 12 | 6719448 | MAGNET | 100 lb. force | | 4 |
| 13 | 6704892 | RIVET | | | 1 |
| 14 | 6675026 | CAP | | | 2 |
| 15 | 83D-6 | NUT | | | 2 |
| 16 | 25G-612 | BOLT | | | 2 |
| 17 | 6676514 | CONTROLLER | | | 1 |
| 18 | 84G-3112 | BOLT | | | 2 |
| 19 | 6730291 | BRACKET | for 873G & 883 | | 1 |
| 20 | 35C-512 | BOLT | | | 2 |
| 21 | 6901116 | INSTRUCTIONS | | | 1 |

**DRAWING NOT AVAIABLE AT TIME OF PRINTING**

Fixsomething

PE-1664

# EUROPEAN ACCESSORIES

| Ref.N° | Part N° | Description | Remarks | Serial N° | Qty. |
|---|---|---|---|---|---|
| 1 | | KIT | | | 1 |
| 2 | 6665728 | LIGHT | front | | 2 |
| 3 | 6665727 | LIGHT | front turn | | 2 |
| 4 | 6713151 | MOUNT | light - R.H. | | 1 |
| 5 | 6713150 | MOUNT | light - L.H. | | 1 |
| 6 | 84G-3716 | BOLT | | | 6 |
| 7 | 84G-3712 | BOLT | | | 4 |
| 8 | 17C-508 | BOLT | | | 8 |
| 9 | 6610510 | NYLON TIE | | | 20 |
| 10 | 6713993 | ADAPTER | adapter - light | | 2 |
| 11 | 6713994 | ADAPTER | adapter - headlight | | 2 |
| 12 | 6732081 | HARNESS | boom light | | 2 |
| 13 | 85G-808 | SCREW | | | 4 |
| 14 | 12D-8 | NUT | | | 4 |
| 15 | 6665729 | LIGHT | license plate | | 1 |
| 16 | 6670312 | SOLENOID | magnetic | | 4 |
| 17 | 6702650 | BRACKET | fuse | | 1 |
| 18 | 17C-512 | BOLT | | | 1 |
| 19 | 85D-5 | NUT | | | 1 |
| 20 | 17C-410 | BOLT | | | 2 |
| 21 | 85D-4 | NUT | | | 6 |
| 22 | 6676872 | TURN SIGNAL | | | 1 |
| 23 | 6713269 | MOUNT | rear lights | | 2 |
| 24 | 6670621 | REFLECTOR | | | 2 |
| 25 | 6670620 | MOUNT | reflector | | 2 |
| 26 | 25E-15 | WASHER | | | 2 |
| 27 | 35C-412 | BOLT | | | 4 |
| 28 | 85G-1010 | SCREW | | | 2 |
| 29 | 14D-10 | NUT | | | 2 |
| 30 | 6726430 | HARNESS | engine/tail - Italian | | 1 |
| 31 | 6557904 | FLASHER | | | 1 |
| 32 | 6668815 | SWITCH | hazard | | 1 |
| 33 | 6732045 | HARNESS | stop lights | | 1 |
| 34 | 6668816 | SWITCH | beacon | | 1 |
| 35 | 6675523 | BEACON | light | | 1 |
| 36 | 6718872 | HARNESS | cab exterior | | 1 |
| 37 | 6713841 | SHIELD | bucket | | 1 |
| 38 | 6713842 | SHIELD | bucket | | 1 |
| 39 | 6731819 | STRAP | rubber | | 3 |
| 40 | 6713990 | PIN | | | 1 |
| 41 | 6733296 | BRACKET | pin holder | | 1 |
| 42 | 6670668 | PIN | | | 1 |
| 43 | 25E-17 | WASHER | | | 2 |
| 44 | 6733270 | MOUNT | pin lock | | 1 |
| 45 | 6671106 | HORN | | | 1 |
| 46 | 6675064 | TERMINAL | | | 2 |
| 47 | 35C-514 | BOLT | | | 1 |
| 48 | 55D-5 | NUT | | | 1 |
| 49 | 35C-410 | BOLT | | | 4 |
| 50 | 83D-4 | NUT | | | 4 |

# EUROPEAN ACCESSORIES

| Ref.N° | Part N° | Description | Remarks | Serial N° | Qty. |
|---|---|---|---|---|---|
| 51 | 6665860 | SIDE MIRROR | side mirror | | 1 |
| 52 | 6901909 | INSTRUCTIONS | | | 1 |

Fixsomething

# FIRE EXTINGUISHER

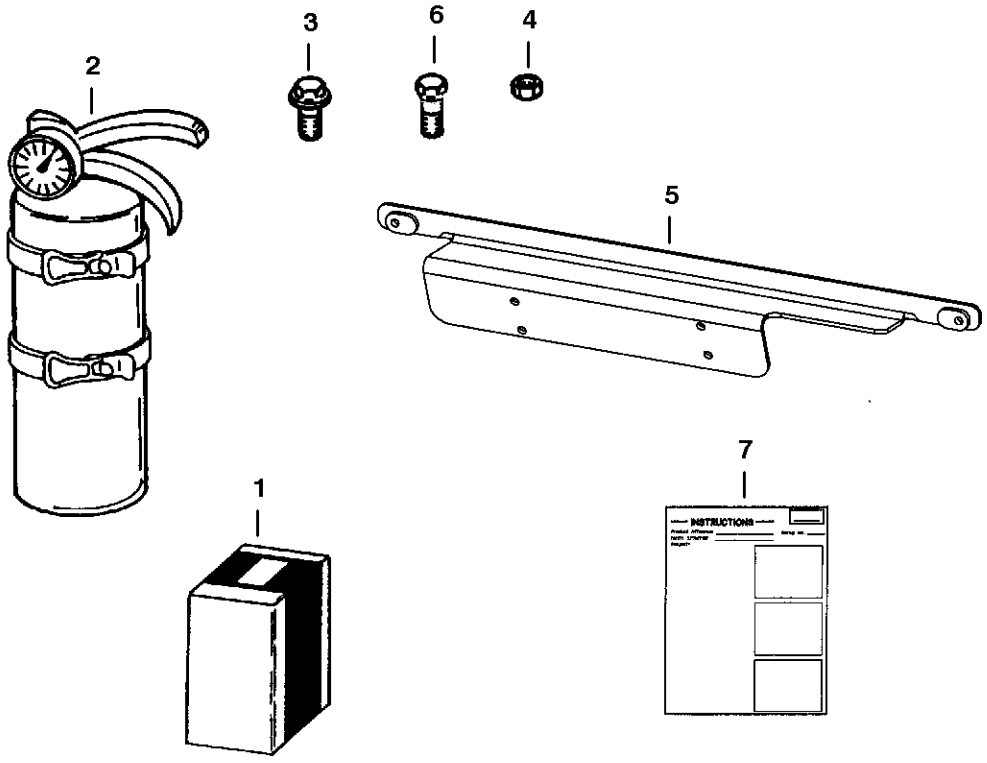


A-2386

# FIRE EXTINGUISHER

| Ref.N° | Part N° | Description | Remarks | Serial N° | Qty. |
|---|---|---|---|---|---|
| 1 | 6725898 | KIT | fire extinguisher - Ref. FIRE EXTINGUISHER(2)-FIRE EXTINGUISHER(7) | | 1 |
| 2 | 6675581 | EXTINGUISHER | | | 1 |
| 3 | 45G-1006 | BOLT | | | 4 |
| 4 | 12D-10 | NUT | | | 4 |
| 5 | 6725906 | BRACKET | | | 1 |
| 6 | 31C-410 | BOLT | | | 2 |
| 7 | 6901025 | INSTRUCTIONS | | | 1 |

Fixsomething

# F.O.P.S. KIT

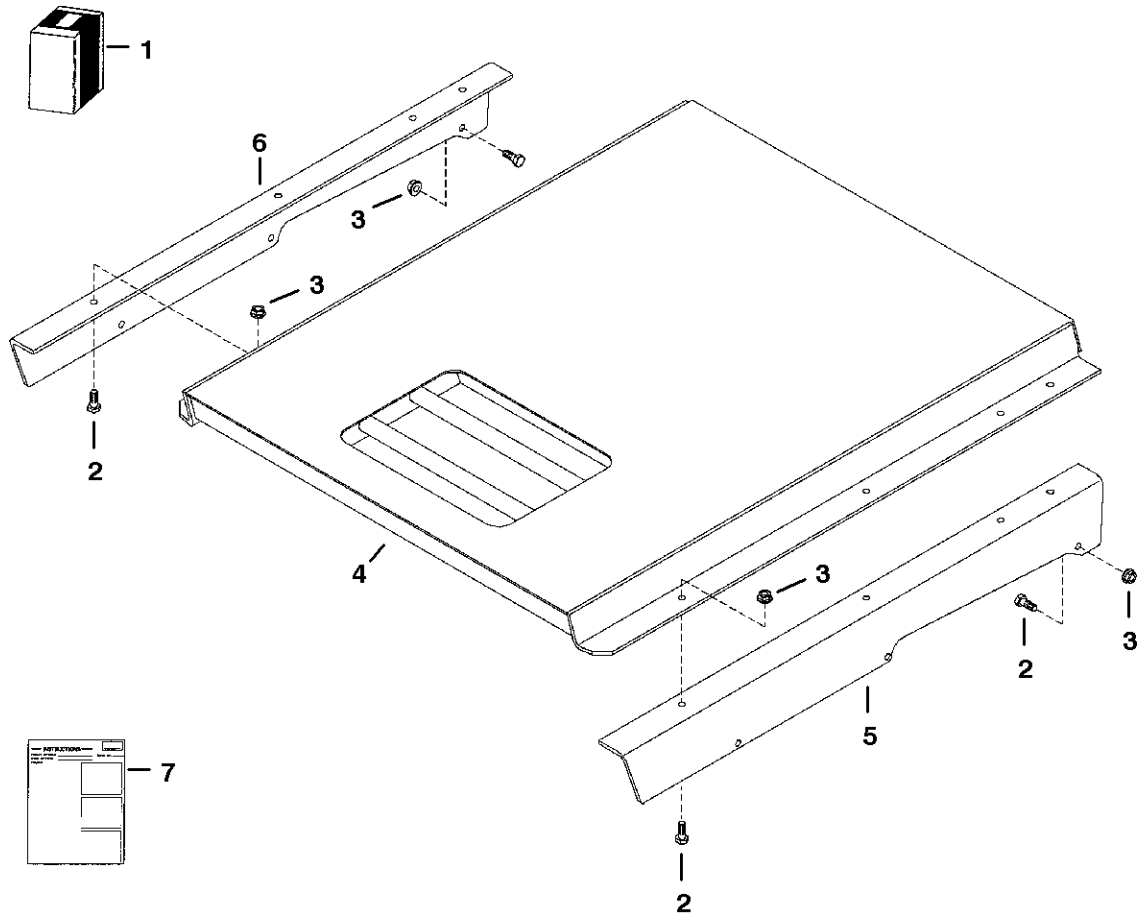


TS-2052

# F.O.P.S. KIT

| Ref.N° | Part N° | Description | Remarks | Serial N° | Qty. |
|---|---|---|---|---|---|
| 1 | 6718924 | KIT | Ref. F.O.P.S. KIT(2)-F.O.P.S. KIT(7) | | 1 |
| 2 | 17C-616 | BOLT | | | 14 |
| 3 | 83D-6 | NUT | | | 14 |
| 4 | 6702402 | SHIELD | | | 1 |
| 5 | 6718833 | BRACKET | L.H. | | 1 |
| 6 | 6718834 | BRACKET | R.H. | | 1 |
| 7 | 6720592 | INSTRUCTIONS | | | 1 |

Fixsomething

# HEATER & A/C
## (Heater Kit)

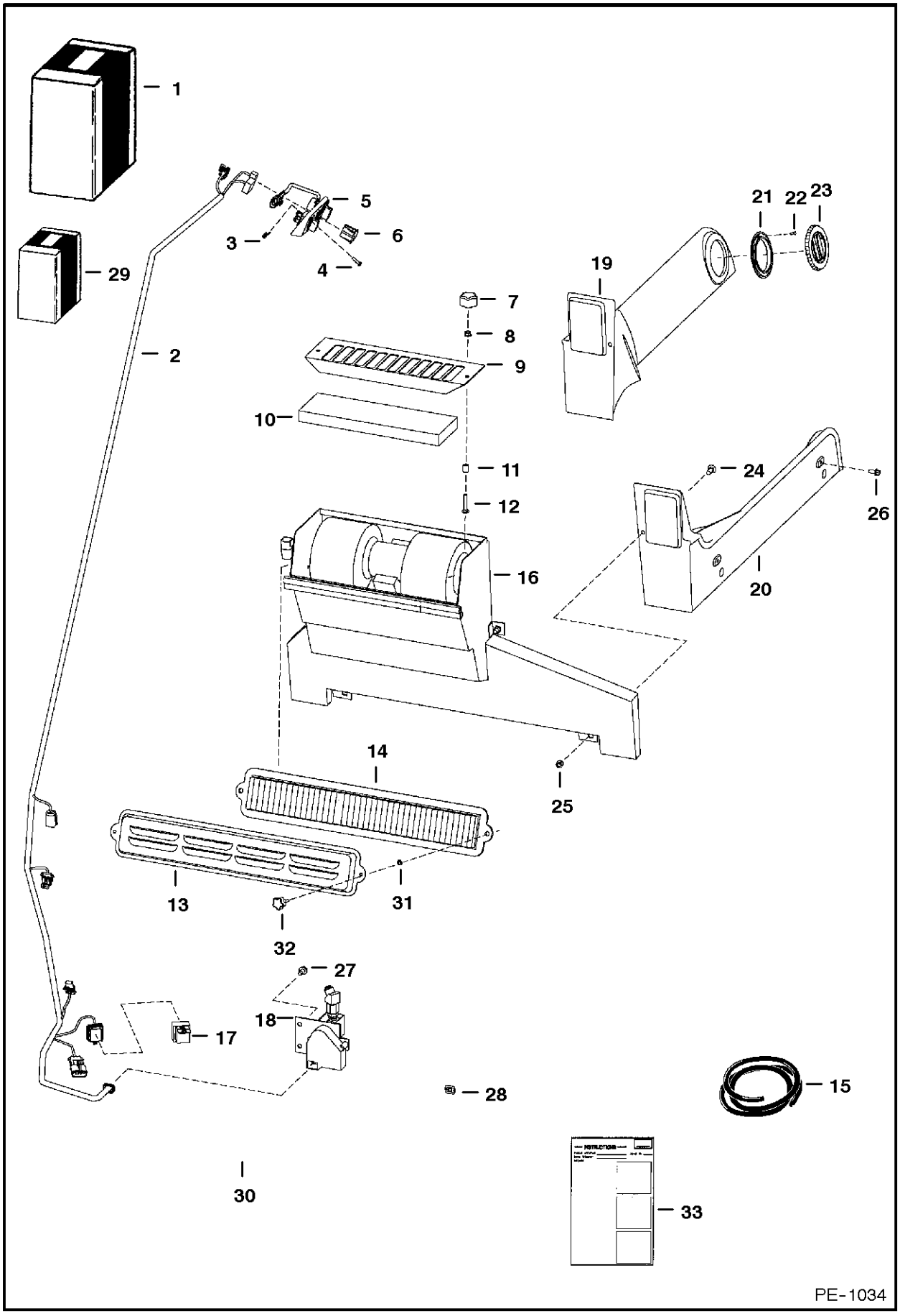

# HEATER & A/C

| Ref.N° | Part N° | Description | Remarks | Serial N° | Qty. |
|---|---|---|---|---|---|
| 1 | 6718803 | HEATER KIT | Ref. HEATER & A/C(2)-HEATER & A/C(28) & HEATE R & A/C(33) | | 1 |
| 2 | 6725933 | HARNESS | HVAC - W/Ref. HEATER & A/C(17) | | 1 |
| 3 | 6669091 | CLIP | retainer | | 3 |
| 4 | 6669224 | BOLT | | | 3 |
| 5 | 6674228 | PANEL | control | | 1 |
| 5 | 6640699 | CONNECTOR | | | 1 |
| 5 | 6718579 | DECAL | | | 1 |
| 5 | 6718887 | PANEL | A/C | | 1 |
| 5 | 6675176 | SWITCH | blower | | 1 |
| 5 | 6675177 | KNOB | | | 1 |
| 5 | 6675846 | POTENTIOMETER | | | 1 |
| 6 | 6675181 | PLUG | switch hole | | 1 |
| 7 | 6674741 | KNOB | | | 2 |
| 8 | 83D-4 | NUT | | | 2 |
| 9 | 6718175 | SCREEN | filter | | 1 |
| 10 | 6674229 | FILTER | recirculation | | 1 |
| 11 | 6718837 | SPACER | | | 2 |
| 12 | 37C-424 | BOLT | | | 2 |
| 13 | 6726608 | COVER | | | 1 |
| 14 | 6727140 | FILTER | | | 1 |
| 15 | 6513152 | SEAL | bulk - Sold Per Foot | | x |
| 16 | | HEATER | See Page HEATER & A/C(5) | | 1 |
| 17 | 6670312 | SOLENOID | relay | | 1 |
| 18 | 6675684 | VALVE | | | 1 |
| 18 | 6640699 | CONNECTOR | | | 1 |
| 18 | 6675175 | BRACKET | | | 1 |
| 18 | 6675172 | BRACKET | | | 1 |
| 18 | 6675173 | ACTUATOR | | | 1 |
| 18 | 6675174 | BODY | | | 1 |
| 19 | 6717644 | DUCT | L.H. | | 1 |
| 20 | 6717643 | DUCT | R.H. | | 1 |
| 21 | 6675179 | FLANGE | | | 4 |
| 22 | 57G-608 | SCREW | | | 16 |
| 23 | 6674231 | VENT | round - W/Ref. HEATER & A/C(21) & HEATER & A/C(22) | | 4 |
| 23 | 6675180 | VENT | | | 4 |
| 24 | 37C-512 | BOLT | | | 4 |
| 25 | 59D-5 | NUT | | | 4 |
| 26 | 35C-410 | BOLT | | | 4 |
| 27 | 84G-3110 | BOLT | | | 2 |
| 28 | 774220 | NUT | spring | | 2 |
| 29 | 6725513 | DECAL PACKAGE | decal | | 1 |
| 30 | NAP | SEAL | 16.25' (413mm) long - Order Ref. HEATER & A/C(15) | | 1 |
| 31 | 6676516 | NUT | push | | 2 |
| 32 | 6726386 | KNOB | | | 2 |
| 33 | 6900850 | INSTRUCTIONS | | | 1 |

Fixsomething

# HEATER & AC
## (Heater Plumbing Kit)

**NOTE:** For Heater Kit See Page 208.

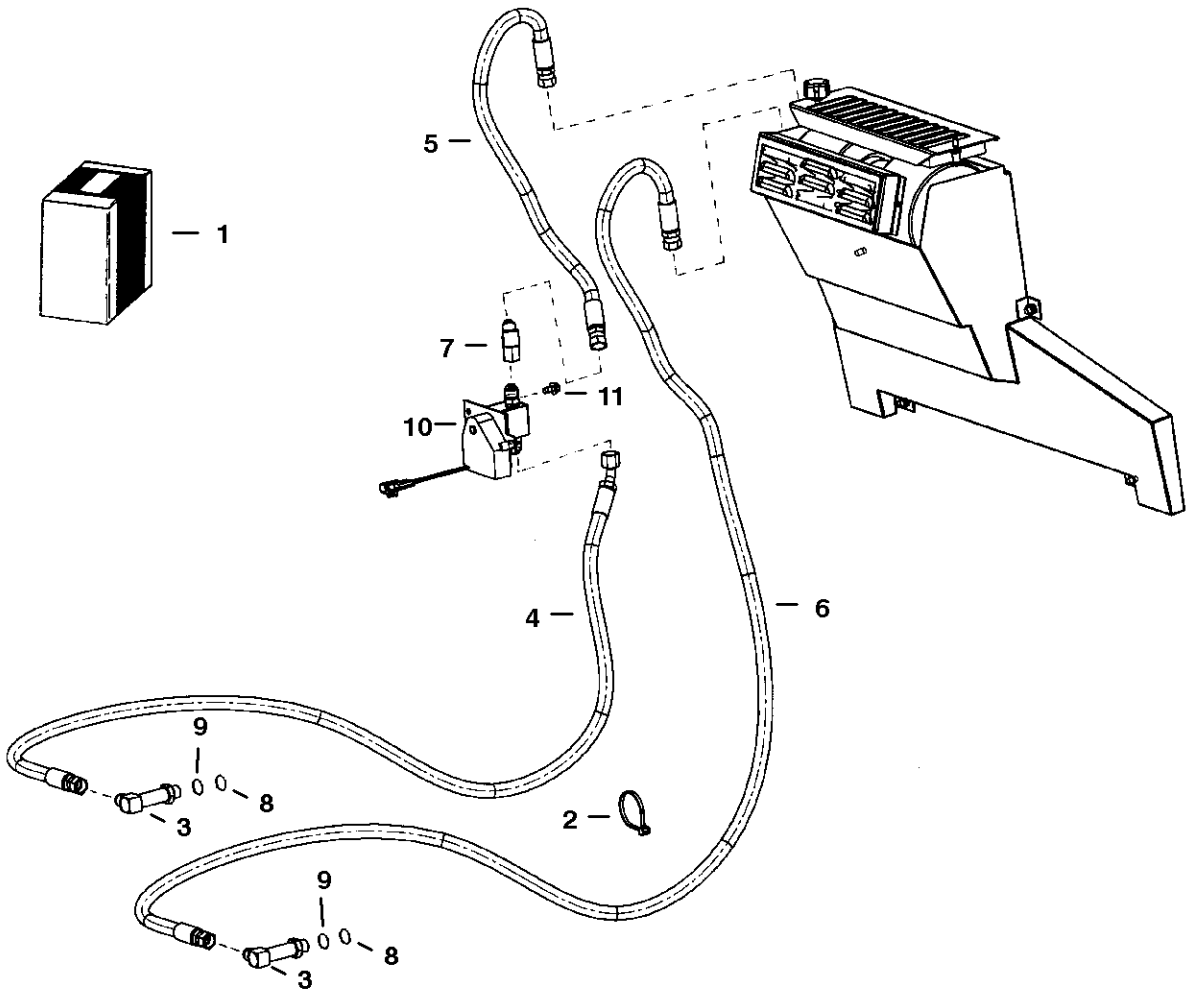


PE-1555

# HEATER & AC

| Ref.N° | Part N° | Description | Remarks | Serial N° | Qty. |
|---|---|---|---|---|---|
| 1 | 6718810 | KIT | Ref. HEATER & AC(2)-HEATER & AC(7) | | 1 |
| 2 | 6624289 | STA-STRAP | | | 3 |
| 3 | 6719395 | CONNECTOR | W/Ref. HEATER & AC(8) & HEATER & AC(9) | | 2 |
| 4 | 6719914 | HOSE | | | 1 |
| 5 | 6719514 | HOSE | | | 1 |
| 6 | 6719515 | HOSE | | | 1 |
| 7 | 12KN-6 | ELBOW | | | 1 |
| 8 | 6676540 | O-RING | | | x |
| 9 | NSS | BACKAUP RING | | | x |
| 10 | | VALVE | heater - not in kit - See Page HEATER & A/C(4) | | 1 |
| 11 | 84G-3110 | BOLT | not in kit | | 2 |

# HEATER & A/C
## (Heater Assembly)

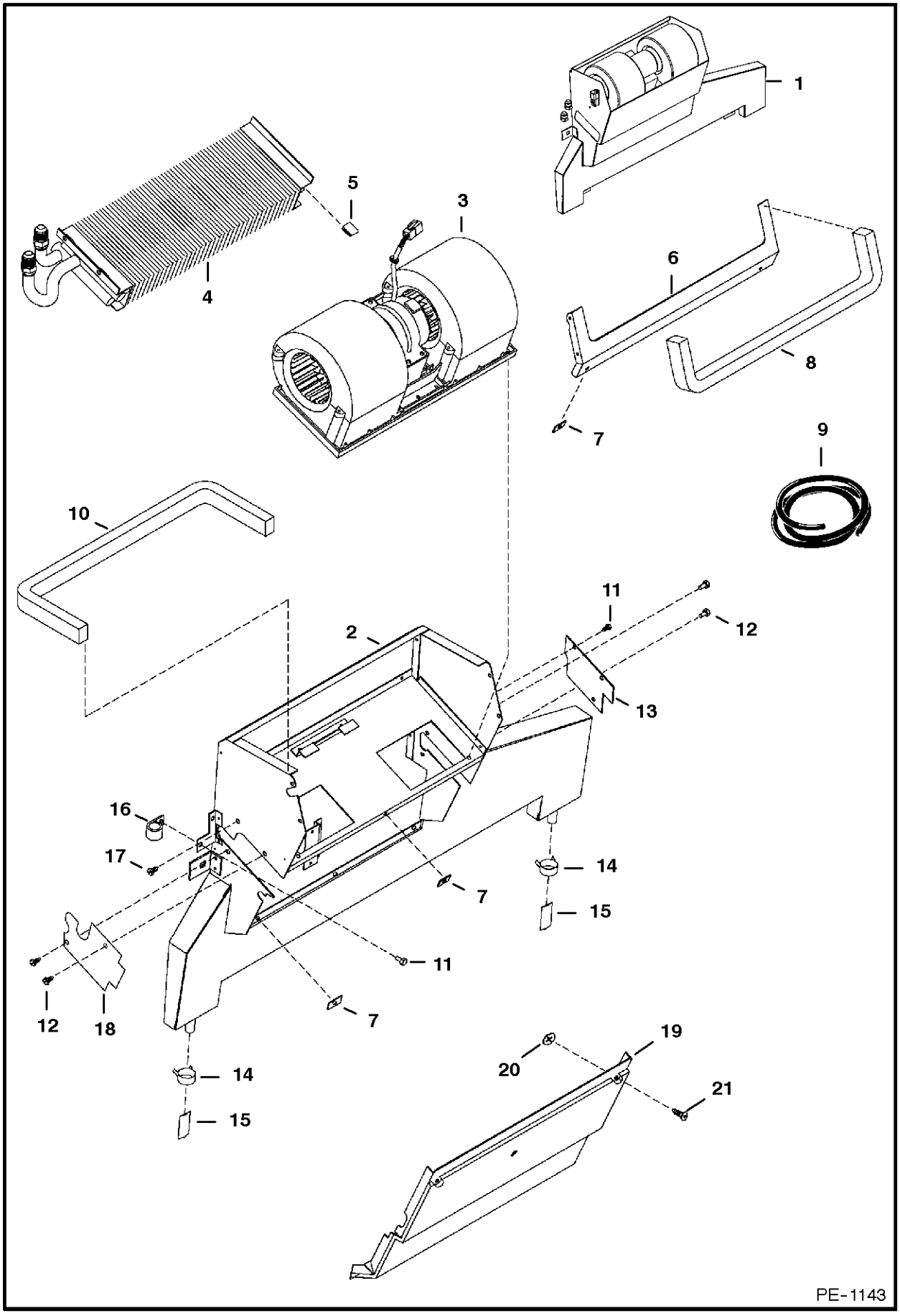

# HEATER & A/C

| Ref.N° | Part N° | Description | Remarks | Serial N° | Qty. |
|---|---|---|---|---|---|
| 1 | 6676562 | HEATER | assy - Ref. HEATER & A/C(2)-HEATER & A/C(12) | | 1 |
| 2 | 6677108 | HOUSING | | | 1 |
| 3 | 6675497 | BLOWER | assy - See Page HEATER & A/C(7) | | 1 |
| 4 | 6676603 | COIL | heater | | 1 |
| 5 | 6676539 | CLIP | | | 1 |
| 6 | 6677114 | SEAL | | | 1 |
| 7 | 6677115 | RECEPTACLE | | | 6 |
| 8 | NAP | SEAL | 522.6' (575mm) long - Order Ref. HEATER & A/C(9) | | 1 |
| 9 | 6677111 | SEAL | bulk - Sold Per Foot | | x |
| 10 | NAP | SEAL | 25' (635mm) long - Order Ref. HEATER & A/C(9) | | 1 |
| 11 | 6677119 | SCREW | sheetmetal | | 7 |
| 12 | 6677118 | SCREW | w/washer | | 4 |
| 13 | 6677120 | COVER | | | 1 |
| 14 | 6675510 | CLAMP | drain hose | | 2 |
| 15 | 6675511 | DRAIN VALVE | | | 2 |
| 16 | 6675512 | CLAMP | hose | | 2 |
| 17 | 6675513 | GROMMET | | | 1 |
| 18 | 6676604 | COVER | | | 1 |
| 19 | 6677109 | COVER | | | 1 |
| 20 | 6677116 | RETAINER | | | 6 |
| 21 | 6677117 | SCREW | captive | | 6 |

# HEATER & A/C
## (Blower Assembly)

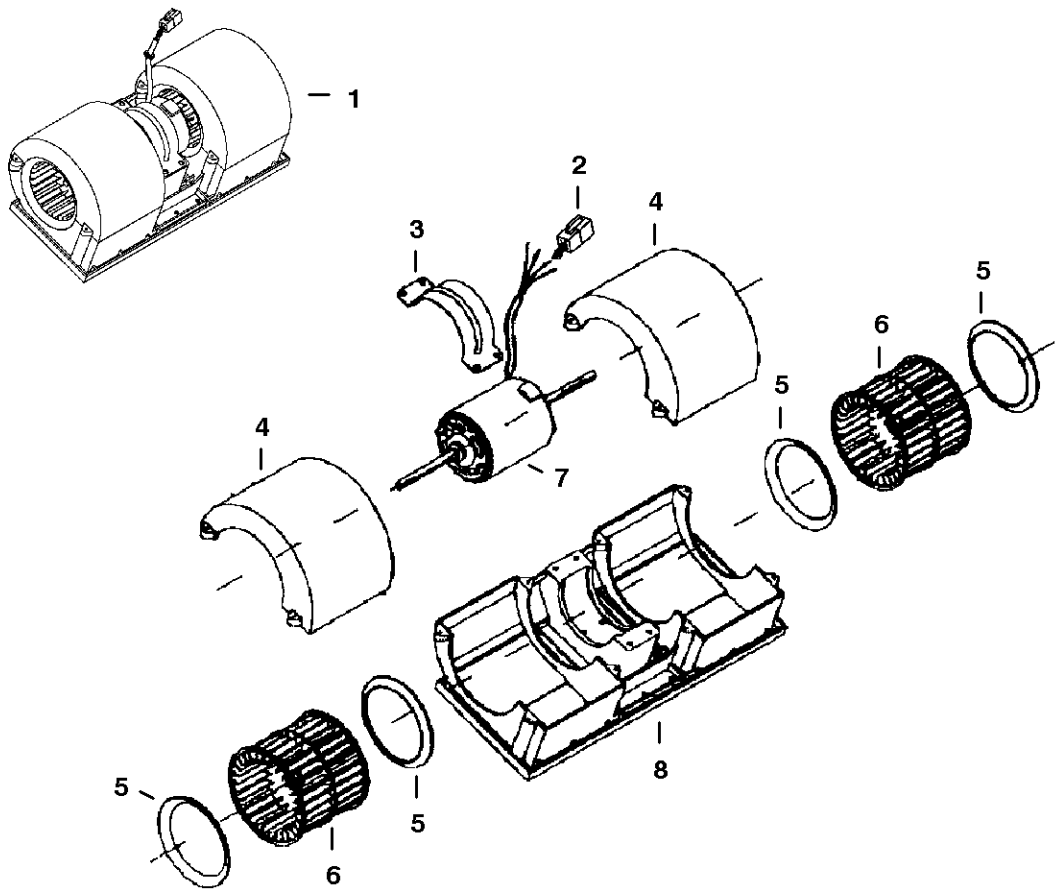


B-16401

# HEATER & A/C

| Ref.N° | Part N° | Description | Remarks | Serial N° | Qty. |
|---|---|---|---|---|---|
| 1 | 6675497 | BLOWER | Ref. HEATER & A/C(2)-HEATER & A/C(8) | | 1 |
| 2 | 6728567 | KIT | 6pin | | 1 |
| 2 | 6662252 | LOCK | 6pin | | 1 |
| 2 | 6662257 | PIN | | | 4 |
| 2 | 6665370 | PLUG | | | 2 |
| 3 | 6675506 | MOUNT | | | 1 |
| 4 | 6675507 | COVER | | | 2 |
| 5 | 6675504 | RING | | | 4 |
| 6 | 6675505 | BLOWER WHEEL | | | 2 |
| 7 | 6675509 | MOTOR | W/Ref. HEATER & A/C(2) | | 1 |
| 8 | 6675503 | HOUSING | | | 1 |

# HEATER & A/C
## (Blower Seal Kit)

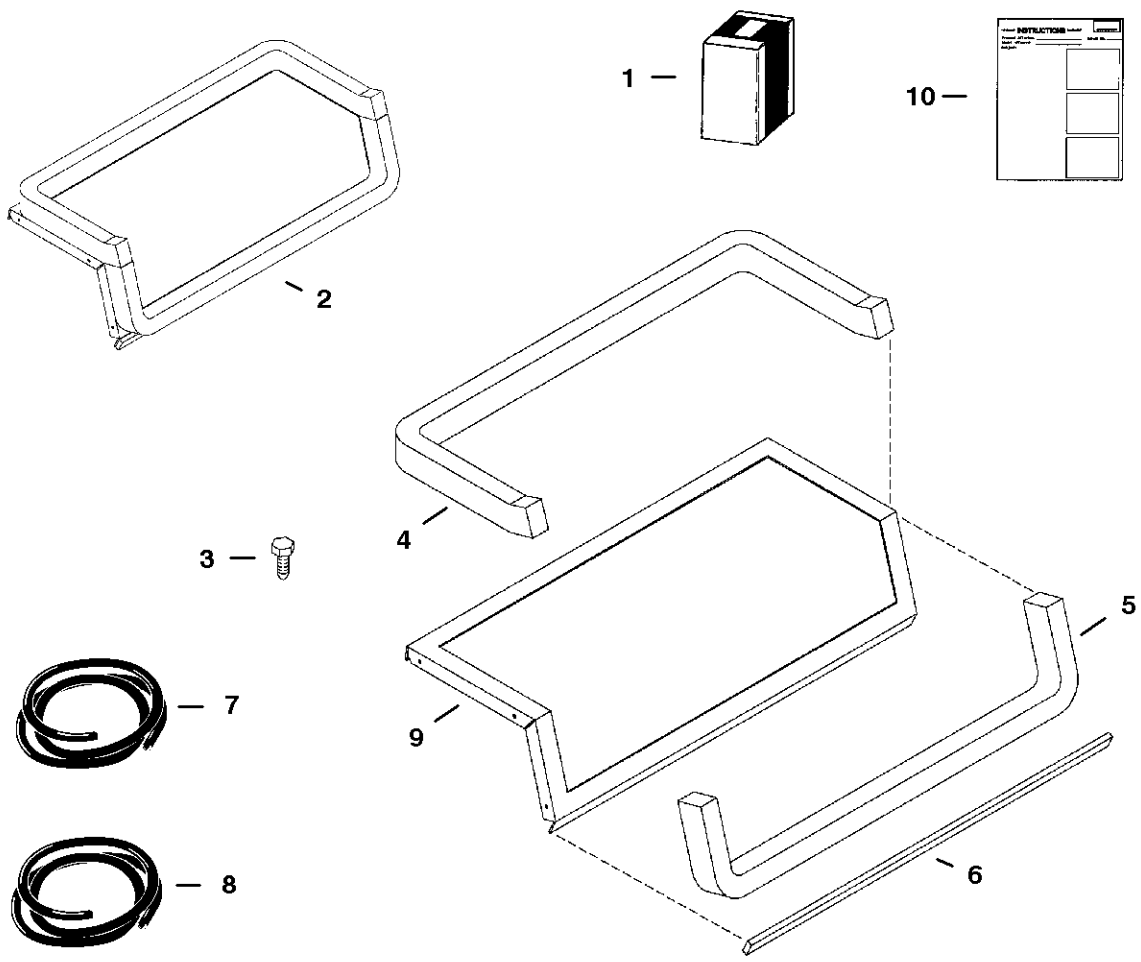


PE-1151

# HEATER & A/C

| Ref.N° | Part N° | Description | Remarks | Serial N° | Qty. |
|---|---|---|---|---|---|
| 1 | 6728567 | KIT | blower seal - W/Ref. HEATER & A/C(2), HEATER & A/C(3) & HEATER & A/C(10) | | 1 |
| 2 | NSS | FLANGE SEAL | assy - Ref. HEATER & A/C(4), HEATER & A/C(5), HEATER & A/C(6) & HEATER & A/C(9) - Order Ref. HEATER & A/C(1) | | 1 |
| 3 | 6726621 | SCREW | | | 7 |
| 4 | NAP | SEAL | 27'(686mm) long - Order Ref. HEATER & A/C(8) | | 1 |
| 5 | NAP | SEAL | 21'(534mm) long - Order Ref. HEATER & A/C(8) | | 1 |
| 6 | NAP | SEAL | 15'(384mm) long - Order Ref. HEATER & A/C(7) | | 1 |
| 7 | 6675611 | SEAL | bulk - Sold Per Foot | | x |
| 8 | 6677111 | SEAL | bulk - Sold Per Foot | | x |
| 9 | NSS | FLANGE | Order Ref. HEATER & A/C(1) | | 1 |
| 10 | 6901213 | INSTRUCTIONS | | | 1 |

# HEATER & A/C
## (Insulation)

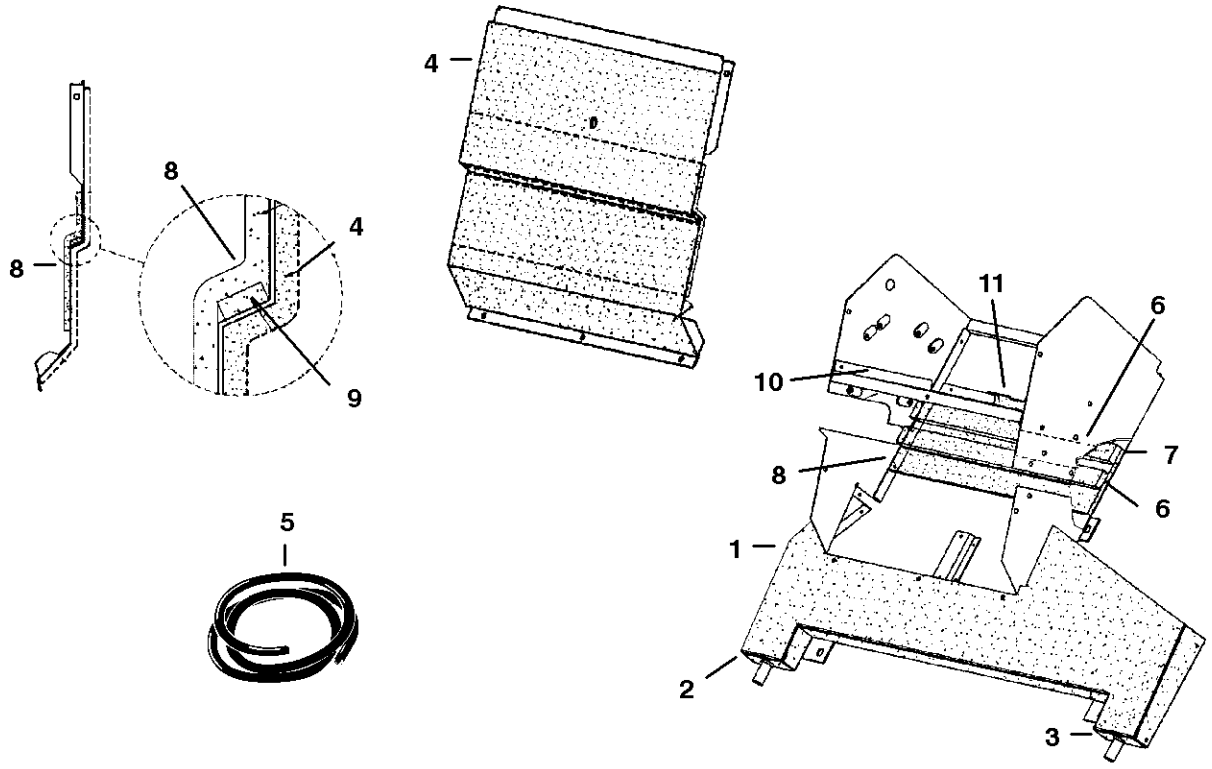


B-16402

# HEATER & A/C

| Ref.N° | Part N° | Description | Remarks | Serial N° | Qty. |
|---|---|---|---|---|---|
| 1 | 6675607 | INSULATION | | | 1 |
| 2 | 6675608 | INSULATION | | | 1 |
| 3 | 6675609 | INSULATION | | | 1 |
| 4 | 6675610 | INSULATION | | | 1 |
| 5 | 6675611 | SEAL | bulk - Sold Per Foot | | x |
| 6 | 6675612 | INSULATION | | | 2 |
| 7 | 6675613 | INSULATION | | | 1 |
| 8 | 6675614 | INSULATION | | | 2 |
| 9 | NAP | SEAL | 15' (381mm) long - Order Ref. HEATER & A/C(5) | | 1 |
| 10 | NAP | SEAL | 5.5' (140mm) long - Order Ref. HEATER & A/C(5) | | 1 |
| 11 | NAP | SEAL | 4' (101,6mm) long - Order Ref. HEATER & A/C(5) | | 1 |

# HEATER & A/C
## (Heater Coil Kit)

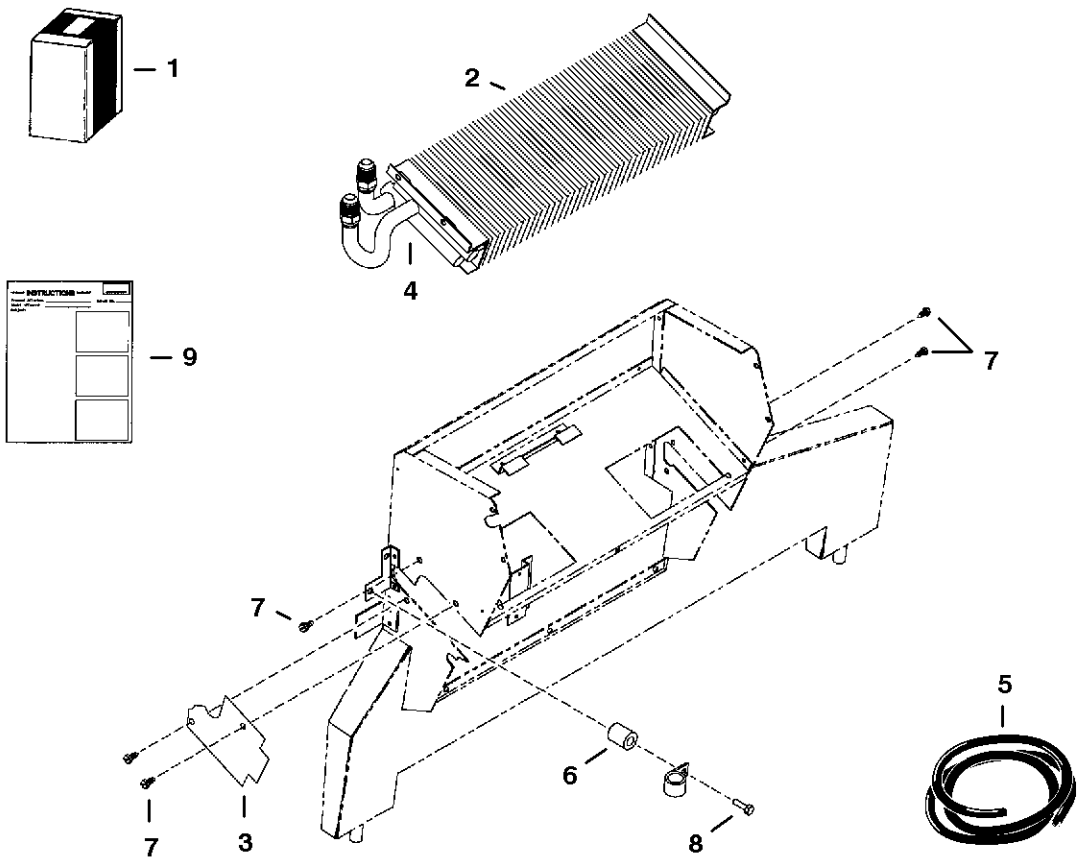


PE-1228

# HEATER & A/C

| Ref.N° | Part N° | Description | Remarks | Serial N° | Qty. |
|---|---|---|---|---|---|
| 1 | 6727786 | KIT | heater coil - W/Ref. HEATER & A/C(2)-HEATER & A/C(9) | | 1 |
| 2 | 6677394 | HEATER COIL | | | 1 |
| 3 | 6676604 | COVER | .279' (7,1mm) thick | | 1 |
| 4 | NAP | INSULATION | 6' (152,4mm) long - Order Ref. HEATER & A/C(5) | | 1 |
| 5 | 6676538 | INSULATION | bulk - Sold Per Foot | | x |
| 6 | 6676606 | SPACER | | | 1 |
| 7 | 6677579 | SCREW | | | 4 |
| 8 | 6676653 | SCREW | | | 1 |
| 9 | 6901120 | INSTRUCTIONS | | | 1 |

# HEATER & A/C
## (A/C Kit)

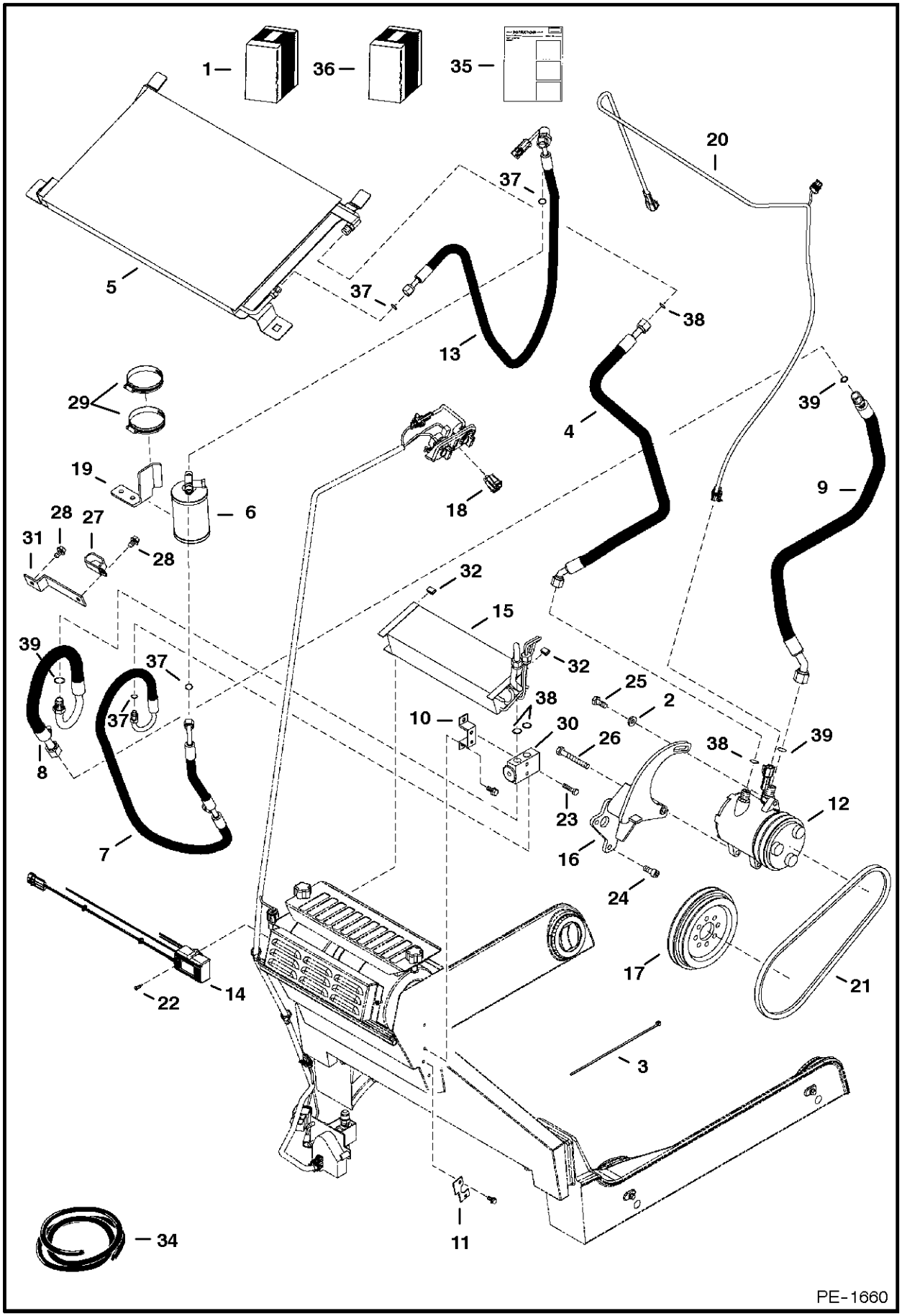

# HEATER & A/C

| Ref.N° | Part N° | Description | Remarks | Serial N° | Qty. |
|---|---|---|---|---|---|
| 1 | 6726490 | KIT | Ref. HEATER & A/C(2) - HEATER & A/C(35) | | 1 |
| 2 | 6557831 | WASHER | | | 1 |
| 3 | 6624289 | STA-STRAP | | | 1 |
| 4 | 6674232 | HOSE | ac - W/Ref. HEATER & A/C(38) | | 1 |
| 5 | 6674234 | CONDENSER | | | 1 |
| 6 | 6674235 | RECEIVER DRIER | reciever | | 1 |
| 6 | 6676062 | RELIEF VALVE | relief | | 1 |
| 7 | 6675075 | HOSE | ac - W/Ref. HEATER & A/C(37) | | 1 |
| 7 | 6677122 | CAP | plastic | | 1 |
| 8 | 6675076 | HOSE | ac - W/Ref. HEATER & A/C(39) | | 1 |
| 8 | 6677121 | CAP | plastic | | 1 |
| 9 | 6675270 | HOSE | ac - W/Ref. HEATER & A/C(39) | | 1 |
| 10 | 6675536 | BRACKET | valve | | 1 |
| 11 | 6675537 | COVER | plate | | 1 |
| 12 | 6675667 | COMPRESSOR | | | 1 |
| 12 | 6679145 | CLUTCH | | | 1 |
| 13 | 6675685 | HOSE | ac - W/Ref. HEATER & A/C(37) | | 1 |
| 13 | 6675779 | SWITCH | pressure switch | | 1 |
| 13 | 6676399 | VALVE CORE | | | 1 |
| 14 | 6675790 | THERMOSTAT | | | 1 |
| 15 | 6675533 | COIL | evaporator | | 1 |
| 16 | 6717375 | MOUNT | compressor | | 1 |
| 17 | 6718310 | PULLEY | engine | | 1 |
| 18 | 6719176 | SWITCH | rocker | | 1 |
| 19 | 6719459 | MOUNT | reciever drier | | 1 |
| 20 | 6719630 | HARNESS | ac | | 1 |
| 21 | 6725943 | BELT | compressor | | 1 |
| 22 | 6726621 | SCREW | | | 2 |
| 23 | 1CM-635 | BOLT | | | 2 |
| 24 | 3GM-1025 | SCREW | | | 3 |
| 25 | 5CM-1025 | BOLT | | | 1 |
| 26 | 5CM-1080 | BOLT | | | 1 |
| 27 | 31H-42 | CLAMP | | | 1 |
| 28 | 84G-3710 | BOLT | | | 2 |
| 29 | 6515576 | CLAMP | | | 2 |
| 30 | 6675534 | BLOCK VALVE | | | 1 |
| 31 | 6727326 | MOUNT | clamp | | 1 |
| 32 | 6676539 | CLIP | | | 2 |
| 33 | NAP | INSULATION | tape - 6' (152,4mm) long - Order Ref. HEATER & A/C(34) | | 1 |
| 34 | 6676538 | INSULATION | bulk - sold per foot | | x |
| 35 | 6901039 | INSTRUCTIONS | | | 1 |
| 36 | 6676063 | KIT | fitting caps | | 1 |
| 37 | 6675824 | O-RING | #6 | | x |
| 38 | 6675538 | O-RING | #8 | | x |
| 39 | 6675825 | O-RING | #10 | | x |

# HEATER & A/C
# (HVAC Assembly)

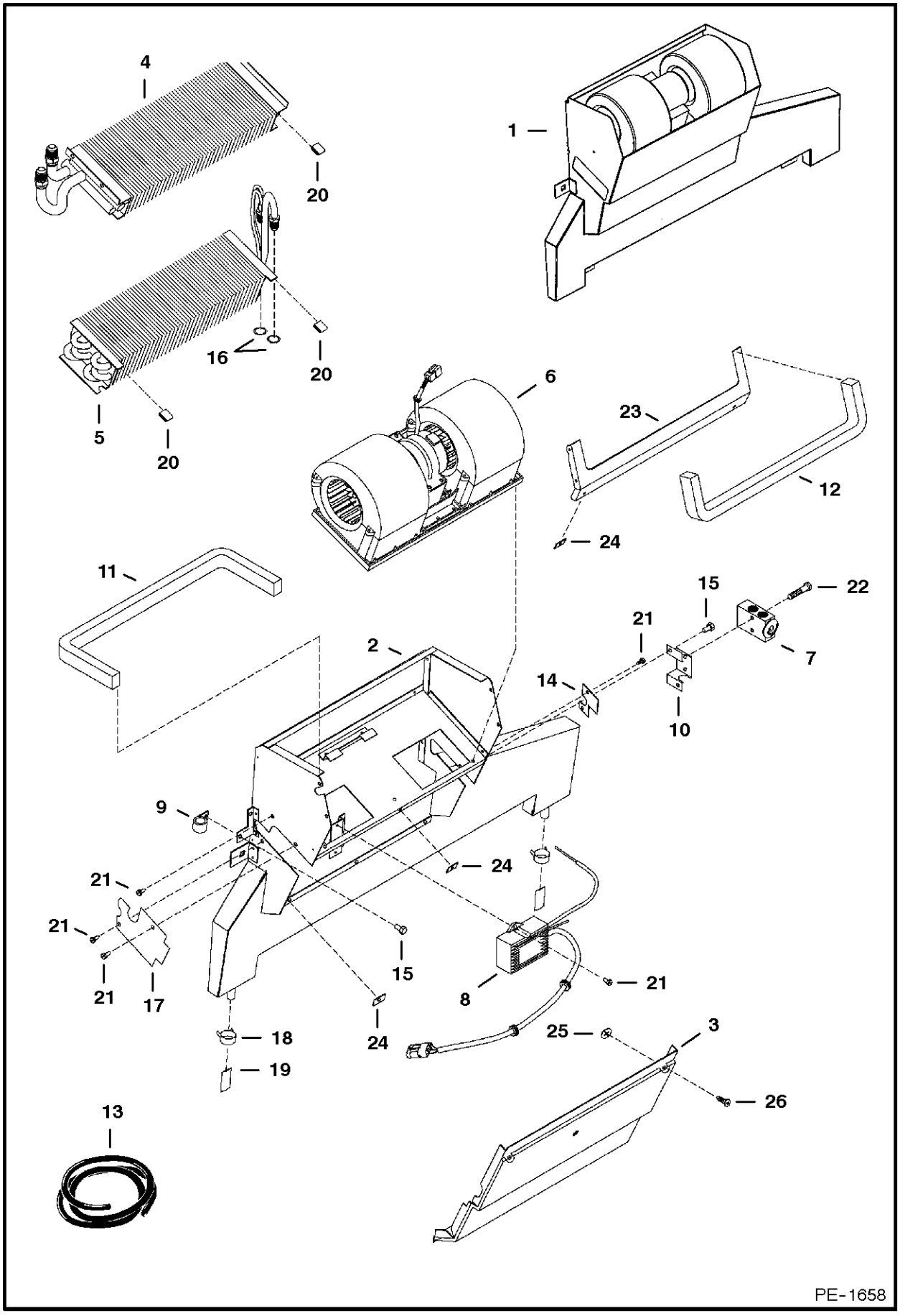

# HEATER & A/C

| Ref.N° | Part N° | Description | Remarks | Serial N° | Qty. |
|---|---|---|---|---|---|
| 1 | 6676561 | HVAC ASSY | assy - Ref. HEATER & A/C(2)-HEATER & A/C(26) | | 1 |
| 2 | 6677108 | HOUSING | | | 1 |
| 3 | 6677109 | COVER | | | 1 |
| 4 | 6676603 | COIL | heater | | 1 |
| 5 | 6675533 | COIL | evaporator | | 1 |
| 6 | 6675497 | BLOWER | assy - See Page HEATER & A/C(7) | | 1 |
| 7 | 6675534 | BLOCK VALVE | | | 1 |
| 8 | 6675790 | THERMOSTAT | | | 1 |
| 9 | 6675512 | CLAMP | hose | | 2 |
| 10 | 6676984 | BRACKET | valve | | 1 |
| 11 | NAP | SEAL | 25' (635mm) long - Order Ref. HEATER & A/C(13) | | 1 |
| 12 | NAP | SEAL | 122.6' (575mm) long - Order Ref. HEATER & A/C(13) | | 1 |
| 13 | 6677111 | SEAL | bulk - Sold Per Foot | | x |
| 14 | 6677105 | COVER | | | 1 |
| 15 | 6677118 | SCREW | w/washer | | 4 |
| 16 | 6675538 | O-RING | | | 2 |
| 17 | 6676604 | COVER | | | 1 |
| 18 | 6675510 | CLAMP | drain hose | | 2 |
| 19 | 6675511 | DRAIN VALVE | | | 2 |
| 20 | 6676539 | CLIP | | | 3 |
| 21 | 6726621 | SCREW | sheet metal | | 7 |
| 22 | 1CM-635 | BOLT | | | 2 |
| 23 | 6677114 | SEAL | | | 1 |
| 24 | 6677115 | RECEPTACLE | | | 6 |
| 25 | 6677116 | RETAINER | | | 6 |
| 26 | 6677117 | SCREW | captive | | 6 |

DRAWING NOT AVAILABLE AT TIME OF PRINTING

PE-1662

# HORN KIT

| Ref.N° | Part N° | Description | Remarks | Serial N° | Qty. |
|---|---|---|---|---|---|
| 1 | 6732234 | KIT | horn - Ref. HORN KIT(2)-HORN KIT(13) | | 1 |
| 2 | 6577545 | GROMMET | | | 1 |
| 3 | 6610510 | NYLON TIE | | | 3 |
| 4 | 6675099 | HORN | horn | | 1 |
| 5 | 6703727 | DECAL | horn/aux. | | 1 |
| 6 | 6707726 | MOUNT | alarm | | 1 |
| 7 | 6726662 | HARNESS | | | 1 |
| 8 | 17C-410 | BOLT | | | 2 |
| 9 | 25E-13 | WASHER | | | 2 |
| 10 | 35C-512 | BOLT | | | 2 |
| 11 | 83D-4 | NUT | | | 2 |
| 12 | 83D-5 | NUT | | | 2 |
| 13 | 6901691 | INSTRUCTIONS | | | 1 |

## LIFT KIT
## (Four Point - .75" Thick Lift Eyes)

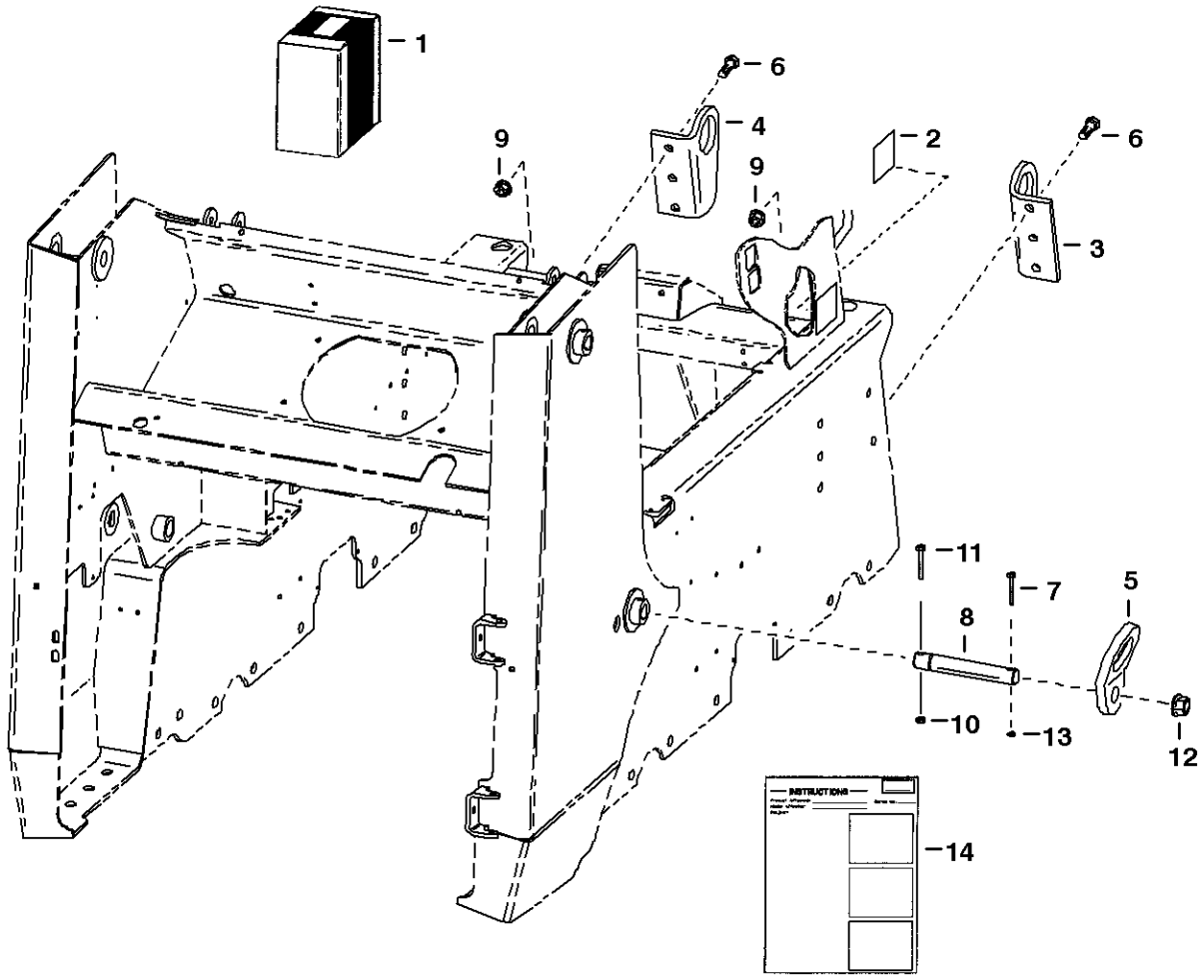


MC-1986

# LIFT KIT

| Ref.N° | Part N° | Description | Remarks | Serial N° | Qty. |
|---|---|---|---|---|---|
| 1 | 6707002 | KIT | Ref. LIFT KIT(2)-9 & LIFT KIT(12)-LIFT KIT(14) | | 1 |
| 2 | 6726423 | DECAL | | | 2 |
| 3 | 6701573 | LIFT EYE | front - R.H. | | 1 |
| 4 | 6701574 | LIFT EYE | front - L.H. | | 1 |
| 5 | 6706825 | LIFT EYE | rear | | 2 |
| 6 | 17C-1028 | BOLT | | | 6 |
| 7 | 17C-540 | BOLT | | | 2 |
| 8 | 6706807 | PIN | | | 2 |
| 9 | 83D-10 | NUT | | | 6 |
| 10 | 85D-6 | NUT | not in kit | | 2 |
| 11 | 17C-640 | BOLT | not in kit | | 2 |
| 12 | 4D-20 | NUT | | | 2 |
| 13 | 87D-5 | NUT | | | 2 |
| 14 | 6722873 | INSTRUCTIONS | | | 1 |

# LIFT KIT
## (Single Point)

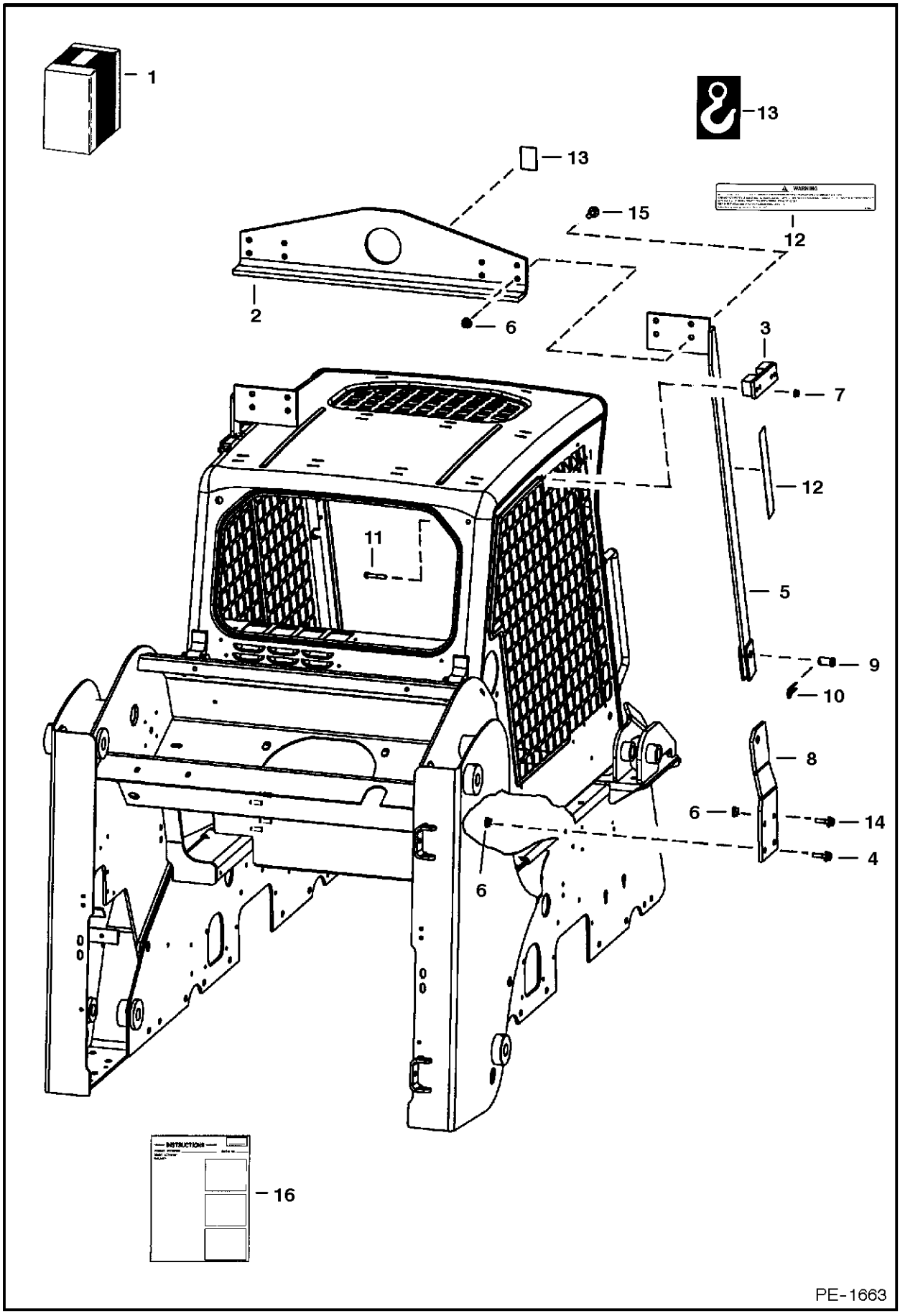

# LIFT KIT

| Ref.N° | Part N° | Description | Remarks | Serial N° | Qty. |
|---|---|---|---|---|---|
| 1 | 6719664 | KIT | Ref. LIFT KIT(2)-LIFT KIT(16) | | 1 |
| 2 | 6567827 | ANGLE | | | 2 |
| 3 | 6719184 | BRACKET | L.H. | | 1 |
| 3 | 6719185 | BRACKET | R.H. | | 1 |
| 4 | 31C-824 | BOLT | | | 6 |
| 5 | 6704146 | BRACKET | R.H. | | 1 |
| 5 | 6704147 | BRACKET | L.H. | | 1 |
| 6 | 57D-8 | NUT | | | 16 |
| 7 | 57D-6 | NUT | | | 8 |
| 8 | 6719485 | BRACKET | R.H. | | 1 |
| 8 | 6719484 | BRACKET | L.H. | | 1 |
| 9 | 6567838 | PIN | | | 2 |
| 10 | 1320075 | COTTER PIN | | | 2 |
| 11 | 17C-632 | BOLT | | | 8 |
| 12 | 6704786 | DECAL | warning | | 2 |
| 13 | 6533898 | DECAL | hook | | 1 |
| 14 | 17C-824 | BOLT | | | 2 |
| 15 | 31C-832 | BOLT | | | 8 |
| 16 | 6900888 | INSTRUCTIONS | | | 1 |

## * POWER BOB-TACH KIT
## (Hydraulic Assisted) (Cast Iron Gear Pump)

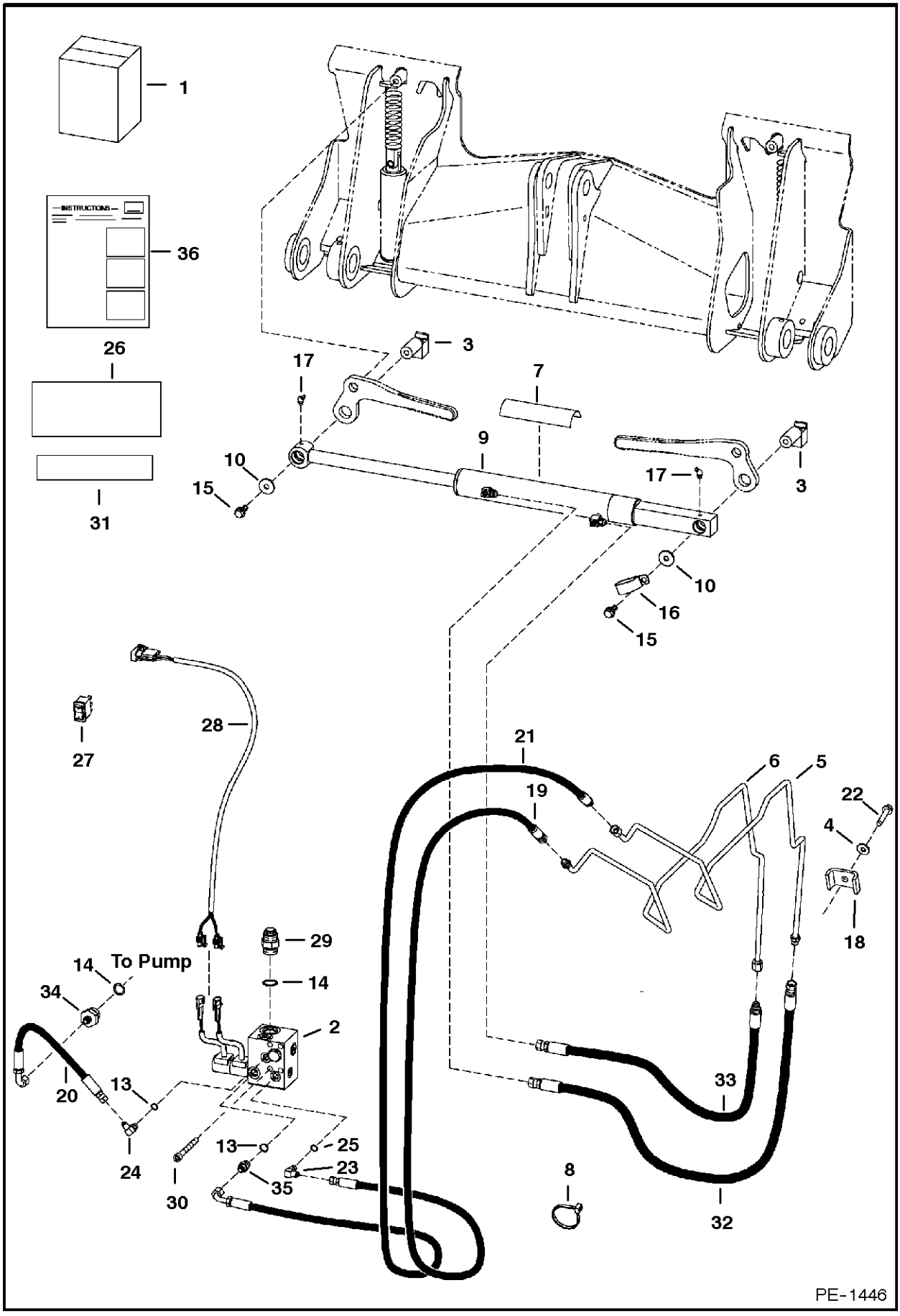

# * POWER BOB-TACH KIT

| Ref.N° | Part N° | Description | Remarks | Serial N° | Qty. |
|---|---|---|---|---|---|
| 1 | 6731092 | KIT | Ref. NO PAGE-NO PAGE | | 1 |
| 2 | | VALVE | See Page NO PAGE | | 1 |
| 3 | 6714576 | PIVOT | | | 2 |
| 4 | 872229 | WASHER | | | 1 |
| 5 | 6719164 | TUBE | | | 1 |
| 6 | 6719167 | TUBE | | | 1 |
| 7 | 6554100 | SAFETY TREAD | | | 1 |
| 8 | 6624289 | STA-STRAP | | | 3 |
| 9 | | CYLINDER | See Page NO PAGE | | 1 |
| 10 | 619021 | WASHER | | | 2 |
| 11 | NAP | COVER | 32' (813mm) long - Order Ref. NO PAGE01Tcom3SO }H~10{M | | 1 |
| 12 | 6656155 | COVER | 1.25' I.D. - bulk - sold per foot | | x |
| 13 | 99K-6 | O-RING | | | x |
| 14 | 99K-12 | O-RING | | | x |
| 15 | 35C-616 | BOLT | | | 2 |
| 16 | 31H-42 | CLAMP | | | 1 |
| 17 | 11H-25 | GREASE ZERK | | | 2 |
| 18 | 6502203 | CLAMP | | | 1 |
| 19 | 6726987 | HOSE | | | 1 |
| 20 | 6806403 | HOSE | | | 1 |
| 21 | 6731082 | HOSE | | | 1 |
| 22 | 84G-3724 | BOLT | | | 1 |
| 23 | 17KV-3 | ELBOW | W/Ref. NO PAGE | | 1 |
| 23 | 97K-4 | O-RING | flared end | | x |
| 24 | 17KV-5 | ELBOW | W/Ref. NO PAGE | | 1 |
| 24 | 97K-6 | O-RING | flared end | | x |
| 25 | 99K-4 | O-RING | | | x |
| 26 | 6717842 | DECAL | | | 1 |
| 27 | 6676732 | SWITCH | vertical | | 1 |
| 28 | 6730770 | HARNESS | | | 1 |
| 29 | 15KN-8 | ADAPTER | W/Ref. NO PAGE | | 1 |
| 29 | 97K-12 | O-RING | flared end | | 3 |
| 30 | 73G-656 | BOLT | | | 4 |
| 31 | 6719888 | DECAL | power bobAtach | | 1 |
| 32 | 6725198 | HOSE | | | 1 |
| 33 | 6725199 | HOSE | | | 1 |
| 34 | 6715186 | ADAPTER | W/Ref. NO PAGE | | 1 |
| 34 | 97K-6 | O-RING | flared end | | x |
| 35 | 15KV-5 | ADAPTER | W/Ref. NO PAGE | | 1 |
| 35 | 97K-6 | O-RING | flared end | | x |
| 36 | 6901483 | INSTRUCTIONS | | | 1 |

## * POWER BOB-TACH KIT
## (Hydraulic Assisted) (Cast Iron Gear Pump) (5196 , 5197 & Above)

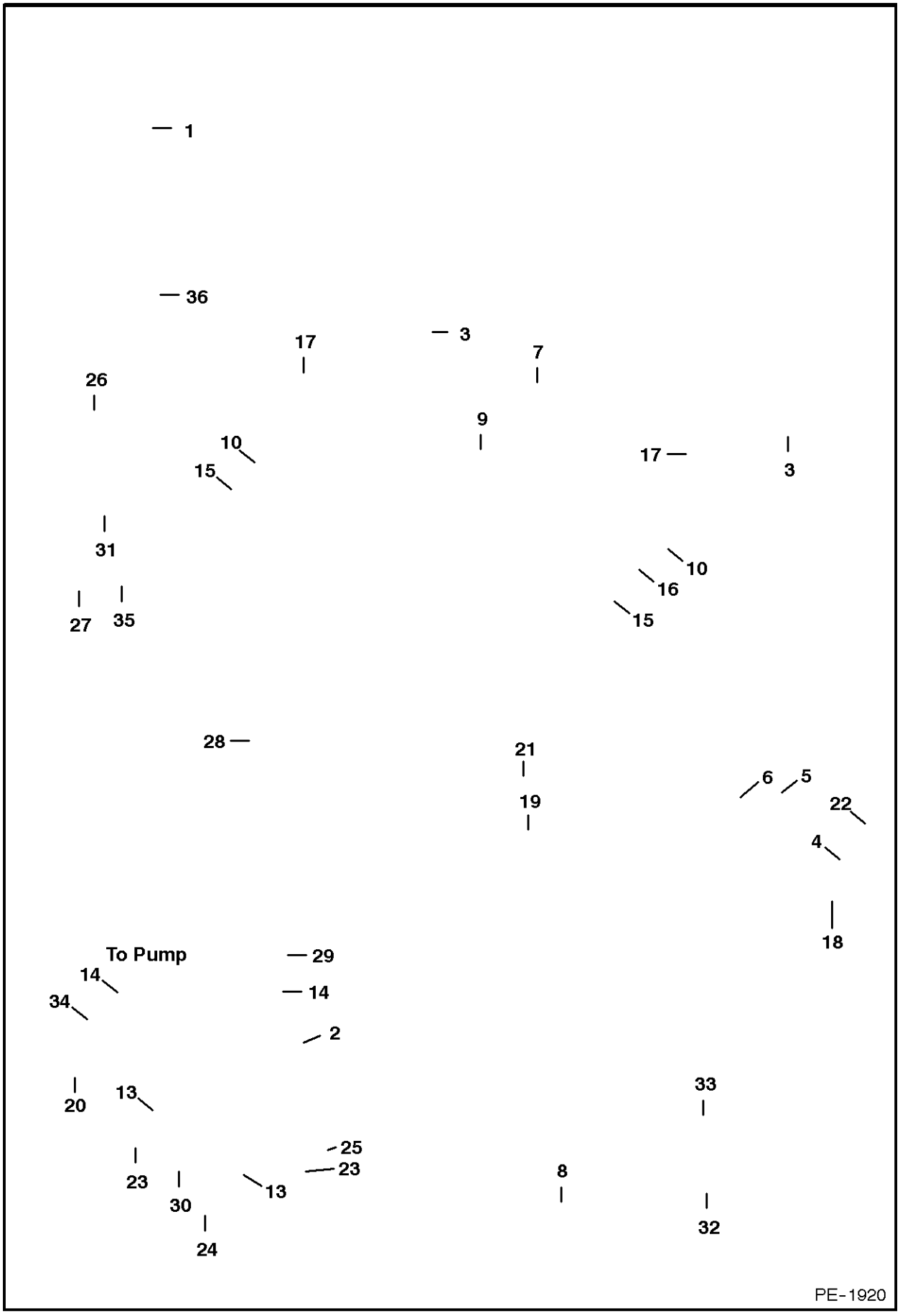

# * POWER BOB-TACH KIT

| Ref.N° | Part N° | Description | Remarks | Serial N° | Qty. |
|---|---|---|---|---|---|
| 1 | 6735468 | KIT | Ref. NO PAGE-NO PAGE | | 1 |
| 2 | | VALVE | See Page | | 1 |
| 3 | 6714576 | PIVOT | | | 2 |
| 4 | 872229 | WASHER | | | 1 |
| 5 | 6719164 | TUBE | | | 1 |
| 6 | 6719167 | TUBE | | | 1 |
| 7 | 6554100 | SAFETY TREAD | | | 1 |
| 8 | 6624289 | STA-STRAP | | | 3 |
| 9 | | CYLINDER | See Page NO PAGE | | 1 |
| 10 | 619021 | WASHER | | | 2 |
| 11 | NAP | COVER | 32' (813mm) long - Order Ref. NO PAGE01Tcom3SO }H~10{M | | 1 |
| 12 | 6656155 | COVER | 1.25' I.D. - bulk - sold per foot | | x |
| 13 | 79K-6 | O-RING | | | x |
| 14 | 79K-12 | O-RING | | | x |
| 15 | 35C-616 | BOLT | | | 2 |
| 16 | 31H-42 | CLAMP | | | 1 |
| 17 | 12H-25 | GREASE ZERK | | | 2 |
| 18 | 6502203 | CLAMP | | | 1 |
| 19 | 6726987 | HOSE | | | 1 |
| 20 | 6806403 | HOSE | | | 1 |
| 21 | 6735475 | HOSE | | | 1 |
| 22 | 84G-3724 | BOLT | | | 1 |
| 23 | 17KB-404 | ELBOW | W/Ref. NO PAGE | | 2 |
| 24 | 17KB-606 | ELBOW | W/Ref. NO PAGE | | 1 |
| 25 | 79K-4 | O-RING | | | x |
| 26 | 6725907 | DECAL | Was 6717842 [A] | | 1 |
| 27 | 6676732 | SWITCH | vertical | | 1 |
| 28 | 6730770 | HARNESS | | | 1 |
| 29 | 15KB-1212 | ADAPTER | W/Ref. NO PAGE | | 1 |
| 30 | 73G-656 | BOLT | | | 4 |
| 31 | 6719888 | DECAL | power bobAtach | | 1 |
| 32 | 6725198 | HOSE | | | 1 |
| 33 | 6725199 | HOSE | | | 1 |
| 34 | 15KB-612 | ADAPTER | W/Ref. NO PAGE | | 1 |
| 35 | 11H-15 | GREASE ZERK | for cylinder 6810350 | | 1 |
| 36 | 6902360 | INSTRUCTIONS | | | 1 |

# POWER BOB-TACH CYLINDER

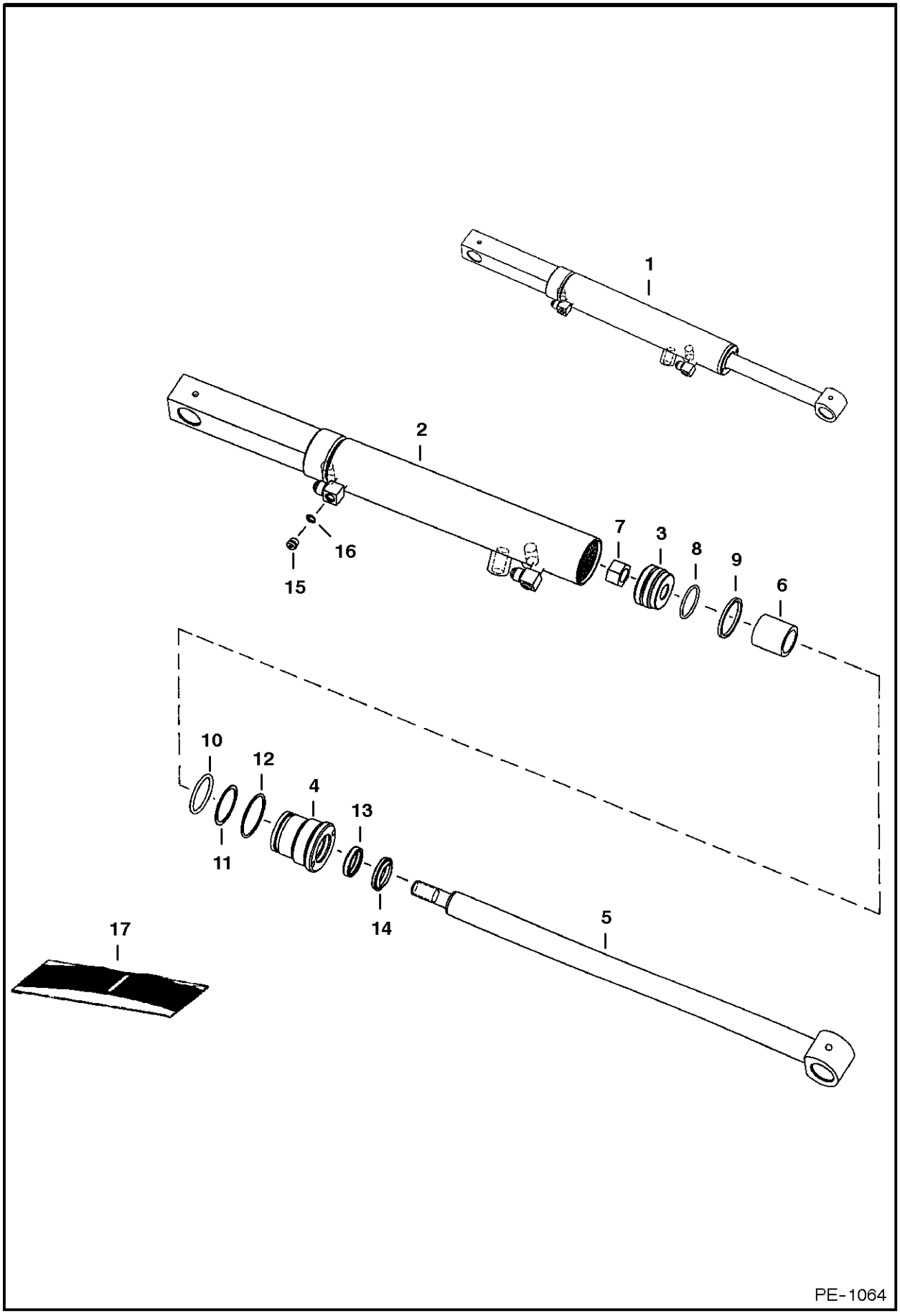

# POWER BOB-TACH CYLINDER

| Ref.N° | Part N° | Description | Remarks | Serial N° | Qty. |
|---|---|---|---|---|---|
| 1 | 6810611 | CYLINDER | Ref. POWER BOB-TACH CYLINDER(2)-POWER BOB-TACH CYLINDER(16) | | 1 |
| 2 | 6810349 | CASE | 1.75' (45mm) I.D. | | 1 |
| 3 | 6586543 | PISTON | | | 1 |
| 4 | 6586542 | HEAD | | | 1 |
| 5 | 6810612 | ROD | W/ .25' grease zerk hole | | 1 |
| 6 | 6810356 | SPACER | | | 1 |
| 7 | 92D-10 | NUT | | | 1 |
| 8 | 54K-30110 | O-RING | | | 1 |
| 9 | 6532453 | RING | | | 1 |
| 10 | 54K-40116 | O-RING | | | 1 |
| 11 | 73K-222 | WASHER | backAup | | 1 |
| 12 | 58K-132 | O-RING | | | 1 |
| 13 | 6667323 | SEAL | rod | | 1 |
| 14 | 6666542 | SEAL | wiper | | 1 |
| 15 | 90KV-2 | PLUG | W/Ref. POWER BOB-TACH CYLINDER(16) | | 2 |
| 16 | 79K-3 | O-RING | | | 2 |
| 17 | 6803473 | SEAL KIT | Ref. POWER BOB-TACH CYLINDER(7)-POWER BOB-TACH CYLINDER(14) | | 1 |

# POWER BOB-TACH - VALVE ASSEMBLY

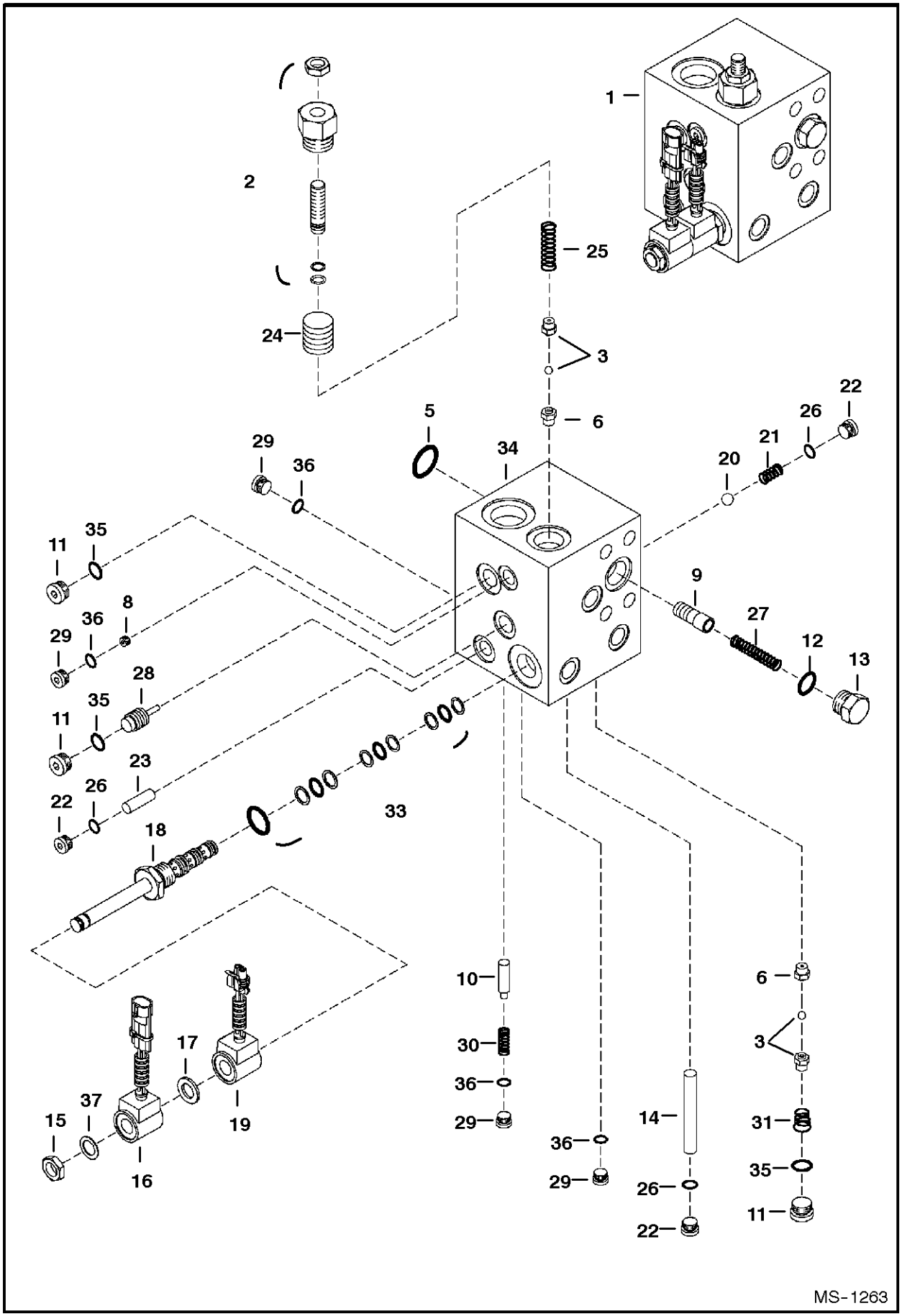

# POWER BOB-TACH - VALVE ASSEMBLY

| Ref.N° | Part N° | Description | Remarks | Serial N° | Qty. |
|---|---|---|---|---|---|
| 1 | 6678554 | VALVE | Ref. POWER BOB-TACH - VALVE ASSEMBLY(2)-POWER BOB-TACH - VALVE ASSEMBLY(31) | | 1 |
| 2 | 6679245 | RELIEF VALVE | | | 1 |
| 2 | | SEAL KIT | | | 1 |
| 3 | 6679244 | BALL ASSY. | | | 2 |
| 4 | 6678709 | O-RING | | | x |
| 5 | 6678695 | O-RING | | | 1 |
| 6 | NSS | SEAT | relief loctited | | 2 |
| 7 | 99K-5 | O-RING | | | x |
| 8 | 6678701 | ORIFICE | screw in plug W/ screen | | 1 |
| 9 | 6678708 | COMPENSATOR | | | 1 |
| 10 | 6678694 | FLOW CONTROL | | | 1 |
| 10 | 6677150 | SEAL KIT | | | 1 |
| 11 | 6678698 | PLUG | W/Ref. POWER BOB-TACH - VALVE ASSEMBLY(35) | | 3 |
| 12 | 95K-8 | O-RING | | | x |
| 13 | 6678706 | PLUG | W/Ref. POWER BOB-TACH - VALVE ASSEMBLY(12) | | 1 |
| 14 | 6678702 | ORIFICE | | | 1 |
| 15 | 6671628 | NUT | | | 1 |
| 16 | 6671025 | COIL | | | 2 |
| 17 | 6678711 | SPACER | | | 1 |
| 18 | 6678697 | STEM | W/Ref. POWER BOB-TACH - VALVE ASSEMBLY(33) | | 1 |
| 19 | 6678712 | COIL | W/ male connector | | 1 |
| 20 | 6678705 | BALL | | | 1 |
| 21 | 6678704 | SPRING | | | 1 |
| 22 | 6677159 | PLUG | W/Ref. POWER BOB-TACH - VALVE ASSEMBLY(26) | | 3 |
| 23 | 6678703 | SHUTTLE | | | 1 |
| 24 | 6678717 | PISTON | | | 1 |
| 25 | 6678718 | SPRING | | | 1 |
| 26 | 95K-4 | O-RING | | | x |
| 27 | 6678707 | SPRING | | | 1 |
| 28 | 6678700 | PISTON | | | 1 |
| 29 | 6678699 | PLUG | W/Ref. POWER BOB-TACH - VALVE ASSEMBLY(36) | | 4 |
| 30 | 6678692 | SPRING | | | 1 |
| 31 | 6678693 | SPRING | | | 1 |
| 32 | 6679246 | SEAL KIT | complete | | 1 |
| 33 | 6672756 | SEAL KIT | | | 1 |
| 34 | NSS | BLOCK | | | 1 |
| 35 | 95K-6 | O-RING | | | x |
| 36 | 95K-2 | O-RING | | | x |

# * POWER BOB-TACH - VALVE ASSEMBLY

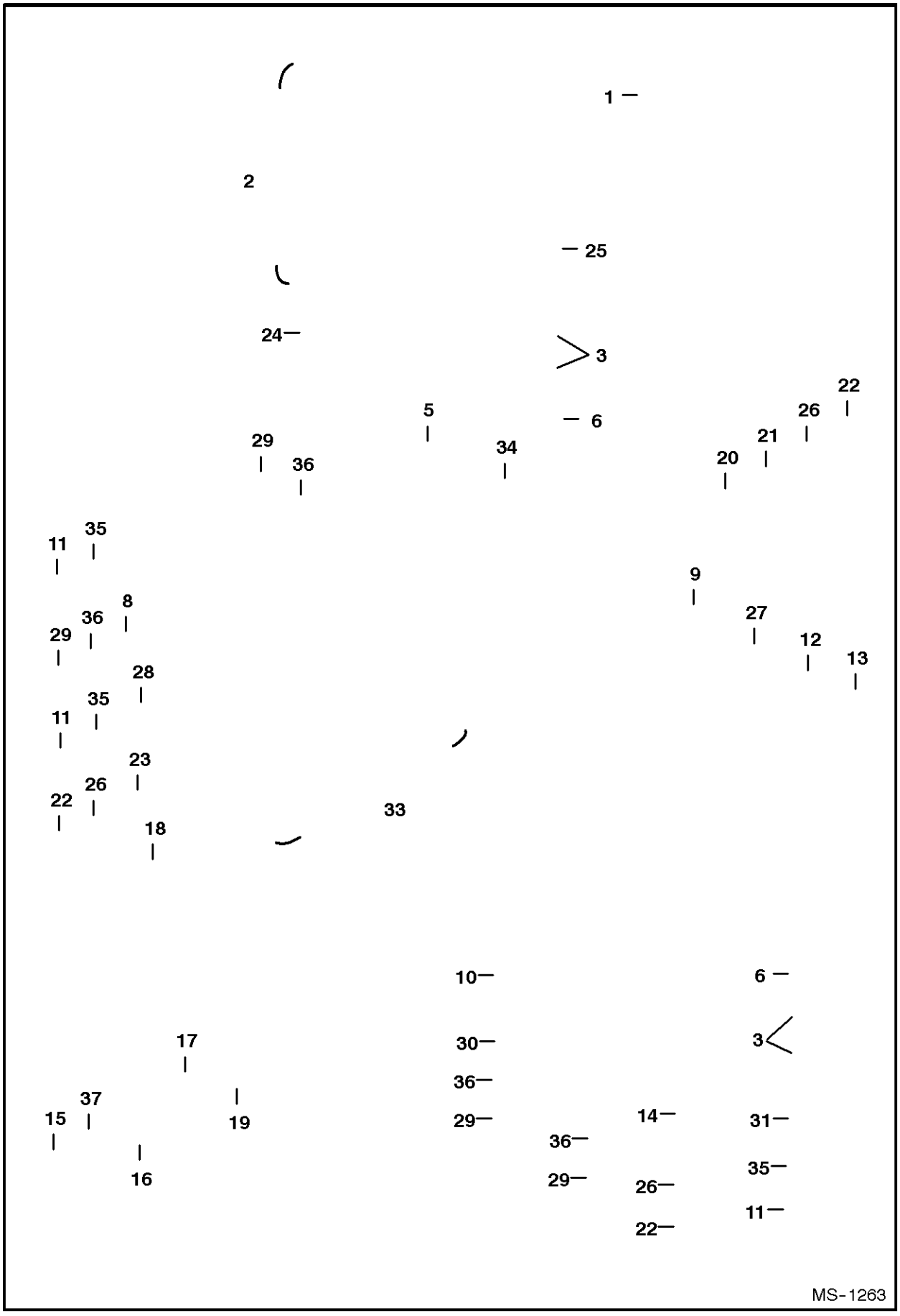

# * POWER BOB-TACH - VALVE ASSEMBLY

| Ref.N° | Part N° | Description | Remarks | Serial N° | Qty. |
|---|---|---|---|---|---|
| 1 | 6681864 | VALVE | | | 1 |
| 2 | 6684743 | SOLENOID | W/male connector | | 1 |
| 3 | 6684744 | SOLENOID | W/male connector | | x |
| 4 | 6684742 | NUT | | | 1 |
| 5 | 6684745 | PISTON | | | 1 |
| 6 | 6684746 | CHECK VALVE | W/Ref. * POWER BOB-TACH - VALVE ASSEMBLY(7 ) | | 1 |
| 7 | 79K-7 | O-RING | | | x |
| 8 | 79K-10 | O-RING | | | x |
| 9 | 79K-8 | O-RING | | | x |
| 10 | 6684747 | SEAL KIT | complete | | 1 |

# PURIFIER

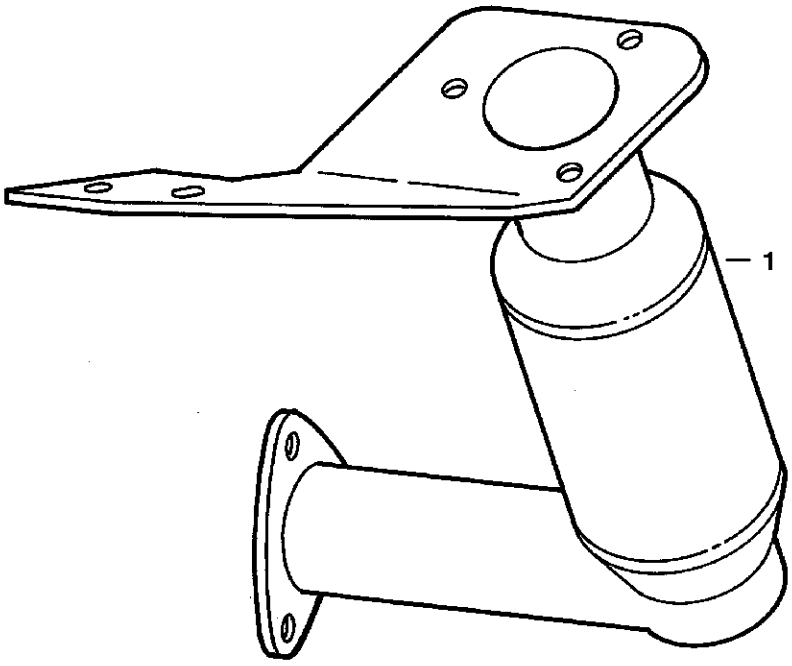


B-13643

# PURIFIER

| Ref.N° | Part N° | Description | Remarks | Serial N° | Qty. |
|---|---|---|---|---|---|
| 1 | 6673826 | PURIFIER | 12 hole mounting - replaces exhaust tube - uses existing hardware & gasket | | 1 |

# RADIATOR SCREEN KIT

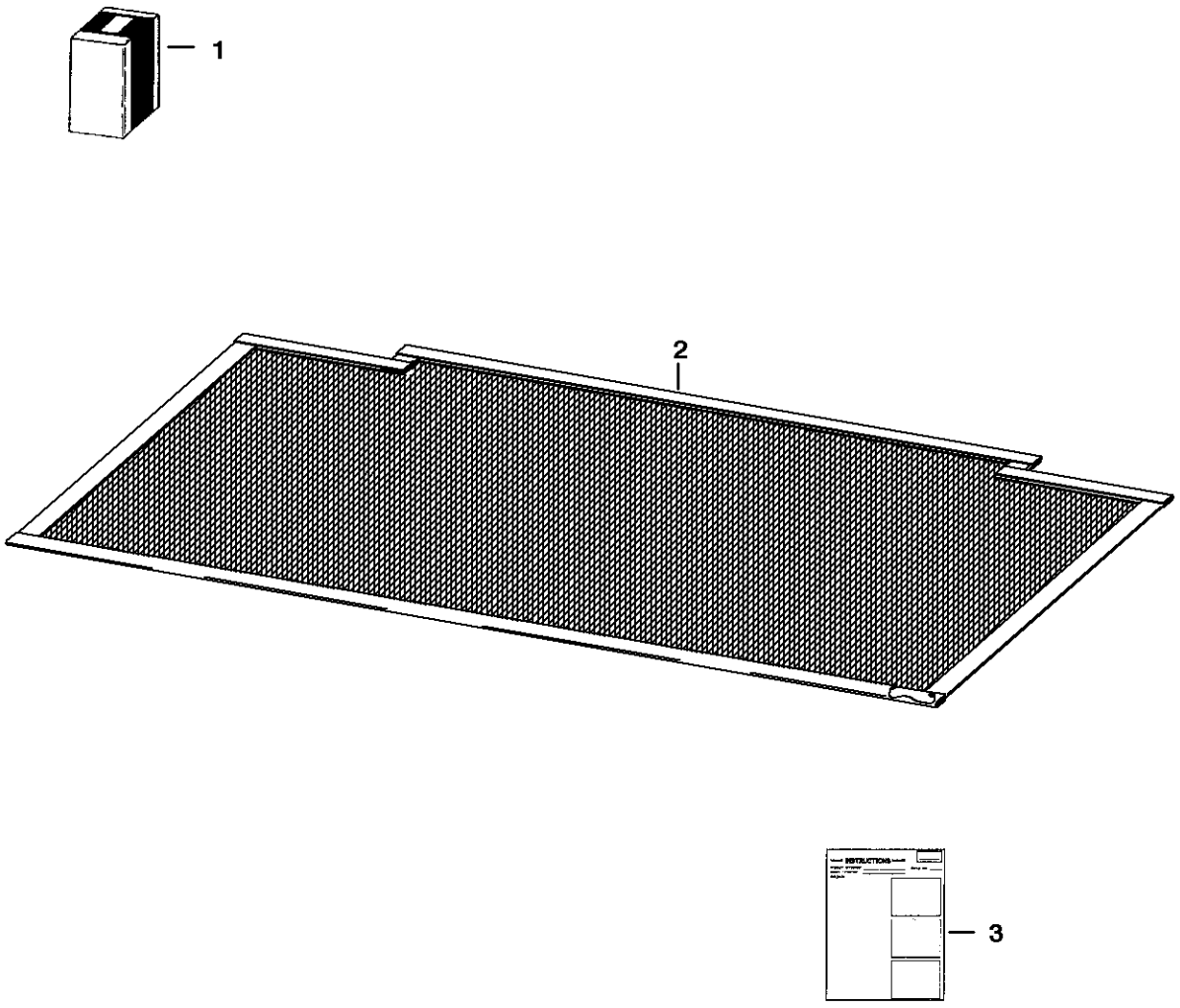


TS-1189

# RADIATOR SCREEN KIT

| Ref.N° | Part N° | Description | Remarks | Serial N° | Qty. |
|---|---|---|---|---|---|
| 1 | 6706940 | KIT | Ref. RADIATOR SCREEN KIT(2) & RADIATOR SCREEN KIT(3) | | 1 |
| 2 | 6706286 | SCREEN | | | 1 |
| 3 | 6722861 | INSTRUCTIONS | | | 1 |

# REAR AUXILIARY HYDRAULICS KIT

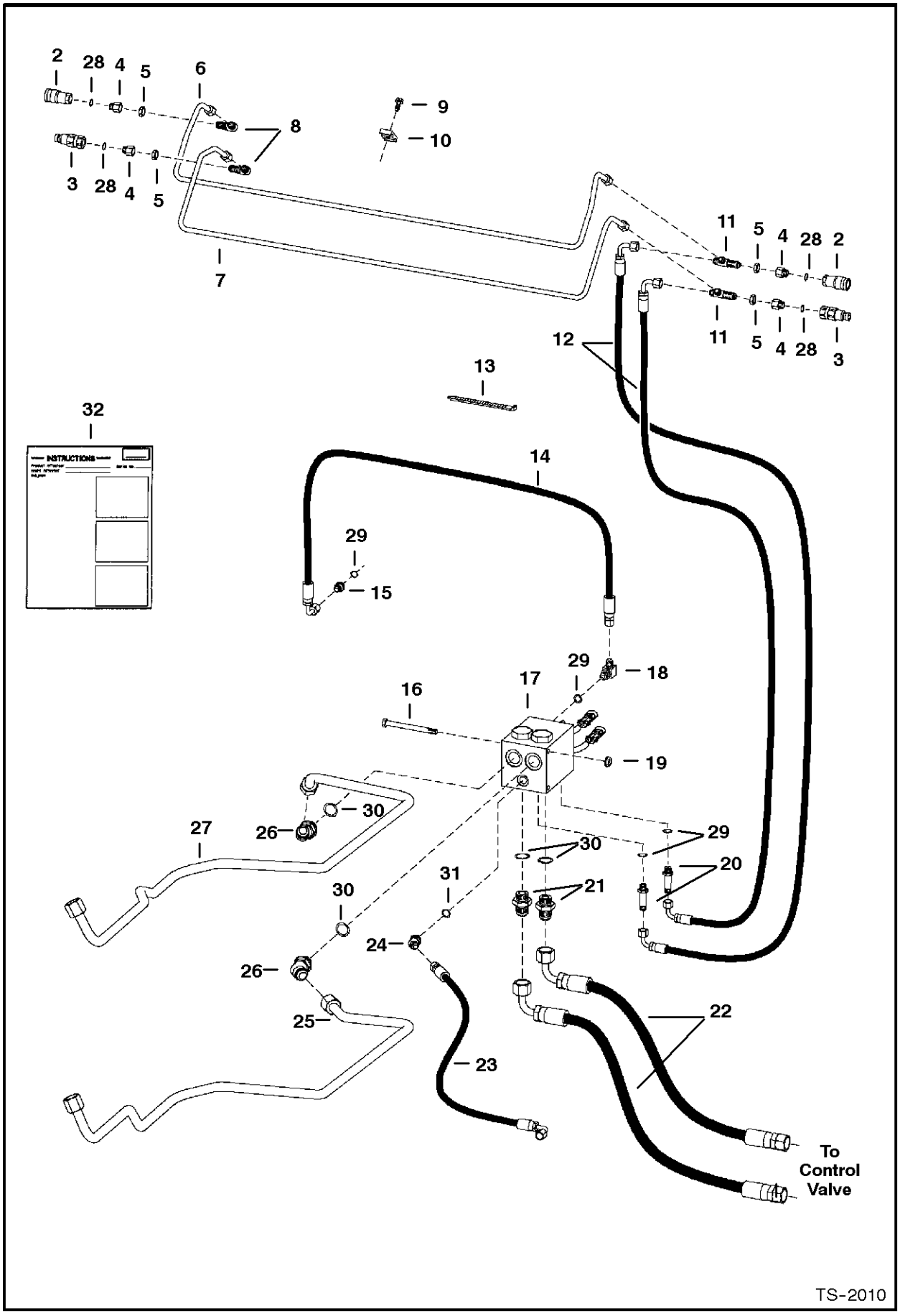

# REAR AUXILIARY HYDRAULICS KIT

| Ref.N° | Part N° | Description | Remarks | Serial N° | Qty. |
|---|---|---|---|---|---|
| 1 | 6719601 | KIT | Ref. REAR AUXILIARY HYDRAULICS KIT(2)-REAR AUXILIARY HYDRAULICS KIT(27) & REAR AUXILIA RY HYDRAULICS KIT(32) | | 1 |
| 2 | 6667803 | QUICK COUPLER | female | | 1 |
| 3 | 6667804 | QUICK COUPLER | male | | 1 |
| 4 | 6706633 | CONNECTOR | W/Ref. REAR AUXILIARY HYDRAULICS KIT(28) | | 4 |
| 5 | 86F-5 | NUT | | | 4 |
| 6 | 6719296 | TUBELINE | | | 1 |
| 7 | 6719297 | TUBELINE | | | 1 |
| 8 | 88FN-5 | ELBOW | | | 2 |
| 8 | 97K-6 | O-RING | flared end | | x |
| 9 | 84G-3716 | BOLT | | | 1 |
| 10 | 6500989 | CLAMP | | | 1 |
| 11 | 6719298 | TEE | | | 2 |
| 11 | 97K-6 | O-RING | flared end | | x |
| 12 | 6719847 | HOSE | | | 2 |
| 13 | 6624289 | STA-STRAP | | | 2 |
| 14 | 6537283 | HOSE | | | 1 |
| 15 | 15KV-5 | ADAPTER | W/Ref. REAR AUXILIARY HYDRAULICS KIT(29) | | 1 |
| 15 | 97K-6 | O-RING | flared end | | x |
| 16 | 17C-680 | BOLT | | | 2 |
| 17 | 6665572 | VALVE | | | 1 |
| 18 | 17KV-5 | ELBOW | W/Ref. REAR AUXILIARY HYDRAULICS KIT(29) | | 1 |
| 18 | 97K-6 | O-RING | flared end | | x |
| 19 | 83D-6 | NUT | | | 2 |
| 20 | 16KN-5 | CONNECTOR | W/Ref. REAR AUXILIARY HYDRAULICS KIT(29) | | 2 |
| 20 | 97K-6 | O-RING | flared end | | x |
| 21 | 15KN-8 | ADAPTER | W/Ref. REAR AUXILIARY HYDRAULICS KIT(30) | | 2 |
| 21 | 97K-12 | O-RING | flared end | | x |
| 22 | 6725311 | HOSE | | | 2 |
| 23 | 6587291 | HOSE | | | 1 |
| 24 | 18KN-3 | ELBOW | 4565 - W/Ref. REAR AUXILIARY HYDRAULICS KIT(3 1) | | 1 |
| 24 | 97K-4 | O-RING | flared end | | x |
| 25 | 6719849 | TUBELINE | | | 1 |
| 26 | 18KN-8 | ELBOW | 4565 - W/Ref. REAR AUXILIARY HYDRAULICS KIT(3 0) | | 2 |
| 26 | 97K-12 | O-RING | flared end | | x |
| 27 | 6719850 | TUBELINE | | | 1 |
| 28 | 79K-6 | O-RING | | | x |
| 29 | 99K-6 | O-RING | | | x |
| 30 | 99K-12 | O-RING | | | x |
| 31 | 99K-4 | O-RING | | | x |
| 32 | 6900935 | INSTRUCTIONS | | | 1 |

# REAR AUXILIARY HYDRAULICS KIT
## (High Horsepower)

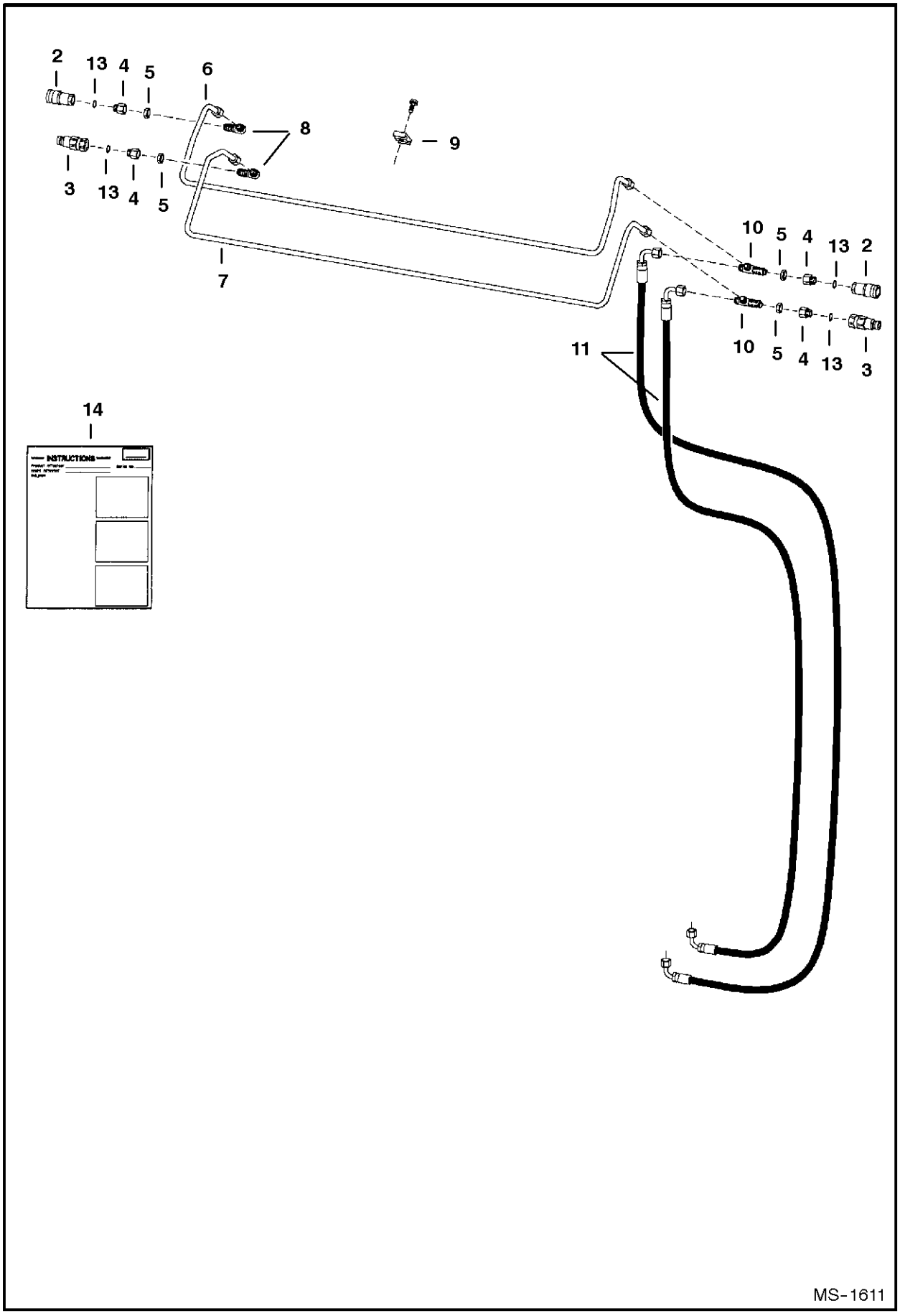

# REAR AUXILIARY HYDRAULICS KIT

| Ref.N° | Part N° | Description | Remarks | Serial N° | Qty. |
|---|---|---|---|---|---|
| 1 | 6719627 | KIT | Ref. REAR AUXILIARY HYDRAULICS KIT(2)-REAR AUXILIARY HYDRAULICS KIT(12) & REAR AUXILIARY HYDRAULICS KIT(14) | | 1 |
| 2 | 6667803 | QUICK COUPLER | female | | 1 |
| 3 | 6667804 | QUICK COUPLER | male | | 1 |
| 4 | 6706633 | CONNECTOR | W/Ref. REAR AUXILIARY HYDRAULICS KIT(13) | | 4 |
| 5 | 86F-5 | NUT | | | 4 |
| 6 | 6719296 | TUBELINE | | | 1 |
| 7 | 6719297 | TUBELINE | | | 1 |
| 8 | 88FN-5 | ELBOW | | | 2 |
| 8 | 97K-6 | O-RING | flared end | | x |
| 9 | 6500989 | CLAMP | | | 1 |
| 10 | 6719298 | TEE | | | 2 |
| 10 | 97K-6 | O-RING | flared end | | x |
| 11 | 6719847 | HOSE | | | 2 |
| 12 | 84G-3716 | BOLT | | | 1 |
| 13 | 79K-6 | O-RING | | | x |
| 14 | 6900941 | INSTRUCTIONS | | | 1 |

# REAR DOOR LOCK

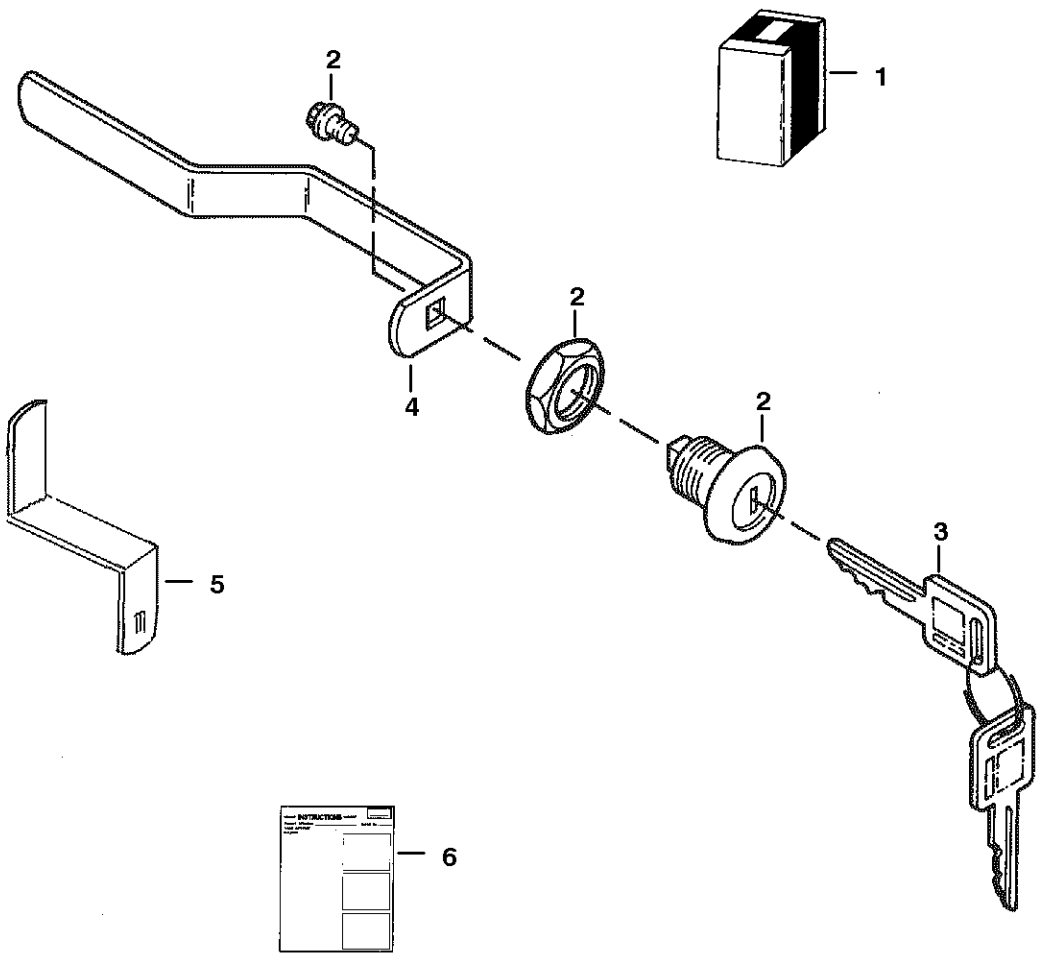

# REAR DOOR LOCK

| Ref.N° | Part N° | Description | Remarks | Serial N° | Qty. |
|---|---|---|---|---|---|
| 1 | 6714973 | KIT | lock - Ref. REAR DOOR LOCK(2)-REAR DOOR LOCK(5) | | 1 |
| 2 | 6670726 | LOCK | | | 1 |
| 3 | 6672345 | KEY | | | 1 |
| 4 | 6714037 | LATCH | use W/ 6711524 door | | 1 |
| 4 | 6729688 | LATCH | use W/ 6729991 door | | 1 |
| 5 | 6570762 | INSTRUCTIONS | | | 1 |

# REAR WIPER

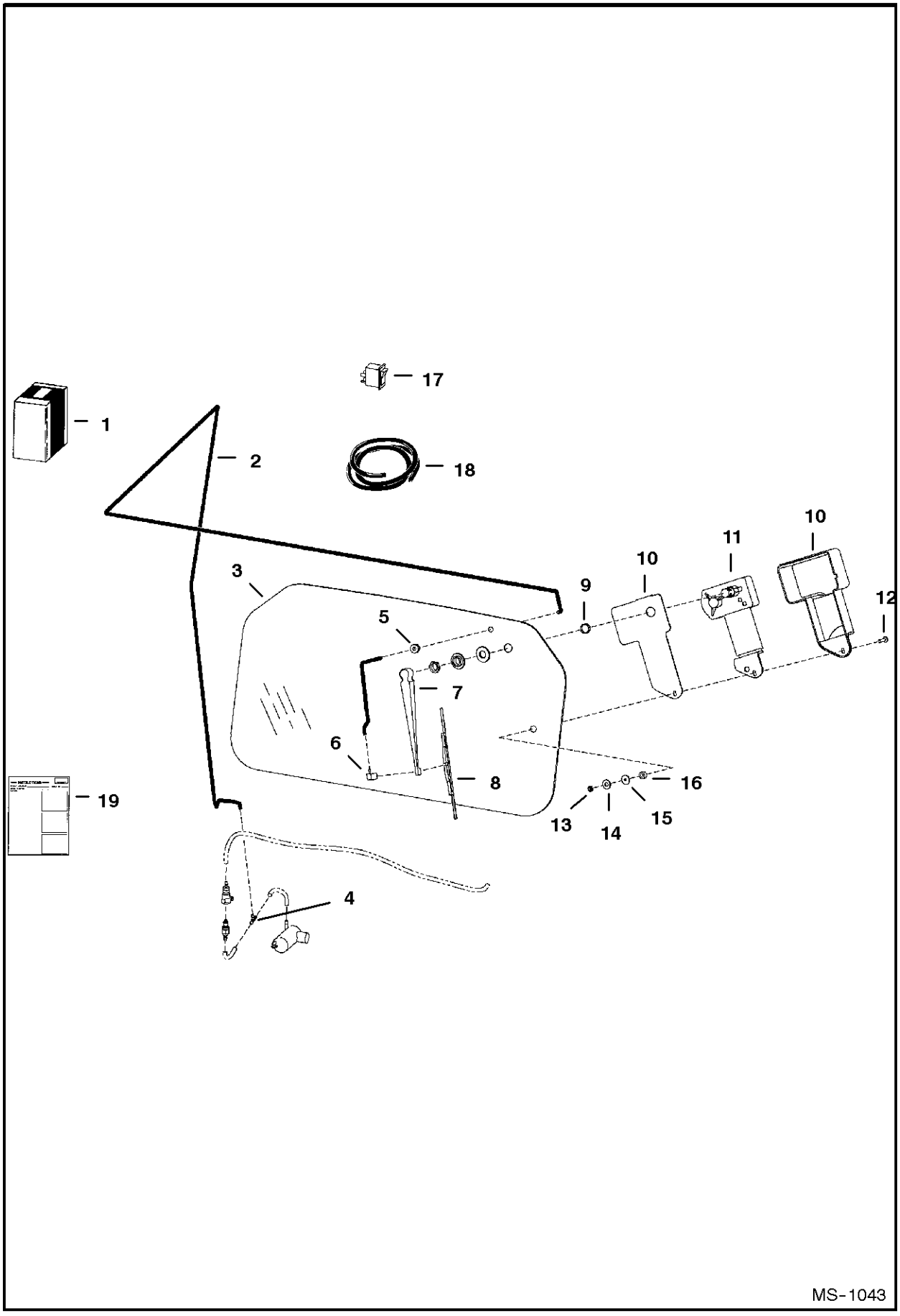

# REAR WIPER

| Ref.N° | Part N° | Description | Remarks | Serial N° | Qty. |
|---|---|---|---|---|---|
| 1 | 6726655 | KIT | rear wiper | | 1 |
| 2 | 6557493 | GROMMET | | | 1 |
| 3 | 6664065 | WASHER | nylon | | 1 |
| 4 | 6664085 | BUSHING | nylon | | 1 |
| 5 | 6664097 | COVER | wiper | | 1 |
| 6 | 6664103 | NUT | | | 1 |
| 7 | 6664566 | SCREW | | | 1 |
| 8 | 6665602 | MOTOR | | | 1 |
| 9 | 6667201 | SPACER | nylon | | 1 |
| 10 | 6675999 | SWITCH | | | 1 |
| 11 | 6676000 | TEE | | | 1 |
| 12 | 6676001 | ARM | | | 1 |
| 13 | 6676002 | BLADE | | | 1 |
| 14 | 6676028 | NOZZLE | | | 1 |
| 15 | 6719317 | WINDOW | | | 1 |
| 16 | NAP | HOSE | 96' (2438mm) long - Order Ref. REAR WIPER(17) | | 1 |
| 17 | 6676003 | HOSE | bulk - Sold Per Foot | | x |
| 18 | 6801059 | WASHER | neoprene | | 1 |
| 19 | 6901061 | INSTRUCTIONS | | | 1 |

# SEAT
## (Suspension - Sears)

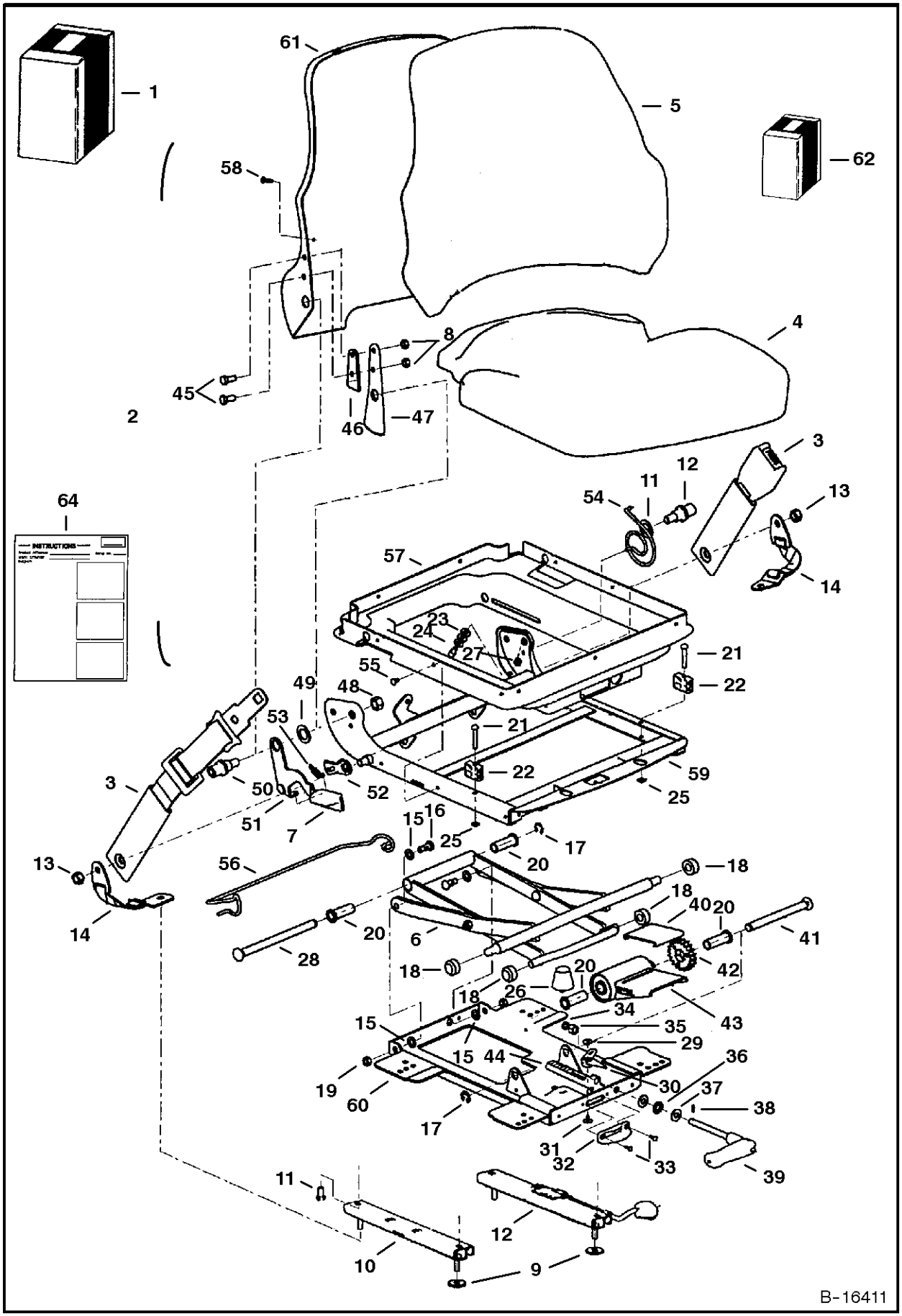

# SEAT

| Ref.N° | Part N° | Description | Remarks | Serial N° | Qty. |
|---|---|---|---|---|---|
| 1 | NAP | KIT | vinyl seat - Order Ref. SEAT(2), SEAT(3) & SEAT(64) | | 1 |
| 1 | NAP | KIT | fabric seat - Order Ref. SEAT(2), SEAT(3) & SEAT(64) 2com3YG }H~10{M | | x |
| 2 | 6675595 | SEAT | vinyl - L.H. recliner lever | | 1 |
| 2 | 6675596 | SEAT | fabric - L.H. recliner lever | | 1 |
| 3 | 6675170 | SEAT BELT | lap | | 1 |
| 4 | 6675320 | SEAT | seat - fabric | | 1 |
| 4 | 6675322 | SEAT | seat - vinyl | | 1 |
| 5 | 6675319 | SEAT | backrest - fabric - W/Ref. SEAT(58) | | 1 |
| 5 | 6675321 | SEAT | backrest - vinyl - W/Ref. SEAT(58) | | 1 |
| 6 | 6675317 | SCISSORS | | | 1 |
| 7 | 6675323 | KNOB | recliner | | 1 |
| 8 | NSS | NUT | | | 6 |
| 9 | 619021 | WASHER | | | 4 |
| 10 | NSS | SLIDE | slave | | 1 |
| 11 | NSS | BOLT | | | 4 |
| 12 | NSS | SLIDE | locking | | 1 |
| 13 | NSS | NUT | | | 2 |
| 14 | NSS | BELT | tether | | 2 |
| 15 | NSS | WASHER | cross pivot | | 4 |
| 16 | NSS | BOLT | pivot | | 2 |
| 17 | NSS | RING | retaining | | 2 |
| 18 | NSS | ROLLER | | | 4 |
| 19 | NSS | NUT | | | 2 |
| 20 | NSS | BUSHING | weight adjustment | | 4 |
| 21 | NSS | RIVET | | | 2 |
| 22 | NSS | BLOCK | up stop | | 2 |
| 23 | NSS | WASHER | | | 3 |
| 24 | NSS | STOP | armrest | | 1 |
| 25 | NSS | PUSHNUT | | | 2 |
| 26 | NSS | BUMPER | | | 1 |
| 27 | NSS | NUT | | | 1 |
| 28 | NSS | SHAFT | bearing | | 1 |
| 29 | NSS | RIVET | female snap | | 1 |
| 30 | NSS | INDICATOR | weight | | 1 |
| 31 | NSS | RIVET | male snap | | 1 |
| 32 | NSS | DIAL | weight indicator | | 1 |
| 33 | NSS | POP RIVET | | | 2 |
| 34 | NSS | SPACER | | | 1 |
| 35 | NSS | NUT | | | 1 |
| 36 | NSS | BEARING | thrust | | 1 |
| 37 | NSS | RACE | thrust | | 2 |
| 38 | NSS | SHEAR PIN | | | 1 |
| 39 | NSS | HANDLE | weight adjustment | | 1 |
| 40 | NSS | PLATE | wear | | 1 |
| 41 | NSS | SHAFT | torsion | | 1 |
| 42 | NSS | DRIVE GEAR | | | 1 |
| 43 | NSS | BUSHING | torsion | | 1 |
| 44 | NSS | RACK | weight adjustment | | 1 |
| 45 | NSS | BOLT | | | 2 |

# SEAT

| Ref.N° | Part N° | Description | Remarks | Serial N° | Qty. |
|---|---|---|---|---|---|
| 46 | NSS | SPACER | recliner | | 1 |
| 47 | NSS | BRACKET | back tilt | | 1 |
| 48 | NSS | NUT | | | 2 |
| 49 | NSS | WASHER | plastic | | 2 |
| 50 | NSS | BOSS | back pan pivot | | 2 |
| 51 | NSS | HANDLE | recliner (RH) | | 1 |
| 52 | NSS | LATCH | recliner | | 1 |
| 53 | NSS | SPRING | extension | | 1 |
| 54 | NSS | SPRING | tilt latch | | 1 |
| 55 | NSS | CLIP | | | 6 |
| 56 | NSS | WIRE | boot support | | 1 |
| 57 | NSS | SUSPENSION | boot | | 1 |
| 58 | NSS | SCREW | | | 2 |
| 59 | NSS | HOUSING | upper | | 1 |
| 60 | NSS | HOUSING | lower | | 1 |
| 61 | NSS | BACK PAN | | | 1 |
| 62 | 6675309 | KIT | slides - W/Ref. SEAT(8)-SEAT(12) | | 1 |
| 62 | 6675310 | KIT | tether belt - W/Ref. SEAT(9), SEAT(13) & SEAT(14) | | 1 |
| 62 | 6675311 | KIT | suspension rollers & bearings - W/Ref. SEAT(15)-SEAT(20) | | 1 |
| 62 | 6675312 | KIT | suspension bumpers & stops - W/Ref. SEAT(21)-SEAT(27) | | 1 |
| 62 | 6675313 | KIT | rear tube - W/Ref. SEAT(17), SEAT(20) & SEAT(28) | | 1 |
| 62 | 6675314 | KIT | weight adj. indicator - W/Ref. SEAT(29)-SEAT(33) | | 1 |
| 62 | 6675315 | KIT | weight adj. handle - W/Ref. SEAT(34)-SEAT(39) | | 1 |
| 62 | 6675316 | KIT | weight adj. - W/Ref. SEAT(17), SEAT(20) & SEAT(40)-SEAT(44) | | 1 |
| 62 | 6675318 | KIT | R.H. recliner - W/Ref. SEAT(7),SEAT(8) & SEAT(45)-SEAT(54) | | 1 |
| 62 | 6676034 | KIT | L.H. recliner - W/Ref. SEAT(7),SEAT(8) & SEAT(45)-SEAT(54) | | 1 |
| 62 | 6675308 | KIT | susp. boot - W/Ref. SEAT(55)-SEAT(57) | | 1 |
| 63 | 6676338 | GAS SPRING | | | 1 |
| 64 | 6900861 | INSTRUCTIONS | | | 1 |

# SEAT BELT
## (Three Point Retractable)

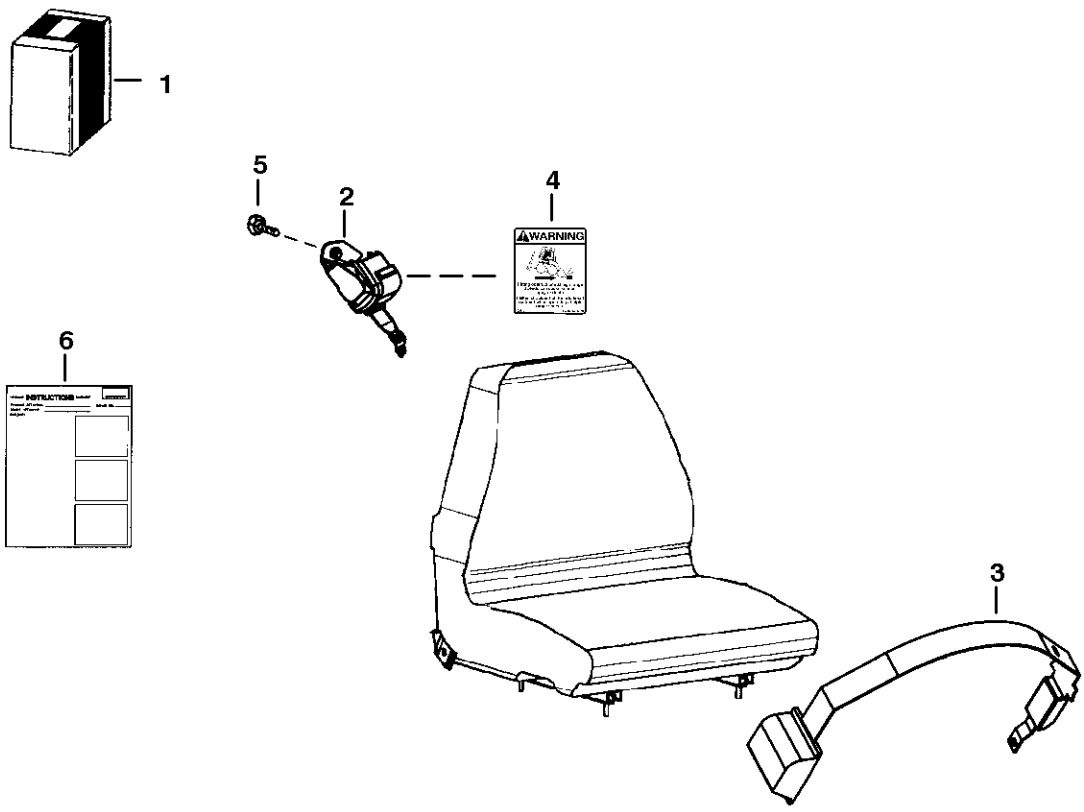


**NOTE:** This Seat Belt Kit is released for Sears brand Suspension Seats with a L.H. recliner lever. See Page 254.

PE-1507

# SEAT BELT

| Ref.N° | Part N° | Description | Remarks | Serial N° | Qty. |
|---|---|---|---|---|---|
| 1 | 6725168 | KIT | three point retractable seat belt | | 1 |
| 2 | 6674407 | SHOULDER BELT | | | 1 |
| 3 | 6674408 | SEAT BELT | | | 1 |
| 4 | 6725370 | DECAL | | | 1 |
| 5 | 35C-612 | BOLT | | | 1 |
| 6 | 6901010 | INSTRUCTIONS | | | 1 |

# SEAT BELT
## ( 3" Wide Retractable)

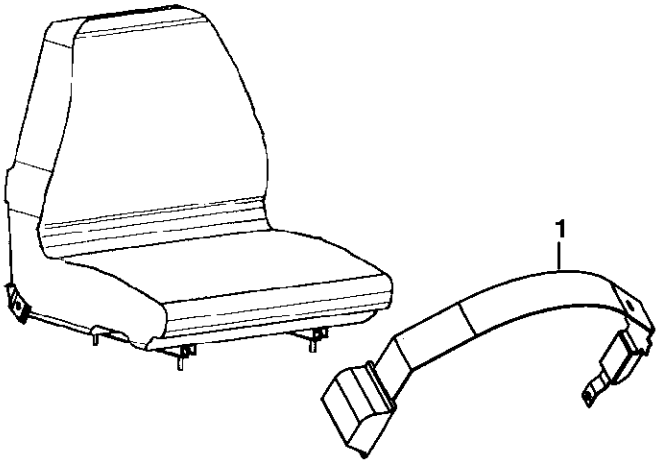


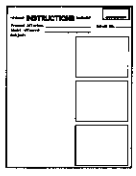


**NOTE:** This Seat Belt is released for Sears brand Suspension Seats with a L.H. recliner lever. See Page 254.

PE-1508

# SEAT BELT

| Ref.N° | Part N° | Description | Remarks | Serial N° | Qty. |
|---|---|---|---|---|---|
| 1 | 6675562 | SEAT BELT | 3' wide retractable | | 1 |
| 2 | 6901011 | INSTRUCTIONS | | | 1 |

# SEAT BELT
## ( 3" Wide)

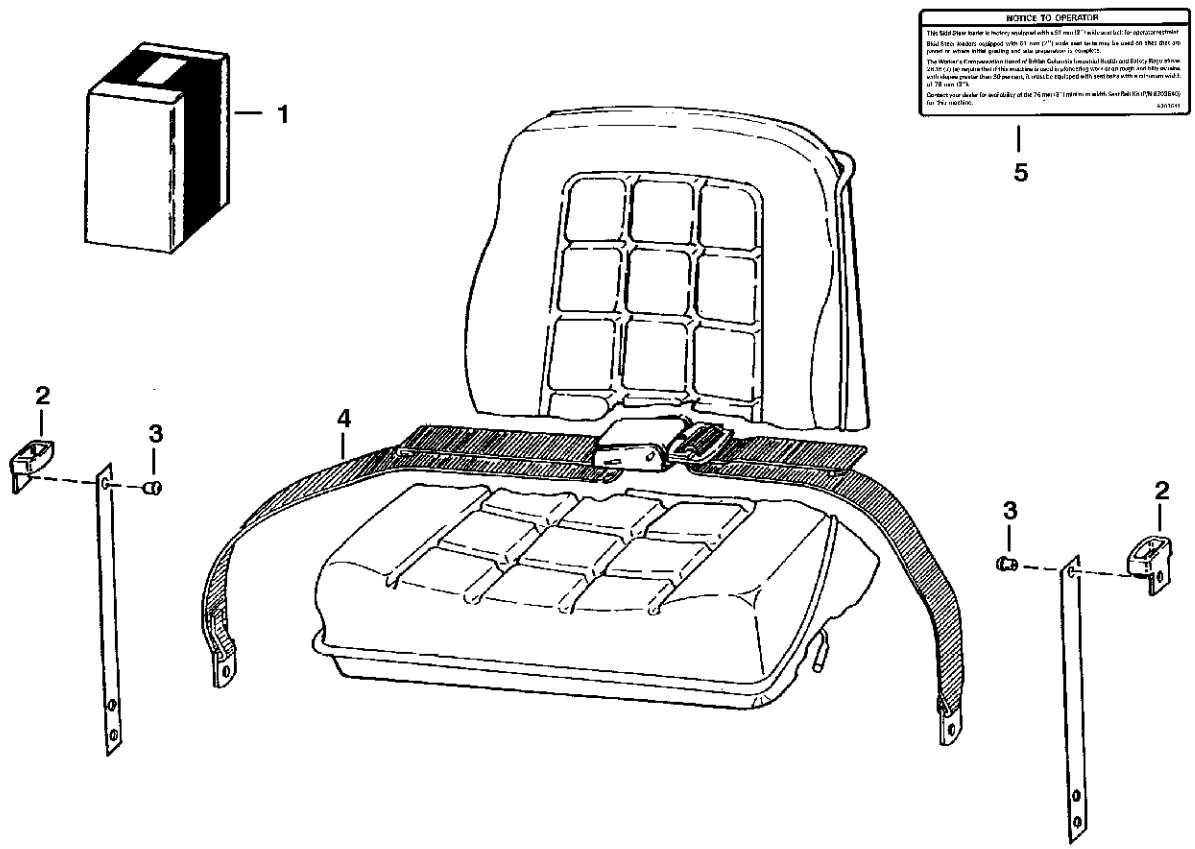


**NOTE:** Complies with British Columbia Industrial Health and Safety Regulations 26.16 (7) (a).

B-13601

# SEAT BELT

| Ref.N° | Part N° | Description | Remarks | Serial N° | Qty. |
|---|---|---|---|---|---|
| 1 | 6703640 | KIT | W/Ref. 2-5 | | 1 |
| 2 | 6703703 | GUIDE | | | 2 |
| 3 | 6630207 | RIVET | | | 4 |
| 4 | 6659999 | BELT | | | 1 |
| 5 | 6703641 | DECAL | | | x |

# SEVEN PIN CONNECTOR KIT

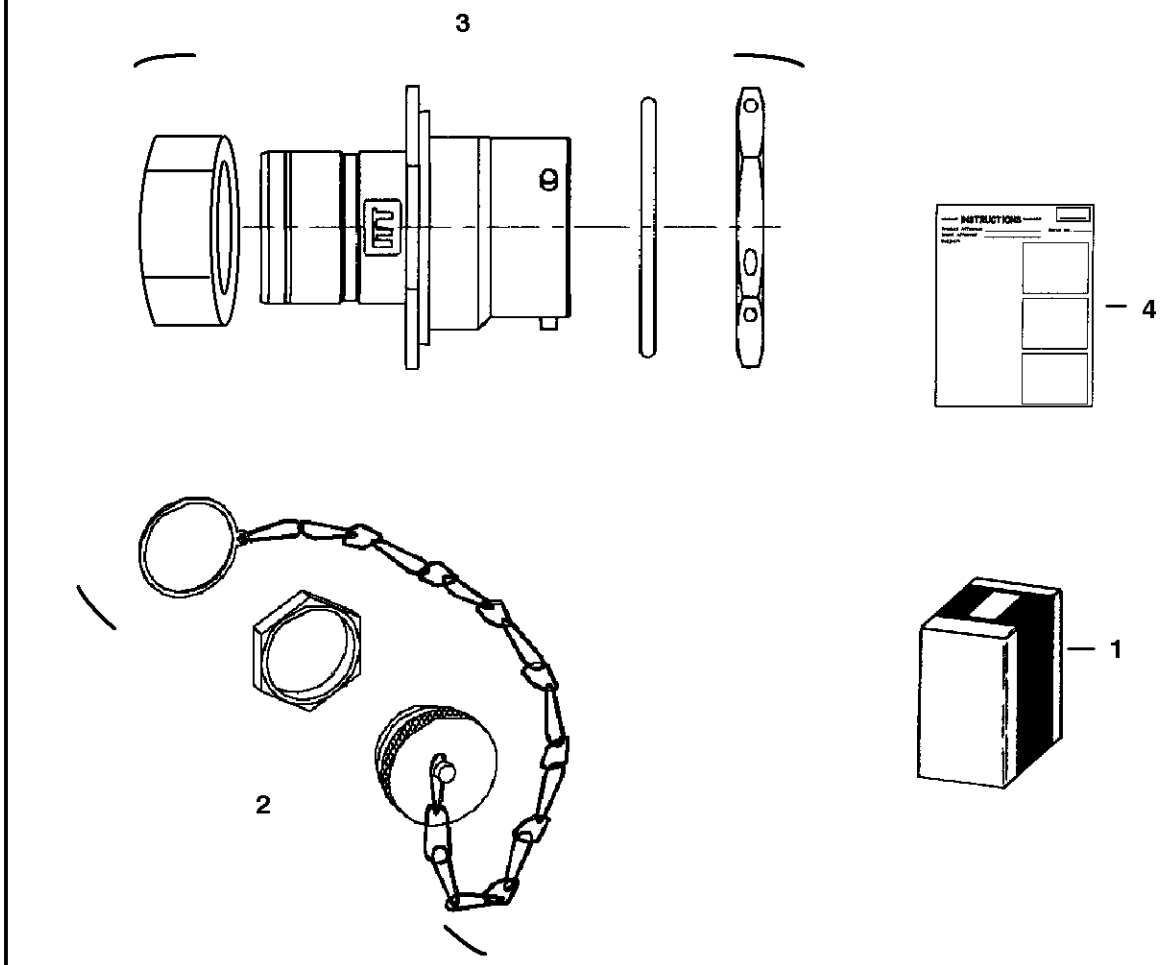


P-16385

# SEVEN PIN CONNECTOR KIT

| Ref.N° | Part N° | Description | Remarks | Serial N° | Qty. |
|---|---|---|---|---|---|
| 1 | 6727176 | KIT | Ref. SEVEN PIN CONNECTOR KIT(2)-SEVEN PIN CONNECTOR KIT(4) | | 1 |
| 2 | 6675026 | CAP | | | 1 |
| 3 | 6674802 | CONNECTOR | 7pin | | 1 |
| 4 | 6901076 | INSTRUCTIONS | | | 1 |

# DRAWING NOT AVAILABLE AT TIME OF PRINTING

PE-1691

# SOUND OPTION

| Ref.N° | Part N° | Description | Remarks | Serial N° | Qty. |
|---|---|---|---|---|---|
| 1 | 6676345 | BELT | fan | | 1 |
| 2 | 6579385 | DECAL | noise warning | | 1 |
| 3 | 6579404 | DECAL | noise warning | | 1 |
| 4 | 6712971 | PULLEY | fan | | 1 |
| 5 | 6715428 | DECAL | dynamic noise level | | 1 |
| 6 | 6719332 | INSULATION | blower housing | | 1 |
| 7 | 6703963 | INSULATION | crossmember | | 1 |
| 8 | 6703964 | INSULATION | crossmember | | 1 |
| 9 | 6703965 | INSULATION | crossmember | | 1 |
| 10 | 6703969 | INSULATION | crossmember | | 1 |
| 11 | 6730094 | INSULATION | steering panel | | 1 |
| 12 | 6719333 | INSULATION | blower housing | | 1 |
| 13 | 6715106 | INSULATION | rear door | | 1 |
| 14 | 6730095 | INSULATION | pedal shield | | 2 |
| 15 | 6730096 | INSULATION | transmission | | 1 |
| 16 | 6730097 | INSULATION | panel shield - R.H. | | 1 |
| 17 | 6730098 | INSULATION | panel shield - L.H. | | 1 |

# STROBE LIGHT

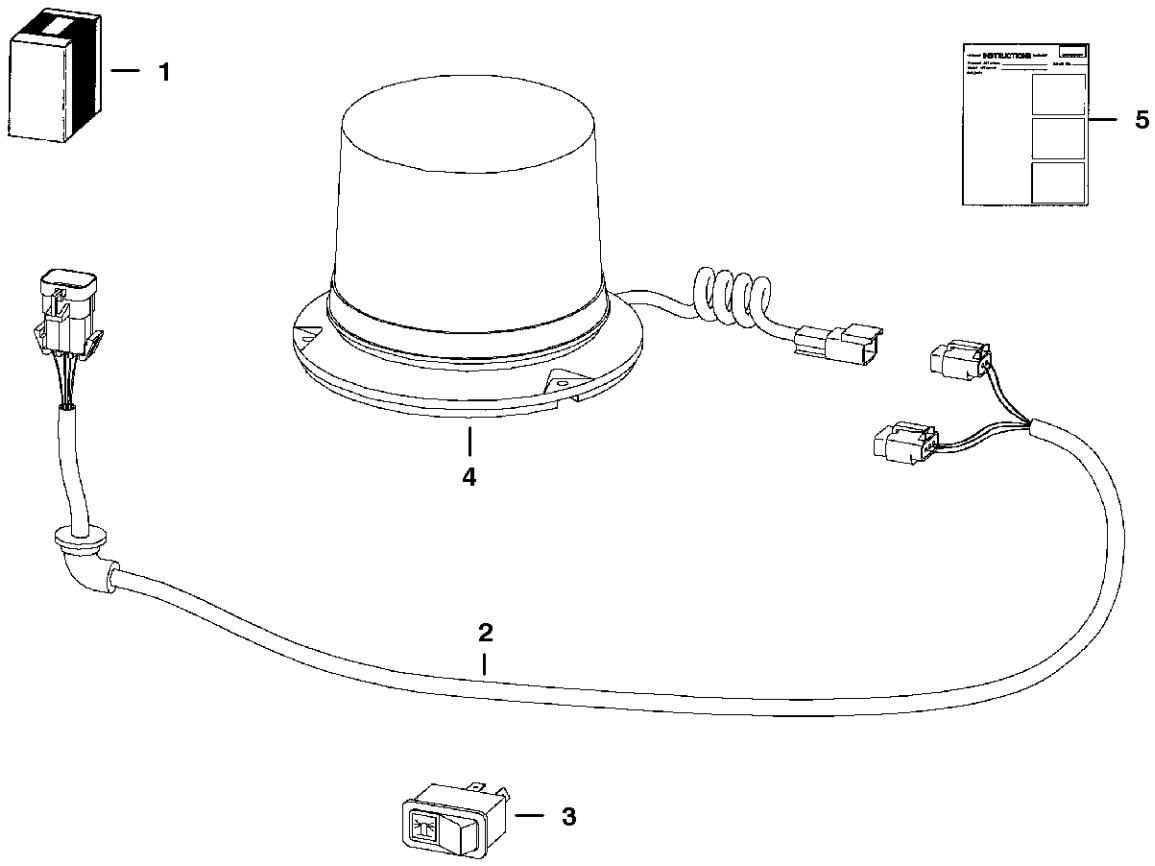


TS-1977

# STROBE LIGHT

| Ref.N° | Part N° | Description | Remarks | Serial N° | Qty. |
|---|---|---|---|---|---|
| 1 | 6719857 | KIT | strobe light | | 1 |
| 2 | 6718872 | HARNESS | | | 1 |
| 3 | 6665317 | SWITCH | | | 1 |
| 4 | 6675522 | STROBE | | | 1 |
| 4 | 6675858 | FLASH TUBE | | | 1 |
| 5 | 6900992 | INSTRUCTIONS | | | 1 |

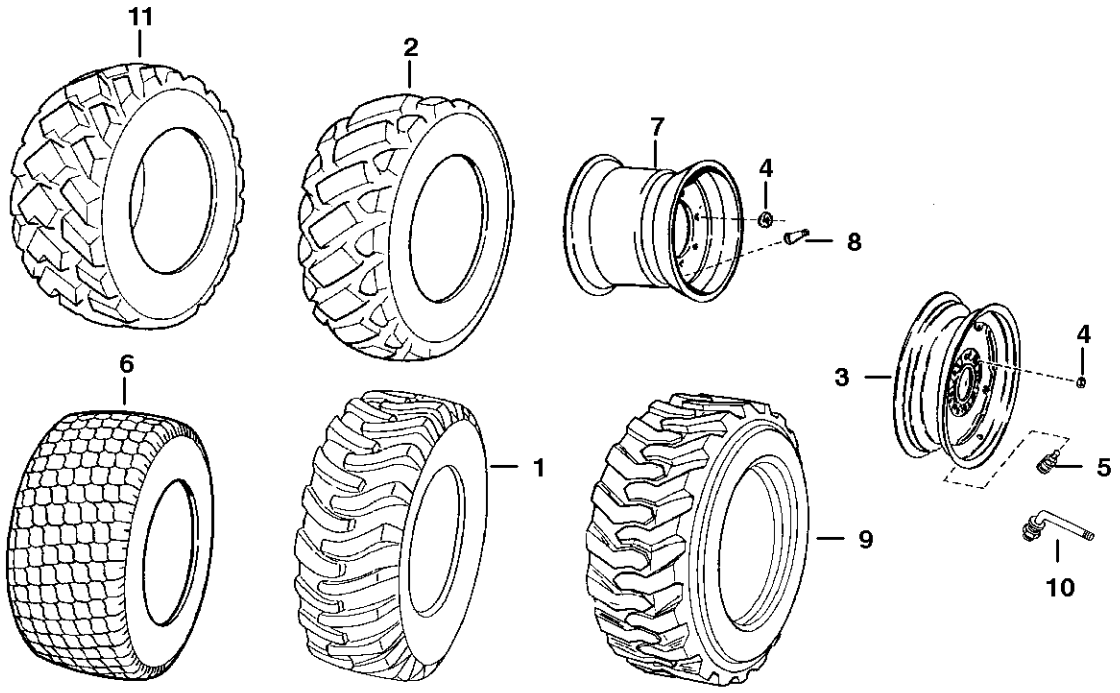


B-18276

# TIRES & RIMS

| Ref.N° | Part N° | Description | Remarks | Serial N° | Qty. |
|---|---|---|---|---|---|
| 1 | 6730109 | TIRE | 33 x 15.5 x 16.5 - 12 ply rating - Bobcat branded | | 4 |
| 2 | 6730108 | TIRE | 12 x 16.5 - 12 ply rating - severe duty L5 - Bobcat branded | | 4 |
| 3 | 6718619 | RIM | used W/Ref. TIRES & RIMS(2) & TIRES & RIMS(9) | | 4 |
| 4 | 6564669 | NUT | wheel | | 32 |
| 5 | 1614765 | VALVE | valve - used on 6718619 & 6729990 rim | | 4 |
| 6 | 6678044 | TIRE | 33 x 15.5 x 16.5 - 12 ply rating - sand & turf (Mighty Mow) - Bobcat branded | | 4 |
| 7 | 6729990 | RIM | Use W/Ref. TIRES & RIMS(1) & TIRES & RIMS(6) | | 4 |
| 8 | 6591447 | STEM | valve - Use W/Ref. TIRES & RIMS(7) | | 4 |
| 9 | 6661601 | TIRE | 12 x 16.5 - 10 ply rating - Bobcat Brand | | 4 |
| 10 | 6669244 | STEM | valve - use W/6669060 | | 4 |
| 11 | 6677903 | TIRE | 12 x 16.5 - 12 ply rating - Hulky Bulk - Galaxy | | 4 |

## BULK ITEMS
## (See Note)

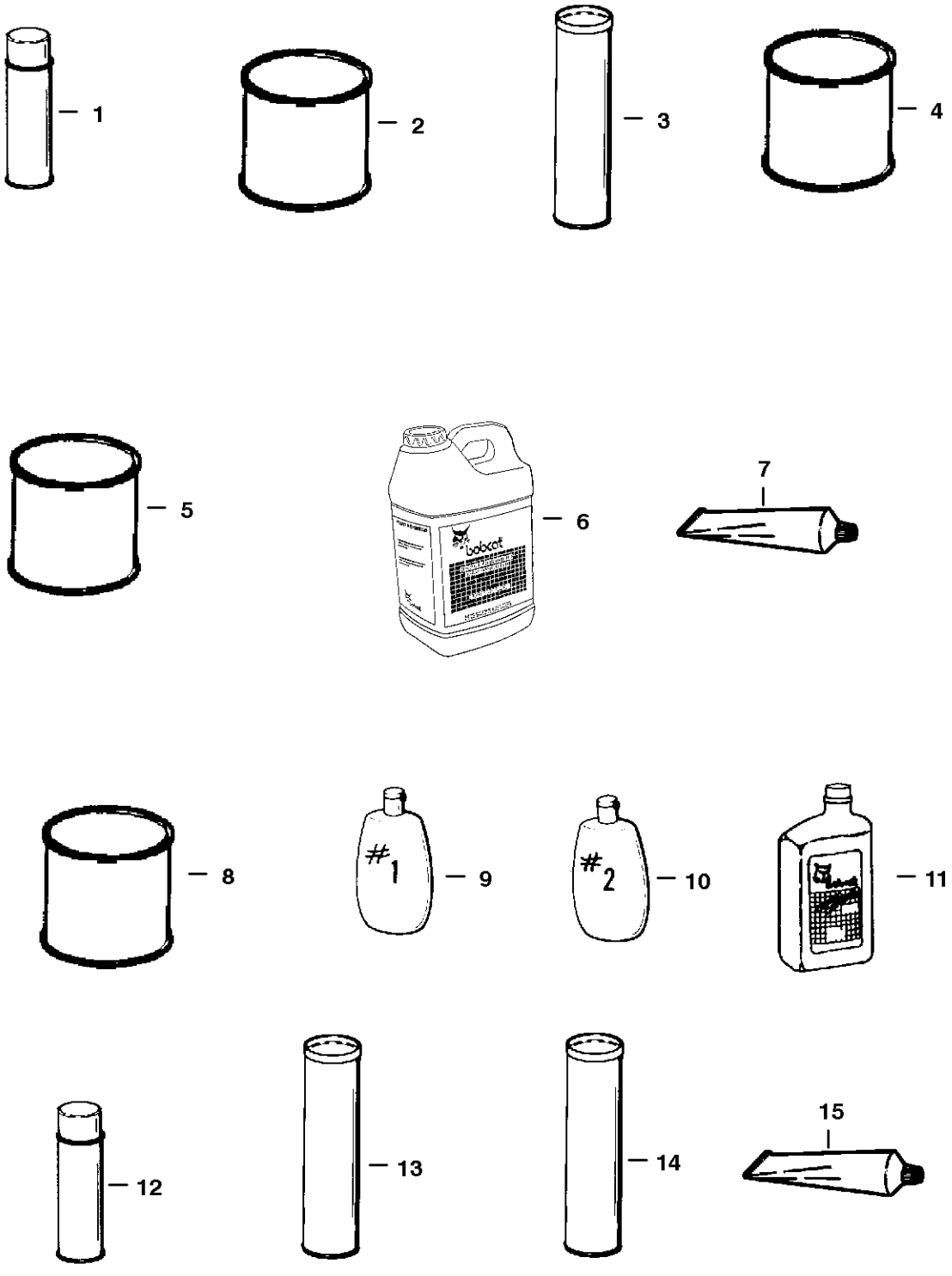


**NOTE:** Some of these bulk items may not be used on this particular model Bobcat.

**NOTE:** See Merchandising catalog for more products & information.

**NOTE:** Paint spray cans are packaged 6 per box. Motor oil quarts are packaged 12 per box. Motor oil 5 gal. jugs are packaged 4 per box.

B-16413

# BULK ITEMS

| Ref.N° | Part N° | Description | Remarks | Serial N° | Qty. |
|---|---|---|---|---|---|
| 1 | 6722783 | PAINT | orange - spray can - SEE NOTE | | x |
| 1 | 6722786 | PAINT | 8charcoal - spray can - SEE NOTE | | x |
| 1 | 6722789 | PAINT | white - spray can - SEE NOTE | | x |
| 1 | 6722790 | PAINT | red - spray can - SEE NOTE | | x |
| 2 | 6722781 | PAINT | 1orange - gallon - also Order Ref. NO PAGE(4) | | x |
| 2 | 6722782 | PAINT | orange - Qt. - also Order Ref. NO PAGE(4) | | x |
| 2 | 6722784 | PAINT | charcoal - gallon - also Order Ref. NO PAGE(4) | | x |
| 2 | 6722785 | PAINT | 8charcoal - Qt. - also Order Ref. NO PAGE(4) | | x |
| 2 | 6722787 | PAINT | 1white - gallon - also Order Ref. NO PAGE(4) | | x |
| 2 | 6722788 | PAINT | white - Qt. also Order Ref. NO PAGE(4) | | x |
| 3 | 6633583 | SEALANT | chaincase covers | | x |
| 4 | 6653517 | REDUCER | gallon | | x |
| 5 | 6653518 | PRIMER | gallon | | x |
| 5 | 6657743 | PRIMER | spray can | | x |
| 6 | 6563328 | BLACK GOLD | hydraulic/hydrostatic transmission fluid - 5 gallon - 2 - 2 1/2 gallon containers | | x |
| 6 | 6722344 | BLACK GOLD | hydraulic/hydrostatic transmission fluid - 5 gallon container | | x |
| 6 | NAP | FLUID | 30 gallon drum | | x |
| 6 | 6563330 | BLACK GOLD | 55 gallon drum | | x |
| 7 | 6599360 | SEALANT | electrical - 3 oz. tube | | x |
| 8 | 6634393 | LUBRICANT | 90 wt. gear - pint - for use in cooling fan drive assy. | | x |
| 9 | 6630188 | POLISH | window # 1 (8 oz.) | | x |
| 10 | 6630189 | POLISH | window # 2 (8 oz.) - scratch remover | | x |
| 11 | 6657303 | MOTOR OIL | 30 CE/SG - 1 Qt. - SEE NOTE | | x |
| 11 | 6657301 | MOTOR OIL | 10W30 CE/SG - 1 Qt. - SEE NOTE | | x |
| 11 | 6657299 | MOTOR OIL | 15W40 CE/SG - 1 Qt. - SEE NOTE | | x |
| 11 | 6724557 | MOTOR OIL | SAE 10W30 - 1 gallon | | x |
| 11 | 6724558 | MOTOR OIL | SAE 15W40 - 1 gallon | | x |
| 11 | 6724559 | MOTOR OIL | SAE 30 - 1 gallon | | x |
| 11 | 6674204 | MOTOR OIL | 15W-40 - 2.5 gallon | | x |
| 11 | 6674205 | MOTOR OIL | 10W-30 - 2.5 gallon | | x |
| 11 | 6674206 | MOTOR OIL | 30W - 2.5 gallon | | x |
| 12 | 6652818 | ADHESIVE | insulation - spray can | | x |
| 13 | 6658266 | GREASE | general purpose | | x |
| 14 | 6599719 | GREASE | 14.5 oz. cartridge - for fan idler bearing | | x |
| 15 | 6650407 | ADHESIVE | 1 oz. tube | | x |
| 16 | 6650388 | SEALANT | flange | | x |