FEVEREIRO 2007

B110

RUTHZIL TRATOR COMERCIAL DE PEÇAS LTDA 11 97083-6812 ROLANDO

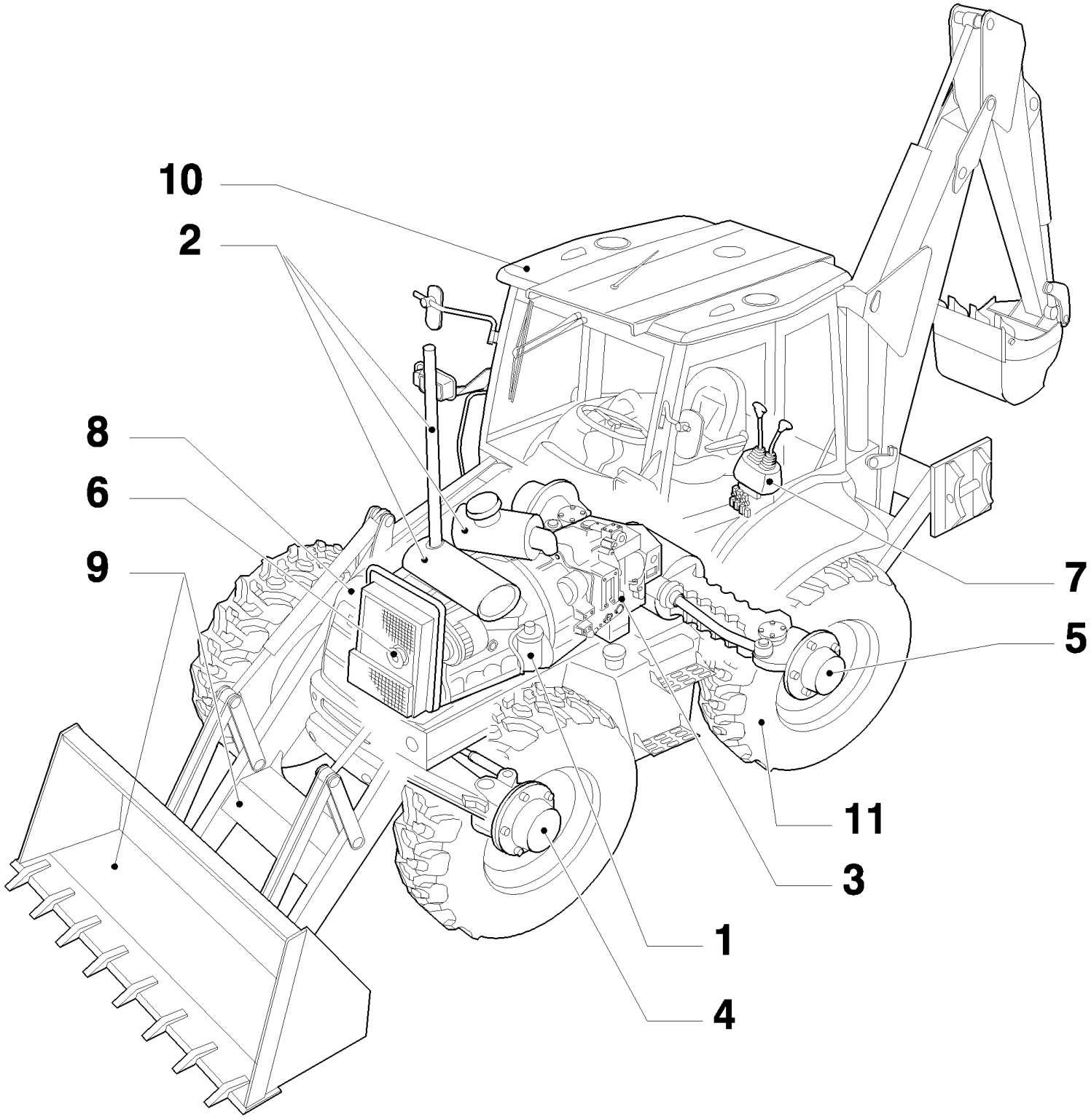

B110 TIER 3 BACKHOE LOADER (2/07-)

MAIN SECTIONS

Ref	Numero de Pieza	Ctd	Descripción

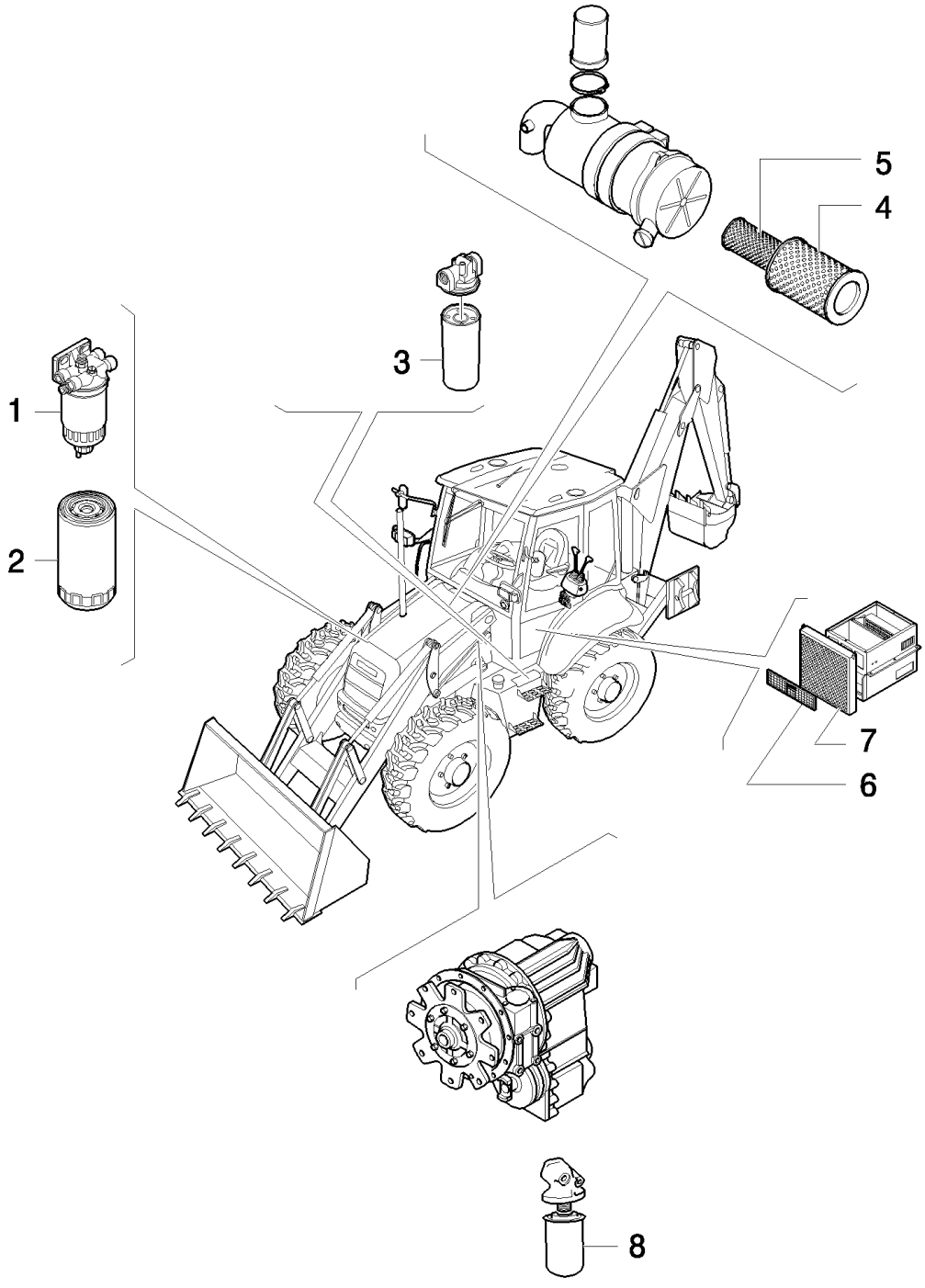
1
2
3
4
5
6
7
8

B110 TIER 3 BACKHOE LOADER (2/07-)

MPARTS(00) MAINTENANCE PARTS

Ref	Numero de Pieza	Ctd	Descripción
1	87563601	1	FILTER, FUEL, , See Page 1.42.7 Ref : 8
2	87803260	1	FILTER, ENGINE OIL, , See Page 0.302 Ref : 1
3	86989733	1	FILTER, HYDRAULIC OIL, , See Page 1.82.6 06 Ref : 4
4	87418364	1	FILTER, AIR, , See Page 1.19.1 Ref : 4
5	87418365	1	FILTER, AIR, , See Page 1.19.1 Ref : 3
6	87314330	1	GRILLE, , See Page 346 Ref : 7
7	87314367	1	FILTER, CAB, , See Page 346 Ref : 10
8	85817004	1	FILTER, , Power Shuttle 2 WD See Page 1.28.0/ A Ref : 11 And 4 WD See Page 1.28.0/ B Ref : 14
8	9968988	1	FILTER, HYDRAULIC OIL, , Power Shift See Page 1.28.0/ C Ref : 3

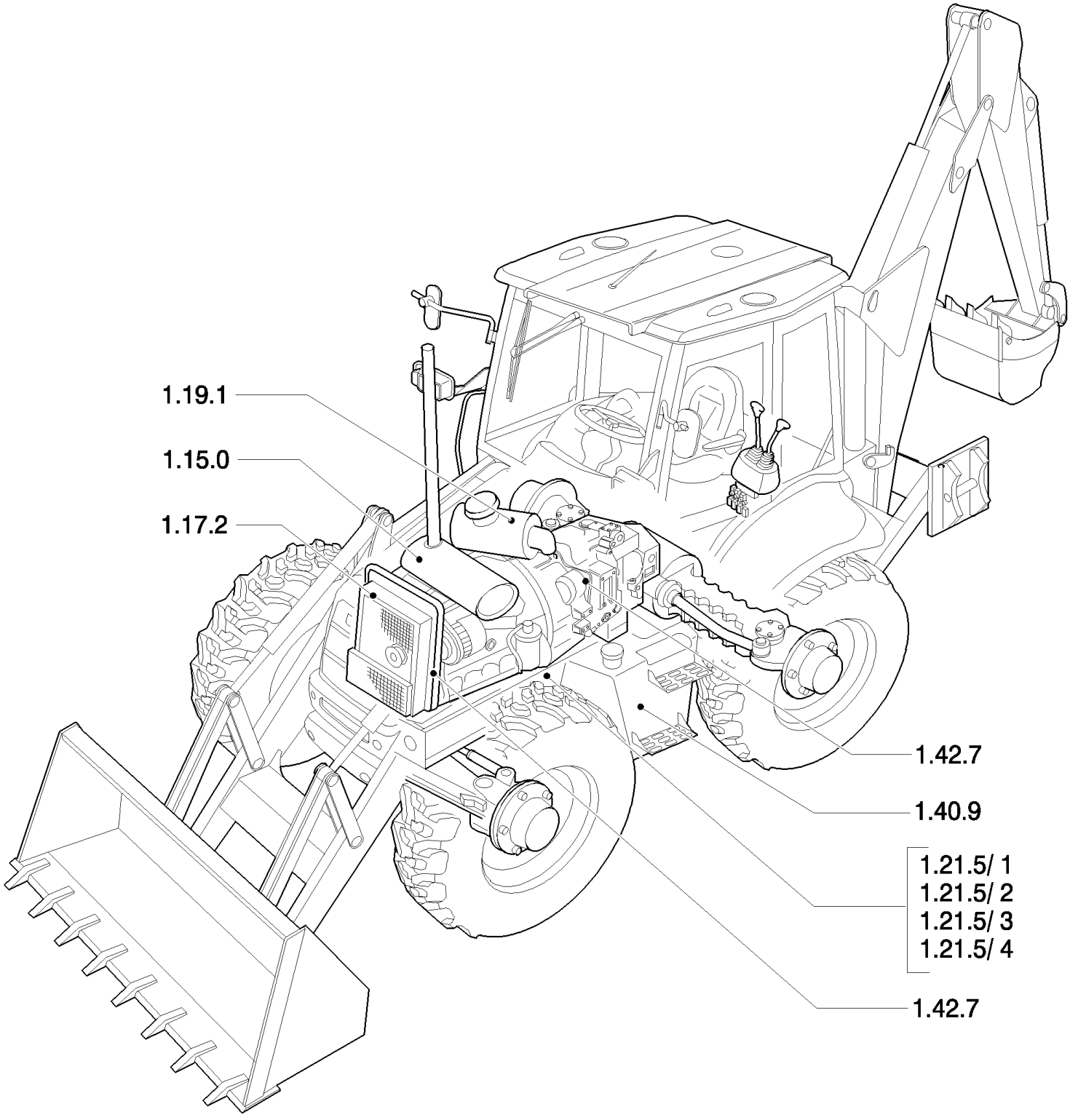
1.19.1
1.15.0
1.17.2
1.42.7
1.40.9
1.21.5/ 1
1.21.5/ 2
1.21.5/ 3
1.21.5/ 4
1.42.7

SEC. 02 FUEL TANK - MUFFLER - RADIATOR - AIR CLEANER - CHASSIS

Ref	Numero de Pieza	Ctd	Descripción

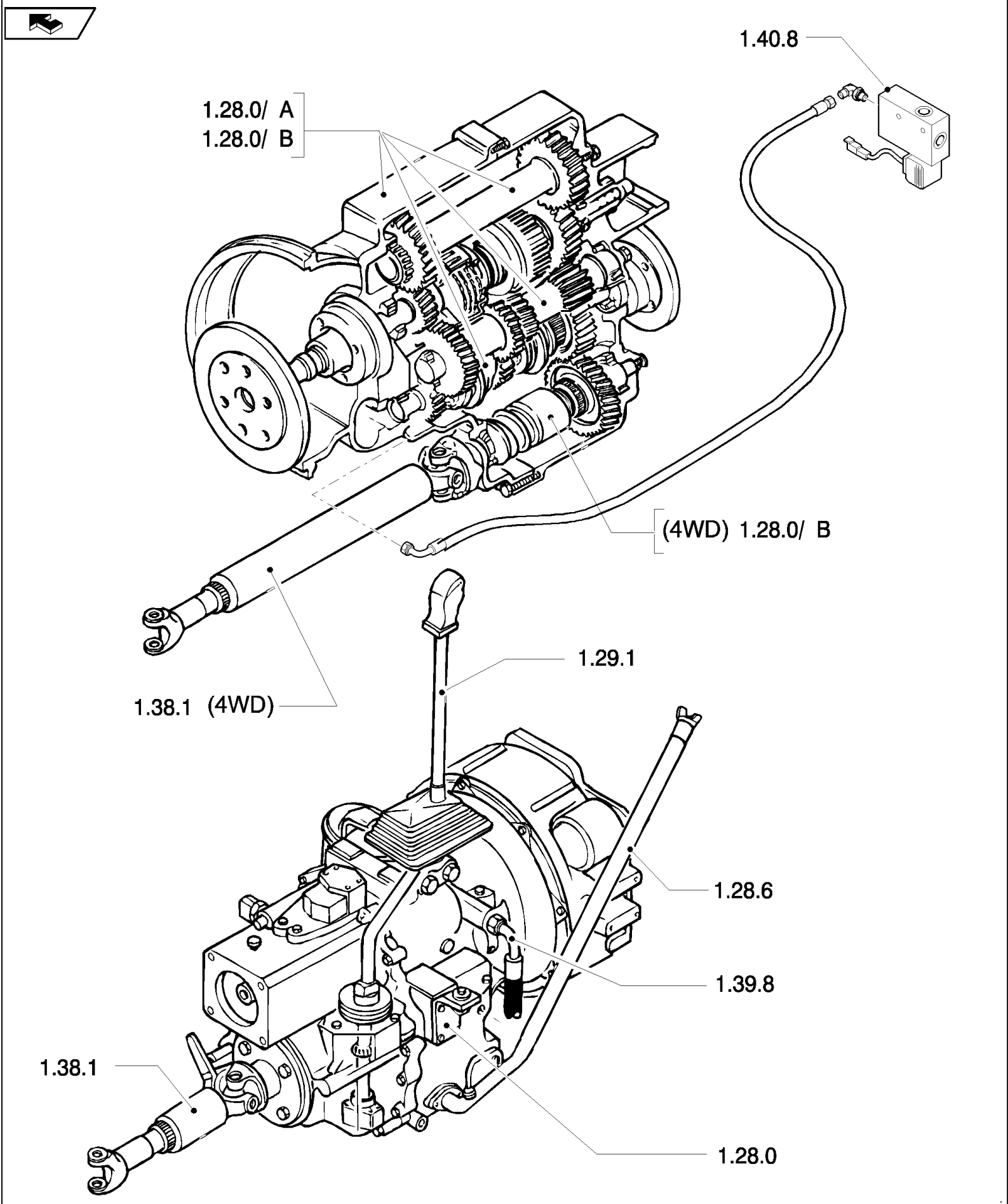
1.40.8
1.28.0/ A
1.28.0/ B
(4WD) 1.28.0/ B
1.29.1
1.38.1 (4WD)
1.28.6
1.39.8
1.38.1
1.28.0

Ref	Numero de Pieza	Ctd	Descripción

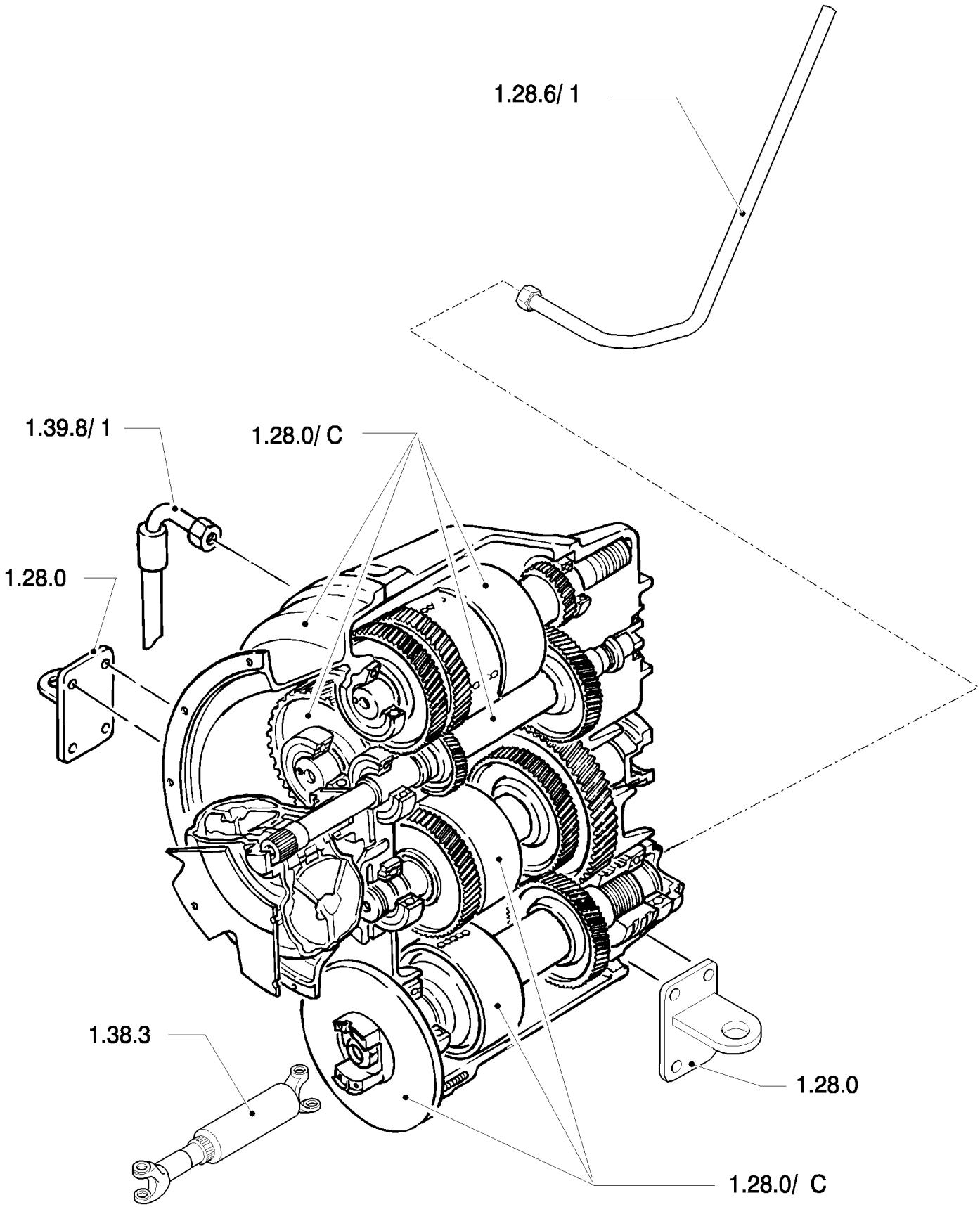
1.28.6/ 1
1.39.8/ 1
1.28.0/ C
1.28.0
1.38.3
1.28.0
1.28.0/ C

Ref	Numero de Pieza	Ctd	Descripción

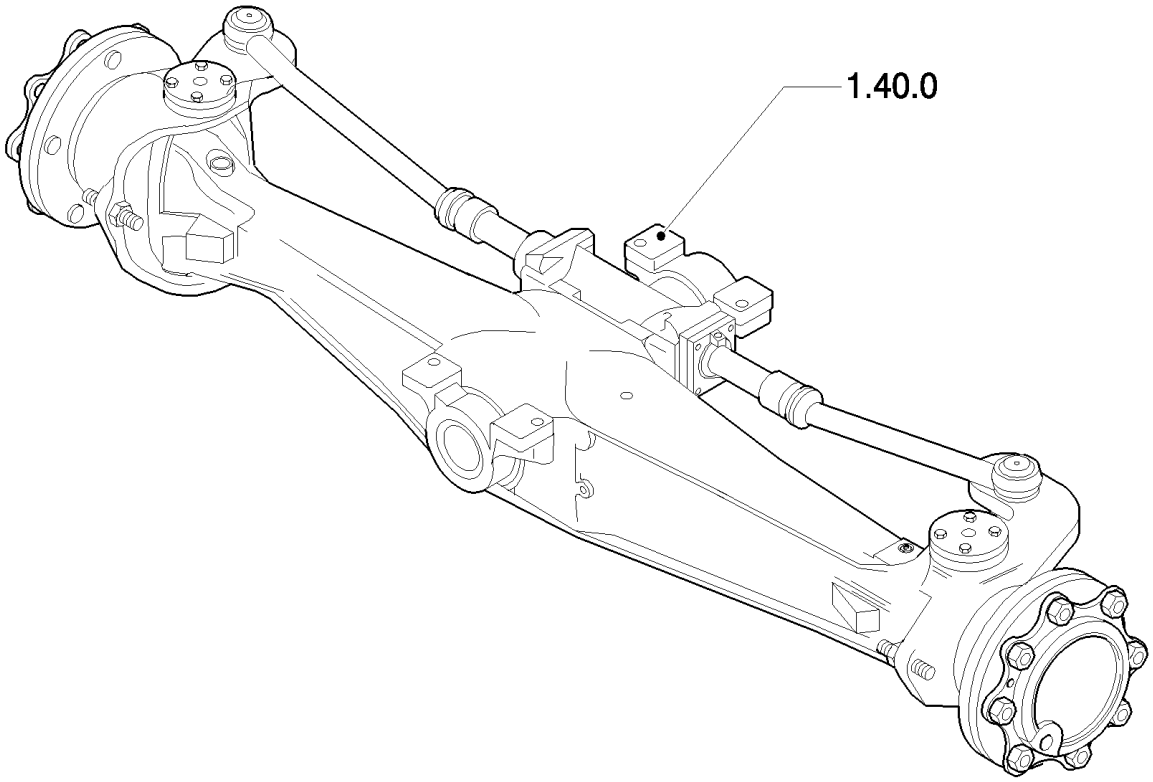
1.40.0

Ref	Numero de Pieza	Ctd	Descripción

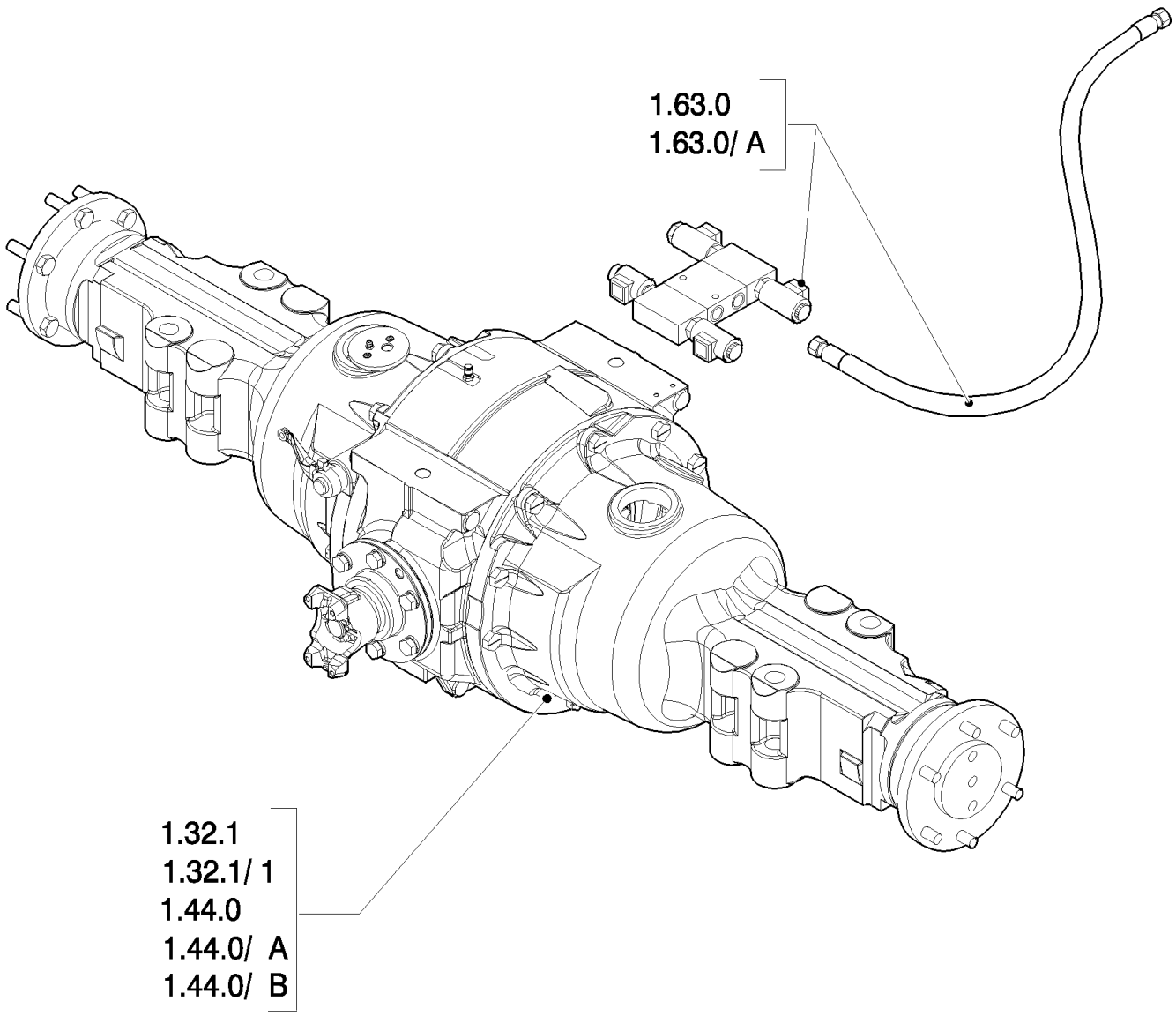
1.63.0
1.63.0/ A
1.32.1
1.32.1/ 1
1.44.0
1.44.0/ A
1.44.0/ B

Ref	Numero de Pieza	Ctd	Descripción

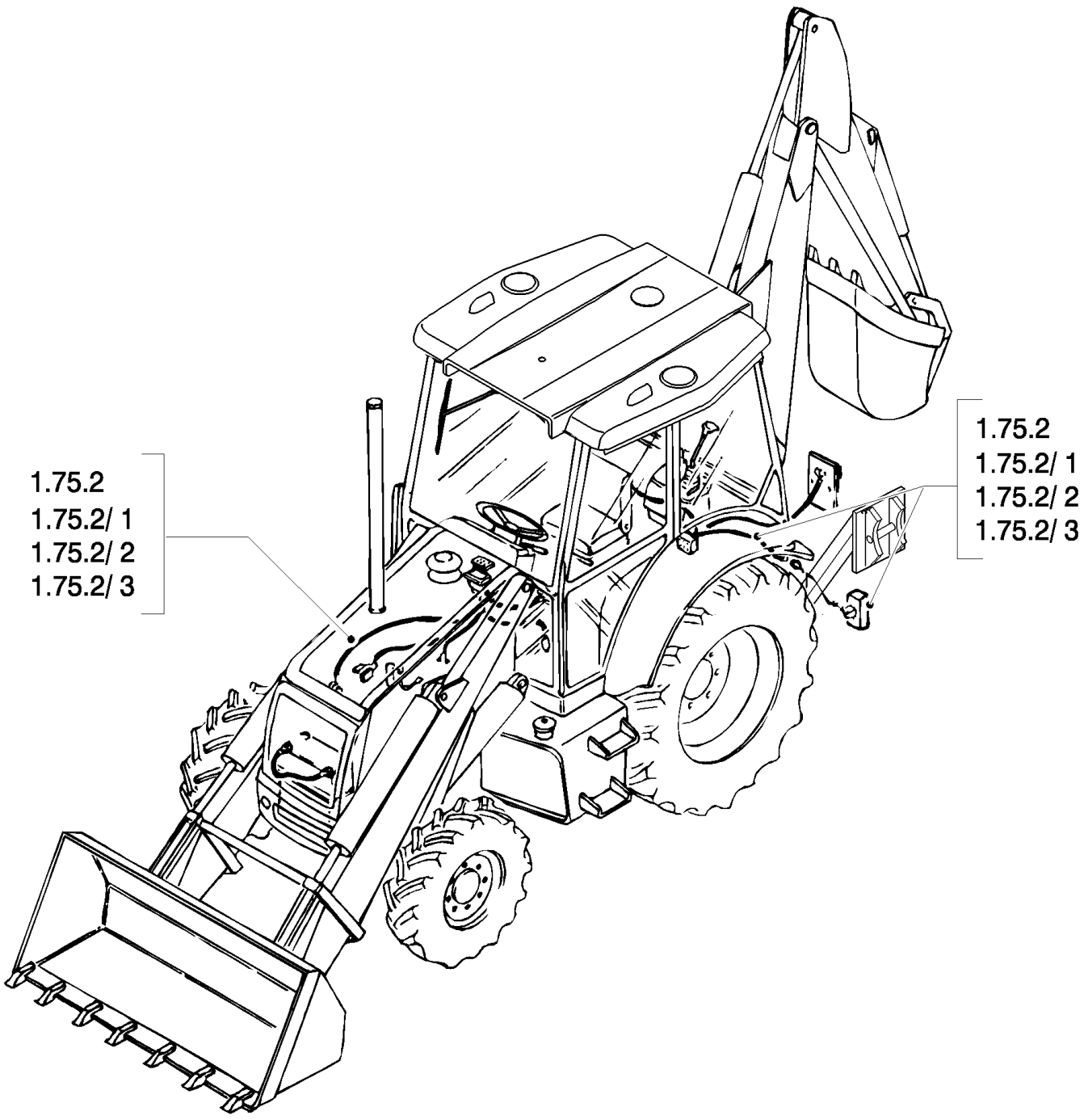
1.75.2
1.75.2/ 1
1.75.2/ 2
1.75.2/ 3
1.75.2
1.75.2/ 1
1.75.2/ 2
1.75.2/ 3

Ref	Numero de Pieza	Ctd	Descripción

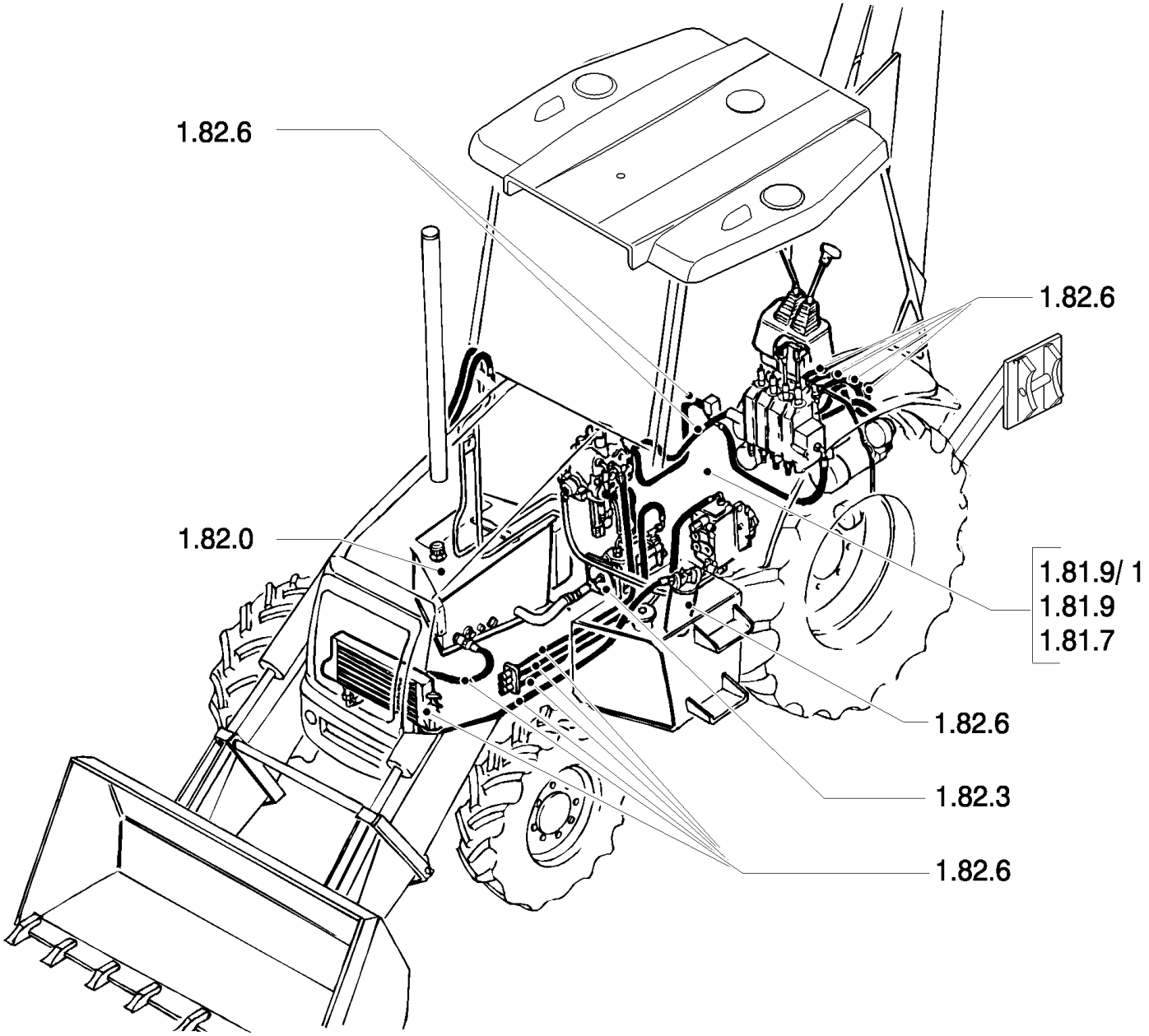
1.82.6
1.82.6
1.82.0
1.81.9/ 1
1.81.9
1.81.7
1.82.6
1.82.3
1.82.6

Ref	Numero de Pieza	Ctd	Descripción

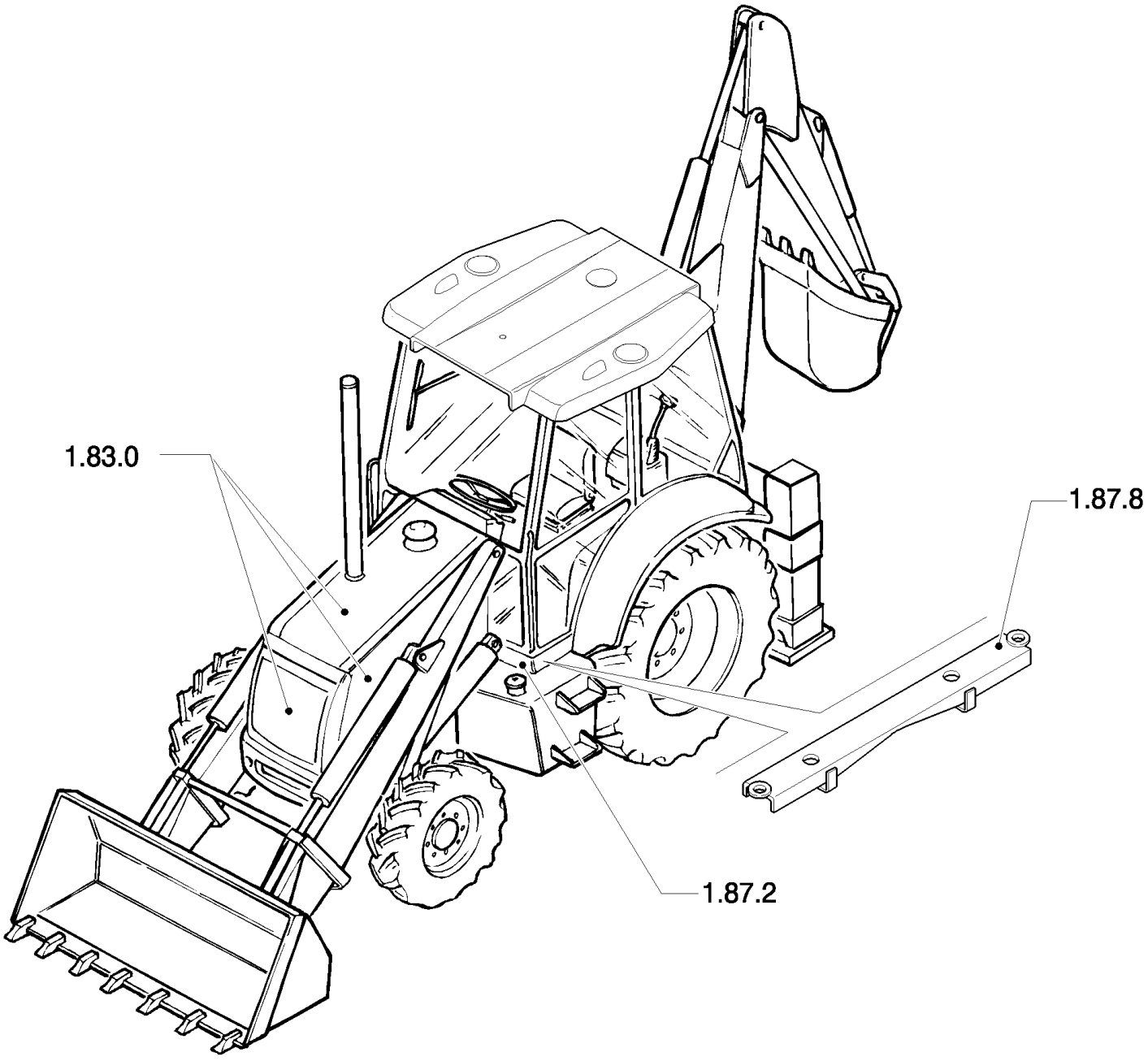
1.83.0
1.87.8
1.87.2

Ref	Numero de Pieza	Ctd	Descripción

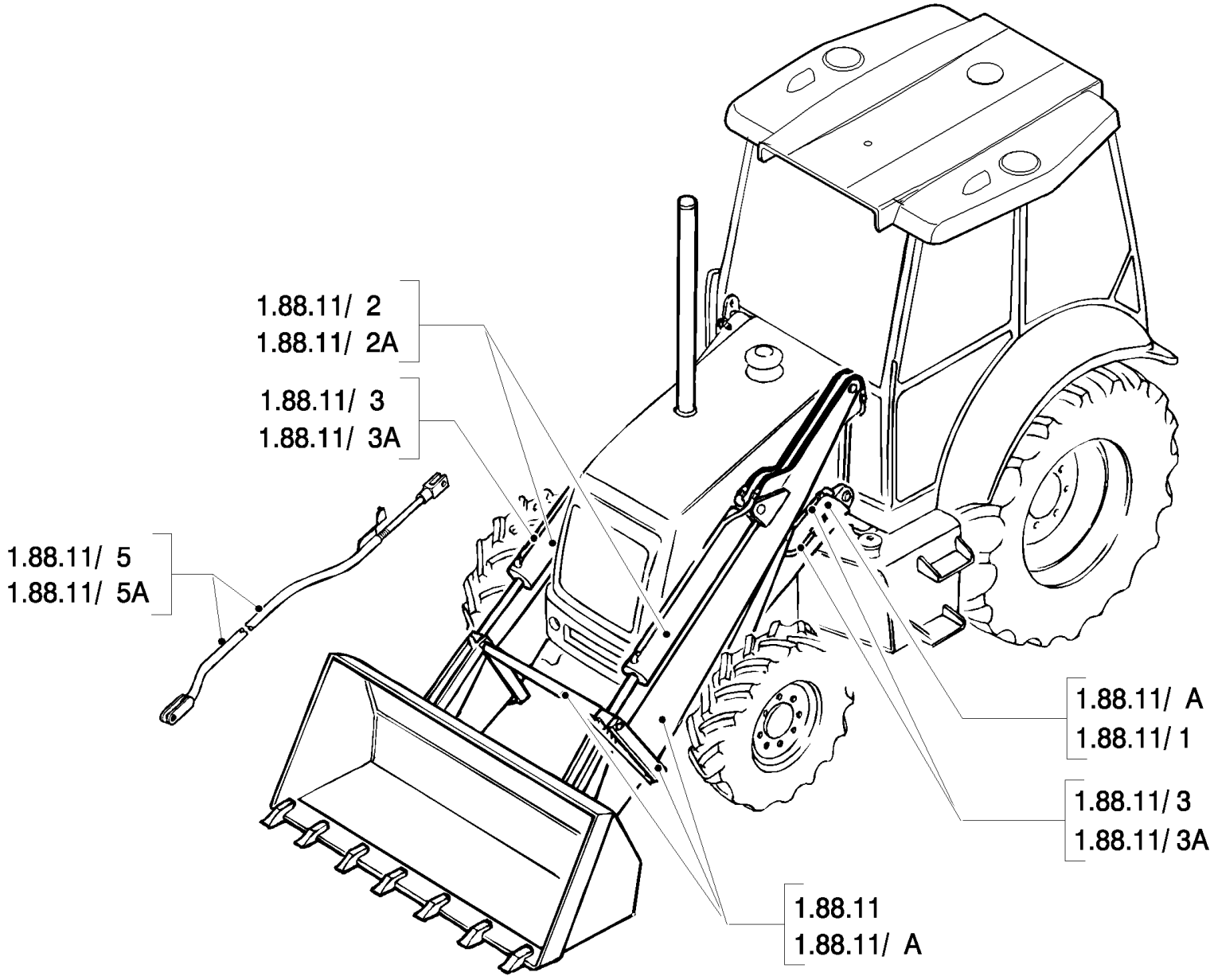
1.88.11/ 2
1.88.11/ 2A
1.88.11/ 3
1.88.11/ 3A
1.88.11/ 5
1.88.11/ 5A
1.88.11/ A
1.88.11/ 1
1.88.11/ 3
1.88.11/ 3A
1.88.11
1.88.11/ A

Ref	Numero de Pieza	Ctd	Descripción

SIDE SHIFT

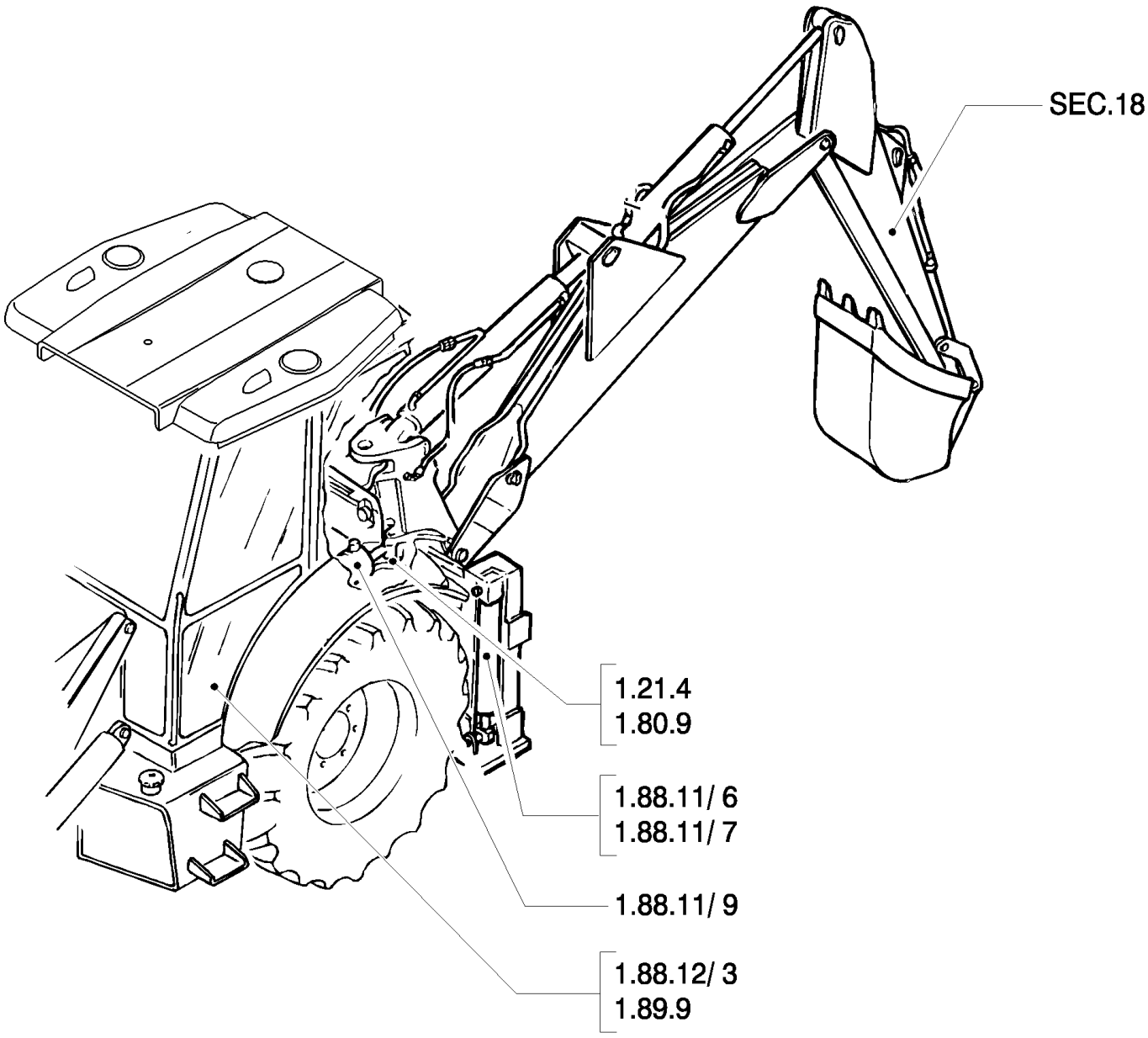

Ref	Numero de Pieza	Ctd	Descripción

CENTER PIVOT

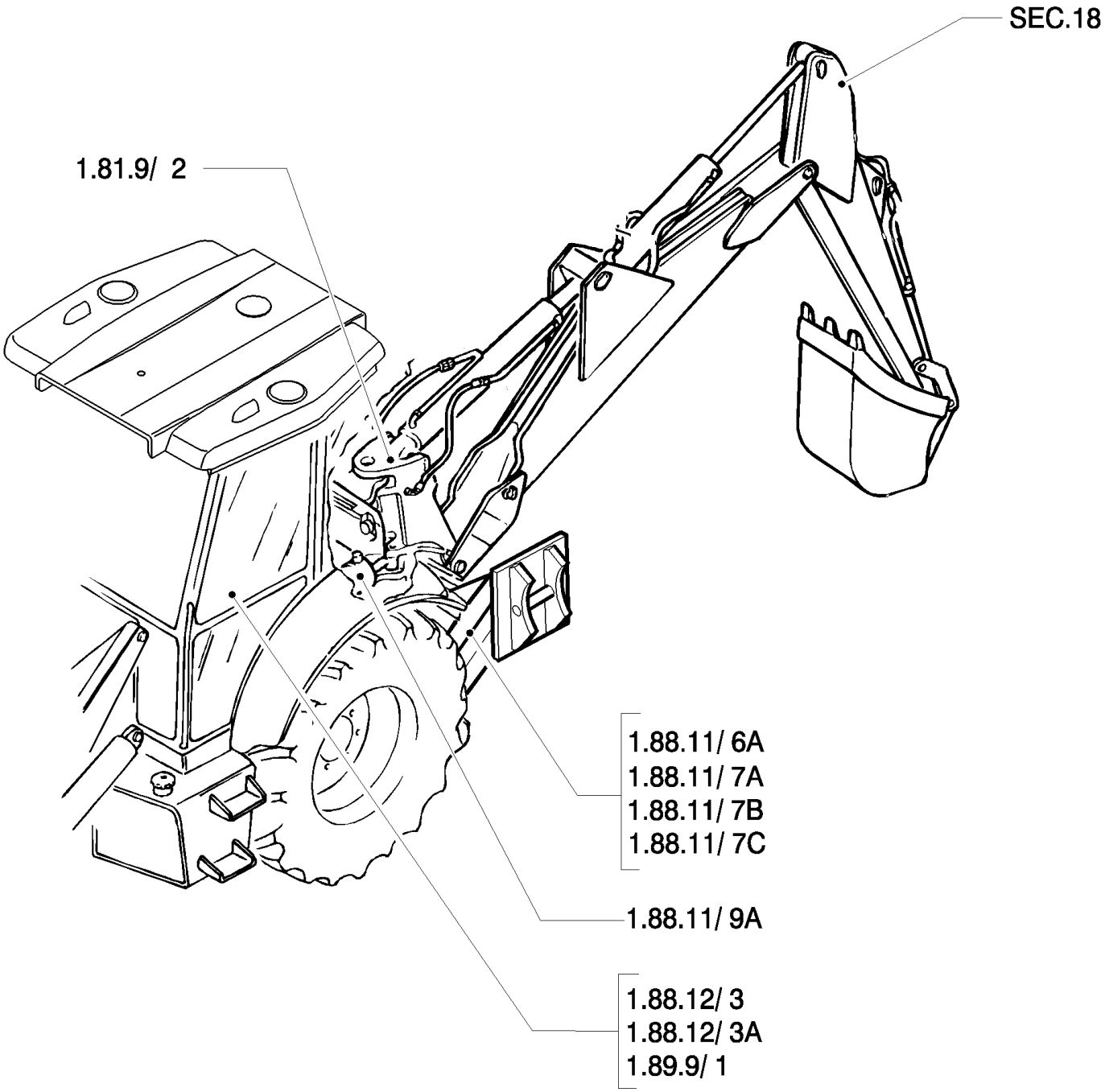

Ref	Numero de Pieza	Ctd	Descripción

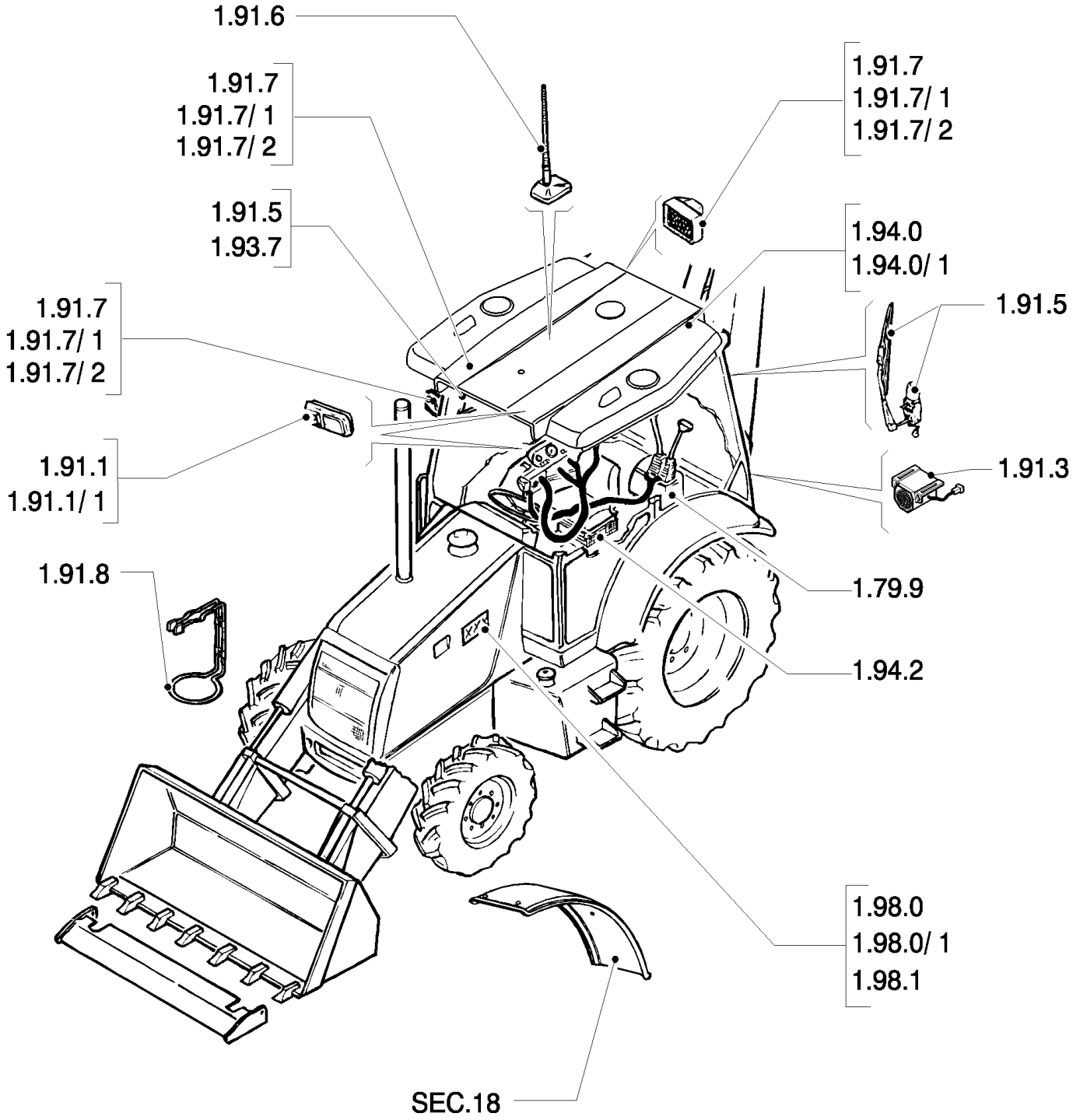
1.91.6
1.91.7
1.91.7/ 1
1.91.7/ 2
1.91.5
1.93.7
1.91.7
1.91.7/ 1
1.91.7/ 2
1.91.1
1.91.1/ 1
1.91.8
1.91.7
1.91.7/ 1
1.91.7/ 2
1.94.0
1.94.0/ 1
1.91.5
1.91.3
1.79.9
1.94.2
1.98.0
1.98.0/ 1
1.98.1
SEC.18

B110 TIER 3 BACKHOE LOADER (2/07-)

SEC. 10(01) BODY, HOOD & DRIVER'S POST

Ref	Numero de Pieza	Ctd	Descripción

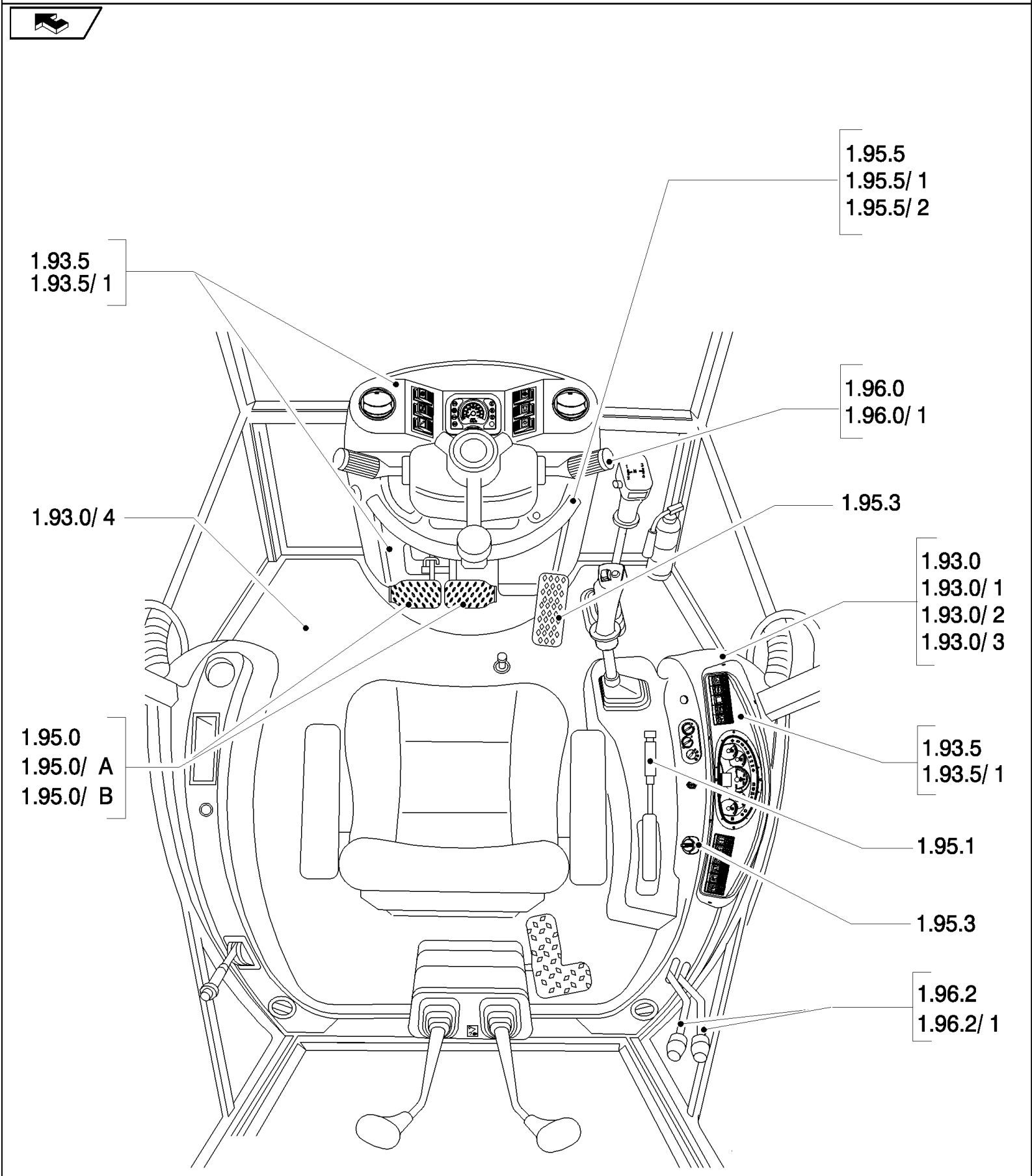
1.95.5
1.95.5/ 1
1.95.5/ 2
1.93.5
1.93.5/ 1
1.96.0
1.96.0/ 1
1.93.0/ 4
1.95.3
1.93.0
1.93.0/ 1
1.93.0/ 2
1.93.0/ 3
1.95.0
1.95.0/ A
1.95.0/ B
1.93.5
1.93.5/ 1
1.95.1
1.95.3
1.96.2
1.96.2/ 1

B110 TIER 3 BACKHOE LOADER (2/07-)

SEC. 10(02) BODY, HOOD & DRIVER'S POST

Ref	Numero de Pieza	Ctd	Descripción

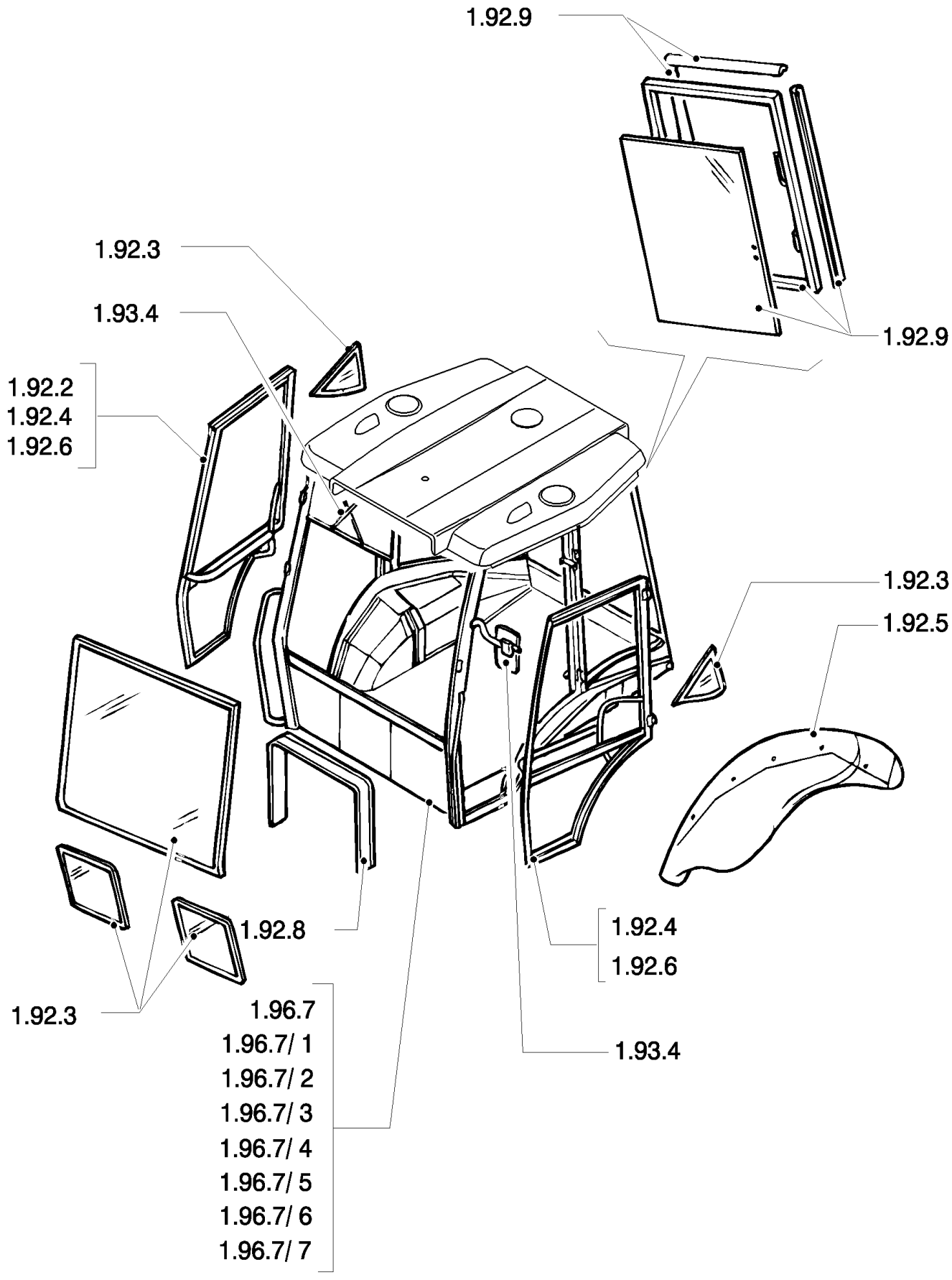
1.92.9
1.92.3
1.93.4
1.92.2
1.92.4
1.92.6
1.92.9
1.92.3
1.92.5
1.92.8
1.92.4
1.92.6
1.92.3
1.96.7
1.96.7/ 1
1.96.7/ 2
1.96.7/ 3
1.96.7/ 4
1.96.7/ 5
1.96.7/ 6
1.96.7/ 7
1.93.4

B110 TIER 3 BACKHOE LOADER (2/07-)

SEC. 10(03) BODY, HOOD & DRIVER'S POST

Ref	Numero de Pieza	Ctd	Descripción

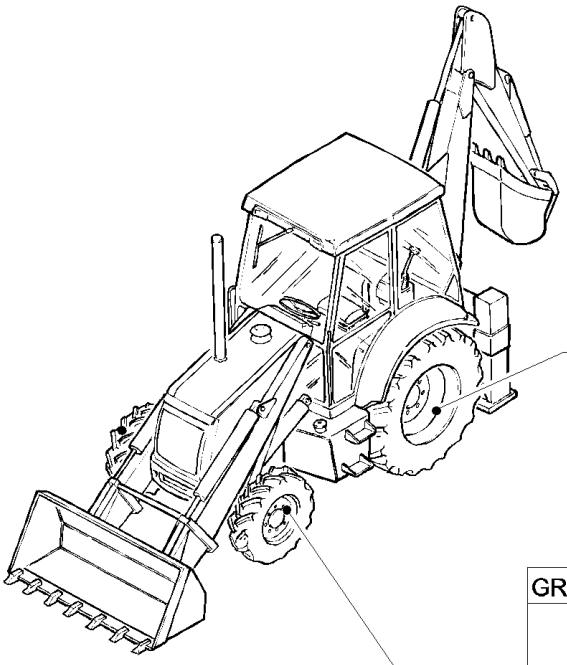

GROUP	EQUIP	TIRE SIZE	RIM
83.00	83.52	16.9 - 28 R4-10PLY TITAN	W15LX 28
	83.62	16.9 - 28 R4 - 12PR	W14LX 28
	83.64	16.9 - 24 R4 - 10PR	W15LX 24
	83.65	17.5 - L24 R4 - 10PR	W15LX 24
	83.91	19.5 - 24 R4 - 10PR	W16LX 24
	83.92	18.4 - 26 R4 - 12PR	DW16L X26
	83.92	21L24 R4 - 10PR	W18L X24
	83.93	18.4 - 26 R1 - 12PR	DW16L X26
	83.93	19.5 x 24 "JUMBO HULK"	W16L X24
	83.96	480/80 R26 IT520	DW16LX26
	83.97	16.9 - 28	W14L X28Z
	83.98	18.4 - 26	DW16L X26

GROUP	EQUIP	TIRE SIZE	RIM
82.00	82.75	14 -17.5NHS - 8PR	10.5 X 17.5
	82.76	12 -16.5NHS -8PR	9,75 X 16,5
	82.76	12 - 16.3 HULK	9,75 X 16,5
	82.76	12 - 16.5 HULK	9,75 X 16,5
	82.78	10.5/80 -18I3 - 10PR	9 X 18
	82.79	12.5/80 -18I3 - 10PR	9 X 18
	82.80	12.5/80 -18I3 - 10PR	9 X 18
	82.87	320/80-R18-IT520	9 X 18
	82.89	12.5 - 18	9 X 18

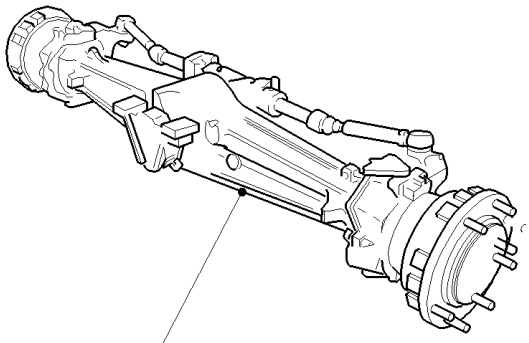

GROUP	EQUIP	TIRE SIZE	RIM
81.00	81.38	11L - 16SLF3 - 10PR	W8LX 16

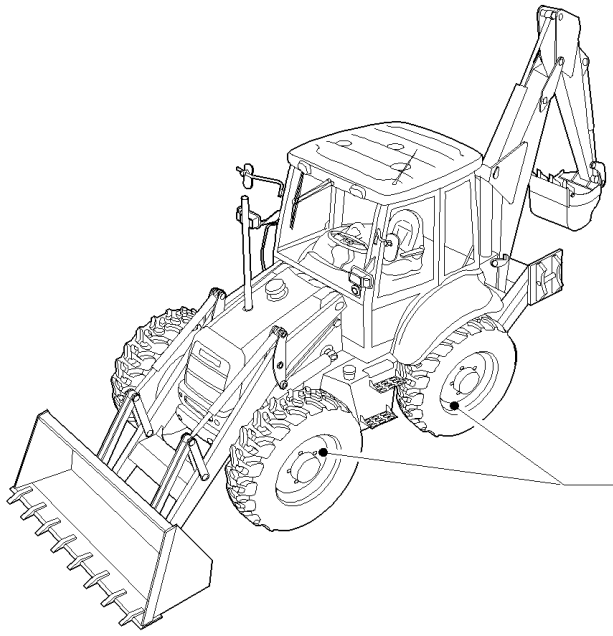

GROUP	EQUIP	TIRE SIZE	RIM
85.00	85.64	16.9 - 24 R4 - 12PR	W14LX 24
	85.64	16.9 - 24 R4 - 12PR (I.S.G.)	W15LX 24
	85.65	16.9 - 28 R4 - 12PR	W15LX 28
	85.65	16.9 - 28 R4 12PLY GY (I.S.G.T.)	W14LX 28
	85.66	440/80 R28 156A8 IT530	W14LX 28
	85.67	440/80 R28 156A8 IT520	W14LX 28

SEC. 11 WHEELS

Ref	Numero de Pieza	Ctd	Descripción

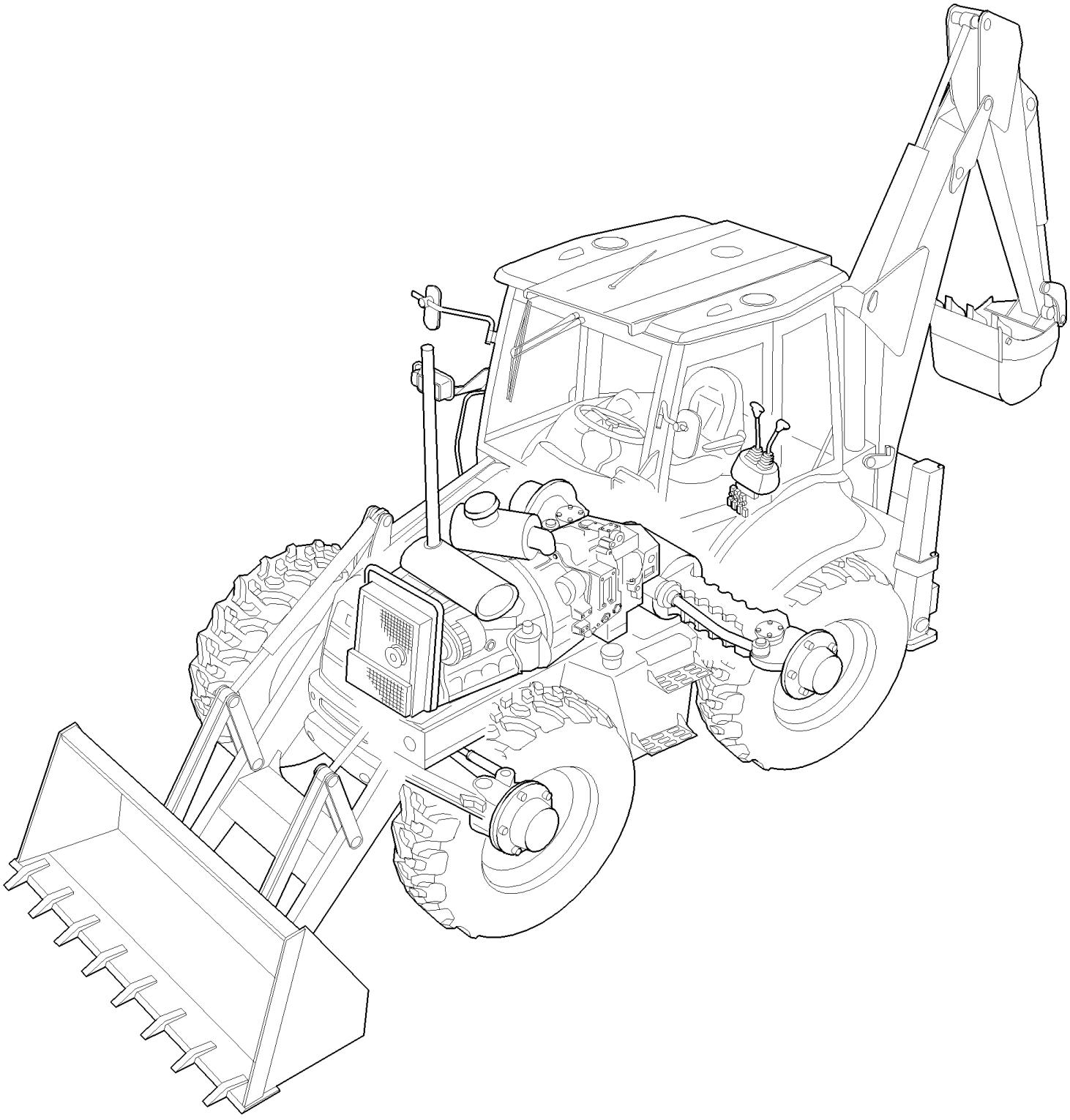

SEC. 18 VARIATION

Ref	Numero de Pieza	Ctd	Descripción

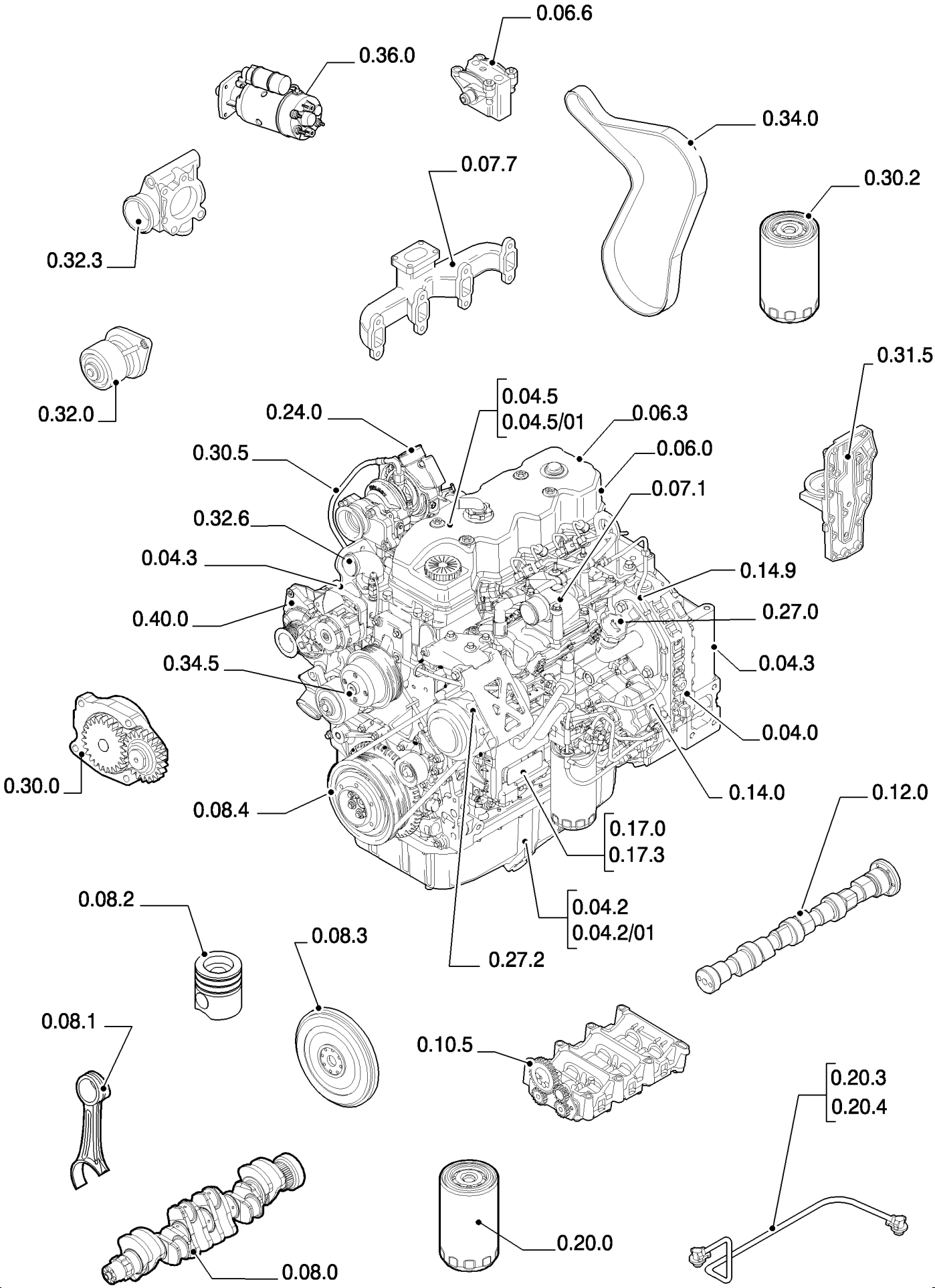
0.06.6
0.36.0
0.34.0
0.07.7
0.30.2
0.32.3
0.32.0
0.31.5
0.04.5
0.04.5/01
0.24.0
0.06.3
0.30.5
0.06.0
0.07.1
0.32.6
0.04.3
0.14.9
0.40.0
0.27.0
0.34.5
0.04.3
0.04.0
0.30.0
0.14.0
0.12.0
0.08.4
0.17.0
0.17.3
0.08.2
0.04.2
0.04.2/01
0.08.3
0.27.2
0.08.1
0.10.5
0.20.3
0.20.4
0.20.0
0.08.0

Ref	Numero de Pieza	Ctd	Descripción

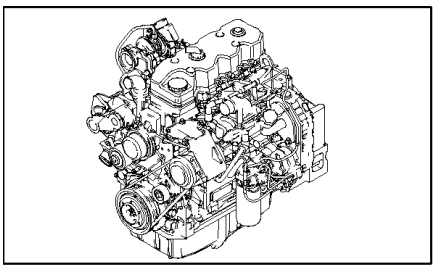

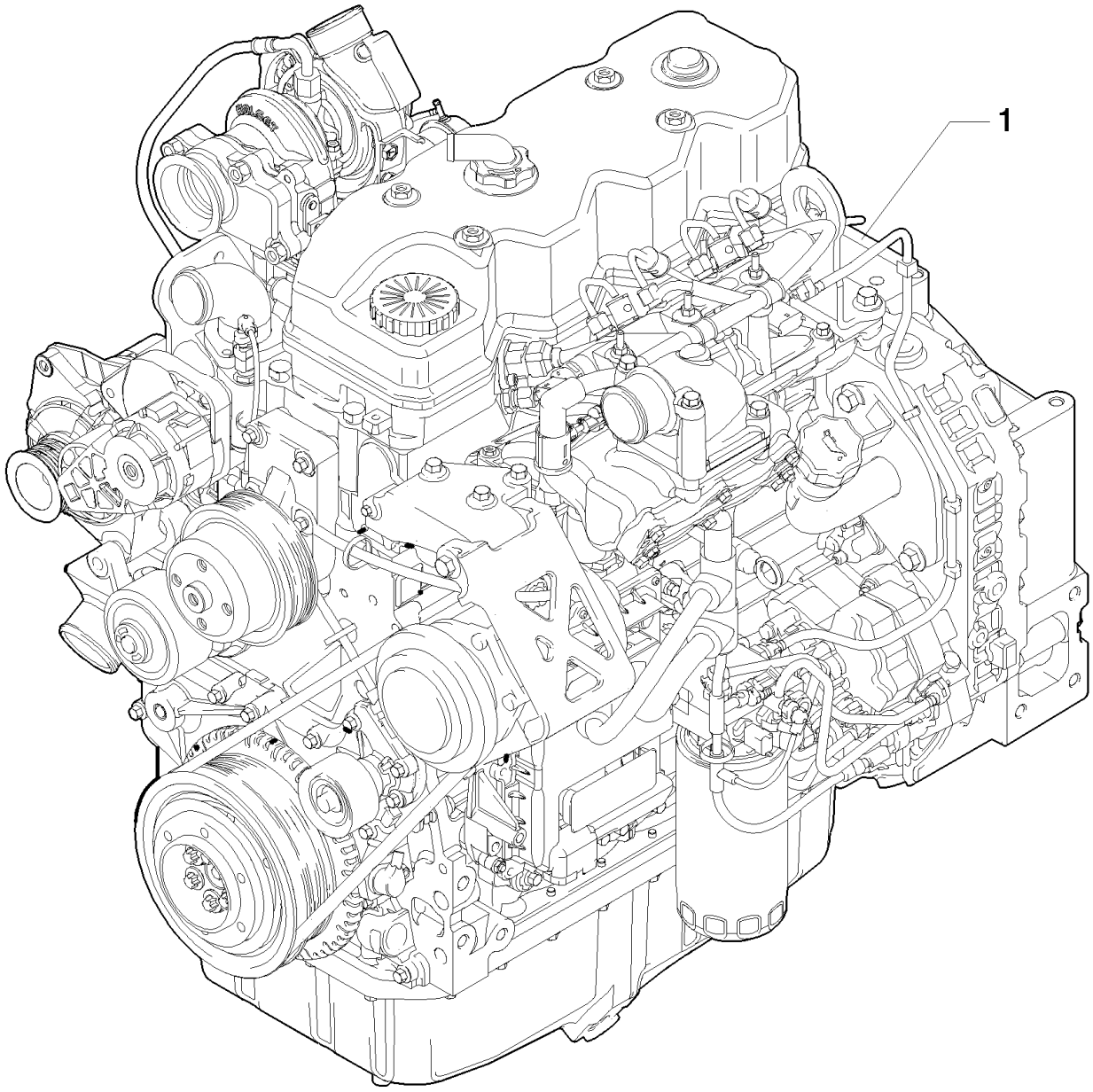
1

B110 TIER 3 BACKHOE LOADER (2/07-)

0.02.1 ENGINE

Ref	Numero de Pieza	Ctd	Descripción
1	87399929	1	ENGINE, B110
1	87399930	1	ENGINE, B115

0.04.0 CRANKCASE

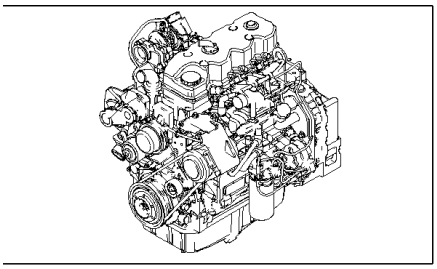

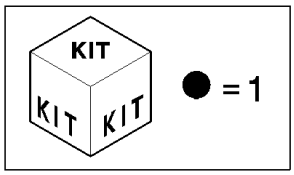

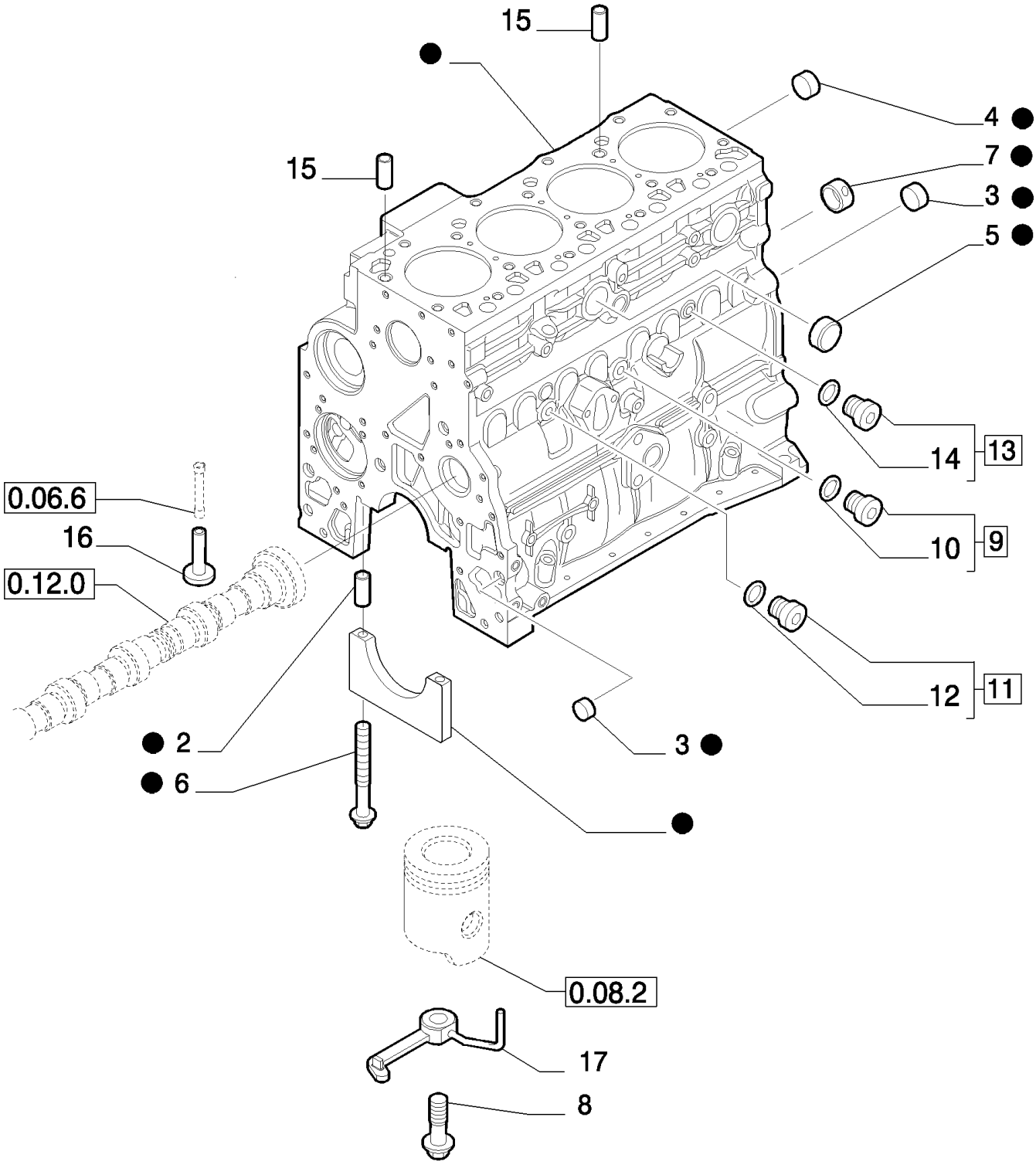

B110 TIER 3 BACKHOE LOADER (2/07-)

0.04.0 CRANKCASE

Ref	Numero de Pieza	Ctd	Descripción
1	2830082	1	CYLINDER BLOCK, - ASSY
2	4899026	10	DOWEL,
3	4895039	3	PLUG,
4	4895038	4	PLUG,
5	4895228	2	PLUG,
6	4891353	10	SCREW, Flg Hd, M12 x 1.5 x 120,
7	4895040	1	BUSHING,
8	4894218	4	SCREW,
9	4895605	1	PLUG, M14 x 1.5 - ASSY
10	4899115	1	O-RING,
11	4899009	1	PLUG, M10 x 1 - ASSY
12	4899072	1	O-RING,
13	4895392	1	PLUG, M18 x 1.5 - ASSY
14	4895393	1	O-RING,
15	4895049	2	DOWEL,
16	4899803	8	TAPPET,
17	2852203	4	NOZZLE, LUB. OIL JET,

0.04.2 ENGINE OIL SUMP

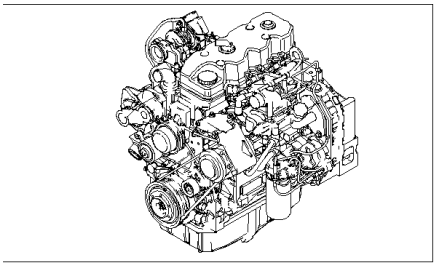

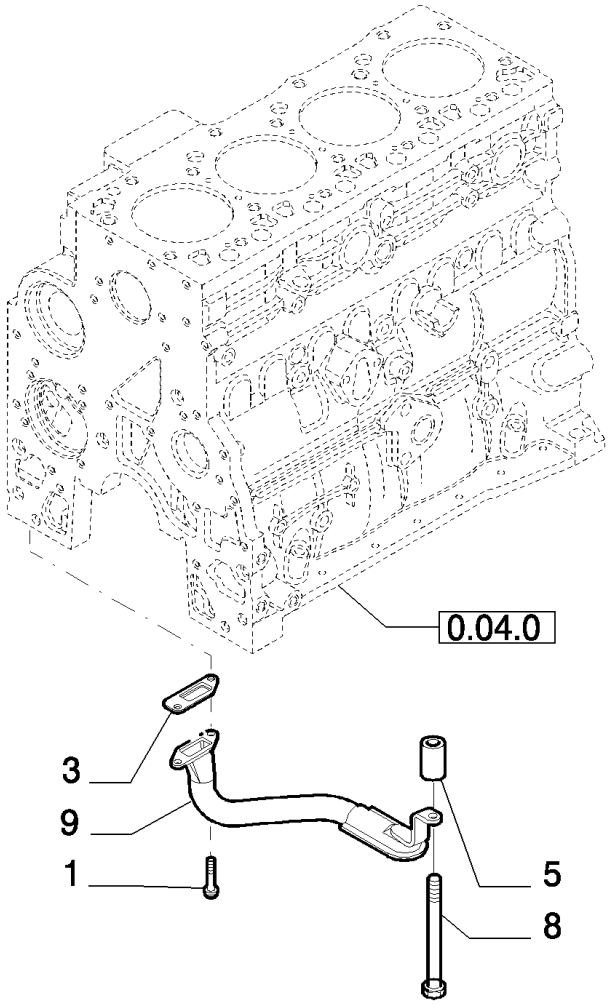

B110 TIER 3 BACKHOE LOADER (2/07-)

0.04.2 ENGINE OIL SUMP

Ref	Numero de Pieza	Ctd	Descripción
1	2852234	2	SCREW, Hex Flg, M8 x 1.25 x 20,
2	4899091	22	SCREW, Hex Flg, M8 x 1.25 x 40,
2	4895489	2	SCREW, M8X1.25X110
3	4898301	1	GASKET, - ASSY
4	2852011	1	PAN, ENGINE OIL,
5	2852016	1	SPACER,
6	2856086	1	PLUG, M22X1.5
7	2852012	1	GASKET,
8	4895538	1	SCREW,
9	2852013	1	STRAINER, ELEMENT,
10	2853728	1	O-RING,

0.04.3(01) CRANKCASE COVERS

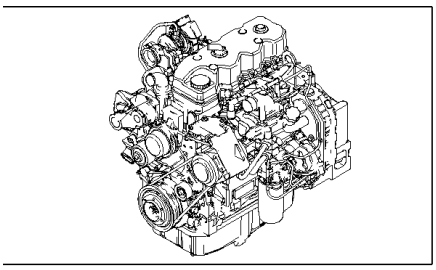

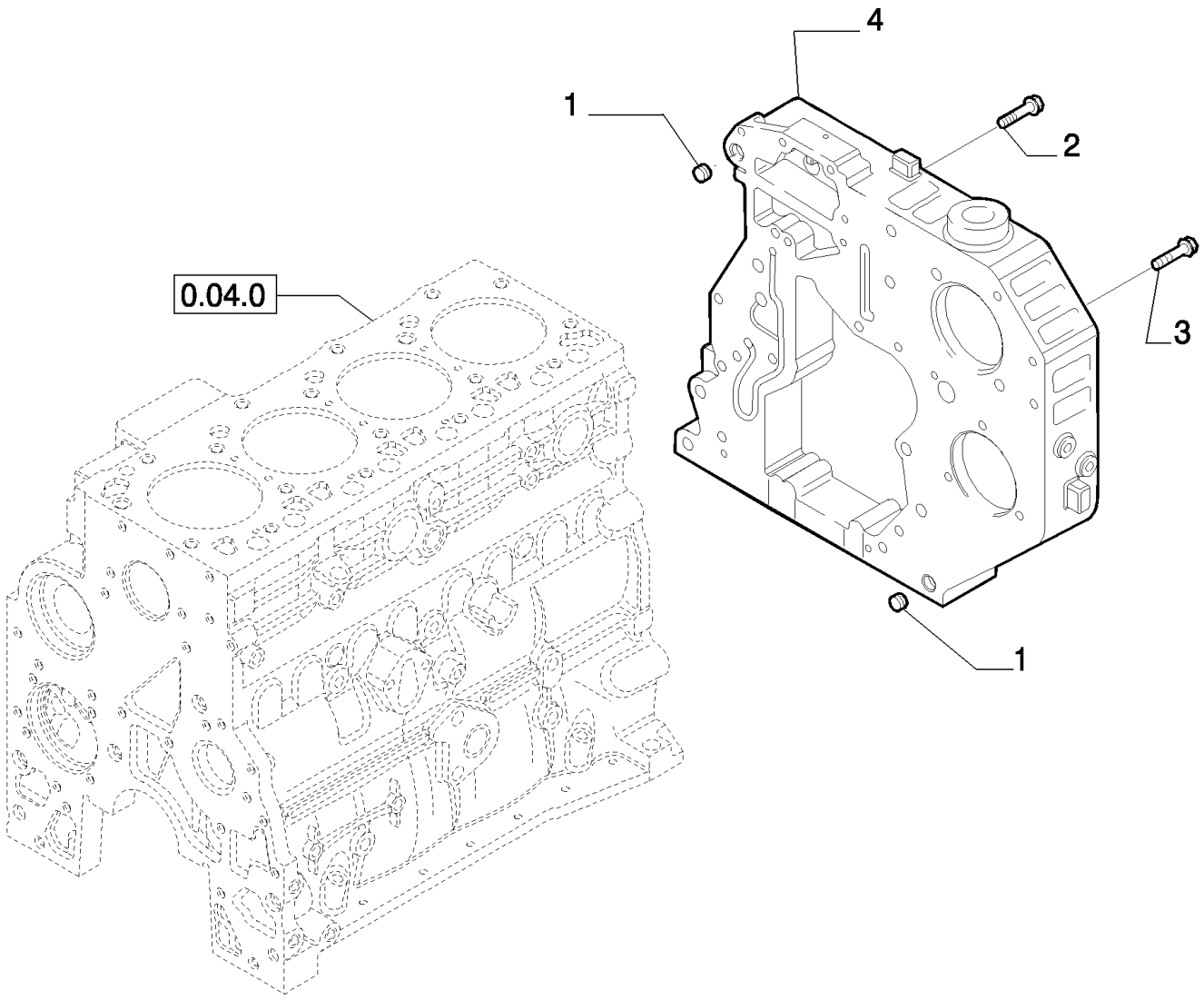

B110 TIER 3 BACKHOE LOADER (2/07-)

0.04.3(01) CRANKCASE COVERS

Ref	Numero de Pieza	Ctd	Descripción
1	4899026	2	DOWEL,
2	4899078	4	SCREW, Hex Flg, M8 x 1.25 x 45,
3	4899093	2	SCREW, Hex Flg, M10 x 1.5 x 30,
3	4899073	1	SCREW, Hex Flg, M12 x 1.75 x 30,
3	4896939	3	SCREW, M10X1.5X50
4	2855801	1	HOUSING,

0.04.3(02) CRANKCASE COVERS

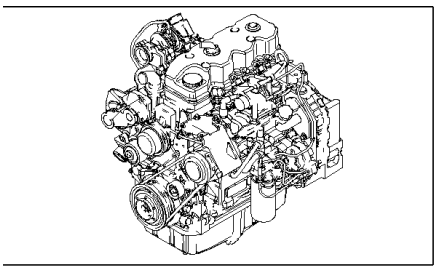

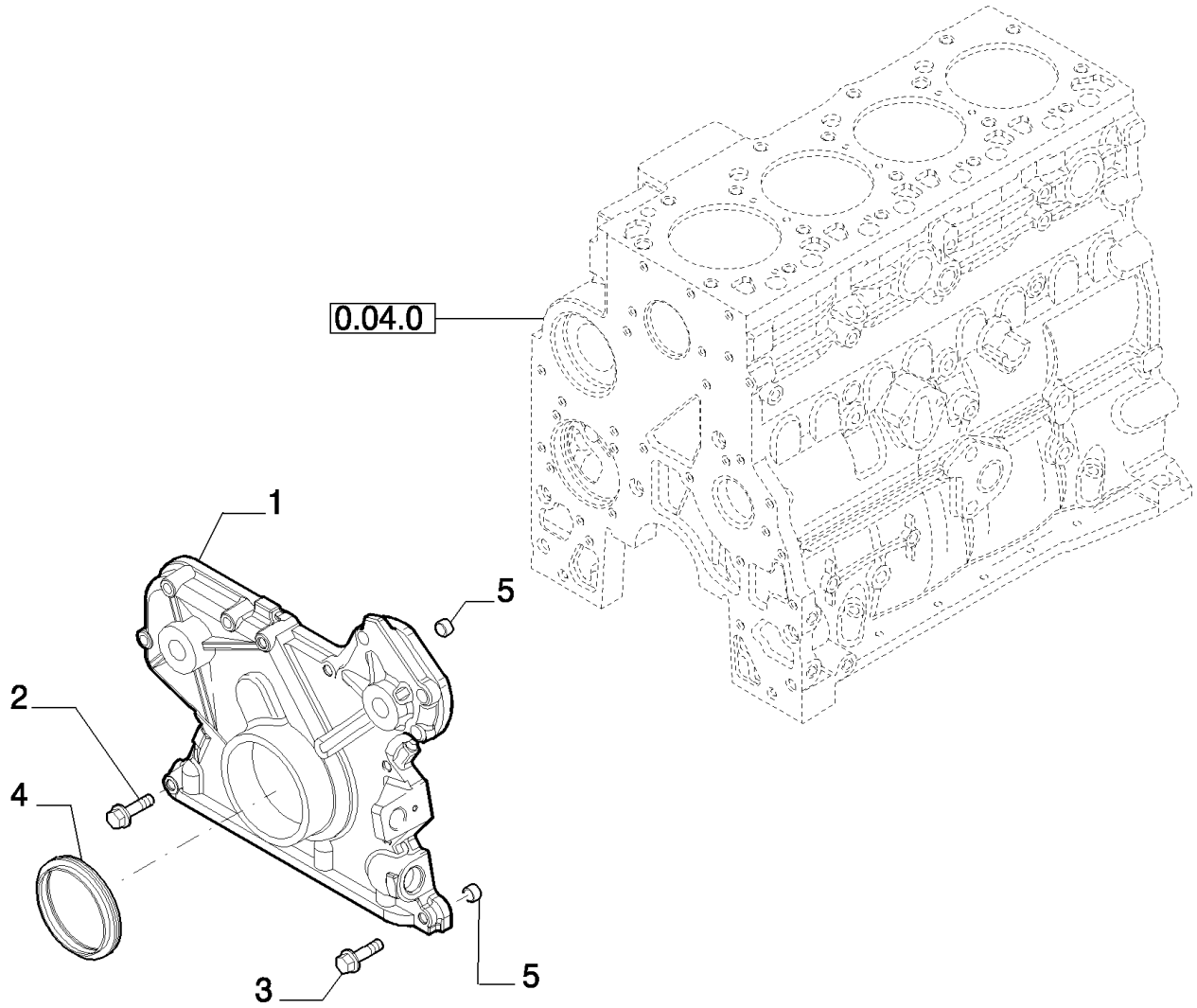

B110 TIER 3 BACKHOE LOADER (2/07-)

0.04.3(02) CRANKCASE COVERS

Ref	Numero de Pieza	Ctd	Descripción
1	4897024	1	COVER, - FRONT
2	4899078	5	SCREW, Hex Flg, M8 x 1.25 x 45,
3	4899063	8	SCREW, Hex Flg, M8 x 1.25 x 30,
4	4890832	1	SEAL,
5	4891209	2	DOWEL,

0.04.3(03) CRANKCASE COVERS

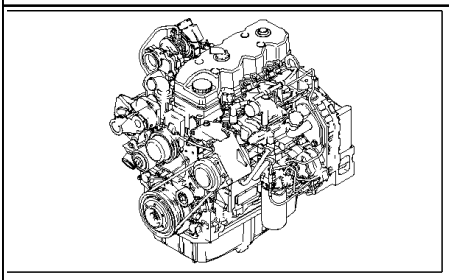

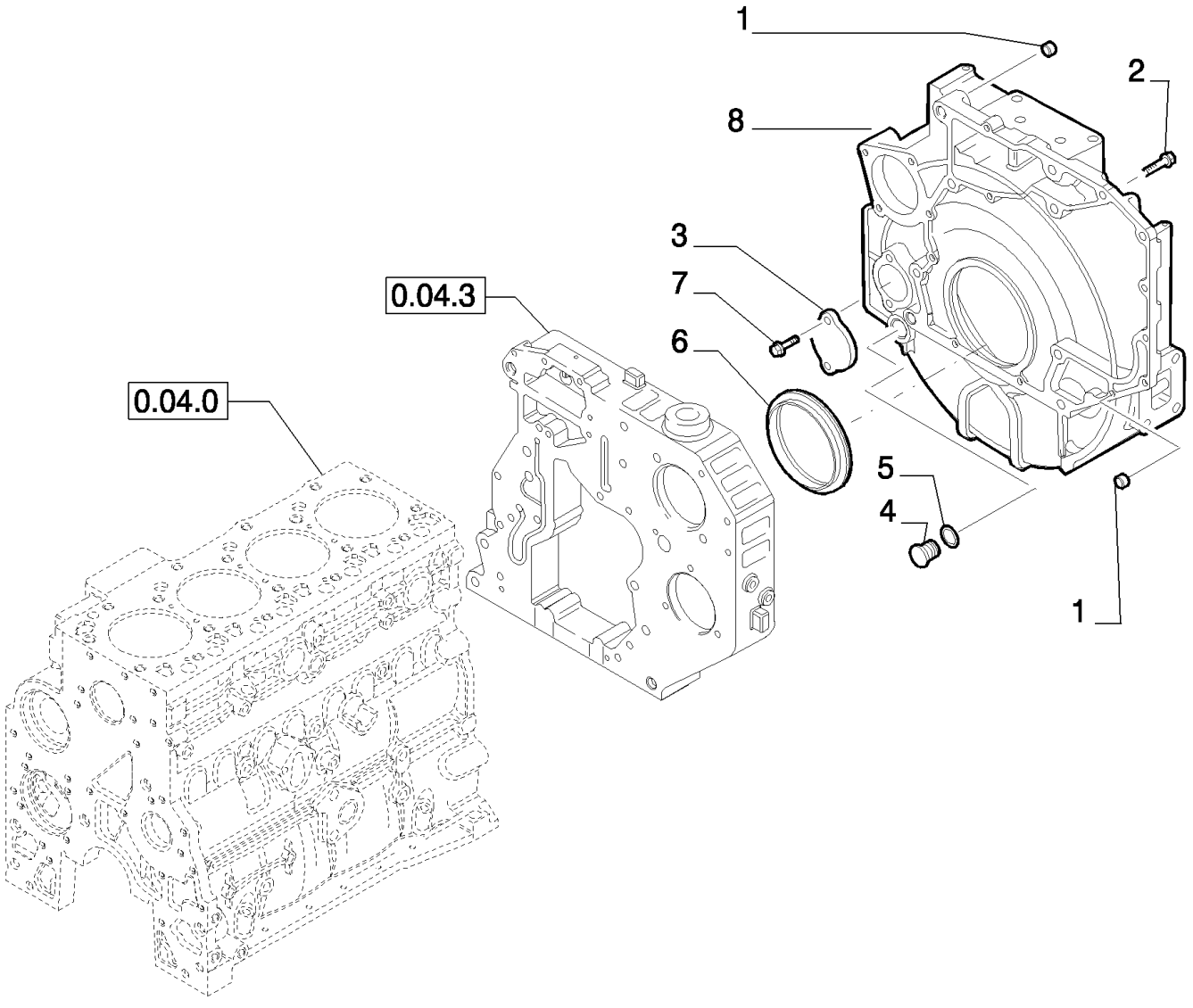

B110 TIER 3 BACKHOE LOADER (2/07-)

0.04.3(03) CRANKCASE COVERS

Ref	Numero de Pieza	Ctd	Descripción
1	4899026	2	DOWEL,
2	4899109	2	SCREW, Hex, M10 x 1.5 x 80,
2	4892915	7	SCREW, M10X1.5X40
2	4899076	6	SCREW, Hex Flg, M12 x 1.75 x 80,
2	4899064	2	SCREW, M12X1.75X120
2	4899068	2	SCREW, Hex Flg , M8 x 1.25 x 16,
2	2852865	2	SCREW, M10X35
3	4895155	1	COVER,
4	4895378	1	PLUG,
5	4895379	1	O-RING, M21.82 ID x 3.53 Thk
6	4890833	1	SEAL,
7	4899143	2	SCREW, Hex Flg, M10 x 1.5 x 140,
8	2855803	1	HOUSING,

0.06.0 CYLINDER HEAD

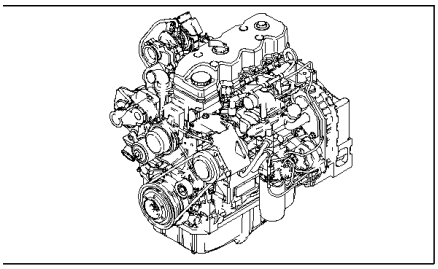

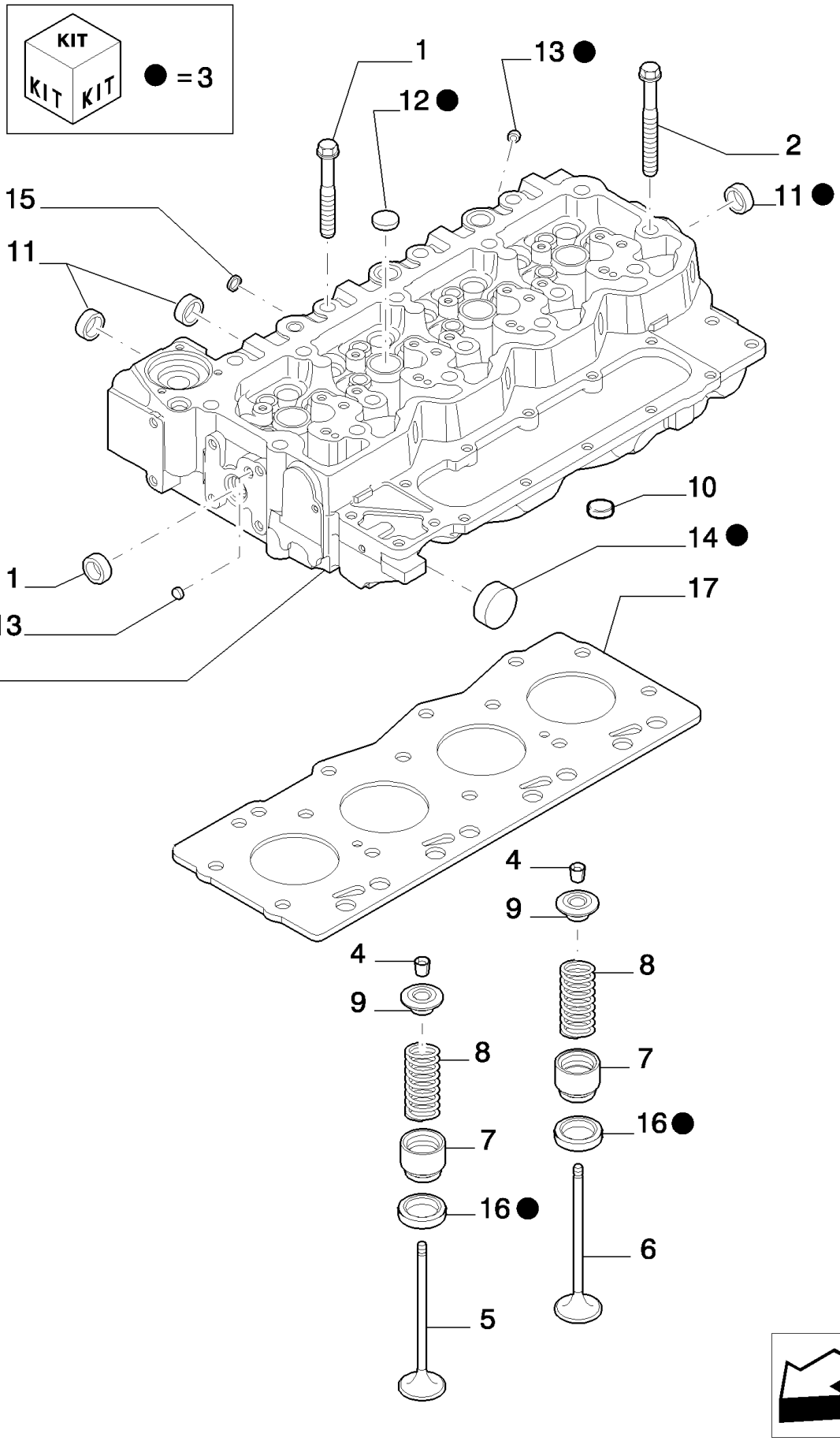

B110 TIER 3 BACKHOE LOADER (2/07-)

0.06.0 CYLINDER HEAD

Ref	Numero de Pieza	Ctd	Descripción
1	4891024	8	SCREW,
2	4891025	10	SCREW,
3	2831266	1	CYLINDER HEAD, - ASSY
	87536218	1	CYLINDER HEAD, -ASSY, Include Ref 3,4,5,6,7,8,9,10
4	4899081	32	COTTER, ROCKER ARM,
5	4895051	8	VALVE, ENG EXHAUST, STD,
6	4895052	8	VALVE, ENGINE, INLET, STD,
7	2831287	16	SEAT, SPRING,
8	4895073	16	SPRING, VALVE,
9	4895074	16	CUP,
10	4893036	1	PLUG,
11	4895085	9	PLUG, 25.74mm OD
12	4895089	7	PLUG, .886" OD
13	4895406	5	PLUG, 9.8mm OD
14	4895407	1	PLUG, 38.28mm OD
15	4895408	2	PLUG, .511" OD
16	4893244	16	VALVE SEAT,
17	2830706	1	GASKET, CYLINDER HEAD, SP=1,25
17	2830707	1	GASKET, CYLINDER HEAD, SP=1,15

0.06.3(01) CYLINDER HEAD COVERS

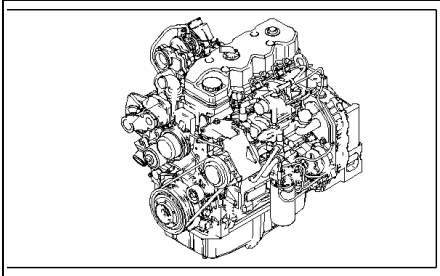

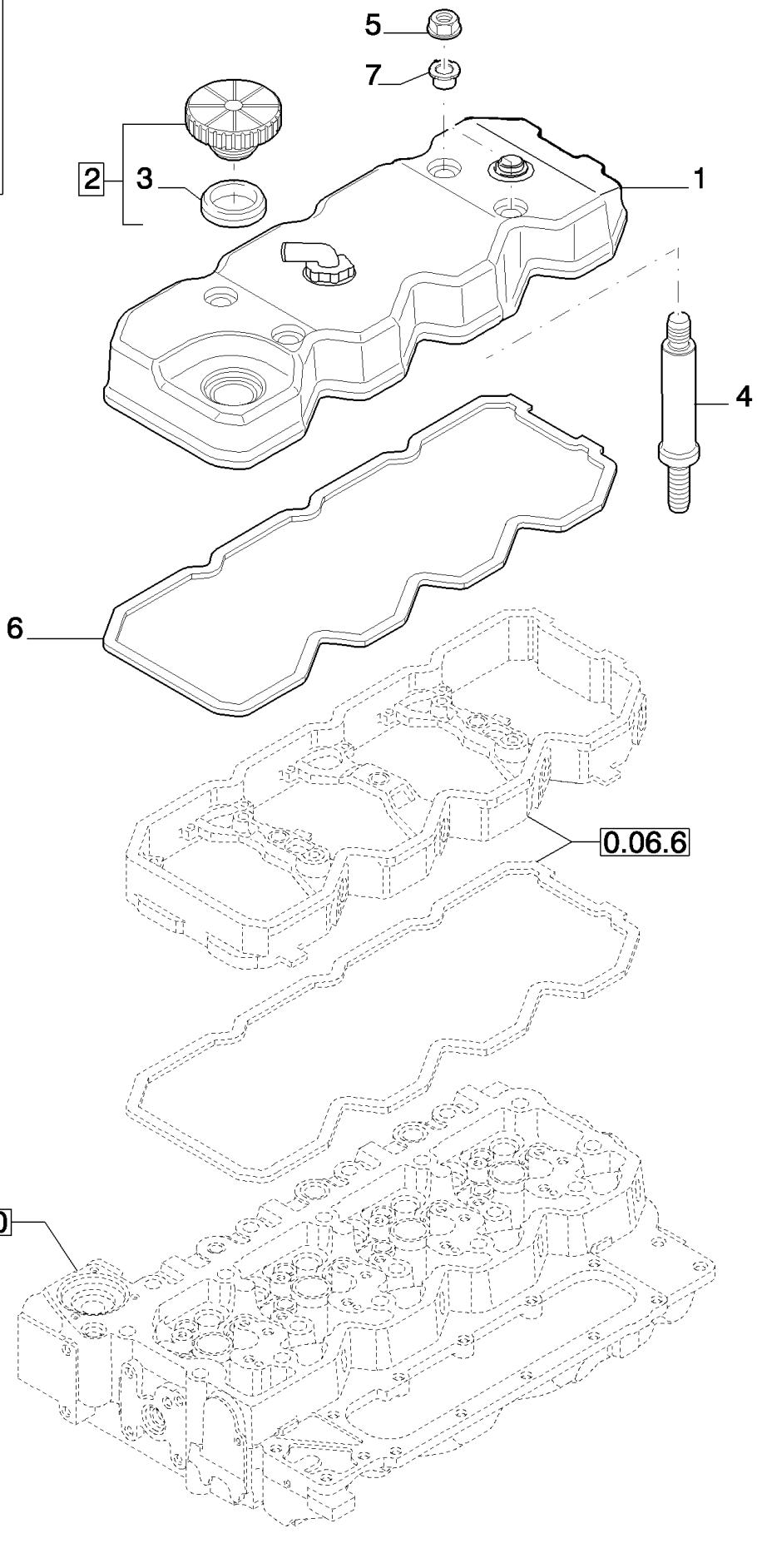

B110 TIER 3 BACKHOE LOADER (2/07-)

0.06.3(01) CYLINDER HEAD COVERS

Ref	Numero de Pieza	Ctd	Descripción
1	2853858	1	COVER, VALVE, - ASSY, SEE PAGE 2 (Incl. p/n 2853826)
2	2852773	1	CAP, - ASSY
3	2852774	1	GASKET,
4	2854812	4	STUD,
5	504075125	4	NUT,
6	4899228	1	GASKET,
7	504070041	4	GASKET,

0.06.3(02) CYLINDER HEAD COVERS

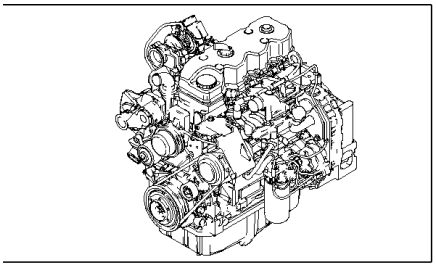

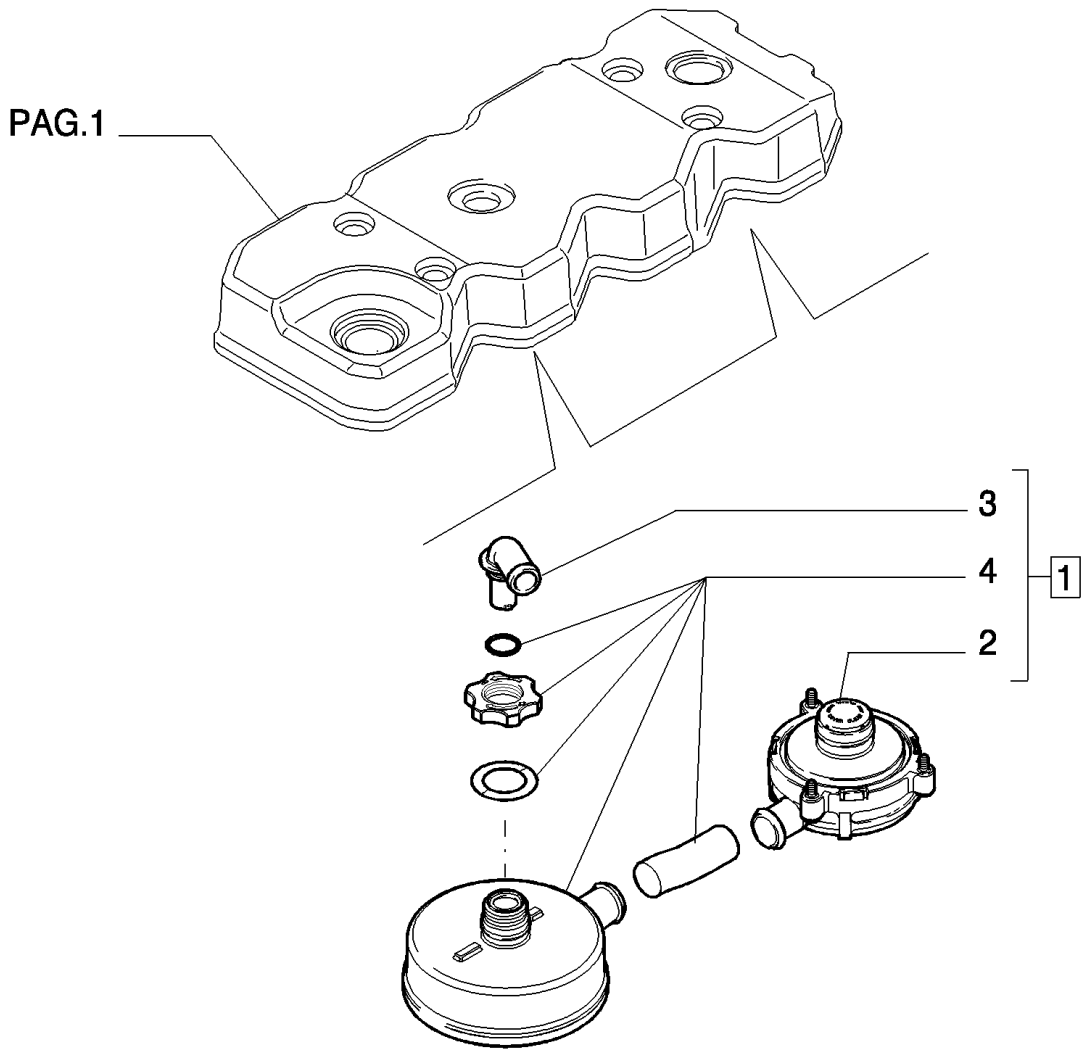

B110 TIER 3 BACKHOE LOADER (2/07-)

0.06.3(02) CYLINDER HEAD COVERS

Ref	Numero de Pieza	Ctd	Descripción
1	2853826	1	BREATHER, - ASSY
2	504153150	1	VALVE,
3	2856367	1	
4	504153151	1	ELEMENT,

0.06.6 ROCKER SHAFT

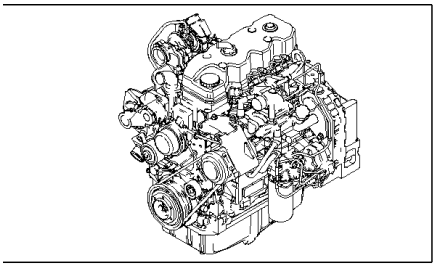

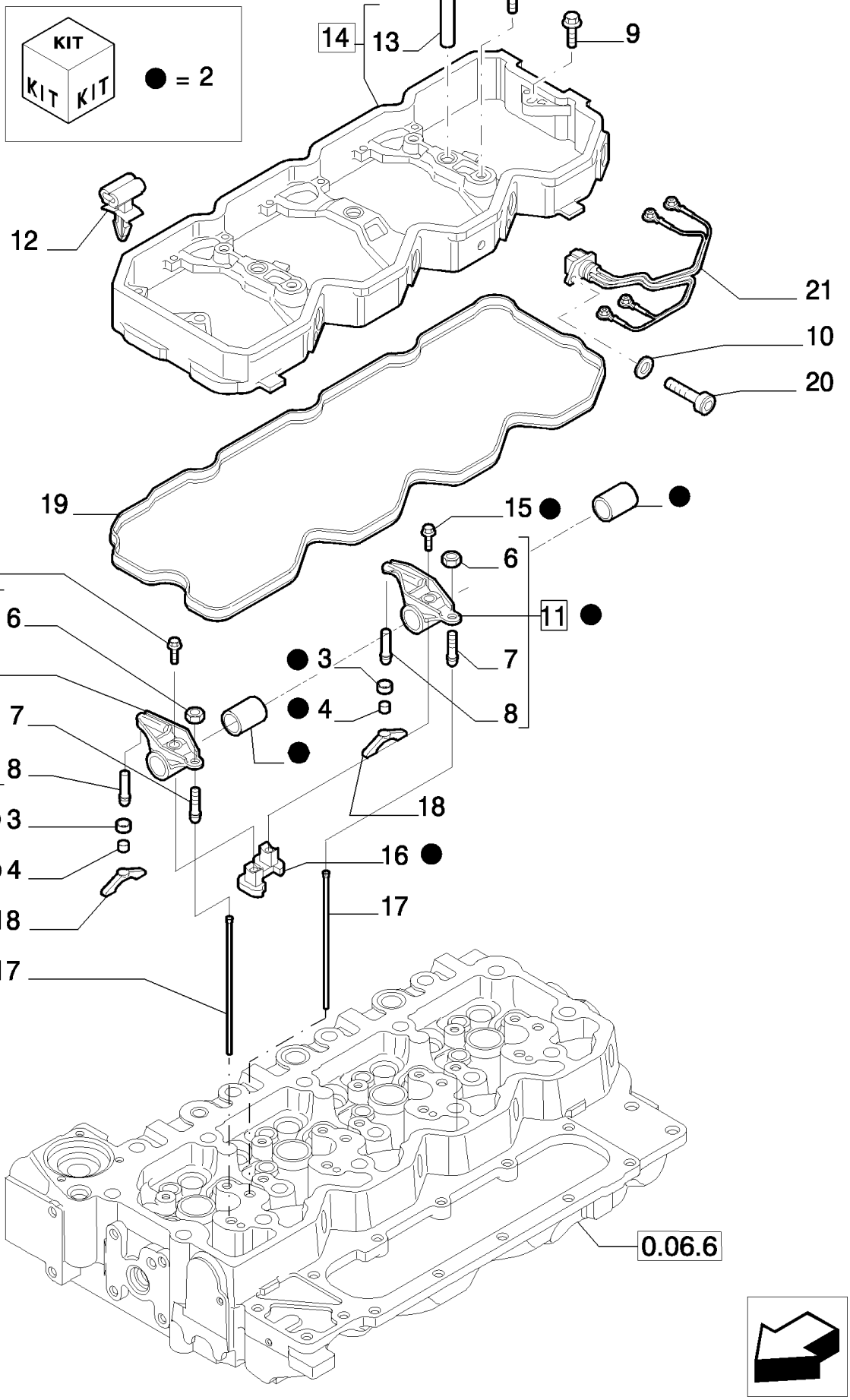

B110 TIER 3 BACKHOE LOADER (2/07-)

0.06.6 ROCKER SHAFT

Ref	Numero de Pieza	Ctd	Descripción
1	4895432	3	SCREW, M8X1.25X70
2	4898717	4	ROCKER ARM, - ASSY
3	4897248	2	RETAINER,
4	4897245	2	SOCKET,
5	4895068	1	ROCKER ARM, - ASSY
6	4895198	2	NUT,
7	2830222	2	SCREW, ADJUSTMENT,
8	4895065	2	SPACER,
9	4899089	2	SCREW, Hex Flg, M8 x 1.25 x 50,
10	2852776	2	WASHER, 6X11
11	4895067	1	ROCKER ARM, - ASSY
12	2852428	4	CLIP,
13	4899245	3	SLEEVE,
14	4899256	1	HOUSING, - ASSY
15	2830434	2	SCREW,
16	4893487	4	SUPPORT,
17	4895031	8	ROD, PUSH,
18	2854530	8	BRIDGE,
19	2853535	1	GASKET,
20	2852602	2	SCREW, 6X16
21	4896052	2	HARNESS, WIRE,

0.07.1 MANIFOLD - INTAKE

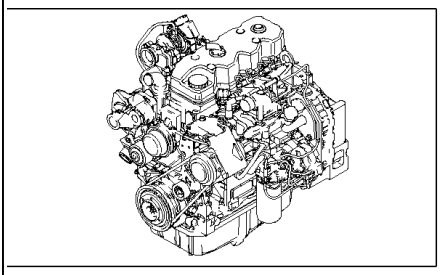

B110 TIER 3 BACKHOE LOADER (2/07-)

0.07.1 MANIFOLD - INTAKE

Ref	Numero de Pieza	Ctd	Descripción
1	2855805	1	MANIFOLD, INLET,
2	4895432	1	SCREW,
3	4899039	6	SCREW, Hex Flg, M8 x 1.25 x 25,
4	2855809	1	MANIFOLD,
5	4899921	1	GASKET,
6	2854702	6	SCREW, M6X20
7	4895294	4	SCREW,
8	2854700	1	COVER,
9	2854701	1	GASKET,

0.07.7 EXHAUST MANIFOLD

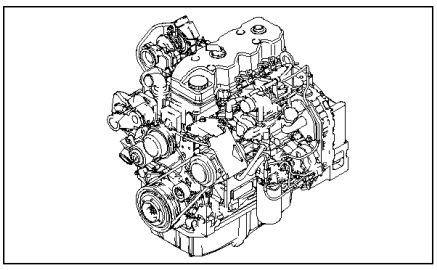

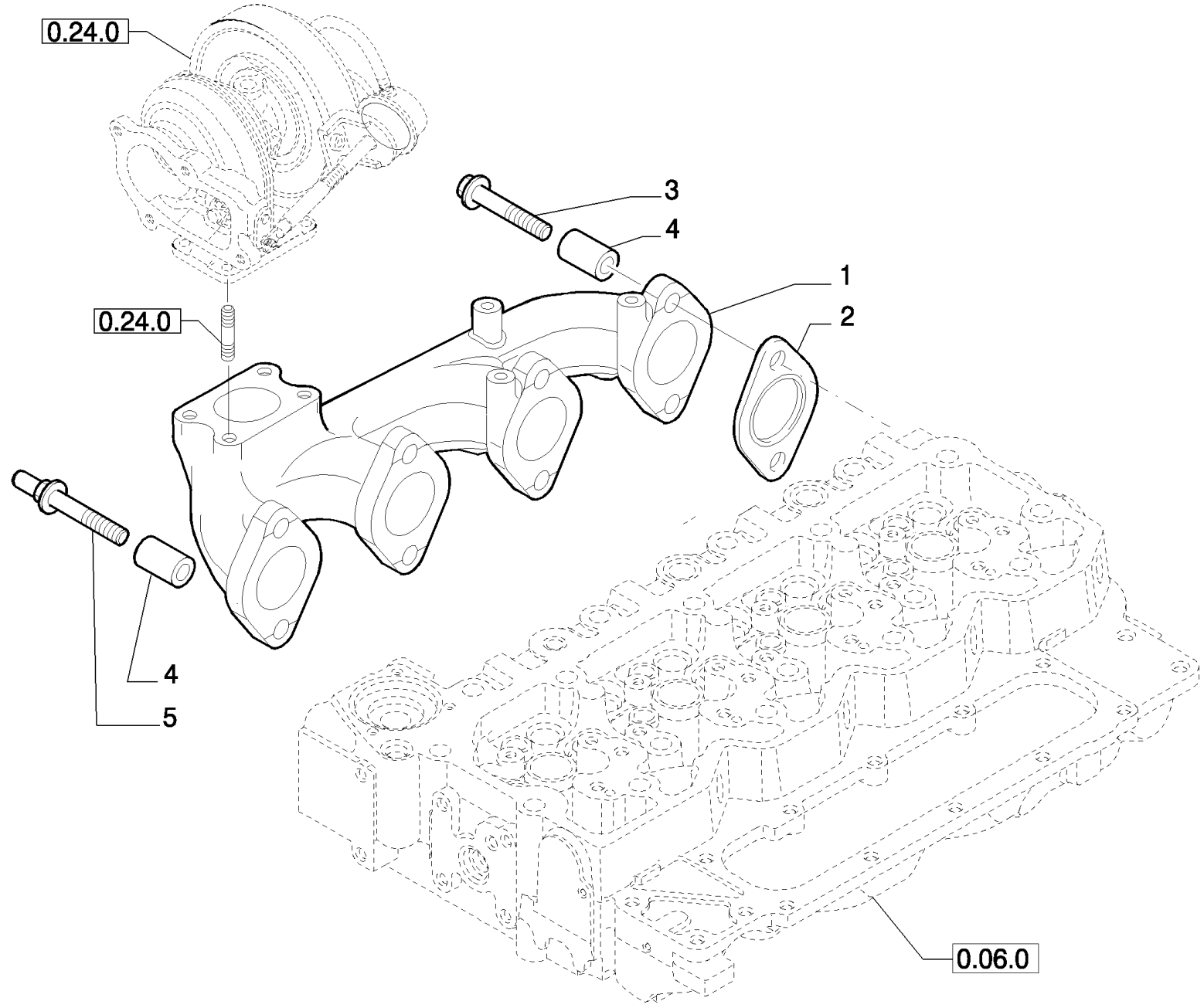

B110 TIER 3 BACKHOE LOADER (2/07-)

0.07.7 EXHAUST MANIFOLD

Ref	Numero de Pieza	Ctd	Descripción
1	2855807	1	MANIFOLD, EXHAUST,
2	2830444	4	GASKET,
3	2852744	4	SCREW,
4	4895336	8	SPACER,
5	4895219	4	STUD,

0.08.0 CRANKSHAFT

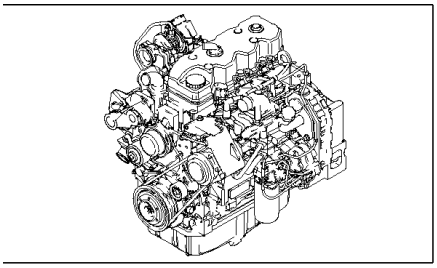

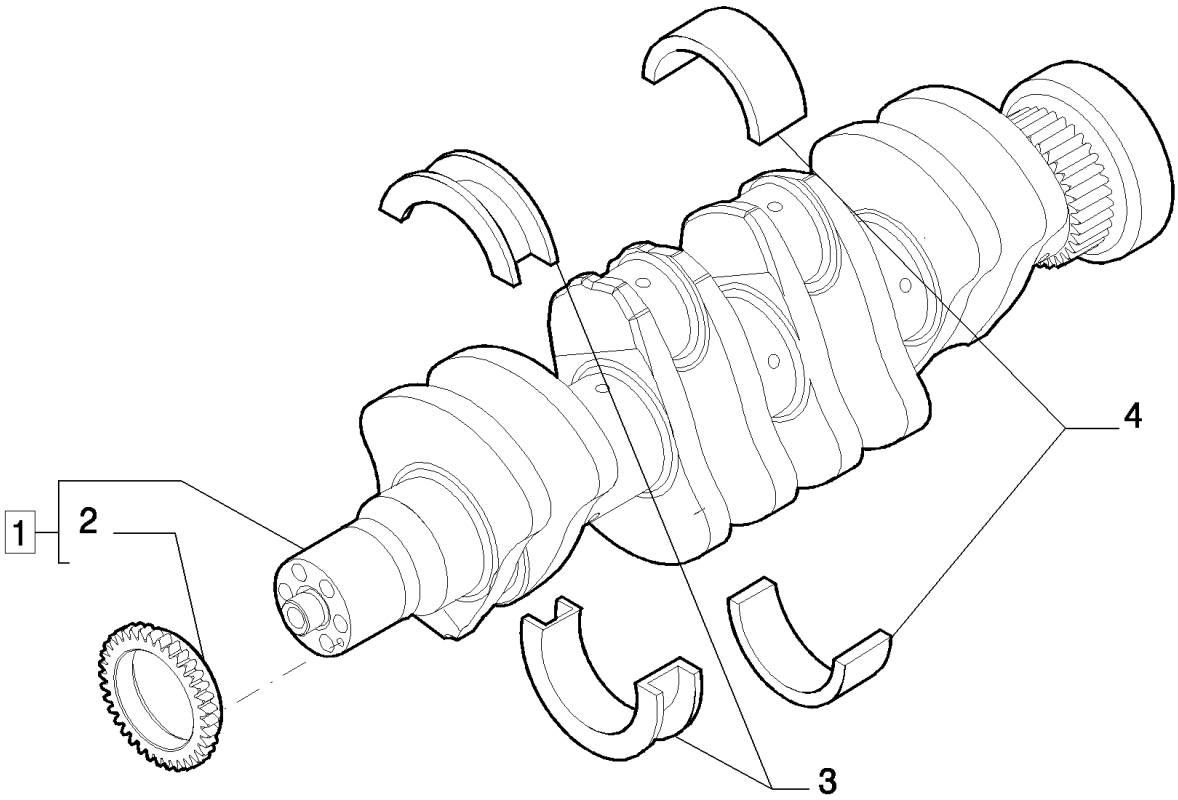

B110 TIER 3 BACKHOE LOADER (2/07-)

0.08.0 CRANKSHAFT

Ref	Numero de Pieza	Ctd	Descripción
1	2853822	1	CRANKSHAFT, - ASSY
2	4893386	1	GEAR,
3	2992153	1	BEARING, CRANKSHAFT, STD (THRUST)
3	2992154	1	SET,THRUST WASHERS +0.508, + 0,250 (THRUST)
3	2992155	1	SET, THRUST WASHERS +0.25, + 0.500 (THRUST)
4	2992147	4	SET OF MAIN BRGS.STD,
4	2992148	4	SET OF MAIN BRGS -0.254,
4	2992149	4	SET OF MAIN BRGS -0.508mm,

0.08.1 CONNECTING ROD

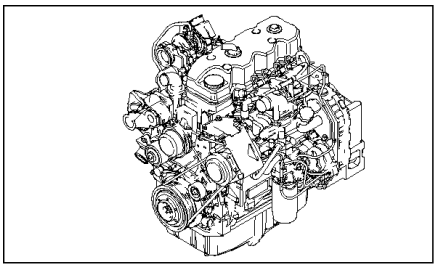

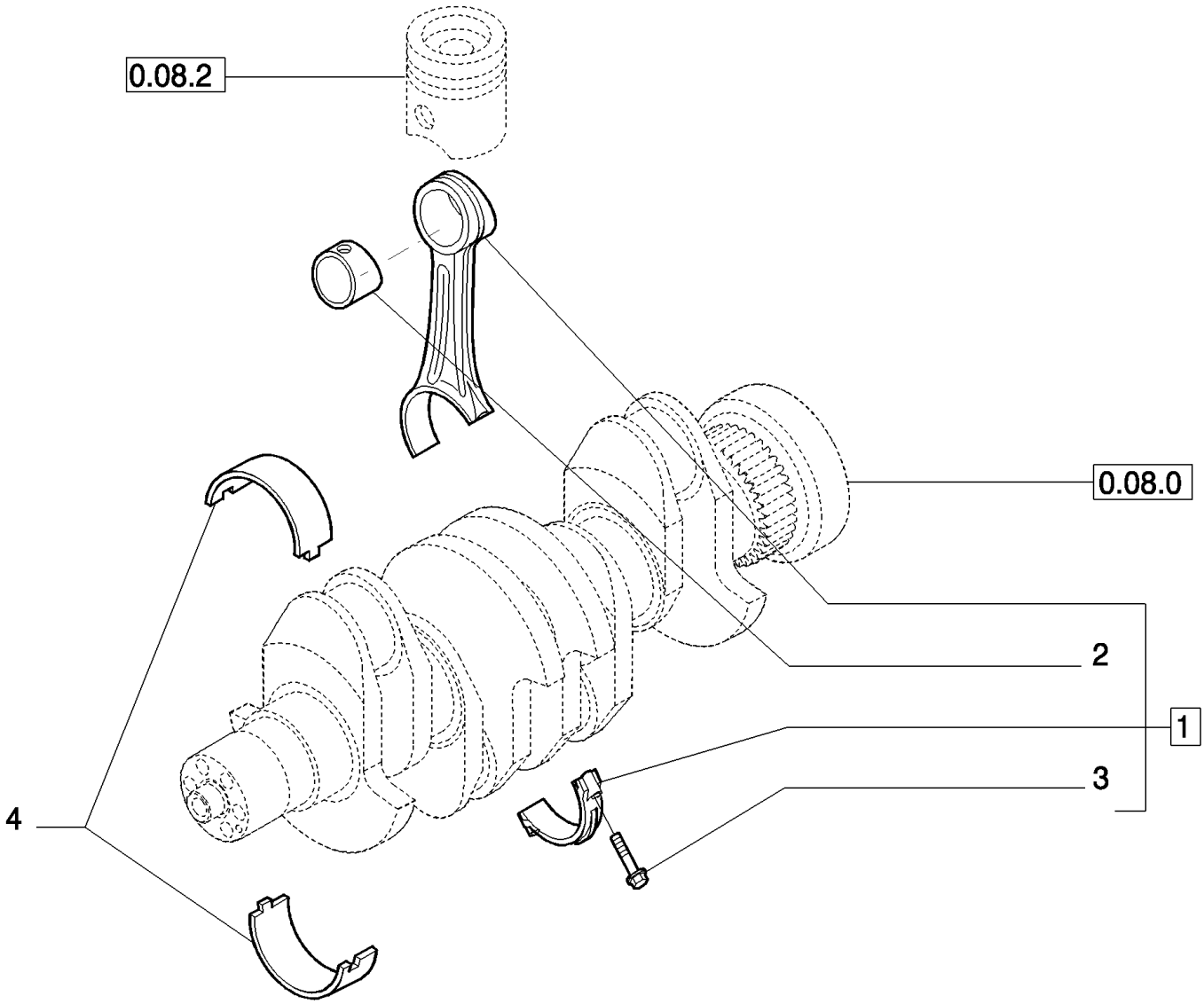

B110 TIER 3 BACKHOE LOADER (2/07-)

0.08.1 CONNECTING ROD

Ref	Numero de Pieza	Ctd	Descripción
1	2831298	4	ROD, CONNECTING, - ASSY
2	4892708	1	BUSHING,
3	2831297	2	SCREW,
4	8093882	4	SET, CONN ROD BRGS (STD),
4	8094960	4	SET, CONN ROD BRGS (STD), (-0,250)
4	8094961	4	SET, CONN ROD BRGS (STD), (-0,500)

0.08.2 PISTON - ENGINE

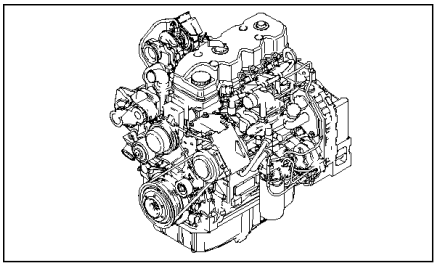

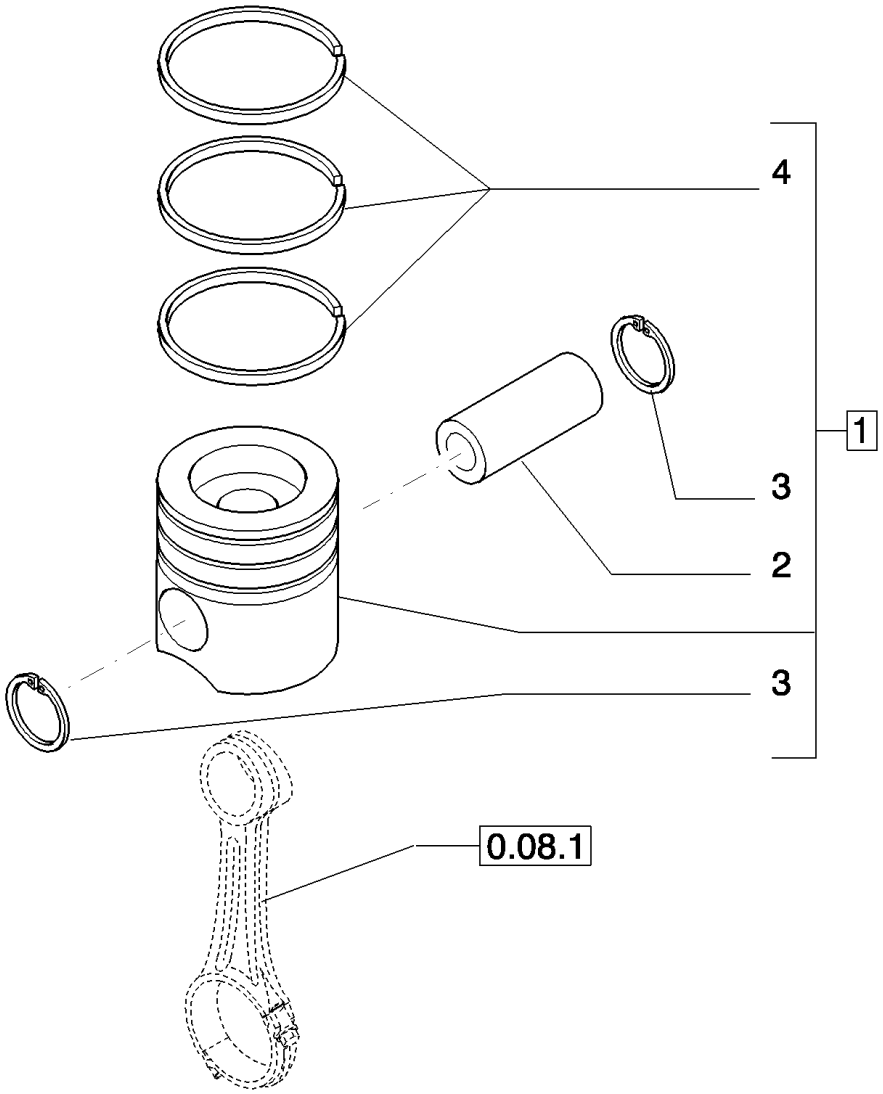

B110 TIER 3 BACKHOE LOADER (2/07-)

0.08.2 PISTON - ENGINE

Ref	Numero de Pieza	Ctd	Descripción
1	8094853	4	- ASSY (STD)
1	8094854	4	- ASSY (+0,4)
2	4892712	1	PIN, PISTON,
3	2854030	2	RING, SNAP,
4	87582179	1	KIT, PISTON RINGS, (STD)
4	87582180	1	KIT, PISTON RINGS, (+0,4)

0.08.3 FLYWHEEL - ENGINE

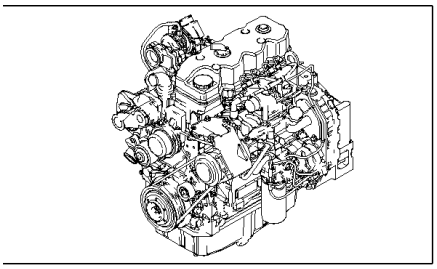

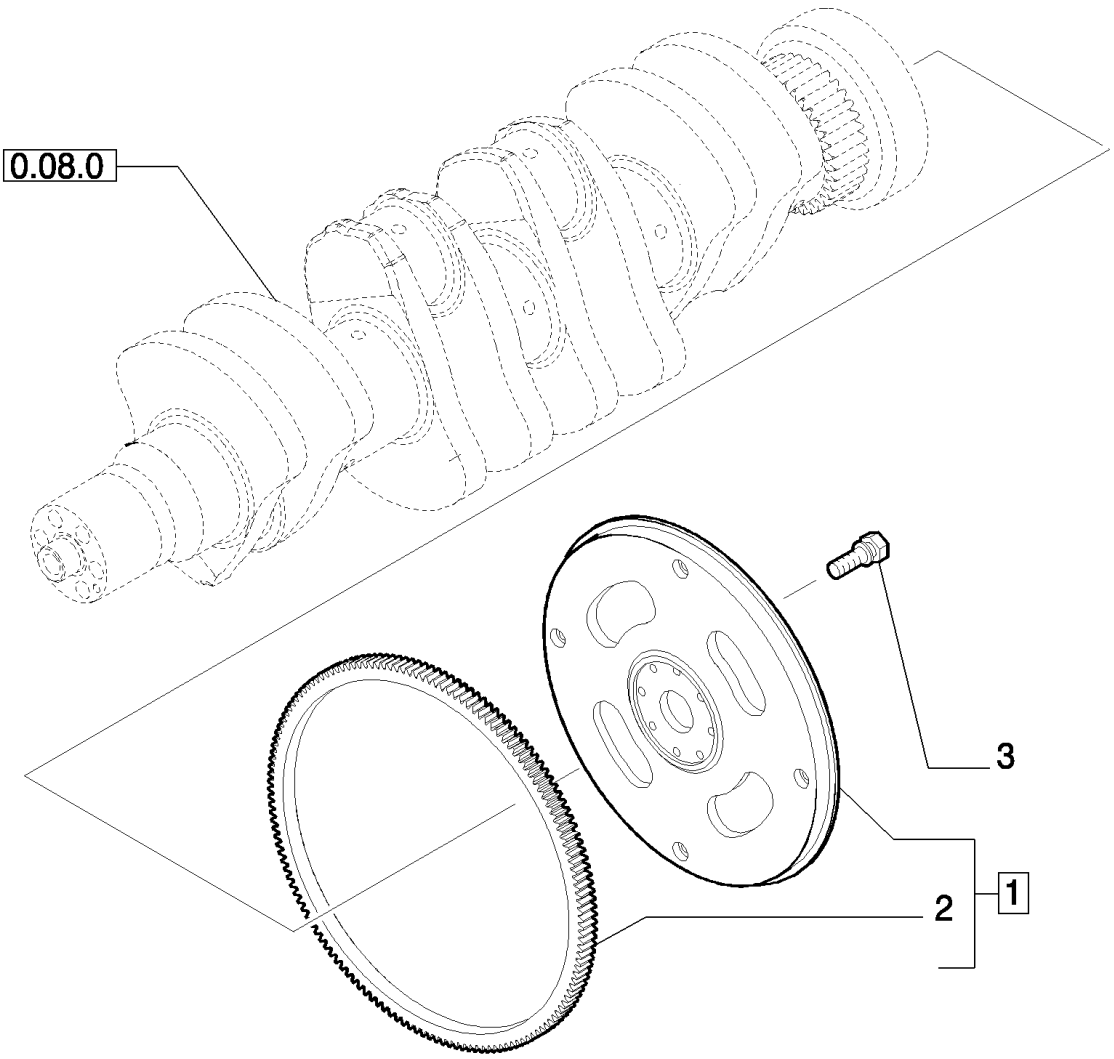

B110 TIER 3 BACKHOE LOADER (2/07-)

0.08.3 FLYWHEEL - ENGINE

Ref	Numero de Pieza	Ctd	Descripción
1	2852049	1	FLYWHEEL, ENGINE, - ASSY
2	2852051	1	GEAR, RING,
3	4894641	8	SCREW, Wash Hd, M12 x 1.25 x 31,

0.08.4 PULLEY - CRANKSHAFT

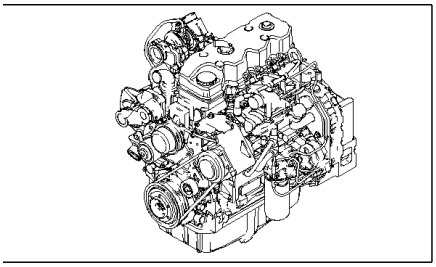

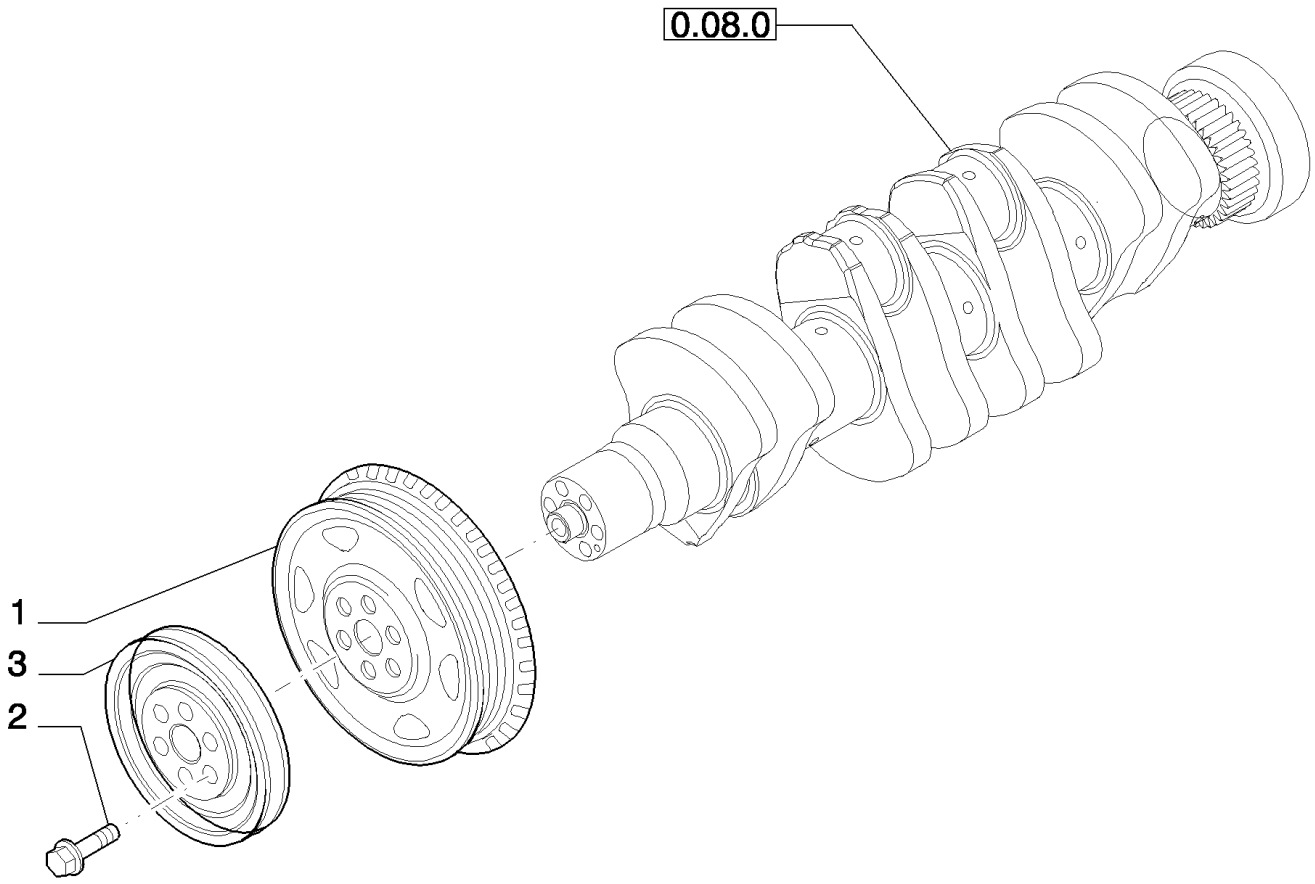

B110 TIER 3 BACKHOE LOADER (2/07-)

0.08.4 PULLEY - CRANKSHAFT

Ref	Numero de Pieza	Ctd	Descripción
1	4896773	1	PULLEY,
2	4892867	6	SCREW, Torx Wash Hd, M12 x 1.25 x 78.5,
3	504061622	1	PULLEY,

0.10.5(01) DYNAMIC BALANCER, GEARS & SHAFTS

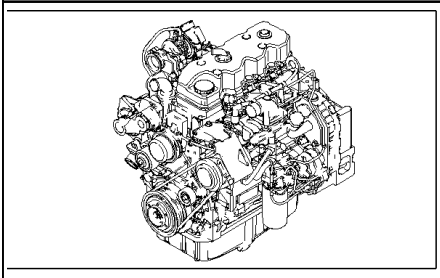

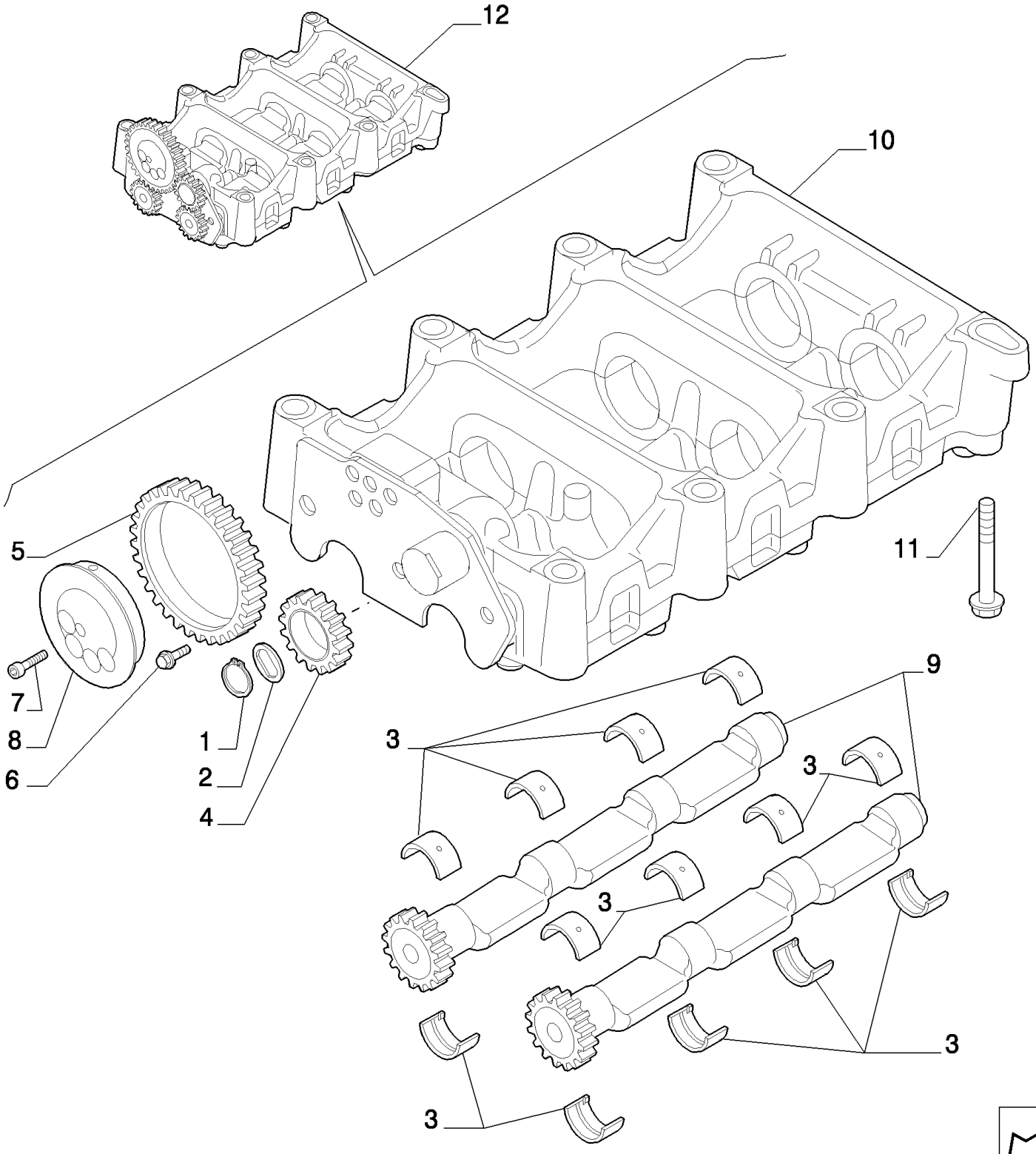

B110 TIER 3 BACKHOE LOADER (2/07-)

0.10.5(01) DYNAMIC BALANCER, GEARS & SHAFTS

Ref	Numero de Pieza	Ctd	Descripción
1	2852870	1	
2	2855753	1	PLATE, THRUST,
3	4897071	16	BUSHING,
4	4897048	1	GEAR, IDLER,
5	4896947	1	GEAR, IDLER,
6	4895586	3	SCREW,
7	2830433	5	SCREW,
8	2831031	1	SHAFT, IDLE,
9	2831354	2	SHAFT,
10	2855744	1	HOUSING, - ASSY, ASSY SEE PAGE 2
11	4899109	7	SCREW, Hex, M10 x 1.5 x 80,
11	4897934	1	SCREW, M10X1.5X100
12	2855743	1	BALANCER, - ASSY

0.10.5(02) DYNAMIC BALANCER, GEARS & SHAFTS

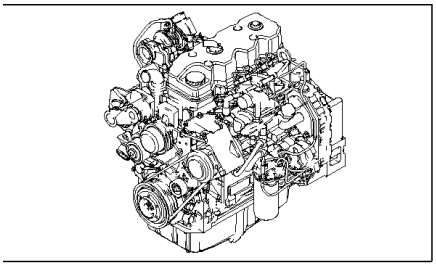

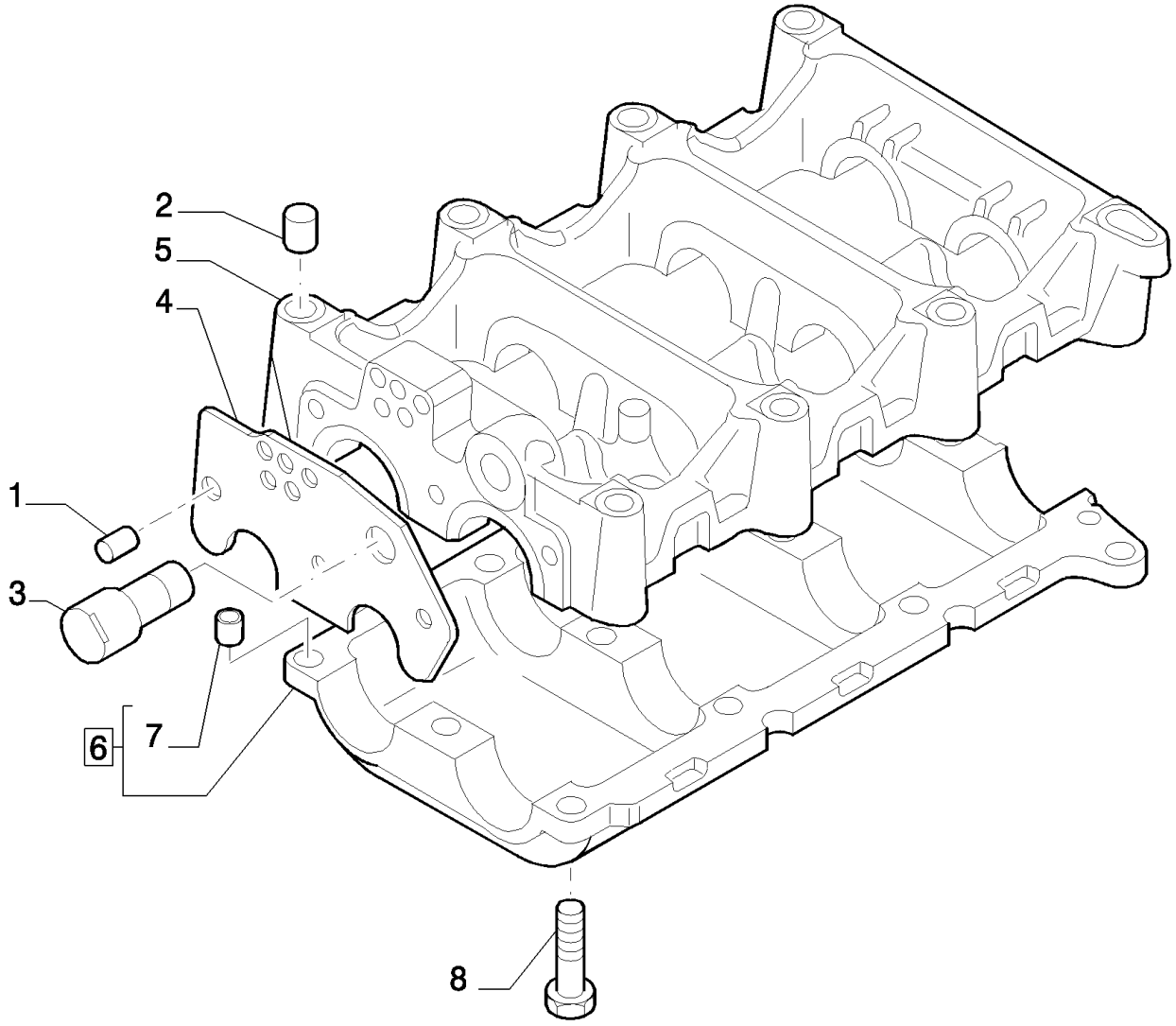

B110 TIER 3 BACKHOE LOADER (2/07-)

0.10.5(02) DYNAMIC BALANCER, GEARS & SHAFTS

Ref	Numero de Pieza	Ctd	Descripción
1	2831305	1	DOWEL,
2	4899027	2	DOWEL,
3	2830948	1	SHAFT, IDLE,
4	2855746	1	PLATE, THRUST,
5	2831303	1	FRAME,
6	2831302	1	FRAME, - ASSY
7	4891209	6	DOWEL,
8	4895323	12	SCREW,

0.12.0 CAMSHAFT - TIMING CONTROL

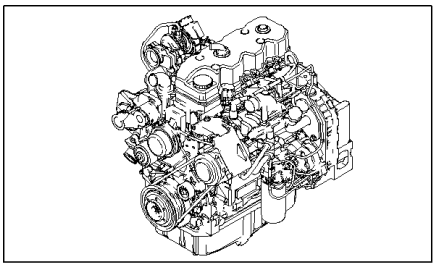

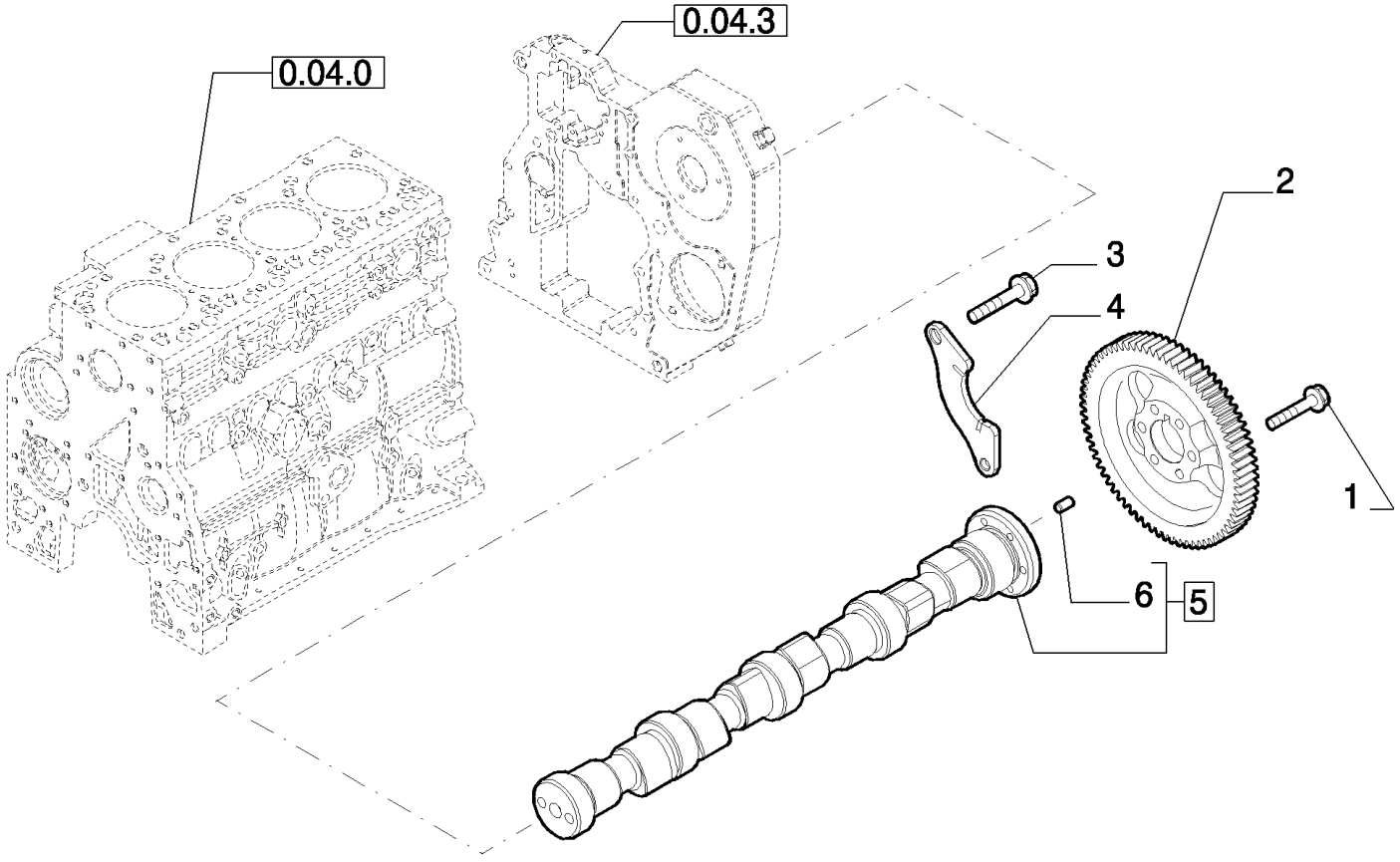

B110 TIER 3 BACKHOE LOADER (2/07-)

0.12.0 CAMSHAFT - TIMING CONTROL

Ref	Numero de Pieza	Ctd	Descripción
1	4899079	6	SCREW, Hex Flg, M8 x 1.25 x 25,
2	4896381	1	GEAR,
3	4899068	2	SCREW, Hex Flg , M8 x 1.25 x 16,
4	4897457	1	FLANGE,
5	2855487	1	CAMSHAFT, - ASSY
6	4899080	1	DOWEL,

0.14.0(01) INJECTION PUMP

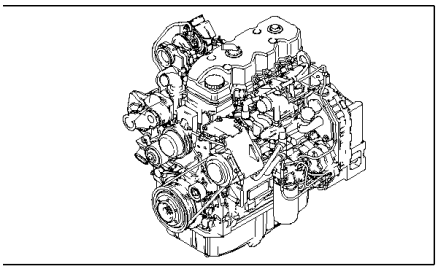

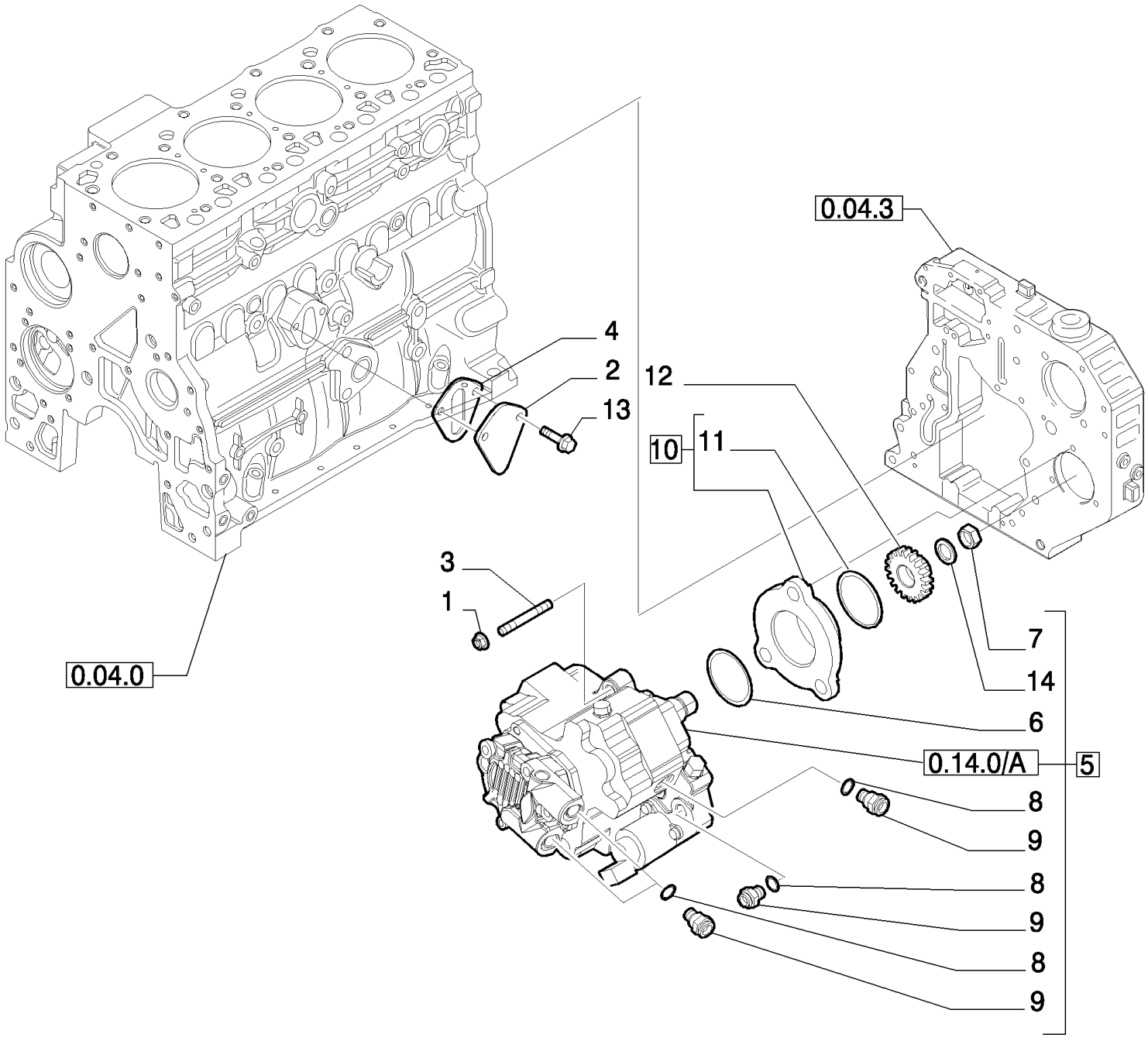

B110 TIER 3 BACKHOE LOADER (2/07-)

0.14.0(01) INJECTION PUMP

Ref	Numero de Pieza	Ctd	Descripción
1	4899003	3	NUT,
2	4896952	1	COVER,
3	16747224	1	NUT, M8X1,25X50
4	4890700	1	GASKET,
5	4898921	1	PUMP, FUEL INJECTION, - ASSY, SEE PL 0.14.0/A
6	4890088	1	O-RING,
7	4890634	1	NUT,
8	4891385	4	GASKET,
9	4893962	4	COUPLING, QUICK, MALE,
10	2852804	1	HUB,
11	17285381	1	O-RING,
12	4893389	1	GEAR, DRIVEN,
13	2852234	2	SCREW, Hex Flg, M8 x 1.25 x 20,
14	4890635	1	WASHER,

0.14.0(02) INJECTION EQUIPMENT - INJECTOR

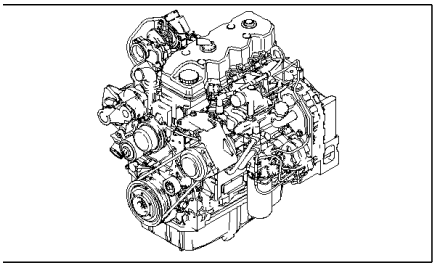

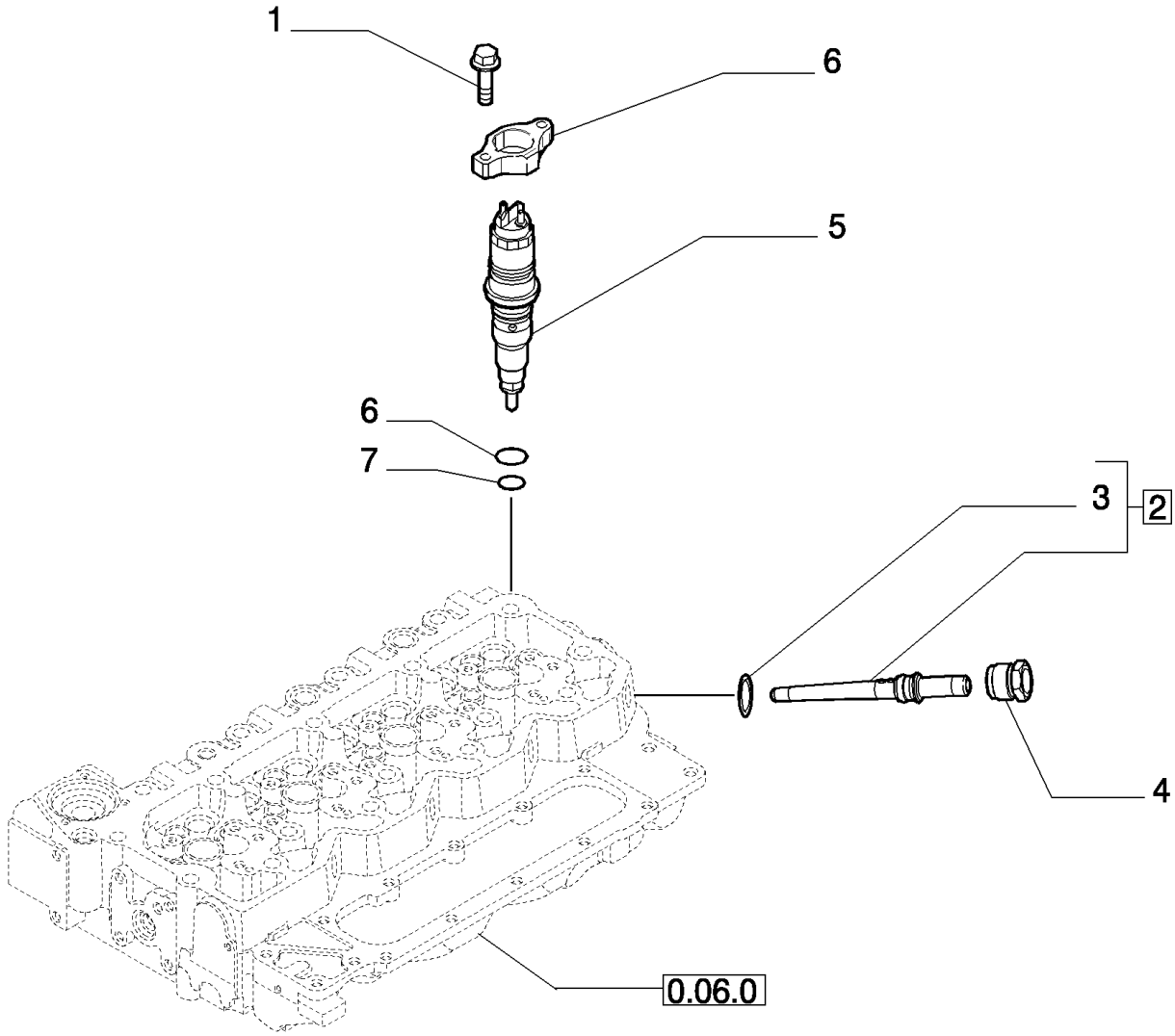

B110 TIER 3 BACKHOE LOADER (2/07-)

0.14.0(02) INJECTION EQUIPMENT - INJECTOR

Ref	Numero de Pieza	Ctd	Descripción
1	4895483	8	SCREW, M6X1.0X25
2	2854606	4	FITTING, - ASSY
3	4890929	1	O-RING,
4	4893739	4	NUT, TUBE,
5	2855491	4	INJECTOR, FUEL SYSTEM,
6	2854609	4	BRACKET,
7	4899689	4	WASHER, SEALING,
8	4890926	4	O-RING,

0.14.0/ A INJECTION PUMP - COMPONENTS

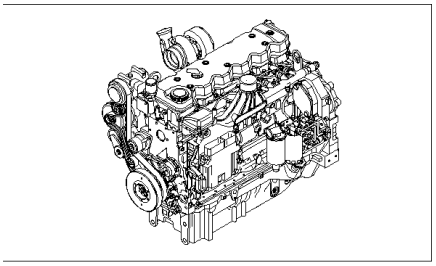

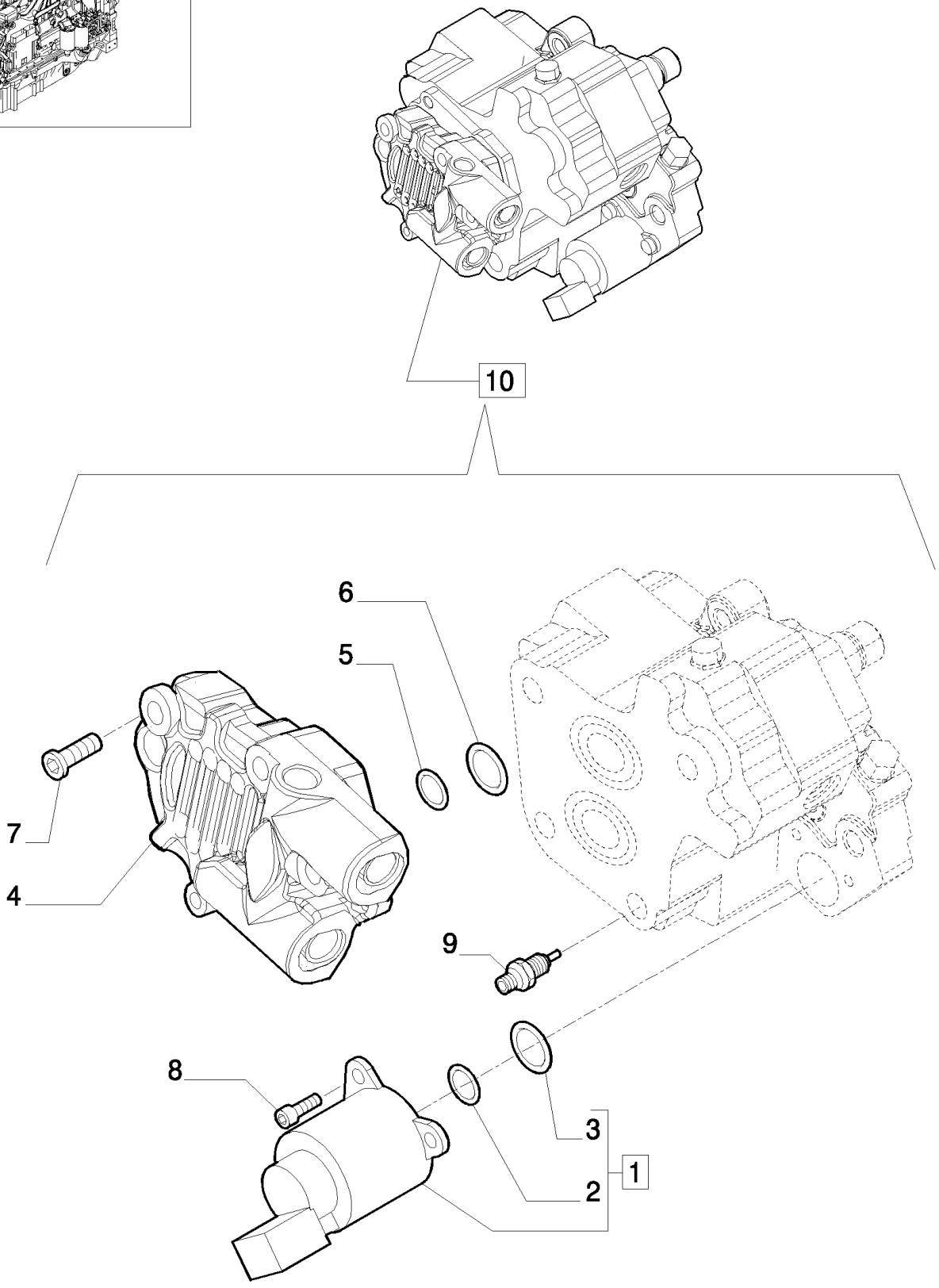

B110 TIER 3 BACKHOE LOADER (2/07-)

0.14.0/ A INJECTION PUMP - COMPONENTS

Ref	Numero de Pieza	Ctd	Descripción
1	42541851	1	SOLENOID, - ASSY
2	42541850	1	O-RING,
3	42541849	1	O-RING,
4	42547619	1	PUMP, FUEL,
5	42550488	1	O-RING,
6	42548060	1	O-RING,
7	42550487	4	SCREW,
8	42550932	3	SCREW,
9	42550486	1	VALVE,
10	4898921	1	PUMP, FUEL INJECTION,

0.14.9 INJECTION EQUIPMENT - PIPING

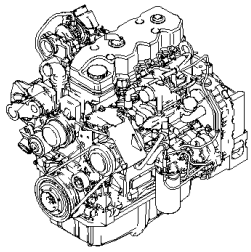

KIT

● = 1

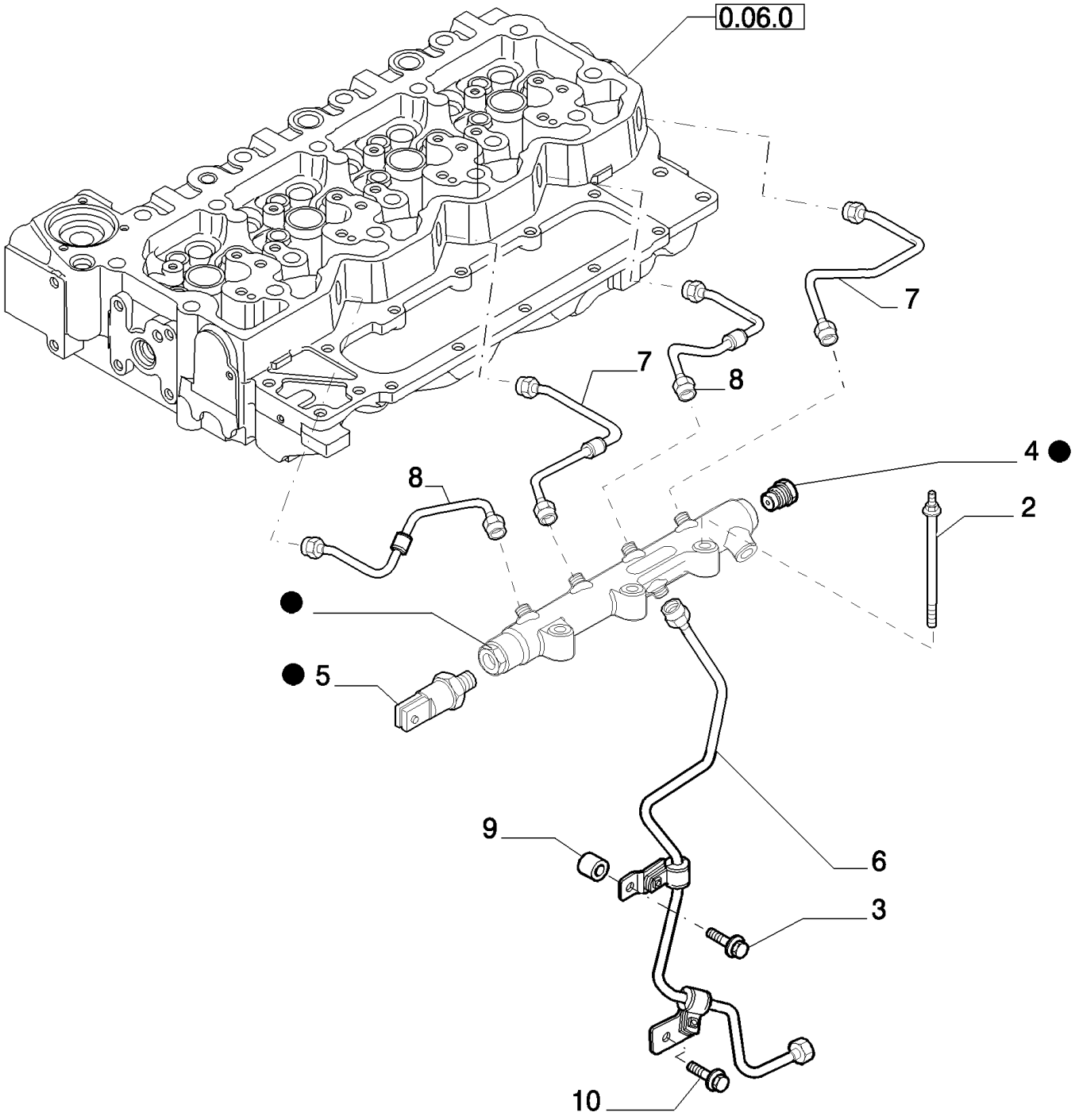

B110 TIER 3 BACKHOE LOADER (2/07-)

0.14.9 INJECTION EQUIPMENT - PIPING

Ref	Numero de Pieza	Ctd	Descripción
1	2855503	1	MANIFOLD, - ASSY
2	2853537	3	BOLT,
3	4899020	1	SCREW, M8X1,25X16
4	2854543	1	VALVE, PRESSURE RELIEF,
5	2854542	1	SENSOR,
6	2855819	1	PIPE INJECTION,
7	2855818	2	PIPE INJECTION,
8	2854544	2	PIPE,
9	2852434	1	SPACER,
10	4896884	1	SCREW,

0.17.0 ELECTRONIC INJECTION

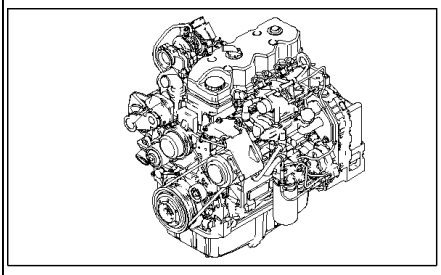

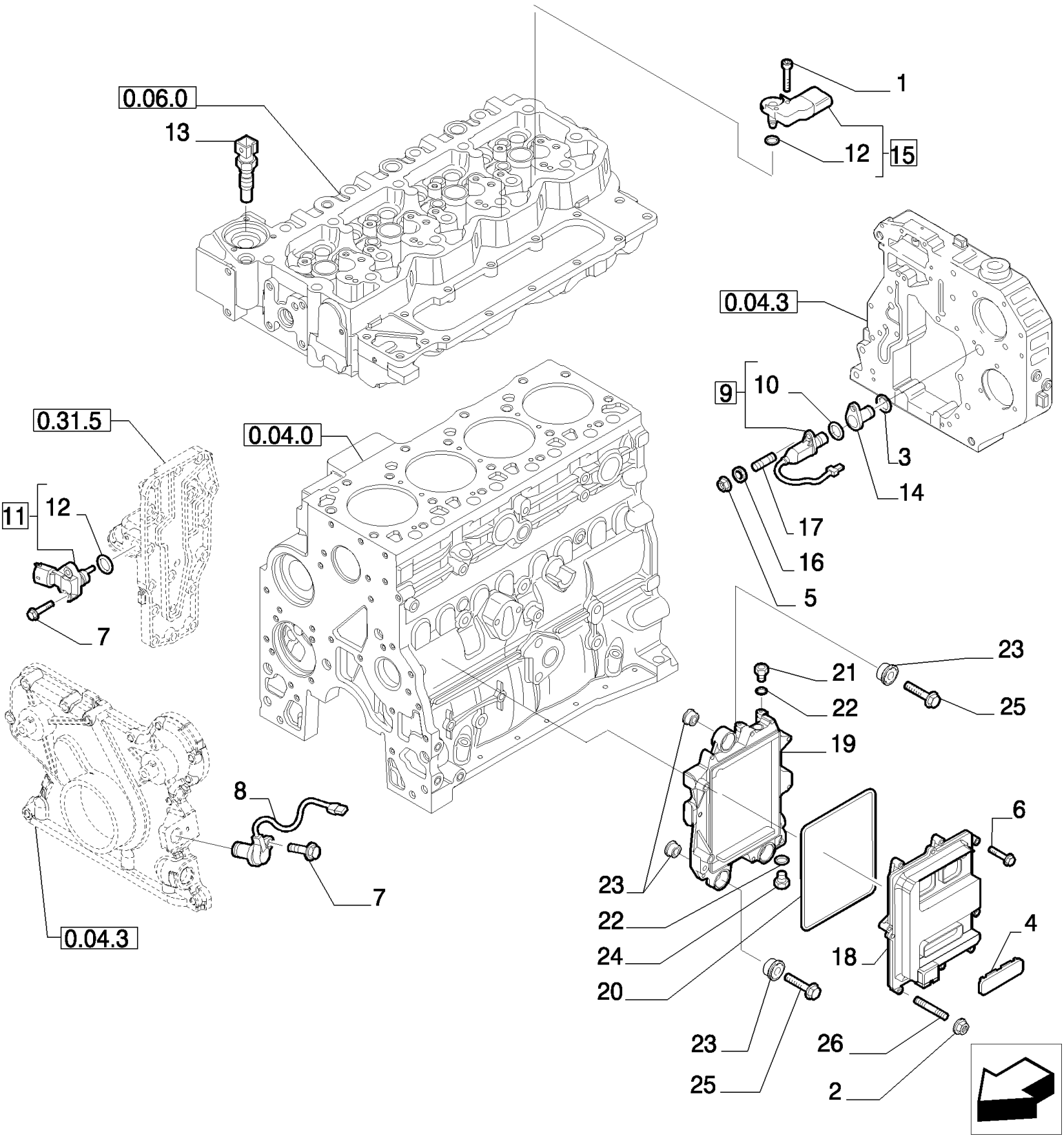

B110 TIER 3 BACKHOE LOADER (2/07-)

0.17.0 ELECTRONIC INJECTION

Ref	Numero de Pieza	Ctd	Descripción
1	4895817	1	SCREW,
2	4899057	1	NUT,
3	17278881	1	O-RING, 23,5X1,7
4	2852825	1	PLUG,
5	17037821	1	NUT,
6	16586021	7	SCREW, M6X30
7	4899110	3	SCREW, Hex Flg, M6 x 1 x 20,
8	4890189	1	SENDER UNIT,
9	4890190	1	SENDER UNIT, - ASSY
10	17278481	1	O-RING, 17,17X1,78
11	4890193	1	SENDER UNIT, - ASSY
12	4895477	1	O-RING,
13	4897224	1	SENSOR, Temperature
14	4892255	1	HOUSING,
15	2852821	1	SENSOR, - ASSY; Boost/Air Temperature Sensor
16	4899124	1	WASHER,
17	4895157	1	STUD,
18	2854594	1	ELECTRONIC UNIT, CONTROL,
19	2854596	1	BRACKET,
20	2854079	1	GASKET,
21	4896542	1	CONNECTOR, HYD., M12X1,5
22	2854292	2	GASKET,
23	2855150	6	INSULATOR BLOCK,
24	4890964	1	FITTING,
25	4899078	3	SCREW, Hex Flg, M8 x 1.25 x 45,
26	2854593	1	STUD,

0.17.3 MOTOR ELECTRIC INSTALLATION

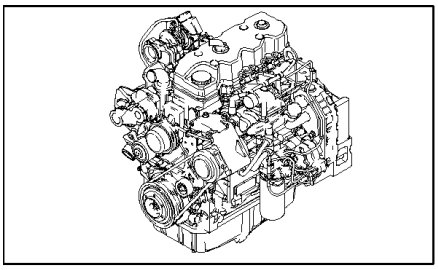

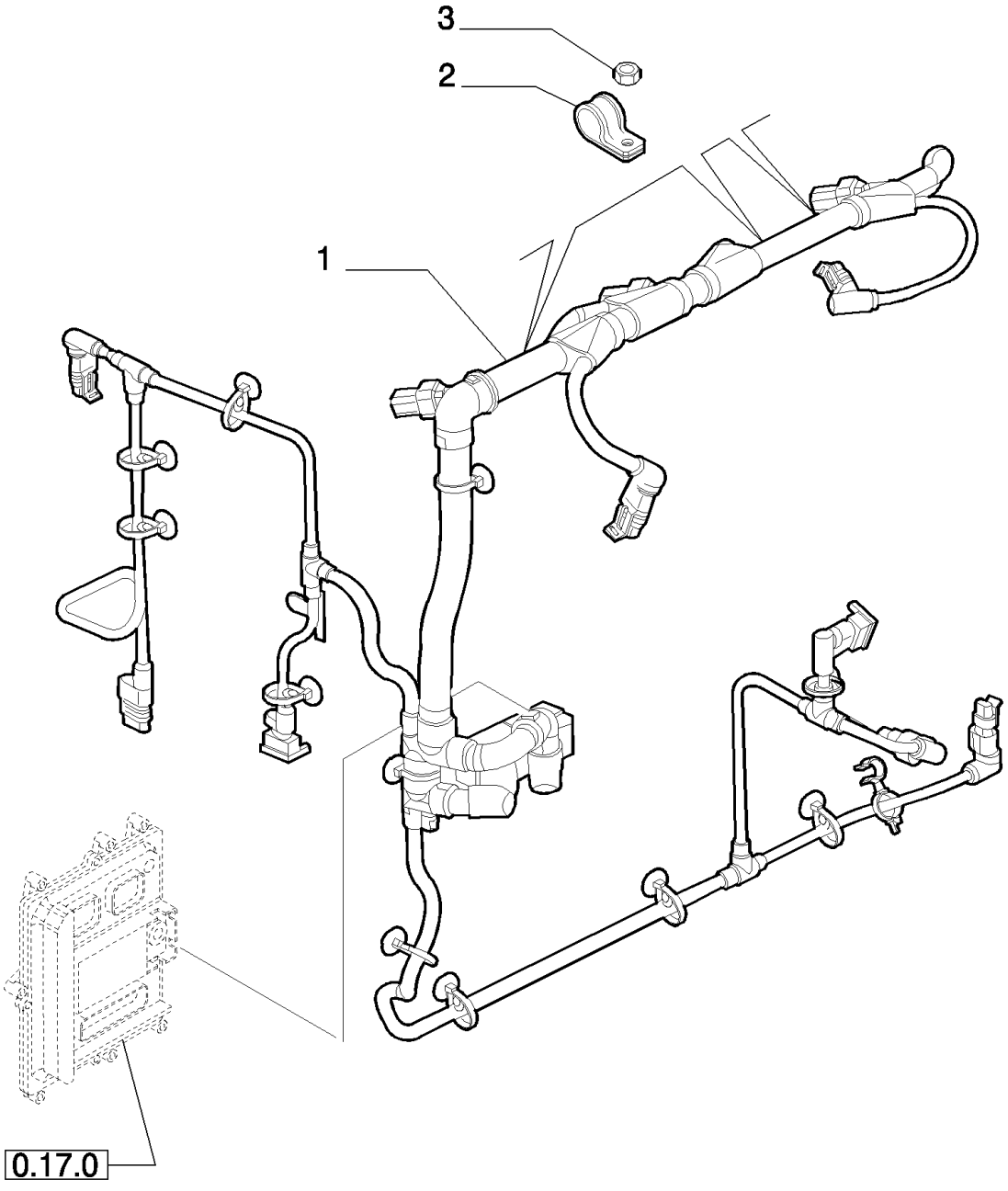

B110 TIER 3 BACKHOE LOADER (2/07-)

0.17.3 MOTOR ELECTRIC INSTALLATION

Ref	Numero de Pieza	Ctd	Descripción
1	2855886	1	HARNESS, WIRE,
2	2852501	2	COLLAR, RETAINER,
2	17315190	1	CLAMP,
3	2852484	3	NUT,

0.20.0 FUEL FILTER

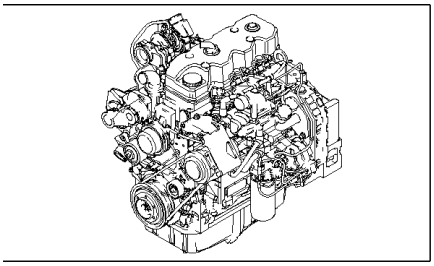

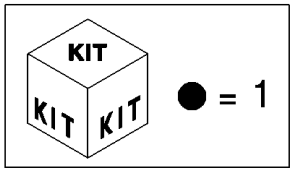

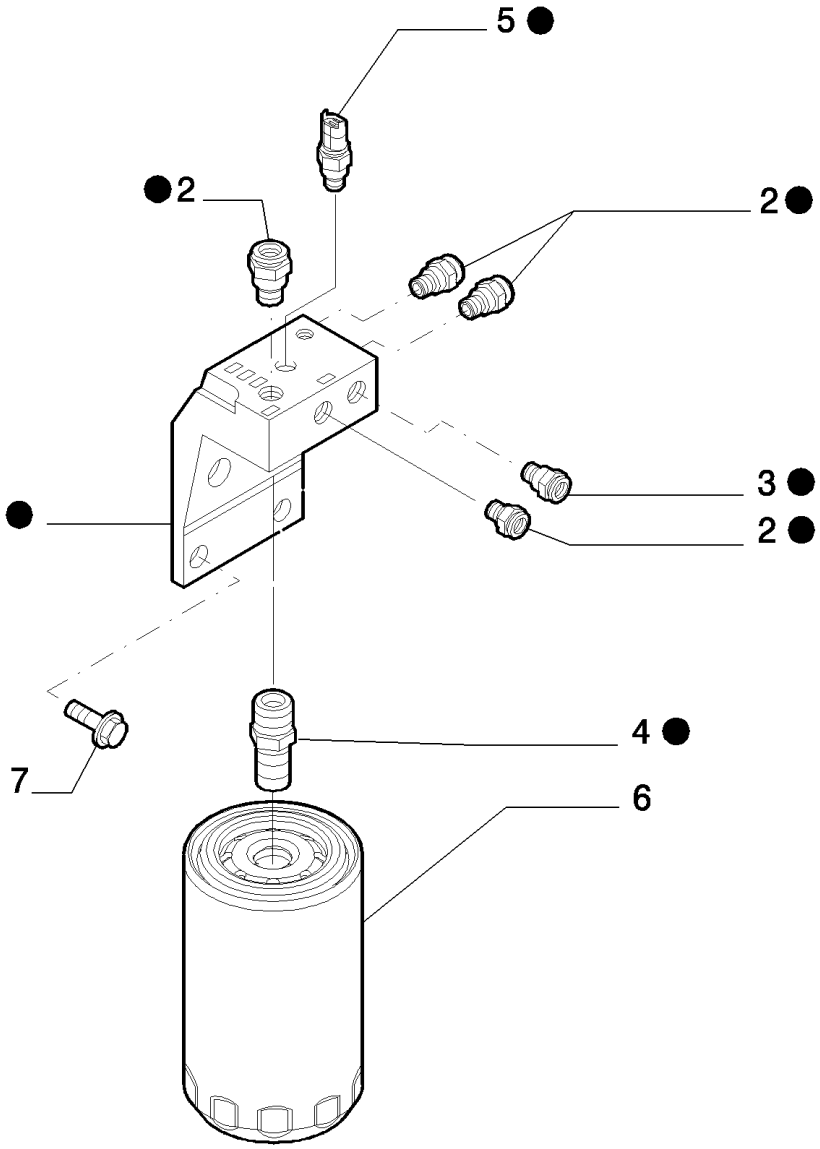

B110 TIER 3 BACKHOE LOADER (2/07-)

0.20.0 FUEL FILTER

Ref	Numero de Pieza	Ctd	Descripción
1	2855792	1	HOUSING, - ASSY
2	2854563	4	FITTING,
3	2854564	1	FITTING,
4	4898877	1	FITTING,
5	4897224	1	SENSOR, Temperature
6	87803197	1	FILTER, FUEL,
7	2854566	2	SCREW, M12X30

0.20.3 PIPING - FUEL

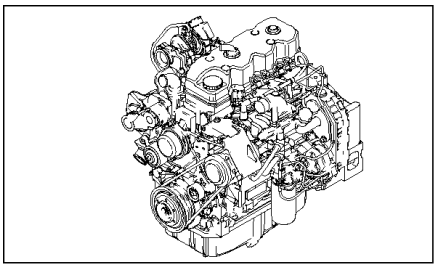

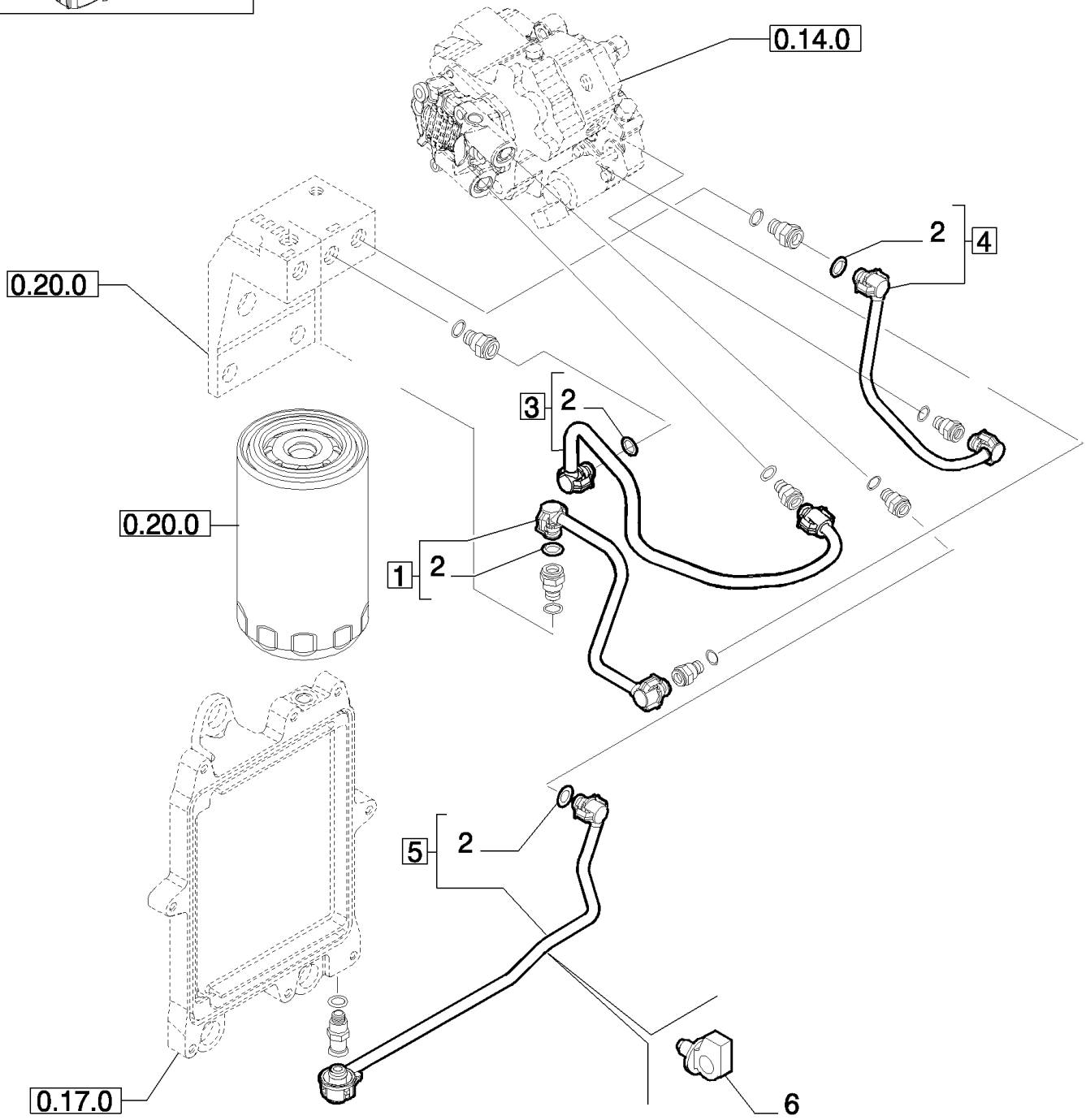

B110 TIER 3 BACKHOE LOADER (2/07-)

0.20.3 PIPING - FUEL

Ref	Numero de Pieza	Ctd	Descripción
1	2855427	1	PIPE, - ASSY
2	4894095	2	O-RING,
3	2855428	1	PIPE, - ASSY
4	2855430	1	PIPE, - ASSY
5	2855795	1	PIPE INJECTION, - ASSY
6	4896996	1	CLAMP,

0.20.4 INJECTION EQUIPMENT - PIPING

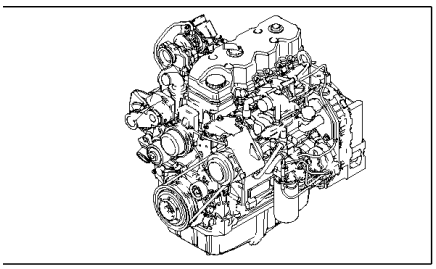

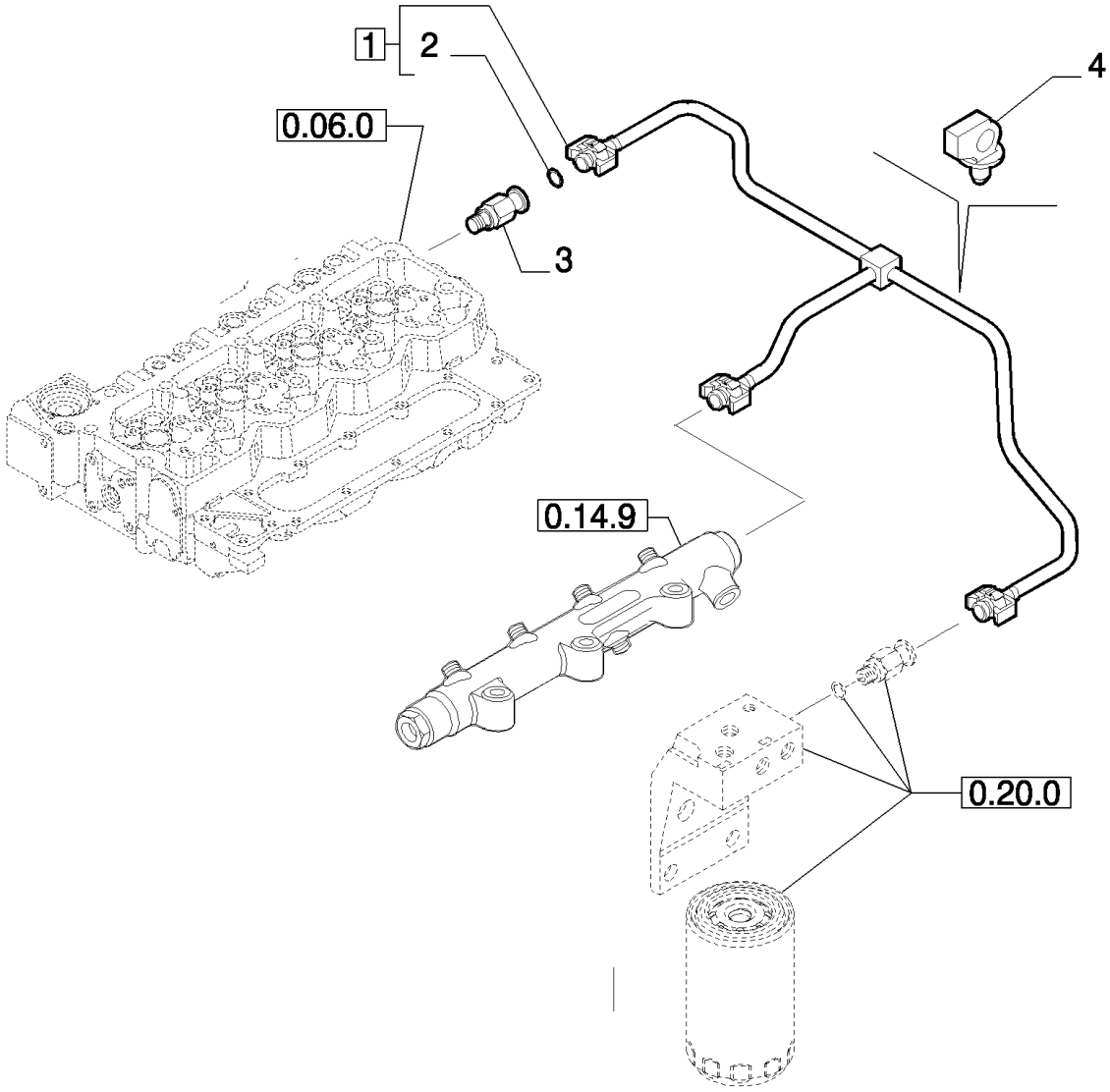

B110 TIER 3 BACKHOE LOADER (2/07-)

0.20.4 INJECTION EQUIPMENT - PIPING

Ref	Numero de Pieza	Ctd	Descripción
1	2855336	1	PIPE, RETURN, - ASSY
2	4894095	3	O-RING,
3	4896329	1	VALVE, PRESSURE RELIEF,
4	4896996	1	CLAMP,

0.24.0 TURBOCHARGER

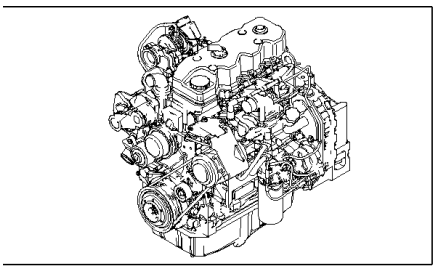

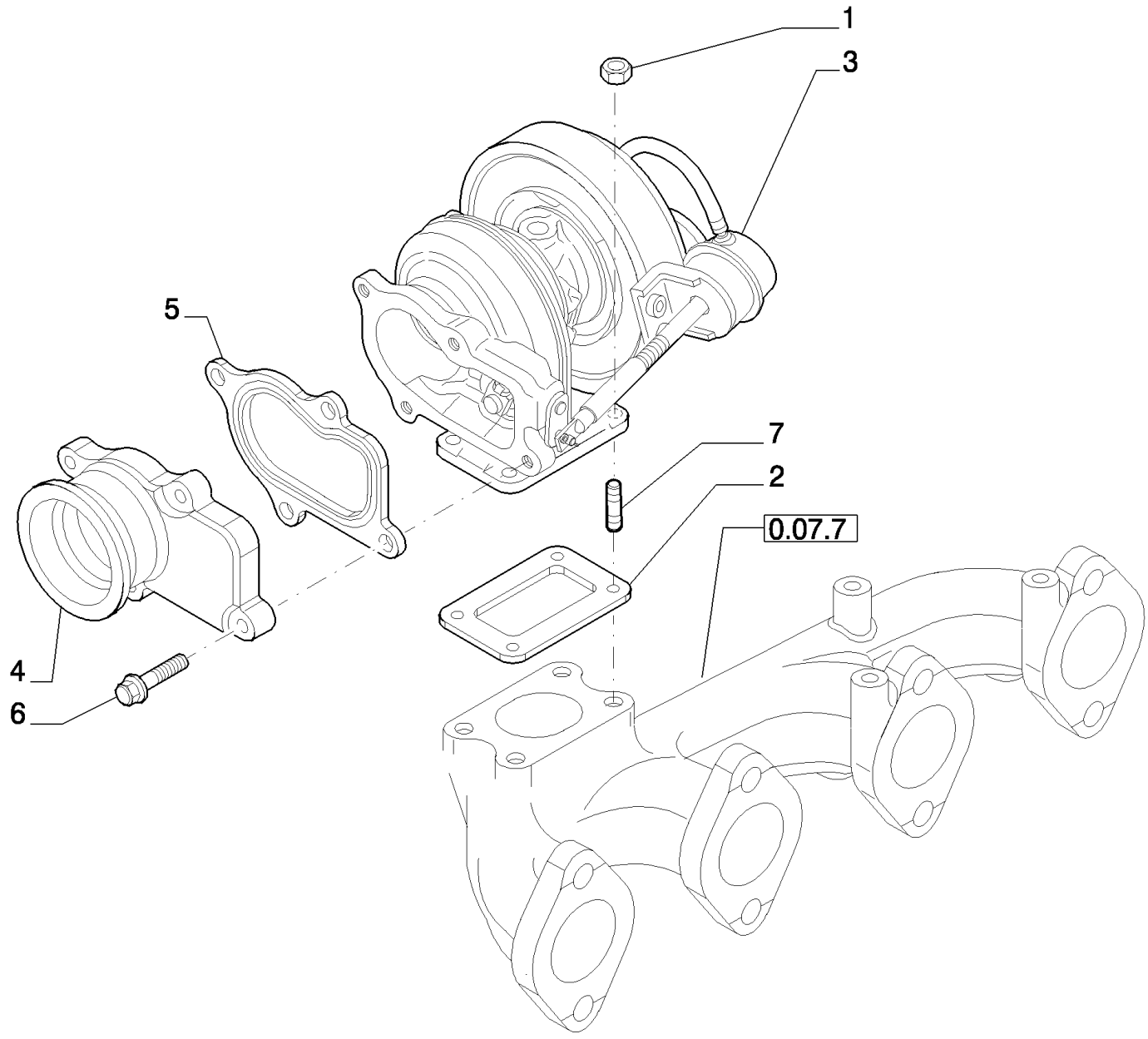

B110 TIER 3 BACKHOE LOADER (2/07-)

0.24.0 TURBOCHARGER

Ref	Numero de Pieza	Ctd	Descripción
1	4899118	4	NUT,
2	4895133	1	GASKET,
3	2855947	1	TURBOCHARGER,
4	2852072	1	MANIFOLD, EXHAUST,
5	2852071	1	GASKET,
6	4898482	4	SCREW, Flg Hd, M8 x 1.25 x 30,
7	4850581	4	STUD,

0.27.0 ENGINE OIL DIPSTICK

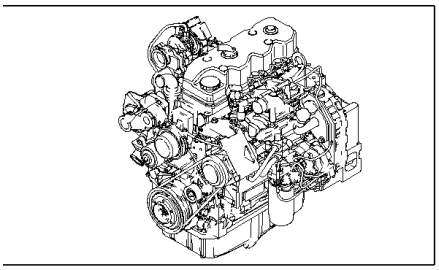

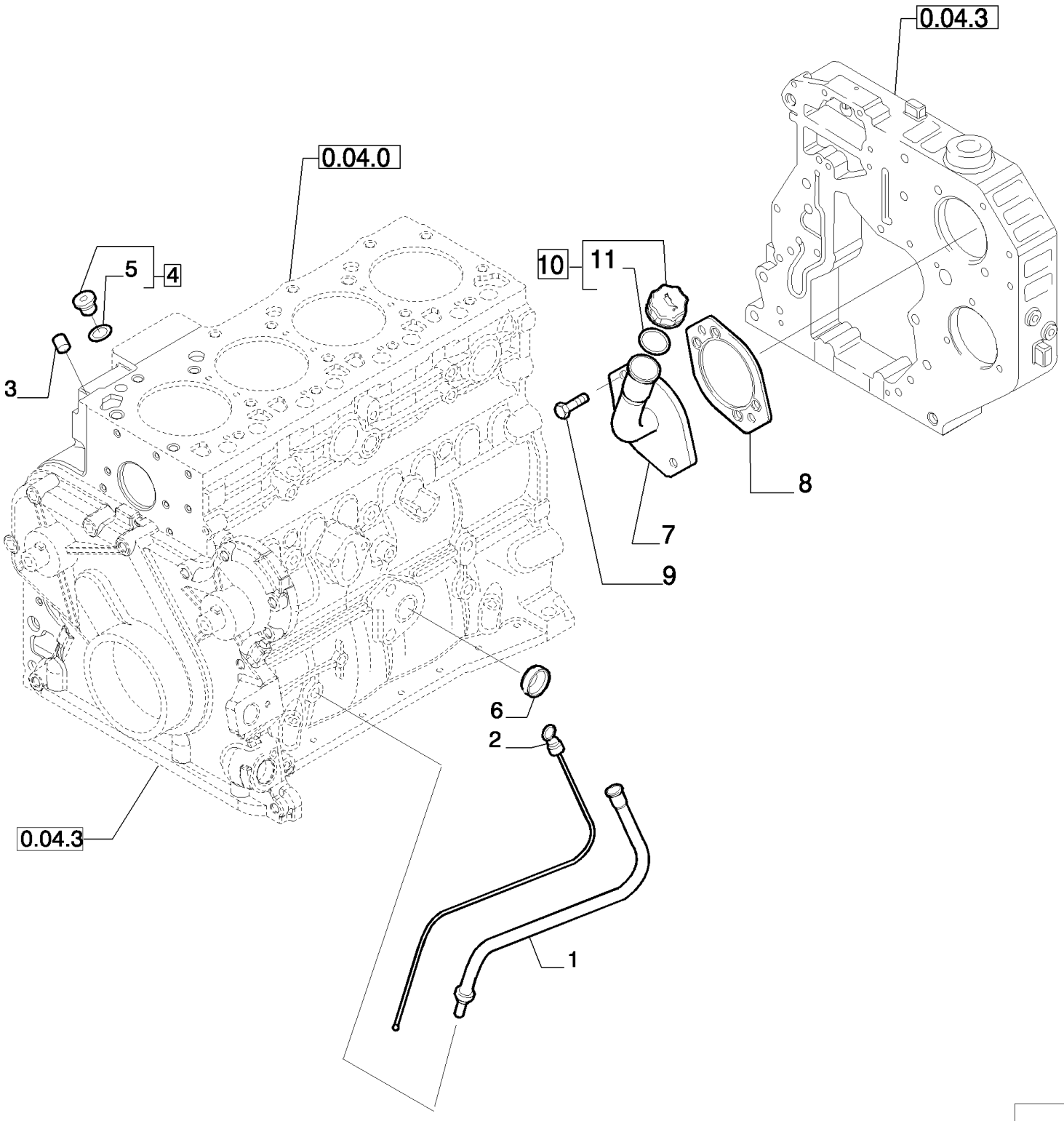

B110 TIER 3 BACKHOE LOADER (2/07-)

0.27.0 ENGINE OIL DIPSTICK

Ref	Numero de Pieza	Ctd	Descripción
1	2855813	1	TUBE, - OIL LEVEL
2	2855815	1	DIPSTICK,
3	4899036	2	PLUG,
4	4897330	2	PLUG, - ASSY
5	4895610	1	O-RING,
6	4895037	1	PLUG,
7	2855787	1	TUBE,
8	4896897	1	GASKET,
9	16588025	2	SCREW,
10	2853410	1	CAP, INTRODUCTION, - ASSY
11	2853412	1	O-RING,

0.30.0 OIL PUMP - ENGINE

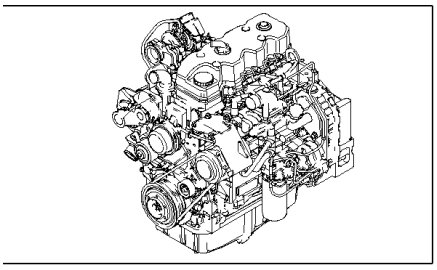

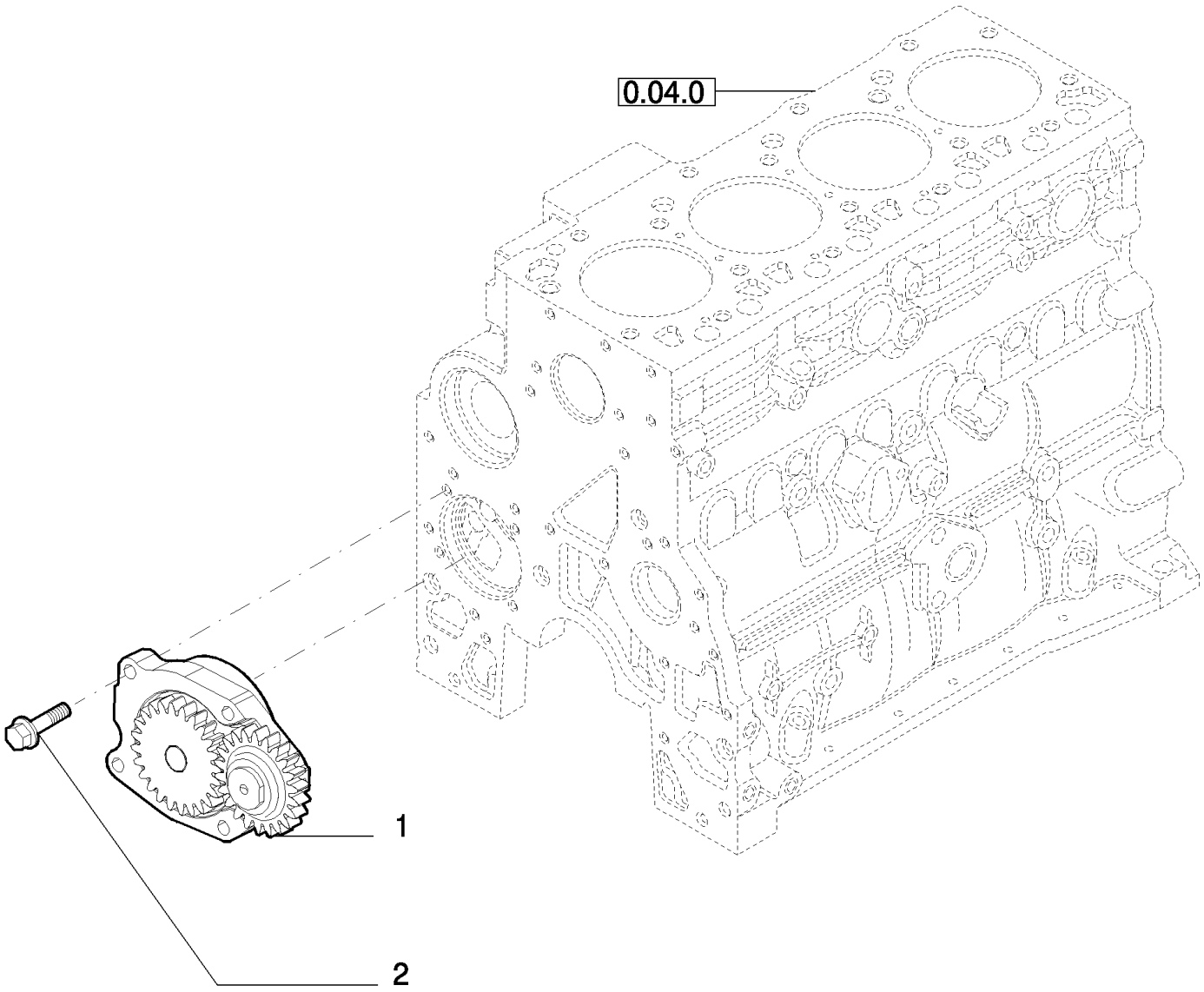

B110 TIER 3 BACKHOE LOADER (2/07-)

0.30.0 OIL PUMP - ENGINE

Ref	Numero de Pieza	Ctd	Descripción
1	4897480	1	PUMP, ENGINE OIL,
2	4899090	4	SCREW, Hex Flg, M8 x 1.25 x 30,

0.30.2 OIL FILTERS - ENGINE

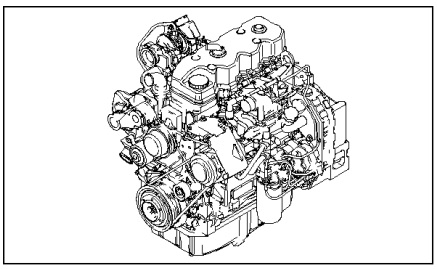

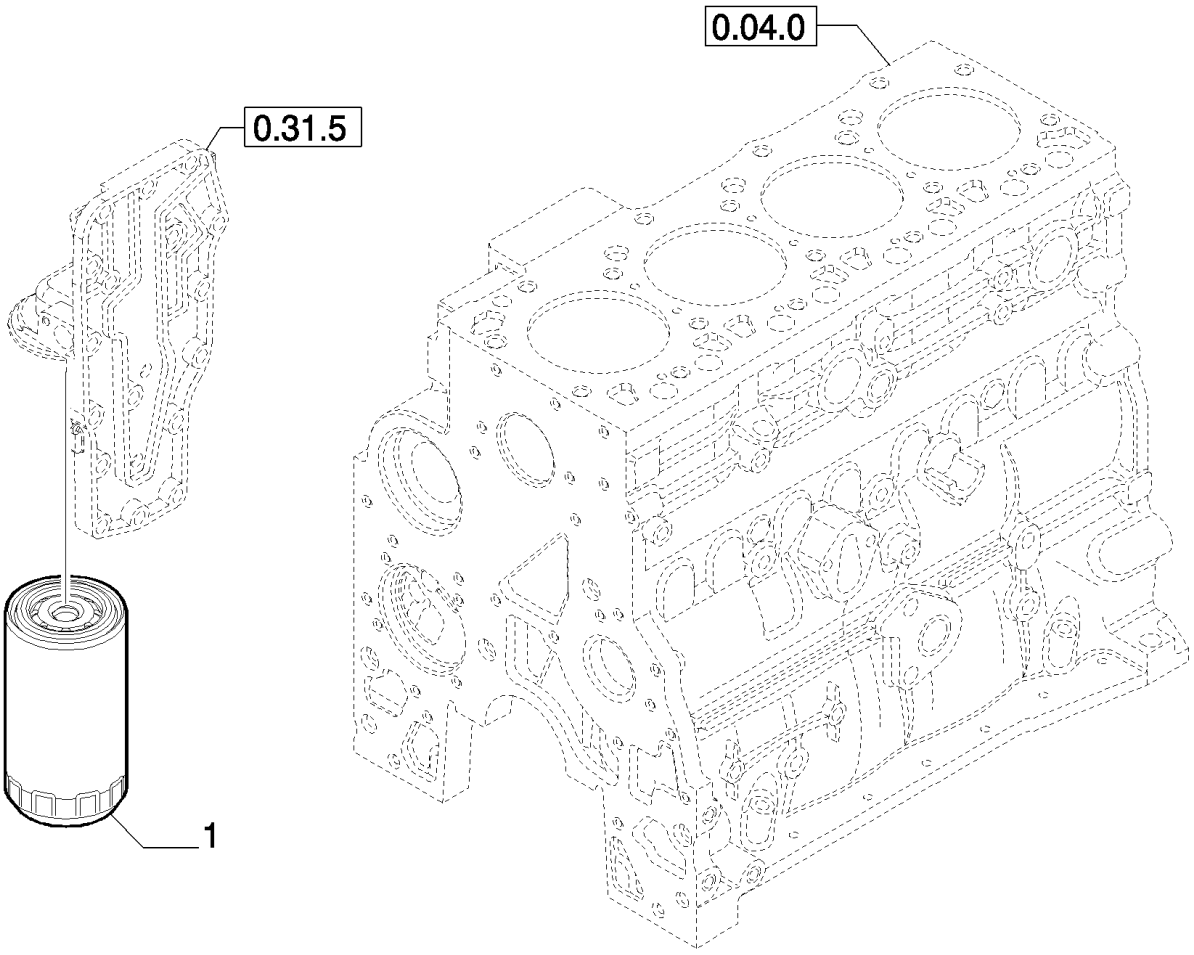

B110 TIER 3 BACKHOE LOADER (2/07-)

0.30.2 OIL FILTERS - ENGINE

Ref	Numero de Pieza	Ctd	Descripción
1	87803260	1	FILTER, ENGINE OIL,

0.30.5 PIPING - ENGINE OIL

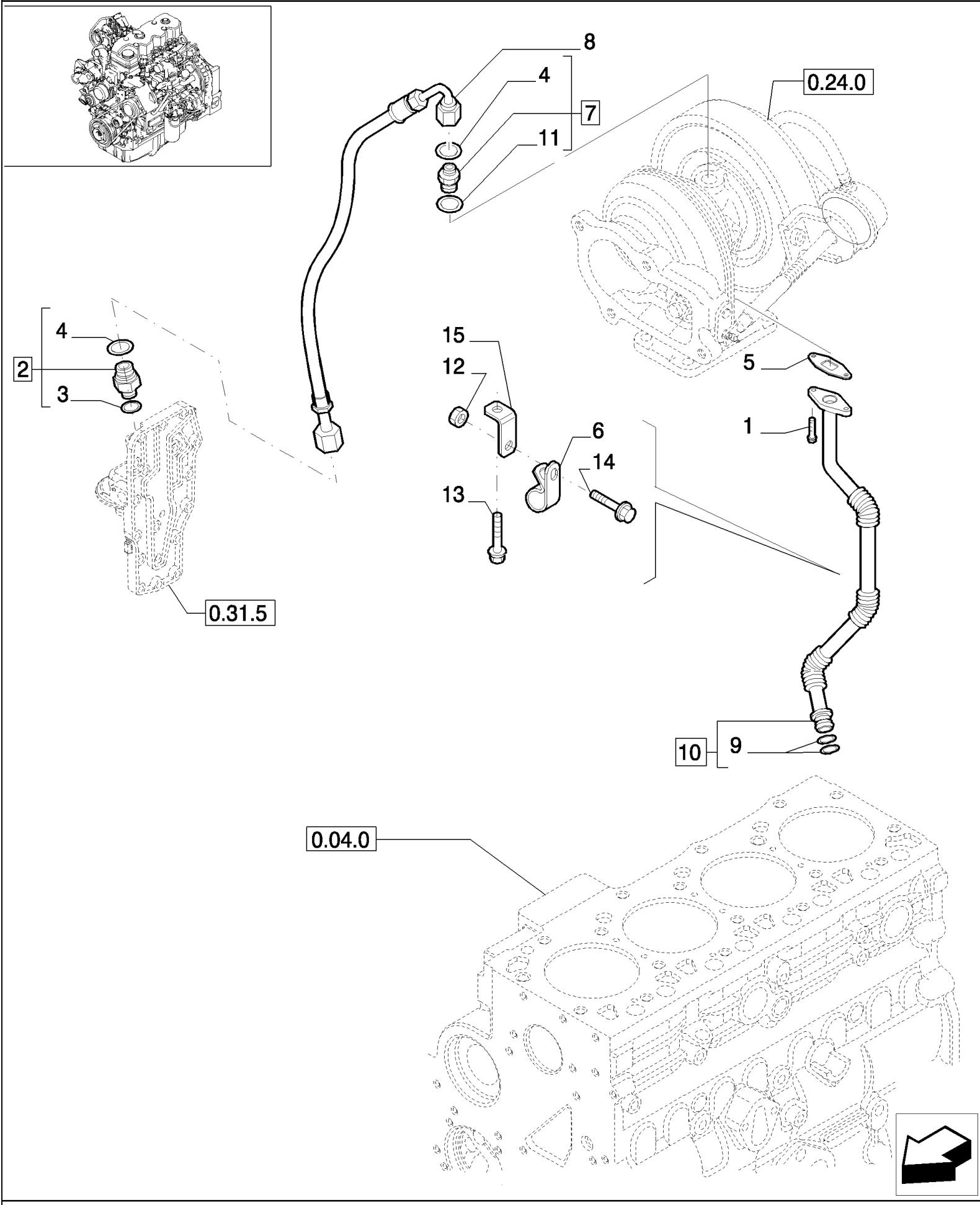

B110 TIER 3 BACKHOE LOADER (2/07-)

0.30.5 PIPING - ENGINE OIL

Ref	Numero de Pieza	Ctd	Descripción
1	4895164	2	SCREW,
2	4895107	1	CONNECTOR, HYD., - ASSY
3	4899107	1	O-RING,
4	4899108	2	O-RING,
5	4899467	1	GASKET,
6	4899519	1	CLAMP,
7	4899106	1	CONNECTOR, HYD., - ASSY
8	2852195	1	HOSE,
9	4899058	2	O-RING, M17.12 ID x 2.62 Thk
10	2855780	1	PIPE, - ASSY
11	4899121	1	WASHER, SEALING,
12	2852197	1	NUT, M6
13	2852100	1	SCREW, 8X1.25X16
14	2852101	1	SCREW, M6X16
15	2852196	1	BRACKET,

0.31.5 HEAT EXCHANGER - ENGINE

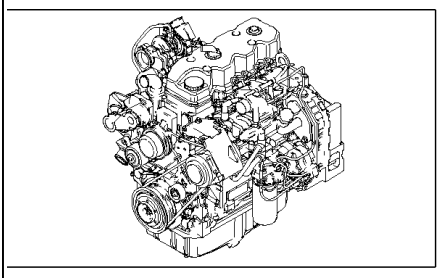

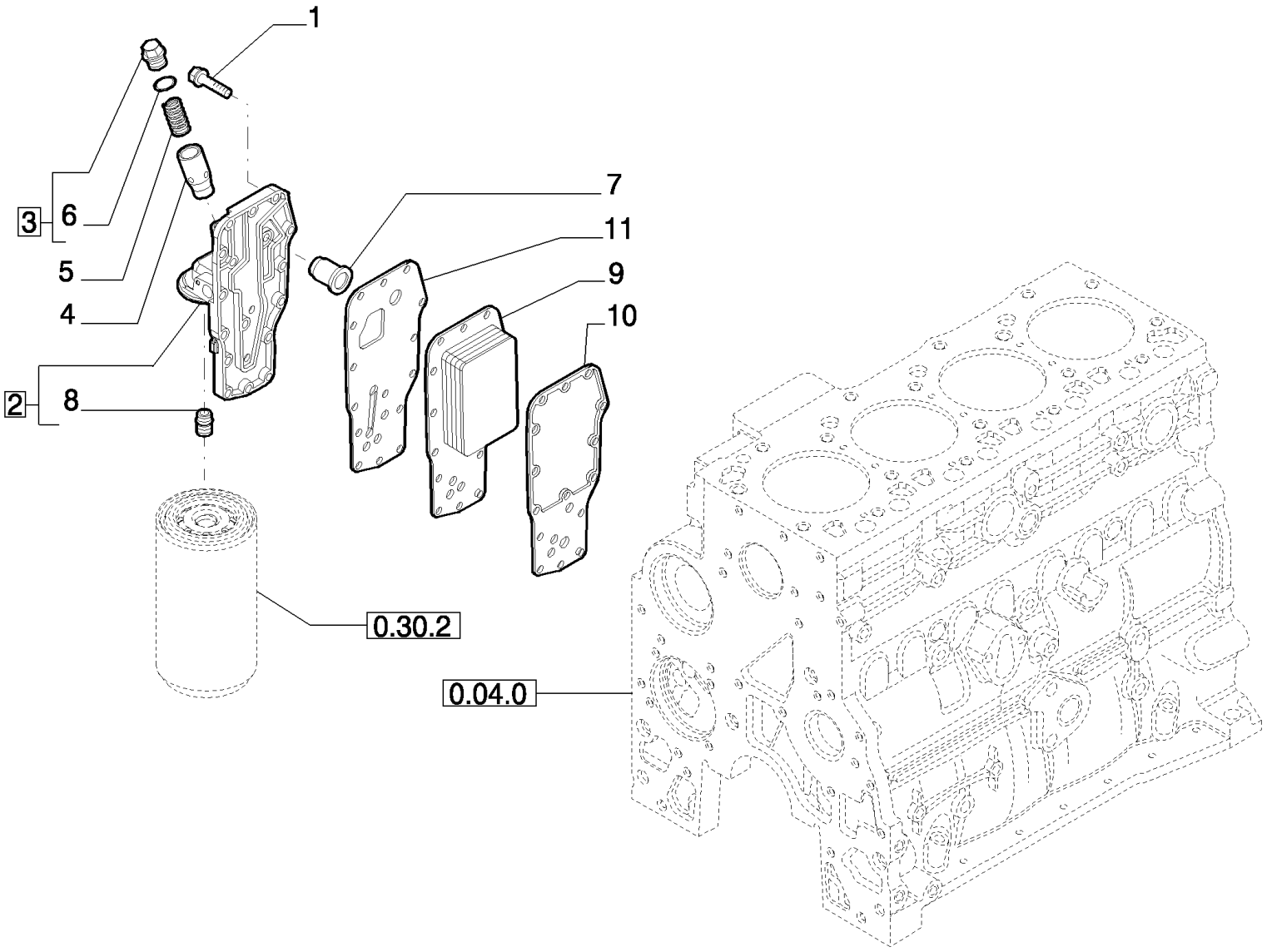

B110 TIER 3 BACKHOE LOADER (2/07-)

0.31.5 HEAT EXCHANGER - ENGINE

Ref	Numero de Pieza	Ctd	Descripción
1	4899019	15	SCREW, Hex Flg, M8 x 1.25 x 35,
2	4899566	1	HEAT EXCHANGER, - ASSY
3	2853781	1	PLUG, - ASSY
4	4896404	1	PLUNGER,
5	4895045	1	SPRING,
6	17916280	1	GASKET,
7	4896410	1	VALVE, PRESSURE RELIEF,
8	4893391	1	ADAPTER,
9	4896406	1	COOLER, OIL,
10	2830559	1	GASKET,
11	4896409	1	GASKET,

0.32.0 WATER PUMP

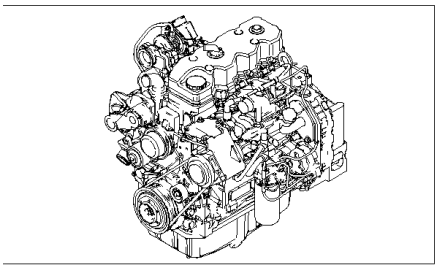

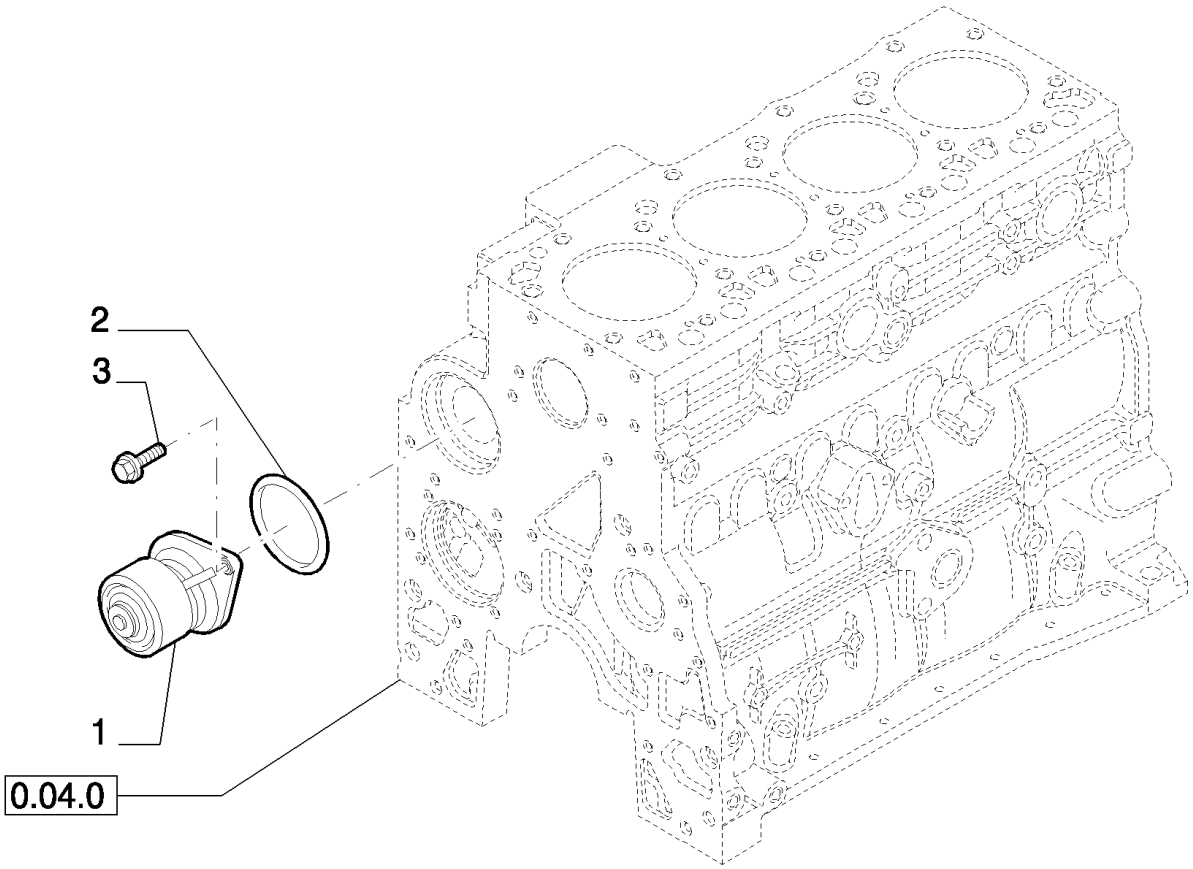

B110 TIER 3 BACKHOE LOADER (2/07-)

0.32.0 WATER PUMP

Ref	Numero de Pieza	Ctd	Descripción
1	4891252	1	PUMP, WATER, (F4HE9484C*J103)
1	2852114	1	PUMP, WATER, (F4HE9484C*J102)
2	2852047	1	GASKET,
3	4899079	2	SCREW, Hex Flg, M8 x 1.25 x 25,

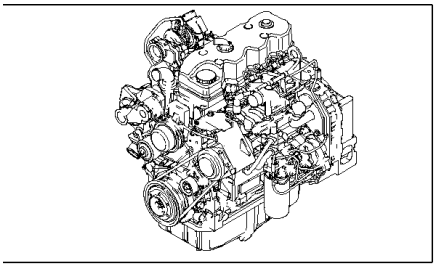

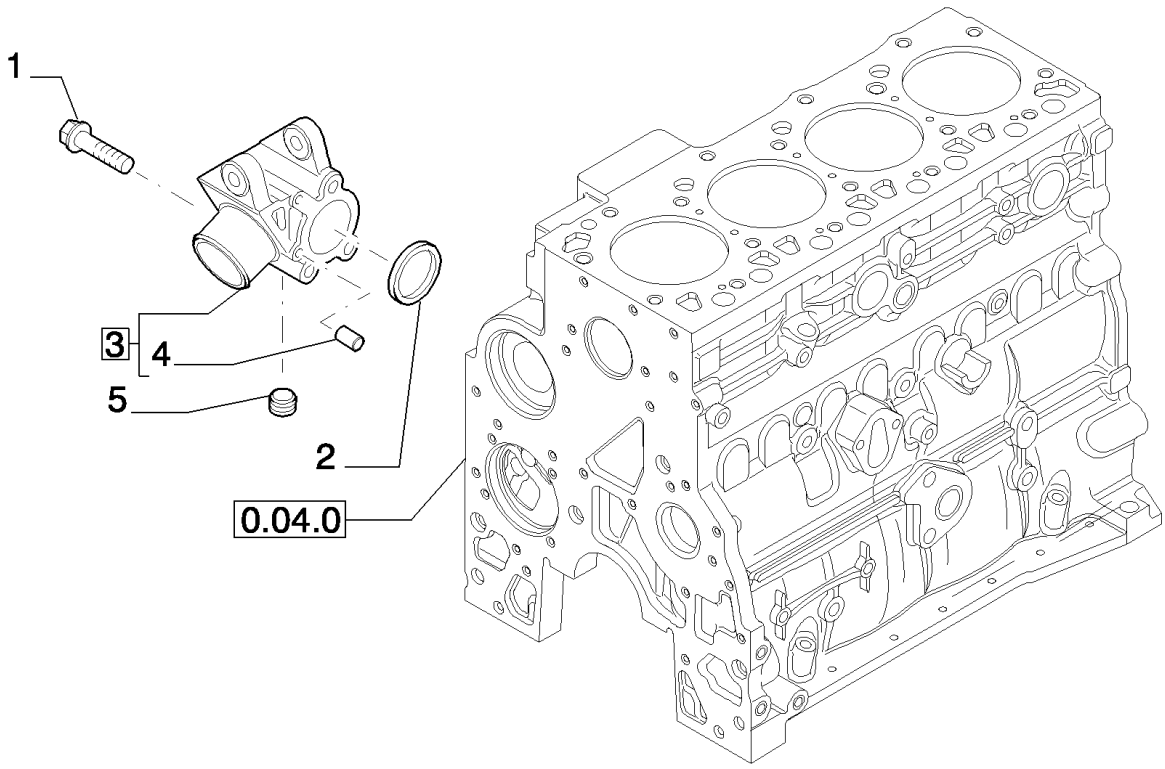
1
3
4
5
2
0.04.0

B110 TIER 3 BACKHOE LOADER (2/07-)

0.32.3 COOLING SYSTEM - ENGINE

Ref	Numero de Pieza	Ctd	Descripción
1	4899109	3	SCREW, Hex, M10 x 1.5 x 80,
2	2854072	1	O-RING,
3	2855776	1	MANIFOLD, - ASSY
4	2830894	2	DOWEL,
5	2852511	1	PLUG,

0.32.4 PIPING - ENGINE COOLING SYSTEM

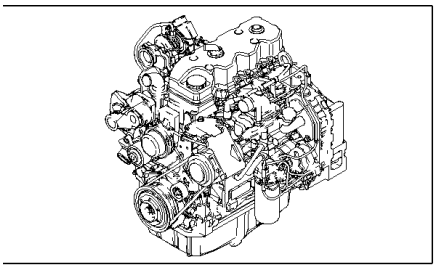

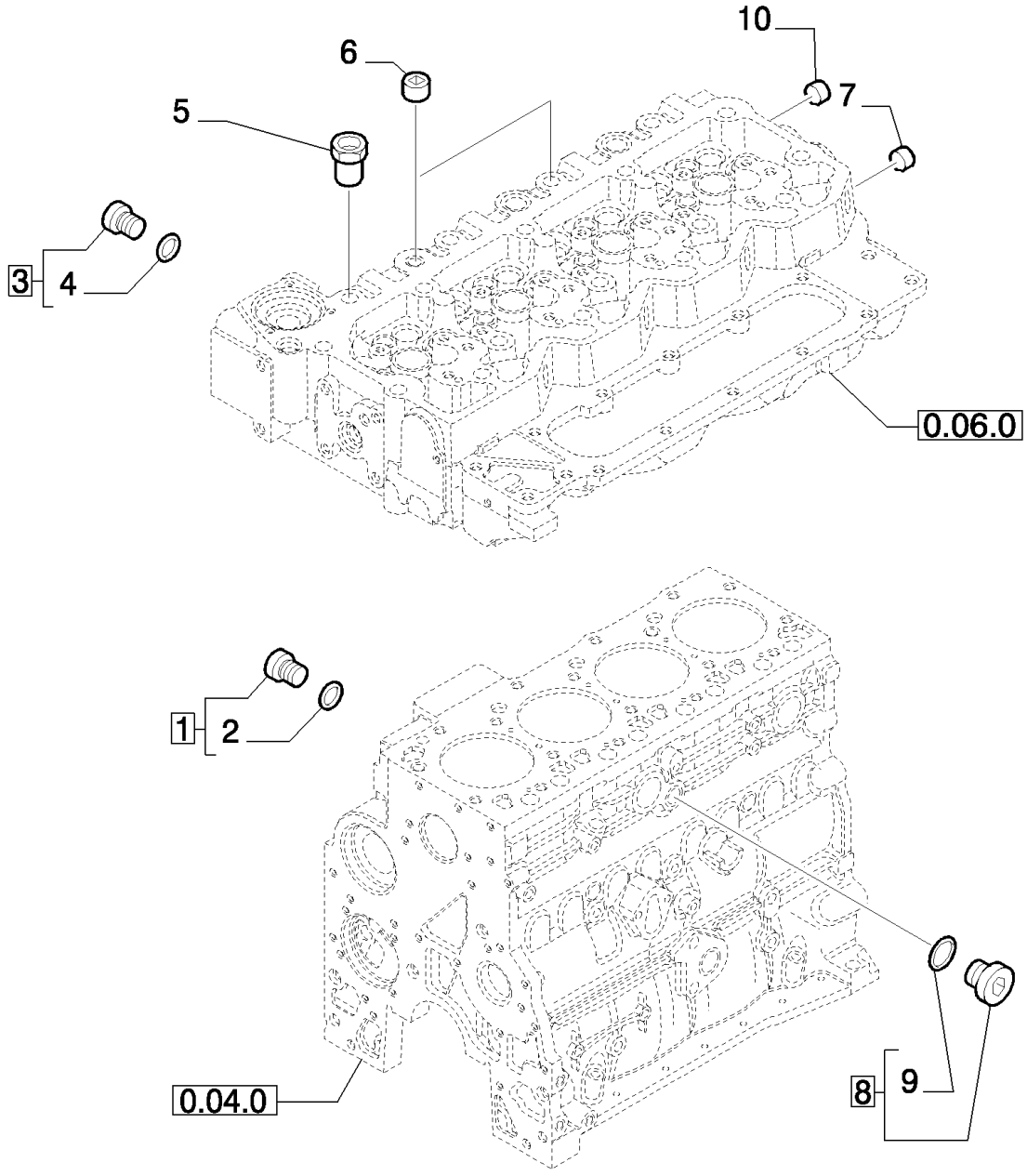

B110 TIER 3 BACKHOE LOADER (2/07-)

0.32.4 PIPING - ENGINE COOLING SYSTEM

Ref	Numero de Pieza	Ctd	Descripción
1	4895392	1	PLUG, - ASSY
2	4895393	1	O-RING,
3	4895080	1	PLUG, - ASSY
4	4895082	1	O-RING,
5	2854491	1	PLUG,
6	4895078	2	PLUG,
7	4895079	1	PLUG, M22X1.5
8	4895323	1	SCREW, - ASSY
9	4895625	1	O-RING,
10	4893036	1	PLUG,

0.32.6 THERMOSTAT - ENGINE COOLING SYSTEM

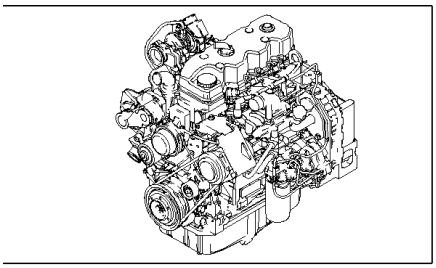

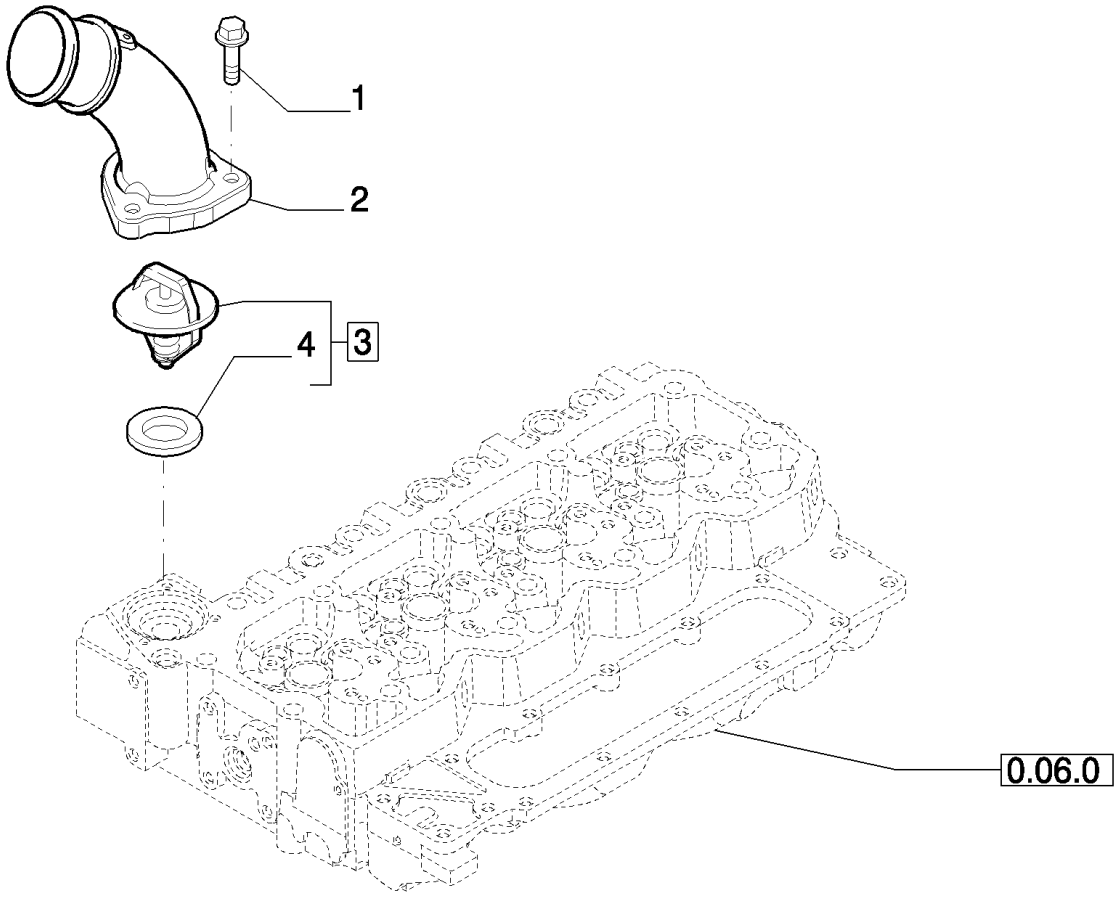

B110 TIER 3 BACKHOE LOADER (2/07-)

0.32.6 THERMOSTAT - ENGINE COOLING SYSTEM

Ref	Numero de Pieza	Ctd	Descripción
1	4899110	3	SCREW, Hex Flg, M6 x 1 x 20,
2	2855823	1	COVER,
3	2852471	1	THERMOSTAT, - ASSY
4	2852473	1	GASKET,

0.34.0 WATER PUMP - CONTROL

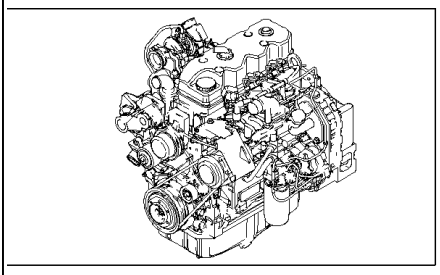

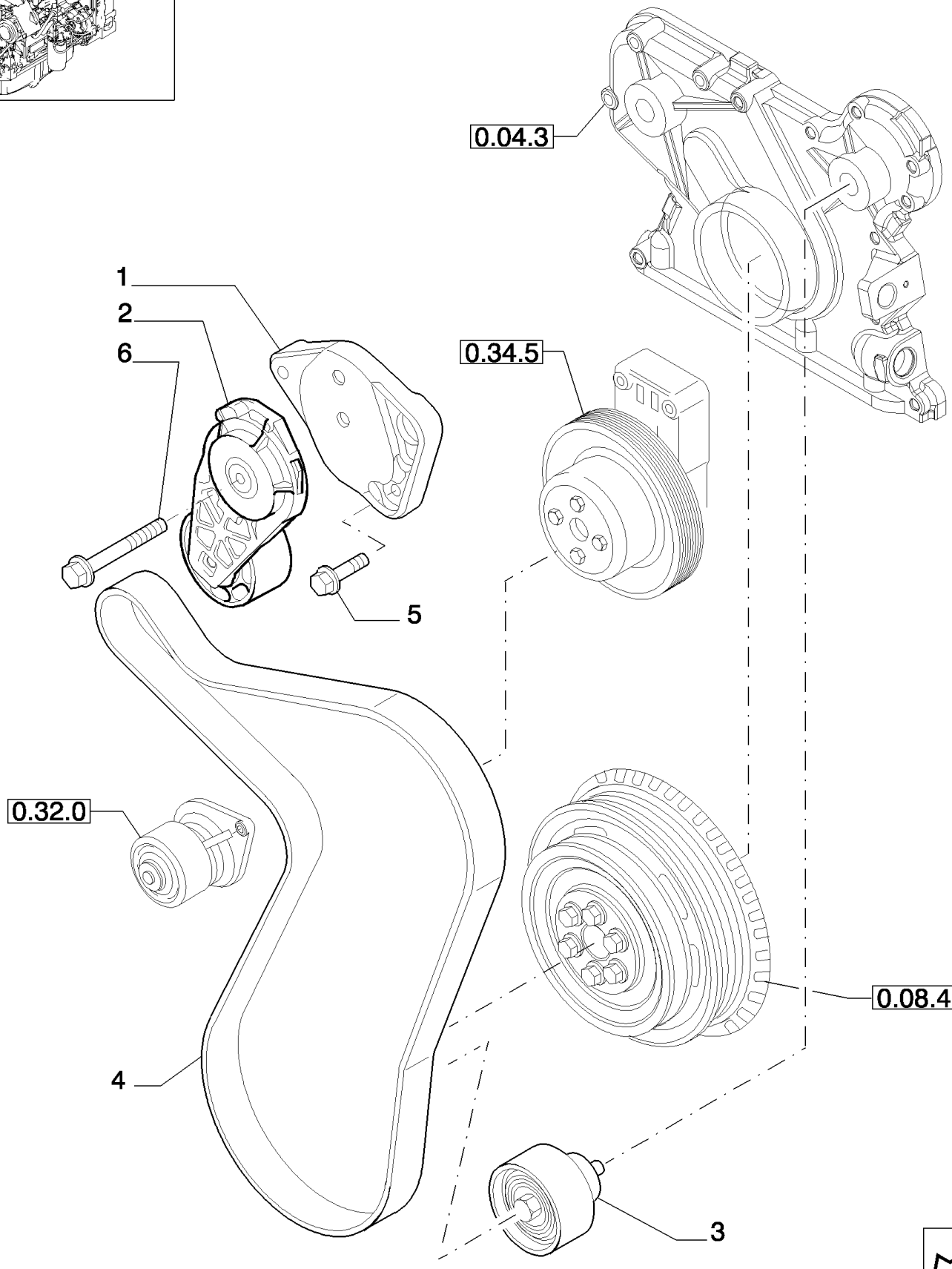

B110 TIER 3 BACKHOE LOADER (2/07-)

0.34.0 WATER PUMP - CONTROL

Ref	Numero de Pieza	Ctd	Descripción
1	2855949	1	SUPPORT,
2	2852161	1	TENSIONER, BELT,
3	2852162	1	PULLEY,
4	2855950	1	BELT,
5	4899079	2	SCREW, Hex Flg, M8 x 1.25 x 25,
6	4895292	1	SCREW,

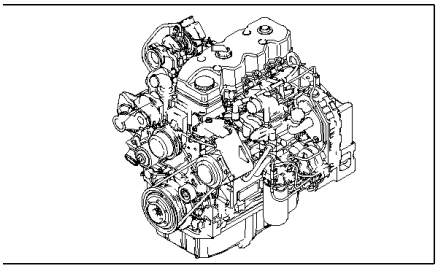

KIT

KIT KIT

● = 1

SEE ALSO GROUP
638/ A – 639/ A

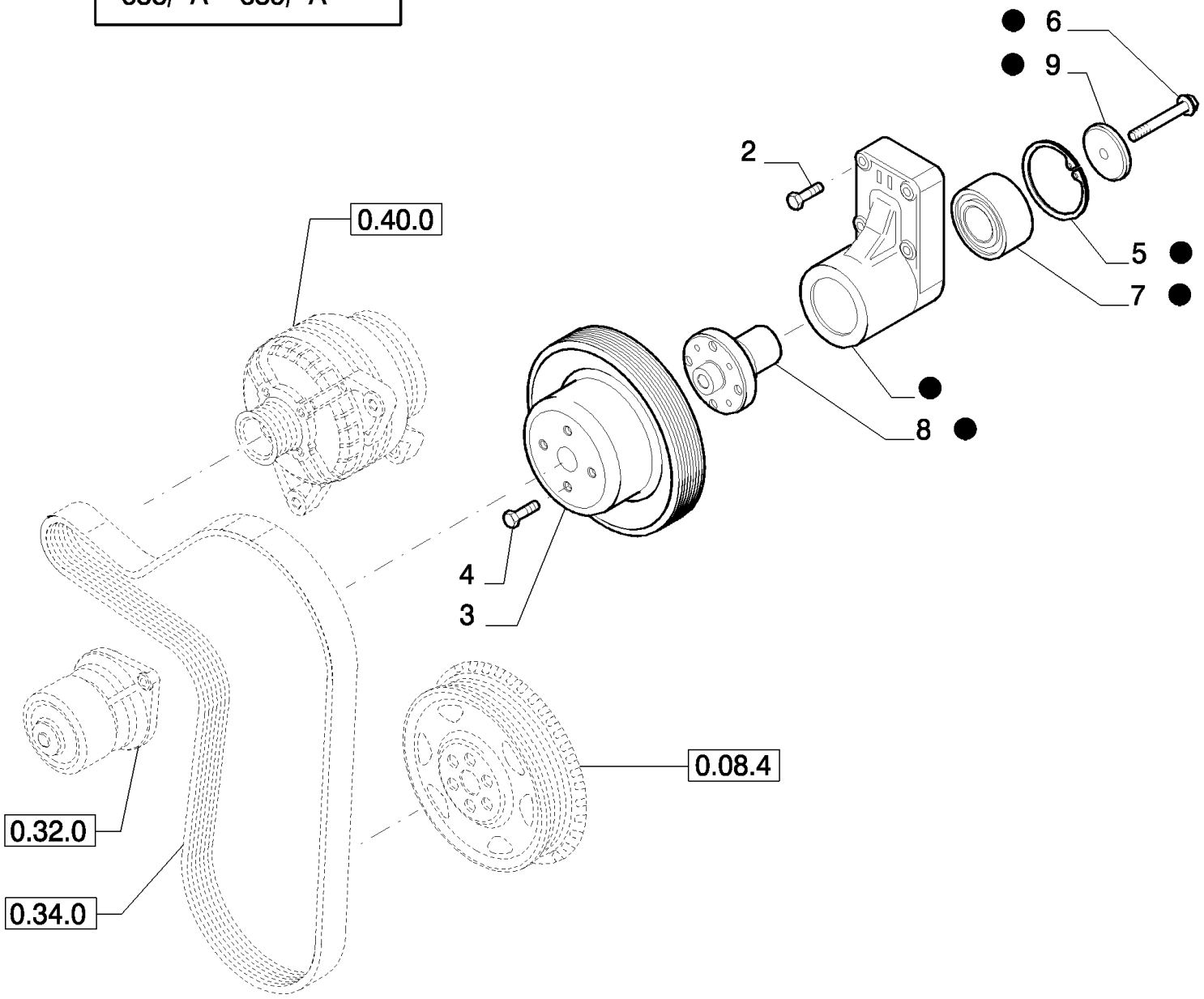

B110 TIER 3 BACKHOE LOADER (2/07-)

0.34.5 FAN DRIVE

Ref	Numero de Pieza	Ctd	Descripción
1	2852170	1	SUPPORT, - ASSY
2	4899053	4	SCREW, Hex Flg, M8 x 45,
3	4890343	1	PULLEY,
4	4895291	4	SCREW, Hex Flg, M10 x 1.5 x 20, M10X1,5X20
5	2852171	1	CIRCLIP,
6	2852172	1	SCREW,
7	4892732	1	BEARING, BALL,
8	4892426	1	HUB,
9	4890732	1	RETAINER,

0.36.0 STARTER MOTOR

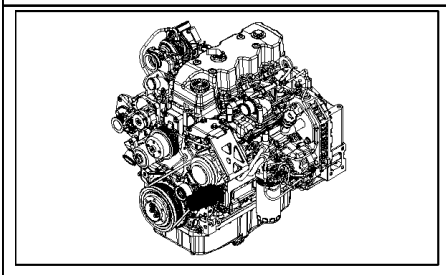

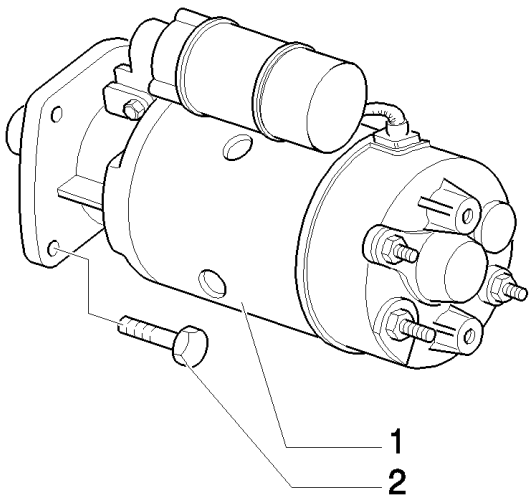

B110 TIER 3 BACKHOE LOADER (2/07-)

0.36.0 STARTER MOTOR

Ref	Numero de Pieza	Ctd	Descripción
1	86992395	1	MOTOR, STARTER,
2	86511845	2	BOLT, Hex Flg, M10 x 35, 8.8, M10x35

0.40.0 ALTERNATOR

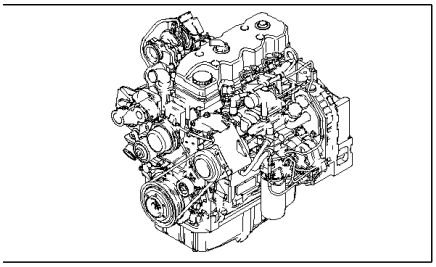

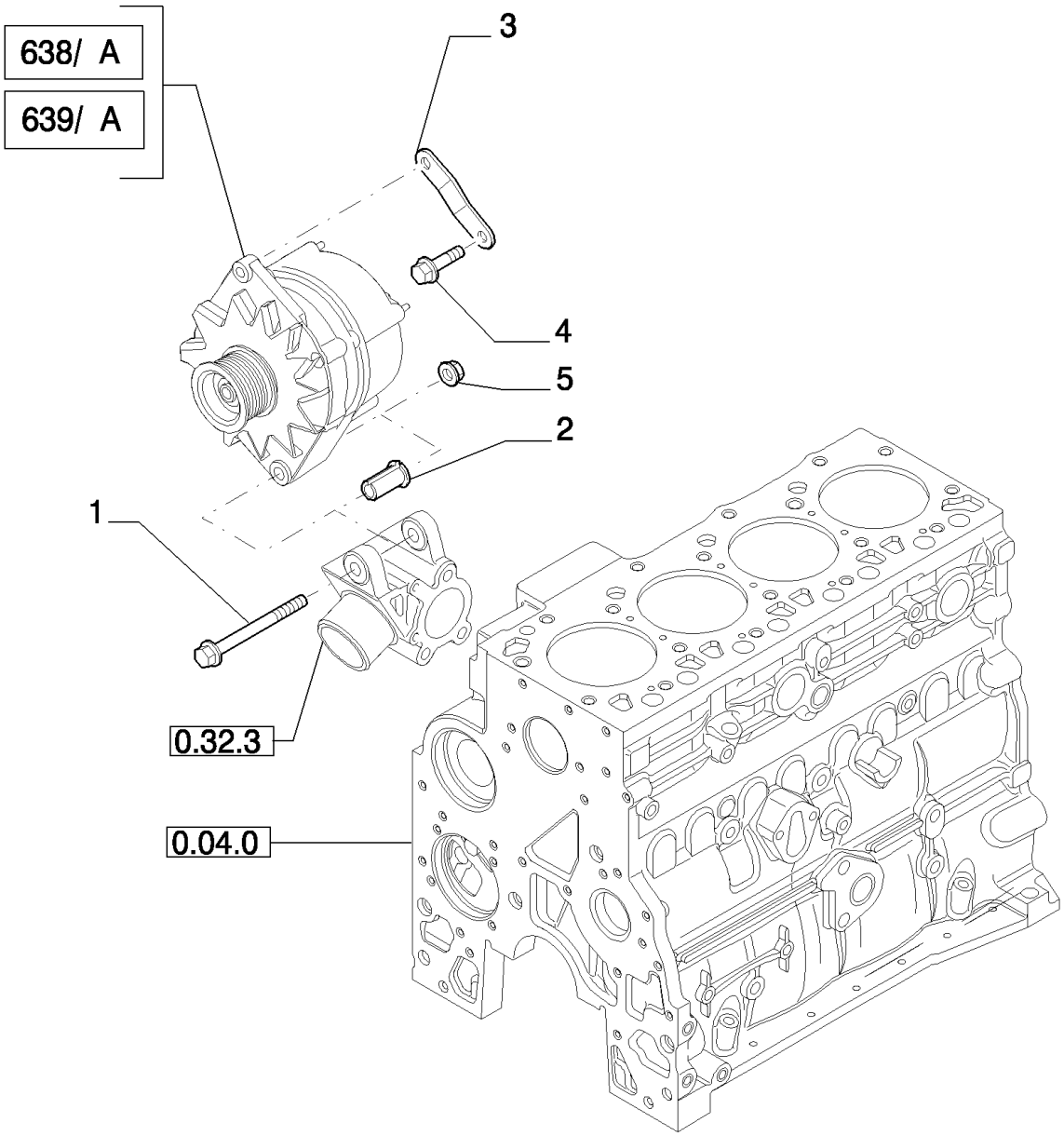

B110 TIER 3 BACKHOE LOADER (2/07-)

0.40.0 ALTERNATOR

Ref	Numero de Pieza	Ctd	Descripción
1	4895538	1	SCREW, - ASSY
2	2852181	1	SPACER,
3	2852180	1	BRACKET,
4	4895291	1	SCREW, Hex Flg, M10 x 1.5 x 20, M10X1.5X20
5	4895166	1	NUT, M10X1,5

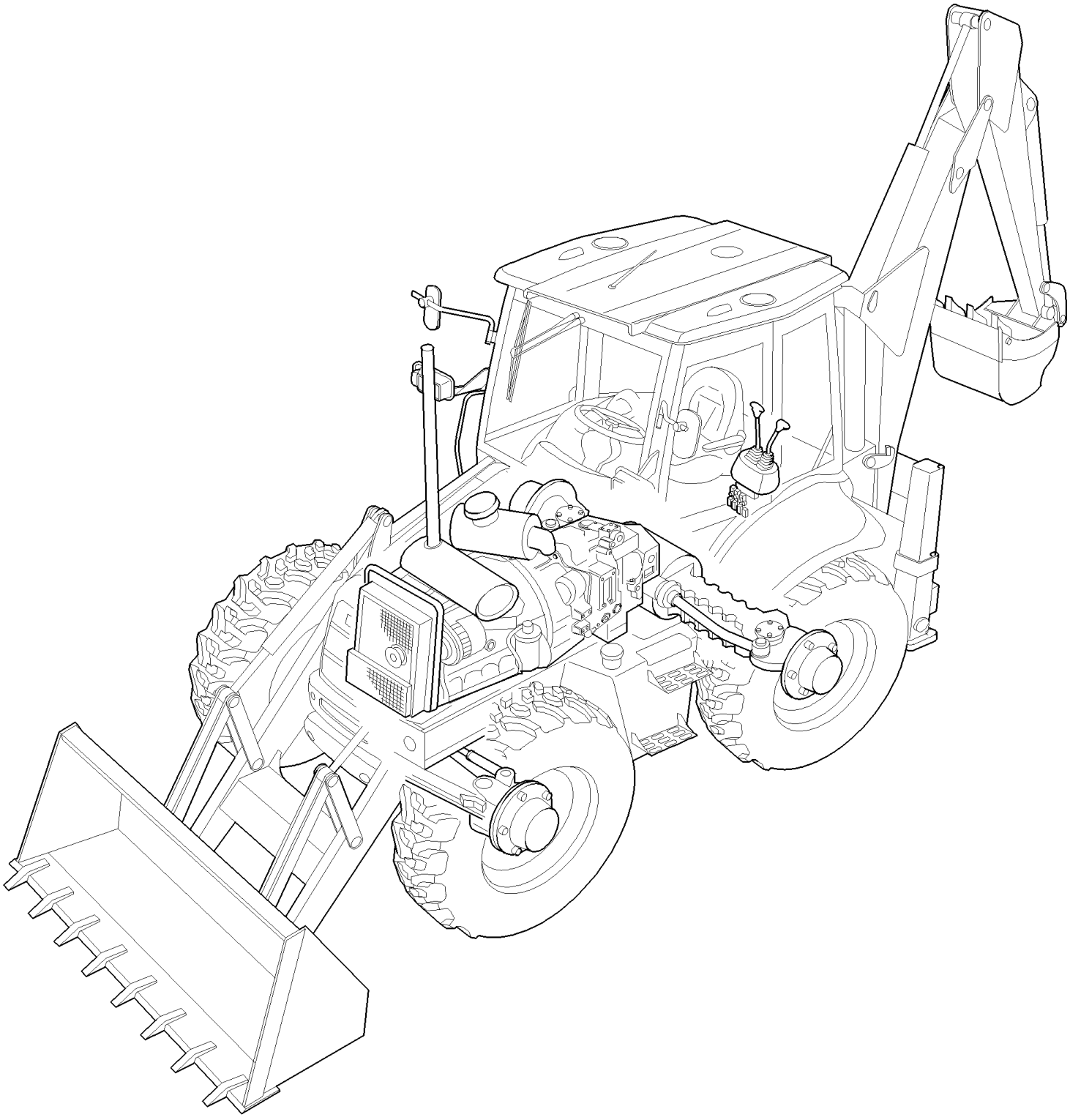

094 SEC. 18 - VARIATION

Ref	Numero de Pieza	Ctd	Descripción

095(01) STABILIZER CONTROL WITHOUT AUTO-UP (CENTER PIVOT)

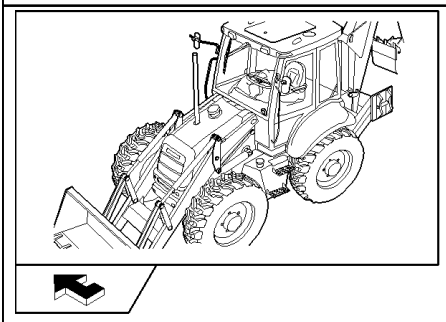

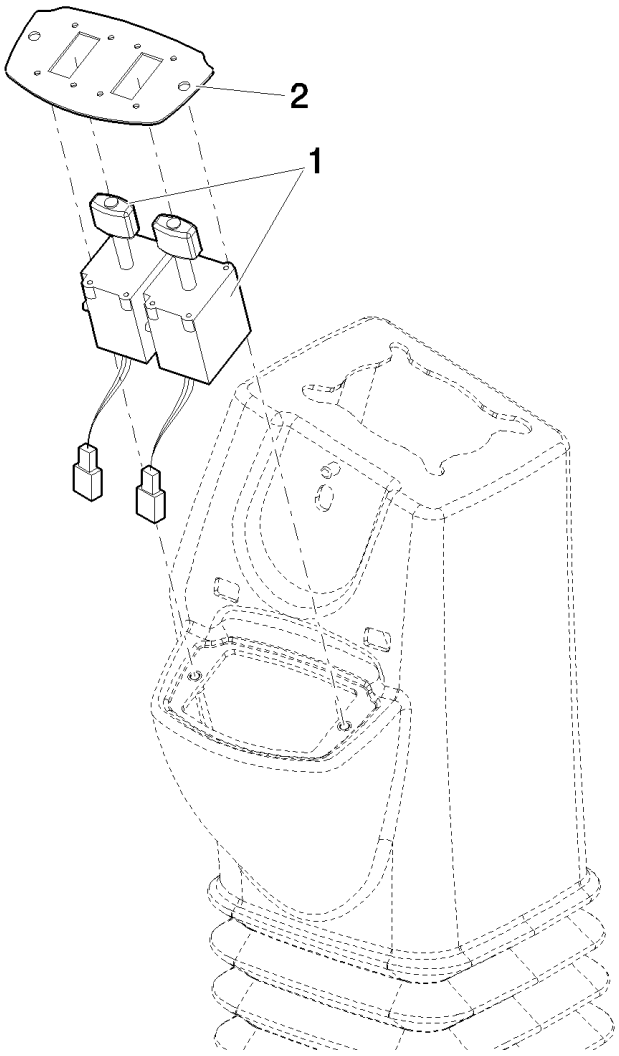

Pilot Control Version

B110 TIER 3 BACKHOE LOADER (2/07-)

095(01) STABILIZER CONTROL WITHOUT AUTO-UP (CENTER PIVOT)

Ref	Numero de Pieza	Ctd	Descripción
1	86988086	2	JOYSTICK,
2	87435381	1	PLATE, MOUNTING,

Pilot Control Version

096(01) STABILIZER CONTROL WITH AUTO-UP (CENTER PIVOT) - NA

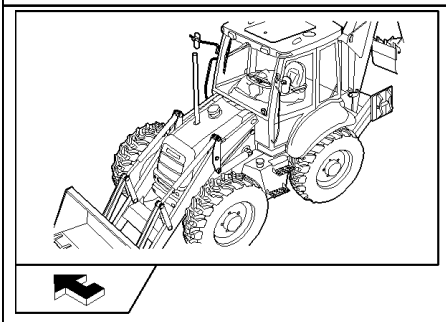

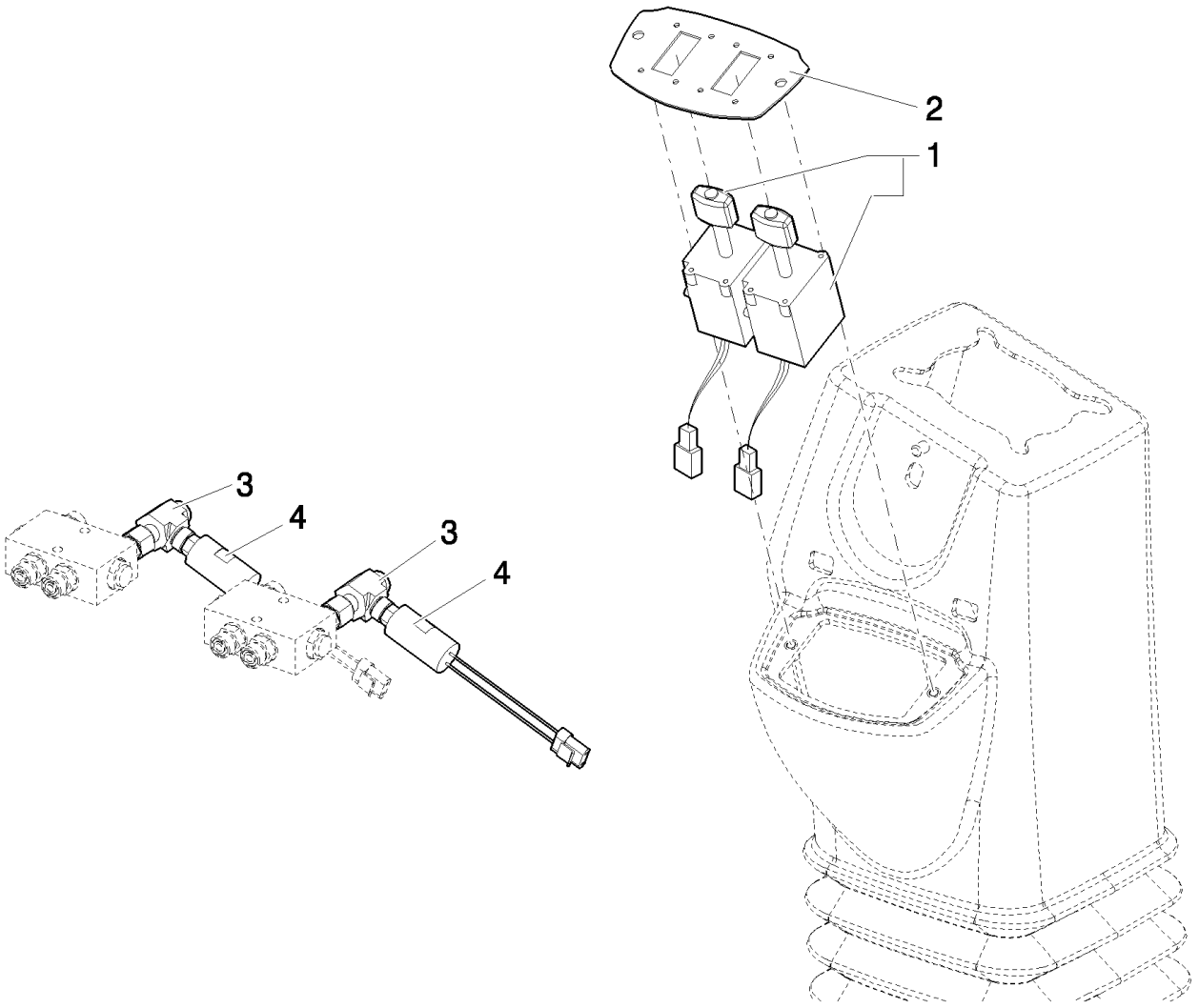

Pilot Control Version

B110 TIER 3 BACKHOE LOADER (2/07-)

096(01) STABILIZER CONTROL WITH AUTO-UP (CENTER PIVOT) - NA

Ref	Numero de Pieza	Ctd	Descripción
1	86988086	2	JOYSTICK,
2	87435381	1	PLATE, MOUNTING,
3	87401111	2	CONNECTOR, HYD.,
4	87589234	2	SWITCH, PRESSURE,

Pilot Control Version

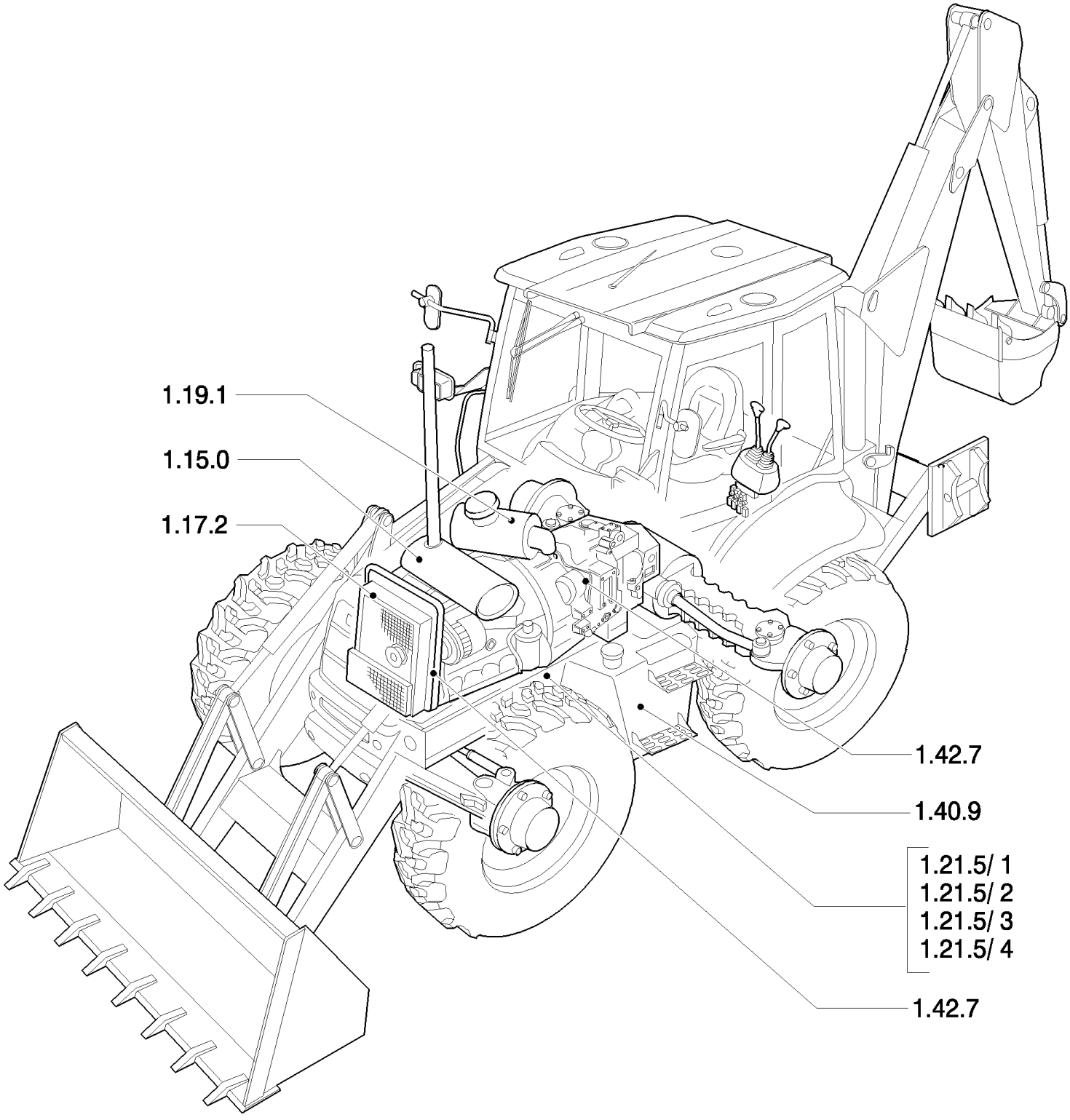
1.19.1
1.15.0
1.17.2
1.42.7
1.40.9
1.21.5/ 1
1.21.5/ 2
1.21.5/ 3
1.21.5/ 4
1.42.7

Ref	Numero de Pieza	Ctd	Descripción

1.15.0(01) MUFFLER & EXTENSIONS

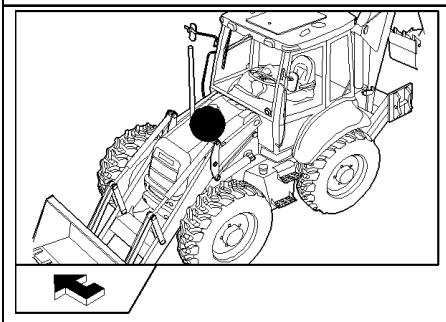

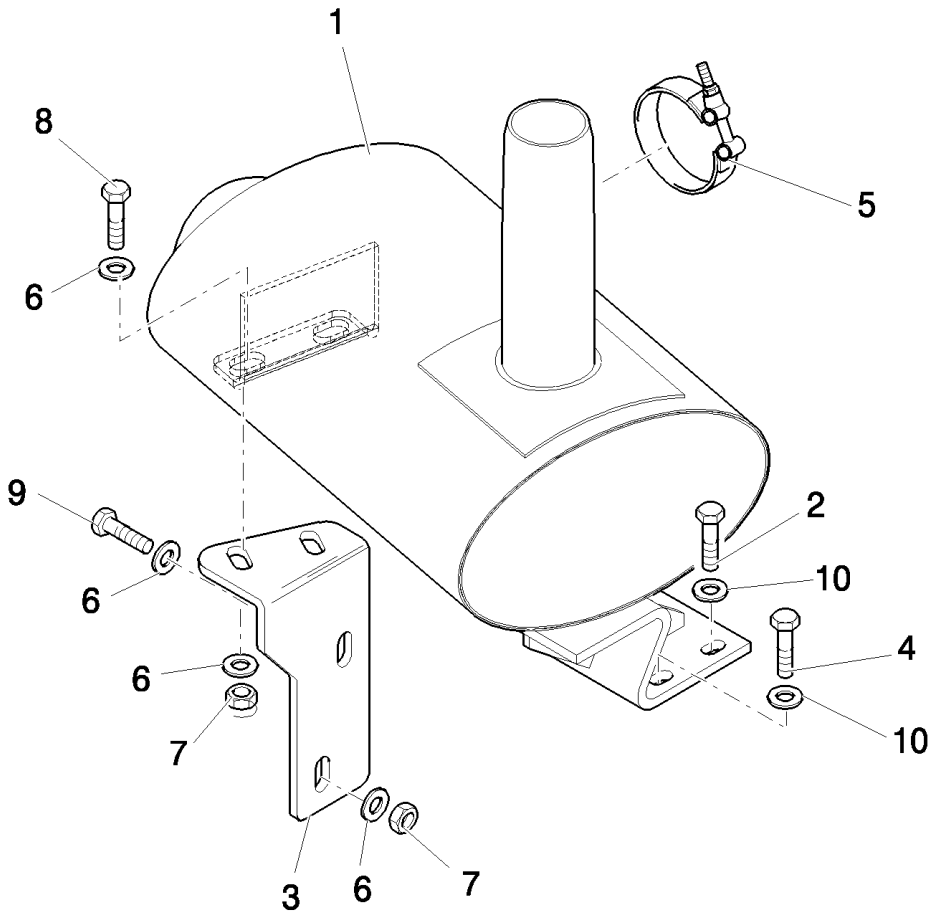

B110 TIER 3 BACKHOE LOADER (2/07-)

1.15.0(01) MUFFLER & EXTENSIONS

Ref	Numero de Pieza	Ctd	Descripción
1	87539932	1	MUFFLER,
2	14421121	2	
3	87535928	1	BRACKET,
4	14421021	1	SCREW,
5	47048898	1	CLAMP,
6	47048972	8	WASHER, M10
7	47049041	4	NUT, M10
8	47049186	4	BOLT, Hex, M10 x 30, 8.8,
9	14420121	1	SCREW, Hex Soc Hd, M10 x 25, 8.8,
10	11190679	4	WASHER, SPRING, Belleville, M10.5,

1.15.0(02) MUFFLER & EXTENSIONS

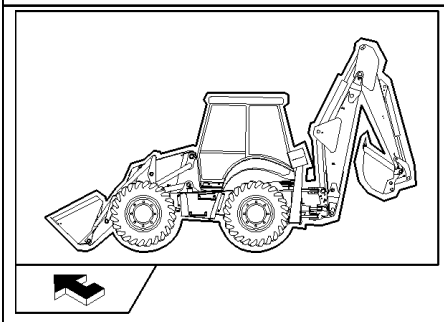

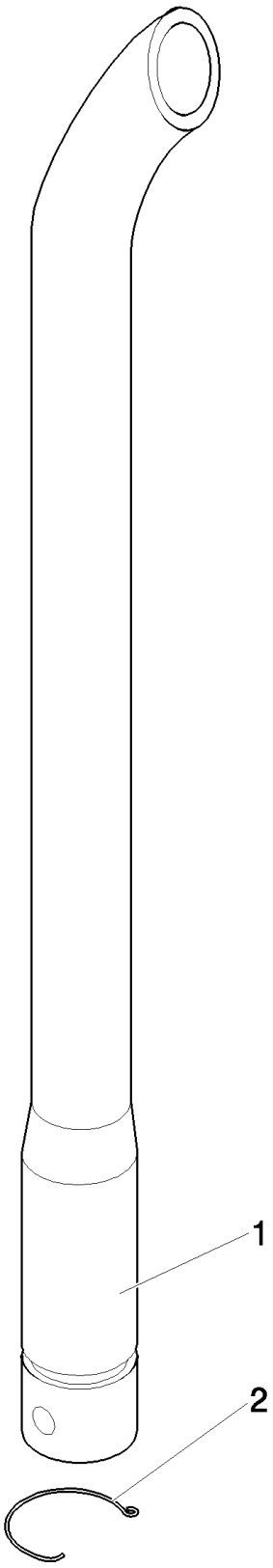

B110 TIER 3 BACKHOE LOADER (2/07-)

1.15.0(02) MUFFLER & EXTENSIONS

Ref	Numero de Pieza	Ctd	Descripción
1	47055750	1	TUBE, RIGID,
2	87416643	1	SPRING,

1.17.2(01) EXPANSION TANK

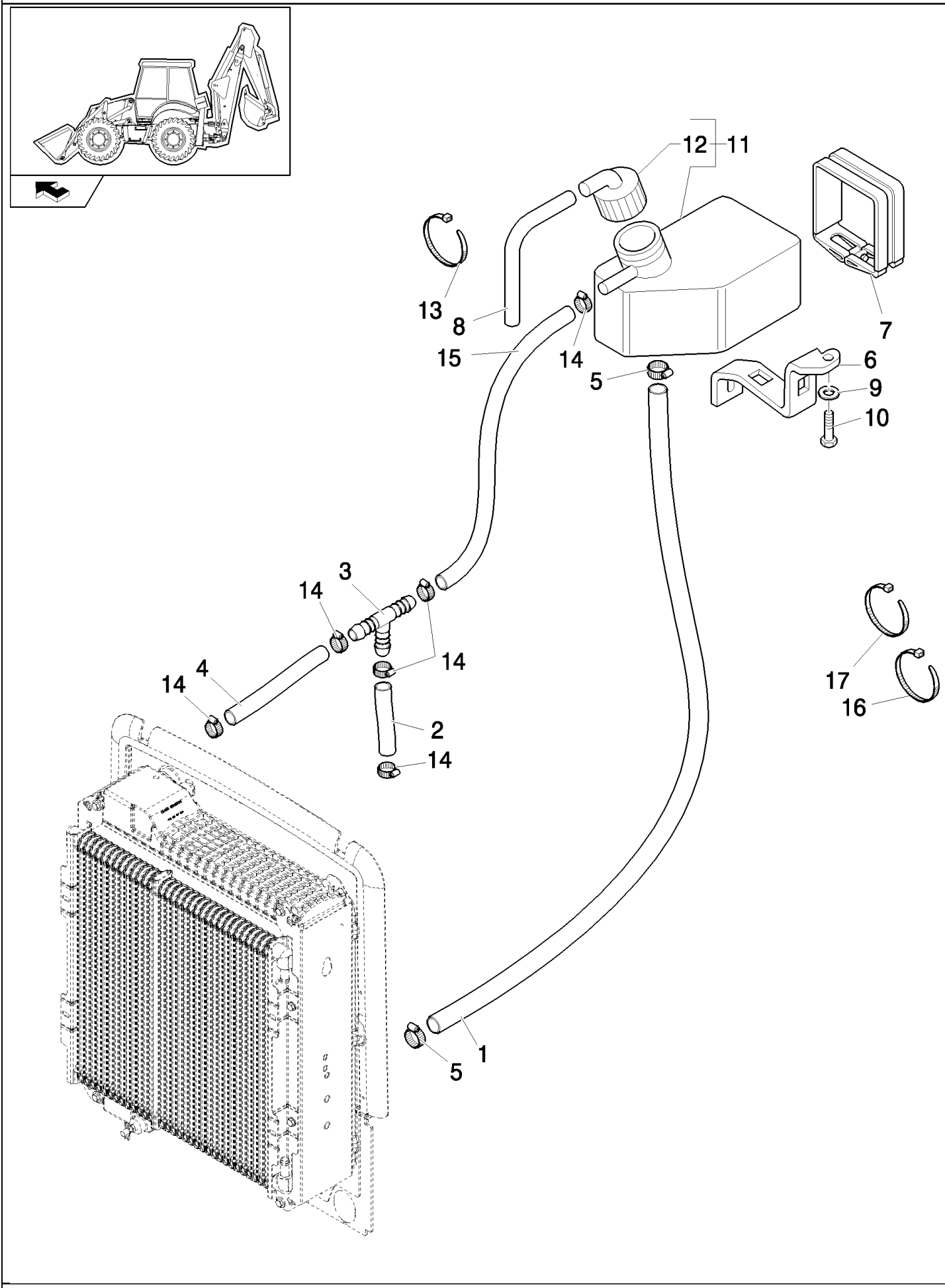

B110 TIER 3 BACKHOE LOADER (2/07-)

1.17.2(01) EXPANSION TANK

Ref	Numero de Pieza	Ctd	Descripción
1	87410546	1	TUBE,
2	87560823	1	TUBE,
3	87556757	1	FITTING,
4	87560825	1	TUBE,
5	85803013	2	CLAMP, HOSE,
6	85805256	1	BRACKET,
7	85804302	1	CLAMP,
8	85803226	1	HOSE, FLEXIBLE, 1000mm lg,
9	11193979	2	WASHER, SPRING, Belleville, M8.4,
10	16043821	2	BOLT, Hex, M8 x 30, 8.8,
11	85802804	1	RESERVOIR,COOLANT EXPNSN,
12	85803019	1	CAP, FILLER,
13	14560187	4	STRAP, CABLE, 178mm lg, L=203.2 mm
14	85824381	6	CLAMP, HOSE,
15	87560824	1	TUBE,
16	47050733	1	CLAMP, HOSE,
17	47050734	1	CLAMP, HOSE,

B110 TIER 3 BACKHOE LOADER (2/07-)

1.19.1(01) AIR CLEANER & HOSES

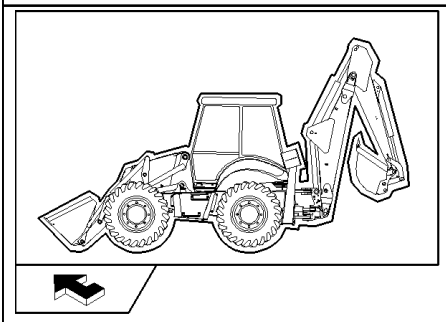

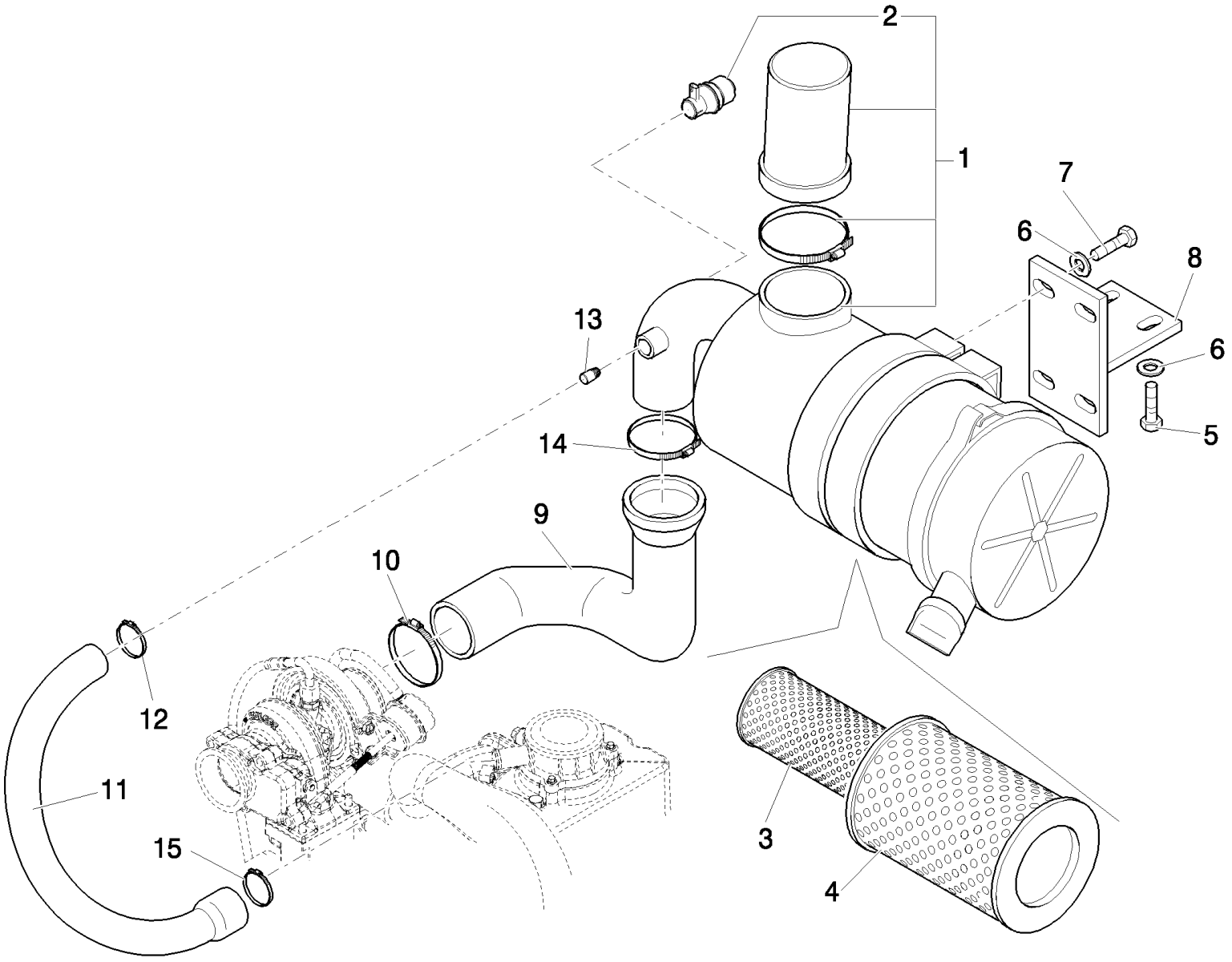

B110 TIER 3 BACKHOE LOADER (2/07-)

1.19.1(01) AIR CLEANER & HOSES

Ref	Numero de Pieza	Ctd	Descripción
1	87442705	1	AIR CLEANER, ASSY; Incl. Ref 2 - 4
2	87442601	1	SWITCH,
3	87418365	1	FILTER, AIR, Secondary, Inner
4	87418364	1	FILTER, AIR, Primary, Outer
5	16043821	2	BOLT, Hex, M8 x 30, 8.8,
6	47048962	6	WASHER, 9x16x1.6
7	47049160	4	BOLT, Hex, M8 x 20, 8.8,
8	87412754	1	BRACKET,
9	87516934	1	HOSE,
10	85803010	1	CLAMP, HOSE,
11	87518242	1	HOSE,
12	85803013	1	CLAMP, HOSE,
13	47048450	1	FITTING,
14	85802743	1	CLAMP, HOSE,
15	85803079	1	CLAMP, HOSE,

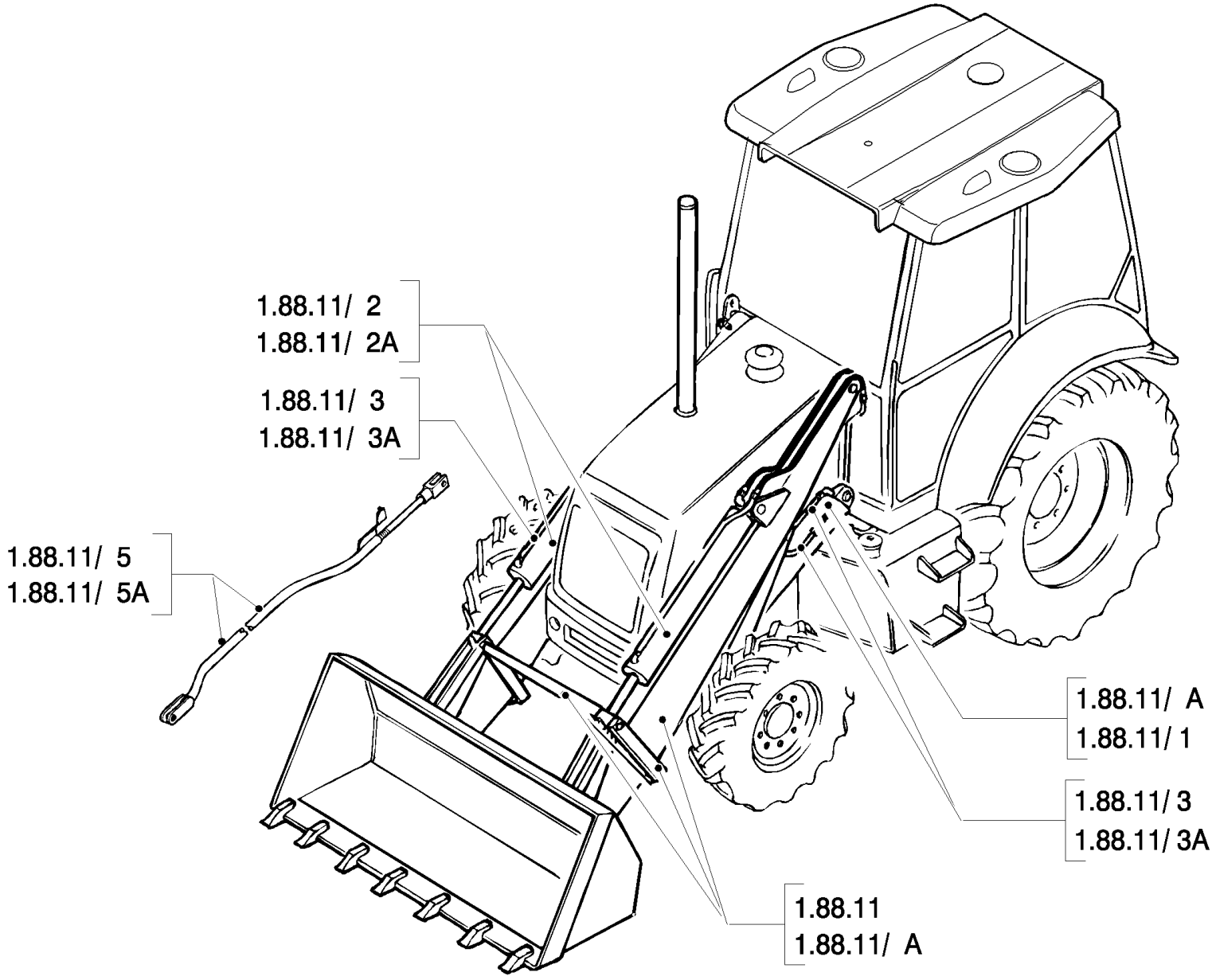
1.88.11/ 2
1.88.11/ 2A
1.88.11/ 3
1.88.11/ 3A
1.88.11/ 5
1.88.11/ 5A
1.88.11/ A
1.88.11/ 1
1.88.11/ 3
1.88.11/ 3A
1.88.11
1.88.11/ A

B110 TIER 3 BACKHOE LOADER (2/07-)

1.20.0(01) SEC. 09 - LOADER

Ref	Numero de Pieza	Ctd	Descripción

SIDE SHIFT

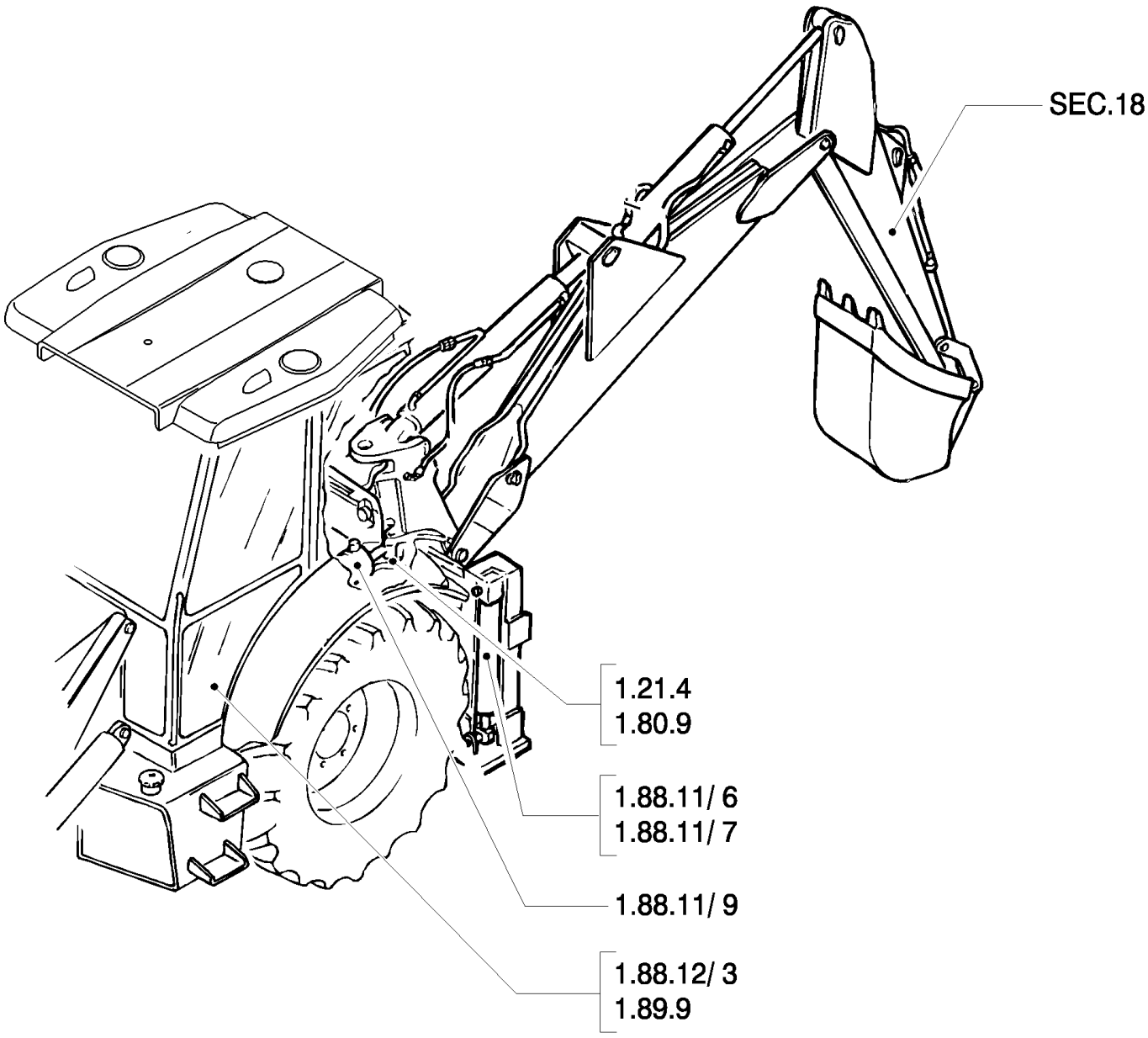

Ref	Numero de Pieza	Ctd	Descripción

CENTER PIVOT

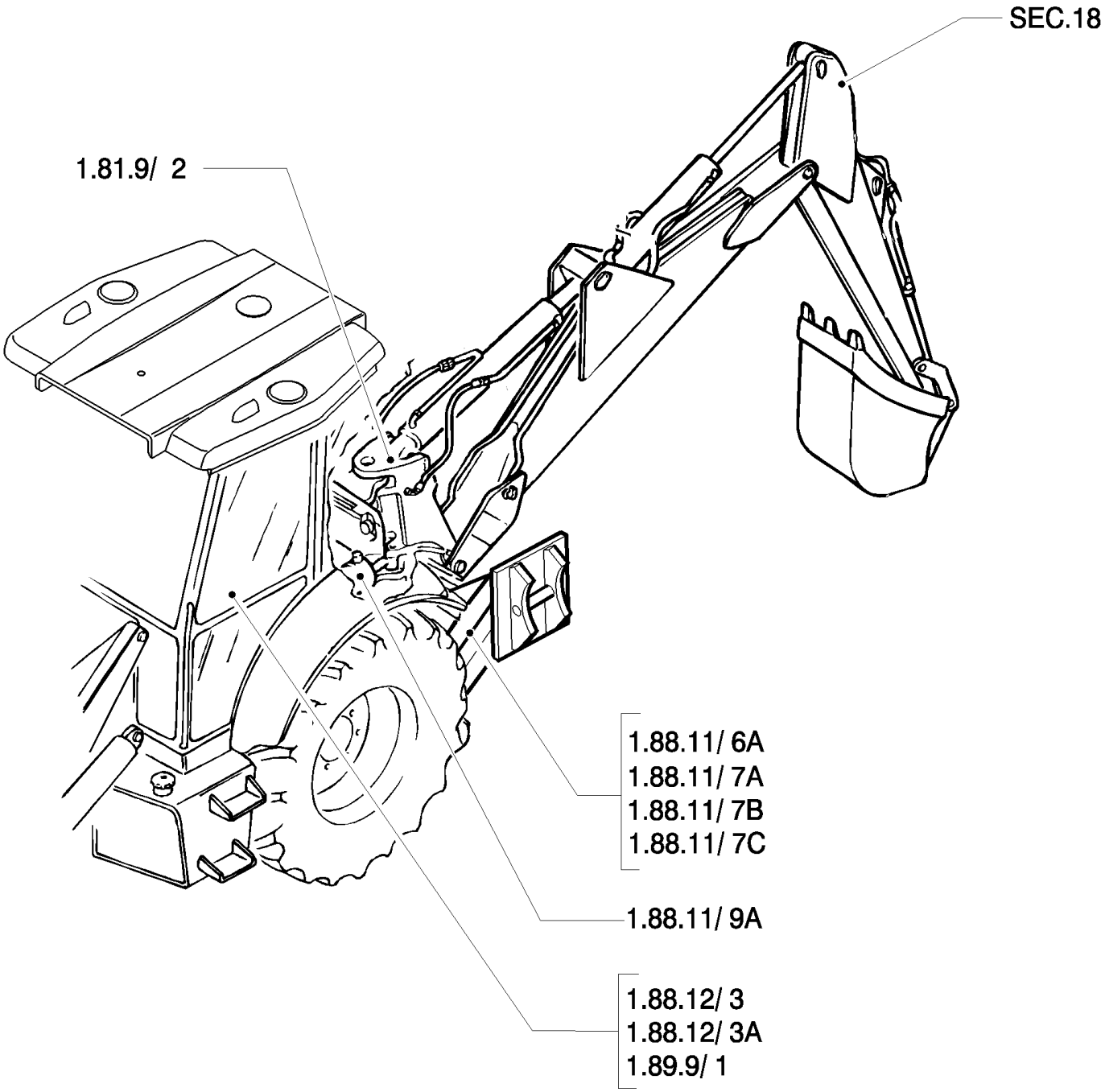

B110 TIER 3 BACKHOE LOADER (2/07-)

1.20.0(03) SEC. 09 - BACKHOE

Ref	Numero de Pieza	Ctd	Descripción

1.21.4(01) REAR SUPPORT (SIDE SHIFT) - EU

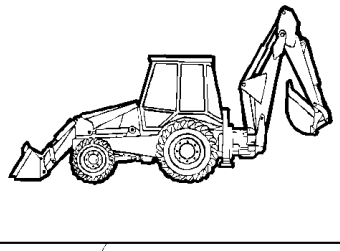

KIT KIT KIT 10 = ●

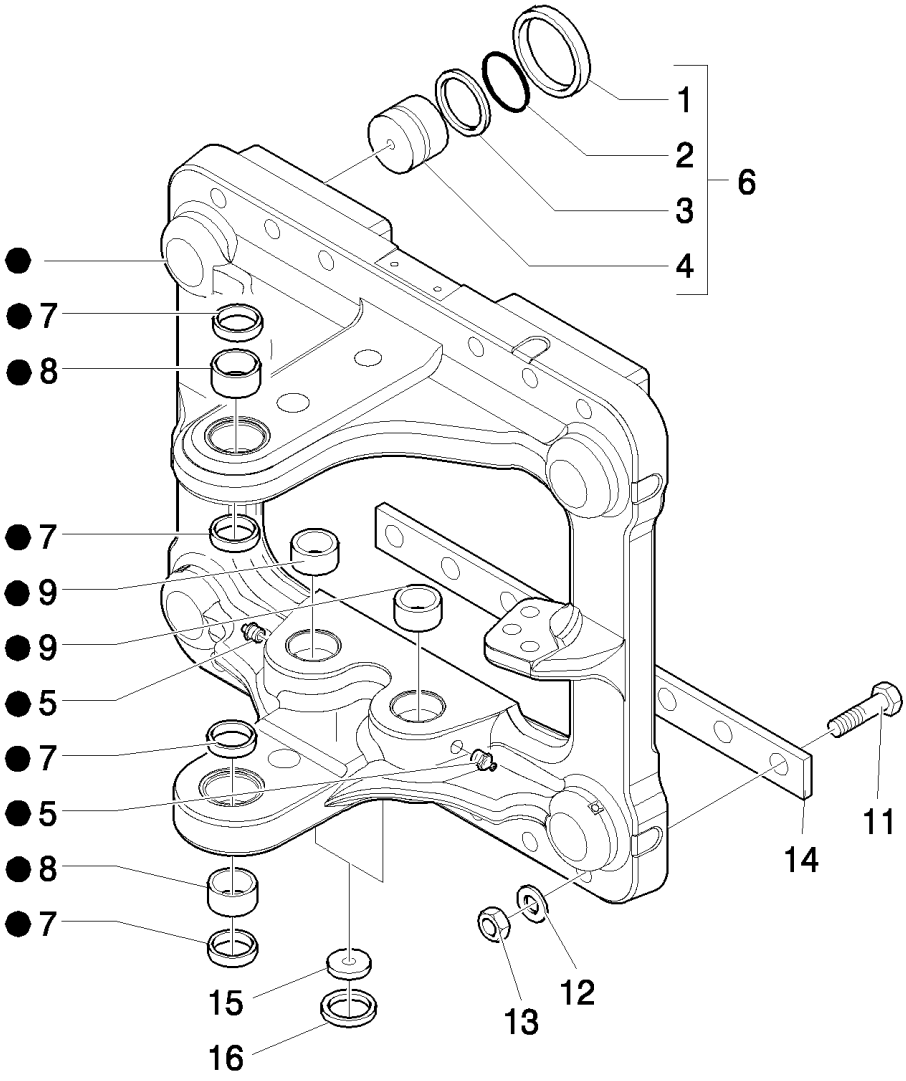

B110 TIER 3 BACKHOE LOADER (2/07-)

1.21.4(01) REAR SUPPORT (SIDE SHIFT) - EU

Ref	Numero de Pieza	Ctd	Descripción
1	85801395	4	CAP, WASHER,
2	14471780	4	O-RING, -334, 70 Duro, 2.6" ID x .210" Thk,
3	85828100	4	RING,
4	85801396	4	PISTON,
5	83416242	2	NIPPLE, LUBE,
6	85828099	4	SHOCK ABSORBER, , Includes 1 To 4
7	81875248	4	SEAL,
8	85700728	2	BUSHING,
9	83910645	2	BUSHING,
10	87356803	1	PLATE, RETAINING, , Includes 7, 8, 9, 17
11	15871934	12	BOLT, Hex, M24 x 140, 10.9,
12	11200679	12	WASHER, LOCK,
13	12164521	12	NUT, M24 x 2, Cl 10, M24x2
14	85801373	2	PLATE,
15	85825426	2	COVER,
16	11061876	2	RING, SNAP, M78, Int,

1.21.5/1(01) FRAME (CENTER PIVOT) - NA

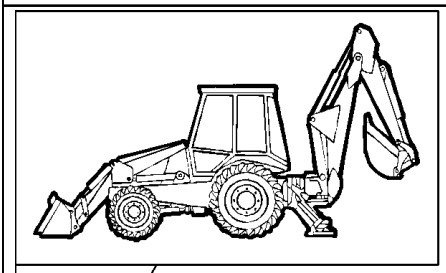

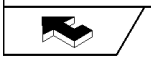

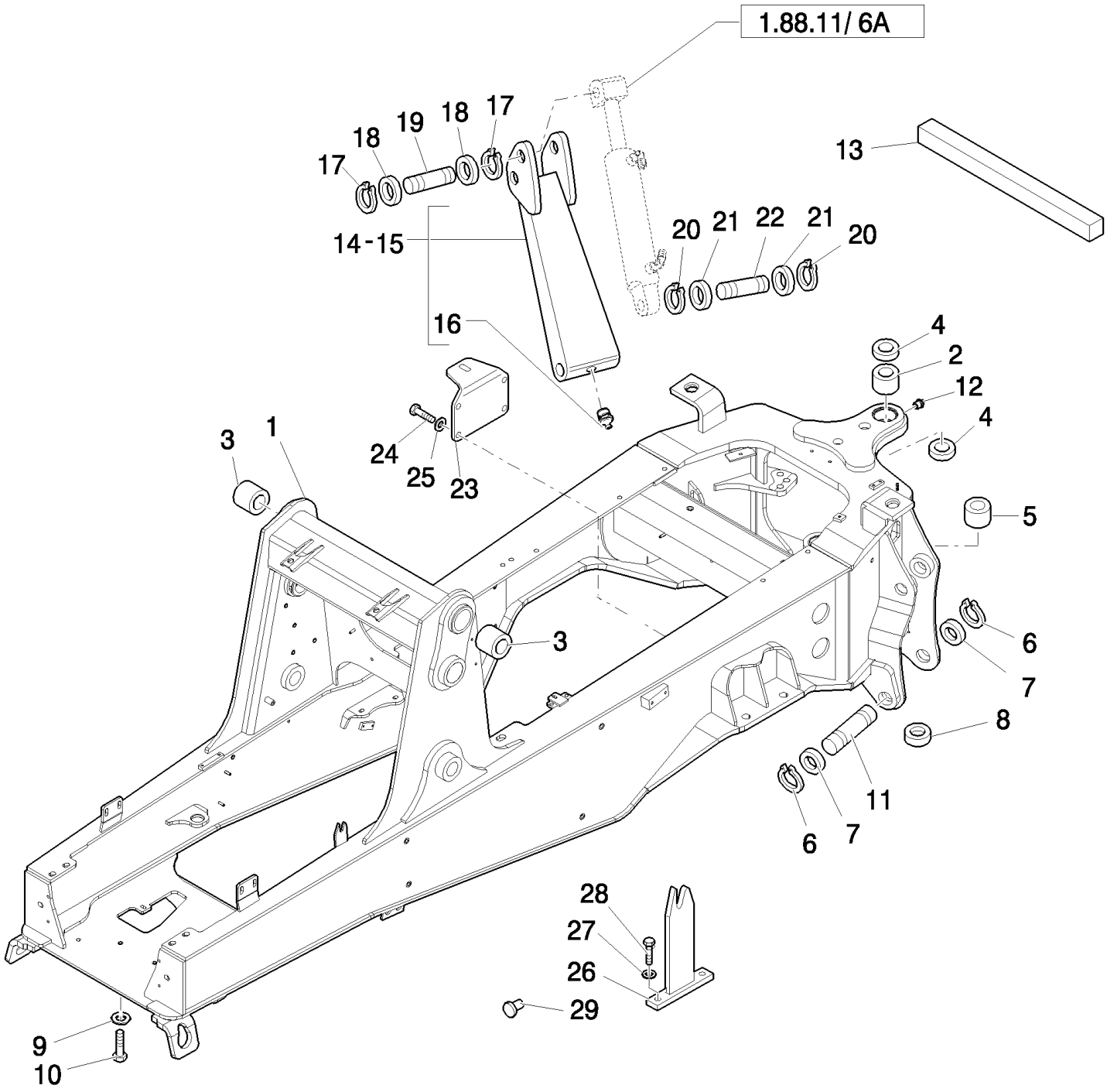

B110 TIER 3 BACKHOE LOADER (2/07-)

1.21.5/1(01) FRAME (CENTER PIVOT) - NA

Ref	Numero de Pieza	Ctd	Descripción
1	87573088	1	FRAME, , Includes 2, 3, 5
2	85700728	2	BUSHING,
3	85801110	2	BUSHING,
4	81875248	4	SEAL,
5	83910645	2	BUSHING,
6	83911020	4	RING,
7	81901837	4	WASHER,
8	85802903	1	INSULATOR,
9	10520431	6	WASHER, 20x35
10	15989134	6	BOLT, Hex, M20 x 100, 10.9,
11	83911000	2	PIN,
12	83416242	2	NIPPLE, LUBE,
13	85802338	1	SEAL, RUBBER,
14	85803959	1	STABILIZER, LH, Includes 16
15	85803960	1	STABILIZER, RH, Includes 16
16	81818824	2	NIPPLE, LUBE, 90º, 1/8"-27 NPT,
17	83910630	4	RING,
18	83910629	4	WASHER,
19	83999466	2	PIN,
20	83911019	4	RING, SNAP,
21	83910977	4	SPACER,
22	85801262	2	PIN,
23	85804171	1	SUPPORT,
24	15540534	4	BOLT, Hex, M12 x 1.25 x 35, 10.9, Full Thd,
25	11198679	4	WASHER, SPRING, Belleville, M13,
26	87302151	1	SUPPORT, RH
27	11193874	2	WASHER, SPRING, Belleville, M8.4,
28	16043421	2	SCREW, Hex, M8 x 20, 8.8,
29	85808422	2	PLUG,

B110 TIER 3 BACKHOE LOADER (2/07-)

1.21.5/3(01) FRAME (SIDE SHIFT) - EU

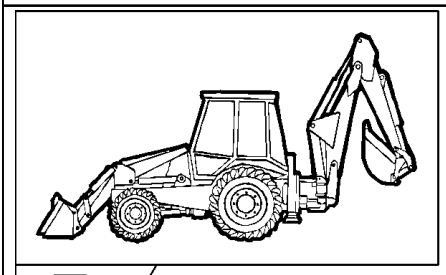

B110 TIER 3 BACKHOE LOADER (2/07-)

1.21.5/3(01) FRAME (SIDE SHIFT) - EU

Ref	Numero de Pieza	Ctd	Descripción
1	87376503	1	FRAME, , Includes 2, 5, 6
2	85801110	2	BUSHING,
3	15989134	6	BOLT, Hex, M20 x 100, 10.9,
4	10520431	6	WASHER, 20x35
5	87376353	1	STABILIZER, LH
6	87376352	1	STABILIZER, RH
7	85802338	2	SEAL, RUBBER,
8	85808422	1	PLUG,
9	85819234	1	PANEL, RH
10	85819236	1	PANEL, LH
11	11190679	10	WASHER, SPRING, Belleville, M10.5,
12	12164711	10	NUT, M10 x 1.25, Cl 8,
13	15970621	6	BOLT, Hex, M10 x 1.25 x 22, 8.8, Full Thd,
14	85804171	1	SUPPORT,
15	11198679	4	WASHER, SPRING, Belleville, M13,
16	15540534	4	BOLT, Hex, M12 x 1.25 x 35, 10.9, Full Thd,
17	11306921	4	BOLT, Hex, M10 x 1.25 x 30, 8.8, Full Thd,
18	87376888	1	SUPPORT, RH
19	87376890	1	SUPPORT, LH
20	85818854	8	SHIM,
21	85818853	8	SHIM,
22	85818855	2	SHIM,
23	87302151	1	SUPPORT,
24	11193874	2	WASHER, SPRING, Belleville, M8.4,
25	16043421	2	SCREW, Hex, M8 x 20, 8.8,
26	11255921	6	BOLT, Hex, M14 x 1.5 x 40, 8.8, Full Thd, M14x40
27	11194179	6	WASHER, SPRING, Belleville, M15,
28	85818852	4	PAD,

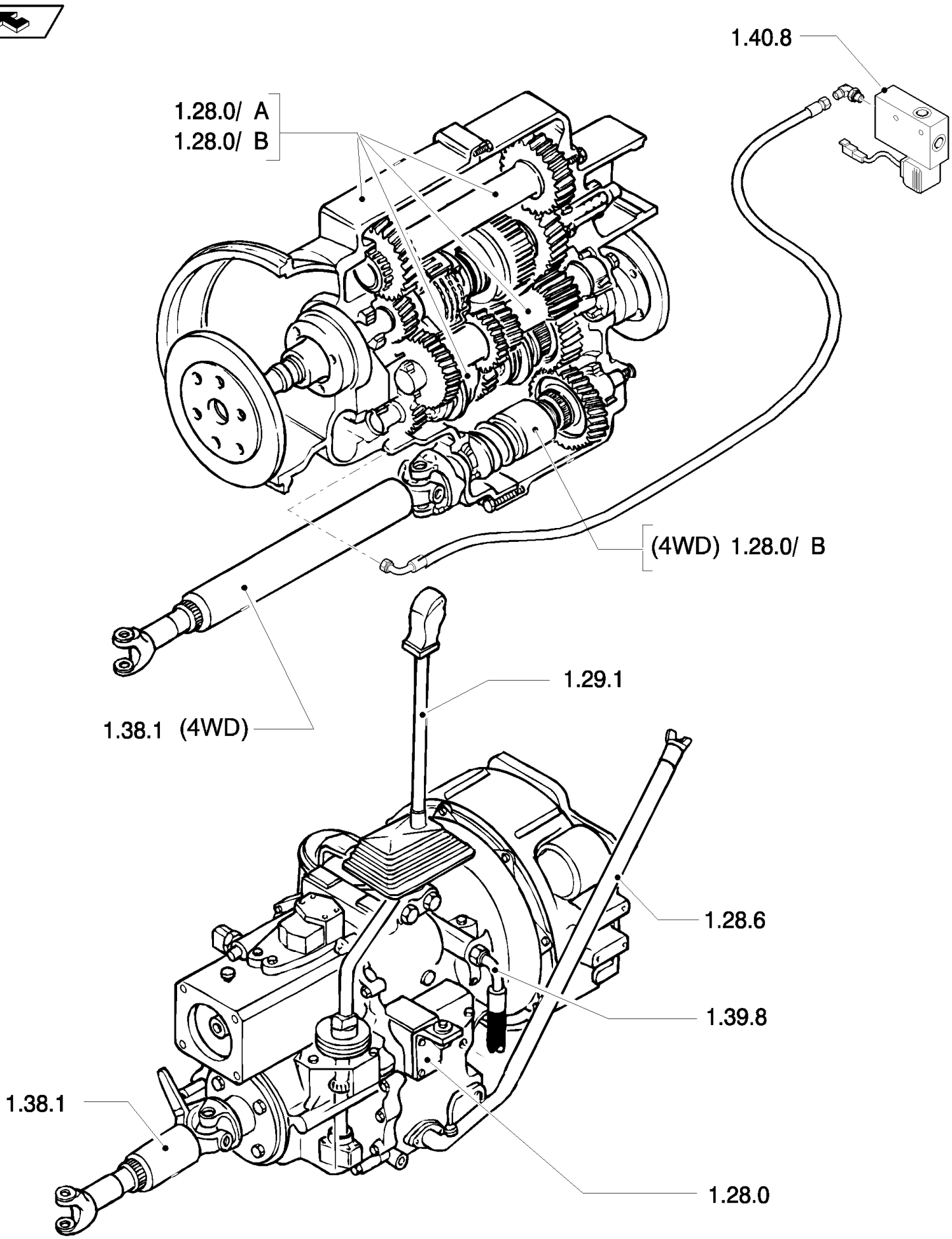
1.40.8
1.28.0/ A
1.28.0/ B
(4WD) 1.28.0/ B
1.29.1
1.38.1 (4WD)
1.28.6
1.39.8
1.38.1
1.28.0

Ref	Numero de Pieza	Ctd	Descripción

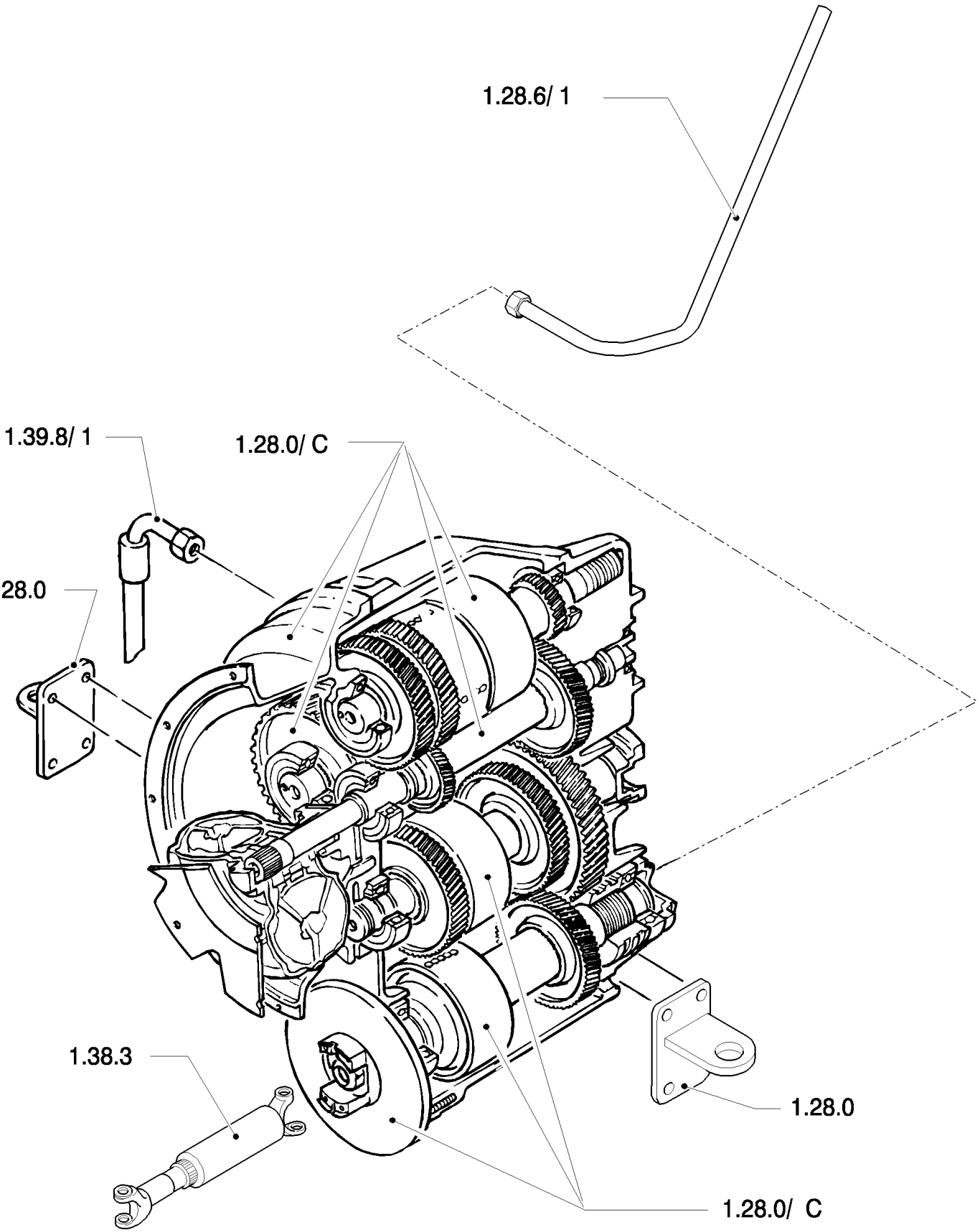
1.28.6/ 1
1.39.8/ 1
1.28.0/ C
1.28.0
1.38.3
1.28.0
1.28.0/ C

Ref	Numero de Pieza	Ctd	Descripción

1.28.0(01) GEARING SPEED GEAR

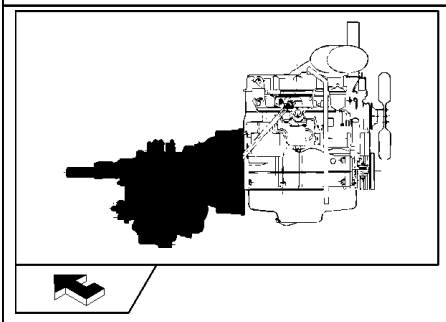

KIT KIT KIT = 16

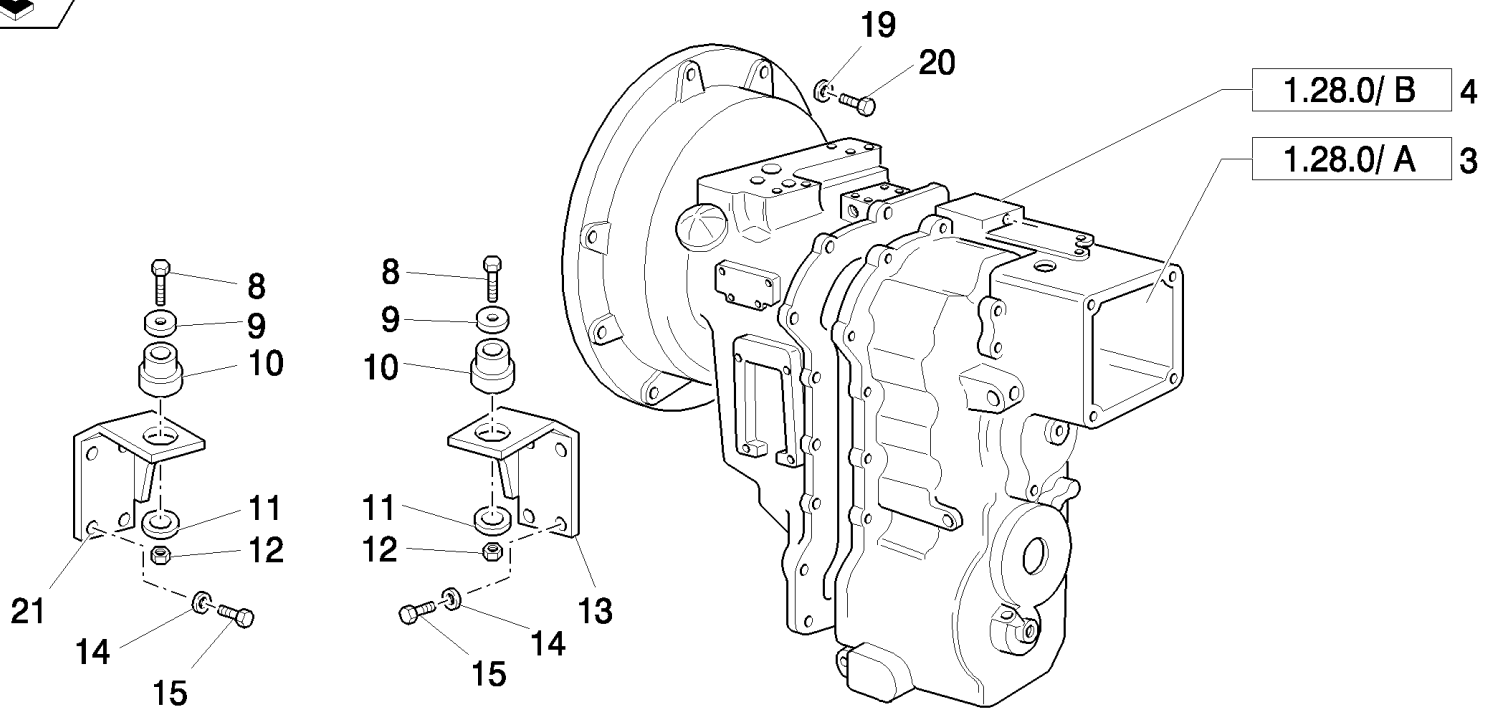

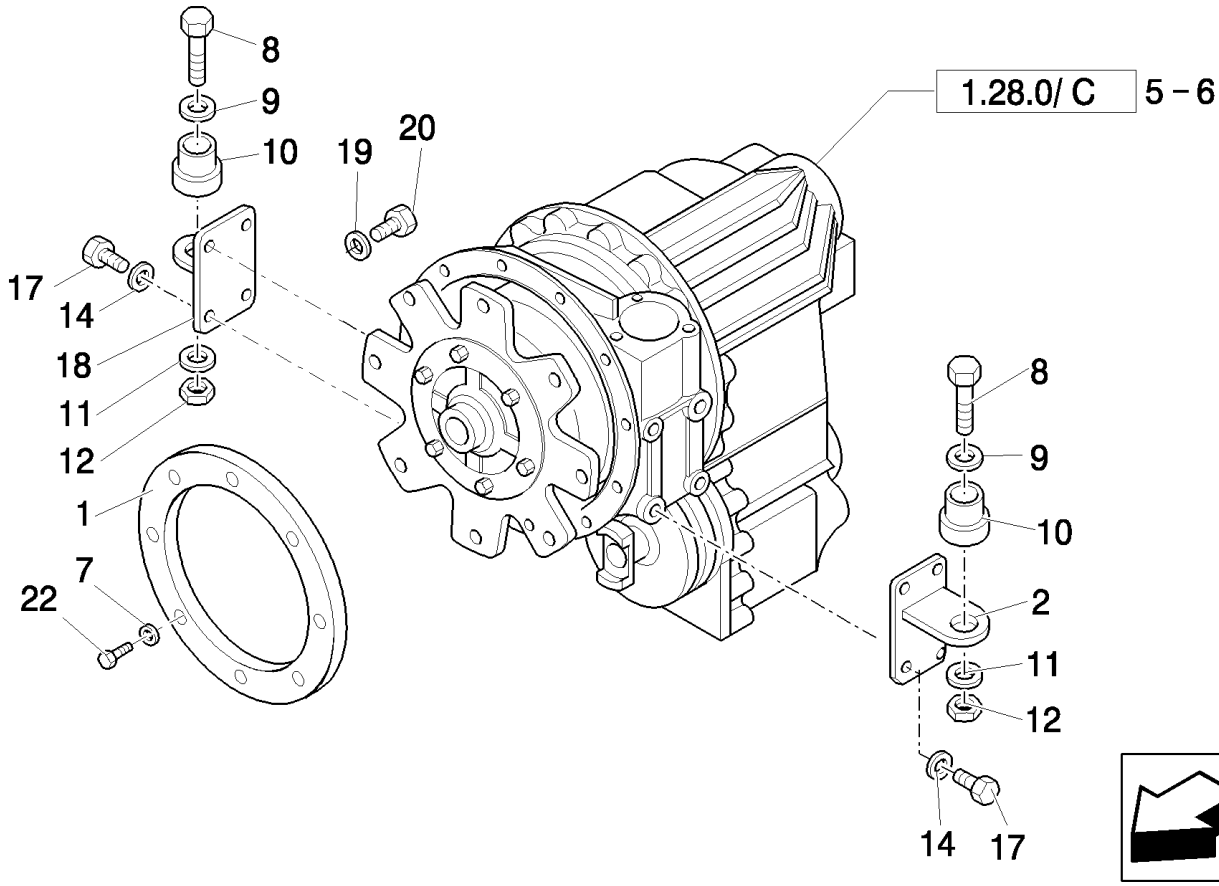

B110 TIER 3 BACKHOE LOADER (2/07-)

1.28.0(01) GEARING SPEED GEAR

Ref	Numero de Pieza	Ctd	Descripción
1	87407758	1	RING,
2	85804276	1	SUPPORT, LH
3	86990712	1	TRANSMISSION, , Only for 2WD, Power Shuttle
4	86990713	1	TRANSMISSION, , Only for 4WD, Power Shuttle, Repair and exchange component available - call Avatar Components, 1-800-453-3544, ext. 122
5	87571324	1	TRANSMISSION, 2WS, Only for B110 4WD, Power Shift
6	87571330	1	TRANSMISSION, 4WS, Only for B115 4WD, Power Shift
7	11190779	4	WASHER, SPRING, Belleville, M13,
8	87410647	2	SCREW, M12x1.25x90
9	85801585	2	WASHER, SEALING, 65mm OD
10	87416967	2	SUPPORT,
11	85802618	2	WASHER, SEALING,
12	16105011	2	NUT, LOCK, M12x1.75x1.25
13	87405629	1	SUPPORT, LH
14	11198679	8	WASHER, SPRING, Belleville, M13,
15	11112634	8	SCREW, M12x35
16	85806019	AR	KIT, O-RING, O-Ring, for under Directional Control Valve, Kit o-ring for directional control valve
17	11112434	8	BOLT, Hex, M12 x 30, 10.9, Full Thd,
18	85804275	1	SUPPORT, RH
19	47049372	12	WASHER,
20	11106434	12	BOLT, Hex, M10 x 30, 10.9, Full Thd,
21	87405628	1	SUPPORT, RH
22	87019767	4	SCREW, 12 Pt Hd, M10 x 1.25 x 30, 12.9,

1.28.0/A(01) TRANSMISSIONGEARING SPEED GEAR (2WD POWER-SHUTTLE) - EU

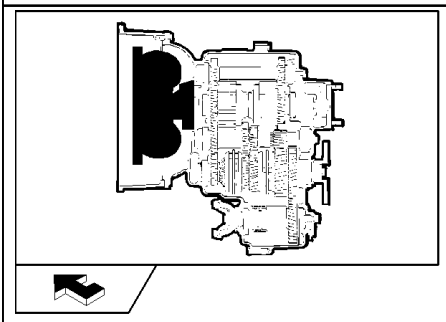

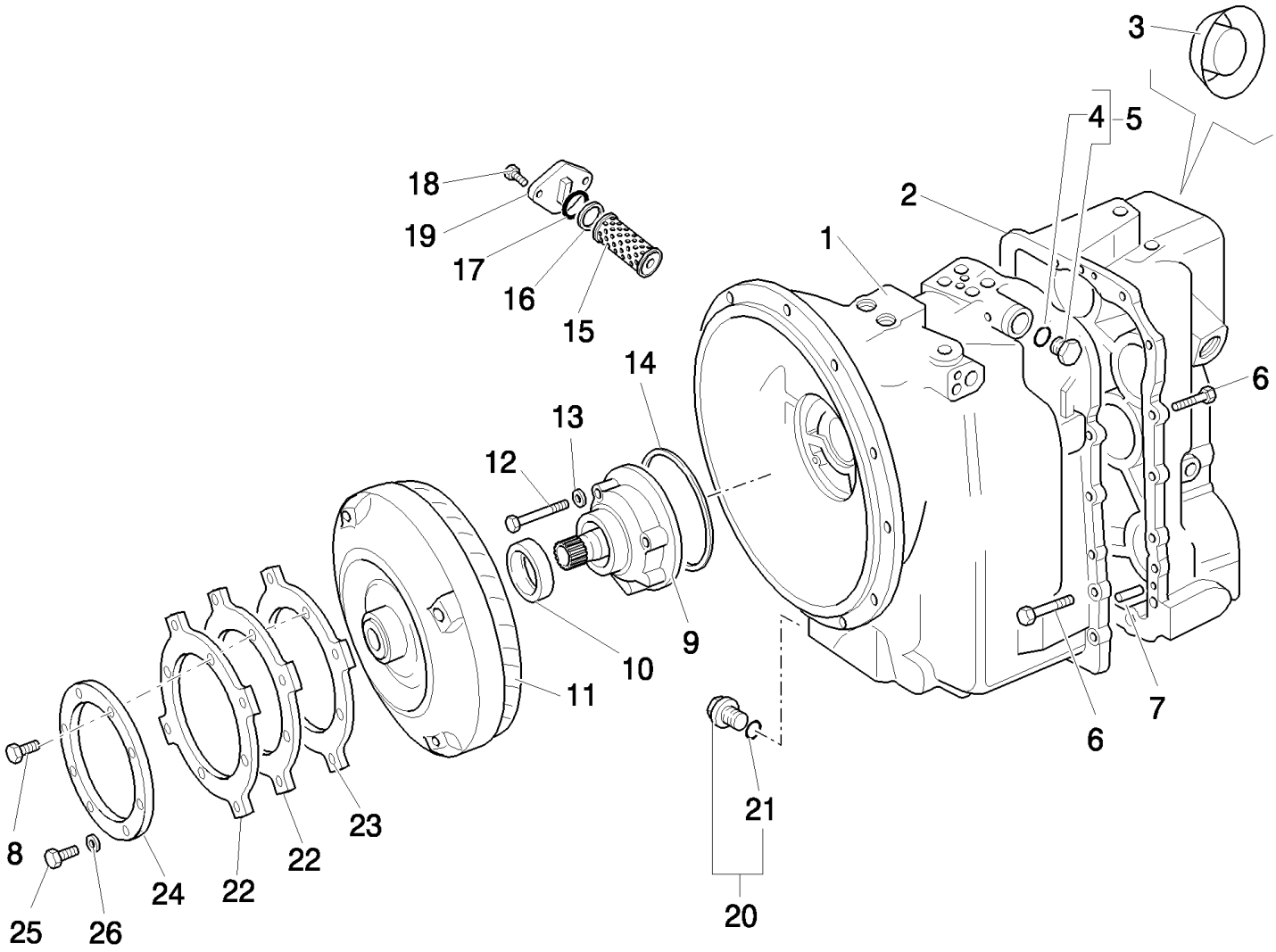

B110 TIER 3 BACKHOE LOADER (2/07-)

1.28.0/A(01) TRANSMISSIONGEARING SPEED GEAR (2WD POWER-SHUTTLE) - EU

Ref	Numero de Pieza	Ctd	Descripción
1	85827769	1	TRANSMISSION HOUSING,
2	85827770	1	TRANSMISSION HOUSING,
3	85812096	1	PLUG,
4	9968218	1	O-RING, 9/16"
5	9968219	1	PLUG, 9/16" UNF, 2, Includes 4
6	85817164	17	SCREW,
7	9968356	2	DOWEL,
8	87019767	4	SCREW, 12 Pt Hd, M10 x 1.25 x 30, 12.9, M10x1.25x90
9	9968311	1	PUMP, M10x30, Includes 10
10	9968312	1	SEAL,
11	87400114	1	TORQUE CONVERTER,
12	85817163	7	SCREW,
13	85817001	4	WASHER,
14	9968313	1	SEALRING,
15	9968359	1	FILTER,
16	9968361	1	WASHER,
17	9968360	1	O-RING,
18	85817169	2	SCREW,
19	9968362	1	BELL HOUSING,
20	9968339	1	PLUG, , Includes 21
21	9968365	1	O-RING,
22	86993546	1	PLATE,
23	87406934	1	PLATE,
24	87409201	1	Plate, Backing,
25	11106021	4	BOLT, Hex, M10 x 20, 8.8, Full Thd,
26	47049372	4	WASHER,

1.28.0/A(02) TRANSMISSIONGEARING SPEED GEAR (2WD POWER-SHUTTLE) - EU

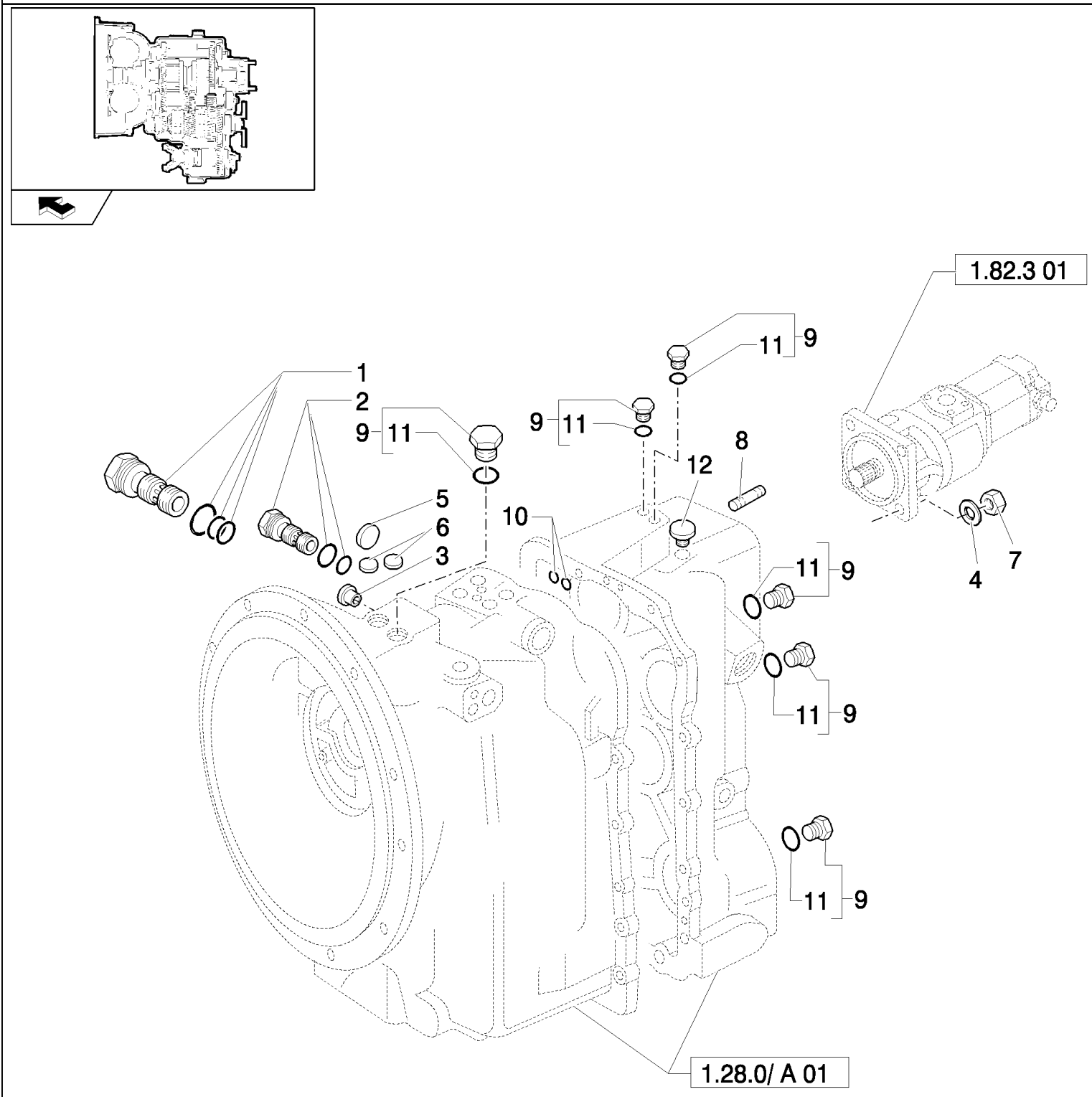

B110 TIER 3 BACKHOE LOADER (2/07-)

1.28.0/A(02) TRANSMISSIONGEARING SPEED GEAR (2WD POWER-SHUTTLE) - EU

Ref	Numero de Pieza	Ctd	Descripción
1	9968350	1	VALVE, CONTROL, Hydraulic Pressure Regulator
2	9968334	1	VALVE, PRESSURE RELIEF, Hydraulic Converter Relief
3	85812094	2	PLUG,
4	11190779	4	WASHER, SPRING, Belleville, M13,
5	9968371	1	PLUG, Expansion, 1"
6	9968333	2	PLUG, Tyers, .5"
7	85802684	4	NUT,
8	85802683	4	STUD, 1/2"
9	9968219	AR	PLUG, 9/16" UNF
10	9968368	3	O-RING, .512" ID x .094" Thk
11	9968218	AR	O-RING, 9/16"
12	9968364	1	BREATHER,

1.28.0/A(03) TRANSMISSIONGEARING SPEED GEAR (2WD POWER-SHUTTLE) - EU

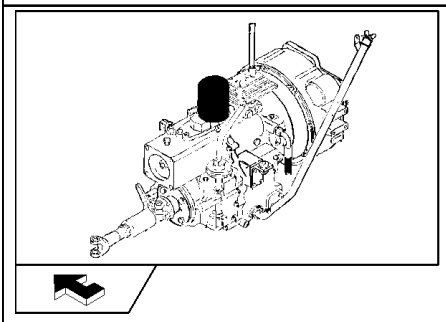

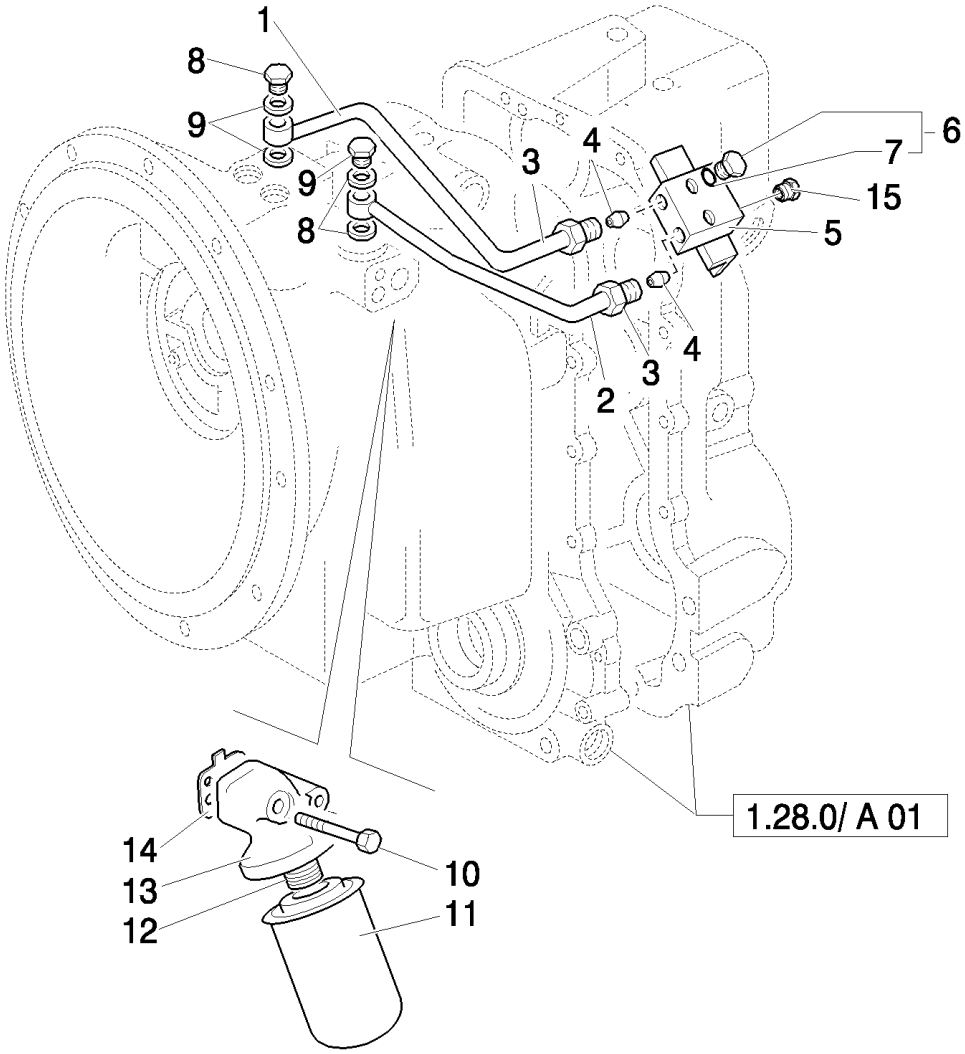

B110 TIER 3 BACKHOE LOADER (2/07-)

1.28.0/A(03) TRANSMISSIONGEARING SPEED GEAR (2WD POWER-SHUTTLE) - EU

Ref	Numero de Pieza	Ctd	Descripción
1	85812087	1	TUBE,
2	85812086	1	TUBE,
3	9968336	2	NUT,
4	9969449	4	CONNECTOR, HYD.,
5	85812085	1	BLOCK, CONNECTING,
6	9968219	2	PLUG, 9/16" UNF
7	9968218	2	O-RING, 9/16"
8	9968676	2	BOLT, BANJO,
9	85817002	4	WASHER,
10	85817165	2	SCREW,
11	85817004	1	FILTER,
12	9968354	1	ADAPTER,
13	9968374	1	Head, Filter,
14	9968375	1	GASKET,
15	85812091	1	PLUG,

1.28.0/A(04) TRANSMISSIONGEARING SPEED GEAR (2WD POWER-SHUTTLE) - EU

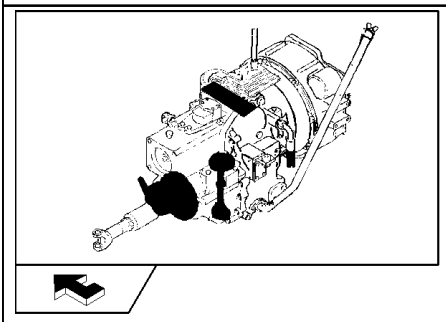

B110 TIER 3 BACKHOE LOADER (2/07-)

1.28.0/A(04) TRANSMISSIONGEARING SPEED GEAR (2WD POWER-SHUTTLE) - EU

Ref	Numero de Pieza	Ctd	Descripción
1	85827764	1	VALVE, HYDRAULIC, , Includes 25 To 28
2	85827798	2	COIL,
3	85812092	3	WASHER,
4	9969445	4	SCREW,
5	85817163	3	SCREW,
6	85827797	1	KIT, REPAIR,
7	85813300	1	BRAKE, PARKING, , Includes 15, 17, 18
8	85827779	4	PLUG,
9	9968324	1	LEVER,
10	9968327	1	PIN,
11	9968326	1	SUPPORT,
12	9968328	1	BOOT,
13	9969281	2	NUT,
14	9968299	2	BOLT,
15	85813318	2	KIT, REPAIR,
16	85806019	1	KIT, O-RING,
17	9968926	1	KIT,
18	9968927	1	KIT,
19	9968370	2	PLUG,
20	85827777	1	STRAP, CABLE,
21	85817006	1	O-RING,
22	85817007	1	GASKET,
23	85827776	1	STRAP, CABLE,
24	85827799	1	KIT,

1.28.0/A(05) TRANSMISSIONGEARING SPEED GEAR (2WD POWER-SHUTTLE) - EU

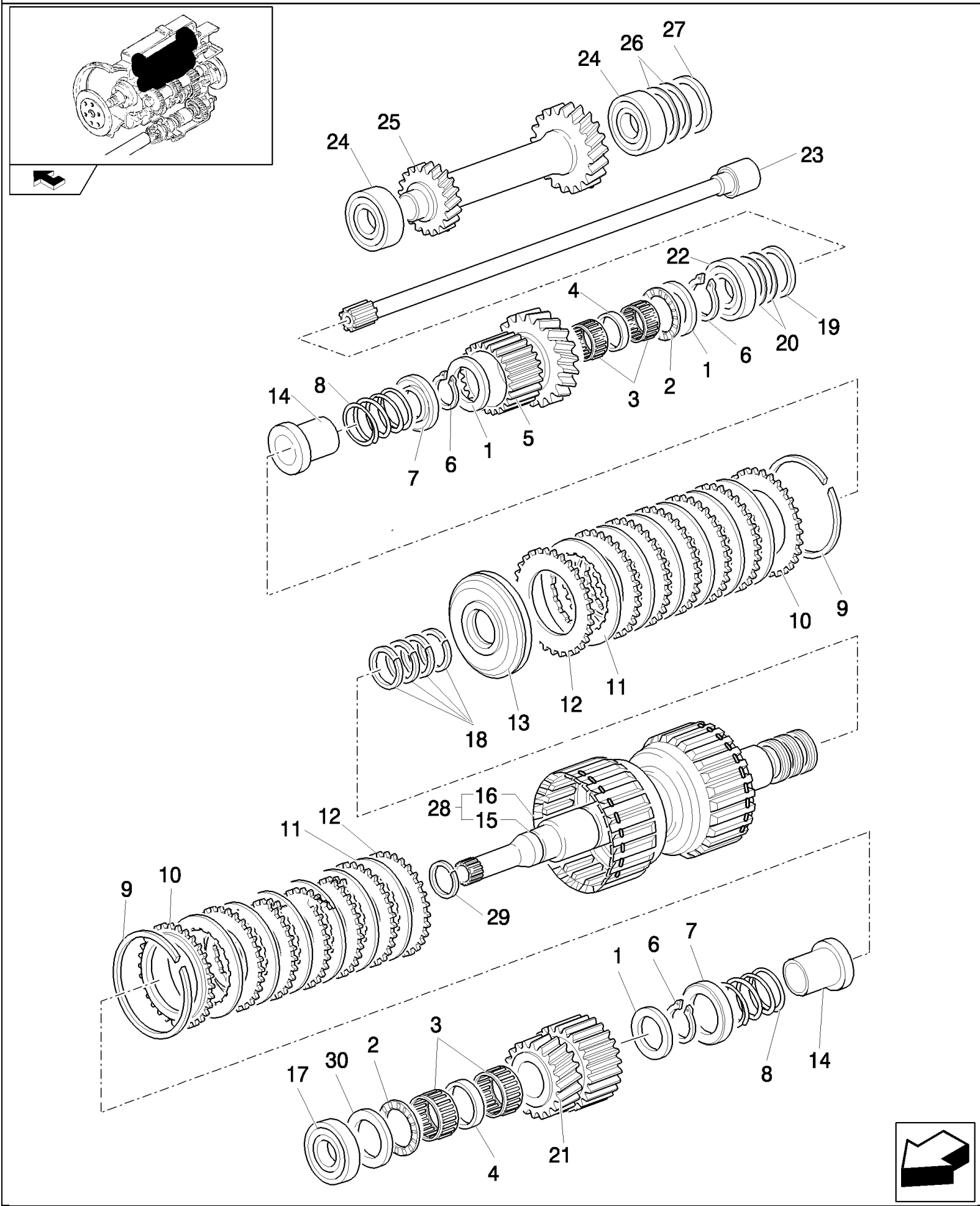

B110 TIER 3 BACKHOE LOADER (2/07-)

1.28.0/A(05) TRANSMISSIONGEARING SPEED GEAR (2WD POWER-SHUTTLE) - EU

Ref	Numero de Pieza	Ctd	Descripción
1	9968279	3	WASHER,
2	9968228	2	BEARING, THRUST,
3	9968304	4	BEARING, NEEDLE, 50x5x17
4	9968302	2	SPACER,
5	9968286	1	GEAR, 30T
6	9968291	3	RING, SNAP,
7	85827771	2	SPRING-CHECK,
8	85827772	2	SPRING,
9	9968287	2	CIRCLIP,
10	9968288	2	PLATE, BACK,
11	9968290	12	CLUTCH PLATE,
12	9968289	12	CLUTCH, PLATE,
13	85827773	2	PISTON,
14	85827774	2	SPRING,
15	85821452	1	SHAFT,
16	85821454	1	SLEEVE, 2.234" IDx.139" Thk
17	9968276	1	BEARING, ROLLER, TAPERED,
18	9968226	4	GASKET,
19	9968341	1	O-RING, M80 x 70 x 2
20	9968342	AR	SHIM, 24T-25T
20	9968343	AR	SHIM, M80 x 70 x .076
20	9968344	AR	SHIM, M80 x 70 x .178
20	9968345	AR	SHIM, M80 x 70 x .599
21	9968285	1	GEAR, 24T
22	9968305	1	BEARING, ROLLER, TAPERED,
23	9968347	1	SHAFT,
24	9968268	2	BEARING, ROLLER, TAPERED,
25	9968281	1	GEAR, 24T-25T
26	9968262	AR	SHIM, 0.002mm Thk,
26	9968263	AR	SHIM, 0.003mm Thk,
26	9968264	AR	SHIM, 0.003mm Thk,
26	9968265	AR	SHIM, 0.007mm Thk,
26	9968266	AR	SHIM, 0.015mm Thk,
26	9968267	AR	SHIM, 0.020mm Thk,
27	9968261	1	SPACER,
28	9968282	1	SHAFT,
29	9968314	1	SEALRING, 40 mm
30	9968230	1	WASHER, M40 x 70 x 4

1.28.0/A(06) TRANSMISSIONGEARING SPEED GEAR (2WD POWER-SHUTTLE) - EU

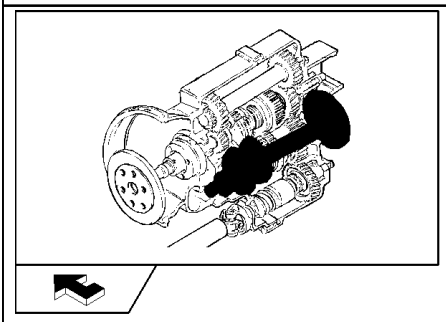

B110 TIER 3 BACKHOE LOADER (2/07-)

1.28.0/A(06) TRANSMISSIONGEARING SPEED GEAR (2WD POWER-SHUTTLE) - EU

Ref	Numero de Pieza	Ctd	Descripción
1	9968308	1	SCREW,
2	9968306	1	WASHER,
3	9968309	1	O-RING, 1.29" IDx.139" Thk
4	85820909	1	FLANGE,
5	85825506	1	SEAL, M48x62x8
6	9968271	1	SPACER,
7	9968272	AR	SHIM, 0.051mm Thk,
7	9968273	AR	SHIM, 0.076mm Thk,
7	9968274	AR	SHIM, 0.178mm Thk,
7	9968275	AR	SHIM, 0.559mm Thk,
8	9968270	1	BEARING, ROLLER, TAPERED,
9	85827803	1	GEAR,
10	9968252	1	SPACER,
11	9968250	2	BEARING, NEEDLE,
12	9968251	1	SPACER,
13	9968248	1	GEAR, 43T, 1ST
14	9968307	2	SYNCHRONIZER,
15	9968223	2	SLEEVE,
16	9968247	1	GEAR, 37T, 2ND
17	9968269	1	SHAFT,
18	9968246	1	GEAR, 28T, 3RD
19	9968396	1	SPACER,
20	9968358	1	CAP, Sealing Cap, 2.25"
21	9968253	1	RING, SNAP,
22	9968278	1	BEARING, ROLLER, TAPERED,
23	9968260	1	WASHER, 55x4

1.28.0/A(07) TRANSMISSIONGEARING SPEED GEAR (2WD POWER-SHUTTLE) - EU

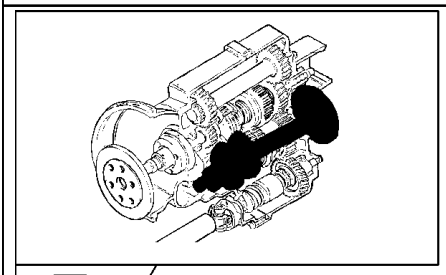

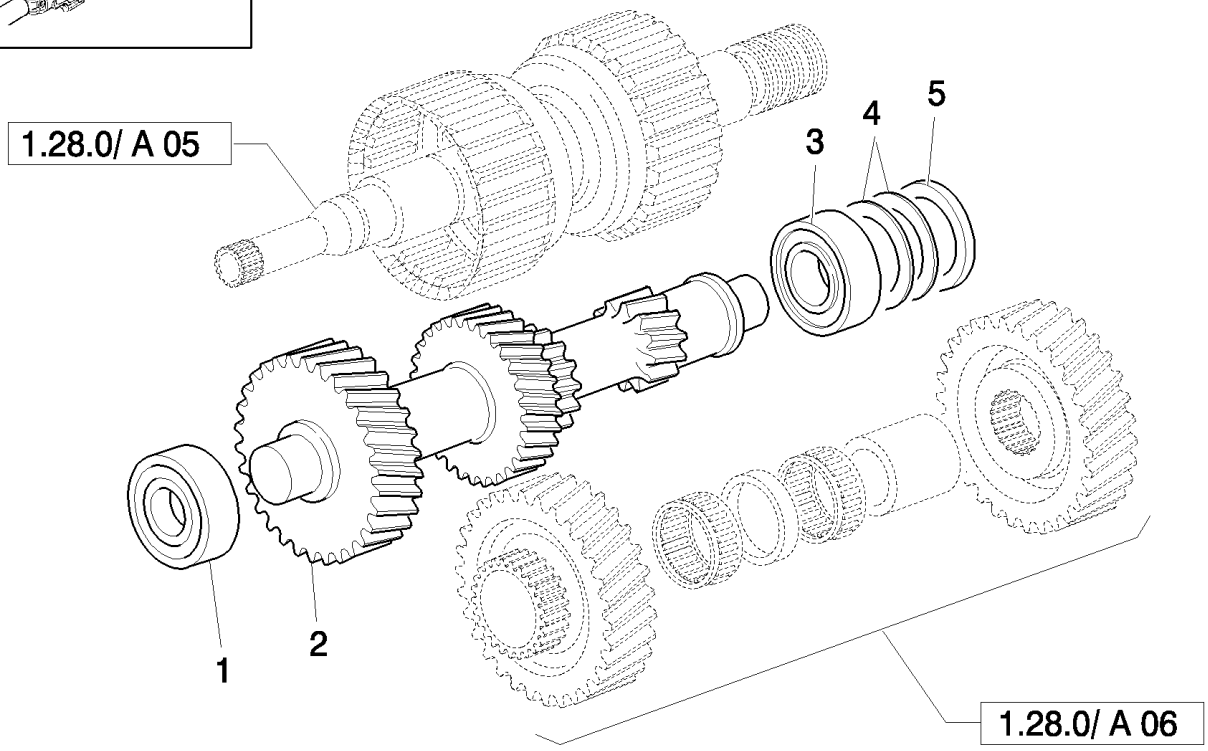

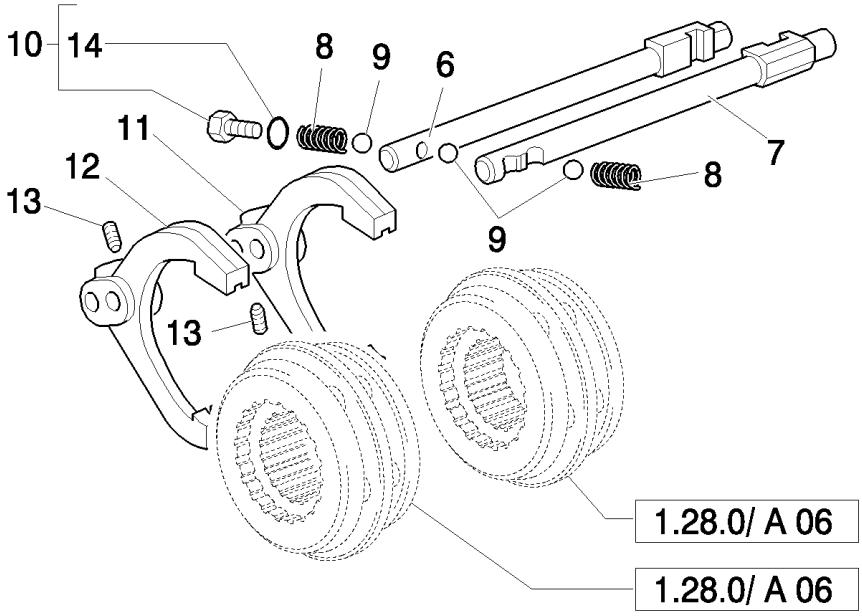

B110 TIER 3 BACKHOE LOADER (2/07-)

1.28.0/A(07) TRANSMISSIONGEARING SPEED GEAR (2WD POWER-SHUTTLE) - EU

Ref	Numero de Pieza	Ctd	Descripción
1	9968277	1	BEARING, ROLLER, TAPERED,
2	9968280	1	SHAFT, 35T-29T-20T-13T
3	9968270	1	BEARING, ROLLER, TAPERED,
4	9968272	AR	SHIM, 0.051mm Thk,
4	9968273	AR	SHIM, 0.076mm Thk,
4	9968274	AR	SHIM, 0.178mm Thk,
4	9968275	AR	SHIM, 0.559mm Thk,
5	9968271	1	SPACER,
6	9968319	1	SHIFT RAIL, 1st-2nd
7	9968322	1	SHIFT RAIL, 3rd-4th
8	9968316	2	SPRING,
9	9968315	3	BALL,
10	9968219	AR	PLUG, 9/16" UNF
11	9968317	1	FORK, SHIFTER, 1st-2nd
12	9968318	1	FORK, SHIFTER, 3rd-4th
13	9968323	2	SCREW,
14	9968218	AR	O-RING, 9/16"

1.28.0/B(01) TRANSMISSIONGEARING SPEED GEAR (4WD POWER-SHUTTLE)

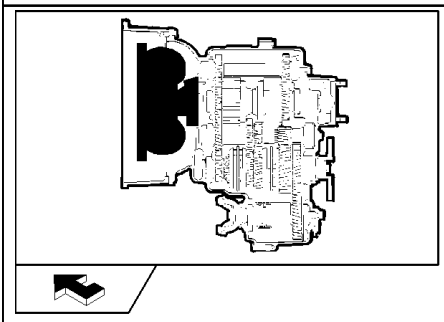

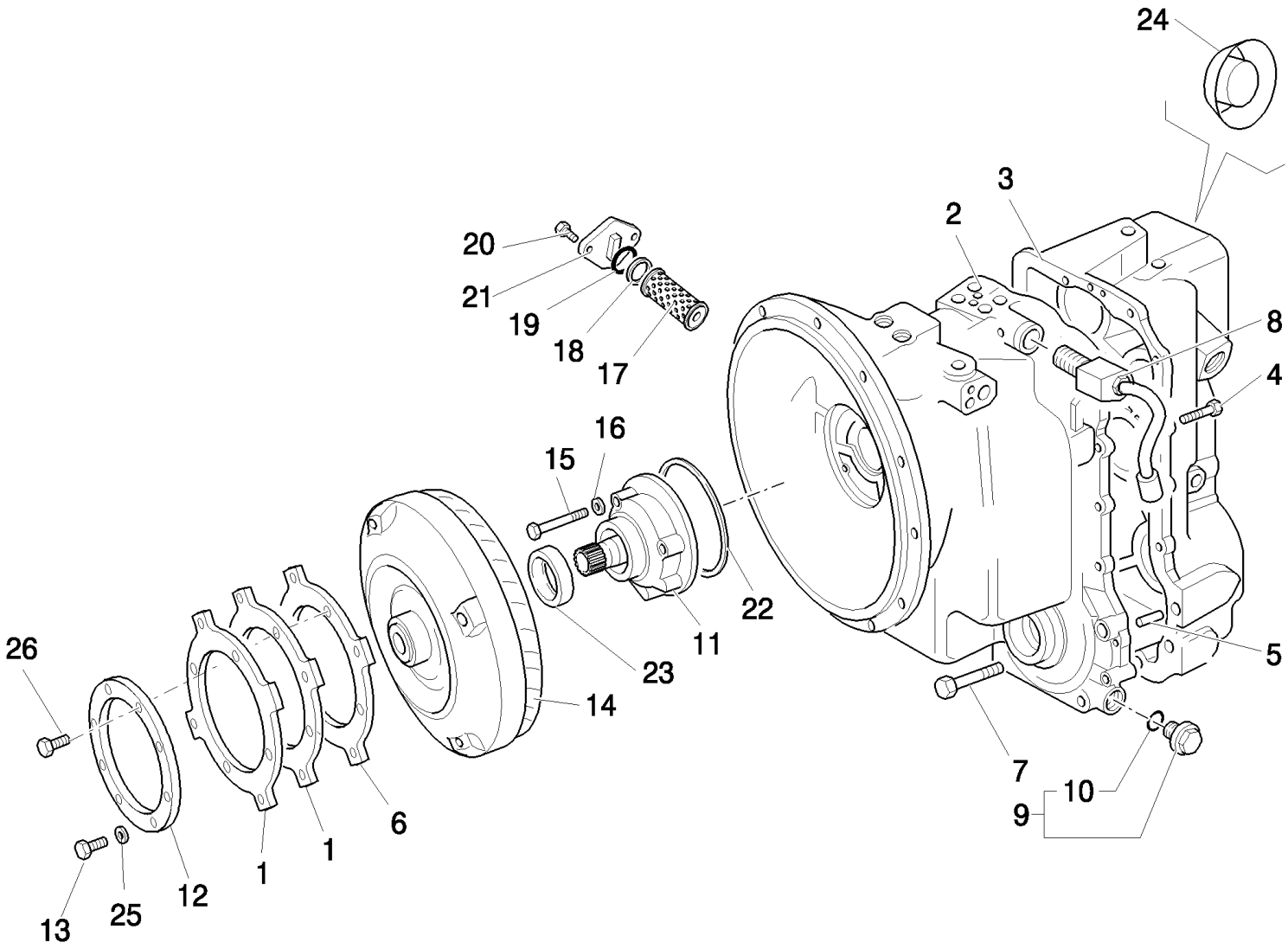

B110 TIER 3 BACKHOE LOADER (2/07-)

1.28.0/B(01) TRANSMISSIONGEARING SPEED GEAR (4WD POWER-SHUTTLE)

Ref	Numero de Pieza	Ctd	Descripción
1	86993546	2	PLATE,
2	85827783	1	TRANSMISSION HOUSING,
3	85827784	1	TRANSMISSION HOUSING,
4	85817164	14	SCREW,
5	9968356	2	DOWEL,
6	87406934	1	PLATE,
7	85817190	4	SCREW,
8	9968351	1	VALVE, SOLENOID, 4WD Solenoid
9	9968339	1	PLUG,
10	9968365	1	O-RING,
11	9968311	1	PUMP,
12	87409201	1	Plate, Backing,
13	11106021	4	BOLT, Hex, M10 x 20, 8.8, Full Thd,
14	87400114	1	TORQUE CONVERTER,
15	85817163	7	SCREW,
16	85817001	4	WASHER,
17	9968359	1	FILTER,
18	9968361	1	WASHER,
19	9968360	1	O-RING,
20	85817169	2	SCREW,
21	9968362	1	BELL HOUSING,
22	9968313	1	SEALRING,
23	9968312	1	SEAL,
24	85812096	1	PLUG,
25	47049372	4	WASHER,
26	87019767	4	SCREW, 12 Pt Hd, M10 x 1.25 x 30, 12.9, M10x1.25x90

1.28.0/B(02) TRANSMISSIONGEARING SPEED GEAR (4WD POWER-SHUTTLE)

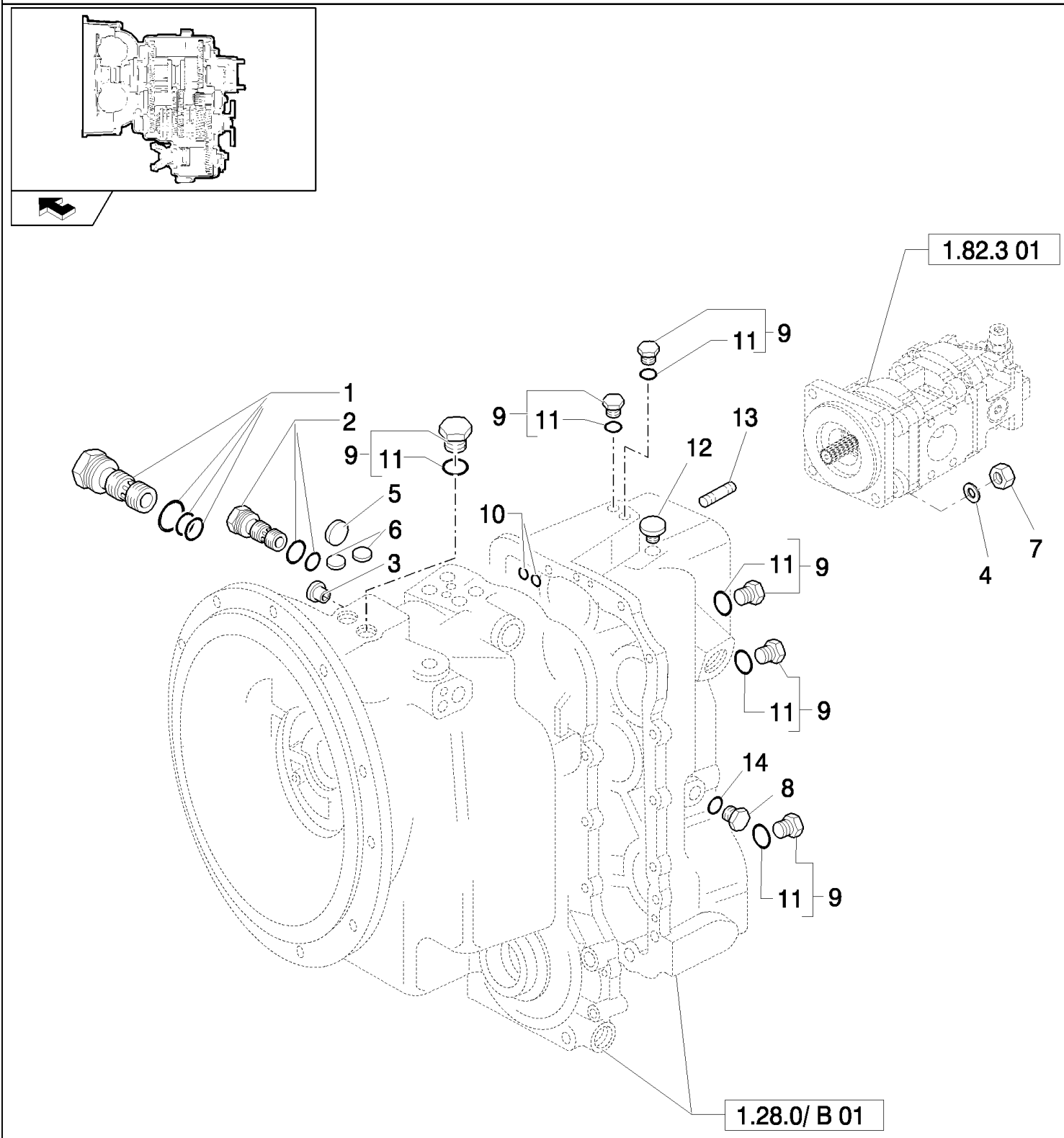

B110 TIER 3 BACKHOE LOADER (2/07-)

1.28.0/B(02) TRANSMISSIONGEARING SPEED GEAR (4WD POWER-SHUTTLE)

Ref	Numero de Pieza	Ctd	Descripción
1	9968350	1	VALVE, CONTROL, Hydraulic Pressure Regulator
2	9968334	1	VALVE, PRESSURE RELIEF, Hydraulic Converter Relief
3	85812094	2	PLUG,
4	11190779	4	WASHER, SPRING, Belleville, M13,
5	9968371	1	PLUG, Expansion, 1"
6	9968333	2	PLUG, Tyers, .5"
7	85802684	4	NUT,
8	9968382	1	PLUG,
9	9968219	AR	PLUG, 9/16" UNF
10	9968368	4	O-RING, .512" IDx.094"Thk
11	9968218	AR	O-RING, 9/16"
12	9968364	1	BREATHER,
13	85802683	4	STUD, 1/2"
14	9968383	1	WASHER,

1.28.0/B(03) TRANSMISSIONGEARING SPEED GEAR (4WD POWER-SHUTTLE)

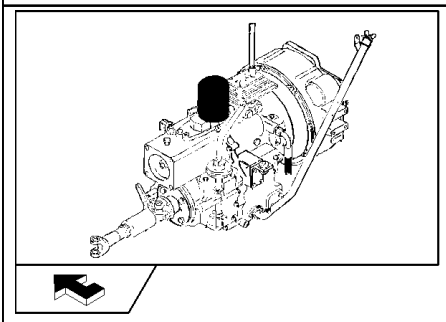

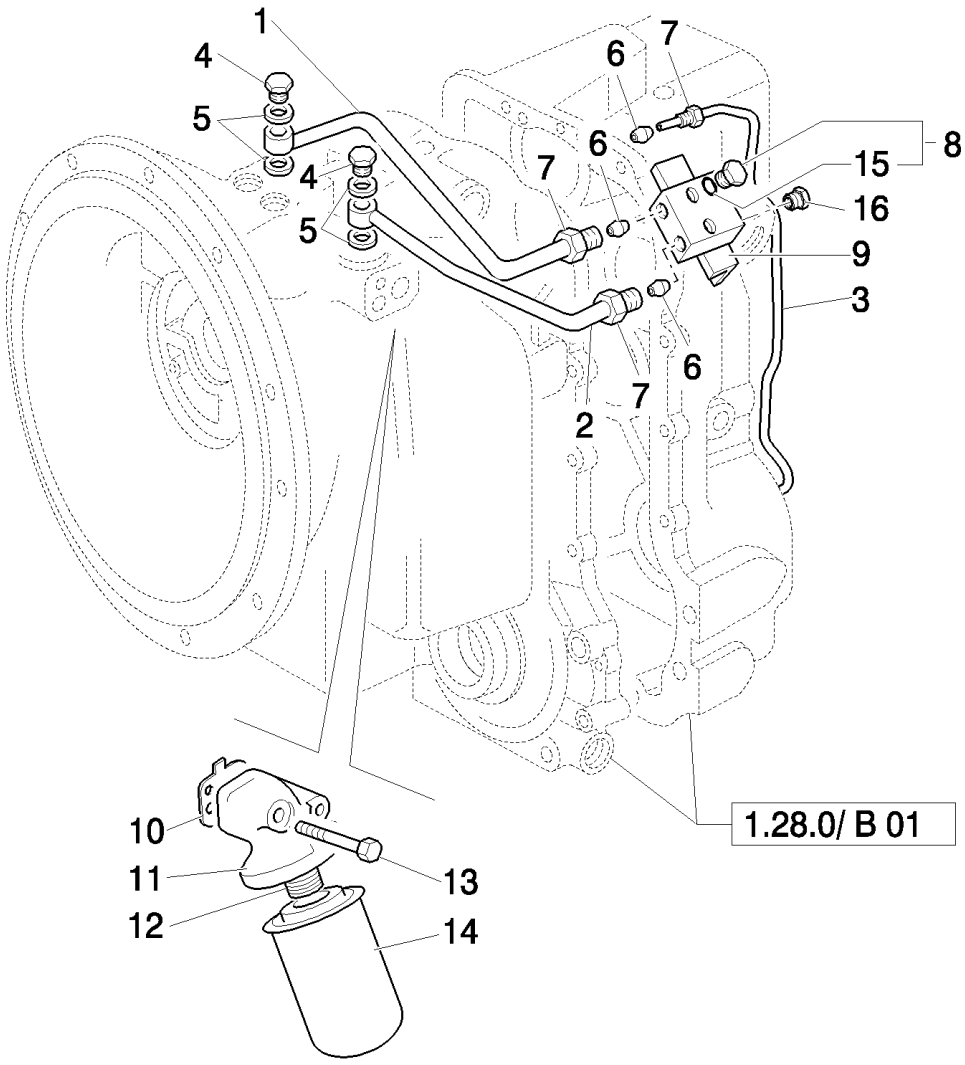

B110 TIER 3 BACKHOE LOADER (2/07-)

1.28.0/B(03) TRANSMISSIONGEARING SPEED GEAR (4WD POWER-SHUTTLE)

Ref	Numero de Pieza	Ctd	Descripción
1	85812086	1	TUBE,
2	85812087	1	TUBE,
3	9968337	1	TUBE, 4WD
4	9968676	2	BOLT, BANJO,
5	85817002	4	WASHER,
6	9968340	AR	CONNECTOR, HYD.,
7	9968336	AR	NUT,
8	9968219	2	PLUG, 9/16" UNF
9	85812085	1	BLOCK, CONNECTING,
10	9968375	1	GASKET,
11	9968374	1	Head, Filter,
12	9968354	1	ADAPTER,
13	85817165	2	SCREW,
14	85817004	1	FILTER,
15	9968218	AR	O-RING, 9/16"
16	85812091	1	PLUG,

1.28.0/B(04) TRANSMISSIONGEARING SPEED GEAR (4WD POWER-SHUTTLE)

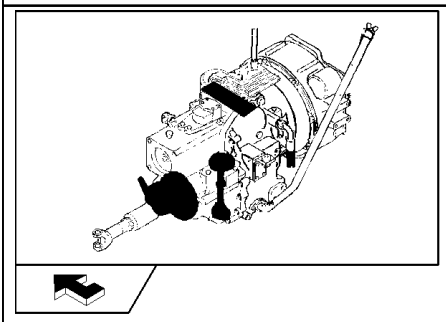

B110 TIER 3 BACKHOE LOADER (2/07-)

1.28.0/B(04) TRANSMISSIONGEARING SPEED GEAR (4WD POWER-SHUTTLE)

Ref	Numero de Pieza	Ctd	Descripción
1	85827764	1	VALVE, HYDRAULIC, , Includes 24 To 28
2	85827798	2	COIL,
3	85812092	3	WASHER,
4	9969445	4	SCREW,
5	85817163	3	SCREW,
6	85827797	1	KIT, REPAIR,
7	85813300	1	BRAKE, PARKING, , Includes 17, 18
8	85827779	4	PLUG, 2WD
9	9968324	1	LEVER,
10	9968327	1	PIN,
11	9968326	1	SUPPORT,
12	9968328	1	BOOT,
13	9969281	2	NUT,
14	9968299	2	BOLT,
15	85813318	1	KIT, REPAIR,
16	85806019	1	KIT, O-RING,
17	9968926	1	KIT,
18	9968927	1	KIT,
19	9968370	2	PLUG, Plastic, .25"
20	85827777	1	STRAP, CABLE,
21	85817006	1	O-RING,
22	85817007	1	GASKET,
23	85827776	1	STRAP, CABLE,
24	85827799	1	KIT,

1.28.0/B(05) TRANSMISSIONGEARING SPEED GEAR (4WD POWER-SHUTTLE)

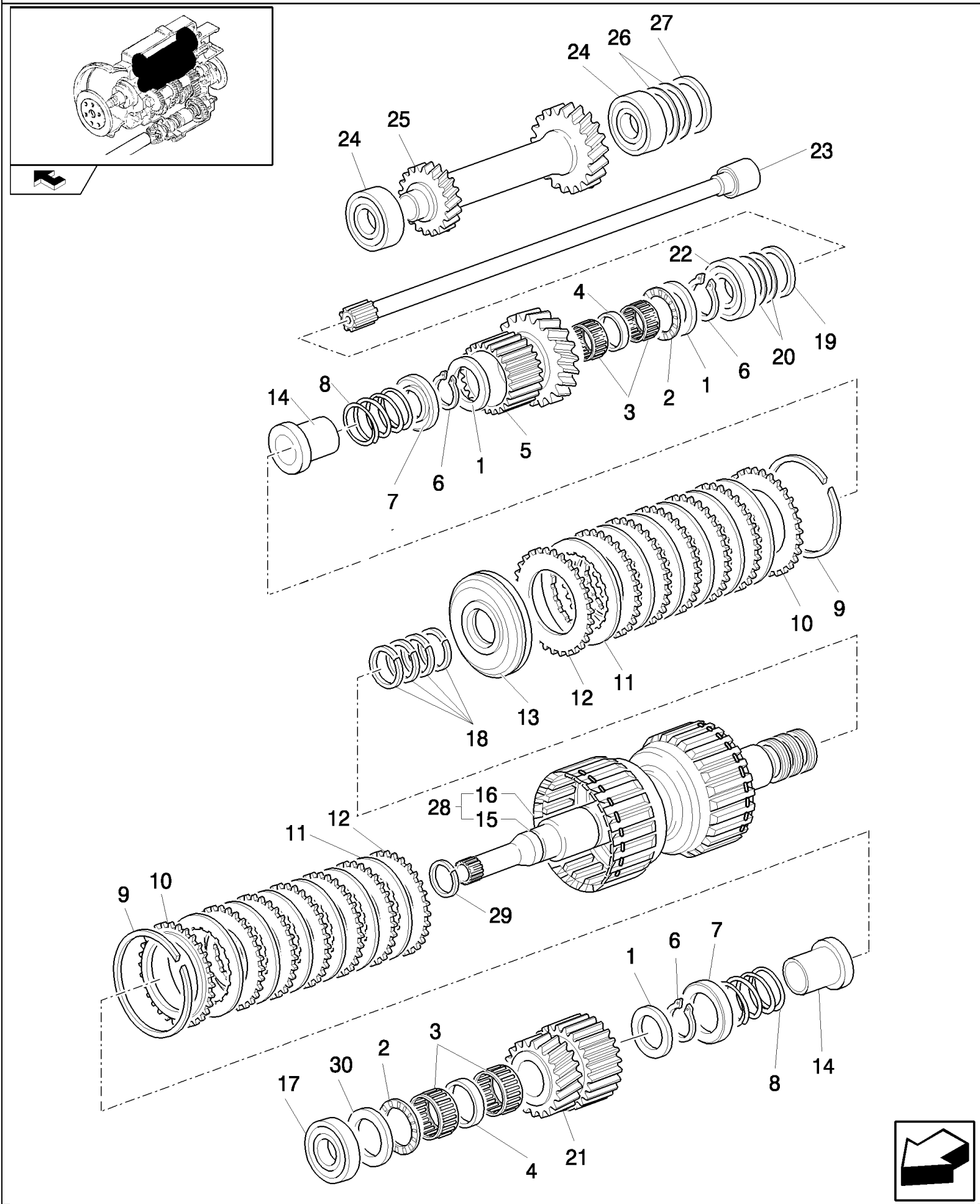

B110 TIER 3 BACKHOE LOADER (2/07-)

1.28.0/B(05) TRANSMISSIONGEARING SPEED GEAR (4WD POWER-SHUTTLE)

Ref	Numero de Pieza	Ctd	Descripción
1	9968279	3	WASHER, 50x70x4
2	9968228	2	BEARING, THRUST,
3	9968304	4	BEARING, NEEDLE, 50x5x17
4	9968302	2	SPACER,
5	9968286	1	GEAR, 30T
6	9968291	3	RING, SNAP,
7	85827771	2	SPRING-CHECK,
8	85827772	2	SPRING,
9	9968287	2	CIRCLIP,
10	9968288	2	PLATE, BACK,
11	9968290	12	CLUTCH PLATE,
12	9968289	12	CLUTCH, PLATE,
13	85827773	2	PISTON,
14	85827774	2	SPRING,
15	85821452	1	SHAFT,
16	85821454	1	SLEEVE,
17	9968276	1	BEARING, ROLLER, TAPERED,
18	9968226	4	GASKET,
19	9968341	1	O-RING, M80 x 70 x 2
20	9968342	AR	SHIM, 24T-25T
20	9968343	AR	SHIM, M80 x 70 x .076
20	9968344	AR	SHIM, M80 x 70 x .178
20	9968345	AR	SHIM, M80 x 70 x .599
21	9968285	1	GEAR, 24T
22	9968305	1	BEARING, ROLLER, TAPERED,
23	9968347	1	SHAFT,
24	9968268	2	BEARING, ROLLER, TAPERED,
25	9968281	1	GEAR, 24T-25T
26	9968262	AR	SHIM, 0.002mm Thk,
26	9968263	AR	SHIM, 0.003mm Thk,
26	9968264	AR	SHIM, 0.003mm Thk,
26	9968265	AR	SHIM, 0.007mm Thk,
26	9968266	AR	SHIM, 0.015mm Thk,
26	9968267	AR	SHIM, 0.020mm Thk,
27	9968261	1	SPACER,
28	9968282	1	SHAFT,
29	9968314	1	SEALRING, 40 mm
30	9968230	1	WASHER, M40 x 70 x 4

1.28.0/B(06) TRANSMISSIONGEARING SPEED GEAR (4WD POWER-SHUTTLE)

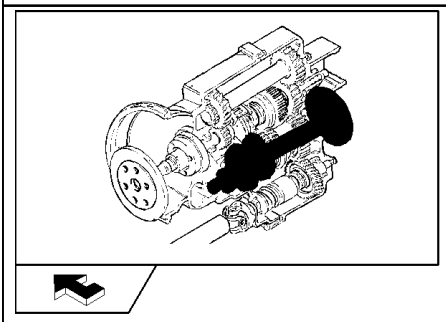

B110 TIER 3 BACKHOE LOADER (2/07-)

1.28.0/B(06) TRANSMISSIONGEARING SPEED GEAR (4WD POWER-SHUTTLE)

Ref	Numero de Pieza	Ctd	Descripción
1	9968308	1	SCREW,
2	9968306	1	WASHER,
3	9968309	1	O-RING, 1.29"IDx.139"Thk
4	85820909	1	FLANGE,
5	85825505	1	GASKET, M48x62x8
6	9968271	1	SPACER,
7	9968272	AR	SHIM, 0.051mm Thk,
7	9968273	AR	SHIM, 0.076mm Thk,
7	9968274	AR	SHIM, 0.178mm Thk,
7	9968275	AR	SHIM, 0.559mm Thk,
8	9968270	1	BEARING, ROLLER, TAPERED,
9	9968249	1	GEAR, 4WD
10	9968252	1	SPACER,
11	9968250	2	BEARING, NEEDLE,
12	9968251	1	SPACER,
13	9968248	1	GEAR, 43T, 1ST
14	9968307	2	SYNCHRONIZER,
15	9968223	2	SLEEVE,
16	9968247	1	GEAR, 37T, 2ND
17	9968269	1	SHAFT,
18	9968246	1	GEAR, 28T 3RD
19	9968278	1	BEARING, ROLLER, TAPERED,
20	9968358	1	CAP, Sealing Cap, 2.25"
21	9968253	1	RING, SNAP,
22	85827803	1	GEAR,
23	9968260	1	WASHER, 55x35x4

1.28.0/B(07) TRANSMISSIONGEARING SPEED GEAR (4WD POWER-SHUTTLE)

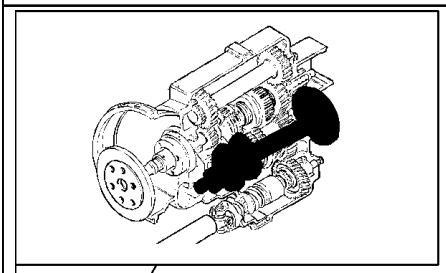

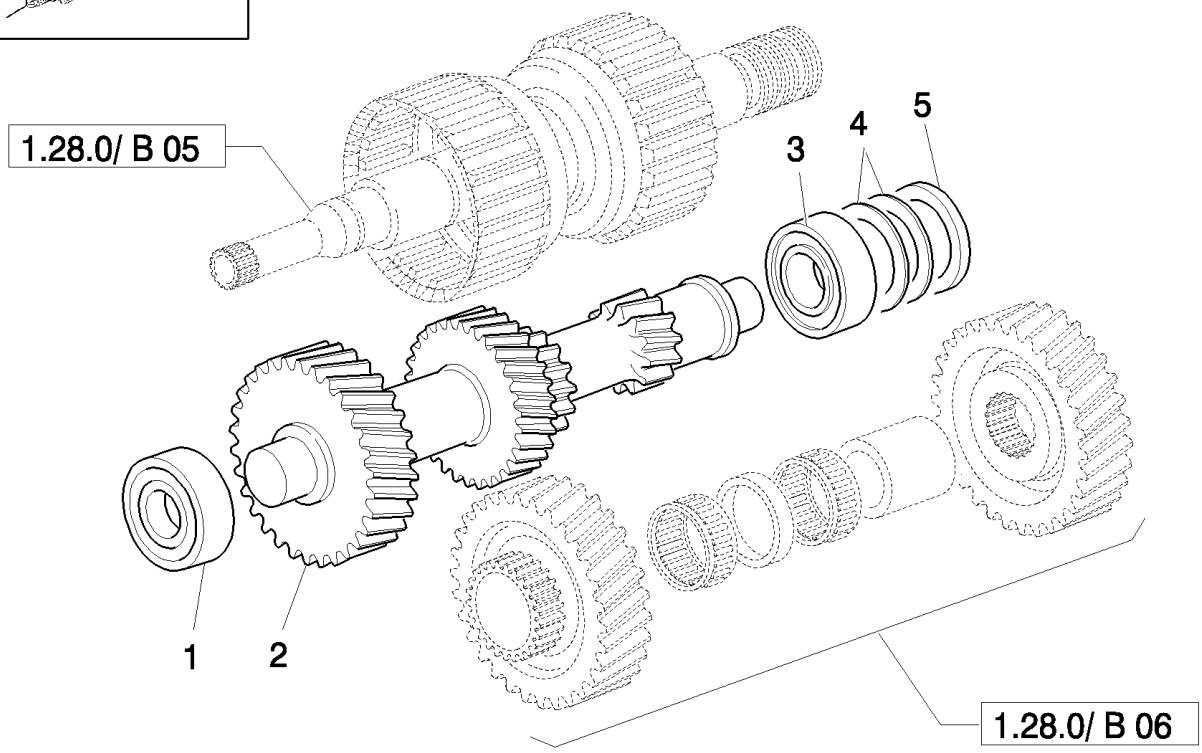

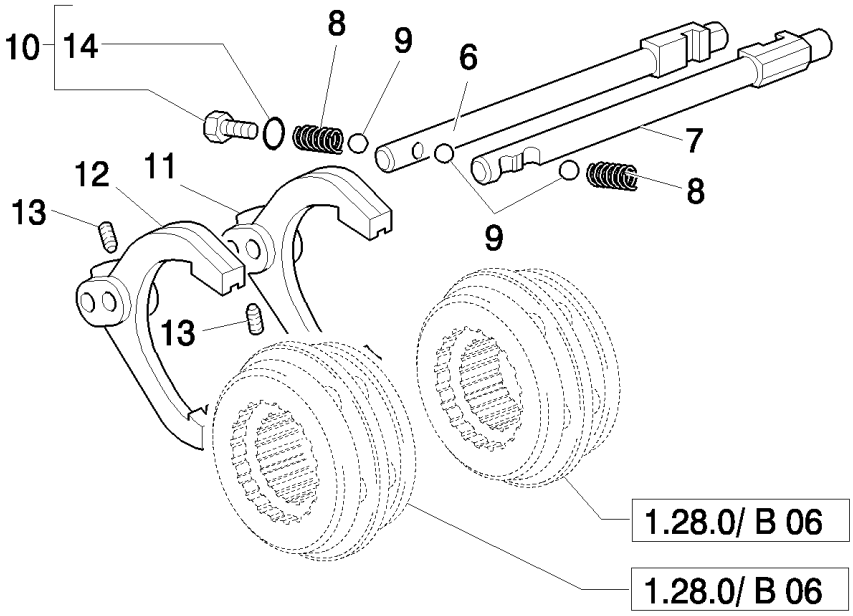

B110 TIER 3 BACKHOE LOADER (2/07-)

1.28.0/B(07) TRANSMISSIONGEARING SPEED GEAR (4WD POWER-SHUTTLE)

Ref	Numero de Pieza	Ctd	Descripción
	9968277	1	BEARING, ROLLER, TAPERED,
2	9968280	1	SHAFT, 35T-29T-20T-13T
3	9968270	1	BEARING, ROLLER, TAPERED,
4	9968272	AR	SHIM, 0.051mm Thk,
4	9968273	AR	SHIM, 0.076mm Thk,
4	9968274	AR	SHIM, 0.178mm Thk,
4	9968275	AR	SHIM, 0.559mm Thk,
5	9968271	1	SPACER,
6	9968319	1	SHIFT RAIL, 1st-2nd
7	9968322	1	SHIFT RAIL, 3rd-4th
8	9968316	2	SPRING,
9	9968315	3	BALL,
10	9968219	AR	PLUG, 9/16" UNF
11	9968317	1	FORK, SHIFTER, 1st-2nd
12	9968318	1	FORK, SHIFTER, 3rd-4th
13	9968323	2	SCREW,
14	9968218	AR	O-RING, 9/16"

1.28.0/B(08) TRANSMISSIONGEARING SPEED GEAR (4WD POWER-SHUTTLE)

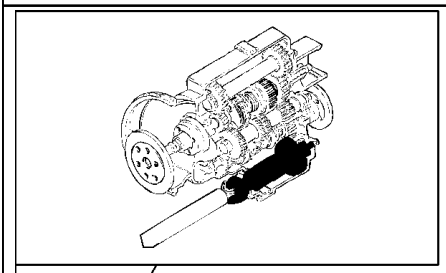

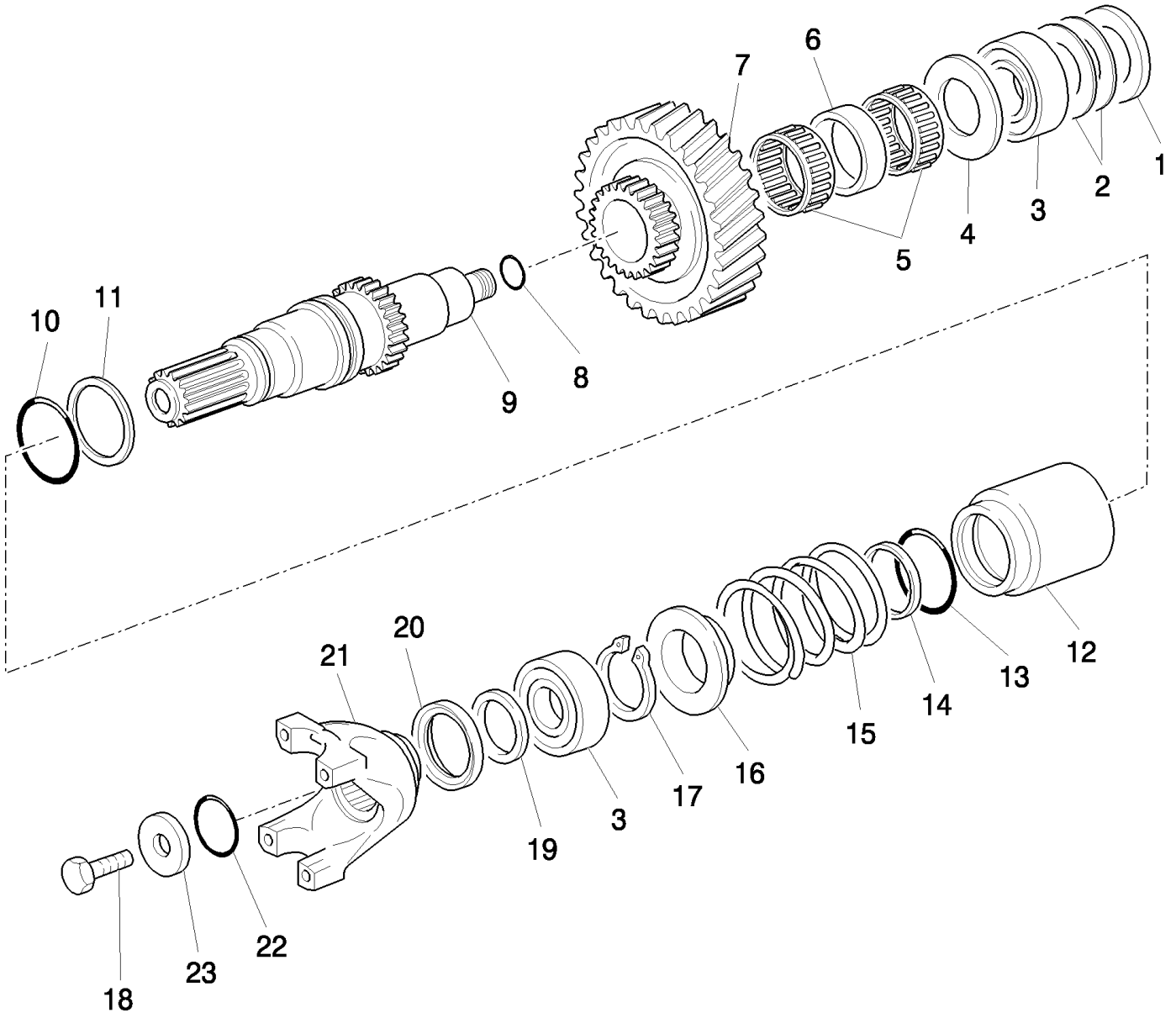

B110 TIER 3 BACKHOE LOADER (2/07-)

1.28.0/B(08) TRANSMISSIONGEARING SPEED GEAR (4WD POWER-SHUTTLE)

Ref	Numero de Pieza	Ctd	Descripción
1	9968255	1	SPACER,
2	9968256	AR	SHIM, 67.5 x 58 x 0.051 mm
2	9968257	AR	SHIM, 67.5 x 58 x 0.076 mm
2	9968258	AR	SHIM, 67.5x58x0.178
2	9968259	AR	SHIM, 67.5 x 58 x 0.599 mm
3	9968276	2	BEARING, ROLLER, TAPERED,
4	9968244	1	WASHER, THRUST, 65 x 40.5 x 4
5	85827782	2	BEARING, NEEDLE,
6	9968393	1	SPACER,
7	9968240	1	GEAR, 35T
8	9968254	1	O-RING,
9	9968239	1	SHAFT,
10	9968232	1	O-RING, 1.859"IDx.139"Thk
11	9968229	1	GASKET,
12	9968234	1	CLUTCH,
13	9968298	1	O-RING, 2.234"IDx.139"Thk
14	9968297	1	O-RING,
15	9968235	1	SPRING,
16	9968236	1	SUPPORT,
17	9968233	1	RING, SNAP,
18	9968308	1	SCREW,
19	9968301	1	SPACER,
20	85825506	1	SEAL, M48x62x8
21	9968300	1	YOKE,
22	9968309	1	O-RING, 1.29"IDx.139"Thk
23	9968306	1	WASHER,

1.28.0/C(01) TRANSMISSIONGEARING SPEED GEAR (4WD POWER-SHIFT)

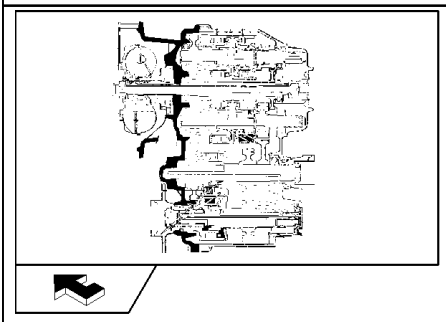

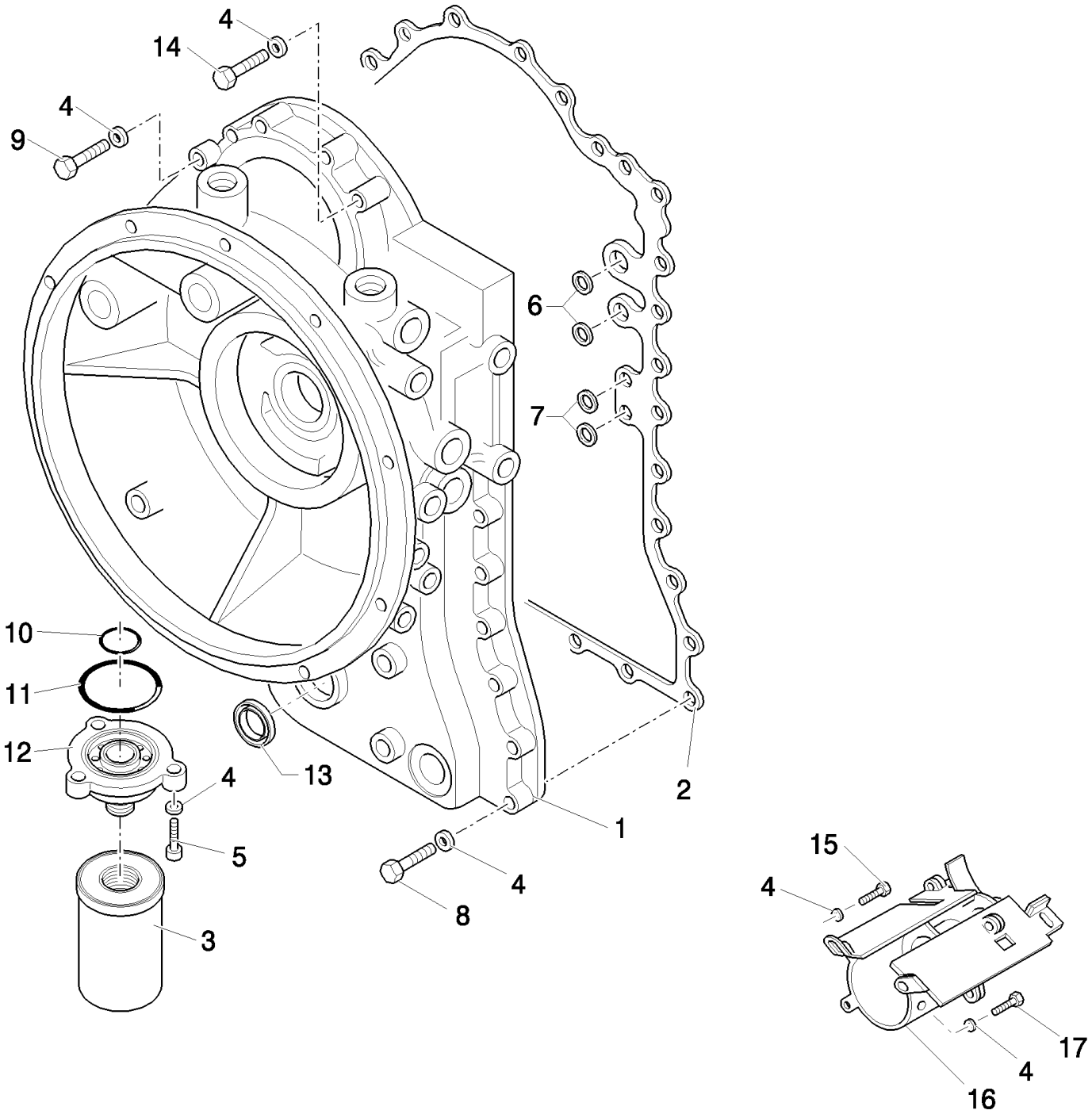

B110 TIER 3 BACKHOE LOADER (2/07-)

1.28.0/C(01) TRANSMISSIONGEARING SPEED GEAR (4WD POWER-SHIFT)

Ref	Numero de Pieza	Ctd	Descripción
1	9968979	1	TRANSMISSION HOUSING,
2	9969002	1	GASKET,
3	9968988	1	FILTER, HYDRAULIC OIL,
4	9968996	37	WASHER, LOCK,
5	9968997	3	SCREW,
6	9969420	2	O-RING,
7	9969421	2	O-RING,
8	9969007	14	SCREW,
9	9969424	10	SCREW,
10	85808324	1	O-RING,
11	85808325	1	O-RING,
12	85812020	1	Head, Filter,
13	9969001	1	SEAL,
14	9969008	5	SCREW,
15	9969016	1	SCREW,
16	85808326	1	BAFFLE,
17	9969000	2	SCREW,

1.28.0/C(02) TRANSMISSIONGEARING SPEED GEAR (4WD POWER-SHIFT)

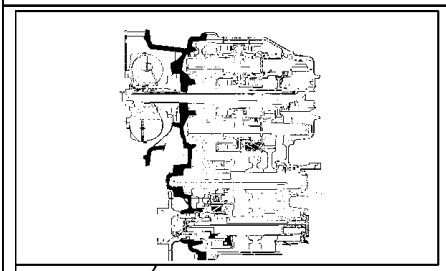

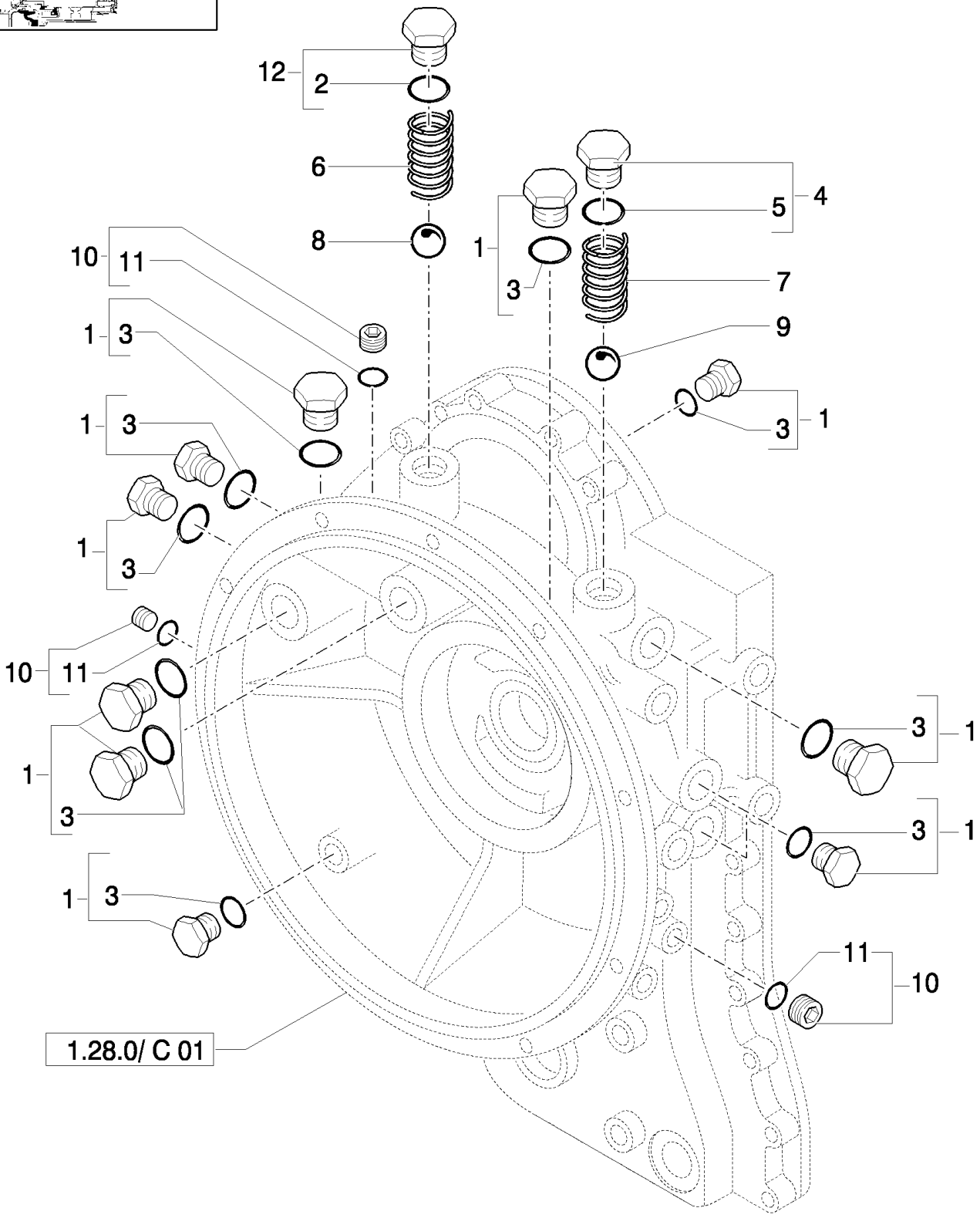

B110 TIER 3 BACKHOE LOADER (2/07-)

1.28.0/C(02) TRANSMISSIONGEARING SPEED GEAR (4WD POWER-SHIFT)

Ref	Numero de Pieza	Ctd	Descripción
1	9970283	10	PLUG, , Includes 3
2	85808321	1	O-RING,
3	85808323	10	O-RING,
4	9968987	1	PLUG, , Includes 5
5	9968986	1	O-RING,
6	85808320	1	SPRING,
7	9968985	1	SPRING,
8	85808319	1	BALL,
9	9968984	1	BALL,
10	9970284	3	PLUG, MAGNETIC, , Includes 11
11	9968989	3	O-RING,
12	85808322	1	PLUG, , Includes 2

1.28.0/C(03) TRANSMISSIONGEARING SPEED GEAR (4WD POWER-SHIFT)

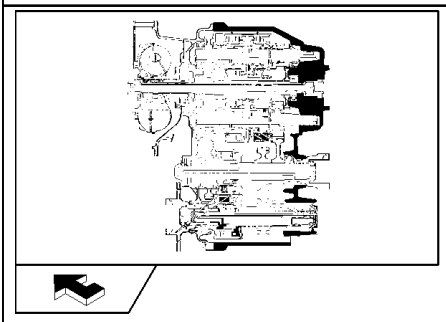

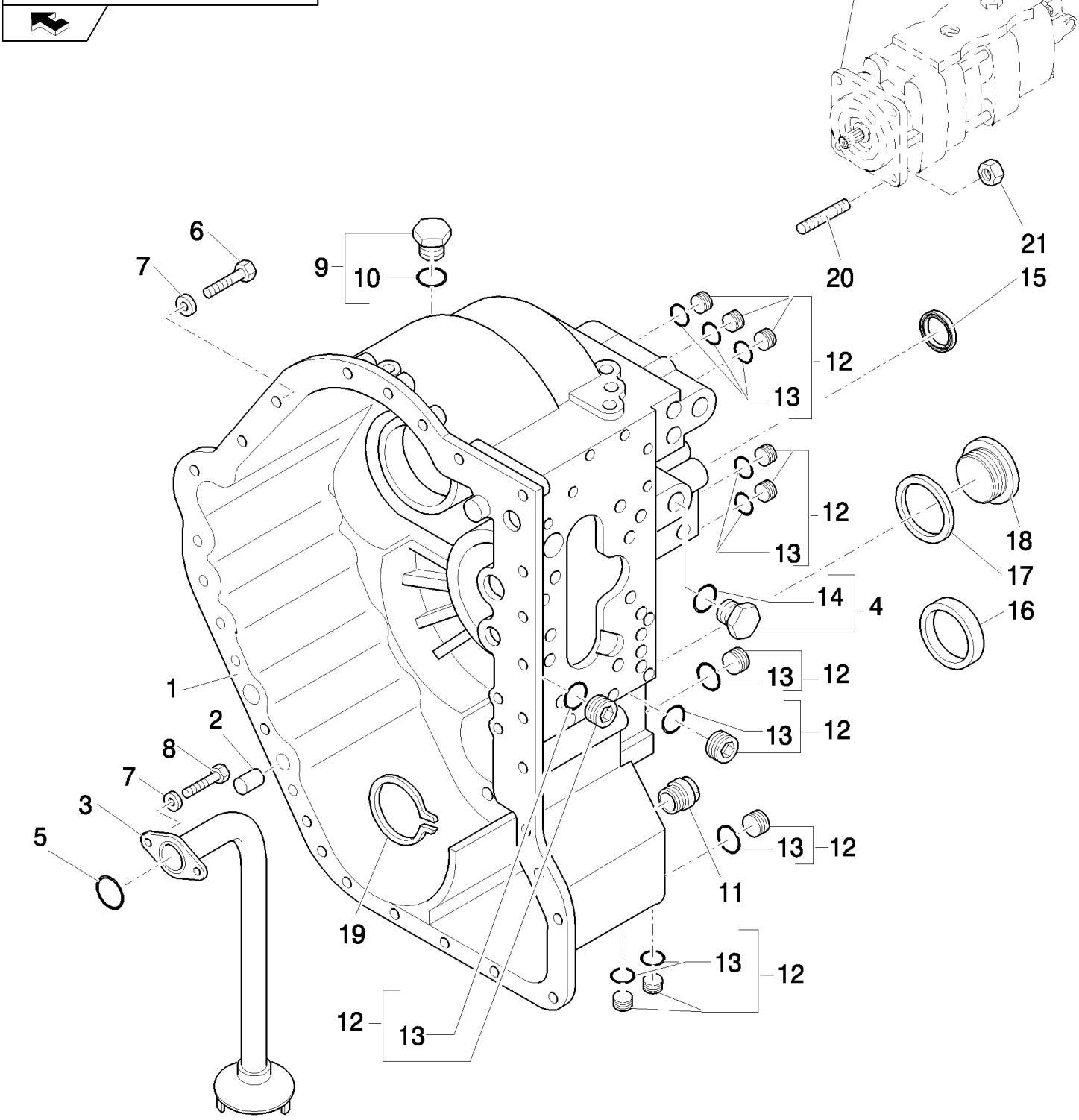

B110 TIER 3 BACKHOE LOADER (2/07-)

1.28.0/C(03) TRANSMISSIONGEARING SPEED GEAR (4WD POWER-SHIFT)

Ref	Numero de Pieza	Ctd	Descripción
1	85812225	1	TRANSMISSION HOUSING,
2	9969017	2	DOWEL,
3	85808328	1	TUBE,
4	85808330	1	PLUG, , Includes 14
5	85808327	1	O-RING,
6	9969424	9	SCREW,
7	9968996	9	WASHER, LOCK,
8	9969000	2	SCREW,
9	9970283	1	PLUG, , Includes 10
10	85808323	1	O-RING,
11	9970002	1	PLUG,
12	9970284	11	PLUG, MAGNETIC, , Includes 13
13	9968989	11	O-RING,
14	9969429	1	O-RING,
15	9969001	1	SEAL,
16	9970285	1	PLUG,
17	9970004	1	GASKET,
18	85808331	1	PLUG,
19	9970003	1	RING, SNAP,
20	85803991	4	STUD, M12x1.75
21	85802684	4	NUT,

1.28.0/C(04) TRANSMISSIONGEARING SPEED GEAR (4WD POWER-SHIFT)

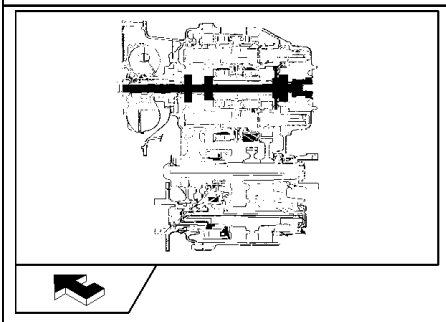

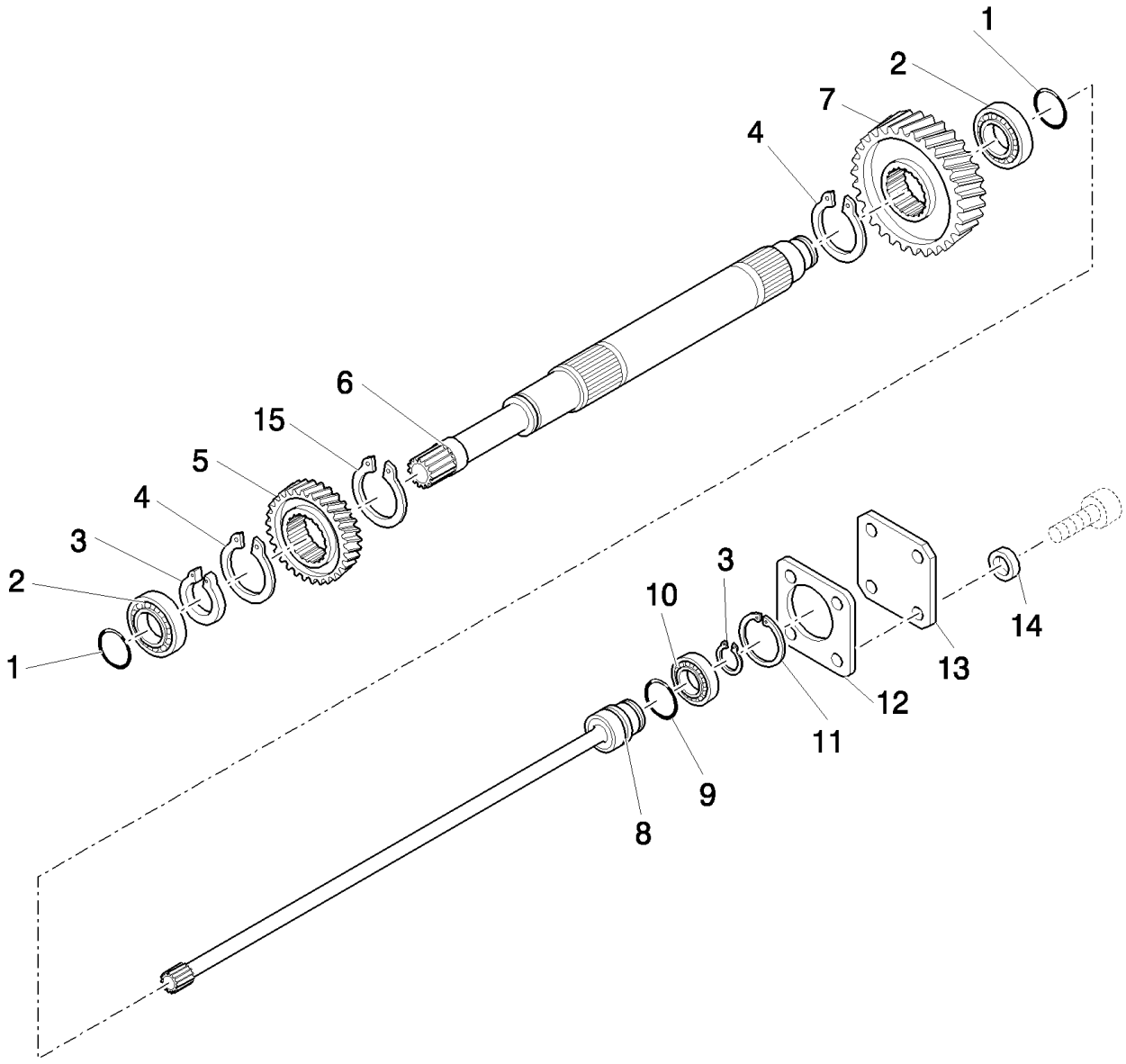

PUMP DRIVE AND INPUT SHAFT GROUP

B110 TIER 3 BACKHOE LOADER (2/07-)

1.28.0/C(04) TRANSMISSIONGEARING SPEED GEAR (4WD POWER-SHIFT)

Ref	Numero de Pieza	Ctd	Descripción
1	9969070	2	RING,
2	9970010	2	BEARING, ROLLER, TAPERED,
3	9969023	2	RING, SNAP,
4	9969059	2	RING, SNAP,
5	85808356	1	GEAR,
6	85808354	1	SHAFT,
7	85808357	1	GEAR,
8	85808333	1	ROD,
9	9969021	1	RING,
10	9969022	1	BEARING, ROLLER, TAPERED,
11	9969024	1	RING, SNAP,
12	9970015	1	GASKET,
13	9969027	1	COVER,
14	9970016	4	WASHER, LOCK,
15	85808355	1	RING, SNAP,

PUMP DRIVE AND INPUT SHAFT GROUP

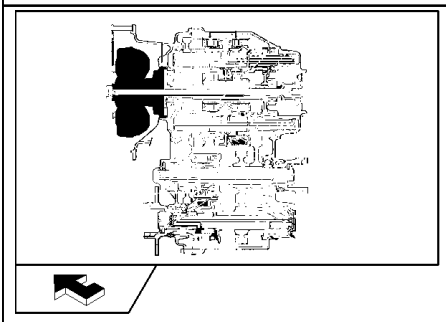

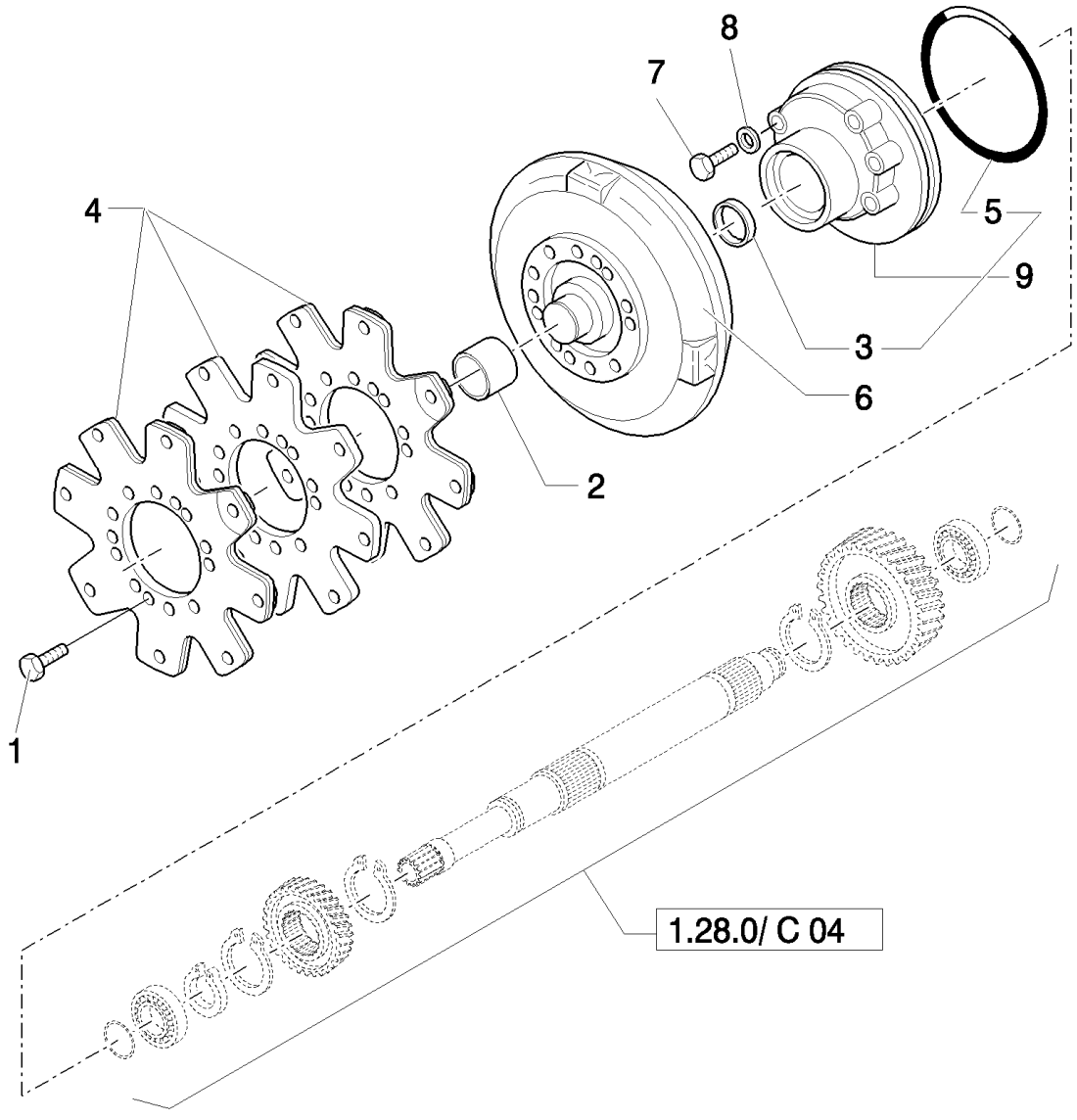
8
7
4
5
9
3
6
2
1
1.28.0/ C 04

B110 TIER 3 BACKHOE LOADER (2/07-)

1.28.0/C(05) TRANSMISSIONGEARING SPEED GEAR (4WD POWER-SHIFT)

Ref	Numero de Pieza	Ctd	Descripción
1	9970017	6	SCREW,
2	9969039	1	BUSHING,
3	85808336	1	SEAL,
4	87410613	1	PLATE,
5	9969041	1	O-RING,
6	87410612	1	TORQUE CONVERTER,
7	9969042	6	SCREW,
8	9969043	6	WASHER, SEALING,
9	9969040	1	PUMP, , Includes 3, 5

TORQUE CONVERTER, CHARGING PUMP AND DRIVE PLATE GROUP

1.28.0/C(06) TRANSMISSIONGEARING SPEED GEAR (4WD POWER-SHIFT)

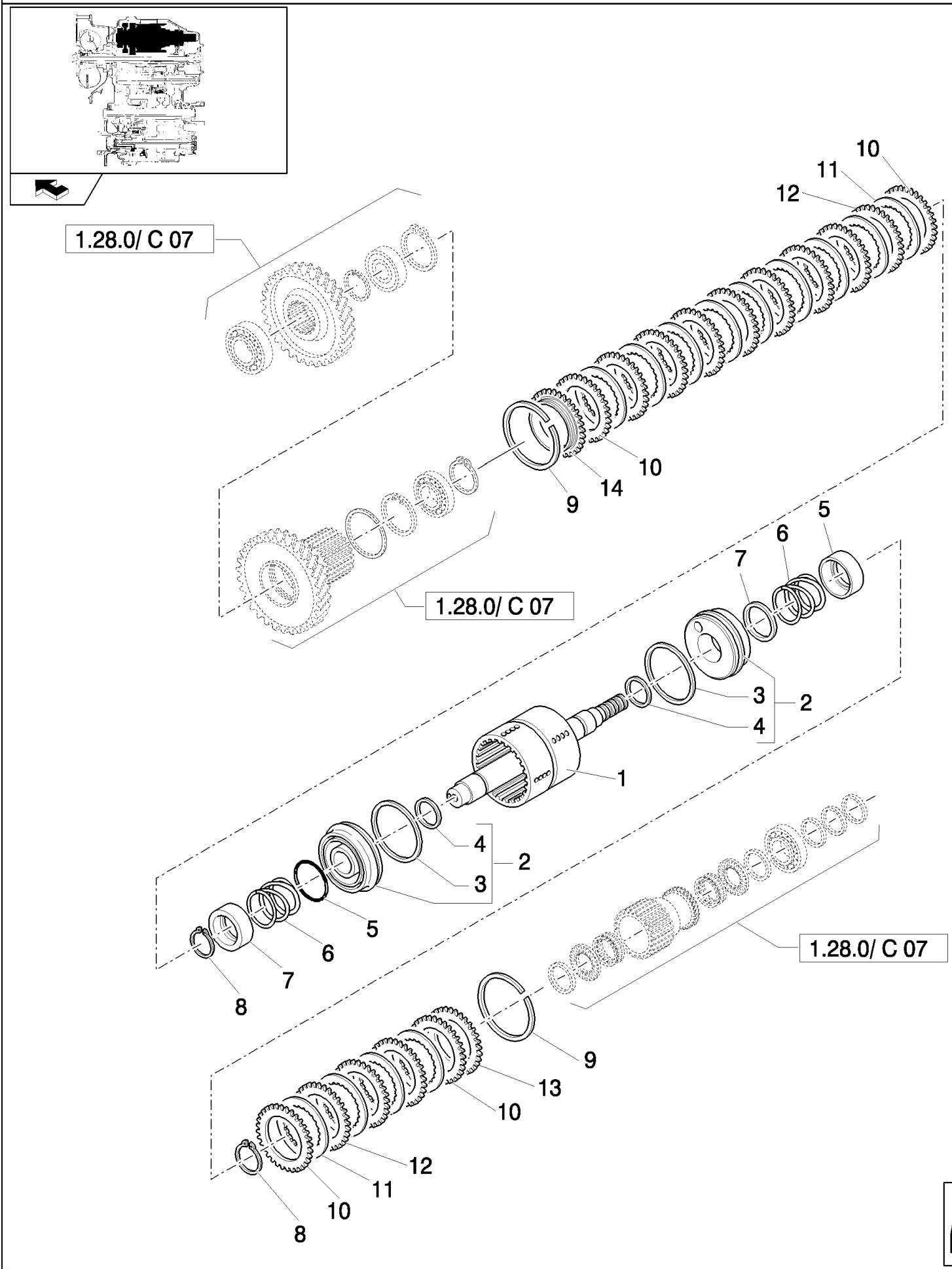

FWD LOW/FWD HIGH SHAFT AND GEARS GROUP

B110 TIER 3 BACKHOE LOADER (2/07-)

1.28.0/C(06) TRANSMISSIONGEARING SPEED GEAR (4WD POWER-SHIFT)

Ref	Numero de Pieza	Ctd	Descripción
1	85823862	1	SHAFT,
2	9969045	2	PISTON, , Includes 3, 4
3	9969046	2	O-RING,
4	9969047	2	O-RING,
5	9969048	2	RING,
6	9969049	2	SPRING,
7	9969050	2	RETAINER,
8	9969051	2	RING, SNAP,
9	9969057	2	RING,
10	85808338	4	HALF-DISC,
11	85808339	12	DISC,
12	85808340	10	CLUTCH, PLATE,
13	85808343	1	Plate, Backing,
14	85823863	1	PLATE, BACK,

FWD LOW/FWD HIGH SHAFT AND GEARS GROUP

1.28.0/C(07) TRANSMISSIONGEARING SPEED GEAR (4WD POWER-SHIFT)

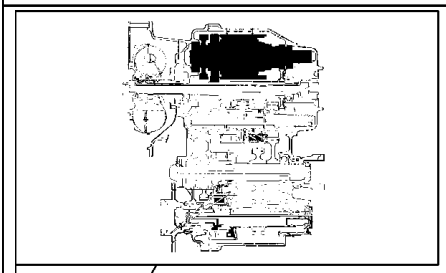

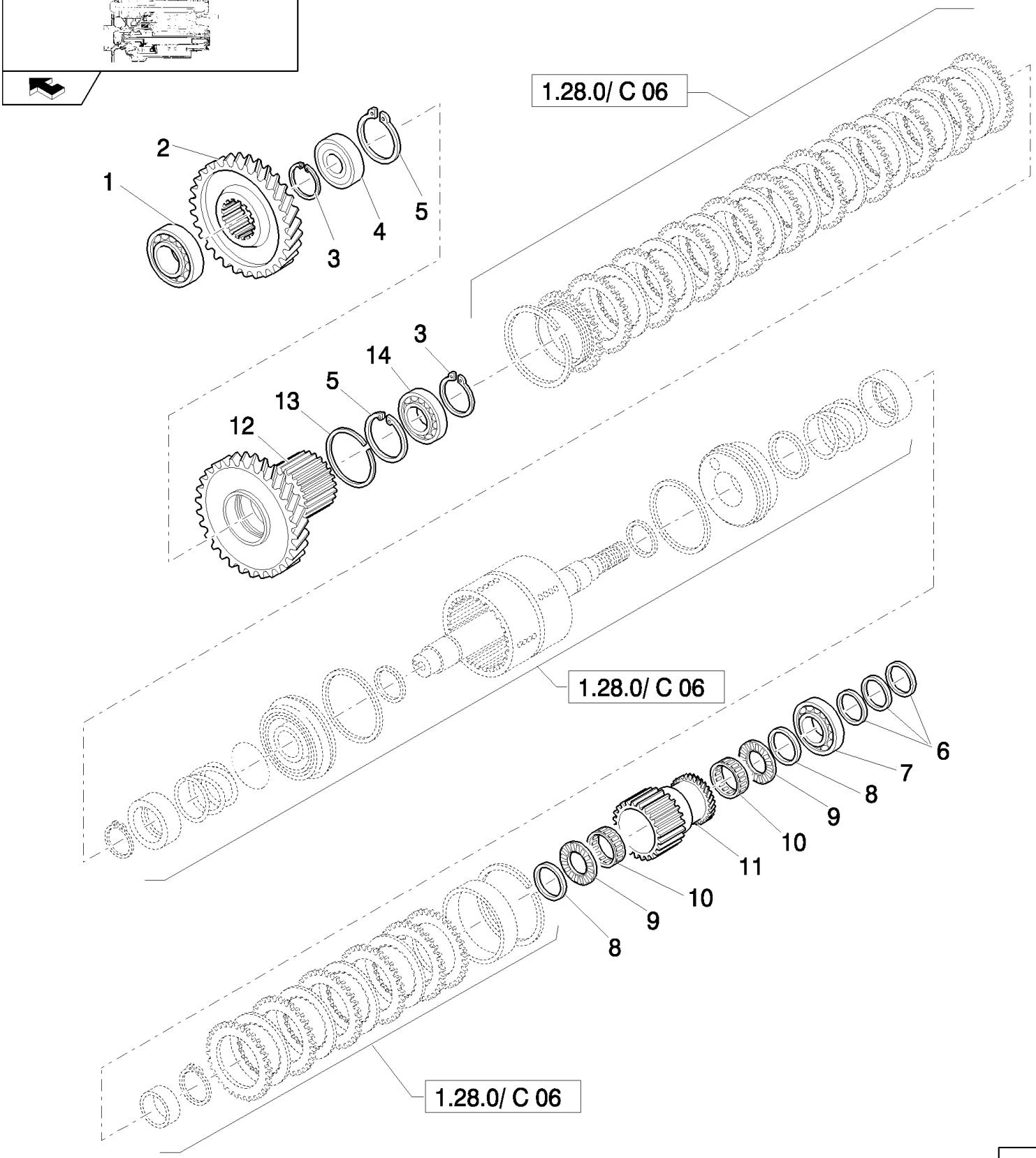

FWD LOW/FWD HIGH SHAFT AND GEARS GROUP

B110 TIER 3 BACKHOE LOADER (2/07-)

1.28.0/C(07) TRANSMISSIONGEARING SPEED GEAR (4WD POWER-SHIFT)

Ref	Numero de Pieza	Ctd	Descripción
1	85808348	1	BEARING, ROLLER, TAPERED,
2	85808347	1	GEAR,
3	9969059	2	RING, SNAP,
4	85808346	1	BUSHING,
5	9969061	2	RING, SNAP,
6	9969070	3	RING,
7	9970044	1	BEARING, ROLLER, TAPERED,
8	9969066	2	SPACER,
9	9969065	2	BEARING, THRUST,
10	9969067	2	BEARING, NEEDLE,
11	85808349	1	GEAR,
12	85823864	1	GEAR,
13	85823865	1	RING, LOCKING,
14	9969062	1	BEARING, ROLLER, TAPERED,

FWD LOW/FWD HIGH SHAFT AND GEARS GROUP

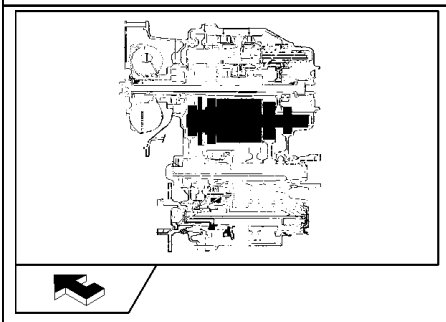

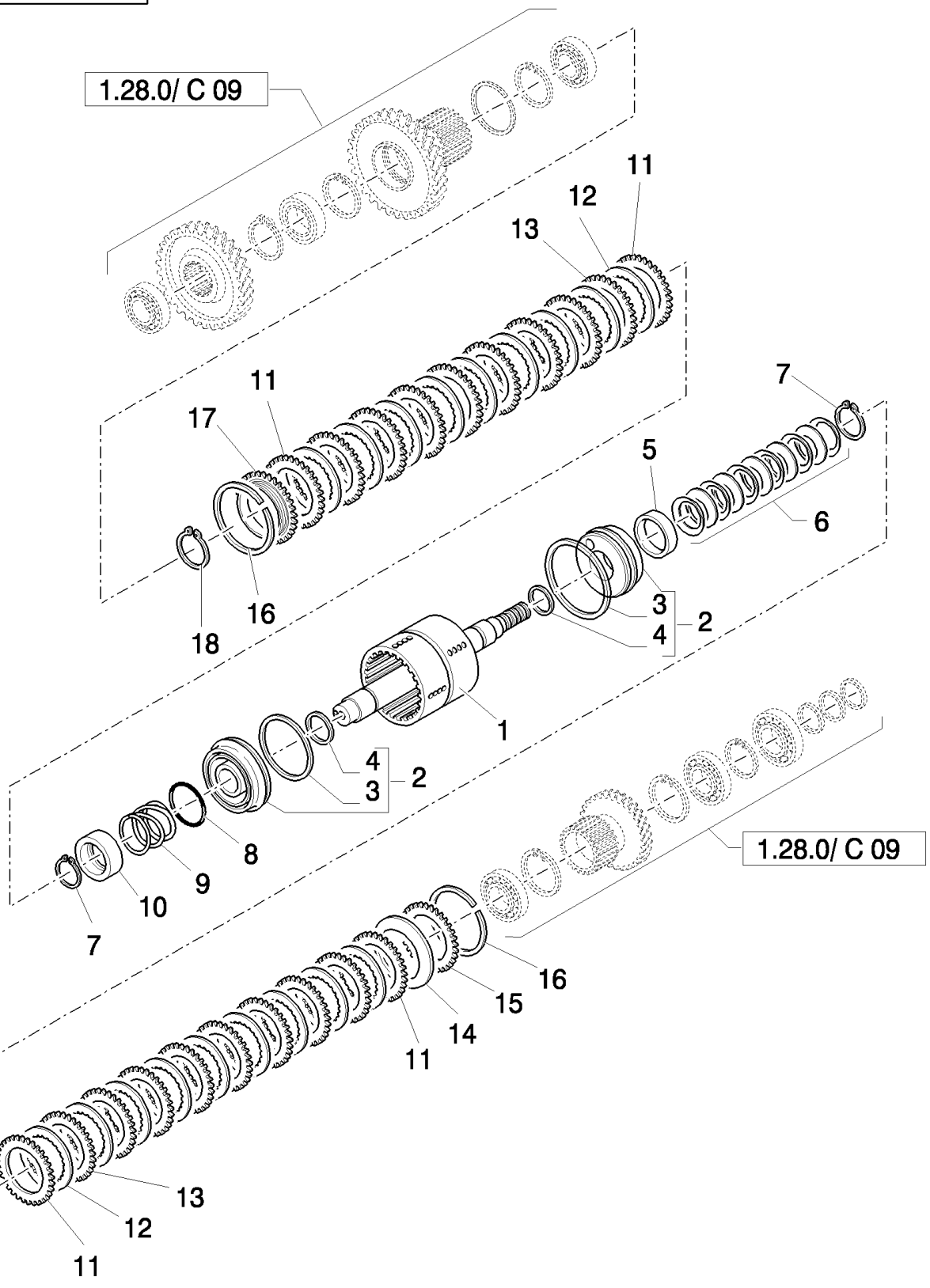
1.28.0/ C 09
11
12
13
11
17
7
5
6
16
18
3
4
2
1
4
3
2
8
9
10
7
1.28.0/ C 09
16
15
14
11
13
12
11

B110 TIER 3 BACKHOE LOADER (2/07-)

1.28.0/C(08) TRANSMISSIONGEARING SPEED GEAR (4WD POWER-SHIFT)

Ref	Numero de Pieza	Ctd	Descripción
1	85823872	1	SHAFT,
2	9969045	2	PISTON, , Includes 3, 4
3	9969046	2	O-RING,
4	9969047	2	O-RING,
5	85808351	1	RING,
6	9969072	1	KIT,
7	9969051	2	RING, SNAP,
8	9969048	1	RING,
9	9969049	1	SPRING,
10	9969050	1	RETAINER,
11	85808338	4	HALF-DISC,
12	85808339	16	DISC, MM.2.5
13	85808340	14	CLUTCH, PLATE, MM.2.5
14	9969073	1	SPRING,
15	85808343	1	Plate, Backing,
16	9969057	2	RING,
17	85823863	1	PLATE, BACK,
18	9969059	1	RING, SNAP,

REVERSE/1ST SHAFT AND GEARS GROUP

1.28.0/C(09) TRANSMISSIONGEARING SPEED GEAR (4WD POWER-SHIFT)

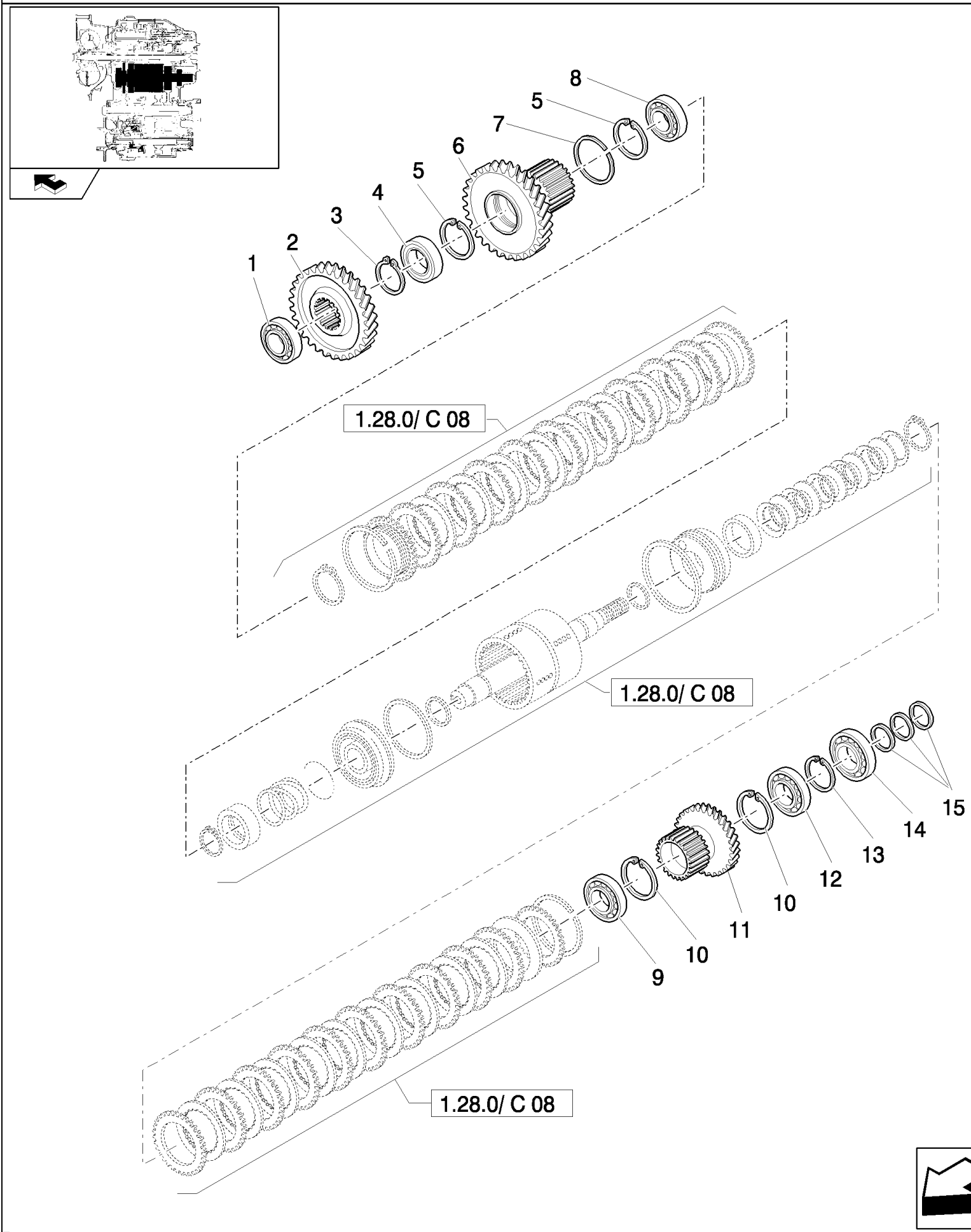

REVERSE/1ST SHAFT AND GEARS GROUP

B110 TIER 3 BACKHOE LOADER (2/07-)

1.28.0/C(09) TRANSMISSIONGEARING SPEED GEAR (4WD POWER-SHIFT)

Ref	Numero de Pieza	Ctd	Descripción
1	85808348	1	BEARING, ROLLER, TAPERED,
2	85808352	1	GEAR,
3	9969059	1	RING, SNAP,
4	85808346	1	BUSHING,
5	9969061	2	RING, SNAP,
6	85823864	1	GEAR,
7	85823865	1	RING, LOCKING,
8	9969062	1	BEARING, ROLLER, TAPERED,
9	9969077	1	BEARING, ROLLER, TAPERED,
10	9969076	2	RING, SNAP,
11	85808353	1	GEAR,
12	9969078	1	BEARING, ROLLER, TAPERED,
13	9969079	1	RING, SNAP,
14	9970010	1	BEARING, ROLLER, TAPERED,
15	9969070	3	RING,

REVERSE/1ST SHAFT AND GEARS GROUP

1.28.0/C(10) TRANSMISSIONGEARING SPEED GEAR (4WD POWER-SHIFT)

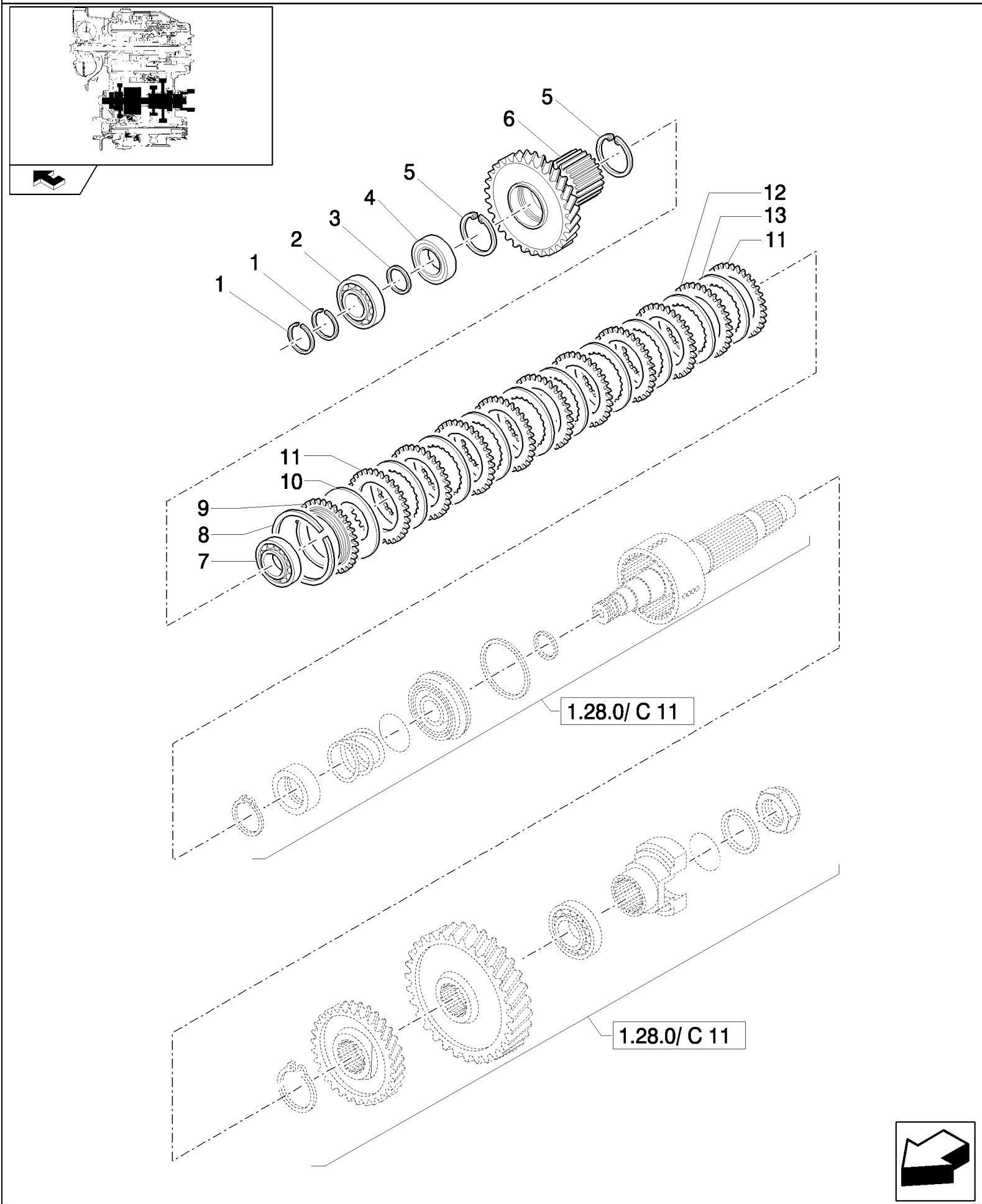

B110 TIER 3 BACKHOE LOADER (2/07-)

1.28.0/C(10) TRANSMISSIONGEARING SPEED GEAR (4WD POWER-SHIFT)

Ref	Numero de Pieza	Ctd	Descripción
1	9969070	2	RING,
2	9970010	1	BEARING, ROLLER, TAPERED,
3	9969085	1	RING,
4	9969078	1	BEARING, ROLLER, TAPERED,
5	9969076	2	RING, SNAP,
6	85808359	1	GEAR,
7	9969077	1	BEARING, ROLLER, TAPERED,
8	9969057	1	RING,
9	85808343	1	Plate, Backing,
10	9969073	1	SPRING,
11	85808338	2	HALF-DISC,
12	85808340	7	CLUTCH, PLATE,
13	85808339	8	DISC,

2ND SHAFT GROUP

1.28.0/C(11) TRANSMISSIONGEARING SPEED GEAR (4WD, 2WS, POWER-SHIFT)

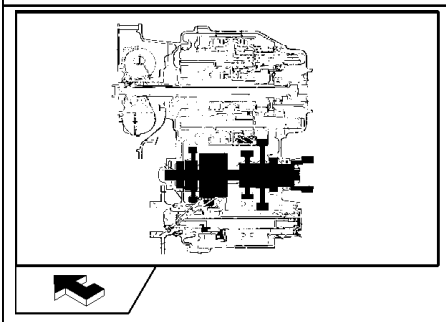

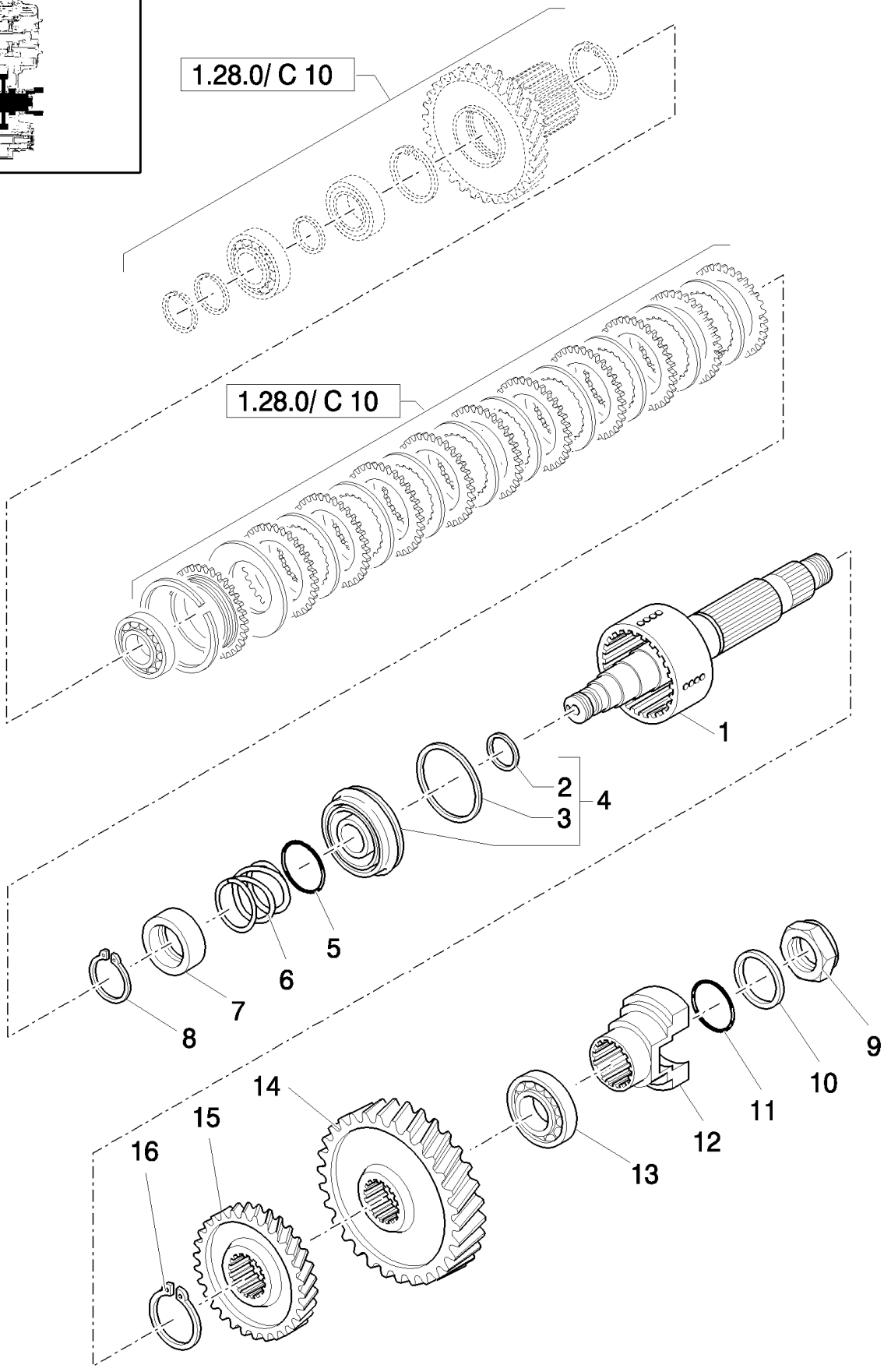

B110 TIER 3 BACKHOE LOADER (2/07-)

1.28.0/C(11) TRANSMISSIONGEARING SPEED GEAR (4WD, 2WS, POWER-SHIFT)

Ref	Numero de Pieza	Ctd	Descripción
1	85808475	1	SHAFT,
2	9969047	1	O-RING,
3	9969046	1	O-RING,
4	9969045	1	PISTON, , Includes 2, 3
5	9969048	1	RING,
6	9969049	1	SPRING,
7	9969050	1	RETAINER,
8	9969051	1	RING, SNAP,
9	9969093	1	NUT,
10	9969092	1	WASHER,
11	9970059	1	O-RING,
12	9969090	1	HUB,
13	85808362	1	BEARING, ROLLER, TAPERED,
14	85808361	1	GEAR,
15	85808360	1	GEAR,
16	9970054	1	RING, SNAP,

2ND SHAFT GROUP

1.28.0/C(12) TRANSMISSIONGEARING SPEED GEAR (4WD POWER-SHIFT)

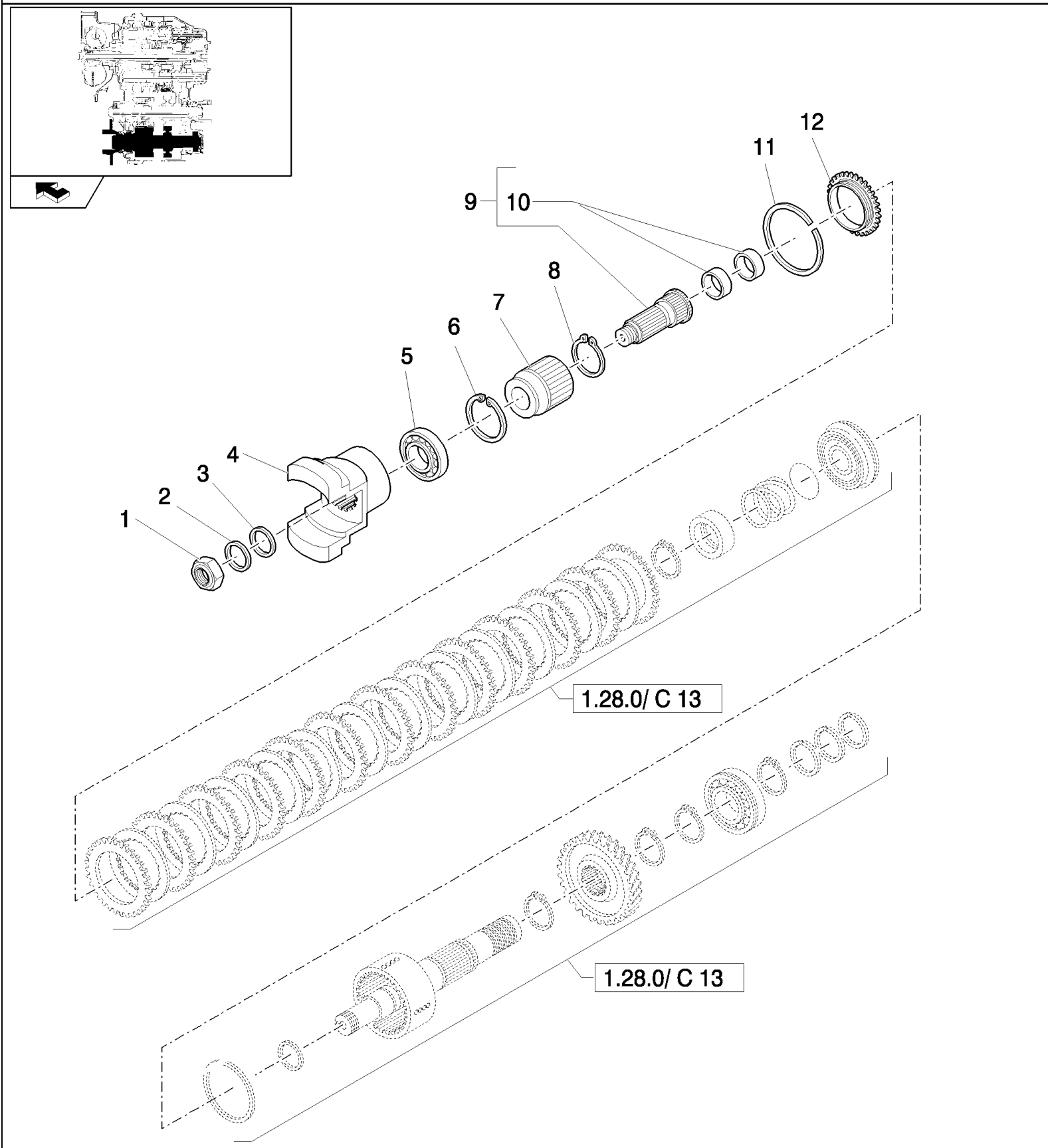

OUTPUT SHAFT W/INTERNAL DISCONNECT GROUP

B110 TIER 3 BACKHOE LOADER (2/07-)

1.28.0/C(12) TRANSMISSIONGEARING SPEED GEAR (4WD POWER-SHIFT)

Ref	Numero de Pieza	Ctd	Descripción
1	9969093	1	NUT,
2	9969092	1	WASHER,
3	9970059	1	O-RING,
4	9969090	1	HUB,
5	9970068	1	BEARING, ROLLER, TAPERED,
6	9969100	1	RING,
7	85808335	1	HUB,
8	9970054	1	RING, SNAP,
9	85808478	1	SHAFT, , Includes 10
10	85813307	2	BUSHING,
11	9969057	1	RING,
12	85808343	1	Plate, Backing,

OUTPUT SHAFT W/INTERNAL DISCONNECT GROUP

1.28.0/C(13) TRANSMISSIONGEARING SPEED GEAR (4WD, 2WS, POWER-SHIFT)

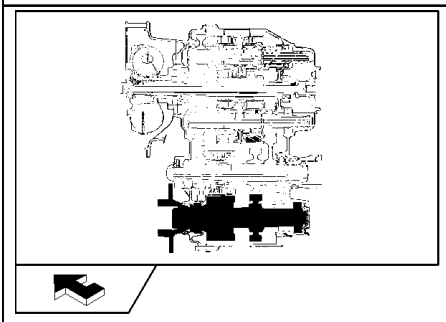

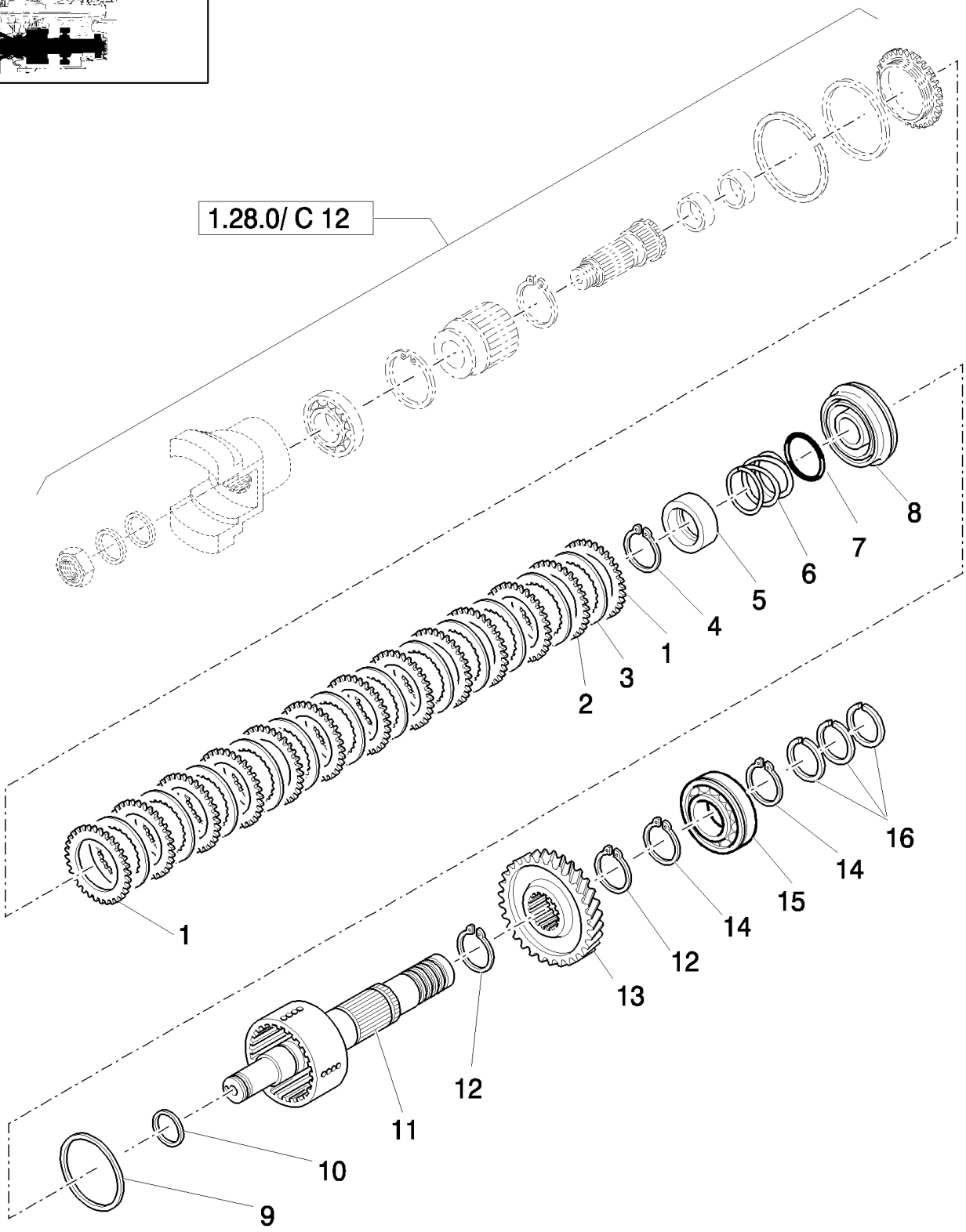

OUTPUT SHAFT W/INTERNAL DISCONNECT GROUP

B110 TIER 3 BACKHOE LOADER (2/07-)

1.28.0/C(13) TRANSMISSIONGEARING SPEED GEAR (4WD, 2WS, POWER-SHIFT)

Ref	Numero de Pieza	Ctd	Descripción
1	85808338	2	HALF-DISC,
2	85808340	11	CLUTCH, PLATE, MM.2.5
3	85808339	12	DISC, MM.2.5
4	9969051	1	RING, SNAP,
5	9969050	1	RETAINER,
6	9969049	1	SPRING,
7	9969048	1	RING,
8	9969045	1	PISTON,
9	9969046	1	O-RING,
10	9969047	1	O-RING,
11	85823851	1	SHAFT,
12	9969095	2	RING, SNAP,
13	85808334	1	GEAR,
14	9969086	2	RING, SNAP,
15	85808365	1	BEARING, ROLLER, TAPERED,
16	9969097	3	RING, PISTON,

OUTPUT SHAFT W/INTERNAL DISCONNECT GROUP

1.28.0/C(14) TRANSMISSIONGEARING SPEED GEAR (4WD - 2WS POWER-SHIFT)

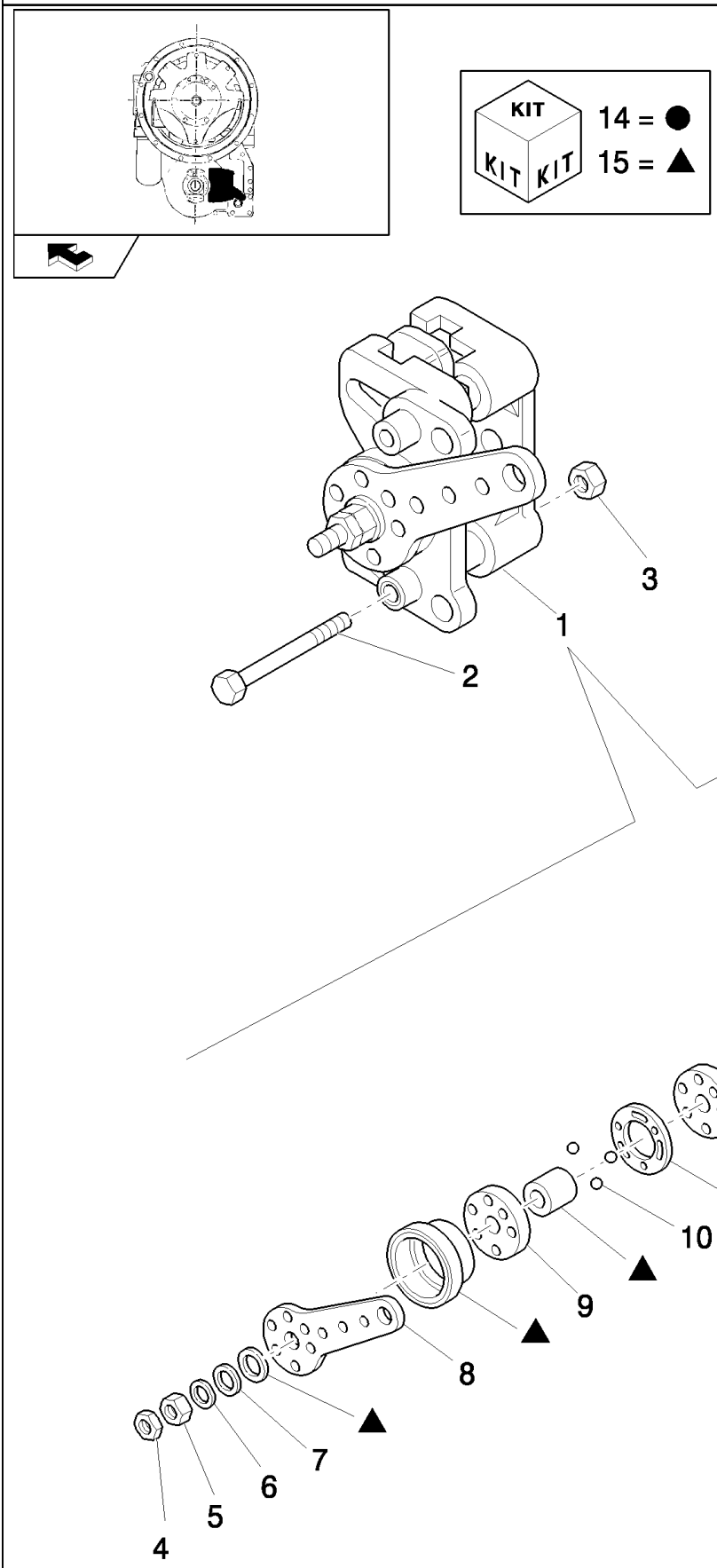

B110 TIER 3 BACKHOE LOADER (2/07-)

1.28.0/C(14) TRANSMISSIONGEARING SPEED GEAR (4WD - 2WS POWER-SHIFT)

Ref	Numero de Pieza	Ctd	Descripción
1	85813303	1	BRAKE ASSY.,
2	9969103	2	SCREW,
3	9969104	2	NUT,
4	9969105	1	NUT,
5	9969106	1	NUT,
6	9969107	1	WASHER,
7	9969108	1	WASHER,
8	9969109	1	LEVER,
9	9969110	2	CAM,
10	9969111	3	BALL,
11	9969112	1	STOP,
12	9969113	2	SLEEVE,
13	9969114	1	SCREW,
14	9969115	1	KIT,
15	9969116	1	KIT,
16	85813302	2	BUSHING, RUBBER,

PARKING BRAKE GROUP

1.28.0/C(15) TRANSMISSIONGEARING SPEED GEAR (4WD POWER-SHIFT)

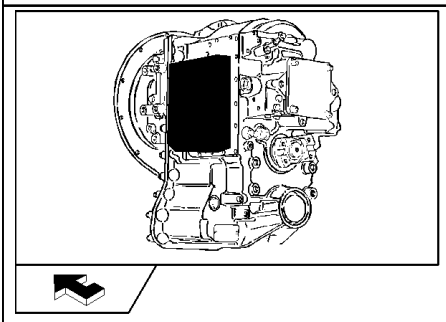

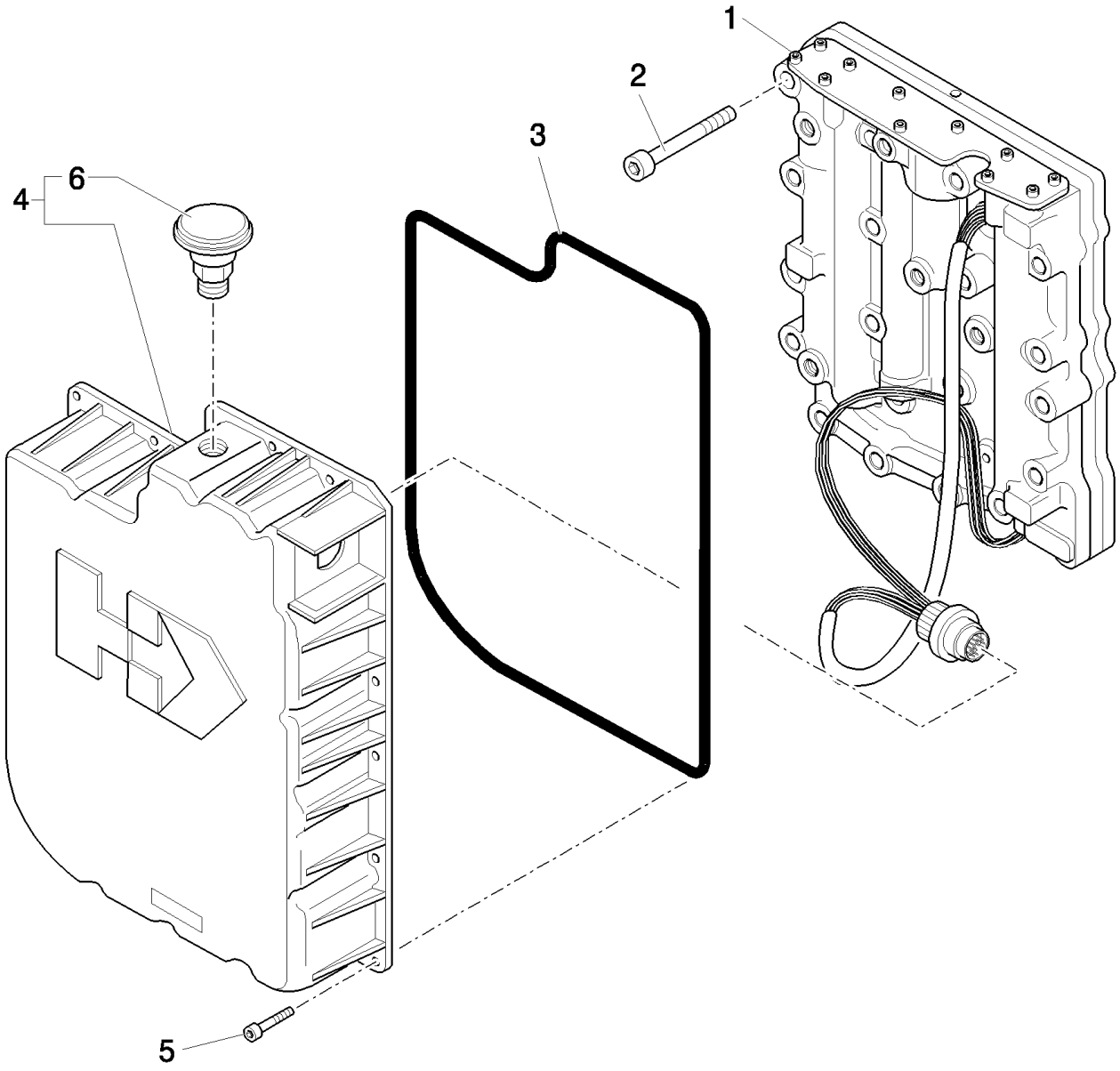

CONTROL VALVE MOUNTING GROUP

B110 TIER 3 BACKHOE LOADER (2/07-)

1.28.0/C(15) TRANSMISSIONGEARING SPEED GEAR (4WD POWER-SHIFT)

Ref	Numero de Pieza	Ctd	Descripción
1	85817030	1	VALVE, CONTROL,
2	9970071	17	SCREW,
3	85808368	1	GASKET,
4	85808369	1	COVER, , Includes 6
5	9970074	20	SCREW,
6	9970075	1	BREATHER,

CONTROL VALVE MOUNTING GROUP

1.28.0/C(16) TRANSMISSIONGEARING SPEED GEAR (4WD POWER-SHIFT)

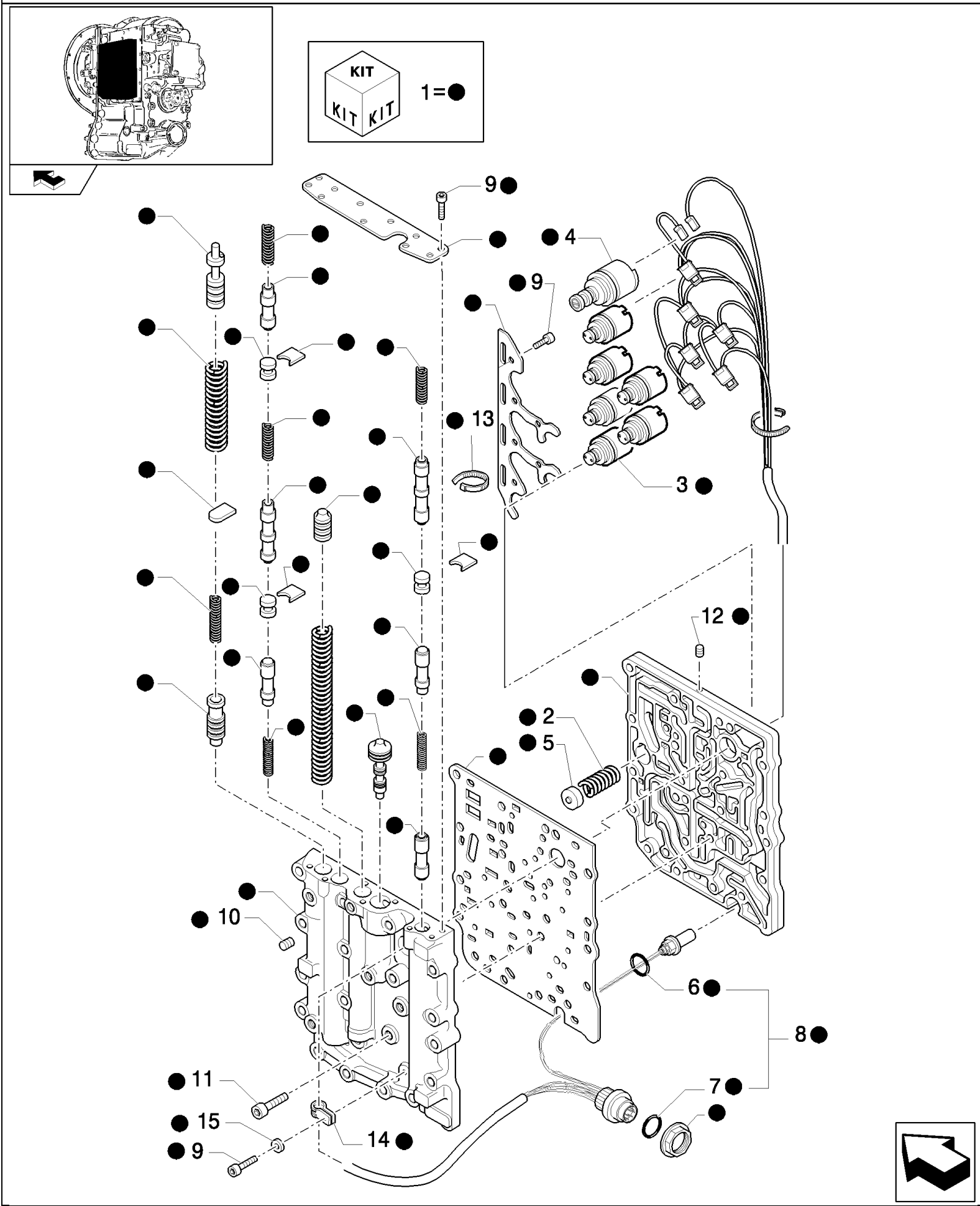

CONTROL VALVE ASSEMBLY

B110 TIER 3 BACKHOE LOADER (2/07-)

1.28.0/C(16) TRANSMISSIONGEARING SPEED GEAR (4WD POWER-SHIFT)

Ref	Numero de Pieza	Ctd	Descripción
1	85817030	1	VALVE, CONTROL,
2	9970286	1	SPRING,
3	9970078	6	SOLENOID,
4	9970079	1	VALVE, SOLENOID,
5	85808373	1	SPOOL,
6	85813308	1	O-RING,
7	9970082	1	O-RING,
8	85817029	1	SENSOR, , Includes 6, 7
9	85808370	18	SCREW,
10	85808371	2	PLUG,
11	85808372	3	SCREW,
12	85808374	6	PLUG,
13	9969363	6	STRAP, CABLE,
14	85808375	1	CLAMP,
15	85808376	1	WASHER, LOCK,

CONTROL VALVE ASSEMBLY

1.28.6(01) GEAR FILTER PIPES (POWER-SHUTTLE)

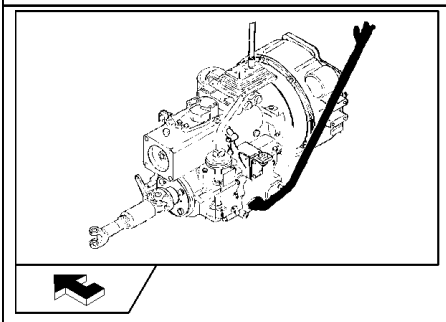

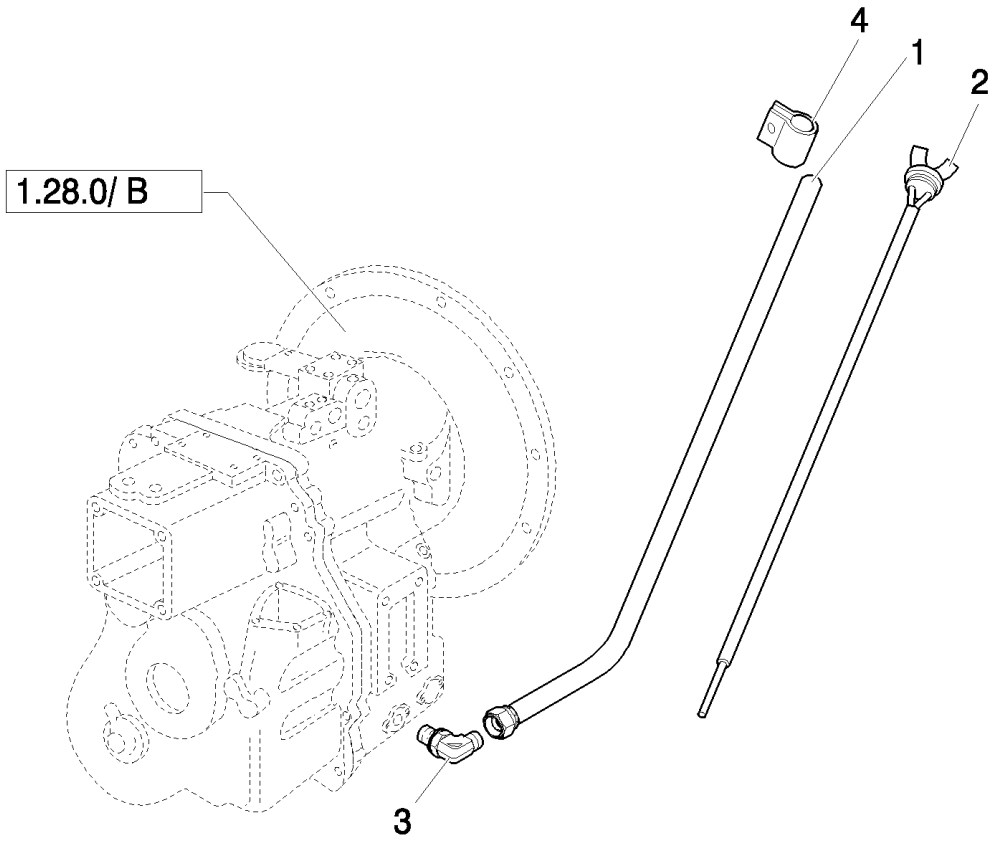

B110 TIER 3 BACKHOE LOADER (2/07-)

1.28.6(01) GEAR FILTER PIPES (POWER-SHUTTLE)

Ref	Numero de Pieza	Ctd	Descripción
1	87408479	1	TUBE,
2	87408557	1	DIPSTICK,
3	47050658	1	ELBOW,
4	47049176	1	CLAMP,

1.28.6/1(01) GEAR FILTER PIPES (POWER-SHIFT)

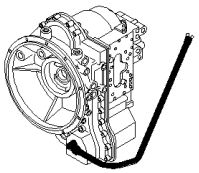

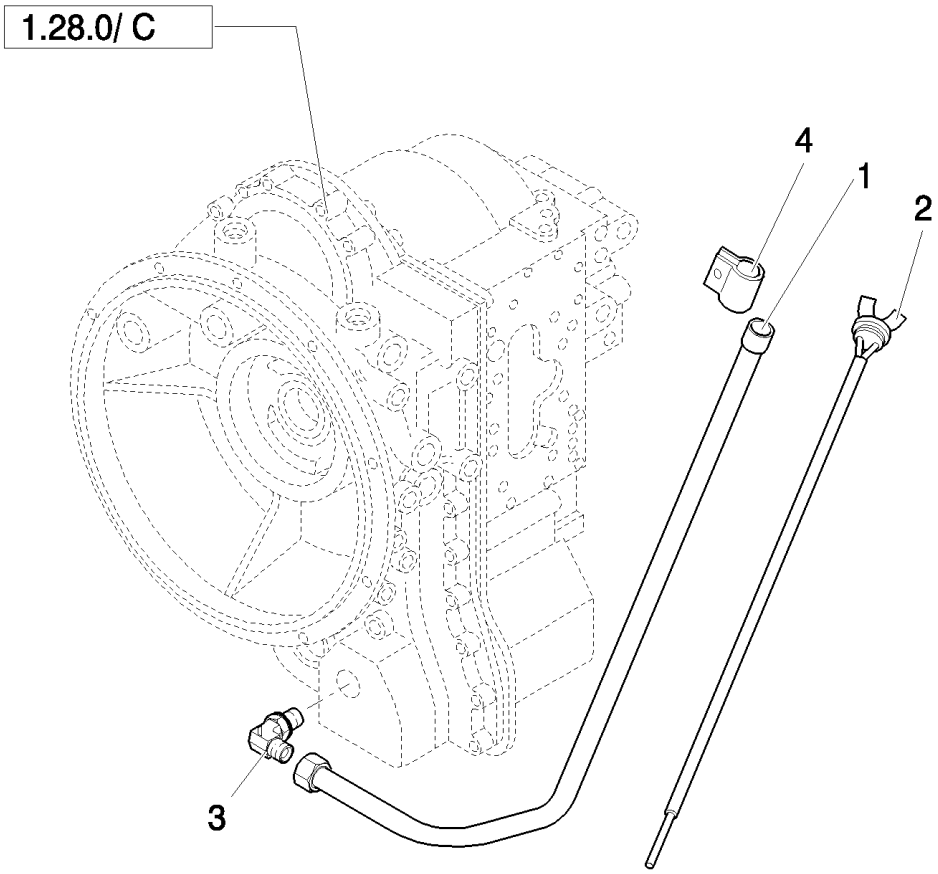

B110 TIER 3 BACKHOE LOADER (2/07-)

1.28.6/1(01) GEAR FILTER PIPES (POWER-SHIFT)

Ref	Numero de Pieza	Ctd	Descripción
1	87400239	1	TUBE,
2	87400371	1	DIPSTICK,
3	47050658	1	ELBOW,
4	47049176	1	CLAMP,

1.29.1(01) TRANSMISSION ESTERNALSHIFTING CONTROLS (POWER-SHUTTLE)

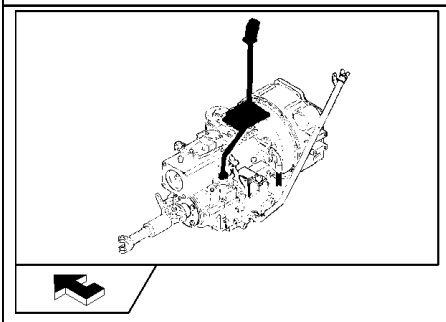

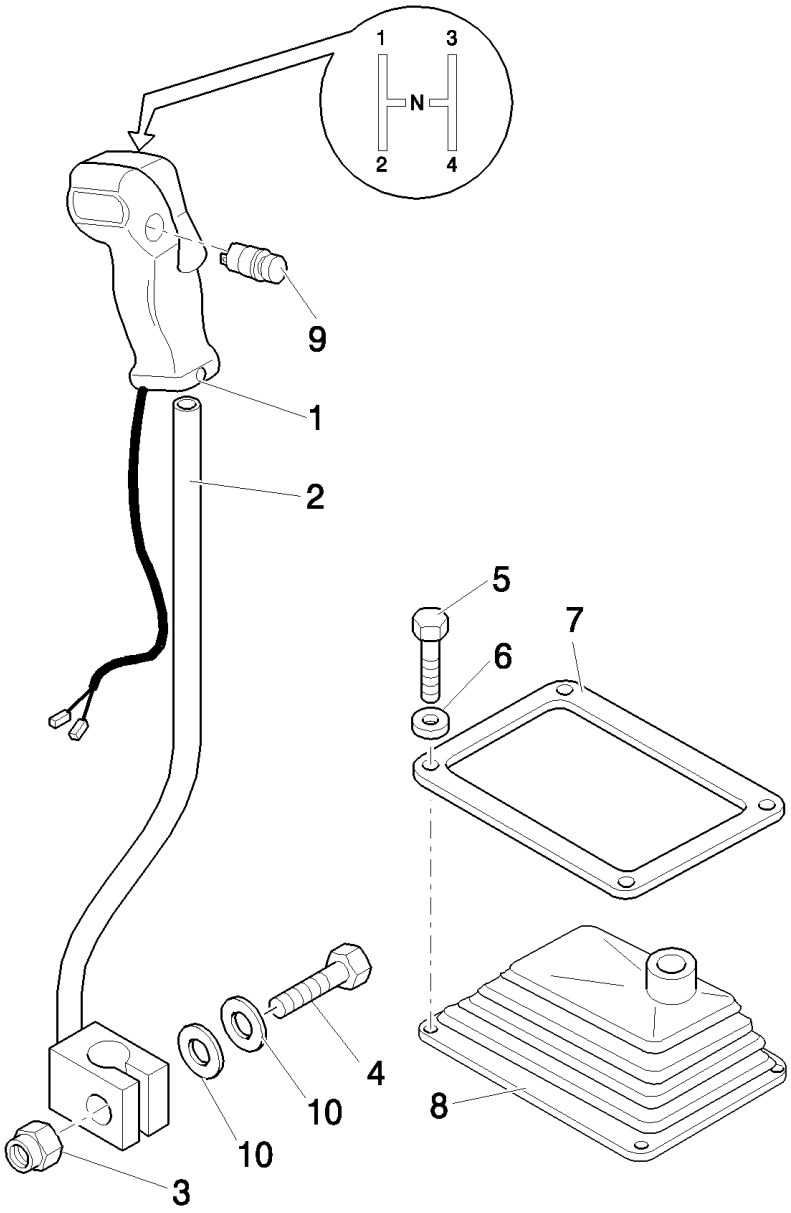

B110 TIER 3 BACKHOE LOADER (2/07-)

1.29.1(01) TRANSMISSION ESTERNALSHIFTING CONTROLS (POWER-SHUTTLE)

Ref	Numero de Pieza	Ctd	Descripción
1	85802947	1	KNOB, Assy
2	85826943	1	LEVER,
3	16105011	1	NUT, LOCK, M12x1.25
4	15540821	1	BOLT, Hex, M12 x 1.25 x 50, 8.8,
5	10903021	4	BOLT, Hex, M6 x 35, 8.8,
6	11197779	4	WASHER, SPRING, Belleville, M6.4,
7	85824187	1	RETAINER,
8	85802847	1	BOOT,
9	87447132	1	SWITCH, ASSY,
10	14496721	2	WASHER, M12 x 24 x 2.5,

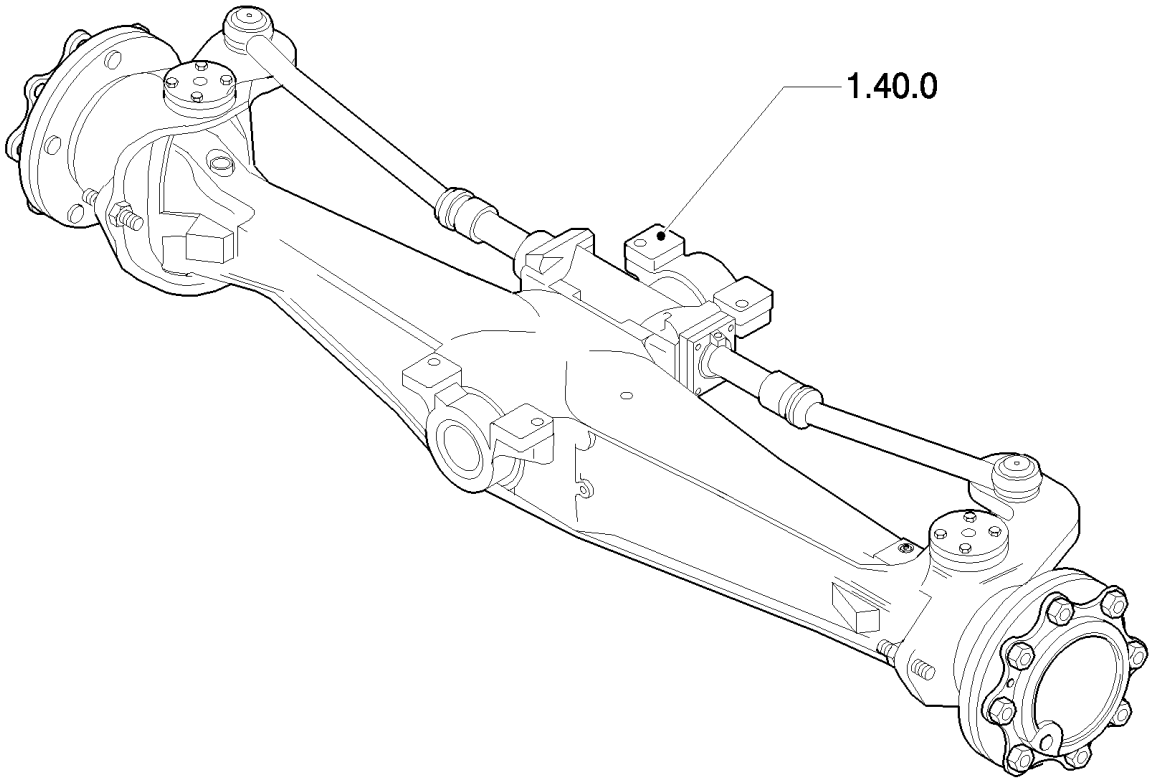
1.40.0

Ref	Numero de Pieza	Ctd	Descripción

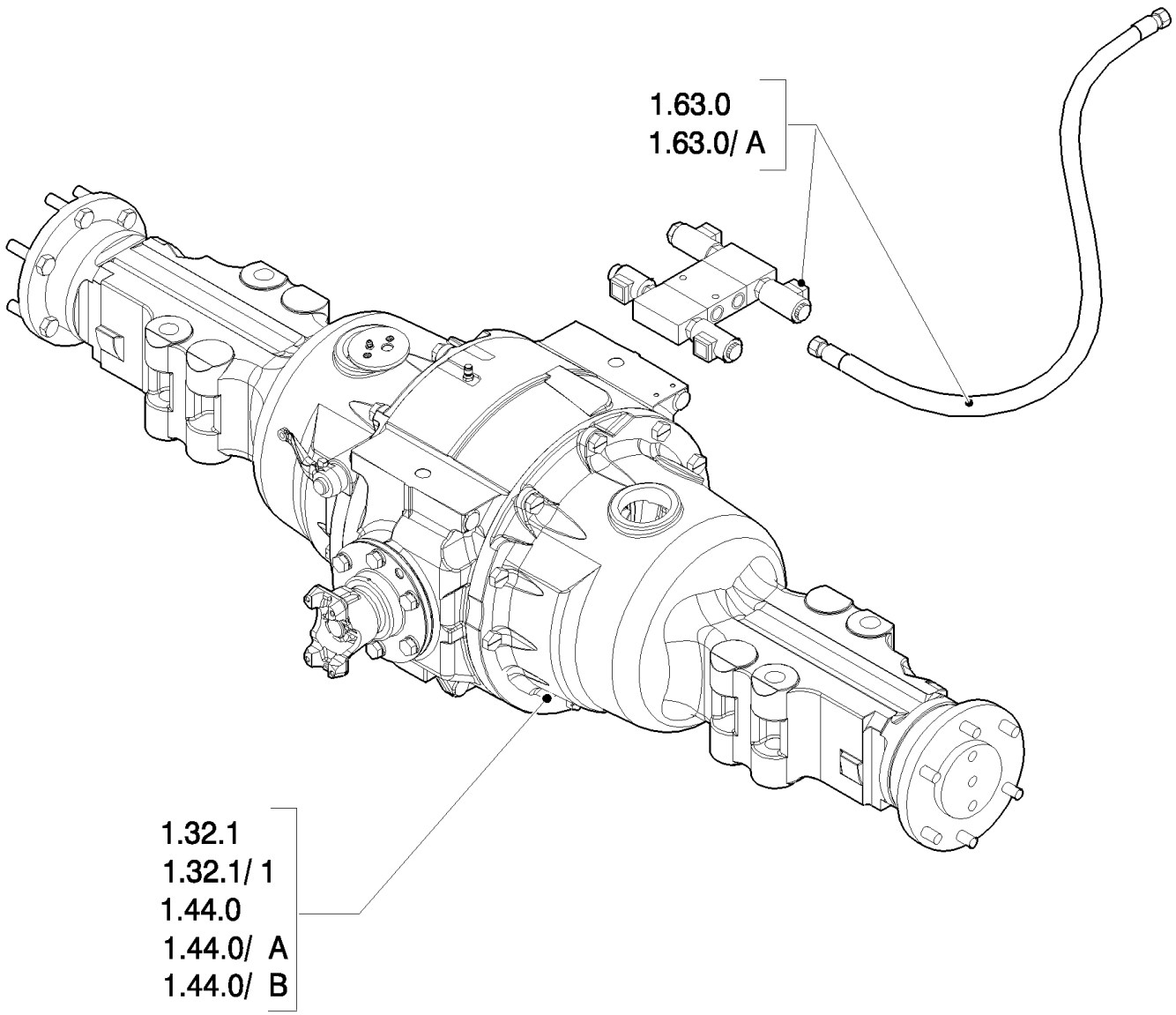
1.63.0
1.63.0/ A
1.32.1
1.32.1/ 1
1.44.0
1.44.0/ A
1.44.0/ B

B110 TIER 3 BACKHOE LOADER (2/07-)

1.31.0(00) SEC. 05 - REAR AXLE

Ref	Numero de Pieza	Ctd	Descripción

1.32.1(01) DIFFERENTIAL CONTROL (POWER-SHUTTLE)

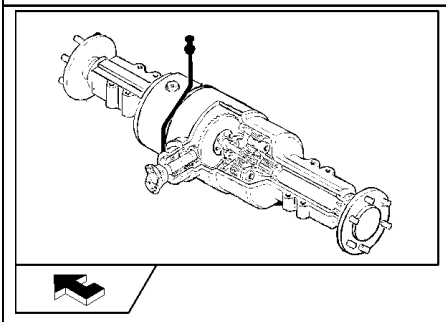

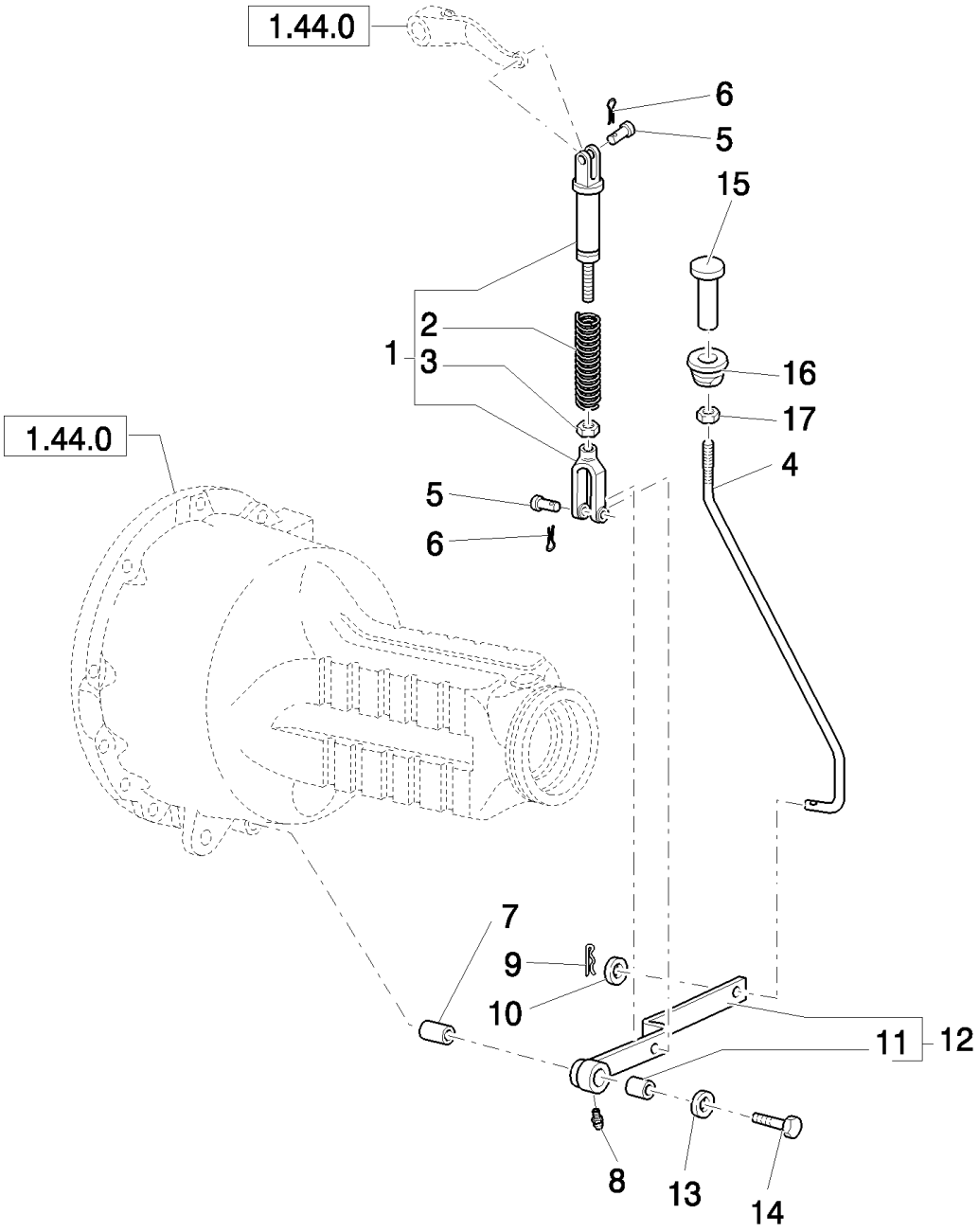

B110 TIER 3 BACKHOE LOADER (2/07-)

1.32.1(01) DIFFERENTIAL CONTROL (POWER-SHUTTLE)

Ref	Numero de Pieza	Ctd	Descripción
1	83949838	1	ROD, Incl Ref 2, 3, Also Incl 83952932 Clevis
2	81800486	1	SPRING, Inside Rod Tube
3	81821691	1	NUT,
4	85819013	1	TIE-ROD,
5	83948308	2	PIN,
6	10802801	2	PIN, SPLIT (COTTER), M2.5 x 25,
7	81800488	1	SPACER,
8	13406911	1	NIPPLE, LUBE, 1/4"-28,
9	10766901	1	PIN, SPLIT (COTTER), M3.2 x 25,
10	12644921	1	WASHER, M14 x 32 x 4,
11	81805231	1	BUSHING,
12	85802513	1	LEVER,
13	14497121	1	WASHER, M20 x 37 x 3,
14	83911686	1	SCREW,
15	83971567	1	PEDAL,
16	83904750	1	BUSHING,
17	81822462	1	NUT, Jam, 1/2"-20, G2,

1.32.1/1(01) DIFFERENTIAL CONTROL (POWER-SHUTTLE) (MECHANIC) (CENTER PIVOT)-NA

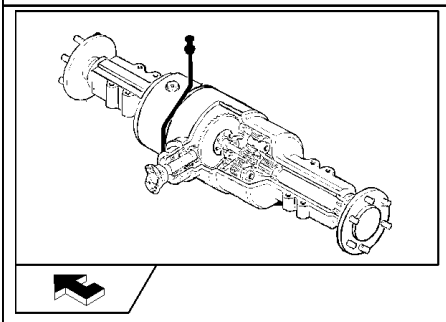

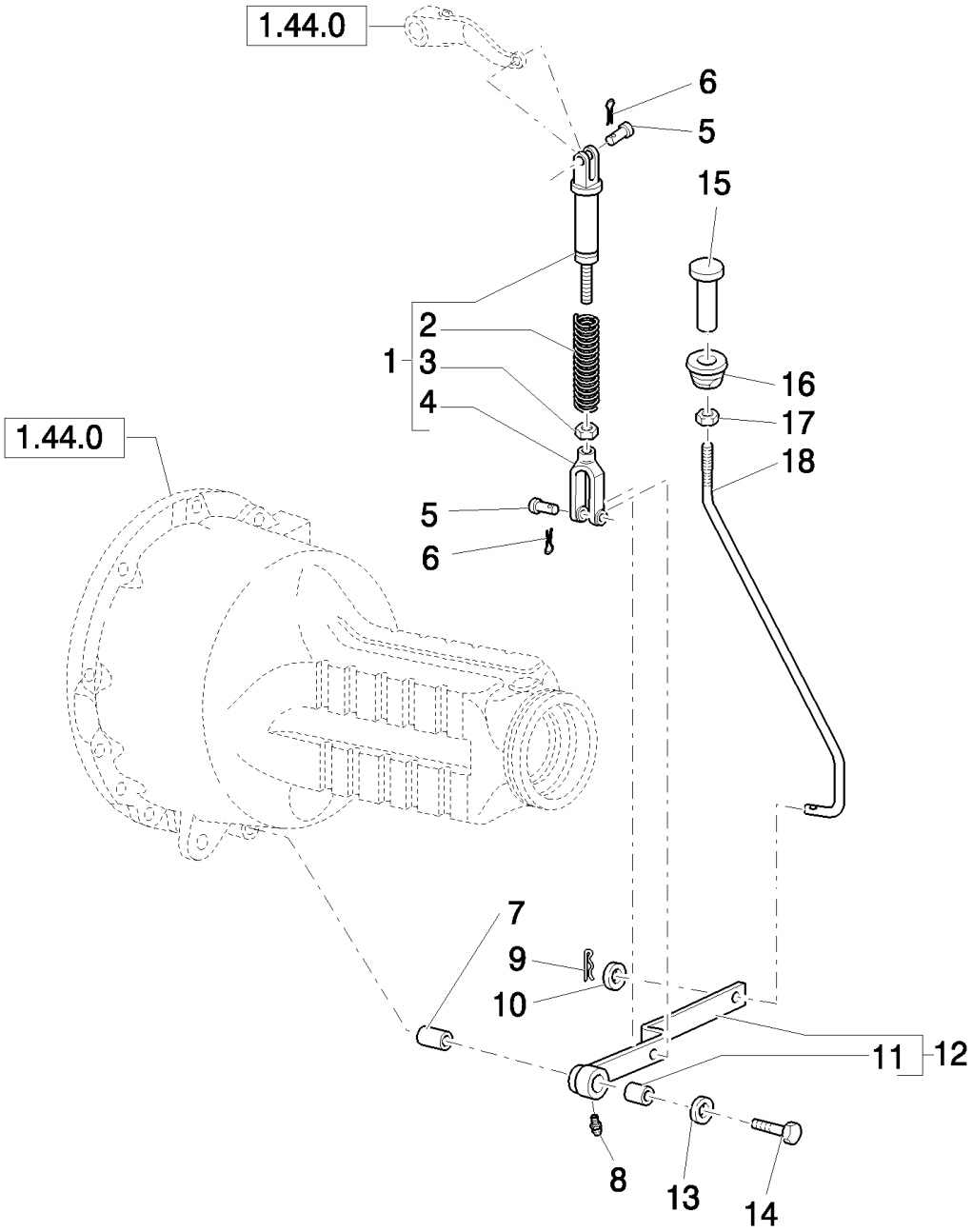

B110 TIER 3 BACKHOE LOADER (2/07-)

1.32.1/1(01) DIFFERENTIAL CONTROL (POWER-SHUTTLE) (MECHANIC) (CENTER PIVOT)-NA

Ref	Numero de Pieza	Ctd	Descripción
1	83949838	1	ROD,
2	81800486	1	SPRING, Inside Rod Tube
3	81821691	1	NUT,
4	83952932	1	CLEVIS,
5	83948308	2	PIN,
6	10802801	2	PIN, SPLIT (COTTER), M2.5 x 25,
7	81800488	1	SPACER,
8	13406911	1	NIPPLE, LUBE, 1/4"-28,
9	10766901	1	PIN, SPLIT (COTTER), M3.2 x 25,
10	12644921	1	WASHER, M14 x 32 x 4,
11	81805231	1	BUSHING,
12	85802513	1	LEVER,
13	14497121	1	WASHER, M20 x 37 x 3,
14	83911686	1	SCREW,
15	83971567	1	PEDAL,
16	83904750	1	BUSHING,
17	81822462	1	NUT, Jam, 1/2"-20, G2,
18	85802515	1	ROD,

1.38.1(01) FRONT & REAR DRIVESHAFT (POWER-SHUTTLE)

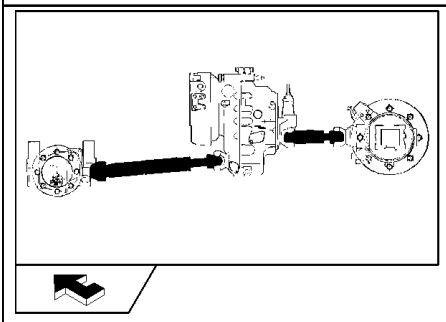

KIT
KIT KIT
6 = ■
7 = ●

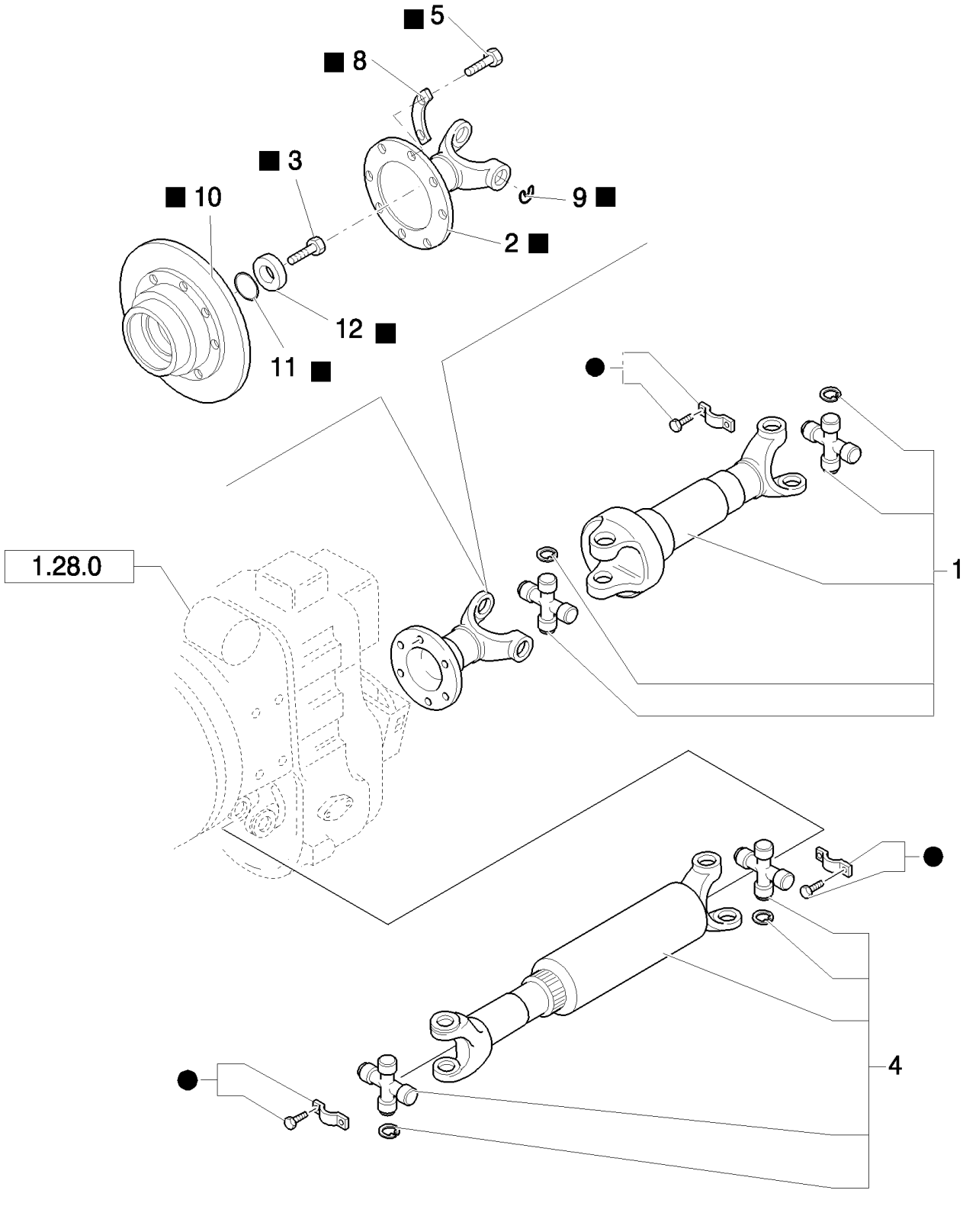

B110 TIER 3 BACKHOE LOADER (2/07-)

1.38.1(01) FRONT & REAR DRIVESHAFT (POWER-SHUTTLE)

Ref	Numero de Pieza	Ctd	Descripción
1	87552418	1	PROPELLER SHAFT,
2	85820157	1	FLANGE,
3	9968308	1	SCREW,
4	87552416	1	PROPELLER SHAFT,
5	85820154	8	SCREW, M10 x 1.5
6	85820908	1	KIT, SERVICE, , Trasformation Kit from DIN100 to DIN120
7	87311154	4	BRACKET, Front
8	85819186	4	COVER,
9	85820914	2	CIRCLIP,
10	85820909	1	FLANGE,
11	9968309	1	O-RING, 1.29"IDx.139"Thk
12	9968306	1	WASHER,

1.38.3(01) FRONT & REAR DRIVESHAFT (POWER-SHIFT)

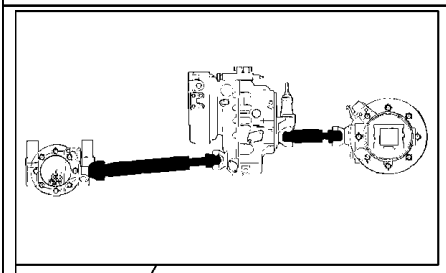

KIT KIT KIT 3 = ●

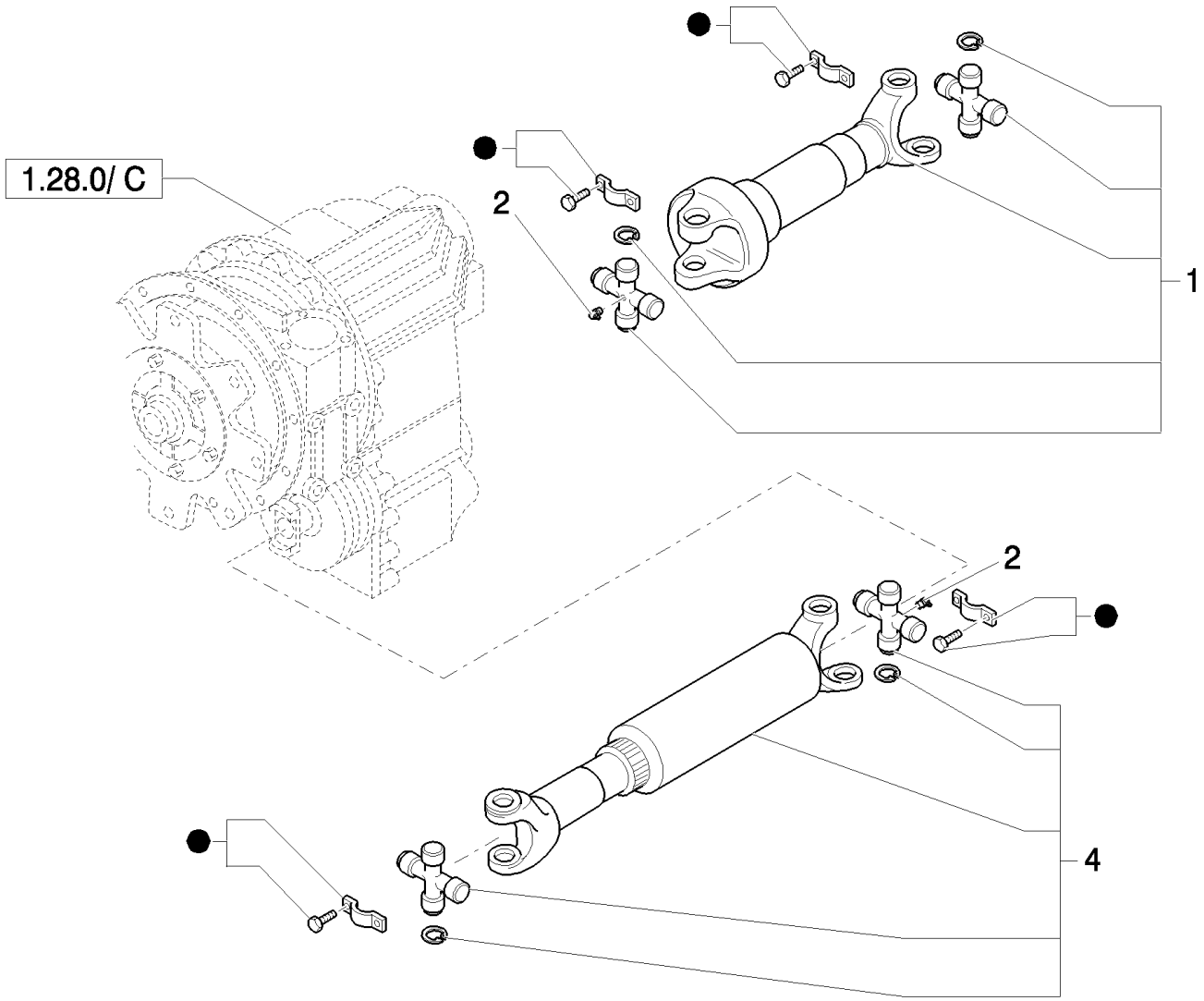

B110 TIER 3 BACKHOE LOADER (2/07-)

1.38.3(01) FRONT & REAR DRIVESHAFT (POWER-SHIFT)

Ref	Numero de Pieza	Ctd	Descripción
1	87552422	1	PROPELLER SHAFT, ASSY,REAR
2	87559778	2	NIPPLE, LUBE,
3	87311154	4	BRACKET,
4	87552420	1	PROPELLER SHAFT, ASSY,FRONT

1.39.8(01) TRANSMISSION OIL COOLING PIPES (POWER-SHUTTLE)

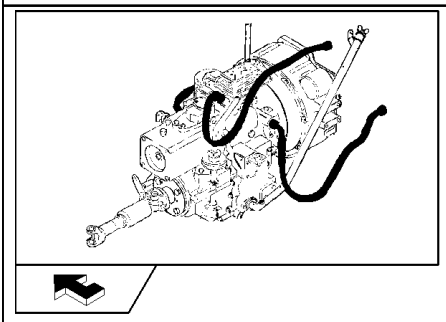

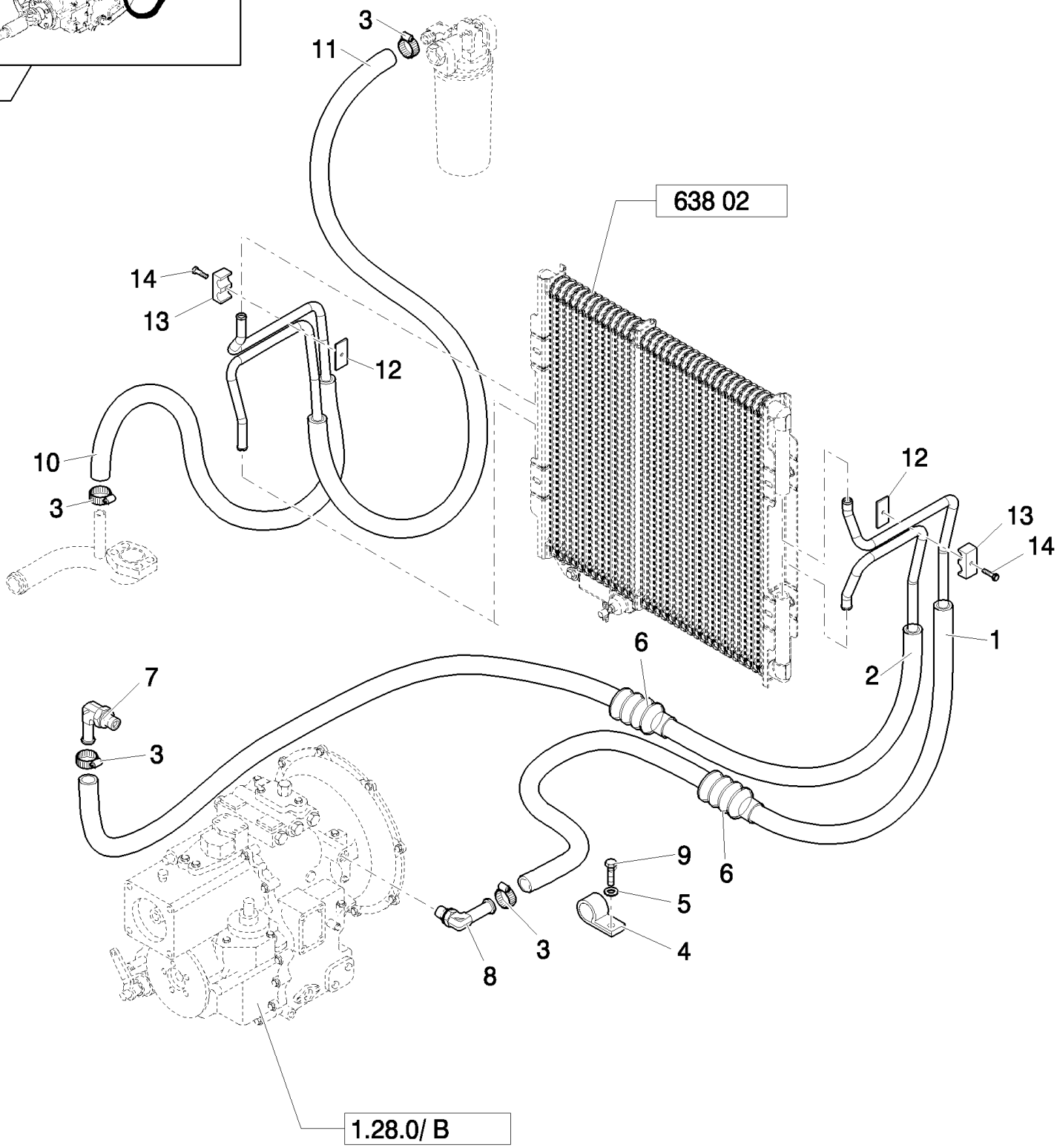

B110 TIER 3 BACKHOE LOADER (2/07-)

1.39.8(01) TRANSMISSION OIL COOLING PIPES (POWER-SHUTTLE)

Ref	Numero de Pieza	Ctd	Descripción
1	87590894	1	PIPE,
2	87591241	1	PIPE,
3	87314076	4	COLLAR,
4	47048664	1	CLAMP,
5	47048964	1	WASHER,
6	87345955	2	SHIELD,
7	87017744	1	FITTING, 90º, 5/8" Hose x 1 5/16"-12 ORB Beaded,
8	87017743	1	FITTING, 45º, 5/8" Hose x 1 5/16"-12 ORB Beaded,
9	47042364	1	BOLT,
10	87592724	1	PIPE,
11	87592822	1	PIPE,
12	87612722	2	BRACKET,
13	87589951	2	CLAMP,
14	14305321	2	SCREW, Hex Soc Hd, M6 x 20, 8.8,

1.39.8/1(01) TRANSMISSION OIL COOLING PIPES (POWER-SHIFT)

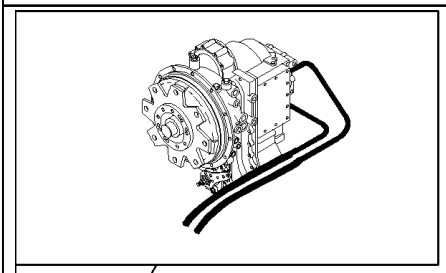

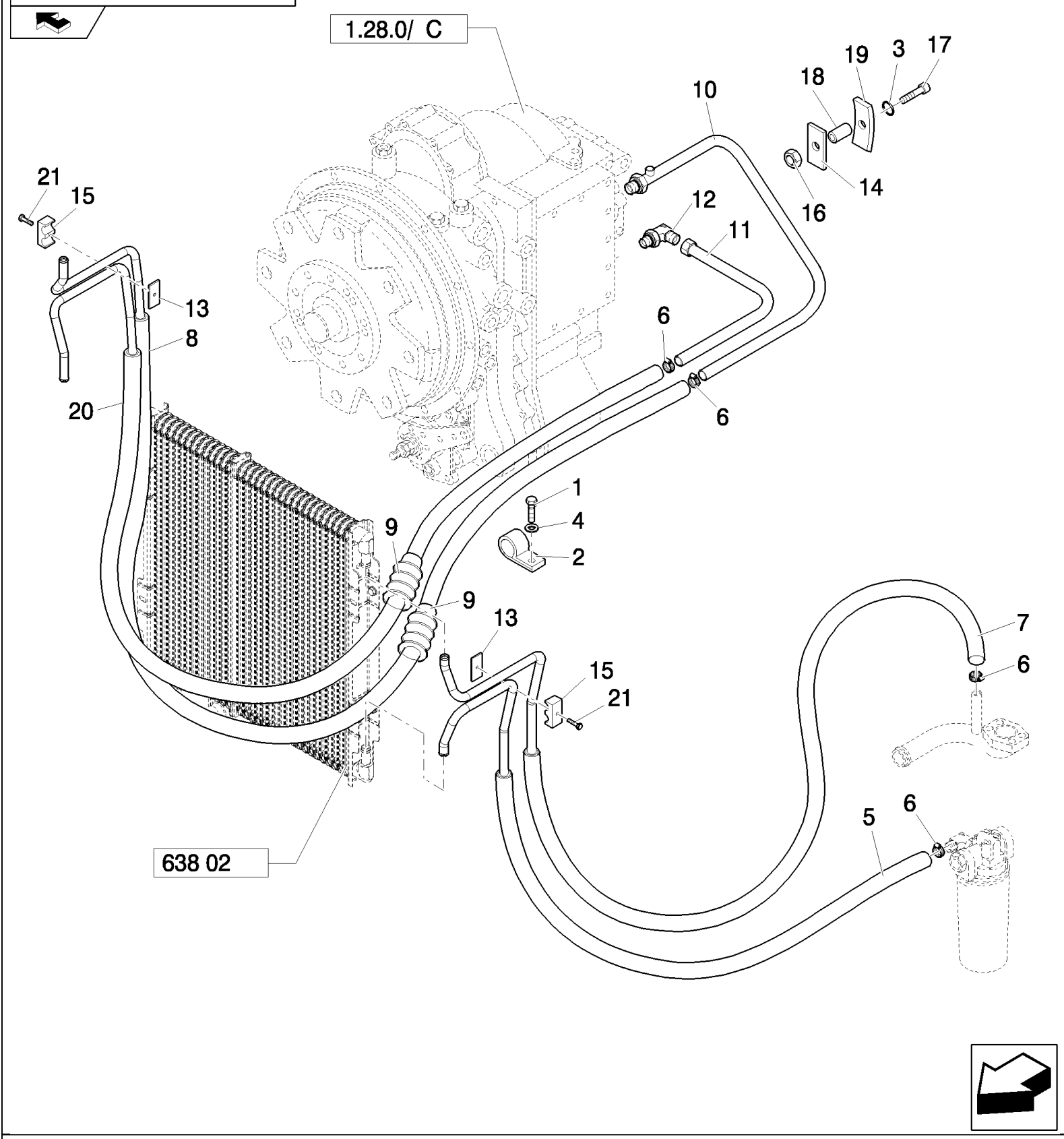

B110 TIER 3 BACKHOE LOADER (2/07-)

1.39.8/1(01) TRANSMISSION OIL COOLING PIPES (POWER-SHIFT)

Ref	Numero de Pieza	Ctd	Descripción
1	47042364	1	BOLT,
2	47048664	3	CLAMP,
3	47048962	1	WASHER, 9x16x16
4	47048964	1	WASHER,
5	87591994	1	PIPE,
6	87314076	4	COLLAR,
7	87592330	1	PIPE,
8	87591771	1	PIPE,
9	87345955	2	SHIELD,
10	87586703	1	TUBE,
11	87403229	1	TUBE,
12	100197	1	ELBOW, 45º, 7/8"-14 x 1 1/16"-12, O-Ring,
13	87612722	2	BRACKET,
14	87400407	1	BRACKET,
15	87589951	2	CLAMP,
16	47049030	1	NUT, M8x10
17	47049082	1	BOLT, M8x35
18	47048328	1	SPACER,
19	47048735	1	COLLAR,
20	87591407	1	PIPE,
21	14305321	2	SCREW, Hex Soc Hd, M6 x 20, 8.8,

1.40.0(01) FRONT AXLE (2WD) - NA

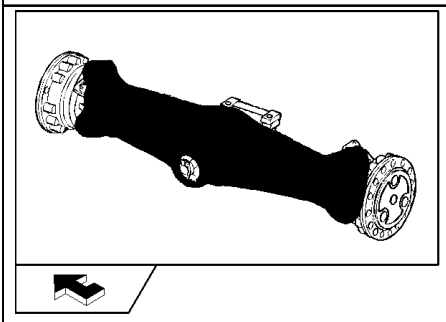

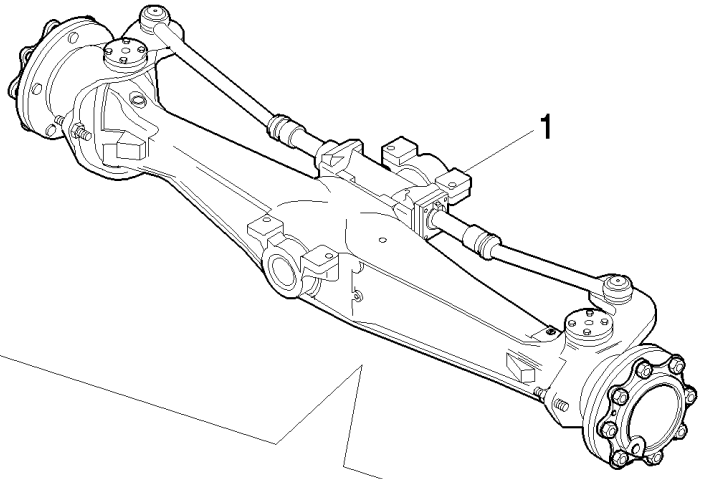

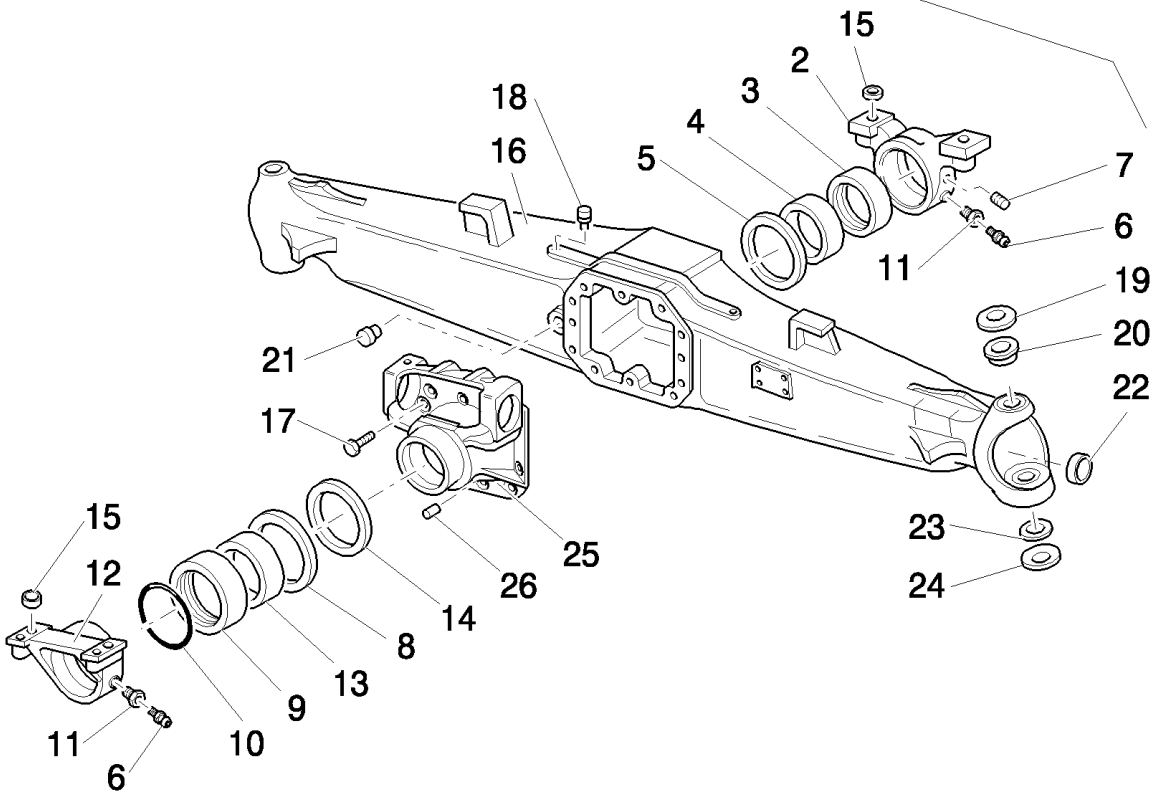

B110 TIER 3 BACKHOE LOADER (2/07-)

1.40.0(01) FRONT AXLE (2WD) - NA

Ref	Numero de Pieza	Ctd	Descripción
1	85824339	1	AXLE, FRONT, LIVE,
2	9967991	1	SUPPORT,
3	9967992	1	BUSHING, 125x115x5
4	9967993	1	BUSHING, 115x105x44
5	9967994	1	WASHER, THRUST,
6	321204	2	NIPPLE, LUBE, M6 x 1, 16mm lg,
7	85805973	1	SCREW, M8x1
8	9968006	1	WASHER, THRUST,
9	9968007	1	RING, 135x125x5
10	9968008	1	O-RING,
11	9967995	2	SCREW,
12	9968009	1	SUPPORT,
13	9968010	1	BUSHING,
14	85805706	1	PLUG, DIA=92x12
15	9967990	4	BUSHING, 30x21x16.5
16	85824347	1	HOUSING, AXLE,
17	9967769	10	SCREW, M12x1.75x33
18	85805703	1	PLUG, M10 x 1
19	9967673	2	WASHER,
20	85824469	2	BUSHING,
21	85805707	1	PLUG, M22 x 1.5,
22	85805704	2	PLUG,
23	9967678	2	RACE,
24	9967679	2	WASHER,
25	85805705	1	SUPPORT,
26	9967683	2	PIN, ROLL, 15x35

1.40.0(02) FRONT AXLE (2WD) - NA

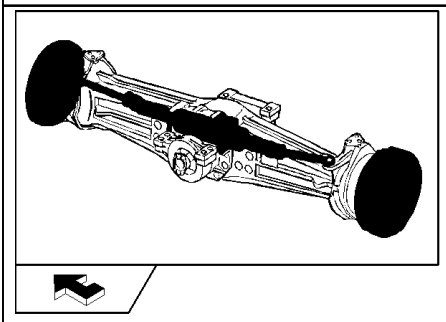

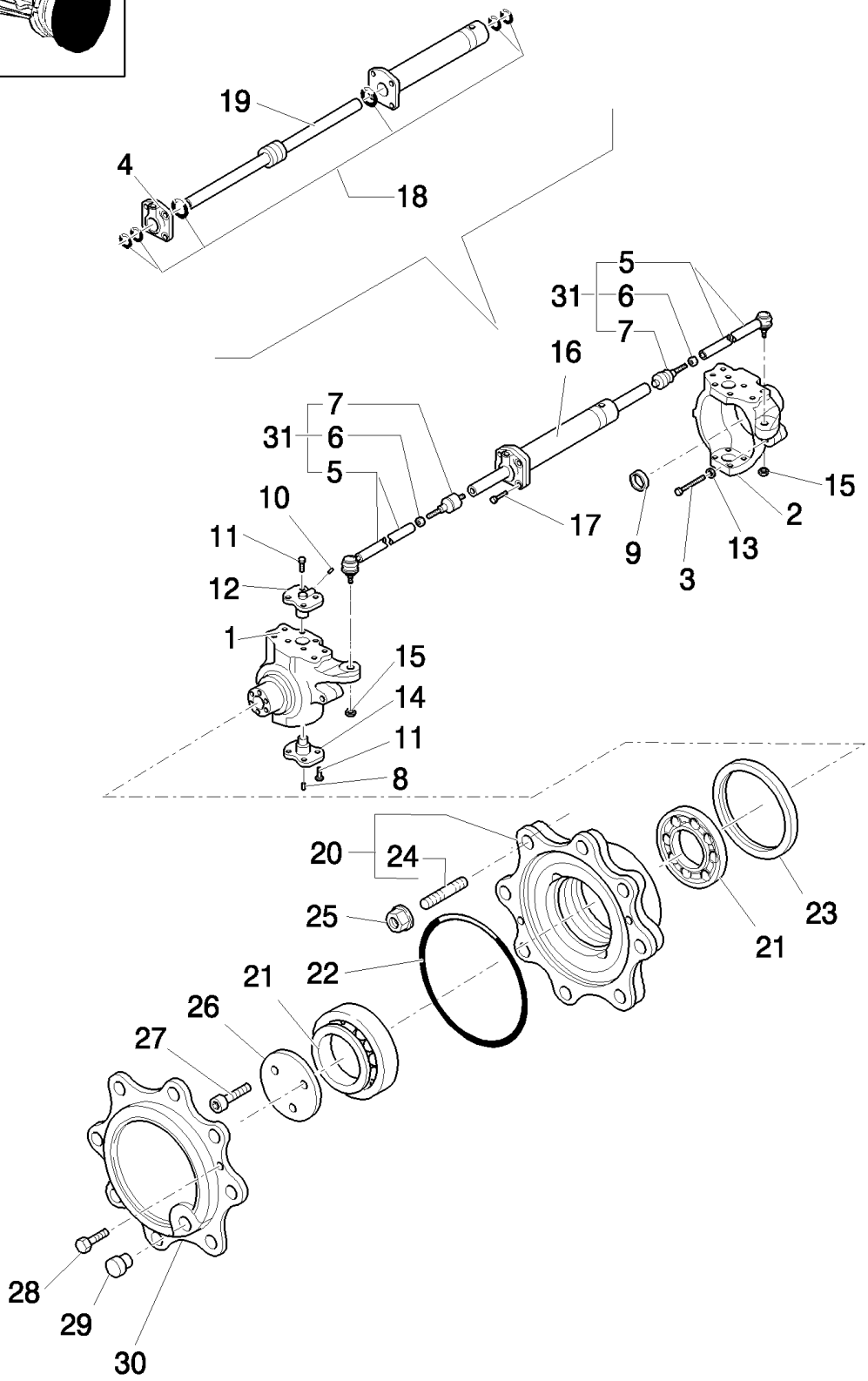

B110 TIER 3 BACKHOE LOADER (2/07-)

1.40.0(02) FRONT AXLE (2WD) - NA

Ref	Numero de Pieza	Ctd	Descripción
1	85824351	1	KNOTTER, LH; 8 Bolt Holes
2	85824350	1	KNUCKLE, STEERING, RH; 8 Bolt Holes
3	85805987	2	SCREW, M16x100
4	85805989	1	CYLINDER HEAD,
5	85805977	2	TIE-ROD,
6	85805976	2	NUT, M18x1.5
7	85805975	2	BALL JOINT,
8	85805984	2	NIPPLE, LUBE, M6x1
9	85824352	2	PLUG,
10	9968021	2	NIPPLE, LUBE, M6x2
11	85805979	16	SCREW, M12x1.75x30
12	85805980	2	PIN,
13	85805986	2	NUT, M16,
14	85805983	2	PIN,
15	85805982	2	NUT, M18x1,5
16	85805978	1	CYLINDER STEERING, Assy
17	9968028	4	SCREW, M12x45
18	85805990	1	KIT, SEALS,
19	85805992	1	ROD,
20	85806003	2	KIT, , Includes 24
21	9967687	4	BEARING ASSY,
22	85805711	2	O-RING,
23	85827067	2	SEAL, OIL,
24	9968070	16	STUD,
25	9968071	16	NUT, Wheel, M18 x 1.5,
26	85813054	2	WASHER, THRUST,
27	85806010	6	SCREW, M10x4.5
28	85805709	4	SCREW, M8x20
29	85805707	2	PLUG, M22 x 1.5,
30	85805710	2	COVER,
31	85805974	2	TIE-ROD, , Includes 5, 6, 7

1.40.8(01) HYDRAULIC DIFFERENTIAL LOCK (POWER SHIFT)

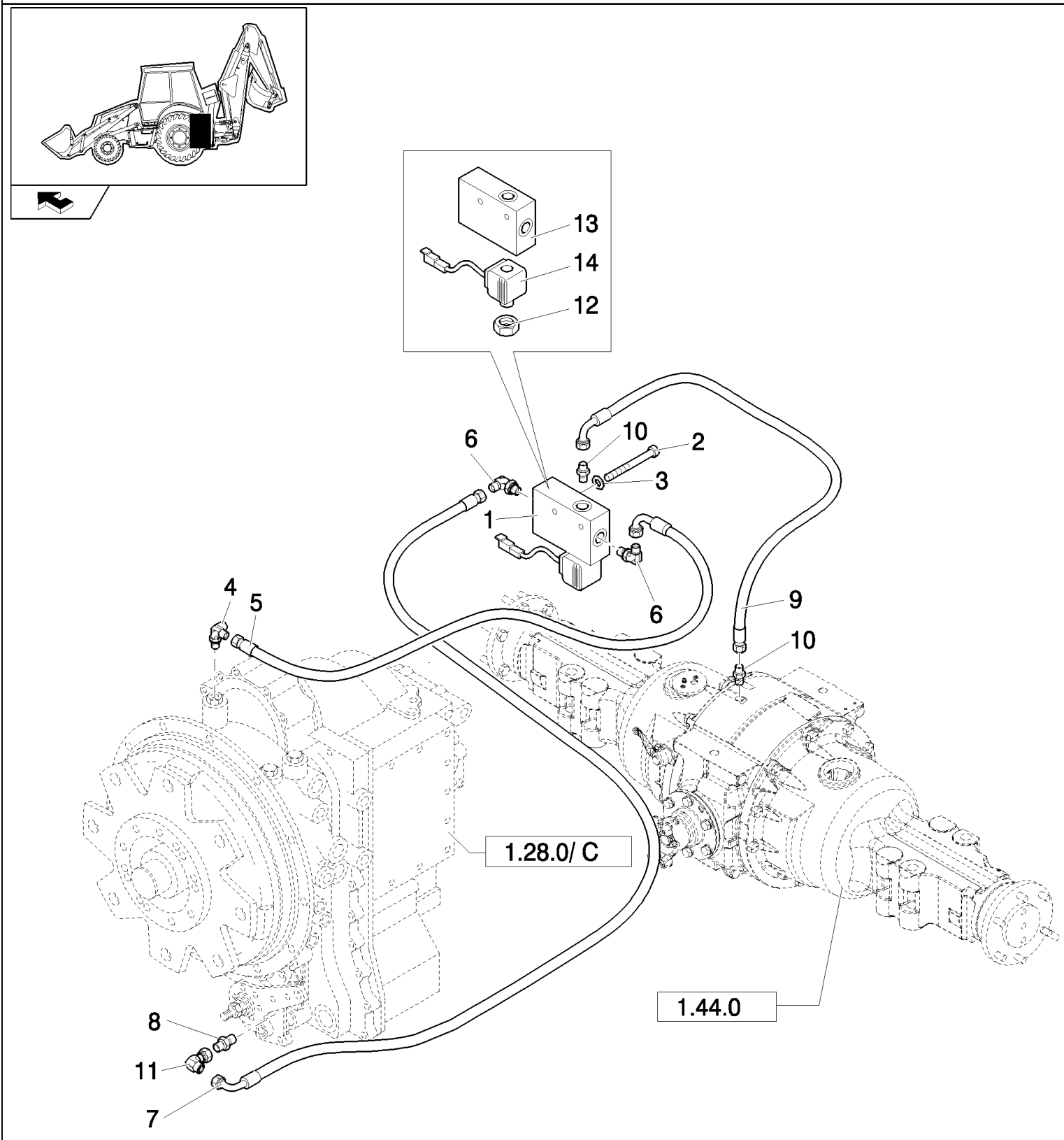

B110 TIER 3 BACKHOE LOADER (2/07-)

1.40.8(01) HYDRAULIC DIFFERENTIAL LOCK (POWER SHIFT)

Ref	Numero de Pieza	Ctd	Descripción
1	85817265	1	VALVE, SOLENOID,
2	10903221	2	BOLT, Hex, M6 x 40, 8.8,
3	11197779	2	WASHER, SPRING, Belleville, M6.4,
4	87566829	1	FITTING,
5	85819069	1	HOSE, FLEXIBLE, , Side Shift
5	85802195	1	HOSE, FLEXIBLE, 2000mm lg , , Center Pivot
6	85802234	2	ELBOW,
7	85819068	1	HOSE, FLEXIBLE, , Side Shift
7	85804833	1	HOSE, FLEXIBLE, , Center Pivot
8	87403805	1	CONNECTOR, HYD.,
9	85819071	1	HOSE, FLEXIBLE, , Side Shift
9	85803308	1	HOSE, FLEXIBLE, 1000mm lg, , Center Pivot
10	85803312	2	CONNECTOR, HYD.,
11	47050634	1	ELBOW,
12	9970384	1	NUT,
13	85810977	1	VALVE, HYDRAULIC,
14	87357715	1	SENDER UNIT,

1.40.9(01) FUEL TANK & RELATED PARTS

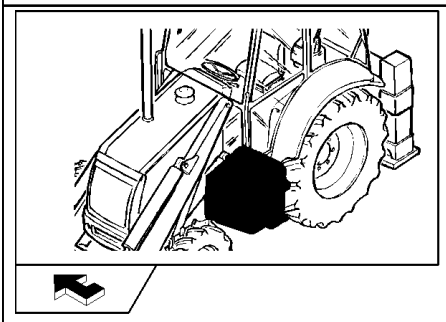

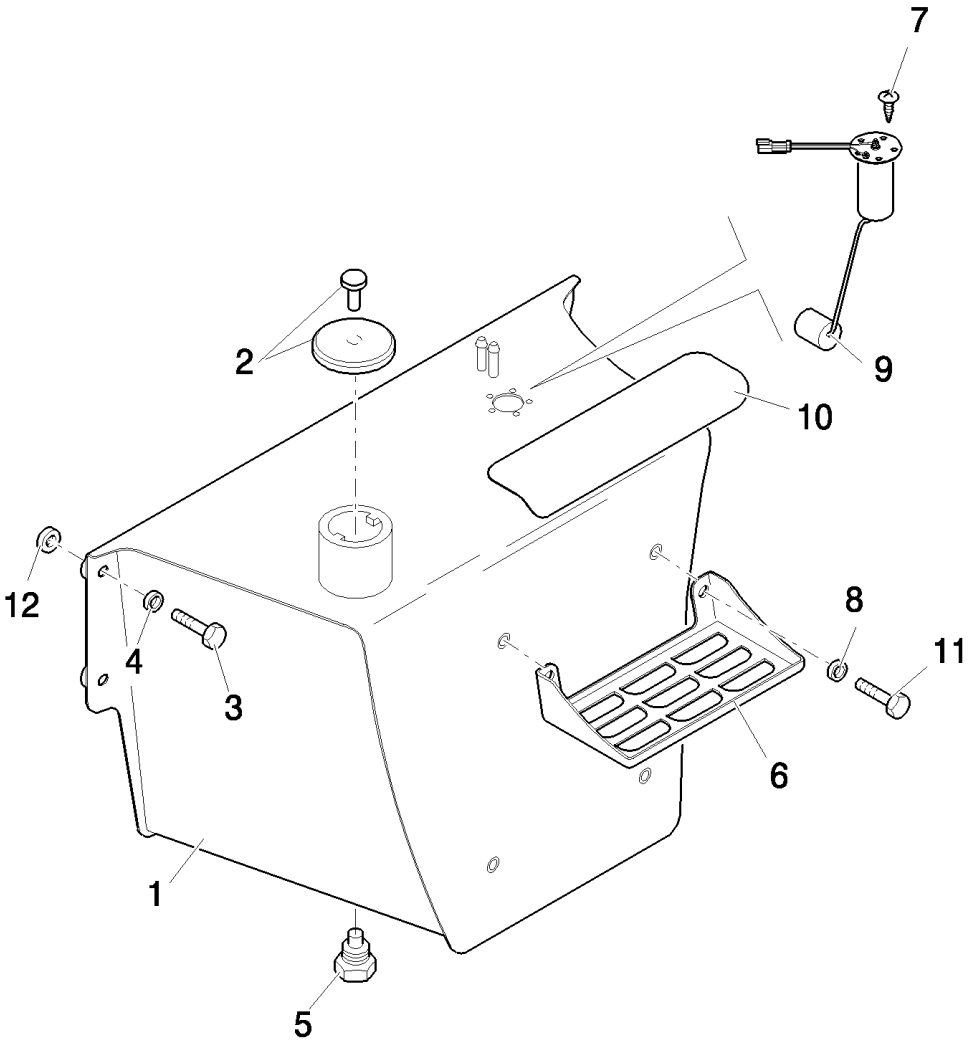

B110 TIER 3 BACKHOE LOADER (2/07-)

1.40.9(01) FUEL TANK & RELATED PARTS

Ref	Numero de Pieza	Ctd	Descripción
1	87355226	1	FUEL TANK,
2	85825392	1	CAP FUEL, LOCKABLE,
3	15540721	4	BOLT, Hex, M12 x 1.25 x 45, 8.8, Full Thd,
4	47048973	4	WASHER,
5	47050671	1	PLUG,
6	85801218	2	PLATE, STEP,
7	85825158	5	SCREW, M5x12
8	47048976	4	WASHER, M12
9	86985587	1	SENDER UNIT,
10	87404910	1	STRIP, ANTI-SKID,
11	15540721	4	BOLT, Hex, M12 x 1.25 x 45, 8.8, Full Thd,
12	87353741	4	SPACER,

B110 TIER 3 BACKHOE LOADER (2/07-)

1.42.7(01) FUEL PIPING

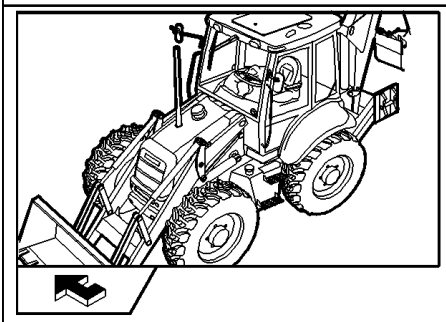

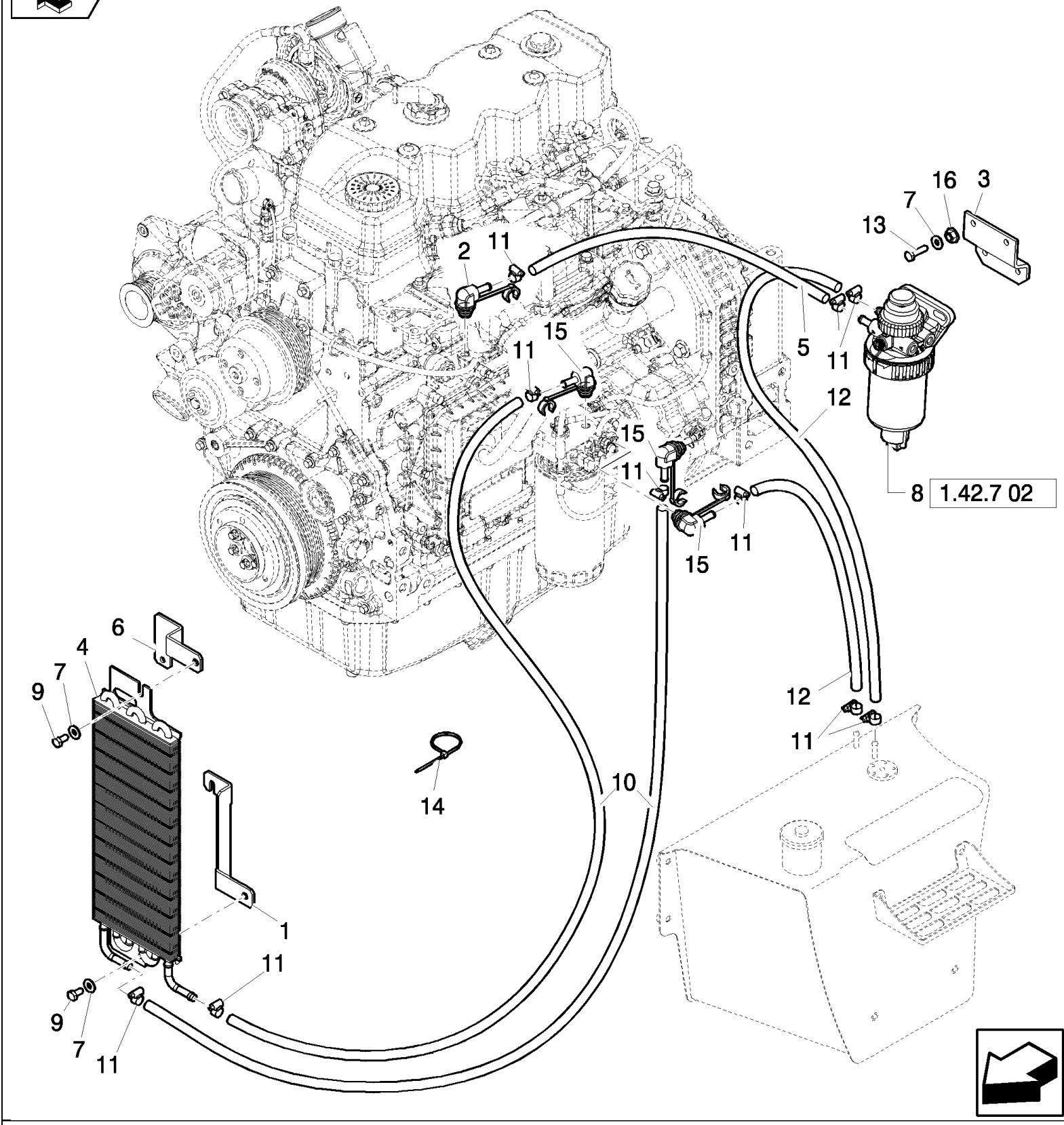

B110 TIER 3 BACKHOE LOADER (2/07-)

1.42.7(01) FUEL PIPING

Ref	Numero de Pieza	Ctd	Descripción
1	87570398	1	BRACKET,
2	8605735	1	FITTING,
3	87564669	1	BRACKET,
4	87571706	1	COOLER,
5	87609039	1	HOSE, FLEXIBLE,
6	87570395	1	BRACKET,
7	12646701	6	WASHER, M8 x 20 x 2,
8	87563601	1	FILTER, FUEL,
9	16043221	2	SCREW, Hex, M8 x 16, 8.8,
10	87609060	2	HOSE, FLEXIBLE,
11	85824381	10	CLAMP, HOSE,
12	87403672	2	HOSE, FLEXIBLE,
13	16043821	6	BOLT, Hex, M8 x 30, 8.8,
14	14560187	7	STRAP, CABLE, 178mm lg, L=203.2 mm
15	87414560	3	FITTING,
16	14039711	2	NUT, M8

B110 TIER 3 BACKHOE LOADER (2/07-)

1.42.7(02) FILTER FUEL

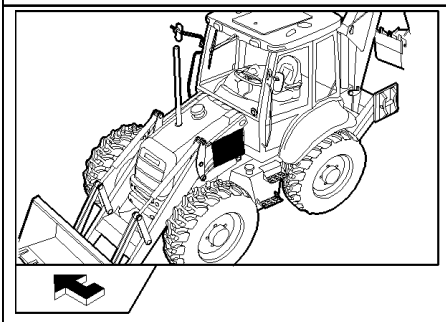

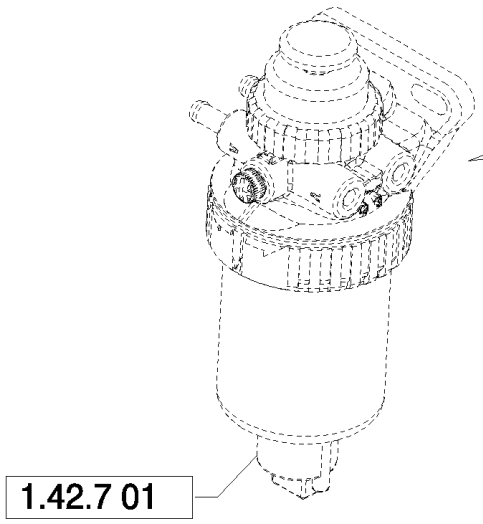

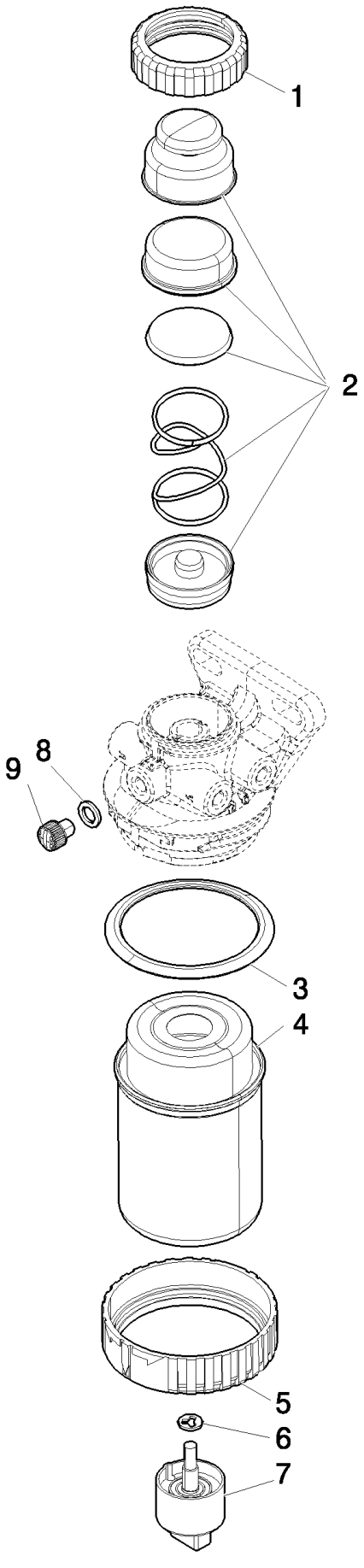

B110 TIER 3 BACKHOE LOADER (2/07-)

1.42.7(02) FILTER FUEL

Ref	Numero de Pieza	Ctd	Descripción
1	87612473	1	CAP,
2	87612472	1	KIT,
3	87612468	1	SEAL,
4	87803444	1	FILTER, FUEL,
5	87612467	1	RING,
6	87612469	1	SEAL,
7	87612475	1	KIT,
8	87612162	1	SEAL,
9	87612494	1	PLUG,

1.44.0(01) REAR AXLE (POWER-SHIFT)

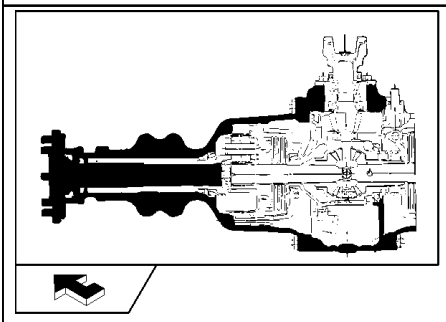

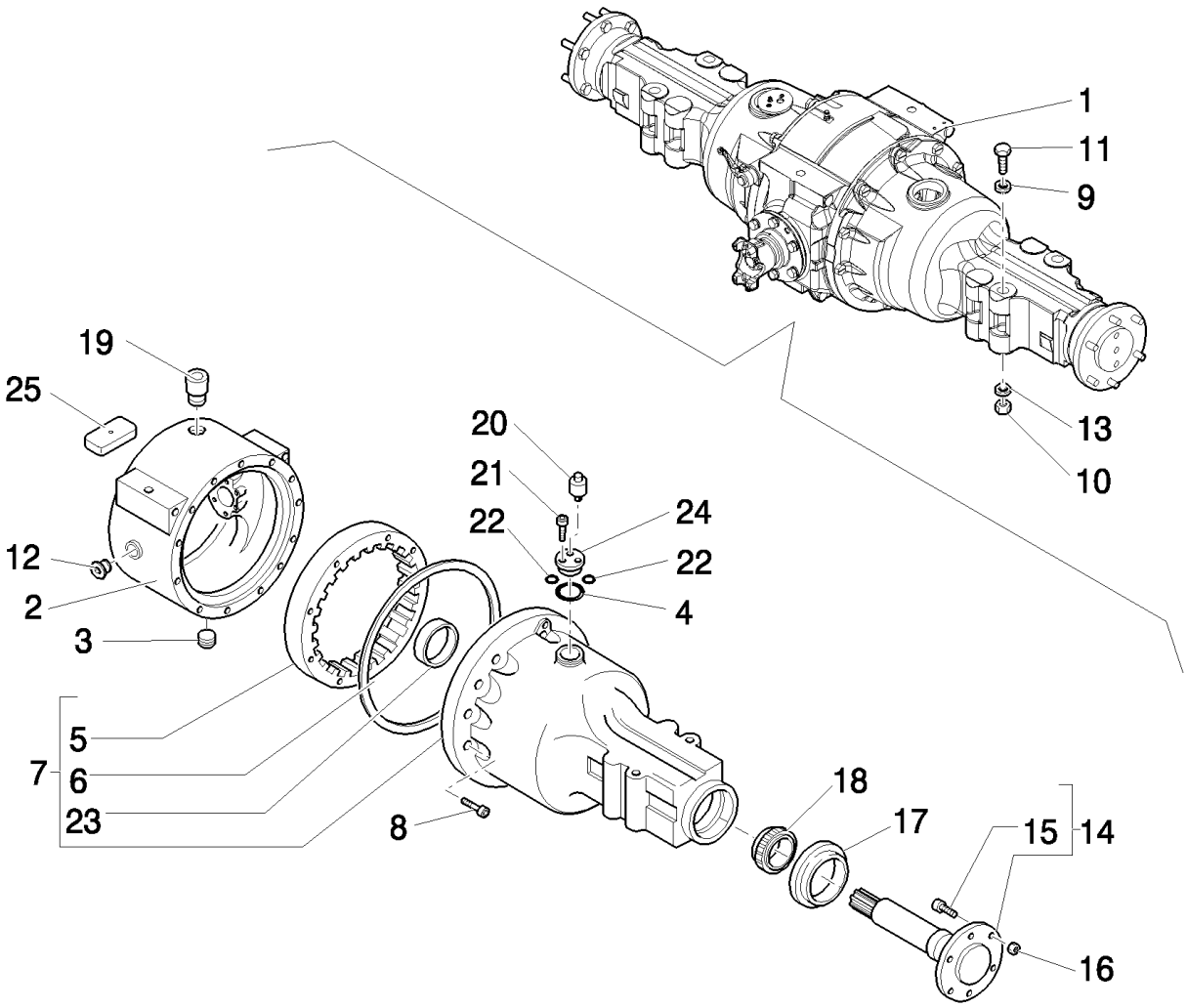

B110 TIER 3 BACKHOE LOADER (2/07-)

1.44.0(01) REAR AXLE (POWER-SHIFT)

Ref	Numero de Pieza	Ctd	Descripción
1	87542397	1	AXLE,
2	86517774	1	HOUSING,
3	83909107	1	PLUG,
4	81845041	1	O-RING,
5	86536749	2	GEAR, PLANETARY,
6	83417133	2	O-RING,
7	86552795	1	HOUSING, AXLE, RH
7	86552794	1	HOUSING, AXLE, LH
8	81809406	1	BOLT,
8	86505999	25	BOLT, Hex, 5/8"-11 x 2", G5,
9	14497331	4	WASHER,
10	12575321	4	NUT, LOCK, M24 x 2, Cl 10,
11	15999434	4	SCREW, M24 x 2 x 220
12	80263136	1	PLUG, MAGNETIC,
13	11200679	4	WASHER, LOCK,
14	86511646	2	AXLE,
15	83955490	16	BOLT, 3/4"-16 x 2.32"
16	87348000	16	NUT,
17	81866390	1	GASKET,
18	81818397	1	BEARING ASSY,
19	81812912	1	PLUG,
20	81820047	1	SCREW, BLEED,
21	82895716	2	SCREW, 1/4-20X1,75
22	83925620	2	O-RING,
23	82959373	2	CUP,
24	81878514	1	MANIFOLD,
25	328955A1	2	

1.44.0(02) REAR AXLE (POWER-SHIFT)

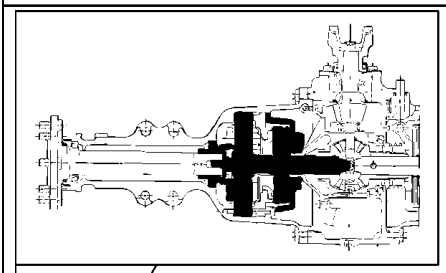

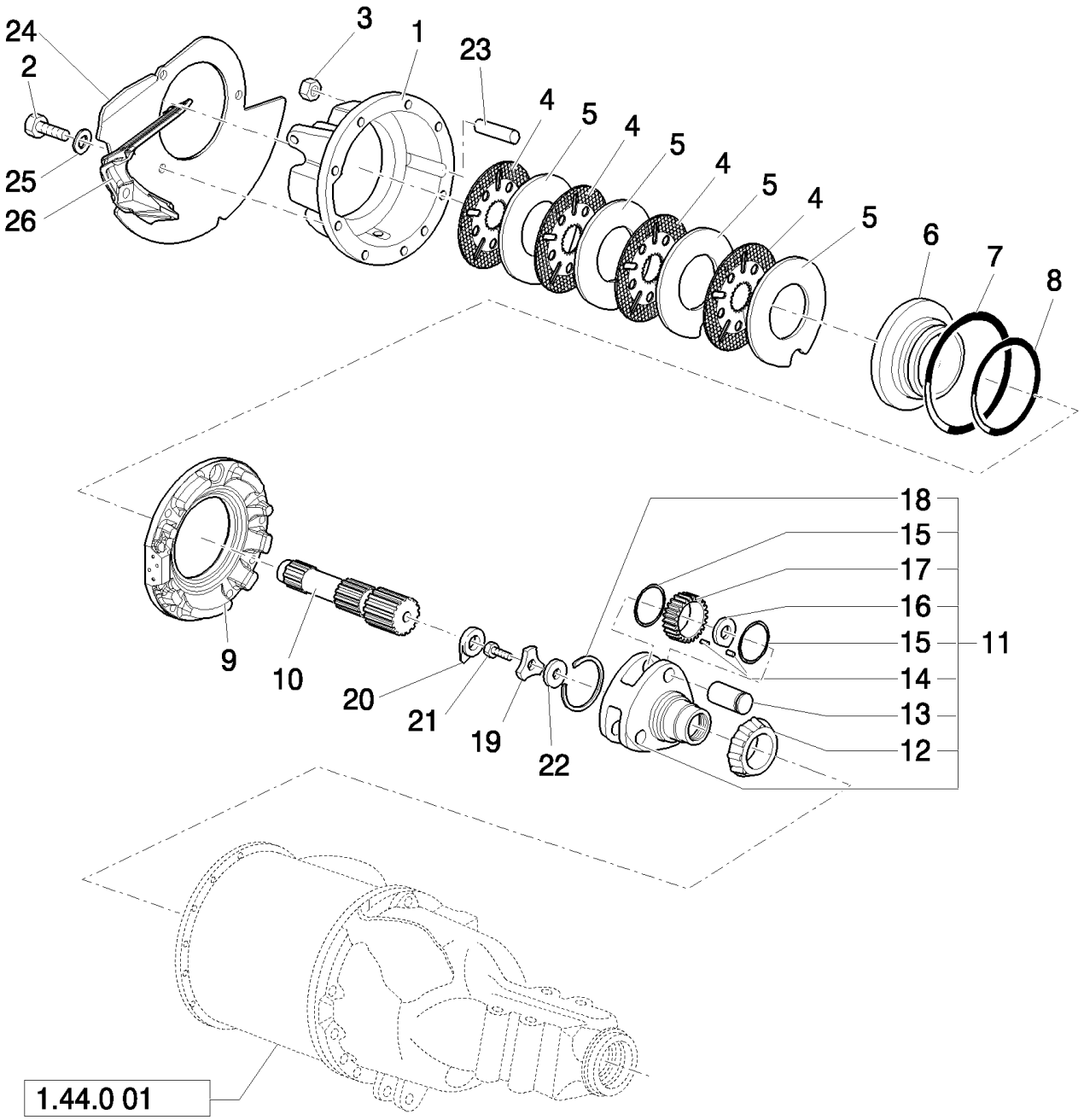

1.44.0 01

B110 TIER 3 BACKHOE LOADER (2/07-)

1.44.0(02) REAR AXLE (POWER-SHIFT)

Ref	Numero de Pieza	Ctd	Descripción
1	87304344	1	HOUSING, LH
1	87304345	1	HOUSING, RH
2	87313966	3	BOLT, Cap, HH, G8, 9/16"-12 x 5"
3	86597537	4	BOLT, G8, .56x7.25
4	87305713	8	BRAKE DISC,
5	87308018	8	BRAKE DISC,
6	87542345	2	PISTON,
7	87302761	2	O-RING, -253, 7.484" ID x .139" Thk,
8	87302760	2	O-RING, -253, 5.359" ID x .139" Thk,
9	87542348	1	HOUSING, RH
9	87542350	1	HOUSING, LH
10	81803334	2	SUN GEAR,
11	86584273	2	CARRIER,
12	81854753	2	BEARING, CONE,
13	81820849	6	SHAFT,
14	81823610	AR	BEARING ASSY,
15	81803273	12	WASHER, THRUST,
16	81803275	6	SPACER,
17	86584272	6	GEAR, PLANETARY,
18	81820846	2	RETAINER,
19	87326170	2	WASHER,
20	83949811	2	PLATE, LOCKING,
21	81846884	2	BOLT,
22	81803502	AR	SPACER, .054/.053" Thk, (1.372/1.346 mm)
22	81803491	AR	SPACER, .050/.049" Thk, (1.270/1.245 mm)
22	81803503	AR	SPACER, .058/.057" Thk, (1.473/1.448 mm)
22	81803504	AR	SPACER, .062/.061" Thk, (1.575/1.549 mm)
22	81803505	AR	SPACER, .066/.065" Thk, (1.676/1.651 mm)
22	81803506	AR	SPACER, .070/.069" Thk, (1.778/1.753 mm)
22	81803507	AR	SPACER, .074/.073" Thk, (1.880/1.854 mm)
22	81803508	AR	SPACER, .078/.077" Thk , (1.981/1.956 mm)
22	81803509	AR	SPACER, .082/.081" Thk, (2.083/2.057 mm)
22	81803510	AR	SPACER, .086/.085" Thk, (2.184/2.159 mm)
22	81803511	AR	SPACER, .090/.089" Thk, (2.286/2.261 mm)
23	81802548	2	PIN,
24	87355552	1	PLATE,
25	86632588	3	WASHER, 13/32" x 13/16" x .065", HDN,
26	87313590	1	BLOCK,

1.44.0(03) REAR AXLE (POWER-SHIFT)

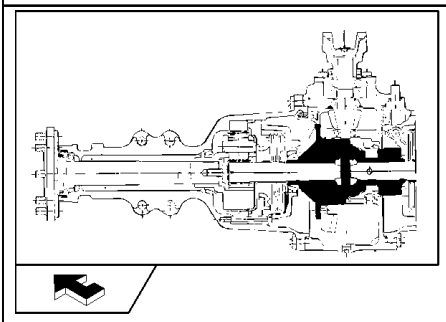

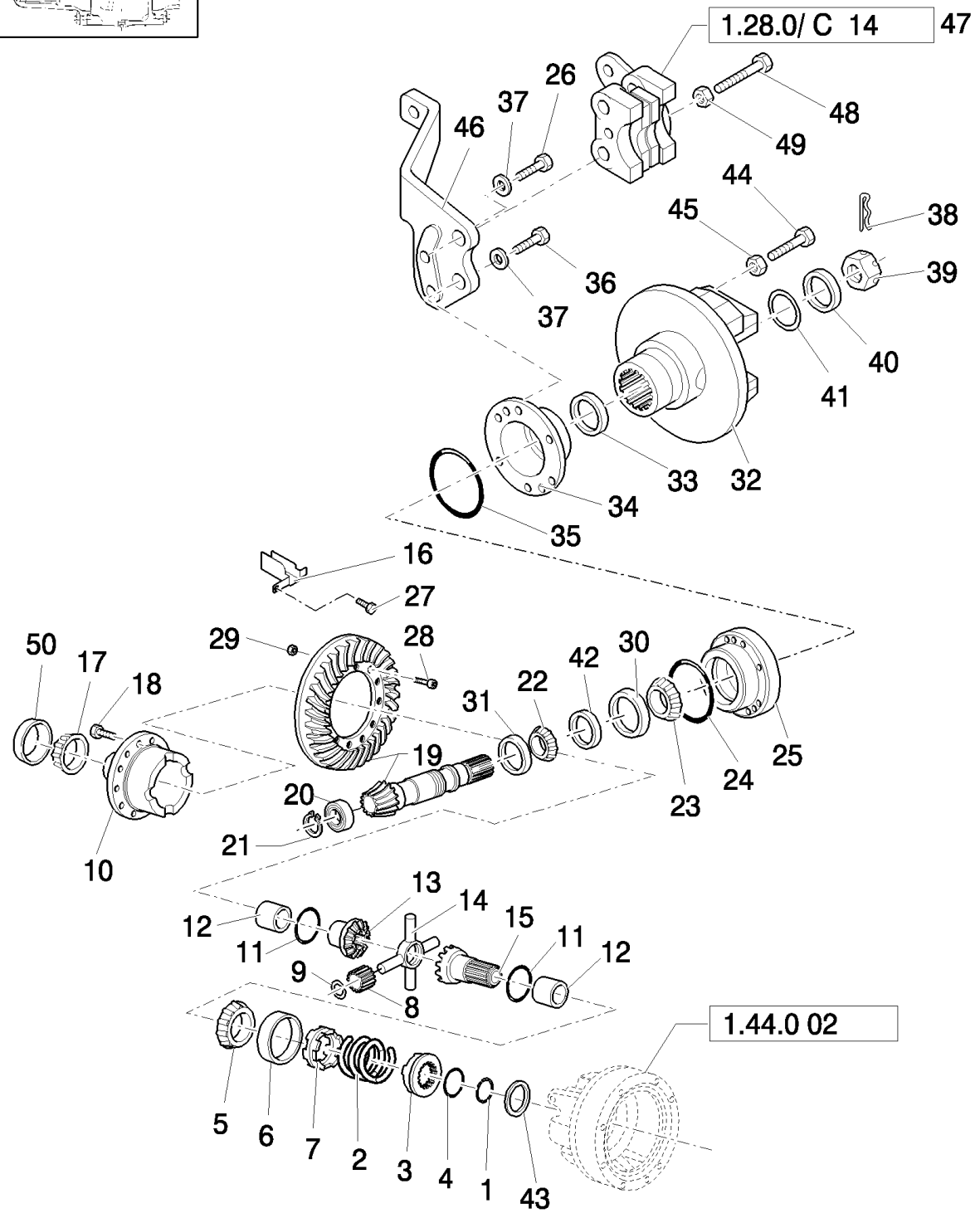

B110 TIER 3 BACKHOE LOADER (2/07-)

1.44.0(03) REAR AXLE (POWER-SHIFT)

Ref	Numero de Pieza	Ctd	Descripción
1	81803474	1	RING,
2	81800474	1	SPRING,
3	81812261	1	ADAPTER,
4	81800475	1	WASHER,
5	81803413	1	BEARING, CONE,
6	80510892	1	BEARING, CUP, RH
7	81800472	1	ADAPTER,
8	81728114	4	PINION,
9	83989915	4	WASHER, LOCK,
10	81816246	1	HOUSING,
11	81803424	2	WASHER, THRUST, RH
12	81800471	2	BUSHING, RH
13	81803445	1	GEAR,
14	81876885	1	SPIDER,
15	81803451	1	GEAR, RH
16	87356354	1	SUPPORT,
17	82959377	1	BEARING, CONE,
18	83994579	8	SCREW, Cap, HH, G8, Self-Locking, 1/2"-13 x 2-7/8"
19	83958890	1	GEAR SET, (R.9X37)
20	81824478	1	BEARING, ROLLER,
21	81803542	1	RING, SNAP,
22	82958961	1	BEARING, ROLLER, TAPERED,
23	81845711	1	BEARING, CONE,
24	81827354	1	O-RING, 4.625" ID x .139" Thk
25	81847146	1	RETAINER,
27	89706729	2	SCREW,
26	83959181	2	SCREW,
28	83957533	12	BOLT, HH, G8, 1/2"-20 x 1-5/8"
29	83417169	12	NUT, LOCK, 1/2"-20, GA,
30	81812385	1	CUP,
31	82958963	1	CUP,
32	85805307	1	BRAKE DISC,
33	81834073	1	GASKET,
34	83912246	1	RETAINER,
35	81845713	1	SEAL,
36	81821267	4	BOLT,
37	80280248	6	WASHER, LOCK,
38	83947107	1	PIN,
39	83949812	1	NUT,
40	81834042	1	WASHER,
41	81845714	1	SEAL,
42	81847148	AR	SPACER, 31,852/31,864
42	81847149	AR	SPACER, 31,902/31,915

Ref	Numero de Pieza	Ctd	Descripción
42	81847150	AR	SPACER, 31,953/31,966
42	81847151	AR	SPACER, 32,004/32,017
42	81847152	AR	SPACER, 32,055/32,068
42	81847153	AR	SPACER, 32,106/32,118
42	81847154	AR	SPACER, 32,156/32,169
42	81847155	AR	SPACER, 32,207/32,220
42	81847156	AR	SPACER, 32,258/32,271
42	81847157	AR	SPACER, 32,309/32,322
42	81847158	AR	SPACER, 32,360/32,372
42	81847159	AR	SPACER, 32,410/32,423
42	81847160	AR	SPACER, 32,461/32,474
42	81847161	AR	SPACER, 32,512/32,525
42	81847162	AR	SPACER, 32,563/32,576
43	81803515	AR	SHIM, 0,965/1,016
43	81803516	AR	SHIM, .046/.044" Thk, (1.118-1.168 mm)
43	81803517	AR	SHIM, .052/.050" Thk, (1.321/1.270 mm)
43	81803518	AR	SHIM, .058/.056" Thk, (1.473/1.422 mm)
43	81803519	AR	SHIM, .064/.062" Thk, (1.626/1.575 mm)
43	81803520	AR	SHIM, .070/.068" Thk, (1.778/1.727 mm)
43	81803521	AR	SHIM, .076/.074" Thk, (1.930/1.880 mm)
43	81803522	AR	SHIM, .082/.080" Thk, (2.083/2.032 mm)
44	14359431	4	SCREW, M8X1,25X75
45	14048221	4	NUT, LOCK, M8 x 1.25, Cl 10,
46	85804940	1	SUPPORT,
47	85813303	1	BRAKE ASSY.,
48	9969103	2	SCREW,
49	9969104	2	NUT,
50	82959375	1	BEARING, CUP,

1.44.0(04) REAR AXLE (POWER-SHIFT)

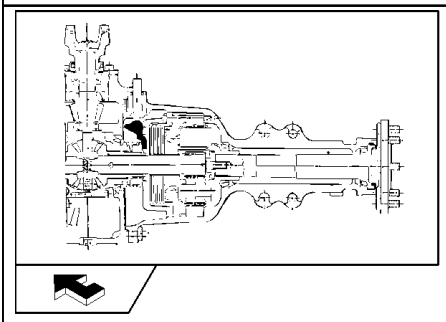

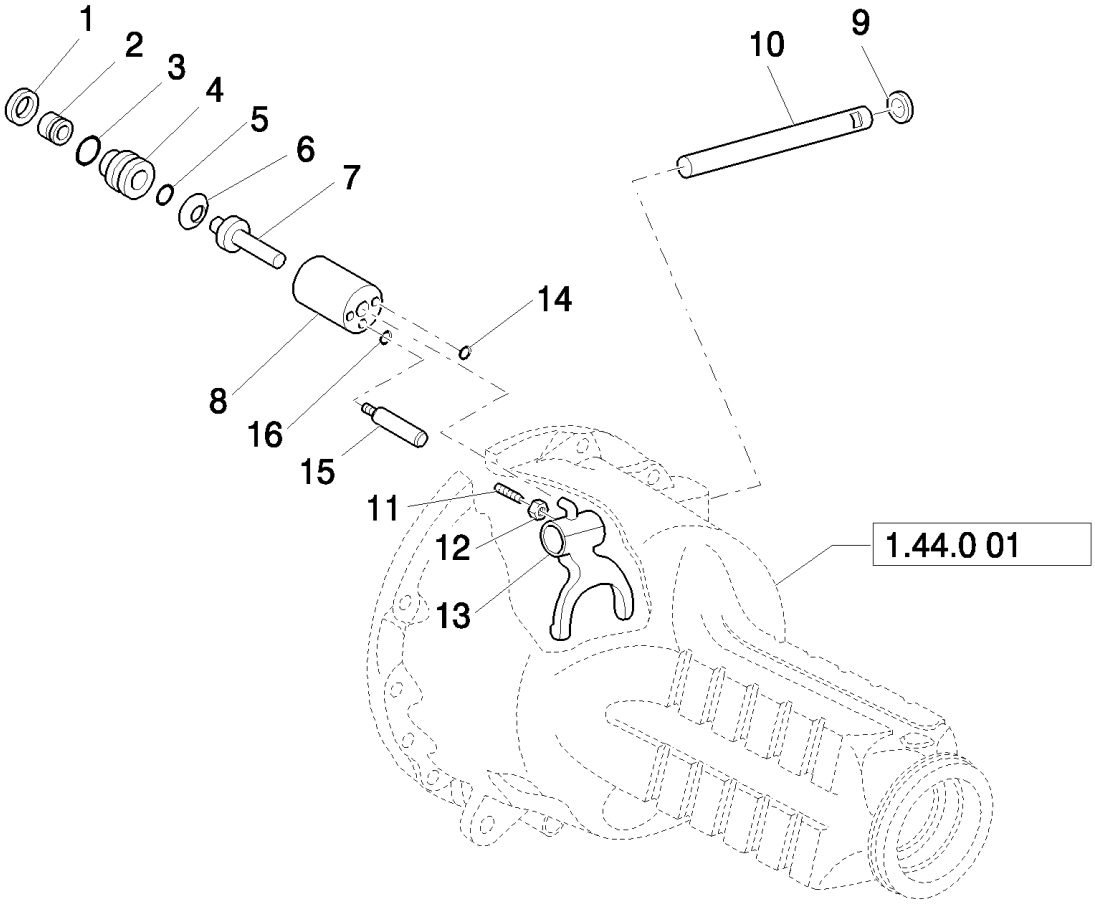

B110 TIER 3 BACKHOE LOADER (2/07-)

1.44.0(04) REAR AXLE (POWER-SHIFT)

Ref	Numero de Pieza	Ctd	Descripción
1	86517825	1	RING, SNAP, 1.688", Int, #168,
2	86517781	1	PLUG,
3	83983856	1	GASKET,
4	86517780	1	PLUNGER,
5	86517824	1	O-RING, -217, 90 Duro, 1.187" ID x .139" Thk,
6	86517779	1	SPRING,
7	86517778	1	ROD,
8	86517777	1	BODY,
9	81844767	1	PLUG,
10	86517776	1	SHAFT,
11	81804978	1	SCREW,
12	80087308	1	NUT,
13	86517775	1	FORK,
14	80188582	1	O-RING,
15	83925617	2	BOLT,
16	83932452	1	CIRCLIP,

1.44.0/A(01) REAR AXLE (POWER-SHUTTLE) (SIDE SHIFT) - EU

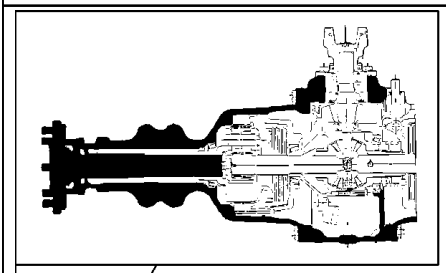

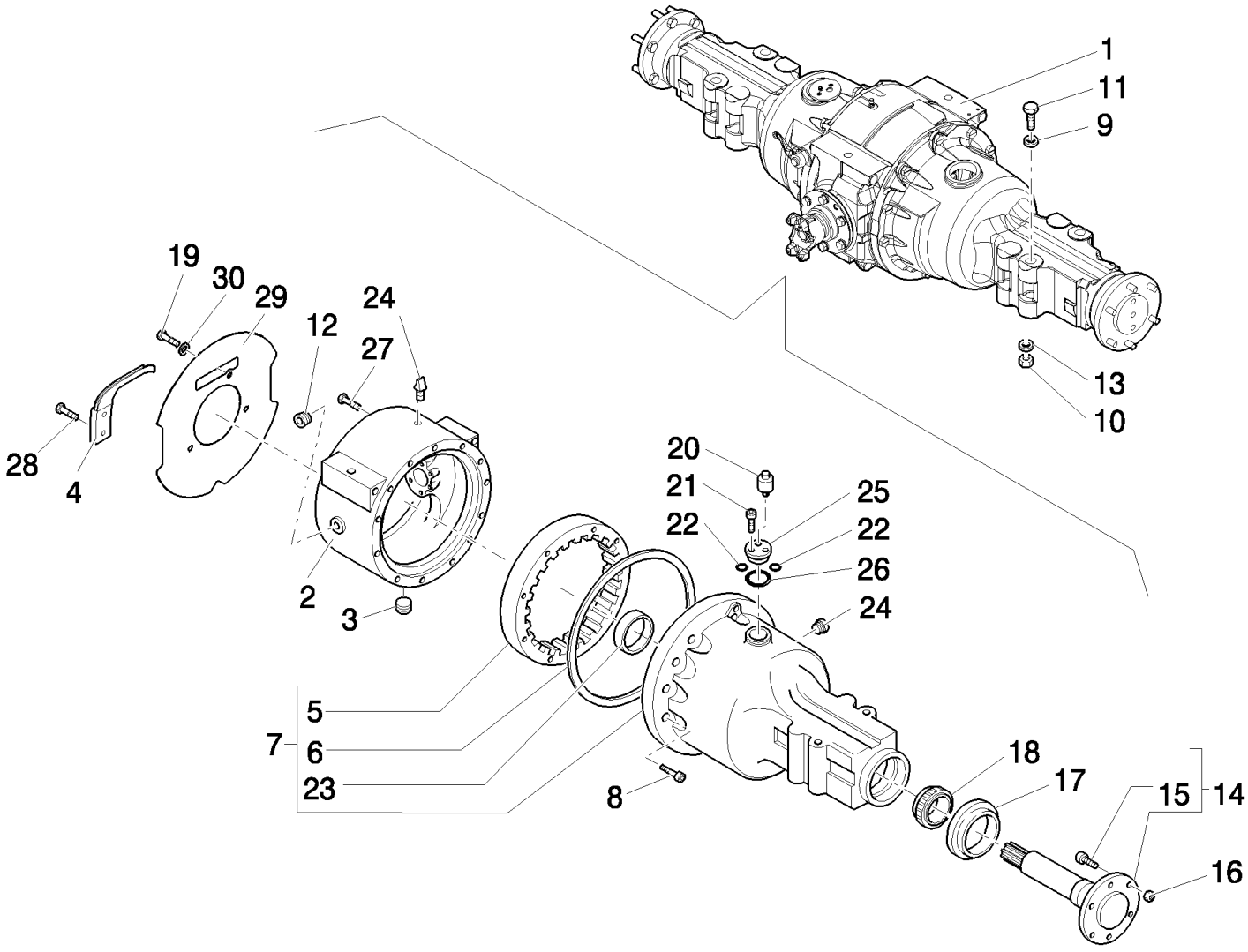

B110 TIER 3 BACKHOE LOADER (2/07-)

1.44.0/A(01) REAR AXLE (POWER-SHUTTLE) (SIDE SHIFT) - EU

Ref	Numero de Pieza	Ctd	Descripción
1	87542399	1	AXLE, 4,11
2	83955462	1	HOUSING,
3	83909107	1	PLUG,
4	87314211	1	BLOCK, 9/16"-12-18 x 7.88"
5	86536749	2	GEAR, PLANETARY,
6	83417133	2	O-RING,
7	86552793	1	HOUSING, AXLE, LH
7	86552794	1	HOUSING, AXLE, RH
8	86505999	25	BOLT, Hex, 5/8"-11 x 2", G5,
8	81809406	1	BOLT,
9	14497331	4	WASHER,
10	12575321	4	NUT, LOCK, M24 x 2, Cl 10,
11	15999434	4	SCREW, M24 x 2 x 220
12	80263136	1	PLUG, MAGNETIC,
13	11200679	4	WASHER, LOCK,
14	86511646	2	AXLE,
15	83955490	16	BOLT, 3/4"-16 x 2.32"
16	87348000	16	NUT,
17	81866390	2	GASKET,
18	81818397	2	BEARING ASSY,
19	87313966	2	BOLT,
20	81820047	2	SCREW, BLEED,
21	82895716	4	SCREW, 1/4-20X1,75
22	83925620	4	O-RING,
23	82959373	2	CUP,
24	81812912	1	PLUG,
25	81878514	2	MANIFOLD,
26	81845041	2	O-RING,
27	86597537	2	BOLT,
28	89706729	2	SCREW,
29	87334836	1	PLATE, RETAINING,
30	86632588	3	WASHER, 13/32" x 13/16" x .065", HDN,

1.44.0/A(02) REAR AXLE (POWER-SHUTTLE) (SIDE SHIFT) - EU

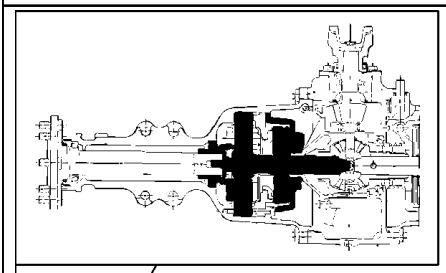

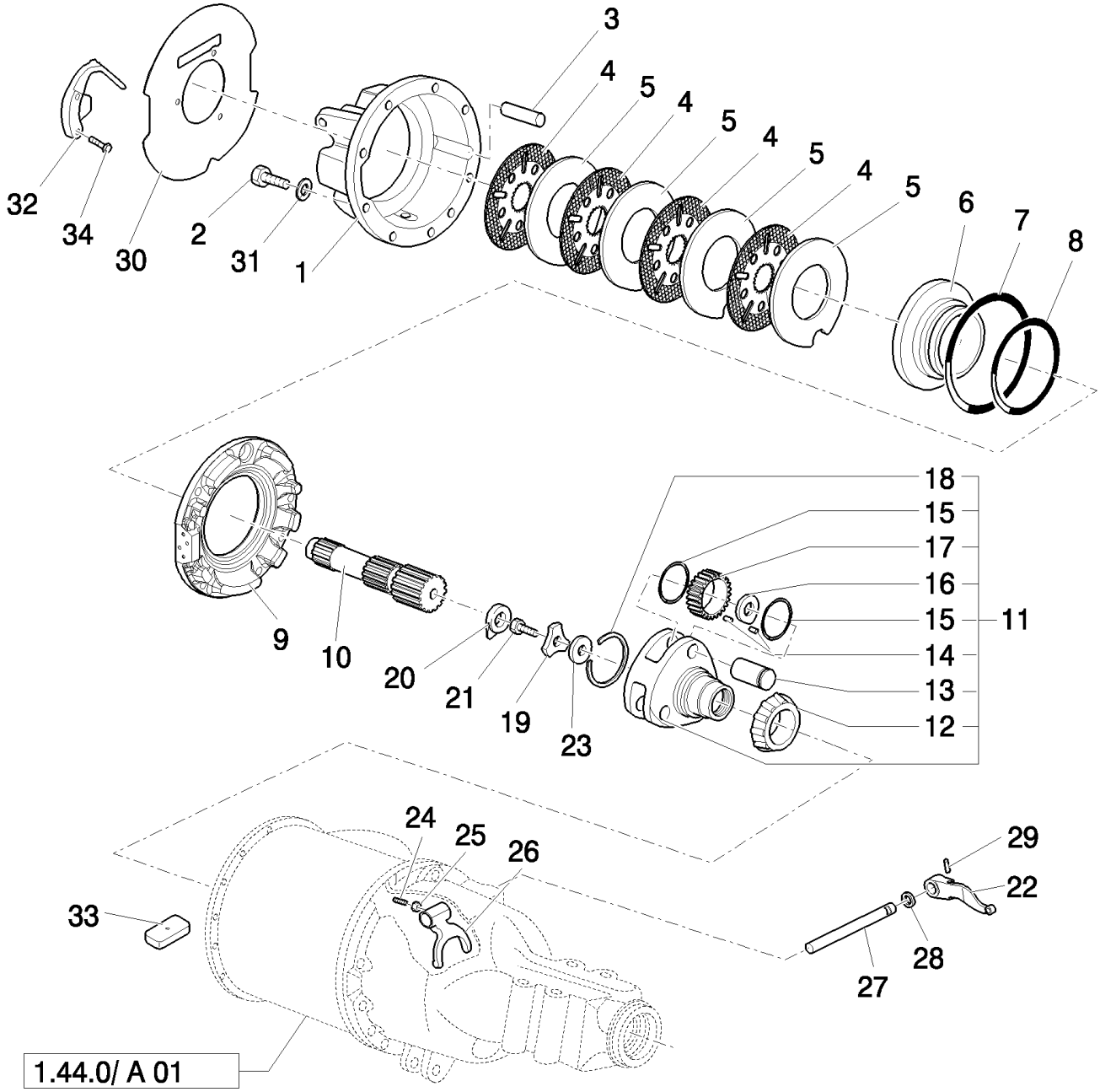

B110 TIER 3 BACKHOE LOADER (2/07-)

1.44.0/A(02) REAR AXLE (POWER-SHUTTLE) (SIDE SHIFT) - EU

Ref	Numero de Pieza	Ctd	Descripción
1	87304345	1	HOUSING, RH
1	87304344	1	HOUSING, LH
2	87313966	3	BOLT, Cap, HH, G8, 9/16"-12 x 5"
3	81802548	1	PIN,
4	87308018	8	BRAKE DISC,
5	87305713	8	BRAKE DISC,
6	87542345	2	PISTON,
7	87302761	2	O-RING, -253, 7.484" ID x .139" Thk,
8	87302760	2	O-RING, -253, 5.359" ID x .139" Thk,
9	87542348	1	HOUSING, RH
9	87542350	1	HOUSING, LH
10	81803334	2	SUN GEAR,
11	86584273	2	CARRIER,
12	81854753	2	BEARING, CONE,
13	81820849	6	SHAFT,
14	81823610	AR	BEARING ASSY,
15	81803273	12	WASHER, THRUST,
16	81803275	6	SPACER,
17	86584272	6	GEAR, PLANETARY,
18	81820846	2	RETAINER,
19	87326170	2	WASHER,
20	83949811	2	PLATE, LOCKING,
21	81846884	2	BOLT,
22	81802560	1	LEVER,
23	81803502	AR	SPACER, .054/.053" Thk, (1.372/1.346 mm)
23	81803503	AR	SPACER, .058/.057" Thk, (1.473/1.448 mm)
23	81803504	AR	SPACER, .062/.061" Thk, (1.575/1.549 mm)
23	81803505	AR	SPACER, .066/.065" Thk, (1.676/1.651 mm)
23	81803506	AR	SPACER, .070/.069" Thk, (1.778/1.753 mm)
23	81803507	AR	SPACER, .074/.073" Thk, (1.880/1.854 mm)
23	81803508	AR	SPACER, .078/.077" Thk , (1.981/1.956 mm)
23	81803509	AR	SPACER, .082/.081" Thk, (2.083/2.057 mm)
23	81803510	AR	SPACER, .086/.085" Thk, (2.184/2.159 mm)
23	81803511	AR	SPACER, .090/.089" Thk, (2.286/2.261 mm)
23	81803491	AR	SPACER, .050/.049" Thk, (1.270/1.245 mm)
24	81804978	1	SCREW,
25	80087308	1	NUT,
26	81803336	1	FORK,
27	82979988	1	GASKET,
28	81803345	1	SHAFT,
29	82958118	1	PIN, ROLL,
30	87334836	1	PLATE, RETAINING,
31	86632588	1	WASHER, 13/32" x 13/16" x .065", HDN,

B110 TIER 3 BACKHOE LOADER (2/07-)

1.44.0/A(02) REAR AXLE (POWER-SHUTTLE) (SIDE SHIFT) - EU

Ref	Numero de Pieza	Ctd	Descripción
32	87314211	1	BLOCK,
33	328955A1	2	
34	89706729	2	SCREW,

1.44.0/A(03) REAR AXLE (POWER-SHUTTLE) (SIDE SHIFT) - EU

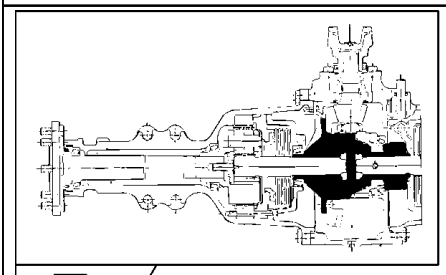

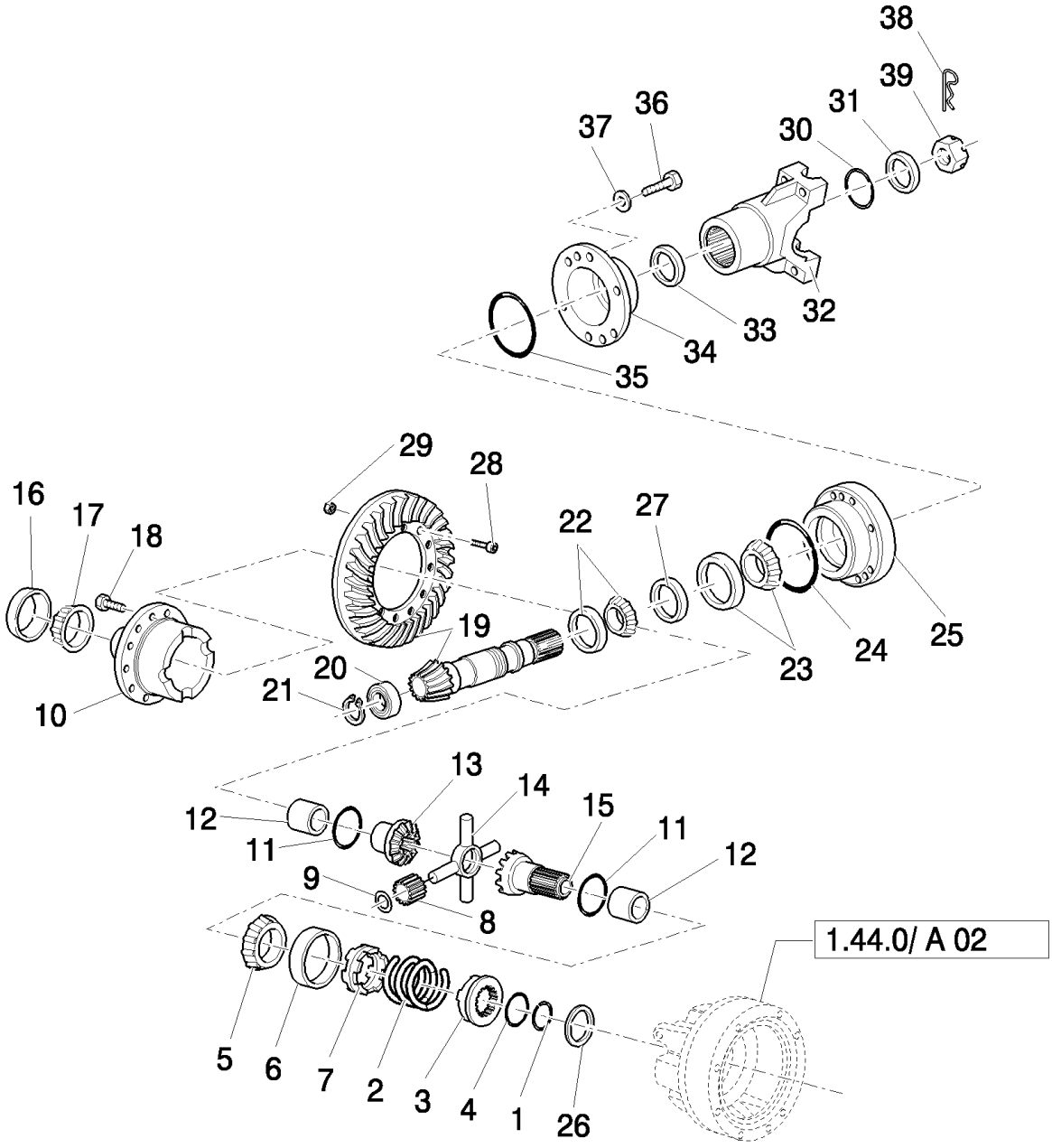

B110 TIER 3 BACKHOE LOADER (2/07-)

1.44.0/A(03) REAR AXLE (POWER-SHUTTLE) (SIDE SHIFT) - EU

Ref	Numero de Pieza	Ctd	Descripción
1	81803474	1	RING,
2	81800474	1	SPRING,
3	81812261	1	ADAPTER,
4	81800475	1	WASHER,
5	81803413	1	BEARING, CONE,
6	80510892	1	BEARING, CUP, RH
7	81800472	1	ADAPTER,
8	81728114	4	PINION,
9	83989915	4	WASHER, LOCK,
10	81816246	1	HOUSING,
11	81803424	2	WASHER, THRUST, RH
12	81800471	2	BUSHING, RH
13	81803445	1	GEAR,
14	81876885	1	SPIDER,
15	81803451	1	GEAR, RH
16	82959375	1	BEARING, CUP,
17	80510884	1	BEARING, CONE,
18	83994579	8	SCREW,
19	83958890	1	GEAR SET,
20	81824478	1	BEARING, ROLLER,
21	81803542	1	RING, SNAP,
22	82958961	1	BEARING, ROLLER, TAPERED,
23	81845711	1	BEARING, CONE,
24	81827354	1	O-RING, 4.625" ID x .139" Thk
25	81847146	1	RETAINER,
26	81803515	1	SHIM, 0,956/1,016
26	81803516	AR	SHIM, .046/.044" Thk, 0,965/1,016
26	81803517	AR	SHIM, .052/.050" Thk, (1.321/1.270 mm)
26	81803518	AR	SHIM, .058/.056" Thk, (1.473/1.422 mm)
26	81803519	AR	SHIM, .064/.062" Thk, (1.626/1.575 mm)
26	81803520	AR	SHIM, .070/.068" Thk, (1.778/1.727 mm)
26	81803521	AR	SHIM, .076/.074" Thk, (1.930/1.880 mm)
26	81803522	AR	SHIM, .082/.080" Thk, (2.083/2.032 mm)
27	81847148	AR	SPACER, 31,852/31,864
27	81847149	AR	SPACER, 31,902/31,915
27	81847150	AR	SPACER, 31,953/31,966
27	81847151	AR	SPACER, 32,004/32,017
27	81847152	AR	SPACER, 32,055/32,068
27	81847153	AR	SPACER, 32,106/32,118
27	81847154	AR	SPACER, 32,156/32,169
27	81847155	AR	SPACER, 32,207/32,220
27	81847156	AR	SPACER, 32,258/32,271
27	81847157	AR	SPACER, 32,309/32,322

B110 TIER 3 BACKHOE LOADER (2/07-)

1.44.0/A(03) REAR AXLE (POWER-SHUTTLE) (SIDE SHIFT) - EU

Ref	Numero de Pieza	Ctd	Descripción
27	81847158	AR	SPACER, 32,360/32,372
27	81847159	AR	SPACER, 32,410/32,423
27	81847160	AR	SPACER, 32,461/32,474
27	81847161	AR	SPACER, 32,512/32,525
27	81847162	AR	SPACER, 32,563/32,576
28	83957533	12	BOLT, HH, G8, 1/2"-20 x 1-5/8"
29	83417169	12	NUT, LOCK, 1/2"-20, GA,
30	81845714	1	SEAL,
31	81834042	1	WASHER,
32	83949810	1	FLANGE,
33	81834073	1	GASKET,
34	83912246	1	RETAINER,
35	81845713	1	SEAL,
36	81821267	6	BOLT,
37	80280248	6	WASHER, LOCK,
38	83947107	1	PIN,
39	83949812	1	NUT,

1.44.0/B(01) REAR AXLE (POWER-SHUTTLE) (CENTER PIVOT) - NA

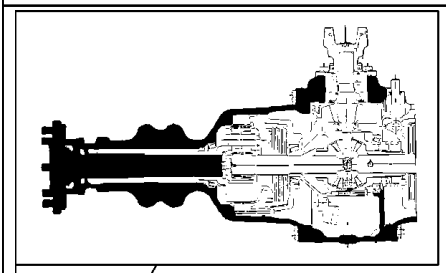

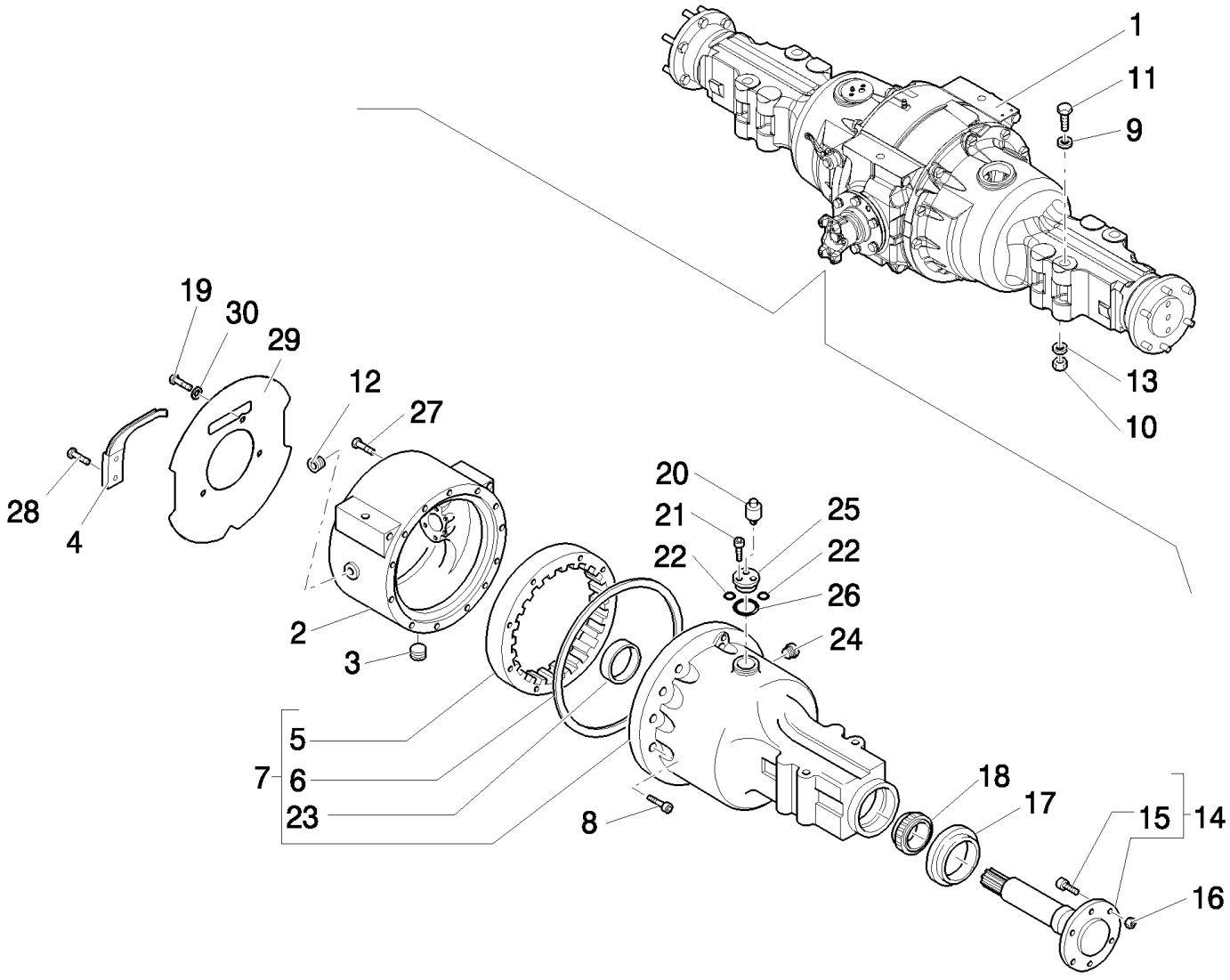

B110 TIER 3 BACKHOE LOADER (2/07-)

1.44.0/B(01) REAR AXLE (POWER-SHUTTLE) (CENTER PIVOT) - NA

Ref	Numero de Pieza	Ctd	Descripción
1	87542398	1	AXLE, 4,62
2	83955462	1	HOUSING,
3	83909107	1	PLUG,
4	87314211	4	BLOCK, 9/16"-12-18 x 7.88"
5	86536749	2	GEAR, PLANETARY,
6	83417133	2	O-RING,
7	86552793	1	HOUSING, AXLE, LH
7	86552794	1	HOUSING, AXLE, RH
8	86505999	25	BOLT, Hex, 5/8"-11 x 2", G5,
8	81809406	1	BOLT,
9	14497331	4	WASHER,
10	12575321	4	NUT, LOCK, M24 x 2, Cl 10,
11	15999434	4	SCREW, M24 x 2 x 220
12	80263136	1	PLUG, MAGNETIC,
13	11200679	4	WASHER, LOCK,
14	86511646	2	AXLE,
15	83955490	16	BOLT, 3/4"-16 x 2.32"
16	87348000	16	NUT,
17	81866390	2	GASKET,
18	81818397	2	BEARING ASSY,
19	87313966	2	BOLT,
20	81820047	2	SCREW, BLEED,
21	82895716	4	SCREW, 1/4-20X1,75
22	83925620	4	O-RING, 90 Duro, .375" ID x .103" Thk
23	82959373	2	CUP,
24	81812912	1	PLUG, 1/2"-11 x 1/2"
25	81878514	2	MANIFOLD,
26	81845041	2	O-RING,
27	86597537	2	BOLT,
28	89706729	2	SCREW,
29	87334836	1	PLATE, RETAINING,
30	86632588	3	WASHER, 13/32" x 13/16" x .065", HDN,

1.44.0/B(02) REAR AXLE (POWER-SHUTTLE) (CENTER PIVOT) - NA

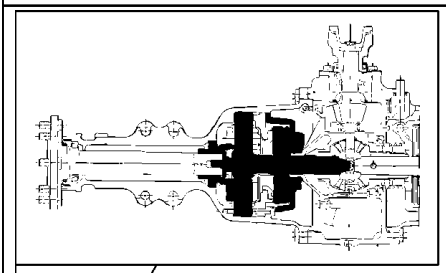

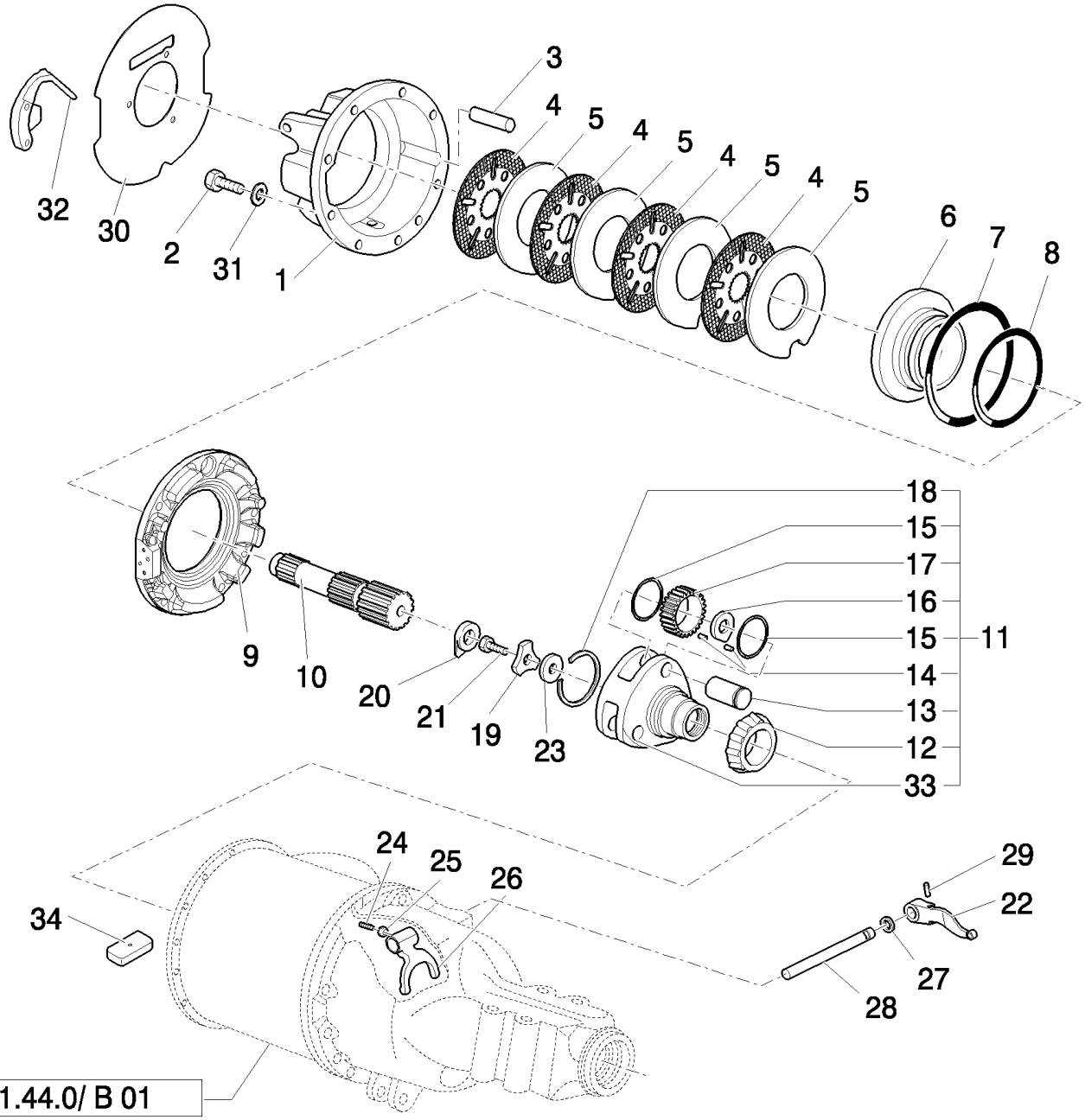

1.44.0/ B 01

B110 TIER 3 BACKHOE LOADER (2/07-)

1.44.0/B(02) REAR AXLE (POWER-SHUTTLE) (CENTER PIVOT) - NA

Ref	Numero de Pieza	Ctd	Descripción
1	87304345	1	HOUSING, RH
1	87304344	1	HOUSING, LH
2	87313966	3	BOLT, Cap, HH, G8, 9/16"-12 x 5"
3	81802548	4	PIN, G8, 9/16"-18
4	87308018	8	BRAKE DISC,
5	87305713	8	BRAKE DISC,
6	87542345	2	PISTON,
7	87302760	2	O-RING, -253, 5.359" ID x .139" Thk,
8	87302761	2	O-RING, -253, 7.484" ID x .139" Thk,
9	87542348	1	HOUSING, RH
9	87542350	1	HOUSING, LH
10	81803334	2	SUN GEAR,
11	86584273	2	CARRIER,
12	81854753	2	BEARING, CONE,
13	81820849	6	SHAFT,
14	81823610	AR	BEARING ASSY,
15	81803273	12	WASHER, THRUST,
16	81803275	6	SPACER,
17	86584272	6	GEAR, PLANETARY,
18	81820846	2	RETAINER,
19	87326170	2	WASHER,
20	83949811	2	PLATE, LOCKING,
21	81846884	2	BOLT, HH, 7/8"-14 x 1-5/8"
22	81802560	1	LEVER,
23	81803491	1	SPACER, .050/.049" Thk,
23	81803502	AR	SPACER, .054/.053" Thk, (1.372/1.346 mm)
23	81803503	AR	SPACER, .058/.057" Thk, (1.473/1.448 mm)
23	81803504	AR	SPACER, .062/.061" Thk, (1.575/1.549 mm)
23	81803505	AR	SPACER, .066/.065" Thk, (1.676/1.651 mm)
23	81803506	AR	SPACER, .070/.069" Thk, (1.778/1.753 mm)
23	81803507	AR	SPACER, .074/.073" Thk, (1.880/1.854 mm)
23	81803508	AR	SPACER, .078/.077" Thk , (1.981/1.956 mm)
23	81803509	AR	SPACER, .082/.081" Thk, (2.083/2.057 mm)
23	81803510	AR	SPACER, .086/.085" Thk, (2.184/2.159 mm)
23	81803511	AR	SPACER, .090/.089" Thk, (2.286/2.261 mm)
24	81804978	1	SCREW, Set, 3/8"-24 x 7/16"
25	80087308	1	NUT,
26	81803336	1	FORK,
27	82979988	1	GASKET,
28	81803345	1	SHAFT,
29	82958118	1	PIN, ROLL,
30	87334836	1	PLATE, RETAINING,
31	86632588	1	WASHER, 13/32" x 13/16" x .065", HDN,

B110 TIER 3 BACKHOE LOADER (2/07-)

1.44.0/B(02) REAR AXLE (POWER-SHUTTLE) (CENTER PIVOT) - NA

Ref	Numero de Pieza	Ctd	Descripción
32	87314211	1	BLOCK,
33	86576091	1	CARRIER,
34	328955A1	2	

1.44.0/B(03) REAR AXLE (POWER-SHUTTLE) (CENTER PIVOT) - NA

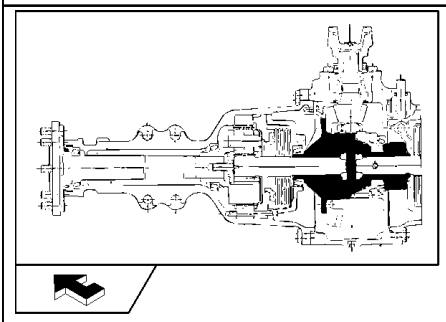

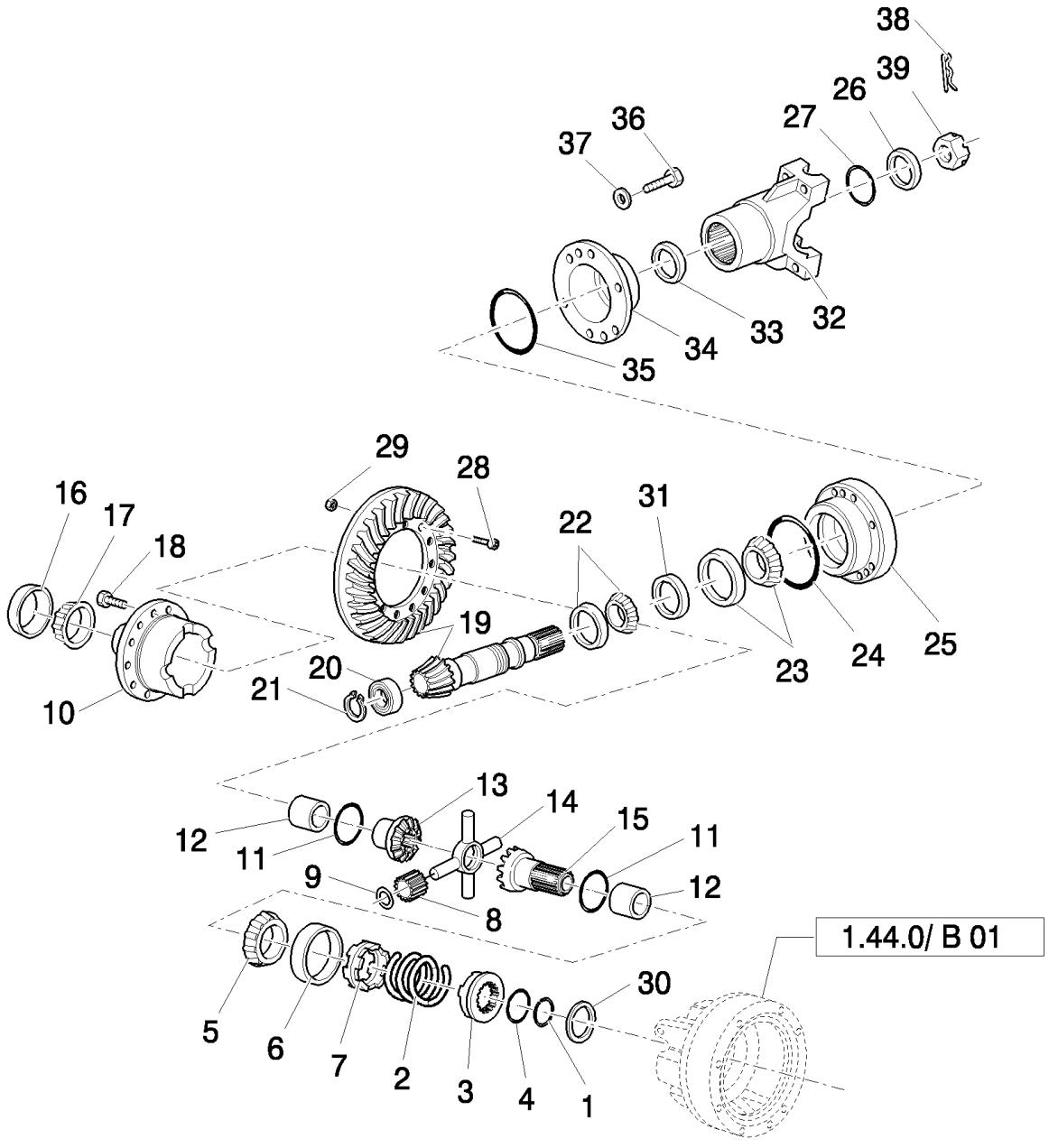

B110 TIER 3 BACKHOE LOADER (2/07-)

1.44.0/B(03) REAR AXLE (POWER-SHUTTLE) (CENTER PIVOT) - NA

Ref	Numero de Pieza	Ctd	Descripción
1	81803474	1	RING,
2	81800474	1	SPRING, Differential Lock Coupler
3	81812261	1	ADAPTER,
4	81800475	1	WASHER, Differential Lock, Coupler Stop
5	81803413	1	BEARING, CONE,
6	80510892	1	BEARING, CUP, RH
7	81800472	1	ADAPTER, Differential Lock Gear Case
8	81728114	4	PINION,
9	83989915	4	WASHER, LOCK,
10	81816246	1	HOUSING,
11	81803424	2	WASHER, THRUST, RH
12	81800471	2	BUSHING, RH
13	81803445	1	GEAR,
14	81876885	1	SPIDER,
15	81803451	1	GEAR, RH
16	82959375	1	BEARING, CUP,
17	80510884	1	BEARING, CONE,
18	83994579	8	SCREW, Cap, HH, G8, Self-Locking, 1/2"-13 x 2-7/8"
19	83937179	1	GEAR SET, 4,62
20	81824478	1	BEARING, ROLLER,
21	81803542	1	RING, SNAP,
22	82958961	1	BEARING, ROLLER, TAPERED,
23	81845711	1	BEARING, CONE,
24	81827354	1	O-RING, 4.625" ID x .139" Thk
25	81847146	1	RETAINER,
26	81834042	1	WASHER,
27	81845714	1	SEAL,
28	83957533	12	BOLT, HH, G8, 1/2"-20 x 1-5/8"
29	83417169	12	NUT, LOCK, 1/2"-20, GA, Lock, G2, 1/2"-20
30	81803515	AR	SHIM, 0,965/1,016
30	81803516	AR	SHIM, .046/.044" Thk, (1.118-1.168 mm)
30	81803517	AR	SHIM, .052/.050" Thk, (1.321/1.270 mm)
30	81803519	AR	SHIM, .064/.062" Thk, (1.626/1.575 mm)
30	81803520	AR	SHIM, .070/.068" Thk, (1.778/1.727 mm)
30	81803521	AR	SHIM, .076/.074" Thk, (1.930/1.880 mm)
30	81803522	AR	SHIM, .082/.080" Thk, (2.083/2.032 mm)
31	81847148	AR	SPACER, 31,852/31,864
31	81847149	AR	SPACER, 31,902/31,915
31	81847150	AR	SPACER, 31,953/31,966
31	81847151	AR	SPACER, 32,004/32,017
31	81847152	AR	SPACER, 32,055/32,068
31	81847153	AR	SPACER, 32,106/32,118
31	81847154	AR	SPACER, 32,156/32,169

B110 TIER 3 BACKHOE LOADER (2/07-)

1.44.0/B(03) REAR AXLE (POWER-SHUTTLE) (CENTER PIVOT) - NA

Ref	Numero de Pieza	Ctd	Descripción
31	81847155	AR	SPACER, 32,207/32,220
31	81847156	AR	SPACER, 32,258/32,271
31	81847157	AR	SPACER, 32,309/32,322
31	81847158	AR	SPACER, 32,360/32,372
31	81847159	AR	SPACER, 32,410/32,423
31	81847160	AR	SPACER, 32,461/32,474
31	81847161	AR	SPACER, 32,512/32,525
31	81847162	AR	SPACER, 32,563/32,576
32	83949810	1	FLANGE,
33	81834073	1	GASKET,
34	83912246	1	RETAINER,
35	81845713	1	SEAL,
36	81821267	6	BOLT, 9/16-12X1,50
37	80280248	6	WASHER, LOCK,
38	83947107	1	PIN, Cotter, 3/16" x 2.125"
39	83949812	1	NUT, Slotted, 1-1/4"-18

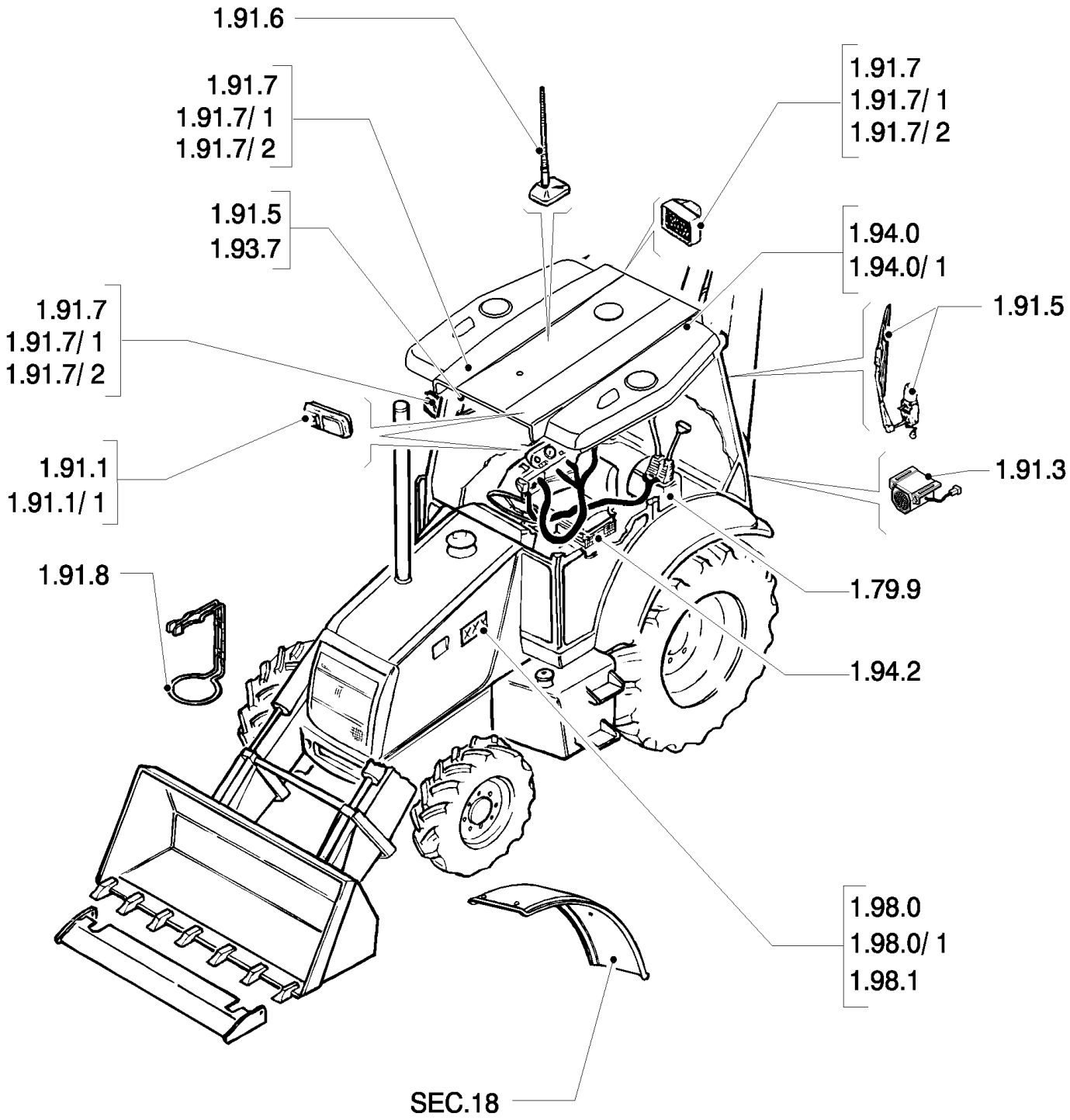
1.91.6
1.91.7
1.91.7/ 1
1.91.7/ 2
1.91.5
1.93.7
1.91.7
1.91.7/ 1
1.91.7/ 2
1.91.1
1.91.1/ 1
1.91.8
1.91.7
1.91.7/ 1
1.91.7/ 2
1.94.0
1.94.0/ 1
1.91.5
1.91.3
1.79.9
1.94.2
1.98.0
1.98.0/ 1
1.98.1
SEC.18

B110 TIER 3 BACKHOE LOADER (2/07-)

1.62.0(01) SEC. 10 - BODY, HOOD & DRIVER'S POST

Ref	Numero de Pieza	Ctd	Descripción

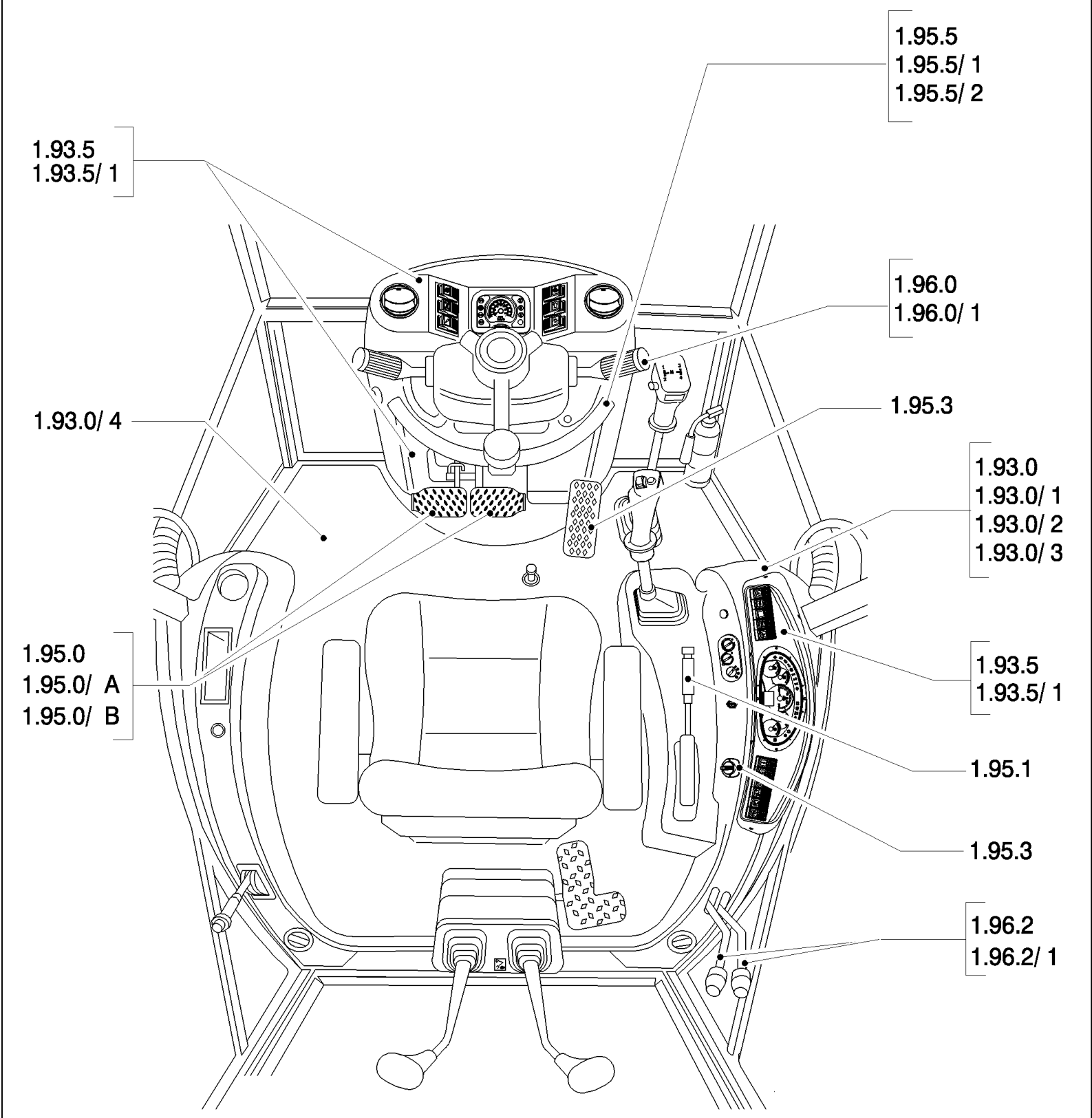
1.95.5
1.95.5/ 1
1.95.5/ 2
1.93.5
1.93.5/ 1
1.96.0
1.96.0/ 1
1.93.0/ 4
1.95.3
1.93.0
1.93.0/ 1
1.93.0/ 2
1.93.0/ 3
1.95.0
1.95.0/ A
1.95.0/ B
1.93.5
1.93.5/ 1
1.95.1
1.95.3
1.96.2
1.96.2/ 1

B110 TIER 3 BACKHOE LOADER (2/07-)

1.62.0(02) SEC. 10 - BODY, HOOD & DRIVER'S POST

Ref	Numero de Pieza	Ctd	Descripción

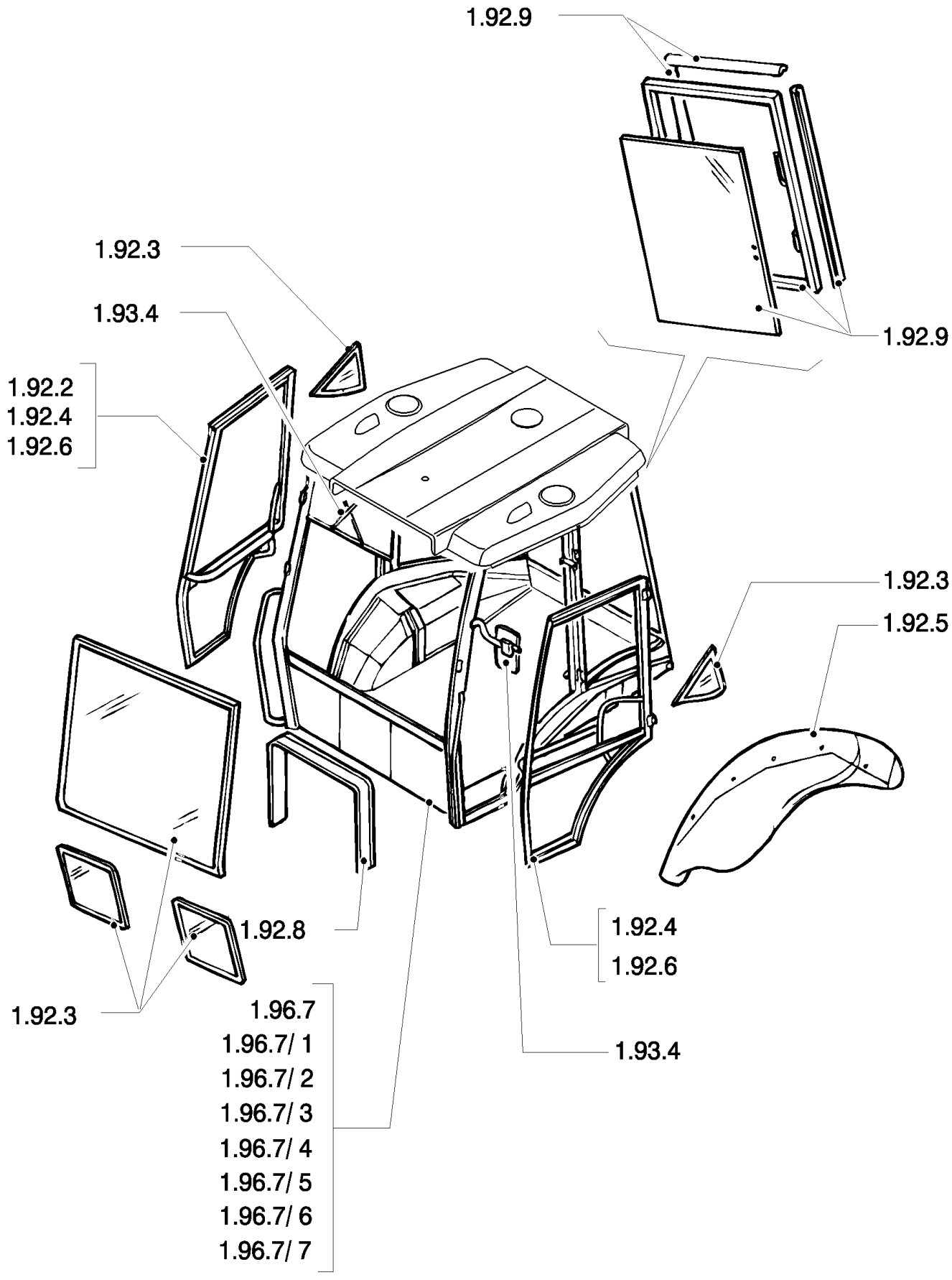
1.92.9
1.92.3
1.93.4
1.92.2
1.92.4
1.92.6
1.92.9
1.92.3
1.92.5
1.92.8
1.92.4
1.92.6
1.92.3
1.96.7
1.96.7/ 1
1.96.7/ 2
1.96.7/ 3
1.96.7/ 4
1.96.7/ 5
1.96.7/ 6
1.96.7/ 7
1.93.4

B110 TIER 3 BACKHOE LOADER (2/07-)

1.62.0(03) SEC. 10 - BODY, HOOD & DRIVER'S POST

Ref	Numero de Pieza	Ctd	Descripción

1.63.0(01) POWER STEERING HYDRAULIC SYSTEM

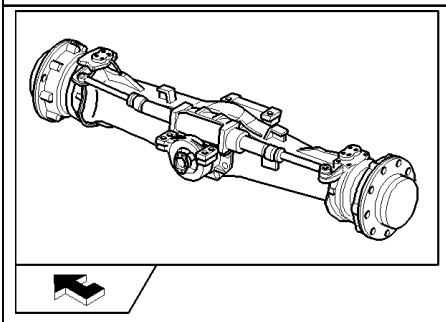

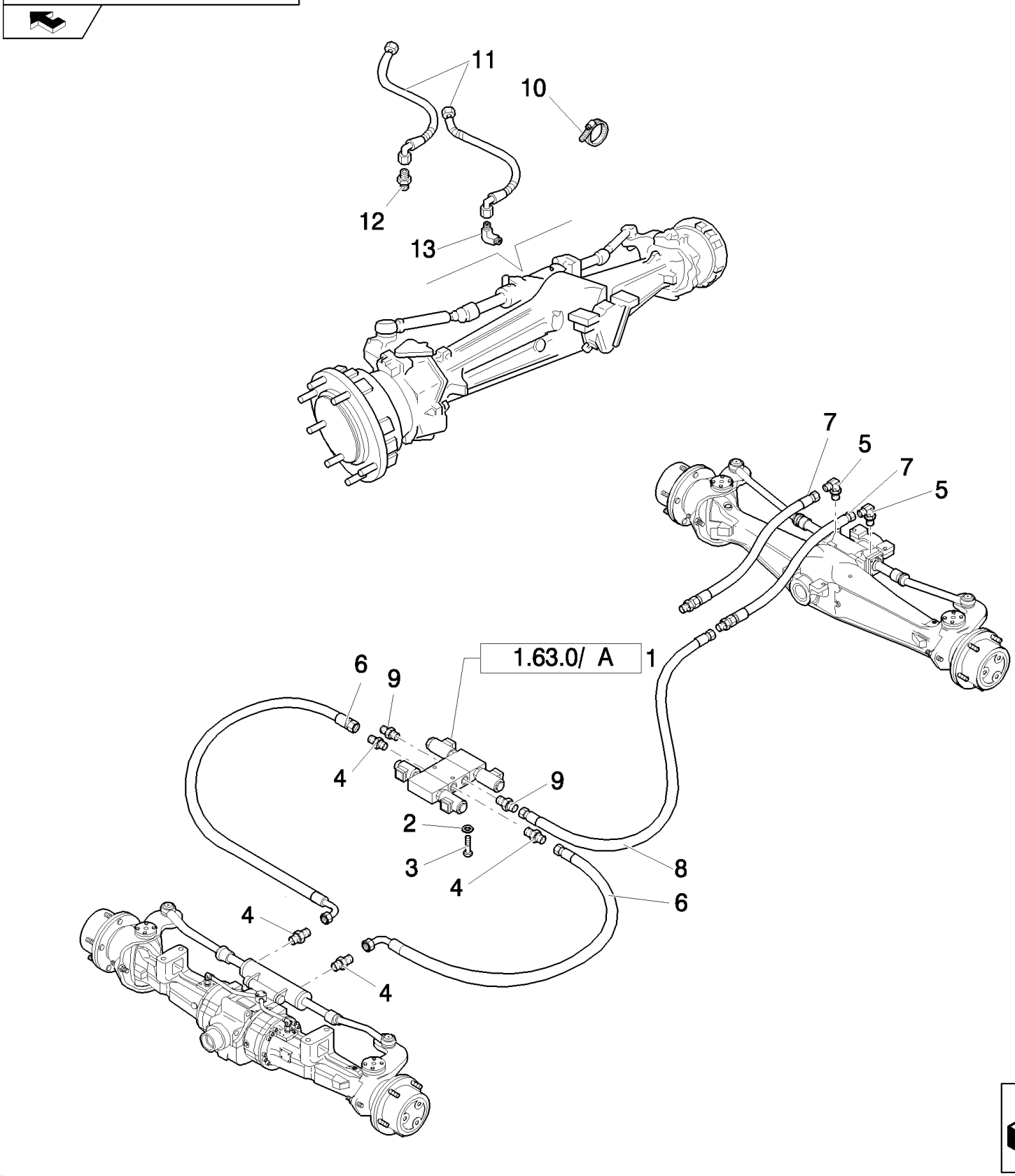

B110 TIER 3 BACKHOE LOADER (2/07-)

1.63.0(01) POWER STEERING HYDRAULIC SYSTEM

Ref	Numero de Pieza	Ctd	Descripción
1	85805232	1	VALVE, HYDRAULIC, , See Page 1.63.0/A, Only for B115 (EU) - B115 (NA)
2	11193879	2	WASHER, SPRING, Belleville, M8.4, , Only for B115 (EU) - B115 (NA)
3	16043421	2	SCREW, Hex, M8 x 20, 8.8, , Only for B115 (EU) - B115 (NA)
4	83963371	4	CONNECTOR, HYD.,
5	85805318	2	ELBOW, 90º, 9/16"-18, 37º x 9/16"-18, O-Ring, , Only for B115 (EU) - B115 (NA)
6	85815615	2	HOSE, FLEXIBLE, , Only for B115 (EU) - B115 (NA)
7	85813377	2	HOSE, FLEXIBLE, , Only for B115 (EU) - B115 (NA)
8	85812202	1	HOSE, FLEXIBLE, , Only for B115 (EU) - B115 (NA)
9	85815614	2	CONNECTOR, HYD., 11/16"-16 ORS x 9/16"-18, O-Ring, , Only for B115 (EU) - B115 (NA)
10	85803332	1	STRAP, CABLE, M4.8 x 180, , Only for B110 (EU) - B115 (NA)
11	85812212	2	HOSE, FLEXIBLE, 1050mm lg, , Only for B110 (EU) - B110 (NA)
12	83985067	1	CONNECTOR, HYD., , Only for B110 (EU) - B110 (NA)
13	83983763	1	CONNECTOR, HYD., , Only for B110 (EU) - B110 (NA)

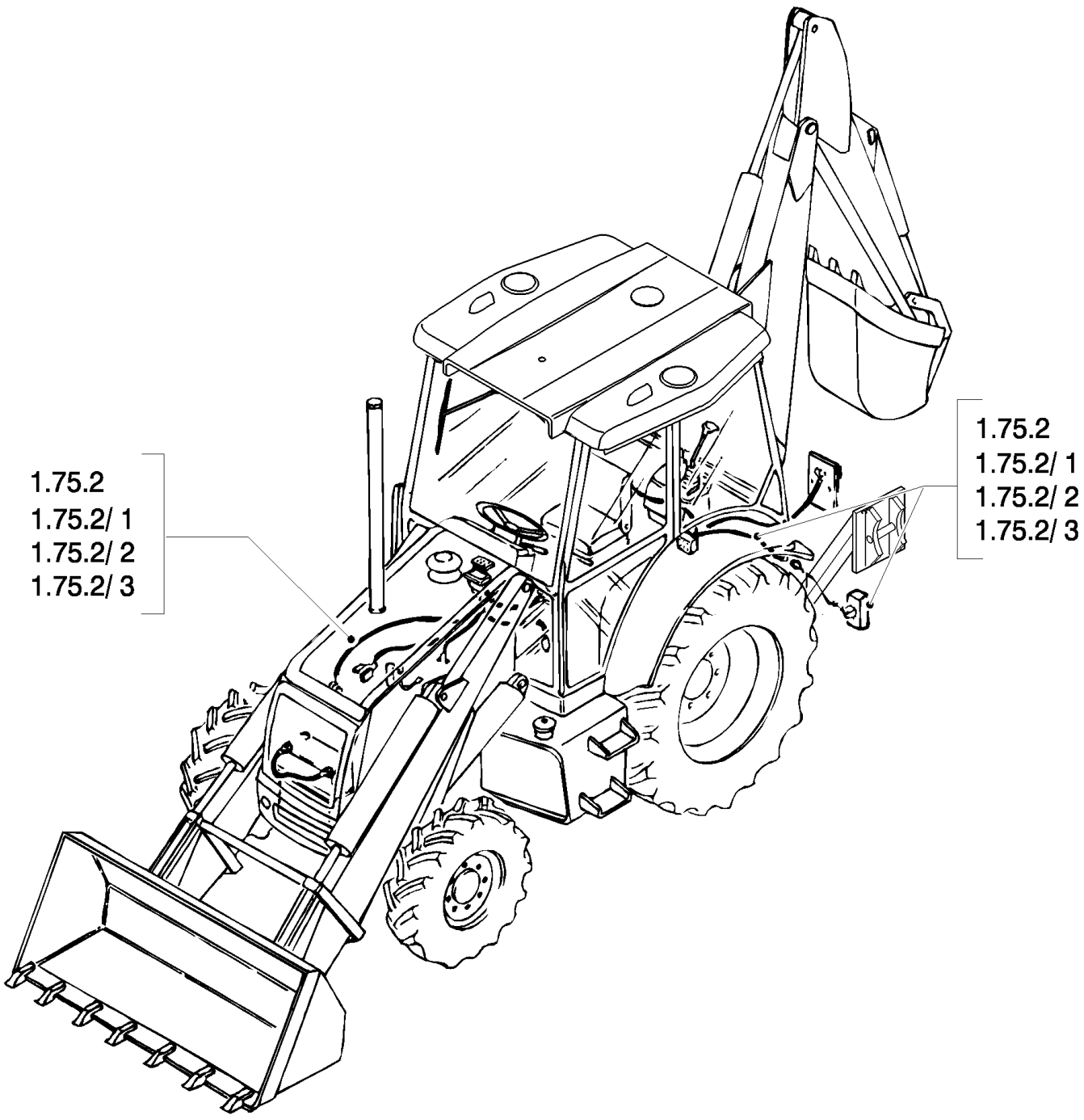
1.75.2
1.75.2/ 1
1.75.2/ 2
1.75.2/ 3
1.75.2
1.75.2/ 1
1.75.2/ 2
1.75.2/ 3

B110 TIER 3 BACKHOE LOADER (2/07-)

1.75.1 SEC. 06 - ELECTRICAL

Ref	Numero de Pieza	Ctd	Descripción

1.75.2(01) CHASSIS HARNESS & GROUND WIRE (POWER SHUTTLE) - NA

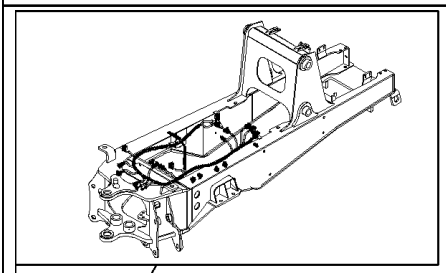

Center Pivot

B110 TIER 3 BACKHOE LOADER (2/07-)

1.75.2(01) CHASSIS HARNESS & GROUND WIRE (POWER SHUTTLE) - NA

Ref	Numero de Pieza	Ctd	Descripción
1	87564242	1	HARNESS,
2	85805686	4	CLIP, HOSE,
3	85805685	2	CLIP, HOSE,
4	14560187	55	STRAP, CABLE, 178mm lg, L=203.2 mm
5	85803884	1	Strap, Ground,
6	16043021	1	BOLT, Hex, M8 x 12, 8.8, Full Thd,
7	11193879	1	WASHER, SPRING, Belleville, M8.4,
8	14048211	1	NUT, LOCK, M8 x 1.25, Cl 8,
9	12647121	1	WASHER, M8 x 20 x 3,

B110 TIER 3 BACKHOE LOADER (2/07-)

1.75.2(02) BATTERY LOCK-OUT SWITCH & GROUND WIRE (POWER SHUTTLE)

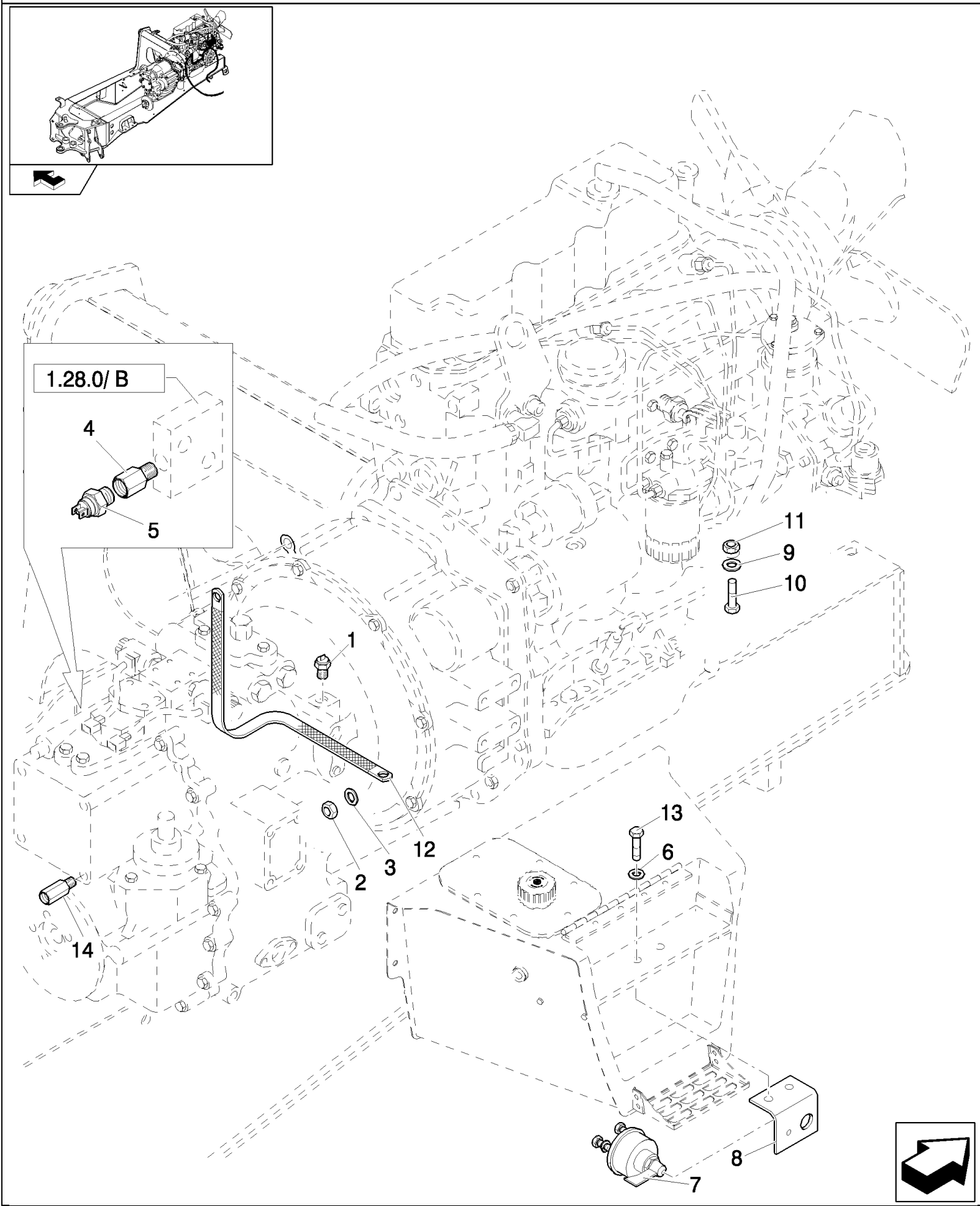

B110 TIER 3 BACKHOE LOADER (2/07-)

1.75.2(02) BATTERY LOCK-OUT SWITCH & GROUND WIRE (POWER SHUTTLE)

Ref	Numero de Pieza	Ctd	Descripción
1	47048895	2	SENSOR,
2	16104111	1	NUT, LOCK, M8 x 1.25, Cl 8,
3	12647121	1	WASHER, M8 x 20 x 3,
4	85820156	1	ADAPTER,
5	85817672	1	SWITCH, PRESSURE, Trans. Oil Pressure
6	11197879	2	WASHER, SPRING, Belleville, M8.4,
7	87409316	1	SWITCH,
8	87613641	1	SUPPORT,
9	47048993	1	WASHER,
10	47049010	1	SCREW, M10x20
11	47049031	1	NUT, M10
12	87427925	1	CABLE,
13	16043421	2	SCREW, Hex, M8 x 20, 8.8,
14	85826964	1	

B110 TIER 3 BACKHOE LOADER (2/07-)

1.75.2(03) ENGINE HARNESS (POWER SHUTTLE)

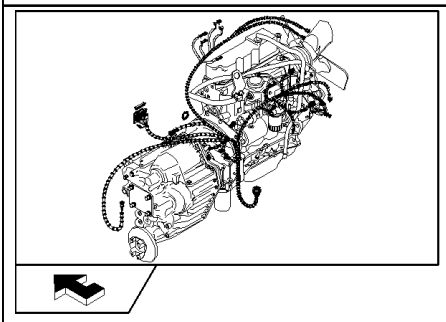

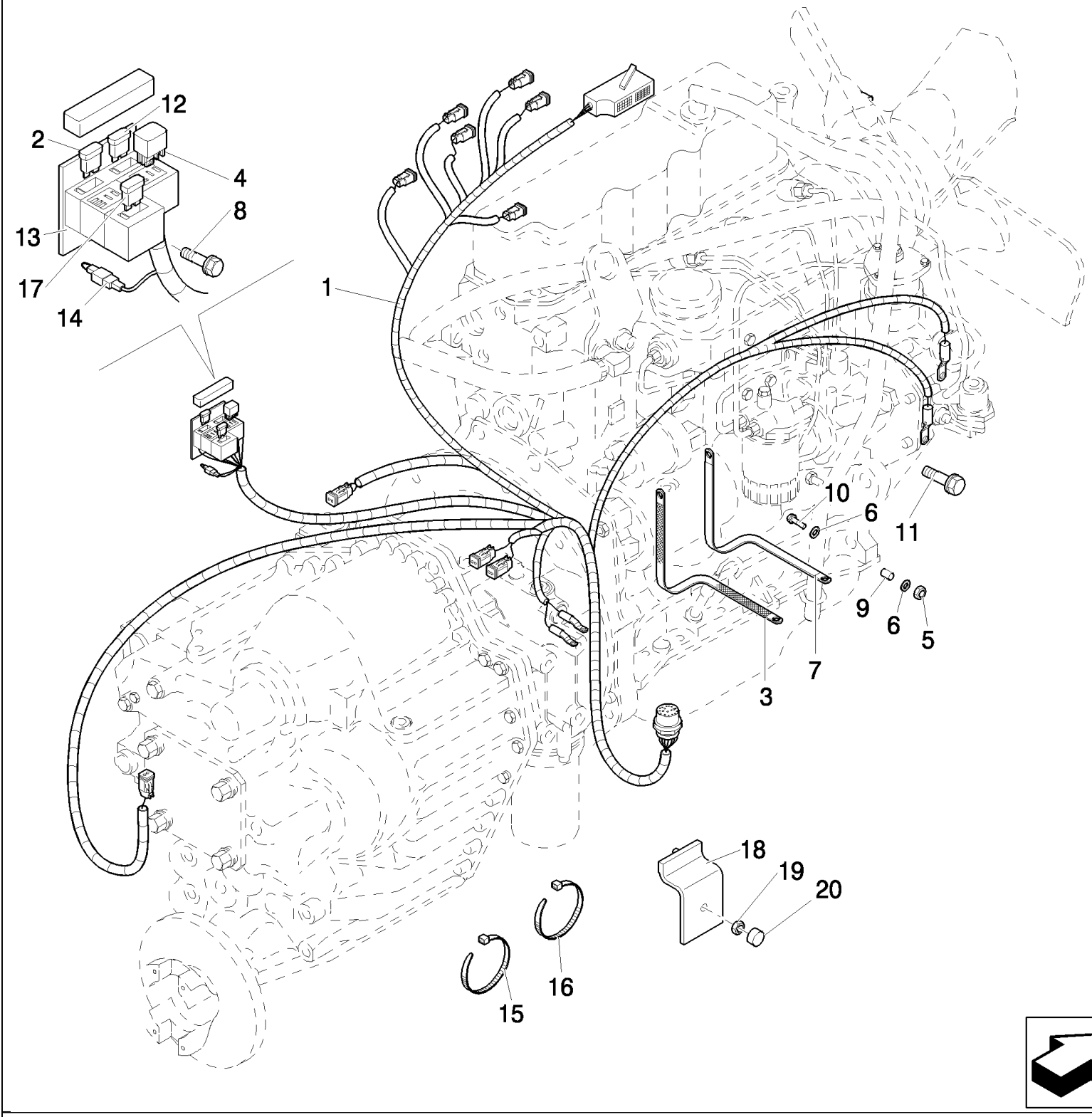

B110 TIER 3 BACKHOE LOADER (2/07-)

1.75.2(03) ENGINE HARNESS (POWER SHUTTLE)

Ref	Numero de Pieza	Ctd	Descripción
1	87564241	1	HARNESS, Includes 87431470 3 amp diode
2	11055790	1	FUSE, 80A
3	87407206	1	Strap, Ground,
4	87640749	1	12V-70A
5	14048211	1	NUT, LOCK, M8 x 1.25, Cl 8,
6	12638511	2	WASHER, M8 x 15 x 1.5, 8x15
7	87410268	1	Strap, Ground,
8	16043824	1	BOLT, Hex, M8 x 30, 8.8, Full Thd,
9	87415208	1	SPACER,
10	16044421	2	BOLT, Hex, M8 x 60, 8.8,
11	47049186	1	BOLT, Hex, M10 x 30, 8.8,
12	11056090	2	FUSE, 30A
13	87640748	1	SUPPORT,
14	87640750	1	CONNECTOR, HYD.,
15	87567355	4	CLAMP,
16	87567356	4	CLAMP,
17	11054790	1	FUSE, 5A
18	87562089	1	COVER,
19	11701711	1	NUT, M10, Cl 8,
20	87565124	1	NUT,

B110 TIER 3 BACKHOE LOADER (2/07-)

1.75.2/1(01) CHASSIS HARNESS & GROUND WIRE (POWER SHUTTLE)

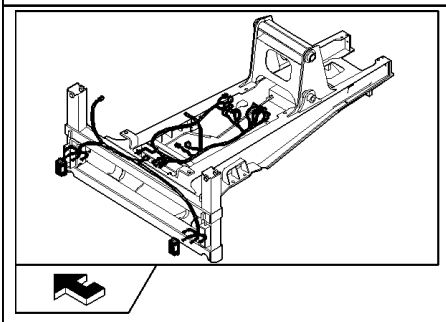

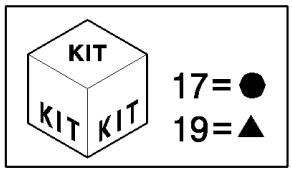

Side Shift

B110 TIER 3 BACKHOE LOADER (2/07-)

1.75.2/1(01) CHASSIS HARNESS & GROUND WIRE (POWER SHUTTLE)

Ref	Numero de Pieza	Ctd	Descripción
1	87564242	1	HARNESS,
2	85805686	4	CLIP, HOSE,
3	85805685	2	CLIP, HOSE,
4	14560187	45	STRAP, CABLE, 178mm lg, L=203.2 mm
5	85803884	1	Strap, Ground,
6	16043021	1	BOLT, Hex, M8 x 12, 8.8, Full Thd,
7	11193879	1	WASHER, SPRING, Belleville, M8.4,
8	14048211	1	NUT, LOCK, M8 x 1.25, Cl 8,
9	12647121	1	WASHER, M8 x 20 x 3,
10	87303310	2	HARNESS, WIRE,
11	85803854	2	LAMP, TAIL,
12	10902321	4	BOLT, Hex, M6 x 18, 8.8, Full Thd,
13	87302820	2	BRACKET,
14	10441190	2	CLAMP,
15	12574211	4	NUT, LOCK, M6 x 1, Cl 8,
16	87303306	2	CLIP,
17	87303309	1	LAMP, TAIL,
18	15980321	2	BOLT, Hex, M16 x 1.5 x 22, 8.8, Full Thd, M16x1.5x25
19	87318551	1	LAMP, TAIL,
20	87302756	2	SUPPORT,
21	11191579	2	WASHER, SPRING, Belleville, M17,

Side Shift

1.75.2/2(01) CHASSIS HARNESS & GROUND WIRE (POWER SHIFT)

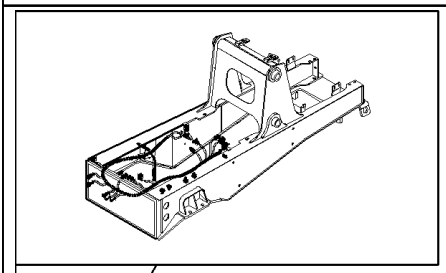

B110 TIER 3 BACKHOE LOADER (2/07-)

1.75.2/2(01) CHASSIS HARNESS & GROUND WIRE (POWER SHIFT)

Ref	Numero de Pieza	Ctd	Descripción
1	87565010	1	HARNESS,
2	85805686	4	CLIP, HOSE,
3	85805685	2	CLIP, HOSE,
4	14560187	45	STRAP, CABLE, 178mm lg, L=203.2 mm
5	85803884	1	Strap, Ground,
6	16043021	1	BOLT, Hex, M8 x 12, 8.8, Full Thd,
7	11193879	1	WASHER, SPRING, Belleville, M8.4,
8	14048211	1	NUT, LOCK, M8 x 1.25, Cl 8,
9	12647121	1	WASHER, M8 x 20 x 3,

B110 TIER 3 BACKHOE LOADER (2/07-)

1.75.2/2(02) BATTERY LOCK-OUT SWITCH & GROUND WIRE (POWER SHIFT)

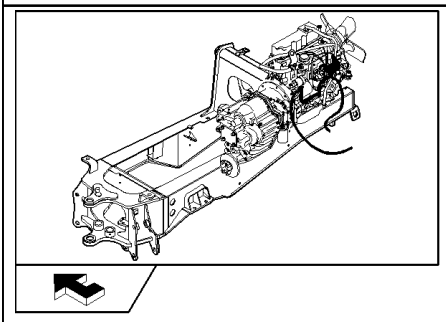

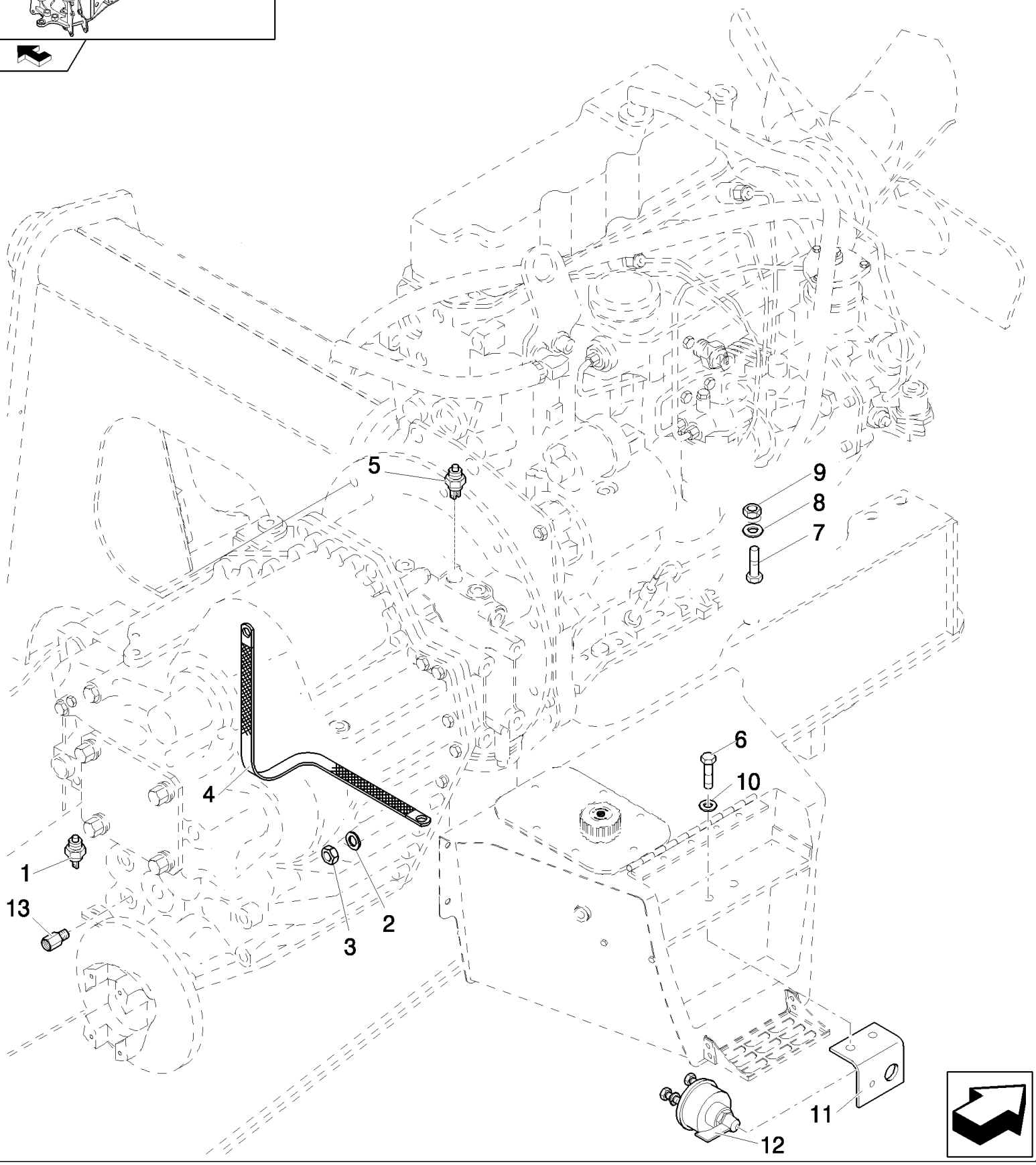

B110 TIER 3 BACKHOE LOADER (2/07-)

1.75.2/2(02) BATTERY LOCK-OUT SWITCH & GROUND WIRE (POWER SHIFT)

Ref	Numero de Pieza	Ctd	Descripción
1	47048895	1	SENSOR,
2	12647121	1	WASHER, M8 x 20 x 3,
3	16104111	1	NUT, LOCK, M8 x 1.25, Cl 8,
4	87427925	1	CABLE,
5	85818894	1	SWITCH, PRESSURE,
6	16043421	2	SCREW, Hex, M8 x 20, 8.8,
7	47049010	1	SCREW, M10x20
8	47048993	1	WASHER,
9	47049031	1	NUT, M10
10	11197879	2	WASHER, SPRING, Belleville, M8.4,
11	87613641	1	SUPPORT,
12	87409316	1	SWITCH,
13	47050660	1	ELBOW,

B110 TIER 3 BACKHOE LOADER (2/07-)

1.75.2/2(03) ENGINE HARNESS (POWER SHIFT)

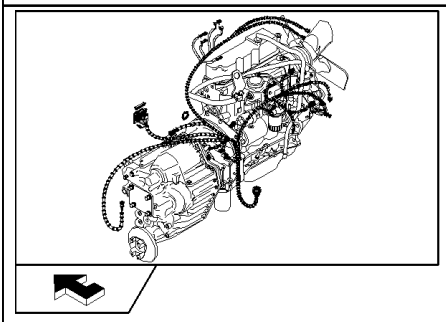

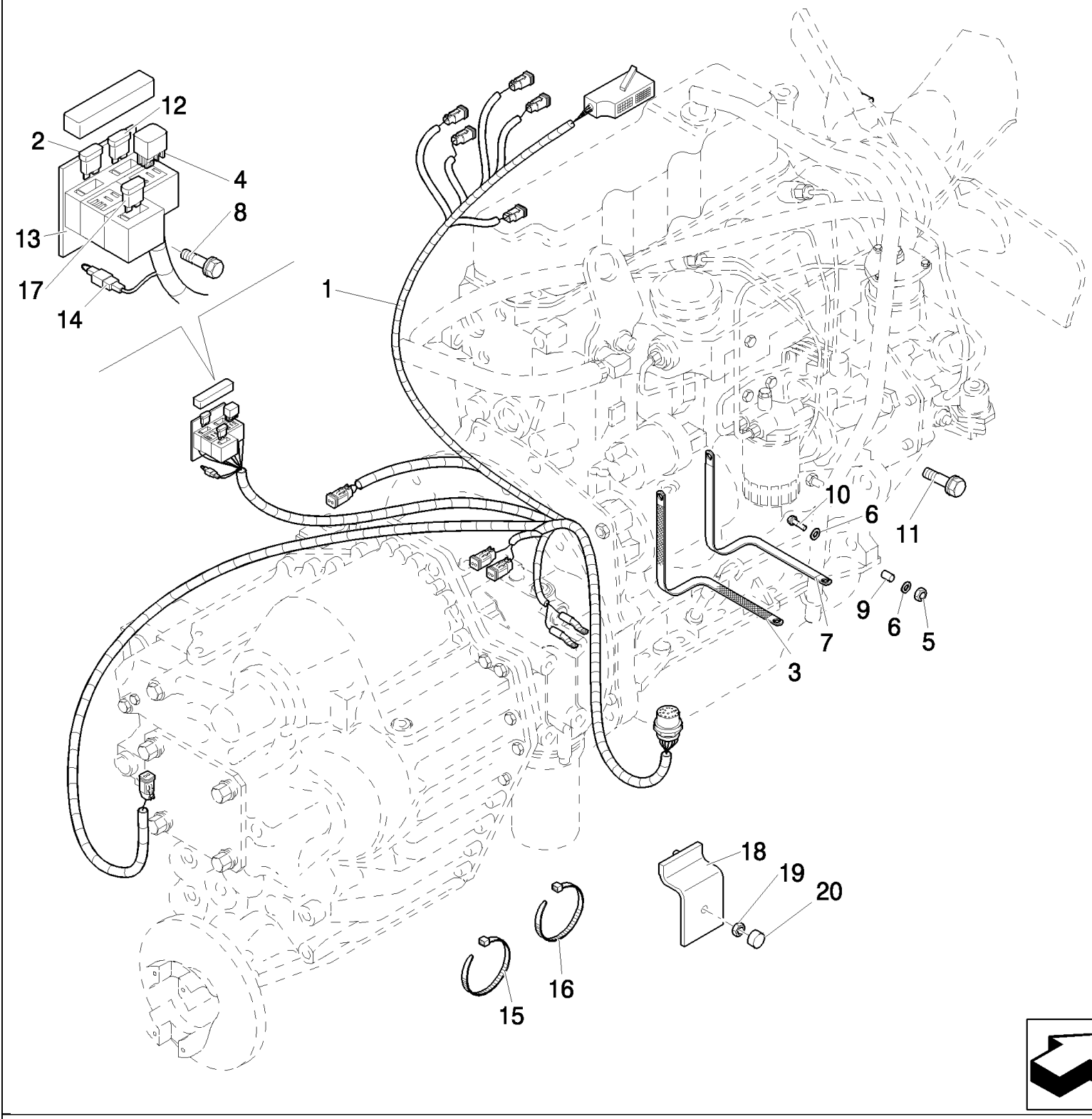

B110 TIER 3 BACKHOE LOADER (2/07-)

1.75.2/2(03) ENGINE HARNESS (POWER SHIFT)

Ref	Numero de Pieza	Ctd	Descripción
1	87565008	1	HARNESS,
2	11055790	1	FUSE, 80A
3	87407206	1	Strap, Ground,
4	87640749	1	12V-70A
5	14048211	1	NUT, LOCK, M8 x 1.25, Cl 8,
6	12638511	2	WASHER, M8 x 15 x 1.5, 8x15
7	87410268	1	Strap, Ground,
8	16043824	1	BOLT, Hex, M8 x 30, 8.8, Full Thd,
9	87415208	1	SPACER,
10	16044221	2	BOLT, Hex, M8 x 50, 8.8,
11	47049186	1	BOLT, Hex, M10 x 30, 8.8,
12	11056090	2	FUSE, 30A
13	87640748	1	SUPPORT,
14	87640750	1	CONNECTOR, HYD.,
15	87567355	4	CLAMP,
16	87567356	4	CLAMP,
17	11054790	1	FUSE, 5A
18	87562089	1	COVER,
19	11701711	1	NUT, M10, Cl 8,
20	87565124	1	NUT,

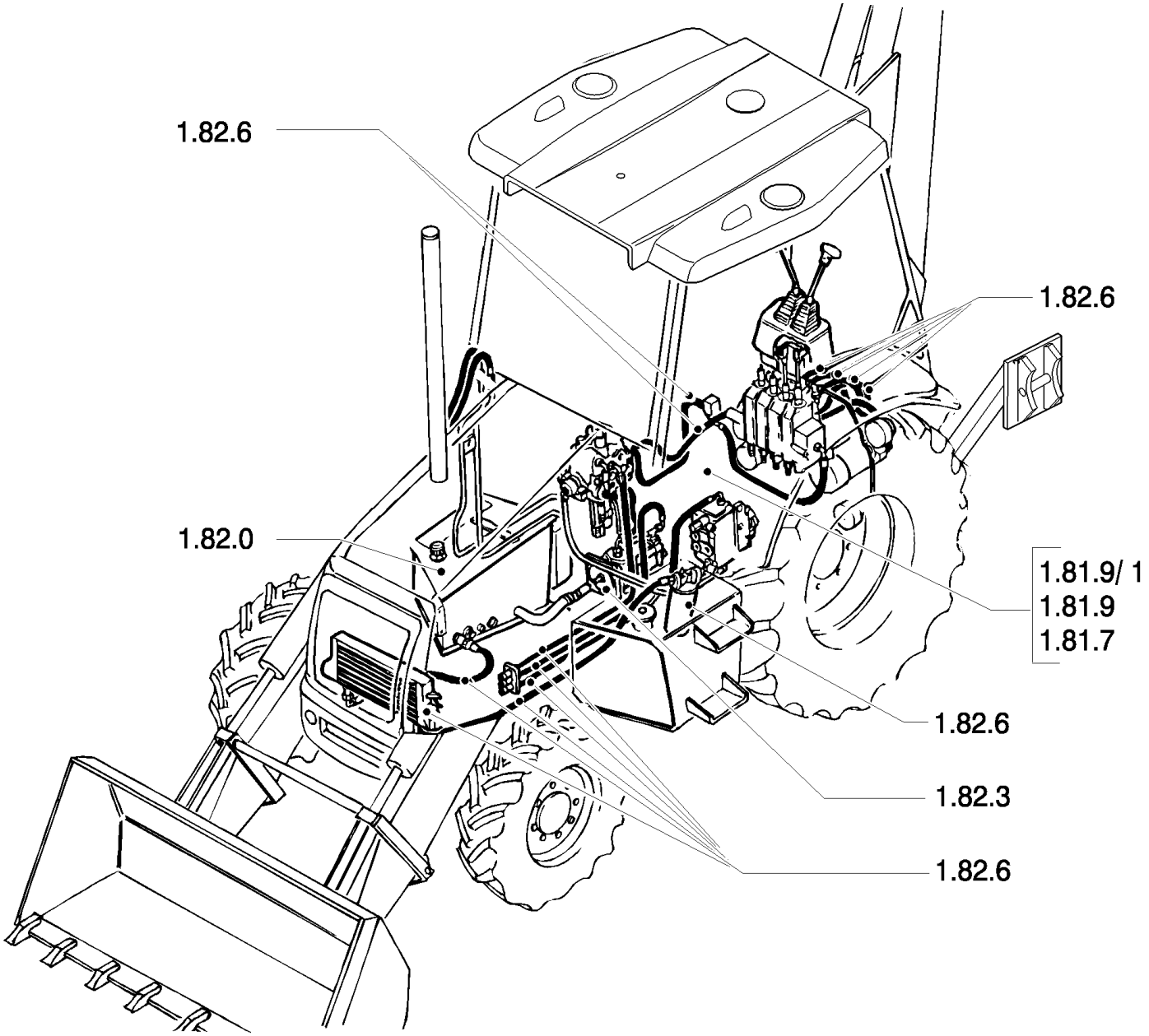
1.82.6
1.82.6
1.82.0
1.81.9/ 1
1.81.9
1.81.7
1.82.6
1.82.3
1.82.6

B110 TIER 3 BACKHOE LOADER (2/07-)

1.77.0 SEC. 07 - SLIDES VALVES

Ref	Numero de Pieza	Ctd	Descripción

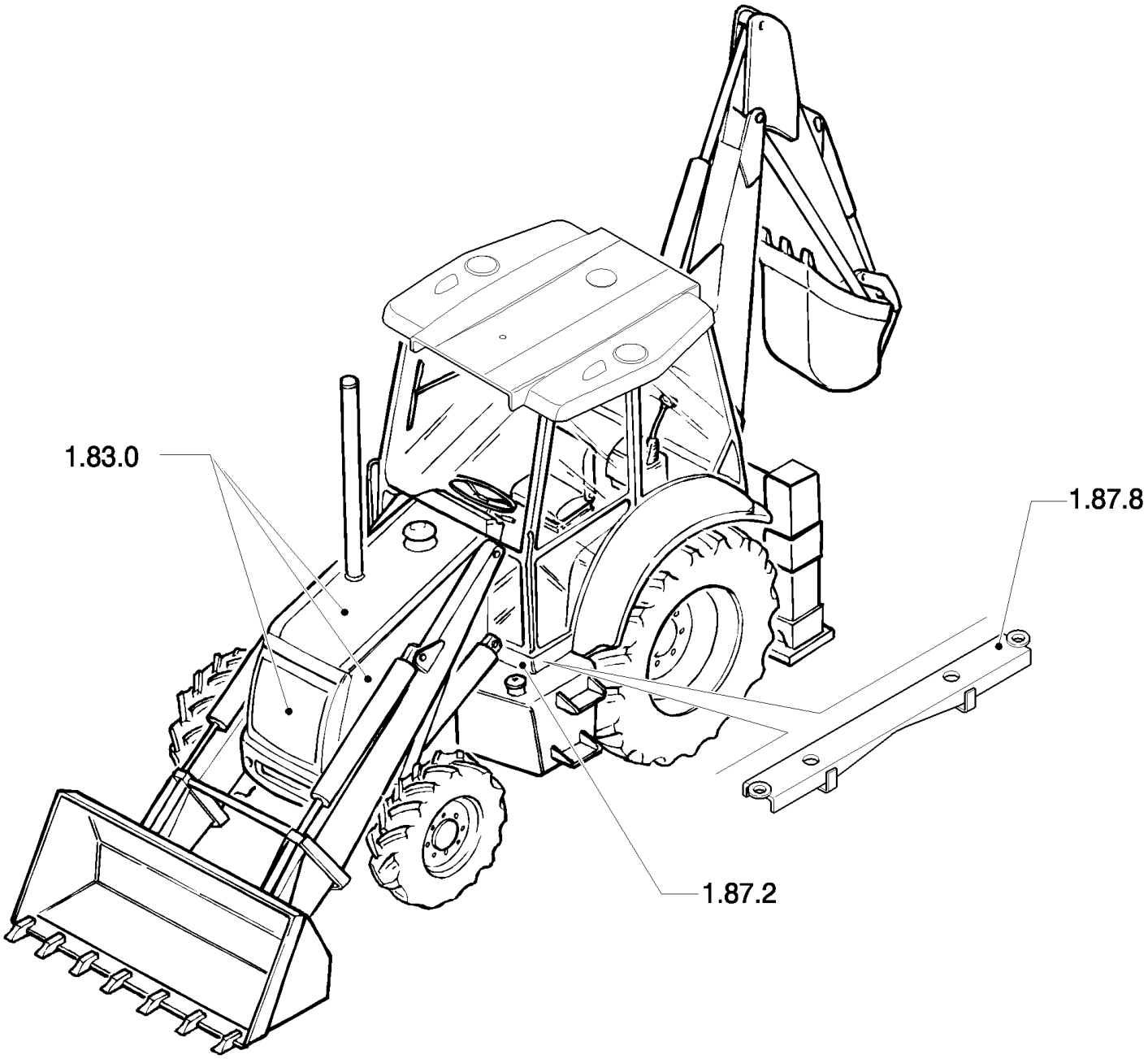
1.83.0
1.87.8
1.87.2

B110 TIER 3 BACKHOE LOADER (2/07-)

1.78.0 SEC. 08 - BODY & HOOD

Ref	Numero de Pieza	Ctd	Descripción

1.79.9(01) STABILIZER CONTROL (CENTER PIVOT) - NA

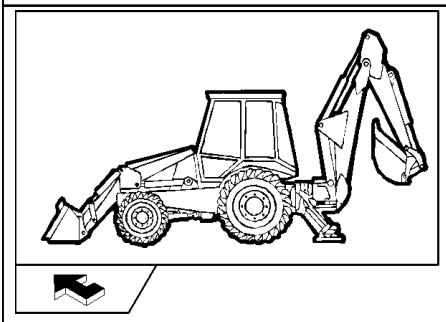

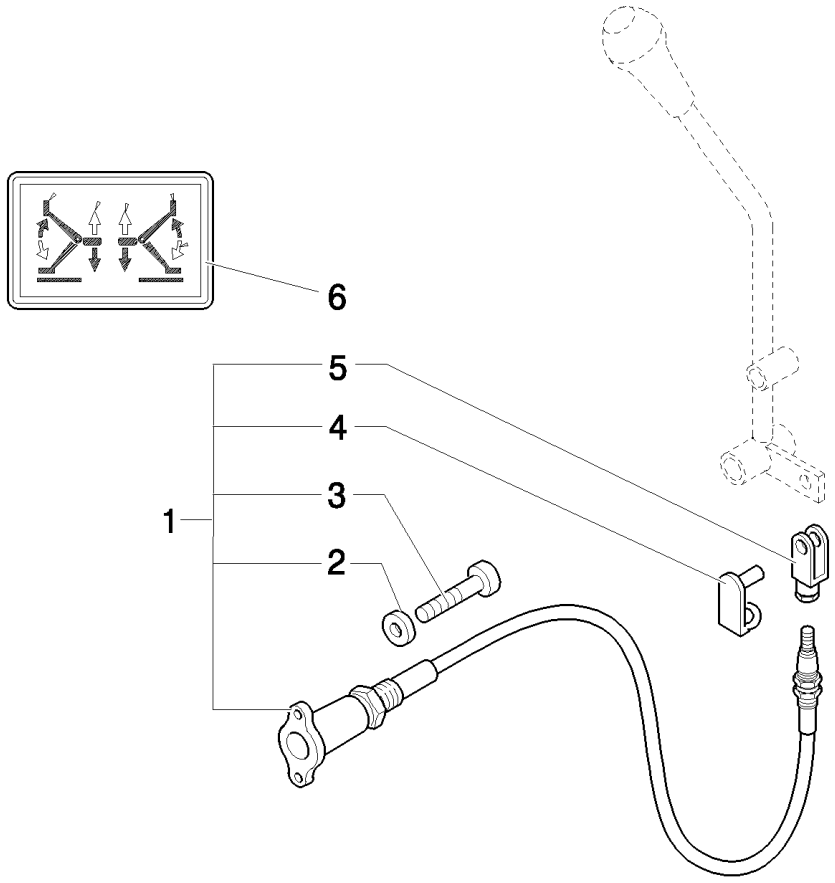

B110 TIER 3 BACKHOE LOADER (2/07-)

1.79.9(01) STABILIZER CONTROL (CENTER PIVOT) - NA

Ref	Numero de Pieza	Ctd	Descripción
1	85813104	2	CABLE,
2	85813201	4	WASHER,
3	85813200	4	SCREW, M6 x 15
4	85813186	2	CLIP,
5	85813187	2	CLEVIS,
6	85803788	1	DECAL,

Mechanical Version

1.80.9(01) SWING POST ASSEMBLY, BUSHINGS & PINS

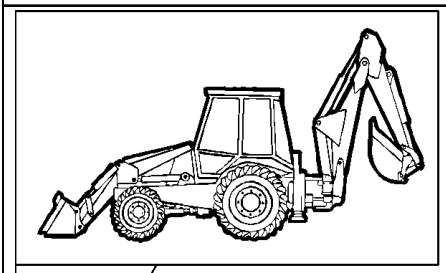

KIT 18 = ●

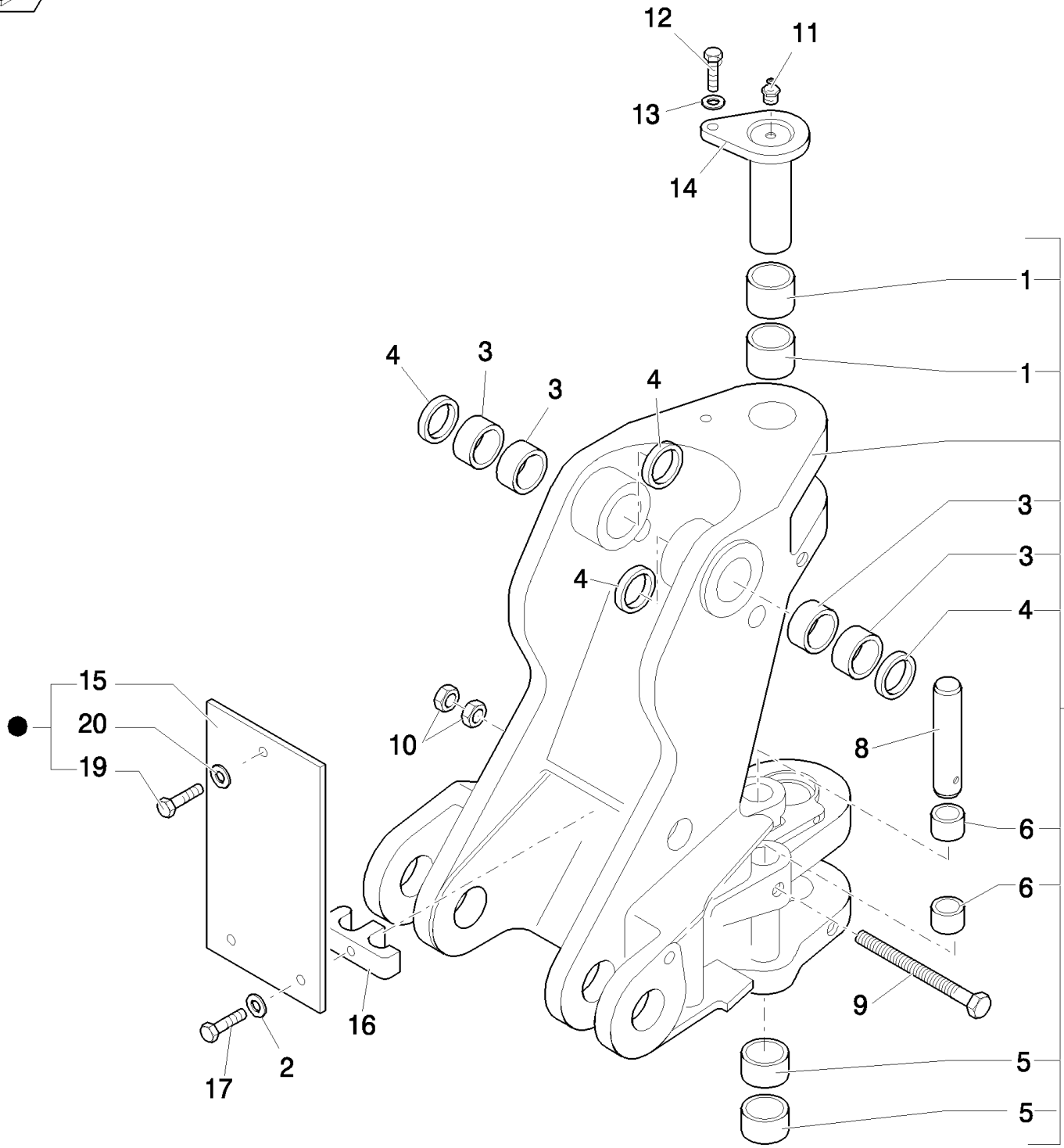

B110 TIER 3 BACKHOE LOADER (2/07-)

1.80.9(01) SWING POST ASSEMBLY, BUSHINGS & PINS

Ref	Numero de Pieza	Ctd	Descripción
1	85803196	2	BUSHING,
2	11190579	2	WASHER, SPRING, Belleville, M10.5,
3	85801029	4	BUSHING,
4	85801025	4	SEAL,
5	85803197	2	BUSHING,
6	85803193	4	BUSHING,
7	85803623	1	SUPPORT, P/N 85801028 in Primer colour, Includes 1, 3 To 6
8	85803192	2	PIN,
9	87363478	2	SCREW, M10x270
10	10717421	2	NUT, Thin, M14 x 2, Cl 05, M14
11	83416242	3	NIPPLE, LUBE, 1/8"-27
12	85802397	1	SCREW, M16X40
13	85802396	1	WASHER,
14	85801076	1	PIN,
15	85805137	1	PLATE,
16	87310285	1	CLAMP,
17	11107321	2	BOLT, Hex, M10 x 55, 8.8,
18	85805648	1	KIT,
19	16043621	1	BOLT, Hex, M8 x 25, 8.8,
20	11193979	1	WASHER, SPRING, Belleville, M8.4,

1.80.9(02) SWING POST PINS & TRANSPORT LOCK HOOK

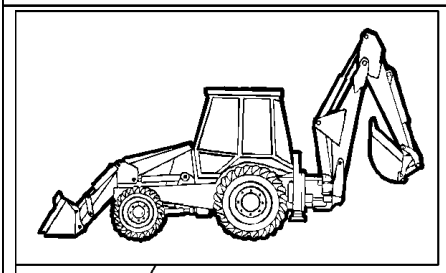

KIT KIT KIT 9 = ●

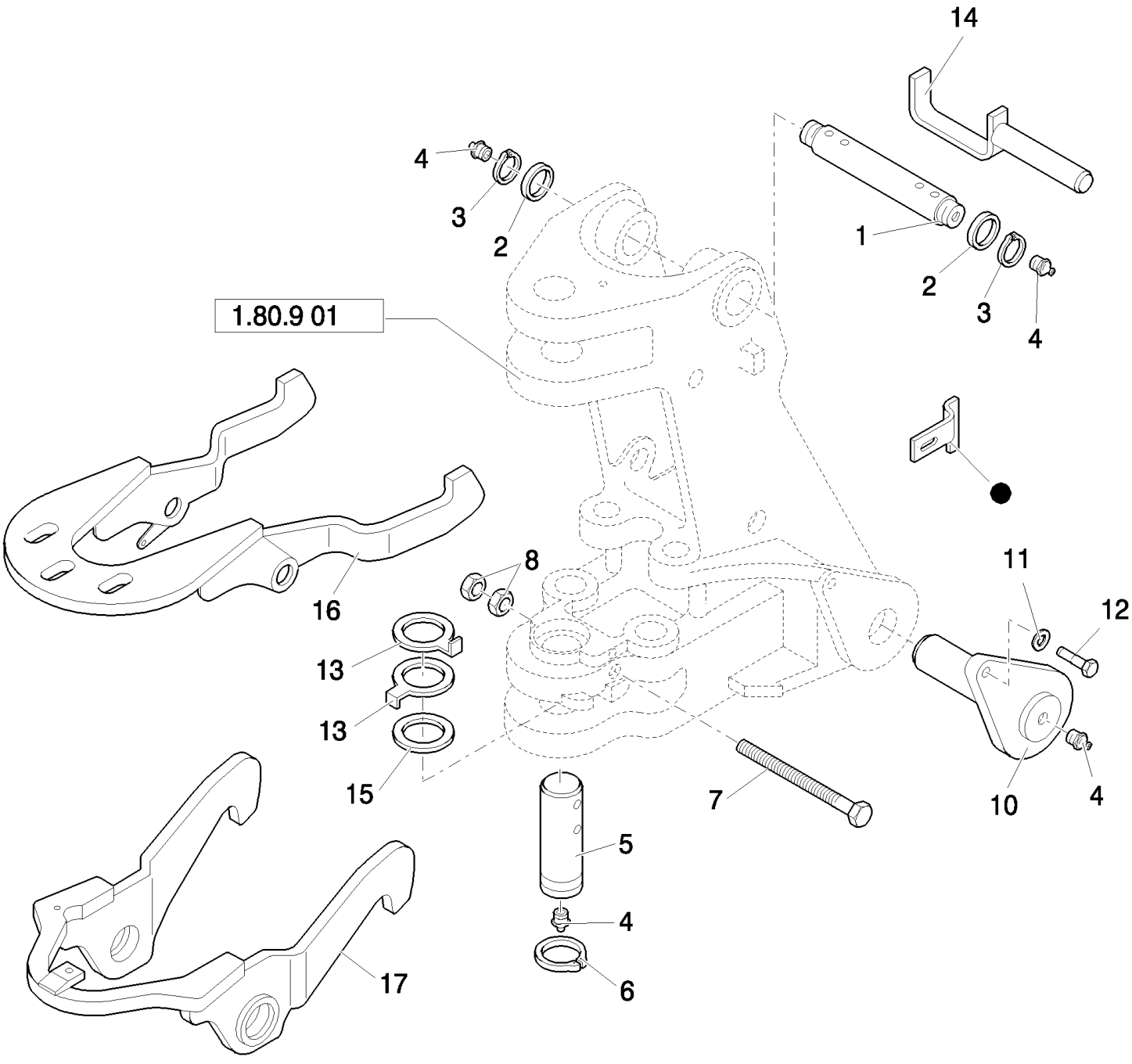

B110 TIER 3 BACKHOE LOADER (2/07-)

1.80.9(02) SWING POST PINS & TRANSPORT LOCK HOOK

Ref	Numero de Pieza	Ctd	Descripción
1	85801026	1	PIN,
2	83910977	2	SPACER, M45X66X3
3	83911019	2	RING, SNAP,
4	83416242	3	NIPPLE, LUBE, 1/8"-27
5	85801079	1	PIN,
6	85803198	1	RING, SNAP,
7	15201934	1	BOLT, Hex, M14 x 170, 10.9, M14x170
8	10717421	2	NUT, Thin, M14 x 2, Cl 05, M14
9	85816776	1	KIT,
10	85802872	2	PIN,
11	85802396	1	WASHER,
12	85802397	1	SCREW, M16X40
13	85801191	2	SPACER,
14	87610829	1	PIN, , Only for Trans. Lock Hydraulic
14	87610834	1	PIN, , Only for Trans. Lock Mechanic
15	8274447	1	SHIM,
16	85803637	1	HOOK, , Only for Trans. Lock Hydraulic
17	85819493	1	HOOK, , Only for Trans. Lock Mechanic

1.81.9(01) "TRANSPORT LOCK" ON/OFF SWITCH, VALVE & HOSES (SIDE SHIFT)

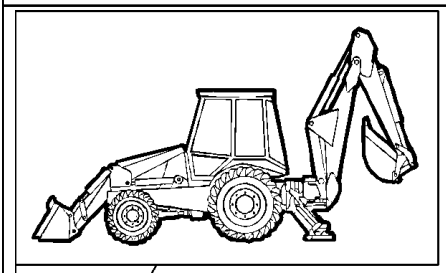

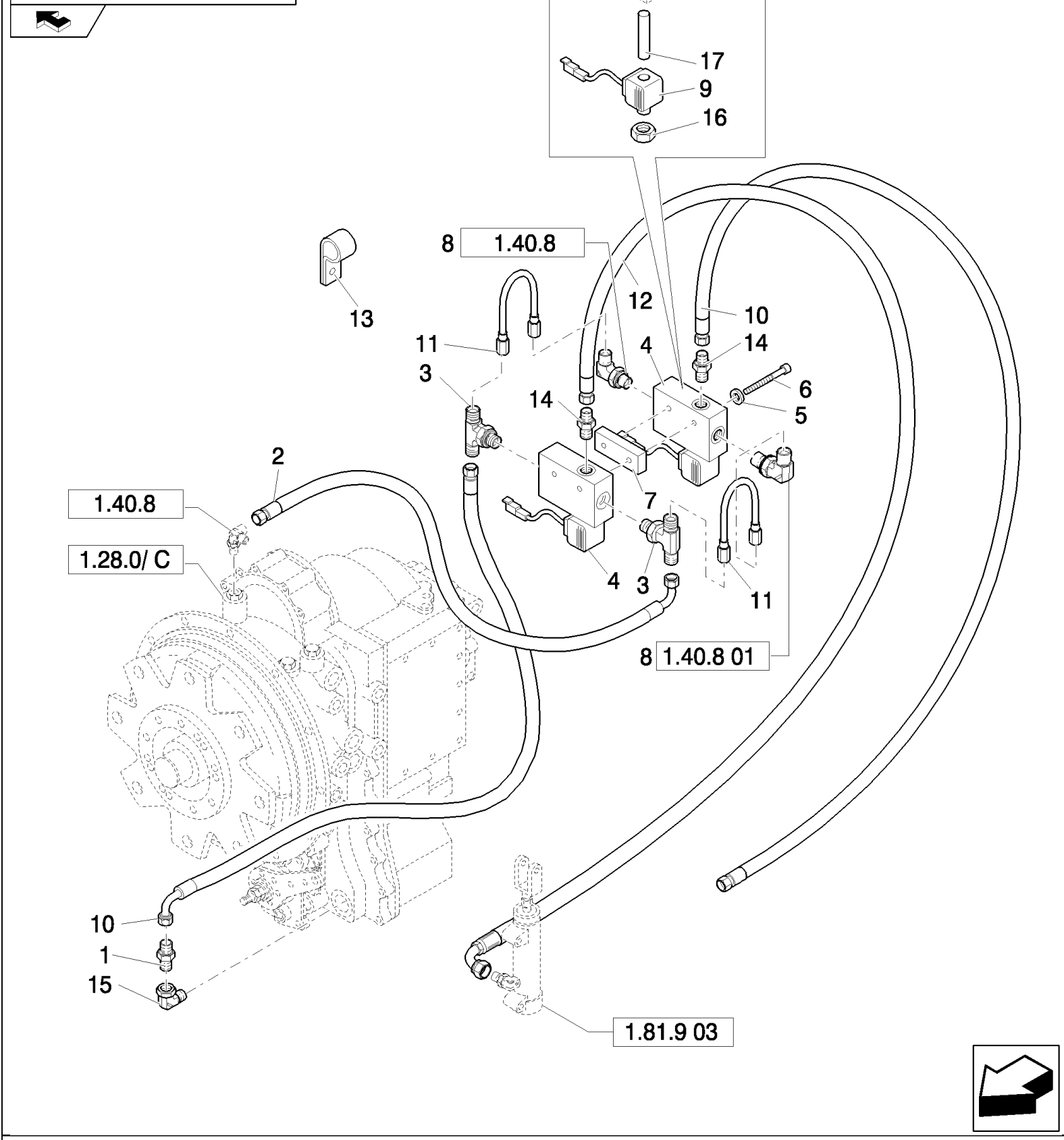

B110 TIER 3 BACKHOE LOADER (2/07-)

1.81.9(01) "TRANSPORT LOCK" ON/OFF SWITCH, VALVE & HOSES (SIDE SHIFT)

Ref	Numero de Pieza	Ctd	Descripción
1	87403805	1	CONNECTOR, HYD.,
2	85805260	1	HOSE, FLEXIBLE,
3	85802234	2	ELBOW,
4	85817265	1	VALVE, SOLENOID,
5	11197779	2	WASHER, SPRING, Belleville, M6.4,
6	10903221	2	BOLT, Hex, M6 x 40, 8.8, M6x1x85
7	47050634	1	ELBOW,
8	85802234	2	ELBOW,
9	87357715	2	SENDER UNIT,
10	85819068	2	HOSE, FLEXIBLE,
11	85819083	2	TUBE, HYD,
12	85819071	1	HOSE, FLEXIBLE,
13	85802890	1	CLAMP,
14	85803312	2	CONNECTOR, HYD.,
15	47050634	1	ELBOW,
16	9970384	2	NUT,
17	85810977	2	VALVE, HYDRAULIC,

1.81.9(02) TRANSPORT LOCK HOOK, CYLINDER & HOSE (SIDE SHIFT, POWER SHIFT)

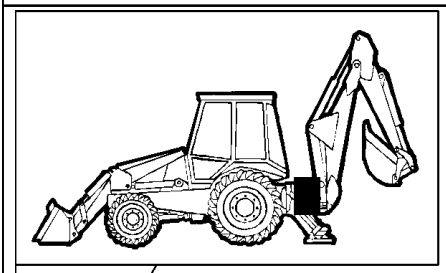

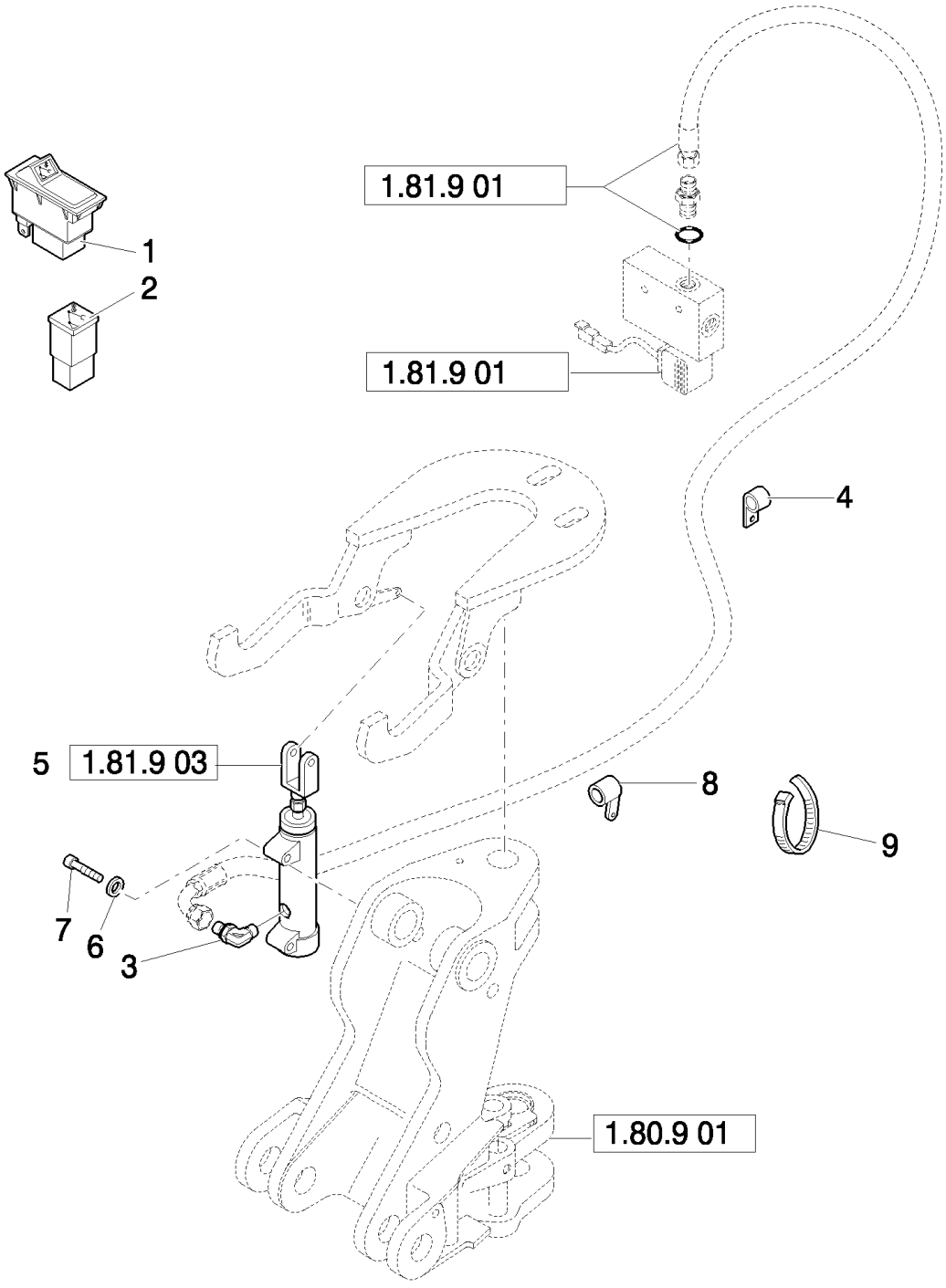

B110 TIER 3 BACKHOE LOADER (2/07-)

1.81.9(02) TRANSPORT LOCK HOOK, CYLINDER & HOSE (SIDE SHIFT, POWER SHIFT)

Ref	Numero de Pieza	Ctd	Descripción
1	85819141	1	SWITCH,
2	85802160	1	LIGHT, WARNING,
3	85824089	1	ELBOW,
4	79072960	1	STRAP, CABLE,
5	87362349	1	CYLINDER,
6	11193879	2	WASHER, SPRING, Belleville, M8.4,
7	16044221	2	BOLT, Hex, M8 x 50, 8.8,
8	14560187	1	STRAP, CABLE, 178mm lg, L=203.2 mm
9	85803332	2	STRAP, CABLE, M4.8 x 180,

1.81.9(03) LOCKING CYLINDER "TRANSPORT LOCK"

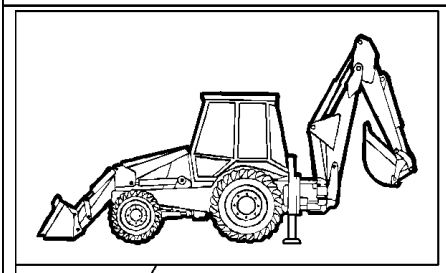

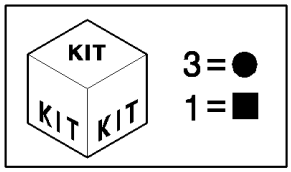

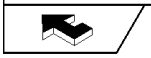

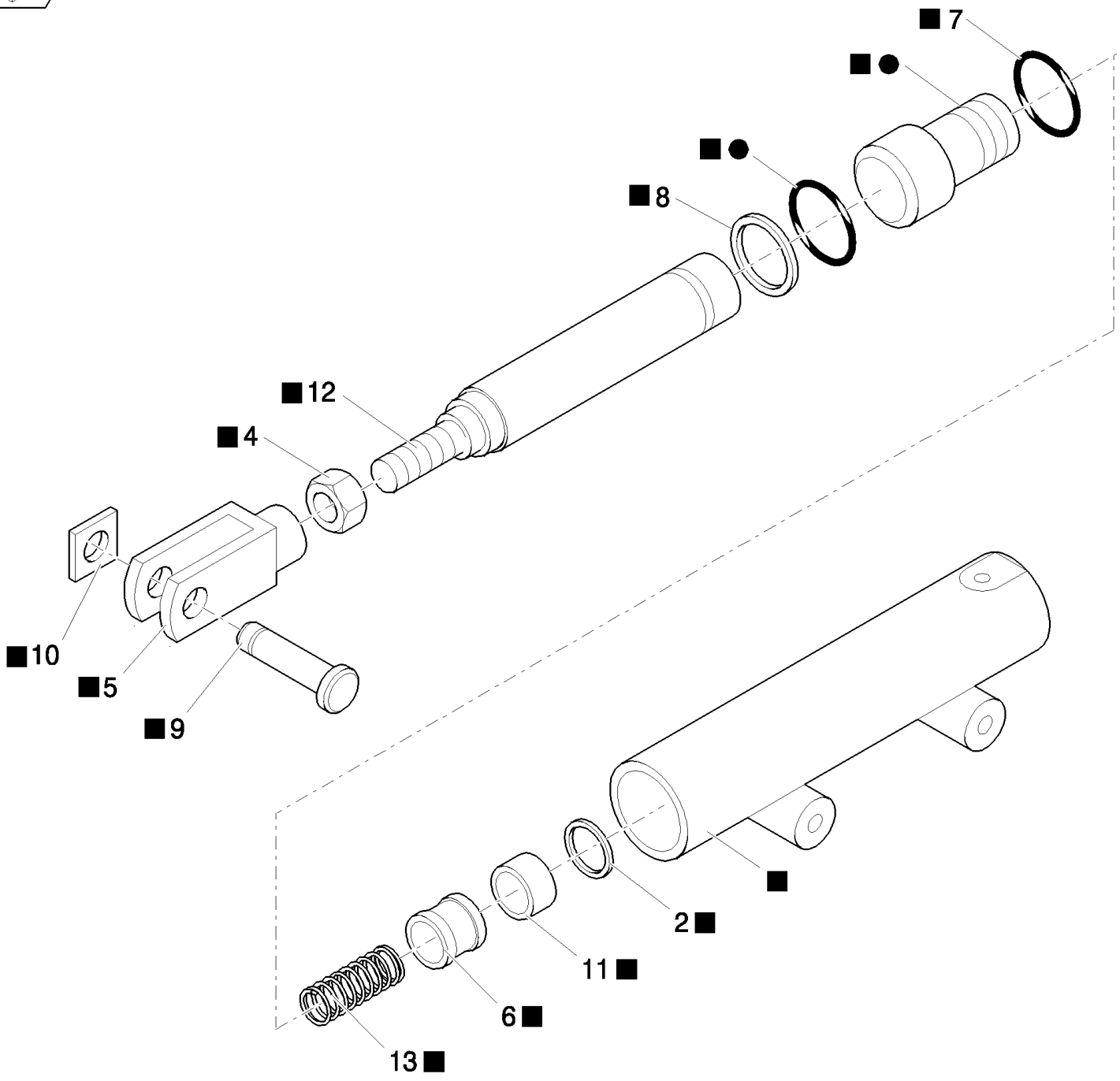

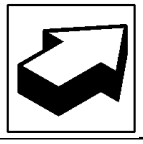

B110 TIER 3 BACKHOE LOADER (2/07-)

1.81.9(03) LOCKING CYLINDER "TRANSPORT LOCK"

Ref	Numero de Pieza	Ctd	Descripción
1	87362349	1	CYLINDER,
2	87323079	1	O-RING,
3	87350826	1	BUSHING,
4	85828116	1	NUT,
5	85828117	1	YOKE,
6	87337310	1	BUSHING,
7	85828118	1	GASKET,
8	87319827	1	RING, OIL SCRAPER,
9	85828120	1	PIN,
10	85828121	1	CLIP,
11	87337351	1	GASKET,
12	87343032	1	ROD,
13	87362350	1	SPRING,

B110 TIER 3 BACKHOE LOADER (2/07-)

1.81.9/1(01) "TRANSPORT LOCK" ON/OFF SWITCH, VALVE & HOSES (POWER SHIFT, CENTER PIVOT) - EU

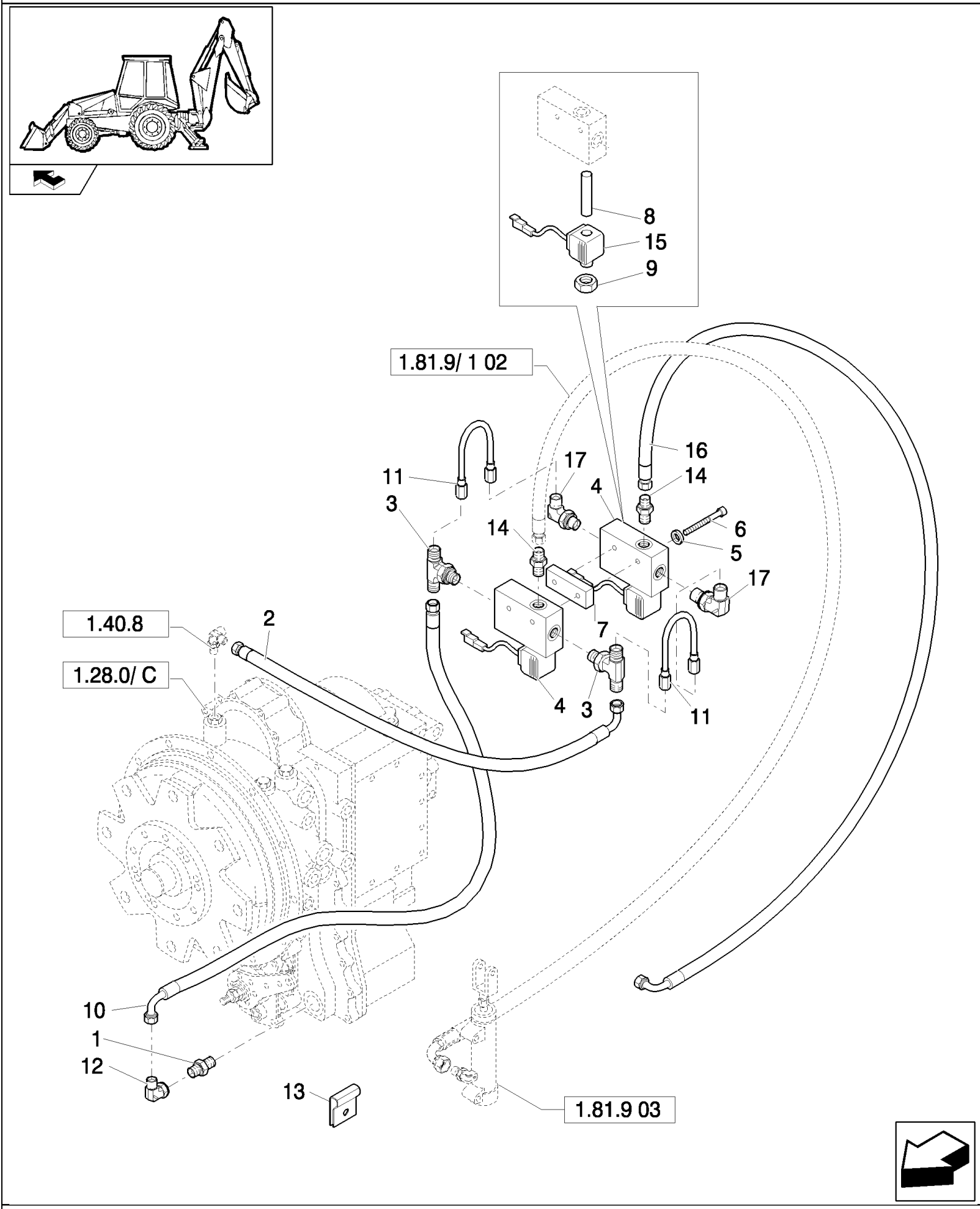

B110 TIER 3 BACKHOE LOADER (2/07-)

1.81.9/1(01) "TRANSPORT LOCK" ON/OFF SWITCH, VALVE & HOSES (POWER SHIFT, CENTER PIVOT) - EU

Ref	Numero de Pieza	Ctd	Descripción
1	87403805	1	CONNECTOR, HYD.,
2	85819069	1	HOSE, FLEXIBLE,
3	85802231	2	TEE,
4	85817265	2	VALVE, SOLENOID,
5	11197779	2	WASHER, SPRING, Belleville, M6.4,
6	11030921	2	BOLT, Hex, M6 x 85, 8.8,
7	85824110	1	PLATE,
8	85810977	2	VALVE, HYDRAULIC,
9	9970384	2	NUT,
10	85819068	1	HOSE, FLEXIBLE,
11	85819083	2	TUBE, HYD,
12	47050634	1	ELBOW,
13	14560187	1	STRAP, CABLE, 178mm lg, L=203.2 mm
14	85803312	2	CONNECTOR, HYD.,
15	87357715	2	SENDER UNIT,
16	87342832	1	HOSE, FLEXIBLE,
17	85802234	2	ELBOW,

1.81.9/1(02) TRANSPORT LOCK HOOK, CYLINDER & HOSE (CENTER PIVOT, POWER SHIFT) - EU

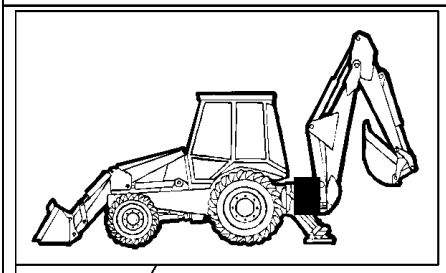

KIT KIT KIT 1 = ✸

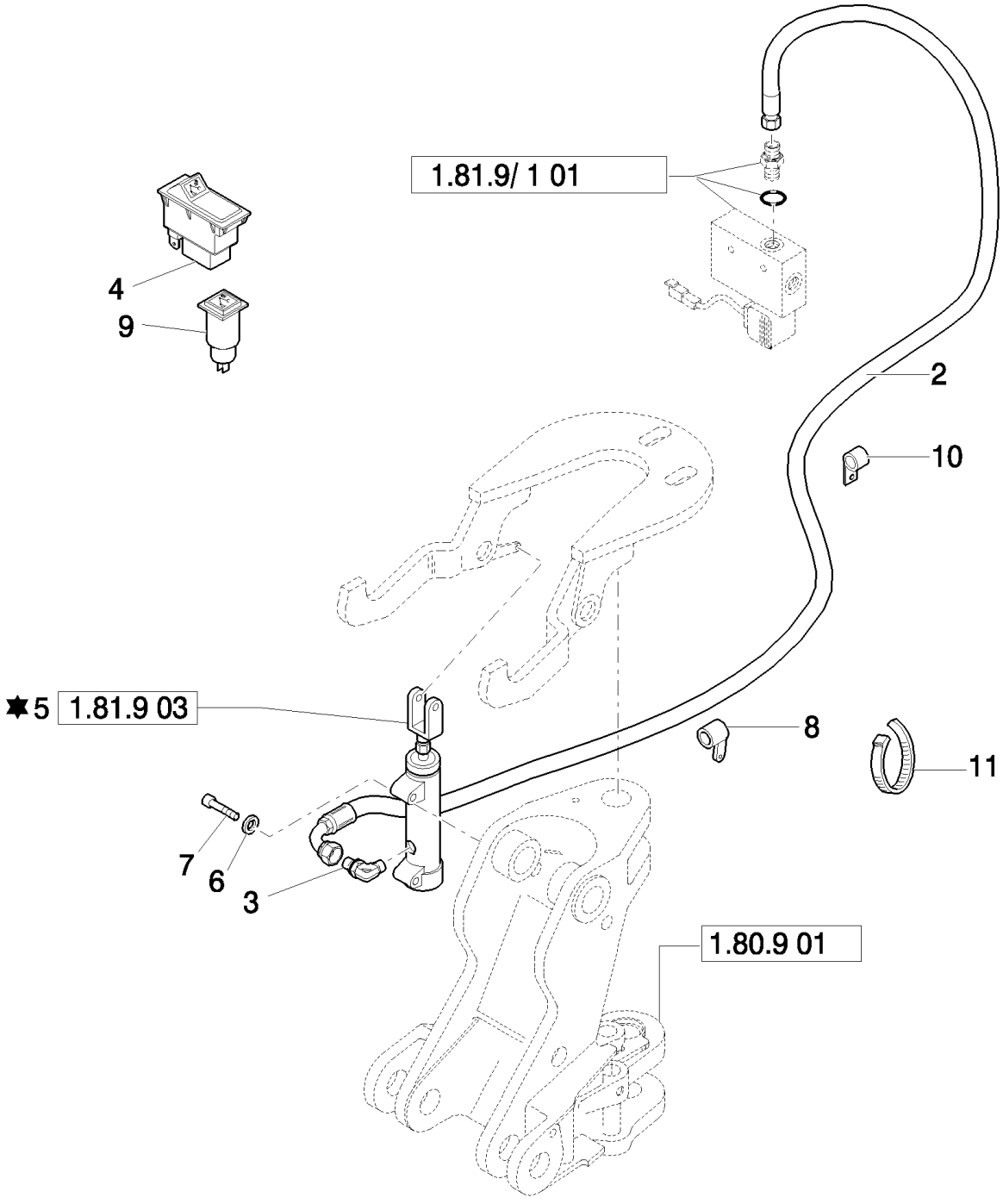

B110 TIER 3 BACKHOE LOADER (2/07-)

1.81.9/1(02) TRANSPORT LOCK HOOK, CYLINDER & HOSE (CENTER PIVOT, POWER SHIFT) - EU

Ref	Numero de Pieza	Ctd	Descripción
1	87337354	1	KIT,
2	85819071	1	HOSE, FLEXIBLE,
3	85824089	1	ELBOW,
4	85819141	1	SWITCH,
5	87362349	1	CYLINDER,
6	11193879	2	WASHER, SPRING, Belleville, M8.4,
7	16044221	2	BOLT, Hex, M8 x 50, 8.8,
8	85802890	1	CLAMP,
9	85802160	1	LIGHT, WARNING,
10	79072960	1	STRAP, CABLE,
11	85803332	4	STRAP, CABLE, M4.8 x 180,

B110 TIER 3 BACKHOE LOADER (2/07-)

1.81.9/2(01) TRANSPORT LOCK" REAR LOCKING" (CENTER PIVOT)

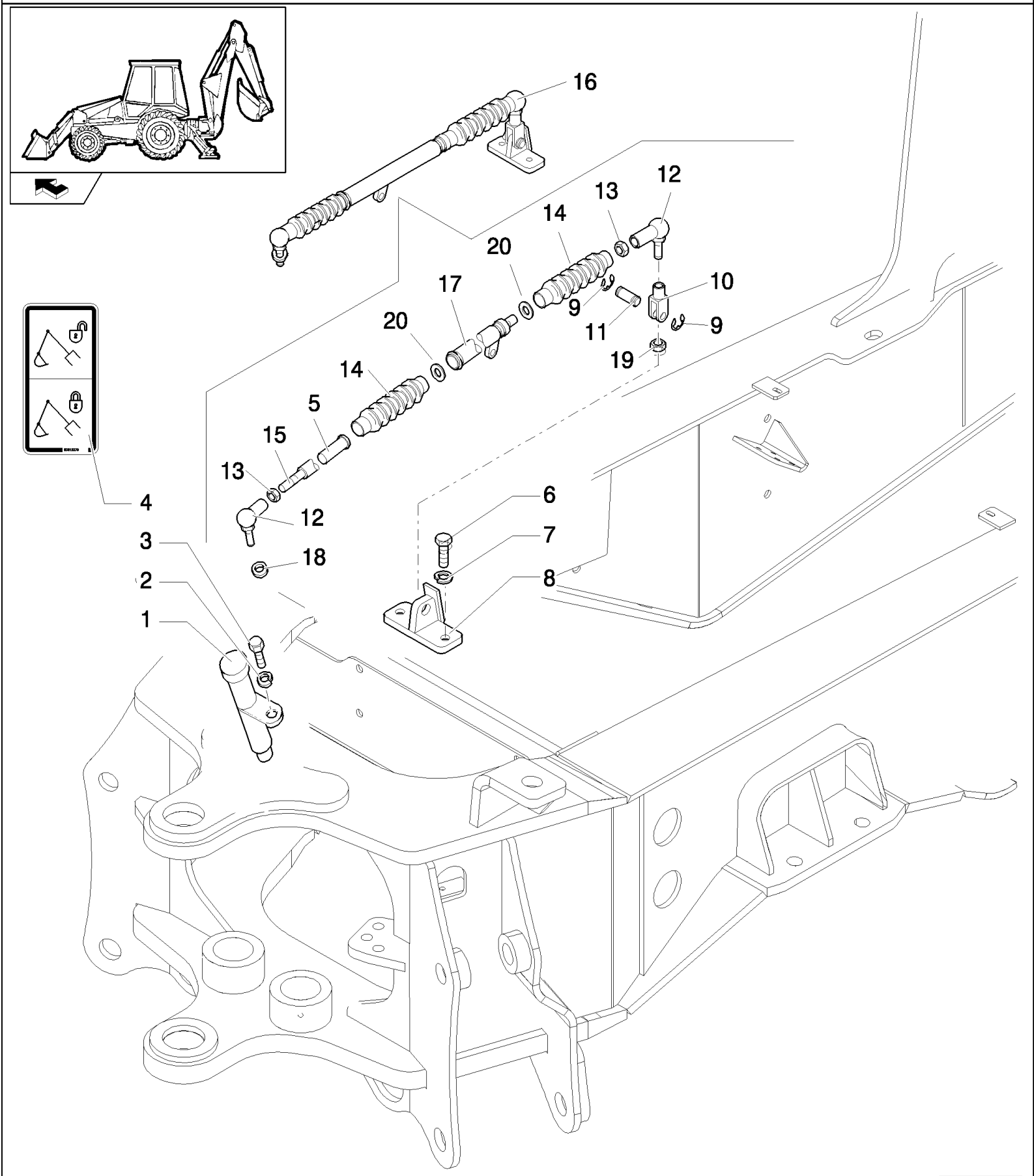

B110 TIER 3 BACKHOE LOADER (2/07-)

1.81.9/2(01) TRANSPORT LOCK" REAR LOCKING" (CENTER PIVOT)

Ref	Numero de Pieza	Ctd	Descripción
1	85821268	1	SHOCK ABSORBER,
2	11193879	1	WASHER, SPRING, Belleville, M8.4,
3	16043621	1	BOLT, Hex, M8 x 25, 8.8,
4	85812278	1	DECAL,
5	85819482	1	BUSHING,
6	11106221	2	BOLT, Hex, M10 x 25, 8.8, Full Thd,
7	11190579	2	WASHER, SPRING, Belleville, M10.5,
8	85819488	1	SUPPORT,
9	85813407	2	RING,
10	85819468	1	CLEVIS,
11	87302958	1	PIN, CLEVIS,
12	85819477	2	BALL JOINT,
13	85819478	1	NUT, M10
14	85819479	2	BELLOWS,
15	85819481	1	ROD,
16	87302965	1	TIE-ROD,
17	85819480	1	TUBE,
18	85821270	1	WASHER,
19	85821271	1	NUT, M16
20	85824227	2	CLAMP,

B110 TIER 3 BACKHOE LOADER (2/07-)

1.81.9/2(02) TRANSPORT LOCK" REAR LOCKING" (CENTER PIVOT)

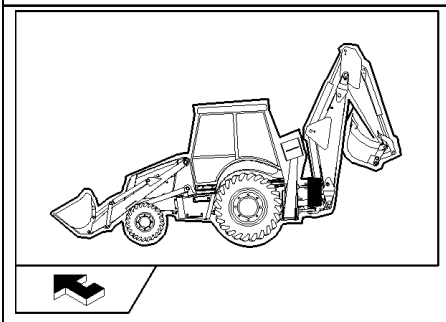

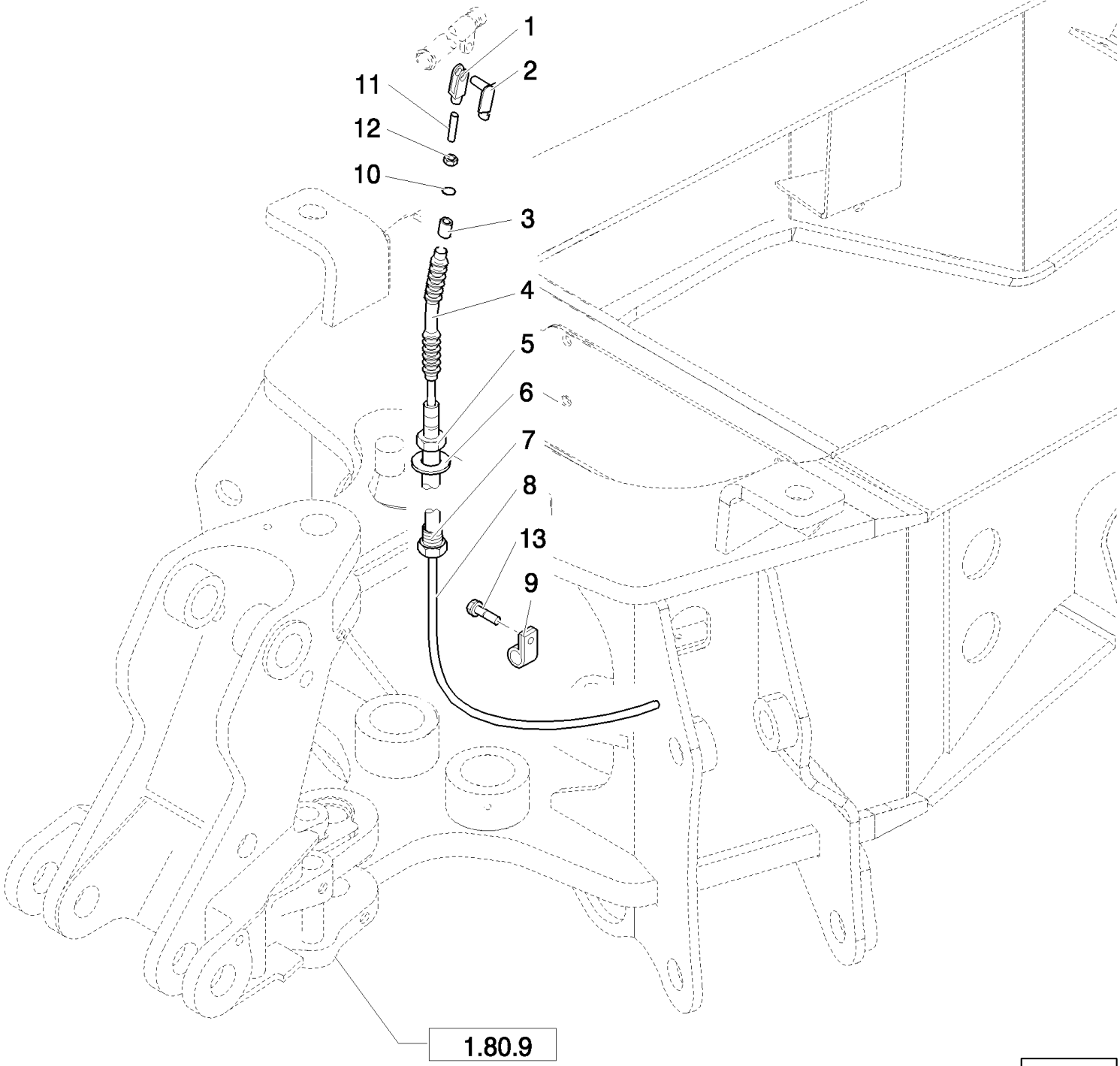

B110 TIER 3 BACKHOE LOADER (2/07-)

1.81.9/2(02) TRANSPORT LOCK" REAR LOCKING" (CENTER PIVOT)

Ref	Numero de Pieza	Ctd	Descripción
1	85819467	1	CLEVIS,
2	85819469	1	CLIP,
3	85819471	1	RING,
4	85821278	1	BELLOWS,
5	87302960	2	NUT,
6	87302959	1	WASHER,
7	87302961	1	REGULATOR,
8	87302967	1	CABLE,
9	10450190	1	CLAMP,
10	85821277	1	RING, RUBBER,
11	85821279	1	ROD,
12	85821273	1	NUT, M8 x 1.25
13	16043021	1	BOLT, Hex, M8 x 12, 8.8, Full Thd,

1.82.0(01) HYDRAULIC OIL RESERVOIR

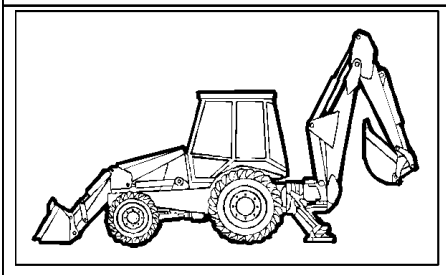

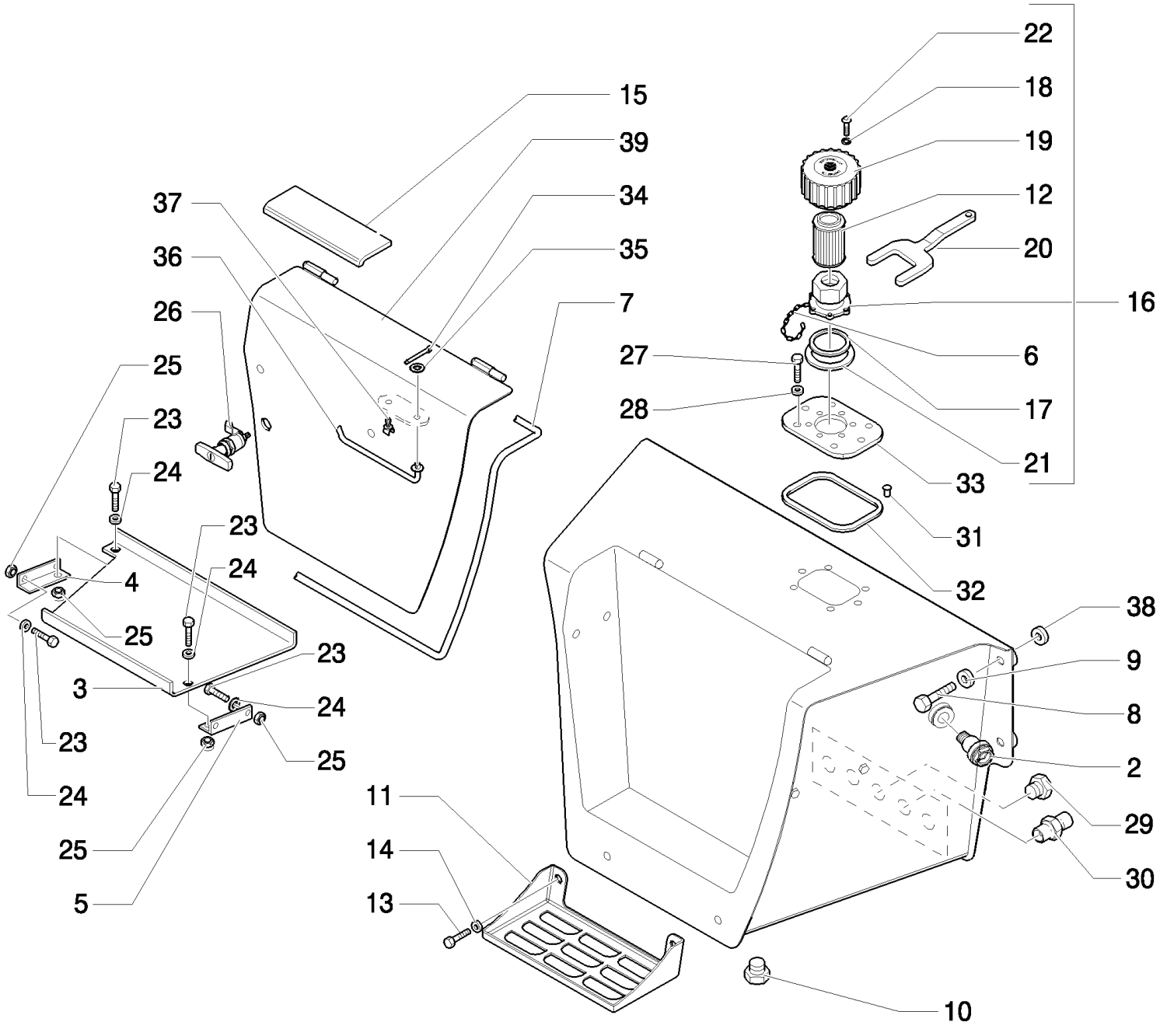

B110 TIER 3 BACKHOE LOADER (2/07-)

1.82.0(01) HYDRAULIC OIL RESERVOIR

Ref	Numero de Pieza	Ctd	Descripción
1	87577246	1	TANK,
2	85801249	1	GAUGE, LEVEL,
3	87407463	1	TRAY,
4	87407464	1	BRACKET,
5	87407465	1	BRACKET,
6	85813352	1	FLANGE,
7	87417207	1	SEAL, RUBBER,
8	15540721	4	BOLT, Hex, M12 x 1.25 x 45, 8.8, Full Thd,
9	47048976	4	WASHER,
10	47050671	2	PLUG,
11	85801218	2	PLATE, STEP,
12	87407928	1	FILTER,
13	11112421	4	BOLT, Hex, M12 x 30, 8.8,
14	47048973	4	WASHER,
15	87404910	1	STRIP, ANTI-SKID,
16	87403241	1	CAP, FILLER, ASSY
17	85813351	1	O-RING,
18	85813354	6	O-RING,
19	85813350	1	PLUG,
20	85802580	1	WRENCH, SPECIAL,
21	9969380	1	GASKET,
22	85813353	6	SCREW,
23	47049185	4	SCREW,
24	47048972	4	WASHER,
25	47049041	4	NUT,
26	87574189	1	HANDLE,
27	16043421	6	SCREW, Hex, M8 x 20, 8.8,
28	47048962	6	WASHER,
29	85825154	3	PLUG,
30	85825155	1	CONNECTOR, HYD.,
31	85826382	7	NUT,
32	85826383	1	GASKET,
33	85828107	1	PLATE,
34	47042074	1	PIN,
35	47044758	1	WASHER,
36	85828017	1	LEVER,
37	72273491	1	CLAMP,
38	87353741	4	SPACER,
39	85828112	1	COVER, , Includes 34, 35, 36, 37

1.82.3(01) HYDRAULIC PUMP (40+35-165L/MM)

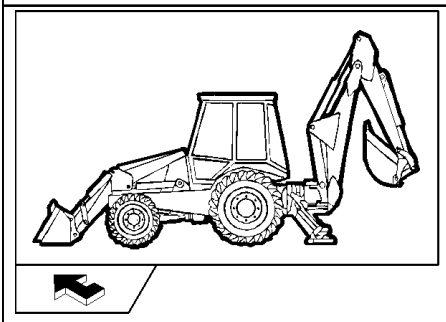

KIT KIT KIT

2 = ●
4 = ■
3 = ▲

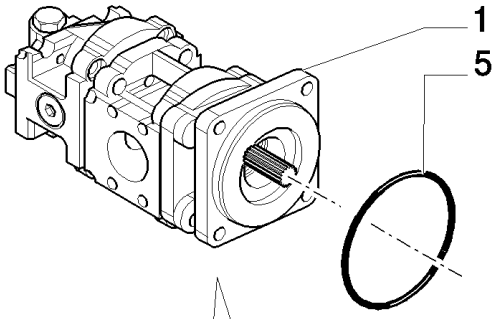

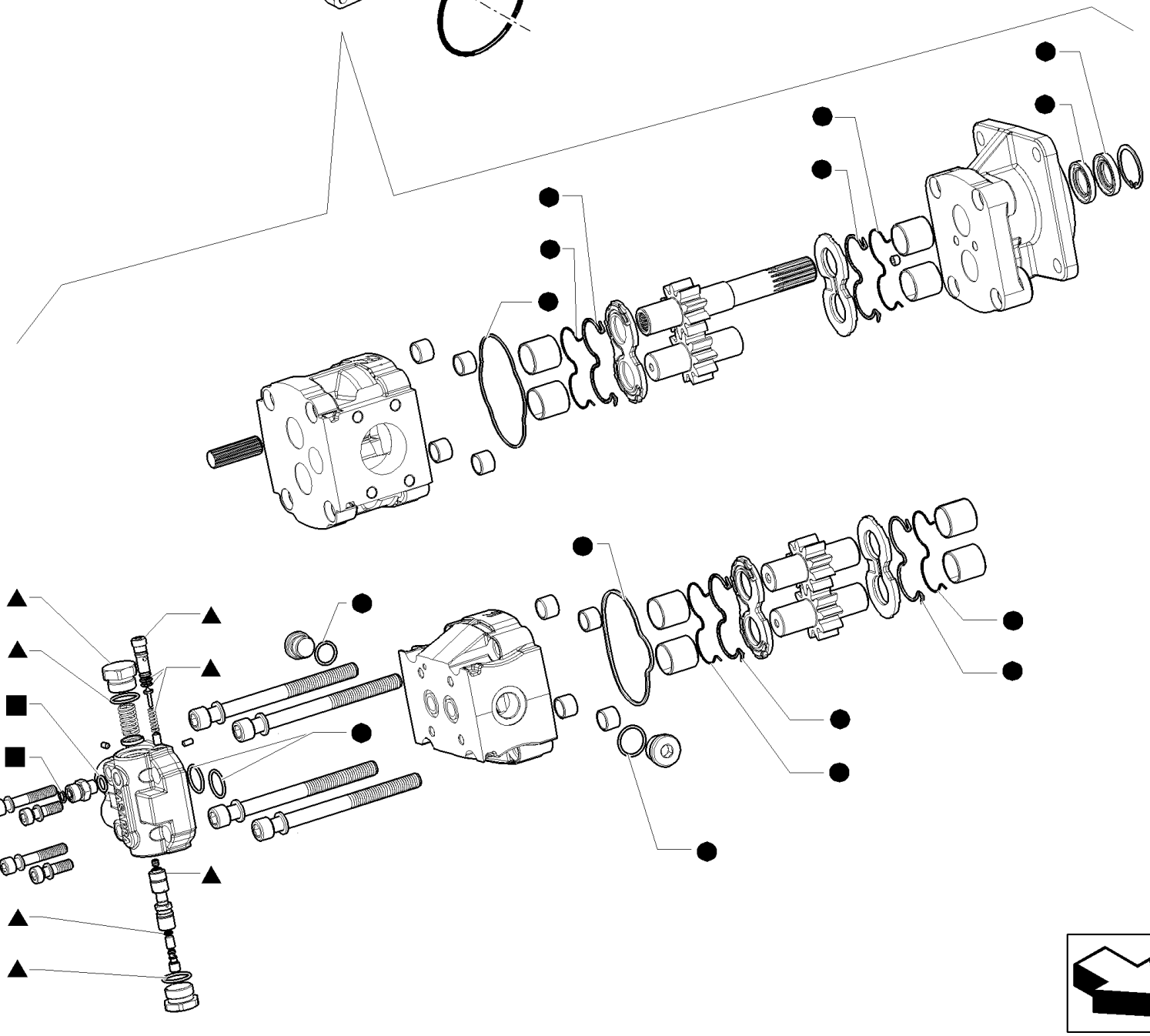

B110 TIER 3 BACKHOE LOADER (2/07-)

1.82.3(01) HYDRAULIC PUMP (40+35-165L/MM)

Ref	Numero de Pieza	Ctd	Descripción
1	87362337	1	PUMP, HYDRAULIC, , Includes 2, 3, 4
2	85813244	1	KIT, SEALS, Seal
3	87530241	1	COVER,
4	85824196	1	CONNECTOR, HYD.,
5	14466880	1	O-RING, -250, 70 Duro, 4.984" ID x .139" Thk,

1.82.6(01) HYDRAULIC SYSTEM PIPING

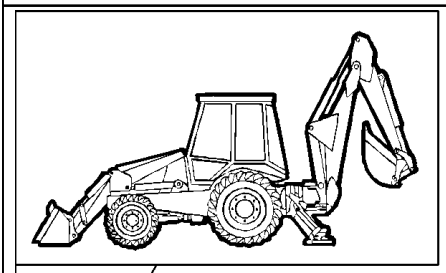

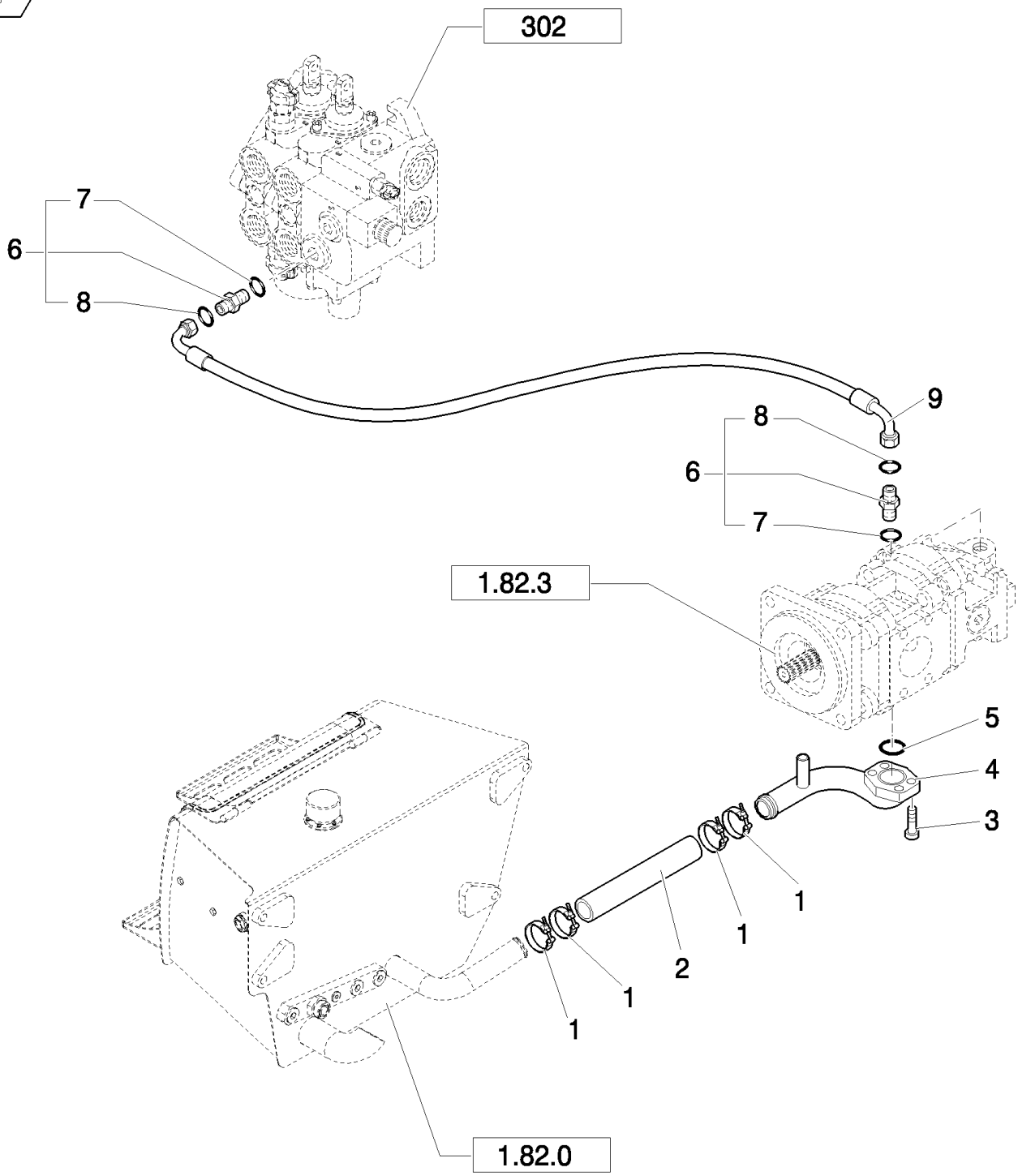

All version except: B110 Nord America Mechanical Version

B110 TIER 3 BACKHOE LOADER (2/07-)

1.82.6(01) HYDRAULIC SYSTEM PIPING

Ref	Numero de Pieza	Ctd	Descripción
1	85803012	4	CLAMP, HOSE,
2	85811870	1	HOSE,
3	14422021	3	SCREW, Hex Soc Hd, M12 x 30, 8.8,
4	85827041	1	TUBE,
5	14464680	1	O-RING, -228, 70 Duro, 2.234" ID x .139" Thk,
6	83962538	2	CONNECTOR, HYD., , Includes 7, 8
7	80167266	2	O-RING,
8	89991976	2	O-RING,
9	87614753	1	HOSE, FLEXIBLE,

All version except: B110 Nord America Mechanical Version

1.82.6(02) HYDRAULIC SYSTEM PIPING

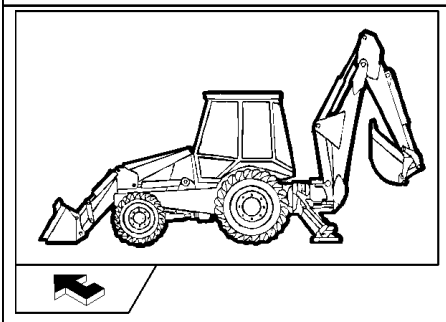

All version except: B110 Nord America Mechanical Version

B110 TIER 3 BACKHOE LOADER (2/07-)

1.82.6(02) HYDRAULIC SYSTEM PIPING

Ref	Numero de Pieza	Ctd	Descripción
1	85803486	1	CONNECTOR, HYD.,
2	83963000	1	CONNECTOR, HYD., , Includes 3, 4
3	80167269	1	O-RING,
4	83901443	1	O-RING,
5	87614751	1	HOSE, FLEXIBLE,
6	85805838	1	CONNECTION, 3 WAY, , Only for Mechanical Version
6	85826093	1	TEE, , Only for Pilot Version
7	87516888	1	HOSE, FLEXIBLE, L=MM.1080
8	15541621	2	BOLT, Hex, M12 x 1.25 x 100, 8.8,
9	85802890	2	CLAMP,
10	11190779	2	WASHER, SPRING, Belleville, M13,
11	14048211	2	NUT, LOCK, M8 x 1.25, Cl 8,
12	47049161	1	BOLT,
13	85802214	2	SUPPORT, , Only for Pilot Version
14	16044221	2	BOLT, Hex, M8 x 50, 8.8, , Only for Pilot Version
15	87631462	2	BRACKET, , Only for Pilot Version
16	16104111	2	NUT, LOCK, M8 x 1.25, Cl 8, , Only for Pilot Version

All version except: B110 Nord America Mechanical Version

1.82.6(03) HYDRAULIC SYSTEM PIPING

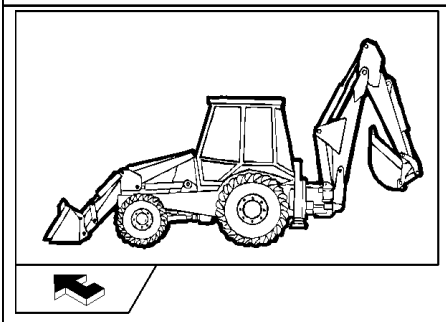

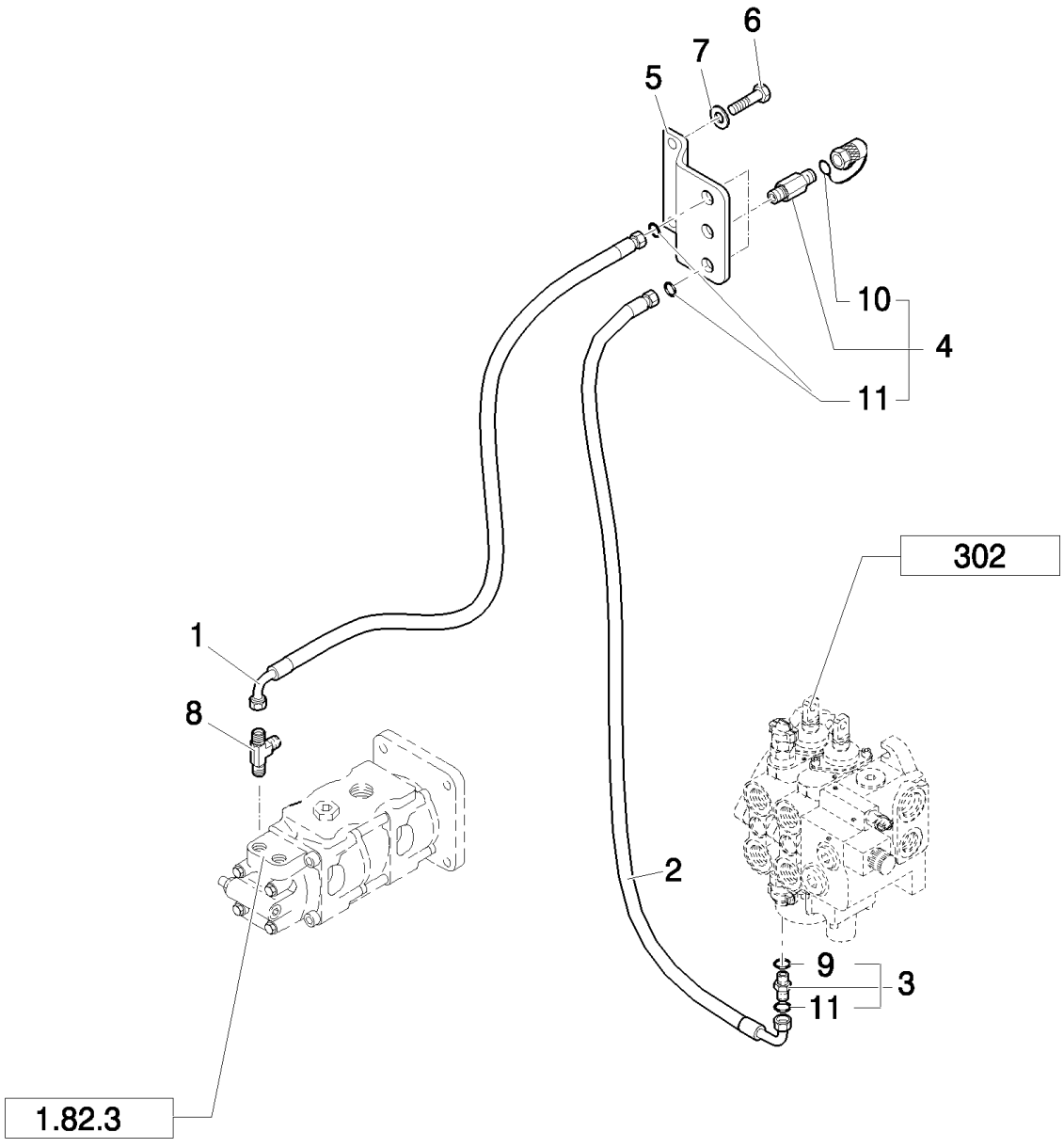

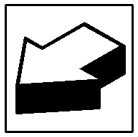

All version except: B110 Nord America Mechanical Version

B110 TIER 3 BACKHOE LOADER (2/07-)

1.82.6(03) HYDRAULIC SYSTEM PIPING

Ref	Numero de Pieza	Ctd	Descripción
1	85812171	1	HOSE, FLEXIBLE, 1450mm lg,
2	85812173	1	HOSE, FLEXIBLE,
3	83963371	1	CONNECTOR, HYD., , Includes 9, 11
4	85817226	2	COUPLING, QUICK, MALE, , Includes 10, 11
5	87569583	1	PLATE,
6	14441524	2	SCREW,
7	11193879	2	WASHER, SPRING, Belleville, M8.4,
8	85805502	1	TEE,
9	81845037	1	O-RING,
10	9968791	2	PLUG,
11	81844851	4	O-RING, 90 Duro, .375" ID x .070" Thk

All version except: B110 Nord America Mechanical Version

B110 TIER 3 BACKHOE LOADER (2/07-)

1.82.6(04) HYDRAULIC SYSTEM PIPING

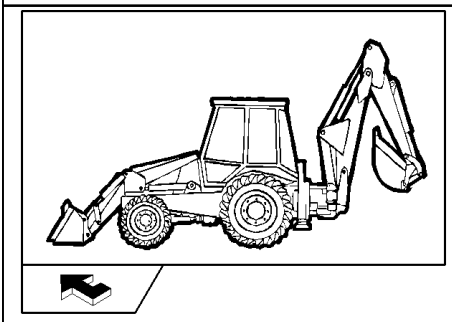

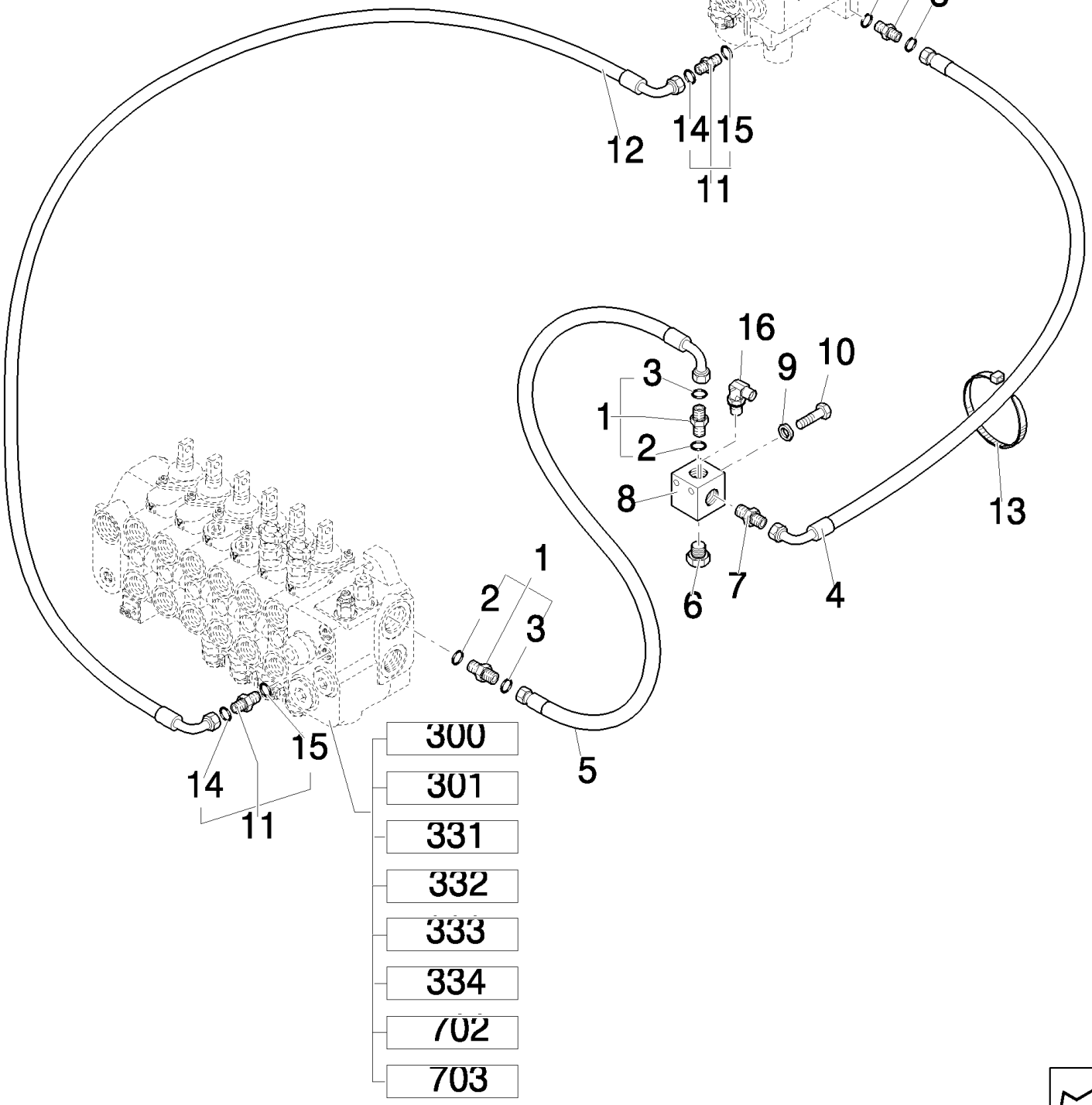

All version except: B110 Nord America Mechanical Version

B110 TIER 3 BACKHOE LOADER (2/07-)

1.82.6(04) HYDRAULIC SYSTEM PIPING

Ref	Numero de Pieza	Ctd	Descripción
1	83963375	3	CONNECTOR, HYD., , Includes 2, 3
2	80167268	3	O-RING,
3	89824050	3	O-RING,
4	85818909	1	HOSE, FLEXIBLE,
5	85805167	1	HOSE, FLEXIBLE, , Mechanical Control Version Europe
5	85827823	1	HOSE, FLEXIBLE, , Only for Pilot Control Version Europe an NA version
6	85802955	1	PLUG,
7	85805168	1	CONNECTOR, HYD.,
8	85805166	1	BLOCK,
9	11190779	2	WASHER, SPRING, Belleville, M13, 12x24x2.8
10	15541621	2	BOLT, Hex, M12 x 1.25 x 100, 8.8,
11	83963371	2	CONNECTOR, HYD., , Includes 14, 15
12	85812174	1	HOSE, FLEXIBLE,
13	79072960	1	STRAP, CABLE,
14	81844851	2	O-RING, 90 Duro, .375" ID x .070" Thk
15	81845037	2	O-RING, 90 Duro, .468" ID x .078" Thk
16	83962179	1	ELBOW, 90°, Only for Pilot Control Version Europe an NA version

All version except: B110 Nord America Mechanical Version

1.82.6(05) HYDRAULIC SYSTEM PIPING

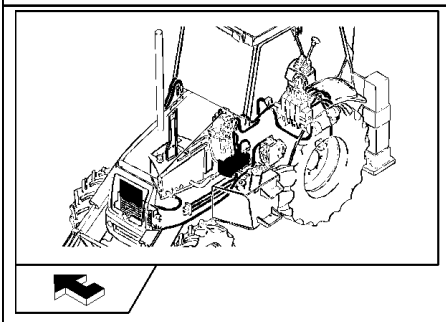

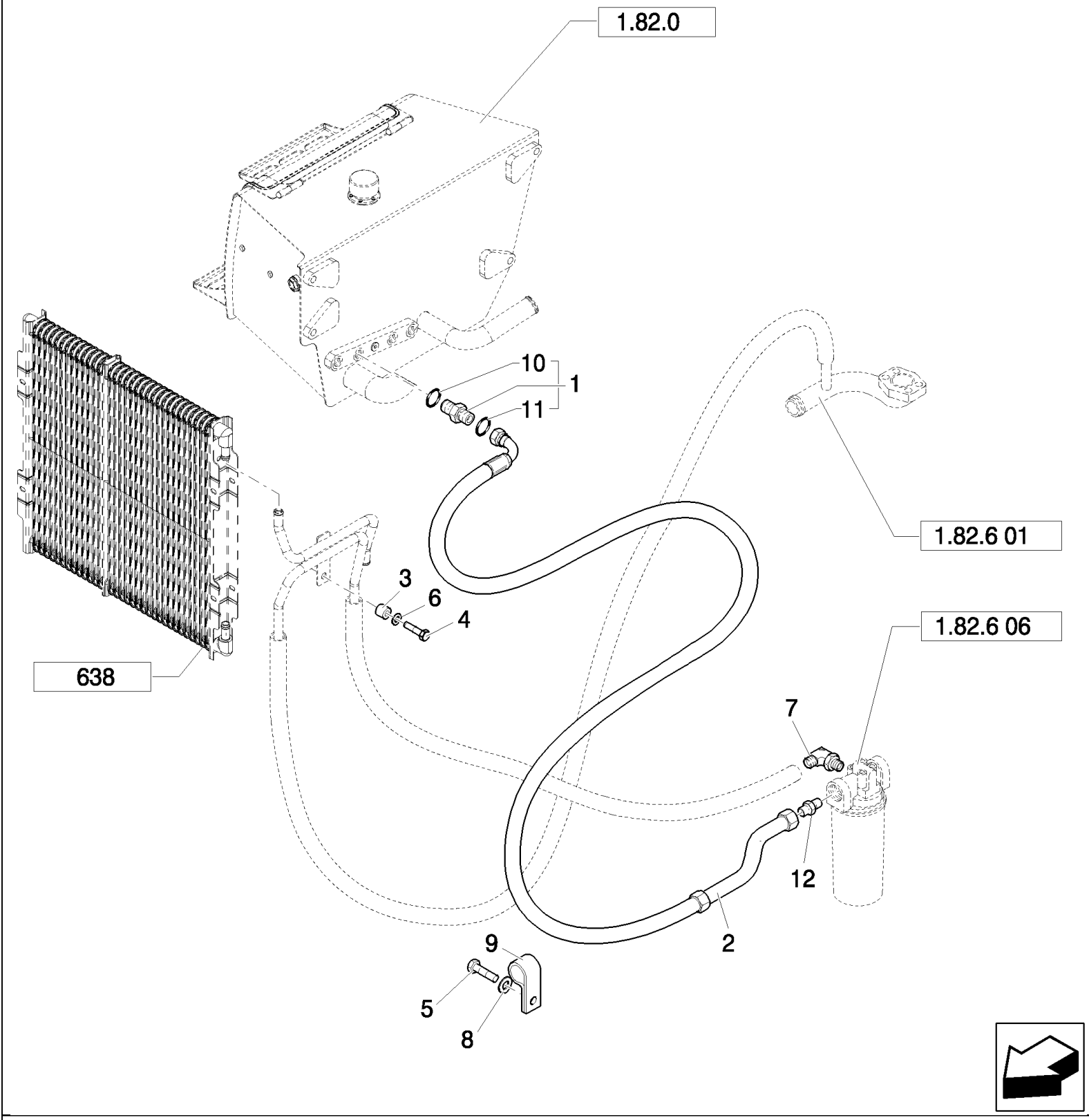

B110 TIER 3 BACKHOE LOADER (2/07-)

1.82.6(05) HYDRAULIC SYSTEM PIPING

Ref	Numero de Pieza	Ctd	Descripción
1	85802801	1	CONNECTOR, HYD., 1-11/16"-12 ORS x 1-5/16"-12 SAE O-ring, Includes 10, 11
2	85827824	1	HOSE, FLEXIBLE,
3	85825169	1	SPACER,
4	47049184	4	SCREW,
5	47042364	1	BOLT, M12x25
6	47048963	1	WASHER,
7	85825355	1	CONNECTOR, HYD.,
8	47048964	1	WASHER,
9	47048664	1	CLAMP,
10	80167268	1	O-RING,
11	89824051	1	O-RING,
12	85802960	1	CONNECTOR, HYD.,

1.82.6(06) HYDRAULIC SYSTEM PIPING

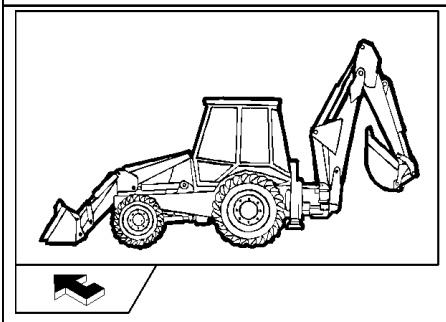

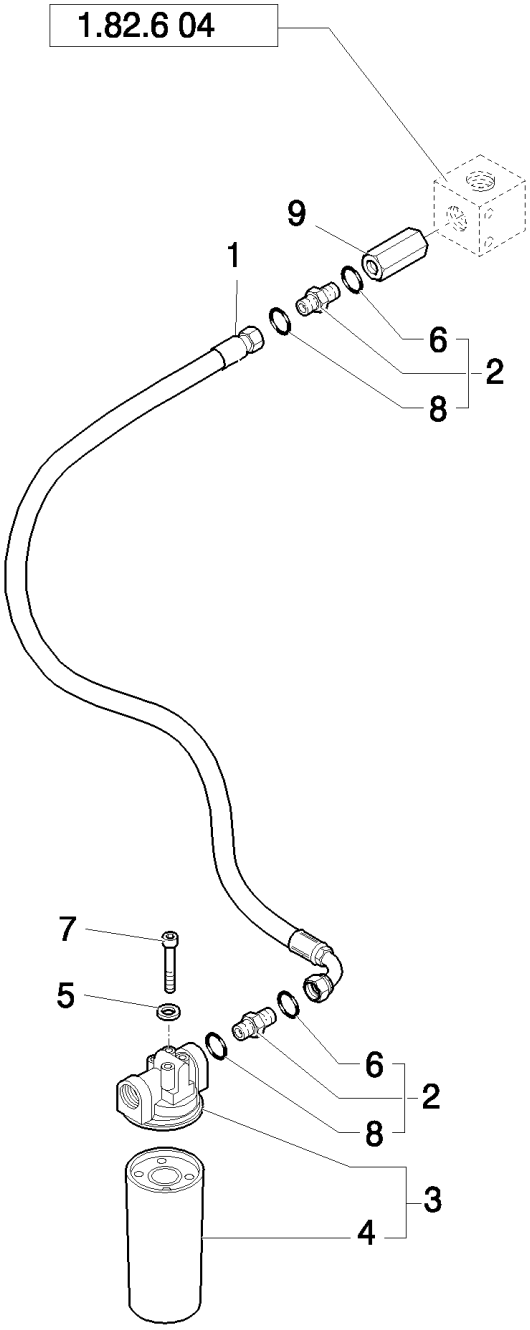

B110 TIER 3 BACKHOE LOADER (2/07-)

1.82.6(06) HYDRAULIC SYSTEM PIPING

Ref	Numero de Pieza	Ctd	Descripción
1	85805840	1	HOSE, FLEXIBLE,
2	85802801	2	CONNECTOR, HYD., 1-11/16"-12 ORS x 1-5/16"-12 SAE O-ring, Includes 6, 8
3	87315438	1	FILTER ASSY, , Includes 4
4	86989733	1	FILTER, HYDRAULIC OIL,
5	11190579	4	WASHER, SPRING, Belleville, M10.5,
6	80167268	2	O-RING,
7	11106221	4	BOLT, Hex, M10 x 25, 8.8, Full Thd,
8	89824051	2	O-RING,
9	85805824	1	VALVE, CHECK,

1.82.6(07) HYDRAULIC SYSTEM PIPING

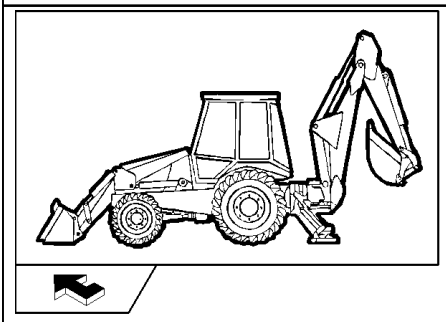

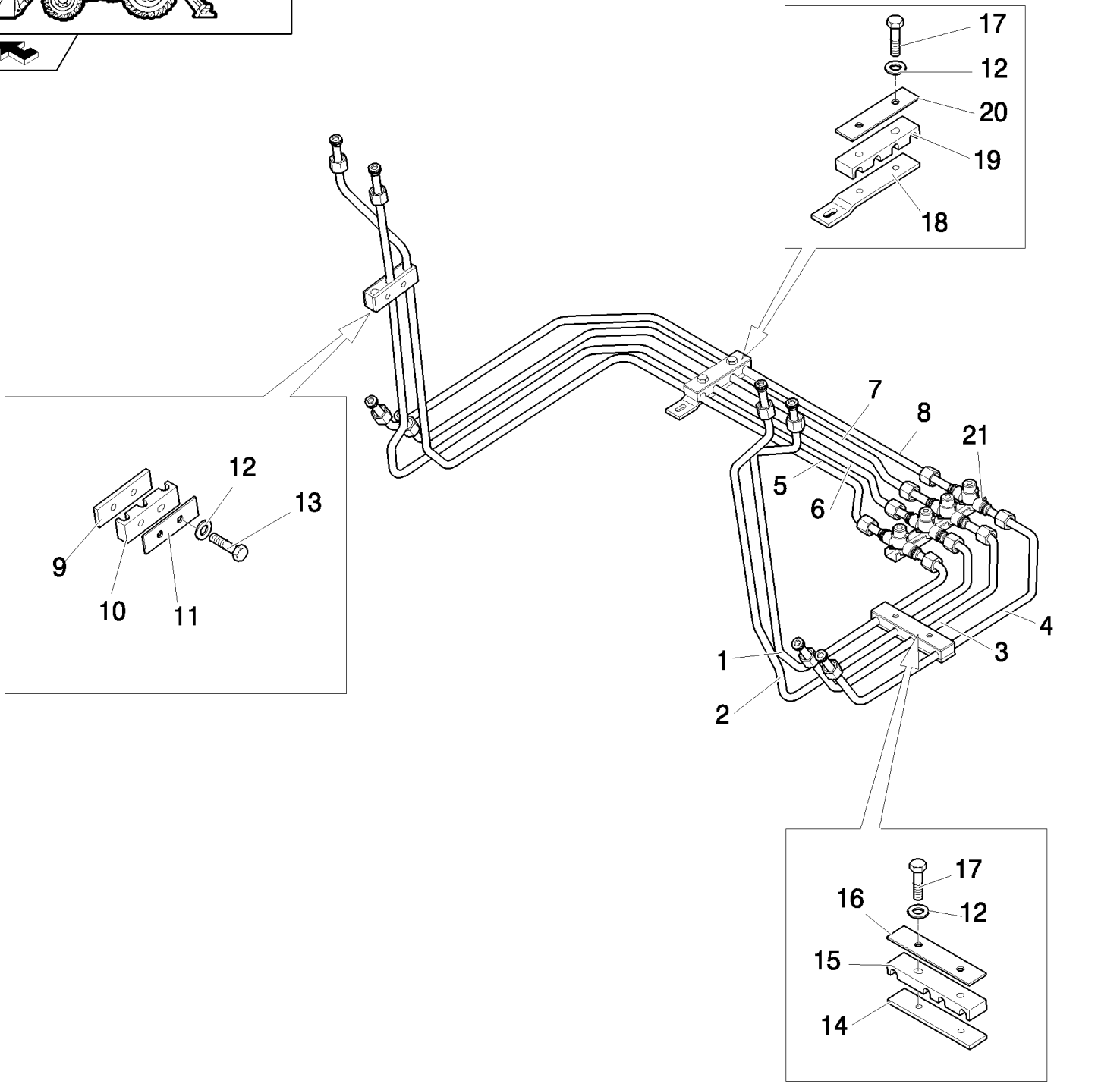

B110 TIER 3 BACKHOE LOADER (2/07-)

1.82.6(07) HYDRAULIC SYSTEM PIPING

Ref	Numero de Pieza	Ctd	Descripción
1	85805854	1	TUBE, HYD, LH
2	85805855	1	TUBE, HYD, LH
3	85805858	1	TUBE, HYD, LH
4	85805859	1	TUBE, HYD, LH
5	85805856	1	TUBE, HYD, RH
6	85805857	1	TUBE, HYD, RH
7	85805860	1	TUBE, HYD, RH
8	85805861	1	TUBE, HYD, RH
9	85805870	2	PLATE,
10	85805872	2	CLAMP,
11	85805869	2	PLATE,
12	11193979	8	WASHER, SPRING, Belleville, M8.4,
13	16043621	2	BOLT, Hex, M8 x 25, 8.8,
14	85805210	2	PLATE,
15	85805211	2	CLAMP,
16	85805209	2	PLATE,
17	16043821	6	BOLT, Hex, M8 x 30, 8.8,
18	85805206	1	BRACKET,
19	85805208	1	CLAMP,
20	85805207	1	PLATE,
21	85805203	1	MANIFOLD,

1.82.6(08) HYDRAULIC SYSTEM PIPING

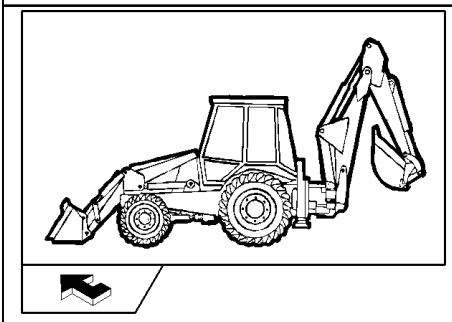

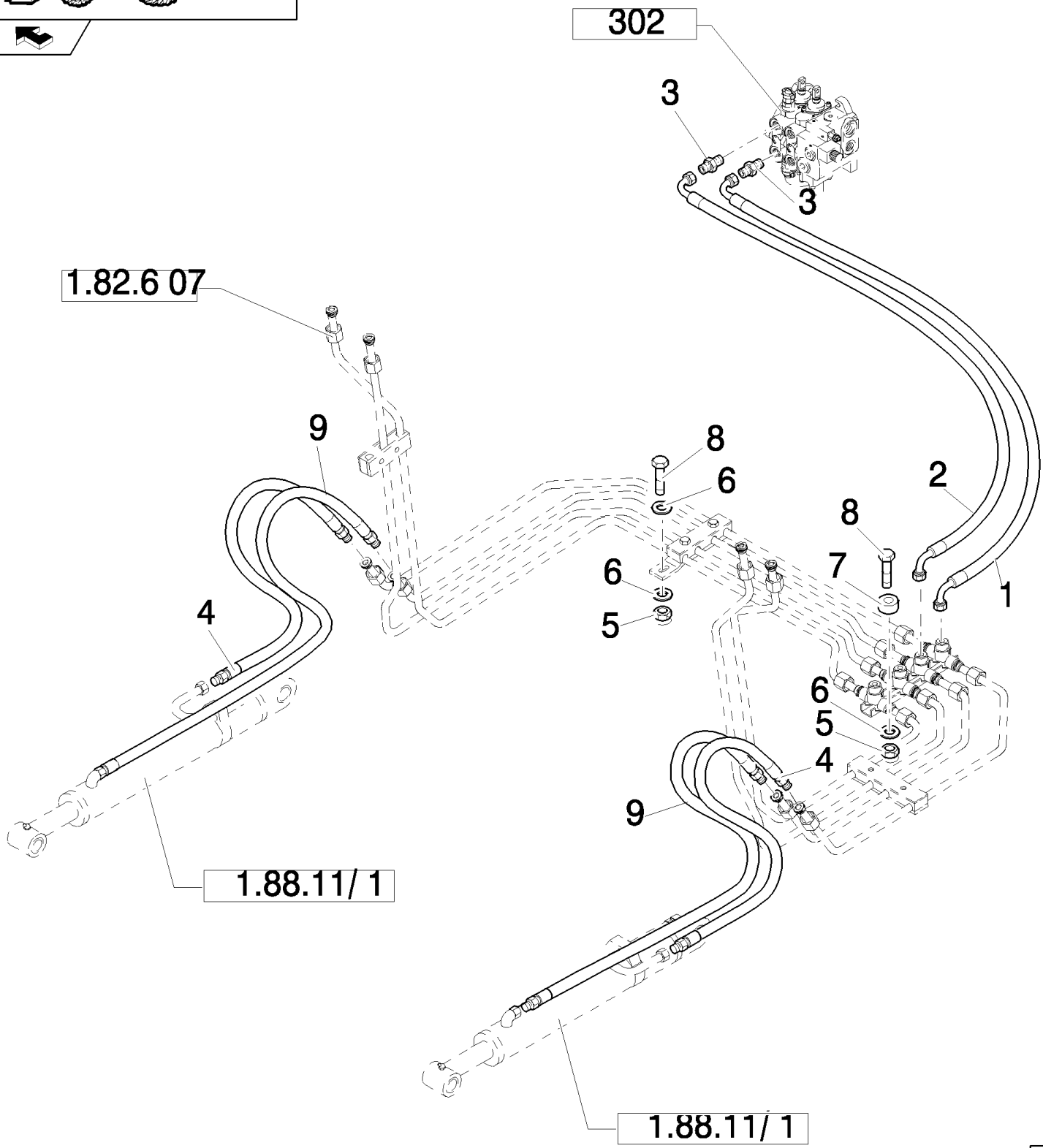

All version except: B110 Nord America Mechanical Version

B110 TIER 3 BACKHOE LOADER (2/07-)

1.82.6(08) HYDRAULIC SYSTEM PIPING

Ref	Numero de Pieza	Ctd	Descripción
1	87619508	1	HOSE, FLEXIBLE,
2	87619510	1	HOSE, FLEXIBLE,
3	83962539	2	CONNECTOR, HYD., 1-1/16-12 ORB x 1-14 ORFS; Incl. 167266, 9992069 O-Rings
4	85813363	2	HOSE, FLEXIBLE, 550mm lg,
5	14048211	2	NUT, LOCK, M8 x 1.25, Cl 8,
6	12647121	3	WASHER, M8 x 20 x 3,
7	85802891	2	SPACER,
8	16044021	2	BOLT, Hex, M8 x 40, 8.8,
9	85813380	2	HOSE, FLEXIBLE,

All version except: B110 Nord America Mechanical Version

1.82.6(09) HYDRAULIC SYSTEM PIPING

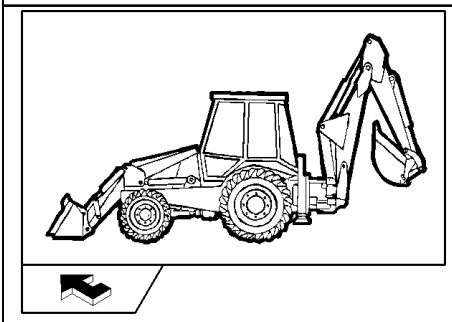

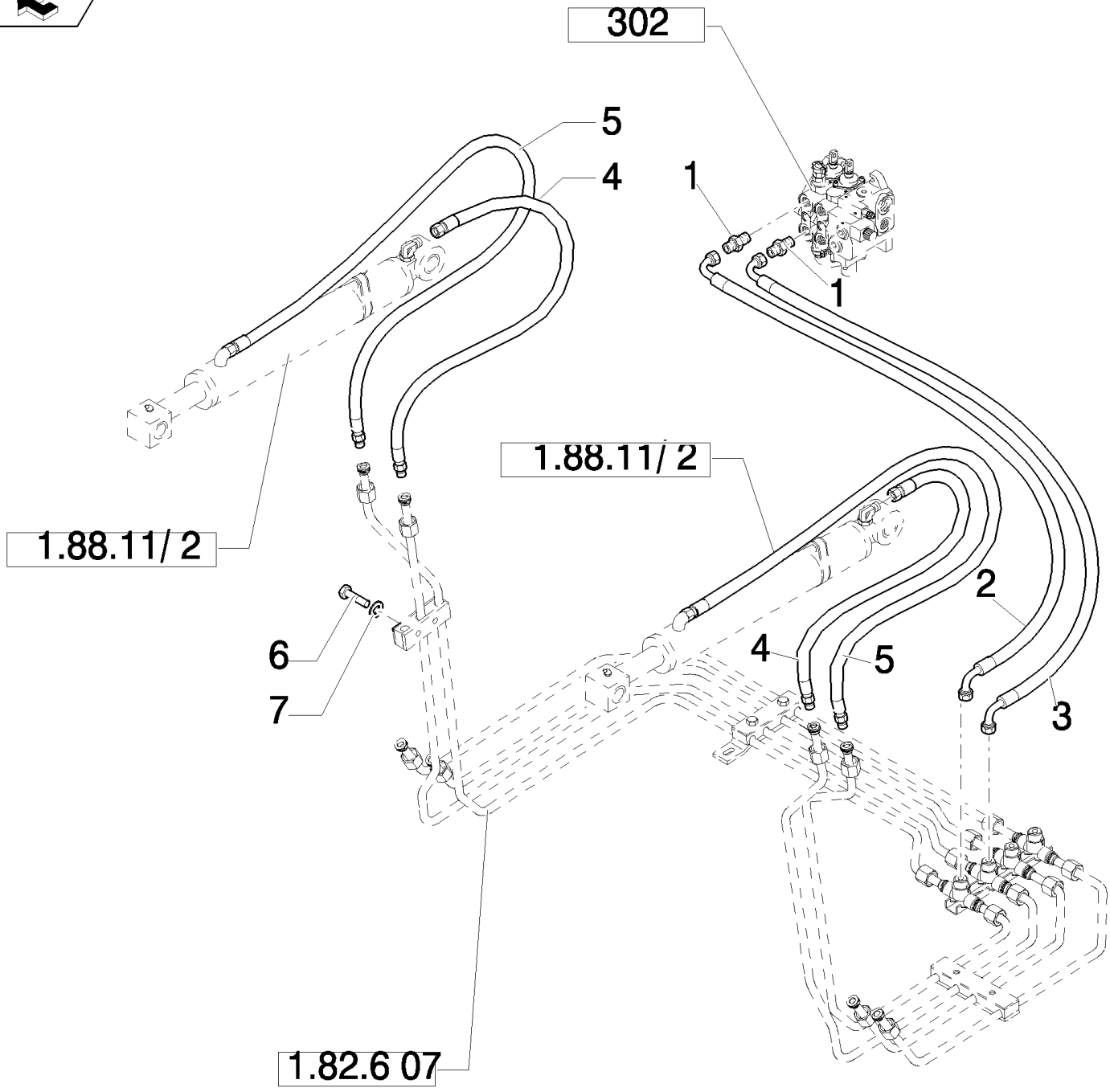

All version except: B110 Nord America Mechanical Version

B110 TIER 3 BACKHOE LOADER (2/07-)

1.82.6(09) HYDRAULIC SYSTEM PIPING

Ref	Numero de Pieza	Ctd	Descripción
1	83962539	2	CONNECTOR, HYD., 1-1/16-12 ORB x 1-14 ORFS; Incl. 167266, 9992069 O-Rings
2	87619509	1	HOSE, FLEXIBLE,
3	87619507	1	HOSE, FLEXIBLE, , Only for EUROPE Mechanical Version
4	85813362	2	HOSE, FLEXIBLE, 1130mm lg,
3	85826087	1	HOSE, FLEXIBLE, , Only for EUROPE and NA Pilot Version
5	85813379	2	HOSE, FLEXIBLE,
6	16044021	2	BOLT, Hex, M8 x 40, 8.8,
7	11193979	2	WASHER, SPRING, Belleville, M8.4,

All version except: B110 Nord America Mechanical Version

1.82.6(11) HYDRAULIC SYSTEM PIPING(SIDE SHIFT)

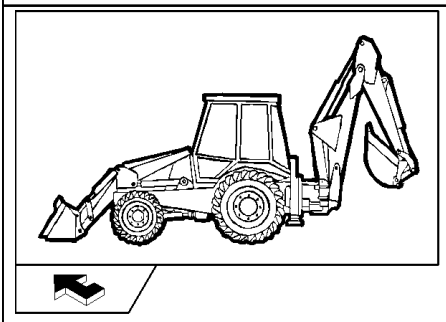

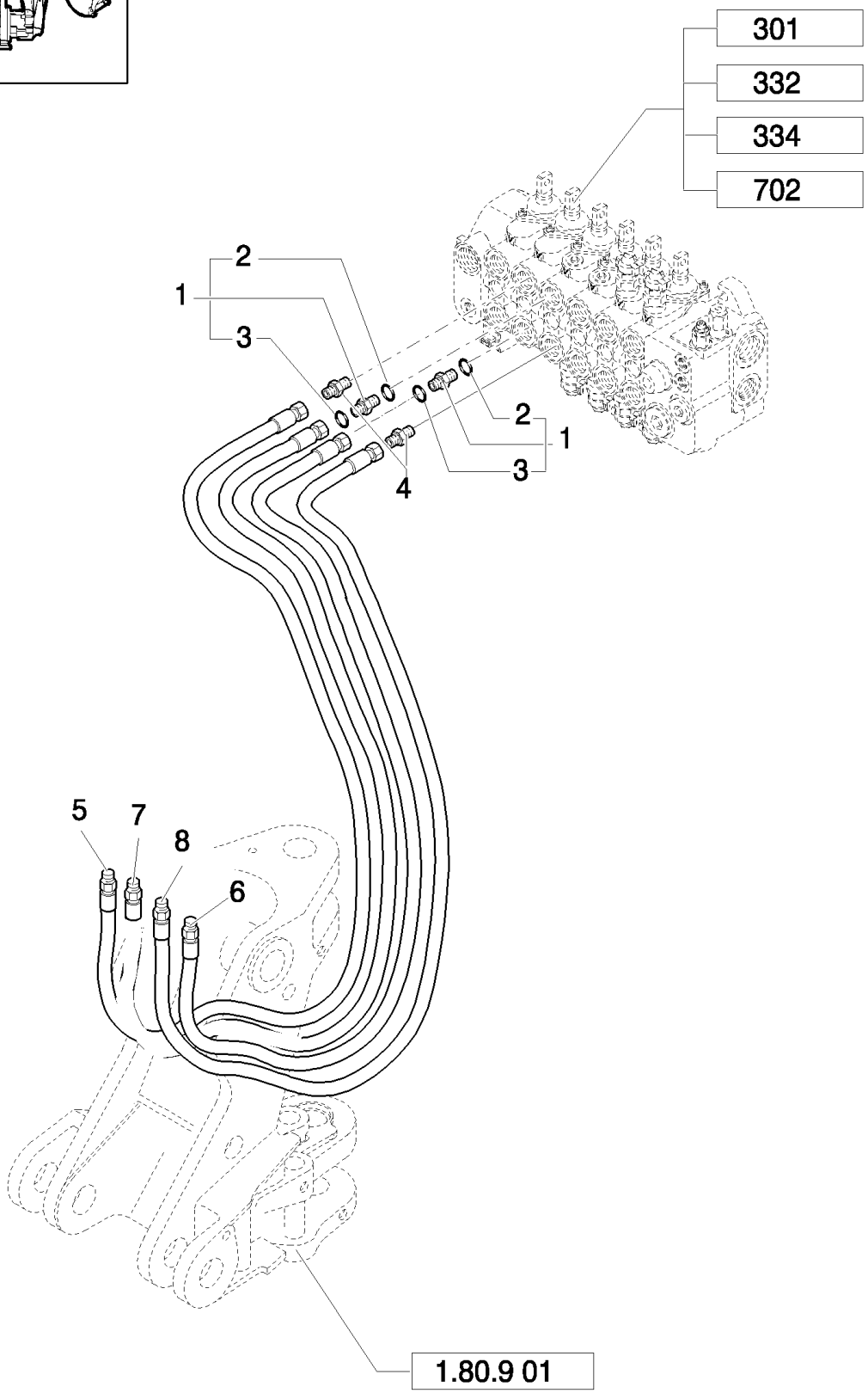

B110 TIER 3 BACKHOE LOADER (2/07-)

1.82.6(11) HYDRAULIC SYSTEM PIPING(SIDE SHIFT)

Ref	Numero de Pieza	Ctd	Descripción
1	83962538	2	CONNECTOR, HYD., , Includes 2, 3
2	80167266	2	O-RING,
3	89991976	2	O-RING,
4	83962539	2	CONNECTOR, HYD., 1-1/16-12 ORB x 1-14 ORFS; Incl. 167266, 9992069 O-Rings
5	85819064	1	HOSE, FLEXIBLE,
6	85819062	1	HOSE, FLEXIBLE,
7	85819063	1	HOSE, FLEXIBLE,
8	85819065	1	HOSE, FLEXIBLE,

Mechanical Version

1.82.6(12) HYDRAULIC SYSTEM PIPING

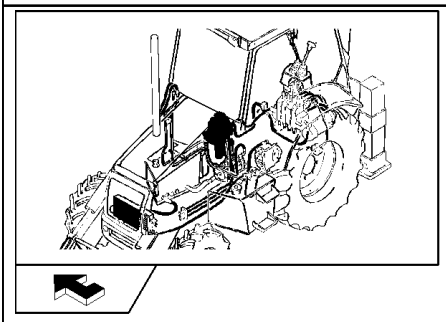

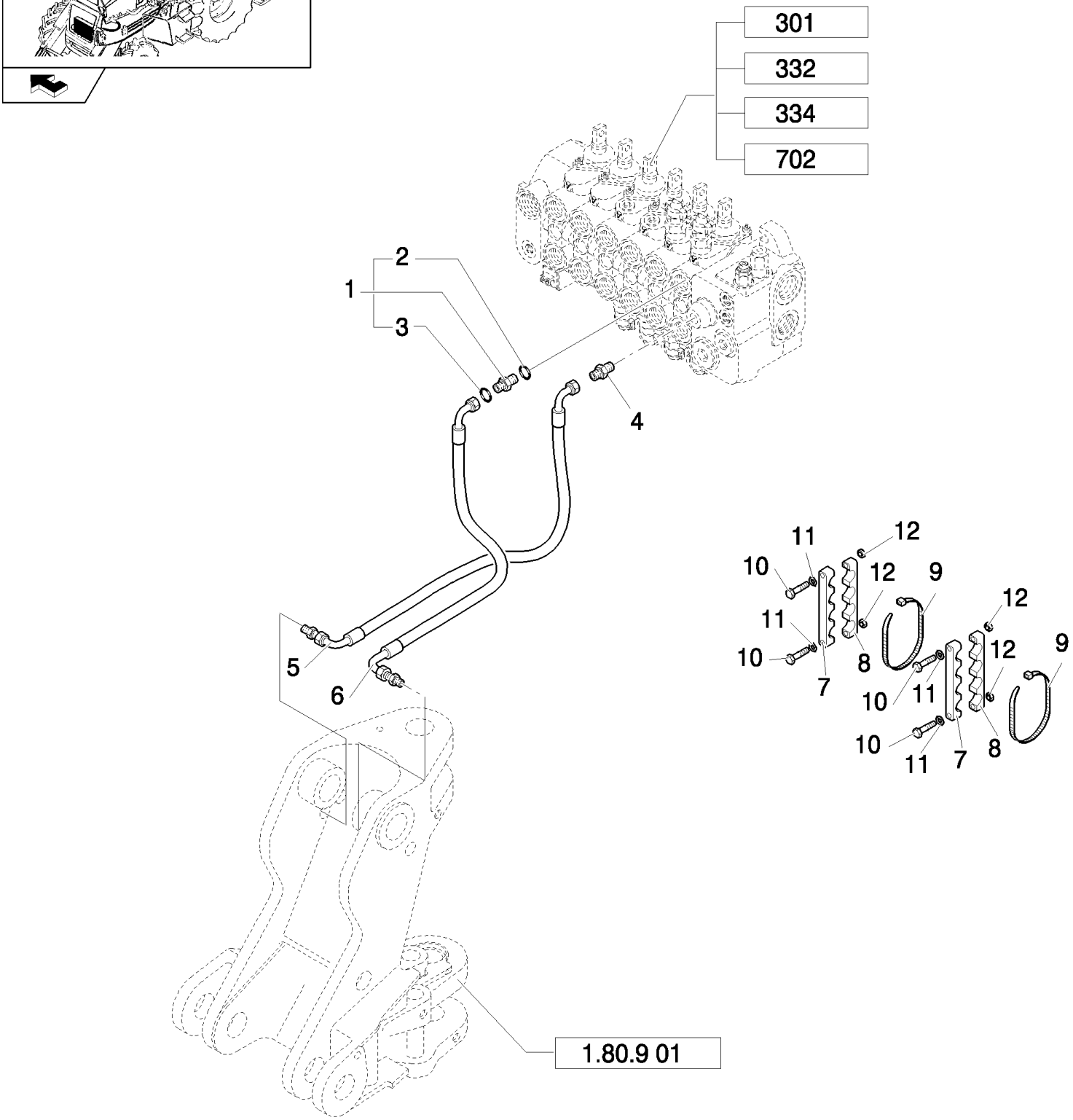

B110 TIER 3 BACKHOE LOADER (2/07-)

1.82.6(12) HYDRAULIC SYSTEM PIPING

Ref	Numero de Pieza	Ctd	Descripción
1	83962538	1	CONNECTOR, HYD., , Includes 2, 3
2	80167266	1	O-RING,
3	89991976	1	O-RING,
4	83962539	1	CONNECTOR, HYD., 1-1/16-12 ORB x 1-14 ORFS; Incl. 167266, 9992069 O-Rings
5	85819058	1	TUBE, HYD, , Only for Mechanical Version
5	87621907	1	HOSE, FLEXIBLE, , Only for Pilot Version
6	85819059	1	TUBE, HYD, , Only for Mechanical Version
6	87629484	1	, Only for Pilot Version
7	85817230	2	CLAMP,
8	85817231	2	CLAMP,
9	85817474	2	STRAP, CABLE,
10	15213621	4	SCREW, Hex, M8 x 55, 8.8, Full Thd,
11	11193879	4	WASHER, SPRING, Belleville, M8.4,
6	14048211	4	NUT, LOCK, M8 x 1.25, Cl 8,

1.82.6(13) HYDRAULIC SYSTEM PIPING(SIDE SHIFT)

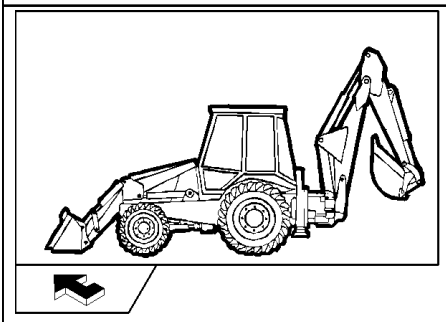

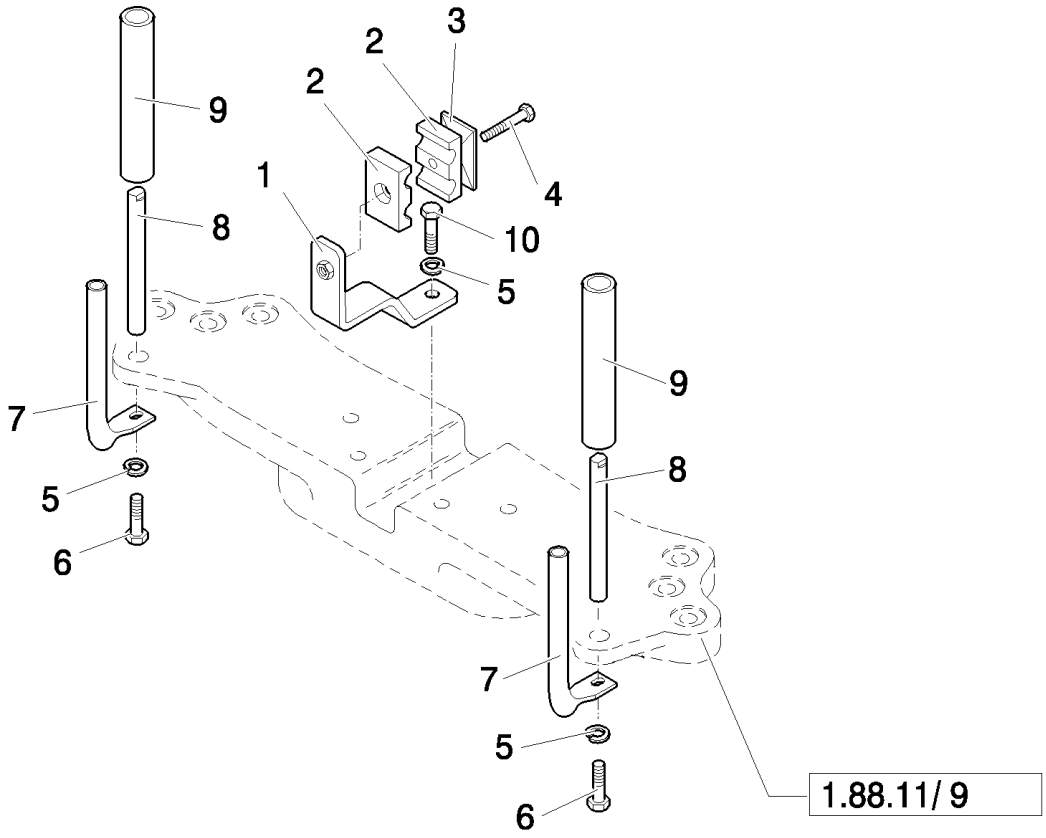

B110 TIER 3 BACKHOE LOADER (2/07-)

1.82.6(13) HYDRAULIC SYSTEM PIPING(SIDE SHIFT)

Ref	Numero de Pieza	Ctd	Descripción
1	85817316	1	SUPPORT,
2	87390511	2	CLAMP,
3	87390514	1	PLATE,
4	16044221	1	BOLT, Hex, M8 x 50, 8.8,
5	11190579	3	WASHER, SPRING, Belleville, M10.5,
6	11307021	2	BOLT, Hex, M10 x 1.25 x 40, 10.9, Full Thd,
7	85819584	2	PIN,
8	85825231	2	PIN,
9	85825230	2	HOSE, FLEXIBLE,
10	11106221	1	BOLT, Hex, M10 x 25, 8.8, Full Thd,

1.82.6(14) HYDRAULIC SYSTEM PIPING (SIDE SHIFT)

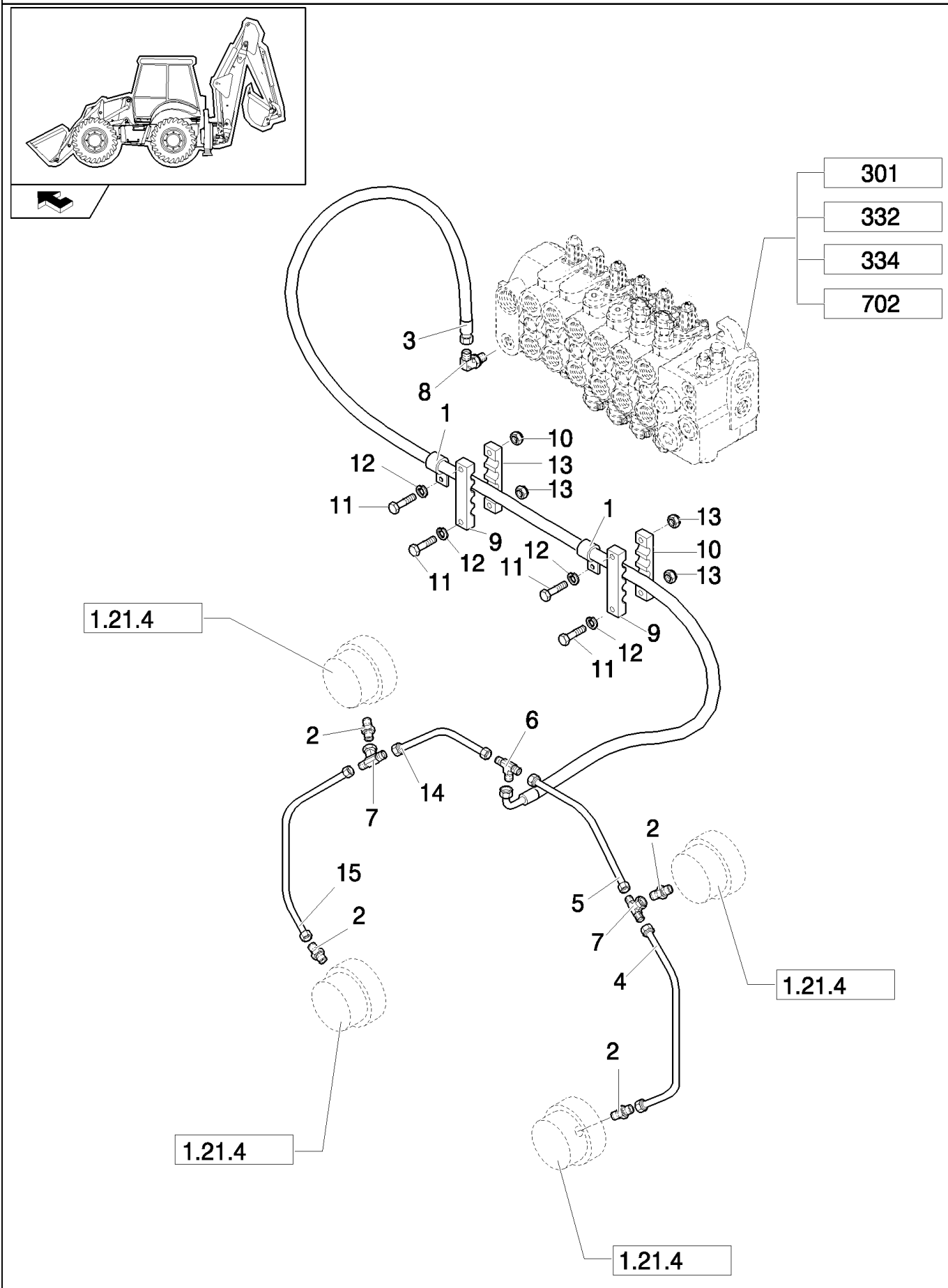

B110 TIER 3 BACKHOE LOADER (2/07-)

1.82.6(14) HYDRAULIC SYSTEM PIPING (SIDE SHIFT)

Ref	Numero de Pieza	Ctd	Descripción
1	47049644	1	CLAMP, HOSE,
2	85803333	4	CONNECTOR, HYD.,
3	85819554	1	HOSE, FLEXIBLE,
4	87576141	1	TUBE, RIGID, RH
5	87576145	1	TUBE, RIGID, RH
6	85803334	1	TEE,
7	86513653	2	TEE, 37º, 7/16"-20 x 7/16"-20, Fem Sw Run,
8	85802234	1	ELBOW,
9	85817277	2	CLAMP, RH
10	85817279	2	CLAMP, LH
11	15213621	4	SCREW, Hex, M8 x 55, 8.8, Full Thd,
12	11193879	4	WASHER, SPRING, Belleville, M8.4,
13	14048211	4	NUT, LOCK, M8 x 1.25, Cl 8,
14	87576143	1	TUBE, RIGID, LH
15	87576137	1	TUBE, RIGID, LH

Mechanical Version

1.82.6(15) HYDRAULIC SYSTEM PIPING

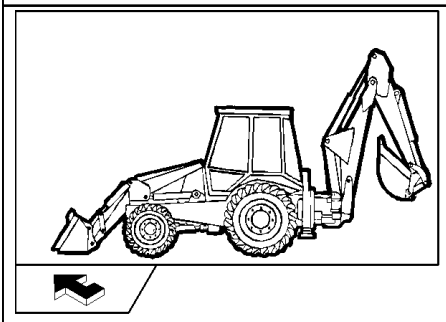

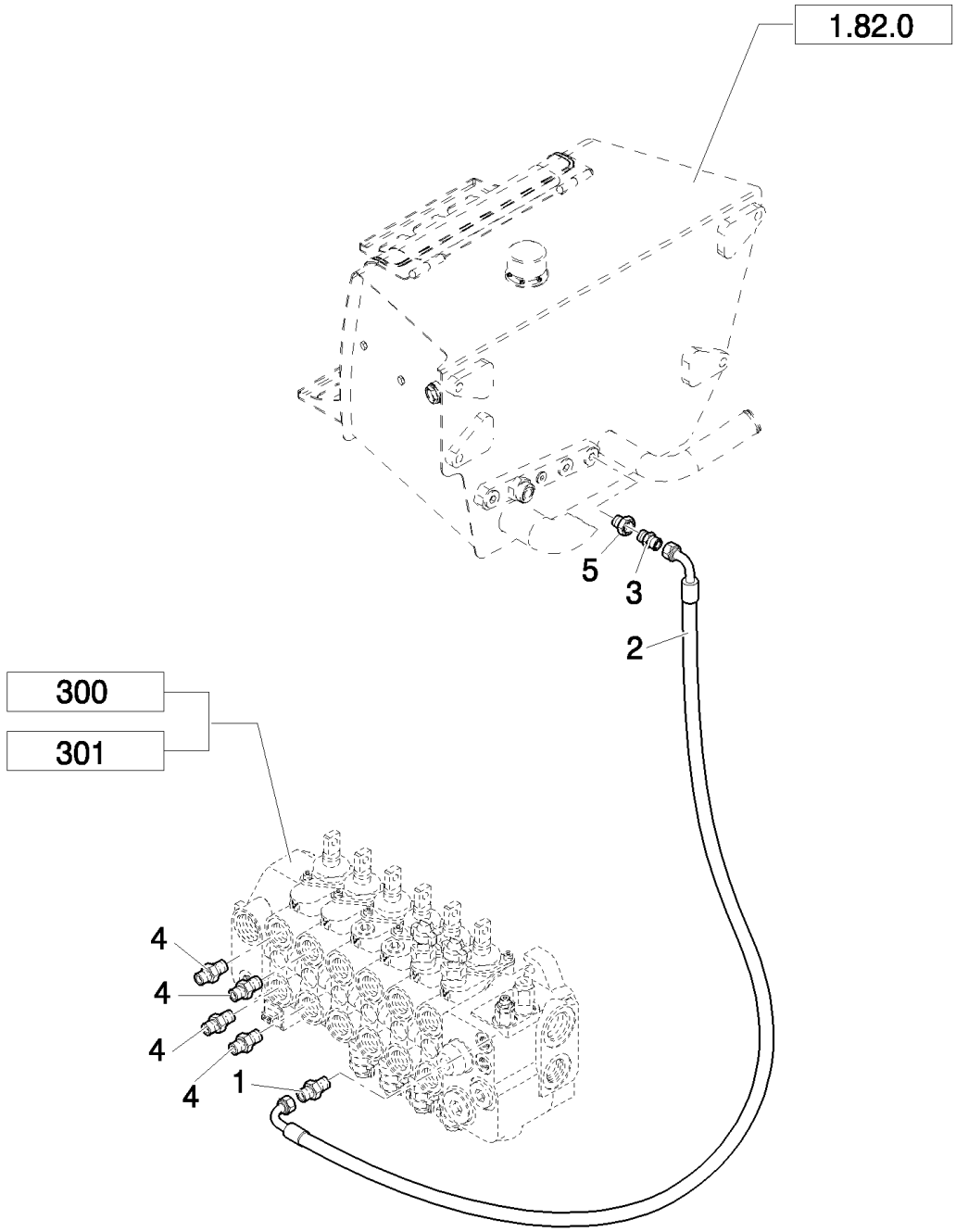

B110 TIER 3 BACKHOE LOADER (2/07-)

1.82.6(15) HYDRAULIC SYSTEM PIPING

Ref	Numero de Pieza	Ctd	Descripción
1	85802803	1	CONNECTOR, HYD.,
2	85805259	1	HOSE, FLEXIBLE,
3	85802960	1	CONNECTOR, HYD.,
4	85805258	4	CONNECTOR, HYD., 9/16"-16 ORS x 1 1/16"-12, O-Ring,
5	85826100	1	REDUCER,

Mechanical Version

1.82.6(16) BACKHOE CONTROL VALVE(CENTER PIVOT) - NA

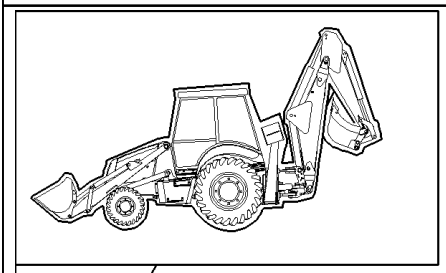

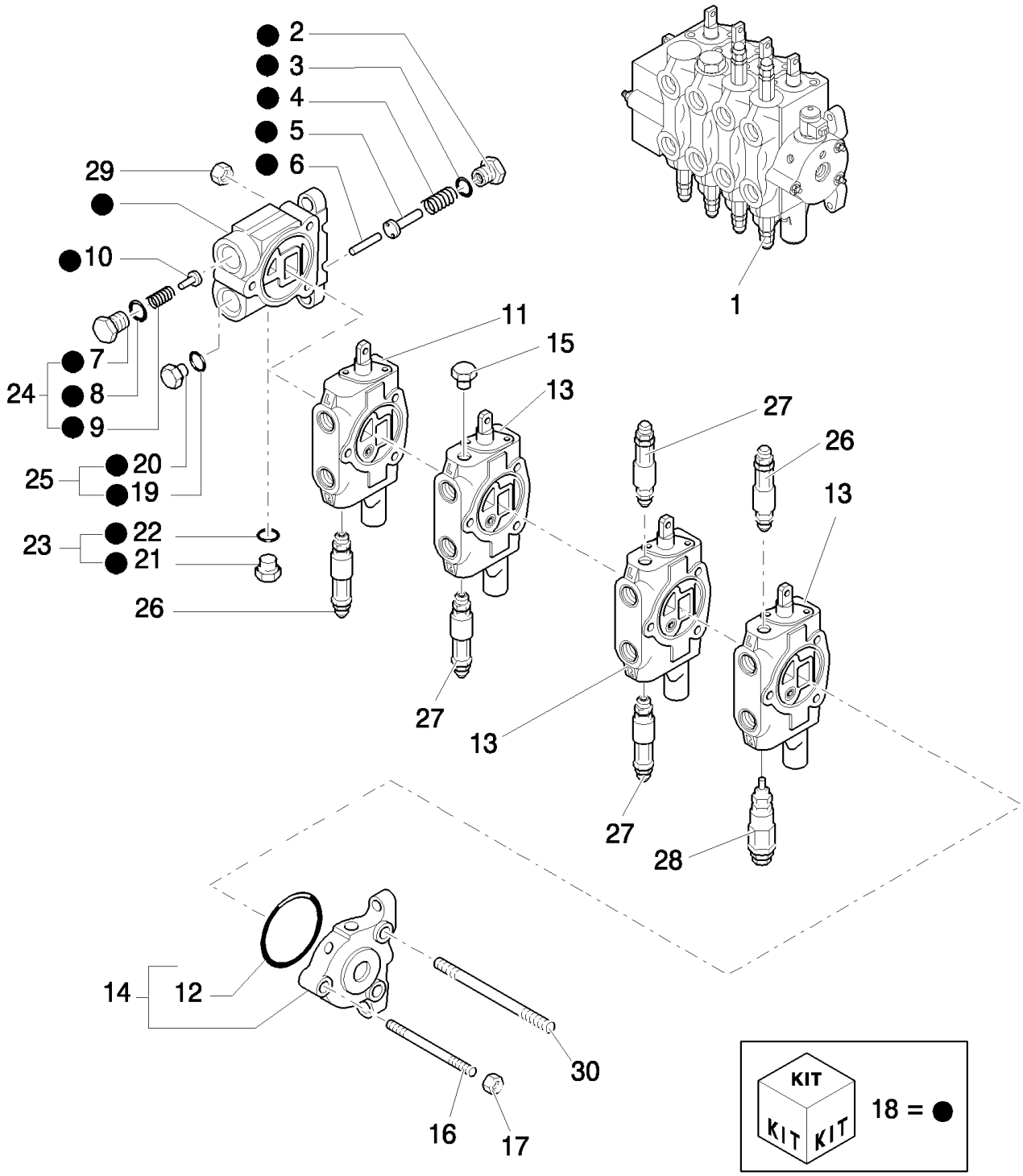

B110 TIER 3 BACKHOE LOADER (2/07-)

1.82.6(16) BACKHOE CONTROL VALVE(CENTER PIVOT) - NA

Ref	Numero de Pieza	Ctd	Descripción
1	85827100	1	VALVE, CONTROL,
2	9968501	1	PLUG,
3	9968502	1	O-RING,
4	9968500	1	SPRING,
5	9968503	1	PLUNGER,
6	9968497	1	PIN,
7	9968498	1	PLUG,
8	9968468	1	O-RING,
9	9968448	1	SPRING,
10	9968447	1	PLUNGER,
11	85827102	1	VALVE SECTION, HYD, , See Page 1.82.6 17
12	9968495	1	O-RING,
13	85827101	3	VALVE SECTION, HYD, , See Page 1.82.6 18
14	9968494	1	VALVE SECTION, HYD,
15	85807832	1	PLUG,
16	9968506	1	ROD, THREADED,
17	9968507	1	NUT,
18	85807827	1	VALVE SECTION, HYD,
19	85807830	1	O-RING,
20	85807831	1	PLUG,
21	85807828	1	PLUG,
22	85807829	1	O-RING,
23	9968523	1	PLUG,
24	85807834	1	PLUG,
25	85807833	1	PLUG,
26	9968595	2	VALVE, PRESSURE RELIEF,
27	9968596	3	VALVE, PRESSURE RELIEF,
28	9968508	1	VALVE, PRESSURE RELIEF,
29	9968504	1	NUT,
29	9968505	1	ROD, THREADED,

Mechanical Version

1.82.6(17) DIPPER VALVE SECTION (CENTER PIVOT) - NA

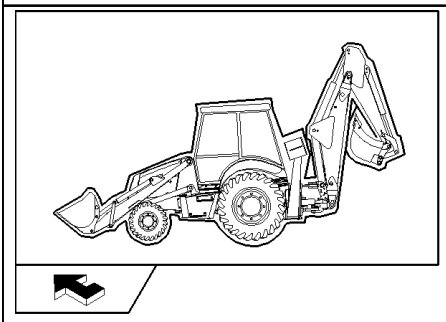

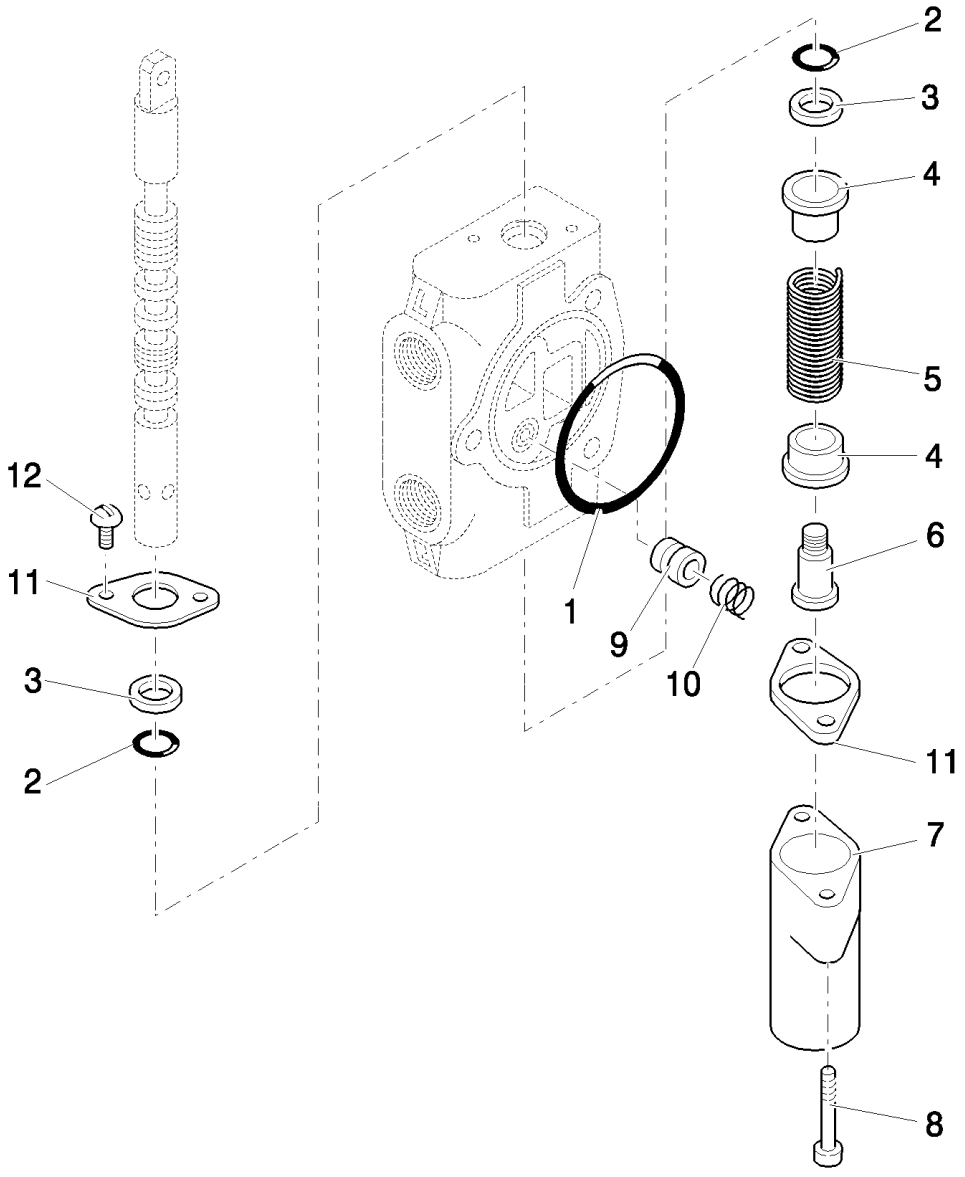

B110 TIER 3 BACKHOE LOADER (2/07-)

1.82.6(17) DIPPER VALVE SECTION (CENTER PIVOT) - NA

Ref	Numero de Pieza	Ctd	Descripción
1	9968495	1	O-RING,
2	9968489	1	SEAL,
3	9968490	1	WIPER,
4	9968512	1	SEAT/SLOT,
5	9968514	1	SPRING,
6	9968515	1	SPOOL,
7	9968513	1	COVER,
8	9968516	1	SCREW,
9	9968510	2	PLUNGER,
10	9968511	1	SPRING,
11	9968458	2	FLANGE,
12	9968460	1	SCREW,

Mechanical Version

1.82.6(18) BUCKET, SWING, & BOOM VALVE SECTION (CENTER PIVOT) - NA

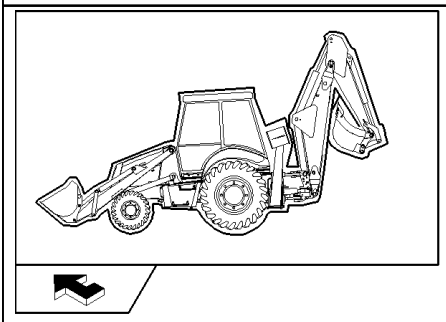

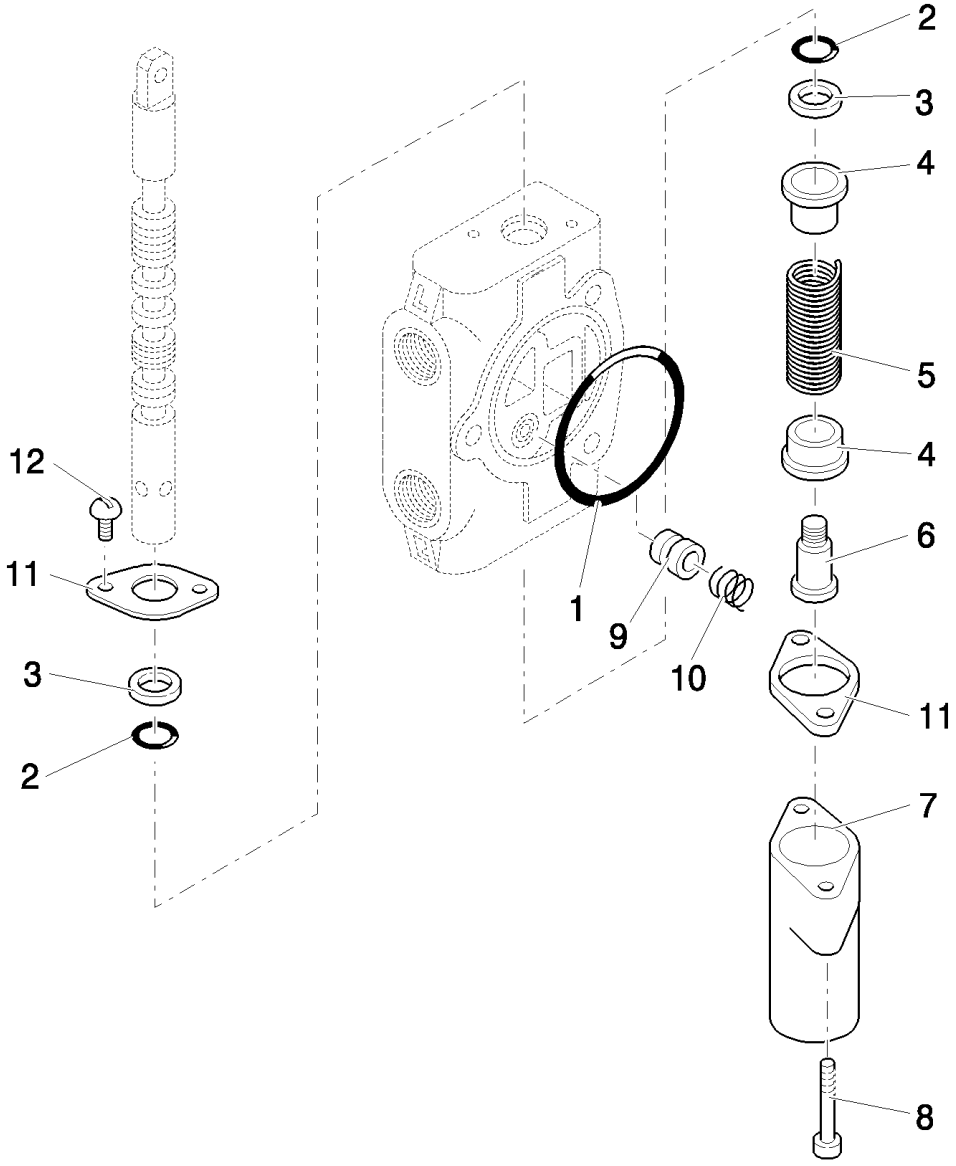

B110 TIER 3 BACKHOE LOADER (2/07-)

1.82.6(18) BUCKET, SWING, & BOOM VALVE SECTION (CENTER PIVOT) - NA

Ref	Numero de Pieza	Ctd	Descripción
1	9968495	1	O-RING,
2	9968489	1	SEAL,
3	9968490	1	WIPER,
4	9968512	2	SEAT/SLOT,
5	9968514	1	SPRING,
6	9968515	1	SPOOL,
7	9968513	1	COVER,
8	9968516	1	SCREW,
9	9968510	1	PLUNGER,
10	9968511	1	SPRING,
11	9968458	2	FLANGE,
12	9968460	1	SCREW,

Mechanical Version

1.82.6/ 1(01) FRONT HYDRAULIC PUMP INTAKE & OUTLET HOSES (CENTER PIVOT) - NA

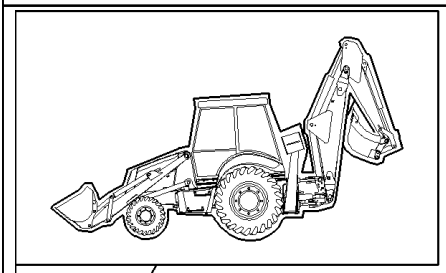

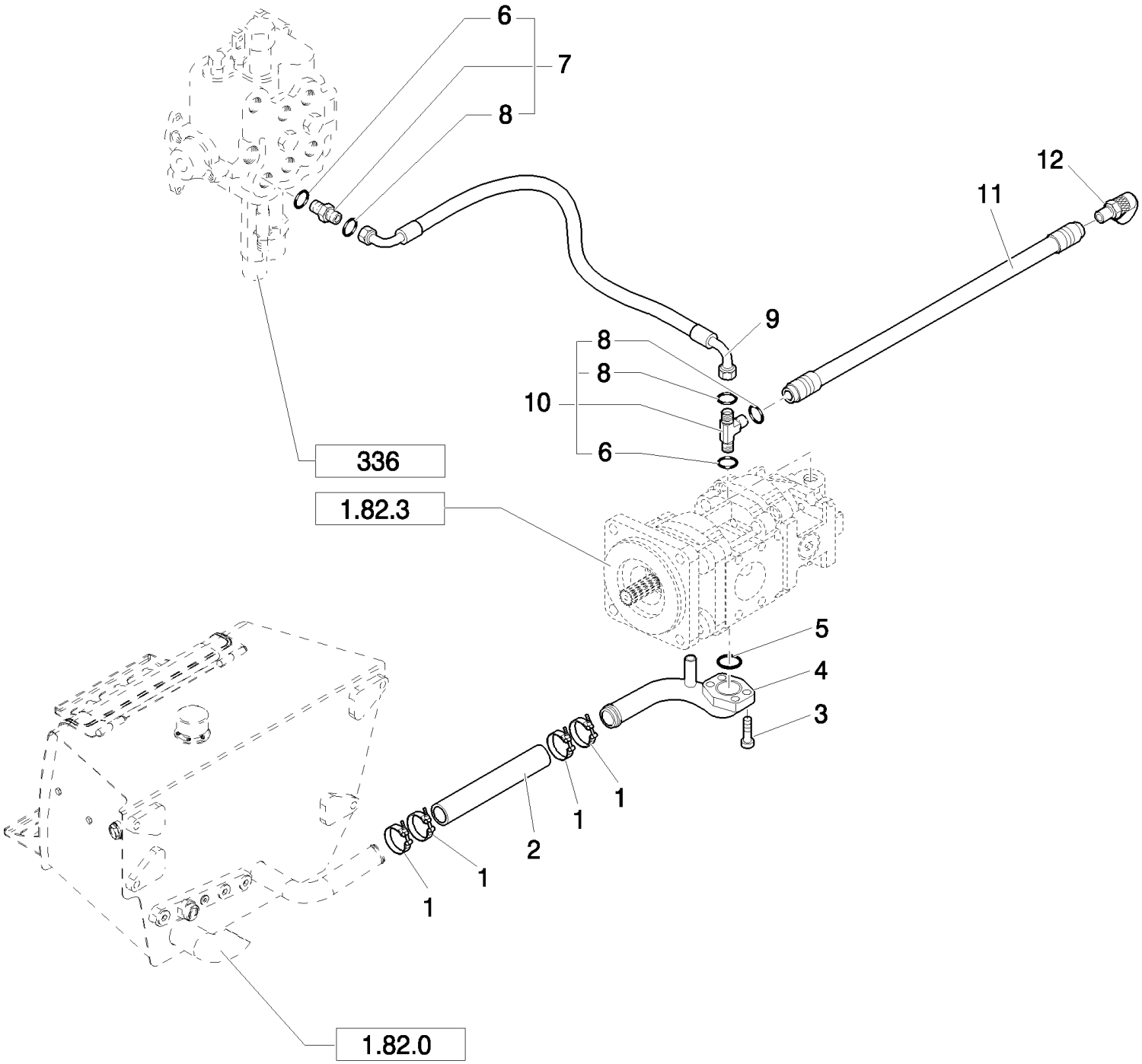

B110 TIER 3 BACKHOE LOADER (2/07-)

1.82.6/ 1(01) FRONT HYDRAULIC PUMP INTAKE & OUTLET HOSES (CENTER PIVOT) - NA

Ref	Numero de Pieza	Ctd	Descripción
1	85803012	4	CLAMP, HOSE,
2	85811870	1	HOSE,
3	14422021	3	SCREW, Hex Soc Hd, M12 x 30, 8.8,
4	85827041	1	TUBE,
5	14464680	1	O-RING, -228, 70 Duro, 2.234" ID x .139" Thk,
6	80167266	2	O-RING,
7	83962538	1	CONNECTOR, HYD., , Includes 6, 8
8	89991976	3	O-RING,
9	87621912	1	HOSE, FLEXIBLE,
10	85815581	1	TEE, , Includes 6, 8
11	85815568	1	HOSE, FLEXIBLE,
12	85817596	1	COUPLING, QUICK, MALE,

Mechanical Version

1.82.6/ 1(02) REAR HYDRAULIC PUMP STABILIZER, LOADER & BACKHOE VALVE HOSES (CENTER PIVOT) - NA

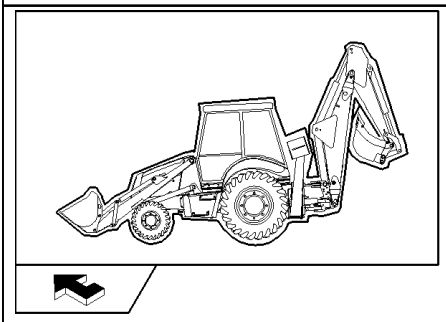

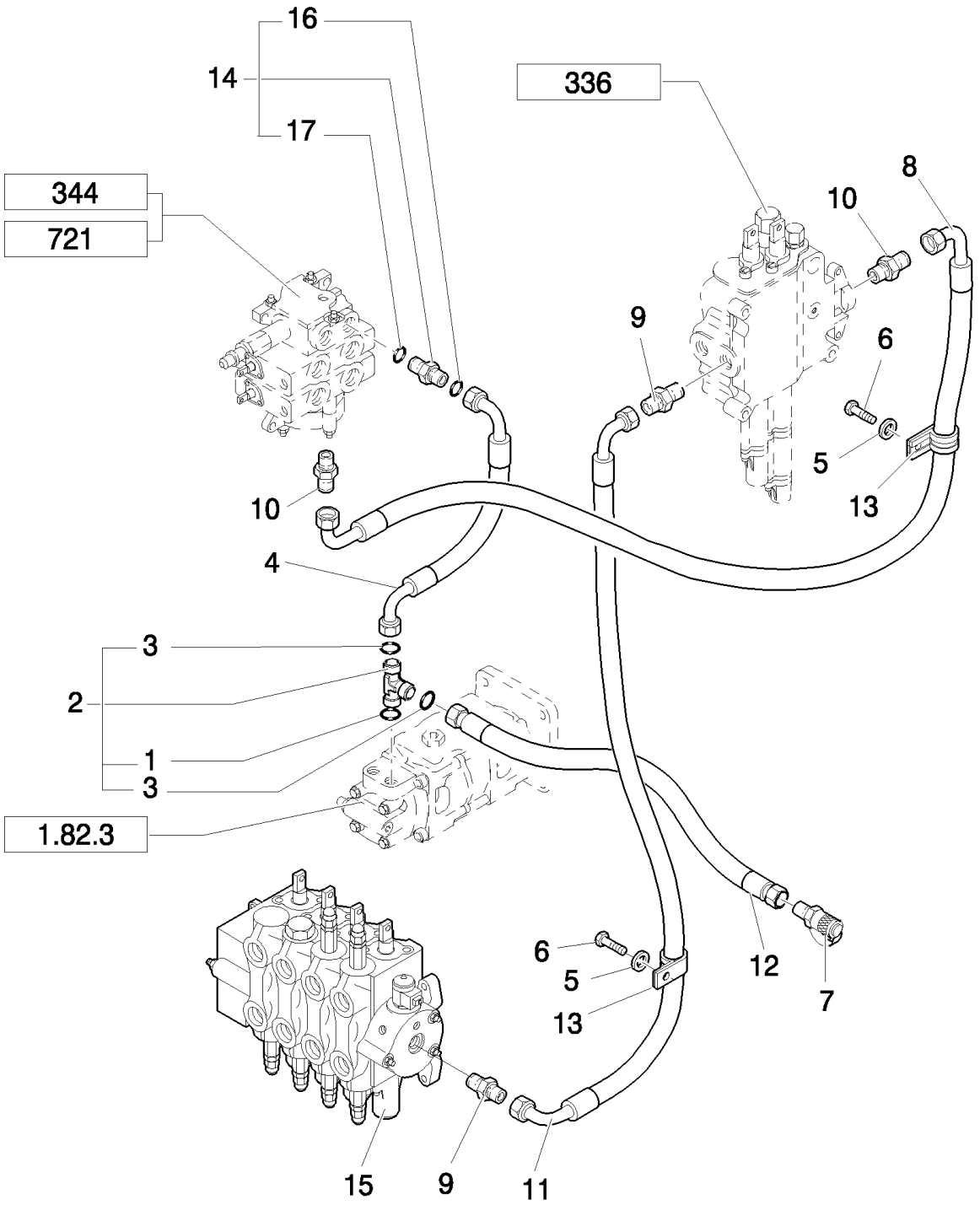

B110 TIER 3 BACKHOE LOADER (2/07-)

1.82.6/ 1(02) REAR HYDRAULIC PUMP STABILIZER, LOADER & BACKHOE VALVE HOSES (CENTER PIVOT) - NA

Ref	Numero de Pieza	Ctd	Descripción
1	80167269	1	O-RING,
2	85815580	1	CONNECTOR, HYD., , Includes 1, 3
3	83901443	2	O-RING,
4	87614752	1	HOSE, FLEXIBLE,
5	11190779	2	WASHER, SPRING, Belleville, M13,
6	15541621	2	BOLT, Hex, M12 x 1.25 x 100, 8.8,
7	85817596	1	COUPLING, QUICK, MALE,
8	87621910	1	HOSE, FLEXIBLE,
9	85802958	2	CONNECTOR, HYD.,
10	85802642	2	CONNECTOR, HYD., 1-3/16"-12 ORS x 7/8"-14 SAE O-Ring
11	85802776	1	HOSE, FLEXIBLE, 1150mm lg,
12	85815567	1	HOSE, FLEXIBLE,
13	85802890	2	CLAMP,
14	83963000	1	CONNECTOR, HYD., , Includes 14, 16
15	85827100	1	VALVE, CONTROL,
16	80167269	1	O-RING,
17	83901443	1	O-RING,

Mechanical Version

1.82.6/ 1(03) HYDRAULIC SYSTEM PIPING(CENTER PIVOT) - NA

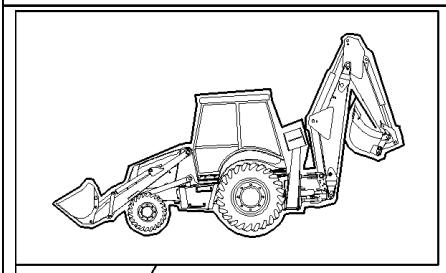

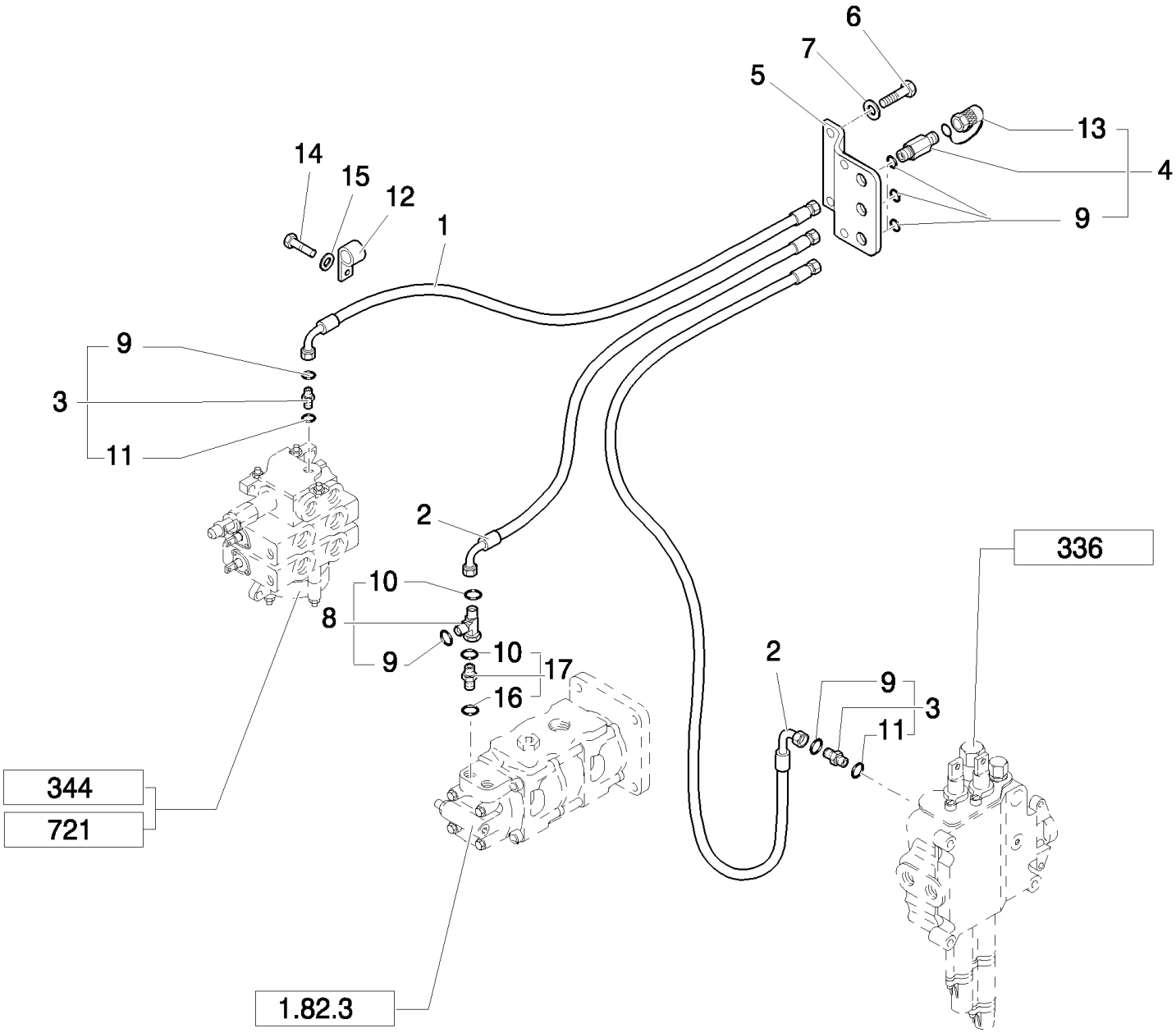

B110 TIER 3 BACKHOE LOADER (2/07-)

1.82.6/ 1(03) HYDRAULIC SYSTEM PIPING(CENTER PIVOT) - NA

Ref	Numero de Pieza	Ctd	Descripción
1	85812170	1	HOSE, FLEXIBLE, 1250mm lg,
2	85812171	2	HOSE, FLEXIBLE, 1450mm lg,
3	83963371	2	CONNECTOR, HYD., , Includes 9, 11
4	85817226	3	COUPLING, QUICK, MALE, , Includes 9, 13
5	87569583	1	PLATE,
6	14441524	2	SCREW,
7	11193879	2	WASHER, SPRING, Belleville, M8.4,
8	85815582	1	TEE, , Includes 9, 10
9	81845037	5	O-RING, 90 Duro, .468" ID x .078" Thk
10	89992298	1	O-RING,
11	81844851	5	O-RING, 90 Duro, .375" ID x .070" Thk
12	85802890	2	CLAMP,
13	9968791	3	PLUG,
14	15540821	2	BOLT, Hex, M12 x 1.25 x 50, 8.8,
15	11190779	2	WASHER, SPRING, Belleville, M13,
16	80128825	1	O-RING,
17	83971549	1	ELBOW, , Includes 10, 16

Mechanical Version

1.82.6/ 1(04) RETURN MANIFOLD HOSES - NA

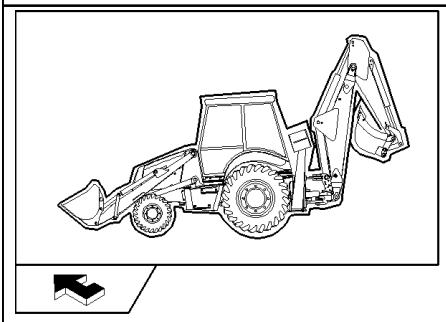

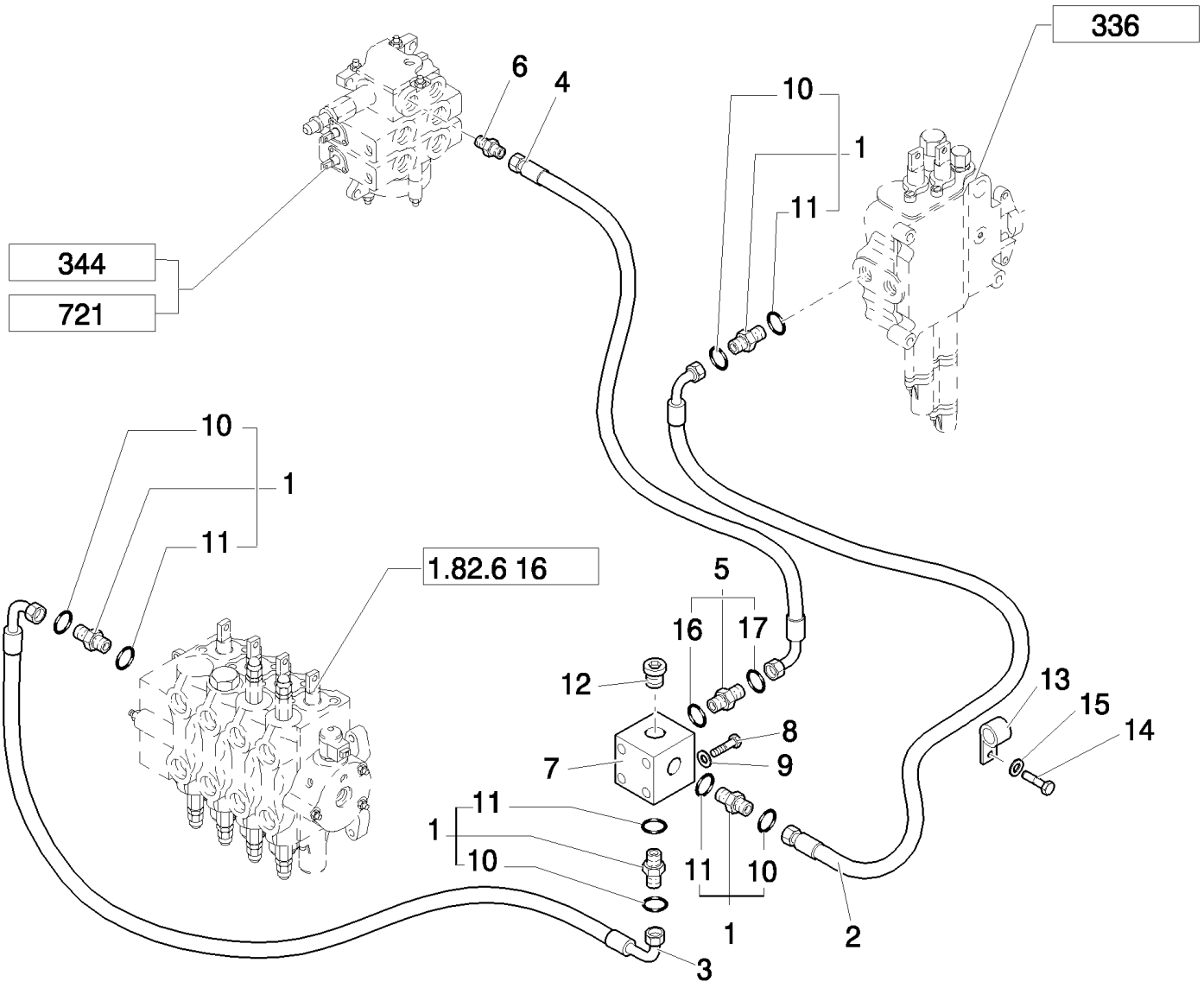

Mechanical Version

B110 TIER 3 BACKHOE LOADER (2/07-)

1.82.6/ 1(04) RETURN MANIFOLD HOSES - NA

Ref	Numero de Pieza	Ctd	Descripción
1	83963375	4	CONNECTOR, HYD., , Includes 10, 11
2	85802777	1	HOSE, FLEXIBLE, 1100mm lg,
3	85802839	1	HOSE, FLEXIBLE, 500mm lg,
4	85802838	1	HOSE, FLEXIBLE, 700mm lg,
5	83962538	1	CONNECTOR, HYD., , Includes 16, 17
6	85802642	1	CONNECTOR, HYD., 1-3/16"-12 ORS x 7/8"-14 SAE O-Ring
7	85802799	1	BLOCK, CONNECTING,
8	15541621	2	BOLT, Hex, M12 x 1.25 x 100, 8.8,
9	11190779	2	WASHER, SPRING, Belleville, M13,
10	89824050	4	O-RING,
11	80167268	4	O-RING,
12	85802955	1	PLUG,
13	85802890	1	CLAMP,
14	15540821	1	BOLT, Hex, M12 x 1.25 x 50, 8.8,
15	12646921	1	WASHER, M12 x 28 x 3,
16	80167266	1	O-RING,
17	89991976	1	O-RING,

Mechanical Version

1.82.6/ 1(05) FILTER ASSEMBLY & HOSE TO RETURN MANIFOLD (CENTER PIVOT) - NA

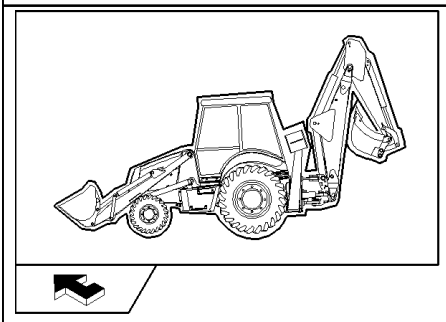

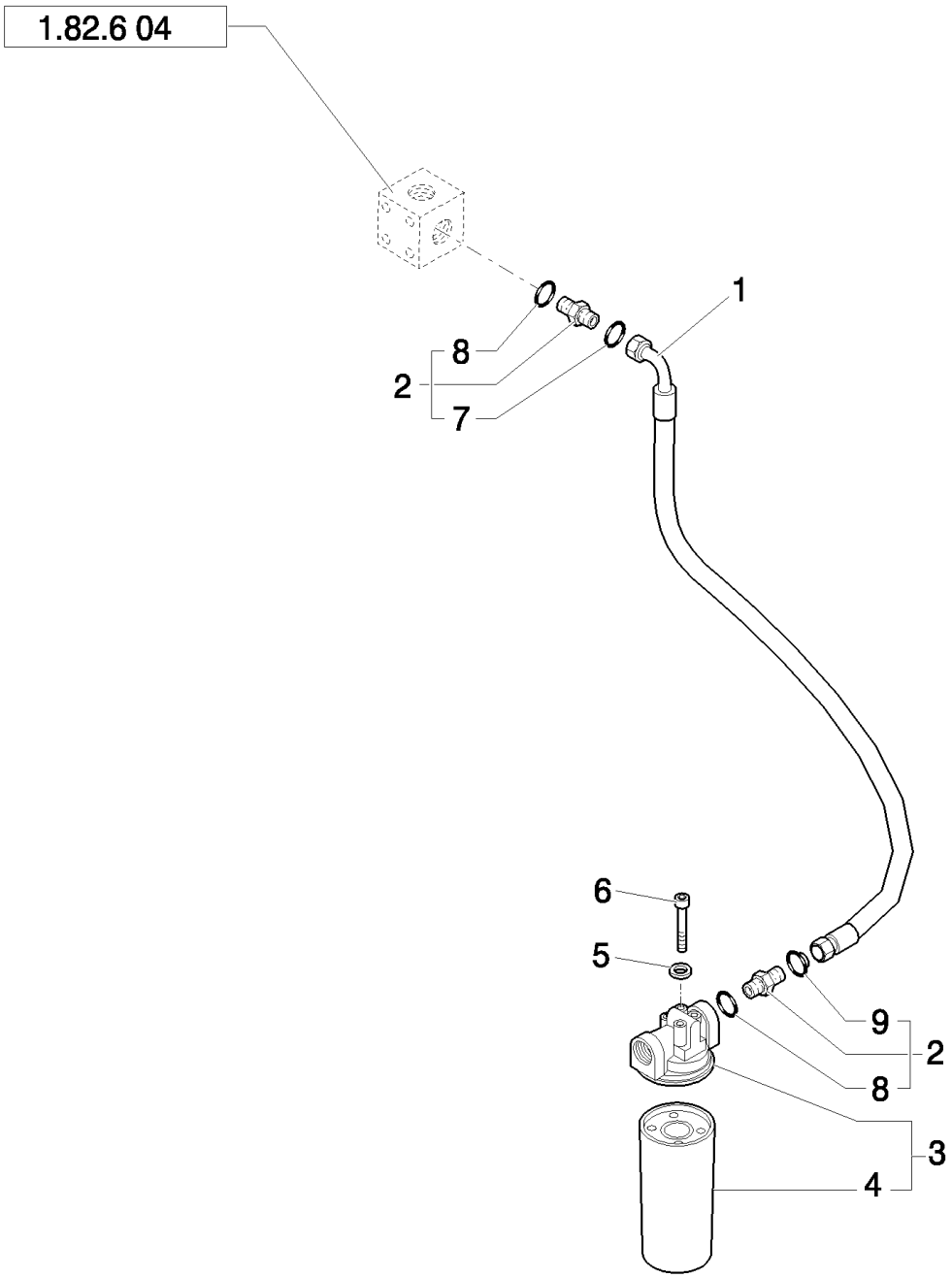

B110 TIER 3 BACKHOE LOADER (2/07-)

1.82.6/ 1(05) FILTER ASSEMBLY & HOSE TO RETURN MANIFOLD (CENTER PIVOT) - NA

Ref	Numero de Pieza	Ctd	Descripción
1	85826986	1	HOSE, FLEXIBLE, , Only for B110 Mechanical Version
1	87414983	1	HOSE, FLEXIBLE, , Only for NA Pilot Control Version and B115 Mechanical Version
2	85802801	2	CONNECTOR, HYD., , Includes 8, 9
3	87315438	1	FILTER ASSY, , Includes 4
4	86989733	1	FILTER, HYDRAULIC OIL,
5	11190579	4	WASHER, SPRING, Belleville, M10.5,
6	11106221	4	BOLT, Hex, M10 x 25, 8.8, Full Thd,
7	89824051	2	O-RING,
8	80167268	2	O-RING,

1.82.6/ 1(07) LOADER LIFT CYLINDER HOSES (CENTER PIVOT) - NA

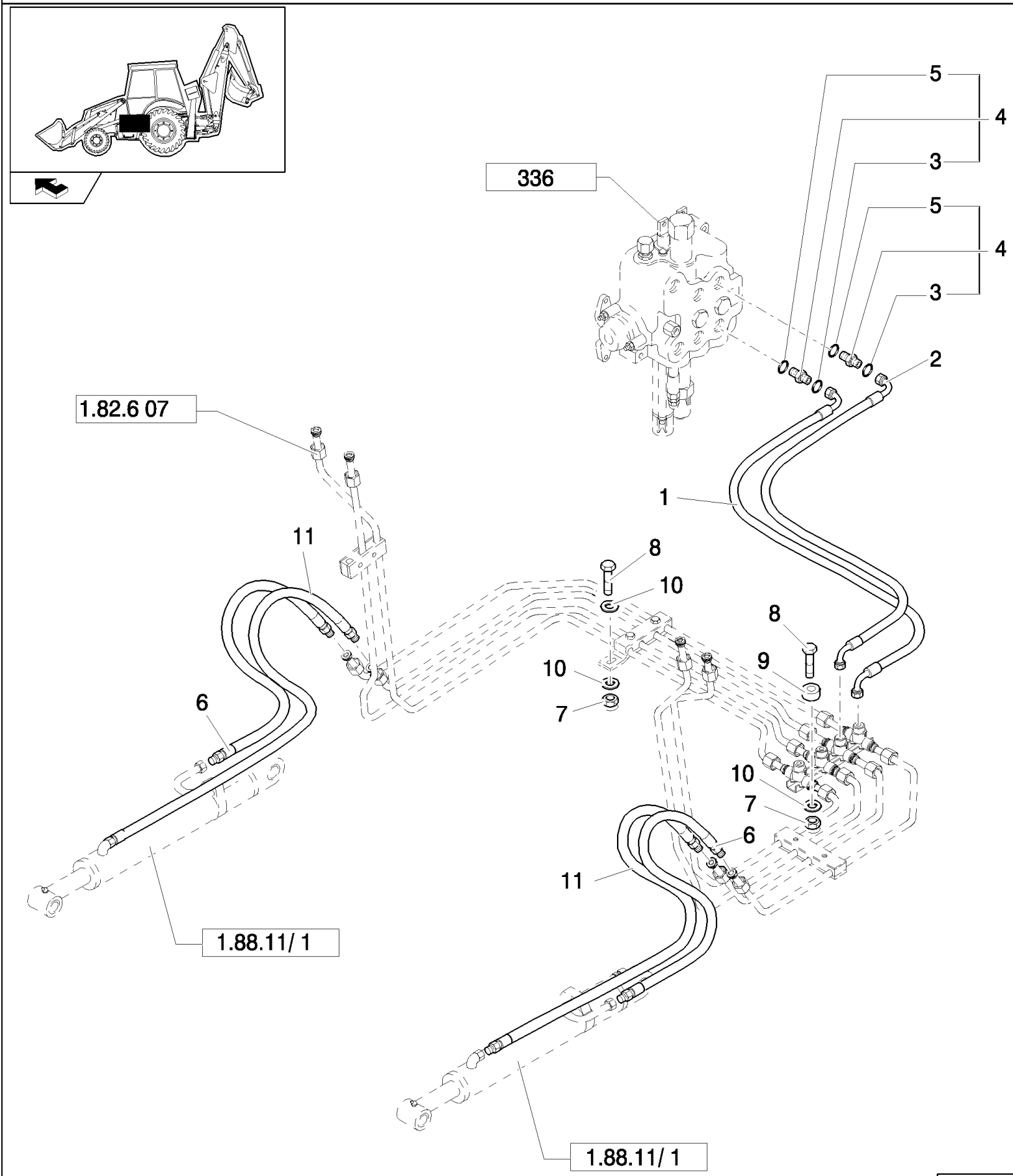

B110 TIER 3 BACKHOE LOADER (2/07-)

1.82.6/ 1(07) LOADER LIFT CYLINDER HOSES (CENTER PIVOT) - NA

Ref	Numero de Pieza	Ctd	Descripción
1	87619505	1	HOSE, FLEXIBLE,
2	87619504	1	HOSE, FLEXIBLE,
3	83901443	2	O-RING,
4	83963000	2	CONNECTOR, HYD., , Includes 3, 5
5	80167269	2	O-RING,
6	85813363	2	HOSE, FLEXIBLE, 550mm lg,
7	14048211	2	NUT, LOCK, M8 x 1.25, Cl 8,
8	16044021	2	BOLT, Hex, M8 x 40, 8.8,
9	85802891	1	SPACER,
10	12647121	3	WASHER, M8 x 20 x 3,
11	85813380	2	HOSE, FLEXIBLE,

Mechanical Version

1.82.6/ 1(08) LOADER BUCKET CYLINDER HOSES (CENTER PIVOT) - NA

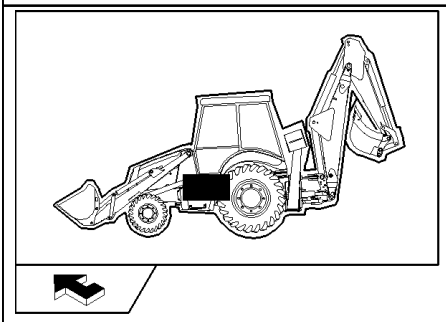

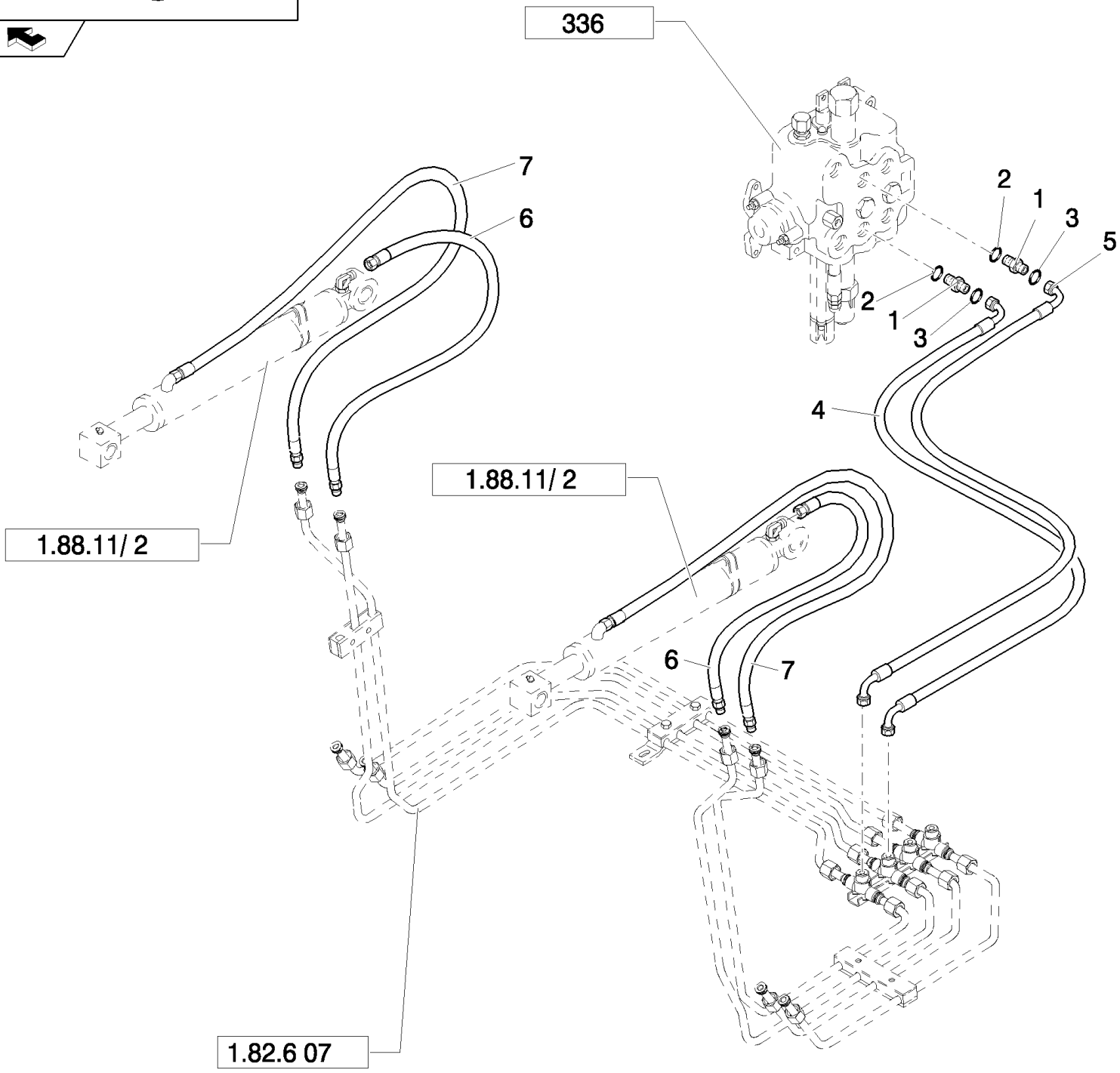

B110 TIER 3 BACKHOE LOADER (2/07-)

1.82.6/ 1(08) LOADER BUCKET CYLINDER HOSES (CENTER PIVOT) - NA

Ref	Numero de Pieza	Ctd	Descripción
1	83963000	2	CONNECTOR, HYD., , Includes 2, 3
2	80167269	2	O-RING,
3	83901443	2	O-RING,
4	87619504	1	HOSE, FLEXIBLE,
5	87619505	1	HOSE, FLEXIBLE,
6	85813362	2	HOSE, FLEXIBLE, 1130mm lg,
7	85813379	2	HOSE, FLEXIBLE,

Mechanical Version

1.82.6/ 1(09) HYDRAULIC SYSTEM PIPING NA (CENTER PIVOT) - NA

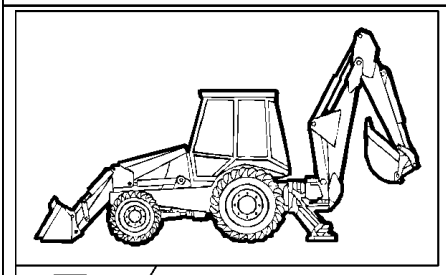

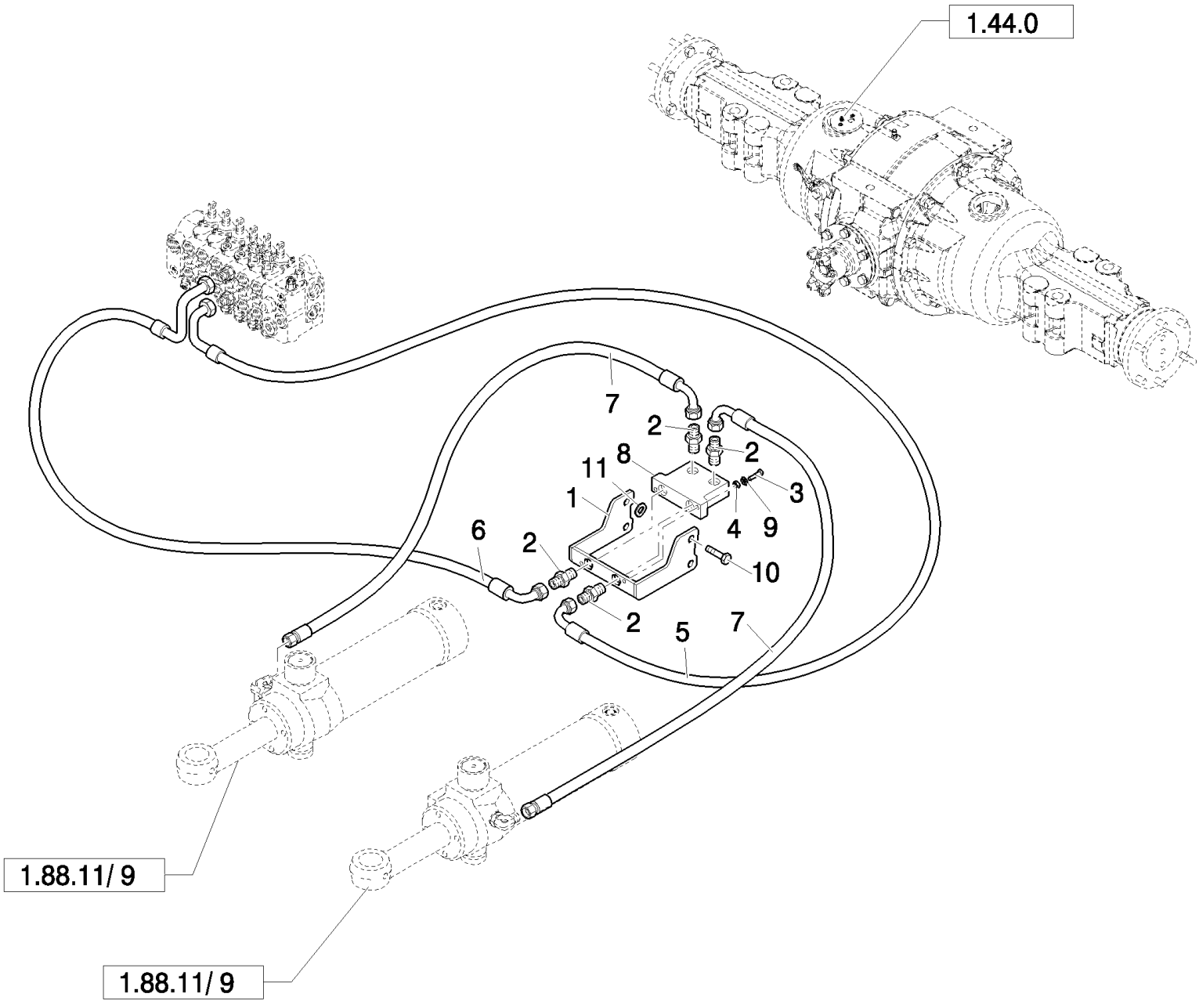

Pilot Control Version

B110 TIER 3 BACKHOE LOADER (2/07-)

1.82.6/ 1(09) HYDRAULIC SYSTEM PIPING NA (CENTER PIVOT) - NA

Ref	Numero de Pieza	Ctd	Descripción
1	87350477	1	BRACKET, , Power Shuttle
1	87351460	1	BRACKET, , Power Shift
2	201-112	4	CONNECTOR, HYD., 13/16"-16 ORFS x 7/8"-14 ORB,
3	614-10040	2	BOLT, Hex, M10 x 40, 8.8, Full Thd, M10x40
4	829-1410	2	NUT, M10, Cl 10,
5	87356499	1	HOSE, FLEXIBLE,
6	87356501	1	HOSE, FLEXIBLE,
7	87361461	2	HOSE, FLEXIBLE,
8	87449373	1	VALVE, HYDRAULIC,
9	895-11010	4	WASHER, M10 x 20 x 2, 11 x 21 x 2
10	413-1036	4	BOLT, Hex, 5/8"-11 x 2 1/4", G5,
11	14496931	1	WASHER, M16 x 30 x 3, , Power Shift

Pilot Control Version

1.82.6/ 1(10) BACKHOE CONTROL VALVE HOSES (CENTER PIVOT) - NA

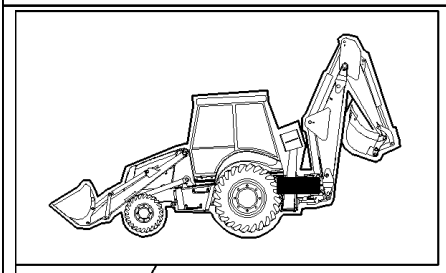

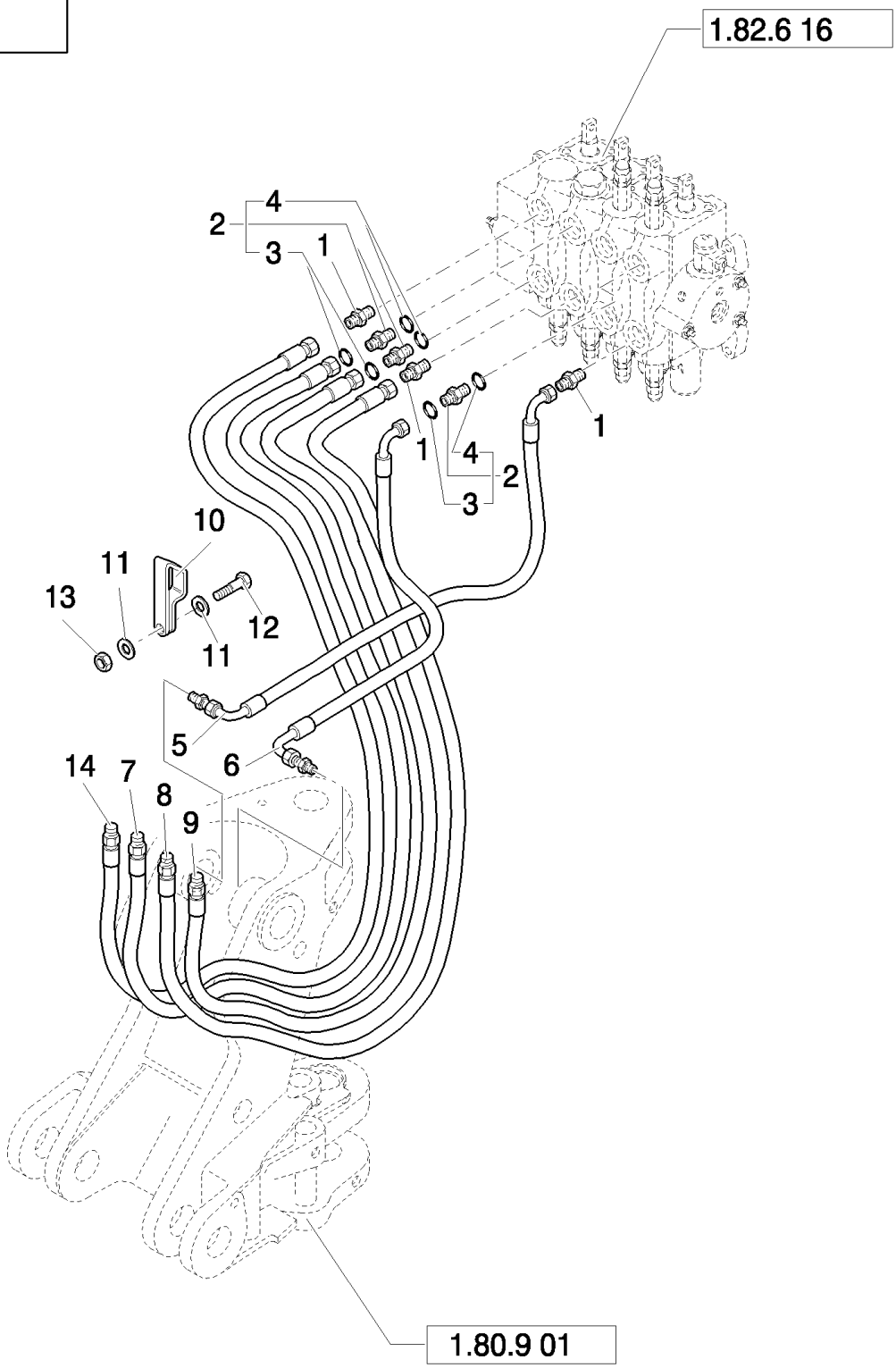

B110 TIER 3 BACKHOE LOADER (2/07-)

1.82.6/ 1(10) BACKHOE CONTROL VALVE HOSES (CENTER PIVOT) - NA

Ref	Numero de Pieza	Ctd	Descripción
1	85802642	3	CONNECTOR, HYD., 1-3/16"-12 ORS x 7/8"-14 SAE O-Ring
2	83963000	3	CONNECTOR, HYD., , Includes 3, 4
3	83901443	3	O-RING,
4	80167269	3	O-RING,
5	87621907	1	HOSE, FLEXIBLE,
6	87619484	1	HOSE, FLEXIBLE,
7	87619496	1	HOSE, FLEXIBLE,
8	87631531	1	HOSE, FLEXIBLE,
9	87621908	1	HOSE, FLEXIBLE,
10	85804947	1	CLAMP,
11	10519411	2	WASHER, M6 x 11.95 x 1.6,
12	10902221	1	BOLT, Hex, M6 x 16, 8.8,
13	12574211	1	NUT, LOCK, M6 x 1, Cl 8,
14	87619495	1	HOSE, FLEXIBLE,

Mechanical Version

1.82.6/ 1(11) ROTATION PLATE HOSE CLAMPS (CENTER PIVOT)

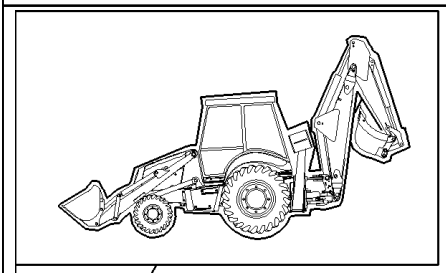

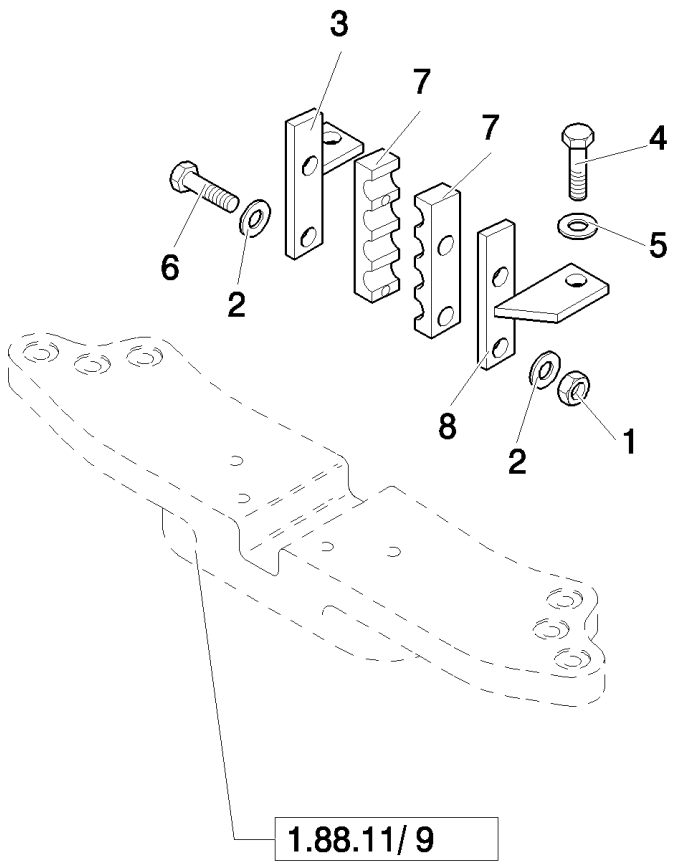

B110 TIER 3 BACKHOE LOADER (2/07-)

1.82.6/ 1(11) ROTATION PLATE HOSE CLAMPS (CENTER PIVOT)

Ref	Numero de Pieza	Ctd	Descripción
1	14048221	1	NUT, LOCK, M8 x 1.25, Cl 10,
2	12647121	3	WASHER, M8 x 20 x 3,
3	85804573	1	SUPPORT,
4	11106221	2	BOLT, Hex, M10 x 25, 8.8, Full Thd,
5	11190579	2	WASHER, SPRING, Belleville, M10.5,
6	16044421	2	BOLT, Hex, M8 x 60, 8.8,
7	87631460	2	CLAMP,
8	85804574	1	SUPPORT,

1.82.6/ 2(02) BACKHOE SWING CYLINDER HOSES (CENTER PIVOT) - NA

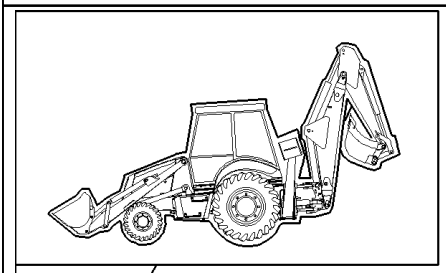

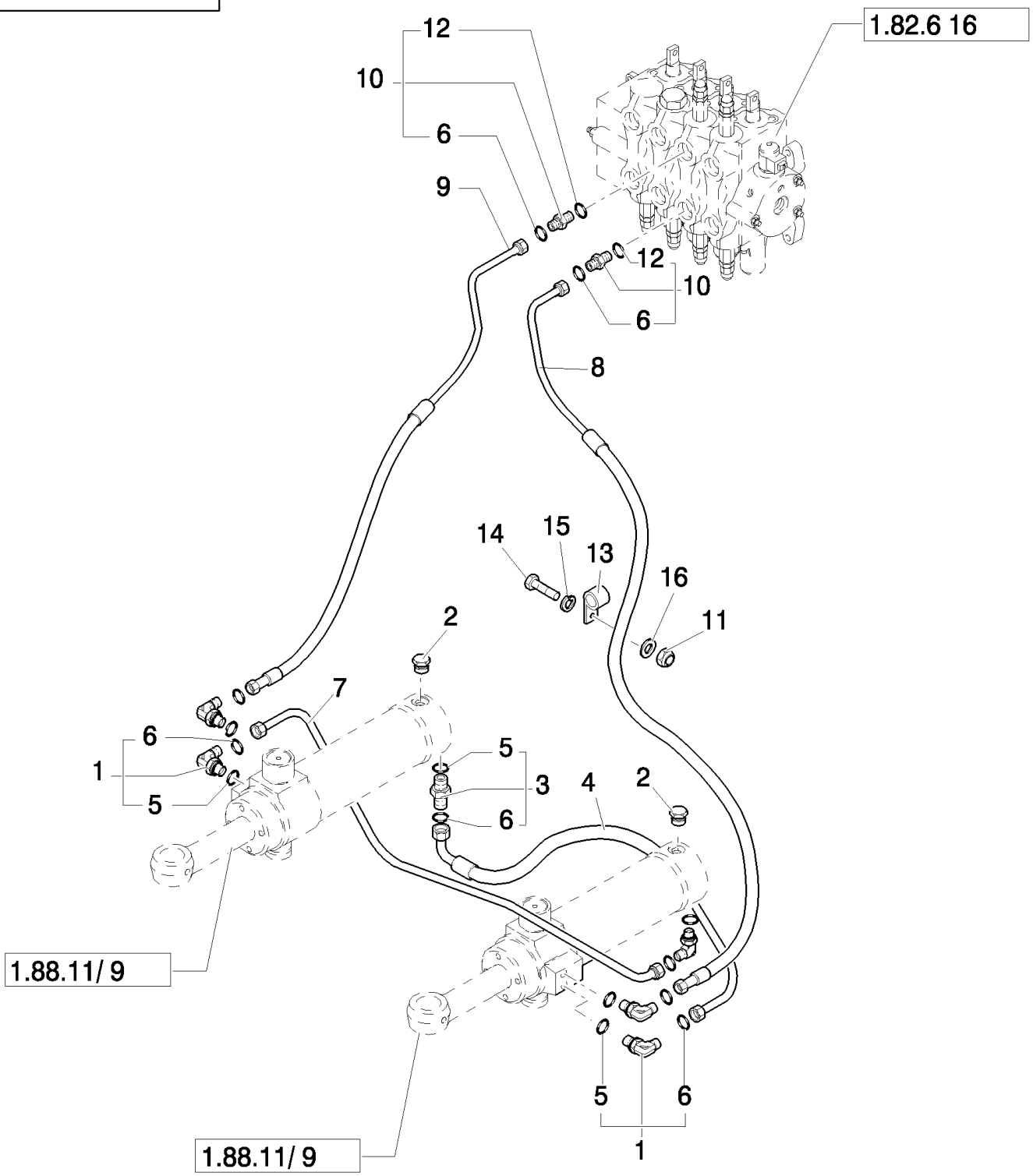

B110 TIER 3 BACKHOE LOADER (2/07-)

1.82.6/ 2(02) BACKHOE SWING CYLINDER HOSES (CENTER PIVOT) - NA

Ref	Numero de Pieza	Ctd	Descripción
1	83971549	5	ELBOW, , Includes 5, 6
2	85802955	2	PLUG,
3	83963374	1	CONNECTOR, HYD., , Includes 5, 6
4	85819727	1	HOSE, FLEXIBLE, 415mm lg,
5	80128825	6	O-RING,
6	89992298	6	O-RING,
7	85819729	1	HOSE, FLEXIBLE,
8	85819730	1	HOSE, FLEXIBLE,
9	85819728	1	HOSE, FLEXIBLE,
10	83963376	2	CONNECTOR, HYD., , Includes 6,12
11	16101511	1	NUT, M12 x 1.25, Cl 8,
12	80167269	2	O-RING,
13	85802954	1	CLAMP,
14	15540821	1	BOLT, Hex, M12 x 1.25 x 50, 8.8,
15	11190779	1	WASHER, SPRING, Belleville, M13,
16	12646921	1	WASHER, M12 x 28 x 3,

Mechanical Version

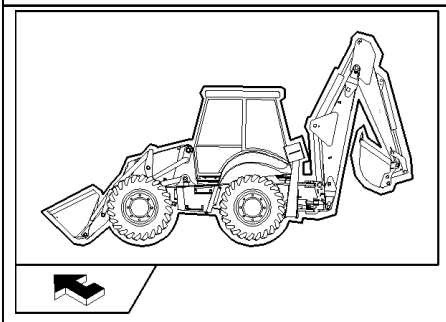

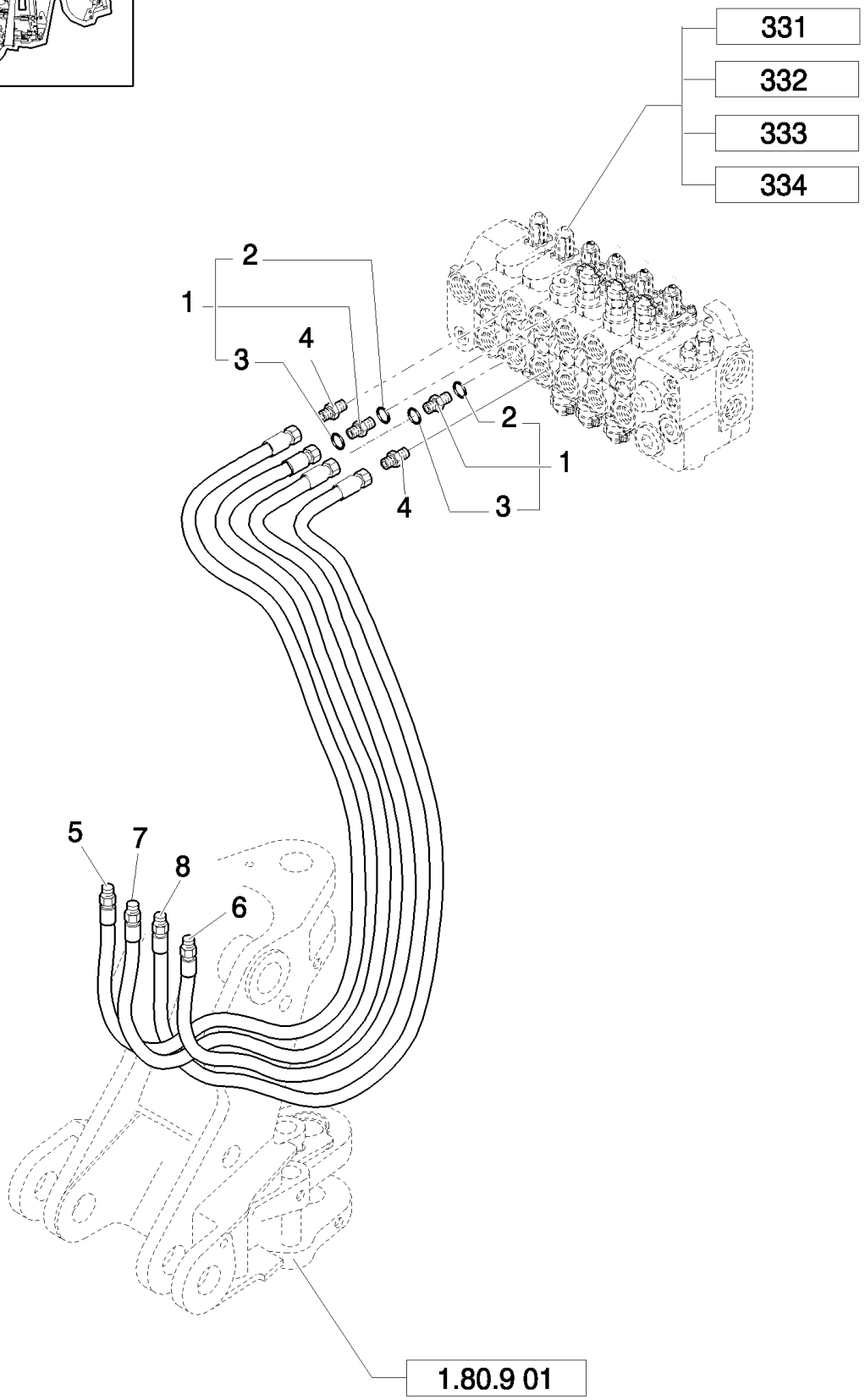
331
332
333
334
2
1
3
4
2
1
4
3
5
7
8
6
1.80.9 01

B110 TIER 3 BACKHOE LOADER (2/07-)

1.82.6/ 2(03) HYDRAULIC SYSTEM PIPING

Ref	Numero de Pieza	Ctd	Descripción
1	83962538	2	CONNECTOR, HYD., , Includes 2, 3
2	80167266	2	O-RING,
3	89991976	2	O-RING,
4	83962539	2	CONNECTOR, HYD., 1-1/16-12 ORB x 1-14 ORFS; Incl. 167266, 9992069 O-Rings
5	87619495	1	HOSE, FLEXIBLE,
6	87621908	1	HOSE, FLEXIBLE,
7	87619496	1	HOSE, FLEXIBLE,
8	87621920	1	HOSE, FLEXIBLE,

Pilot Control Version

1.82.6/ 3(01) HYDRAULIC SYSTEM PIPING

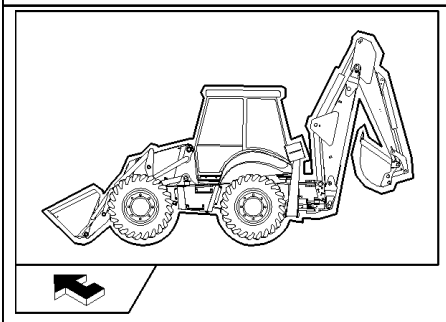

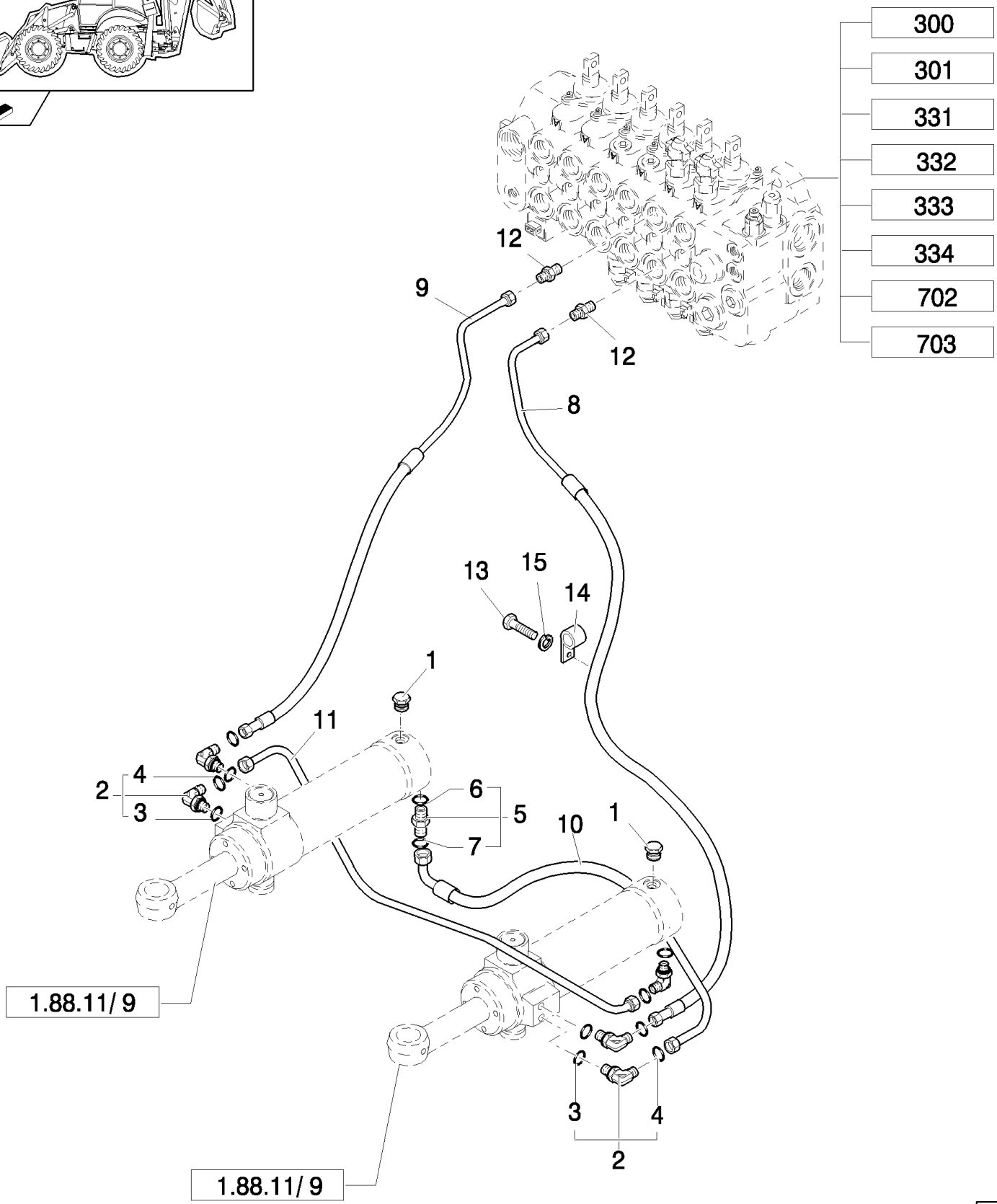

All version except: B110 Nord America Mechanical Version

B110 TIER 3 BACKHOE LOADER (2/07-)

1.82.6/ 3(01) HYDRAULIC SYSTEM PIPING

Ref	Numero de Pieza	Ctd	Descripción
1	85802955	2	PLUG,
2	83971549	5	ELBOW, , Includes 3, 4
3	80128825	5	O-RING,
4	89992298	5	O-RING,
5	83963374	1	CONNECTOR, HYD., , Includes 16, 17
6	80128825	1	O-RING,
7	89992298	1	O-RING,
8	85819730	1	HOSE, FLEXIBLE, , Only for B110 - B115 Center Pivot
8	85819060	1	TUBE, HYD,
9	85819728	1	HOSE, FLEXIBLE, , Only for B110 - B115 Center Pivot
9	85819061	1	HOSE, FLEXIBLE,
10	85819727	1	HOSE, FLEXIBLE, 415mm lg, , Only for B110 - B115 Center Pivot
10	85820109	1	TUBE, HYD,
11	85819729	1	HOSE, FLEXIBLE,
12	85805258	2	CONNECTOR, HYD., 9/16"-16 ORS x 1 1/16"-12, O-Ring,
13	16044221	2	BOLT, Hex, M8 x 50, 8.8,
14	14560187	2	STRAP, CABLE, 178mm lg, L=203.2 mm
15	11193879	2	WASHER, SPRING, Belleville, M8.4,

All version except: B110 Nord America Mechanical Version

1.83.0(01) HOOD, GRILLE & RELATED PARTS

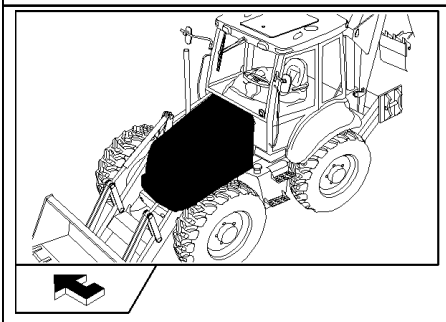

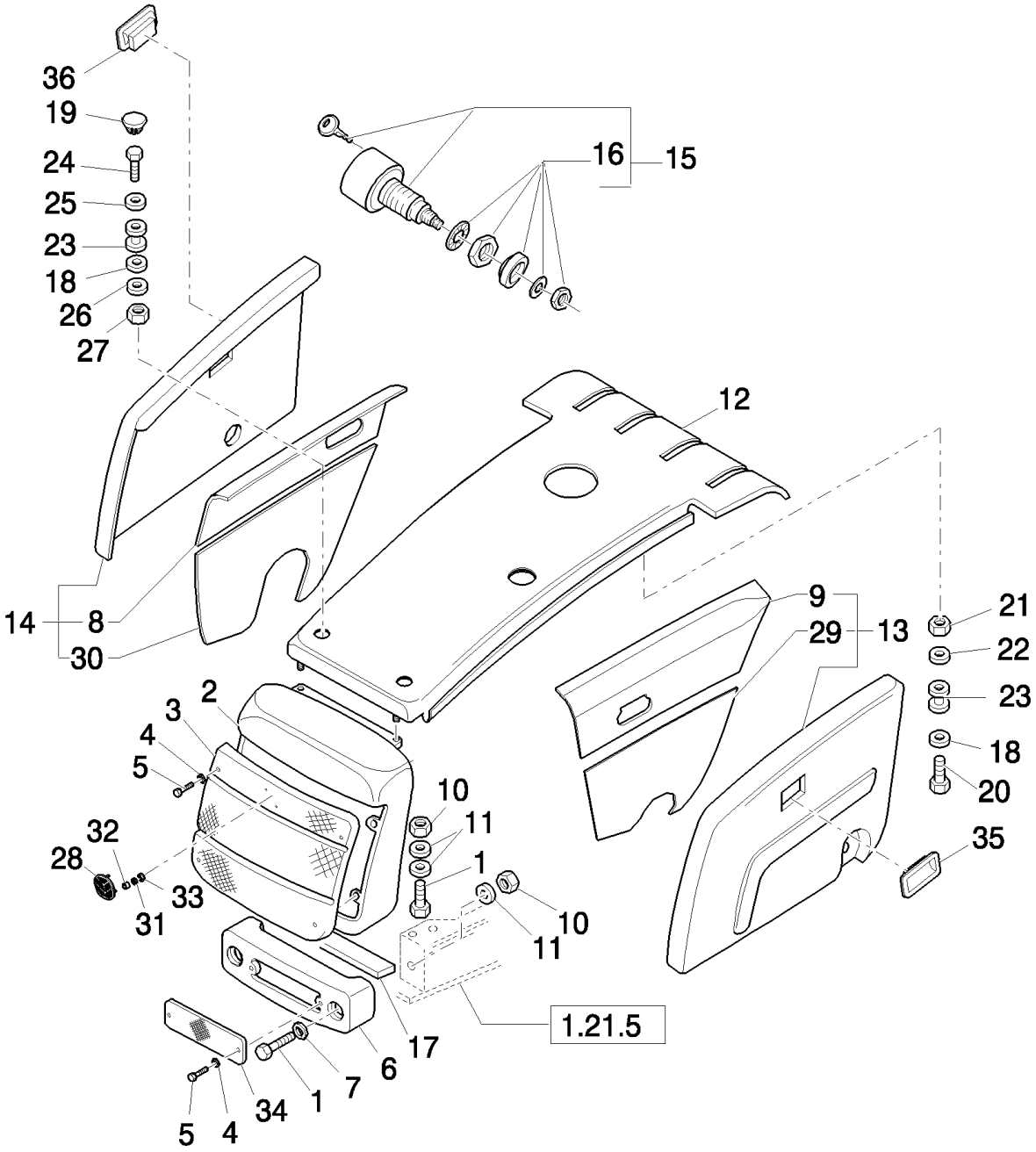

B110 TIER 3 BACKHOE LOADER (2/07-)

1.83.0(01) HOOD, GRILLE & RELATED PARTS

Ref	Numero de Pieza	Ctd	Descripción
1	15981221	6	BOLT, Hex, M16 x 65, 8.8,
2	87325160	1	HOOD,
3	87571893	1	GRILLE,
4	11193979	6	WASHER, SPRING, Belleville, M8.4,
5	16043421	6	SCREW, Hex, M8 x 20, 8.8,
6	87537136	1	BUMPER,
7	13580121	2	WASHER,
8	87619075	1	PANEL, RH Upper, Only for NA Version
8	87619081	2	PANEL, , Only for EUROPE Version
9	87619077	1	PANEL, LH Upper, Only for NA Version
10	12164111	6	NUT, M16x1.5
11	11191579	10	WASHER, SPRING, Belleville, M17,
12	85826084	1	PANEL, ENGINE HOOD,
13	87619082	1	PANEL, LH, Only for EUROPE Version
13	87619713	1	PANEL, LH, Only for NA Version
14	87619078	1	PANEL, RH, Only for EUROPE Version
14	85825102	1	PANEL, RH, Only for NA Version
15	87302234	2	KNOB, L = 101 mm
16	85806128	AR	KIT,
17	85817795	1	STRIP, SEALING,
18	86592700	4	WASHER, M10 x 28 x 4, HT,
19	85827683	2	PLUG,
20	11107021	2	BOLT, Hex, M10 x 45, 8.8,
21	86625071	2	NUT, M10, U,
22	13578621	2	WASHER, 10x30x2
23	47048668	4	GASKET,
24	85826361	2	SCREW,
25	47054521	2	WASHER,
26	47048972	2	WASHER, M10
27	12577211	2	NUT, LOCK, M10 x 1.5, Cl 8,
28	85820107	1	EMBLEM,
29	87619076	1	PANEL, LH Lower, Only for NA Version
29	87619083	1	PANEL, LH, Only for EUROPE Version
30	87619074	1	PANEL, RH Lower, Only for NA Version
30	87619079	1	PANEL, RH, Only for EUROPE Version
31	12643711	2	WASHER,
32	5138360	2	RING,
33	5135069	2	CLIP,
34	87537137	1	GRILLE,
35	83962571	2	HANDLE,

1.87.2(01) CAB SCREEN

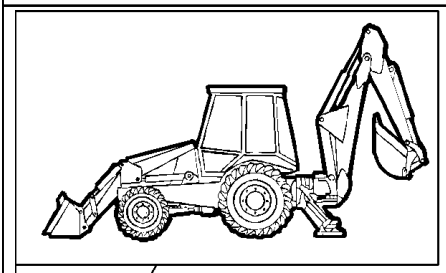

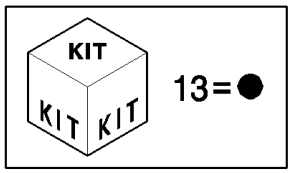

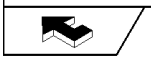

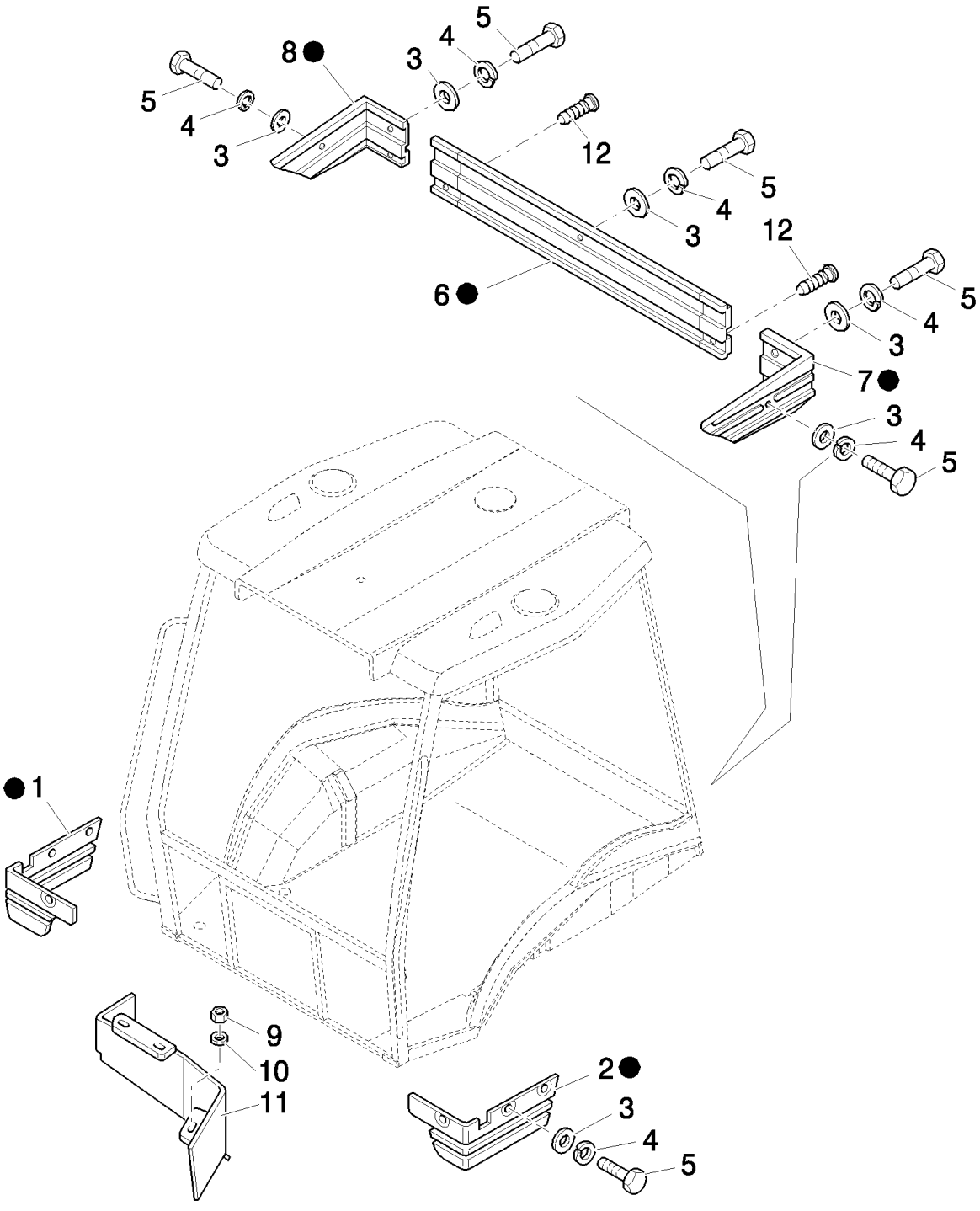

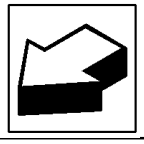

B110 TIER 3 BACKHOE LOADER (2/07-)

1.87.2(01) CAB SCREEN

Ref	Numero de Pieza	Ctd	Descripción
1	87315641	1	COVER, RH
2	87315643	1	COVER, LH
3	12643721	11	WASHER, M6 x 18 x 1.5,
4	11194679	11	WASHER, SPRING, Belleville, M6.4,
5	10902421	11	BOLT, Hex, M6 x 20, 8.8,
6	85805303	1	COVER,
7	85805304	1	COVER, LH
8	85805305	1	COVER, RH
9	16104111	3	NUT, LOCK, M8 x 1.25, Cl 8,
10	11193979	3	WASHER, SPRING, Belleville, M8.4,
11	85805142	1	PANEL,
12	81870039	2	FASTENER,
13	87315628	1	KIT,

1.87.8(01) CAB FASTENERS

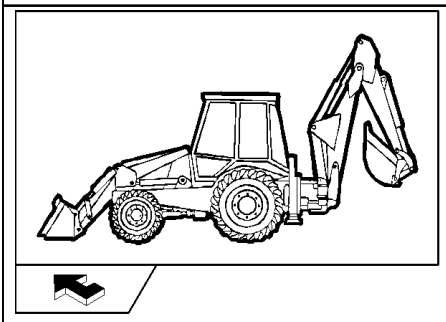

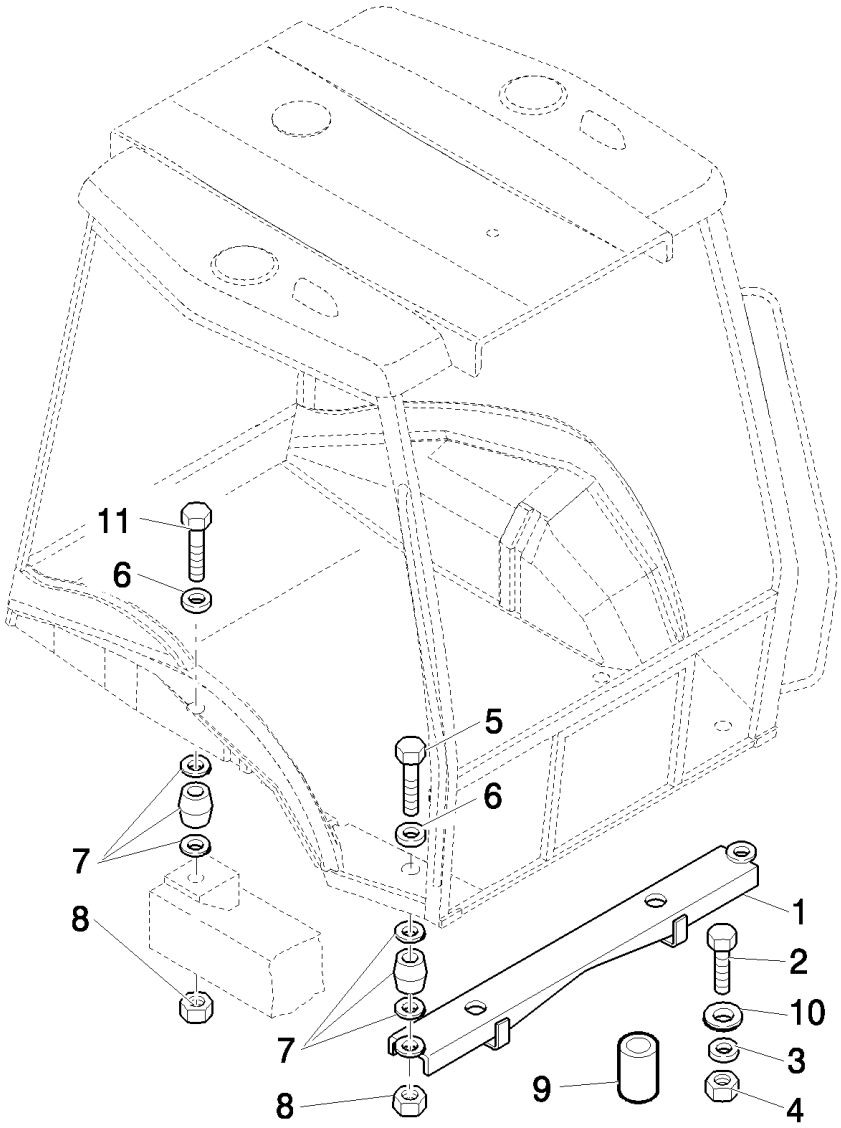

B110 TIER 3 BACKHOE LOADER (2/07-)

1.87.8(01) CAB FASTENERS

Ref	Numero de Pieza	Ctd	Descripción
1	85801319	1	SUPPORT, , Only For B110
1	87303780	1	SUPPORT, , Only for B115
2	15989334	2	BOLT, Hex, M20 x 1.5 x 110, 10.9,
3	10520431	2	WASHER,
4	12575121	2	NUT, LOCK, M20 x 1.5, Cl 10,
5	15982134	2	BOLT, Hex, M16 x 140, 10.9,
6	14496931	4	WASHER, M16 x 30 x 3,
7	87569589	4	SILENTBLOC,
8	12574921	4	NUT, LOCK, M16 x 1.5, Cl 10,
9	85801324	2	SPACER,
10	85804493	2	WASHER, 21 x 40 x 6
11	15981834	2	BOLT, Hex, M16 x 1.5 x 120, 10.9,

1.88.11(01) ARMS AND JOINTS

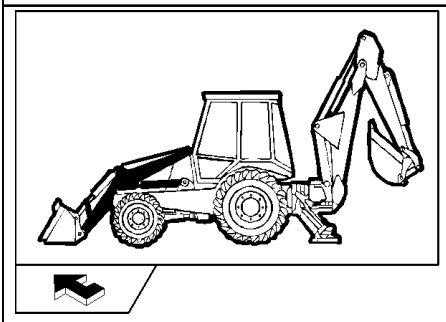

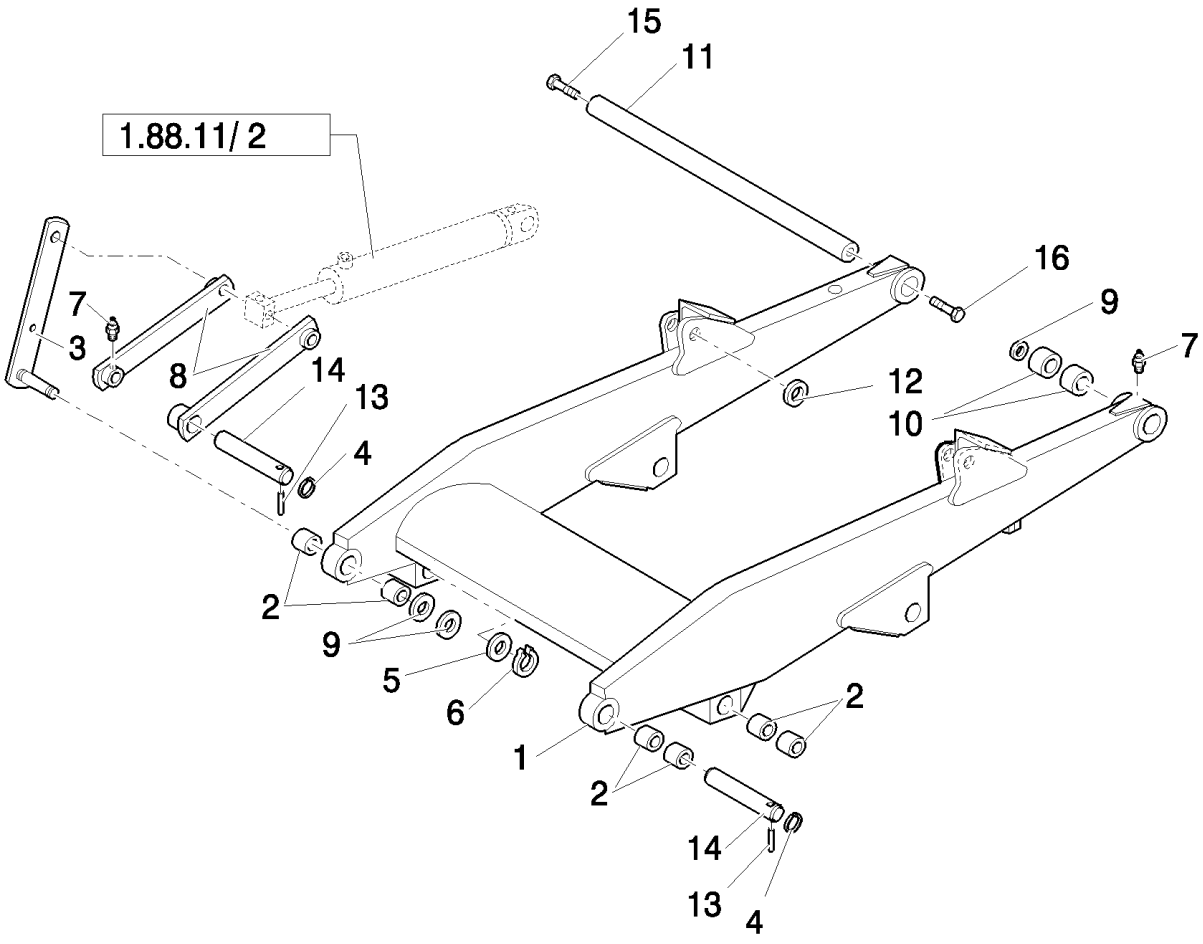

B110 TIER 3 BACKHOE LOADER (2/07-)

1.88.11(01) ARMS AND JOINTS

Ref	Numero de Pieza	Ctd	Descripción
1	85803604	1	ARM, LIFT, , Includes Ref. 2, 10
2	81901809	8	BUSHING,
3	85803643	1	LINK, RH
3	85803645	1	TIE-ROD, LH
4	85802992	4	RING,
5	85700130	2	WASHER,
6	81902463	2	RING,
7	83416242	10	NIPPLE, LUBE,
8	85803647	4	LINK CONROD,
9	85828254	2	SHIM,
10	81901896	4	BUSHING,
11	85801087	1	PIN,
12	81900328	2	WASHER,
13	85802993	4	PIN,
14	85801051	4	PIN,
15	11383634	1	BOLT, Hex, M20 x 1.5 x 50, 10.9, Full Thd,
16	15988734	1	BOLT, Hex, M20 x 1.5 x 80, 10.9,

1.88.11/1(01) LOADER CYLINDER

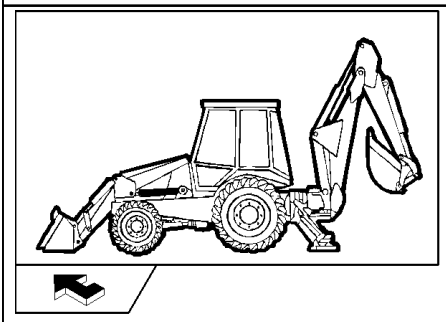

KIT
KIT KIT
25 = ●
4 = ■

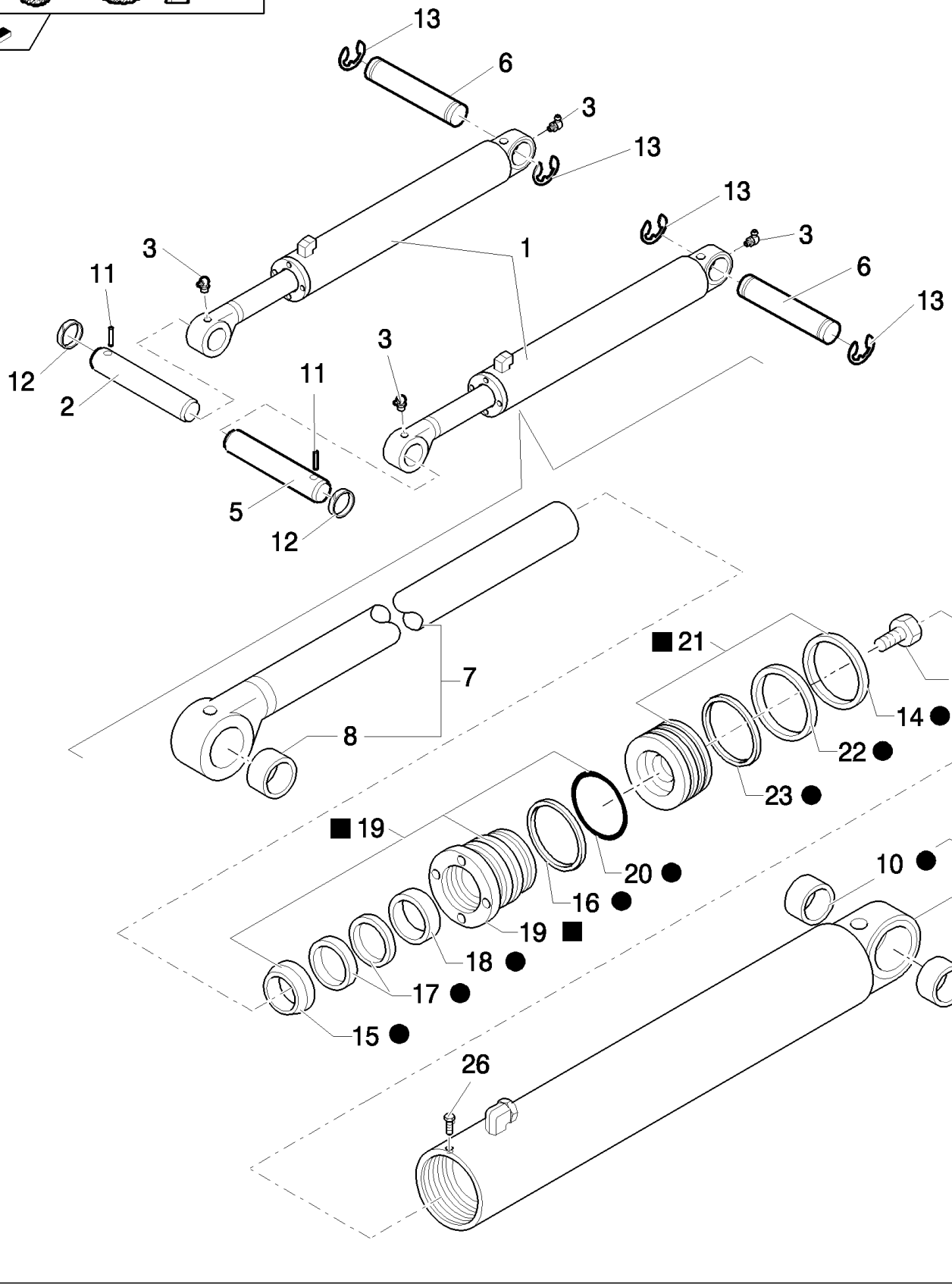

B110 TIER 3 BACKHOE LOADER (2/07-)

1.88.11/1(01) LOADER CYLINDER

Ref	Numero de Pieza	Ctd	Descripción
1	87315525	2	HYDRAULIC CYLINDER,
2	85801049	1	PIN,
3	81818824	4	NIPPLE, LUBE, 90º, 1/8"-27 NPT,
4	87424196	2	KIT, REPAIR,
5	85801050	1	PIN,
6	87402742	2	PIN,
7	85800103	2	ROD,
8	81902174	2	BUSHING,
9	85800105	2	TUBE,
10	81901897	4	BUSHING,
11	85802993	2	PIN,
12	85802992	2	RING,
13	47049094	4	CIRCLIP,
14	87408634	2	Ring, Wear,
15	87414969	2	SEAL,
16	87440401	2	BACK-UP RING,
17	87414970	2	KIT, SEALS,
18	87414966	2	BEARING, NYLON,
19	87415116	2	GLAND,
20	87421144	2	O-RING,
21	87405859	2	PISTON,
22	87414333	2	SEAL,
23	87414341	2	RING,
24	87428020	2	SCREW,
25	87428628	1	KIT, SEALS,
26	276-2446	1	SCREW, SELF TAPPING, Hex Hd, #8 x 3/8",

1.88.11/2(01) LOADER BUCKET CONTROL CYLINDER

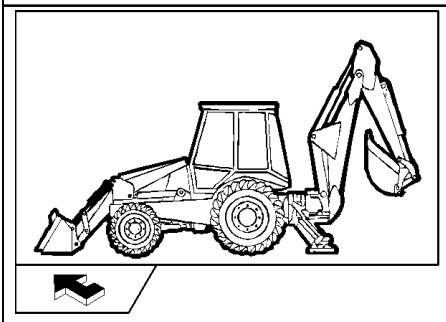

KIT
KIT KIT
13 = ●
19 = ■

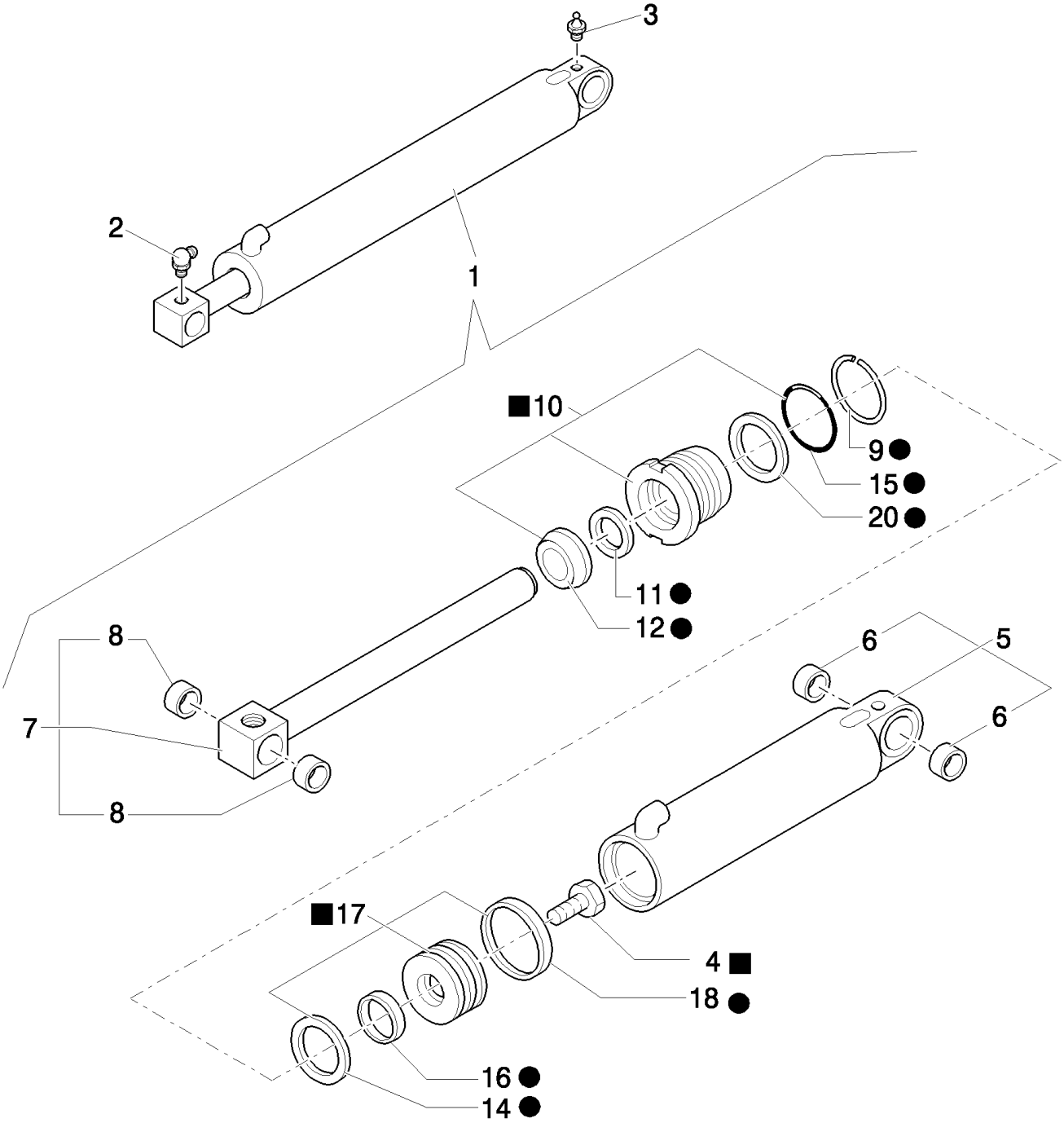

B110 TIER 3 BACKHOE LOADER (2/07-)

1.88.11/2(01) LOADER BUCKET CONTROL CYLINDER

Ref	Numero de Pieza	Ctd	Descripción
1	87315521	2	HYDRAULIC CYLINDER, ASSY,LOADER BUCKET
2	81818824	2	NIPPLE, LUBE, 90º, 1/8"-27 NPT, 1/8-27-90GR
3	83416242	2	NIPPLE, LUBE, 1/8"-27
4	87428020	2	SCREW,
5	85800504	2	TUBE,
6	81902174	4	BUSHING,
7	83962811	2	ROD,
8	83902710	4	BUSHING,
9	83937315	2	WIRE, RETAINING,
10	87415115	2	GLAND,
11	87414965	2	KIT, SEALS,
12	87414964	2	WIPER,
13	87428627	1	KIT, SEALS,
14	87414340	2	RING,
15	87421143	2	O-RING,
16	87414332	2	SEAL,
17	87406750	2	PISTON,
18	87408633	2	Ring, Wear,
19	87424195	1	KIT, REPAIR,
20	87440396	1	BACK-UP RING,

1.88.11/2(02) LOADER BUCKET CONTROL CYLINDER

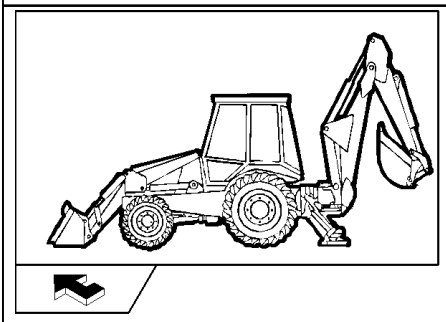

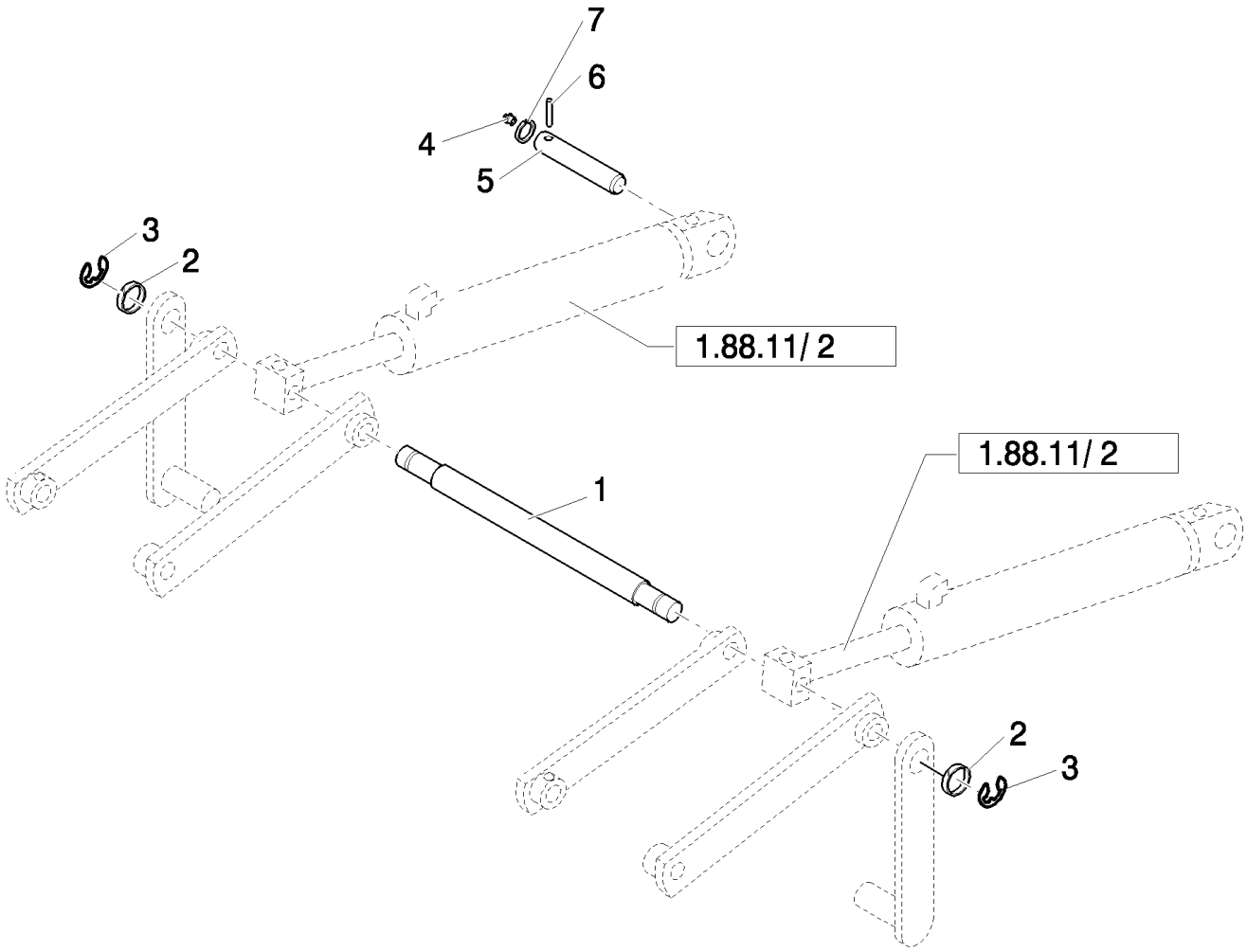

B110 TIER 3 BACKHOE LOADER (2/07-)

1.88.11/2(02) LOADER BUCKET CONTROL CYLINDER

Ref	Numero de Pieza	Ctd	Descripción
1	85803635	1	SPACER,
2	81900328	2	WASHER,
3	81902463	2	RING,
4	83416242	2	NIPPLE, LUBE,
5	85801049	2	PIN, 38mm x 159mm
6	85802993	2	PIN,
7	85802992	2	RING,

1.88.11/3(01) LIFT CYLINDER AND BUCKET PIPES

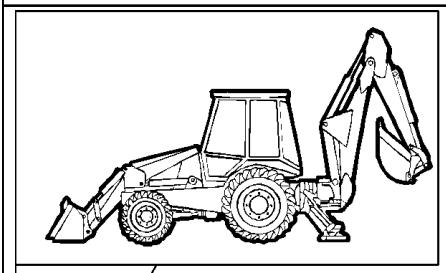

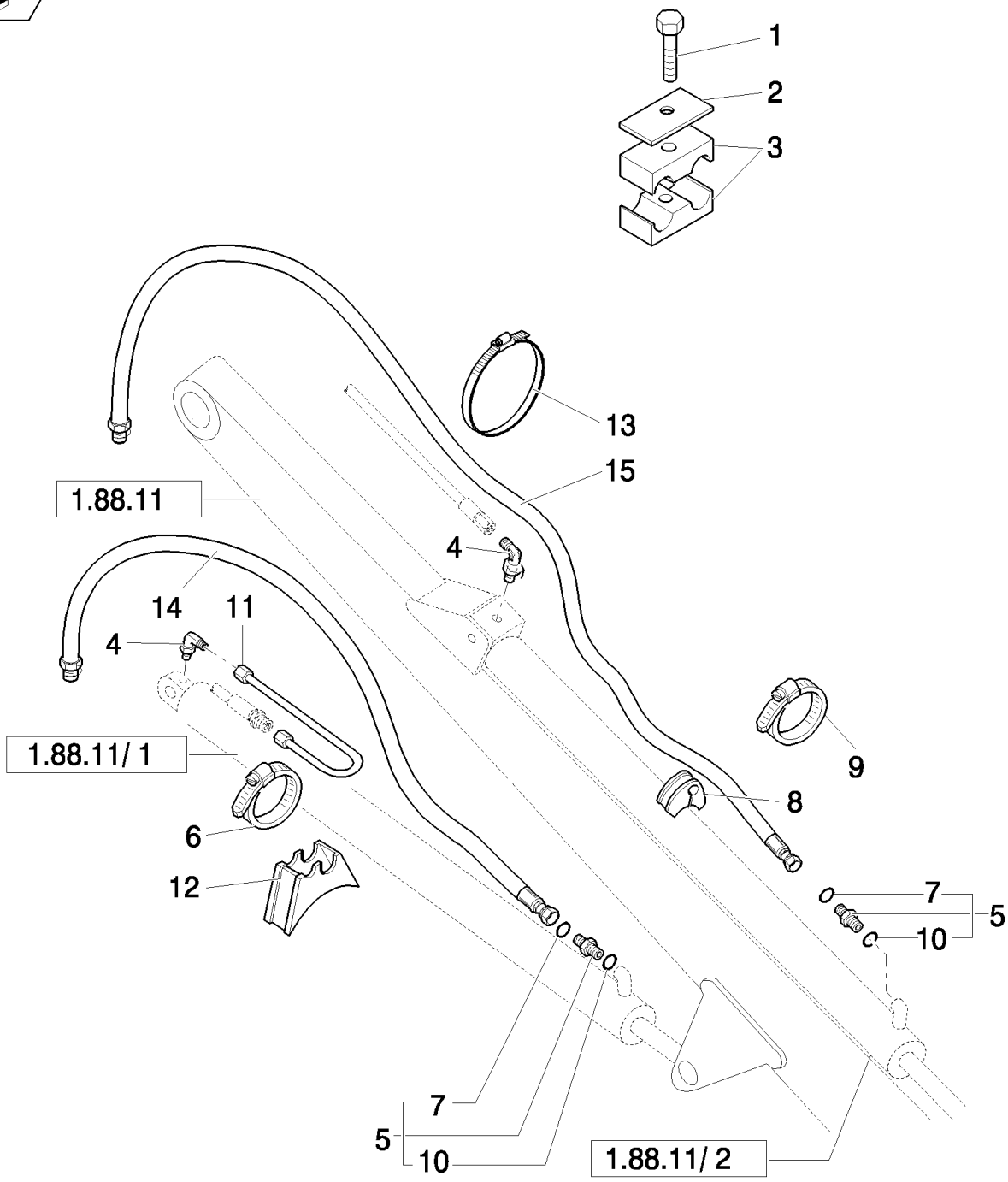

B110 TIER 3 BACKHOE LOADER (2/07-)

1.88.11/3(01) LIFT CYLINDER AND BUCKET PIPES

Ref	Numero de Pieza	Ctd	Descripción
1	16044321	2	BOLT, Hex, M8 x 55, 8.8,
2	87390514	2	PLATE,
3	87390511	4	CLAMP,
4	85802961	4	ELBOW,
5	83963376	4	CONNECTOR, HYD., , Includes 7, 10
6	85802743	2	CLAMP, HOSE,
7	89992298	8	O-RING,
8	85803008	2	CLAMP, HOSE,
9	85805567	2	BLOCK,
10	80167269	10	O-RING,
11	85801596	2	TUBE,
12	87303909	2	BLOCK,
13	14560187	2	STRAP, CABLE, 178mm lg, L=203.2 mm
14	85813380	2	HOSE, FLEXIBLE,
15	85813379	2	HOSE, FLEXIBLE,

1.88.11/5(01) SELF-LEVELING LINKAGE, LOADER CONTROLS (SIDE SHIFT)

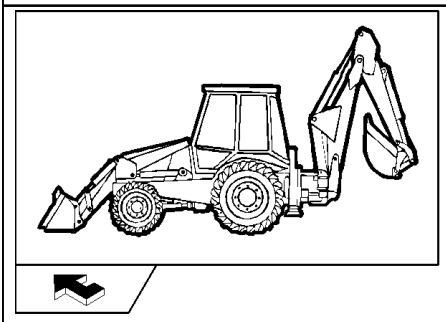

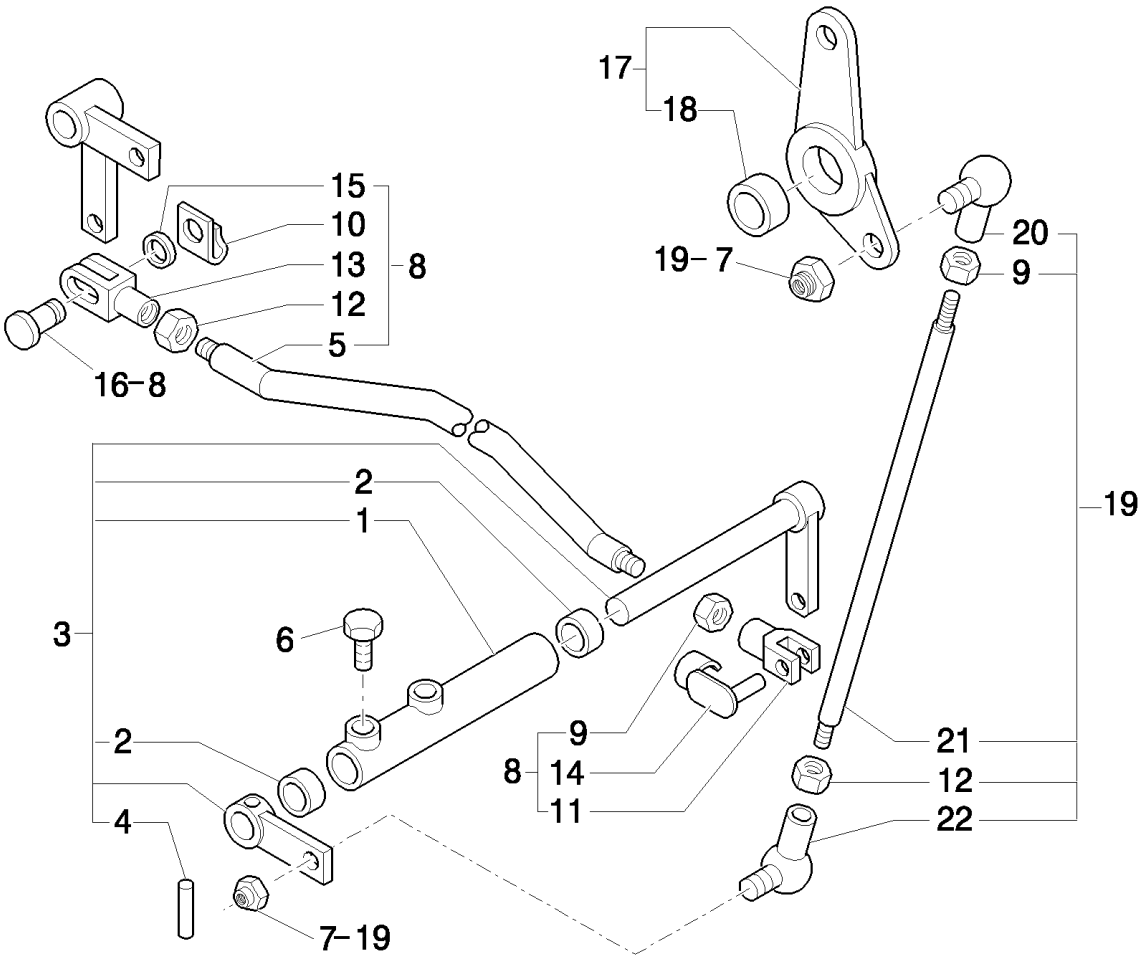

B110 TIER 3 BACKHOE LOADER (2/07-)

1.88.11/5(01) SELF-LEVELING LINKAGE, LOADER CONTROLS (SIDE SHIFT)

Ref	Numero de Pieza	Ctd	Descripción
1	85802724	1	LEVER, Assy, Includes 2
2	85802494	2	BUSHING,
3	85827787	1	LEVER, ASSY
4	85805616	1	PIN, 5X26
5	85825467	1	TIE-ROD,
6	15970521	2	BOLT, Hex, M10 x 1.25 x 20, 8.8, Full Thd,
7	14048211	2	NUT, LOCK, M8 x 1.25, Cl 8,
8	85825466	1	TIE-ROD,
9	16102311	2	NUT, Thin, M8 x 1.25, Cl 04,
10	11064071	1	CLIP,
11	11991971	1	CLEVIS,
12	16102911	2	NUT, Thin, M8 x 1.25, Cl 04, LH,
13	85802735	1	CLEVIS,
14	85802738	1	RETAINER,
15	14496521	1	WASHER, M8 x 17 x 1.6,
16	85802737	2	PIN,
17	85803215	1	LEVER,
18	81855916	1	BUSHING,
19	85802741	1	TIE-ROD,
20	85804376	1	BALL JOINT,
21	85802742	1	TIE-ROD,
22	85804375	1	BALL JOINT,

B110 TIER 3 BACKHOE LOADER (2/07-)

1.88.11/5(02) SELF-LEVELING LINKAGE, LOADER ARM (SIDE SHIFT)

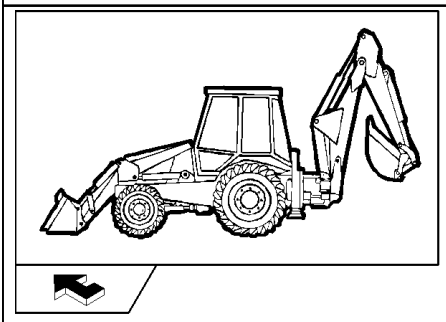

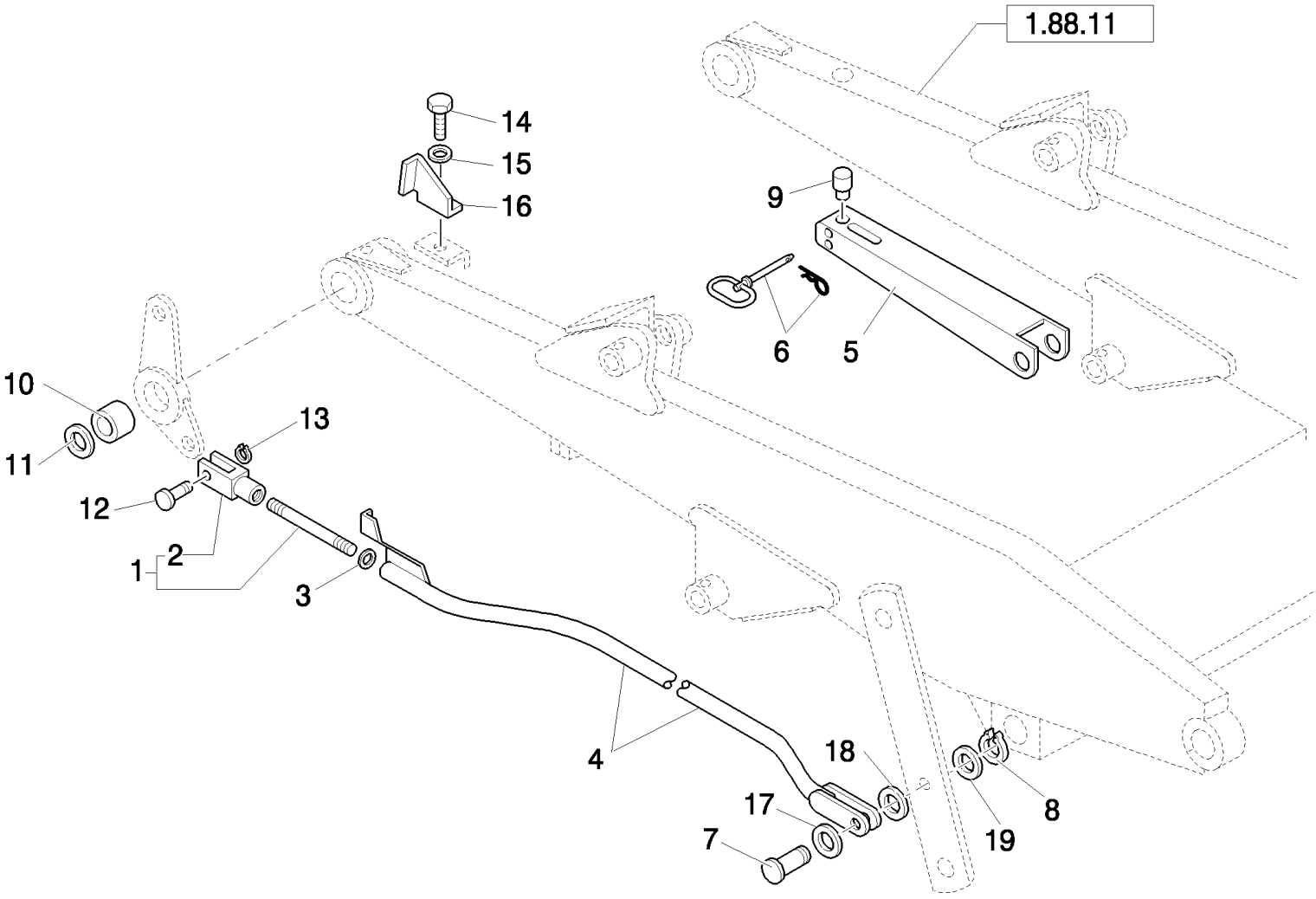

B110 TIER 3 BACKHOE LOADER (2/07-)

1.88.11/5(02) SELF-LEVELING LINKAGE, LOADER ARM (SIDE SHIFT)

Ref	Numero de Pieza	Ctd	Descripción
1	83963433	1	ROD, Assy
2	83962659	1	CLEVIS,
3	82879400	1	WASHER,
4	85804026	1	LINK,
5	85802405	1	LOCK, CYLINDER, Strut; Loader Lift Cylinder Lockout; Incl. Ref 9
6	86507337	1	PIN, HITCH,
7	85803297	1	PIN, 1.515" IDX2.25" OD
8	83911366	1	RING, SNAP,
9	85802403	1	PLUG, Pad, Strut Prop
10	83963422	1	SPACER,
11	85804366	1	WASHER,
12	85819179	1	PIN,
13	85700341	1	CIRCLIP,
14	10979421	1	BOLT, Hex, M6 x 10, 8.8, Full Thd,
15	11190679	1	WASHER, SPRING, Belleville, M10.5,
16	85803277	1	PLATE,
17	85817622	1	WASHER, 12 x 24 x 2
18	85817623	1	WASHER, 12 x 24 x 1.5
19	81900328	1	WASHER,

1.88.11/5A(01) SELF-LEVELING LINKAGE, LOADER CONTROLS (CENTER PIVOT MECHANIC) - NA

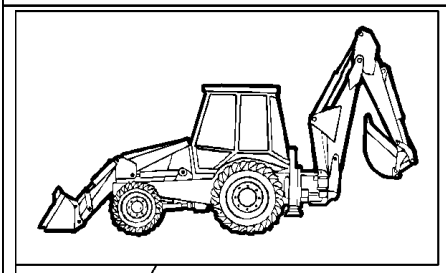

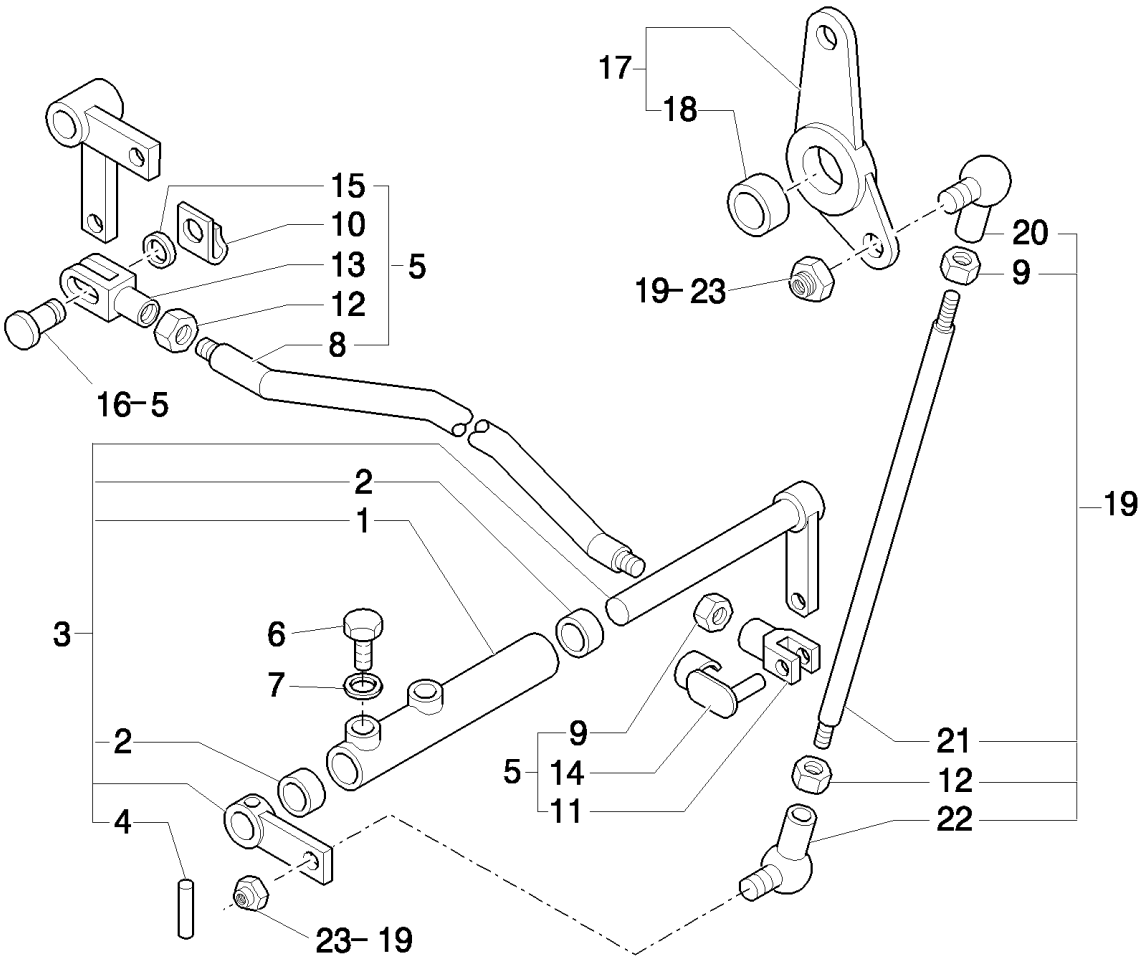

B110 TIER 3 BACKHOE LOADER (2/07-)

1.88.11/5A(01) SELF-LEVELING LINKAGE, LOADER CONTROLS (CENTER PIVOT MECHANIC) - NA

Ref	Numero de Pieza	Ctd	Descripción
1	85802724	1	LEVER, Assy, Includes 2
2	85802494	2	BUSHING,
3	85827787	1	LEVER, ASSY
4	85805616	1	PIN,
5	85802734	1	TIE-ROD, Assy
6	15970521	1	BOLT, Hex, M10 x 1.25 x 20, 8.8, Full Thd,
7	11190679	2	WASHER, SPRING, Belleville, M10.5,
8	85802736	1	TIE-ROD,
9	16102311	2	NUT, Thin, M8 x 1.25, Cl 04,
10	11064071	1	CLIP,
11	11991971	1	CLEVIS,
12	16102911	2	NUT, Thin, M8 x 1.25, Cl 04, LH,
13	85802735	1	CLEVIS,
14	85802738	1	RETAINER,
15	14496521	1	WASHER, M8 x 17 x 1.6,
16	85802737	2	PIN,
17	85803215	1	LEVER,
18	81855916	1	BUSHING,
19	85802741	1	TIE-ROD,
20	85804376	1	BALL JOINT,
21	85802742	1	TIE-ROD,
22	85804375	1	BALL JOINT,
23	14048211	2	NUT, LOCK, M8 x 1.25, Cl 8,

1.88.11/5A(02) SELF-LEVELING LINKAGE, LOADER ARM (CENTER PIVOT) - NA

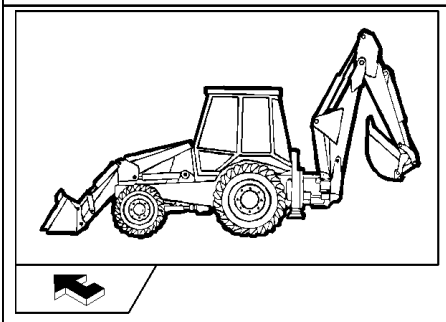

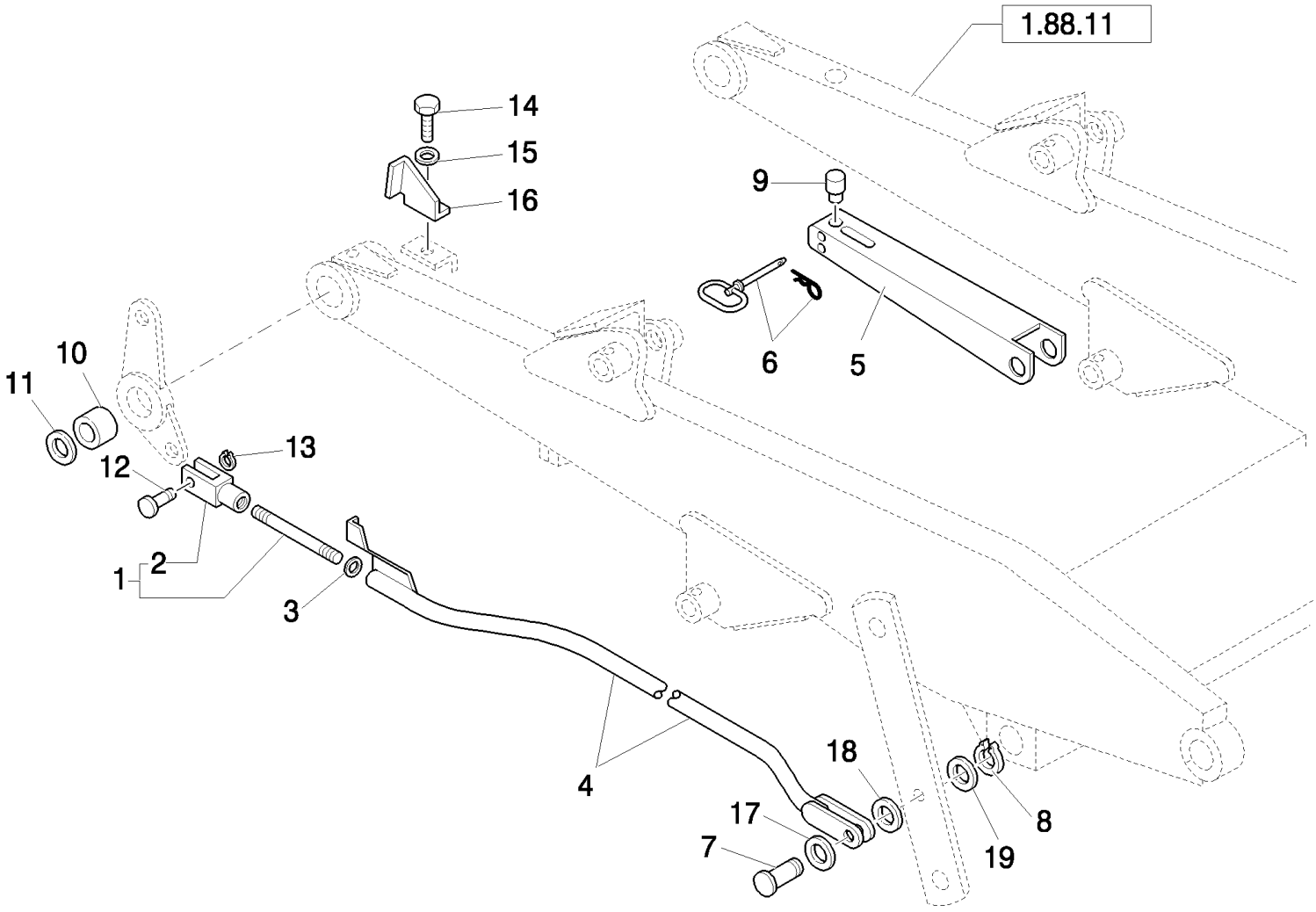

B110 TIER 3 BACKHOE LOADER (2/07-)

1.88.11/5A(02) SELF-LEVELING LINKAGE, LOADER ARM (CENTER PIVOT) - NA

Ref	Numero de Pieza	Ctd	Descripción
1	83963433	1	ROD, Assy
2	83962659	1	CLEVIS,
3	82879400	1	WASHER,
4	85804026	1	LINK,
5	85802405	1	LOCK, CYLINDER, Strut; Loader Lift Cylinder Lockout; Incl. Ref 9
6	86507337	1	PIN, HITCH,
7	85803297	1	PIN,
8	83911366	1	RING, SNAP,
9	85802403	1	PLUG, Pad, Strut Prop
10	83963422	1	SPACER,
11	85804366	1	WASHER,
12	85819179	1	PIN,
13	85700341	1	CIRCLIP,
14	10979421	1	BOLT, Hex, M6 x 10, 8.8, Full Thd,
15	11193279	1	WASHER, SPRING, Belleville, M6.4,
16	85803277	1	PLATE,
17	85817622	AR	WASHER,
18	85817623	AR	WASHER,
19	81900328	1	WASHER,

1.88.11/6(01) STABILIZER CYLINDERS (SIDE SHIFT) - EU

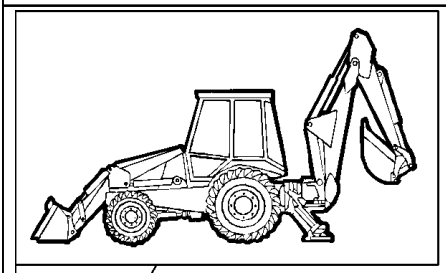

KIT KIT KIT

17 = ■
18 = ●

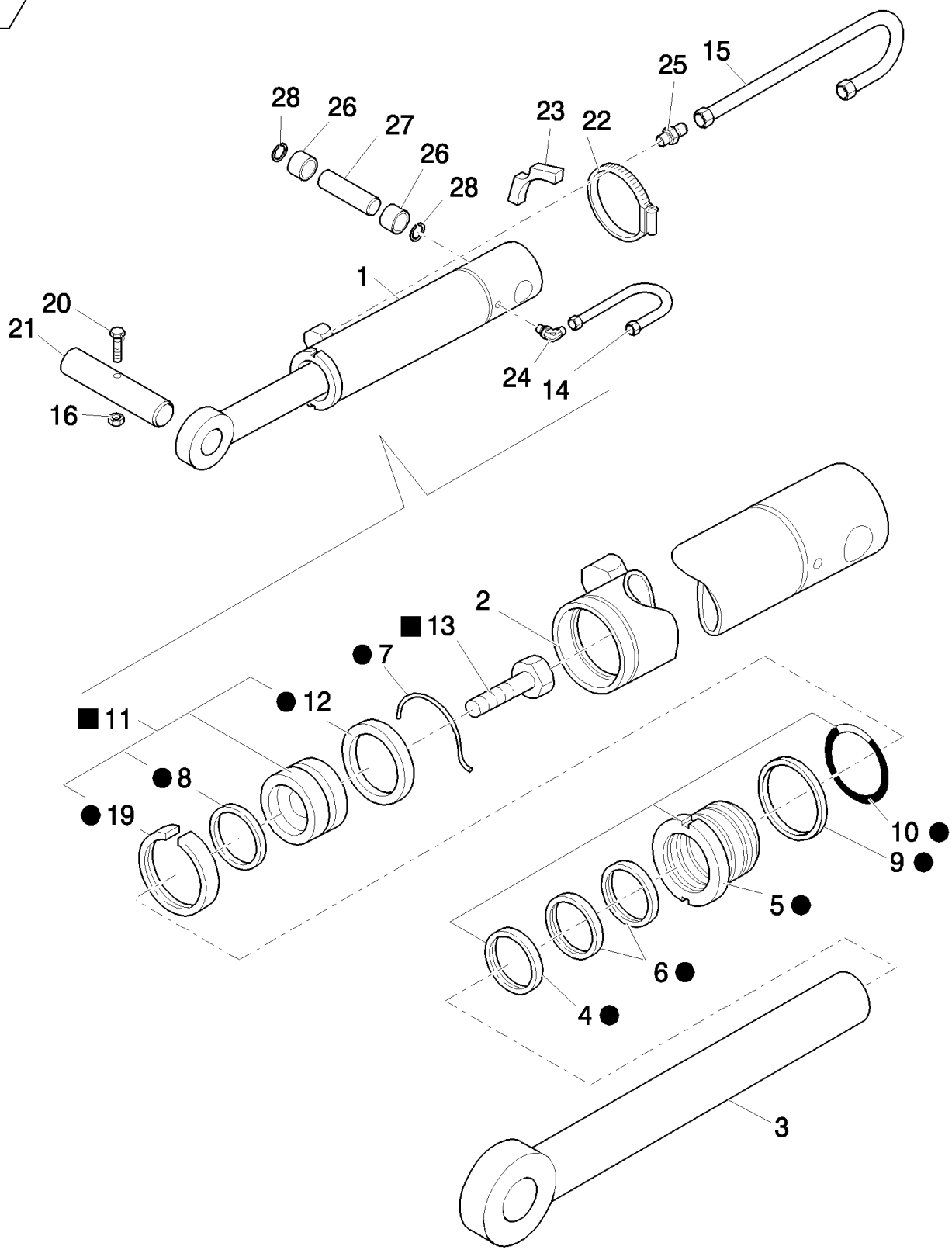

B110 TIER 3 BACKHOE LOADER (2/07-)

1.88.11/6(01) STABILIZER CYLINDERS (SIDE SHIFT) - EU

Ref	Numero de Pieza	Ctd	Descripción
1	87574186	2	CYLINDER,
2	87547464	2	TUBE, RIGID,
3	87520398	2	ROD,
4	87414969	2	SEAL,
5	87415113	2	GLAND,
6	87414970	2	KIT, SEALS,
7	83913375	2	WIRE, RETAINING,
8	87414339	2	RING,
9	87440399	2	BACK-UP RING,
10	87421142	2	O-RING,
11	87606649	2	PISTON,
12	349519A1	2	SEAL,
13	87428020	2	SCREW,
14	87573091	2	TUBE, RIGID,
15	87573090	2	TUBE, RIGID,
16	12577211	2	NUT, LOCK, M10 x 1.5, Cl 8,
17	87606688	AR	
18	87608671	1	KIT, SEALS,
19	87408632	1	Ring, Wear,
20	11108221	2	BOLT, Hex, M10 x 100, 8.8,
21	87376510	2	PIN,
22	85813328	2	COLLAR,
23	87573095	2	ANCHOR,
24	83961741	2	ELBOW,
25	83963371	2	CONNECTOR, HYD.,
26	87376505	4	SPACER,
27	87376504	2	PIN,
28	11069071	4	RING, SNAP, M45, Ext,

1.88.11/6A(01) STABILIZER CYLINDERS (CENTER PIVOT)

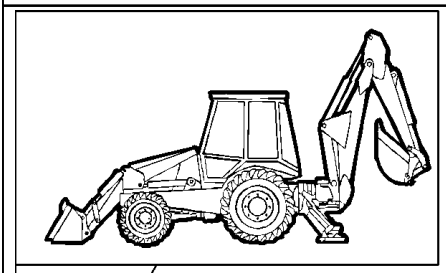

KIT
KIT KIT
15 = ●
17 = ■

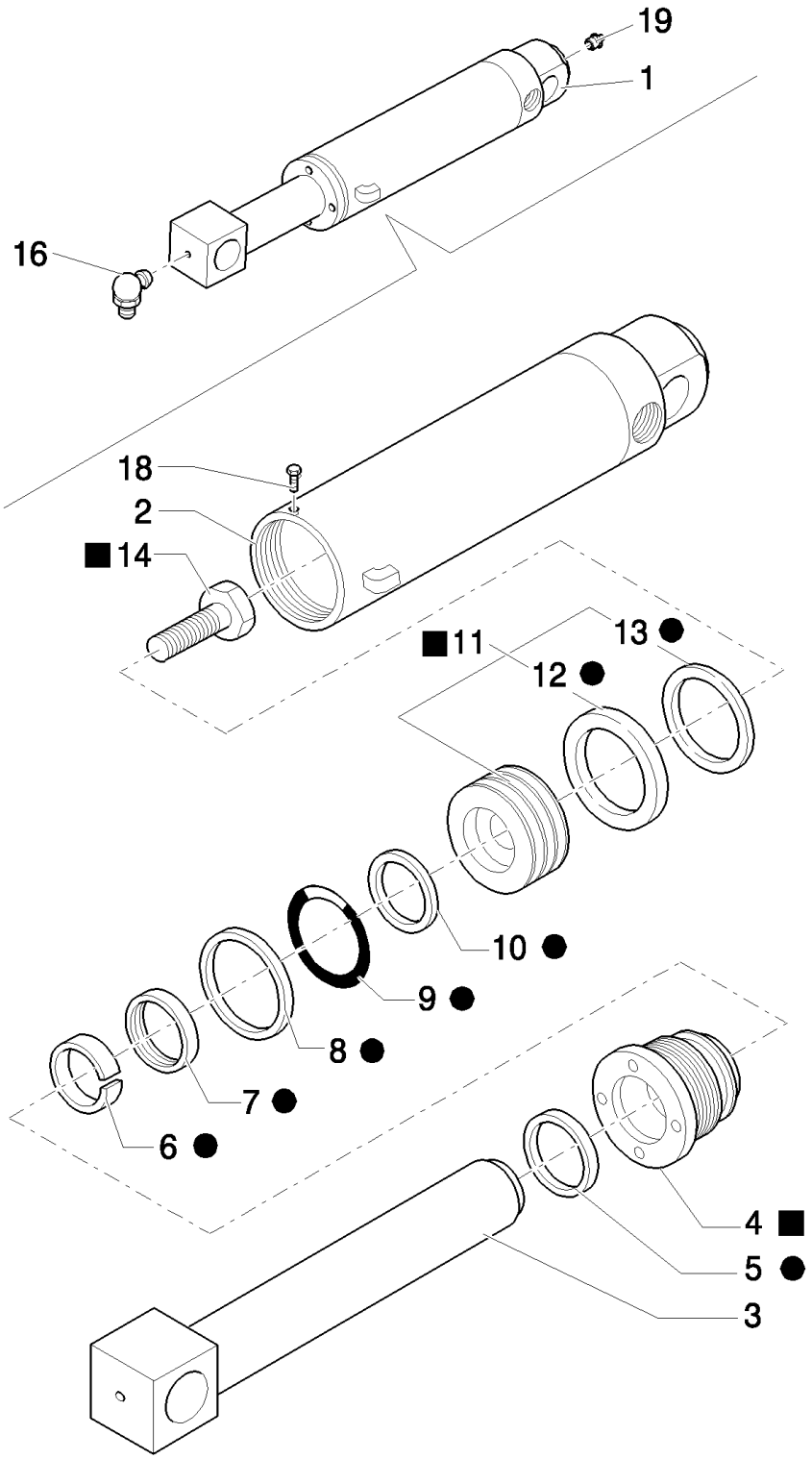

B110 TIER 3 BACKHOE LOADER (2/07-)

1.88.11/6A(01) STABILIZER CYLINDERS (CENTER PIVOT)

Ref	Numero de Pieza	Ctd	Descripción
1	87315528	2	HYDRAULIC CYLINDER,
2	85800604	2	BARREL,
3	85800603	2	ROD,
4	87412400	2	CYLINDER HEAD, , Includes 5 To 9
5	87414974	2	WIPER,
6	87414971	2	O-RING,
7	87414975	2	KIT, SEALS,
8	87440410	2	BACK-UP RING,
9	87421145	2	O-RING,
10	87414342	2	RING,
11	87406921	2	PISTON, , Includes 12, 13
12	87414334	2	SEAL,
13	87408635	2	Ring, Wear,
14	87428011	2	BOLT,
15	87428630	1	KIT, SEALS,
16	81818824	2	NIPPLE, LUBE, 90º, 1/8"-27 NPT,
17	81818824	2	NIPPLE, LUBE, 90º, 1/8"-27 NPT, 1/8"-27
18	85827128	1	SCREW,
19	83416242	2	NIPPLE, LUBE,

1.88.11/7(01) PIPES FOR STABILIZER CYLINDERS (SIDE SHIFT) - EU

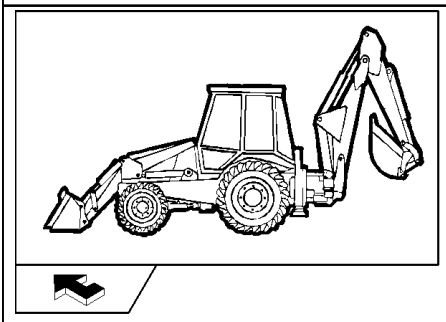

B110 TIER 3 BACKHOE LOADER (2/07-)

1.88.11/7(01) PIPES FOR STABILIZER CYLINDERS (SIDE SHIFT) - EU

Ref	Numero de Pieza	Ctd	Descripción
1	87573096	4	FITTING,
2	87357861	1	HOSE, FLEXIBLE, RH
3	87357866	1	HOSE, FLEXIBLE, RH
4	87357871	1	HOSE, FLEXIBLE, LH
5	87357872	1	HOSE, FLEXIBLE, LH
6	87357881	2	SPACER,
7	85802900	2	CLAMP,
8	14048211	2	NUT, LOCK, M8 x 1.25, Cl 8,
9	16044121	2	BOLT, Hex, M8 x 45, 8.8,
10	83963374	4	CONNECTOR, HYD.,
11	80128825	4	O-RING,
12	89992298	4	O-RING,
13	87573086	2	PLATE,
14	87573083	2	PLATE,
15	87573077	2	RETAINER,
16	11193979	2	WASHER, SPRING, Belleville, M8.4,
17	16043821	2	BOLT, Hex, M8 x 30, 8.8,

1.88.11/7A(01) PIPES FOR STABILIZER CYLINDERS (CENTER PIVOT PILOT)

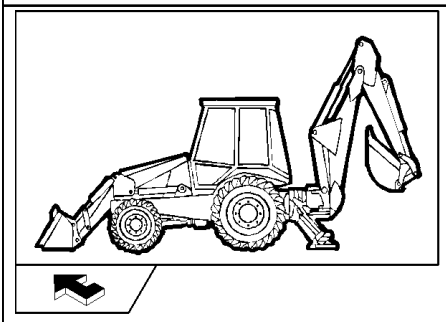

KIT 20 = ●

B110 TIER 3 BACKHOE LOADER (2/07-)

1.88.11/7A(01) PIPES FOR STABILIZER CYLINDERS (CENTER PIVOT PILOT)

Ref	Numero de Pieza	Ctd	Descripción
1	83963374	2	CONNECTOR, HYD., , Includes 2, 3
2	89992298	6	O-RING,
3	80128825	6	O-RING,
4	83985067	6	CONNECTOR, HYD.,
5	85802820	2	VALVE, CHECK, , Includes 20 To 23
6	85807873	4	HOSE, FLEXIBLE, 946mm lg,
7	85802965	2	CONNECTOR, HYD.,
8	85803008	2	CLAMP, HOSE,
9	87303912	2	BLOCK,
10	87390514	2	PLATE,
11	15213621	2	SCREW, Hex, M8 x 55, 8.8, Full Thd,
12	14048211	2	NUT, LOCK, M8 x 1.25, Cl 8,
13	11193879	6	WASHER, SPRING, Belleville, M8.4,
14	87390534	2	PLATE,
15	85807874	4	HOSE, FLEXIBLE, 1676mm lg,
16	87390511	4	CLAMP,
17	85802620	2	TUBE, HYD,
18	16044421	4	BOLT, Hex, M8 x 60, 8.8,
19	85803517	2	BUSHING, RUBBER,
20	85821126	2	KIT,
21	85805258	4	CONNECTOR, HYD., 9/16"-16 ORS x 1 1/16"-12, O-Ring,
22	85820159	1	PLUNGER,
23	85820160	2	VALVE, HYDRAULIC,
24	83983763	2	CONNECTOR, HYD.,
25	86511208	2	ELBOW,

1.88.11/7C(01) PIPES FOR STABILIZER CYLINDERS (CENTER PIVOT MECHANIC) - NA

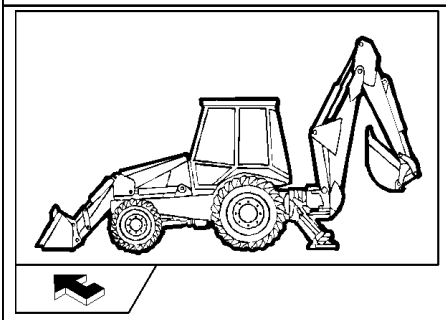

KIT 20 = ●

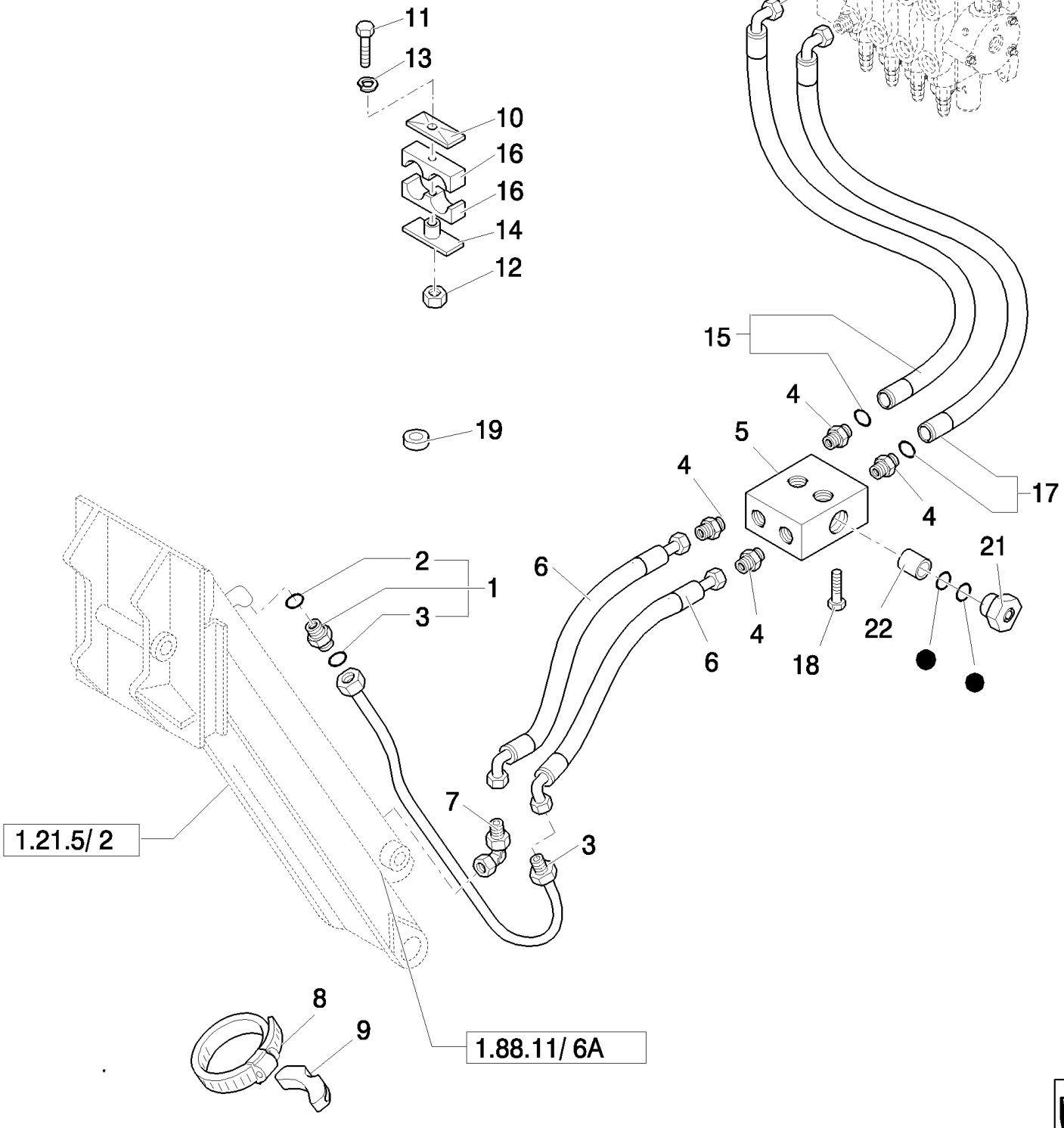

B110 TIER 3 BACKHOE LOADER (2/07-)

1.88.11/7C(01) PIPES FOR STABILIZER CYLINDERS (CENTER PIVOT MECHANIC) - NA

Ref	Numero de Pieza	Ctd	Descripción
1	83963374	6	CONNECTOR, HYD., , Includes 2, 3
2	89992298	6	O-RING,
3	80128825	6	O-RING,
4	83985067	8	CONNECTOR, HYD.,
5	85802820	2	VALVE, CHECK, , Includes 20 To 22
6	85807873	4	HOSE, FLEXIBLE, 946mm lg,
7	85802965	2	CONNECTOR, HYD.,
8	85803008	2	CLAMP, HOSE,
9	87303912	2	BLOCK,
10	87390514	2	PLATE,
11	15213621	2	SCREW, Hex, M8 x 55, 8.8, Full Thd,
12	14048211	2	NUT, LOCK, M8 x 1.25, Cl 8,
13	11193879	6	WASHER, SPRING, Belleville, M8.4,
14	87390534	2	PLATE,
15	85807874	4	HOSE, FLEXIBLE, 1676mm lg,
16	87390511	4	CLAMP,
17	85802620	2	TUBE, HYD,
18	16044421	4	BOLT, Hex, M8 x 60, 8.8,
19	85803517	2	BUSHING, RUBBER,
20	85821126	2	KIT,
21	85820160	2	VALVE, HYDRAULIC,
22	85820159	1	PLUNGER,

1.88.11/8(01) RETURN TO DIG SENSOR

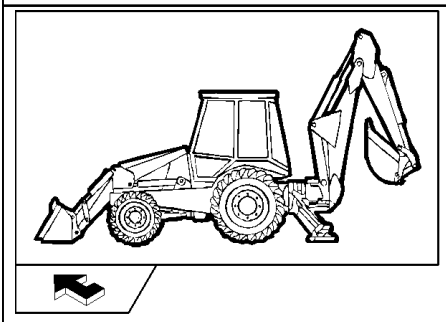

B110 EU

B110 NA

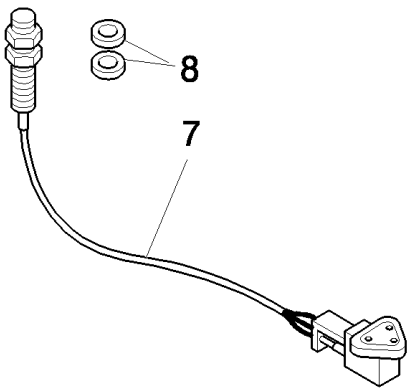

B115 EU

B115 NA

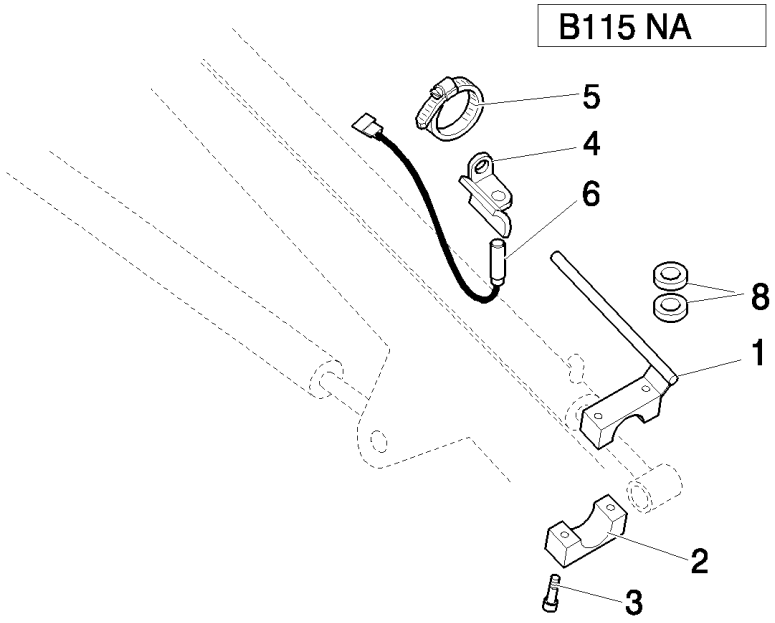

B110 TIER 3 BACKHOE LOADER (2/07-)

1.88.11/8(01) RETURN TO DIG SENSOR

Ref	Numero de Pieza	Ctd	Descripción
1	85805108	1	ROD,
2	85805111	1	BLOCK,
3	14305621	2	SCREW, Hex Soc Hd, M6 x 35, 8.8,
4	85805113	1	SUPPORT,
5	85803010	2	CLAMP, HOSE,
6	85805619	1	SENSOR, Pigtail Length = 2600mm
7	85802950	1	SENSOR, Pigtail Length = 400mm
8	14497001	4	WASHER, LOCK, 19X34X3

1.88.11/9(01) CYLINDERS AND ROTATION PLATE (SIDE SHIFT) - EU

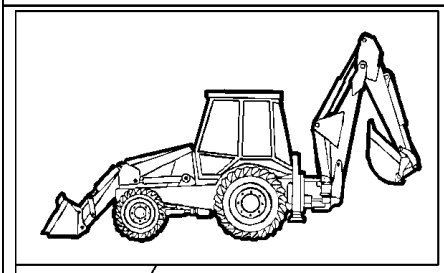

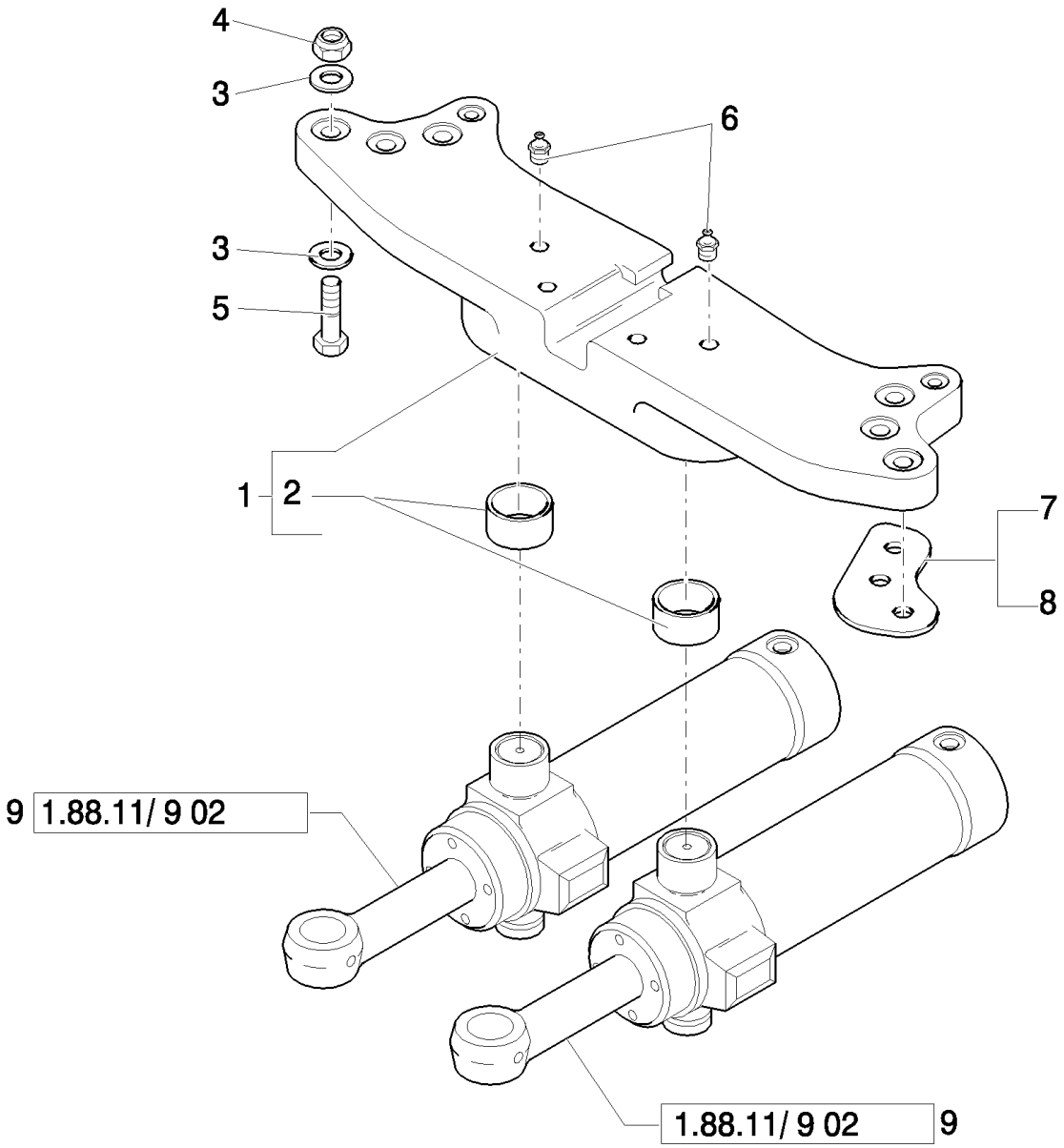

B110 TIER 3 BACKHOE LOADER (2/07-)

1.88.11/9(01) CYLINDERS AND ROTATION PLATE (SIDE SHIFT) - EU

Ref	Numero de Pieza	Ctd	Descripción
1	85818903	1	PLATE, RETAINING,
2	83910645	2	BUSHING,
3	10520431	12	WASHER, 20X35
4	12575121	6	NUT, LOCK, M20 x 1.5, Cl 10,
5	15988934	6	BOLT, Hex, M20 x 90, 10.9,
6	83416242	4	NIPPLE, LUBE,
7	85801153	4	SHIM,
8	85803039	2	SHIM,
9	87315529	2	HYDRAULIC CYLINDER,

1.88.11/9(02) SWING CYLINDERS BACKHOE

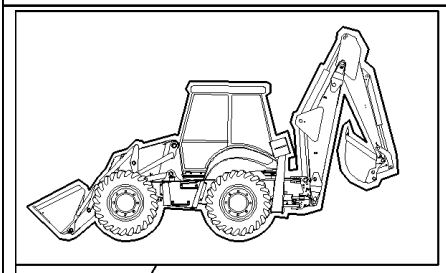

KIT KIT KIT 11 = ●

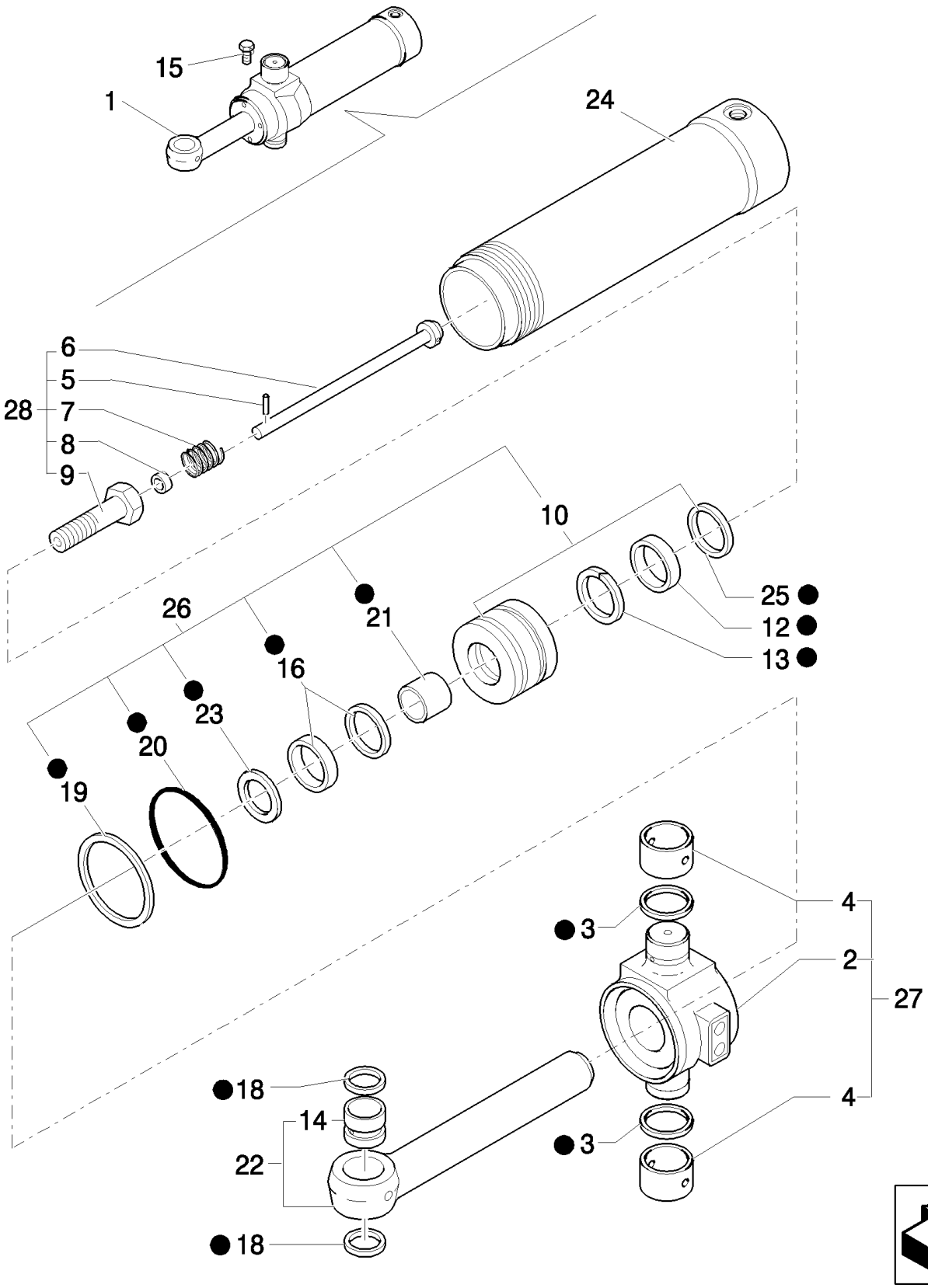

B110 TIER 3 BACKHOE LOADER (2/07-)

1.88.11/9(02) SWING CYLINDERS BACKHOE

Ref	Numero de Pieza	Ctd	Descripción
1	87315529	1	HYDRAULIC CYLINDER,
2	87422783	1	TRUNNION,
3	83910601	2	SEAL, Seal
4	83912378	2	BUSHING,
5	83910599	1	PIN,
6	85800990	1	ROD,
7	83931313	1	SPRING,
8	83998909	1	BUSHING, DRIVE,
9	87428014	1	SCREW, M30x2x100
10	87424838	1	PISTON,
11	87428631	1	KIT, SEALS,
12	87408636	1	RING,
13	87414335	1	SEAL, HYD-CYLINDER,
14	85800303	1	BUSHING,
15	276-2456	1	SCREW, SELF TAPPING,
16	87414970	1	KIT, SEALS, 50 mm Rod
18	83931289	2	SEAL,
19	85800007	1	BACK-UP RING, Back-up
20	87421149	1	O-RING, 4.734" ID x .139" Thk
21	87414966	1	BEARING, NYLON, 50 mm Rod
22	87433032	1	ROD,
23	87414969	1	SEAL, 50 mm Rod
24	87455335	1	CYLINDER HEAD,
25	87414343	1	RING,
26	87445307	1	KIT, SEALS,
27	87445758	1	TRUNNION,
28	87424935	1	BOLT,

1.88.11/9A(01) CYLINDERS AND ROTATION PLATE (CENTER PIVOT)

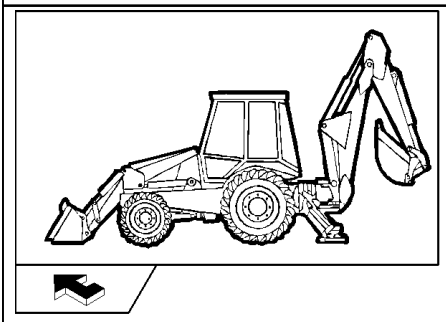

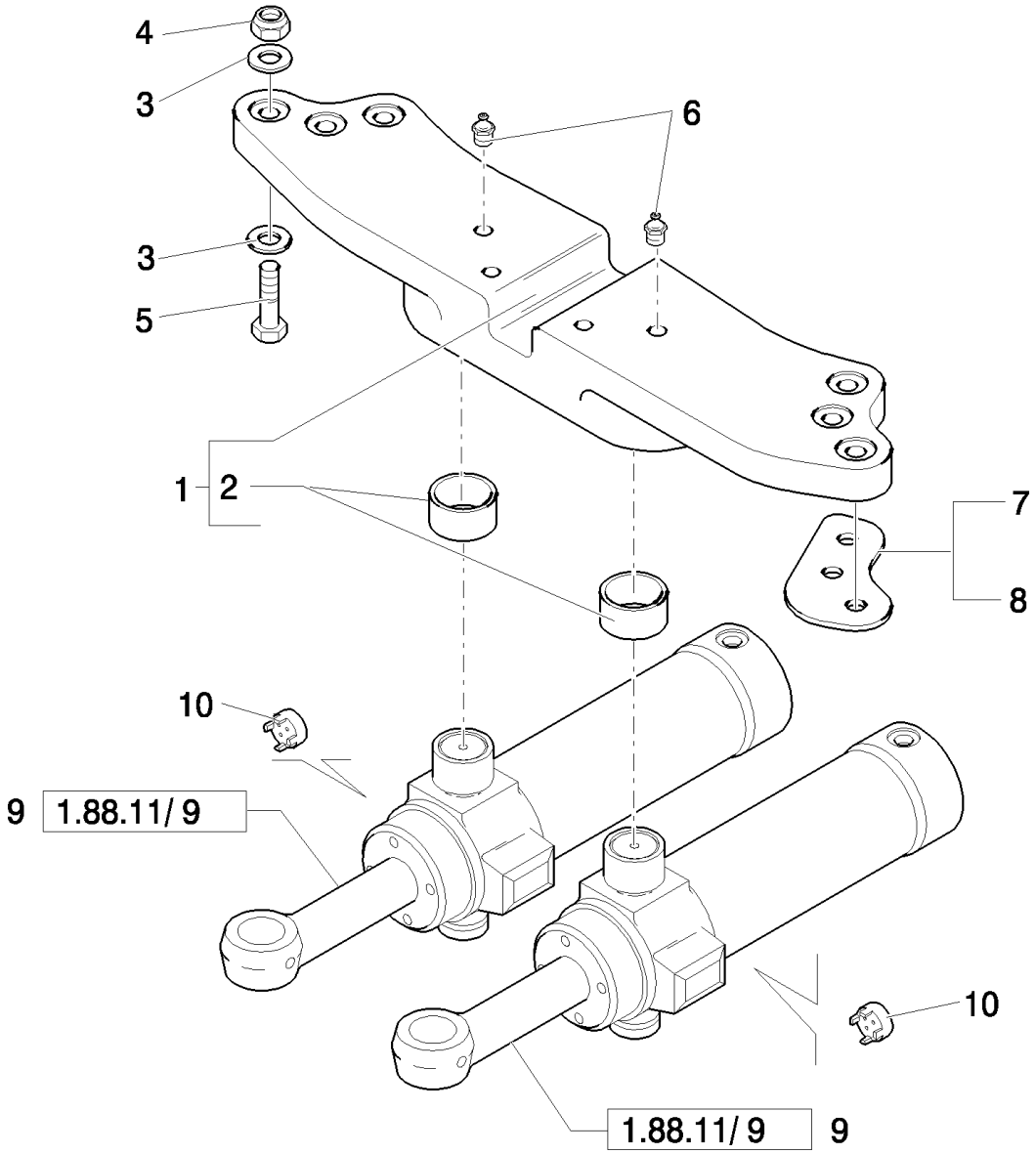

B110 TIER 3 BACKHOE LOADER (2/07-)

1.88.11/9A(01) CYLINDERS AND ROTATION PLATE (CENTER PIVOT)

Ref	Numero de Pieza	Ctd	Descripción
1	85803617	1	PLATE, RETAINING, , Includes 2
2	83910645	2	BUSHING,
3	10520431	12	WASHER,
4	12575121	6	NUT, LOCK, M20 x 1.5, Cl 10,
5	15988934	6	BOLT, Hex, M20 x 90, 10.9,
6	83416242	4	NIPPLE, LUBE, 1/8"-27
7	85801153	4	SHIM,
8	85803039	2	SHIM,
9	87315529	2	HYDRAULIC CYLINDER,
10	85800965	2	REDUCER,

1.88.12/3(01) FRONT CONTROL VALVE SUPPORT AND TRANSMISSIONS (CENTER PIVOT - SIDE SHIFT)

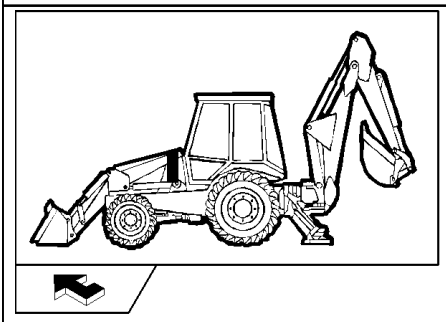

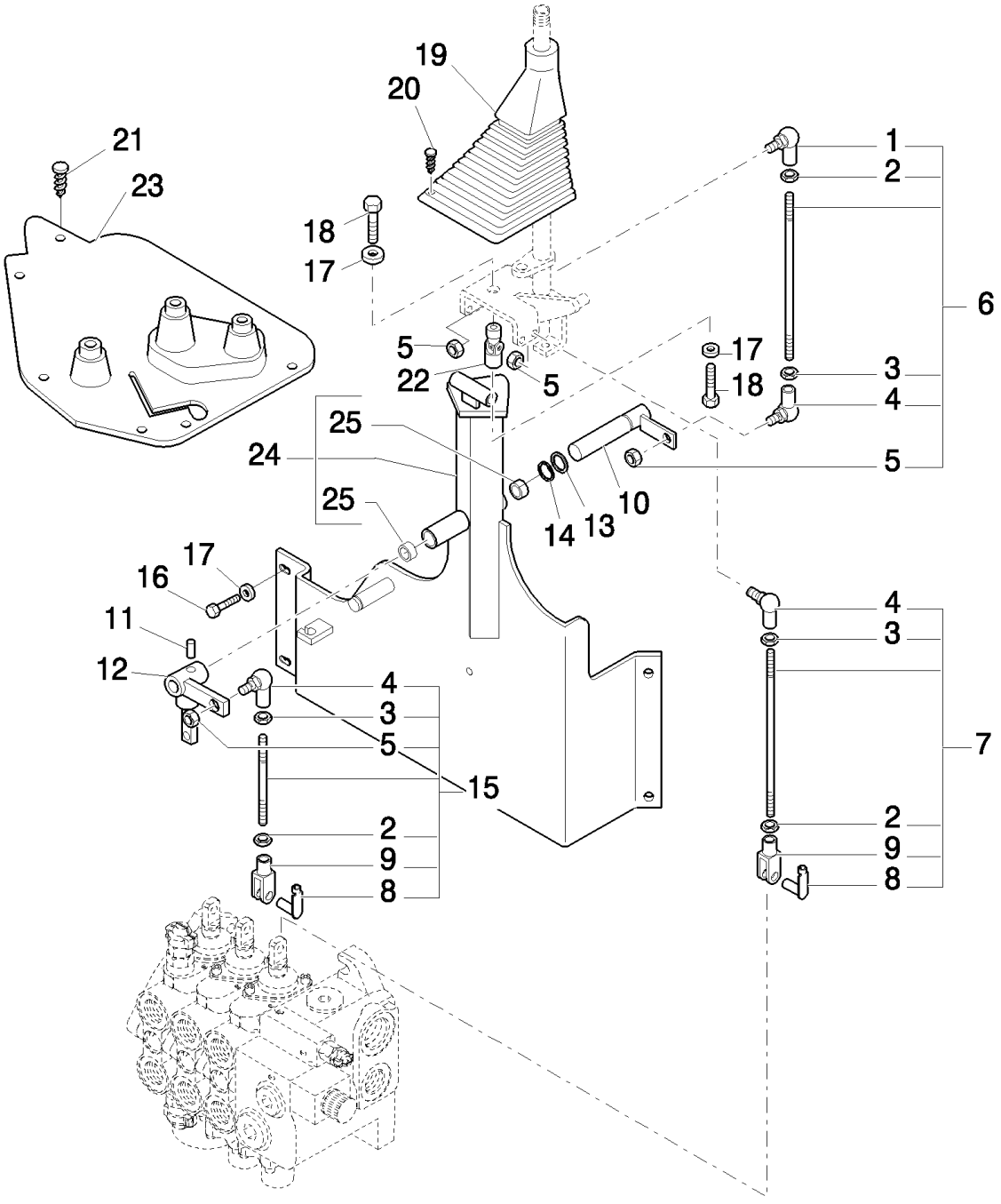

B110 TIER 3 BACKHOE LOADER (2/07-)

1.88.12/3(01) FRONT CONTROL VALVE SUPPORT AND TRANSMISSIONS (CENTER PIVOT - SIDE SHIFT)

Ref	Numero de Pieza	Ctd	Descripción
1	85804376	1	BALL JOINT,
2	16102911	3	NUT, Thin, M8 x 1.25, Cl 04, LH,
3	16102311	3	NUT, Thin, M8 x 1.25, Cl 04,
4	85804375	3	BALL JOINT,
5	14048211	5	NUT, LOCK, M8 x 1.25, Cl 8,
6	85803477	1	TIE-ROD,
7	85805498	1	TIE-ROD,
8	85802738	2	RETAINER,
9	11991971	2	CLEVIS,
10	85824463	1	LEVER,
11	85805616	1	PIN,
12	85825465	1	IDLER,
13	14496901	1	WASHER, M16 x 30 x 3,
14	83911366	1	RING, SNAP,
15	85805806	1	TIE-ROD,
16	11112821	4	BOLT, Hex, M12 x 40, 8.8, Full Thd,
17	11190779	5	WASHER, SPRING, Belleville, M13,
18	15540321	1	BOLT, Hex, M12 x 1.25 x 25, 8.8, Full Thd,
19	85802842	1	BOOT,
20	14568887	4	FASTENER, 8x20
21	85808422	6	PLUG, , Only for Cab
22	85801518	1	JOINT, UNIVERSAL,
23	85806245	1	BOOT, , Only for Cab
24	87304841	1	SUPPORT,
25	85802494	2	BUSHING,

Mecchanical Version

1.88.12/3A(01) FRONT CONTROL VALVE SUPPORT AND TRANSMISSIONS (CENTER PIVOT) - NA

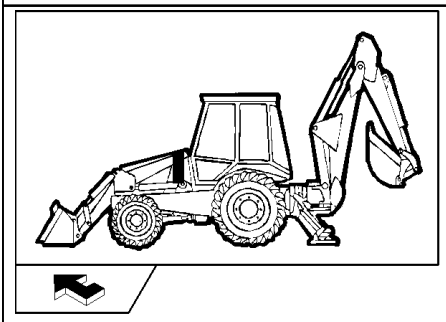

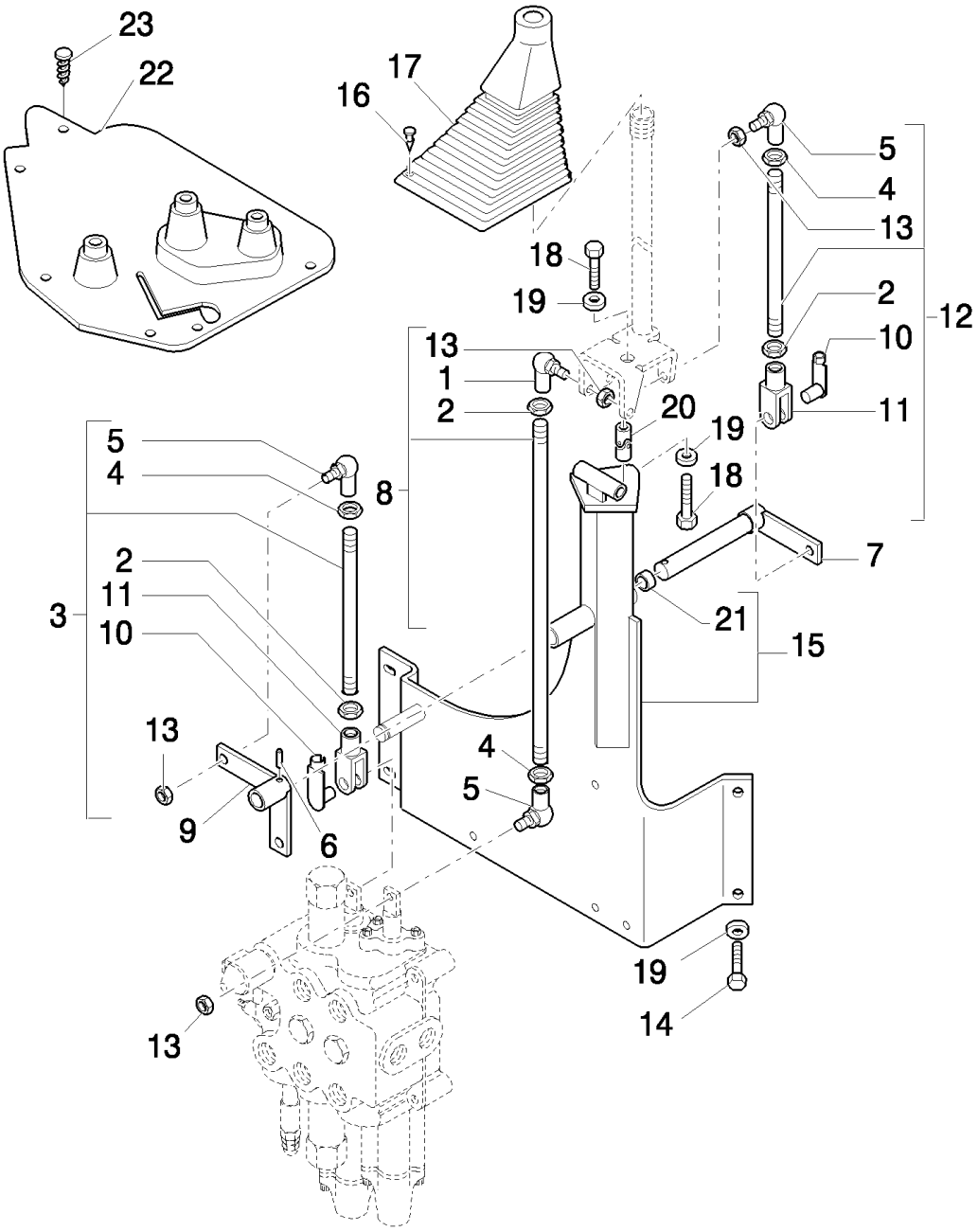

Mecchanical Version

B110 TIER 3 BACKHOE LOADER (2/07-)

1.88.12/3A(01) FRONT CONTROL VALVE SUPPORT AND TRANSMISSIONS (CENTER PIVOT) - NA

Ref	Numero de Pieza	Ctd	Descripción
1	85804376	1	BALL JOINT,
2	16102311	3	NUT, Thin, M8 x 1.25, Cl 04,
3	85801564	1	TIE-ROD,
4	16102911	3	NUT, Thin, M8 x 1.25, Cl 04, LH,
5	85804375	3	BALL JOINT,
6	85805616	1	PIN,
7	85805692	1	PIN,
8	85801566	1	TIE-ROD,
9	85805690	1	LEVER,
10	85802738	2	RETAINER,
11	11991971	2	CLEVIS,
12	85801562	1	TIE-ROD,
13	14048211	4	NUT, LOCK, M8 x 1.25, Cl 8,
14	11112821	4	BOLT, Hex, M12 x 40, 8.8, Full Thd,
15	87312027	1	SUPPORT,
16	14568887	AR	FASTENER,
17	85802842	1	BOOT,
18	15540321	2	BOLT, Hex, M12 x 1.25 x 25, 8.8, Full Thd,
19	11190779	6	WASHER, SPRING, Belleville, M13,
20	85801518	1	JOINT, UNIVERSAL,
21	85802494	2	BUSHING,
22	85804539	1	COVER, , Only for Cab
23	85808422	6	PLUG, , Only for Cab

Mecchanical Version

1.89.9(01) DISTRIBUTOR VALVE SUPPORT (SIDE SHIFT REXROTH) - EU

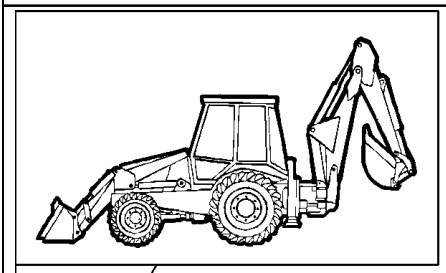

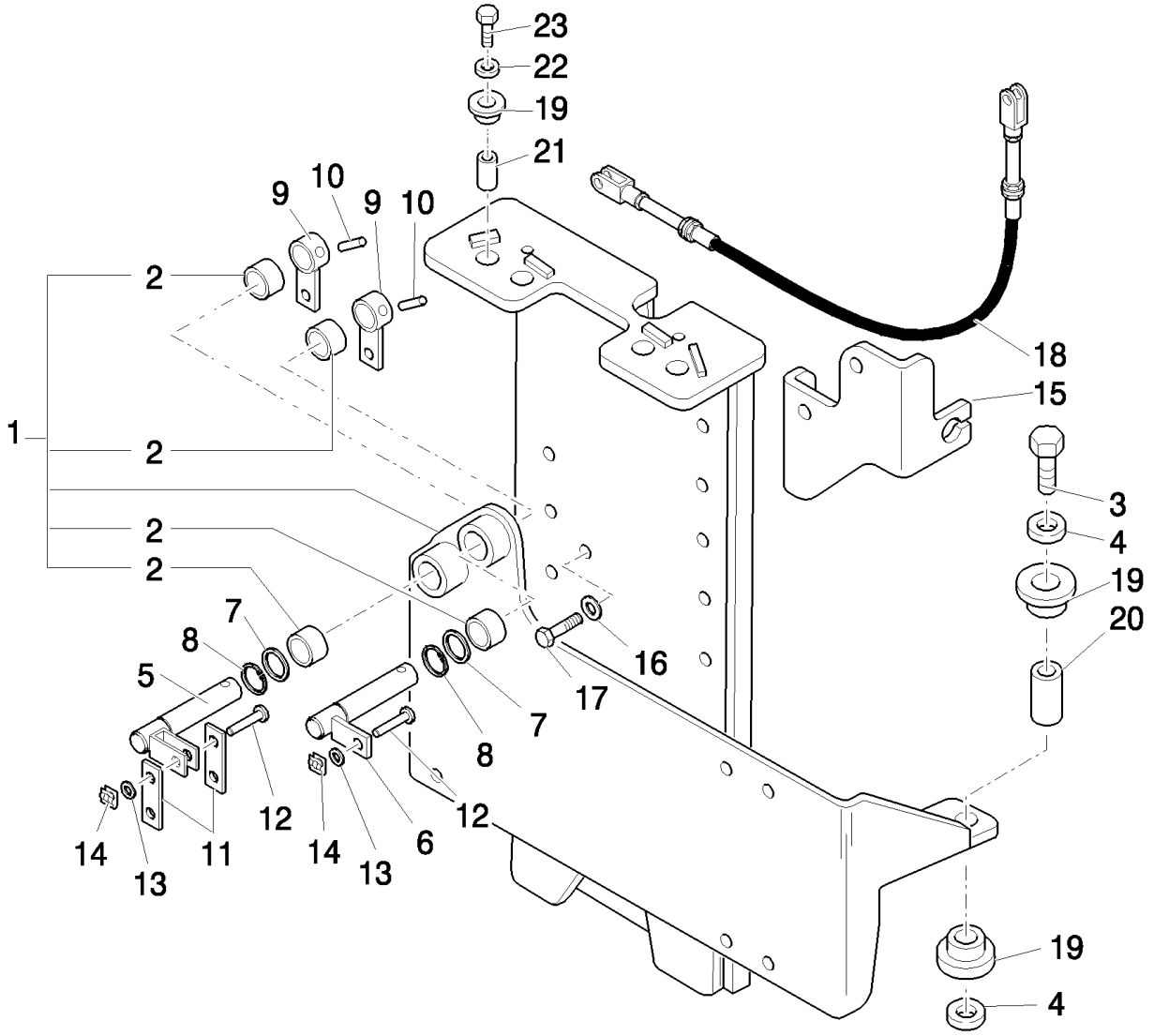

B110 TIER 3 BACKHOE LOADER (2/07-)

1.89.9(01) DISTRIBUTOR VALVE SUPPORT (SIDE SHIFT REXROTH) - EU

Ref	Numero de Pieza	Ctd	Descripción
1	85820168	1	SUPPORT,
2	85802494	4	BUSHING,
3	15215821	2	BOLT, Hex, M12 x 60, 8.8, Full Thd,
4	85802618	5	WASHER, SEALING, 13X41X3
5	85805328	1	LEVER,
6	85805331	1	LEVER, IDLER,
7	14496901	2	WASHER, M16 x 30 x 3,
8	83911366	2	RING, SNAP,
9	85805335	2	LEVER,
10	85805616	2	PIN,
11	85805338	2	LINK,
12	85805408	3	PIN, ROLL,
13	14499401	3	WASHER, M8 x 14 x 1.6,
14	11064071	3	CLIP,
15	85805097	1	SUPPORT,
16	11193879	2	WASHER, SPRING, Belleville, M8.4,
17	16043121	2	BOLT, Hex, M8 x 14, 8.8, Full Thd,
18	85805409	2	CABLE,
19	87348165	6	ISOLATOR,
20	85817252	2	BUSHING, 12.5 x 16.5 x 24
21	85820172	1	BUSHING,
22	85820170	1	SPACER,
23	15216421	1	BOLT, Hex, M12 x 90, 8.8, Full Thd,

Mechanical Version

1.89.9/1(01) DISTRIBUTOR VALVE SUPPORT HUSCO (CENTER PIVOT) - NA

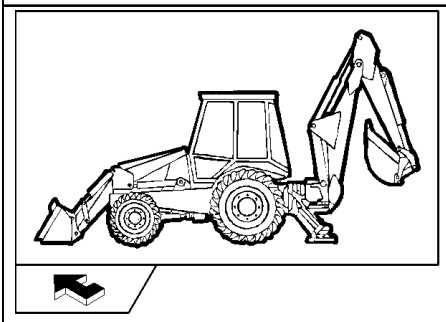

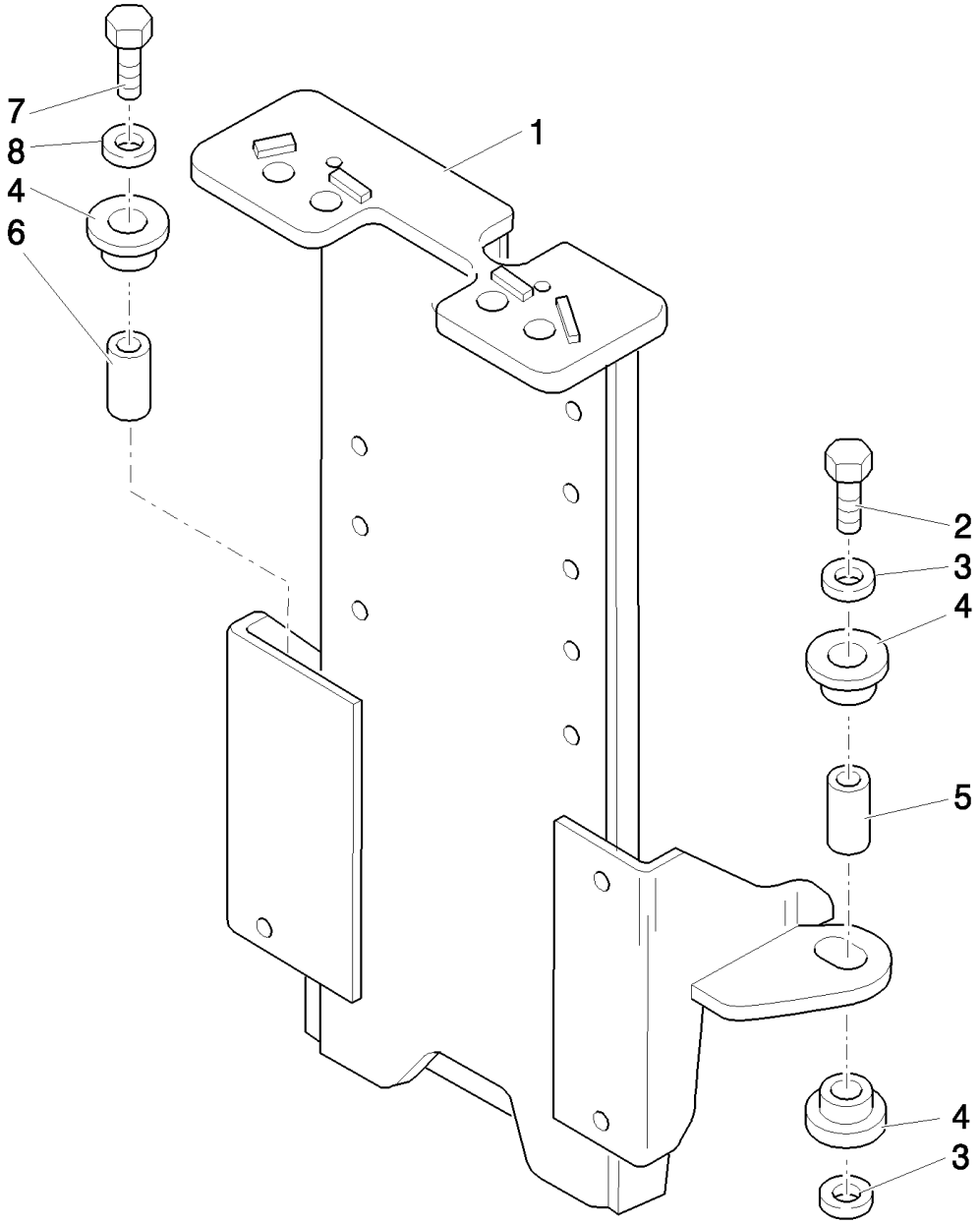

B110 TIER 3 BACKHOE LOADER (2/07-)

1.89.9/1(01) DISTRIBUTOR VALVE SUPPORT HUSCO (CENTER PIVOT) - NA

Ref	Numero de Pieza	Ctd	Descripción
1	85820167	1	SUPPORT,
2	15215821	2	BOLT, Hex, M12 x 60, 8.8, Full Thd,
3	85802618	5	WASHER, SEALING, 13x41x3
4	87348165	6	ISOLATOR,
5	85817252	2	BUSHING, 12.5 x 16.5 x 24
6	85820172	1	BUSHING, 12.5 x 16.5 x 22
7	15216421	1	BOLT, Hex, M12 x 90, 8.8, Full Thd,
8	85820170	1	SPACER,

Mechanical Version

1.91.1(01) CAB / CEILING LIGHT

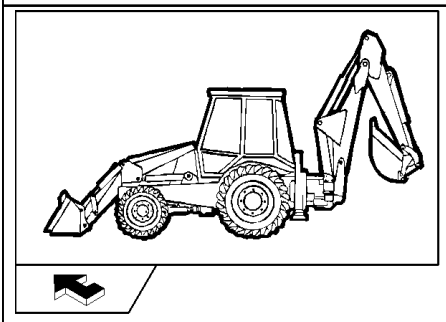

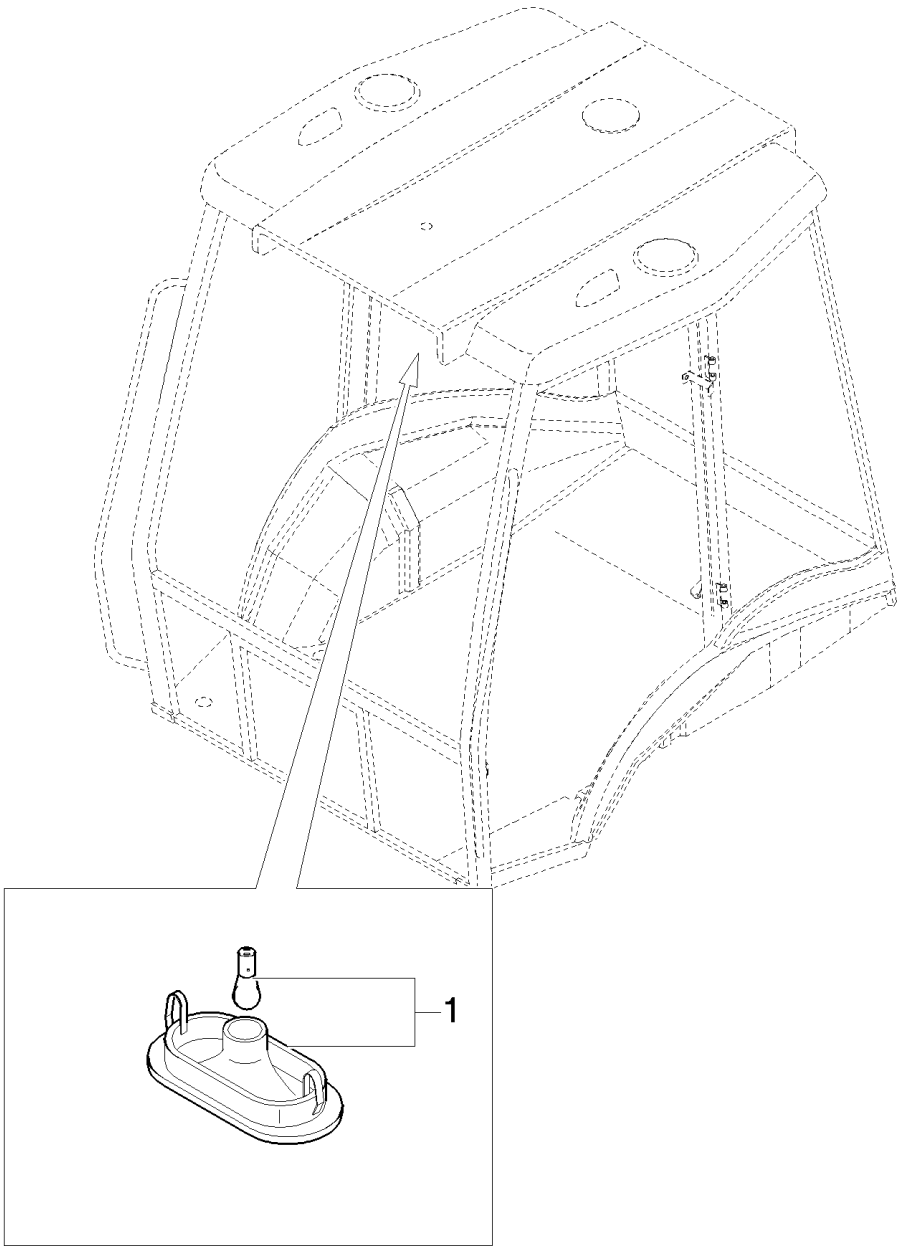

B110 TIER 3 BACKHOE LOADER (2/07-)

1.91.1(01) CAB / CEILING LIGHT

Ref	Numero de Pieza	Ctd	Descripción
1	82022833	1	LAMP, CEILING,

1.91.1/1(01) SAFETY FRAME- INSTRUMENTS AND GAUGES (ROPS) - NA

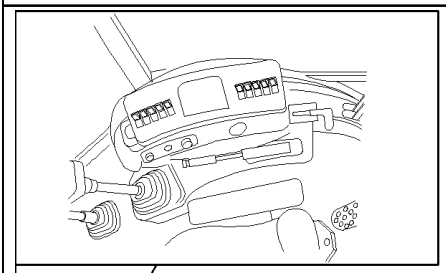

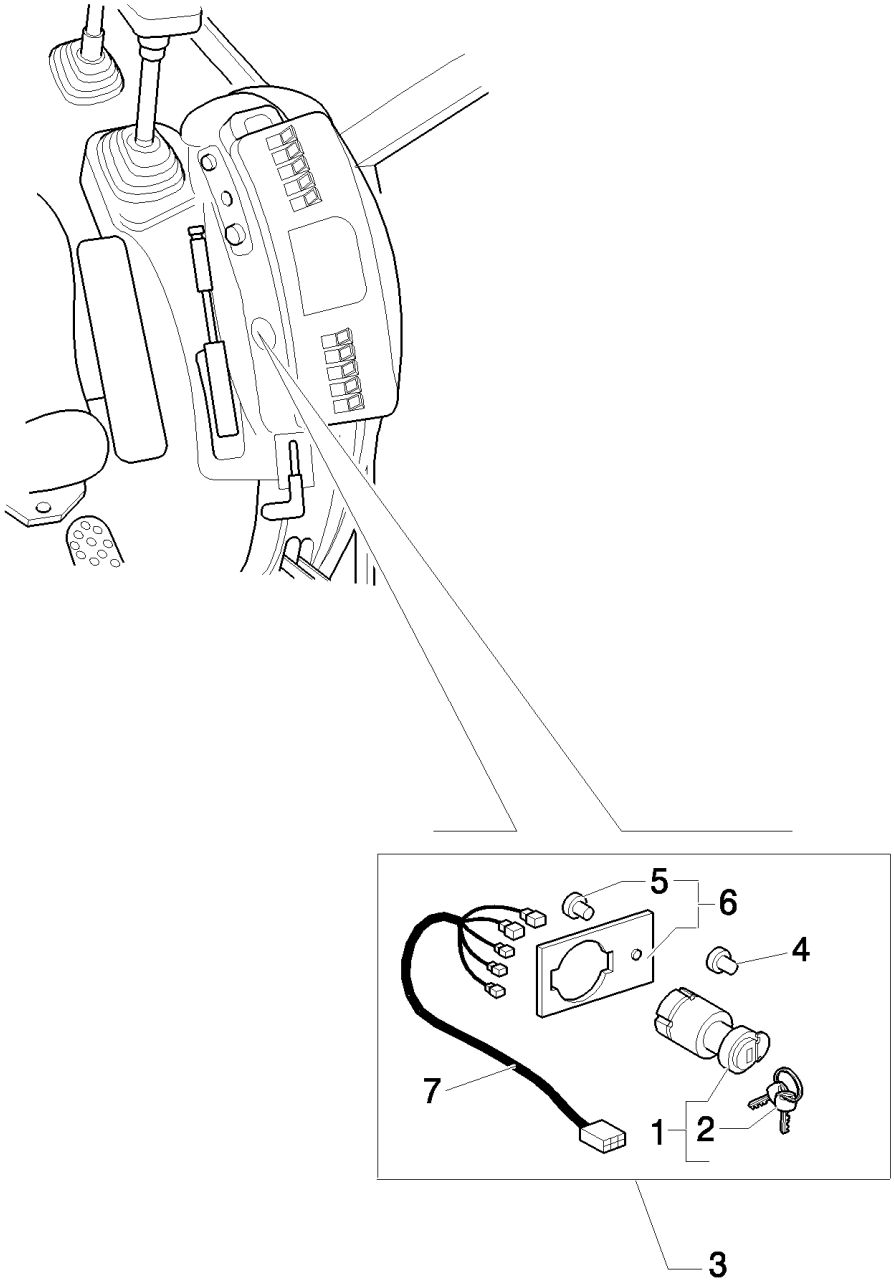

B110 TIER 3 BACKHOE LOADER (2/07-)

1.91.1/1(01) SAFETY FRAME- INSTRUMENTS AND GAUGES (ROPS) - NA

Ref	Numero de Pieza	Ctd	Descripción
1	85804674	1	SWITCH, IGNITION,
2	85804675	2	KEY, IGNITION,
3	85807866	1	KIT, CONVERSION,
4	784122	1	PLUG,
5	10427201	1	RIVET,
6	85827548	1	PLATE,
7	85807855	1	HARNESS, WIRE,

1.91.3(01) BACK-UP ALARM

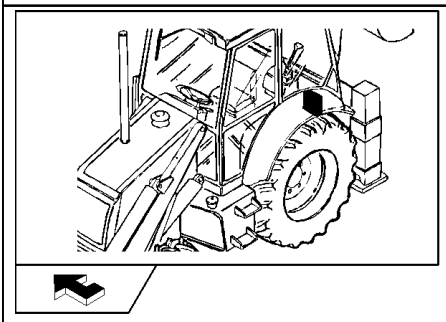

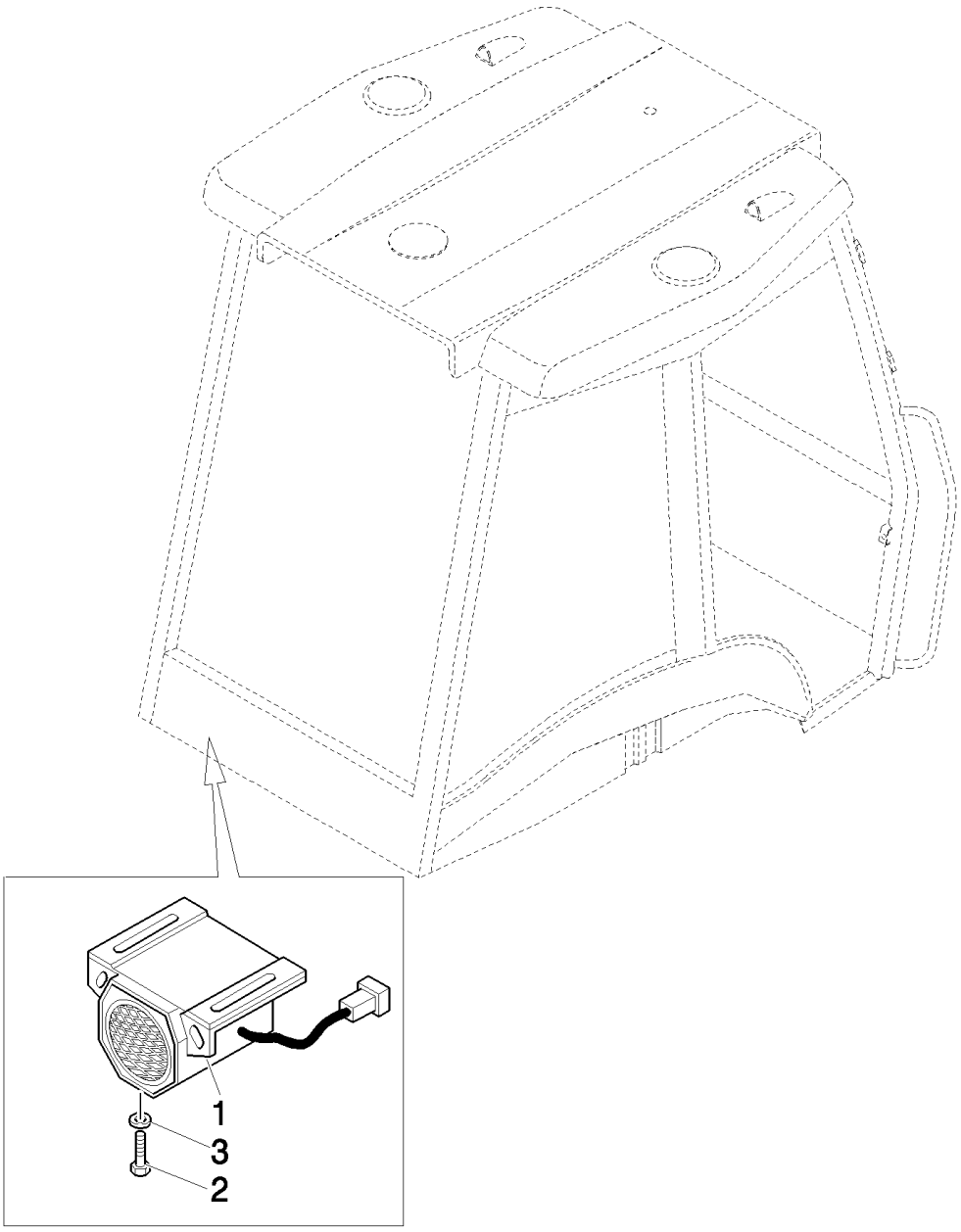

B110 TIER 3 BACKHOE LOADER (2/07-)

1.91.3(01) BACK-UP ALARM

Ref	Numero de Pieza	Ctd	Descripción
1	87303261	1	ALARM,
2	10902321	2	BOLT, Hex, M6 x 18, 8.8, Full Thd,
3	11197779	2	WASHER, SPRING, Belleville, M6.4,

B110 TIER 3 BACKHOE LOADER (2/07-)

1.91.4(01) IGNITON SWITCH, POWER POINT, FUSE PANEL & SIDE CONSOLE HARNESS (CAB POWER SHUTTLE)

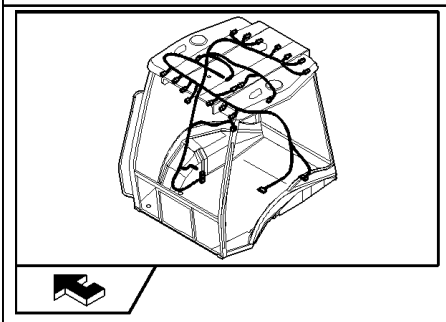

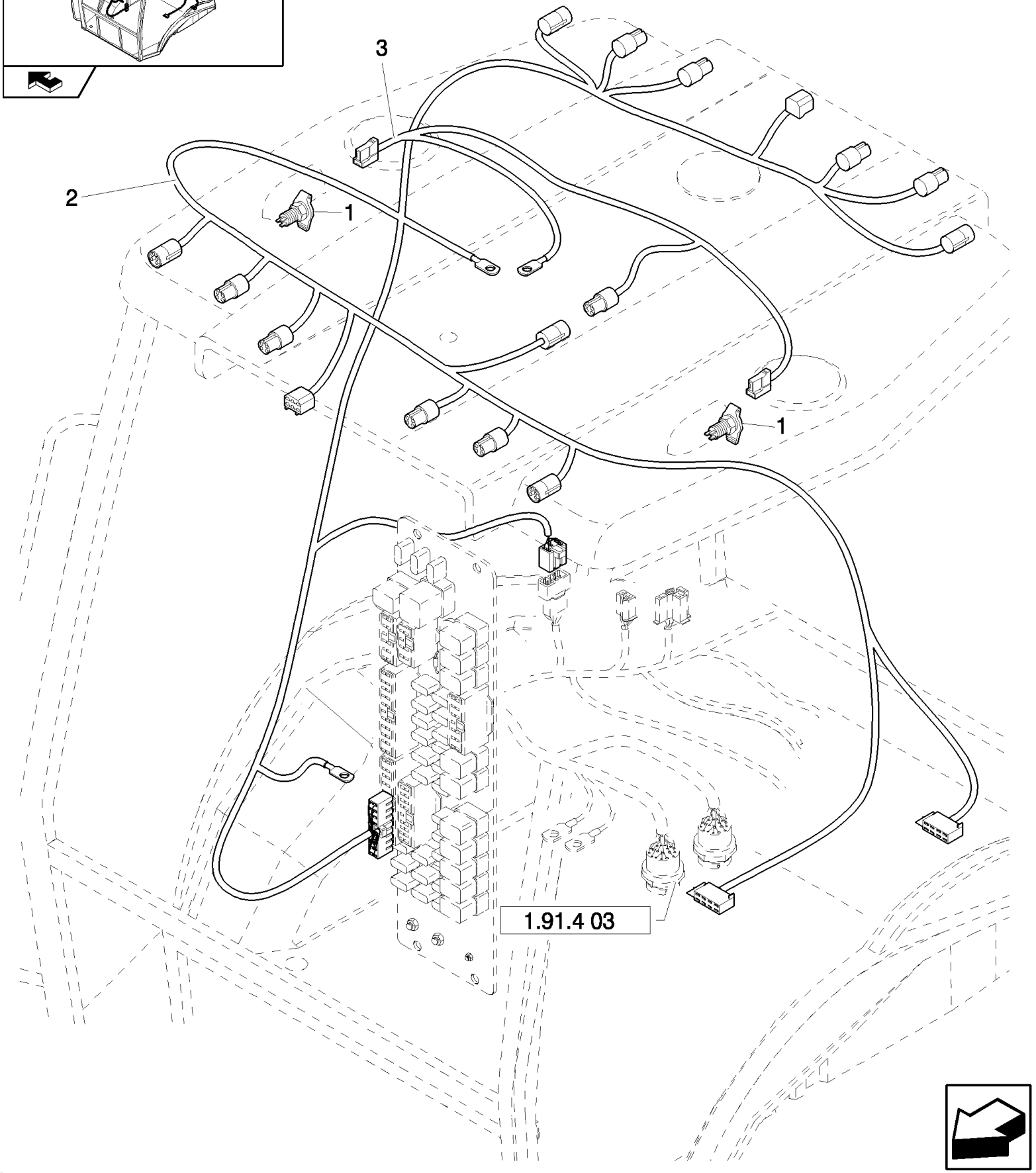

B110 TIER 3 BACKHOE LOADER (2/07-)

1.91.4(01) IGNITON SWITCH, POWER POINT, FUSE PANEL & SIDE CONSOLE HARNESS (CAB POWER SHUTTLE)

Ref	Numero de Pieza	Ctd	Descripción
1	87546419	1	SOCKET, Mating Part is 86508819 Plug
2	85825330	1	HARNESS, WIRE,
3	85819568	1	HARNESS, WIRE, Rotary Beacon

B110 TIER 3 BACKHOE LOADER (2/07-)

1.91.4(02) IGNITON SWITCH, POWER POINT, FUSE PANEL & SIDE CONSOLE HARNESS (CAB POWER SHUTTLE)

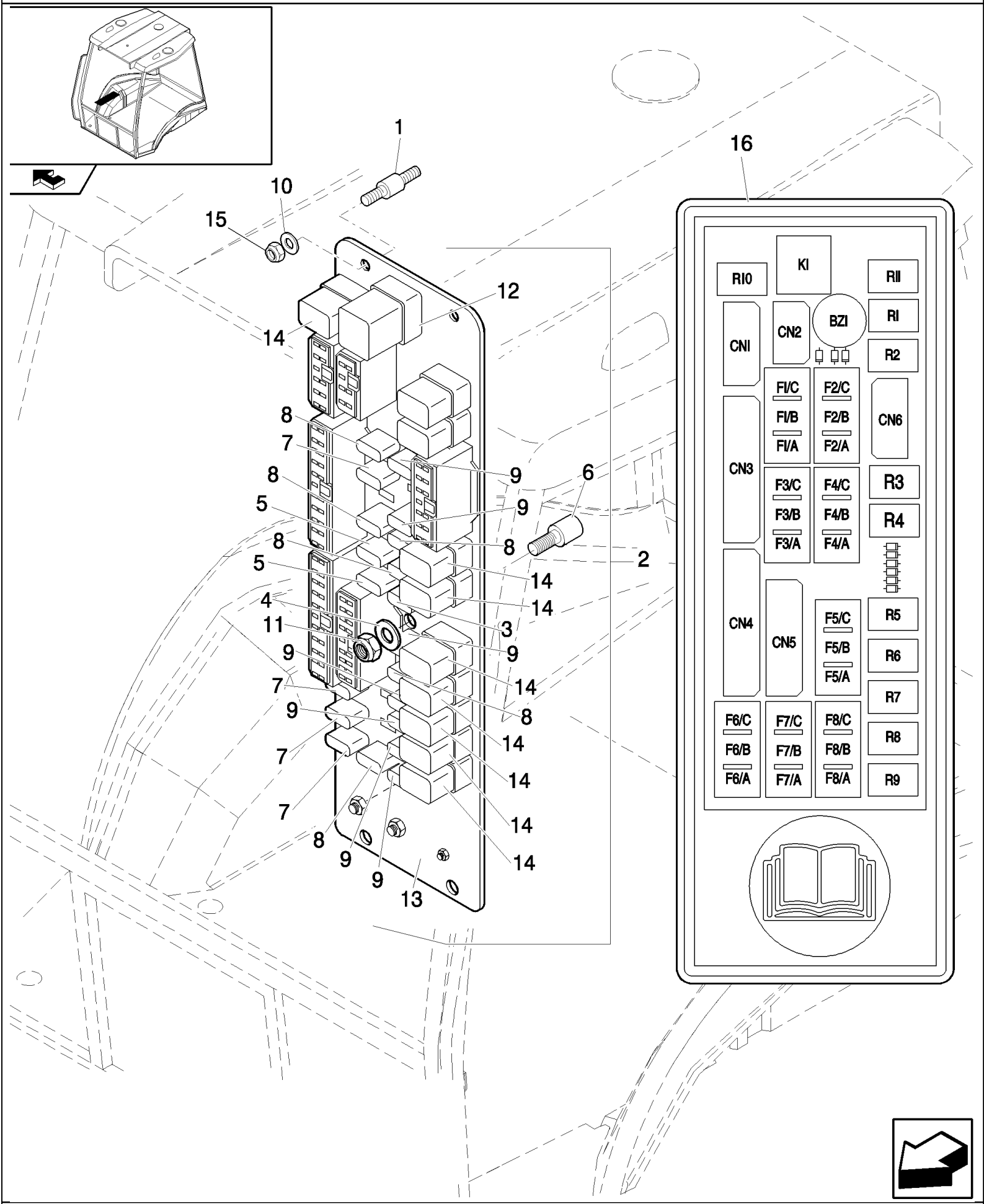

B110 TIER 3 BACKHOE LOADER (2/07-)

1.91.4(02) IGNITON SWITCH, POWER POINT, FUSE PANEL & SIDE CONSOLE HARNESS (CAB POWER SHUTTLE)

Ref	Numero de Pieza	Ctd	Descripción
1	85802478	4	ISOLATOR,
2	87552124	1	ELECTRONIC UNIT, CONTROL,
3	85806134	1	FUSE,
4	10519204	1	WASHER, M4 x 9 x .8,
5	11054590	2	FUSE,
6	85806135	1	ISOLATOR,
7	11054890	4	FUSE,
8	11054990	7	FUSE, 10 Amp
9	11055090	10	FUSE,
10	10615274	4	WASHER, LOCK, Ext Tooth, M4,
11	12574011	1	NUT, LOCK, M4 x .7, Cl 8,
12	85803986	1	RELAY, Flasher
13	87552125	1	BODY,
14	85825198	9	RELAY,
15	12574011	4	NUT, LOCK, M4 x .7, Cl 8,
16	85802250	1	DECAL,

B110 TIER 3 BACKHOE LOADER (2/07-)

1.91.4(03) IGNITON SWITCH, POWER POINT, FUSE PANEL & SIDE CONSOLE HARNESS (CAB POWER SHUTTLE)

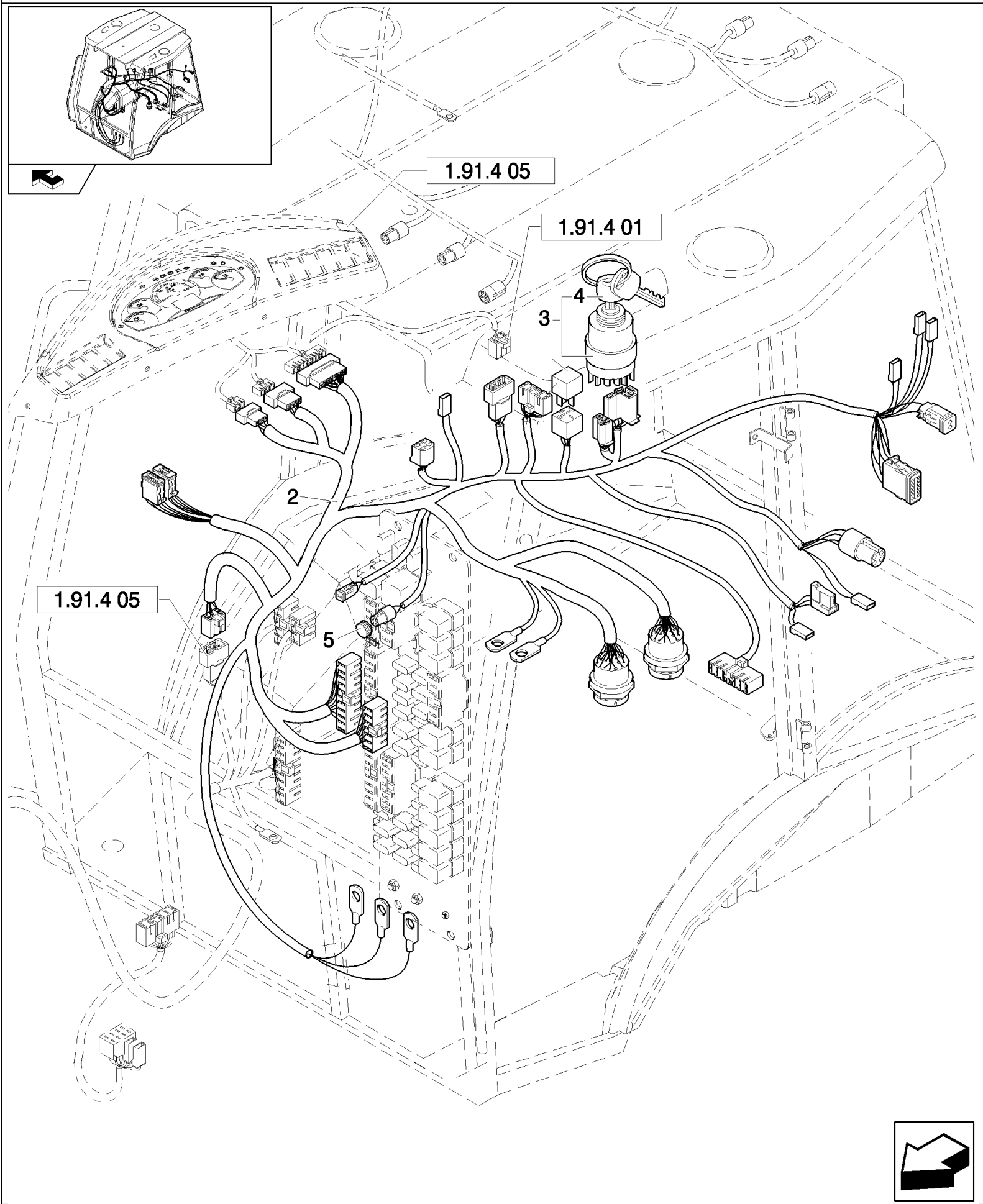

B110 TIER 3 BACKHOE LOADER (2/07-)

1.91.4(03) IGNITON SWITCH, POWER POINT, FUSE PANEL & SIDE CONSOLE HARNESS (CAB POWER SHUTTLE)

Ref	Numero de Pieza	Ctd	Descripción
1	87433890	1	ADAPTER, , Only for EU
1	87433891	1	ADAPTER, , Only for NA
2	87552126	1	CABLE, ELECTRIC,
3	87431469	1	SWITCH, IGNITION, 3A
4	85804675	2	KEY, IGNITION,
5	79111978	1	PLUG,

B110 TIER 3 BACKHOE LOADER (2/07-)

1.91.4(04) IGNITON SWITCH, POWER POINT, FUSE PANEL & SIDE CONSOLE HARNESS (CAB POWER SHUTTLE)

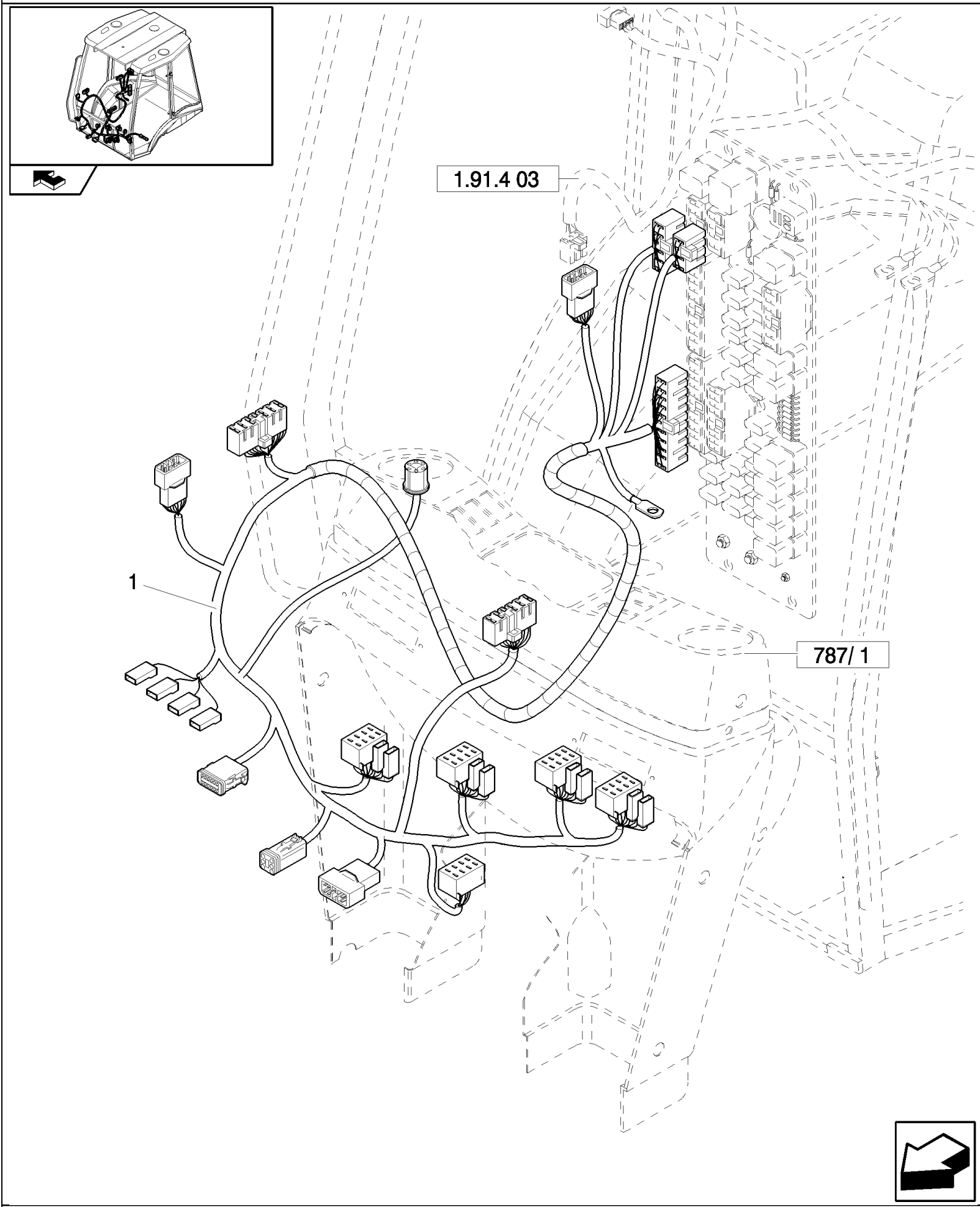

B110 TIER 3 BACKHOE LOADER (2/07-)

1.91.4(04) IGNITON SWITCH, POWER POINT, FUSE PANEL & SIDE CONSOLE HARNESS (CAB POWER SHUTTLE)

Ref	Numero de Pieza	Ctd	Descripción
1	87601608	1	HARNESS,

1.91.4(05) FRONT DASH (CAB POWER SHUTTLE)

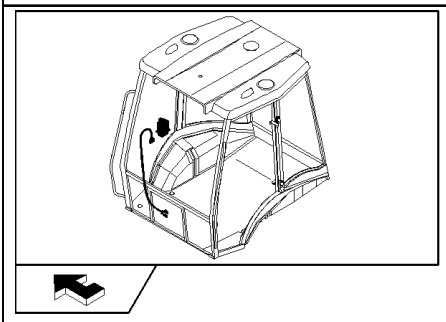

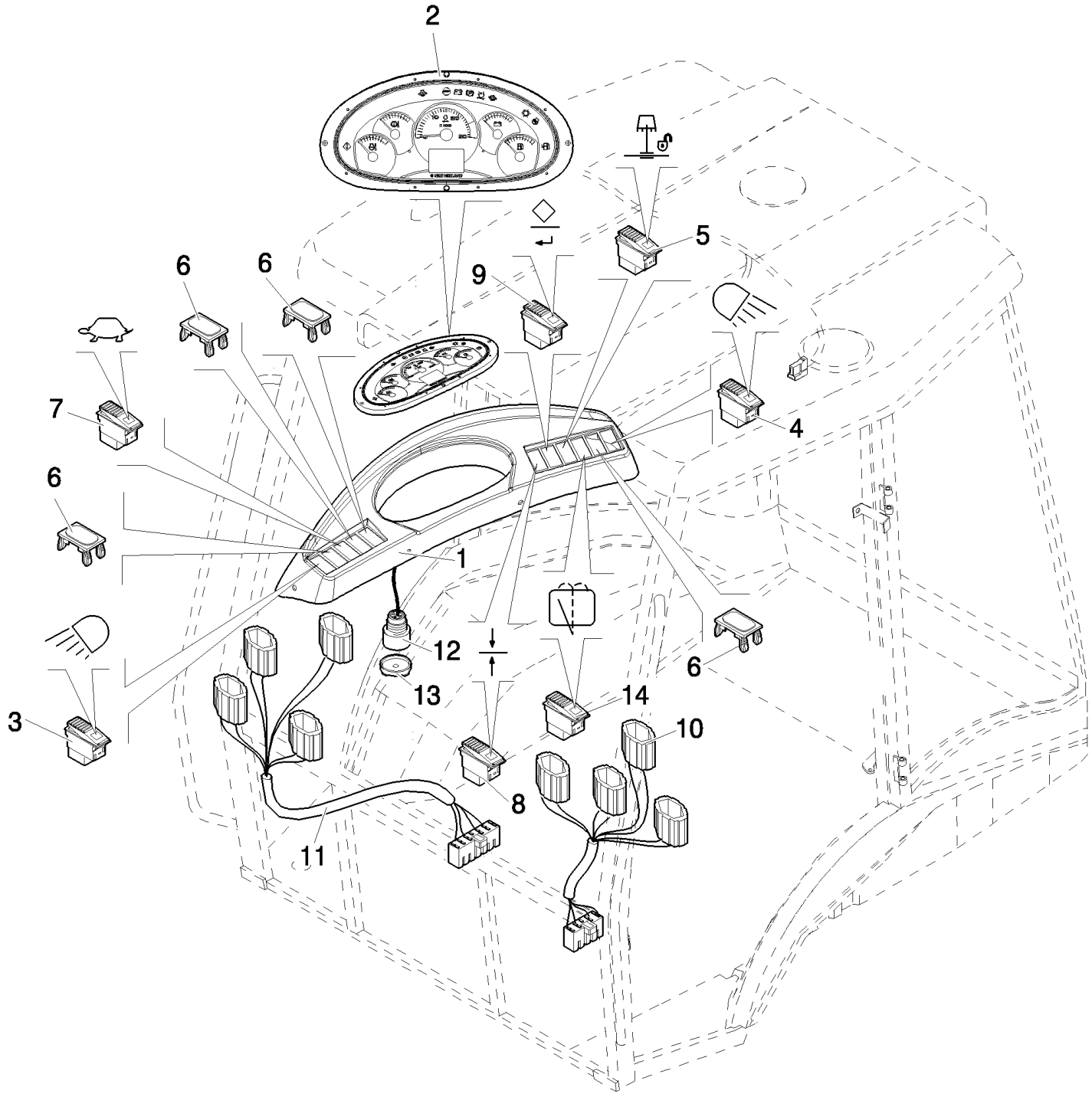

B110 TIER 3 BACKHOE LOADER (2/07-)

1.91.4(05) FRONT DASH (CAB POWER SHUTTLE)

Ref	Numero de Pieza	Ctd	Descripción
1	87540632	1	DASHBOARD,
2	87521757	1	CLUSTER,
3	85818818	1	SWITCH, LIGHTS,
4	85818819	1	SWITCH,
5	85818895	1	SWITCH, , Only for EU
6	85825254	6	PLUG,
7	85819142	1	SWITCH, , Only for EU
8	87536826	1	SWITCH,
9	87536827	1	SWITCH,
10	87557803	1	DASHBOARD,
11	87550456	1	DASHBOARD,
12	87527167	1	HORN,
13	87539792	1	COVER,
14	85818823	1	SWITCH, WINDSHIELD WIPER,

B110 TIER 3 BACKHOE LOADER (2/07-)

1.91.4(06) IGNITON SWITCH, POWER POINT, FUSE PANEL & SIDE CONSOLE HARNESS (CAB POWER SHUTTLE)

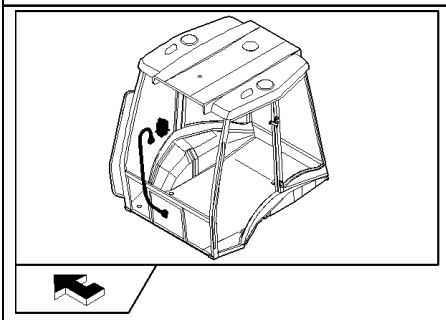

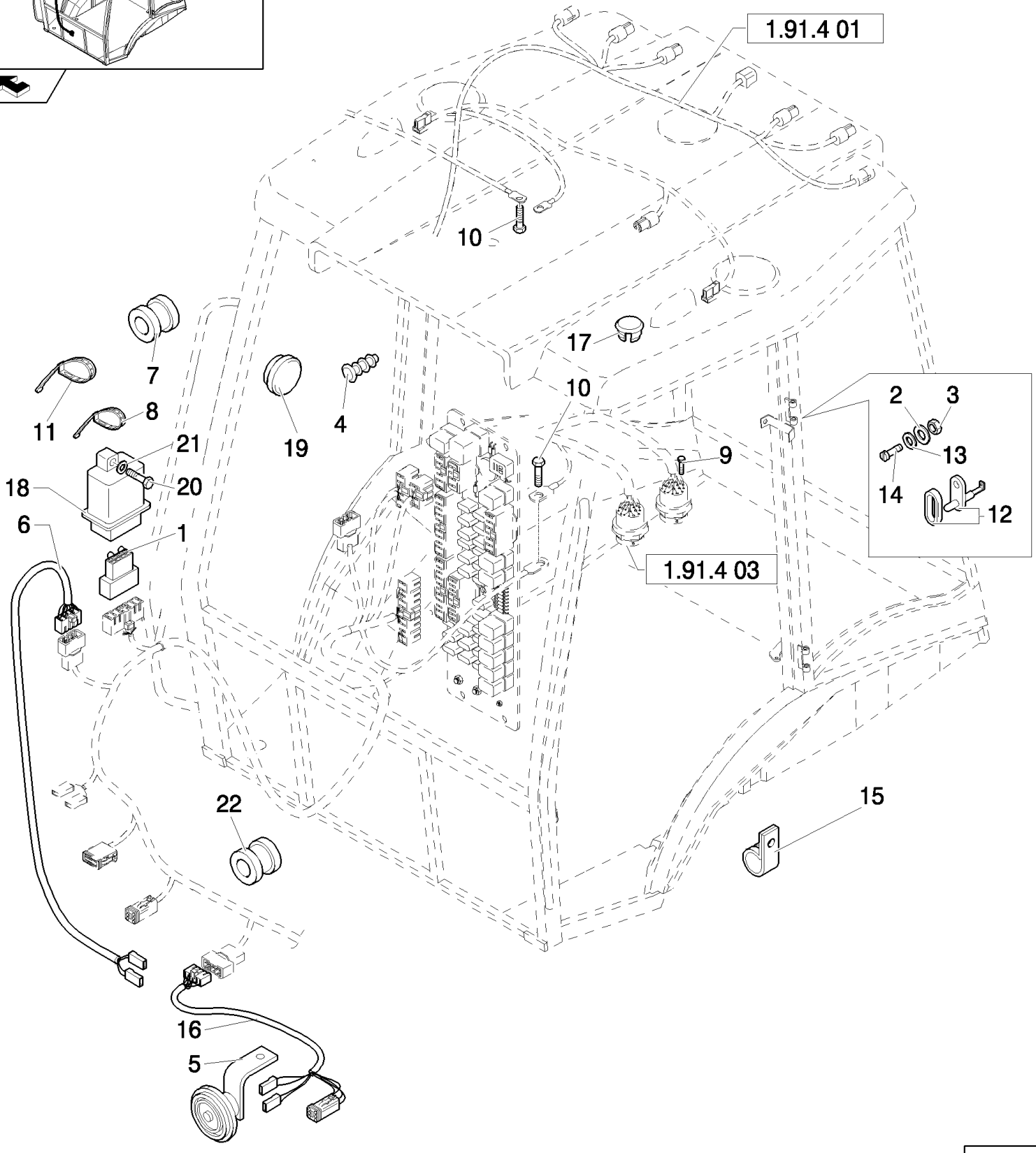

B110 TIER 3 BACKHOE LOADER (2/07-)

1.91.4(06) IGNITON SWITCH, POWER POINT, FUSE PANEL & SIDE CONSOLE HARNESS (CAB POWER SHUTTLE)

Ref	Numero de Pieza	Ctd	Descripción
1	85806136	1	CONNECTOR, ELEC, , Only for EU
2	10615274	2	WASHER, LOCK, Ext Tooth, M4,
3	12574011	2	NUT, LOCK, M4 x .7, Cl 8,
4	85802310	1	PLUG,
5	47133992	1	HORN,
6	85819193	1	HARNESS, WIRE, , Only for EU
6	87552128	1	CABLE, ELECTRIC, , Only for NA
7	10398980	1	GROMMET,
8	5112712	5	CLIP, HOSE, M4.8 x 283,
9	13272214	2	SCREW, Cross Pan Hd, M4 x 16,
10	16042924	2	BOLT, Hex, M8 x 10, 8.8, Full Thd,
11	85805383	30	STRAP, CABLE,
12	83961521	2	SWITCH,
13	10519204	2	WASHER, M4 x 9 x .8,
14	13309417	2	SCREW, Cross Oval Hd, M4 x 20,
15	10450090	1	CLAMP,
16	85819195	1	HARNESS, WIRE, , Only for EU
17	79111978	1	PLUG,
18	85806132	1	FLASHER UNIT, Circuit Board, Only for NA
19	85808460	1	PLUG, , Only for NA
20	10902624	1	BOLT, Hex, M6 x 25, 8.8, Full Thd, , Only for NA
21	11193274	1	WASHER, SPRING, Belleville, M6.4, , Only for NA
22	10398680	2	GROMMET, , Only for EU

B110 TIER 3 BACKHOE LOADER (2/07-)

1.91.4/1(01) IGNITON SWITCH, POWER POINT, FUSE PANEL & SIDE CONSOLE HARNESS (CAB POWER SHIFT)

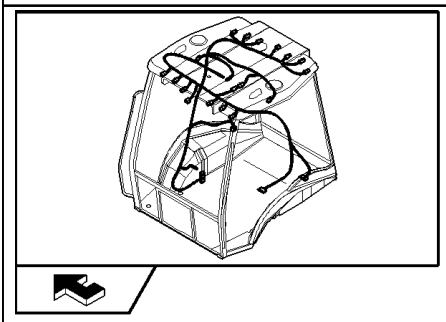

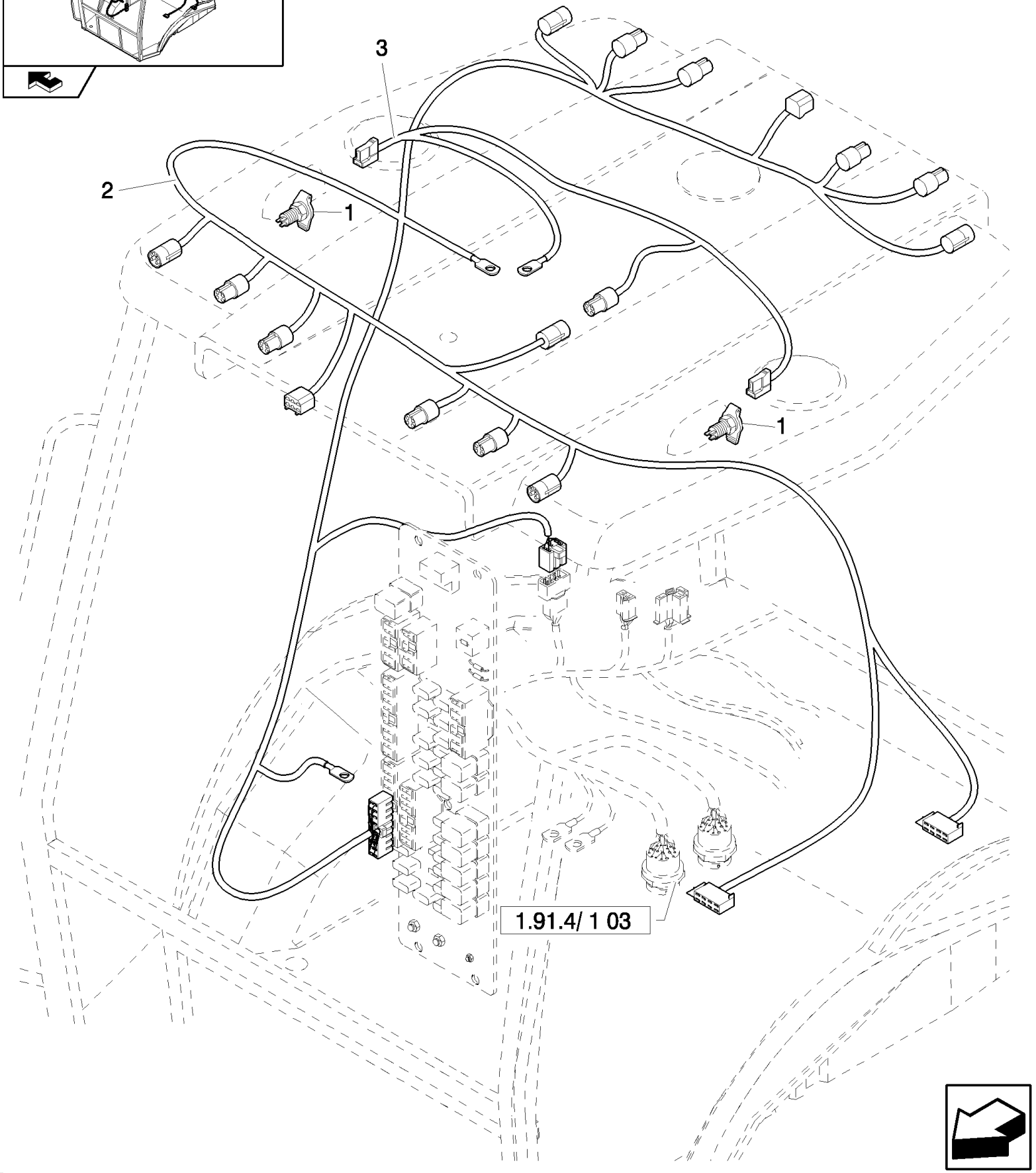

B110 TIER 3 BACKHOE LOADER (2/07-)

1.91.4/1(01) IGNITON SWITCH, POWER POINT, FUSE PANEL & SIDE CONSOLE HARNESS (CAB POWER SHIFT)

Ref	Numero de Pieza	Ctd	Descripción
1	87546419	1	SOCKET, Mating Part is 86508819 Plug
2	85825330	1	HARNESS, WIRE,
3	85819568	1	HARNESS, WIRE, Rotary Beacon

B110 TIER 3 BACKHOE LOADER (2/07-)

1.91.4/1(02) IGNITON SWITCH, POWER POINT, FUSE PANEL & SIDE CONSOLE HARNESS (CAB POWER SHIFT)

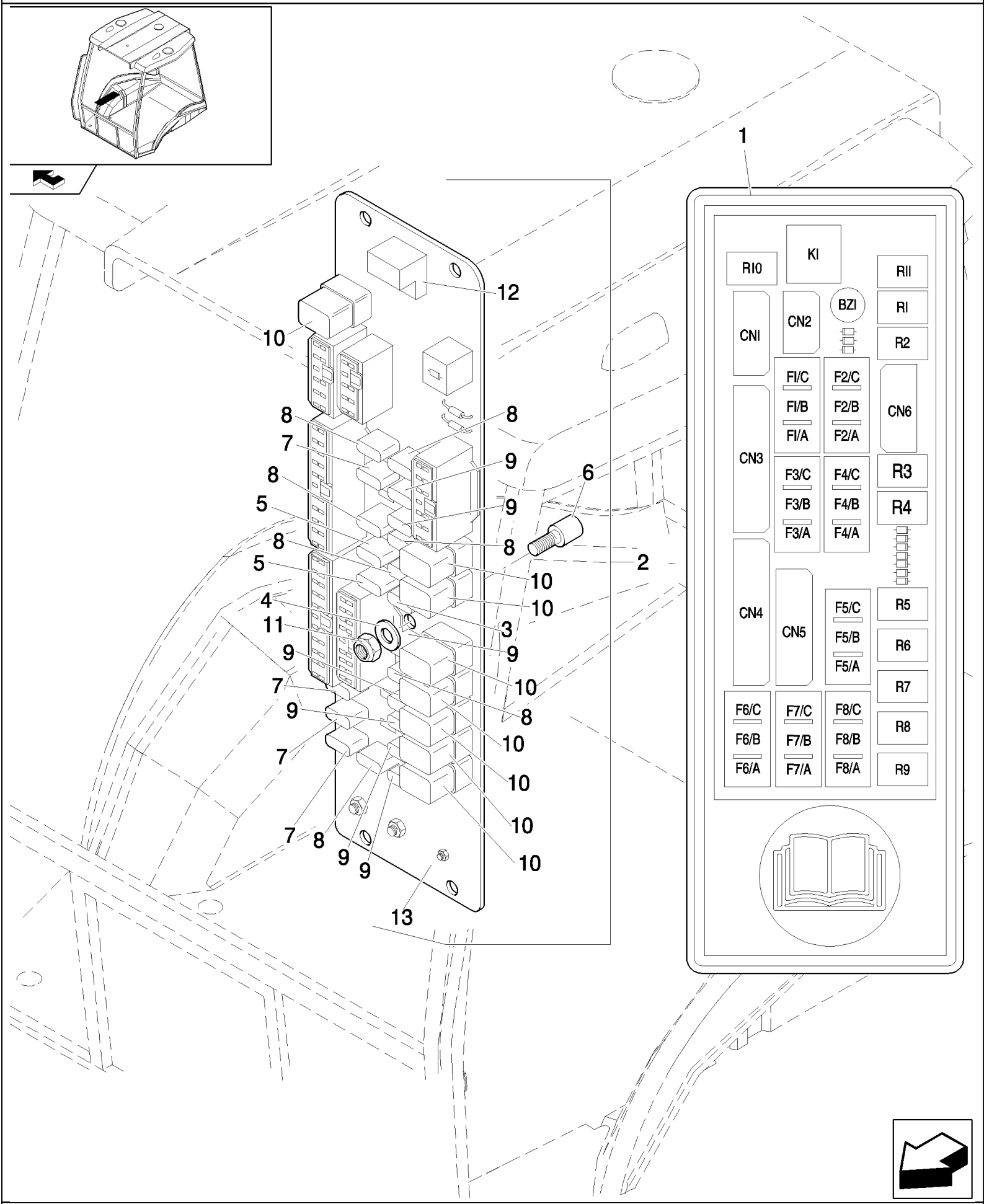

B110 TIER 3 BACKHOE LOADER (2/07-)

1.91.4/1(02) IGNITON SWITCH, POWER POINT, FUSE PANEL & SIDE CONSOLE HARNESS (CAB POWER SHIFT)

Ref	Numero de Pieza	Ctd	Descripción
1	85802250	1	DECAL,
2	87552487	1	ELECTRONIC UNIT, CONTROL,
3	85806134	1	FUSE, 5A
4	10519204	1	WASHER, M4 x 9 x .8,
5	11054590	2	FUSE, 3A
6	85806135	1	ISOLATOR,
7	11054890	4	FUSE, 7,5A
8	11054990	7	FUSE, 10 Amp
9	11055090	10	FUSE, 15A
10	85825198	9	RELAY,
11	12574011	1	NUT, LOCK, M4 x .7, Cl 8,
12	85803986	1	RELAY, Flasher
13	87552490	1	BODY,

B110 TIER 3 BACKHOE LOADER (2/07-)

1.91.4/1(03) IGNITON SWITCH, POWER POINT, FUSE PANEL & SIDE CONSOLE HARNESS (CAB POWER SHIFT)

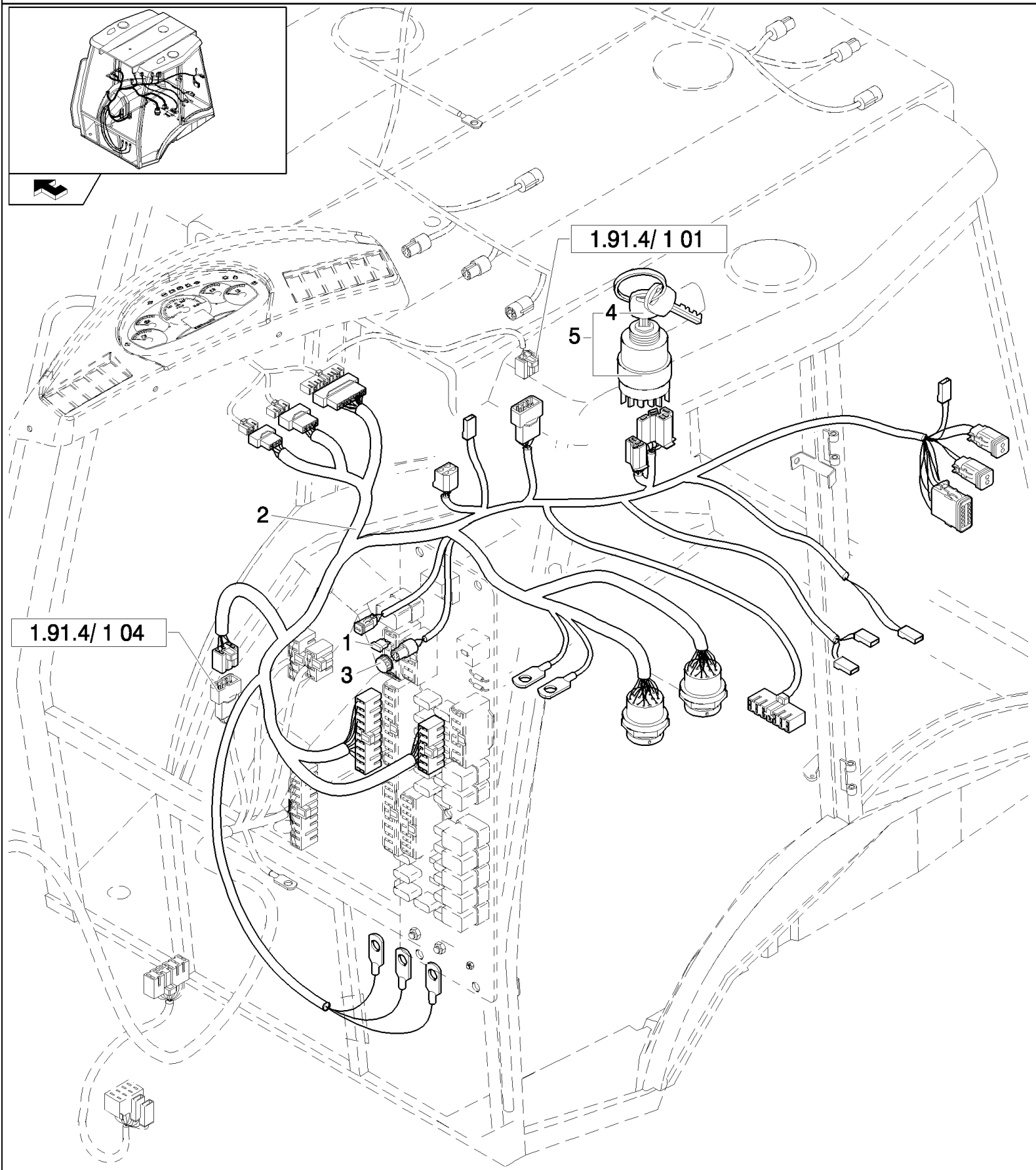

B110 TIER 3 BACKHOE LOADER (2/07-)

1.91.4/1(03) IGNITON SWITCH, POWER POINT, FUSE PANEL & SIDE CONSOLE HARNESS (CAB POWER SHIFT)

Ref	Numero de Pieza	Ctd	Descripción
1	87433890	1	ADAPTER, , Only for EU
1	87433891	1	ADAPTER, , Only for NA
2	87554021	1	CABLE, ELECTRIC,
3	79111978	1	PLUG,
4	85804675	2	KEY, IGNITION,
5	87431469	1	SWITCH, IGNITION,

B110 TIER 3 BACKHOE LOADER (2/07-)

1.91.4/1(04) IGNITON SWITCH, POWER POINT, FUSE PANEL & SIDE CONSOLE HARNESS (CAB POWER SHIFT)

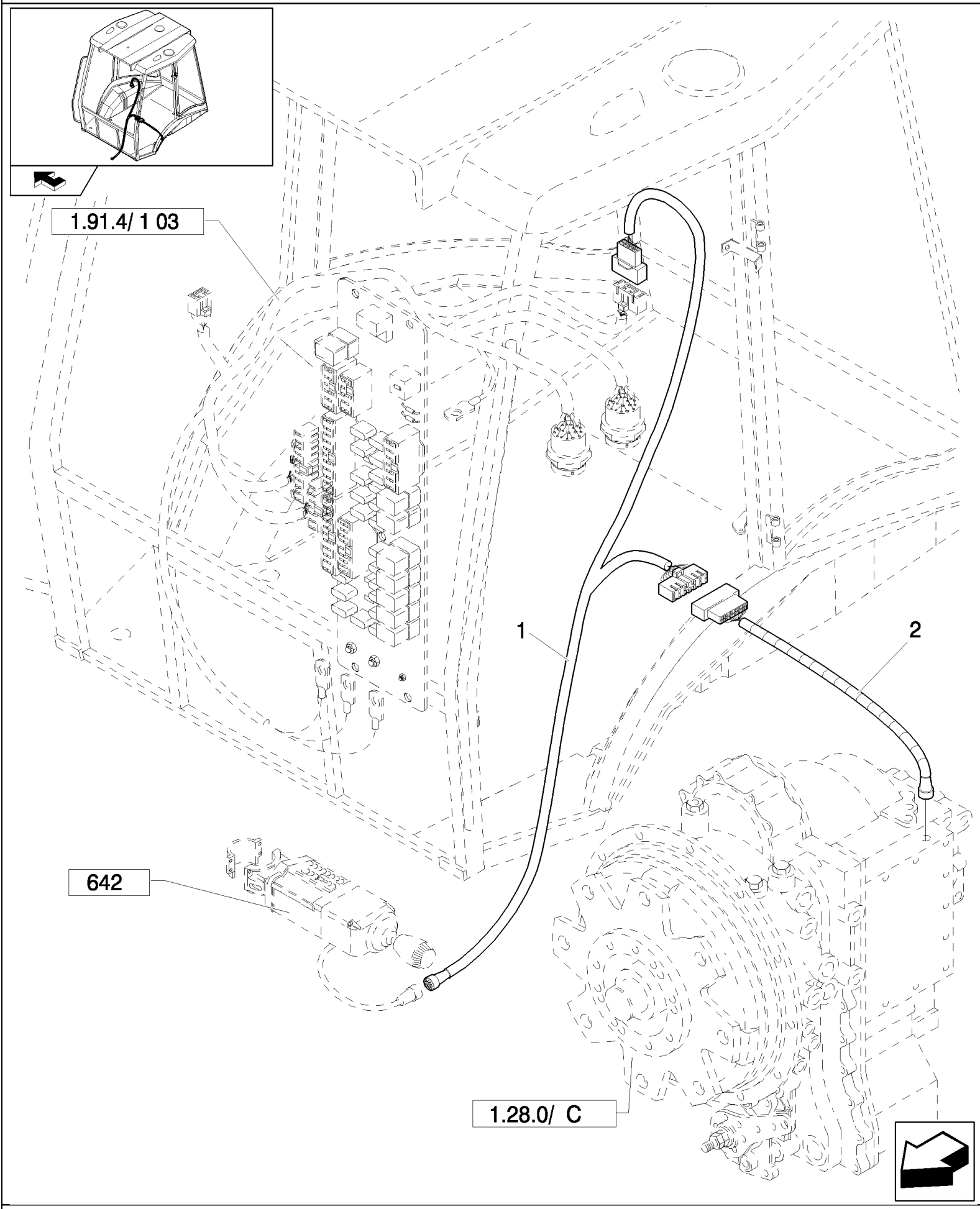

B110 TIER 3 BACKHOE LOADER (2/07-)

1.91.4/1(04) IGNITON SWITCH, POWER POINT, FUSE PANEL & SIDE CONSOLE HARNESS (CAB POWER SHIFT)

Ref	Numero de Pieza	Ctd	Descripción
1	85802427	1	HARNESS, WIRE, Electronic Gear Selector (EGS)
2	85802426	1	HARNESS, WIRE, Trans.

B110 TIER 3 BACKHOE LOADER (2/07-)

1.91.4/1(05) IGNITON SWITCH, POWER POINT, FUSE PANEL & SIDE CONSOLE HARNESS (CAB POWER SHIFT)

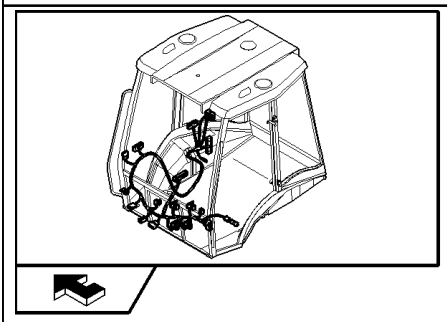

B110 TIER 3 BACKHOE LOADER (2/07-)

1.91.4/1(05) IGNITON SWITCH, POWER POINT, FUSE PANEL & SIDE CONSOLE HARNESS (CAB POWER SHIFT)

Ref	Numero de Pieza	Ctd	Descripción
1	87601609	1	HARNESS, Front Dashboard

B110 TIER 3 BACKHOE LOADER (2/07-)

1.91.4/1(06) FRONT DASH (CAB POWER SHIFT)

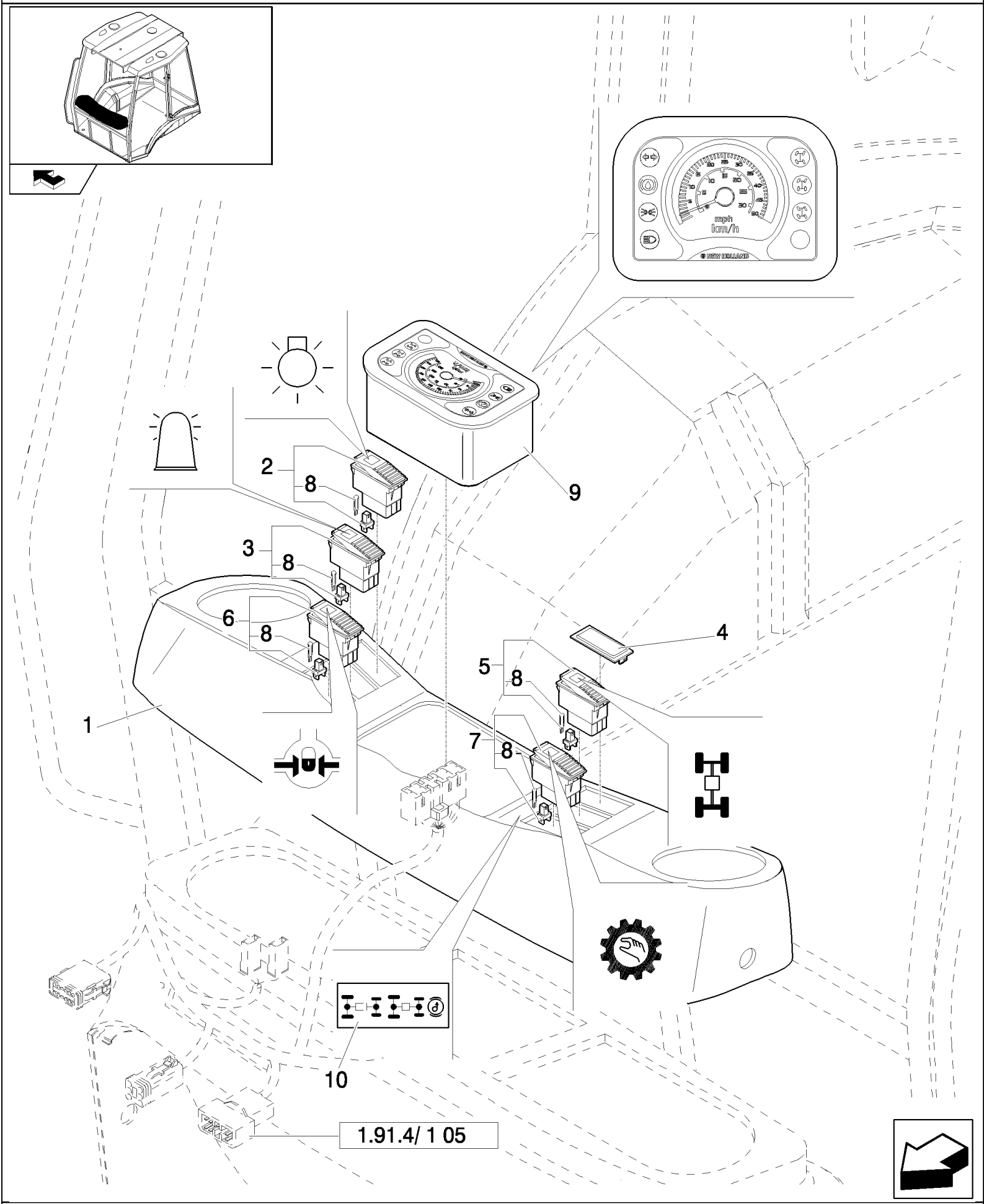

B110 TIER 3 BACKHOE LOADER (2/07-)

1.91.4/1(06) FRONT DASH (CAB POWER SHIFT)

Ref	Numero de Pieza	Ctd	Descripción
1	85818826	1	DASHBOARD,
2	85818828	1	SWITCH, LIGHTS,
3	85818827	1	SWITCH,
4	85825254	1	PLUG,
5	85819134	1	SWITCH,
6	85819146	1	SWITCH,
7	85819145	1	SWITCH,
8	14143790	5	BULB,
9	87575514	1	SPEEDOMETER-KM,
10	85807944	1	DECAL,

B110 TIER 3 BACKHOE LOADER (2/07-)

1.91.4/1(07) IGNITON SWITCH, POWER POINT, FUSE PANEL & SIDE CONSOLE HARNESS (CAB POWER SHIFT)

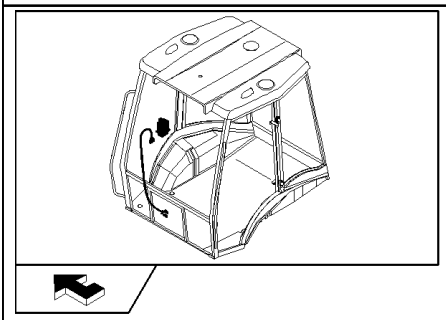

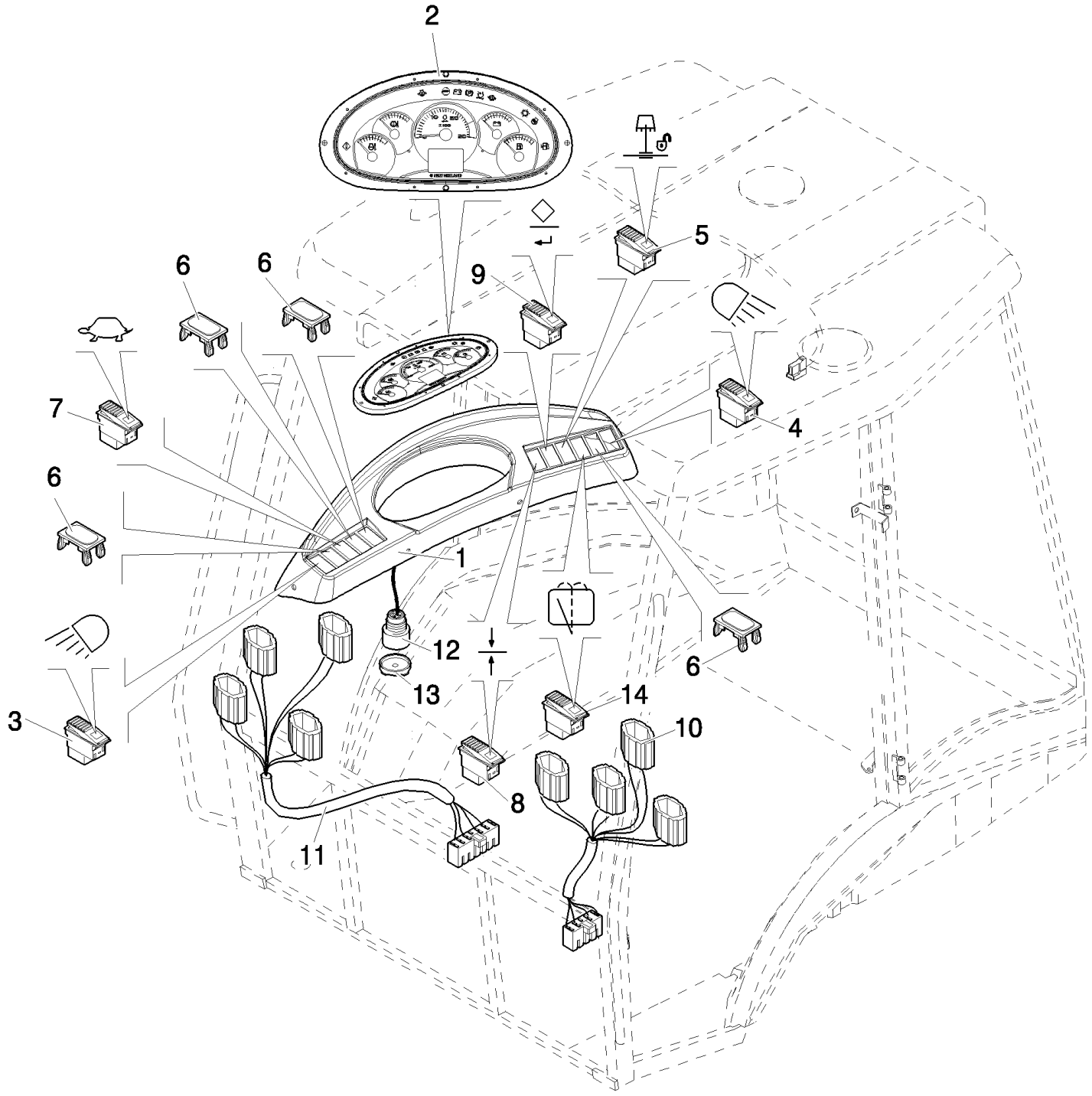

B110 TIER 3 BACKHOE LOADER (2/07-)

1.91.4/1(07) IGNITON SWITCH, POWER POINT, FUSE PANEL & SIDE CONSOLE HARNESS (CAB POWER SHIFT)

Ref	Numero de Pieza	Ctd	Descripción
1	87540632	1	DASHBOARD,
2	87521757	1	CLUSTER,
3	85818818	1	SWITCH, LIGHTS,
4	85818819	1	SWITCH,
5	85818895	1	SWITCH,
6	85825254	6	PLUG,
7	85819142	1	SWITCH,
8	87536826	1	SWITCH,
9	87536827	1	SWITCH,
10	87557803	1	DASHBOARD,
11	87550456	1	DASHBOARD,
12	87527167	1	HORN,
13	87539792	1	COVER,
14	85818823	1	SWITCH, WINDSHIELD WIPER,

B110 TIER 3 BACKHOE LOADER (2/07-)

1.91.4/1(08) IGNITON SWITCH, POWER POINT, FUSE PANEL & SIDE CONSOLE HARNESS (CAB POWER SHIFT)

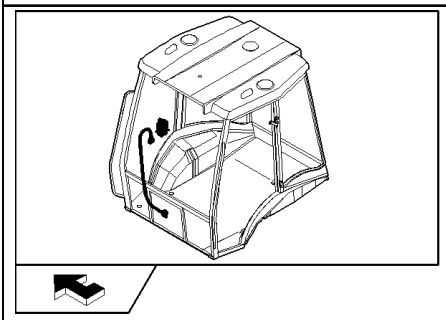

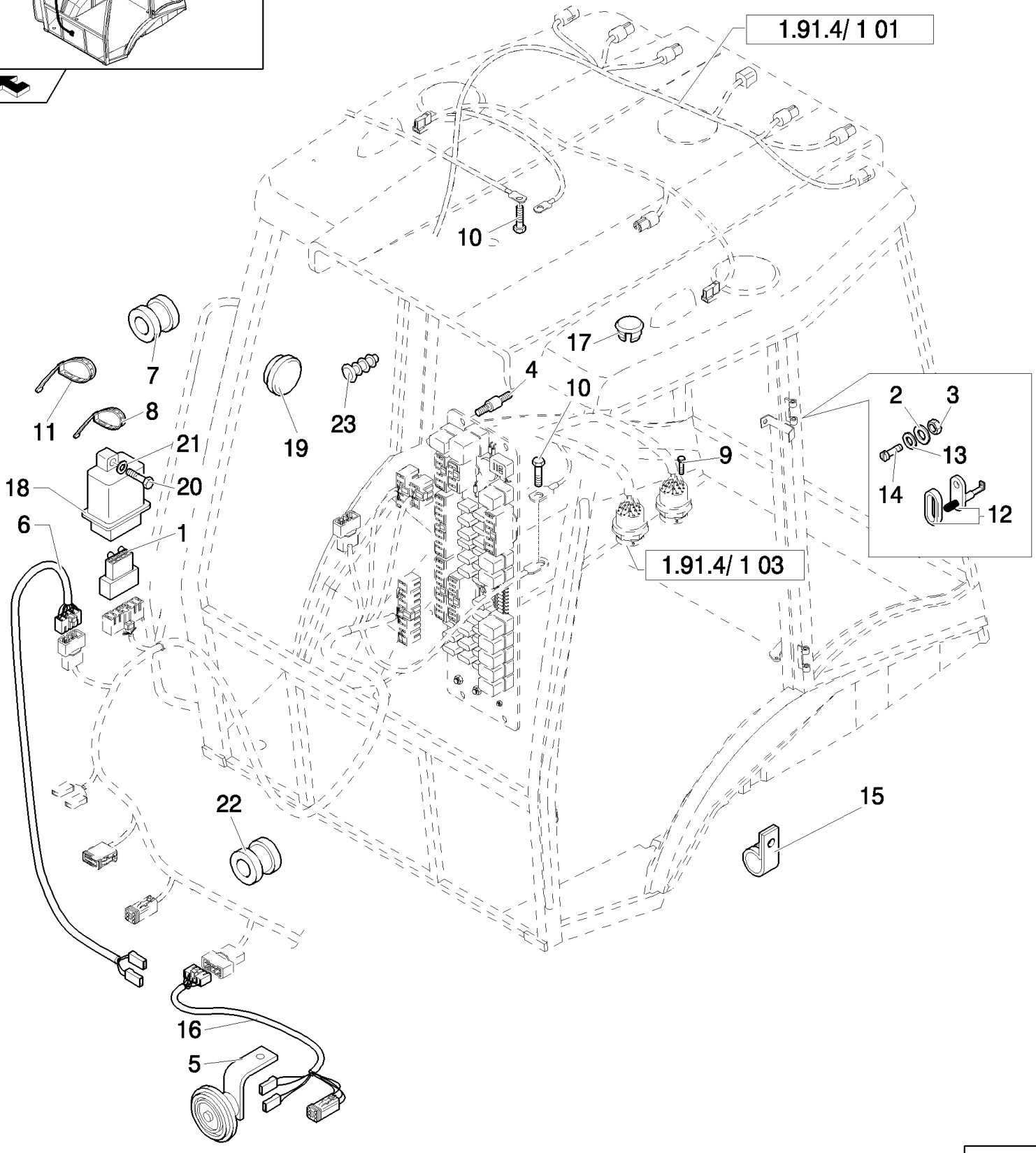

B110 TIER 3 BACKHOE LOADER (2/07-)

1.91.4/1(08) IGNITON SWITCH, POWER POINT, FUSE PANEL & SIDE CONSOLE HARNESS (CAB POWER SHIFT)

Ref	Numero de Pieza	Ctd	Descripción
1	85806136	1	CONNECTOR, ELEC, , Only for EU
2	10615274	2	WASHER, LOCK, Ext Tooth, M4,
3	12574011	2	NUT, LOCK, M4 x .7, Cl 8,
4	85802478	4	ISOLATOR,
5	47133992	1	HORN,
6	85819193	1	HARNESS, WIRE, , Only for EU
6	87552128	1	CABLE, ELECTRIC, , Only for NA
7	10398980	1	GROMMET,
8	5112712	5	CLIP, HOSE, M4.8 x 283,
9	13272214	2	SCREW, Cross Pan Hd, M4 x 16,
10	16042924	2	BOLT, Hex, M8 x 10, 8.8, Full Thd,
11	85805383	30	STRAP, CABLE,
12	83961521	2	SWITCH,
13	10519204	2	WASHER, M4 x 9 x .8,
14	13309417	2	SCREW, Cross Oval Hd, M4 x 20,
15	10450090	1	CLAMP,
16	85819195	1	HARNESS, WIRE, , Only for EU
17	79111978	1	PLUG,
18	85806132	1	FLASHER UNIT, , Only for NA
19	85808460	1	PLUG, , Only for NA
20	10902624	1	BOLT, Hex, M6 x 25, 8.8, Full Thd, , Only for NA
21	11193274	1	WASHER, SPRING, Belleville, M6.4, , Only for NA
22	10398680	2	GROMMET,
23	85802310	1	PLUG,

B110 TIER 3 BACKHOE LOADER (2/07-)

1.91.4/2(01) IGNITON SWITCH, POWER POINT, FUSE PANEL & SIDE CONSOLE HARNESS (ROPS CP POWER SHUTTLE) - NA

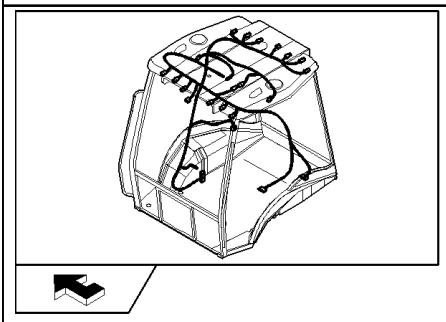

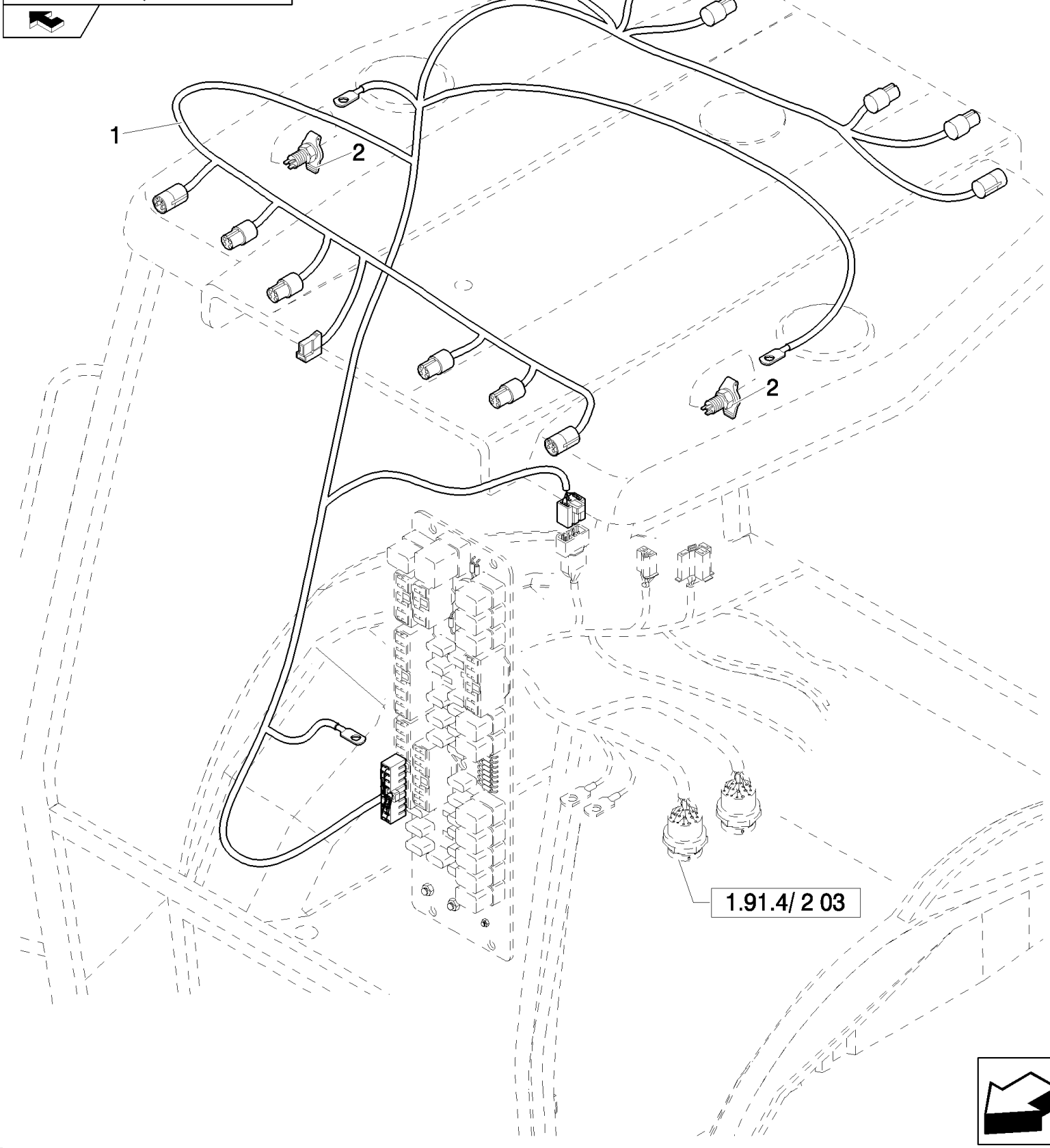

B110 TIER 3 BACKHOE LOADER (2/07-)

1.91.4/2(01) IGNITON SWITCH, POWER POINT, FUSE PANEL & SIDE CONSOLE HARNESS (ROPS CP POWER SHUTTLE) - NA

Ref	Numero de Pieza	Ctd	Descripción
1	85819724	1	HARNESS, WIRE,
2	87546419	1	SOCKET, Mating Part is 86508819 Plug

B110 TIER 3 BACKHOE LOADER (2/07-)

1.91.4/2(02) IGNITON SWITCH, POWER POINT, FUSE PANEL & SIDE CONSOLE HARNESS (ROPS CP POWER SHUTTLE) - NA

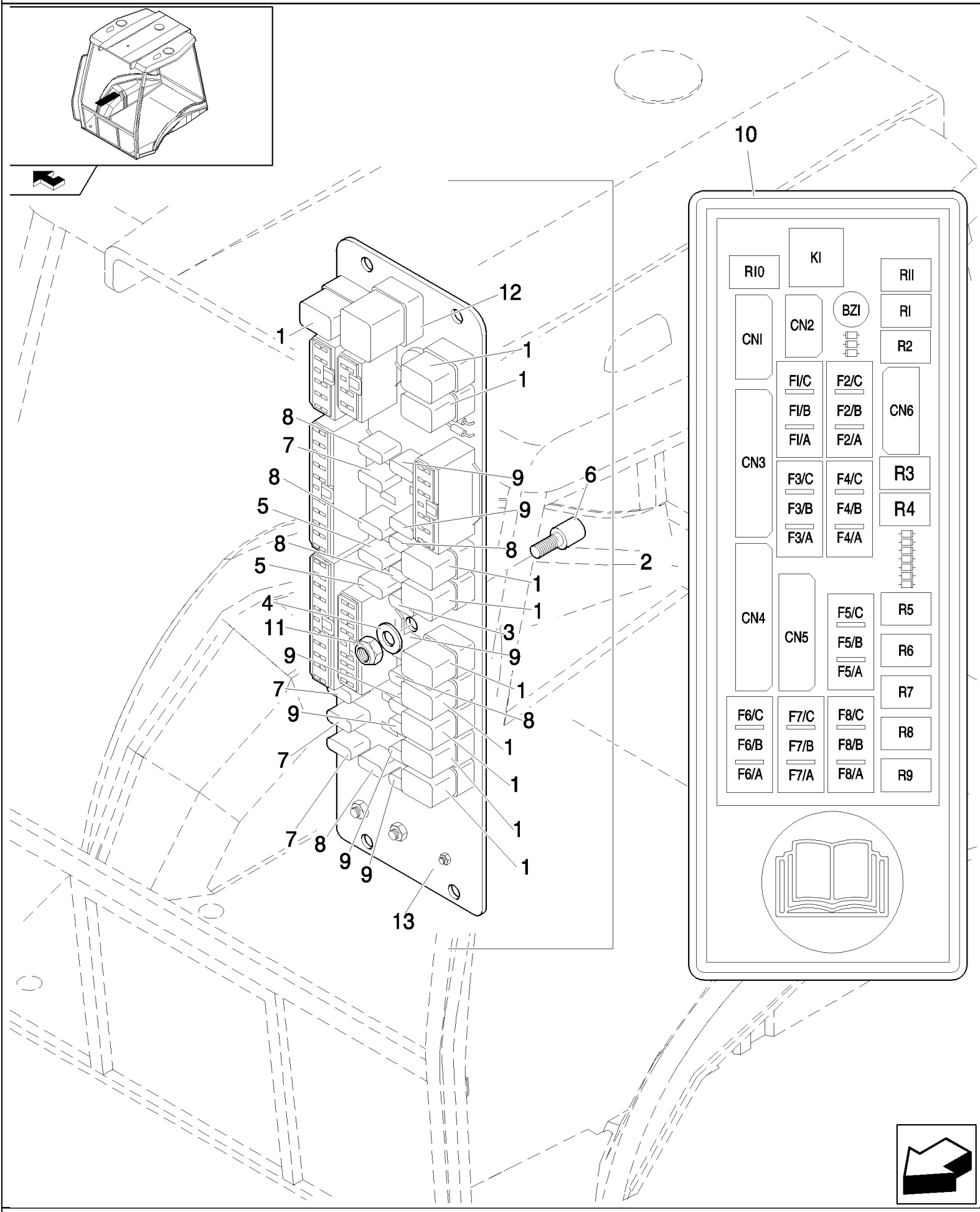

B110 TIER 3 BACKHOE LOADER (2/07-)

1.91.4/2(02) IGNITON SWITCH, POWER POINT, FUSE PANEL & SIDE CONSOLE HARNESS (ROPS CP POWER SHUTTLE) - NA

Ref	Numero de Pieza	Ctd	Descripción
1	85825198	10	RELAY,
2	87554901	1	ELECTRONIC UNIT, CONTROL,
3	11054790	1	FUSE, 5A
4	10519204	1	WASHER, M4 x 9 x .8,
5	11054590	2	FUSE, 3A
6	85806135	1	ISOLATOR,
7	11054890	4	FUSE, 7,5A
8	11054990	6	FUSE, 10 Amp
9	11055090	8	FUSE, 15A
10	85802250	1	DECAL,
11	12574011	1	NUT, LOCK, M4 x .7, Cl 8,
12	85803986	1	RELAY, Flasher
13	87552125	1	BODY,

B110 TIER 3 BACKHOE LOADER (2/07-)

1.91.4/2(03) IGNITON SWITCH, POWER POINT, FUSE PANEL & SIDE CONSOLE HARNESS (ROPS CP POWER SHUTTLE) - NA

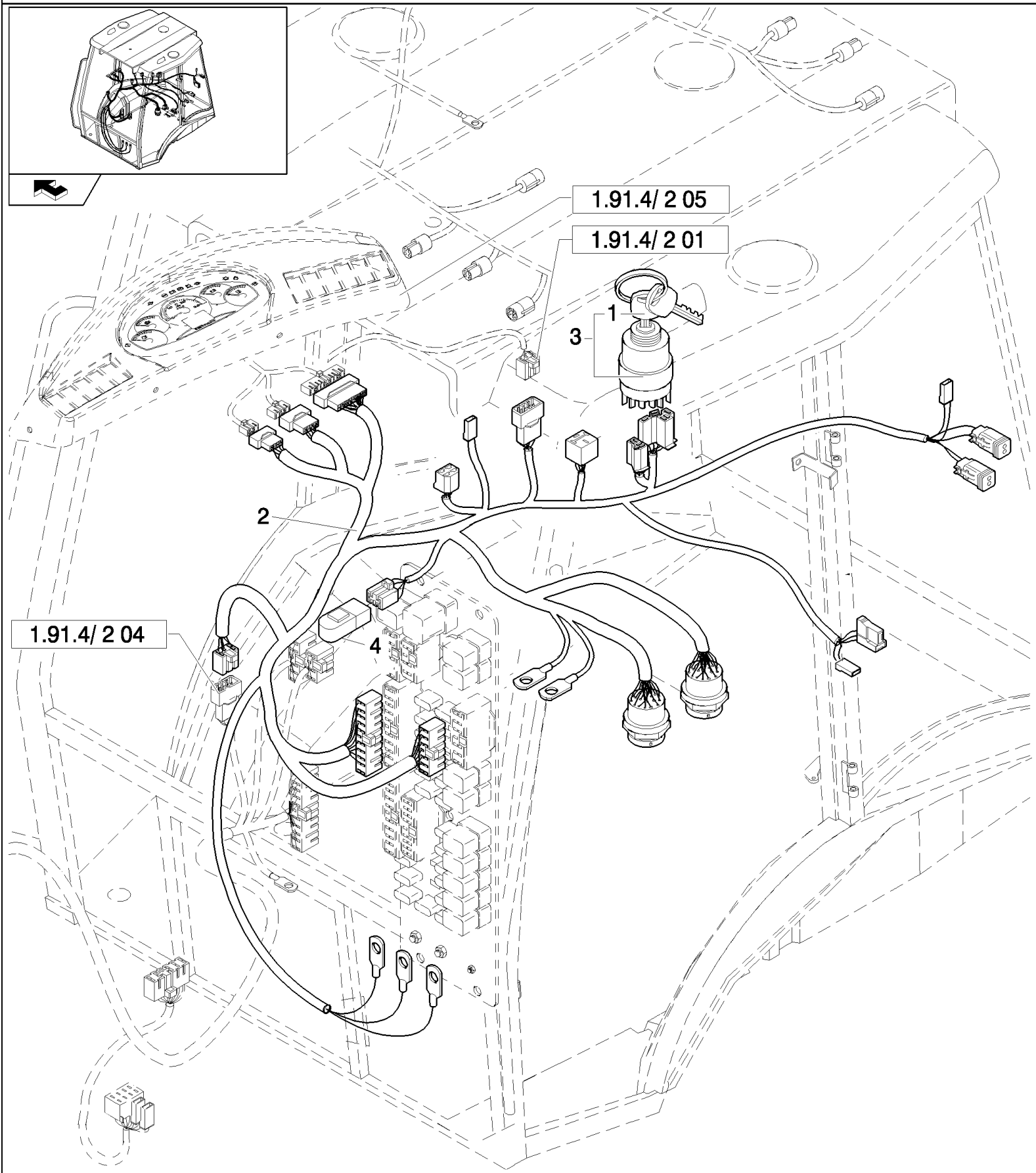

B110 TIER 3 BACKHOE LOADER (2/07-)

1.91.4/2(03) IGNITON SWITCH, POWER POINT, FUSE PANEL & SIDE CONSOLE HARNESS (ROPS CP POWER SHUTTLE) - NA

Ref	Numero de Pieza	Ctd	Descripción
1	85804675	2	KEY, IGNITION,
2	87554286	1	CABLE, ELECTRIC,
3	87431469	1	SWITCH, IGNITION, , Includes 4
4	87433891	1	ADAPTER,

B110 TIER 3 BACKHOE LOADER (2/07-)

1.91.4/2(04) IGNITON SWITCH, POWER POINT, FUSE PANEL & SIDE CONSOLE HARNESS (ROPS CP POWER SHUTTLE) - NA

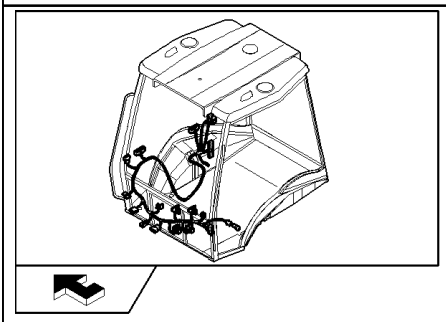

B110 TIER 3 BACKHOE LOADER (2/07-)

1.91.4/2(04) IGNITON SWITCH, POWER POINT, FUSE PANEL & SIDE CONSOLE HARNESS (ROPS CP POWER SHUTTLE) - NA

Ref	Numero de Pieza	Ctd	Descripción
1	14560187	1	STRAP, CABLE, 178mm lg,
2	87601605	1	HARNESS,

B110 TIER 3 BACKHOE LOADER (2/07-)

1.91.4/2(05) IGNITON SWITCH, POWER POINT, FUSE PANEL & SIDE CONSOLE HARNESS (ROPS CP POWER SHUTTLE) - NA

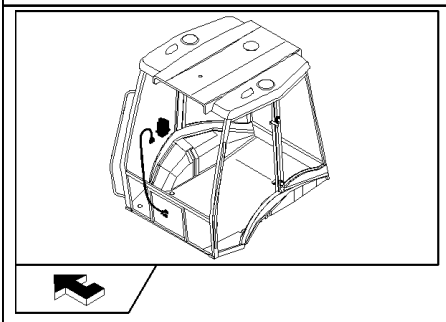

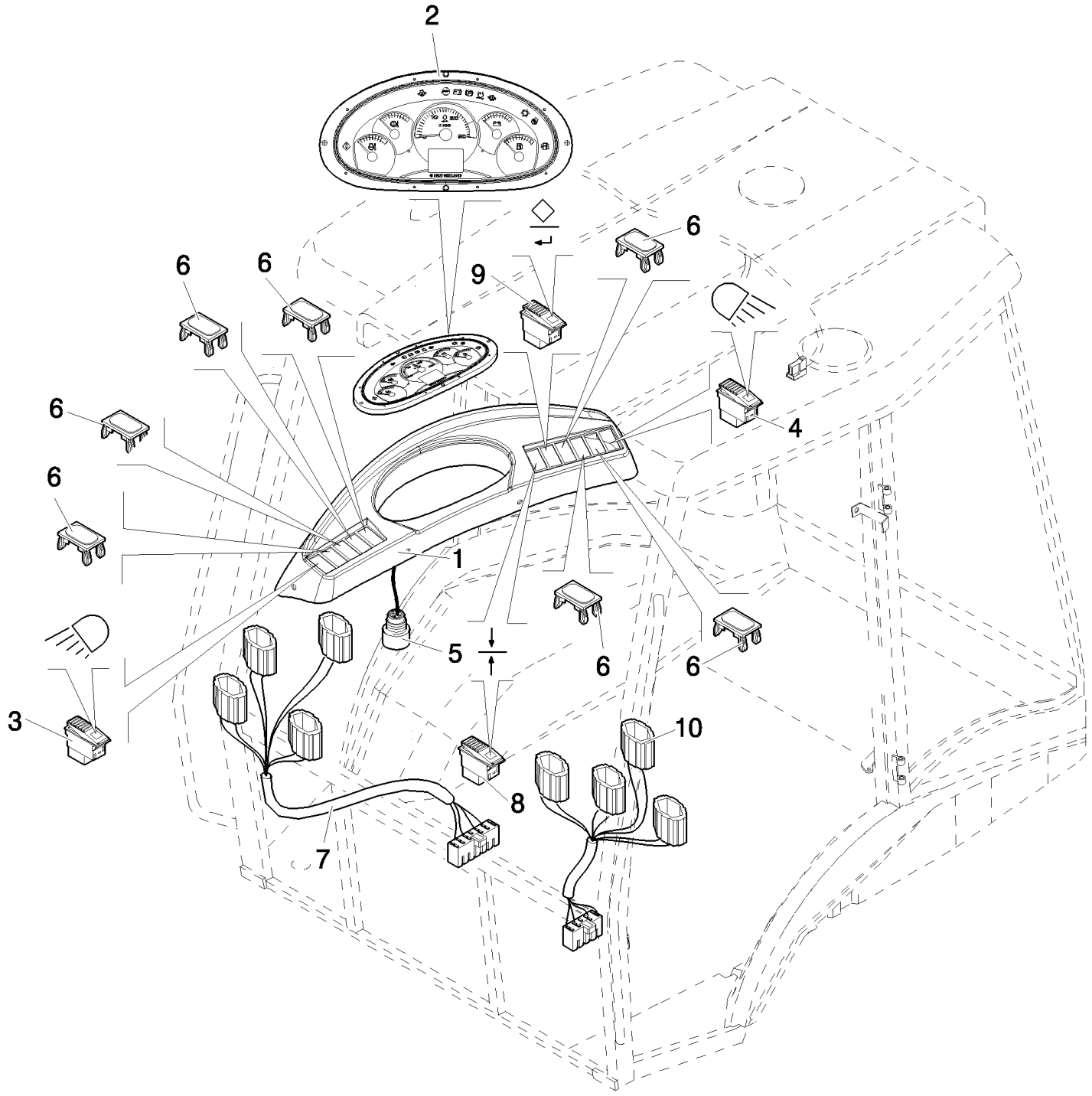

B110 TIER 3 BACKHOE LOADER (2/07-)

1.91.4/2(05) IGNITON SWITCH, POWER POINT, FUSE PANEL & SIDE CONSOLE HARNESS (ROPS CP POWER SHUTTLE) - NA

Ref	Numero de Pieza	Ctd	Descripción
1	87540632	1	DASHBOARD,
2	87521757	1	CLUSTER,
3	85818818	1	SWITCH, LIGHTS,
4	85818819	1	SWITCH,
5	87527167	1	HORN,
6	85825254	6	PLUG,
7	87558491	1	CABLE, ELECTRIC,
8	87536826	1	SWITCH,
9	87536827	1	SWITCH,
10	87557803	1	DASHBOARD,

B110 TIER 3 BACKHOE LOADER (2/07-)

1.91.4/2(06) RH SIDE CONSOLE TRIM, INSTRUMENT CLUSTER & SWITCHES (ROPS CP POWER SHUTTLE) - NA

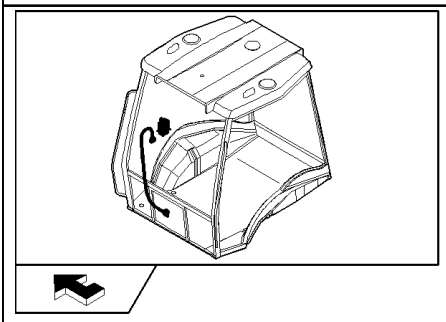

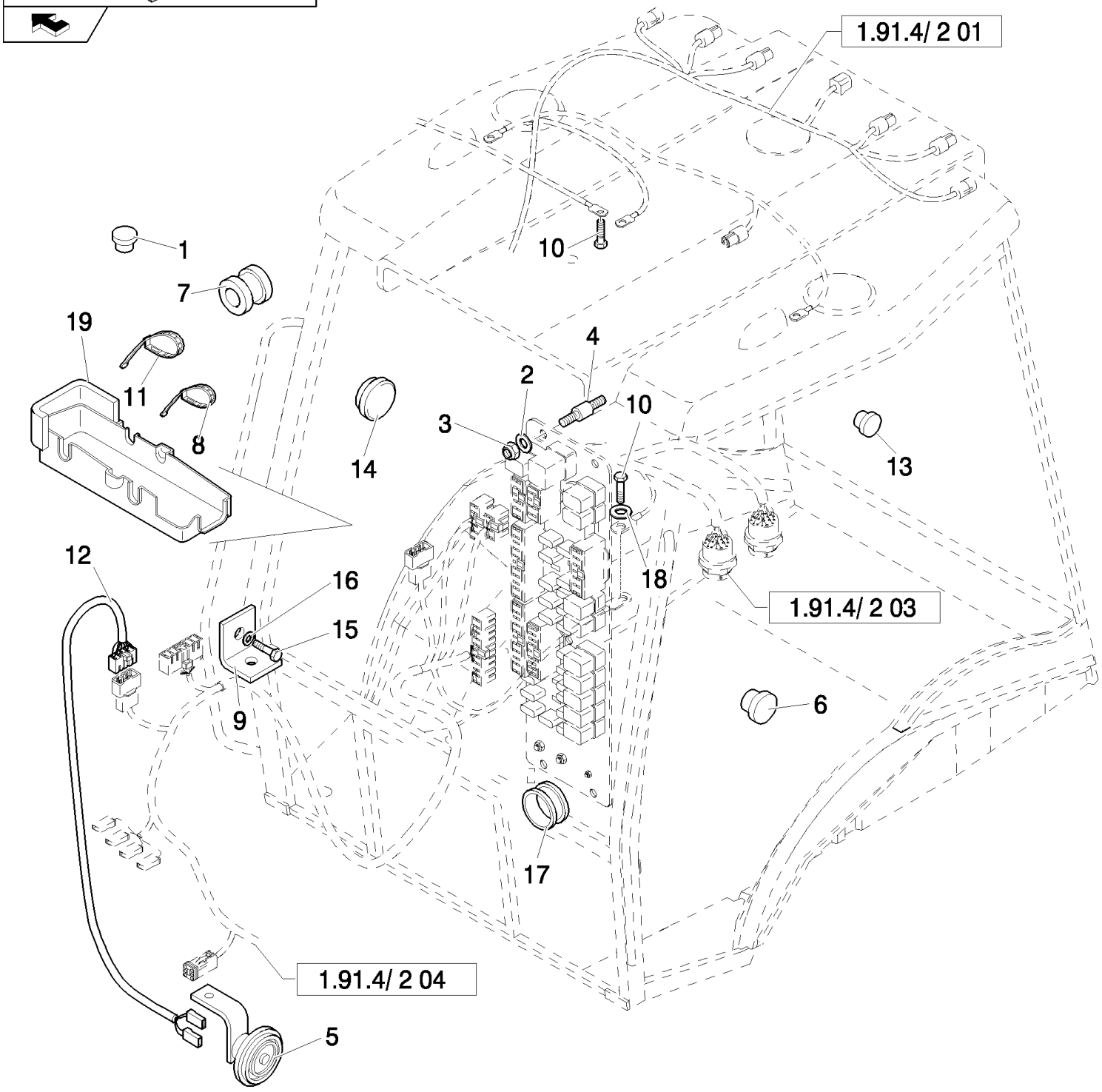

B110 TIER 3 BACKHOE LOADER (2/07-)

1.91.4/2(06) RH SIDE CONSOLE TRIM, INSTRUMENT CLUSTER & SWITCHES (ROPS CP POWER SHUTTLE) - NA

Ref	Numero de Pieza	Ctd	Descripción
1	85825254	1	PLUG,
2	10615274	4	WASHER, LOCK, Ext Tooth, M4,
3	12574011	4	NUT, LOCK, M4 x .7, Cl 8,
4	85825129	4	ISOLATOR,
5	47133992	1	HORN,
6	79111978	1	PLUG,
7	10398980	2	GROMMET,
8	5112712	5	CLIP, HOSE, M4.8 x 283,
9	85821326	1	SUPPORT,
10	16043121	2	BOLT, Hex, M8 x 14, 8.8, Full Thd,
11	85805383	26	STRAP, CABLE,
12	87552128	1	CABLE, ELECTRIC,
13	85802310	1	PLUG,
14	85808460	1	PLUG,
15	10902624	1	BOLT, Hex, M6 x 25, 8.8, Full Thd,
16	11193274	1	WASHER, SPRING, Belleville, M6.4,
17	10398680	6	GROMMET,
18	11193879	2	WASHER, SPRING, Belleville, M8.4,
19	85825136	1	COVER,

1.91.5(01) FRONT AND REAR WINDSCREEN WIPERS

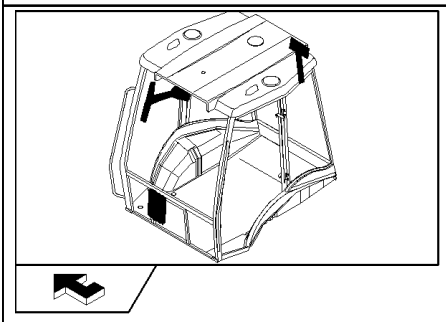

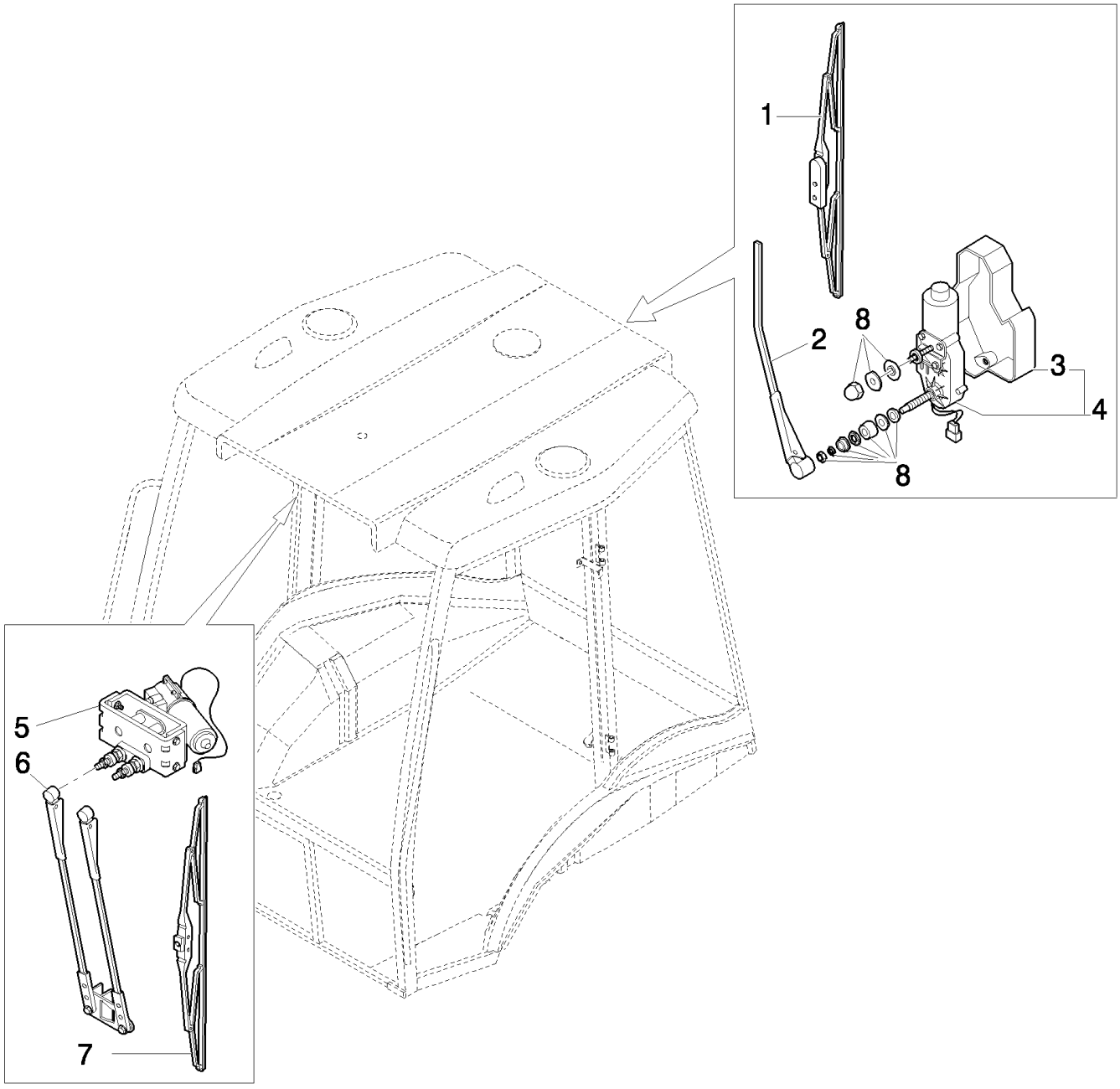

B110 TIER 3 BACKHOE LOADER (2/07-)

1.91.5(01) FRONT AND REAR WINDSCREEN WIPERS

Ref	Numero de Pieza	Ctd	Descripción
1	85819827	1	WIPER BLADE, Rear
2	85806098	1	WIPER ARM, Rear
3	85806095	1	COVER, Rear
4	87628768	1	WIPER MOTOR, Rear, Includes 3
5	85806184	1	WIPER MOTOR, Front
6	85806185	1	WIPER ARM, Front
7	85819826	1	WIPER BLADE, Front
8	87628806	1	KIT,

1.91.5(02) WINDSCREEN WIPERS RESERVOIR & NOZZLES

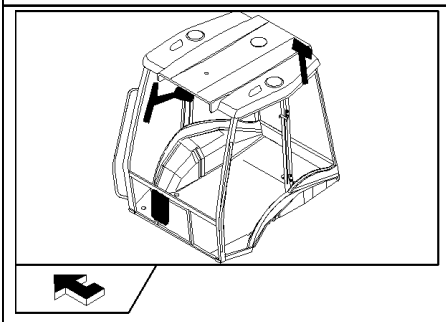

KIT
KIT KIT
1 = ●

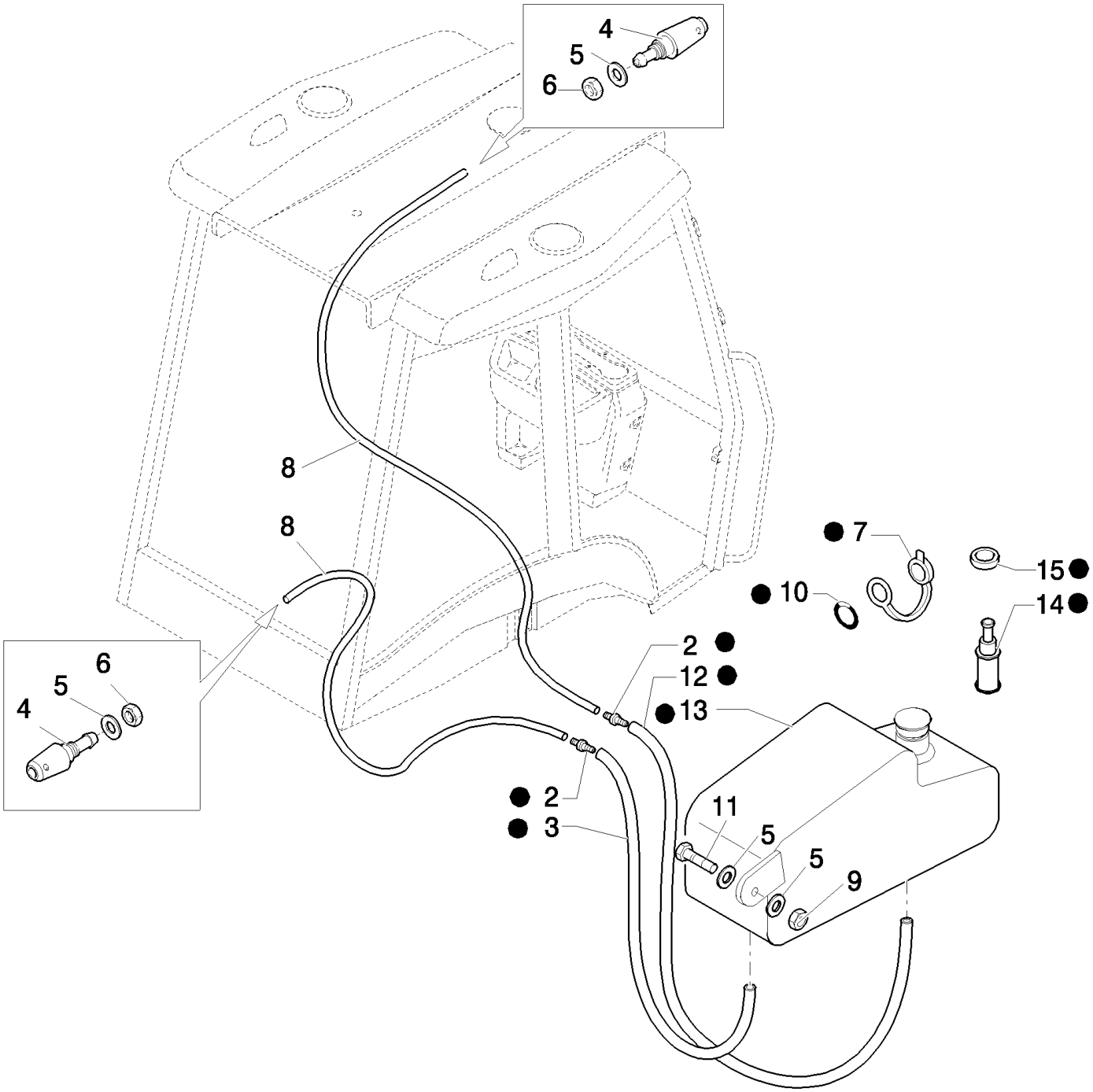

B110 TIER 3 BACKHOE LOADER (2/07-)

1.91.5(02) WINDSCREEN WIPERS RESERVOIR & NOZZLES

Ref	Numero de Pieza	Ctd	Descripción
1	85821153	1	PAN,
2	85821337	2	VALVE, CHECK,
3	85821335	1	HOSE, FLEXIBLE,
4	85802398	2	NOZZLE,
5	12646704	4	WASHER, M8 x 20 x 2,
6	16102411	2	NUT, Thin, M8 x 1, Cl 04,
7	5175736	1	CAP,
8	85821338	2	HOSE, FLEXIBLE,
9	12574211	1	NUT, LOCK, M6 x 1, Cl 8,
10	85820237	1	O-RING,
11	13313417	1	SCREW, Cross Oval Hd, M6 x 25,
12	85824450	1	HOSE, FLEXIBLE,
13	85821334	1	RESERVOIR, WINDSH. WASH,
14	85821333	2	PUMP,
15	85821336	2	SEAL,

1.91.6(01) RADIO ANTENNA & SPEAKER COVER

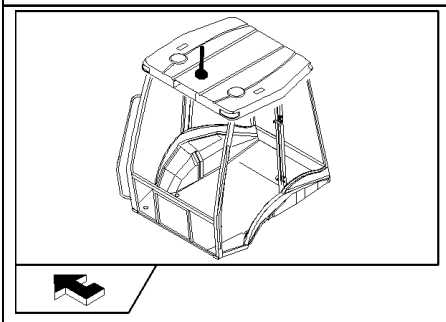

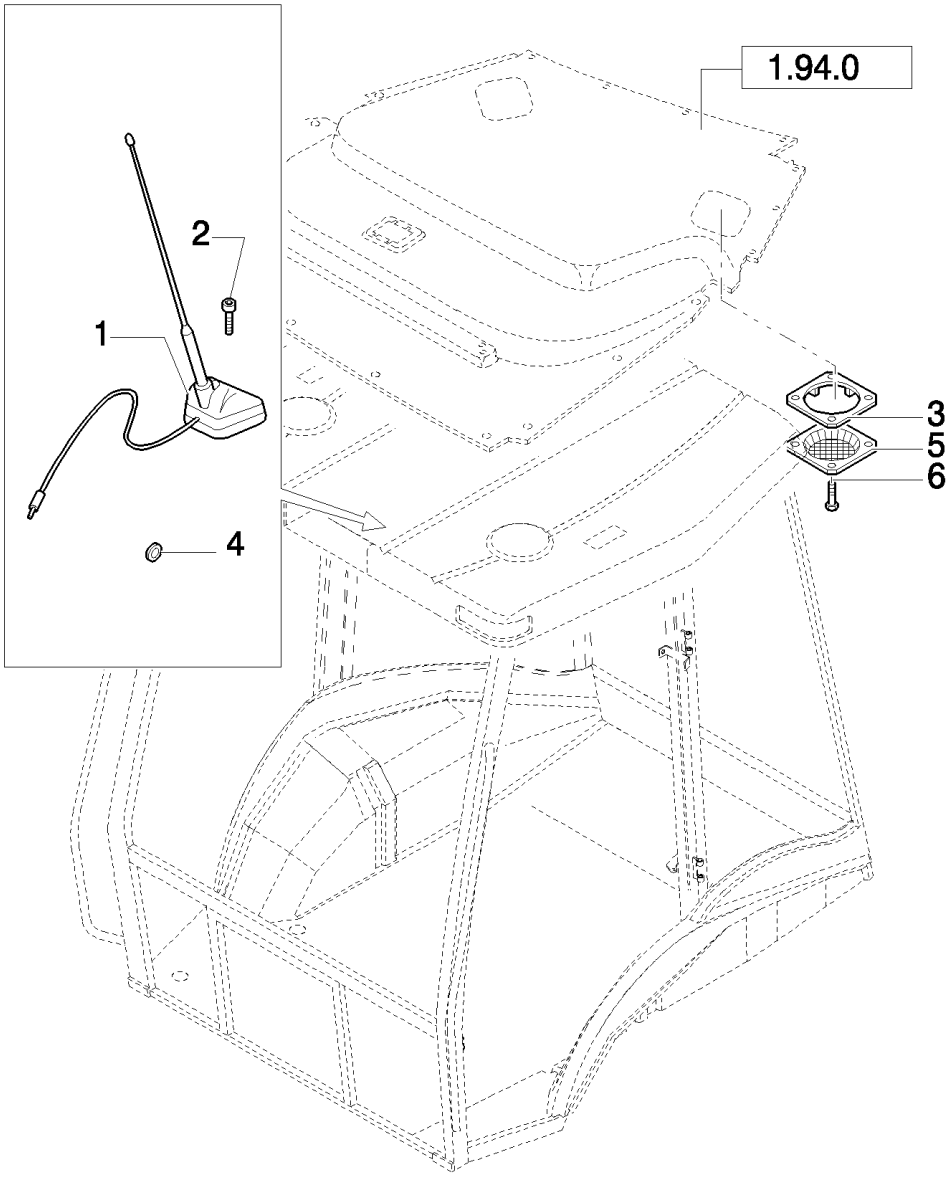

B110 TIER 3 BACKHOE LOADER (2/07-)

1.91.6(01) RADIO ANTENNA & SPEAKER COVER

Ref	Numero de Pieza	Ctd	Descripción
1	85819569	1	ANTENNA,
2	13311817	1	SCREW, Cross Oval Hd, M5 x 40,
3	85802107	2	PLATE, MOUNTING,
4	10399580	1	GROMMET,
5	85804362	2	GRILLE,
6	13297817	8	SCREW,

1.91.7(01) LAMPS & LIGHTS - CAB - EU

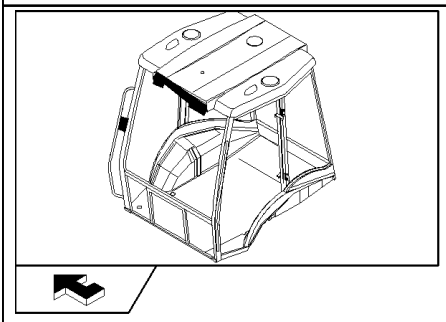

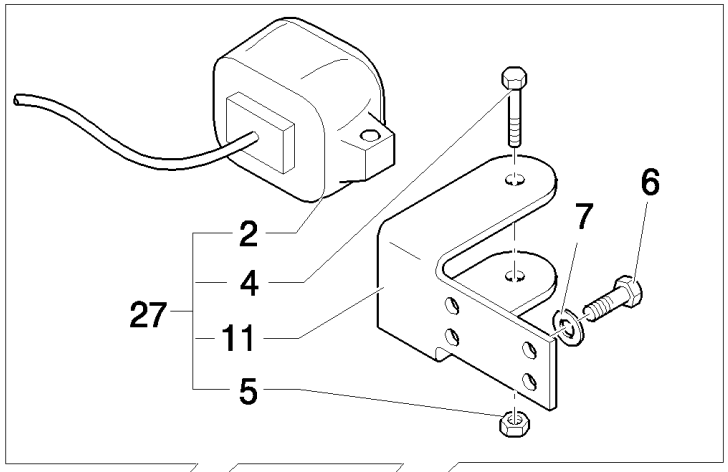

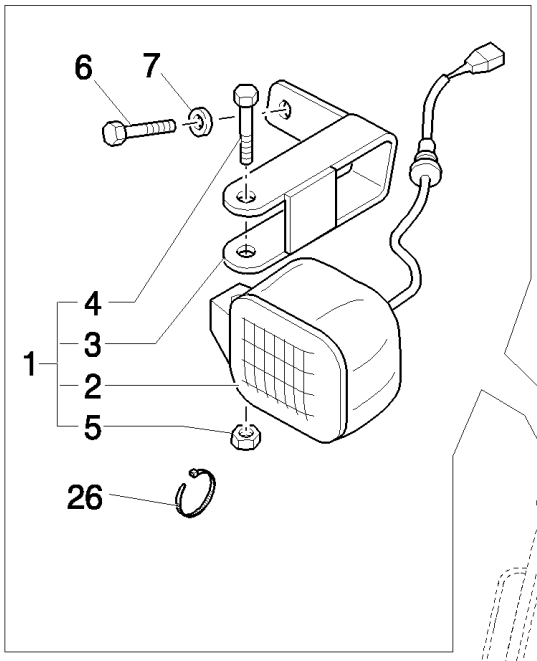





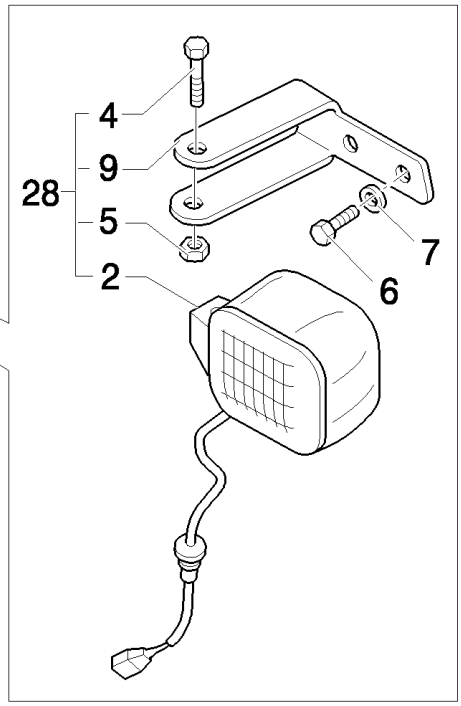

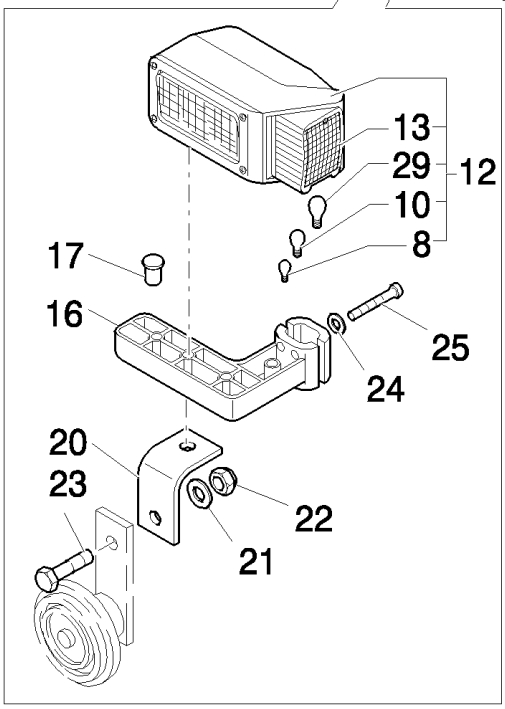

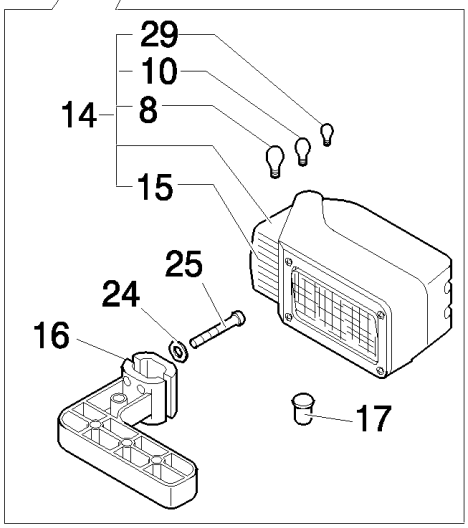



B110 TIER 3 BACKHOE LOADER (2/07-)

1.91.7(01) LAMPS & LIGHTS - CAB - EU

Ref	Numero de Pieza	Ctd	Descripción
1	85819695	1	LIGHT,
2	85819200	4	HEADLAMP, Includes H3 12V 55W Bulb, Order 9703399 For Bulb
3	85819190	1	BRACKET, RH
4	16044324	4	BOLT, Hex, M8 x 55, 8.8,
5	16104111	4	NUT, LOCK, M8 x 1.25, Cl 8,
6	10902124	8	BOLT, Hex, M6 x 14, 8.8, Full Thd,
7	11197774	8	WASHER, SPRING, Belleville, M6.4,
8	14148190	2	BULB,
9	85819191	1	BRACKET, LH
10	14152090	2	BULB,
11	85819194	2	BRACKET,
12	85821384	1	HEADLAMP, RH, , Includes 13, 29, 30, 31
13	9969431	1	LENS, RH
14	85821385	1	HEADLAMP, LH, , Includes 15, 29, 30, 31
15	9969430	1	LENS, LH
16	85819828	2	SUPPORT,
17	5132136	4	COVER,
18	83994150	8	PLUG,
19	5118658	8	PLUG,
20	87358963	1	COLLAR, RETAINER,
21	10519611	1	WASHER, Ø 8
22	14048211	2	NUT, LOCK, M8 x 1.25, Cl 8,
23	16043421	1	SCREW, Hex, M8 x 20, 8.8,
24	10569274	8	WASHER, LOCK, Ø 6
25	14305324	8	SCREW, Hex Soc Hd, M6 x 20, 8.8,
26	5112712	2	CLIP, HOSE, M4.8 x 283,
27	85819699	2	KIT, ENGINE OVERHAUL,
28	85819696	1	LIGHT,
29	14142390	2	BULB,

B110 TIER 3 BACKHOE LOADER (2/07-)

1.91.7/1(01) LAMPS & LIGHTS - ROPS - NA

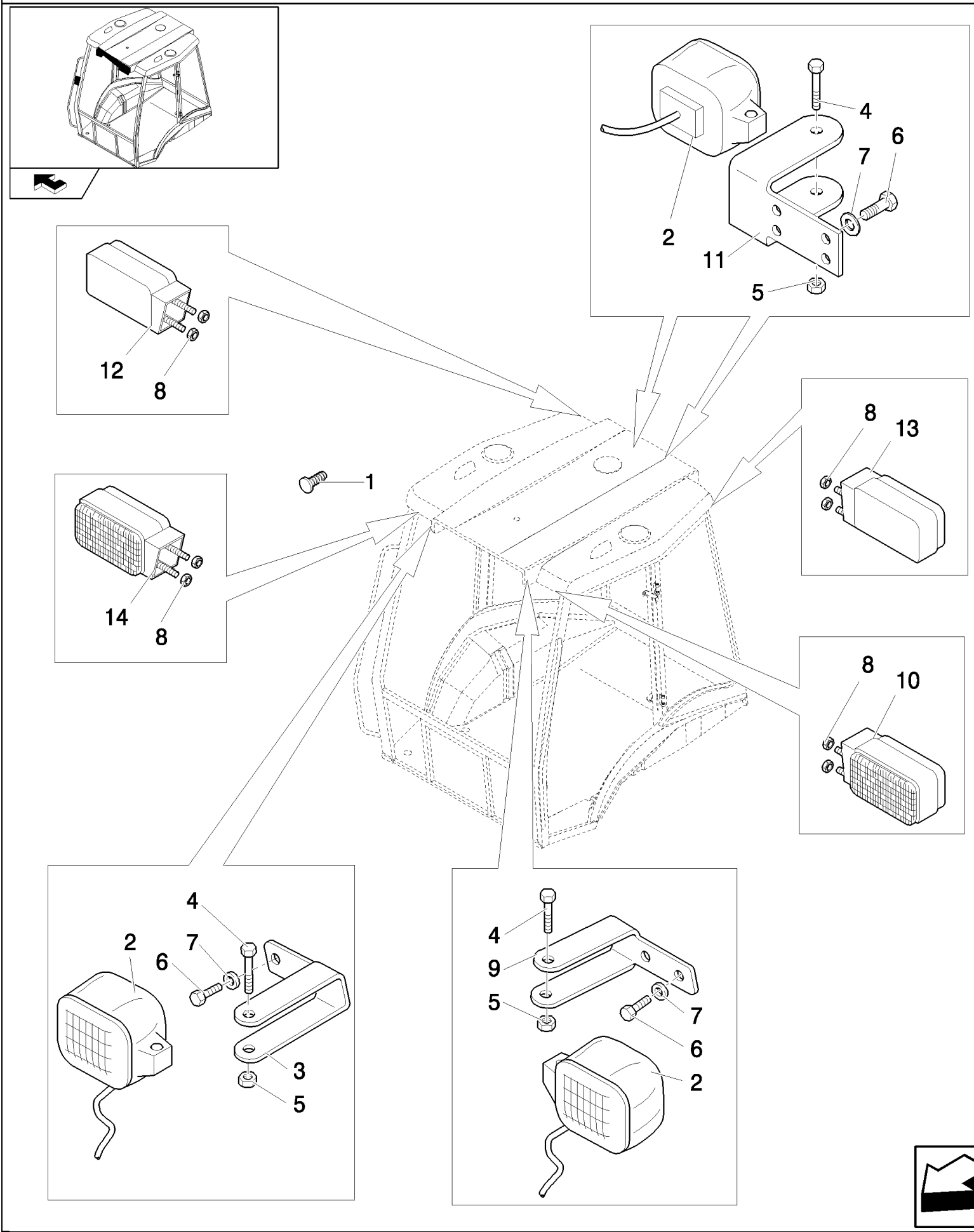

B110 TIER 3 BACKHOE LOADER (2/07-)

1.91.7/1(01) LAMPS & LIGHTS - ROPS - NA

Ref	Numero de Pieza	Ctd	Descripción
1	14591687	1	BUTTON,
2	85819200	4	HEADLAMP, Includes H3 12V 55W Bulb, Order 9703399 For Bulb
3	85819190	1	BRACKET, RH
4	16044324	4	BOLT, Hex, M8 x 55, 8.8,
5	16104111	4	NUT, LOCK, M8 x 1.25, Cl 8,
6	10902124	8	BOLT, Hex, M6 x 14, 8.8, Full Thd,
7	11197774	8	WASHER, SPRING, Belleville, M6.4,
8	14084111	8	NUT, M5 x .8, Flg,
9	85819191	1	BRACKET, LH
10	85819197	1	LAMP, FRONT, LH; Solid Amber Lens
11	85819194	2	BRACKET,
12	85819198	1	LAMP, TAIL, RH; Red/Amber Lens
13	85819199	1	LAMP, TAIL, LH; Red/Amber Lens
14	85819196	1	LAMP, FRONT, RH; Solid Amber Lens

B110 TIER 3 BACKHOE LOADER (2/07-)

1.91.7/2(01) LAMPS & LIGHTS - CAB - NA

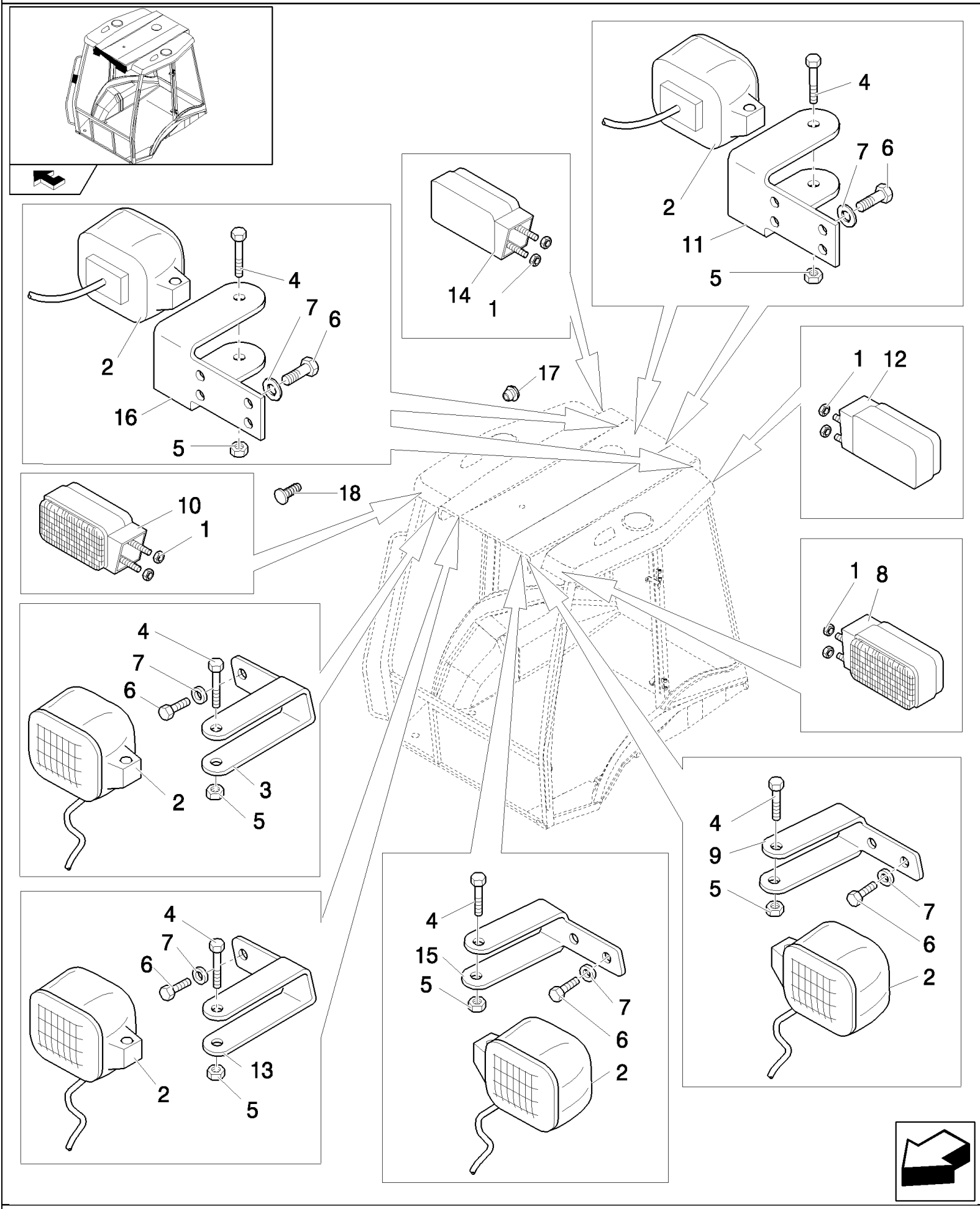

B110 TIER 3 BACKHOE LOADER (2/07-)

1.91.7/2(01) LAMPS & LIGHTS - CAB - NA

Ref	Numero de Pieza	Ctd	Descripción
1	14084111	8	NUT, M5 x .8, Flg,
2	85819200	8	HEADLAMP,
3	85819190	1	BRACKET,
4	16044324	8	BOLT, Hex, M8 x 55, 8.8,
5	16104111	8	NUT, LOCK, M8 x 1.25, Cl 8,
6	10902124	24	BOLT, Hex, M6 x 14, 8.8, Full Thd,
7	11197774	24	WASHER, SPRING, Belleville, M6.4,
8	85819197	1	LAMP, FRONT,
9	85819191	1	BRACKET,
10	85819196	1	LAMP, FRONT,
11	85819194	2	BRACKET,
12	85819199	1	LAMP, TAIL,
13	85819188	1	BRACKET,
14	85819198	1	LAMP, TAIL,
15	85819189	1	BRACKET,
16	85819192	2	BRACKET,
17	83994150	1	PLUG,
18	5118658	1	PLUG,

1.91.8(01) CAB-SAFETY FRAME / EXTINGUISHER

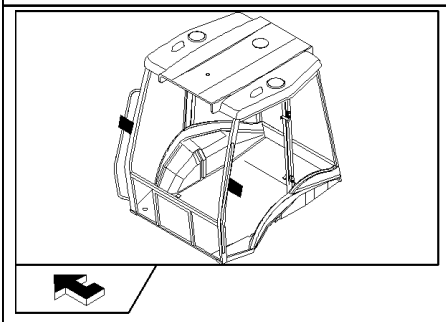

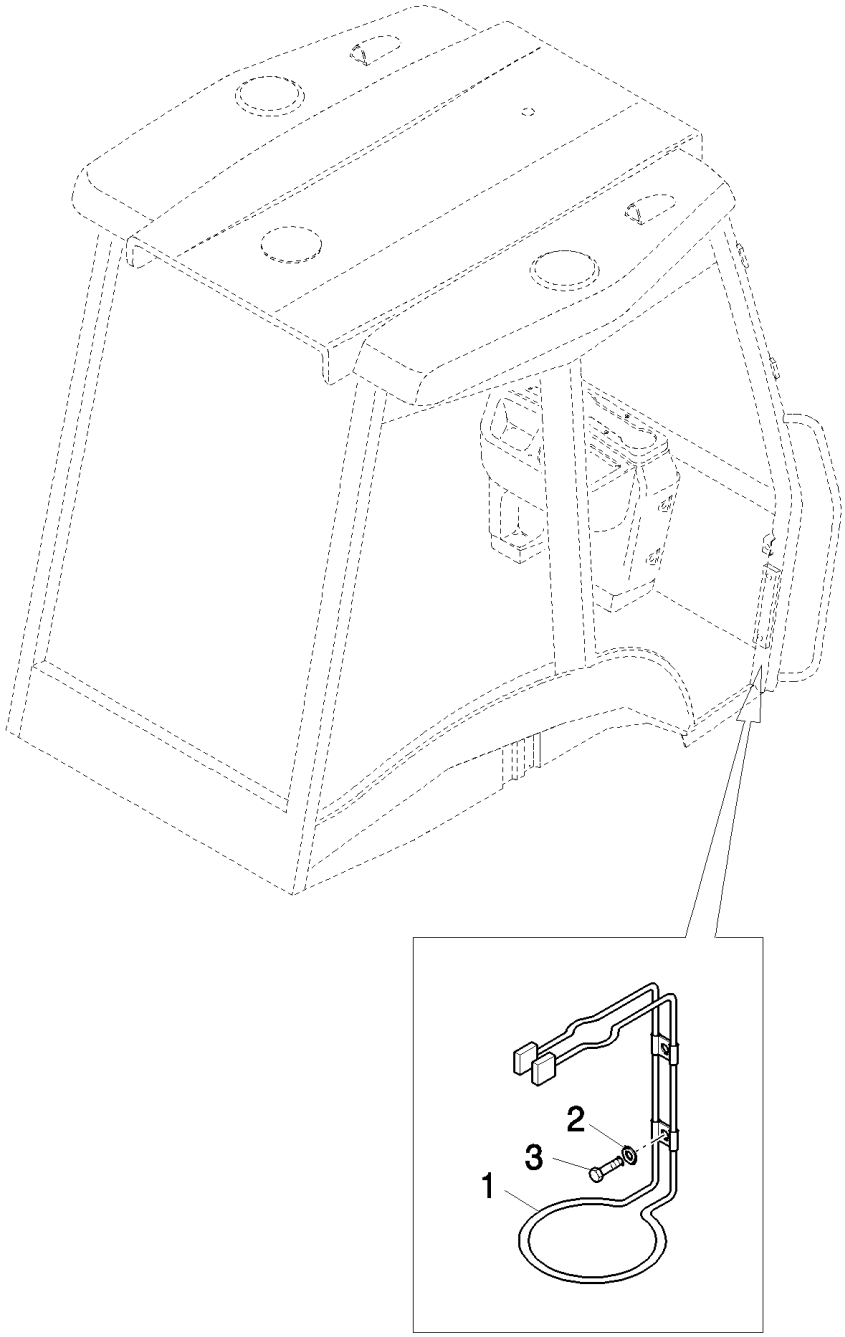

B110 TIER 3 BACKHOE LOADER (2/07-)

1.91.8(01) CAB-SAFETY FRAME / EXTINGUISHER

Ref	Numero de Pieza	Ctd	Descripción
1	85802276	1	SUPPORT,
2	11193274	2	WASHER, SPRING, Belleville, M6.4,
3	13275914	2	SCREW, Pan Hd, M6 x 10, 5.8,

B110 TIER 3 BACKHOE LOADER (2/07-)

1.92.2(01) CAB - FRAME-DOOR

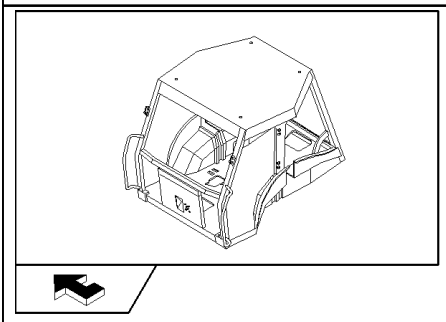

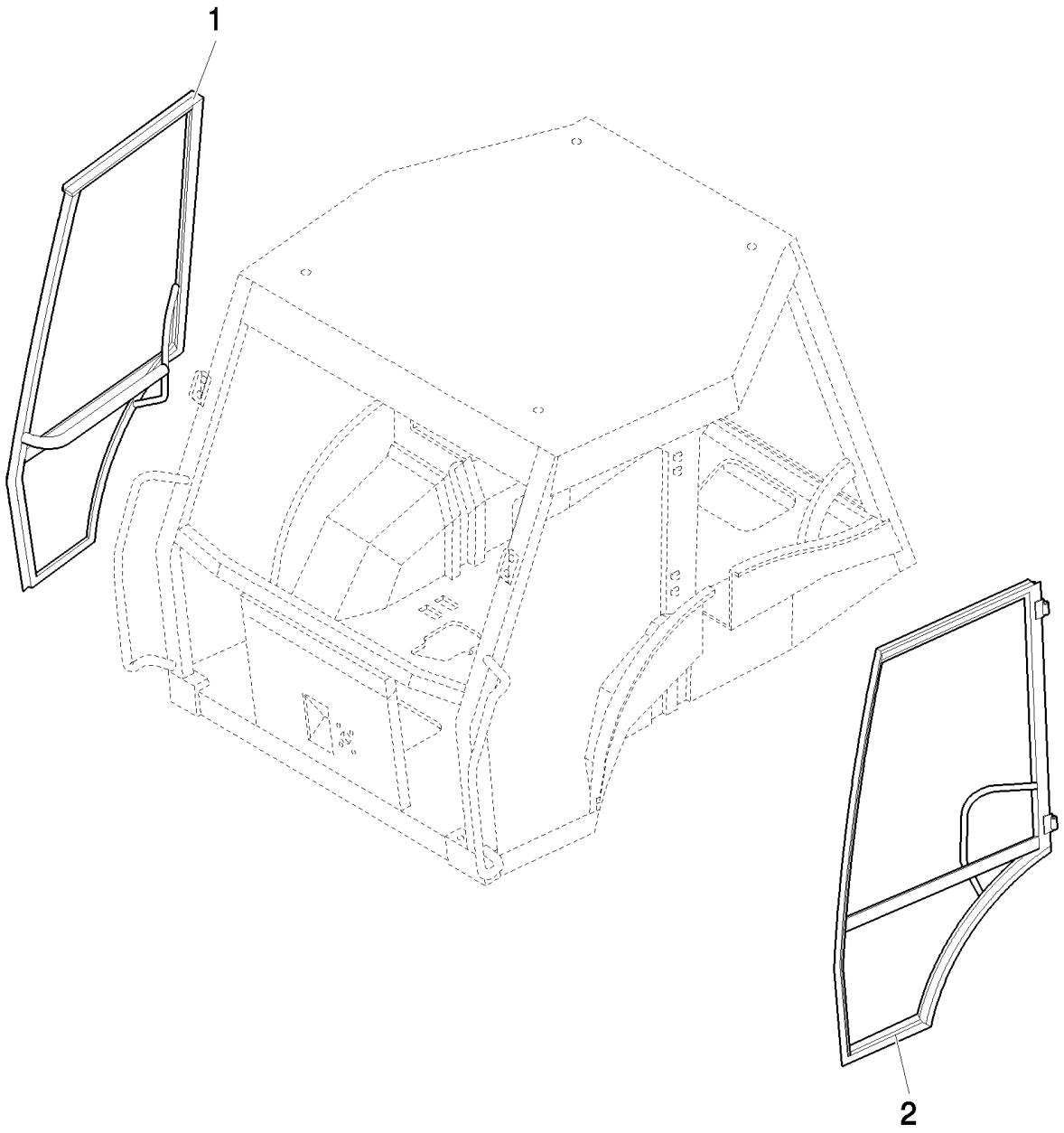

Only Pilot and Mechanical

B110 TIER 3 BACKHOE LOADER (2/07-)

1.92.2(01) CAB - FRAME-DOOR

Ref	Numero de Pieza	Ctd	Descripción
1	87354650	1	FRAME, RH
2	87354652	1	FRAME, LH

Only Pilot and Mechanical

1.92.3(01) WINDOWS

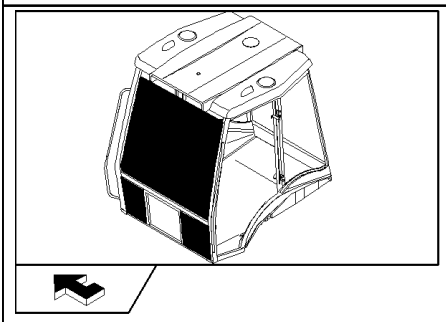

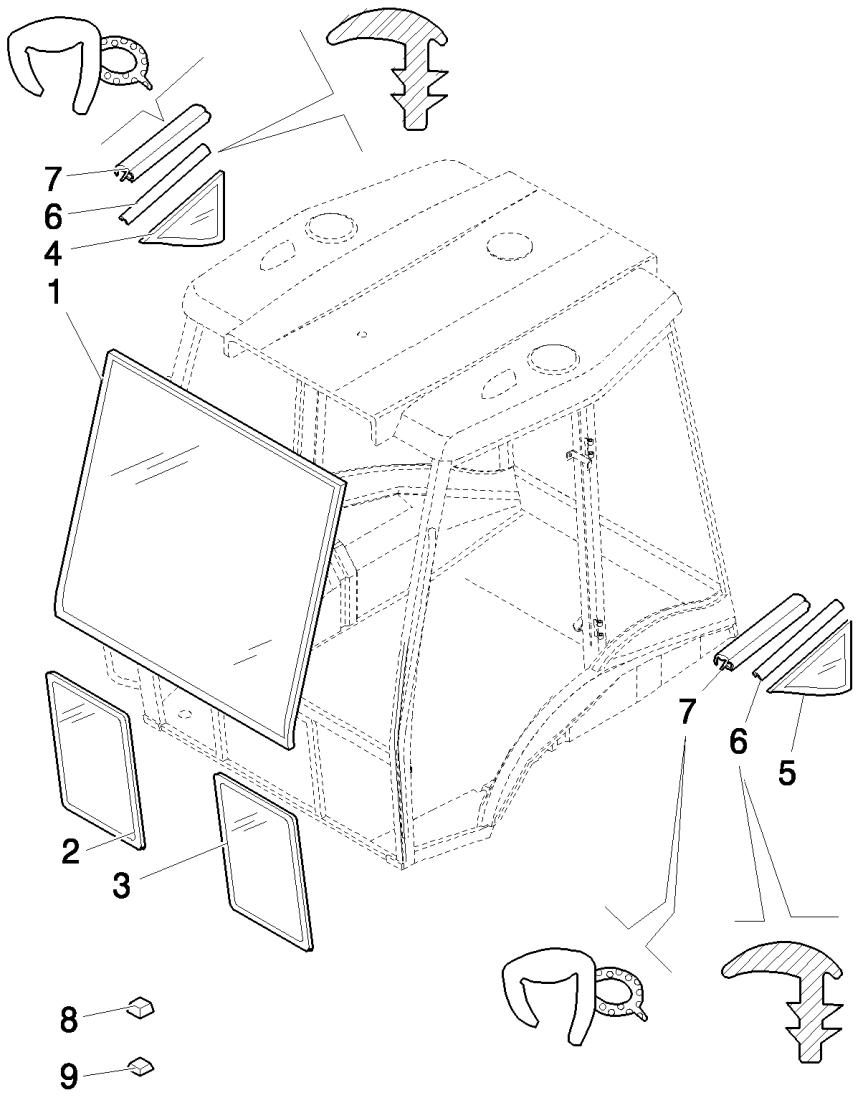

B110 TIER 3 BACKHOE LOADER (2/07-)

1.92.3(01) WINDOWS

Ref	Numero de Pieza	Ctd	Descripción
1	85801621	1	GLASS,
2	85801622	1	GLASS, CAB, RH
3	85801623	1	GLASS, CAB, LH
4	85801630	1	GLASS, CAB, RH
5	85801631	1	GLASS, CAB, LH
6	85802334	M	GASKET,
7	85805065	2	GASKET,
8	85802223	8	SPACER,
9	85802224	10	SPACER,

1.92.4(01) WINDOWS

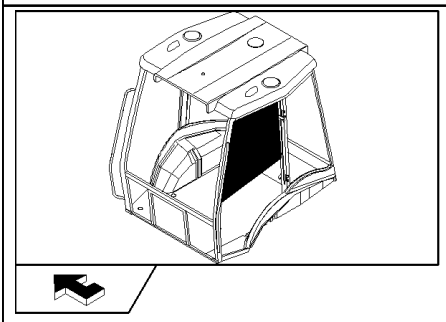

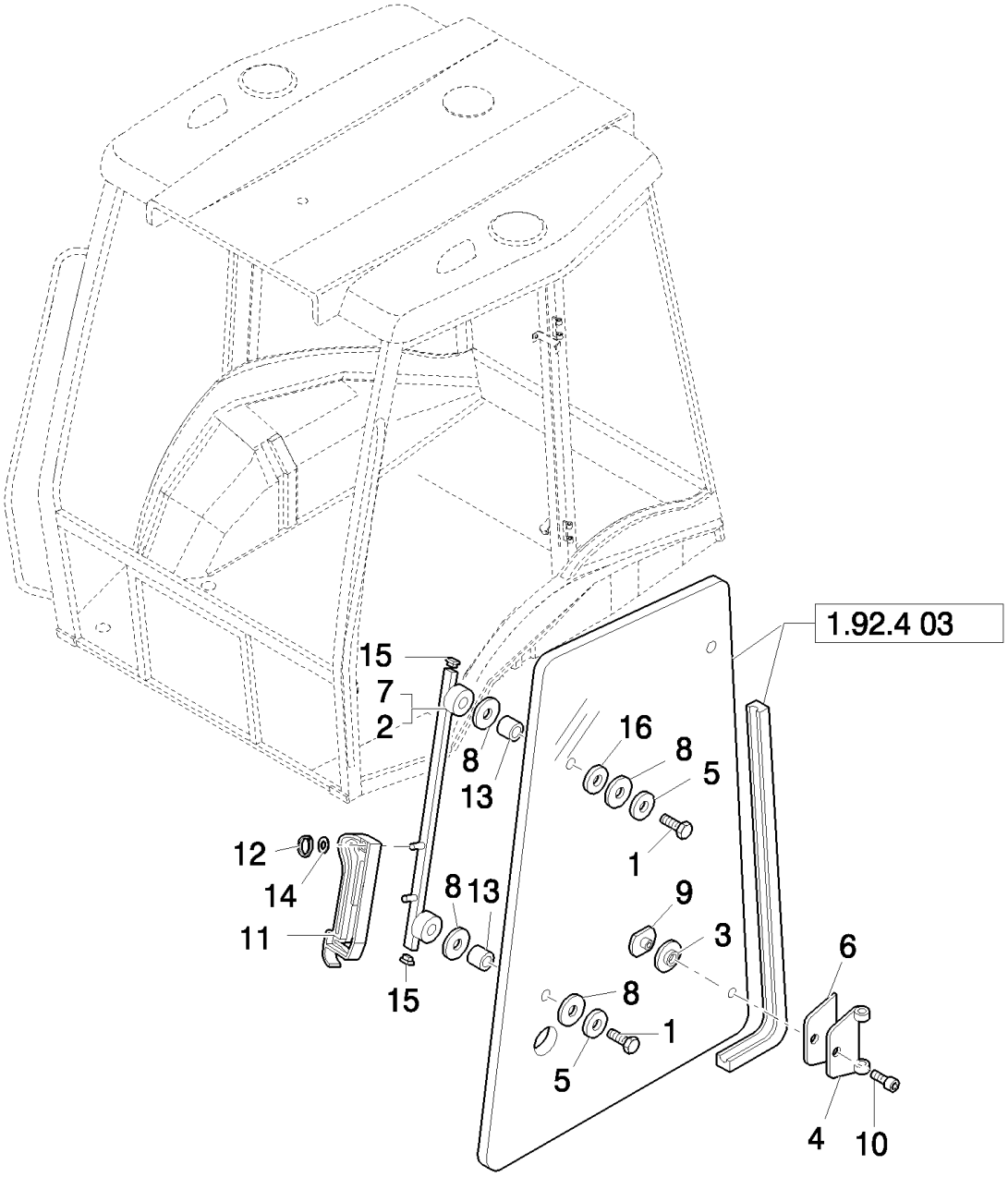

B110 TIER 3 BACKHOE LOADER (2/07-)

1.92.4(01) WINDOWS

Ref	Numero de Pieza	Ctd	Descripción
1	82859922	4	BOLT,
2	87396515	1	SUPPORT, RH
3	83961985	4	SPACER,
4	85804869	4	HINGE,
5	83963153	4	SPACER,
6	81872036	4	GASKET,
7	87396492	1	SUPPORT, LH
8	83995356	12	BUSHING,
9	85805448	4	NUT, RING,
10	81871864	4	SCREW, Socket Drive, M8x1.25x16
11	87353724	4	HANDLE,
12	11087776	4	CIRCLIP, M6,
13	83961987	4	SPACER,
14	10519404	2	WASHER, M6 x 11.95 x 1.6,
15	81871439	8	CAP,
16	12638504	4	WASHER, M8 x 15 x 1.5,

1.92.4(02) WINDOWS

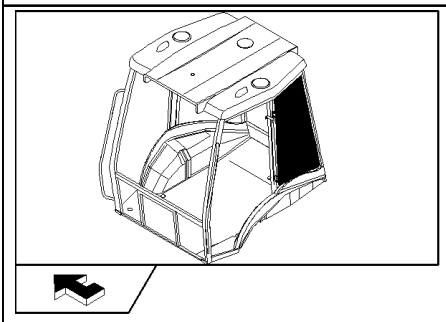

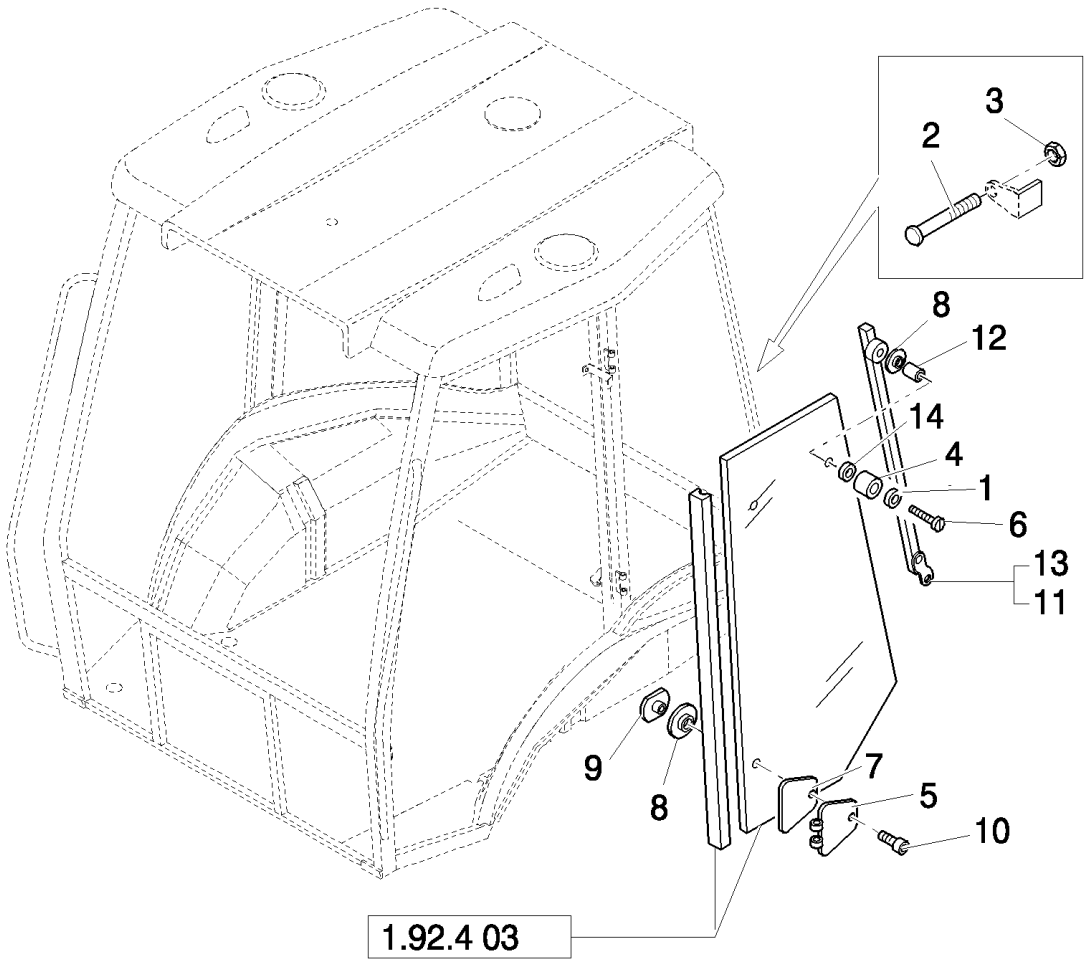

B110 TIER 3 BACKHOE LOADER (2/07-)

1.92.4(02) WINDOWS

Ref	Numero de Pieza	Ctd	Descripción
1	10519404	2	WASHER, M6 x 11.95 x 1.6,
2	87313813	4	PIN,
3	10702711	8	NUT,
4	83976357	2	BUMPER,
5	85804870	4	HINGE,
6	10903224	2	VALVE, HYDRAULIC, Hex, M6 x 40, 8.8,
7	81872028	4	SPACER,
8	83961985	4	SPACER,
9	85805448	4	NUT, RING,
10	81871864	4	SCREW, Socket Drive, M8 x 1.25 x 16
11	87396525	1	SUPPORT, RH
12	83961987	2	SPACER,
13	87396528	1	SUPPORT, LH
14	11193979	2	WASHER, SPRING, Belleville, M8.4,

1.92.4(03) WINDOWS

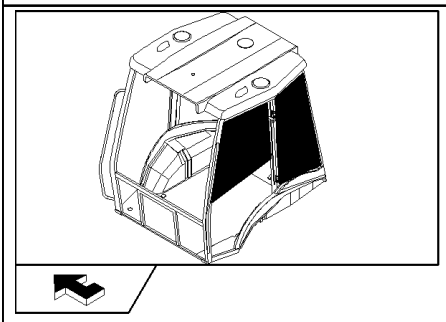

KIT KIT KIT 1 = ●

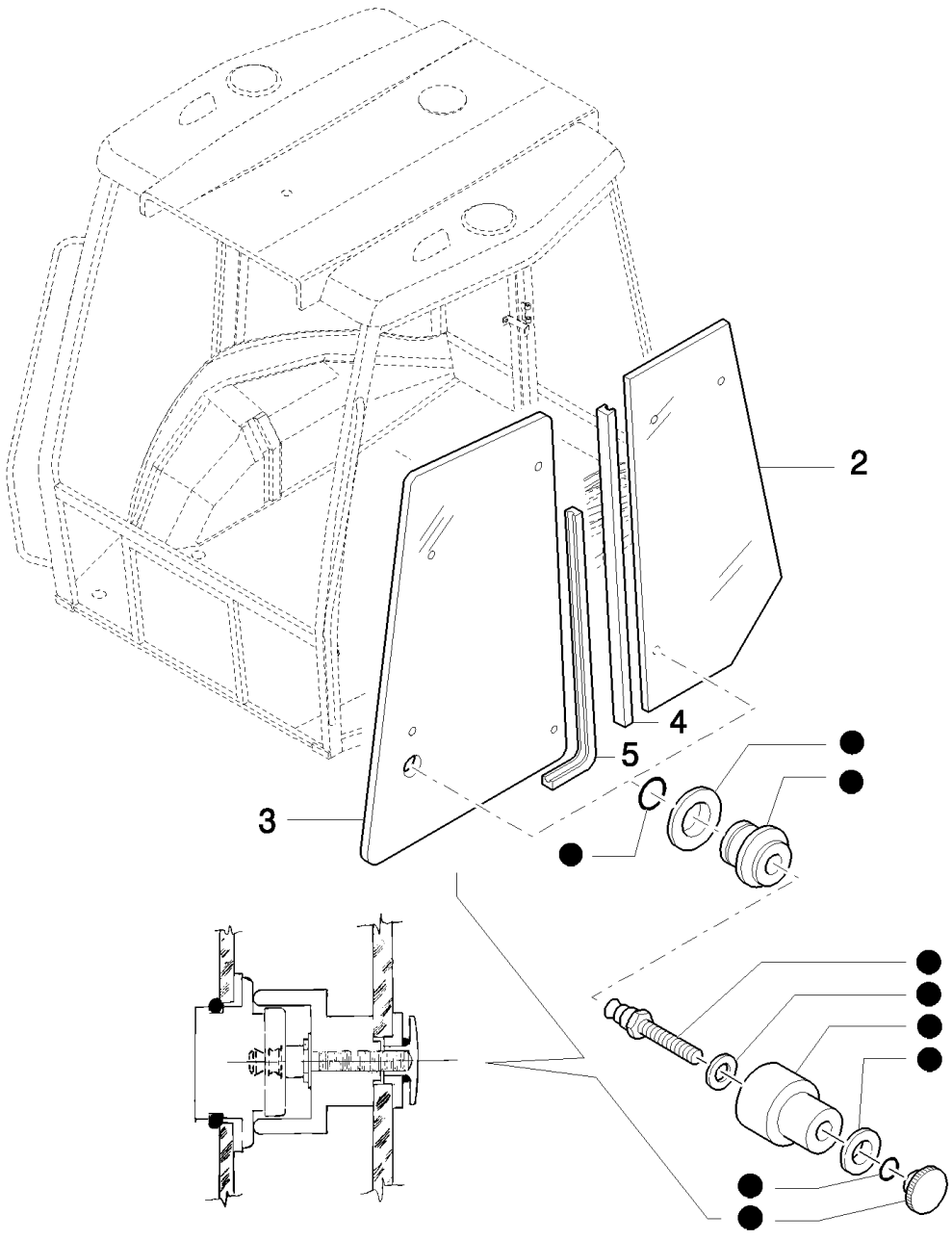

B110 TIER 3 BACKHOE LOADER (2/07-)

1.92.4(03) WINDOWS

Ref	Numero de Pieza	Ctd	Descripción
1	85804617	2	KIT,
2	85801628	2	GLASS, CAB,
3	85801626	2	GLASS, CAB,
4	85812254	2	SEAL, RUBBER, 3150 mm lg
5	85812255	2	SEAL, RUBBER, 3315 mm lg

B110 TIER 3 BACKHOE LOADER (2/07-)

1.92.5(01) FENDERS, REAR

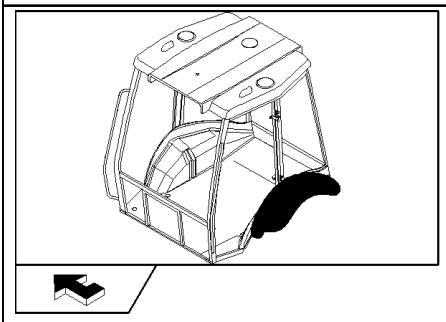

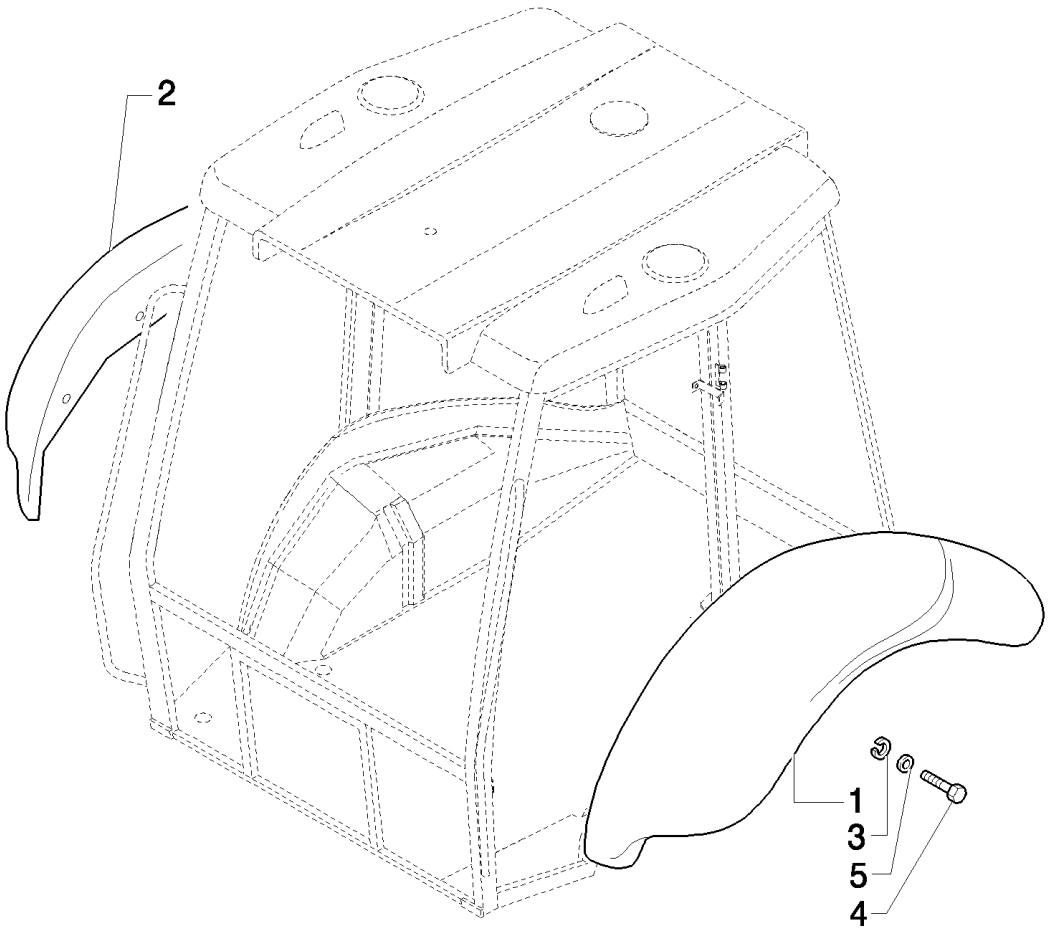

B110 TIER 3 BACKHOE LOADER (2/07-)

1.92.5(01) FENDERS, REAR

Ref	Numero de Pieza	Ctd	Descripción
1	85817211	1	FENDER, REAR, LH, Only for B110
1	85817213	1	FENDER, REAR, LH, Only for B115
2	85817210	1	FENDER, REAR, RH, Only for B110
2	85817212	1	FENDER, REAR, RH, Only for B115
3	11193874	10	WASHER, SPRING, Belleville, M8.4,
4	16044124	10	BOLT, Hex, M8 x 45, 8.8,
5	12646204	10	WASHER, M8 x 35 x 3,

1.92.6(01) DOOR COMPONENTS

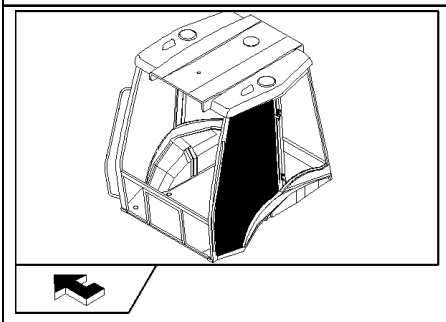

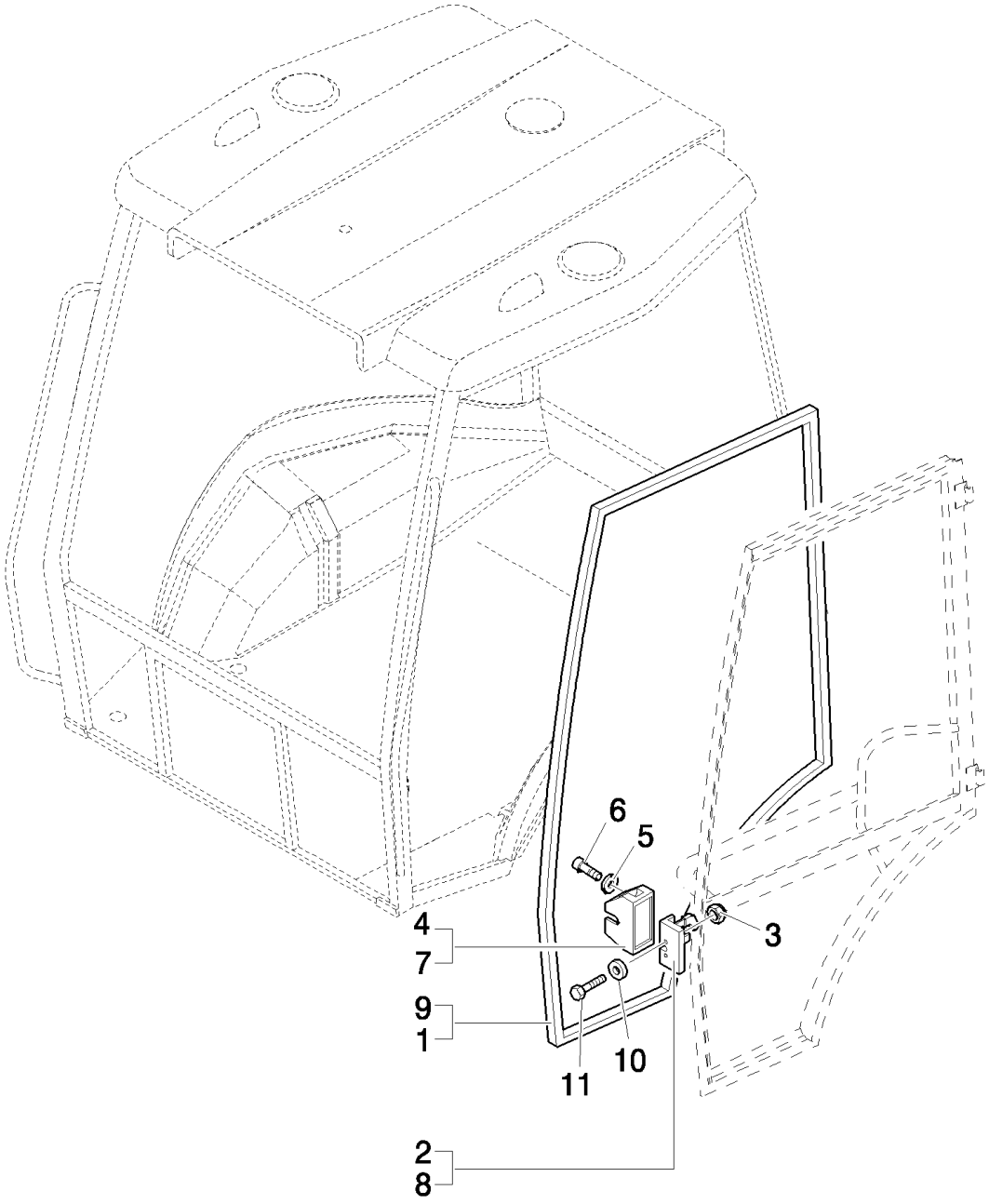

B110 TIER 3 BACKHOE LOADER (2/07-)

1.92.6(01) DOOR COMPONENTS

Ref	Numero de Pieza	Ctd	Descripción
1	85812252	1	SEAL, RUBBER, RH
2	44910052	1	LOCK, DOOR, LH, LH
3	14048214	4	NUT, LOCK, M8 x 1.25,
4	85805771	1	COVER, LH
5	12643701	4	WASHER, M6 x 18 x 1.5,
6	13273911	4	SCREW, Cross Pan Hd, M5 x 10,
7	85805770	1	COVER, RH
8	44910053	1	LOCK, DOOR, RH, RH
9	85812253	1	SEAL, RUBBER, LH
10	10519604	4	WASHER, M8 x 17 x 2,
11	14442421	4	SCREW, Hex Soc Flat Hd, M8 x 40, 8.8,

1.92.6(02) DOOR COMPONENTS

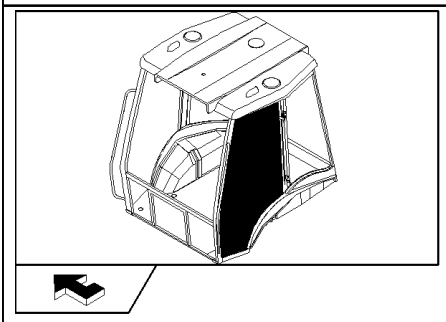

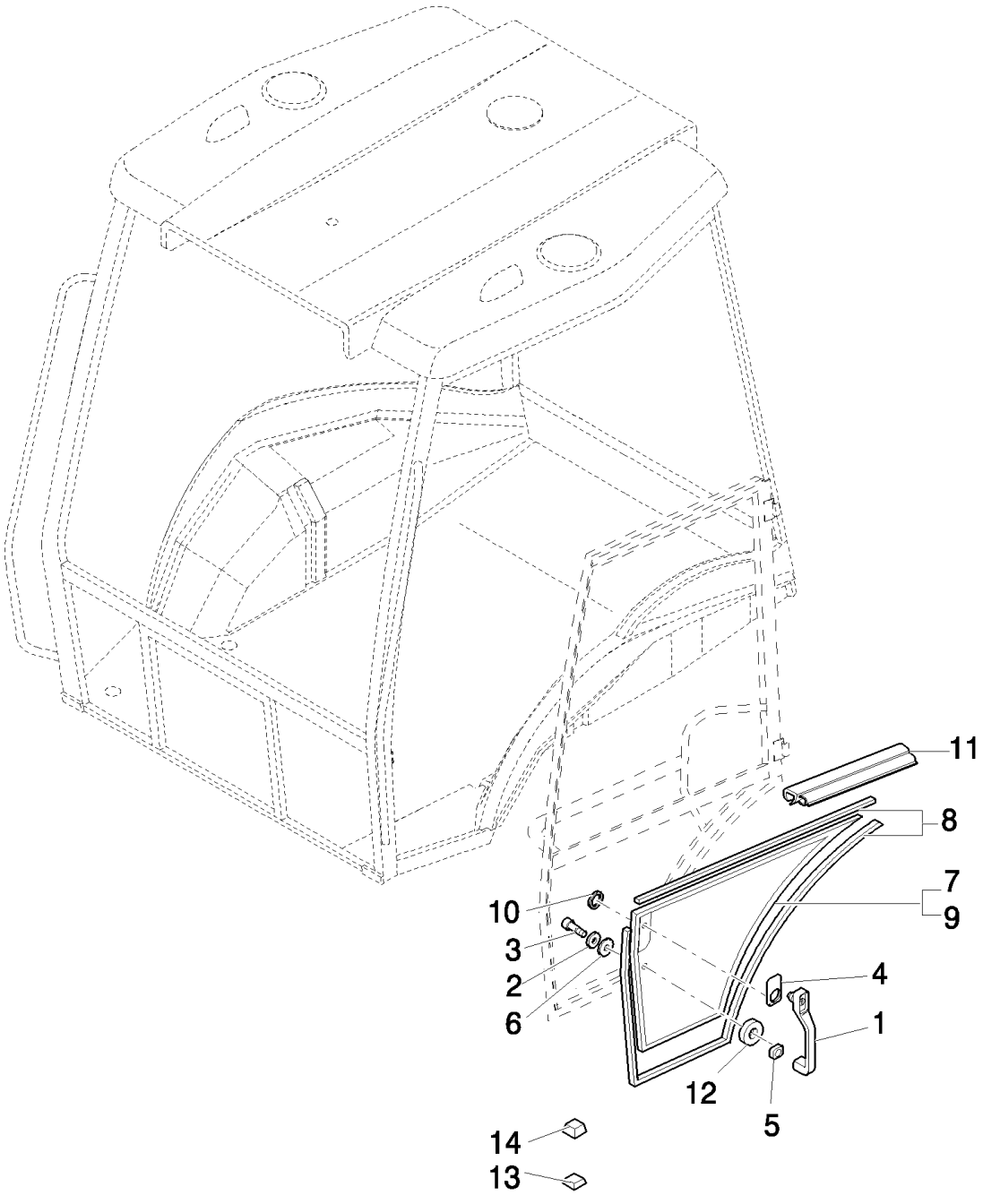

B110 TIER 3 BACKHOE LOADER (2/07-)

1.92.6(02) DOOR COMPONENTS

Ref	Numero de Pieza	Ctd	Descripción
1	85805659	2	HANDLE,
2	12640601	2	WASHER, M6 x 25 x 2,
3	13276621	2	SCREW, Cross Pan Hd, M6 x 25, 8.8,
4	85801799	2	GASKET,
5	85801800	2	GASKET,
6	83961987	4	SPACER,
7	85801624	1	GLASS, CAB, RH
8	85802334	MT	GASKET,
9	85801625	1	GLASS, CAB, LH
10	85802307	2	GASKET,
11	85805065	2	GASKET,
12	85801801	2	GASKET, 24X6X2
13	85802224	10	SPACER,
14	85802223	20	SPACER,

1.92.6(03) DOOR COMPONENTS

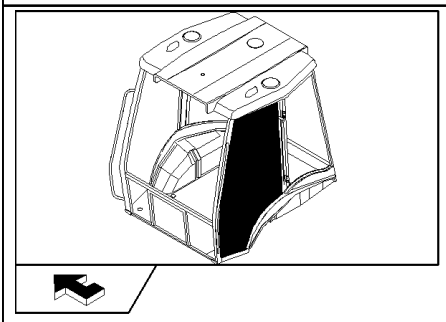

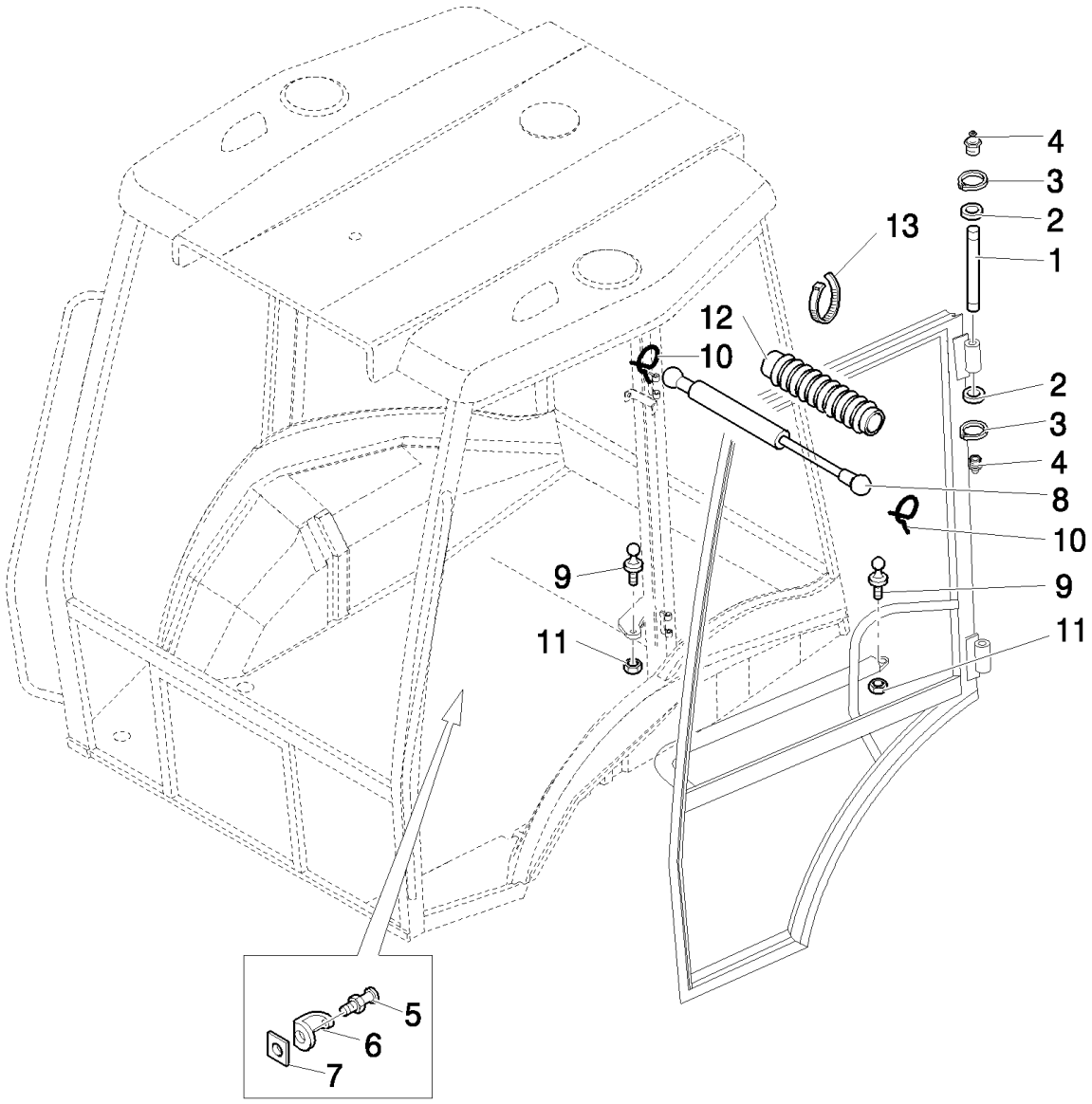

B110 TIER 3 BACKHOE LOADER (2/07-)

1.92.6(03) DOOR COMPONENTS

Ref	Numero de Pieza	Ctd	Descripción
1	87304810	4	PIN,
2	83964146	24	WASHER,
3	11088076	8	CIRCLIP, M10, D.9
4	13406911	4	NIPPLE, LUBE, 1/4"-28,
5	83994395	2	PLATE, STEEL,
6	83994372	2	GUARD,
7	83994378	2	NUT, M12 x 1
8	5183854	2	GAS STRUT,
9	82000409	4	PIN, BALL,
10	81869714	4	CLIP,
11	16104511	4	NUT, LOCK, M8 x 1.25, Cl 8.8,
12	81867742	2	BOOT,
13	5112712	4	CLIP, HOSE, M4.8 x 283,

B110 TIER 3 BACKHOE LOADER (2/07-)

1.92.8(01) FIREWALL SEAL, ROPS - NA

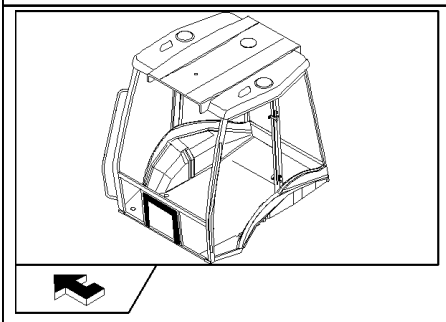

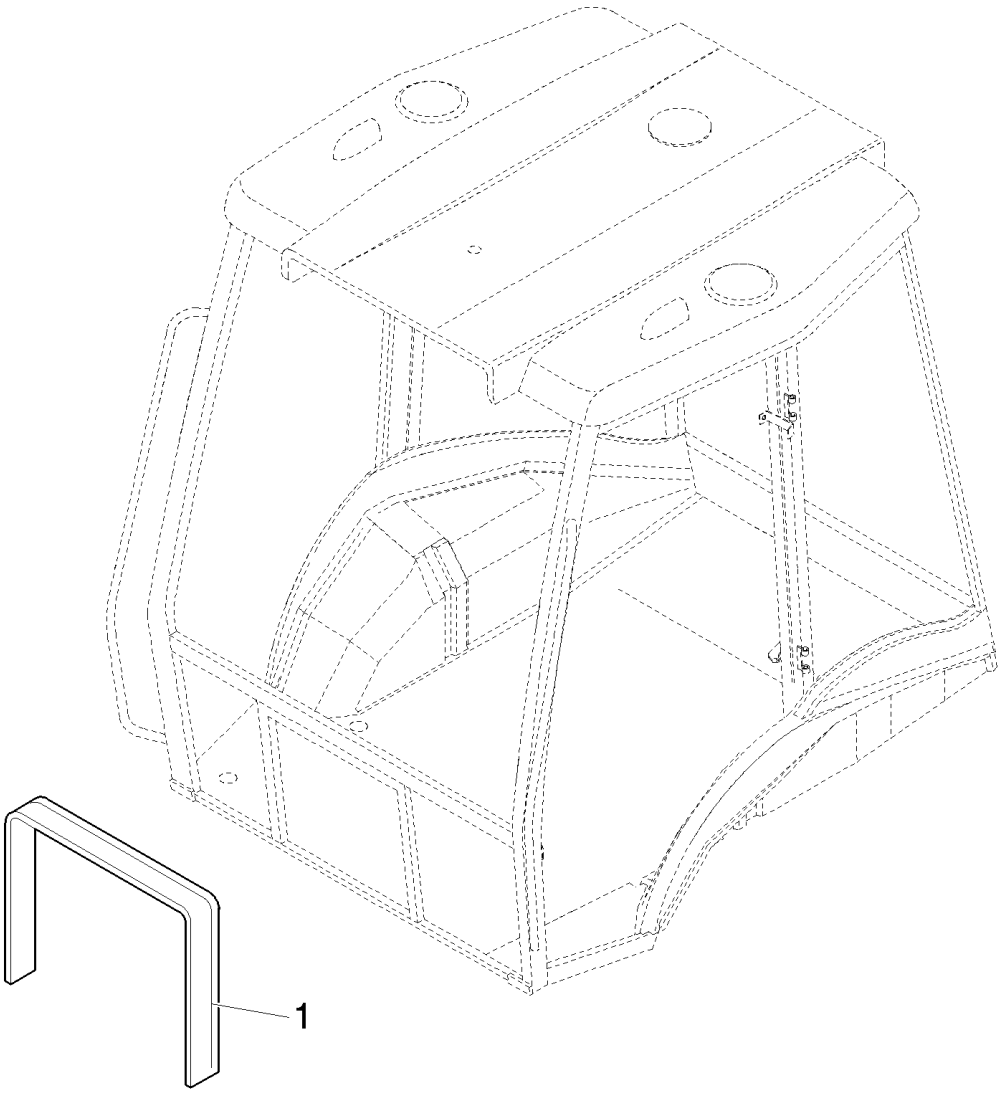

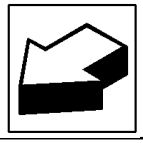

B110 TIER 3 BACKHOE LOADER (2/07-)

1.92.8(01) FIREWALL SEAL, ROPS - NA

Ref	Numero de Pieza	Ctd	Descripción
1	85805571	1	GASKET,

1.92.9(01) REAR WINDOWS

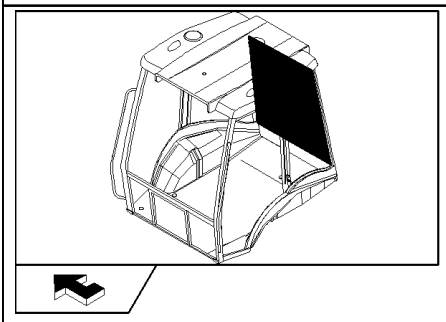

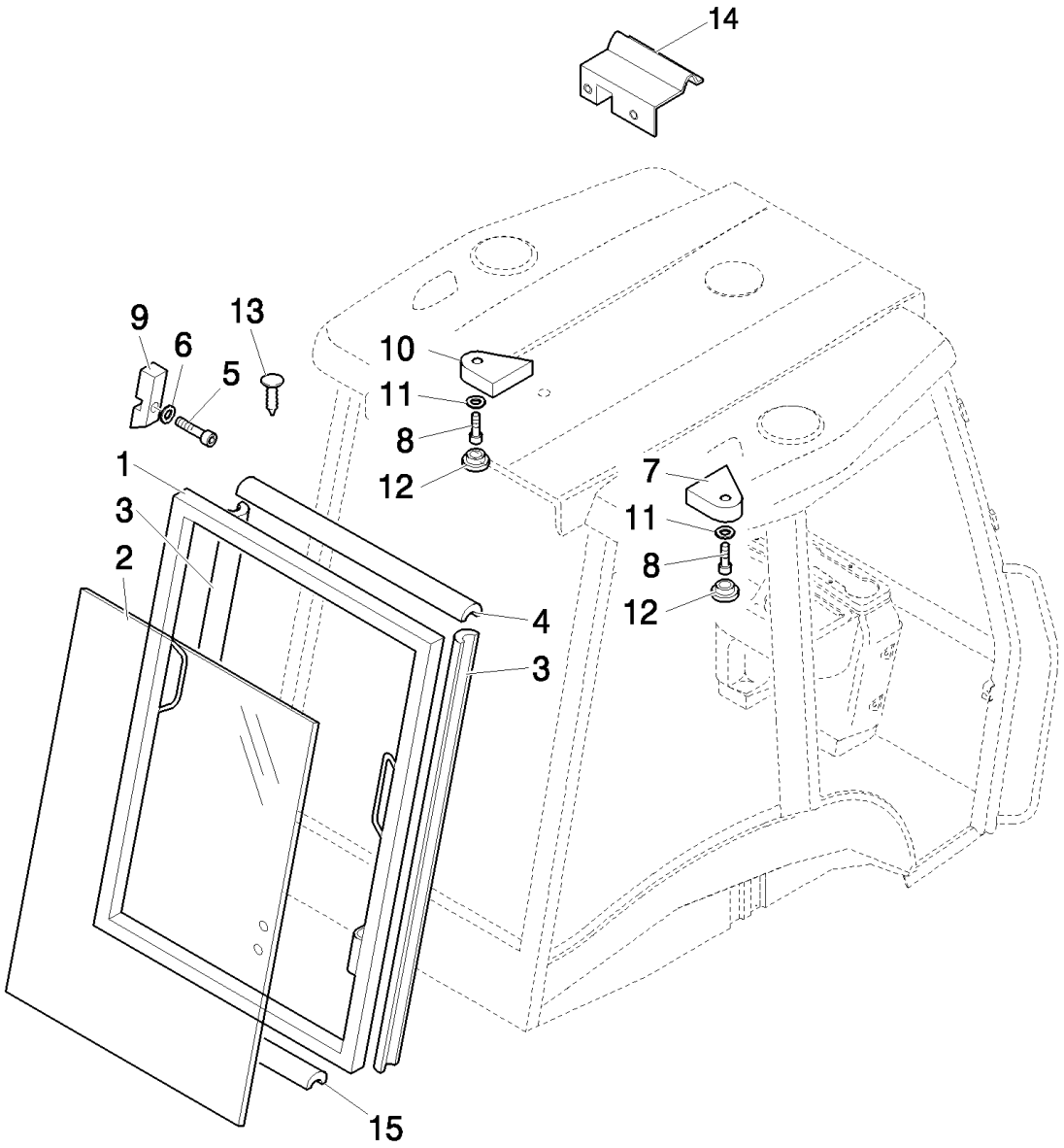

B110 TIER 3 BACKHOE LOADER (2/07-)

1.92.9(01) REAR WINDOWS

Ref	Numero de Pieza	Ctd	Descripción
1	85801739	1	DOOR,
2	85801632	1	GLASS, CAB,
3	85801811	2	EXTRUSION,
4	85819018	1	GASKET, L=965
5	16043324	2	BOLT, Hex, M8 x 18, 8.8, Full Thd,
6	12646704	2	WASHER, M8 x 20 x 2,
7	85801828	1	PAD, RH
8	13313417	2	SCREW, Cross Oval Hd, M6 x 25,
9	85801826	2	STOP,
10	85801829	1	PAD, LH
11	85801991	2	WASHER,
12	79111978	2	PLUG,
13	83994150	2	PLUG,
14	85812365	1	COLLAR, RETAINER,
15	85819017	1	GASKET, L=1010

1.92.9(02) REAR WINDOWS

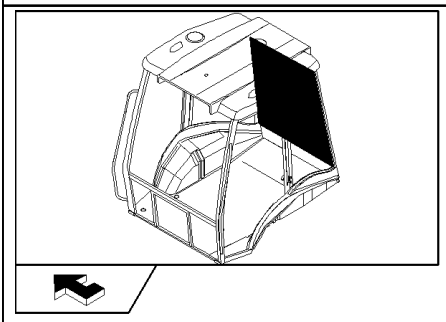

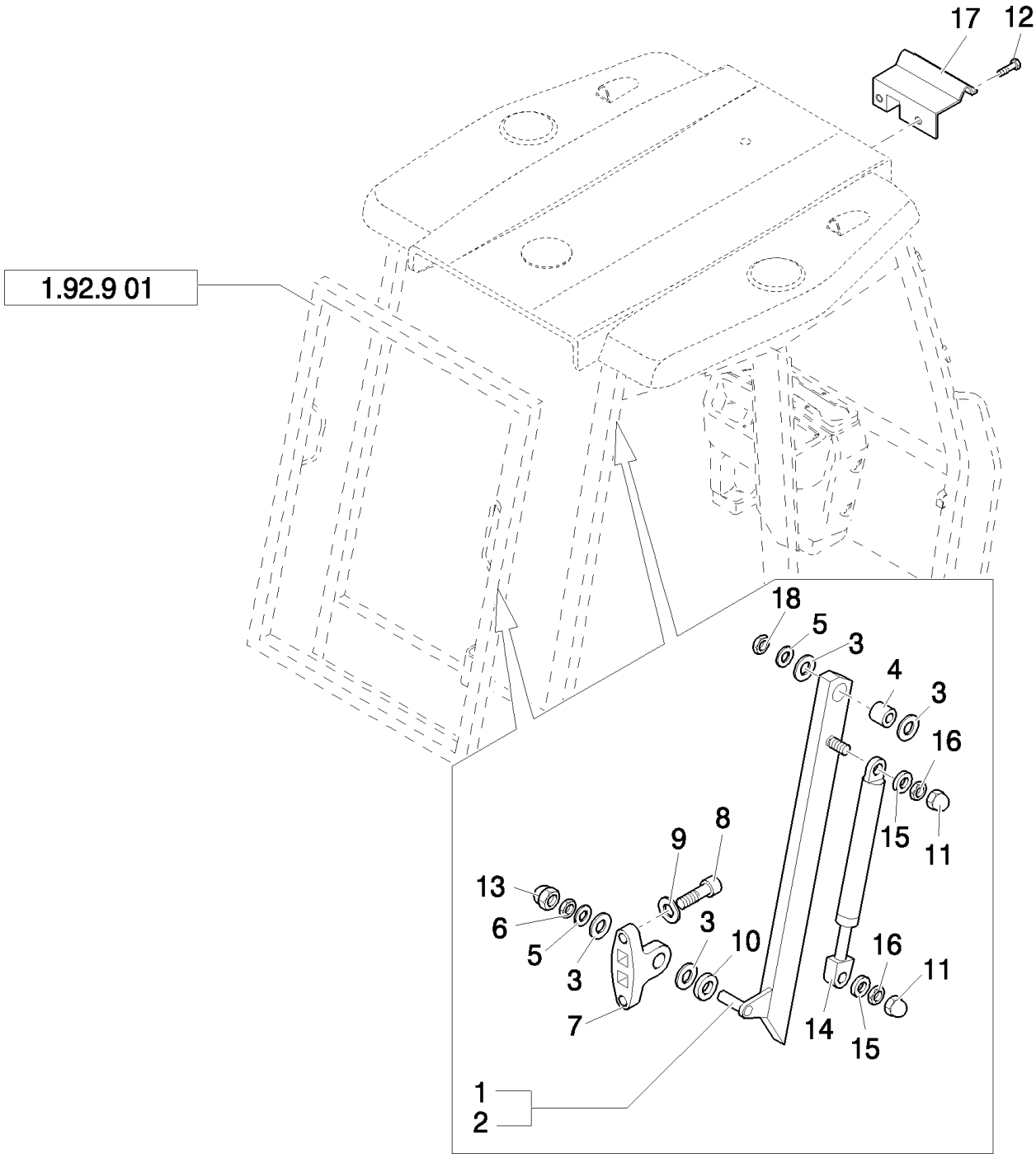

B110 TIER 3 BACKHOE LOADER (2/07-)

1.92.9(02) REAR WINDOWS

Ref	Numero de Pieza	Ctd	Descripción
1	85801812	1	SUPPORT, RH
2	85801813	1	SUPPORT, LH
3	85801814	12	SPACER,
4	85801815	2	BUSHING,
5	12646904	4	WASHER, M12 x 28 x 3,
6	16104111	2	NUT, LOCK, M8 x 1.25, Cl 8,
7	85801816	2	SUPPORT,
8	12638504	4	WASHER, M8 x 15 x 1.5,
9	14306424	4	SCREW, Hex Soc Hd, M8 x 25, 8.8,
10	12647004	2	WASHER, M8 x 25 x 2.5,
11	15811387	4	CAP,
12	13276217	2	SCREW, Cross Pan Hd, M6 x 16,
13	5132136	2	COVER,
14	85801827	2	GAS STRUT,
15	14496407	4	WASHER,
16	12574215	4	NUT, LOCK, M6 x 1, Cl 8,
17	85812364	1	RETAINER,
18	16105111	2	NUT, LOCK, M12 x 1.25, Cl 8,

1.92.9(03) REAR WINDOWS

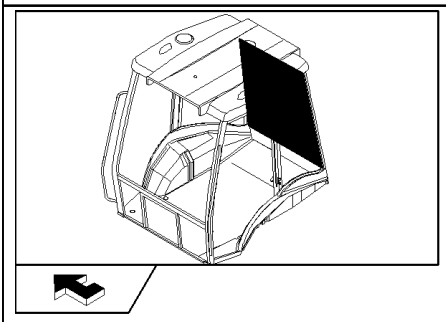

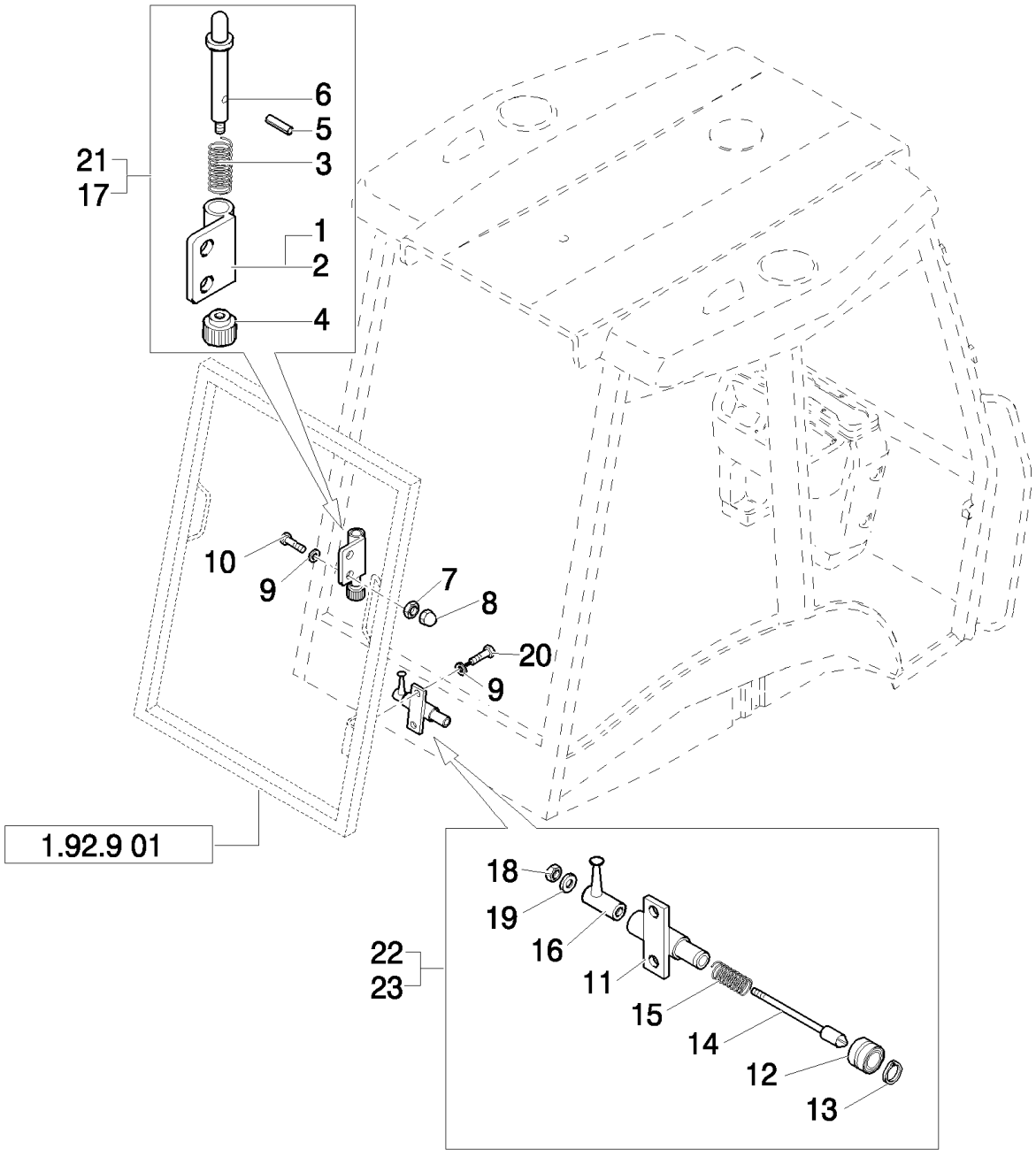

B110 TIER 3 BACKHOE LOADER (2/07-)

1.92.9(03) REAR WINDOWS

Ref	Numero de Pieza	Ctd	Descripción
1	85801831	1	BLOCK, LH
2	85801830	1	BLOCK, RH
3	85801832	2	SPRING,
4	85801833	2	KNOB,
5	14161771	2	PIN, LOCK, M3 x 16, Slotted,
6	85801834	2	PIN,
7	16104111	4	NUT, LOCK, M8 x 1.25, Cl 8,
8	5132136	4	COVER,
9	11198074	8	WASHER, SPRING, Belleville, M8.4,
10	85827836	4	SCREW, Cap, HH, CL 8.8, M8 x 1.25 x 25
11	85801820	1	PIN, RH
11	85801821	1	PIN, LH
12	85802018	2	BEARING, NEEDLE,
13	85802351	2	RING, LOCKING,
14	85801823	2	PIN,
15	85801824	2	SPRING,
16	85801825	2	LATCH,
17	85802345	2	HINGE, LH
18	12574111	2	NUT, LOCK, M5 x .8, Cl 8,
19	12637821	2	WASHER, M5 x 11 x 1,
20	16043624	4	BOLT, Hex, M8 x 25, 8.8, Full Thd,
21	85802344	4	HINGE, RH
22	85802346	1	BLOCK, RH
23	85802347	1	BLOCK, LH

1.93.0(01) CAB / SOFT TRIM (POWER SHUTTLE, POWER SHIFT)

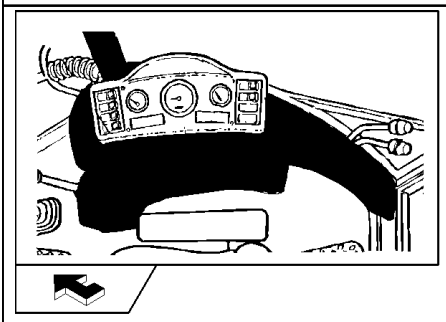

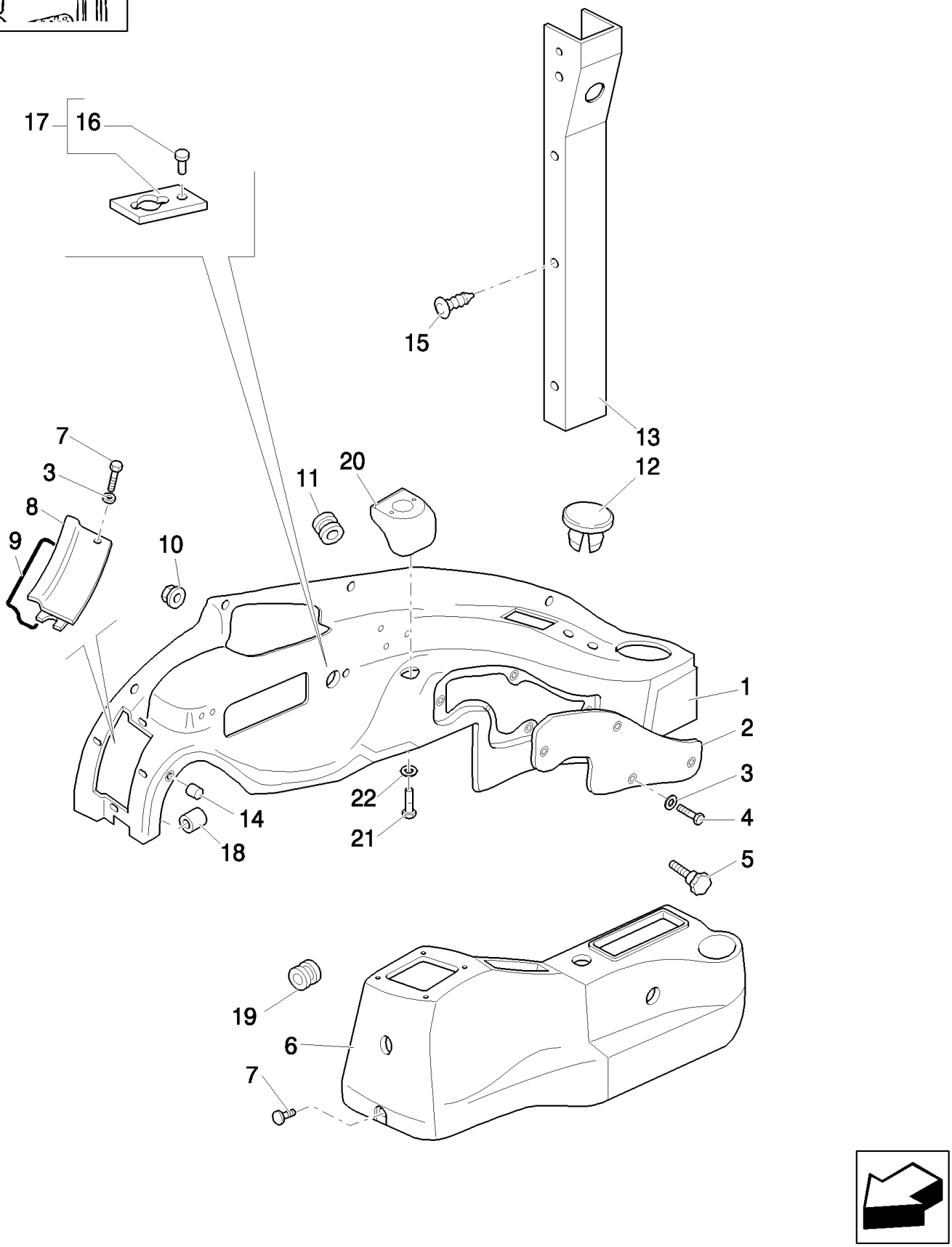

Mechanical Version

B110 TIER 3 BACKHOE LOADER (2/07-)

1.93.0(01) CAB / SOFT TRIM (POWER SHUTTLE, POWER SHIFT)

Ref	Numero de Pieza	Ctd	Descripción
1	87543600	1	SOFT TRIM, , Includes 2, 8, 9, 18
2	85801649	1	SOFT TRIM,
3	12647701	2	WASHER,
4	13311017	5	SCREW, Cross Oval Hd, M5 x 16,
5	85805323	1	KNOB,
6	87319785	1	SOFT TRIM,
7	16043824	AR	BOLT, Hex, M8 x 30, 8.8, Full Thd,
8	85825191	1	COVER,
9	85806023	1	STRIP, SEALING,
10	14084814	5	NUT, M8 x 1.25, Flg,
10	14059314	5	NUT,
11	10398980	1	GROMMET, 46X5
12	79111815	1	PLUG,
13	85819285	1	SOFT TRIM, RH
14	85805819	4	BUSHING, THREADED,
15	81870039	6	FASTENER,
16	10427201	1	RIVET,
17	85827548	1	PLATE,
18	85804750	6	BUSHING, THREADED,
19	87517471	1	RING, INSULATING,
20	87540633	1	DASHBOARD,
21	13274217	2	SCREW, Pan Hd, M5 x 16, 5.8,
22	12647701	2	WASHER,

Mechanical Version

1.93.0(02) CAB / SOFT TRIM (POWER SHUTTLE)

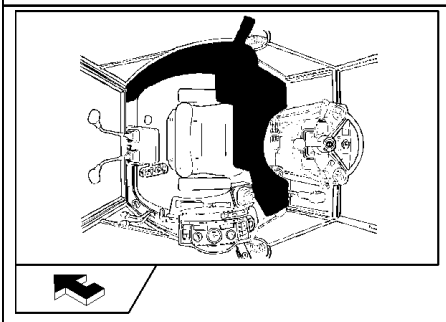

B110 TIER 3 BACKHOE LOADER (2/07-)

1.93.0(02) CAB / SOFT TRIM (POWER SHUTTLE)

Ref	Numero de Pieza	Ctd	Descripción
1	85808460	1	PLUG,
2	12647004	8	WASHER, M8 x 25 x 2.5, D=24
3	13313417	6	SCREW, Cross Oval Hd, M6 x 25,
4	85819287	1	SOFT TRIM, LH
5	5178468	1	COAT HOOK,
6	14084011	1	NUT, M4 x .7, Flg,
7	14059314	4	NUT,
8	10519604	4	WASHER, M8 x 17 x 2,
9	15627011	12	RIVET,
10	83961823	1	STRAP,
11	12638107	1	SPACER, 5X14
12	85806154	1	RIVET,
13	79111978	1	PLUG,
14	5148132	1	NUT, LOCK,
15	5148131	1	HOUSING, 1,2W
16	81870039	6	FASTENER,

Mechanical Version / Pilot Version

1.93.0(03) CAB / SOFT TRIM (POWER SHUTTLE - POWER SHIFT)

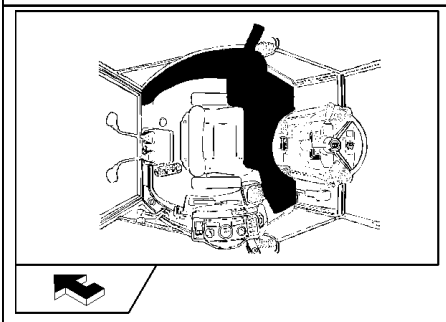

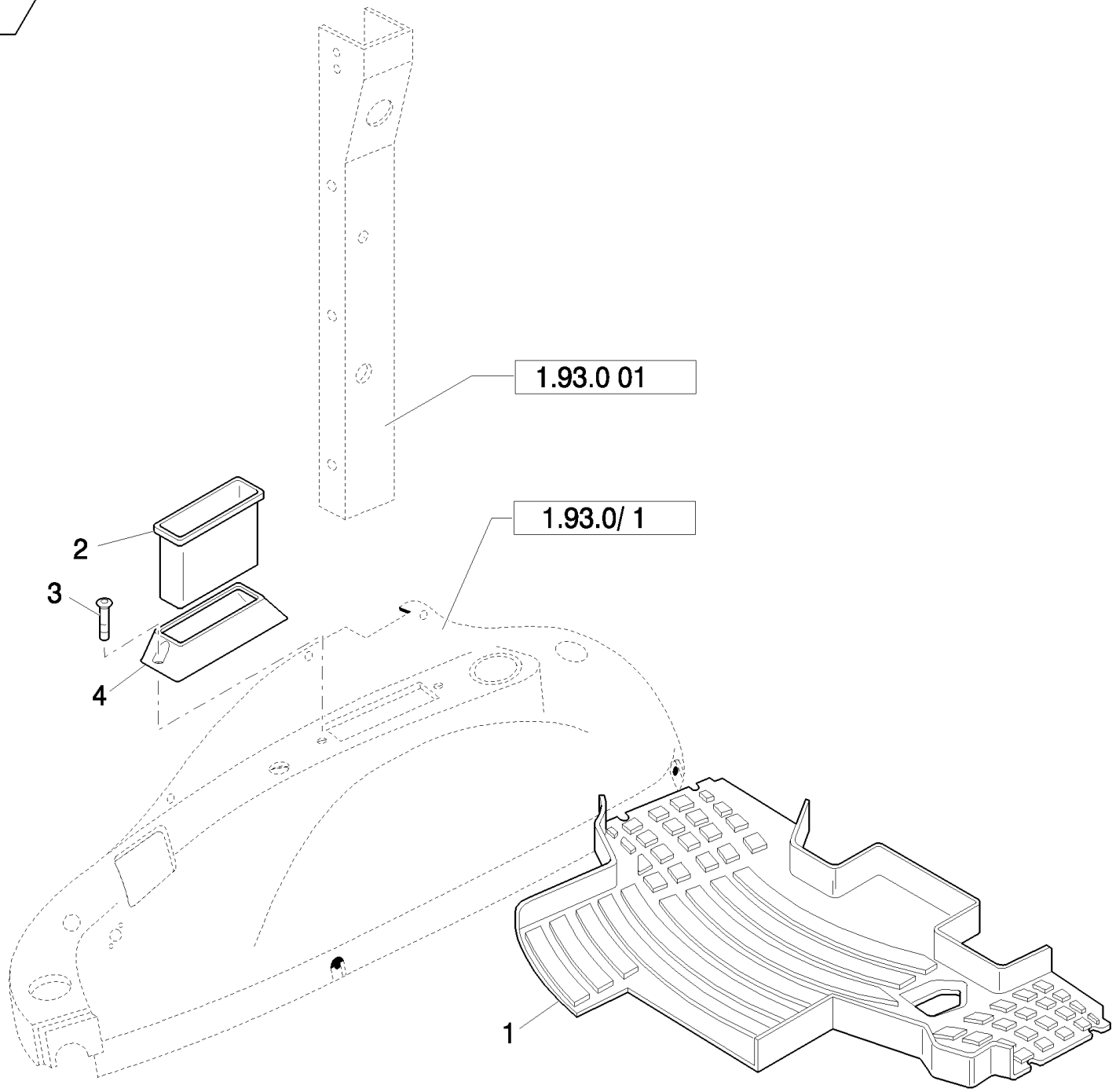

B110 TIER 3 BACKHOE LOADER (2/07-)

1.93.0(03) CAB / SOFT TRIM (POWER SHUTTLE - POWER SHIFT)

Ref	Numero de Pieza	Ctd	Descripción
1	85804867	1	MAT, FLOOR,
1	85804865	1	MAT, FLOOR, , Only for Power shift
2	85801979	1	CONTAINER,
3	13276617	2	SCREW, Cross Pan Hd, M6 x 25,
4	85801651	1	HOUSING,

Mechanical Version / Pilot Version

1.93.0(04) CAB / SOFT TRIM (POWER SHUTTLE, POWER SHIFT)

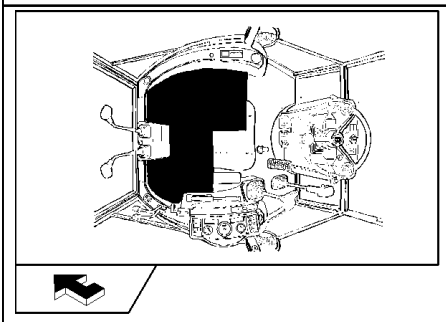

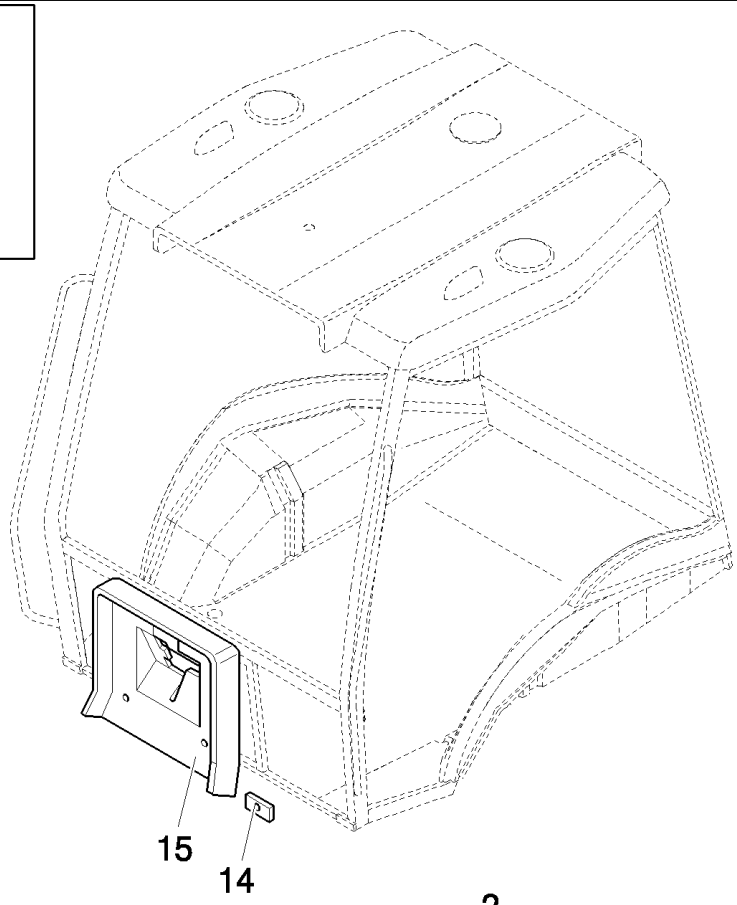

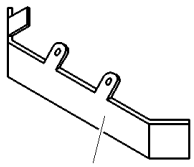

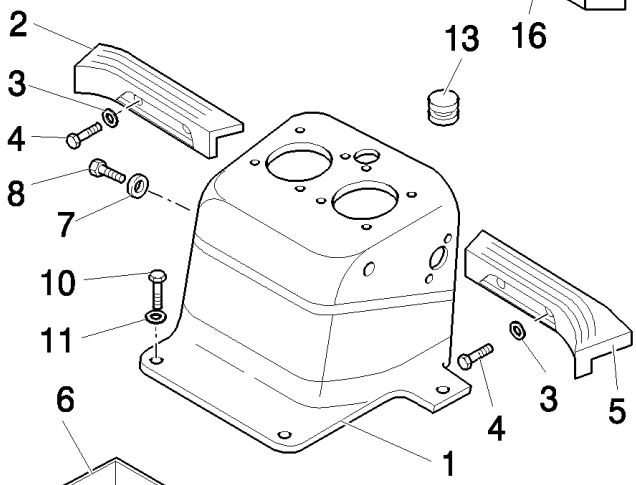

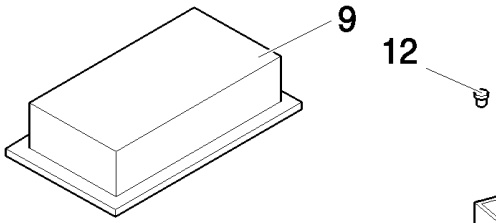

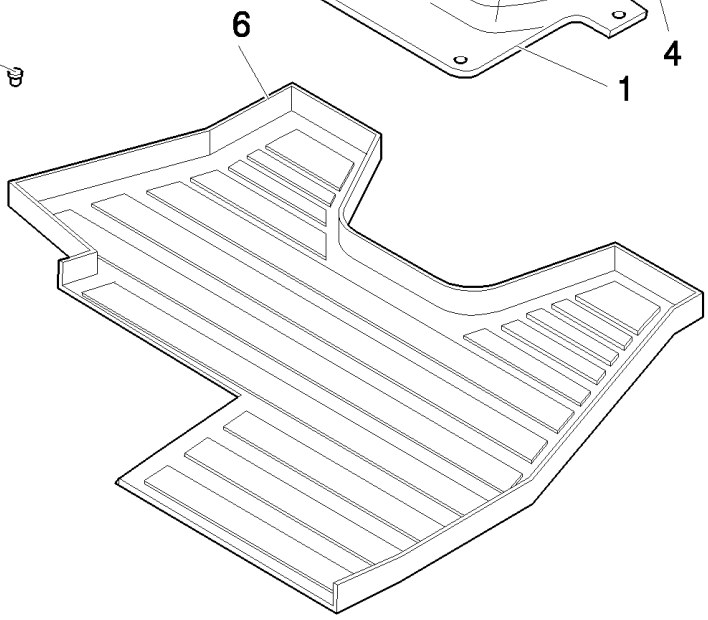

B110 TIER 3 BACKHOE LOADER (2/07-)

1.93.0(04) CAB / SOFT TRIM (POWER SHUTTLE, POWER SHIFT)

Ref	Numero de Pieza	Ctd	Descripción
1	87319801	1	CONSOLE,
2	85804863	1	FOOT REST,
3	10519604	4	WASHER, M8 x 17 x 2,
4	16043824	4	BOLT, Hex, M8 x 30, 8.8, Full Thd,
5	85804864	1	FOOT REST,
6	85804866	1	MAT, FLOOR,
7	79089592	1	WASHER,
8	13311217	1	SCREW, Cross Oval Hd, M5 x 20,
9	4999021	1	GASKET,
10	10902624	4	BOLT, Hex, M6 x 25, 8.8, Full Thd,
11	12640621	4	WASHER, M6 x 25 x 2,
12	87319803	2	PLUG,
13	82001909	1	GROMMET,
14	85812080	4	NUT,
15	87408893	1	PANEL,
16	87323749	1	BRACKET,

Mechanical Version

1.93.0/1(01) CAB / SOFT TRIM (POWER SHIFT - POWER SHUTTLE)

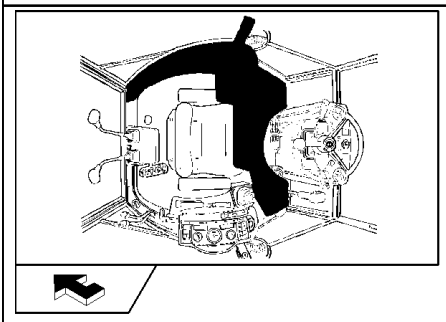

Mechanical Version / Pilot Version

B110 TIER 3 BACKHOE LOADER (2/07-)

1.93.0/1(01) CAB / SOFT TRIM (POWER SHIFT - POWER SHUTTLE)

Ref	Numero de Pieza	Ctd	Descripción
1	87362094	1	SOFT TRIM,
1	87362098	1	SOFT TRIM, , Only Power Shuttle
2	12647004	8	WASHER, M8 x 25 x 2.5, D=24
3	13313417	6	SCREW, Cross Oval Hd, M6 x 25,
4	85819287	1	SOFT TRIM, LH
5	5178468	1	COAT HOOK,
6	14084011	1	NUT, M4 x .7, Flg,
7	14059314	4	NUT, M8
7	14084814	4	NUT, M8 x 1.25, Flg, M8, Only Power Shuttle
8	85801991	4	WASHER,
9	15627011	6	RIVET,
10	83961823	1	STRAP,
11	12638107	1	SPACER, 5X14
12	85806154	1	RIVET,
13	79111978	1	PLUG,
14	5148132	1	NUT, LOCK,
15	5148131	1	HOUSING,
16	81870039	6	FASTENER,
17	12574211	1	NUT, LOCK, M6 x 1, Cl 8,
18	85808460	1	PLUG,

Mechanical Version / Pilot Version

1.93.0/2(01) CAB / SOFT TRIM (POWER SHUTTLE, POWER SHIFT)

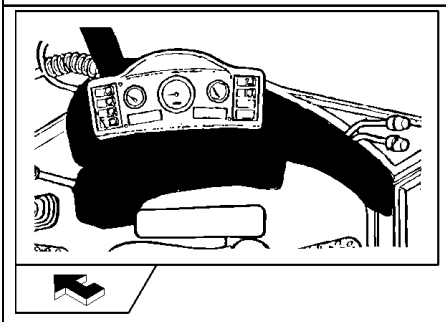

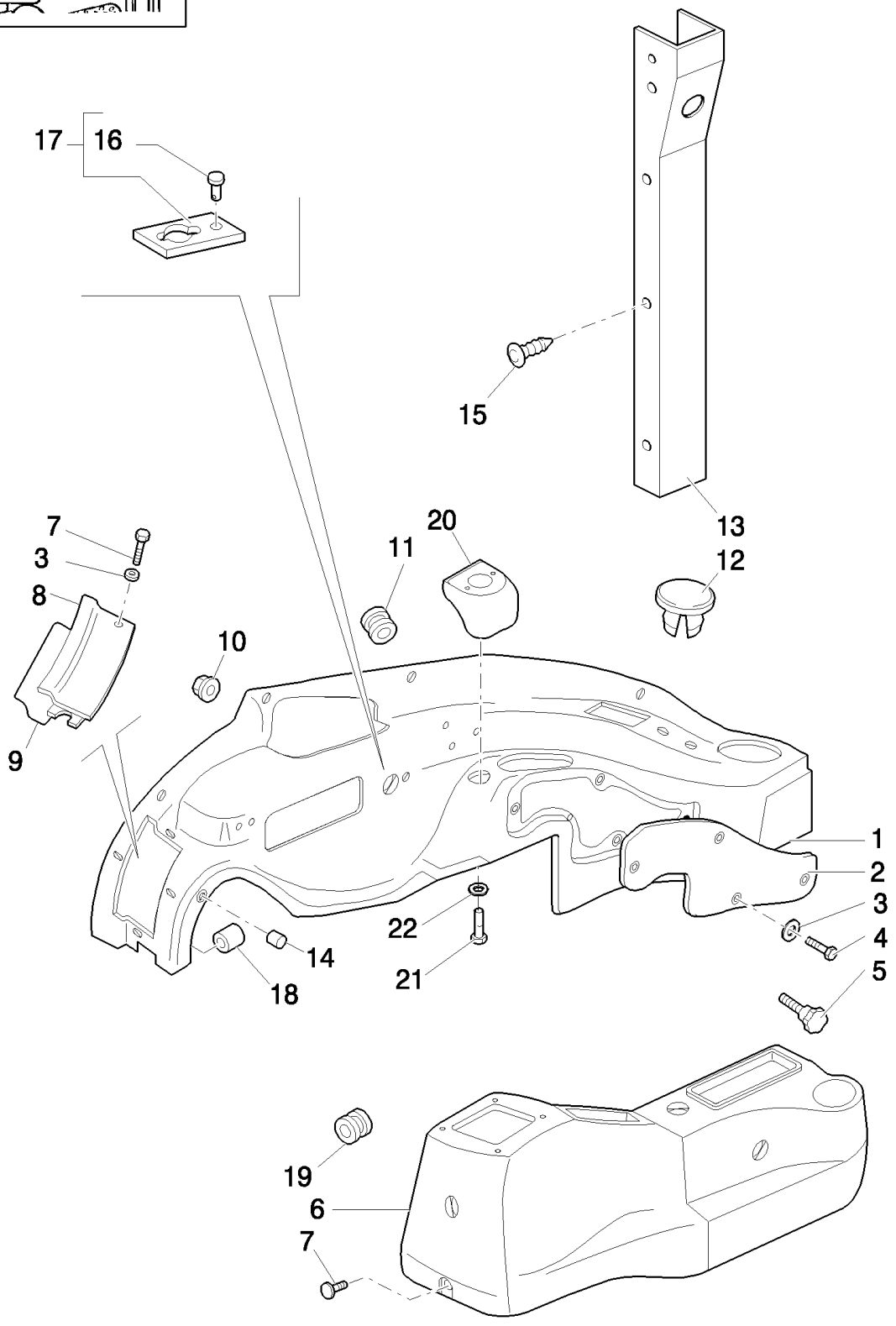

Pilot Control Version

B110 TIER 3 BACKHOE LOADER (2/07-)

1.93.0/2(01) CAB / SOFT TRIM (POWER SHUTTLE, POWER SHIFT)

Ref	Numero de Pieza	Ctd	Descripción
1	87543654	1	SOFT TRIM, , Includes 2, 8, 9, 14, 18
2	85801649	1	SOFT TRIM,
3	12647701	2	WASHER,
4	13311217	5	SCREW, Cross Oval Hd, M5 x 20,
5	85805323	1	KNOB,
6	87319785	1	SOFT TRIM,
7	13311017	AR	SCREW, Cross Oval Hd, M5 x 16,
8	85825191	1	COVER,
9	85806023	1	STRIP, SEALING,
10	14084814	5	NUT, M8 x 1.25, Flg,
10	14059314	5	NUT, M8, Only for Power Shift
11	10398980	1	GROMMET, 46X5
12	79111815	1	PLUG,
13	85819285	1	SOFT TRIM, RH
14	85805819	4	BUSHING, THREADED,
15	81870039	6	FASTENER,
16	10427201	1	RIVET,
17	85827548	1	PLATE,
18	85804750	6	BUSHING, THREADED,
19	87517471	1	RING, INSULATING,
20	87540633	1	DASHBOARD,
21	13274217	2	SCREW, Pan Hd, M5 x 16, 5.8,
22	12647701	2	WASHER,

Pilot Control Version

1.93.0/2(02) CAB / SOFT TRIM (POWER SHUTTLE, POWER SHIFT)

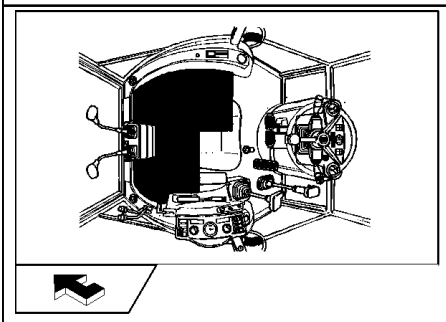

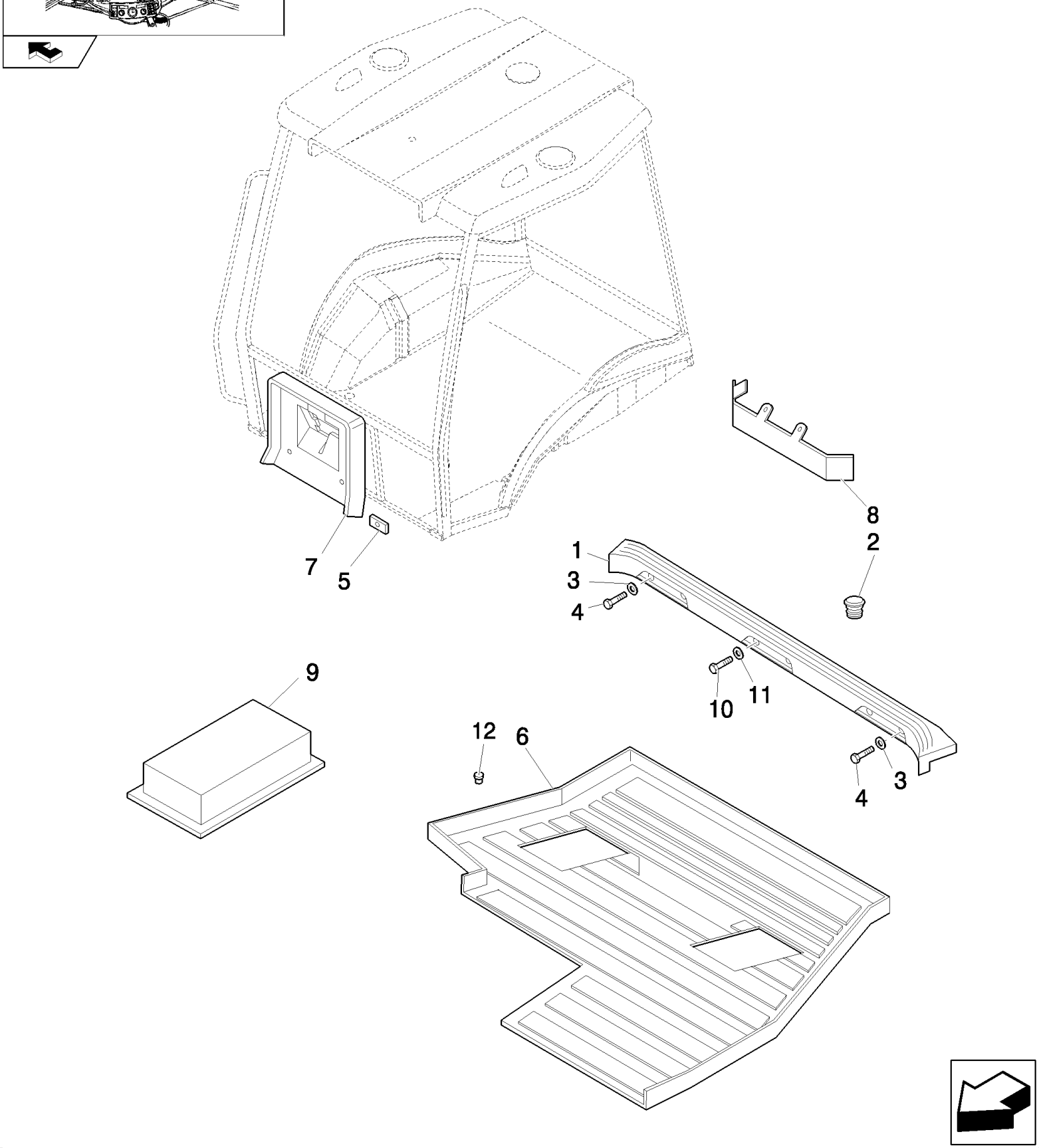

B110 TIER 3 BACKHOE LOADER (2/07-)

1.93.0/2(02) CAB / SOFT TRIM (POWER SHUTTLE, POWER SHIFT)

Ref	Numero de Pieza	Ctd	Descripción
1	87410385	1	PANEL,
2	82001909	1	GROMMET,
3	10519604	4	WASHER, M8 x 17 x 2,
4	16043824	4	BOLT, Hex, M8 x 30, 8.8, Full Thd,
5	85812080	1	NUT,
6	87410108	1	MAT,
7	87408893	1	PANEL,
8	87323749	10	BRACKET,
9	4999021	1	GASKET,
10	10902624	4	BOLT, Hex, M6 x 25, 8.8, Full Thd,
11	12640621	4	WASHER, M6 x 25 x 2,
12	87319803	10	PLUG,

1.93.0/3(01) RH & BACKHOE CONSOLE TRIM, ROPS (CENTER PIVOT) - NA

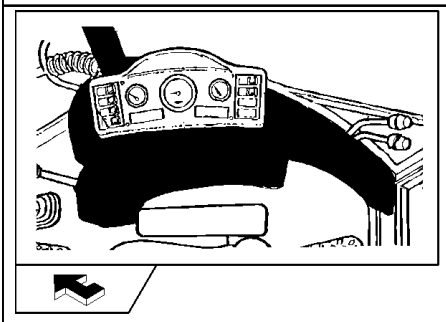

Mechanical Version

B110 TIER 3 BACKHOE LOADER (2/07-)

1.93.0/3(01) RH & BACKHOE CONSOLE TRIM, ROPS (CENTER PIVOT) - NA

Ref	Numero de Pieza	Ctd	Descripción
1	87543716	1	SOFT TRIM, , Includes 2, 8, 9, 18, 29
2	85801649	1	SOFT TRIM,
3	85801991	AR	WASHER,
4	13311217	5	SCREW, Cross Oval Hd, M5 x 20,
5	85805323	1	KNOB,
6	85805803	1	UTILITY HOLDER,
7	16043424	4	SCREW, Hex, M8 x 20, 8.8, Full Thd,
8	85825191	1	COVER, Fuse Panel
9	85806023	1	STRIP, SEALING,
10	14084814	5	NUT, M8 x 1.25, Flg,
11	85805308	1	GASKET,
12	79111815	1	PLUG,
13	79089592	2	WASHER, D=24
14	13311017	4	SCREW, Cross Oval Hd, M5 x 16,
15	85812081	1	GASKET,
16	10427201	1	RIVET,
17	85827548	1	PLATE,
18	85804750	6	BUSHING, THREADED,
19	85827817	1	BLISTER,
20	85808460	1	PLUG,
21	14441521	2	BOLT, Hex Soc Flat Hd, M6 x 25, 8.8,
22	11193974	4	WASHER, SPRING, Belleville, M8.4,
23	79111978	1	PLUG,
24	82001909	1	GROMMET,
25	4999021	1	GASKET,
26	87540633	1	DASHBOARD,
27	12647701	2	WASHER,
28	13274217	2	SCREW, Pan Hd, M5 x 16, 5.8,
29	85805819	4	BUSHING, THREADED,
30	85819016	1	GASKET,

Mechanical Version

1.93.0/4(01) MACHINES SOFT TRIMS (ROPS) - NA

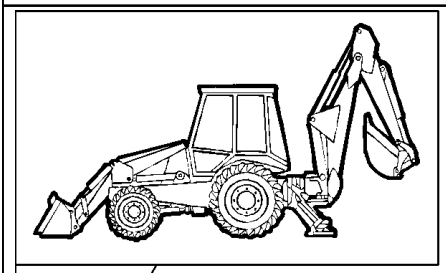

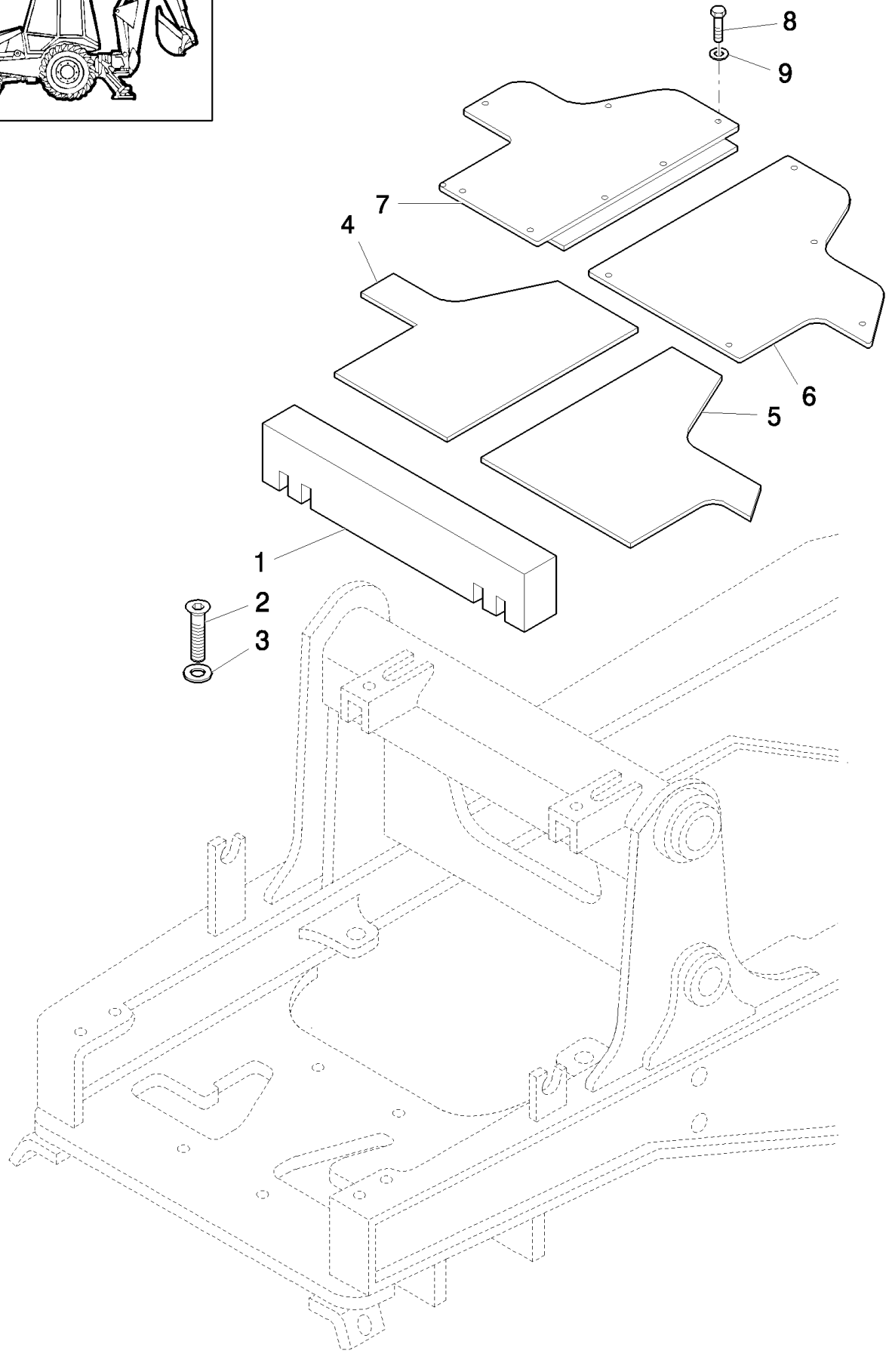

B110 TIER 3 BACKHOE LOADER (2/07-)

1.93.0/4(01) MACHINES SOFT TRIMS (ROPS) - NA

Ref	Numero de Pieza	Ctd	Descripción
1	85817287	1	GASKET,
2	13311217	5	SCREW, Cross Oval Hd, M5 x 20,
3	85801991	5	WASHER,
4	87442379	1	MAT,
5	87442378	1	MAT,
6	87426546	1	COVER, TOP,
7	87426550	1	COVER, TOP, RH
8	10902524	10	BOLT, Hex, M6 x 22, 8.8, Full Thd,
9	11193274	10	WASHER, SPRING, Belleville, M6.4,

1.93.4(01) REAR MIRROR - SUN SCREEN

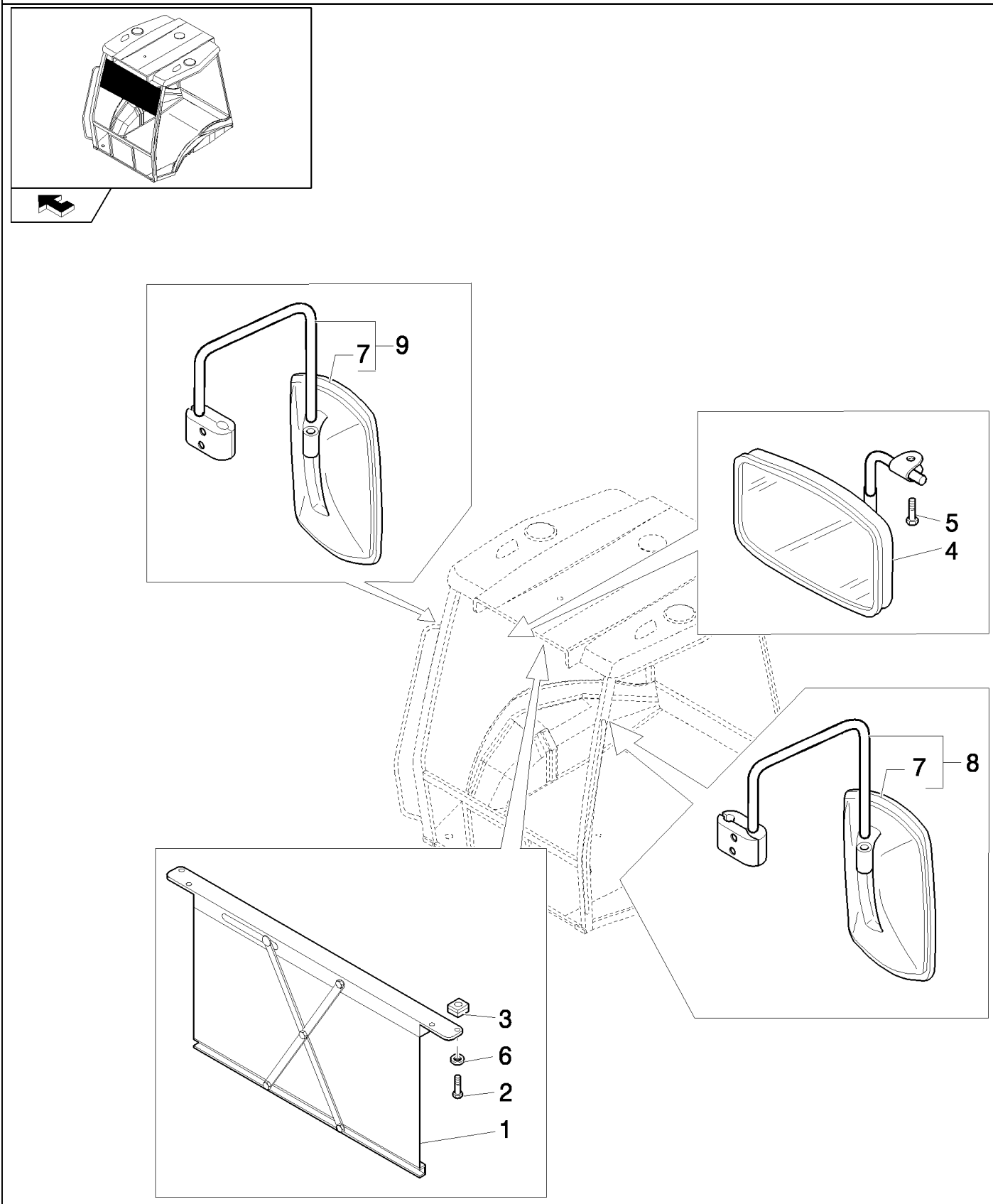

B110 TIER 3 BACKHOE LOADER (2/07-)

1.93.4(01) REAR MIRROR - SUN SCREEN

Ref	Numero de Pieza	Ctd	Descripción
1	5176441	1	SUN CURTAIN,
2	14303324	4	SCREW, Hex Soc Hd, M4 x 20, 8.8, Full Thd,
3	14197790	4	NUT, M4 x .7, Cage,
4	83995298	1	MIRROR, REAR-VIEW,
5	13313417	1	SCREW, Cross Oval Hd, M6 x 25,
6	12642821	4	WASHER, M4 x 12 x 1,
7	85820138	2	MIRROR, REAR-VIEW,
8	85820139	1	MIRROR, LH,
9	85820136	1	MIRROR, RH,

1.93.5(01) CAB / PANEL DASH

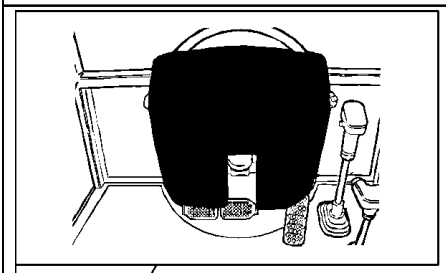

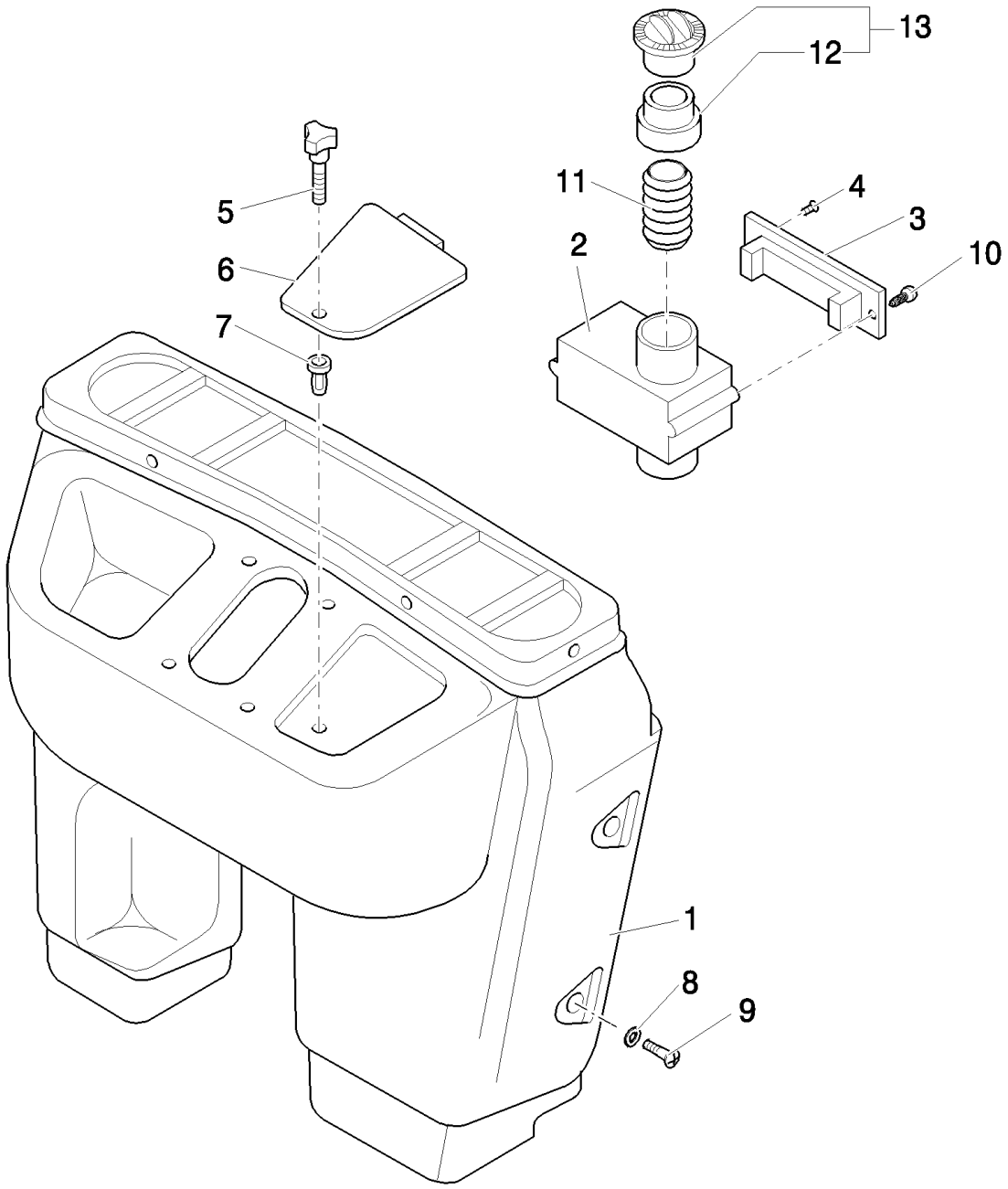

B110 TIER 3 BACKHOE LOADER (2/07-)

1.93.5(01) CAB / PANEL DASH

Ref	Numero de Pieza	Ctd	Descripción
1	85819289	1	PANEL, DASH, Assy, Includes 2 To 7, Only for B110 (EU) - B110 (NA)
1	85819291	1	PANEL, DASH, , Includes 2 To 7, Only for B115 (EU) - B115 (NA)
2	85819567	2	DUCT, AIR,
3	85819454	2	DIFFUSER,
4	14440327	4	SCREW, Hex Soc Flat Hd, M4 x 20, 8.8,
5	85805323	1	KNOB, M5
6	85806089	1	COVER,
7	85804750	5	BUSHING, THREADED, M5
8	79089592	AR	WASHER, D=24
9	79105220	AR	SCREW, LOCK, Cross Oval Csk Hd, M6 x 20,
10	14568887	4	FASTENER, 8X20
11	85819592	2	SLEEVE,
12	87362071	2	REDUCER,
13	87362065	2	DIFFUSER,

1.93.5(02) CAB / PANEL DASH

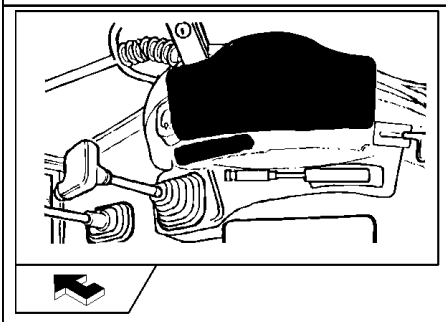

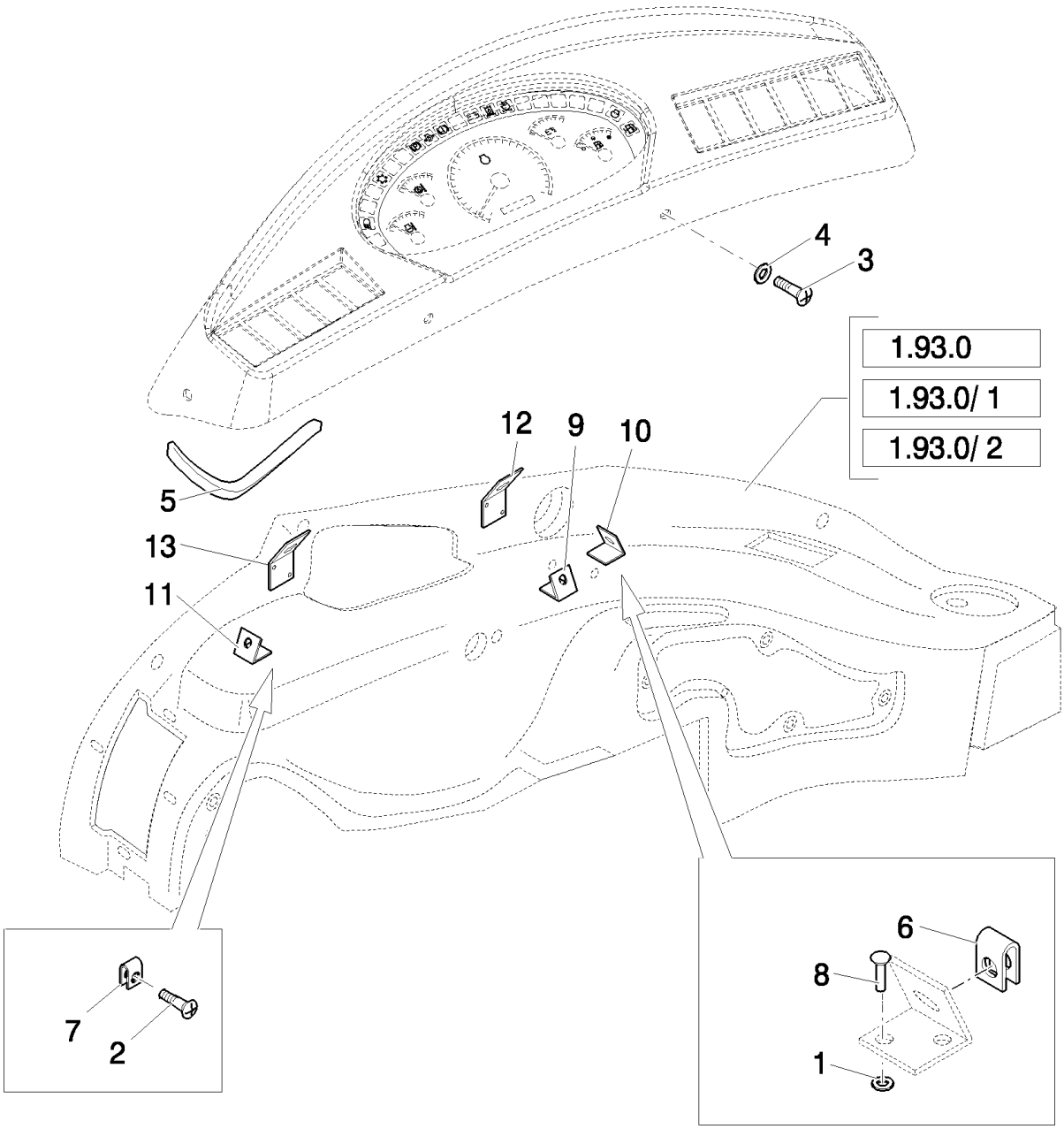

B110 TIER 3 BACKHOE LOADER (2/07-)

1.93.5(02) CAB / PANEL DASH

Ref	Numero de Pieza	Ctd	Descripción
1	12642804	12	WASHER, M4 x 12 x 1,
2	13311017	4	SCREW, Cross Oval Hd, M5 x 16, CAB
3	15693507	AR	SCREW, SELF TAPPING, Cross Oval Hd, M4.8 x 22,
4	85801991	AR	WASHER,
5	87552670	1	SEAL,
6	14189176	6	NUT, J, #10,
7	85802145	2	BRACKET, CAB
8	14642191	12	RIVET,
9	85802142	2	BRACKET,
10	85802143	1	BRACKET,
11	85802144	1	BRACKET,
12	85802145	1	BRACKET,
13	87551537	1	BRACKET,

1.93.5/1(01) FRONT CONSOLE - ROPS (POWER SHUTTLE) - NA

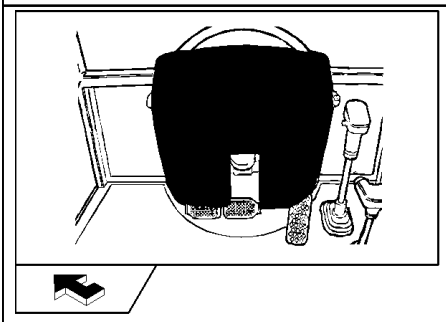

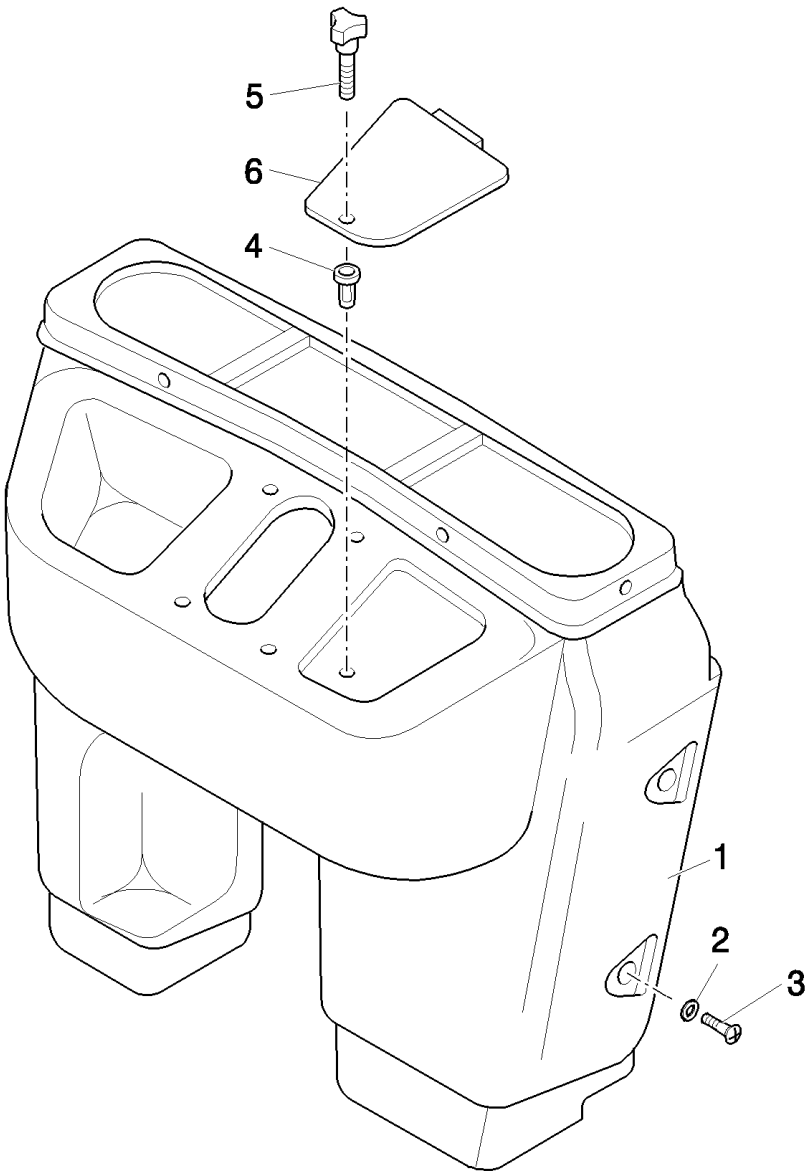

B110 TIER 3 BACKHOE LOADER (2/07-)

1.93.5/1(01) FRONT CONSOLE - ROPS (POWER SHUTTLE) - NA

Ref	Numero de Pieza	Ctd	Descripción
1	85819407	1	PANEL, DASH, Assy, ROPS, Includes 4 to 6
2	79089592	5	WASHER, D=24
3	13311214	4	SCREW, Cross Oval Hd, M5 x 20, M6X20
4	85804750	5	BUSHING, THREADED, M5
5	85805323	1	KNOB, M5
6	85806089	1	COVER,

1.93.5/1(02) RH SIDE CONSOLE SEAL & CLIPS - ROPS (POWER SHUTTLE) - NA

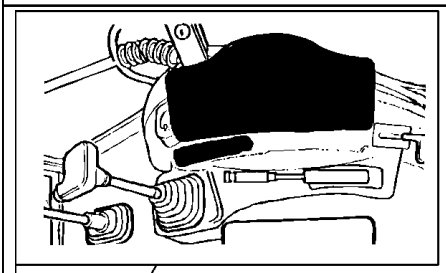

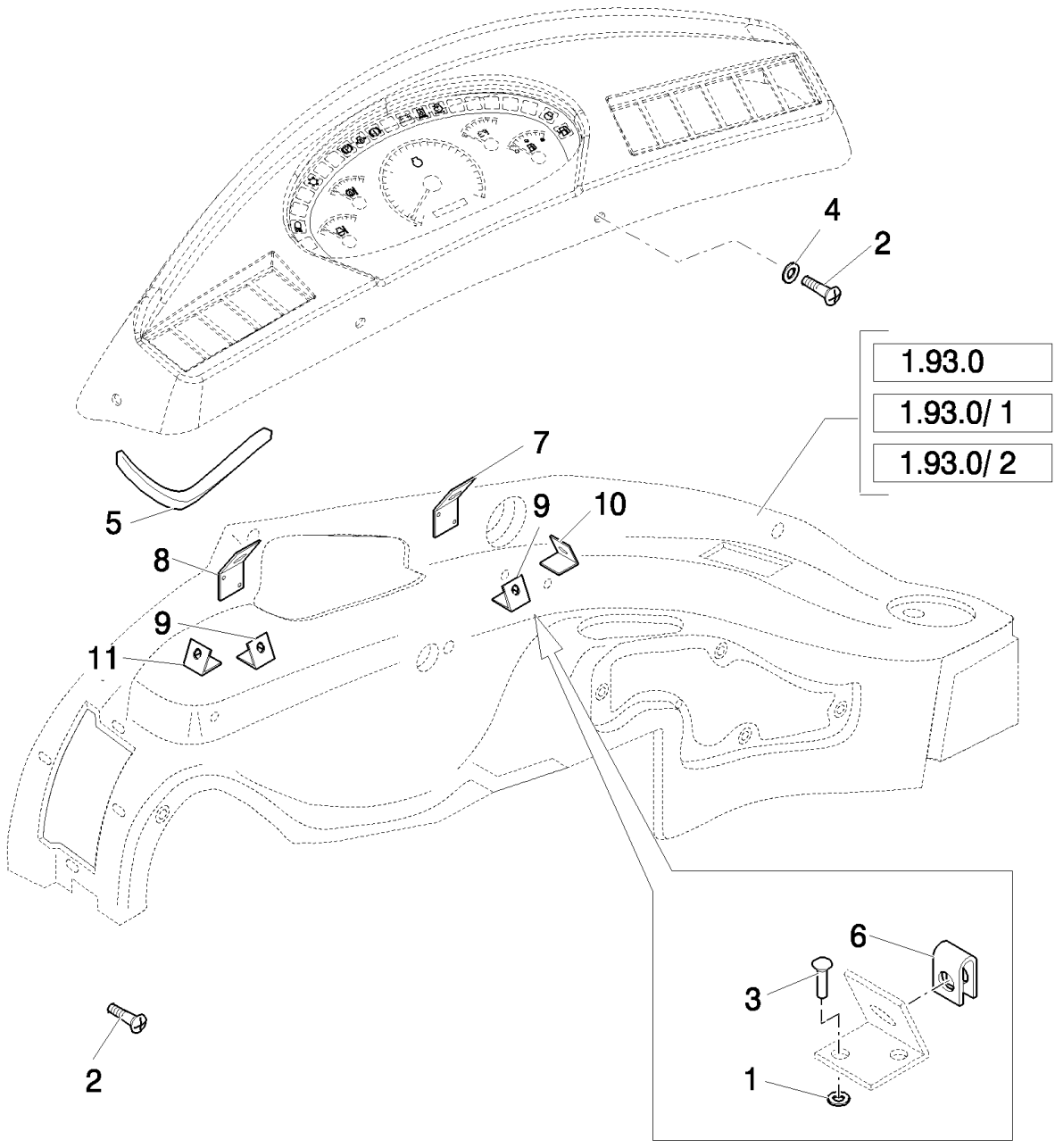

B110 TIER 3 BACKHOE LOADER (2/07-)

1.93.5/1(02) RH SIDE CONSOLE SEAL & CLIPS - ROPS (POWER SHUTTLE) - NA

Ref	Numero de Pieza	Ctd	Descripción
1	12642804	12	WASHER, M4 x 12 x 1,
2	15693507	AR	SCREW, SELF TAPPING, Cross Oval Hd, M4.8 x 22,
3	14642191	12	RIVET,
4	85801991	AR	WASHER,
5	87552670	1	SEAL,
6	14189176	6	NUT, J, #10,
7	85802145	1	BRACKET,
8	87551537	1	BRACKET,
9	85802142	2	BRACKET,
10	85802143	1	BRACKET,
11	85802144	1	BRACKET,

1.93.7(01) INNER REAR VIEW MIRROR (POWER SHUTTLE) ROPS - NA

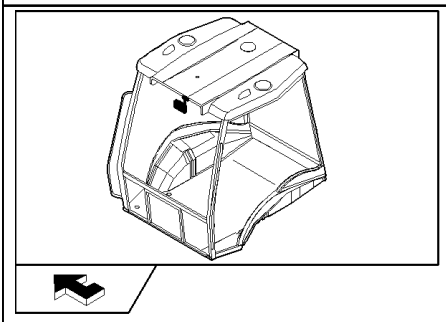

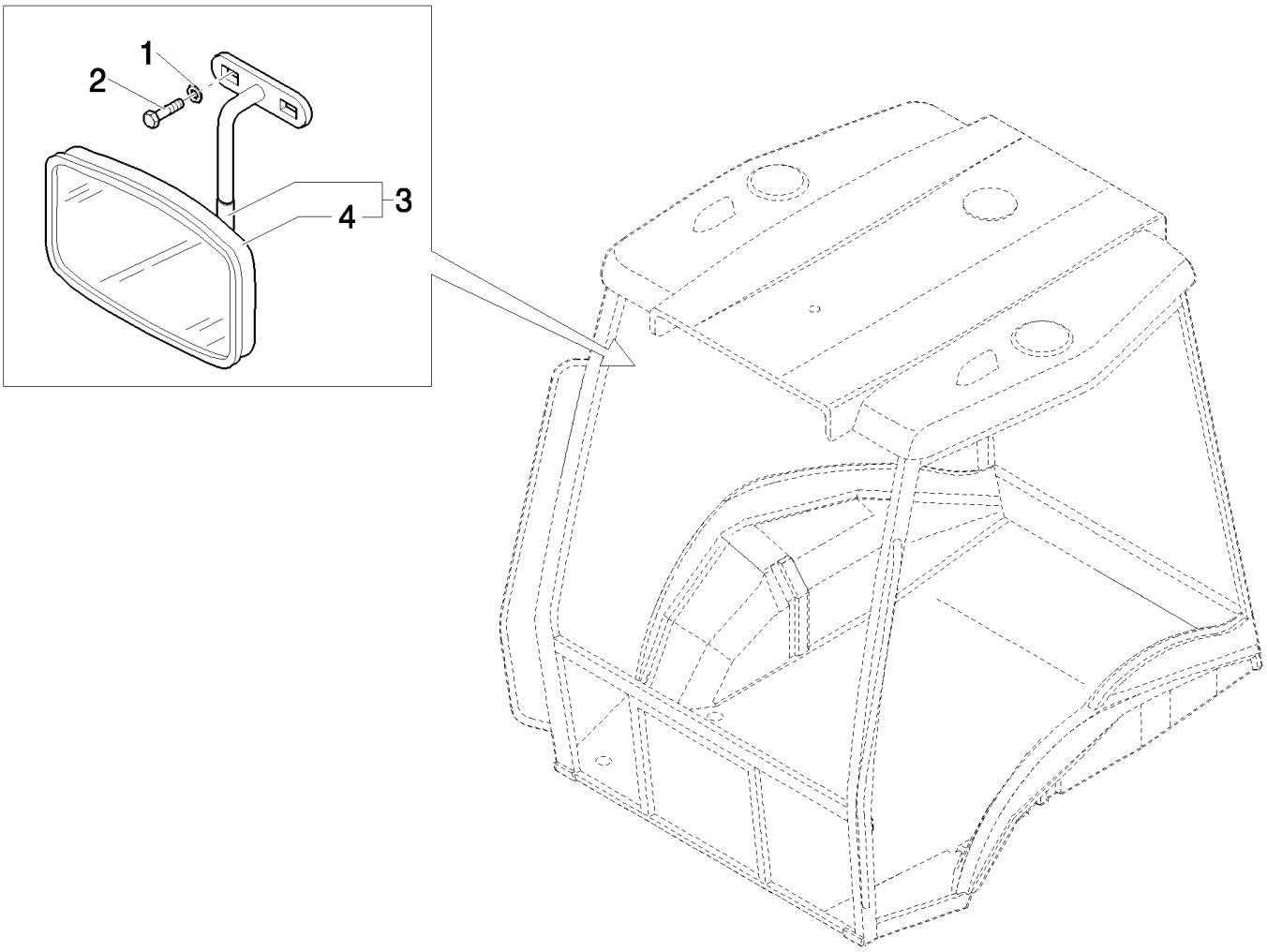

B110 TIER 3 BACKHOE LOADER (2/07-)

1.93.7(01) INNER REAR VIEW MIRROR (POWER SHUTTLE) ROPS - NA

Ref	Numero de Pieza	Ctd	Descripción
1	11193274	2	WASHER, SPRING, Belleville, M6.4,
2	10902424	2	BOLT, Hex, M6 x 20, 8.8, Full Thd,
3	85817685	1	MIRROR, REAR-VIEW,
4	85817686	1	MIRROR, REAR-VIEW,

1.94.0(01) CAB/ CANOPY

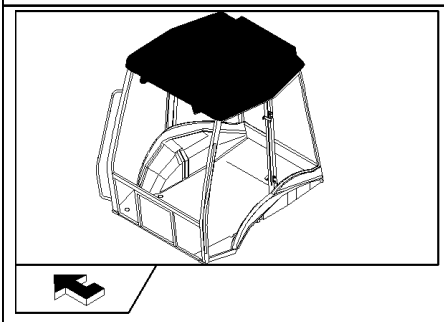

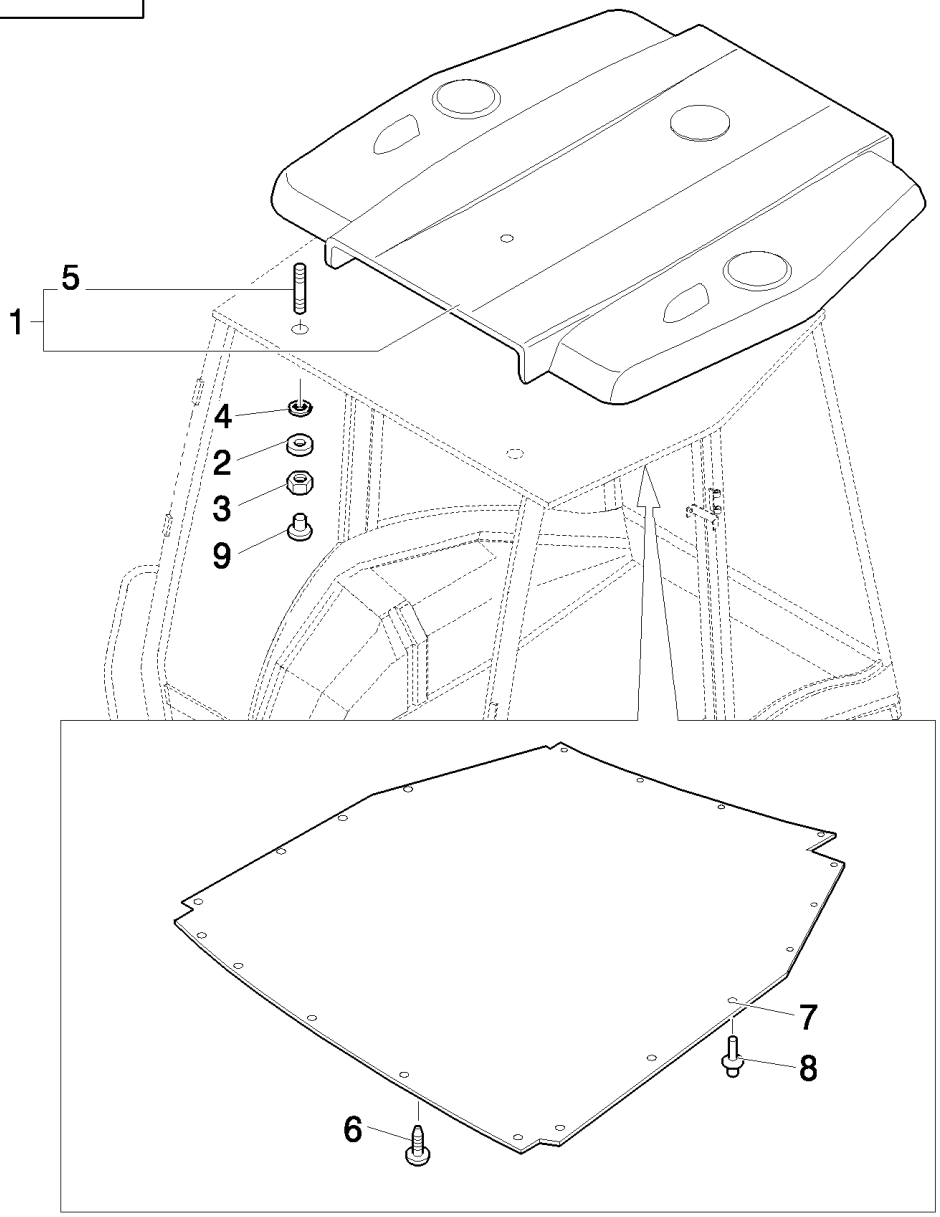

B110 TIER 3 BACKHOE LOADER (2/07-)

1.94.0(01) CAB/ CANOPY

Ref	Numero de Pieza	Ctd	Descripción
1	87315646	1	ROOF, , Only for EUROPE Version
1	87349055	1	ROOF, , Only for NA Version
2	12647004	8	WASHER, M8 x 25 x 2.5,
3	16104111	8	NUT, LOCK, M8 x 1.25, Cl 8,
4	85801801	8	GASKET,
5	13517021	8	STUD,
6	85805777	1	PLUG,
7	87319727	1	SOFT TRIM,
8	5162852	21	FASTENER,
9	87350247	8	PLUG, , Only for NA Version

B110 TIER 3 BACKHOE LOADER (2/07-)

1.94.0/1(01) ROOF - NA

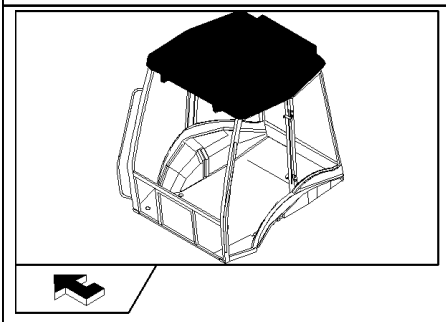

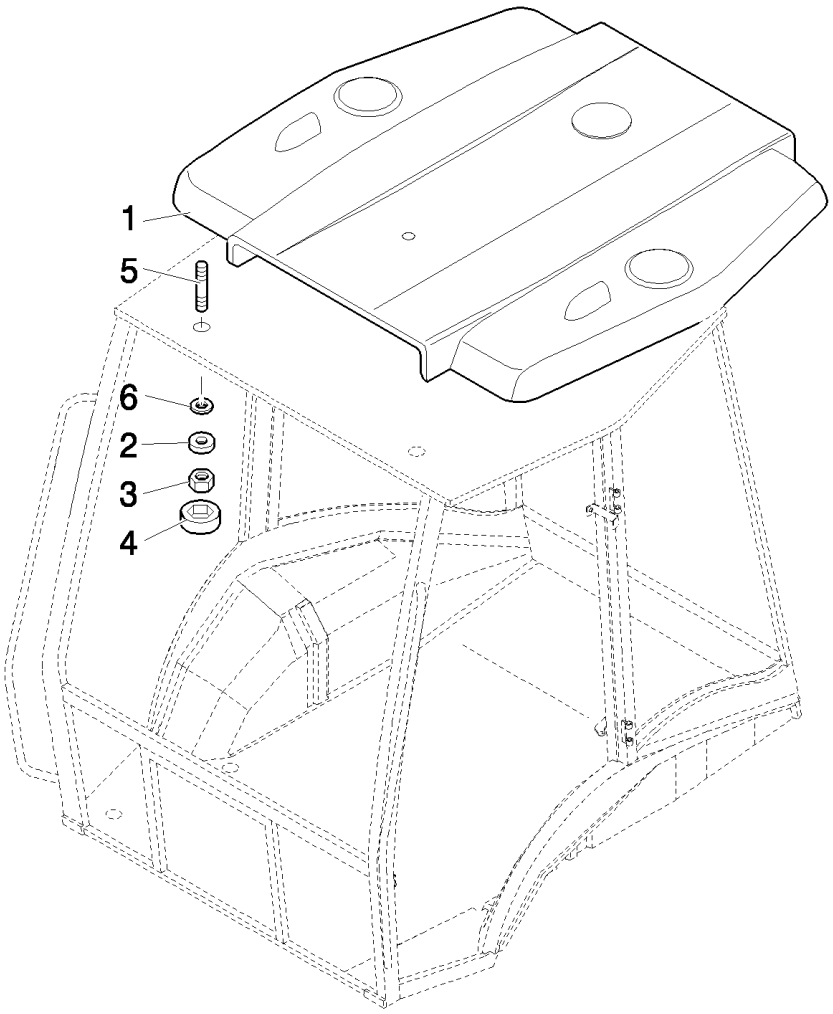

B110 TIER 3 BACKHOE LOADER (2/07-)

1.94.0/1(01) ROOF - NA

Ref	Numero de Pieza	Ctd	Descripción
1	87349058	1	ROOF, , Includes 5, Only for Rops
1	87349055	1	ROOF, , Only for Cab, Includes 5
2	12647004	8	WASHER, M8 x 25 x 2.5,
3	16104111	8	NUT, LOCK, M8 x 1.25, Cl 8,
4	87350247	8	PLUG,
5	13517021	8	STUD,
6	85801801	8	GASKET,

B110 TIER 3 BACKHOE LOADER (2/07-)

1.94.2(01) HEATER WATER HOSES

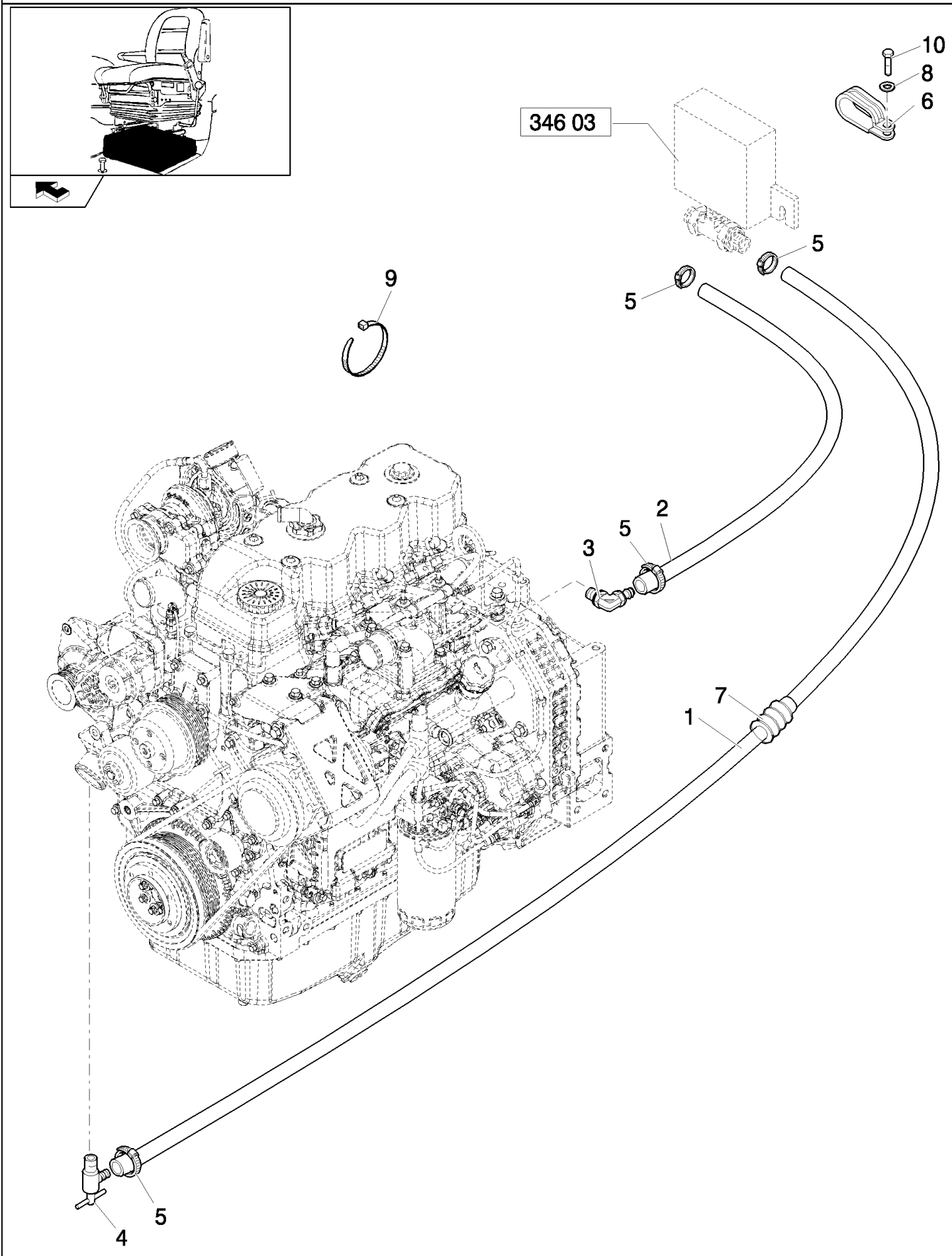

B110 TIER 3 BACKHOE LOADER (2/07-)

1.94.2(01) HEATER WATER HOSES

Ref	Numero de Pieza	Ctd	Descripción
1	87324991	1	HOSE, FLEXIBLE,
2	87553661	1	HOSE,
3	87550746	1	FITTING,
4	47048896	1	VALVE, HYDRAULIC,
5	85803079	4	CLAMP, HOSE,
6	85802890	3	CLAMP,
7	87345955	1	SHIELD,
8	47044673	1	WASHER,
9	47048451	4	STRAP, CABLE, M8 x 384,
10	11112221	1	BOLT, Hex, M12 x 25, 8.8, Full Thd,

1.95.0(01) CAB-SAFETY FRAME / BRAKE PEDAL

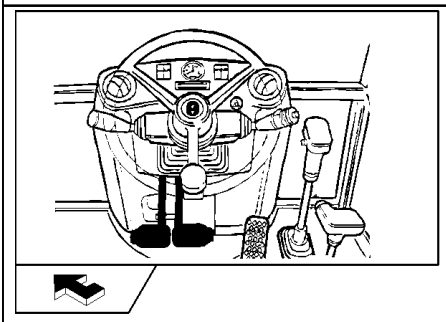

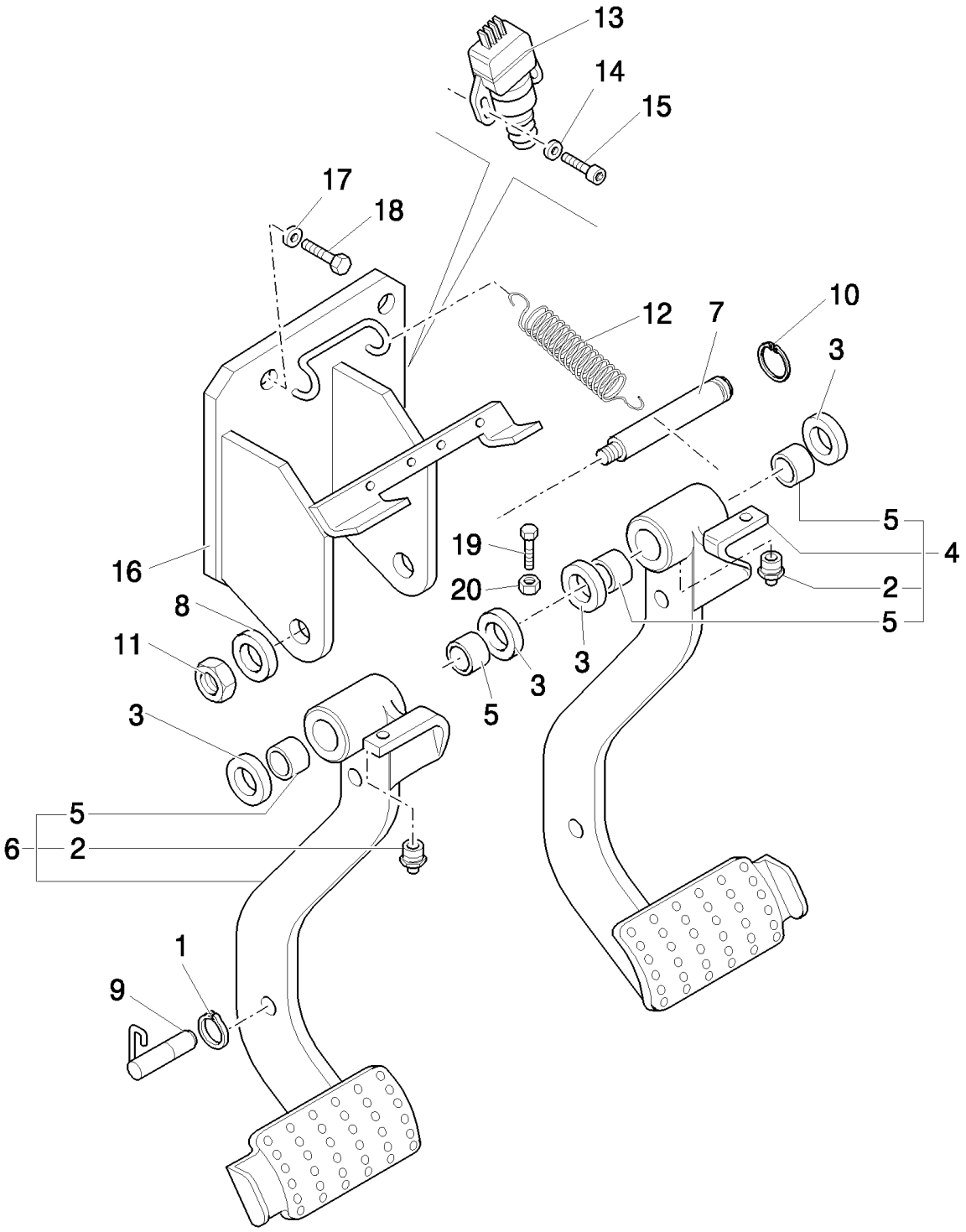

B110 TIER 3 BACKHOE LOADER (2/07-)

1.95.0(01) CAB-SAFETY FRAME / BRAKE PEDAL

Ref	Numero de Pieza	Ctd	Descripción
1	11088176	1	CIRCLIP, M11,
2	13407214	2	NIPPLE, LUBE,
3	5148062	4	WASHER,
4	85805285	1	PEDAL, RH
5	4983992	4	BEARING, NEEDLE,
6	85805283	1	PEDAL, LH
7	85801860	1	PIN,
8	10517274	1	WASHER, LOCK,
9	87517988	1	BLOCK,
10	11067376	1	RING, SNAP, M25, Ext,
11	12164114	1	NUT, M16 x 1.5
12	5153180	1	SPRING,
13	82026949	2	SWITCH, Brake
14	12642821	4	WASHER, M4 x 12 x 1, W/Cab
15	14303324	4	SCREW, Hex Soc Hd, M4 x 20, 8.8, Full Thd, W/Cab
16	85805277	1	SUPPORT,
17	11190574	4	WASHER, SPRING, Belleville, M10.5,
18	15970524	4	BOLT, Hex, M10 x 1.25 x 20, 8.8, Full Thd,
19	16043921	2	SCREW, M8 x 1,25 x 35
20	11701621	2	NUT, M8, Cl 10,

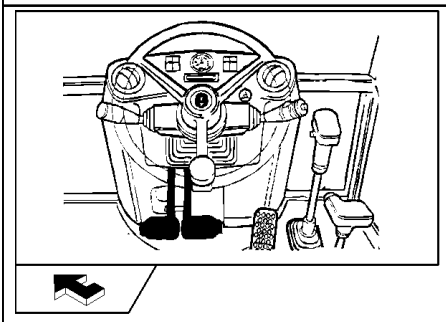

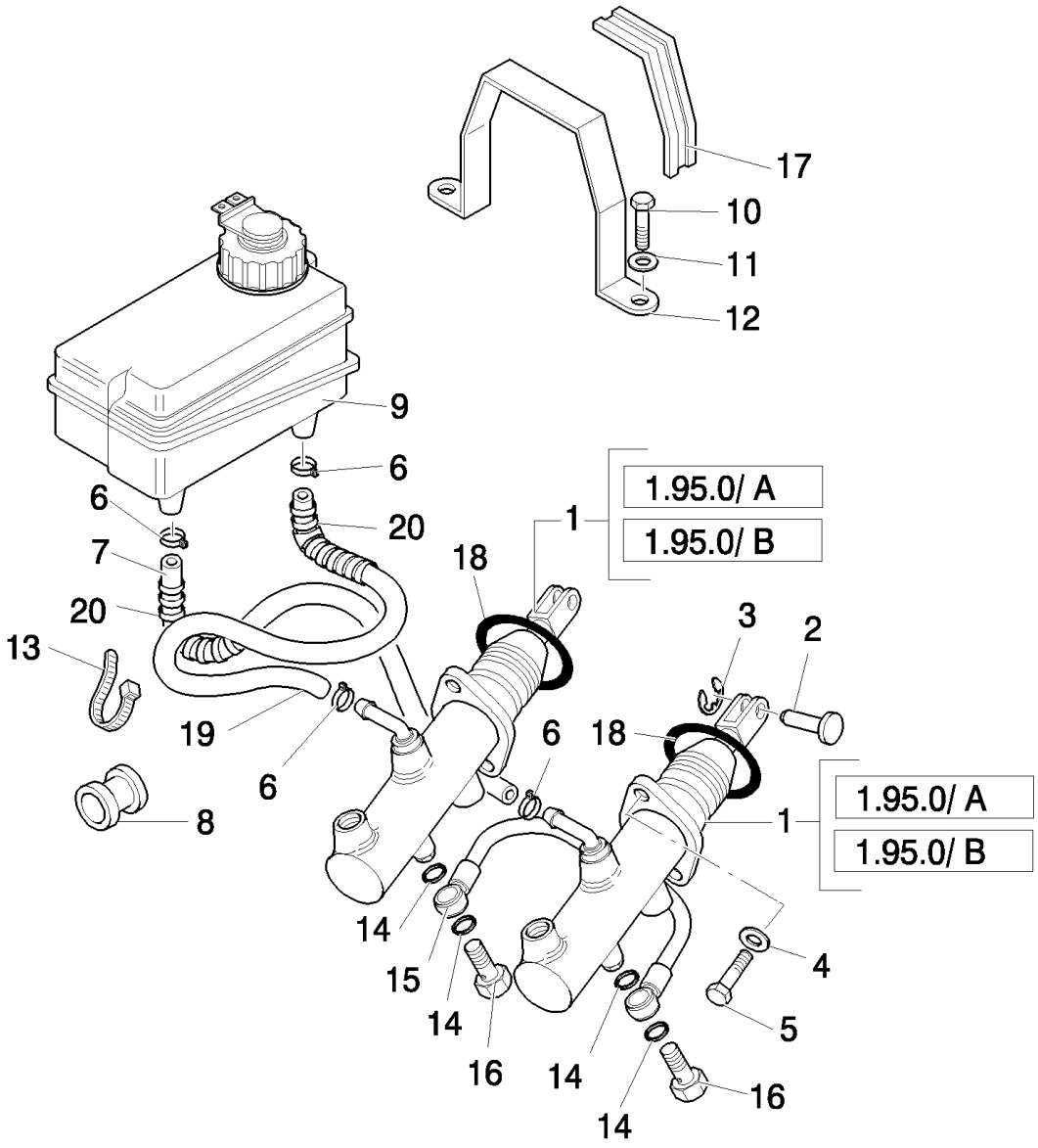
17
10
11
12
9
6
6
20
7
20
13
19
6
8
1
1.95.0/ A
1.95.0/ B
18
3
2
18
6
1
1.95.0/ A
1.95.0/ B
14
15
14
16
14
16
14
4
5

B110 TIER 3 BACKHOE LOADER (2/07-)

1.95.0(02) CAB-SAFETY FRAME / BRAKE PEDAL

Ref	Numero de Pieza	Ctd	Descripción
1	87398198	2	BRAKE CYLINDER, , Only for B110
1	85824114	2	PUMP, HYDRAULIC, , Only for B115
2	5155381	2	PIN,
3	11064176	2	CLIP,
4	11193874	4	WASHER, SPRING, Belleville, M8.4,
5	14306324	4	SCREW, Hex Soc Hd, M8 x 20, 8.8,
6	13423271	4	CLIP, HOSE,
7	85819914	1	TUBE,
8	85801941	2	GROMMET,
9	82003369	1	RESERVOIR, BRAKE FLUID,
10	10902624	2	BOLT, Hex, M6 x 25, 8.8, Full Thd,
11	11193274	2	WASHER, SPRING, Belleville, M6.4,
12	85801092	1	BRACKET,
13	14560187	1	STRAP, CABLE, 178mm lg, L=203.2 mm
14	2854292	8	GASKET,
15	5155701	1	TUBE,
16	5155703	2	BOLT, BANJO, M12x1.25x22
17	85801093	1	STRIP-GASKET,
18	13399076	2	RING, , Only for CAB
19	85819915	1	TUBE,
20	87302705	2	SHEATH, FLEXIBLE,

1.95.0(03) CAB-SAFETY FRAME / BRAKE PEDAL

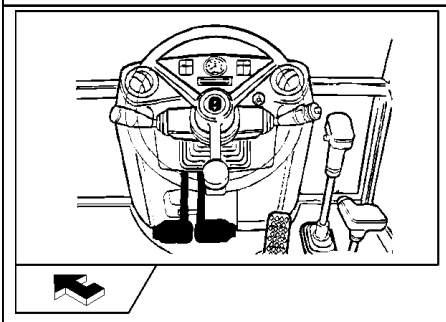

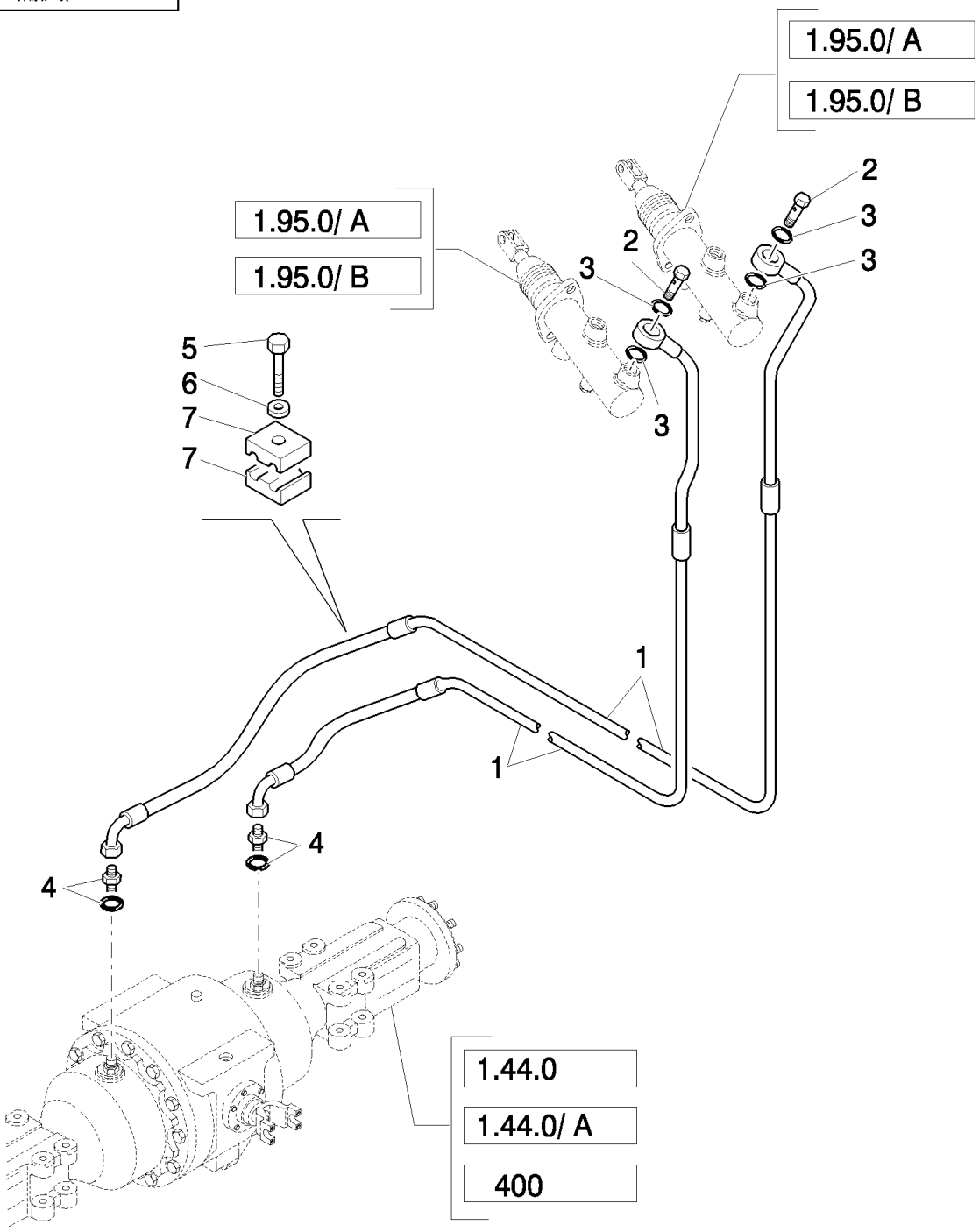

B110 TIER 3 BACKHOE LOADER (2/07-)

1.95.0(03) CAB-SAFETY FRAME / BRAKE PEDAL

Ref	Numero de Pieza	Ctd	Descripción
1	85819177	2	BRAKE LINE,
2	5155703	2	BOLT, BANJO,
3	2854292	4	GASKET,
4	85803312	2	CONNECTOR, HYD., , Only For B110
4	85805655	2	ELBOW, , Only For B115
5	15212721	2	BOLT, Hex, M6 x 40, 8.8, Full Thd,
6	14447021	2	WASHER, M5 x 15 x 1,
7	85805548	4	CLIP,

1.95.0/A(01) CAB-SAFETY FRAME / BRAKE PEDAL

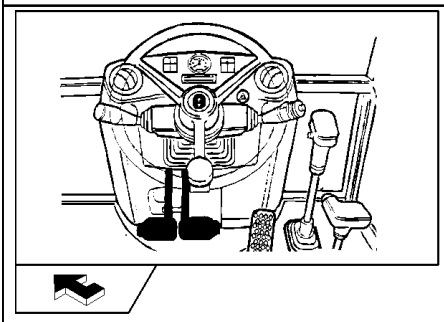

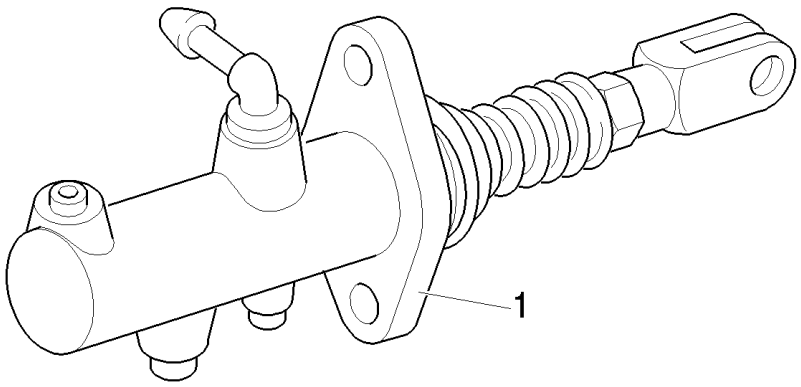

B110 TIER 3 BACKHOE LOADER (2/07-)

1.95.0/A(01) CAB-SAFETY FRAME / BRAKE PEDAL

Ref	Numero de Pieza	Ctd	Descripción
1	87398198	1	BRAKE CYLINDER,

1.95.1(01) CAB-SAFETY FRAME / HAND BRAKE

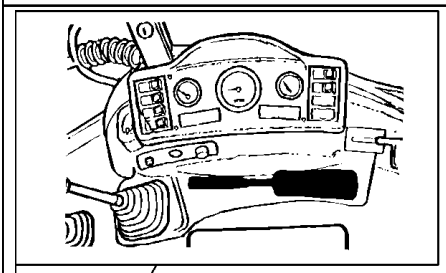

KIT KIT KIT 19 = ●

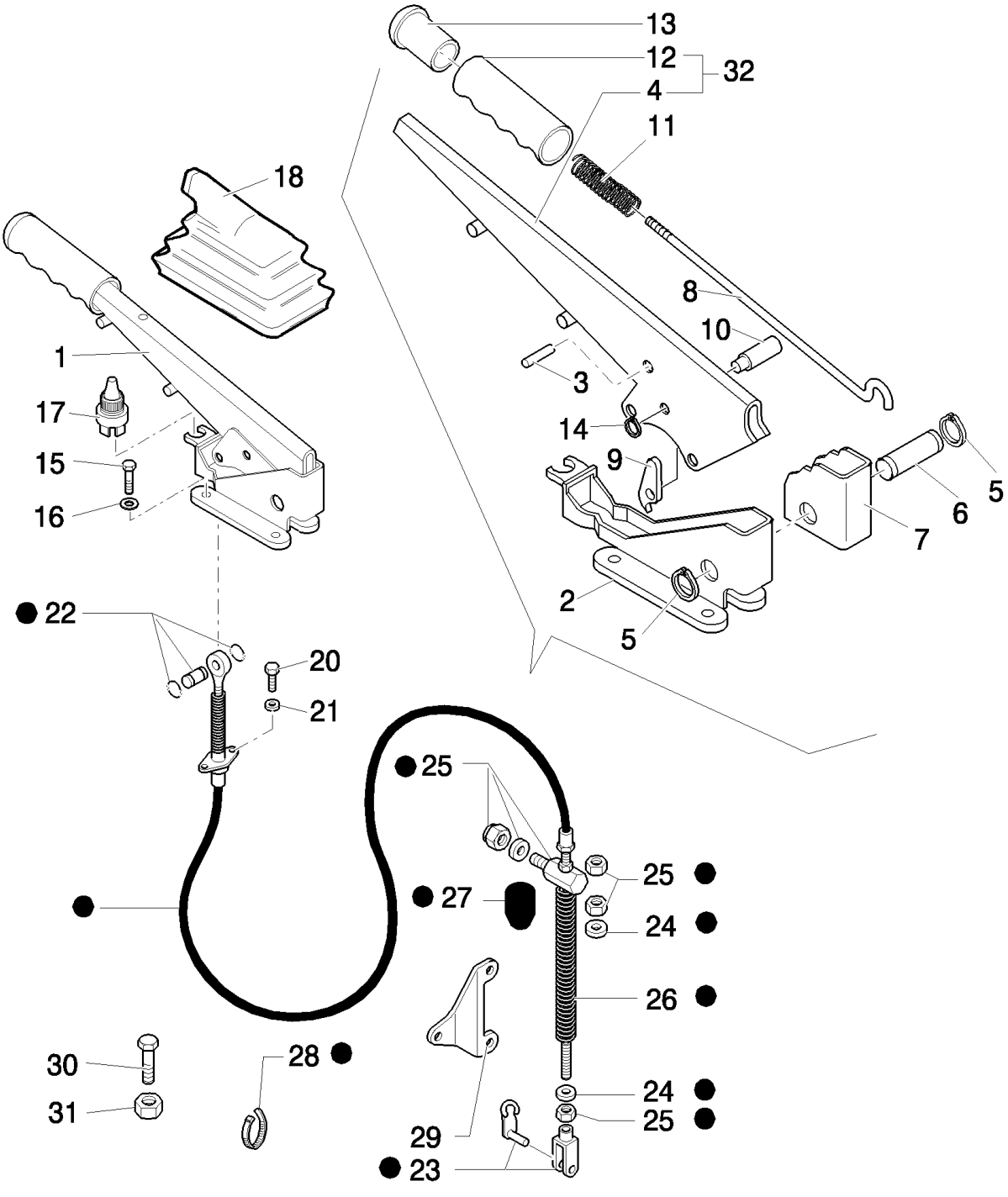

B110 TIER 3 BACKHOE LOADER (2/07-)

1.95.1(01) CAB-SAFETY FRAME / HAND BRAKE

Ref	Numero de Pieza	Ctd	Descripción
1	85827832	1	LEVER, , Includes 2 To 14, 30, 31, 33
2	85805441	1	SUPPORT,
3	4985127	1	RIVET,
4	85805440	1	LEVER,
5	13400776	2	RING, LOCKING,
6	4988275	1	PIN,
7	5110153	1	RATCHET,
8	85827833	1	DIPSTICK,
9	5110155	1	PAWL,
10	5131437	1	PIN,
11	5105729	1	SPRING,
12	86021837	1	HANDLE GRIP,
13	4985122	1	BUTTON,
14	11065476	1	RING, SNAP, M6, Ext,
15	14306424	4	SCREW, Hex Soc Hd, M8 x 25, 8.8,
16	11197874	4	WASHER, SPRING, Belleville, M8.4,
17	85816770	1	SWITCH, ASSY,
18	5106733	1	BOOT,
19	85815536	1	CABLE, , Includes 22 To 28, 32, Only for B110 (EU) - B110 (NA)
19	85815537	1	CABLE, , Includes 22 To 28, 32, Only for B115 (EU) - B115 (NA)
20	10978024	2	BOLT, Hex, M5 x 20, 8.8, Full Thd,
21	10615371	2	WASHER, LOCK, Ext Tooth, M5,
22	85815550	1	BALL JOINT,
23	85815556	1	CLEVIS,
24	85815555	1	WASHER, 22 x 10.2 x 2
25	85815552	1	CONNECTION, SWIVEL,
26	85815554	1	SPRING, , Only for B110 (EU) - B110 (NA)
26	85821173	1	SPRING, , Only for B115 (EU) - B115 (NA)
27	85821172	1	GASKET,
28	85815549	1	STRAP, CABLE,
29	85826099	1	SUPPORT, , Only for B110 (EU) - B110 (NA)
29	85805251	1	SUPPORT, , Only for B115 (EU) - B115 (NA)
30	13272319	1	SCREW,
31	10794011	1	NUT, M4, Cl 8,
32	85827834	1	LEVER, , Includes 4, 12

B110 TIER 3 BACKHOE LOADER (2/07-)

1.95.2(01) TRANSPORT LOCK CONTROL - NA

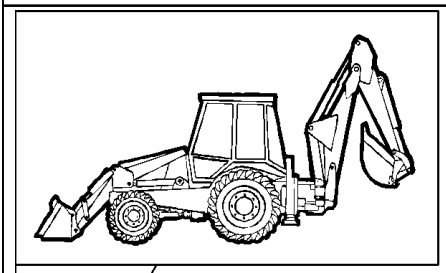

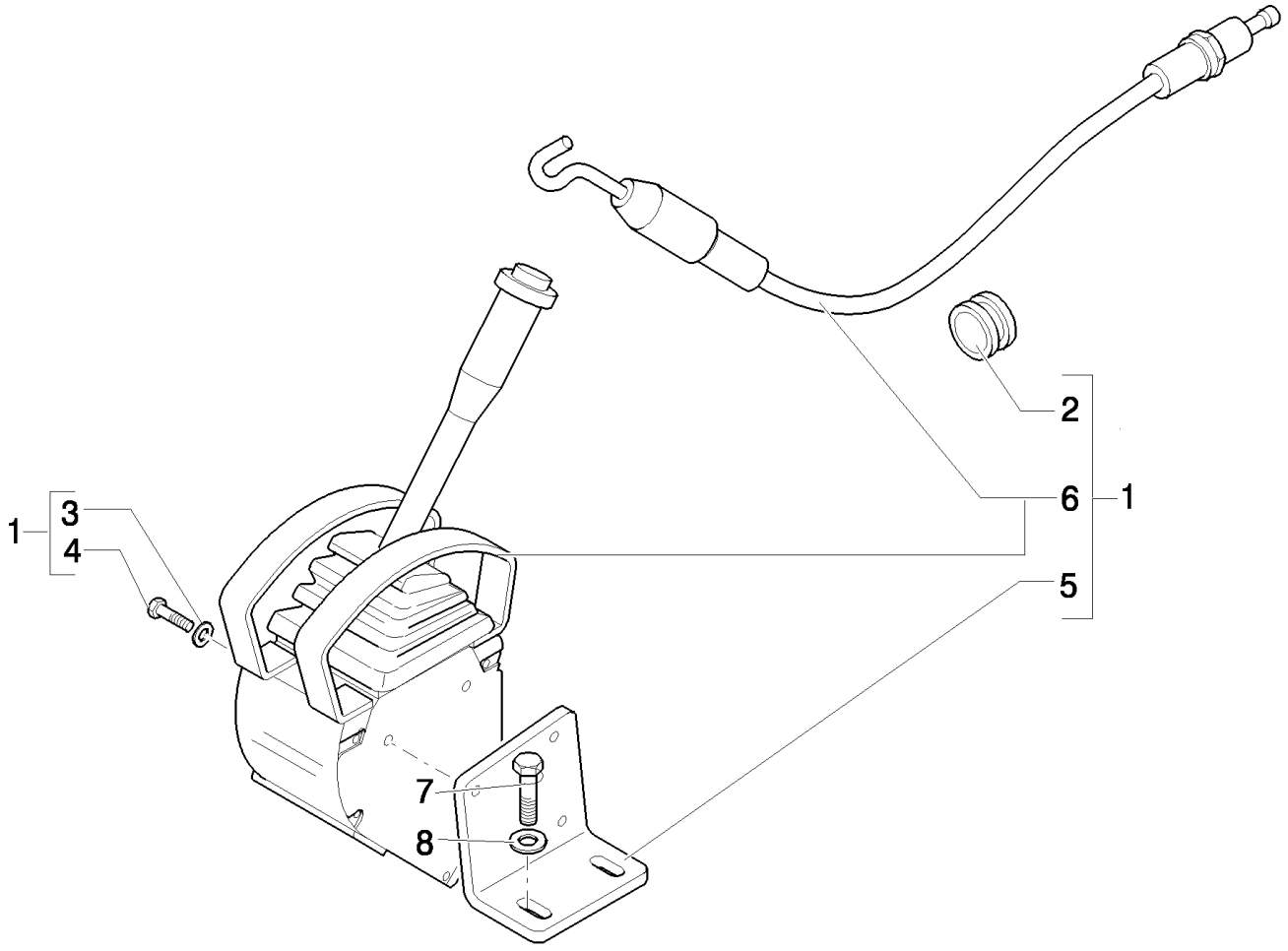

B110 TIER 3 BACKHOE LOADER (2/07-)

1.95.2(01) TRANSPORT LOCK CONTROL - NA

Ref	Numero de Pieza	Ctd	Descripción
1	87324535	1	LEVER, TRANSPORT LOCK; Not Serviced As An Assembly, Order Components, Includes 2 To 6, Only for Rops
1	87324490	1	LEVER, , Includes 2 To 6, Only for Cab
2	10398680	1	GROMMET,
3	11193274	3	WASHER, SPRING, Belleville, M6.4,
4	15212921	3	BOLT, Hex, M6 x 50, 8.8, Full Thd,
5	85808419	1	SUPPORT,
6	87324496	1	LEVER,
7	16043624	2	BOLT, Hex, M8 x 25, 8.8, Full Thd,
8	11193874	2	WASHER, SPRING, Belleville, M8.4,

1.95.3(01) ACCELERATOR CONTROL HAND/PEDAL

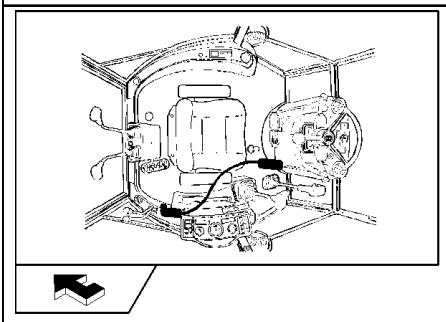

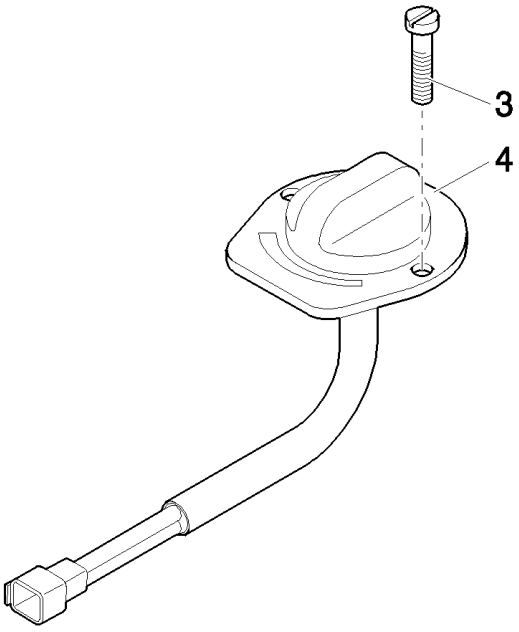

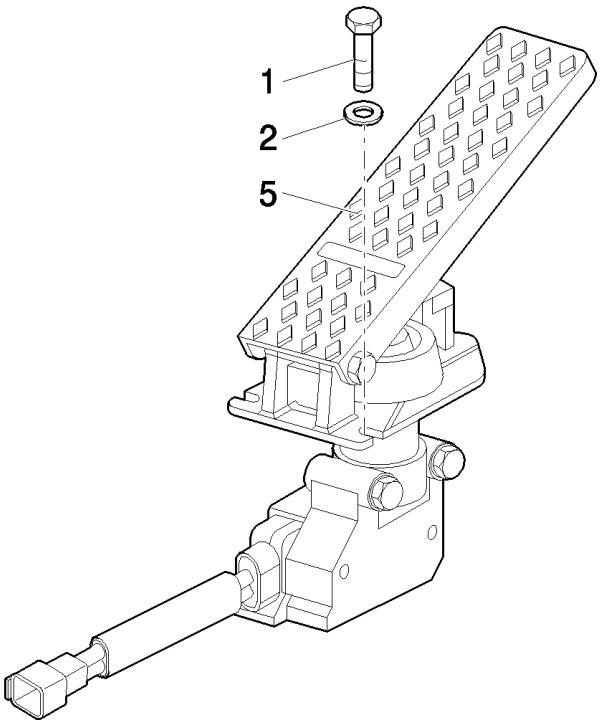

B110 TIER 3 BACKHOE LOADER (2/07-)

1.95.3(01) ACCELERATOR CONTROL HAND/PEDAL

Ref	Numero de Pieza	Ctd	Descripción
1	10902424	3	BOLT, Hex, M6 x 20, 8.8, Full Thd,
2	11193274	3	WASHER, SPRING, Belleville, M6.4,
3	13274117	2	SCREW,
4	87528964	1	THROTTLE CONTROL,
5	87518902	1	PEDAL,

1.95.5(01) POWER STEERING MOTOR, WHEEL & COLUMN TRIM - NA

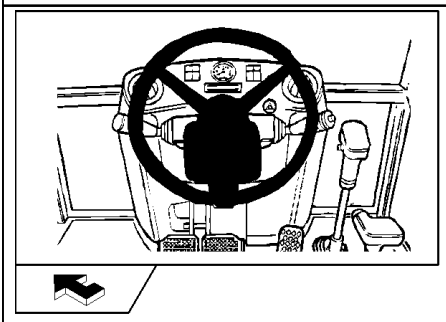

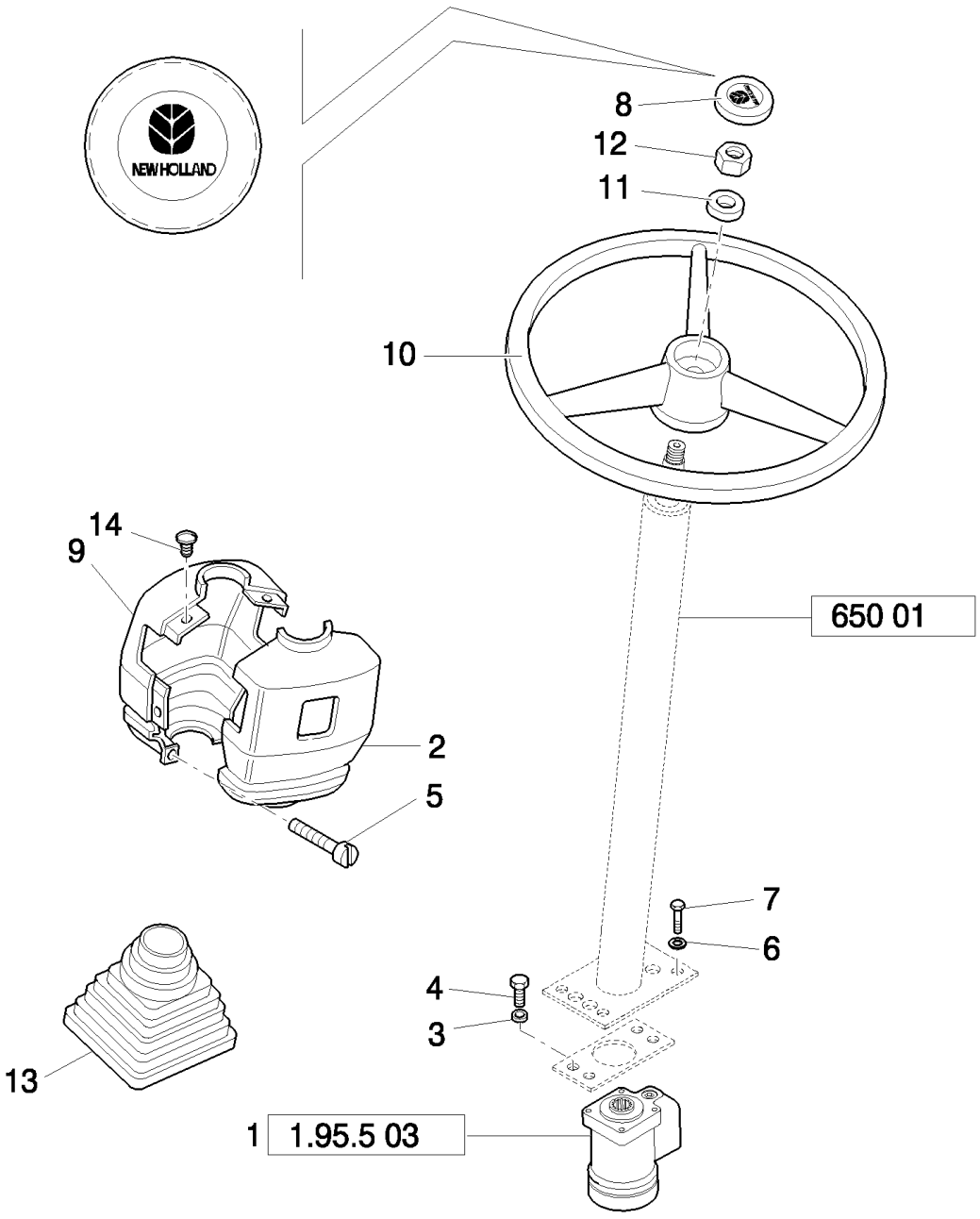

B110 TIER 3 BACKHOE LOADER (2/07-)

1.95.5(01) POWER STEERING MOTOR, WHEEL & COLUMN TRIM - NA

Ref	Numero de Pieza	Ctd	Descripción
1	87360424	1	STEERING HYDRAULIC,
2	85805775	1	COVER, Upper, Only for Power Shuttle Rops
2	85805774	1	COVER, , Only for Cab Power Shuttle / Power Shift
3	10615774	4	WASHER, LOCK,
4	14432334	4	SCREW, Hex Soc Hd, M10 x 22, 10.9,
5	14303324	4	SCREW, Hex Soc Hd, M4 x 20, 8.8, Full Thd,
6	11190574	4	WASHER, SPRING, Belleville, M10.5,
7	15970724	4	BOLT, Hex, M10 x 1.25 x 25, 8.8, Full Thd,
8	85820105	1	CAP,
9	85805772	1	COVER, LOWER, Only for Power Shuttle
9	85805773	1	COVER, , Only for Cab Power Shift
10	5148946	1	STEERING WHEEL,
11	4998760	1	WASHER,
12	10791414	1	NUT, M16X1,5
13	85801976	1	BOOT,
14	14568887	4	FASTENER,

1.95.5(02) POWER STEERING MOTOR HOSES - NA

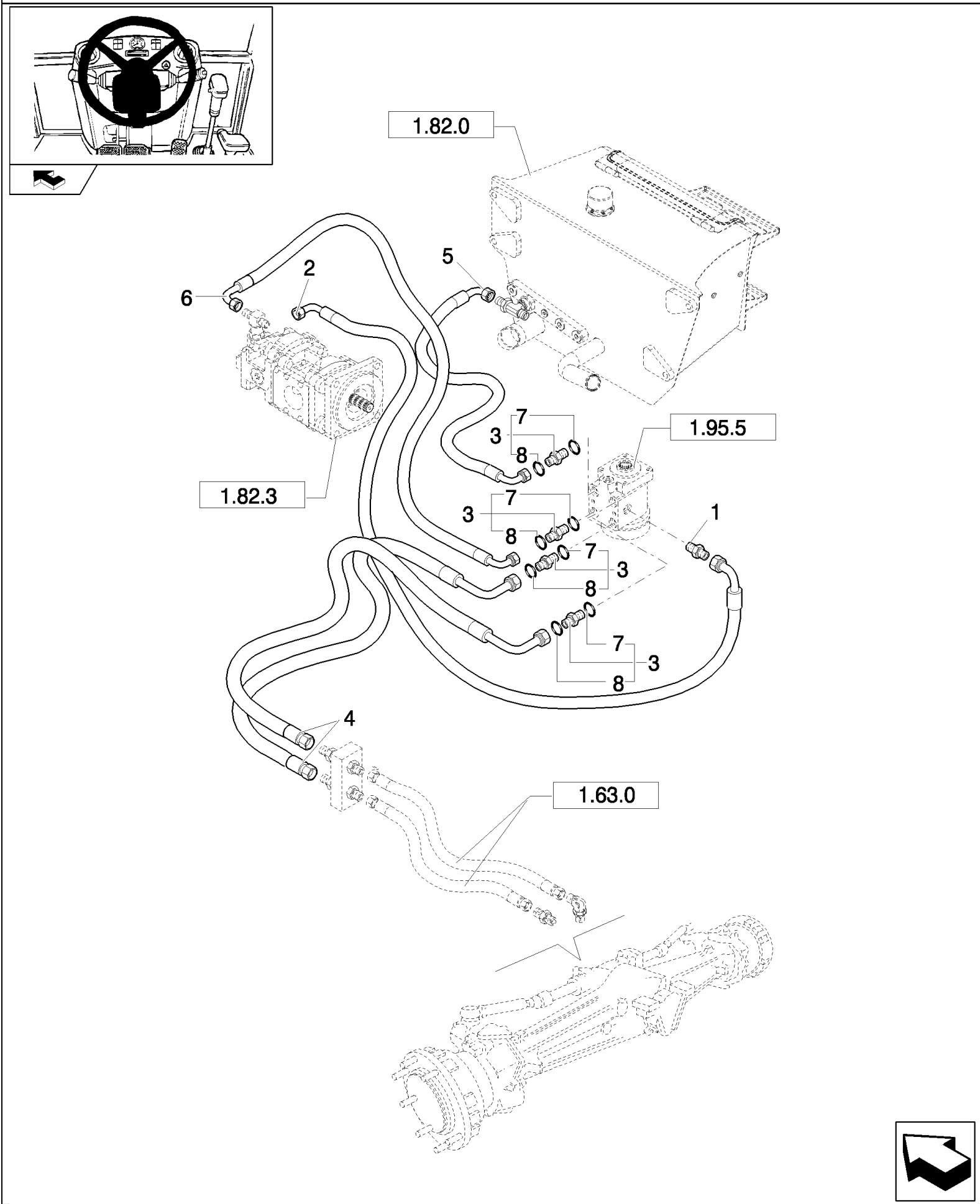

B110 TIER 3 BACKHOE LOADER (2/07-)

1.95.5(02) POWER STEERING MOTOR HOSES - NA

Ref	Numero de Pieza	Ctd	Descripción
1	85802640	1	CONNECTOR, HYD.,
2	85819041	1	HOSE, FLEXIBLE,
3	83963374	4	CONNECTOR, HYD., , Includes 7, 8
4	85826080	2	HOSE, FLEXIBLE, RH CYLINDER
5	85802761	1	HOSE, FLEXIBLE, 1100mm lg,
6	85820282	1	HOSE, FLEXIBLE,
7	80128825	4	O-RING,
8	89992298	4	O-RING,

1.95.5(03) POWER STEERING MOTOR - NA

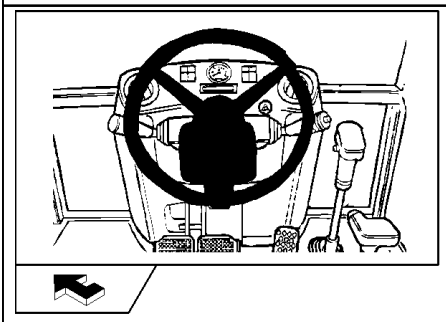

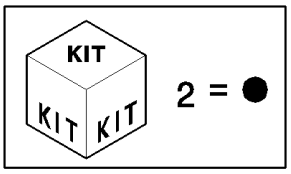

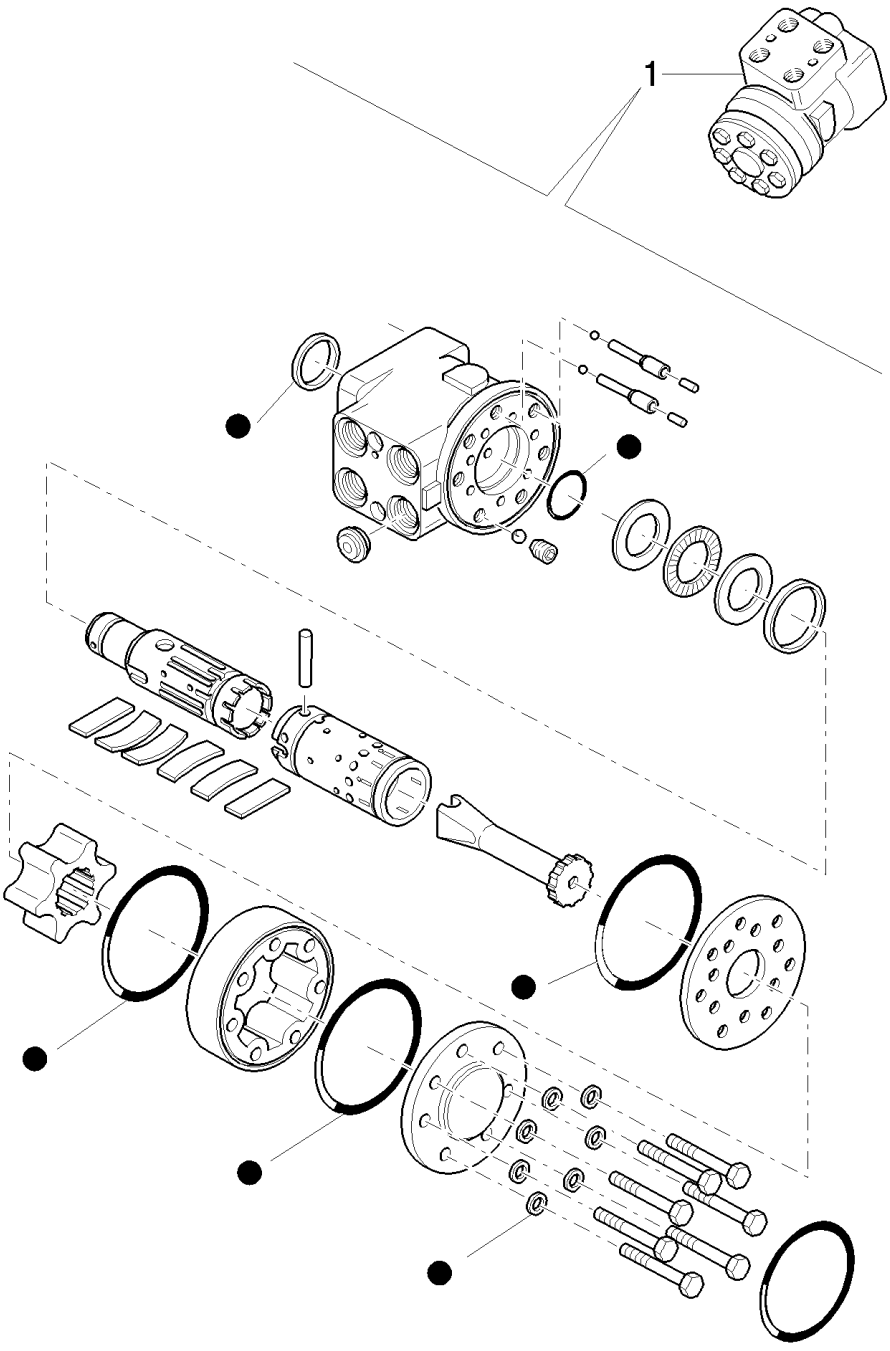

B110 TIER 3 BACKHOE LOADER (2/07-)

1.95.5(03) POWER STEERING MOTOR - NA

Ref	Numero de Pieza	Ctd	Descripción
1	87360424	1	STEERING HYDRAULIC,
2	85808390	1	KIT, SEALS,

1.95.5/1(01) POWER STEERING MOTOR, WHEEL & COLUMN TRIM - EU

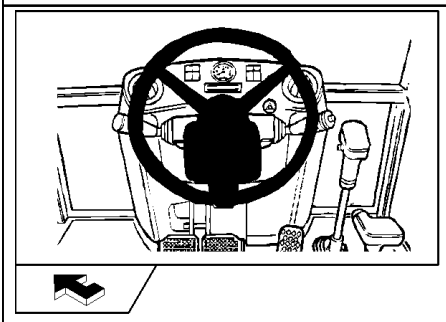

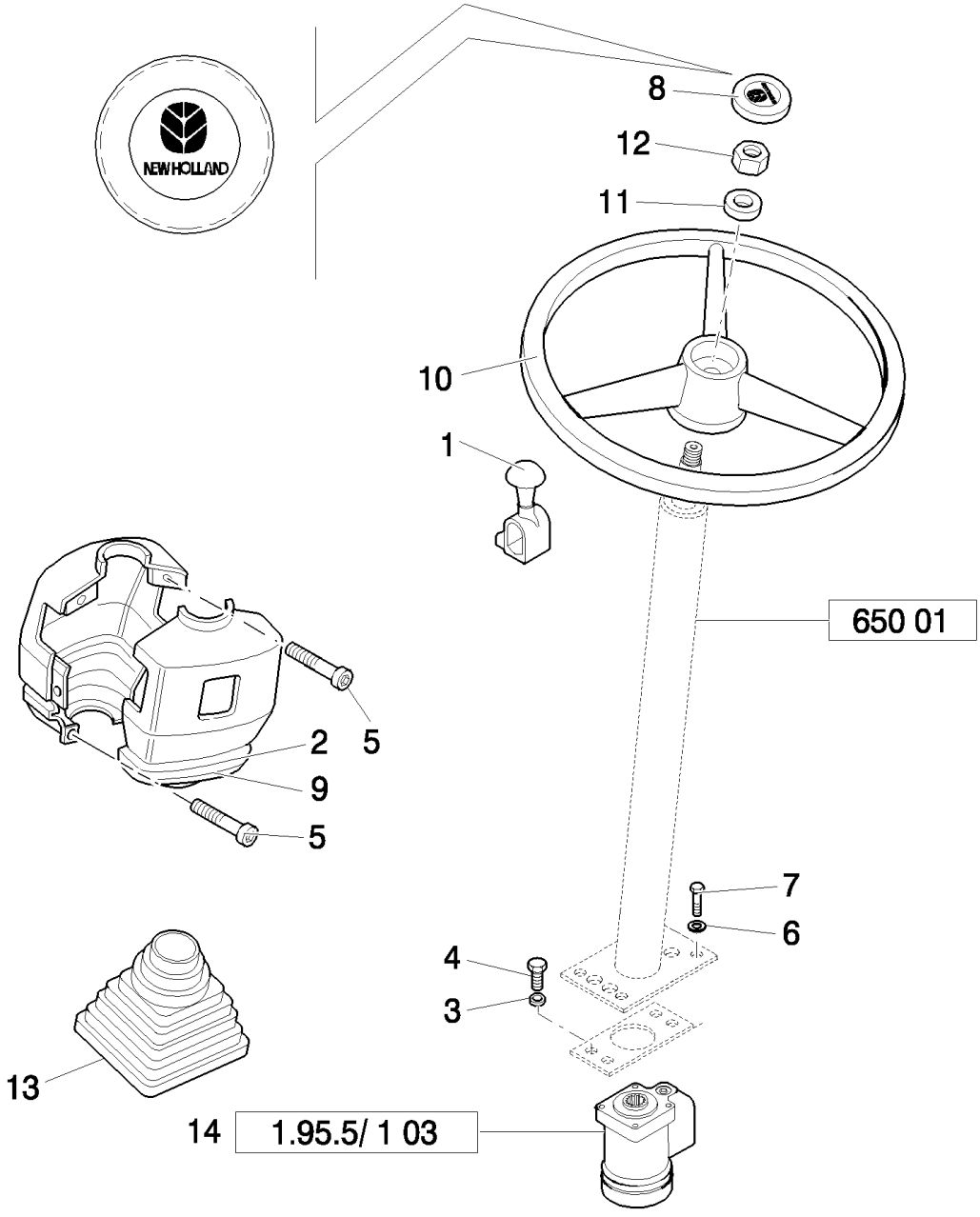

B110 TIER 3 BACKHOE LOADER (2/07-)

1.95.5/1(01) POWER STEERING MOTOR, WHEEL & COLUMN TRIM - EU

Ref	Numero de Pieza	Ctd	Descripción
1	85801879	1	KNOB,
2	85805774	1	COVER, Upper
3	10615774	4	WASHER, LOCK,
4	14432334	4	SCREW, Hex Soc Hd, M10 x 22, 10.9,
5	14303324	4	SCREW, Hex Soc Hd, M4 x 20, 8.8, Full Thd,
6	11190574	4	WASHER, SPRING, Belleville, M10.5,
7	15970724	4	BOLT, Hex, M10 x 1.25 x 25, 8.8, Full Thd,
8	85820105	1	CAP,
9	85805772	1	COVER, LOWER, Only for POWER SHUTTLE
9	85805773	1	COVER, , Only for POWER SHIFT
10	5148946	1	STEERING WHEEL,
11	4998760	1	WASHER,
12	10791414	1	NUT, M16x1.5
13	85801976	1	BOOT, M4x18
14	87360411	1	STEERING HYDRAULIC,

1.95.5/1(02) POWER STEERING MOTOR HOSES - EU

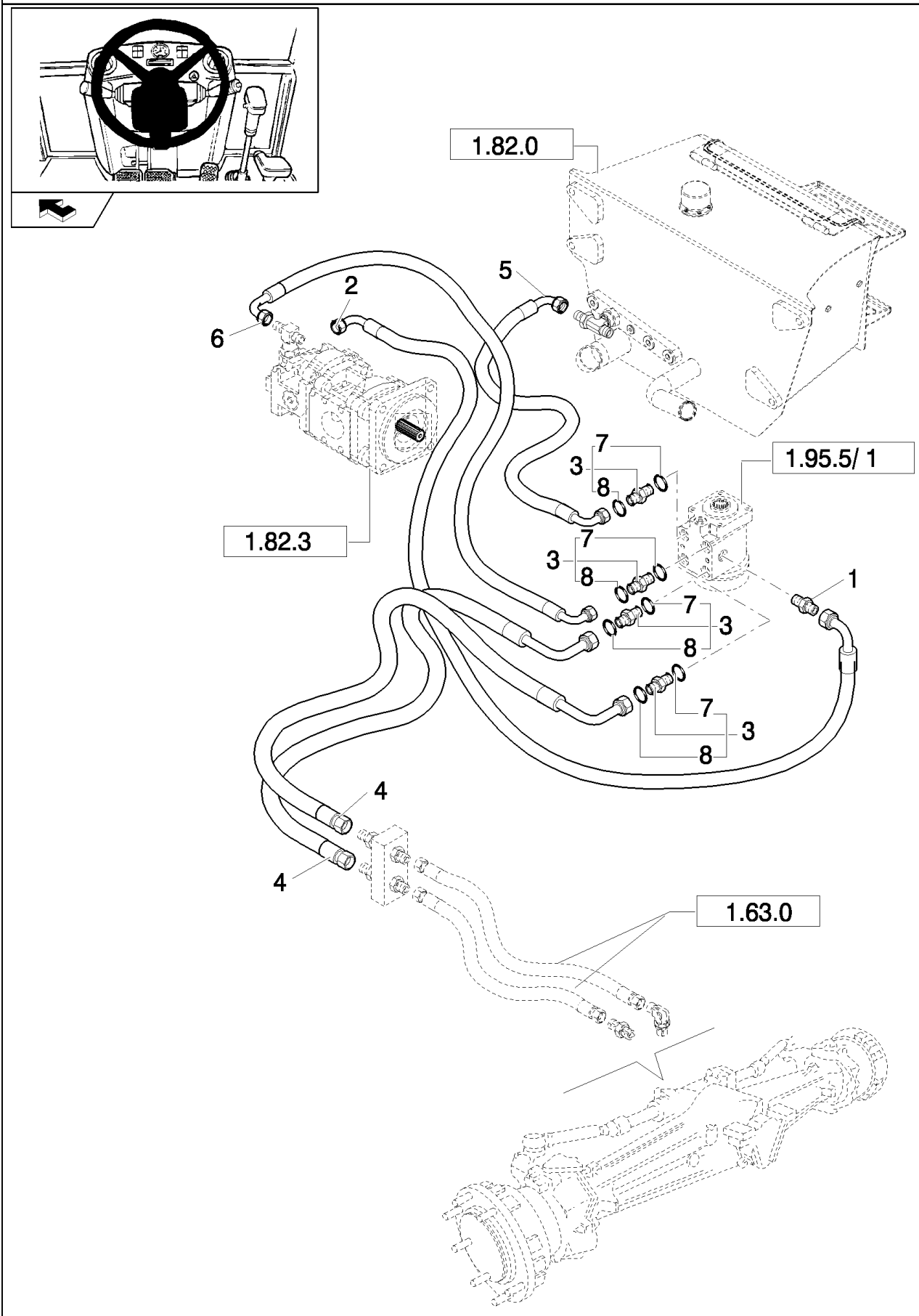

B110 TIER 3 BACKHOE LOADER (2/07-)

1.95.5/1(02) POWER STEERING MOTOR HOSES - EU

Ref	Numero de Pieza	Ctd	Descripción
1	85802640	1	CONNECTOR, HYD.,
2	85819041	1	HOSE, FLEXIBLE,
3	83963374	4	CONNECTOR, HYD., , Includes 7, 8
4	85826080	2	HOSE, FLEXIBLE,
5	85802761	1	HOSE, FLEXIBLE, 1100mm lg,
6	85820282	1	HOSE, FLEXIBLE,
7	80128825	4	O-RING,
8	89992298	4	O-RING,

1.95.5/1(03) POWER STEERING MOTOR - EU

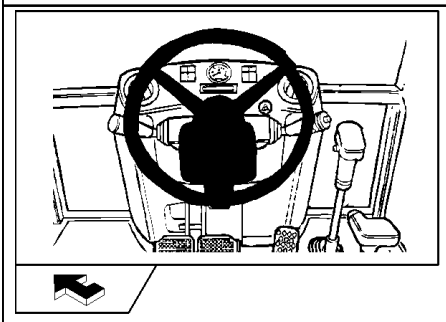

KIT KIT KIT 2 = ●

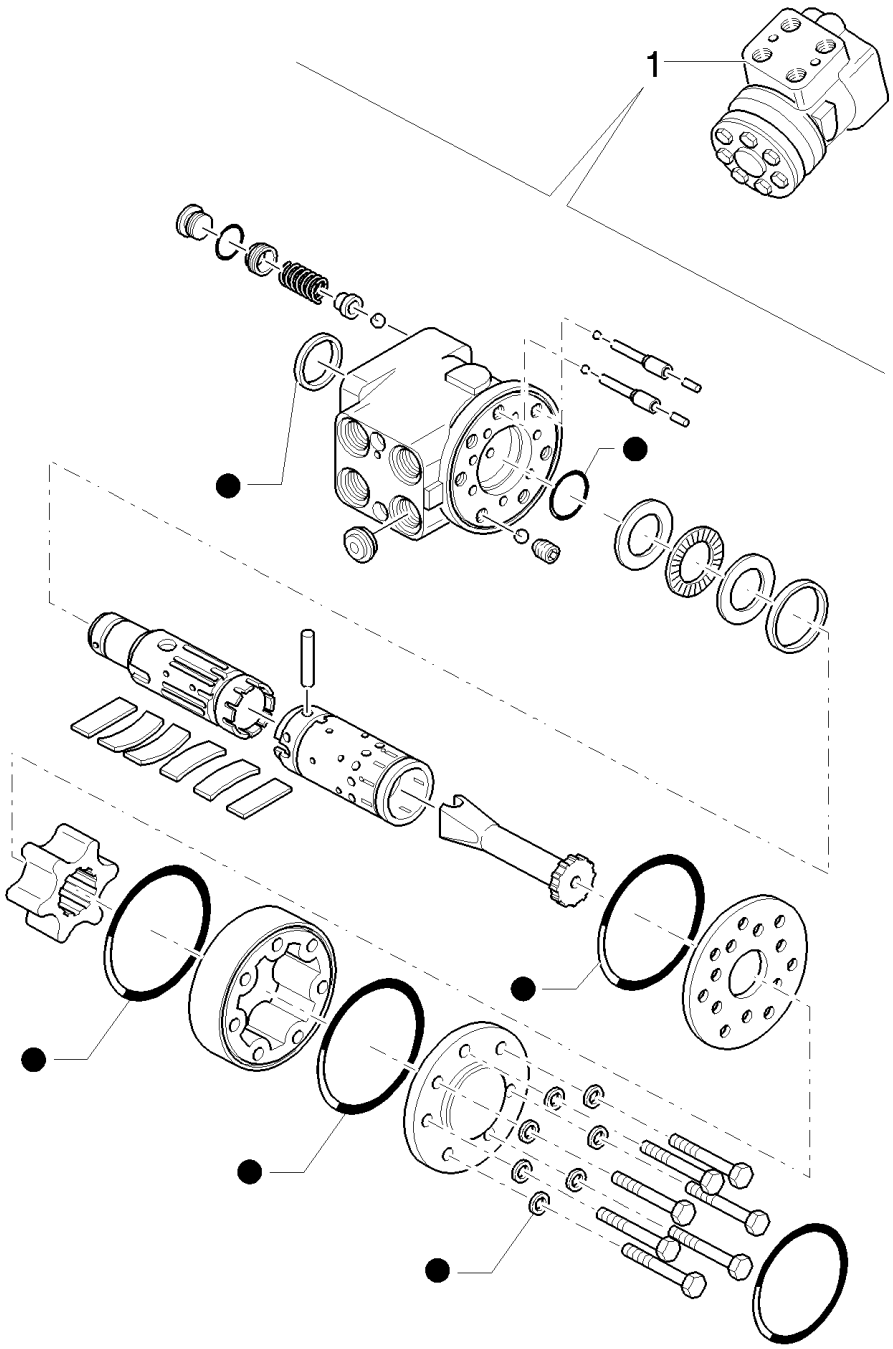

B110 TIER 3 BACKHOE LOADER (2/07-)

1.95.5/1(03) POWER STEERING MOTOR - EU

Ref	Numero de Pieza	Ctd	Descripción
1	87360411	1	STEERING HYDRAULIC,
2	85808390	1	KIT, SEALS,

1.96.0(01) FOWARD/REVERSE & MULTI-PURPOSE LEVER

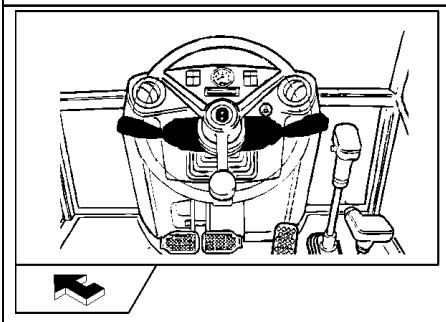

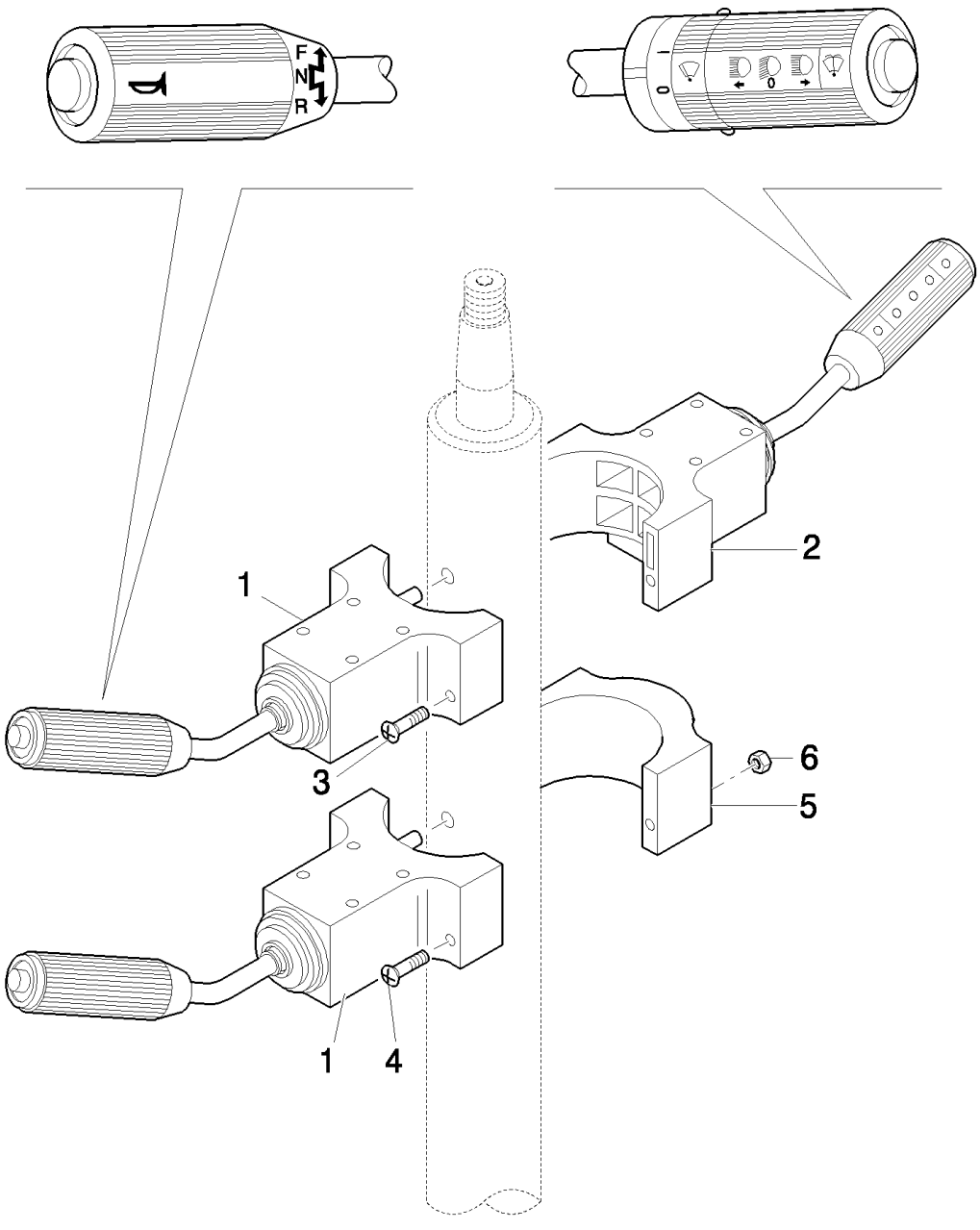

B110 TIER 3 BACKHOE LOADER (2/07-)

1.96.0(01) FOWARD/REVERSE & MULTI-PURPOSE LEVER

Ref	Numero de Pieza	Ctd	Descripción
1	85801938	1	LEVER, CONTROL, , Only for Power shuttle
2	85801939	1	SWITCH, , Only for Power Shuttle / Power Shift
3	14304724	2	SCREW, Hex Soc Hd, M5 x 50, 8.8, Full Thd, , Only for Power shuttle
3	14358724	2	SCREW,
4	14301521	2	SCREW, Hex Soc Hd, M5 x 60, 8.8, , Only for Rops
5	85804676	1	CLAMP, , Only for Rops
6	12574111	2	NUT, LOCK, M5 x .8, Cl 8, , Only for Rops

1.96.0/1(01) FOWARD/REVERSE & MULTI-PURPOSE LEVER

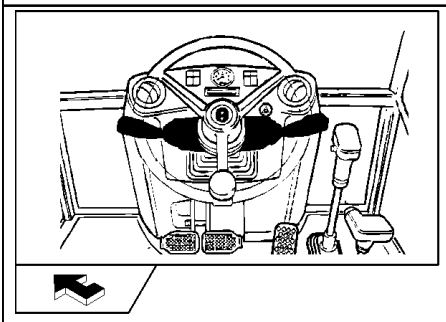

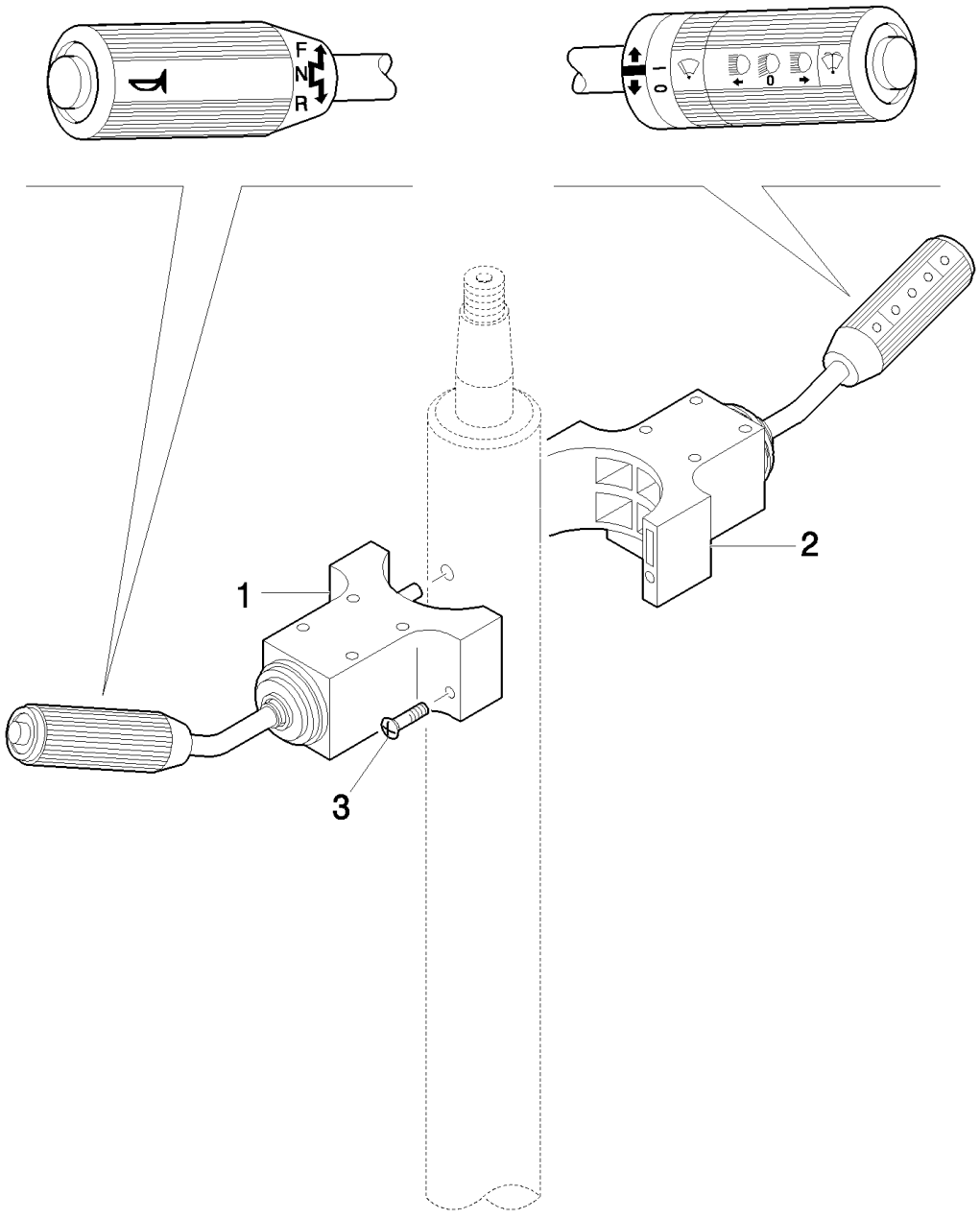

B110 TIER 3 BACKHOE LOADER (2/07-)

1.96.0/1(01) FOWARD/REVERSE & MULTI-PURPOSE LEVER

Ref	Numero de Pieza	Ctd	Descripción
1	85801938	1	LEVER, CONTROL, , Only for Power shuttle
2	85828252	1	SWITCH, ASSY, , Only for Power shift / Power shuttle
3	14304724	2	SCREW, Hex Soc Hd, M5 x 50, 8.8, Full Thd, , Only for Power shuttle
3	14358721	2	SCREW, Hex Soc Hd, M5 x 35, 8.8,

1.96.2(01) STABILIZER CONTROL (SIDE SHIFT)

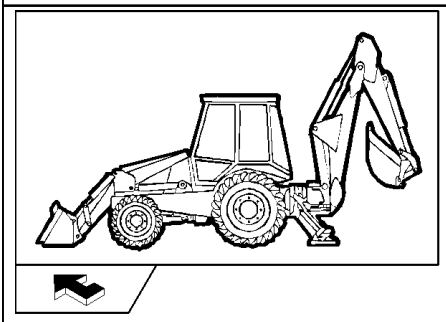

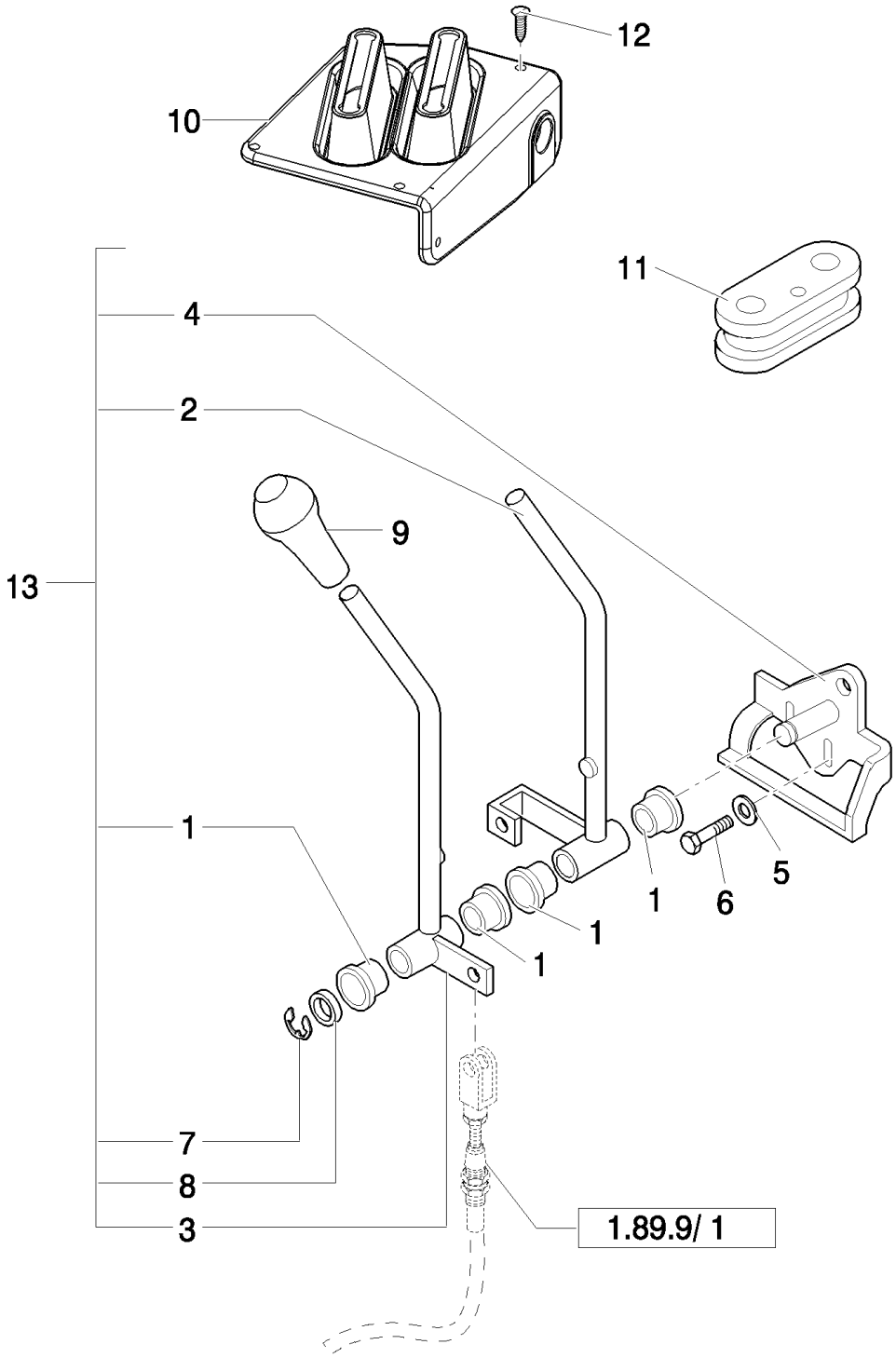

B110 TIER 3 BACKHOE LOADER (2/07-)

1.96.2(01) STABILIZER CONTROL (SIDE SHIFT)

Ref	Numero de Pieza	Ctd	Descripción
1	85813136	4	BUSHING,
2	85813134	1	LEVER, RH
3	85813135	1	LEVER, LH
4	85813133	1	SUPPORT,
5	11193874	2	WASHER, SPRING, Belleville, M8.4,
6	16043624	2	BOLT, Hex, M8 x 25, 8.8, Full Thd,
7	85813138	1	CIRCLIP,
8	85813137	1	WASHER,
9	85802763	2	KNOB,
10	85821316	1	BOOT,
11	87407927	1	INSULATOR BLOCK,
12	85827850	6	PLUG,
13	85813100	1	ARM, TRIP, , Includes 1 To 4, 7, 8

Mechanical Version

1.96.2/1(01) PILOT CONTROL DIAGNOSTICS

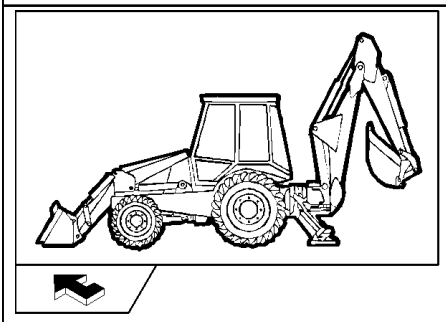

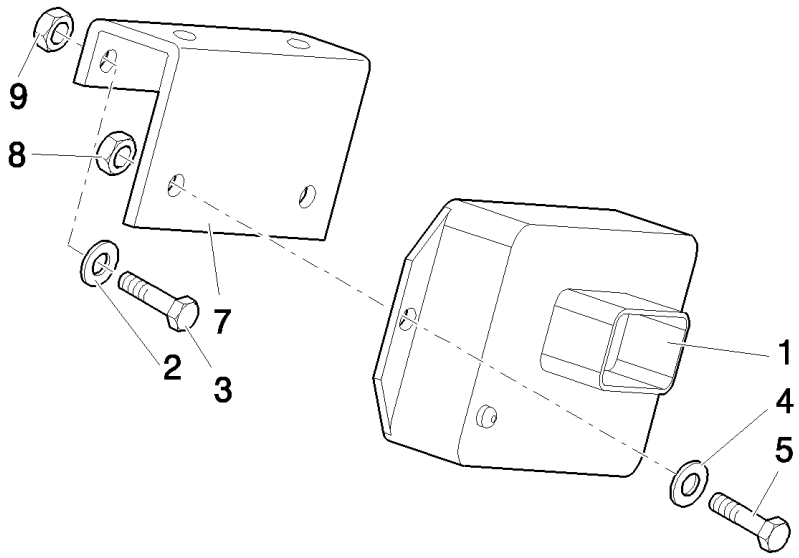

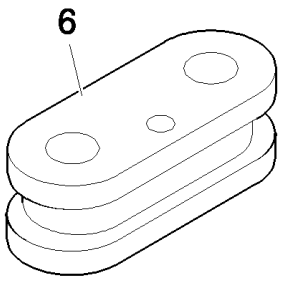

Pilot Control Version 87419454 Black Box Controller for Machines W/O Bi-Directional Auxiliary Hydraulics; 87419455 White Box Controller for Machines W/Bi-Directional Auxiliary Hydraulics. 87419455 Can Service All Machines Equipped With or Without Bi-Directional Auxiliary Hydraulics.

B110 TIER 3 BACKHOE LOADER (2/07-)

1.96.2/1(01) PILOT CONTROL DIAGNOSTICS

Ref	Numero de Pieza	Ctd	Descripción
1	87419454	1	BOX, , 6/7 function black color
1	87419455	1	CONTROL UNIT, , 8 function white color
2	11197779	2	WASHER, SPRING, Belleville, M6.4,
3	10902321	2	BOLT, Hex, M6 x 18, 8.8, Full Thd,
4	47048959	2	WASHER,
5	10444721	2	SCREW, Hex, M4 x 14, 8.8, Full Thd, M4x20
6	87407927	1	INSULATOR BLOCK,
7	85828213	1	SUPPORT,
8	12574011	2	NUT, LOCK, M4 x .7, Cl 8,
9	12574211	2	NUT, LOCK, M6 x 1, Cl 8,

Pilot Control Version 87419454 Black Box Controller for Machines W/O Bi-Directional Auxiliary Hydraulics; 87419455 White Box Controller for Machines W/Bi-Directional Auxiliary Hydraulics. 87419455 Can Service All Machines Equipped With or Without Bi-Directional Auxiliary Hydraulics.

1.96.7(01) CAB / MISCELLANEOUS CAPS (POWER SHIFT) (SIDE SHIFT) - EU

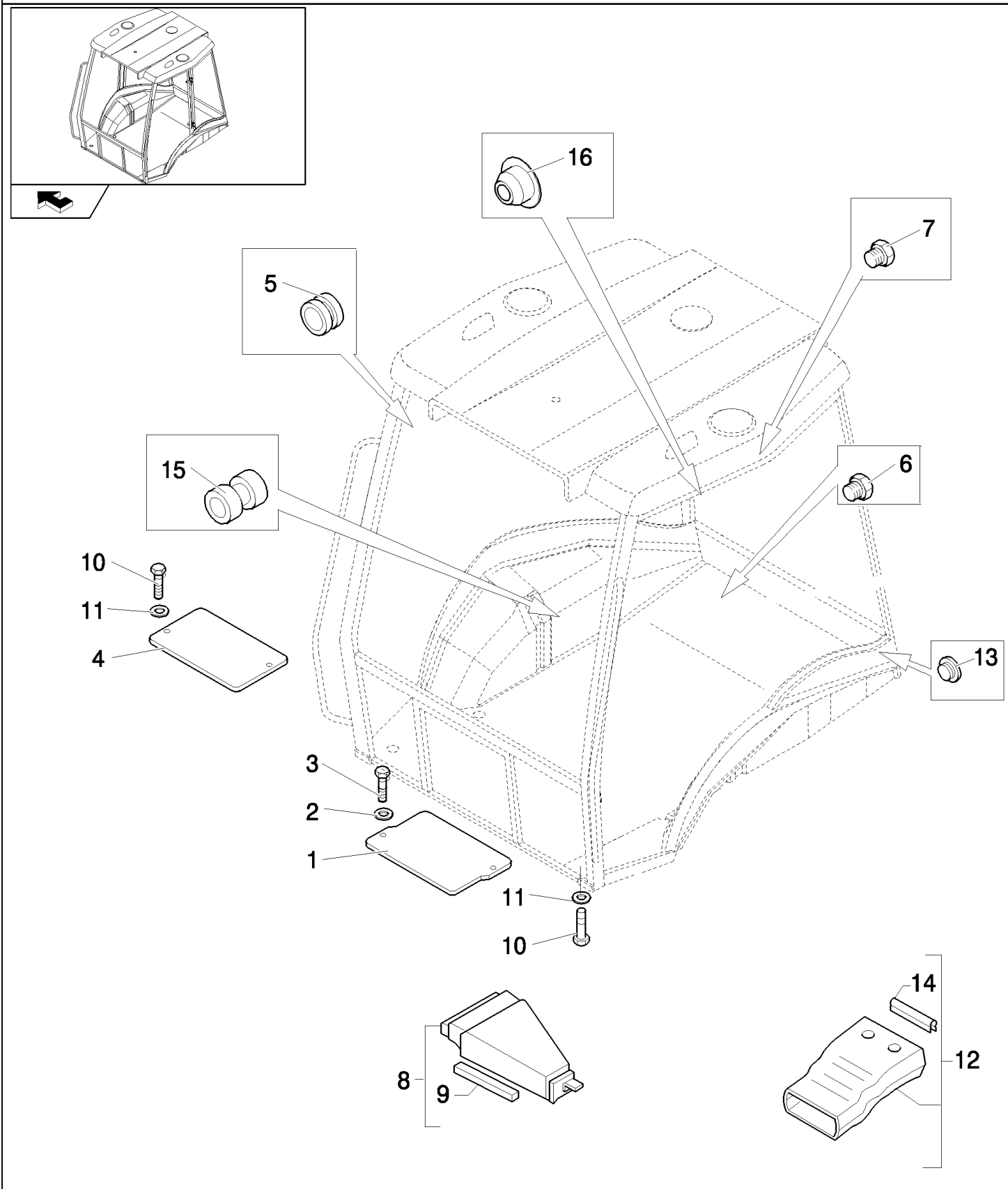

B110 TIER 3 BACKHOE LOADER (2/07-)

1.96.7(01) CAB / MISCELLANEOUS CAPS (POWER SHIFT) (SIDE SHIFT) - EU

Ref	Numero de Pieza	Ctd	Descripción
1	85801968	1	PLATE,
2	11198074	2	WASHER, SPRING, Belleville, M8.4,
3	16043424	2	SCREW, Hex, M8 x 20, 8.8, Full Thd,
4	85802225	1	COVER,
5	85801941	3	GROMMET,
6	79111978	5	PLUG,
7	83994150	2	PLUG,
8	85805200	1	DUCT, AIR, FRONT.
9	85806023	1	STRIP, SEALING,
10	10902224	9	BOLT, Hex, M6 x 16, 8.8, Full Thd,
11	11193274	9	WASHER, SPRING, Belleville, M6.4,
12	85820141	1	DUCT, AIR,
13	85802227	1	PLUG,
14	85812021	1	STRIP, SEALING,
15	10398580	2	GROMMET,
16	82003283	2	PLUG,

Mechanical Version

1.96.7/1(01) CAB / MISCELLANEOUS CAPS (POWER SHIFT) (SIDE SHIFT) - EU

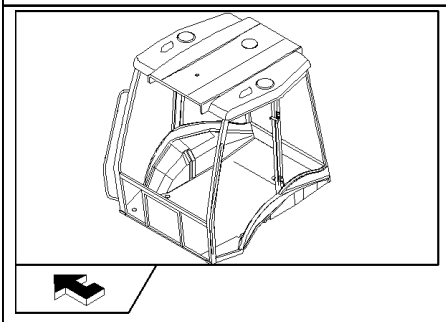

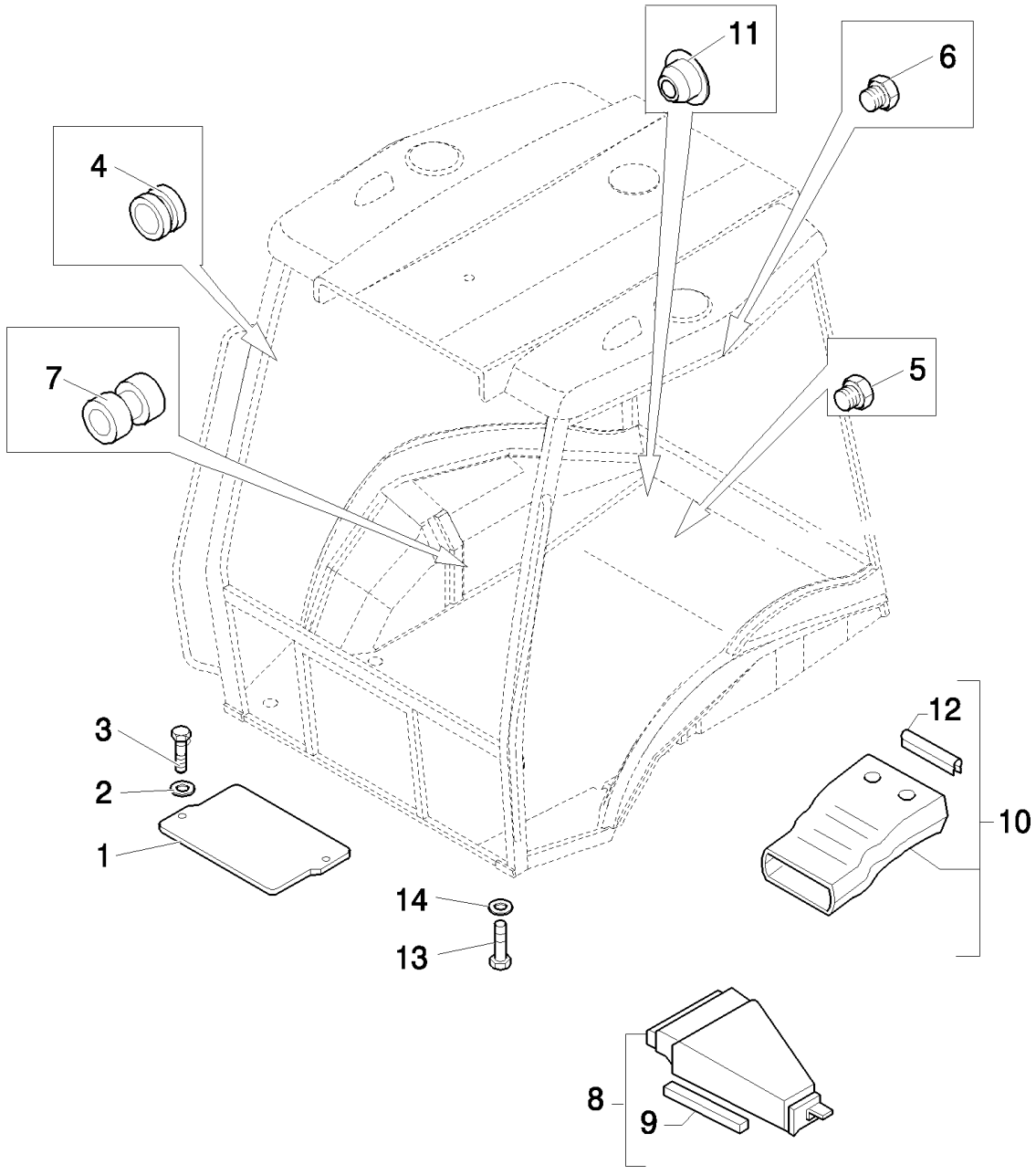

B110 TIER 3 BACKHOE LOADER (2/07-)

1.96.7/1(01) CAB / MISCELLANEOUS CAPS (POWER SHIFT) (SIDE SHIFT) - EU

Ref	Numero de Pieza	Ctd	Descripción
1	85801968	1	PLATE,
2	11198074	2	WASHER, SPRING, Belleville, M8.4,
3	16043424	2	SCREW, Hex, M8 x 20, 8.8, Full Thd,
4	85801941	3	GROMMET,
5	79111978	5	PLUG,
6	83994150	2	PLUG,
7	10398580	2	GROMMET,
8	85805200	1	DUCT, AIR, FRONT
9	85806023	1	STRIP, SEALING,
10	85820141	1	DUCT, AIR, REAR
11	82003283	2	PLUG,
12	85812021	1	STRIP, SEALING,
13	10902224	5	BOLT, Hex, M6 x 16, 8.8, Full Thd,
14	11193274	5	WASHER, SPRING, Belleville, M6.4,

Mechanical Version

1.96.7/2(01) CAB PLUGS, FLOOR PLATES & AIR CONVEYER (SIDE SHIFT POWER SHUTTLE) - EU

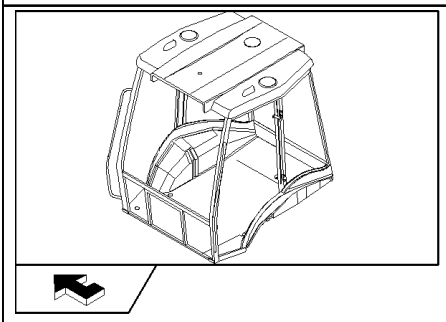

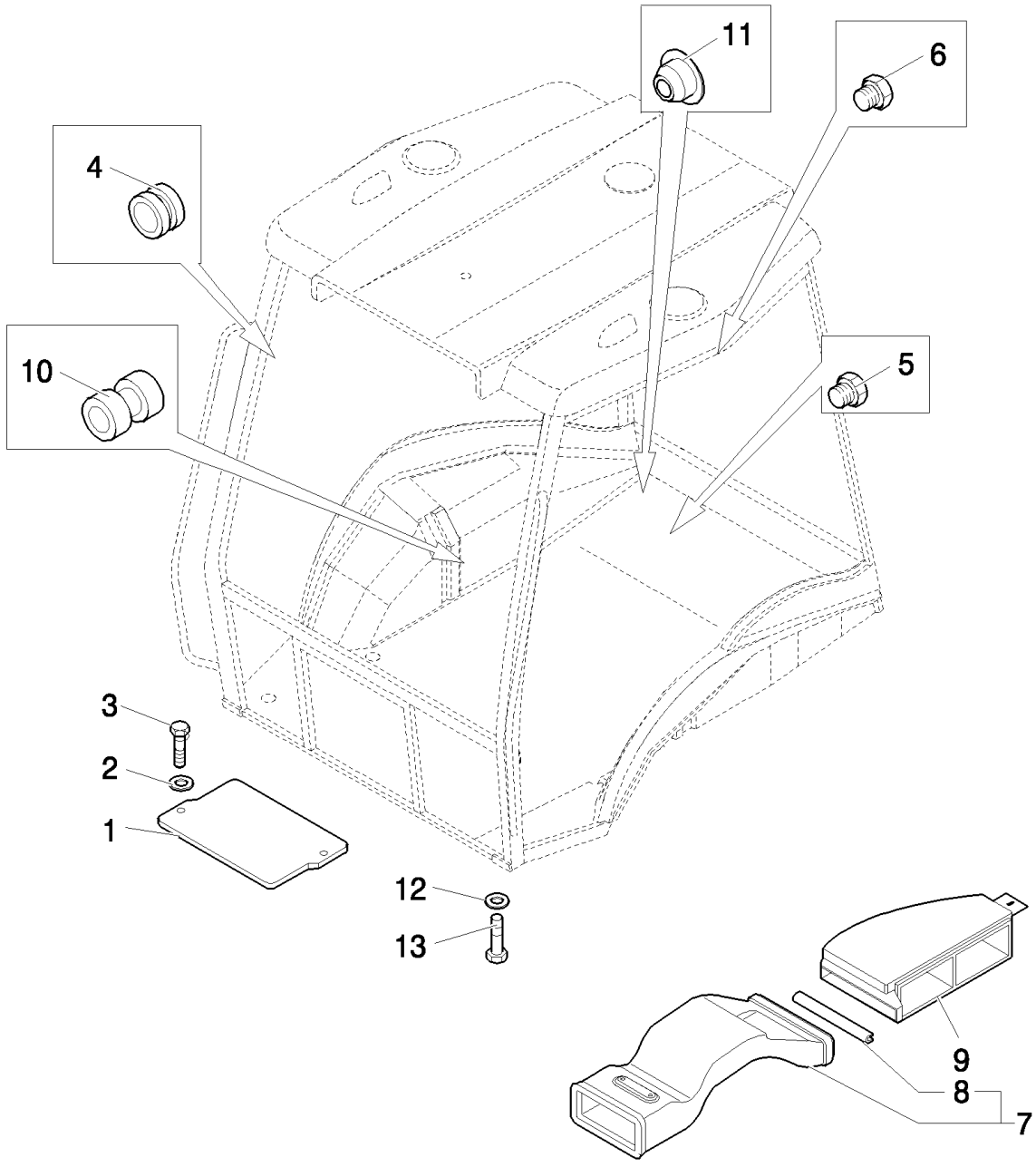

Pilot Control Version

B110 TIER 3 BACKHOE LOADER (2/07-)

1.96.7/2(01) CAB PLUGS, FLOOR PLATES & AIR CONVEYER (SIDE SHIFT POWER SHUTTLE) - EU

Ref	Numero de Pieza	Ctd	Descripción
1	85801968	1	PLATE,
2	11198074	2	WASHER, SPRING, Belleville, M8.4,
3	16043424	2	SCREW, Hex, M8 x 20, 8.8, Full Thd,
4	85801941	3	GROMMET,
5	79111978	5	PLUG,
6	83994150	2	PLUG,
7	87408277	1	DUCT, AIR,
8	85812021	1	STRIP, SEALING,
9	87319754	1	DUCT, AIR,
10	10398580	2	GROMMET,
11	82003283	2	PLUG,
12	11193274	5	WASHER, SPRING, Belleville, M6.4,
13	10902224	5	BOLT, Hex, M6 x 16, 8.8, Full Thd,

Pilot Control Version

1.96.7/3(01) CAB / MISCELLANEOUS CAPS (POWER SHIFT) - EU

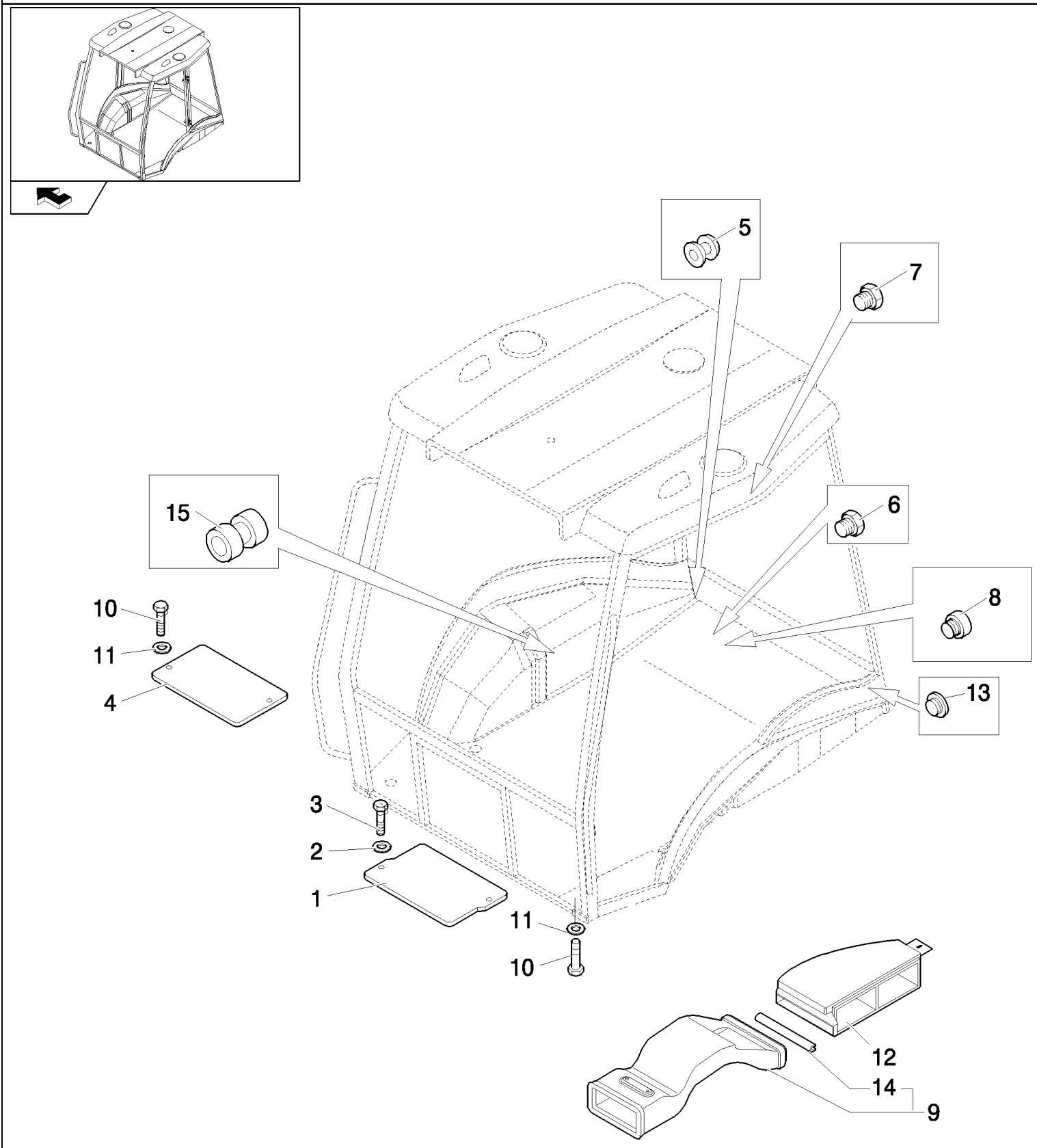

Pilot Control Version

B110 TIER 3 BACKHOE LOADER (2/07-)

1.96.7/3(01) CAB / MISCELLANEOUS CAPS (POWER SHIFT) - EU

Ref	Numero de Pieza	Ctd	Descripción
1	85801968	1	PLATE,
2	11198074	2	WASHER, SPRING, Belleville, M8.4,
3	16043424	2	SCREW, Hex, M8 x 20, 8.8, Full Thd,
4	85802225	1	COVER,
5	85801941	3	GROMMET,
6	79111978	5	PLUG,
7	83994150	2	PLUG,
8	82003283	2	PLUG,
9	87408277	1	DUCT, AIR,
10	10902224	11	BOLT, Hex, M6 x 16, 8.8, Full Thd,
11	11193274	11	WASHER, SPRING, Belleville, M6.4,
12	87319754	1	DUCT, AIR,
13	85802227	1	PLUG,
14	85812021	1	STRIP, SEALING,
15	10398580	2	GROMMET,

Pilot Control Version

1.96.7/4(01) ROPS PLUGS & FLOOR PLATE (CENTER PIVOT) - NA

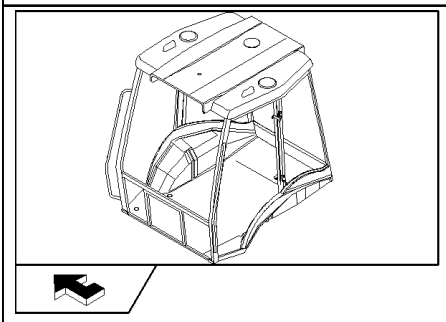

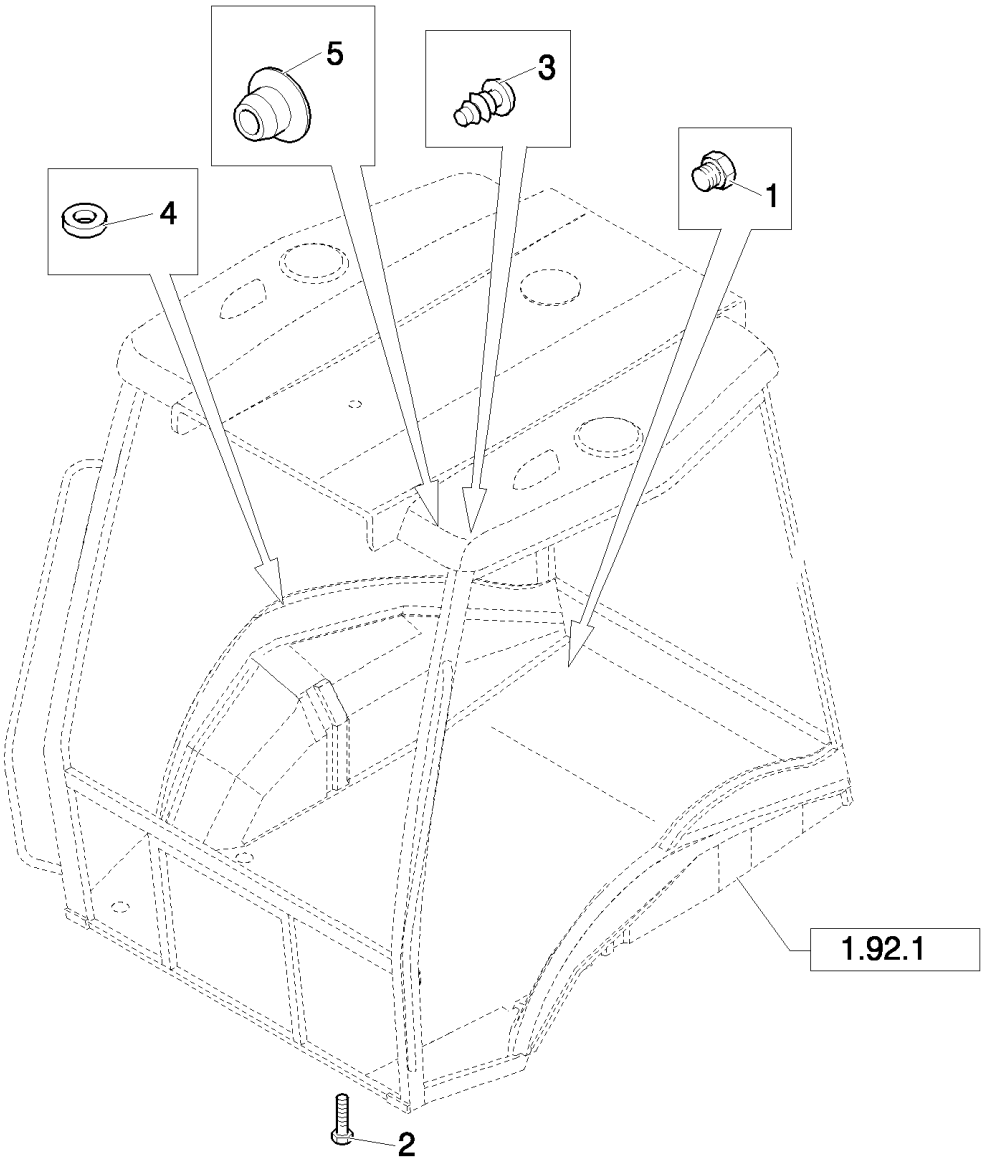

Mechanical Version

B110 TIER 3 BACKHOE LOADER (2/07-)

1.96.7/4(01) ROPS PLUGS & FLOOR PLATE (CENTER PIVOT) - NA

Ref	Numero de Pieza	Ctd	Descripción
1	85802309	4	PLUG,
2	13313417	4	SCREW, Cross Oval Hd, M6 x 25,
3	85802310	4	PLUG,
4	85804734	5	WASHER, RUBBER,
5	82003283	4	PLUG,

Mechanical Version

1.96.7/5(01) CAB / MISCELLANEOUS CAPS (CENTER PIVOT) - NA

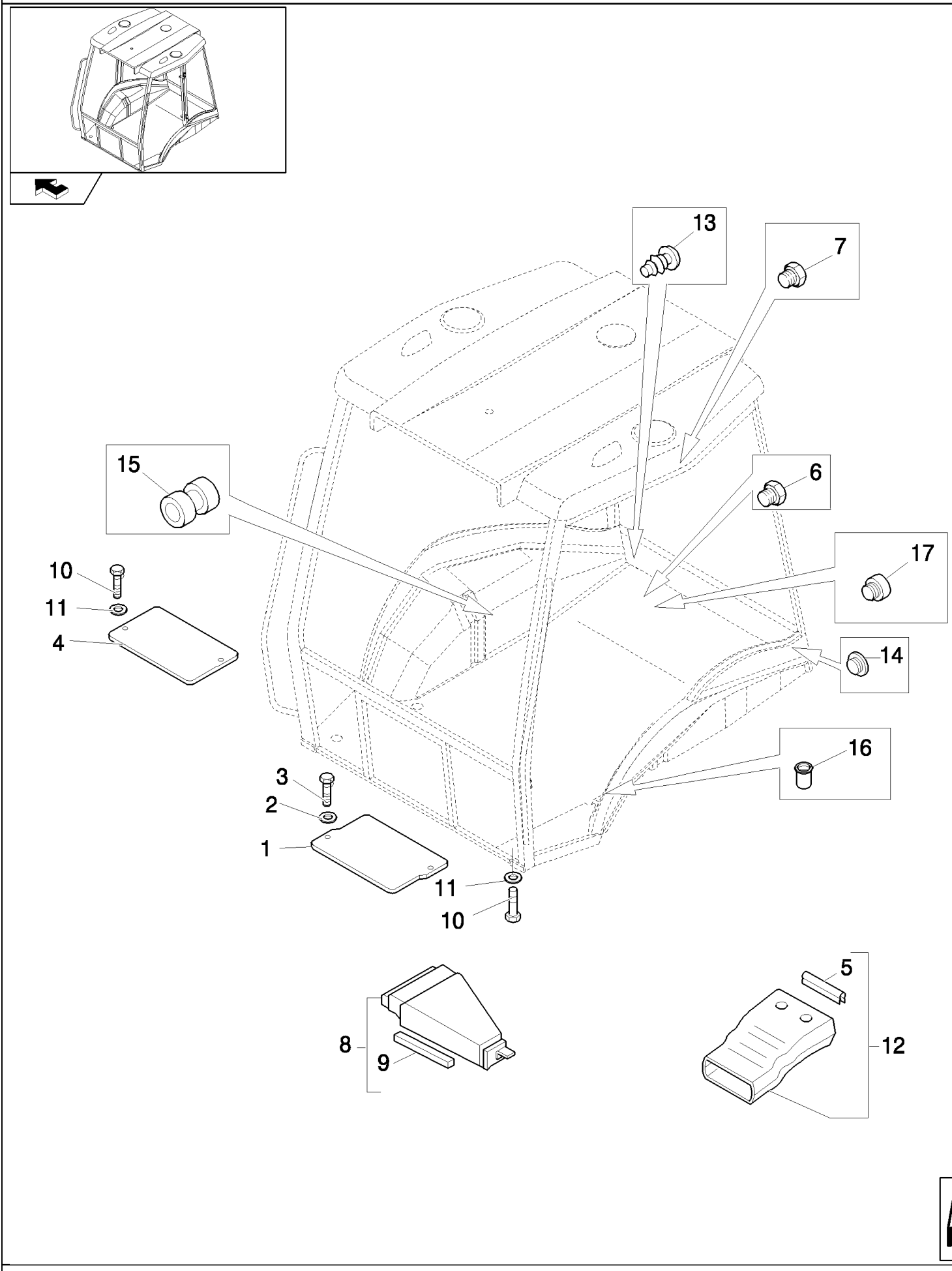

B110 TIER 3 BACKHOE LOADER (2/07-)

1.96.7/5(01) CAB / MISCELLANEOUS CAPS (CENTER PIVOT) - NA

Ref	Numero de Pieza	Ctd	Descripción
1	85801968	1	PLATE,
2	11198074	2	WASHER, SPRING, Belleville, M8.4,
3	16043424	2	SCREW, Hex, M8 x 20, 8.8, Full Thd,
4	85802225	1	COVER, , Only for Power Shift
5	85812021	1	STRIP, SEALING,
6	79111978	10	PLUG,
7	83994150	2	PLUG,
8	85805200	1	DUCT, AIR, FRONT
9	85806023	1	STRIP, SEALING,
10	10902224	5	BOLT, Hex, M6 x 16, 8.8, Full Thd, , Only for Power Shift
11	11193274	5	WASHER, SPRING, Belleville, M6.4, , Only for Power Shift
12	85820141	1	DUCT, AIR,
13	85802310	4	PLUG,
14	85802227	1	PLUG, , Only for Power Shift
15	10398580	2	GROMMET,
16	85801953	2	RIVET,
17	85802309	2	PLUG,

Mechanical Version

1.96.7/6(01) CAB / MISCELLANEOUS CAPS (CENTER PIVOT) - NA

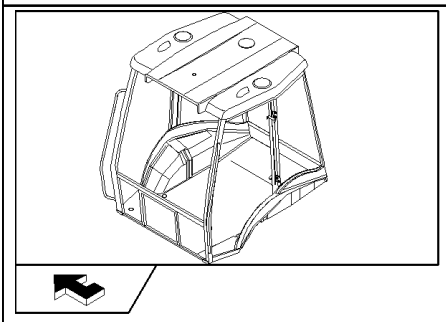

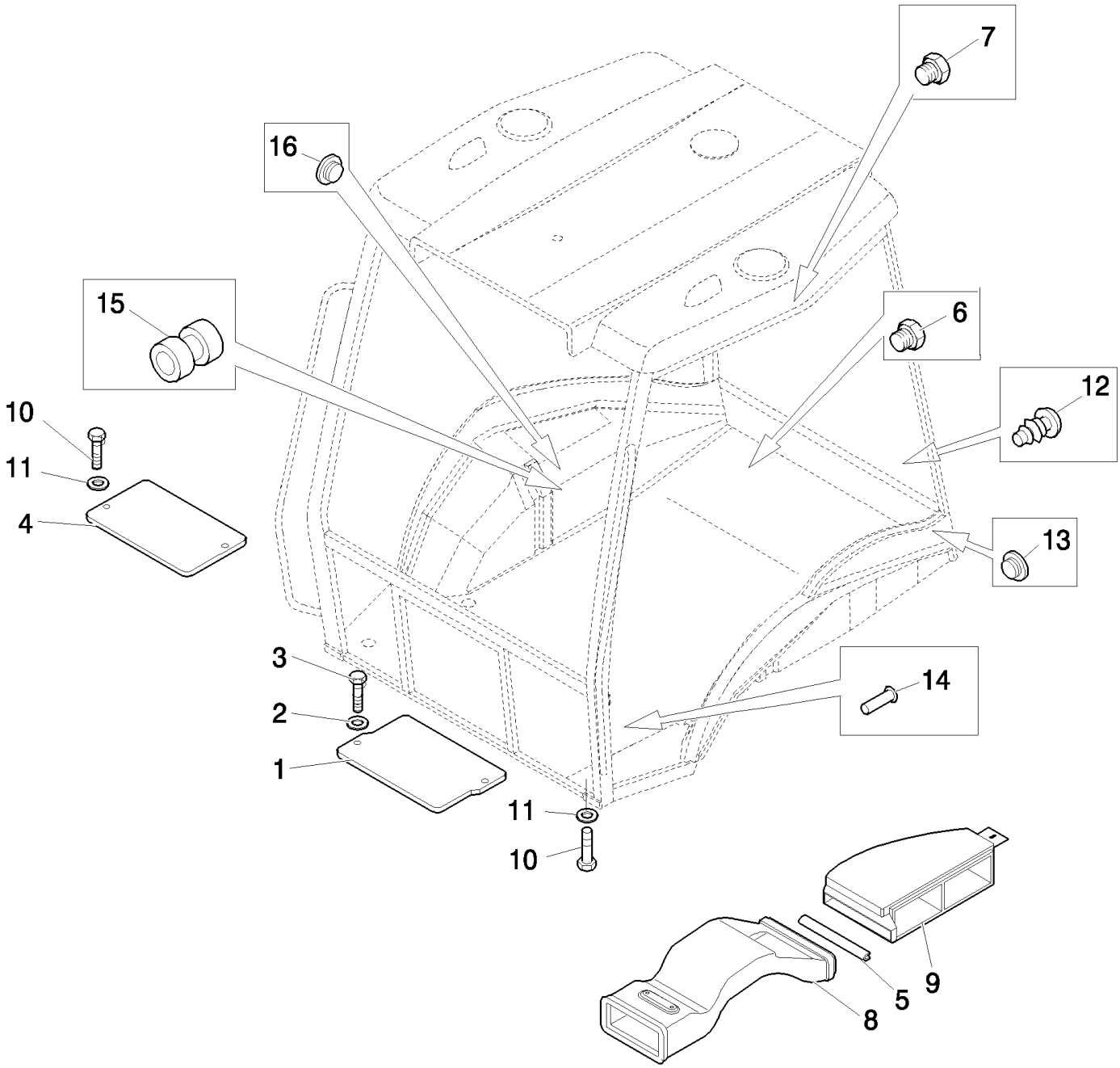

Pilot Control Version

B110 TIER 3 BACKHOE LOADER (2/07-)

1.96.7/6(01) CAB / MISCELLANEOUS CAPS (CENTER PIVOT) - NA

Ref	Numero de Pieza	Ctd	Descripción
1	85801968	1	PLATE,
2	11198074	2	WASHER, SPRING, Belleville, M8.4,
3	16043424	2	SCREW, Hex, M8 x 20, 8.8, Full Thd,
4	85802225	1	COVER, , Only for Power Shift
5	85812021	1	STRIP, SEALING,
6	79111978	10	PLUG,
7	83994150	2	PLUG,
8	87408277	1	DUCT, AIR, FRONT
9	87319754	1	DUCT, AIR,
10	10902224	7	BOLT, Hex, M6 x 16, 8.8, Full Thd,
11	11193274	7	WASHER, SPRING, Belleville, M6.4,
12	85802310	4	PLUG,
13	85802309	2	PLUG,
14	85801953	2	RIVET,
15	10398580	2	GROMMET,
16	85802227	1	PLUG, , Only for Power Shift

Pilot Control Version

B110 TIER 3 BACKHOE LOADER (2/07-)

1.96.7/7(01) ROPS PLUGS & FLOOR PLATE (CENTER PIVOT) - NA

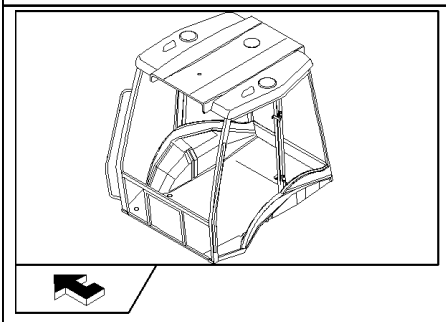

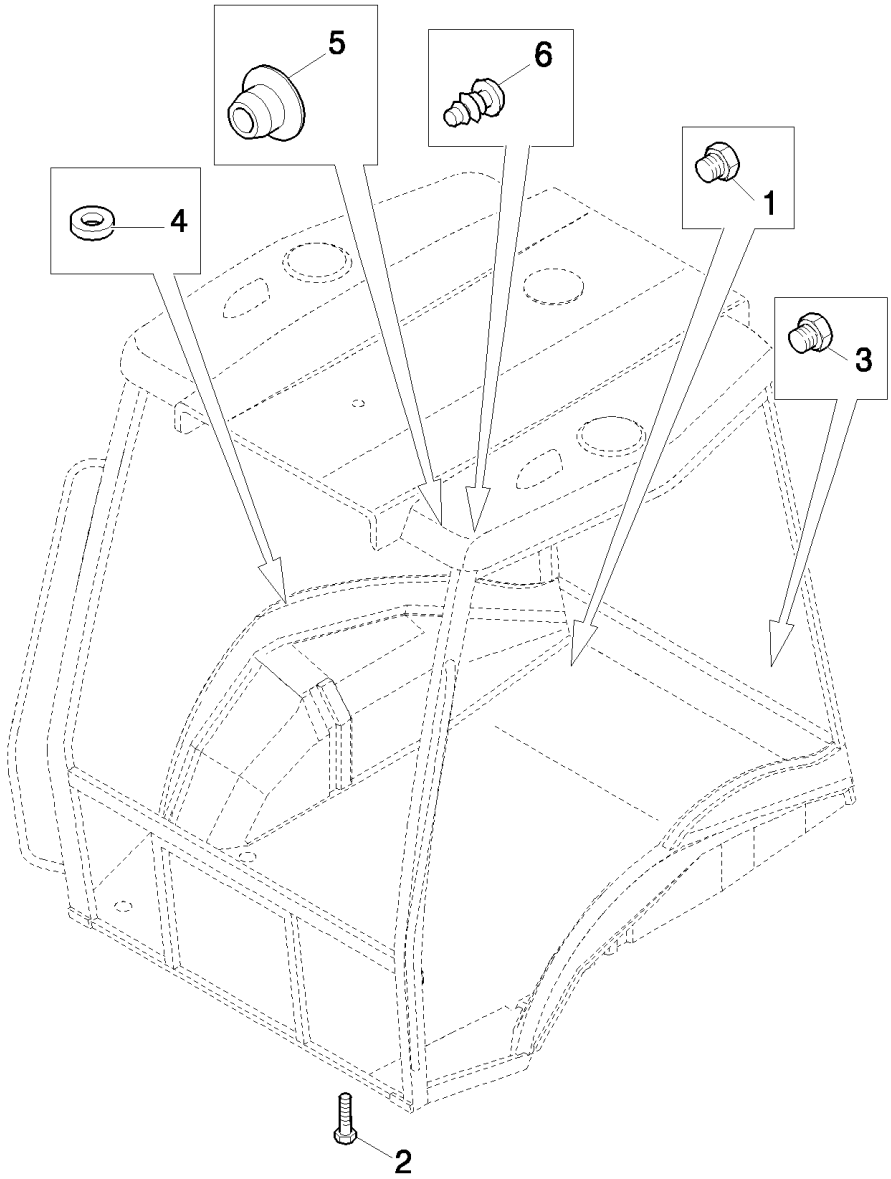

Pilot Control Version

B110 TIER 3 BACKHOE LOADER (2/07-)

1.96.7/7(01) ROPS PLUGS & FLOOR PLATE (CENTER PIVOT) - NA

Ref	Numero de Pieza	Ctd	Descripción
1	85802309	2	PLUG,
2	13313417	4	SCREW, Cross Oval Hd, M6 x 25,
3	85802309	2	PLUG,
4	85804734	5	WASHER, RUBBER,
5	82003283	4	PLUG,
6	85802310	4	PLUG,

Pilot Control Version

1.98.0(01) INFORMATION SYMBOL DECALS - EU

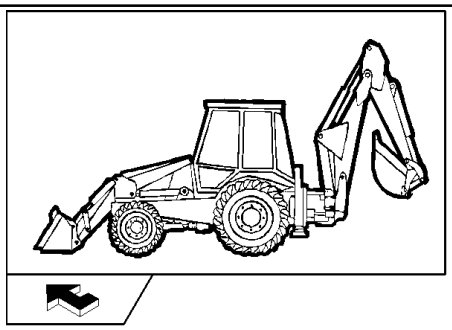

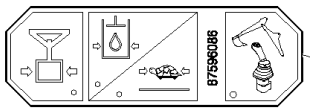

14

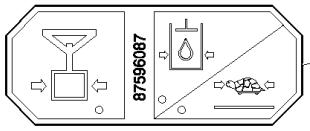

1

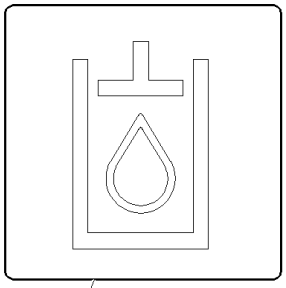

2

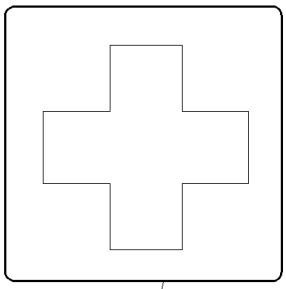

3

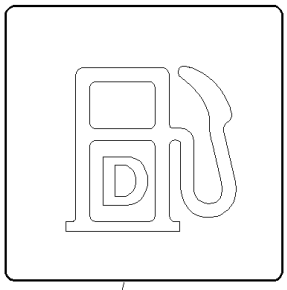

4

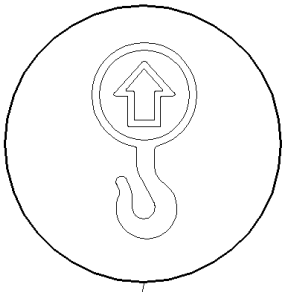

5

6

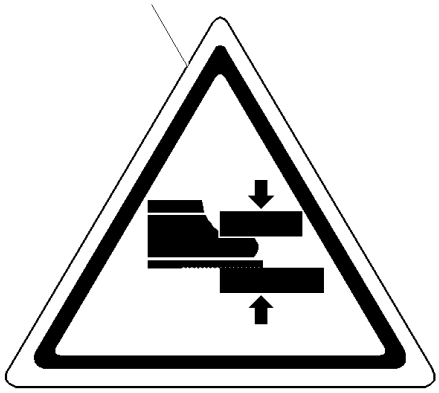

13

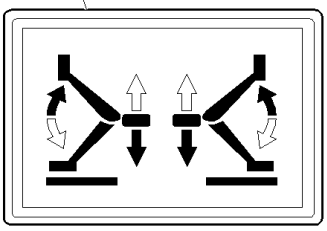

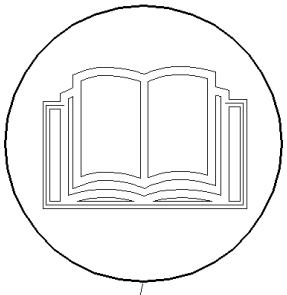

7

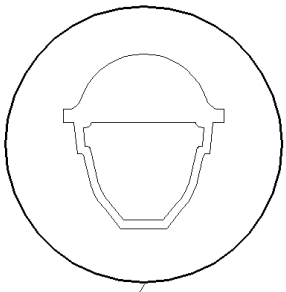

8

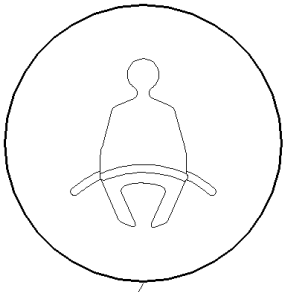

9

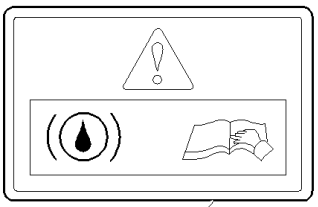

12



10

11

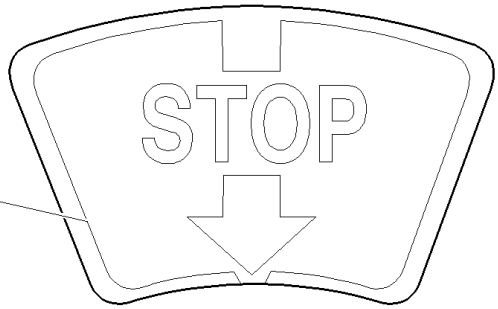

B110 TIER 3 BACKHOE LOADER (2/07-)

1.98.0(01) INFORMATION SYMBOL DECALS - EU

Ref	Numero de Pieza	Ctd	Descripción
1	87596087	1	DECAL, , Only For Mechanical Version
2	85804341	1	DECAL,
3	85804339	1	DECAL,
4	85804338	1	DECAL,
5	85804336	4	DECAL,
6	85804332	1	DECAL,
7	85804333	2	DECAL,
8	85804334	1	DECAL,
9	85804335	1	DECAL,
10	87387139	1	DECAL, , Only For B110
11	85802441	1	DECAL,
12	85807870	1	DECAL,
13	85803788	1	DECAL, , Only For Mechanical Version
14	87596086	1	DECAL, , Only For Piltot Version

1.98.0(02) WARNING SYMBOL DECALS

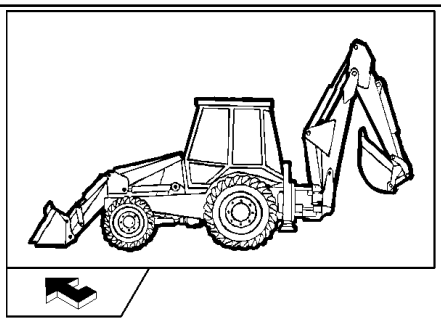

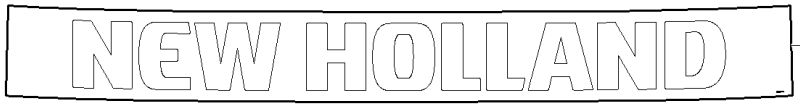

10

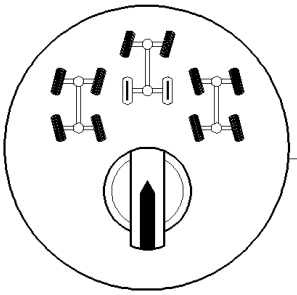

9

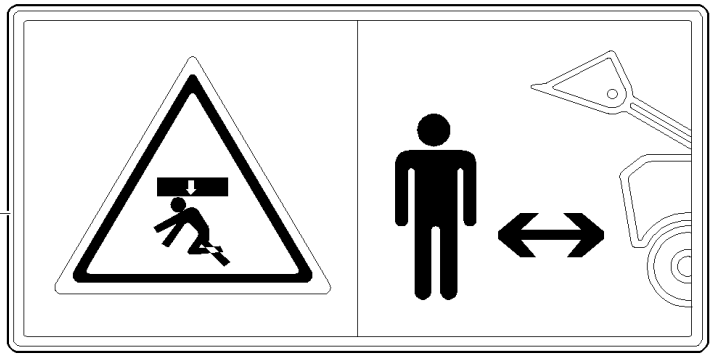

3

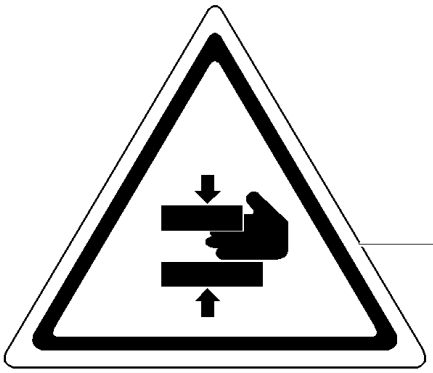

4



1

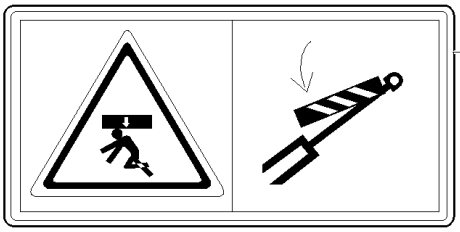

5

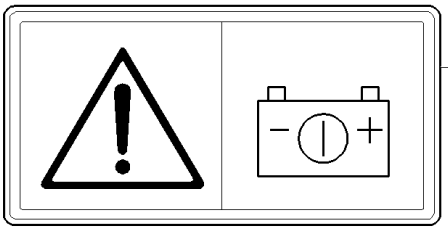

2



6

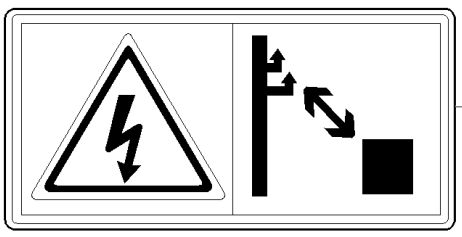

7

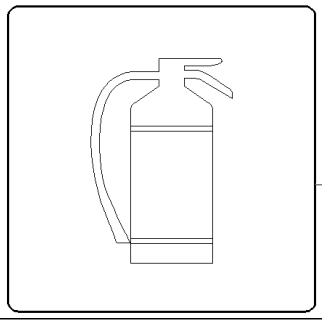

8

B110 TIER 3 BACKHOE LOADER (2/07-)

1.98.0(02) WARNING SYMBOL DECALS

Ref	Numero de Pieza	Ctd	Descripción
1	85804324	2	DECAL,
2	85804330	1	DECAL,
3	85804331	4	DECAL,
4	85804329	6	DECAL,
5	85804325	1	DECAL,
6	85804326	1	DECAL,
7	85804327	1	DECAL,
8	85804337	1	DECAL,
9	85805909	1	DECAL, , Only for B115
10	87607864	1	DECAL,

1.98.0/1(01) INFORMATION SYMBOL DECALS (POWER SHUTTLE - POWER SHIFT)

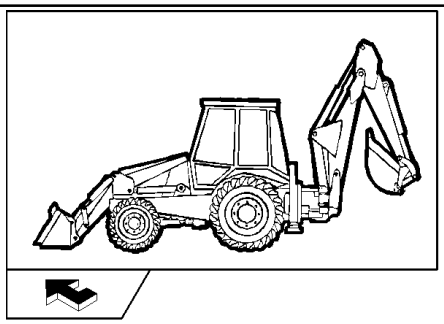

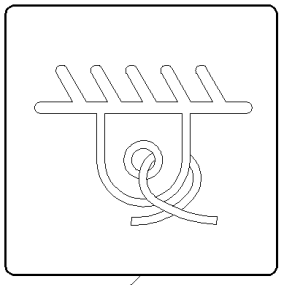

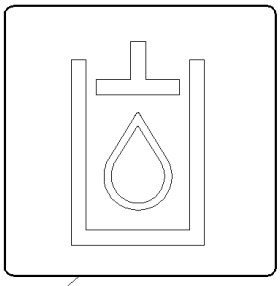

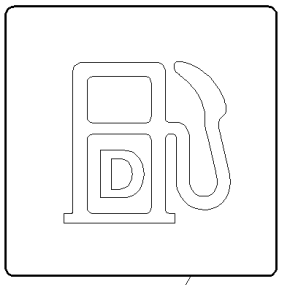

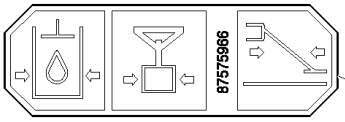

3
10
5

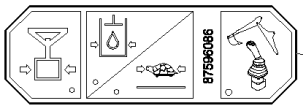

2
11

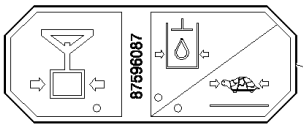

4
12

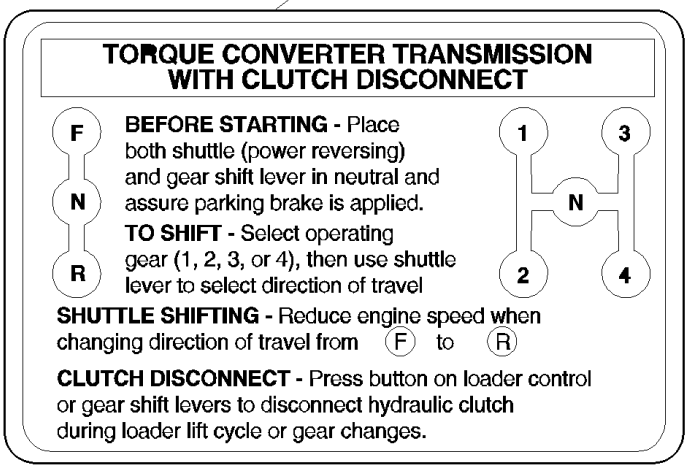

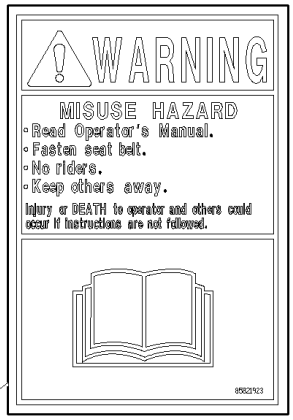

6
9

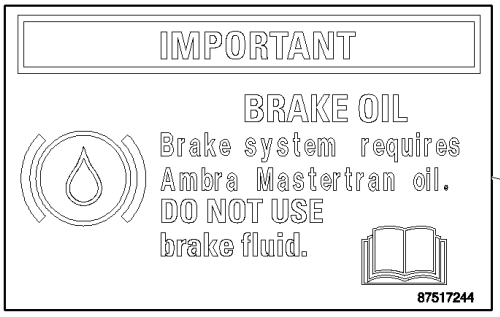

1

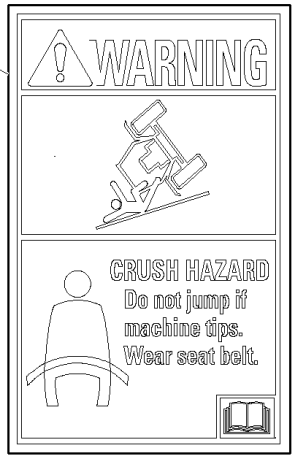



8
7

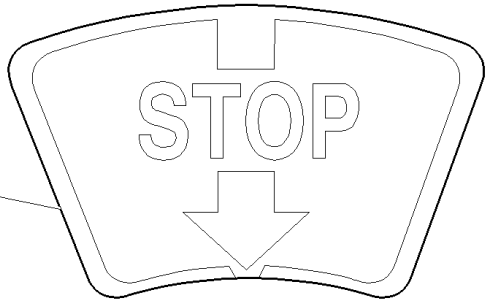

B110 TIER 3 BACKHOE LOADER (2/07-)

1.98.0/1(01) INFORMATION SYMBOL DECALS (POWER SHUTTLE - POWER SHIFT)

Ref	Numero de Pieza	Ctd	Descripción
1	85821926	1	DECAL,
2	85804341	1	DECAL,
3	86500514	4	DECAL,
4	85804338	1	DECAL,
5	85804091	1	DECAL, , Only for Power Shuttle
6	85821923	1	DECAL,
7	85802441	1	DECAL,
8	87387139	1	DECAL,
9	85821920	1	DECAL,
10	87575966	1	DECAL, , Only for Mechanical Version HUSCO
11	87596086	1	DECAL, , Only for Pilot Version
12	87596087	1	DECAL, , Only for Mechanical Version REXROTH

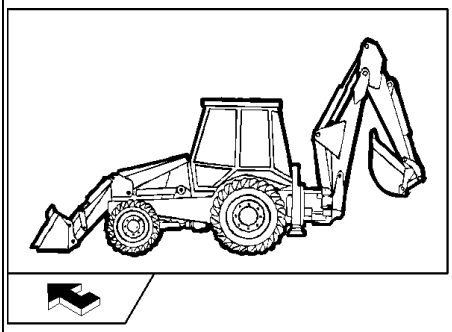

1

COMMAND CONTROL

B110 TIER 3 BACKHOE LOADER (2/07-)

1.98.1(01) PILOT IDENTIFICATION - EU

Ref	Numero de Pieza	Ctd	Descripción
1	85828051	1	DECAL,

1.98.1(02) B110 MODEL IDENTIFICATION (POWER SHIFT) - EU

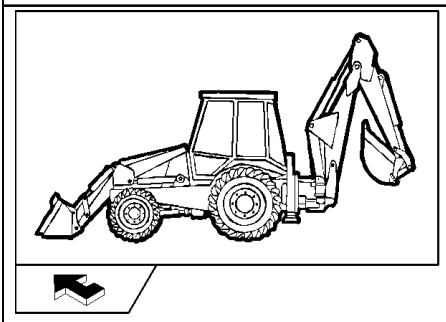

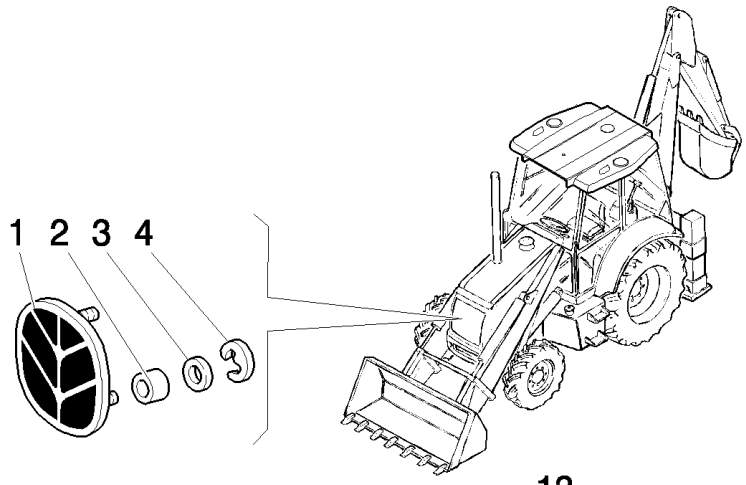

5

POWERSHIFT

13

NEW HOLLAND

NEW HOLLAND

NEW HOLLAND

6

7

12

NEW HOLLAND

LWA
103dB
2000/14/EC

8
9

10

B110

11

B110

NEW HOLLAND

B110 TIER 3 BACKHOE LOADER (2/07-)

1.98.1(02) B110 MODEL IDENTIFICATION (POWER SHIFT) - EU

Ref	Numero de Pieza	Ctd	Descripción
1	85820107	1	EMBLEM,
2	12643711	2	WASHER,
3	5138360	2	RING,
4	5135069	2	CLIP,
5	85804461	1	DECAL,
6	87616402	2	DECAL, L=MM.1183
7	87609724	2	DECAL, L=MM.949
8	87346214	1	DECAL,
9	87802964	1	DECAL,
10	87360270	2	DECAL, L=MM.320
11	87360272	2	DECAL, L=MM.555
12	87415930	2	DECAL,
13	87319148	1	DECAL, L=MM.570

1.98.1(03) B110 MODEL IDENTIFICATION (POWER SHUTTLE) - EU

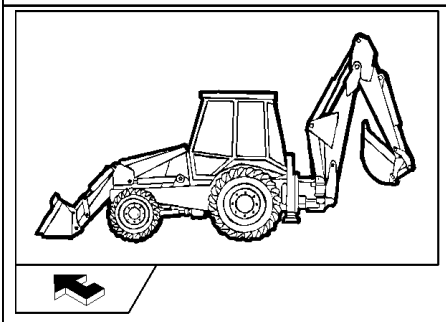

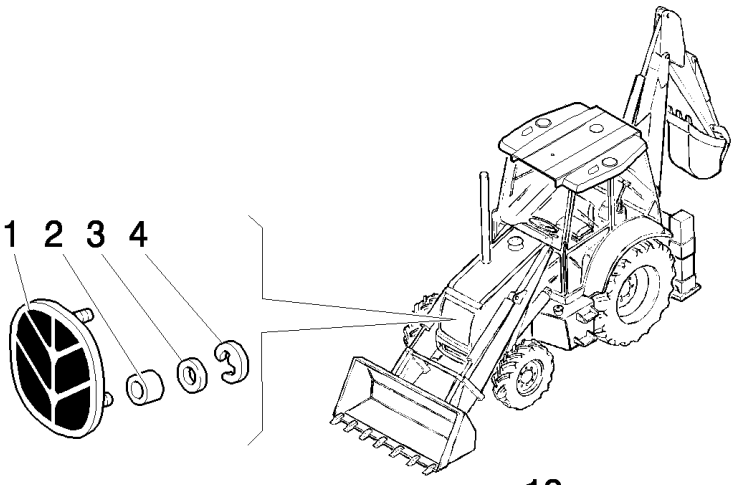

12

NEW HOLLAND

NEW HOLLAND

7

NEW HOLLAND

6

11

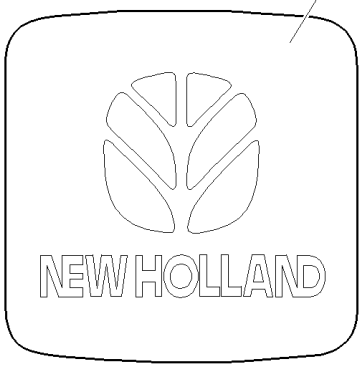

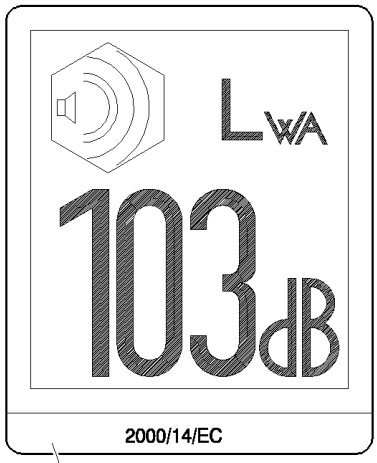

8

9

B110

5

10

B110



B110 TIER 3 BACKHOE LOADER (2/07-)

1.98.1(03) B110 MODEL IDENTIFICATION (POWER SHUTTLE) - EU

Ref	Numero de Pieza	Ctd	Descripción
1	85820107	1	EMBLEM,
2	12643711	2	WASHER,
3	5138360	2	RING,
4	5135069	2	CLIP,
5	87360270	2	DECAL, L=MM.320
6	87616402	2	DECAL, L=MM.1183
7	87609724	2	DECAL, L=MM.949
8	87346214	1	DECAL,
9	87802964	1	DECAL,
10	87360272	2	DECAL, L=MM.555
11	87415930	2	DECAL,
12	87319148	1	DECAL, L=MM.570, Only for 4WD

1.98.1(05) B110 MODEL IDENTIFICATION (POWER SHUTTLE) - NA

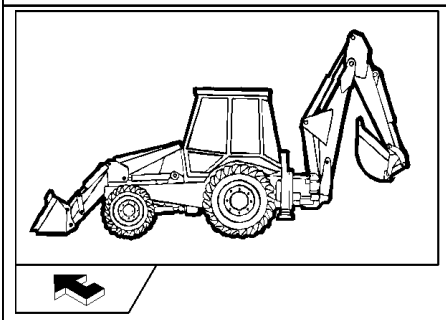

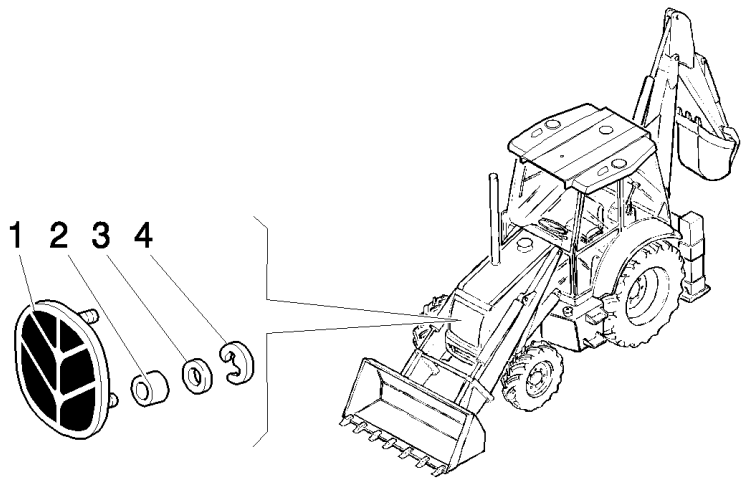

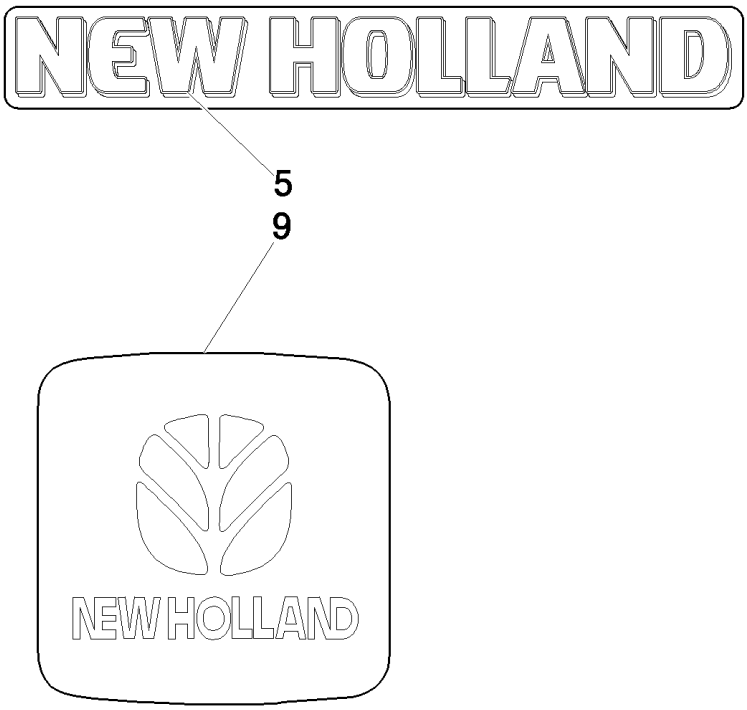

B110 TIER 3 BACKHOE LOADER (2/07-)

1.98.1(05) B110 MODEL IDENTIFICATION (POWER SHUTTLE) - NA

Ref	Numero de Pieza	Ctd	Descripción
1	85820107	1	EMBLEM,
2	12643711	2	WASHER,
3	5138360	2	RING,
4	5135069	2	CLIP,
5	87616402	2	DECAL, L=MM.1183
6	87609724	3	DECAL, L=MM.949
7	87802964	2	DECAL,
8	87360270	2	DECAL, L=MM.320
9	87415930	1	DECAL,
10	87319148	1	DECAL, L=MM.570
11	87360272	2	DECAL, L=MM.550

1.98.1(06) B110 MODEL IDENTIFICATION - POWER SHIFT - NA

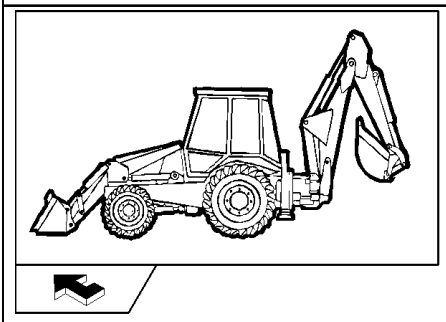

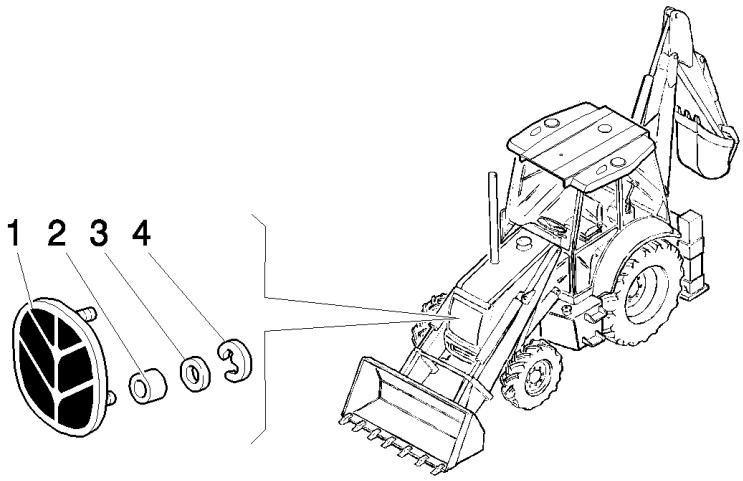



5



12

7

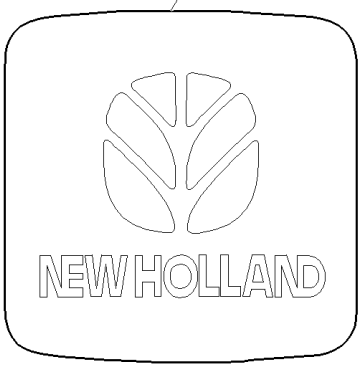

9

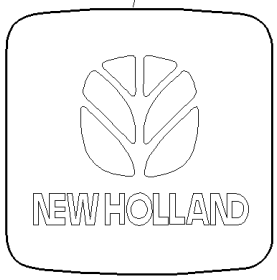

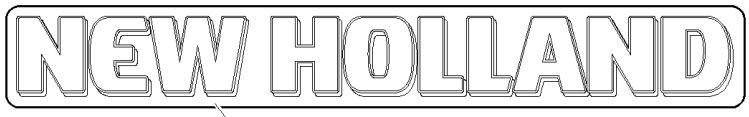

8

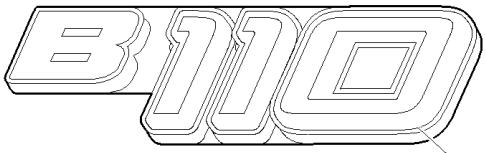

11

10

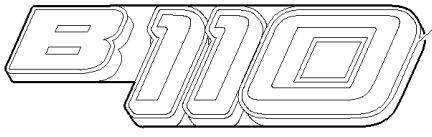



6

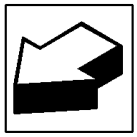

B110 TIER 3 BACKHOE LOADER (2/07-)

1.98.1(06) B110 MODEL IDENTIFICATION - POWER SHIFT - NA

Ref	Numero de Pieza	Ctd	Descripción
1	85820107	1	EMBLEM,
2	12643711	2	WASHER,
3	5138360	2	RING,
4	5135069	2	CLIP,
5	87363419	2	DECAL,
6	87609724	2	DECAL, L=MM.949
7	87415930	2	DECAL,
8	87616402	2	DECAL, L=MM.1183
9	87802964	1	DECAL,
10	87360272	2	DECAL, L=MM.550
11	87360270	2	DECAL, L=MM.320
12	87319148	1	DECAL, L=MM.570

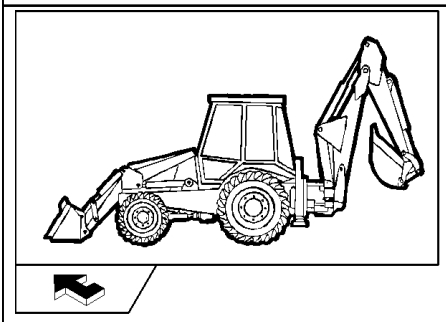

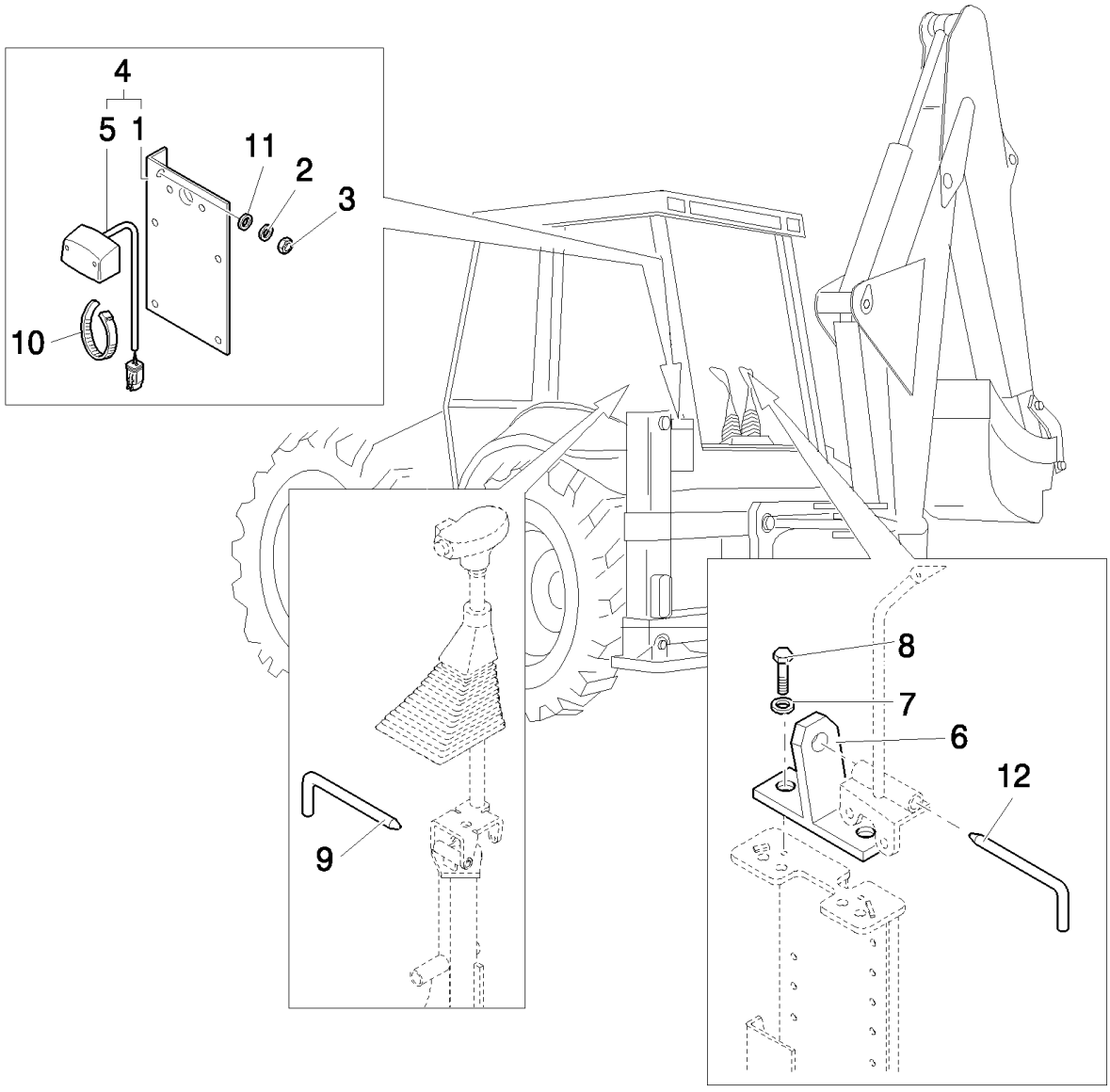
4
5
1
11
2
3
10
9
8
7
6
12

B110 TIER 3 BACKHOE LOADER (2/07-)

128(01) APPROVAL FOR ITALY - EU

Ref	Numero de Pieza	Ctd	Descripción
1	85803296	1	SUPPORT,
2	11193879	2	WASHER, SPRING, Belleville, M8.4,
3	16100811	2	NUT, M8, Cl 8,
4	87387257	1	LAMP, NUMBER PLATE, , Includes 1, 5
5	87387258	1	LAMP, NUMBER PLATE,
6	85803125	1	STOP, (MECH.)
7	11193879	1	WASHER, SPRING, Belleville, M8.4,
8	16043621	1	BOLT, Hex, M8 x 25, 8.8,
9	87608856	1	PIN,
10	85803332	2	STRAP, CABLE, M4.8 x 180,
11	12647121	2	WASHER, M8 x 20 x 3,
12	87609067	1	PIN, (MECH.)

Mechanical Version

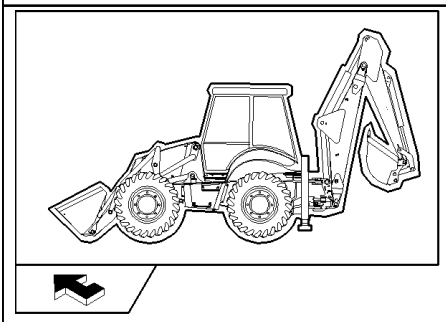

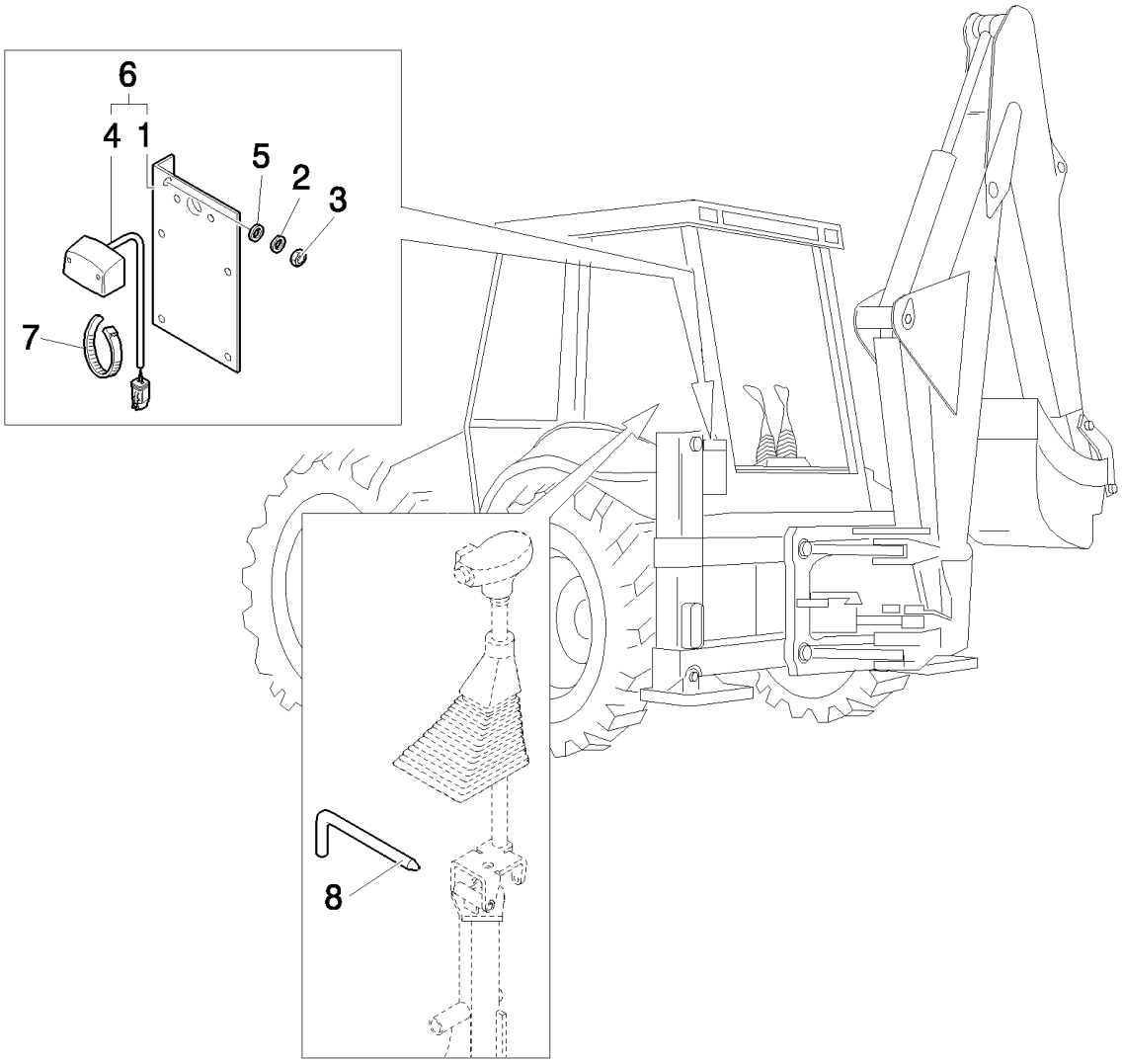
6
4
1
5
2
3
7
8

B110 TIER 3 BACKHOE LOADER (2/07-)

128(02) APPROVAL FOR ITALY - EU

Ref	Numero de Pieza	Ctd	Descripción
1	85803296	1	SUPPORT,
2	11193879	2	WASHER, SPRING, Belleville, M8.4,
3	16100811	2	NUT, M8, Cl 8,
4	87387258	1	LAMP, NUMBER PLATE,
5	12647121	2	WASHER, M8 x 20 x 3,
6	87387257	1	LAMP, NUMBER PLATE, , Includes 1, 4
7	85803332	2	STRAP, CABLE, M4.8 x 180,
8	87608856	1	PIN,

Pilot Control Version

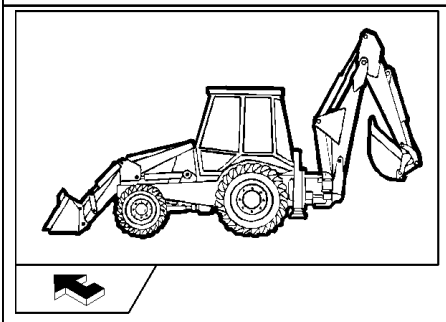

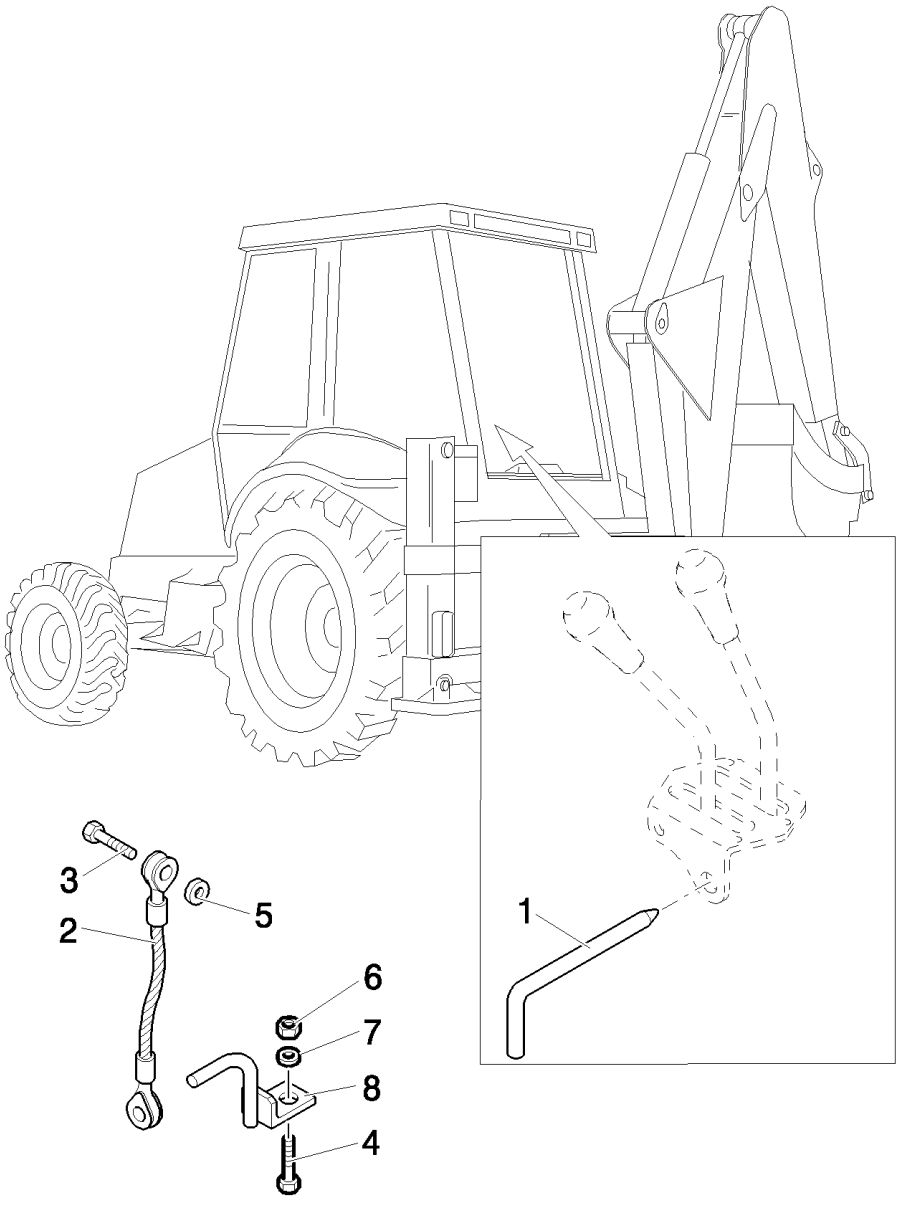
3
5
2
6
7
8
4
1

B110 TIER 3 BACKHOE LOADER (2/07-)

128(03) APPROVAL FOR ITALY - EU

Ref	Numero de Pieza	Ctd	Descripción
1	87609101	1	PIN,
2	87521932	2	TIE-ROD,
3	15540321	2	BOLT, Hex, M12 x 1.25 x 25, 8.8, Full Thd,
4	11390521	2	BOLT, Hex, M16 x 1.5 x 40, 8.8, Full Thd,
5	11190879	2	WASHER, SPRING, Belleville, M13,
6	12574911	2	NUT, LOCK, M16 x 1.5, Cl 8,
7	14496921	2	WASHER, M16 x 30 x 3,
8	85803999	2	HOOK,

Mechanical Version/Pilot Version

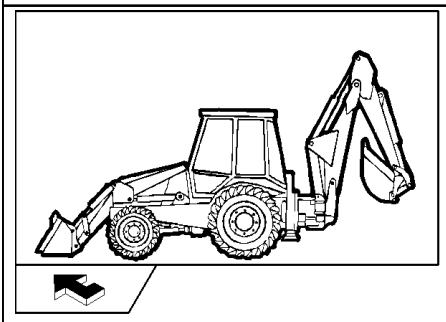

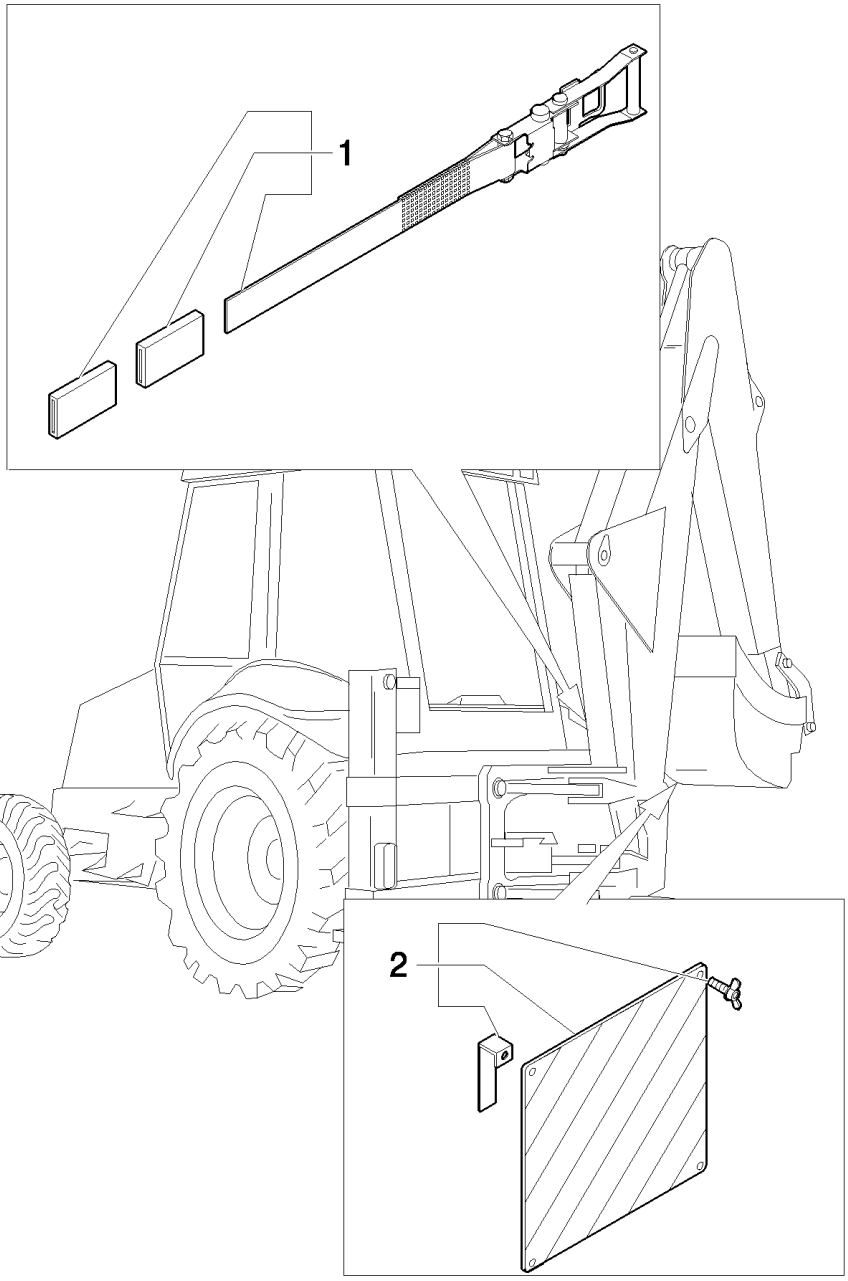
1
2

B110 TIER 3 BACKHOE LOADER (2/07-)

128(04) APPROVAL FOR ITALY - EU

Ref	Numero de Pieza	Ctd	Descripción
1	87361089	1	BLOCK,
2	87394180	1	PANEL,

Mechanical / Pilot Version

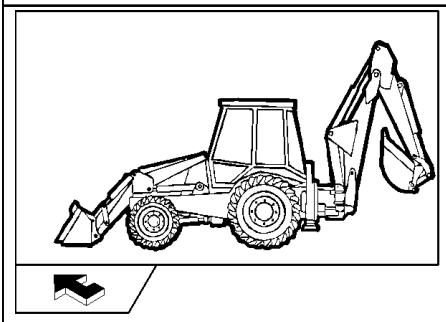

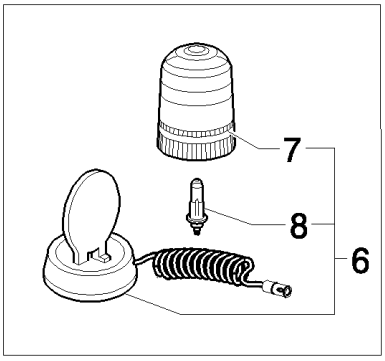
7
8
6

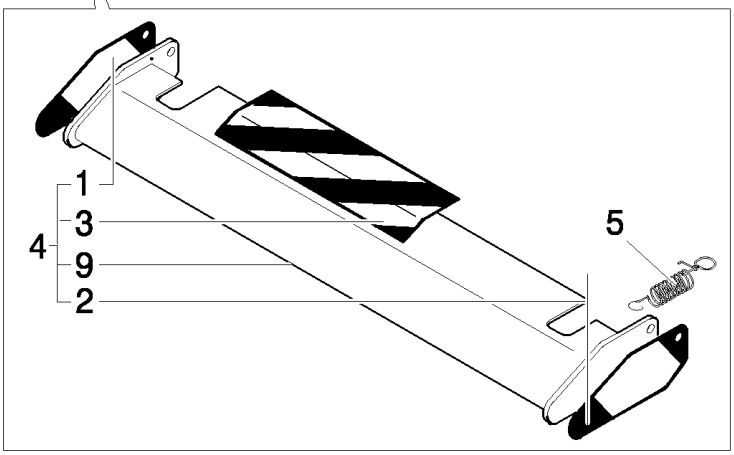
1
4
3
9
2
5

B110 TIER 3 BACKHOE LOADER (2/07-)

128(05) APPROVAL FOR ITALY - EU

Ref	Numero de Pieza	Ctd	Descripción
1	85803538	1	STRIP-GASKET,
2	85803539	1	DECAL,
3	85803537	1	STRIP-GASKET, , Only for B110
3	85805614	1	DECAL, , Only for B115
4	85803534	1	GUARD, , Includes 1 To 3, 9, Only for B110
4	85805611	1	SHIELD, , Includes 1 To 3, 9, Only for B115
5	85803541	2	SPRING,
6	85817129	1	BEACON, , Includes 7, 8
7	85817131	1	LENS,
8	85817130	1	BULB,
9	85803518	1	GUARD, , Only for B110
9	85805611	1	SHIELD, , Only for B115

Mechanical / Pilot Version

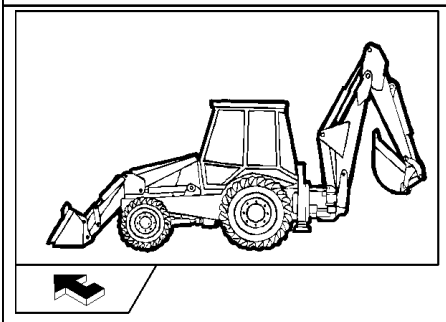

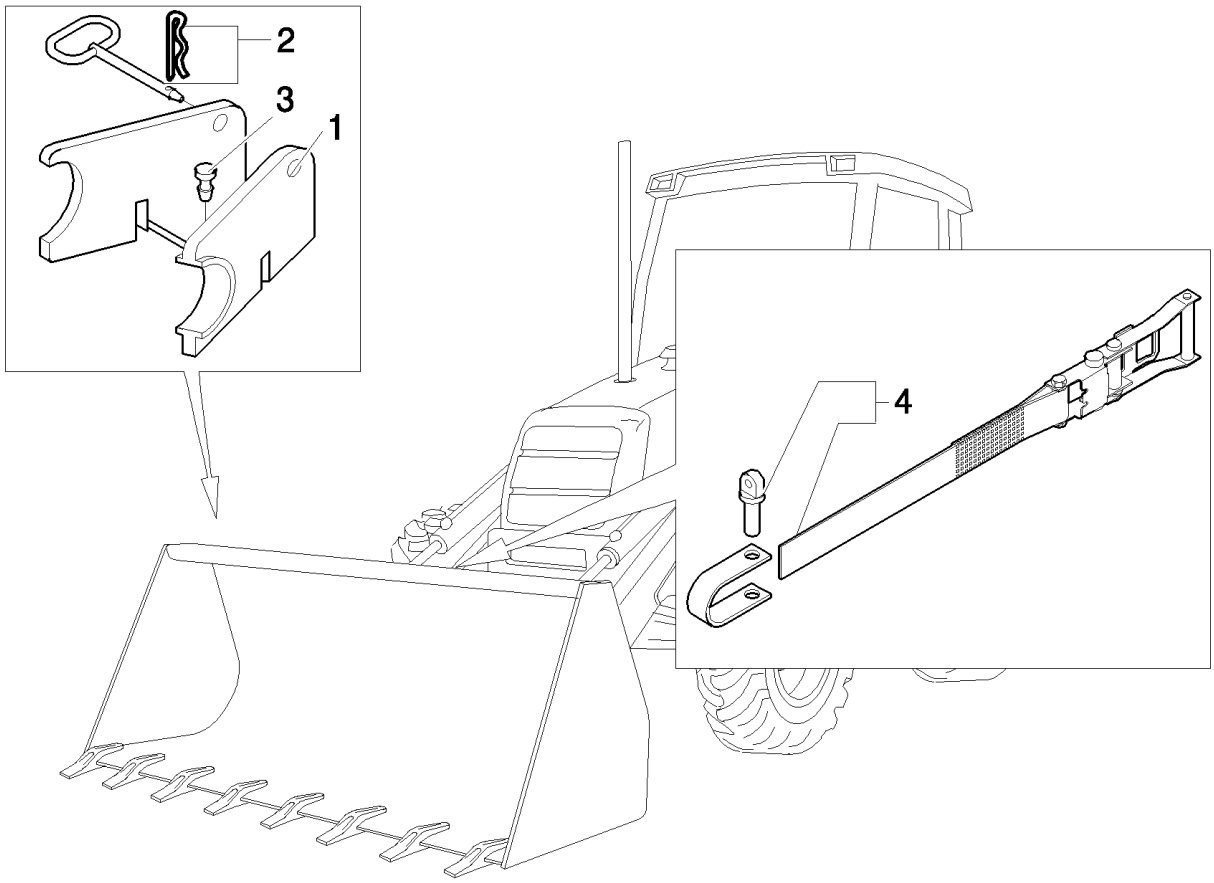
2
3
1
4

B110 TIER 3 BACKHOE LOADER (2/07-)

128(07) APPROVAL FOR - EU

Ref	Numero de Pieza	Ctd	Descripción
1	85803519	1	BLOCK,
2	86507337	1	PIN, HITCH,
3	14566887	2	PLUG,
4	87361052	1	BELT, CONVEYOR,

Mechanical / Pilot Version

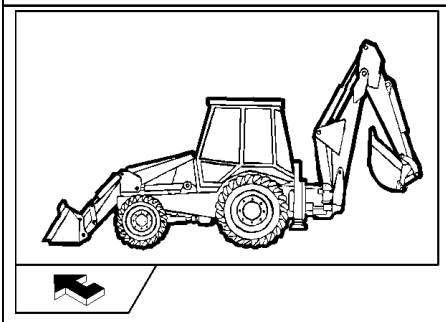

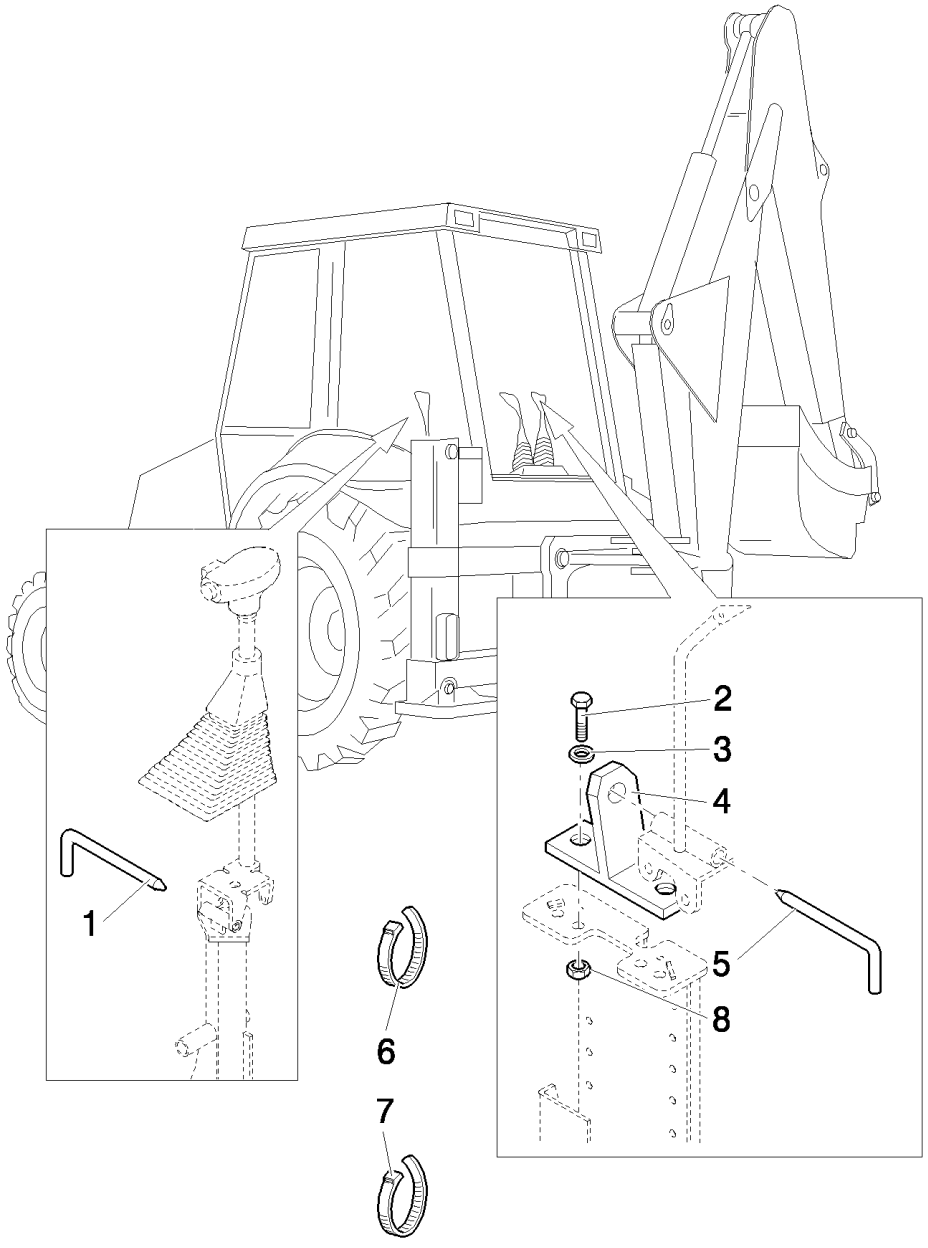
1
2
3
4
5
6
7
8

B110 TIER 3 BACKHOE LOADER (2/07-)

129(01) APPROVAL FOR GERMANY - EU

Ref	Numero de Pieza	Ctd	Descripción
1	87608856	1	PIN,
2	16043621	2	BOLT, Hex, M8 x 25, 8.8,
3	11193979	2	WASHER, SPRING, Belleville, M8.4,
4	85803125	1	STOP,
5	87609067	1	PIN,
6	79072960	1	STRAP, CABLE,
7	85803332	2	STRAP, CABLE, M4.8 x 180,
8	16100811	2	NUT, M8, Cl 8,

Mechanical Version

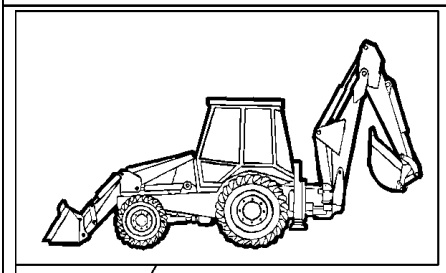

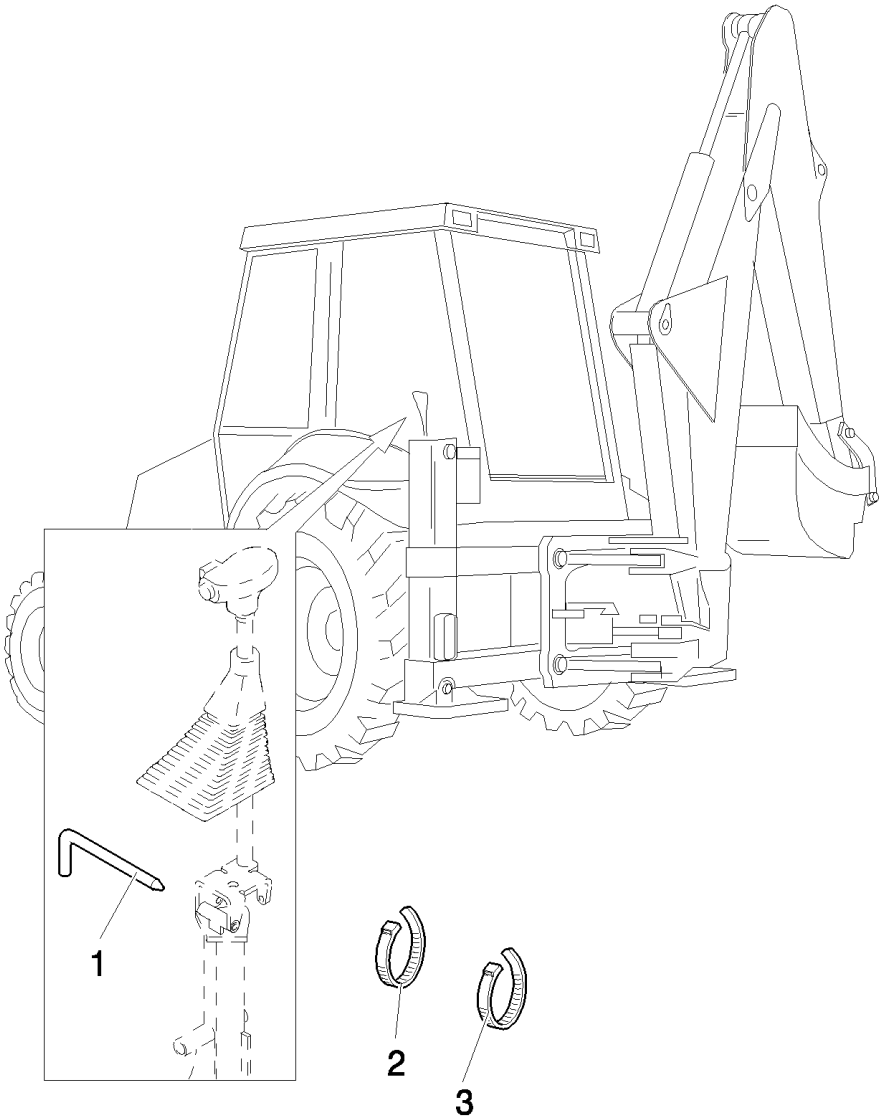
1
2
3

B110 TIER 3 BACKHOE LOADER (2/07-)

129(02) APPROVAL FOR GERMANY - EU

Ref	Numero de Pieza	Ctd	Descripción
1	87608856	1	PIN,
2	79072960	2	STRAP, CABLE,
3	85803332	2	STRAP, CABLE, M4.8 x 180,

Pilot Control Version

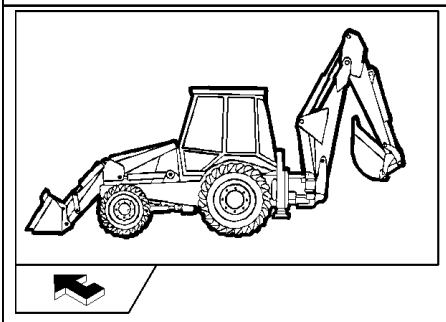

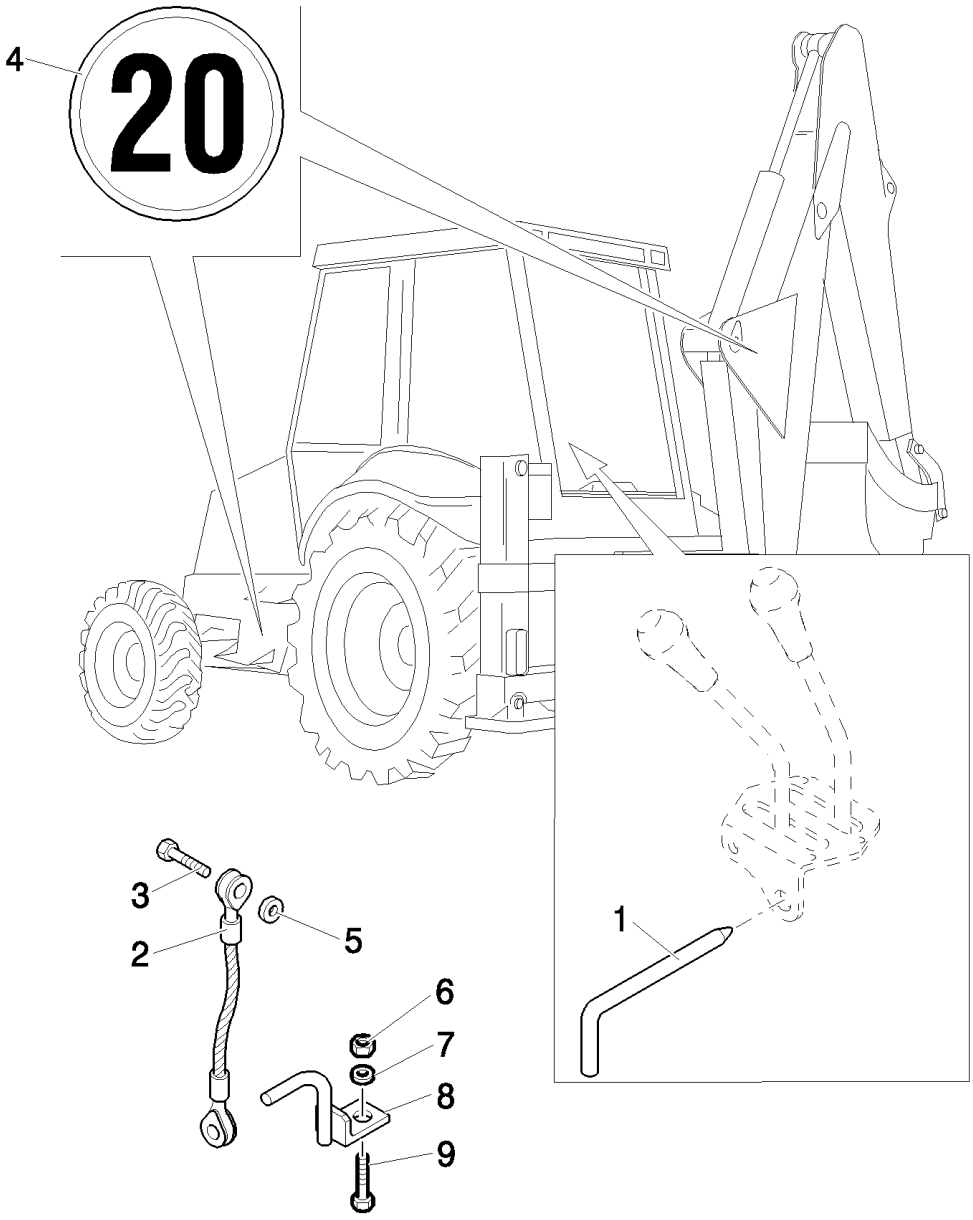
4
20
3
2
5
6
7
8
9
1

B110 TIER 3 BACKHOE LOADER (2/07-)

129(03) APPROVAL FOR GERMANY - EU

Ref	Numero de Pieza	Ctd	Descripción
1	87609101	1	PIN,
2	87521932	2	TIE-ROD,
3	15540321	2	BOLT, Hex, M12 x 1.25 x 25, 8.8, Full Thd,
4	85804357	3	DECAL,
5	11190879	2	WASHER, SPRING, Belleville, M13,
6	12574911	2	NUT, LOCK, M16 x 1.5, Cl 8,
7	14496921	2	WASHER, M16 x 30 x 3,
8	85803999	2	HOOK,
9	11390521	2	BOLT, Hex, M16 x 1.5 x 40, 8.8, Full Thd,

Mechanical Version/Pilot Version

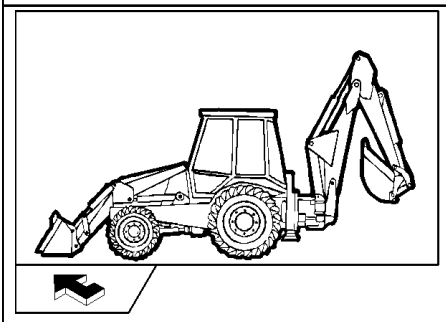

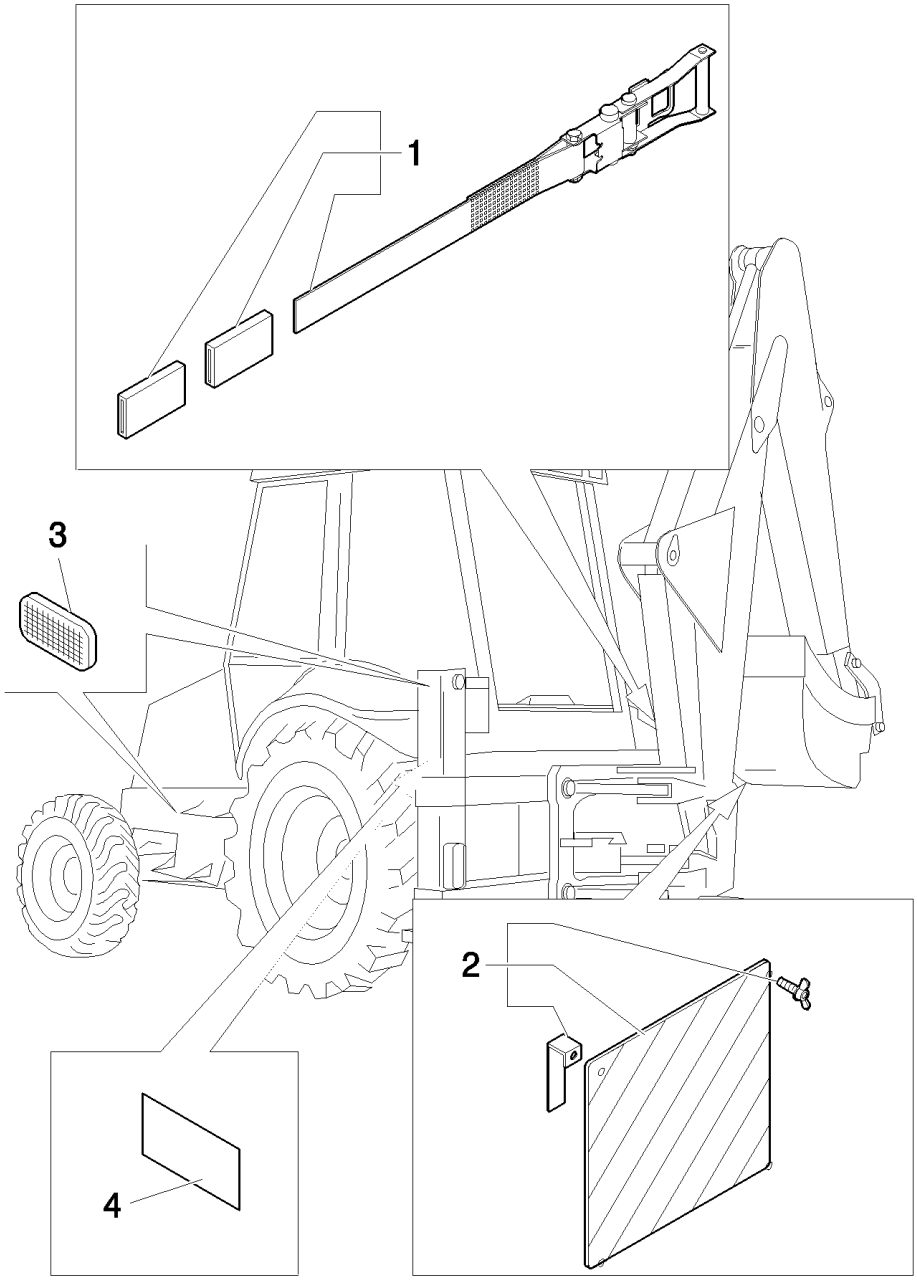
1
3
2
4

B110 TIER 3 BACKHOE LOADER (2/07-)

129(04) APPROVAL FOR GERMANY - EU

Ref	Numero de Pieza	Ctd	Descripción
1	87361089	1	BLOCK,
2	87394180	1	PANEL,
3	85804011	4	REFLECTOR, Orange
4	85804012	4	REFLECTOR,

Mechanical / Pilot Version

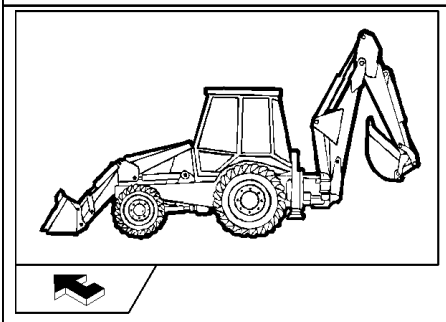

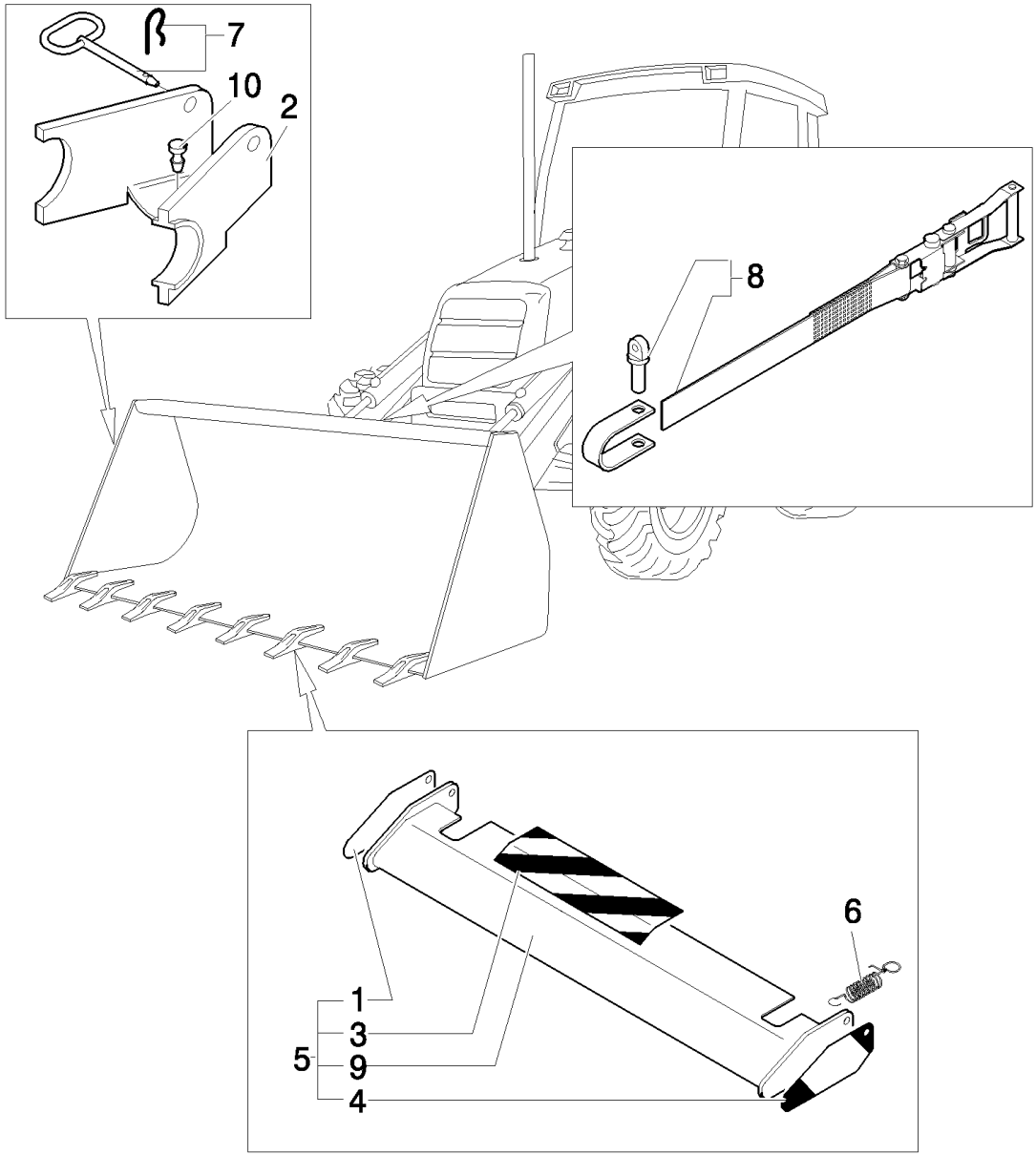
7
10
2
8
6
1
3
5
9
4

B110 TIER 3 BACKHOE LOADER (2/07-)

129(05) APPROVAL FOR GERMANY - EU

Ref	Numero de Pieza	Ctd	Descripción
1	85803538	1	STRIP-GASKET,
2	85803519	1	BLOCK,
3	85803537	1	STRIP-GASKET,
4	85803539	1	DECAL,
5	85803534	1	GUARD, , Includes 1, 3, 4, 12
6	85803541	2	SPRING,
7	86507337	1	PIN, HITCH,
8	87361052	1	BELT, CONVEYOR,
9	85803518	1	GUARD,
10	14566887	2	PLUG,

Mechanical / Pilot Version

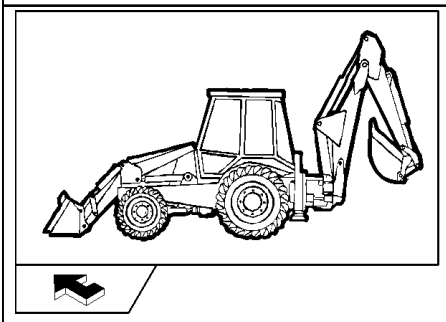

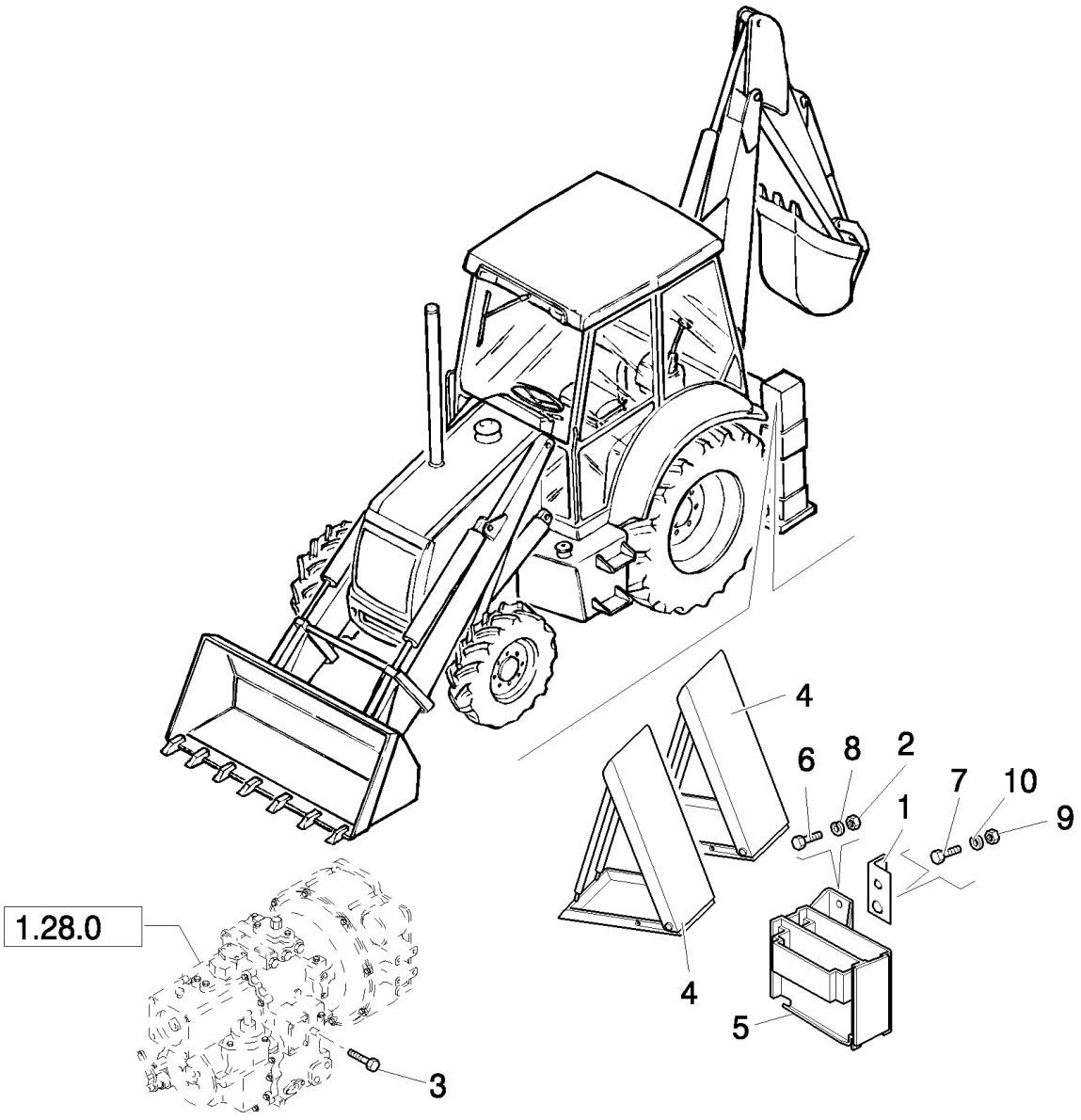
4
6
8
2
7
10
1
9
1.28.0
4
5
3

B110 TIER 3 BACKHOE LOADER (2/07-)

129(07) APPROVAL FOR GERMANY - EU

Ref	Numero de Pieza	Ctd	Descripción
1	85802389	1	ANGLE BAR,
2	16101521	1	NUT, M12 x 1.25, Cl 10,
3	85803398	1	SCREW, , 4TH Geéar Lock, Only for B110
4	5112736	2	WHEEL CHOCK,
5	5155895	1	SUPPORT, -ASSY
6	15540534	1	BOLT, Hex, M12 x 1.25 x 35, 10.9, Full Thd,
7	16043621	1	BOLT, Hex, M8 x 25, 8.8,
8	11198679	1	WASHER, SPRING, Belleville, M13,
9	16102211	1	NUT, M8, Cl 10,
10	11193979	1	WASHER, SPRING, Belleville, M8.4,

Mechanical / Pilot Version

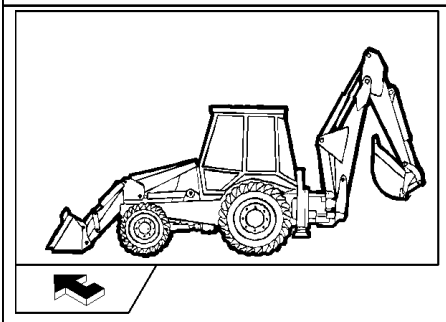

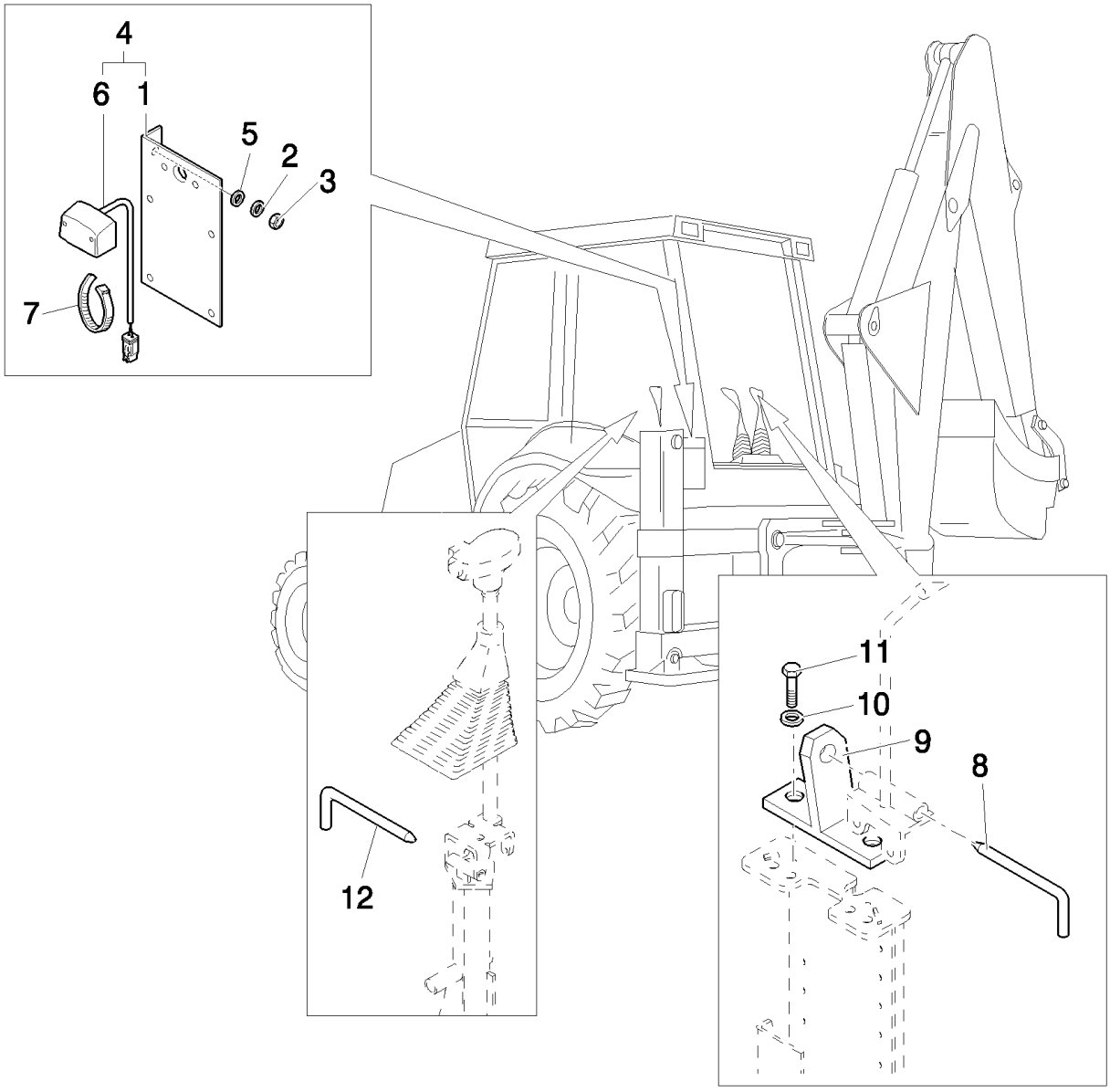
4
6
1
5
2
3
7
12
11
10
9
8

B110 TIER 3 BACKHOE LOADER (2/07-)

130(01) APPROVAL FOR EUROPE

Ref	Numero de Pieza	Ctd	Descripción
1	85803296	1	SUPPORT,
2	11193879	2	WASHER, SPRING, Belleville, M8.4,
3	16100811	2	NUT, M8, Cl 8,
4	87387257	1	LAMP, NUMBER PLATE, , Includes 1, 6
5	12647121	2	WASHER, M8 x 20 x 3,
6	87387258	1	LAMP, NUMBER PLATE,
7	85803332	2	STRAP, CABLE, M4.8 x 180,
8	87609067	1	PIN,
9	85803125	1	STOP,
10	11193979	2	WASHER, SPRING, Belleville, M8.4,
11	16043621	2	BOLT, Hex, M8 x 25, 8.8,
12	87608856	1	PIN,

Mechanical Version

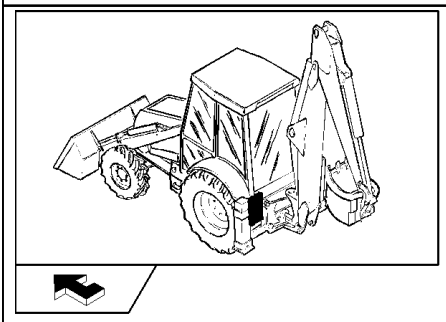

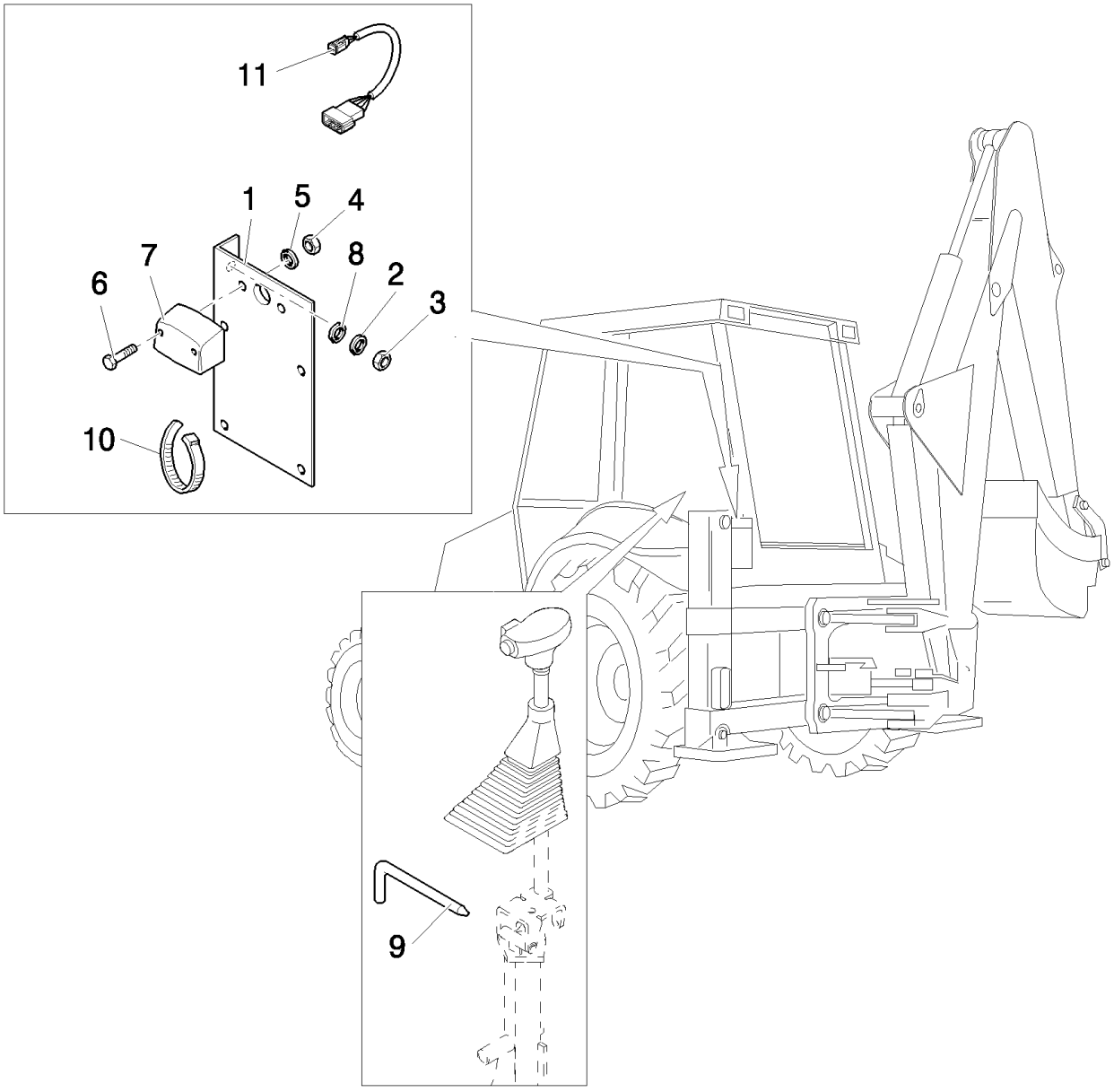
11
1
5
4
7
8
2
6
3
10
9

B110 TIER 3 BACKHOE LOADER (2/07-)

130(02) APPROVAL FOR EUROPE

Ref	Numero de Pieza	Ctd	Descripción
1	85803296	1	SUPPORT,
2	11193879	2	WASHER, SPRING, Belleville, M8.4,
3	16100811	2	NUT, M8, Cl 8,
4	12574111	2	NUT, LOCK, M5 x .8, Cl 8,
5	12647121	2	WASHER, M8 x 20 x 3,
6	10977821	2	BOLT, Hex, M5 x 16, 8.8, Full Thd,
7	85803533	1	LAMP, NUMBER PLATE, , Only for B110 EU
7	87387258	1	LAMP, NUMBER PLATE, , Only for B115 EU
8	87608856	1	PIN,
9	85803543	1	PIN,
10	85803332	2	STRAP, CABLE, M4.8 x 180,
11	87318560	1	HARNESS, WIRE,

Pilot Control Version

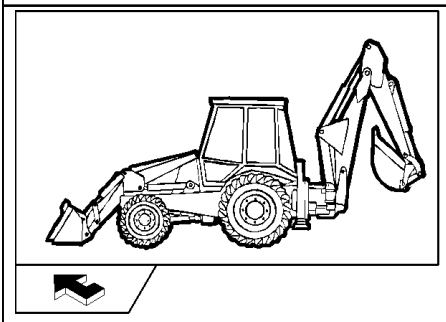

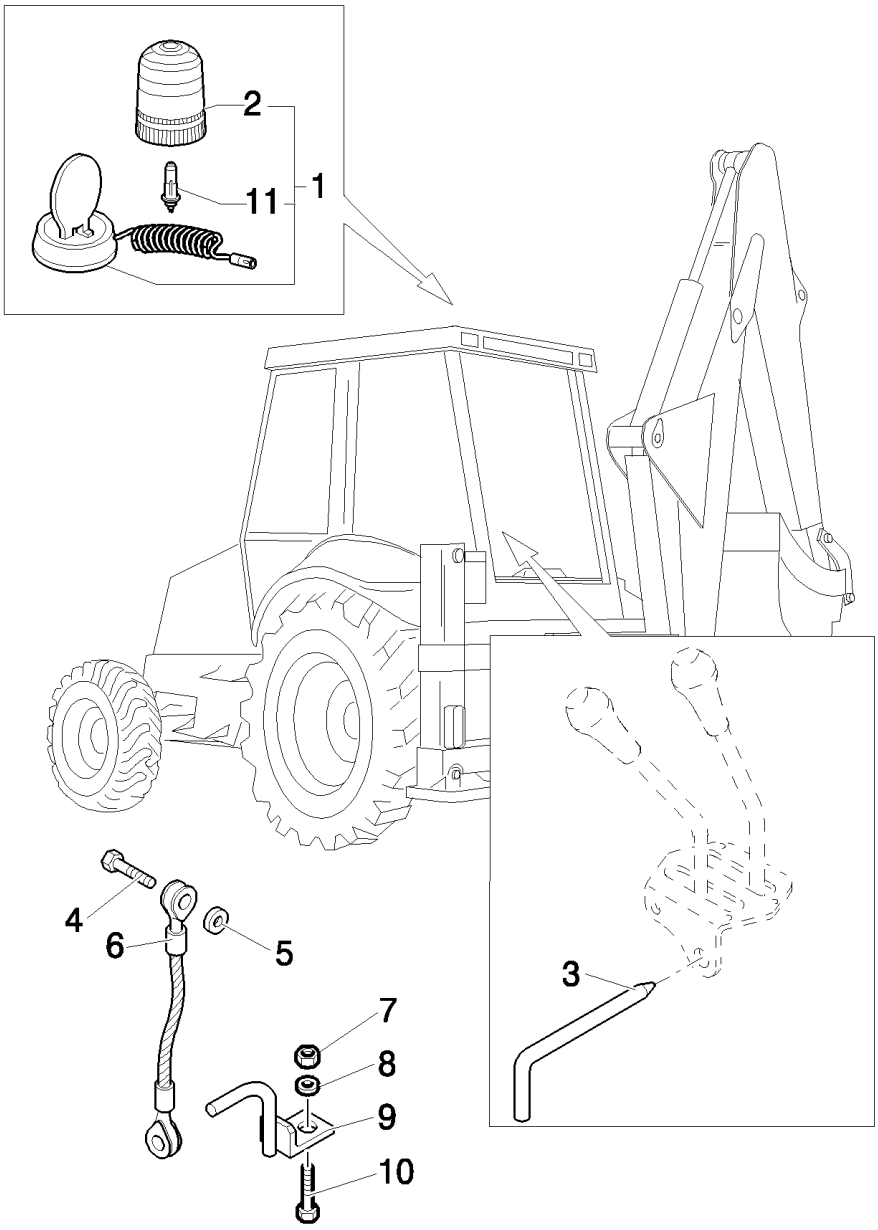
2
11
1
4
6
5
3
7
8
9
10

B110 TIER 3 BACKHOE LOADER (2/07-)

130(03) APPROVAL FOR EUROPE

Ref	Numero de Pieza	Ctd	Descripción
1	85817129	2	BEACON, , Includes 2, 11
2	85817131	2	LENS,
3	87609101	1	PIN,
4	15540321	2	BOLT, Hex, M12 x 1.25 x 25, 8.8, Full Thd,
5	11190879	2	WASHER, SPRING, Belleville, M13,
6	87521932	2	TIE-ROD,
7	12574911	2	NUT, LOCK, M16 x 1.5, Cl 8,
8	14496921	2	WASHER, M16 x 30 x 3,
9	85803999	2	HOOK,
10	11390521	2	BOLT, Hex, M16 x 1.5 x 40, 8.8, Full Thd,
11	85817130	2	BULB, 12V-55W

Mechanical Version/Pilot Version

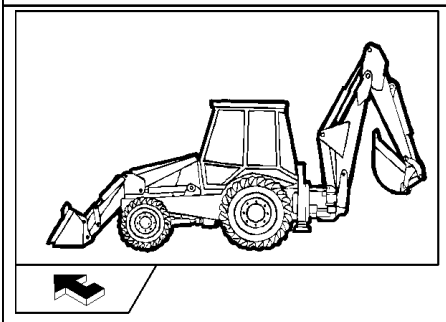

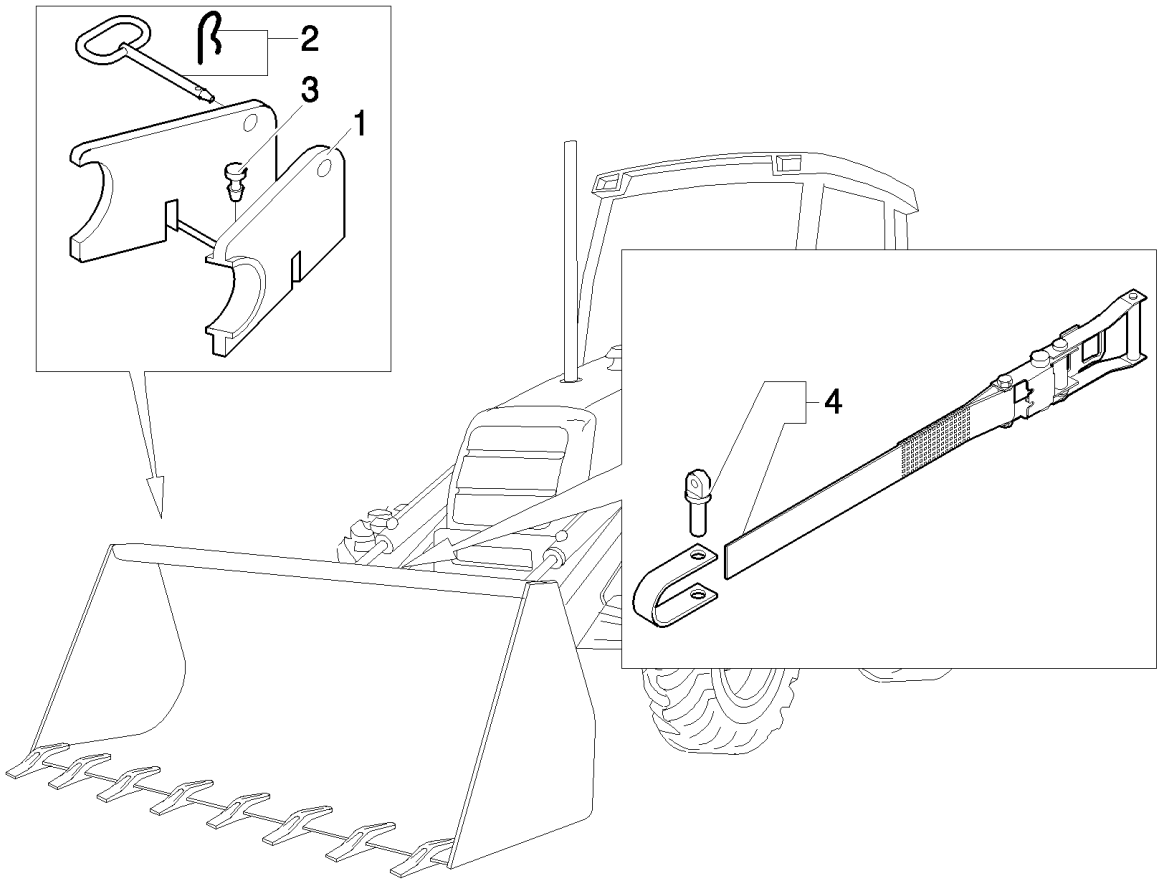
2
3
1
4

B110 TIER 3 BACKHOE LOADER (2/07-)

130(04) APPROVAL FOR EUROPE

Ref	Numero de Pieza	Ctd	Descripción
1	85803519	1	BLOCK,
2	86507337	1	PIN, HITCH,
3	14566887	2	PLUG,
4	87361052	1	BELT, CONVEYOR,

Mechanical Version

131(01) SINGLE BATTERY

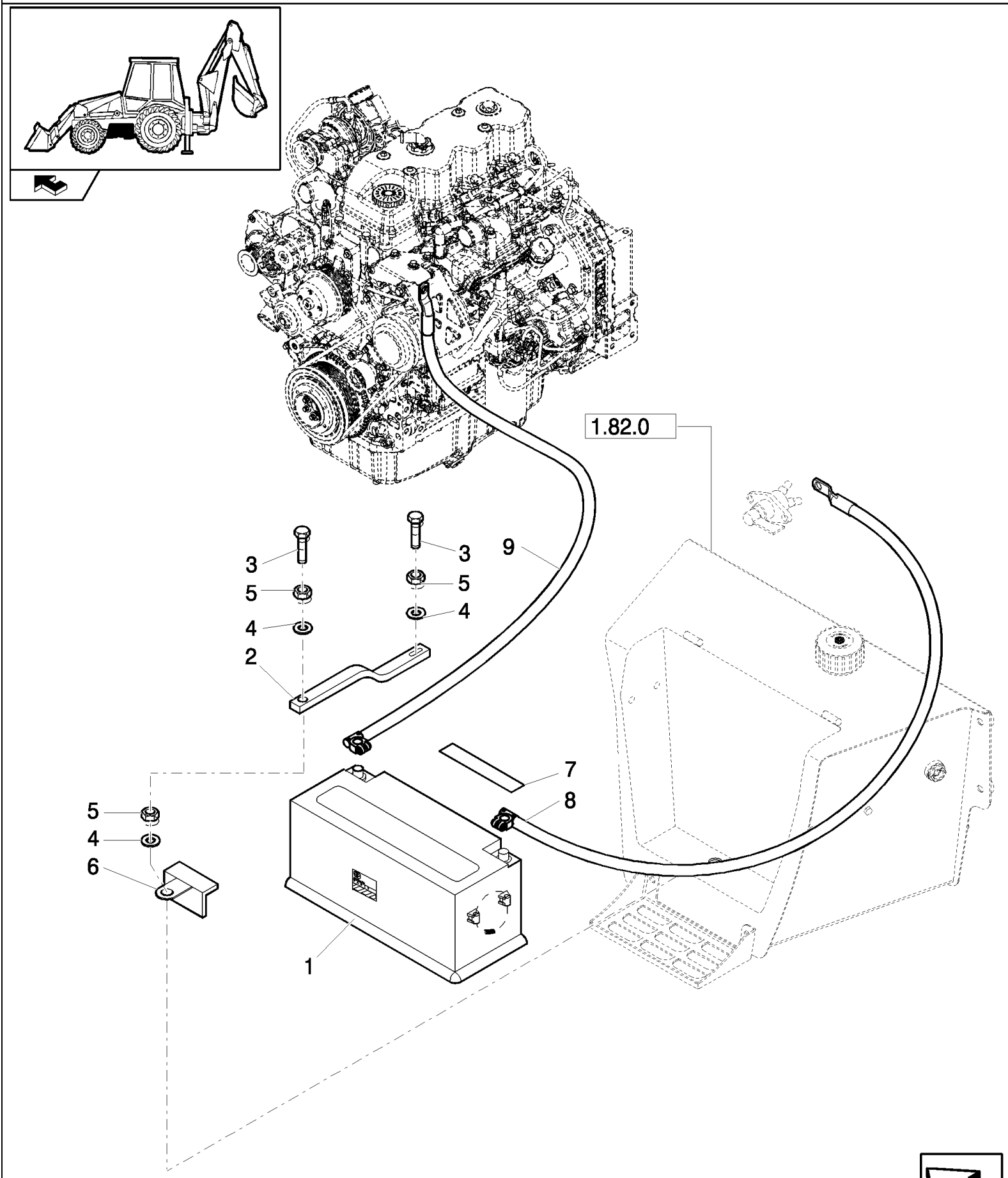

B110 TIER 3 BACKHOE LOADER (2/07-)

131(01) SINGLE BATTERY

Ref	Numero de Pieza	Ctd	Descripción
1	85826206	1	BATTERY, WET, CANADIAN.
2	87416929	1	BRACKET,
3	412005	2	BOLT, Hex, M10 x 220, 8.8, M10x220
4	47048963	2	WASHER,
5	47049041	2	NUT, M10
6	47048788	2	ANGLE,
7	47049590	1	DECAL,
8	87405018	1	Strap, Ground,
9	87567413	1	CABLE,

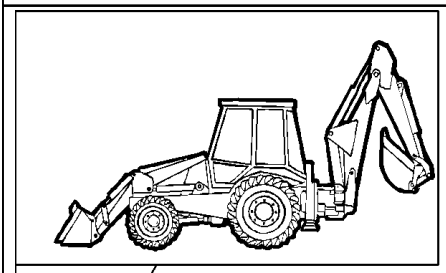

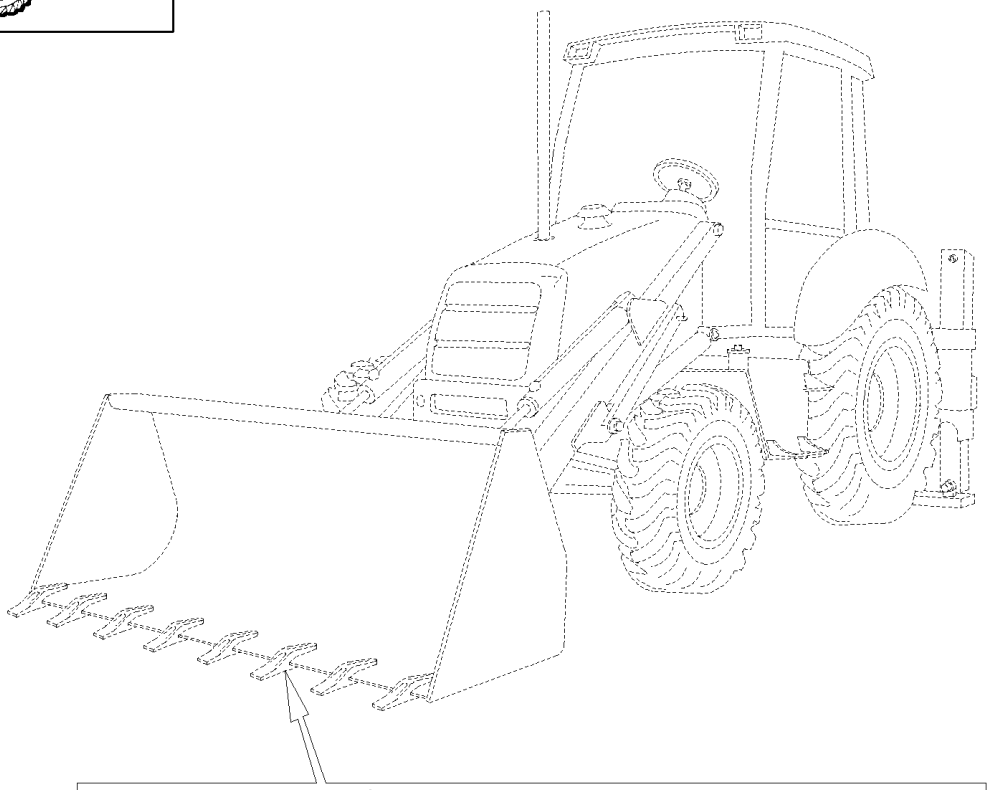

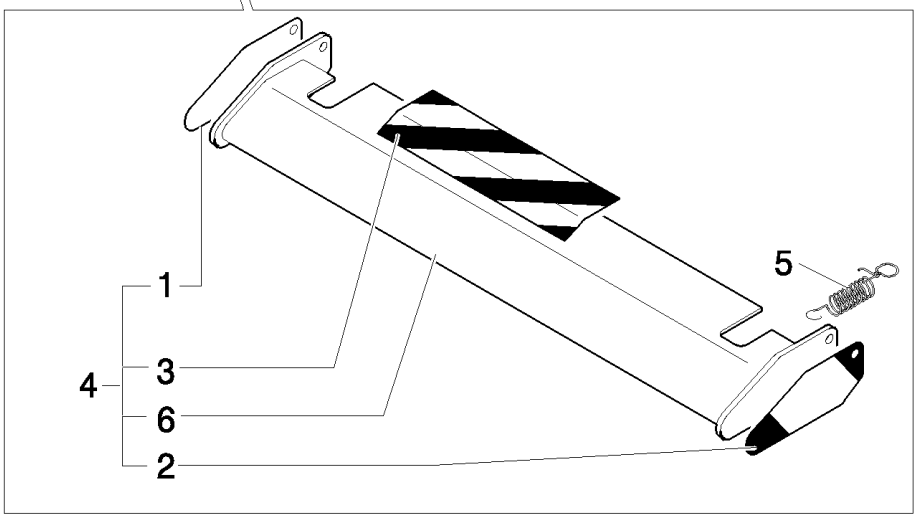
1
3
4
6
2
5

B110 TIER 3 BACKHOE LOADER (2/07-)

140(01) UK VERSION - EU

Ref	Numero de Pieza	Ctd	Descripción
1	85803538	1	STRIP-GASKET,
2	85803539	1	DECAL,
3	85803537	1	STRIP-GASKET, , Only for B110
3	85805614	1	DECAL, , Only for B115
4	85803534	1	GUARD, , Only for B110, Includes Ref. 1, 2, 3, 6
4	85805611	1	SHIELD, , Only for B115, Includes Ref. 1, 2, 3, 6
5	85803541	2	SPRING,
6	85803518	1	GUARD, , Only for B110
6	85805612	1	PROTECTION, , Only for B115

Mechanical / Pilot Version

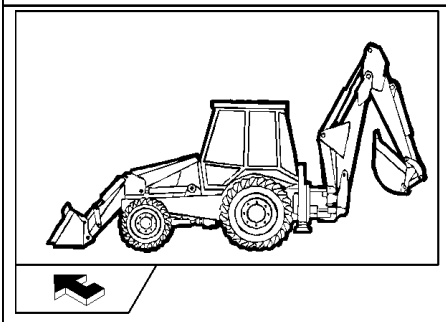

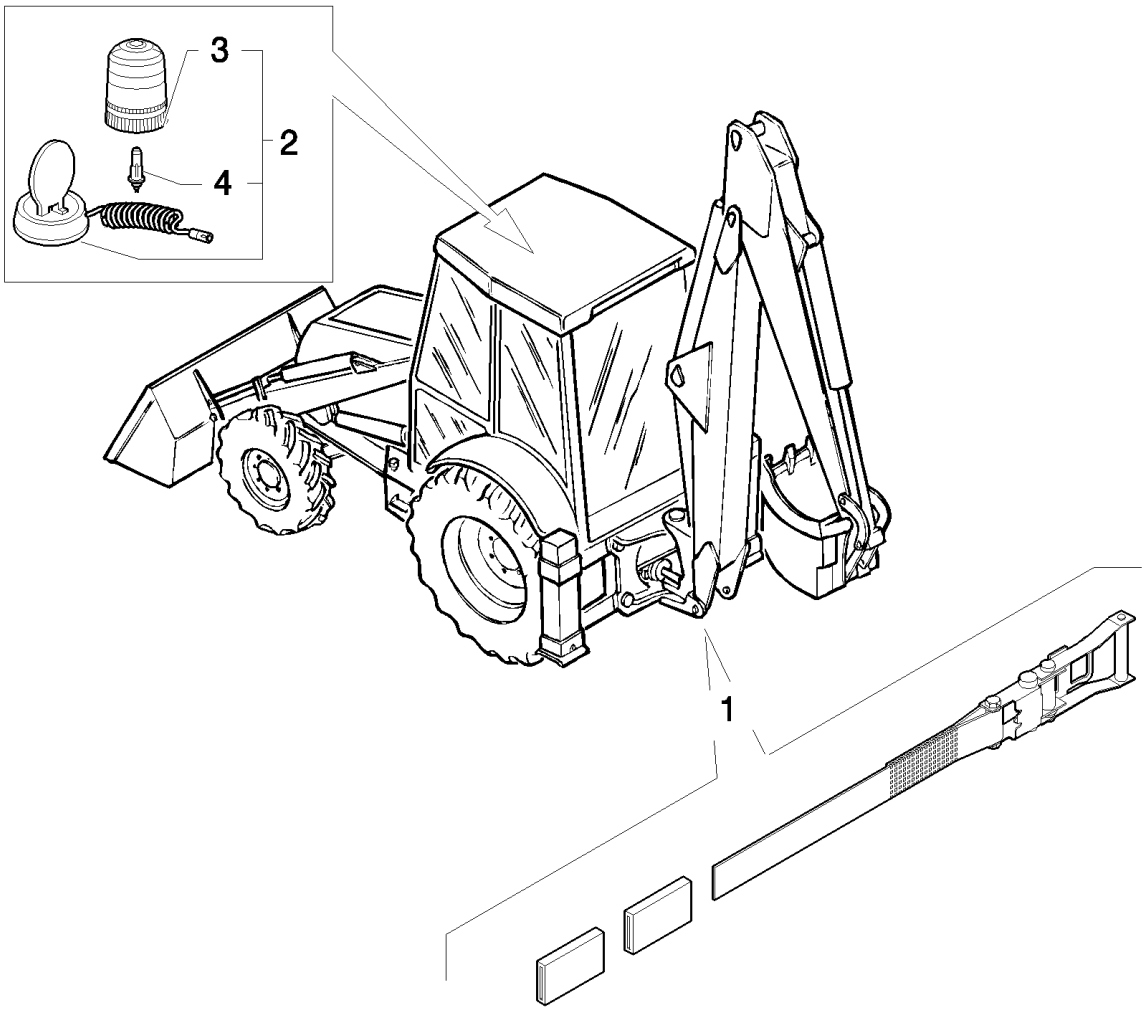
3
2
4
1

B110 TIER 3 BACKHOE LOADER (2/07-)

140(02) APPROVAL FOR UK - EU

Ref	Numero de Pieza	Ctd	Descripción
1	87361089	1	BLOCK,
2	85817129	1	BEACON, , Includes Ref. 3, 4
3	85817131	1	LENS,
4	85817130	1	BULB,

Mechanical / Pilot Version

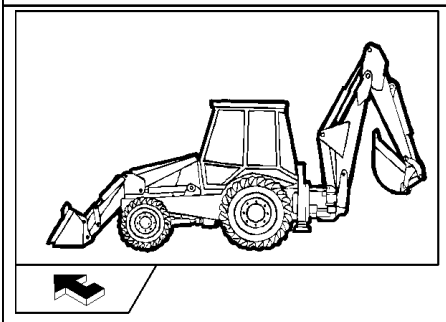

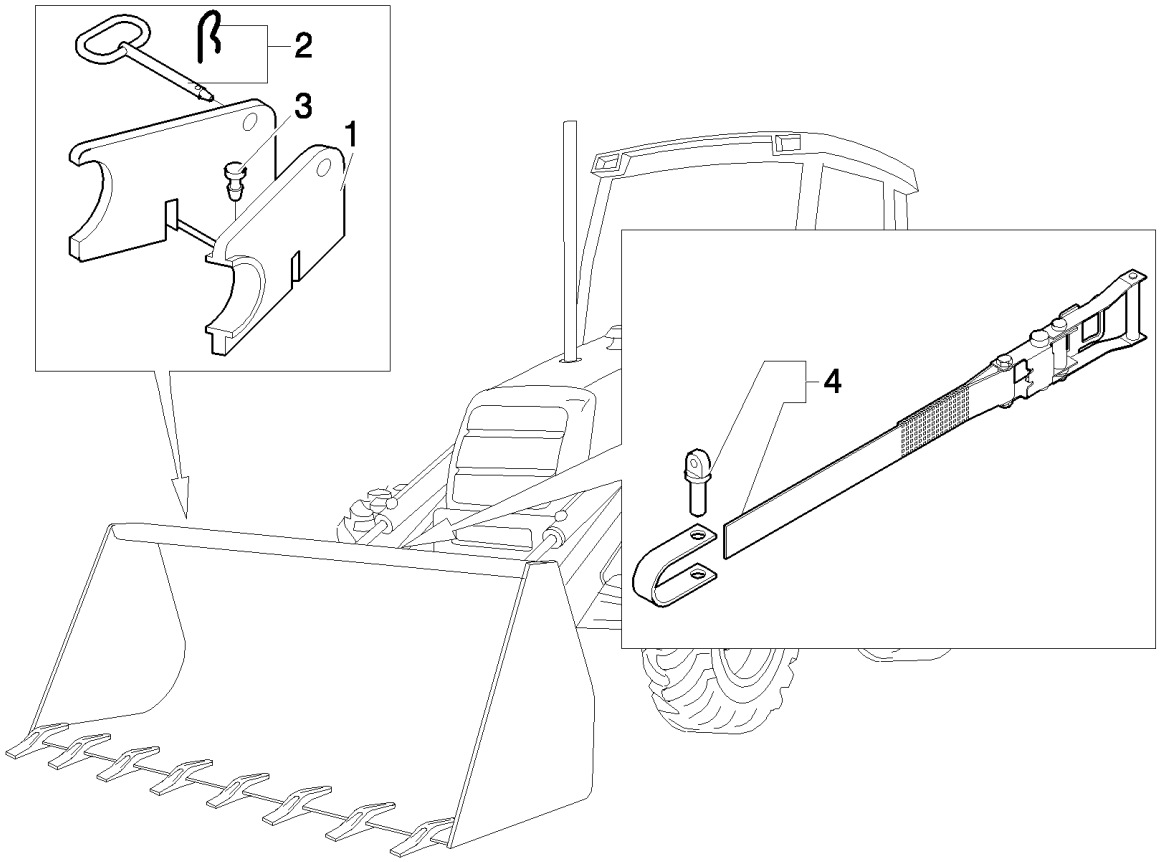
2
3
1
4

B110 TIER 3 BACKHOE LOADER (2/07-)

140(03) APPROVAL FOR UK - EU

Ref	Numero de Pieza	Ctd	Descripción
1	85803519	1	BLOCK,
2	86507337	1	PIN, HITCH,
3	14566887	1	PLUG,
4	87361052	1	BELT, CONVEYOR,

Mechanical Version

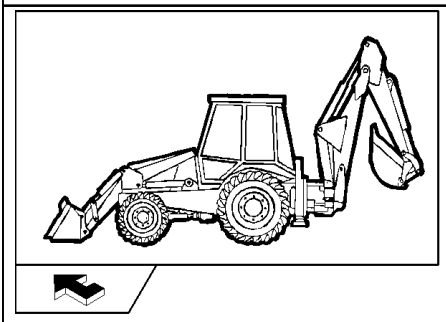

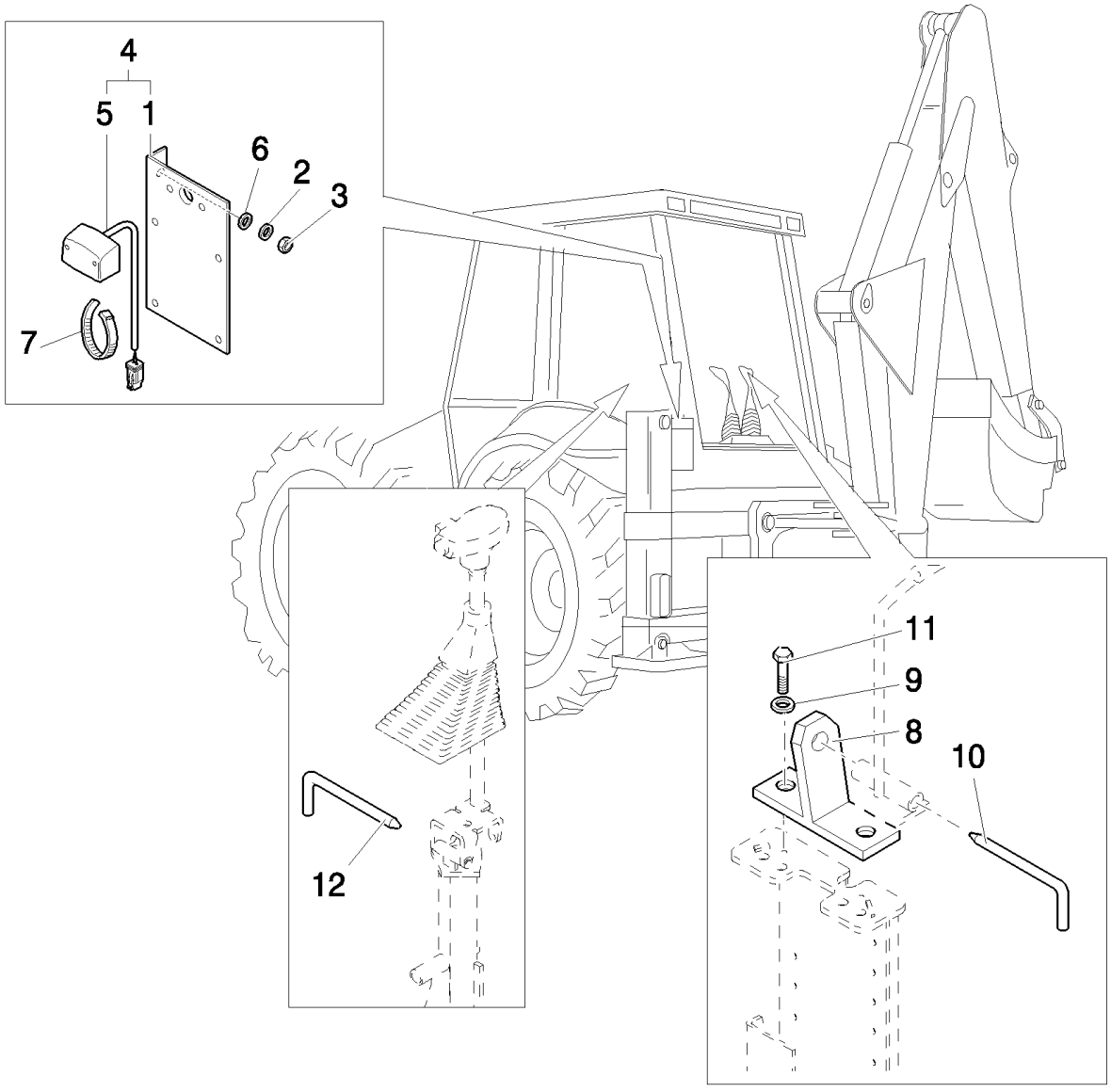
4
5
1
6
2
3
7
12
11
9
8
10

B110 TIER 3 BACKHOE LOADER (2/07-)

140(04) APPROVAL FOR UK - EU

Ref	Numero de Pieza	Ctd	Descripción
1	85803296	1	SUPPORT,
2	11193879	2	WASHER, SPRING, Belleville, M8.4,
3	16100811	2	NUT, M8, Cl 8,
4	87387257	1	LAMP, NUMBER PLATE, M10, Includes 1, 5
5	87387258	1	LAMP, NUMBER PLATE,
6	12647121	2	WASHER, M8 x 20 x 3,
7	85803332	2	STRAP, CABLE, M4.8 x 180,
8	85803125	1	STOP,
9	11193979	2	WASHER, SPRING, Belleville, M8.4,
10	87609067	1	PIN,
11	16043621	2	BOLT, Hex, M8 x 25, 8.8,
12	87608856	1	PIN,

Mechanical Version

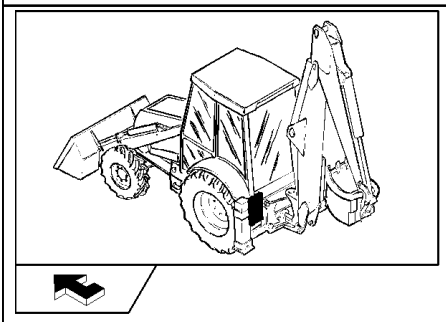

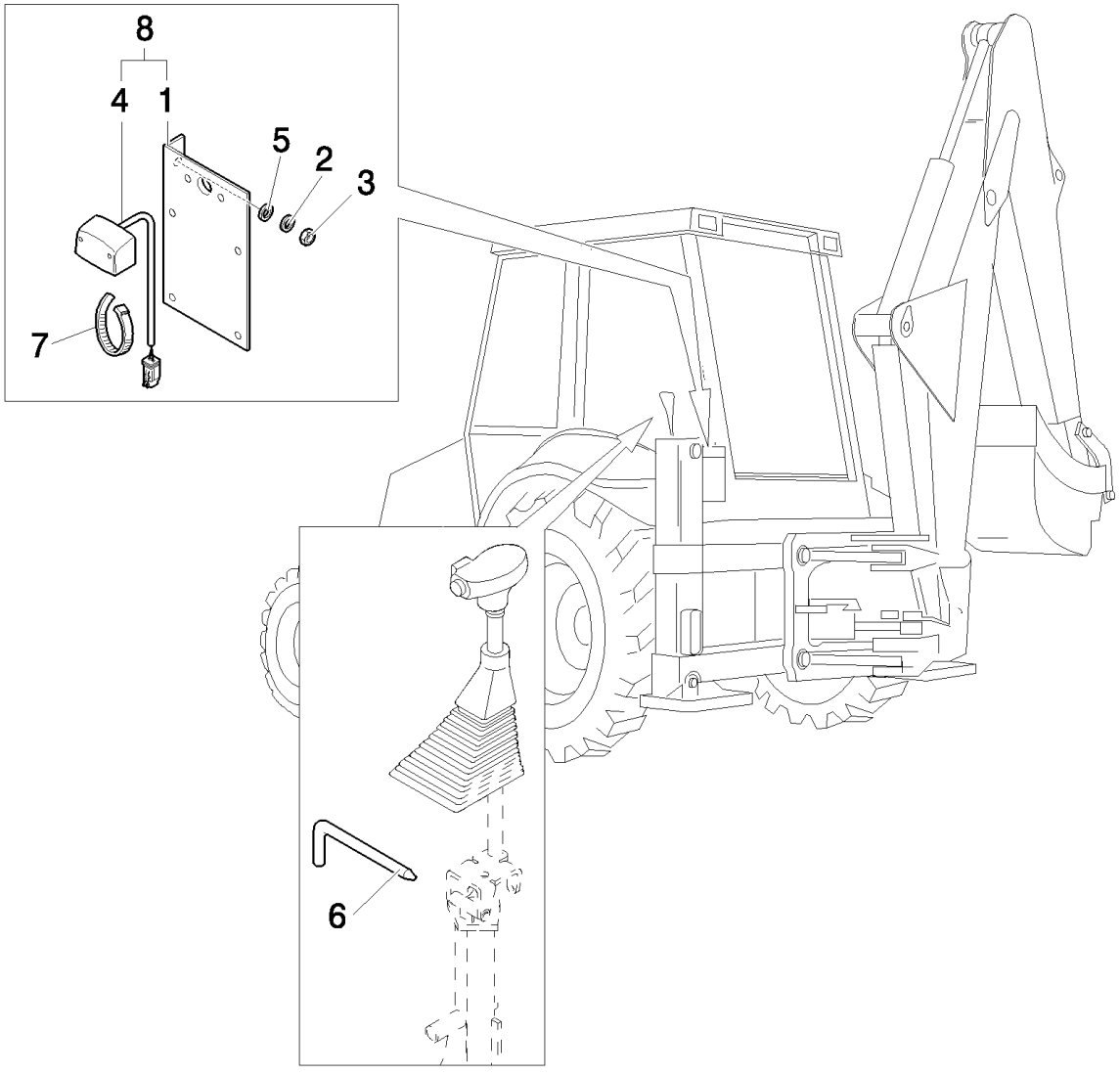
8
4
1
5
2
3
7
6

B110 TIER 3 BACKHOE LOADER (2/07-)

140(05) UK VERSION - EU

Ref	Numero de Pieza	Ctd	Descripción
1	85803296	1	SUPPORT,
2	11193879	2	WASHER, SPRING, Belleville, M8.4,
3	16100811	2	NUT, M8, Cl 8,
4	87387258	1	LAMP, NUMBER PLATE,
5	12647121	2	WASHER, M8 x 20 x 3,
6	87608856	1	PIN,
7	85803332	2	STRAP, CABLE, M4.8 x 180,
8	87387257	1	LAMP, NUMBER PLATE, , Includes 1,4

Pilot Control Version

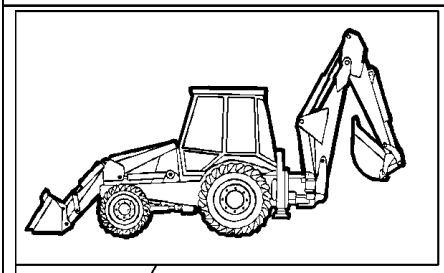

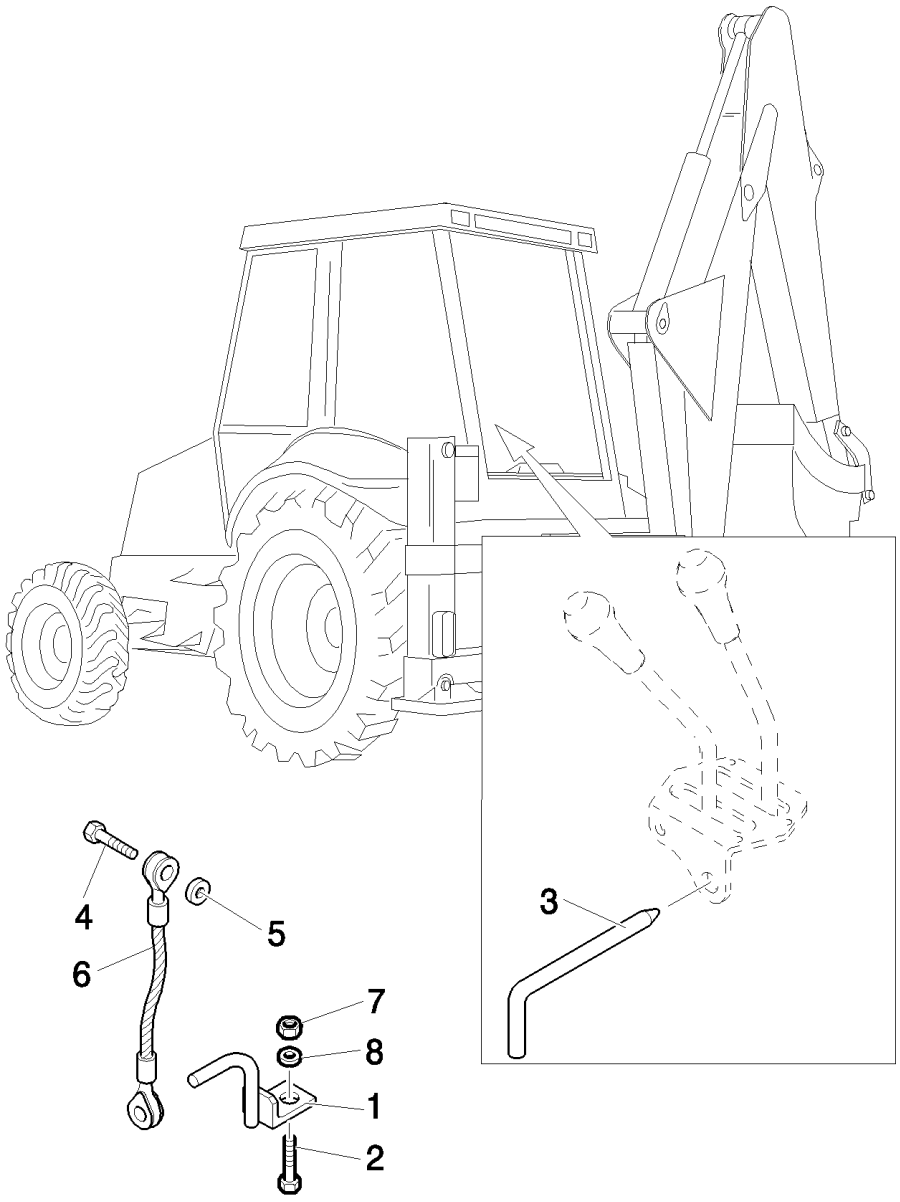
4
5
6
7
8
1
2
3

B110 TIER 3 BACKHOE LOADER (2/07-)

140(06) APPROVAL FOR UK - EU

Ref	Numero de Pieza	Ctd	Descripción
1	85803999	2	HOOK,
2	11390521	2	BOLT, Hex, M16 x 1.5 x 40, 8.8, Full Thd,
3	87609101	1	PIN,
4	15540321	2	BOLT, Hex, M12 x 1.25 x 25, 8.8, Full Thd,
5	11190879	2	WASHER, SPRING, Belleville, M13,
6	87521932	2	TIE-ROD,
7	12574911	2	NUT, LOCK, M16 x 1.5, Cl 8,
8	14496921	2	WASHER, M16 x 30 x 3,

Mechanical Version/Pilot Version

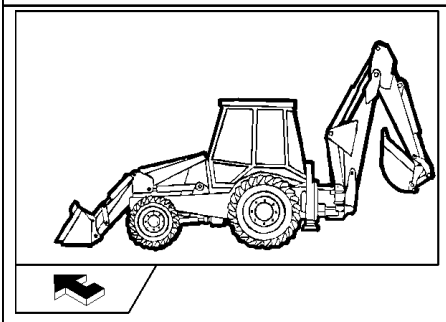

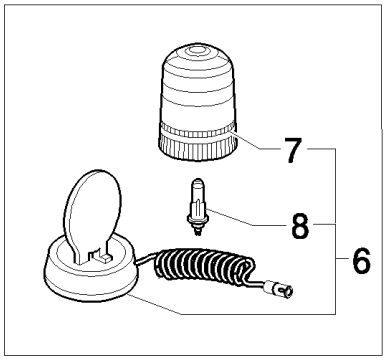
7
8
6

1
3
4
9
2
5

B110 TIER 3 BACKHOE LOADER (2/07-)

141(01) APPROVAL FOR FRANCE - EU

Ref	Numero de Pieza	Ctd	Descripción
1	85803538	1	STRIP-GASKET,
2	85803539	1	DECAL,
3	85803537	1	STRIP-GASKET, , Only for B115 EU
3	85805614	1	DECAL, , Only for B110 EU
4	85803534	1	GUARD, , Only for B115 EU, Includes 1, 2, 3, 9
4	85805611	1	SHIELD, , Only for B110 EU
5	85803541	2	SPRING,
6	85817129	1	BEACON, , Includes 7, 8
7	85817131	1	LENS,
8	85817130	1	BULB,
9	85803518	1	GUARD, , Only for B115 EU
9	85805611	1	SHIELD, , Only for B110 EU

Mechanical / Pilot Version

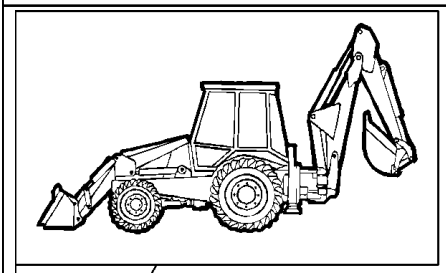

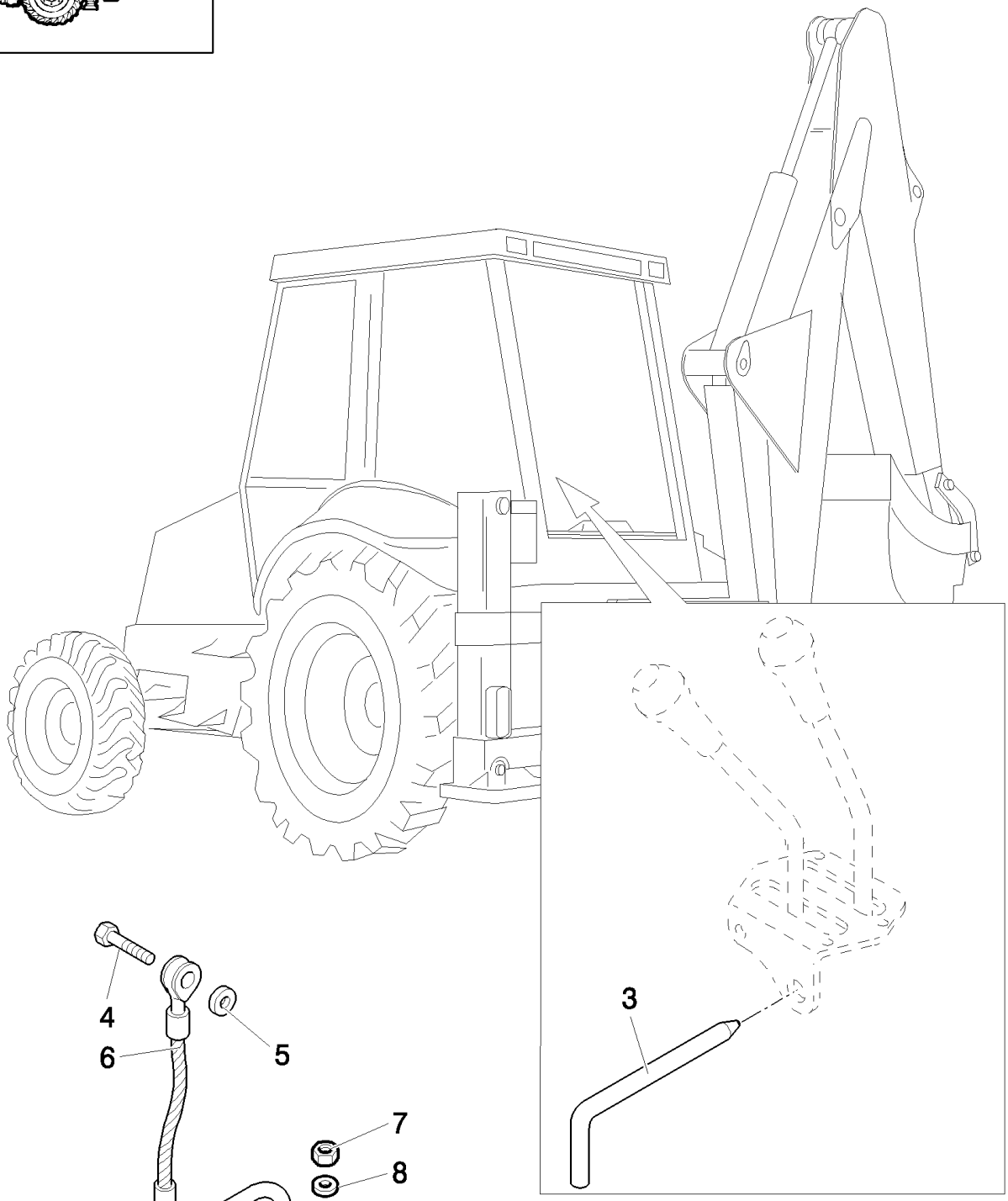
3
4
5
6
7
8
1
2

B110 TIER 3 BACKHOE LOADER (2/07-)

141(02) APPROVAL FOR FRANCE - EU

Ref	Numero de Pieza	Ctd	Descripción
1	85803999	2	HOOK,
2	11390521	2	BOLT, Hex, M16 x 1.5 x 40, 8.8, Full Thd,
3	87609101	1	PIN,
4	15540321	2	BOLT, Hex, M12 x 1.25 x 25, 8.8, Full Thd,
5	11190879	2	WASHER, SPRING, Belleville, M13,
6	87521932	2	TIE-ROD,
7	12574911	2	NUT, LOCK, M16 x 1.5, Cl 8,
8	14496921	2	WASHER, M16 x 30 x 3,

Mechanical Version/Pilot Version

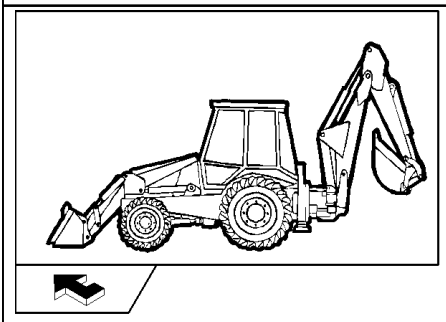

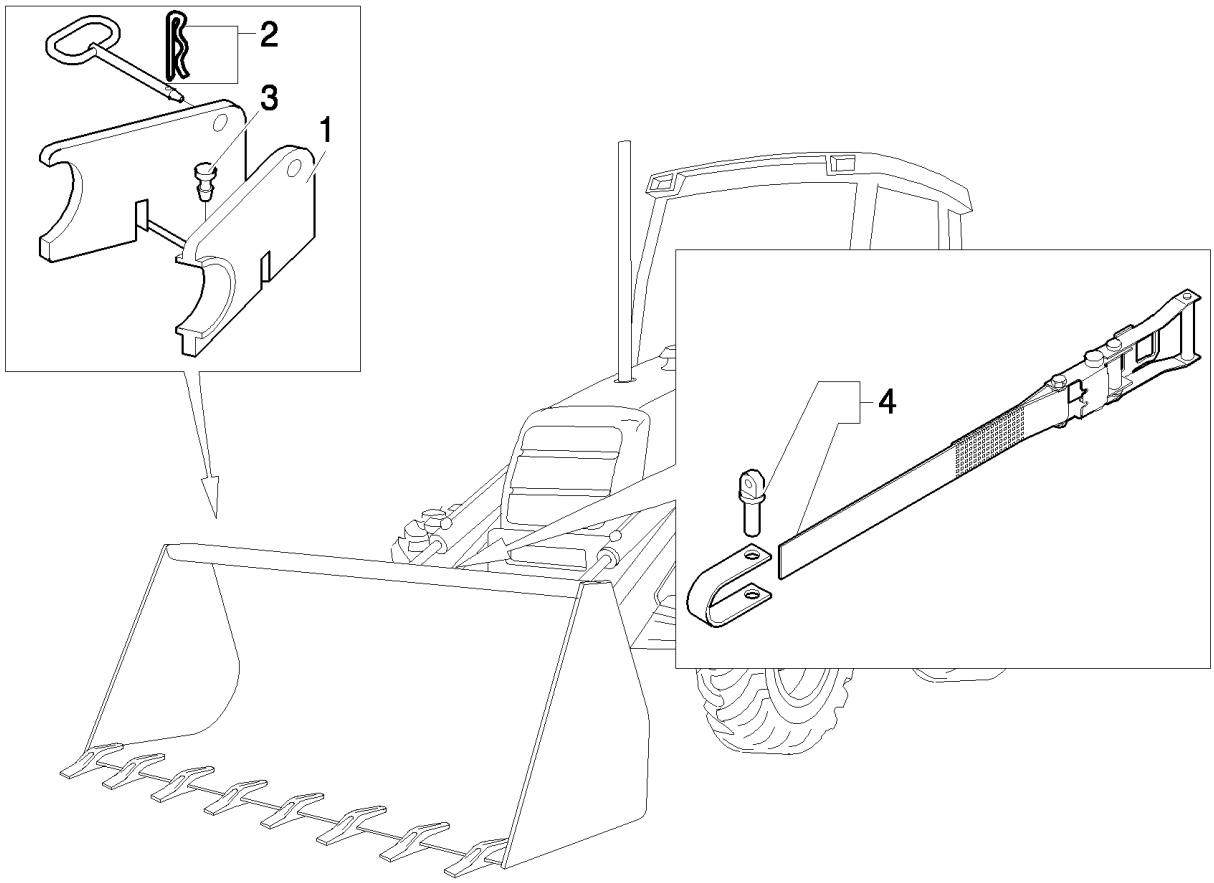
2
3
1
4

B110 TIER 3 BACKHOE LOADER (2/07-)

141(03) APPROVAL FOR FRANCE - EU

Ref	Numero de Pieza	Ctd	Descripción
1	85803519	1	BLOCK,
2	86507337	1	PIN, HITCH,
3	14566887	2	PLUG,
4	87361052	1	BELT, CONVEYOR,

Mechanical Version

141(04) APPROVAL FOR FRANCE - EU

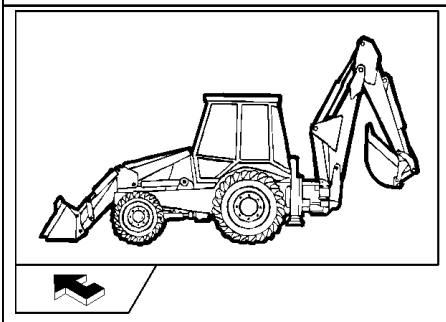

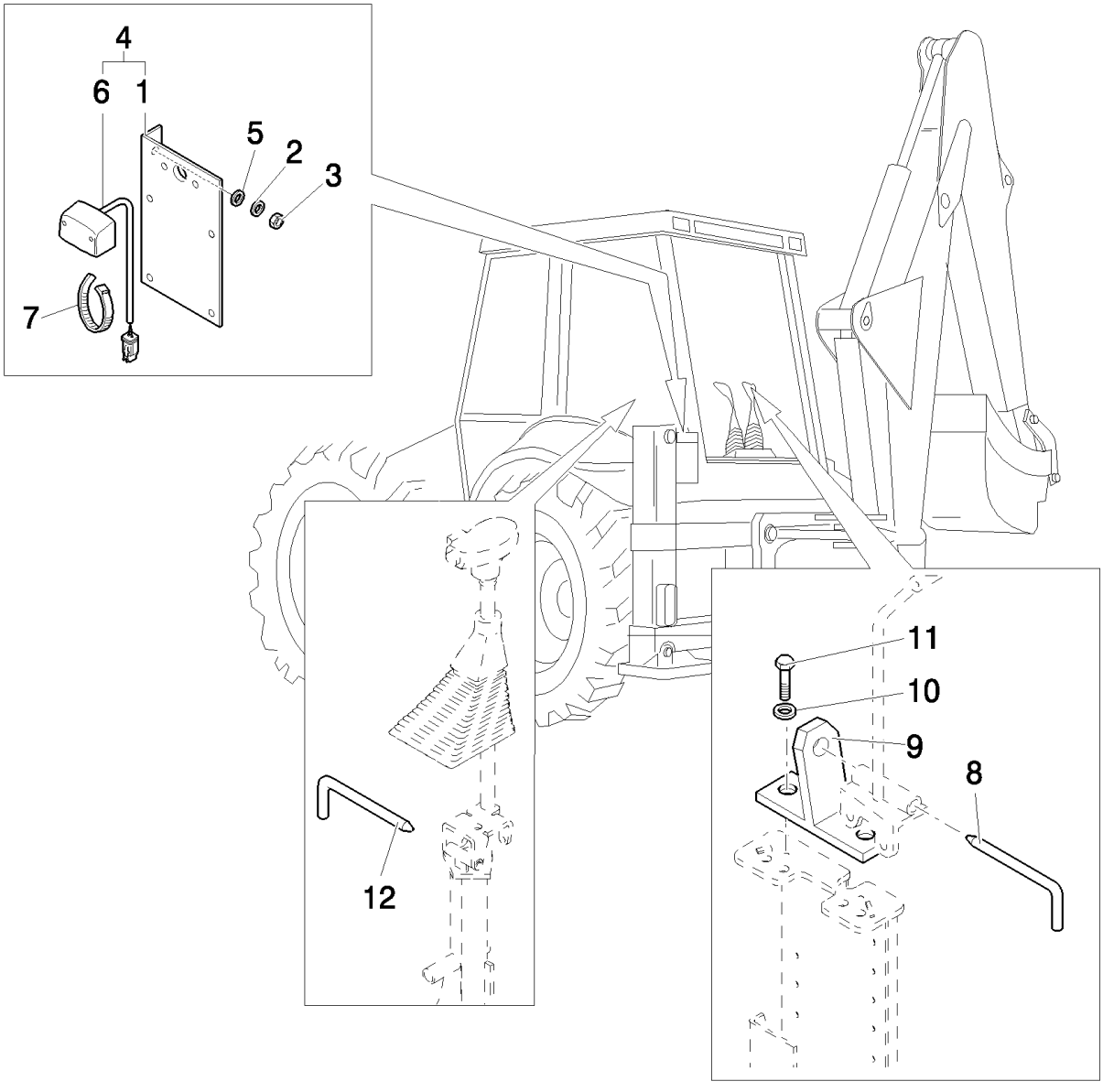

B110 TIER 3 BACKHOE LOADER (2/07-)

141(04) APPROVAL FOR FRANCE - EU

Ref	Numero de Pieza	Ctd	Descripción
1	85803296	1	SUPPORT,
2	11193879	2	WASHER, SPRING, Belleville, M8.4,
3	16100811	2	NUT, M8, Cl 8,
4	87387257	1	LAMP, NUMBER PLATE, , Includes 1, 6
5	12647121	2	WASHER, M8 x 20 x 3,
6	87387258	1	LAMP, NUMBER PLATE,
7	85803332	2	STRAP, CABLE, M4.8 x 180,
8	87609067	1	PIN,
9	85803125	1	STOP,
10	11193979	2	WASHER, SPRING, Belleville, M8.4,
11	16043621	2	BOLT, Hex, M8 x 25, 8.8,
12	87608856	1	PIN,

Mechanical Version

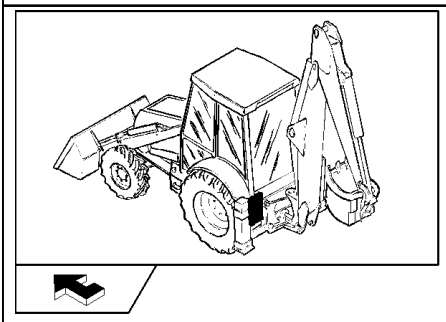

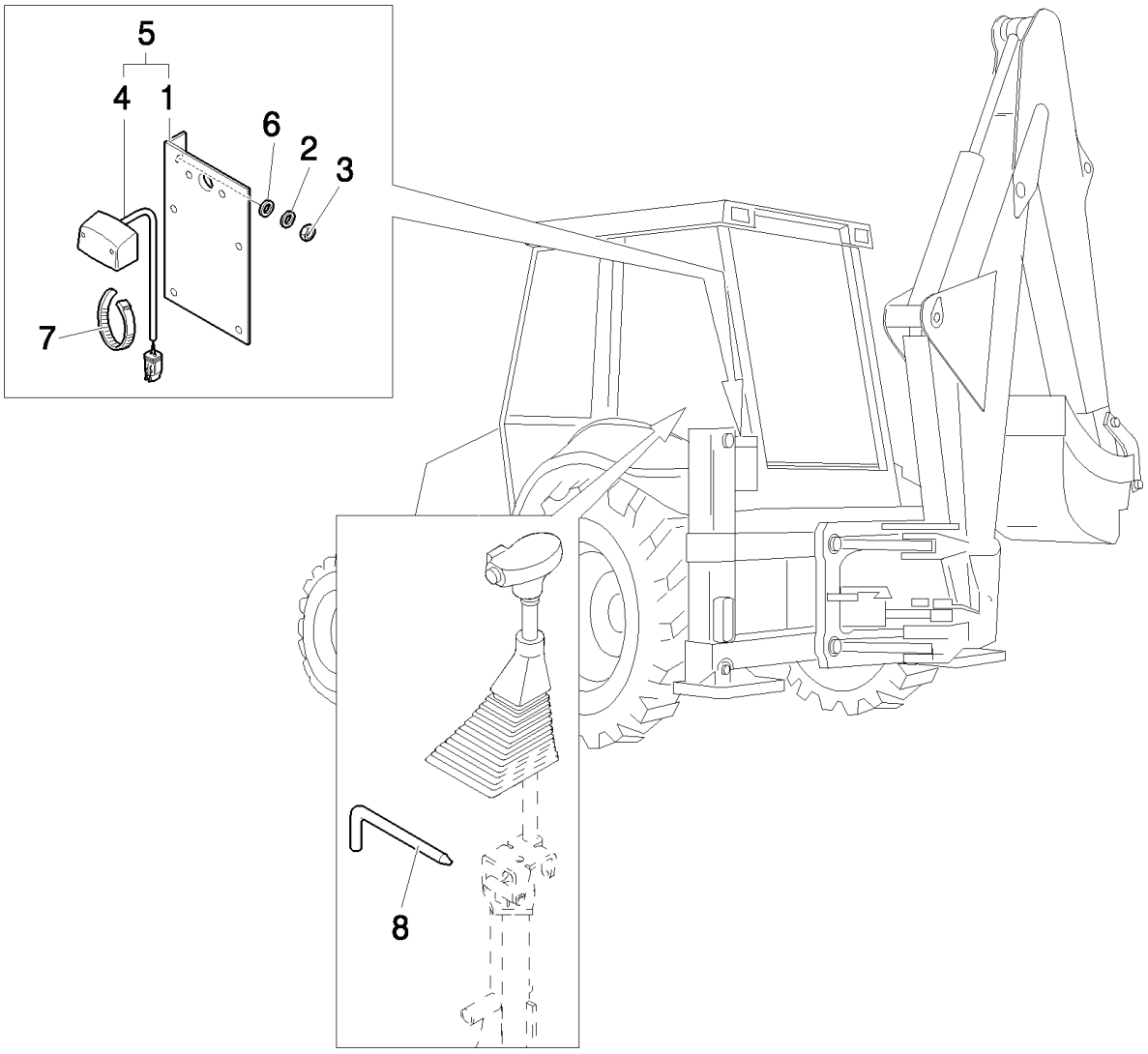
5
4
1
6
2
3
7
8

B110 TIER 3 BACKHOE LOADER (2/07-)

141(05) APPROVAL FOR FRANCE - EU

Ref	Numero de Pieza	Ctd	Descripción
1	85803296	1	SUPPORT,
2	11193879	2	WASHER, SPRING, Belleville, M8.4,
3	16100811	2	NUT, M8, Cl 8,
4	87387258	1	LAMP, NUMBER PLATE,
5	87387257	1	LAMP, NUMBER PLATE, , Includes 1, 4
6	12647121	2	WASHER, M8 x 20 x 3,
7	85803332	2	STRAP, CABLE, M4.8 x 180,
8	87608856	1	PIN,

Pilot Control Version

173(01) MUFFLER & EXTENSIONS WITH FLASH GUARD

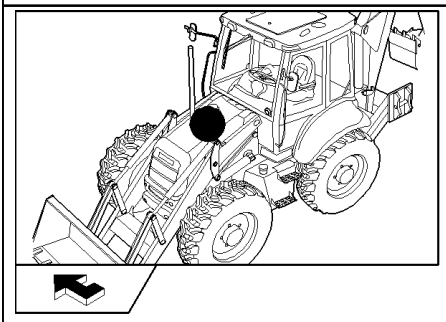

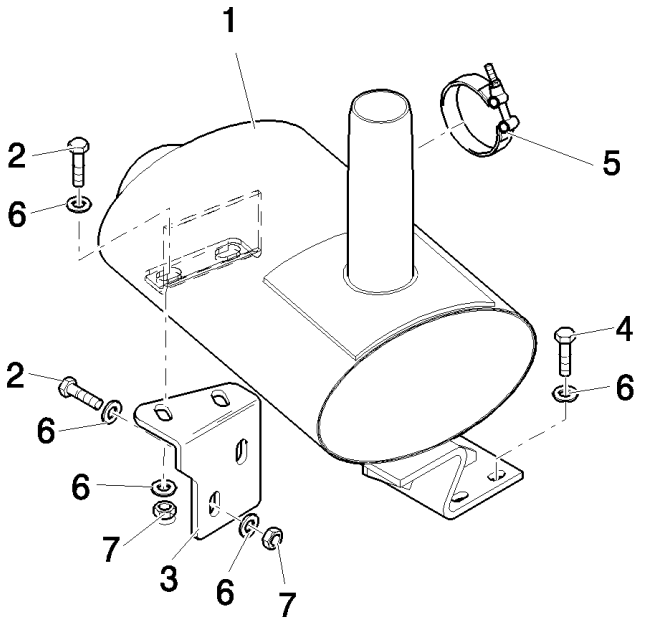

B110 TIER 3 BACKHOE LOADER (2/07-)

173(01) MUFFLER & EXTENSIONS WITH FLASH GUARD

Ref	Numero de Pieza	Ctd	Descripción
1	87539933	1	MUFFLER,
2	47049186	4	BOLT, Hex, M10 x 30, 8.8,
3	87535928	1	BRACKET,
4	47049098	3	SCREW, M10x60
5	47048898	1	CLAMP,
6	47048972	11	WASHER, M10
7	47049041	4	NUT, M10

175(01) AIR INTAKE CAP & PRE-CLEANER

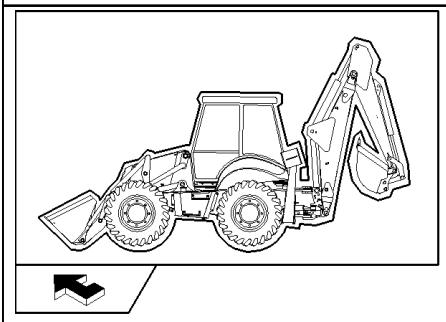

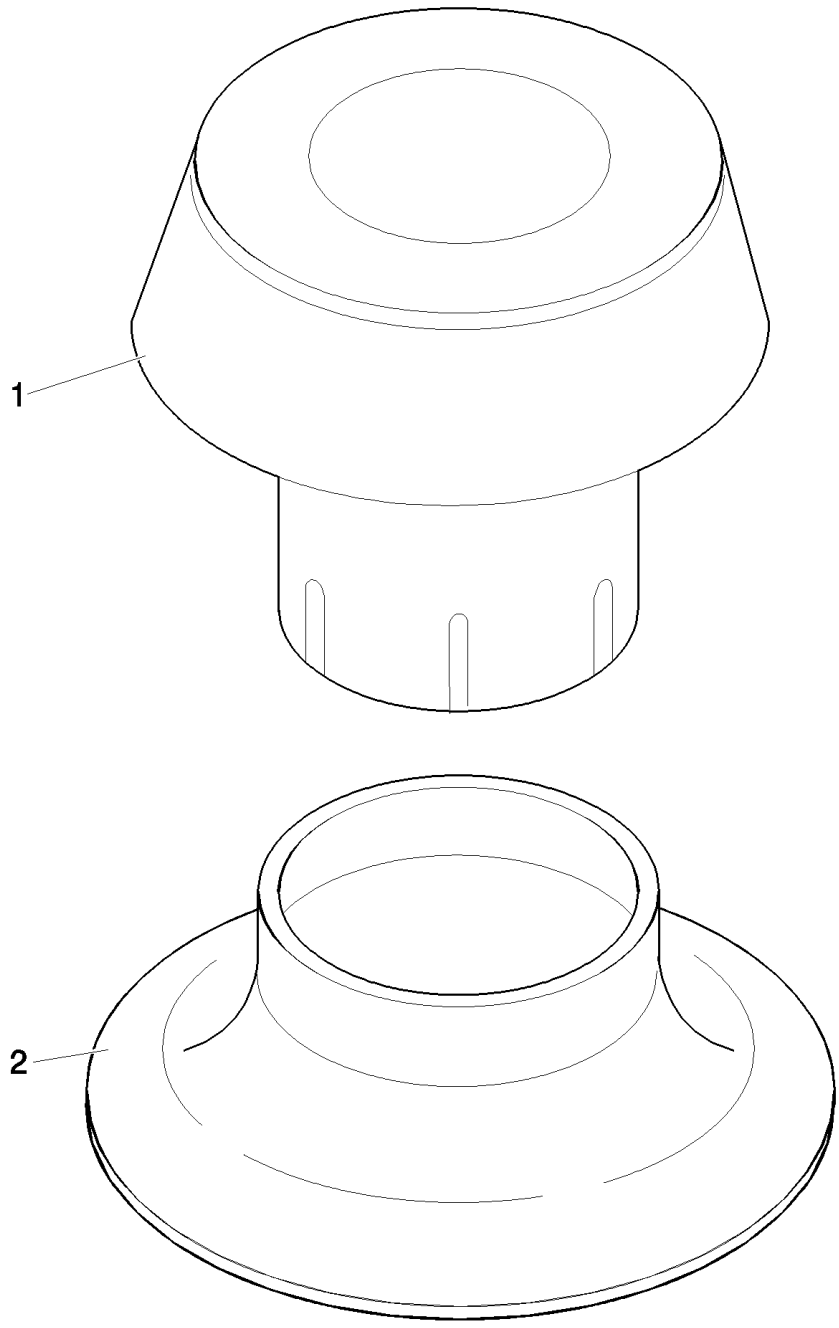

Standard

B110 TIER 3 BACKHOE LOADER (2/07-)

175(01) AIR INTAKE CAP & PRE-CLEANER

Ref	Numero de Pieza	Ctd	Descripción
1	85804602	1	CAP,
2	85802829	1	GUARD,

Standard

176(01) AIR INTAKE CAP & PRE-CLEANER

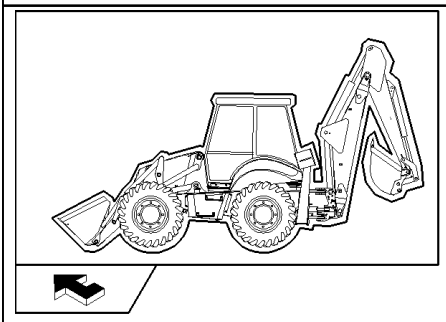

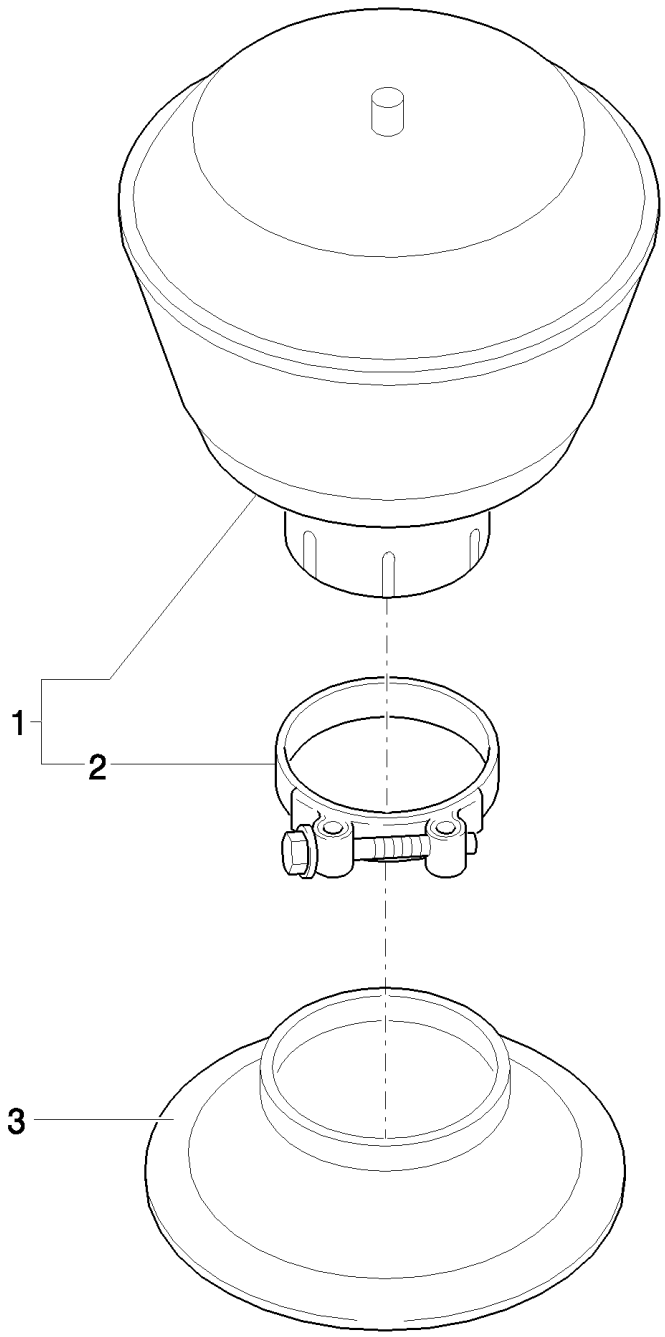

Centrifugal Pre-cleaner

B110 TIER 3 BACKHOE LOADER (2/07-)

176(01) AIR INTAKE CAP & PRE-CLEANER

Ref	Numero de Pieza	Ctd	Descripción
1	85804347	1	PRESCREENER,
2	85802743	1	CLAMP, HOSE,
3	87597631	1	COVER,

Centrifugal Pre-cleaner

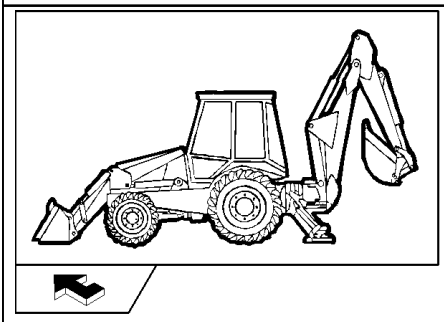

EQUIP. 201

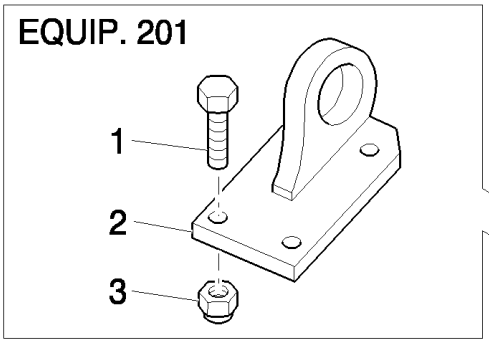

SWL=1000 Kg
AT 3.4m RADIUS

6

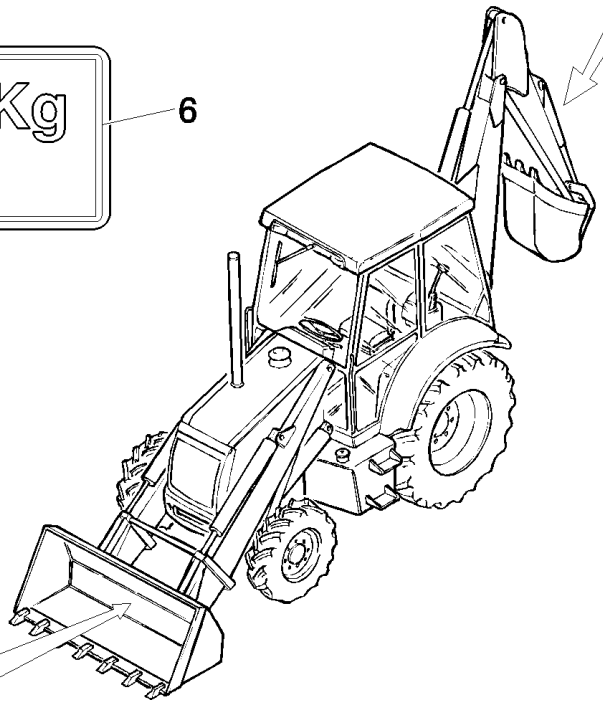

EQUIP. 200

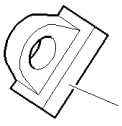

SWL=1000 Kg

5

B110 TIER 3 BACKHOE LOADER (2/07-)

201(01) SHOVEL AND REAR LIFTING HOOKS

Ref	Numero de Pieza	Ctd	Descripción
1	11394334	4	BOLT, Hex, M14 x 1.5 x 45, 8.8, Full Thd, (Equip.201)
2	85802599	1	EYE, LIFTING, (EQUIP.201)
3	12574825	4	NUT, LOCK, M14 x 1.5, Cl 10, (EQUIP.201)
4	85805807	1	EYE, LIFTING, (Equip.200)
5	85805663	1	DECAL, (EQUIP.200)
6	85805664	1	DECAL, (EQUIP.201)

203(01) FRONT WEIGHTS

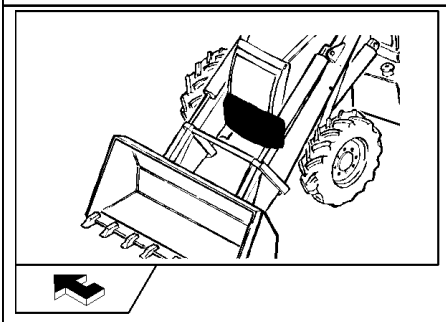

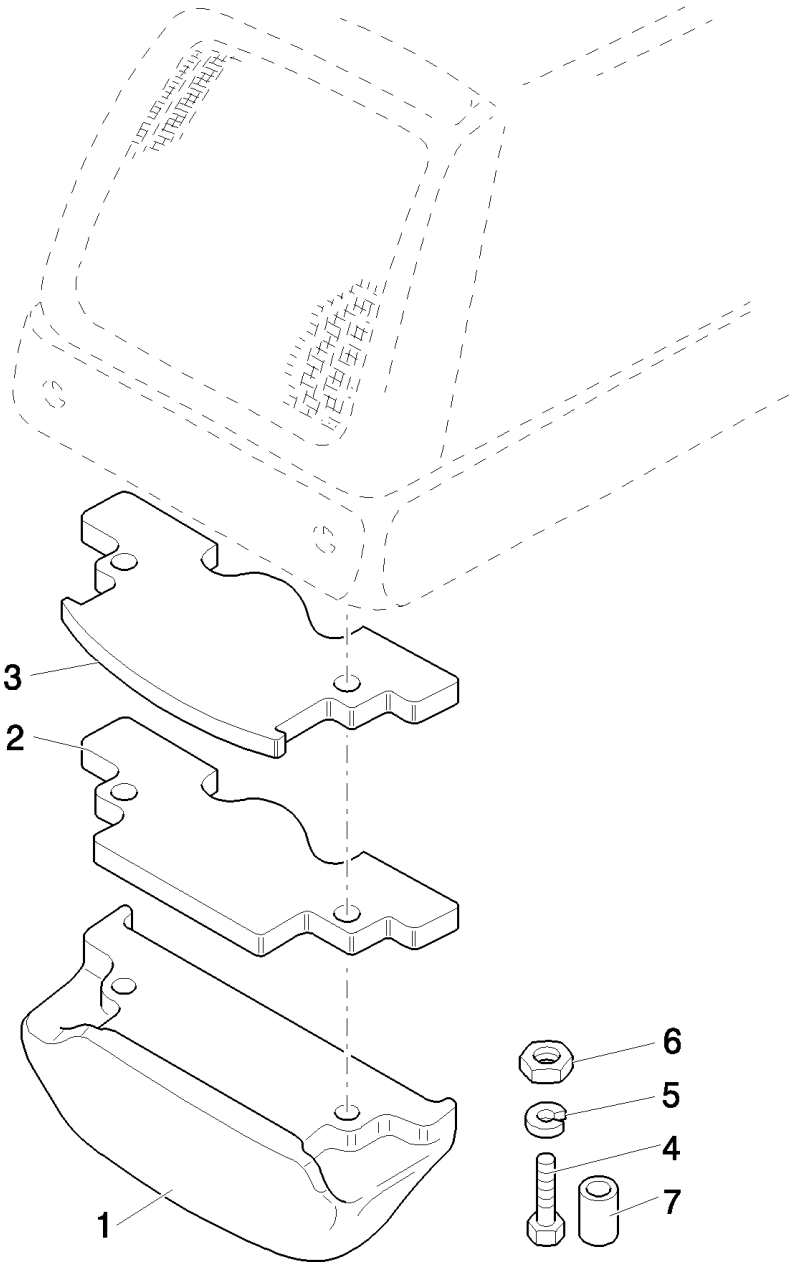

B110 TIER 3 BACKHOE LOADER (2/07-)

203(01) FRONT WEIGHTS

Ref	Numero de Pieza	Ctd	Descripción
1	85804838	1	WEIGHT,
2	85805071	1	WEIGHT,
3	85805069	1	WEIGHT,
4	85805300	2	SCREW, M20 x 1.5 x 300
5	10520431	4	WASHER,
6	12575121	2	NUT, LOCK, M20 x 1.5, Cl 10,
7	85801324	2	SPACER, 21X30X50

215(01) FRONT WEIGHTS

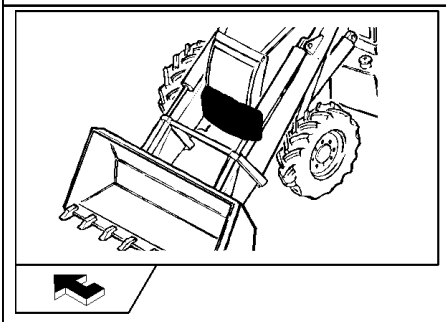

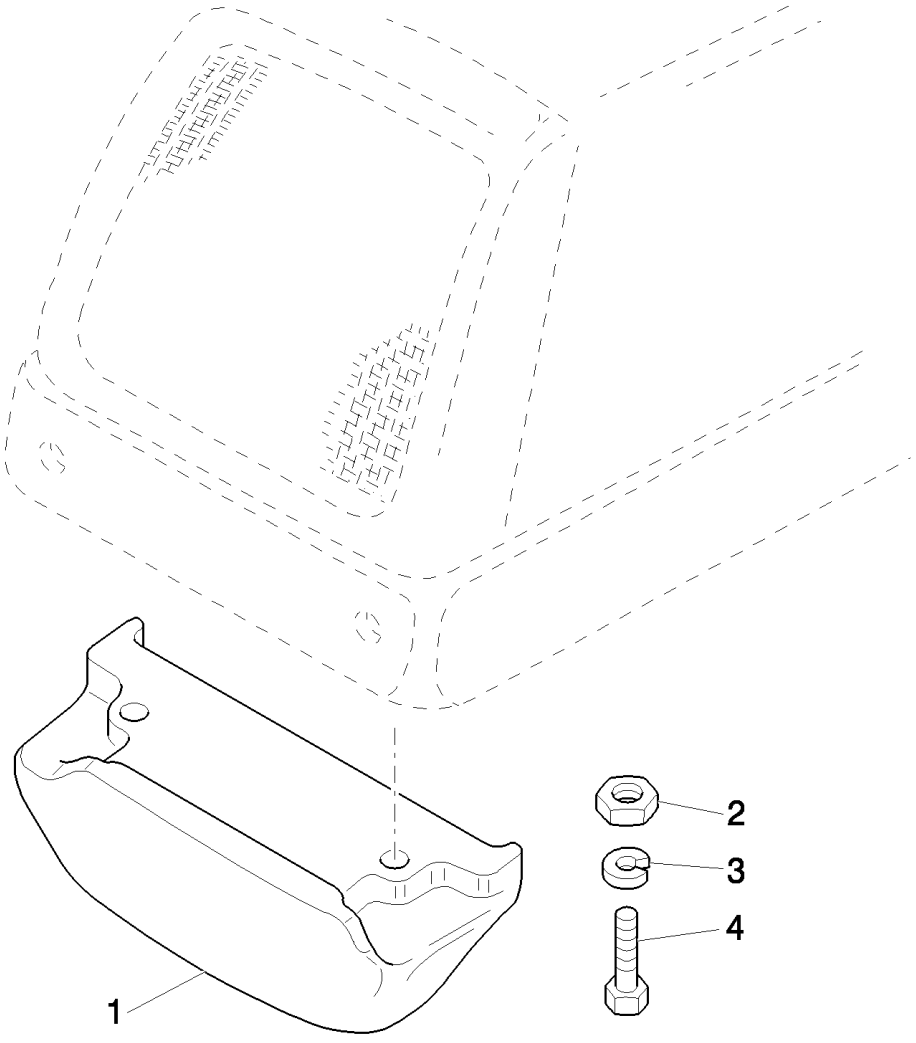

B110 TIER 3 BACKHOE LOADER (2/07-)

215(01) FRONT WEIGHTS

Ref	Numero de Pieza	Ctd	Descripción
1	85804838	1	WEIGHT,
2	12575121	2	NUT, LOCK, M20 x 1.5, Cl 10,
3	10520431	4	WASHER,
4	15991134	2	BOLT, Hex, M20 x 1.5 x 200, 10.9,

243(01) BACKHOE LOADER BUCKETS COUPLING - EU

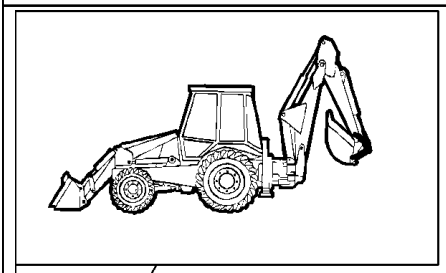

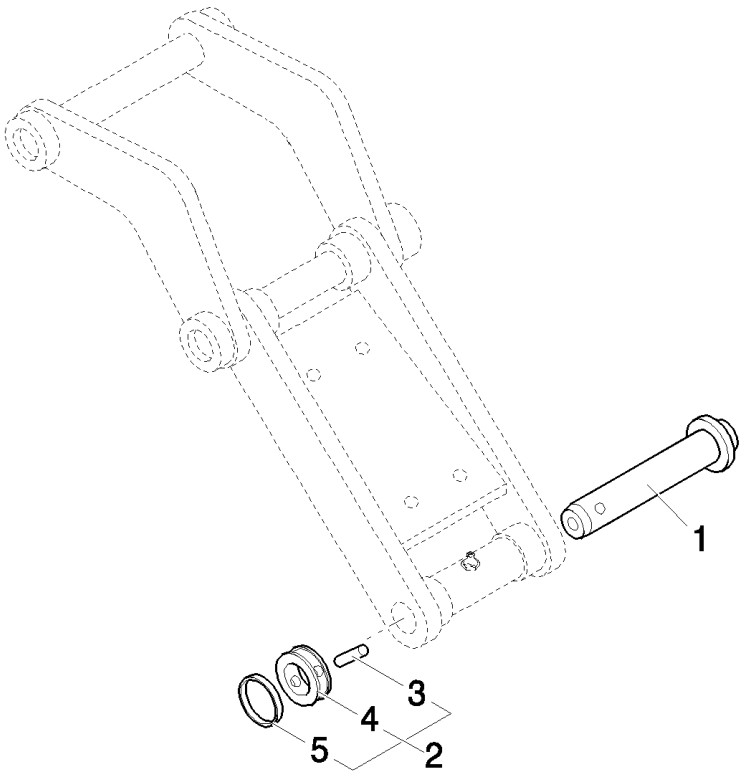

B110 TIER 3 BACKHOE LOADER (2/07-)

243(01) BACKHOE LOADER BUCKETS COUPLING - EU

Ref	Numero de Pieza	Ctd	Descripción
1	85803005	1	PIN,
2	85802975	1	PIN, LOCK,
3	85802976	1	PIN,
4	85802643	1	SPACER,
5	85802974	1	RING,

B110 TIER 3 BACKHOE LOADER (2/07-)

284(01) REAR MIRROR (CAB) - NA

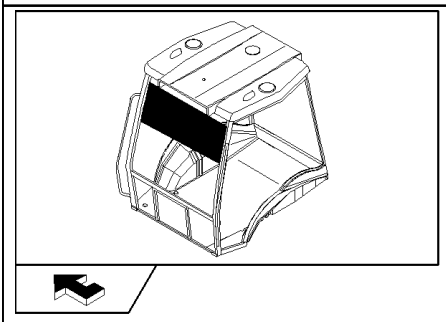

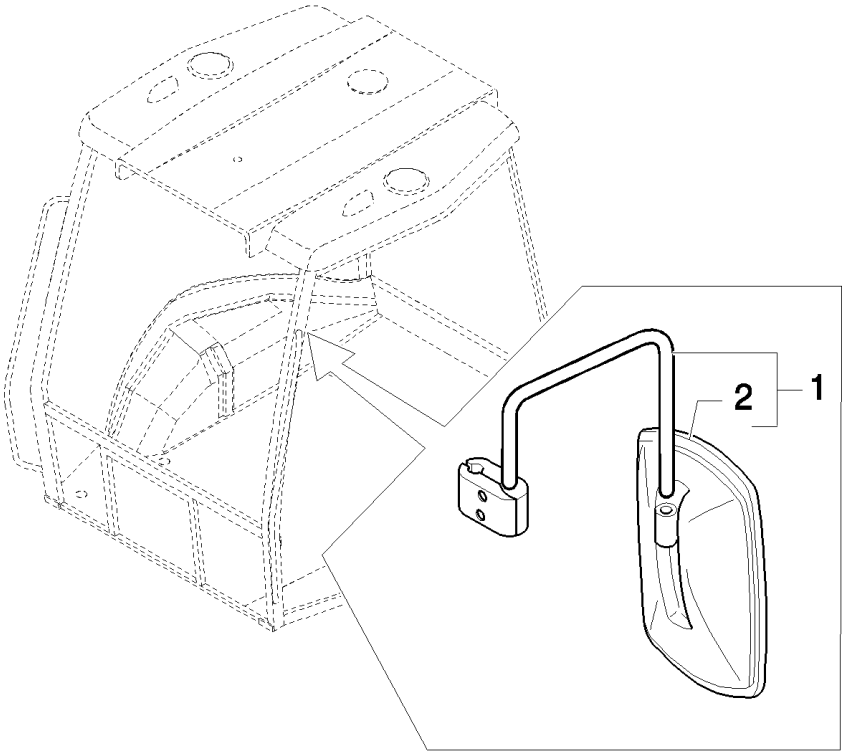

B110 TIER 3 BACKHOE LOADER (2/07-)

284(01) REAR MIRROR (CAB) - NA

Ref	Numero de Pieza	Ctd	Descripción
1	85820139	1	MIRROR, LH,
2	85820138	2	MIRROR, REAR-VIEW,

301(01) BACKHOE CONTROL VALVE, 6 SECTIONS (SIDE SHIFT)

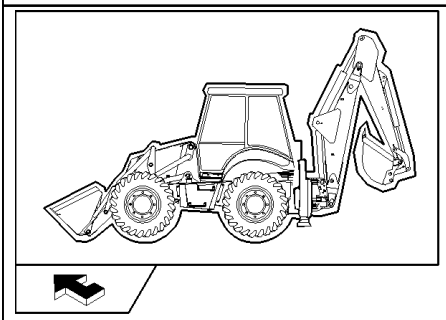

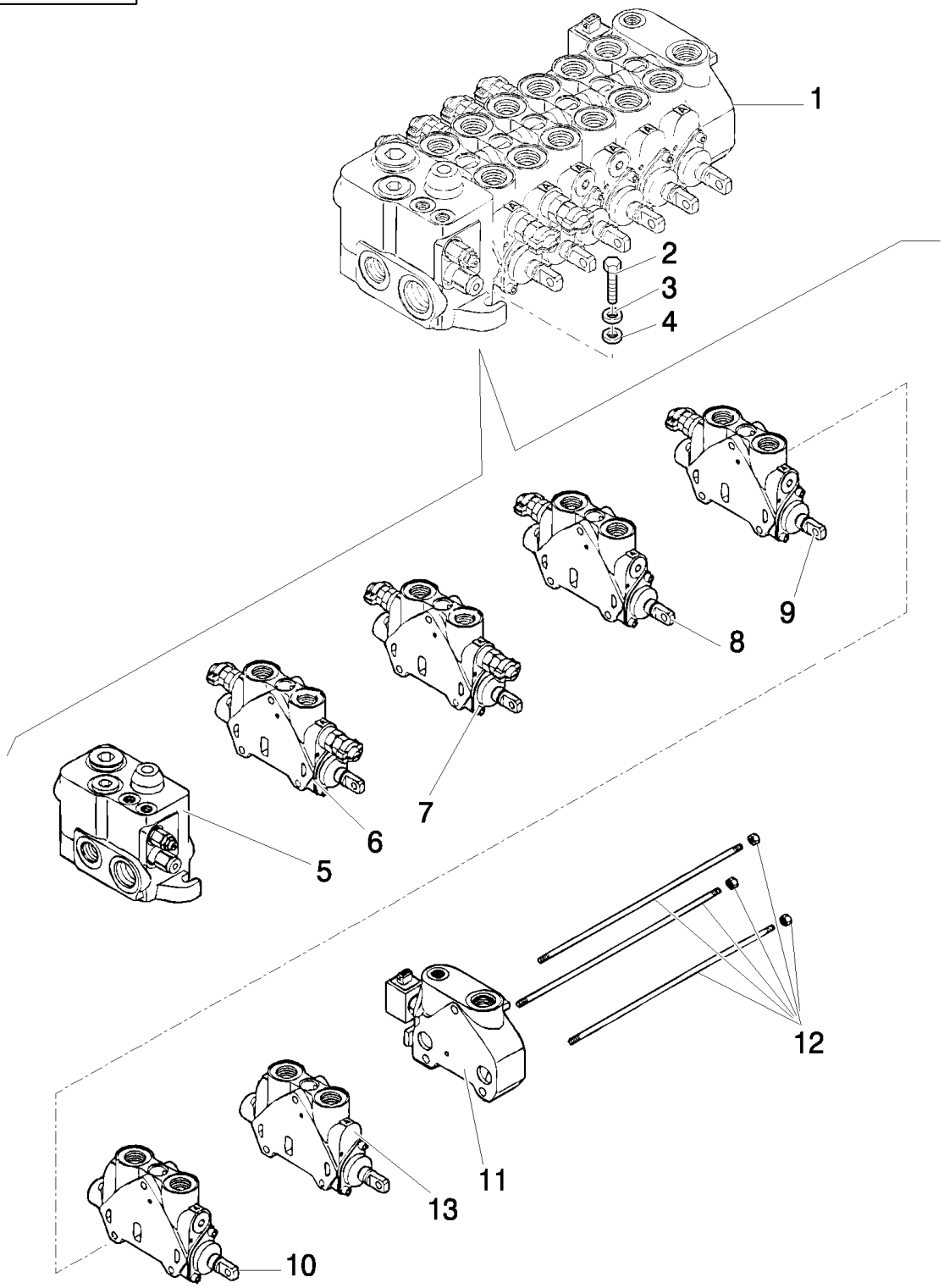

Mechanical Version

B110 TIER 3 BACKHOE LOADER (2/07-)

301(01) BACKHOE CONTROL VALVE, 6 SECTIONS (SIDE SHIFT)

Ref	Numero de Pieza	Ctd	Descripción
1	87376074	1	VALVE, HYDRAULIC,
2	15888721	3	BOLT, Hex, M10 x 1.25 x 55, 8.8,
3	11190679	3	WASHER, SPRING, Belleville, M10.5,
4	85818943	3	SPACER, 10X30X2
5	85826255	1	VALVE, HYDRAULIC, , See Page 301 03
6	85826245	1	SECTOR, TOOTHED, , Boom Cylinder, See Page 300 03
7	85826253	1	SECTOR, TOOTHED, , See Page 300 04, Swing Cylinder
8	85826246	1	SECTOR, TOOTHED, , Bucket Cylinder, See Page 300 05
9	85826248	1	SECTOR, TOOTHED, , See Page 300 06, Arm Cylinder
10	87542780	1	SECTOR, , Stabilizer Cylinder, See Page 702 02
11	85826249	1	SECTOR, TOOTHED, , See Page 301 02
12	85811958	1	KIT,
13	87611176	1	VALVE, HYDRAULIC, , Stabilizer Cylinder, See Page 301 04

Mechanical Version

301(02) BACKHOE CONTROL VALVE, OULET SECTION (SIDE SHIFT) - EU

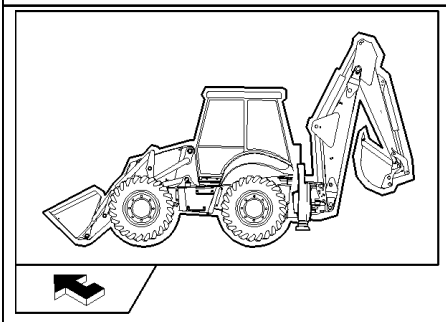

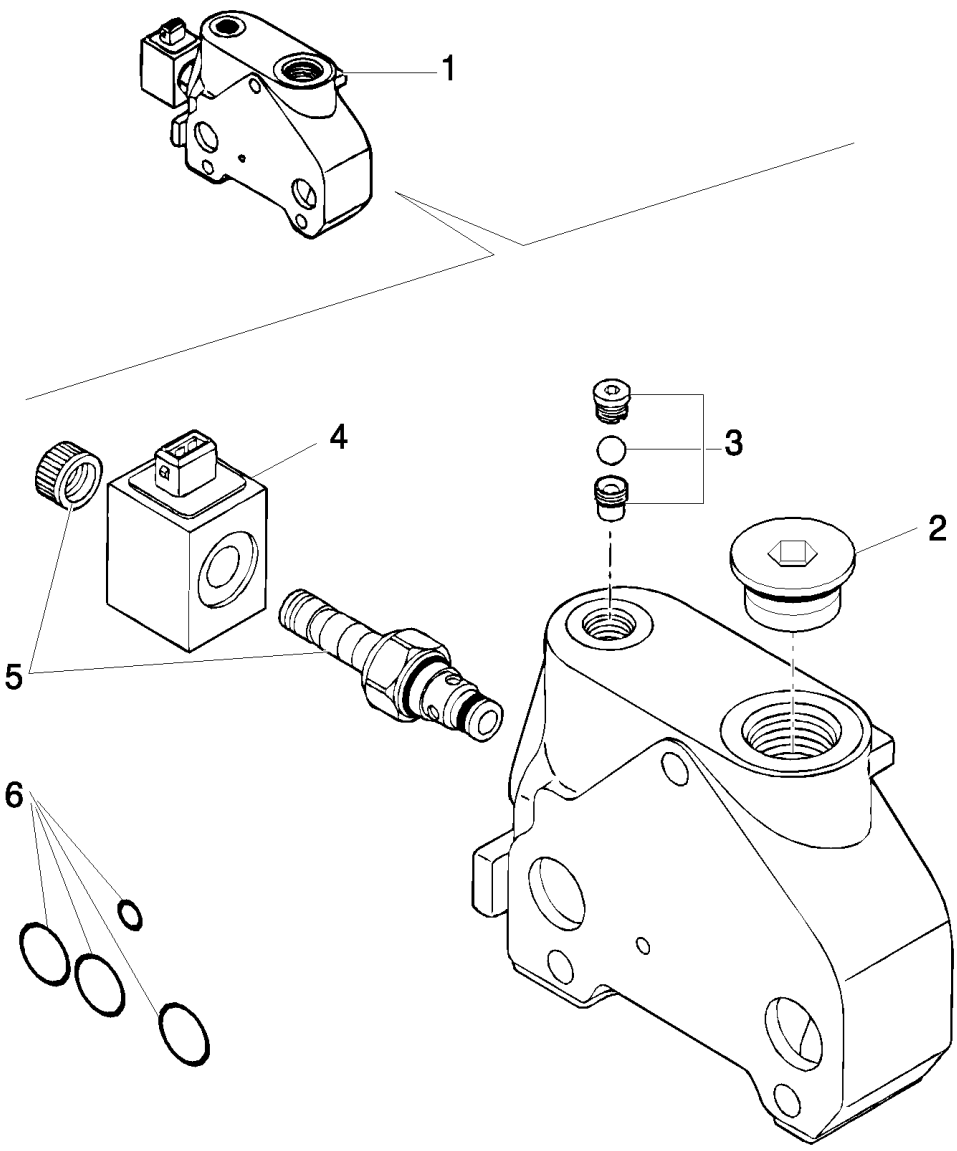

B110 TIER 3 BACKHOE LOADER (2/07-)

301(02) BACKHOE CONTROL VALVE, OULET SECTION (SIDE SHIFT) - EU

Ref	Numero de Pieza	Ctd	Descripción
1	85826249	1	SECTOR, TOOTHED, ASSY
2	85811921	1	PLUG,
3	85811952	1	KIT, Valve
4	85811953	1	SOLENOID,
5	85811954	1	KIT, Valve
6	85825473	1	KIT, SEALS, Seals

Mechanical Version

301(04) PEDAL-OPERATED TELESCOPIC DIPPER HYDRAULIC SYSTEM (SIDE SHIFT) - EU

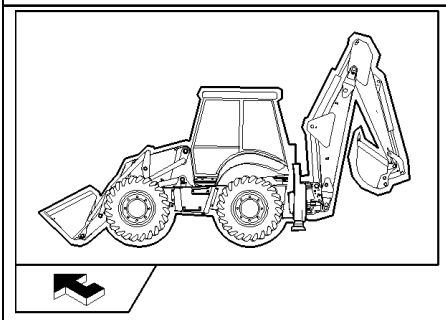

KIT
KIT KIT
8 = ●
10 = ▲

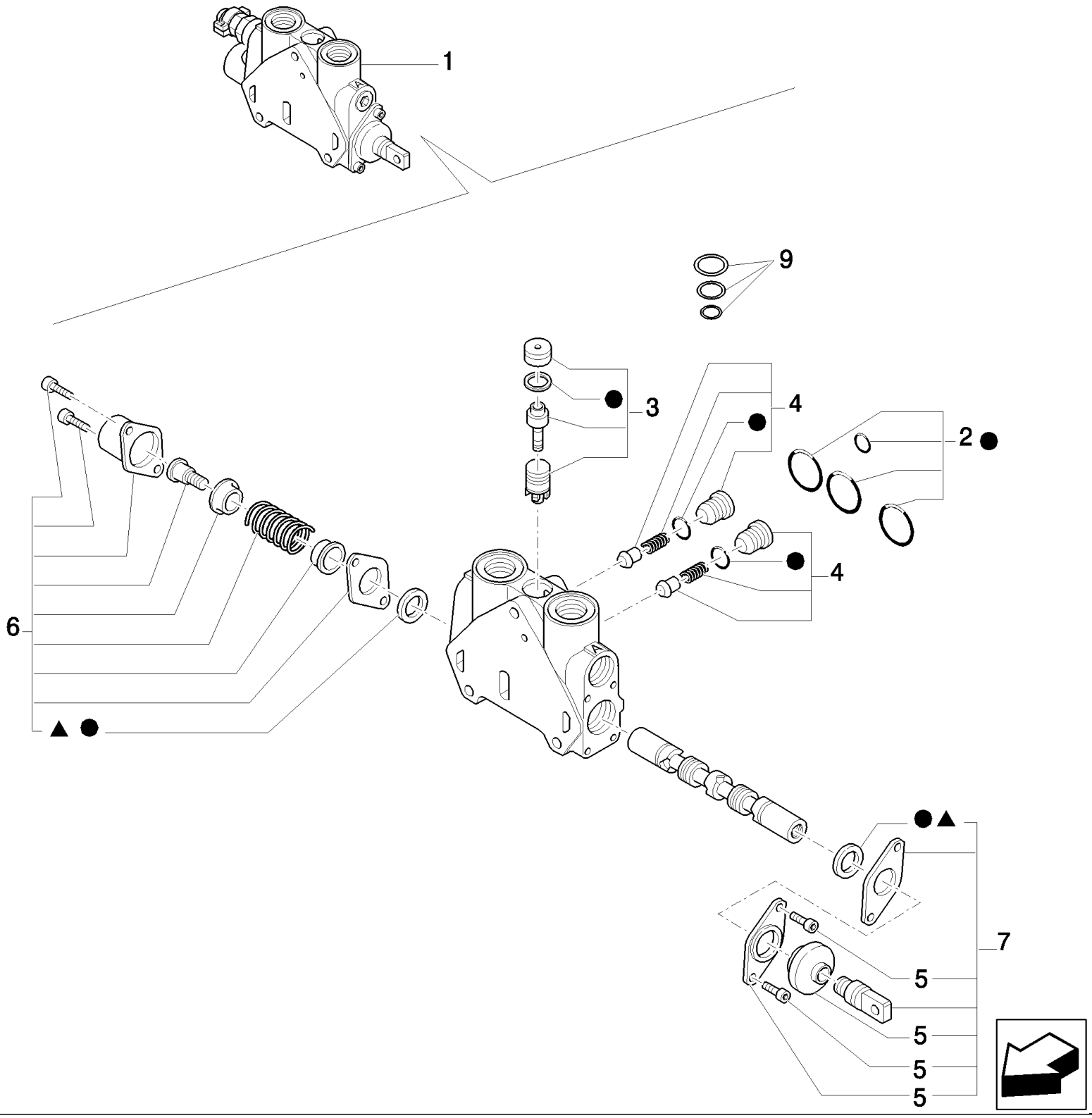

Mechanical Version

B110 TIER 3 BACKHOE LOADER (2/07-)

301(04) PEDAL-OPERATED TELESCOPIC DIPPER HYDRAULIC SYSTEM (SIDE SHIFT) - EU

Ref	Numero de Pieza	Ctd	Descripción
1	87611176	1	VALVE, HYDRAULIC,
2	85819148	1	KIT, SEALS, Seals
3	85819378	1	KIT, SEALS, Valve
4	85811938	2	VALVE, CHECK, Valve
5	85820130	1	BOOT,
6	85824279	1	KIT, Seal
7	85824278	1	KIT, Working Assy
8	85824281	1	KIT, SEALS, Seals
9	85819040	1	KIT, SEALS, Compensator Seal
10	85824283	1	KIT, SEALS, Spool Seal

Mechanical Version

302(01) TWO-SECTION CONTROL VALVE FOR LOADER

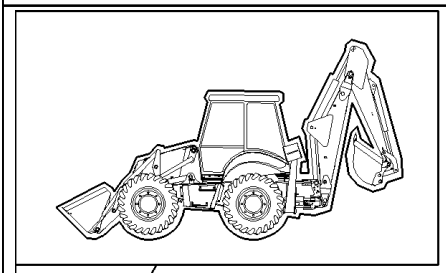

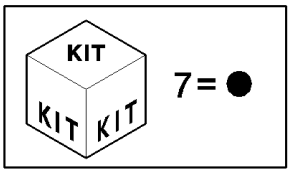

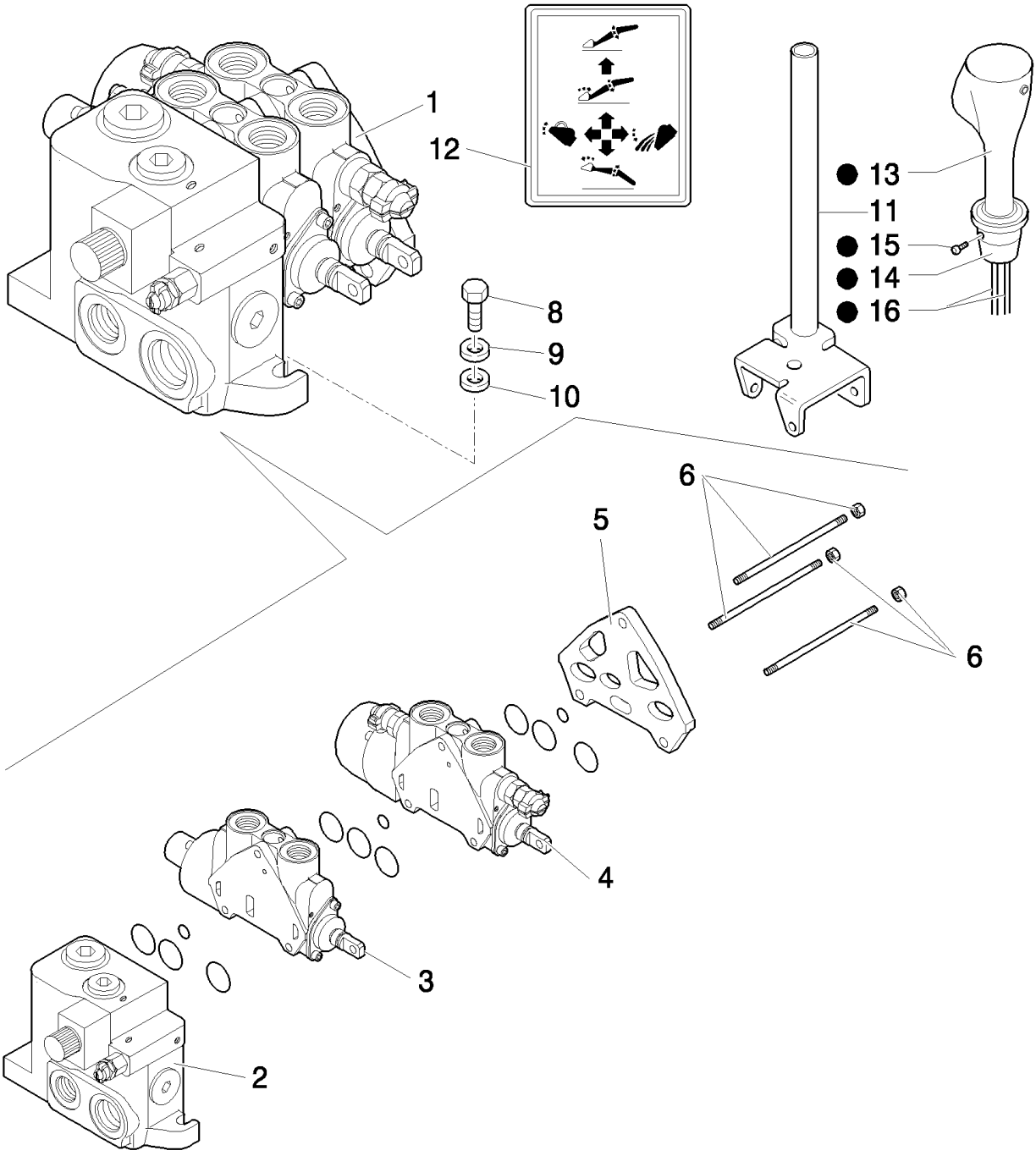

B110 TIER 3 BACKHOE LOADER (2/07-)

302(01) TWO-SECTION CONTROL VALVE FOR LOADER

Ref	Numero de Pieza	Ctd	Descripción
1	85825188	1	VALVE, CONTROL, ASSY
2	85825468	1	VALVE SECTION, HYD, ASSY, See Page 302 02
3	87558567	1	SECTOR, , LOADER, See Page 302 03
4	85825469	1	VALVE SECTION, HYD, , See Page 302 04, Bucket
5	85826924	1	SECTOR, TOOTHED, ASSY
6	85825475	1	TIE-ROD, THREADED, TIE RODS
7	85825473	3	KIT, SEALS, Seal
7	87311102	1	JOYSTICK, , Only for POWER SHIFT
7	87311103	1	JOYSTICK, , Only for POWER SHUTTLE
8	11234721	3	BOLT, Hex, M10 x 1.25 x 45, 8.8,
9	13578621	3	WASHER, 10x30x2
10	11190679	3	WASHER, SPRING, Belleville, M10.5,
11	87304793	1	LEVER,
12	85804346	1	DECAL,
13	87311302	1	HANDLE GRIP, , Only for POWER SHIFT
13	87311306	1	HANDLE GRIP, , Only for POWER SHUTTLE
14	87311303	1	HUB,
15	13789621	2	SET SCREW, Hex Soc, M8 x 10, Flat Pt,
16	87311836	1	HARNESS, WIRE, , Only for POWER SHIFT
16	87311838	1	HARNESS, WIRE, Includes Switch, Only for POWER SHUTTLE

302(02) TWO-SECTION CONTROL VALVE FOR LOADER

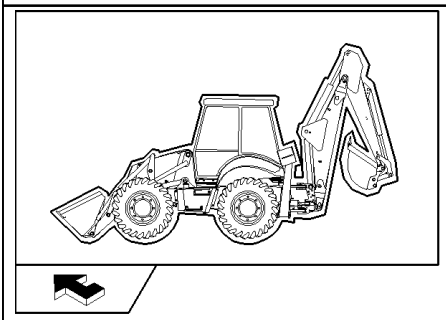

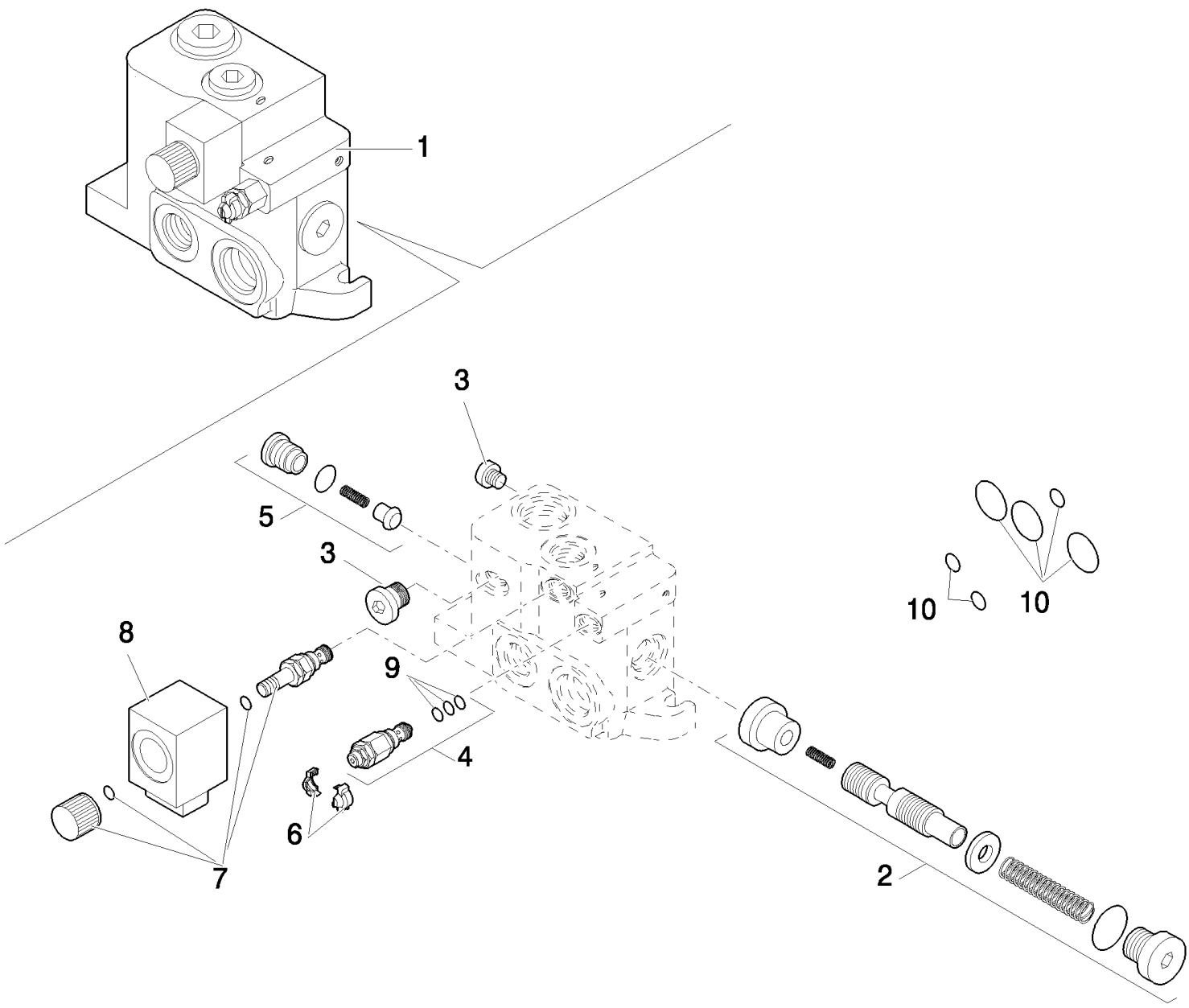

B110 TIER 3 BACKHOE LOADER (2/07-)

302(02) TWO-SECTION CONTROL VALVE FOR LOADER

Ref	Numero de Pieza	Ctd	Descripción
1	85825468	1	VALVE SECTION, HYD,
2	85825472	1	KIT,
3	85811923	2	PLUG,
4	85811946	1	VALVE, PRESSURE RELIEF,
5	85811938	1	VALVE, CHECK,
6	85811934	1	KIT,
7	85811954	1	KIT,
8	85811953	1	SOLENOID,
9	85821236	1	KIT, SEALS,
10	85819148	1	KIT, SEALS,

302(03) TWO-SECTION CONTROL VALVE FOR LOADER

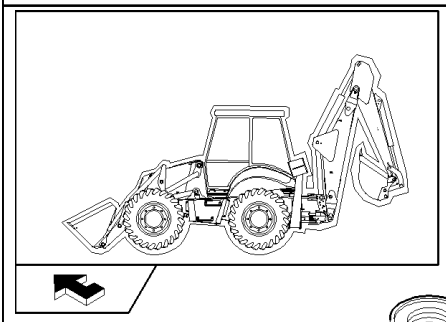

KIT
KIT KIT
8 = ●
10 = ▲

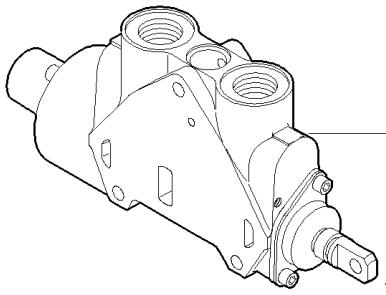

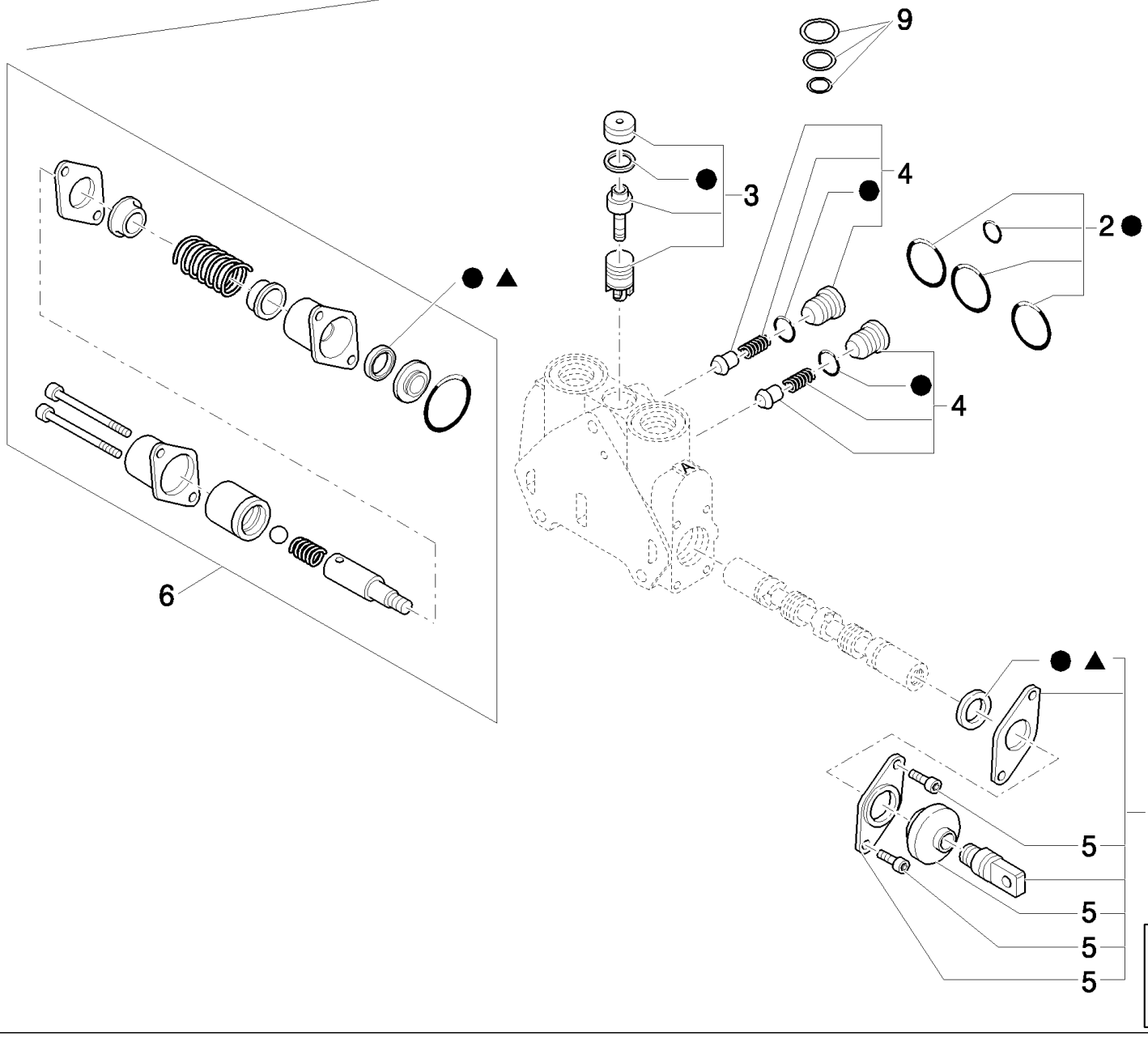

B110 TIER 3 BACKHOE LOADER (2/07-)

302(03) TWO-SECTION CONTROL VALVE FOR LOADER

Ref	Numero de Pieza	Ctd	Descripción
1	87558567	1	SECTOR, ASSY
2	85819148	1	KIT, SEALS, Seals
3	85819378	1	KIT, SEALS, Valve
4	85811938	2	VALVE, CHECK, Valve
5	85820130	1	BOOT,
6	87558870	1	KIT, Cover Assy
7	85824278	1	KIT, Working Assy
8	85824282	1	KIT, Seals
9	85819040	1	KIT, SEALS, Compensator Seal
10	85824283	1	KIT, SEALS, Spool Seal

302(04) TWO-SECTION CONTROL VALVE FOR LOADER

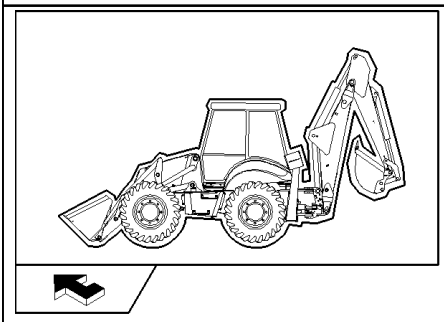

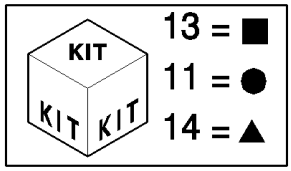

B110 TIER 3 BACKHOE LOADER (2/07-)

302(04) TWO-SECTION CONTROL VALVE FOR LOADER

Ref	Numero de Pieza	Ctd	Descripción
1	85825469	1	VALVE SECTION, HYD, ASSY
2	85819148	1	KIT, SEALS, Seals
3	85819378	1	KIT, SEALS, Valve
4	85811938	2	VALVE, CHECK, Valve
5	85820130	1	BOOT,
6	85825471	1	KIT, Cover Assy
7	85824278	1	KIT, Working Assy
8	85812116	1	VALVE, PRESSURE RELIEF, , 240 BAR, Includes 9, 10
9	85811933	2	KIT, SEALS, Valve Seals
10	85811935	2	KIT, Cover
11	85824281	1	KIT, SEALS, Seals
12	85812113	1	VALVE, HYDRAULIC, , Includes 9, 10, 165 BAR
13	85819040	1	KIT, SEALS, Compensator Seal
14	85824283	1	KIT, SEALS, Spool Seal

311(01) STABILIZER CYLINDER - LOCK VALVE (SIDE SHIFT) - EU

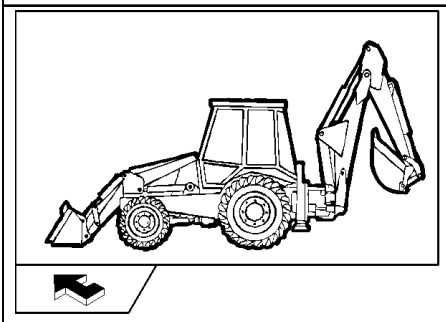

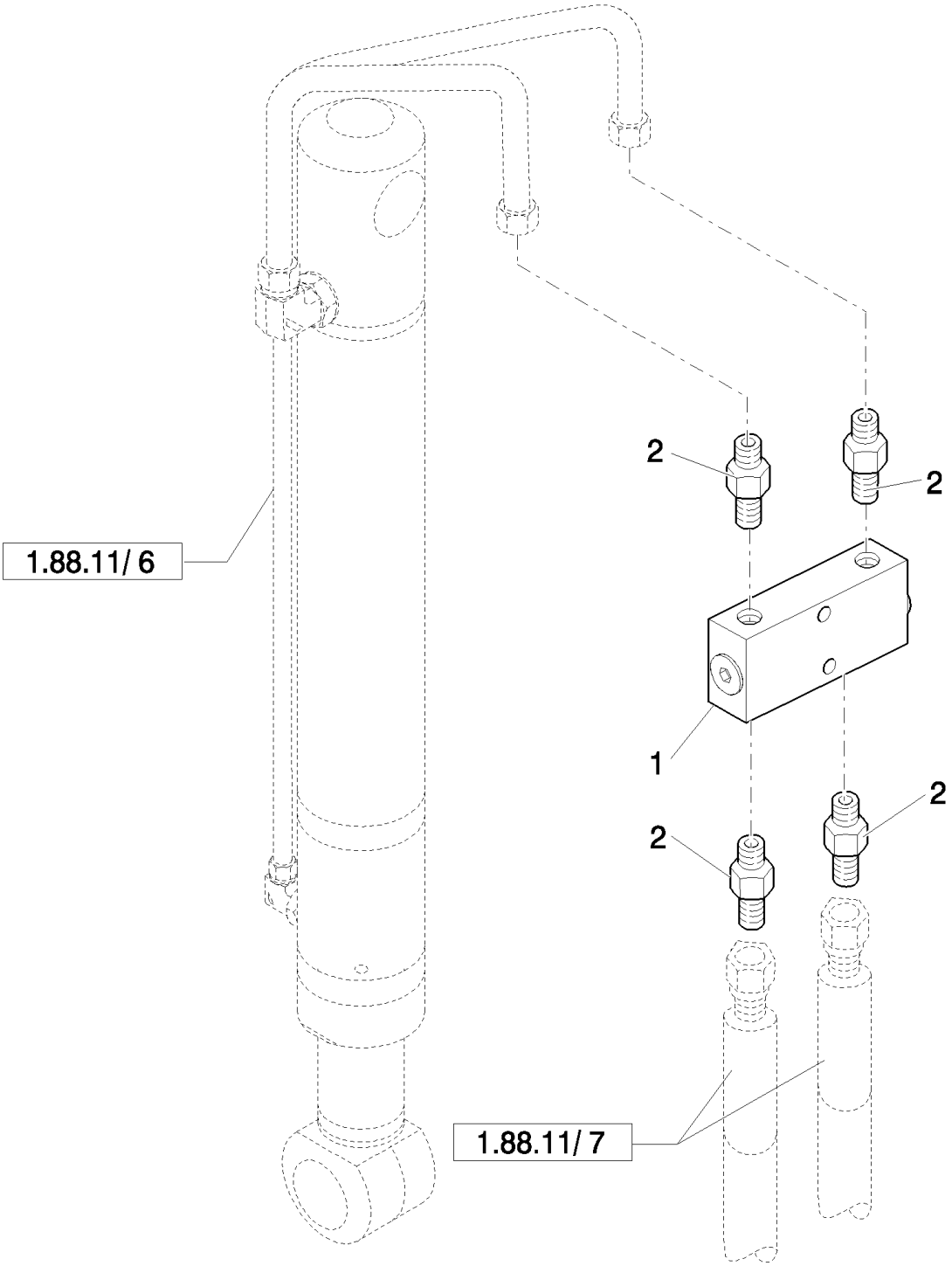

B110 TIER 3 BACKHOE LOADER (2/07-)

311(01) STABILIZER CYLINDER - LOCK VALVE (SIDE SHIFT) - EU

Ref	Numero de Pieza	Ctd	Descripción
1	87374648	2	VALVE,
2	83985067	8	CONNECTOR, HYD.,

B110 TIER 3 BACKHOE LOADER (2/07-)

321(01) DOUBLE BATTERY

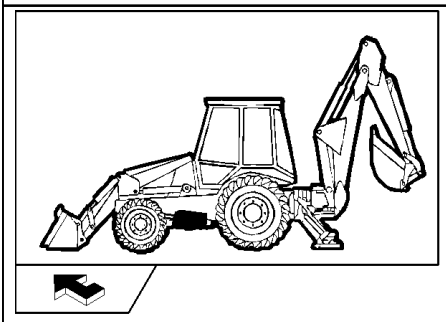

B110 TIER 3 BACKHOE LOADER (2/07-)

321(01) DOUBLE BATTERY

Ref	Numero de Pieza	Ctd	Descripción
1	85826208	2	BATTERY, WET, U.S.
2	412005	4	BOLT, Hex, M10 x 220, 8.8, M10x220
3	85827072	1	CABLE, ELECTRIC,
4	87568472	1	CABLE,
5	47049041	4	NUT, M10
6	47049590	AR	DECAL,
7	85826906	2	GUARD,
8	87415781	2	BRACKET,
9	47048788	4	ANGLE,
10	47048963	4	WASHER,
11	87529531	4	PLATE, RETAINING,
12	85827416	1	CABLE, GROUND,
13	87405018	1	Strap, Ground,

331(01) TOWER ASSY 6 SECTIONS (CENTER PIVOT) - EU

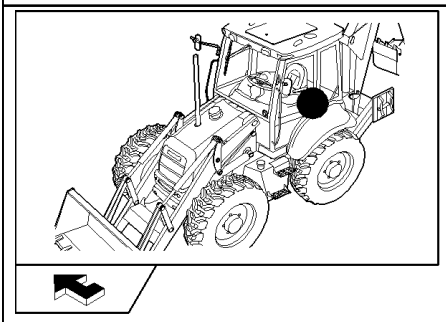

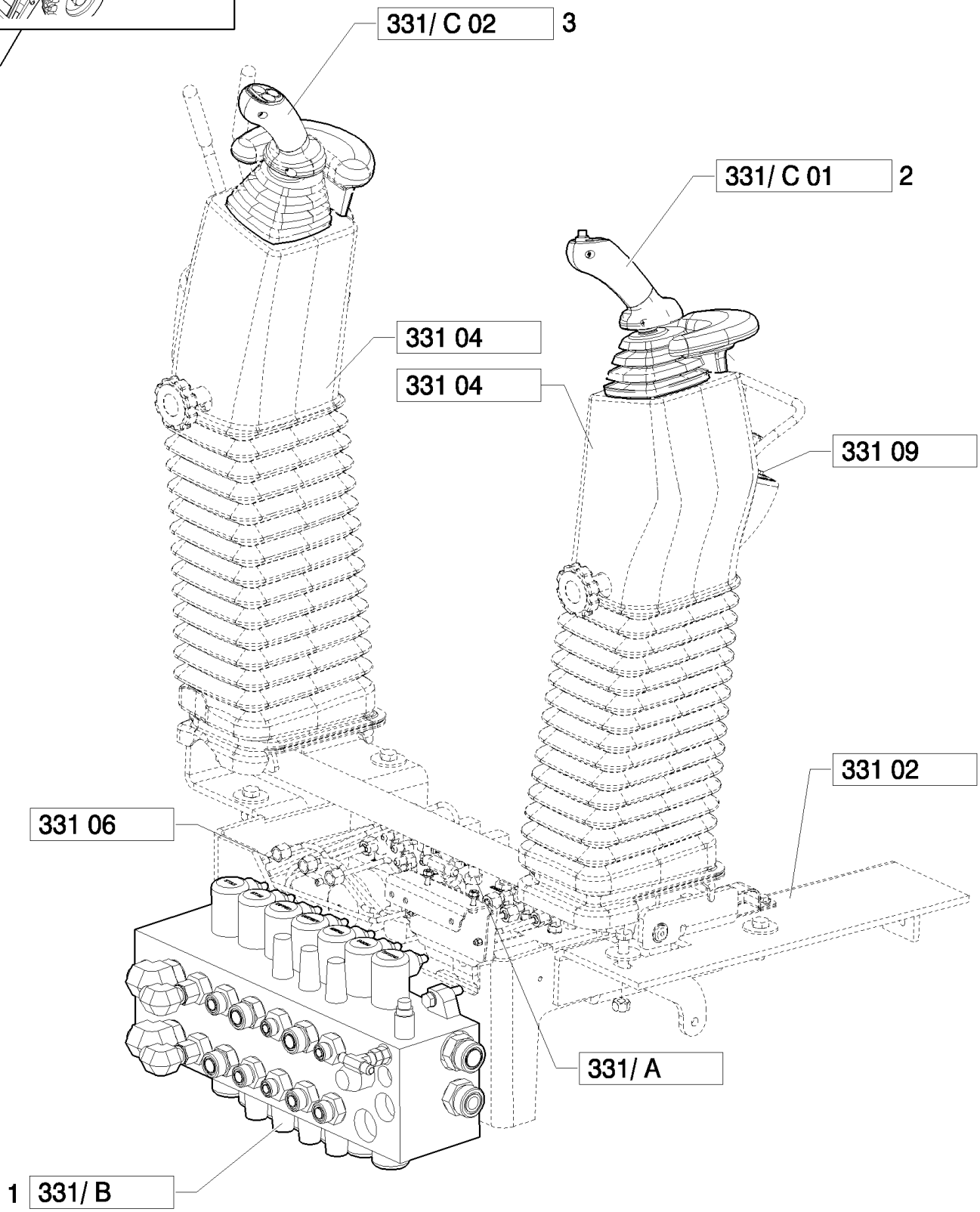

Pilot Control Version

B110 TIER 3 BACKHOE LOADER (2/07-)

331(01) TOWER ASSY 6 SECTIONS (CENTER PIVOT) - EU

Ref	Numero de Pieza	Ctd	Descripción
1	87302742	1	VALVE, CONTROL,
2	87547313	1	JOYSTICK,
3	87388704	1	JOYSTICK,

Pilot Control Version

331(02) PILOT CONTROL VALVE SUPPORT, COMPLETE

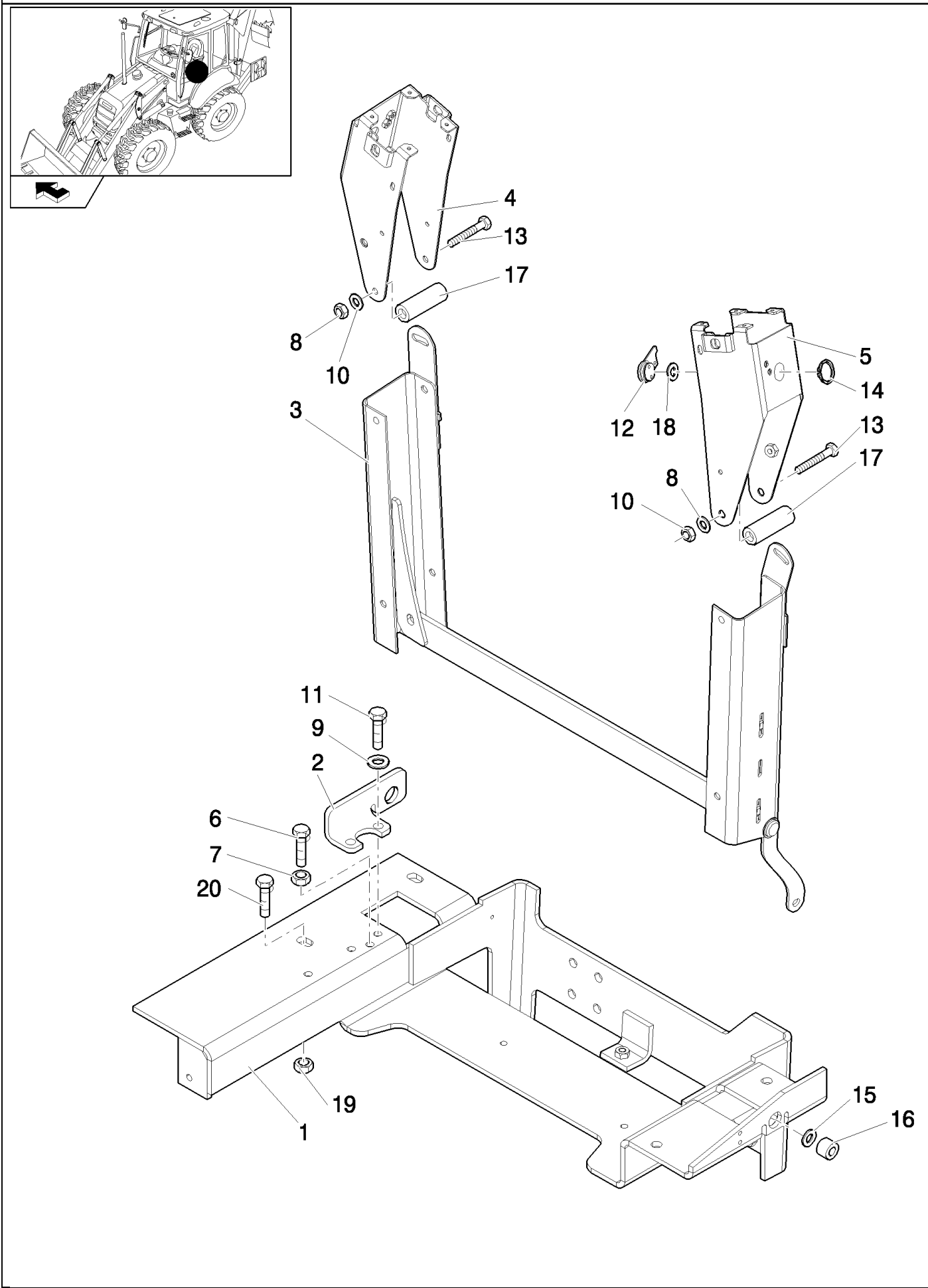

Pilot Control Version

B110 TIER 3 BACKHOE LOADER (2/07-)

331(02) PILOT CONTROL VALVE SUPPORT, COMPLETE

Ref	Numero de Pieza	Ctd	Descripción
1	87434992	1	SUPPORT,
2	87427004	1	SUPPORT,
3	87426960	1	PIVOT ASSY.,
4	87453116	1	SUPPORT,
5	87453117	1	SUPPORT,
6	15213721	1	BOLT, Hex, M8 x 60, 8.8, Full Thd,
7	16100811	1	NUT, M8, Cl 8,
8	47048969	4	WASHER,
9	47048992	2	WASHER,
10	47049041	2	NUT,
11	47049082	2	BOLT,
12	87453118	1	LEVER,
13	84058418	2	BOLT, Hex, M10 x 125, 8.8,
14	85824053	1	O-RING,
15	85824054	4	WASHER,
16	85824059	2	BUSHING,
17	87453110	2	SPACER,
18	87405706	1	WASHER,
19	47049032	4	NUT,
20	47049151	4	SCREW,

Pilot Control Version

331(03) 6 SECTION PILOT CONTROL VALVE SUPPORT, COMPLETE

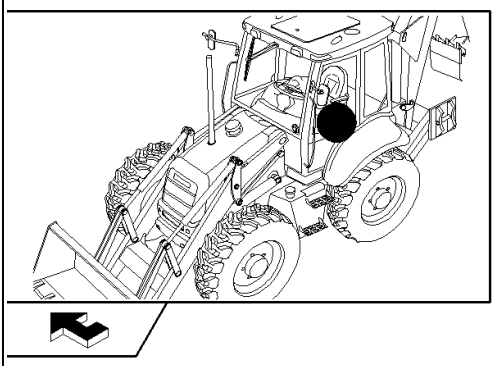

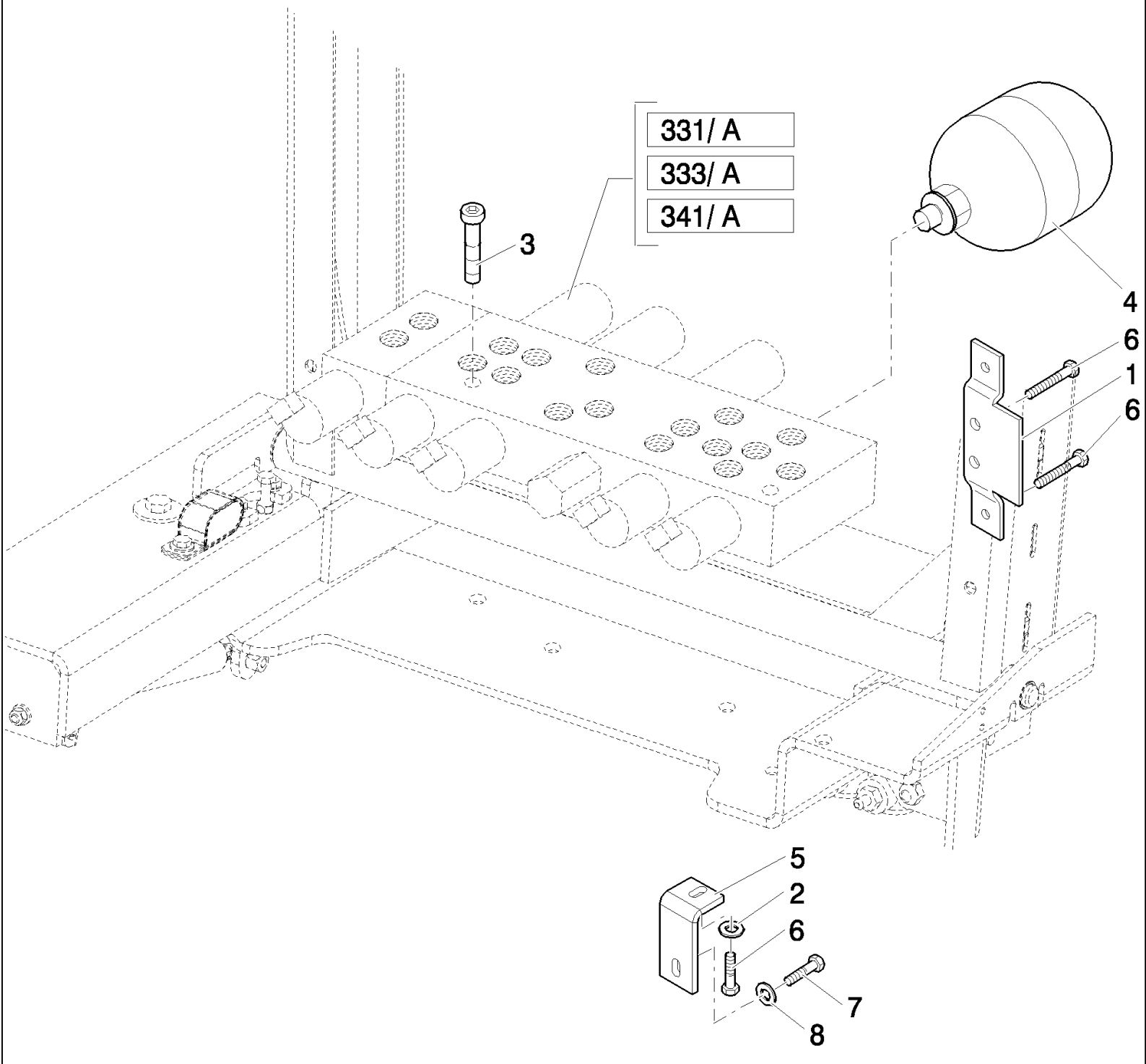

Pilot Control Version

B110 TIER 3 BACKHOE LOADER (2/07-)

331(03) 6 SECTION PILOT CONTROL VALVE SUPPORT, COMPLETE

Ref	Numero de Pieza	Ctd	Descripción
1	86990460	1	PLATE, MOUNTING,
2	47048971	1	WASHER,
3	14306821	2	SCREW, Hex Soc Hd, M8 x 45, 8.8,
4	87425225	1	ACCUMULATOR,
5	87402306	1	BRACKET,
6	16040821	3	BOLT, Hex, M10 x 40, 8.8, Full Thd,
7	47049065	1	SCREW,
8	85802618	1	WASHER, SEALING,

Pilot Control Version

B110 TIER 3 BACKHOE LOADER (2/07-)

331(04) PILOT CONTROL VALVE SUPPORT, COMPLETE

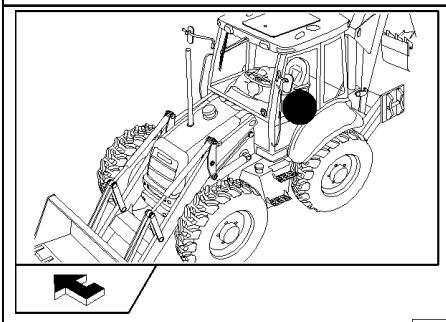

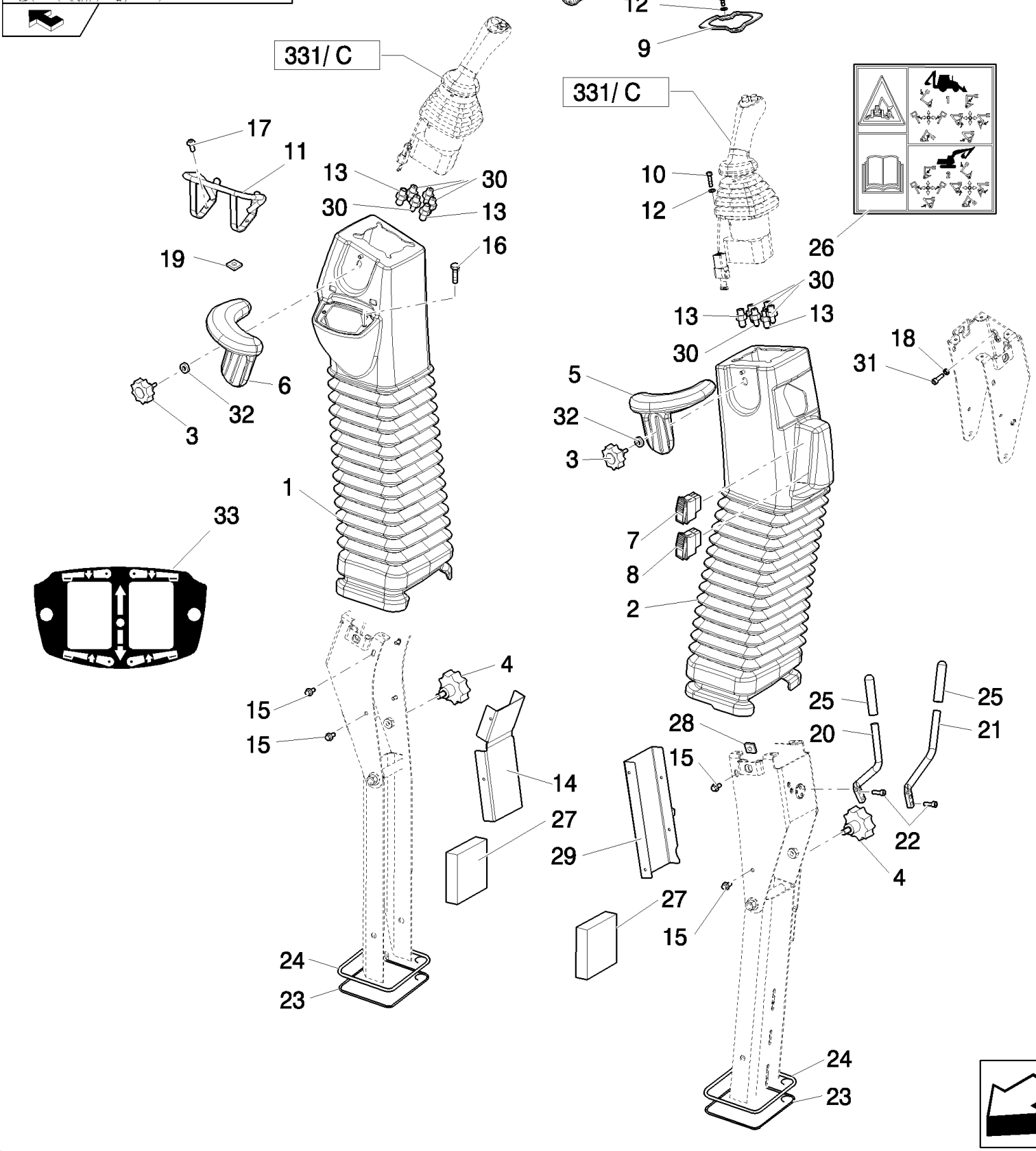

Pilot Control Version

B110 TIER 3 BACKHOE LOADER (2/07-)

331(04) PILOT CONTROL VALVE SUPPORT, COMPLETE

Ref	Numero de Pieza	Ctd	Descripción
1	87309923	1	BOOT,
2	87309924	1	BOOT,
3	87437689	2	KNOB,
4	87437688	2	KNOB,
5	87437366	1	ARMREST,
6	87437369	1	ARMREST,
7	87423802	1	SWITCH,
8	87410105	1	SWITCH,
9	87435372	2	PLATE, RETAINING,
10	10902834	8	SCREW,
11	87307656	1	GUARD,
12	11197779	8	WASHER, SPRING, Belleville, M6.4,
13	86625199	8	SCREW, SELF TAPPING, Hex Flg Hd, M6 x 13,
14	87431301	1	SHIELD,
15	87016552	8	SCREW, SELF TAPPING, Hex Hd, M6.3 x 19,
16	87022296	8	SCREW, Cross Pan Hd, M3 x 8,
17	87310085	2	SCREW, SELF TAPPING,
18	12574111	1	NUT, LOCK, M5 x .8, Cl 8,
19	87452511	2	NUT,
20	87418368	1	ROD,
21	87418369	1	ROD,
22	87310098	4	BOLT, M6 x 20
23	87433514	2	GASKET,
24	87433515	2	GASKET,
25	87421909	2	GRIP,
26	87305953	1	DECAL,
27	87349851	2	PANEL, INSULATING,
28	86625073	2	NUT, M6, U,
29	87431300	1	GUARD,
30	85803312	8	CONNECTOR, HYD.,
31	10977821	1	BOLT, Hex, M5 x 16, 8.8, Full Thd,
32	85821536	2	WASHER, M6 x 25 x 1.6,
33	87423812	1	DECAL,

Pilot Control Version

331(05) PILOT CONTROL VALVE SUPPORT, COMPLETE

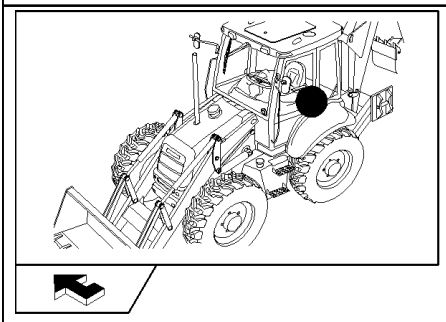

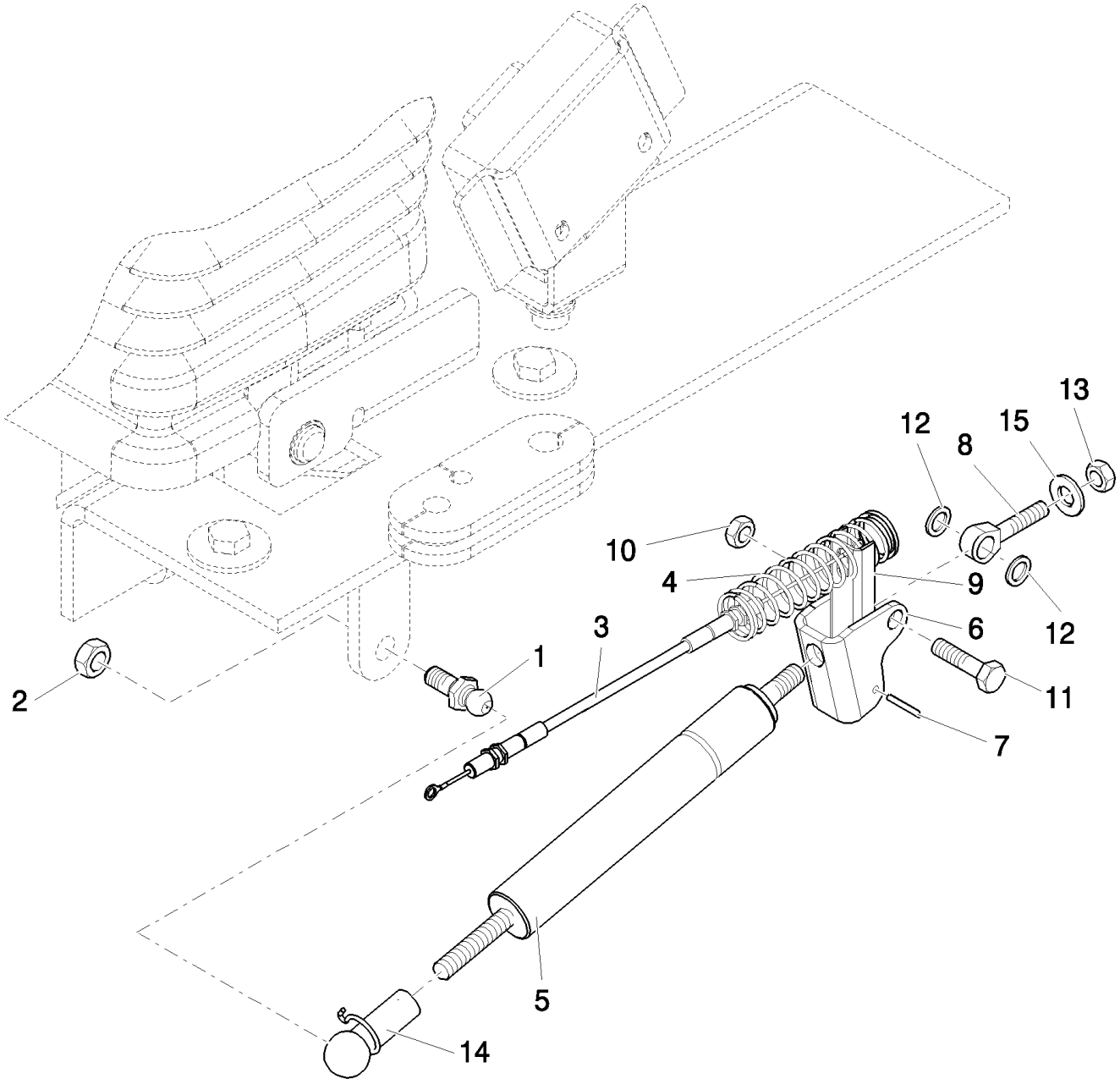

Pilot Control Version

B110 TIER 3 BACKHOE LOADER (2/07-)

331(05) PILOT CONTROL VALVE SUPPORT, COMPLETE

Ref	Numero de Pieza	Ctd	Descripción
1	85824067	1	PIN, BALL,
2	47049041	1	NUT, M10
3	87430028	1	CABLE,
4	87443692	1	SPRING,
5	86989616	1	GAS STRUT,
6	85824080	1	BRACKET,
7	85821514	2	PIN,
8	85824081	1	BALL JOINT,
9	86984549	1	CHANNEL,
10	85821516	1	NUT,
11	85821515	1	BOLT,
12	85821520	2	SPACER,
13	47049442	2	NUT,
14	86999310	1	CLIP,
15	47049404	1	WASHER,

Pilot Control Version

331(06) 6 SECTION PILOT CONTROL VALVE SUPPORT, COMPLETE

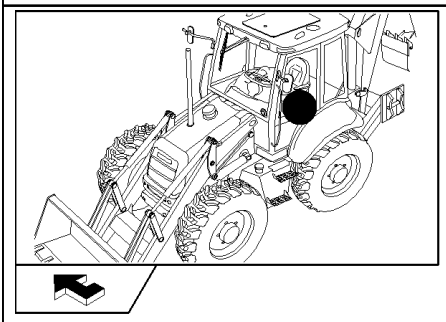

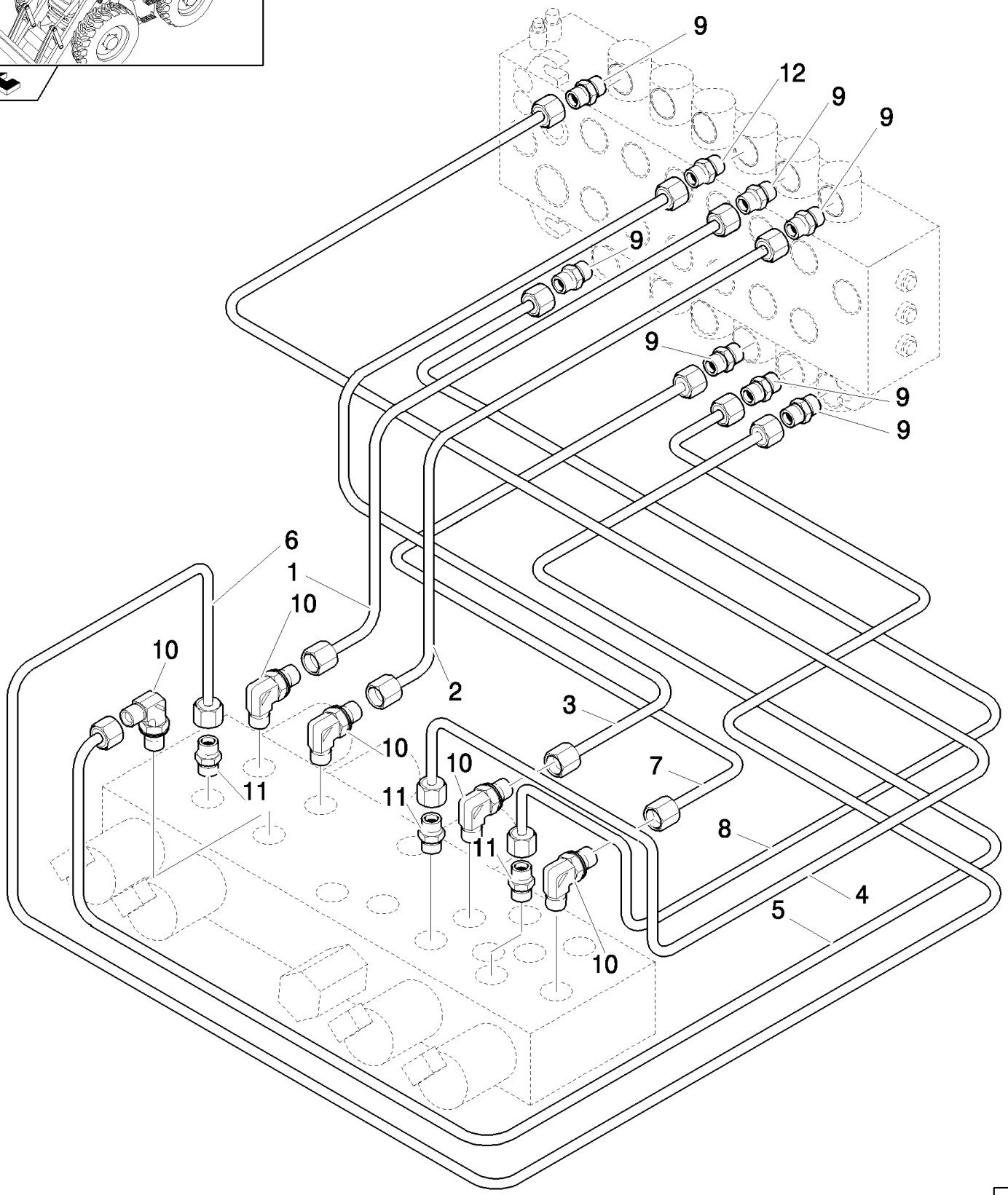

Pilot Control Version

B110 TIER 3 BACKHOE LOADER (2/07-)

331(06) 6 SECTION PILOT CONTROL VALVE SUPPORT, COMPLETE

Ref	Numero de Pieza	Ctd	Descripción
1	85827093	1	TUBE, HYD,
2	85827094	1	TUBE, HYD,
3	85827091	1	TUBE, HYD,
4	85827089	1	TUBE, HYD,
5	85827092	1	TUBE, HYD,
6	85827095	1	TUBE, HYD,
7	85827090	1	TUBE, HYD,
8	85827088	1	TUBE, HYD,
9	85803312	7	CONNECTOR, HYD.,
10	47050653	5	ELBOW,
11	47050685	3	CONNECTOR, HYD.,
12	87423401	1	FITTING,

Pilot Control Version

B110 TIER 3 BACKHOE LOADER (2/07-)

331(07) PILOT CONTROL VALVE SUPPORT, COMPLETE

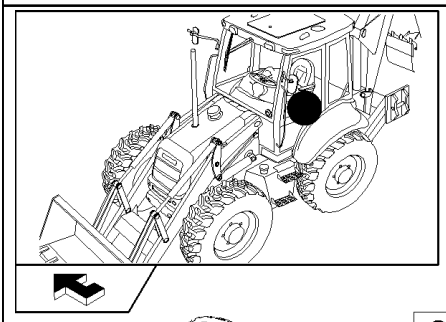

Pilot Control Version

B110 TIER 3 BACKHOE LOADER (2/07-)

331(07) PILOT CONTROL VALVE SUPPORT, COMPLETE

Ref	Numero de Pieza	Ctd	Descripción
1	85827084	1	HOSE, FLEXIBLE,
2	85827085	1	HOSE, FLEXIBLE,
3	85827086	1	HOSE, FLEXIBLE,
4	85827077	1	HOSE, FLEXIBLE,
5	85827087	1	HOSE, FLEXIBLE,
6	85827082	1	HOSE, FLEXIBLE,
7	85827467	1	ELBOW,
8	85827466	2	TEE,
9	85827076	1	HOSE, FLEXIBLE,
10	85827080	1	HOSE, FLEXIBLE,
11	85827078	1	HOSE, FLEXIBLE,
12	47120173	2	TEE,
13	47050686	3	CONNECTOR, HYD.,
14	47050653	3	ELBOW,
15	85803312	4	CONNECTOR, HYD.,
16	85827533	1	HOSE, FLEXIBLE,
17	85827531	1	HOSE, FLEXIBLE,
18	85827532	1	HOSE, FLEXIBLE,
19	85827534	1	HOSE, FLEXIBLE,

Pilot Control Version

331(08) PILOT CONTROL VALVE SUPPORT, COMPLETE

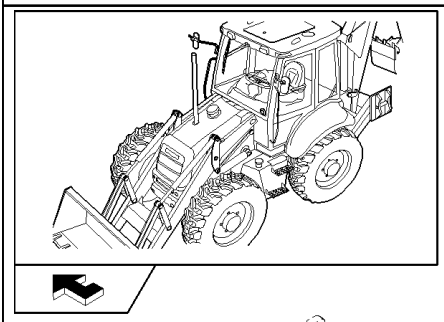

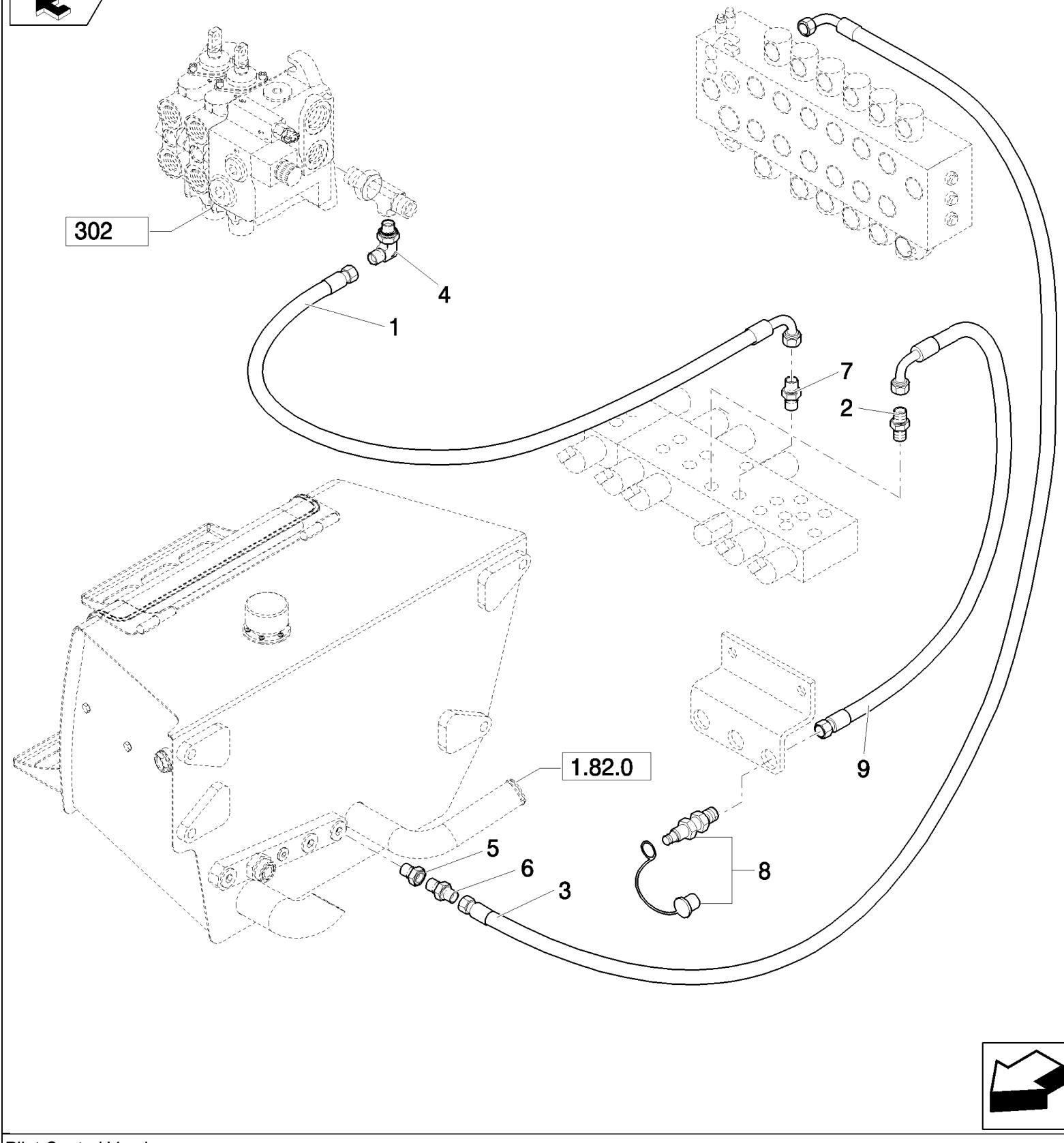

Pilot Control Version

B110 TIER 3 BACKHOE LOADER (2/07-)

331(08) PILOT CONTROL VALVE SUPPORT, COMPLETE

Ref	Numero de Pieza	Ctd	Descripción
1	85827476	1	HOSE, FLEXIBLE,
2	83963371	1	CONNECTOR, HYD.,
3	85827475	1	HOSE, FLEXIBLE,
4	85805318	1	ELBOW, 90º, 9/16"-18, 37º x 9/16"-18, O-Ring,
5	85826100	1	REDUCER,
6	47050686	1	CONNECTOR, HYD.,
7	47050653	1	ELBOW,
8	85817226	1	COUPLING, QUICK, MALE,
9	85812173	1	HOSE, FLEXIBLE,

Pilot Control Version

331(09) PILOT CONTROL VALVE SUPPORT, COMPLETE

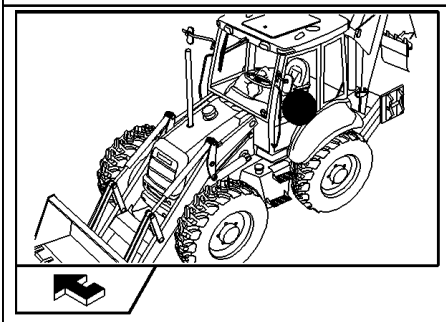

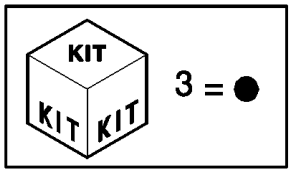

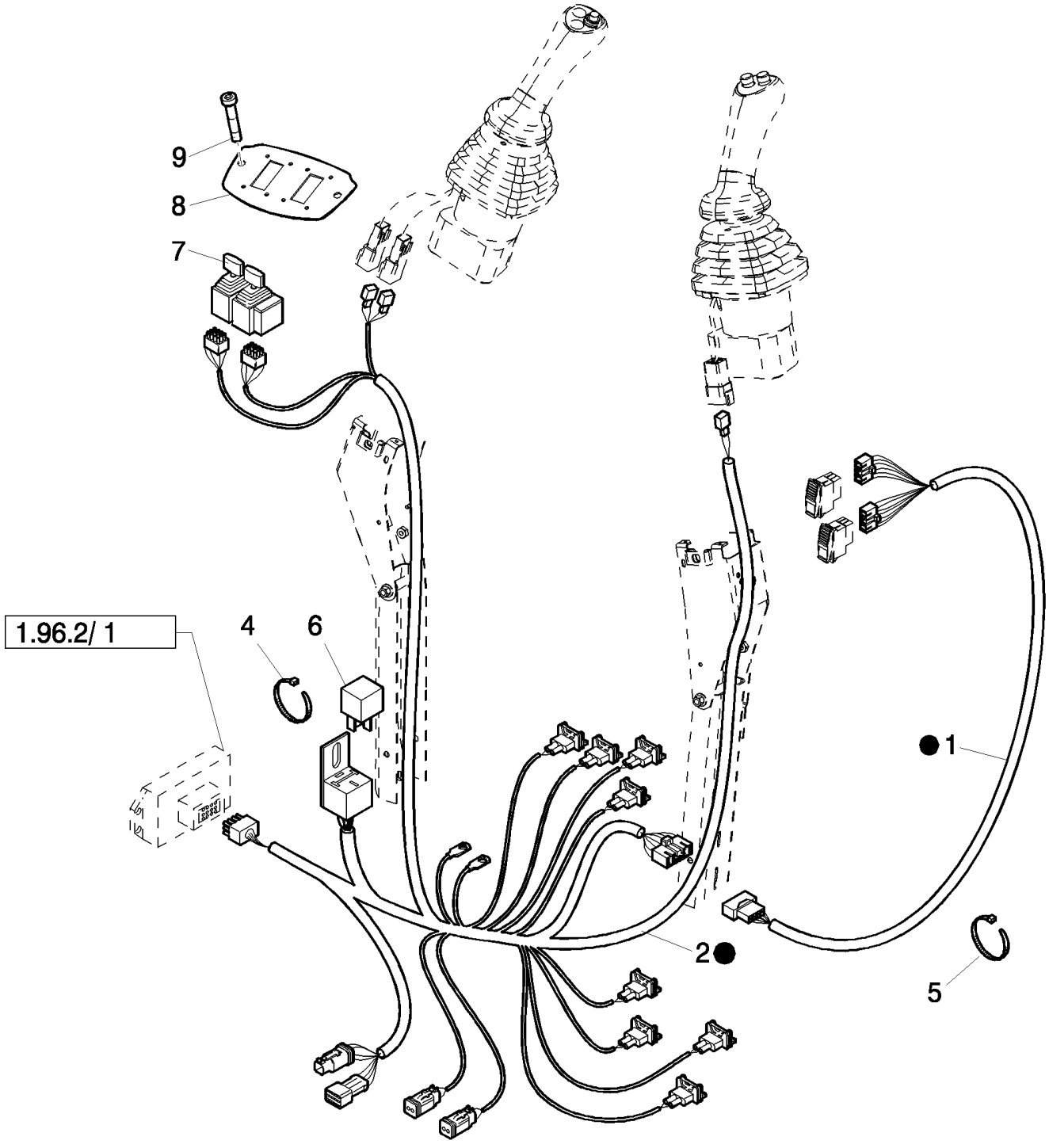

Pilot Control Version

B110 TIER 3 BACKHOE LOADER (2/07-)

331(09) PILOT CONTROL VALVE SUPPORT, COMPLETE

Ref	Numero de Pieza	Ctd	Descripción
1	85828216	1	HARNESS, WIRE,
2	87573079	1	HARNESS,
3	87573078	1	HARNESS, , Includes 1, 2, 6
4	14560187	7	STRAP, CABLE, 178mm lg, L=203.2 mm
5	47044780	2	CABLE,
6	85821537	1	RELAY,
7	86988086	2	JOYSTICK,
8	87435381	1	PLATE, MOUNTING,
9	85821534	2	SCREW,

Pilot Control Version

331/A(01) PROPORTIONAL CONTROL VALVE 6 SECTIONS

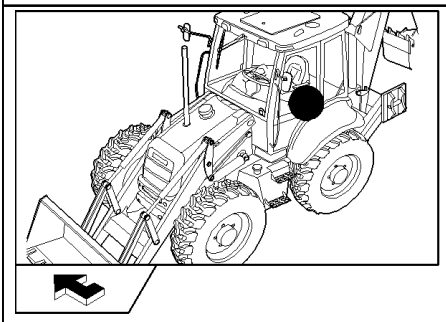

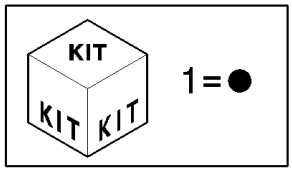

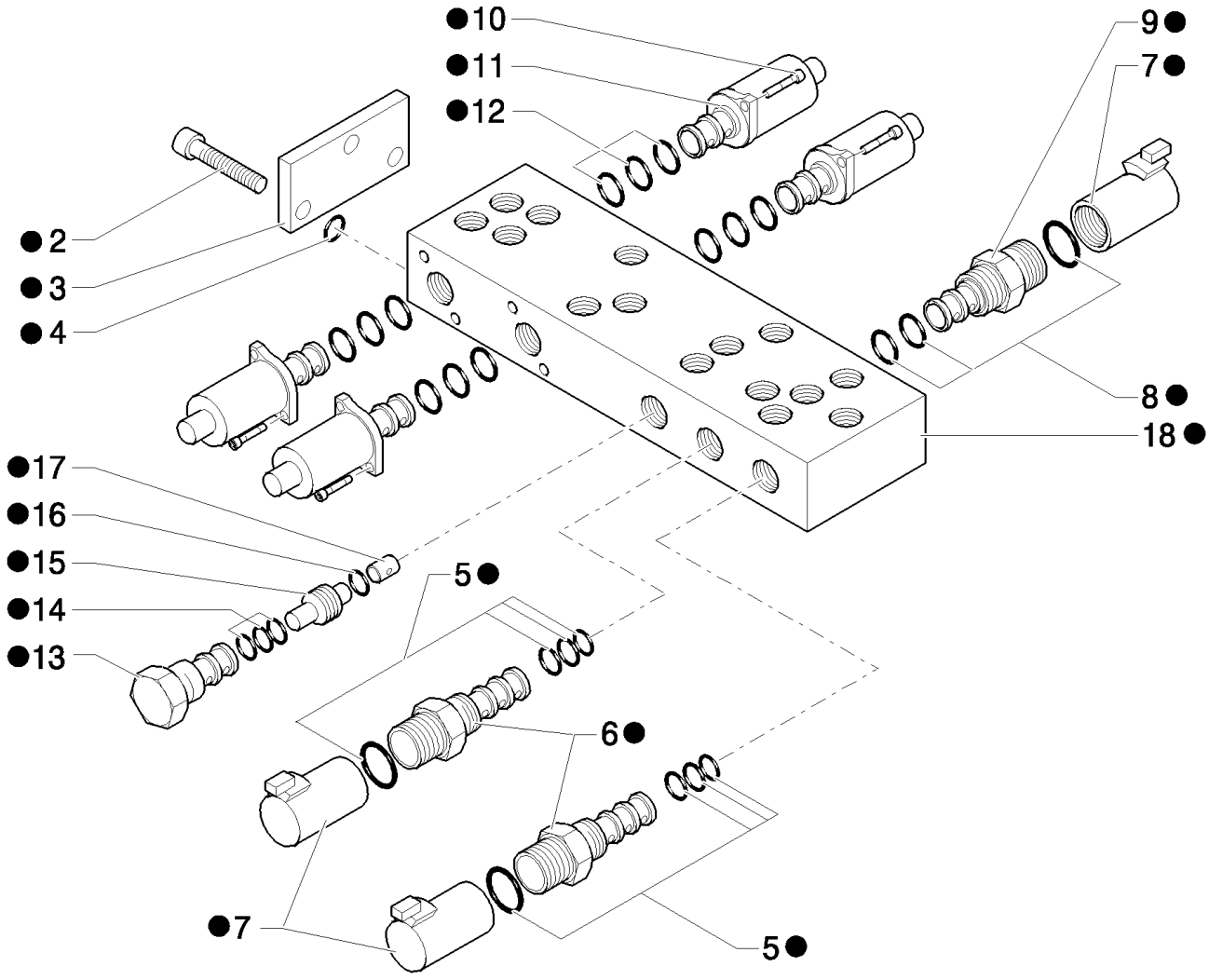

Pilot Control Version

B110 TIER 3 BACKHOE LOADER (2/07-)

331/A(01) PROPORTIONAL CONTROL VALVE 6 SECTIONS

Ref	Numero de Pieza	Ctd	Descripción
1	85827472	1	VALVE, HYDRAULIC,
2	14304021	3	SCREW, Hex Soc Hd, M5 x 10, 8.8,
3	85827991	1	PLATE,
4	85827999	1	KIT, SEALS,
5	85828002	2	KIT, SEALS,
6	85827996	2	SOLENOID, , Includes 5, 7
7	85827995	3	COIL,
8	85827998	1	KIT, SEALS,
9	85827994	1	SOLENOID, , Includes 7, 8
10	14302921	8	BOLT, Hex, M4 x 10, 8.8, Full Thd,
11	85827993	4	SOLENOID,
12	85828000	4	KIT, SEALS,
13	85827997	1	VALVE, CARTRIDGE, HYDRAULIC PRESSURE REDUCING VALVE
14	85828001	1	KIT, SEALS,
15	85827992	1	VALVE, CHECK,
16	85828003	1	O-RING,
17	85828005	1	ORIFICE,
18	85828013	1	BODY,

Pilot Control Version

B110 TIER 3 BACKHOE LOADER (2/07-)

331/B(01) BACKHOE CONTROL VALVE, 6 SECTIONS (CENTER PIVOT) - EU

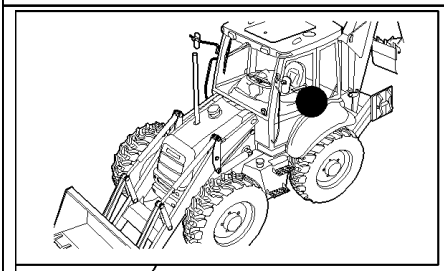

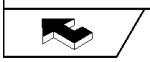

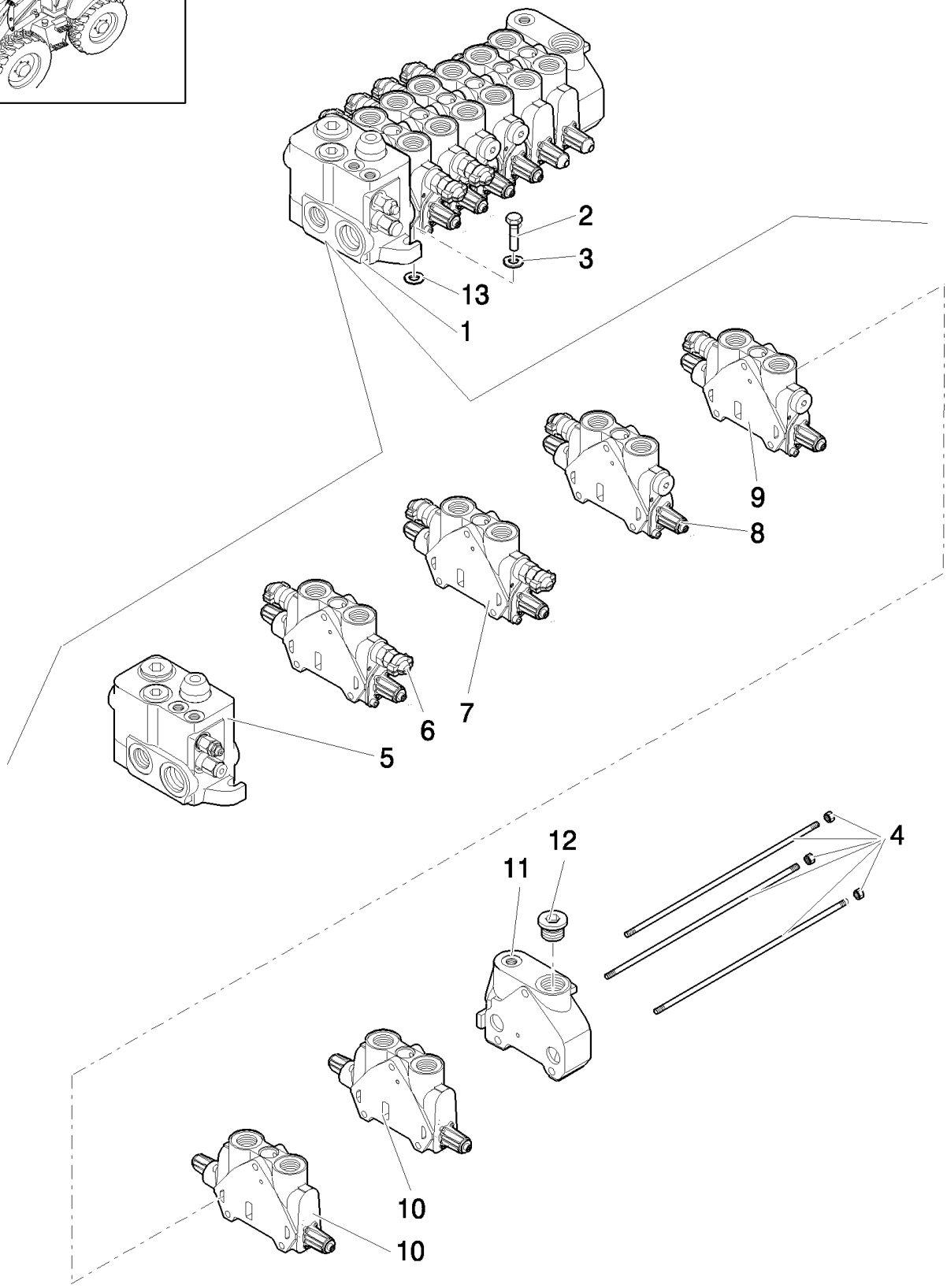

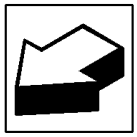

Pilot Control Version

B110 TIER 3 BACKHOE LOADER (2/07-)

331/B(01) BACKHOE CONTROL VALVE, 6 SECTIONS (CENTER PIVOT) - EU

Ref	Numero de Pieza	Ctd	Descripción
1	87302742	1	VALVE, CONTROL,
2	11234721	3	BOLT, Hex, M10 x 1.25 x 45, 8.8,
3	11190679	3	WASHER, SPRING, Belleville, M10.5,
4	85811958	1	KIT,
5	87308747	1	VALVE SECTION, HYD, , See Page 331/B 02
6	85826359	1	SECTOR, TOOTHED, , See Page 331/B 03, Boom Cylinder
7	85826357	1	SECTOR, TOOTHED, , Swing Cylinder, See Page 331/B 04
8	85826356	1	SECTOR, TOOTHED, , See Page 331/B 05, Bucket Cylinder
9	85826355	1	SECTOR, TOOTHED, , See Page 331/B 06, Arm Cylinder
10	85826360	2	SECTOR, TOOTHED, , Stabilizer Cylinder, See Page 331/B 07
11	85826250	1	VALVE SECTION, HYD, , Includes 12
12	85811921	1	PLUG, 1-1/16"-12 UNF 2A
13	13578621	3	WASHER,

Pilot Control Version

331/B(02) BACKHOE CONTROL VALVE, INLET SECTION (CENTER PIVOT) - EU

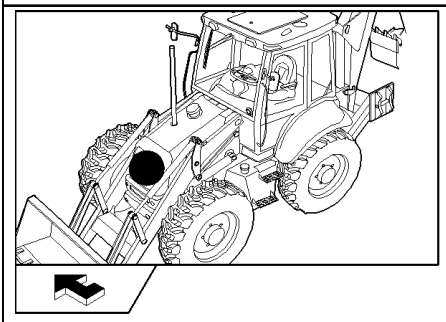

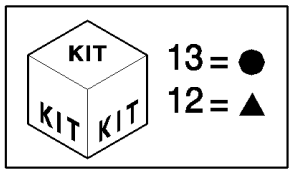

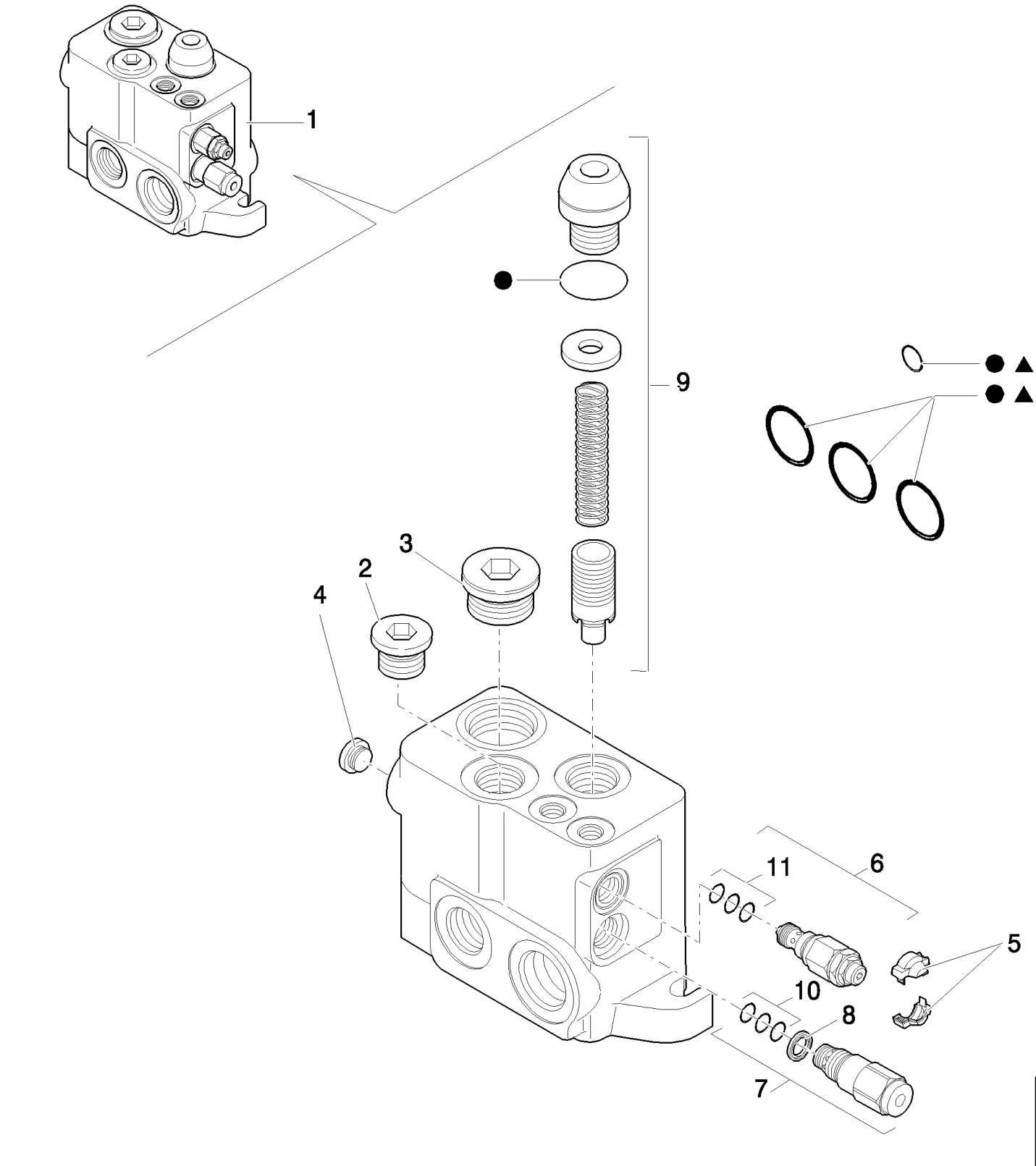

Pilot Control Version

B110 TIER 3 BACKHOE LOADER (2/07-)

331/B(02) BACKHOE CONTROL VALVE, INLET SECTION (CENTER PIVOT) - EU

Ref	Numero de Pieza	Ctd	Descripción
1	87308747	1	VALVE SECTION, HYD,
2	85811921	1	PLUG, 1-1/16"-12 UNF 2A
3	85811922	1	PLUG, 1-5/16"-12 UNF 2A
4	85811923	1	PLUG,
5	85811934	1	KIT, Cover
6	85811946	1	VALVE, PRESSURE RELIEF,
7	85820128	1	REGULATOR,
8	85817669	1	GASKET,
9	85820129	1	KIT, Regulation Assy
10	85821235	1	KIT, SEALS, Seal, Flow Regulator
11	85821236	1	KIT, SEALS, Seal, LS Pressure Relief
12	87308749	1	KIT, SEALS, Seals
13	85825477	1	KIT, SEALS, Seal

Pilot Control Version

331/B(03) BACKHOE CONTROL VALVE, BOOM SECTION (CENTER PIVOT) - EU

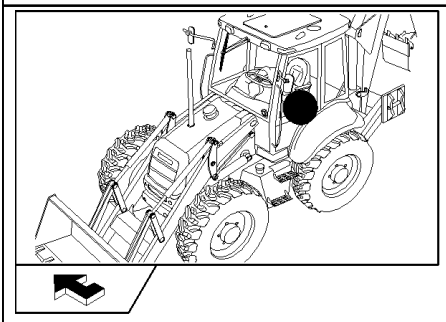

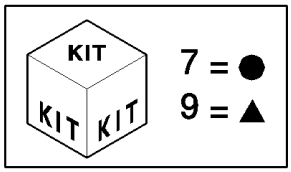

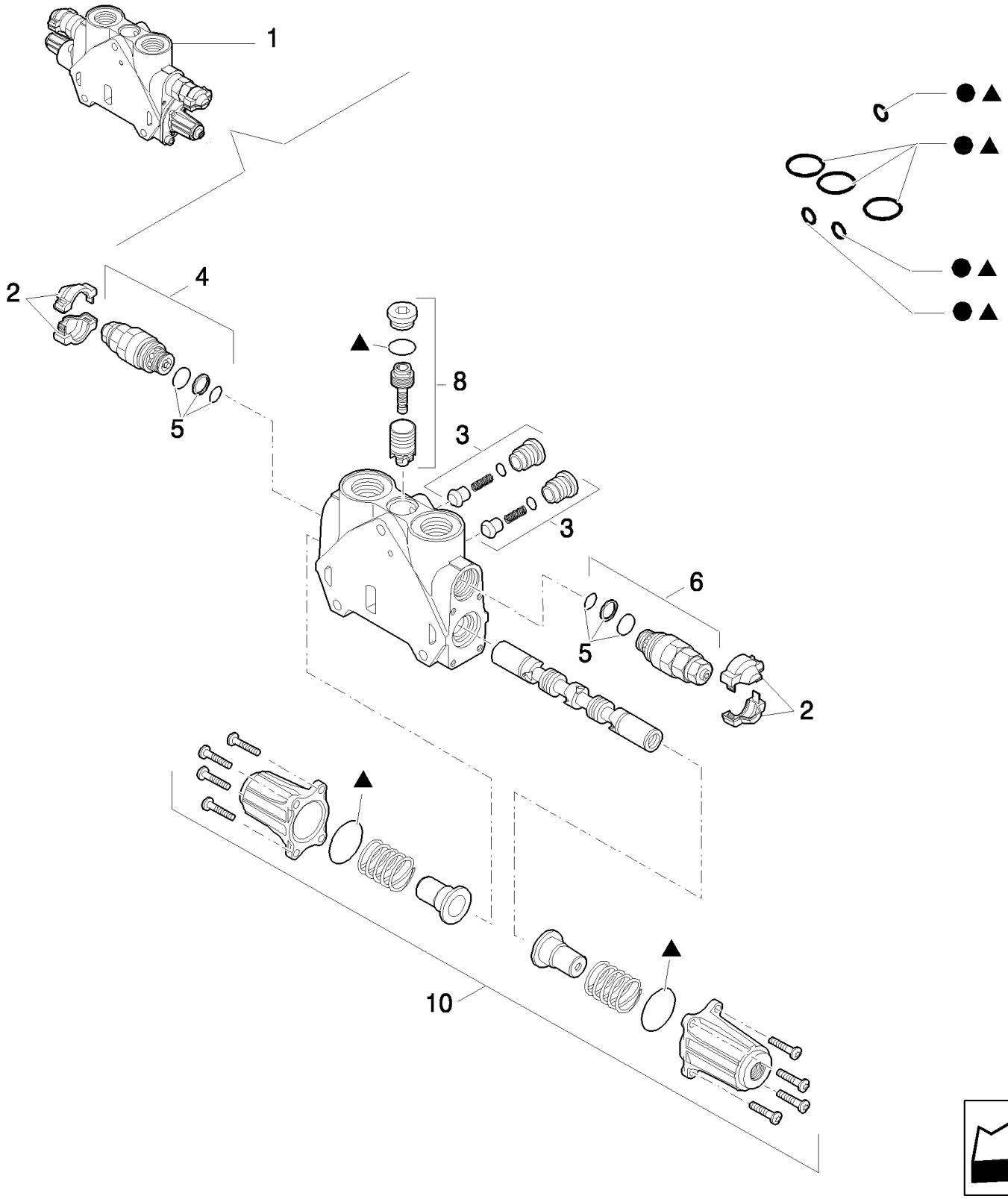

Pilot Control Version

B110 TIER 3 BACKHOE LOADER (2/07-)

331/B(03) BACKHOE CONTROL VALVE, BOOM SECTION (CENTER PIVOT) - EU

Ref	Numero de Pieza	Ctd	Descripción
1	85826359	1	SECTOR, TOOTHED,
2	85811934	2	KIT, Cover
3	85811938	2	VALVE, CHECK, Valve
4	85812116	2	VALVE, PRESSURE RELIEF, , 240 BAR
5	85811933	2	KIT, SEALS, Valve Seals
6	85812117	2	VALVE, HYDRAULIC, , 315 BAR
7	85819148	1	KIT, SEALS, Seals
8	85819378	1	KIT, SEALS, Valve
9	85824281	1	KIT, SEALS, Cover Assy
10	85826344	1	KIT,

Pilot Control Version

331/B(04) BACKHOE CONTROL VALVE, SWING SECTION (CENTER PIVOT) - EU

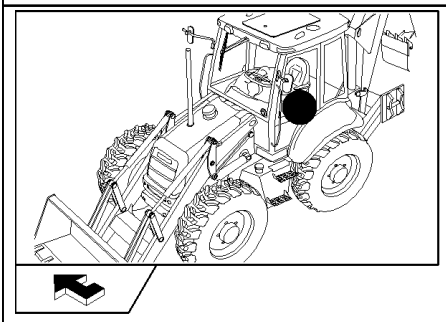

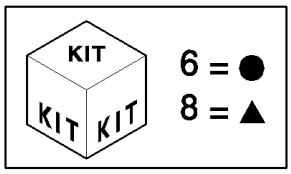

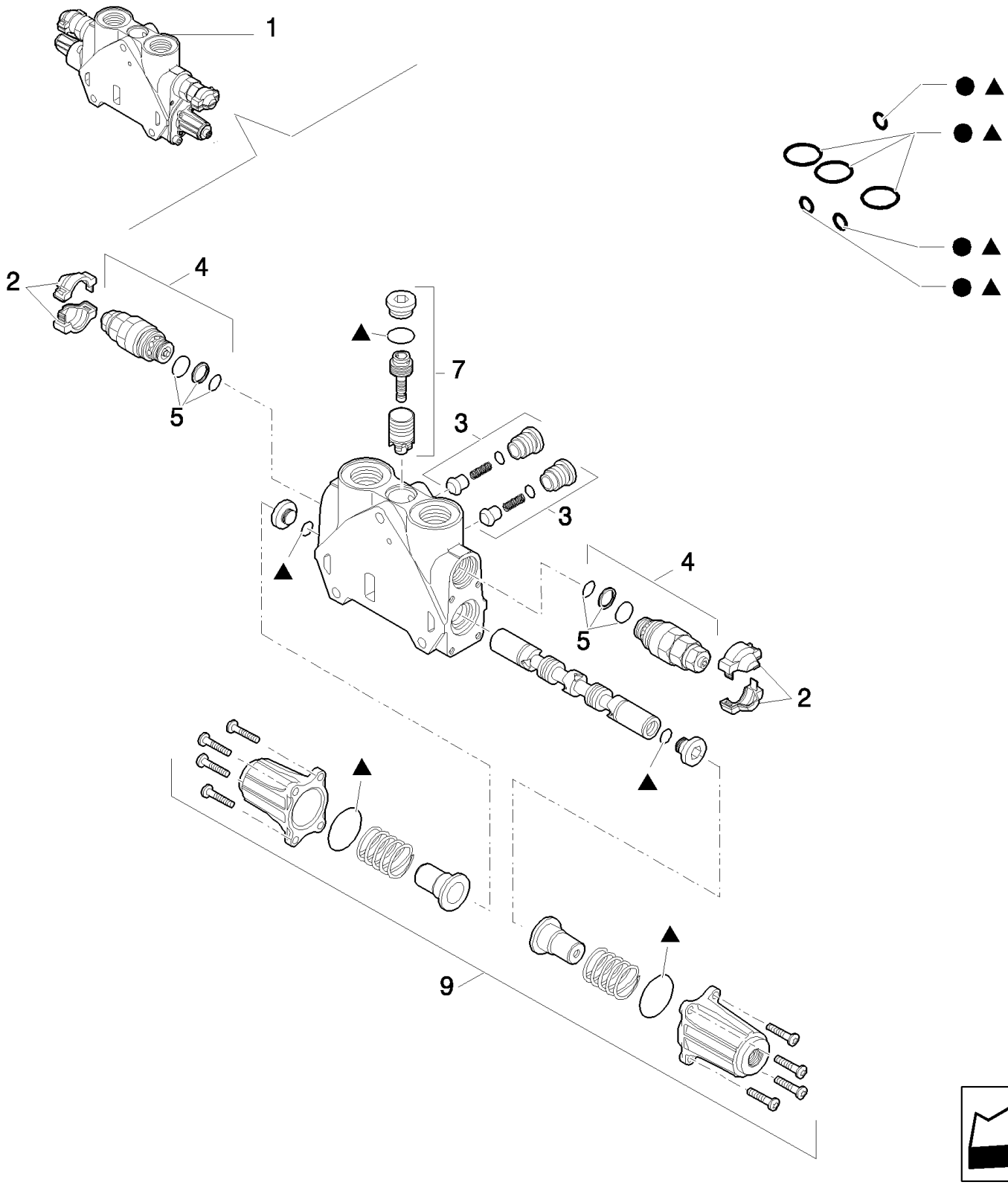

Pilot Control Version

B110 TIER 3 BACKHOE LOADER (2/07-)

331/B(04) BACKHOE CONTROL VALVE, SWING SECTION (CENTER PIVOT) - EU

Ref	Numero de Pieza	Ctd	Descripción
1	85826357	1	SECTOR, TOOTHED,
2	85811934	2	KIT, Cover
3	85811938	2	VALVE, CHECK, Valve
4	85812114	2	VALVE, HYDRAULIC, , 205 BAR
5	85811933	2	KIT, SEALS, Secondary Valve
6	85819148	1	KIT, SEALS, Seals
7	85819378	1	KIT, SEALS, Seals
8	85824282	1	KIT,
9	85826344	1	KIT,

Pilot Control Version

331/B(05) BACKHOE CONTROL VALVE, BUCKET SECTION (CENTER PIVOT) - EU

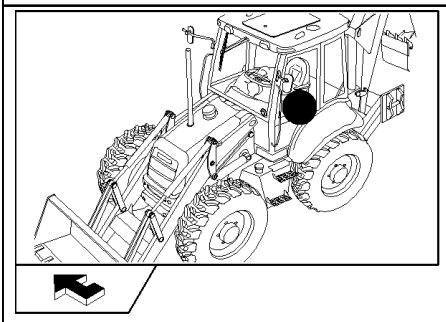

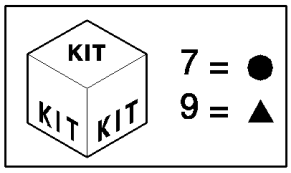

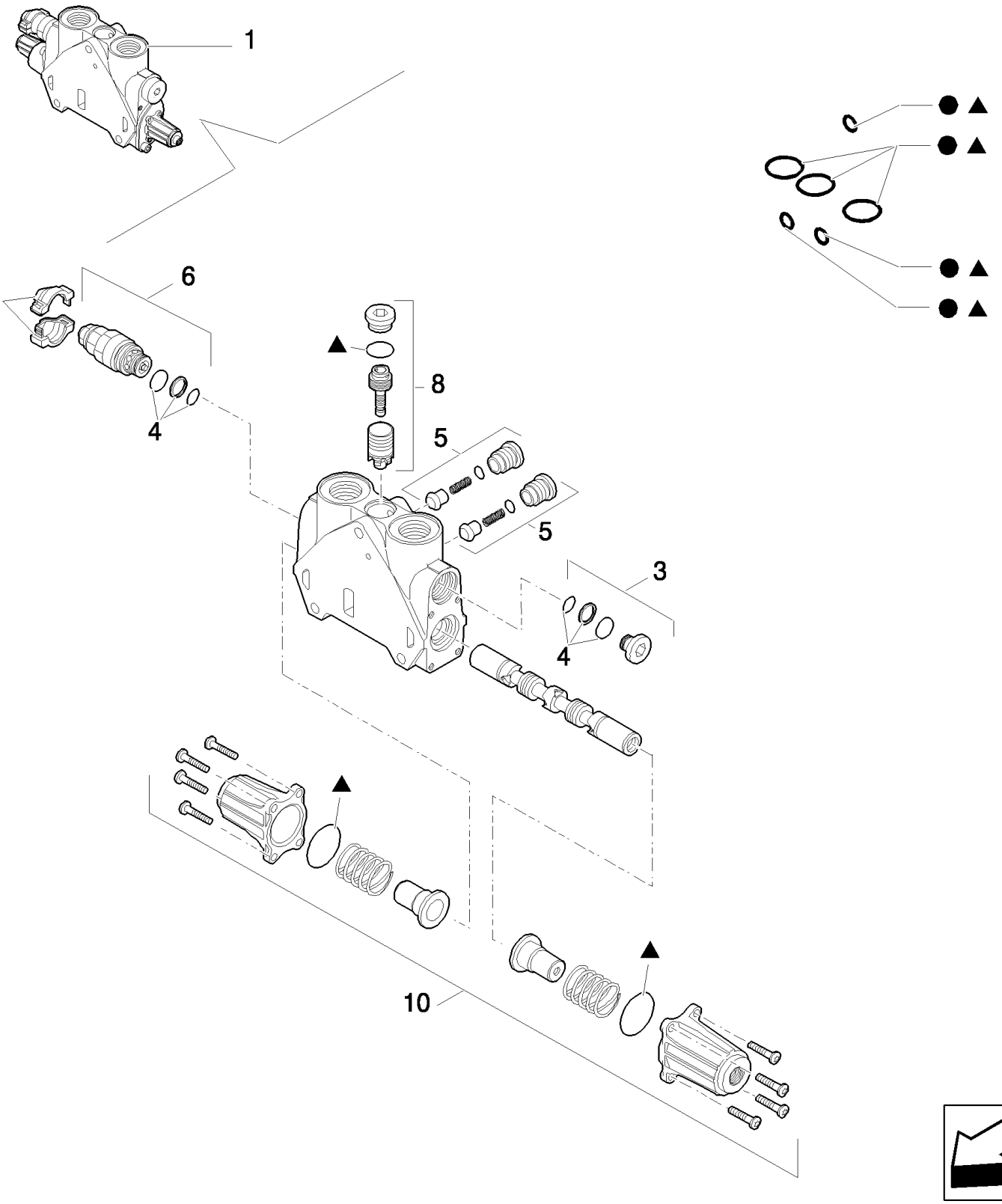

Pilot Control Version

B110 TIER 3 BACKHOE LOADER (2/07-)

331/B(05) BACKHOE CONTROL VALVE, BUCKET SECTION (CENTER PIVOT) - EU

Ref	Numero de Pieza	Ctd	Descripción
1	85826356	1	SECTOR, TOOTHED,
2	85811934	1	KIT, Cover
3	85811937	1	PLUG,
4	85811933	1	KIT, SEALS, Valve Seals
5	85811938	1	VALVE, CHECK, Valve
6	85812115	1	VALVE, HYDRAULIC, , 220 BAR
7	85819148	1	KIT, SEALS, Seals
8	85819378	1	KIT, SEALS, Valve
9	85824281	1	KIT, SEALS, Seals
10	85826344	2	KIT, Cover Assy

Pilot Control Version

331/B(06) BACKHOE CONTROL VALVE, DIPPERSTICK SECTION (CENTER PIVOT) - EU

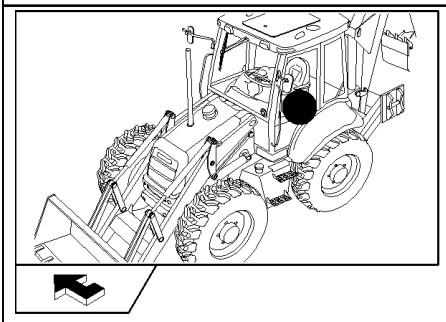

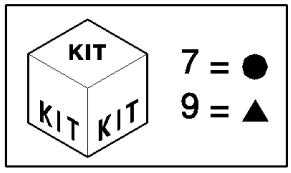

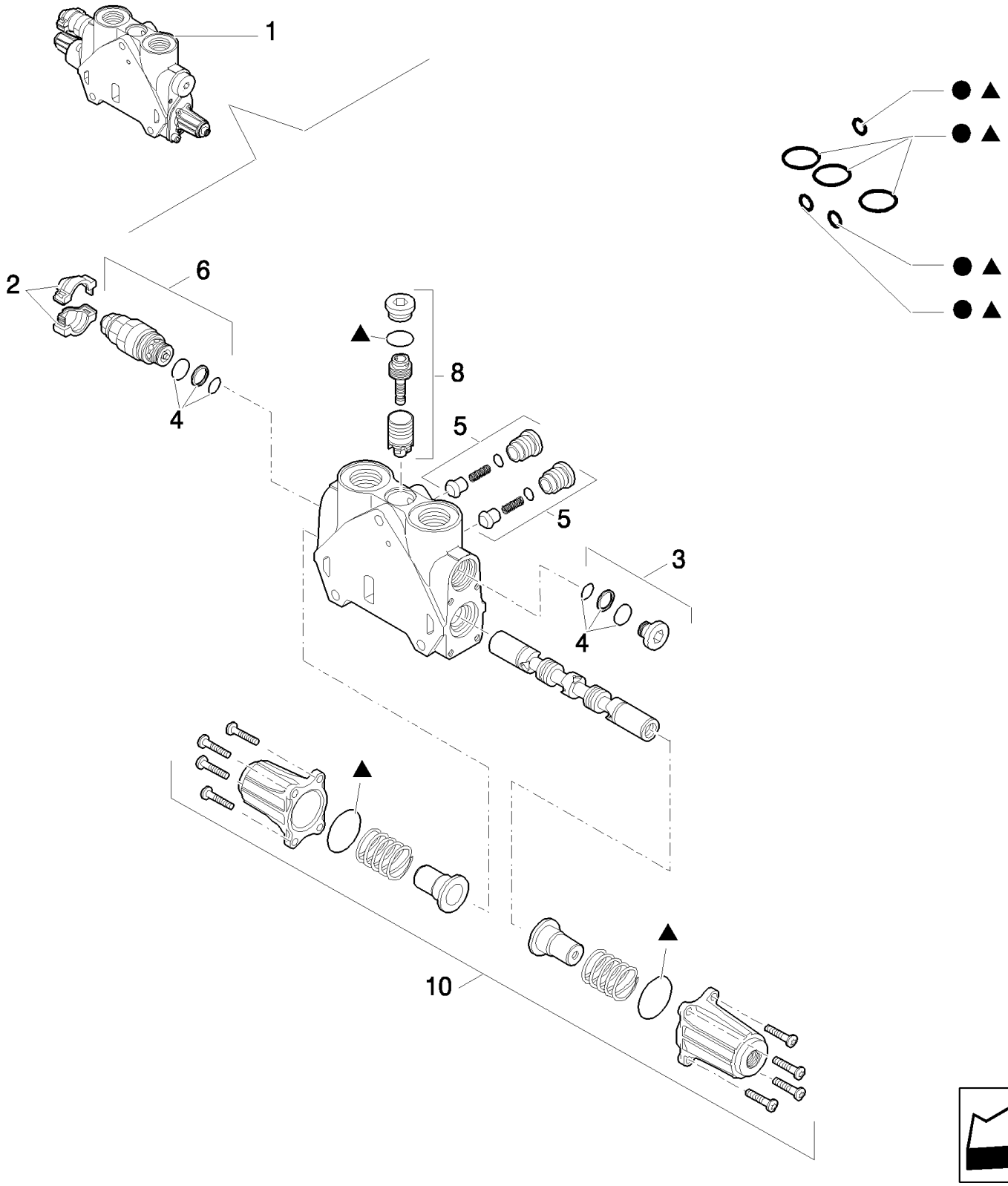

Pilot Control Version

B110 TIER 3 BACKHOE LOADER (2/07-)

331/B(06) BACKHOE CONTROL VALVE, DIPPERSTICK SECTION (CENTER PIVOT) - EU

Ref	Numero de Pieza	Ctd	Descripción
1	85826355	1	SECTOR, TOOTHED,
2	85811934	1	KIT, Cover
3	85811937	1	PLUG,
4	85811933	1	KIT, SEALS, Valve Seals
5	85811938	2	VALVE, CHECK, Valve
6	85812116	1	VALVE, PRESSURE RELIEF, , 240 BAR
7	85819148	1	KIT, SEALS, Seals
8	85819378	1	KIT, SEALS, Valve
9	85824281	1	KIT, SEALS, Seals
10	85826344	1	KIT, Cover Assy

Pilot Control Version

331/B(07) BACKHOE CONTROL VALVE, STABILIZER SECTION (CENTER PIVOT) - EU

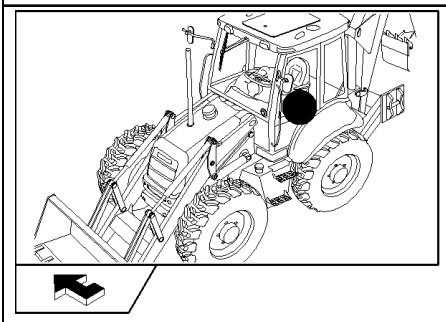

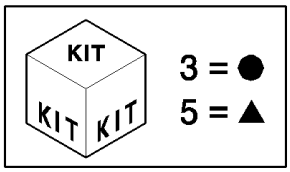

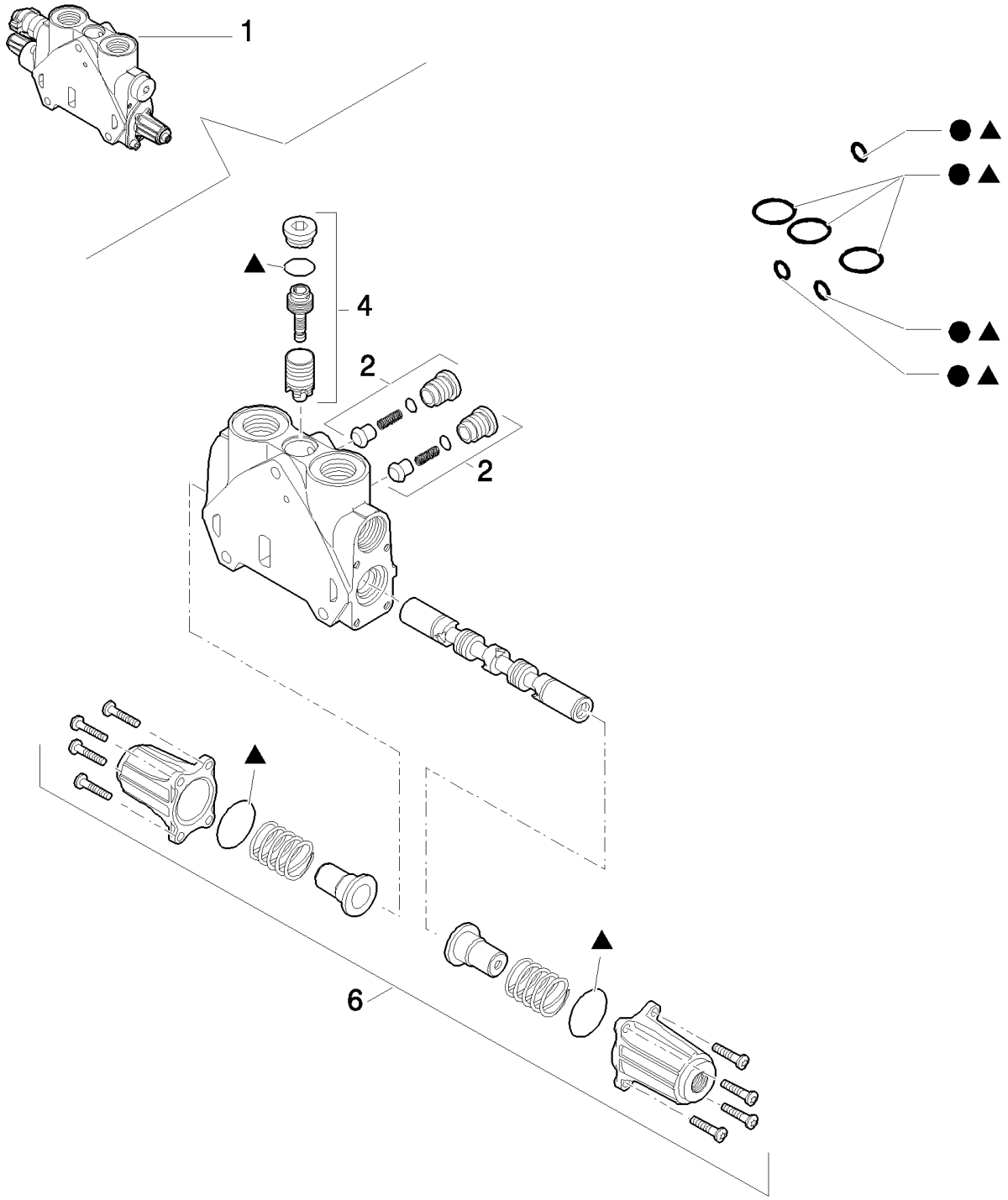

Pilot Control Version

B110 TIER 3 BACKHOE LOADER (2/07-)

331/B(07) BACKHOE CONTROL VALVE, STABILIZER SECTION (CENTER PIVOT) - EU

Ref	Numero de Pieza	Ctd	Descripción
1	85826360	2	SECTOR, TOOTHED,
2	85811938	2	VALVE, CHECK, Valve
3	85819148	1	KIT, SEALS, Seals
4	85819378	1	KIT, SEALS, Valve
5	85824281	1	KIT, SEALS, Seals
6	85826344	1	KIT, Cover Assy

Pilot Control Version

331/C(01) PILOT VALVE OF HYDRAULIC CONTROL LEVER (RIGHT HAND)

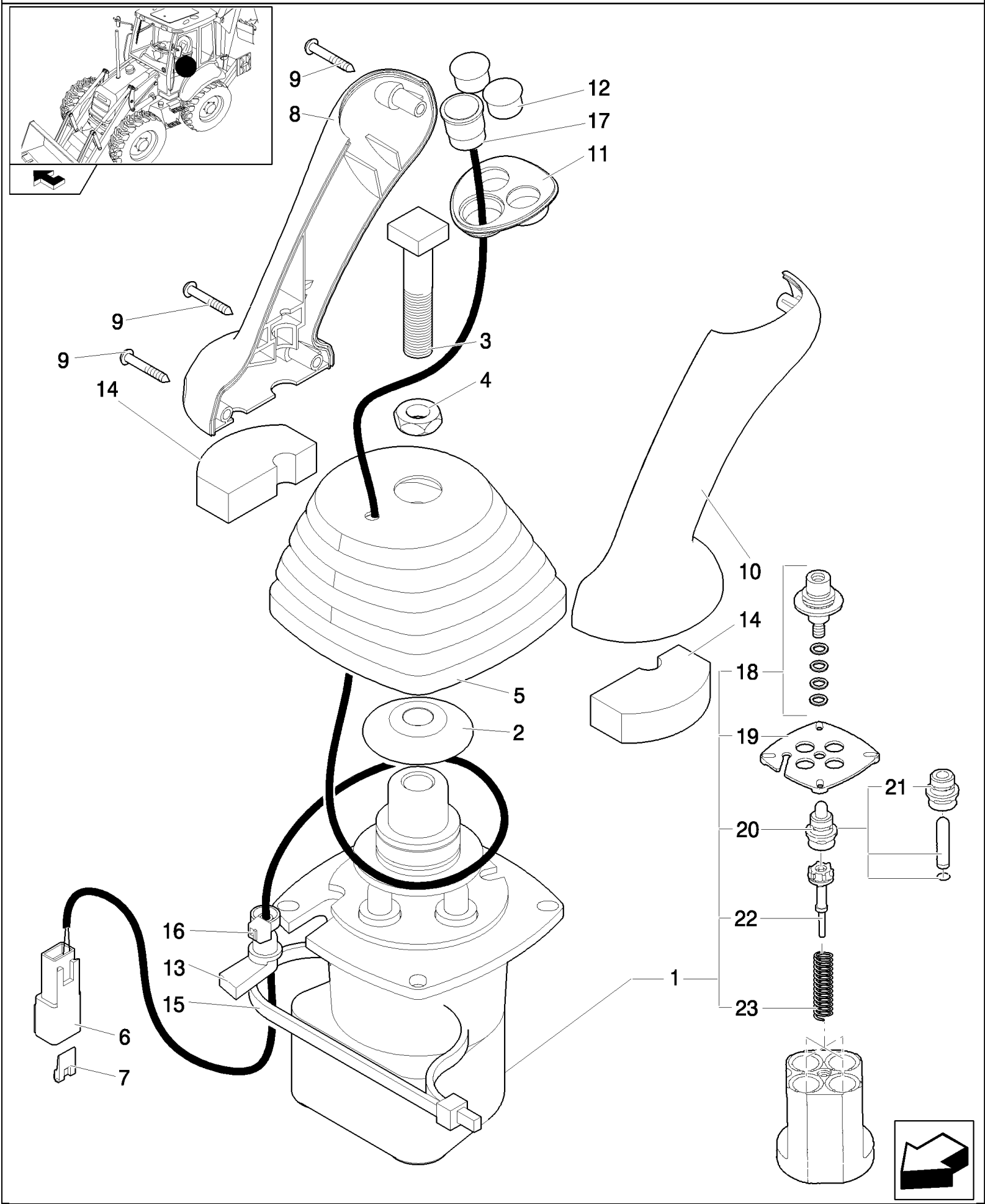

B110 TIER 3 BACKHOE LOADER (2/07-)

331/C(01) PILOT VALVE OF HYDRAULIC CONTROL LEVER (RIGHT HAND)

Ref	Numero de Pieza	Ctd	Descripción
	87547313	1	JOYSTICK, RH, Includes 1 To 23
1	87398960	1	VALVE, PILOT,
2	87436225	1	RETAINER,
3	87428023	1	BOLT,
4	87037944	1	NUT, Thin, M12 x 1.75, Cl 05,
5	87443721	1	BOOT,
6	225315C1	1	CONNECTOR, ELEC,
7	225318C1	1	WEDGE,
8	87308838	1	HANDLE GRIP,
9	15687475	3	SCREW, SELF TAPPING, Pan Hd, M3.5 x 25, Stainless,
10	87308839	1	HANDLE GRIP,
11	87547309	1	BEZEL,
12	86625128	2	PLUG, Dome, .562" hole, Nylon,
13	87424267	1	GROMMET,
14	87435506	2	SEAL,
15	87438046	1	STRAP, CABLE,
16	87000312	1	STRAP, CABLE,
17	87546922	1	SWITCH,
18	87586731	4	KIT,
19	87586758	1	PLATE, RETAINING,
20	87586760	4	PLUNGER,
21	87586764	1	PLUNGER,
22	87586772	4	REGULATOR,
23	87586773	1	KIT,

B110 TIER 3 BACKHOE LOADER (2/07-)

331/C(02) VALVE, JOYSTICK PILOT CONTROLS (LEFT HAND)

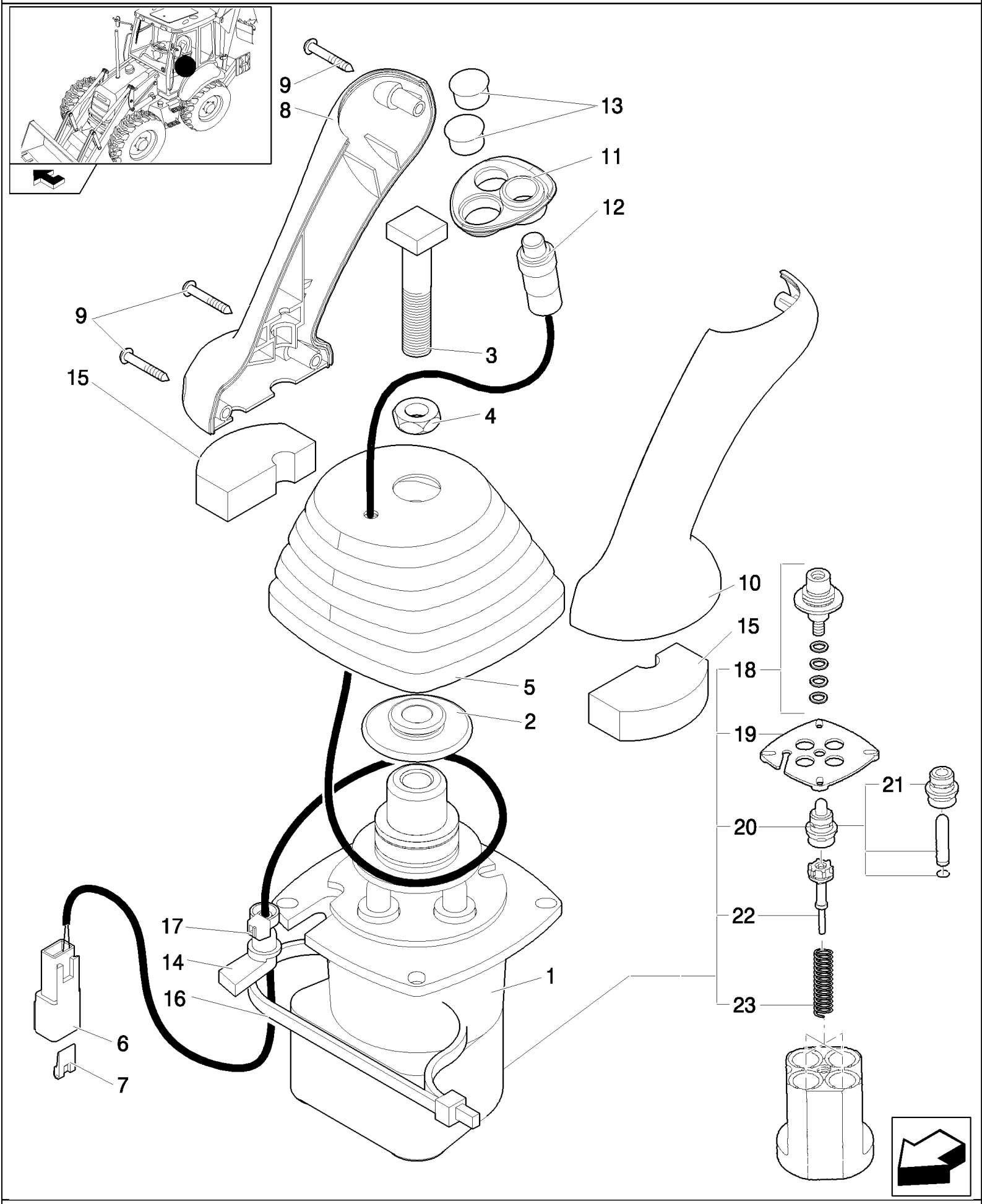

B110 TIER 3 BACKHOE LOADER (2/07-)

331/C(02) VALVE, JOYSTICK PILOT CONTROLS (LEFT HAND)

Ref	Numero de Pieza	Ctd	Descripción
	87388704	1	JOYSTICK, , Includes 1 To 23
1	87398960	1	VALVE, PILOT,
2	87436225	1	RETAINER,
3	87428023	1	BOLT,
4	87037944	1	NUT, Thin, M12 x 1.75, Cl 05,
5	87443721	1	BOOT,
6	225315C1	1	CONNECTOR, ELEC,
7	225318C1	1	WEDGE,
8	87308838	1	HANDLE GRIP,
9	15687475	3	SCREW, SELF TAPPING, Pan Hd, M3.5 x 25, Stainless,
10	87308839	1	HANDLE GRIP,
11	87435243	1	BEZEL,
12	87437372	1	SWITCH,
13	86625128	2	PLUG, Dome, .562" hole, Nylon,
14	87424267	1	GROMMET,
15	87435506	2	SEAL,
16	87438046	1	STRAP, CABLE,
17	87000312	1	STRAP, CABLE,
18	87586731	4	KIT,
19	87586758	1	PLATE, RETAINING,
20	87586760	4	PLUNGER,
21	87586764	1	PLUNGER,
22	87586772	4	REGULATOR,
23	87586773	1	KIT,

332(01) TOWER ASSY 6 SECTIONS (SIDE SHIFT) - EU

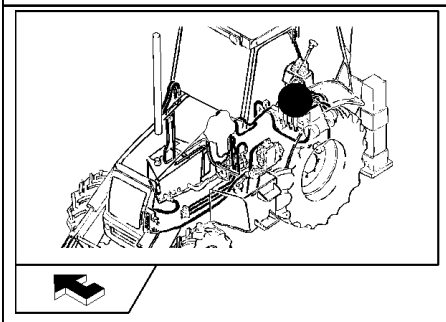

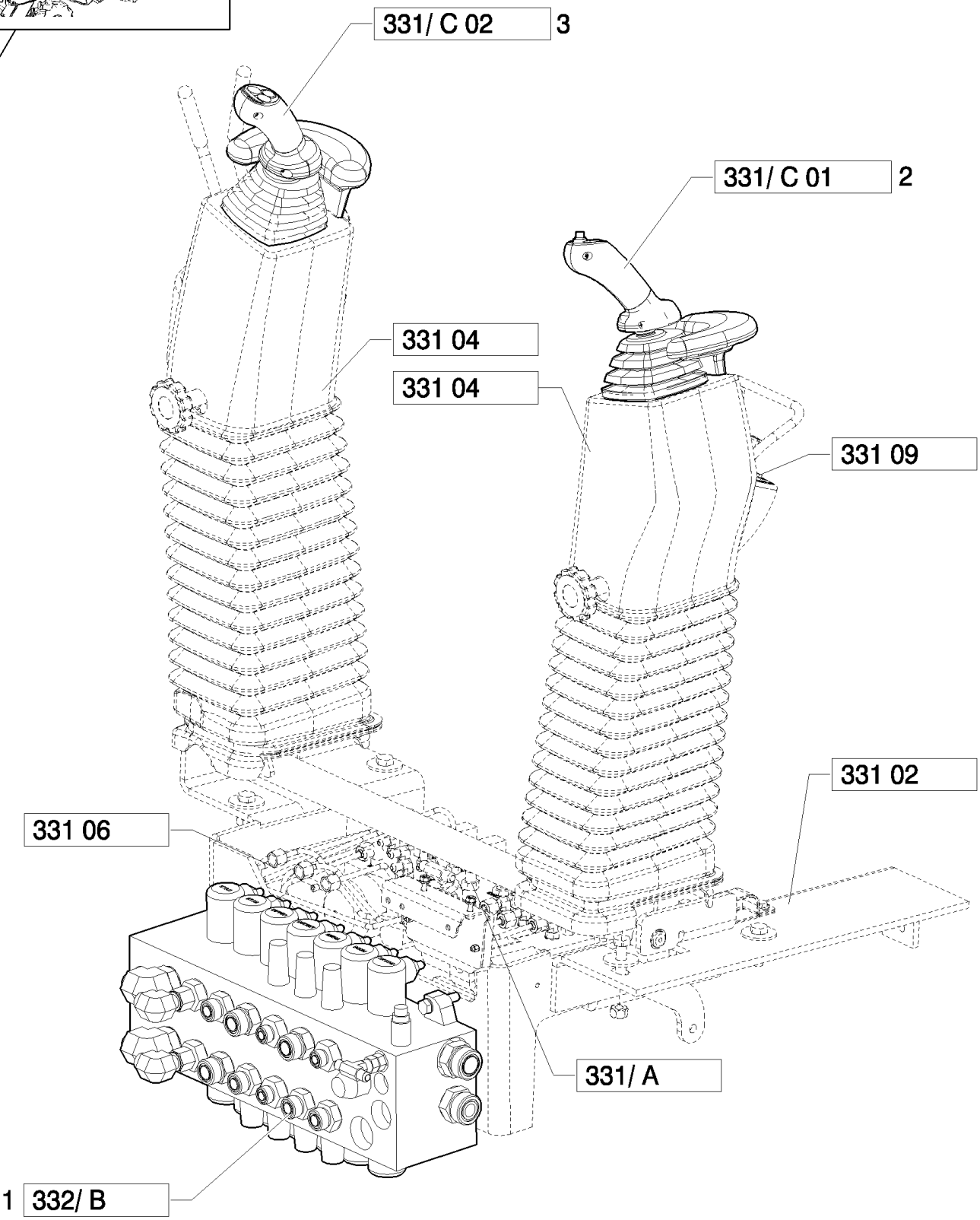

B110 TIER 3 BACKHOE LOADER (2/07-)

332(01) TOWER ASSY 6 SECTIONS (SIDE SHIFT) - EU

Ref	Numero de Pieza	Ctd	Descripción
1	87378502	1	VALVE, HYDRAULIC,
2	87547313	1	JOYSTICK,
3	87388704	1	JOYSTICK,

Pilot Control Version

332/B(01) BACKHOE CONTROL VALVE, 6 SECTIONS (SIDE SHIFT) - EU

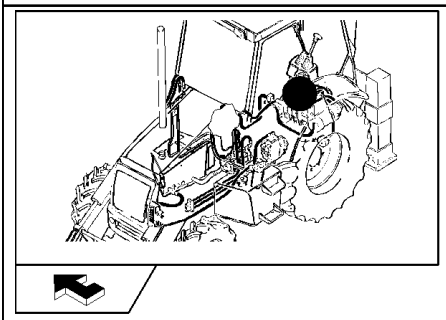

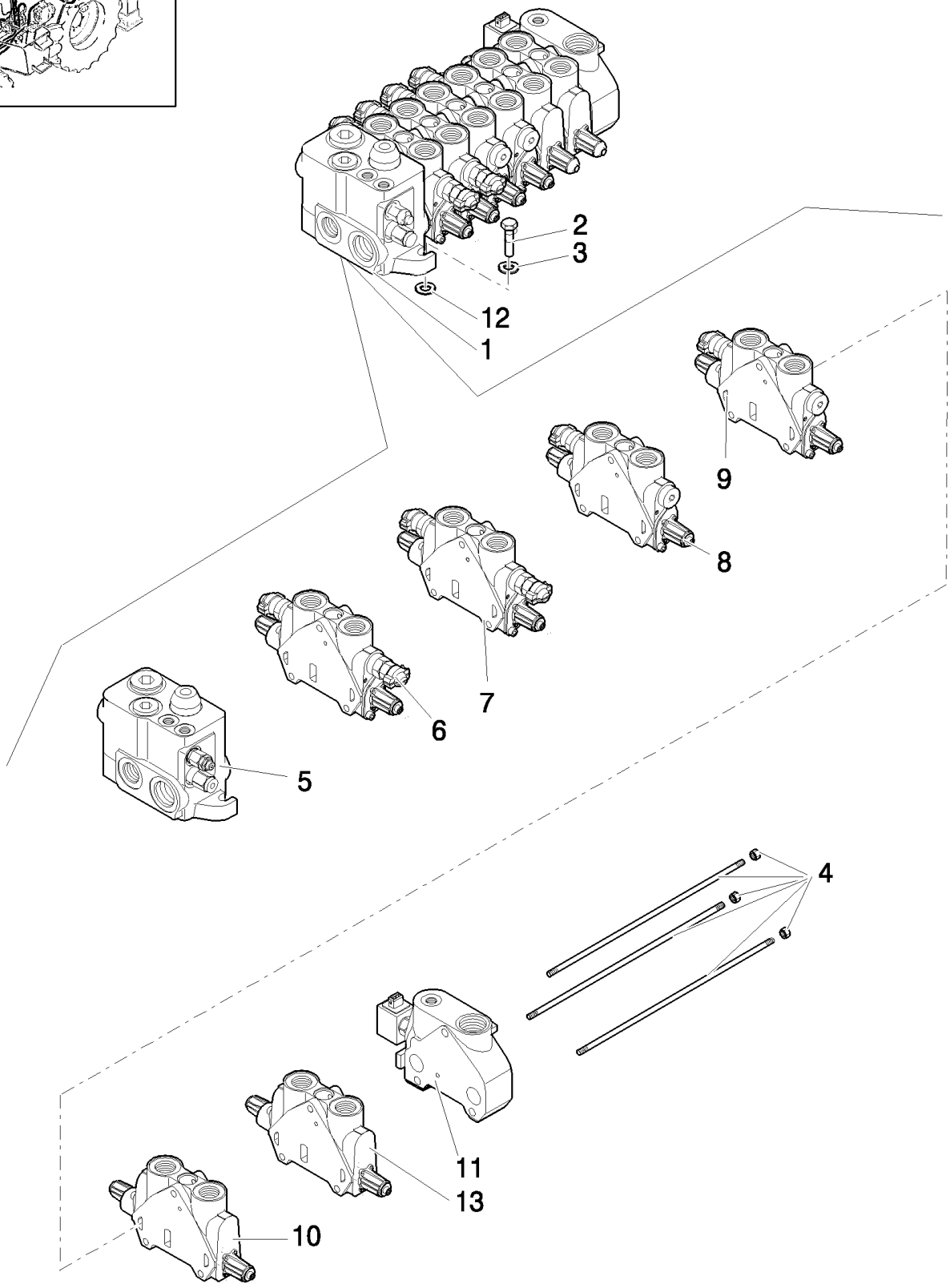

Pilot Control Version

B110 TIER 3 BACKHOE LOADER (2/07-)

332/B(01) BACKHOE CONTROL VALVE, 6 SECTIONS (SIDE SHIFT) - EU

Ref	Numero de Pieza	Ctd	Descripción
1	87378502	1	VALVE, HYDRAULIC,
2	11234721	3	BOLT, Hex, M10 x 1.25 x 45, 8.8, M10x45
3	11190679	3	WASHER, SPRING, Belleville, M10.5,
4	85811958	1	KIT,
5	87308747	1	VALVE SECTION, HYD, , See Page 331/B 02
6	85826930	1	SECTOR, TOOTHED, , See Page 332/B 02, Boom Cylinder
7	85826931	1	SECTOR, TOOTHED, , See Page 332/B 03, Swing Cylinder
8	85826932	1	SECTOR, TOOTHED, , Bucket Cylinder, See Page 332/B 04
9	85826933	1	SECTOR, TOOTHED, , Arm Cylinder, See Page 332/B 05
10	87558568	1	SECTOR, , Stabilizer Cylinder, See Page 332/B 06
11	85826249	1	SECTOR, TOOTHED, , See Page 332/B 07
12	13578621	3	WASHER,
13	87611178	1	VALVE, HYDRAULIC, , Stabilizer Cylinder, See Page 332/B 08

Pilot Control Version

332/B(02) BACKHOE CONTROL VALVE, 6 SECTIONS (SIDE SHIFT) - EU

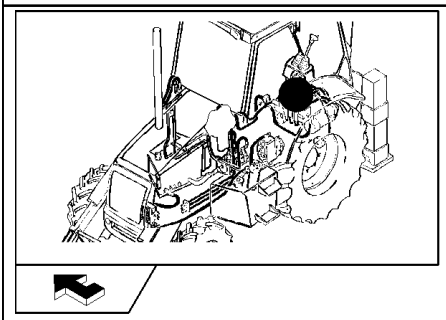

KIT
KIT KIT
7 = ●
9 = ▲

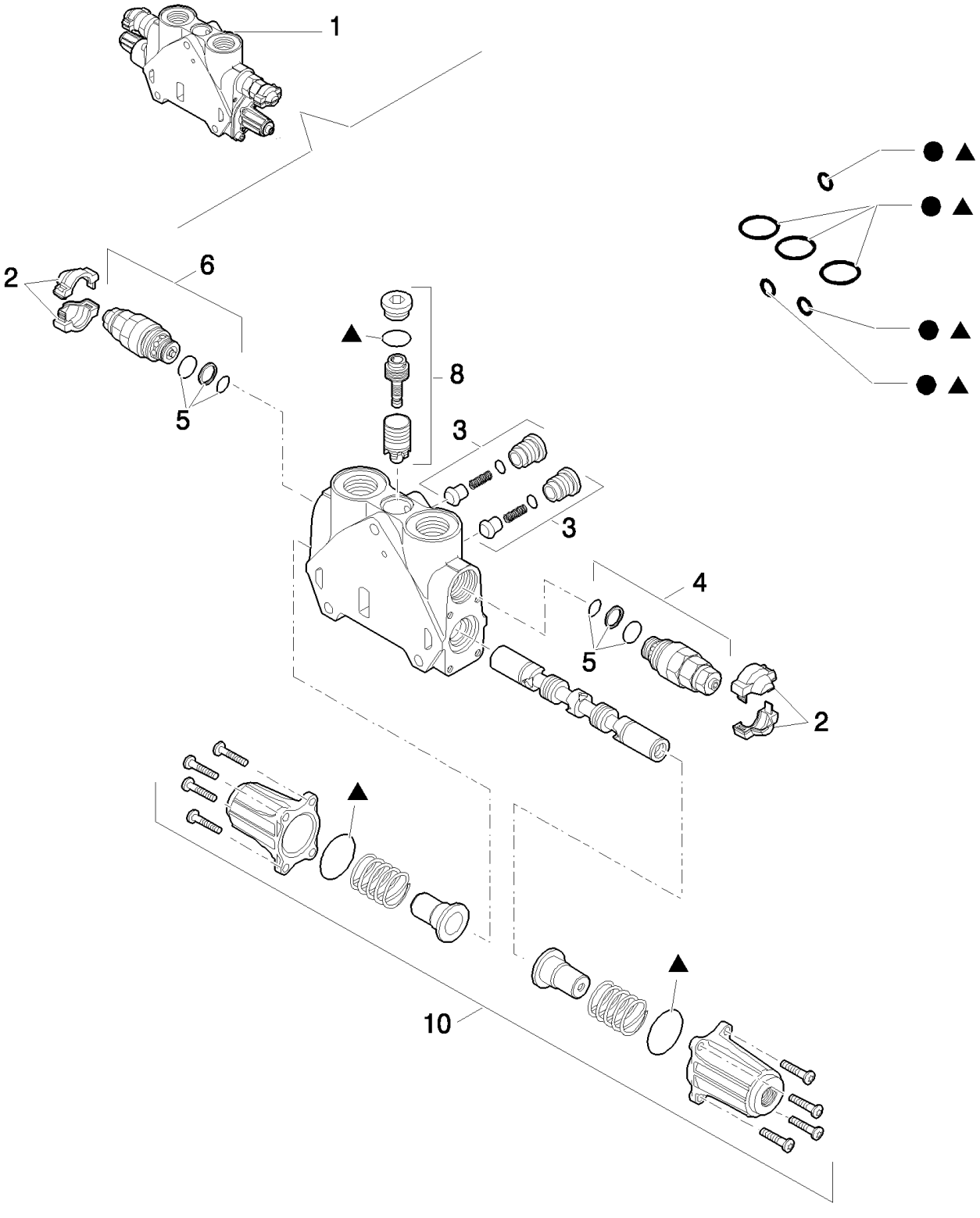

Pilot Control Version, Boom Cylinder

B110 TIER 3 BACKHOE LOADER (2/07-)

332/B(02) BACKHOE CONTROL VALVE, 6 SECTIONS (SIDE SHIFT) - EU

Ref	Numero de Pieza	Ctd	Descripción
1	85826930	1	SECTOR, TOOTHED,
2	85811934	2	KIT, Cover
3	85811938	2	VALVE, CHECK, Valve
4	85812116	1	VALVE, PRESSURE RELIEF, , Includes 5, 240 BAR
5	85811933	1	KIT, SEALS, Valve seals
6	85812117	1	VALVE, HYDRAULIC, , 315 BAR
7	85819148	1	KIT, SEALS, Seals
8	85819378	1	KIT, SEALS, Valve
9	85824281	1	KIT, SEALS, Seals
10	85826344	1	KIT, Cover Assy

Pilot Control Version, Boom Cylinder

332/B(03) BACKHOE CONTROL VALVE, 6 SECTIONS (SIDE SHIFT) - EU

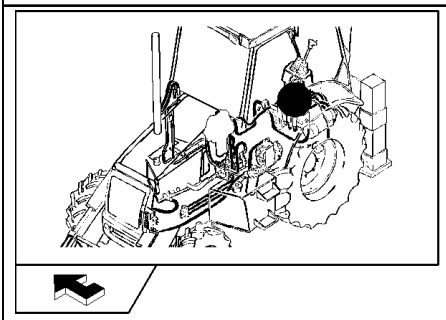

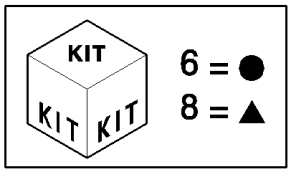

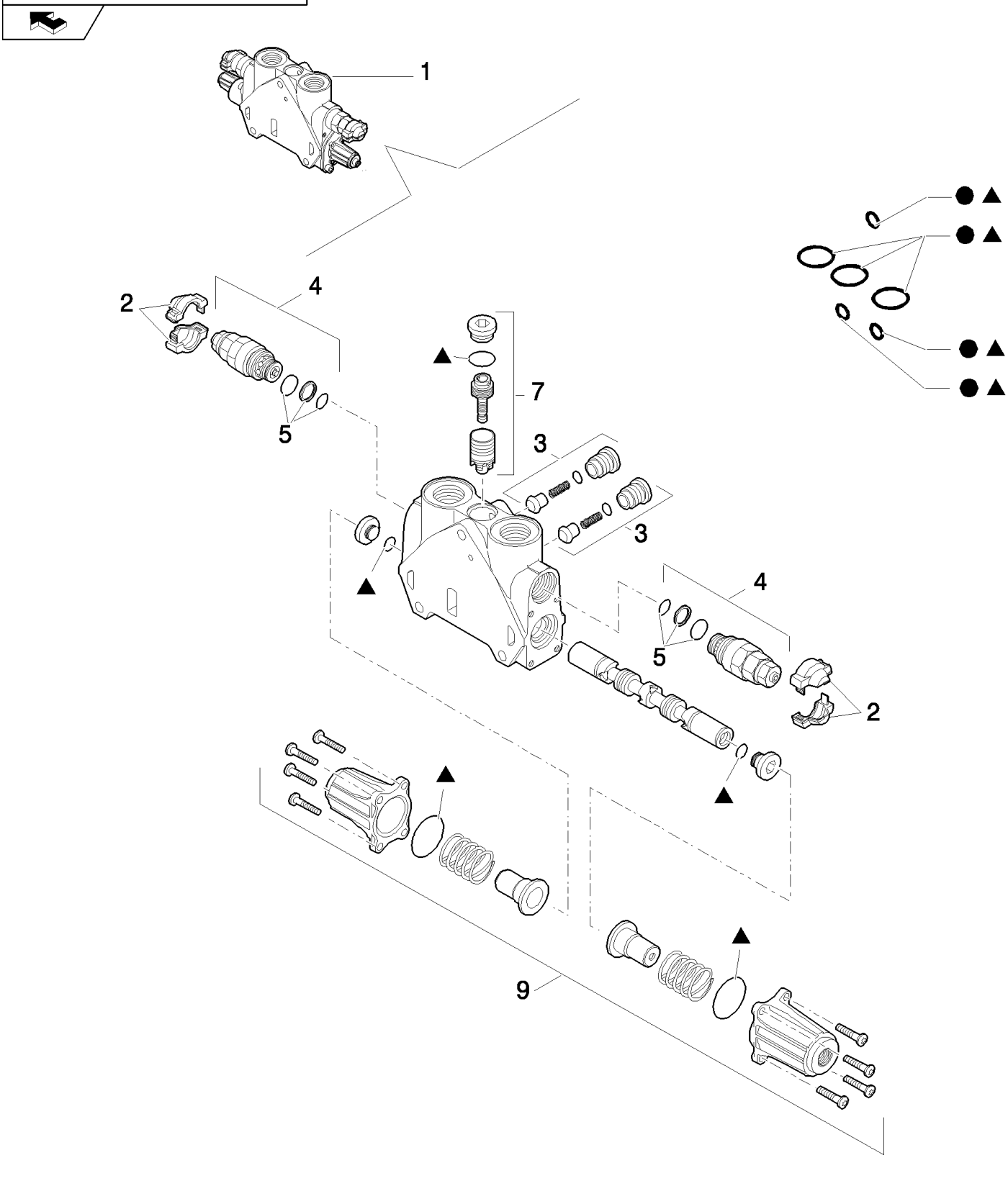

Pilot Control Version, Swing Cylinder

B110 TIER 3 BACKHOE LOADER (2/07-)

332/B(03) BACKHOE CONTROL VALVE, 6 SECTIONS (SIDE SHIFT) - EU

Ref	Numero de Pieza	Ctd	Descripción
1	85826931	1	SECTOR, TOOTHED,
2	85811934	2	KIT, Cover
3	85811938	2	VALVE, CHECK, Valve
4	85812114	2	VALVE, HYDRAULIC, , 205 BAR, Includes 5
5	85811933	2	KIT, SEALS, Valve
6	85819148	1	KIT, SEALS, Seals
7	85819378	1	KIT, SEALS, Valve
8	85824282	1	KIT, Seals
9	85826344	1	KIT, Cover Assy

Pilot Control Version, Swing Cylinder

332/B(04) BACKHOE CONTROL VALVE, 6 SECTIONS (SIDE SHIFT) - EU

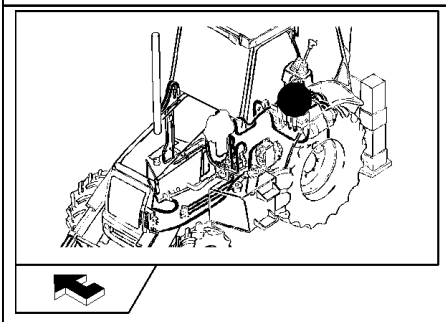

KIT
KIT KIT
7 = ●
9 = ▲

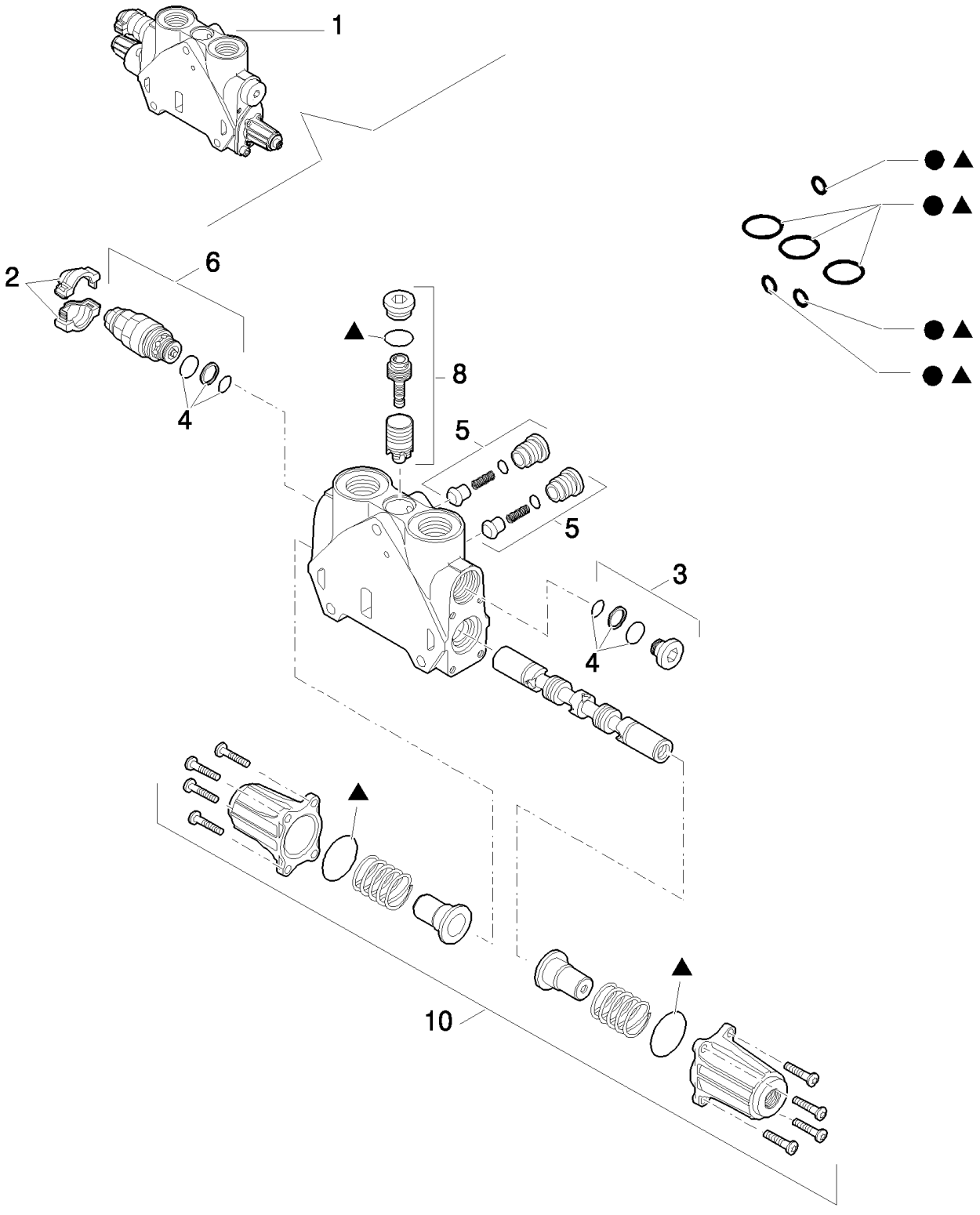

Pilot Control Version, Bucket Cylinder

B110 TIER 3 BACKHOE LOADER (2/07-)

332/B(04) BACKHOE CONTROL VALVE, 6 SECTIONS (SIDE SHIFT) - EU

Ref	Numero de Pieza	Ctd	Descripción
1	85826932	1	SECTOR, TOOTHED,
2	85811934	1	KIT, Cover
3	85811937	1	PLUG, , Includes 4
4	85811933	1	KIT, SEALS, Valve Seals
5	85811938	2	VALVE, CHECK, Valve
6	85812115	1	VALVE, HYDRAULIC, , 220 BAR, Includes 4
7	85819148	1	KIT, SEALS, Seals
8	85819378	1	KIT, SEALS, Valve
9	85824281	1	KIT, SEALS, Seals
10	85826344	1	KIT, Cover Assy

Pilot Control Version, Bucket Cylinder

332/B(05) BACKHOE CONTROL VALVE, 6 SECTIONS (SIDE SHIFT) - EU

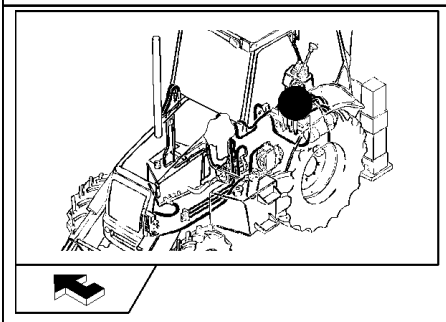

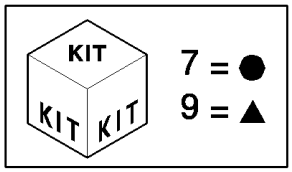

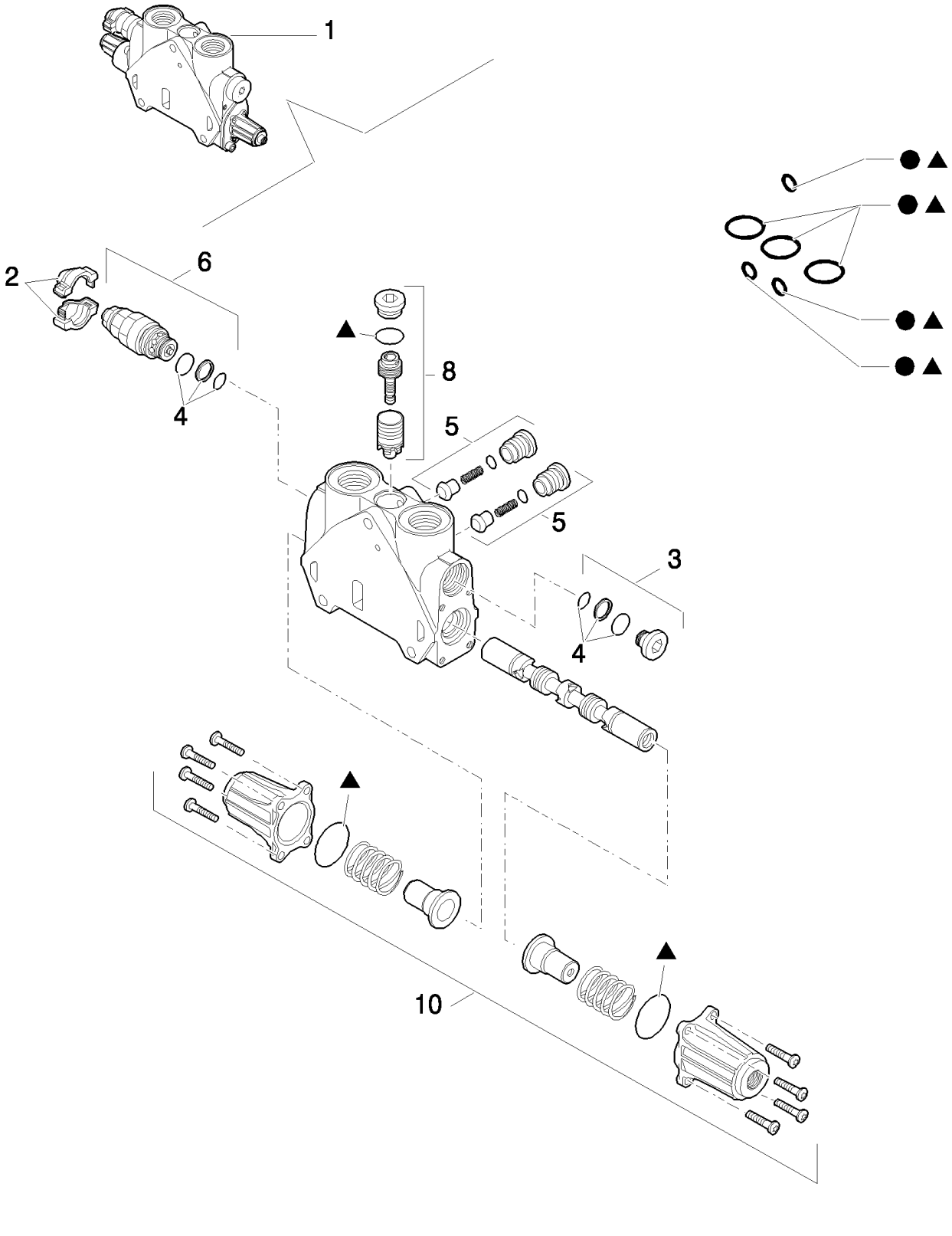

Pilot Control Version, Dipperstick Cylinder

B110 TIER 3 BACKHOE LOADER (2/07-)

332/B(05) BACKHOE CONTROL VALVE, 6 SECTIONS (SIDE SHIFT) - EU

Ref	Numero de Pieza	Ctd	Descripción
1	85826933	1	SECTOR, TOOTHED,
2	85811934	1	KIT, Cover
3	85811937	1	PLUG, , Includes 4
4	85811933	1	KIT, SEALS, Valve Seals
5	85811938	2	VALVE, CHECK, Valve
6	85812116	1	VALVE, PRESSURE RELIEF, , Includes 4, 240 BAR
7	85819148	1	KIT, SEALS, Seals
8	85819378	1	KIT, SEALS, Valve
9	85824281	1	KIT, SEALS, Seals
10	85826344	1	KIT, Cover Assy

Pilot Control Version, Dipperstick Cylinder

332/B(06) BACKHOE CONTROL VALVE, 6 SECTIONS (SIDE SHIFT) - EU

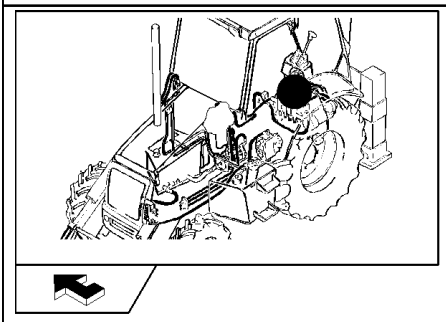

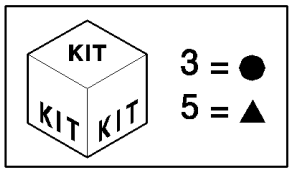

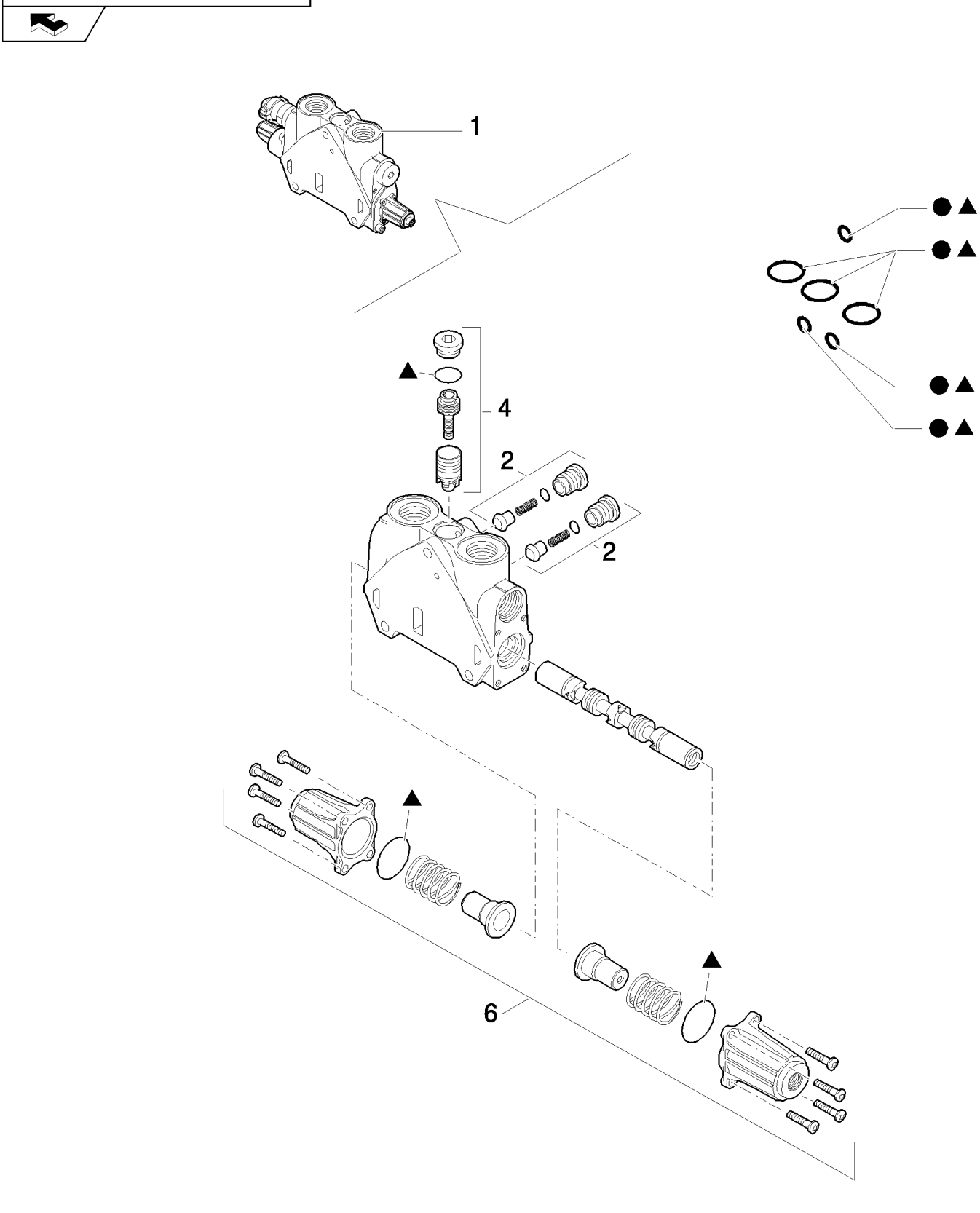

Pilot Control Version, Stabilizer

B110 TIER 3 BACKHOE LOADER (2/07-)

332/B(06) BACKHOE CONTROL VALVE, 6 SECTIONS (SIDE SHIFT) - EU

Ref	Numero de Pieza	Ctd	Descripción
1	87558568	2	SECTOR,
2	85811938	2	VALVE, CHECK, Valve
3	85819148	1	KIT, SEALS, Seals
4	85819378	1	KIT, SEALS, Valve
5	85824281	1	KIT, SEALS, Seals
6	85826344	1	KIT, Cover Assy

Pilot Control Version, Stabilizer

332/B(07) BACKHOE CONTROL VALVE, 6 SECTIONS (SIDE SHIFT) - EU

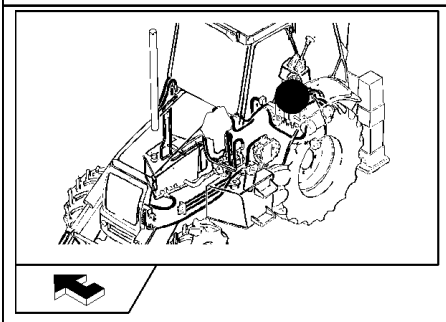

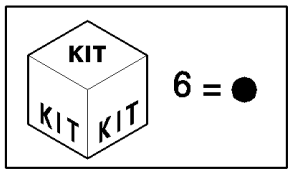

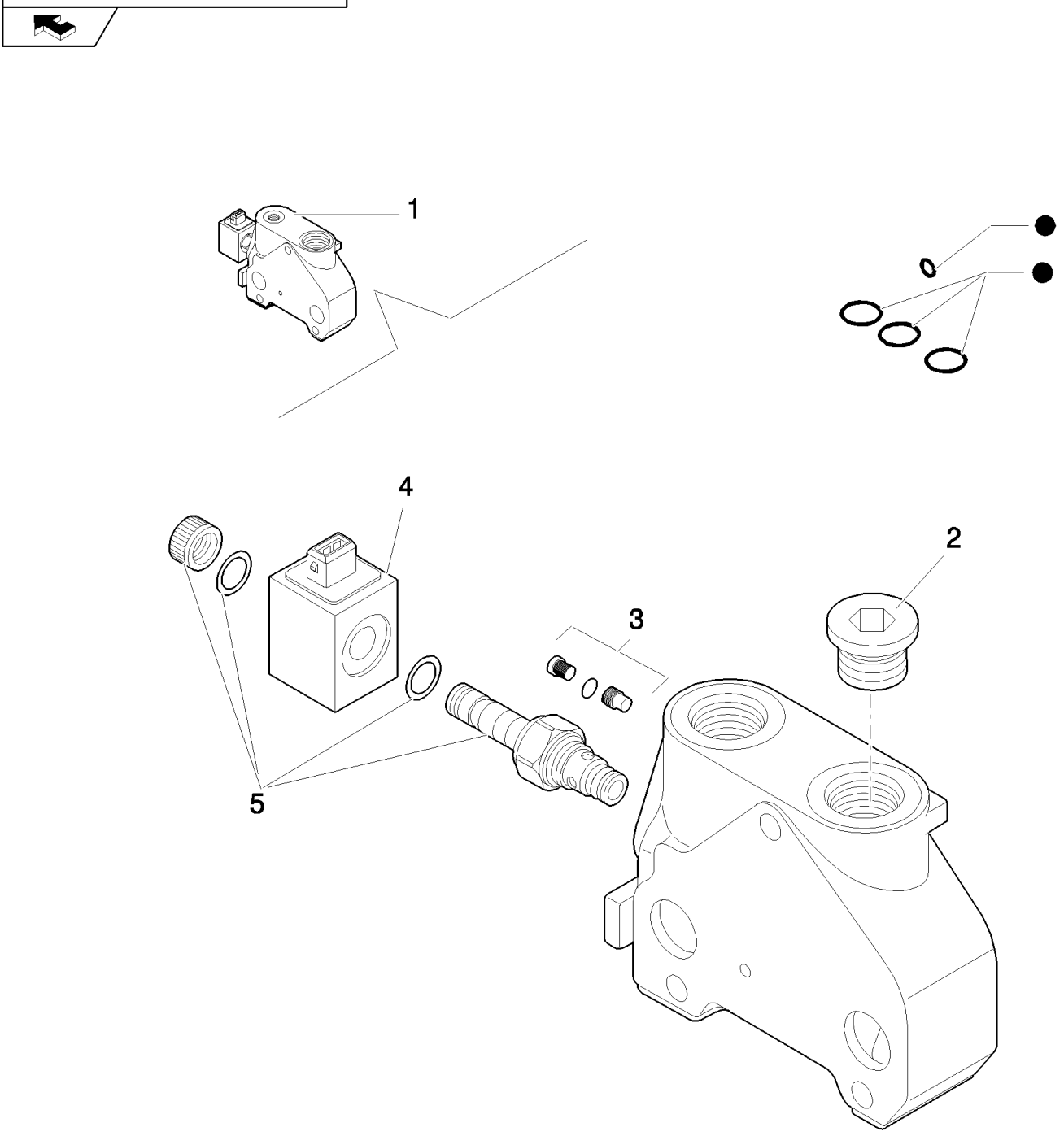

Pilot Control Version

B110 TIER 3 BACKHOE LOADER (2/07-)

332/B(07) BACKHOE CONTROL VALVE, 6 SECTIONS (SIDE SHIFT) - EU

Ref	Numero de Pieza	Ctd	Descripción
1	85826249	1	SECTOR, TOOTHED,
2	85811921	1	PLUG, 1-1/16"-12 UNF 2A
3	85811952	1	KIT, Valve
4	85811953	1	SOLENOID,
5	85811954	1	KIT, Valve
6	85825473	1	KIT, SEALS, Seal

Pilot Control Version

332/B(08) BACKHOE CONTROL VALVE, 6 SECTIONS (SIDE SHIFT) - EU

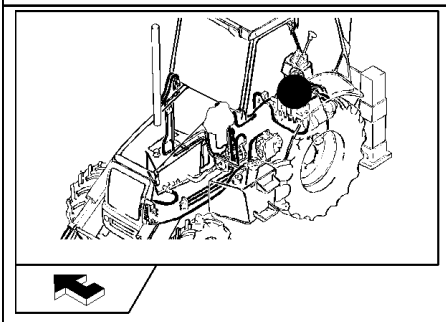

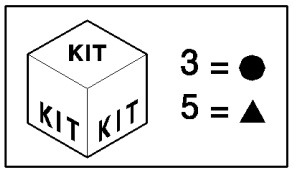

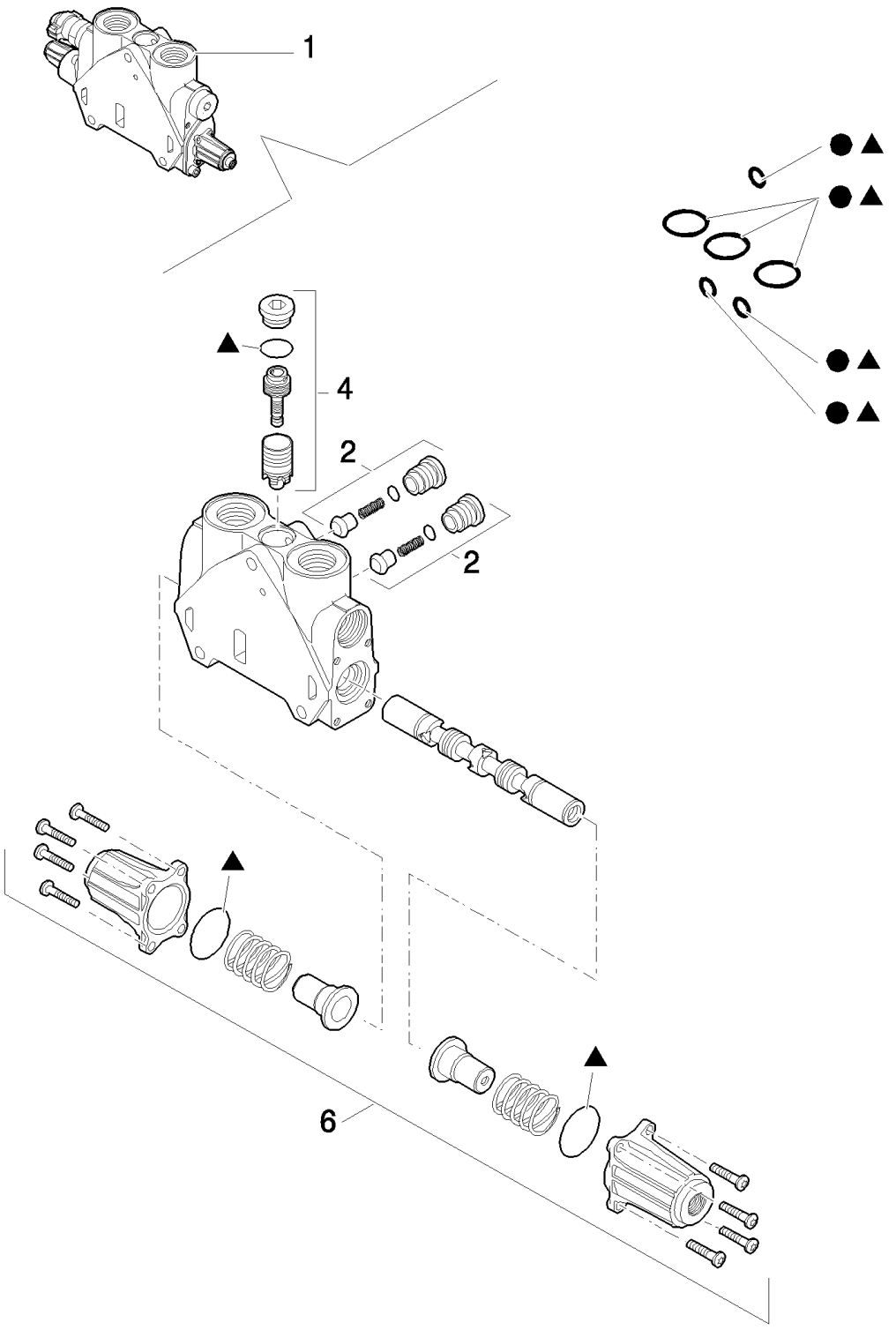

Pilot Control Version, Stabilizer

B110 TIER 3 BACKHOE LOADER (2/07-)

332/B(08) BACKHOE CONTROL VALVE, 6 SECTIONS (SIDE SHIFT) - EU

Ref	Numero de Pieza	Ctd	Descripción
1	87611178	1	VALVE, HYDRAULIC,
2	85811938	1	VALVE, CHECK, Valve
3	85819148	1	KIT, SEALS, Seals
4	85819378	1	KIT, SEALS, Valve
5	85824281	1	KIT, SEALS, Seals
6	85826344	1	KIT, Cover Assy

Pilot Control Version, Stabilizer

333(01) TOWER ASSY 7 SECTIONS (CENTER PIVOT)

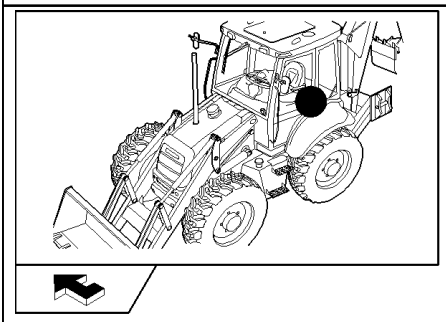

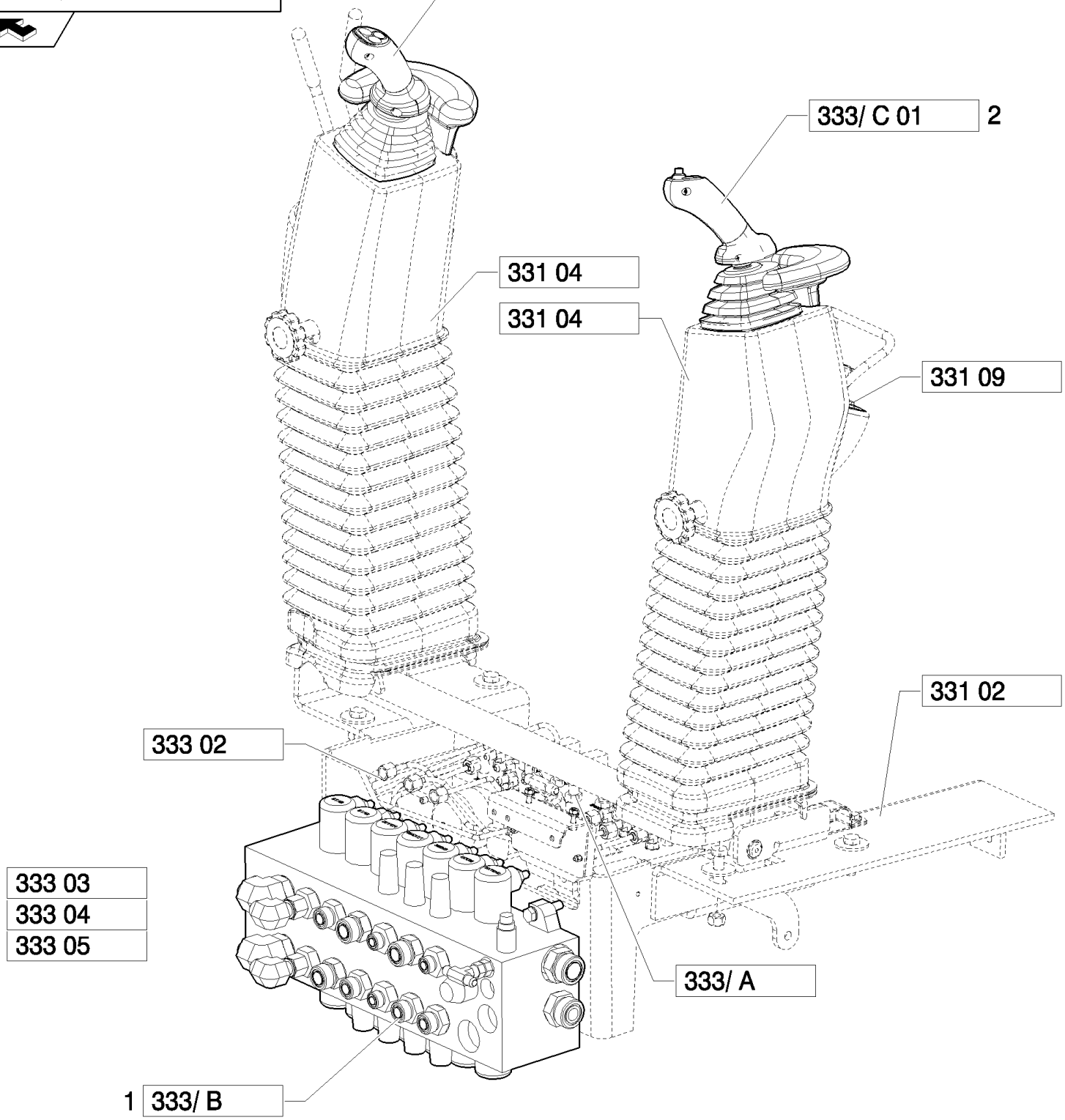

Pilot Control Version

B110 TIER 3 BACKHOE LOADER (2/07-)

333(01) TOWER ASSY 7 SECTIONS (CENTER PIVOT)

Ref	Numero de Pieza	Ctd	Descripción
1	87327766	1	VALVE, CONTROL,
2	87547314	1	JOYSTICK,
3	87388704	1	JOYSTICK,

Pilot Control Version

B110 TIER 3 BACKHOE LOADER (2/07-)

333(02) 7 SECTION PILOT CONTROL VALVE SUPPORT, COMPLETE (CENTER PIVOT)

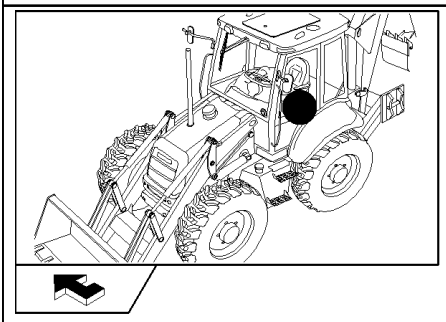

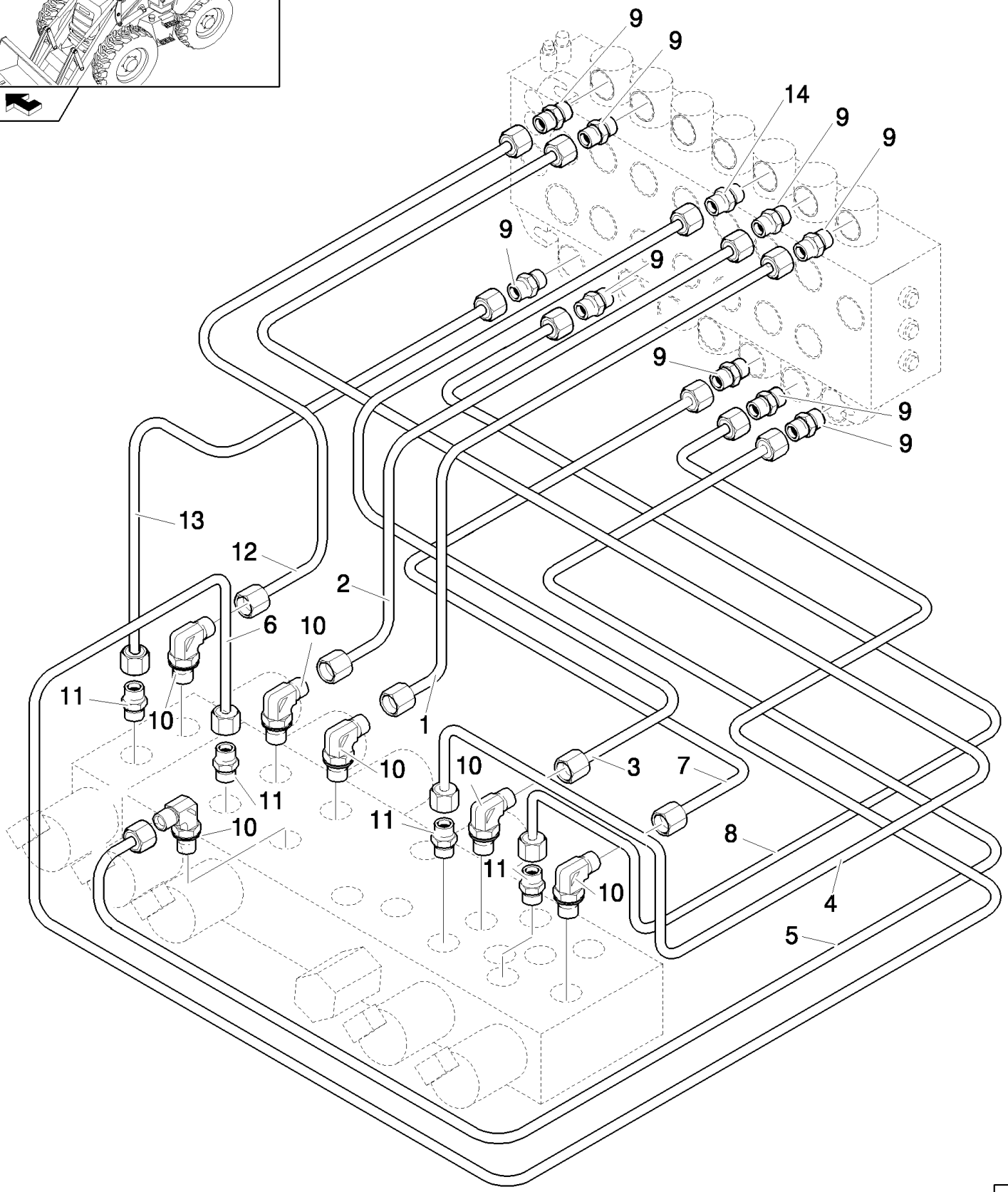

Pilot Control Version

B110 TIER 3 BACKHOE LOADER (2/07-)

333(02) 7 SECTION PILOT CONTROL VALVE SUPPORT, COMPLETE (CENTER PIVOT)

Ref	Numero de Pieza	Ctd	Descripción
1	85827093	1	TUBE, HYD,
2	85827094	1	TUBE, HYD,
3	85827091	1	TUBE, HYD,
4	85827089	1	TUBE, HYD,
5	85827092	1	TUBE, HYD,
6	85827095	1	TUBE, HYD,
7	85827090	1	TUBE, HYD,
8	85827088	1	TUBE, HYD,
9	85803312	9	CONNECTOR, HYD.,
10	47050653	6	ELBOW,
11	47050685	4	CONNECTOR, HYD.,
12	85827097	1	TUBE, HYD,
13	87306186	1	TUBE, HYD,
14	87423401	1	FITTING,

Pilot Control Version

333(03) 7 SECTION PILOT CONTROL VALVE SUPPORT, COMPLETE (CENTER PIVOT)

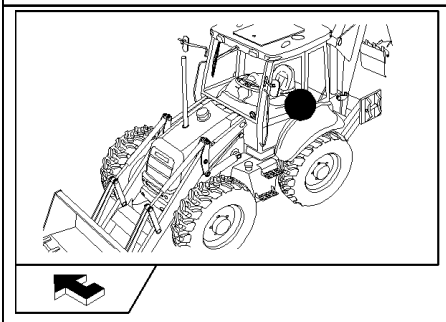

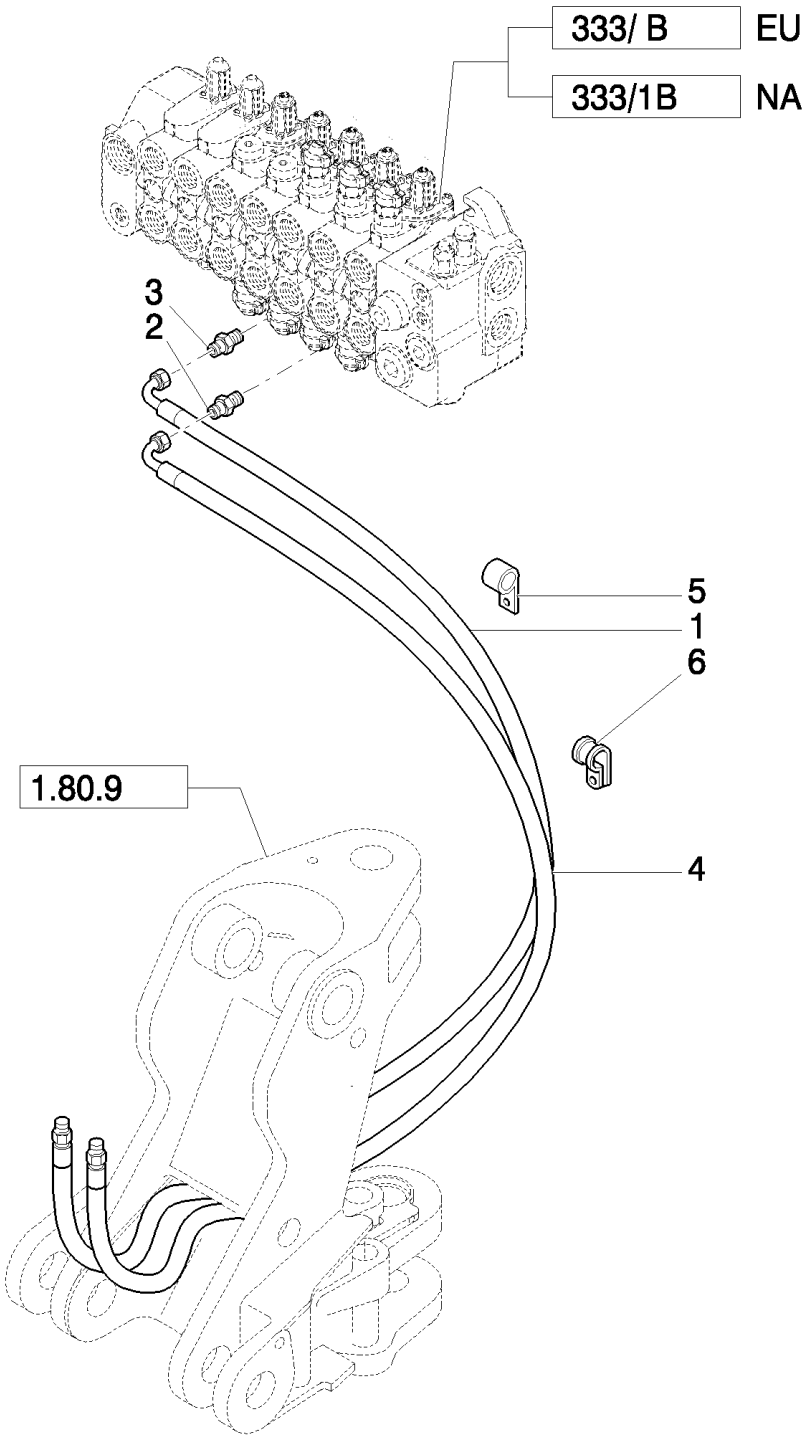

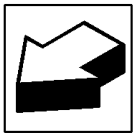

Pilot Control Version

B110 TIER 3 BACKHOE LOADER (2/07-)

333(03) 7 SECTION PILOT CONTROL VALVE SUPPORT, COMPLETE (CENTER PIVOT)

Ref	Numero de Pieza	Ctd	Descripción
1	85812192	1	HOSE, FLEXIBLE,
2	85805258	1	CONNECTOR, HYD., 9/16"-16 ORS x 1 1/16"-12, O-Ring,
3	83962539	1	CONNECTOR, HYD.,
4	85812211	1	HOSE, FLEXIBLE,
5	85803393	2	CLAMP,
6	85812029	4	CLAMP,

Pilot Control Version

B110 TIER 3 BACKHOE LOADER (2/07-)

333(04) 7 SECTION PILOT CONTROL VALVE SUPPORT, COMPLETE (CENTER PIVOT)

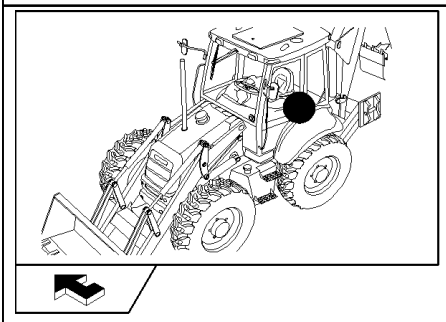

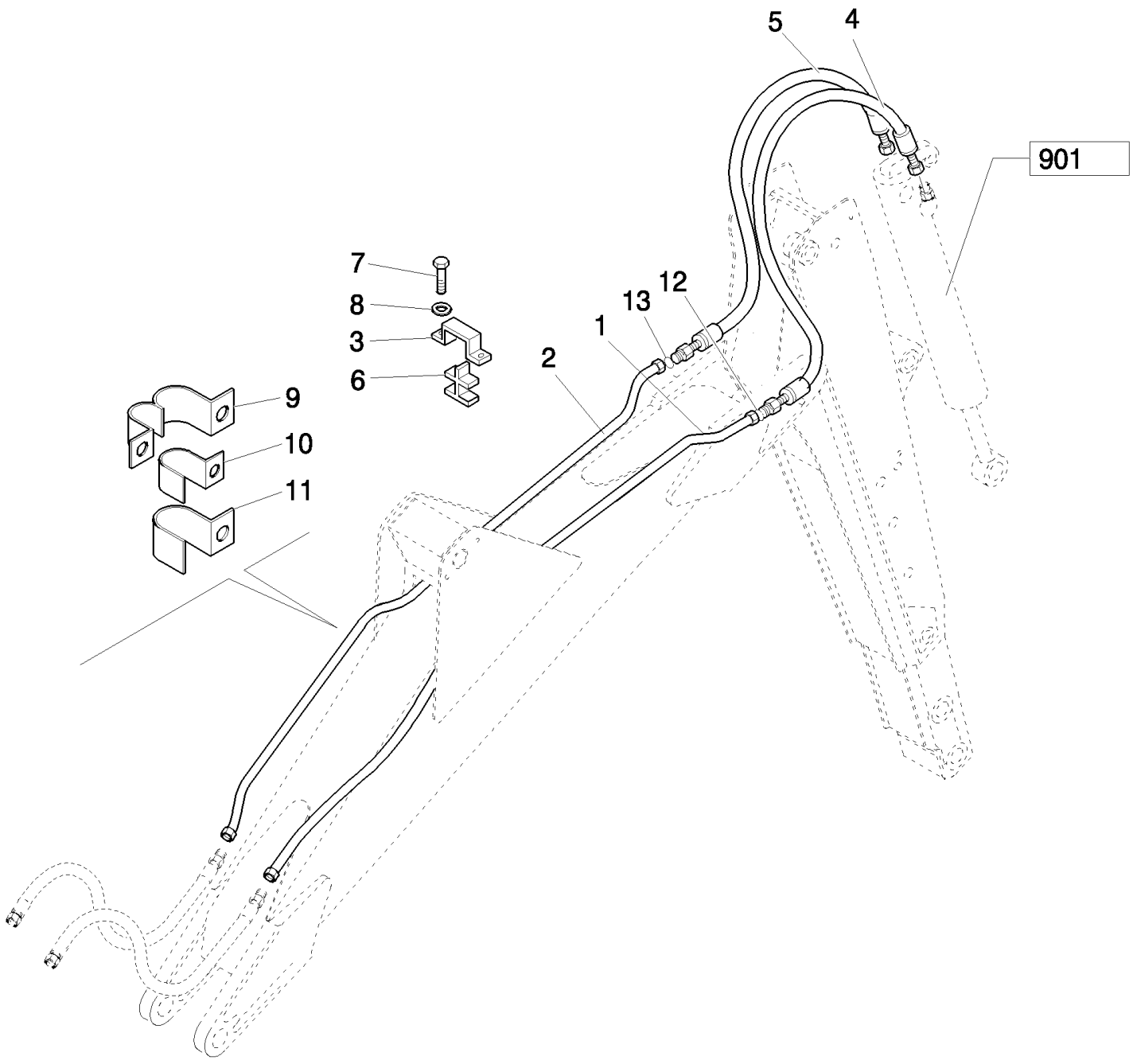

Pilot Control Version

B110 TIER 3 BACKHOE LOADER (2/07-)

333(04) 7 SECTION PILOT CONTROL VALVE SUPPORT, COMPLETE (CENTER PIVOT)

Ref	Numero de Pieza	Ctd	Descripción
1	85815642	1	TUBE, HYD, 16 mm OD Tube
2	85815640	1	TUBE, HYD, 12 mm OD Tube
3	85803402	1	PLATE,
4	87619506	1	HOSE, FLEXIBLE,
4	87619506	1	HOSE, FLEXIBLE, , Only for NA
5	85817108	1	HOSE, FLEXIBLE,
6	85802532	1	CLIP, HOSE,
7	16043621	2	BOLT, Hex, M8 x 25, 8.8,
8	11193879	2	WASHER, SPRING, Belleville, M8.4,
9	85802529	1	CLAMP,
10	85802527	2	CLAMP,
11	85802528	2	CLAMP,
12	9992069	1	O-RING, -016, 90 Duro, .614" ID x .070" Thk,
13	9992298	1	O-RING, -014, 90 Duro, .489" ID x .070" Thk,

Pilot Control Version

333(05) 7 SECTION PILOT CONTROL VALVE SUPPORT, COMPLETE (CENTER PIVOT)

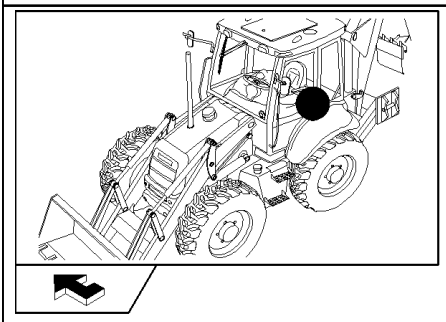

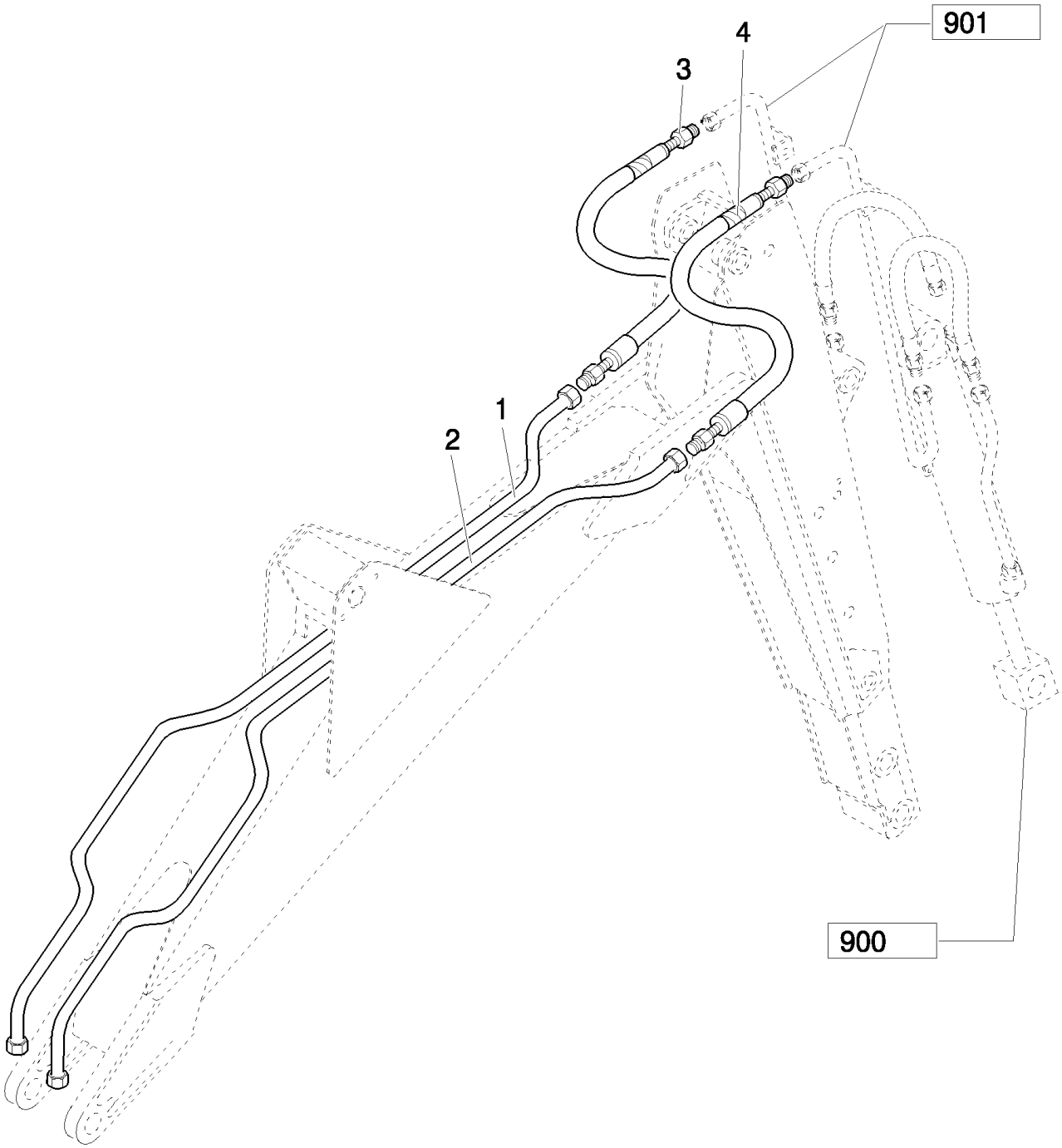

Pilot Control Version

B110 TIER 3 BACKHOE LOADER (2/07-)

333(05) 7 SECTION PILOT CONTROL VALVE SUPPORT, COMPLETE (CENTER PIVOT)

Ref	Numero de Pieza	Ctd	Descripción
1	85815674	1	TUBE, HYD, 20 mm OD Tube
2	85815676	1	TUBE, HYD, 16 mm OD Tube
3	85817106	1	HOSE, FLEXIBLE,
4	85817107	1	HOSE, FLEXIBLE,

Pilot Control Version

333/1(01) TOWER ASSY 7 SECTIONS (CENTER PIVOT) - NA

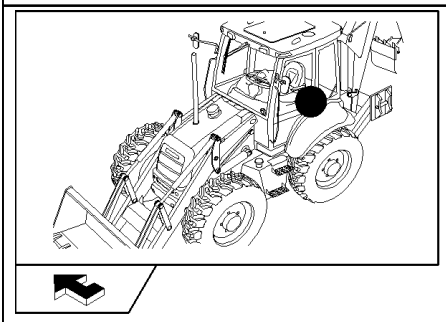

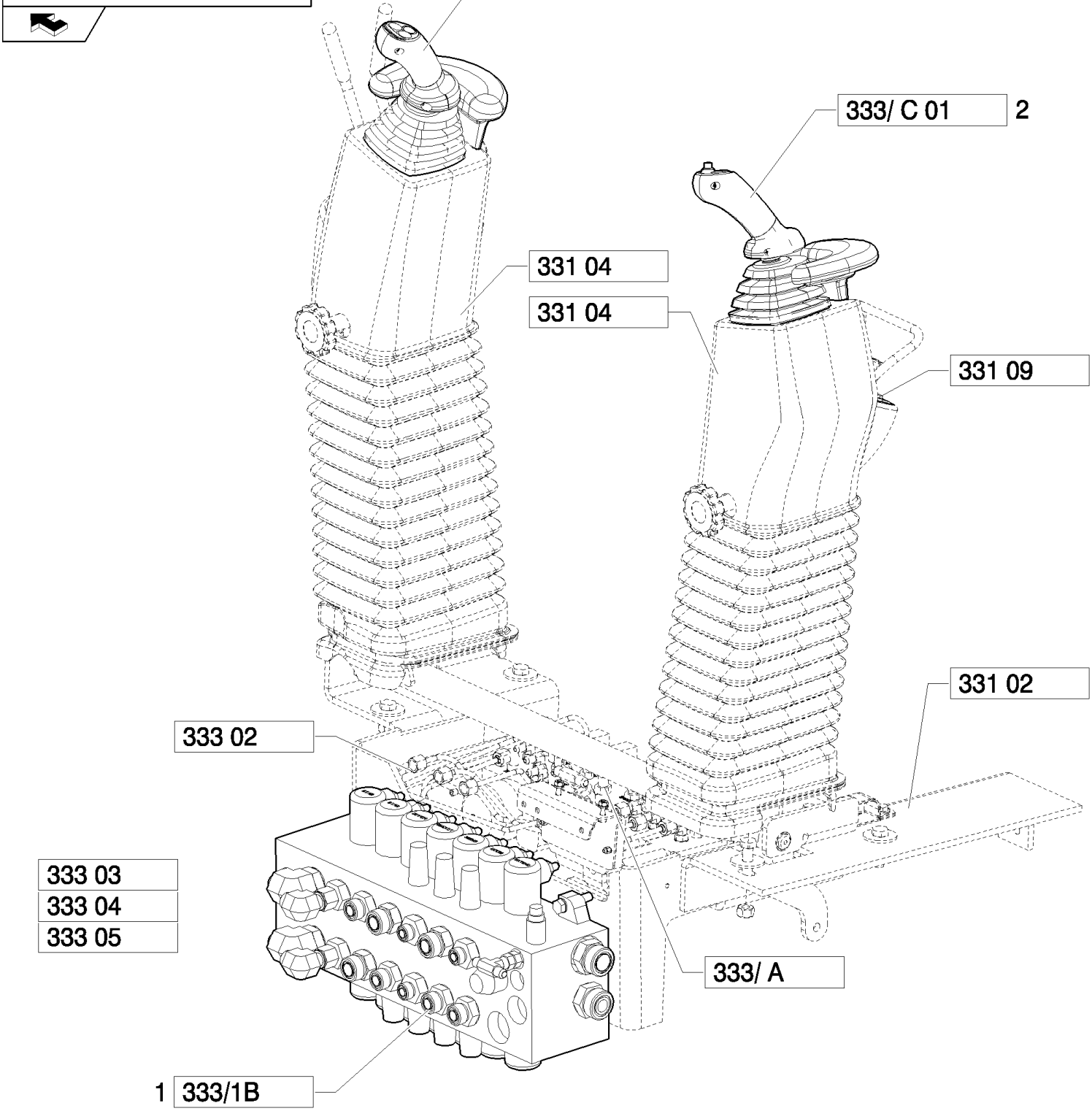

Pilot Control Version

B110 TIER 3 BACKHOE LOADER (2/07-)

333/1(01) TOWER ASSY 7 SECTIONS (CENTER PIVOT) - NA

Ref	Numero de Pieza	Ctd	Descripción
1	87327768	1	VALVE, CONTROL,
2	87547314	1	JOYSTICK,
3	87388704	1	JOYSTICK,

Pilot Control Version

333/1B(01) 7-SECTIONS EXCAVATOR CONTROL VALVE (CENTER PIVOT) - NA

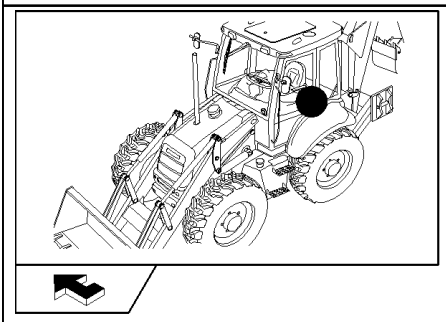

KIT KIT KIT 15 = ●

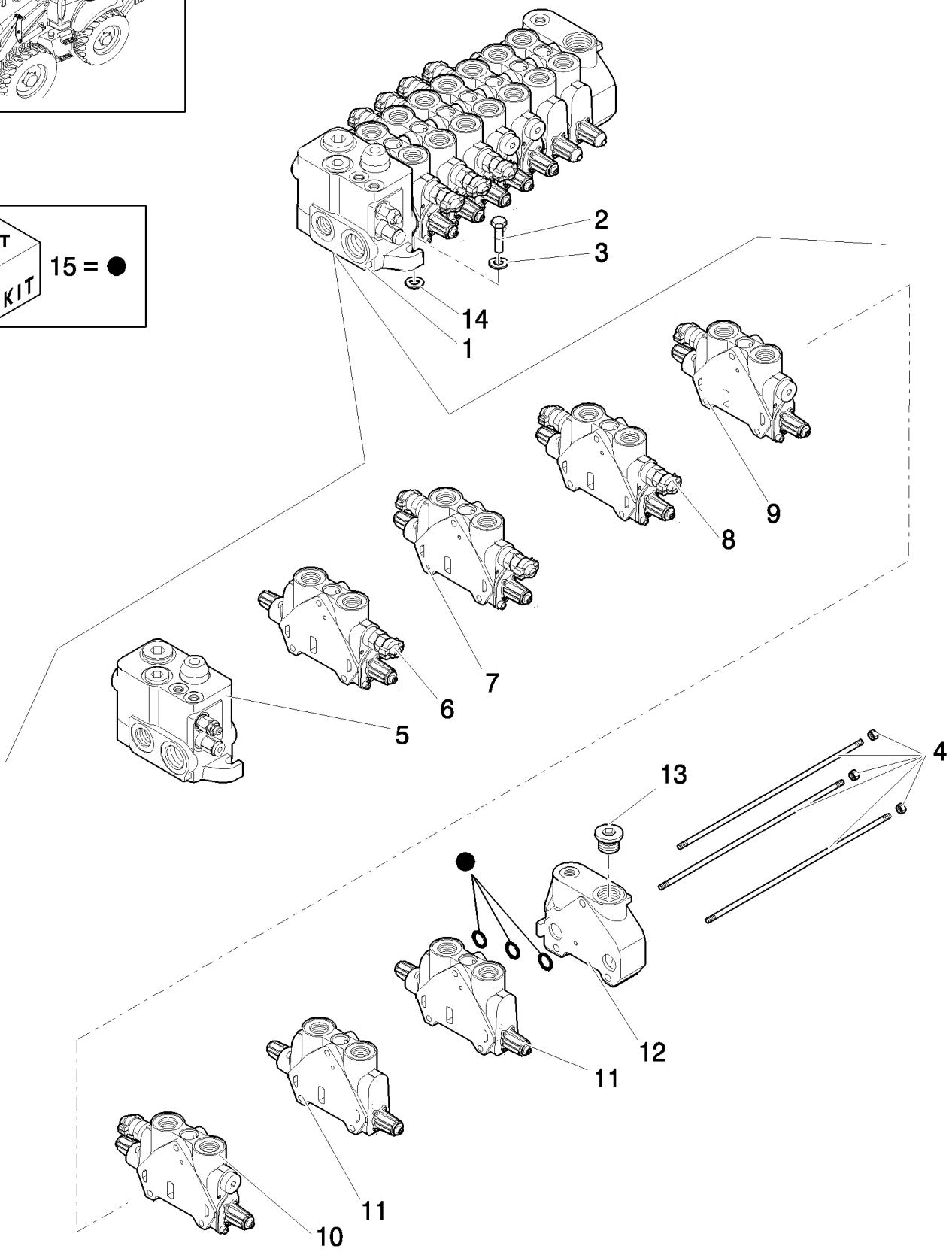

Pilot Control Version

B110 TIER 3 BACKHOE LOADER (2/07-)

333/1B(01) 7-SECTIONS EXCAVATOR CONTROL VALVE (CENTER PIVOT) - NA

Ref	Numero de Pieza	Ctd	Descripción
1	87327768	1	VALVE, CONTROL,
2	11234721	3	BOLT, Hex, M10 x 1.25 x 45, 8.8,
3	11190679	3	WASHER, SPRING, Belleville, M10.5,
4	85811959	1	KIT,
5	87610858	1	VALVE SECTION, HYD, , See Page 331/1B 02
6	87558574	1	SECTOR, , See Page 333/1B 08, Telescopic Cylinder
7	85826901	1	VALVE SECTION, HYD, , Boom Cylinder, See Page 333/1B 03
8	85826339	1	VALVE SECTION, HYD, , Swing Cylinder, See Page 333/1B 04
9	85826903	1	SECTOR, TOOTHED, , Bucket Cylinder, See Page 333/1B 05
10	85826902	1	VALVE SECTION, HYD, , See Page 333/1B 06, Arm Cylinder
11	85826340	2	VALVE SECTION, HYD, , See Page 333/1B 07, Stabilizer Cylinder
12	85826250	1	VALVE SECTION, HYD, , Includes 13
13	85811921	1	PLUG, 1-1/16"-12 UNF 2A
14	13578621	3	WASHER,
15	85825473	1	KIT, SEALS,

Pilot Control Version

333/1B(02) BACKHOE CONTROL VALVE, INLET SECTION (CENTER PIVOT) - NA

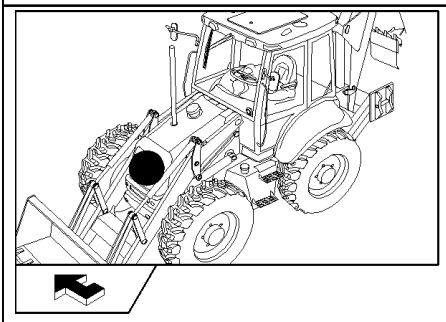

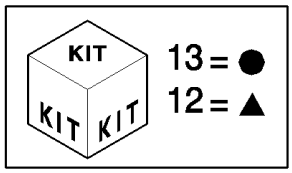

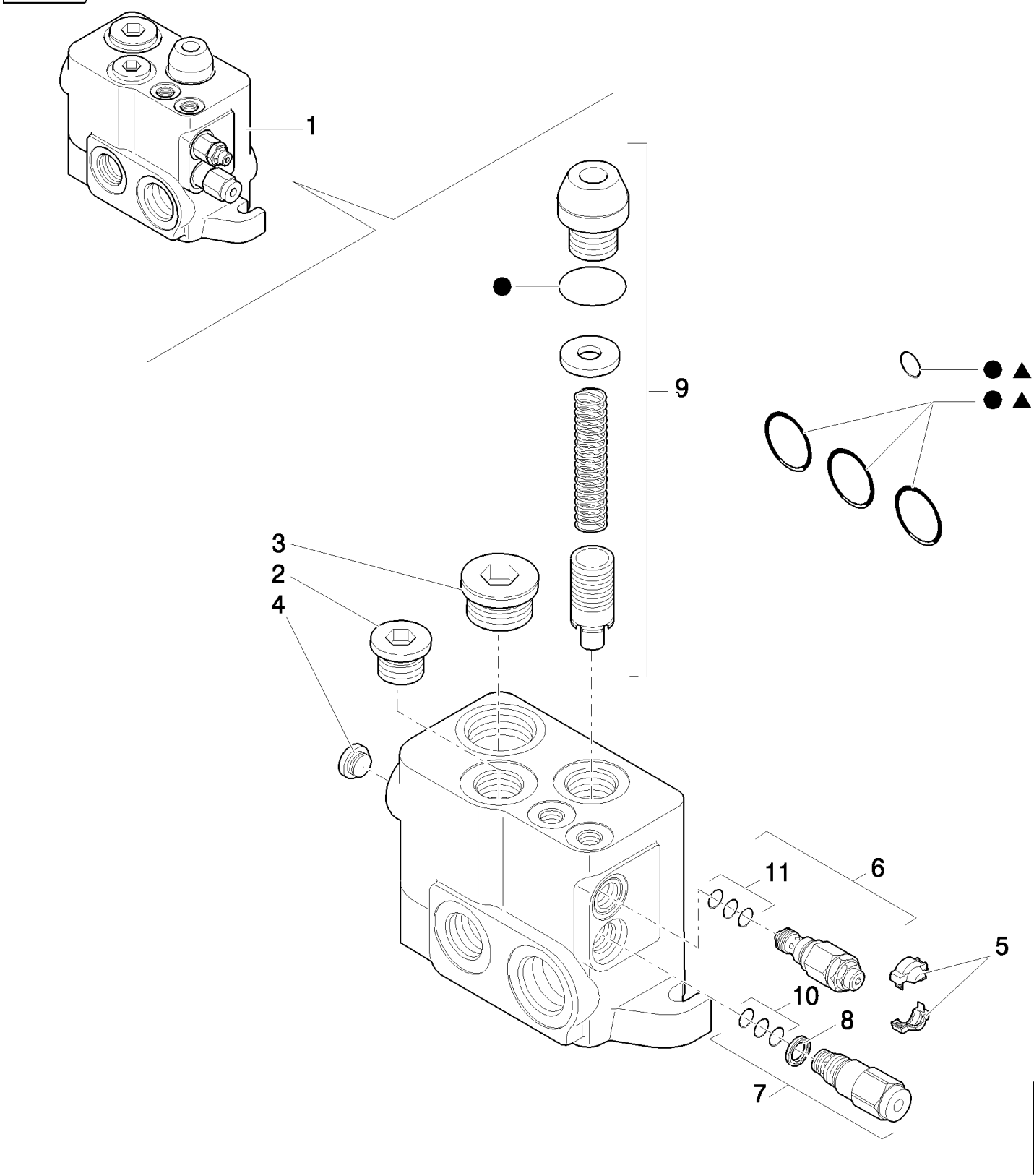

Pilot Control Version

B110 TIER 3 BACKHOE LOADER (2/07-)

333/1B(02) BACKHOE CONTROL VALVE, INLET SECTION (CENTER PIVOT) - NA

Ref	Numero de Pieza	Ctd	Descripción
1	87327768	1	VALVE, CONTROL,
2	85811921	1	PLUG, 1-1/16"-12 UNF 2A
3	85811922	1	PLUG, 1-5/16"-12 UNF 2A
4	85811923	1	PLUG,
5	85811934	1	KIT, Cover
6	85811946	1	VALVE, PRESSURE RELIEF,
7	85820128	1	REGULATOR,
8	85817669	1	GASKET,
9	85820129	1	KIT, Regulation Assy
10	85821235	1	KIT, SEALS, Seal, Flow Regulator
11	85821236	1	KIT, SEALS, Seal, LS Pressure Relief
12	87308749	1	KIT, SEALS, Seals
13	85825477	1	KIT, SEALS, Seal

Pilot Control Version

333/1B(03) 7-SECTIONS EXCAVATOR CONTROL VALVE (CENTER PIVOT) - NA

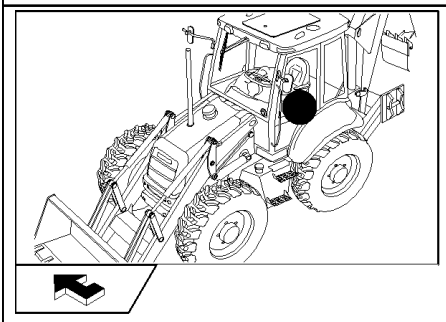

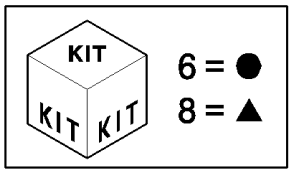

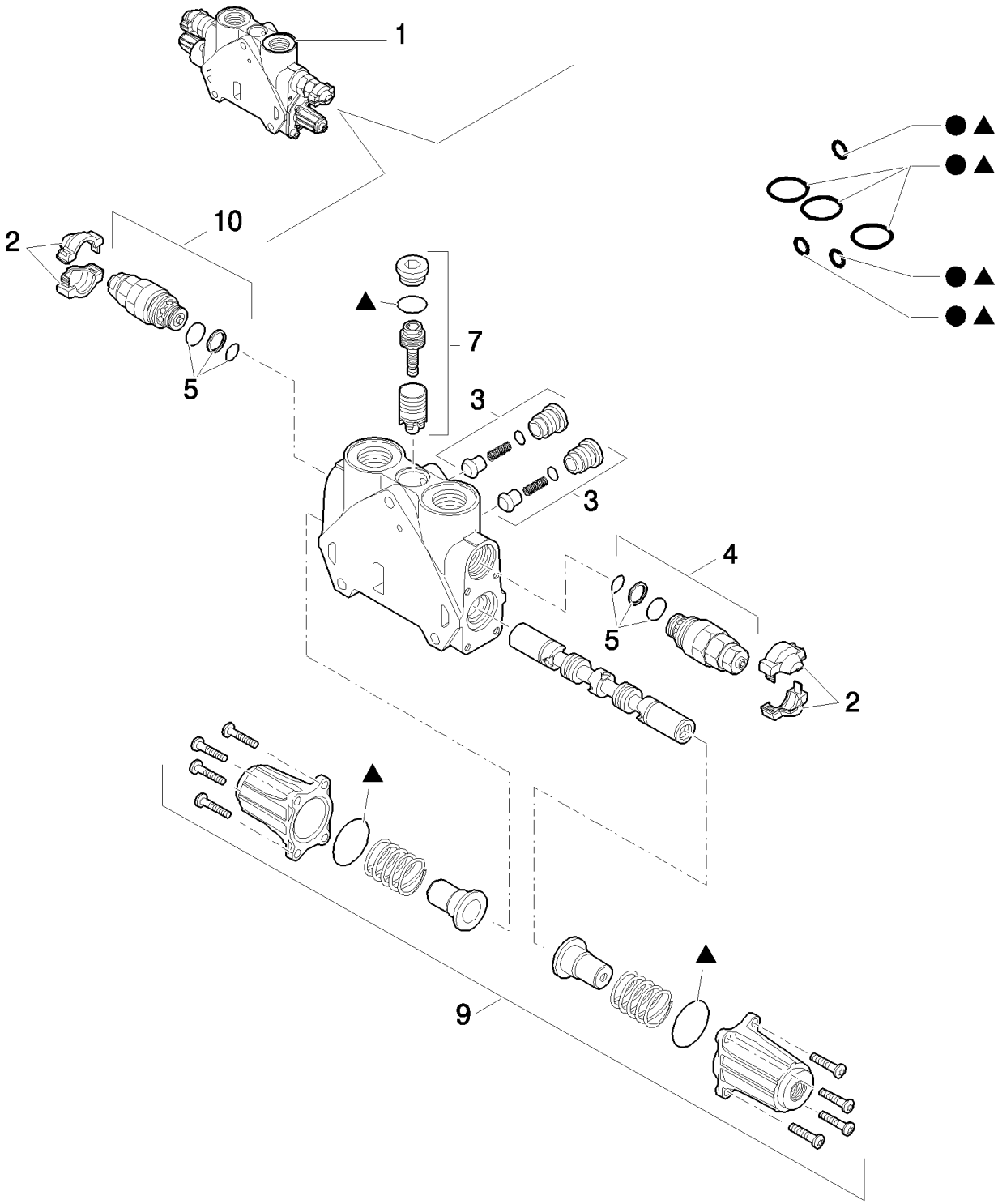

Pilot Control Version

B110 TIER 3 BACKHOE LOADER (2/07-)

333/1B(03) 7-SECTIONS EXCAVATOR CONTROL VALVE (CENTER PIVOT) - NA

Ref	Numero de Pieza	Ctd	Descripción
1	85826901	1	VALVE SECTION, HYD,
2	85811934	2	KIT, Cover
3	85811938	2	VALVE, CHECK, Valve
4	85812116	1	VALVE, PRESSURE RELIEF, , Includes Ref. 5, 240 BAR
5	85811933	1	KIT, SEALS,
6	85819148	1	KIT, SEALS, Seals
7	85819378	1	KIT, SEALS, Valve
8	85824281	1	KIT, SEALS, Seals
9	85826344	1	KIT, Cover Assy
10	85812117	1	VALVE, HYDRAULIC, , 315 BAR, Includes Ref. 5

Pilot Control Version

333/1B(04) 7-SECTIONS EXCAVATOR CONTROL VALVE (CENTER PIVOT) - NA

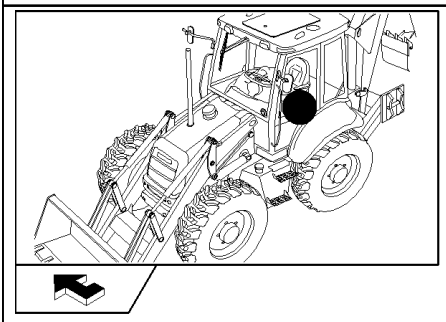

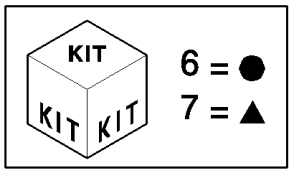

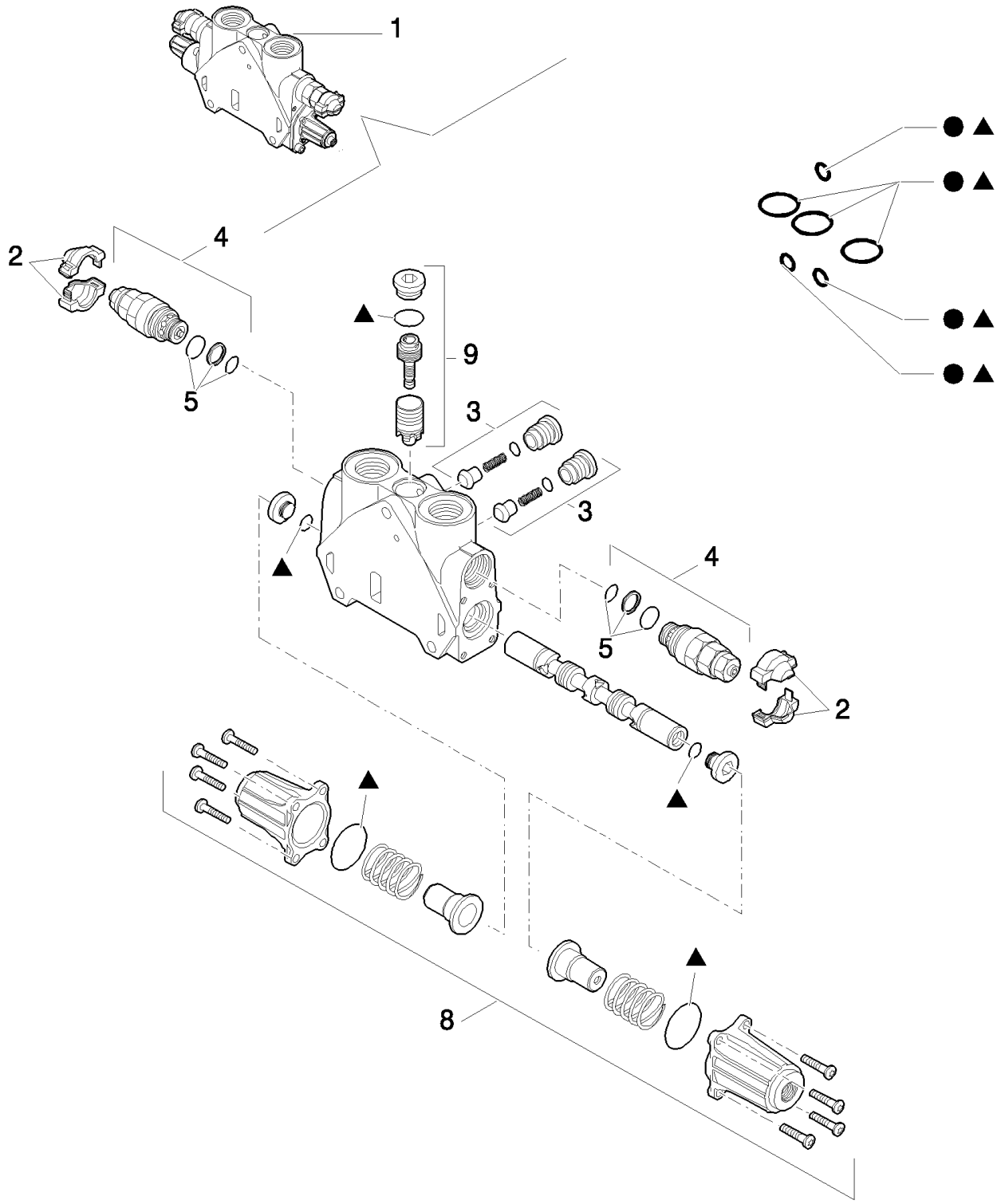

Pilot Control Version

B110 TIER 3 BACKHOE LOADER (2/07-)

333/1B(04) 7-SECTIONS EXCAVATOR CONTROL VALVE (CENTER PIVOT) - NA

Ref	Numero de Pieza	Ctd	Descripción
1	85826339	1	VALVE SECTION, HYD,
2	85811934	2	KIT, Cover
3	85811938	2	VALVE, CHECK, Valve
4	85812114	2	VALVE, HYDRAULIC, , 205 BAR, Includes 5
5	85811933	2	KIT, SEALS, Valve Seals
6	85819148	1	KIT, SEALS, Seals
7	85824282	1	KIT, Seals
8	85826344	1	KIT, Cover Assy
9	85826345	1	KIT, Valve

Pilot Control Version

333/1B(05) 7-SECTIONS EXCAVATOR CONTROL VALVE (CENTER PIVOT) - NA

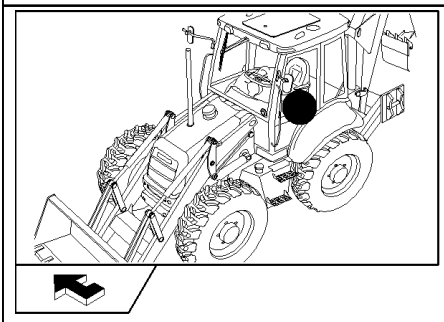

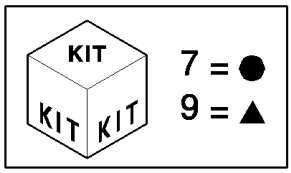

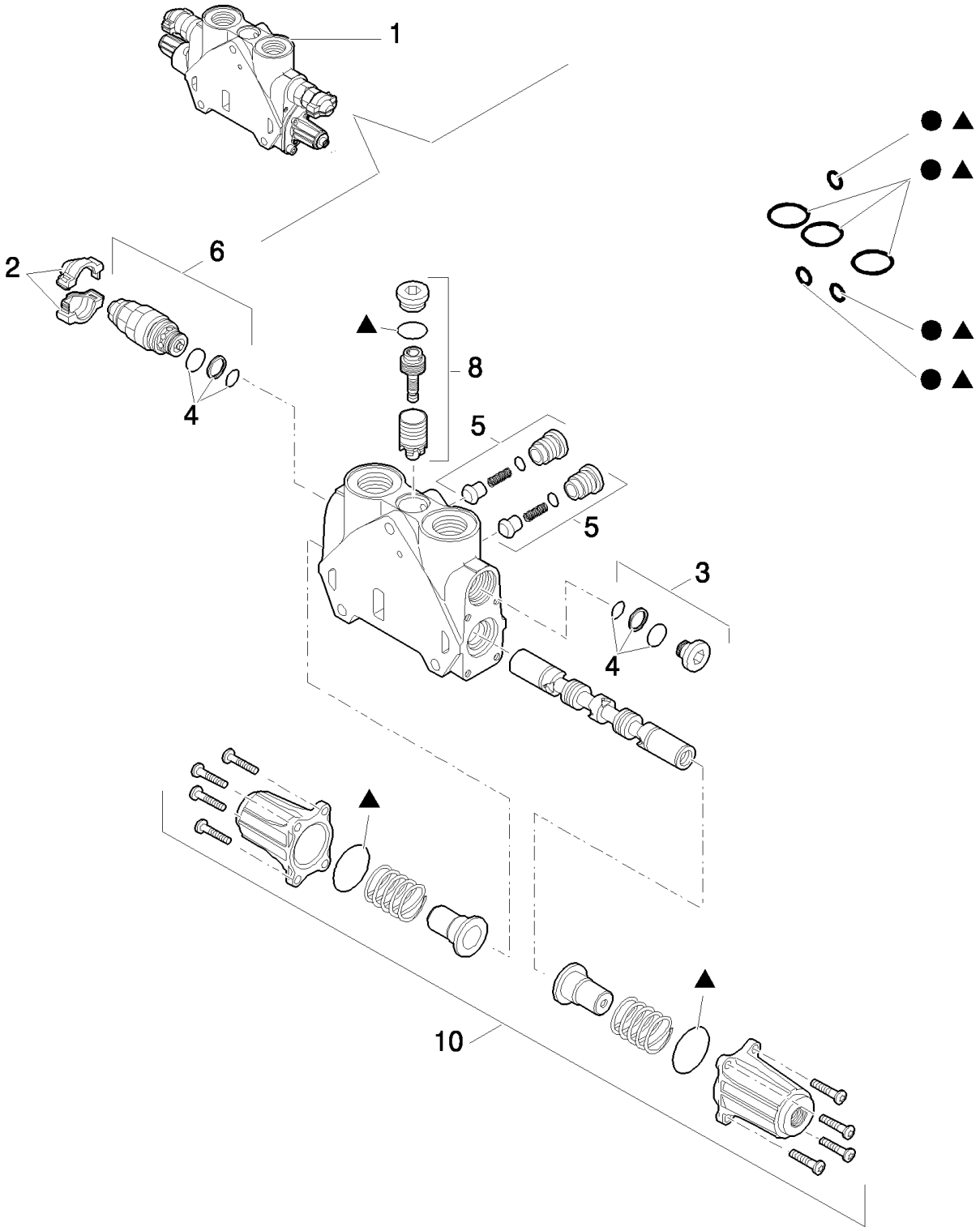

Pilot Control Version

B110 TIER 3 BACKHOE LOADER (2/07-)

333/1B(05) 7-SECTIONS EXCAVATOR CONTROL VALVE (CENTER PIVOT) - NA

Ref	Numero de Pieza	Ctd	Descripción
1	85826903	1	SECTOR, TOOTHED,
2	85811934	1	KIT, Cover
3	85811937	1	PLUG, , 220 BAR, Includes 4
4	85811933	1	KIT, SEALS, Valve Seals
5	85811938	2	VALVE, CHECK, Valve
6	85812115	1	VALVE, HYDRAULIC, , 220 BAR, Includes 4
7	85819148	1	KIT, SEALS, Seals
8	85819378	1	KIT, SEALS, Valve
9	85824281	1	KIT, SEALS, Seals
10	85826344	1	KIT, Cover Assy

Pilot Control Version

333/1B(06) 7-SECTIONS EXCAVATOR CONTROL VALVE (CENTER PIVOT) - NA

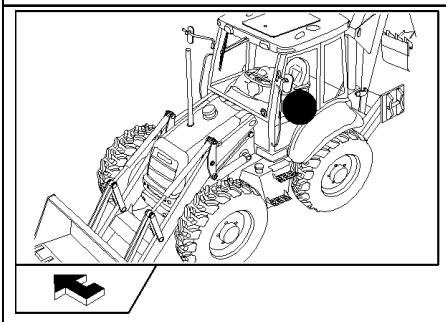

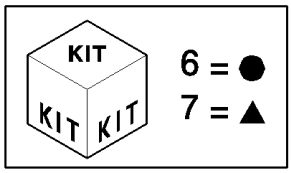

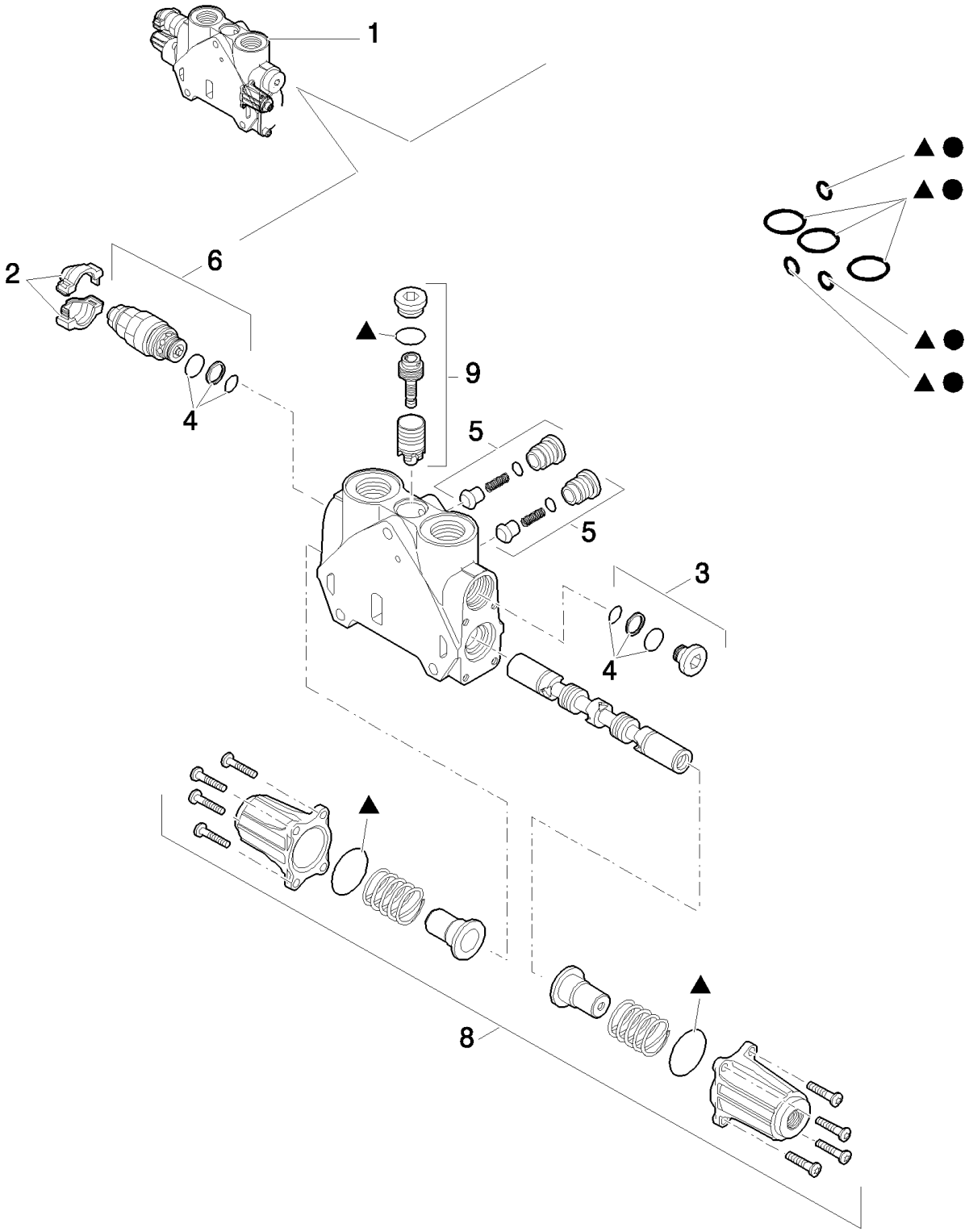

Pilot Control Version

B110 TIER 3 BACKHOE LOADER (2/07-)

333/1B(06) 7-SECTIONS EXCAVATOR CONTROL VALVE (CENTER PIVOT) - NA

Ref	Numero de Pieza	Ctd	Descripción
1	85826902	1	VALVE SECTION, HYD,
2	85811934	1	KIT, Cover
3	85811937	1	PLUG, , 240 BAR, Includes 4
4	85811933	1	KIT, SEALS, Valve Seals
5	85811938	2	VALVE, CHECK, Valve
6	85812116	1	VALVE, PRESSURE RELIEF, , 240 BAR, Includes 4
6	85819148	1	KIT, SEALS, Valve
7	85824281	1	KIT, SEALS, Seals
8	85826344	1	KIT, Cover Assy
9	85826345	1	KIT, Valve

Pilot Control Version

333/1B(07) 7-SECTIONS EXCAVATOR CONTROL VALVE (CENTER PIVOT) - NA

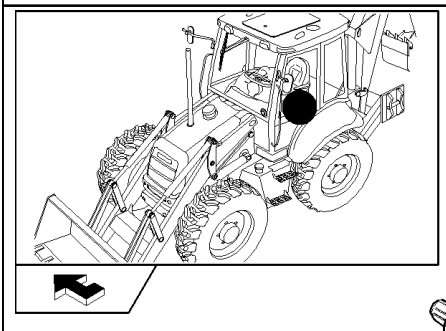

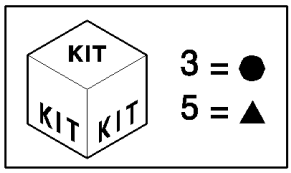

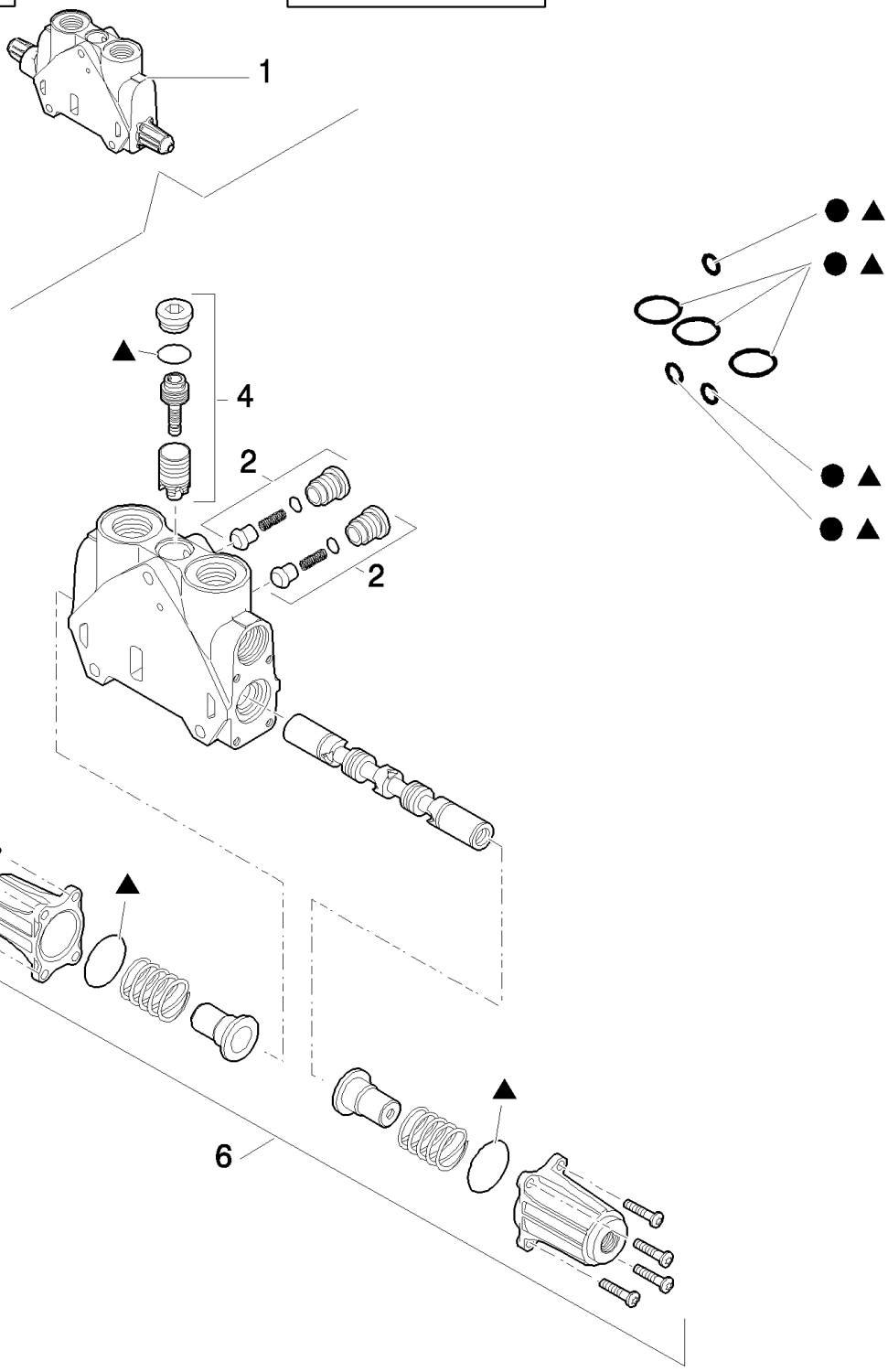

Pilot Control Version

B110 TIER 3 BACKHOE LOADER (2/07-)

333/1B(07) 7-SECTIONS EXCAVATOR CONTROL VALVE (CENTER PIVOT) - NA

Ref	Numero de Pieza	Ctd	Descripción
1	85826340	2	VALVE SECTION, HYD,
2	85811938	2	VALVE, CHECK, Valve
3	85819148	1	KIT, SEALS, Seals
4	85819378	1	KIT, SEALS, Valve
5	85824281	1	KIT, SEALS, Seals
6	85826344	1	KIT, Cover Assy

Pilot Control Version

333/1B(08) 7-SECTIONS EXCAVATOR CONTROL VALVE (CENTER PIVOT) - NA

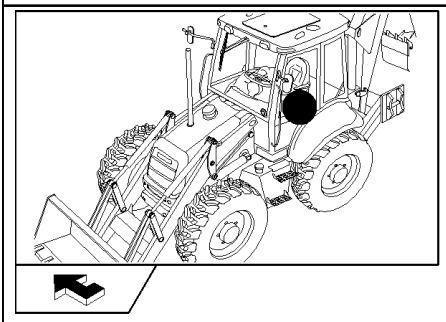

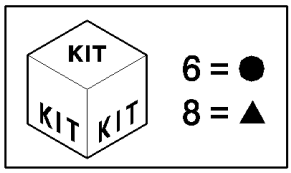

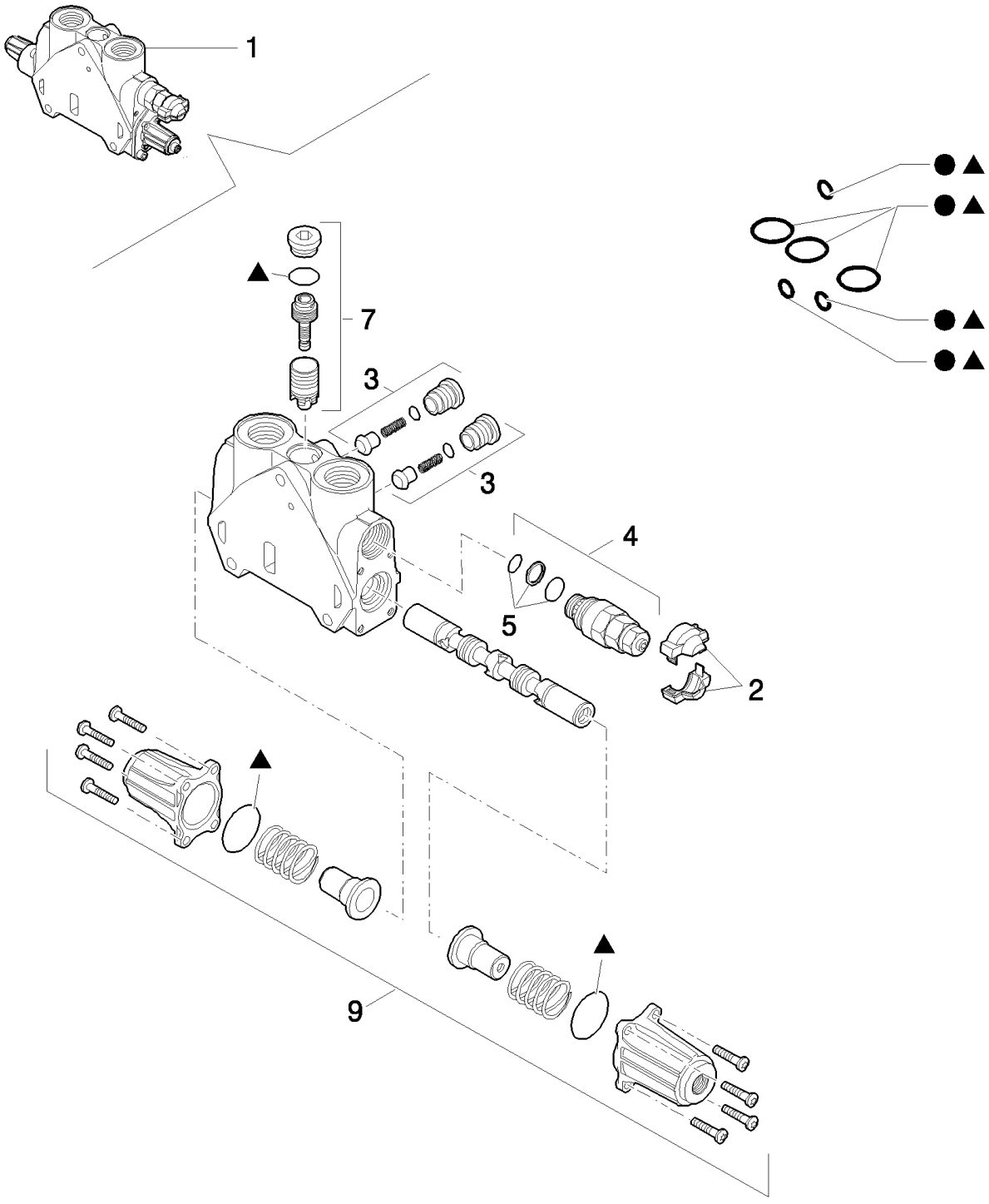

Pilot Control Version

B110 TIER 3 BACKHOE LOADER (2/07-)

333/1B(08) 7-SECTIONS EXCAVATOR CONTROL VALVE (CENTER PIVOT) - NA

Ref	Numero de Pieza	Ctd	Descripción
1	87558574	1	SECTOR,
2	85811934	2	KIT, Cover
3	85811938	2	VALVE, CHECK, Valve
4	87341088	2	VALVE, HYDRAULIC, , Includes 4, 124 BAR
5	85811933	1	KIT, SEALS, Valve Seals
6	85819148	1	KIT, SEALS, Seals
7	85819378	1	KIT, SEALS, Valve
8	85824281	1	KIT, SEALS, Seals
9	85826344	1	KIT, Cover Assy

Pilot Control Version

333/A(01) PROPORTIONAL CONTROL VALVE 7 SECTIONS

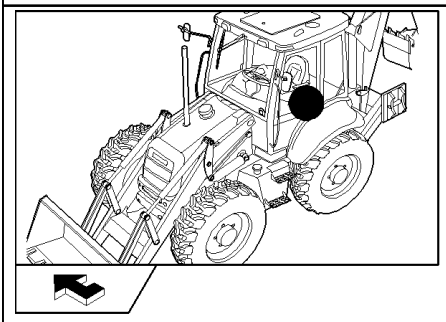

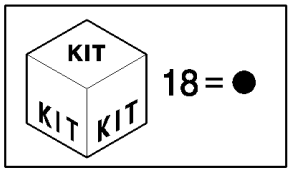

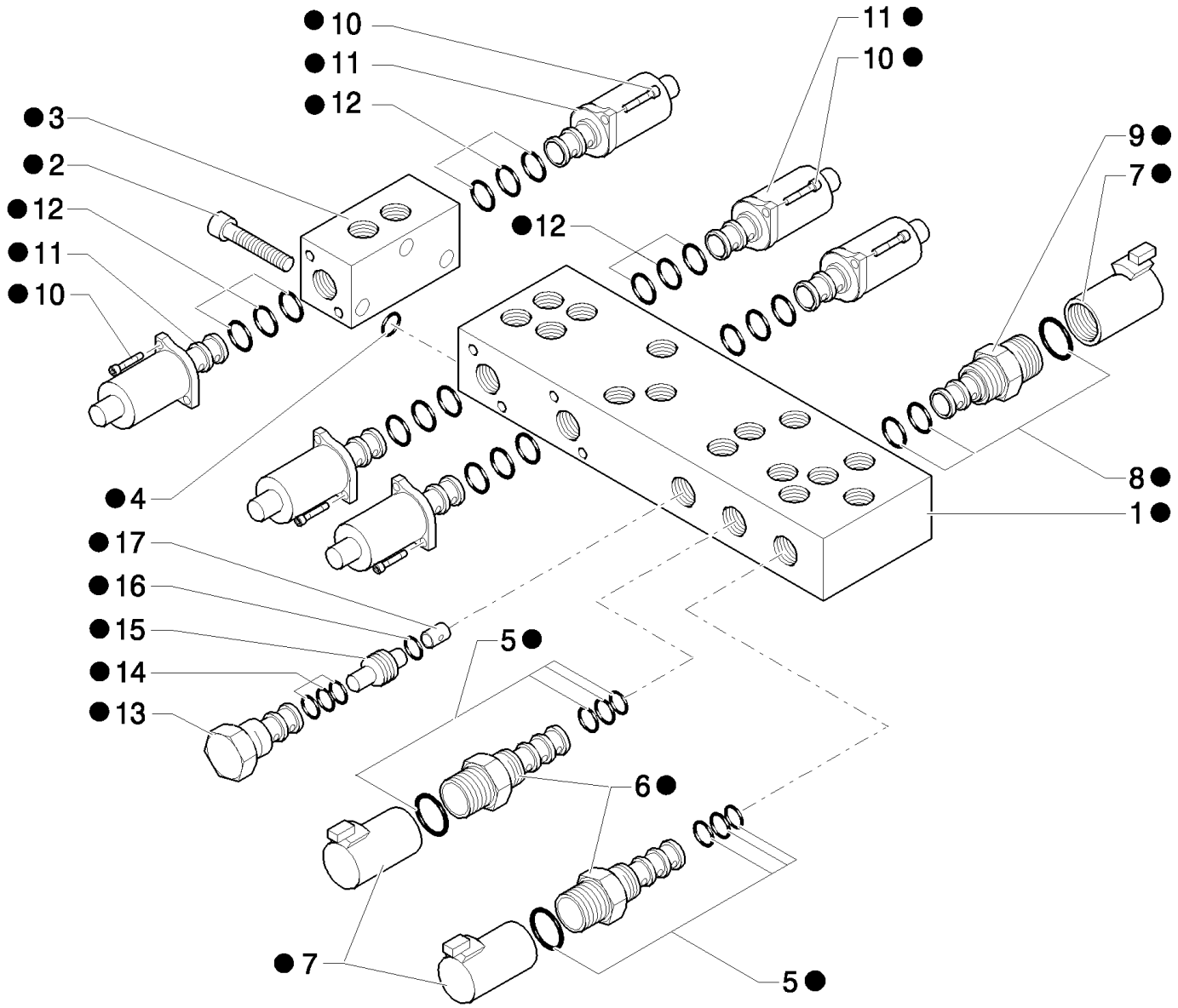

Pilot Control Version

B110 TIER 3 BACKHOE LOADER (2/07-)

333/A(01) PROPORTIONAL CONTROL VALVE 7 SECTIONS

Ref	Numero de Pieza	Ctd	Descripción
1	85828015	1	BODY,
2	14358921	3	SCREW, Hex Soc Hd, M5 x 45, 10.9,
3	85828004	1	BODY, M6x60
4	85827999	1	KIT, SEALS,
5	85828002	2	KIT, SEALS,
6	85827996	2	SOLENOID, , Includes 5, 7
7	85827995	3	COIL,
8	85827998	1	KIT, SEALS,
9	85827994	1	SOLENOID, , Includes 7, 8
10	14302921	12	BOLT, Hex, M4 x 10, 8.8, Full Thd,
11	85827993	6	SOLENOID,
12	85828000	6	KIT, SEALS,
13	85827997	1	VALVE, CARTRIDGE, HYDRAULIC PRESSURE REDUCING VALVE
14	85828001	1	KIT, SEALS,
15	85827992	1	VALVE, CHECK,
16	85828003	1	O-RING,
17	85828005	1	ORIFICE,
18	85827471	1	VALVE, HYDRAULIC,

Pilot Control Version

333/B(01) 7-SECTIONS EXCAVATOR CONTROL VALVE (CENTER PIVOT) - EU

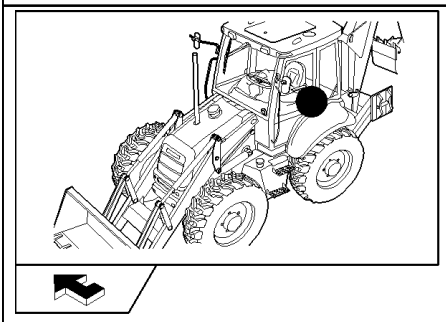

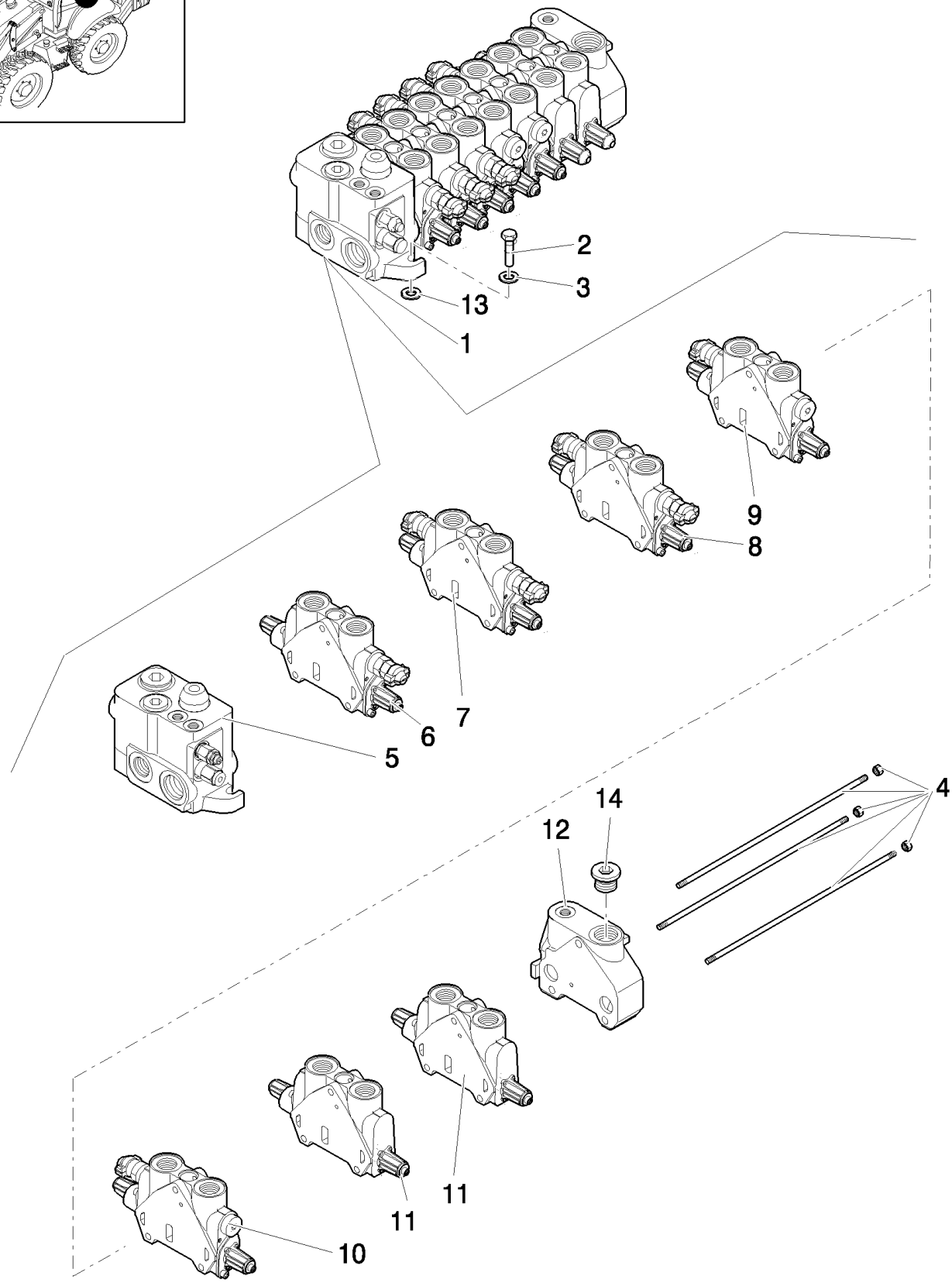

Pilot Control Version

B110 TIER 3 BACKHOE LOADER (2/07-)

333/B(01) 7-SECTIONS EXCAVATOR CONTROL VALVE (CENTER PIVOT) - EU

Ref	Numero de Pieza	Ctd	Descripción
1	87327766	1	VALVE, CONTROL,
2	11234721	3	BOLT, Hex, M10 x 1.25 x 45, 8.8,
3	11190679	3	WASHER, SPRING, Belleville, M10.5,
4	85811959	1	KIT,
5	87308747	1	VALVE SECTION, HYD, , See Page 331/B 02
6	87558573	1	SECTOR, , See Page 333/B 02
7	85826359	1	SECTOR, TOOTHED, , See Page 331/B 03
8	85826357	1	SECTOR, TOOTHED, , See Page 331/B 04
9	85826356	1	SECTOR, TOOTHED, , See Page 331/B 05
10	85826355	1	SECTOR, TOOTHED, , See Page 331/B 06
11	85826360	2	SECTOR, TOOTHED, , See Page 331/B 07
12	85826250	1	VALVE SECTION, HYD,
13	13578621	3	WASHER,
14	85811921	1	PLUG,

Pilot Control Version

333/B(02) 7-SECTIONS EXCAVATOR CONTROL VALVE (CENTER PIVOT) - EU

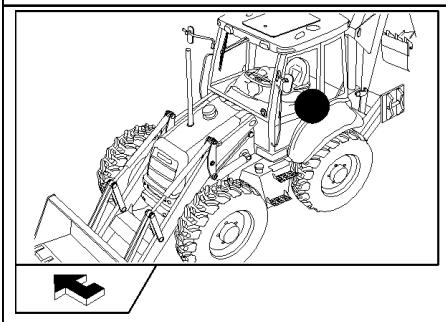

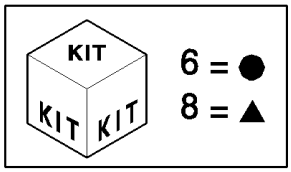

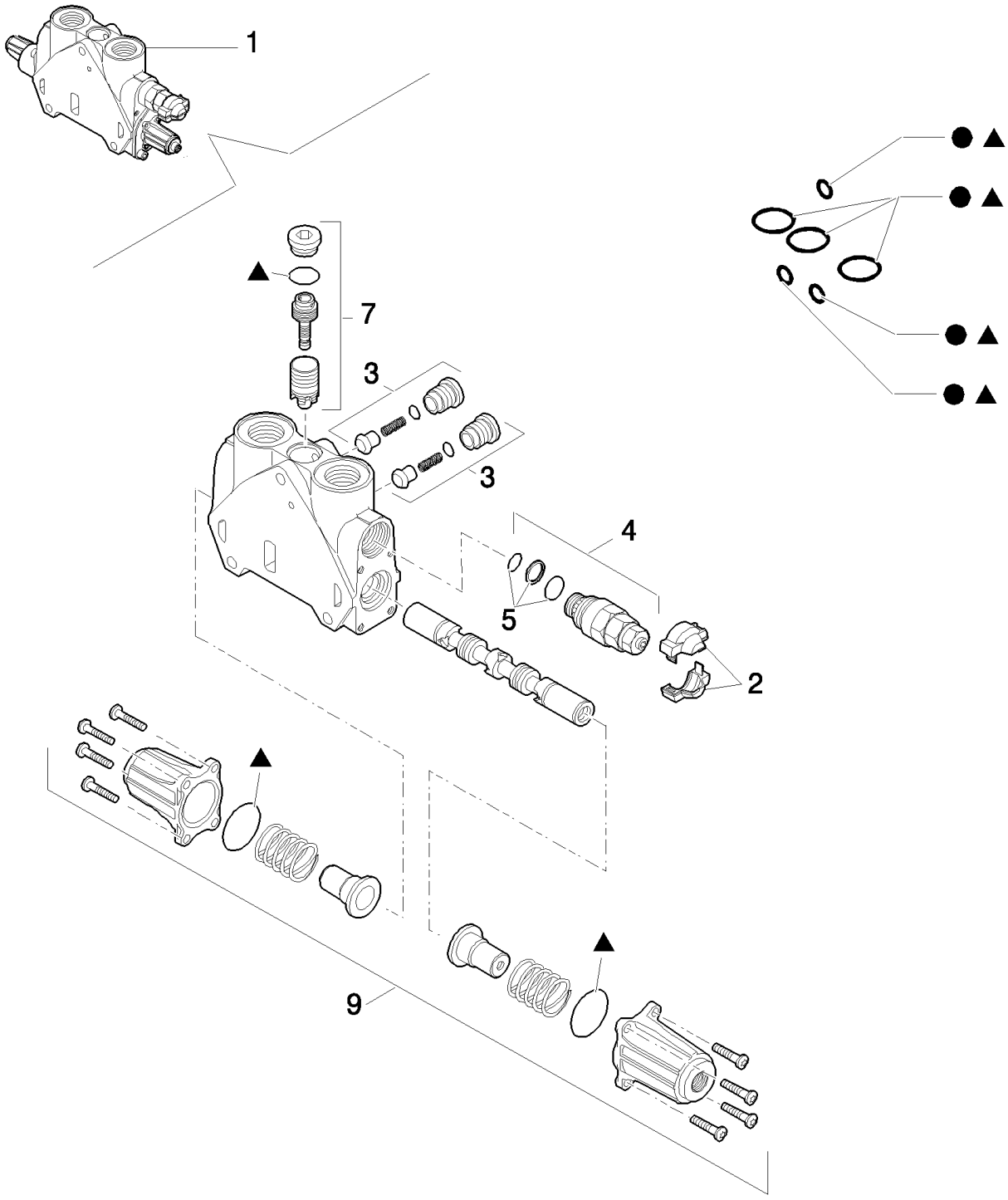

Pilot Control Version

B110 TIER 3 BACKHOE LOADER (2/07-)

333/B(02) 7-SECTIONS EXCAVATOR CONTROL VALVE (CENTER PIVOT) - EU

Ref	Numero de Pieza	Ctd	Descripción
1	87558573	1	SECTOR,
2	85811934	1	KIT, Cover
3	85811938	2	VALVE, CHECK, Valve
4	87341088	1	VALVE, HYDRAULIC, , Includes 5, 124 BAR
5	85811933	1	KIT, SEALS, Valve Seals
6	85819148	1	KIT, SEALS, Seals
7	85819378	1	KIT, SEALS, Valve
8	85824281	1	KIT, SEALS, Seals
9	85826344	1	KIT, Cover Assy

Pilot Control Version

B110 TIER 3 BACKHOE LOADER (2/07-)

333/C(01) PILOT VALVE OF HYDRAULIC CONTROL LEVER (RIGHT HANDS) 7 SPOOLS

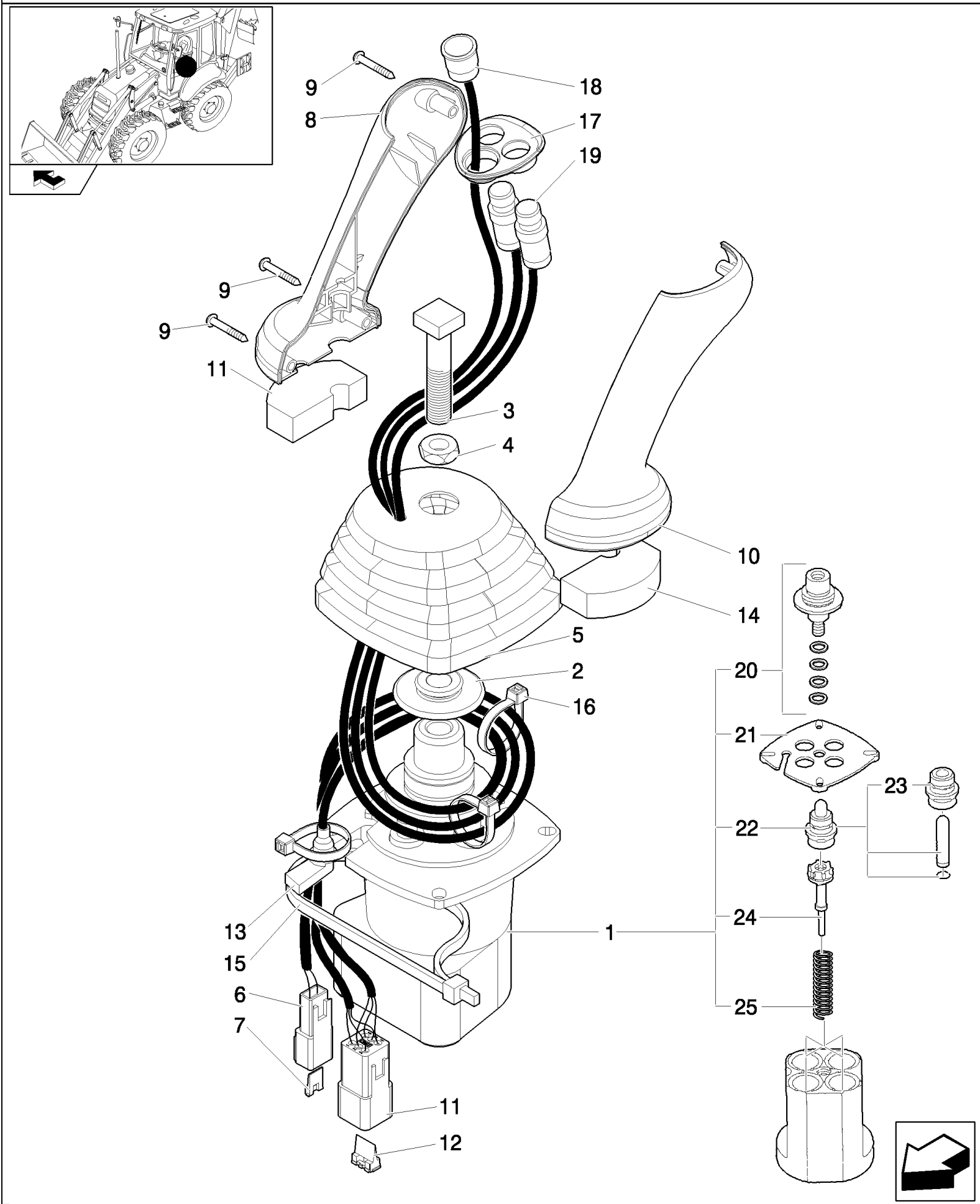

B110 TIER 3 BACKHOE LOADER (2/07-)

333/C(01) PILOT VALVE OF HYDRAULIC CONTROL LEVER (RIGHT HANDS) 7 SPOOLS

Ref	Numero de Pieza	Ctd	Descripción
	87547314	1	JOYSTICK, , Includes 1 To 25
1	87398960	1	VALVE, PILOT,
2	87436225	1	RETAINER,
3	87428023	1	BOLT,
4	87037944	1	NUT, Thin, M12 x 1.75, Cl 05,
5	87443721	1	BOOT,
6	225315C1	1	CONNECTOR, ELEC,
7	225318C1	1	WEDGE,
8	87308838	1	HANDLE GRIP,
9	15687475	3	SCREW, SELF TAPPING, Pan Hd, M3.5 x 25, Stainless,
10	87308839	1	HANDLE GRIP,
11	225350C1	1	CONNECTOR, ELEC,
12	225353C1	1	WEDGE,
13	87424267	1	GROMMET,
14	87435506	2	SEAL,
15	87438046	1	STRAP, CABLE,
16	87000312	3	STRAP, CABLE,
17	87547309	1	BEZEL,
18	87546922	1	SWITCH,
19	87437371	2	SWITCH, ASSY,
20	87586731	4	KIT,
21	87586758	1	PLATE, RETAINING,
22	87586760	4	PLUNGER,
23	87586764	1	PLUNGER,
24	87586772	4	REGULATOR,
25	87586773	1	KIT,

334(01) TOWER ASSY 7 SECTIONS (SIDE SHIFT) - EU

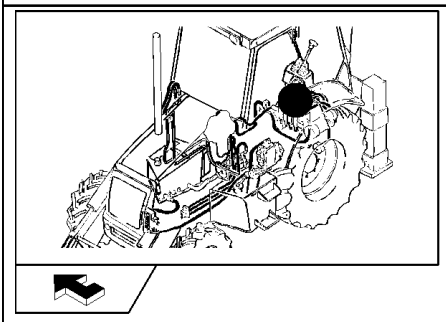

Pilot Control Version

B110 TIER 3 BACKHOE LOADER (2/07-)

334(01) TOWER ASSY 7 SECTIONS (SIDE SHIFT) - EU

Ref	Numero de Pieza	Ctd	Descripción
1	87378498	1	VALVE, HYDRAULIC,
2	87547314	1	JOYSTICK,
3	87388704	1	JOYSTICK,

Pilot Control Version

334(02) 7-SECTIONS EXCAVATOR CONTROL VALVE (SIDE SHIFT) - EU

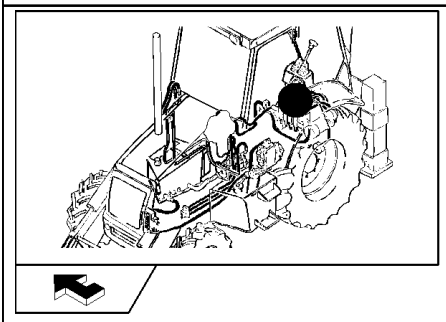

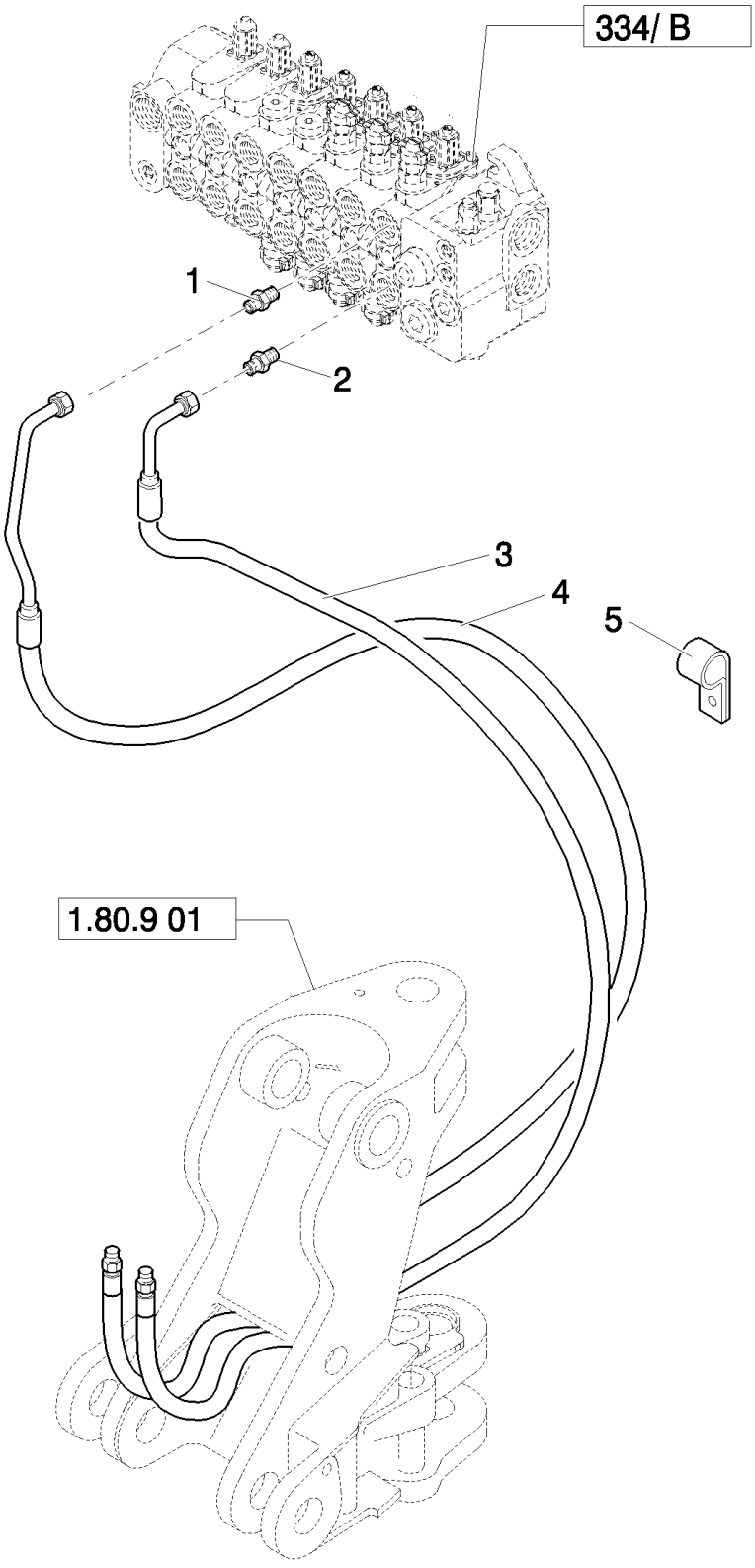

B110 TIER 3 BACKHOE LOADER (2/07-)

334(02) 7-SECTIONS EXCAVATOR CONTROL VALVE (SIDE SHIFT) - EU

Ref	Numero de Pieza	Ctd	Descripción
1	83962539	1	CONNECTOR, HYD.,
2	85805258	1	CONNECTOR, HYD., 9/16"-16 ORS x 1 1/16"-12, O-Ring,
3	85819067	1	HOSE, FLEXIBLE,
4	85819066	1	HOSE, FLEXIBLE,
5	85803393	2	CLAMP,

334/B(01) 7-SECTIONS EXCAVATOR CONTROL VALVE (SIDE SHIFT) - EU

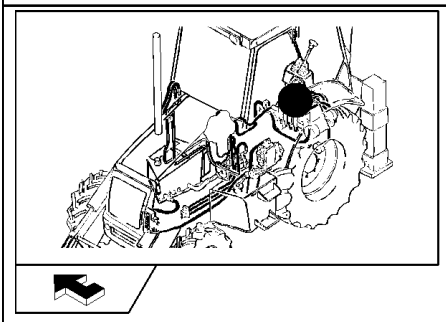

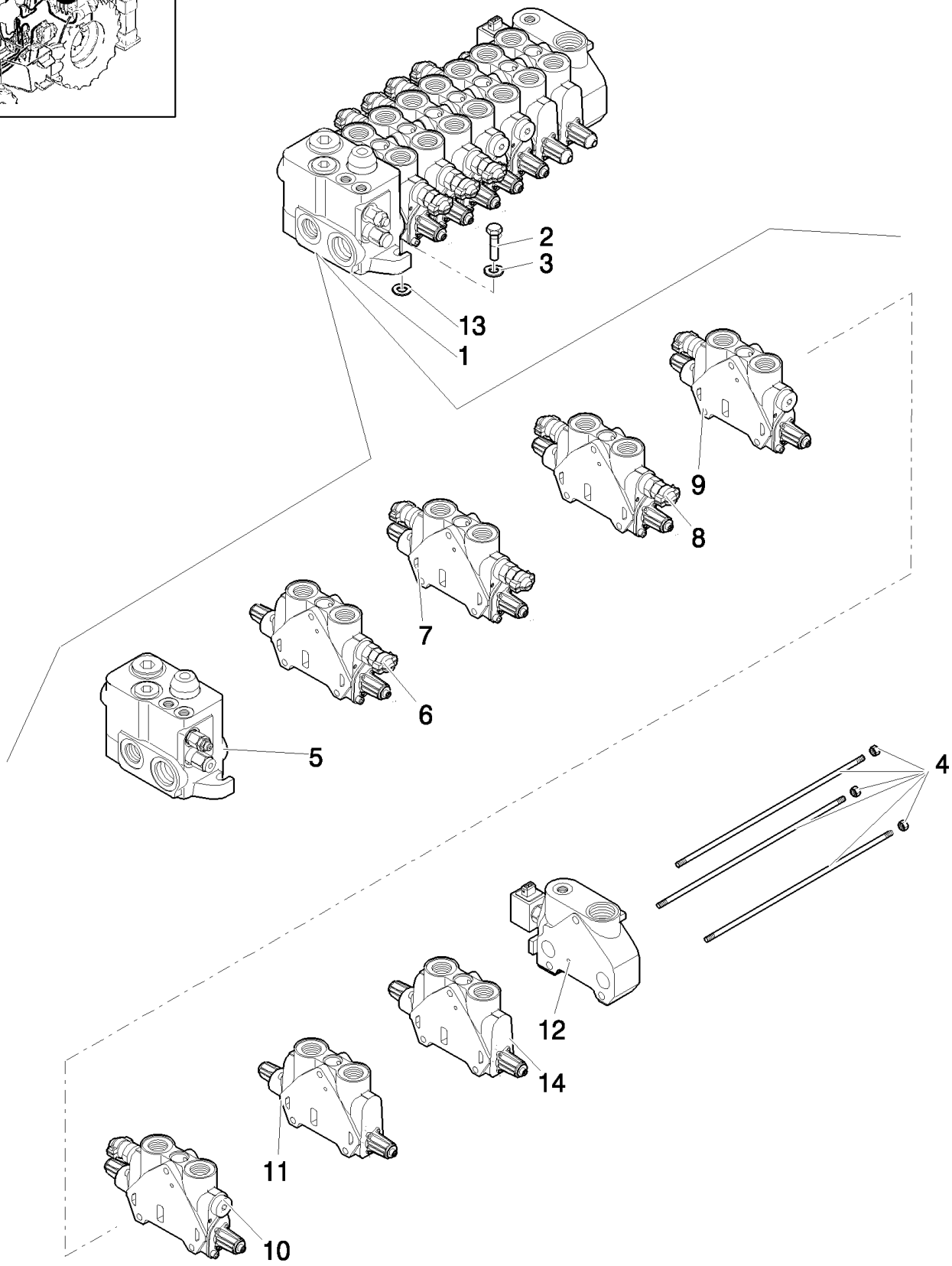

Pilot Control Version

B110 TIER 3 BACKHOE LOADER (2/07-)

334/B(01) 7-SECTIONS EXCAVATOR CONTROL VALVE (SIDE SHIFT) - EU

Ref	Numero de Pieza	Ctd	Descripción
1	87378498	1	VALVE, HYDRAULIC,
2	11234721	3	BOLT, Hex, M10 x 1.25 x 45, 8.8, M10x45
3	11190679	5	WASHER, SPRING, Belleville, M10.5,
4	85811959	1	KIT,
5	87308747	1	VALVE SECTION, HYD, , See Page 331/B 02
6	87558573	1	SECTOR, , See Page 333/B 02, Telescopic Cylinder
7	85826930	1	SECTOR, TOOTHED, , Boom Cylinder, See Page 332/B 02
8	85826931	1	SECTOR, TOOTHED, , See Page 332/B 03, Swing Cylinder
9	85826932	1	SECTOR, TOOTHED, , Bucket Cylinder, See Page 332/B 04
10	85826933	1	SECTOR, TOOTHED, , Arm Cylinder, See Page 332/B 05
11	87558568	1	SECTOR, , See Page 334/B 02, Stabilizer Cylinder
12	85826249	1	SECTOR, TOOTHED, , See Page 332/B 07
13	13578621	3	WASHER,
14	87611178	1	VALVE, HYDRAULIC, , See Page 332/B 08, Stabilizer Cylinder

Pilot Control Version

334/B(02) 7-SECTIONS EXCAVATOR CONTROL VALVE (SIDE SHIFT) - EU

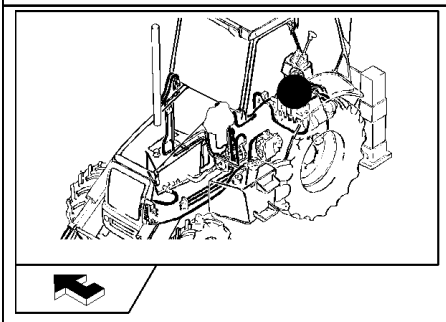

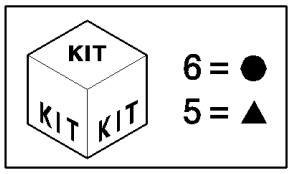

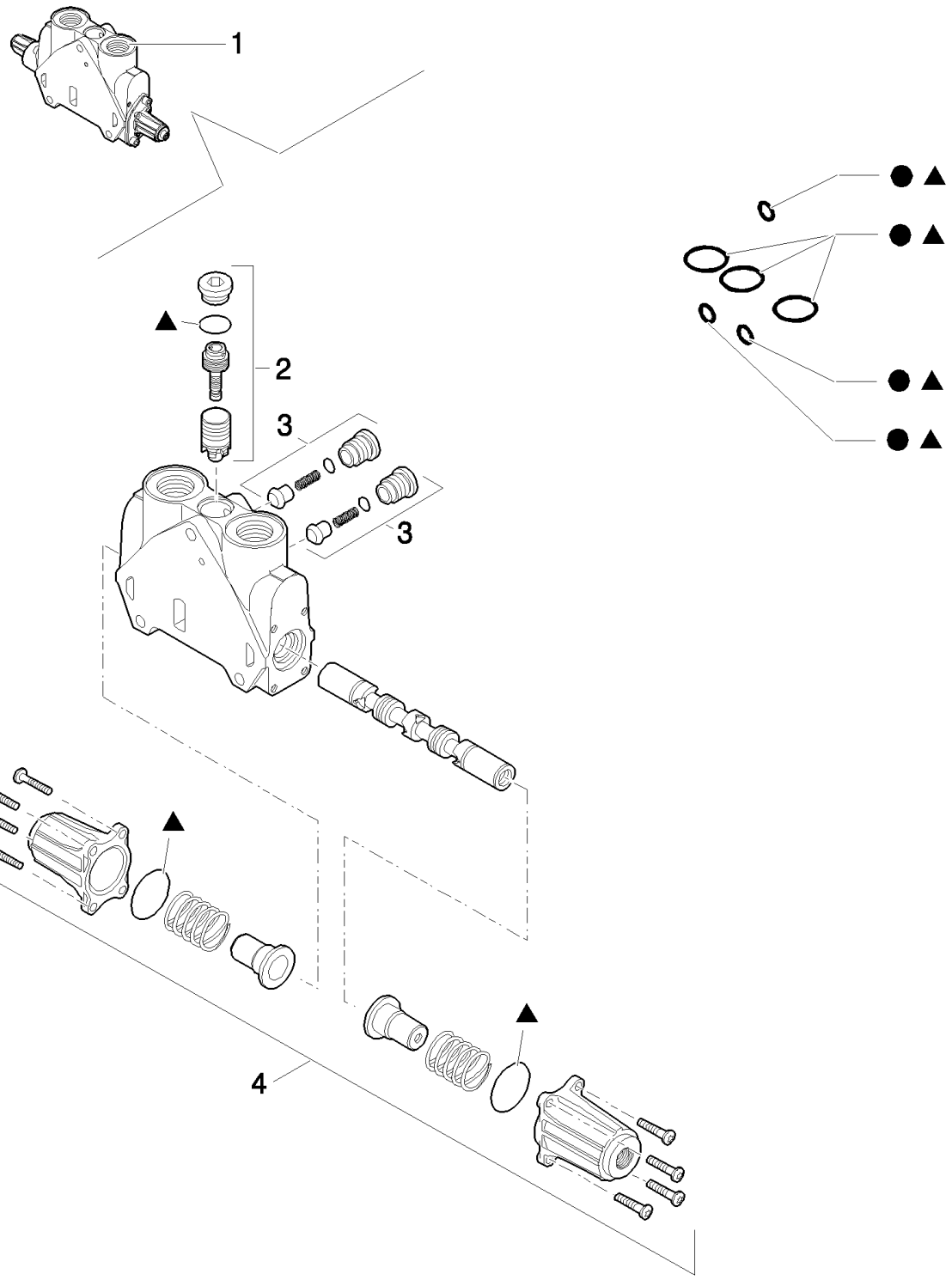

B110 TIER 3 BACKHOE LOADER (2/07-)

334/B(02) 7-SECTIONS EXCAVATOR CONTROL VALVE (SIDE SHIFT) - EU

Ref	Numero de Pieza	Ctd	Descripción
1	87558568	1	SECTOR,
2	85819378	1	KIT, SEALS, Cover
3	85811938	2	VALVE, CHECK, Valve
4	85826344	1	KIT,
5	85824281	1	KIT, SEALS, Valve Seals
6	85819148	1	KIT, SEALS, Seals

Pilot Control

336(01) TWO SECTION LOADER CONTROL VALVE (CENTER PIVOT)

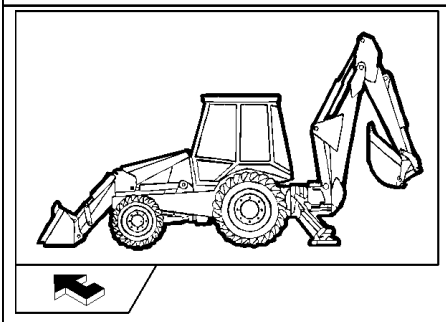

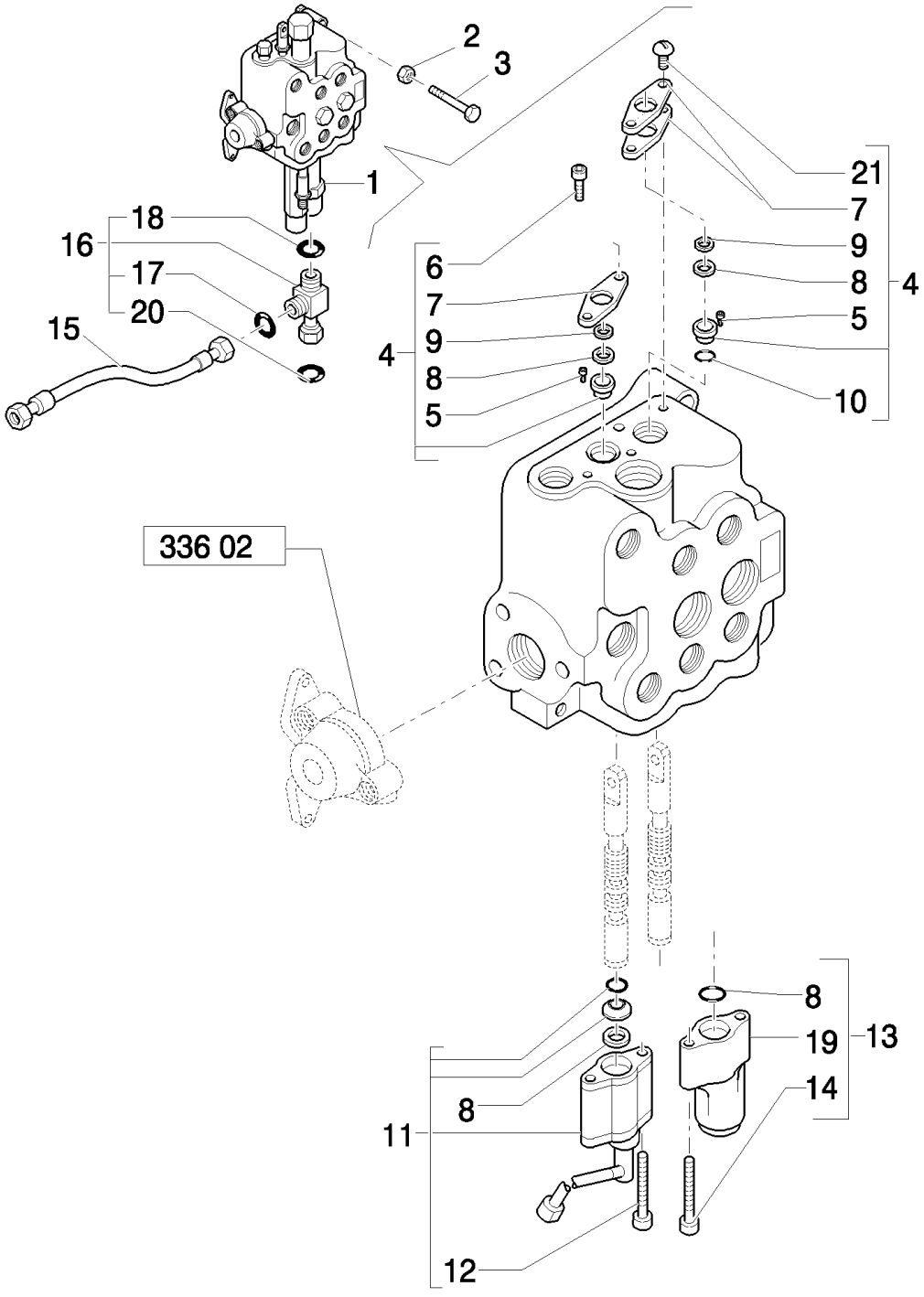

Mechanical Version

B110 TIER 3 BACKHOE LOADER (2/07-)

336(01) TWO SECTION LOADER CONTROL VALVE (CENTER PIVOT)

Ref	Numero de Pieza	Ctd	Descripción
1	85819649	1	VALVE, CONTROL, Assy
2	11190579	3	WASHER, SPRING, Belleville, M10.5,
3	14308221	3	SCREW, Hex Soc Hd, M10 x 1.25 x 65, 8.8,
4	9968455	1	KIT,
5	9968457	1	SPACER,
6	9968456	2	SCREW,
7	9968458	3	FLANGE,
8	9968489	4	SEAL,
9	9968490	1	WIPER,
10	87327076	1	O-RING,
11	85808403	1	STOP, Magnetic Detent
12	9968451	2	SCREW,
13	85817025	1	SPOOL,
14	9968454	2	SCREW,
15	85816804	1	HOSE, FLEXIBLE, 550mm lg,
16	85817531	1	TEE, , Includes 17, 18, 20
17	89825770	1	O-RING,
18	89824050	1	O-RING,
19	9968513	1	COVER,
20	89626929	1	O-RING, 90 Duro, 1.048" ID x .116" Thk
21	9968460	2	SCREW,

Mechanical Version

336(02) LOADER CONTROL VALVE, TWO SECTION, CAP & UNLOAD VALVE (CENTER PIVOT)

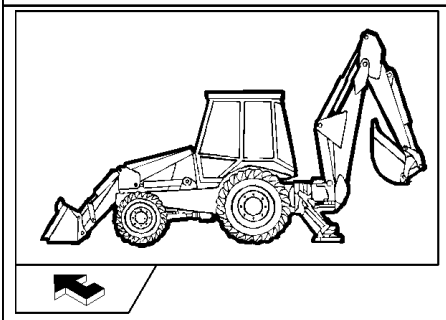

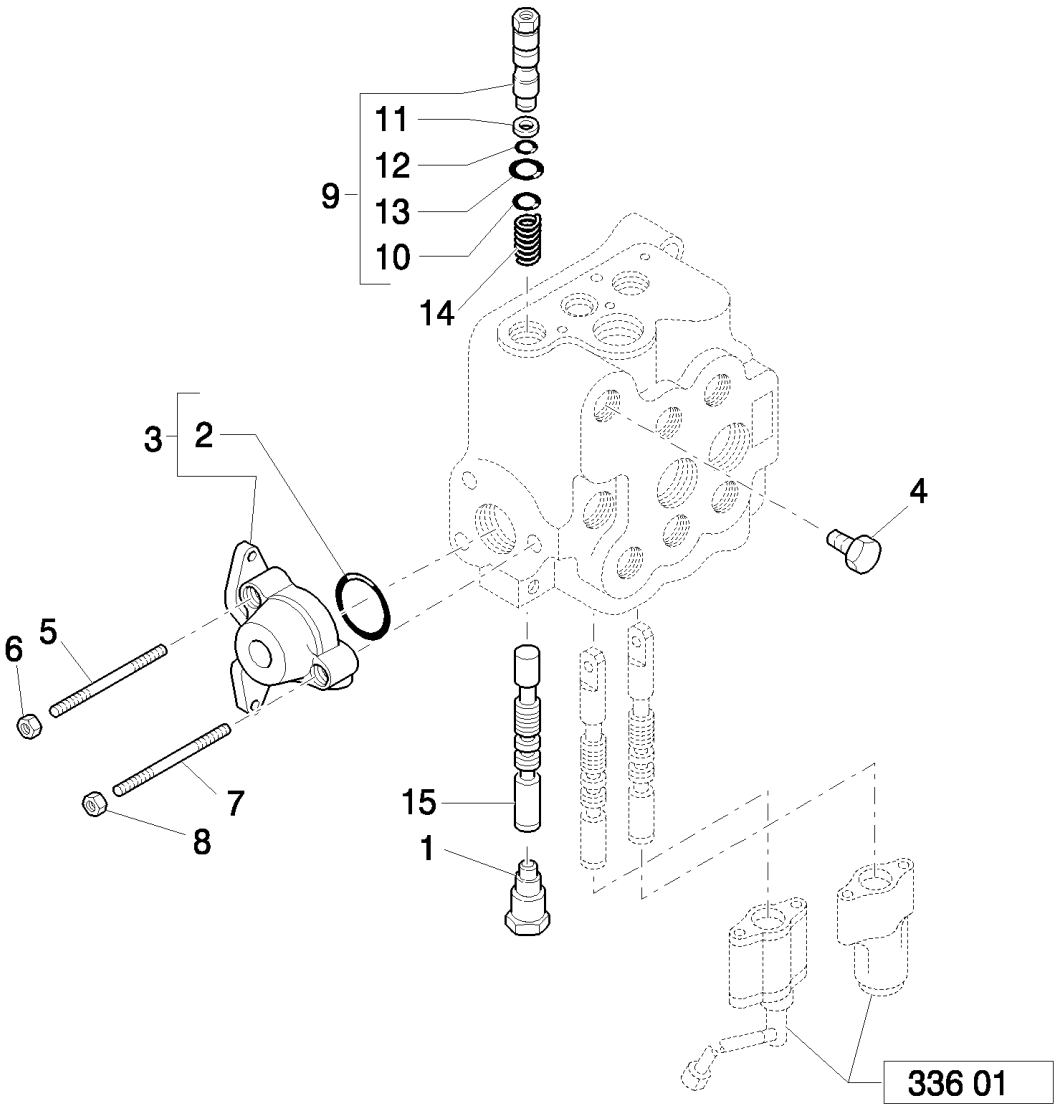

B110 TIER 3 BACKHOE LOADER (2/07-)

336(02) LOADER CONTROL VALVE, TWO SECTION, CAP & UNLOAD VALVE (CENTER PIVOT)

Ref	Numero de Pieza	Ctd	Descripción
1	9968464	1	PLUG, ASSY
2	9968476	1	O-RING,
3	9968443	1	VALVE SECTION, HYD,
4	85807857	1	PLUG,
5	9968521	2	STUD,
6	9968441	2	NUT,
7	9968520	1	STUD,
8	9968440	1	NUT,
9	85815667	1	VALVE, BY-PASS,
10	85815668	1	O-RING,
11	9968467	1	RING, BACK-UP,
12	9968466	1	O-RING,
13	9968468	1	O-RING,
14	9968488	1	SPRING,
15	85807858	1	SPOOL,

Mechanical Version

336(03) LOADER CONTROL VALVE, TWO SECTION, RELIEF & CHECK VALVES (CENTER PIVOT)

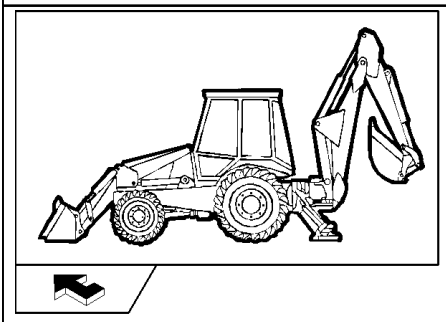

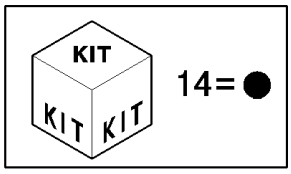

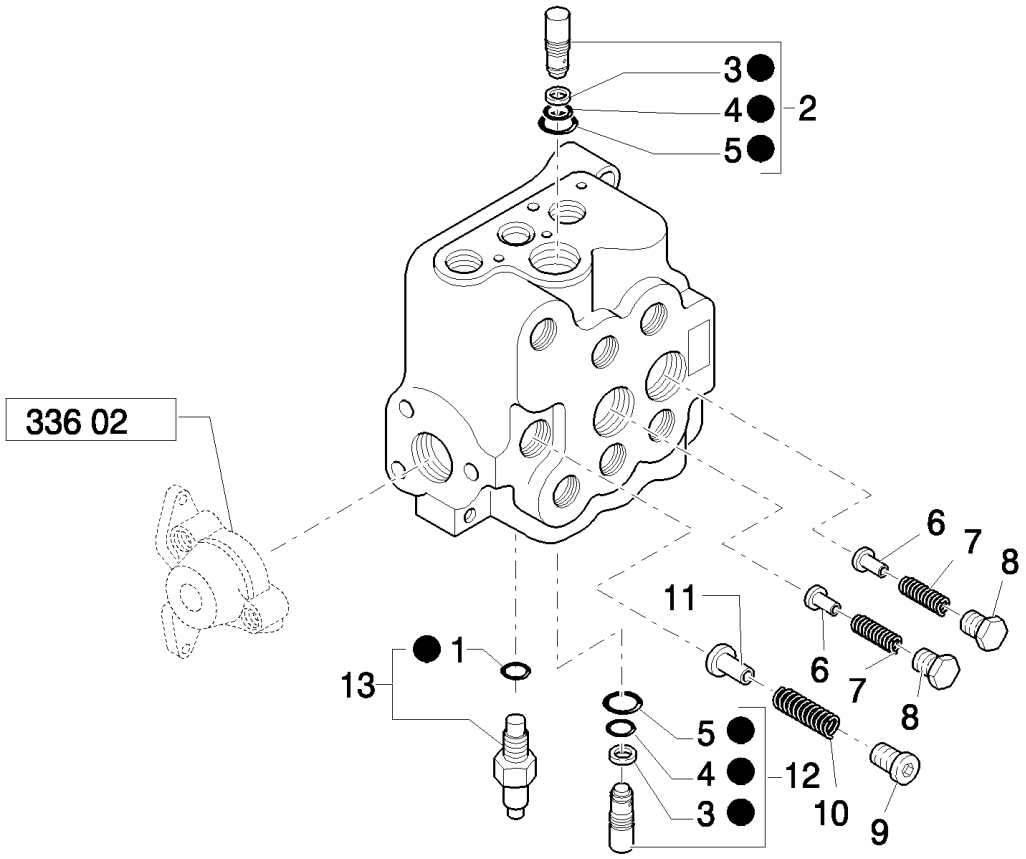

B110 TIER 3 BACKHOE LOADER (2/07-)

336(03) LOADER CONTROL VALVE, TWO SECTION, RELIEF & CHECK VALVES (CENTER PIVOT)

Ref	Numero de Pieza	Ctd	Descripción
1	85819945	1	O-RING, ASSY
2	87302609	1	VALVE, PRESSURE RELIEF,
3	87302608	2	BACK-UP RING,
4	9968471	2	O-RING,
5	9968470	2	O-RING,
6	9968444	2	PLUNGER,
7	9968445	2	SPRING,
8	9968446	2	PLUG,
9	9968449	1	PLUG,
10	9968448	1	SPRING,
11	9968447	1	PLUNGER,
12	87302611	1	VALVE, PRESSURE RELIEF,
13	85819722	1	VALVE, HYDRAULIC,
14	87302607	2	KIT, SEALS,

Mechanical Version

336(04) LOADER CONTROL VALVE, TWO SECTION, BY-PASS KIT (CENTER PIVOT)

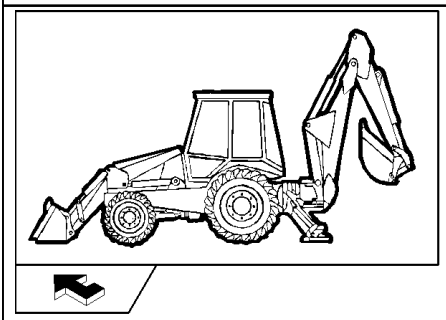

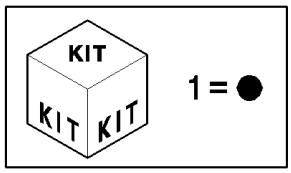

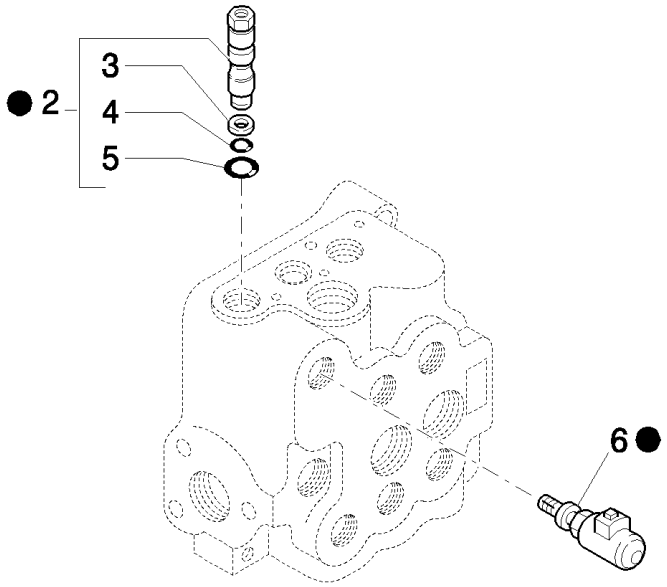

B110 TIER 3 BACKHOE LOADER (2/07-)

336(04) LOADER CONTROL VALVE, TWO SECTION, BY-PASS KIT (CENTER PIVOT)

Ref	Numero de Pieza	Ctd	Descripción
1	85817201	1	KIT, CONVERSION,
2	9968465	1	VALVE, PILOT,
3	9968467	1	RING, BACK-UP,
4	9968466	1	O-RING,
5	9968468	1	O-RING,
6	9968461	1	SOLENOID,

Mechanical Version

336(05) LOADER CONTROL VALVE, TWO SECTION, UNLOAD KIT OR DUMP VALVE (CENTER PIVOT)

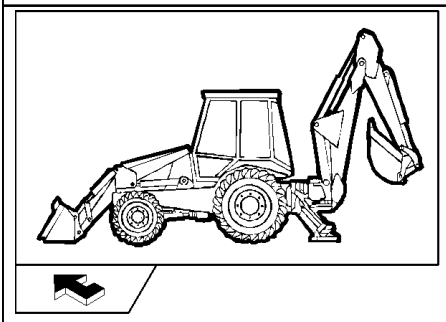

KIT KIT KIT 1 = ▲

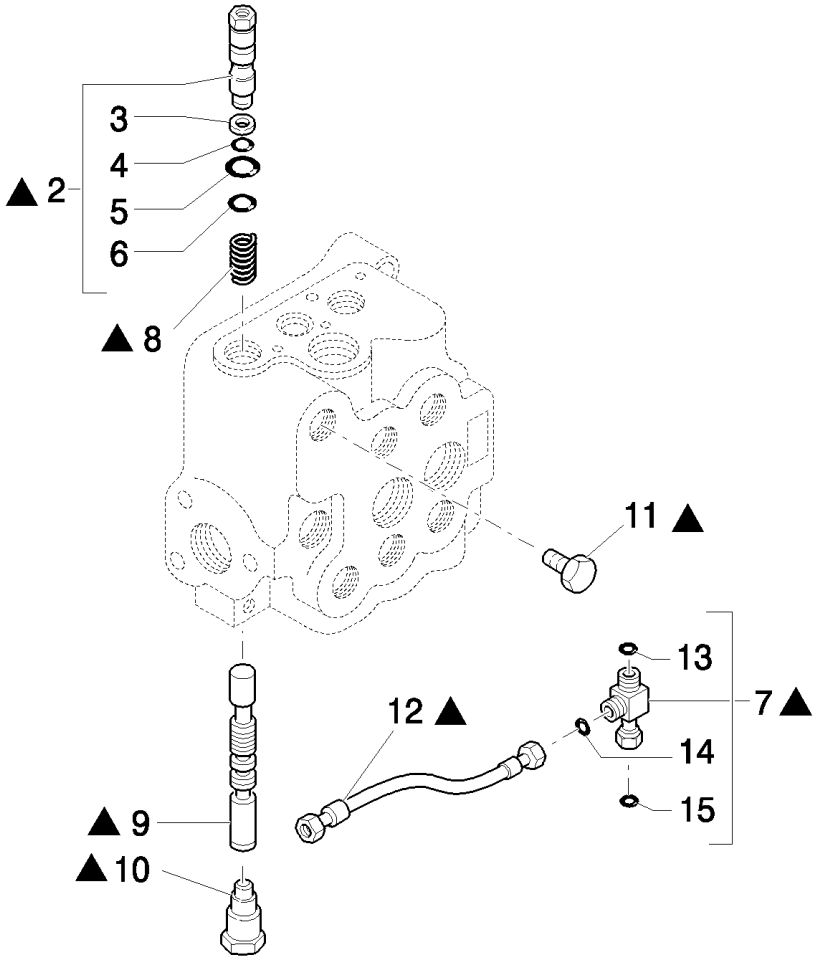

B110 TIER 3 BACKHOE LOADER (2/07-)

336(05) LOADER CONTROL VALVE, TWO SECTION, UNLOAD KIT OR DUMP VALVE (CENTER PIVOT)

Ref	Numero de Pieza	Ctd	Descripción
1	85816793	1	KIT,
2	85815667	1	VALVE, BY-PASS,
3	9968467	1	RING, BACK-UP,
4	9968466	1	O-RING,
5	9968468	1	O-RING,
6	85815668	1	O-RING,
7	85817531	1	TEE,
8	9968488	1	SPRING,
9	85807858	1	SPOOL,
10	9968464	1	PLUG,
11	85807857	1	PLUG,
12	85816804	1	HOSE, FLEXIBLE, 550mm lg,
13	89824050	1	O-RING,
14	89825770	1	O-RING,
15	89626929	1	O-RING, 90 Duro, 1.048" ID x .116" Thk

Mechanical Version

336/1(01) TOWER ASSY 7 SECTIONS (SIDE SHIFT)

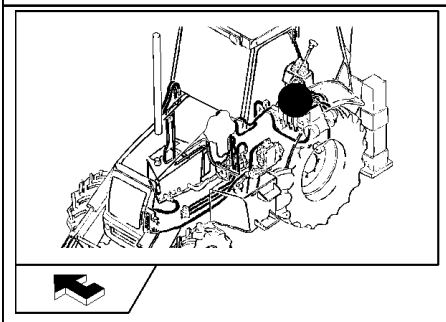

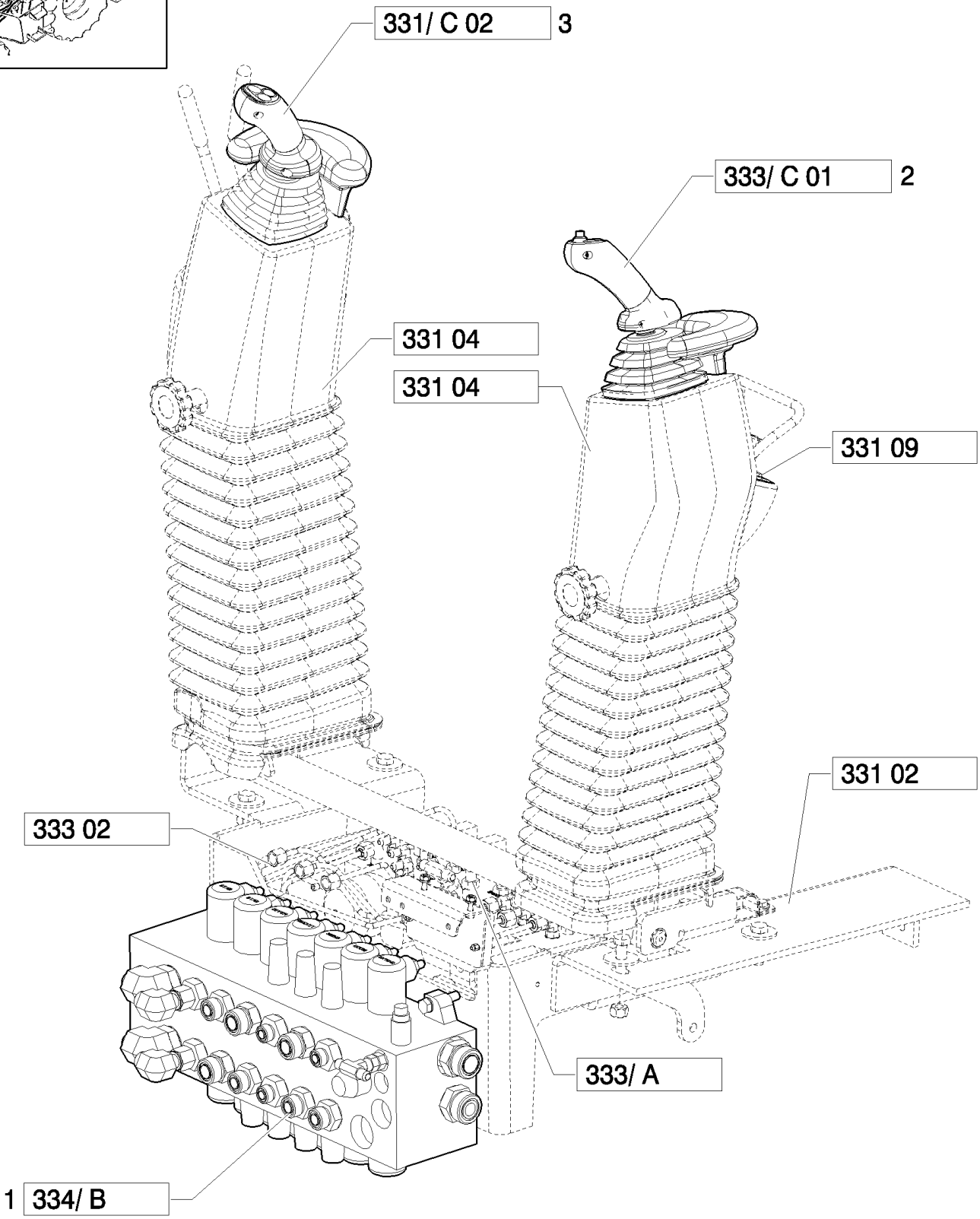

Pilot Control Version

B110 TIER 3 BACKHOE LOADER (2/07-)

336/1(01) TOWER ASSY 7 SECTIONS (SIDE SHIFT)

Ref	Numero de Pieza	Ctd	Descripción
1	87378498	1	VALVE, HYDRAULIC,
2	87547314	1	JOYSTICK,
3	87388704	1	JOYSTICK,

Pilot Control Version

337(01) LOCK VALVE ON LOADER CYLINDERS

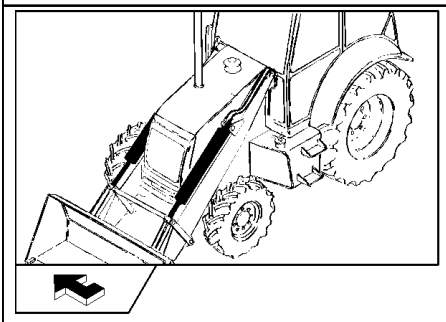

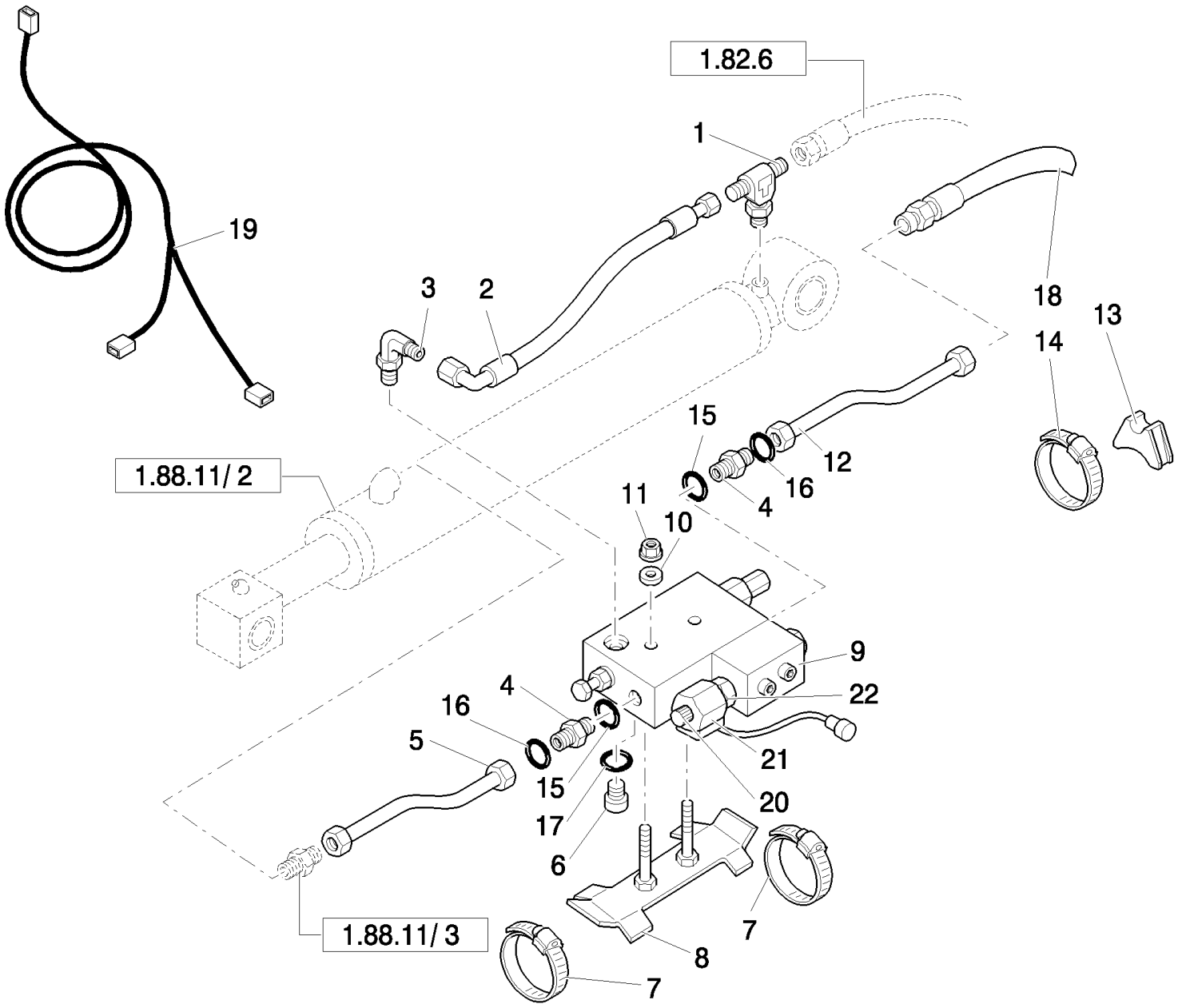

B110 TIER 3 BACKHOE LOADER (2/07-)

337(01) LOCK VALVE ON LOADER CYLINDERS

Ref	Numero de Pieza	Ctd	Descripción
1	85805218	2	TEE,
2	85815506	2	HOSE, FLEXIBLE,
3	85805220	2	ELBOW,
4	83963374	4	CONNECTOR, HYD., , Includes 15, 16
5	85805262	2	TUBE, HYD,
6	85802805	2	PLUG, , Includes 17
7	85803010	4	CLAMP, HOSE,
8	85805221	2	SUPPORT,
9	85805224	2	VALVE, HYDRAULIC, Assy
10	11193879	4	WASHER, SPRING, Belleville, M8.4,
11	14048221	4	NUT, LOCK, M8 x 1.25, Cl 10,
12	85805264	2	TUBE, HYD,
13	87303910	2	SPACER,
14	85802743	2	CLAMP, HOSE,
15	80128825	2	O-RING,
16	89992298	2	O-RING,
17	89825770	1	O-RING,
18	85813361	2	HOSE, FLEXIBLE, 1130mm lg,
19	85826276	1	HARNESS, WIRE,
20	9970384	2	NUT,
21	85820283	2	COIL,
22	85820285	2	VALVE, HYDRAULIC,

337(02) LOCK VALVE ON LOADER LIFT CYLINDERS

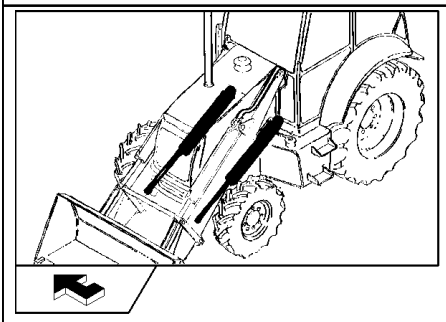

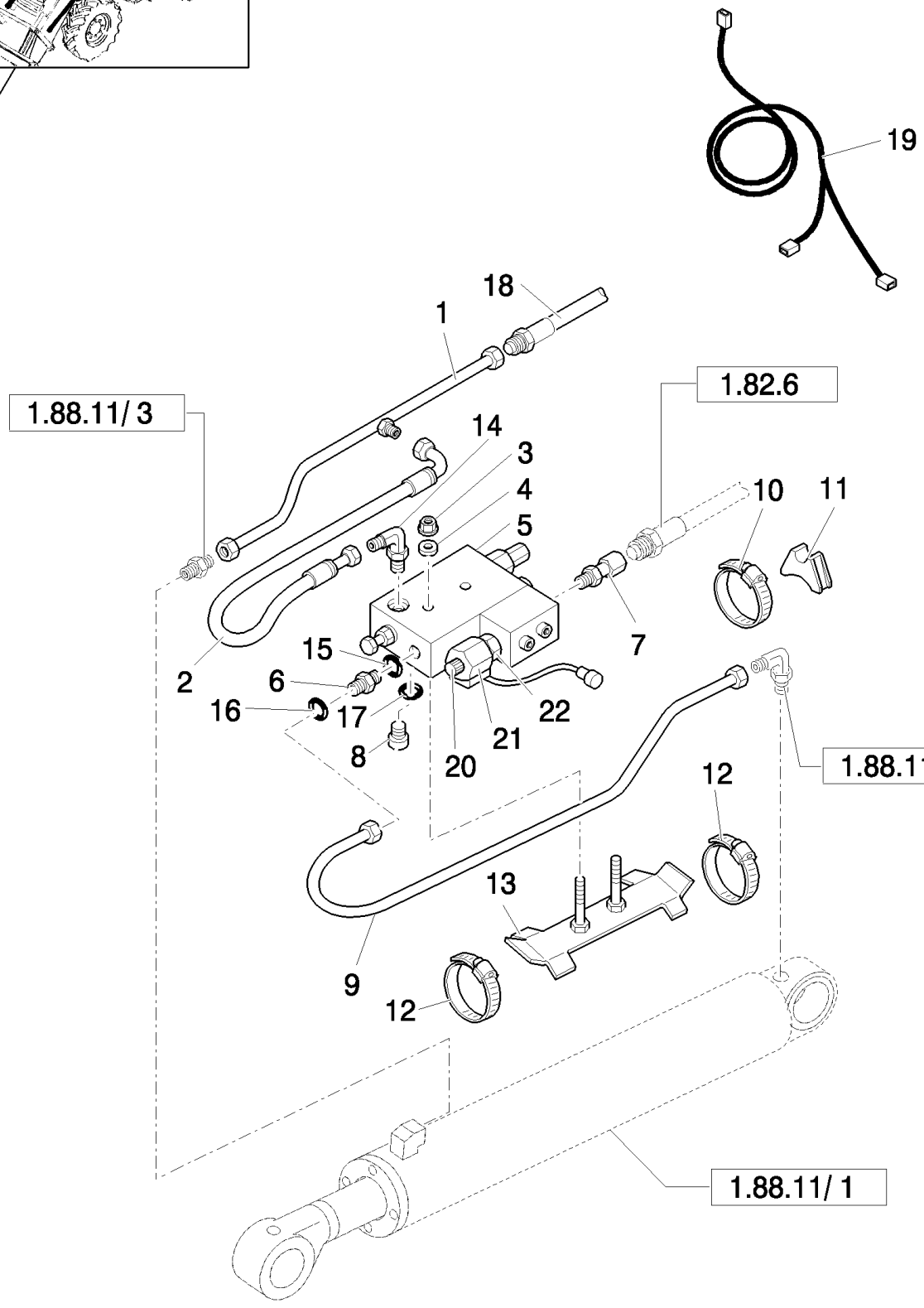

B110 TIER 3 BACKHOE LOADER (2/07-)

337(02) LOCK VALVE ON LOADER LIFT CYLINDERS

Ref	Numero de Pieza	Ctd	Descripción
1	85827853	2	TUBE, HYD,
2	85815506	2	HOSE, FLEXIBLE,
3	14048221	4	NUT, LOCK, M8 x 1.25, Cl 10,
4	11193879	4	WASHER, SPRING, Belleville, M8.4,
5	85805223	2	VALVE, HYDRAULIC, Assy
6	83963374	2	CONNECTOR, HYD., , Includes 15, 16
7	85805217	2	CONNECTOR, HYD.,
8	85802805	2	PLUG, , Includes 17
9	85805271	1	TUBE, HYD, LH
9	85805273	1	TUBE, HYD, RH
10	85803008	2	CLAMP, HOSE,
11	87303910	2	SPACER,
12	85802743	4	CLAMP, HOSE,
13	85805221	2	SUPPORT,
14	85805220	2	ELBOW,
15	80128825	2	O-RING,
16	89992298	2	O-RING,
17	89825770	2	O-RING,
18	85813363	2	HOSE, FLEXIBLE, 550mm lg,
19	85826275	1	HARNESS, WIRE,
20	9970384	2	NUT,
21	85820283	2	COIL,
22	85820285	2	VALVE, HYDRAULIC,

338(01) LOCK VALVE ON LOADER LIFT CYLINDERS

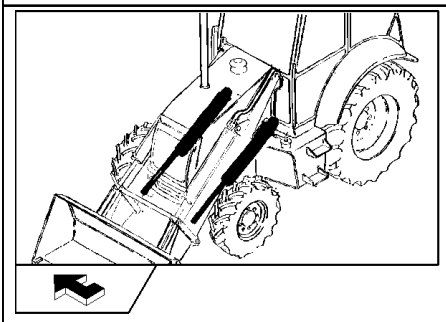

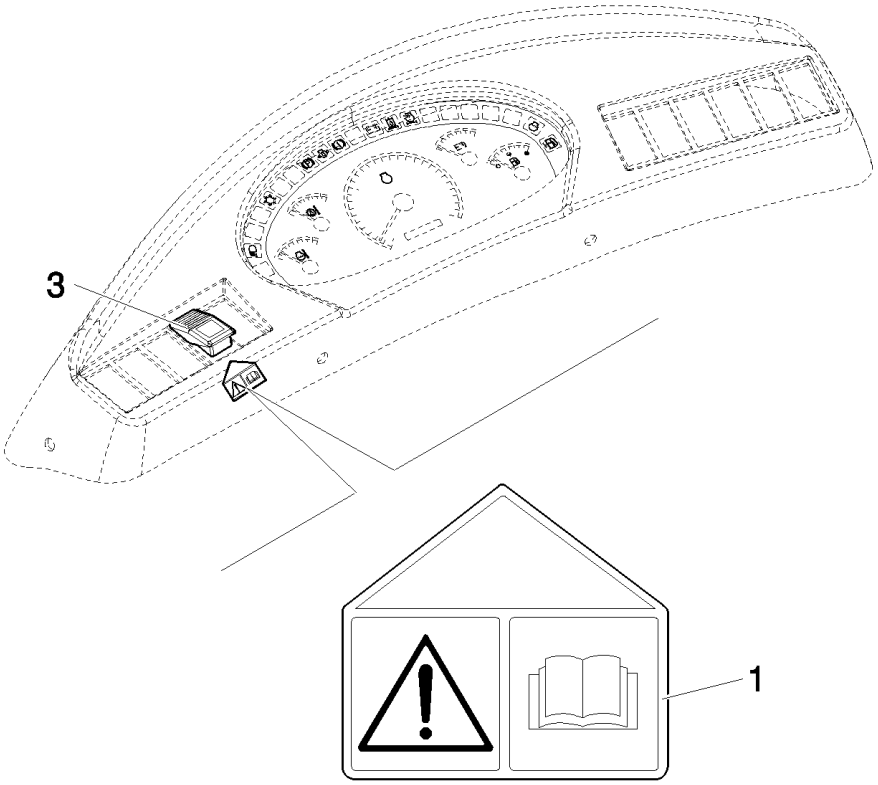

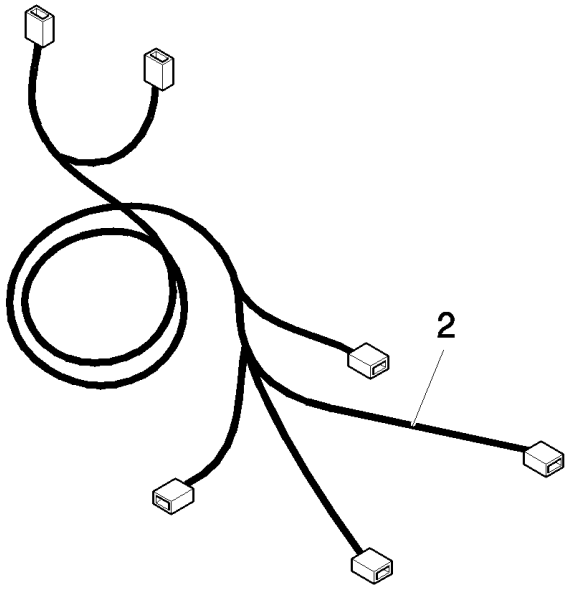

B110 TIER 3 BACKHOE LOADER (2/07-)

338(01) LOCK VALVE ON LOADER LIFT CYLINDERS

Ref	Numero de Pieza	Ctd	Descripción
1	85805228	1	DECAL,
2	85826274	1	HARNESS,
3	85819074	1	SWITCH,

341(01) TOWER ASSY 8 SECTIONS (SIDE SHIFT) - EU

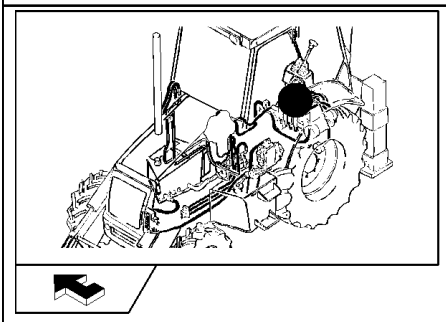

341/ C 01 3

333/ C 01 2

331 04

331 04

331 09

331 02

341 02

341 03
341 04
333 04
333 05

341/ A

1 341/ B

Pilot Control Version

B110 TIER 3 BACKHOE LOADER (2/07-)

341(01) TOWER ASSY 8 SECTIONS (SIDE SHIFT) - EU

Ref	Numero de Pieza	Ctd	Descripción
1	87378511	1	VALVE, HYDRAULIC,
2	87547314	1	JOYSTICK,
3	87388708	1	JOYSTICK,

Pilot Control Version

B110 TIER 3 BACKHOE LOADER (2/07-)

341(02) 8 SECTION PILOT CONTROL VALVE SUPPORT, COMPLETE - EU

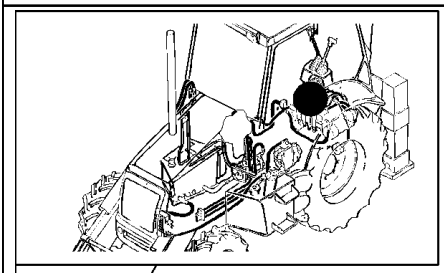

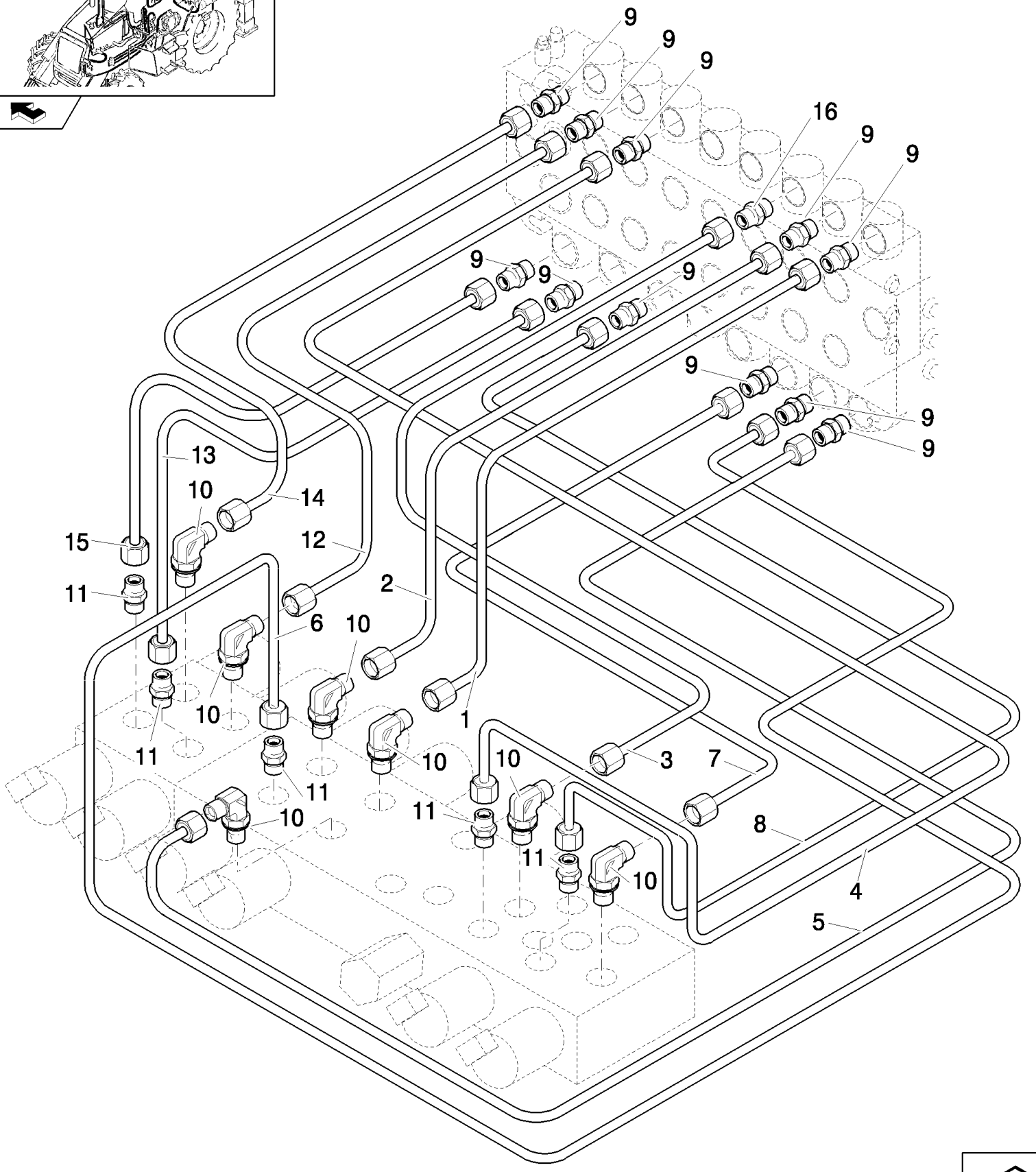

Pilot Control Version

B110 TIER 3 BACKHOE LOADER (2/07-)

341(02) 8 SECTION PILOT CONTROL VALVE SUPPORT, COMPLETE - EU

Ref	Numero de Pieza	Ctd	Descripción
1	85827093	1	TUBE, HYD,
2	85827094	1	TUBE, HYD,
3	85827091	1	TUBE, HYD,
4	85827089	1	TUBE, HYD,
5	85827092	1	TUBE, HYD,
6	85827095	1	TUBE, HYD,
7	85827090	1	TUBE, HYD,
8	85827088	1	TUBE, HYD,
9	85803312	11	CONNECTOR, HYD.,
10	47050653	7	ELBOW,
11	47050685	5	CONNECTOR, HYD.,
12	85827097	1	TUBE, HYD,
13	87306186	1	TUBE, HYD,
14	87306187	1	TUBE, HYD,
15	87306188	1	TUBE, HYD,
16	87423401	1	FITTING,

Pilot Control Version

341(03) 8 SECTION PILOT CONTROL VALVE SUPPORT,COMPLETE (SIDE SHIFT) EU

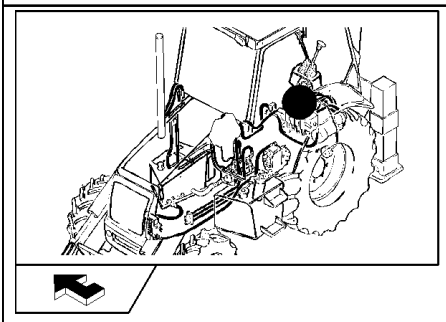

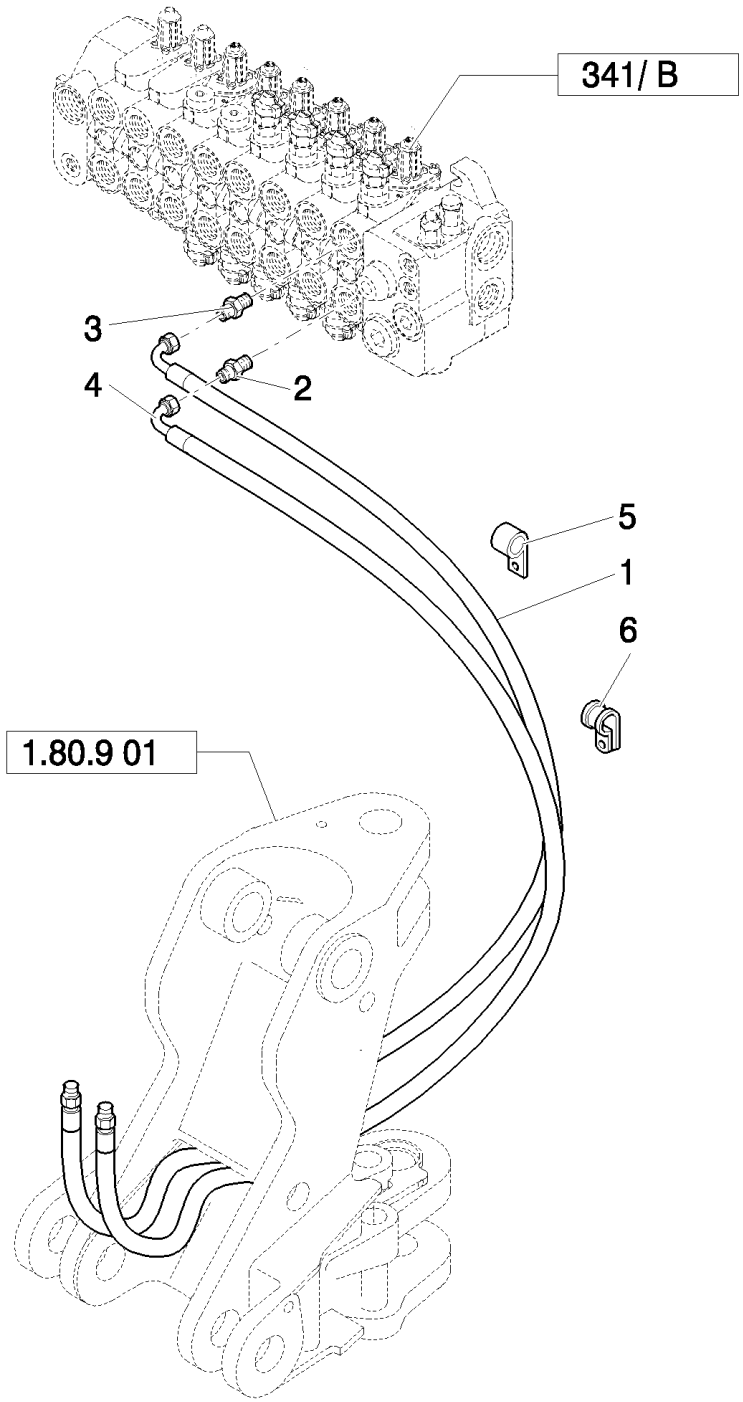

Pilot Control Version

B110 TIER 3 BACKHOE LOADER (2/07-)

341(03) 8 SECTION PILOT CONTROL VALVE SUPPORT,COMPLETE (SIDE SHIFT) EU

Ref	Numero de Pieza	Ctd	Descripción
1	87311441	1	HOSE, FLEXIBLE,
2	85805258	1	CONNECTOR, HYD., 9/16"-16 ORS x 1 1/16"-12, O-Ring,
3	83962539	1	CONNECTOR, HYD.,
4	87311440	1	HOSE, FLEXIBLE,
5	85803393	2	CLAMP,
6	85812029	4	CLAMP,

Pilot Control Version

B110 TIER 3 BACKHOE LOADER (2/07-)

341(04) 8 SECTION PILOT CONTROL VALVE SUPPORT,COMPLETE - EU

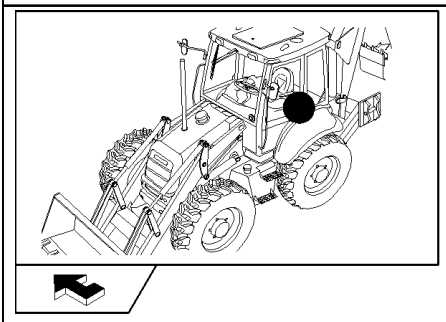

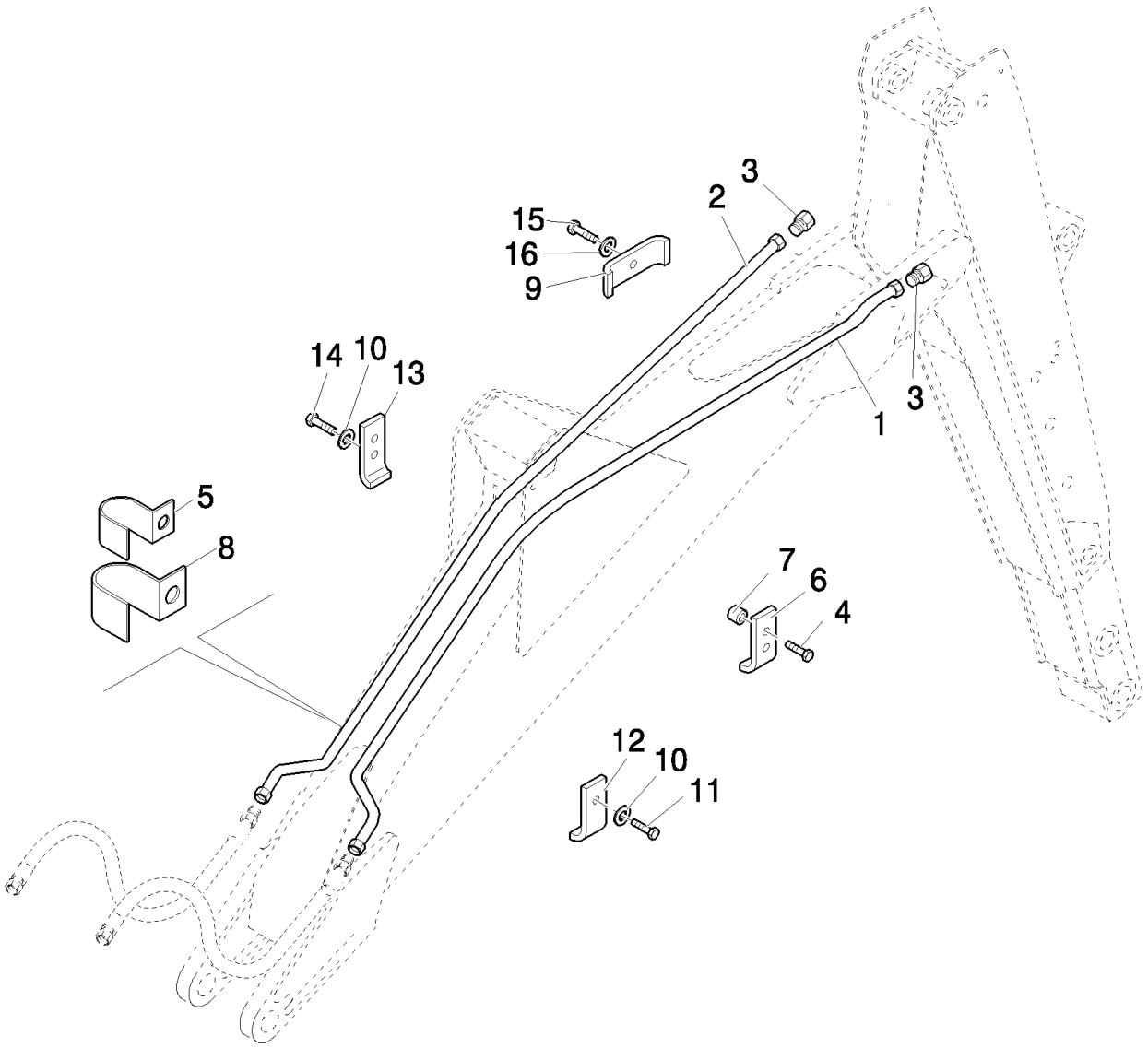

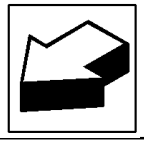

Pilot Control Version

B110 TIER 3 BACKHOE LOADER (2/07-)

341(04) 8 SECTION PILOT CONTROL VALVE SUPPORT,COMPLETE - EU

Ref	Numero de Pieza	Ctd	Descripción
1	87309782	1	TUBE, HYD,
2	87309783	1	TUBE, HYD,
3	87311516	2.	PLUG,
4	16044021	2	BOLT, Hex, M8 x 40, 8.8,
5	87316099	1	CLAMP,
6	47044988	1	ARM,
7	87311442	2	SPACER,
8	87316101	1	CLAMP,
9	D143846	1	SHIN,
10	11193974	3	WASHER, SPRING, Belleville, M8.4,
11	16044321	1	BOLT, Hex, M8 x 55, 8.8,
12	85815627	3	CLAMP,
13	87311443	1	PLATE, COVER,
14	16044221	1	BOLT, Hex, M8 x 50, 8.8,
15	11106021	1	BOLT, Hex, M10 x 20, 8.8, Full Thd,
16	11190579	1	WASHER, SPRING, Belleville, M10.5,

Pilot Control Version

341/A(01) PROPORTIONAL VALVE 4 OPERATIONSV - EU

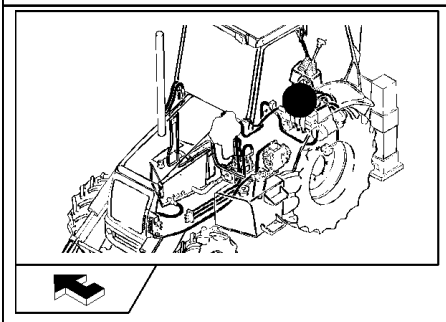

KIT KIT KIT 18 = ●

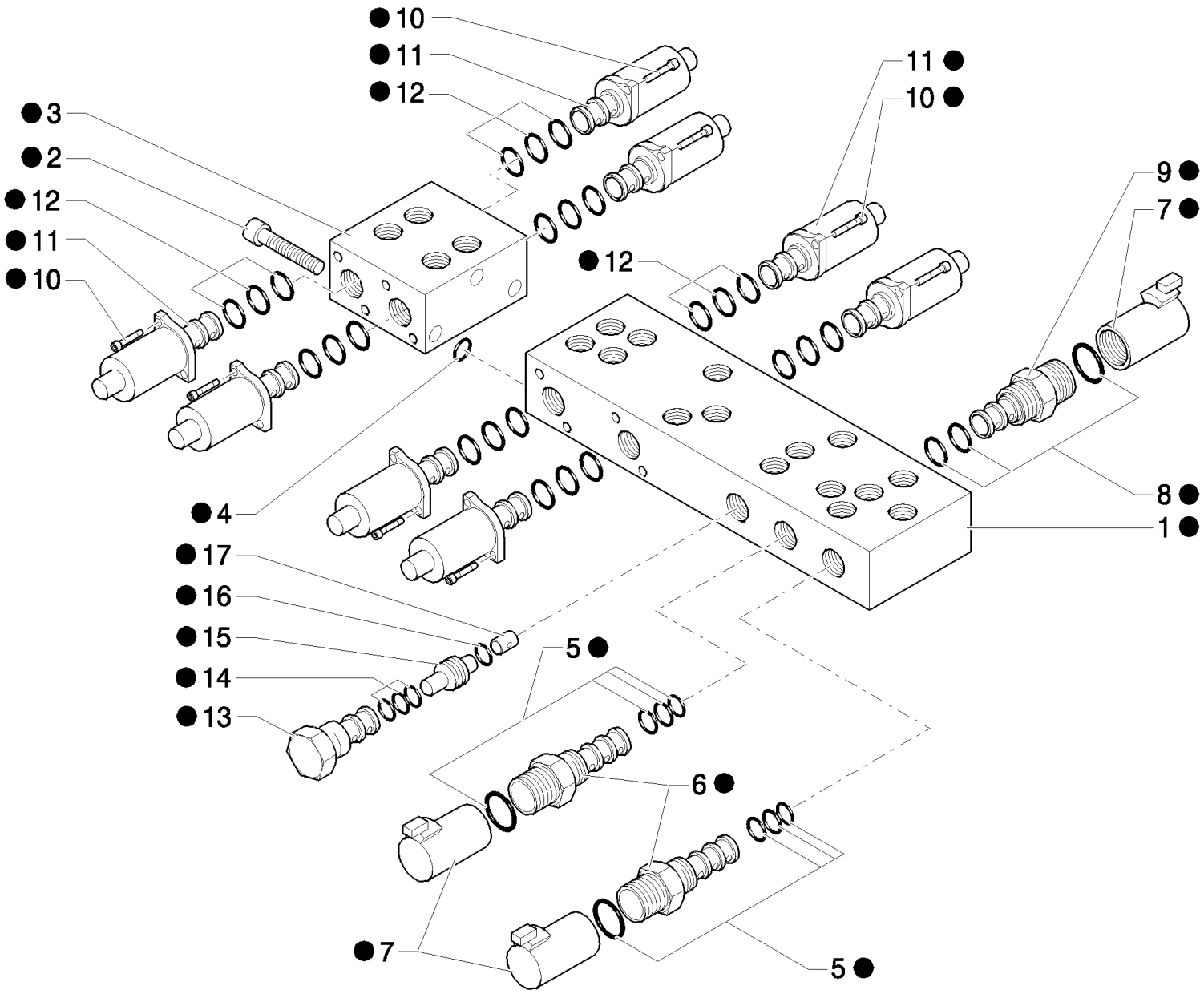

Pilot Control Version

B110 TIER 3 BACKHOE LOADER (2/07-)

341/A(01) PROPORTIONAL VALVE 4 OPERATIONSV - EU

Ref	Numero de Pieza	Ctd	Descripción
1	85828015	1	BODY,
2	85828061	3	SCREW,
3	85828054	1	VALVE, MANIFOLD, M6x60
4	85827999	1	KIT, SEALS,
5	85828002	2	KIT, SEALS,
6	85827996	2	SOLENOID, , Includes 5, 7
7	85827995	3	COIL,
8	85827998	1	KIT, SEALS,
9	85827994	1	SOLENOID, , Includes 7, 8
10	14302921	16	BOLT, Hex, M4 x 10, 8.8, Full Thd,
11	85827993	8	SOLENOID,
12	85828000	8	KIT, SEALS,
13	85827997	1	VALVE, CARTRIDGE, HYDRAULIC PRESSURE REDUCING VALVE
14	85828001	1	KIT, SEALS,
15	85827992	1	VALVE, CHECK,
16	85828003	1	O-RING,
17	85828005	1	ORIFICE,
18	87434621	1	VALVE, CONTROL,

Pilot Control Version

341/B(01) 8-SECTIONS EXCAVATOR CONTROL VALVE (SIDE SHIFT) - EU

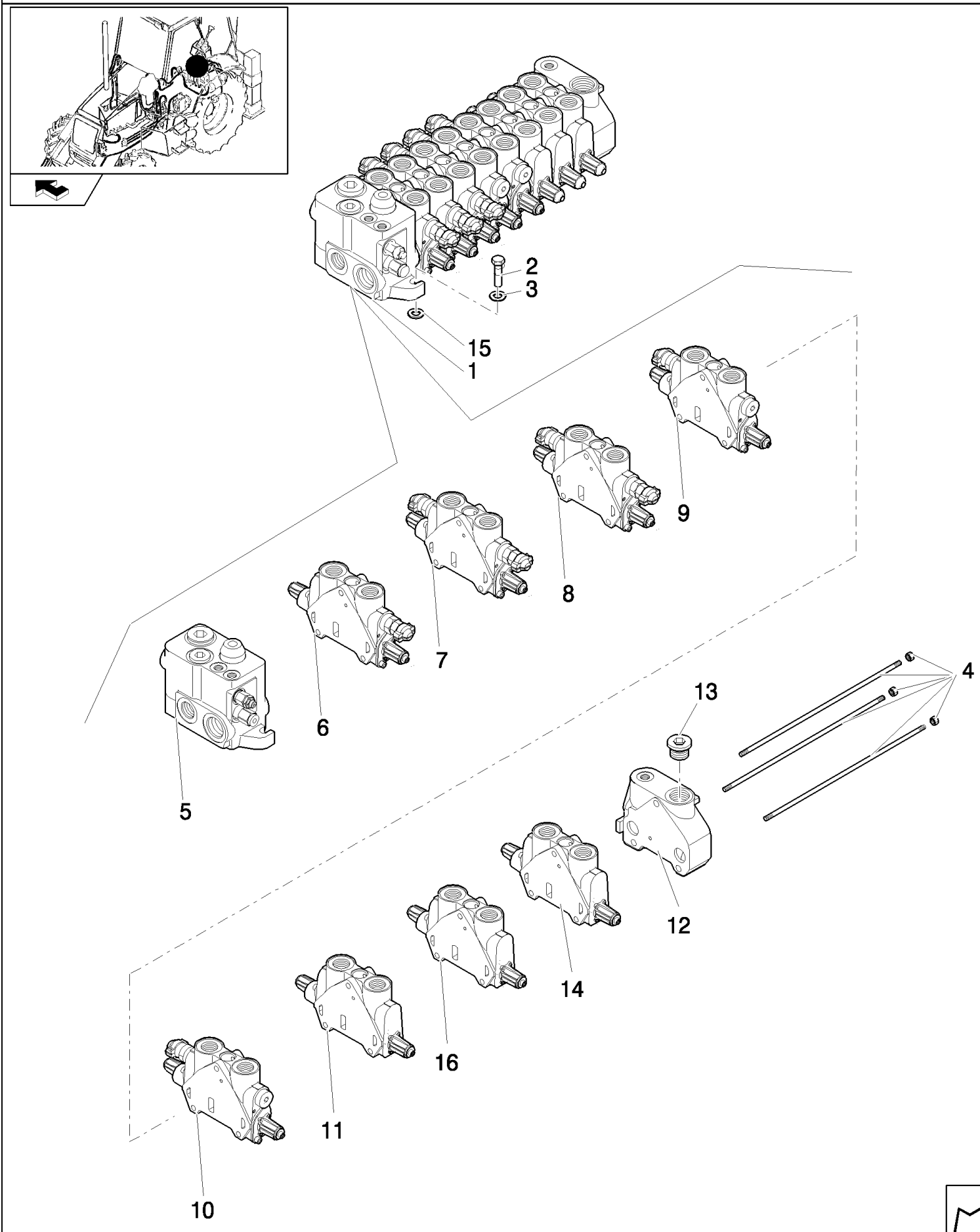

Pilot Control Version

B110 TIER 3 BACKHOE LOADER (2/07-)

341/B(01) 8-SECTIONS EXCAVATOR CONTROL VALVE (SIDE SHIFT) - EU

Ref	Numero de Pieza	Ctd	Descripción
1	87378511	1	VALVE, HYDRAULIC,
2	11234721	3	BOLT, Hex, M10 x 1.25 x 45, 8.8, M10x45
3	11190679	5	WASHER, SPRING, Belleville, M10.5,
4	87447477	1	SET OF PARTS,
5	87308747	1	VALVE SECTION, HYD, , See Page 331/B 02
6	87558573	1	SECTOR, , Telescopic Cylinder, See Page 333/B 02
7	85826930	1	SECTOR, TOOTHED, , See Page 333/B 02, Boom Cylinder
8	85826931	1	SECTOR, TOOTHED, , Swing Cylinder, See Page 332/B 03
9	85826932	1	SECTOR, TOOTHED, , See Page 332/B 04, Bucket Cylinder
10	85826933	1	SECTOR, TOOTHED, , See Page 332/B 05, Arm Cylinder
11	87558568	1	SECTOR, , Stabilizer Cylinder, See Page 332/B 06
12	85826249	1	SECTOR, TOOTHED, , Includes 13
13	85811921	1	PLUG, 1-1/16"-12 UNF 2A
14	85826342	1	VALVE SECTION, HYD, , See Page 341/B 02, Optional
15	13578621	3	WASHER,
16	87611178	1	VALVE, HYDRAULIC, , Stabilizer Cylinder, See Page 332/B 08

Pilot Control Version

341/B(02) EXCAVATOR CONTROL VALVES GROUP 8 SECTIONS (SIDE SHIFT) - EU

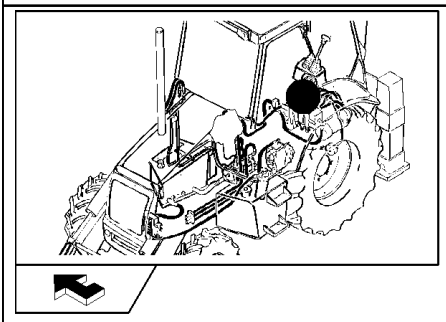

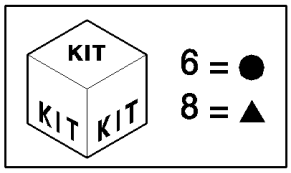

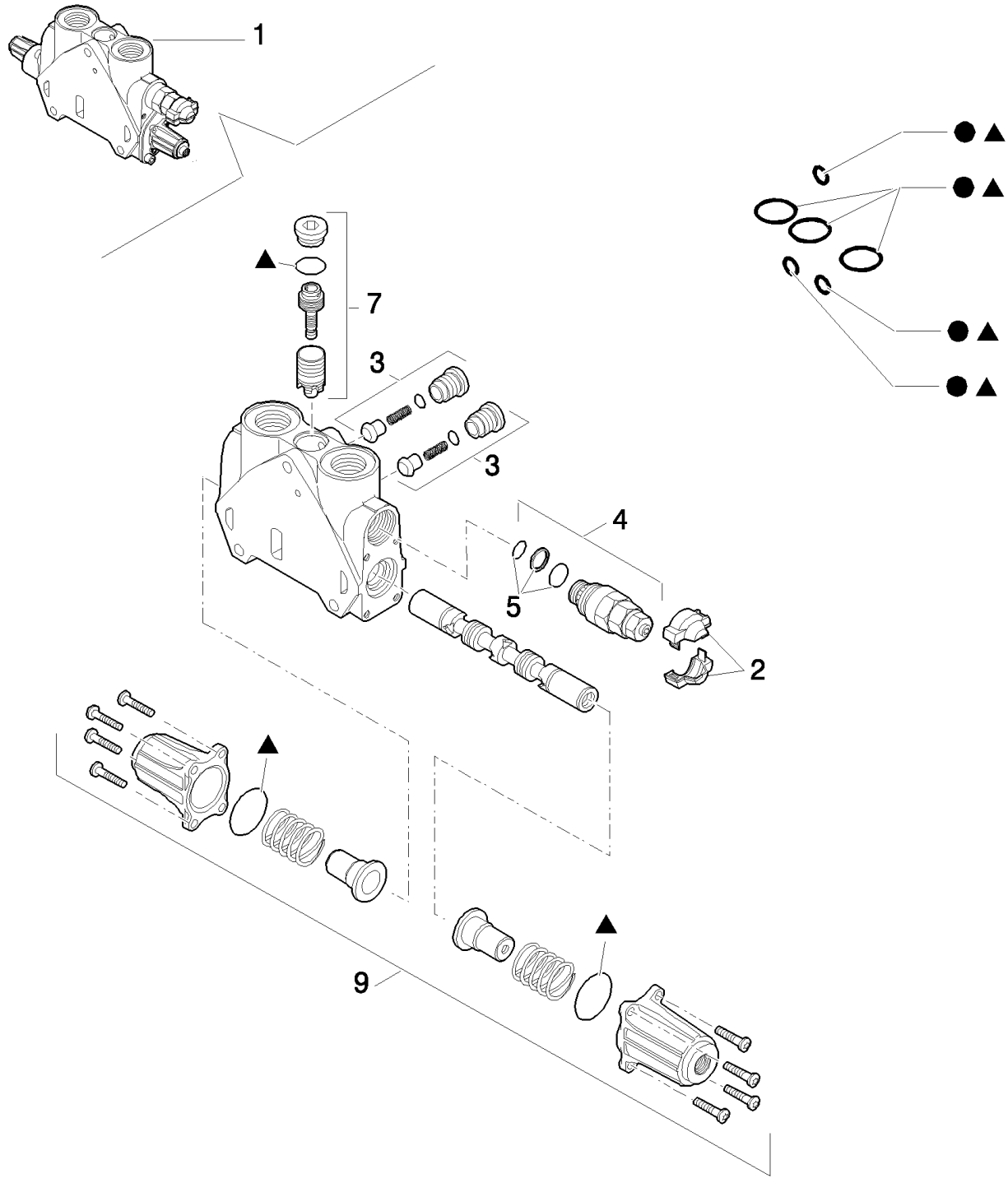

Pilot Control Version

B110 TIER 3 BACKHOE LOADER (2/07-)

341/B(02) EXCAVATOR CONTROL VALVES GROUP 8 SECTIONS (SIDE SHIFT) - EU

Ref	Numero de Pieza	Ctd	Descripción
1	85826342	1	VALVE SECTION, HYD,
2	85811934	1	KIT,
3	85811938	2	VALVE, CHECK,
4	85812115	1	VALVE, HYDRAULIC, , 220 BAR, Includes 5
5	85811933	1	KIT, SEALS,
6	85819148	1	KIT, SEALS, SEALS
7	85819378	1	KIT, SEALS,
8	85824281	1	KIT, SEALS,
9	85826344	1	KIT,

Pilot Control Version

341/C(01) PILOT VALVE OF HYDRAULIC CONTROL LEVER (L.H.) - EU

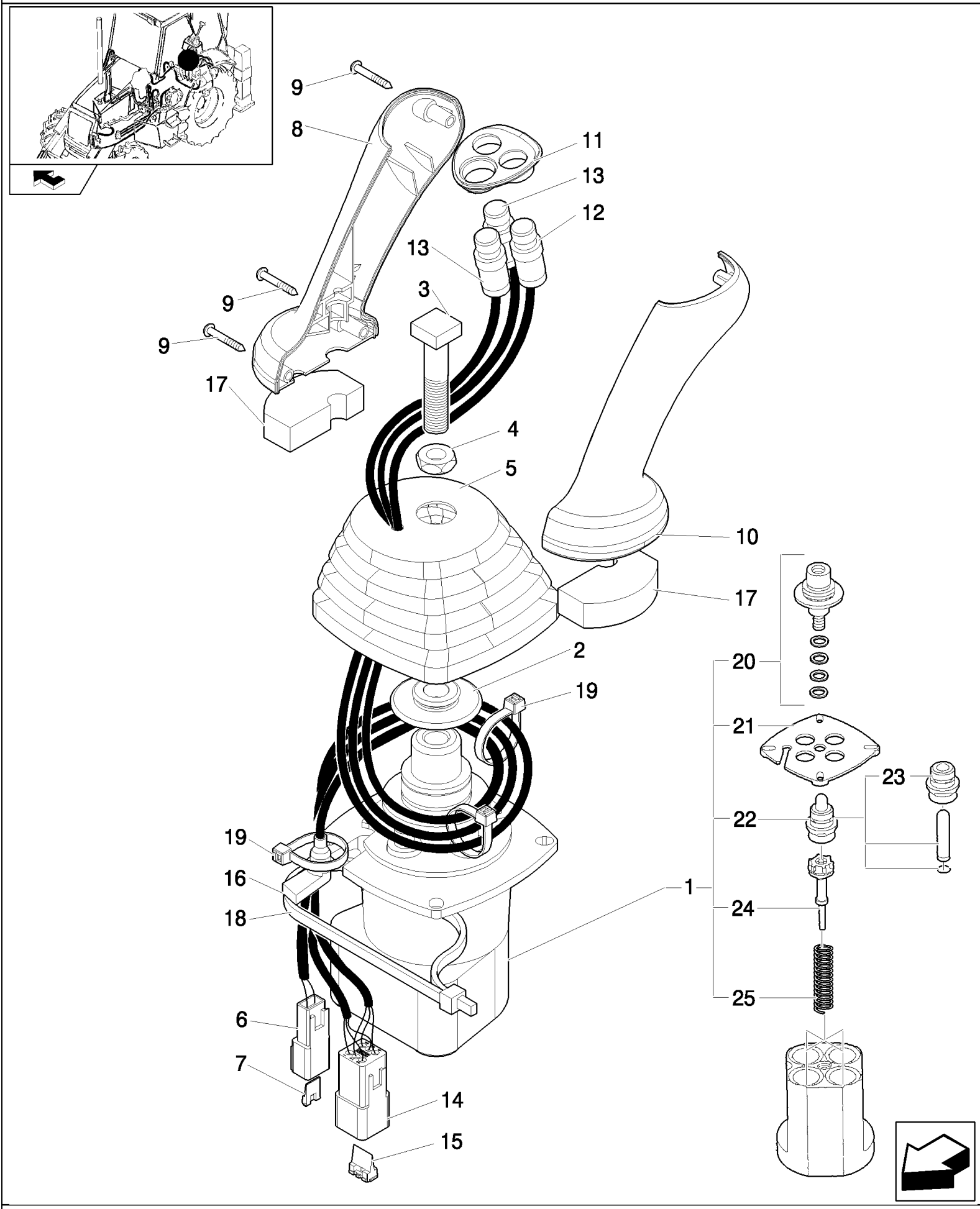

B110 TIER 3 BACKHOE LOADER (2/07-)

341/C(01) PILOT VALVE OF HYDRAULIC CONTROL LEVER (L.H.) - EU

Ref	Numero de Pieza	Ctd	Descripción
	87388708	1	JOYSTICK, , Includes 1 To 25
1	87398960	1	VALVE, PILOT,
2	87436225	1	RETAINER,
3	87428023	1	BOLT,
4	87037944	1	NUT, Thin, M12 x 1.75, Cl 05,
5	87443721	1	BOOT,
6	225315C1	1	CONNECTOR, ELEC,
7	225318C1	1	WEDGE,
8	87308838	1	HANDLE GRIP,
9	15687475	3	SCREW, SELF TAPPING, Pan Hd, M3.5 x 25, Stainless,
10	87308839	1	HANDLE GRIP,
11	87435243	1	BEZEL,
12	87437372	1	SWITCH,
13	87437371	2	SWITCH, ASSY,
14	225350C1	1	CONNECTOR, ELEC,
15	225353C1	1	WEDGE,
16	87424267	1	GROMMET,
17	87435506	2	SEAL,
18	87438046	1	STRAP, CABLE,
19	87000312	1	STRAP, CABLE,
20	87586731	4	KIT,
21	87586758	1	PLATE, RETAINING,
22	87586760	4	PLUNGER,
23	87586764	1	PLUNGER,
24	87586772	4	REGULATOR,
25	87586773	1	KIT,

344(01) STABILIZER CONTROL VALVE, TWO SECTION (CENTER PIVOT) - NA

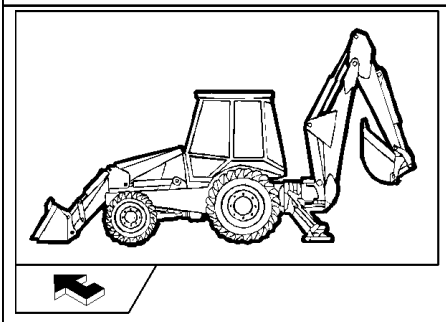

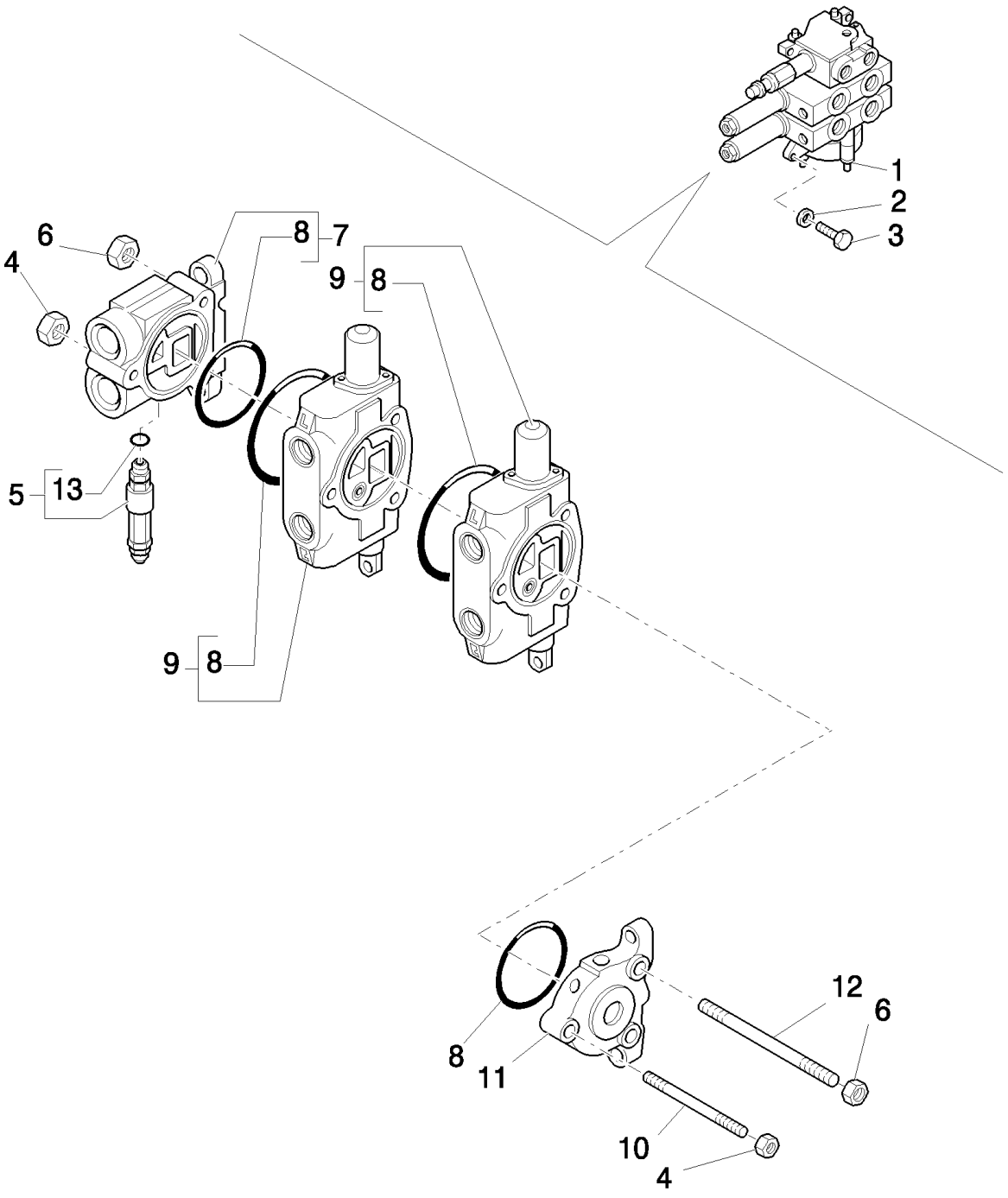

Mechanical Version

B110 TIER 3 BACKHOE LOADER (2/07-)

344(01) STABILIZER CONTROL VALVE, TWO SECTION (CENTER PIVOT) - NA

Ref	Numero de Pieza	Ctd	Descripción
1	85819684	1	VALVE, CONTROL, Assy
2	11193879	3	WASHER, SPRING, Belleville, M8.4,
3	16043921	3	SCREW, M8x1.25x35
4	9968440	2	NUT,
5	85819721	1	VALVE, HYDRAULIC,
6	9968441	4	NUT,
7	9968524	1	VALVE SECTION, HYD,
8	9968476	4	O-RING,
9	9970107	2	VALVE SECTION, HYD, , See Page 344 02
10	9968533	1	STUD,
11	9968527	1	VALVE SECTION, HYD,
12	9968532	2	STUD,
13	85819945	1	O-RING,

Mechanical Version

344(02) STABILIZER CONTROL VALVE, LH & RH SECTION (CENTER PIVOT) - NA

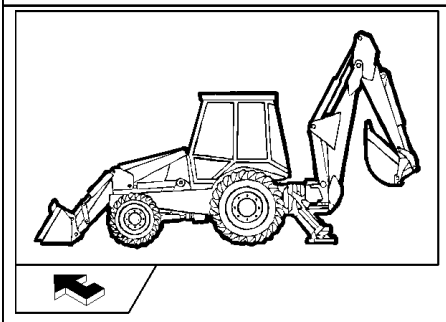

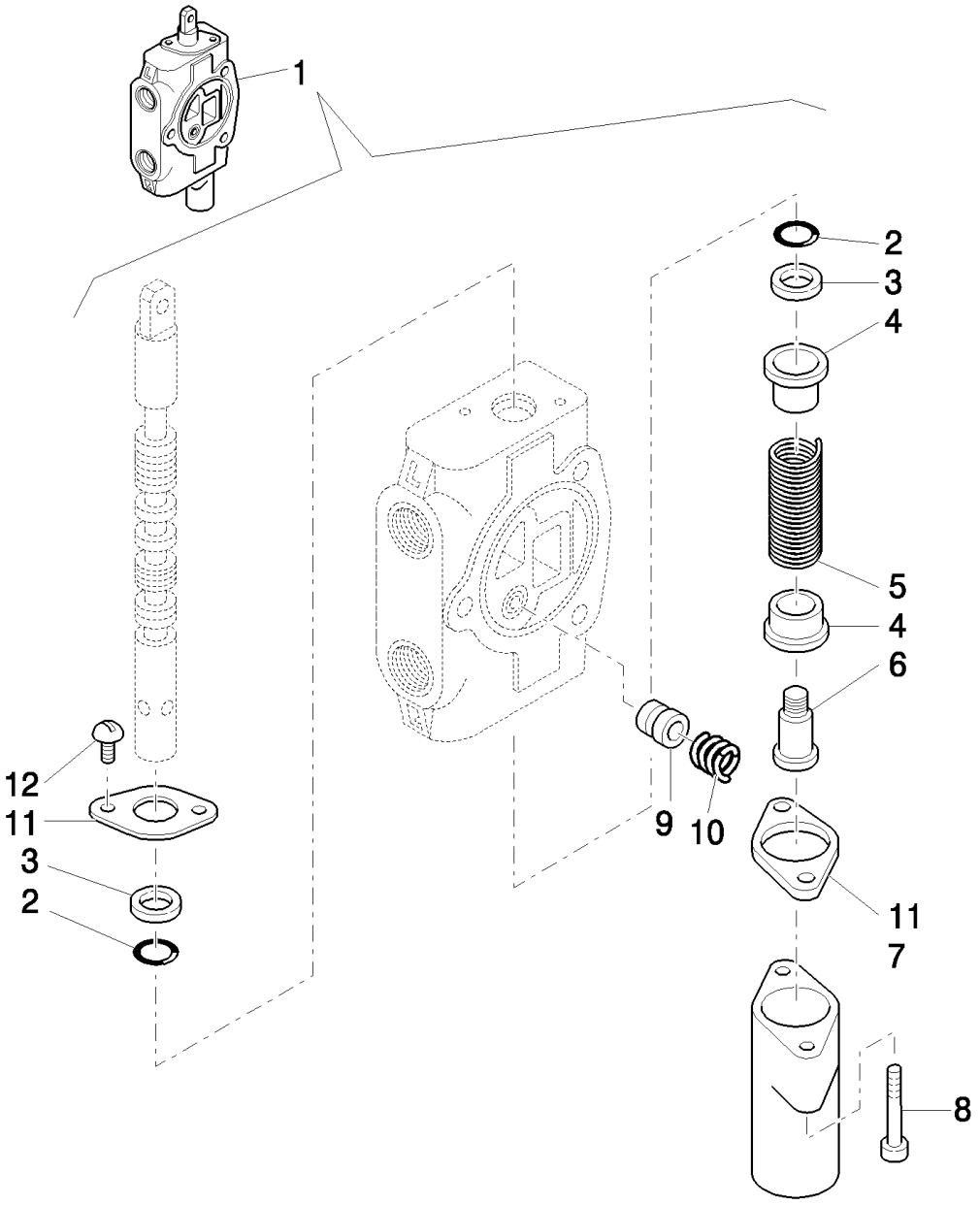

Mechanical Version

B110 TIER 3 BACKHOE LOADER (2/07-)

344(02) STABILIZER CONTROL VALVE, LH & RH SECTION (CENTER PIVOT) - NA

Ref	Numero de Pieza	Ctd	Descripción
1	9970107	1	VALVE SECTION, HYD, ASSY
2	85813418	2	O-RING,
3	85813419	2	WIPER,
4	9968481	2	SEAT/SLOT,
5	9968531	1	SPRING,
6	9968483	1	SCREW,
7	9968484	1	COVER,
8	9968486	2	SCREW,
9	9968477	1	POPPET,
10	9968478	1	SPRING,
11	9968480	2	FLANGE,
12	9968460	2	SCREW,

Mechanical Version

346(01) A/C HOUSING & FILTERS

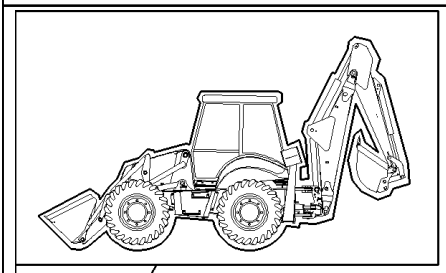

KIT = 16

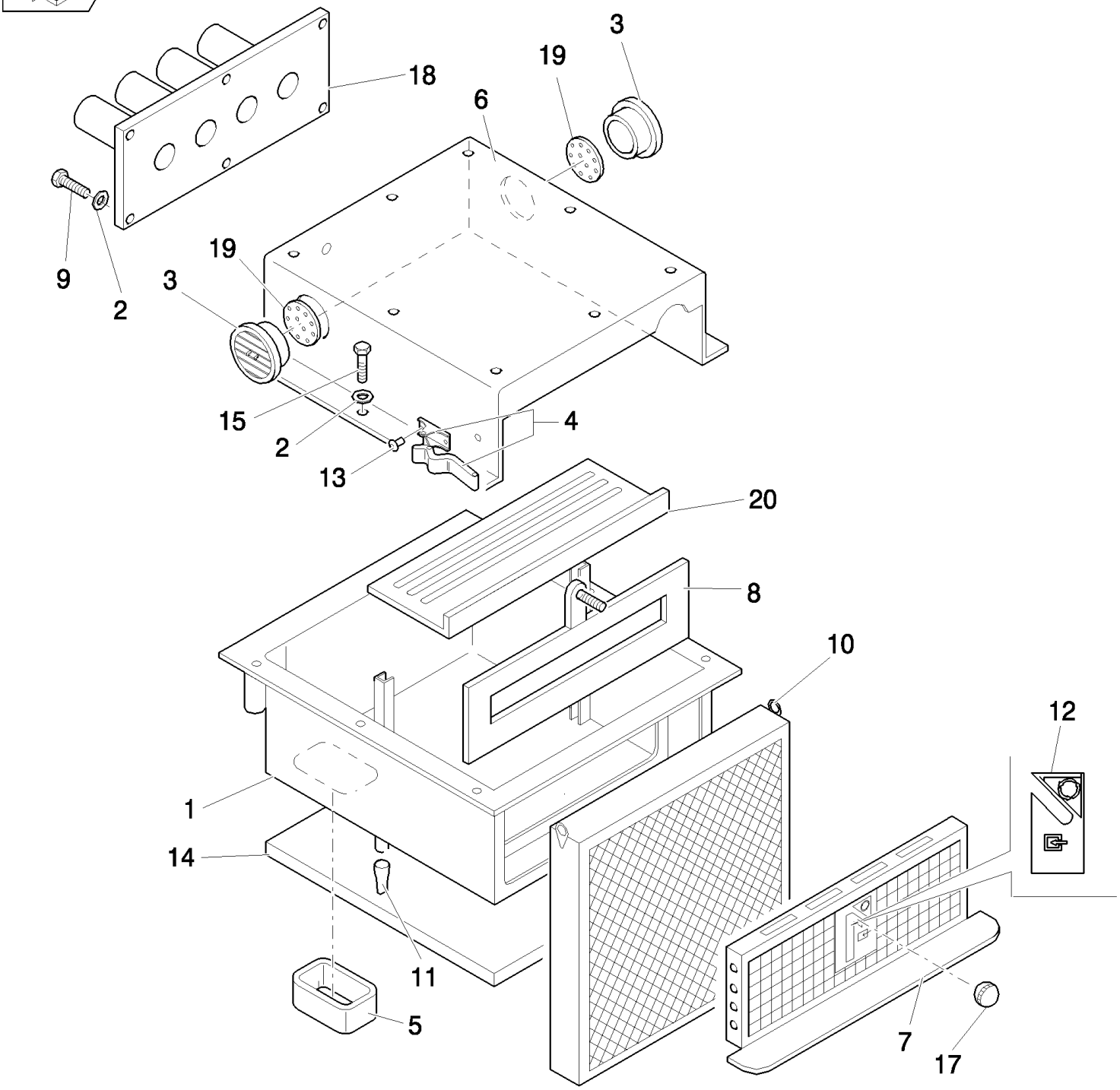

B110 TIER 3 BACKHOE LOADER (2/07-)

346(01) A/C HOUSING & FILTERS

Ref	Numero de Pieza	Ctd	Descripción
1	87314323	1	HOUSING,
2	11193974	6	WASHER, SPRING, Belleville, M8.4,
3	87314728	2	INTAKE, AIR,
4	87358140	2	HANDLE GRIP,
5	87314730	1	INSULATION, FOAM,
6	87314328	1	INTAKE, AIR,
7	87314330	1	GRILLE,
8	87314350	1	LID,
9	85819184	6	SCREW,
10	87314367	1	FILTER, CAB,
11	87315029	2	VALVE, DUST,
12	87314351	1	DECAL,
13	87358141	4	RIVET,
14	87314520	1	INSULATION, FOAM,
15	16043624	6	BOLT, Hex, M8 x 25, 8.8, Full Thd,
16	87314518	1	INSULATION, FOAM, - KIT
17	87314353	1	KNOB,
18	87314357	1	DUCT, AIR,
19	87314362	2	BULKHEAD,
20	87314355	1	BOTTOM,

346(02) A/C BLOWER & COILS

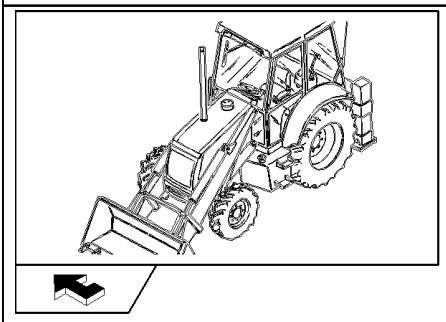

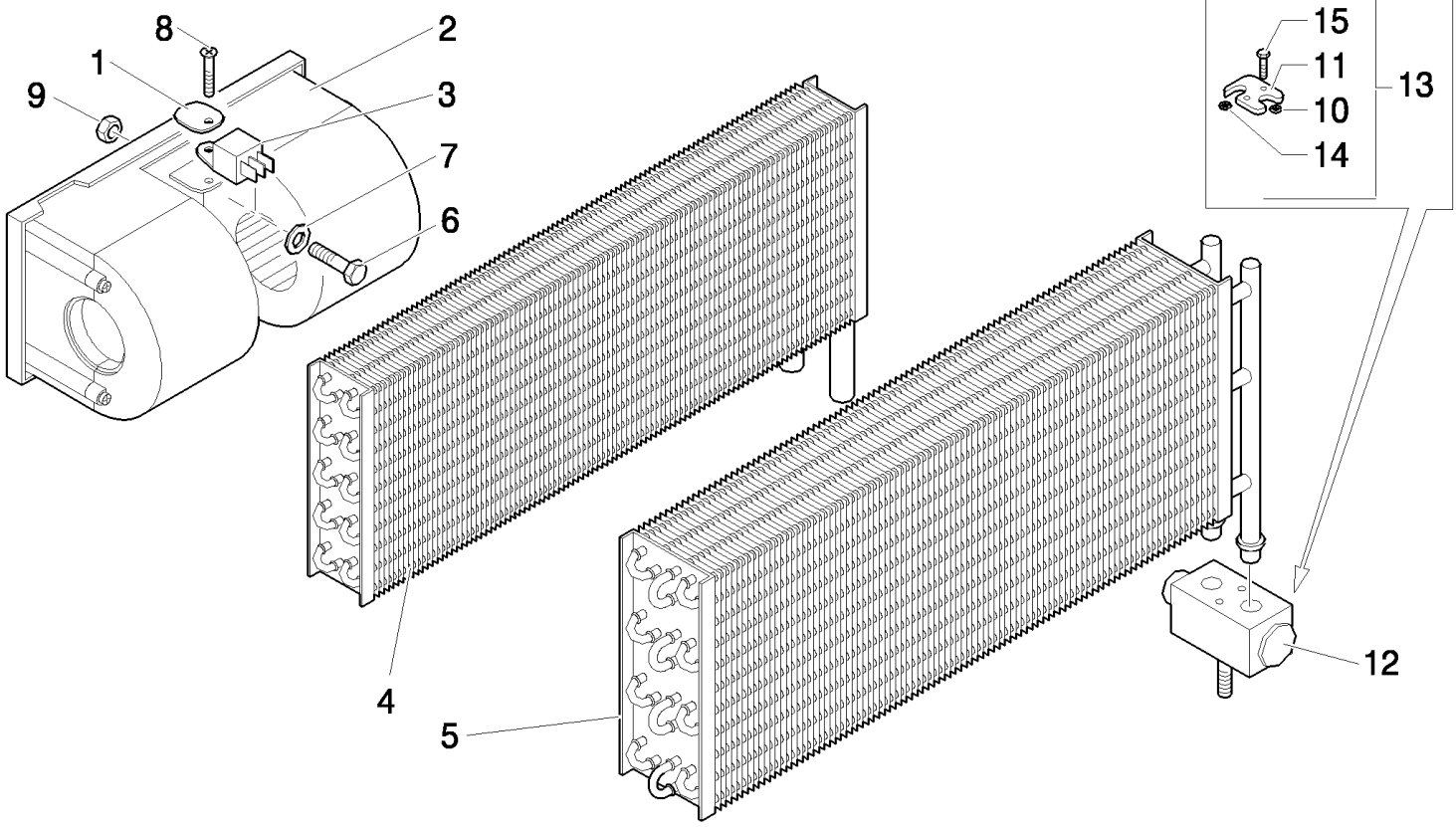

B110 TIER 3 BACKHOE LOADER (2/07-)

346(02) A/C BLOWER & COILS

Ref	Numero de Pieza	Ctd	Descripción
1	85817289	1	PLATE, RETAINING,
2	85813079	1	BLOWER, ELECTRIC,
3	85804041	1	RESISTOR,
4	87314527	1	HEATER,
5	87314369	1	EVAPORATOR,
6	10902424	1	BOLT, Hex, M6 x 20, 8.8, Full Thd,
7	11197774	1	WASHER, SPRING, Belleville, M6.4,
8	85817189	1	SCREW,
9	12574211	1	NUT, LOCK, M6 x 1, Cl 8,
10	85805006	1	O-RING,
11	85805005	1	FLANGE,
12	87314524	1	VALVE, CONTROL,
13	85804038	1	FLANGE,
14	85805003	1	O-RING,
15	85805004	2	SCREW,

346(03) HEATER COIL HOSES

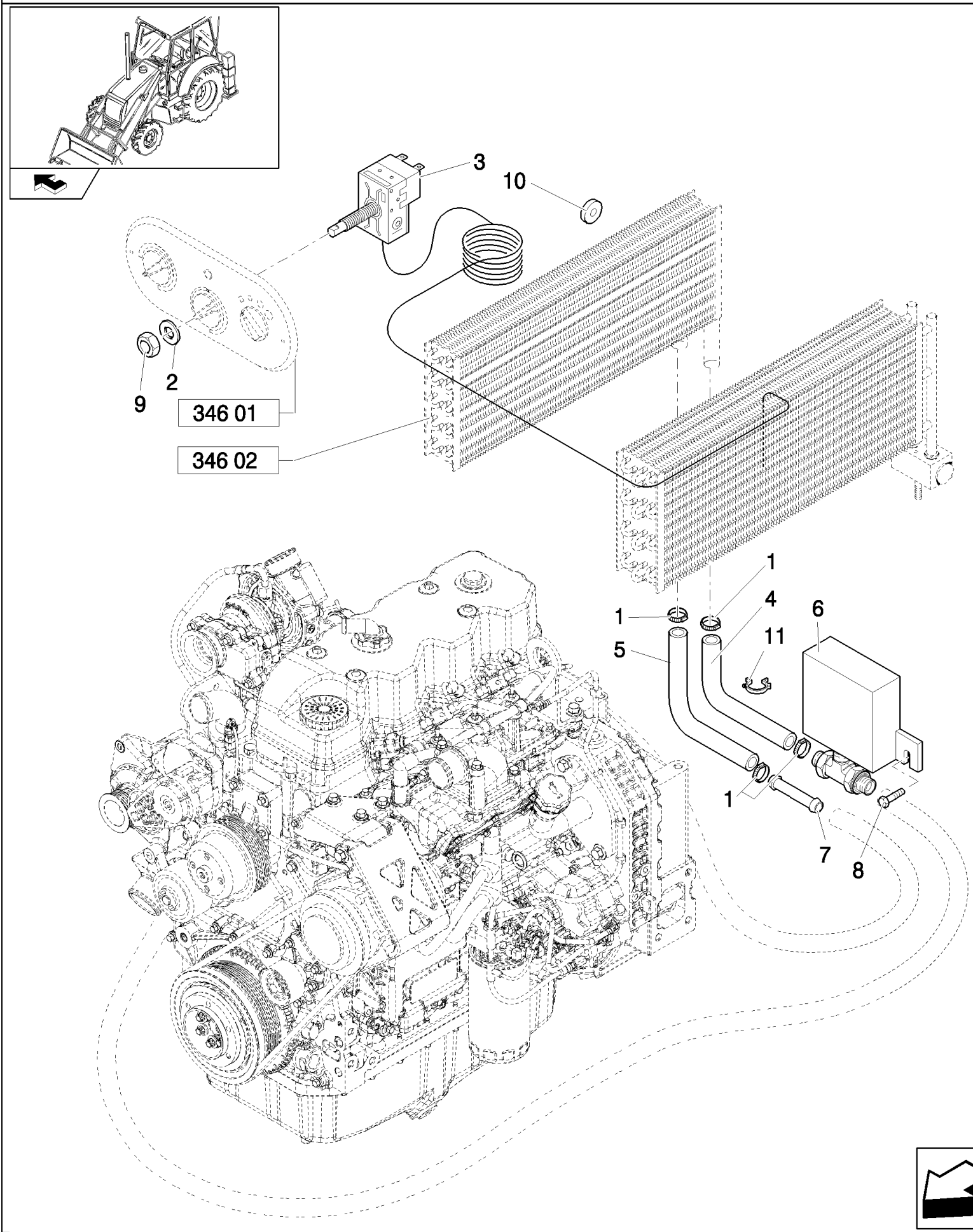

B110 TIER 3 BACKHOE LOADER (2/07-)

346(03) HEATER COIL HOSES

Ref	Numero de Pieza	Ctd	Descripción
1	87314726	4	CLAMP, HOSE,
2	85817295	1	NUT,
3	87314526	1	THERMOSTAT,
4	87318747	1	HOSE, FLEXIBLE,
5	87318750	1	HOSE, FLEXIBLE,
6	87314554	1	DRAINCOCK/TAP, SUPPLY,
7	85804051	1	TUBE,
8	85819184	2	SCREW,
9	87358348	1	WASHER,
10	87314729	2	SEAL,
11	87358142	2	COLLAR,

346(04) A/C & HEATER CONTROL PANEL

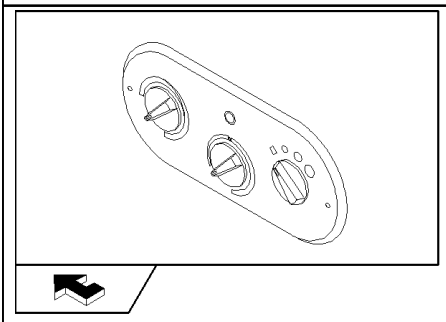

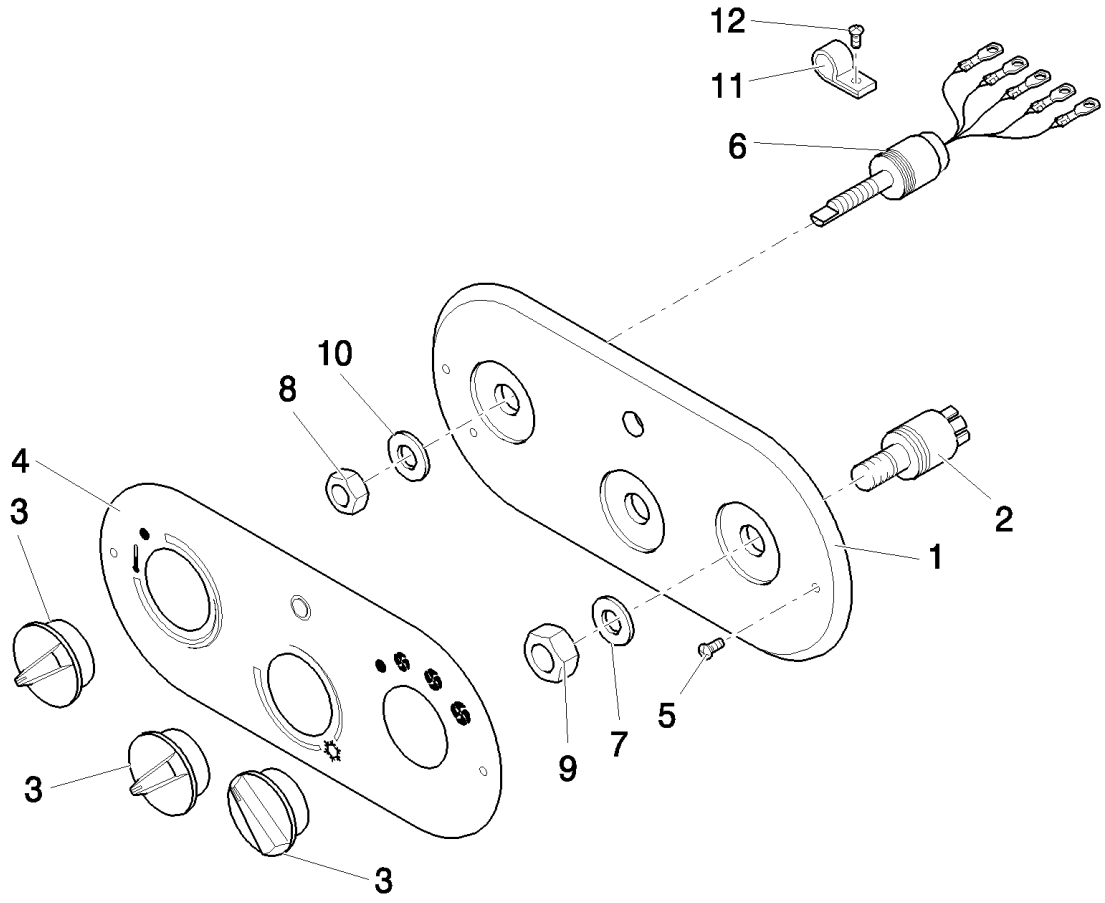

B110 TIER 3 BACKHOE LOADER (2/07-)

346(04) A/C & HEATER CONTROL PANEL

Ref	Numero de Pieza	Ctd	Descripción
1	87314743	1	DASHBOARD,
2	87314747	1	SWITCH,
3	87314749	3	KNOB,
4	87567694	1	SCREEN,
5	12678401	2	SCREW,
6	87314753	1	POTENTIOMETER,
7	87358348	1	WASHER, 13X20
8	87334860	1	NUT,
9	87334861	1	NUT, 12,5X18X1,5
10	87358349	1	WASHER, 10,5X16X1,5
11	14372671	2	NUT, M4.2, U, 12.4mm long,
12	15693507	2	SCREW, SELF TAPPING, Cross Oval Hd, M4.8 x 22,
13	12678401	2	SCREW,

B110 TIER 3 BACKHOE LOADER (2/07-)

346(05) A/C & HEATER CONSOLE DUCTS

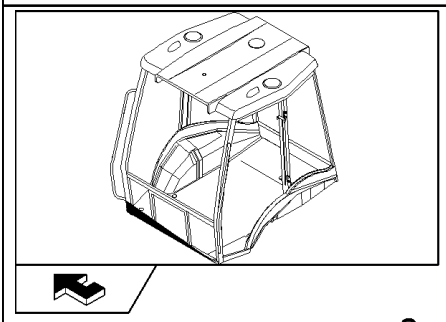

B110 TIER 3 BACKHOE LOADER (2/07-)

346(05) A/C & HEATER CONSOLE DUCTS

Ref	Numero de Pieza	Ctd	Descripción
1	85819452	5	HOSE,
2	85819451	1	HOSE,
3	87314771	1	DUCT, AIR,
4	87314772	2	DUCT, AIR,
5	87314773	1	DUCT, AIR,
6	87319448	1	DUCT, AIR,
7	85819454	2	DIFFUSER,
8	87314946	1	DISTRIBUTOR,
9	87314947	1	DISTRIBUTOR,
10	87314948	1	ELBOW,
11	85819453	1	ELBOW,
12	87362065	2	DIFFUSER,
13	87362065	4	DIFFUSER,
14	14440327	4	SCREW, Hex Soc Flat Hd, M4 x 20, 8.8,
15	87319437	1	DUCT, AIR,
16	13000690	6	CLAMP, HOSE,
17	87314767	2	DUCT, AIR,
18	87314769	2	DUCT, AIR,
19	87319453	1	ELBOW,
20	13000990	4	CLAMP, HOSE,
21	87319443	1	DUCT, AIR,
22	5112712	12	CLIP, HOSE, M4.8 x 283,
23	85818891	1	ELBOW,

B110 TIER 3 BACKHOE LOADER (2/07-)

347(01) HOUSING & FILTERS

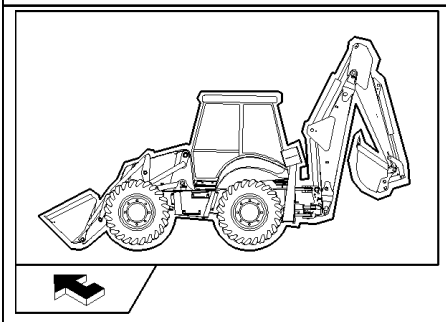

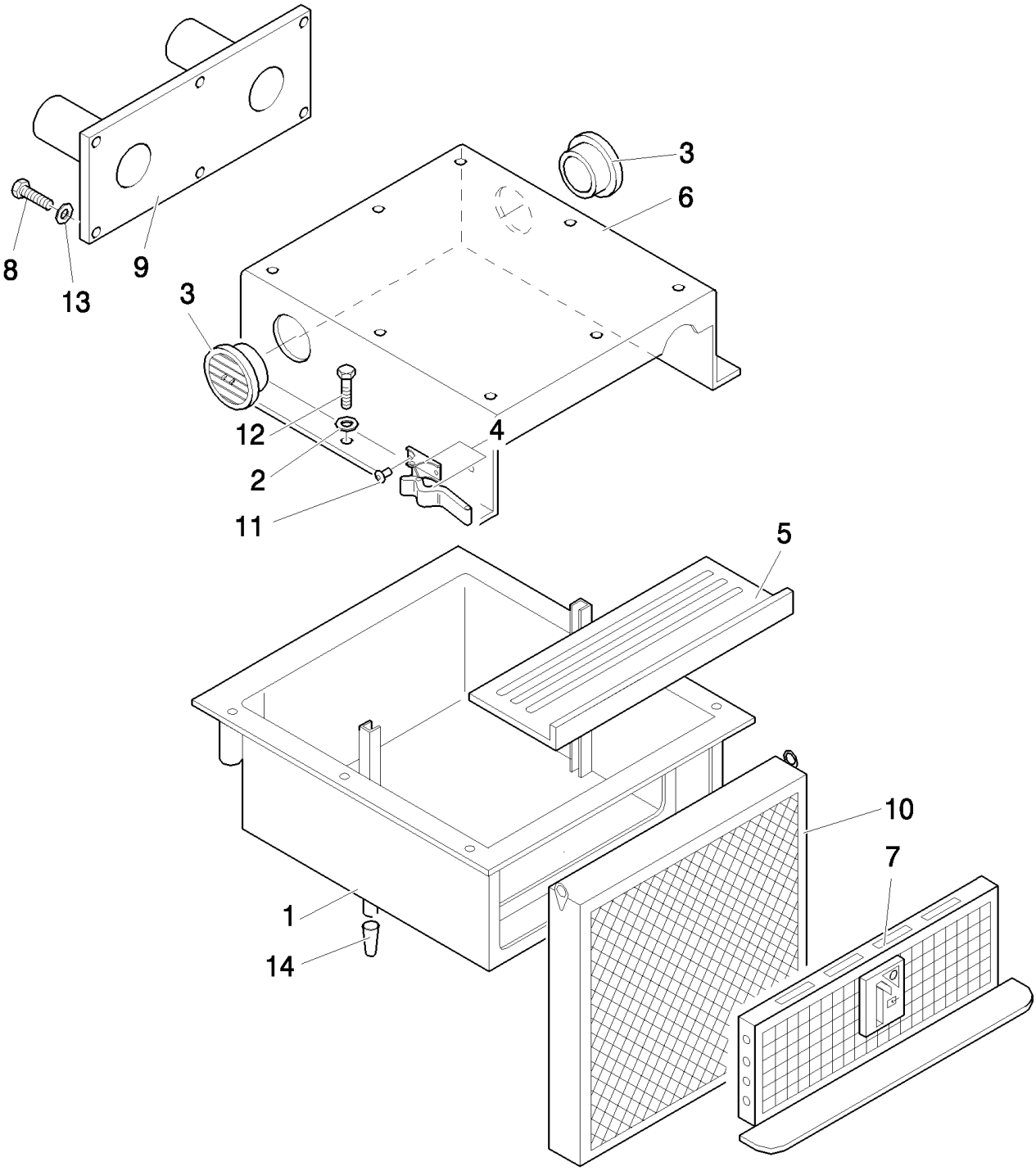

B110 TIER 3 BACKHOE LOADER (2/07-)

347(01) HOUSING & FILTERS

Ref	Numero de Pieza	Ctd	Descripción
1	87314323	1	HOUSING,
2	11193974	6	WASHER, SPRING, Belleville, M8.4,
3	87314728	2	INTAKE, AIR,
4	87358140	2	HANDLE GRIP,
5	87314355	1	BOTTOM,
6	87314328	1	INTAKE, AIR,
7	87314330	1	GRILLE,
8	85819184	6	SCREW,
9	87316439	1	DUCT, AIR,
10	87314367	1	FILTER, CAB,
11	87358141	4	RIVET,
12	16043624	6	BOLT, Hex, M8 x 25, 8.8, Full Thd,
13	11193974	1	WASHER, SPRING, Belleville, M8.4,
14	87315029	2	VALVE, DUST,

347(02) HEATER BLOWER & COILS

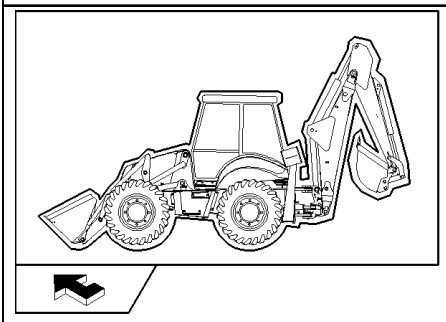

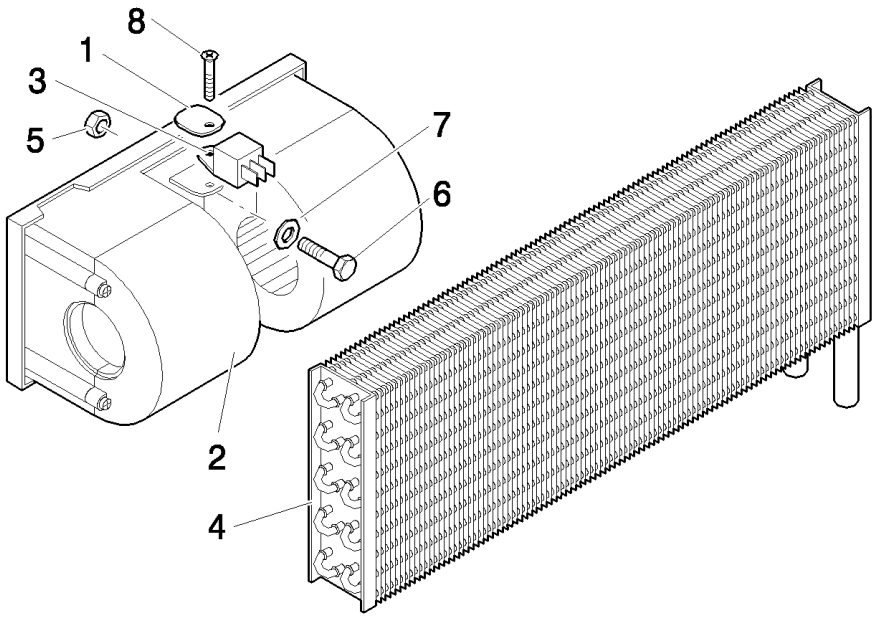

B110 TIER 3 BACKHOE LOADER (2/07-)

347(02) HEATER BLOWER & COILS

Ref	Numero de Pieza	Ctd	Descripción
1	85817289	1	PLATE, RETAINING,
2	85813079	1	BLOWER, ELECTRIC,
3	85804041	1	RESISTOR,
4	87314527	1	HEATER,
5	12574211	1	NUT, LOCK, M6 x 1, Cl 8,
6	10902424	1	BOLT, Hex, M6 x 20, 8.8, Full Thd,
7	11197774	1	WASHER, SPRING, Belleville, M6.4,
8	85817189	1	SCREW,

347(03) HEATER COIL HOSES

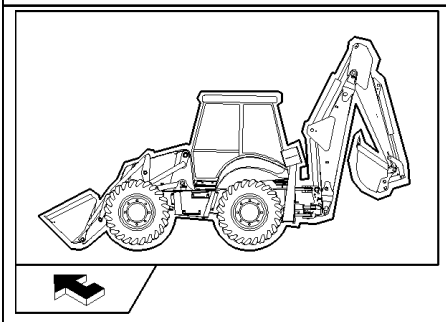

B110 TIER 3 BACKHOE LOADER (2/07-)

347(03) HEATER COIL HOSES

Ref	Numero de Pieza	Ctd	Descripción
1	87314726	4	CLAMP, HOSE,
2	85819184	2	SCREW,
3	85804051	1	TUBE,
4	87318747	1	HOSE, FLEXIBLE,
5	87318750	1	HOSE, FLEXIBLE,
6	87314554	1	DRAINCOCK/TAP, SUPPLY,
7	87358142	2	COLLAR,
8	87314729	2	SEAL,

347(04) A/C & HEATER CONTROL PANEL

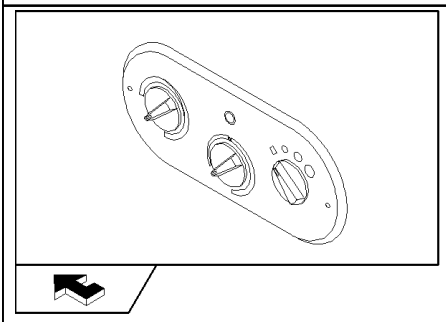

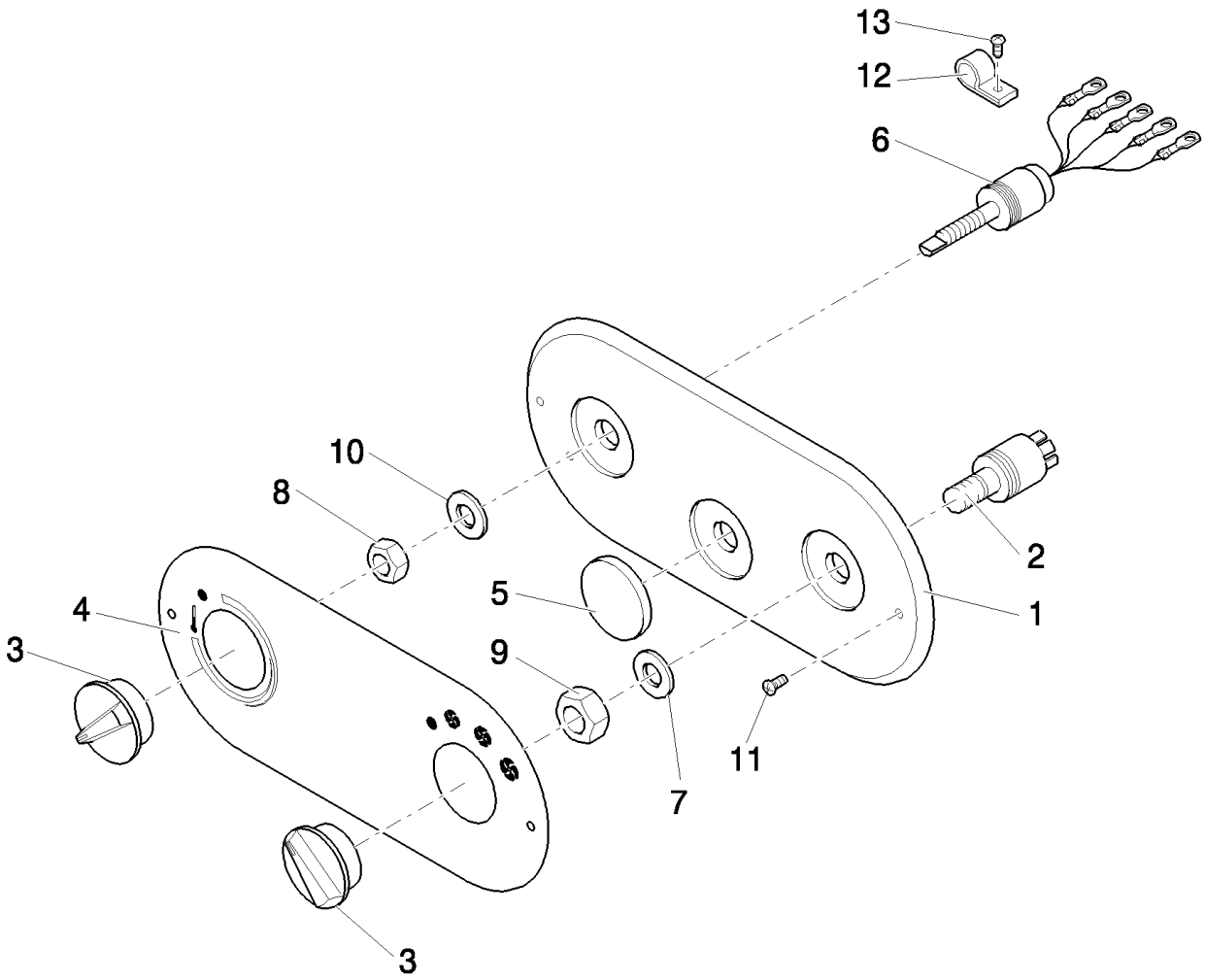

B110 TIER 3 BACKHOE LOADER (2/07-)

347(04) A/C & HEATER CONTROL PANEL

Ref	Numero de Pieza	Ctd	Descripción
1	87314743	1	DASHBOARD,
2	87314747	1	SWITCH,
3	87314749	2	KNOB,
4	87316443	1	DECAL,
5	87316442	1	PLUG,
6	87314753	1	POTENTIOMETER,
7	87358348	1	WASHER, 12,5X18X1,5
8	87334860	1	NUT,
9	87334861	1	NUT,
10	87358348	1	WASHER, 10,5X16X1,5
11	12678401	2	SCREW,
12	14372671	2	NUT, M4.2, U, 12.4mm long,
13	15687801	2	SCREW, SELF TAPPING, Cross Pan Hd, M4.8 x 9.5,

347(05) A/C & HEATER CONSOLE DUCTS

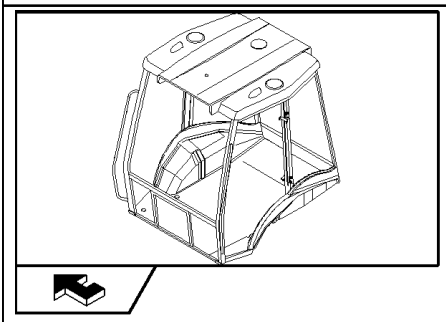

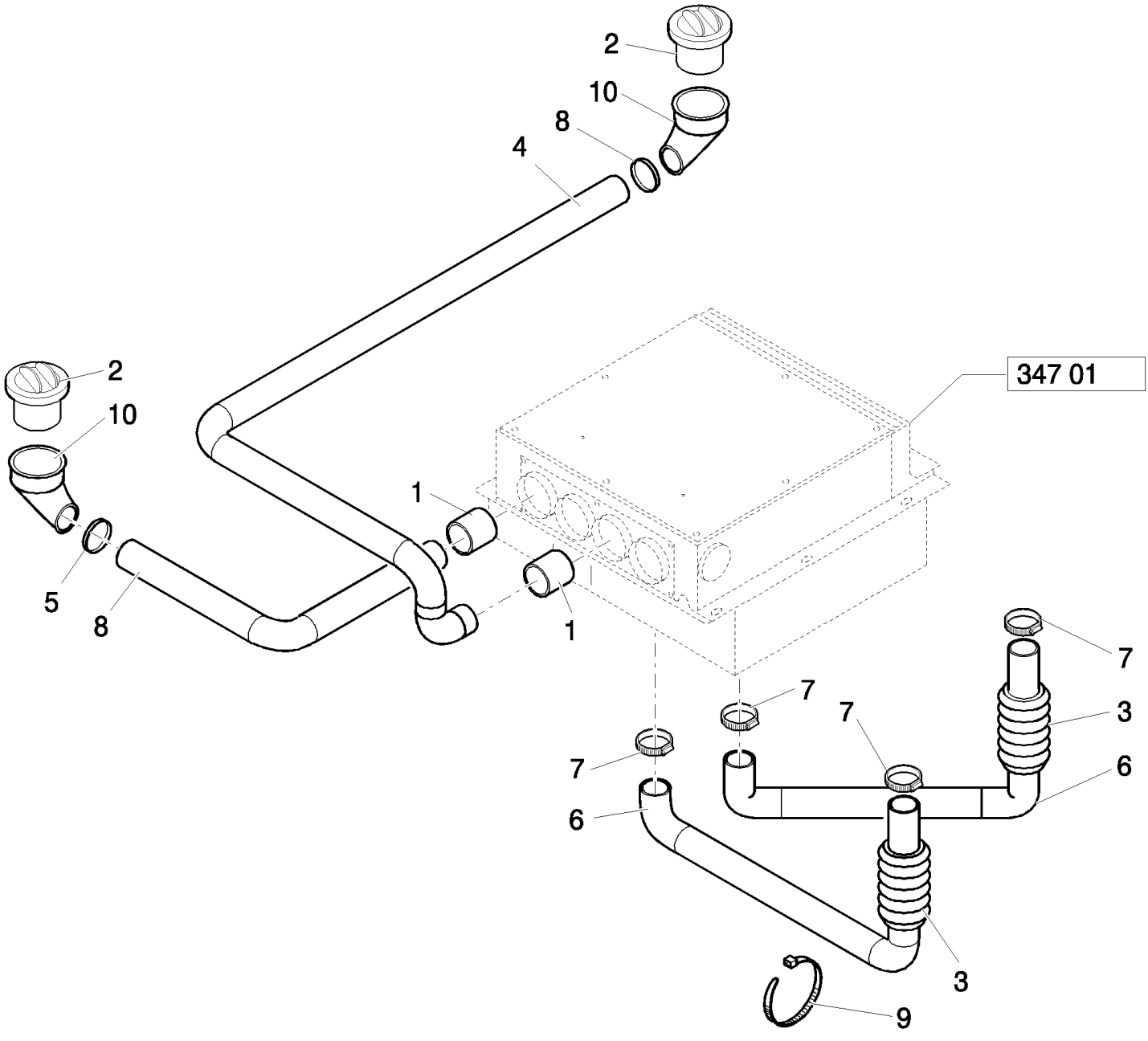

B110 TIER 3 BACKHOE LOADER (2/07-)

347(05) A/C & HEATER CONSOLE DUCTS

Ref	Numero de Pieza	Ctd	Descripción
1	85819452	2	HOSE,
2	87362065	2	DIFFUSER,
3	87314769	2	DUCT, AIR,
4	87319437	1	DUCT, AIR,
5	13000690	2	CLAMP, HOSE,
6	87314767	2	DUCT, AIR,
7	13000990	4	CLAMP, HOSE,
8	87319443	1	DUCT, AIR,
9	5112712	12	CLIP, HOSE, M4.8 x 283,
10	87319453	2	ELBOW,

347(06) CAB HEATING COATING PLUG

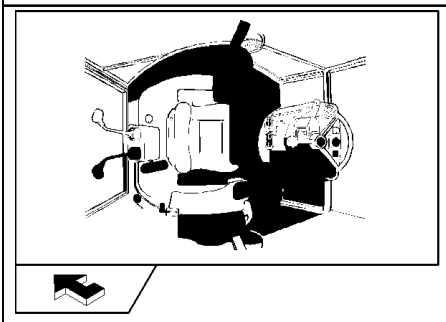

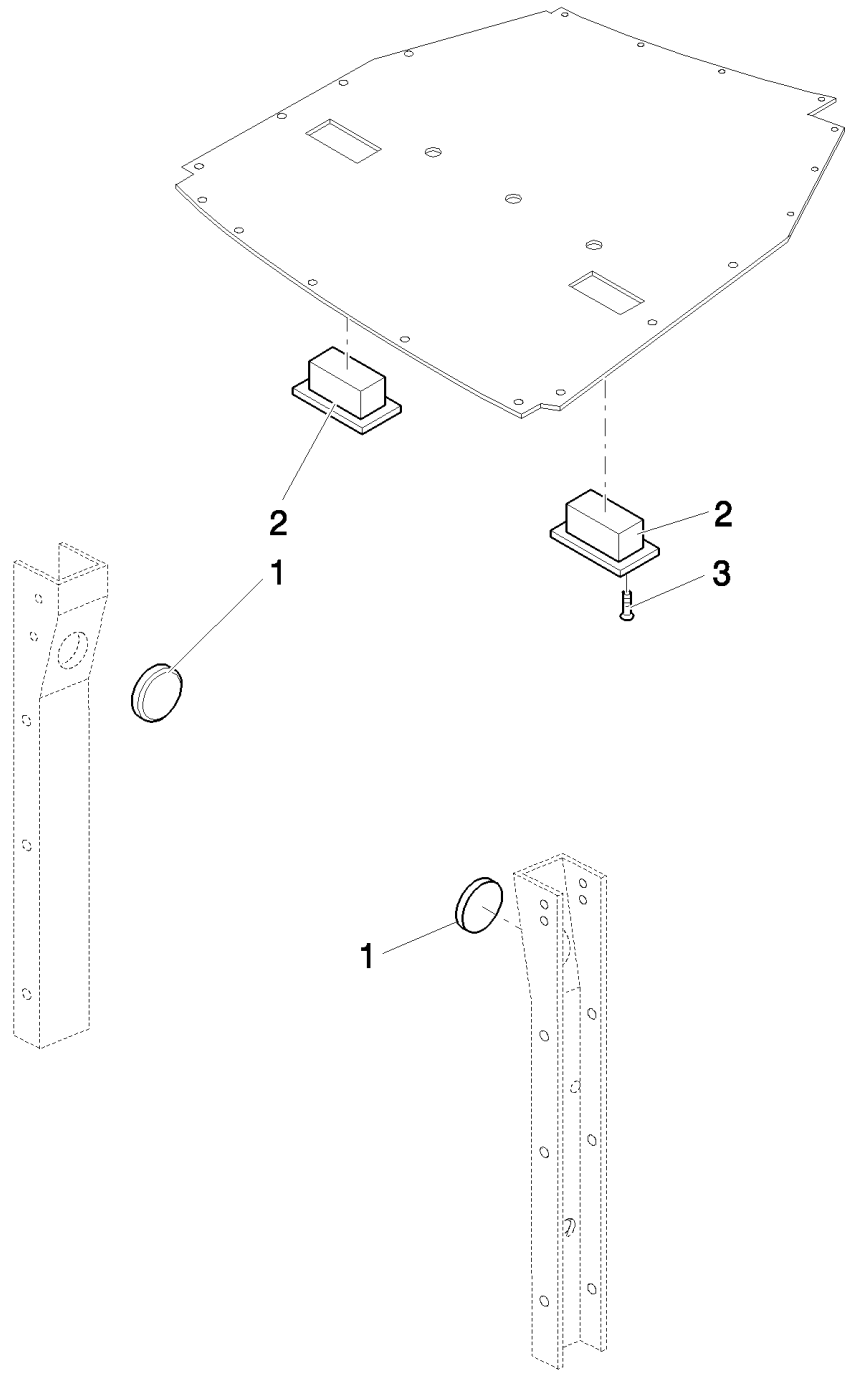

B110 TIER 3 BACKHOE LOADER (2/07-)

347(06) CAB HEATING COATING PLUG

Ref	Numero de Pieza	Ctd	Descripción
1	87319018	2	PLUG,
2	87318763	2	PLUG,
3	14440327	4	SCREW, Hex Soc Flat Hd, M4 x 20, 8.8,

350(01) 2 LEVER BACKHOE CONTROLS

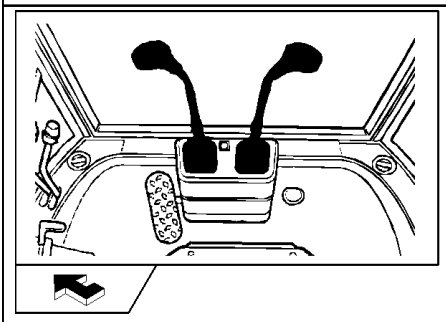

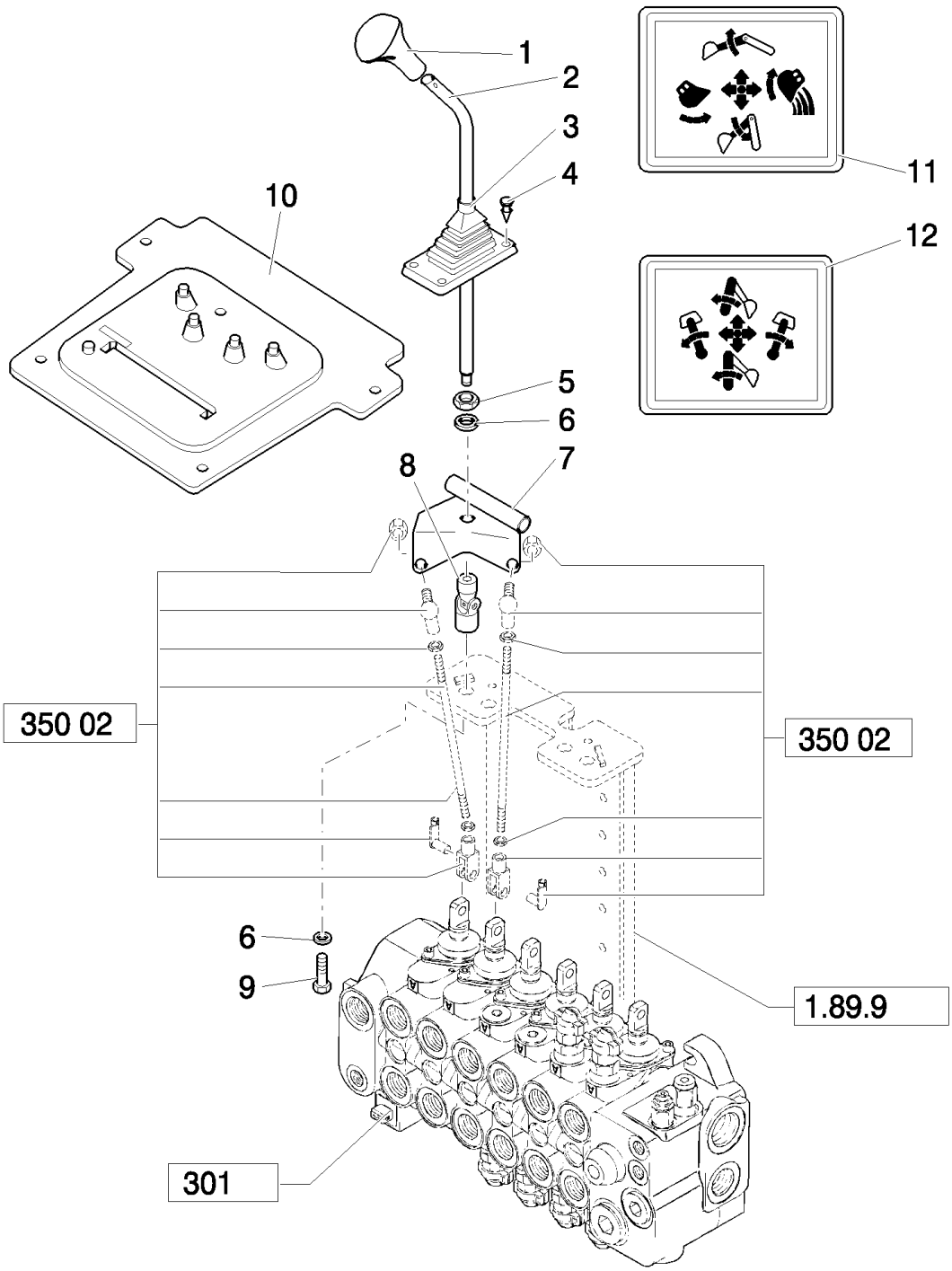

B110 TIER 3 BACKHOE LOADER (2/07-)

350(01) 2 LEVER BACKHOE CONTROLS

Ref	Numero de Pieza	Ctd	Descripción
1	85801502	1	KNOB, Without Horn Switch, REAR CONTROL
1	85802682	1	KNOB, Includes 13796621 M5 x 8mm long Setscrew; With 87448432 Horn Switch, Rear Control
	87448432	1	SWITCH, ASSY, Horn
2	85801488	2	LEVER,
3	85802843	2	BOOT,
4	14568887	8	FASTENER,
5	16101511	2	NUT, M12 x 1.25, Cl 8,
6	11190779	4	WASHER, SPRING, Belleville, M13,
7	85803124	1	BRACKET, LH
7	85803107	1	BRACKET, RH
8	85801518	2	JOINT, UNIVERSAL,
9	15540321	2	BOLT, Hex, M12 x 1.25 x 25, 8.8, Full Thd,
10	85804540	1	BOOT,
11	85804344	1	DECAL,
12	85804345	1	DECAL,

Mechanical Version

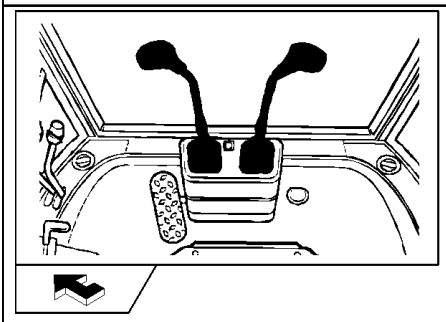

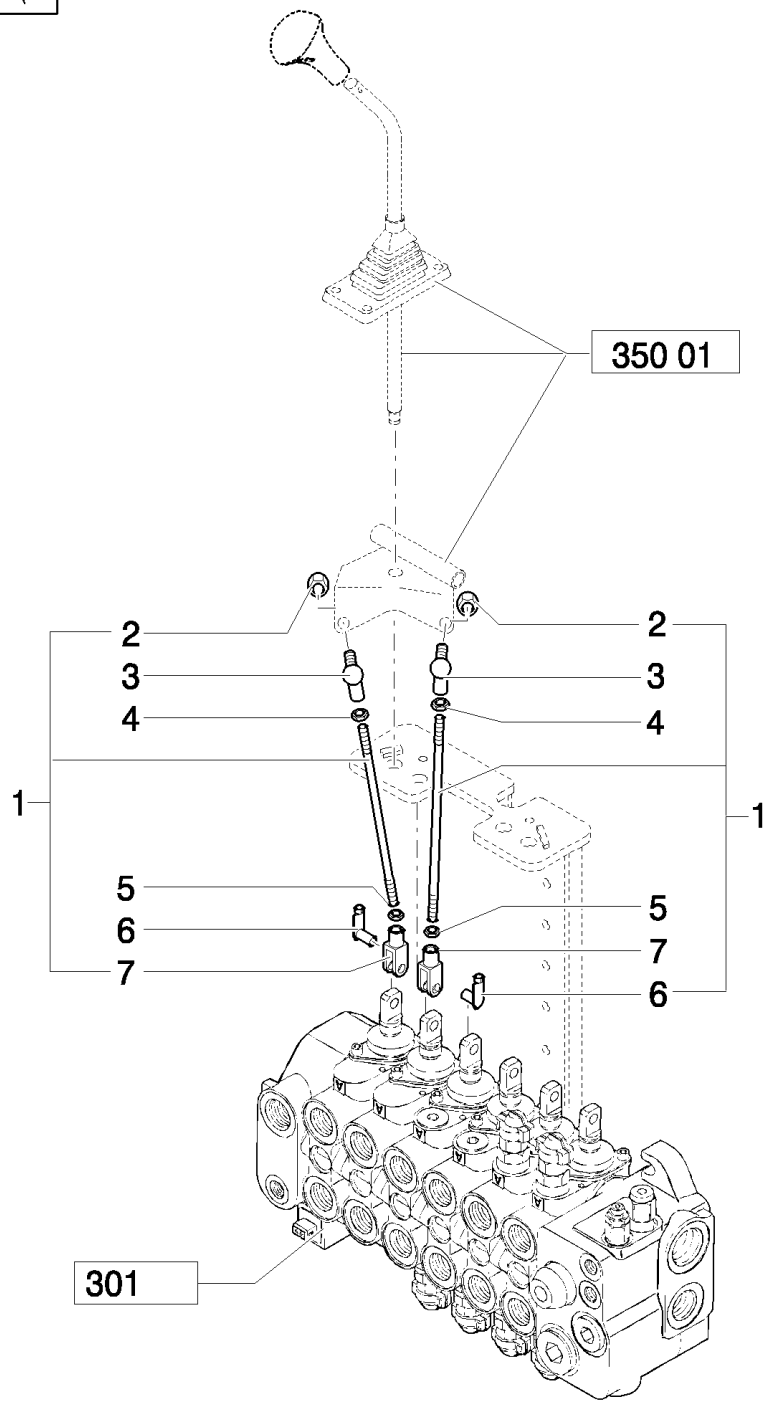
350 01
2
3
4
1
5
6
7
2
3
4
1
5
7
6
301

B110 TIER 3 BACKHOE LOADER (2/07-)

350(02) 2 LEVER BACKHOE CONTROLS

Ref	Numero de Pieza	Ctd	Descripción
1	85805237	4	TIE-ROD,
2	14048211	4	NUT, LOCK, M8 x 1.25, Cl 8,
3	85804375	4	BALL JOINT,
4	16102311	4	NUT, Thin, M8 x 1.25, Cl 04,
5	16102911	4	NUT, Thin, M8 x 1.25, Cl 04, LH,
6	85802738	4	RETAINER,
7	11991971	4	CLEVIS,

Mechanical Version

351(01) JCB 2 LEVER BACKHOE CONTROLS

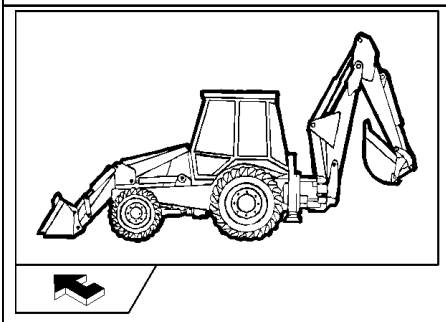

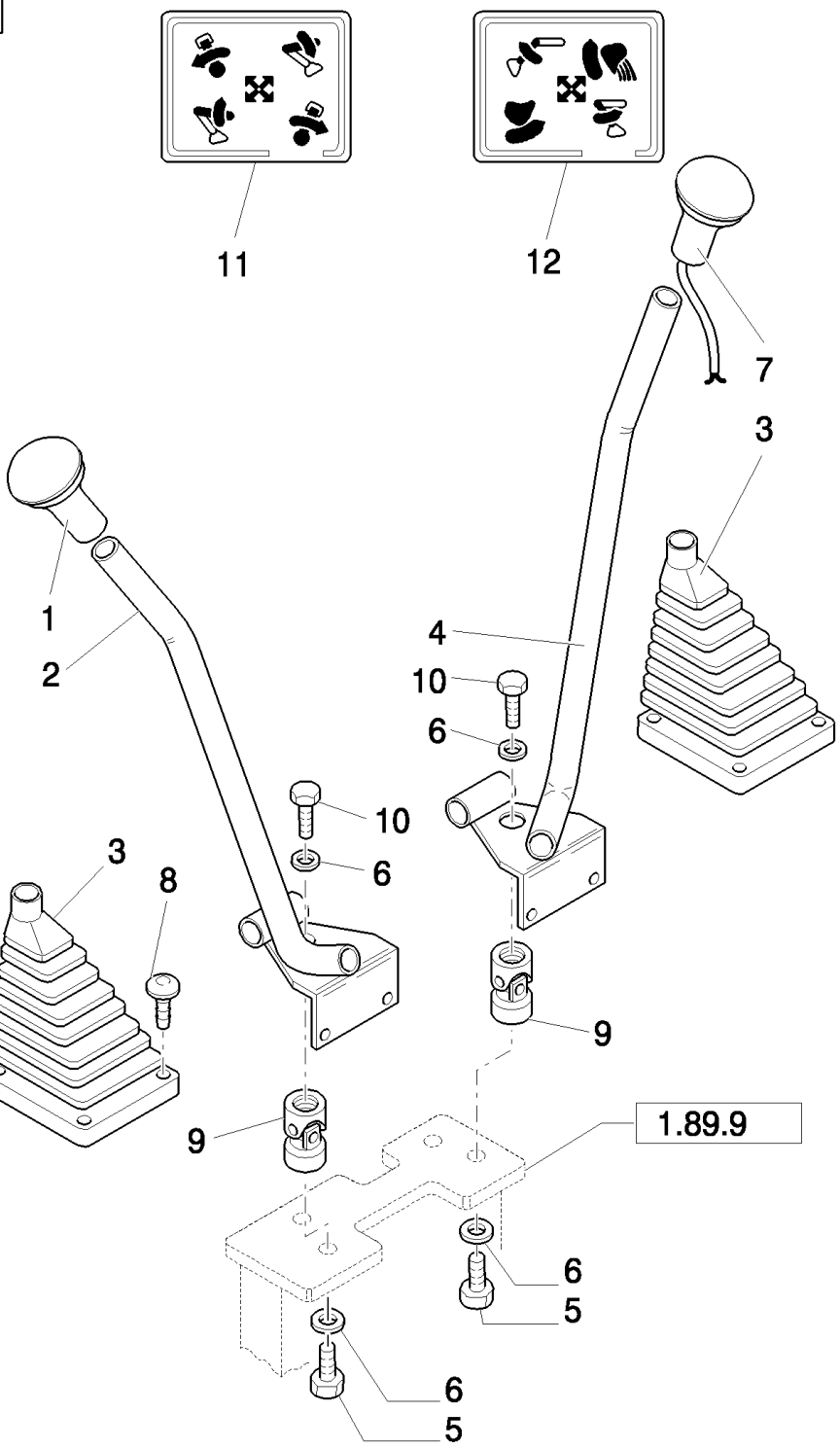

Mechanical Version

B110 TIER 3 BACKHOE LOADER (2/07-)

351(01) JCB 2 LEVER BACKHOE CONTROLS

Ref	Numero de Pieza	Ctd	Descripción
1	85801502	1	KNOB, Without Horn Switch
2	85803802	1	BRACKET,
3	85802843	2	BOOT,
4	85803784	1	BRACKET,
5	15540321	2	BOLT, Hex, M12 x 1.25 x 25, 8.8, Full Thd,
6	11190779	4	WASHER, SPRING, Belleville, M13,
7	85802682	1	KNOB, Includes 13796621 M5 x 8mm long Setscrew; With 87448432 Horn Switch
	87448432	1	SWITCH, ASSY, Horn
8	14568887	8	FASTENER,
9	85801518	2	JOINT, UNIVERSAL,
10	14331024	2	BOLT, Hex, M12 x 1.25 x 25, 8.8, Full Thd, M12X1,25X25
11	85803810	1	DECAL,
12	85803811	1	DECAL,

Mechanical Version

351(02) JCB 2 LEVER BACKHOE CONTROLS

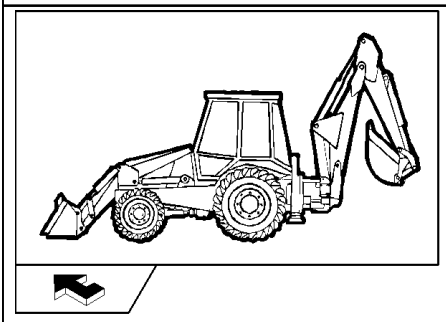

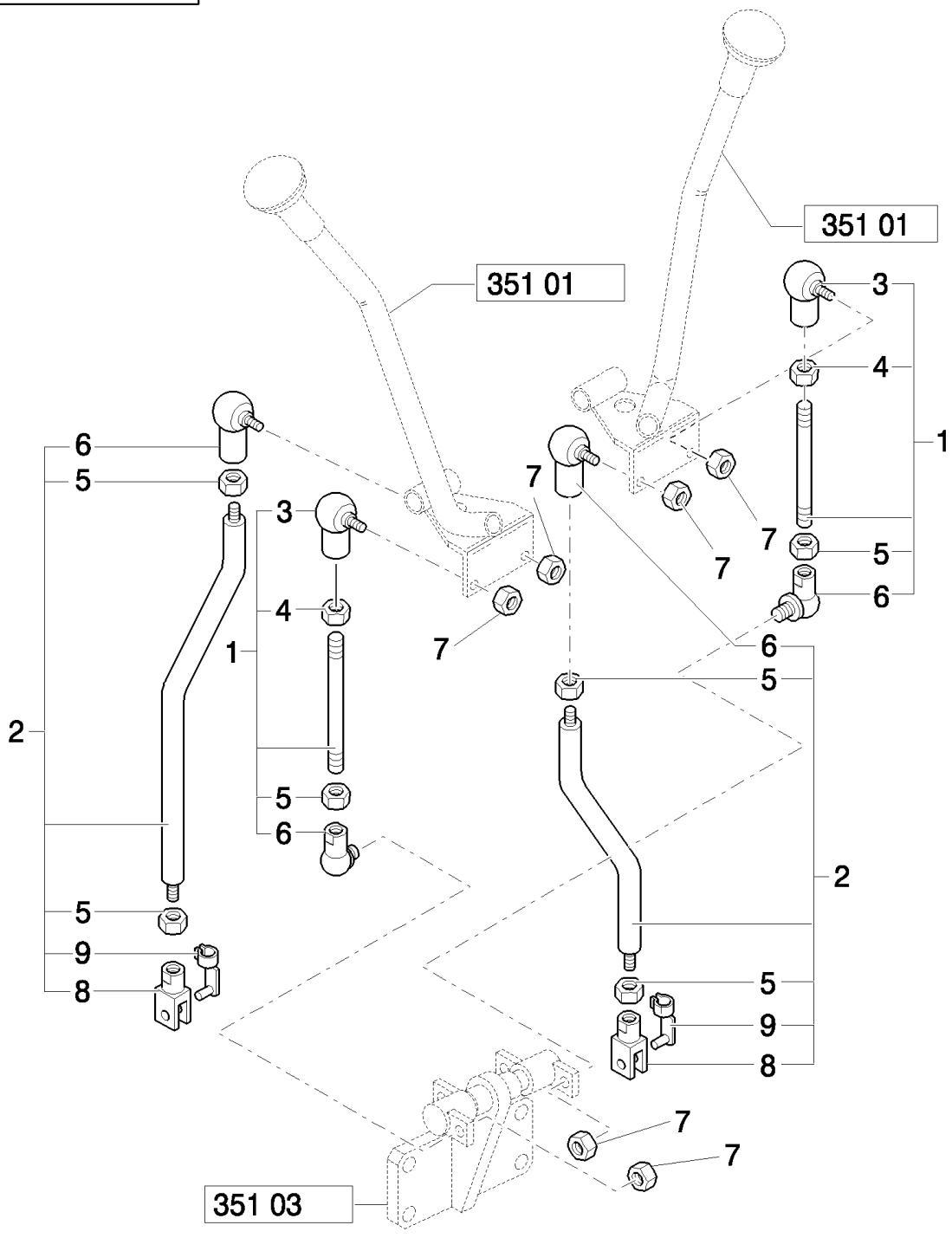

B110 TIER 3 BACKHOE LOADER (2/07-)

351(02) JCB 2 LEVER BACKHOE CONTROLS

Ref	Numero de Pieza	Ctd	Descripción
1	85804915	2	TIE-ROD, Assy, Includes 3 To 7
2	85806167	2	TIE-ROD, Assy, Includes 5 to 9
3	85804376	2	BALL JOINT,
4	16102911	2	NUT, Thin, M8 x 1.25, Cl 04, LH,
5	16102311	6	NUT, Thin, M8 x 1.25, Cl 04,
6	85804375	4	BALL JOINT,
7	14048211	6	NUT, LOCK, M8 x 1.25, Cl 8,
8	10007871	2	YOKE,
9	85802738	2	RETAINER,

Mechanical Version

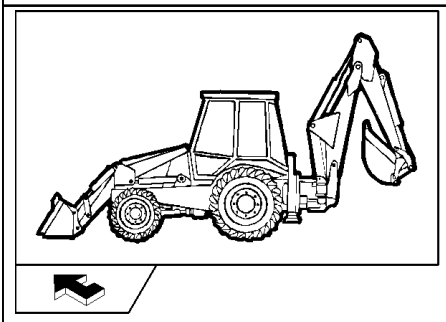

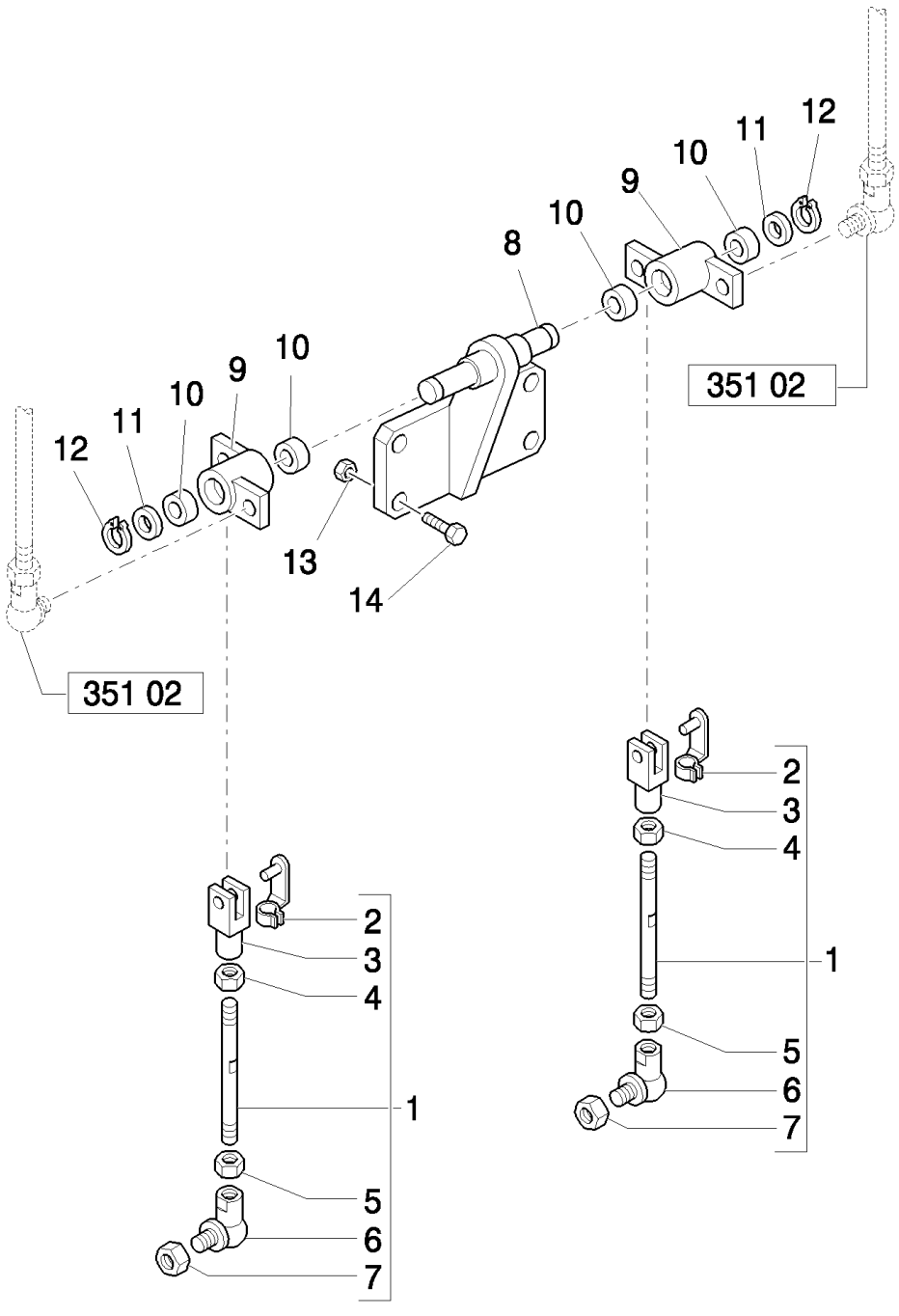
12
11
10
9
10
8
10
9
10
11
12
351 02
351 02
13
14
2
3
4
1
5
6
7
2
3
4
1
5
6
7

B110 TIER 3 BACKHOE LOADER (2/07-)

351(03) JCB 2 LEVER BACKHOE CONTROLS

Ref	Numero de Pieza	Ctd	Descripción
1	85806165	2	TIE-ROD, Assy
2	85802738	2	RETAINER,
3	11991971	2	CLEVIS,
4	16102911	2	NUT, Thin, M8 x 1.25, Cl 04, LH,
5	16102311	2	NUT, Thin, M8 x 1.25, Cl 04,
6	85804375	2	BALL JOINT,
7	14048211	2	NUT, LOCK, M8 x 1.25, Cl 8,
8	85804899	1	SUPPORT,
9	85804895	2	LEVER, , Includes 10
10	85802494	4	BUSHING,
11	13507714	2	WASHER,
12	83911366	2	RING, SNAP,
13	16104111	4	NUT, LOCK, M8 x 1.25, Cl 8,
14	16043821	4	BOLT, Hex, M8 x 30, 8.8,

Mechanical Version

358(01) ISO 2 LEVER BACKHOE CONTROLS

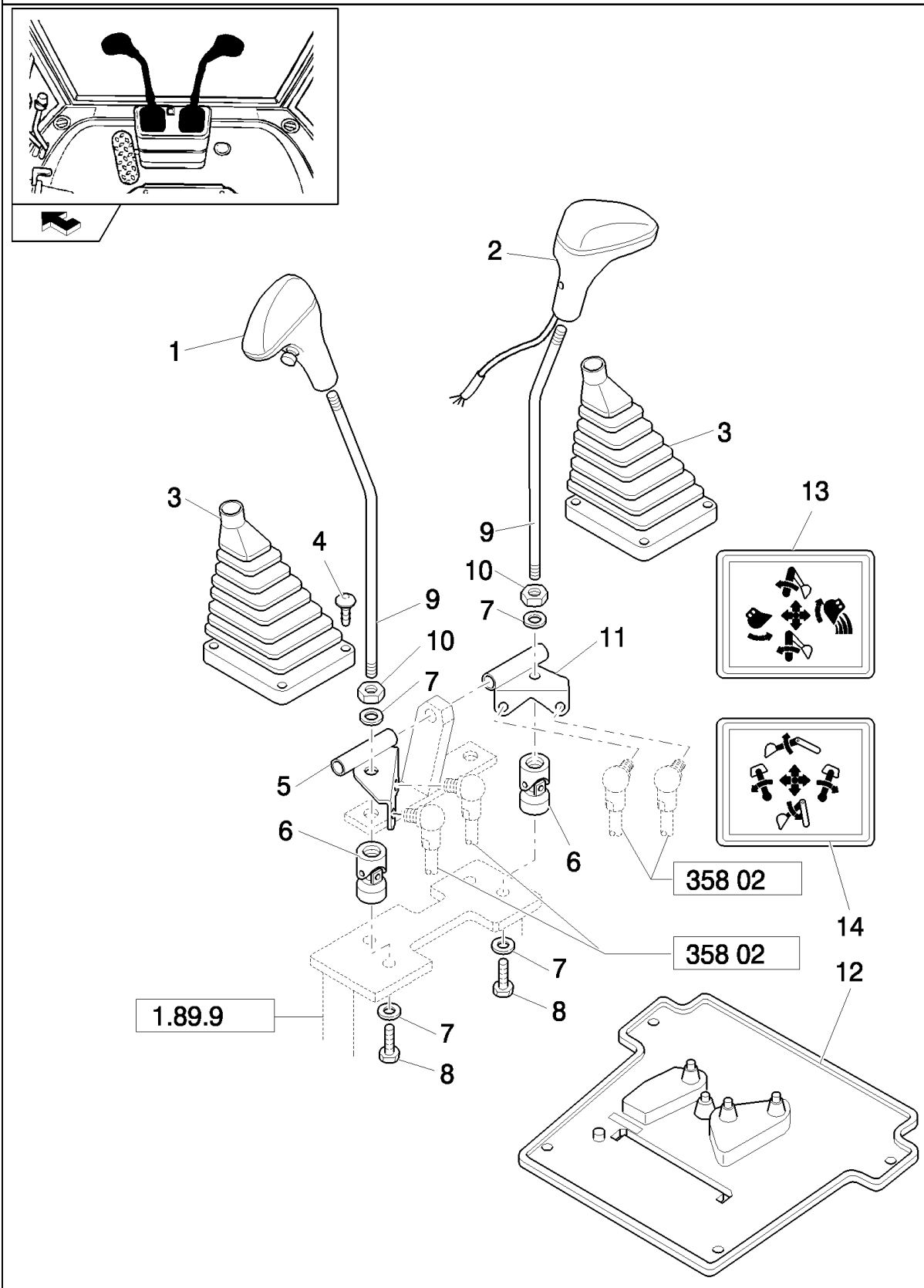

B110 TIER 3 BACKHOE LOADER (2/07-)

358(01) ISO 2 LEVER BACKHOE CONTROLS

Ref	Numero de Pieza	Ctd	Descripción
1	85801502	1	KNOB, Without Horn Switch
2	85802682	1	KNOB, Includes 13796621 M5 x 8mm long Setscrew; With 87448432 Horn Switch
	87448432	1	SWITCH, ASSY, Horn
3	85802843	2	BOOT,
4	14568887	8	FASTENER, 8X20
5	85803124	1	BRACKET, LH
6	85801518	2	JOINT, UNIVERSAL,
7	11190779	4	WASHER, SPRING, Belleville, M13,
8	15540321	2	BOLT, Hex, M12 x 1.25 x 25, 8.8, Full Thd,
9	85801488	2	LEVER,
10	16101511	2	NUT, M12 x 1.25, Cl 8,
11	85803107	1	BRACKET, RH
12	85804541	1	BOOT,
13	85803783	1	DECAL,
14	85803782	1	DECAL,

Mechanical Version

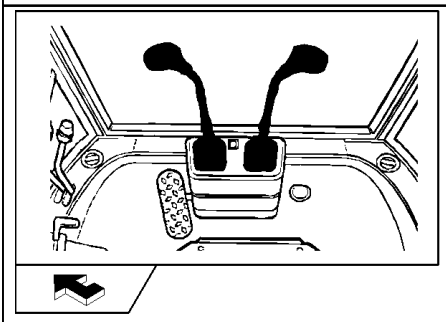

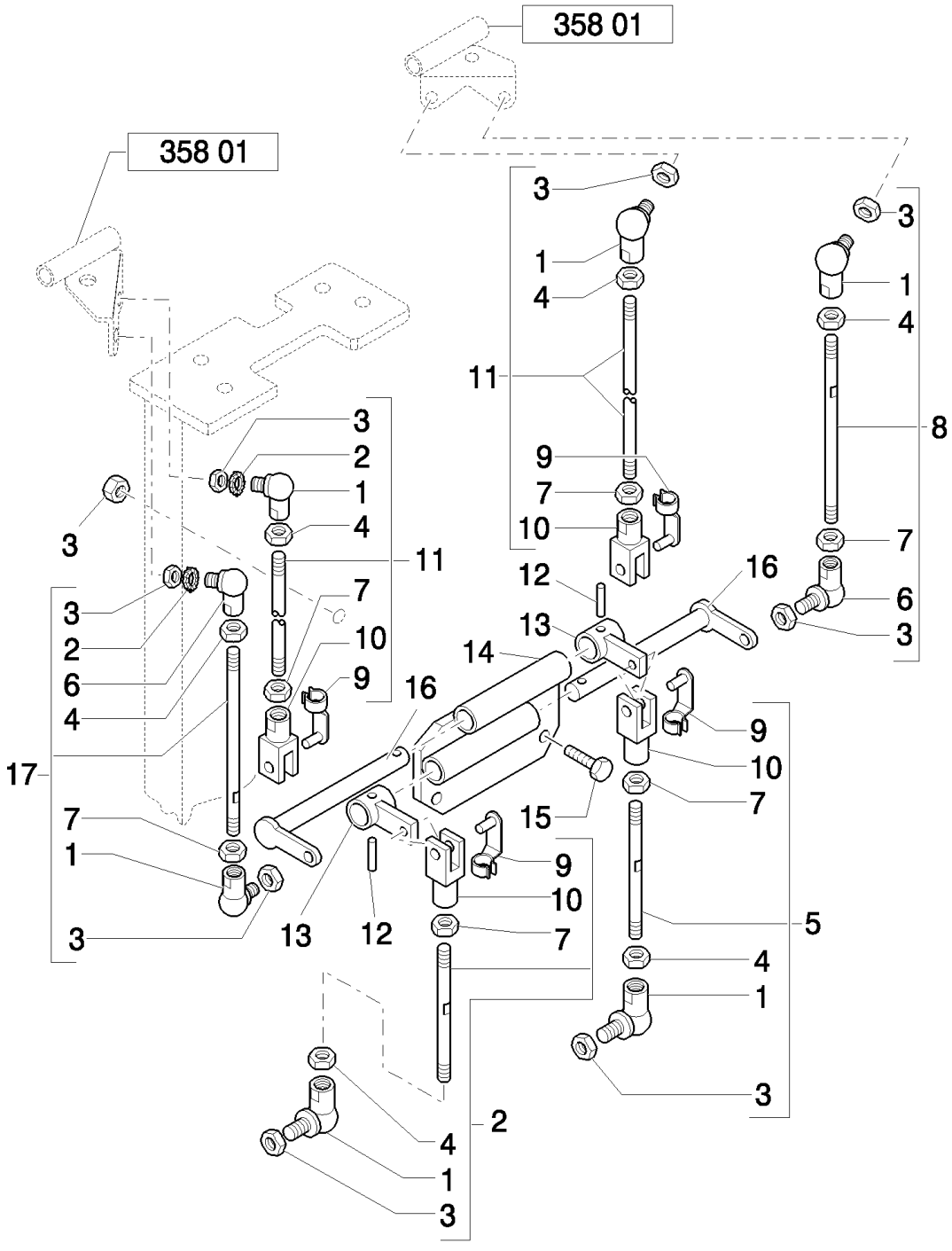
358 01
358 01
3
1
4
11
9
7
10
12
16
13
14
8
2
6
17
15
5
2
3

B110 TIER 3 BACKHOE LOADER (2/07-)

358(02) ISO 2 LEVER BACKHOE CONTROLS

Ref	Numero de Pieza	Ctd	Descripción
1	85804375	6	BALL JOINT,
2	85805806	1	TIE-ROD, Assy
3	14048211	8	NUT, LOCK, M8 x 1.25, Cl 8,
4	16102311	4	NUT, Thin, M8 x 1.25, Cl 04,
5	85805867	1	TIE-ROD, Assy
6	85804376	2	BALL JOINT,
7	16102911	6	NUT, Thin, M8 x 1.25, Cl 04, LH,
8	85803477	1	TIE-ROD, Assy
9	85802738	4	RETAINER,
10	11991971	4	CLEVIS, LH
11	85805237	2	TIE-ROD, Assy
12	13940370	2	PIN, ROLL, M5 x 26, Coiled,
13	85805866	2	LEVER, IDLER,
14	85803493	1	SUPPORT,
15	16043621	3	BOLT, Hex, M8 x 25, 8.8,
16	85803489	2	PIN,
17	85803474	1	TIE-ROD,

Mechanical Version

367(01) LOCK VALVES COMPONENTS - EU

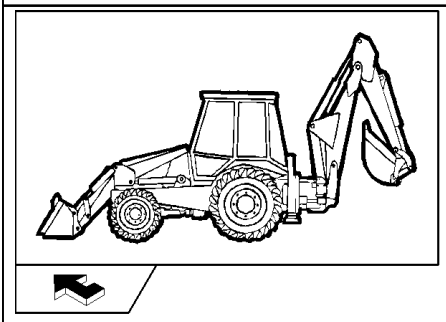

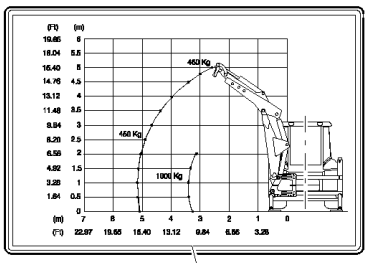

1

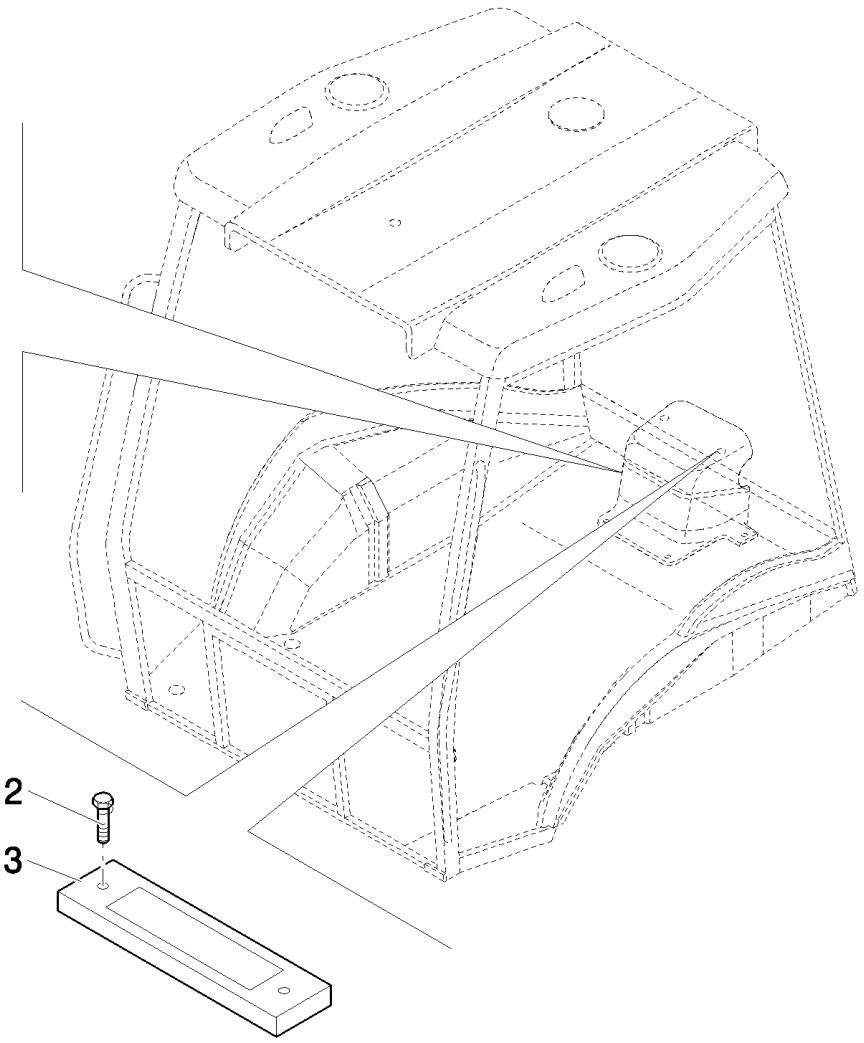

B110 TIER 3 BACKHOE LOADER (2/07-)

367(01) LOCK VALVES COMPONENTS - EU

Ref	Numero de Pieza	Ctd	Descripción
1	85818947	1	DECAL, , Only for B110 (EU)
1	85818948	1	DECAL, , Only For B115 (EU)
2	15910007	2	SCREW, SELF TAPPING, Oval Hd, M4.2 x 25,
3	85819160	1	GAUGE, LEVEL,

374(01) HYDRAULIC SYSTEM FOR "TRANSPORT LOCK" REAR LOCKING (POWER SHUTTLE, SIDE SHIFT) - EU

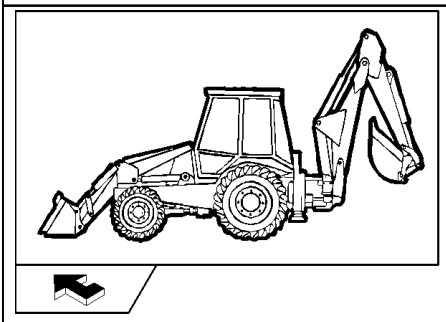

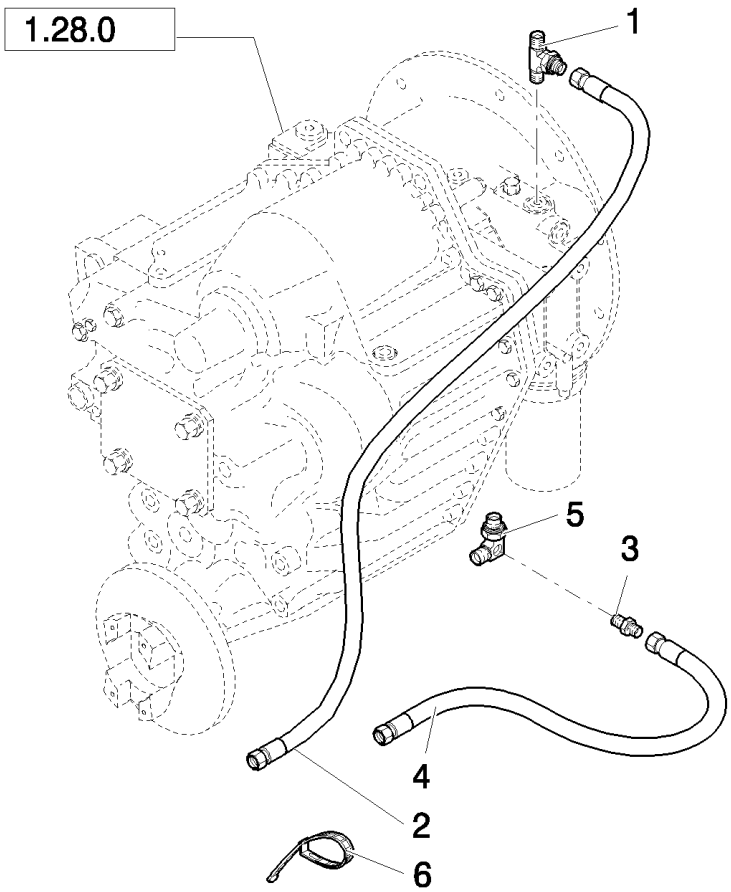

B110 TIER 3 BACKHOE LOADER (2/07-)

374(01) HYDRAULIC SYSTEM FOR "TRANSPORT LOCK" REAR LOCKING (POWER SHUTTLE, SIDE SHIFT) - EU

Ref	Numero de Pieza	Ctd	Descripción
1	85806170	1	TEE,
2	87552396	1	HOSE, FLEXIBLE,
3	47050685	1	CONNECTOR, HYD.,
4	87552395	1	HOSE, FLEXIBLE,
5	87378609	1	ADAPTER,
6	79072960	1	STRAP, CABLE,

374(02) HYDRAULIC SYSTEM FOR "TRANSPORT LOCK" REAR LOCKING (POWER SHUTTLE, SIDE SHIFT) - EU

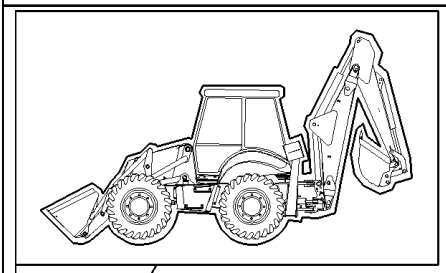

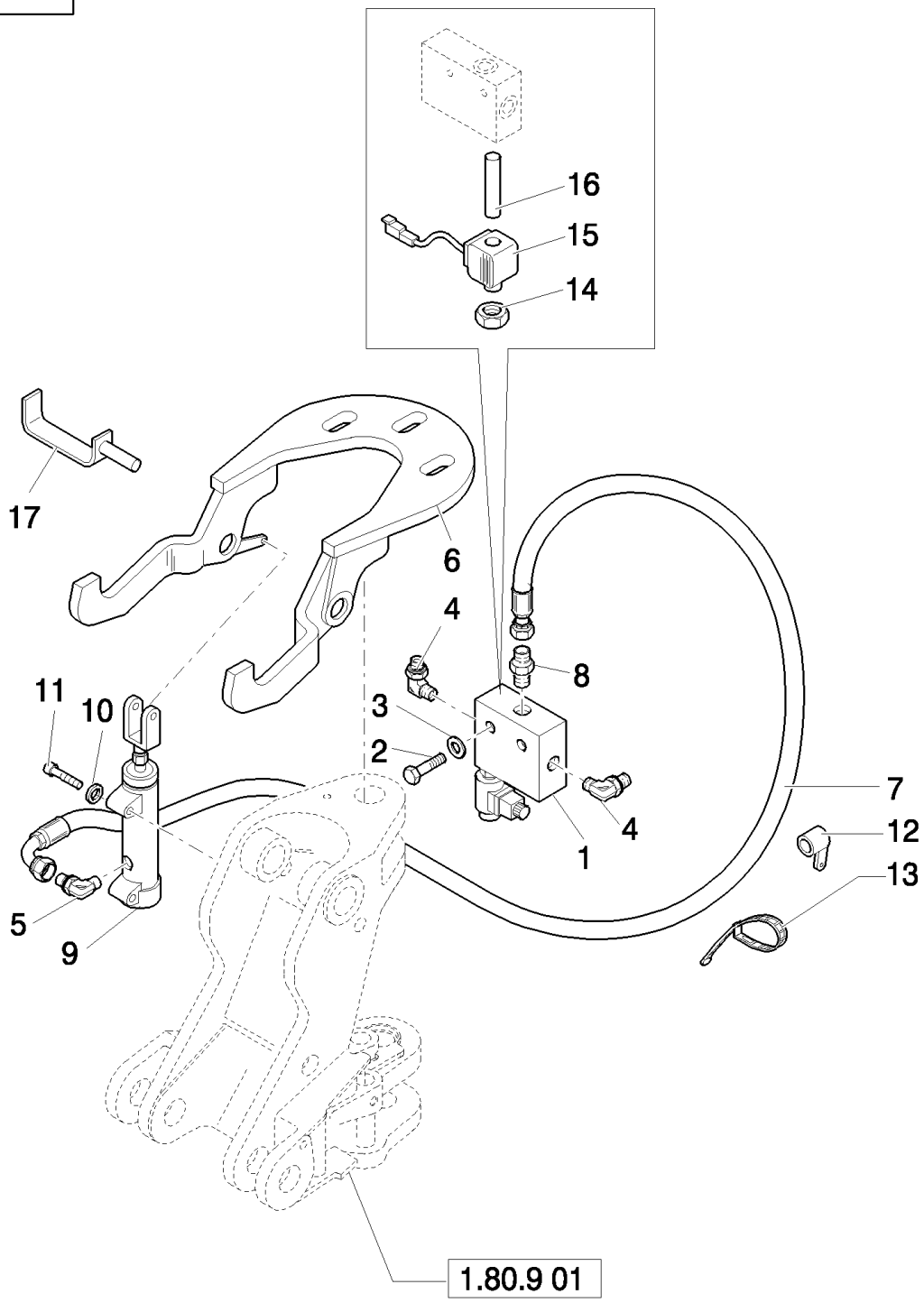

B110 TIER 3 BACKHOE LOADER (2/07-)

374(02) HYDRAULIC SYSTEM FOR "TRANSPORT LOCK" REAR LOCKING (POWER SHUTTLE, SIDE SHIFT) - EU

Ref	Numero de Pieza	Ctd	Descripción
1	85817265	1	VALVE, SOLENOID,
2	10903221	2	BOLT, Hex, M6 x 40, 8.8,
3	11197779	2	WASHER, SPRING, Belleville, M6.4,
4	85802234	2	ELBOW,
5	85824089	1	ELBOW,
6	85803637	1	HOOK, M8
7	87542236	1	HOSE, FLEXIBLE,
8	85803312	1	CONNECTOR, HYD.,
9	87362349	1	CYLINDER,
10	11193879	2	WASHER, SPRING, Belleville, M8.4,
11	16044211	2	SCREW, M8x1,25x50
12	14560187	1	STRAP, CABLE, 178mm lg, L=203.2 mm
13	85803332	4	STRAP, CABLE, M4.8 x 180,
14	9970384	1	NUT,
15	87357715	1	SENDER UNIT,
16	85810977	1	VALVE, HYDRAULIC,
17	85819702	1	PIN,

B110 TIER 3 BACKHOE LOADER (2/07-)

375(01) TRANSPORT LOCK - EUROPE (POWER SHUTTLE) (CAB SIDE SHIFT) - EU

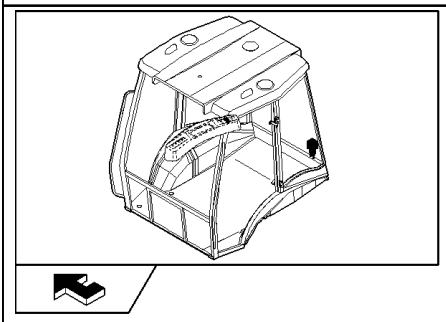

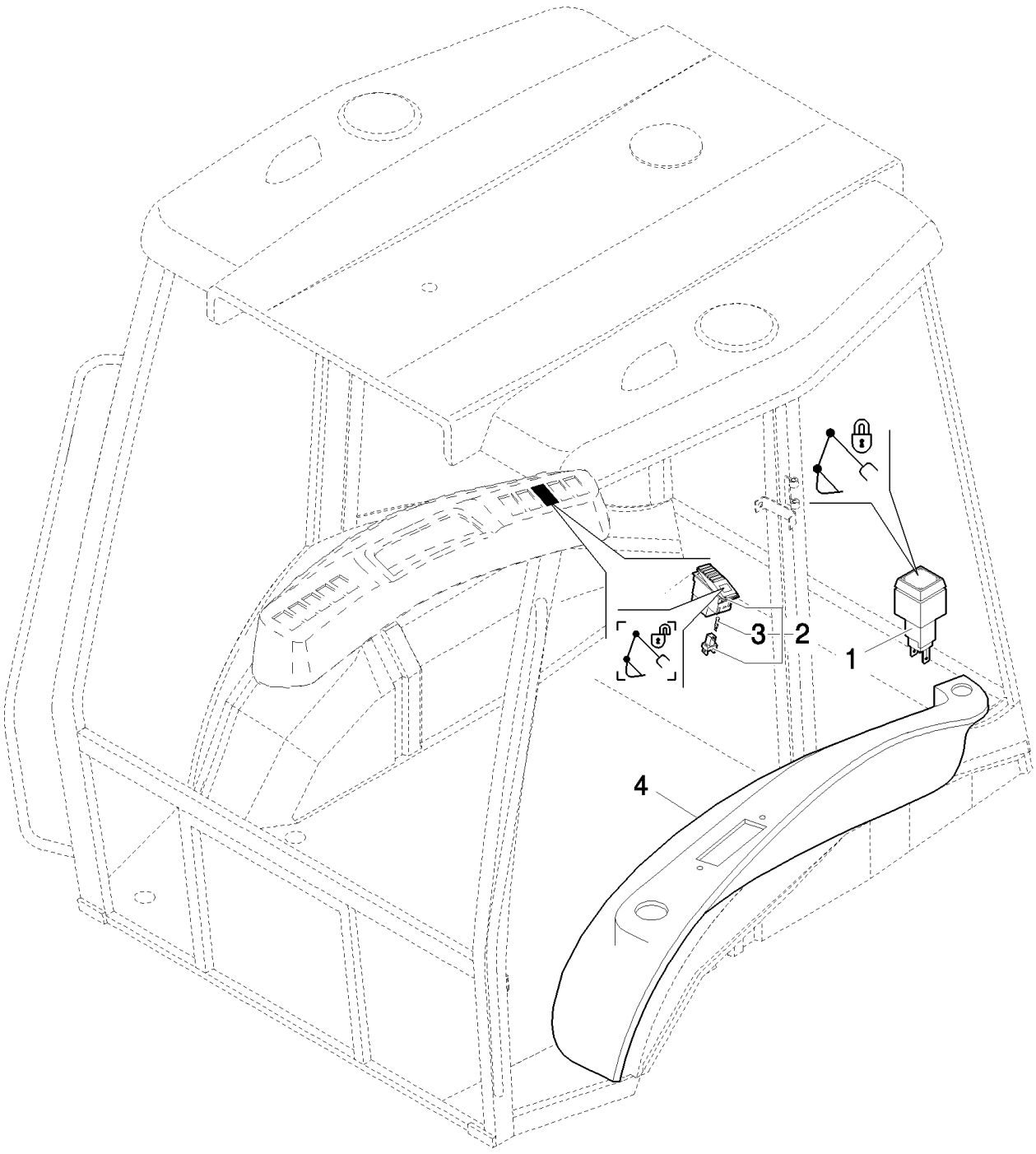

B110 TIER 3 BACKHOE LOADER (2/07-)

375(01) TRANSPORT LOCK - EUROPE (POWER SHUTTLE) (CAB SIDE SHIFT) - EU

Ref	Numero de Pieza	Ctd	Descripción
1	85802160	1	LIGHT, WARNING,
2	85819141	1	SWITCH,
3	14143790	1	BULB,
4	87362094	1	SOFT TRIM,

B110 TIER 3 BACKHOE LOADER (2/07-)

379(01) TRANSPORT LOCK" REAR LOCKING" (SIDE SHIFT POWER SHUTTLE) - EU

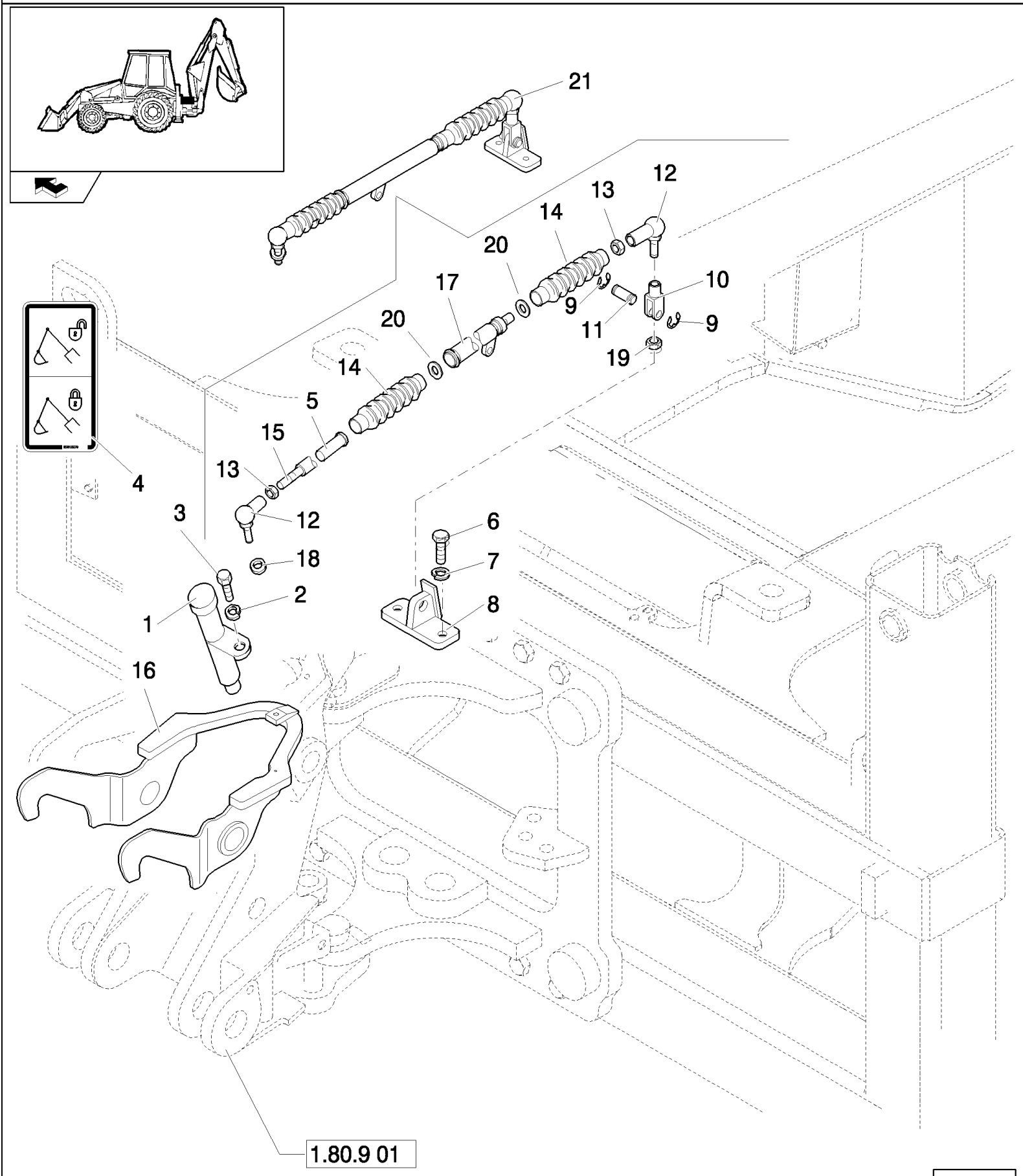

B110 TIER 3 BACKHOE LOADER (2/07-)

379(01) TRANSPORT LOCK" REAR LOCKING" (SIDE SHIFT POWER SHUTTLE) - EU

Ref	Numero de Pieza	Ctd	Descripción
1	85821268	1	SHOCK ABSORBER,
2	11193879	1	WASHER, SPRING, Belleville, M8.4,
3	16043621	1	BOLT, Hex, M8 x 25, 8.8,
4	85812278	1	DECAL,
5	85819482	1	BUSHING,
6	11106221	2	BOLT, Hex, M10 x 25, 8.8, Full Thd,
7	11190579	2	WASHER, SPRING, Belleville, M10.5,
8	85819485	1	BASE,
9	85813407	2	RING,
10	85819468	1	CLEVIS,
11	87302958	1	PIN, CLEVIS,
12	85819477	2	BALL JOINT,
13	85819478	1	NUT, M10
14	85819479	1	BELLOWS,
15	85819481	1	ROD,
16	85819493	1	HOOK,
17	85819480	1	TUBE,
18	85821270	1	WASHER,
19	85821271	1	NUT, M16
20	85824227	2	CLAMP,
21	87302956	1	TIE-ROD,

B110 TIER 3 BACKHOE LOADER (2/07-)

379(02) TRANSPORT LOCK" REAR LOCKING" (SIDE SHIFT POWER SHUTTLE) - EU

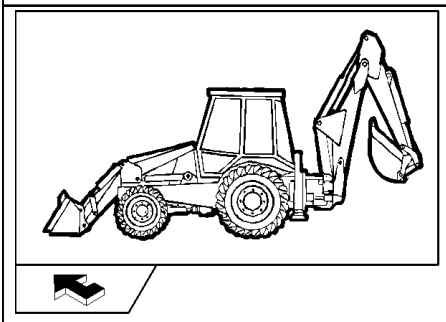

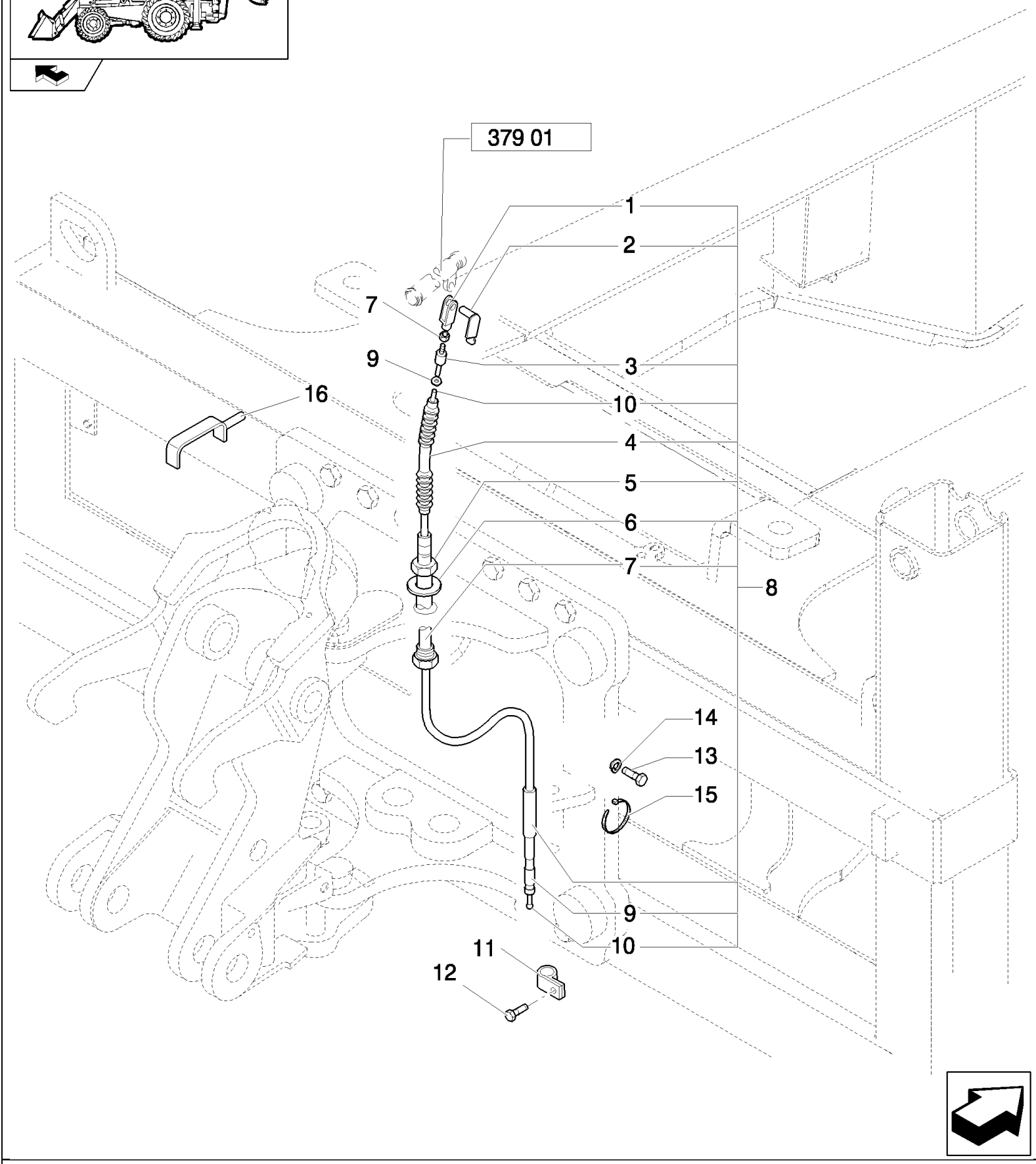

B110 TIER 3 BACKHOE LOADER (2/07-)

379(02) TRANSPORT LOCK" REAR LOCKING" (SIDE SHIFT POWER SHUTTLE) - EU

Ref	Numero de Pieza	Ctd	Descripción
1	85819467	1	CLEVIS,
2	85819469	1	CLIP, D=8
3	85819471	1	RING, D=19
4	85821278	1	BELLOWS,
5	87302960	1	NUT, M30
6	87302959	1	WASHER, D=46
7	85821273	1	NUT,
8	87302957	1	CABLE,
9	85821277	1	RING, RUBBER,
10	85821279	1	ROD,
11	10450190	1	CLAMP,
12	16043021	1	BOLT, Hex, M8 x 12, 8.8, Full Thd,
13	16043021	1	BOLT, Hex, M8 x 12, 8.8, Full Thd,
14	12626204	2	WASHER, M10 x 25 x 3,
15	79072960	3	STRAP, CABLE,
16	85819613	1	PIN,

B110 TIER 3 BACKHOE LOADER (2/07-)

380(01) TRANSPORT LOCK CONTROL (CAB POWER SHUTTLE) - EU

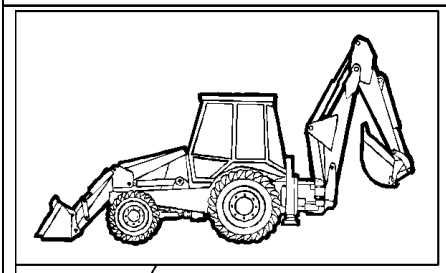

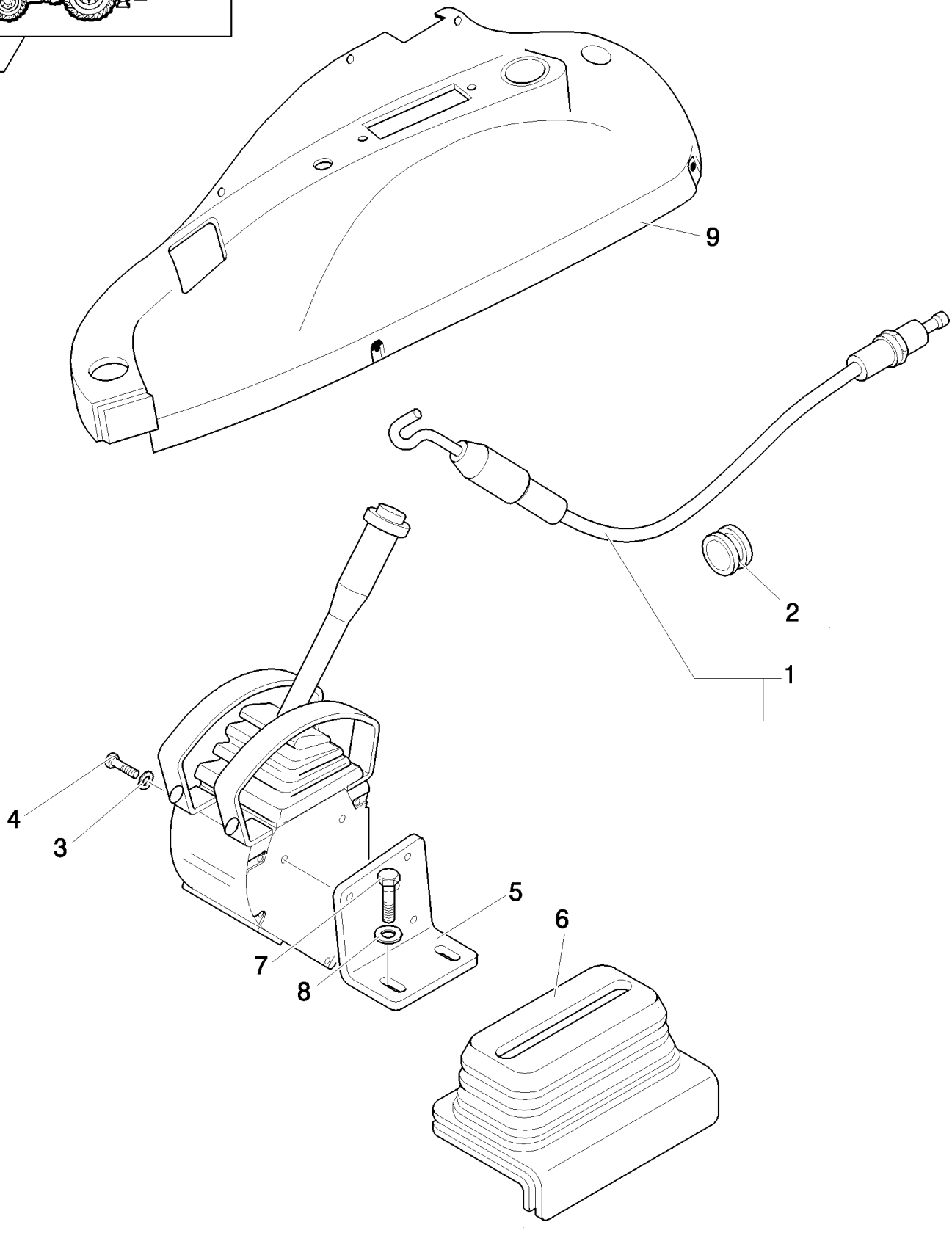

B110 TIER 3 BACKHOE LOADER (2/07-)

380(01) TRANSPORT LOCK CONTROL (CAB POWER SHUTTLE) - EU

Ref	Numero de Pieza	Ctd	Descripción
1	87324496	1	LEVER, Includes 87325156 Cable
2	10398680	1	GROMMET,
3	11193274	3	WASHER, SPRING, Belleville, M6.4,
4	15212921	3	BOLT, Hex, M6 x 50, 8.8, Full Thd,
5	85808419	1	SUPPORT,
6	85813132	1	BOOT,
7	16043624	2	BOLT, Hex, M8 x 25, 8.8, Full Thd,
8	11193874	2	WASHER, SPRING, Belleville, M8.4,
9	87362098	1	SOFT TRIM,

390(01) LOADER CONTROL VALVE, TWO SECTION, LEVER & DECAL

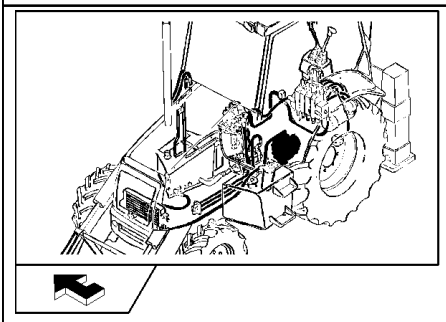

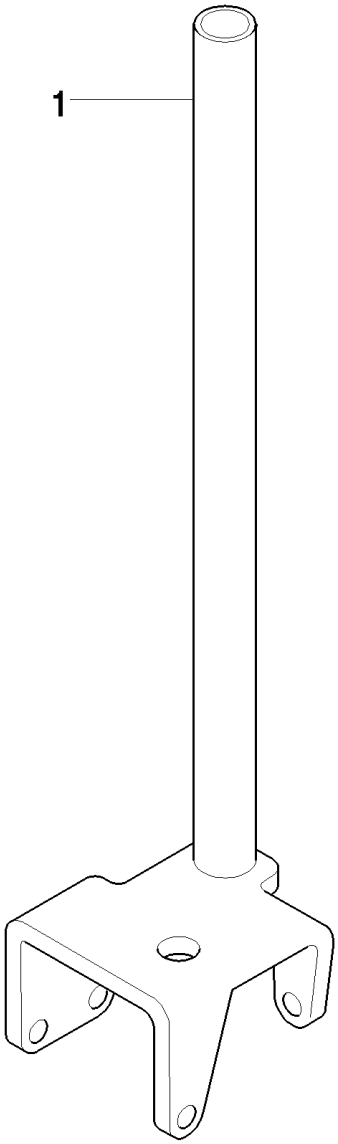

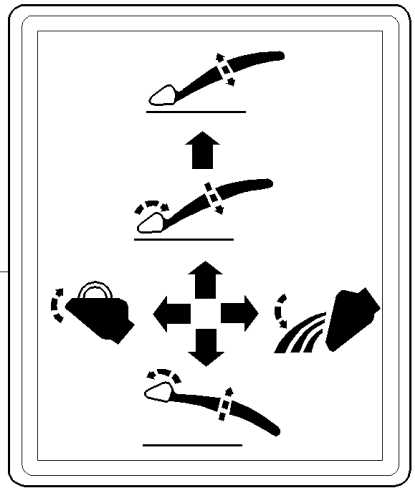

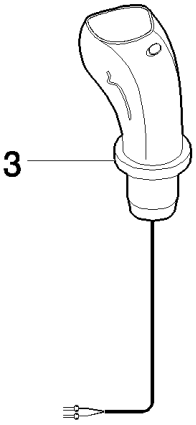

B110 TIER 3 BACKHOE LOADER (2/07-)

390(01) LOADER CONTROL VALVE, TWO SECTION, LEVER & DECAL

Ref	Numero de Pieza	Ctd	Descripción
1	87312049	1	LEVER,
2	85804346	1	DECAL,
3	87311102	1	JOYSTICK, , Only for POWER SHIFT
3	87311103	1	JOYSTICK, , Only for POWER SHUTTLE

391(01) LOCK VALVE FOR BUCKET 4X1 / 6X1

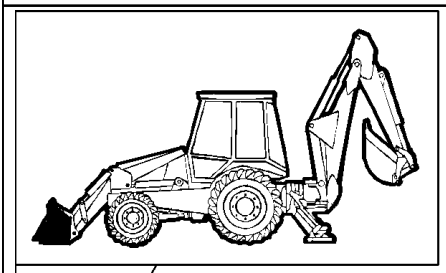

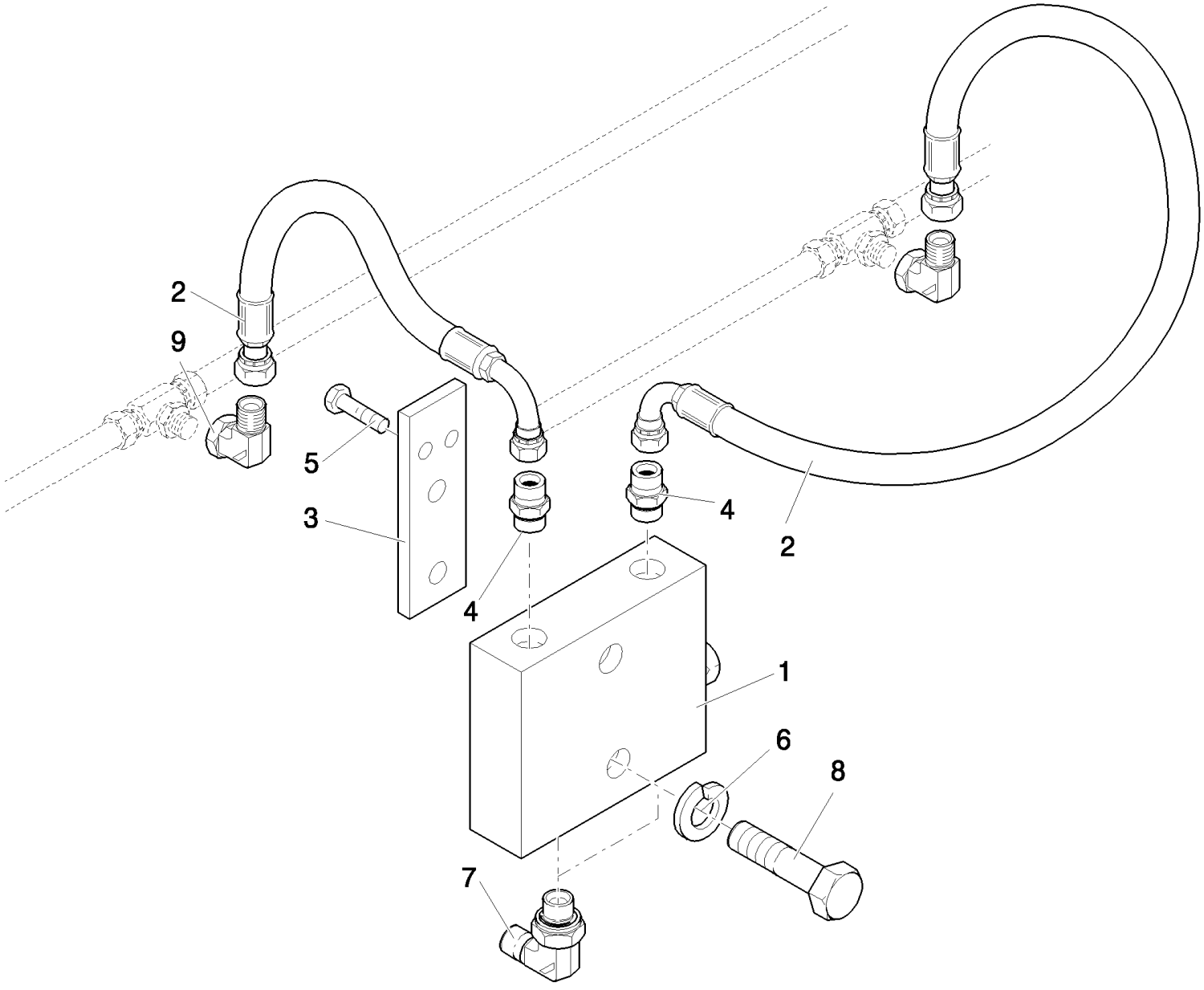

B110 TIER 3 BACKHOE LOADER (2/07-)

391(01) LOCK VALVE FOR BUCKET 4X1 / 6X1

Ref	Numero de Pieza	Ctd	Descripción
1	85820844	1	VALVE, HYDRAULIC,
2	85821127	2	HOSE, FLEXIBLE,
3	87316861	1	PLATE,
4	83963374	2	CONNECTOR, HYD.,
5	16044321	2	BOLT, Hex, M8 x 55, 8.8,
6	11193874	4	WASHER, SPRING, Belleville, M8.4,
7	83971549	2	ELBOW,
8	16044121	2	BOLT, Hex, M8 x 45, 8.8,
9	86511208	2	ELBOW,

392(01) LOCKING VALVE ON BACKHOE LIFT AND DIPP. CYLINDER

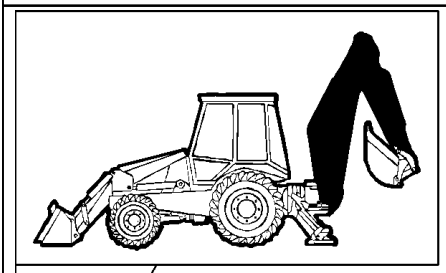

KIT 12=●
SEE ALSO 392 02

KIT 2=▲

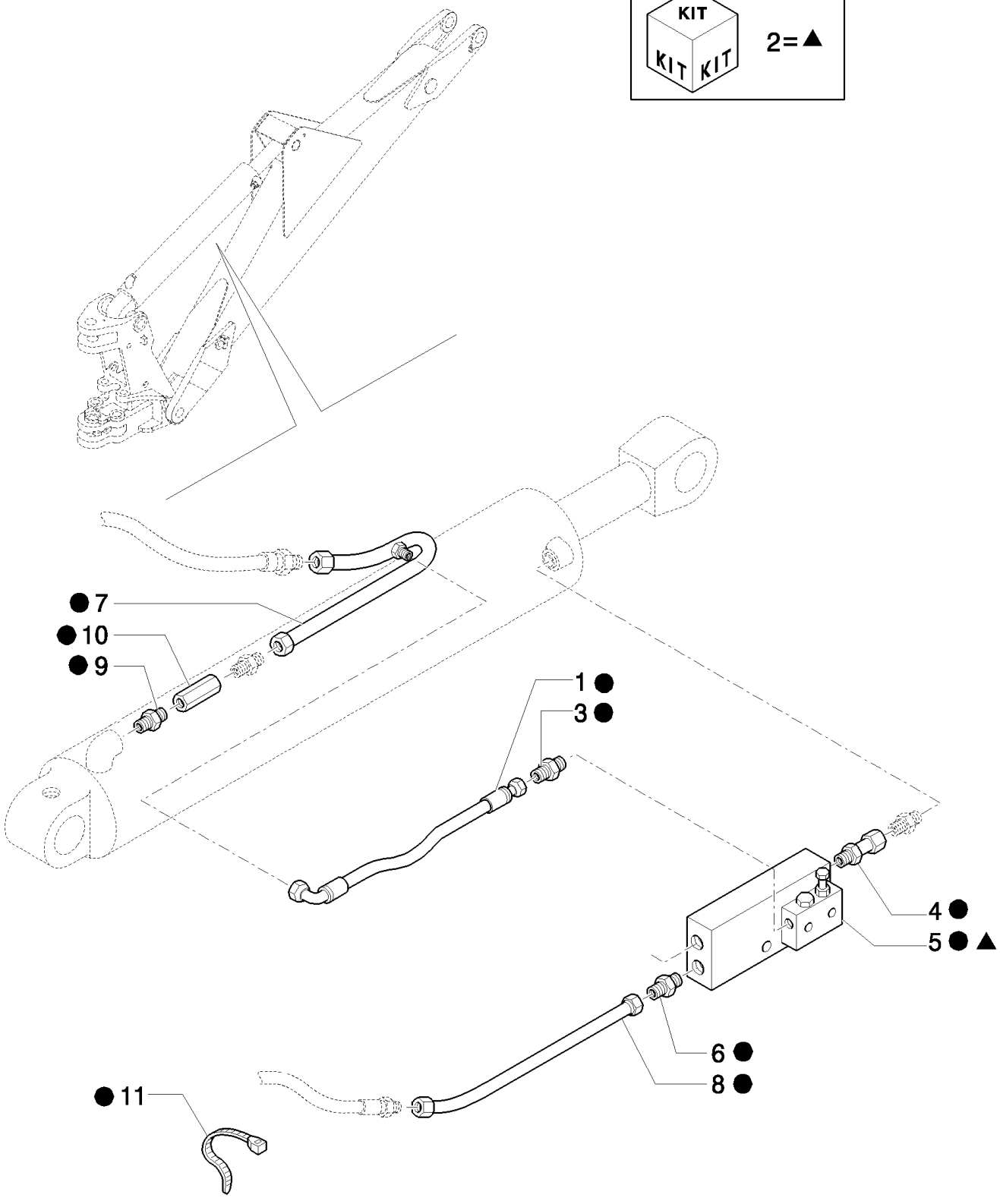

B110 TIER 3 BACKHOE LOADER (2/07-)

392(01) LOCKING VALVE ON BACKHOE LIFT AND DIPP. CYLINDER

Ref	Numero de Pieza	Ctd	Descripción
1	85815505	1	HOSE, FLEXIBLE, 600mm lg,
2	85820912	1	KIT,
3	85802803	1	CONNECTOR, HYD.,
4	85805124	1	CONNECTOR, HYD.,
5	87353316	1	VALVE, SAFETY, ASSY, Includes 2
6	83963000	2	CONNECTOR, HYD.,
7	85820835	1	TUBE, HYD,
8	85820836	1	TUBE, HYD,
9	85804879	1	CONNECTOR, HYD.,
10	85824308	1	VALVE, HYDRAULIC,
11	79072960	2	STRAP, CABLE,
12	87356232	1	KIT,

392(02) BACKHOE LIFT & DIPPERSTICK CYLINDER LOCK VALVE

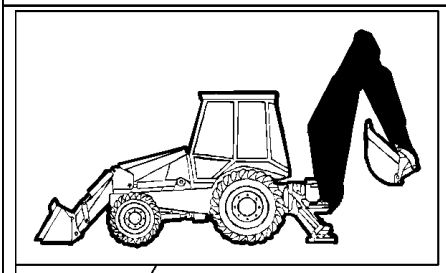

KIT KIT KIT 11 = ●
SEE ALSO 392 01

KIT KIT KIT 6 = ▲

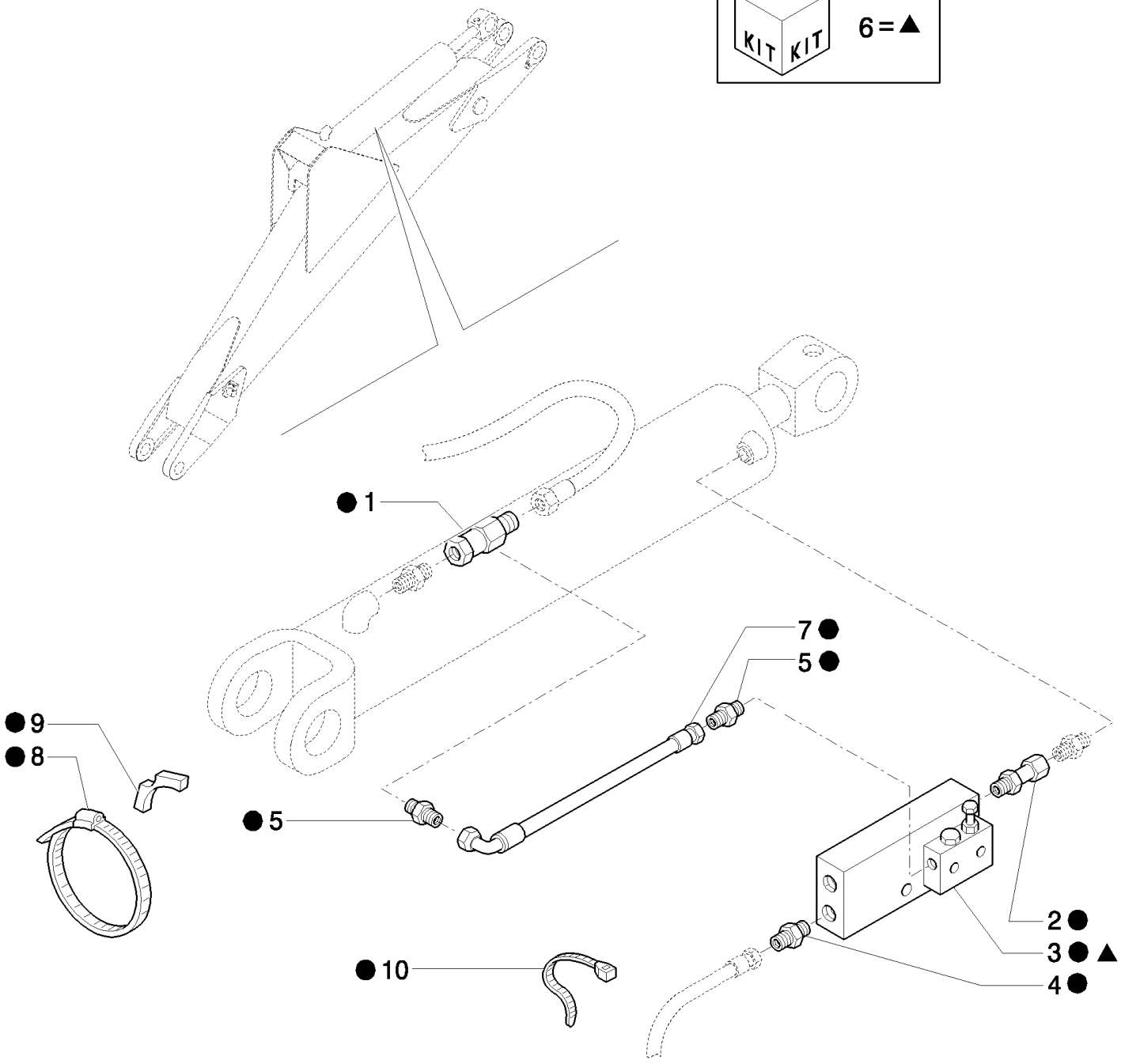

B110 TIER 3 BACKHOE LOADER (2/07-)

392(02) BACKHOE LIFT & DIPPERSTICK CYLINDER LOCK VALVE

Ref	Numero de Pieza	Ctd	Descripción
1	85805115	1	CONNECTOR, HYD.,
2	85805124	1	CONNECTOR, HYD.,
3	87353314	1	VALVE, SAFETY, ASSY, Includes 6
4	83963000	2	CONNECTOR, HYD.,
5	85802803	2	CONNECTOR, HYD.,
6	85820913	1	KIT,
7	85815505	1	HOSE, FLEXIBLE, 600mm lg,
8	85805126	1	CLAMP, HOSE,
9	85805123	1	SPACER,
10	79072960	2	STRAP, CABLE,
11	87356232	1	KIT,

393(01) 2 LEVER BACKHOE CONTROLS, LEVER, BOOT & DECALS

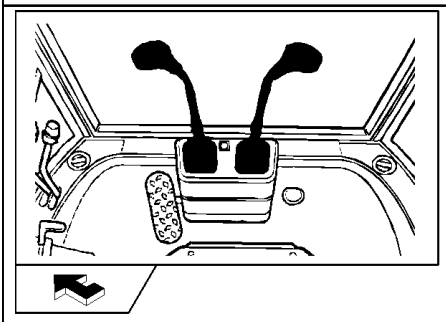

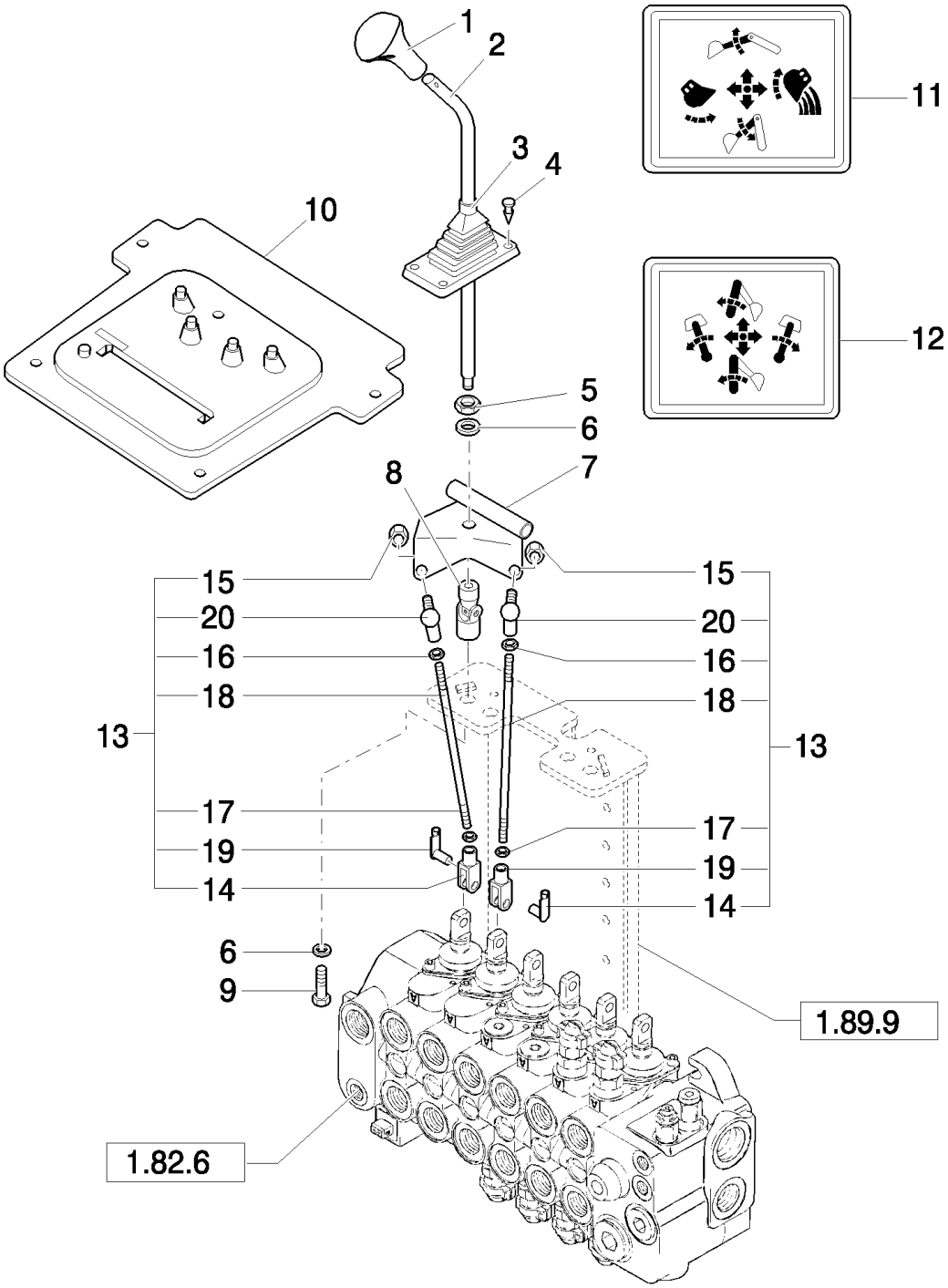

B110 TIER 3 BACKHOE LOADER (2/07-)

393(01) 2 LEVER BACKHOE CONTROLS, LEVER, BOOT & DECALS

Ref	Numero de Pieza	Ctd	Descripción
1	85801502	1	KNOB, Without Horn Switch
1	85802682	1	KNOB, Includes 13796621 M5 x 8mm long Setscrew; With 87448432 Horn Switch
	87448432	1	SWITCH, ASSY, Horn
2	85801488	2	LEVER,
3	85802843	2	BOOT,
4	14568887	8	FASTENER,
5	16101511	2	NUT, M12 x 1.25, Cl 8,
6	11190779	4	WASHER, SPRING, Belleville, M13,
7	85803124	1	BRACKET, LH
7	85803107	1	BRACKET, RH
8	85801518	2	JOINT, UNIVERSAL,
9	15540321	2	BOLT, Hex, M12 x 1.25 x 25, 8.8, Full Thd,
10	85804540	1	BOOT, , Only for Cab
11	85804344	1	DECAL,
12	85804345	1	DECAL,
13	85801514	4	TIE-ROD,
14	11991971	1	CLEVIS,
15	14048211	1	NUT, LOCK, M8 x 1.25, Cl 8,
16	16102311	1	NUT, Thin, M8 x 1.25, Cl 04,
17	16102911	1	NUT, Thin, M8 x 1.25, Cl 04, LH,
18	85801515	1	TIE-ROD,
19	85802738	1	RETAINER,
20	85804375	1	BALL JOINT,

Mechanical Version

394(01) 4 LEVER BACKHOE CONTROLS, CONSOLE, LEVERS & BELLCRANK (CENTER PIVOT - SIDE SHIFT)

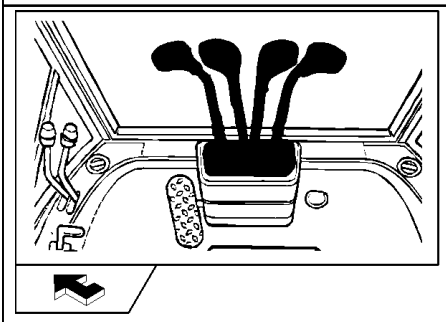

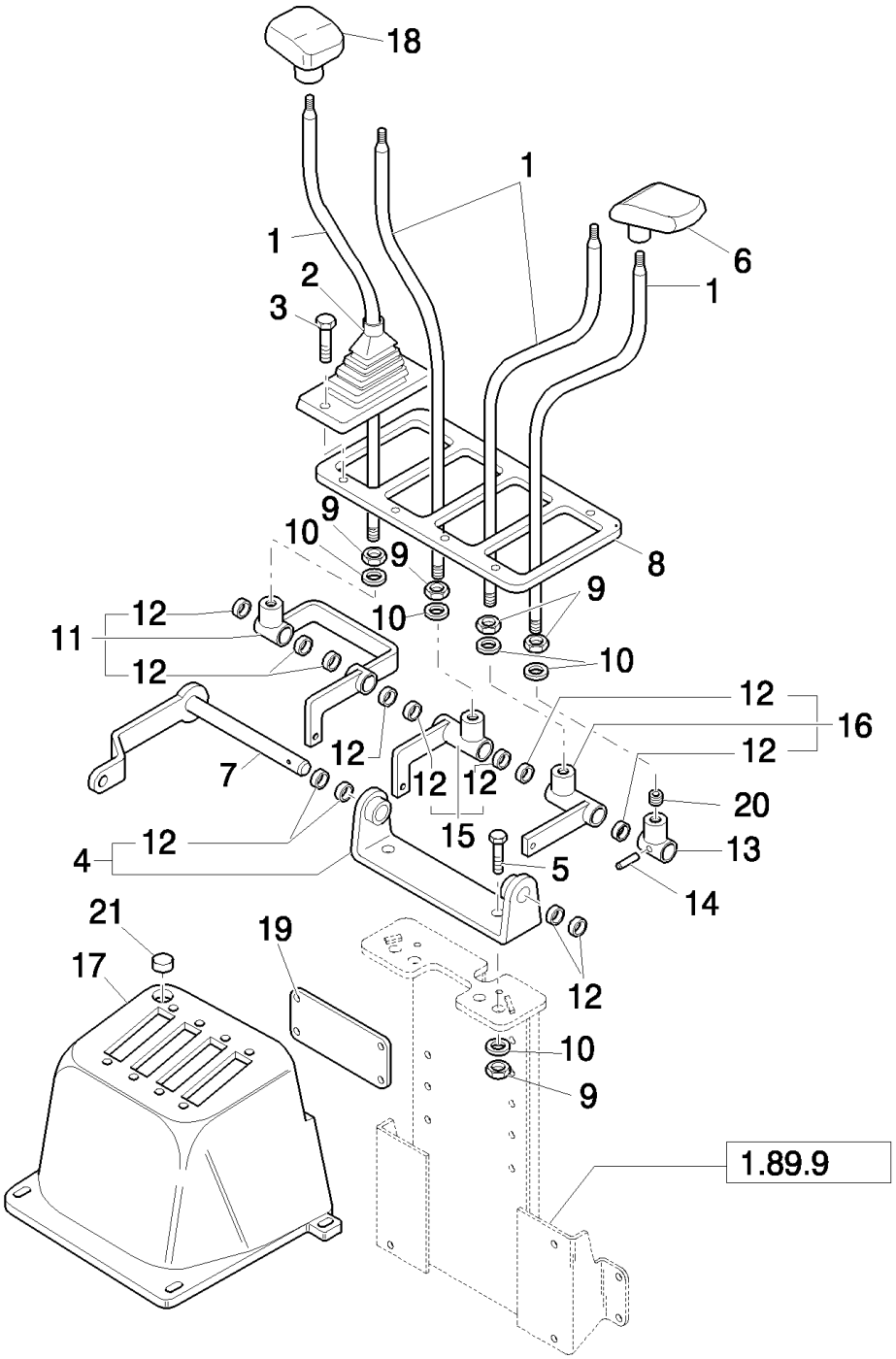

B110 TIER 3 BACKHOE LOADER (2/07-)

394(01) 4 LEVER BACKHOE CONTROLS, CONSOLE, LEVERS & BELLCRANK (CENTER PIVOT - SIDE SHIFT)

Ref	Numero de Pieza	Ctd	Descripción
1	85804780	4	LEVER,
2	85803382	4	BOOT,
3	13272477	8	SCREW, Cross Pan Hd, M4 x 20, 12.9,
4	85802647	1	SUPPORT,
5	15540421	2	BOLT, Hex, M12 x 1.25 x 30, 8.8, Full Thd,
6	83962918	2	HANDLE, LH
7	85804782	1	PIN,
8	85803540	1	PLATE,
9	16101511	6	NUT, M12 x 1.25, Cl 8,
10	11190779	6	WASHER, SPRING, Belleville, M13,
11	85804801	1	BELLCRANK,
12	85802494	12	BUSHING,
13	85804787	1	BELLCRANK,
14	13940370	1	PIN, ROLL, M5 x 26, Coiled,
15	85804794	1	BELLCRANK,
16	85804791	1	BELLCRANK,
17	87319744	1	DASHBOARD, , Side Shift
17	85827820	1	BLISTER, , Center Pivot
18	83962919	2	HANDLE, RH
19	85804781	1	COVER, , Center Pivot
20	13812631	1	SET SCREW, Hex Soc, M12 x 12, Flat Pt,
21	85802227	1	PLUG,

Mechanical Version

394(02) 4 LEVER BACKHOE CONTROLS, UPPER TIE-ROD ASSEMBLY, (CENTER PIVOT - SIDE SHIFT)

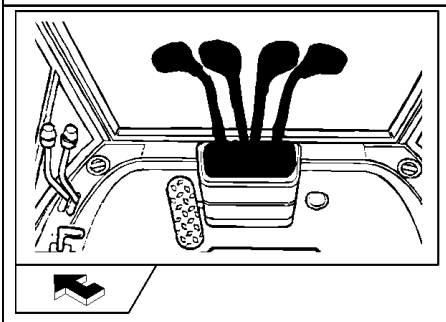

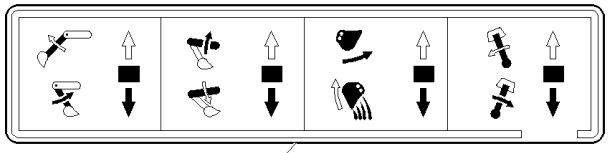

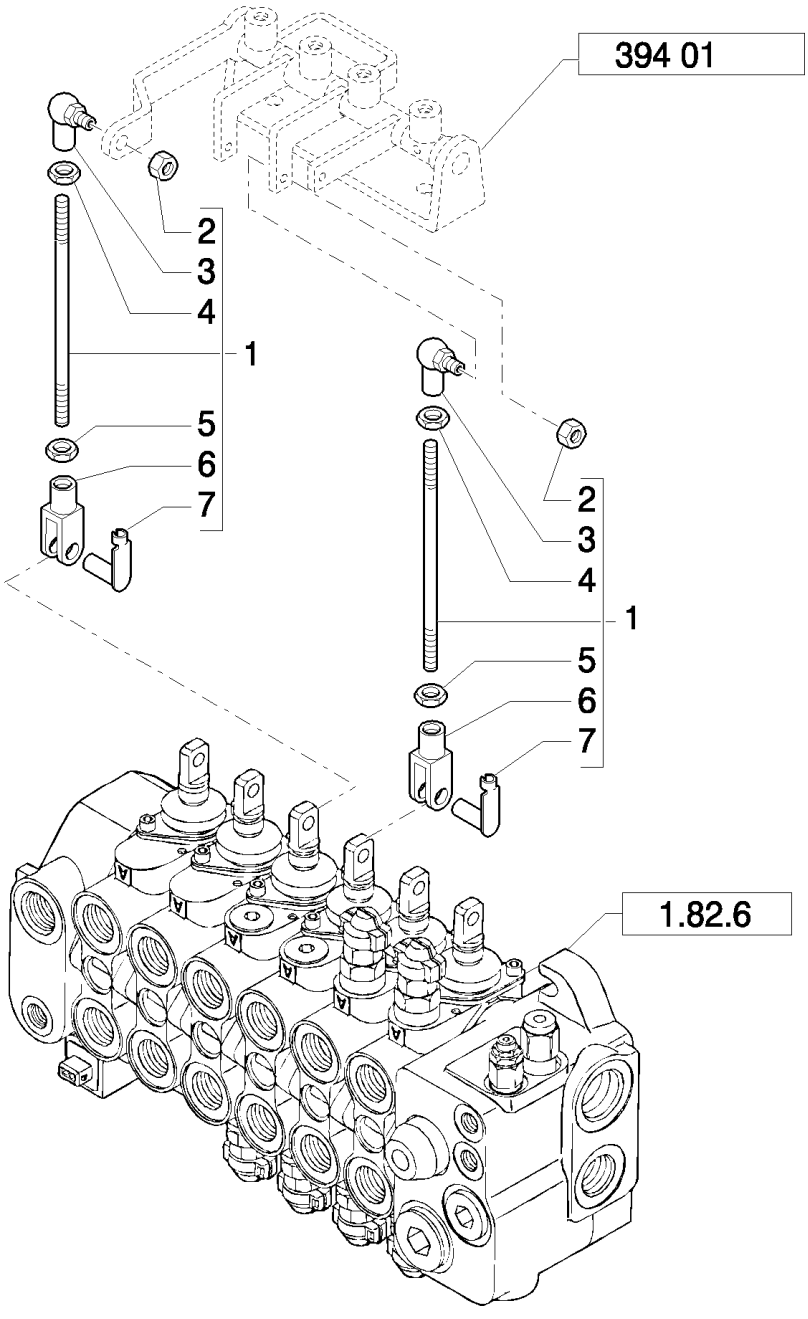

B110 TIER 3 BACKHOE LOADER (2/07-)

394(02) 4 LEVER BACKHOE CONTROLS, UPPER TIE-ROD ASSEMBLY, (CENTER PIVOT - SIDE SHIFT)

Ref	Numero de Pieza	Ctd	Descripción
1	85804803	2	TIE-ROD, , Center Pivot
1	85805498	2	TIE-ROD, , Side Shift
2	14048211	2	NUT, LOCK, M8 x 1.25, Cl 8,
3	85804375	2	BALL JOINT,
4	16102311	2	NUT, Thin, M8 x 1.25, Cl 04,
5	16102911	2	NUT, Thin, M8 x 1.25, Cl 04, LH,
6	11991971	2	CLEVIS,
7	85802738	2	RETAINER,
8	85803917	1	DECAL,

Mechanical Version

394(03) 4 LEVER BACKHOE CONTROLS, LOWER TIE-ROD ASSEMBLY (CENTER PIVOT - SIDE SHIFT)

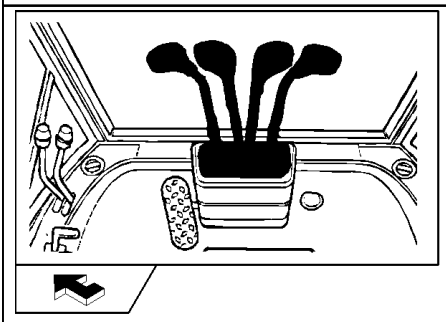

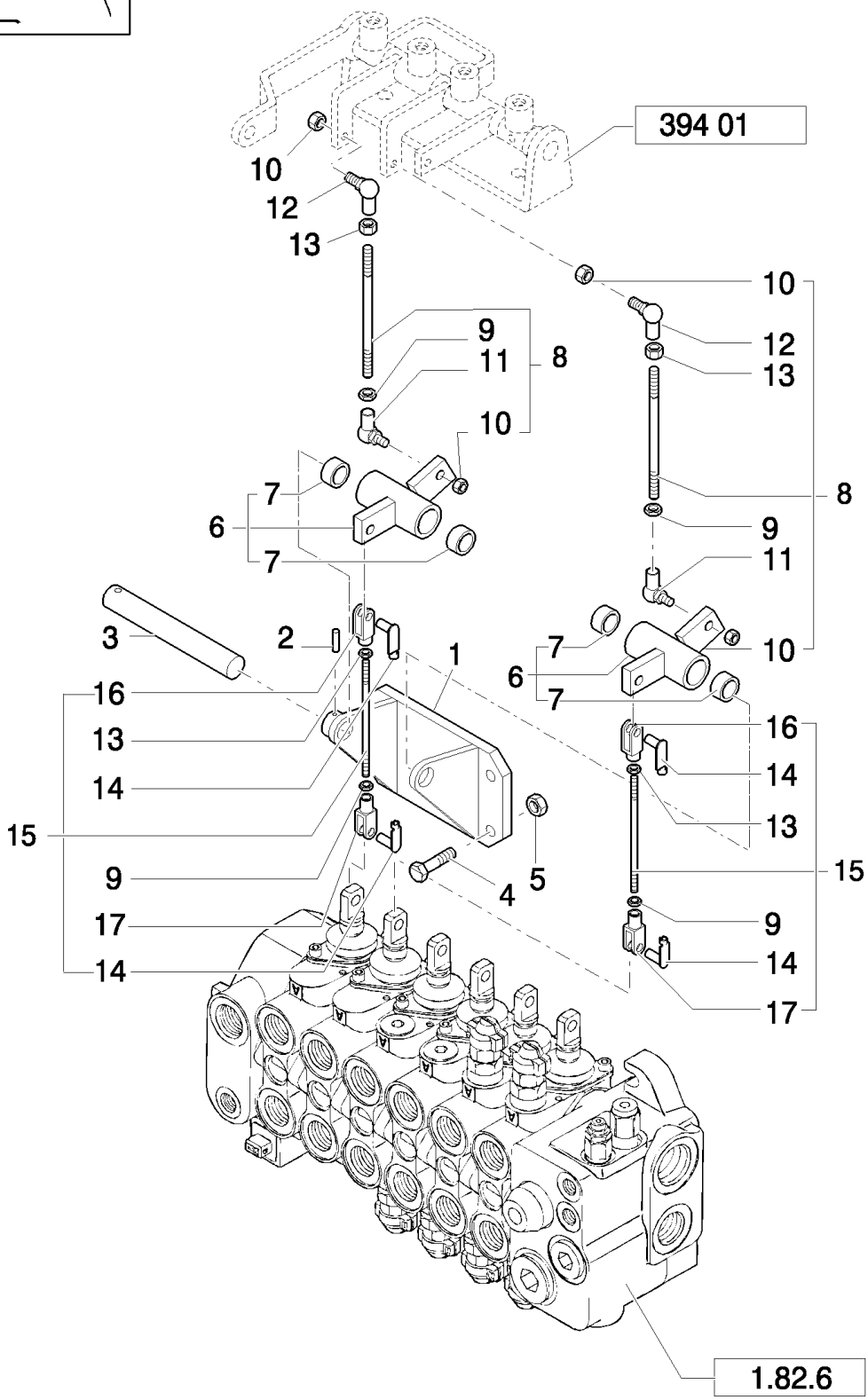

B110 TIER 3 BACKHOE LOADER (2/07-)

394(03) 4 LEVER BACKHOE CONTROLS, LOWER TIE-ROD ASSEMBLY (CENTER PIVOT - SIDE SHIFT)

Ref	Numero de Pieza	Ctd	Descripción
1	85803360	1	SUPPORT,
2	13940370	1	PIN, ROLL, M5 x 26, Coiled,
3	85803364	1	PIN,
4	16043621	4	BOLT, Hex, M8 x 25, 8.8,
5	16104111	4	NUT, LOCK, M8 x 1.25, Cl 8,
6	85807926	2	BELLCRANK,
7	85802494	4	BUSHING,
8	85804736	2	TIE-ROD,
9	16102911	4	NUT, Thin, M8 x 1.25, Cl 04, LH,
10	14048211	4	NUT, LOCK, M8 x 1.25, Cl 8,
11	85804376	2	BALL JOINT,
12	85804375	2	BALL JOINT,
13	16102311	6	NUT, Thin, M8 x 1.25, Cl 04,
14	85802738	4	RETAINER,
15	85803447	2	TIE-ROD, , Center Pivot
15	85807914	1	TIE-ROD, , Side Shift
16	10007871	2	YOKE,
17	11991971	2	CLEVIS,

Mechanical Version

394/1(01) ISO 2 LEVER BACKHOE CONTROLS, LEVERS, BOOT & DECALS (CENTER PIVOT)

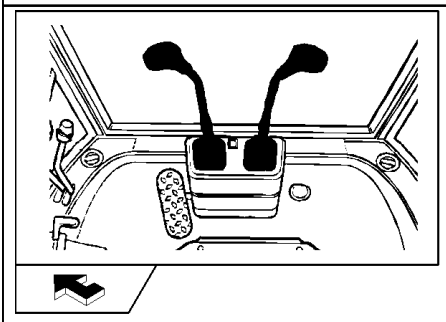

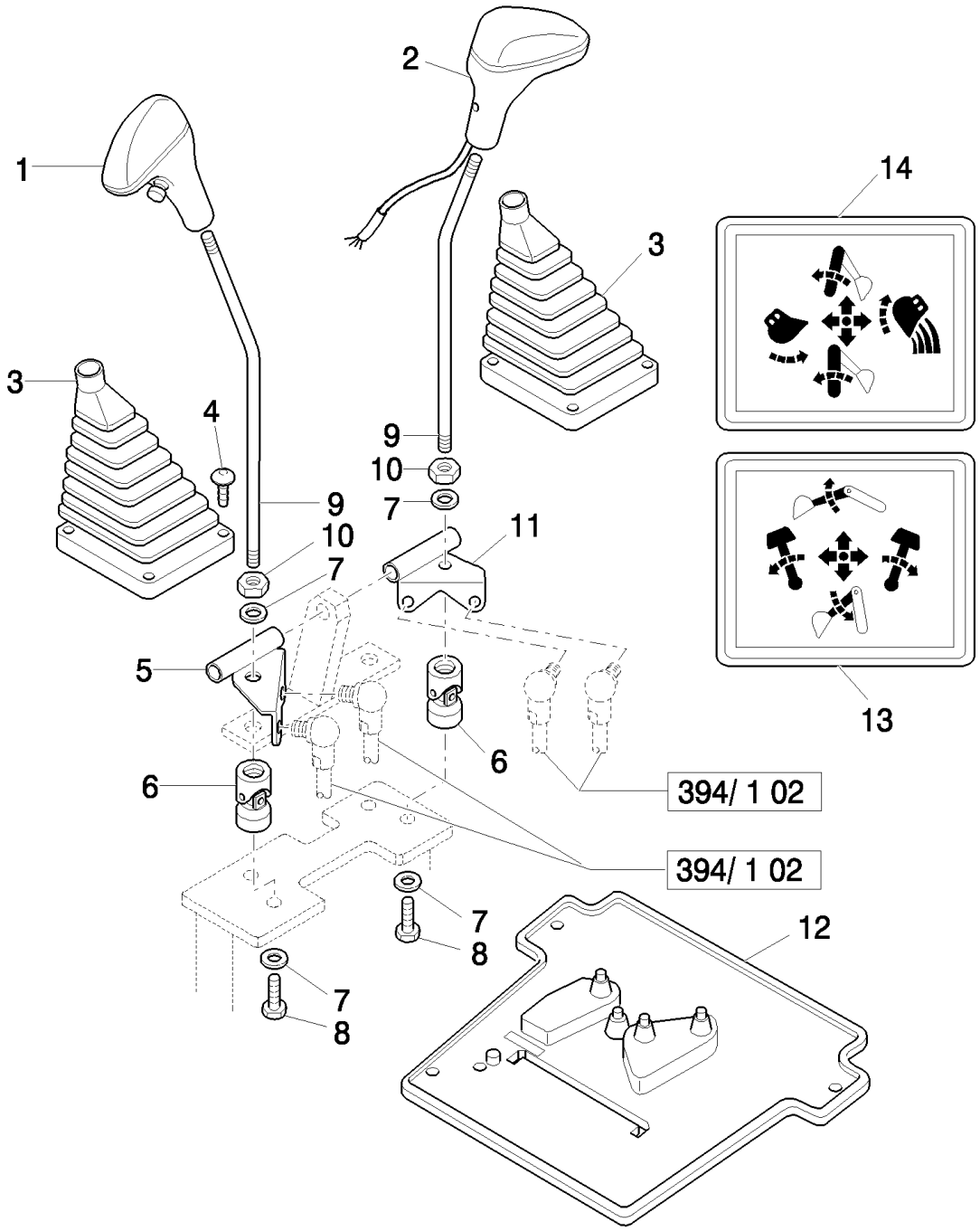

B110 TIER 3 BACKHOE LOADER (2/07-)

394/1(01) ISO 2 LEVER BACKHOE CONTROLS, LEVERS, BOOT & DECALS (CENTER PIVOT)

Ref	Numero de Pieza	Ctd	Descripción
1	85801502	1	KNOB, Without Horn Switch
2	85802682	1	KNOB, Includes 13796621 M5 x 8mm long Setscrew; With 87448432 Horn Switch
	87448432	1	SWITCH, ASSY, Horn
3	85802843	2	BOOT,
4	14568887	8	FASTENER, 8X20
5	85803124	1	BRACKET, L.H.
6	85801518	2	JOINT, UNIVERSAL,
7	11190779	4	WASHER, SPRING, Belleville, M13,
8	15540321	2	BOLT, Hex, M12 x 1.25 x 25, 8.8, Full Thd,
9	85801488	2	LEVER,
10	16101511	2	NUT, M12 x 1.25, Cl 8,
11	85803107	1	BRACKET, R.H.
12	85804541	1	BOOT, w/Cab, Only for Cab
13	85803782	1	DECAL,
14	85803783	1	DECAL,
15	85803125	1	STOP, Support

Mechanical Version

394/1(02) ISO 2 LEVER BACKHOE CONTROLS, TIE-ROD ASSEMBLY (CENTER PIVOT)

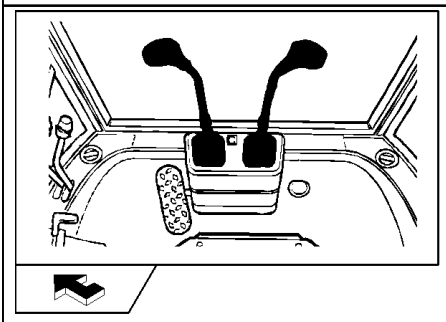

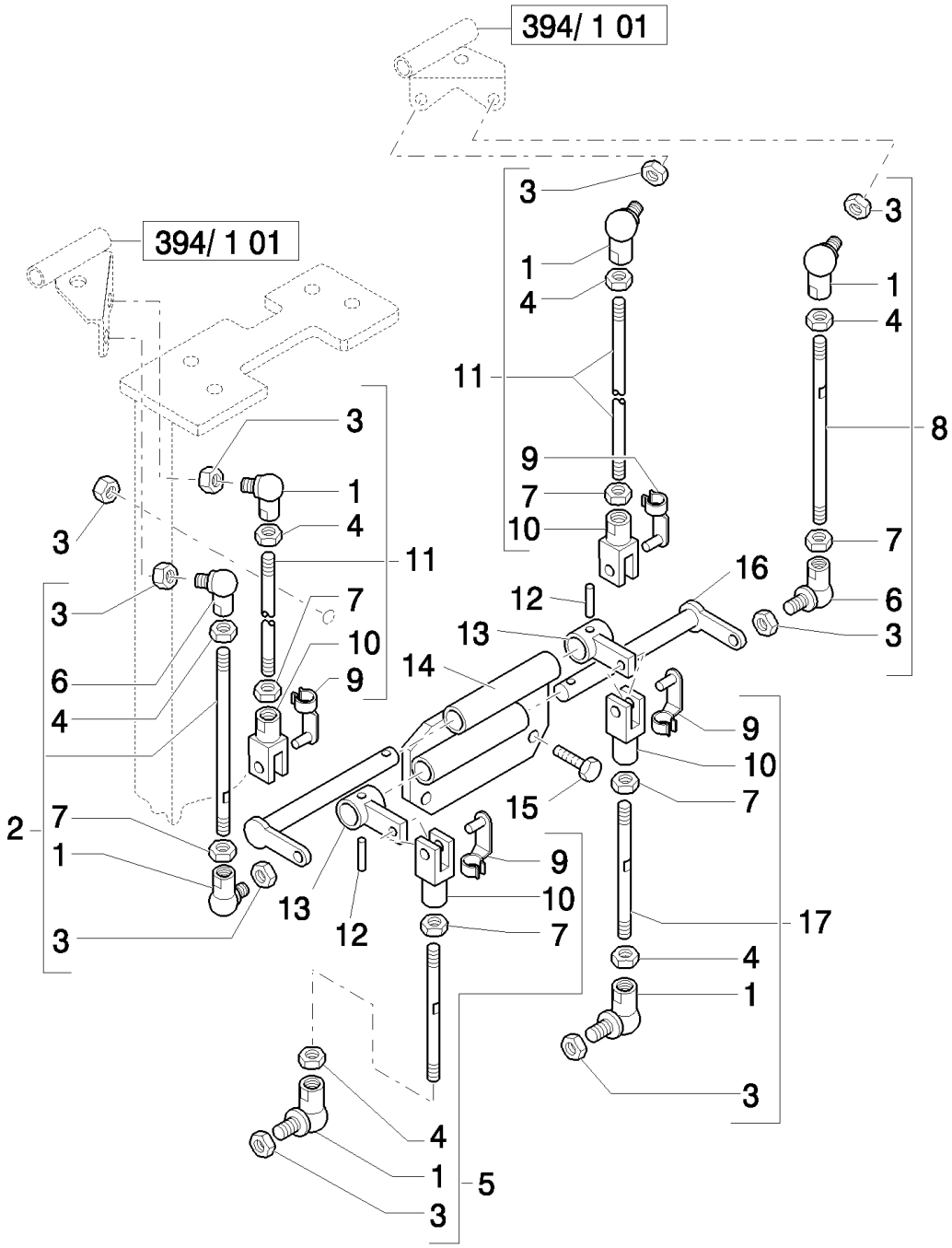

B110 TIER 3 BACKHOE LOADER (2/07-)

394/1(02) ISO 2 LEVER BACKHOE CONTROLS, TIE-ROD ASSEMBLY (CENTER PIVOT)

Ref	Numero de Pieza	Ctd	Descripción
1	85804375	6	BALL JOINT,
2	85803474	1	TIE-ROD,
3	14048211	9	NUT, LOCK, M8 x 1.25, Cl 8,
4	16102311	6	NUT, Thin, M8 x 1.25, Cl 04,
5	85803479	1	TIE-ROD,
6	85804376	2	BALL JOINT,
7	16102911	6	NUT, Thin, M8 x 1.25, Cl 04, LH,
8	85803477	1	TIE-ROD,
9	85802738	4	RETAINER,
10	11991971	4	CLEVIS, L.H
11	85801514	2	TIE-ROD,
12	13940370	2	PIN, ROLL, M5 x 26, Coiled,
13	85803492	2	ARM,
14	85803493	1	SUPPORT,
15	16043621	3	BOLT, Hex, M8 x 25, 8.8,
16	85803489	2	PIN,
17	85803476	1	TIE-ROD,

Mechanical Version

402(01) 4WD FRONT AXLE, HOUSING, BUSHINGS & SUPPORTS - NA

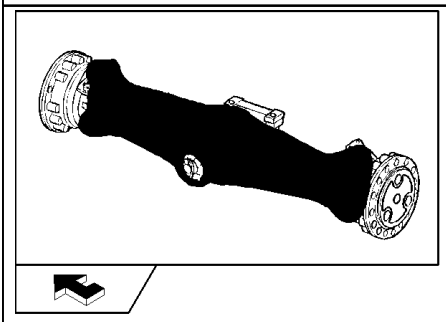

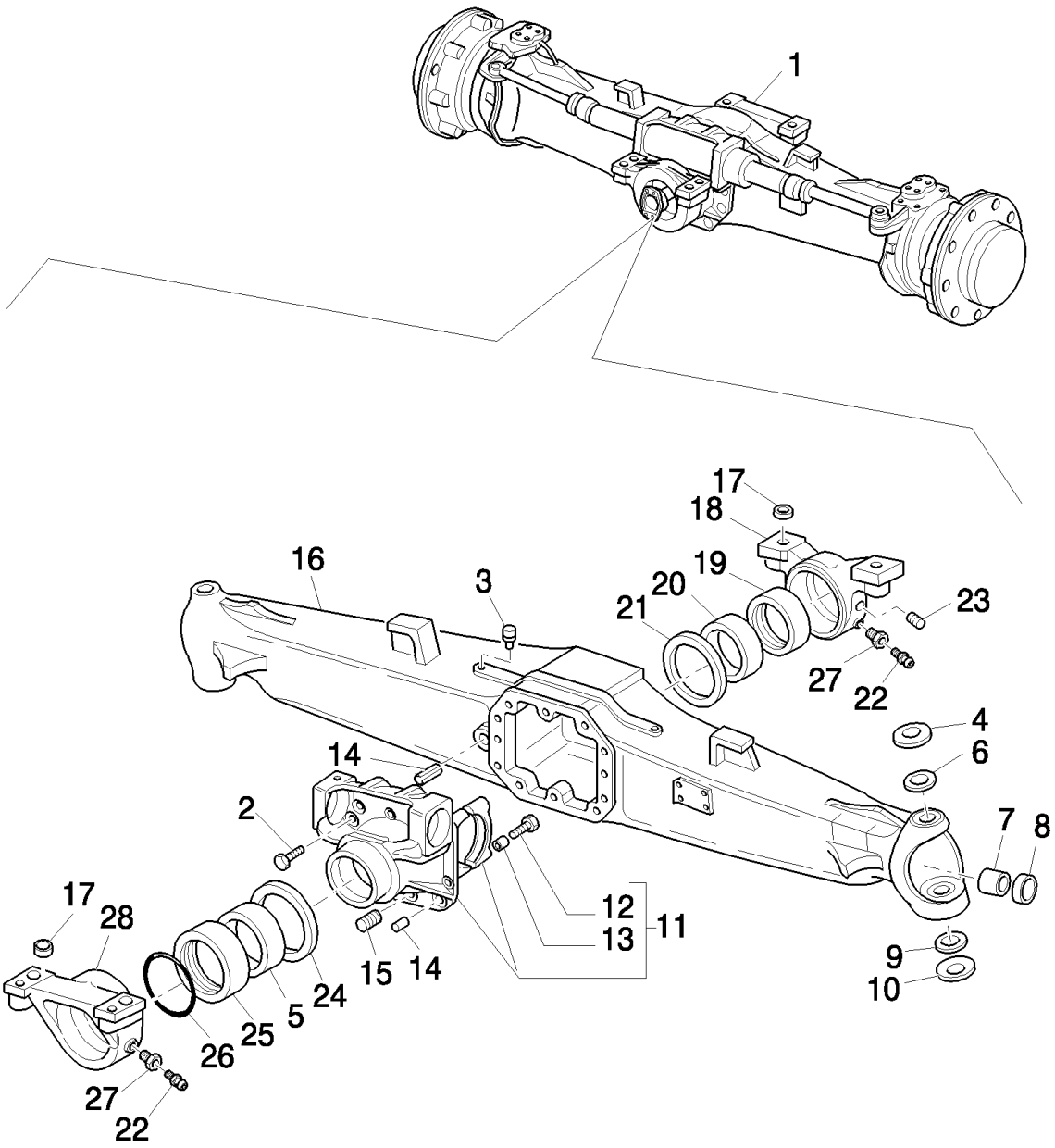

B110 TIER 3 BACKHOE LOADER (2/07-)

402(01) 4WD FRONT AXLE, HOUSING, BUSHINGS & SUPPORTS - NA

Ref	Numero de Pieza	Ctd	Descripción
1	85827726	1	AXLE ASSY, 4WD, , Power Shuttle 13.714
1	85827725	1	AXLE ASSY, 4WD, , Power Shuttle 14.308
2	9967769	10	SCREW, Cap, HH, M12X1.75X33
3	9967672	1	PLUG, M10X1
4	9967997	2	WASHER,
5	9968010	1	BUSHING,
6	87306932	2	BUSHING,
7	9968019	2	BUSHING,
8	85824346	2	SEAL,
9	9968002	2	BALL JOINT, 2 piece
10	9968003	2	WASHER,
11	9968004	1	SUPPORT, , Includes 12, 13
12	9967681	4	SCREW,
13	9967682	4	BUSHING,
14	9968005	2	PLUG, DRAIN,
15	9967683	2	PIN, ROLL,
16	85827738	1	HOUSING, AXLE,
17	9967990	4	BUSHING,
18	9967991	1	SUPPORT, Front
19	9967992	1	BUSHING,
20	9967993	1	BUSHING,
21	9967994	1	WASHER, THRUST,
22	9967996	2	NIPPLE, LUBE,
23	85805973	1	SCREW, M8X1
24	9968006	1	WASHER, THRUST,
25	9968007	1	RING,
26	9968008	1	O-RING,
27	9967995	2	SCREW,
28	9968009	1	SUPPORT, Rear

402(02) 4WD FRONT AXLE, SWIVEL HOUSING & STEERING CYLINDER - NA

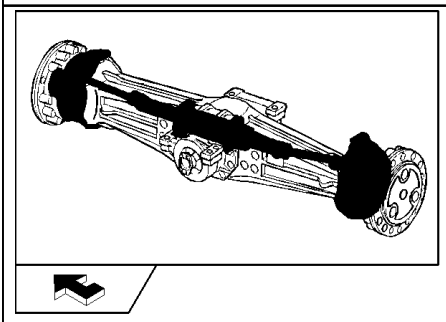

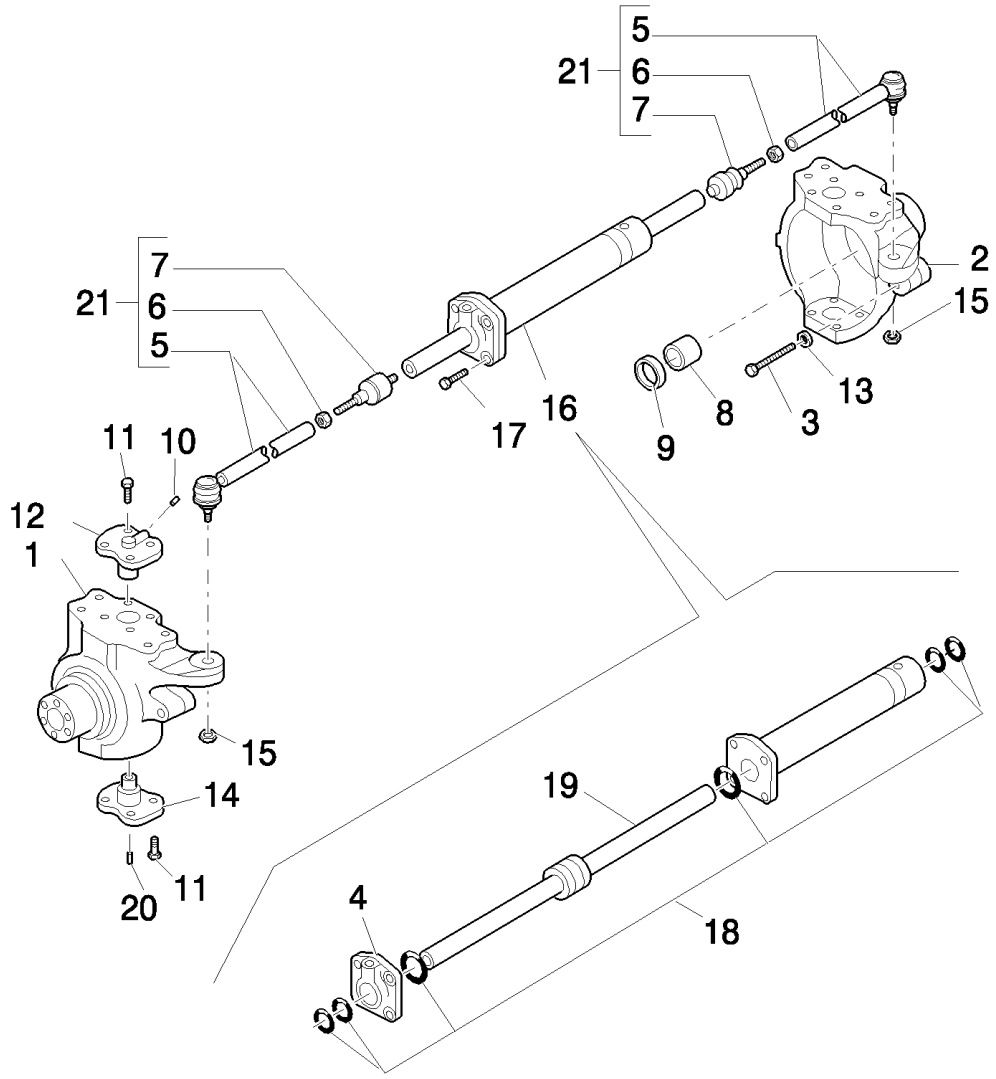

B110 TIER 3 BACKHOE LOADER (2/07-)

402(02) 4WD FRONT AXLE, SWIVEL HOUSING & STEERING CYLINDER - NA

Ref	Numero de Pieza	Ctd	Descripción
1	85827740	1	KNOTTER, LH; 8 Bolt Holes
2	85827739	1	KNOTTER, RH; 8 Bolt Holes
3	85805987	2	SCREW, M16x100
4	85805989	1	CYLINDER HEAD,
5	85805977	2	TIE-ROD,
6	85805976	2	NUT, M18x1.5
7	85805975	2	BALL JOINT,
8	85805988	2	BUSHING,
9	85824345	2	SEAL,
10	9968021	2	NIPPLE, LUBE, M6x2
11	9968022	14	SCREW, M14 x 2 x 35
12	9968023	2	PIVOT,
13	85805986	2	NUT, M16,
14	9968025	2	PIN,
15	85805982	2	NUT, M18x1.5
16	85805978	1	CYLINDER STEERING, Assy
17	9968028	4	SCREW, M12x45
18	85805990	1	KIT, SEALS,
19	85805992	1	ROD,
20	85805984	2	NIPPLE, LUBE, M6x1
21	87306934	2	TIE-ROD, , Includes Ref. 5 To 7

402(03) 4WD FRONT AXLE, HUBS - NA

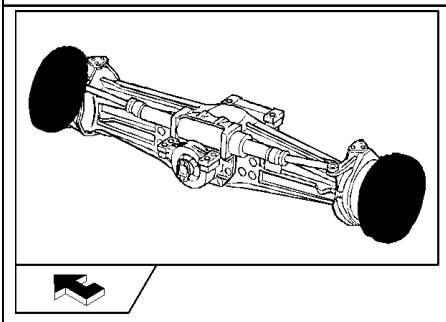

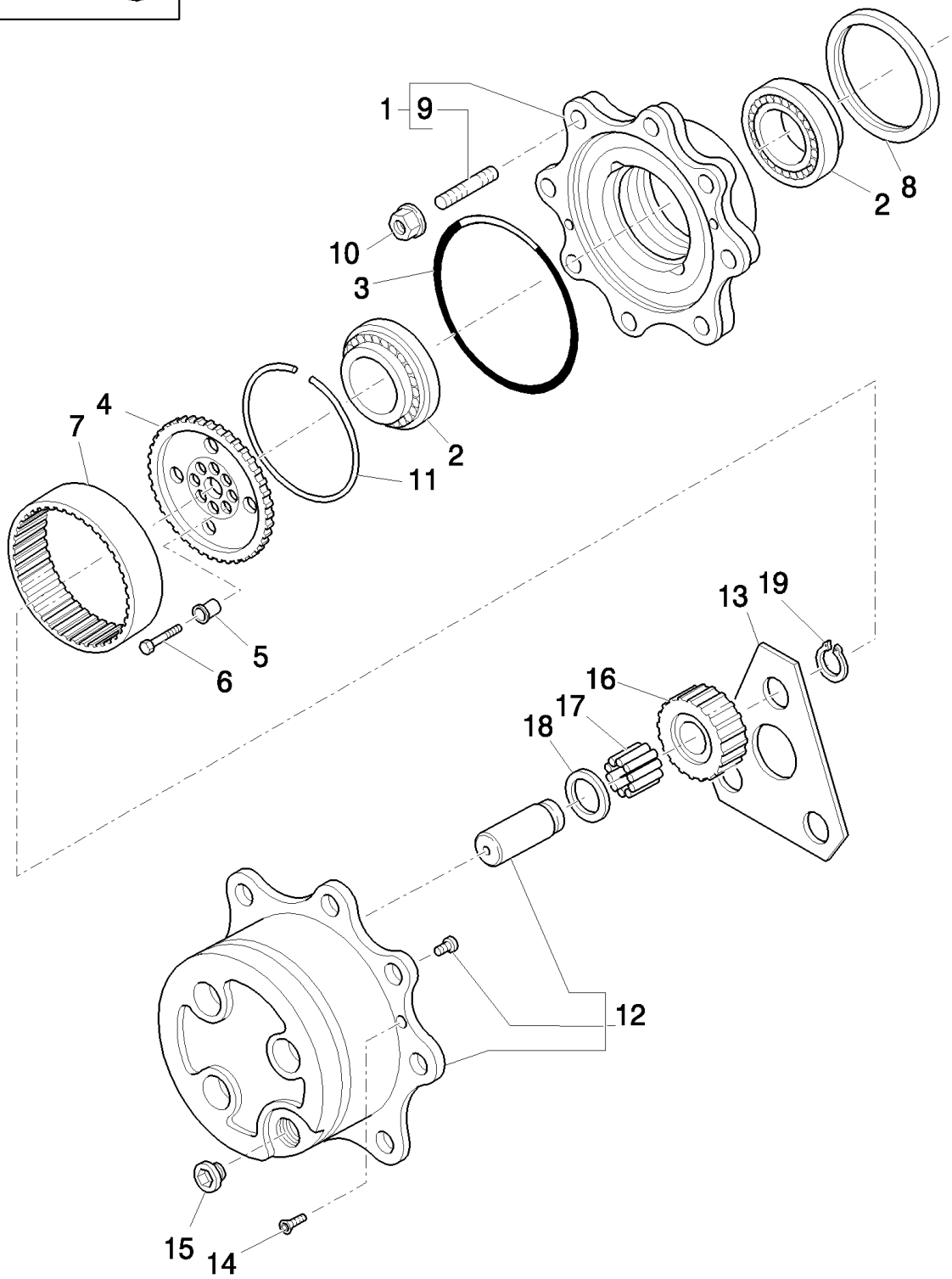

B110 TIER 3 BACKHOE LOADER (2/07-)

402(03) 4WD FRONT AXLE, HUBS - NA

Ref	Numero de Pieza	Ctd	Descripción
1	85806003	2	KIT,
2	9967687	4	BEARING ASSY,
3	85805711	2	O-RING,
4	85817698	2	HUB,
5	85806009	16	BUSHING,
6	85806010	16	SCREW, M10 x 45
7	85806008	2	GEAR, RING,
8	85827067	2	SEAL, OIL, Seal, Oil
9	9968070	16	STUD,
10	9968071	16	NUT, Wheel, M18 x 1.5,
11	85806006	2	RING,
12	85806011	2	KIT,
13	85806016	2	WASHER, THRUST,
14	85805709	4	SCREW, M8 x 20
15	85806012	2	PLUG, M30 x 2
16	85806014	6	GEAR, PLANETARY, T23
17	85806015	AR	KIT OF 10 NEEDLE BRG, (Qty 1=10 Pieces)
18	9968084	6	WASHER, THRUST, M55 x 34.6 x 1.5
19	9968083	6	RING, SNAP,

402(04) 4WD FRONT AXLE, RING GEAR & PINION ASSEMBLY - NA

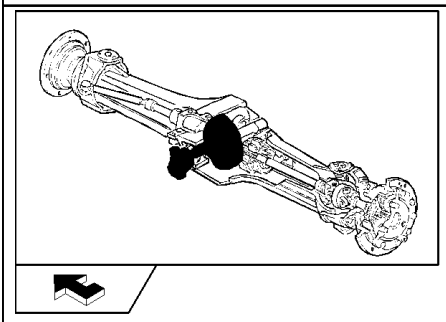

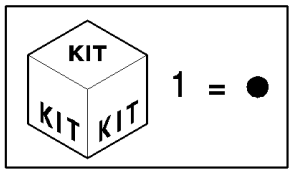

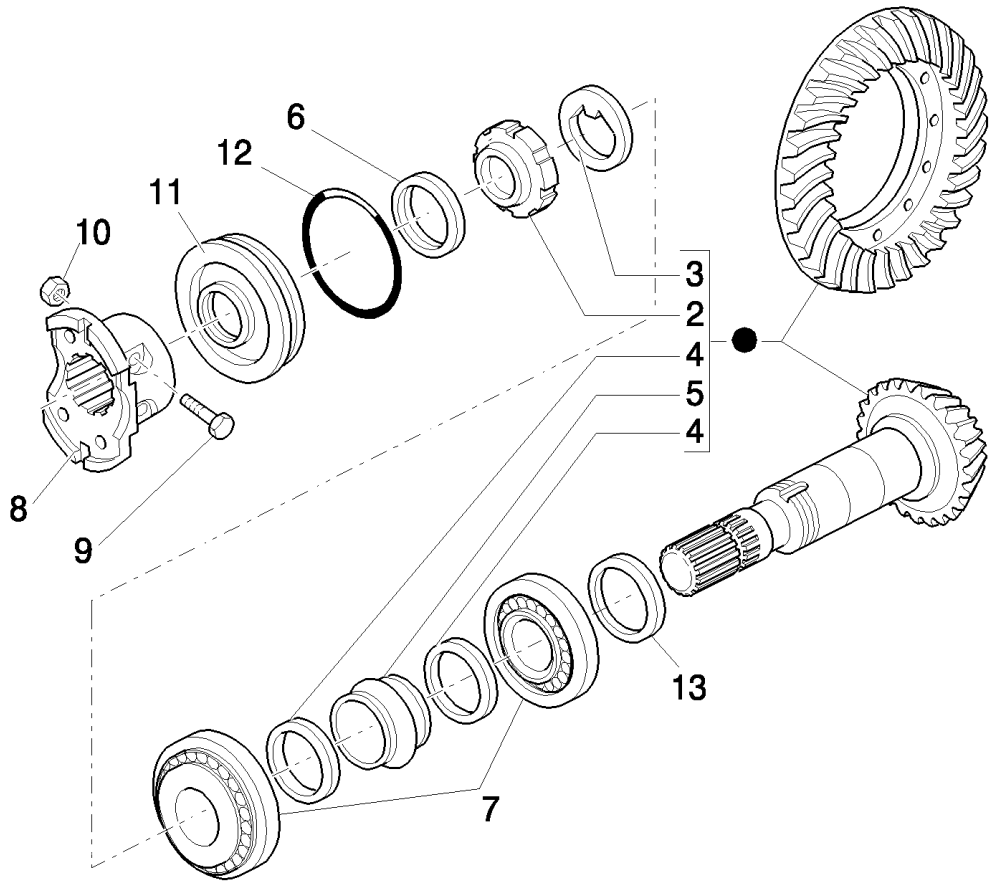

B110 TIER 3 BACKHOE LOADER (2/07-)

402(04) 4WD FRONT AXLE, RING GEAR & PINION ASSEMBLY - NA

Ref	Numero de Pieza	Ctd	Descripción
1	85813060	1	GEAR SET, , Consist Ref. Number : 2 To 5, Ratio=14.308 Axles 8582775
1	85813059	1	GEAR SET, , Consist Ref. Number : 2 To 5, Ratio=13.174 Axles 85824331 And 8582776
2	9968032	1	NUT, RING, M40 x 1.5
3	9968031	1	WASHER, LOCK,
4	9968033	2	WASHER, 50 x 40.5 x
5	9968034	1	SPACER,
6	85824346	1	SEAL, Seal, Oil, M35 x 52 x 16
7	9968047	2	BEARING, ROLLER, TAPERED,
8	9968049	1	FLANGE,
9	9968048	2	SCREW, M10 x 60
10	9968050	2	NUT, M10 x 1.25,
11	9968051	1	COVER,
12	9968052	1	O-RING,
13	9968037	AR	SHIM, 2.5 mm
13	9968038	AR	SHIM, 2.6 mm
13	9968039	AR	SHIM, 2.7 mm
13	9968040	AR	SHIM, 2.8 mm
13	9968041	AR	SHIM, 2.9 mm
13	9968042	AR	SHIM, 3.0 mm
13	9968043	AR	SHIM, 3.1 mm
13	9968044	AR	SHIM, 3.2 mm
13	9968045	AR	SHIM, 3.3 mm
13	9968046	AR	SHIM, 3.4 mm

402(05) 4WD FRONT AXLE, DIFFERENTIAL - NA

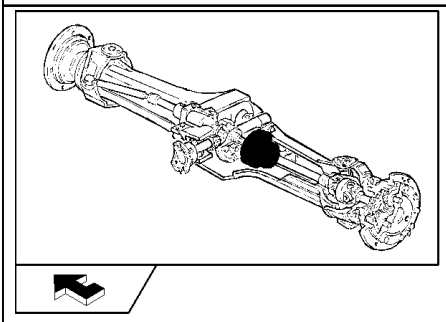

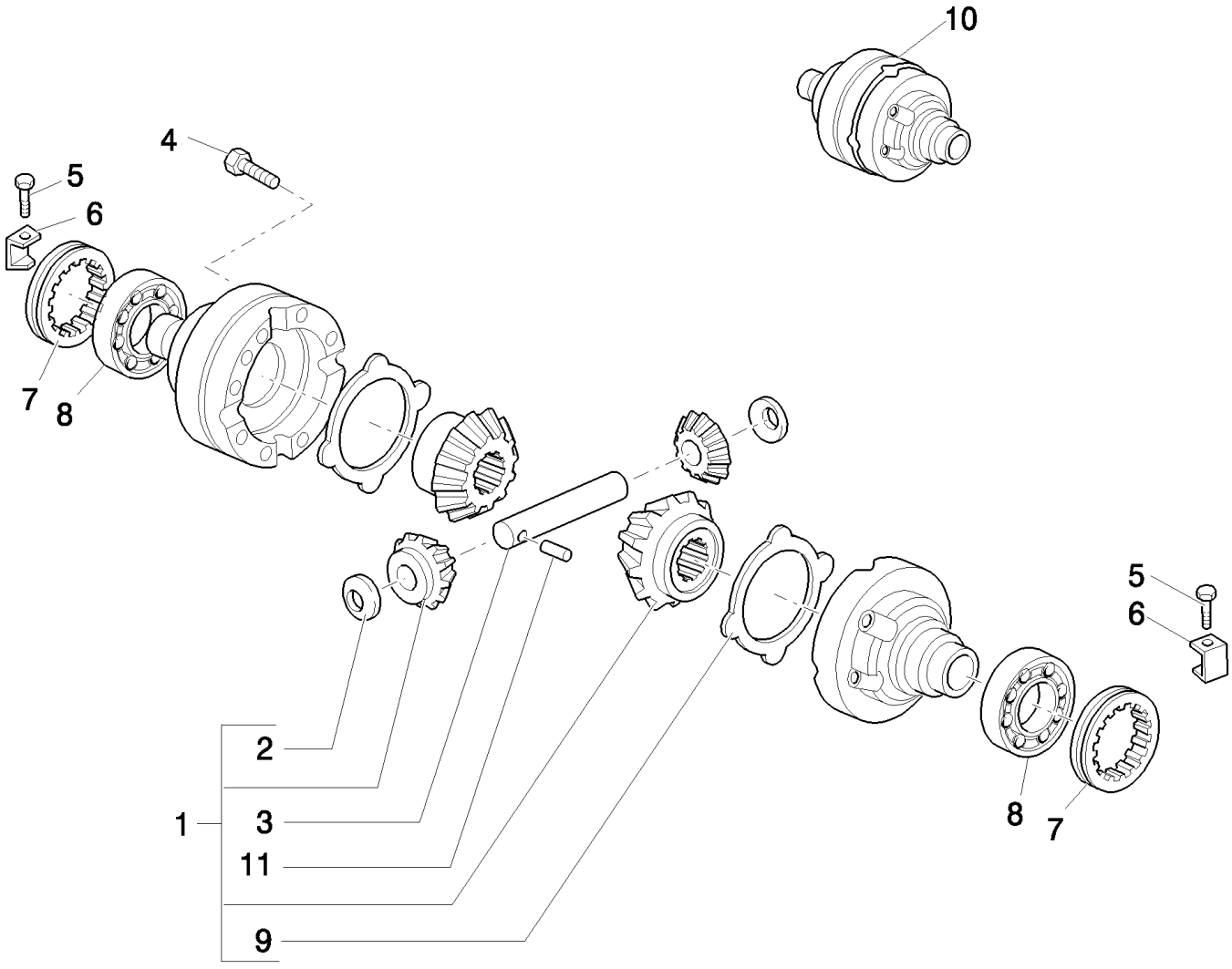

B110 TIER 3 BACKHOE LOADER (2/07-)

402(05) 4WD FRONT AXLE, DIFFERENTIAL - NA

Ref	Numero de Pieza	Ctd	Descripción
1	85806004	1	KIT, , Includes Ref. 2, 3, 9, 11
2	9966352	2	WASHER, THRUST,
3	9966354	1	PIN,
4	9967736	12	SCREW, M10 x 1.5 x 75
5	9967739	2	SCREW, M6 x 10
6	9967740	2	CLIP,
7	9967741	2	NUT, RING,
8	9968054	2	BEARING, ROLLER, TAPERED,
9	9967734	2	PLATE, DRIVE,
10	85827068	1	HOUSING,
11	9966356	1	PIN, ROLL, 7 x 40

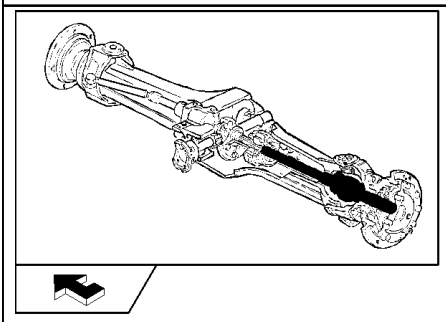

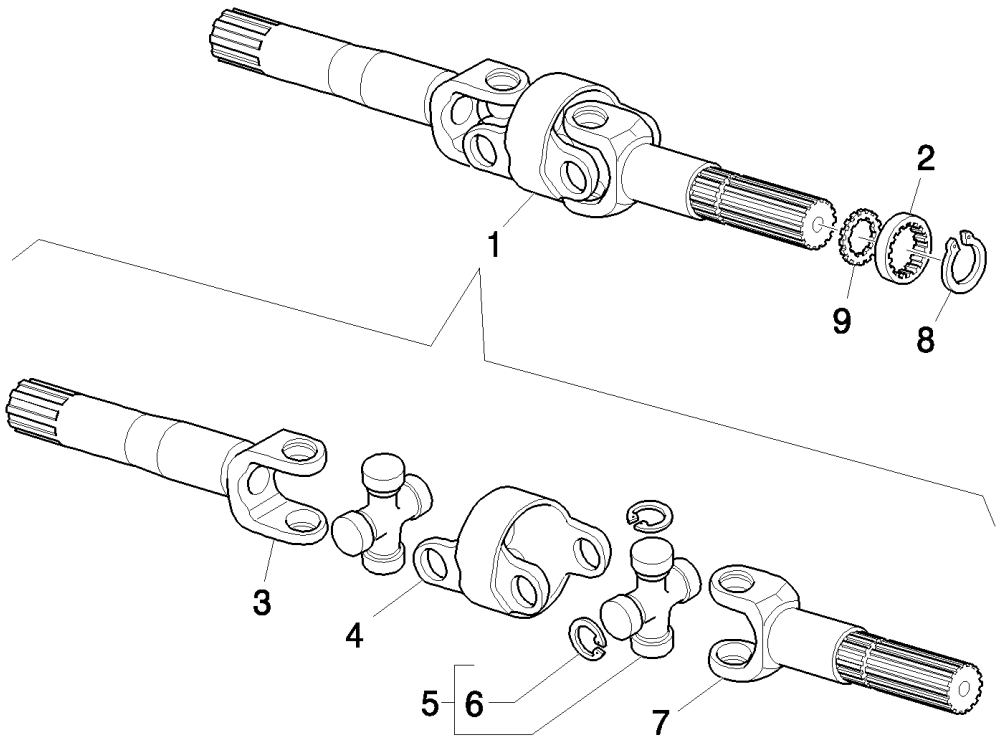
1
2
3
4
5
6
7
8
9

B110 TIER 3 BACKHOE LOADER (2/07-)

402(06) 4WD FRONT AXLE, DRIVE SHAFT

Ref	Numero de Pieza	Ctd	Descripción
1	85827741	2	SHAFT, ARTICULATED,
2	85805999	2	WASHER, THRUST,
3	87306929	1	SHAFT,
4	85827070	2	BODY,
5	85807283	2	SPIDER,
6	85807284	1	RING, SNAP,
7	87306930	2	SHAFT,
8	87306933	2	RING, SNAP,
9	85817697	2	WASHER, THRUST,

415(01) FRONT AXLE - (4WD) W/GEAR,BEVEL

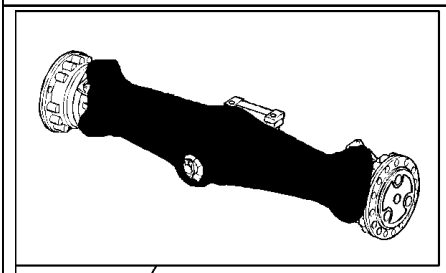

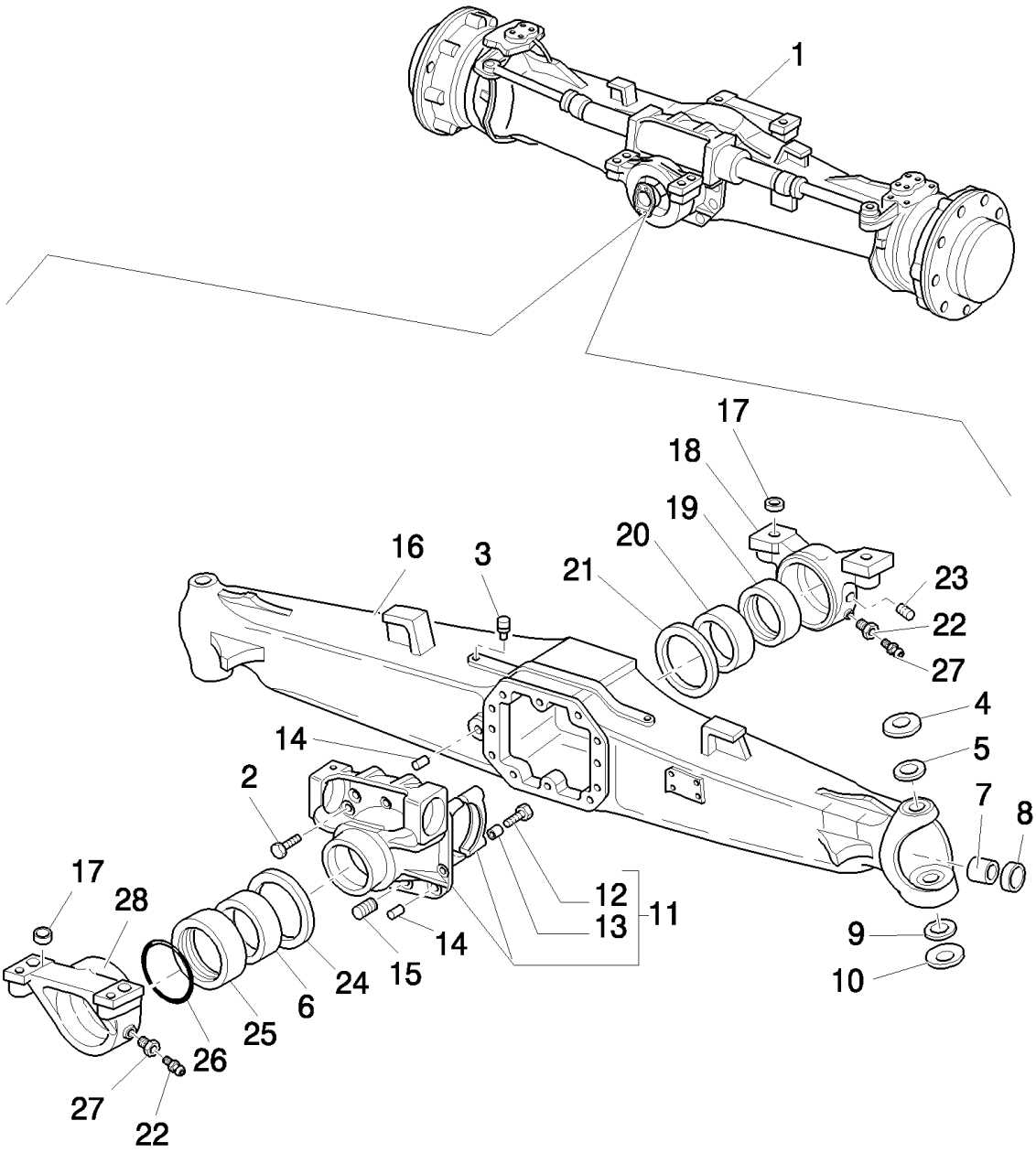

B110 TIER 3 BACKHOE LOADER (2/07-)

415(01) FRONT AXLE - (4WD) W/GEAR,BEVEL

Ref	Numero de Pieza	Ctd	Descripción
1	85827731	1	AXLE ASSY, 4WD, , Only For Power Shuttle, Ratio=12,8
1	85827727	1	AXLE ASSY, 4WD, , Only For Power Shuttle, Ratio=12,333
1	85827729	1	AXLE ASSY, 4WD, , Only For Power Shift, Ratio=12,8
1	85827733	1	AXLE ASSY, 4WD, , Only For Power Shift, Ratio=12,333
2	9967769	10	SCREW, M12X1,75X33
3	9967672	1	PLUG, M10X1
4	9967997	2	WASHER,
5	87306932	2	BUSHING,
6	9968010	1	BUSHING,
7	9968019	2	BUSHING,
8	85824346	2	SEAL,
9	9968002	2	BALL JOINT, 2 piece
10	9968003	2	WASHER,
11	9968004	1	SUPPORT,
12	9967681	4	SCREW,
13	9967682	4	BUSHING,
14	9968005	2	PLUG, DRAIN, 15X35
15	9967683	2	PIN, ROLL,
16	85827738	1	HOUSING, AXLE,
17	9967990	4	BUSHING,
18	9967991	1	SUPPORT,
19	9967992	1	BUSHING,
20	9967993	1	BUSHING,
21	9967994	1	WASHER, THRUST,
22	321204	2	NIPPLE, LUBE, M6 x 1, 16mm lg,
23	85805973	1	SCREW, M8x1
24	9968006	1	WASHER, THRUST,
25	9968007	1	RING,
26	9968008	1	O-RING,
27	9967995	2	SCREW,
28	9968009	1	SUPPORT,

415(02) FRONT AXLE - (4WD) W/GEAR,BEVEL

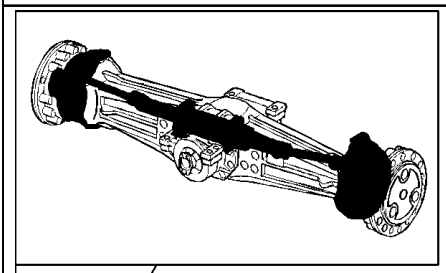

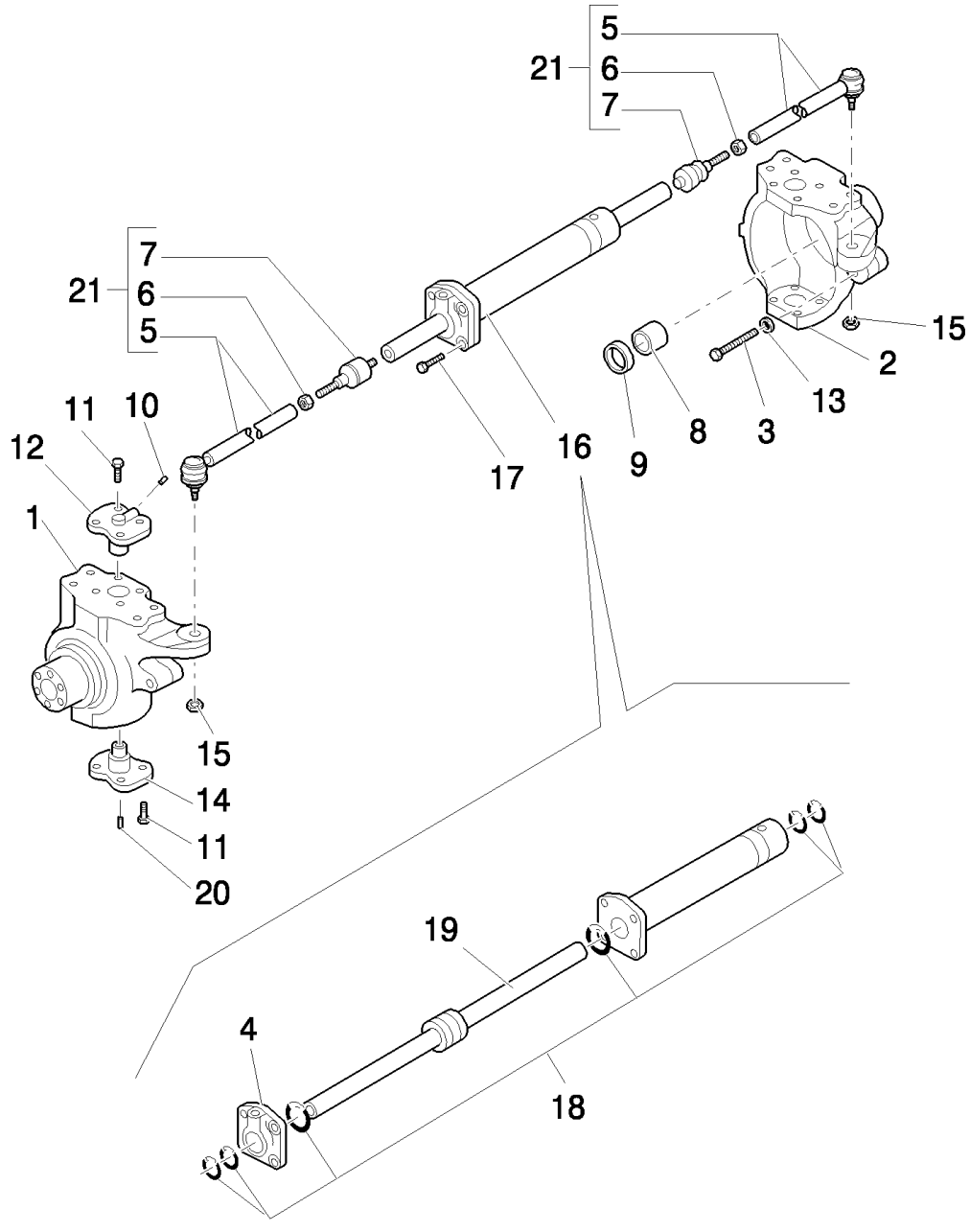

B110 TIER 3 BACKHOE LOADER (2/07-)

415(02) FRONT AXLE - (4WD) W/GEAR,BEVEL

Ref	Numero de Pieza	Ctd	Descripción
1	85827740	1	KNOTTER, LH
2	85827739	2	KNOTTER, RH
3	85805987	2	SCREW, M16x100
4	85805989	1	CYLINDER HEAD,
5	87306927	2	TIE-ROD,
6	85805976	2	NUT, M18 x 1.5
7	85805975	2	BALL JOINT,
8	85805988	2	BUSHING,
9	85824345	2	SEAL, 45 x 60 x 16
10	9968021	2	NIPPLE, LUBE, M6 x 2
11	9968022	16	SCREW, M14 x 2 x 35
12	85805980	2	PIN,
12	9968023	2	PIVOT,
13	85805986	2	NUT, M16,
14	9968025	2	PIN,
15	85805982	2	NUT, M18 x 1.5
16	85805978	1	CYLINDER STEERING, Assy
17	9968028	4	SCREW, M12x5
18	85805990	1	KIT, SEALS,
19	85805992	1	ROD,
20	85805984	2	NIPPLE, LUBE, M6 x 1
21	87306934	2	TIE-ROD,

415(03) FRONT AXLE - (4WD) W/GEAR,BEVEL

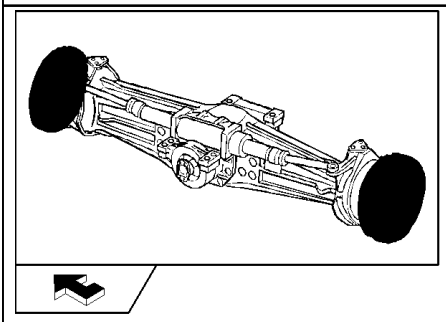

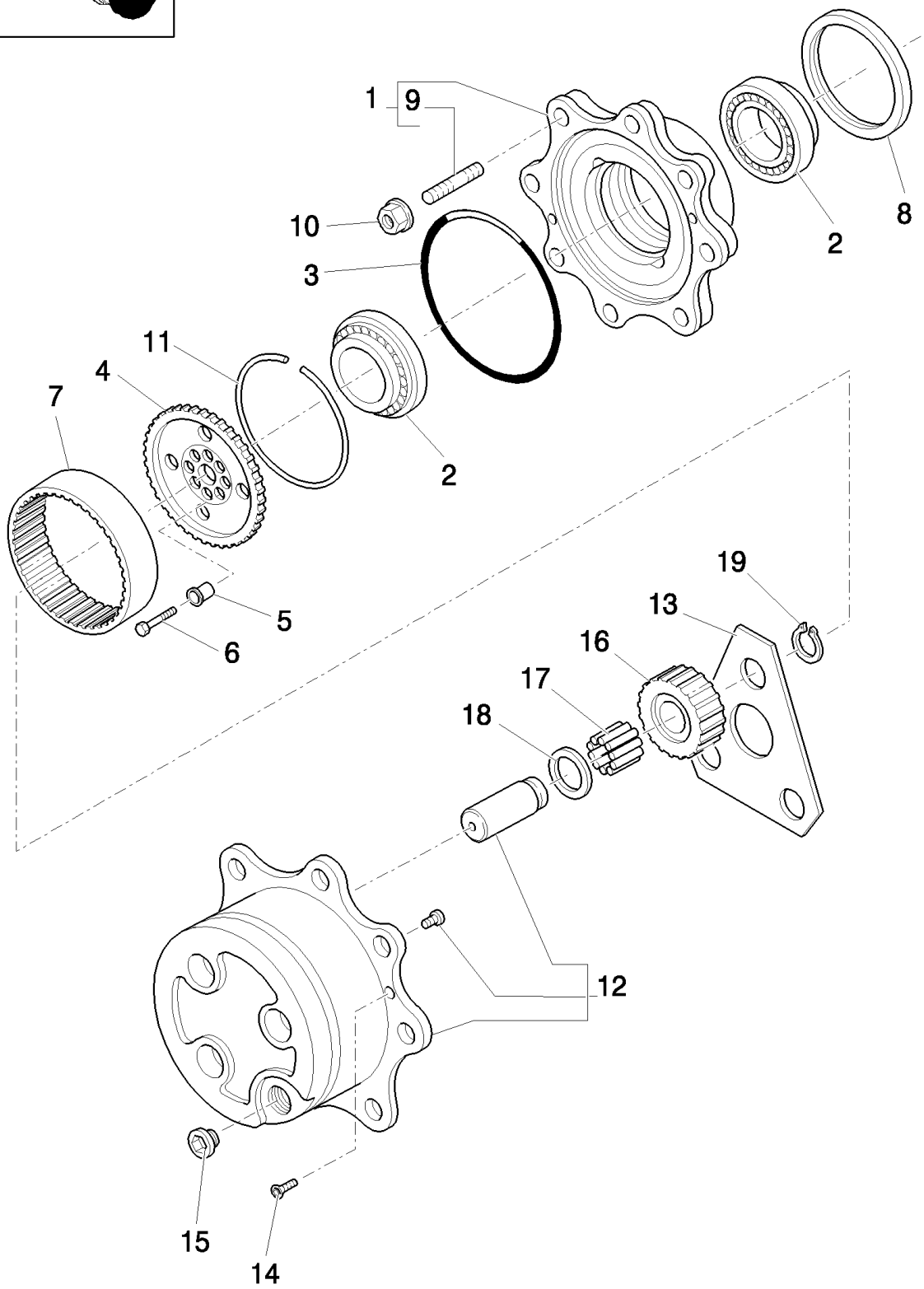

B110 TIER 3 BACKHOE LOADER (2/07-)

415(03) FRONT AXLE - (4WD) W/GEAR,BEVEL

Ref	Numero de Pieza	Ctd	Descripción
1	85806003	2	KIT,
2	9967687	4	BEARING ASSY,
3	85805711	2	O-RING,
4	85817698	2	HUB,
5	85806009	16	BUSHING,
6	85806010	16	SCREW, M10 x 45
7	85806008	2	GEAR, RING,
8	85827067	2	SEAL, OIL,
9	9968070	16	STUD,
10	9968071	16	NUT, Wheel, M18 x 1.5,
11	85806006	2	RING,
12	85806011	2	KIT,
13	85806016	2	WASHER, THRUST,
14	85805709	4	SCREW, M8 x 20
15	85806012	2	PLUG,
16	85806014	6	GEAR, PLANETARY, T23
17	85806015	AR	KIT OF 10 NEEDLE BRG, (Qty 1=10 Pieces)
18	9968084	6	WASHER, THRUST, 55 x 34.6 x 1.5
19	9968083	6	RING, SNAP,

415(04) FRONT AXLE - (4WD) W/GEAR,BEVEL

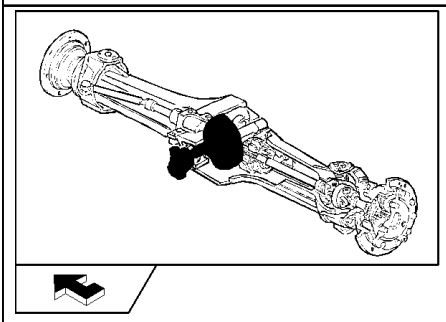

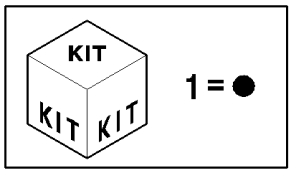

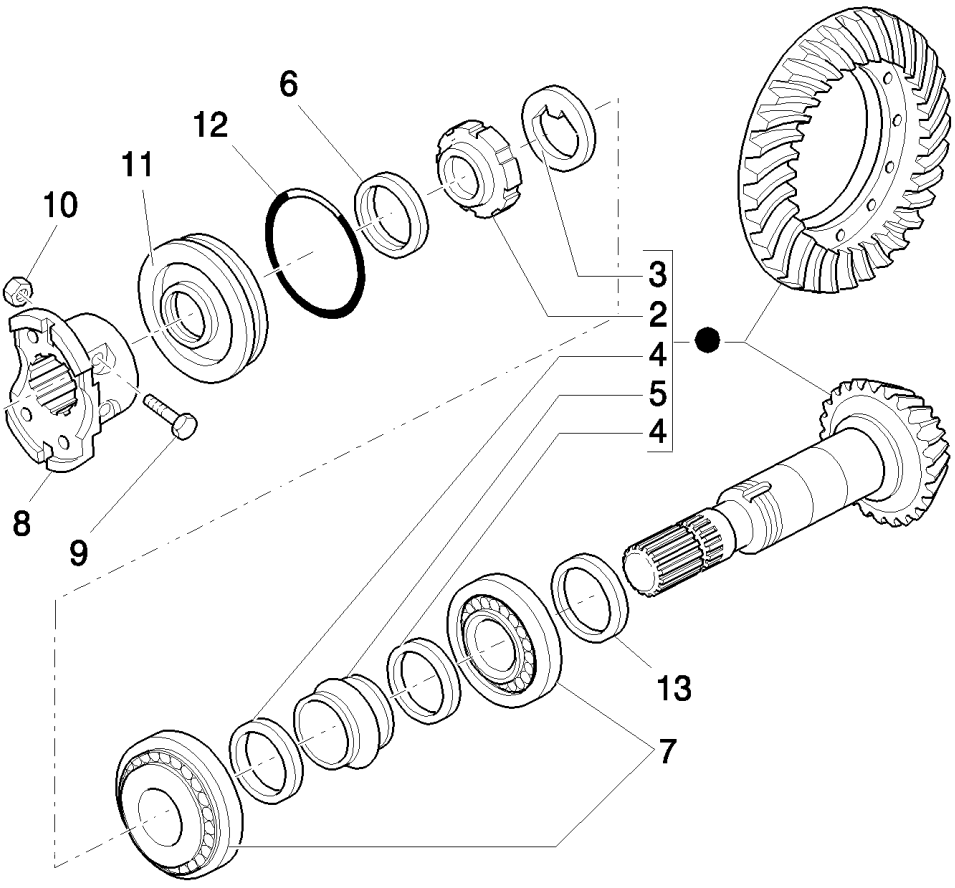

B110 TIER 3 BACKHOE LOADER (2/07-)

415(04) FRONT AXLE - (4WD) W/GEAR,BEVEL

Ref	Numero de Pieza	Ctd	Descripción
1	9968035	1	GEAR SET, , Consist Ref. Number : 2 To 5, Ratio=12,8 Only Power Shuttle, Axles 85827731
1	9968925	1	GEAR SET, , Consist Ref. Number : 2 To 5, Ratio =12,8 Only Power Shift, Axles 85827729
1	9968036	1	GEAR SET, , Consist Ref. Number : 2 To 5, Ratio=12,333 Only Axles 85827733, 85827727
2	9968032	1	NUT, RING, M40 x 1.5
3	9968031	1	WASHER, LOCK,
4	9968033	2	WASHER, 50 x 40.5 x 2
5	9968034	1	SPACER,
6	85824346	1	SEAL, 32 x 52 x 16
7	9968047	2	BEARING, ROLLER, TAPERED,
8	9968049	1	FLANGE,
9	9968048	2	SCREW, M10 x 60
10	9968050	2	NUT, M10 x 1.25,
11	9968051	1	COVER,
12	9968052	1	O-RING,
13	9968037	AR	SHIM, 2.5 mm
13	9968038	AR	SHIM, 2.6 mm
13	9968039	AR	SHIM, 2.7 mm
13	9968040	AR	SHIM, 2.8 mm
13	9968041	AR	SHIM, 2.9 mm
13	9968042	AR	SHIM, 3.0 mm
13	9968043	AR	SHIM, 3.1 mm
13	9968044	AR	SHIM, 3.2 mm
13	9968045	AR	SHIM, 3.3 mm
13	9968046	AR	SHIM, 3.4 mm

415(05) FRONT AXLE - (4WD) W/GEAR,BEVEL

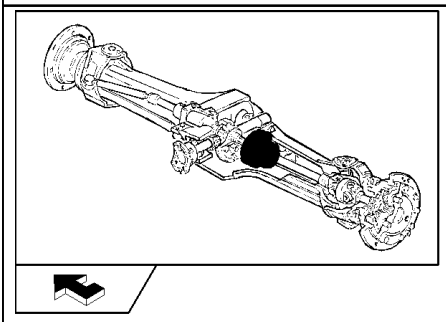

KIT KIT KIT 1 = ●

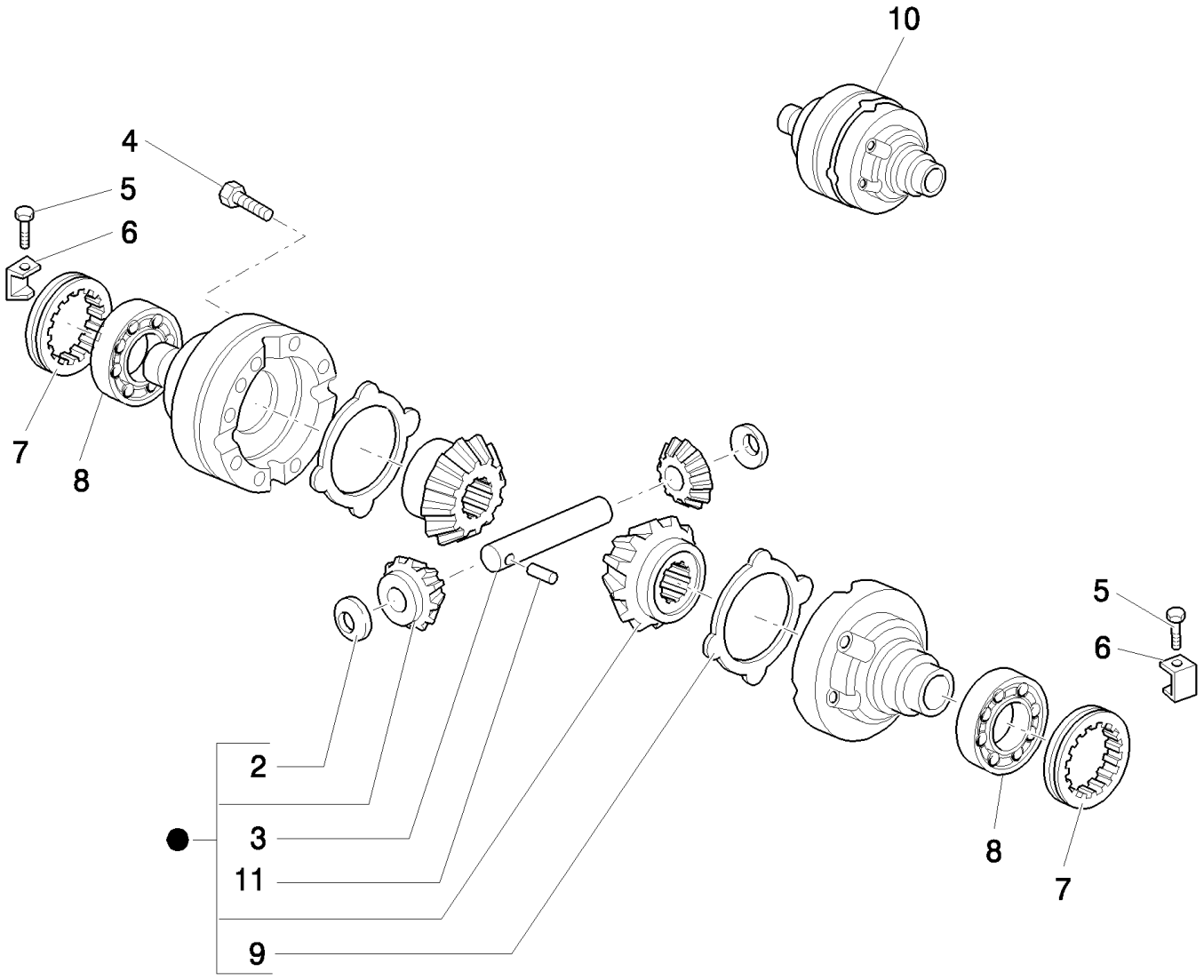

B110 TIER 3 BACKHOE LOADER (2/07-)

415(05) FRONT AXLE - (4WD) W/GEAR,BEVEL

Ref	Numero de Pieza	Ctd	Descripción
1	85806004	1	KIT,
2	9966352	2	WASHER, THRUST,
3	9966354	1	PIN,
4	9967736	12	SCREW, M10 x 1.5 x 75
5	9967739	2	SCREW, M6 x 10
6	9967740	2	CLIP,
7	9967741	2	NUT, RING,
8	9968054	2	BEARING, ROLLER, TAPERED,
9	9967734	2	PLATE, DRIVE,
10	85827068	1	HOUSING,
11	9966356	1	PIN, ROLL, 7 x 40

415(06) FRONT AXLE - (4WD) W/GEAR,BEVEL

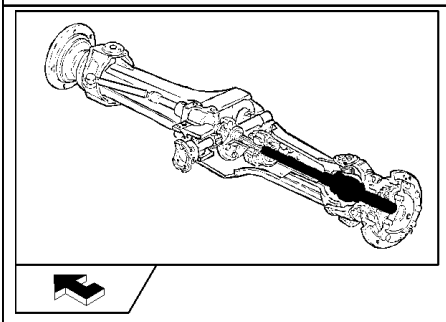

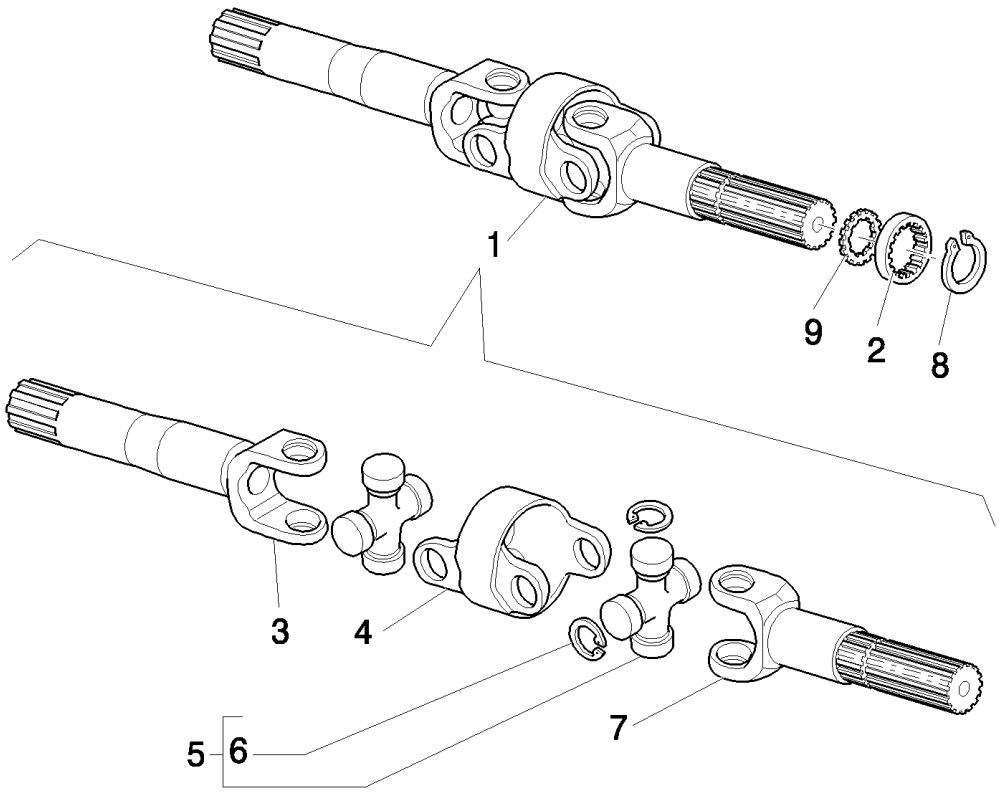

B110 TIER 3 BACKHOE LOADER (2/07-)

415(06) FRONT AXLE - (4WD) W/GEAR,BEVEL

Ref	Numero de Pieza	Ctd	Descripción
1	85827741	2	SHAFT, ARTICULATED,
2	85805999	2	WASHER, THRUST,
3	87306930	2	SHAFT,
4	85827070	2	BODY,
5	85807283	2	SPIDER, , Water proof cruise
5	85805996	2	SPIDER,
6	85807284	2	RING, SNAP, , Water proof cruise
6	9968060	4	RING, SNAP,
7	87306929	1	SHAFT,
8	87306933	2	RING, SNAP,
9	85817697	2	WASHER, THRUST,

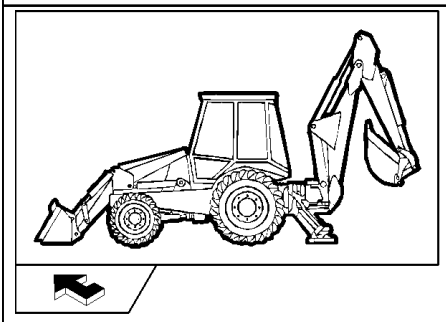

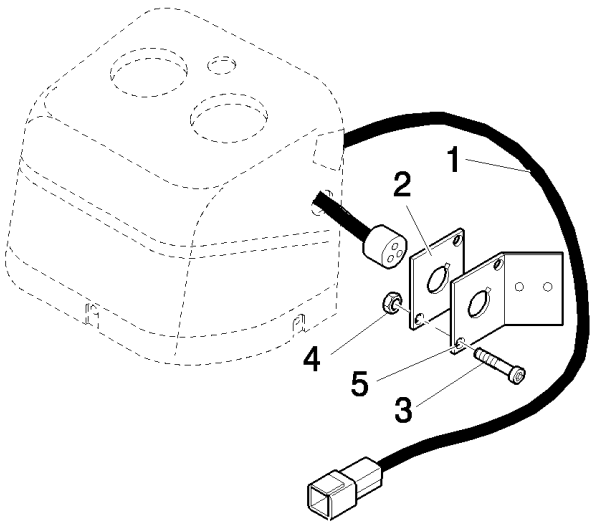
1
2
4
5
3

B110 TIER 3 BACKHOE LOADER (2/07-)

416(01) SYSTEM HAMMER COMPONENTS (CAB - ROPS)

Ref	Numero de Pieza	Ctd	Descripción
1	85819237	1	HARNESS, WIRE,
2	85816760	1	PLATE,
3	13272477	2	SCREW, Cross Pan Hd, M4 x 20, 12.9,
4	12574011	2	NUT, LOCK, M4 x .7, Cl 8,
5	85827822	1	PLATE, MOUNTING, , Only for ROPS

B110 TIER 3 BACKHOE LOADER (2/07-)

437(01) GLIDE RIDE VALVE,HYDRAULIC SYSTEM FOR MACHINE FRAME LEVELLING

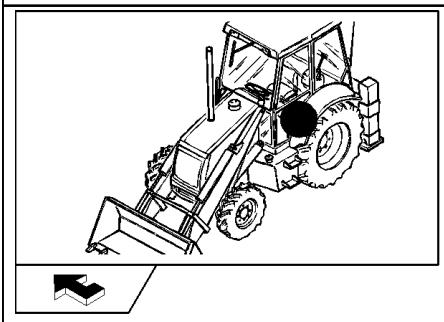

B110 TIER 3 BACKHOE LOADER (2/07-)

437(01) GLIDE RIDE VALVE,HYDRAULIC SYSTEM FOR MACHINE FRAME LEVELLING

Ref	Numero de Pieza	Ctd	Descripción
1	87358815	2	HOSE, FLEXIBLE,
2	85815620	1	HOSE, FLEXIBLE,
3	85817222	1	HOSE, FLEXIBLE,
4	83971549	4	ELBOW,
5	83963374	2	CONNECTOR, HYD.,
6	85824211	1	CABLE, ELECTRIC,
7	87358808	1	BRACKET,
8	87358817	1	VALVE, HYDRAULIC,
9	87358818	1	ACCUMULATOR,
10	87386551	1	PIPE,
11	11106421	2	BOLT, Hex, M10 x 30, 8.8,
12	85817223	1	HOSE, FLEXIBLE,
13	11190579	3	WASHER, SPRING, Belleville, M10.5,
14	85815583	2	TEE,
15	83901443	2	O-RING,
16	89992298	2	O-RING,
17	15971321	1	BOLT, Hex, M10 x 75, 8.8,
18	80128825	2	O-RING,
19	11190679	2	WASHER, SPRING, Belleville, M10.5,

B110 TIER 3 BACKHOE LOADER (2/07-)

471(01) BUCKET 4X1 (1 M3) WITH BLADE "COMMON GREY"

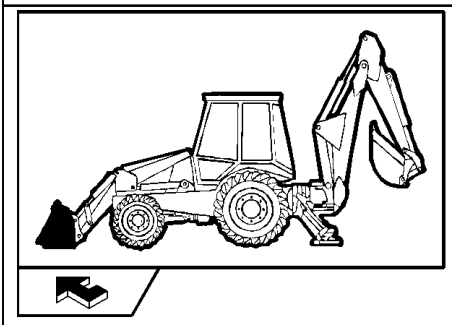

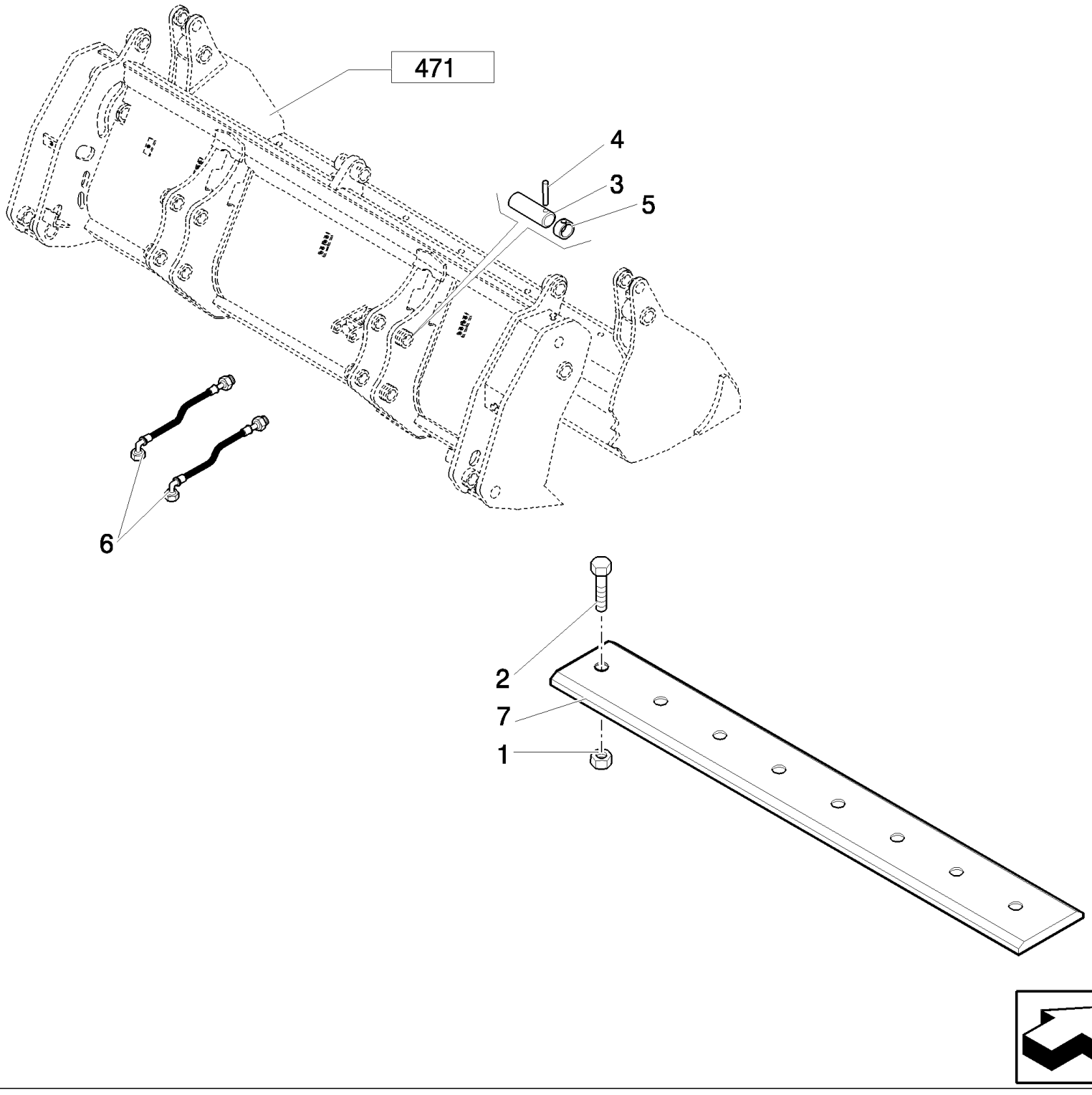

B110 TIER 3 BACKHOE LOADER (2/07-)

471(01) BUCKET 4X1 (1 M3) WITH BLADE "COMMON GREY"

Ref	Numero de Pieza	Ctd	Descripción
1	85801470	8	NUT, 5/8"-11, G8,
2	85801371	8	BOLT, PLOW, 5/8"-11 x 2 1/4",
3	85801051	4	PIN,
4	85802993	4	PIN,
5	85802992	4	RING,
6	85820819	2	HOSE, FLEXIBLE,
7	85801161	1	EDGE, CUTTING, , Reversible bolt on

B110 TIER 3 BACKHOE LOADER (2/07-)

471(02) BUCKET 4X1 (1 M3) WITH BLADE "COMMON GREY"

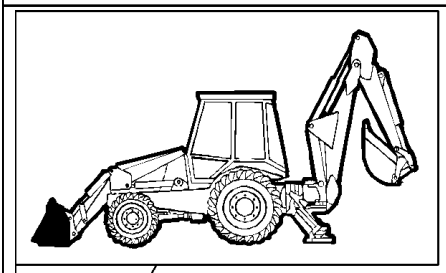

KIT KIT KIT 30 = ●

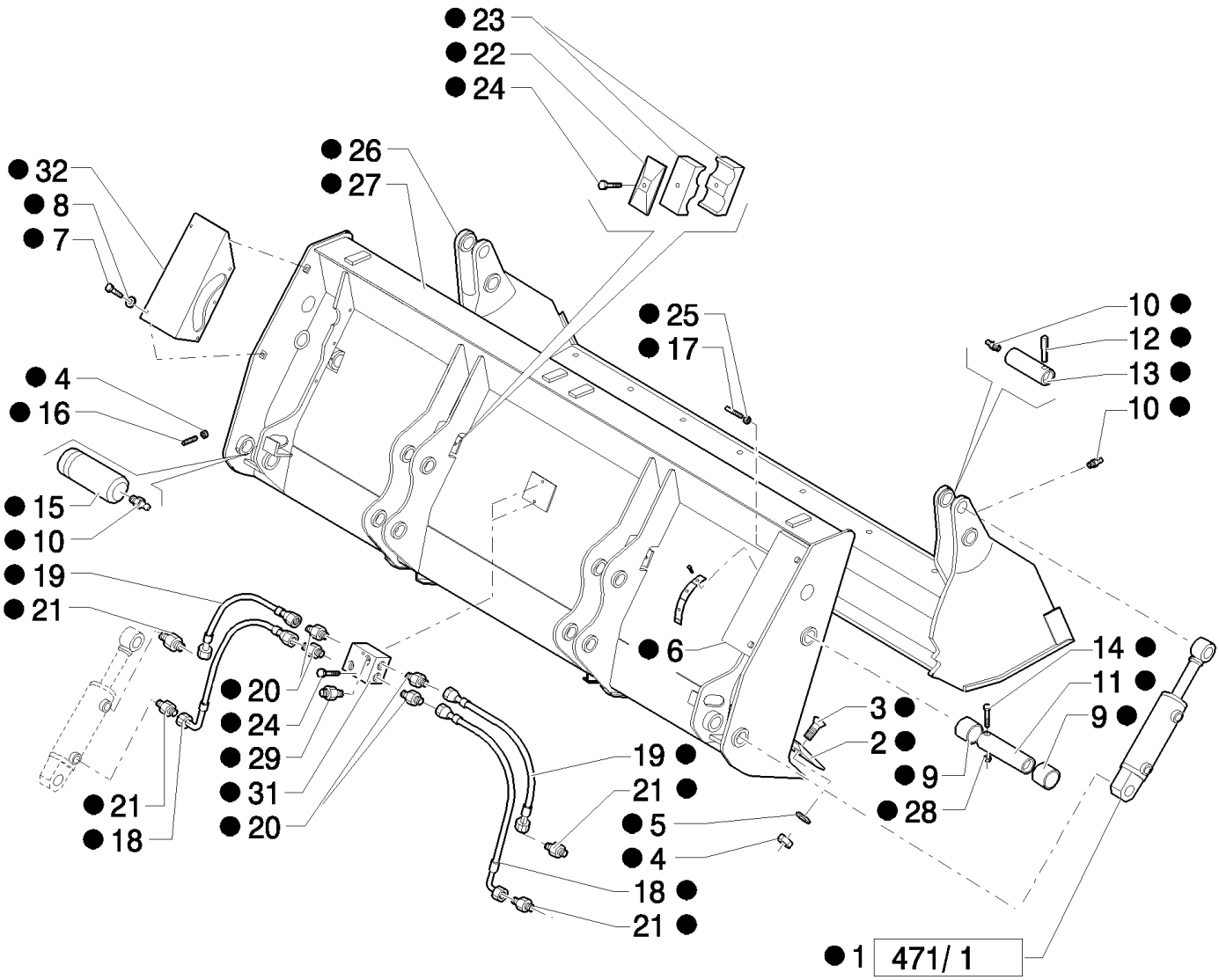

B110 TIER 3 BACKHOE LOADER (2/07-)

471(02) BUCKET 4X1 (1 M3) WITH BLADE "COMMON GREY"

Ref	Numero de Pieza	Ctd	Descripción
1	87573861	2	CYLINDER,
2	87308614	1	BLADE, KNIFE,
3	87312328	8	SCREW, M14 x 40
4	85820008	10	NUT, M14 x 2
5	85820009	8	WASHER, SEALING,
6	87312330	1	GUARD, RH
7	85820011	10	SCREW,
8	85820012	10	WASHER, SEALING,
9	85820013	4	BUSHING,
10	85820014	6	NIPPLE, LUBE, M10 x 1,
11	85820015	2	PIN,
12	85820016	2	PIN, ROLL, 10 x 80
13	85820017	2	PIN,
14	85820018	2	SCREW, M10 x 90
15	87310286	2	PIN,
16	85820020	2	SCREW, M14 x 30
17	87312331	1	SCREW, M8 x 120
18	87312340	2	HOSE, FLEXIBLE,
19	87312342	2	HOSE, FLEXIBLE,
20	87312343	4	CONNECTOR, HYD.,
21	87312333	4	CONNECTOR, HYD.,
22	85820026	2	PLATE,
23	85820027	4	CLAMP,
24	85820030	4	SCREW, M8 x 45
25	85820031	1	NUT, M8
26	87310434	1	BUCKET,
27	87310354	1	BUCKET,
28	85820035	2	NUT, M10x1,5
29	87395482	2	CONNECTOR, HYD.,
30	87573550	1	BUCKET, 4 IN 1,
31	87312335	1	FITTING,
32	87395481	1	GUARD,

471/1(01) HYDRAULIC CYLINDER (BUCKET 4X1-6X1)

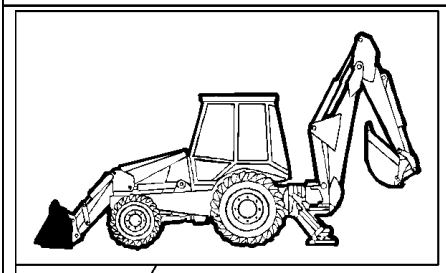

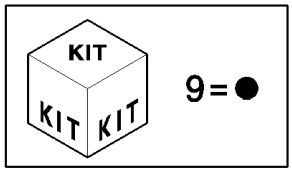

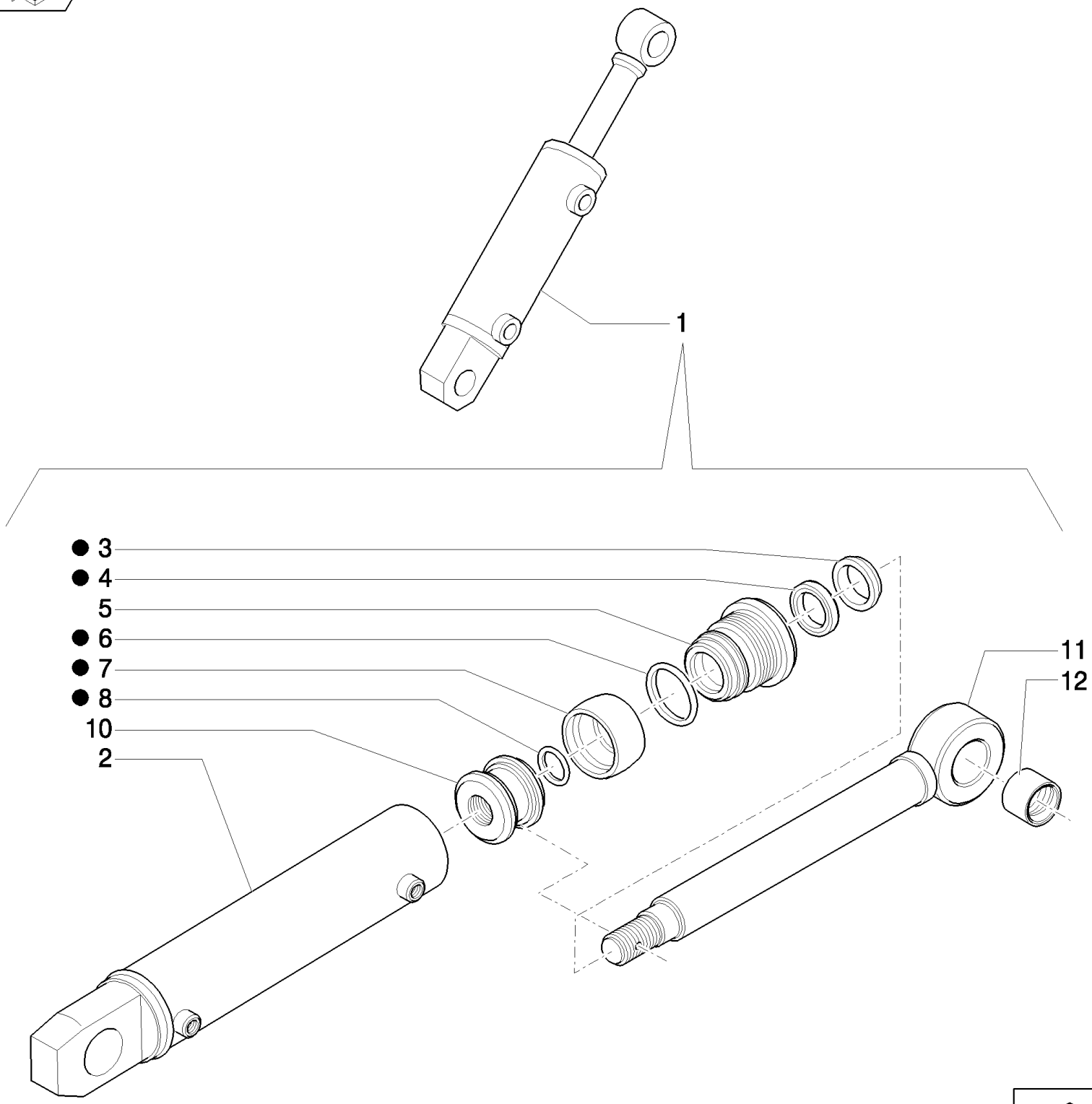

B110 TIER 3 BACKHOE LOADER (2/07-)

471/1(01) HYDRAULIC CYLINDER (BUCKET 4X1-6X1)

Ref	Numero de Pieza	Ctd	Descripción
1	87573861	1	CYLINDER,
2	87574523	1	LINER,
3	87574080	1	SCRAPER,
4	87574092	1	SEAL,
5	87574524	1	BOTTOM,
6	87574099	1	SEAL,
7	87574097	1	SEAL,
8	87574098	1	O-RING,
9	87573868	1	PACKAGE, SEALS, , Insludes Ref. 3, 4, 6, 7, 8
10	85820054	1	PISTON, Part May or May Not Have Hole For 85820055 Roll Pin; If Part Does Not Have Hole, The Piston Is Fixed To The Rod With Loctite 243
11	85820052	1	ROD, Part May or May Not Have Hole For 85820055 Roll Pin; If Part Does Not Have Hole, The Piston Is Fixed To The Rod With Loctite 243
12	85820056	1	BUSHING,

B110 TIER 3 BACKHOE LOADER (2/07-)

472(01) BUCKET 4X1 (1 M3) WITH TINE "COMMON GREY"

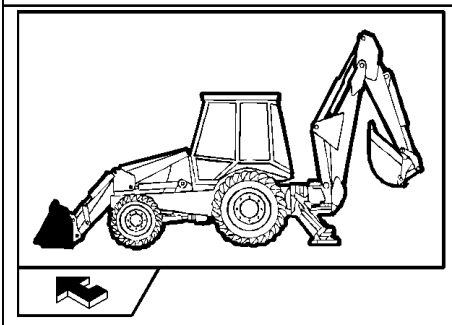

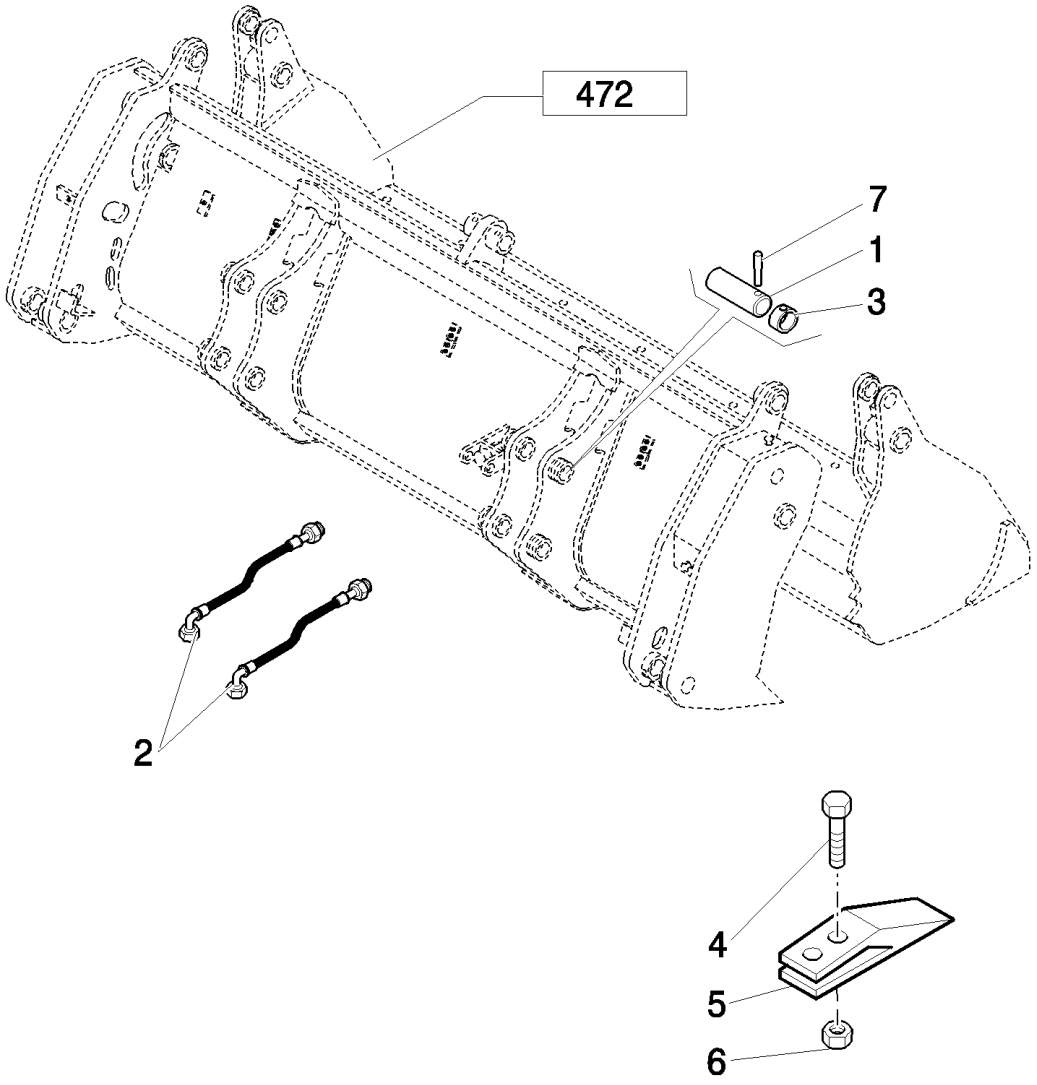

B110 TIER 3 BACKHOE LOADER (2/07-)

472(01) BUCKET 4X1 (1 M3) WITH TINE "COMMON GREY"

Ref	Numero de Pieza	Ctd	Descripción
1	85801051	4	PIN,
2	85820819	2	HOSE, FLEXIBLE, L=800 mm
3	85802992	4	RING,
4	85801371	16	BOLT, PLOW, 5/8"-11 x 2 1/4",
5	85811440	8	SHANK, BUCKET TOOTH,
6	85801470	16	NUT, 5/8"-11, G8,
7	85802993	4	PIN,

B110 TIER 3 BACKHOE LOADER (2/07-)

472(02) BUCKET 4X1 (1 M3) WITH TINE "COMMON GREY"

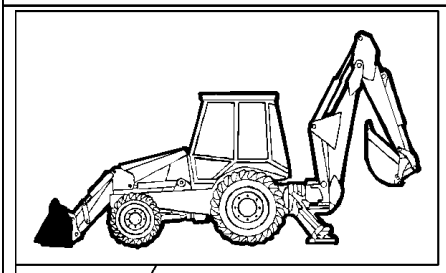

KIT KIT KIT 30 = ●

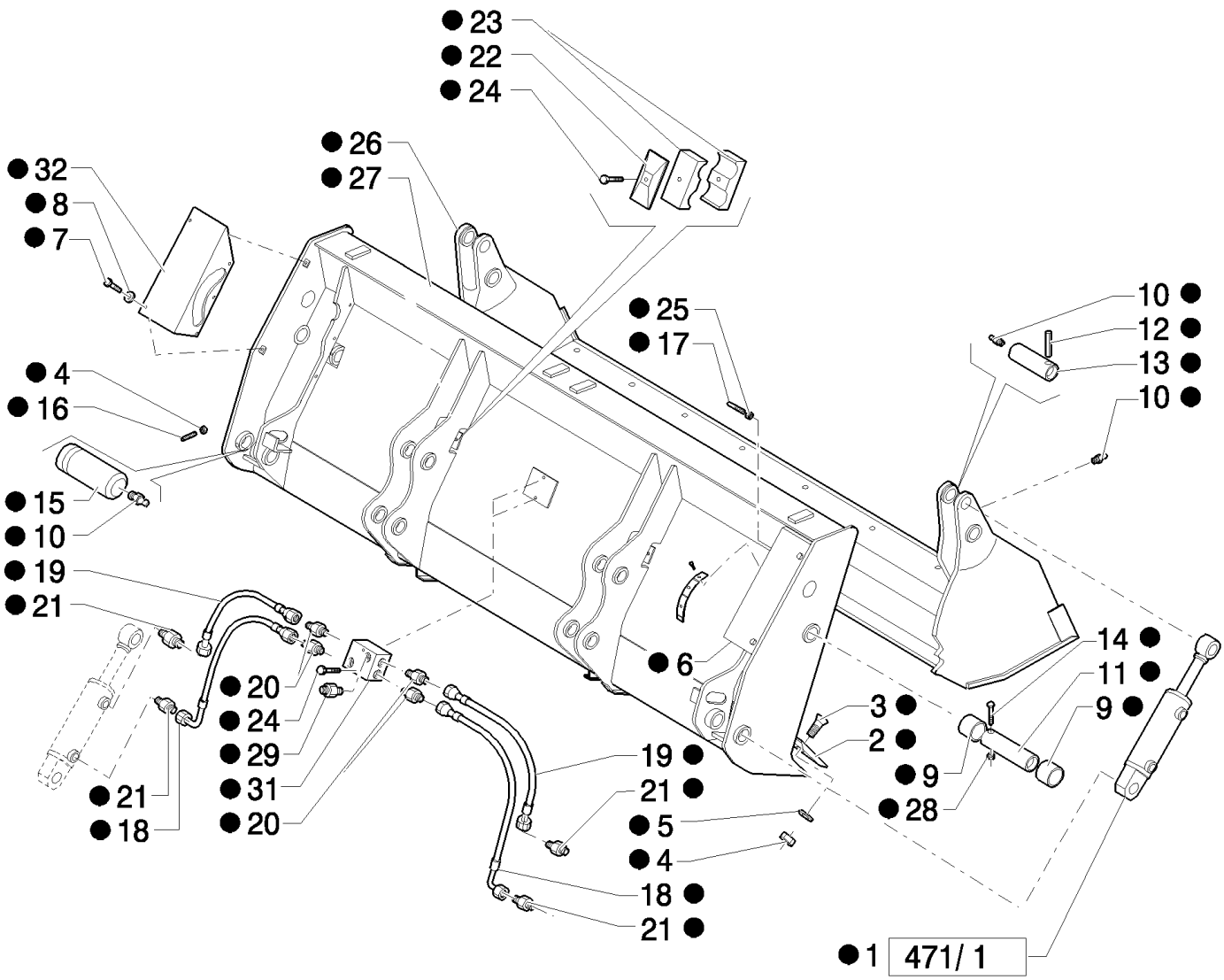

B110 TIER 3 BACKHOE LOADER (2/07-)

472(02) BUCKET 4X1 (1 M3) WITH TINE "COMMON GREY"

Ref	Numero de Pieza	Ctd	Descripción
1	87573861	2	CYLINDER,
2	87308614	1	BLADE, KNIFE,
3	87312328	8	SCREW, M14 x 40
4	85820008	10	NUT, M14 x 2
5	85820009	8	WASHER, SEALING,
6	87312330	1	GUARD, RH
7	85820011	10	SCREW,
8	85820012	10	WASHER, SEALING,
9	85820013	4	BUSHING,
10	85820014	6	NIPPLE, LUBE, M10 x 1,
11	85820015	2	PIN,
12	85820016	2	PIN, ROLL, 10 x 80
13	85820017	2	PIN,
14	85820018	2	SCREW, M10 x 90
15	87310286	2	PIN,
16	85820020	2	SCREW, M14 x 30
17	87312331	1	SCREW, M8 x 120
18	87312340	2	HOSE, FLEXIBLE,
19	87312342	2	HOSE, FLEXIBLE,
20	87312343	4	CONNECTOR, HYD.,
21	87312333	4	CONNECTOR, HYD.,
22	85820026	2	PLATE,
23	85820027	4	CLAMP,
24	85820030	4	SCREW, M8 x 45
25	85820031	1	NUT, M8
26	87310434	1	BUCKET,
27	87310354	1	BUCKET,
28	85820035	2	NUT, M10x1,5
29	87395482	2	CONNECTOR, HYD.,
30	87573550	1	BUCKET, 4 IN 1,
31	87312335	1	FITTING,
32	87395481	1	GUARD,

B110 TIER 3 BACKHOE LOADER (2/07-)

473(01) BUCKET 6X1 (1 M3) WITH BLADE "COMMON GREY"

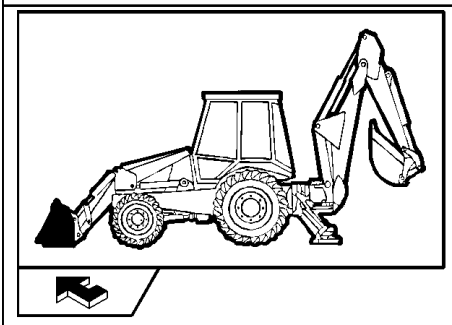

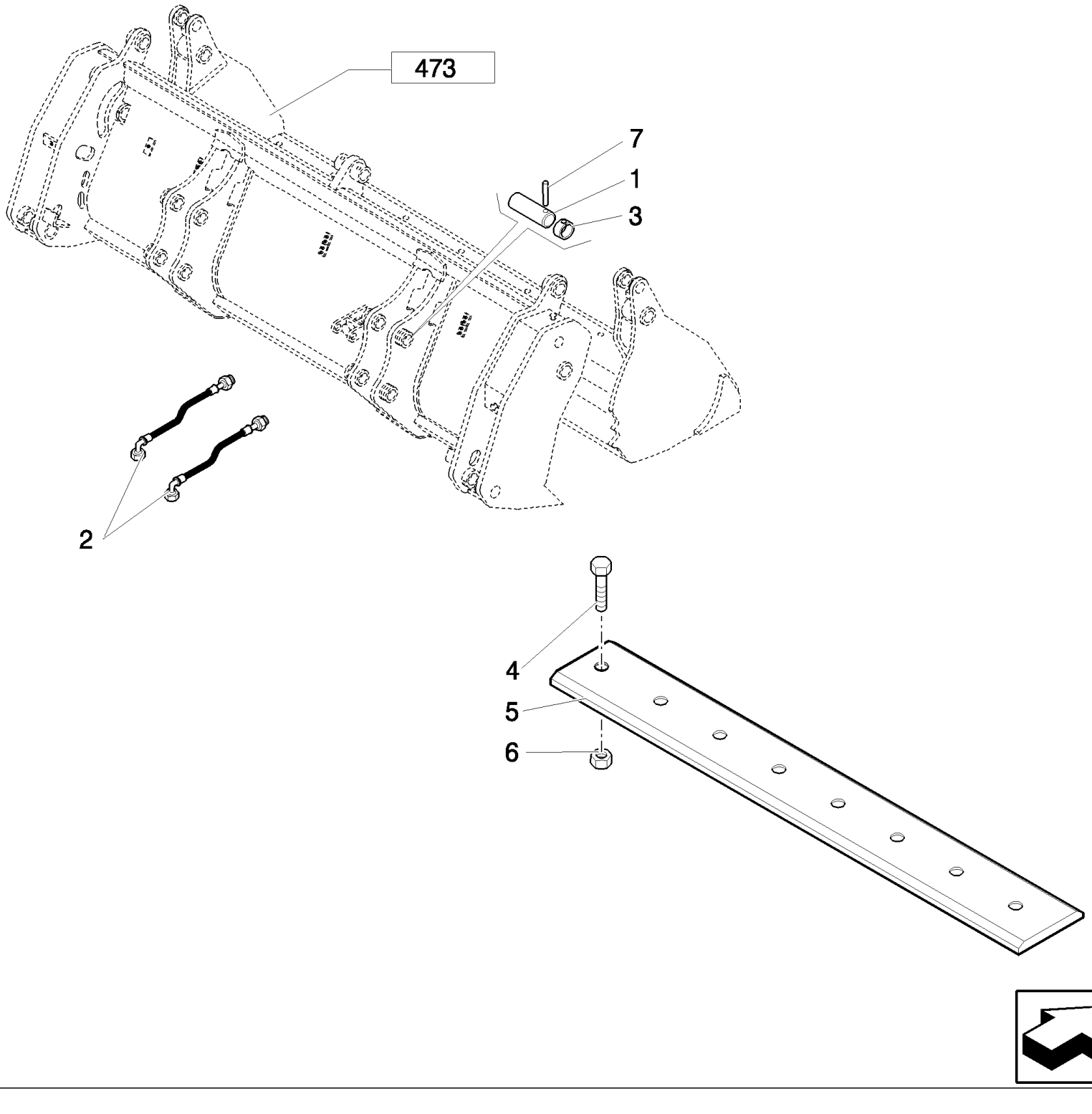

B110 TIER 3 BACKHOE LOADER (2/07-)

473(01) BUCKET 6X1 (1 M3) WITH BLADE "COMMON GREY"

Ref	Numero de Pieza	Ctd	Descripción
1	85801051	4	PIN,
2	85820819	2	HOSE, FLEXIBLE, L=800 mm
3	85802992	4	RING,
4	85801371	8	BOLT, PLOW, 5/8"-11 x 2 1/4",
5	85801161	1	EDGE, CUTTING,
6	85801470	8	NUT, 5/8"-11, G8,
7	85802993	4	PIN,

473(02) BUCKET 6X1 (1 M3) WITH BLADE "COMMON GREY"

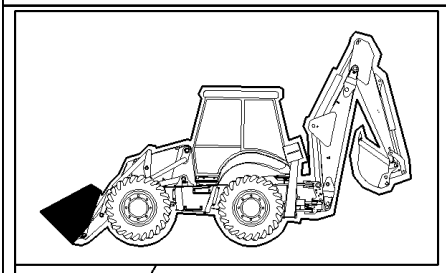

KIT KIT KIT 45 = ●

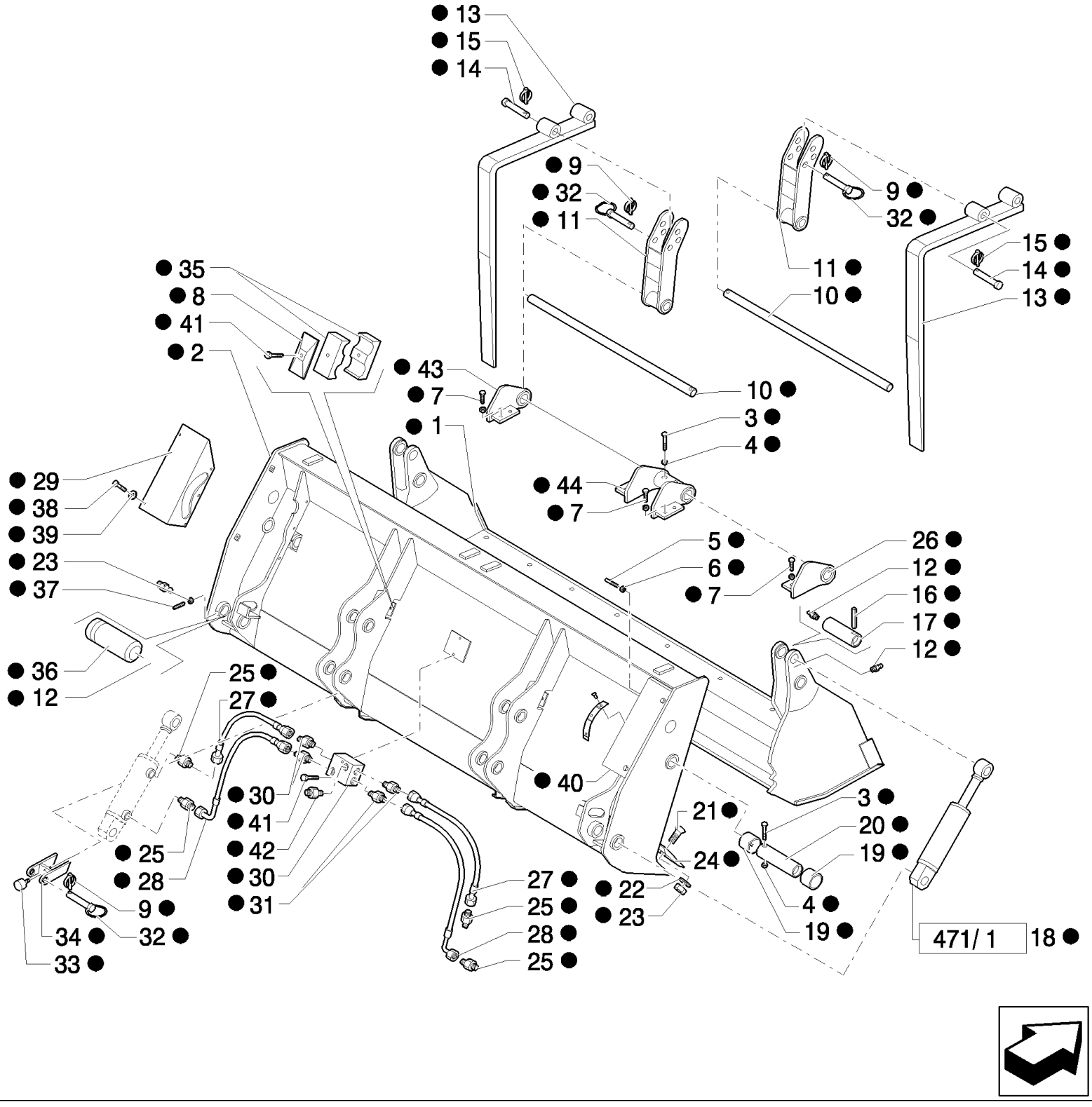

B110 TIER 3 BACKHOE LOADER (2/07-)

473(02) BUCKET 6X1 (1 M3) WITH BLADE "COMMON GREY"

Ref	Numero de Pieza	Ctd	Descripción
1	87310434	1	BUCKET,
2	87310354	1	BUCKET,
3	85820018	4	SCREW, M10 x 90
4	85820035	4	NUT, M10x1,5
5	87312331	1	SCREW, M8 x 120
6	85820031	1	NUT, M8
7	87557215	8	SCREW, M16x35
8	85820026	2	PLATE,
9	85820068	4	PIN, LOCK, D=11
10	87310372	2	SHAFT,
11	87310368	2	SUPPORT,
12	85820014	6	NIPPLE, LUBE, M10 x 1,
13	87310367	2	FORK, BUCKET,
14	87310369	2	PIN,
15	85825177	2	PIN, LOCK, D=8
16	85820016	2	PIN, ROLL, 10 x 80
17	85820017	2	PIN,
18	87573861	2	CYLINDER,
19	85820013	4	BUSHING,
20	85820015	2	PIN,
21	87312328	8	SCREW, M14 x 40
22	85820009	8	WASHER, SEALING,
23	85820008	10	NUT, M14 x 2
24	87308614	1	BLADE, KNIFE,
25	87312333	4	CONNECTOR, HYD.,
26	87310375	1	HINGE, RH
27	87312342	2	HOSE, FLEXIBLE,
28	87312340	2	HOSE, FLEXIBLE,
29	87395481	1	GUARD,
30	87312335	1	FITTING,
31	87312343	4	CONNECTOR, HYD.,
32	85820064	2	PIN,
33	85820069	2	PLUG,
34	87310370	2	BRACKET,
35	85820027	4	CLAMP,
36	87310286	2	PIN,
37	85820020	2	SCREW, M14 x 30
38	85820011	10	SCREW, M8x16
39	85820012	10	WASHER, SEALING,
40	87312330	1	GUARD, RH
41	85820030	4	SCREW, M8 x 45
42	87395482	2	CONNECTOR, HYD.,
43	87310373	1	HINGE, LH

B110 TIER 3 BACKHOE LOADER (2/07-)

473(02) BUCKET 6X1 (1 M3) WITH BLADE "COMMON GREY"

Ref	Numero de Pieza	Ctd	Descripción
44	87310374	1	HINGE,
45	87573552	1	BUCKET, 4 IN 1,

474(01) BUCKET 6X1 (1 M3) WITH TINE "COMMON GREY"

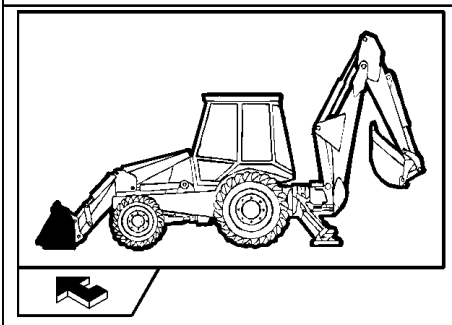

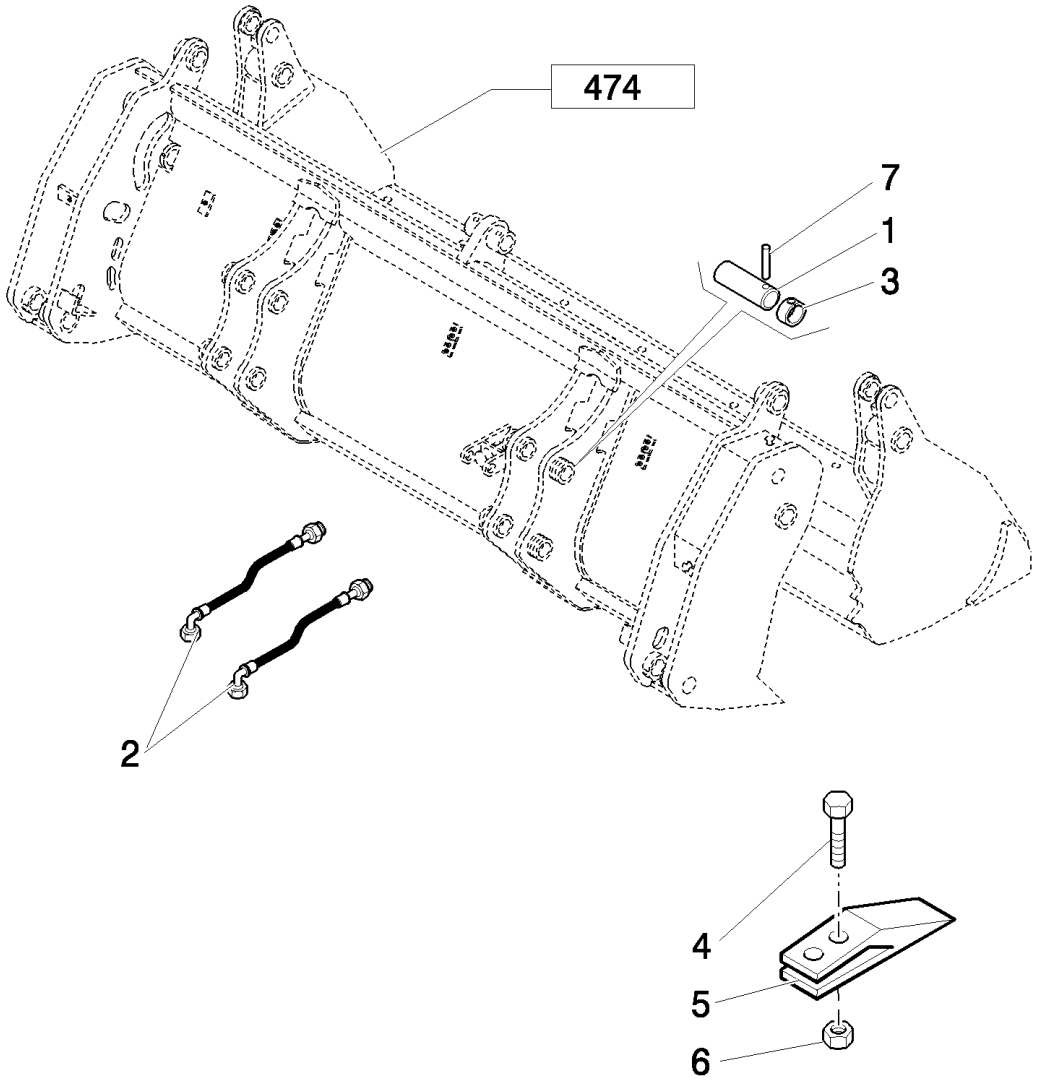

B110 TIER 3 BACKHOE LOADER (2/07-)

474(01) BUCKET 6X1 (1 M3) WITH TINE "COMMON GREY"

Ref	Numero de Pieza	Ctd	Descripción
1	85801051	4	PIN,
2	85820819	2	HOSE, FLEXIBLE, L=800 mm
3	85802992	4	RING,
4	85801371	16	BOLT, PLOW, 5/8"-11 x 2 1/4",
5	85811440	8	SHANK, BUCKET TOOTH,
6	85801470	16	NUT, 5/8"-11, G8,
7	85802993	4	PIN,

474(02) BUCKET 6X1 (1 M3) WITH TINE "COMMON GREY"

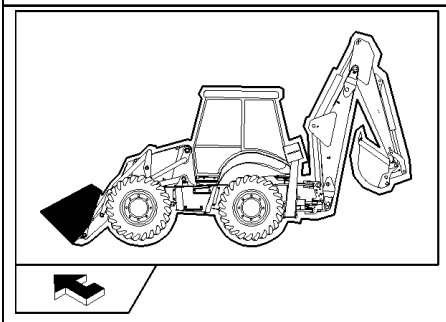

KIT KIT KIT 45 = ●

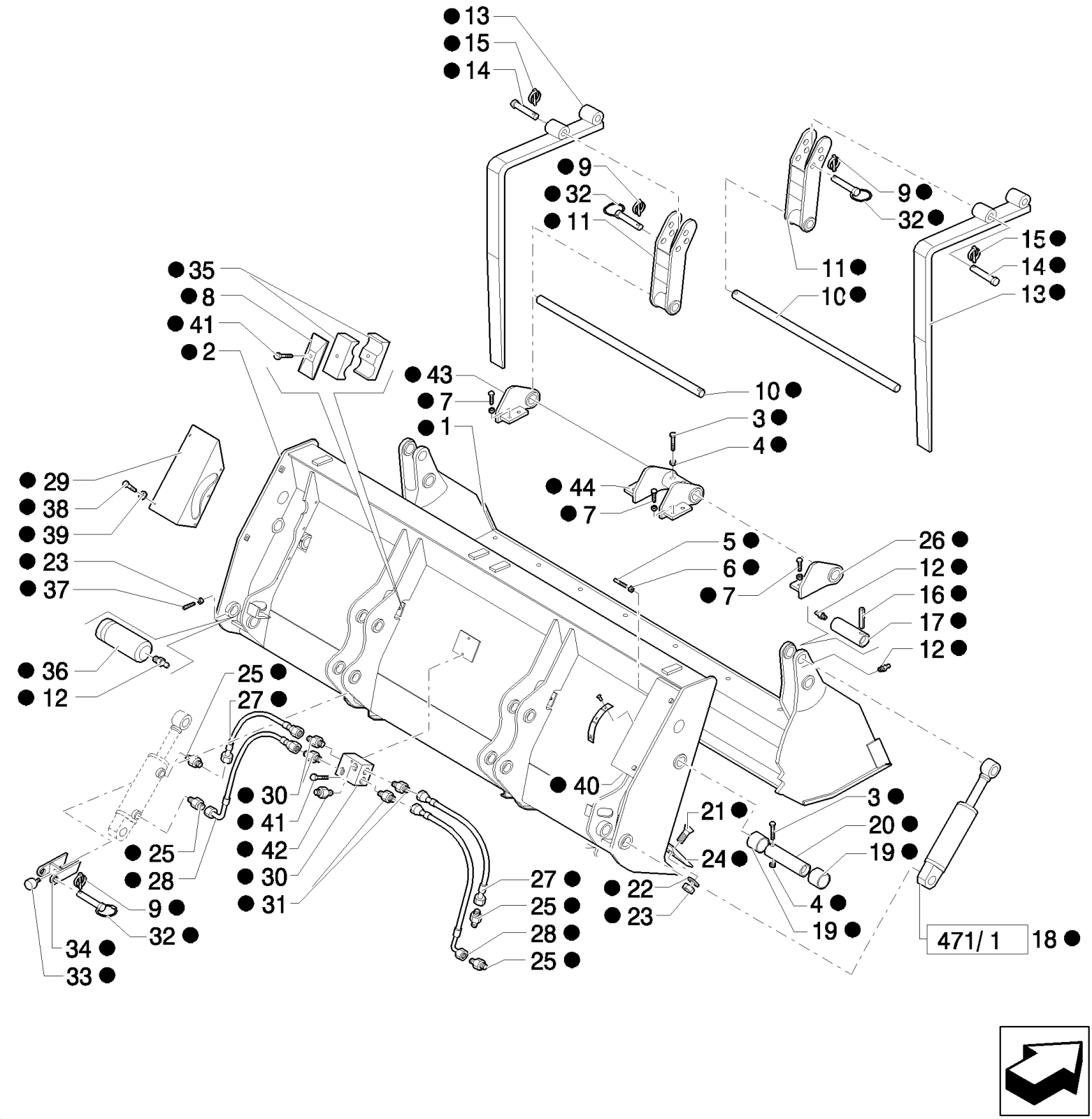

B110 TIER 3 BACKHOE LOADER (2/07-)

474(02) BUCKET 6X1 (1 M3) WITH TINE "COMMON GREY"

Ref	Numero de Pieza	Ctd	Descripción
1	87310434	1	BUCKET,
2	87310354	1	BUCKET,
3	85820018	4	SCREW, M10 x 90
4	85820035	4	NUT, M10x1,5
5	87312331	1	SCREW, M8 x 120
6	85820031	1	NUT, M8
7	87557215	8	SCREW, M16x35
8	85820026	2	PLATE,
9	85820068	4	PIN, LOCK, D=11
10	87310372	2	SHAFT,
11	87310368	2	SUPPORT,
12	85820014	6	NIPPLE, LUBE, M10 x 1,
13	87310367	2	FORK, BUCKET,
14	87310369	2	PIN,
15	85825177	2	PIN, LOCK, D=8
16	85820016	2	PIN, ROLL, 10 x 80
17	85820017	2	PIN,
18	87573861	2	CYLINDER,
19	85820013	4	BUSHING,
20	85820015	2	PIN,
21	87312328	8	SCREW, M14 x 40
22	85820009	8	WASHER, SEALING,
23	85820008	10	NUT, M14 x 2
24	87308614	1	BLADE, KNIFE,
25	87312333	4	CONNECTOR, HYD.,
26	87310375	1	HINGE, RH
27	87312342	2	HOSE, FLEXIBLE,
28	87312340	2	HOSE, FLEXIBLE,
29	87395481	1	GUARD,
30	87312335	1	FITTING,
31	87312343	4	CONNECTOR, HYD.,
32	85820064	2	PIN,
33	85820069	2	PLUG,
34	87310370	2	BRACKET,
35	85820027	4	CLAMP,
36	87310286	2	PIN,
37	85820020	2	SCREW, M14 x 30
38	85820011	10	SCREW, M8x16
39	85820012	10	WASHER, SEALING,
40	87312330	1	GUARD,
41	85820030	4	SCREW, M8 x 45
42	87395482	2	CONNECTOR, HYD.,
43	87310373	1	HINGE, LH

B110 TIER 3 BACKHOE LOADER (2/07-)

474(02) BUCKET 6X1 (1 M3) WITH TINE "COMMON GREY"

Ref	Numero de Pieza	Ctd	Descripción
44	87310374	1	HINGE,
45	87573552	1	BUCKET, 4 IN 1,

B110 TIER 3 BACKHOE LOADER (2/07-)

487(01) 24" (610MM) BACKHOE BUCKET WITH PIN TEETH

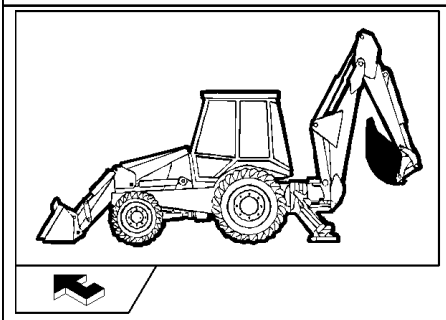

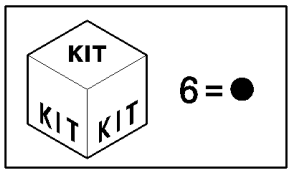

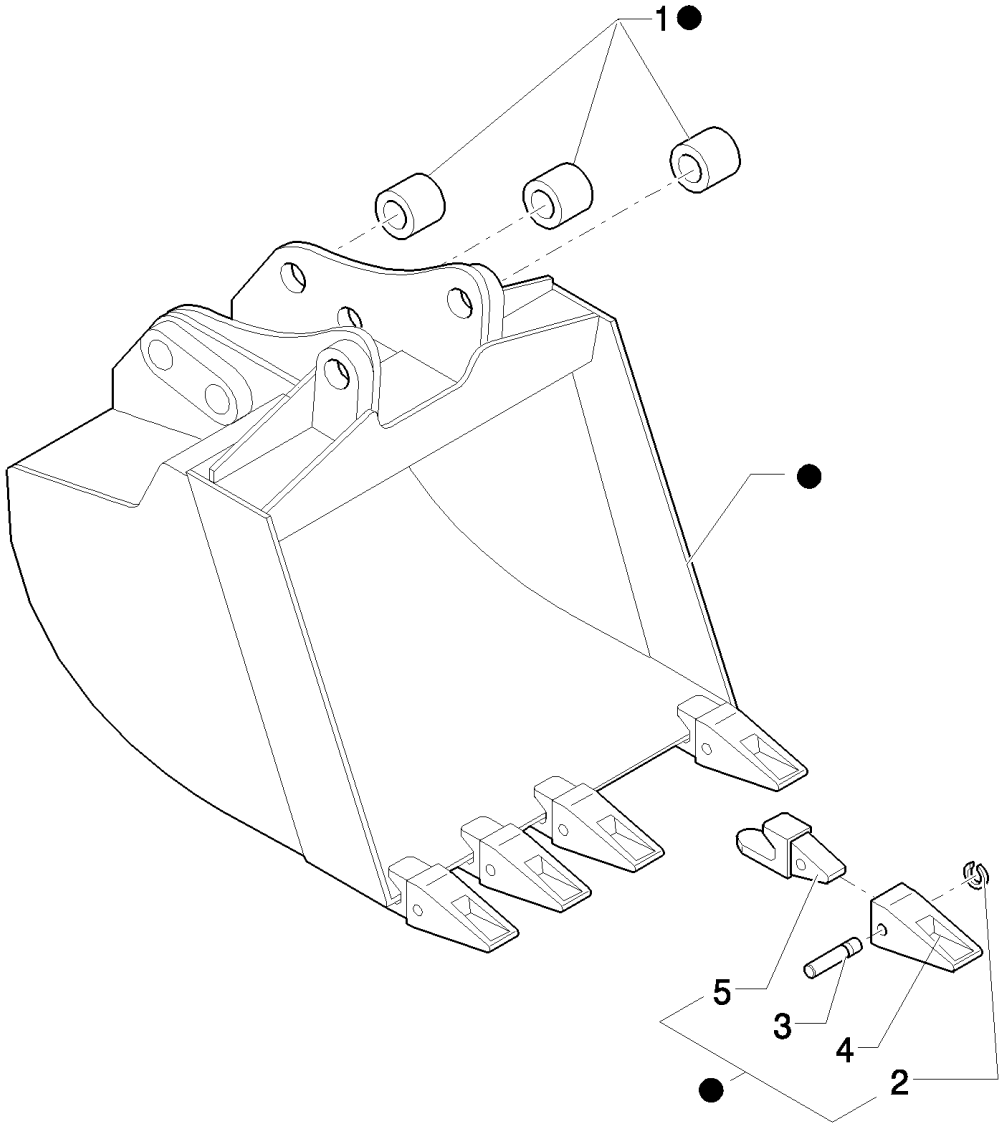

B110 TIER 3 BACKHOE LOADER (2/07-)

487(01) 24" (610MM) BACKHOE BUCKET WITH PIN TEETH

Ref	Numero de Pieza	Ctd	Descripción
1	83910634	6	BUSHING,
2	85801098	5	RING,
3	85801097	5	PIN,
4	85811432	5	TOOTH, BUCKET,
5	85821788	5	SHANK, BUCKET TOOTH,
6	85819319	1	BUCKET,

515(01) 12" (305MM) BACKHOE BUCKET WITH BOLT-ON TEETH

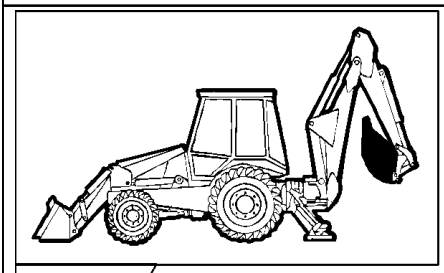

KIT KIT KIT 9 = ●

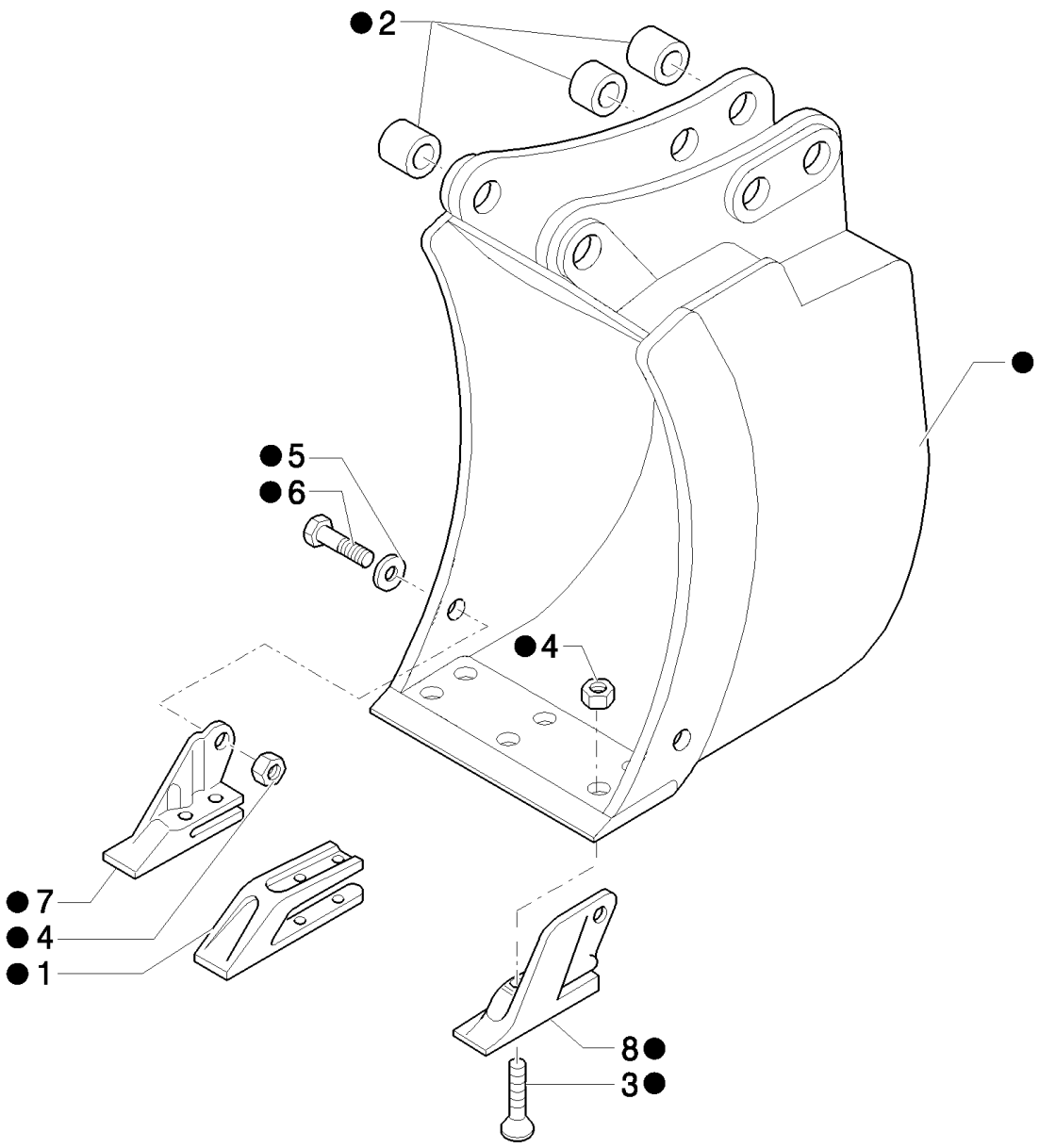

B110 TIER 3 BACKHOE LOADER (2/07-)

515(01) 12" (305MM) BACKHOE BUCKET WITH BOLT-ON TEETH

Ref	Numero de Pieza	Ctd	Descripción
1	85811440	1	SHANK, BUCKET TOOTH,
2	83910634	6	BUSHING,
3	85801371	6	BOLT, PLOW, 5/8"-11 x 2 1/4",
4	85801470	8	NUT, 5/8"-11, G8,
5	10520211	2	WASHER,
6	83904658	2	SCREW, 5/8"-11X1.75
7	85801377	1	TOOTH, BUCKET, RH
8	85801376	1	TOOTH, BUCKET, LH
9	85801400	1	BUCKET,

515/1(01) 12" (305MM) BACKHOE BUCKET WITH PIN TEETH

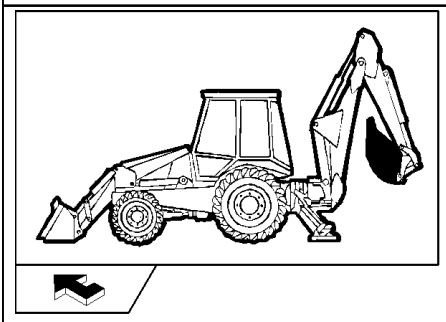

KIT KIT KIT 6 = ●

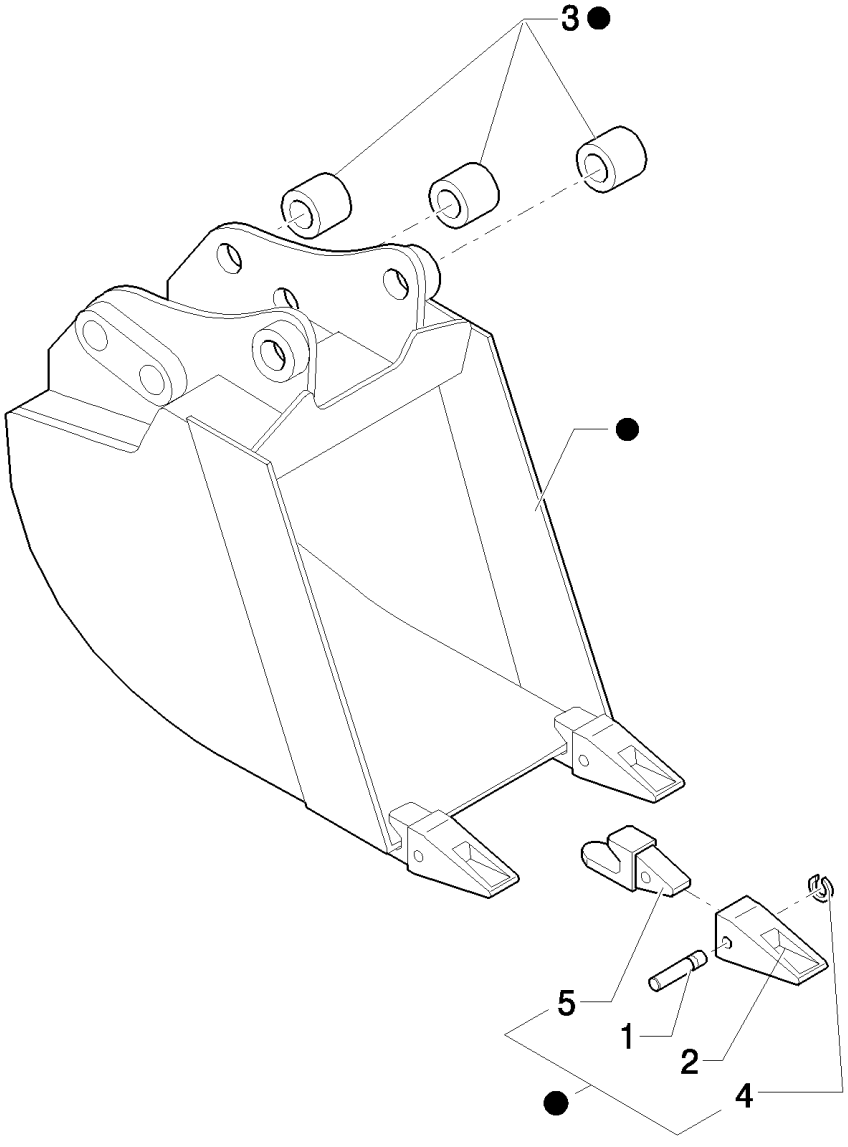

B110 TIER 3 BACKHOE LOADER (2/07-)

515/1(01) 12" (305MM) BACKHOE BUCKET WITH PIN TEETH

Ref	Numero de Pieza	Ctd	Descripción
1	85801097	3	PIN,
2	85811432	3	TOOTH, BUCKET,
3	83910634	6	BUSHING,
4	85801098	3	RING,
5	85821788	3	SHANK, BUCKET TOOTH,
6	85801192	1	BUCKET,

516(01) 18" (457MM) BACKHOE BUCKET WITH BOLT-ON TEETH

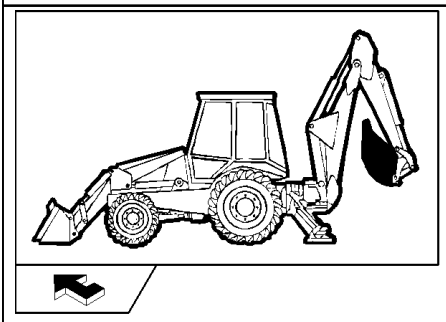

KIT KIT KIT 9 = ●

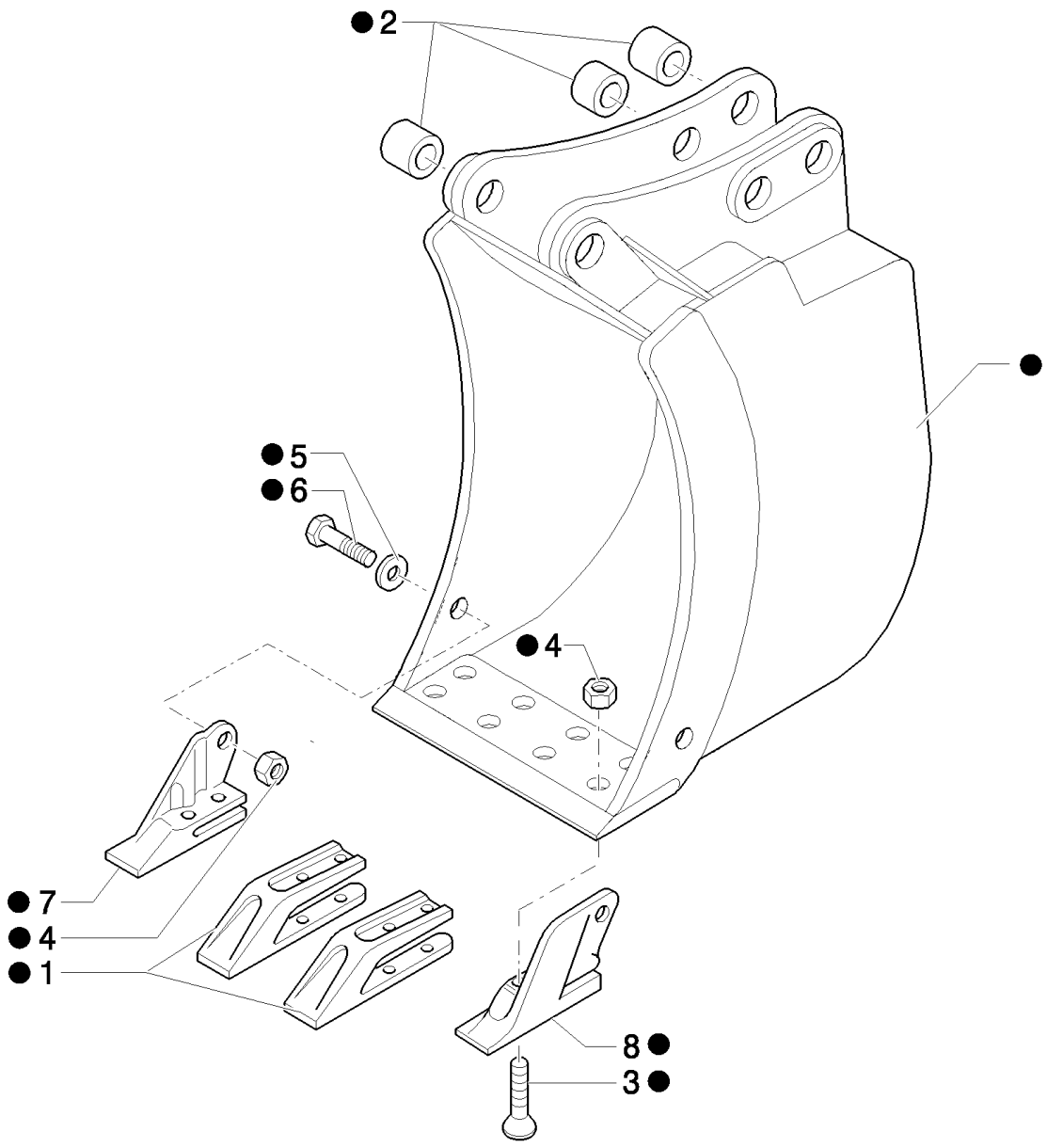

B110 TIER 3 BACKHOE LOADER (2/07-)

516(01) 18" (457MM) BACKHOE BUCKET WITH BOLT-ON TEETH

Ref	Numero de Pieza	Ctd	Descripción
1	85811440	2	SHANK, BUCKET TOOTH,
2	83910634	6	BUSHING,
3	85801371	8	BOLT, PLOW, 5/8"-11 x 2 1/4",
4	85801470	10	NUT, 5/8"-11, G8,
5	10520211	2	WASHER,
6	83904658	2	SCREW, 5/8"-11X1.75
7	85801377	1	TOOTH, BUCKET, RH
8	85801376	1	TOOTH, BUCKET, LH
9	85801388	1	BUCKET,

516/1(01) BACKHOE BUCKET WITH PIN TEETH

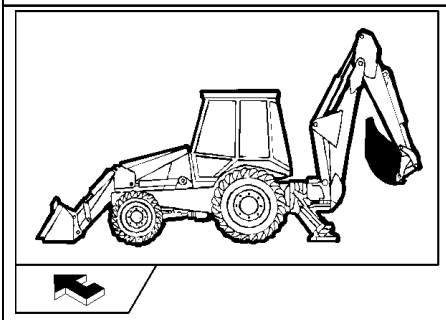

KIT KIT KIT 6 = ●

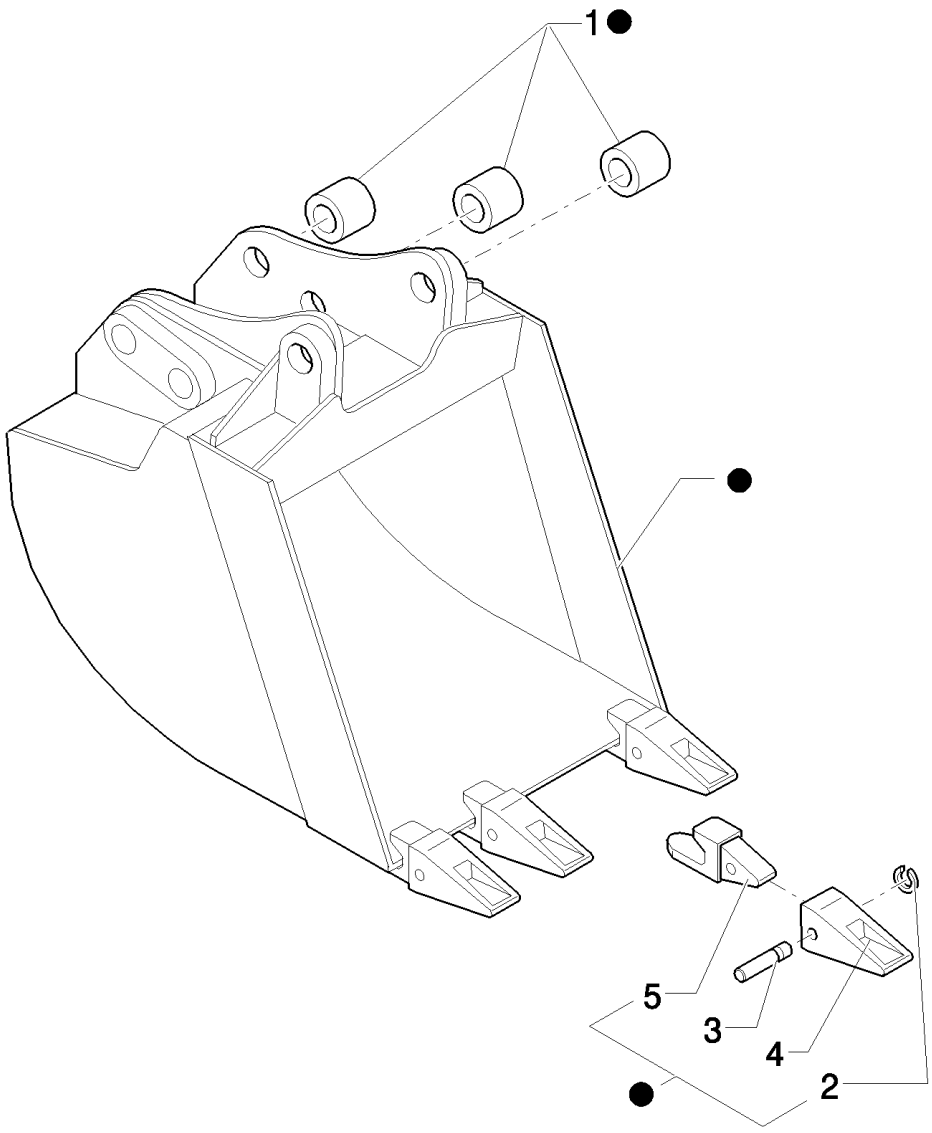

B110 TIER 3 BACKHOE LOADER (2/07-)

516/1(01) BACKHOE BUCKET WITH PIN TEETH

Ref	Numero de Pieza	Ctd	Descripción
1	83910634	6	BUSHING,
2	85801098	4	RING,
3	85801097	4	PIN,
4	85811432	4	TOOTH, BUCKET,
5	85821788	4	SHANK, BUCKET TOOTH,
6	85801193	1	BUCKET,

517(01) 24" (610MM) BACKHOE BUCKET WITH BOLT-ON TEETH

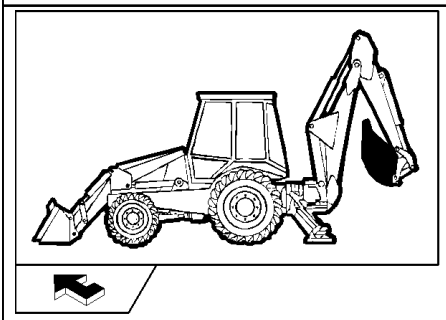

KIT 9 = ●

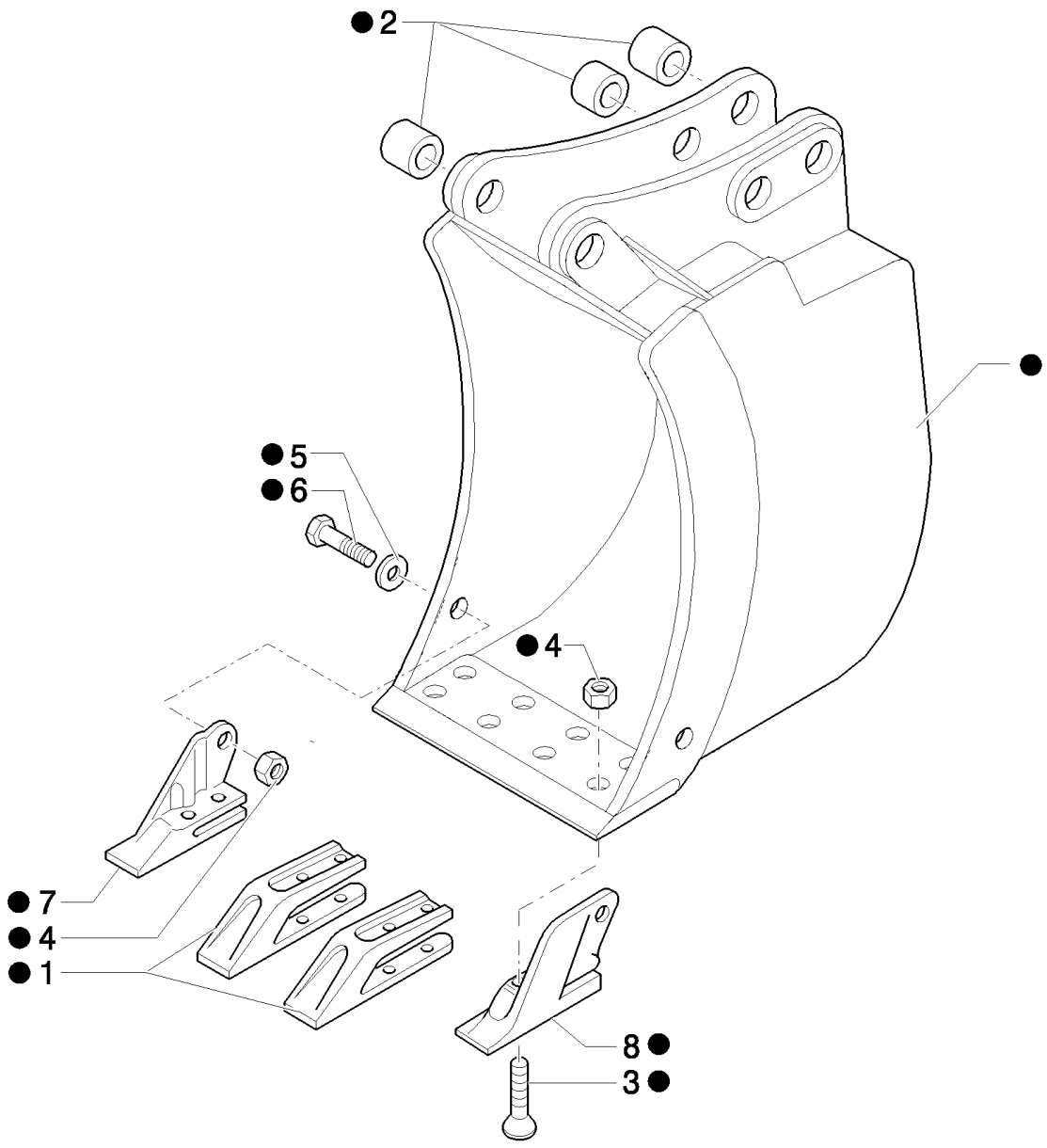

B110 TIER 3 BACKHOE LOADER (2/07-)

517(01) 24" (610MM) BACKHOE BUCKET WITH BOLT-ON TEETH

Ref	Numero de Pieza	Ctd	Descripción
1	85811440	2	SHANK, BUCKET TOOTH,
2	83910634	6	BUSHING,
3	85801371	8	BOLT, PLOW, 5/8"-11 x 2 1/4",
4	85801470	10	NUT, 5/8"-11, G8,
5	10520211	2	WASHER,
6	83904658	2	SCREW,
7	85801377	1	TOOTH, BUCKET, RH
8	85801376	1	TOOTH, BUCKET, LH
9	85801407	1	BUCKET,

517/1(01) 24" (610MM) BACKHOE BUCKET WITH PIN TEETH

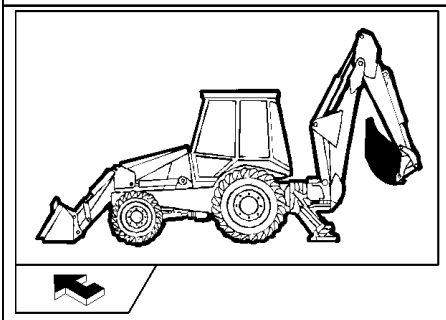

KIT KIT KIT 6 = ●

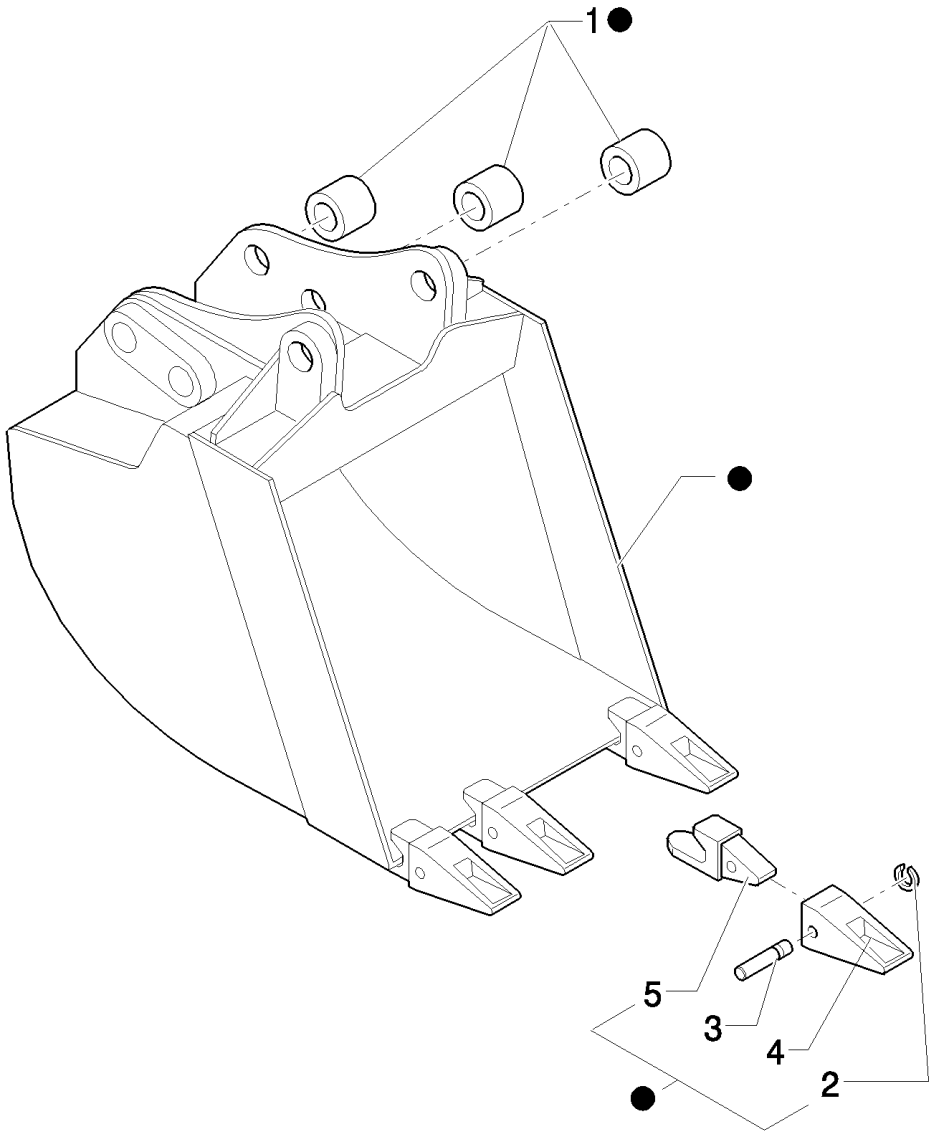

B110 TIER 3 BACKHOE LOADER (2/07-)

517/1(01) 24" (610MM) BACKHOE BUCKET WITH PIN TEETH

Ref	Numero de Pieza	Ctd	Descripción
1	83910634	6	BUSHING,
2	85801098	4	RING,
3	85801097	4	PIN,
4	85811432	4	TOOTH, BUCKET,
5	85821788	4	SHANK, BUCKET TOOTH,
6	85801325	1	BUCKET,

518(01) 30" (762MM) BACKHOE BUCKET WITH BOLT-ON TEETH

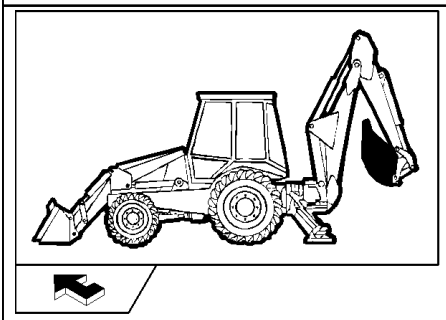

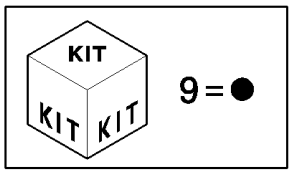

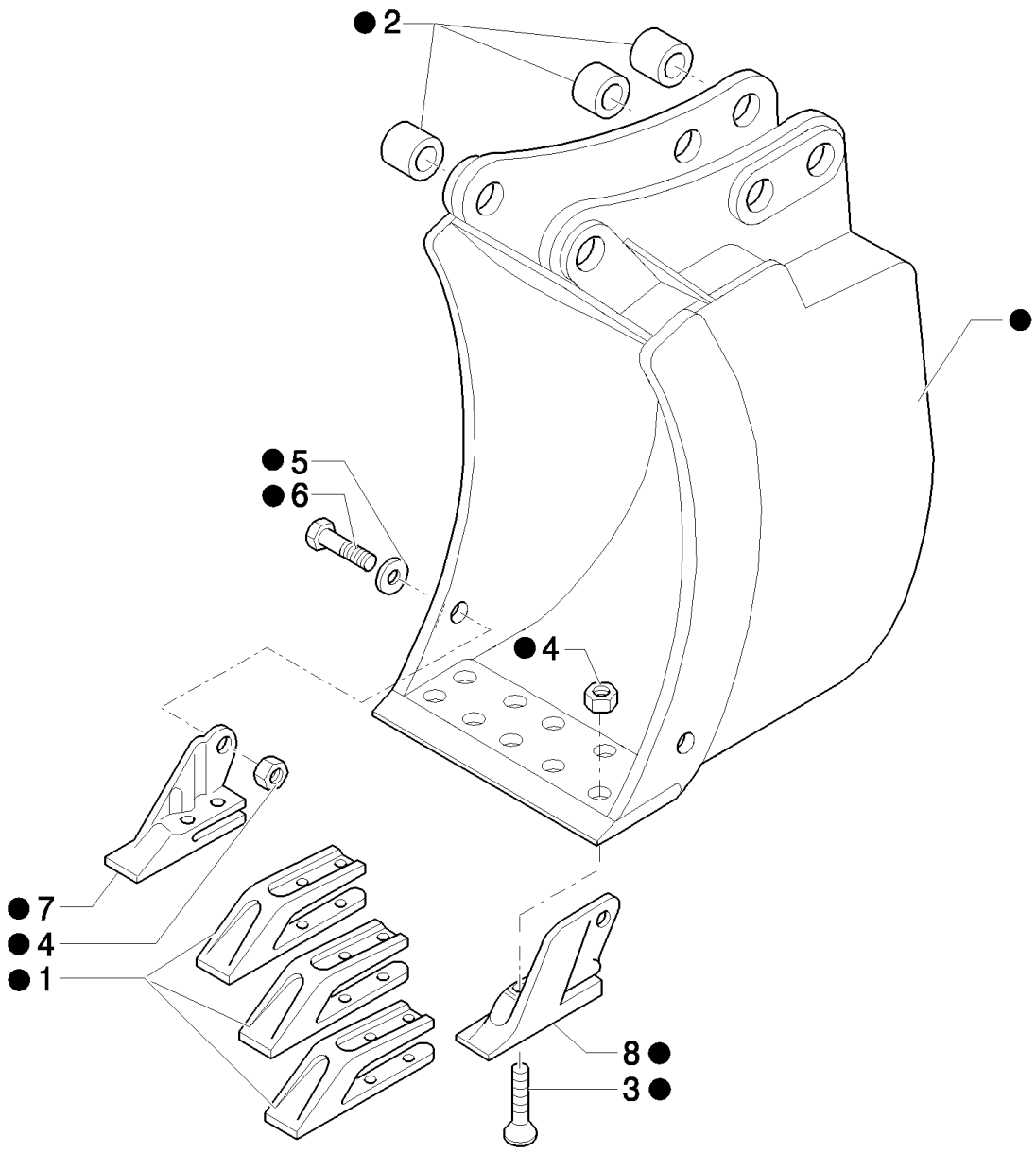

B110 TIER 3 BACKHOE LOADER (2/07-)

518(01) 30" (762MM) BACKHOE BUCKET WITH BOLT-ON TEETH

Ref	Numero de Pieza	Ctd	Descripción
1	85811440	3	SHANK, BUCKET TOOTH,
2	83910634	6	BUSHING,
3	85801371	10	BOLT, PLOW, 5/8"-11 x 2 1/4",
4	85801470	12	NUT, 5/8"-11, G8,
5	10520211	2	WASHER,
6	83904658	2	SCREW,
7	85801377	1	TOOTH, BUCKET, RH
8	85801376	1	TOOTH, BUCKET, LH
9	85801415	1	BUCKET,

B110 TIER 3 BACKHOE LOADER (2/07-)

518/1(01) 30" (762MM) BACKHOE BUCKET WITH PIN TEETH

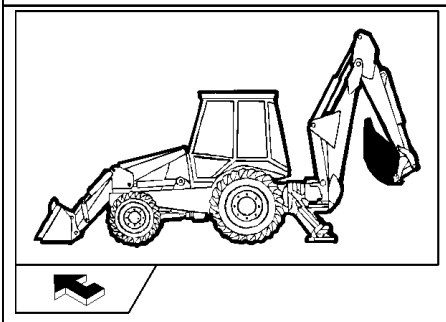

KIT KIT KIT 6 = ●

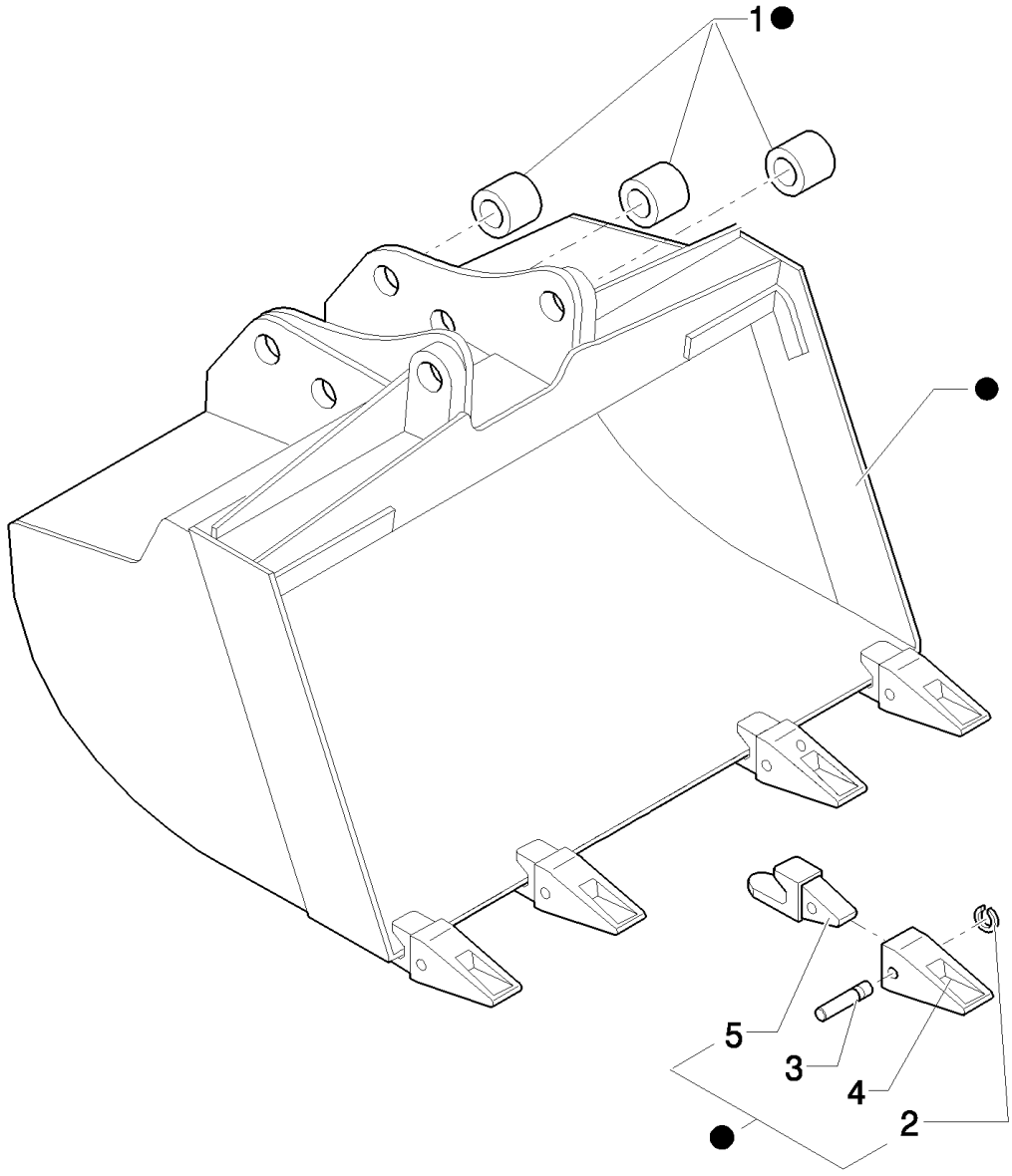

B110 TIER 3 BACKHOE LOADER (2/07-)

518/1(01) 30" (762MM) BACKHOE BUCKET WITH PIN TEETH

Ref	Numero de Pieza	Ctd	Descripción
1	83910634	6	BUSHING,
2	85801098	5	RING,
3	85801097	5	PIN,
4	85811432	5	TOOTH, BUCKET,
5	85821788	5	SHANK, BUCKET TOOTH,
6	85801231	1	BUCKET,

519(01) 36" (914MM) BACKHOE BUCKET WITH BOLT-ON TEETH

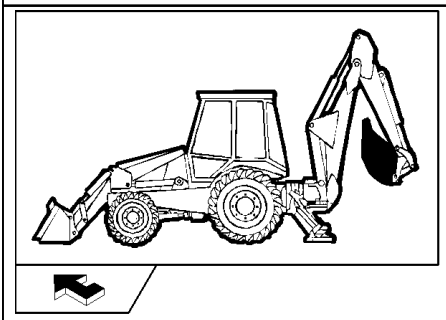

KIT KIT KIT 9 = ●

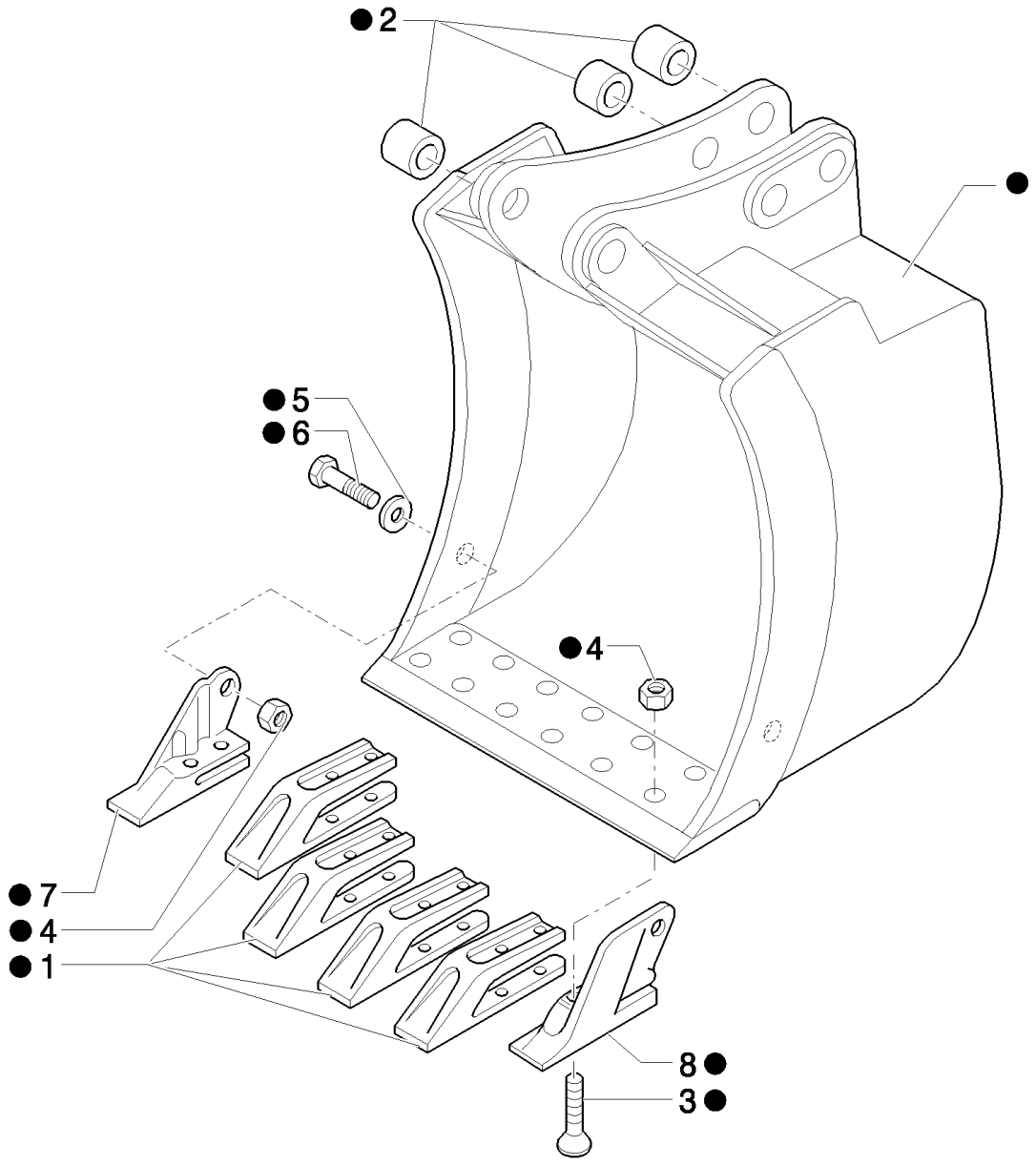

B110 TIER 3 BACKHOE LOADER (2/07-)

519(01) 36" (914MM) BACKHOE BUCKET WITH BOLT-ON TEETH

Ref	Numero de Pieza	Ctd	Descripción
1	85811440	4	SHANK, BUCKET TOOTH,
2	83910634	6	BUSHING,
3	85801371	12	BOLT, PLOW, 5/8"-11 x 2 1/4",
4	85801470	14	NUT, 5/8"-11, G8,
5	10520211	2	WASHER,
6	83904658	2	SCREW,
7	85801377	1	TOOTH, BUCKET, RH
8	85801376	1	TOOTH, BUCKET, LH
9	85801423	1	BUCKET,

519/1(01) 36" (914MM) BACKHOE BUCKET WITH PIN TEETH

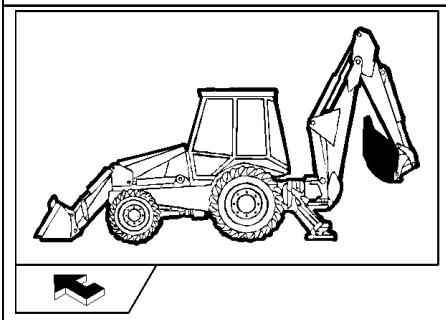

KIT KIT KIT 6 = ●

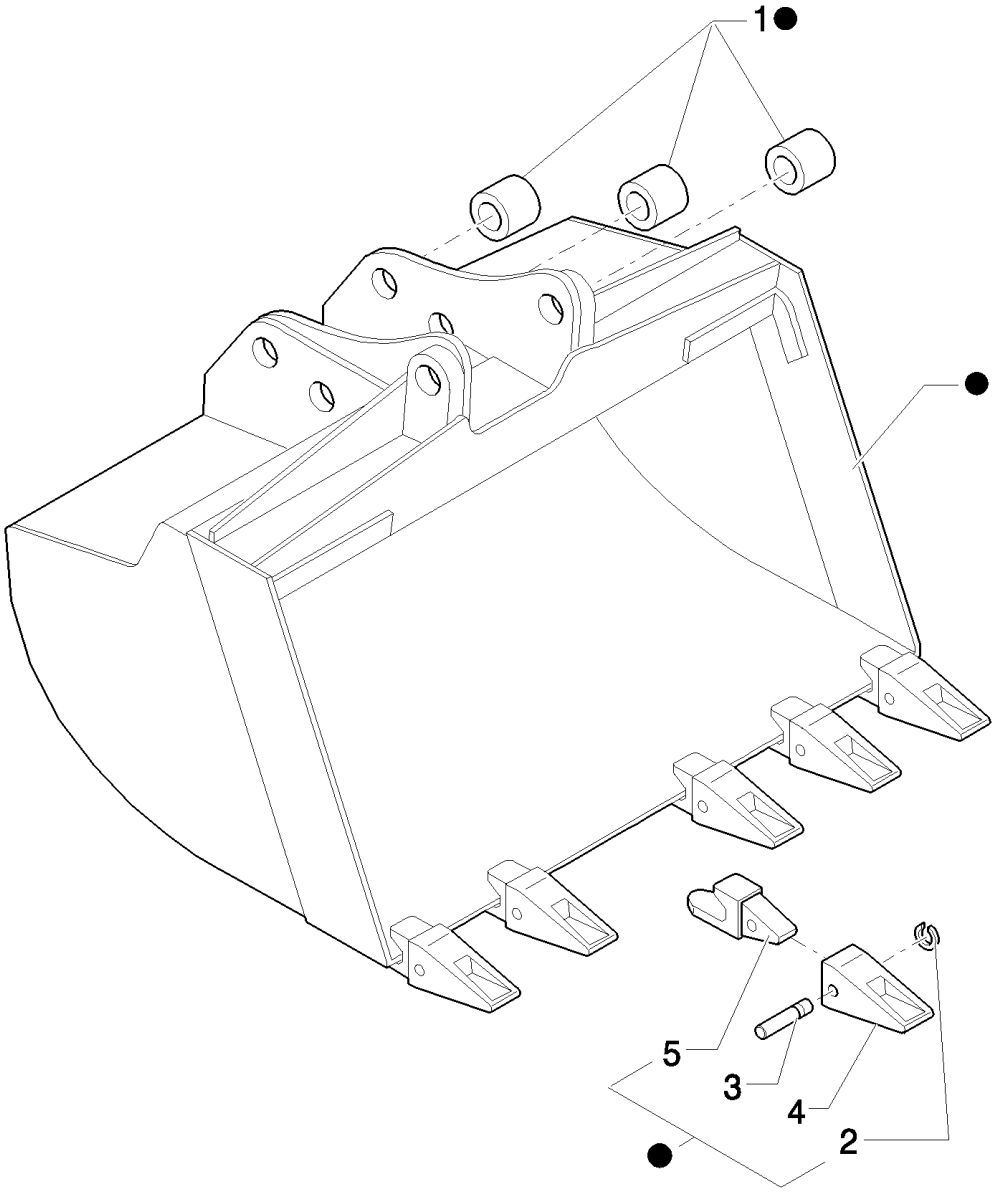

B110 TIER 3 BACKHOE LOADER (2/07-)

519/1(01) 36" (914MM) BACKHOE BUCKET WITH PIN TEETH

Ref	Numero de Pieza	Ctd	Descripción
1	83910634	6	BUSHING,
2	85801098	6	RING,
3	85801097	6	PIN,
4	85811432	6	TOOTH, BUCKET,
5	85821788	6	SHANK, BUCKET TOOTH,
6	85801238	1	BUCKET,

B110 TIER 3 BACKHOE LOADER (2/07-)

520(01) 0.88 M3 BUCKET WITHOUT TINES

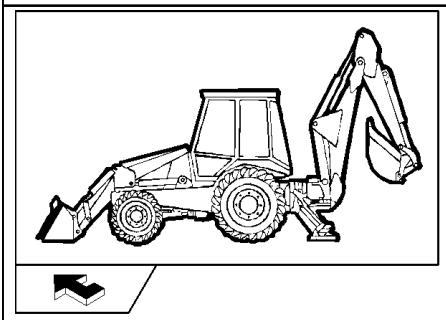

KIT KIT KIT 6 = ●

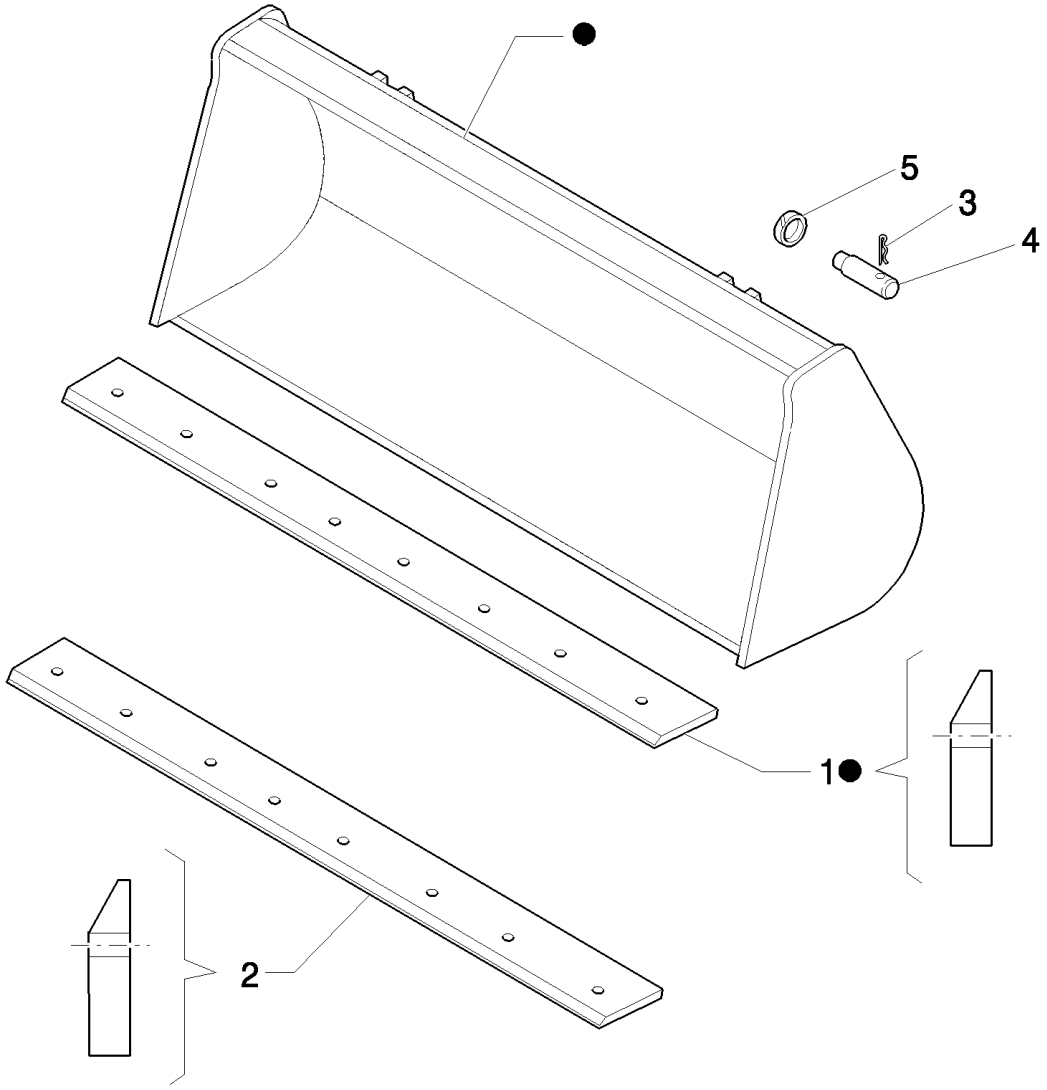

B110 TIER 3 BACKHOE LOADER (2/07-)

520(01) 0.88 M3 BUCKET WITHOUT TINES

Ref	Numero de Pieza	Ctd	Descripción
1	85801044	1	EDGE, CUTTING, 27 Deg. cutting edge, Part welded to bucket
2	85807868	1	EDGE, CUTTING, , Non-reversible weld on
3	85802993	4	PIN,
4	85801051	4	PIN,
5	85802992	4	RING,
6	85801042	1	BUCKET,

520/1(01) 18" (457MM) BACKHOE BUCKET WITH PIN TEETH (EXTRA HD)

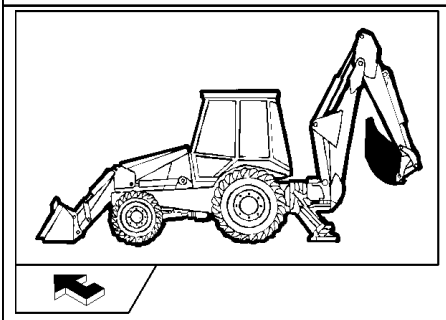

KIT KIT KIT 6 = ●

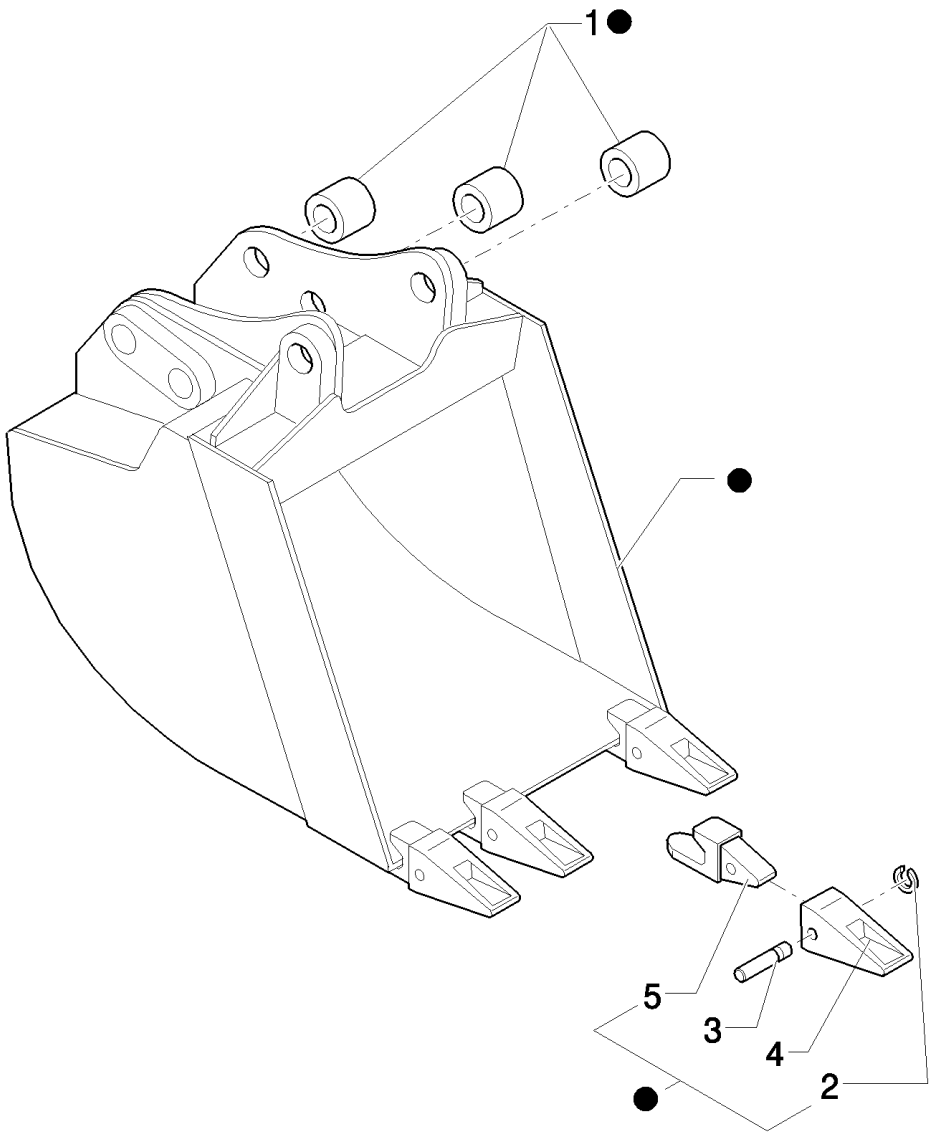

B110 TIER 3 BACKHOE LOADER (2/07-)

520/1(01) 18" (457MM) BACKHOE BUCKET WITH PIN TEETH (EXTRA HD)

Ref	Numero de Pieza	Ctd	Descripción
1	83910634	6	BUSHING,
2	85801098	4	RING,
3	85801097	4	PIN,
4	85811432	4	TOOTH, BUCKET,
5	85821788	4	SHANK, BUCKET TOOTH,
6	85801334	1	BUCKET,

B110 TIER 3 BACKHOE LOADER (2/07-)

521(01) PIN TOOTH KIT, 24" (610 MM) BACKHOE BUCKETS (EXTRA HD) - EU

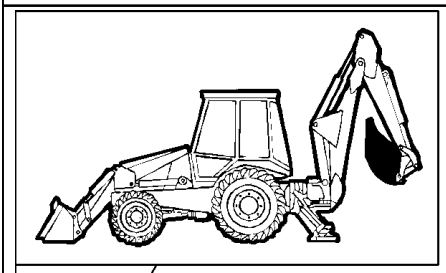

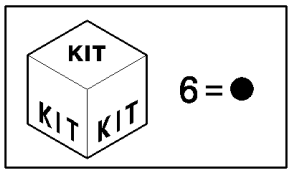

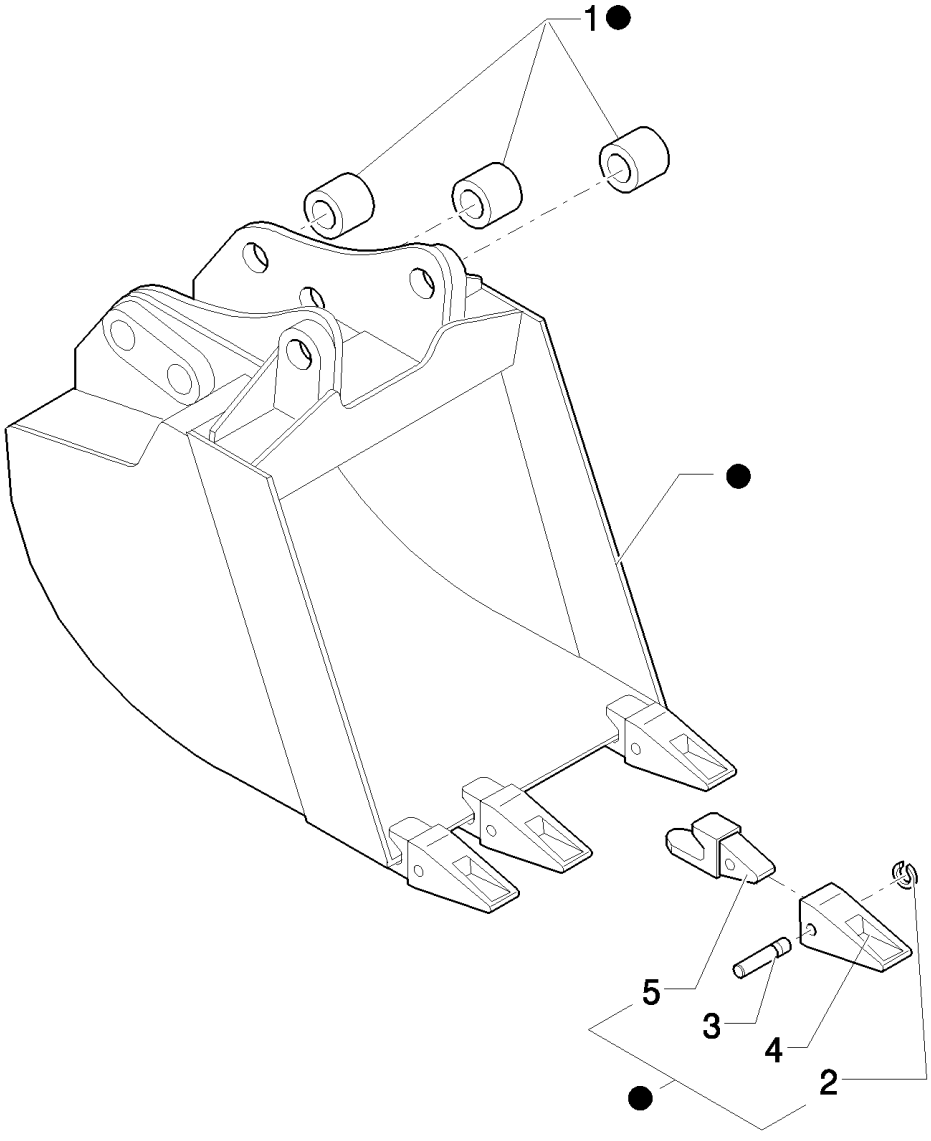

B110 TIER 3 BACKHOE LOADER (2/07-)

521(01) PIN TOOTH KIT, 24" (610 MM) BACKHOE BUCKETS (EXTRA HD) - EU

Ref	Numero de Pieza	Ctd	Descripción
1	83910634	6	BUSHING,
2	85801098	4	RING,
3	85801097	4	PIN,
4	85811432	4	TOOTH, BUCKET,
5	85821788	4	SHANK, BUCKET TOOTH,
6	85801344	1	BUCKET,

522(01) 1 M3 BUCKET

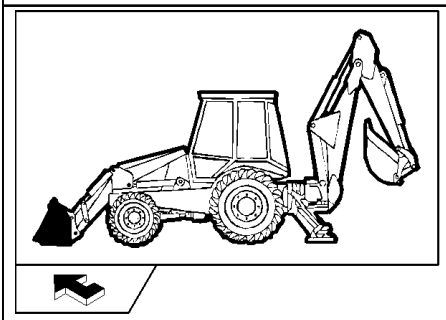

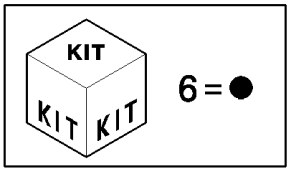

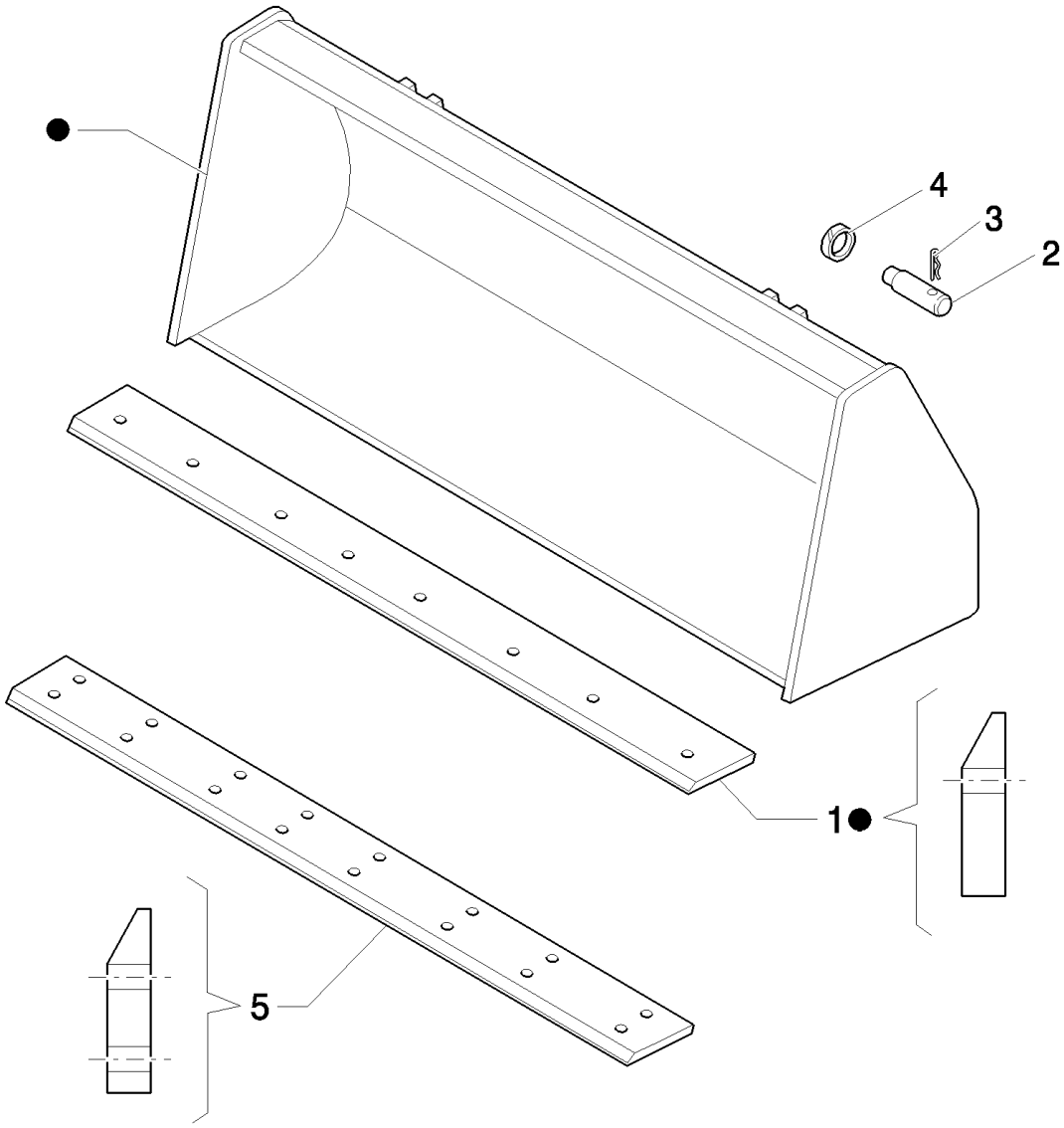

B110 TIER 3 BACKHOE LOADER (2/07-)

522(01) 1 M3 BUCKET

Ref	Numero de Pieza	Ctd	Descripción
1	85801034	1	EDGE, CUTTING, , Part welded to bucket
2	85801051	4	PIN,
3	85802993	4	PIN,
4	85802992	4	RING,
5	85807867	1	EDGE, CUTTING, 200mm W x 2250 L, Non-reversible weld on
6	85801040	1	BUCKET,

522/1(01) STANDARD 1MC BUCKET WITH FORKS

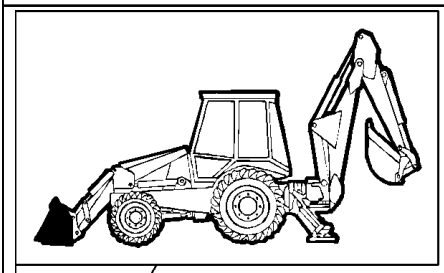

KIT

14 = ●
19 = ■

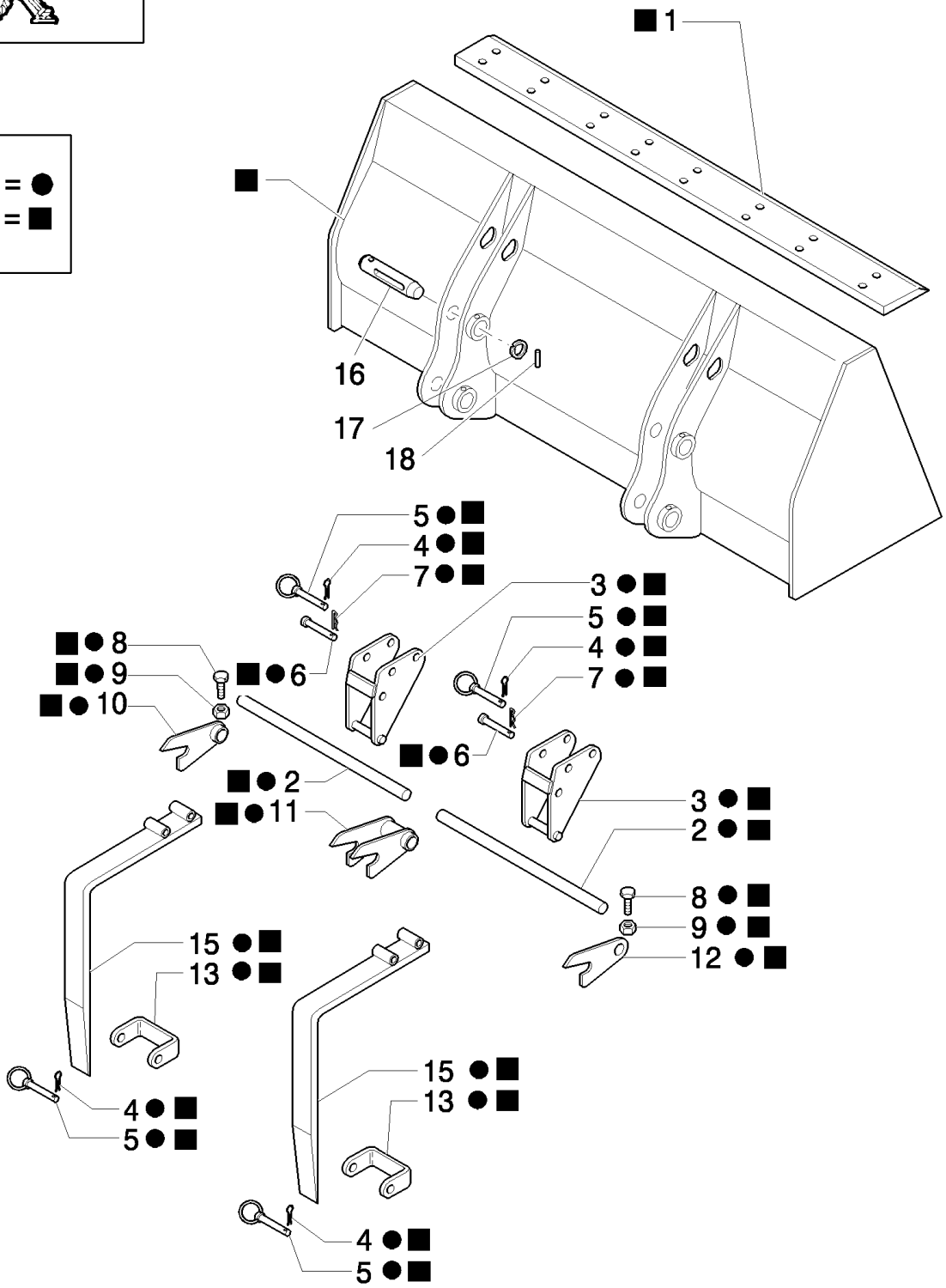

B110 TIER 3 BACKHOE LOADER (2/07-)

522/1(01) STANDARD 1MC BUCKET WITH FORKS

Ref	Numero de Pieza	Ctd	Descripción
1	85801034	1	EDGE, CUTTING, , Part welded to bucket
2	9969170	2	ROD,
3	9968146	2	SUPPORT,
4	9968147	4	PIN, ROLL,
5	9968148	4	PIN, LOCK,
6	9968149	2	PIN,
7	9968150	2	PIN, SPLIT (COTTER),
8	9968151	2	SCREW,
9	9968152	4	NUT, M10
10	9968153	1	HINGE,
11	9968154	1	HINGE,
12	9968155	1	HINGE,
13	9968156	2	U-BRACKET,
14	85801486	1	KIT, CONVERSION, FORKS
15	9968144	2	FORK,
16	85801051	4	PIN,
17	85802992	4	RING,
18	85802993	4	PIN,
19	85803224	1	BUCKET,

B110 TIER 3 BACKHOE LOADER (2/07-)

525(01) STANDARD 1MC BUCKET WITH FORKS AND REVERSIBLE BLADE

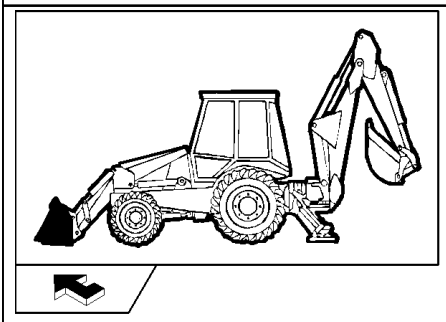

KIT
KIT KIT
14 = ●
21 = ■

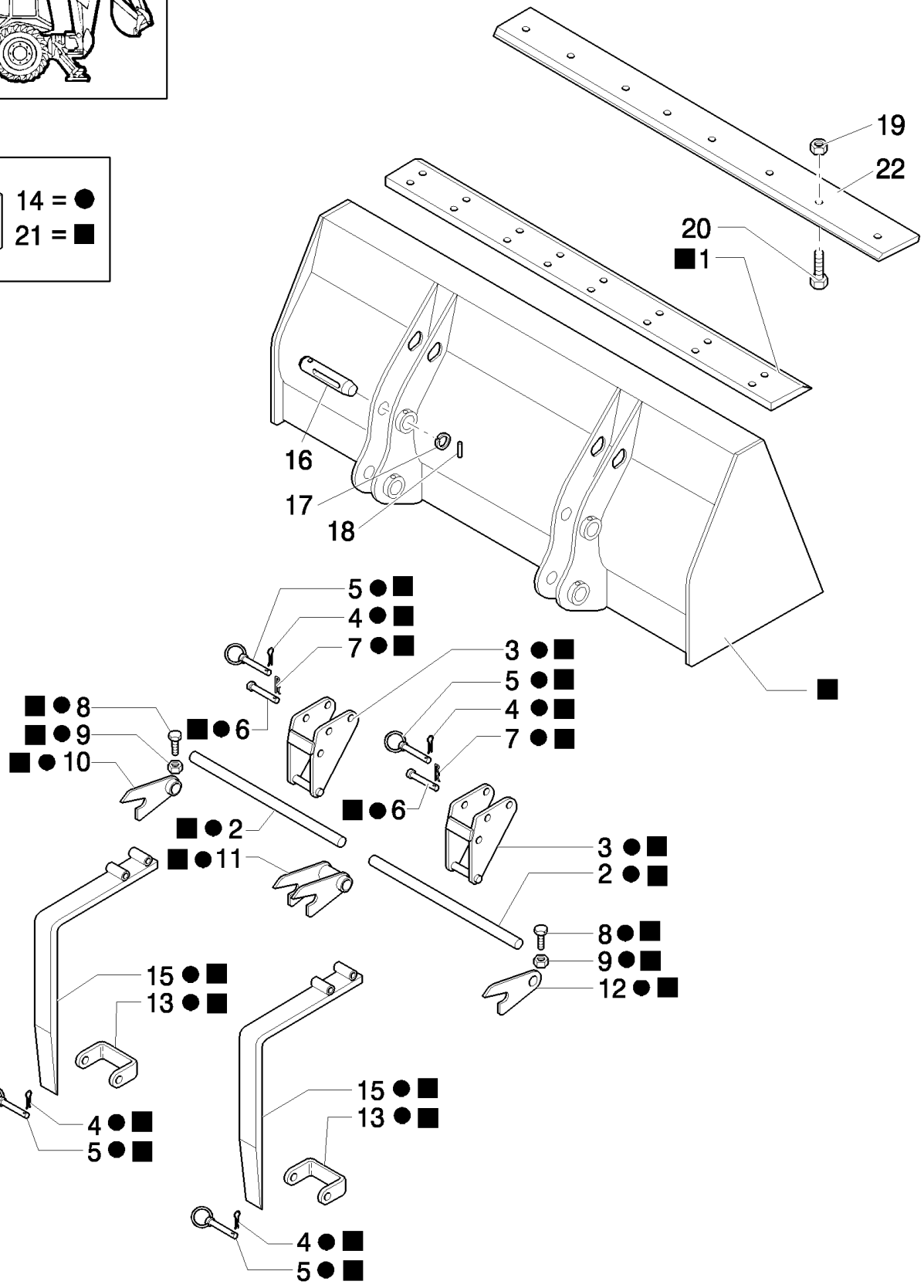

B110 TIER 3 BACKHOE LOADER (2/07-)

525(01) STANDARD 1MC BUCKET WITH FORKS AND REVERSIBLE BLADE

Ref	Numero de Pieza	Ctd	Descripción
1	85801034	1	EDGE, CUTTING, , Part welded to bucket
2	9969170	2	ROD,
3	9968146	2	SUPPORT,
4	9968147	4	PIN, ROLL,
5	9968148	4	PIN, LOCK,
6	9968149	2	PIN,
7	9968150	2	PIN, SPLIT (COTTER),
8	9968151	2	SCREW,
9	9968152	4	NUT, M10
10	9968153	1	HINGE,
11	9968154	1	HINGE,
12	9968155	1	HINGE,
13	9968156	2	U-BRACKET,
14	85801486	1	KIT, CONVERSION, FORKS
15	9968144	2	FORK,
16	85801051	4	PIN,
17	85802992	4	RING,
18	85802993	4	PIN,
19	85801470	8	NUT, 5/8"-11, G8,
20	85801371	8	BOLT, PLOW, 5/8"-11 x 2 1/4",
21	85803224	1	BUCKET,
22	85801161	1	EDGE, CUTTING, , Reversible bolt on

526(01) STANDARD 1M3 BUCKET WITH FORKS AND TINE

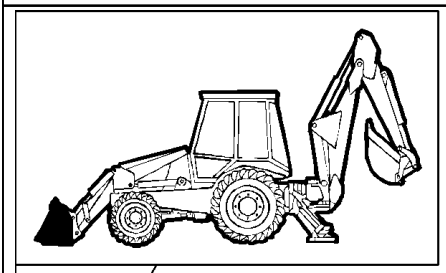

KIT KIT KIT
14 = ●
22 = ■

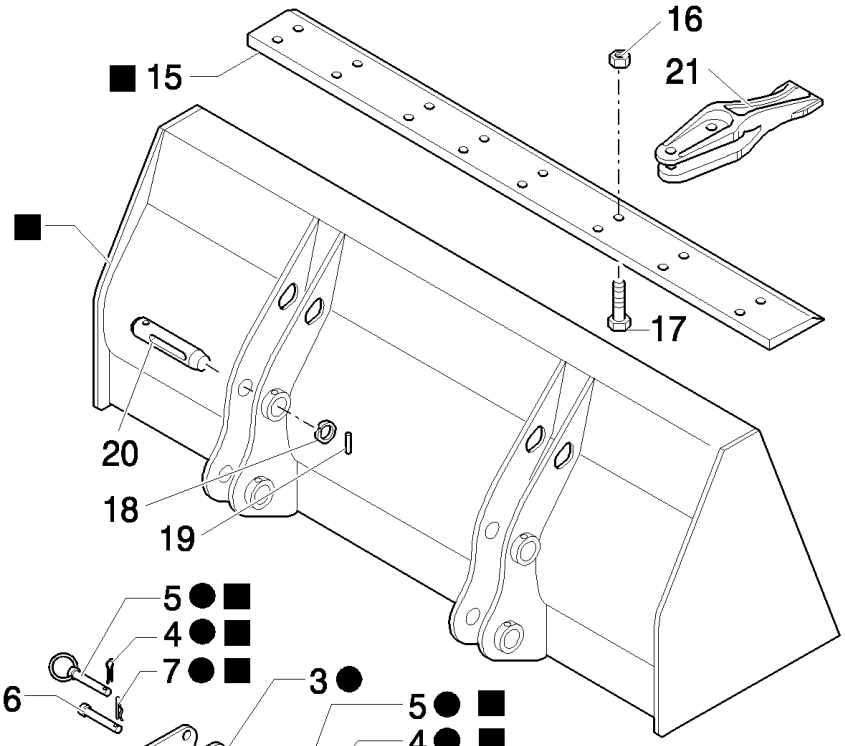

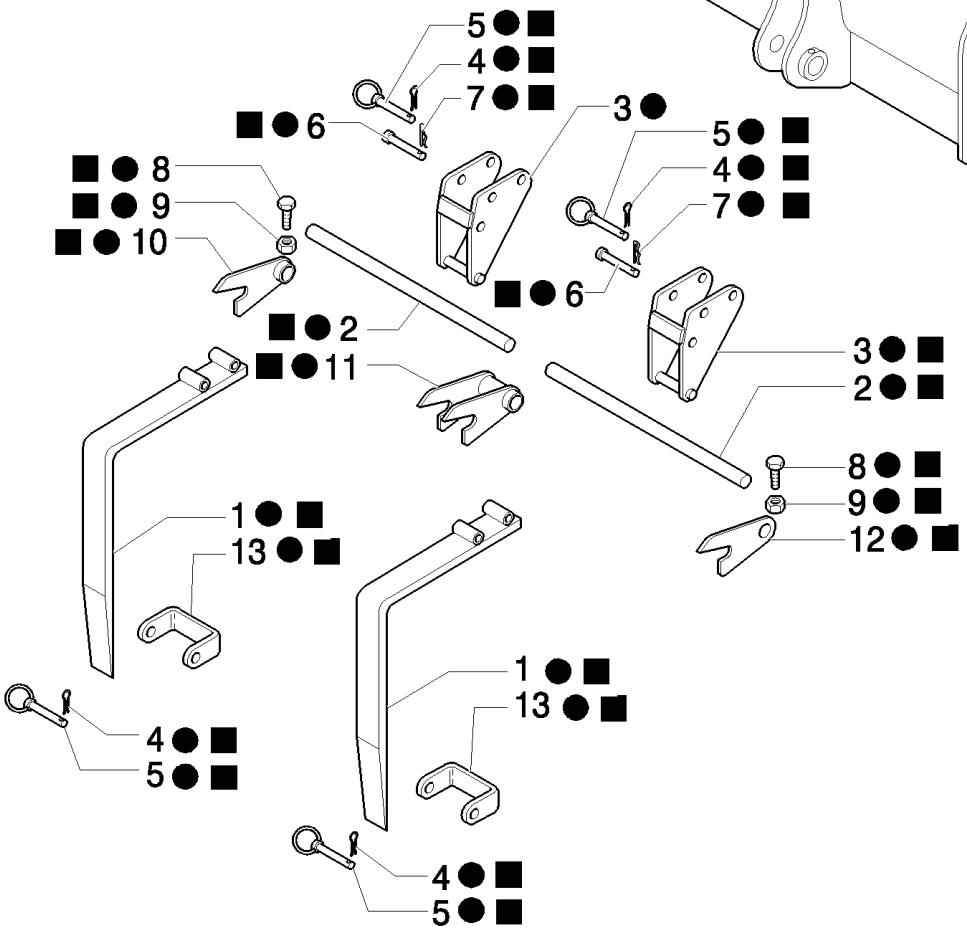

B110 TIER 3 BACKHOE LOADER (2/07-)

526(01) STANDARD 1M3 BUCKET WITH FORKS AND TINE

Ref	Numero de Pieza	Ctd	Descripción
1	9968144	2	FORK,
2	9969170	2	ROD,
3	9968146	2	SUPPORT,
4	9968147	4	PIN, ROLL,
5	9968148	4	PIN, LOCK,
6	9968149	2	PIN,
7	9968150	2	PIN, SPLIT (COTTER),
8	9968151	2	SCREW, M10X90
9	9968152	2	NUT, M10
10	9968153	1	HINGE,
11	9968154	1	HINGE,
12	9968155	1	HINGE,
13	9968156	2	U-BRACKET,
14	85801486	1	KIT, CONVERSION, FORKS
15	85801034	1	EDGE, CUTTING, , Part welded to bucket
16	85801470	16	NUT, 5/8"-11, G8,
17	85801371	16	BOLT, PLOW, 5/8"-11 x 2 1/4",
18	85802992	4	RING,
19	85802993	4	PIN,
20	85801051	4	PIN,
21	85811440	8	SHANK, BUCKET TOOTH,
22	85803224	1	BUCKET,

527(01) 0.88 M3 BUCKET AND EXTRA REVERSIBLE BLADE

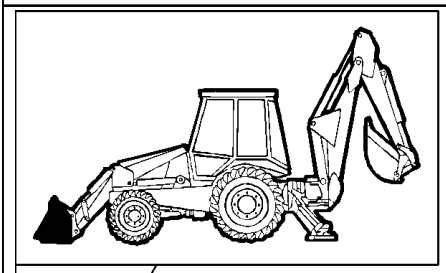

KIT KIT KIT 9 = ●

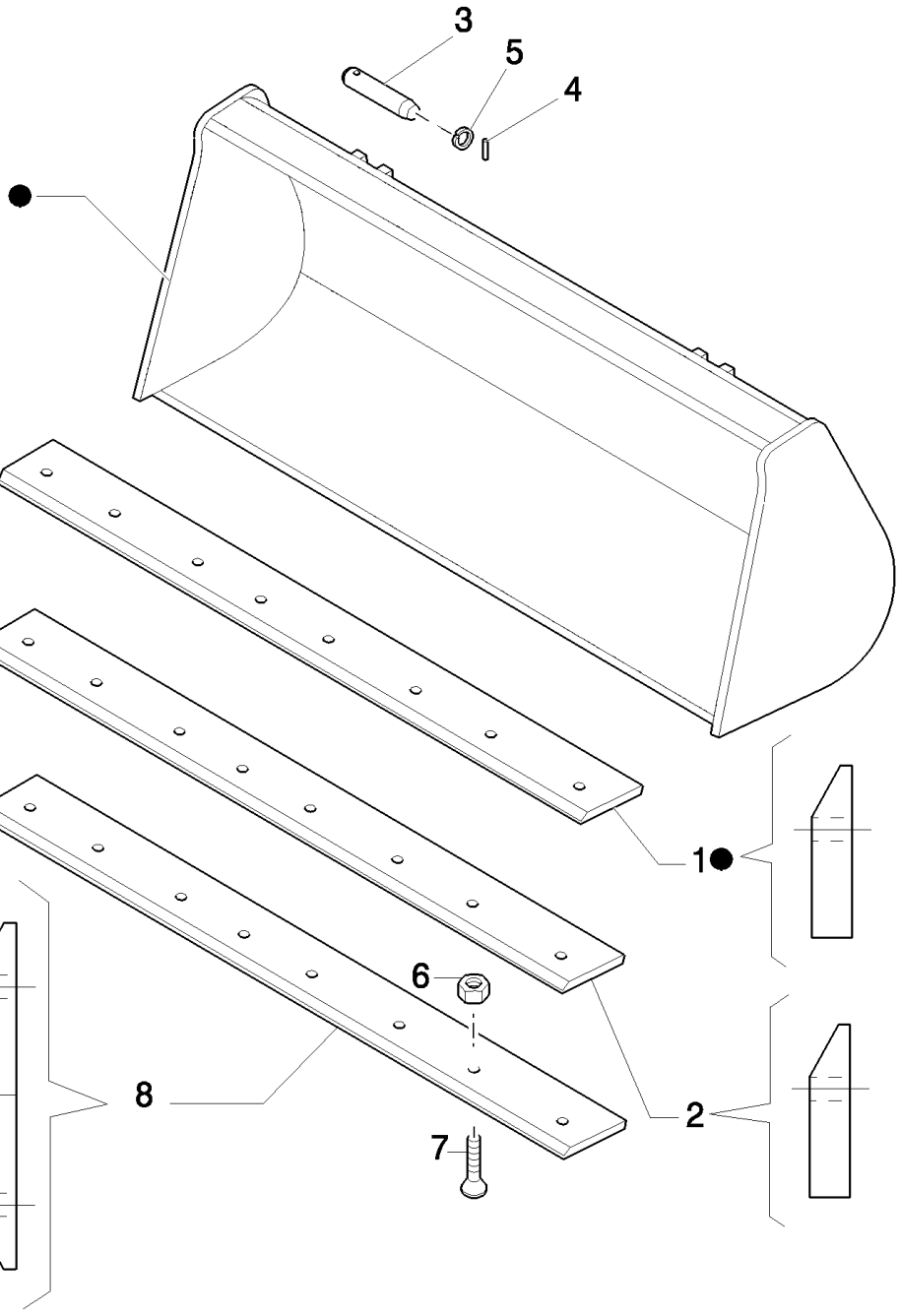

B110 TIER 3 BACKHOE LOADER (2/07-)

527(01) 0.88 M3 BUCKET AND EXTRA REVERSIBLE BLADE

Ref	Numero de Pieza	Ctd	Descripción
1	85801044	1	EDGE, CUTTING, 27 Deg. cutting edge, Part welded to bucket
2	85807868	1	EDGE, CUTTING, N.A. ONLY
3	85801051	4	PIN,
4	85802993	4	PIN,
5	85802992	4	RING,
6	85801470	8	NUT, 5/8"-11, G8,
7	85801371	8	BOLT, PLOW, 5/8"-11 x 2 1/4",
8	85801161	1	EDGE, CUTTING, 35 Deg. cutting edge, Reversible bolt on
9	85801042	1	BUCKET,

529(01) STABILIZER FOOT STREET PAD (SIDE SHIFT) - EU

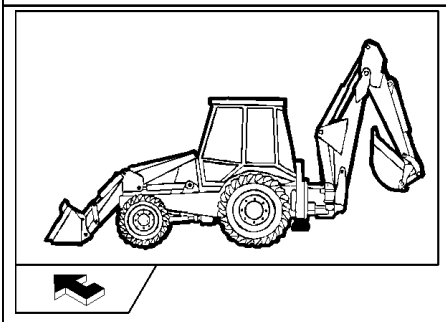

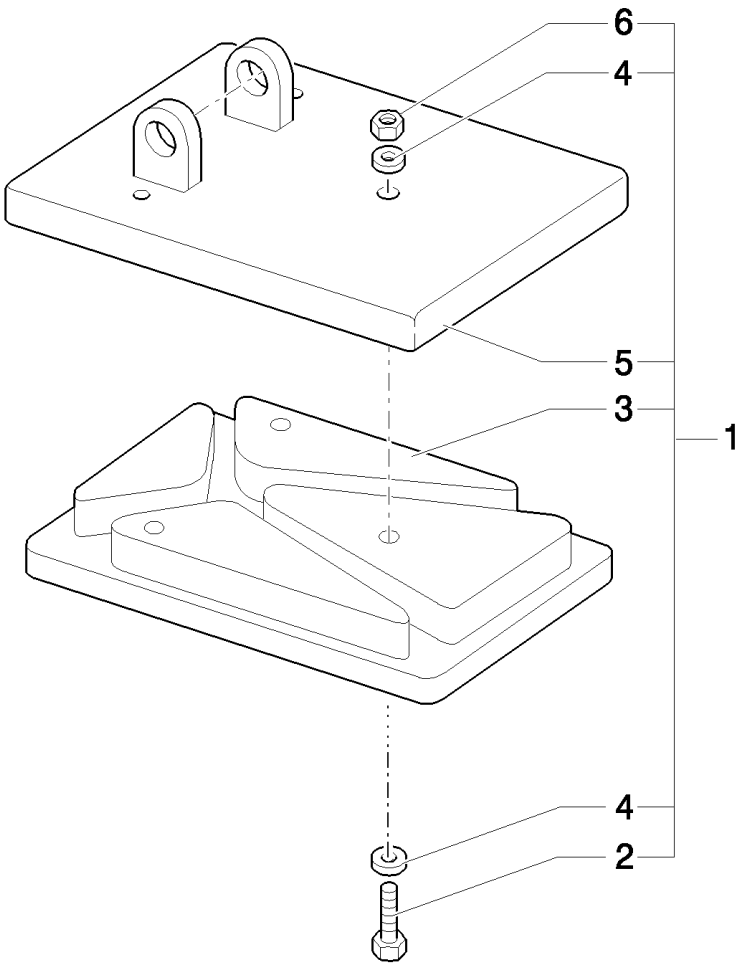

B110 TIER 3 BACKHOE LOADER (2/07-)

529(01) STABILIZER FOOT STREET PAD (SIDE SHIFT) - EU

Ref	Numero de Pieza	Ctd	Descripción
1	87574544	2	STABILIZER,
2	15981221	3	BOLT, Hex, M16 x 65, 8.8,
3	85817788	2	PAD, RUBBER,
4	14496921	6	WASHER, M16 x 30 x 3,
5	87574541	2	STABILIZER,
6	12574911	3	NUT, LOCK, M16 x 1.5, Cl 8,

530(01) STABILIZER FOOT GROUND (SIDE SHIFT) - EU

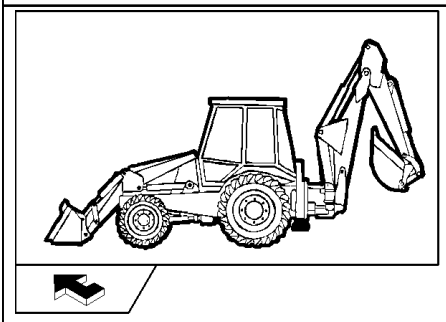

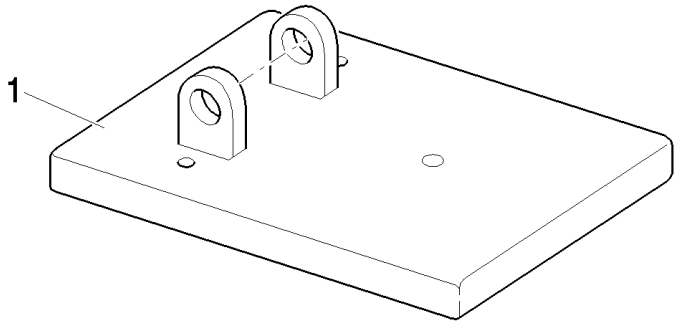

B110 TIER 3 BACKHOE LOADER (2/07-)

530(01) STABILIZER FOOT GROUND (SIDE SHIFT) - EU

Ref	Numero de Pieza	Ctd	Descripción
1	87574541	2	STABILIZER,

535(01) STABILIZER FOOT GROUND (CENTER PIVOT)

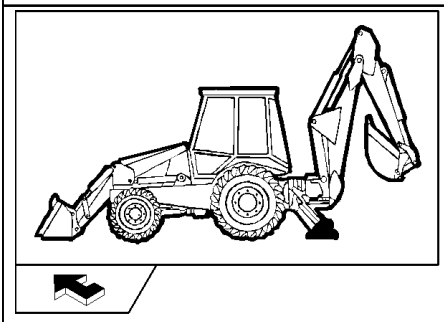

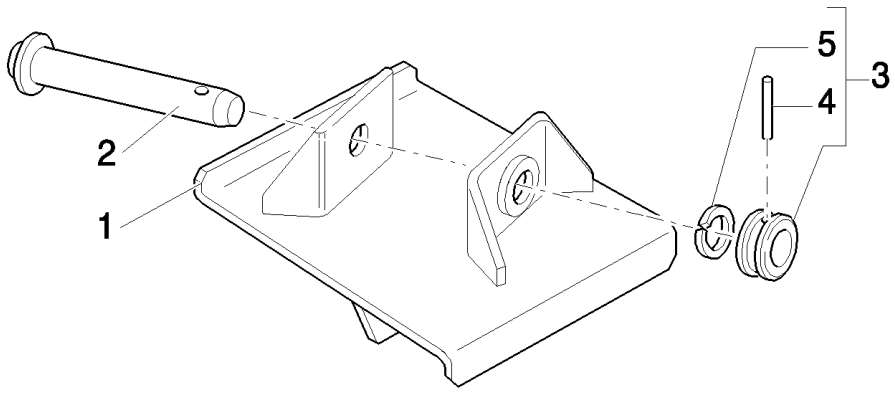

B110 TIER 3 BACKHOE LOADER (2/07-)

535(01) STABILIZER FOOT GROUND (CENTER PIVOT)

Ref	Numero de Pieza	Ctd	Descripción
1	85804847	1	PAD, RH
1	85804848	1	PAD, LH
2	85803141	2	PIN,
3	85803139	2	PIN, LOCK, Assy, Includes 4, 5
4	85802992	2	RING,
5	85802993	2	PIN,

535/1(01) STABILIZER FOOT STREET PAD (CENTER PIVOT)

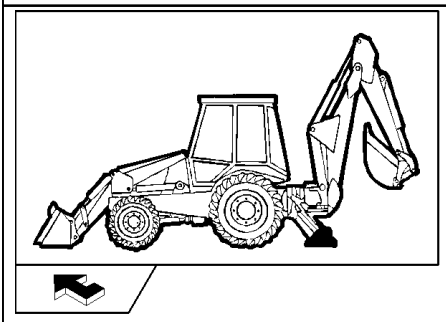

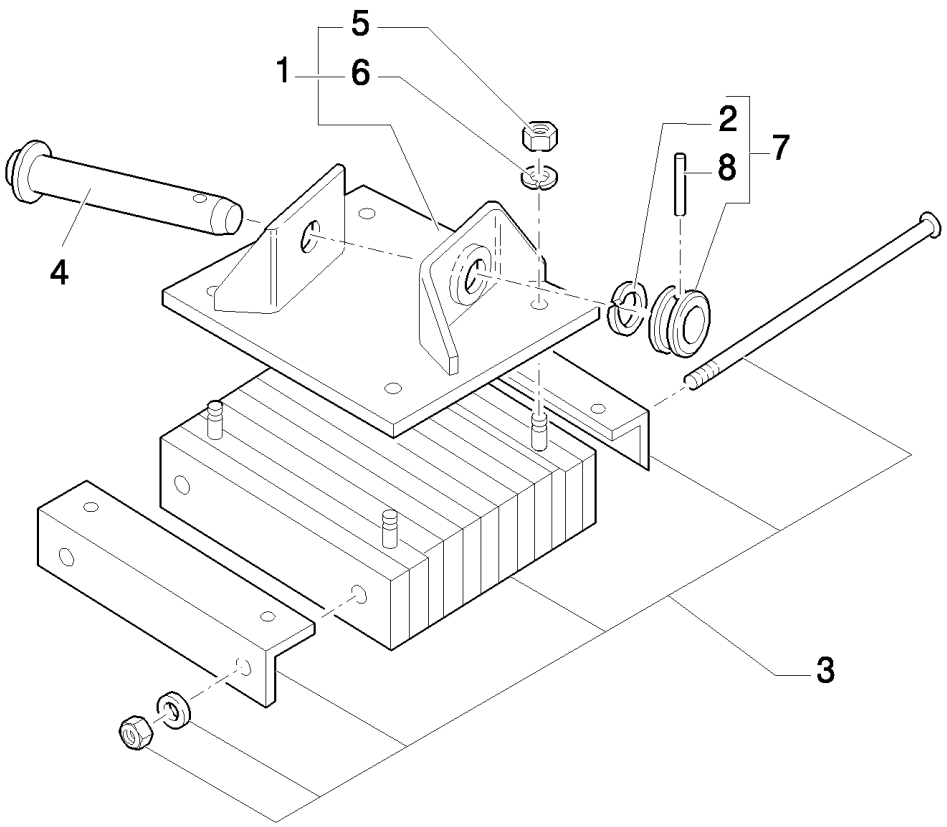

B110 TIER 3 BACKHOE LOADER (2/07-)

535/1(01) STABILIZER FOOT STREET PAD (CENTER PIVOT)

Ref	Numero de Pieza	Ctd	Descripción
1	85804845	1	PAD, RH, Includes 3, 5, 6
1	85804846	1	PAD, LH, Includes 3, 5, 6
2	85802992	2	RING,
3	83911040	2	PAD, ASSY
4	85803141	2	PIN,
5	83911041	8	NUT, M20x2.5
6	83911042	8	WASHER, D=20
7	85803139	2	PIN, LOCK, Assy, Includes 2, 8
8	85802993	2	PIN,

536(01) STANDARD 1MC BUCKET WITH TINE

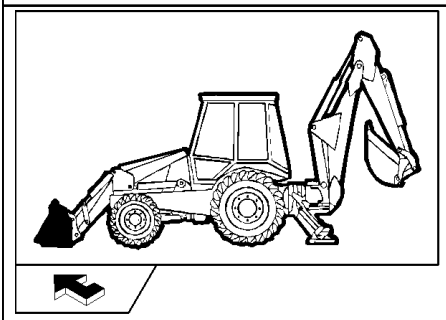

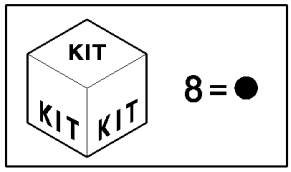

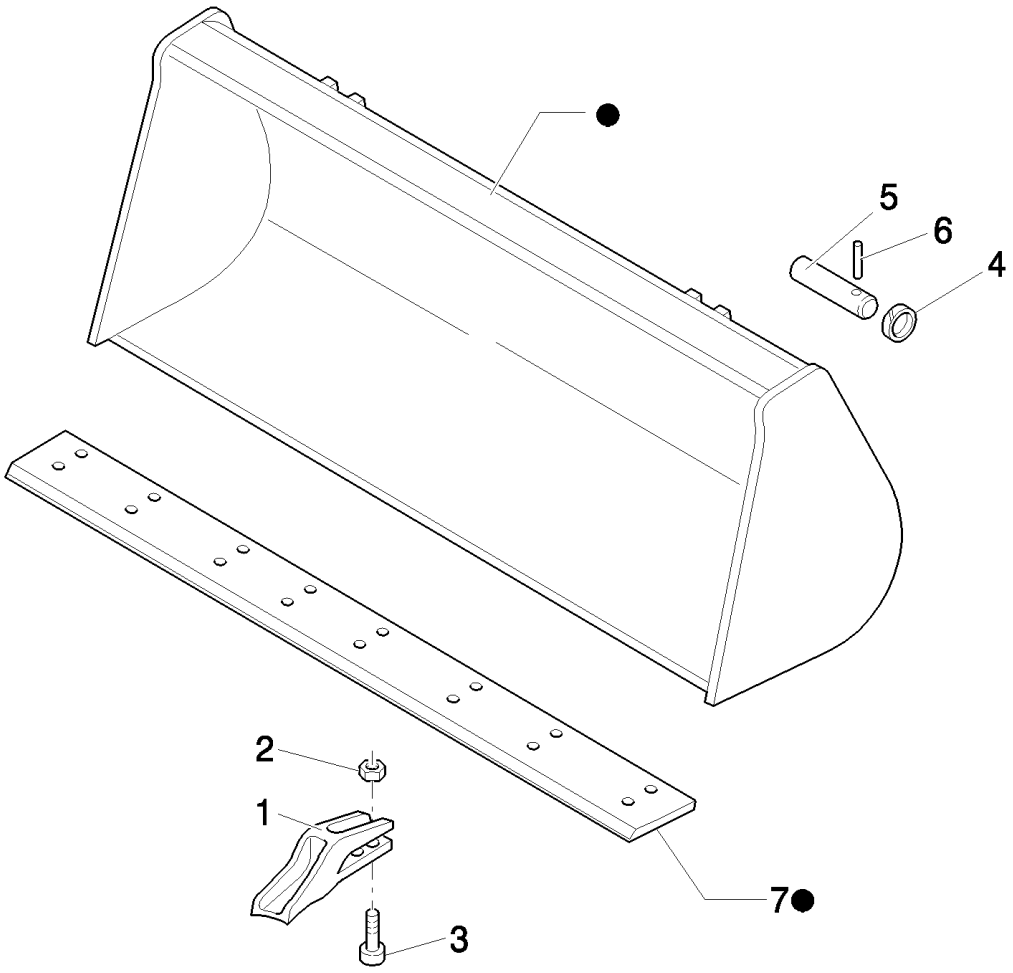

B110 TIER 3 BACKHOE LOADER (2/07-)

536(01) STANDARD 1MC BUCKET WITH TINE

Ref	Numero de Pieza	Ctd	Descripción
1	85811440	8	SHANK, BUCKET TOOTH,
2	85801470	16	NUT, 5/8"-11, G8,
3	85801371	16	BOLT, PLOW, 5/8"-11 x 2 1/4",
4	85802992	4	RING,
5	85802993	4	PIN,
6	85801051	4	PIN,
7	85801034	1	EDGE, CUTTING, , PART WELDED TO BUCKET
7	85807867	1	EDGE, CUTTING, 200mm W x 2250 L
8	85801040	1	BUCKET,

536/1(01) REVERSIBLE STABILIZER FOOT (CENTER PIVOT)

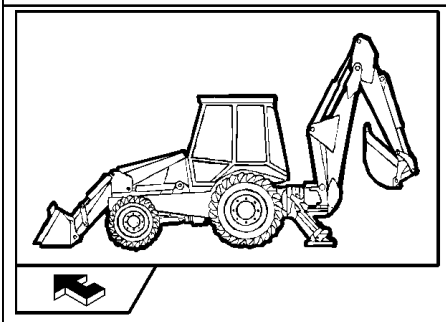

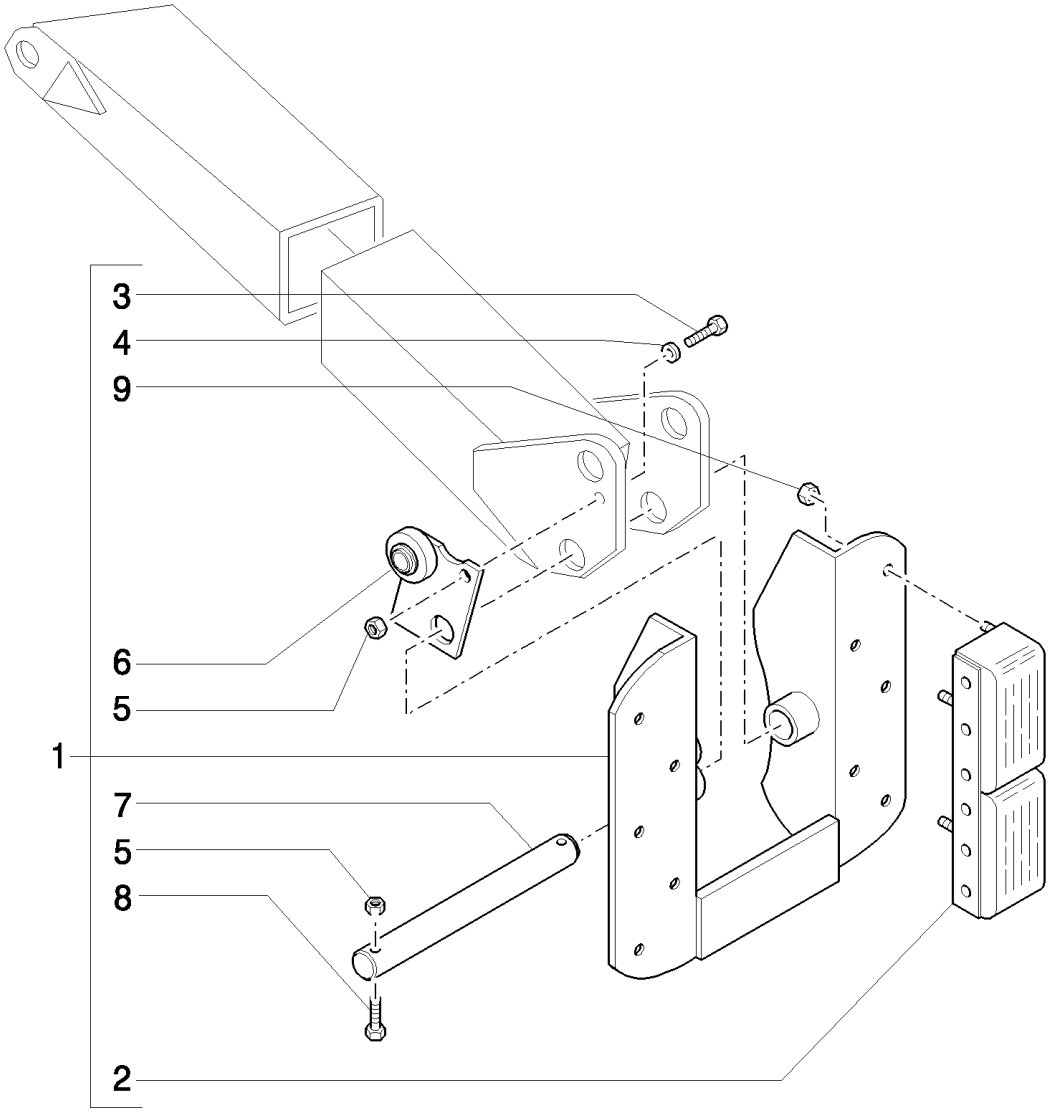

B110 TIER 3 BACKHOE LOADER (2/07-)

536/1(01) REVERSIBLE STABILIZER FOOT (CENTER PIVOT)

Ref	Numero de Pieza	Ctd	Descripción
1	85811985	1	FOOT, LH
1	85811986	1	FOOT, RH
2	85811992	4	PAD, RUBBER,
3	81821263	2	BOLT, Hex, 3/8"-16 x 1 1/2", G5,
4	12641004	2	WASHER, M10 x 20 x 3,
5	81823746	6	NUT, 3/8"-16
6	85811990	1	BRACKET, LH
6	85811991	1	BRACKET, RH; Shown in Illustration
7	85811989	2	PIN,
8	85804878	4	SCREW,
9	81821237	20	NUT, 7/16"-14, G5, 7/16"-14

537(01) STANDARD 1MC BUCKET WITH EXTRA REVERSIBLE BLADE

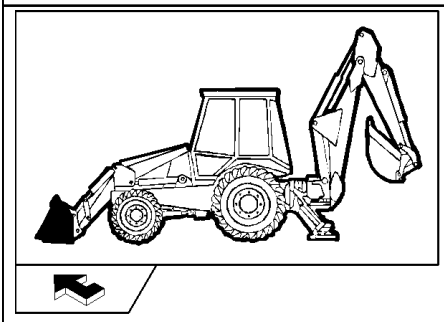

KIT KIT KIT 8 = ●

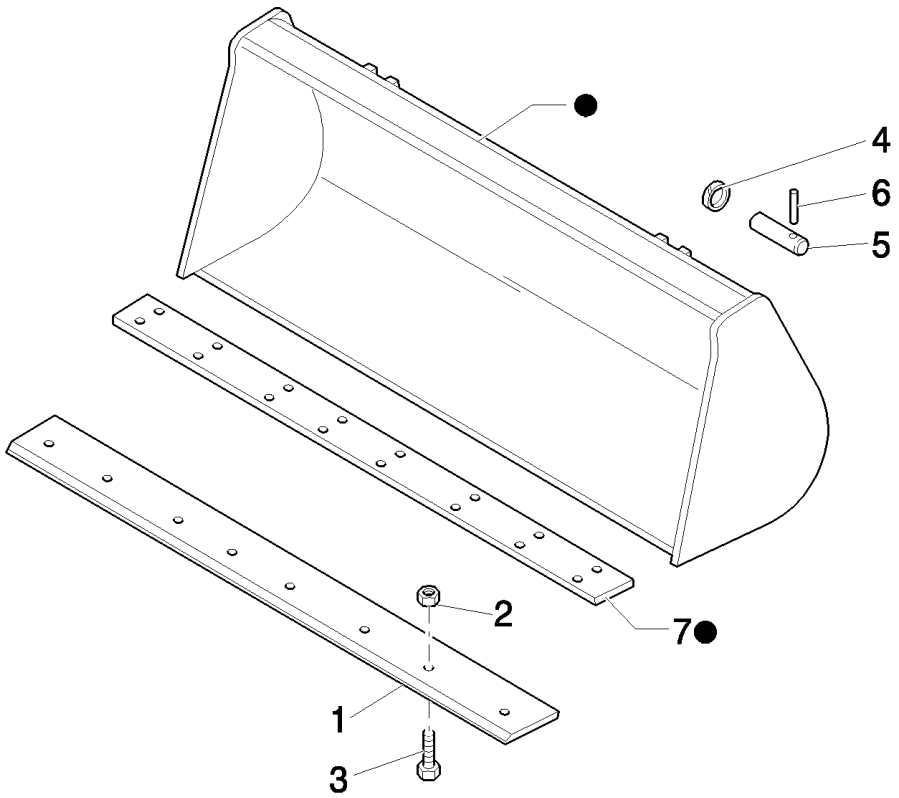

B110 TIER 3 BACKHOE LOADER (2/07-)

537(01) STANDARD 1MC BUCKET WITH EXTRA REVERSIBLE BLADE

Ref	Numero de Pieza	Ctd	Descripción
1	85801161	1	EDGE, CUTTING, 35 Deg. cutting edge, Reversible bolt on
2	85801470	8	NUT, 5/8"-11, G8,
3	85801371	8	BOLT, PLOW, 5/8"-11 x 2 1/4",
4	85802992	4	RING,
5	85802993	4	PIN,
6	85801051	4	PIN,
7	85801034	1	EDGE, CUTTING, , PART WELDED TO BUCKET
7	85807867	1	EDGE, CUTTING, 200mm W x 2250 L
8	85801040	1	BUCKET,

548(01) DITCH CLEANING BUCKET

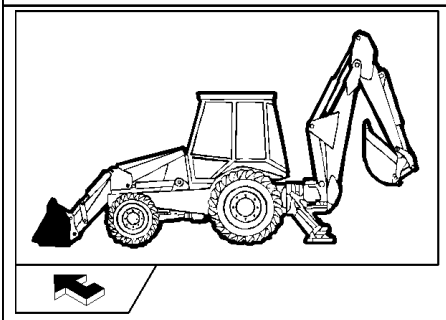

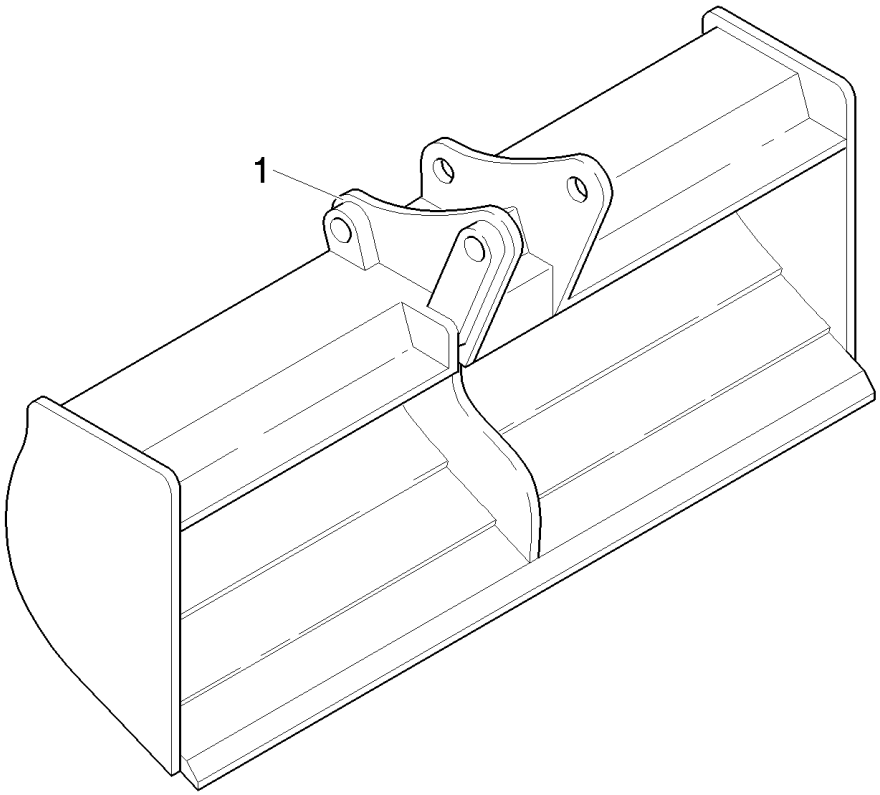

B110 TIER 3 BACKHOE LOADER (2/07-)

548(01) DITCH CLEANING BUCKET

Ref	Numero de Pieza	Ctd	Descripción
1	85824356	1	BUCKET,

B110 TIER 3 BACKHOE LOADER (2/07-)

599(01) STABILIZER FOOTSTREET PAD (SIDE SHIFT) - EU

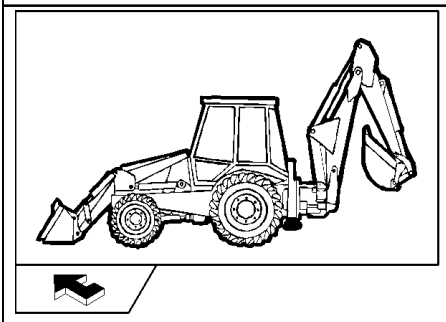

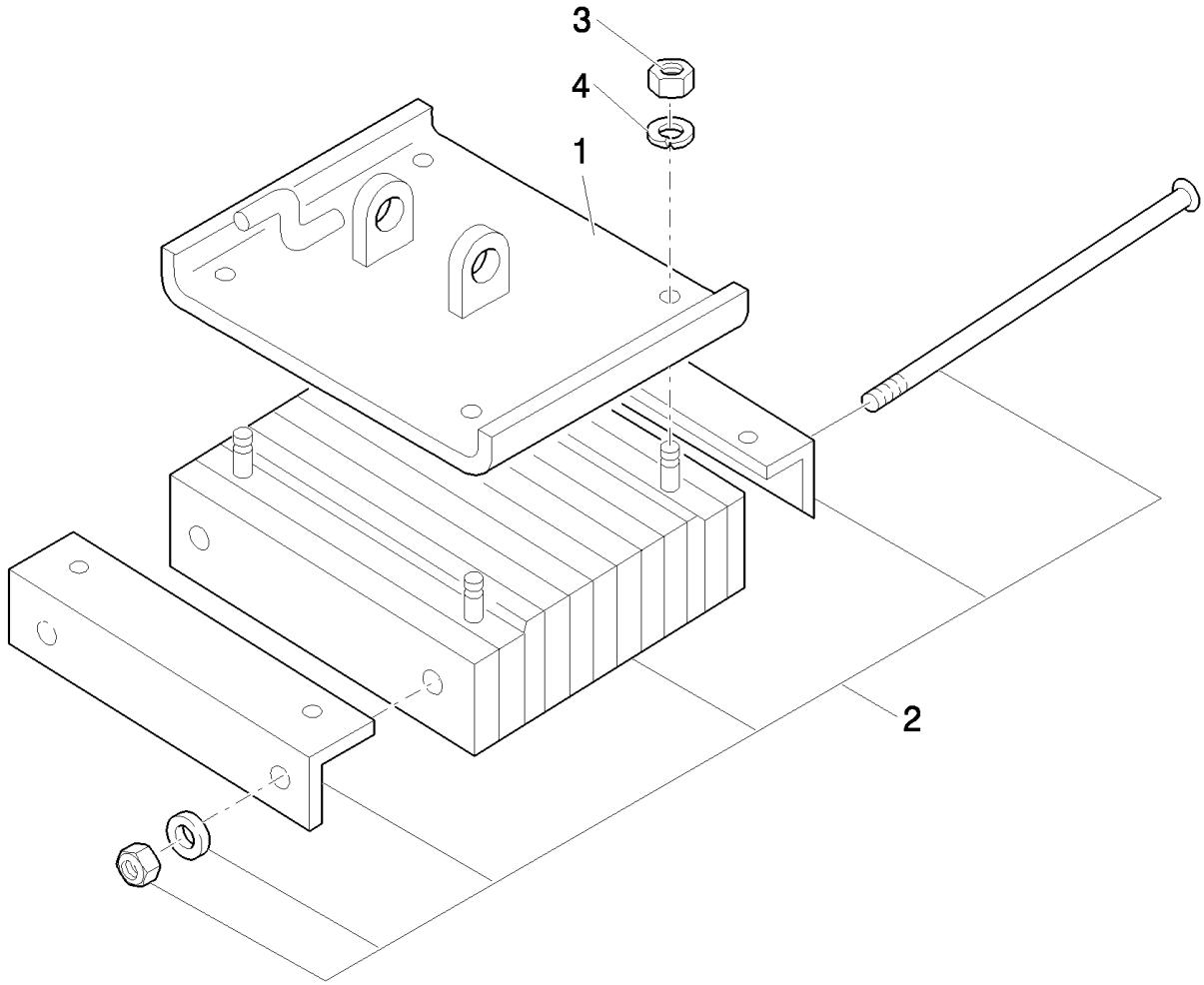

B110 TIER 3 BACKHOE LOADER (2/07-)

599(01) STABILIZER FOOTSTREET PAD (SIDE SHIFT) - EU

Ref	Numero de Pieza	Ctd	Descripción
1	87575197	1	STABILIZER, LH
1	87575200	1	STABILIZER, RH
2	83911040	2	PAD,
3	12163511	8	NUT, M20, Cl 8,
4	10520424	8	WASHER, 20X35

622(01) INTERNAL FAN

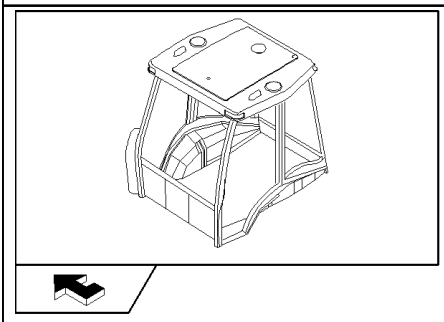

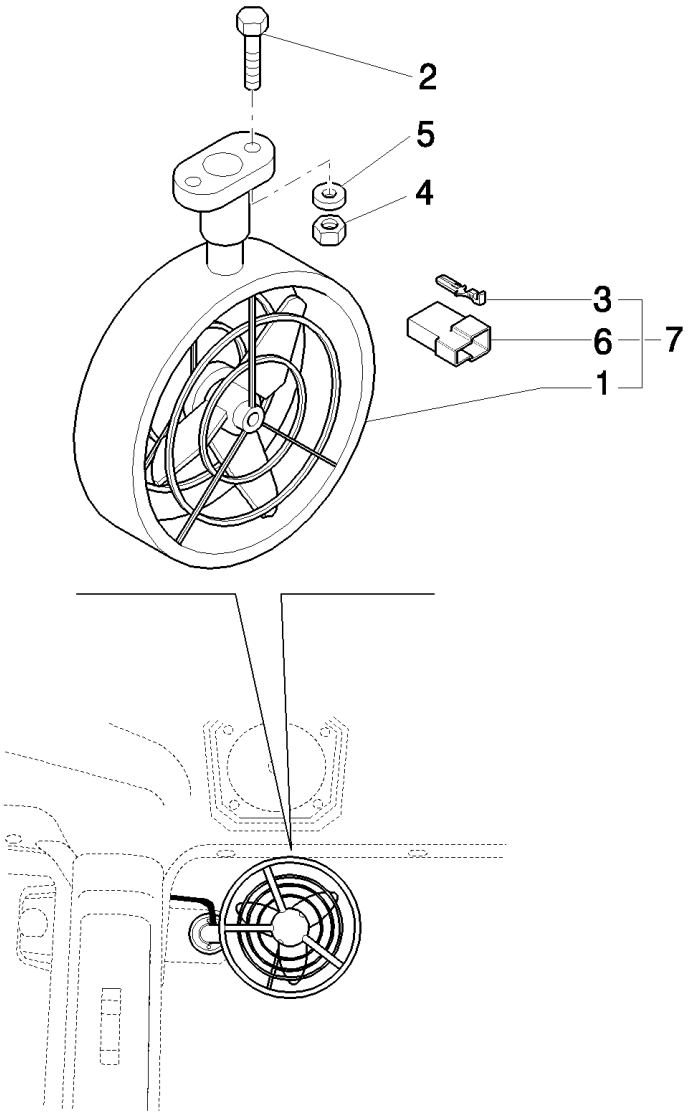

B110 TIER 3 BACKHOE LOADER (2/07-)

622(01) INTERNAL FAN

Ref	Numero de Pieza	Ctd	Descripción
1	85804323	1	FAN,
2	14303324	2	SCREW, Hex Soc Hd, M4 x 20, 8.8, Full Thd,
3	10250644	2	CABLE TERMINAL,
4	12574011	2	NUT, LOCK, M4 x .7, Cl 8,
5	12642804	2	WASHER, M4 x 12 x 1,
6	12059980	1	CONNECTOR, ELEC,
7	85802205	1	FAN,

638(01) RADIATOR

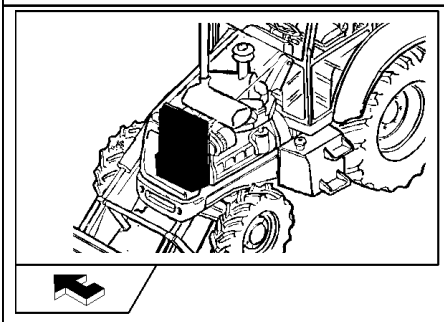

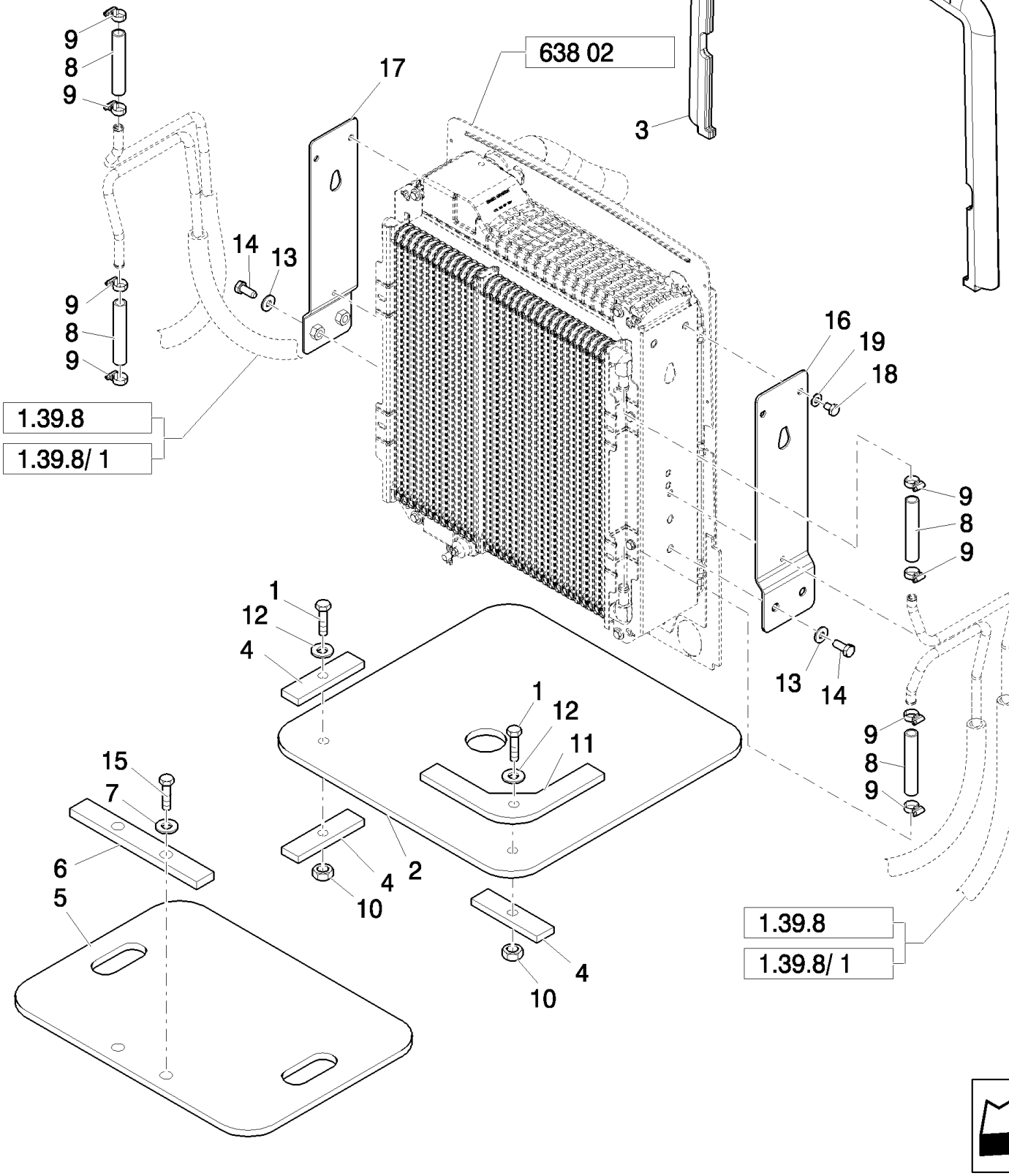

Without Air Conditioner

B110 TIER 3 BACKHOE LOADER (2/07-)

638(01) RADIATOR

Ref	Numero de Pieza	Ctd	Descripción
1	47049163	4	SCREW,
2	87440497	2	COVER,
3	87583716	1	SEAL,
4	87440498	6	PLATE, RETAINING,
5	85827830	1	SEAL, RUBBER,
6	85827831	1	PLATE,
7	11193879	2	WASHER, SPRING, Belleville, M8.4,
8	87302508	4	HOSE, FLEXIBLE,
9	87314076	8	COLLAR,
10	47042260	4	NUT,
11	87440499	2	PLATE, RETAINING,
12	47048962	8	WASHER,
13	12646901	4	WASHER, 12x28x3
14	11112421	4	BOLT, Hex, M12 x 30, 8.8,
15	16043821	2	BOLT, Hex, M8 x 30, 8.8,
16	85828168	1	BRACKET,
17	87302922	1	BRACKET,
18	87306887	4	SCREW,
19	87306886	4	WASHER,

Without Air Conditioner

B110 TIER 3 BACKHOE LOADER (2/07-)

638(02) RADIATOR

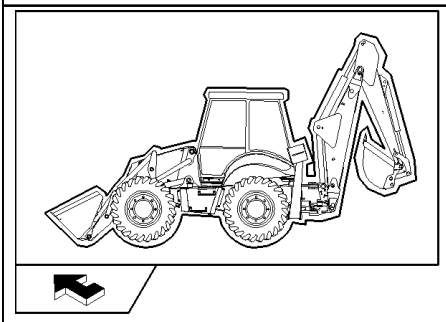

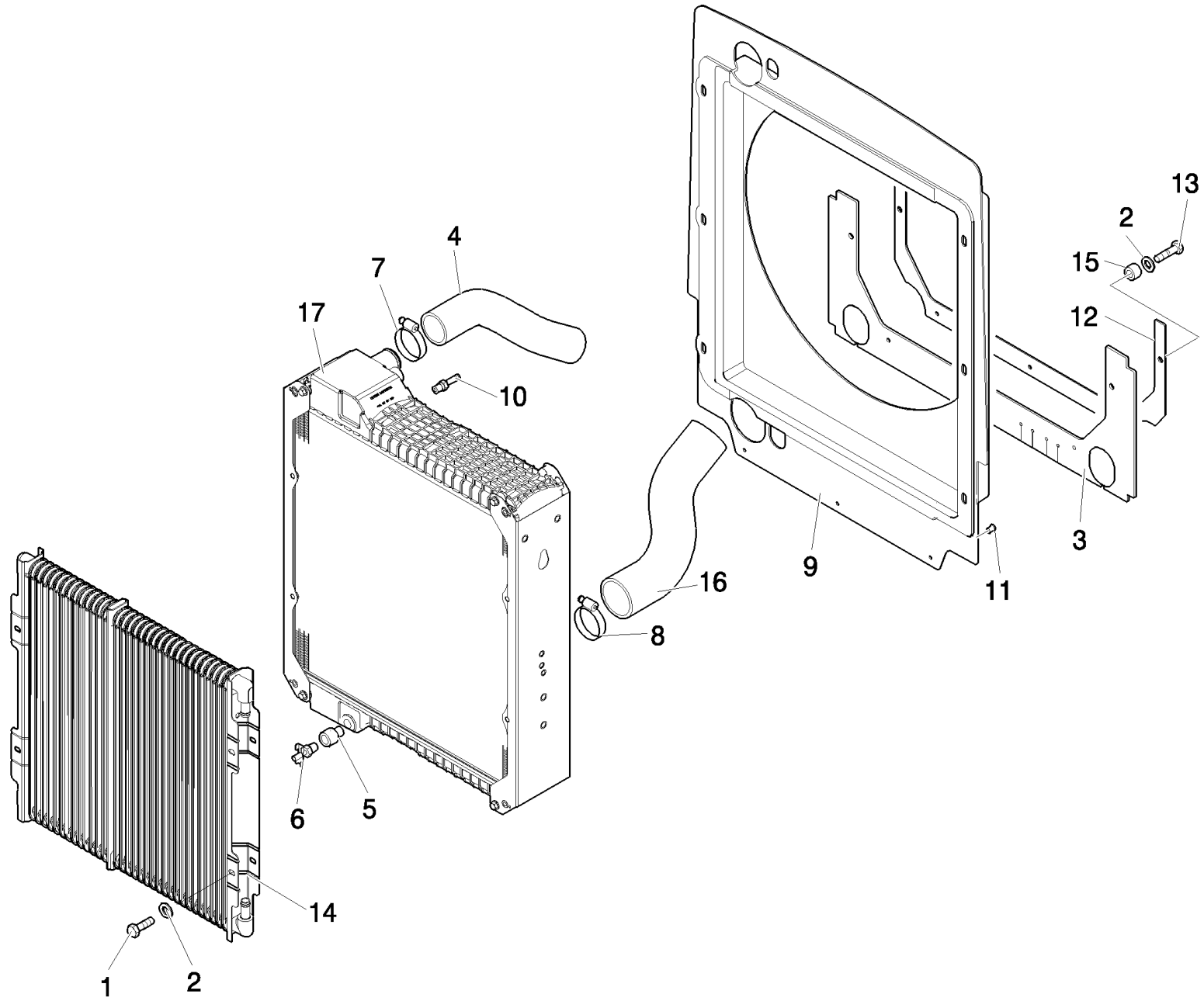

Without Air Conditioner

B110 TIER 3 BACKHOE LOADER (2/07-)

638(02) RADIATOR

Ref	Numero de Pieza	Ctd	Descripción
1	16043021	8	BOLT, Hex, M8 x 12, 8.8, Full Thd,
2	47048962	10	WASHER,
3	87595243	1	SEAL,
4	87528978	1	HOSE,
5	47049581	1	SEALANT,
6	47050674	1	DRAINCOCK/TAP, SUPPLY,
7	47050733	1	CLAMP, HOSE,
8	47050734	1	CLAMP, HOSE,
9	87410916	1	SHROUD,
10	87016893	1	FITTING, 1/4" Hose X 1/4" NPTF Beaded,
11	85825170	3	BUTTON,
12	86983070	1	SEAL, RUBBER,
13	87026277	2	BOLT, Hex, Lock, M8 x 30, Cl 10.9,
14	87410099	1	COOLER, OIL, , Oil Cooler
15	85825169	1	SPACER,
16	87407272	1	HOSE,
17	87310155	1	RADIATOR, , Water

Without Air Conditioner

638(03) RADIATOR

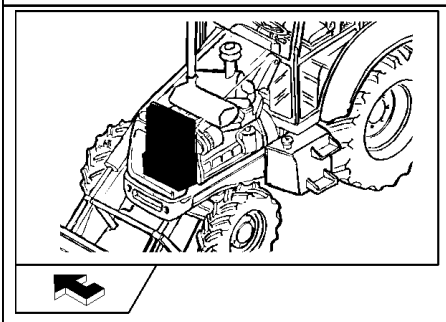

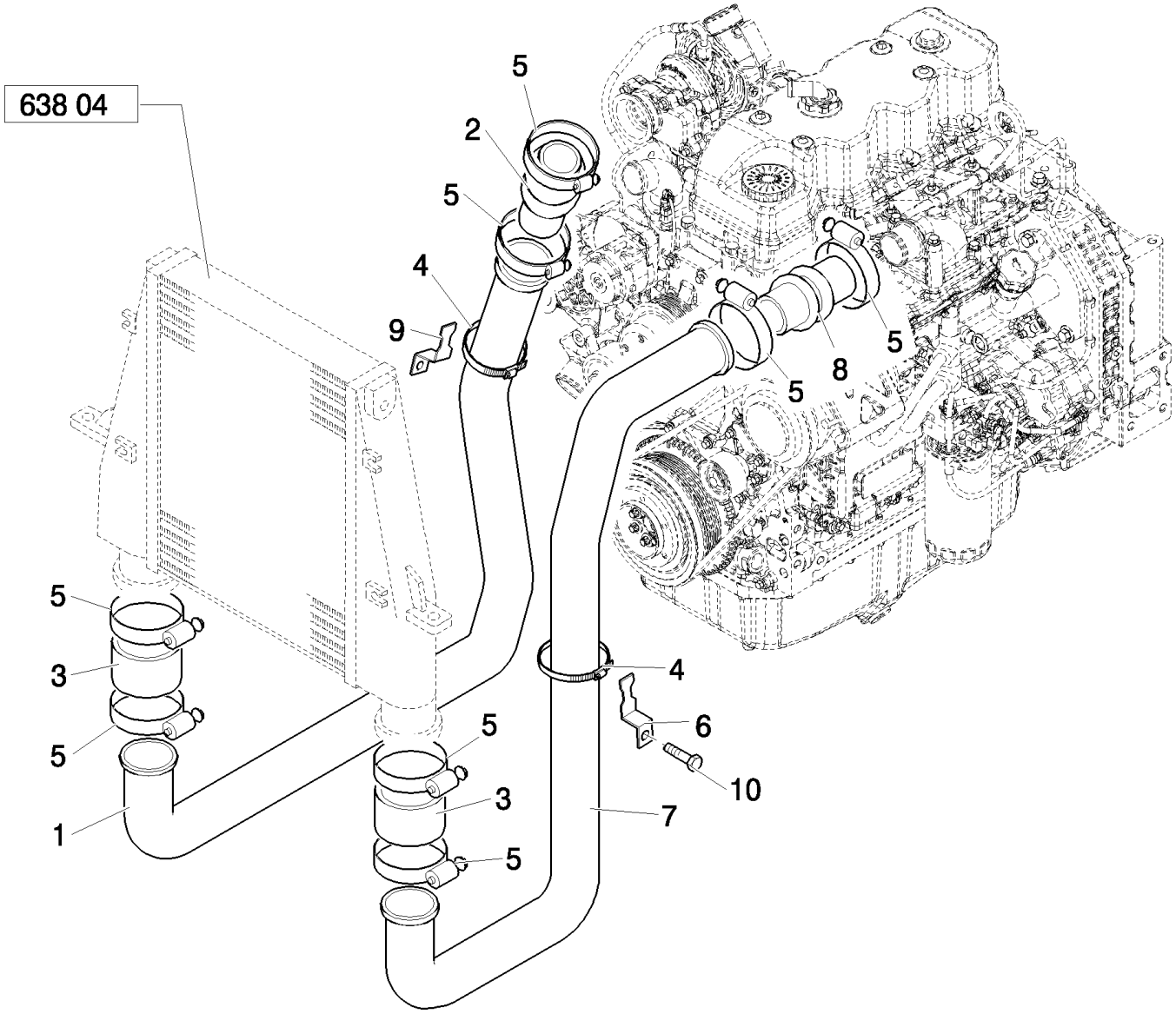

Charge Air Cooler/ With Air Conditioner

B110 TIER 3 BACKHOE LOADER (2/07-)

638(03) RADIATOR

Ref	Numero de Pieza	Ctd	Descripción
1	87548192	1	TUBE,
2	86982962	1	HOSE, M10X40
3	86982960	2	HOSE,
4	86624194	4	CLAMP, HOSE, #36, 1.81/2.75 Type F Worm, M10X35
5	87410724	8	CLAMP,
6	87561489	1	BRACKET,
7	87554030	1	TUBE,
8	86994498	1	HOSE,
9	86983163	1	BRACKET,
10	16043621	1	BOLT, Hex, M8 x 25, 8.8,

Charge Air Cooler/ With Air Conditioner

638(04) RADIATOR

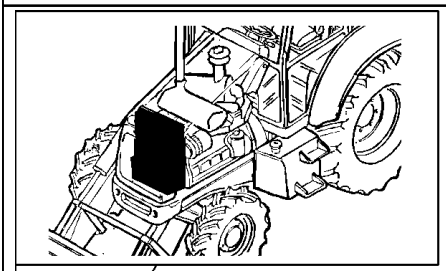

1.39.8

1.39.8/ 1

638 02

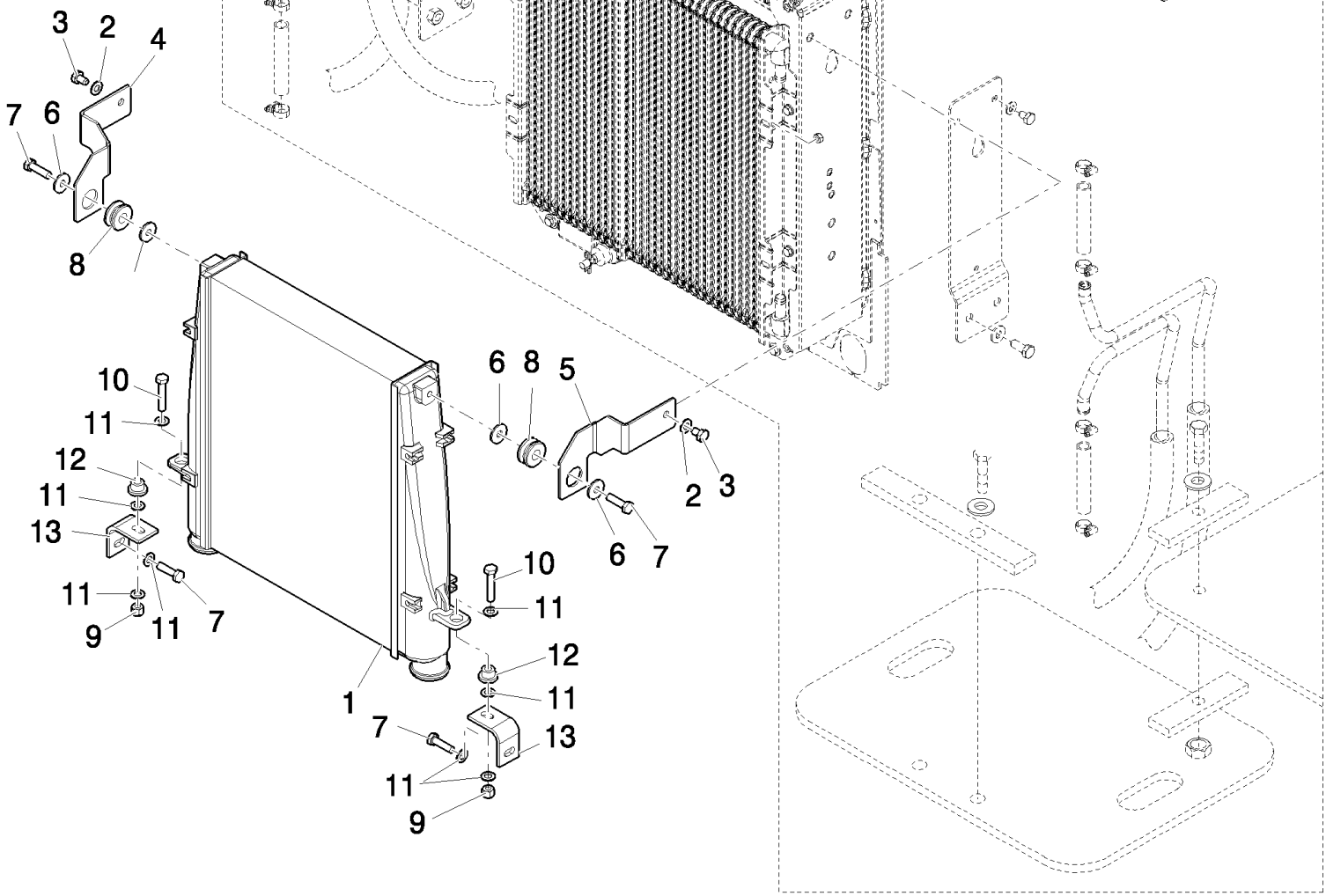

Charger Air Cooler/ Without Air Conditioner

B110 TIER 3 BACKHOE LOADER (2/07-)

638(04) RADIATOR

Ref	Numero de Pieza	Ctd	Descripción
1	87573731	1	COOLER,
2	14496601	4	WASHER, M10 x 20 x 2,
3	11106021	2	BOLT, Hex, M10 x 20, 8.8, Full Thd,
4	87559628	1	BRACKET,
5	87559274	1	BRACKET,
6	47048440	6	WASHER,
7	47049187	2	SCREW, M10x35
8	47048759	2	GROMMET,
9	47049041	2	NUT,
10	47049088	2	SCREW, M10x50
11	47048963	4	WASHER, 11x20x2.0mm
12	47048668	2	GASKET,
13	87404427	2	BRACKET,

Charger Air Cooler/ Without Air Conditioner

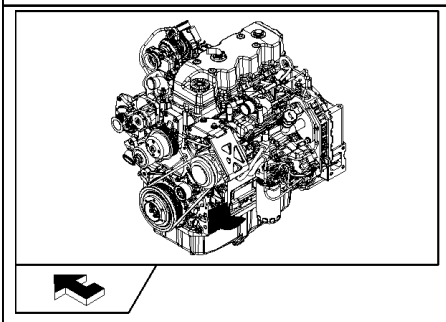

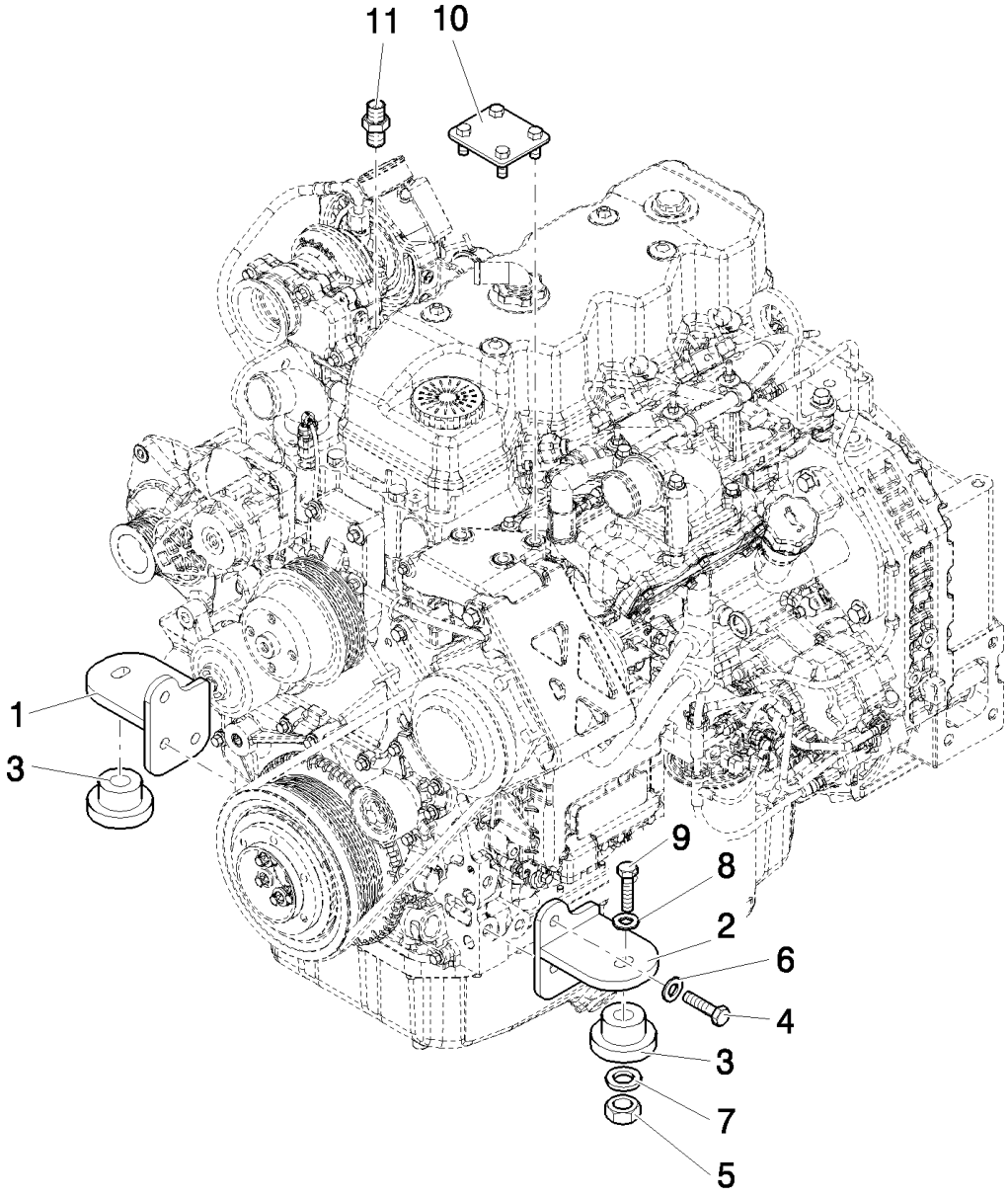
11
10
1
3
9
8
2
6
4
3
7
5

B110 TIER 3 BACKHOE LOADER (2/07-)

638/ A(01) ACCESSORY ENGINE

Ref	Numero de Pieza	Ctd	Descripción
1	87407275	1	MOUNT, ENGINE,
2	87368320	1	MOUNT, ENGINE,
3	87416966	2	ISOLATOR,
4	11112421	6	BOLT, Hex, M12 x 30, 8.8,
5	16105011	2	NUT, LOCK, M12x1.25
6	47048976	6	WASHER, M12
7	85801585	2	WASHER, SEALING, 65mm OD
8	85802618	2	WASHER, SEALING,
9	87410647	2	SCREW, M12x1.25x90
10	87539936	1	SPACER,
11	87016893	1	FITTING, 1/4" Hose X 1/4" NPTF Beaded,

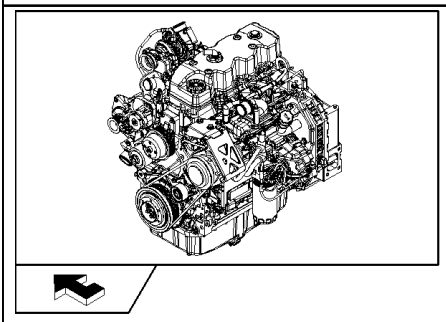

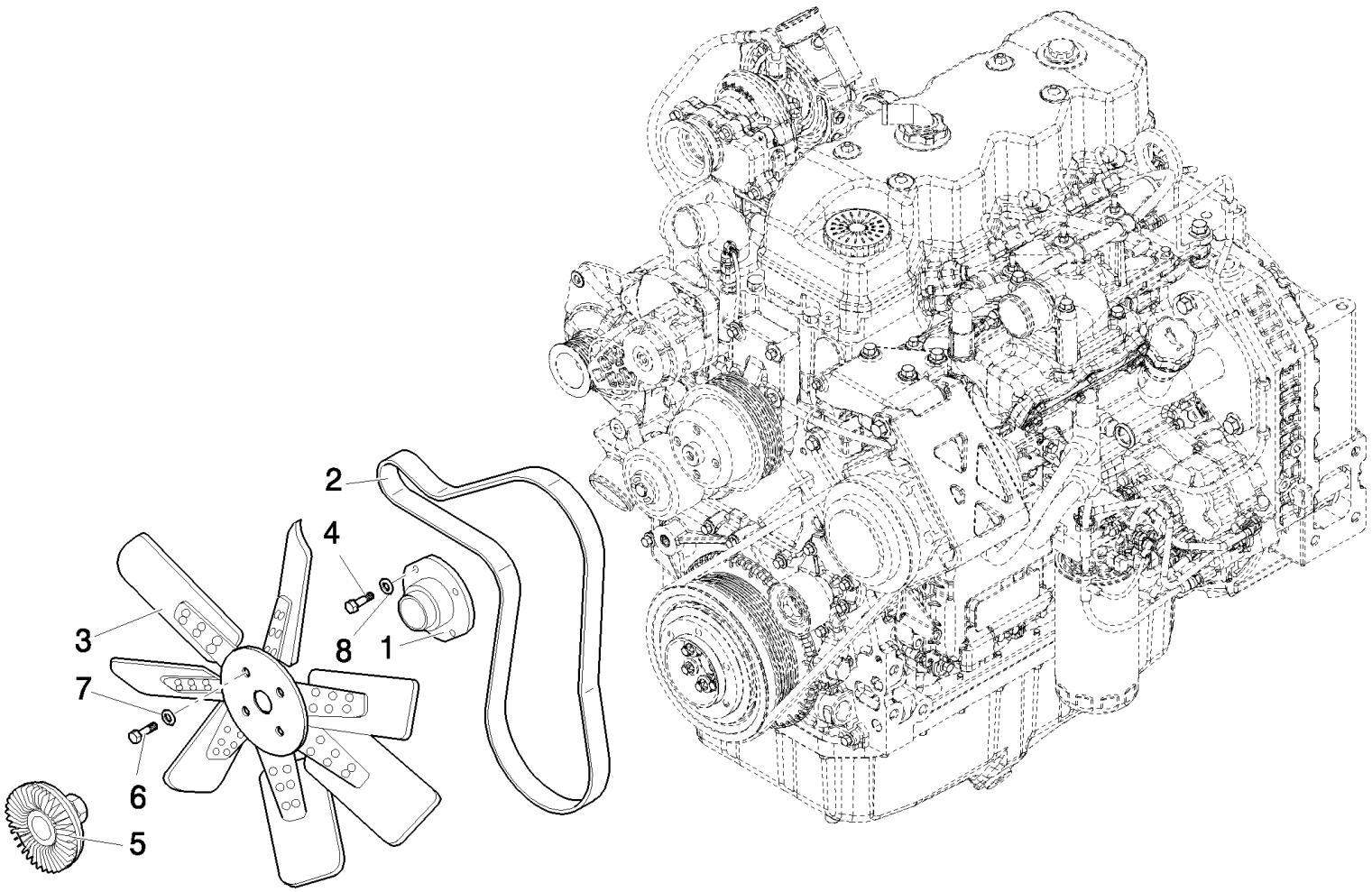
2
4
3
8
1
7
6
5

B110 TIER 3 BACKHOE LOADER (2/07-)

638/ A(02) ACCESSORY ENGINE - VENTILATOR

Ref	Numero de Pieza	Ctd	Descripción
1	47049809	1	ADAPTER,
2	87415774	1	BELT,
3	47049943	1	FAN,
4	47049186	4	BOLT, Hex, M10 x 30, 8.8,
5	87340008	1	DRIVE,
6	47042342	4	SCREW,
7	47048992	6	WASHER,
8	47048972	4	WASHER,

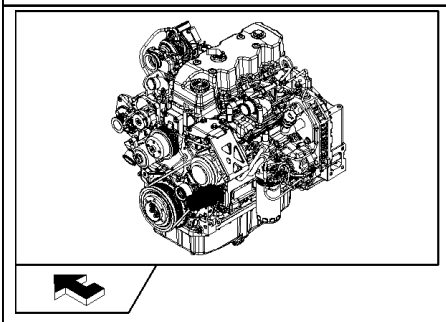

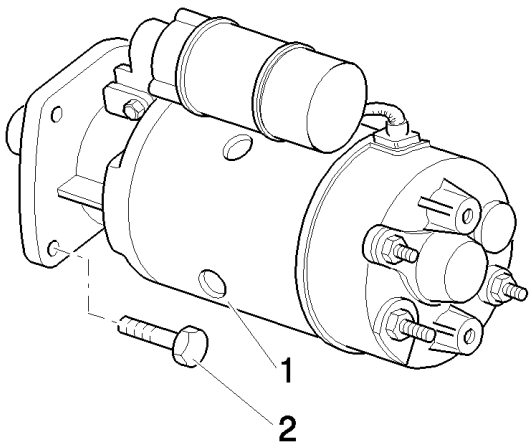
1
2

B110 TIER 3 BACKHOE LOADER (2/07-)

638/ A(03) ACCESSORY ENGINE - STARTER

Ref	Numero de Pieza	Ctd	Descripción
1	86992395	1	MOTOR, STARTER,
2	86511845	2	BOLT, Hex Flg, M10 x 35, 8.8, M10x35

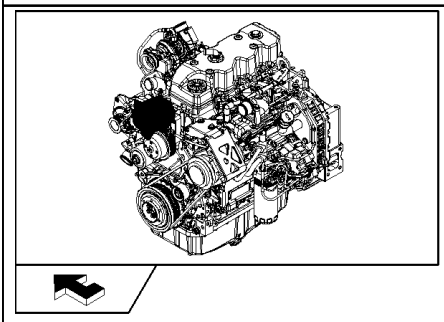

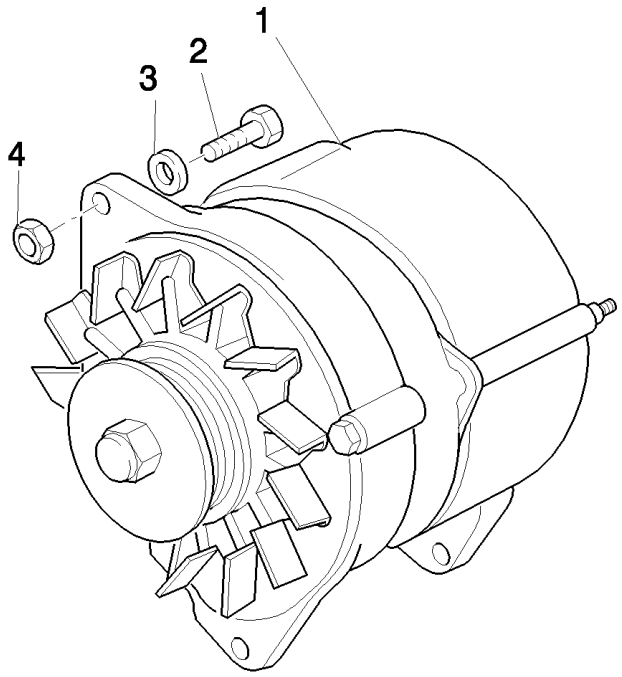
1
2
3
4

B110 TIER 3 BACKHOE LOADER (2/07-)

638/ A(04) ACCESSORY ENGINE- ALTERNATOR

Ref	Numero de Pieza	Ctd	Descripción
1	87422777	1	ALTERNATOR,
2	827-10130	1	BOLT, Hex, M10 x 130, 10.9,
2	16043621	1	BOLT, Hex, M8 x 25, 8.8,
3	896-11010	2	WASHER, M10 x 21.5 x 2.5, HT,
4	12577211	1	NUT, LOCK, M10 x 1.5, Cl 8,

638/1(01) 4WD STEERING LOCK

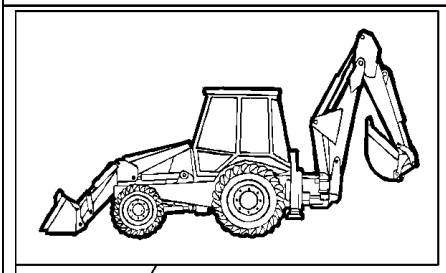

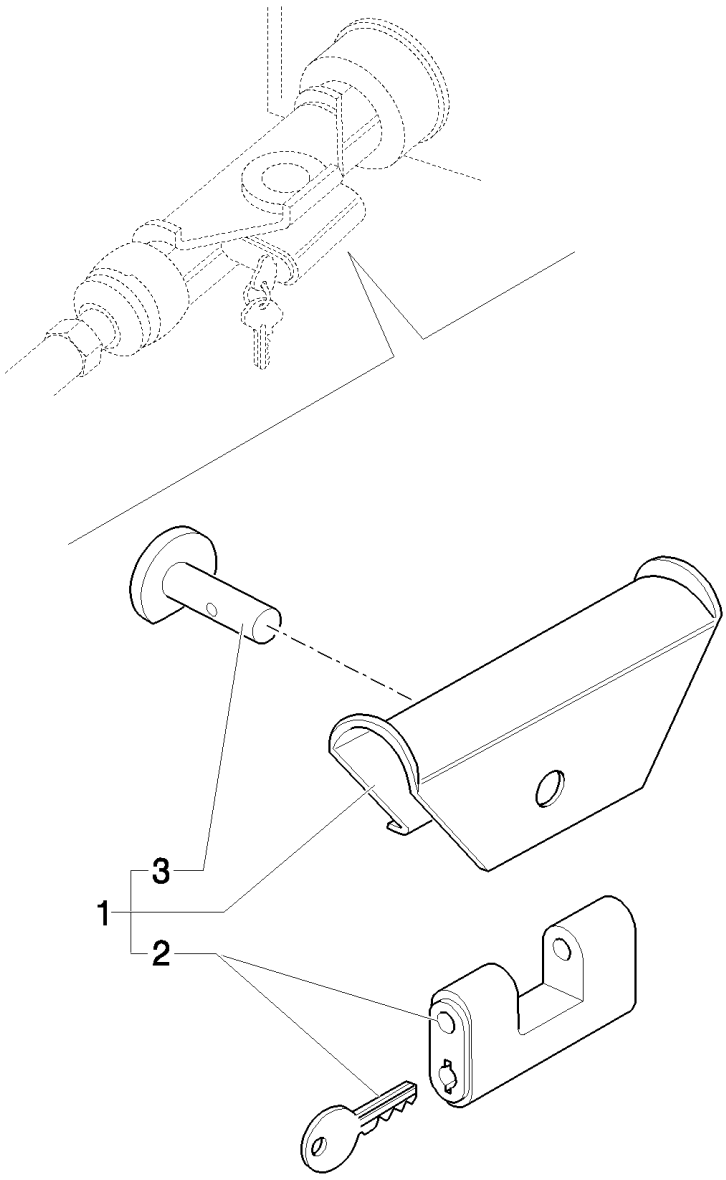

B110 TIER 3 BACKHOE LOADER (2/07-)

638/1(01) 4WD STEERING LOCK

Ref	Numero de Pieza	Ctd	Descripción
1	85816802	1	LOCK,
2	85803372	1	LOCK,
3	85803372	1	LOCK,

639(01) RADIATOR

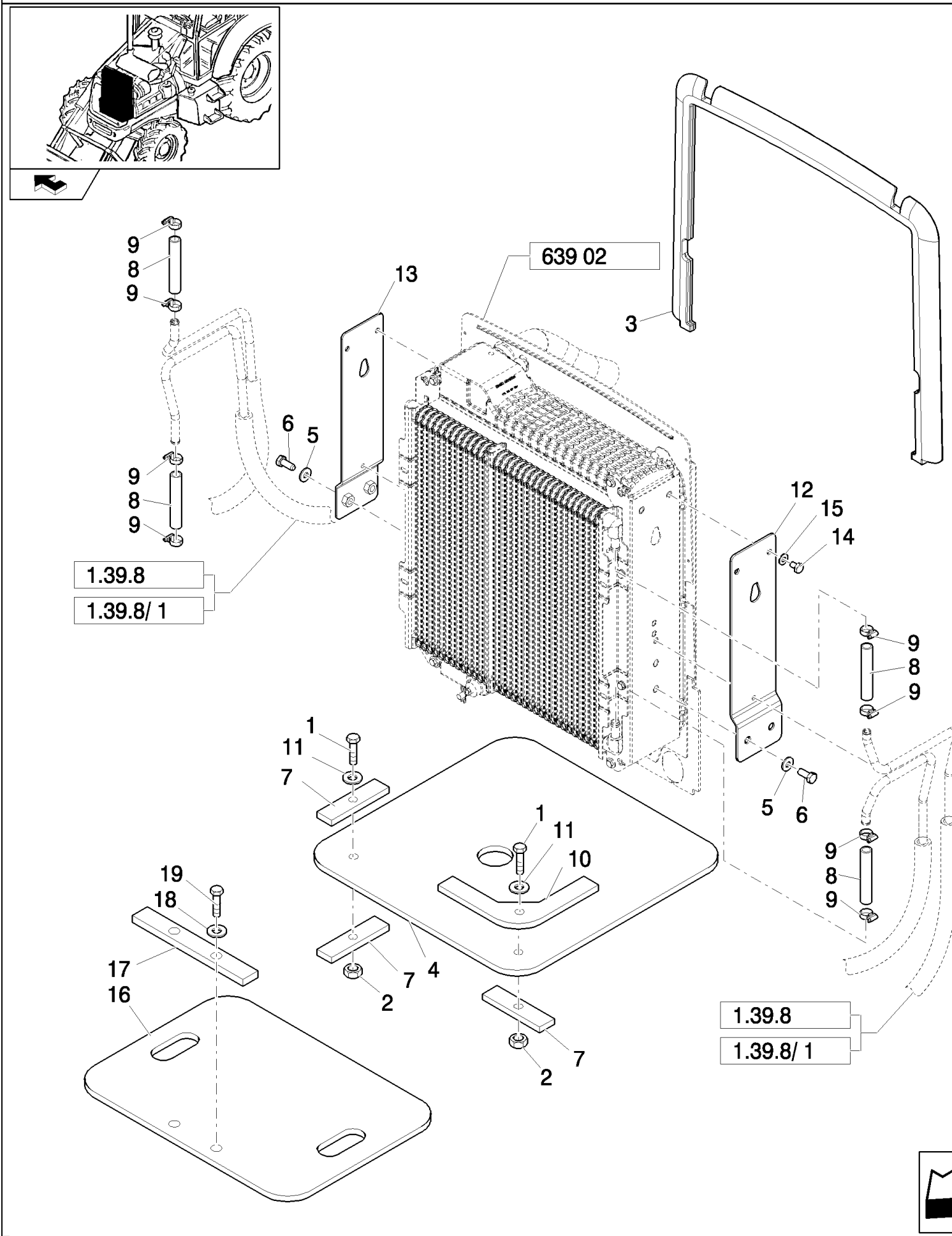

With Air Conditioner

B110 TIER 3 BACKHOE LOADER (2/07-)

639(01) RADIATOR

Ref	Numero de Pieza	Ctd	Descripción
1	47049163	4	SCREW,
2	47042260	4	NUT,
3	87583716	1	SEAL,
4	87440497	2	COVER,
5	12646901	4	WASHER, 12x28x3
6	11112421	4	BOLT, Hex, M12 x 30, 8.8,
7	87440498	6	PLATE, RETAINING,
8	87302508	4	HOSE, FLEXIBLE,
9	87314076	8	COLLAR,
10	87440499	2	PLATE, RETAINING,
11	47048962	8	WASHER,
12	85828168	1	BRACKET,
13	87302922	1	BRACKET,
14	87306887	4	SCREW, M10x6
15	87306886	4	WASHER,
16	85827830	1	SEAL, RUBBER,
17	85827831	1	PLATE,
18	11193879	2	WASHER, SPRING, Belleville, M8.4,
19	16043821	2	BOLT, Hex, M8 x 30, 8.8,

With Air Conditioner

B110 TIER 3 BACKHOE LOADER (2/07-)

639(02) RADIATOR

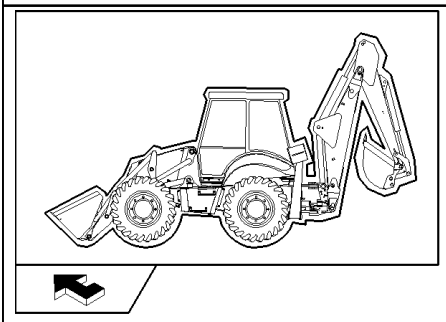

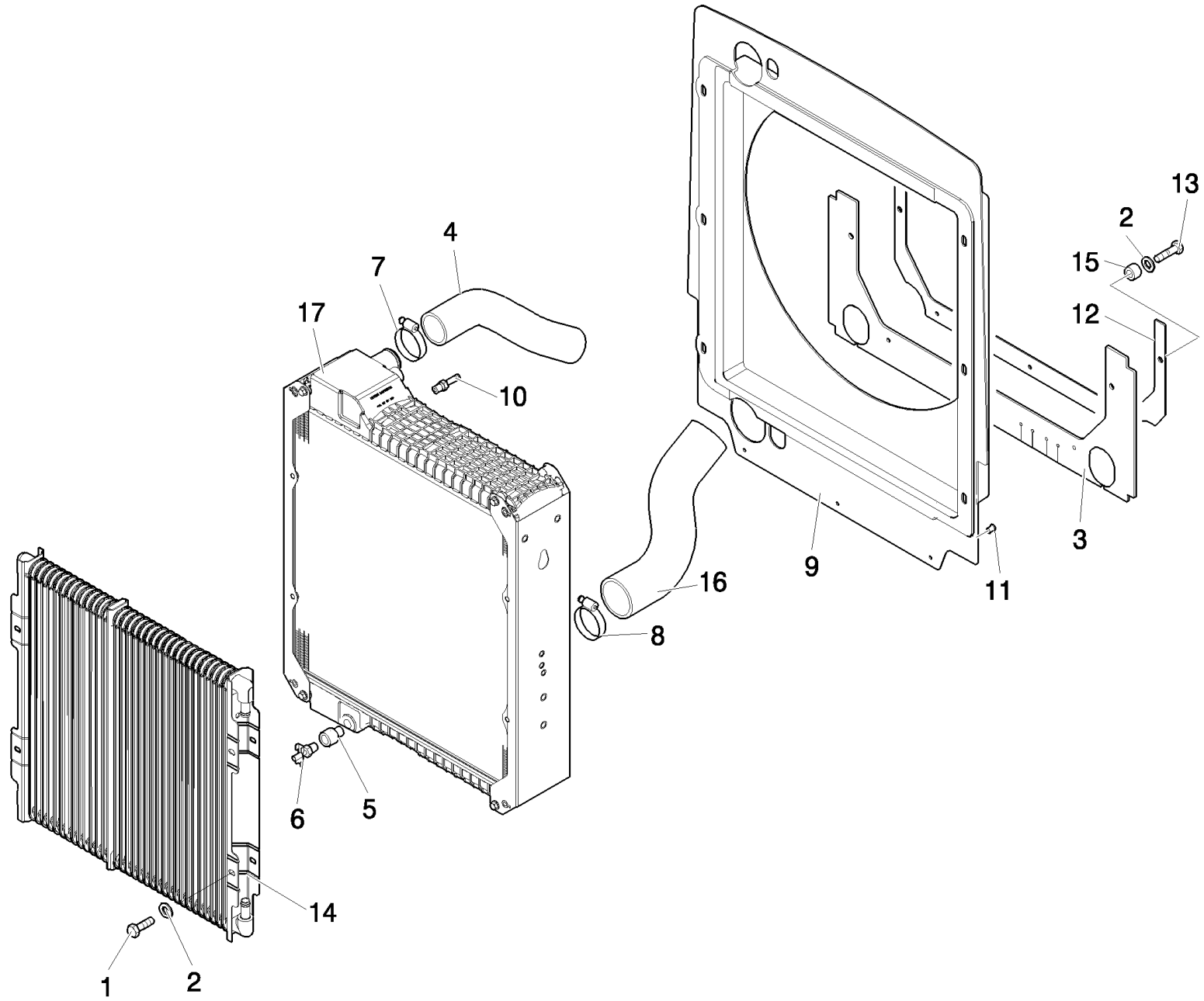

With Air Conditioner

B110 TIER 3 BACKHOE LOADER (2/07-)

639(02) RADIATOR

Ref	Numero de Pieza	Ctd	Descripción
1	16043021	8	BOLT, Hex, M8 x 12, 8.8, Full Thd,
2	47048962	10	WASHER,
3	87595243	1	SEAL,
4	87528978	1	HOSE,
5	47049581	1	SEALANT,
6	47050674	1	DRAINCOCK/TAP, SUPPLY,
7	47050733	1	CLAMP, HOSE,
8	47050734	1	CLAMP, HOSE,
9	87410916	1	SHROUD,
10	87016893	1	FITTING, 1/4" Hose X 1/4" NPTF Beaded,
11	85825170	3	BUTTON,
12	86983070	1	SEAL, RUBBER,
13	87026277	2	BOLT, Hex, Lock, M8 x 30, Cl 10.9,
14	87410099	1	COOLER, OIL, , Oil Cooler
15	85825169	1	SPACER,
16	87407272	1	HOSE,
17	87310155	1	RADIATOR, , Water

With Air Conditioner

639(03) RADIATOR

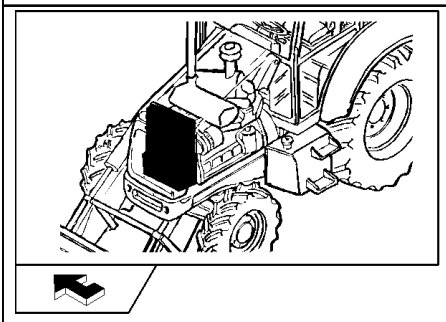

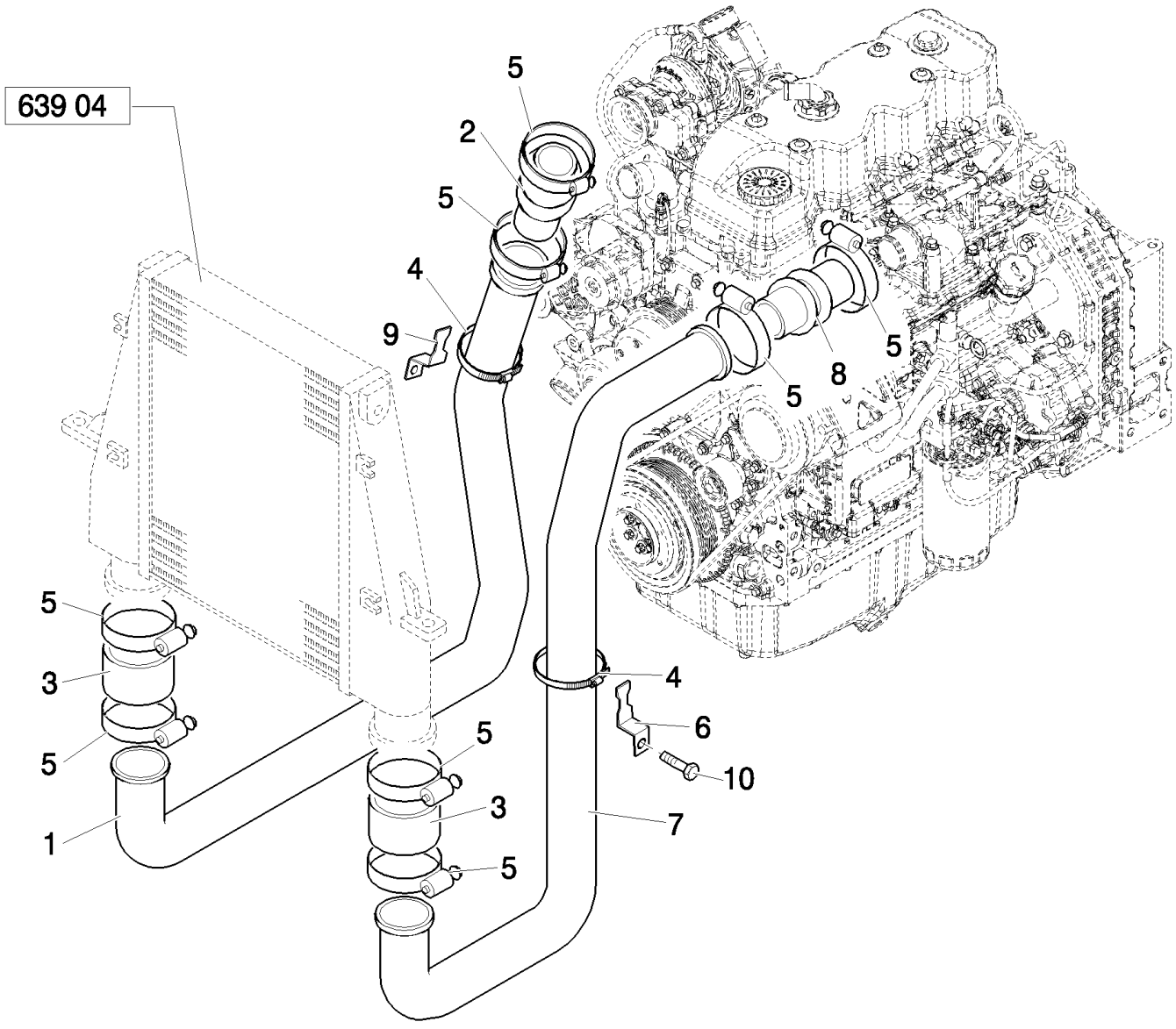

Charge Air Cooler/ With Air Conditioner

B110 TIER 3 BACKHOE LOADER (2/07-)

639(03) RADIATOR

Ref	Numero de Pieza	Ctd	Descripción
1	87548192	1	TUBE,
2	86982962	1	HOSE, M10X40
3	86982960	2	HOSE,
4	86624194	4	CLAMP, HOSE, #36, 1.81/2.75 Type F Worm, M10X35
5	87410724	8	CLAMP,
6	87561489	1	BRACKET,
7	87554030	1	TUBE,
8	86994498	1	HOSE,
9	86983163	1	BRACKET,
10	16043621	1	BOLT, Hex, M8 x 25, 8.8,

Charge Air Cooler/ With Air Conditioner

639(04) RADIATOR

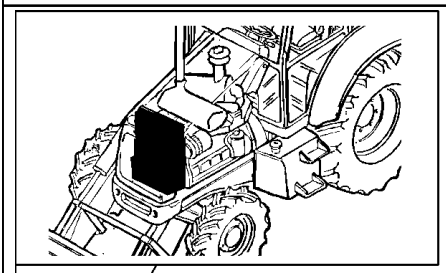

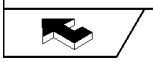

Charger Air Cooler/With Air Conditioner

B110 TIER 3 BACKHOE LOADER (2/07-)

639(04) RADIATOR

Ref	Numero de Pieza	Ctd	Descripción
1	87573731	1	COOLER,
2	14496601	4	WASHER, M10 x 20 x 2,
3	11106021	2	BOLT, Hex, M10 x 20, 8.8, Full Thd,
4	87559628	1	BRACKET,
5	87559274	1	BRACKET,
6	47048440	6	WASHER,
7	47049187	2	SCREW, M10x35
8	47048759	2	GROMMET,
9	47048646	2	SPACER,
10	47049088	2	SCREW, M10x50
11	47048963	4	WASHER, 11x20x2.0mm
12	47048668	2	GASKET,
13	87404427	2	BRACKET,
14	47049041	2	NUT,

Charger Air Cooler/□With Air Conditioner□

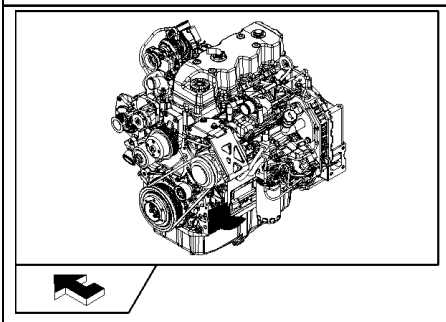

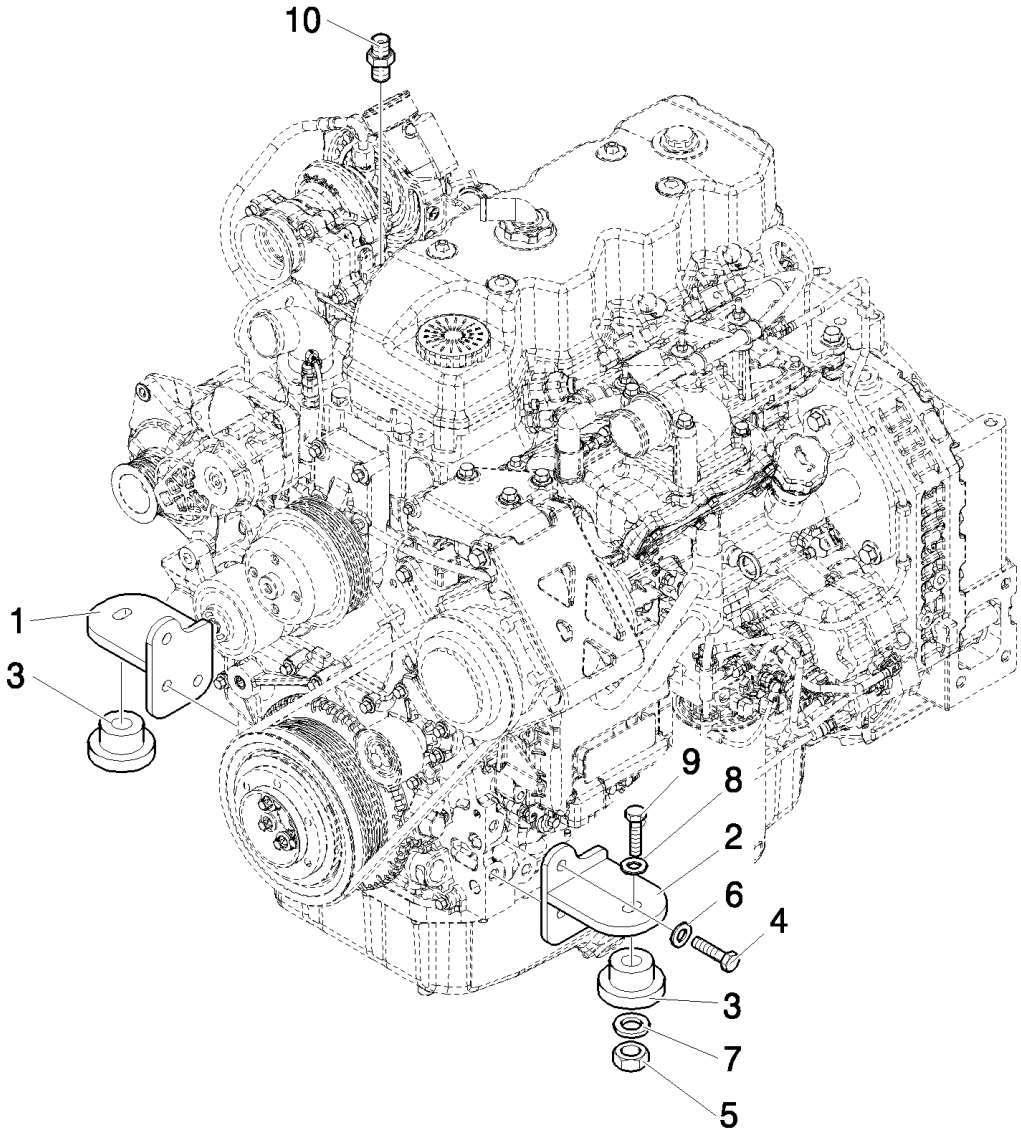
10
1
3
9
8
2
6
4
3
7
5

B110 TIER 3 BACKHOE LOADER (2/07-)

639/ A(01) ACCESSORY ENGINE

Ref	Numero de Pieza	Ctd	Descripción
1	87407275	1	MOUNT, ENGINE,
2	87368320	1	MOUNT, ENGINE,
3	87416966	2	ISOLATOR,
4	11112421	6	BOLT, Hex, M12 x 30, 8.8,
5	16105011	2	NUT, LOCK, M12x1.25
6	47048976	6	WASHER, M12
7	85801585	2	WASHER, SEALING, 65mm OD
8	85802618	2	WASHER, SEALING,
9	87410647	2	SCREW, M12x1.25x90
10	87016893	1	FITTING, 1/4" Hose X 1/4" NPTF Beaded,

639/ A(02) ACCESSORY ENGINE - VENTILATOR

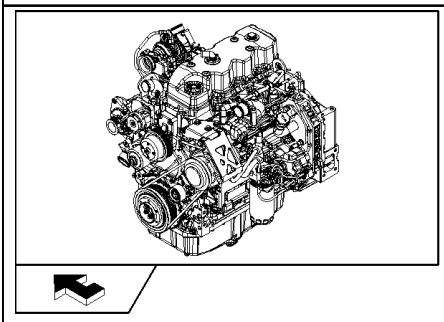

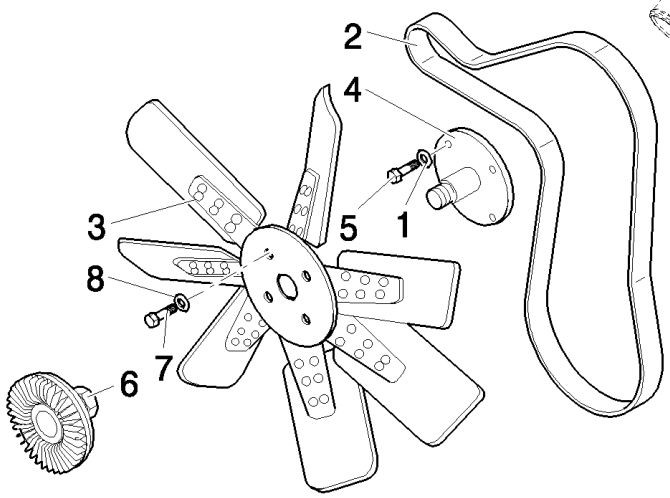

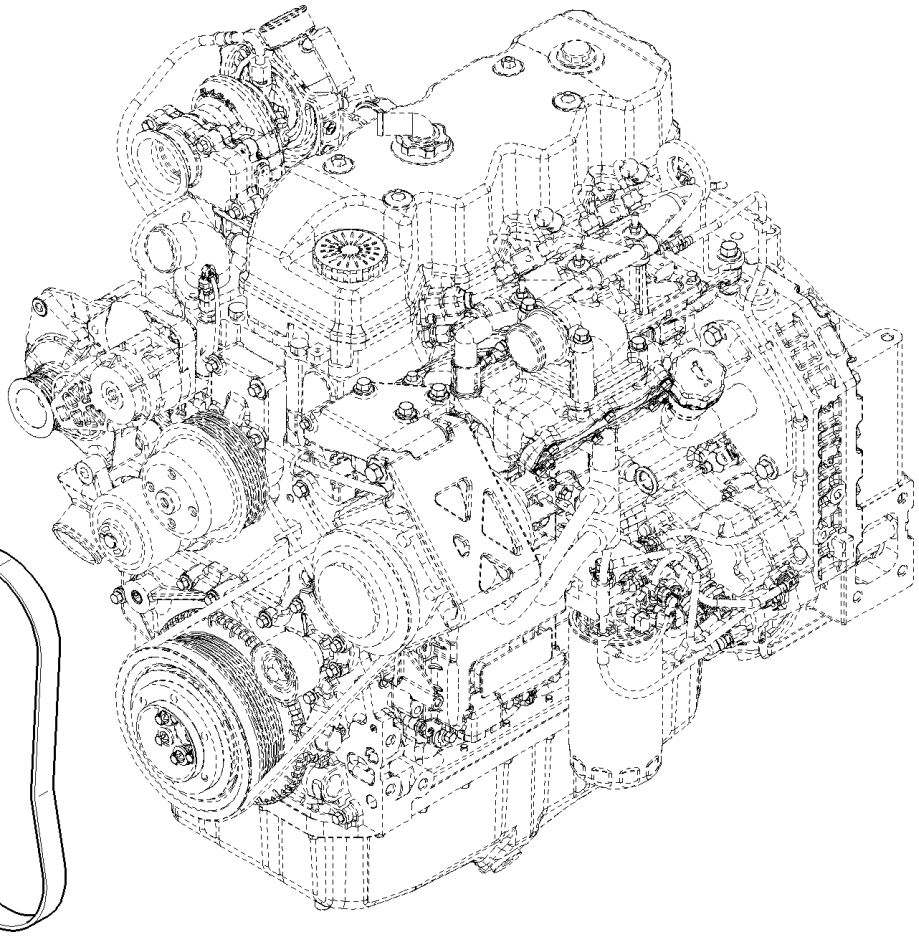

B110 TIER 3 BACKHOE LOADER (2/07-)

639/ A(02) ACCESSORY ENGINE - VENTILATOR

Ref	Numero de Pieza	Ctd	Descripción
1	47048972	1	WASHER,
2	87415774	1	BELT,
3	47049943	1	FAN,
4	47049809	1	ADAPTER,
5	47049186	4	BOLT, Hex, M10 x 30, 8.8,
6	87340008	1	DRIVE,
7	47042342	4	SCREW,
8	47048992	6	WASHER,

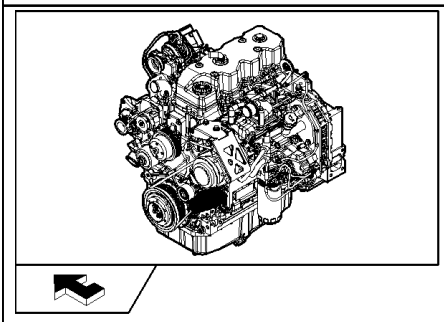

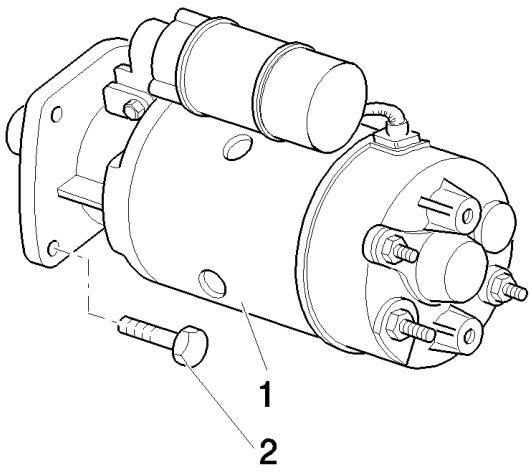
1
2

B110 TIER 3 BACKHOE LOADER (2/07-)

639/ A(03) ACCESSORY ENGINE - STARTER

Ref	Numero de Pieza	Ctd	Descripción
1	86992395	1	MOTOR, STARTER,
2	86511845	2	BOLT, Hex Flg, M10 x 35, 8.8, M10x35

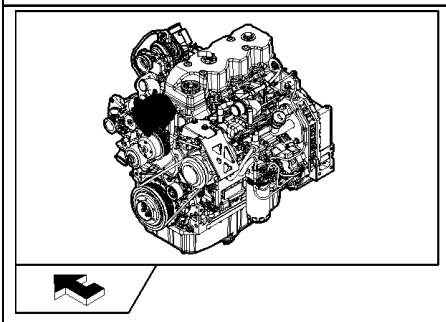

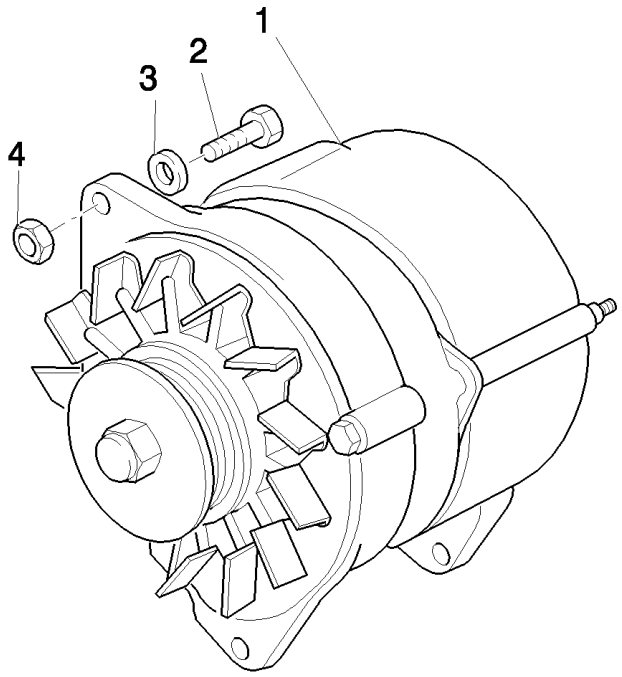
1
2
3
4

B110 TIER 3 BACKHOE LOADER (2/07-)

639/ A(04) ACCESSORY ENGINE- ALTERNATOR

Ref	Numero de Pieza	Ctd	Descripción
1	87422777	1	ALTERNATOR,
2	827-10130	2	BOLT, Hex, M10 x 130, 10.9,
2	16043621	1	BOLT, Hex, M8 x 25, 8.8,
3	896-11010	2	WASHER, M10 x 21.5 x 2.5, HT,
4	12577211	1	NUT, LOCK, M10 x 1.5, Cl 8,

642(01) EGS CONTROL, 20 & 40KM/H (POWER SHIFT)

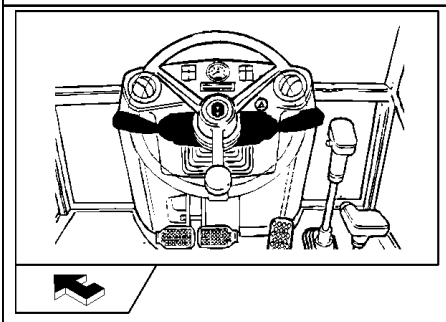

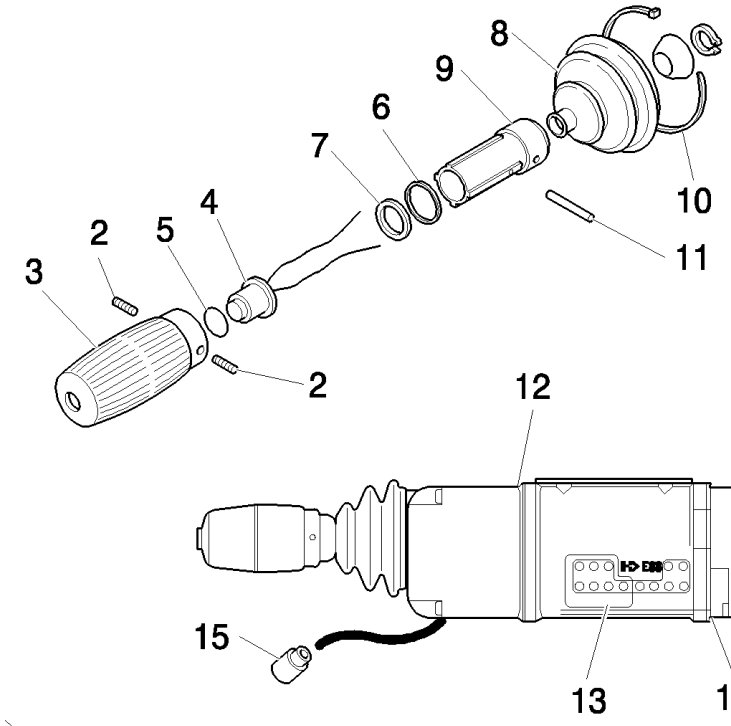

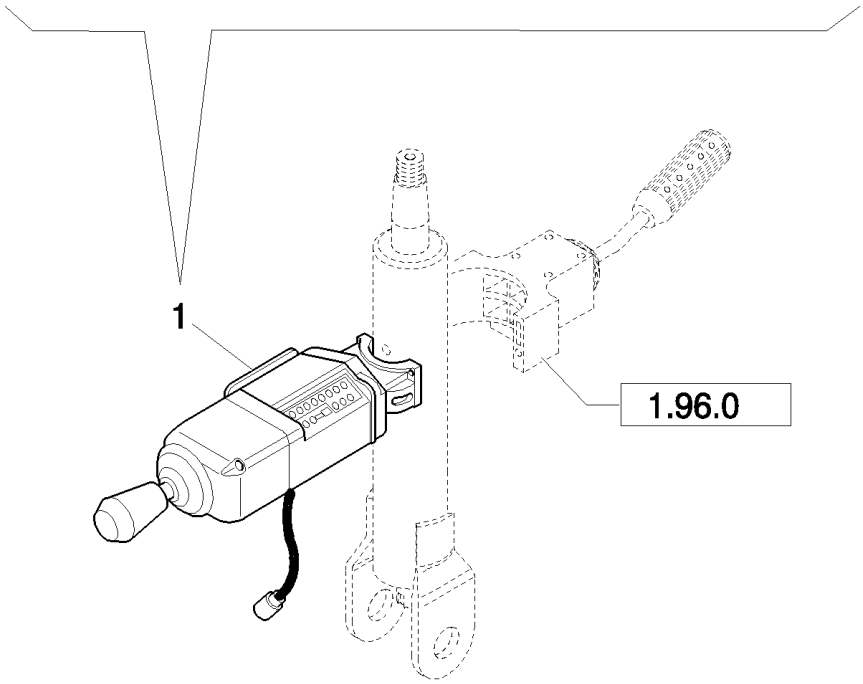

B110 TIER 3 BACKHOE LOADER (2/07-)

642(01) EGS CONTROL, 20 & 40KM/H (POWER SHIFT)

Ref	Numero de Pieza	Ctd	Descripción
1	87571318	1	CONTROL, (Equip.642) 40KM/H
1	87571319	1	CONTROL, (Equip.643) 20KM/H
2	9969356	2	SCREW,
3	9969351	1	HANDLE GRIP,
4	9969358	1	SWITCH,
5	9969357	1	O-RING,
6	9969360	1	O-RING,
7	9969359	1	SHIM,
8	9969352	1	BOOT,
9	9969361	1	BODY,
10	9969363	1	STRAP, CABLE,
11	9969362	1	PIN,
12	9969353	1	SEAL, Transmission
13	9969354	1	DECAL,
14	9969355	1	COVER, Rear
15	85819152	1	HARNESS, WIRE,
16	85817619	1	COLLAR,

646(01) MACHINE PART AIR CONDITIONING SET

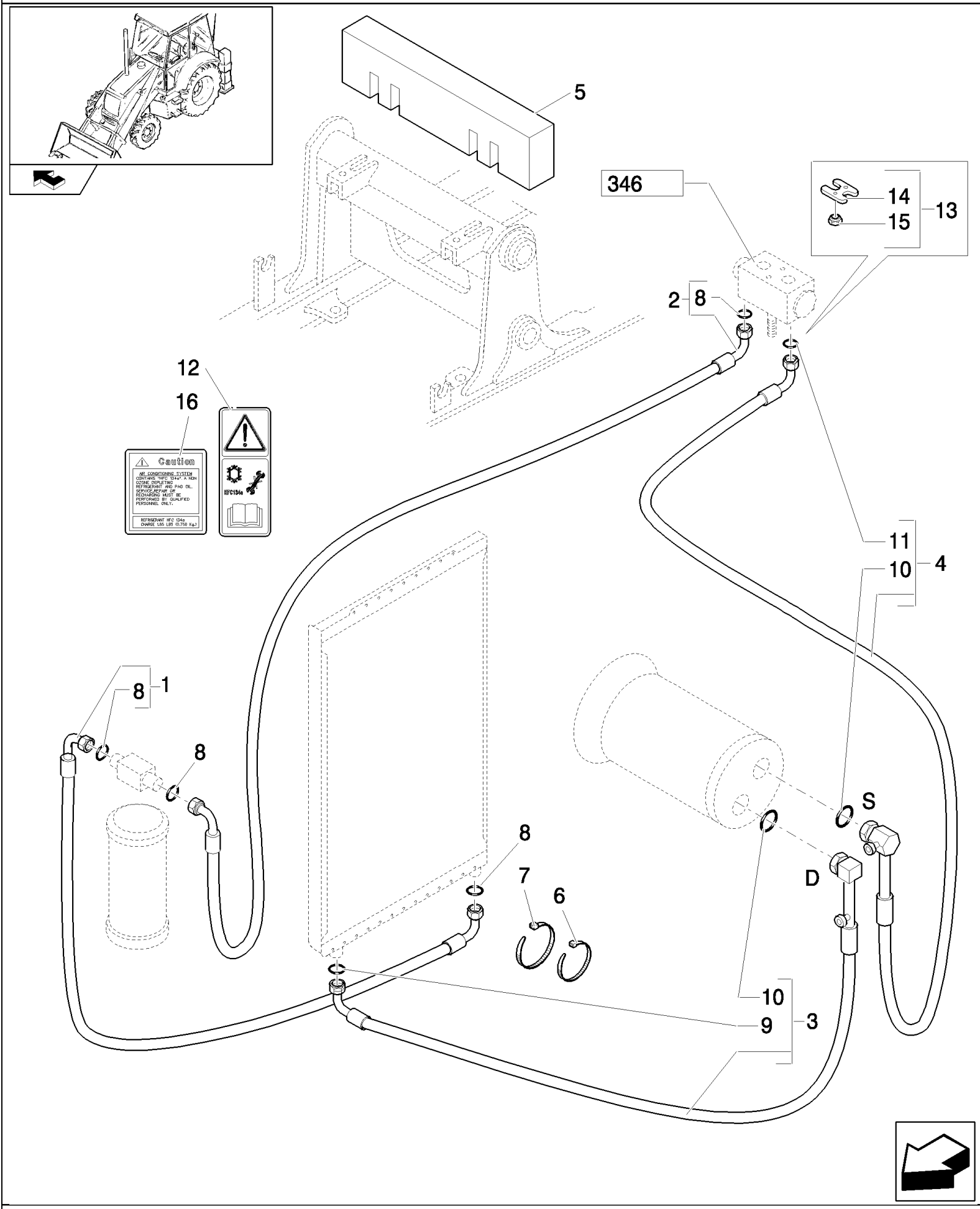

B110 TIER 3 BACKHOE LOADER (2/07-)

646(01) MACHINE PART AIR CONDITIONING SET

Ref	Numero de Pieza	Ctd	Descripción
1	87315364	1	HOSE, FLEXIBLE, , Includes 8 in q.ty 2
2	87315368	1	HOSE, FLEXIBLE, , Includes 8 in q.ty 2
3	87565311	1	HOSE, FLEXIBLE, , Includes 9, 10 in q.ty 1
4	87565319	1	HOSE, FLEXIBLE, , Includes 10 in q.ty 1, 11
5	85817287	1	GASKET,
6	14560187	2	STRAP, CABLE, 178mm lg, L=203.2 mm
7	47048451	4	STRAP, CABLE, M8 x 384,
8	85805013	4	O-RING,
9	85805006	1	O-RING,
10	85817186	2	O-RING,
11	85805014	1	O-RING,
12	85804441	1	DECAL,
13	85821131	1	FLANGE,
14	85805008	1	FLANGE,
15	14040611	1	NUT,
16	87324469	1	DECAL,

646(02) A/C COMPRESSOR ATTACHING GROUP

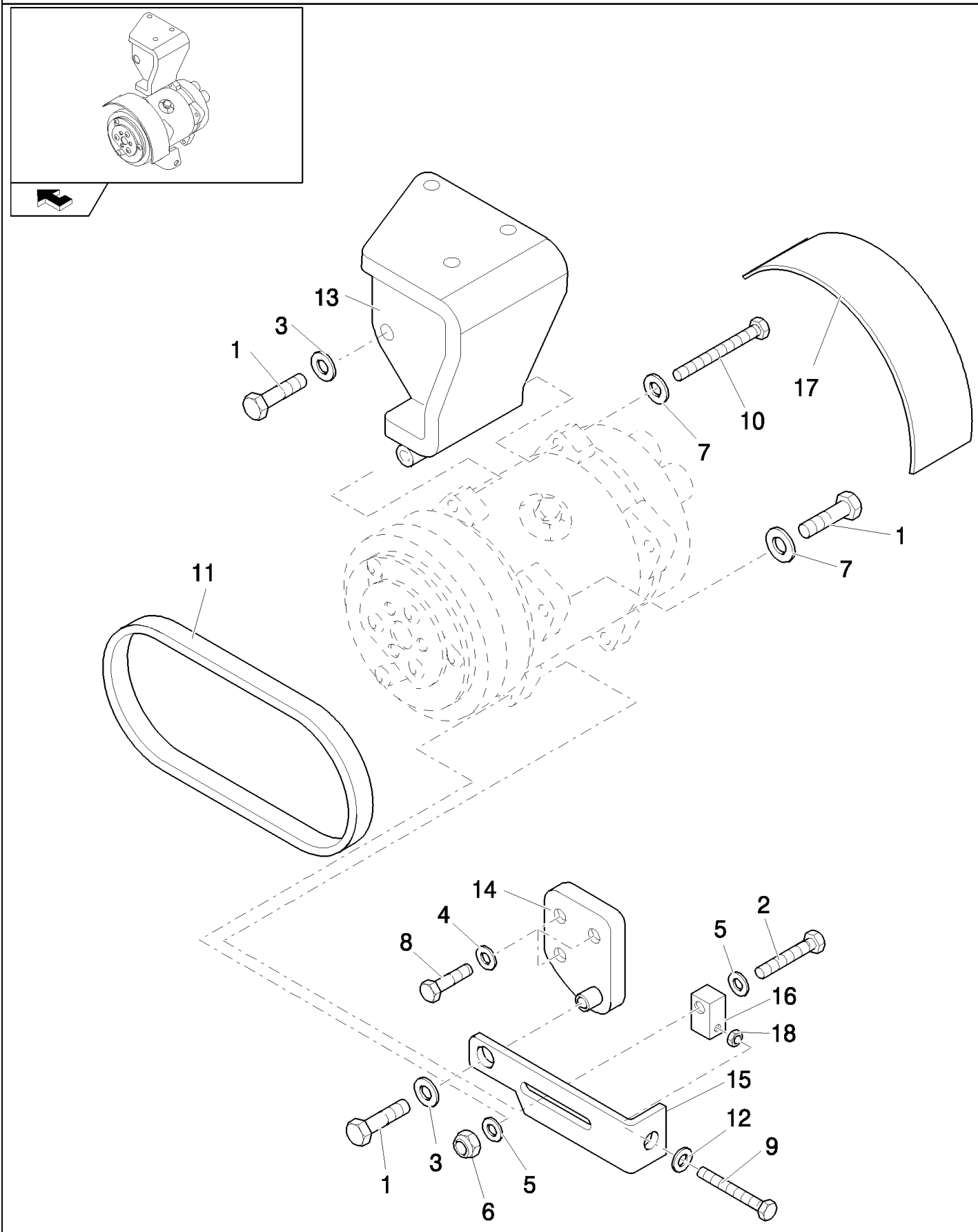

B110 TIER 3 BACKHOE LOADER (2/07-)

646(02) A/C COMPRESSOR ATTACHING GROUP

Ref	Numero de Pieza	Ctd	Descripción
1	11106421	3	BOLT, Hex, M10 x 30, 8.8,
2	11107421	1	BOLT, Hex, M10 x 60, 8.8,
3	11190574	2	WASHER, SPRING, Belleville, M10.5,
4	11193874	3	WASHER, SPRING, Belleville, M8.4,
5	14496601	2	WASHER, M10 x 20 x 2,
6	12577211	1	NUT, LOCK, M10 x 1.5, Cl 8,
7	12601474	1	WASHER, Wave, M10.5,
8	16043621	3	BOLT, Hex, M8 x 25, 8.8,
9	15213921	1	BOLT, Hex, M8 x 70, 8.8, Full Thd,
10	14421621	1	SCREW,
11	87565328	1	BELT,
12	14496534	1	WASHER,
13	87565321	1	SUPPORT,
14	87565322	1	SUPPORT,
15	87565326	1	TIGHTENER,
16	87315459	1	BLOCK,
17	87565346	1	GUARD,
18	16102211	1	NUT, M8, Cl 10,

646(03) A/C COMPRESSOR

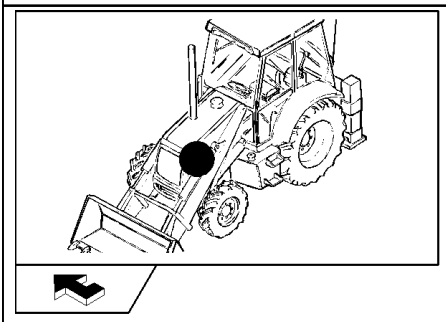

B110 TIER 3 BACKHOE LOADER (2/07-)

646(03) A/C COMPRESSOR

Ref	Numero de Pieza	Ctd	Descripción
1	85817170	1	COMPRESSOR, AIRCOND., (SD7H15) Assy
2	85817171	1	KIT,
3	85817172	3	BEARING ASSY,
4	85817173	1	KIT,
5	85817174	1	KIT,
6	85817175	1	KIT,

B110 TIER 3 BACKHOE LOADER (2/07-)

646(04) A/C FILTER & CONDENSER ATTACHING GROUP

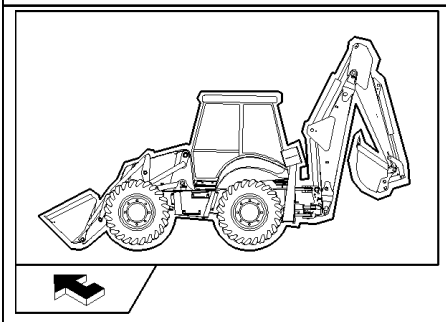

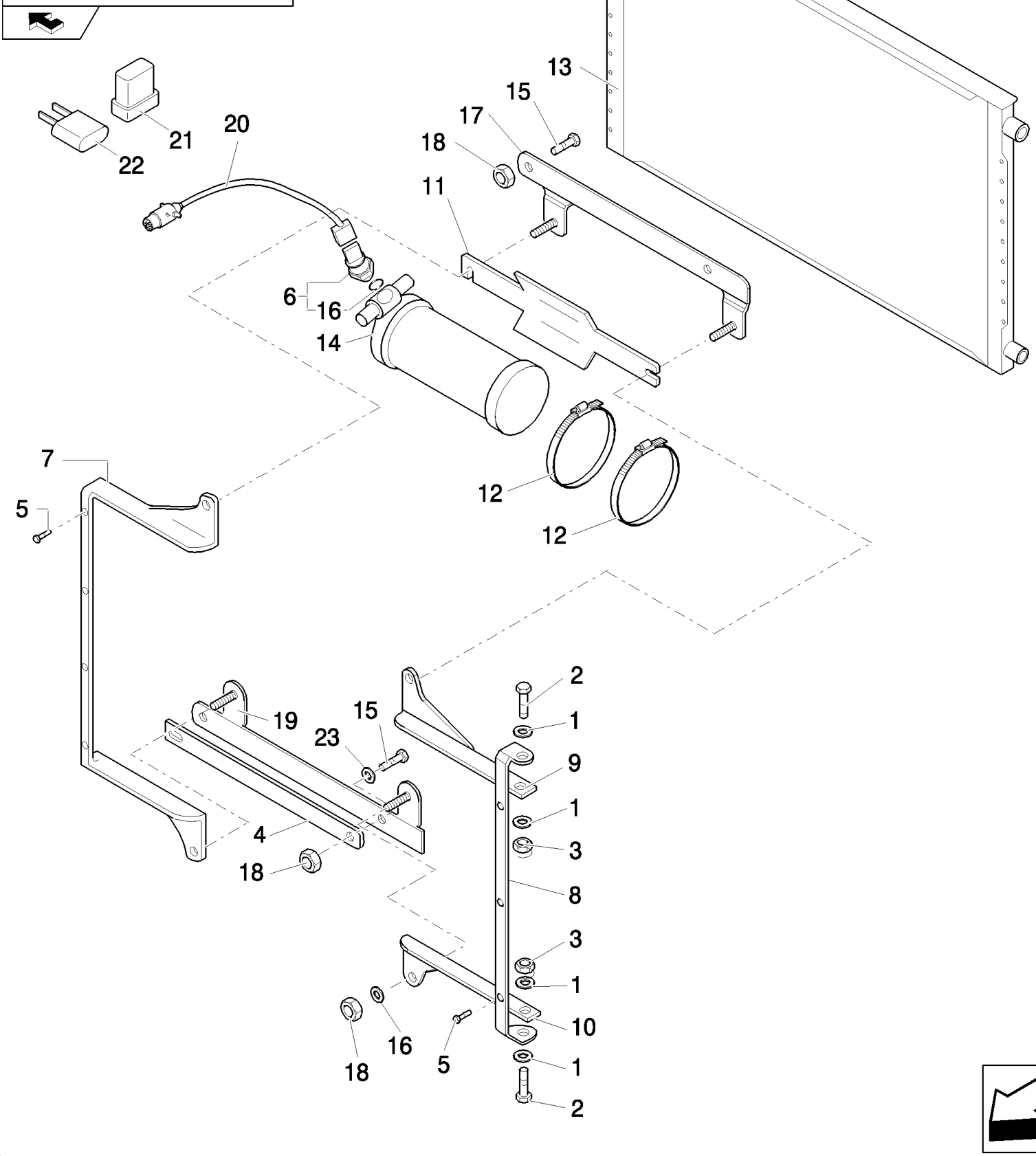

B110 TIER 3 BACKHOE LOADER (2/07-)

646(04) A/C FILTER & CONDENSER ATTACHING GROUP

Ref	Numero de Pieza	Ctd	Descripción
1	14496534	4	WASHER,
2	16043421	2	SCREW, Hex, M8 x 20, 8.8,
3	16104111	2	NUT, LOCK, M8 x 1.25, Cl 8,
4	87315252	1	BRACKET,
5	85819184	7	SCREW,
6	85804065	1	SENDER UNIT, , Includes 16
7	87315214	1	BRACKET,
8	87315219	1	BRACKET,
9	87315221	1	BRACKET, RH
10	87315225	1	BRACKET, LH
11	87315236	1	BRACKET,
12	87315239	2	CLAMP, HOSE,
13	87314566	1	CONDENSER,
14	87315241	1	FILTER, CAB,
15	10903421	1	BOLT, Hex, M6 x 45, 8.8,
16	85819185	1	GASKET,
17	87319438	1	SUPPORT, , Only For Version Without Intercooler
18	14040711	8	WASHER,
19	87319441	1	SUPPORT, , Only For Version Without Intercooler
20	87569316	1	EXTENSION,
21	85821537	1	RELAY,
22	11054990	1	FUSE, 10 Amp
23	12643701	1	WASHER, M6 x 18 x 1.5,

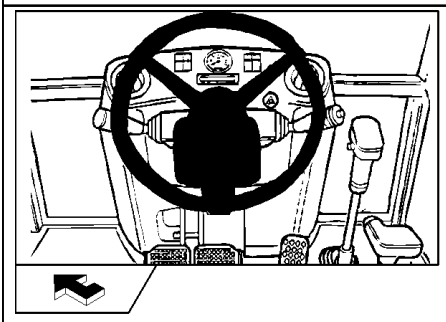

EQUIP.650

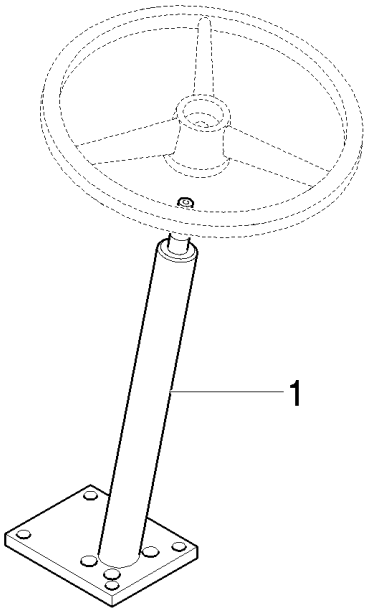

EQUIP.651

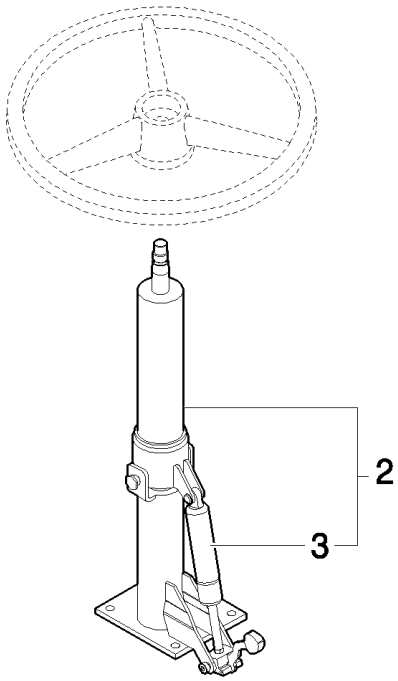

B110 TIER 3 BACKHOE LOADER (2/07-)

650(01) STEERING COLUMN, FIXED & ADJUSTABLE

Ref	Numero de Pieza	Ctd	Descripción
1	87324864	1	STEERING COLUMN, , Only For Power Shuttle
2	87560586	1	STEERING COLUMN,
3	87560589	1	GAS STRUT,

B110 TIER 3 BACKHOE LOADER (2/07-)

698(01) GLIDE RIDE VALVE,HYDRAULIC SYSTEM FOR MACHINE FRAME LEVELLING & ON/OFF SWITCH

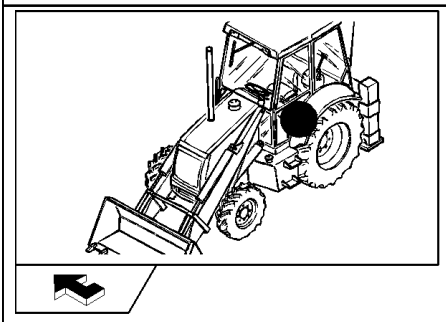

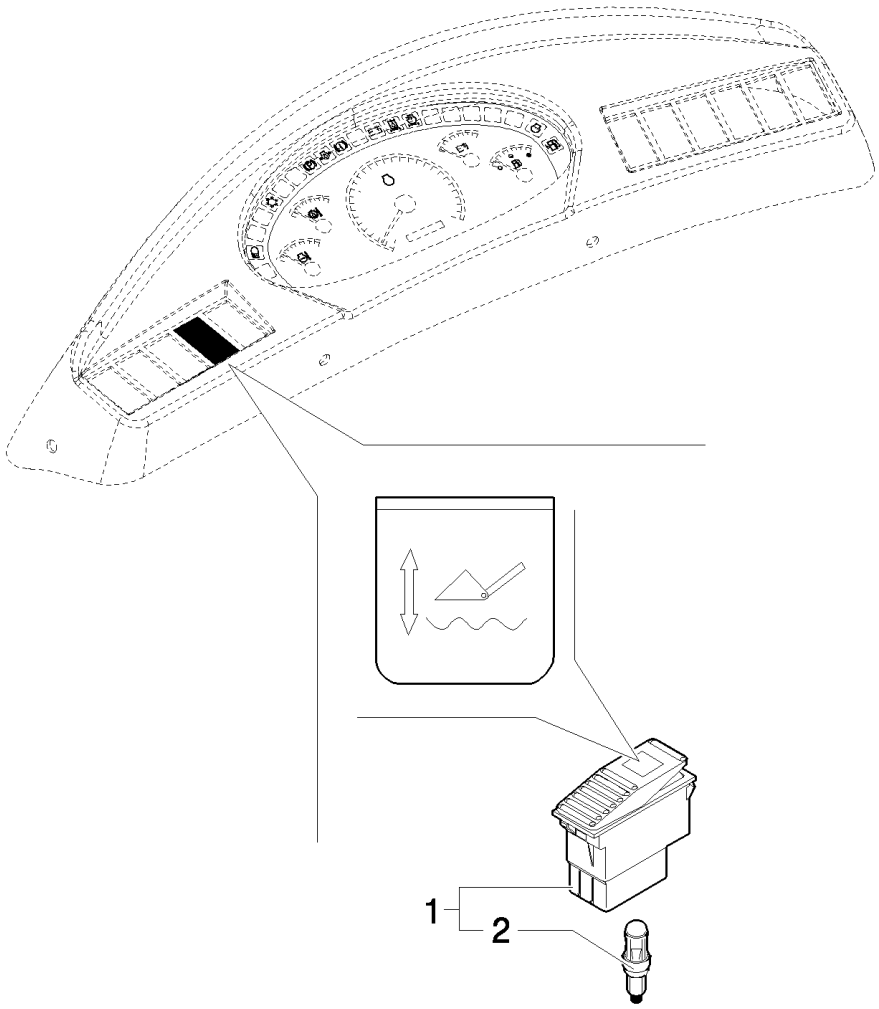

B110 TIER 3 BACKHOE LOADER (2/07-)

698(01) GLIDE RIDE VALVE,HYDRAULIC SYSTEM FOR MACHINE FRAME LEVELLING & ON/OFF SWITCH

Ref	Numero de Pieza	Ctd	Descripción
1	85817674	1	SWITCH,
2	14143790	1	BULB,

699(01) HAND HAMMER SWITCH

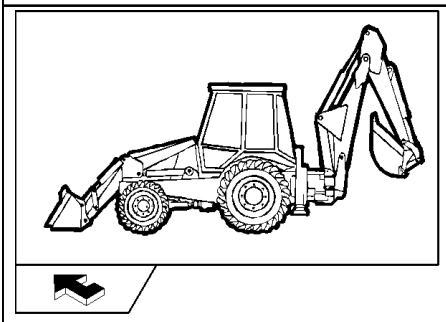

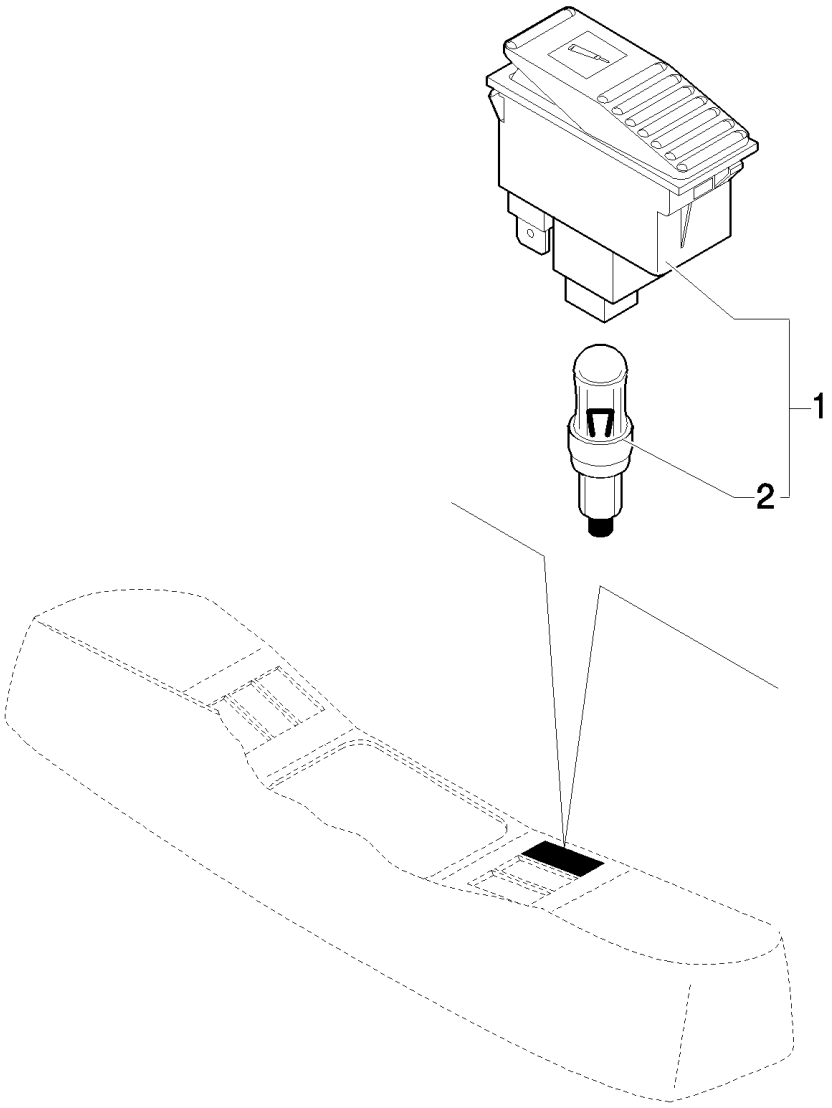

B110 TIER 3 BACKHOE LOADER (2/07-)

699(01) HAND HAMMER SWITCH

Ref	Numero de Pieza	Ctd	Descripción
1	85819072	1	SWITCH,
2	14143790	1	BULB,

B110 TIER 3 BACKHOE LOADER (2/07-)

700(01) 4X1 & 6X1 BUCKET HYDRAULIC LINES (POWER SHIFT POWER SHUTTLE)

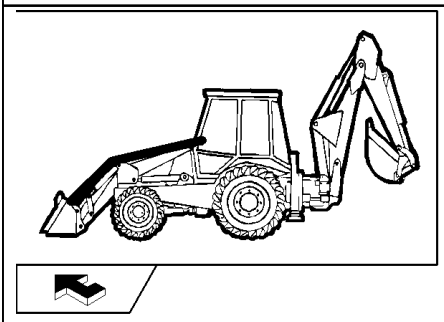

KIT KIT KIT 2 = ▲ 26 = ■

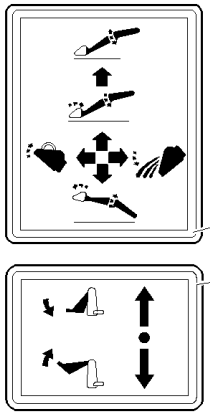

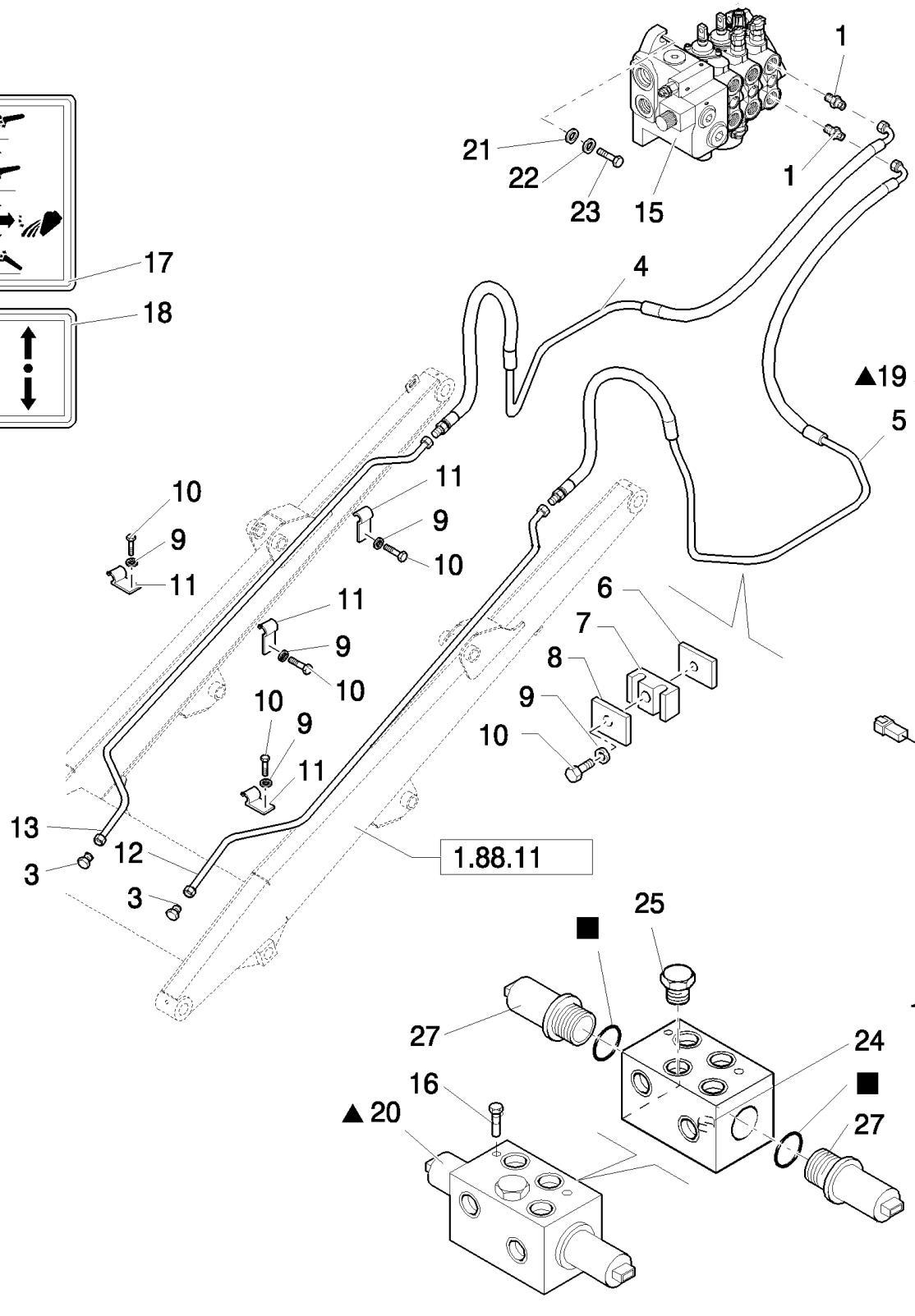

B110 TIER 3 BACKHOE LOADER (2/07-)

700(01) 4X1 & 6X1 BUCKET HYDRAULIC LINES (POWER SHIFT POWER SHUTTLE)

Ref	Numero de Pieza	Ctd	Descripción
1	85805258	2	CONNECTOR, HYD., 9/16"-16 ORS x 1 1/16"-12, O-Ring,
2	87384364	1	JOYSTICK,
3	85803408	2	PLUG,
4	85819572	1	TUBE, HYD,
5	85819571	1	TUBE, HYD, LH
6	85805340	2	PLATE,
7	85805193	2	CLAMP,
8	85805195	2	PLATE,
9	11193979	8	WASHER, SPRING, Belleville, M8.4,
10	16043821	8	BOLT, Hex, M8 x 30, 8.8,
11	85805247	6	CLAMP,
12	85805864	1	TUBE, HYD, LH
13	85805865	1	TUBE, HYD, RH
14	87304793	1	LEVER,
15	87305111	1	VALVE, CONTROL,
16	14300521	1	SCREW, Hex Soc Hd, M6 x 75, 8.8,
17	85804346	1	DECAL,
18	87305209	1	DECAL,
19	87382109	1	HANDLE, Loader, Powershift, W/Detent, Declutch, Horn; Includes 87387702 Grip W/2 Buttons; 87387703 Prop Roller W/Detented Position; 87387719 Transmission & Horn Button Harness; 87387722 Bi-Directional PWM Driver Harness
	87387702	1	HANDLE GRIP, Grip W/2 Buttons
	87387703	1	PUSH BUTTON, Prop Roller W/Detented Position
	87387719	1	CABLE, ELECTRIC, Transmission & Horn Button Harness
	87387722	1	CABLE, ELECTRIC, Bi-Directional PWM Driver Harness, Only for POWER SHIFT
19	87382112	1	HANDLE, Loader, Powershuttle, W/Detent, Declutch; Incl 87387751 Grip W/1 Button; 87387703 Prop Roller W/Detented Position; 87387754 Transmission Button Harness; 87387722 Bi-Directional PWM Driver Harness, Only for POWER SHUTTLE
	87387751	1	HANDLE GRIP, Grip W/1 Button
	87387703	1	PUSH BUTTON, Prop Roller W/Detented Position
	87387754	1	CABLE, ELECTRIC, Transmission Button Harness
	87387722	1	CABLE, ELECTRIC, Bi-Directional PWM Driver Harness
20	87304801	1	VALVE, CONTROL, , Includes 24 To 27
21	11190679	3	WASHER, SPRING, Belleville, M10.5,
22	13578621	3	WASHER, 10x30x2
23	11234721	3	BOLT, Hex, M10 x 1.25 x 45, 8.8,
24	87311363	1	ORIFICE,
25	85827997	1	VALVE,
26	85828001	1	KIT, SEALS,
27	85827993	2	SOLENOID,

B110 TIER 3 BACKHOE LOADER (2/07-)

700(02) 4X1 & 6X1 BUCKET HYDRAULIC LINES (POWER SHIFT POWER SHUTTLE)

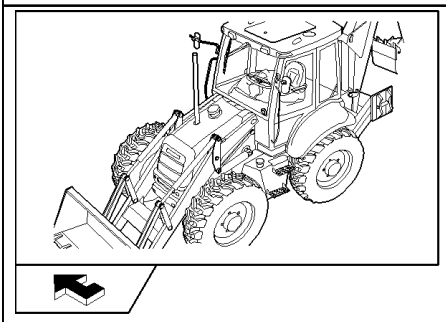

B110 TIER 3 BACKHOE LOADER (2/07-)

700(02) 4X1 & 6X1 BUCKET HYDRAULIC LINES (POWER SHIFT POWER SHUTTLE)

Ref	Numero de Pieza	Ctd	Descripción
1	85802234	1	ELBOW,
2	85803312	1	CONNECTOR, HYD.,
3	218-5053	2	CONNECTOR, HYD., 7/16"-20, 37º x 7/16"-20, O-Ring,
4	218-5057	4	CONNECTOR, HYD., 9/16"-18, 37º x 9/16"-18, O-Ring,
5	85826100	1	REDUCER,
6	85828211	1	COUPLING, QUICK, MALE,
7	87305211	1	HOSE, FLEXIBLE,
8	87303401	1	HOSE, FLEXIBLE,
9	87303400	2	HOSE, FLEXIBLE,

700(03) THREE-SECTION CONTROL VALVE FOR LOADER (POWER SHIFT - POWER SHUTTLE)

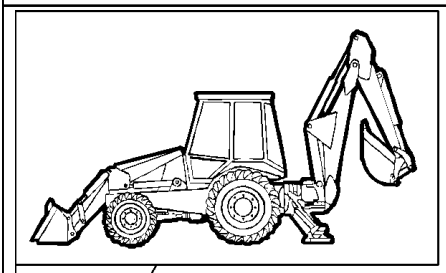



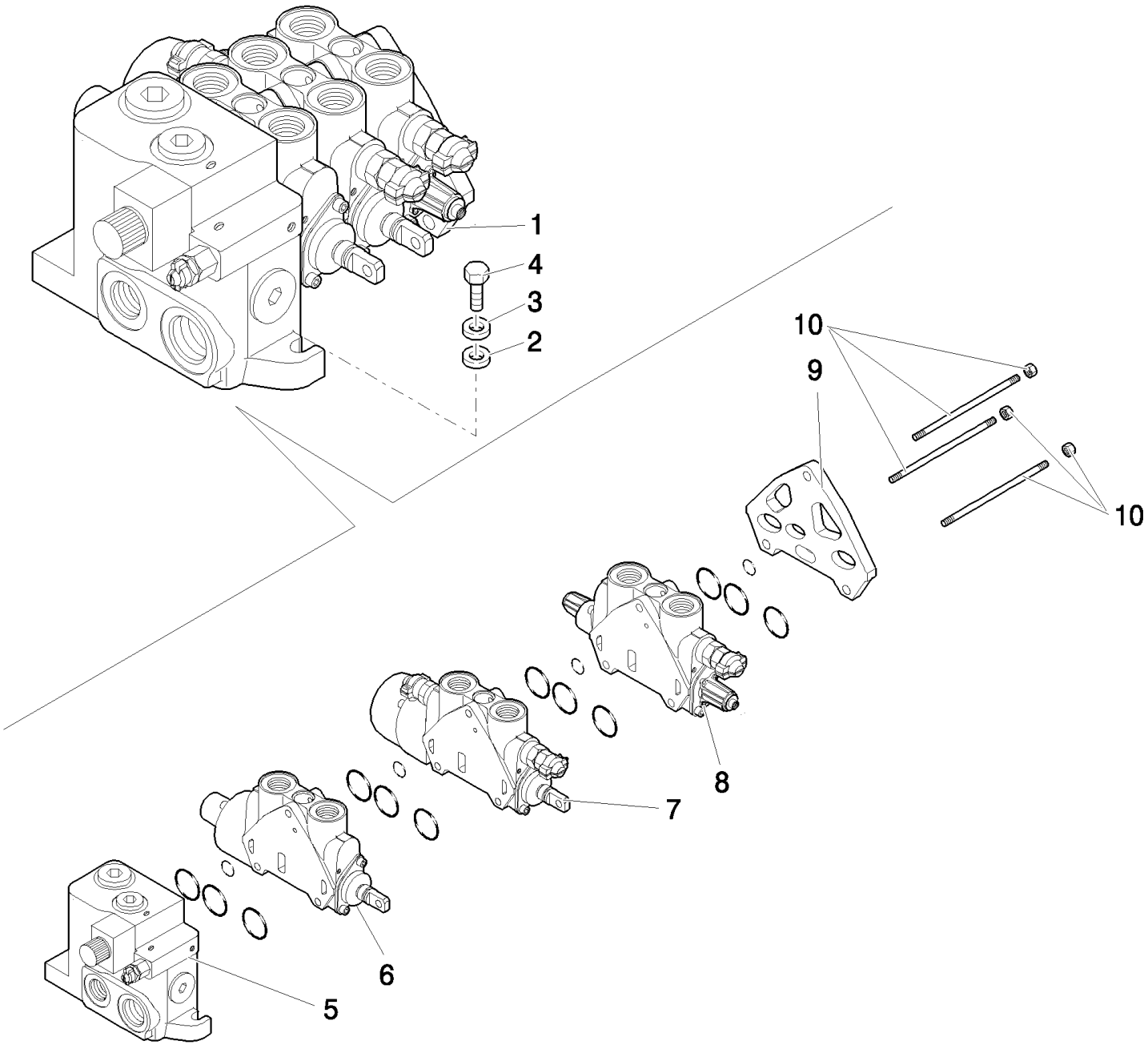



B110 TIER 3 BACKHOE LOADER (2/07-)

700(03) THREE-SECTION CONTROL VALVE FOR LOADER (POWER SHIFT - POWER SHUTTLE)

Ref	Numero de Pieza	Ctd	Descripción
1	87305111	1	VALVE, CONTROL, Rexroth 08 402 312
2	11190679	3	WASHER, SPRING, Belleville, M10.5,
3	13578621	3	WASHER, 10x30x2
4	11234721	3	BOLT, Hex, M10 x 1.25 x 45, 8.8,
5	85825468	1	VALVE SECTION, HYD, , See Page 302 02
6	87558567	1	SECTOR, , See Page 302 03
7	85825469	1	VALVE SECTION, HYD, , See Page 302 04
8	87346911	1	ELEMENT, JOINING,
9	85826924	1	SECTOR, TOOTHED,
10	85825474	1	TIE-ROD, THREADED,

700(04) THREE-SECTION CONTROL VALVE FOR LOADER (POWER SHIFT - POWER SHUTTLE)

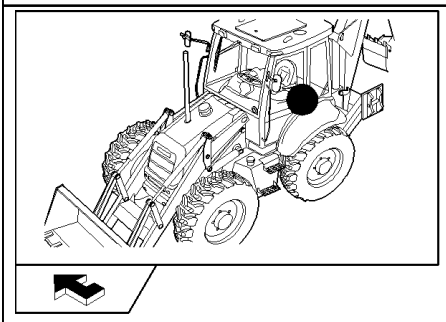

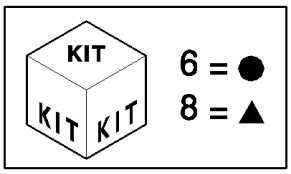

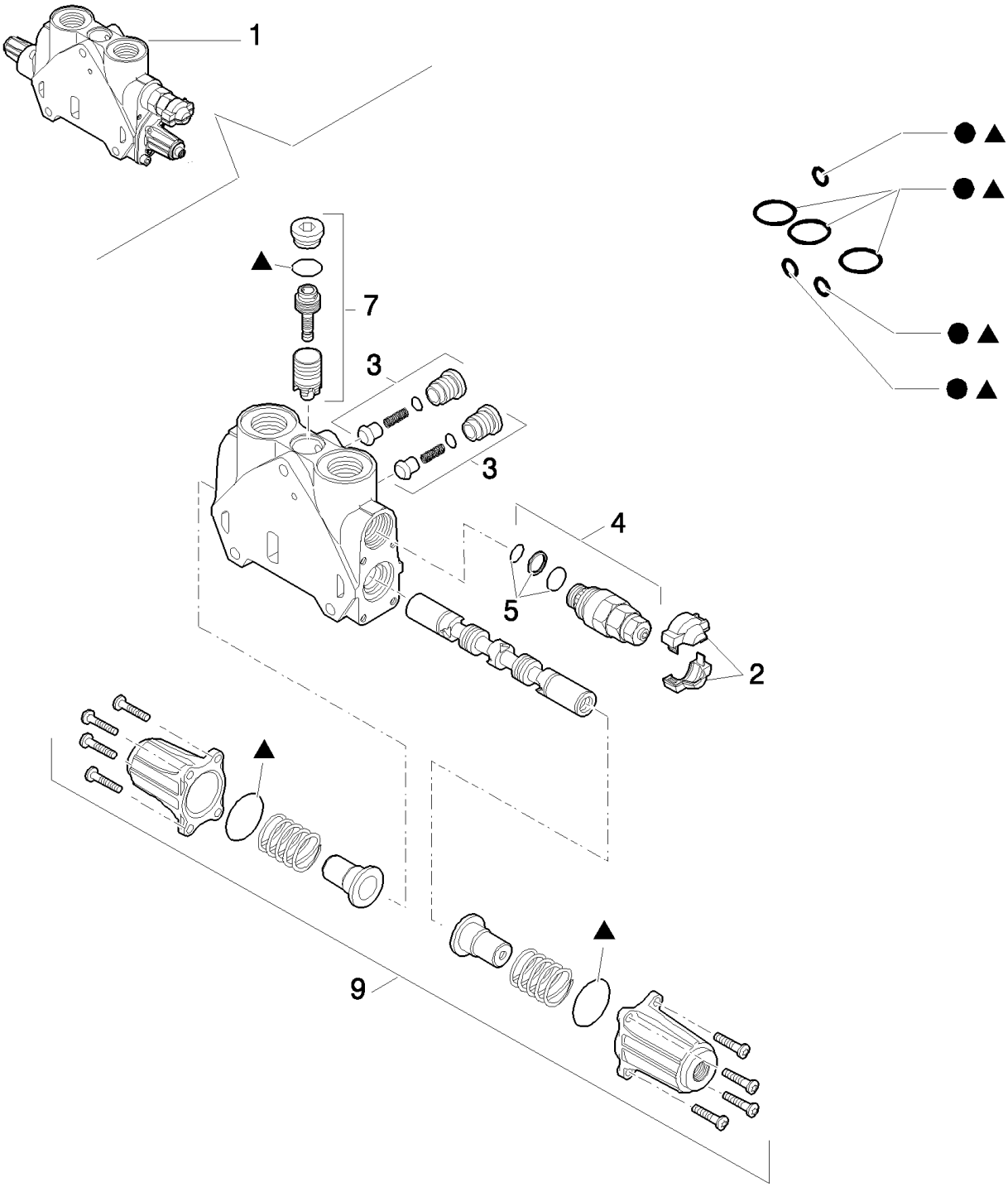

B110 TIER 3 BACKHOE LOADER (2/07-)

700(04) THREE-SECTION CONTROL VALVE FOR LOADER (POWER SHIFT - POWER SHUTTLE)

Ref	Numero de Pieza	Ctd	Descripción
1	87346911	1	ELEMENT, JOINING,
2	85811934	1	KIT, Cover
3	85811938	2	VALVE, CHECK, Valve
4	85812116	1	VALVE, PRESSURE RELIEF, , 240 BAR, Includes 5
5	85811933	1	KIT, SEALS, Valve Seals
6	85819148	1	KIT, SEALS, Seals
7	85819378	1	KIT, SEALS, Valve
8	85824281	1	KIT, SEALS, Seals
9	87346914	1	KIT, Cover Assy

702(01) PEDAL-OPERATED TELESCOPIC DIPPER HYDRAULIC SYSTEM (SIDE SHIFT) (7 SECTION) - EU

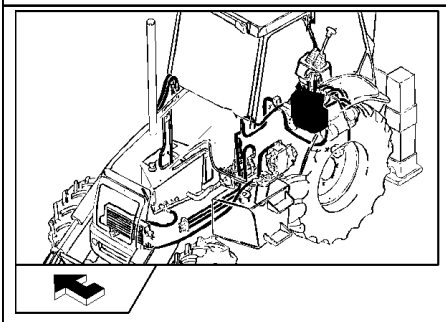

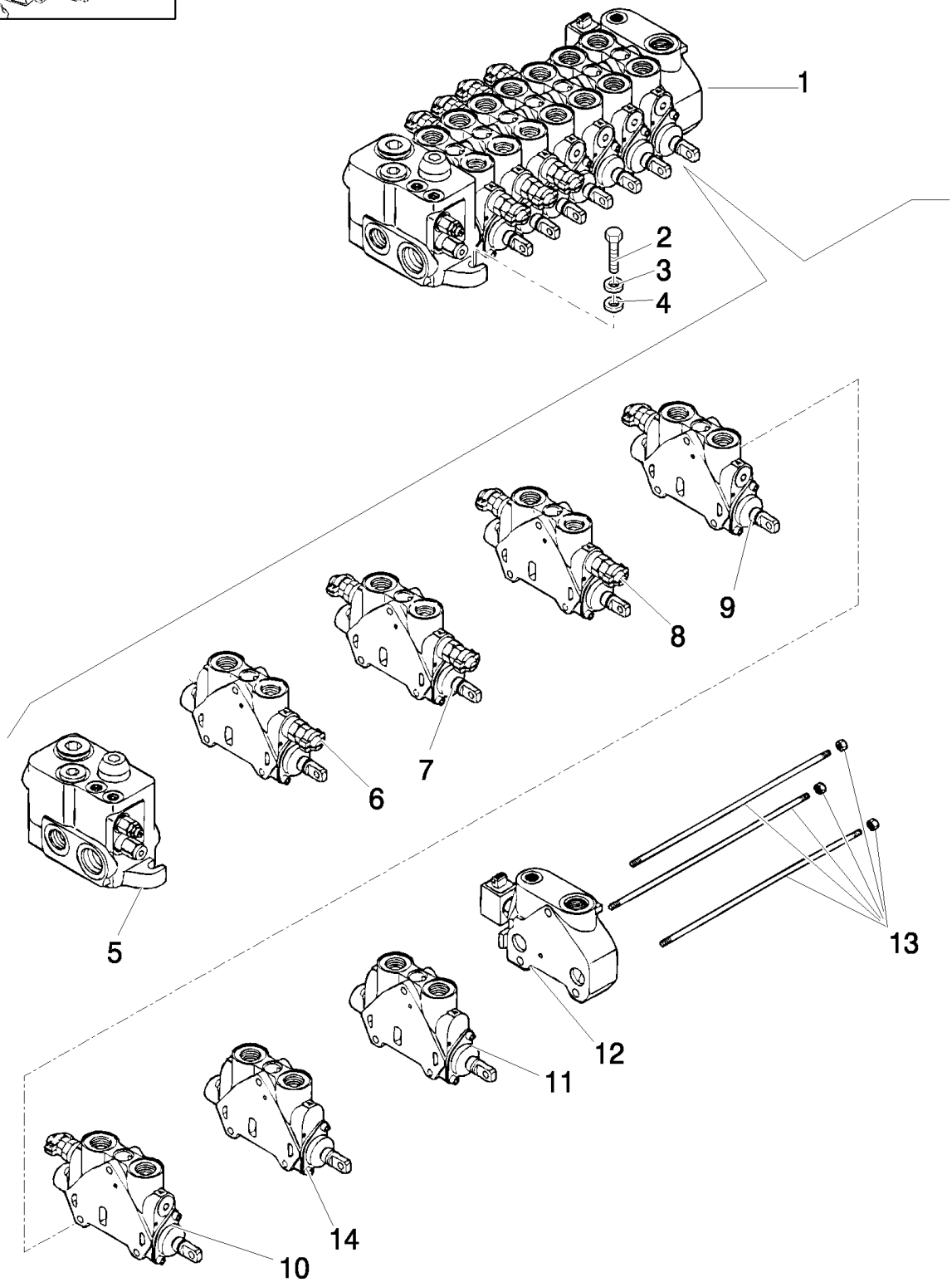

Mechanical Version

B110 TIER 3 BACKHOE LOADER (2/07-)

702(01) PEDAL-OPERATED TELESCOPIC DIPPER HYDRAULIC SYSTEM (SIDE SHIFT) (7 SECTION) - EU

Ref	Numero de Pieza	Ctd	Descripción
1	87376085	1	VALVE, HYDRAULIC,
2	15888721	3	BOLT, Hex, M10 x 1.25 x 55, 8.8,
3	11190679	3	WASHER, SPRING, Belleville, M10.5,
4	85818943	3	SPACER,
5	85826255	1	VALVE, HYDRAULIC, , See Page 301 03
6	85826245	1	SECTOR, TOOTHED, , See Page 300 03, Boom Cylinder
7	85826253	1	SECTOR, TOOTHED, , Swing Cylinder, See Page 300 04
8	85826246	1	SECTOR, TOOTHED, , Bucket Cylinder, See Page 300 05
9	85826248	1	SECTOR, TOOTHED, , See Page 300 06, Arm Cylinder
10	87542780	1	SECTOR, , See Page 702 02, Stabilizer Cylinder
11	87558571	1	SECTOR, , Telescopic Cylinder, See Page 702 03
12	85826249	1	SECTOR, TOOTHED, , See Page 301 02
13	85811959	1	KIT,
14	87611176	1	VALVE, HYDRAULIC, , See Page 301 04, Stabilizer Cylinder

Mechanical Version

702(02) PEDAL-OPERATED TELESCOPIC DIPPER HYDRAULIC SYSTEM (SIDE SHIFT) (7 SECTIONS) - EU

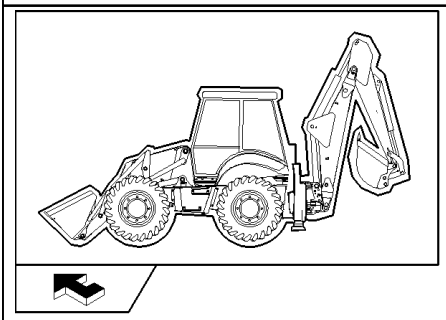

KIT
KIT KIT
8 = ●
10 = ▲

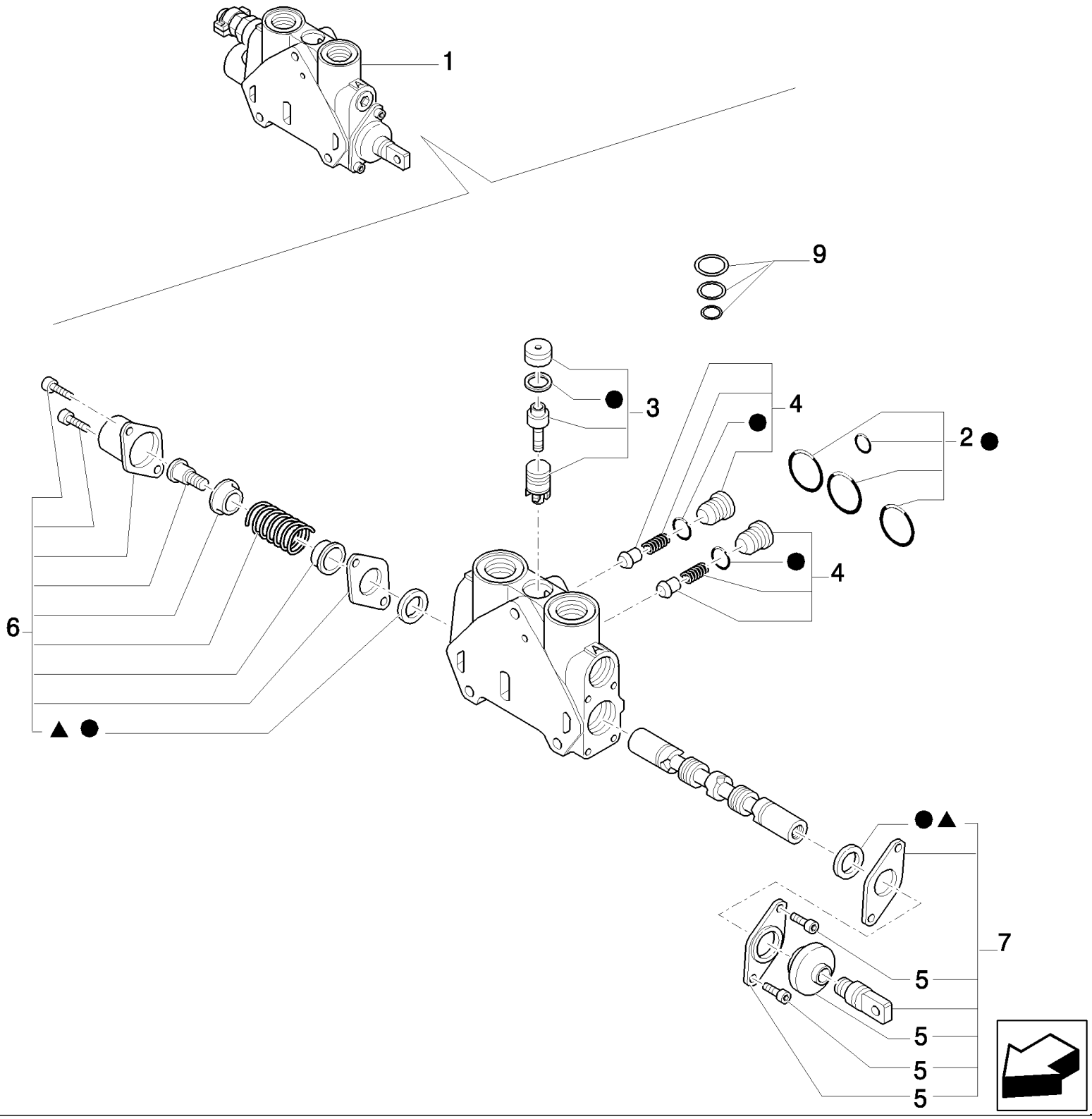

B110 TIER 3 BACKHOE LOADER (2/07-)

702(02) PEDAL-OPERATED TELESCOPIC DIPPER HYDRAULIC SYSTEM (SIDE SHIFT) (7 SECTIONS) - EU

Ref	Numero de Pieza	Ctd	Descripción
1	87542780	1	SECTOR,
2	85819148	1	KIT, SEALS, Seals
3	85819378	1	KIT, SEALS, Valve
4	85811938	2	VALVE, CHECK, Valve
5	85820130	1	BOOT,
6	85824279	1	KIT, Seal
7	85824278	1	KIT, Working Assy
8	85824281	1	KIT, SEALS, Seals
9	85819040	1	KIT, SEALS, Compensator Seal
10	85824283	1	KIT, SEALS, Spool Seal

Mechanical Version

702(03) PEDAL-OPERATED TELESCOPIC DIPPER HYDRAULIC SYSTEM 7 SECTIONS

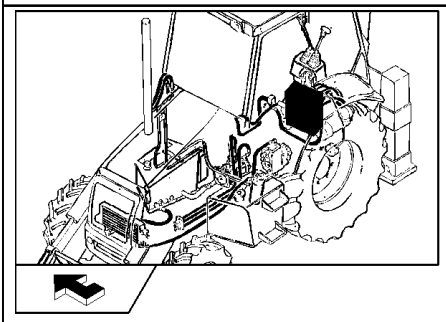

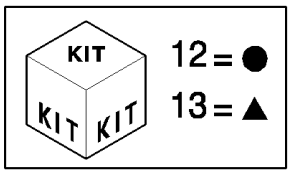

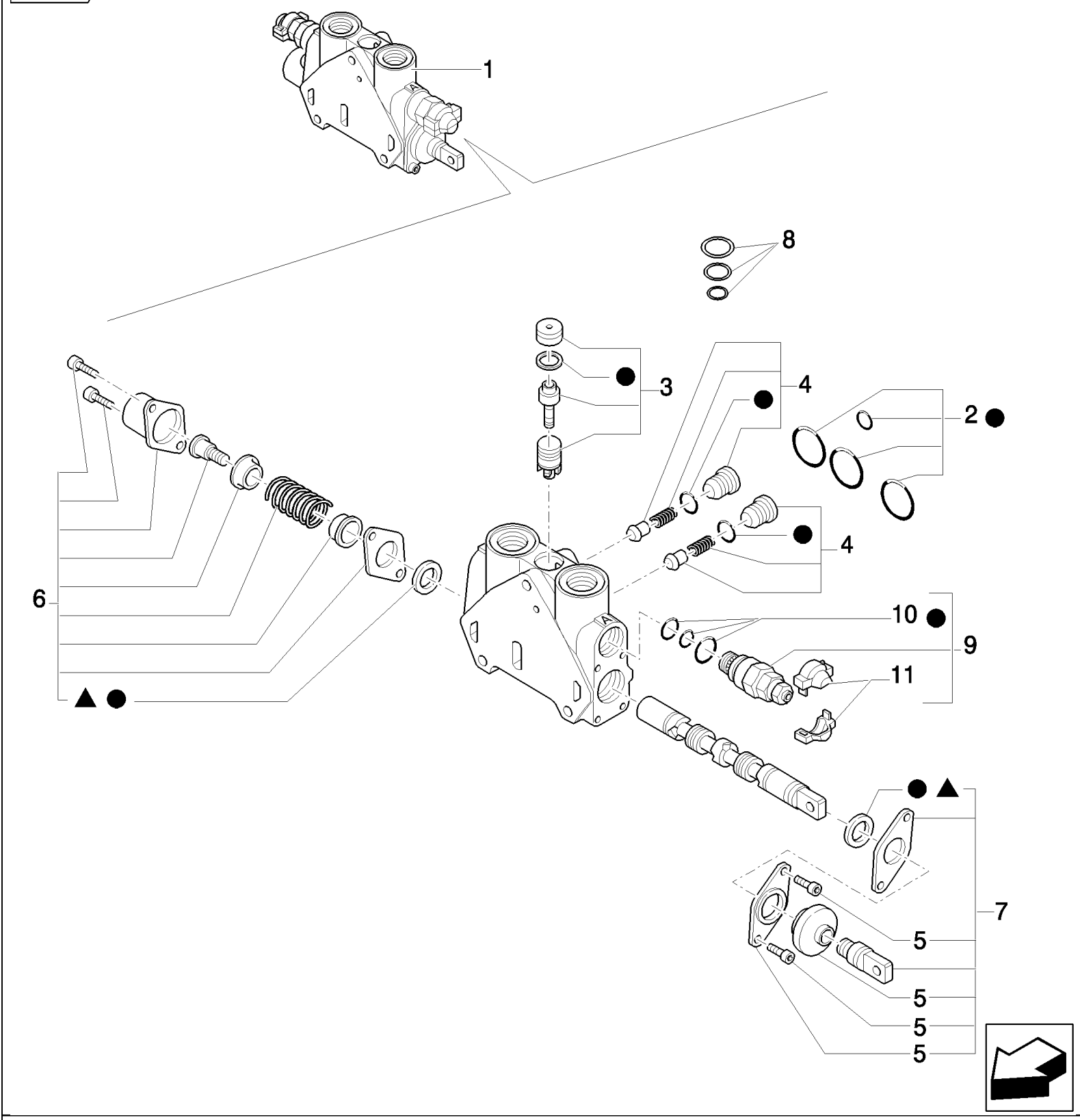

Mechanical Version

B110 TIER 3 BACKHOE LOADER (2/07-)

702(03) PEDAL-OPERATED TELESCOPIC DIPPER HYDRAULIC SYSTEM 7 SECTIONS

Ref	Numero de Pieza	Ctd	Descripción
1	87558571	1	SECTOR,
2	85819148	1	KIT, SEALS,
3	85819378	1	KIT, SEALS,
4	85811938	2	VALVE, CHECK,
5	85820130	1	BOOT,
6	85824279	1	KIT,
7	85824278	1	KIT,
8	85819040	1	KIT, SEALS,
9	87341088	1	VALVE, HYDRAULIC,
10	85811933	1	KIT, SEALS,
11	85811935	1	KIT,
12	85824281	1	KIT, SEALS,
13	85824283	1	KIT, SEALS,

Mechanical Version

702(04) PEDAL-OPERATED TELESCOPIC DIPPER HYDRAULIC SYSTEM - EU

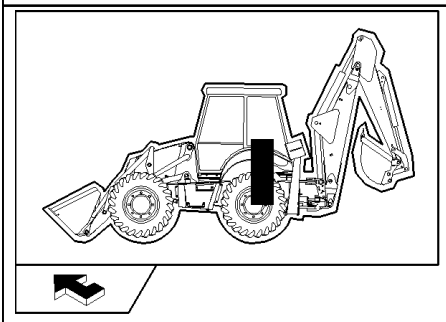

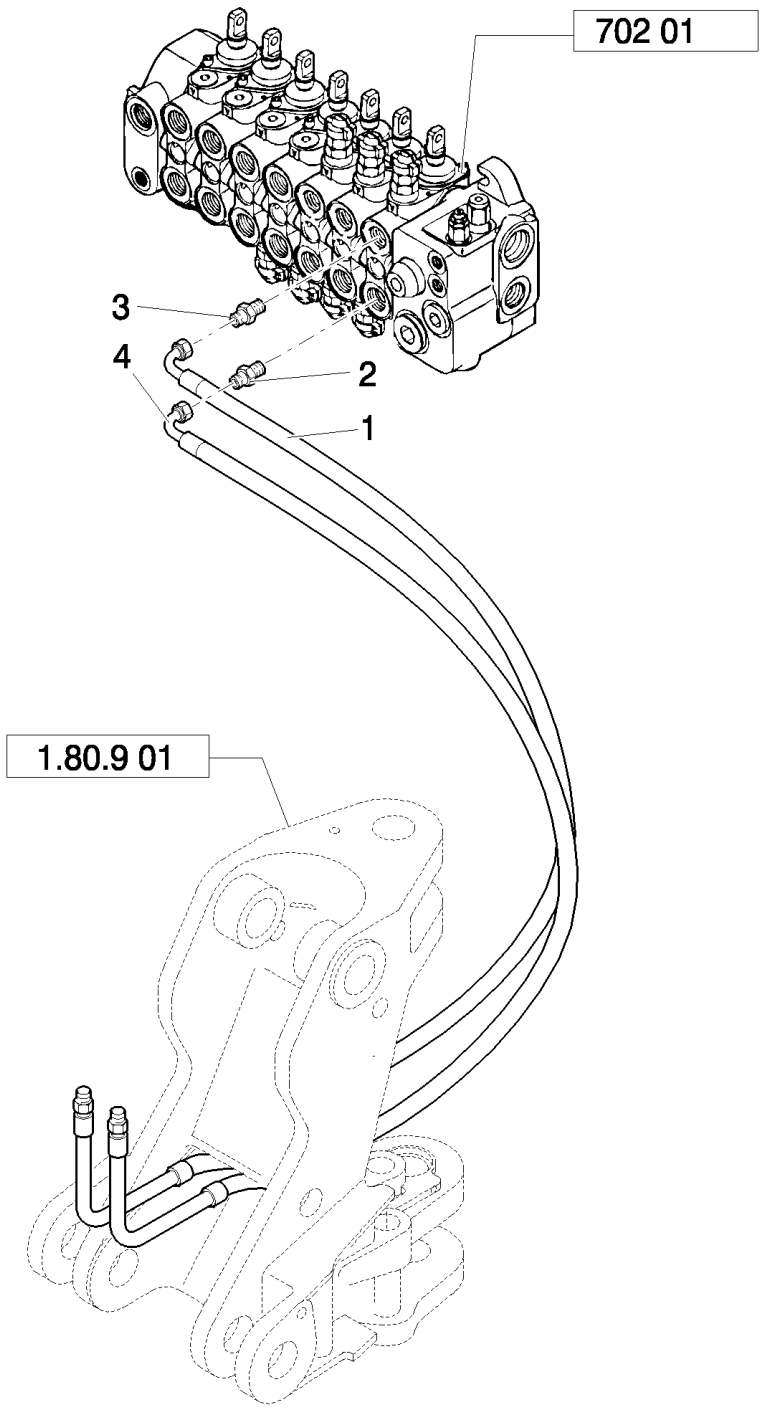

B110 TIER 3 BACKHOE LOADER (2/07-)

702(04) PEDAL-OPERATED TELESCOPIC DIPPER HYDRAULIC SYSTEM - EU

Ref	Numero de Pieza	Ctd	Descripción
1	85819066	1	HOSE, FLEXIBLE,
2	85805258	1	CONNECTOR, HYD., 9/16"-16 ORS x 1 1/16"-12, O-Ring,
3	83962539	1	CONNECTOR, HYD.,
4	85819067	1	HOSE, FLEXIBLE,

Mechanical Version

702(05) PEDAL-OPERATED TELESCOPIC DIPPER HYDRAULIC SYSTEM (SIDE SHIFT) - EU

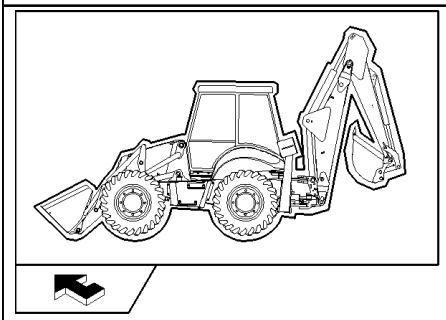

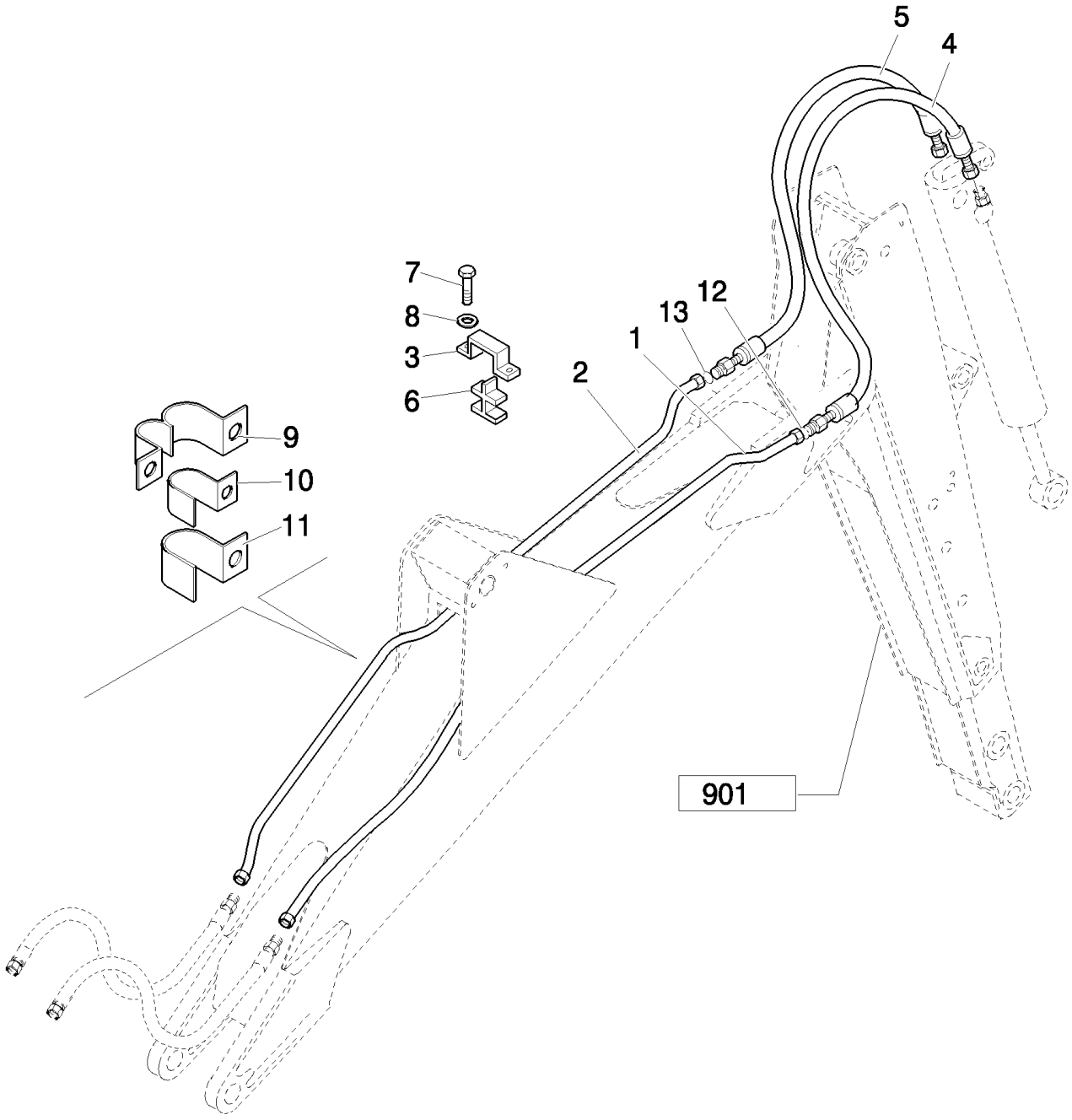

B110 TIER 3 BACKHOE LOADER (2/07-)

702(05) PEDAL-OPERATED TELESCOPIC DIPPER HYDRAULIC SYSTEM (SIDE SHIFT) - EU

Ref	Numero de Pieza	Ctd	Descripción
1	85815642	1	TUBE, HYD, 16 mm OD Tube
2	85815640	1	TUBE, HYD, 12 mm OD Tube
3	85803402	1	PLATE,
4	87619506	1	HOSE, FLEXIBLE,
5	85817108	1	HOSE, FLEXIBLE,
6	85802532	1	CLIP, HOSE,
7	16043621	2	BOLT, Hex, M8 x 25, 8.8,
8	11193879	3	WASHER, SPRING, Belleville, M8.4,
9	85802529	1	CLAMP,
10	85802527	2	CLAMP,
11	85802528	2	CLAMP,
12	9992069	1	O-RING, -016, 90 Duro, .614" ID x .070" Thk,
13	9992298	1	O-RING, -014, 90 Duro, .489" ID x .070" Thk,

Mechanical Version

702(06) PEDAL-OPERATED TELESCOPIC DIPPER HYDRAULIC SYSTEM (SIDE SHIFT) - EU

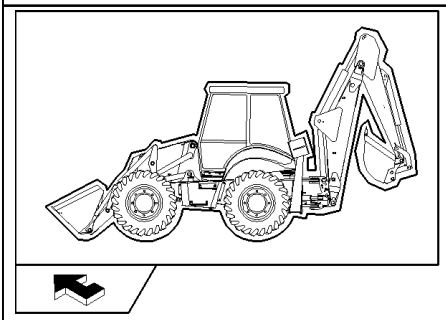

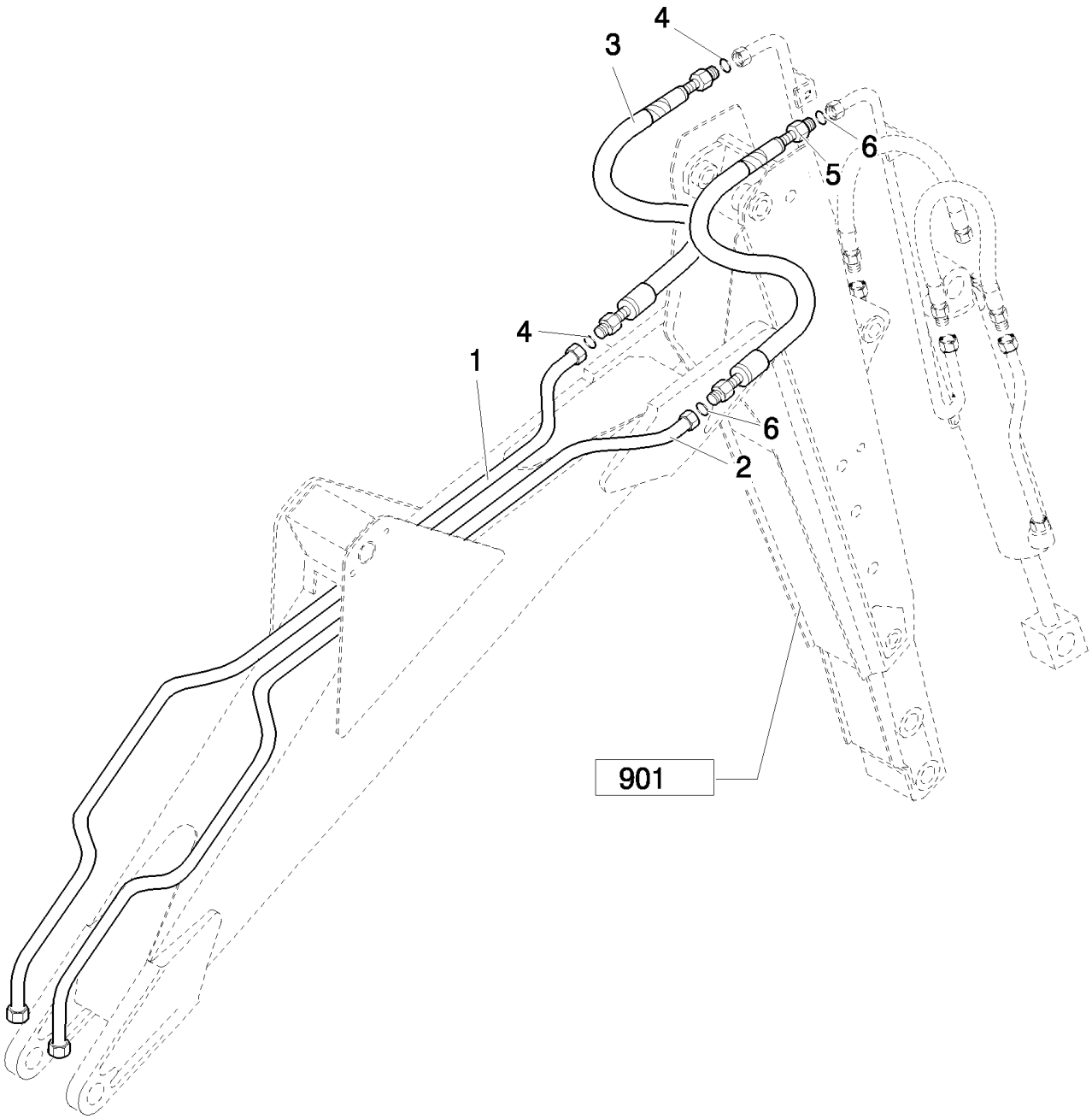

Mechanical Version

B110 TIER 3 BACKHOE LOADER (2/07-)

702(06) PEDAL-OPERATED TELESCOPIC DIPPER HYDRAULIC SYSTEM (SIDE SHIFT) - EU

Ref	Numero de Pieza	Ctd	Descripción
1	85815674	1	TUBE, HYD, 20 mm OD Tube
2	85815676	1	TUBE, HYD, 16 mm OD Tube
3	85817106	1	HOSE, FLEXIBLE, , Includes 4
4	9991976	2	O-RING, -018, 90 Duro, .739" ID x .070" Thk,
5	85817107	1	HOSE, FLEXIBLE, , Includes 6
6	9992069	2	O-RING, -016, 90 Duro, .614" ID x .070" Thk,

Mechanical Version

702(07) PEDAL-OPERATED TELESCOPIC DIPPER HYDRAULIC SYSTEM (SIDE SHIFT) - EU

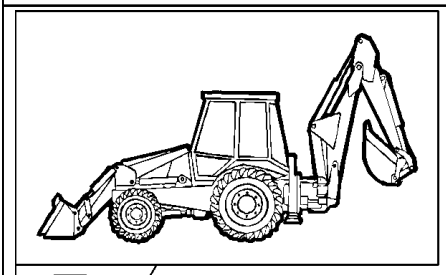

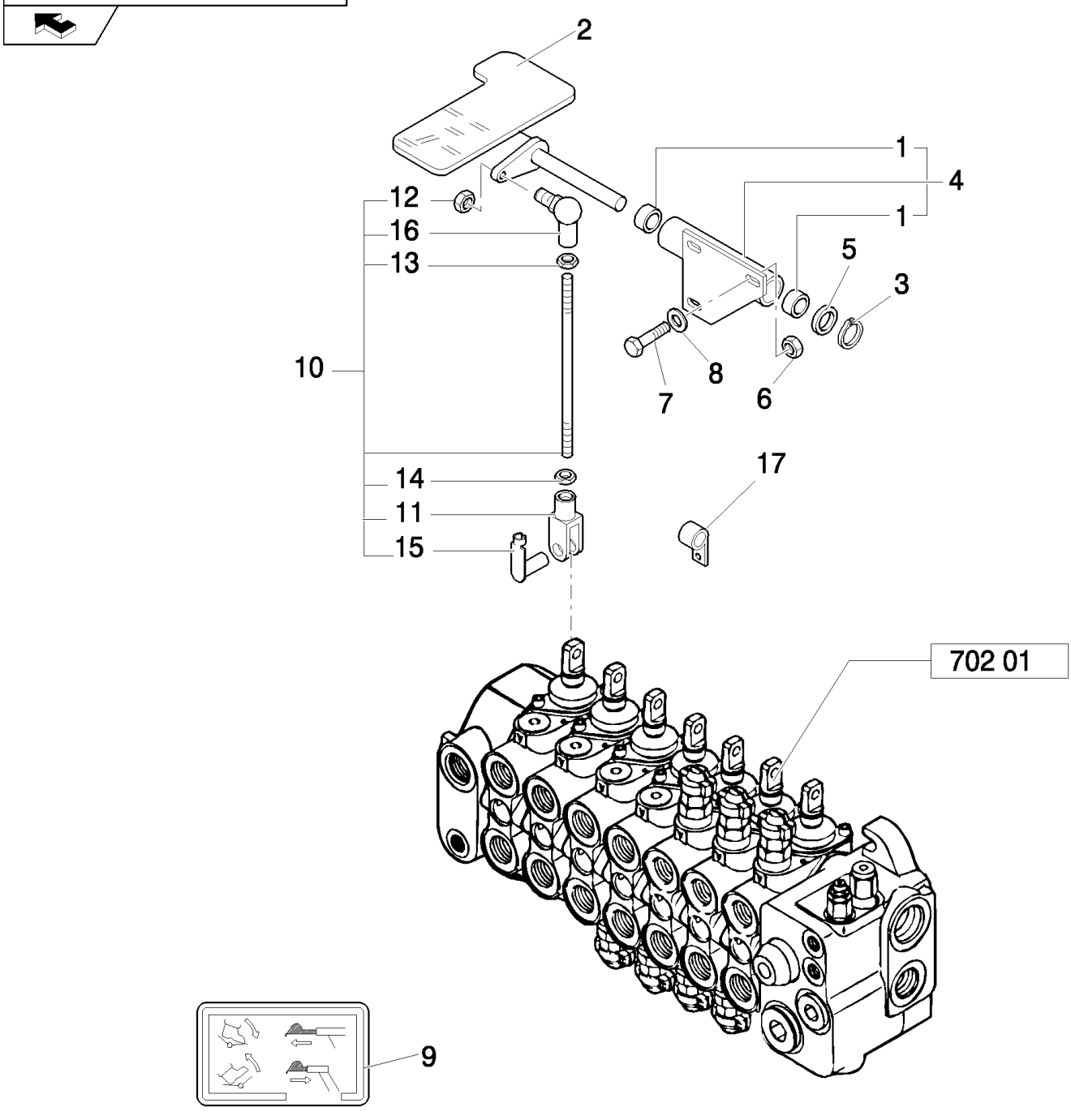

B110 TIER 3 BACKHOE LOADER (2/07-)

702(07) PEDAL-OPERATED TELESCOPIC DIPPER HYDRAULIC SYSTEM (SIDE SHIFT) - EU

Ref	Numero de Pieza	Ctd	Descripción
1	85802494	2	BUSHING, ASSY
2	85805362	1	PEDAL,
3	83911366	1	RING, SNAP,
4	85805357	1	PEDAL,
5	14496901	1	WASHER, M16 x 30 x 3,
6	16104111	3	NUT, LOCK, M8 x 1.25, Cl 8,
7	16043621	3	BOLT, Hex, M8 x 25, 8.8,
8	11193879	2	WASHER, SPRING, Belleville, M8.4,
9	85803786	1	DECAL,
10	85805364	1	TIE-ROD,
11	11991971	1	CLEVIS,
12	14048221	1	NUT, LOCK, M8 x 1.25, Cl 10,
13	16102311	1	NUT, Thin, M8 x 1.25, Cl 04,
14	16102911	1	NUT, Thin, M8 x 1.25, Cl 04, LH,
15	85802738	1	RETAINER,
16	85804375	1	BALL JOINT,
17	85803393	1	CLAMP,

Mechanical Version

721(01) TELESCOPIC CONTROL VALVE, 3 SECTIONS(CENTER PIVOT) - NA

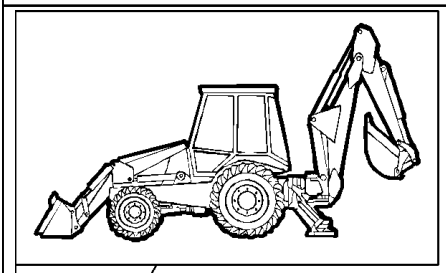

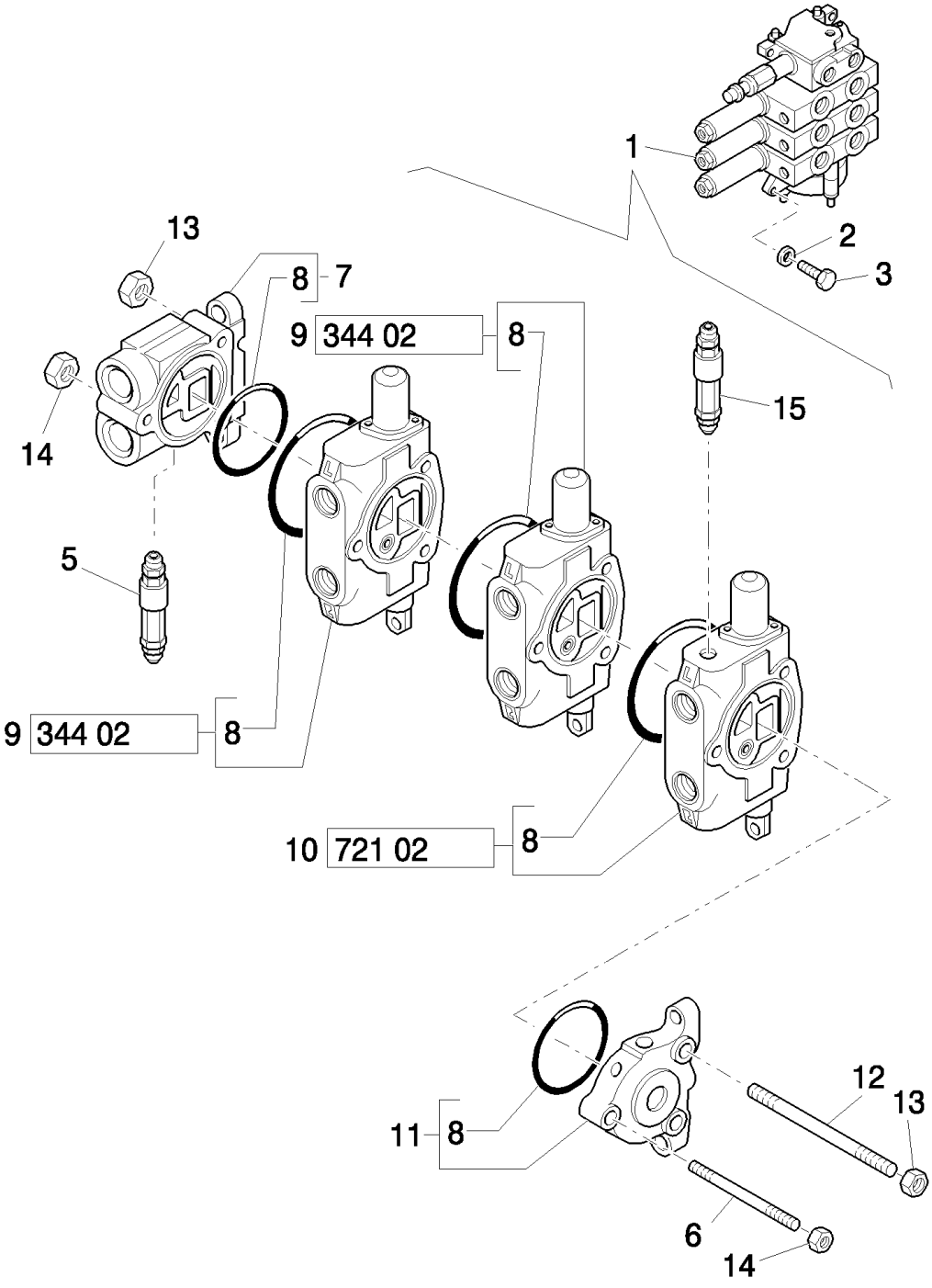

Mechanical Version

B110 TIER 3 BACKHOE LOADER (2/07-)

721(01) TELESCOPIC CONTROL VALVE, 3 SECTIONS(CENTER PIVOT) - NA

Ref	Numero de Pieza	Ctd	Descripción
1	87331094	1	DISTRIBUTOR,
2	11193879	3	WASHER, SPRING, Belleville, M8.4,
3	16043921	3	SCREW, M8x1,25x35
5	85819721	1	VALVE, HYDRAULIC,
6	9968528	1	STUD,
7	9968524	1	VALVE SECTION, HYD,
8	9968476	4	O-RING,
9	9970107	2	VALVE SECTION, HYD, , See Page 344
10	9968526	1	VALVE SECTION, HYD,
11	9968527	1	VALVE SECTION, HYD,
12	9968529	2	STUD,
13	9968441	4	NUT,
14	9968440	2	NUT,
15	87331276	1	VALVE, HYDRAULIC,

Mechanical Version

721(02) STABILIZER CONTROL VALVE, THIRD SECTION (CENTER PIVOT) - NA

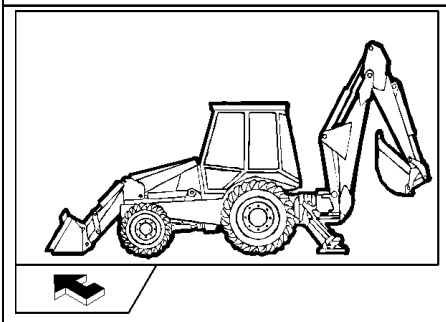

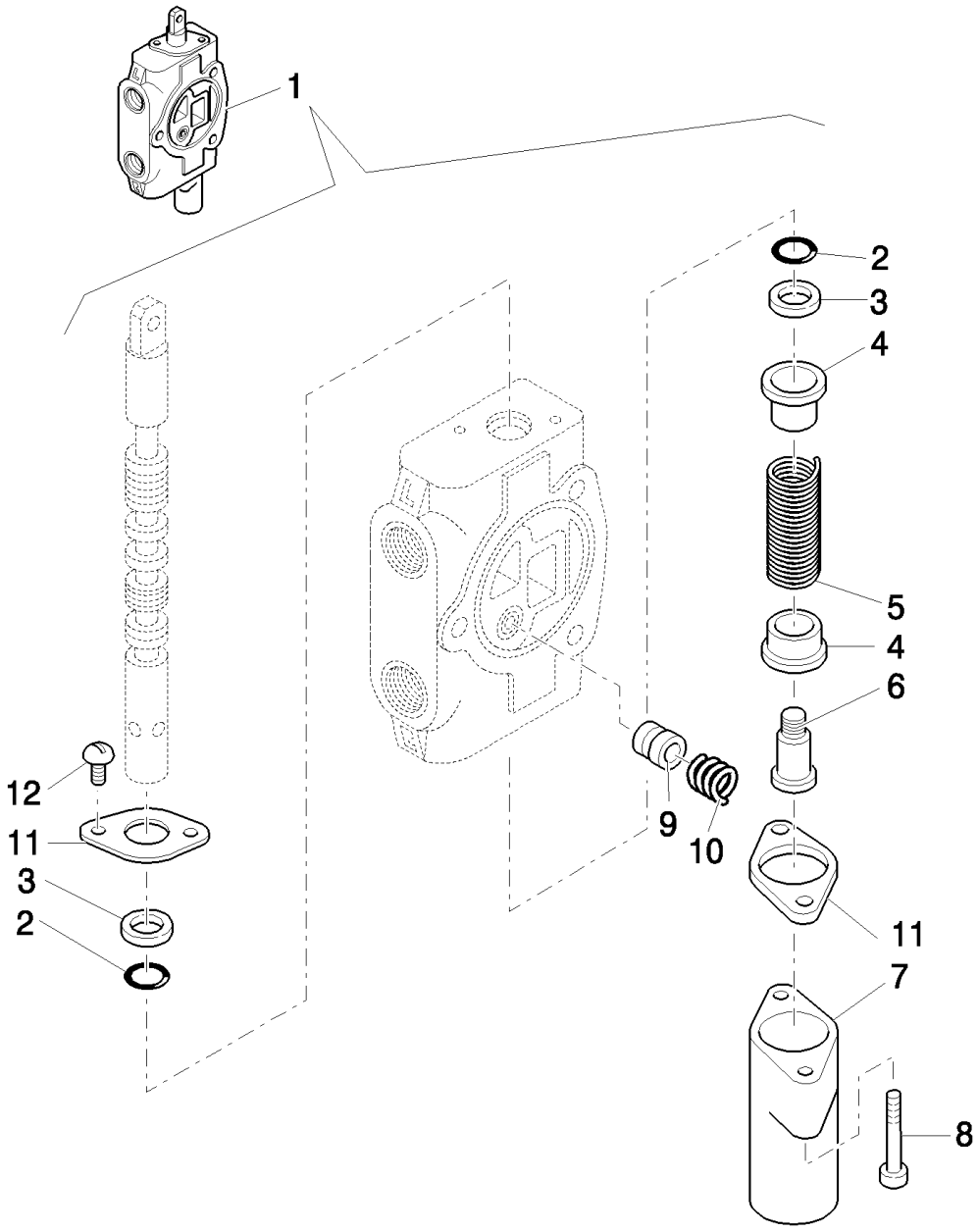

B110 TIER 3 BACKHOE LOADER (2/07-)

721(02) STABILIZER CONTROL VALVE, THIRD SECTION (CENTER PIVOT) - NA

Ref	Numero de Pieza	Ctd	Descripción
1	9968526	1	VALVE SECTION, HYD, Assy
2	85813418	2	O-RING,
3	85813419	2	WIPER,
4	9968481	2	SEAT/SLOT,
5	9968531	1	SPRING,
6	9968483	1	SCREW,
7	9968484	1	COVER,
8	9968486	2	SCREW,
9	9968477	1	POPPET,
10	9968478	1	SPRING,
11	9968480	2	FLANGE,
12	9968460	2	SCREW,

Mechanical Version

721(03) HED TELESCOPIC CONTORL VALVE, SECTION HOSES(CENTER PIVOT) - NA

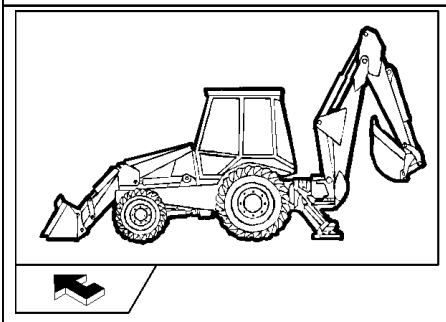

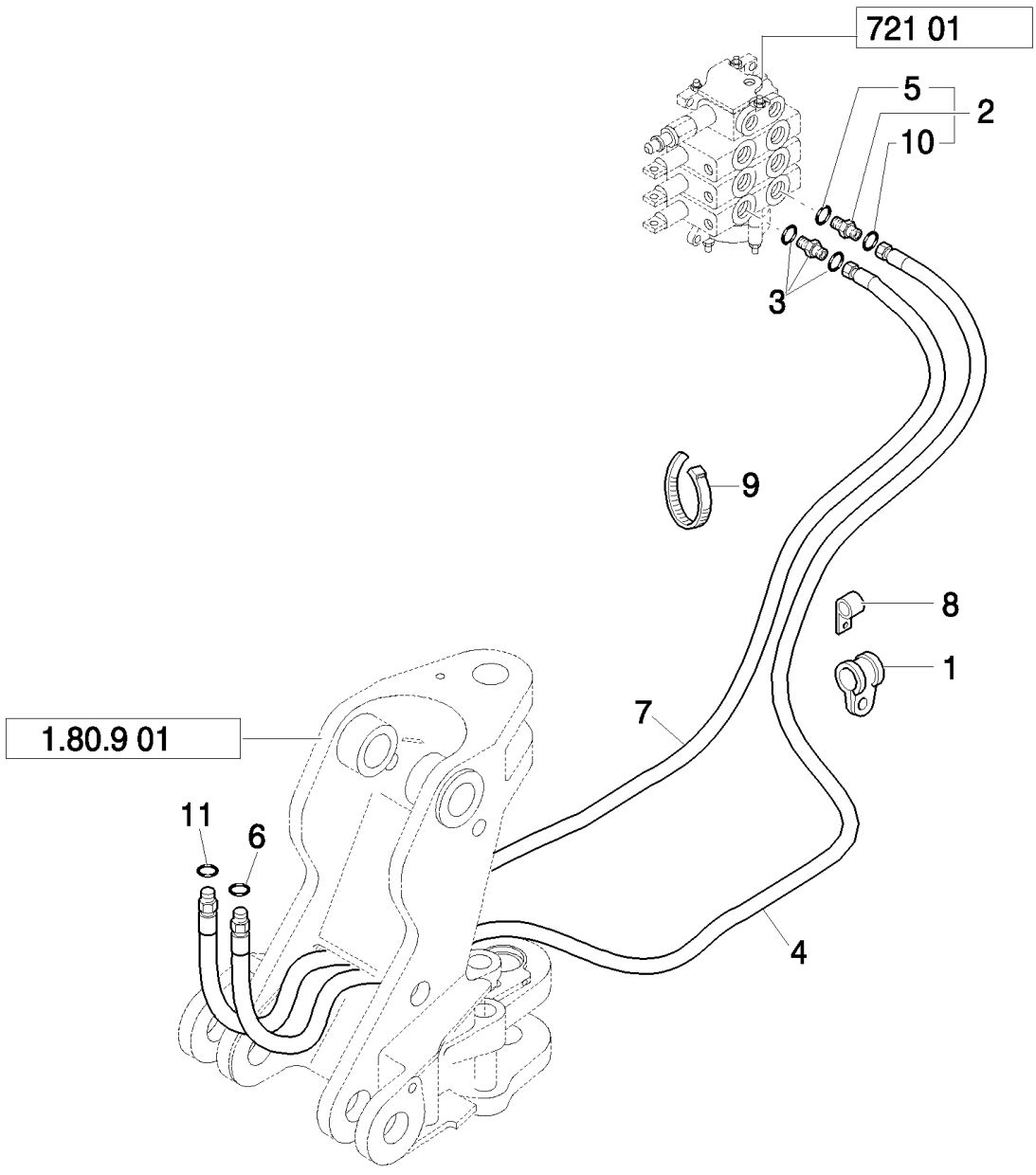

B110 TIER 3 BACKHOE LOADER (2/07-)

721(03) HED TELESCOPIC CONTORL VALVE, SECTION HOSES(CENTER PIVOT) - NA

Ref	Numero de Pieza	Ctd	Descripción
1	85812029	1	CLAMP,
2	83963374	1	CONNECTOR, HYD.,
3	85803234	1	CONNECTOR, HYD.,
4	85812214	1	HOSE, FLEXIBLE, 2700mm lg,
5	81832258	1	O-RING,
6	9992298	1	O-RING, -014, 90 Duro, .489" ID x .070" Thk,
7	85812193	1	HOSE, FLEXIBLE, 2700mm lg,
8	85803393	2	CLAMP,
9	85803332	4	STRAP, CABLE, M4.8 x 180,
10	81845038	1	O-RING, -014, 90 Duro, .489" ID x .070" Thk,
11	9992069	1	O-RING, -016, 90 Duro, .614" ID x .070" Thk,

Mechanical Version

721(04) HED CYLINDER PISTON END HYDRAULIC LINES (CENTER PIVOT) - NA

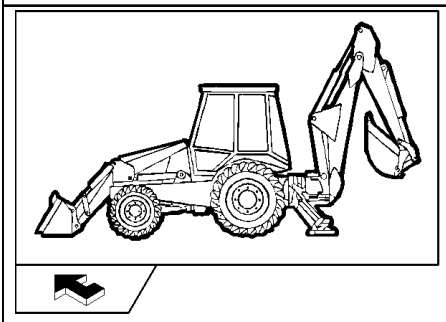

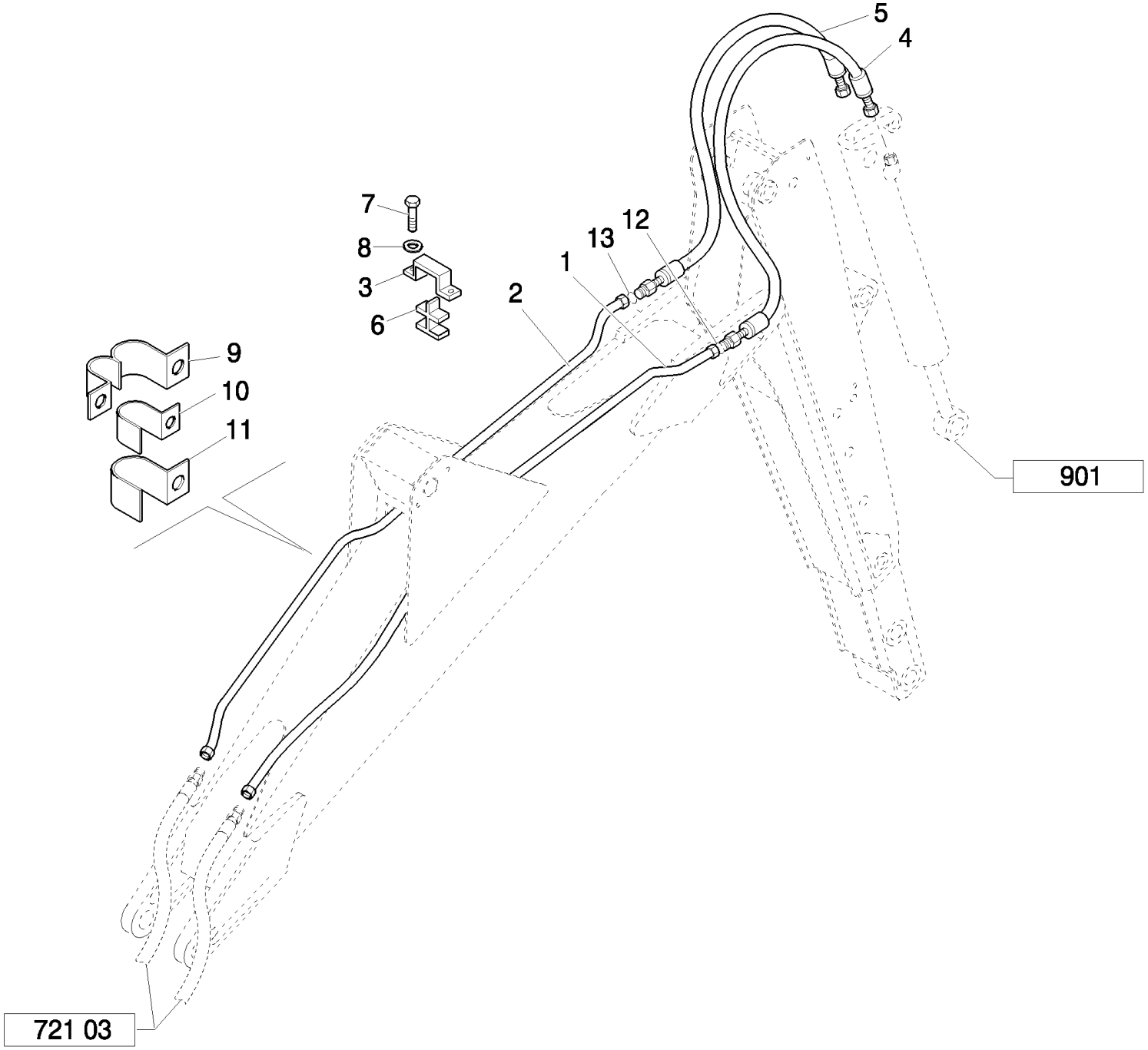

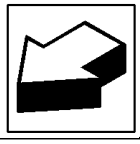

B110 TIER 3 BACKHOE LOADER (2/07-)

721(04) HED CYLINDER PISTON END HYDRAULIC LINES (CENTER PIVOT) - NA

Ref	Numero de Pieza	Ctd	Descripción
1	85815642	1	TUBE, HYD, 16 mm OD Tube
2	85815640	1	TUBE, HYD, 12 mm OD Tube
3	85803402	1	PLATE,
4	87619506	1	HOSE, FLEXIBLE,
5	85817108	1	HOSE, FLEXIBLE,
6	85802532	1	CLIP, HOSE,
7	16043621	2	BOLT, Hex, M8 x 25, 8.8,
8	11193879	2	WASHER, SPRING, Belleville, M8.4,
9	85802529	2	CLAMP,
10	85802527	2	CLAMP,
11	85802528	2	CLAMP,
12	9992069	1	O-RING, -016, 90 Duro, .614" ID x .070" Thk,
13	9992298	1	O-RING, -014, 90 Duro, .489" ID x .070" Thk,

Mechanical Version

721(05) HED CYLINDER ROD END HYDRAULIC LINES (CENTER PIVOT) - NA

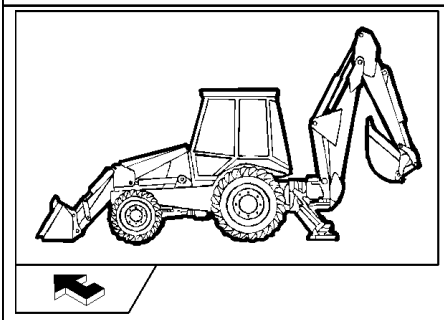

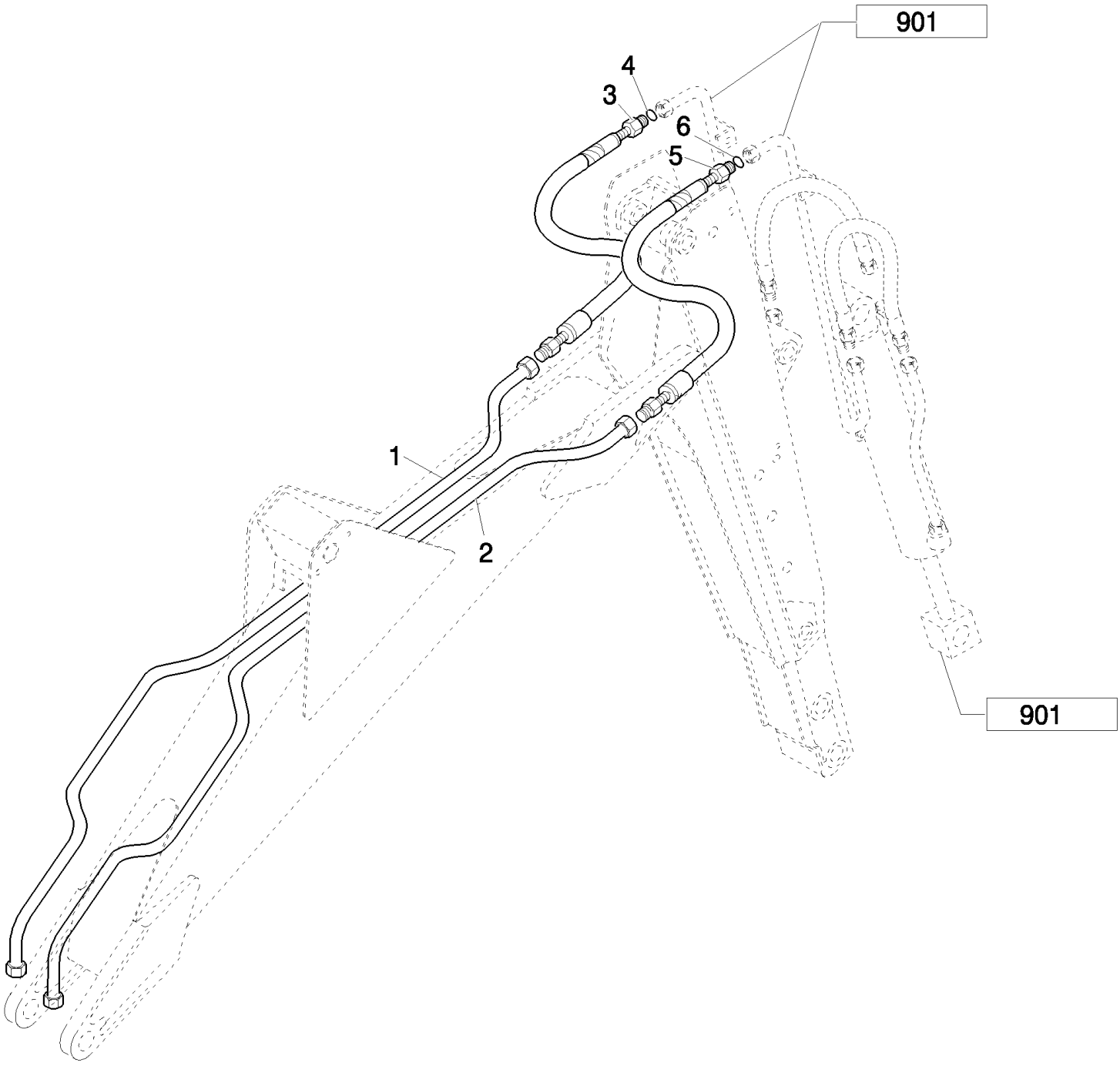

B110 TIER 3 BACKHOE LOADER (2/07-)

721(05) HED CYLINDER ROD END HYDRAULIC LINES (CENTER PIVOT) - NA

Ref	Numero de Pieza	Ctd	Descripción
1	85815674	1	TUBE, HYD, 20 mm OD Tube
2	85815676	1	TUBE, HYD, 16 mm OD Tube
3	85817106	1	HOSE, FLEXIBLE, , Includes 4
4	9991976	2	O-RING, -018, 90 Duro, .739" ID x .070" Thk,
5	85817107	1	HOSE, FLEXIBLE, , Includes 6
6	9992069	2	O-RING, -016, 90 Duro, .614" ID x .070" Thk,

Mechanical Version

721(06) HED FOOT PEDAL, CABLE & DECALS (CENTER PIVOT) - NA

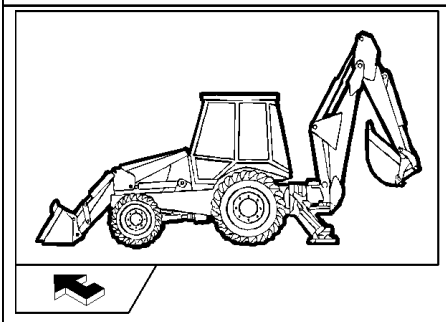

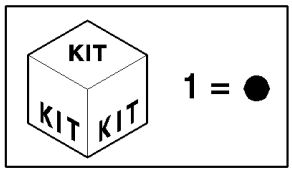

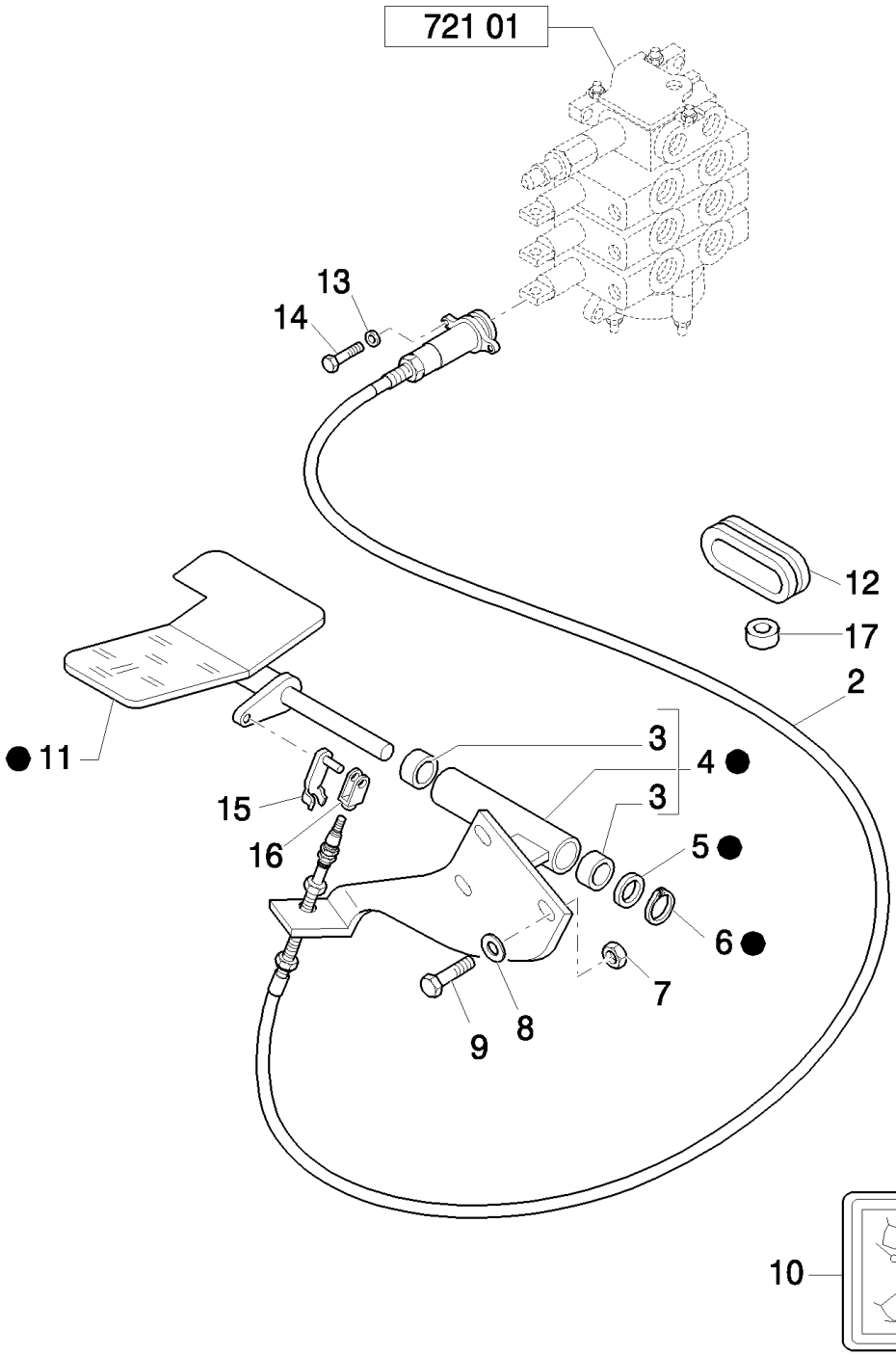

Mechanical Version

B110 TIER 3 BACKHOE LOADER (2/07-)

721(06) HED FOOT PEDAL, CABLE & DECALS (CENTER PIVOT) - NA

Ref	Numero de Pieza	Ctd	Descripción
1	85802509	1	PEDAL, Assy
2	85813103	1	CABLE, , Includes 13 To16
3	85802494	2	BUSHING,
4	85801599	1	PLATE,
5	14496901	1	WASHER, M16 x 30 x 3,
6	83911366	1	RING, SNAP,
7	16104111	3	NUT, LOCK, M8 x 1.25, Cl 8,
8	16043621	3	BOLT, Hex, M8 x 25, 8.8,
9	11193879	3	WASHER, SPRING, Belleville, M8.4,
10	85803786	1	DECAL,
11	85802510	1	PEDAL,
12	85803517	2	BUSHING, RUBBER,
13	85813201	4	WASHER,
14	85813200	4	SCREW,
15	85813186	2	CLIP,
16	85813187	2	CLEVIS,
17	85802903	1	INSULATOR,

Mechanical Version

724(01) HYDRAULIC SYSTEM FOR HAMMER (SIDE SHIFT) - EU

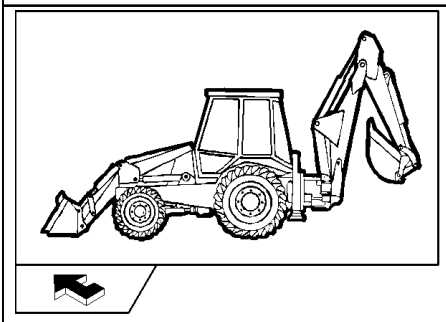

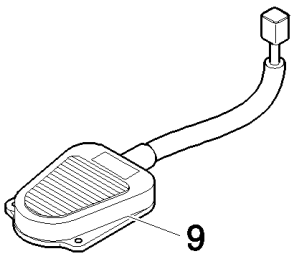

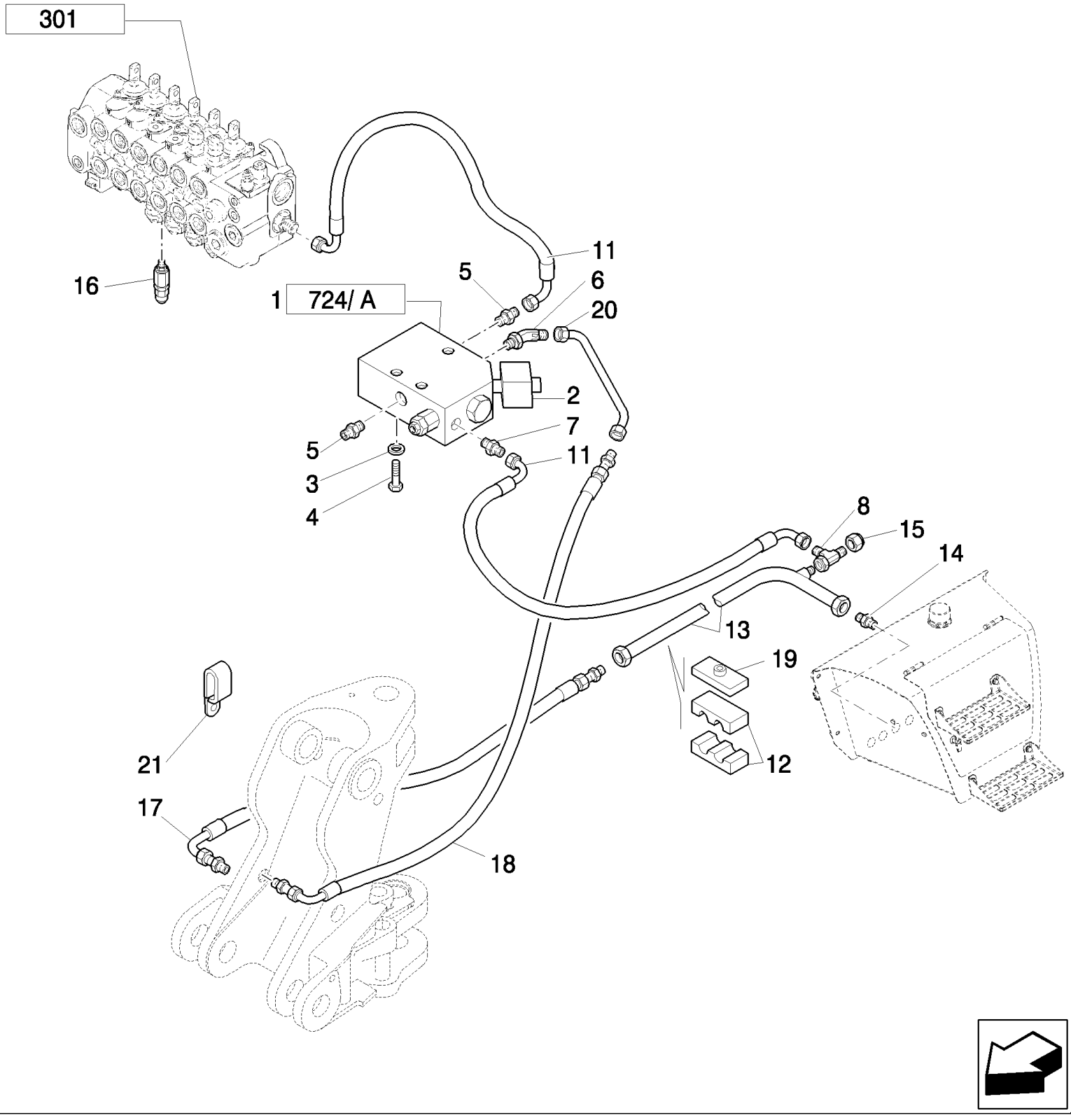

B110 TIER 3 BACKHOE LOADER (2/07-)

724(01) HYDRAULIC SYSTEM FOR HAMMER (SIDE SHIFT) - EU

Ref	Numero de Pieza	Ctd	Descripción
1	87358199	1	VALVE, HYDRAULIC,
2	87357715	1	SENDER UNIT,
3	11193879	3	WASHER, SPRING, Belleville, M8.4,
4	16044821	3	BOLT, Hex, M8 x 80, 8.8,
5	85803486	2	CONNECTOR, HYD.,
6	85803487	1	ELBOW,
7	83963371	1	CONNECTOR, HYD.,
8	85807876	2	TEE,
9	85826123	1	SWITCH, ASSY,
10	85803428	1	HOSE, FLEXIBLE, 850mm lg,
11	85817633	1	HOSE, FLEXIBLE,
12	87390530	1	CLAMP,
13	85802801	1	CONNECTOR, HYD., 1-11/16"-12 ORSx1-5/16"-12 SAE O-ring
14	85827926	1	TUBE, HYD,
15	83987627	1	CAP,
16	85812116	1	VALVE, PRESSURE RELIEF,
17	85820122	1	HOSE, FLEXIBLE,
18	85820123	1	HOSE, FLEXIBLE,
19	87390531	1	PLATE,
20	85817421	1	TUBE, HYD,
21	85803346	2	BRACKET,

724(02) HYDRAULIC SYSTEM FOR BREAKER BACK (SIDE SHIFT) - EU

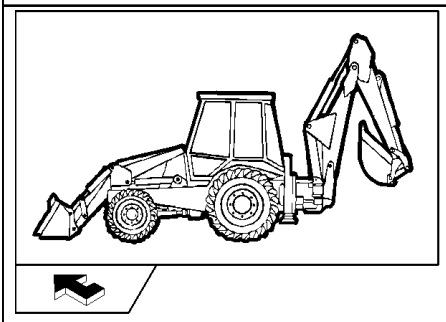

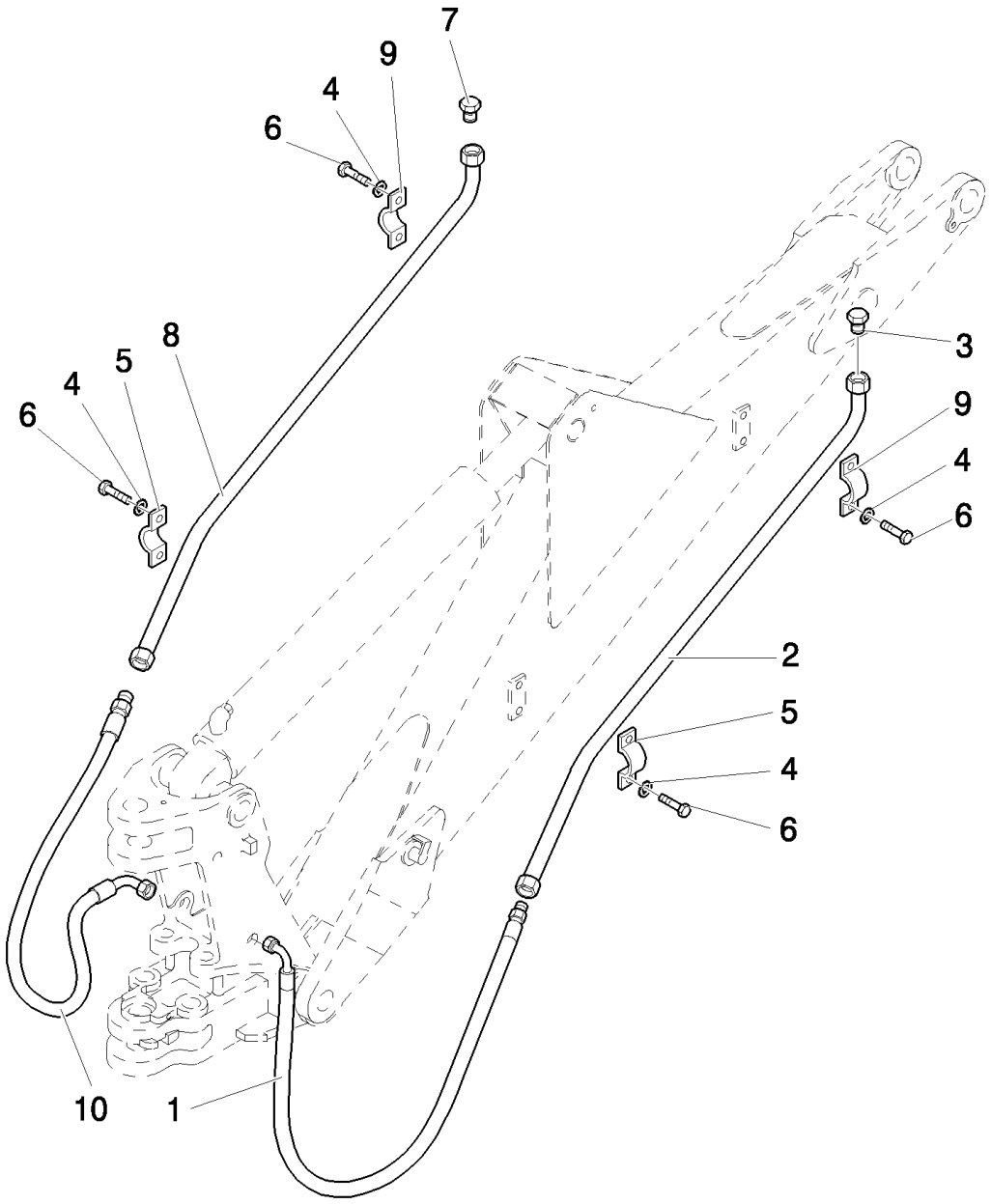

B110 TIER 3 BACKHOE LOADER (2/07-)

724(02) HYDRAULIC SYSTEM FOR BREAKER BACK (SIDE SHIFT) - EU

Ref	Numero de Pieza	Ctd	Descripción
1	85819619	1	HOSE, FLEXIBLE,
2	85802454	1	TUBE, HYD,
3	85801397	1	PLUG,
4	11190579	8	WASHER, SPRING, Belleville, M10.5,
5	87310951	2	CLAMP,
6	10979221	8	BOLT, Hex, M10 x 16, 8.8, Full Thd, M6x16
7	85801452	1	PLUG,
8	85803184	1	TUBE, HYD,
9	87310952	2	CLAMP,
12	85819618	1	HOSE, FLEXIBLE,

724/1(01) HYDRAULIC SYSTEM FOR HAMMER (CENTER PIVOT)

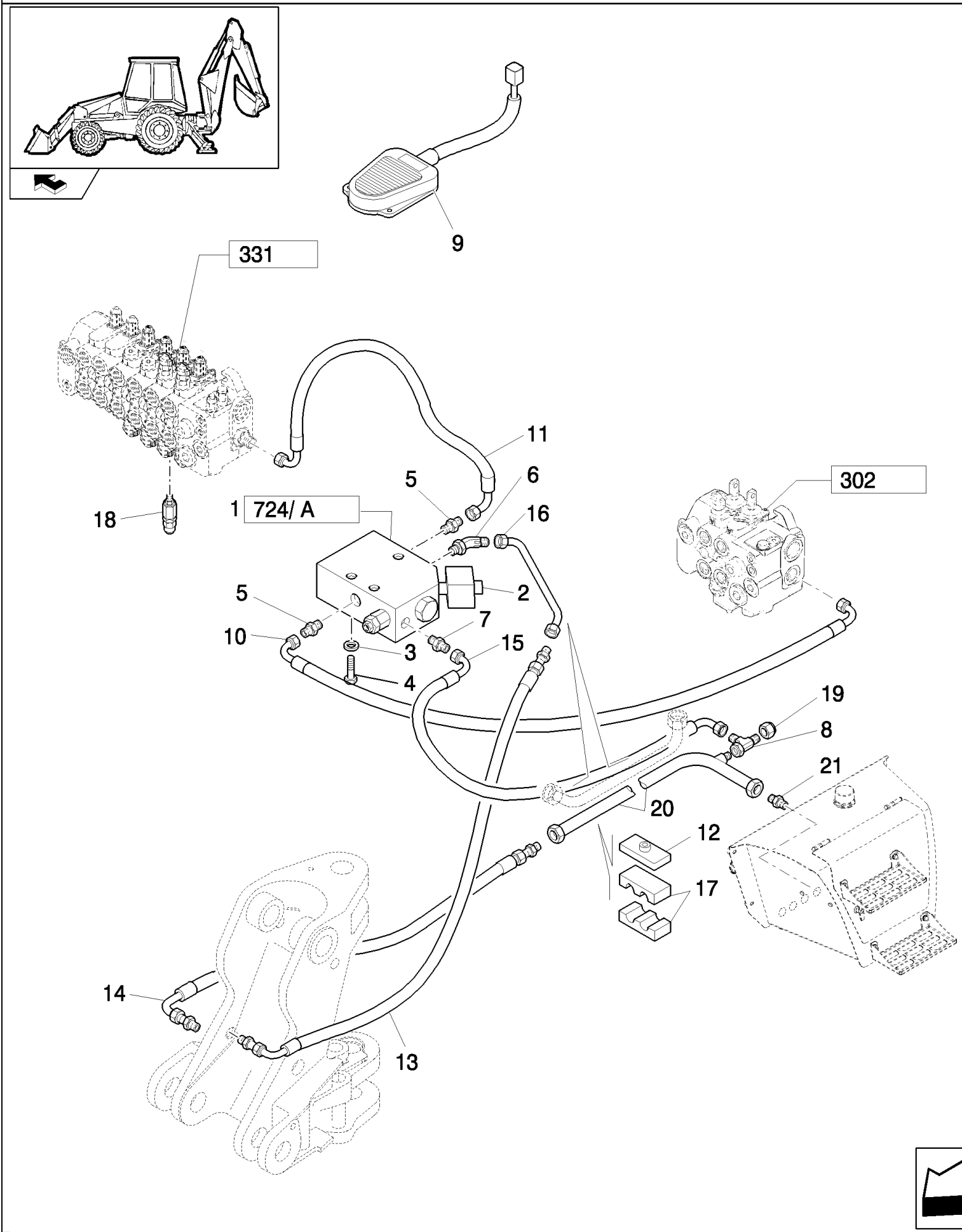

Pilot Control Version

B110 TIER 3 BACKHOE LOADER (2/07-)

724/1(01) HYDRAULIC SYSTEM FOR HAMMER (CENTER PIVOT)

Ref	Numero de Pieza	Ctd	Descripción
1	87358199	1	VALVE, HYDRAULIC,
2	87357715	1	SENDER UNIT,
3	11193879	3	WASHER, SPRING, Belleville, M8.4,
4	16044821	3	BOLT, Hex, M8 x 80, 8.8,
5	85803486	2	CONNECTOR, HYD.,
6	85803487	1	ELBOW,
7	83963371	1	CONNECTOR, HYD.,
8	85807876	1	TEE,
9	85826123	1	SWITCH, ASSY,
10	85802776	1	HOSE, FLEXIBLE, 1150mm lg,
11	85803428	1	HOSE, FLEXIBLE, 850mm lg,
12	87390531	1	PLATE,
13	85817634	1	HOSE, FLEXIBLE,
14	85817635	1	HOSE, FLEXIBLE,
15	85817633	1	HOSE, FLEXIBLE,
16	85817629	1	TUBE, HYD,
17	87390530	1	CLAMP,
18	85812116	1	VALVE, PRESSURE RELIEF,
19	83987627	1	CAP,
20	85826987	1	TUBE, HYD,
21	85802801	1	CONNECTOR, HYD., 1-11/16"-12 ORSx1-5/16"-12 SAE O-ring

Pilot Control Version

724/1(02) HYDRAULIC SYSTEM FOR HAMMER (CENTER PIVOT)

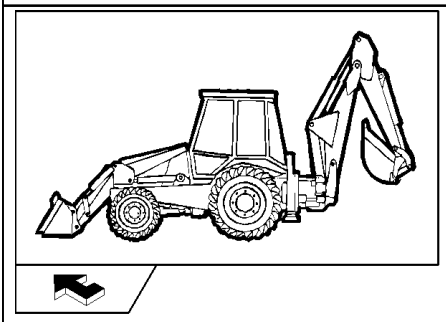

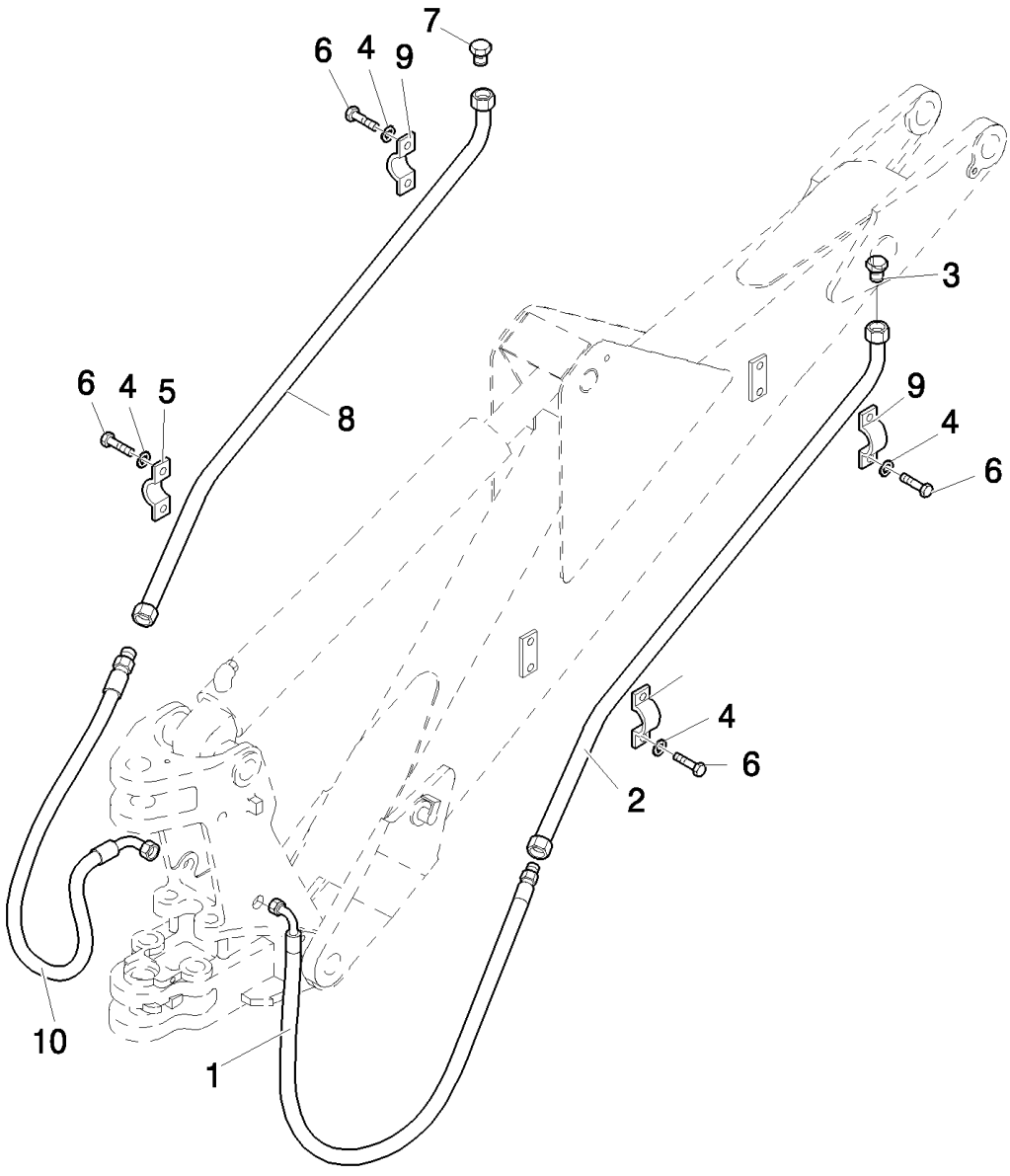

Pilot Control Version

B110 TIER 3 BACKHOE LOADER (2/07-)

724/1(02) HYDRAULIC SYSTEM FOR HAMMER (CENTER PIVOT)

Ref	Numero de Pieza	Ctd	Descripción
1	85819619	1	HOSE, FLEXIBLE,
2	85802454	1	TUBE, HYD,
3	85801397	1	PLUG,
4	11190579	8	WASHER, SPRING, Belleville, M10.5,
5	87310951	2	CLAMP,
6	10979221	4	BOLT, Hex, M10 x 16, 8.8, Full Thd, M6x16
7	85801452	1	PLUG,
8	85803184	1	TUBE, HYD,
9	87310952	2	CLAMP,
10	85819618	1	HOSE, FLEXIBLE,

Pilot Control Version

724/2(01) HYDRAULIC SYSTEM FOR HAMMER (CENTER PIVOT)

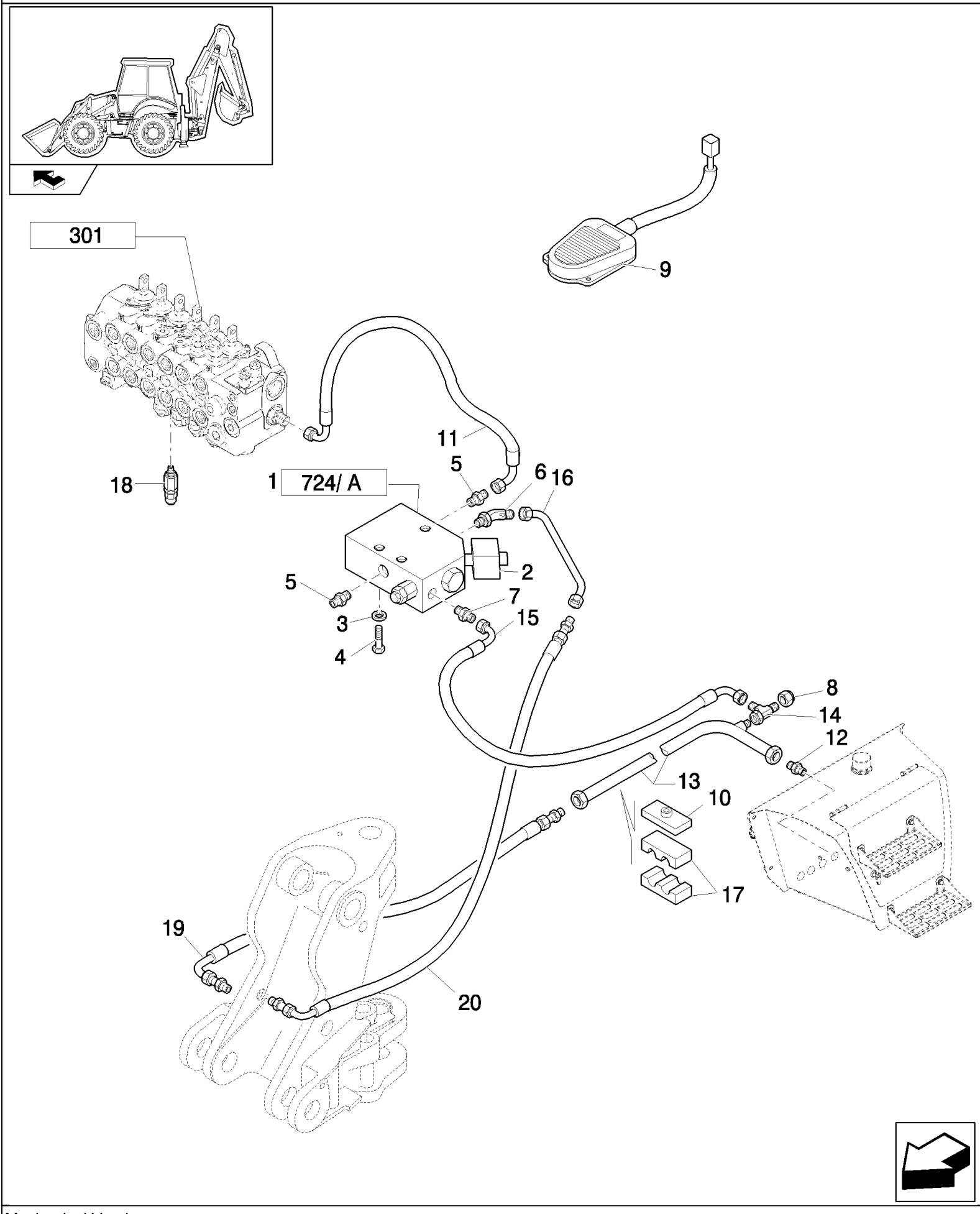

B110 TIER 3 BACKHOE LOADER (2/07-)

724/2(01) HYDRAULIC SYSTEM FOR HAMMER (CENTER PIVOT)

Ref	Numero de Pieza	Ctd	Descripción
1	87358199	1	VALVE, HYDRAULIC,
2	87357715	1	SENDER UNIT,
3	11193879	3	WASHER, SPRING, Belleville, M8.4,
4	16044821	3	BOLT, Hex, M8 x 80, 8.8,
5	85803486	2	CONNECTOR, HYD.,
6	85803487	1	ELBOW, 45°
7	83963371	1	CONNECTOR, HYD.,
8	85807876	1	TEE,
9	85826123	1	SWITCH, ASSY,
10	87390531	1	PLATE,
11	85803428	1	HOSE, FLEXIBLE, 850mm lg,
12	85802801	1	CONNECTOR, HYD.,
13	85826987	1	TUBE, HYD,
14	83987627	1	CAP,
15	85817633	1.	HOSE, FLEXIBLE,
16	85817629	1	TUBE, HYD,
17	87390530	1	CLAMP,
18	9968595	1	VALVE, PRESSURE RELIEF,
19	85817635	1	HOSE, FLEXIBLE,
20	85817634	1	HOSE, FLEXIBLE,

Mechanical Version

724/2(02) HYDRAULIC SYSTEM FOR HAMMER

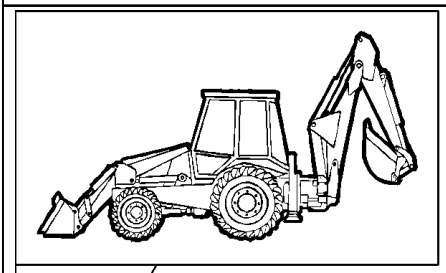

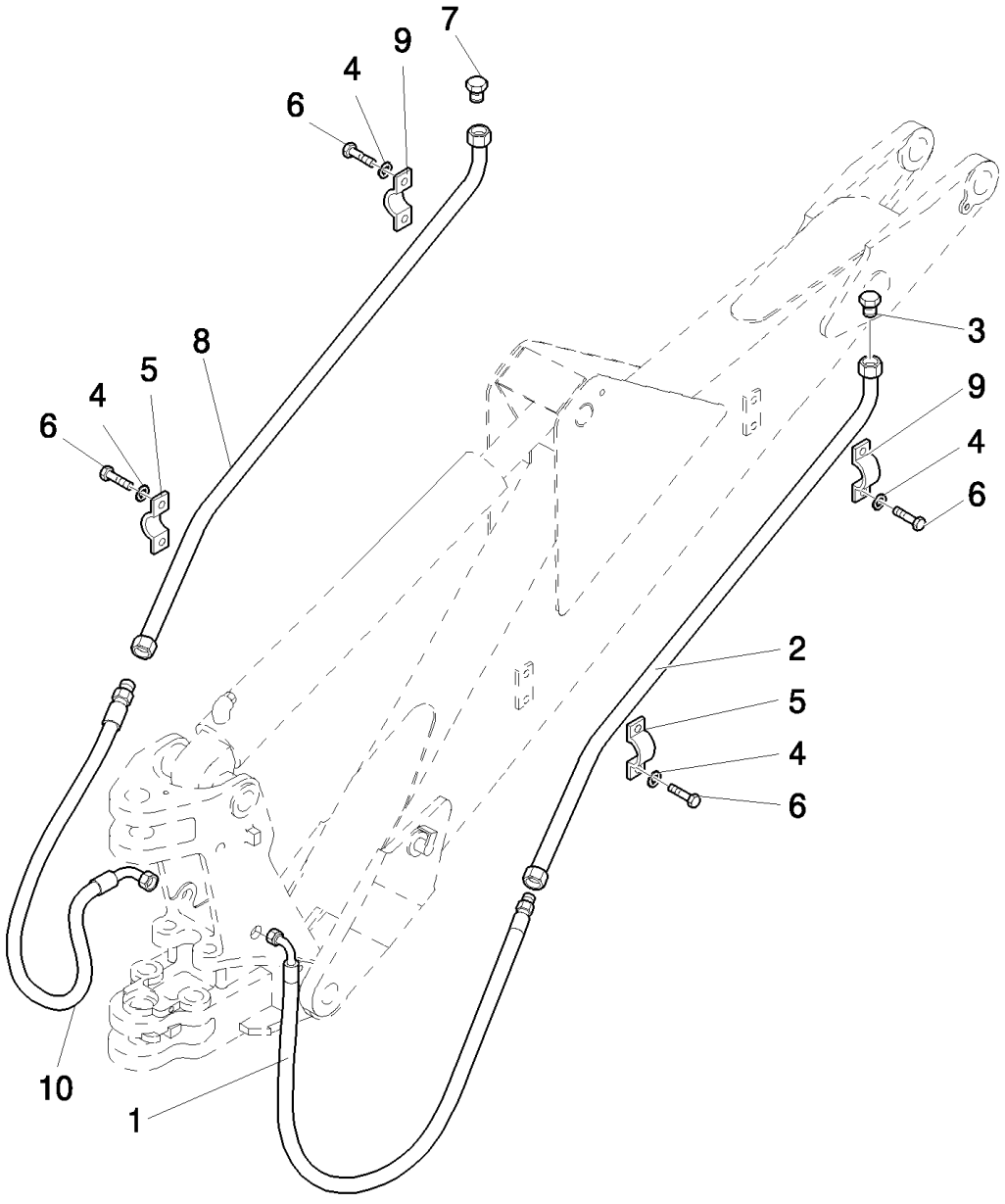

B110 TIER 3 BACKHOE LOADER (2/07-)

724/2(02) HYDRAULIC SYSTEM FOR HAMMER

Ref	Numero de Pieza	Ctd	Descripción
1	85819619	1	HOSE, FLEXIBLE,
2	85802454	1	TUBE, HYD,
3	85801397	1	PLUG,
4	11190579	8	WASHER, SPRING, Belleville, M10.5,
5	87310951	2	CLAMP,
6	10979221	8	BOLT, Hex, M10 x 16, 8.8, Full Thd,
7	85801452	1	PLUG,
8	85803184	1	TUBE, HYD,
9	87310952	2	CLAMP,
10	85819618	1	HOSE, FLEXIBLE,

Mechanical Version

724/A(01) REAR HAMMER CONTROL VALVE

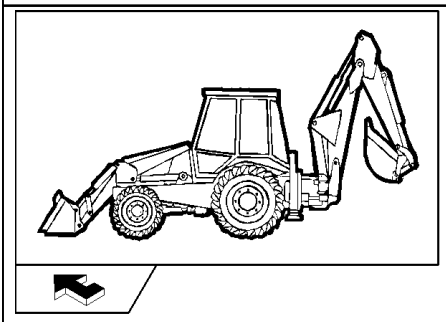

KIT KIT KIT = 2

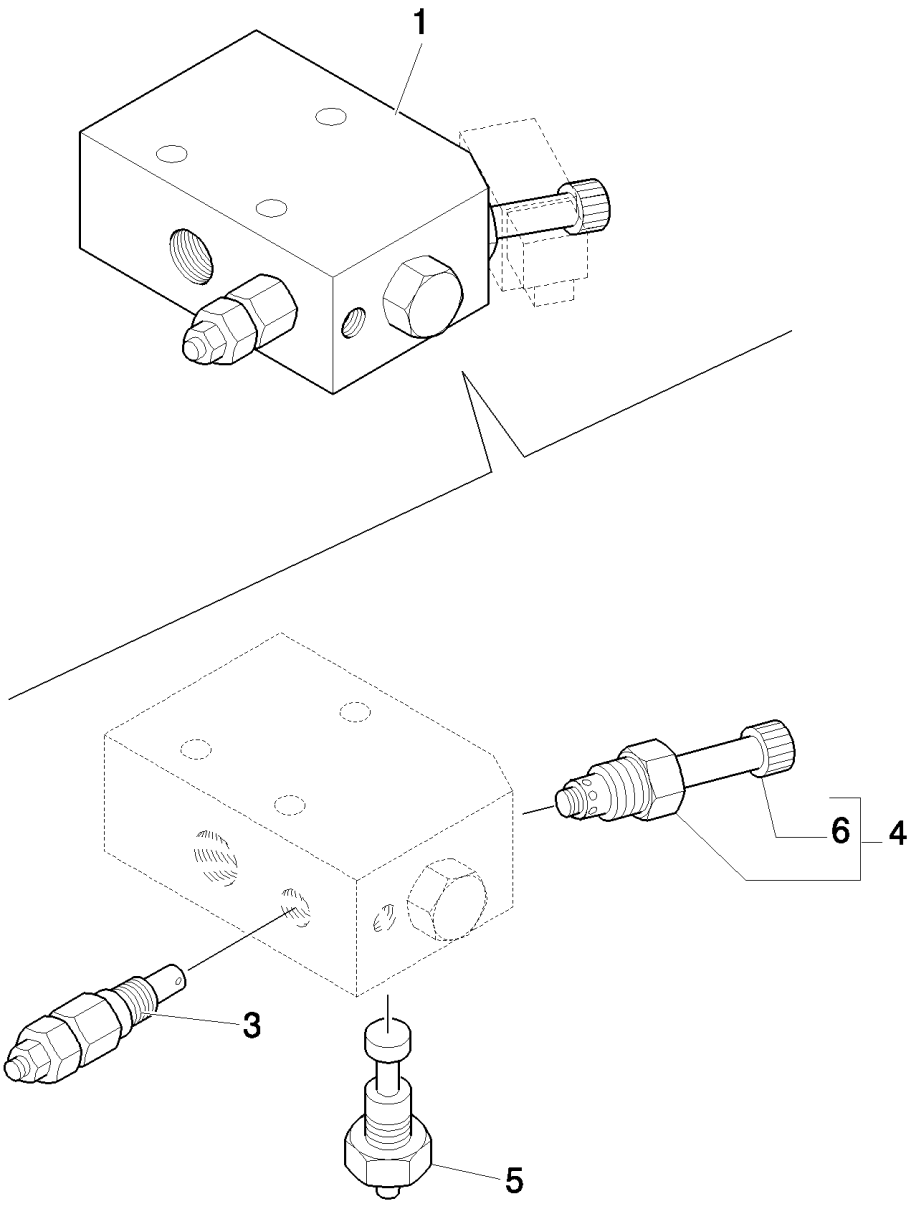

B110 TIER 3 BACKHOE LOADER (2/07-)

724/A(01) REAR HAMMER CONTROL VALVE

Ref	Numero de Pieza	Ctd	Descripción
1	87358199	1	VALVE, HYDRAULIC, ASSY
2	9970181	1	KIT, SEALS, Gaskets
3	87358201	1	VALVE, HYDRAULIC, ASSY
4	87358194	1	VALVE, HYDRAULIC, ASSY
5	9970179	1	REGULATOR, Assy
6	9970384	1	NUT,

725(01) HAMMER KIT FROM LIFTING ARM TO DEMOLITION ARM

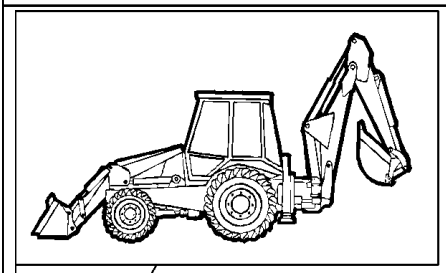

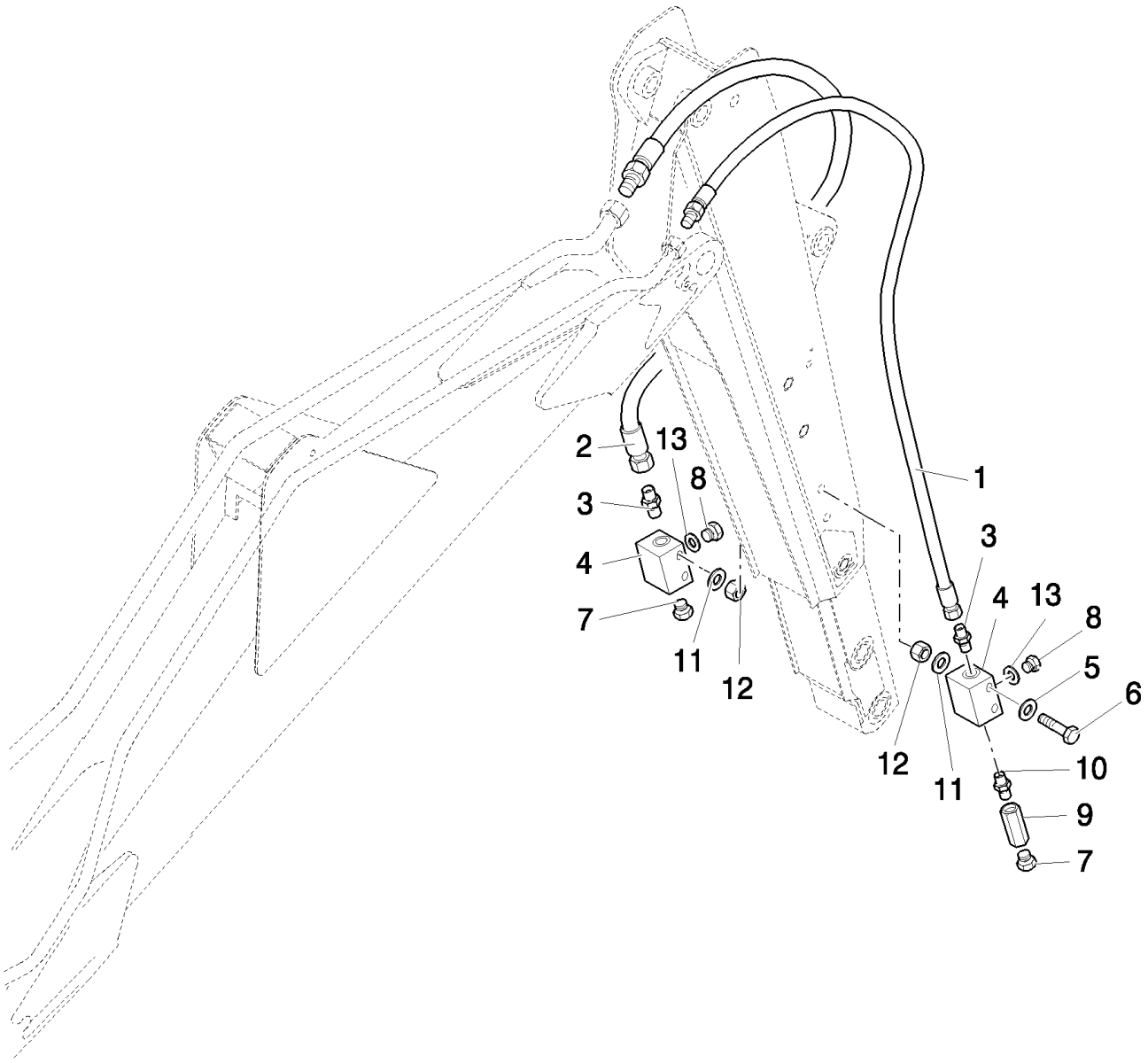

B110 TIER 3 BACKHOE LOADER (2/07-)

725(01) HAMMER KIT FROM LIFTING ARM TO DEMOLITION ARM

Ref	Numero de Pieza	Ctd	Descripción
1	85819621	1	HOSE, FLEXIBLE,
2	85819620	1	HOSE, FLEXIBLE,
3	85803486	2	CONNECTOR, HYD.,
4	85802247	2	BLOCK,
5	11193879	4	WASHER, SPRING, Belleville, M8.4,
6	16045021	4	BOLT, Hex, M8 x 90, 8.8,
7	85802457	2	PLUG,
8	85803409	2	PLUG,
9	85802372	1	VALVE, CHECK, 10 Bar
10	85804879	1	CONNECTOR, HYD.,
11	12647121	6	WASHER, M8 x 20 x 3,
12	14048211	2	NUT, LOCK, M8 x 1.25, Cl 8,
13	80167269	2	O-RING,

725/1(01) 4X1 & 6X1 BUCKET HYDRAULIC LINES (POWER SHUTTLE) - NA

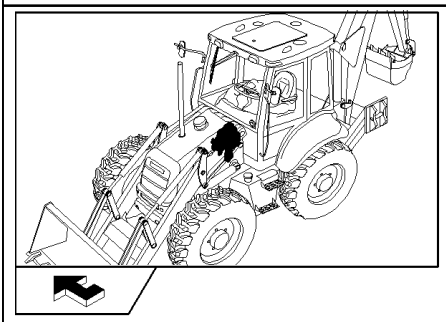

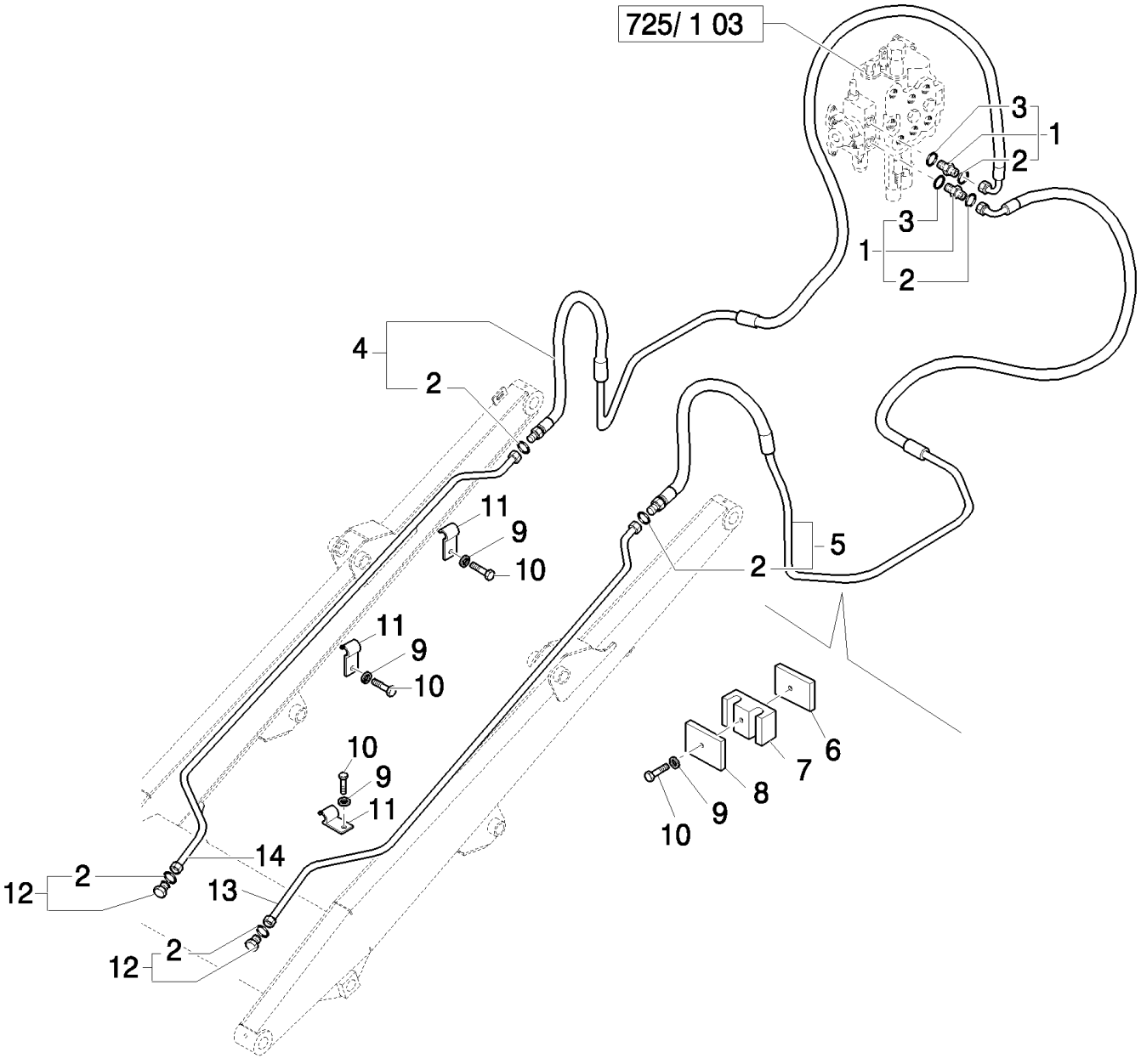

Mechanical Version

B110 TIER 3 BACKHOE LOADER (2/07-)

725/1(01) 4X1 & 6X1 BUCKET HYDRAULIC LINES (POWER SHUTTLE) - NA

Ref	Numero de Pieza	Ctd	Descripción
1	83963376	2	CONNECTOR, HYD.,
2	89992298	6	O-RING,
3	80167269	2	O-RING,
4	85805863	1	HOSE, FLEXIBLE, RH, Includes Ref. 2
5	85805862	1	HOSE, FLEXIBLE, LH, Includes Ref. 2
6	85805340	2	PLATE,
7	85805193	2	CLAMP,
8	85805195	2	PLATE,
9	11193979	8	WASHER, SPRING, Belleville, M8.4,
10	16043821	8	BOLT, Hex, M8 x 30, 8.8,
11	85805247	6	CLAMP,
12	85803408	2	PLUG, , Includes Ref. 2
13	85805864	1	TUBE, HYD, LH
14	85805865	1	TUBE, HYD, RH

Mechanical Version

725/1(02) 4X1 & 6X1 BUCKET HYDRAULIC LINES (P. SHUTTLE) - NA

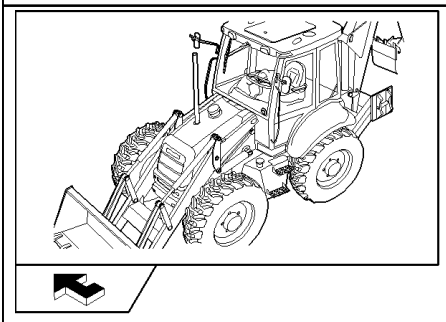

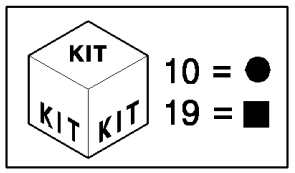

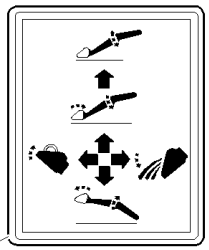

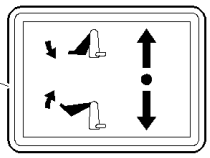

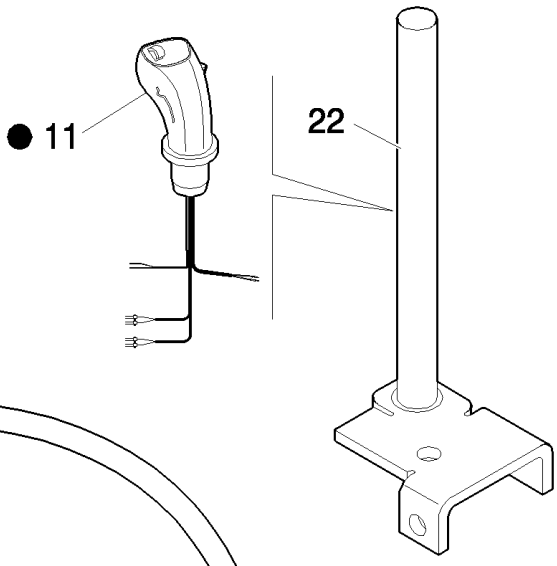

Mechanical Control Version

B110 TIER 3 BACKHOE LOADER (2/07-)

725/1(02) 4X1 & 6X1 BUCKET HYDRAULIC LINES (P. SHUTTLE) - NA

Ref	Numero de Pieza	Ctd	Descripción
1	85802234	2	ELBOW,
2	85805318	2	ELBOW, 90º, 9/16"-18, 37º x 9/16"-18, O-Ring,
3	47050685	2	CONNECTOR, HYD.,
4	47050686	1	CONNECTOR, HYD.,
5	85826100	1	REDUCER,
6	85828211	1	COUPLING, QUICK, MALE,
7	87316092	1	HOSE, FLEXIBLE,
8	87316096	1	HOSE, FLEXIBLE,
9	87316091	2	HOSE, FLEXIBLE,
10	87384365	1	JOYSTICK,
11	87382112	1	HANDLE, Loader, Powershuttle, W/Detent, Declutch; Includes 87387751 Grip W/1 Button; 87387703 Prop Roller W/Detented Position; 87387754 Transmission Button Harness; 87387722 Bi-Directional PWM Driver Harness
	87387751	1	HANDLE GRIP, Grip W/1 Button
	87387703	1	PUSH BUTTON, Prop Roller W/Detented Position
	87387754	1	CABLE, ELECTRIC, Transmission Button Harness
	87387722	1	CABLE, ELECTRIC, Bi-Directional PWM Driver Harness
12	85804346	1	DECAL,
13	87305209	4	DECAL,
14	201-422	4	TEE, 11/16"-16 ORFS x 11/16"-16 Fem Sw Run,
15	87304801	1	VALVE, CONTROL, , Includes 17 To 20
16	14300521	1	SCREW, Hex Soc Hd, M6 x 75, 8.8, M6x75
17	87311363	1	ORIFICE,
18	85827997	1	VALVE,
19	85828001	1	KIT, SEALS,
20	85827993	2	SOLENOID,
21	85817531	1	TEE,
22	87312049	1	LEVER,

Mechanical Control Version

725/1(03) LOADER CONTROL VALVE, THREE SECTION (CENTER PIVOT) - NA

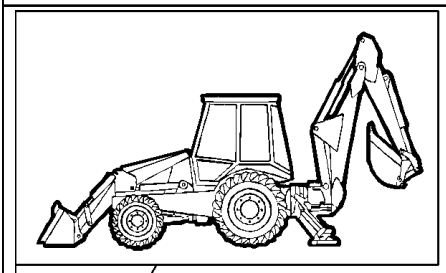

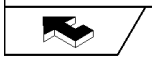

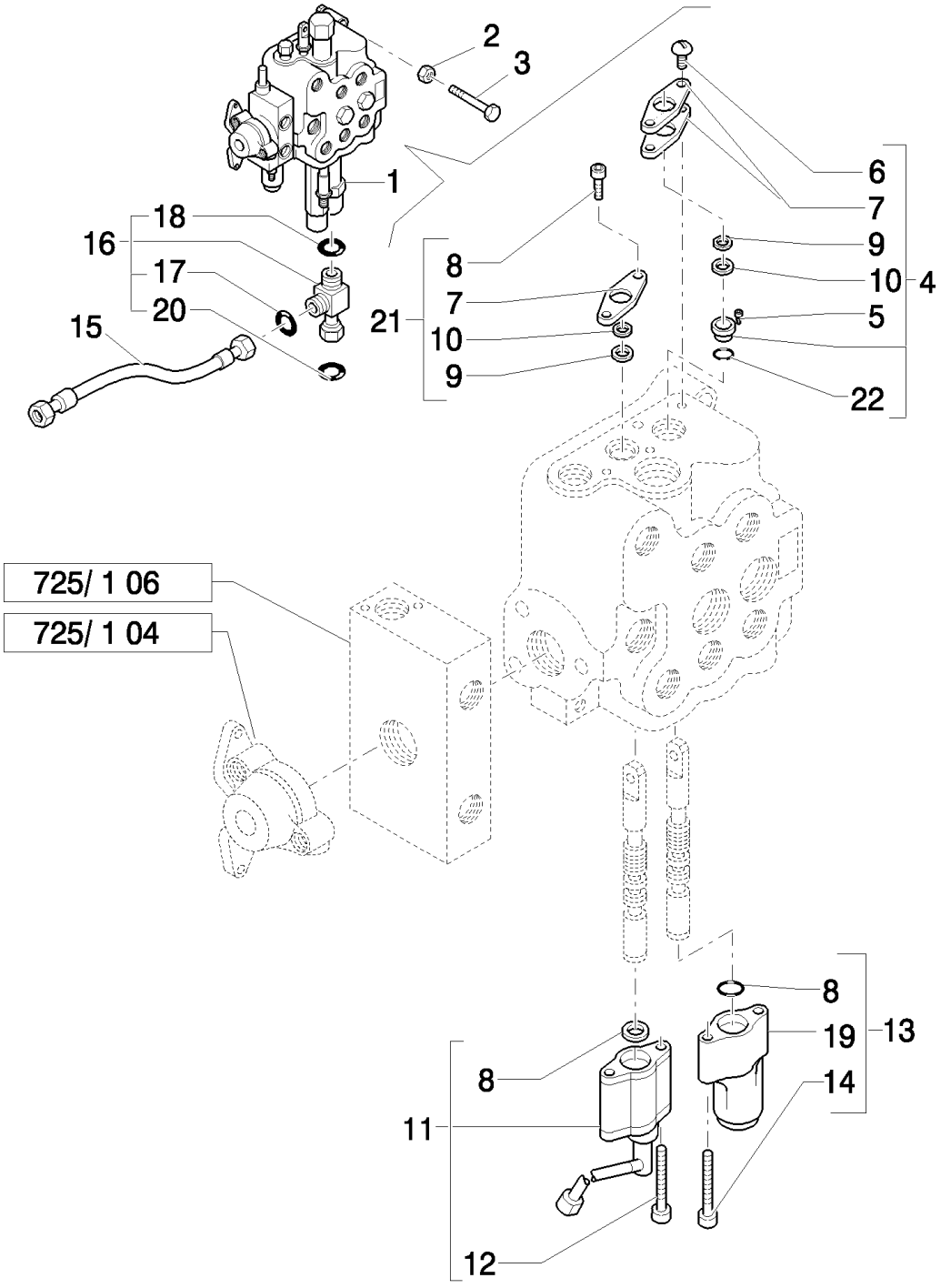

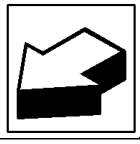

Mechanical Version

B110 TIER 3 BACKHOE LOADER (2/07-)

725/1(03) LOADER CONTROL VALVE, THREE SECTION (CENTER PIVOT) - NA

Ref	Numero de Pieza	Ctd	Descripción
1	87326256	1	VALVE SECTION, HYD, ASSY
2	11190579	3	WASHER, SPRING, Belleville, M10.5,
3	14308221	3	SCREW, Hex Soc Hd, M10 x 1.25 x 65, 8.8,
4	9968455	1	KIT,
5	9968457	1	SPACER,
6	9968456	2	SCREW,
7	9968458	3	FLANGE,
8	9968460	2	SCREW,
9	9968489	4	SEAL,
10	9968490	2	WIPER,
11	85808403	1	STOP, Magnetic Detent
12	9968451	2	SCREW,
13	85817025	1	SPOOL,
14	9968454	2	SCREW,
15	85816804	1	HOSE, FLEXIBLE, 550mm lg,
16	85817531	1	TEE, , Includes 17, 18, 20
17	9825770	1	O-RING, -011, 90 Duro, .301" ID x .070" Thk,
18	9824050	1	O-RING, -021, 90 Duro, .926" ID x .070" Thk,
19	9968513	1	COVER,
20	89626929	1	O-RING, 90 Duro, 1.048" ID x .116" Thk
21	87319445	1	EYEBOLT,
22	87327076	1	O-RING,

Mechanical Version

725/1(04) LOADER CONTROL VALVE, THREE SECTION, CAP & UNLOAD VALVE (CENTER PIVOT) - NA

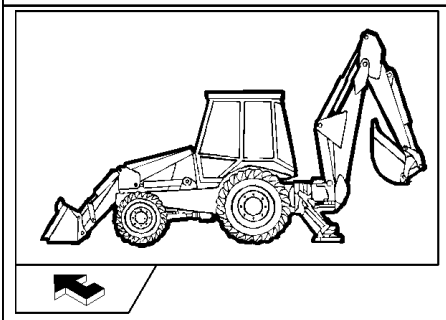

KIT KIT KIT 17 = ●

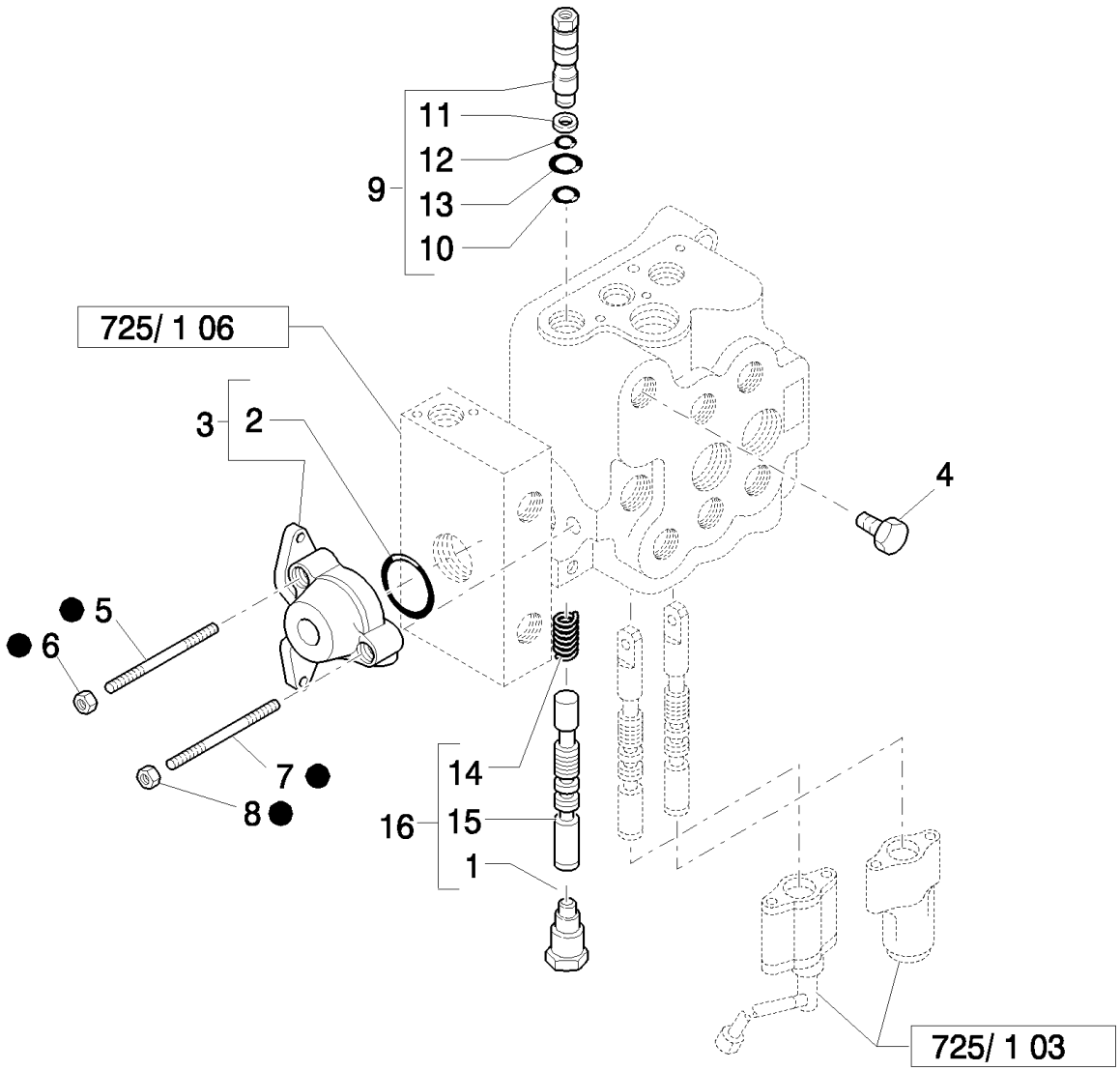

B110 TIER 3 BACKHOE LOADER (2/07-)

725/1(04) LOADER CONTROL VALVE, THREE SECTION, CAP & UNLOAD VALVE (CENTER PIVOT) - NA

Ref	Numero de Pieza	Ctd	Descripción
1	9968464	1	PLUG, ASSY
2	9968476	1	O-RING,
3	9968443	1	VALVE SECTION, HYD,
4	85807857	1	PLUG,
5	9968439	2	STUD,
6	9968441	2	NUT,
7	9968438	1	TIE-ROD, THREADED,
8	9968440	1	NUT,
9	85815667	1	VALVE, BY-PASS,
10	85815668	1	O-RING,
11	9968467	1	RING, BACK-UP,
12	9968466	1	O-RING,
13	9968468	1	O-RING,
14	9968488	1	SPRING,
15	85807858	1	SPOOL,
16	87327632	1	
17	87326258	1	KIT, CONVERSION,

Mechanical Version

725/1(05) LOADER CONTROL VALVE, THREE SECTION, RELIEF & CHECK VALVES (CENTER PIVOT) - NA

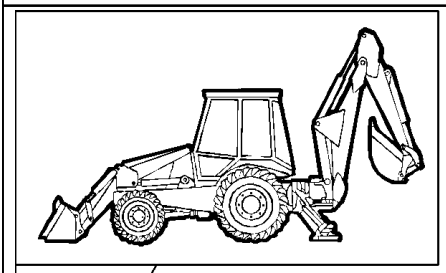

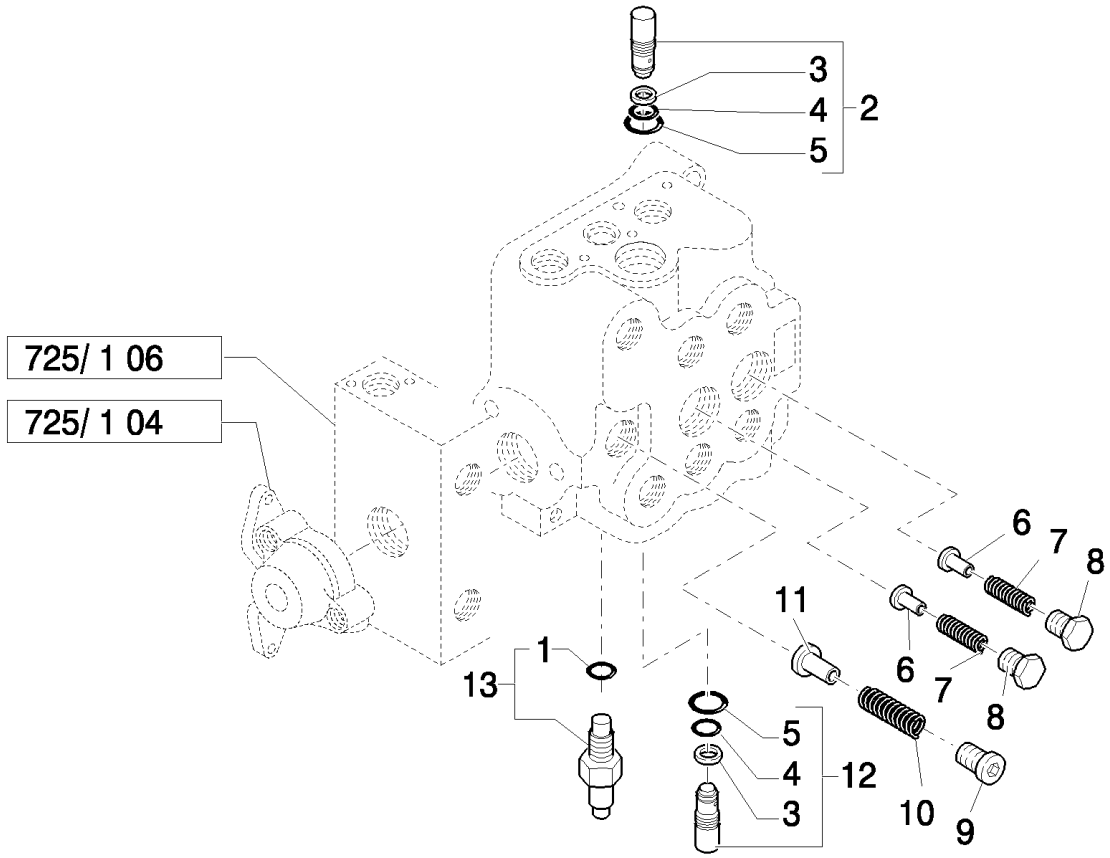

B110 TIER 3 BACKHOE LOADER (2/07-)

725/1(05) LOADER CONTROL VALVE, THREE SECTION, RELIEF & CHECK VALVES (CENTER PIVOT) - NA

Ref	Numero de Pieza	Ctd	Descripción
1	85819945	1	O-RING, ASSY
2	87302609	1	VALVE, PRESSURE RELIEF,
3	87302608	2	BACK-UP RING,
4	9968471	2	O-RING,
5	9968470	2	O-RING,
6	9968444	2	PLUNGER,
7	9968445	2	SPRING,
8	9968446	2	PLUG,
9	9968449	1	PLUG,
10	9968448	1	SPRING,
11	9968447	1	PLUNGER,
12	87302611	1	VALVE, PRESSURE RELIEF,
13	85819722	1	VALVE, HYDRAULIC,

725/1(06) THREE-SECTION CONTROL VALVE FOR LOADER - BUCKET SECTION 4X1 / 6X1(CENTER PIVOT) - NA

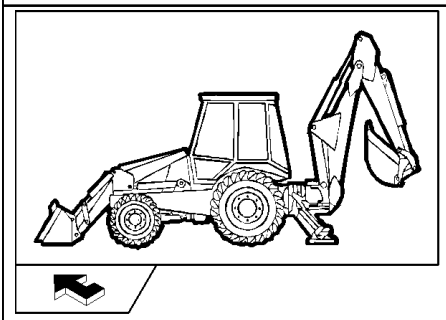

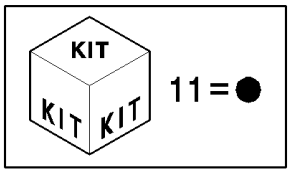

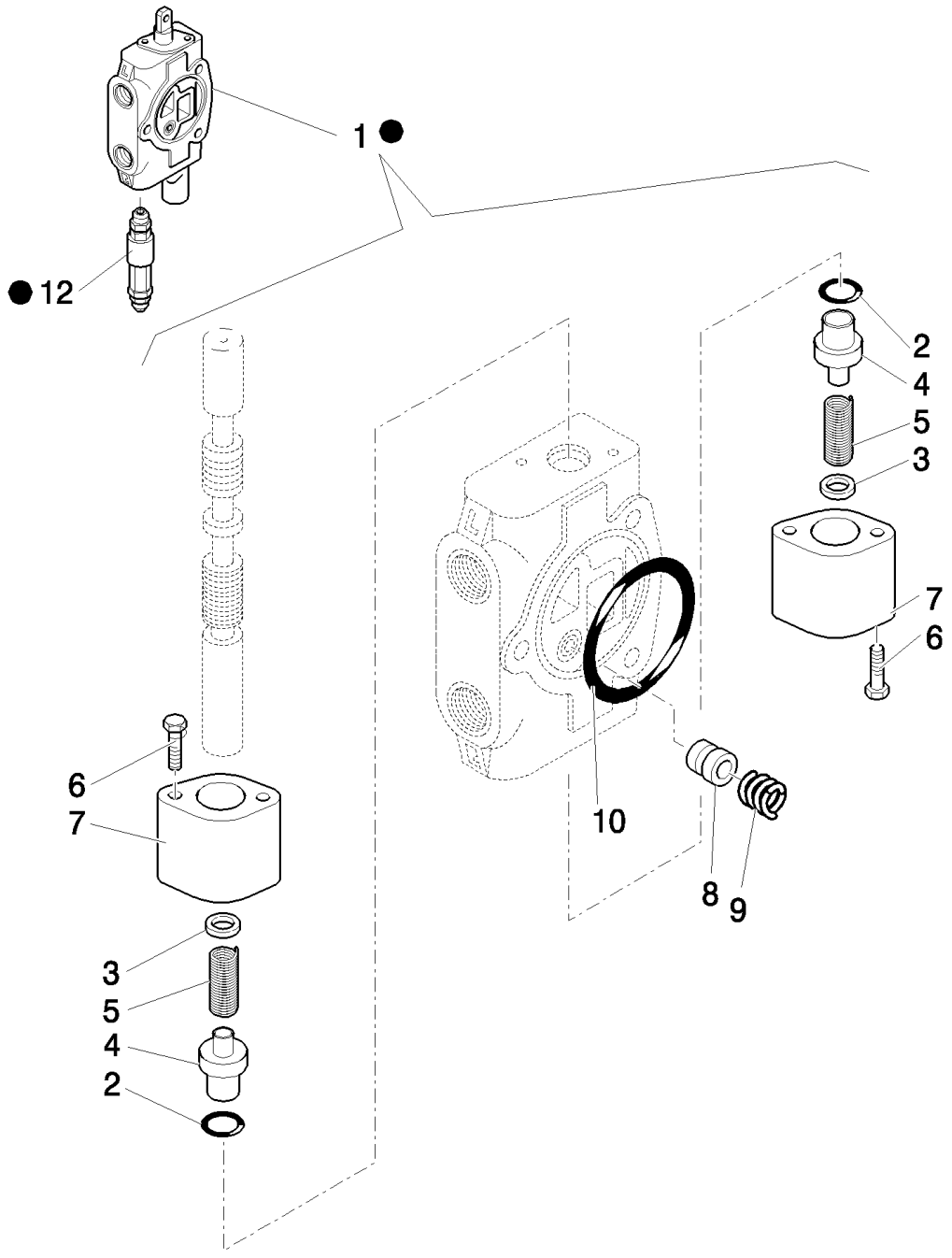

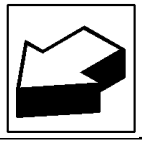

B110 TIER 3 BACKHOE LOADER (2/07-)

725/1(06) THREE-SECTION CONTROL VALVE FOR LOADER - BUCKET SECTION 4X1 / 6X1(CENTER PIVOT) - NA

Ref	Numero de Pieza	Ctd	Descripción
1	87326257	1	VALVE SECTION, HYD, ASSY
2	87327044	2	O-RING,
3	87327053	2	SPACER,
4	87327049	2	SEAT,
5	87327052	2	SPRING,
6	87327057	2	SCREW,
7	87327046	2	PLUG,
8	9968477	1	POPPET,
9	9968478	1	SPRING,
10	9968476	1	O-RING,
11	87326258	1	KIT, CONVERSION,
12	9968595	1	VALVE, PRESSURE RELIEF,

Mechanical Version

725/2(01) 4X1 & 6X1 BUCKET HYDRAULIC LINES (POWER SHIFT) - NA

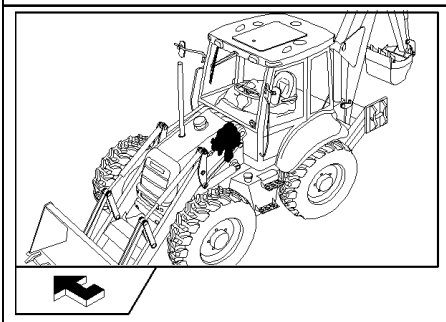

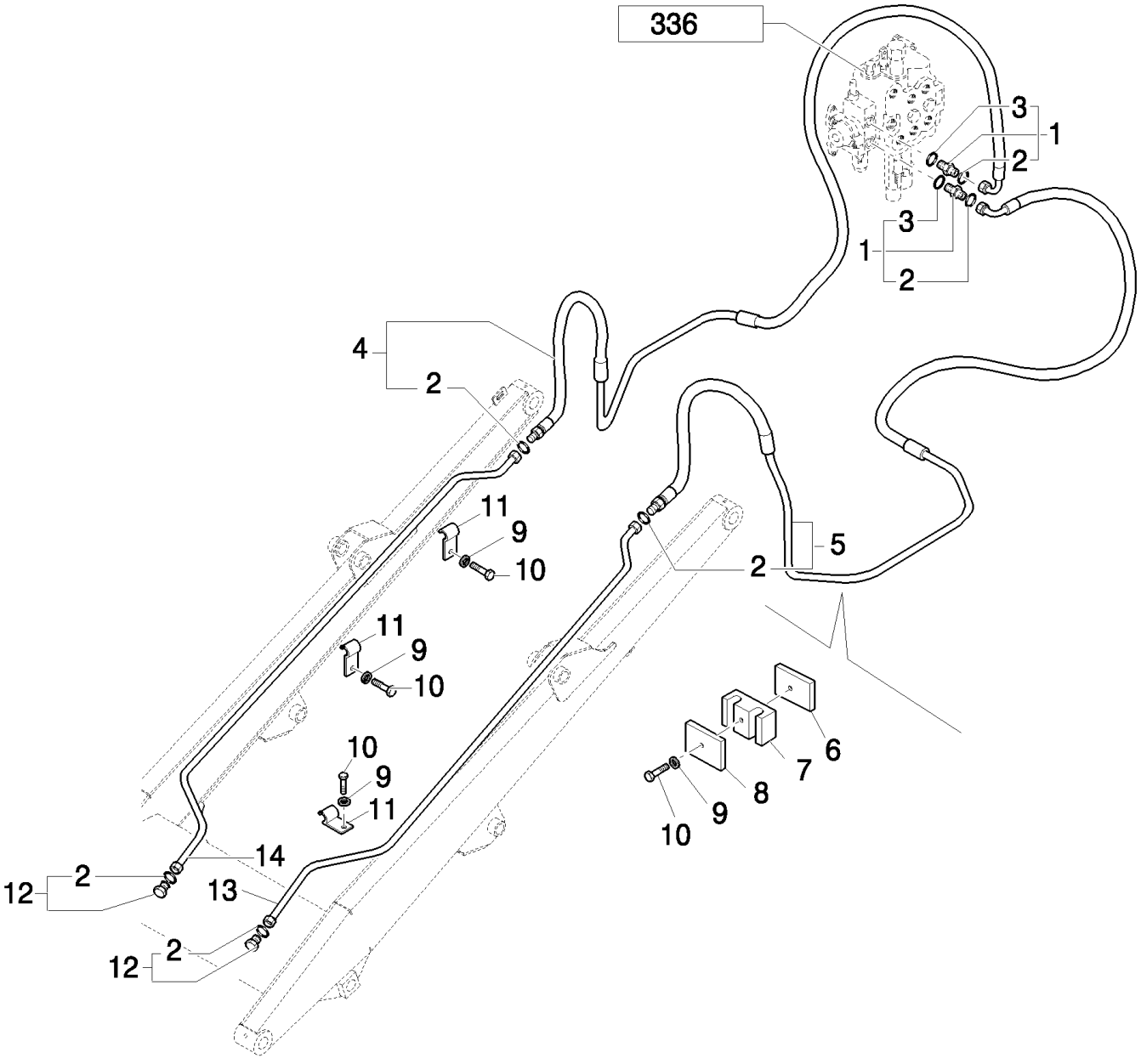

Mechanical Version

B110 TIER 3 BACKHOE LOADER (2/07-)

725/2(01) 4X1 & 6X1 BUCKET HYDRAULIC LINES (POWER SHIFT) - NA

Ref	Numero de Pieza	Ctd	Descripción
1	83963376	2	CONNECTOR, HYD.,
2	89992298	6	O-RING,
3	80167269	2	O-RING,
4	85805863	1	HOSE, FLEXIBLE, RH, Includes Ref. 2
5	85805862	1	HOSE, FLEXIBLE, LH, Includes Ref. 2
6	85805340	2	PLATE,
7	85805193	2	CLAMP,
8	85805195	2	PLATE,
9	11193979	8	WASHER, SPRING, Belleville, M8.4,
10	16043821	8	BOLT, Hex, M8 x 30, 8.8,
11	85805247	6	CLAMP,
12	85803408	2	PLUG, , Includes Ref. 2
13	85805864	1	TUBE, HYD, LH
14	85805865	1	TUBE, HYD, RH

Mechanical Version

725/2(02) 4X1 & 6X1 BUCKET HYDRAULIC LINES (POWER SHIFT) - NA

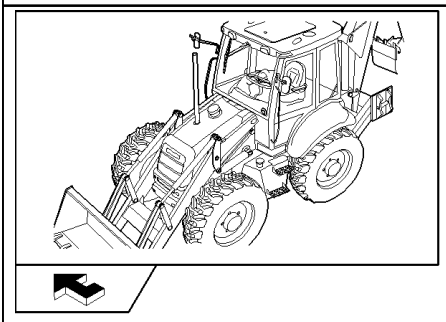

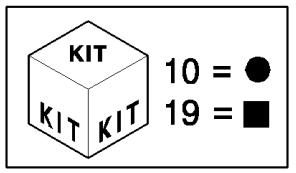

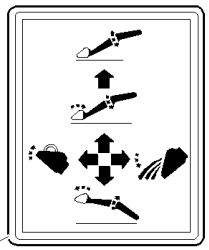

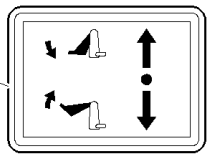

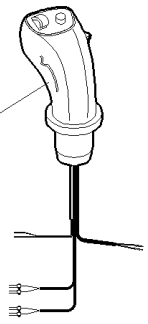

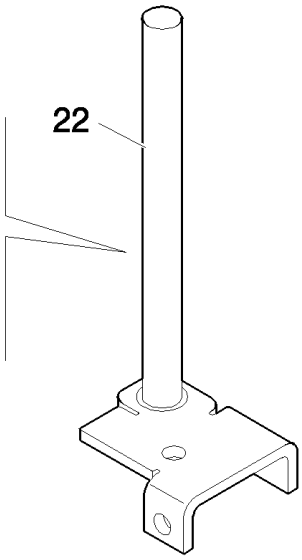

Mechanical Control Version

B110 TIER 3 BACKHOE LOADER (2/07-)

725/2(02) 4X1 & 6X1 BUCKET HYDRAULIC LINES (POWER SHIFT) - NA

Ref	Numero de Pieza	Ctd	Descripción
1	85802234	2	ELBOW,
2	85805318	2	ELBOW, 90º, 9/16"-18, 37º x 9/16"-18, O-Ring,
3	47050685	2	CONNECTOR, HYD.,
4	47050686	1	CONNECTOR, HYD.,
5	85826100	1	REDUCER,
6	85828211	1	COUPLING, QUICK, MALE,
7	87316092	1	HOSE, FLEXIBLE,
8	87316096	1	HOSE, FLEXIBLE,
9	87316091	2	HOSE, FLEXIBLE,
10	87384364	1	JOYSTICK,
11	87382109	1	HANDLE, Loader, Powershift, W/Detent, Declutch, Horn; Includes 87387702 Grip W/2 Buttons; 87387703 Prop Roller W/Detented Position; 87387719 Transmission & Horn Button Harness; 87387722 Bi-Directional PWM Driver Harness
	87387702	1	HANDLE GRIP, Grip W/2 Buttons
	87387703	1	PUSH BUTTON, Prop Roller W/Detented Position
	87387719	1	CABLE, ELECTRIC, Transmission & Horn Button Harness
	87387722	1	CABLE, ELECTRIC, Bi-Directional PWM Driver Harness
12	85804346	1	DECAL,
13	87305209	4	DECAL,
14	201-422	4	TEE, 11/16"-16 ORFS x 11/16"-16 Fem Sw Run,
15	87304801	1	VALVE, CONTROL, , Includes 17 To 20
16	14300521	1	SCREW, Hex Soc Hd, M6 x 75, 8.8, M6x75
17	87311363	1	ORIFICE,
18	85827997	1	VALVE,
19	85828001	1	KIT, SEALS,
20	85827993	2	SOLENOID,
21	85817531	1	TEE,
22	87312049	1	LEVER,

Mechanical Control Version

727(01) HYDRAULIC SYSTEM PRESETTING FOR TELESCOPIC LINKS PEDAL OPERATED

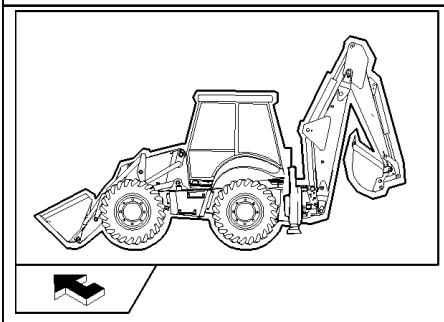

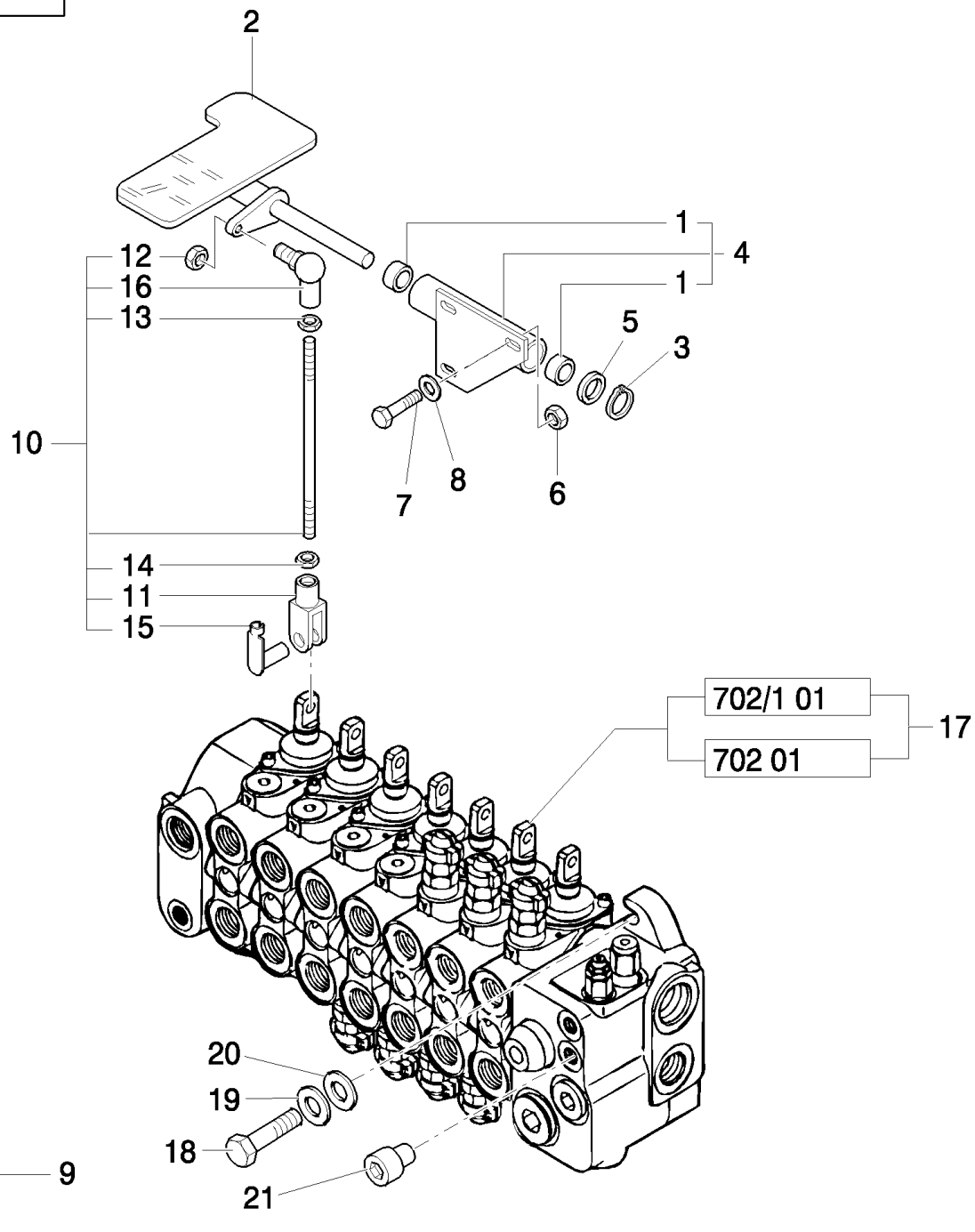

Mechanical Version

B110 TIER 3 BACKHOE LOADER (2/07-)

727(01) HYDRAULIC SYSTEM PRESETTING FOR TELESCOPIC LINKS PEDAL OPERATED

Ref	Numero de Pieza	Ctd	Descripción
1	85802494	2	BUSHING, ASSY
2	85805362	1	PEDAL,
3	83911366	1	RING, SNAP,
4	85805357	1	PEDAL,
5	14496901	1	WASHER, M16 x 30 x 3,
6	16104111	3	NUT, LOCK, M8 x 1.25, Cl 8,
7	16043621	3	BOLT, Hex, M8 x 25, 8.8,
8	11193879	3	WASHER, SPRING, Belleville, M8.4,
9	85803786	1	DECAL,
10	85805364	1	TIE-ROD,
11	11991971	1	CLEVIS,
12	14048211	1	NUT, LOCK, M8 x 1.25, Cl 8,
13	16102311	1	NUT, Thin, M8 x 1.25, Cl 04,
14	16102911	1	NUT, Thin, M8 x 1.25, Cl 04, LH,
15	85802738	1	RETAINER,
16	85804375	1	BALL JOINT,
17	87376085	1	VALVE, HYDRAULIC, , Only for EU
17	87327762	1	VALVE, HYDRAULIC, , Only for NA B115
18	15888721	3	BOLT, Hex, M10 x 1.25 x 55, 8.8,
19	11190679	3	WASHER, SPRING, Belleville, M10.5,
20	85818943	3	SPACER,
21	85802457	1	PLUG,

Mechanical Version

728(01) MANUAL HAMMER SYSTEM

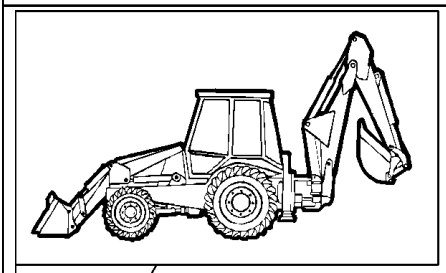

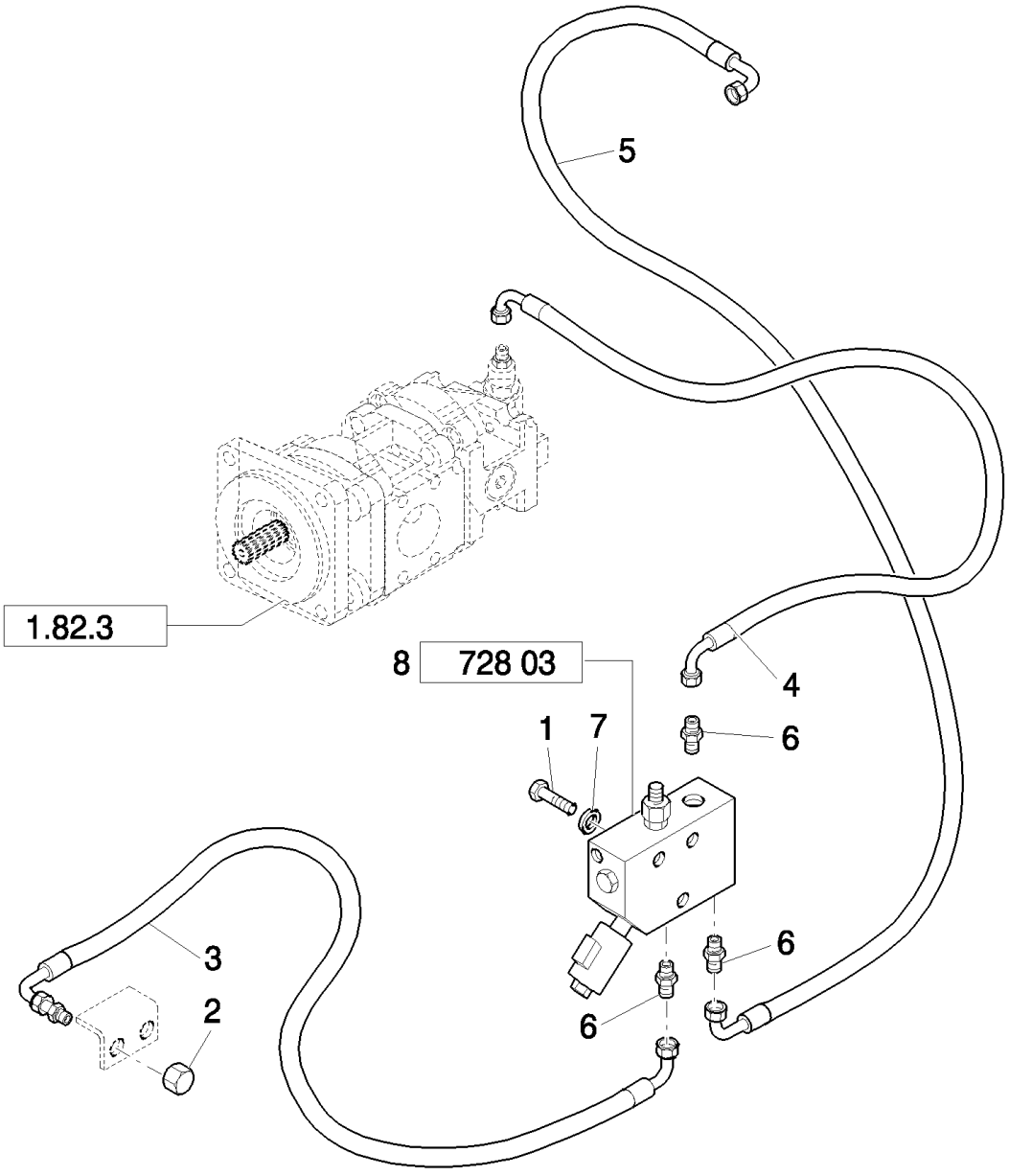

B110 TIER 3 BACKHOE LOADER (2/07-)

728(01) MANUAL HAMMER SYSTEM

Ref	Numero de Pieza	Ctd	Descripción
1	16044521	3	BOLT, Hex, M8 x 65, 8.8,
2	83987627	1	CAP,
3	87619499	1	HOSE, FLEXIBLE,
4	87621906	1	HOSE, FLEXIBLE,
5	85826092	1	HOSE, FLEXIBLE,
6	85803234	3	CONNECTOR, HYD.,
7	11193879	3	WASHER, SPRING, Belleville, M8.4,
8	87358190	1	VALVE, HYDRAULIC,

728(02) MANUAL HAMMER SYSTEM

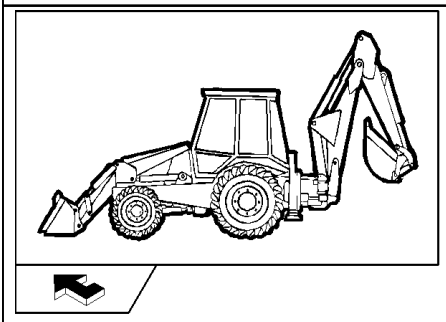

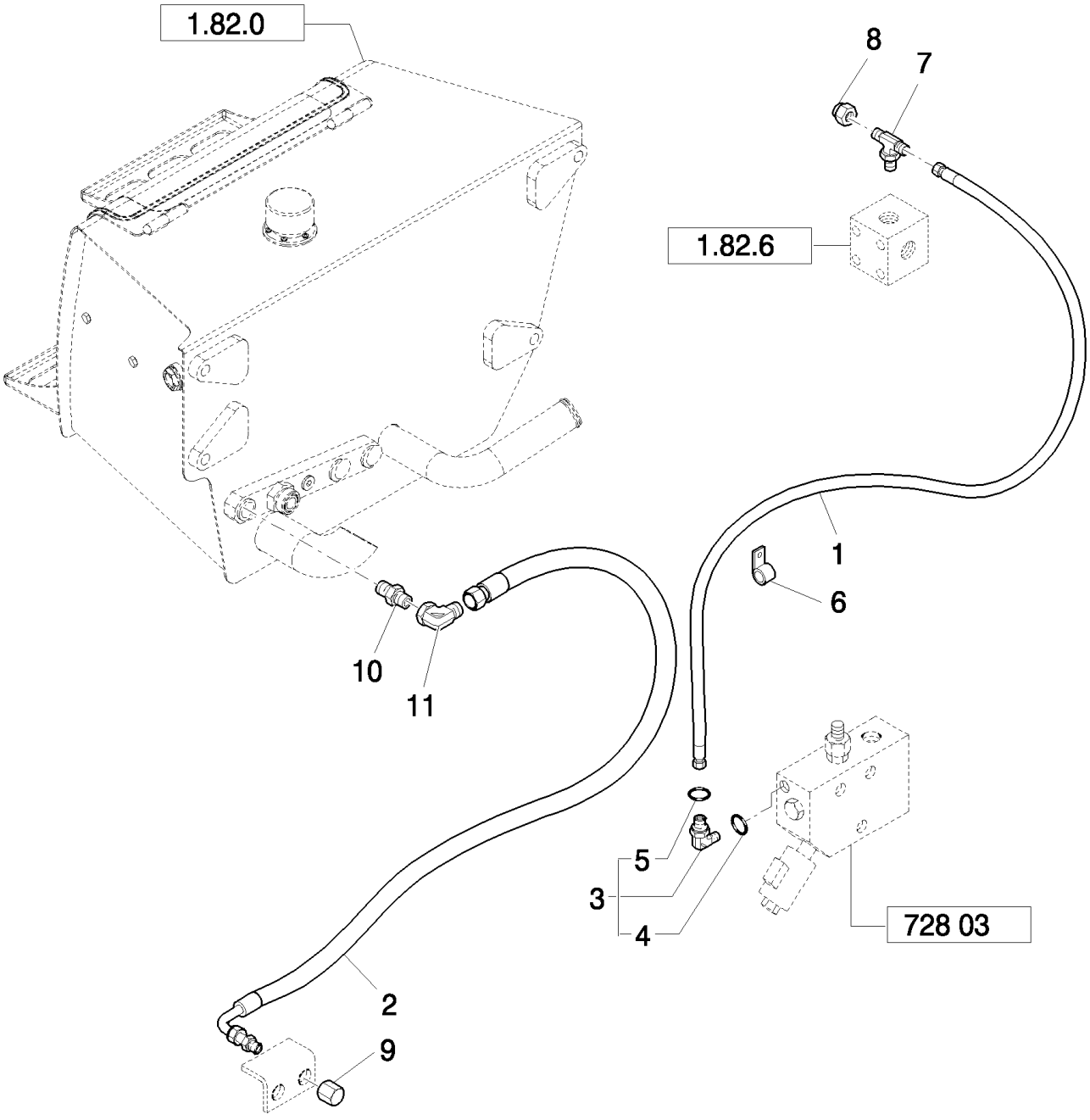

B110 TIER 3 BACKHOE LOADER (2/07-)

728(02) MANUAL HAMMER SYSTEM

Ref	Numero de Pieza	Ctd	Descripción
1	85803230	1	HOSE, FLEXIBLE, 1050mm lg,
2	85803231	1	HOSE, FLEXIBLE, 900mm lg,
3	83961741	1	ELBOW, , Includes 4, 5
4	81844851	1	O-RING,
5	81845037	1	O-RING,
6	85803393	1	CLAMP,
7	85802780	1	TEE,
8	81871325	1	COVER,
9	83987627	1	CAP,
10	85803241	1	CONNECTOR, HYD.,
11	85827861	1	CONNECTOR, HYD.,

728(03) MANUAL HAMMER VALVE

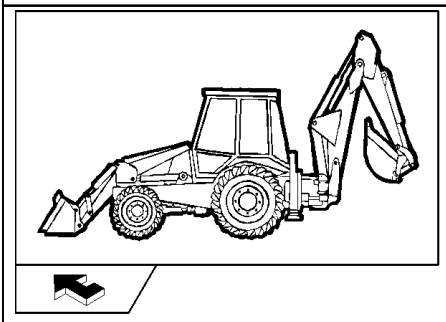

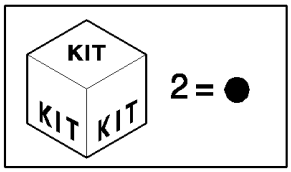

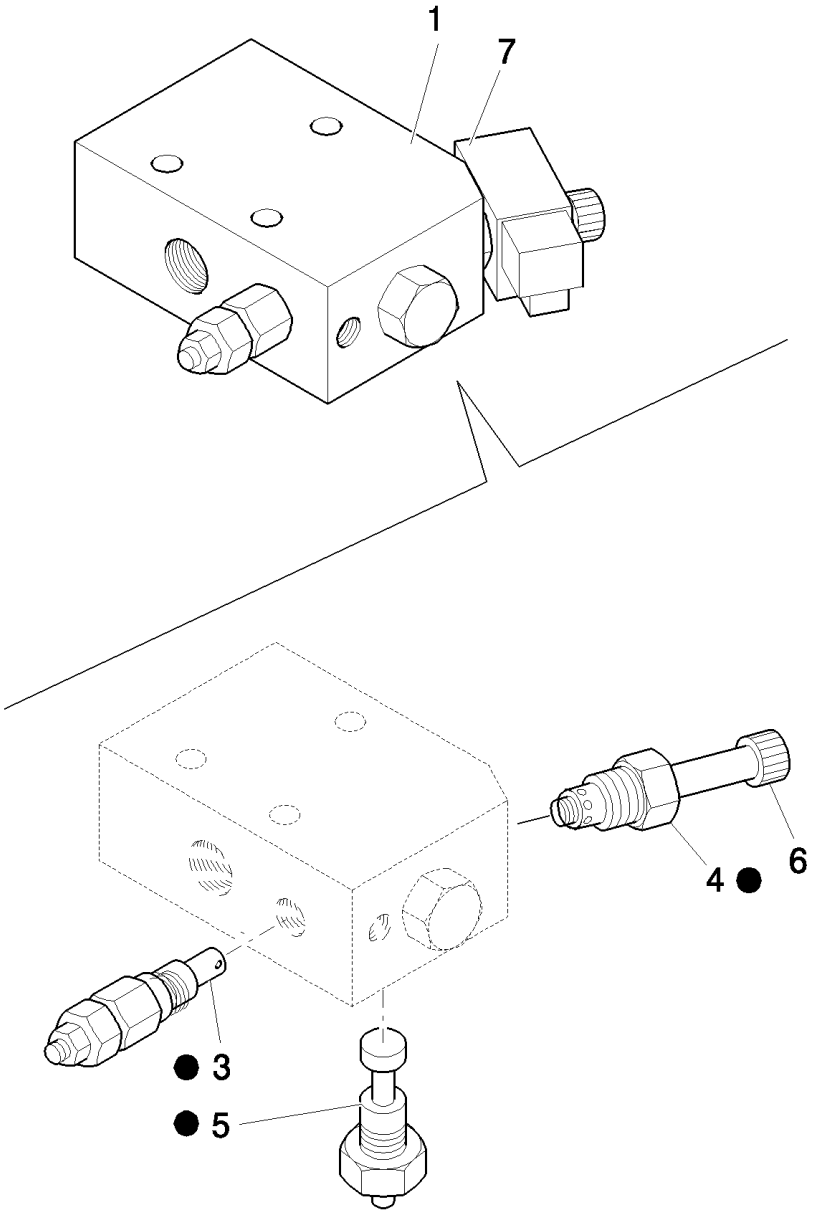

B110 TIER 3 BACKHOE LOADER (2/07-)

728(03) MANUAL HAMMER VALVE

Ref	Numero de Pieza	Ctd	Descripción
1	87358190	1	VALVE, HYDRAULIC,
2	87358193	1	KIT, GASKETS
3	87358196	1	VALVE, HYDRAULIC,
4	87358194	1	VALVE, HYDRAULIC,
5	9970383	1	VALVE, SOLENOID,
6	9970384	1	NUT,
7	87357715	1	SENDER UNIT,

733(01) REAR MECHANICAL QUICK-COUPLING

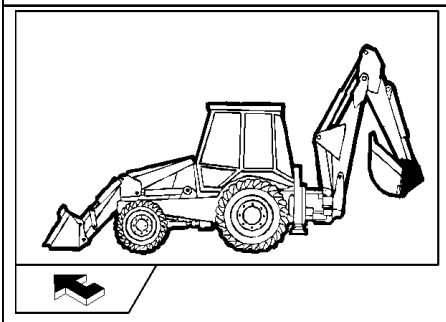

KIT
KIT KIT
1 = ●

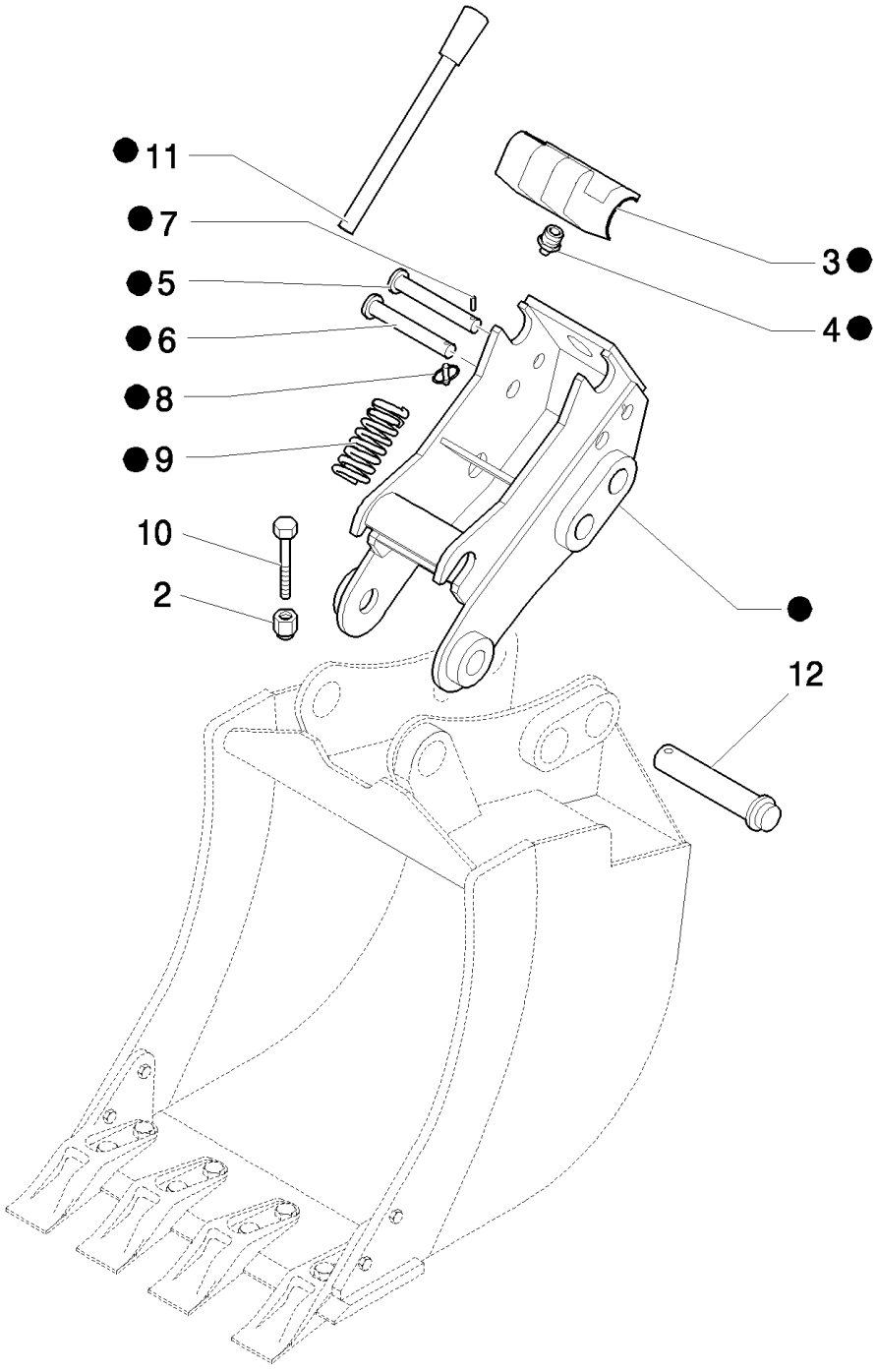

B110 TIER 3 BACKHOE LOADER (2/07-)

733(01) REAR MECHANICAL QUICK-COUPLING

Ref	Numero de Pieza	Ctd	Descripción
1	85801542	1	COUPLING,
2	12574511	2	NUT, LOCK, M10 x 1.25, Cl 8,
3	85827552	1	HOOK,
4	85824266	1	NIPPLE, LUBE,
5	85827553	1	HOOK, 1.26" dia x 10.3" lg
6	85827554	1	PIN,
7	85825285	1	PIN,
8	85824265	1	PIN,
9	85824268	1	SPRING,
10	15972034	2	BOLT, Hex, M10 x 110, 10.9,
11	85824267	1	HANDLE,
12	85803005	2	PIN,

734(01) FRONT MECHANICAL QUICK-COUPLING

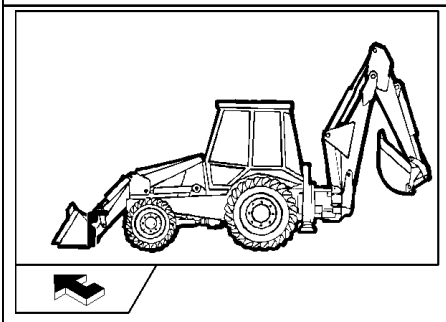

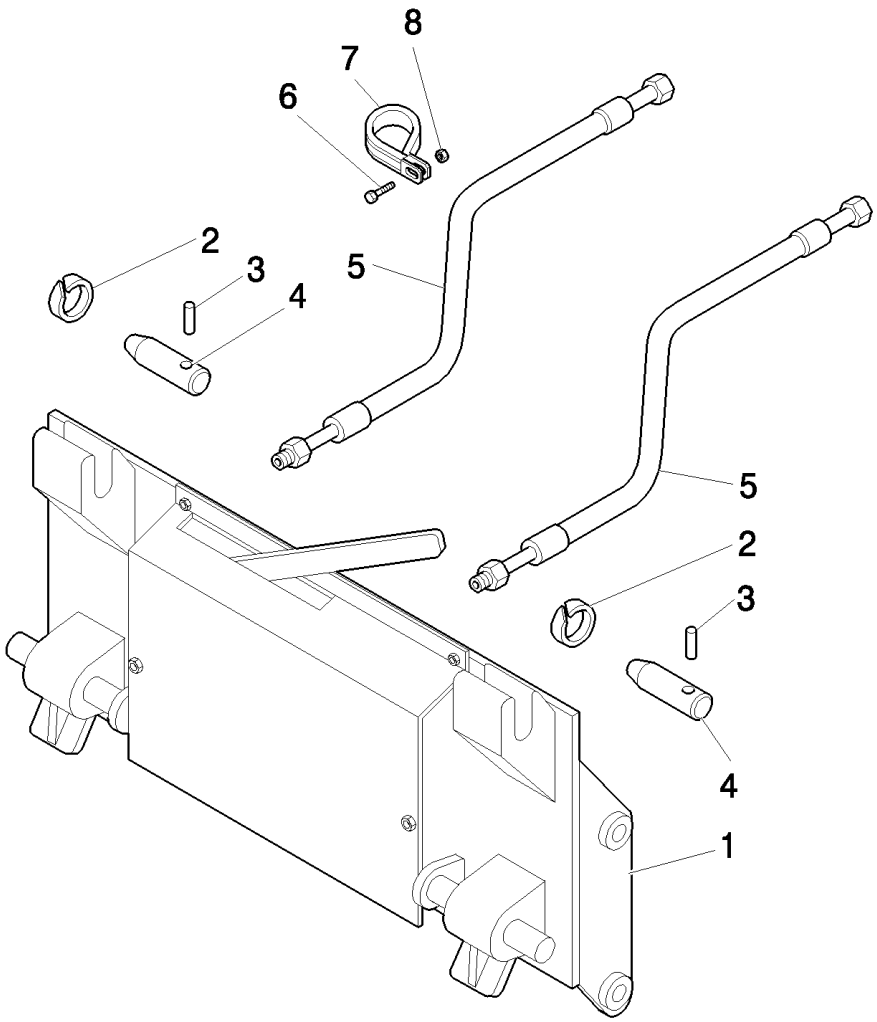

B110 TIER 3 BACKHOE LOADER (2/07-)

734(01) FRONT MECHANICAL QUICK-COUPLING

Ref	Numero de Pieza	Ctd	Descripción
1	85824397	1	PLATE, RETAINING,
2	85802992	2	RING,
3	85802993	2	PIN,
4	85801051	2	PIN,
5	85813378	2	HOSE, FLEXIBLE, 1000mm lg,
6	16043921	2	SCREW, M8x1.25x35
7	85803393	2	CLAMP,
8	16104111	2	NUT, LOCK, M8 x 1.25, Cl 8,

B110 TIER 3 BACKHOE LOADER (2/07-)

758(01) ROTATING BEACON

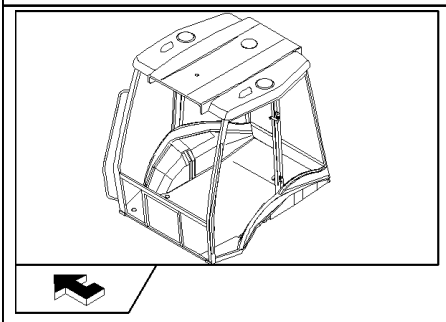

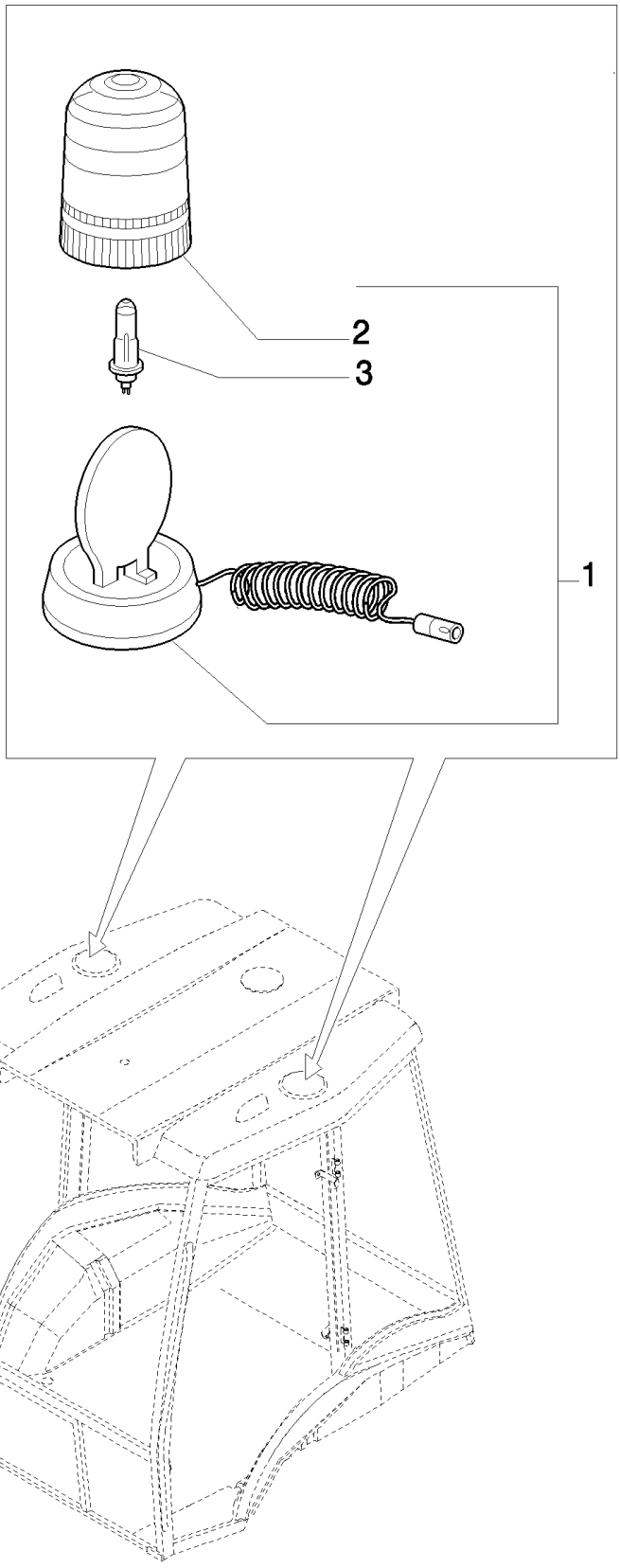

B110 TIER 3 BACKHOE LOADER (2/07-)

758(01) ROTATING BEACON

Ref	Numero de Pieza	Ctd	Descripción
1	85817129	1	BEACON,
2	85817131	1	LENS,
3	85817130	1	BULB,

B110 TIER 3 BACKHOE LOADER (2/07-)

787(01) FRONT CONSOLE WITHOUT SPEEDOMETER (POWER SHUTTLE, ROPS)

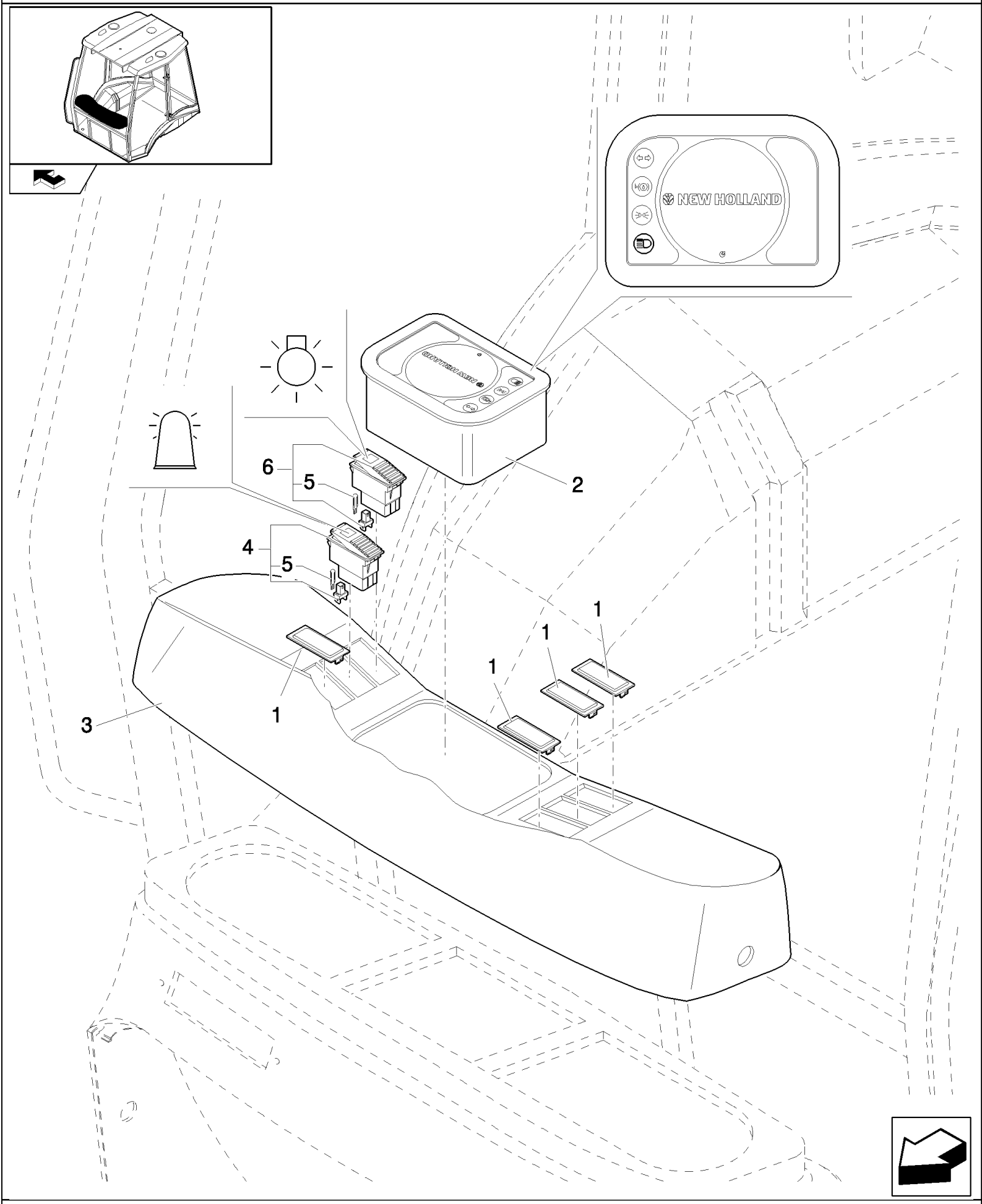

B110 TIER 3 BACKHOE LOADER (2/07-)

787(01) FRONT CONSOLE WITHOUT SPEEDOMETER (POWER SHUTTLE, ROPS)

Ref	Numero de Pieza	Ctd	Descripción
1	85825254	4	PLUG,
2	87521741	1	SPEEDOMETER,
3	85818940	1	DASHBOARD,
4	85818827	1	SWITCH,
5	14143790	4	BULB,
6	85818828	1	SWITCH, LIGHTS,

B110 TIER 3 BACKHOE LOADER (2/07-)

787/1(01) FRONT CONSOLE WITHOUT SPEEDOMETER (POWER SHUTTLE, CAB)

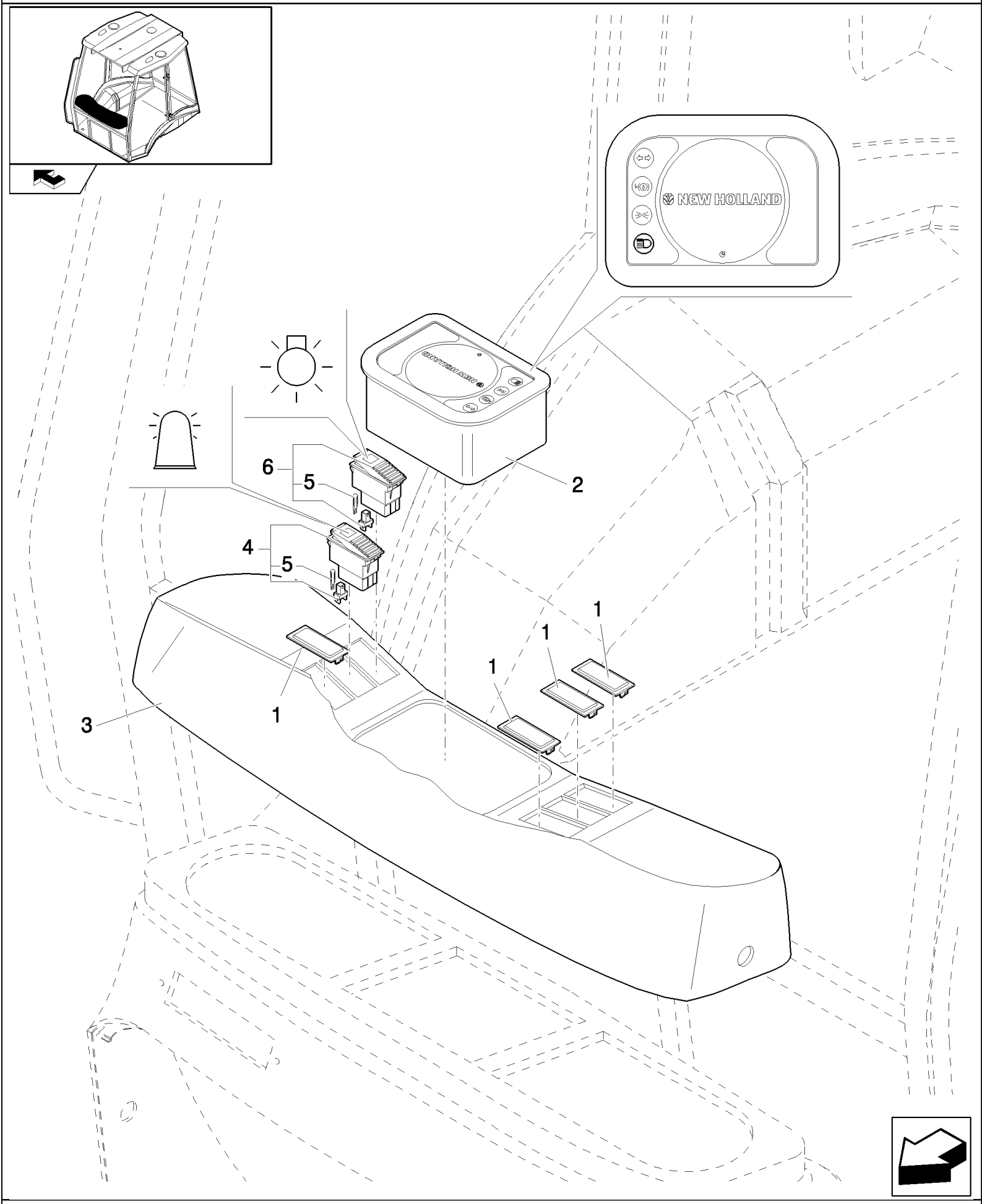

B110 TIER 3 BACKHOE LOADER (2/07-)

787/1(01) FRONT CONSOLE WITHOUT SPEEDOMETER (POWER SHUTTLE, CAB)

Ref	Numero de Pieza	Ctd	Descripción
1	85825254	4	PLUG,
2	87521741	1	SPEEDOMETER,
3	85818826	1	DASHBOARD,
4	85818827	1	SWITCH,
5	14143790	4	BULB,
6	85818828	1	SWITCH, LIGHTS,

B110 TIER 3 BACKHOE LOADER (2/07-)

788(01) FRONT CONSOLE WITH SPEEDOMETER (ROPS)

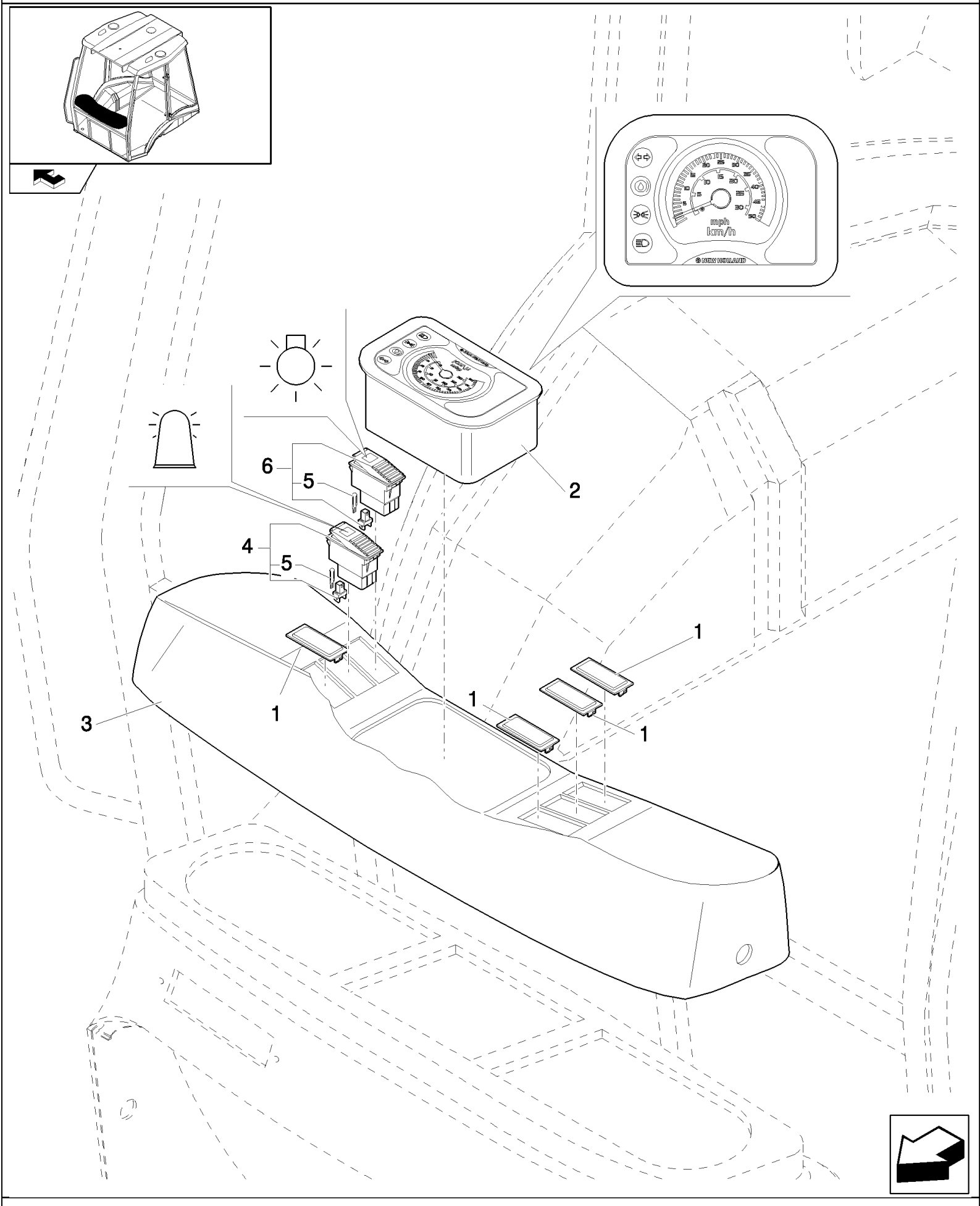

B110 TIER 3 BACKHOE LOADER (2/07-)

788(01) FRONT CONSOLE WITH SPEEDOMETER (ROPS)

Ref	Numero de Pieza	Ctd	Descripción
1	85825254	4	PLUG,
2	87521822	1	SPEEDOMETER,
3	85818940	1	DASHBOARD,
4	85818827	1	SWITCH,
5	14143790	2	BULB,
6	85818828	1	SWITCH, LIGHTS,

B110 TIER 3 BACKHOE LOADER (2/07-)

788/1(01) FRONT CONSOLE WITH SPEEDOMETER (CAB)

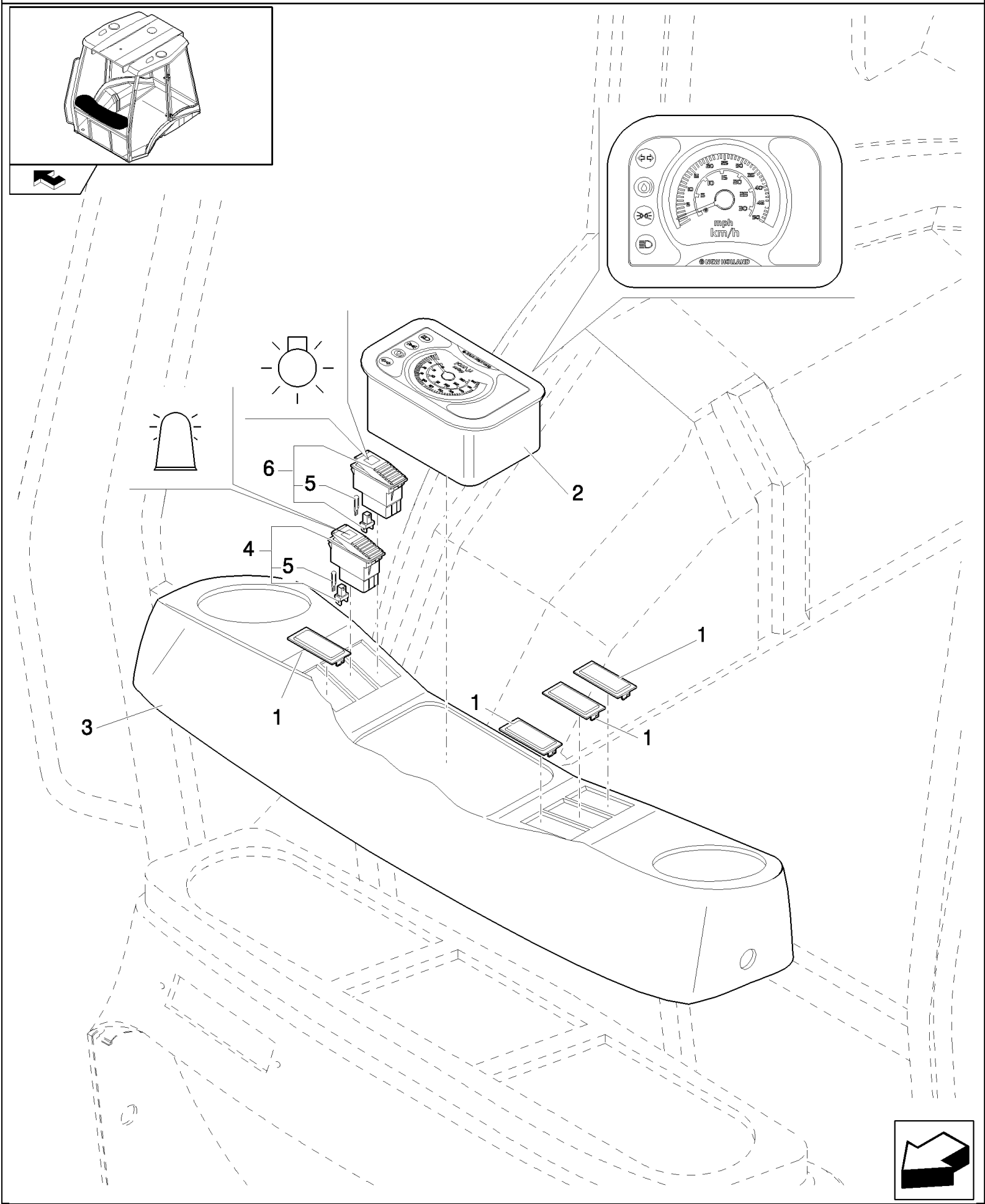

B110 TIER 3 BACKHOE LOADER (2/07-)

788/1(01) FRONT CONSOLE WITH SPEEDOMETER (CAB)

Ref	Numero de Pieza	Ctd	Descripción
1	85825254	4	PLUG,
2	87521822	1	SPEEDOMETER,
3	85818826	1	DASHBOARD,
4	85818827	1	SWITCH,
5	14143790	2	BULB,
6	85818828	1	SWITCH, LIGHTS,

789(01) SPEED SENSOR(P.SHUTTLE)

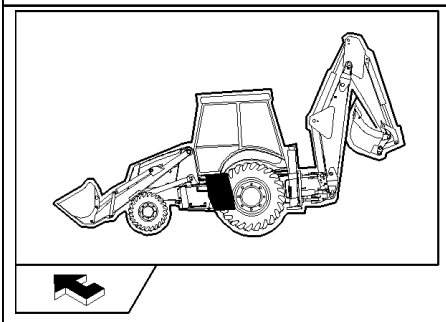

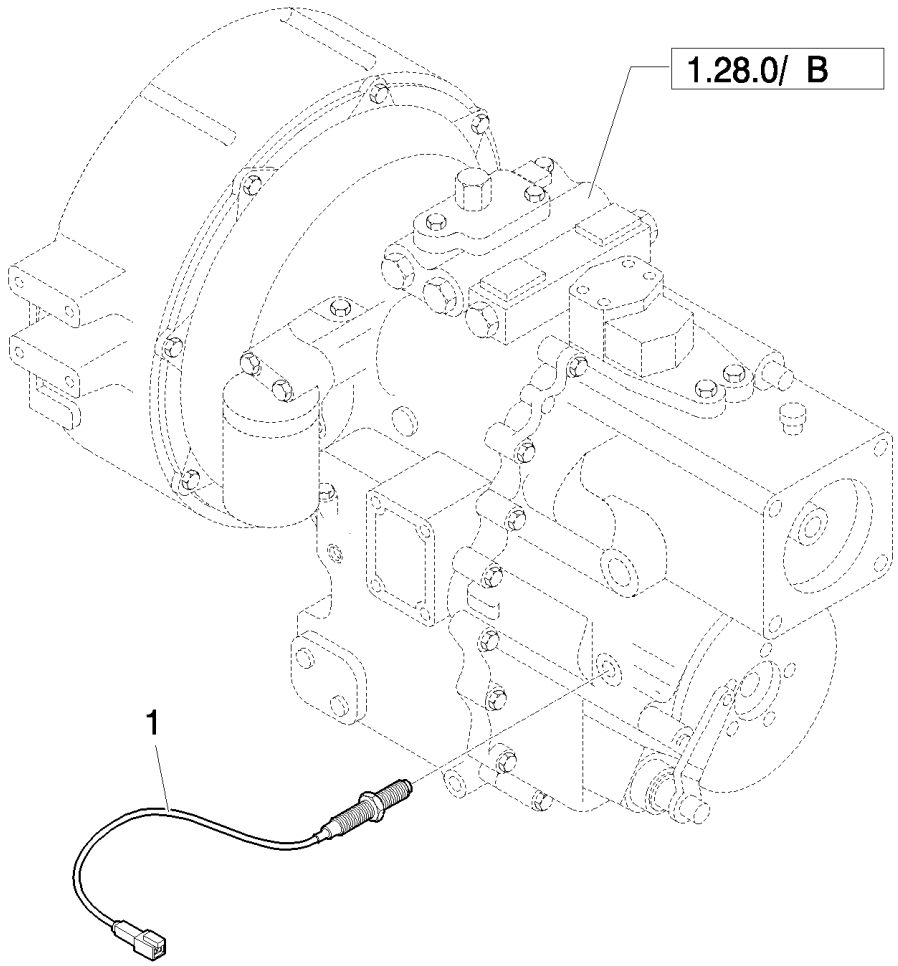

B110 TIER 3 BACKHOE LOADER (2/07-)

789(01) SPEED SENSOR(P.SHUTTLE)

Ref	Numero de Pieza	Ctd	Descripción
1	85804156	1	SENSOR,

793(01) FRONT WORKING LIGHT - CAB

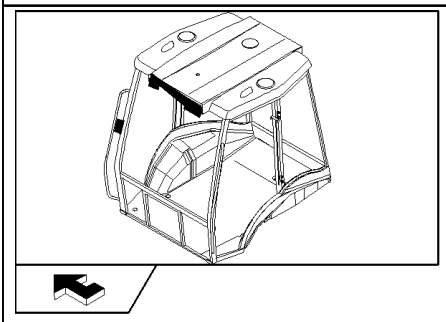

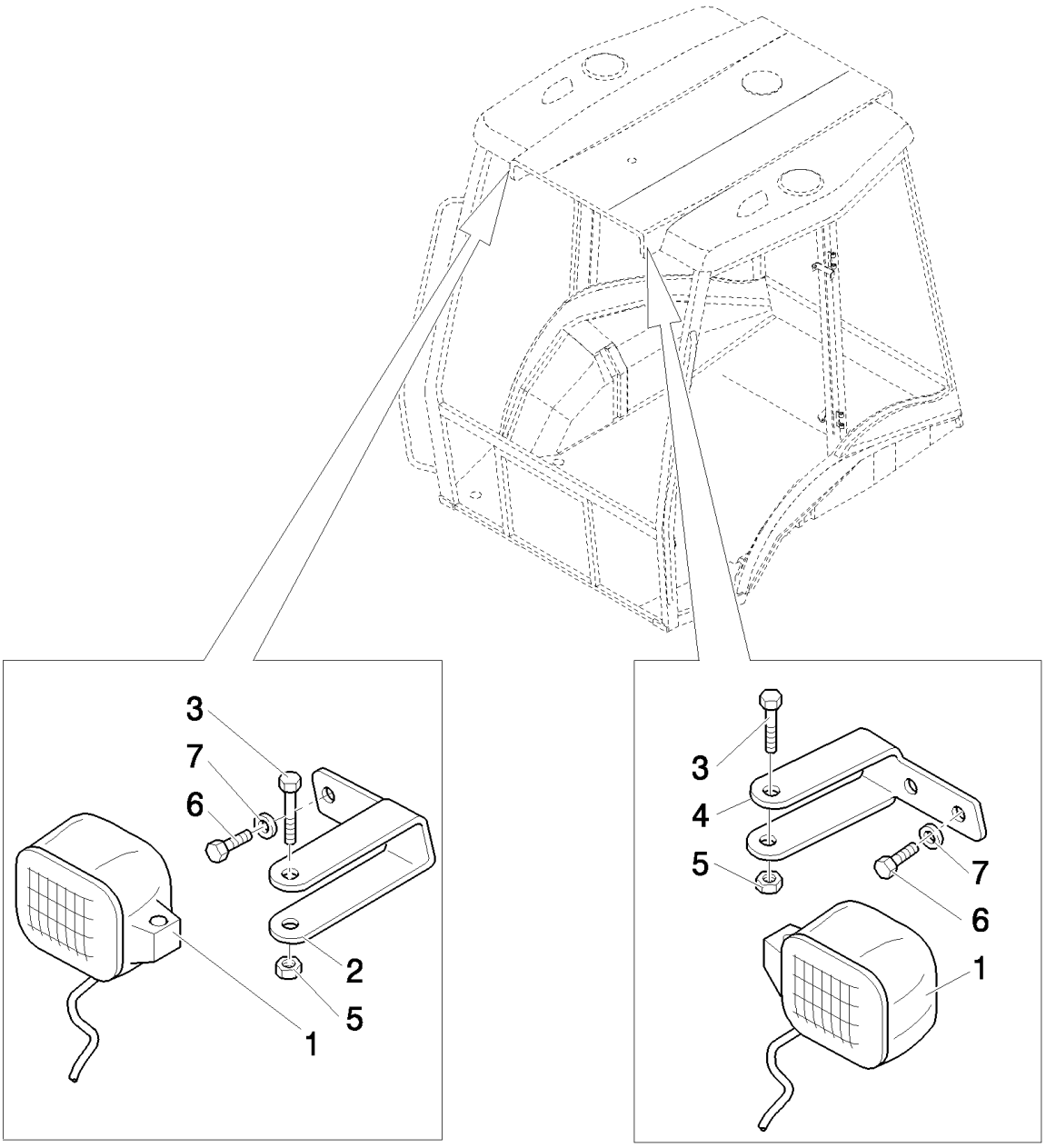

B110 TIER 3 BACKHOE LOADER (2/07-)

793(01) FRONT WORKING LIGHT - CAB

Ref	Numero de Pieza	Ctd	Descripción
1	85819200	2	HEADLAMP, Includes H3 12V 55W Bulb, Order 9703399 For Bulb
2	85819188	1	BRACKET, RH
3	16044324	2	BOLT, Hex, M8 x 55, 8.8,
4	85819189	1	BRACKET,
5	16104111	2	NUT, LOCK, M8 x 1.25, Cl 8,
6	10902124	4	BOLT, Hex, M6 x 14, 8.8, Full Thd,
7	11197774	4	WASHER, SPRING, Belleville, M6.4,

793/1(01) FRONT WORKING LIGHT (ROPS) - NA

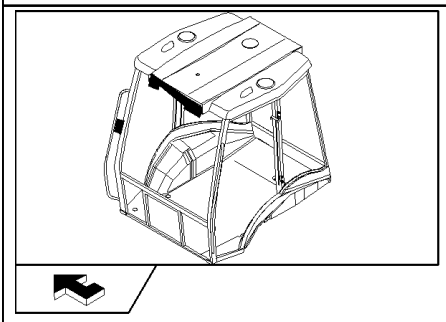

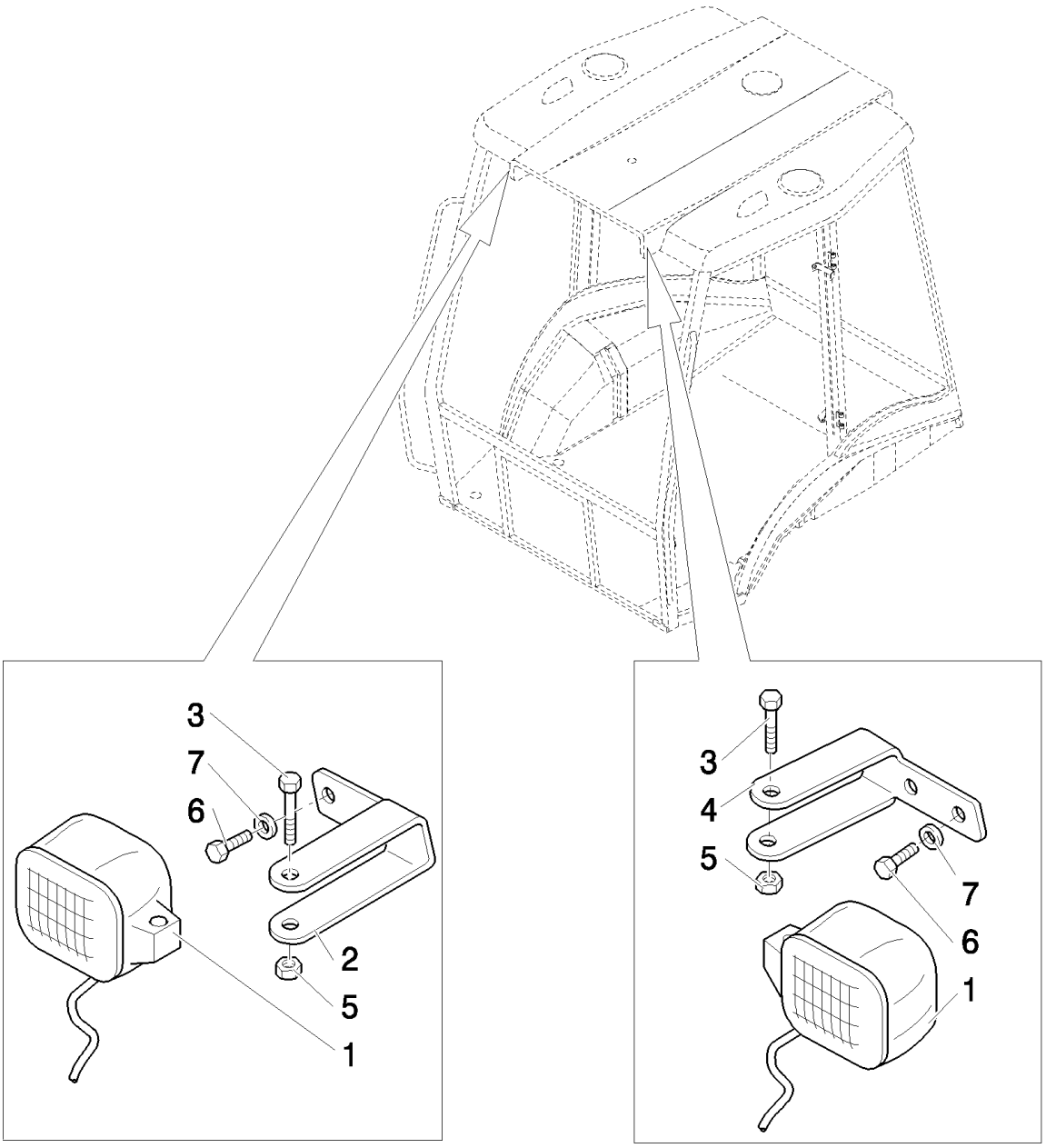

B110 TIER 3 BACKHOE LOADER (2/07-)

793/1(01) FRONT WORKING LIGHT (ROPS) - NA

Ref	Numero de Pieza	Ctd	Descripción
1	85819200	2	HEADLAMP, Includes H3 12V 55W Bulb, Order 9703399 For Bulb
2	85819188	1	BRACKET, RH
3	16044324	2	BOLT, Hex, M8 x 55, 8.8,
4	85819189	1	BRACKET,
5	16104111	2	NUT, LOCK, M8 x 1.25, Cl 8,
6	10902124	4	BOLT, Hex, M6 x 14, 8.8, Full Thd,
7	11197774	4	WASHER, SPRING, Belleville, M6.4,

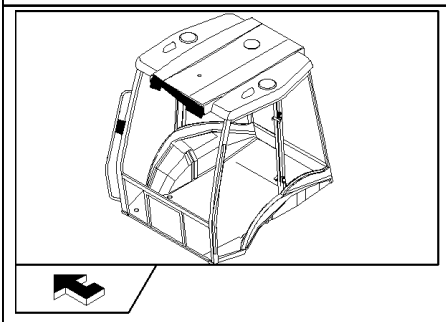

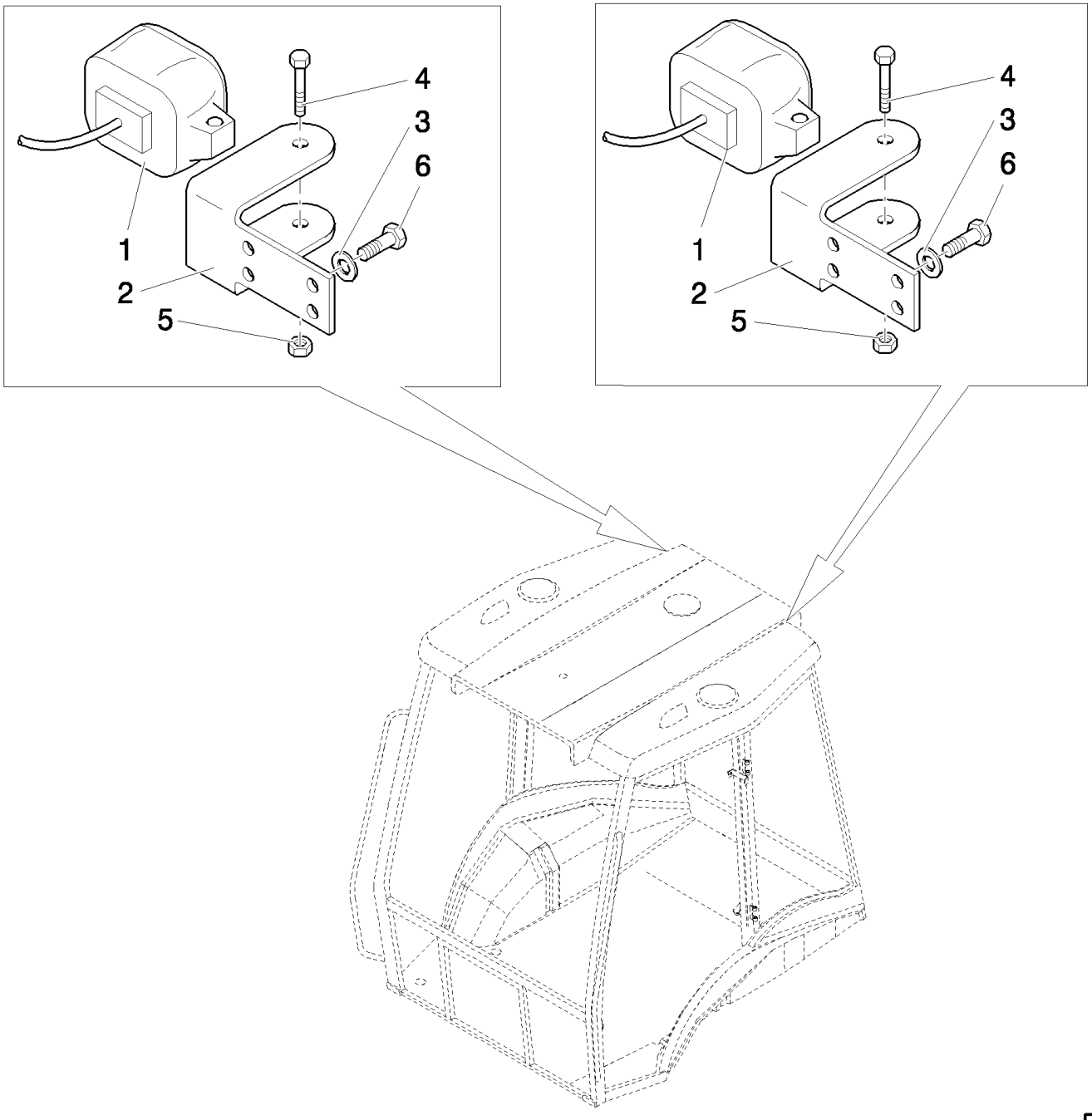
4
3
6
1
2
5
4
3
6
1
2
5

B110 TIER 3 BACKHOE LOADER (2/07-)

794(01) LAMPS & LIGHTS - CAB

Ref	Numero de Pieza	Ctd	Descripción
1	85819200	2	HEADLAMP, Includes H3 12V 55W Bulb, Order 9703399 For Bulb
2	85819192	2	BRACKET, LH
3	11197774	4	WASHER, SPRING, Belleville, M6.4,
4	16044324	2	BOLT, Hex, M8 x 55, 8.8,
5	16104111	2	NUT, LOCK, M8 x 1.25, Cl 8,
6	10902124	4	BOLT, Hex, M6 x 14, 8.8, Full Thd,

794/1(01) LAMPS & LIGHTS (ROPS) - NA

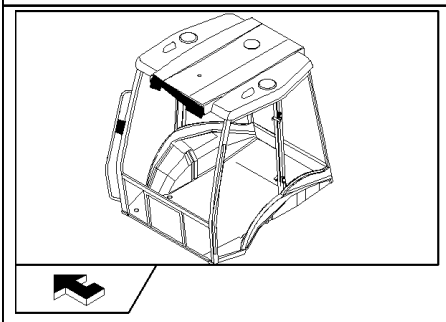

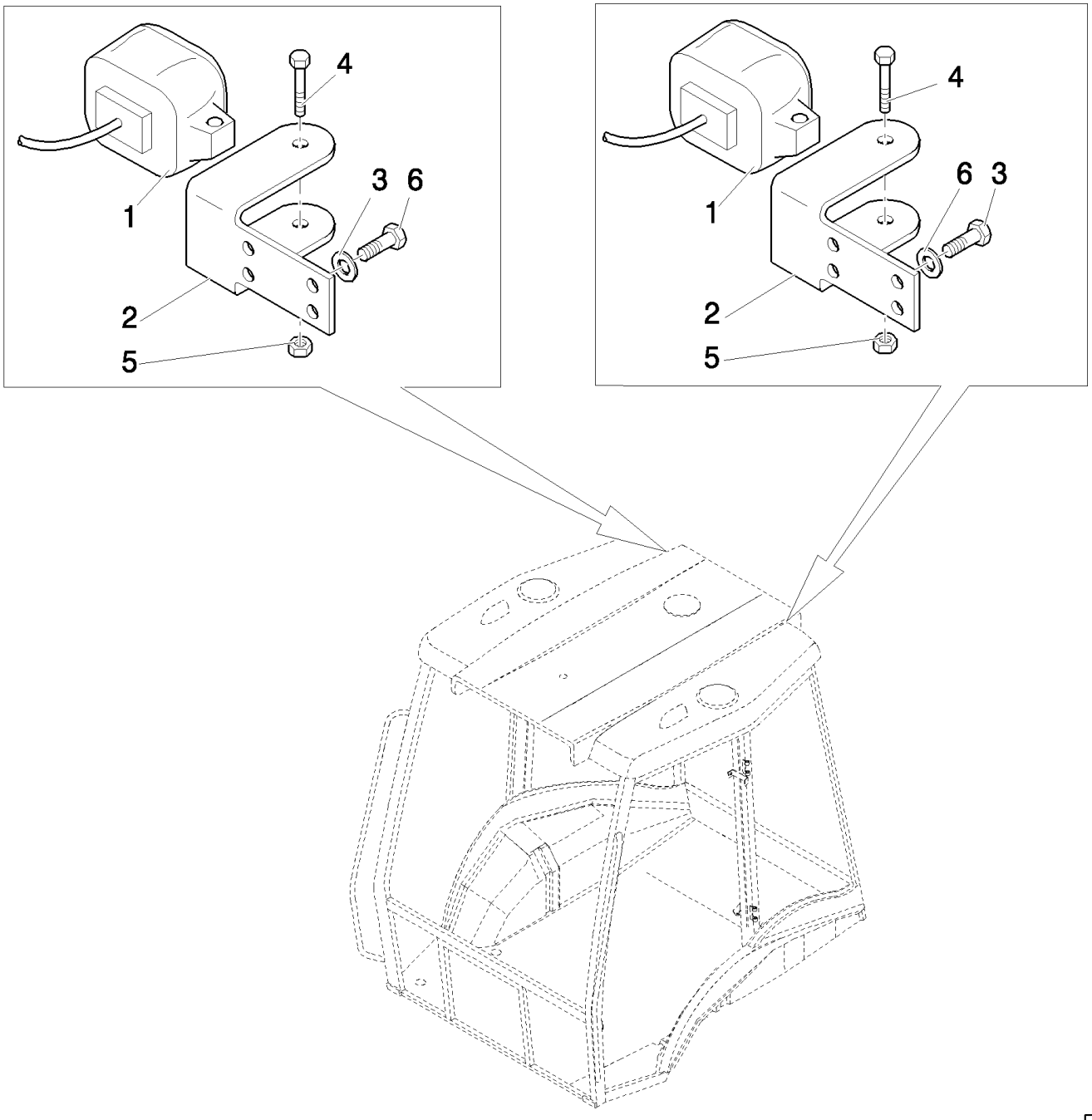

B110 TIER 3 BACKHOE LOADER (2/07-)

794/1(01) LAMPS & LIGHTS (ROPS) - NA

Ref	Numero de Pieza	Ctd	Descripción
1	85819200	2	HEADLAMP, Includes H3 12V 55W Bulb, Order 9703399 For Bulb
2	85819192	2	BRACKET, LH
3	11197774	4	WASHER, SPRING, Belleville, M6.4,
4	16044324	2	BOLT, Hex, M8 x 55, 8.8,
5	16104111	2	NUT, LOCK, M8 x 1.25, Cl 8,
6	10902124	4	BOLT, Hex, M6 x 14, 8.8, Full Thd,

B110 TIER 3 BACKHOE LOADER (2/07-)

796(01) ANTITHEFT

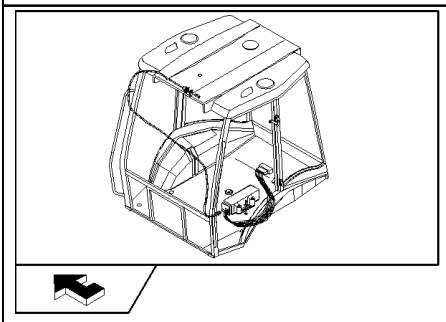

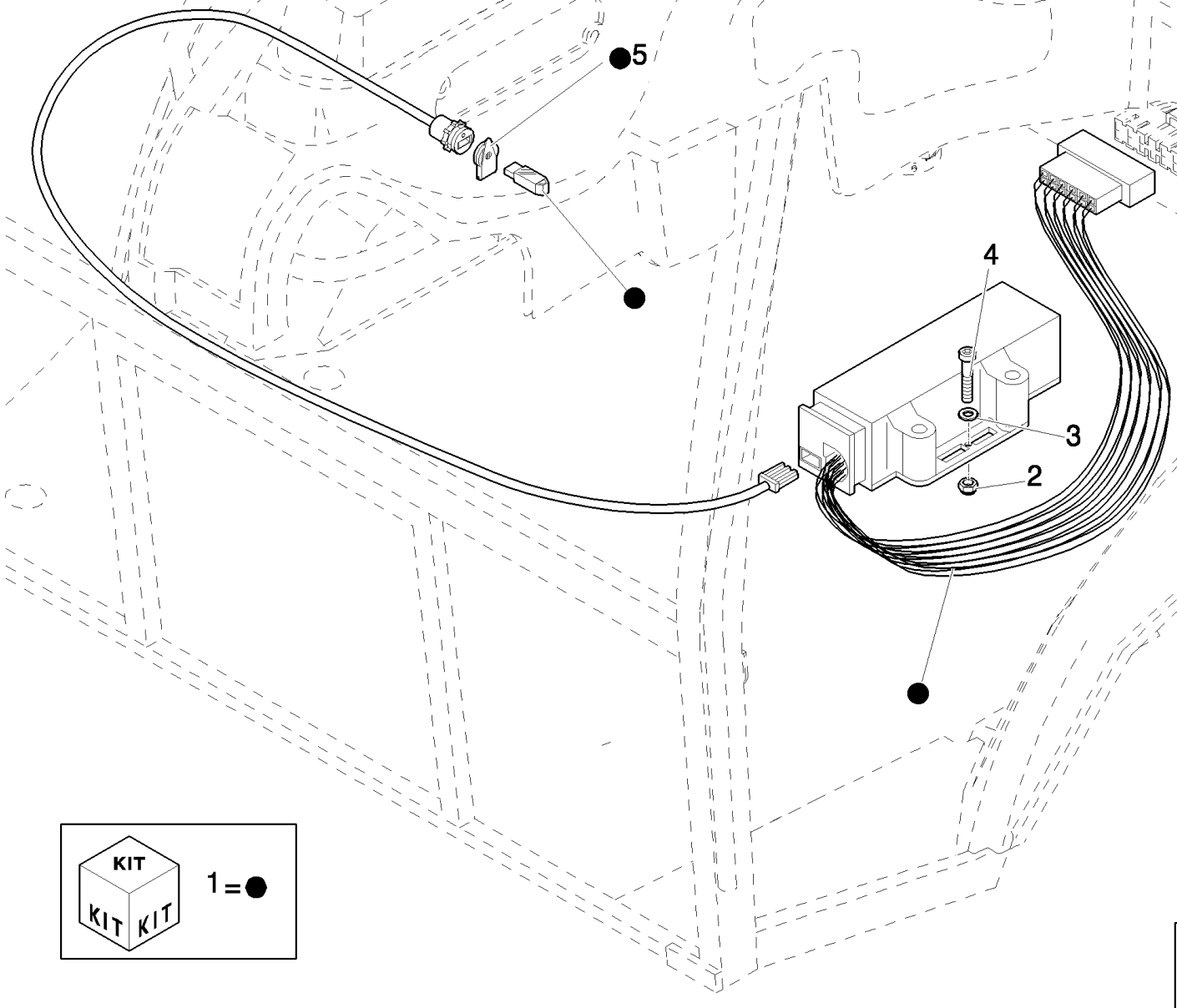

KIT

1 = ●

B110 TIER 3 BACKHOE LOADER (2/07-)

796(01) ANTITHEFT

Ref	Numero de Pieza	Ctd	Descripción
1	85819765	1	KIT,
2	12574011	2	NUT, LOCK, M4 x .7, Cl 8,
3	12642821	2	WASHER, M4 x 12 x 1,
4	14303324	2	SCREW, Hex Soc Hd, M4 x 20, 8.8, Full Thd,
5	85819766	1	COVER,

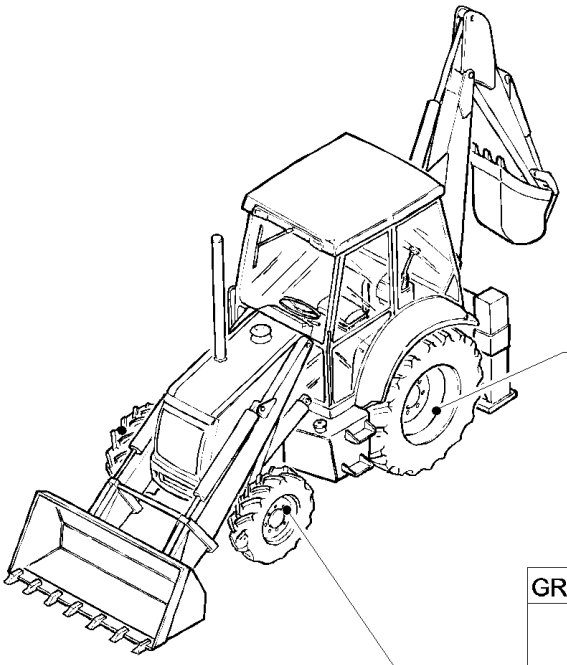

GROUP	EQUIP	TIRE SIZE	RIM
83.00	83.52	16.9 - 28 R4-10PLY TITAN	W15LX 28
	83.62	16.9 - 28 R4 - 12PR	W14LX 28
	83.64	16.9 - 24 R4 - 10PR	W15LX 24
	83.65	17.5 - L24 R4 - 10PR	W15LX 24
	83.91	19.5 - 24 R4 - 10PR	W16LX 24
	83.92	18.4 - 26 R4 - 12PR	DW16L X26
	83.92	21L24 R4 - 10PR	W18L X24
	83.93	18.4 - 26 R1 - 12PR	DW16L X26
	83.93	19.5 x 24 "JUMBO HULK"	W16L X24
	83.96	480/80 R26 IT520	DW16LX26
	83.97	16.9 - 28	W14L X28Z
	83.98	18.4 - 26	DW16L X26

GROUP	EQUIP	TIRE SIZE	RIM
82.00	82.75	14 -17.5NHS - 8PR	10.5 X 17.5
	82.76	12 -16.5NHS -8PR	9,75 X 16,5
	82.76	12 - 16.3 HULK	9,75 X 16,5
	82.76	12 - 16.5 HULK	9,75 X 16,5
	82.78	10.5/80 -18I3 - 10PR	9 X 18
	82.79	12.5/80 -18I3 - 10PR	9 X 18
	82.80	12.5/80 -18I3 - 10PR	9 X 18
	82.87	320/80-R18-IT520	9 X 18
	82.89	12.5 - 18	9 X 18

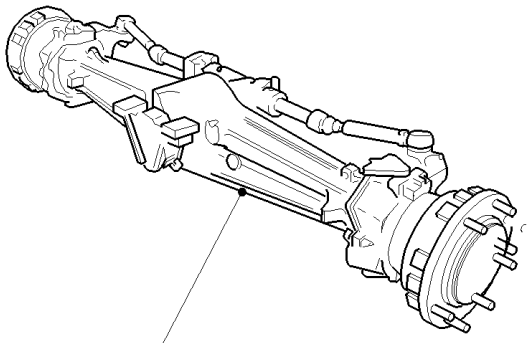

GROUP	EQUIP	TIRE SIZE	RIM
81.00	81.38	11L - 16SLF3 - 10PR	W8LX 16

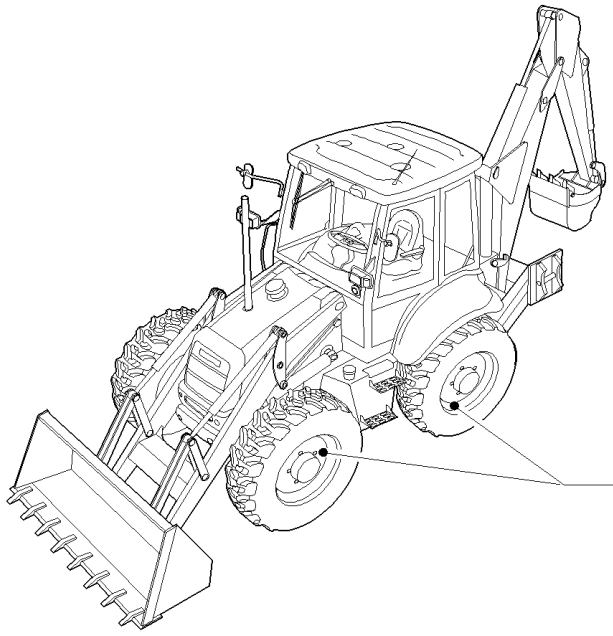

GROUP	EQUIP	TIRE SIZE	RIM
85.00	85.64	16.9 - 24 R4 - 12PR	W14LX 24
	85.64	16.9 - 24 R4 - 12PR (I.S.G.)	W15LX 24
	85.65	16.9 - 28 R4 - 12PR	W15LX 28
	85.65	16.9 - 28 R4 12PLY GY (I.S.G.T.)	W14LX 28
	85.66	440/80 R28 156A8 IT530	W14LX 28
	85.67	440/80 R28 156A8 IT520	W14LX 28

Ref	Numero de Pieza	Ctd	Descripción

803(01) FENDERS, FRONT

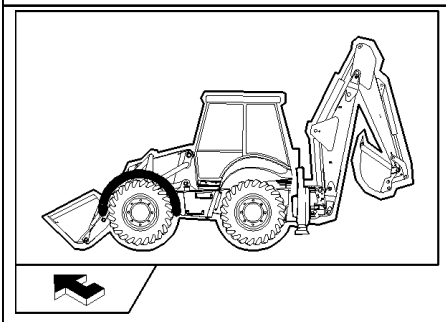

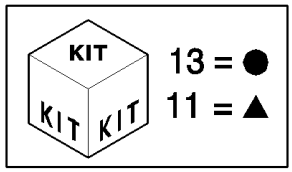

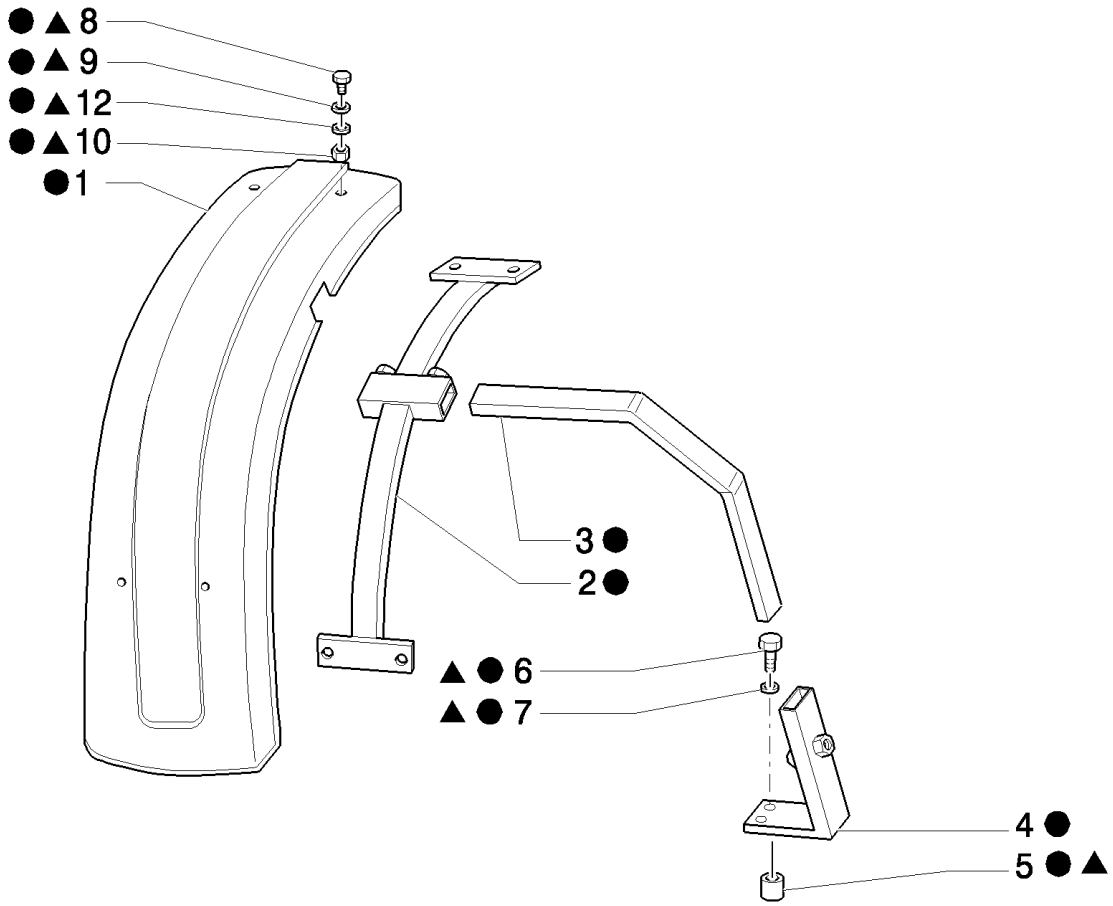

B110 TIER 3 BACKHOE LOADER (2/07-)

803(01) FENDERS, FRONT

Ref	Numero de Pieza	Ctd	Descripción
1	9968885	1	FENDER, FRONT, LH
1	9968886	1	FENDER, FRONT, RH
2	9968884	2	SUPPORT,
3	85826132	2	SUPPORT,
4	85826134	1	SUPPORT, RH
4	85826133	1	SUPPORT, LH
5	87348002	6	SPACER,
6	11119121	6	BOLT, Hex, M16 x 60, 8.8,
7	14496901	6	WASHER, M16 x 30 x 3,
8	87302831	8	SCREW, M6 x 20
9	11194779	8	WASHER, SPRING, Belleville, M6.4, 6.5x18x1.5
10	12574211	8	NUT, LOCK, M6 x 1, Cl 8,
11	87302715	1	KIT, M10x20, Includes 5 To 12
12	11193279	8	WASHER, SPRING, Belleville, M6.4,
13	85826131	8	KIT,

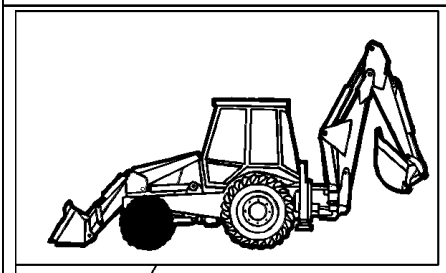

EQUIP	TIRE SIZE	RIM
81.38	11L-16SL F3-10PR	W8LX 16

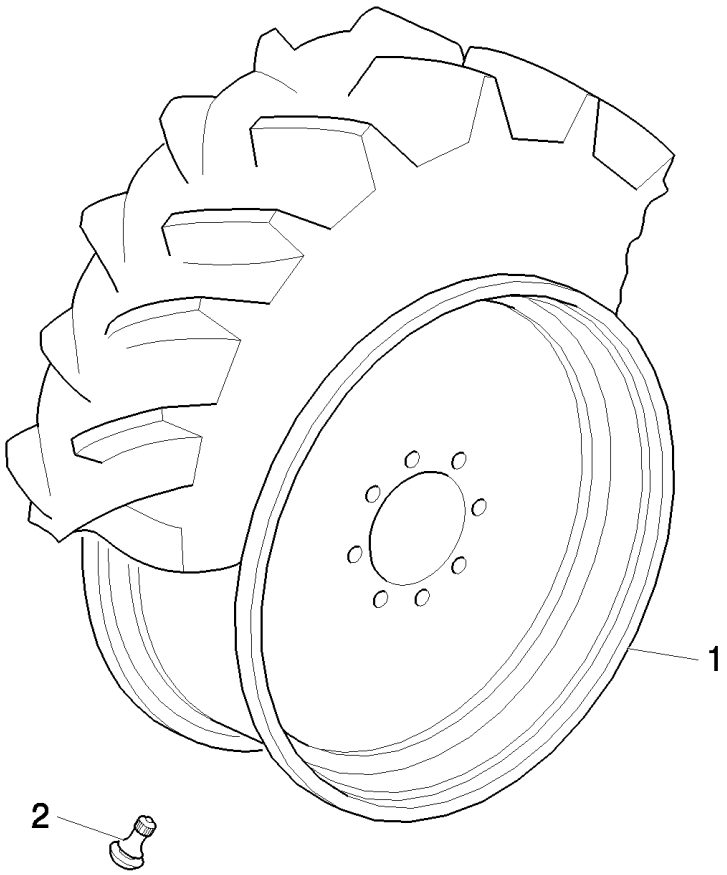

B110 TIER 3 BACKHOE LOADER (2/07-)

81.00(01) FRONT WHEELS (2WD) - NA

Ref	Numero de Pieza	Ctd	Descripción
1	85812260	2	WHEEL, W8Lx16
2	85700224	2	VALVE STEM,

82.00(01) DRIVING WHEELS(4WD) - NA

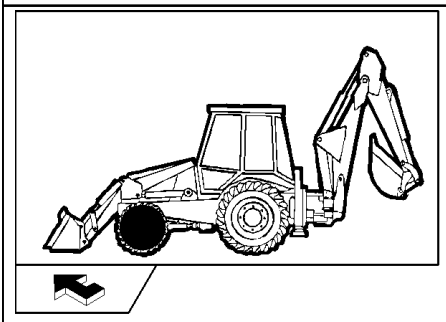

EQUIP	TIRE SIZE	RIM
82.75	14-17.5NHS-8PR	10.5X17.5
82.76	12-16.5NHS-8PR	9.75X16.5
82.76	12-16.5HULK	9.75X16.5

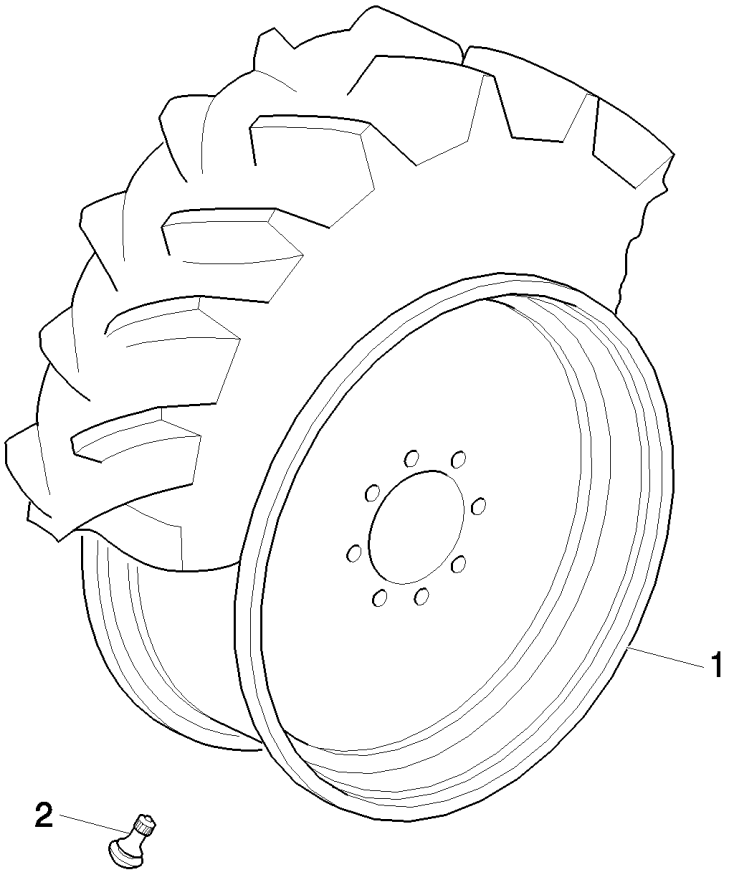

B110 TIER 3 BACKHOE LOADER (2/07-)

82.00(01) DRIVING WHEELS(4WD) - NA

Ref	Numero de Pieza	Ctd	Descripción
1	85803673	2	WHEEL, 10.5 x 17.5
1	85803675	2	WHEEL, 9.75x16.5
2	85700224	2	VALVE STEM,

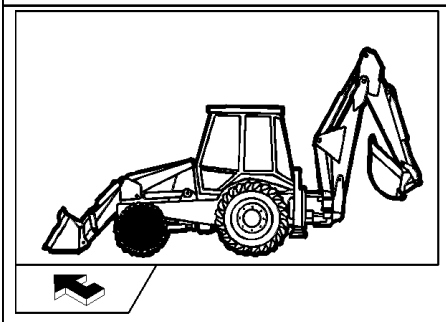

EQUIP	TIRE SIZE	RIM
82.78	10.5/80-18I3-10PR	9X18
82.79	12.5/80-18I3-10PR	9X18
82.80	12.5/80-18I3-10PR	9X18

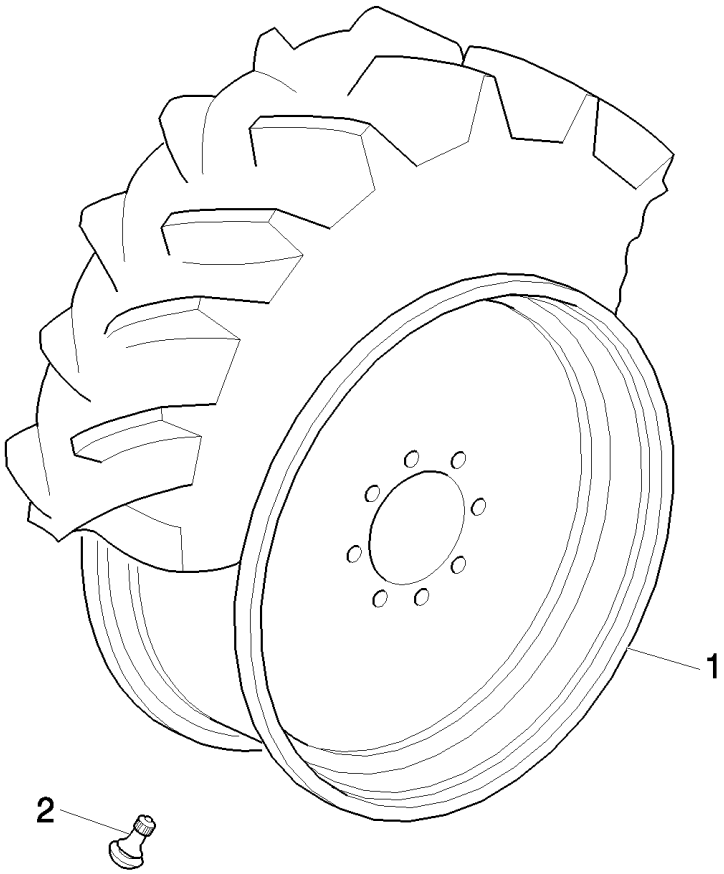

B110 TIER 3 BACKHOE LOADER (2/07-)

82.00(02) FRONT WHEELS (4WD) - EU

Ref	Numero de Pieza	Ctd	Descripción
1	87305236	2	WHEEL, 9x18
2	85700224	2	VALVE STEM,

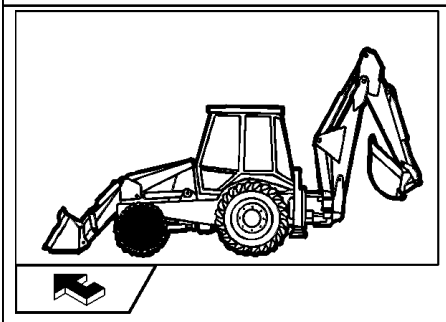

EQUIP	TIRE SIZE	RIM
82.87	320 R18 IT520	9X18
82.89	12.5 - 18	9X18

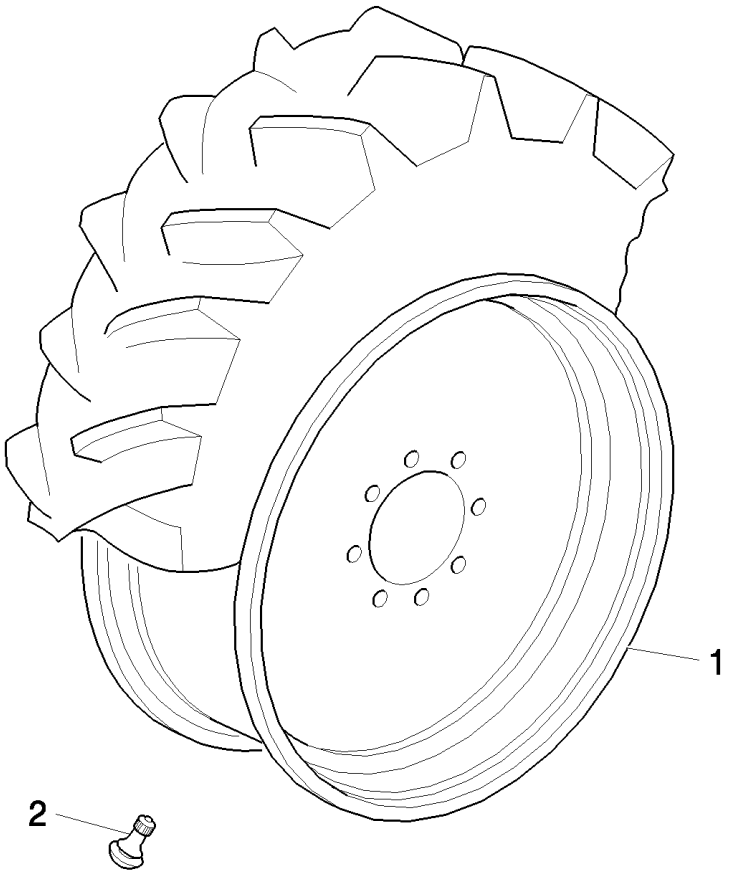

B110 TIER 3 BACKHOE LOADER (2/07-)

82.00(03) FRONT WHEELS (4WD) - EU

Ref	Numero de Pieza	Ctd	Descripción
1	87305236	2	WHEEL, 9x18
2	85700224	2	VALVE STEM,

83.00(01) REAR WHEELS - NA

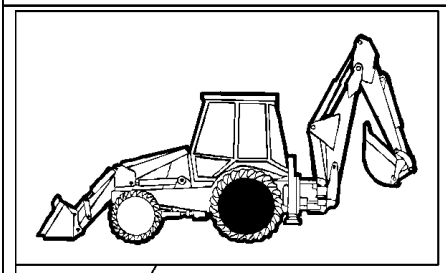

EQUIP	TIRE SIZE	RIM
83.52	16.9-28 R4-10 PLY TITAN	W15LX28
83.64	16.9-24R4-10R	W15LX24
83.65	17.5L24 R4-10PR	W15LX24
83.91	19.5L24 R4-10PR	W16LX24
83.92	21L24 R4 - 10PR	W18LX24
83.93	19,5 x 24 "JUMBO HULK"	W16LX24

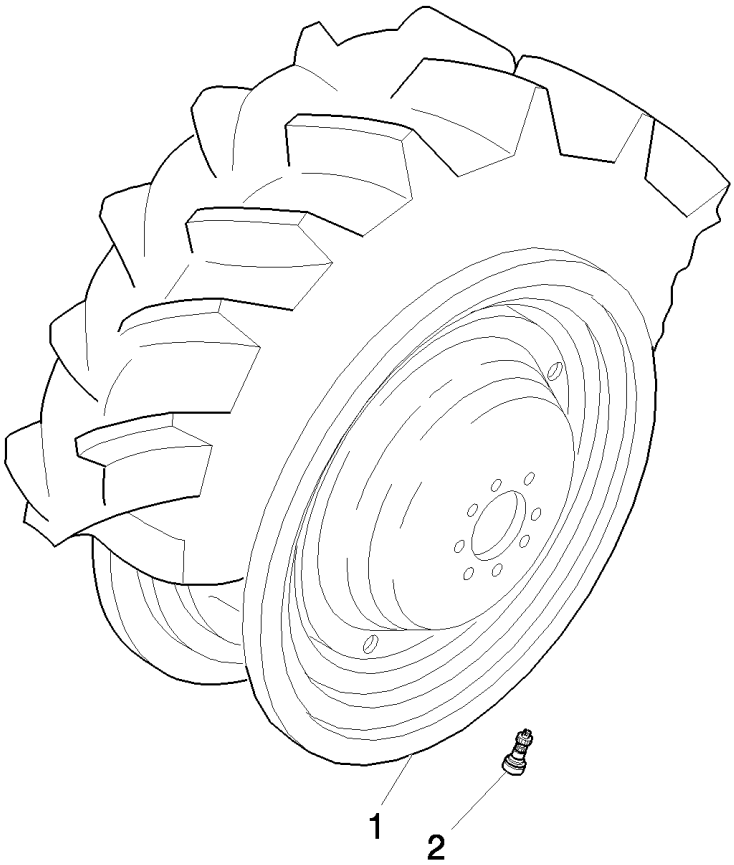

B110 TIER 3 BACKHOE LOADER (2/07-)

83.00(01) REAR WHEELS - NA

Ref	Numero de Pieza	Ctd	Descripción
1	85803679	2	WHEEL, W15L x 28
1	85803681	2	WHEEL, W16Lx24
1	85816850	2	WHEEL, W15L x 24
1	85824195	2	WHEEL, W18L x 24
2	85700224	2	VALVE STEM,

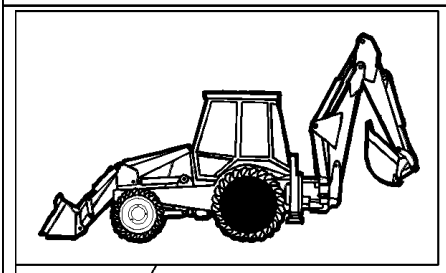

EQUIP	TIRE SIZE	RIM
83.62	16.9-28 R4-12PR	W14LX28
83.92	18.4-26R4-12PR	DW16LX26
83.93	18.4-26R1-12PR	DW16LX26

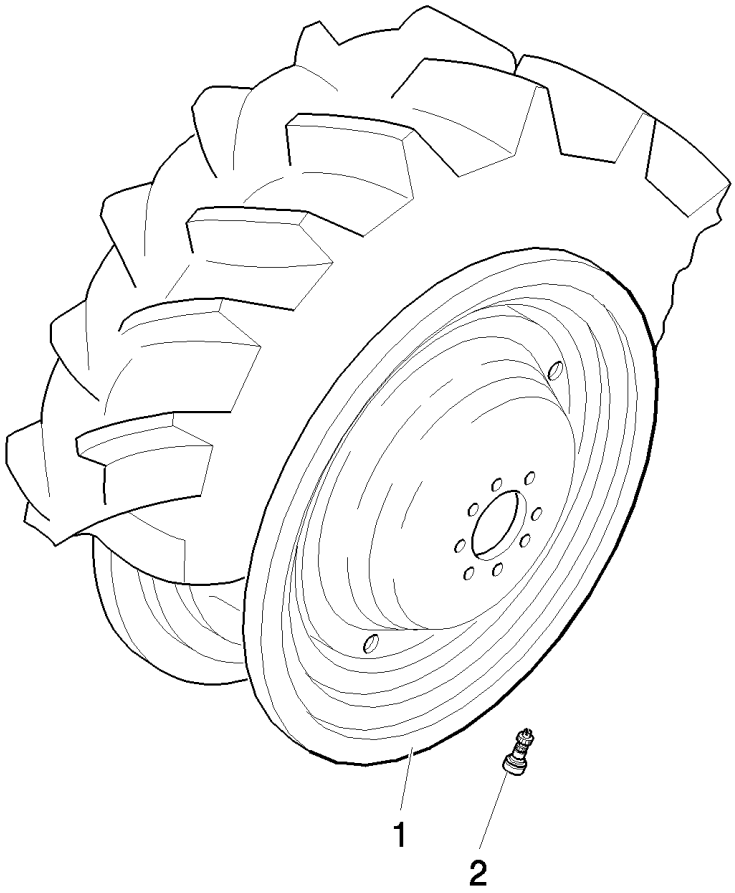

B110 TIER 3 BACKHOE LOADER (2/07-)

83.00(02) REAR WHEELS (SIDE SHIFT) - EU

Ref	Numero de Pieza	Ctd	Descripción
1	87305240	2	WHEEL, W14Lx28
1	87341374	2	WHEEL, DW16Lx26
2	85700224	2	VALVE STEM,

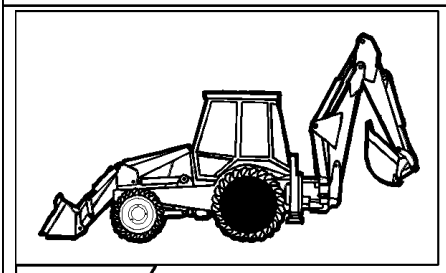

EQUIP	TIRE SIZE	RIM
83.96	480/80 R26 IT520	DW16LX26
83.97	16.9 - 28	W14LX28Z
83.98	18.4 - 26	DW16LX26

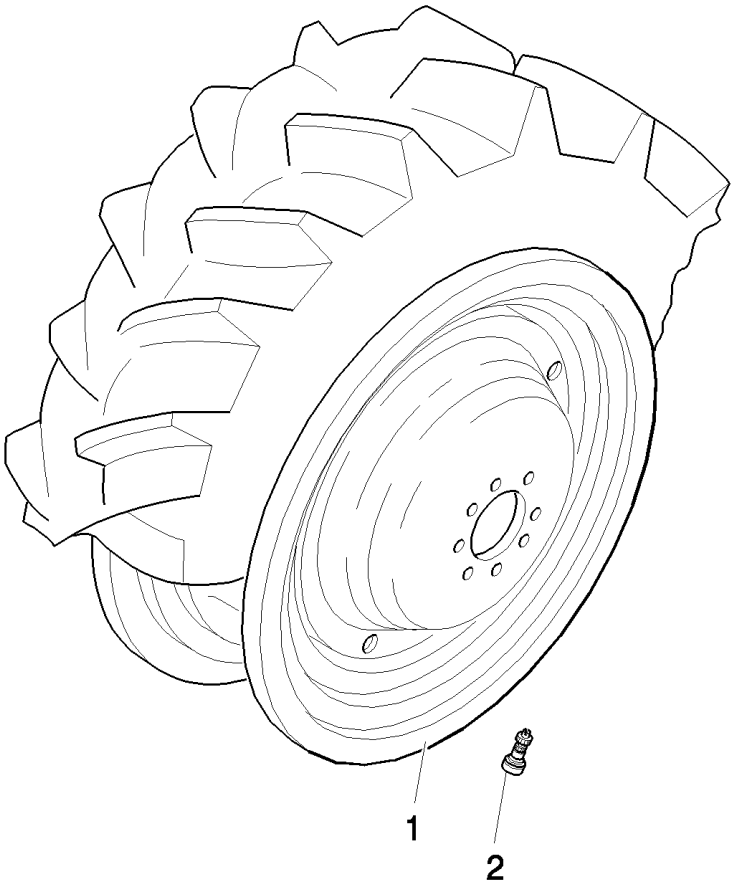

B110 TIER 3 BACKHOE LOADER (2/07-)

83.00(03) FRONT WHEELS (2WD/4WD) - EU

Ref	Numero de Pieza	Ctd	Descripción
1	87341374	2	WHEEL, DW16Lx26
1	87305240	2	WHEEL, W14X28
1	87341374	2	WHEEL, DW16X26
2	85700224	2	VALVE STEM,

851(01) CLOTH SEAT & ATTACHING HARDWARE - CABINE

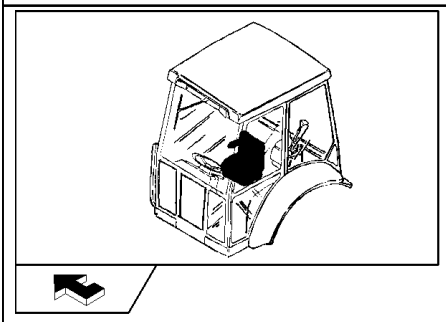

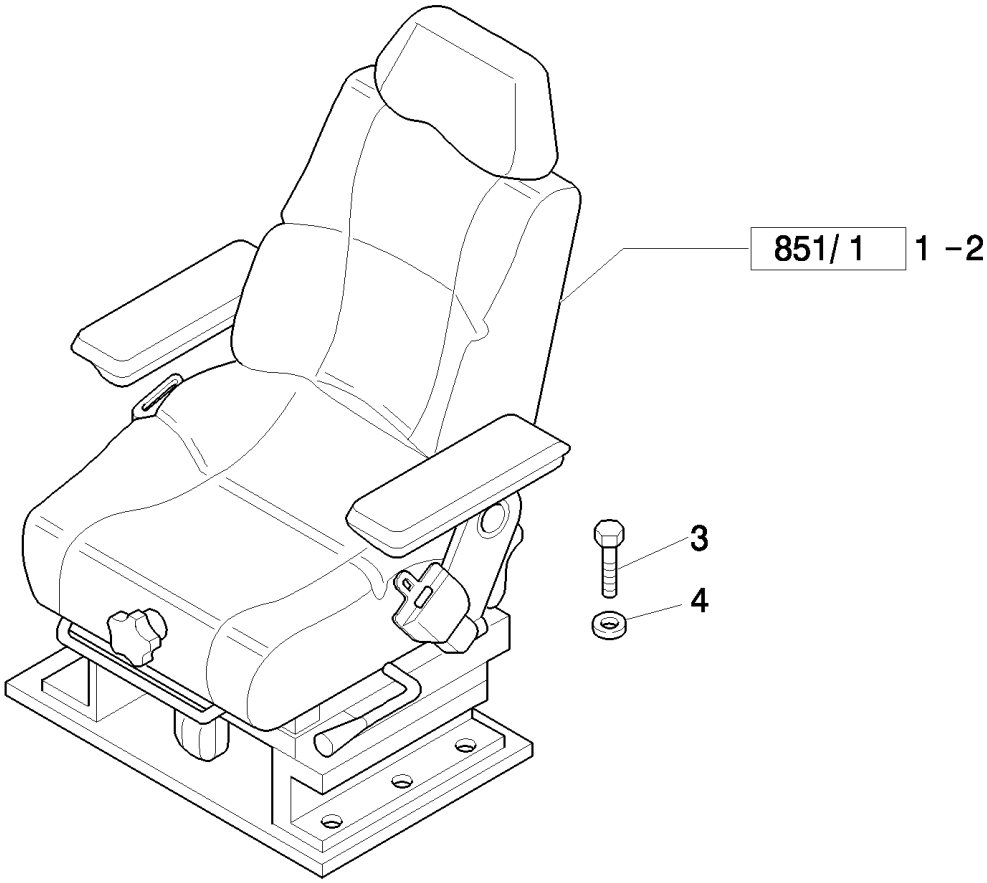

B110 TIER 3 BACKHOE LOADER (2/07-)

851(01) CLOTH SEAT & ATTACHING HARDWARE - CABINE

Ref	Numero de Pieza	Ctd	Descripción
1	87576858	1	SEAT, , Mechanical Control Version, Consists Of Page 851/1 01 to 851/1 04, Only for NA Version, 3" Seat Belt
1	87576859	1	SEAT, , Only for NA Version, Mechanical Control Version, Only for EU Version, Consists Of Page 851/1 01 to 851/1 04, 2" Seat Belt
2	87576866	1	SEAT, , Consists Of Page 851/1 01 to 851/1 04, Only for Pilot Control Version, 3" Seat Belt, Only for NA Version
2	87576867	1	SEAT, , Only for NA Version, 2" Seat Belt, Only for EU Version, Only for Pilot Control Version, Consists Of Page 851/1 01 to 851/1 04
3	16043424	8	SCREW, Hex, M8 x 20, 8.8, Full Thd,
4	11198074	8	WASHER, SPRING, Belleville, M8.4,

851/1(01) CLOTH SEAT CUSHIONS, ARMRESTS & RELATED PARTS

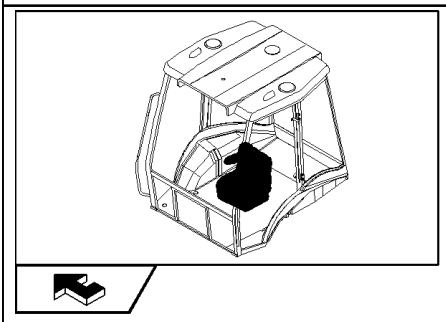

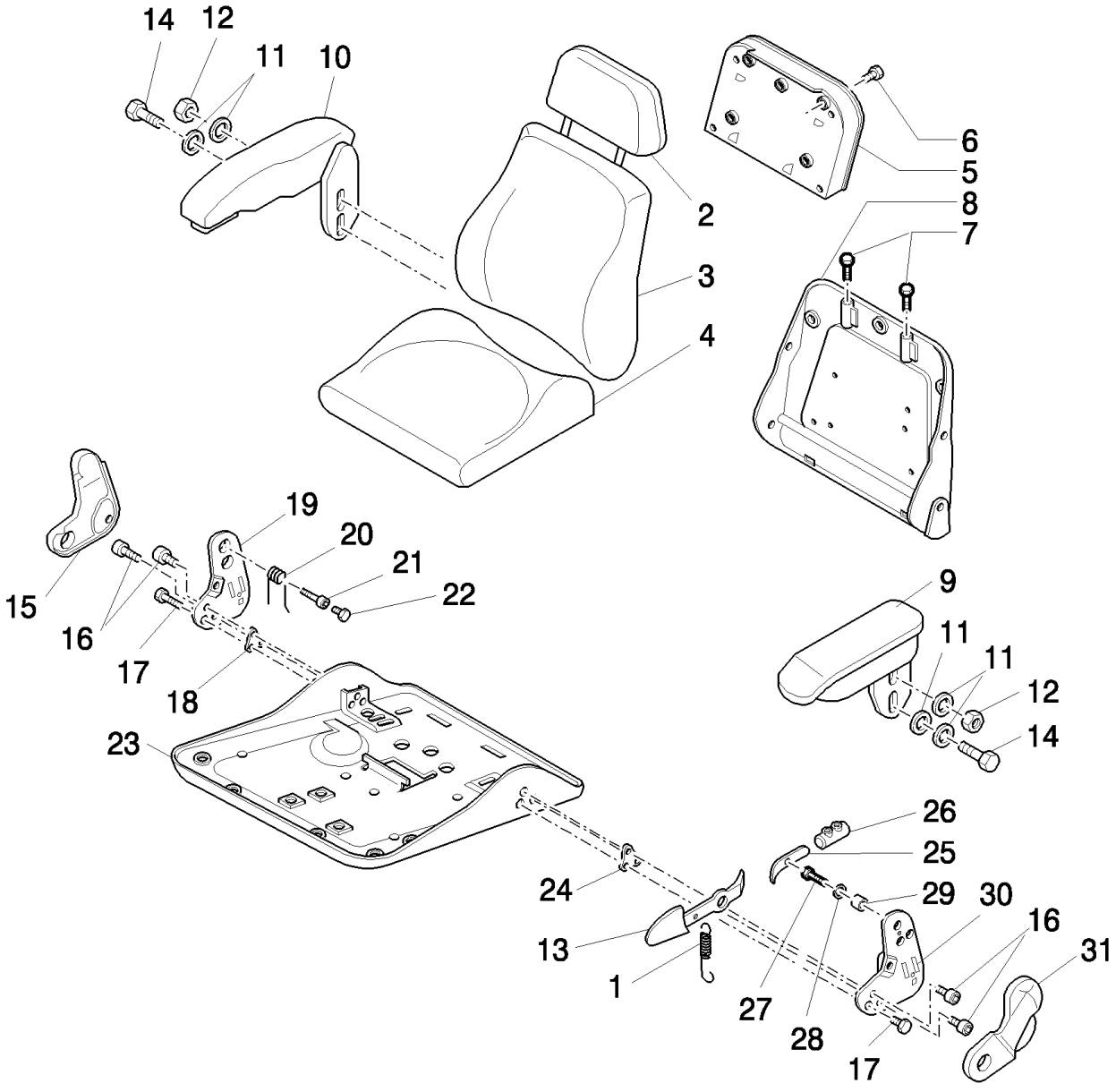

B110 TIER 3 BACKHOE LOADER (2/07-)

851/1(01) CLOTH SEAT CUSHIONS, ARMRESTS & RELATED PARTS

Ref	Numero de Pieza	Ctd	Descripción
1	9960797	1	SPRING,
2	85817452	1	HEADREST, SEAT,
3	85817454	1	SEAT, BACK,
4	85817455	1	CUSHION, SEAT,
5	85817481	1	HOLDER, , Includes 6
6	82034863	4	SCREW,
7	47335213	2	BUSHING,
8	85817485	1	SEAT, BACK, , Includes 7, 21
9	85817453	1	ARMREST, LH, Includes 11, 12, 14, Only for Mechanical Control Version 87576859 - 87576858
9	85828196	1	ARMREST, LH, Includes 11, 12, 14, Only for Pilot Control Version 87576867 - 87576866
10	85827918	1	ARMREST, RH, Includes 11, 12, 14
11	82034881	AR	WASHER,
12	85817459	2	NUT,
13	85817478	1	LEVER,
14	83984666	1	SCREW,
15	85817466	1	COVER, RH
16	9972160	AR	SCREW, M8x25
17	87395582	2	BOLT, 7/16"-20UNF x 60.0
18	85817470	1	PLATE,
19	9960795	1	PLATE, RH
20	9960793	1	SPRING,
21	85817469	1	BUSHING,
22	85817471	1	SCREW, M8 x 40
23	85821419	1	PLATE, RETAINING,
24	85817476	1	PLATE,
25	85817460	1	LEVER,
26	85821418	1	STOP DEVICE,
27	82035038	1	SCREW,
28	9960692	AR	SPACER,
29	85817477	1	SPACER,
30	9960803	1	PLATE, LH
31	85817479	1	COVER, RH

851/1(02) CLOTH SEAT MOUNTING PLATE, ADJUSTING RAILS & SEAT BELT

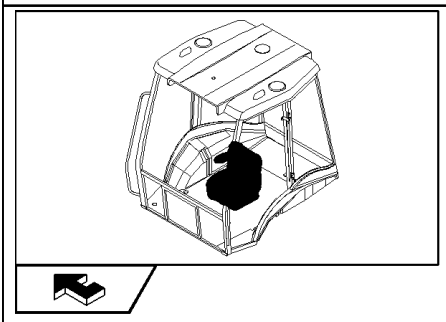

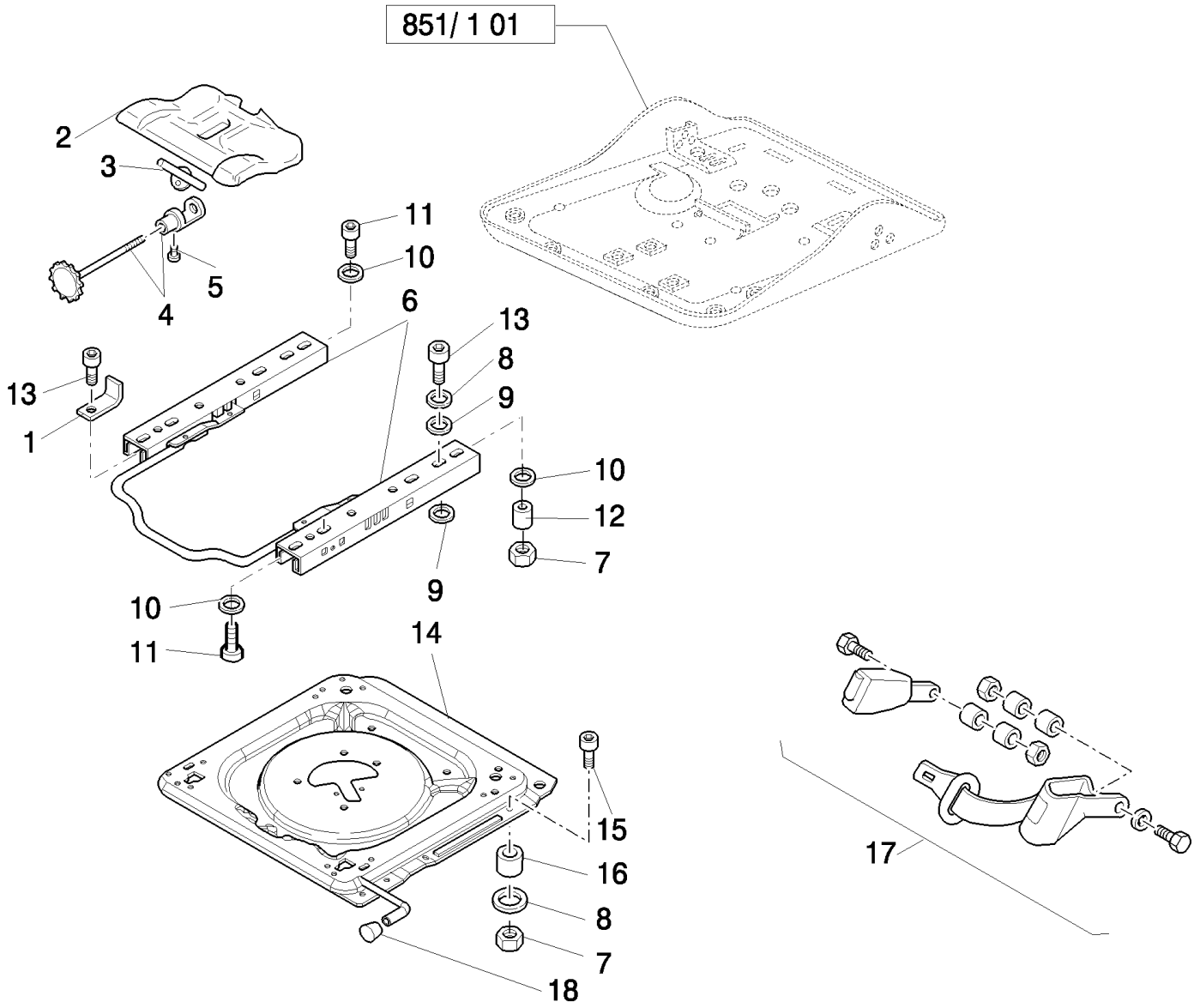

B110 TIER 3 BACKHOE LOADER (2/07-)

851/1(02) CLOTH SEAT MOUNTING PLATE, ADJUSTING RAILS & SEAT BELT

Ref	Numero de Pieza	Ctd	Descripción
1	85824204	2	BRACKET,
2	71485488	1	CONTROL, , Includes 3 to 5
3	85817463	1	PLATE,
4	85817464	1	SCREW, ADJUSTMENT, , Includes 3, 5
5	9962962	1	SCREW, M5 x 10
6	85817484	1	KIT,
7	85817458	9	NUT,
8	9960692	AR	SPACER,
9	9958776	9	SPACER,
10	82034881	AR	WASHER,
11	82034893	4	SCREW,
12	85819813	1	BUSHING,
13	9972160	AR	SCREW, M8x25
14	87395588	1	PLATE, , Includes 18
15	85817465	4	SCREW, M8 x 40
16	85817456	4	SPACER,
17	87364220	1	SEAT BELT, , 2" Seat Belt 87576859 - 87576867
17	87364221	1	SEAT BELT, , 3" Seat Belt 87576858 - 87576866
18	85817482	1	KNOB,
19	85824204	2	BRACKET,

851/1(03) CLOTH SEAT UPPER SUSPENSION PARTS

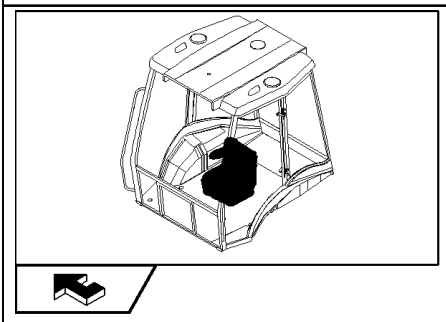

2 SEE ALSO TAV. 851/ 1 04

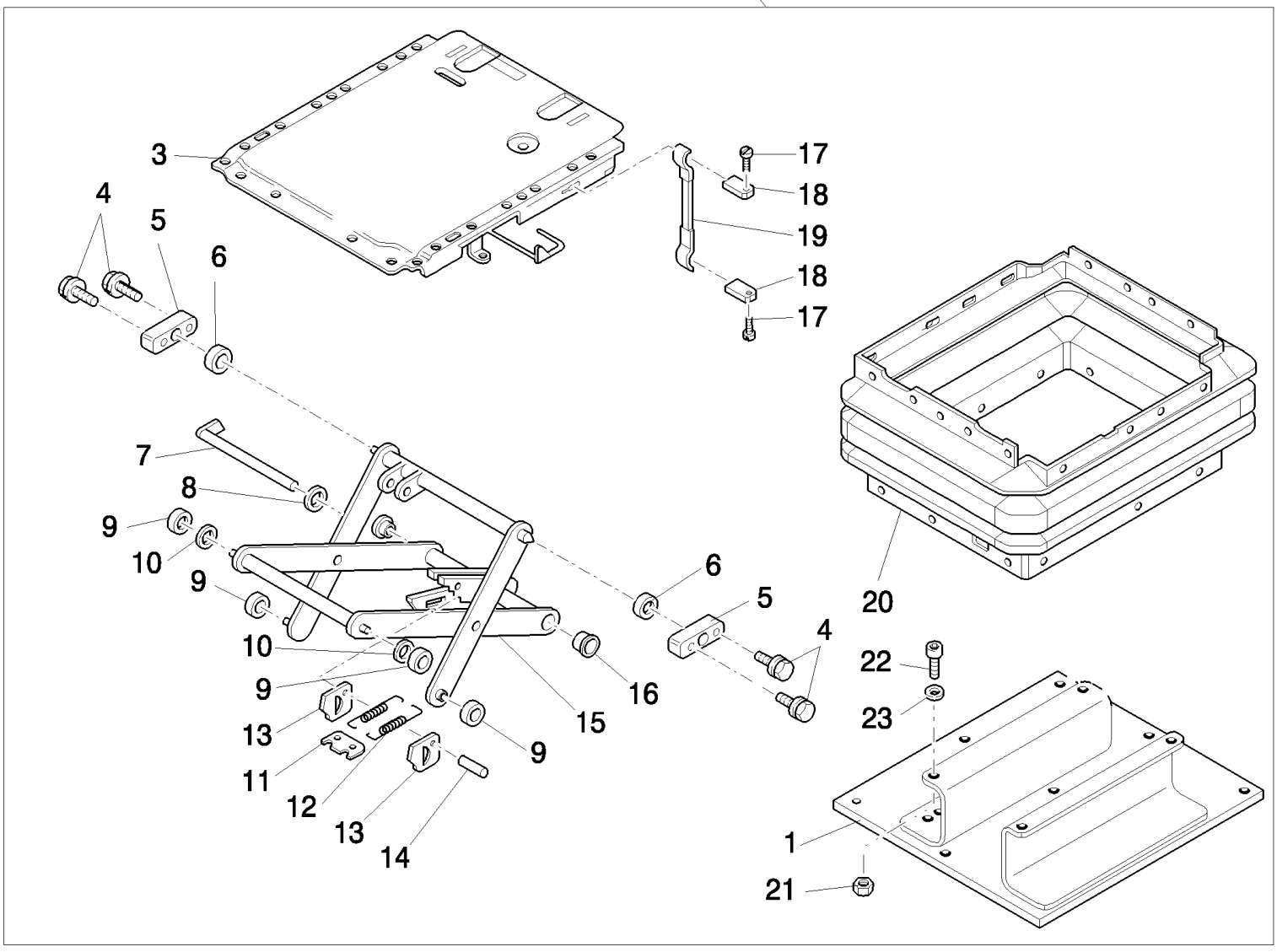

B110 TIER 3 BACKHOE LOADER (2/07-)

851/1(03) CLOTH SEAT UPPER SUSPENSION PARTS

Ref	Numero de Pieza	Ctd	Descripción
1	85817427	1	PLATE, RETAINING,
2	85817426	1	SUSPENSION,
3	85817450	1	PLATE,
4	85817444	4	SCREW, M6 x 16
5	82035094	2	BEARING, , Includes 4, 6
6	85817445	2	BUSHING,
7	85817429	1	BOLT,
8	82035127	1	WASHER,
9	82035031	4	ROLLER,
10	85817442	2	BUSHING,
11	82035030	1	PLATE,
12	85817430	2	SPRING,
13	9958792	2	PLATE,
14	82035036	1	BOLT,
15	85817446	1	SUSPENSION, , Includes 7, 9 to 14, 16
16	9960755	2	BUSHING,
17	85817448	2	RIVET,
18	85817449	2	PLATE,
19	85817447	1	HANDLE, , Includes 17, 18
20	85817428	1	BELLOWS,
21	85817458	4	NUT, M8
22	82034893	4	SCREW,
23	82034881	4	WASHER,

851/1(04) CLOTH SEAT LOWER SUSPENSION PARTS

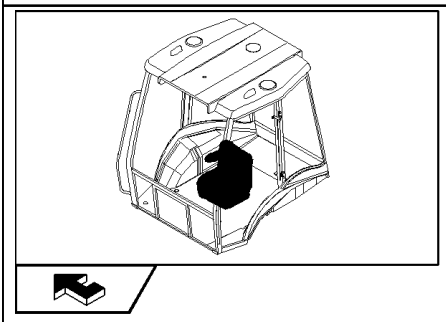

2 SEE ALSO TAV. 851/ 1 03

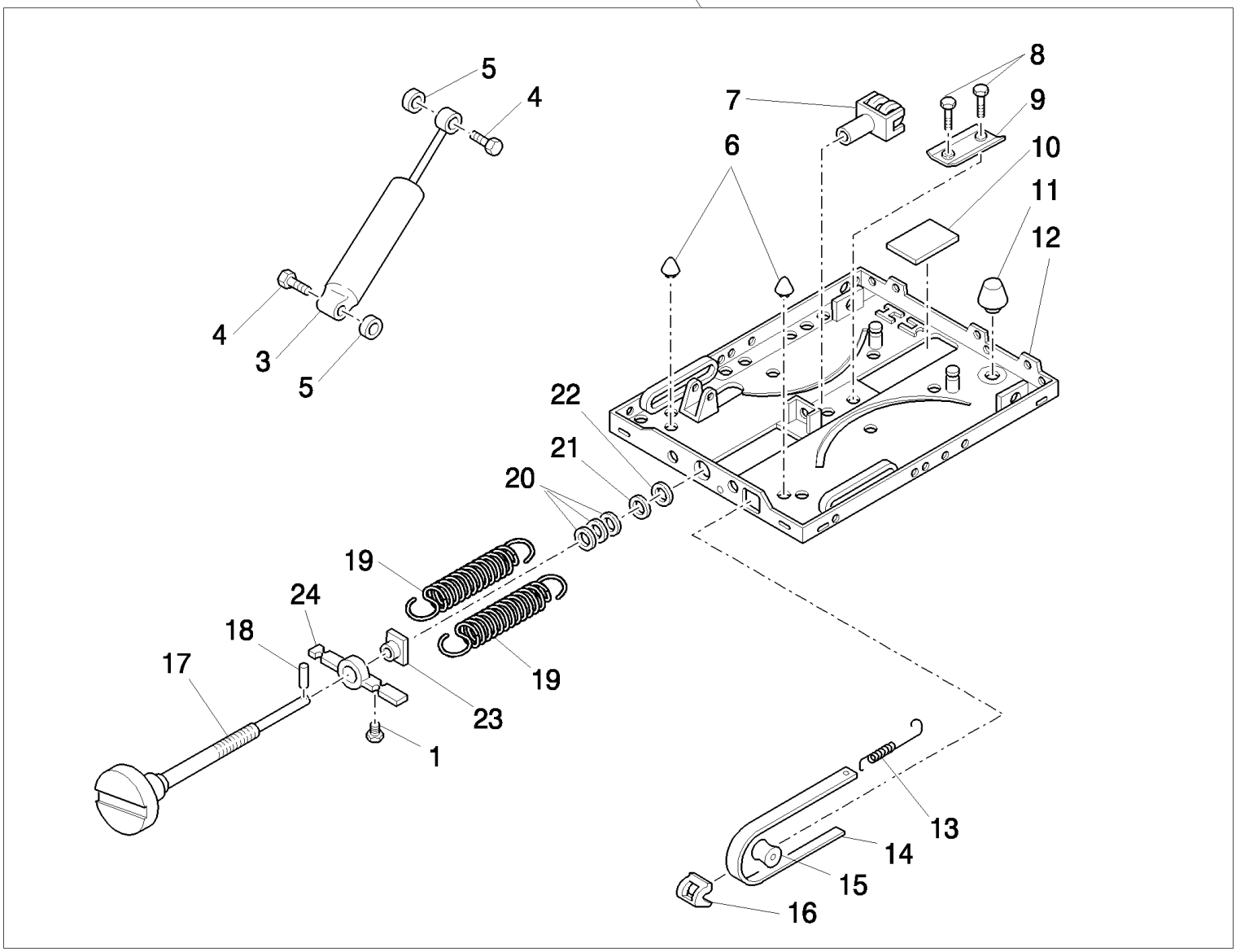

B110 TIER 3 BACKHOE LOADER (2/07-)

851/1(04) CLOTH SEAT LOWER SUSPENSION PARTS

Ref	Numero de Pieza	Ctd	Descripción
1	82035033	1	RETAINER,
2	85817426	1	SUSPENSION,
3	85817431	1	SHOCK ABSORBER, , Includes 4, 5
4	82035040	2	BOLT,
5	82035128	2	WASHER,
6	85817440	2	BUMPER, RUBBER,
7	82035043	1	FORK,
8	82035037	2	RIVET,
9	82035054	1	PROFILE,
10	82035032	1	PLATE,
11	85817441	1	BUMPER, RUBBER,
12	85817436	1	SUSPENSION, , Includes 6, 8 to 11
13	82035039	1	SPRING,
14	85817443	1	INDICATOR, , Includes 13, 15, 16, 25
15	82035029	1	ROLLER,
16	82035025	1	GUIDE,
17	85817451	1	SCREW, ADJUSTMENT, , Includes 18
18	85817433	1	DOWEL,
19	85817434	2	SPRING,
20	82035035	1	SET OF WASHERS,
21	82035028	1	WASHER,
22	85817435	1	BUSHING,
23	82035034	1	NUT,
24	82035027	1	BRACKET,

855(01) AIR RIDE CLOTH SEAT & ATTACHING HARDWARE - CABINE

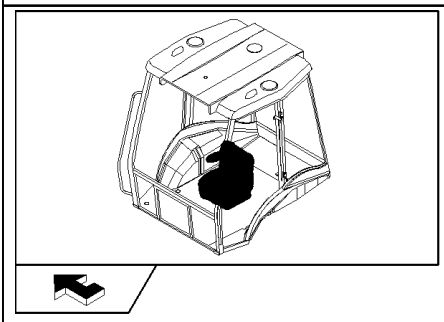

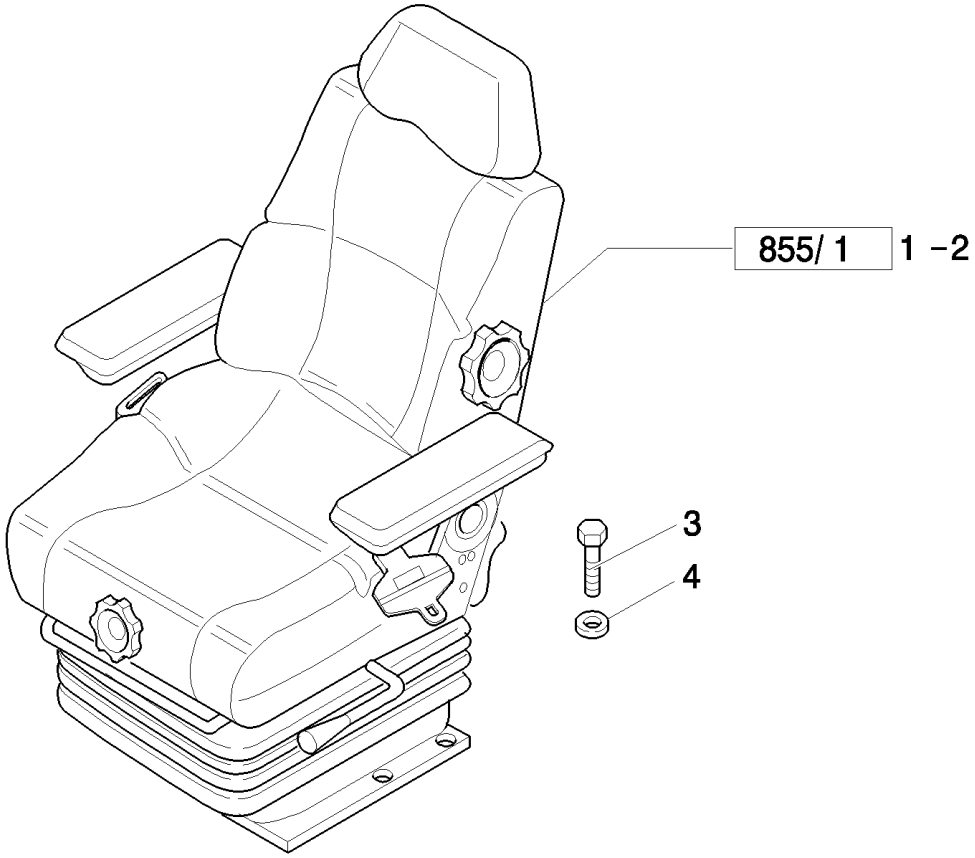

B110 TIER 3 BACKHOE LOADER (2/07-)

855(01) AIR RIDE CLOTH SEAT & ATTACHING HARDWARE - CABINE

Ref	Numero de Pieza	Ctd	Descripción
1	87576861	1	SEAT, , Consists Of Page 855/1 01 to 855/1 05, Only for EU Version, Only for NA Version, 2" Seat Belt, Mechanical Control Version
1	87576862	1	SEAT, , Only for NA Version, Consists Of Page 855/1 01 to 855/1 05, 3" Seat Belt, Mechanical Control Version
2	87576868	1	SEAT, , Consists Of Page 855/1 01 to 855/1 05, Only for NA Version, 2" Seat Belt, Only for EU Version, Only for Pilot Control Version
2	87576869	1	SEAT, , Only for Pilot Control Version, 3" Seat Belt, Only for NA Version, Consists Of Page 855/1 01 to 855/1 05
3	16043424	8	SCREW, Hex, M8 x 20, 8.8, Full Thd,
4	11198074	8	WASHER, SPRING, Belleville, M8.4,

855/1(01) AIR RIDE CLOTH SEAT CUSHIONS, ARMRESTS & RELATED PARTS

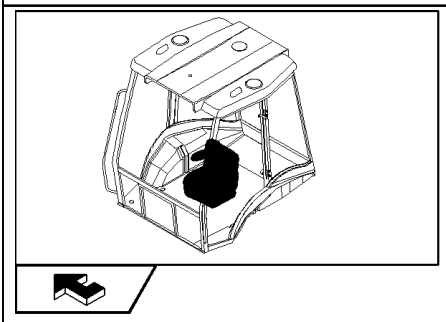

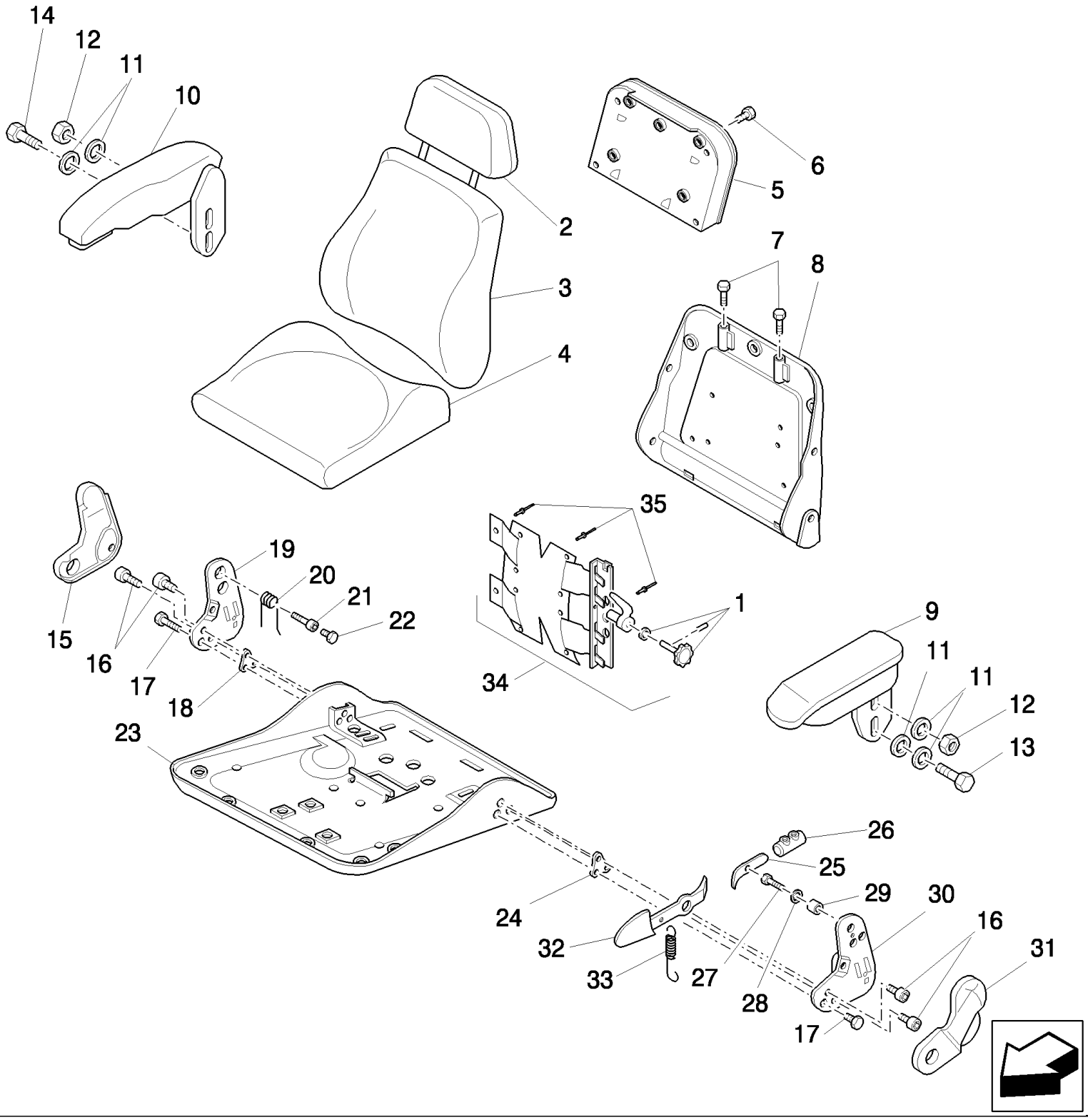

B110 TIER 3 BACKHOE LOADER (2/07-)

855/1(01) AIR RIDE CLOTH SEAT CUSHIONS, ARMRESTS & RELATED PARTS

Ref	Numero de Pieza	Ctd	Descripción
1	85817534	1	SCREW, ADJUSTMENT,
2	85817452	1	HEADREST, SEAT,
3	85817535	1	SEAT, BACK,
4	85817455	1	CUSHION, SEAT,
5	85817481	1	HOLDER, , Includes 6
6	82034863	4	SCREW,
7	47335213	2	BUSHING,
8	85817532	1	HEADREST, SEAT, , Includes 7, 34
9	85817453	1	ARMREST, LH, Includes 11 To 13, Only for Mechanical Control Version 87576861 - 87576862
9	85828196	7	ARMREST, , Only for Pilot Control Version 87576868 - 87576869, Includes 11 To 13
10	85827918	1	ARMREST, RH, Includes 11, 12, 14
11	82034881	AR	WASHER,
12	85817459	2	NUT, M8
13	83984666	1	SCREW,
14	13838071	2	BOLT, Hex Serr Flg, M8 x 20,
15	85817466	1	COVER, RH
16	9972160	6	SCREW,
17	87395582	2	BOLT, 7/16"-20UNF x 60.0
18	85817470	1	PLATE,
19	9960795	1	PLATE, RH
20	9960793	1	SPRING,
21	85817469	1	BUSHING,
22	85817471	1	SCREW,
23	85821419	1	PLATE, RETAINING,
24	85817476	1	PLATE,
25	85817460	1	LEVER,
26	85821418	1	STOP DEVICE,
27	82035038	1	SCREW,
28	9960692	AR	SPACER,
29	85817477	1	SPACER,
30	9960803	1	PLATE, LH
31	85817479	1	COVER, LH
32	85817478	1	LEVER,
33	9960797	1	SPRING,
34	9967970	1	KIT,
35	82034897	3	RIVET,

855/1(02) AIR RIDE CLOTH SEAT MOUNTING PLATE, ADJUSTING RAILS & SEAT BELT

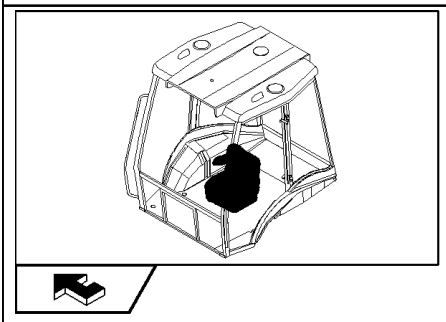

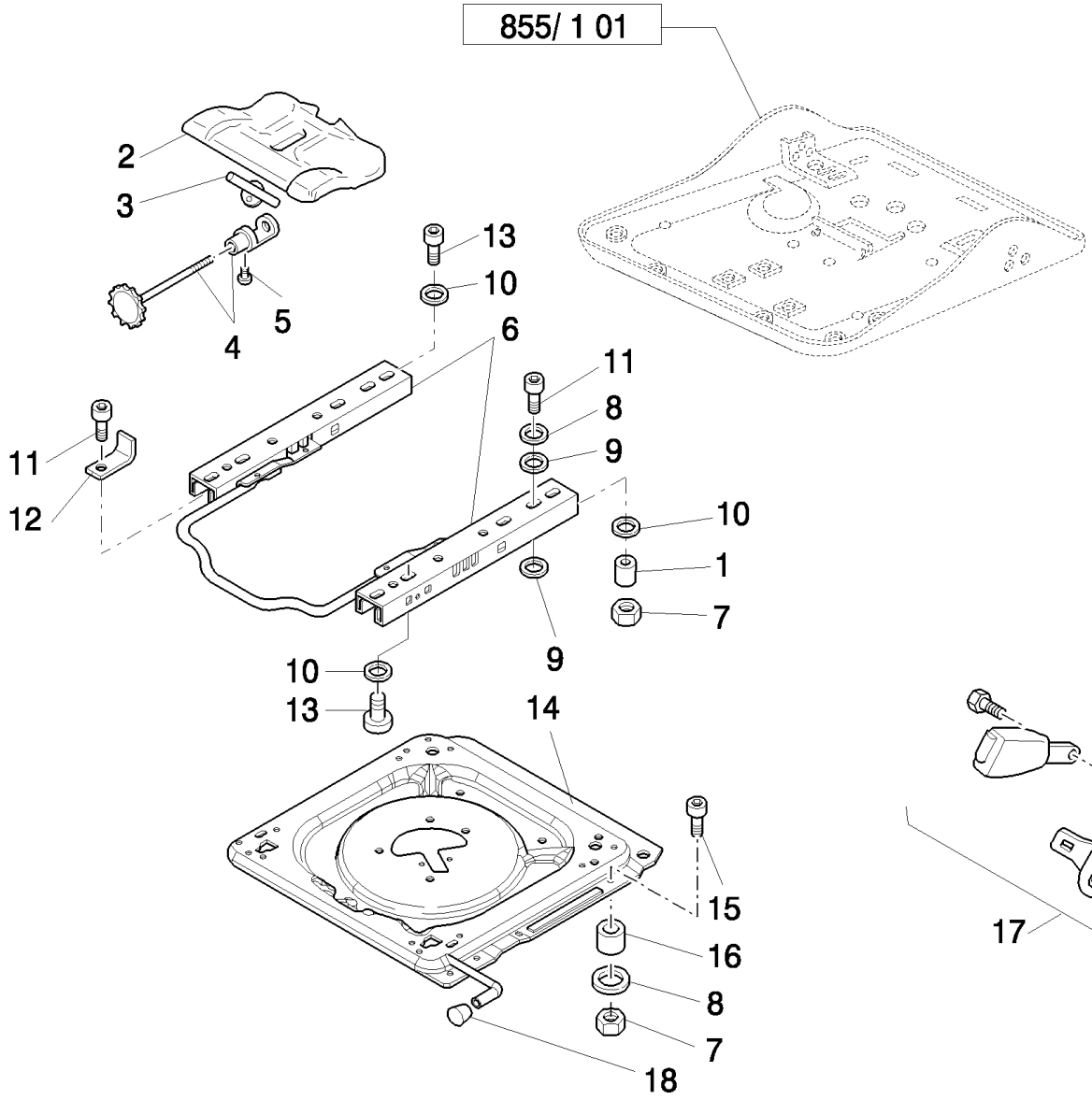

B110 TIER 3 BACKHOE LOADER (2/07-)

855/1(02) AIR RIDE CLOTH SEAT MOUNTING PLATE, ADJUSTING RAILS & SEAT BELT

Ref	Numero de Pieza	Ctd	Descripción
1	85819813	1	BUSHING,
2	71485488	1	CONTROL, , Includes 4
3	85817463	1	PLATE,
4	85817464	1	SCREW, ADJUSTMENT, , Includes 3, 5
5	9962962	1	SCREW, M5 x 10
6	85817484	1	KIT,
7	85817458	8	NUT,
8	9960692	AR	SPACER,
9	9958776	8	SPACER,
10	82034881	AR	WASHER,
11	9972160	AR	SCREW, M8x25
12	85824204	1	BRACKET,
13	82034893	AR	SCREW,
14	87395588	1	PLATE, , Includes 18
15	85817536	4	SCREW,
16	85817456	4	SPACER,
17	87364220	1	SEAT BELT, , 2" Seat Belt 87576861 - 87576868
17	87364221	1	SEAT BELT, , 3" Seat Belt 87576862 - 87576869
18	85817482	1	KNOB,

855/1(03) AIR RIDE CLOTH SEAT UPPER SUSPENSION PARTS

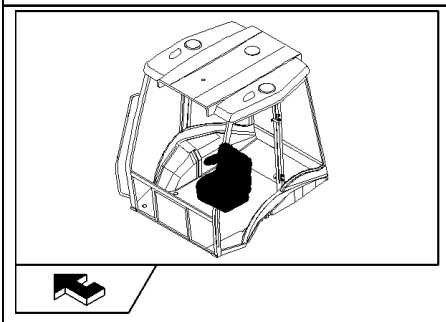

KIT KIT KIT 1 = ●

2 SEE ALSO TAV. 855/ 1 04
SEE ALSO TAV. 855/ 1 05

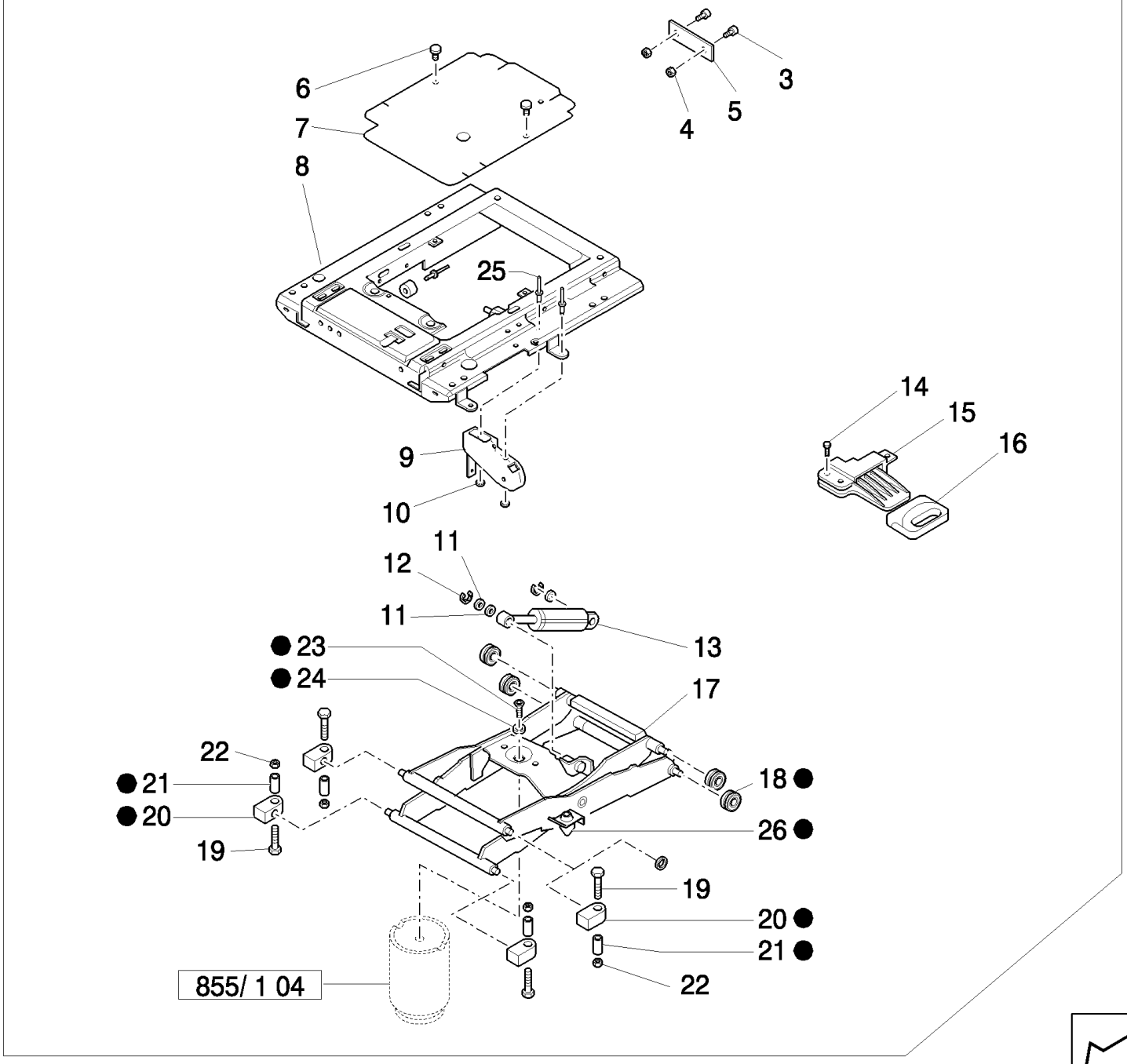

B110 TIER 3 BACKHOE LOADER (2/07-)

855/1(03) AIR RIDE CLOTH SEAT UPPER SUSPENSION PARTS

Ref	Numero de Pieza	Ctd	Descripción
1	82848105	1	KIT,
2	85817529	1	SUSPENSION,
3	82034894	2	SCREW,
4	85817494	1	PLATE,
5	85817458	2	NUT,
6	NS	AR	NOT SERVICED,
7	85817486	1	COVER, , Includes 6
8	85824436	1	SHOCK ABSORBER,
9	85817489	2	WASHER,
10	85817490	1	LEVER, CONTROL,
11	NS	3	NOT SERVICED,
12	85817496	2	WASHER,
13	85824434	1	SHOCK ABSORBER, , Includes 12
14	85819815	3	SCREW,
15	85817493	1	CONTROL,
16	85817492	1	HANDLE,
17	87396449	1	SUSPENSION, , Includes 18, 20
18	82035057	4	ROLLER,
19	NS	4	NOT SERVICED,
20	85817498	AR	BEARING,
21	82035053	AR	TUBE,
22	NS	AR	NOT SERVICED,
23	NS	AR	NOT SERVICED,
24	NS	AR	NOT SERVICED,
25	85817488	2	RIVET,
26	82035126	2	BUMPER,

855/1(04) AIR RIDE CLOTH SEAT LOWER SUSPENSION PARTS

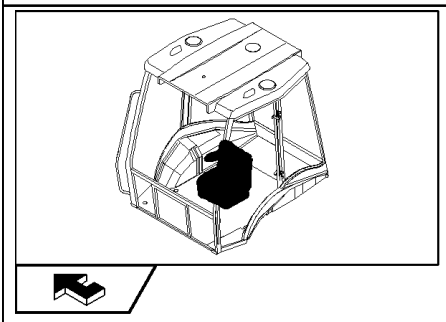

2 SEE ALSO TAV. 855/ 1 03
SEE ALSO TAV. 855/ 1 05

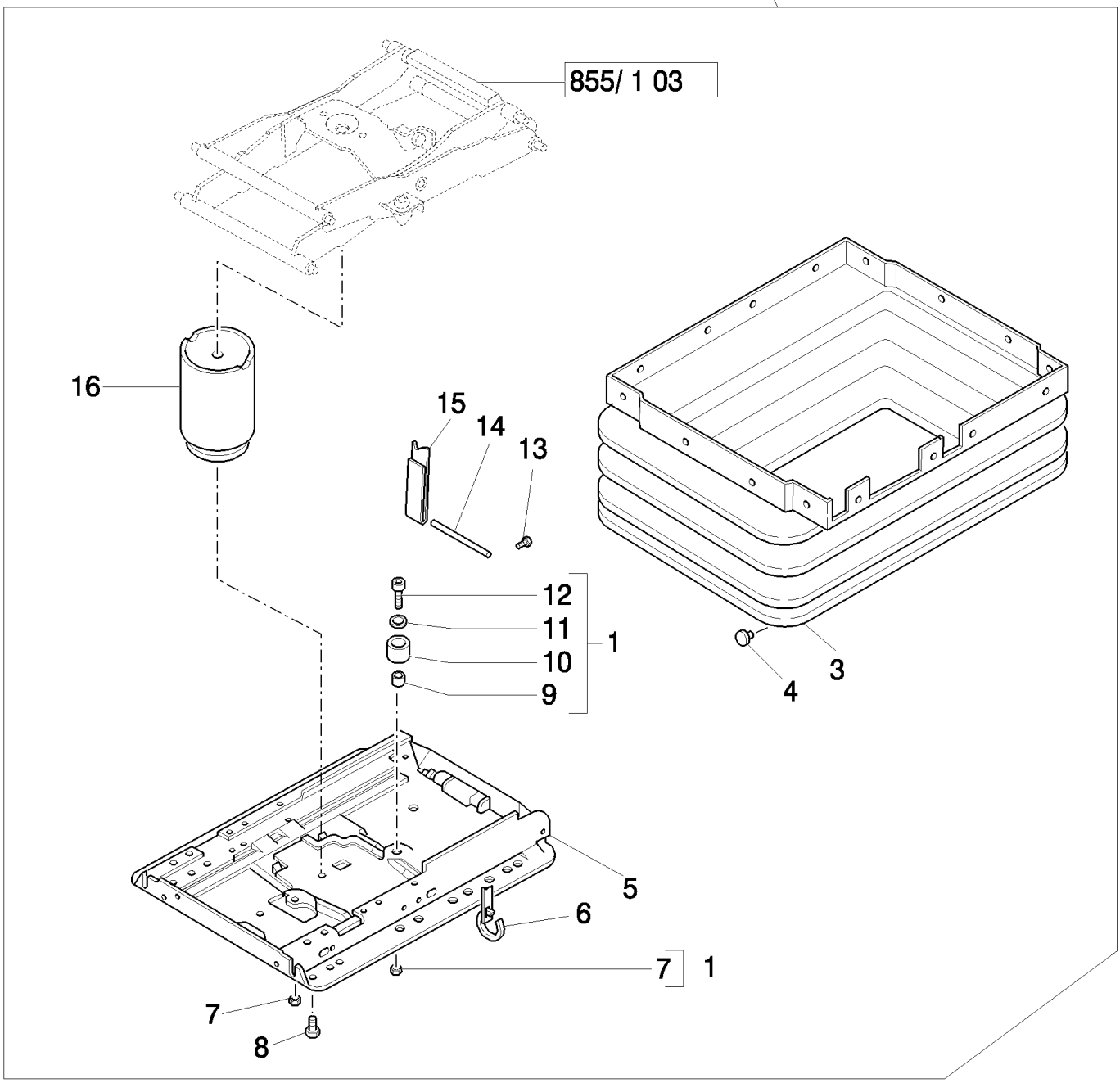

B110 TIER 3 BACKHOE LOADER (2/07-)

855/1(04) AIR RIDE CLOTH SEAT LOWER SUSPENSION PARTS

Ref	Numero de Pieza	Ctd	Descripción
1	85817523	1	GUARD,
2	85817529	1	SUSPENSION,
3	85827920	1	BELLOWS, , Includes 4
4	NS	AR	NOT SERVICED,
5	87396451	1	SUSPENSION, , Includes 4, 7, 10
6	NS	AR	NOT SERVICED,
7	NS	AR	NOT SERVICED,
8	NS	1	NOT SERVICED, M8x20
9	NS	1	NOT SERVICED,
10	NS	1	NOT SERVICED, , Includes 4, 7, 9, 11, 12
11	NS	1	NOT SERVICED,
12	NS	1	NOT SERVICED, M8x20
13	9962962	1	SCREW,
14	85817513	1	PIN,
15	85817512	1	SOFT TRIM,
16	87396450	1	SPRING,

855/1(05) AIR RIDE CLOTH SEAT COMPRESSOR & TUBING

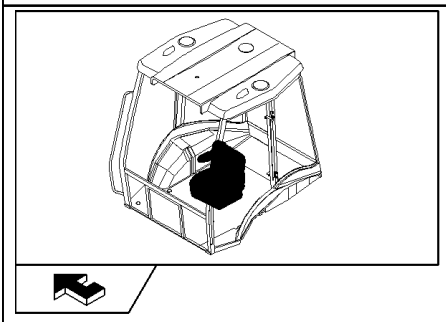

KIT KIT KIT 1 = ●

2 SEE ALSO TAV. 855/ 1 03
SEE ALSO TAV. 855/ 1 04

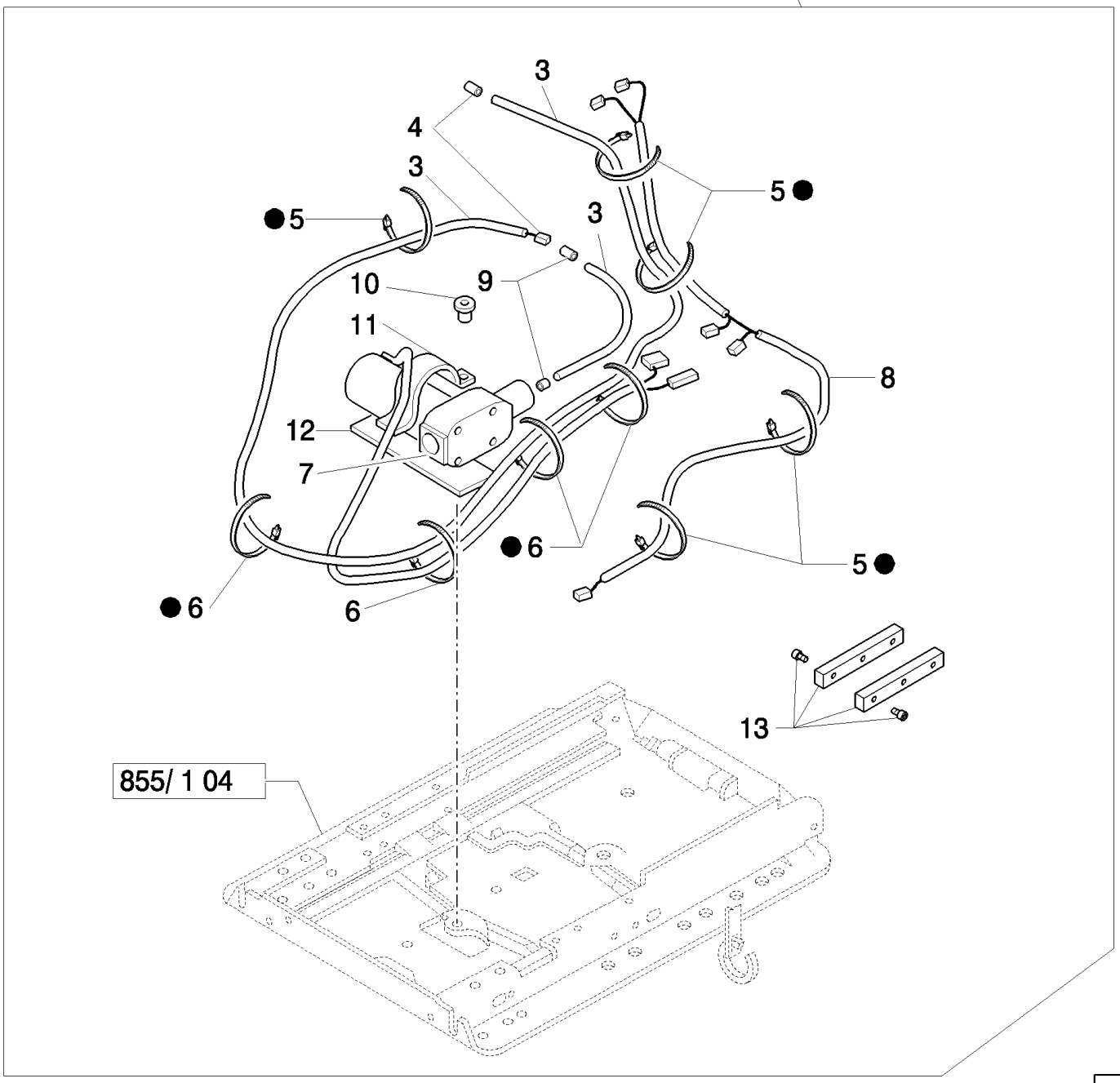

B110 TIER 3 BACKHOE LOADER (2/07-)

855/1(05) AIR RIDE CLOTH SEAT COMPRESSOR & TUBING

Ref	Numero de Pieza	Ctd	Descripción
1	82848105	1	KIT,
2	85817529	1	SUSPENSION,
3	87313729	1	TUBE, HYD,
4	NS	2	NOT SERVICED,
5	NS	AR	NOT SERVICED,
6	NS	4	NOT SERVICED,
7	82035076	1	COMPRESSOR,
8	85819814	1	HARNESS, WIRE,
9	NS	2	NOT SERVICED,
10	NS	1	NOT SERVICED,
11	NS	1	NOT SERVICED,
12	NS	1	NOT SERVICED,
13	47335175	1	STOP,

856(01) VINYL SEAT CUSHIONS, ARMRESTS & RELATED PARTS (ROPS) - NA

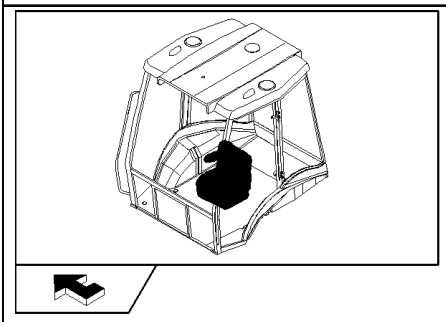

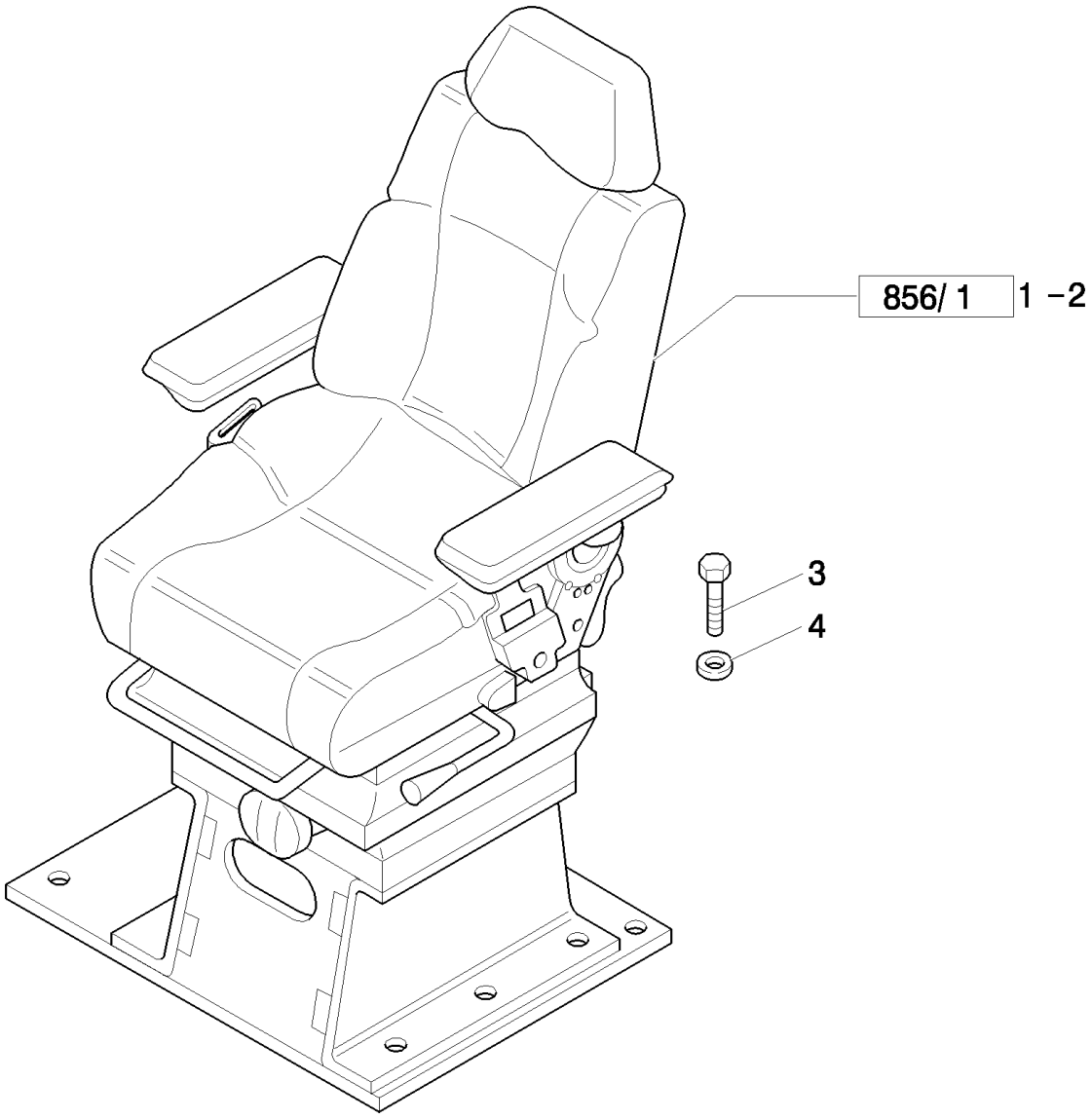

B110 TIER 3 BACKHOE LOADER (2/07-)

856(01) VINYL SEAT CUSHIONS, ARMRESTS & RELATED PARTS (ROPS) - NA

Ref	Numero de Pieza	Ctd	Descripción
1	87576855	1	SEAT, , 2" Seat Belt, Consists Of Page 856/1 01 To 856/1 04, Mechanical Control Version
1	87576856	1	SEAT, , Consists Of Page 856/1 01 To 856/1 04, 3" Seat Belt, Mechanical Control Version
2	87576863	1	SEAT, , Consists Of Page 856/1 01 To 856/1 04, Only for Pilot Control Version, 2" Seat Belt
2	87576865	1	SEAT, , Consists Of Page 856/1 01 To 856/1 04, Only for Pilot Control Version, 3" Seat Belt
3	16043424	8	SCREW, Hex, M8 x 20, 8.8, Full Thd,
4	11198074	8	WASHER, SPRING, Belleville, M8.4,

B110 TIER 3 BACKHOE LOADER (2/07-)

856/1(01) VINYL SEAT WITH ARMRESTS & MOUNTING HARDWARE (ROPS) - NA

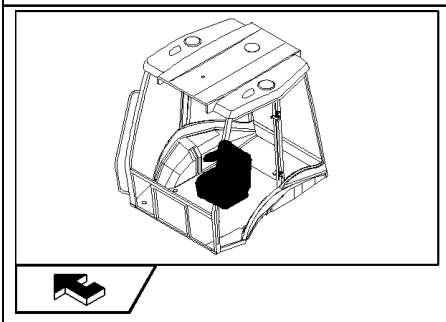

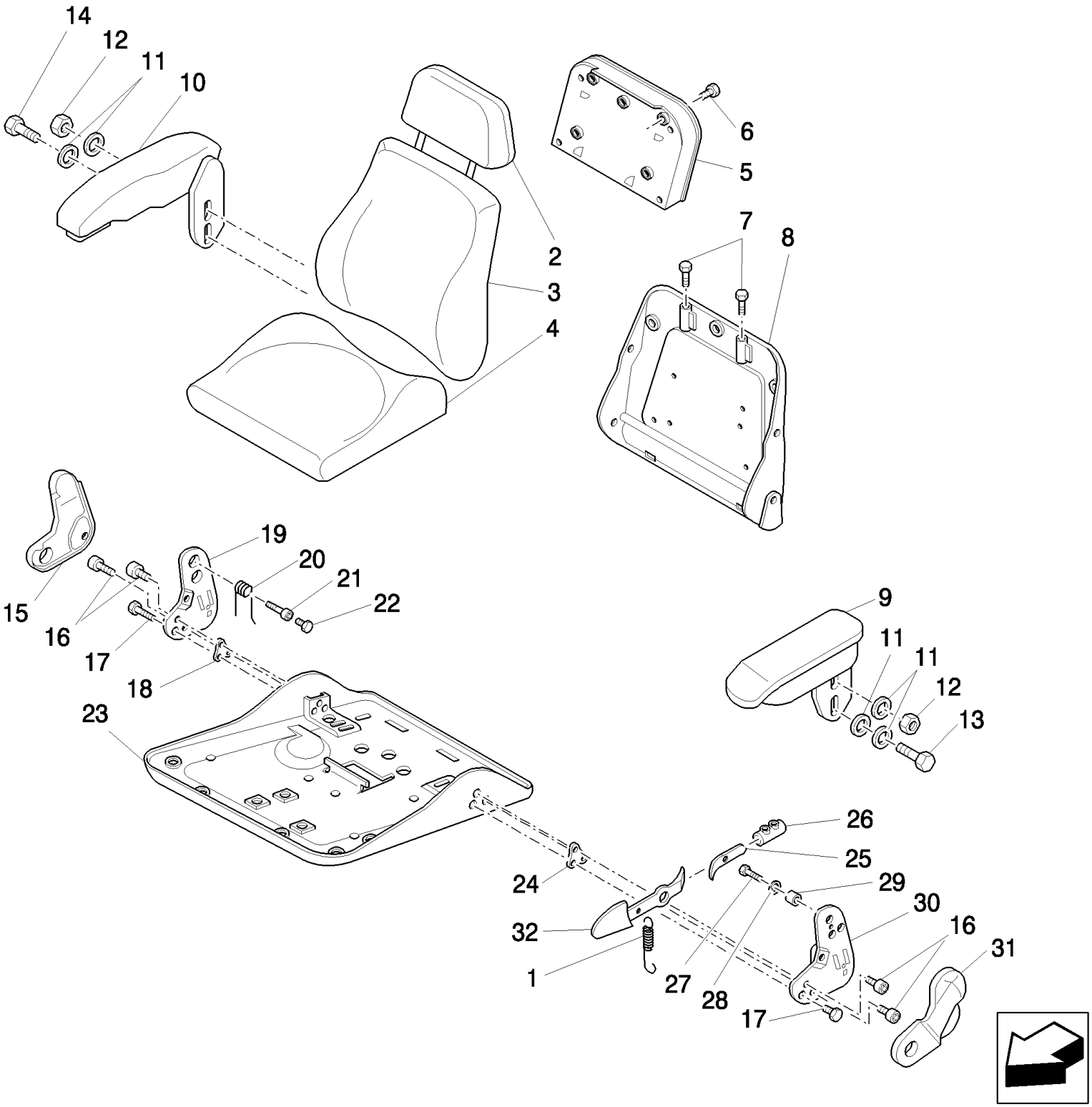

B110 TIER 3 BACKHOE LOADER (2/07-)

856/1(01) VINYL SEAT WITH ARMRESTS & MOUNTING HARDWARE (ROPS) - NA

Ref	Numero de Pieza	Ctd	Descripción
1	9960797	1	SPRING,
2	85817562	1	HEADREST, SEAT,
3	85817563	1	SEAT, BACK, Cap, HH, CL 8.8, M8x1.25x20
4	85817564	1	CUSHION, SEAT,
5	85817481	1	HOLDER, , Includes 6
6	82034863	4	SCREW,
7	47335213	2	BUSHING,
8	85817485	1	SEAT, BACK, , Includes 7, 21
9	85817453	1	ARMREST, , Includes 11 To 13, Mechanical Control Version 87576865 - 87576855
9	85828196	1	ARMREST, , Includes 11 To 13, Only for Pilot Control Version 87576865 - 87576863
10	85827918	1	ARMREST, , Includes 11, 12, 14
11	82034881	AR	WASHER,
12	85817459	2	NUT,
13	83984666	1	SCREW,
14	13838071	1	BOLT, Hex Serr Flg, M8 x 20,
15	85817466	1	COVER,
16	9972160	AR	SCREW,
17	87395582	2	BOLT, 7/16"-20UNFx60.0
18	85817470	1	PLATE,
19	9960795	1	PLATE,
20	9960793	1	SPRING,
21	85817469	1	BUSHING,
22	85817471	1	SCREW,
23	85821419	1	PLATE, RETAINING,
24	85817476	1	PLATE,
25	85817460	1	LEVER,
26	85821418	1	STOP DEVICE,
27	82035038	1	SCREW,
28	9960692	AR	SPACER,
29	85817477	1	SPACER,
30	9960803	1	PLATE,
31	85817479	1	COVER,
32	85817478	1	LEVER,

856/1(02) VINYL SEAT MOUNTING PLATE, ADJUSTING RAILS & SEAT BELT (ROPS) - NA

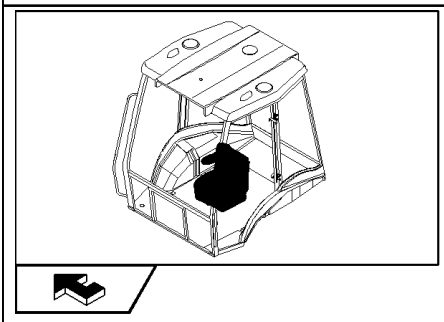

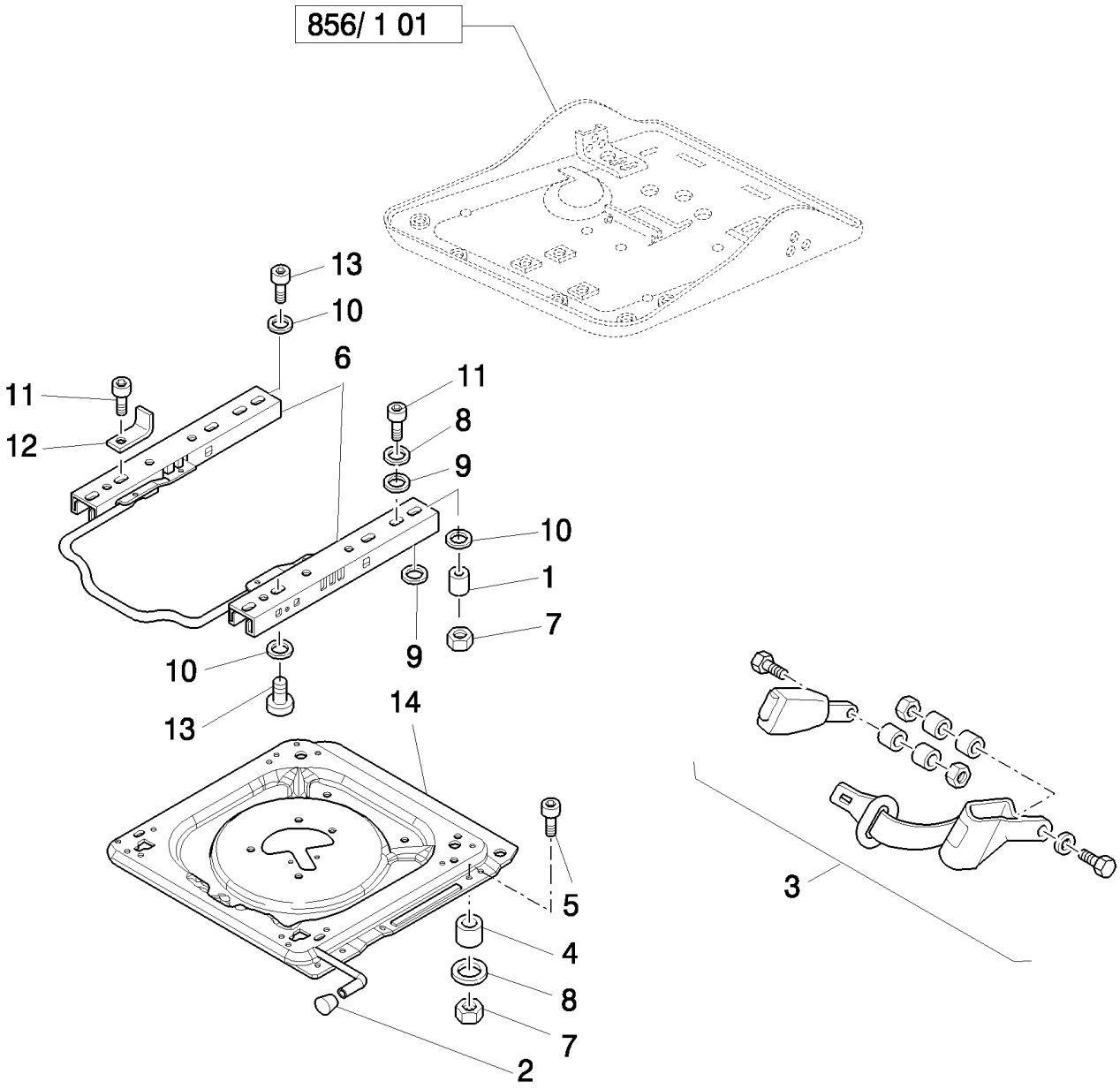

B110 TIER 3 BACKHOE LOADER (2/07-)

856/1(02) VINYL SEAT MOUNTING PLATE, ADJUSTING RAILS & SEAT BELT (ROPS) - NA

Ref	Numero de Pieza	Ctd	Descripción
1	85819813	1	BUSHING,
2	85817482	1	KNOB,
3	87364220	1	SEAT BELT, , 2" Seat Belt 87576855 - 87576863
3	87364221	1	SEAT BELT, , 3" Seat Belt 87576856 - 87576865
4	85817456	4	SPACER,
5	85817465	4	SCREW, M8 x 40
6	85817484	1	KIT,
7	85817458	8	NUT,
8	9960692	AR	SPACER,
9	9958776	8	SPACER,
10	82034881	AR	WASHER,
11	9972160	8	SCREW, M8x25
12	85824204	1	BRACKET,
13	82034893	4	SCREW, M8x20
14	87395588	1	PLATE, , Includes 2

856/1(03) VINYL SEAT UPPER SUSPENSION PARTS (ROPS) - NA

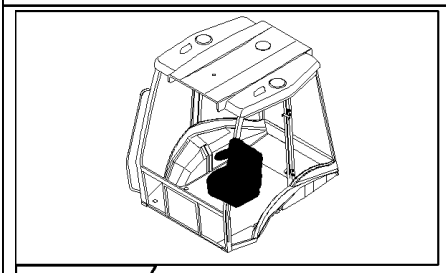

2 SEE ALSO TAV. 856/ 1 04

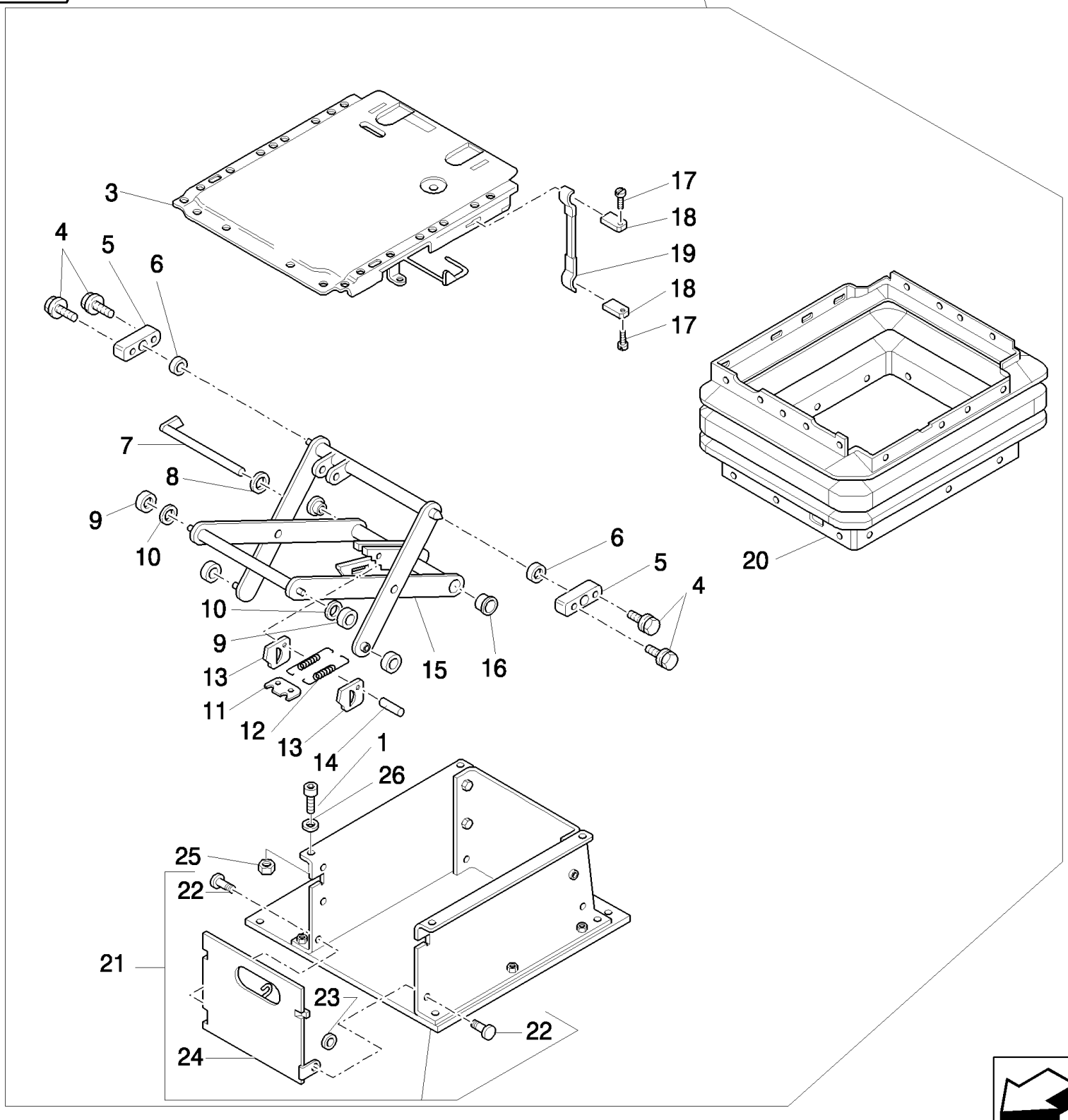

B110 TIER 3 BACKHOE LOADER (2/07-)

856/1(03) VINYL SEAT UPPER SUSPENSION PARTS (ROPS) - NA

Ref	Numero de Pieza	Ctd	Descripción
1	82034893	4	SCREW,
2	85817556	1	SUSPENSION,
3	85817450	1	PLATE,
4	85817444	4	SCREW, M6 x 16
5	82035094	2	BEARING, , Includes 4, 6
6	85817445	2	BUSHING,
7	85817429	1	BOLT,
8	82035127	1	WASHER,
9	82035031	4	ROLLER,
10	85817442	2	BUSHING,
11	82035030	1	PLATE,
12	85817430	2	SPRING,
13	9958792	2	PLATE,
14	82035036	1	BOLT,
15	85817446	1	SUSPENSION, , Includes 7, 9 to 14, 16
16	9960755	2	BUSHING,
17	85817448	2	RIVET,
18	85817449	2	PLATE,
19	85817447	1	HANDLE, , Includes 17, 18
20	85817428	1	BELLOWS,
21	85817561	1	BASE, , Includes 22 To 24
22	85817559	2	BOLT,
23	85817560	2	WASHER,
24	85817558	1	DOOR,
25	85817458	4	NUT, M8
26	82034881	4	WASHER,

856/1(04) VINYL SEAT LOWER SUSPENSION PARTS (ROPS) - NA

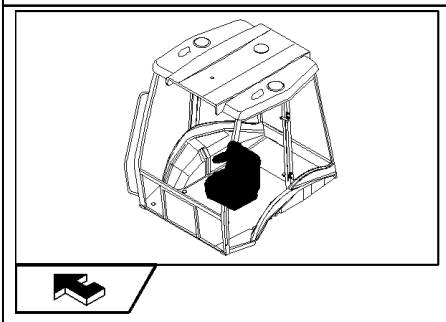

2 SEE ALSO TAV. 856/ 1 03

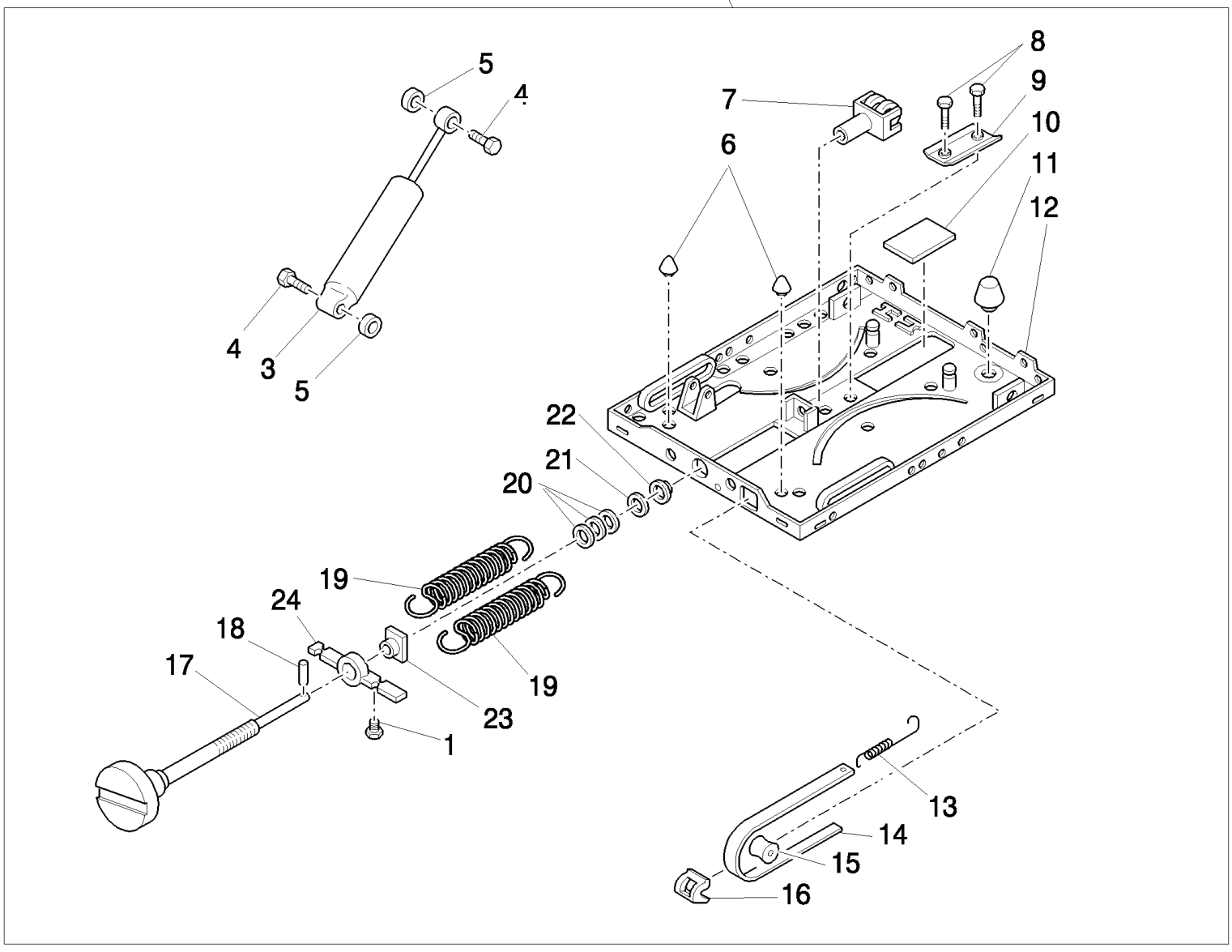

B110 TIER 3 BACKHOE LOADER (2/07-)

856/1(04) VINYL SEAT LOWER SUSPENSION PARTS (ROPS) - NA

Ref	Numero de Pieza	Ctd	Descripción
1	82035033	1	RETAINER,
2	85817556	1	SUSPENSION,
3	85817431	1	SHOCK ABSORBER, , Includes 4, 5
4	82035040	2	BOLT,
5	82035128	2	WASHER,
6	85817440	2	BUMPER, RUBBER,
7	82035043	1	FORK,
8	82035037	2	RIVET,
9	82035054	1	PROFILE,
10	82035032	1	PLATE,
11	85817441	1	BUMPER, RUBBER,
12	85817436	1	SUSPENSION, , Includes 6, 8 to 11
13	82035039	1	SPRING,
14	85817443	1	INDICATOR, , Includes 13, 15, 16, 25
15	82035029	1	ROLLER,
16	82035025	1	GUIDE,
17	85817451	1	SCREW, ADJUSTMENT, , Includes 18
18	85817433	1	DOWEL,
19	85817434	2	SPRING,
20	82035035	1	SET OF WASHERS,
21	82035028	1	WASHER,
22	85817435	1	BUSHING,
23	82035034	1	NUT,
24	82035027	1	BRACKET,

B110 TIER 3 BACKHOE LOADER (2/07-)

879(01) CAB RIGHT BACK VIEW MIRROR

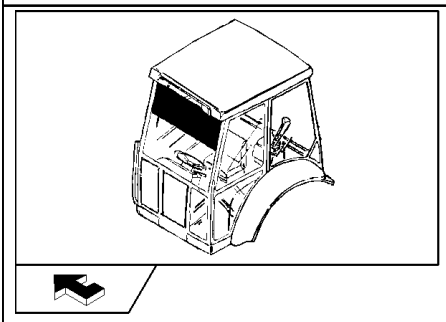

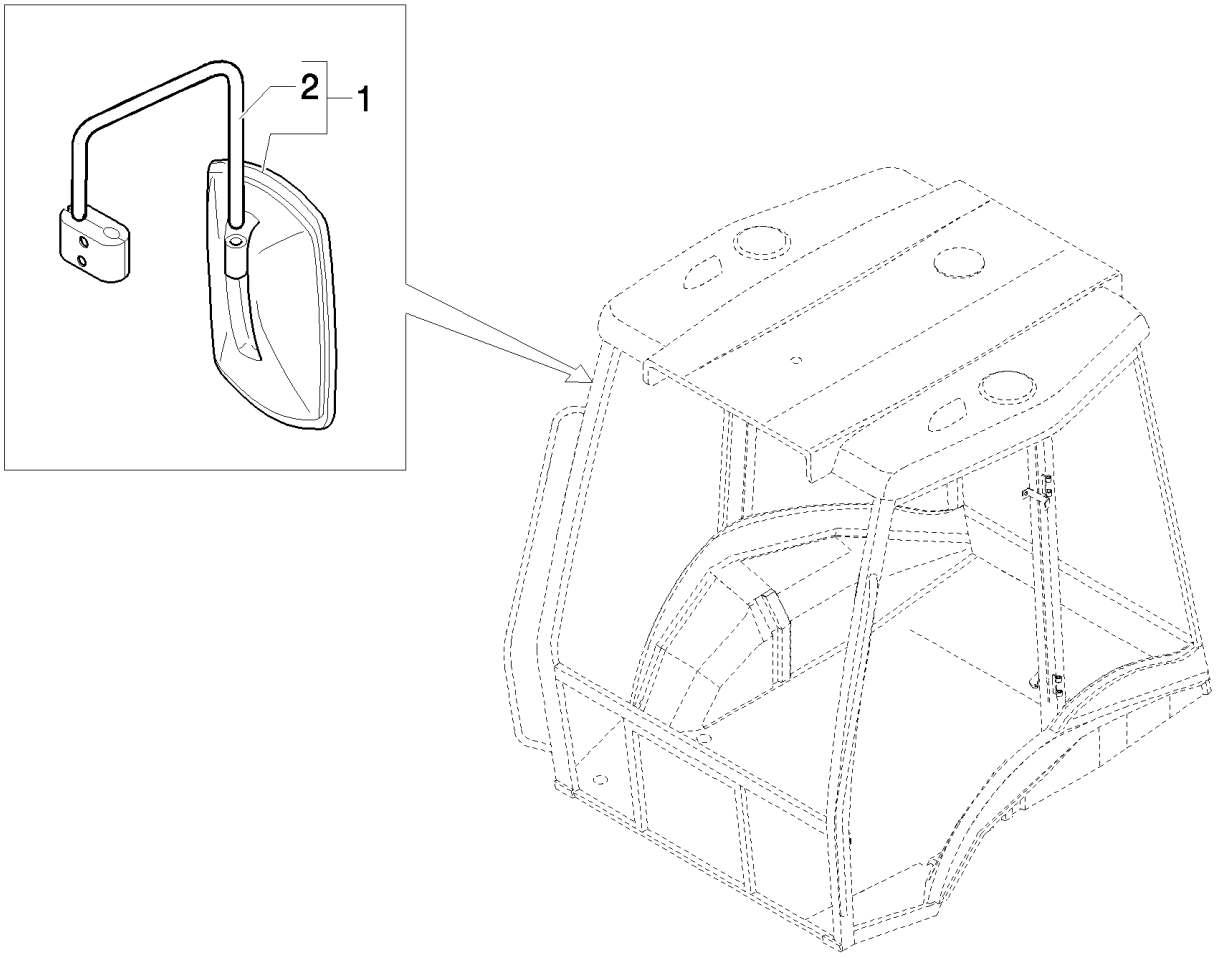

B110 TIER 3 BACKHOE LOADER (2/07-)

879(01) CAB RIGHT BACK VIEW MIRROR

Ref	Numero de Pieza	Ctd	Descripción
1	85820136	1	MIRROR, RH, DX
2	85820138	2	MIRROR, REAR-VIEW,

900(01) BOOM - LONG DIPPER

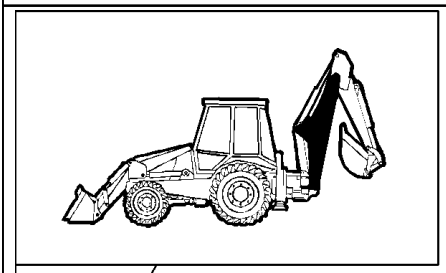

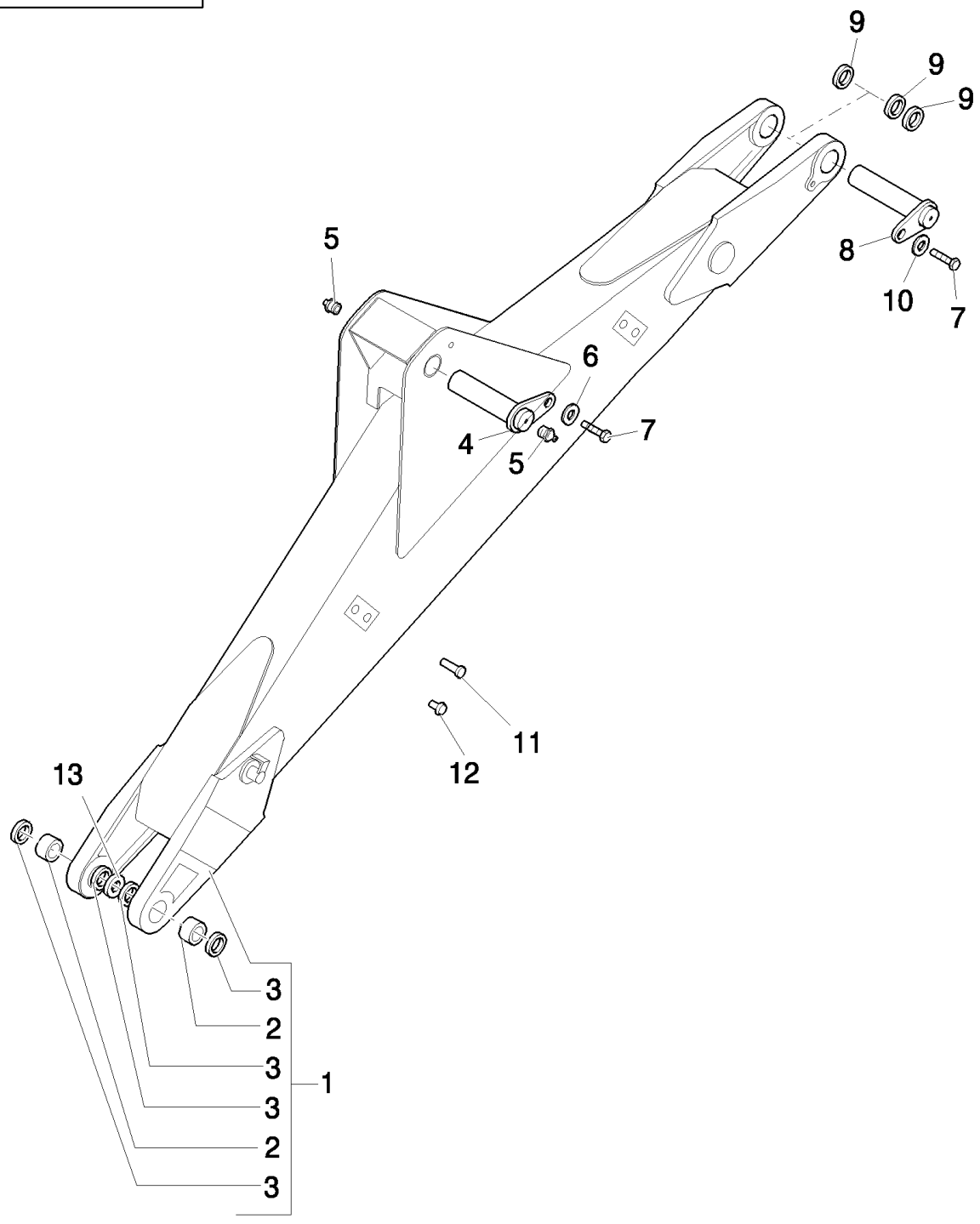

B110 TIER 3 BACKHOE LOADER (2/07-)

900(01) BOOM - LONG DIPPER

Ref	Numero de Pieza	Ctd	Descripción
1	87372186	1	BOOM, Replaces 87311190 Boom, Includes 2, 3
2	83910557	2	RING,
3	83931281	4	SEAL,
4	85815698	1	PIN,
5	83416242	2	NIPPLE, LUBE, 1/8"-27
6	85802396	1	WASHER,
7	85802397	2	SCREW,
8	85815607	1	PIN,
9	85805295	4	SHIM,
10	85815609	1	WASHER,
11	81870039	3	FASTENER,
12	87310961	8	PLUG,
13	85805296	3	SHIM,

900(02) LONG DIPPER

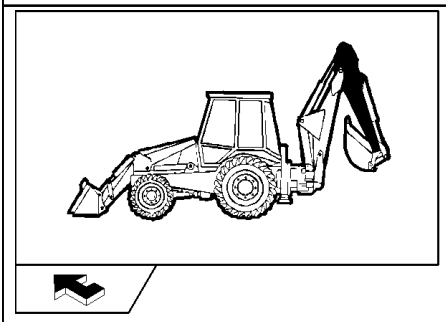

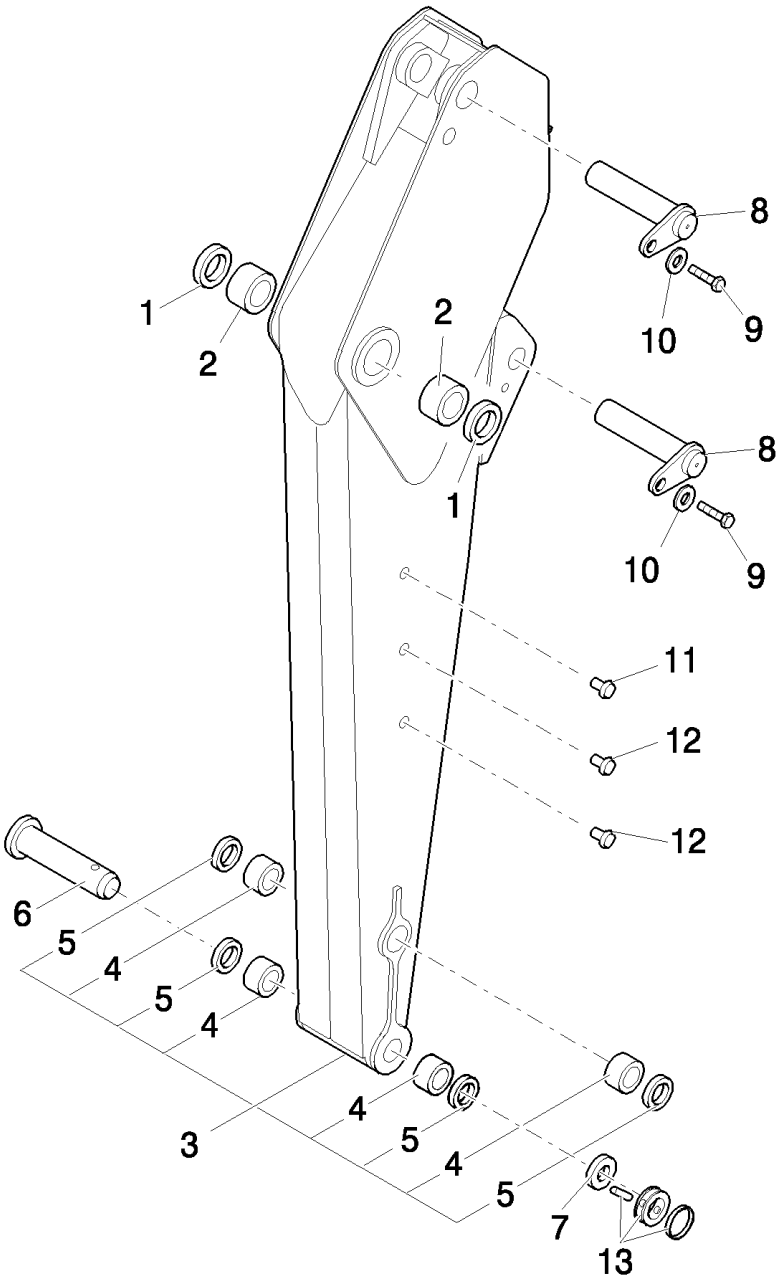

B110 TIER 3 BACKHOE LOADER (2/07-)

900(02) LONG DIPPER

Ref	Numero de Pieza	Ctd	Descripción
1	83931281	2	SEAL,
2	83910546	2	BUSHING, 2.175" ID x 2.80" OD x 1.969"
3	85817039	1	DIPPER, , Includes 1, 2, 4, 5
4	83910548	4	BUSHING,
5	83931289	4	SEAL,
6	85803005	1	PIN,
7	85818916	4	SHIM,
8	85803002	2	PIN,
9	85802397	2	SCREW, M16x40
10	85802396	2	WASHER,
11	81870039	4	FASTENER,
12	85804447	4	PLUG,
13	85802975	1	PIN, LOCK,

900(03) LONG/SHORT DIPPER - BUCKET MOTION

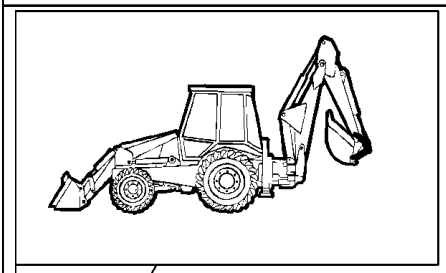

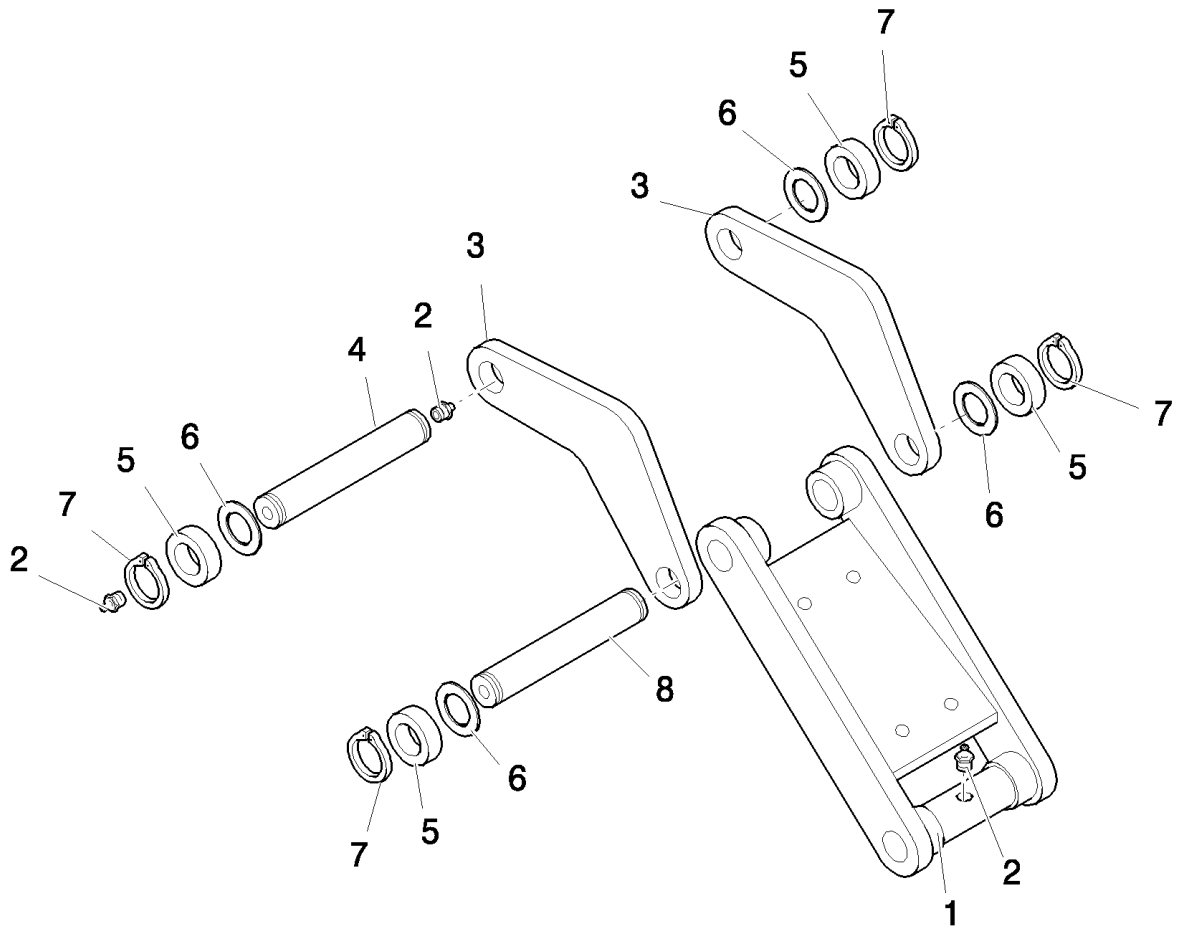

B110 TIER 3 BACKHOE LOADER (2/07-)

900(03) LONG/SHORT DIPPER - BUCKET MOTION

Ref	Numero de Pieza	Ctd	Descripción
1	85803613	1	LINK,
2	83416242	5	NIPPLE, LUBE, 1/8"-27
3	85817133	2	LINK CONROD,
4	85815517	1	PIN,
5	85802396	4	WASHER,
6	83910977	4	SPACER,
7	11069071	4	RING, SNAP, M45, Ext,
8	85813469	1	PIN,

900(04) LONG DIPPÊR - HYDRAULIC SYSTEM

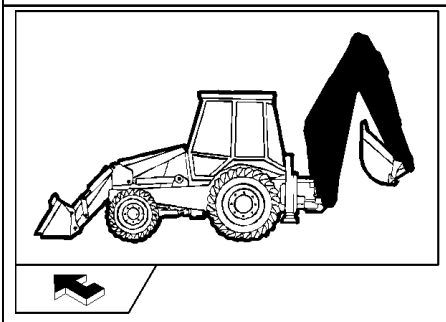

B110 TIER 3 BACKHOE LOADER (2/07-)

900(04) LONG DIPPÊR - HYDRAULIC SYSTEM

Ref	Numero de Pieza	Ctd	Descripción
1	85815632	1	TUBE, HYD,
2	85815630	1	TUBE, HYD,
3	16044421	4	BOLT, Hex, M8 x 60, 8.8,
4	85826212	1	HOSE, FLEXIBLE,
5	11193979	4	WASHER, SPRING, Belleville, M8.4,
6	85802899	1	CLAMP, M8x50
7	85802902	1	SPACER,
8	85802900	1	CLAMP,
9	85802894	1	U-BRACKET,
10	85802895	1	CLAMP,
11	85802893	2	SPACER,
12	85812154	1	HOSE, FLEXIBLE, 600mm lg, , Includes 14
13	85812178	1	HOSE, FLEXIBLE, 600mm lg,
14	89991976	1	O-RING,
15	80167266	1	O-RING, 90 Duro, .924" ID x .116" Thk
16	83962538	1	CONNECTOR, HYD., 1-3/16"-12 ORS x 1-1/16"-12 SAE O-Ring, Includes 14, 15
17	83962539	1	CONNECTOR, HYD.,
18	85826213	1	HOSE, FLEXIBLE,

900(05) LONG DIPPER - HYDRAULIC SYSTEM

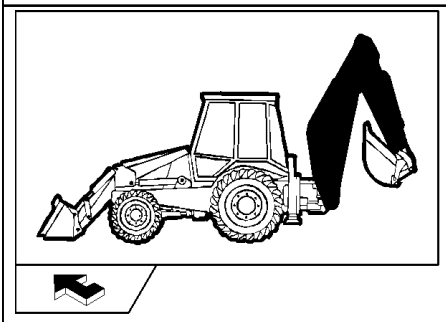

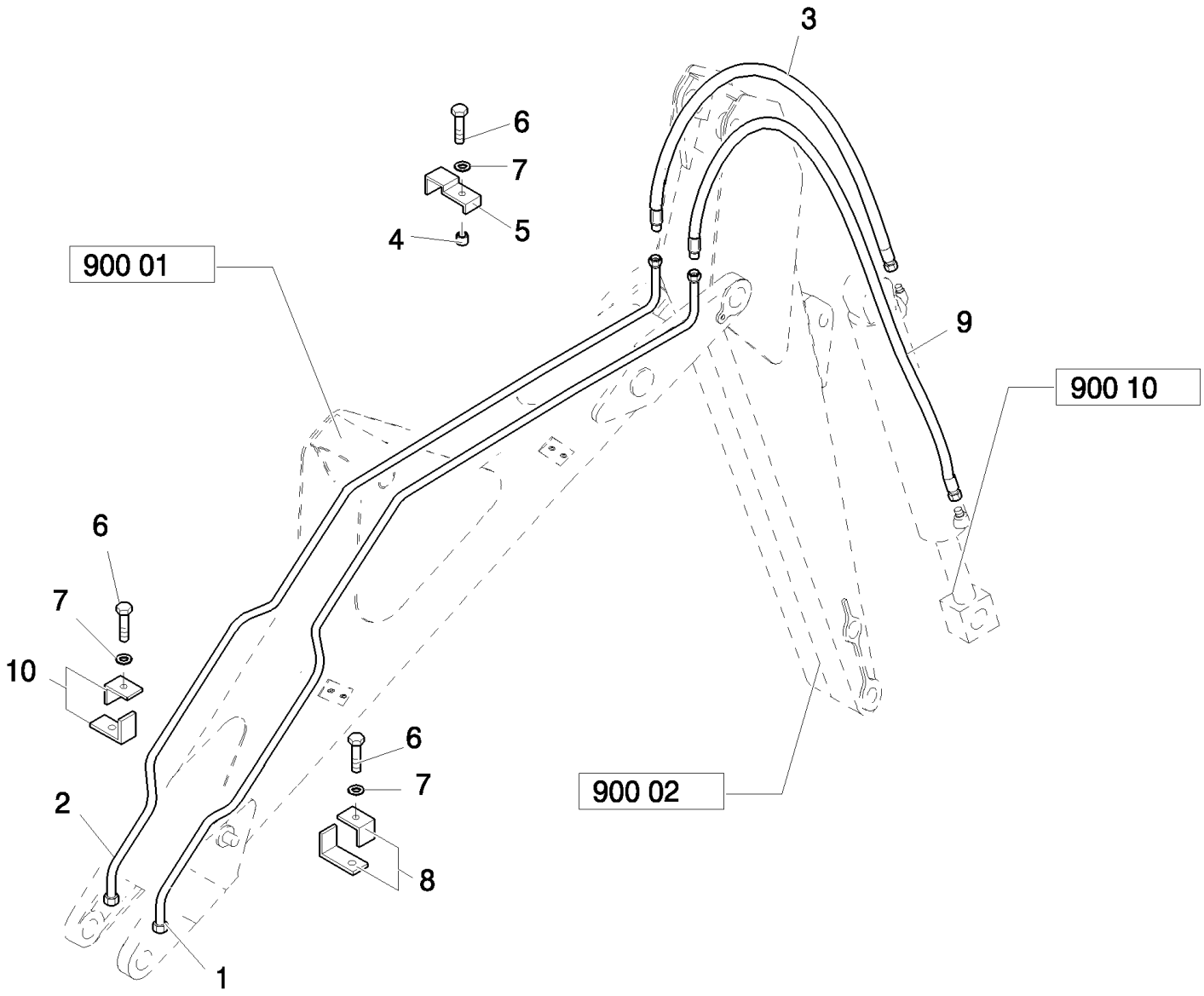

B110 TIER 3 BACKHOE LOADER (2/07-)

900(05) LONG DIPPER - HYDRAULIC SYSTEM

Ref	Numero de Pieza	Ctd	Descripción
1	85815636	1	TUBE, HYD,
2	85815634	1	TUBE, HYD,
3	85826222	1	HOSE, FLEXIBLE,
4	85802901	1	SPACER,
5	85802909	1	CLAMP,
6	16044221	3	BOLT, Hex, M8 x 50, 8.8,
7	11193979	3	WASHER, SPRING, Belleville, M8.4,
8	85815627	2	CLAMP,
9	85826224	1	HOSE, FLEXIBLE,
10	85815628	2	CLAMP,

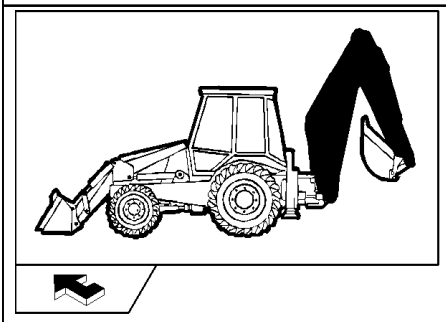

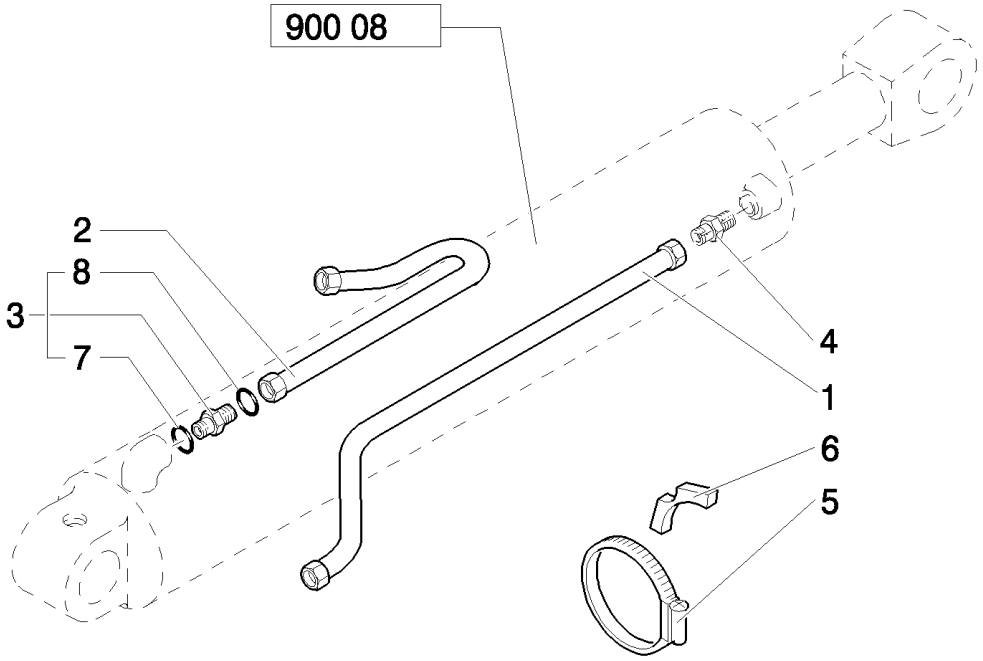
900 08
2
8
3
7
4
1
6
5

B110 TIER 3 BACKHOE LOADER (2/07-)

900(06) LONG DIPPER - HYDRAULIC SYSTEM

Ref	Numero de Pieza	Ctd	Descripción
1	85815683	1	TUBE, HYD,
2	85816813	1	TUBE, HYD,
3	83962538	1	CONNECTOR, HYD., 1-3/16"-12 ORS x 1-1/16"-12 SAE O-Ring, Includes 7, 8
4	83962539	1	CONNECTOR, HYD.,
5	85802744	1	CLAMP, HOSE,
6	87303912	2	BLOCK,
7	80167266	1	O-RING, 90 Duro, .924" ID x .116" Thk
8	89991976	1	O-RING, 90 Duro, .739" ID x .070" Thk

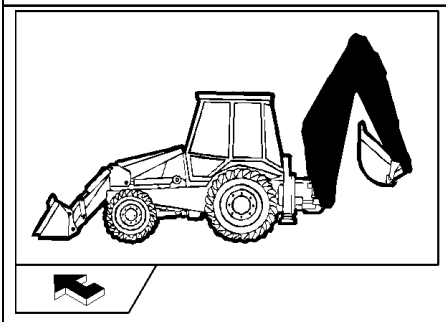

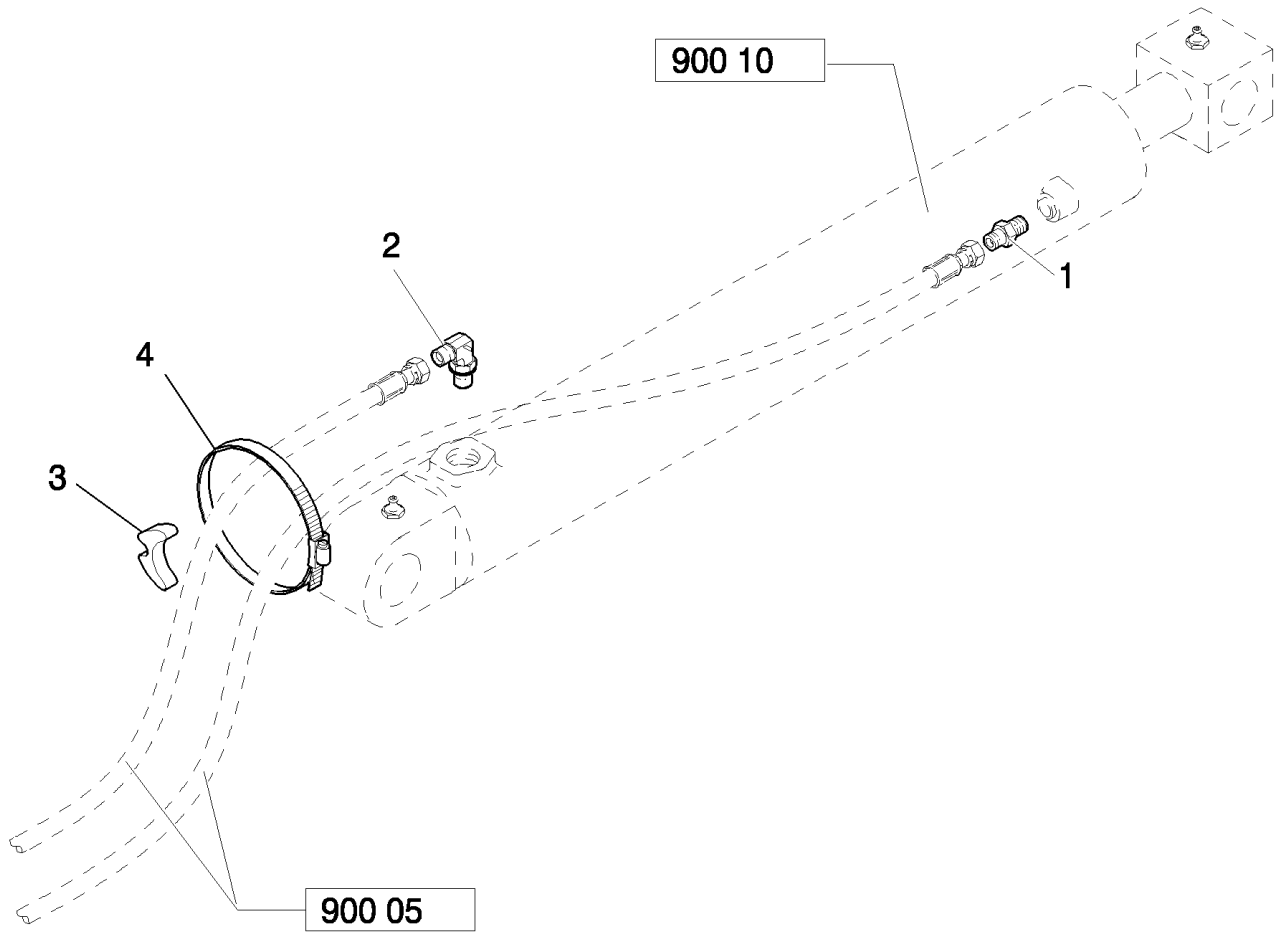
900 10
2
1
4
3
900 05

B110 TIER 3 BACKHOE LOADER (2/07-)

900(07) LONG DIPPER - HYDRAULIC SYSTEM

Ref	Numero de Pieza	Ctd	Descripción
1	83962539	1	CONNECTOR, HYD.,
2	85802957	1	ELBOW, 90º, 1 3/16"-12 ORS x 1 1/16"-12 SAE O-Ring,
3	87565305	1	ANCHOR,
4	85817474	1	STRAP, CABLE,

900(08) HYDRAULIC LIFTING CYLINDER - TELESCOPIC DIPPER LONG

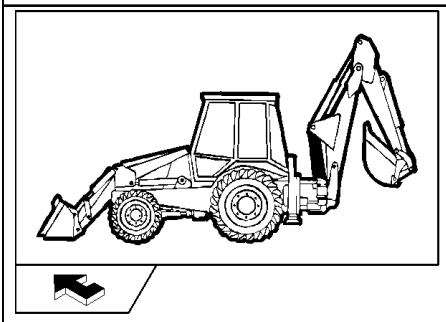

KIT KIT KIT 17 = ●

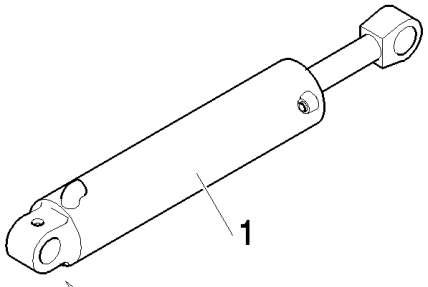

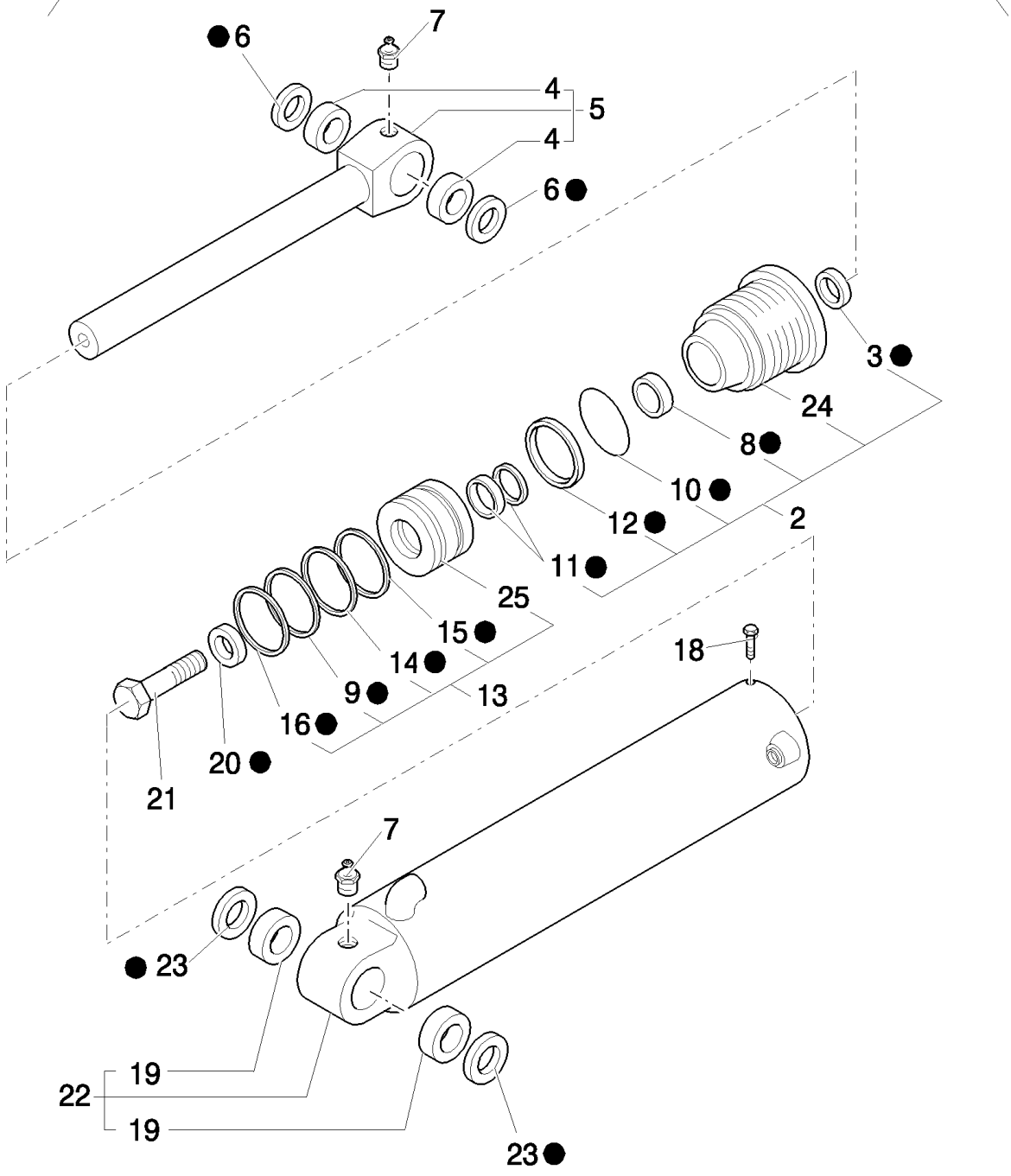

B110 TIER 3 BACKHOE LOADER (2/07-)

900(08) HYDRAULIC LIFTING CYLINDER - TELESCOPIC DIPPER LONG

Ref	Numero de Pieza	Ctd	Descripción
1	87315535	1	HYDRAULIC CYLINDER, ASSY
2	87415120	1	GLAND, , Includes 3, 8, 10, 11, 12, 24
3	87414979	1	WIPER,
4	83910551	2	BUSHING,
5	83962145	1	ROD, , Includes 4
6	83931281	2	SEAL,
7	83416242	2	NIPPLE, LUBE, 1/8"-27
8	87414976	1	BEARING, NYLON,
9	87414346	1	RING,
10	87421149	1	O-RING, 4.734" ID x .139" Thk
11	87414980	1	KIT, SEALS,
12	87441149	1	BACK-UP RING,
13	87407249	1	PISTON, , Includes 9, 14 to 16, 25
14	87401160	1	Ring, Wear,
15	87414338	1	SEAL, HYD-CYLINDER,
16	85800823	1	O-RING,
17	87428634	1	KIT, SEALS,
18	85827128	1	SCREW,
19	85800202	2	BUSHING,
20	83964188	1	WASHER,
21	87428018	1	SCREW, M33x2x90
22	85800824	1	BARREL, , Includes 19
23	85801025	2	SEAL,
24	87414509	1	CAP CYLINDER END,
25	87403203	1	PISTON,

900(09) HYDRAULIC DITCHING CYLINDER

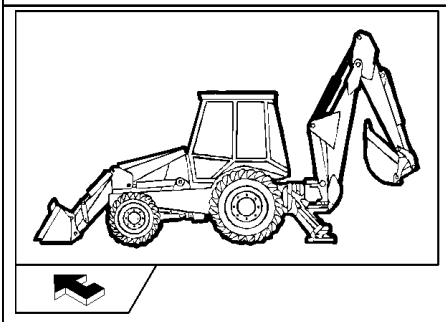

KIT
KIT KIT
14 = ●
21 = ■

17
18 ●
16
15
16
18 ●
12 ●
8 ●
11
10 ●
9 ●
13 ●
3 ■
6 ●
5 ●
■ 2
4 ■
22
● 7
20
19
20
● 7
1

B110 TIER 3 BACKHOE LOADER (2/07-)

900(09) HYDRAULIC DITCHING CYLINDER

Ref	Numero de Pieza	Ctd	Descripción
1	87315531	1	HYDRAULIC CYLINDER,
2	86982444	1	BOLT, SPECIAL,
3	87415119	1	GLAND, , Includes 8 to 13
4	87425174	1	PLUNGER, , Includes 5, 6
5	87414336	1	SEAL, HYD-CYLINDER,
6	87414344	1	RING,
7	83931281	2	SEAL,
8	87414976	1	BEARING, NYLON,
9	87421147	1	O-RING,
10	87440411	1	BACK-UP RING,
11	87414508	1	GLAND,
12	87414980	1	KIT, SEALS,
13	87414979	1	WIPER,
14	87428632	1	KIT, SEALS,
15	87425131	1	ROD, , Includes 16
16	83910547	2	BUSHING,
17	83416242	1	NIPPLE, LUBE, 1/8"-27
18	83931289	2	SEAL,
19	87425142	1	BARREL, , Includes 20
20	83910558	2	RING,
21	87424199	1	KIT, REPAIR,
22	85827128	1	SCREW,

900(10) HYDRAULIC BUCKET CYLINDER

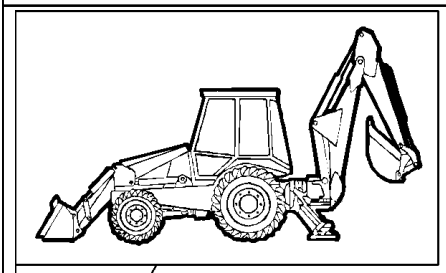

KIT KIT KIT
17 = ●
21 = ▲

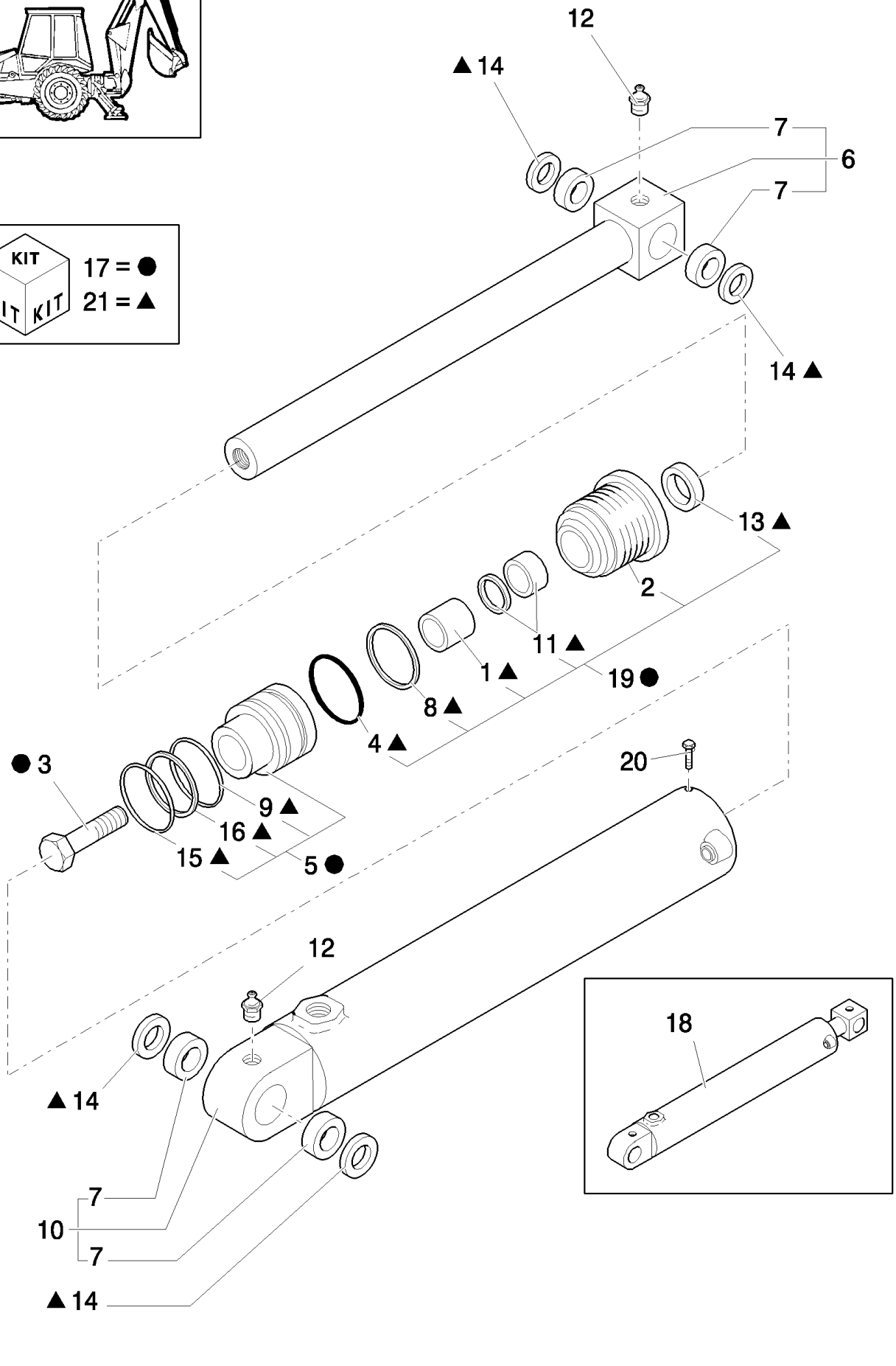

B110 TIER 3 BACKHOE LOADER (2/07-)

900(10) HYDRAULIC BUCKET CYLINDER

Ref	Numero de Pieza	Ctd	Descripción
1	87414976	1	BEARING, NYLON,
2	87414506	1	GLAND,
3	87427999	1	SCREW,
4	87421144	1	O-RING,
5	87408120	1	PISTON, , Includes 9, 15, 16
6	83963252	1	ROD, , Includes 7
7	83910547	4	BUSHING,
8	87440401	1	BACK-UP RING,
9	87408634	1	Ring, Wear,
10	83963280	1	LINER, ENGINE CYLINDER, , Includes 7
11	87414980	1	KIT, SEALS,
12	83416242	2	NIPPLE, LUBE, 1/8"-27
13	87414979	1	WIPER,
14	83931289	4	SEAL,
15	87414333	1	SEAL,
16	87414341	1	RING,
17	87424197	1	KIT,
18	87315527	1	HYDRAULIC CYLINDER,
19	87415117	1	GLAND, , Includes 1, 2, 4, 8, 11, 13
20	85827128	1	SCREW,
21	87428629	1	KIT, SEALS,

901(01) TELESCOPIC DIPPER LONG

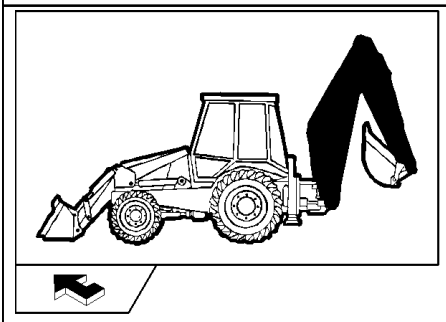

KIT KIT KIT
25 = ●
26 = ▲

900 03

901 03

1
19 ▲
23 ▲
▲ 19
▲ 23
23 ▲
19 ▲
6
33
32
19 ▲
22
23 ▲
6
24
28
29
30
21
20
24
14
13
11
10
14
13
11
10
3
27
17
18
6
5
2 ●
4
9
8
7
2 ●
31
15
12
6
16
17
18

B110 TIER 3 BACKHOE LOADER (2/07-)

901(01) TELESCOPIC DIPPER LONG

Ref	Numero de Pieza	Ctd	Descripción
1	87632098	1	ARM,
2	83910546	2	BUSHING,
3	85803005	1	PIN,
4	85801310	1	PIN,
5	85801309	1	PIN,
6	83911019	4	RING, SNAP,
7	11124421	8	BOLT, Hex, M20 x 40, 8.8,
8	14497121	8	WASHER, M20 x 37 x 3,
9	85801307	40	WASHER,
10	85808473	4	PAD, SLIDING,
11	85808472	4	PAD, SLIDING,
12	16105011	1	NUT, LOCK,
13	11190579	8	WASHER, SPRING, Belleville, M10.5,
14	11106721	8	BOLT, Hex, M10 x 38, 8.8, Full Thd,
15	14332521	1	SCREW, Hex Soc Hd, M12 x 1.25 x 100, 8.8,
16	87392513	2	CLAMP,
17	87392509	2	PLATE,
18	16044121	2	BOLT, Hex, M8 x 45, 8.8,
19	83931289	4	SEAL,
20	85801314	1	PIN,
21	83902702	2	PIN, SPLIT (COTTER),
22	85801308	1	PIN,
23	83910548	4	BUSHING,
24	14497401	2	WASHER, LOCK,
25	87630344	1	ARM, , Includes 2
26	85802750	1	DIPPER, , Includes 19, 23
27	87392516	2	CLAMP,
28	85803002	1	PIN,
29	85802396	1	WASHER,
30	85802397	1	SCREW,
31	81870039	4	FASTENER,
32	85802643	2	SPACER,
33	85802976	1	PIN,

901(02) TELESCOPIC DIPPER LONG - HYDRAULIC SYSTEM

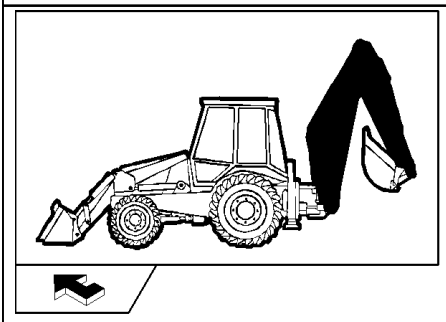

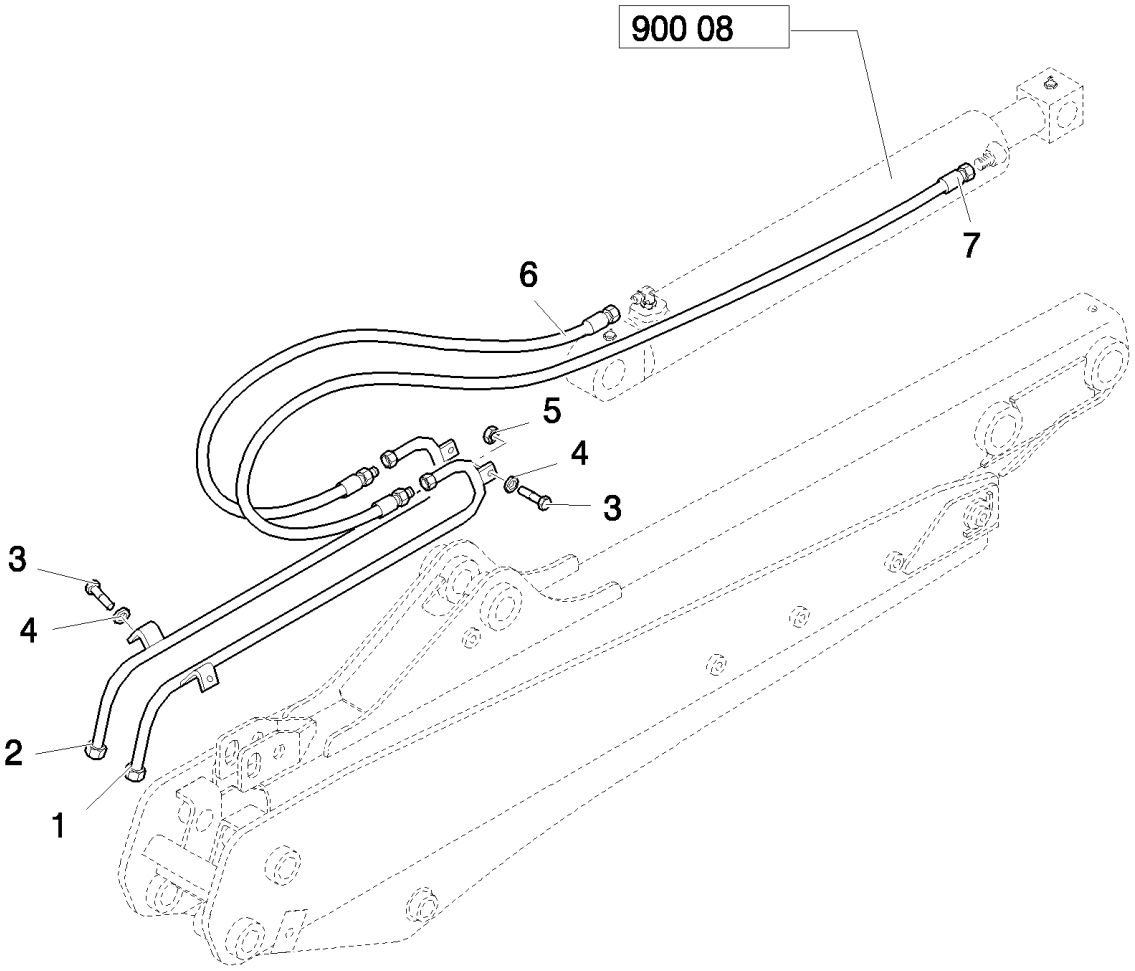

B110 TIER 3 BACKHOE LOADER (2/07-)

901(02) TELESCOPIC DIPPER LONG - HYDRAULIC SYSTEM

Ref	Numero de Pieza	Ctd	Descripción
1	85816815	1	TUBE, HYD,
2	85816817	1	TUBE, HYD,
3	16043621	4	BOLT, Hex, M8 x 25, 8.8,
4	11193979	4	WASHER, SPRING, Belleville, M8.4,
5	14048211	2	NUT, LOCK, M8 x 1.25, Cl 8,
6	85812165	1	HOSE, FLEXIBLE, 1350mm lg,
7	85826110	1	HOSE, FLEXIBLE,

901(03) TELESCOPIC DIPPER LONG - HYDRAULIC LIFTING CYLINDER

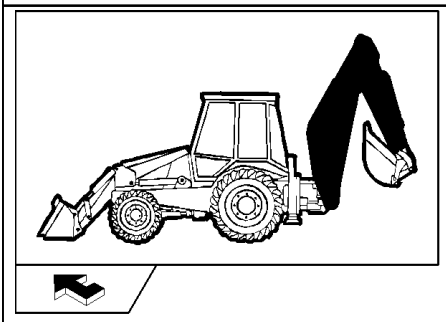

KIT
KIT KIT
3 = ●
19 = ■

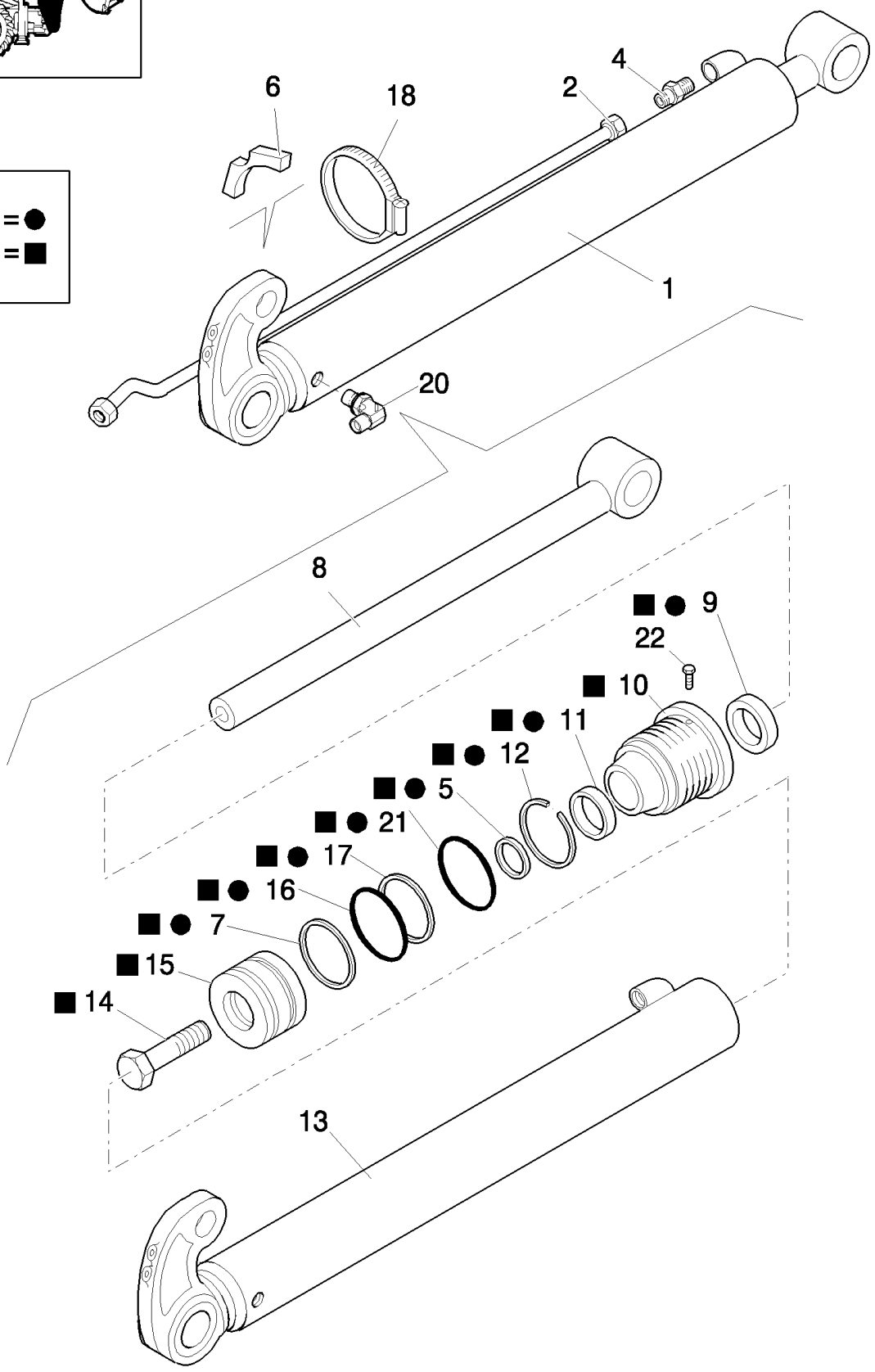

B110 TIER 3 BACKHOE LOADER (2/07-)

901(03) TELESCOPIC DIPPER LONG - HYDRAULIC LIFTING CYLINDER

Ref	Numero de Pieza	Ctd	Descripción
1	87327259	1	HYDRAULIC CYLINDER,
2	87327251	1	TUBE, RIGID,
3	87342131	1	KIT,
4	83963374	1	CONNECTOR, HYD.,
5	1542875C1	1	KIT, SEALS,
6	87303910	1	SPACER,
7	G100444	1	SEAL,
8	87313722	1	ROD,
9	D95143	1	SEAL,
10	297281A1	1	CAP CYLINDER END,
11	G102425	1	BUSHING,
12	G109298	1	RING,
13	87313720	1	LINER, ENGINE CYLINDER,
14	86982435	1	BOLT, SPECIAL,
15	G107277	1	PISTON,
16	G102288	1	SEAL ASSY.,
17	G100449	1	Ring, Wear,
18	85803010	1	CLAMP, HOSE,
19	110692A4	1	PISTON,
20	83971549	1	ELBOW,
21	238-5231	1	O-RING, -231, 70 Duro, 2.609" ID x .139" Thk,
22	G109395	1	SCREW, SELF TAPPING,

B110 TIER 3 BACKHOE LOADER (2/07-)

966(01) PLATE SUPPORT

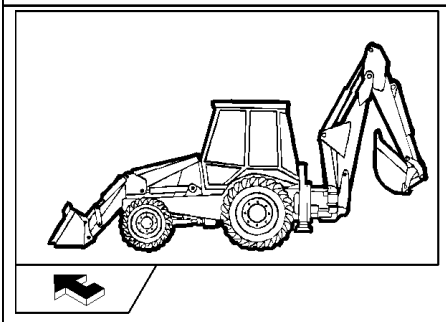

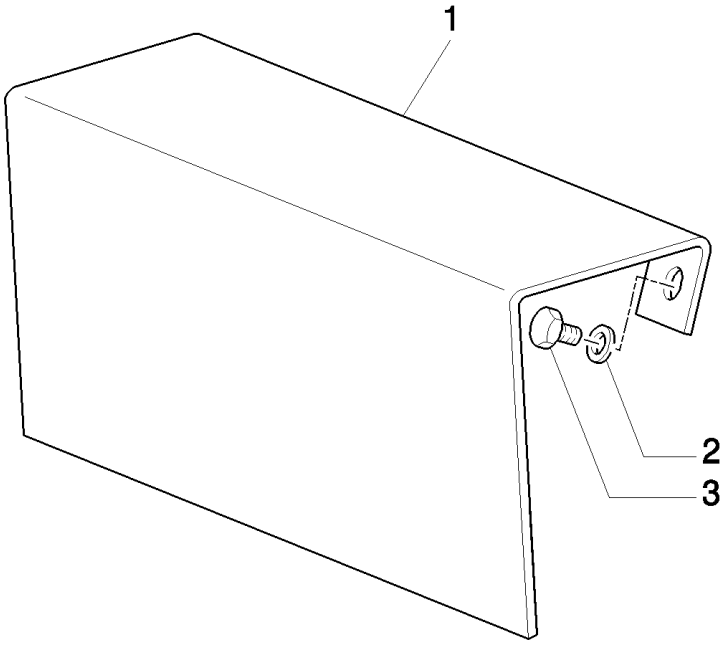

B110 TIER 3 BACKHOE LOADER (2/07-)

966(01) PLATE SUPPORT

Ref	Numero de Pieza	Ctd	Descripción
1	85804437	1	SUPPORT,
2	11193279	2	WASHER, SPRING, Belleville, M6.4,
3	10902221	2	BOLT, Hex, M6 x 16, 8.8,

973(01) CAB WARNING & INFORMATION DECALS (SIDE SHIFT) - EU

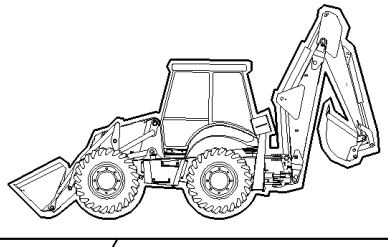

1

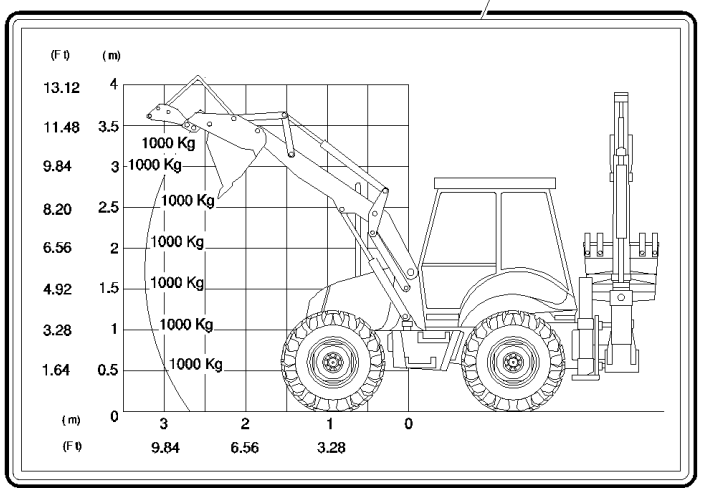

B110 TIER 3 BACKHOE LOADER (2/07-)

973(01) CAB WARNING & INFORMATION DECALS (SIDE SHIFT) - EU

Ref	Numero de Pieza	Ctd	Descripción
1	85819403	1	DECAL, , Only for B110
1	85819404	1	DECAL, , Only for B115

987(01) FOWARD/REVERSE & STEERING DECALS - POWER SHIFT

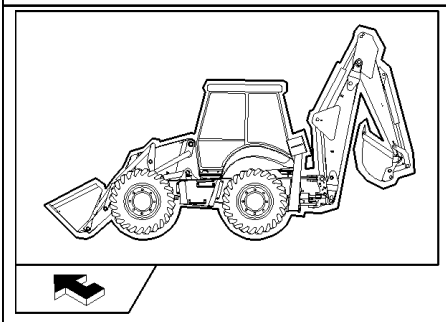

TRANSPORT
HEIGHT
13'3.5"
(4069 mm)

2
1

STEERING SISTEM

ALIGNMENT OF THE WHEEL
ATTENTION

THIS PROCEDURE SHOULD BE CARRIED OUT AT LEAST ONCE A DAY

1 RAISE THE MACHINE SUPPORTING IT ON THE BUCKET AND STABILISERS
2 SELECT THE 2 WHEEL STEERING MODE 2WS
3 FULLY TURN THE STEERING WHEEL FROM SIDE TO SIDE
4 SELECT THE 4 WHEEL STEERING MODE 4WS
5 FULLY TURN THE STEERING WHEEL FROM SIDE TO SIDE
6 SELECT AGAIN THE 2 WHEEL STEERING MODE 2WS
7 FULLY TURN THE STEERING WHEEL FROM SIDE TO SIDE

B110 TIER 3 BACKHOE LOADER (2/07-)

987(01) FOWARD/REVERSE & STEERING DECALS - POWER SHIFT

Ref	Numero de Pieza	Ctd	Descripción
1	85813493	1	DECAL, Italian
1	85813494	1	DECAL, English
1	85813495	1	DECAL, French
1	85813496	1	DECAL, German
1	85813497	1	DECAL, Spanish
1	85813498	1	DECAL, Finnish
1	85813499	1	DECAL, Swedish
1	85815500	1	DECAL, Norwegian
1	85815501	1	DECAL, Dutch
1	85815502	1	DECAL, Portuguese
1	85815503	1	DECAL, Greek
1	85815504	1	DECAL, Danish
1	87324356	1	DECAL, Slovene
1	87323053	1	DECAL, Czech
1	87323061	1	DECAL, Estonian
1	87319998	1	DECAL, Hungarian
1	87323065	1	DECAL, Lithuanian
1	87323057	1	DECAL, Latvian
1	87319994	1	DECAL, Slovak
1	87323069	1	DECAL, Poland
1	87324360	1	DECAL, Turkish
2	85812279	1	DECAL,

990(01) TOOL KIT

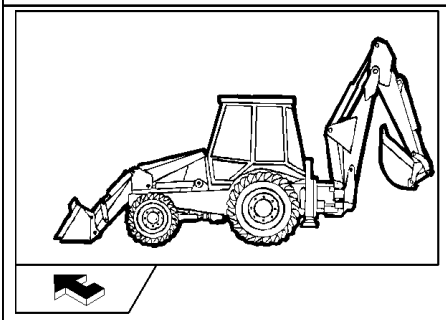

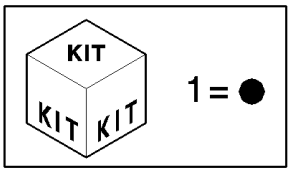

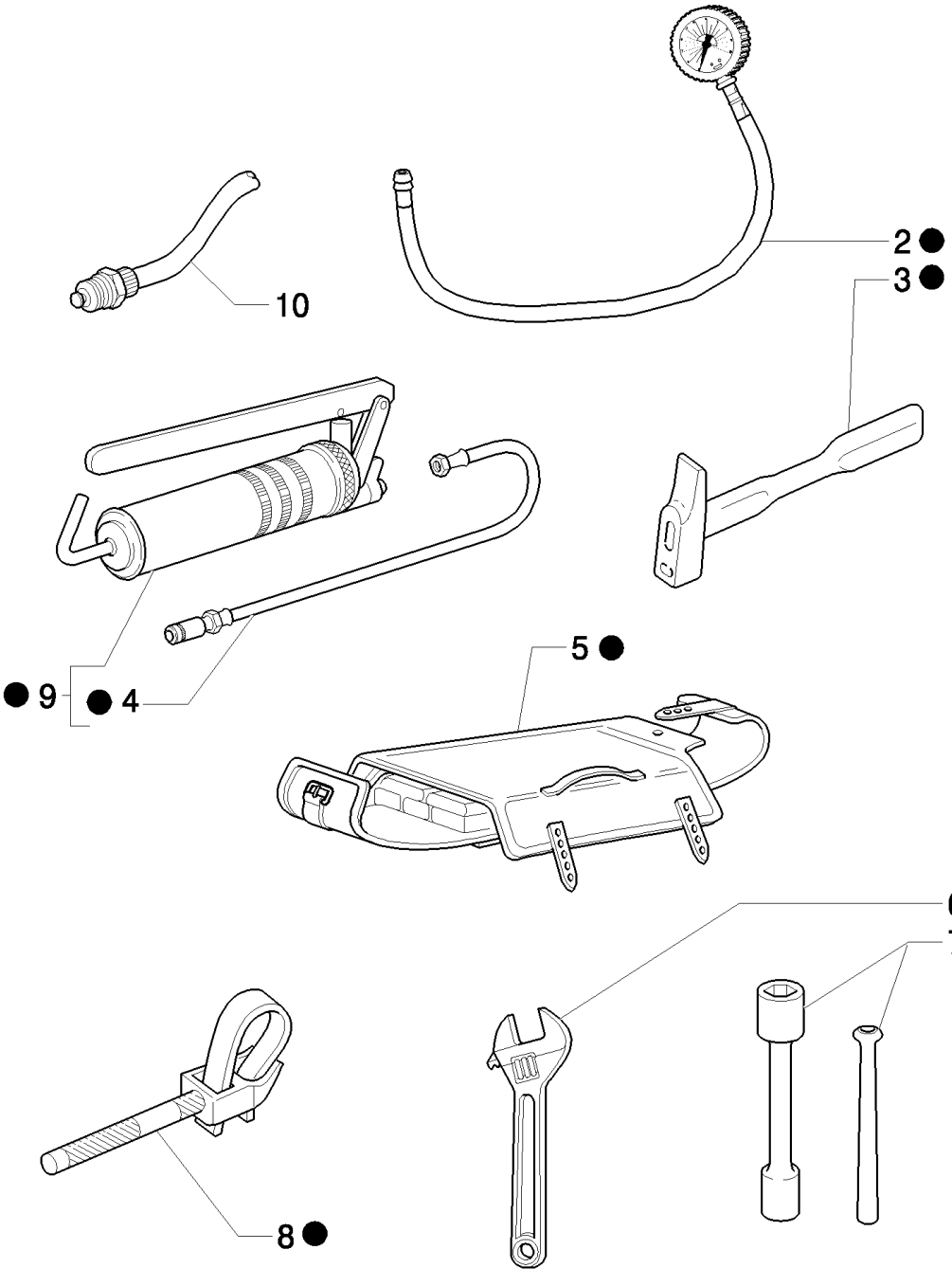

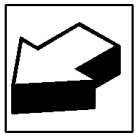

B110 TIER 3 BACKHOE LOADER (2/07-)

990(01) TOOL KIT

Ref	Numero de Pieza	Ctd	Descripción
1	85803394	1	TOOL KIT,
2	85803396	1	GAUGE,
3	14582790	1	HAMMER,
4	79028981	1	HOSE, FLEXIBLE, For greasing
5	79062734	1	TOOL BAG,
6	71431438	1	WRENCH, ADJUSTING,
7	85803395	1	SOCKET WRENCH,
8	71304923	1	WRENCH, SPECIAL,
9	79028977	1	GUN, GREASE,
10	85826260	1	VALVE, DRAIN,

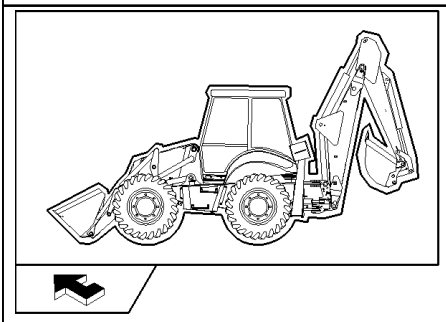


VAROITUS
PAINEISTETTU JÄRJESTELMÄRISKI
Älä avaa korkeapaineista polttoainejärjestelmää kun moottori on käynnissä. Moottorin toiminto aiheuttaa korkeaa polttoaineen painetta. Ohjeiden laiminlyönti voi johtaa kuolemaan tai vakavaan vahinkoon.
code
87536062

5

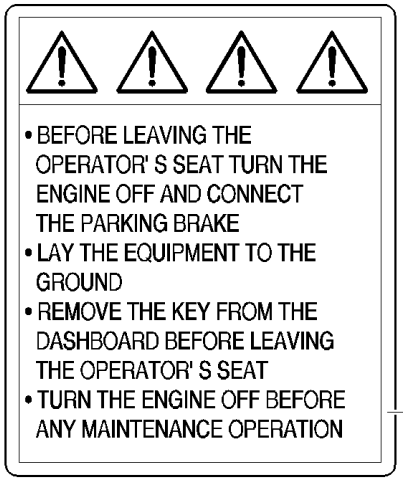
• BEFORE LEAVING THE OPERATOR' S SEAT TURN THE ENGINE OFF AND CONNECT THE PARKING BRAKE
• LAY THE EQUIPMENT TO THE GROUND
• REMOVE THE KEY FROM THE DASHBOARD BEFORE LEAVING THE OPERATOR' S SEAT
• TURN THE ENGINE OFF BEFORE ANY MAINTENANCE OPERATION

3

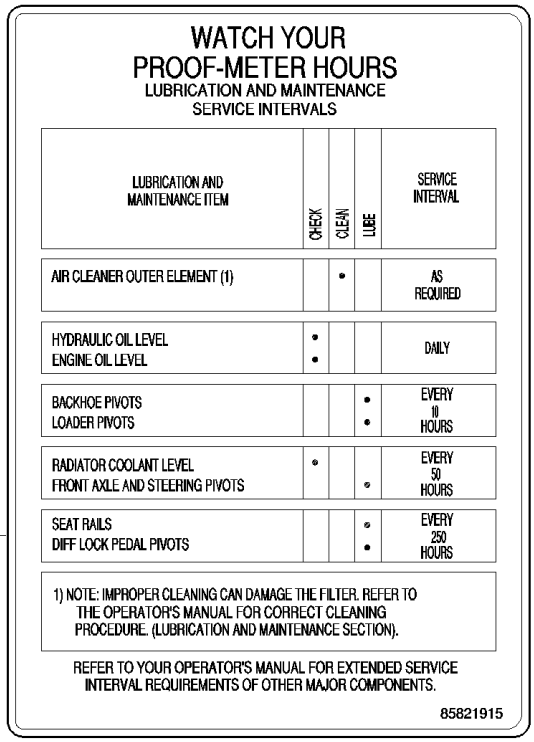
WATCH YOUR
PROOF-METER HOURS
LUBRICATION AND MAINTENANCE
SERVICE INTERVALS
LUBRICATION AND MAINTENANCE ITEM
CHECK
CLEAN
LUBE
SERVICE INTERVAL
AIR CLEANER OUTER ELEMENT (1)
AS REQUIRED
HYDRAULIC OIL LEVEL
ENGINE OIL LEVEL
DAILY
BACKHOE PIVOTS
LOADER PIVOTS
EVERY 10 HOURS
RADIATOR COOLANT LEVEL
FRONT AXLE AND STEERING PIVOTS
EVERY 50 HOURS
SEAT RAILS
DIFF LOCK PEDAL PIVOTS
EVERY 250 HOURS
1) NOTE: IMPROPER CLEANING CAN DAMAGE THE FILTER. REFER TO THE OPERATOR'S MANUAL FOR CORRECT CLEANING PROCEDURE. (LUBRICATION AND MAINTENANCE SECTION).
REFER TO YOUR OPERATOR'S MANUAL FOR EXTENDED SERVICE INTERVAL REQUIREMENTS OF OTHER MAJOR COMPONENTS.
85821915

1

2

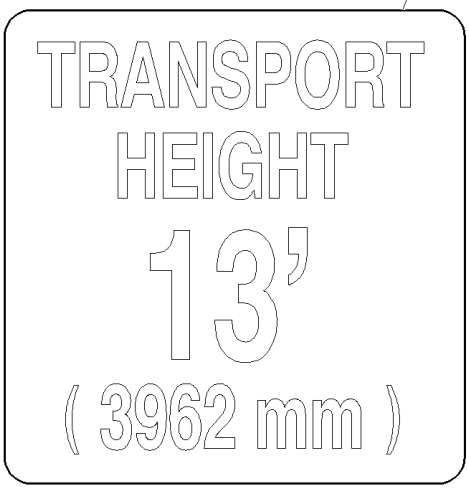
TRANSPORT
HEIGHT
13'
(3962 mm)

4


25

B110 TIER 3 BACKHOE LOADER (2/07-)

992(01) CAB WARNING & INFORMATION DECALS (POWER SHUTTLE - POWER SHIFT) - EU

Ref	Numero de Pieza	Ctd	Descripción
1	85828075	1	DECAL,
1	85828076	1	DECAL,
1	85828072	1	DECAL,
1	85828073	1	DECAL,
1	85821915	1	DECAL,
1	85828050	1	DECAL,
1	85828062	1	DECAL,
1	85828077	1	DECAL,
1	85828078	1	DECAL,
1	85828079	1	DECAL,
1	85828071	1	DECAL,
1	85828074	1	DECAL,
1	87324353	1	DECAL, Slovene
1	87319999	1	DECAL, Czexh
1	87323058	1	DECAL, Estonian
1	87319995	1	DECAL, Hungarian
1	87323062	1	DECAL, Lithuanian
1	87323054	1	DECAL, Latvian
1	87319991	1	DECAL, Slovak
1	87323066	1	DECAL, Poland
1	87324357	1	DECAL, Turkish
2	85805829	1	DECAL,
3	85802242	2	DECAL,
3	85802245	2	DECAL,
3	85802248	2	DECAL,
3	85802251	2	DECAL,
3	85802254	2	DECAL,
3	85802257	2	DECAL,
3	85802260	2	DECAL,
3	85804328	2	DECAL,
3	85804400	2	DECAL,
3	85804401	2	DECAL,
3	85804402	2	DECAL,
3	85804403	2	DECAL,
3	87323051	2	DECAL, Czech
3	87323059	2	DECAL, Estonian
3	87319996	2	DECAL, Hungarian
3	87323063	2	DECAL, Lithuanian
3	87323055	2	DECAL, Latvian
3	87319992	2	DECAL, Slovak
3	87323067	2	DECAL, Poland
3	87324358	2	DECAL, Turkish
3	87324354	2	DECAL, Slovene

B110 TIER 3 BACKHOE LOADER (2/07-)

992(01) CAB WARNING & INFORMATION DECALS (POWER SHUTTLE - POWER SHIFT) - EU

Ref	Numero de Pieza	Ctd	Descripción
3	87319992	2	DECAL, Slovak
4	85804358	3	DECAL,
5	87596092	1	DECAL, Finnish
5	87596098	1	DECAL, Danish
5	87596094	1	DECAL, Norwegian
5	87581010	1	DECAL, English
5	87596093	1	DECAL, Swedish
5	87596095	1	DECAL, Dutch
5	87596103	1	DECAL, Latvian
5	87596100	1	DECAL, Estonian
5	87596102	1	DECAL, Lithuanian
5	87596106	1	DECAL, Turkish
5	87596091	1	DECAL, Spanish
5	87596096	1	DECAL, Portuguese
5	87596097	1	DECAL, Greek
5	87596104	1	DECAL, Slovak
5	87607437	1	DECAL, Slovene
5	87596101	1	DECAL, Hungarian
5	87596099	1	DECAL, Czech
5	87596105	1	DECAL, Poland
5	87596090	1	DECAL, German
5	87596088	1	DECAL, Italian
5	87596089	1	DECAL, French

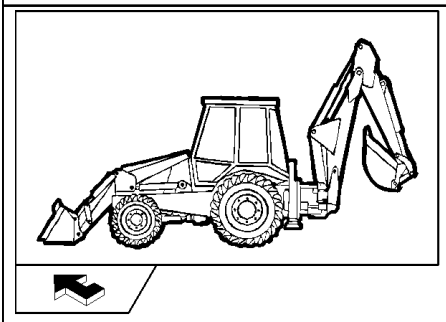

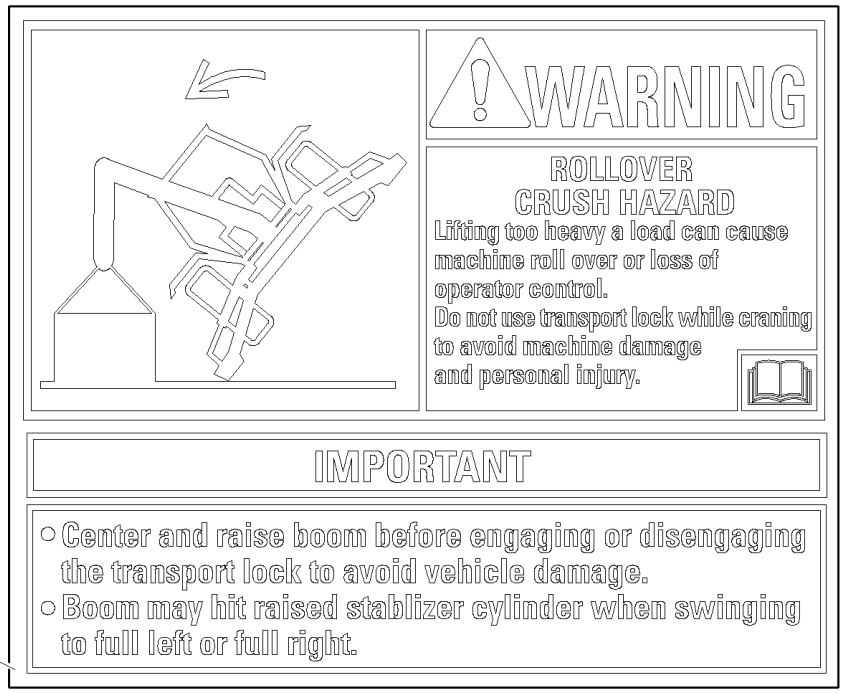
WARNING
ROLLOVER
CRUSH HAZARD
Lifting too heavy a load can cause machine roll over or loss of operator control.
Do not use transport lock while craning to avoid machine damage and personal injury.
IMPORTANT
Center and raise boom before engaging or disengaging the transport lock to avoid vehicle damage.
Boom may hit raised stablizer cylinder when swinging to full left or full right.

1

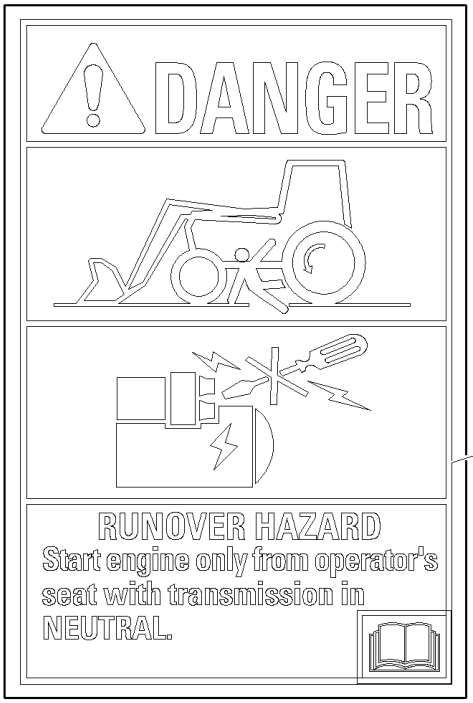
DANGER
RUNOVER HAZARD
Start engine only from operator's seat with transmission in NEUTRAL.

4

7

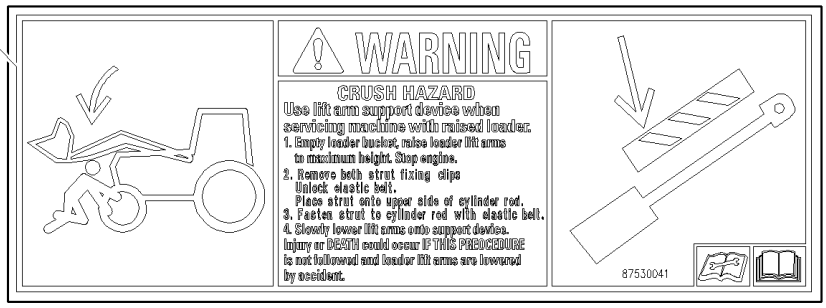
WARNING
CRUSH HAZARD
Use lift arm support device when servicing machine with raised loader.
1. Empty loader bucket, raise loader lift arms to maximum height. Stop engine.
2. Remove both strut fixing clips Unlock elastic belt. Place strut onto upper side of cylinder rod.
3. Fasten strut to cylinder rod with elastic belt.
4. Slowly lower lift arms onto support device.
Injury or DEATH could occur IF THIS PROCEDURE is not followed and loader lift arms are lowered by accident.
87530041

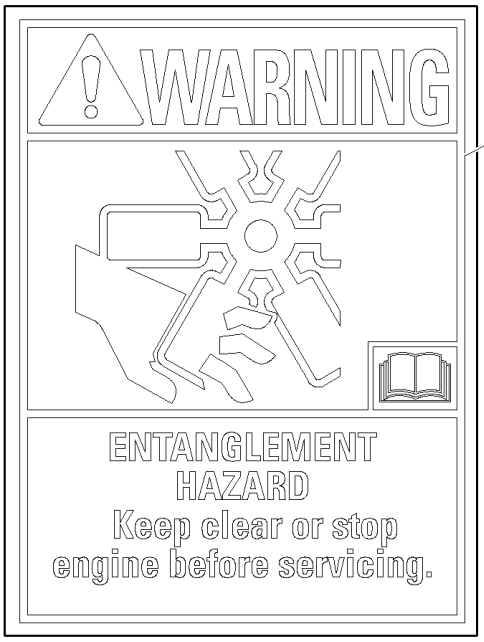
WARNING
ENTANGLEMENT HAZARD
Keep clear or stop engine before servicing.

6

5

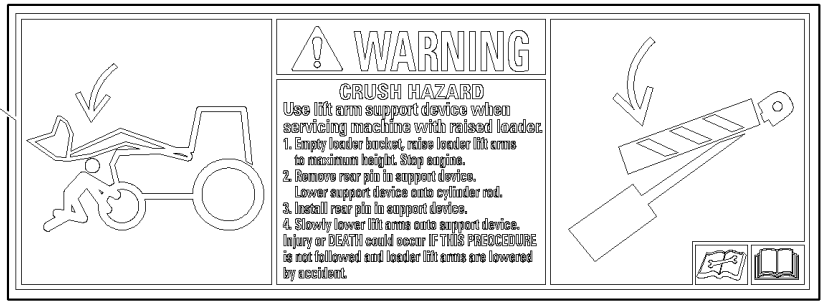
WARNING
CRUSH HAZARD
Use lift arm support device when servicing machine with raised loader.
1. Empty loader bucket, raise loader lift arms to maximum height. Stop engine.
2. Remove rear pin in support device. Lower support device onto cylinder rod.
3. Install rear pin in support device.
4. Slowly lower lift arms onto support device.
Injury or DEATH could occur IF THIS PROCEDURE is not followed and loader lift arms are lowered by accident.

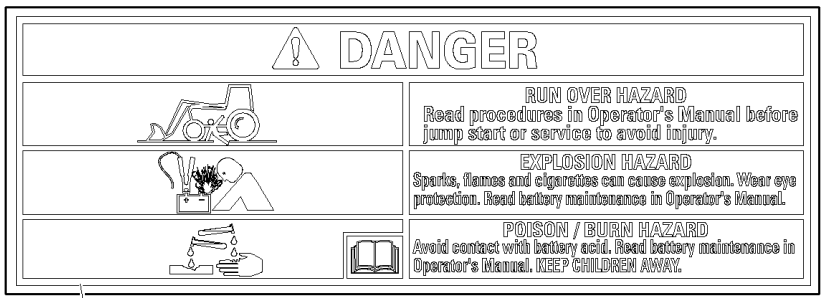
DANGER
RUN OVER HAZARD
Read procedures in Operator's Manual before jump start or service to avoid injury.
EXPLOSION HAZARD
Sparks, flames and cigarettes can cause explosion. Wear eye protection. Read battery maintenance in Operator's Manual.
POISON / BURN HAZARD
Avoid contact with battery acid. Read battery maintenance in Operator's Manual. KEEP CHILDREN AWAY.

2

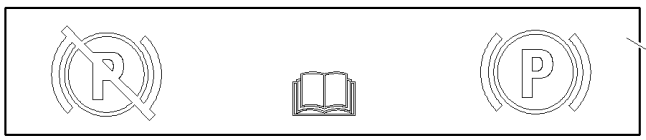
R
P

3


ATENCIÓN
PELIGRO SISTEMA BAJO PRESION
No abrir el sistema carburante bajo alta presión con el motor en marcha. La marcha del motor causa una alta presión del carburante.
El incumplimiento de esta instrucción puede provocar la muerte o heridas graves.
87588091

8

B110 TIER 3 BACKHOE LOADER (2/07-)

993(01) PLATES - NA

Ref	Numero de Pieza	Ctd	Descripción
1	85821924	1	DECAL, ENGLISH
1	85828069	1	DECAL, FRENCH
1	85828070	1	DECAL, SPANISH
2	85821917	1	DECAL, ENGLISH
2	85828088	1	DECAL, FRENCH
2	85828089	1	DECAL, SPANISH
3	85821925	1	DECAL,
4	85821918	1	DECAL, FRENCH
4	85828086	1	DECAL, SPANISH
4	85828087	1	DECAL, ENGLISH
5	85821919	1	DECAL, ENGLISH
5	85828090	1	DECAL, FRENCH
5	85828091	1	DECAL, SPANISH
6	85821921	1	DECAL, ENGLISH, Only for B110
6	85828084	1	DECAL, FRENCH
6	85828085	1	DECAL, SPANISH
7	87530041	1	DECAL, ENGLISH, Only for B115
7	87608143	1	DECAL, FRENCH, Only for B115
7	87608145	1	DECAL, SPANISH, Only for B115
8	87596091	1	DECAL, SPANISH
8	87581010	1	DECAL, ENGLISH
8	87596089	1	DECAL, FRENCH

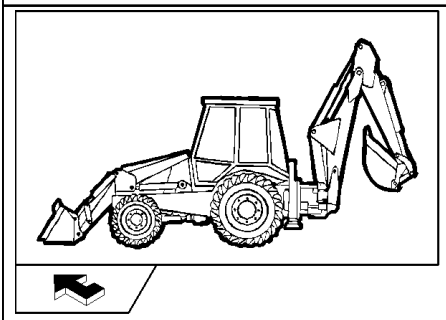

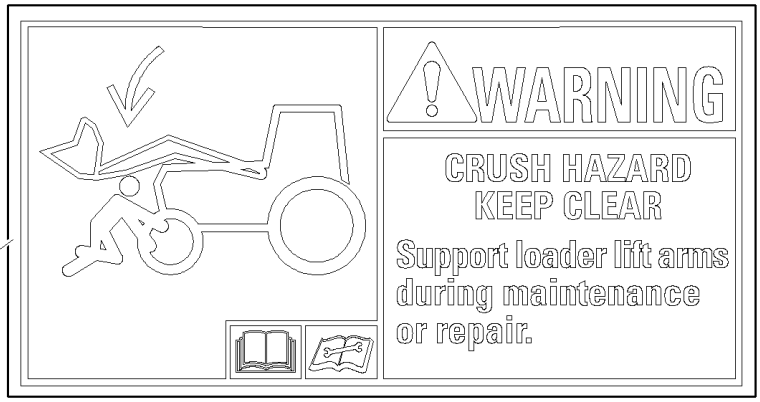
WARNING
CRUSH HAZARD
KEEP CLEAR
Support loader lift arms during maintenance or repair.

2

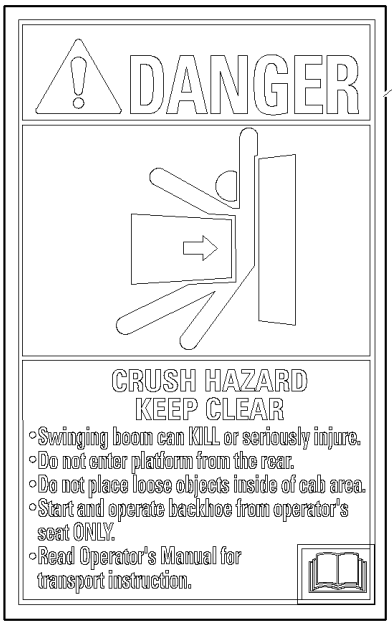
DANGER
CRUSH HAZARD
KEEP CLEAR
◦Swinging boom can KILL or seriously injure.
◦Do not enter platform from the rear.
◦Do not place loose objects inside of cab area.
◦Start and operate backhoe from operator's seat ONLY.
◦Read Operator's Manual for transport instruction.

1

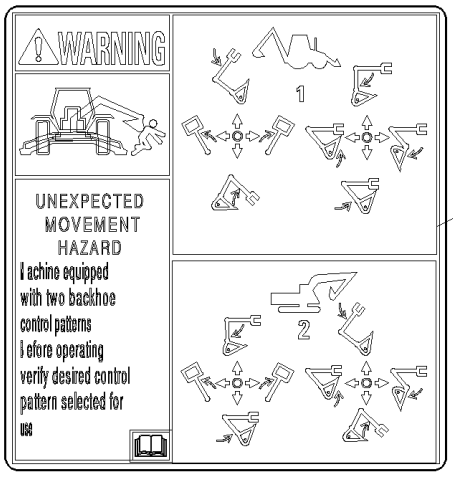
WARNING
UNEXPECTED MOVEMENT HAZARD
Machine equipped with two backhoe control patterns
Before operating verify desired control pattern selected for use
1
2

5

6


WARNING
PINCH POINT HAZARD
Keep clear.

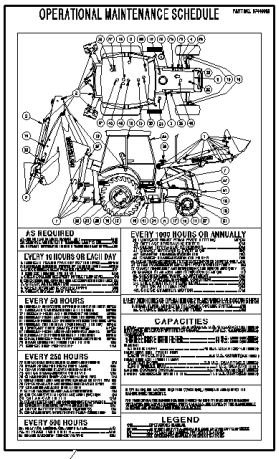
OPERATIONAL MAINTENANCE SCHEDULE

8

7

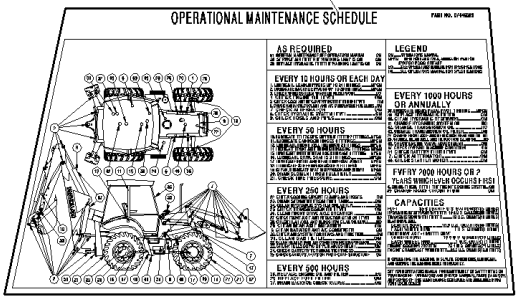
OPERATIONAL MAINTENANCE SCHEDULE
AS REQUIRED
EVERY 10 HOURS OR EACH DAY
EVERY 50 HOURS
EVERY 250 HOURS
EVERY 500 HOURS
LEGEND
EVERY 1000 HOURS OR ANNUALLY
EVERY 2000 HOURS OR 2 YEARS WHICHEVER OCCURS FIRST
CAPACITIES

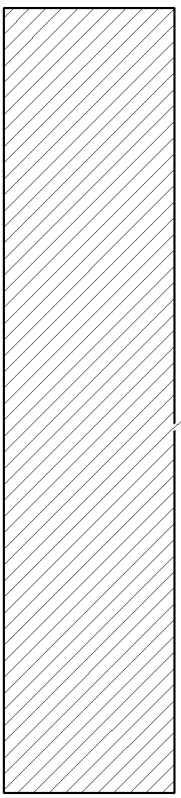

3

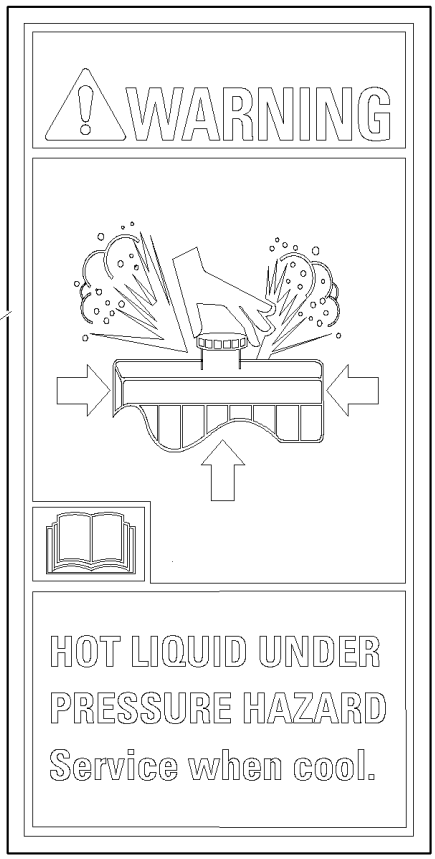
WARNING
HOT LIQUID UNDER PRESSURE HAZARD
Service when cool.

4

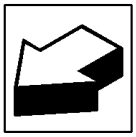

B110 TIER 3 BACKHOE LOADER (2/07-)

993(02) PLATES - NA

Ref	Numero de Pieza	Ctd	Descripción
1	85821922	1	DECAL, ENGLISH
1	85828080	1	DECAL, FRENCH
1	85828081	1	DECAL, SPANISH
2	85821946	1	DECAL, ENGLISH
2	85828082	1	DECAL, FRENCH
2	85828083	1	DECAL, SPANISH
3	86547781	1	DECAL,
4	85821916	1	DECAL, ENGLISH
4	85828094	1	DECAL, FRENCH
4	85828095	1	DECAL, SPANISH
5	87305413	1	DECAL, ENGLISH, Only for NA Pilot Control Version
6	85821927	1	DECAL,
6	85828097	1	DECAL,
6	85828098	1	DECAL,
7	87615426	1	DECAL, FRENCH
7	87615425	1	DECAL, SPANISH
7	87615424	1	DECAL, ENGLISH
8	87615417	1	DECAL, SPANISH
8	87577194	1	DECAL, ENGLISH

995(01) COLD START

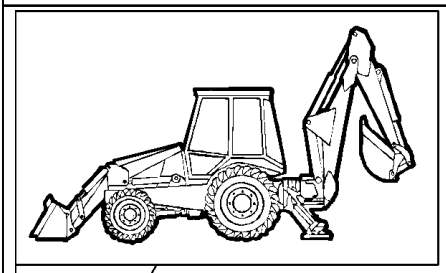

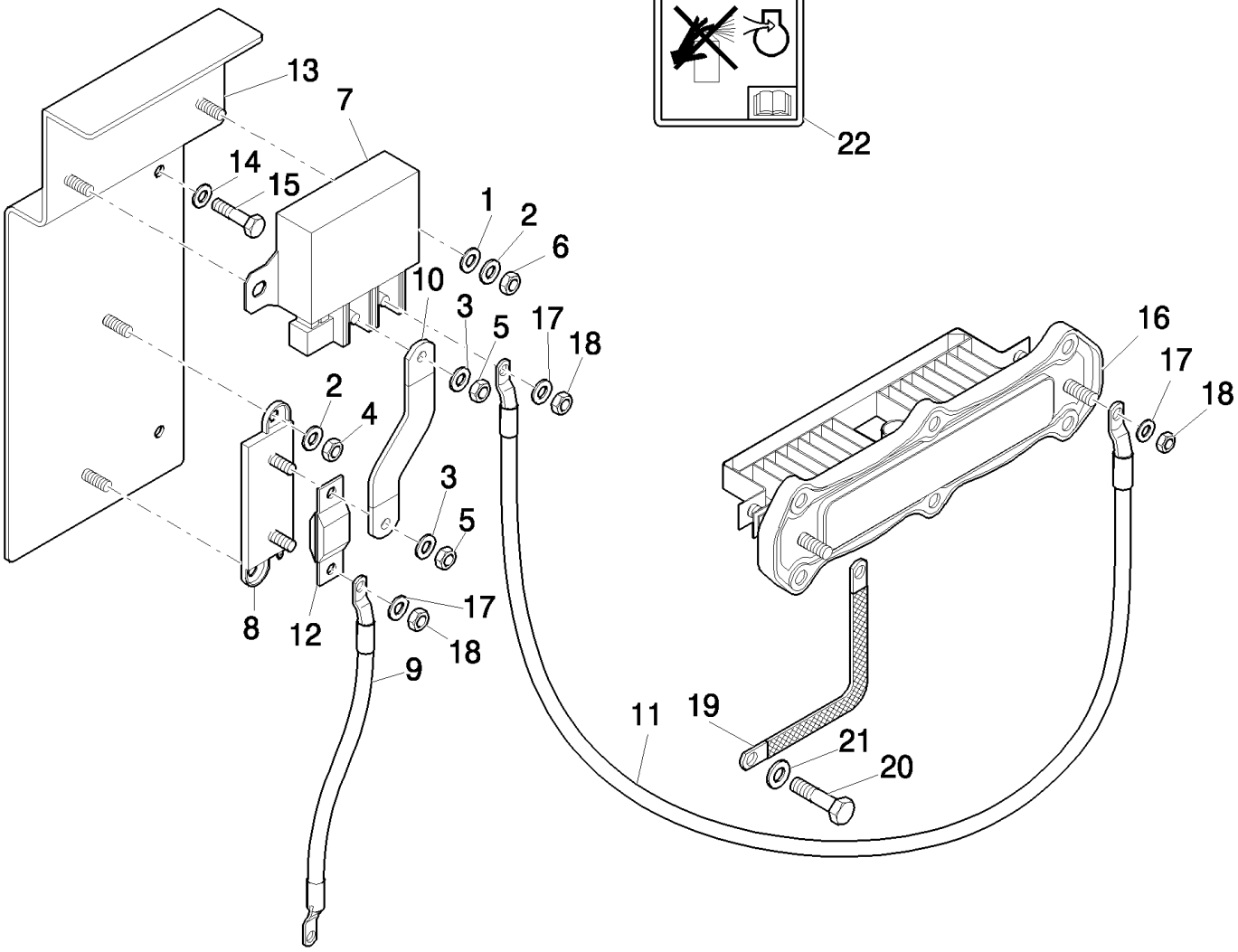

B110 TIER 3 BACKHOE LOADER (2/07-)

995(01) COLD START

Ref	Numero de Pieza	Ctd	Descripción
1	322357	2	WASHER, SPRING, Belleville, M6,
2	13577701	4	WASHER,
3	11193979	2	WASHER, SPRING, Belleville, M8.4,
4	15896211	2	NUT, M6, Cl 8,
5	16104111	2	NUT, LOCK, M8 x 1.25, Cl 8,
6	12574111	4	NUT, LOCK, M5 x .8, Cl 8,
7	86619908	1	RELAY,
8	87302554	1	CONNECTOR, ELEC,
9	87571508	1	CABLE,
10	87571509	1	CABLE,
11	87571511	1	CABLE,
12	87410602	1	FUSE,
13	87571513	1	SUPPORT,
14	16043421	2	SCREW, Hex, M8 x 20, 8.8,
15	11193979	2	WASHER, SPRING, Belleville, M8.4,
16	2854837	1	HEATER,
17	14499304	4	WASHER, M6 x 11 x 1.6,
18	12574211	2	NUT, LOCK, M6 x 1, Cl 8,
19	87571512	1	CABLE, GROUND,
20	16042924	1	BOLT, Hex, M8 x 10, 8.8, Full Thd,
21	12642704	1	WASHER, LOCK,
22	8603095	1	DECAL,
22	8603092	1	DECAL, , Only for NA

998(01) FOWARD/REVERSE & STEERING DECALS - POWER SHIFT

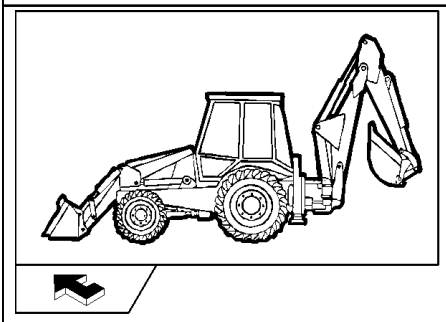

1

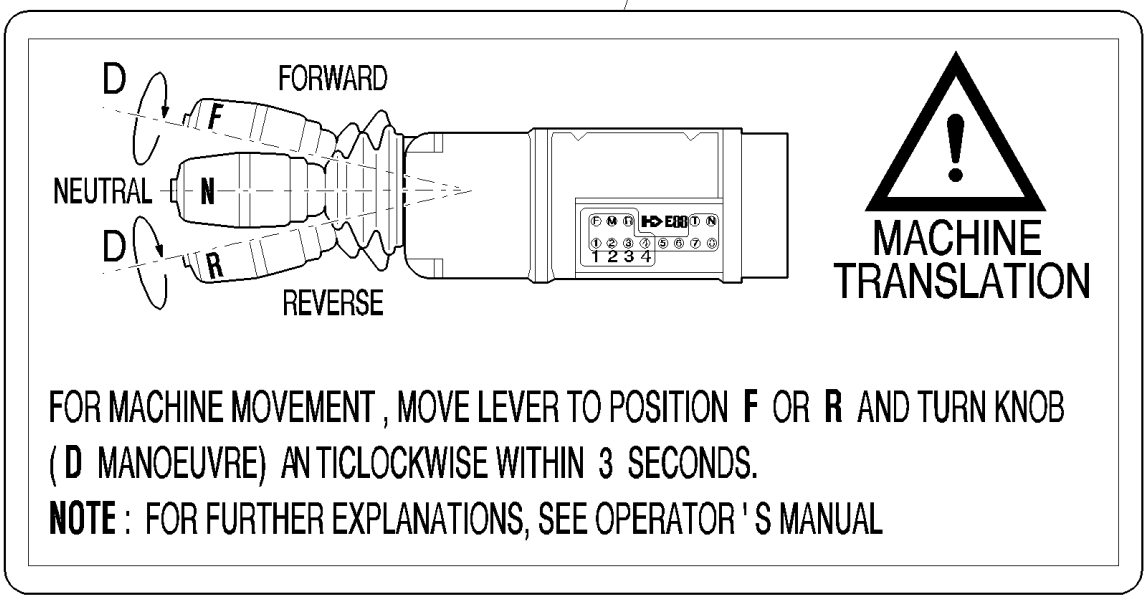

B110 TIER 3 BACKHOE LOADER (2/07-)

998(01) FOWARD/REVERSE & STEERING DECALS - POWER SHIFT

Ref	Numero de Pieza	Ctd	Descripción
1	85804959	1	DECAL, English
1	85805671	1	DECAL, Danish
1	85805672	1	DECAL, Finnish
1	85805673	1	DECAL, Dutch
1	85805674	1	DECAL, Swedish
1	85805675	1	DECAL, Portuguese
1	85805676	1	DECAL, Norwegian
1	85805677	1	DECAL, Greek
1	85805678	1	DECAL, Italian
1	85805679	1	DECAL, French
1	85805680	1	DECAL, German
1	85805681	1	DECAL, Spanish
1	87323052	1	DECAL, Czech
1	87323060	1	DECAL, Estonian
1	87319997	1	DECAL, Hungarian
1	87323064	1	DECAL, Lithuanian
1	87323056	1	DECAL, Latvian
1	87319993	1	DECAL, Slovak
1	87323068	1	DECAL, Poland
1	87324359	1	DECAL, Turkish
1	87324355	1	DECAL, Slovene