RUTHZIL TRATOR COMERCIAL DE PEÇAS LTDA 11 97083-6812 ROLANDO

NEW HOLLAND

FEVEREIRO 2006

PARTS CATALOG

LOADER BACKHOE

B115

Bur • Issued 02-2006
Printed in U.S.A. • Book/Form Number 87364132 NA
Copyright © 2005. CNH America, LLC. All Rights Reserved.

CNH America LLC reserves the right to make improvements in design or changes in specifications at any time without incurring any obligation to install them on units previously sold.

All data given in this publication is subject to production variations. Dimensions and weights are only approximate. Illustrations do not necessarily show products in standard condition. For exact information about any particular product, please consult your Dealer.

This unit first became available 03-2006			
REVISION HISTORY			
Issue	Issue Date	Applicable Machines	Remarks
First Edition	02-2006	B115	87364132

Any use of editorial or pictorial content is strictly prohibited without express written permission from
CNH America LLC. Carol Stream, IL 60188 U.S.A.

TABLE OF CONTENTS

MAIN	00	SECTIONS
MPARTS	00	MAINTENANCE PARTS
SEC. 01	00	ENGINE 1/2
SEC. 01	01	ENGINE 2/2
0.021/ 2	01	ENGINE
0.040	01	CYLINDER BLOCK
0.040	02	CYLINDER BLOCK
0.042/ 1	01	OIL PUMP, PAN
0.043	01	CYLINDER BLOCK - COVERS
0.043	02	CYLINDER BLOCK - COVERS
0.043	03	CYLINDER BLOCK - COVERS
0.045	01	BREATHER - ENGINE
0.060	01	CYLINDER HEAD
0.063	01	CYLINDER HEAD - COVERS
0.066	01	CYLINDER HEAD - VALVE MECHANISM
0.071/ 1	01	MANIFOLD - INTAKE
0.077/ 1	01	MANIFOLD - EXHAUST
0.080	01	CRANKSHAFT
0.081	01	PISTONS - CONNECTING ROD
0.082	01	PISTONS - CONNECTING ROD
0.083	01	FLYWHEEL - ENGINE
0.084	01	PULLEY - CRANKSHAFT
0.105	01	DYNAMIC BALANCER, GEARS & SHAFTS
0.105	02	DYNAMIC BALANCER, GEARS & SHAFTS (2831300)
0.120	01	CAMSHAFT
0.140/ 1	01	FUEL INJECTION PUMP
0.140/ 1	02	FUEL INJECTION SYSTEM
0.142	01	FUEL INJECTION SYSTEM
0.149	01	FUEL INJECTION SYSTEM
0.200	01	FUEL FILTER
0.201	01	FUEL PUMP
0.203	01	FUEL INJECTION SYSTEM
0.204	01	FUEL INJECTION SYSTEM
0.240/ 1	01	TURBOCHARGER
0.270	01	ENGINE, OIL
0.270/A	01	ENGINE, OIL
0.300	01	OIL PUMP - ENGINE
0.302	01	OIL FILTERS - ENGINE
0.305	01	PIPING - ENGINE OIL
0.315	01	OIL FILTER AND COOLER
0.320	01	WATER PUMP
0.323	01	COOLING SYSTEM - ENGINE
0.326	01	THERMOSTAT - ENGINE COOLING SYSTEM
0.340	01	WATER PUMP - CONTROL
0.345/A	01	FAN DRIVE
0.350	01	POWER TAKE-OFF
0.360	01	STARTER MOTOR
0.400	01	ALTERNATOR
0.450	01	ENGINE - LIFT HOOK
636A	01	ACCESSORY ENGINE
636A	04	ACCESSORY ENGINE- ALTERNATOR
636A	05	ACCESSORY ENGINE - BRACKET MUFFLER

TABLE OF CONTENTS

636A	06	ACCESSORY ENGINE - STARTER
638A	01	ACCESSORY ENGINE
638A	02	ACCESSORY ENGINE - VENTILATOR
638A	03	ACCESSORY ENGINE - STARTER
638A	04	ACCESSORY ENGINE- ALTERNATOR
638A	05	ACCESSORY ENGINE - BRACKET MUFFLER
639A	01	ACCESSORY ENGINE
639A	02	ACCESSORY ENGINE - VENTILATOR
639A	03	ACCESSORY ENGINE - STARTER
639A	04	ACCESSORY ENGINE- ALTERNATOR
SEC. 02	00	FUEL TANK - MUFFLER - RADIATOR - AIR CLEANER - CHASSIS
1.14.0	01	FUEL TANK & RELATED PARTS
1.15.0	01	MUFFLER & EXTENSIONS
1.15.0	02	MUFFLER & EXTENSIONS
1.17.2	01	EXPANSION TANK
1.19.1	01	AIR CLEANER & HOSES
1.21.5/ 2	01	FRAME (CENTER PIVOT)
175	01	AIR INTAKE CAP & PRE-CLEANER
176	01	AIR INTAKE CAP & PRE-CLEANER
202	01	FRONT WEIGHTS
638	01	RADIATOR
638	02	RADIATOR
639	01	RADIATOR
639	02	RADIATOR
639	03	RADIATOR
SEC. 03	00	TRANSMISSION 1/2
SEC. 03	01	TRANSMISSION 2/2
1.28.0	01	GEARING SPEED GEAR
1.28.0/ A	01	TRANSMISSIONGEARING SPEED GEAR (2WD POWER-SHUTTLE)
1.28.0/ A	02	TRANSMISSIONGEARING SPEED GEAR (2WD POWER-SHUTTLE)
1.28.0/ A	03	TRANSMISSIONGEARING SPEED GEAR (2WD POWER-SHUTTLE)
1.28.0/ A	04	TRANSMISSIONGEARING SPEED GEAR (2WD POWER-SHUTTLE)
1.28.0/ A	05	TRANSMISSIONGEARING SPEED GEAR (2WD POWER-SHUTTLE)
1.28.0/ A	06	TRANSMISSIONGEARING SPEED GEAR (2WD POWER-SHUTTLE)
1.28.0/ A	07	TRANSMISSIONGEARING SPEED GEAR (2WD POWER-SHUTTLE)
1.28.0/ C	01	TRANSMISSIONGEARING SPEED GEAR (4WD POWER-SHIFT)
1.28.0/ C	02	TRANSMISSIONGEARING SPEED GEAR (4WD POWER-SHIFT)
1.28.0/ C	03	TRANSMISSIONGEARING SPEED GEAR (4WD POWER-SHIFT)
1.28.0/ C	04	TRANSMISSIONGEARING SPEED GEAR (4WD POWER-SHIFT)
1.28.0/ C	05	TRANSMISSIONGEARING SPEED GEAR (4WD POWER-SHIFT)
1.28.0/ C	06	TRANSMISSIONGEARING SPEED GEAR (4WD POWER-SHIFT)
1.28.0/ C	07	TRANSMISSIONGEARING SPEED GEAR (4WD POWER-SHIFT)
1.28.0/ C	08	TRANSMISSIONGEARING SPEED GEAR (4WD POWER-SHIFT)
1.28.0/ C	09	TRANSMISSIONGEARING SPEED GEAR (4WD POWER-SHIFT)
1.28.0/ C	10	TRANSMISSIONGEARING SPEED GEAR (4WD POWER-SHIFT)
1.28.0/ C	11A	TRANSMISSION (4WD, 4WS, POWER-SHIFT)
1.28.0/ C	12	TRANSMISSIONGEARING SPEED GEAR (4WD POWER-SHIFT)
1.28.0/ C	13A	TRANSMISSION (4WD, 4WS POWER-SHIFT)
1.28.0/ C	14A	TRANSMISSION (4WD, 4WS POWER-SHIFT)
1.28.0/ C	15	TRANSMISSIONGEARING SPEED GEAR (4WD POWER-SHIFT)
1.28.0/ C	16	TRANSMISSIONGEARING SPEED GEAR (4WD POWER-SHIFT)
1.28.6/ 1	01	GEAR FILTER PIPES (POWER-SHIFT)

TABLE OF CONTENTS

1.38.1/ 1	01	FRONT & REAR DRIVESHAFT (POWER-SHIFT)
1.39.8	01	TRANSMISSION OIL COOLING PIPES (POWER-SHUTTLE)
1.39.8/ 1	01	TRANSMISSION OIL COOLING PIPES (POWER-SHIFT)
SEC. 04	00	FRONT AXLE
400	01	FRONT AXLE (4WS) - BOX
400	02	FRONT AXLE (4WS) - BOX
400	03	FRONT AXLE (4WS) - STEERING AXLES
400	04	FRONT AXLE (4WS) - BEVEL GEAR PAIR
400	05	FRONT AXLE (4WS) - BEVEL GEAR PAIR
400	06	FRONT AXLE (4WS) - DIFFERENTIAL LOCKING
400	06A	SELF-LOCKING FRONT AXLE: DIFFERENTIAL AUTOMATIC LOCKING 4WS
400	07	FRONT AXLE (4WS) - AXLE-SHAFT ARTICULATED
400	08	FRONT AXLE (4WS) - HUBS
400	09	FRONT AXLE (4WS) - HUBS
SEC. 05	00	REAR AXLE
400A	01	REAR AXLE, RH & CENTER HOUSING
400A	02	REAR AXLE, LH HOUSING & BUSHINGS
400A	03	REAR AXLE, RH SWIVEL HOUSING, STEERING CYLINDER & SENSOR
400A	04	REAR AXLE, LH SWIVEL HOUSING
400A	05	REAR AXLE, RING GEAR & PINION ASSEMBLY
400A	06	REAR AXLE, PINION SHIMS
400A	07	REAR AXLE, DIFFERENTIAL (STANDARD)
400A	08	SELF-LOCKING REAR AXLE, DIFFERENTIAL (SELF LOCKING)
400A	09	REAR AXLE, BRAKES
400A	10	REAR AXLE, WHEEL CARRIER & HUB
400A	11	REAR AXLE, PLANETARY GEARS & COVER
SEC. 06	00	ELECTRICAL
1.75.2/ 5	01	CHASSIS HARNESS & GROUND WIRE (POWER SHIFT)
1.75.2/ 5	02	BATTERY LOCK-OUT SWITCH & GROUND WIRE (POWER SHIFT)
1.75.2/ 5	03	ENGINE HARNESS (POWER SHIFT)
131	01	SINGLE BATTERY
321	01	DOUBLE BATTERY
995	01	COLD START
995	02	COLD START
SEC. 07	00	SLIDES VALVES
1.82.0	01	HYDRAULIC OIL RESERVOIR
1.82.3	01	HYDRAULIC PUMP (35+35-154L/MM)
1.82.3/ 1	01	HYDRAULIC PUMP (40+35-165L/MM)
1.82.3/ 2	01	HYDRAULIC PUMP (40+35-165L/MM)
1.82.6	01	HYDRAULIC SYSTEM PIPING
1.82.6	02	HYDRAULIC SYSTEM PIPING
1.82.6	04C	HYDRAULIC SYSTEM PIPING(CENTER PIVOT)
1.82.6	05B	HYDRAULIC SYSTEM PIPING(CENTER PIVOT)
1.82.6	05C	HYDRAULIC SYSTEM PIPING(CENTER PIVOT)
1.82.6	06B	FILTER ASSEMBLY & HOSE TO RETURN MANIFOLD (CENTER PIVOT)
1.82.6	07A	HYDRAULIC SYSTEM PIPING
1.82.6	08B	HYDRAULIC SYSTEM PIPING
1.82.6	10	HYDRAULIC SYSTEM PIPING NA 4WS (CENTER PIVOT)
1.82.6	11B	HYDRAULIC SYSTEM PIPING(CENTER PIVOT)
1.82.6	12B	HYDRAULIC SYSTEM PIPING(CENTER PIVOT)
1.82.6	13B	HYDRAULIC SYSTEM PIPING(CENTER PIVOT)
300	01	BACKHOE CONTROL VALVE, 6 SECTIONS (CENTER PIVOT)

TABLE OF CONTENTS

300	02	BACKHOE CONTROL VALVE, INLET SECTION
300	03	BACKHOE CONTROL VALVE, BOOM SECTION
300	04	BACKHOE CONTROL VALVE, SWING SECTION
300	05	BACKHOE CONTROL VALVE, BUCKET SECTION
300	06	BACKHOE CONTROL VALVE, DIPPERSTICK SECTION
300	07	BACKHOE CONTROL VALVE, STABILIZER SECTION (CENTER PIVOT)
302	01	TWO-SECTION CONTROL VALVE FOR LOADER
302	02	TWO-SECTION CONTROL VALVE FOR LOADER
302	03	TWO-SECTION CONTROL VALVE FOR LOADER
302	04	TWO-SECTION CONTROL VALVE FOR LOADER
304	01	LOCK VALVE ON TILTING CYLINDER
304	02	LOCK VALVE ON LIFTING CYLINDER
304	03	LOCK VALVE
331	01	BACKHOE CONTROL VALVE, 6 SECTIONS (CENTER PIVOT) NORTH AMERICA
331/ A	01	6 SECTION PILOT CONTROL VALVE SUPPORT, COMPLETE
331/ A	02	2 SECTION PILOT CONTROL VALVE SUPPORT, COMPLETE
331/ B	01	PILOT CONTROL VALVE SUPPORT, COMPLETE
331/ C	01	6 SECTION PILOT CONTROL VALVE SUPPORT, COMPLETE
331/ C	02	6 SECTION PILOT CONTROL VALVE SUPPORT, COMPLETE
331/ C	03	6 SECTION PILOT CONTROL VALVE SUPPORT, COMPLETE
331/ C	04	6 SECTION PILOT CONTROL VALVE SUPPORT, COMPLETE
331/ C	05	6 SECTION PILOT CONTROL VALVE SUPPORT, COMPLETE
331/ C	06	6 SECTION PILOT CONTROL VALVE SUPPORT, COMPLETE (CENTER PIVOT)
331/ D	03	VALVE, JOYSTICK PILOT CONTROLS - EXTENDED VERSION - (RIGTH HAND)
333/ A	01	7 SECTION PILOT CONTROL VALVE SUPPORT, COMPLETE
333/ A	02	7 SECTION PILOT CONTROL VALVE SUPPORT, COMPLETE
333/ A	03	7 SECTION PILOT CONTROL VALVE SUPPORT, COMPLETE
333/ B	01	7 SECTION PILOT CONTROL VALVE SUPPORT, COMPLETE
333/ B	03	7 SECTION PILOT CONTROL VALVE SUPPORT, COMPLETE
333/ B	04	7 SECTION PILOT CONTROL VALVE SUPPORT, COMPLETE
333/ B	05	7 SECTION PILOT CONTROL VALVE SUPPORT, COMPLETE
333/ B	06	7 SECTION PILOT CONTROL VALVE SUPPORT, COMPLETE (CENTER PIVOT) EUROPE
333/ B	07	7 SECTION PILOT CONTROL VALVE SUPPORT, COMPLETE (CENTER PIVOT) EUROPE
333/ B	08	7 SECTION PILOT CONTROL VALVE SUPPORT, COMPLETE
333/ B	09	7 SECTION PILOT CONTROL VALVE SUPPORT, COMPLETE (CENTER PIVOT) EUROPE
333/ B	10	6 SECTION PILOT CONTROL VALVE SUPPORT,COMPLETE
333/ C	01	VALVE, JOYSTICK PILOT CONTROLS (RIGHT HAND)
333/ C	02	VALVE, JOYSTICK PILOT CONTROLS (LEFT HAND)
333/ 1	01	7-SECTIONS EXCAVATOR CONTROL VALVE (CENTER PIVOT) NORTH AMERICA
333/ 1	02	7-SECTIONS EXCAVATOR CONTROL VALVE (CENTER PIVOT) NORTH AMERICA
333/ 1	03	7-SECTIONS EXCAVATOR CONTROL VALVE (CENTER PIVOT) NORTH AMERICA
333/ 1	04	7-SECTIONS EXCAVATOR CONTROL VALVE (CENTER PIVOT) NORTH AMERICA
333/ 1	05	7-SECTIONS EXCAVATOR CONTROL VALVE (CENTER PIVOT) NORTH AMERICA
333/ 1	06	7-SECTIONS EXCAVATOR CONTROL VALVE (CENTER PIVOT) NORTH AMERICA
333/ 1	07	7-SECTIONS EXCAVATOR CONTROL VALVE (CENTER PIVOT) NORTH AMERICA
333/ 1	08	7-SECTIONS EXCAVATOR CONTROL VALVE (CENTER PIVOT) NORTH AMERICA
334	09	7-SECTIONS EXCAVATOR CONTROL VALVE
334	11	7-SECTIONS EXCAVATOR CONTROL VALVE
392	01	LOCKING VALVE ON BACKHOE LIFT AND DIPP. CYLINDER

TABLE OF CONTENTS

392	02	BACKHOE LIFT & DIPPERSTICK CYLINDER LOCK VALVE
437/ 1	01	GLIDE RIDE VALVE,HYDRAULIC SYSTEM FOR MACHINE FRAME LEVELLING & ON/OFF SWITCH
698	01	GLIDE RIDE VALVE,HYDRAULIC SYSTEM FOR MACHINE FRAME LEVELLING & ON/OFF SWITCH
702/ 1	02	PEDAL-OPERATED TELESCOPIC DIPPER HYDRAULIC SYSTEM (CENTER PIVOT)
703	01	PEDAL-OPERATED TELESCOPIC DIPPER HYDRAULIC SYSTEM
703	02	PEDAL-OPERATED TELESCOPIC DIPPER HYDRAULIC SYSTEM
703	03	PEDAL-OPERATED TELESCOPIC DIPPER HYDRAULIC SYSTEM
703	04	PEDAL-OPERATED TELESCOPIC DIPPER HYDRAULIC SYSTEM
703	05	PEDAL-OPERATED TELESCOPIC DIPPER HYDRAULIC SYSTEM
708	01	THREE-SECTION CONTROL VALVE FOR LOADER
708/ 1	01	KIT OF CONVERSION FROM 2 TO 3 SPOOLS
727/ 3	01	HYDRAULIC SYSTEM PRESETTING FOR TELESCOPIC LINKS PEDAL OPERATED(CENTER PIVOT)
SEC. 08	00	BODY & HOOD
1.87.2	01	CAB SCREEN
1.87.8	01	CAB FASTENERS
SEC. 09	00	LOADER 1/1
SEC. 09	01	BACKHOE 1/2
SEC. 09	02	BACKHOE 2/2
1.88.01/ 2	02	TRANSPORT LOCK HOOK, CYLINDER & HOSE (SIDE SHIFT,CENTER PIVOT)
1.88.01/ 3	01	HYDRAULIC SYSTEM FOR "TRANSPORT LOCK" REAR LOCKING
1.88.01/ 3	02	HYDRAULIC SYSTEM FOR "TRANSPORT LOCK" REAR LOCKING
1.88.08	01	SWING POST ASSEMBLY, BUSHINGS & PINS
1.88.08	02	SWING POST PINS & TRANSPORT LOCK HOOK
1.88.09/ 1	01	DISTRIBUTOR VALVE SUPPORT (SIDE SHIFT)
1.88.11/ A	01	ARMS AND JOINTS
1.88.11/ 1C	01	LIFT CYLINDER
1.88.11/ 2B	01	LOADER BUCKET CONTROL CYLINDER
1.88.11/ 3A	01	LIFT CYLINDER AND BUCKET PIPES
1.88.11/ 6	02	STABILIZER CYLINDERS (CENTER PIVOT)
1.88.11/ 7A	01	PIPES FOR STABILIZER CYLINDERS (CENTER PIVOT)
1.88.11/ 8	01	RETURN TO DIG SENSOR
1.88.11/ 9A	01	CYLINDERS AND ROTATION PLATE
1.88.11/ 9C	01	SWING CYLINDERS BACKHOE
1.88.12/ 3	01	FRONT CONTROL VALVE SUPPORT AND TRANSMISSIONS (CENTER PIVOT)
120	01	SILENT HAMMER CB65S
120/ 1	01	HAMMER CB65B
200	01	SHOVEL AND REAR LIFTING HOOKS
416-417	01	SYSTEM HAMMER COMPONENTS (CAB)
469	01	BUCKET 6X1 (1,15 M3) WITH BLADE
469	02	BUCKET 6X1 (1,15 M3) WITH BLADE
469/ A	01	HYDRAULIC CYLINDER (BUCKET 4X1-6X1)
469/ 1	01	BUCKET 6X1 (1,15 M3) WITH BLADE "COMMON GREY"
469/ 2	01	BUCKET 6X1 (1,15 M3) WITH BLADE "COMMON GREY"
470	01	BUCKET 6X1 (1,15 M3) WITH TINE
470	02	BUCKET 6X1 (1,15 M3) WITH TINE
470/ 1	01	BUCKET 6X1 (1,15 M3) WITH TINE "COMMON GREY"
470/ 2	01	BUCKET 6X1 (1,15 M3) WITH TINE "COMMON GREY"
475	01	BUCKET 4X1 (1,15 M3) WITH BLADE
475	02	BUCKET 4X1 (1,15 M3) WITH BLADE

TABLE OF CONTENTS

475/ 1	01	BUCKET 4X1 (1,15 M3) WITH BLADE "COMMON GREY"
475/ 2	01	BUCKET 6X1 (1,15 M3) WITH BLADE
476	01	BUCKET 4X1 (1,15 M3) WITH TINE
476	02	BUCKET 4X1 (1,15 M3) WITH TINE
476/ 1	01	BUCKET 4X1 (1,15 M3) WITH TINE "COMMON GREY"
476/ 2	01	BUCKET 6X1 (1,15 M3) WITH TINE "COMMON GREY"
500	01	1,13 M3 BUCKET
501	01	1,13 M3 BUCKET W/TINES
502	01	1,13 M3 BUCKET WITH EXTRA REVERSIBLE BLADE
505	01	EXTRA REVERSIBLE BLADE
514/ C	01	HYDRAULIC BUCKET CYLINDER
514/ E	01	HYDRAULIC DITCHING CYLINDER
515	01	12" (305MM) BACKHOE BUCKET WITH PIN TEETH
515	02	12" (305MM) BACKHOE BUCKET WITH BOLT-ON TEETH
516	01	18" (457MM) BACKHOE BUCKET WITH PIN TEETH
516	02	18" (457MM) BACKHOE BUCKET WITH BOLT-ON TEETH
517	01	24" (610MM) BACKHOE BUCKET WITH PIN TEETH
517	02	24" (610MM) BACKHOE BUCKET WITH BOLT-ON TEETH
518	01	30" (762MM) BACKHOE BUCKET WITH PIN TEETH
518	02	30" (762MM) BACKHOE BUCKET WITH BOLT-ON TEETH
519	01	36" (914MM) BACKHOE BUCKET WITH PIN TEETH
519	02	36" (914MM) BACKHOE BUCKET WITH BOLT-ON TEETH
526	01	BOLT-ON TOOTH KIT, 12" (305MM) BACKHOE BUCKET
527	01	BOLT-ON TOOTH KIT, 18" (457MM) & 24" (610MM) BACKHOE BUCKETS
528	01	BOLT-ON TOOTH KIT, 30" (762MM) BACKHOE BUCKET
529	01	BOLT-ON TOOTH KIT, 36" (914MM) BACKHOE BUCKET
530	01	PIN TOOTH KIT, 12" (305MM) BACKHOE BUCKET
532	01	PIN TOOTH KIT, 30" (762MM) BACKHOE BUCKET
533	01	PIN TOOTH KIT, 36" (914MM) BACKHOE BUCKET
533/ 1	01	1.15 M3 BUCKET WITH FORKS AND CUTTER BLADE
533/ 1	02	1.15 M3 BUCKET WITH FORKS AND CUTTER BLADE
534	01	1,15 M3 BUCKET WITH FORKS AND EXTRA REVERSIBLE BLADE
534	02	1,15 M3 BUCKET WITH FORKS AND EXTRA REVERSIBLE BLADE
535/ 2	01	1,15MC BUCKET WITH FORKS AND TINE
535/ 2	02	1,15MC BUCKET WITH FORKS AND TINE
548	01	DITCH CLEANING BUCKET
555	01	FRONT BUCKET TEETH
649	01	1.15 BUCKET FORK KIT FOR CONVERSION FROM 4X1 TO 6X1
699	01	HAND HAMMER SWITCH
700	01	4X1 & 6X1 BUCKET HYDRAULIC LINES (4WS)
700	02	4X1 & 6X1 BUCKET HYDRAULIC LINES (4WS)
704	01	MANUAL HAMMER SYSTEM
704	02	MANUAL HAMMER SYSTEM
704/ A	01	MANUAL HAMMER VALVE
707	01	KIT-HYDRAULIC SYSTEM WITH 3 SECTION FOR BUCKET 4X1 / 6X1
707	02	KIT-HYDRAULIC SYSTEM WITH 3 SECTION FOR BUCKET 4X1 / 6X1
724	01	HYDRAULIC SYSTEM FOR HAMMER (CENTER PIVOT)
724	02	HYDRAULIC SYSTEM FOR HAMMER (CENTER PIVOT)
724/ A	01	REAR HAMMER CONTROL VALVE
724/ 2	01	HYDRAULIC SYSTEM FOR HAMMER (CENTER PIVOT)
724/ 2	02	HYDRAULIC SYSTEM FOR HAMMER
724/ 3	01	HYDRAULIC SYSTEM FOR HAMMER (CENTER PIVOT)

TABLE OF CONTENTS

724/ 3	02	HYDRAULIC SYSTEM FOR HAMMER (CENTER PIVOT)
724/ 5	01	HYDRAULIC SYSTEM FOR HAMMER (4WS)
724/ 6	01	HYDRAULIC SYSTEM FOR HAMMER (SIDE SHIFT EUROPA)
732	01	REAR MECHANICAL QUICK-COUPLING
732/ A	01	REAR MECHANICAL QUICK-COUPLING
900	01	BOOM - LONG DIPPER
900	02	LONG DIPPER
900	03	LONG DIPPER - BUCKET MOTION
900	04	LONG DIPPÊR - HYDRAULIC SYSTEM
900	05	LONG DIPPER - HYDRAULIC SYSTEM
900	06	LONG DIPPER - HYDRAULIC SYSTEM
900	07	LONG DIPPER - HYDRAULIC SYSTEM
900	08	LONG DIPPER - HYDRAULIC SYSTEM
901	03	TELESCOPIC DIPPER LONG - HYDRAULIC SYSTEM
901/ A	01	TELESCOPIC DIPPER LONG
901/ B	01	TELESCOPIC DIPPER LONG
901/ C	01	TELESCOPIC DIPPER LONG
901/ D	01	TELESCOPIC DIPPER LONG - HYDRAULIC LIFTING CYLINDER
SEC. 10	00	BODY, HOOD & DRIVER"S POST 1/3
SEC. 10	01	BODY, HOOD & DRIVER"S POST 2/3
SEC. 10	02	BODY, HOOD & DRIVER"S POST 3/3
095	01	STABILIZER CONTROL WITHOUT AUTO-UP (CENTER PIVOT)
096/ 1	01	STABILIZER CONTROL WITH AUTO-UP (CENTER PIVOT)
1.63.0	01	POWER STEERING HYDRAULIC SYSTEM
1.63.0/ A	01	POWER STEERING HYDRAULIC SYSTEM (4WS)
1.91.1	01	CAB / CEILING LIGHT
1.91.3	01	BACK-UP ALARM
1.91.4/ 6	01	IGNITON SWITCH, POWER POINT, FUSE PANEL & SIDE CONSOLE HARNESS (CAB CP POWER SHIFT)
1.91.4/ 6	02	IGNITON SWITCH, POWER POINT, FUSE PANEL & SIDE CONSOLE HARNESS (CAB CP POWER SHIFT)
1.91.4/ 6	03	IGNITON SWITCH, POWER POINT, FUSE PANEL & SIDE CONSOLE HARNESS (CAB CP POWER SHIFT)
1.91.4/ 6	04	IGNITON SWITCH, POWER POINT, FUSE PANEL & SIDE CONSOLE HARNESS (CAB CP POWER SHIFT)
1.91.4/ 6	05	IGNITON SWITCH, POWER POINT, FUSE PANEL & SIDE CONSOLE HARNESS (CAB CP POWER SHIFT)
1.91.4/ 6	06	FRONT DASH (CAB CP POWER SHIFT)
1.91.4/ 6	07	IGNITON SWITCH, POWER POINT, FUSE PANEL & SIDE CONSOLE HARNESS (CAB CP POWER SHIFT)
1.91.5	01	FRONT AND REAR WINDSCREEN WIPERS
1.91.5	02	WINDSCREEN WIPERS RESERVOIR & NOZZLES
1.91.6	01	RADIO ANTENNA & SPEAKER COVER
1.91.7/ 2	01	LAMPS & LIGHTS - CAB (USA)
1.91.8	01	CAB-SAFETY FRAME / EXTINGUISHER
1.92.1	01	CAB - FRAME-DOOR
1.92.1/ 2	01	CAB - FRAME-DOOR
1.92.1/ 3	01	ROPS - SAFETY FRAME
1.92.3	01	WINDOWS
1.92.4	01	WINDOWS
1.92.4	02	WINDOWS
1.92.4	03	WINDOWS

TABLE OF CONTENTS

1.92.5	01	FENDERS, REAR
1.92.6	01	DOOR COMPONENTS
1.92.6	02	DOOR COMPONENTS
1.92.6	03	DOOR COMPONENTS
1.92.9	01	REAR WINDOWS
1.92.9	02	REAR WINDOWS
1.92.9	03	REAR WINDOWS
1.93.0	01	CAB / SOFT TRIM
1.93.0	02	CAB / SOFT TRIM (POWER SHUTTLE)
1.93.0	03	CAB / SOFT TRIM
1.93.0	04	CAB / SOFT TRIM
1.93.0/ 1	02	CAB / SOFT TRIM (POWER SHIFT)
1.93.0/ 1	03	CAB / SOFT TRIM (POWER SHIFT)
1.93.0/ 3	01	CAB / SOFT TRIM
1.93.0/ 3	04	CAB / SOFT TRIM
1.93.4	01	REAR MIRROR- SUN SCREEN
1.93.5	01	FRONT CONSOLE - ROPS (POWER SHUTTLE)
1.93.5/ 1	01	CAB / PANEL DASH
1.93.5/ 1	02	CAB / PANEL DASH
1.93.5/ 3	01	CAB / PANEL DASH
1.94.0	01	CAB/ CANOPY
1.94.2	03	HEATER WATER HOSES
1.94.2/ 1	03	HEATER WATER HOSES
1.95.0	01	CAB-SAFETY FRAME / BRAKE PEDAL
1.95.0	02	CAB-SAFETY FRAME / BRAKE PEDAL
1.95.0	03	CAB-SAFETY FRAME / BRAKE PEDAL
1.95.0/ B	01	CAB- BRAKE PEDAL
1.95.1/1	01	CAB-SAFETY FRAME / HAND BRAKE (EUR)
1.95.5/ C	01	POWER STEERING MOTOR
1.95.5/ C	02	POWER STEERING MOTOR
1.95.5/ 4	01	POWER STEERING MOTOR, WHEEL & COLUMN (4WS)
1.96.0/ 2	01	FOWARD/REVERSE & MULTI-PURPOSE LEVER, CAB (POWER-SHIFT)
1.96.2	01	STABILIZER CONTROL
1.96.2/ 1	01	PILOT CONTROL DIAGNOSTICS
1.96.7/ 2	01	CAB / MISCELLANEOUS CAPS (CENTER PIVOT) USA
1.96.7/ 8	01	CAB / MISCELLANEOUS CAPS (CENTER PIVOT) USA
1.98.0/ 1	01	INFORMATION SYMBOL DECALS (POWER SHUTTLE)
1.98.0/ 1	02	WARNING SYMBOL DECALS
1.98.0/ 1	03	CAB WARNING & INFORMATION DECALS
1.98.0/ 1	04	BACKHOE, LOADER & ENGINE WARNING DECALS
1.98.0/ 3	01	INFORMATION SYMBOL DECALS (POWER SHIFT)
1.98.0/ 3	05	BACKHOE, LOADER & ENGINE WARNING DECALS
1.98.0/ 3	06	FOWARD/REVERSE & STEERING DECALS
1.98.1	11	B115 MODEL IDENTIFICATIO
346	01	A/C HOUSING & FILTERS
346	02	A/C BLOWER & COILS
346	03	HEATER COIL HOSES
346	04	A/C & HEATER CONTROL PANEL
346	05	A/C & HEATER CONSOLE DUCTS
346/1	01	TRANSFORMATION SET FROM HEATING TO AIR CONDITIONING
346/1	02	TRANSFORMATION SET FROM HEATING TO AIR CONDITIONING
347	01	HOUSING & FILTERS

TABLE OF CONTENTS

347	02	HEATER BLOWER & COILS
347	03	HEATER COIL HOSES
347	04	A/C & HEATER CONTROL PANEL
347	05	A/C & HEATER CONSOLE DUCTS
347	06	CAB HEATING COATING PLUG
350	01	2 LEVER BACKHOE CONTROLS, LEVER, BOOT & DECALS
350	02	2 LEVER BACKHOE CONTROLS, LEVER TIE-ROD ASSEMBLY
351	03	JCB 2 LEVER BACKHOE CONTROLS, LOWER TIE-ROD ASSEMBLY
353	01	4 LEVER BACKHOE CONTROLS, CONSOLE, LEVERS & BELLCRANK
353	02	4 LEVER BACKHOE CONTROLS, UPPER TIE-ROD ASSEMBLY
353	03	4 LEVER BACKHOE CONTROLS, LOWER TIE-ROD ASSEMBLY
358	01	ISO 2 LEVER BACKHOE CONTROLS, LEVERS, BOOT & DECALS
358	02	ISO 2 LEVER BACKHOE CONTROLS, TIE-ROD ASSEMBLY
393	03	LOCKING VALVE ON BACKHOE LIFT CYLINDER
622	01	INTERNAL FAN
642	01	EGS CONTROL, 20 & 40KM/H (POWER SHIFT)
646/1	01	MACHINE PART AIR CONDITIONING SET
646/1	02	A/C COMPRESSOR ATTACHING GROUP
646/1	03	A/C COMPRESSOR
646/1	04	A/C FILTER & CONDENSER ATTACHING GROUP
646A	01	A/C COMPRESSOR ATTACHING GROUP
705	01	SEAT BELTS, 2" & 3"
758	01	ROTATING BEACON
792	01	RH CONSOLE WITH INSTRUMENTS AND DIAGNOSTICS
795	01	RH CONSOLE WITH INSTRUMENTS AND DIAGNOSTICS
796	01	ANTITHEFT
851/ 2	01	CLOTH SEAT & ATTACHING HARDWARE - CABINE
855/ 2	01	AIR RIDE CLOTH SEAT & ATTACHING HARDWARE - CABINE
990/ 1	01	TOOL KIT
993	01	SAFETY PLATES - USA
SEC. 11	00	WHEELS
85.00	01	WHEELS
SEC. 18	00	VARIATION
535	01	STABILIZER FOOT GROUND (CENTER PIVOT)
535/ 1	01	STABILIZER FOOT STREET PAD (CENTER PIVOT)
536	01	REVERSIBLE STABILIZER FOOT (CENTER PIVOT)
537	01	STABILIZER FOOT STREET PAD (CENTER PIVOT)
628	01	4WD STEERING LOCK
848	01	BATTERY CONNECTION
860	01	FENDERS, FRONT

NOTES

GENERAL INFORMATION

PROPRIETARY NOTICE

The contents of this manual are proprietary data of this company. Reproduction or use of any part for other than the operation and maintenance of our equipment is permissible only if expressly authorized in writing.

Additional copies may be obtained from your dealer. Address requests for copies to your Dealer and refer to the publication part number appearing on the bottom of the rear catalog cover or on the title page.

COMPANY POLICY

Company policy, which is one of continuous improvement, reserves the right to change prices and to make changes in design and specification at any time without notice and without obligation to modify units previously built.

All data given in this book is subject to production variations. Dimensions and weights are approximate only and the illustrations do not necessarily show machines in standard condition. For exact information about any particular machine please consult your dealer.

PARTS AND ACCESSORIES

Genuine parts and accessories have been specifically designed for these machines.

We would like to point out that “non-genuine” parts and accessories have NOT been examined and released by the Company. The installation and or use of such products could have negative effects upon the design characteristics of your machine and thereby affect its safety. The company is not liable for any damage caused by the use of “non-genuine” parts and accessories.

IMPROVEMENTS

We are continually striving to improve our products. We reserve the right to make improvements or changes when it becomes practical and possible to do so, without incurring any obligation to make changes or additions to the equipment sold previously.

MODEL CODES

The range of machines listed may not be available in all countries or markets therefore, for the latest information consult your local dealer.

OWNER ASSISTANCE

We want you to be completely satisfied with your investment. Normally any problems with your equipment will be handled by your dealer's Service Department; however, misunderstandings can occur. If your problem has not been handled to your satisfaction, we suggest the following:

1. Contact the owner or General Manager of the dealership, explain the problem, and request assistance. When additional assistance is needed, your dealer has direct access to our office.
2. Provide your dealer with:
   - Your Name, Address, and Telephone number
   - Machine Model and Serial Number
   - Dealership Name and Address
   - Machine purchase date and amount of use
   - Nature of problem

Be aware that your problem will likely be resolved in the dealership using the dealer's facilities, equipment, and personnel. So it is important that your initial contact be with the dealer.

SPARE PARTS

To maintain operating efficiency, use original spare parts.

When ordering parts, give the following information:

- Machine Model
- Machine and Engine Serial Numbers
- Part Number from the Parts Catalog

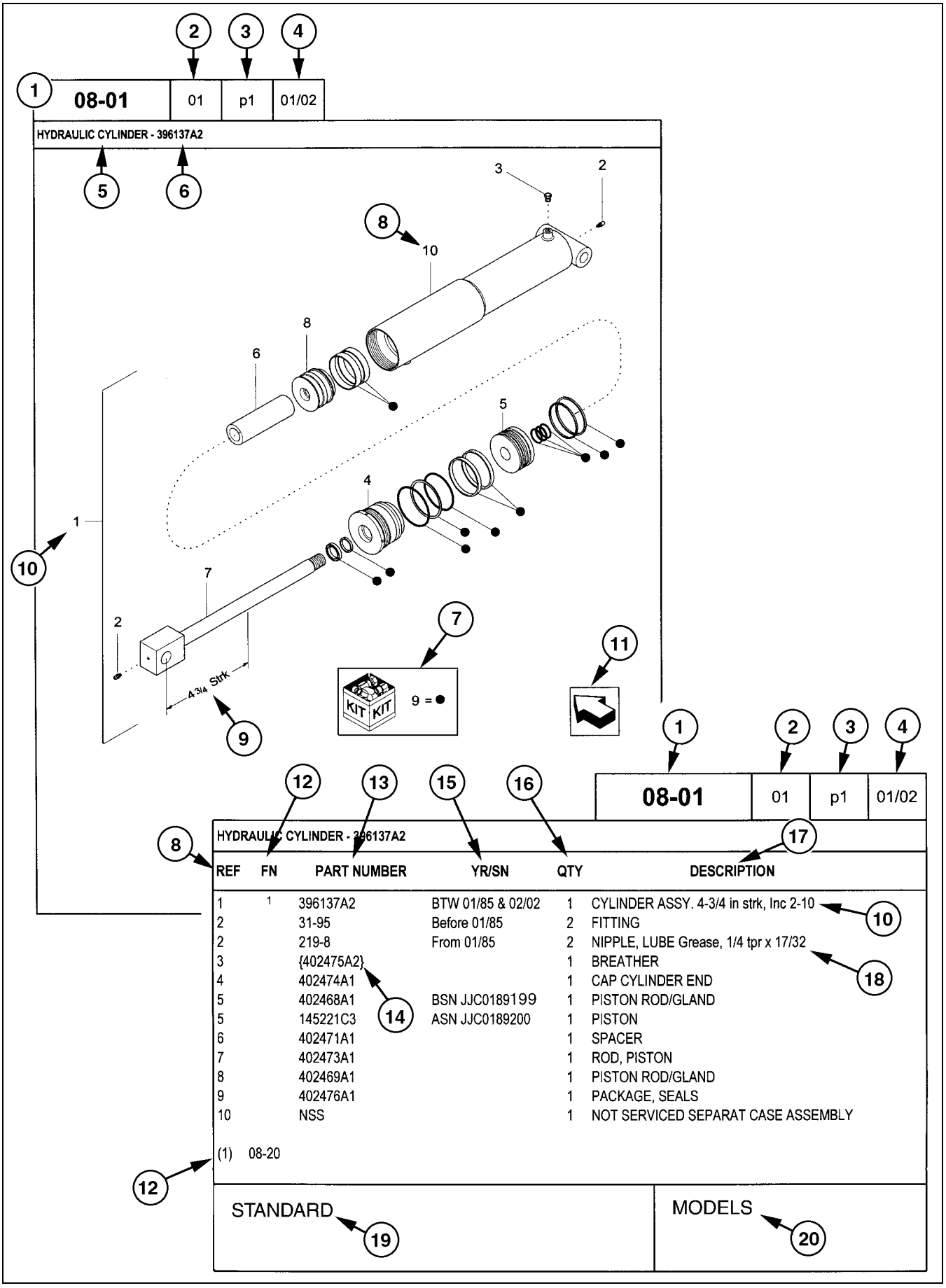

REF	FN	PART NUMBER	YR/SN	QTY	DESCRIPTION
1	1	396137A2	BTW 01/85 & 02/02	1	CYLINDER ASSY. 4-3/4 in strk, Inc 2-10
2		31-95	Before 01/85	2	FITTING
2		219-8	From 01/85	2	NIPPLE, LUBE Grease, 1/4 tpr x 17/32
3		{402475A2}		1	BREATHER
4		402474A1		1	CAP CYLINDER END
5		402468A1	BSN JJC0189199	1	PISTON ROD/GLAND
5		145221C3	ASN JJC0189200	1	PISTON
6		402471A1		1	SPACER
7		402473A1		1	ROD, PISTON
8		402469A1		1	PISTON ROD/GLAND
9		402476A1		1	PACKAGE, SEALS
10		NSS		1	NOT SERVICED SEPARAT CASE ASSEMBLY

(1) 08-20

STANDARD

MODELS

HOW TO USE YOUR PARTS CATALOG

1. Figure Number
2. Sequence Code within the Figure Number
3. Page Number within the Sequence Code
4. Date of Printing (month / year)
5. Figure Description
6. General information regarding the figure
7. Parts supplied in repair kits per symbol reference
8. Figure call-out of the part number (REF)
9. Technical specifications relating to the part indicated
10. Figure call-out includes bracketed items, the included items may also be listed in the additional description area
11. Orientation - Arrow indicates front of the machine
12. Footnote - Additional information relating to the part number. In this example, 08-20 equals another figure that this part is shown on
13. Part Number
    NSS = Not Serviced Separately (Non-serviced parts)
    Bracketed numbers = not available as service parts in this market
14. Not Available as service part in this market
15. YR/SN
    Year
    Before 01/85 = Part valid for production January 1985 and before
    From 01/85 = Part valid for production from January 1985 and after
    BTW 01/85 & 02/02 = Part valid for machines produced between January 1985 and February 2002.
    Serial Number (P.I.N.)
    BSN JJC0268800 = Part valid for serial number JJC0268800 and below
    ASN JJC0268800 = Part valid for serial number JJC0268800 and above
    BTW JJC0178000 & JJC0179000 = Part valid for serial numbers between JJC0178000 & JJC0179000
16. Total Quantity of the Part referred to in the page. The quantity can be replaced by the following indications:
    AR = As Required
    X = As required
17. Part Description
18. Additional description of the part to help confirm identification
19. Figure Notes
20. Model Number(s)

RIGHT-HAND AND LEFT-HAND

The reference to right-hand and left-hand in this catalog is identified by the operator standing at the rear of the basic unit (without rear attachment), looking toward the front of the machine (in normal forward travel).

For pages covering any machine attachments, right-hand and left-hand are defined by the operator sitting in the position for proper operation of the attachment.

DIMENSIONS

Metric and U.S. hardware dimensions do not show the numeric designations of standard coarse threads. A number following a semi colon (;) is the class or grade of hardware. A comma (,) represents the decimal point (.) used in U.S. dimensions.

EXPLANATION OF ABBREVIATIONS

AC	Alternating Current
adj	adjustable
amp	ampere
AR	As required
ASN	Serial number and after P.I.N. and after
blkhd	bulkhead
br	branch
BSN	before Serial number before P.I.N.
BTW	between
cc	cubic centimetre
cl	class
cmprsn	compression
cn pt	cone point
cp pt	cup point
CRS	Chrome Alloy Steel
CST	Carbon Steel
cu yd	cubic yard
DC	Direct Current
deg	degree
dg pt	dog point
dia	diameter
dr type	drive type
fc	face
fc sl	face seal
fem	female
fem PT	female pipe thread
fl	flare
flat pt	flat point
ft	feet or foot
ga	gauge
gal	gallon or gallons
gpm	gallons per minute
gr	grade
hd	head
hdg pt	half dog point
hp	horsepower
ID	inside diameter
in	inch or inches
Incl.	Includes
inv fl	inverted flare
K	kilo
kg	kilogram
km/h	kilometers per hour
L	litre
lb	pounds
lb-ft	pound-foot
lg	long
LH	left-hand
LH thd	left-hand thread
M	(prefix) metric thread size
m	metre
ml	milliliter
mm	millimetre
NF	National Fine
No.	number
NPT	National Pipe Thread
NS	National Super Fine
OD	outside diameter
ohm	electrical unit of resistance
Or	O-ring
ORB	O-ring boss
ORFS	O-ring face seal
ov cntr	over center
ov pt	oval point
oz	ounce
P	pitch
psi	pounds per square inch
pt	pint
PT	pipe thread
rd	round
rd holes	round holes
RH	right-hand
RH thd	right-hand thread
rpm	revolutions per minute
sl	self-locking
sq	square
SST	Stainless Steel
st	self-tapping
strk	stroke
sw	swivel
T	teeth
thk	thick
tpr	taper
tube OD	tube outside diameter
V	volt or volts
W	watt or watts
X	as required
yd	yard

SECTION INDEX

MAIN	00	SECTIONS
MPARTS	00	MAINTENANCE PARTS

MAIN	00	p1	02/05

SECTIONS

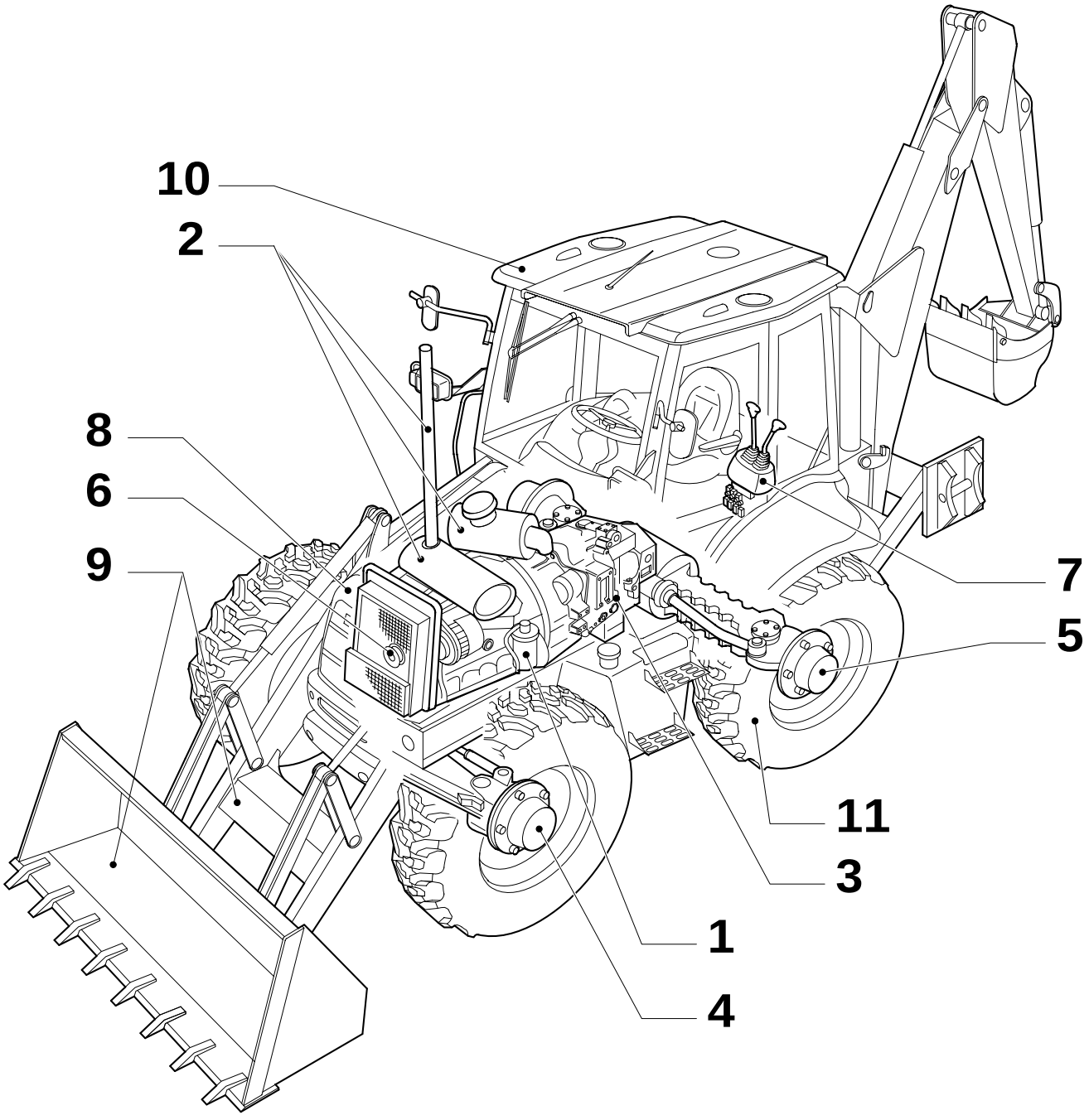

SECTIONS

REF	FN	PART NUMBER	YR/SN	QTY	DESCRIPTION

MAINTENANCE PARTS

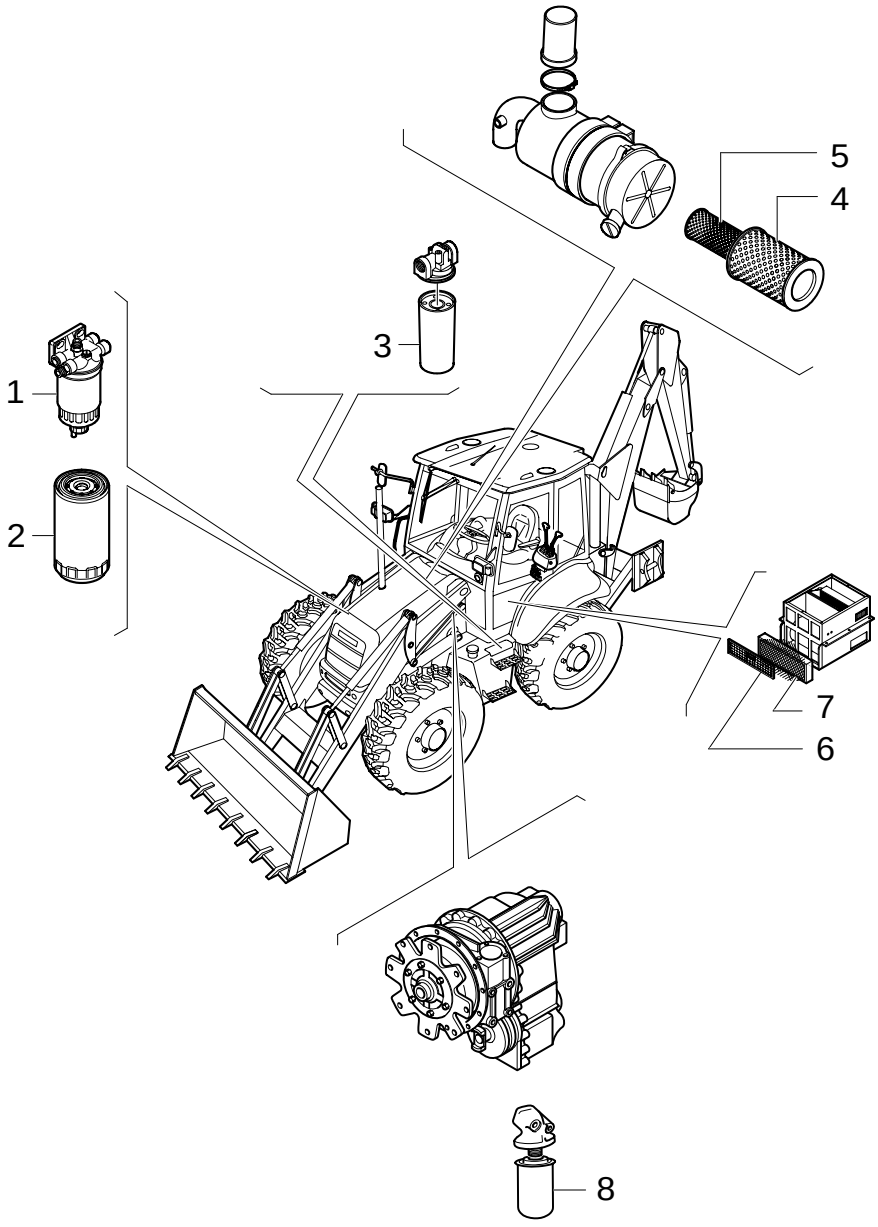

MAINTENANCE PARTS

REF	FN	PART NUMBER	YR/SN	QTY	DESCRIPTION
1	1	1930010		1	FILTER, FUEL
2	2	87803260		1	FILTER, ENGINE OIL
3	3	86989733		1	FILTER, ELEMENT
4	4	87438249		1	FILTER, ELEMENT
5	5	87438246		1	FILTER, ELEMENT
6	6	85826026		1	FILTER, AIR
7	7	85826032		1	FILTER, AIR
8	8	85817004		1	FILTER
8	9	9968988		1	FILTER, HYDRAULIC OIL

(1) See Page 0.200 Ref : 6
(2) See Page 0.302 Ref : 1
(3) See Page 1.821.6 Ref : 6
(4) See Page 1.19.1 Ref : 4
(5) See Page 1.19.1 Ref : 3
(6) See Page 1.94.2 Ref : 4
(7) See Page 1.94.2 Ref : 2
(8) Power Shuttle 2 WD See Page 1.28.0/ A Ref : 14 And 4 WD See Page 1.28.0/ B Ref : 14
(9) Power Shift See Page 1.28.0/ C Ref : 14

SECTION INDEX

SEC. 01	00	ENGINE 1/2
SEC. 01	01	ENGINE 2/2
0.021/ 2	01	ENGINE
0.040	01	CYLINDER BLOCK
0.040	02	CYLINDER BLOCK
0.042/ 1	01	OIL PUMP, PAN
0.043	01	CYLINDER BLOCK - COVERS
0.043	02	CYLINDER BLOCK - COVERS
0.043	03	CYLINDER BLOCK - COVERS
0.045	01	BREATHER - ENGINE
0.060	01	CYLINDER HEAD
0.063	01	CYLINDER HEAD - COVERS
0.066	01	CYLINDER HEAD - VALVE MECHANISM
0.071/ 1	01	MANIFOLD - INTAKE
0.077/ 1	01	MANIFOLD - EXHAUST
0.080	01	CRANKSHAFT
0.081	01	PISTONS - CONNECTING ROD
0.082	01	PISTONS - CONNECTING ROD
0.083	01	FLYWHEEL - ENGINE
0.084	01	PULLEY - CRANKSHAFT
0.105	01	DYNAMIC BALANCER, GEARS & SHAFTS
0.105	02	DYNAMIC BALANCER, GEARS & SHAFTS (2831300)
0.120	01	CAMSHAFT
0.140/ 1	01	FUEL INJECTION PUMP
0.140/ 1	02	FUEL INJECTION SYSTEM
0.142	01	FUEL INJECTION SYSTEM
0.149	01	FUEL INJECTION SYSTEM
0.200	01	FUEL FILTER
0.201	01	FUEL PUMP
0.203	01	FUEL INJECTION SYSTEM
0.204	01	FUEL INJECTION SYSTEM
0.240/ 1	01	TURBOCHARGER
0.270	01	ENGINE, OIL
0.270/A	01	ENGINE, OIL
0.300	01	OIL PUMP - ENGINE
0.302	01	OIL FILTERS - ENGINE
0.305	01	PIPING - ENGINE OIL
0.315	01	OIL FILTER AND COOLER
0.320	01	WATER PUMP
0.323	01	COOLING SYSTEM - ENGINE
0.326	01	THERMOSTAT - ENGINE COOLING SYSTEM
0.340	01	WATER PUMP - CONTROL
0.345/A	01	FAN DRIVE
0.350	01	POWER TAKE-OFF
0.360	01	STARTER MOTOR
0.400	01	ALTERNATOR
0.450	01	ENGINE - LIFT HOOK
636A	01	ACCESSORY ENGINE
636A	04	ACCESSORY ENGINE- ALTERNATOR
636A	05	ACCESSORY ENGINE - BRACKET MUFFLER
636A	06	ACCESSORY ENGINE - STARTER
638A	01	ACCESSORY ENGINE

SECTION INDEX

638A	02	ACCESSORY ENGINE - VENTILATOR
638A	03	ACCESSORY ENGINE - STARTER
638A	04	ACCESSORY ENGINE- ALTERNATOR
638A	05	ACCESSORY ENGINE - BRACKET MUFFLER
639A	01	ACCESSORY ENGINE
639A	02	ACCESSORY ENGINE - VENTILATOR
639A	03	ACCESSORY ENGINE - STARTER
639A	04	ACCESSORY ENGINE- ALTERNATOR

ENGINE 1/2

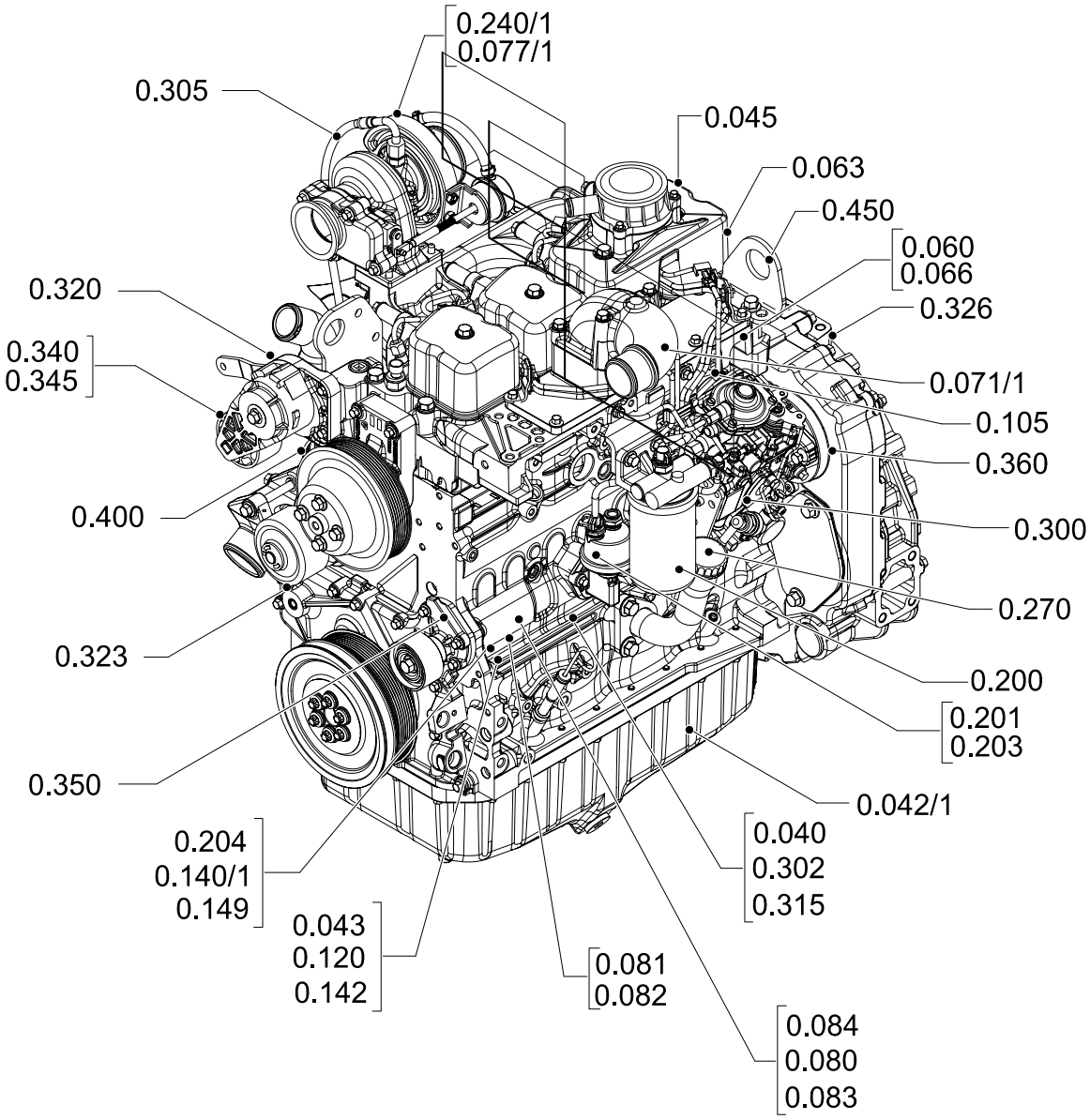
0.240/1
0.077/1
0.305
0.045
0.063
0.450
0.060
0.066
0.320
0.326
0.340
0.345
0.071/1
0.105
0.360
0.400
0.300
0.270
0.323
0.200
0.201
0.203
0.350
0.042/1
0.204
0.140/1
0.149
0.040
0.302
0.315
0.043
0.120
0.142
0.081
0.082
0.084
0.080
0.083

ENGINE 1/2

REF	FN	PART NUMBER	YR/SN	QTY	DESCRIPTION

ENGINE 2/2

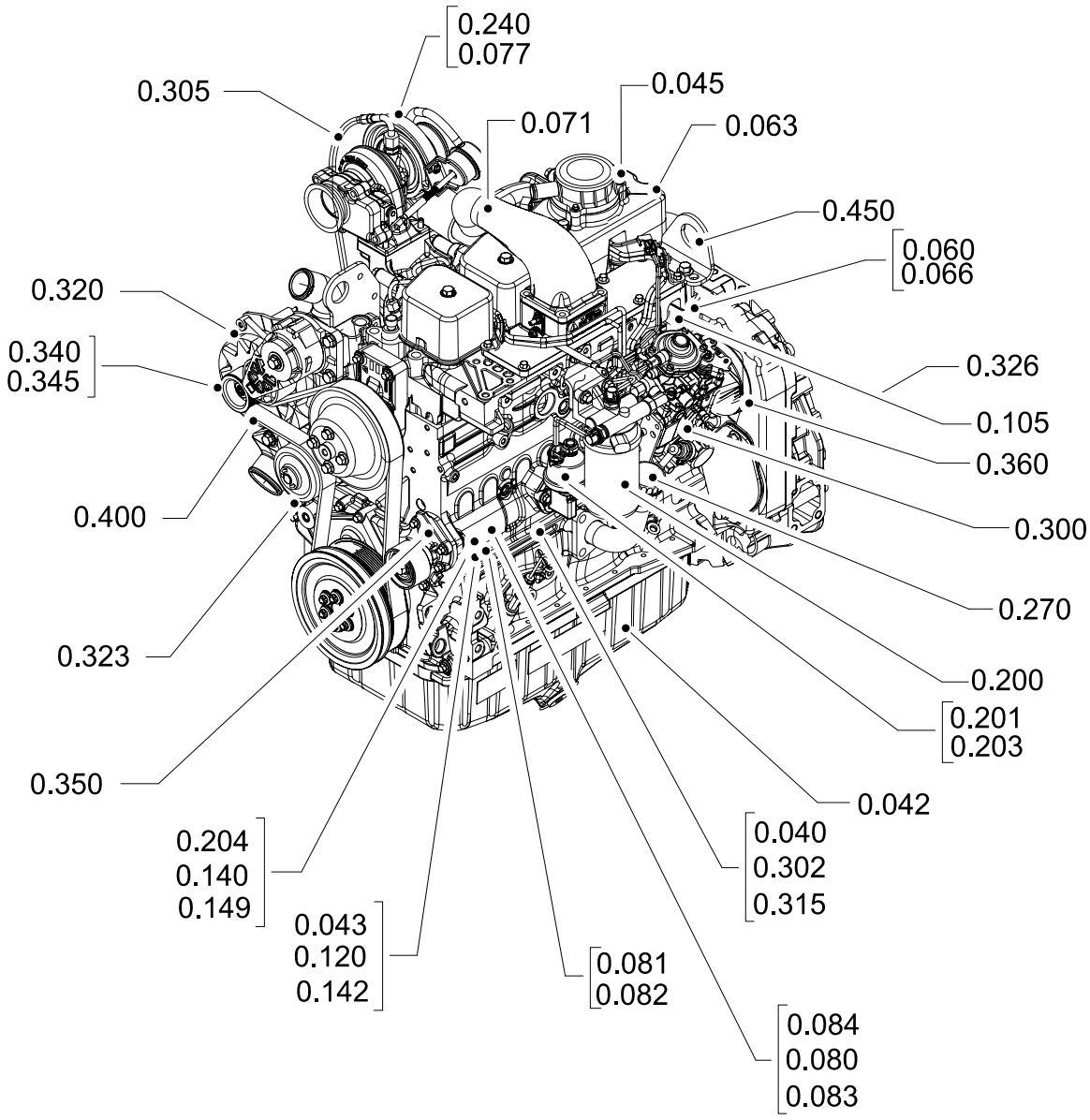
0.240
0.077
0.305
0.045
0.071
0.063
0.450
0.060
0.066
0.320
0.340
0.345
0.326
0.105
0.360
0.400
0.300
0.270
0.323
0.200
0.201
0.203
0.350
0.042
0.204
0.140
0.149
0.040
0.302
0.315
0.043
0.120
0.142
0.081
0.082
0.084
0.080
0.083

ENGINE 2/2

REF	FN	PART NUMBER	YR/SN	QTY	DESCRIPTION

ENGINE

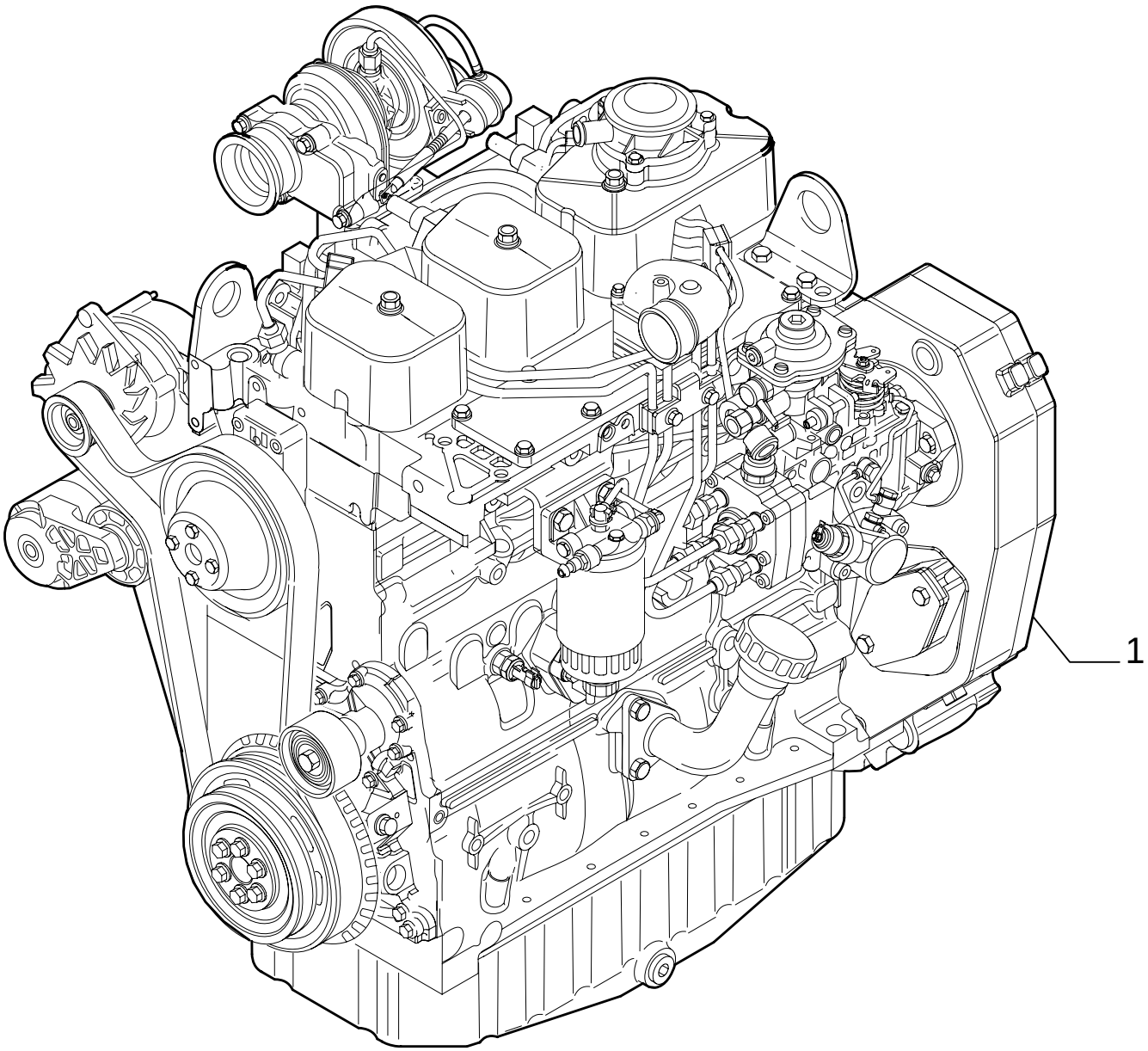

ENGINE

REF	FN	PART NUMBER	YR/SN	QTY	DESCRIPTION
1	1, 2	86982635		1	ENGINE - ASSY
1	3	87342414		1	ENGINE

(1) 86982635=87342414
(2) UP TO S/N 031056893
(3) FROM TO S/N 031056894 (12/12/2005)

0.040	01	p1	12/05

CYLINDER BLOCK

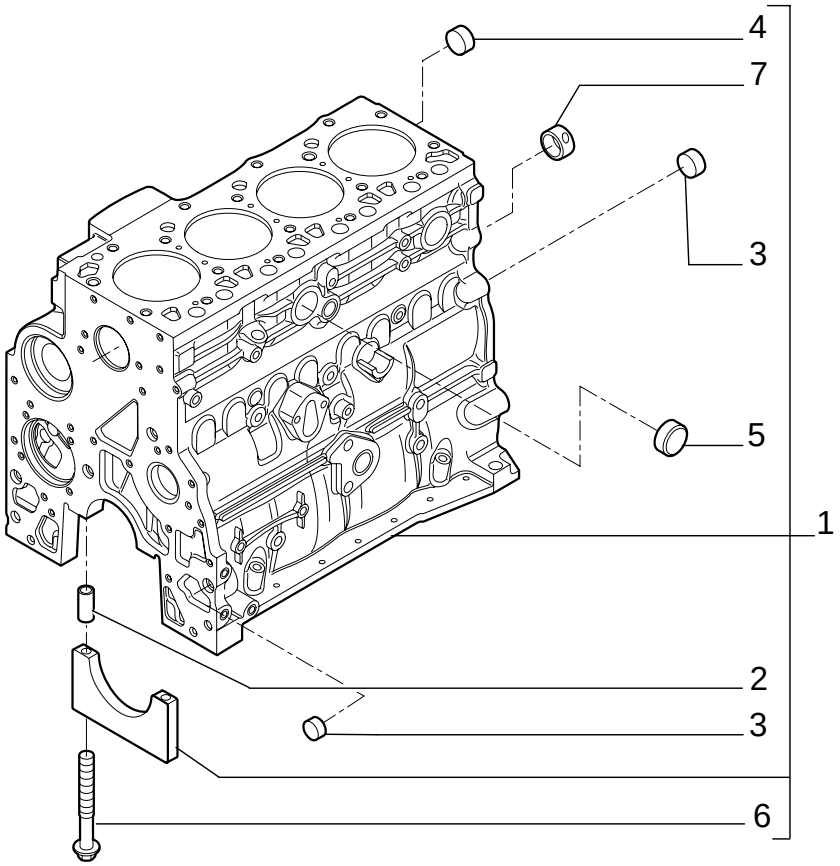

CYLINDER BLOCK

REF	FN	PART NUMBER	YR/SN	QTY	DESCRIPTION
1		2830082		1	CYLINDER BLOCK - ASSY
2		4899026		10	DOWEL
3		4895039		3	PLUG 17.73 mm OD
4		4895038		4	PLUG 58.06 mm OD
5		4895228		2	PLUG 35.23 mm OD
6		4891353		10	SCREW M12X120
7		4895040		1	BUSHING

0.040	02	p1	12/05

CYLINDER BLOCK

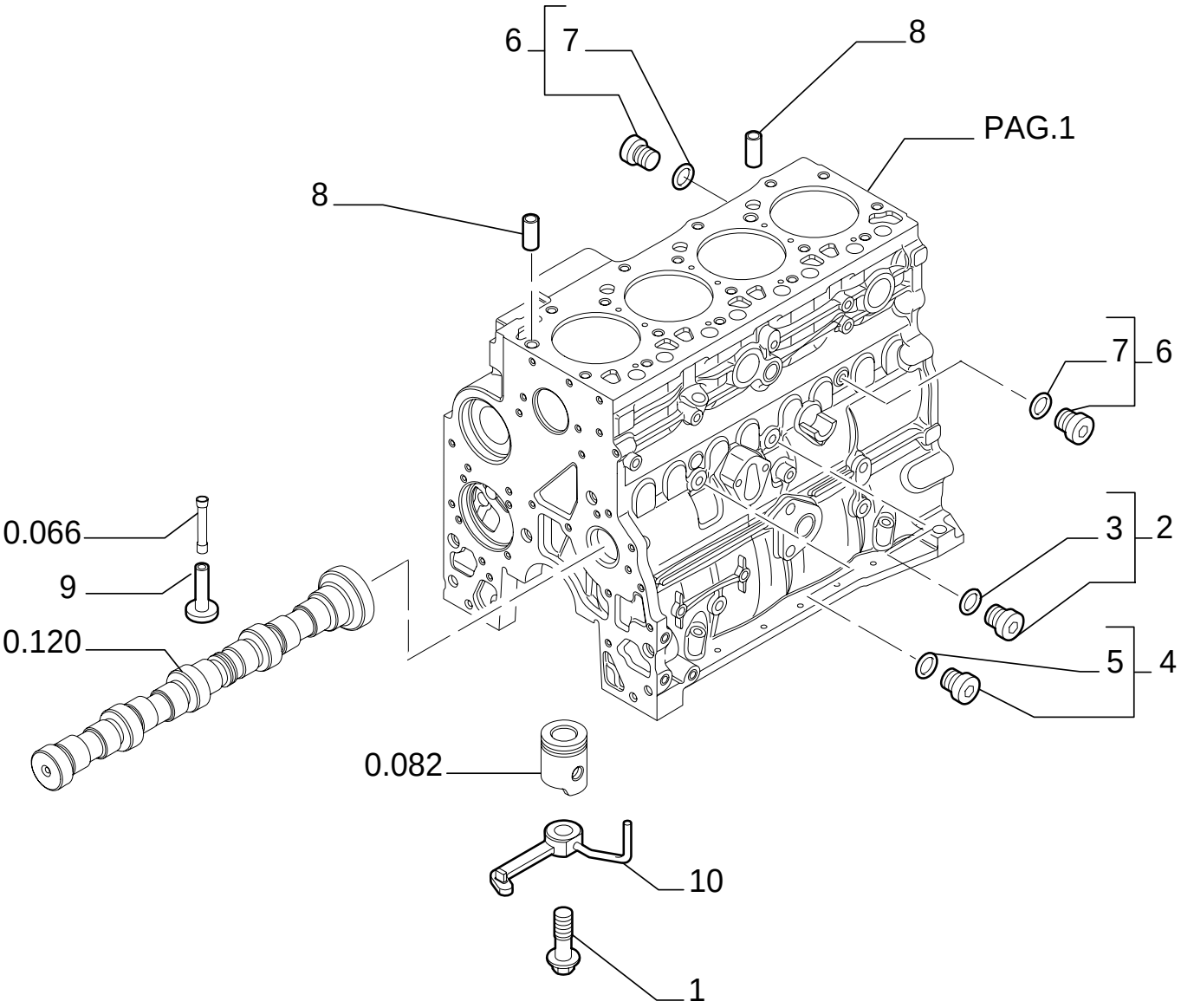

CYLINDER BLOCK

REF	FN	PART NUMBER	YR/SN	QTY	DESCRIPTION
1		4894218		4	SCREW
2		4895605		1	PLUG 14x1.5 - ASSY
3		4899115		1	O-RING
4		4899009		1	PLUG 10x1.5 - ASSY
5		4899072		1	O-RING
6		4895392		2	PLUG 18x1.5 - ASSY
7		4895393		1	O-RING
8		4895049		2	DOWEL
9		4895180		8	TAPPET
10		504047260		4	NOZZLE, LUB. OIL JET

0.042/ 1	01	p1	12/05

OIL PUMP, PAN

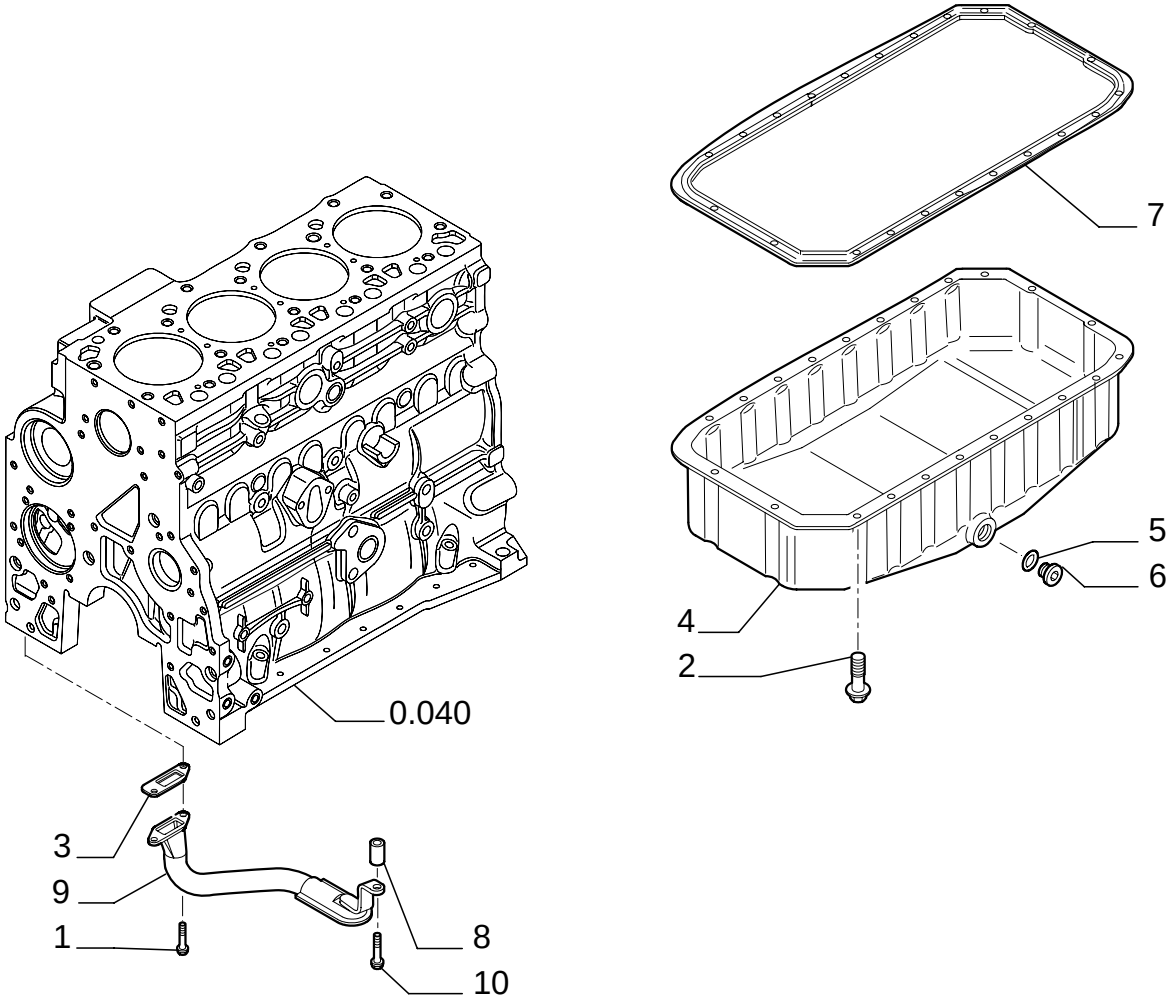

OIL PUMP, PAN

REF	FN	PART NUMBER	YR/SN	QTY	DESCRIPTION
1		4899020		2	SCREW M8X1.25X20
2		4899091		22	SCREW M8X1.25X40
2		4895489		2	SCREW M8X1.25X110
3		4898301		1	GASKET
4		504051886		1	PAN, ENGINE OIL
5		17282280		1	GASKET 23,4X2,6
6		4894139		1	PLUG 22X1.5
7		504069777		1	GASKET
8		504062812		1	SPACER
9		504051893		1	STRAINER, ELEMENT
10		4895538		1	SCREW M10X1.5X120

0.043	01	p1	12/05

CYLINDER BLOCK - COVERS

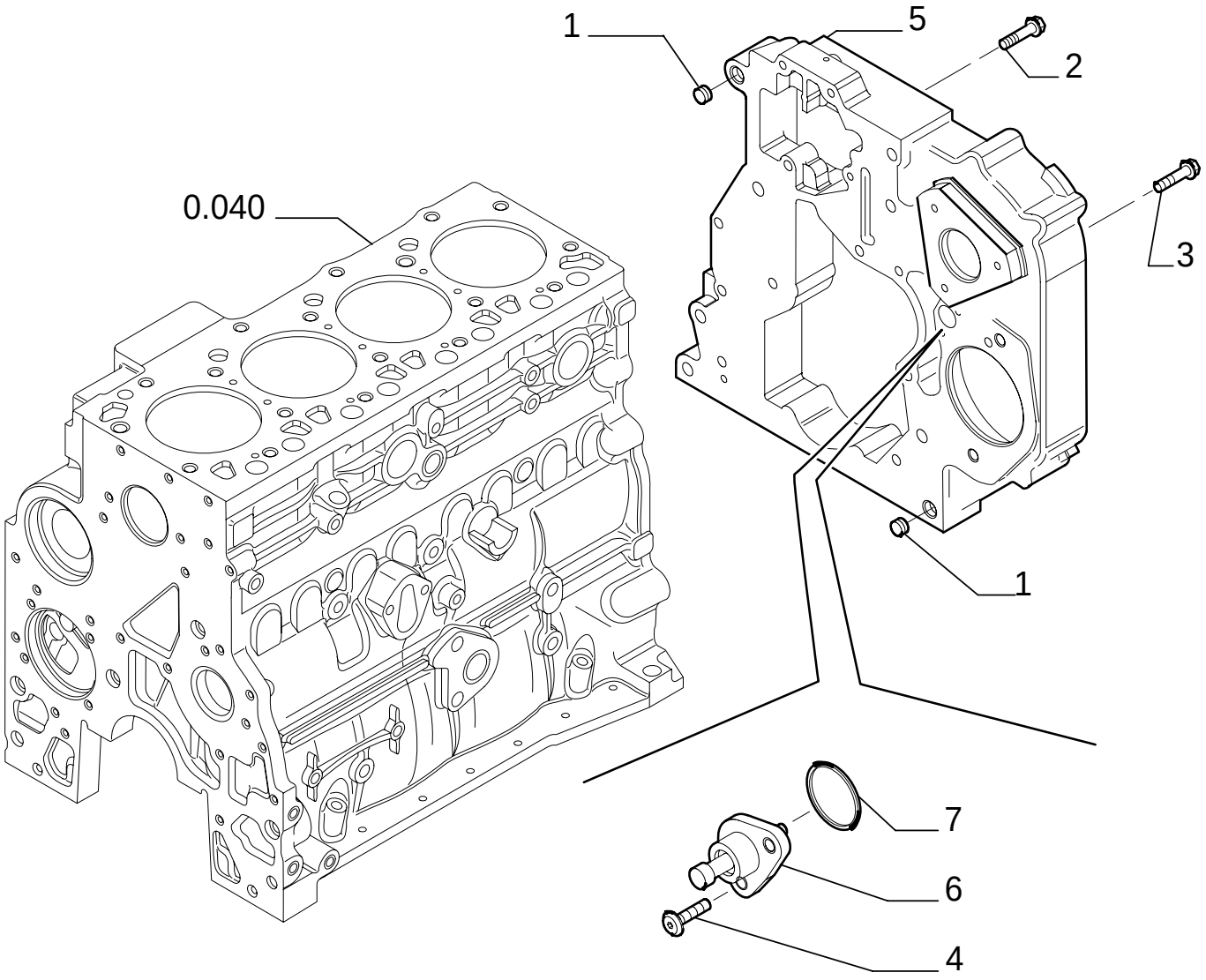

CYLINDER BLOCK - COVERS

REF	FN	PART NUMBER	YR/SN	QTY	DESCRIPTION
1		4899026		2	DOWEL
2		4899091		4	SCREW M8X1.25X40
3		4899093		5	SCREW M10X1.5X30
3		4899073		2	SCREW M12X1.75X30
4		4895355		2	SCREW M5X0.8X17
5		{504097164}		1	
6		504074001		1	COVER
7		17278780		1	O-RING

0.043	02	p1	12/05

CYLINDER BLOCK - COVERS

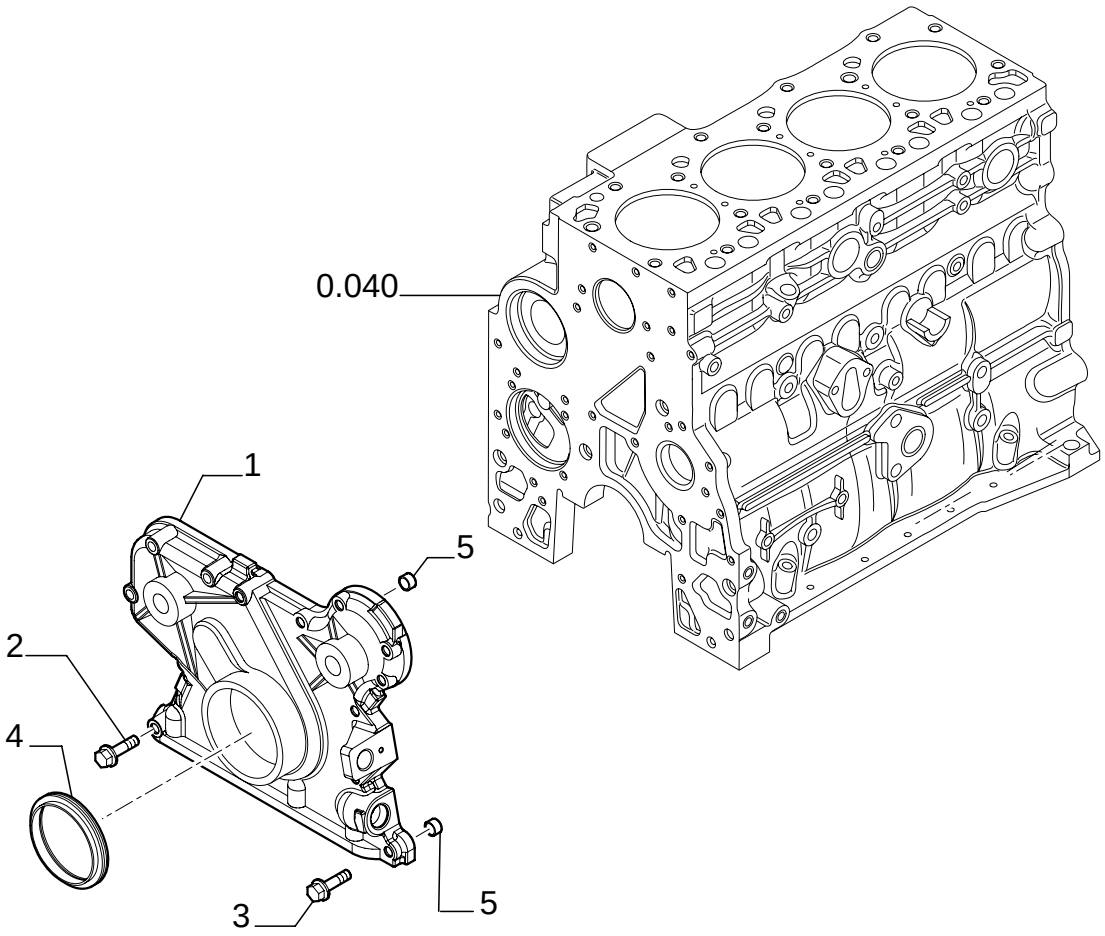

CYLINDER BLOCK - COVERS

REF	FN	PART NUMBER	YR/SN	QTY	DESCRIPTION
1		4897024		1	COVER
2		4899078		5	SCREW M8X1.25X45
3		4899063		8	SCREW M8X1.25X30
4		4890832		1	GASKET
5		4891209		2	DOWEL

0.043	03	p1	12/05

CYLINDER BLOCK - COVERS

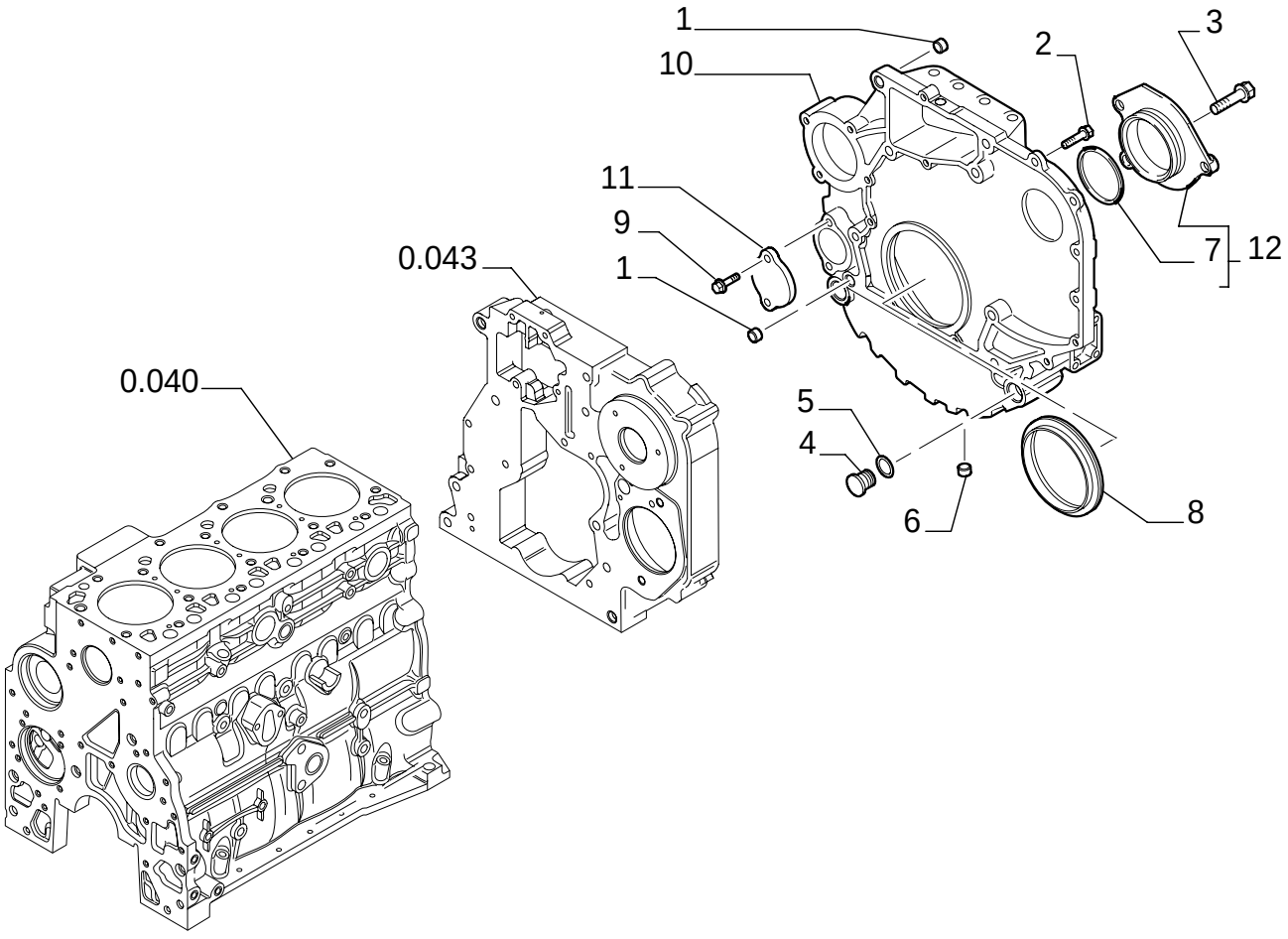

CYLINDER BLOCK - COVERS

REF	FN	PART NUMBER	YR/SN	QTY	DESCRIPTION
1		4899026		2	DOWEL
2		4899109		3	SCREW M10X1.5X80
2		4892915		8	SCREW M10X1.5X40
2		4899076		5	SCREW M12X80
2		4899074		2	SCREW M12X1,75X120
2		2852865		2	SCREW M10X35
2		4899143		1	SCREW M10X1,5X140
3		4899020		3	SCREW M8X20
4		4895378		2	PLUG
5		4895379		2	O-RING M21.82 ID x 3.53 Thk
6		4899079		1	SCREW
7		17285481		1	GASKET 75X87X2,62
8		4890833		1	GASKET
9		4899068		2	SCREW M8X1,25X16
10		504069775		1	COVER
11		4895155		1	COVER
12		2854073		1	COVER - ASSY

0.045	01	p1	12/05

BREATHER - ENGINE

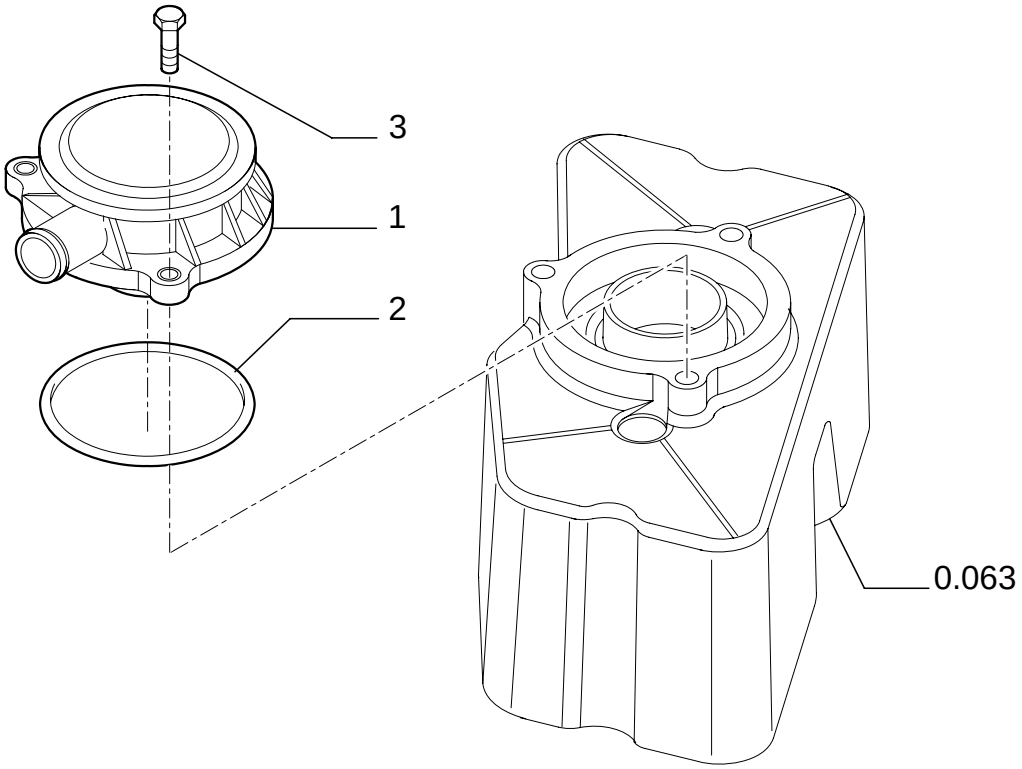

BREATHER - ENGINE

REF	FN	PART NUMBER	YR/SN	QTY	DESCRIPTION
1		500315794		1	BREATHER
2		500315795		1	GASKET
3		4899110		3	SCREW M6X1.0X20

0.060	01	p1	12/05

CYLINDER HEAD

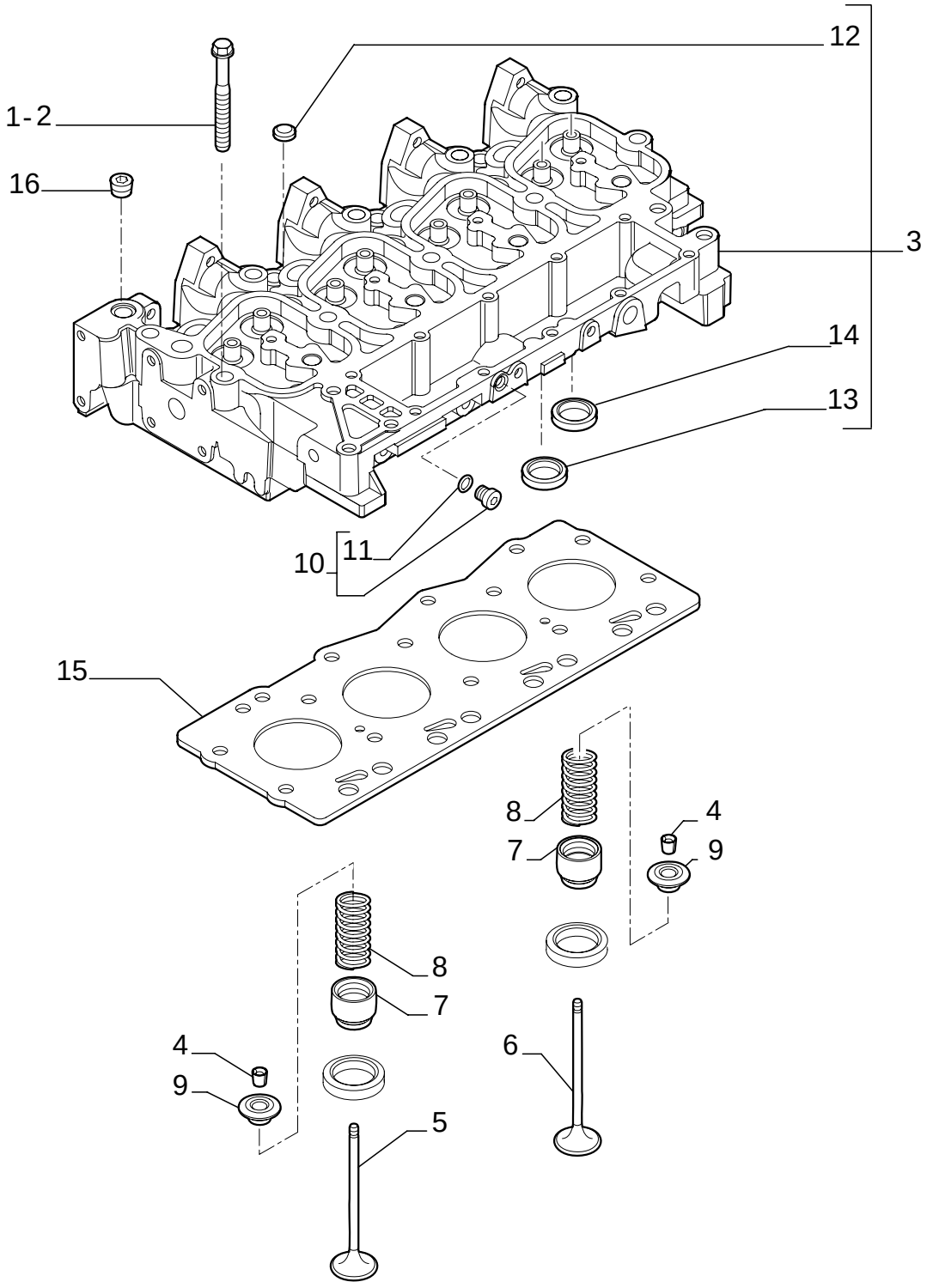

CYLINDER HEAD

REF	FN	PART NUMBER	YR/SN	QTY	DESCRIPTION
1		4892861		4	SCREW M12X1.75X73
2		4892859		10	SCREW M12X1.75X143
3		4895790		1	CYLINDER HEAD - ASSY
4		4895183		16	COTTER, ROCKER ARM
5		4895188		4	VALVE, ENG EXHAUST, STD
6		4895187		4	VALVE, ENGINE, INLET, STD
7		4895347		8	CUP
8		4895215		8	SPRING
9		4895184		8	CUP
10		4899009		1	PLUG - ASSY 10X1.5
11		4899072		1	O-RING
12		4895179		3	PLUG
13		4897178		4	VALVE SEAT
14		4897179		4	VALVE SEAT
15		2830919		1	GASKET, CYLINDER HEAD SP= 1.25
16		4895078		5	PLUG

0.063	01	p1	12/05

CYLINDER HEAD - COVERS

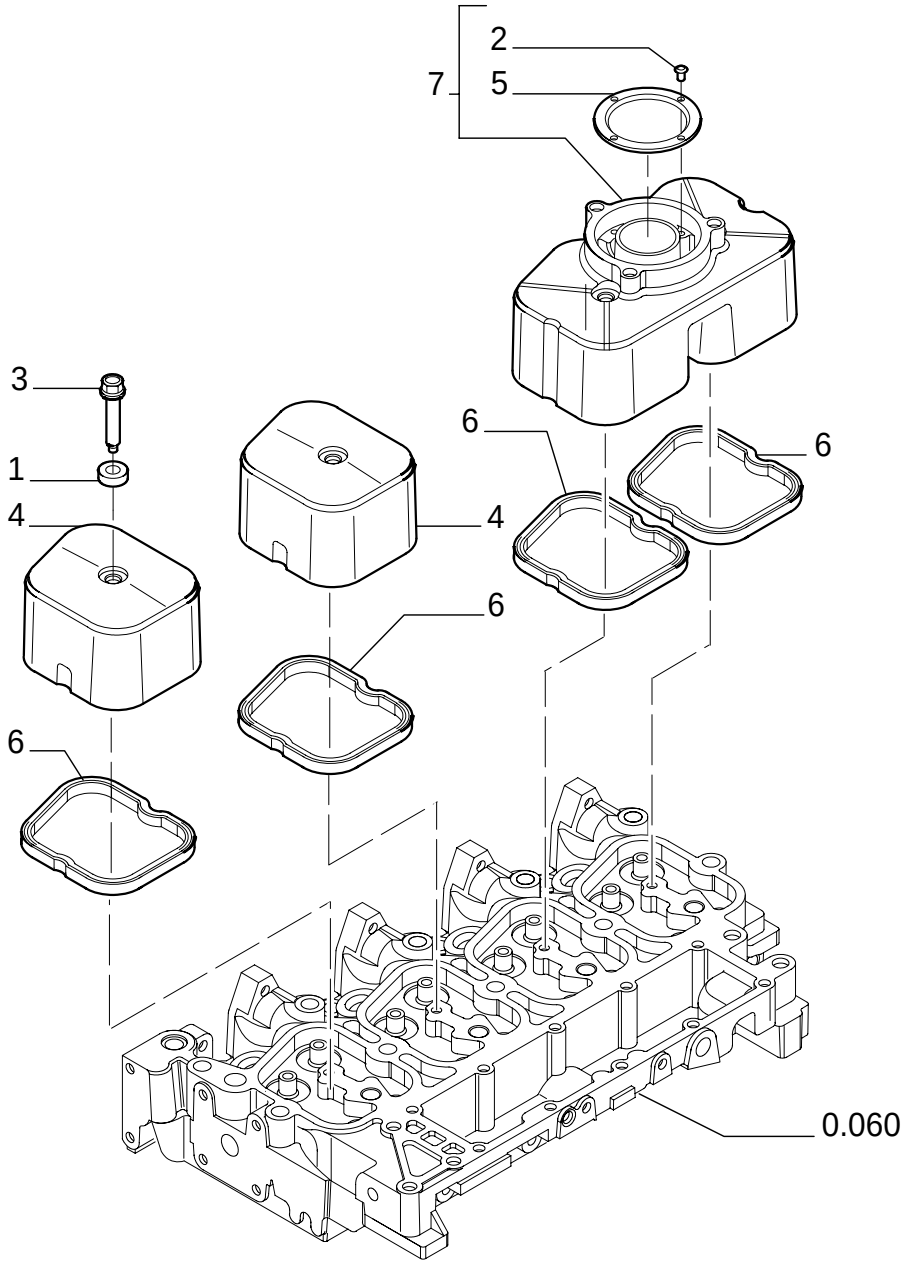

CYLINDER HEAD - COVERS

REF	FN	PART NUMBER	YR/SN	QTY	DESCRIPTION
1		4895360		4	BUSHING
2		16784504		4	SCREW
3		4895214		4	SCREW M8X1.25X33
4		504065040		2	COVER
5		2830775		1	BAFFLE
6		504053522		4	GASKET
7		2830784		1	COVER - ASSY

0.066	01	p1	12/05

CYLINDER HEAD - VALVE MECHANISM

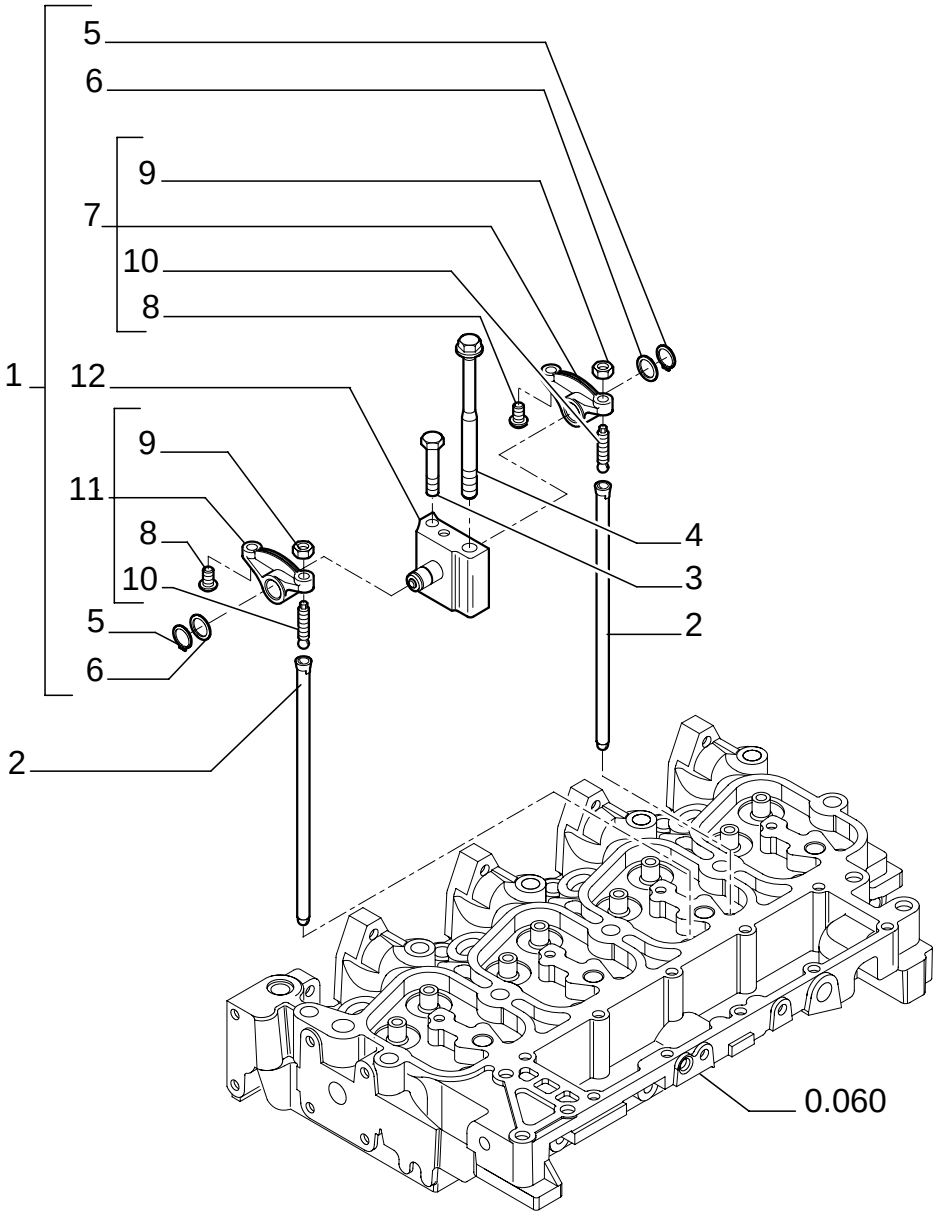

CYLINDER HEAD - VALVE MECHANISM

REF	FN	PART NUMBER	YR/SN	QTY	DESCRIPTION
1		4895195		4	ROCKER ARM - ASSY
2		4895361		8	ROD, PUSH
3		504067723		4	SCREW
4		4892860		4	SCREW M12X1.75X183
5		4895363		2	RING
6		4895364		2	WASHER
7		4895196		1	ROCKER ARM - ASSY
8		4895365		2	SPACER
9		4895198		2	NUT
10		4895199		2	SCREW
11		4895200		1	ROCKER ARM - ASSY
12		4895204		1	SUPPORT

0.071/ 1	01	p1	02/05

MANIFOLD - INTAKE

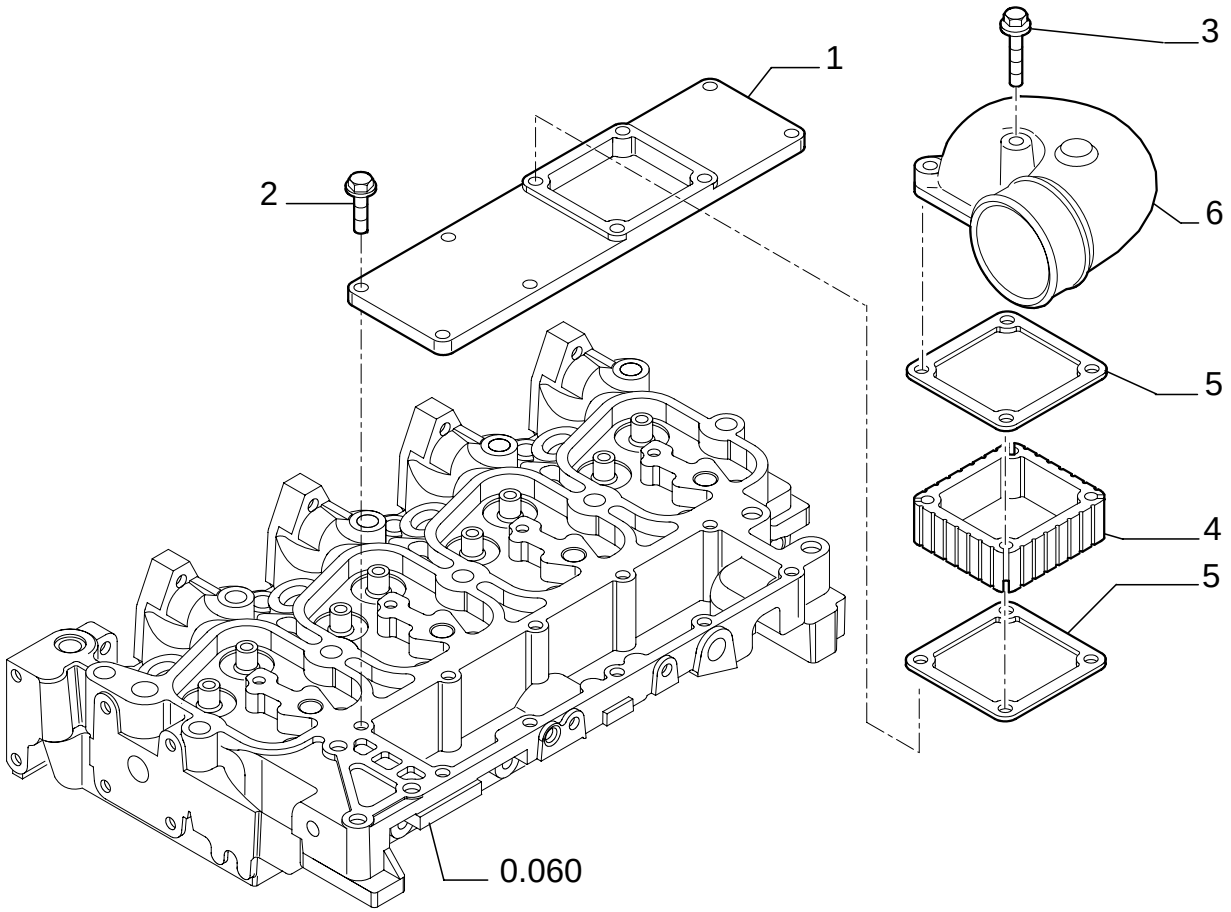

MANIFOLD - INTAKE

REF	FN	PART NUMBER	YR/SN	QTY	DESCRIPTION
1		504064865		1	COVER
2		4899039		6	SCREW 8X1.25X25
3		16598624		2	SCREW M8X1.25X140
3		16598224		2	SCREW M8X90
4		4895648		1	SPACER
5		4899921		2	GASKET
6		504062464		1	MANIFOLD, INLET

0.077/ 1	01	p1	12/05

MANIFOLD - EXHAUST

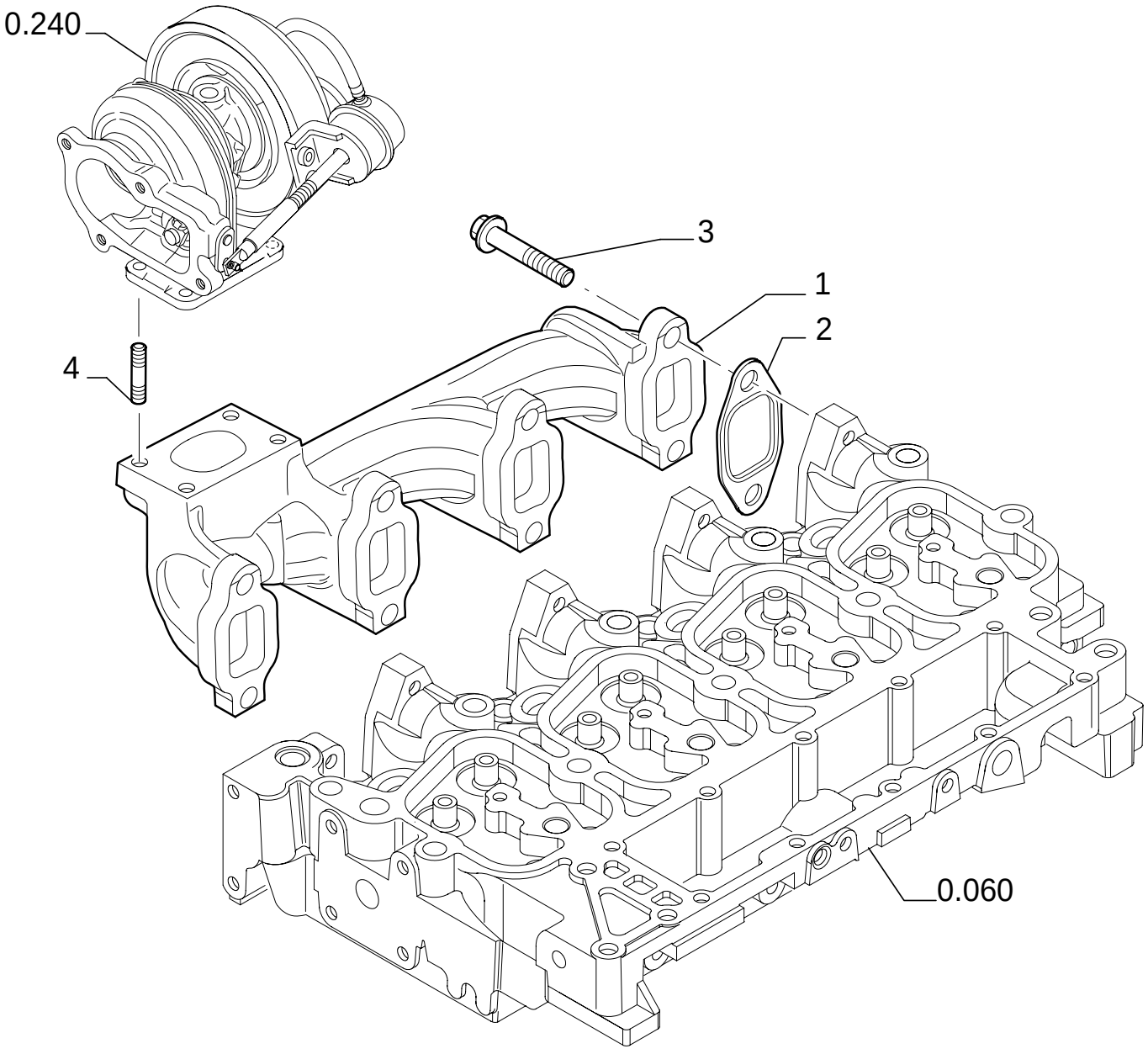

MANIFOLD - EXHAUST

REF	FN	PART NUMBER	YR/SN	QTY	DESCRIPTION
1		504066618		1	MANIFOLD, EXHAUST
2		504081248		4	GASKET
3		504085705		8	SCREW M10X1,5X65
4		4899119		4	STUD

CRANKSHAFT

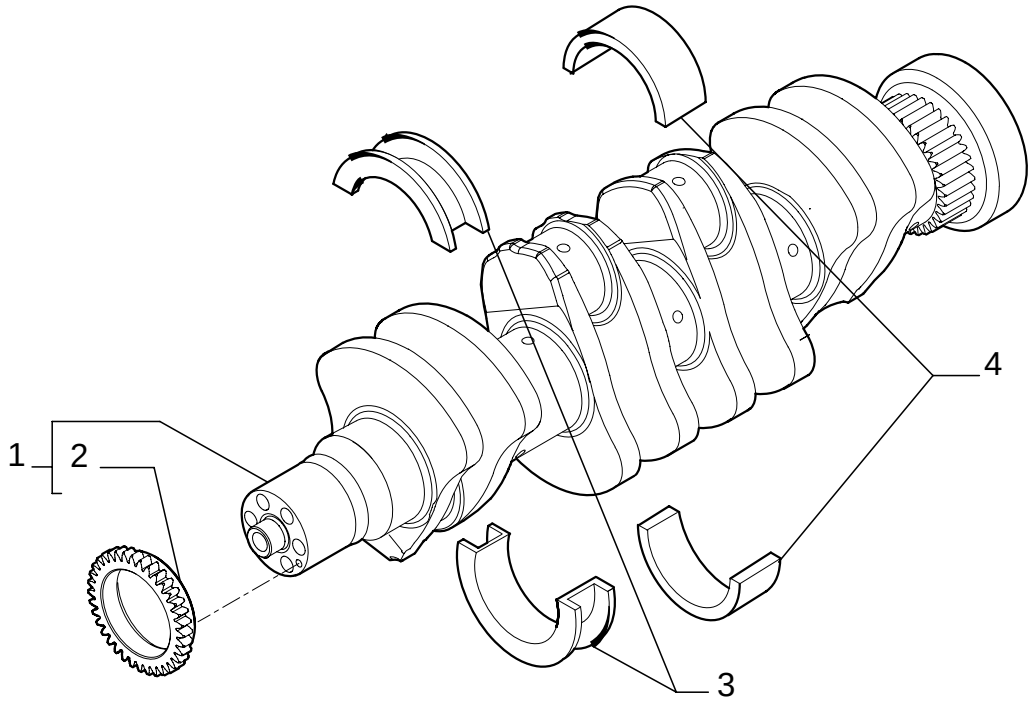

CRANKSHAFT

REF	FN	PART NUMBER	YR/SN	QTY	DESCRIPTION
1		{504095659}		1	- ASSY
2		4893386		1	GEAR
3		2992153		1	SET, CONN ROD BRGS (STD) (+ 0.000) (+ 0.000)
3		2992154		1	SET, CONN ROD BRGS (STD) (+ 0.254) (+ 0.250)
3		2992155		1	SET, CONN ROD BRGS (STD) (+ 0.508) (+ 0.500)
4		2992147		4	SET, CONN ROD BRGS (STD) (- 0.000) (- 0.000)
4		2992148		4	SET, CONN ROD BRGS (STD) (- 0.254) (- 0.250)
4		2992149		4	SET, CONN ROD BRGS (STD) (- 0.508) (- 0.500)

0.081	01	p1	12/05

PISTONS - CONNECTING ROD

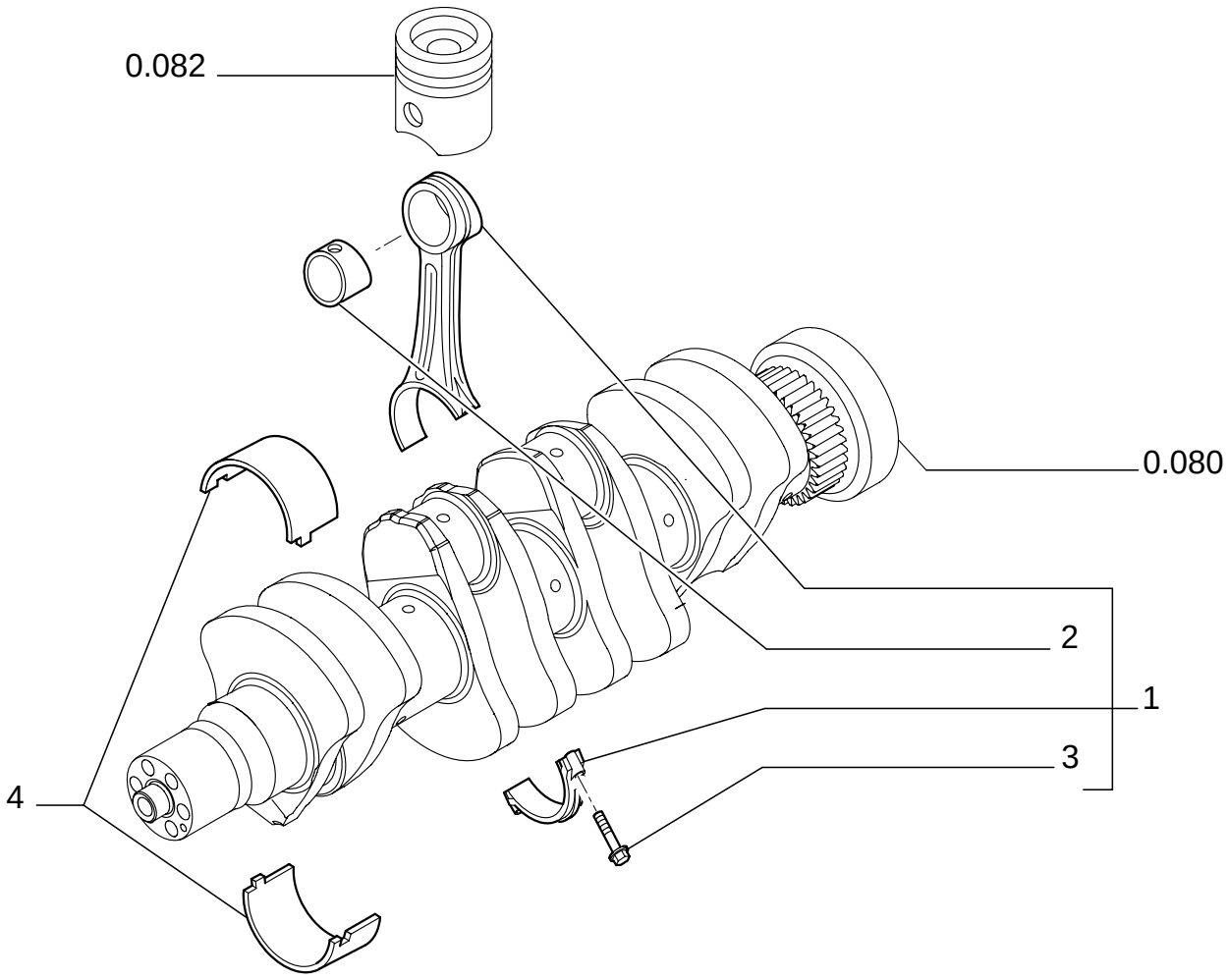

PISTONS - CONNECTING ROD

REF	FN	PART NUMBER	YR/SN	QTY	DESCRIPTION
1		2831298		4	ROD, CONNECTING - ASSY
2		4892708		1	BUSHING
3		2831297		2	SCREW
4		8093882		4	SET, CONN ROD BRGS (STD)

0.082	01	p1	12/05

PISTONS - CONNECTING ROD

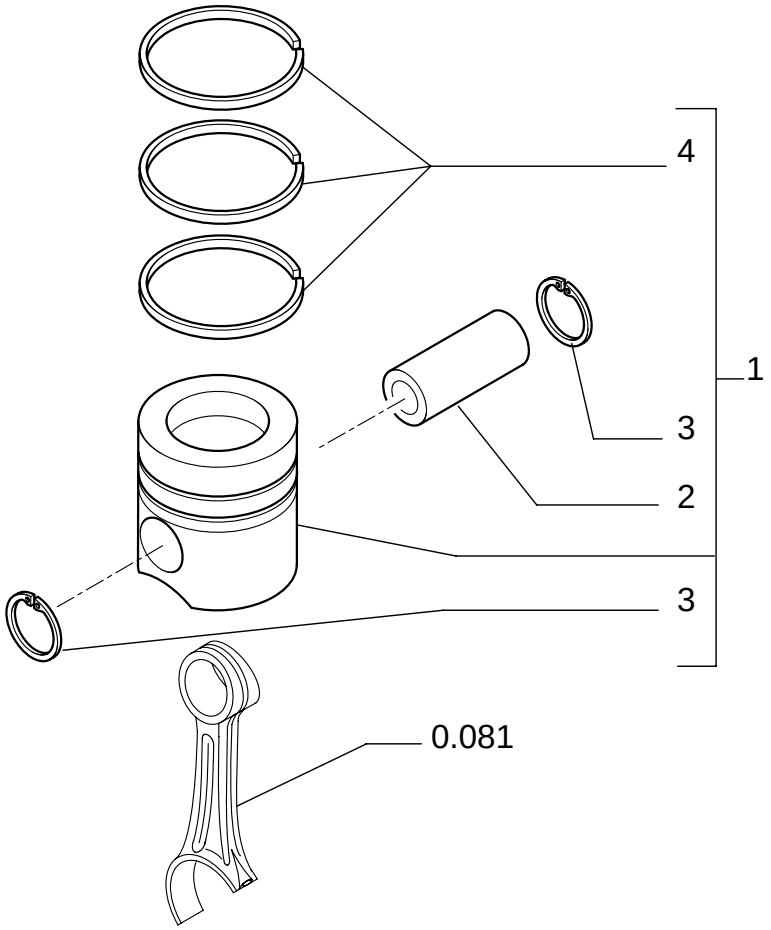

PISTONS - CONNECTING ROD

REF	FN	PART NUMBER	YR/SN	QTY	DESCRIPTION
1		{8094740}		4	STD
1		{8094753}		4	+ 0.4
2		4892712		1	PIN, PISTON
3		4892713		2	RING, LOCKING
4		{8094739}		1	STD
4		{8094752}		1	+ 0.4

0.083	01	p1	02/05

FLYWHEEL - ENGINE

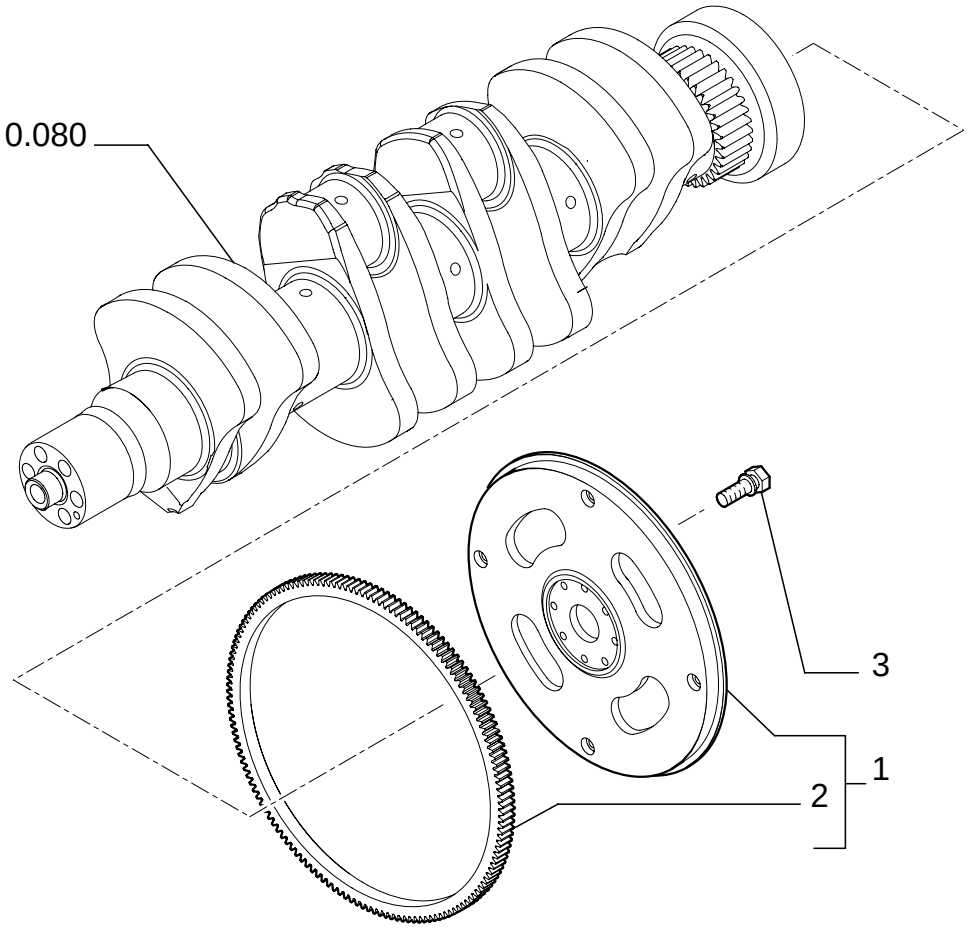

FLYWHEEL - ENGINE

REF	FN	PART NUMBER	YR/SN	QTY	DESCRIPTION
1		504057736		1	FLYWHEEL, ENGINE - ASSY
2		504062460		1	GEAR, RING
3		4894641		8	SCREW

0.084	01	p1	12/05

PULLEY - CRANKSHAFT

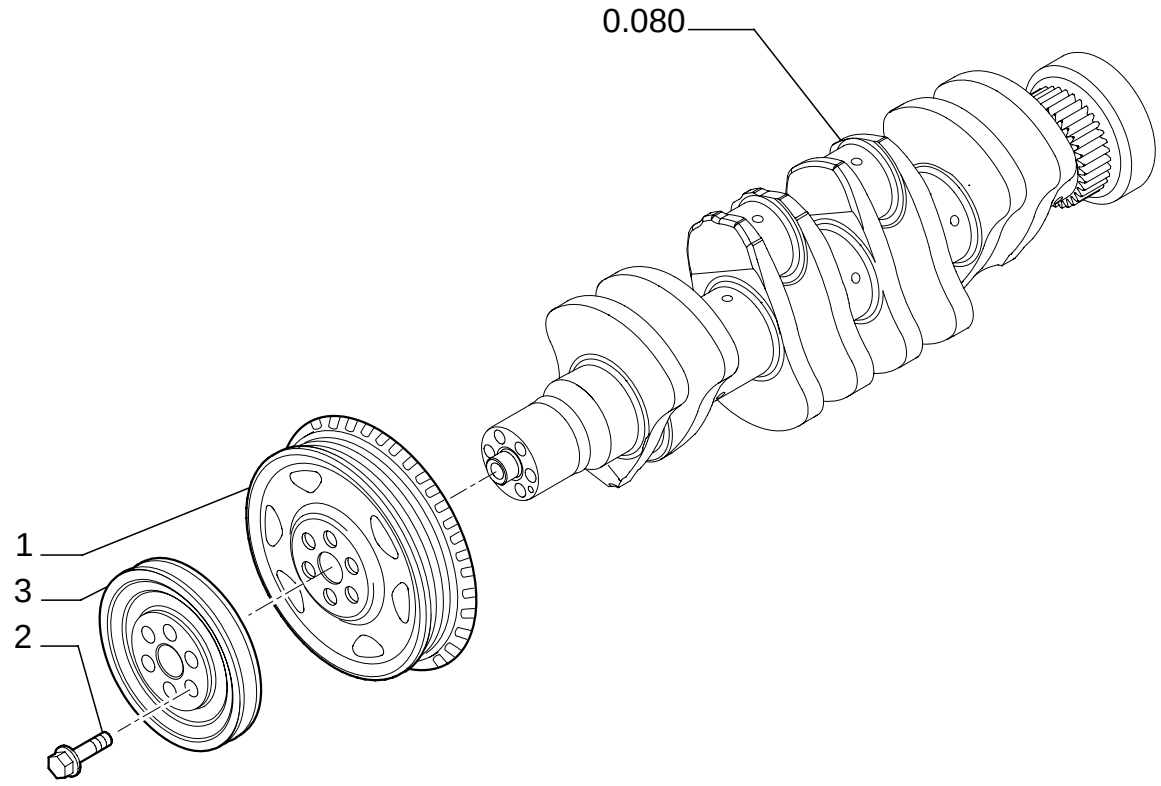

PULLEY - CRANKSHAFT

REF	FN	PART NUMBER	YR/SN	QTY	DESCRIPTION
1		4896773		1	PULLEY
2		4892867		6	SCREW M12X1.25X78.5
3		504061622		1	PULLEY

0.105	01	p1	12/05

DYNAMIC BALANCER, GEARS & SHAFTS

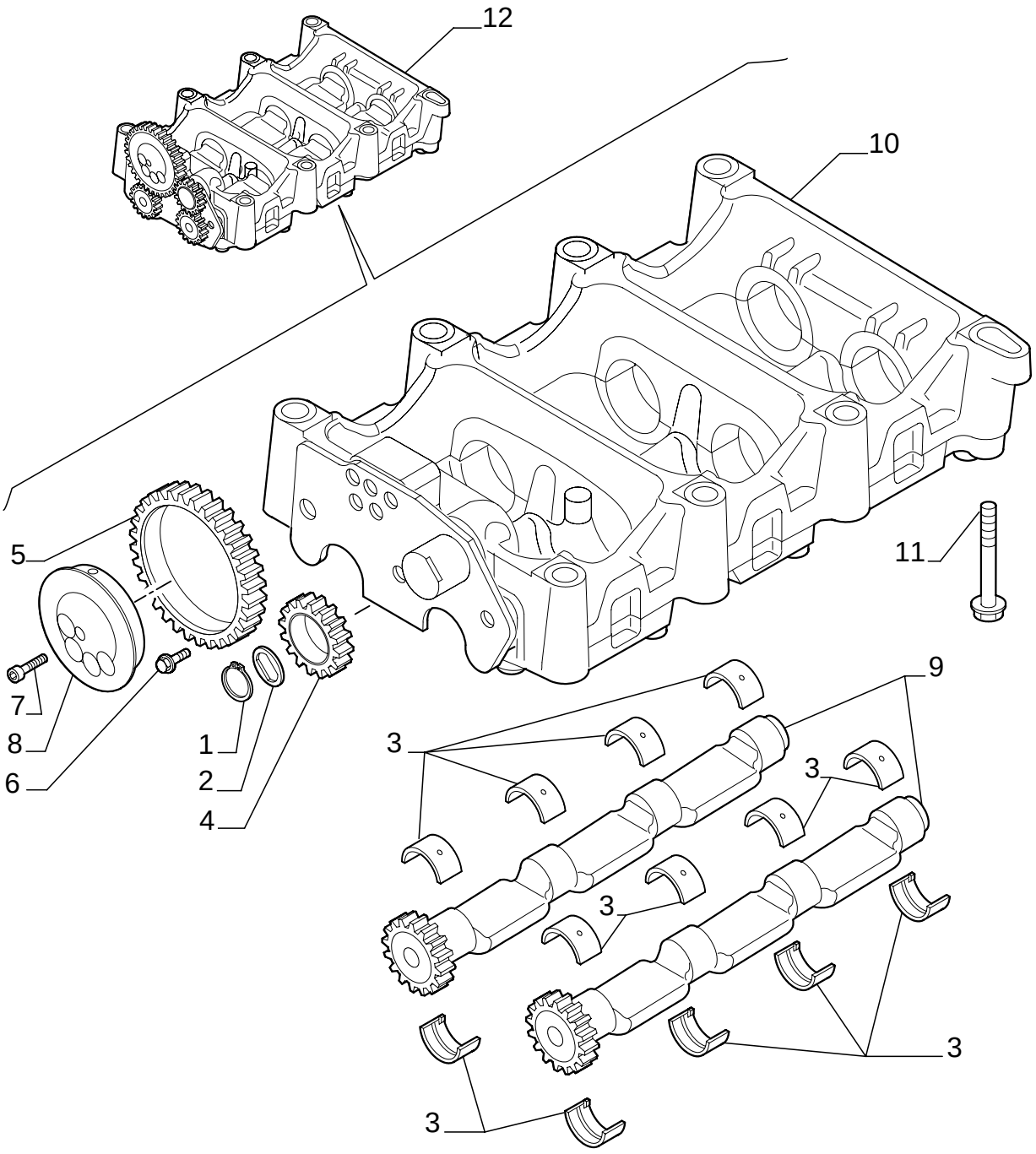

DYNAMIC BALANCER, GEARS & SHAFTS

REF	FN	PART NUMBER	YR/SN	QTY	DESCRIPTION
1		16866473		1	CIRCLIP
2		4897123		1	PLATE, THRUST
3		4897071		16	BUSHING
4		4897048		1	GEAR, DRIVEN
5		4896947		1	GEAR, DRIVEN
6		4895586		3	SCREW
7		2830433		4	SCREW
8		2831031		1	SHAFT, IDLE
9		504088119		2	SHAFT ASSY.
10	1	2831300		1	HOUSING - ASSY
11		4899109		7	SCREW
11		4897934		1	SCREW
12		504088120		1	BALANCER - ASSY

(1) Assy See Page 2

0.105	02	p1	12/05

DYNAMIC BALANCER, GEARS & SHAFTS (2831300)

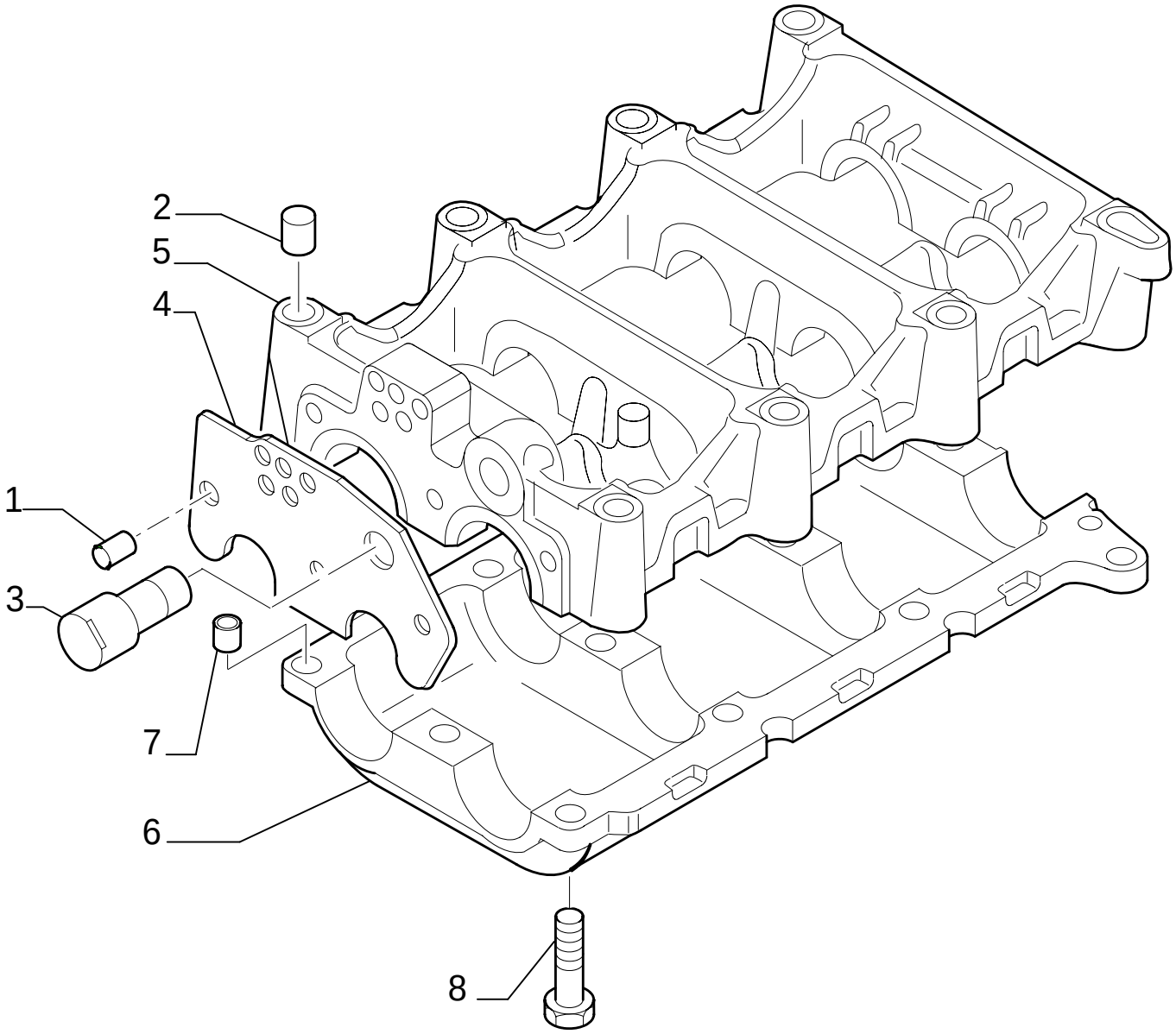

DYNAMIC BALANCER, GEARS & SHAFTS (2831300)

REF	FN	PART NUMBER	YR/SN	QTY	DESCRIPTION
1		2831305		1	DOWEL
2		4899027		2	DOWEL
3		2830948		1	SHAFT, IDLE
4		2830905		1	PLATE, THRUST
5		{2831303}		1	
6		{2831304}		1	
7		4891209		2	DOWEL
8		4895323		12	SCREW

0.120	01	p1	02/05

CAMSHAFT

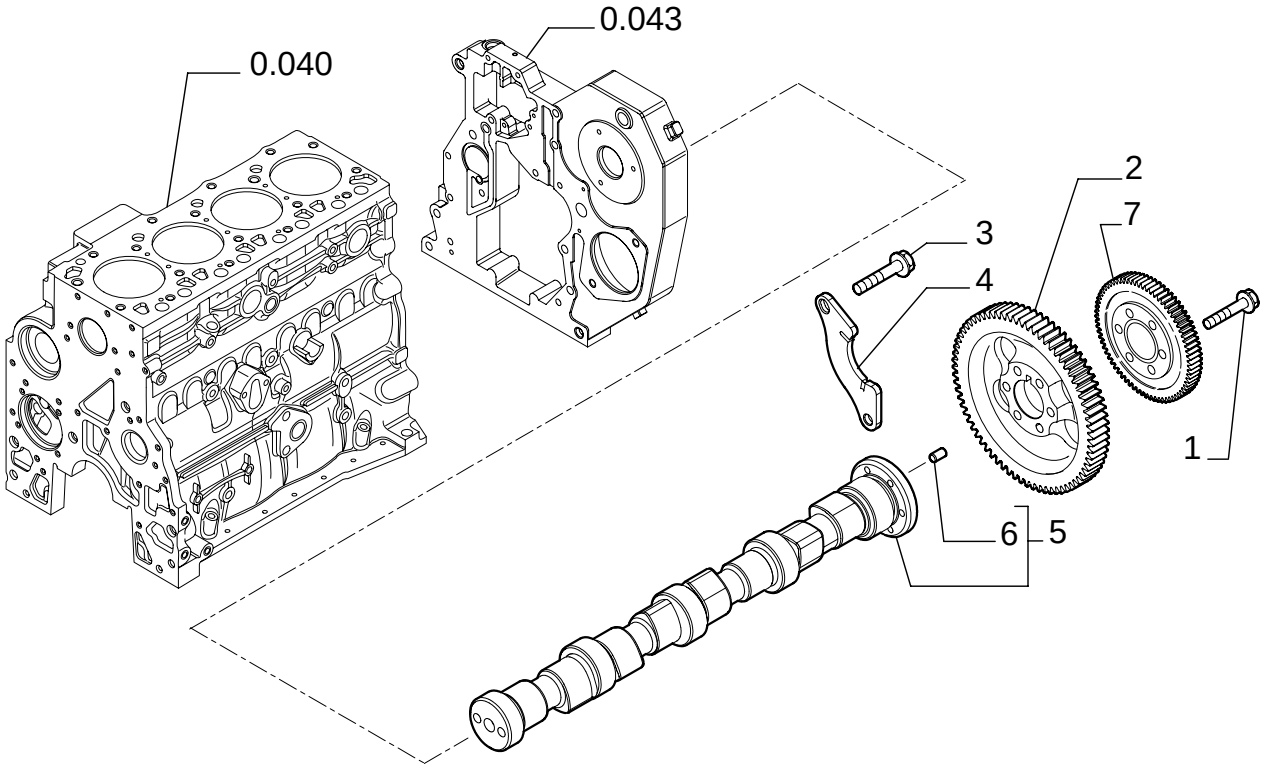

CAMSHAFT

REF	FN	PART NUMBER	YR/SN	QTY	DESCRIPTION
1		4895323		6	SCREW
2		504062752		1	GEAR
3		4899068		2	SCREW 8X17
4		4897457		1	FLANGE
5		4899610		1	CAMSHAFT - ASSY
6		4899080		1	DOWEL
7		504034954		1	GEAR, DRIVEN

0.140/ 1	01	p1	12/05

FUEL INJECTION PUMP

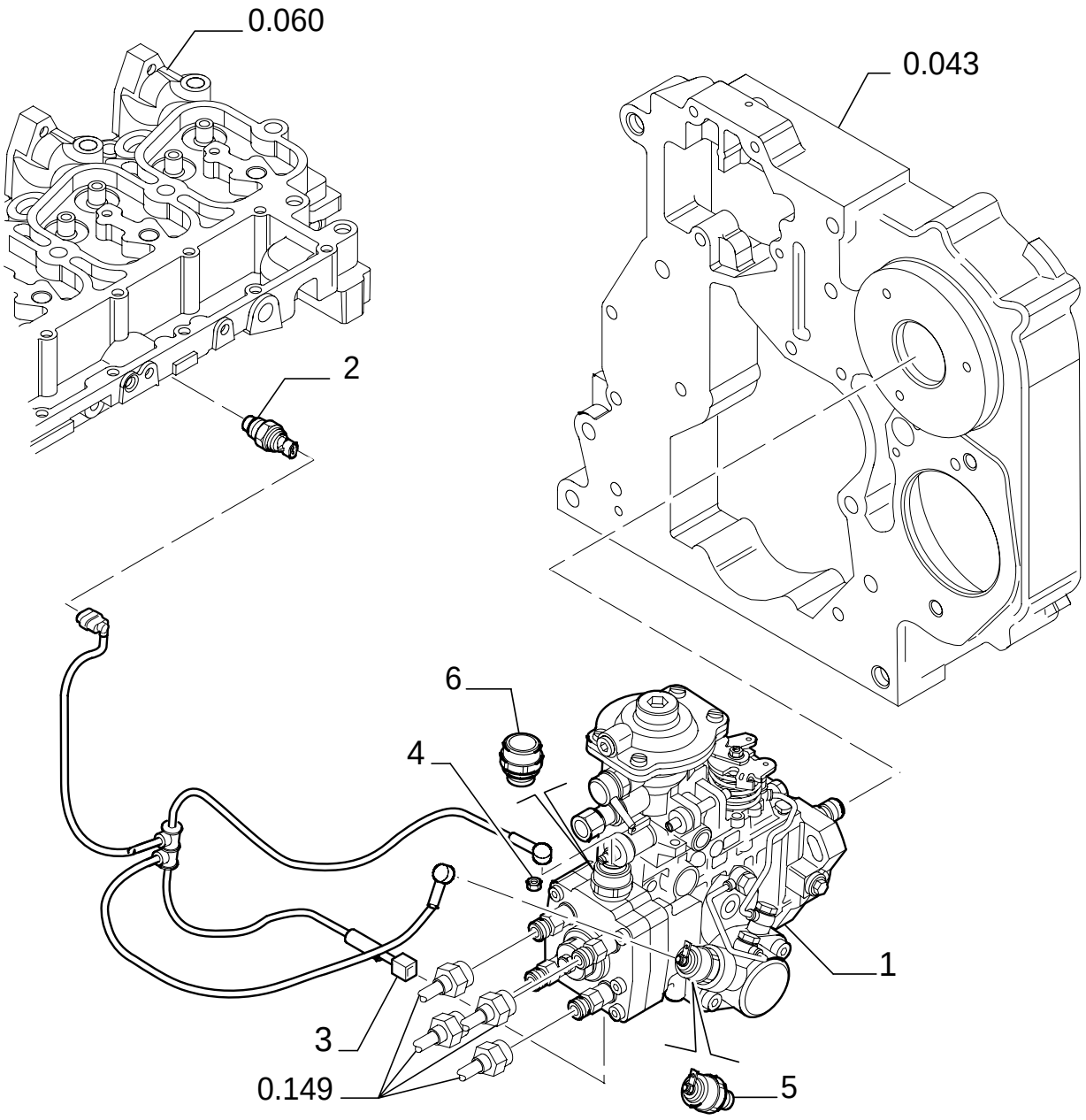

FUEL INJECTION PUMP

REF	FN	PART NUMBER	YR/SN	QTY	DESCRIPTION
1		504054020		1	PUMP, FUEL - ASSY
2		504032877		1	SENDER UNIT Water Temperature
3		504060728		1	CONNECTOR, WIRE
4		16979231		2	NUT
5		72219391		1	VALVE, SHUT-OFF
6		2852741		1	SOLENOID

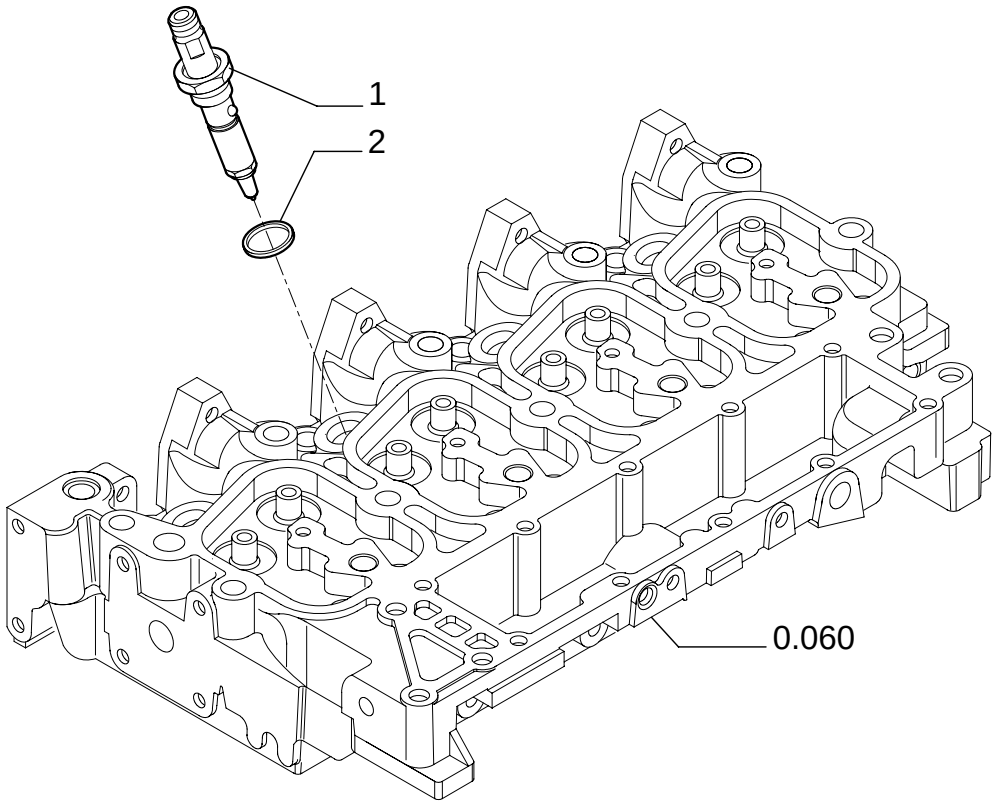
1
2
0.060

FUEL INJECTION SYSTEM

REF	FN	PART NUMBER	YR/SN	QTY	DESCRIPTION
1		504063465		4	INJECTOR, FUEL SYSTEM
2		4895297		4	GASKET

FUEL INJECTION SYSTEM

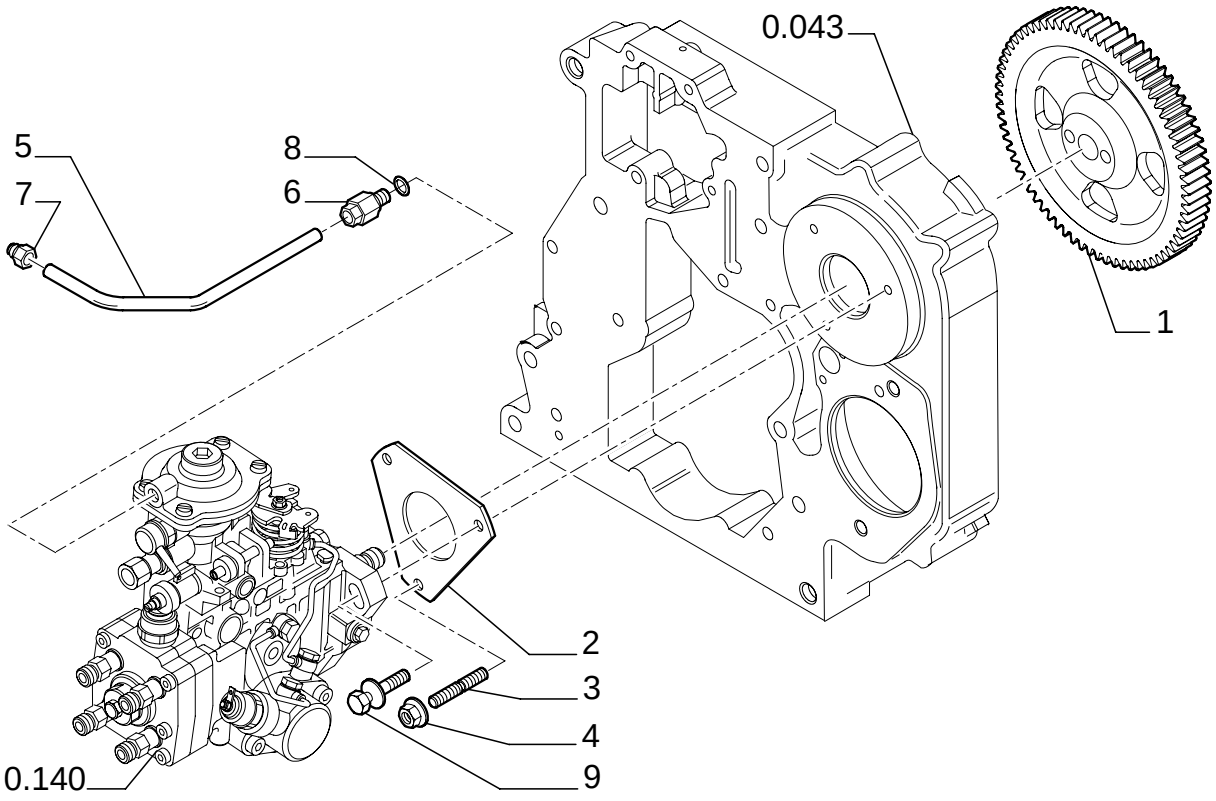

FUEL INJECTION SYSTEM

REF	FN	PART NUMBER	YR/SN	QTY	DESCRIPTION
1		504093385		1	GEAR
2		504083433		1	GASKET
3		16746824		3	STUD
4		4899003		3	NUT 8X1.25
5		504057292		1	TUBE, RIGID
6		4893518		1	CONNECTOR, HYD. 8X1
7		4896770		1	CONNECTOR, HYD. 10X1
8		4858605		1	GASKET

FUEL INJECTION SYSTEM

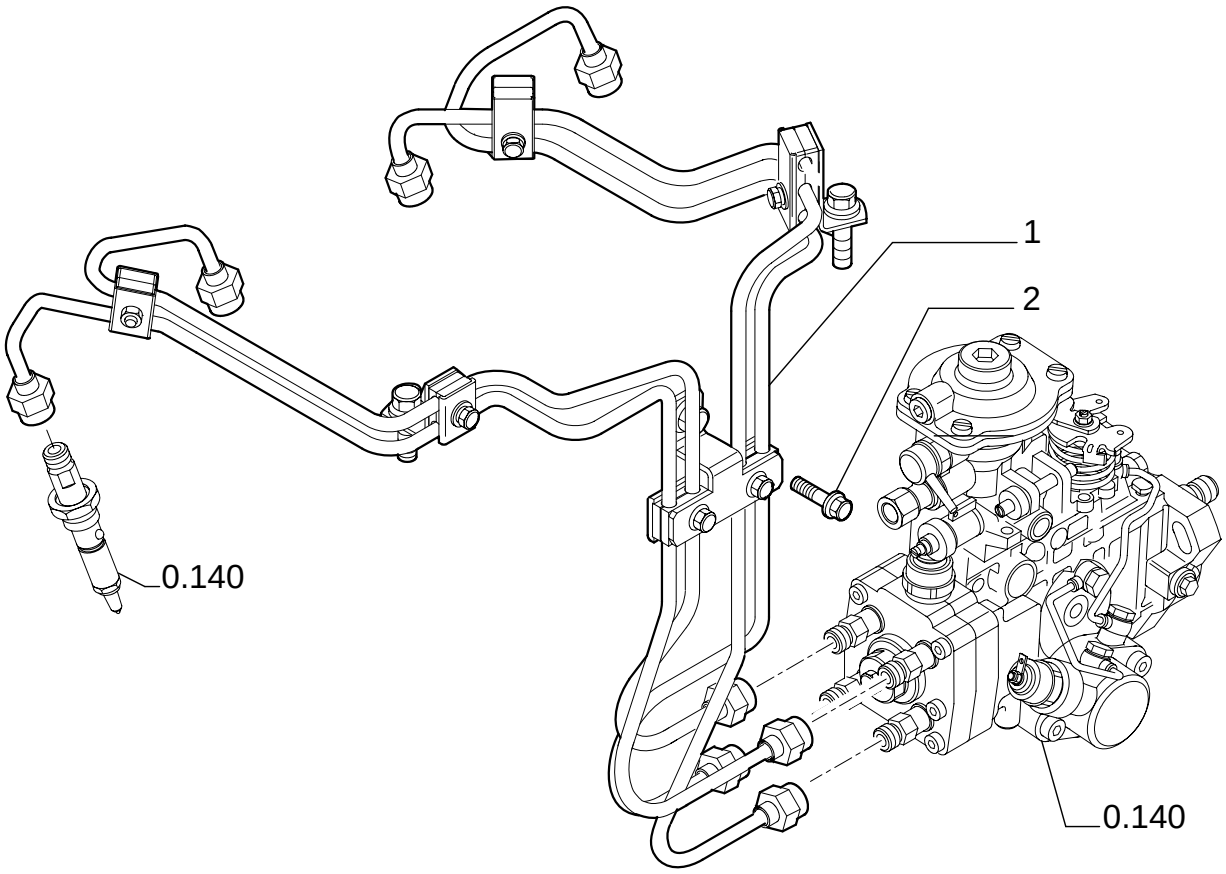

FUEL INJECTION SYSTEM

REF	FN	PART NUMBER	YR/SN	QTY	DESCRIPTION
1		504042116		1	KIT Fuel Injection Supply Tubes
2		4899068		1	SCREW

0.200	01	p1	12/05

FUEL FILTER

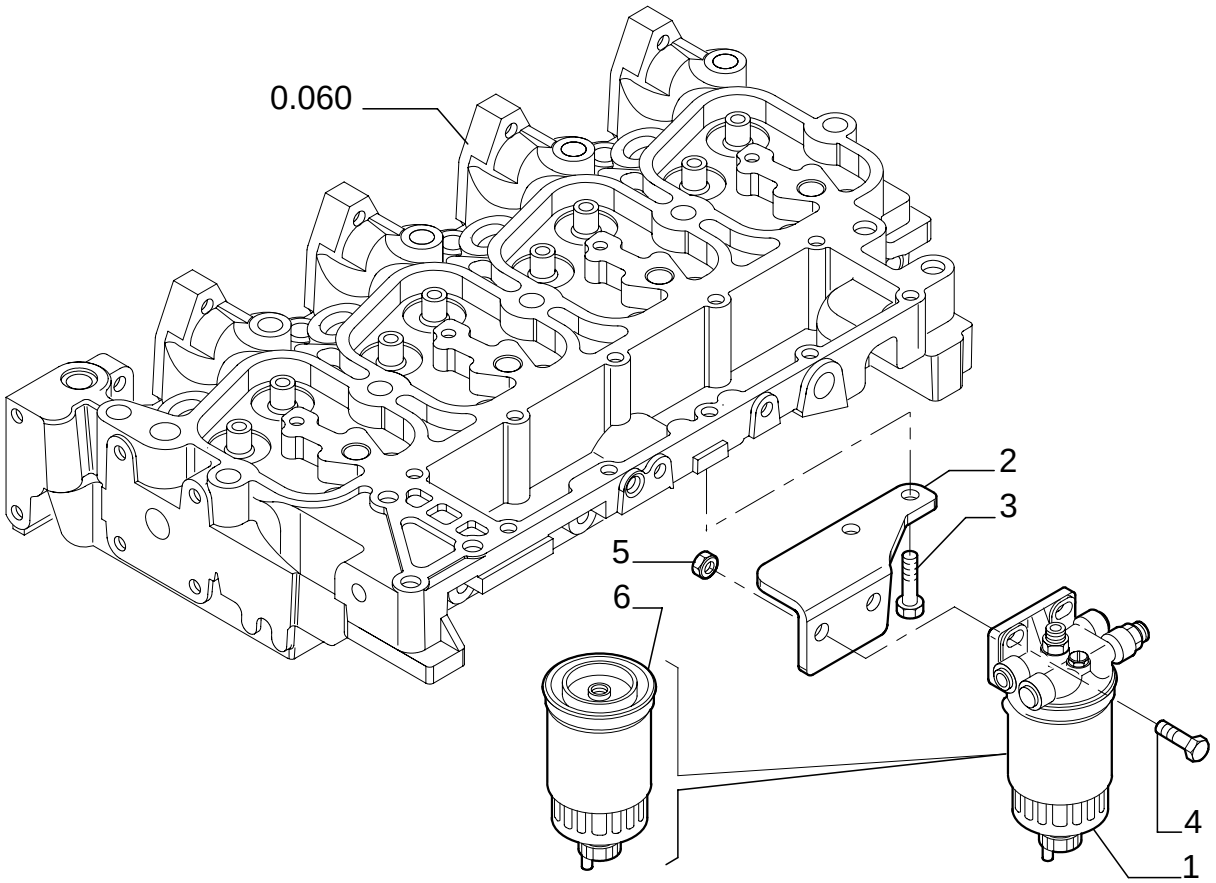

FUEL FILTER

REF	FN	PART NUMBER	YR/SN	QTY	DESCRIPTION
1		2852098		1	FILTER ASSY - ASSY
2		504001088		1	SUPPORT
3		4899020		2	SCREW M8X1,25X20
4		4899093		2	SCREW M10X1,5X30
5		4895166		2	NUT 10X1.5
6		1930010		1	FILTER, FUEL

FUEL PUMP

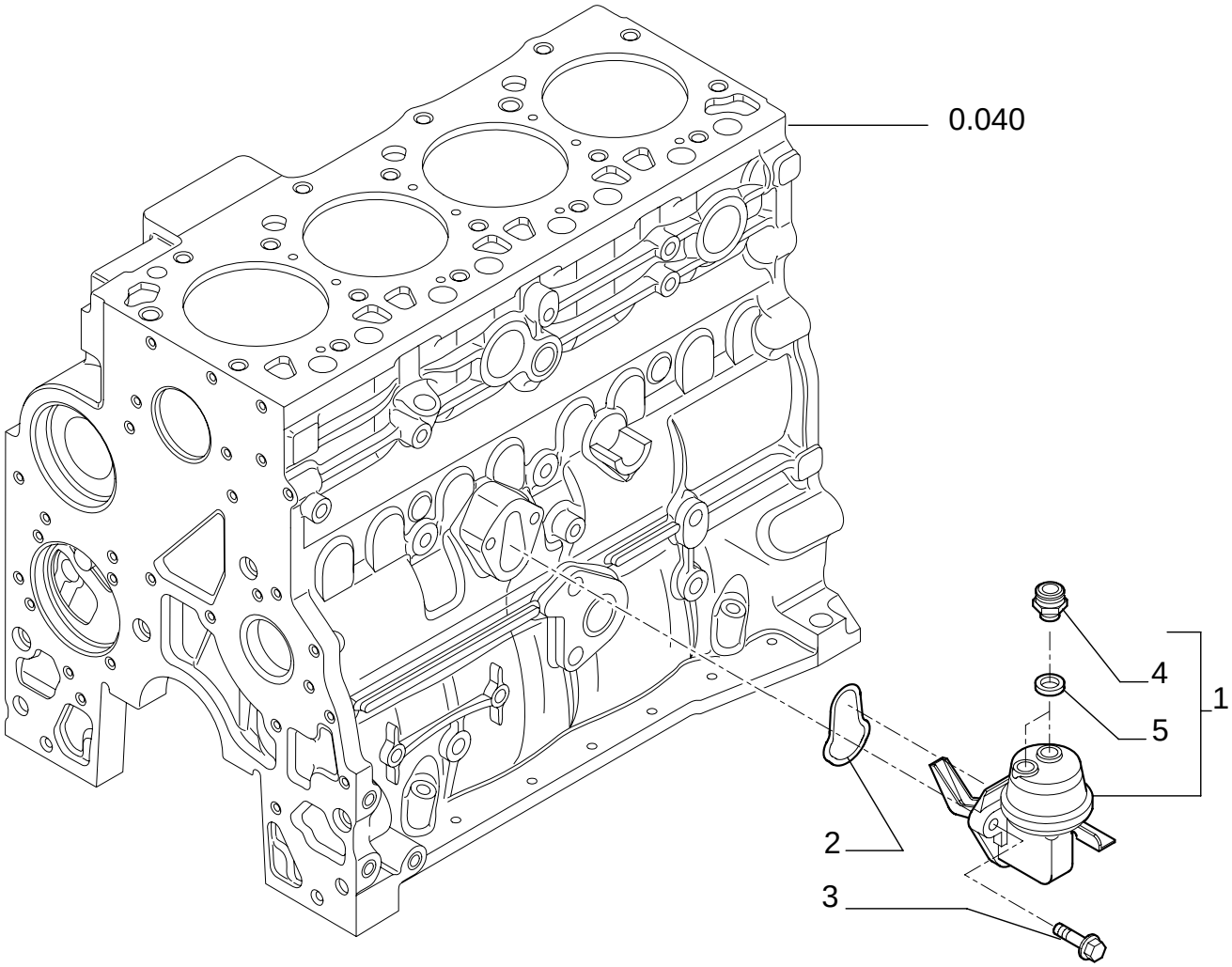

FUEL PUMP

REF	FN	PART NUMBER	YR/SN	QTY	DESCRIPTION
1		2830266		1	PUMP, FUEL - ASSY
2		2830156		1	GASKET
3		4899031		2	SCREW 8X25
4		4890964		2	CONNECTOR, HYD.
5		4894721		2	GASKET

0.203	01	p1	01/06

FUEL INJECTION SYSTEM

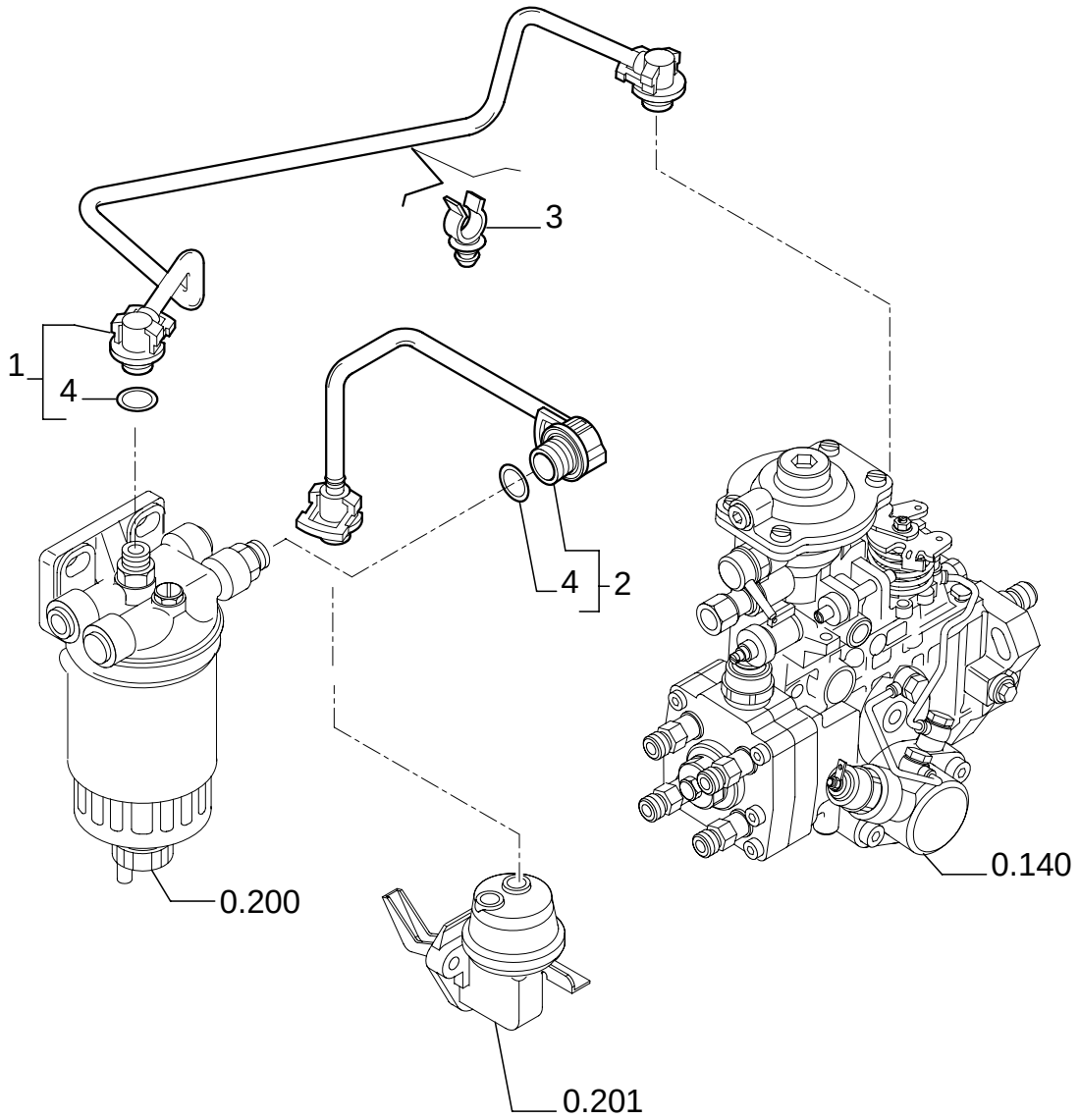

FUEL INJECTION SYSTEM

REF	FN	PART NUMBER	YR/SN	QTY	DESCRIPTION
1		2852105		1	TUBE - ASSY
2		2852594		1	TUBE, RIGID - ASSY
3		2852111		1	CLAMP
4		4894095		2	O-RING

FUEL INJECTION SYSTEM

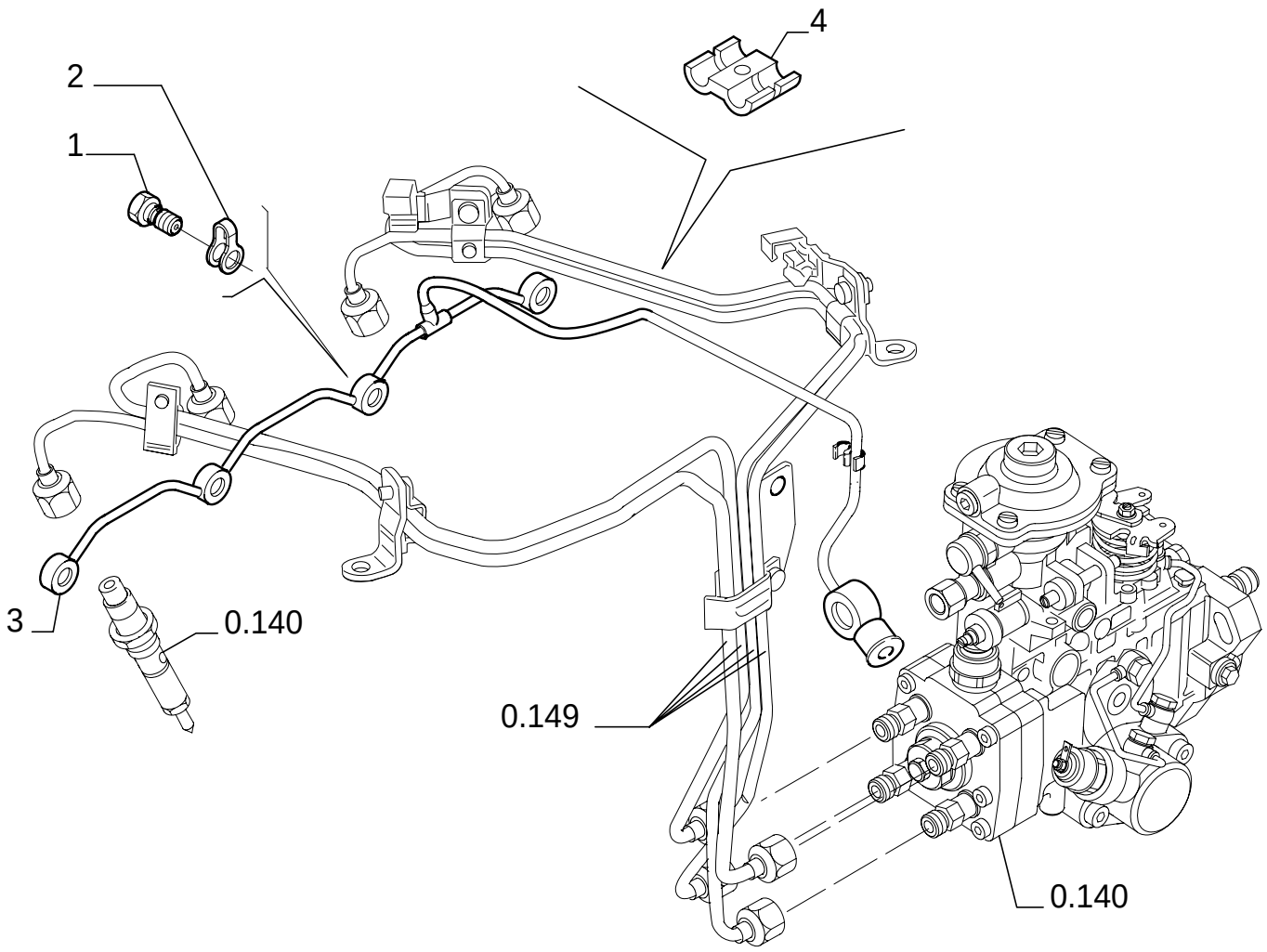

FUEL INJECTION SYSTEM

REF	FN	PART NUMBER	YR/SN	QTY	DESCRIPTION
1		4895244		4	JACK SCREW
2		4895305		4	GASKET
3		504051276		1	TUBE, RIGID
4		98429625		1	CLIP, SPRING

0.240/ 1	01	p1	02/05

TURBOCHARGER

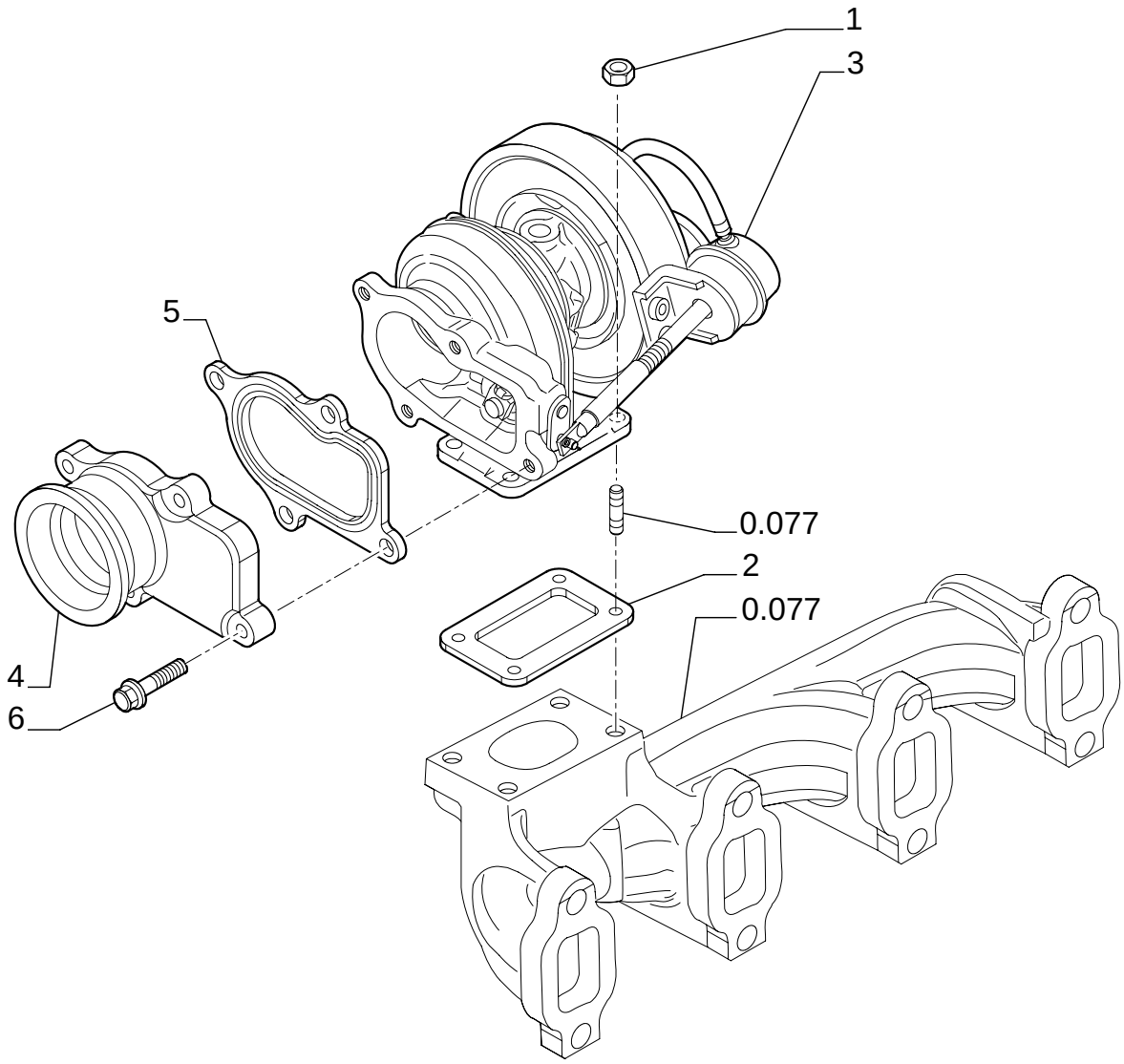

TURBOCHARGER

REF	FN	PART NUMBER	YR/SN	QTY	DESCRIPTION
1		4899118		4	NUT
2		4895133		1	GASKET
3		504057286		1	TURBOCHARGER
4		504010786		1	MANIFOLD, EXHAUST
5		504035094		1	GASKET
6		4898482		4	SCREW

0.270	01	p1	12/05

ENGINE, OIL

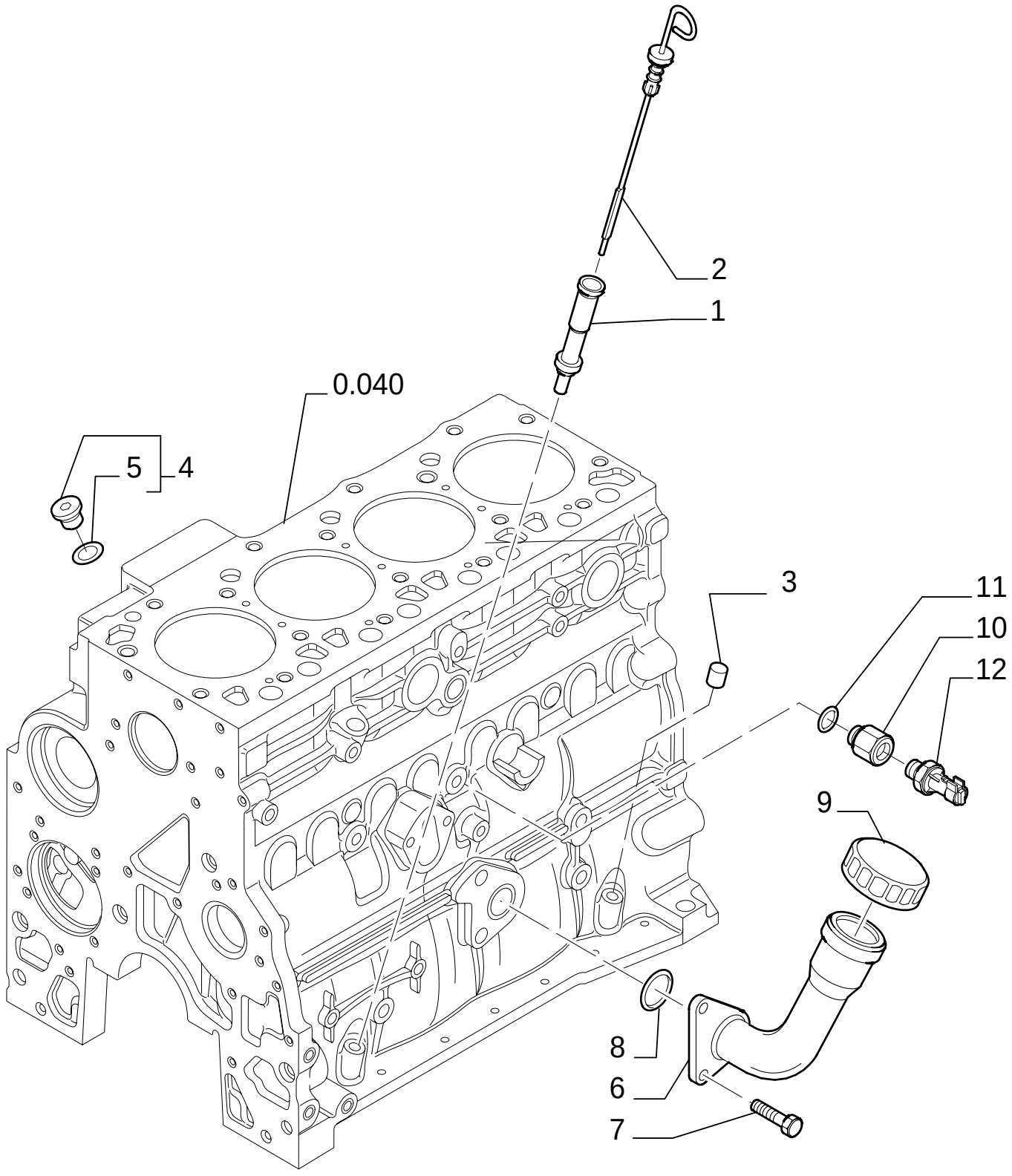

ENGINE, OIL

REF	FN	PART NUMBER	YR/SN	QTY	DESCRIPTION
1		504011329		1	TUBE, RIGID
2		504062795		1	DIPSTICK
3		4899036		1	PLUG
4		4897330		2	PLUG - ASSY
5		4895610		1	O-RING
6	1	504011338		1	TUBE, RIGID
7		16587924		2	SCREW
8		17283181		1	O-RING
9	1	98429552		1	CAP, INTRODUCTION
10		504036358		1	CONNECTOR, HYD.
11		4899115		1	O-RING
12	2	98442879		1	SWITCH
12	3	98445111		1	SWITCH

(1) UP TO S/N ENGINE 148474
(2) Version : SIPEA
(3) Version : BORLETTI

UP TO S/N ENGINE 148474

0.270/A	01	p1	12/05

ENGINE, OIL

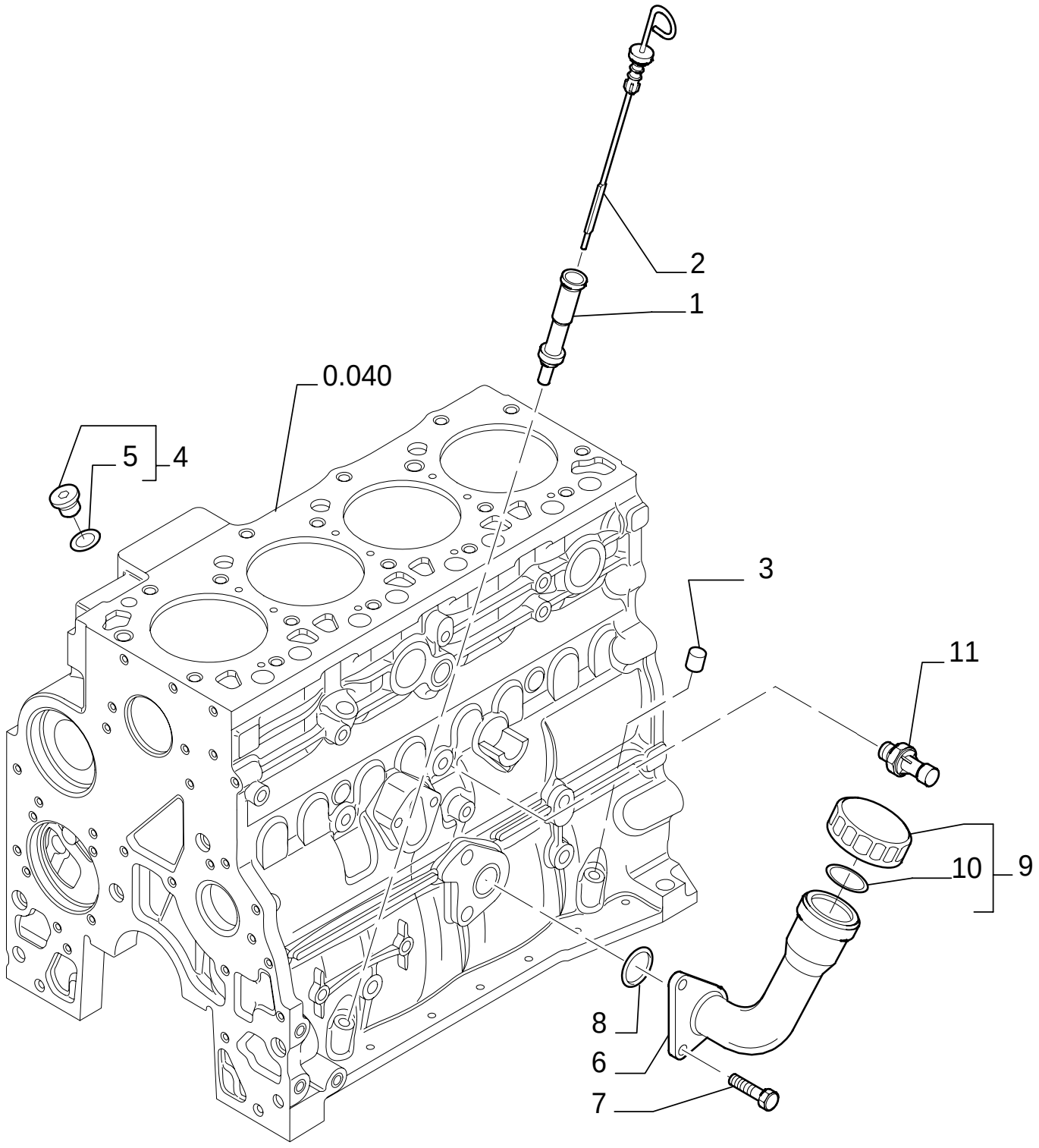

ENGINE, OIL

REF	FN	PART NUMBER	YR/SN	QTY	DESCRIPTION
1		504011329		1	TUBE, RIGID
2		504062795		1	DIPSTICK
3		4899036		1	PLUG
4		4897330		2	PLUG - ASSY
5		4895610		1	O-RING
6	1	{504087621}		1	
7		16587924		2	SCREW
8		17283181		1	O-RING
9	1	{500301568}		1	- ASSY
10	1	{17295480}		1	
11		504084983		1	SWITCH, PRESSURE

(1) FROM S/N ENGINE 148475

FROM S/N ENGINE 148475

0.300	01	p1	02/05

OIL PUMP - ENGINE

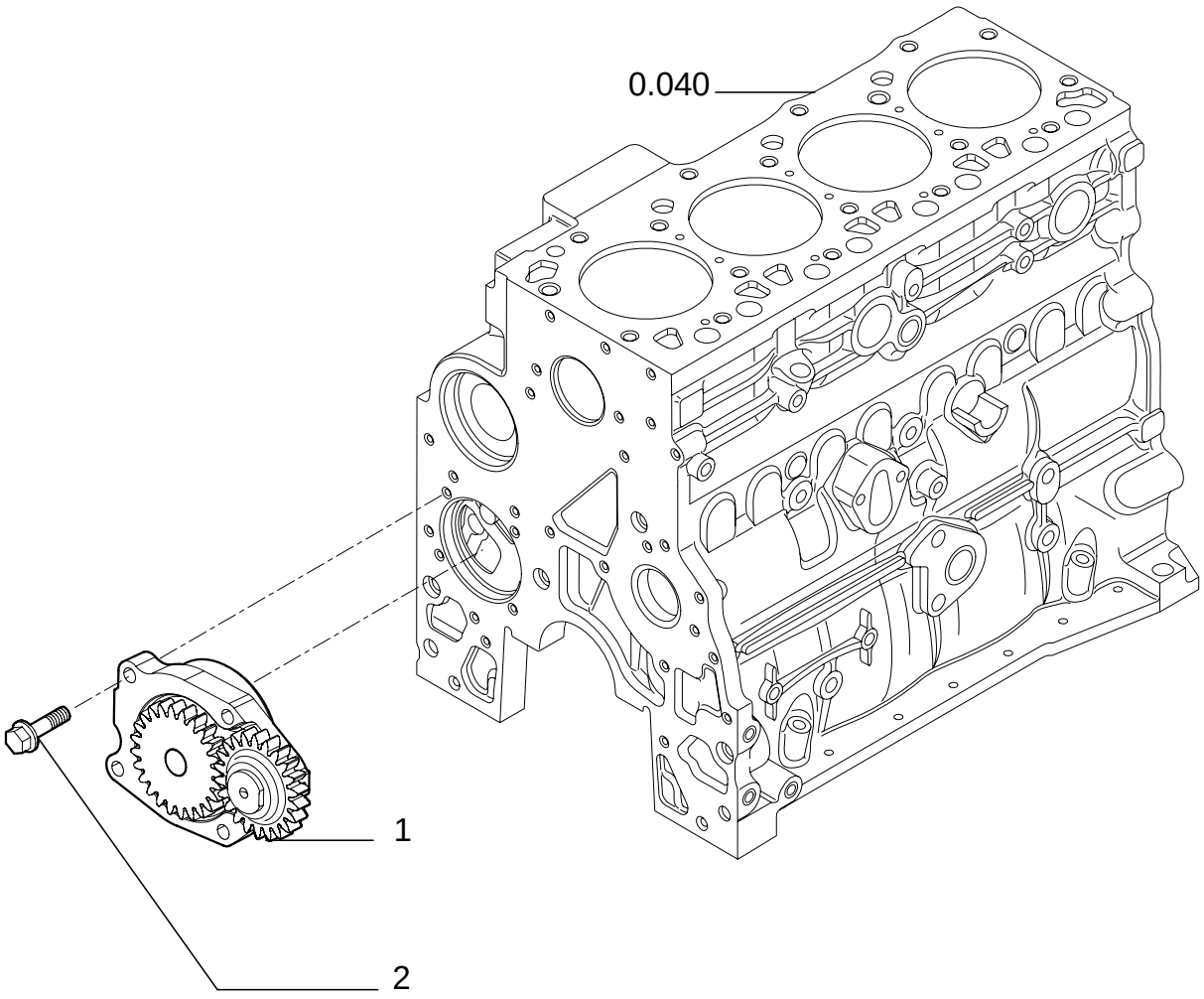

OIL PUMP - ENGINE

REF	FN	PART NUMBER	YR/SN	QTY	DESCRIPTION
1		4897480		1	PUMP, ENGINE OIL
2		4899090		4	SCREW

OIL FILTERS - ENGINE

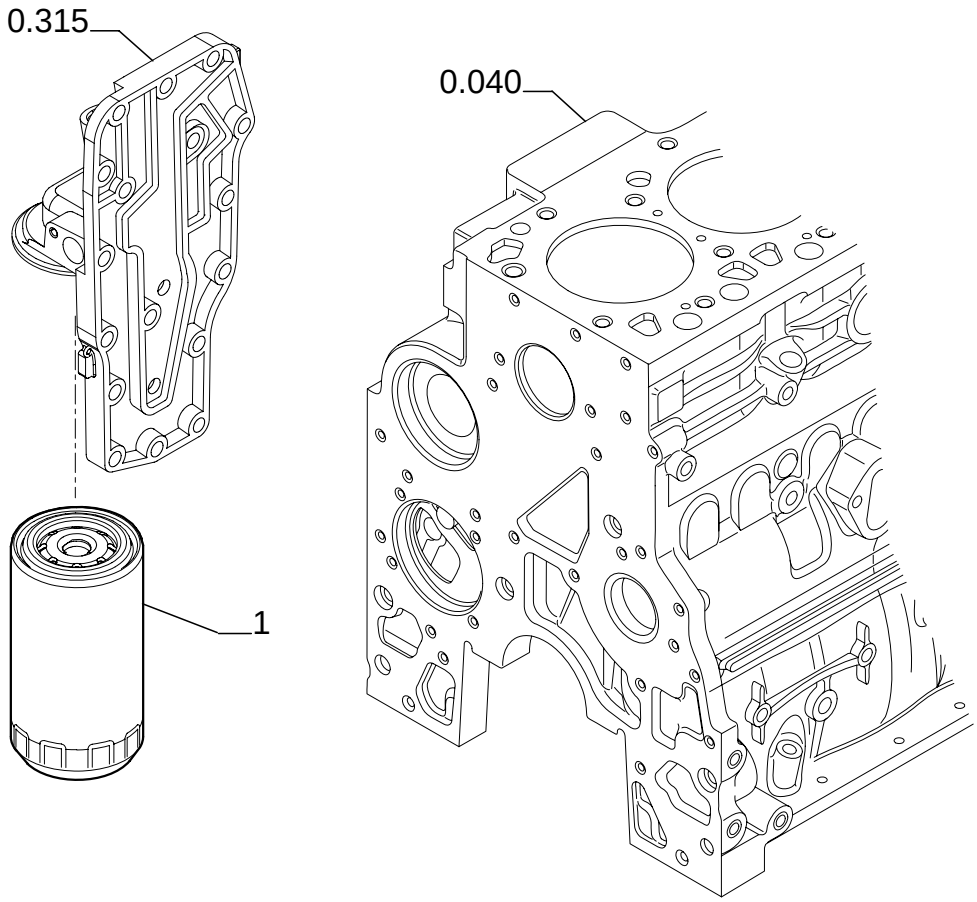

OIL FILTERS - ENGINE

REF	FN	PART NUMBER	YR/SN	QTY	DESCRIPTION
1		87803260		1	FILTER, ENGINE OIL

0.305	01	p1	12/05

PIPING - ENGINE OIL

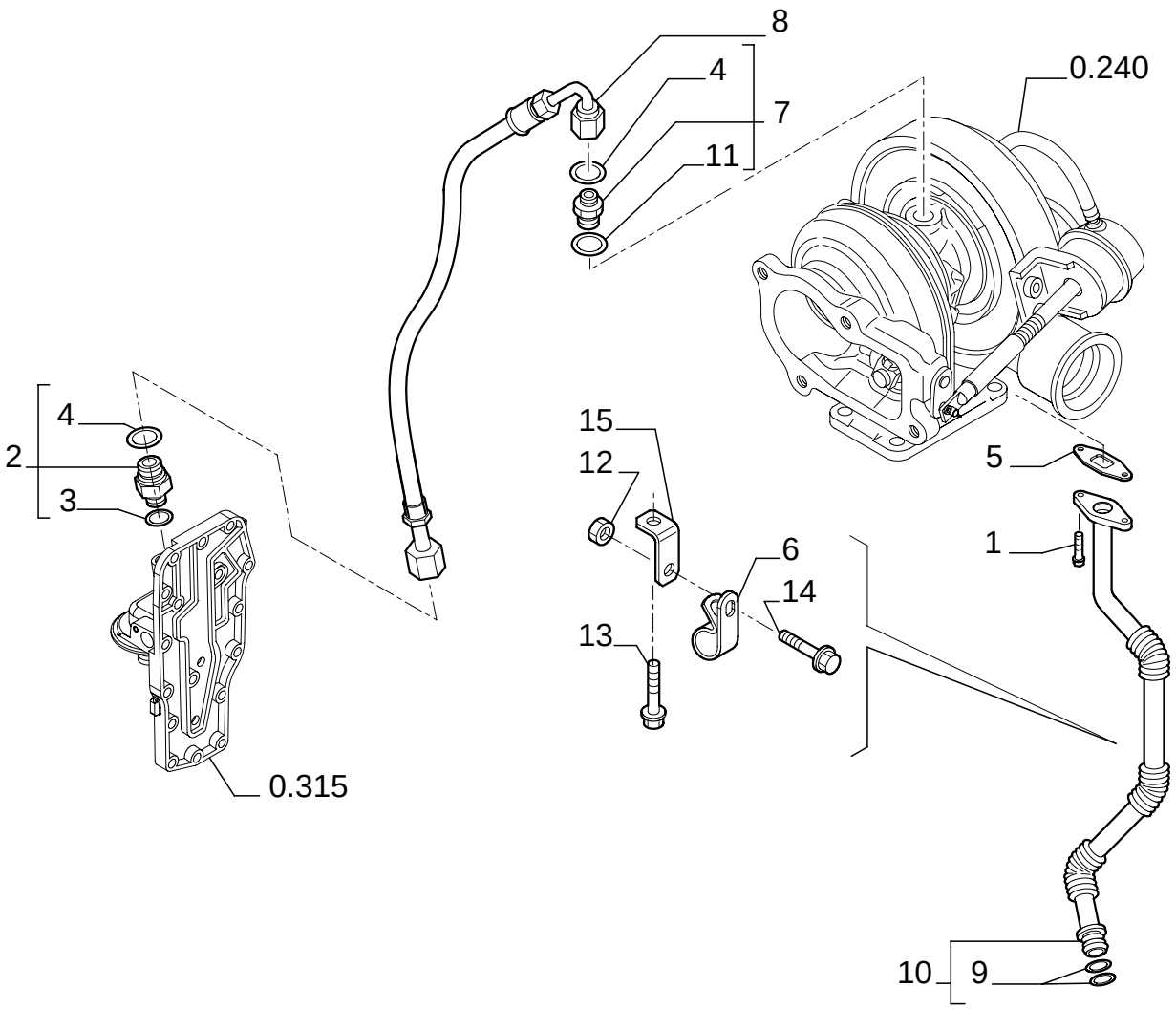

PIPING - ENGINE OIL

REF	FN	PART NUMBER	YR/SN	QTY	DESCRIPTION
1		4895164		2	SCREW M6X1X16
2		4895107		1	CONNECTOR, HYD. - ASSY
3		4899107		1	O-RING
4		4899108		2	O-RING
5		4899467		1	GASKET
6		4899519		1	BRACKET
7		4899106		1	CONNECTOR, HYD.
8		504053173		1	HOSE
9		4899058		2	O-RING M17.12 ID x 2.62 Thk
10		504053166		1	PIPE - ASSY
11		4899121		1	GASKET
12		17044625		1	NUT M6
13		18138324		1	SCREW M8X1.25X16
14		18137824		1	SCREW M8X16
15		504053894		1	BRACKET

0.315	01	p1	12/05

OIL FILTER AND COOLER

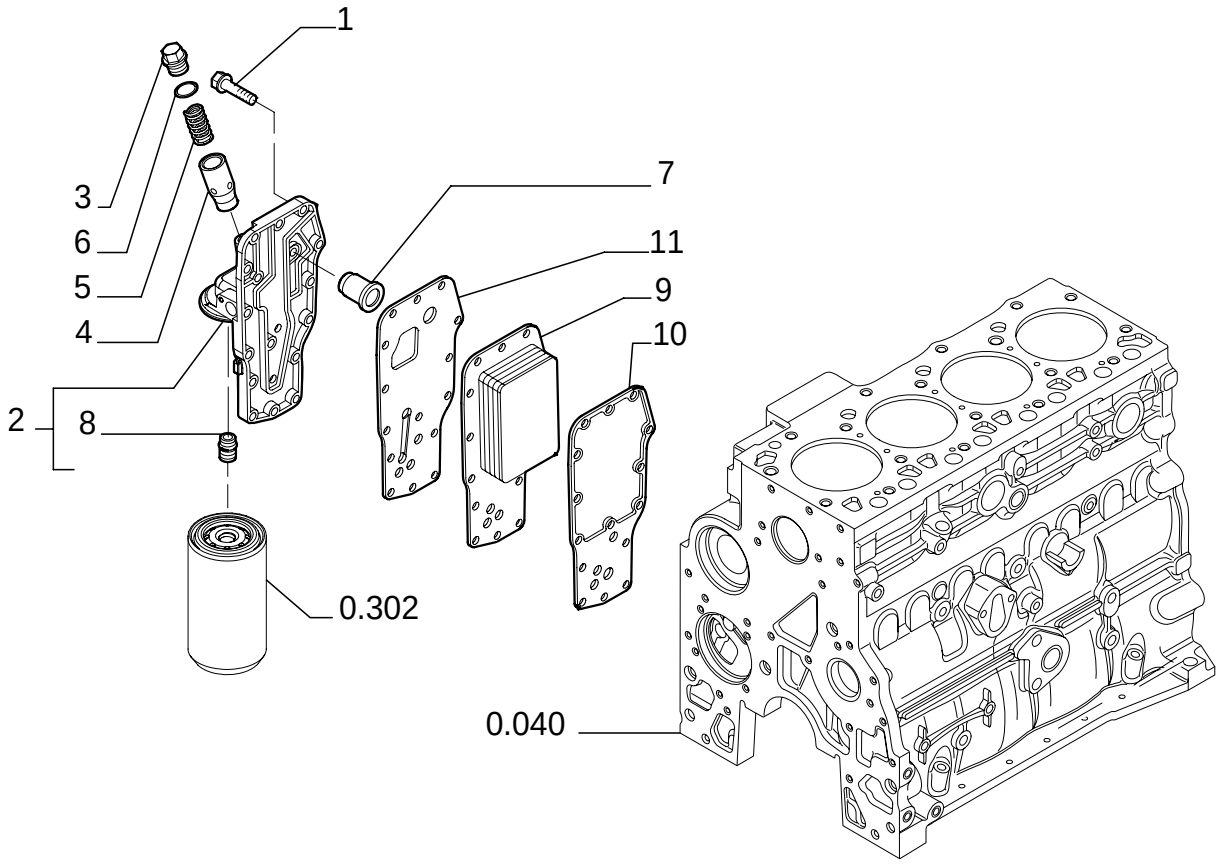

OIL FILTER AND COOLER

REF	FN	PART NUMBER	YR/SN	QTY	DESCRIPTION
1		4899019		15	SCREW 8X35
2		4899643		1	Head, Filter - ASSY
3		4895043		1	PLUG
4		4896404		1	HOUSING
5		4895045		1	SPRING, VALVE
6		4899035		1	O-RING M18.39 ID x 2.69 Thk
7		4896410		1	VALVE, HYDRAULIC
8		4893391		1	CONNECTOR, HYD.
9		4896406		1	RADIATOR
10		2830559		1	GASKET
11		4896409		1	GASKET

0.320	01	p1	12/05

WATER PUMP

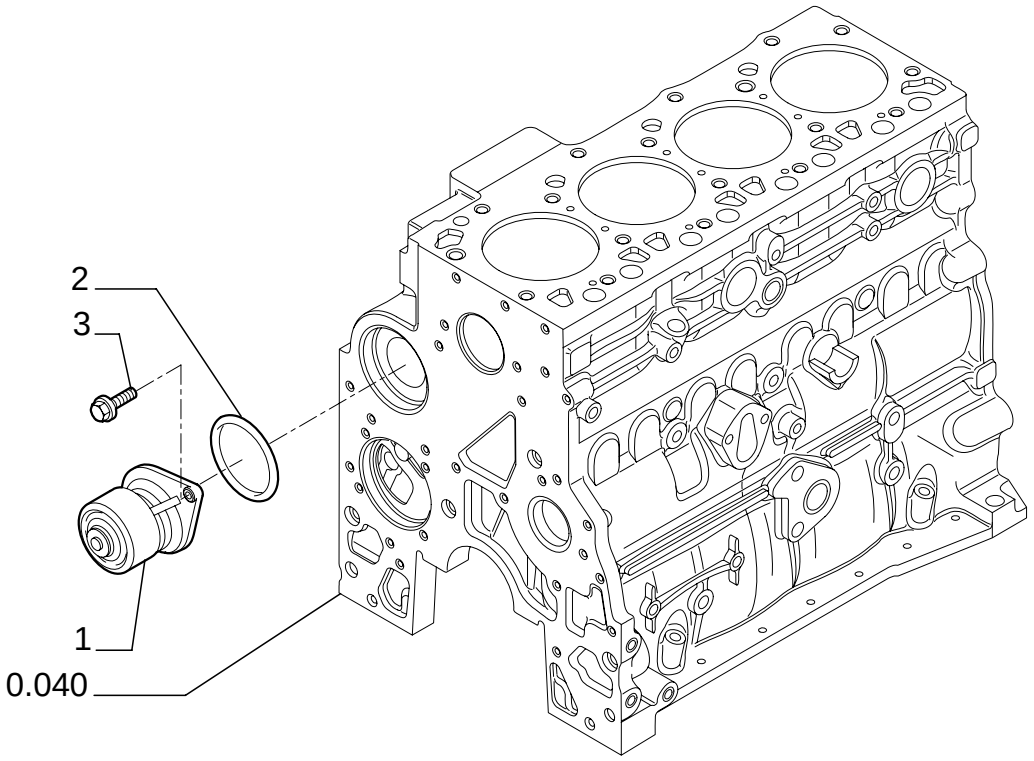

WATER PUMP

REF	FN	PART NUMBER	YR/SN	QTY	DESCRIPTION
1		4891252		1	PUMP, WATER
2		504062856		1	GASKET
3		4899079		2	SCREW M8X25

0.323	01	p1	12/05

COOLING SYSTEM - ENGINE

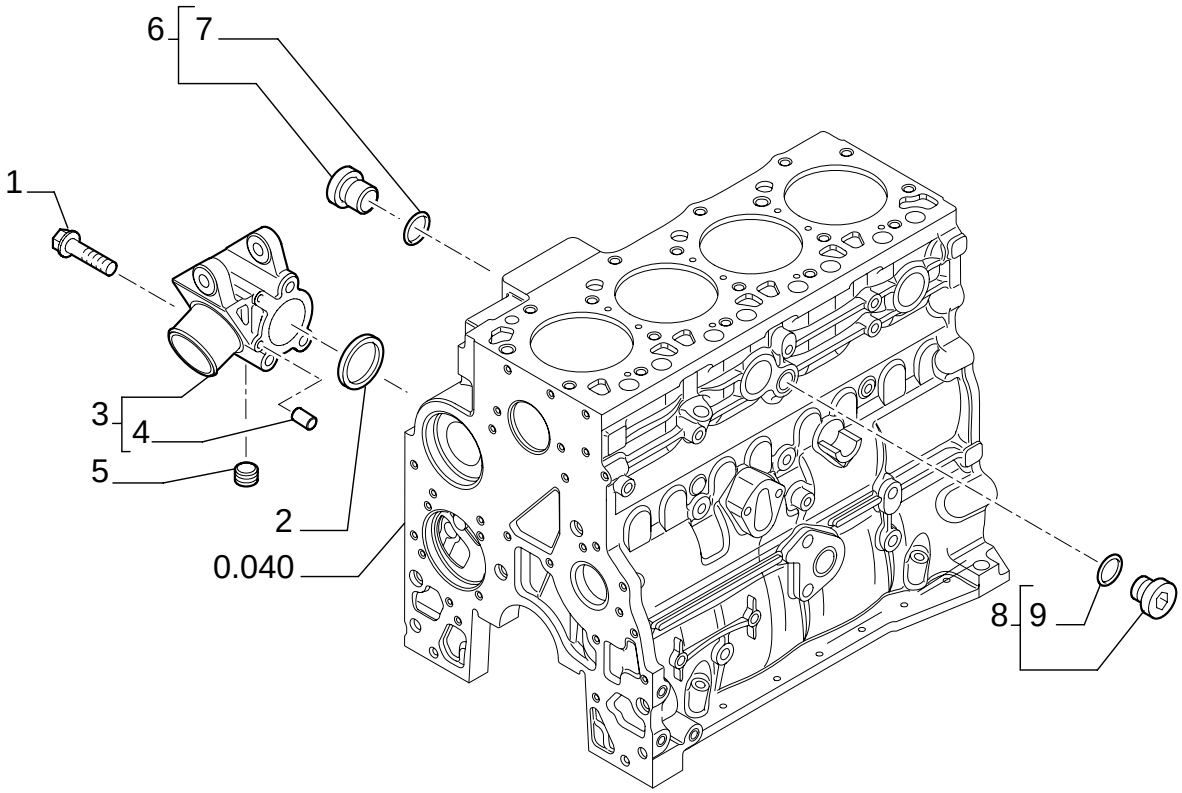

COOLING SYSTEM - ENGINE

REF	FN	PART NUMBER	YR/SN	QTY	DESCRIPTION
1		4899109		3	SCREW M10X1.5X80
2		504062710		1	O-RING
3		504064336		1	SUPPORT - ASSY
4		4895576		2	DOWEL
5		504074178		1	PLUG
6		4895392		1	PLUG - ASSY M18X1.5
7		4895393		1	O-RING
8		4895623		1	PLUG - ASSY
9		4895625		1	O-RING

0.326	01	p1	12/05

THERMOSTAT - ENGINE COOLING SYSTEM

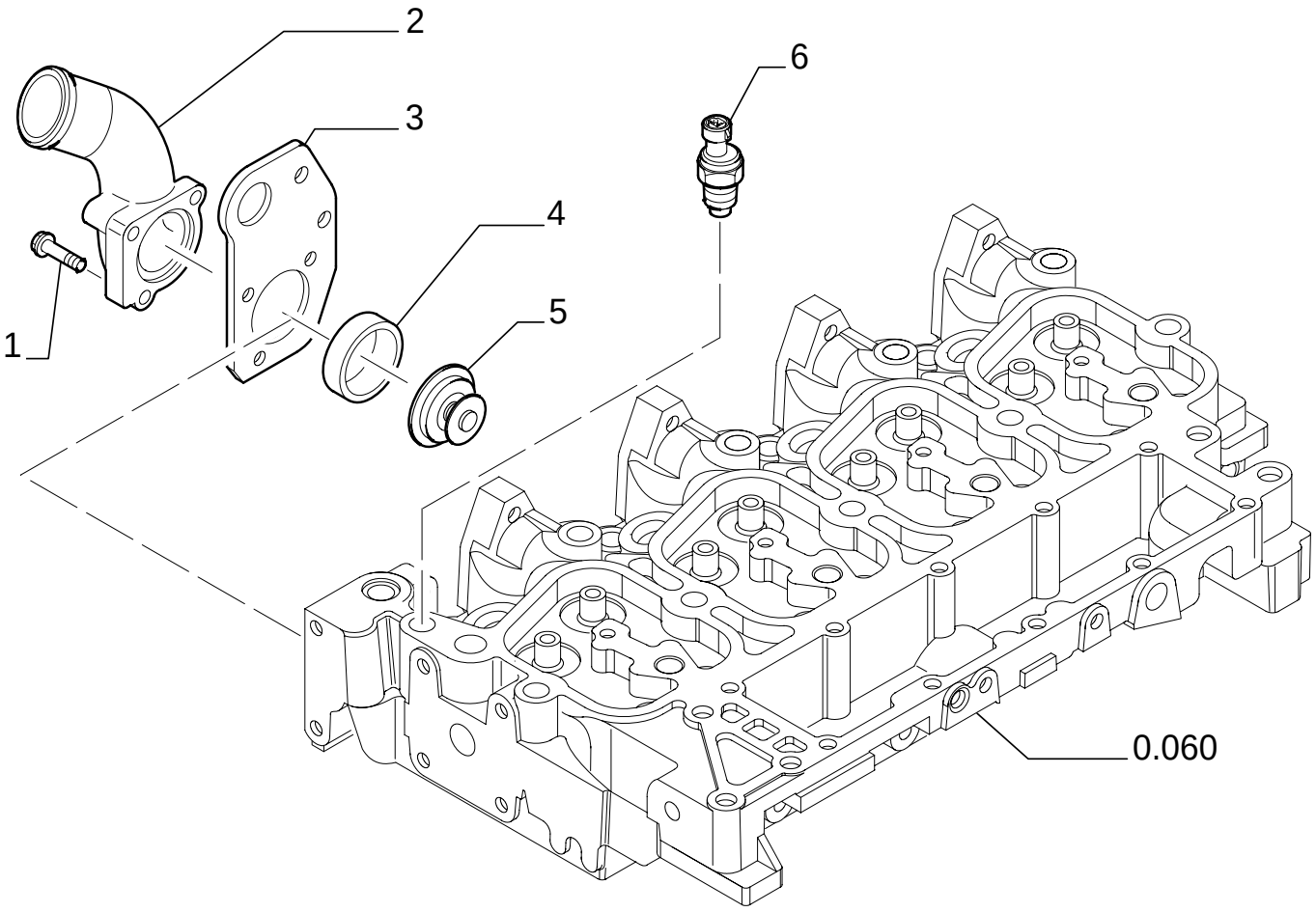

THERMOSTAT - ENGINE COOLING SYSTEM

REF	FN	PART NUMBER	YR/SN	QTY	DESCRIPTION
1		16586624		1	SCREW 8X35
1		16592624		2	SCREW 8X80
2		504051210		1	ELBOW
3		504052013		1	RING, LIFTING
4		504053512		1	GASKET
5		504038890		1	THERMOSTAT
6		504025599		1	SENDER, TEMPERATURE

0.340	01	p1	12/05

WATER PUMP - CONTROL

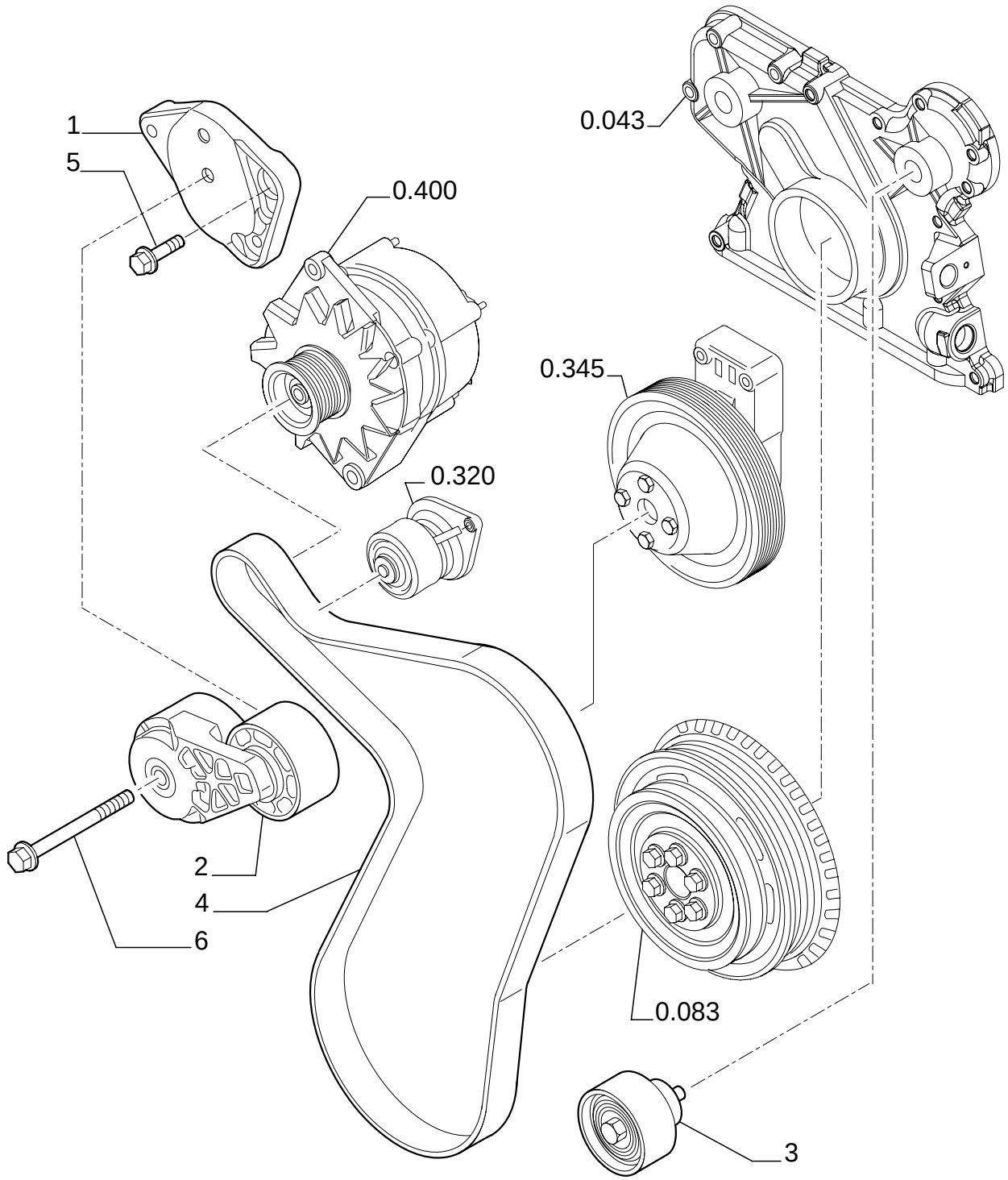

WATER PUMP - CONTROL

REF	FN	PART NUMBER	YR/SN	QTY	DESCRIPTION
1	1	504064340		1	BRACKET
2		504028028		1	TENSIONER, BELT
3		504065880		1	PULLEY
4	2, 1	REF		1	INSTRUCTION
5	1	4899079		2	SCREW M8X1,25X25
6	1	4899109		1	SCREW M10X1.5X80

(1) UP TO S/N 031056821
(2) See Page 636A 02

UP TO S/N 031056821

0.345/A	01	p1	12/05

FAN DRIVE

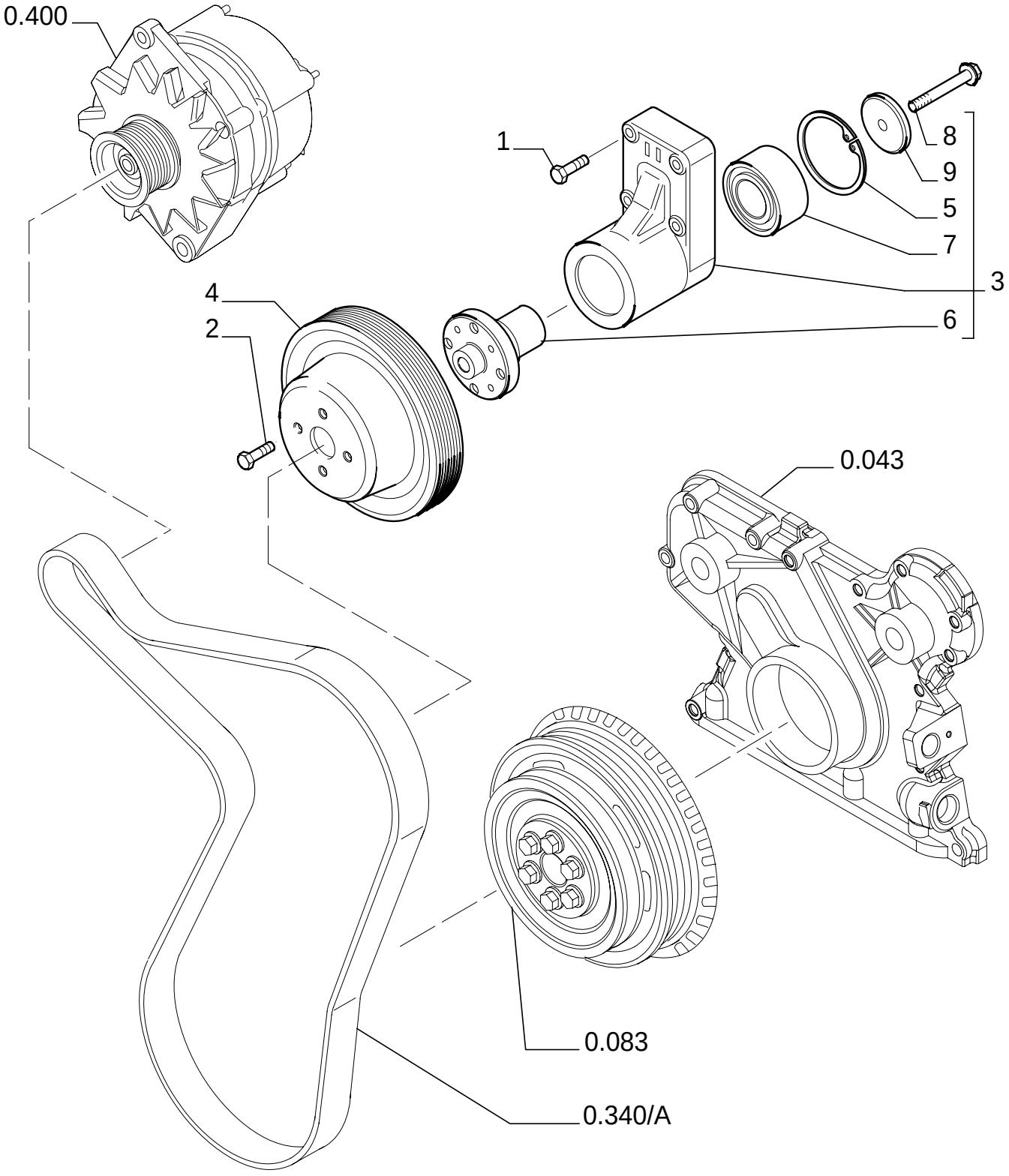

FAN DRIVE

REF	FN	PART NUMBER	YR/SN	QTY	DESCRIPTION
1		4899053		4	SCREW M8X1.25X45
2		4895291		4	SCREW M10X1.5X20
3		504035148		1	SUPPORT - ASSY
4	1	4890343		1	PULLEY
5		500395697		1	CIRCLIP
6		4892426		1	HUB
7		4892732		1	BEARING, BALL
8		16676834		1	SCREW M10X70
9		4890732		1	SPACER

(1) FROM S/N 031056822

FROM S/N 031056822 (12/01/2005)

0.350	01	p1	02/05

POWER TAKE-OFF

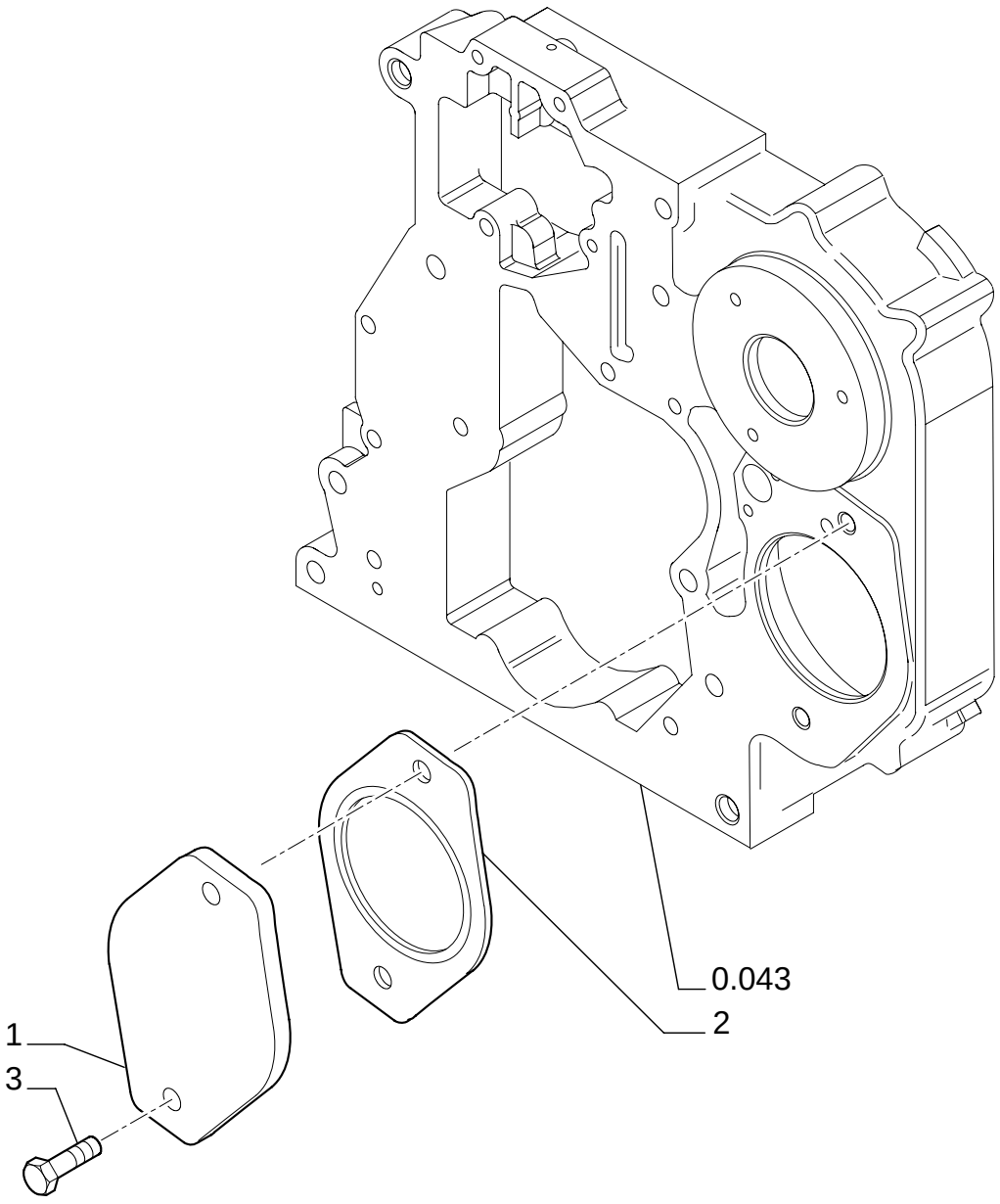

POWER TAKE-OFF

REF	FN	PART NUMBER	YR/SN	QTY	DESCRIPTION
1		504049033		1	COVER
2		4896897		1	GASKET
3		4895327		2	SCREW

0.360	01	p1	02/05

STARTER MOTOR

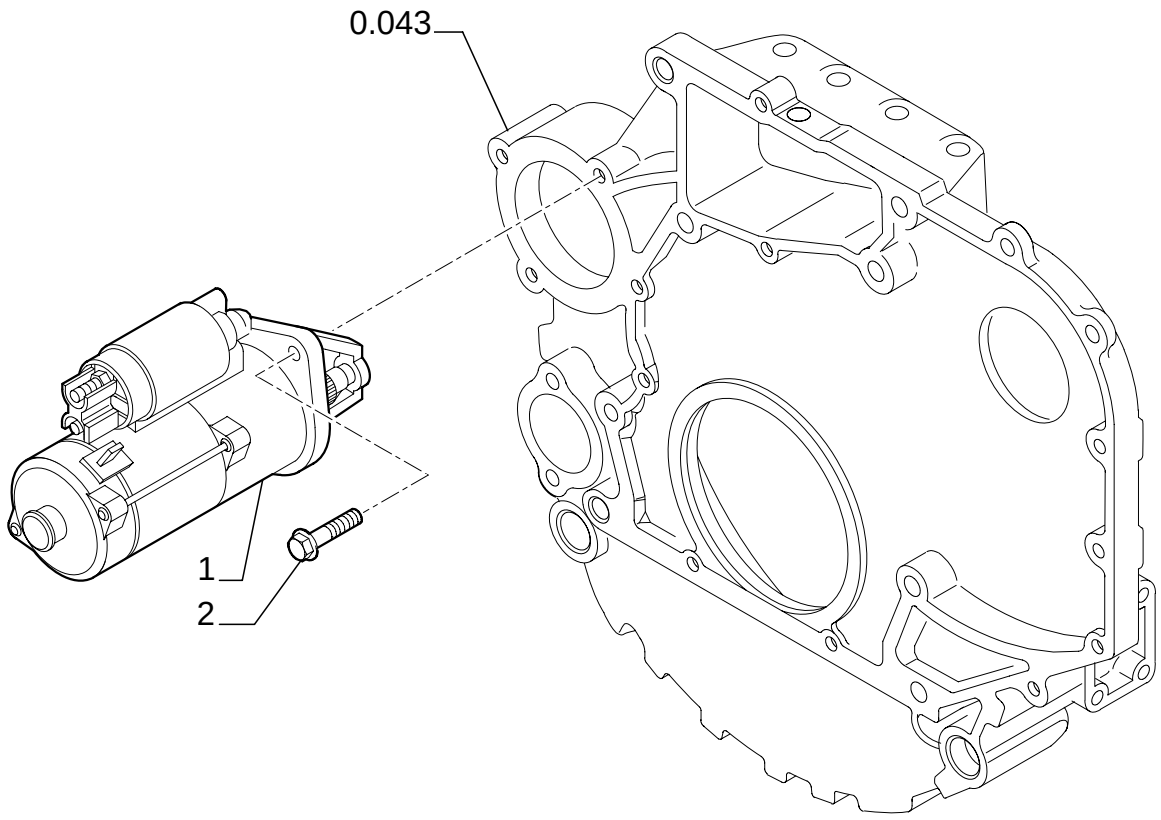

STARTER MOTOR

REF	FN	PART NUMBER	YR/SN	QTY	DESCRIPTION
1		504031929		1	MOTOR, STARTER
2		18139524		3	SCREW M10X1.5X30

0.400	01	p1	12/05

ALTERNATOR

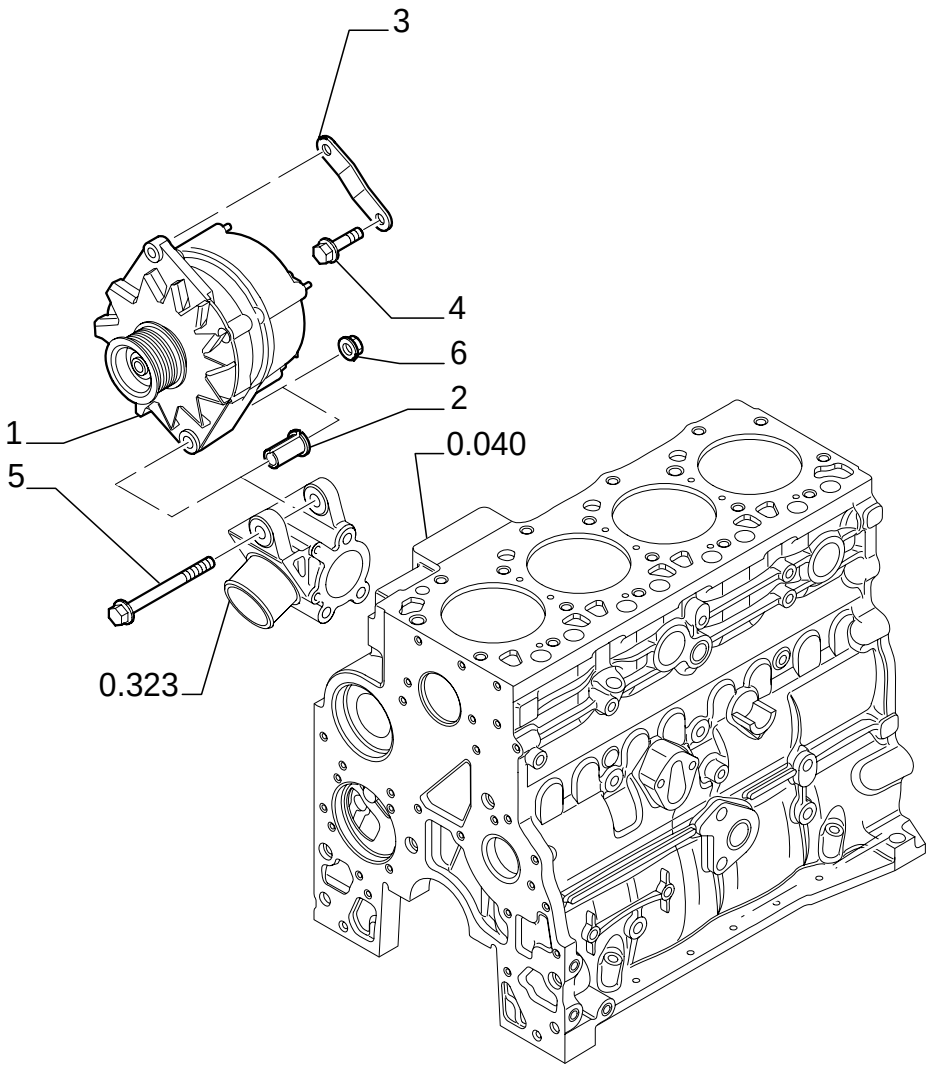

ALTERNATOR

REF	FN	PART NUMBER	YR/SN	QTY	DESCRIPTION
1	1	87422777		1	ALTERNATOR - ASSY
2		504060839		1	SPACER
3		504061464		1	BRACKET
4		4895291		1	SCREW M10X1.5X20
5		4895538		1	SCREW M10X1.5X120
6		4895166		1	NUT M10X1.5

(1) See Page 636A 04

0.450	01	p1	12/05

ENGINE - LIFT HOOK

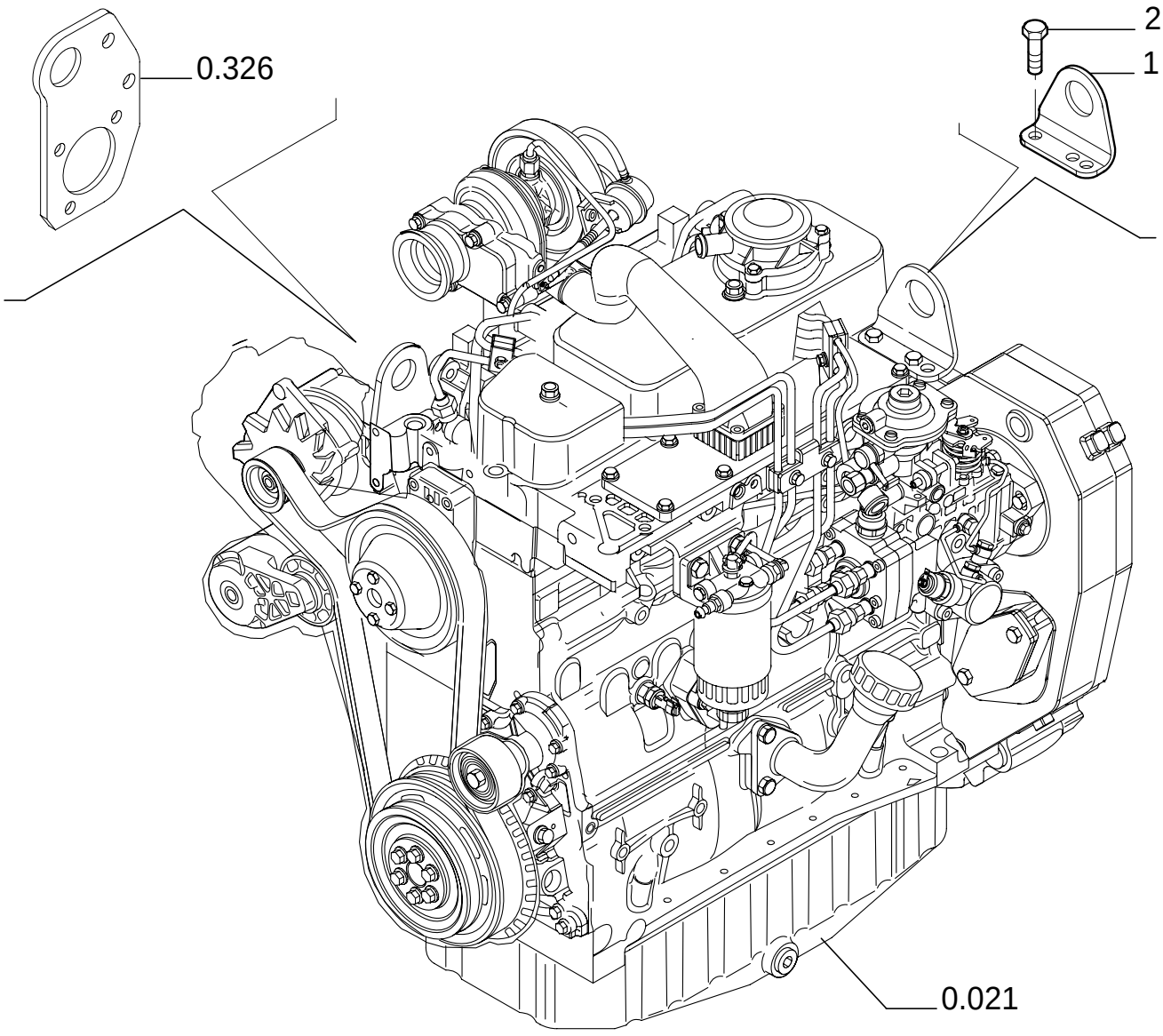

ENGINE - LIFT HOOK

REF	FN	PART NUMBER	YR/SN	QTY	DESCRIPTION
1		504026078		1	RING, LIFTING
2		4899073		2	SCREW M12X1.75X30

ACCESSORY ENGINE

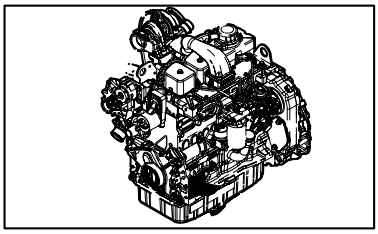

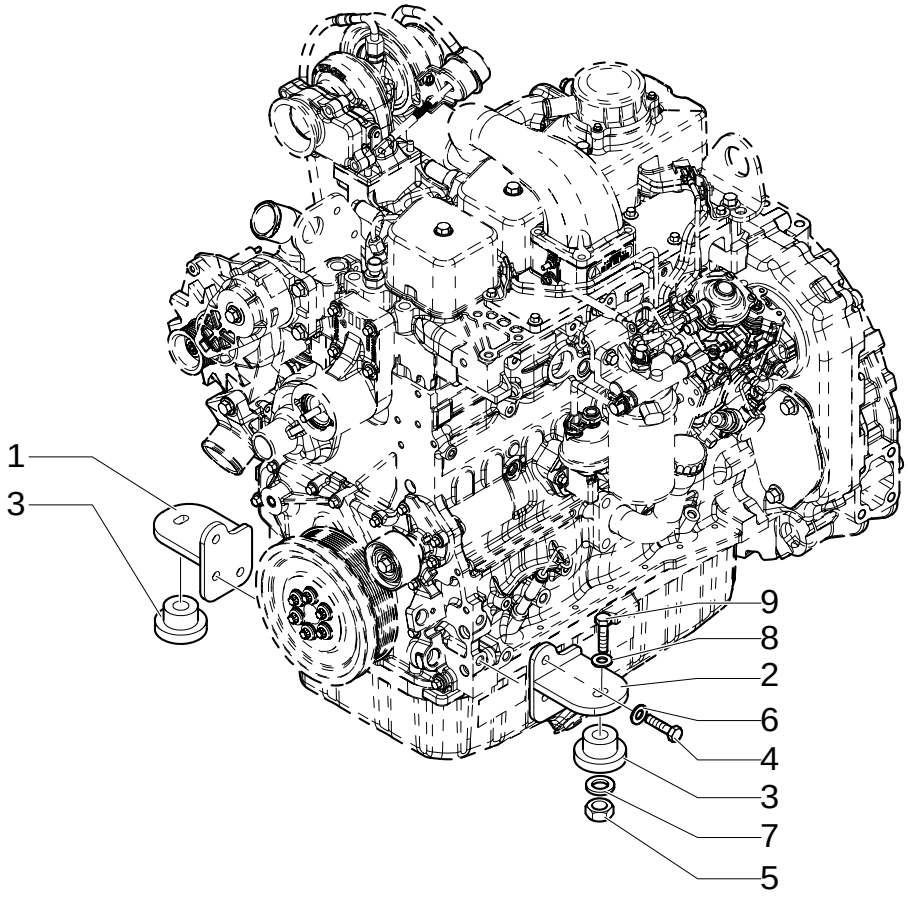

ACCESSORY ENGINE

REF	FN	PART NUMBER	YR/SN	QTY	DESCRIPTION
1		87407275		1	BRACKET
2		87407276		1	BRACKET
3		87416966		2	SUPPORT
4		11112421		6	SCREW
5		16105011		2	NUT
6		47048976		6	WASHER
7		85801585		2	WASHER, SEALING 65mm OD
8		85802618		2	WASHER, SEALING
9		87410647		2	SCREW

ACCESSORY ENGINE- ALTERNATOR

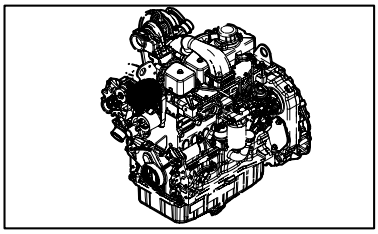

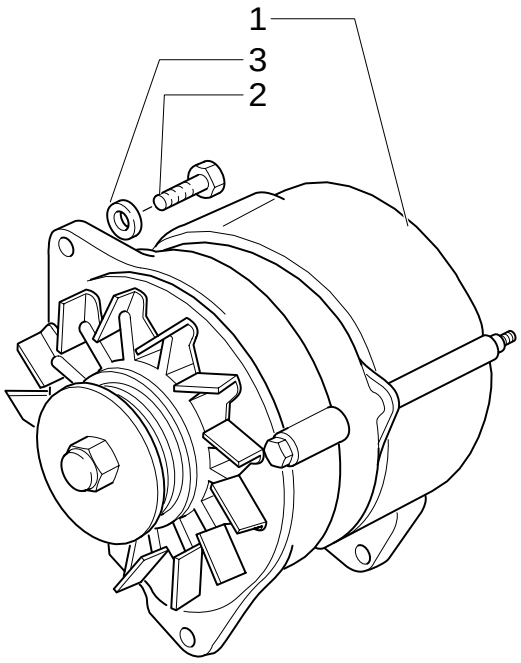

ACCESSORY ENGINE- ALTERNATOR

REF	FN	PART NUMBER	YR/SN	QTY	DESCRIPTION
1		87422777		1	ALTERNATOR
2		47049160		1	SCREW M8 x 20
2		16043621		1	SCREW M8 x 1.25 x 25
3		47048992		1	WASHER

636A	05	p1	12/05

ACCESSORY ENGINE - BRACKET MUFFLER

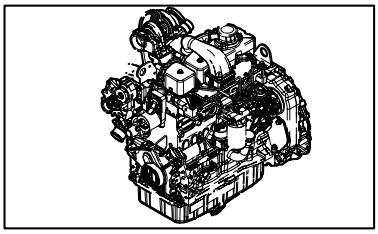

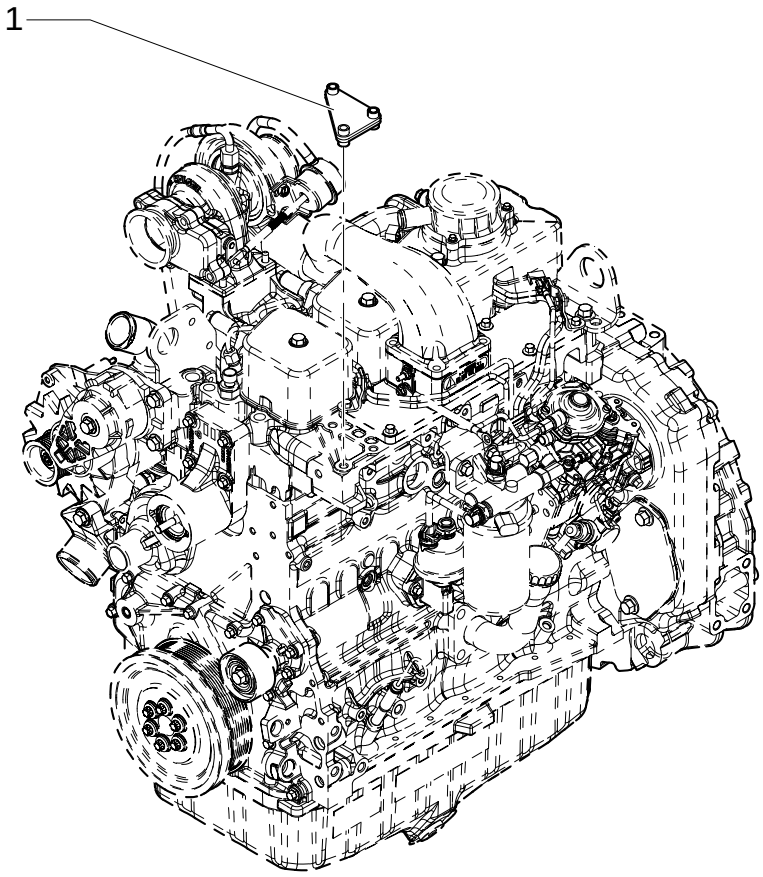

ACCESSORY ENGINE - BRACKET MUFFLER

REF	FN	PART NUMBER	YR/SN	QTY	DESCRIPTION
1		{87437661}		1	

Without Air Conditioner

ACCESSORY ENGINE - STARTER

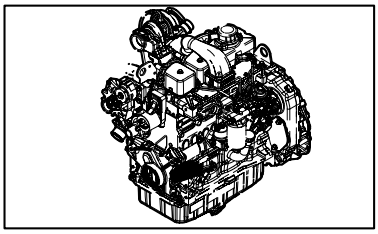

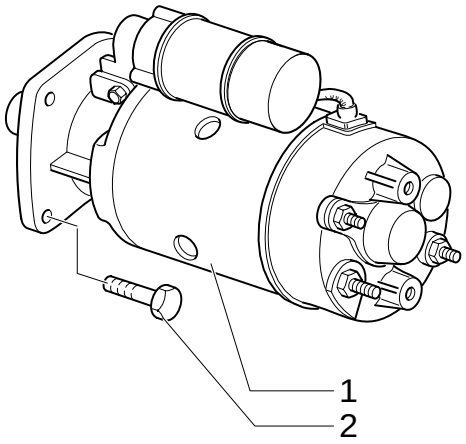

ACCESSORY ENGINE - STARTER

REF	FN	PART NUMBER	YR/SN	QTY	DESCRIPTION
1		86992395		1	MOTOR, STARTER
2		86511845		1	SCREW

638A	01	p1	11/05

ACCESSORY ENGINE

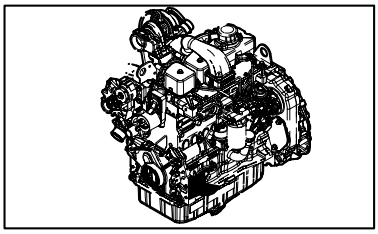

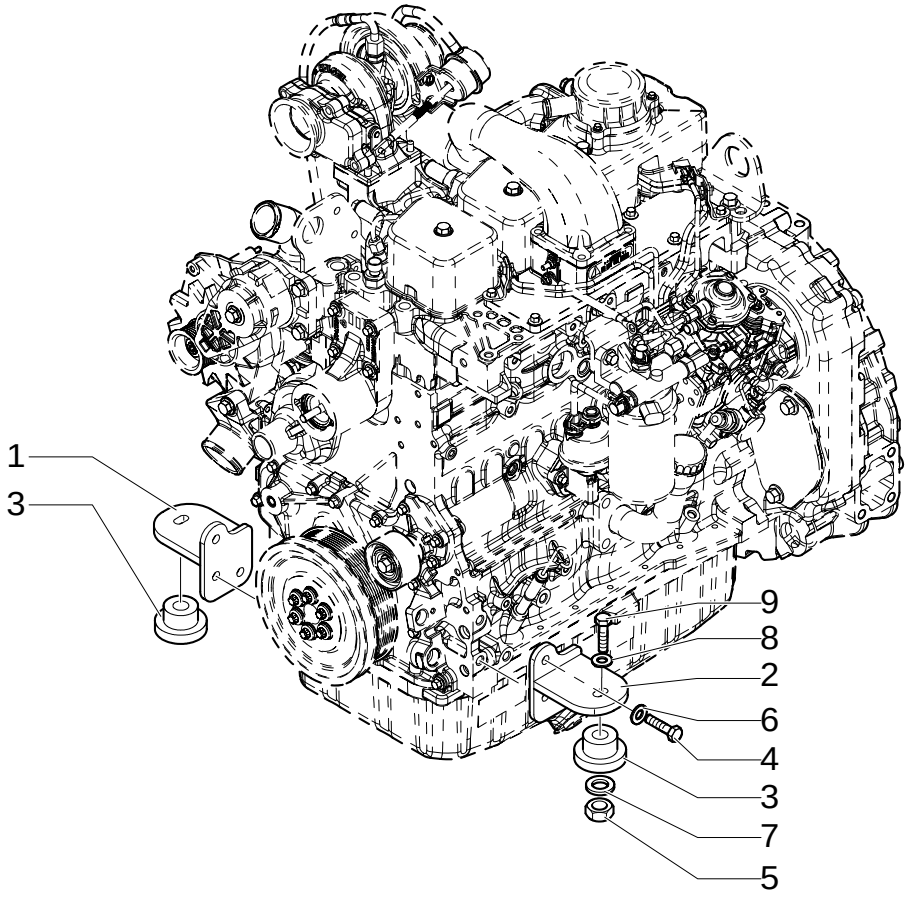

ACCESSORY ENGINE

REF	FN	PART NUMBER	YR/SN	QTY	DESCRIPTION
1		87407275		1	BRACKET
2		87407276		1	BRACKET
3		87416966		2	SUPPORT
4		11112421		6	SCREW M12x30
5		16105011		2	NUT M12x1.25
6		47048976		6	WASHER M12
7		85801585		2	WASHER, SEALING 65mm OD
8		85802618		2	WASHER, SEALING
9		87410647		2	SCREW M12x1.25x90

638A	02	p1	11/05

ACCESSORY ENGINE - VENTILATOR

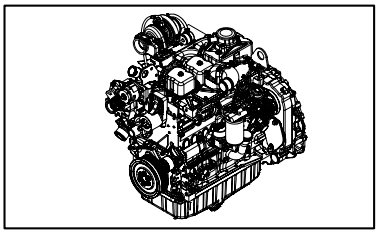

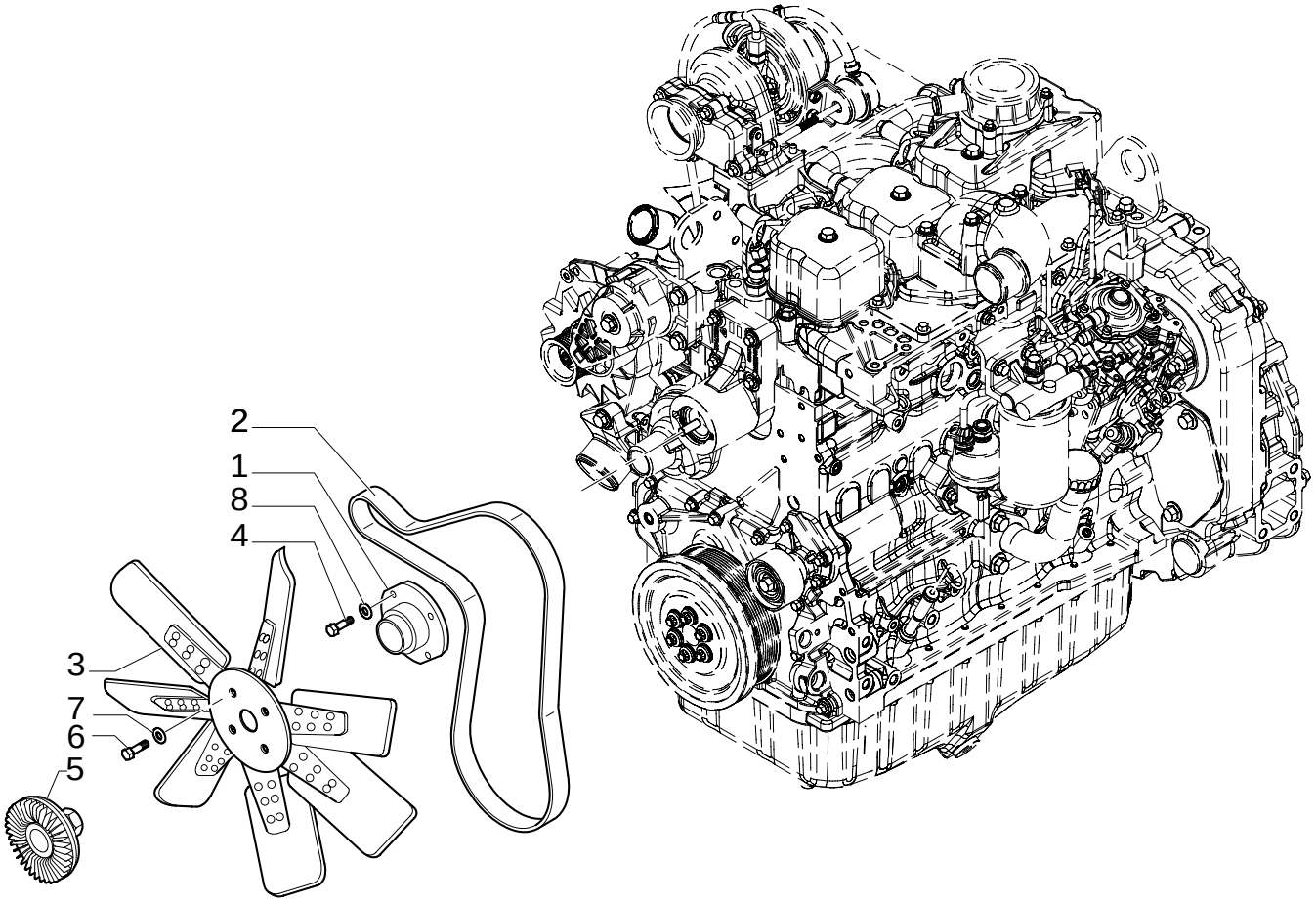

ACCESSORY ENGINE - VENTILATOR

REF	FN	PART NUMBER	YR/SN	QTY	DESCRIPTION
1		47049809		1	ADAPTER
2		87415774		1	BELT, TRANSMISSION
3		47049943		1	BLOWER
4		47049186		4	BOLT
5		87340008		1	DRIVE ASSY.
6		47042342		4	SCREW
7		47048992		7	WASHER
8		47048972		4	WASHER

ACCESSORY ENGINE - STARTER

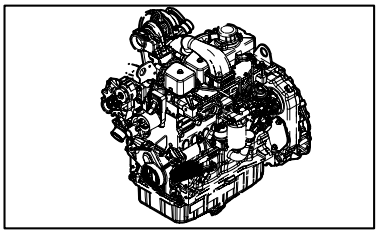

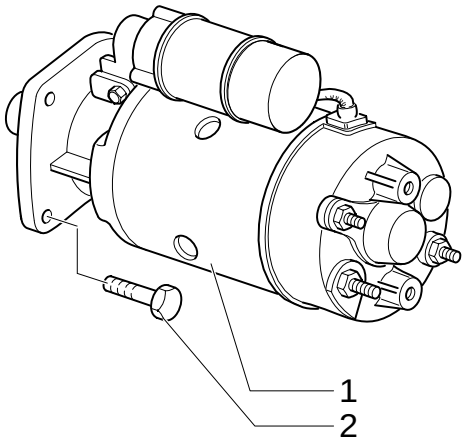

ACCESSORY ENGINE - STARTER

REF	FN	PART NUMBER	YR/SN	QTY	DESCRIPTION
1		86992395		1	MOTOR, STARTER
2		86511845		2	SCREW M10x35

ACCESSORY ENGINE- ALTERNATOR

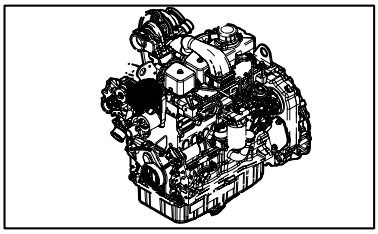

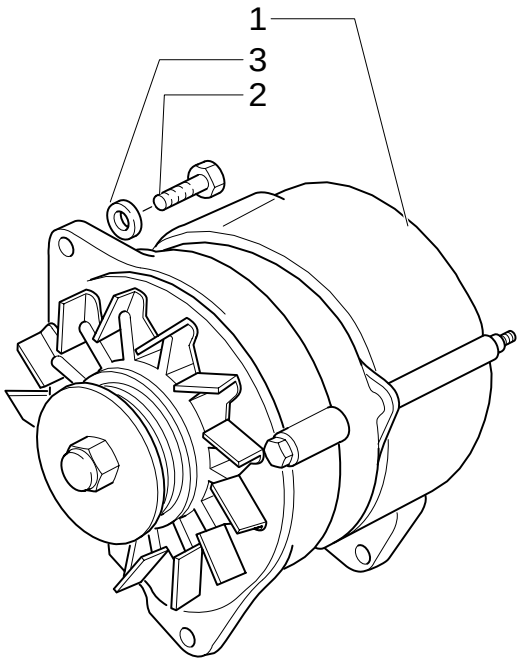

ACCESSORY ENGINE- ALTERNATOR

REF	FN	PART NUMBER	YR/SN	QTY	DESCRIPTION
1		87422777		1	ALTERNATOR
2		47049160		1	SCREW M8 x 20
2		16043621		1	SCREW M8 x 1.25 x 25
3		47048992		1	WASHER

638A	05	p1	11/05

ACCESSORY ENGINE - BRACKET MUFFLER

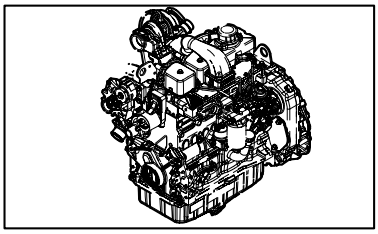

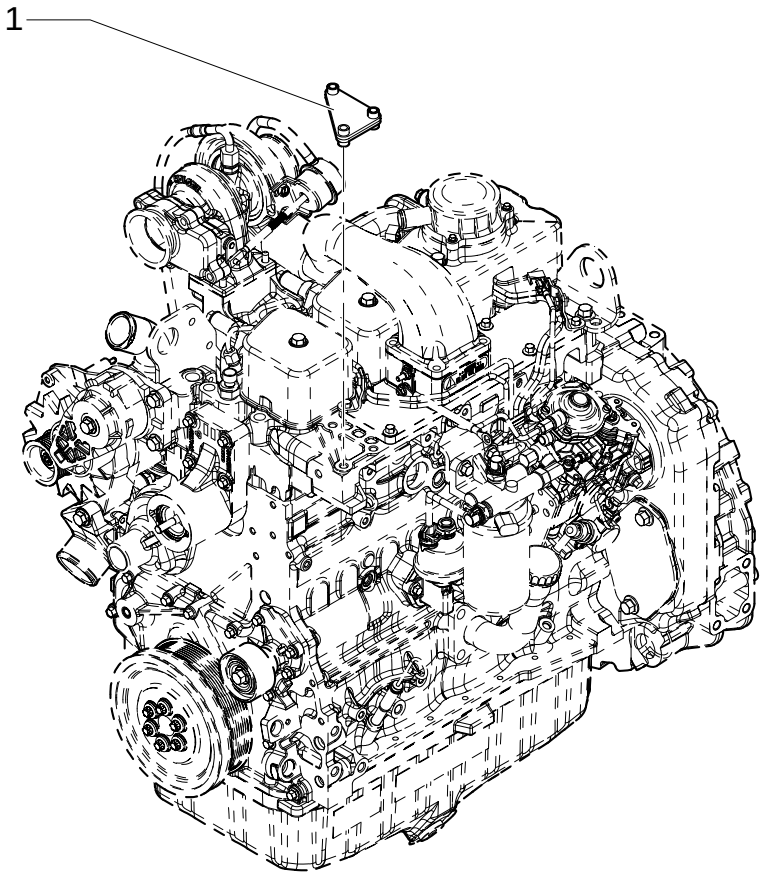

ACCESSORY ENGINE - BRACKET MUFFLER

REF	FN	PART NUMBER	YR/SN	QTY	DESCRIPTION
1		{87437661}		1	

Without Air Conditioner

639A	01	p1	11/05

ACCESSORY ENGINE

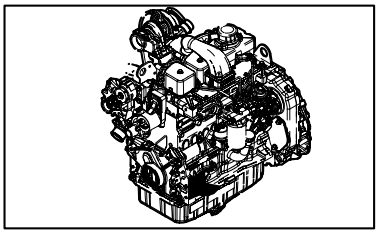

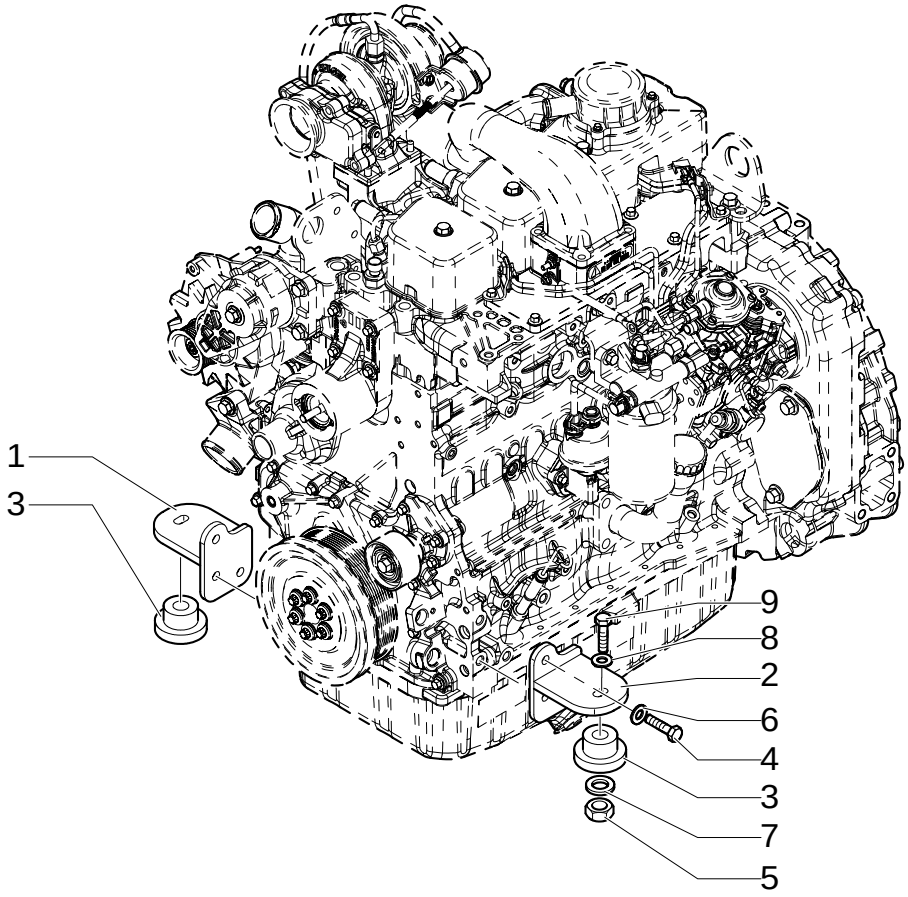

ACCESSORY ENGINE

REF	FN	PART NUMBER	YR/SN	QTY	DESCRIPTION
1		87407275		1	BRACKET
2		87407276		1	BRACKET
3		87416966		2	SUPPORT
4		11112421		6	SCREW M12x30
5		16105011		2	NUT M12x1.25
6		47048976		6	WASHER M12
7		85801585		2	WASHER, SEALING 65mm OD
8		85802618		2	WASHER, SEALING
9		87410647		2	SCREW M12x1.25x90

639A	02	p1	11/05

ACCESSORY ENGINE - VENTILATOR

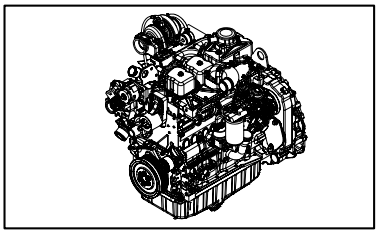

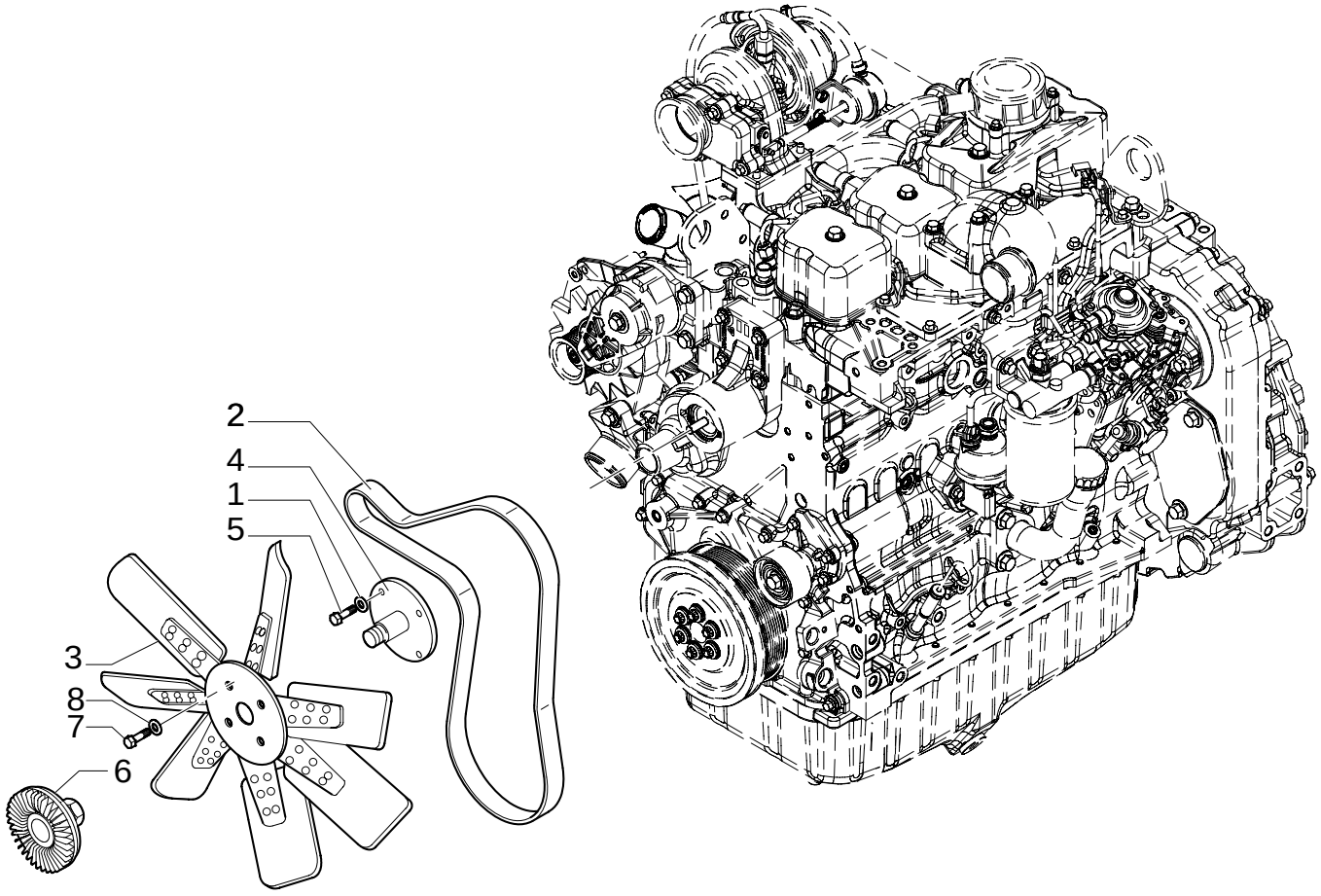

ACCESSORY ENGINE - VENTILATOR

REF	FN	PART NUMBER	YR/SN	QTY	DESCRIPTION
1		47048972		1	WASHER
2		87415774		1	BELT, TRANSMISSION
3		47049943		1	BLOWER
4		47049809		1	ADAPTER
5		47049186		4	BOLT M10x30
6		87340008		1	DRIVE ASSY.
7		47042342		4	SCREW
8		47048992		6	WASHER

With Air Conditioner

ACCESSORY ENGINE - STARTER

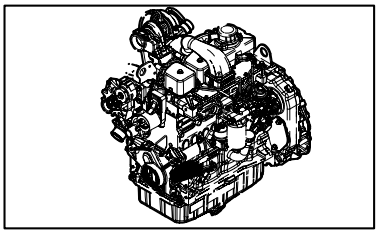

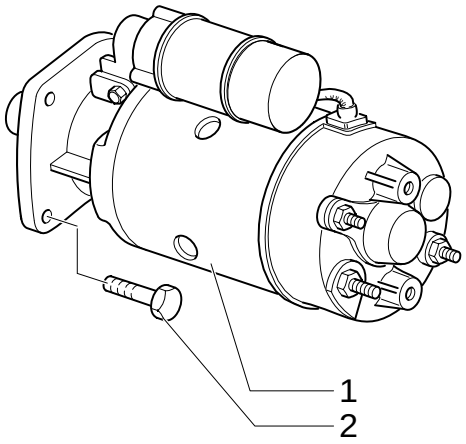

ACCESSORY ENGINE - STARTER

REF	FN	PART NUMBER	YR/SN	QTY	DESCRIPTION
1		86992395		1	MOTOR, STARTER
2		86511845		2	SCREW M10x35

ACCESSORY ENGINE- ALTERNATOR

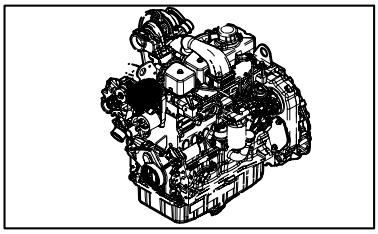

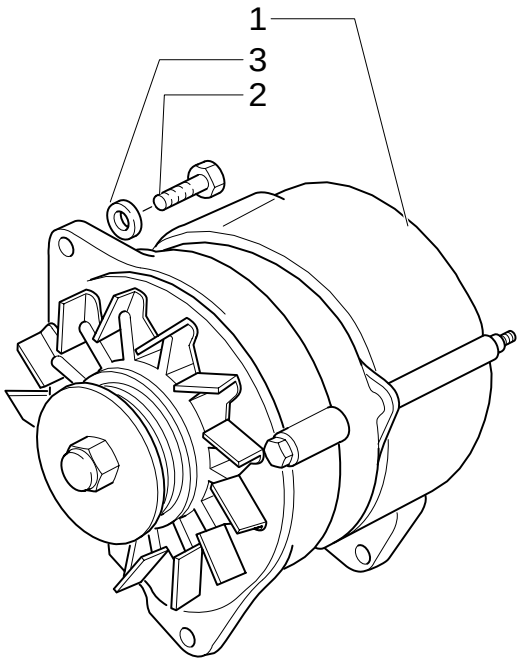

ACCESSORY ENGINE- ALTERNATOR

REF	FN	PART NUMBER	YR/SN	QTY	DESCRIPTION
1		87422777		1	ALTERNATOR
2		11106021		2	SCREW M10x 20
2		16043621		1	SCREW M8x1.25x25
3		47048992		2	WASHER

NOTES

SECTION INDEX

SEC. 02	00	FUEL TANK - MUFFLER - RADIATOR - AIR CLEANER - CHASSIS
1.14.0	01	FUEL TANK & RELATED PARTS
1.15.0	01	MUFFLER & EXTENSIONS
1.15.0	02	MUFFLER & EXTENSIONS
1.17.2	01	EXPANSION TANK
1.19.1	01	AIR CLEANER & HOSES
1.21.5/ 2	01	FRAME (CENTER PIVOT)
175	01	AIR INTAKE CAP & PRE-CLEANER
176	01	AIR INTAKE CAP & PRE-CLEANER
202	01	FRONT WEIGHTS
638	01	RADIATOR
638	02	RADIATOR
639	01	RADIATOR
639	02	RADIATOR
639	03	RADIATOR

FUEL TANK - MUFFLER - RADIATOR - AIR CLEANER - CHASSIS

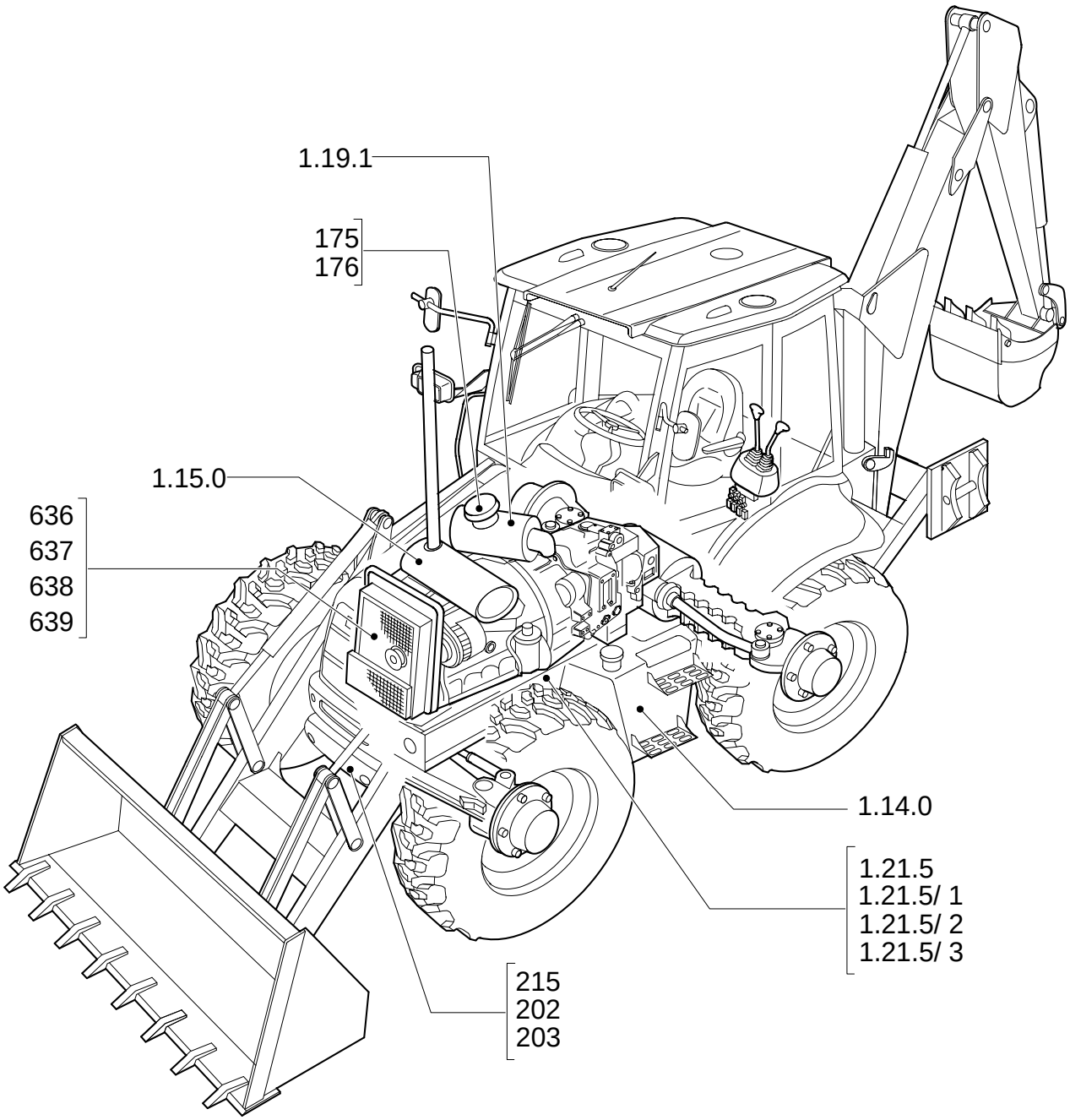

FUEL TANK - MUFFLER - RADIATOR - AIR CLEANER - CHASSIS

REF	FN	PART NUMBER	YR/SN	QTY	DESCRIPTION

1.14.0	01	p1	11/05

FUEL TANK & RELATED PARTS

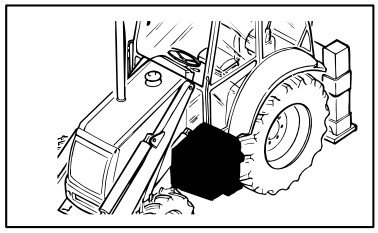

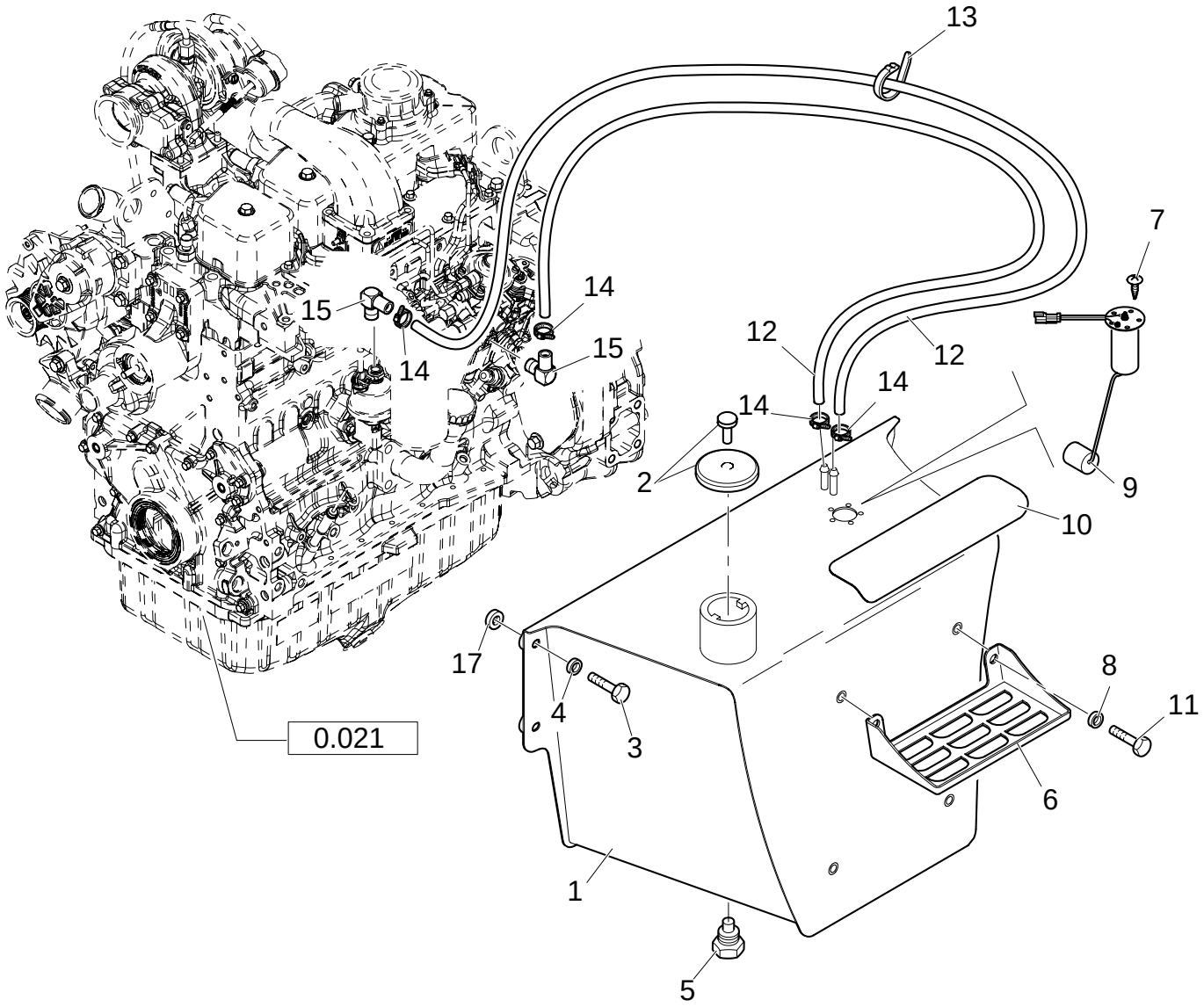

FUEL TANK & RELATED PARTS

REF	FN	PART NUMBER	YR/SN	QTY	DESCRIPTION
1		87355226		1	FUEL TANK
2		85825392		1	CAP Locking
3		15540721		4	SCREW M12x30
4		47048973		4	WASHER
5		47050671		1	PLUG
6		85801218		2	FOOT REST
7		85825158		5	SCREW M5x12
8		47048976		4	WASHER M12
9		86985587		1	SENSOR
10		87404910		1	FOOT BOARD
11		15540721		4	SCREW
12		87403672		2	HOSE, FLEXIBLE
13		14560187		4	COLLAR
14		85824381		4	COLLAR
15		87414560		2	CONNECTOR, HYD.
16		85804675		1	KEY, LOCK
17		87353741		4	SPACER

MUFFLER & EXTENSIONS

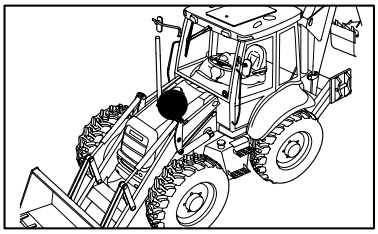

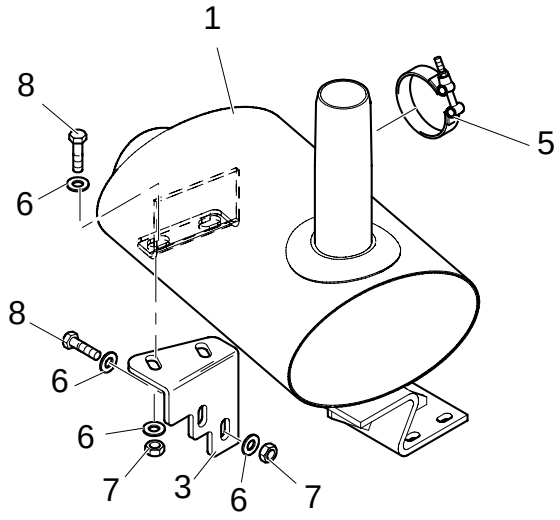

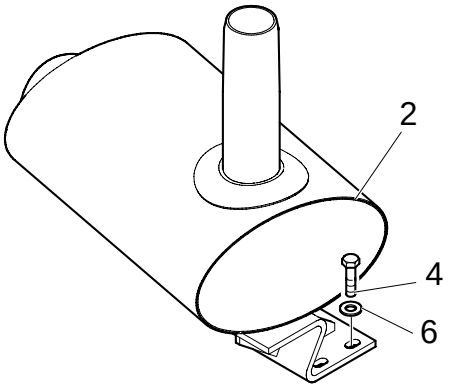

MUFFLER & EXTENSIONS

REF	FN	PART NUMBER	YR/SN	QTY	DESCRIPTION
1	1	87436824		1	MUFFLER
1	2	87347670		1	MUFFLER
2	3, 1	87436825		1	MUFFLER
2	2	87347671		1	MUFFLER
3		87412988		1	BRACKET
4		47049098		3	SCREW M10x60
5		47048898		1	COLLAR
6		47048972		11	WASHER M10
7		47049041		4	NUT M10
8		47049186		4	BOLT M10x30

(1) UP TO S/N XXX
(2) FROM TO S/N XXX
(3) With Spark Arrester

1.15.0	02	p1	11/05

MUFFLER & EXTENSIONS

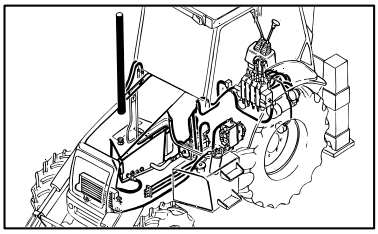

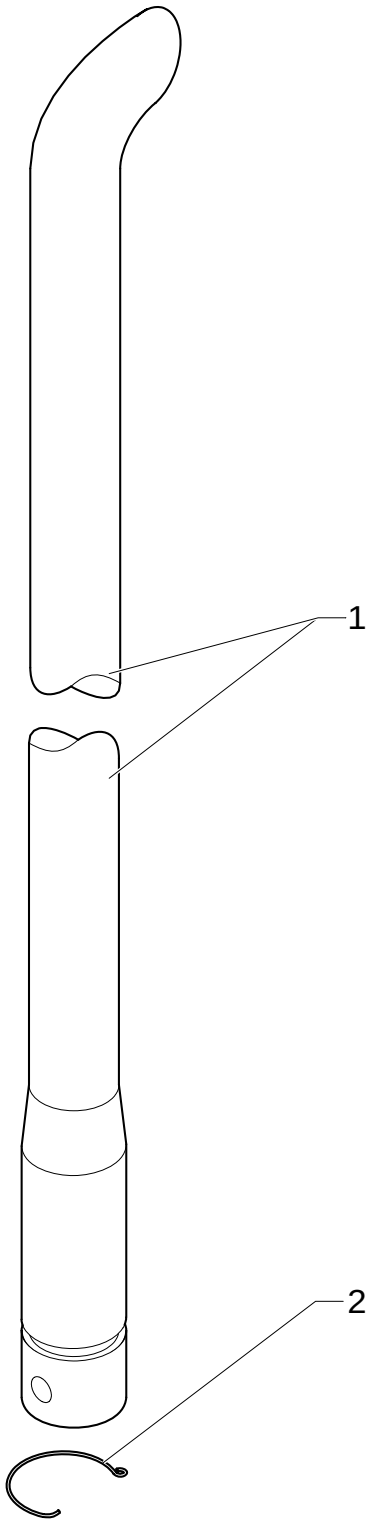

MUFFLER & EXTENSIONS

REF	FN	PART NUMBER	YR/SN	QTY	DESCRIPTION
1		47055750		1	TUBE, RIGID
2		87416643		1	SPRING

1.17.2	01	p1	12/05

EXPANSION TANK

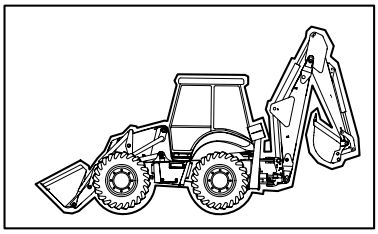

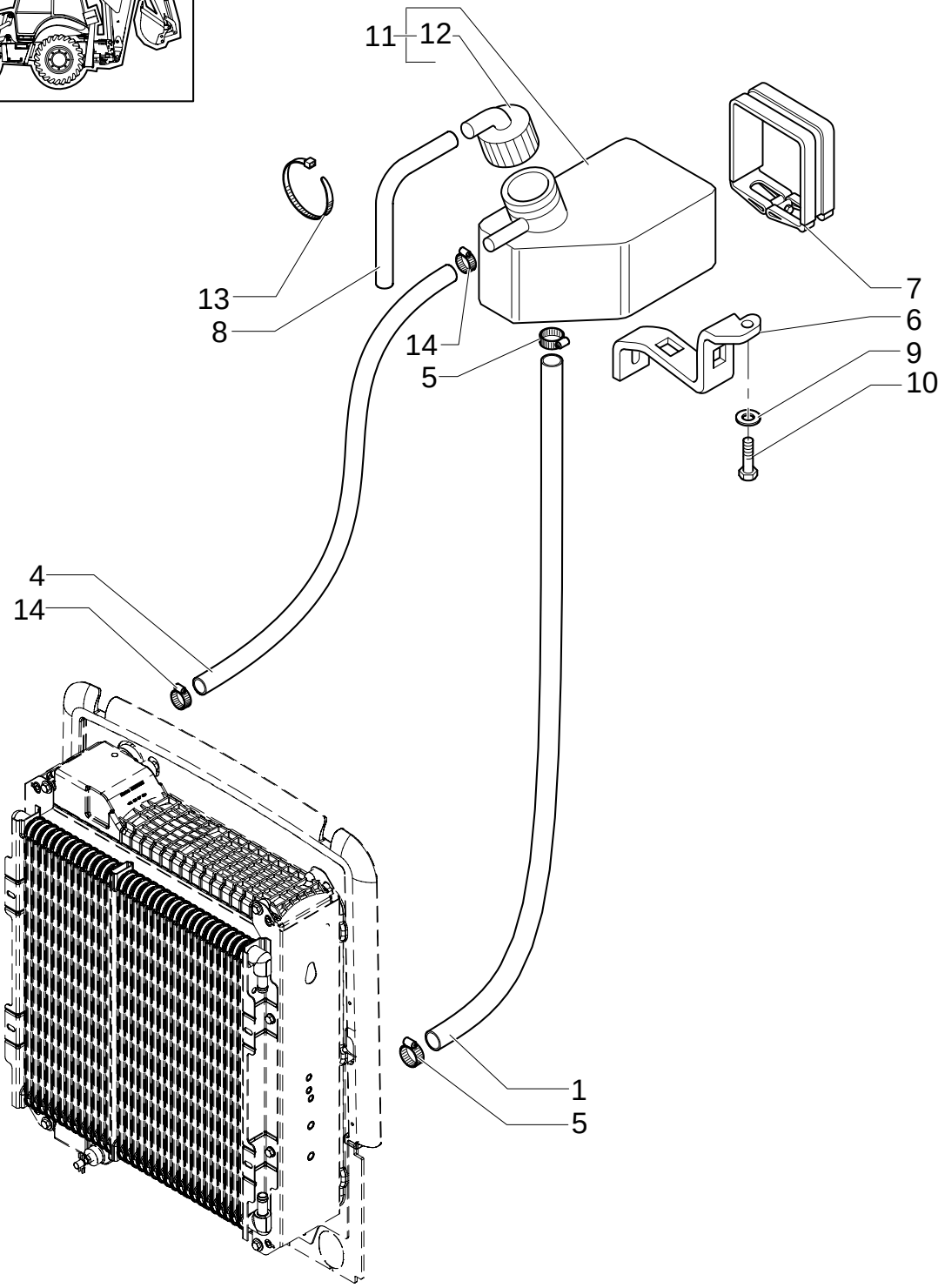

EXPANSION TANK

REF	FN	PART NUMBER	YR/SN	QTY	DESCRIPTION
1		87410546		1	TUBE, RIGID
4		87410547		1	TUBE, RIGID
5		85803013		2	CLAMP
6		85805256		1	PLATE
7		85804302		1	COLLAR
8		85803226		1	HOSE, FLEXIBLE
9		11193979		2	WASHER, LOCK 8x22x1.5
10		16043821		2	SCREW M8x30
11		85802804		1	PAN
12		85803019		1	PLUG
13		14560187		4	COLLAR
14		85824381		2	COLLAR

1.19.1	01	p1	12/05

AIR CLEANER & HOSES

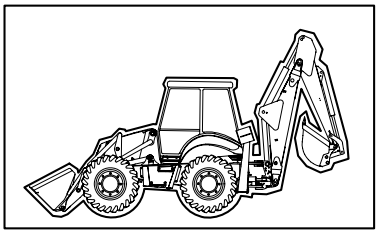

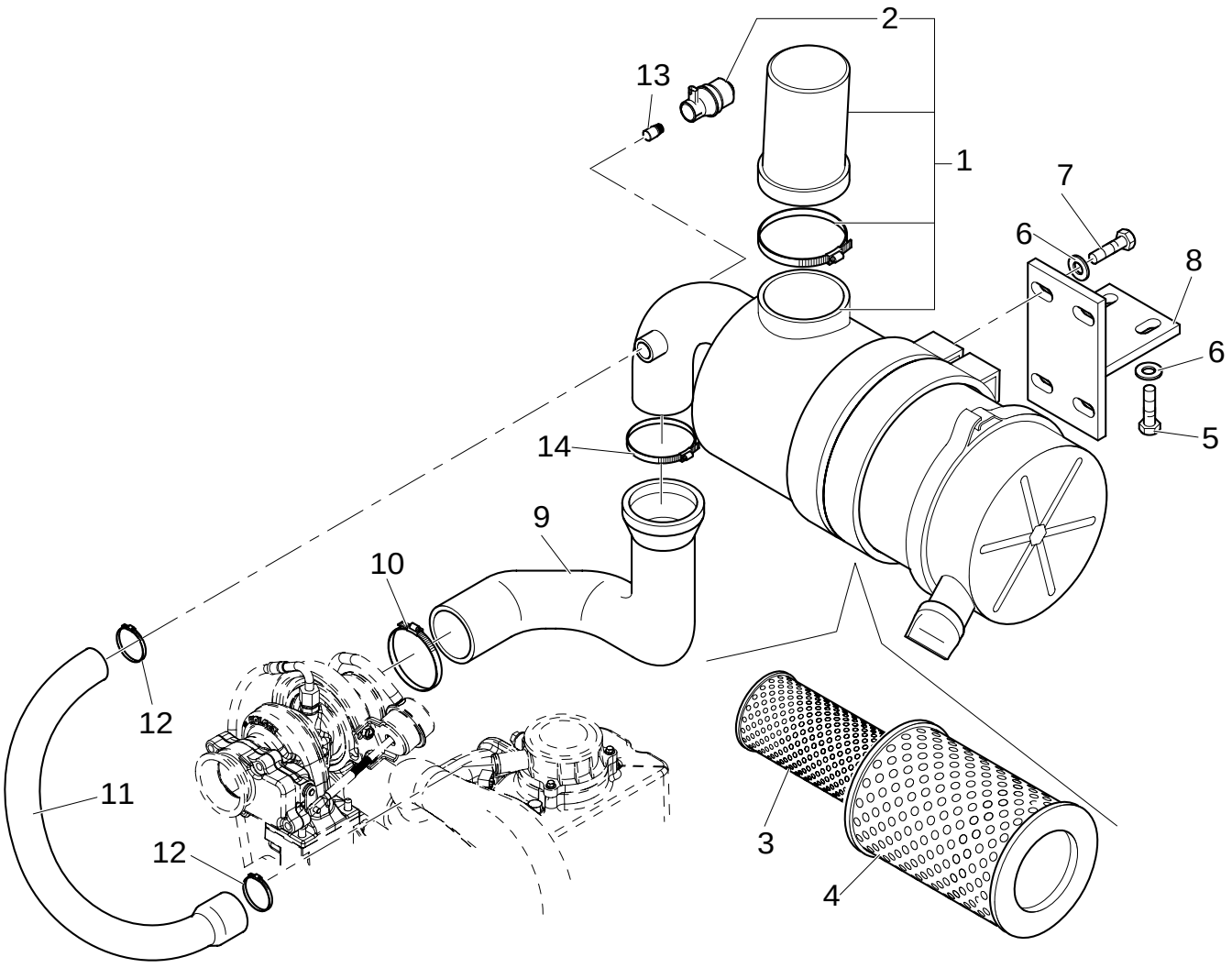

AIR CLEANER & HOSES

REF	FN	PART NUMBER	YR/SN	QTY	DESCRIPTION
1		87442705		1	FILTER, AIR ASSY
2		87442601		1	SWITCH
3	1	87418364		1	FILTER, ELEMENT
4	2	87418365		1	FILTER, ELEMENT
5		16043821		2	SCREW M8x30
6		47048962		6	WASHER 9x16x1.6
7		47049160		4	SCREW M8x20
8		87412754		1	BRACKET
9	3	87442309		1	HOSE
9	4	87335345		1	HOSE
10		85803010		1	CLAMP
11		87442310		1	HOSE, FLEXIBLE
12		85803013		2	CLAMP
13		47048450		1	CONNECTOR, HYD.
14		85802743		1	SEALING RING COLLAR

(1) Primary
(2) Secondary
(3) UP TO S/N XXX
(4) FROM TO S/N XXX

1.21.5/ 2	01	p1	11/05

FRAME (CENTER PIVOT)

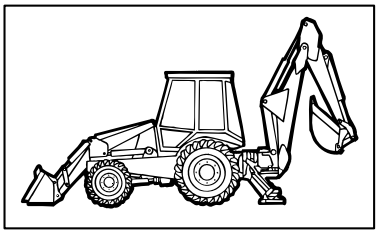

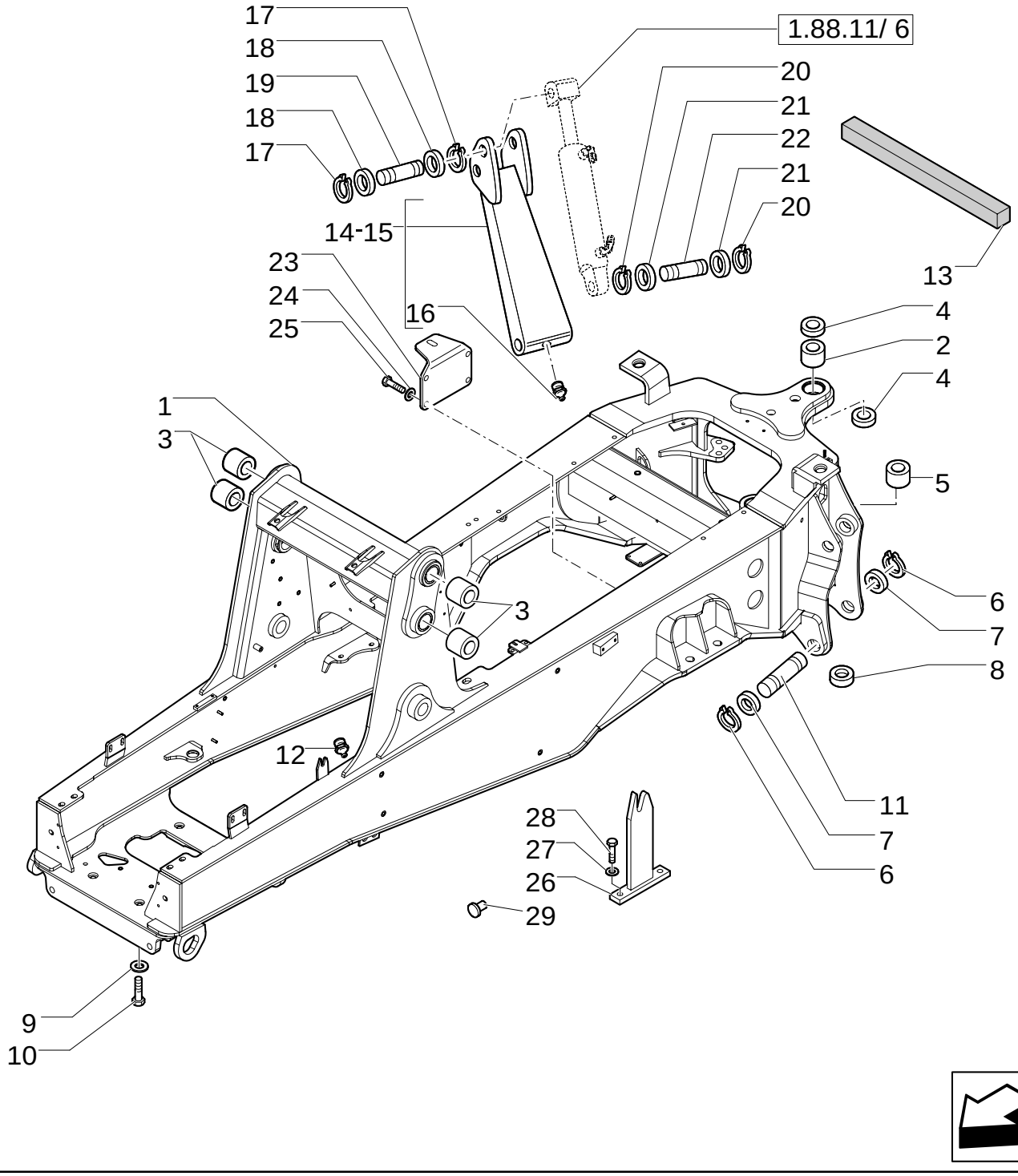

FRAME (CENTER PIVOT)

REF	FN	PART NUMBER	YR/SN	QTY	DESCRIPTION
1	1	87303100		1	FRAME
2		85700728		2	BUSHING
3		85804468		2	BUSHING
4		F2NNC513AA		4	SEAL PROTECTION
5		83910645		2	BUSHING
6		N800272S36M		4	RING
7		290885		4	WASHER
8		85803517		1	BUSHING, RUBBER
9		10520431		6	WASHER 20x35
10		15989134		6	SCREW M20x100
11		D7NNC669A		2	PIN
12		87901S8		1	NIPPLE, LUBE 1/8"-27
13		85802338		1	RUBBER BAND
14	2	{85803960}		1	RH
15	2	{85803959}		1	LH
16		87916S8		1	NIPPLE, LUBE
17		N800270S36M		4	RING
18		D7NNC622A		4	SPACER
19		E8NNC667AA		2	PIN
20		N800271S36M		4	RING
21		D7NNC622C		4	SPACER
22		85801262		1	PIN
23		85804171		1	SUPPORT
24		11198679		4	WASHER, LOCK
25		15540534		4	SCREW M12x35
26		87302151		1	SUPPORT RH
27		11193874		2	WASHER, LOCK 8x16x1.4
28		16043421		2	SCREW M8x1.25x20
29		85808422		2	PLUG

(1) Includes 2, 3, 5
(2) Includes 16

175	01	p1	02/05

AIR INTAKE CAP & PRE-CLEANER

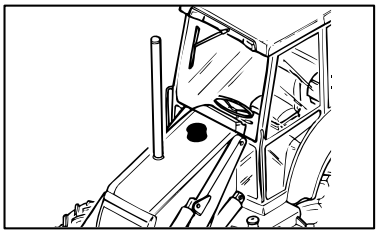

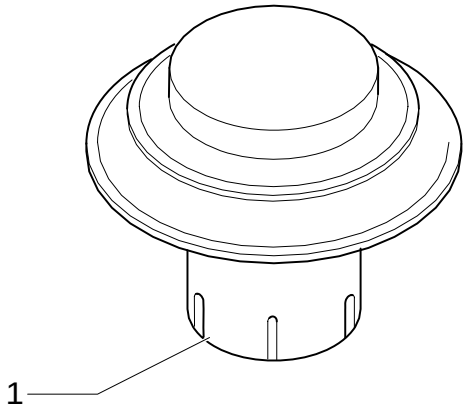

AIR INTAKE CAP & PRE-CLEANER

REF	FN	PART NUMBER	YR/SN	QTY	DESCRIPTION
1		85804602		1	INTAKE, AIR

Standard

AIR INTAKE CAP & PRE-CLEANER

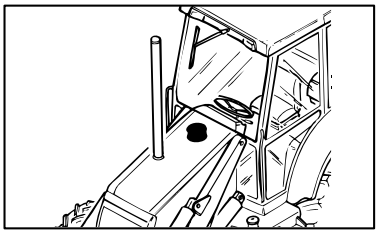

EQUIP. 176

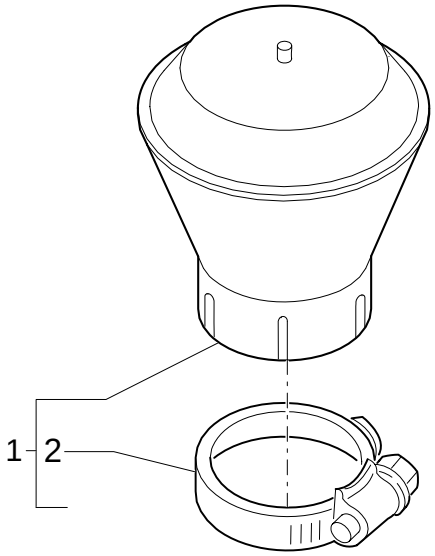

EQUIP. 197

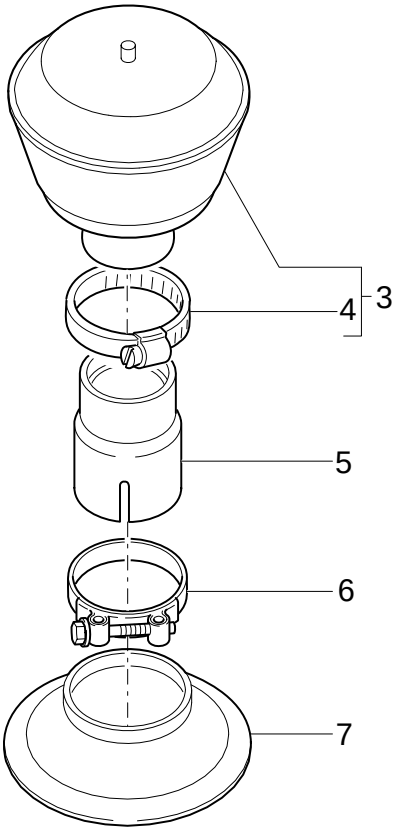

AIR INTAKE CAP & PRE-CLEANER

REF	FN	PART NUMBER	YR/SN	QTY	DESCRIPTION
1		85804347		1	PRE-CLEANER ASSY, AIR
2		85802743		1	SEALING RING COLLAR
3		85804347		1	PRE-CLEANER ASSY, AIR
4		85802743		1	SEALING RING COLLAR
5		85804349		1	EXTENSION
6		85811975		1	COLLAR
7		85802829		1	GUARD

Centrifugal Pre-cleaner

202	01	p1	02/05

FRONT WEIGHTS

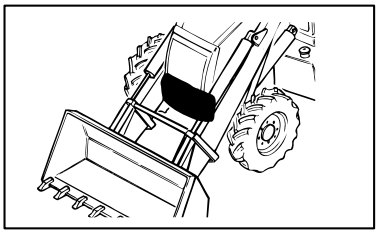

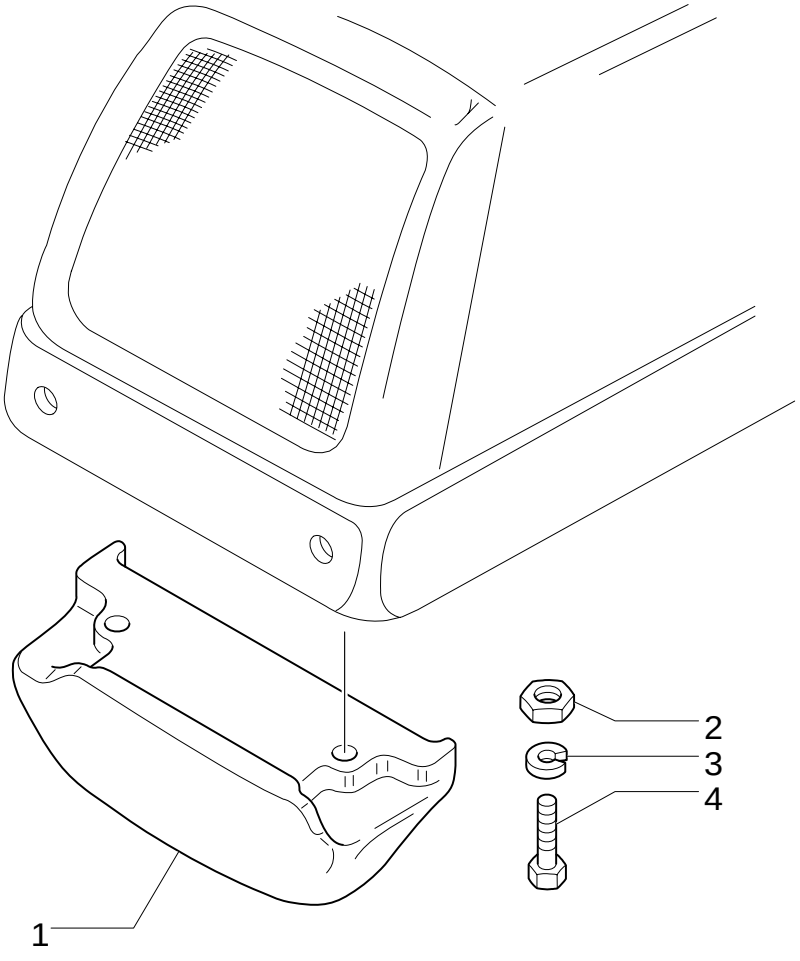

FRONT WEIGHTS

REF	FN	PART NUMBER	YR/SN	QTY	DESCRIPTION
1		85804725		1	WEIGHT
2		12575121		2	NUT M20X1,5
3		10520431		4	WASHER
4		15989334		2	SCREW M20X1,5X110

638	01	p1	12/05

RADIATOR

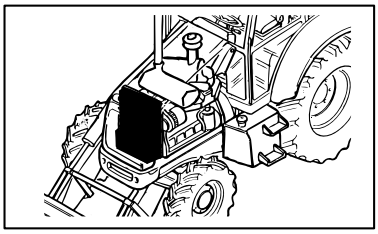

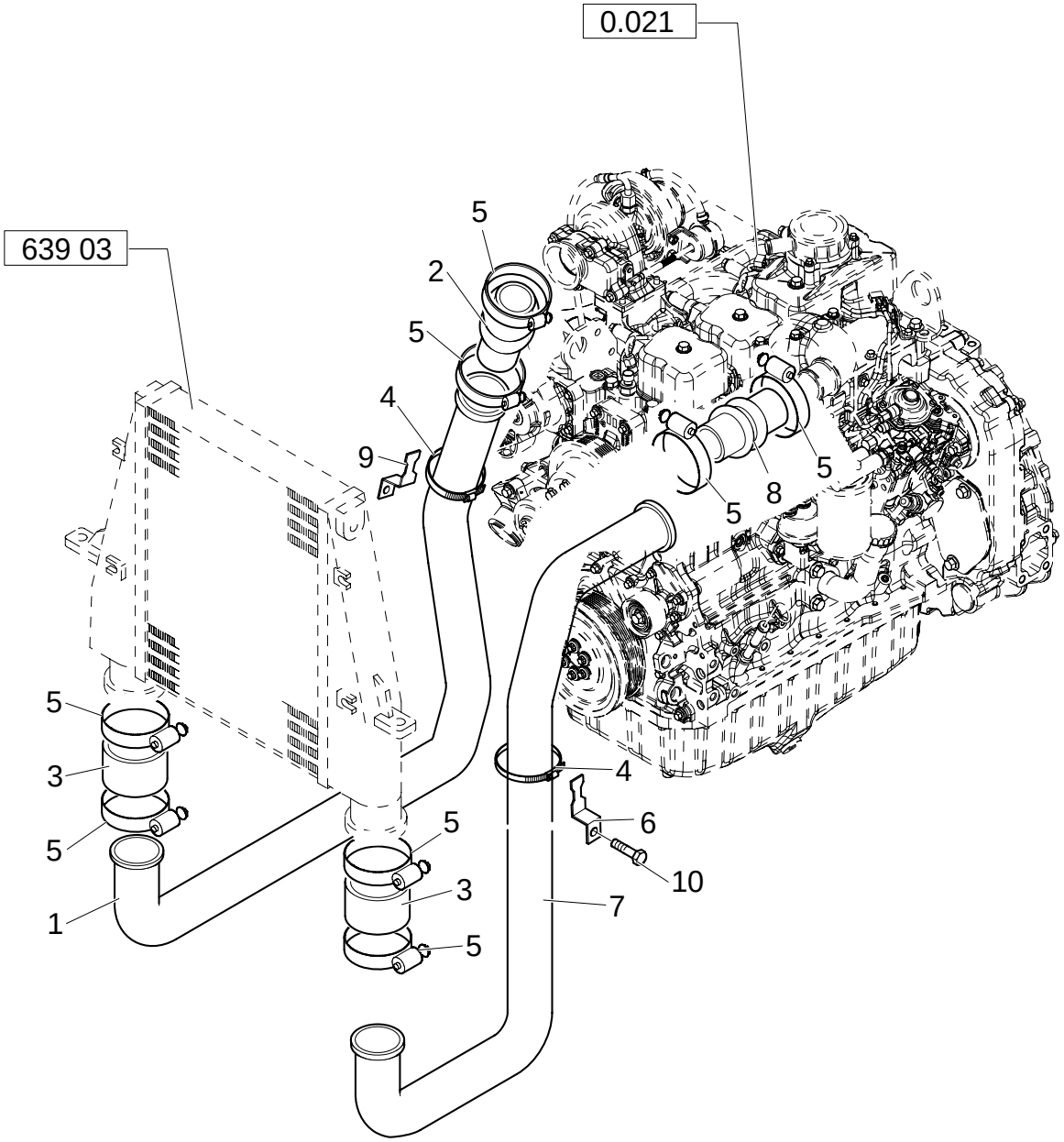

RADIATOR

REF	FN	PART NUMBER	YR/SN	QTY	DESCRIPTION
1		87408660		1	TUBE, RIGID
2		86982962		1	PIPE, VENTILATION M10X40
3		86982960		2	PIPE, VENTILATION
4		86624194		4	CLAMP M10X35
5		87410724		8	CLAMP
6		87415977		1	BRACKET
7		86982964		1	PIPE, VENTILATION
8		86994498		1	TUBE, RIGID
9		86983163		1	BRACKET

Charge Air Cooler/ Without Air Conditioner

638	02	p1	12/05

RADIATOR

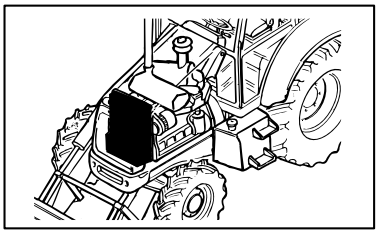

RADIATOR

REF	FN	PART NUMBER	YR/SN	QTY	DESCRIPTION
1		87410100		1	COOLER ASSY.
2		14496601		4	WASHER 10x21
3		10979221		4	SCREW M10x16
4		87302284		1	BRACKET
5		87302283		1	BRACKET
6		47048440		4	WASHER
7		47049187		4	SCREW M10x35
8		47048759		2	RING
9		47048646		2	SPACER
10		47049088		2	SCREW M10x50
11		47048963		4	WASHER 11x20x2.0mm
12		47048668		2	GASKET
13		87404427		2	BRACKET
14		47049041		2	NUT

Charger Air Cooler/ Without Air Conditioner

639	01	p1	11/05

RADIATOR

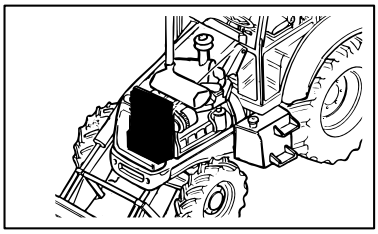

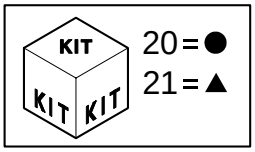

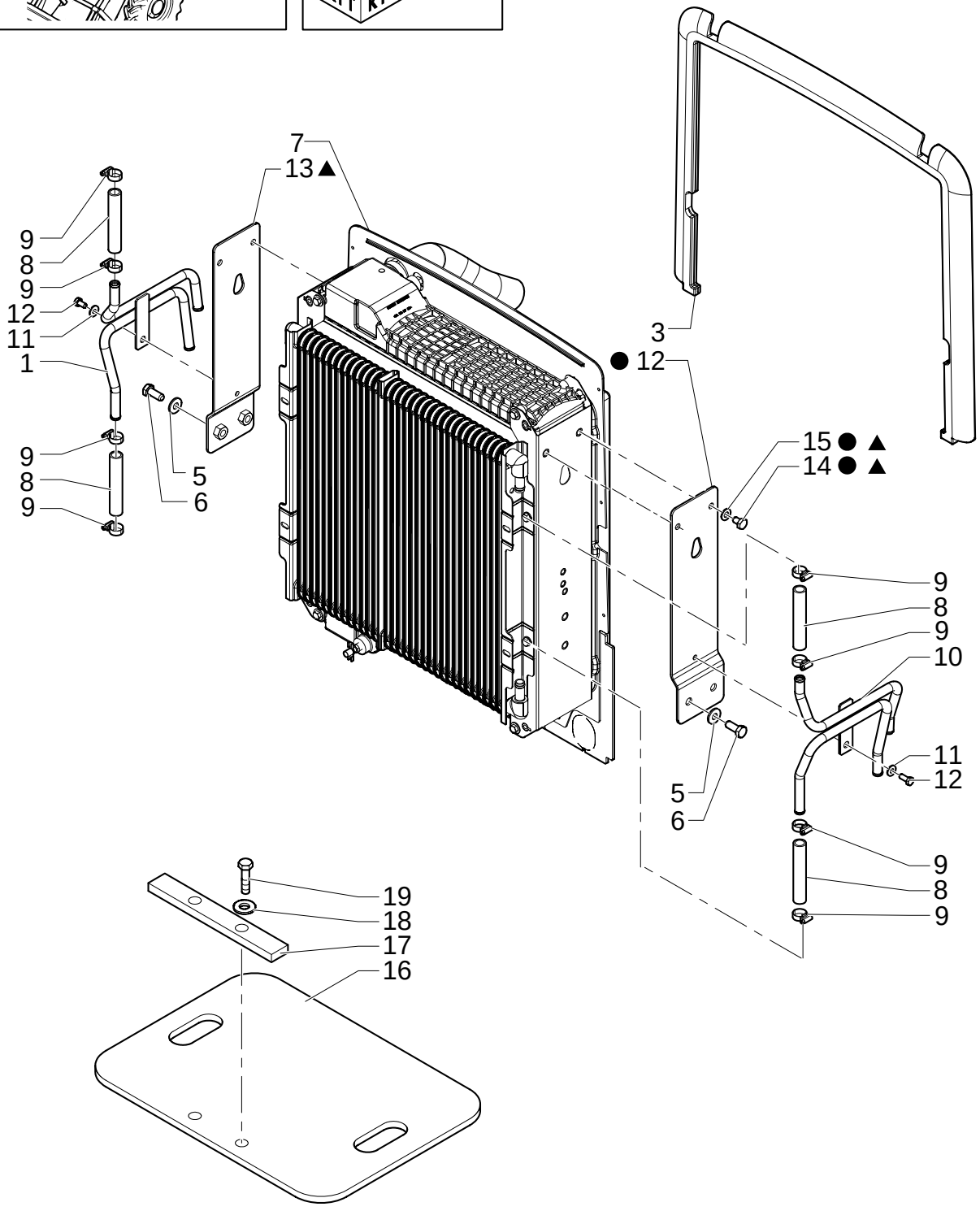

RADIATOR

REF	FN	PART NUMBER	YR/SN	QTY	DESCRIPTION
1		87302280		1	TUBE, HYD
2		16043221		2	SCREW M8x16
3		87303120		1	GASKET
5		12646901		4	WASHER 12x28x3
6		11112421		4	SCREW M12x30
7		47048646		1	SPACER
8		87302508		4	HOSE, FLEXIBLE
9		87314076		8	COLLAR
10		87302279		1	TUBE, HYD
11		12646701		2	WASHER 8x20x2
12		85828168		1	BRACKET
13		87302922		1	BRACKET
14		87306887		4	SCREW M10x6
15		87306886		4	WASHER
16		85827830		1	SEAL, RUBBER
17		85827831		1	PLATE
18		11193879		2	WASHER, LOCK 8x16x1.4
19		16043821		2	SCREW M8x30
20		{87345950}		1	
21		{87345951}		1	

Without Air Conditioner

RADIATOR

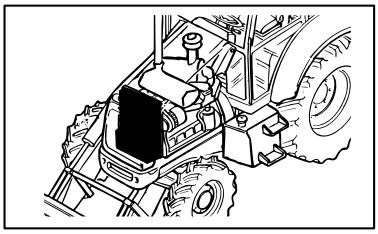

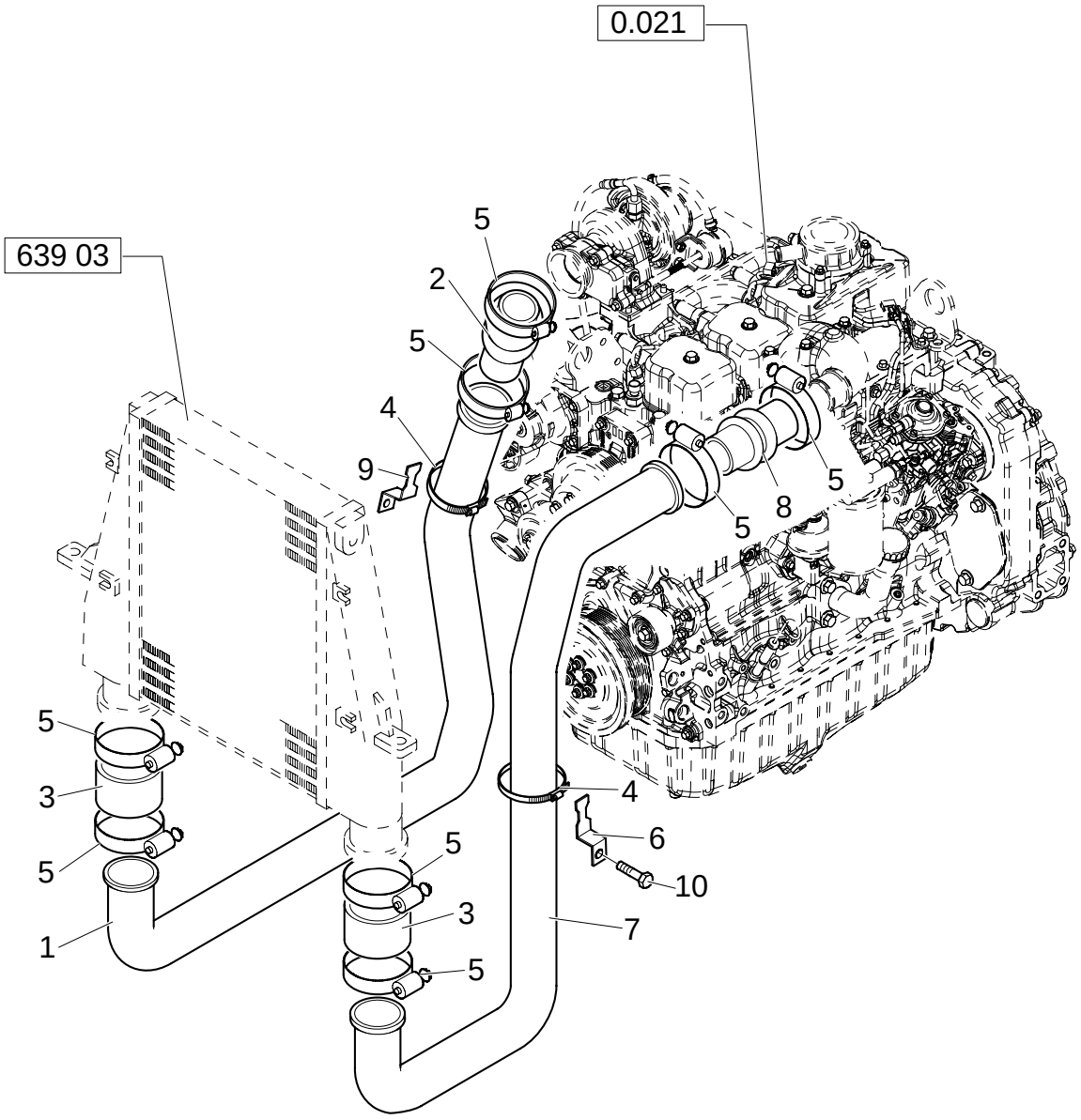

RADIATOR

REF	FN	PART NUMBER	YR/SN	QTY	DESCRIPTION
1		87408660		1	TUBE, RIGID
2		86982962		1	PIPE, VENTILATION M10X40
3		86982960		2	PIPE, VENTILATION
4		86624194		4	CLAMP M10X35
5		87410724		8	CLAMP
6		87415977		1	BRACKET
7		86982964		1	PIPE, VENTILATION
8		86994498		1	TUBE, RIGID
9		86983163		1	BRACKET

Charge Air Cooler/ Without Air Conditioner

639	03	p1	12/05

RADIATOR

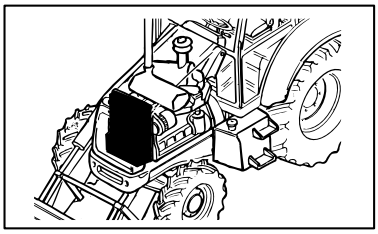

RADIATOR

REF	FN	PART NUMBER	YR/SN	QTY	DESCRIPTION
1		87410100		1	COOLER ASSY.
2		14496601		4	WASHER 10x21
3		10979221		4	SCREW M10x16
4		87302284		1	BRACKET
5		87302283		1	BRACKET
6		47048440		4	WASHER
7		47049187		4	SCREW M10x35
8		47048759		2	RING
9		47048646		2	SPACER
10		47049088		2	SCREW M10x50
11		47048963		4	WASHER 11x20x2.0mm
12		47048668		2	GASKET
13		87404427		2	BRACKET
14		47049041		2	NUT

Charger Air Cooler/ Without Air Conditioner

NOTES

SECTION INDEX

SEC. 03	00	TRANSMISSION 1/2
SEC. 03	01	TRANSMISSION 2/2
1.28.0	01	GEARING SPEED GEAR
1.28.0/ A	01	TRANSMISSIONGEARING SPEED GEAR (2WD POWER-SHUTTLE)
1.28.0/ A	02	TRANSMISSIONGEARING SPEED GEAR (2WD POWER-SHUTTLE)
1.28.0/ A	03	TRANSMISSIONGEARING SPEED GEAR (2WD POWER-SHUTTLE)
1.28.0/ A	04	TRANSMISSIONGEARING SPEED GEAR (2WD POWER-SHUTTLE)
1.28.0/ A	05	TRANSMISSIONGEARING SPEED GEAR (2WD POWER-SHUTTLE)
1.28.0/ A	06	TRANSMISSIONGEARING SPEED GEAR (2WD POWER-SHUTTLE)
1.28.0/ A	07	TRANSMISSIONGEARING SPEED GEAR (2WD POWER-SHUTTLE)
1.28.0/ C	01	TRANSMISSIONGEARING SPEED GEAR (4WD POWER-SHIFT)
1.28.0/ C	02	TRANSMISSIONGEARING SPEED GEAR (4WD POWER-SHIFT)
1.28.0/ C	03	TRANSMISSIONGEARING SPEED GEAR (4WD POWER-SHIFT)
1.28.0/ C	04	TRANSMISSIONGEARING SPEED GEAR (4WD POWER-SHIFT)
1.28.0/ C	05	TRANSMISSIONGEARING SPEED GEAR (4WD POWER-SHIFT)
1.28.0/ C	06	TRANSMISSIONGEARING SPEED GEAR (4WD POWER-SHIFT)
1.28.0/ C	07	TRANSMISSIONGEARING SPEED GEAR (4WD POWER-SHIFT)
1.28.0/ C	08	TRANSMISSIONGEARING SPEED GEAR (4WD POWER-SHIFT)
1.28.0/ C	09	TRANSMISSIONGEARING SPEED GEAR (4WD POWER-SHIFT)
1.28.0/ C	10	TRANSMISSIONGEARING SPEED GEAR (4WD POWER-SHIFT)
1.28.0/ C	11A	TRANSMISSION (4WD, 4WS, POWER-SHIFT)
1.28.0/ C	12	TRANSMISSIONGEARING SPEED GEAR (4WD POWER-SHIFT)
1.28.0/ C	13A	TRANSMISSION (4WD, 4WS POWER-SHIFT)
1.28.0/ C	14A	TRANSMISSION (4WD, 4WS POWER-SHIFT)
1.28.0/ C	15	TRANSMISSIONGEARING SPEED GEAR (4WD POWER-SHIFT)
1.28.0/ C	16	TRANSMISSIONGEARING SPEED GEAR (4WD POWER-SHIFT)
1.28.6/ 1	01	GEAR FILTER PIPES (POWER-SHIFT)
1.38.1/ 1	01	FRONT & REAR DRIVESHAFT (POWER-SHIFT)
1.39.8	01	TRANSMISSION OIL COOLING PIPES (POWER-SHUTTLE)
1.39.8/ 1	01	TRANSMISSION OIL COOLING PIPES (POWER-SHIFT)

TRANSMISSION 1/2

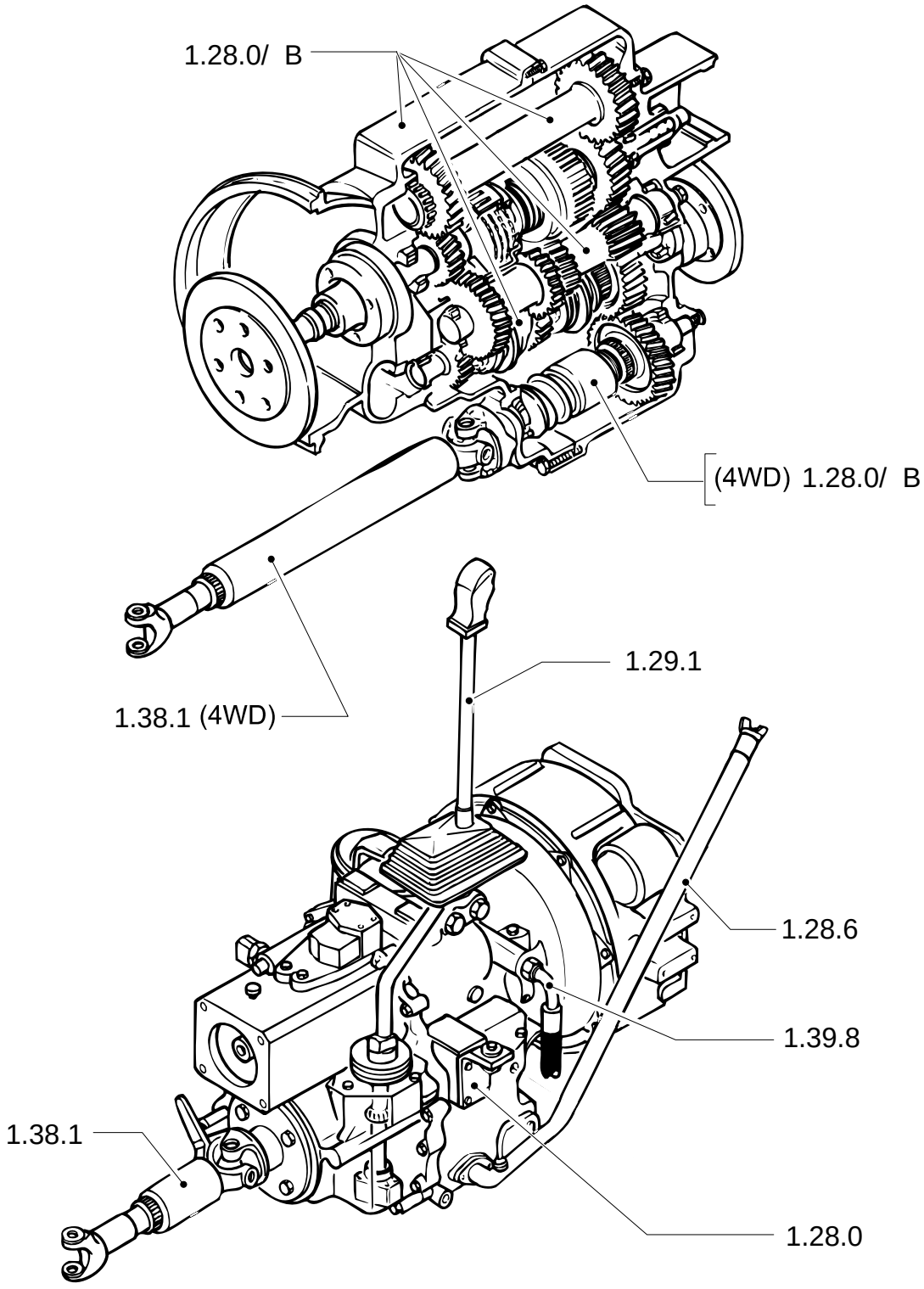

TRANSMISSION 1/2

REF	FN	PART NUMBER	YR/SN	QTY	DESCRIPTION

TRANSMISSION 2/2

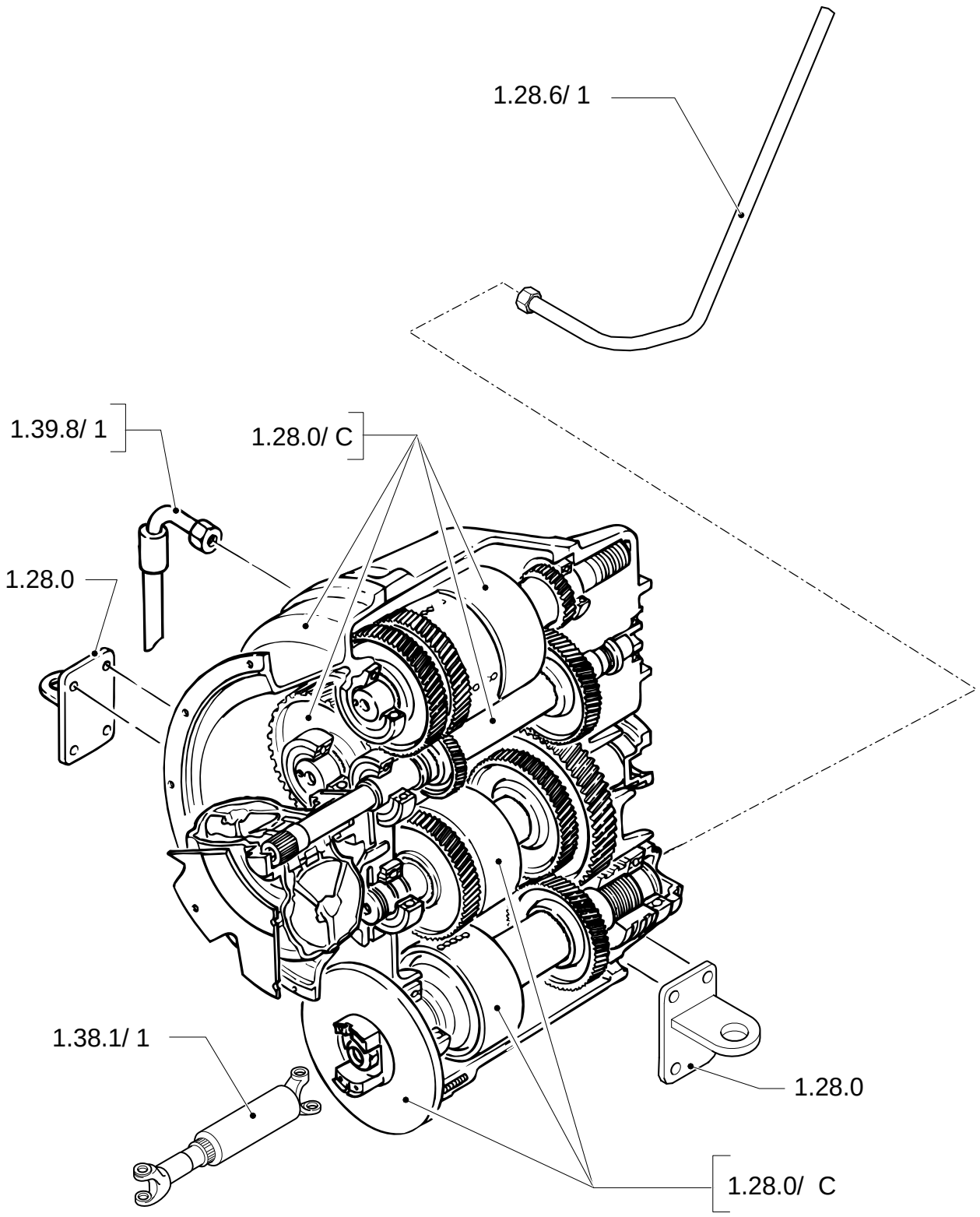

TRANSMISSION 2/2

REF	FN	PART NUMBER	YR/SN	QTY	DESCRIPTION

GEARING SPEED GEAR

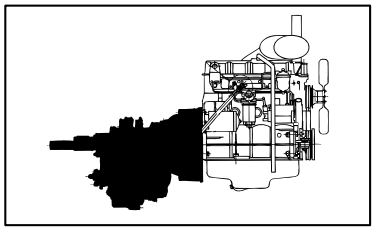

KIT KIT KIT = 16

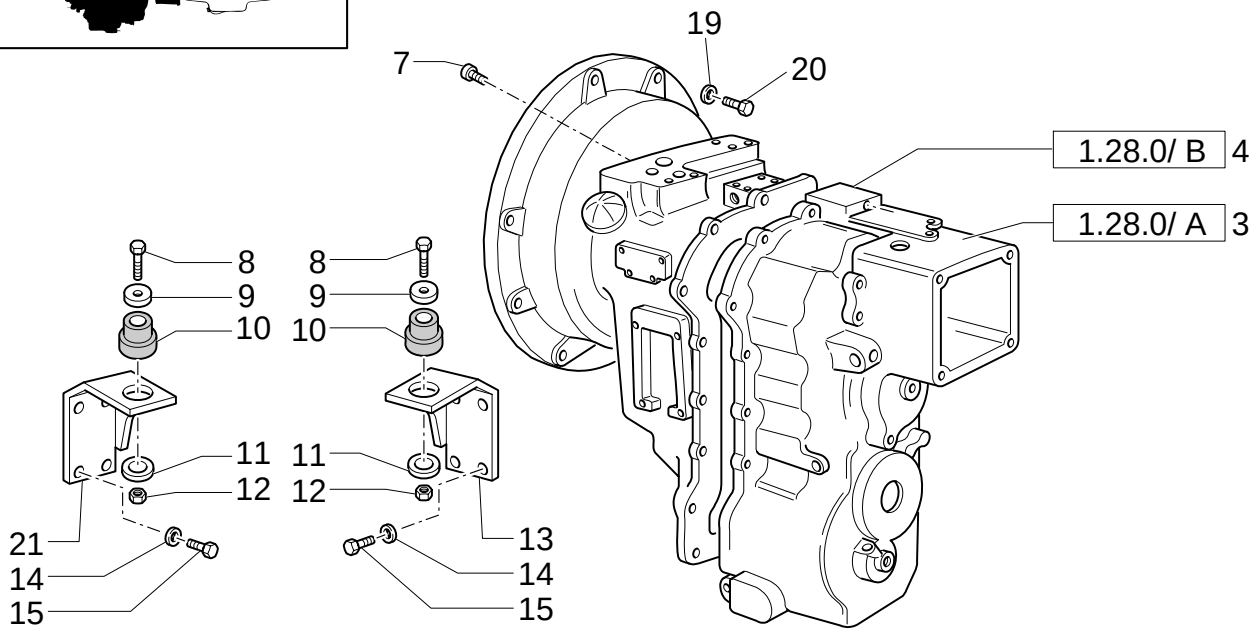

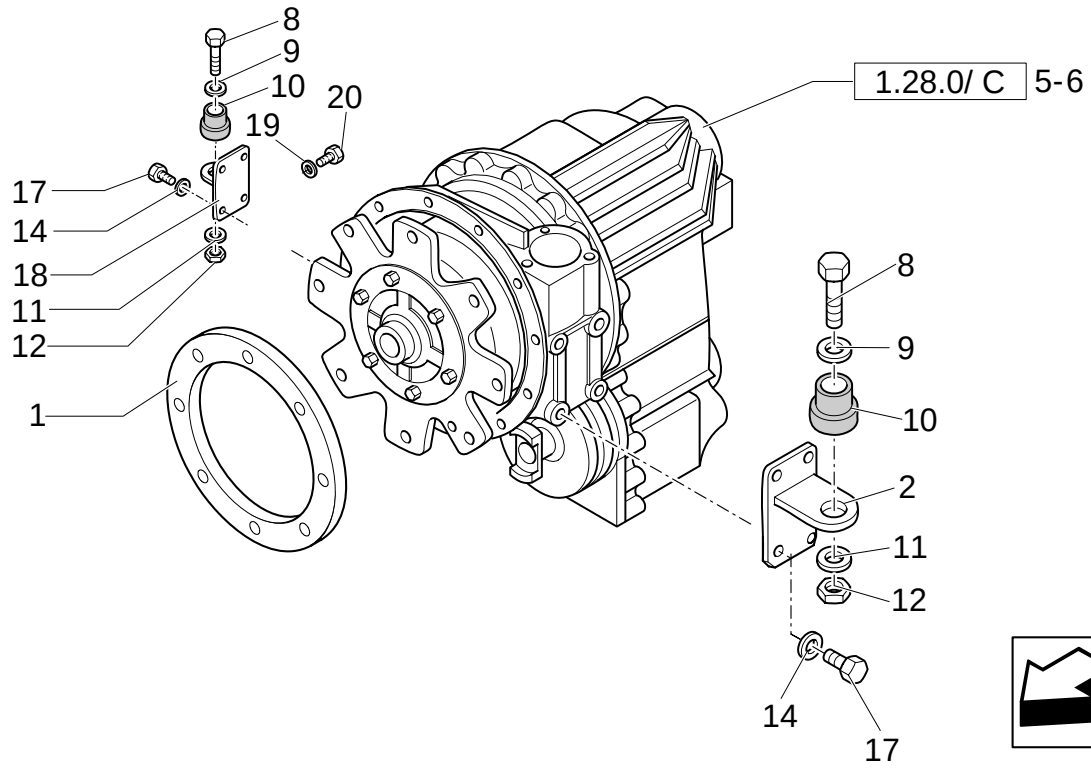

GEARING SPEED GEAR

REF	FN	PART NUMBER	YR/SN	QTY	DESCRIPTION
1		87407758		1	RING
2		85804276		1	SUPPORT LH
3	1	86990712		1	TRANSMISSION
4	2	86990713		1	TRANSMISSION
5	3	86990714		1	TRANSMISSION
6	4	86990715		1	TRANSMISSION
7		88352		8	SCREW 3/8"-16x2 1/2",G5
8		87410647		2	SCREW M12x1.25x90
9		85801585		2	WASHER, SEALING 65mm OD
10		87416967		2	SUPPORT
11		85802618		2	WASHER, SEALING
12		16105011		2	NUT M12x1.75x1.25
13		87405629		1	SUPPORT LH
13		87405628		1	SUPPORT RH
14		11198679		8	WASHER, LOCK
15		11112634		8	SCREW M12x35
16	5	85806019		AR	KIT O-Ring, for under Directional Control Valve
17		11112434		8	SCREW M12x30
18		85804275		1	SUPPORT RH
19		47049372		12	WASHER
20		11106434		12	SCREW M10x30

(1) Only for 2WD, Power Shuttle
(2) Only for 4WD, Power Shuttle
(3) Only for LB110.B, B110 4WD, Power Shift
(4) Only for LB115.B, B115 4WD, Power Shift
(5) Kit o-ring for directional control valve

TRANSMISSIONGEARING SPEED GEAR (2WD POWER-SHUTTLE)

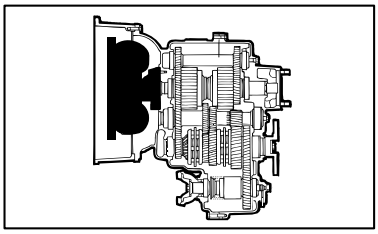

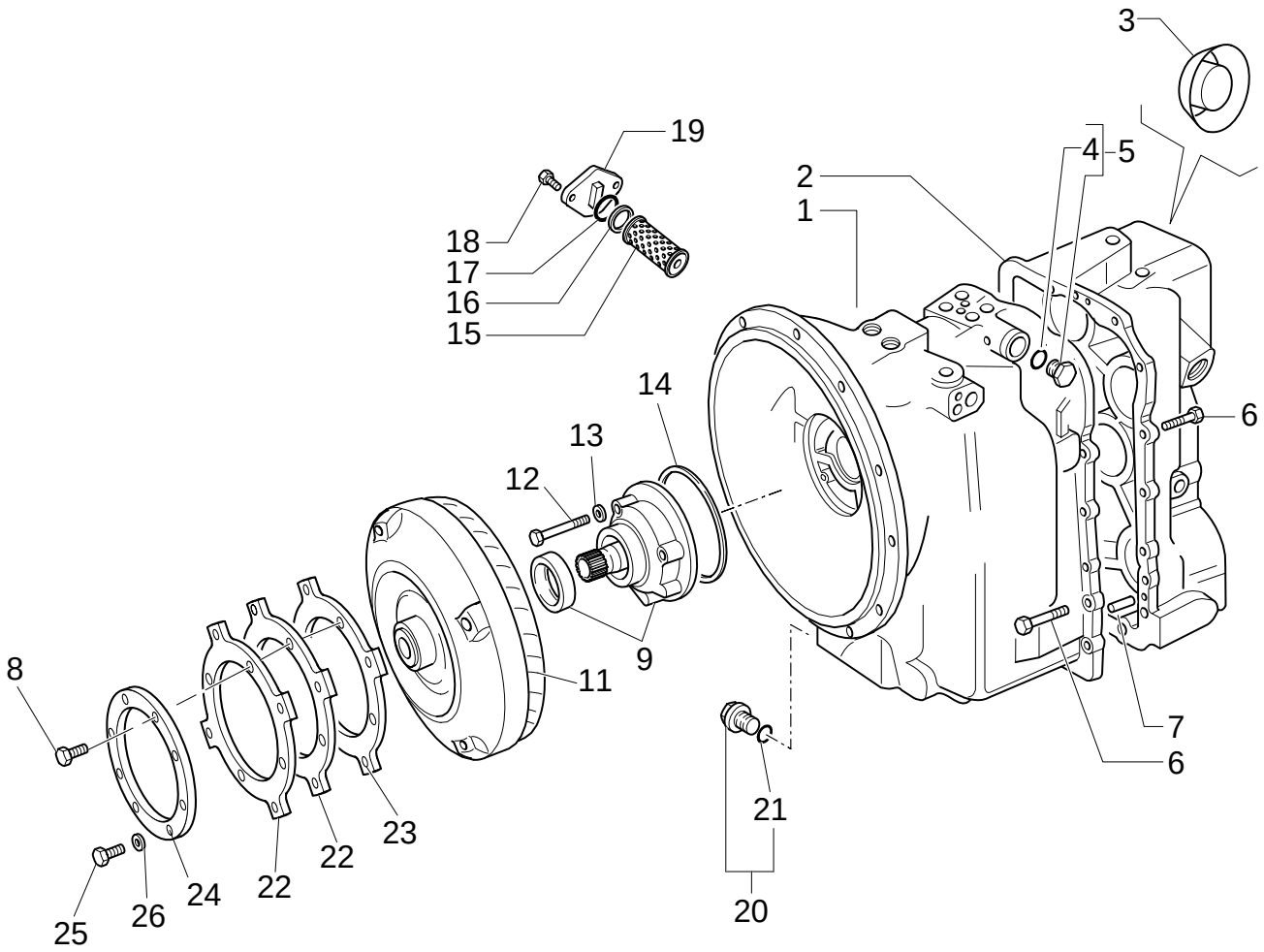

TRANSMISSIONGEARING SPEED GEAR (2WD POWER-SHUTTLE)

REF	FN	PART NUMBER	YR/SN	QTY	DESCRIPTION
1		85827769		1	TRANSMISSION HOUSING
2		85827770		1	TRANSMISSION HOUSING
3		85812096		1	PLUG
4		9968218		1	O-RING 9/16"
5	1	9968219		1	PLUG 9/16" UNF, 2
6		85817164		17	SCREW
7		9968356		2	DOWEL
8		87019767		4	SCREW M10x1.25x90
9	2	9968311		1	PUMP, ENGINE OIL M10x30
10		9968312		1	GASKET
11		87400114		1	TORQUE CONVERTER
12		85817163		7	SCREW
13		85817001		4	WASHER
14		9968313		1	GASKET
15		9968359		1	FILTER
16		9968361		1	WASHER
17		9968360		1	O-RING
18		85817169		2	SCREW
19		9968362		1	COVER
20	3	9968339		1	PLUG
21		9968365		1	O-RING
22		86993546		1	PLATE, RETAINING
23		87406934		1	PLATE, RETAINING
24		87409201		1	PLATE, RETAINING
25		11106021		4	SCREW M10x20
26		47049372		4	WASHER

(1) Includes 4
(2) Includes 10
(3) Includes 21

TRANSMISSIONGEARING SPEED GEAR (2WD POWER-SHUTTLE)

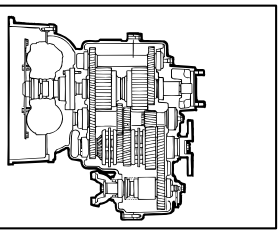

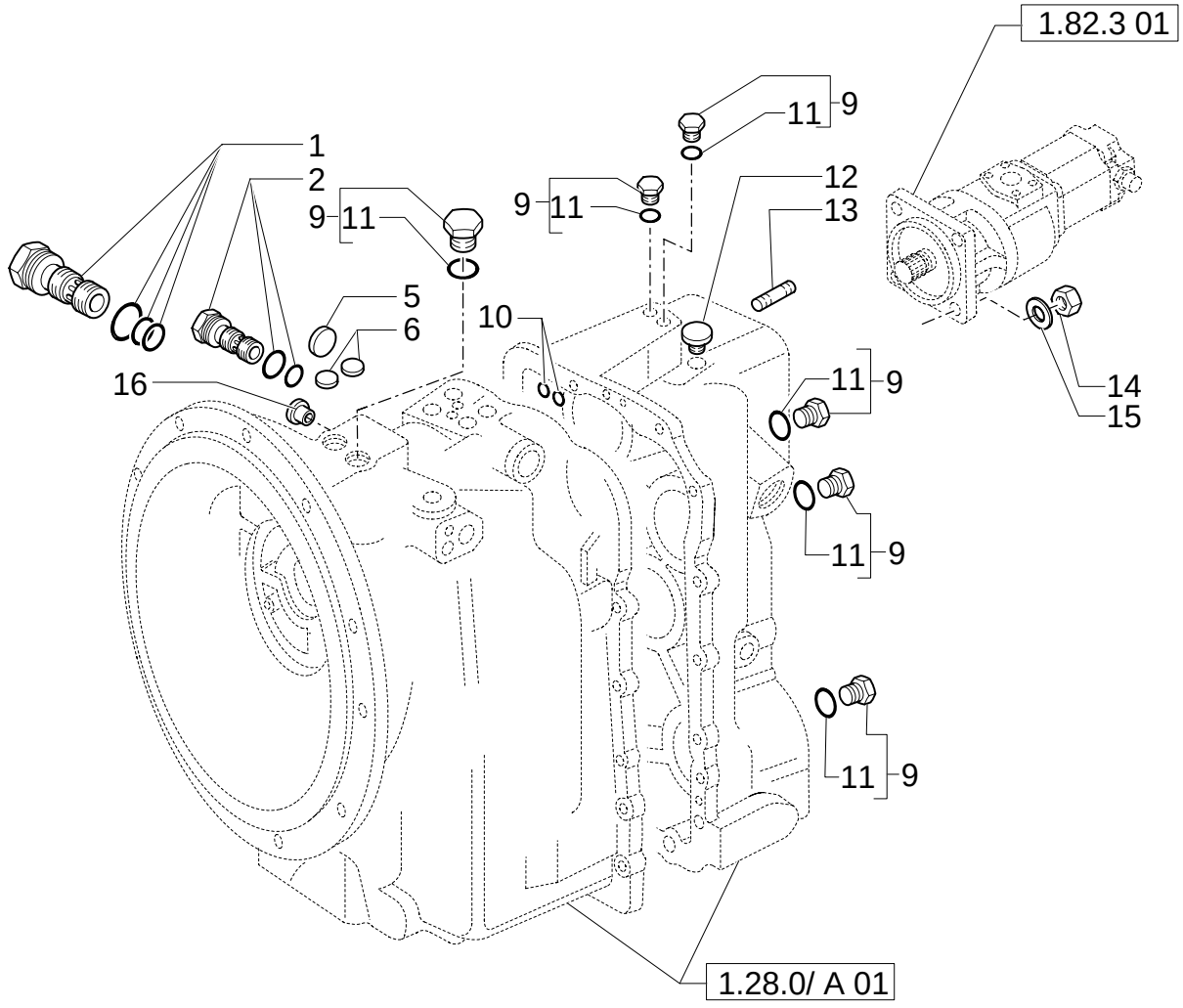

TRANSMISSIONGEARING SPEED GEAR (2WD POWER-SHUTTLE)

REF	FN	PART NUMBER	YR/SN	QTY	DESCRIPTION
1		9968350		1	VALVE, HYDRAULIC HYDR.PRESSURE REGULATOR
2		9968334		1	VALVE, HYDRAULIC HYDR.CONVERTER RELIEF
5		9968371		1	PLUG Expansion, 1"
6		9968333		2	PLUG Tyers, .5"
9		9968219		AR	PLUG 9/16" UNF
10		9968368		3	O-RING .512" ID x .094" Thk
11		9968218		AR	O-RING 9/16"
12		9968364		1	BREATHER
13		85802683		4	STUD 1/2"
14		85802684		4	NUT
15		11190779		4	WASHER, LOCK
16		85812094		2	SHIELD

TRANSMISSIONGEARING SPEED GEAR (2WD POWER-SHUTTLE)

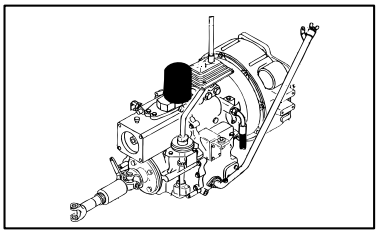

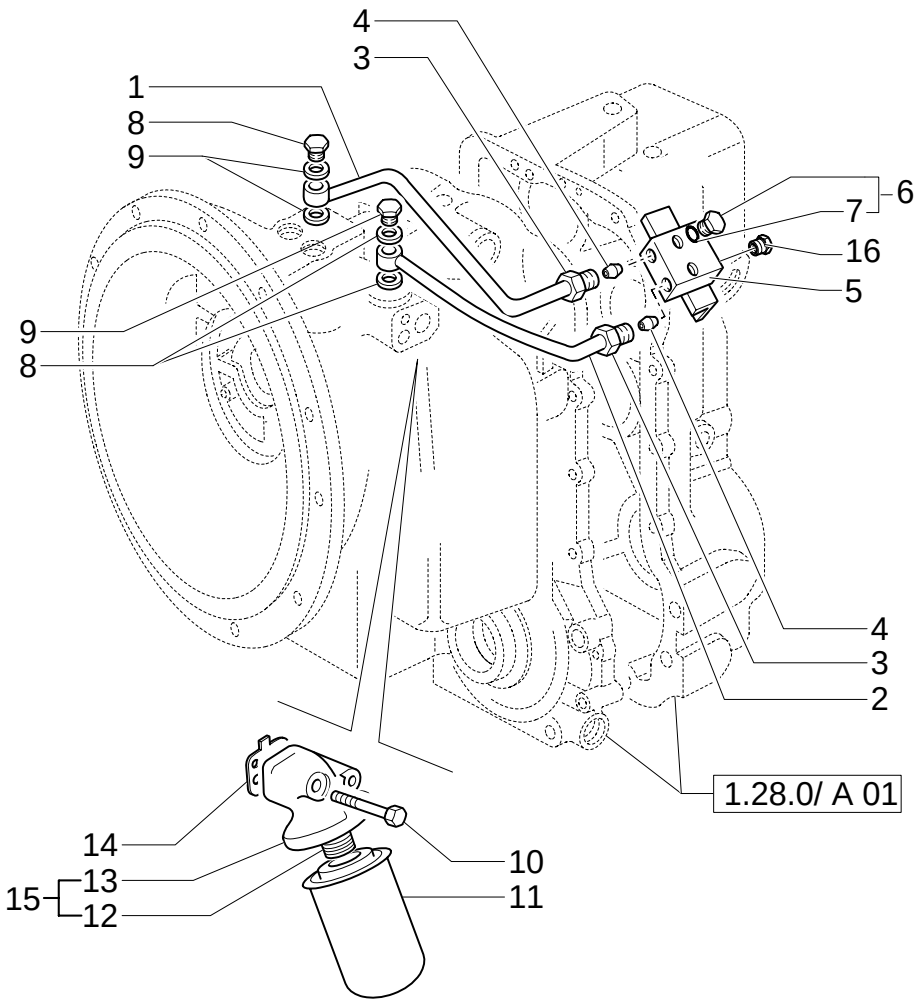

TRANSMISSIONGEARING SPEED GEAR (2WD POWER-SHUTTLE)

REF	FN	PART NUMBER	YR/SN	QTY	DESCRIPTION
1		85812087		1	TUBE, RIGID
2		85812086		1	TUBE, RIGID
3		9968336		2	NUT
4		9969449		4	CONNECTOR, HYD.
5		85812085		1	BLOCK
6		9968219		2	PLUG 9/16" UNF
7		9968218		2	O-RING 9/16"
8		9968676		2	BOLT, BANJO
9		85817002		4	WASHER
10		85817165		2	SCREW
11		85817004		1	FILTER
12		9968354		1	ADAPTER
13		9968374		1	HOUSING
14		9968375		1	GASKET
15		85812091		1	PLUG

TRANSMISSIONGEARING SPEED GEAR (2WD POWER-SHUTTLE)

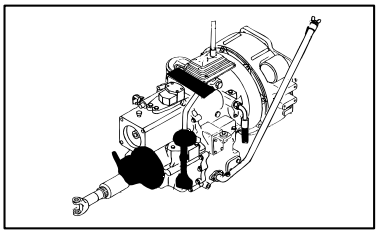

KIT KIT KIT
15 = ■
17 = ●
18 = ▲

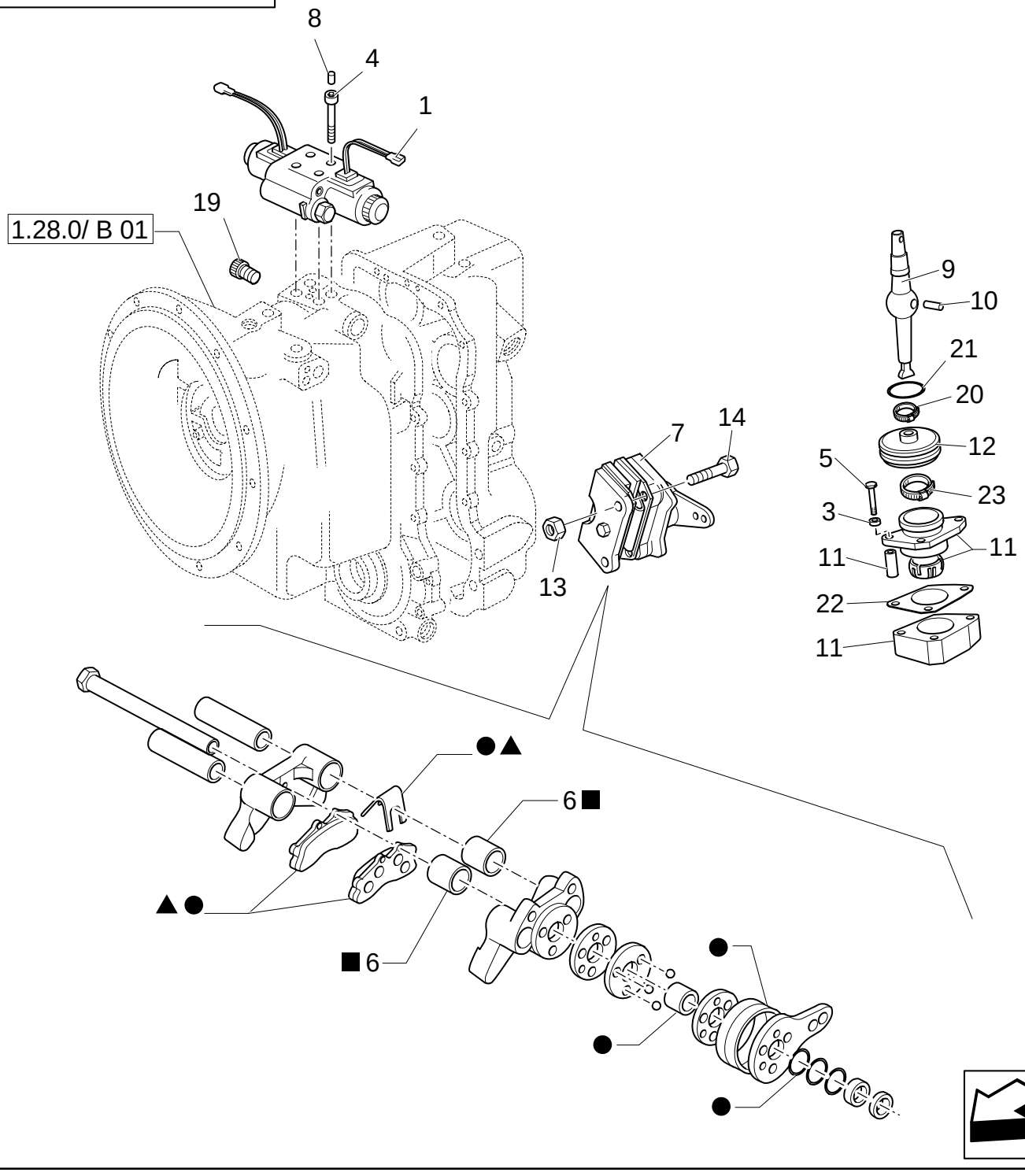

TRANSMISSIONGEARING SPEED GEAR (2WD POWER-SHUTTLE)

REF	FN	PART NUMBER	YR/SN	QTY	DESCRIPTION
1	1	85827764		1	VALVE, HYDRAULIC
3		85812092		3	WASHER
4		9969445		4	SCREW
5		85817163		3	SCREW
7	2	85813300		1	BRAKE CALIPER
8		85827779		1	PLUG
9		9968324		1	LEVER
10		9968327		1	PIN
11		9968326		1	SUPPORT
12		9968328		1	BOOT
13		9969281		2	NUT
14		9968299		2	BOLT
15		85813318		1	KIT, REPAIR
17		9968926		1	SET OF PARTS
18		9968927		1	KIT
19		9968370		2	PLUG
20		85827776		1	TIE-ROD
21		85817006		1	GASKET
22		85817007		1	GASKET
23		85827776		1	TIE-ROD
23		85827776		1	TIE-ROD

(1) Includes 2, 6
(2) Includes 17, 18

1.28.0/ A	05	p1	12/05

TRANSMISSIONGEARING SPEED GEAR (2WD POWER-SHUTTLE)

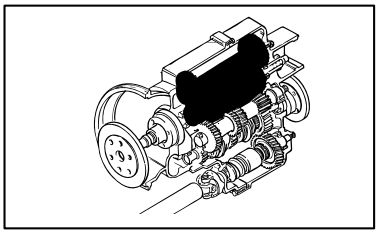

TRANSMISSIONGEARING SPEED GEAR (2WD POWER-SHUTTLE)

REF	FN	PART NUMBER	YR/SN	QTY	DESCRIPTION
1		9968279		3	WASHER
2		9968228		2	BEARING ASSY
3		9968304		4	BEARING ASSY 50x5x17
4		9968302		2	SPACER
5		9968286		1	GEAR 30T
6		9968291		3	RING, LOCKING
7		85827771		2	SPRING-CHECK
8		85827772		2	SPRING
9		9968287		2	CIRCLIP
10		9968288		2	PLATE
11		9968290		12	PLATE
12		9968289		12	PLATE
13		85827773		2	PISTON
14		85827774		2	SPRING
15		85821452		1	SHAFT, PROPELLOR
16		85821454		1	SLEEVE 2.234" IDx.139" Thk
18		9968226		4	GASKET
19		9968341		1	O-RING M80x70x2
20		9968342		AR	SHIM 24T-25T
20		9968343		AR	SHIM 80x70x0,076
20		9968344		AR	SHIM 80x70x0,178
20		9968345		AR	SHIM 80x70x0,599
21		9968285		1	GEAR 24T
22		9968305		1	BEARING ASSY
23		9968347		1	SHAFT
24		9968268		2	BEARING ASSY
25		9968281		1	GEAR 24T-25T
26		9968262		AR	SHIM MM.0,002
26		9968263		AR	SHIM MM.0,003
26		9968264		AR	SHIM MM.0,003
26		9968265		AR	SHIM MM.0,007
26		9968266		AR	SHIM MM.0,015
26		9968267		AR	SHIM MM.0,020
27		9968261		1	SPACER
28		9968282		1	SHAFT
29		9968314		1	GASKET MM.40
30		9968230		1	WASHER 40x70x4

1.28.0/ A	05	p2	12/05

TRANSMISSIONGEARING SPEED GEAR (2WD POWER-SHUTTLE)

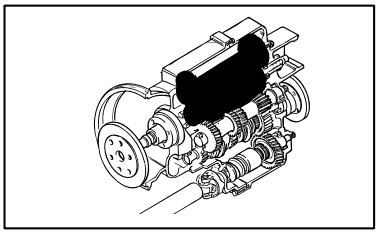

TRANSMISSIONGEARING SPEED GEAR (2WD POWER-SHUTTLE)

REF	FN	PART NUMBER	YR/SN	QTY	DESCRIPTION
31		9968276		1	BEARING ASSY

1.28.0/ A	06	p1	12/05

TRANSMISSIONGEARING SPEED GEAR (2WD POWER-SHUTTLE)

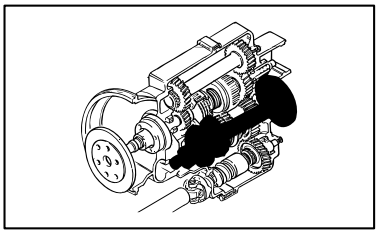

TRANSMISSIONGEARING SPEED GEAR (2WD POWER-SHUTTLE)

REF	FN	PART NUMBER	YR/SN	QTY	DESCRIPTION
1		9968308		1	SCREW
2		9968306		1	WASHER
3		9968309		1	O-RING 1.29" IDx.139" Thk
4		85820909		1	FLANGE
5		85825506		1	GASKET M48x62x8
6		9968271		1	SPACER
7		9968272		AR	SHIM 0.051mm
7		9968273		AR	SHIM 0.076mm
7		9968274		AR	SHIM 0.178mm
7		9968275		AR	SHIM 0.559mm
8		9968270		1	BEARING ASSY
10		9968252		1	HOSE
11		9968250		2	BEARING ASSY
12		9968251		1	SPACER
13		9968248		1	GEAR 43T 1ST
14		9968307		2	SYNCHRONIZER
15		9968223		2	RING
16		9968247		1	GEAR 37T 2ND
17		9968269		1	SHAFT
18		9968246		1	GEAR 28T 3RD
19		9968396		1	SPACER
20		9968358		1	RING Sealing Cap, 2.25"
21		9968253		1	RING, LOCKING
22		9968278		1	BEARING ASSY
23		9968260		1	WASHER 55x4
24		85827803		1	GEAR

1.28.0/ A	07	p1	10/05

TRANSMISSIONGEARING SPEED GEAR (2WD POWER-SHUTTLE)

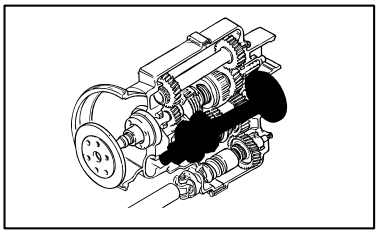

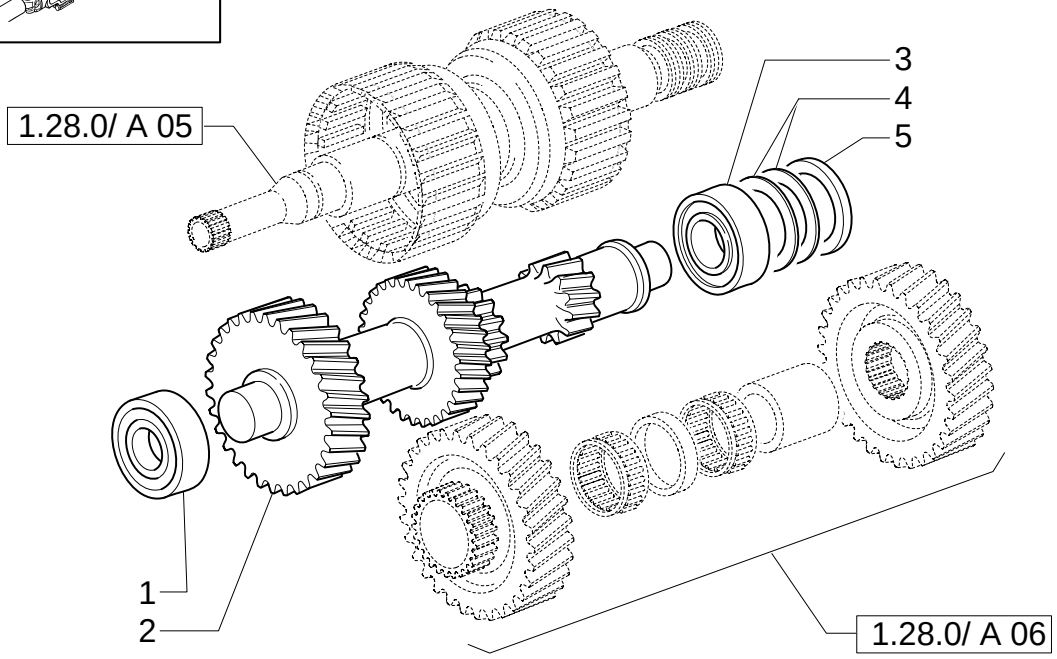

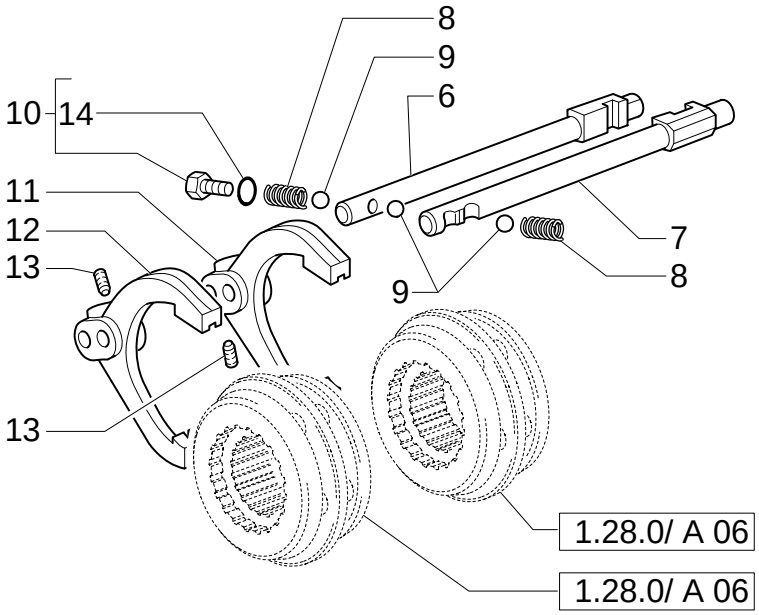

TRANSMISSIONGEARING SPEED GEAR (2WD POWER-SHUTTLE)

REF	FN	PART NUMBER	YR/SN	QTY	DESCRIPTION
1		9968277		1	BEARING ASSY
2		9968280		1	SHAFT 35T-29T-20T-13T
3		9968270		1	BEARING ASSY
4		9968272		AR	SHIM 0.051mm
4		9968273		AR	SHIM 0.076mm
4		9968274		AR	SHIM 0.178mm
4		9968275		AR	SHIM 0.559mm
5		9968271		1	SPACER
6		9968319		1	ROD 1ST-2ND
7		9968322		1	ROD 3RD-4TH
8		9968316		2	SPRING
9		9968315		3	BALL
10		9968219		AR	PLUG 9/16" UNF
11		9968317		1	YOKE 1ST-2ND
12		9968318		1	YOKE 3RD-4TH
13		9968323		2	SCREW
14		9968218		AR	O-RING 9/16"

1.28.0/ C	01	p1	12/05

TRANSMISSIONGEARING SPEED GEAR (4WD POWER-SHIFT)

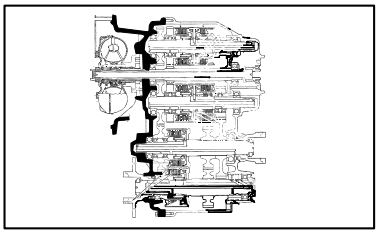

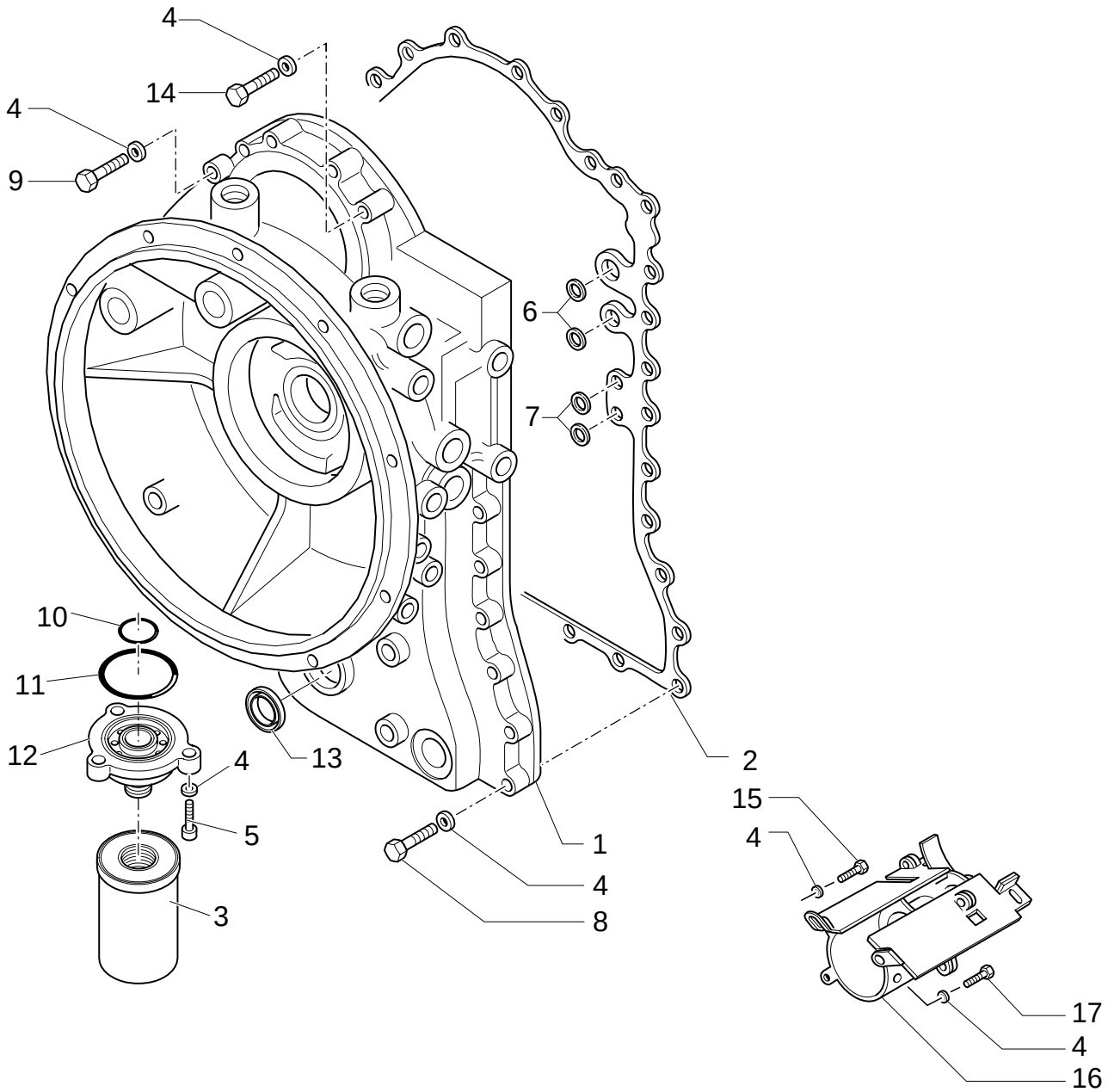

TRANSMISSIONGEARING SPEED GEAR (4WD POWER-SHIFT)

REF	FN	PART NUMBER	YR/SN	QTY	DESCRIPTION
1		9968979		1	TRANSMISSION HOUSING
2		9969002		1	GASKET
3		9968988		1	FILTER, HYDRAULIC OIL
4		9968996		37	WASHER, LOCK
5		9968997		3	SCREW
6		9969420		2	O-RING
7		9969421		2	O-RING
8		9969007		14	SCREW
9		9969424		10	SCREW
10		85808324		1	GASKET
11		85808325		1	GASKET
12		85812020		1	ADAPTER
13		9969001		1	GASKET
14		9969008		5	SCREW
15		9969016		1	SCREW
16		85808326		1	RING, INSULATING
17		9969000		2	SCREW

1.28.0/ C	02	p1	12/05

TRANSMISSIONGEARING SPEED GEAR (4WD POWER-SHIFT)

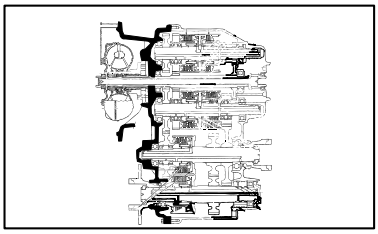

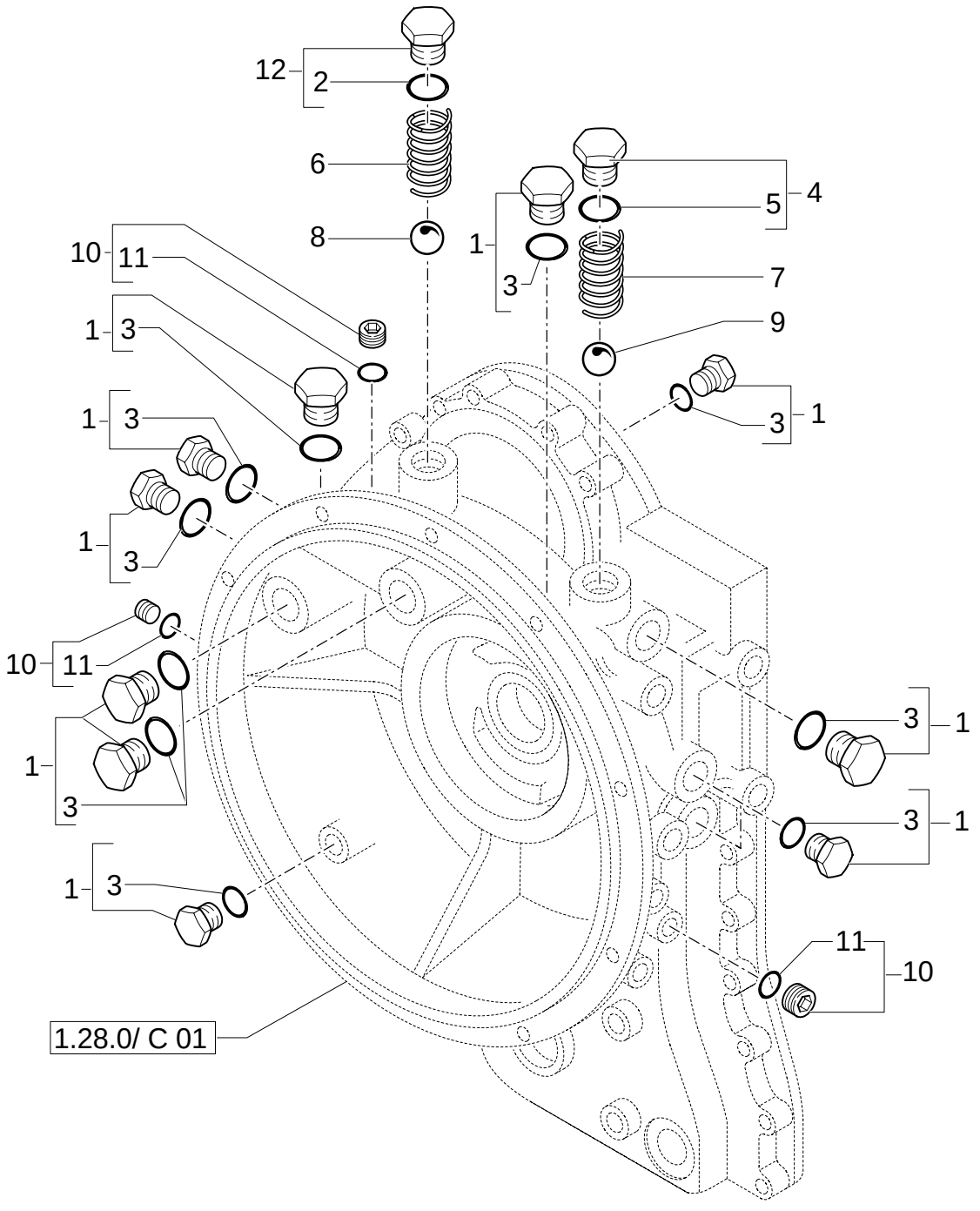

TRANSMISSIONGEARING SPEED GEAR (4WD POWER-SHIFT)

REF	FN	PART NUMBER	YR/SN	QTY	DESCRIPTION
1	1	9970283		10	PLUG
2		85808321		1	GASKET
3		85808323		10	GASKET
4	2	9968987		1	PLUG
5		9968986		1	O-RING
6		85808320		1	SPRING
7		9968985		1	SPRING
8		85808319		1	BALL
9		9968984		1	BALL
10	3	9970284		3	PLUG
11		9968989		3	O-RING
12	4	85808322		1	PLUG

(1) Includes 3
(2) Includes 5
(3) Includes 11
(4) Includes 2

1.28.0/ C	03	p1	12/05

TRANSMISSIONGEARING SPEED GEAR (4WD POWER-SHIFT)

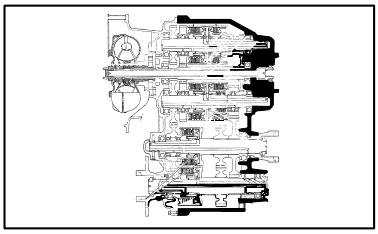

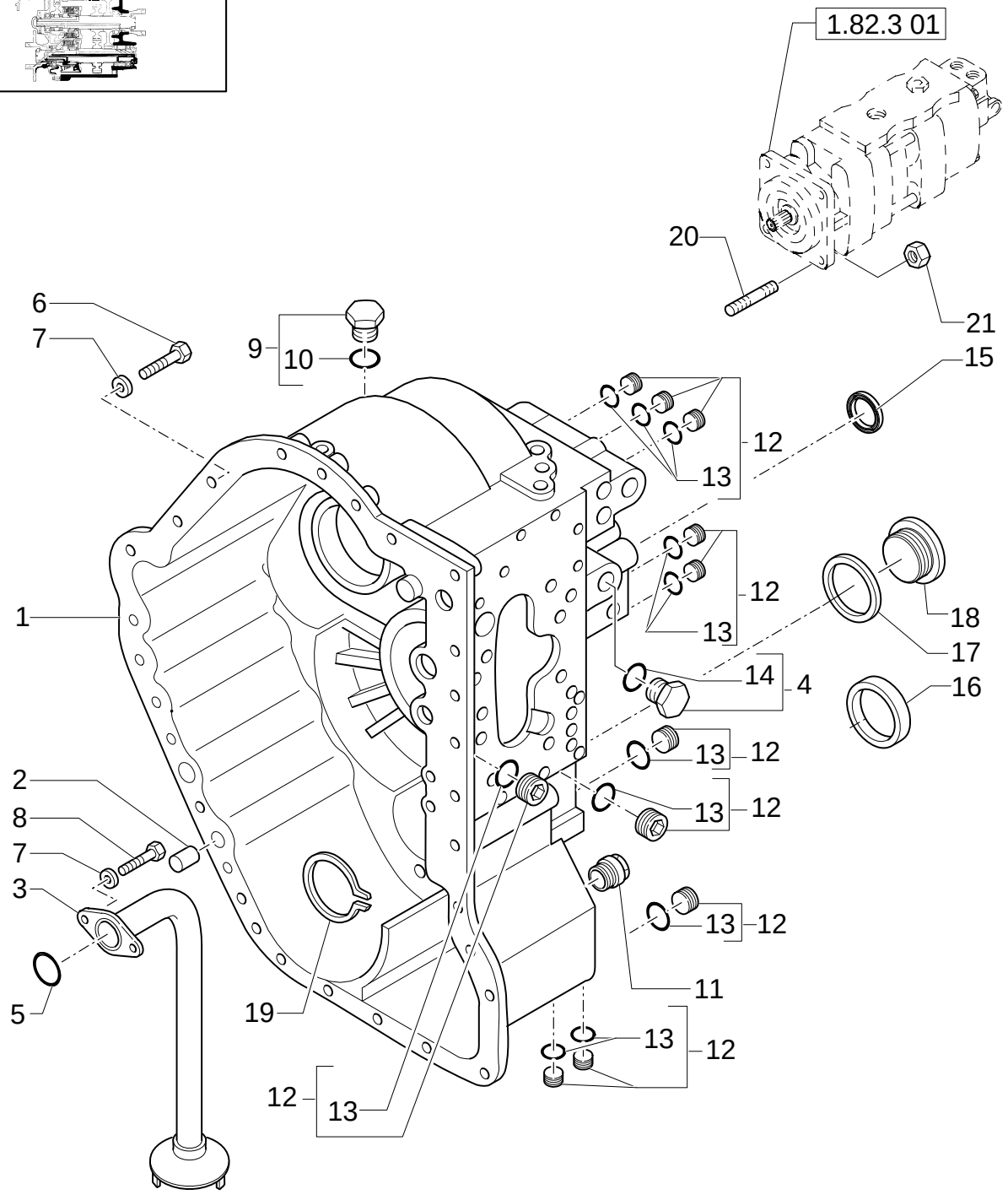

TRANSMISSIONGEARING SPEED GEAR (4WD POWER-SHIFT)

REF	FN	PART NUMBER	YR/SN	QTY	DESCRIPTION
1		85812225		1	GEARBOX
2		9969017		2	PIN
3		85808328		1	TUBE, RIGID
4	1	85808330		1	PLUG
5		85808327		1	GASKET
6		9969424		9	SCREW
7		9968996		9	WASHER, LOCK
8		9969000		2	SCREW
9	2	9970283		1	PLUG
10		85808323		1	GASKET
11		9970002		1	PLUG
12	3	9970284		11	PLUG
13		9968989		11	O-RING
14		9969429		1	O-RING
15		9969001		1	GASKET
16		9970285		1	PLUG
17		9970004		1	GASKET
18		85808331		1	PLUG
19		9970003		1	RING, LOCKING
20		85803991		4	STUD M12x1.75
21		85802684		4	NUT

(1) Includes 14
(2) Includes 10
(3) Includes 13

1.28.0/ C	04	p1	12/05

TRANSMISSIONGEARING SPEED GEAR (4WD POWER-SHIFT)

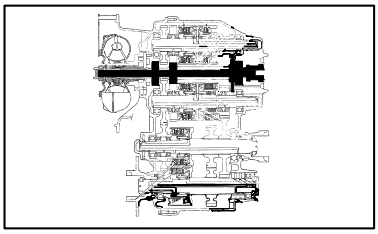

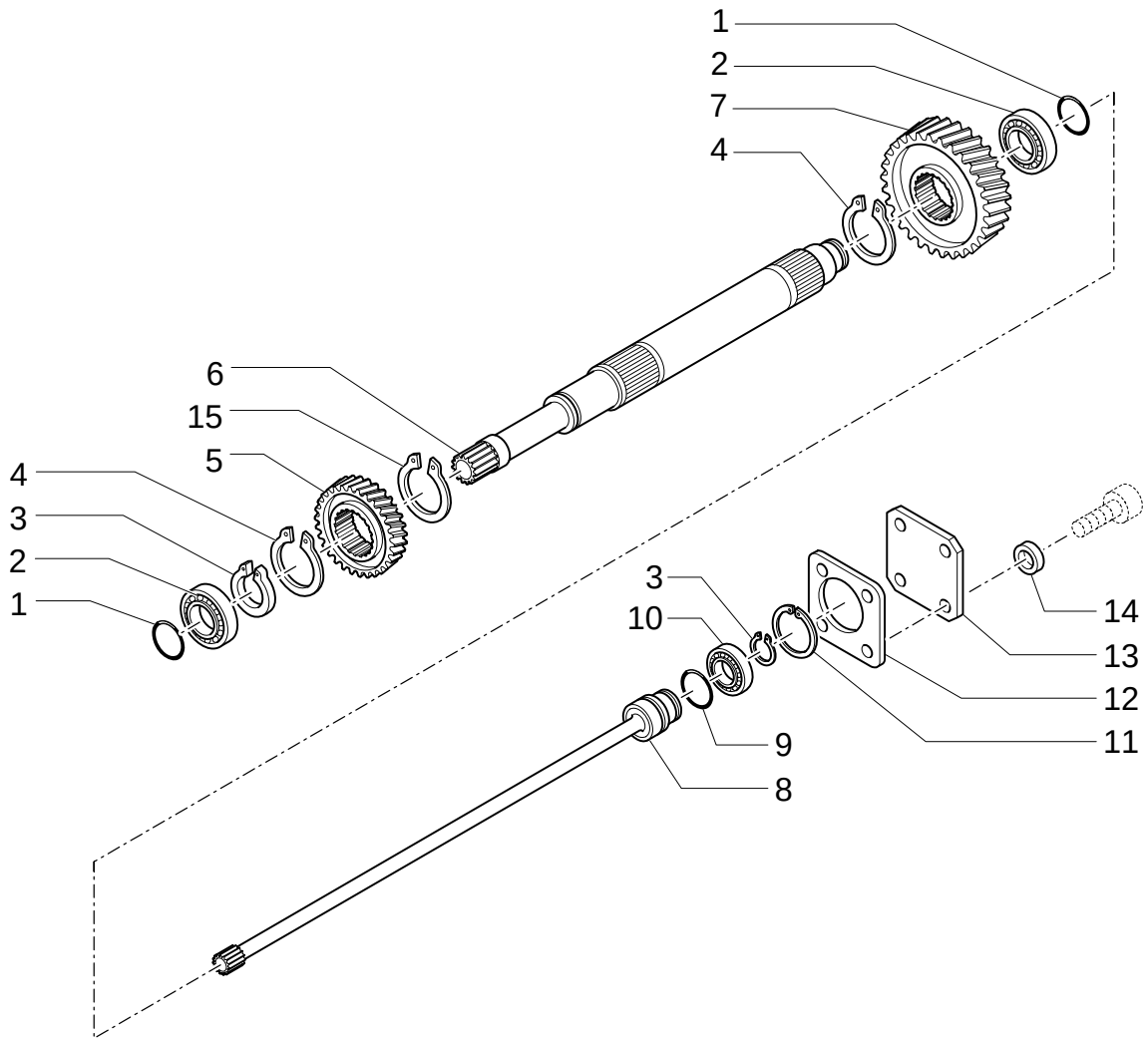

TRANSMISSIONGEARING SPEED GEAR (4WD POWER-SHIFT)

REF	FN	PART NUMBER	YR/SN	QTY	DESCRIPTION
1		9969070		2	RING, PISTON
2		9970010		2	BEARING ASSY
3		9969023		2	RING, SNAP
4		9969059		2	CIRCLIP
5		85808356		1	GEAR, RING
6		85808354		1	SHAFT
7		85808357		1	GEAR, RING
8		85808333		1	ROD
9		9969021		1	RING, PISTON
10		9969022		1	BEARING ASSY
11		9969024		1	CIRCLIP
12		9970015		1	GASKET
13		9969027		1	COVER
14		9970016		4	WASHER, LOCK
15		85808355		1	RING, RUBBER

PUMP DRIVE AND INPUT SHAFT GROUP

1.28.0/ C	05	p1	12/05

TRANSMISSIONGEARING SPEED GEAR (4WD POWER-SHIFT)

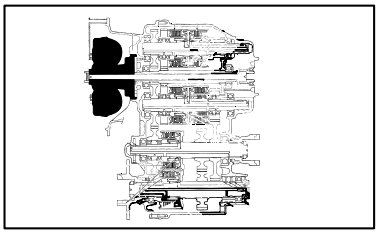

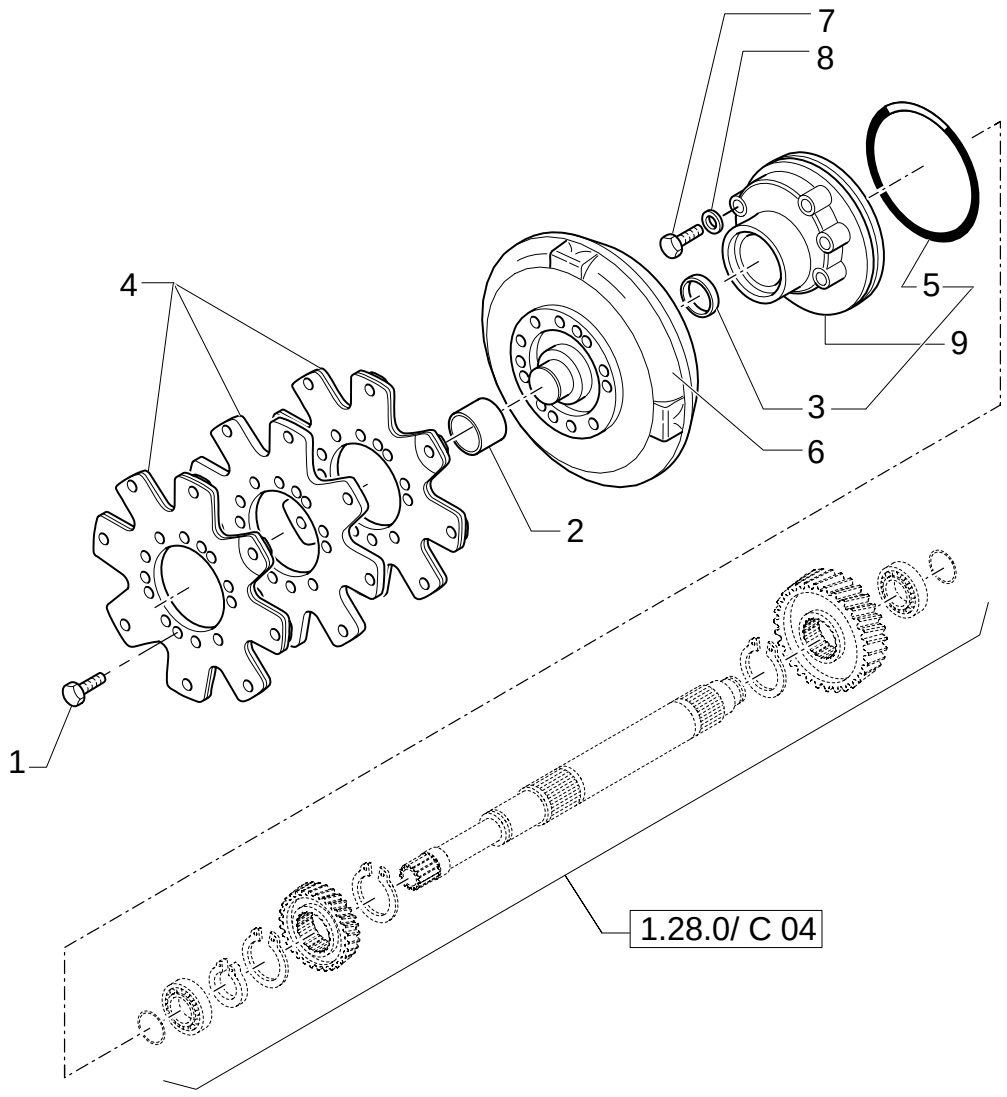

TRANSMISSIONGEARING SPEED GEAR (4WD POWER-SHIFT)

REF	FN	PART NUMBER	YR/SN	QTY	DESCRIPTION
1		9970017		6	SCREW
2		9969039		1	BUSHING
3		85808336		1	RING, INSULATING SEAL
4		87410613		1	PLATE, RETAINING
5		9969041		1	O-RING
6		87410612		1	TORQUE CONVERTER
7		9969042		6	SCREW
8		9969043		6	WASHER, SEALING
9	1	9969040		1	PUMP, HYDRAULIC

(1) Includes 3, 5

TORQUE CONVERTER, CHARGING PUMP AND DRIVE PLATE GROUP

1.28.0/ C	06	p1	12/05

TRANSMISSIONGEARING SPEED GEAR (4WD POWER-SHIFT)

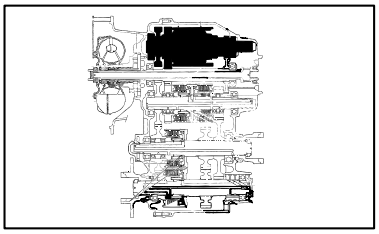

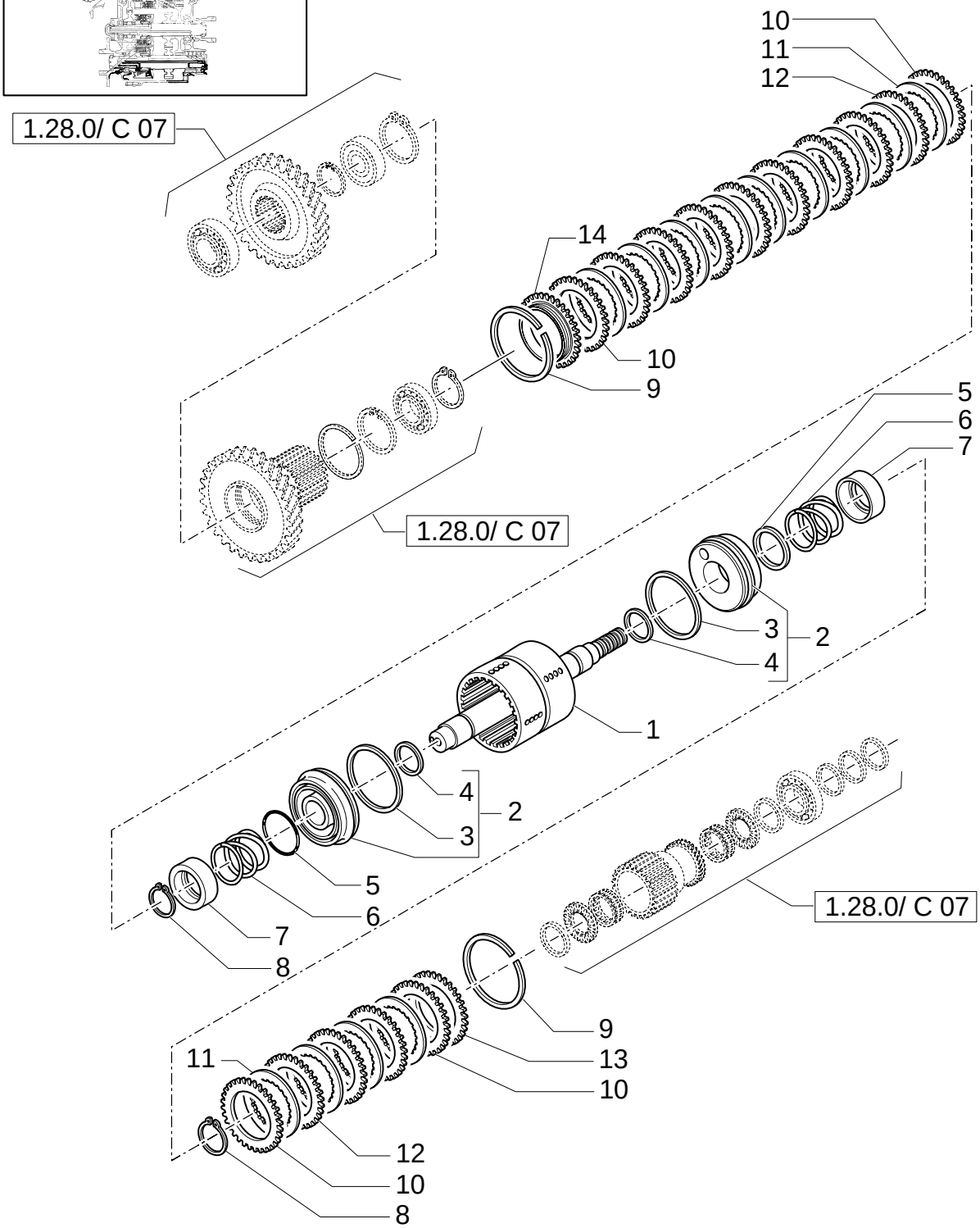

TRANSMISSIONGEARING SPEED GEAR (4WD POWER-SHIFT)

REF	FN	PART NUMBER	YR/SN	QTY	DESCRIPTION
1		85823862		1	SHAFT
2	1	9969045		2	PISTON
3		9969046		2	O-RING
4		9969047		2	O-RING
5		9969048		2	PLATE, COVER
6		9969049		2	SPRING
7		9969050		2	STOP
8		9969051		2	RING, SNAP
9		9969057		2	RING
10		85808338		4	HALF-DISC
11		85808339		12	DISC
12		85808340		10	DISC
13		85808343		1	DISC
14		85823863		1	DISC

(1) Includes 3, 4

FWD LOW/FWD HIGH SHAFT AND GEARS GROUP

1.28.0/ C	07	p1	12/05

TRANSMISSIONGEARING SPEED GEAR (4WD POWER-SHIFT)

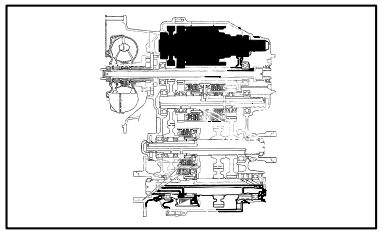

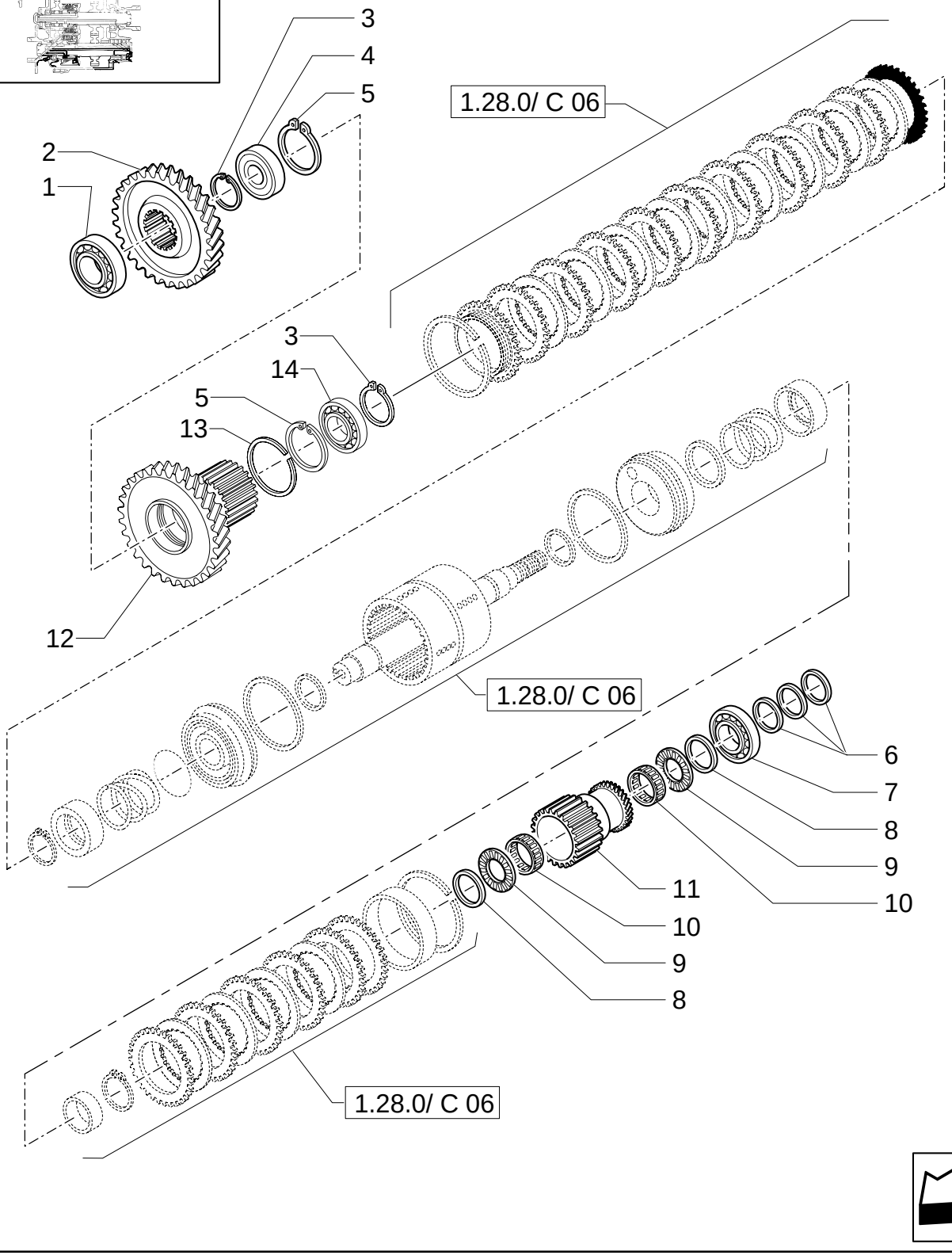

TRANSMISSIONGEARING SPEED GEAR (4WD POWER-SHIFT)

REF	FN	PART NUMBER	YR/SN	QTY	DESCRIPTION
1		85808348		1	BEARING ASSY
2		85808347		1	GEAR, RING
3		9969059		2	CIRCLIP
4		85808346		1	BEARING ASSY
5		9969061		2	CIRCLIP
6		9969070		3	RING, PISTON
7		9970044		1	BEARING ASSY
8		9969066		2	SPACER
9		9969065		2	BEARING ASSY
10		9969067		2	BEARING ASSY
11		85808349		1	GEAR, RING
12		85823864		1	GEAR, RING
13		85823865		1	RING
14		9969062		1	BEARING ASSY

FWD LOW/FWD HIGH SHAFT AND GEARS GROUP

1.28.0/ C	08	p1	12/05

TRANSMISSIONGEARING SPEED GEAR (4WD POWER-SHIFT)

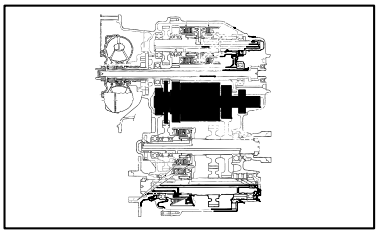

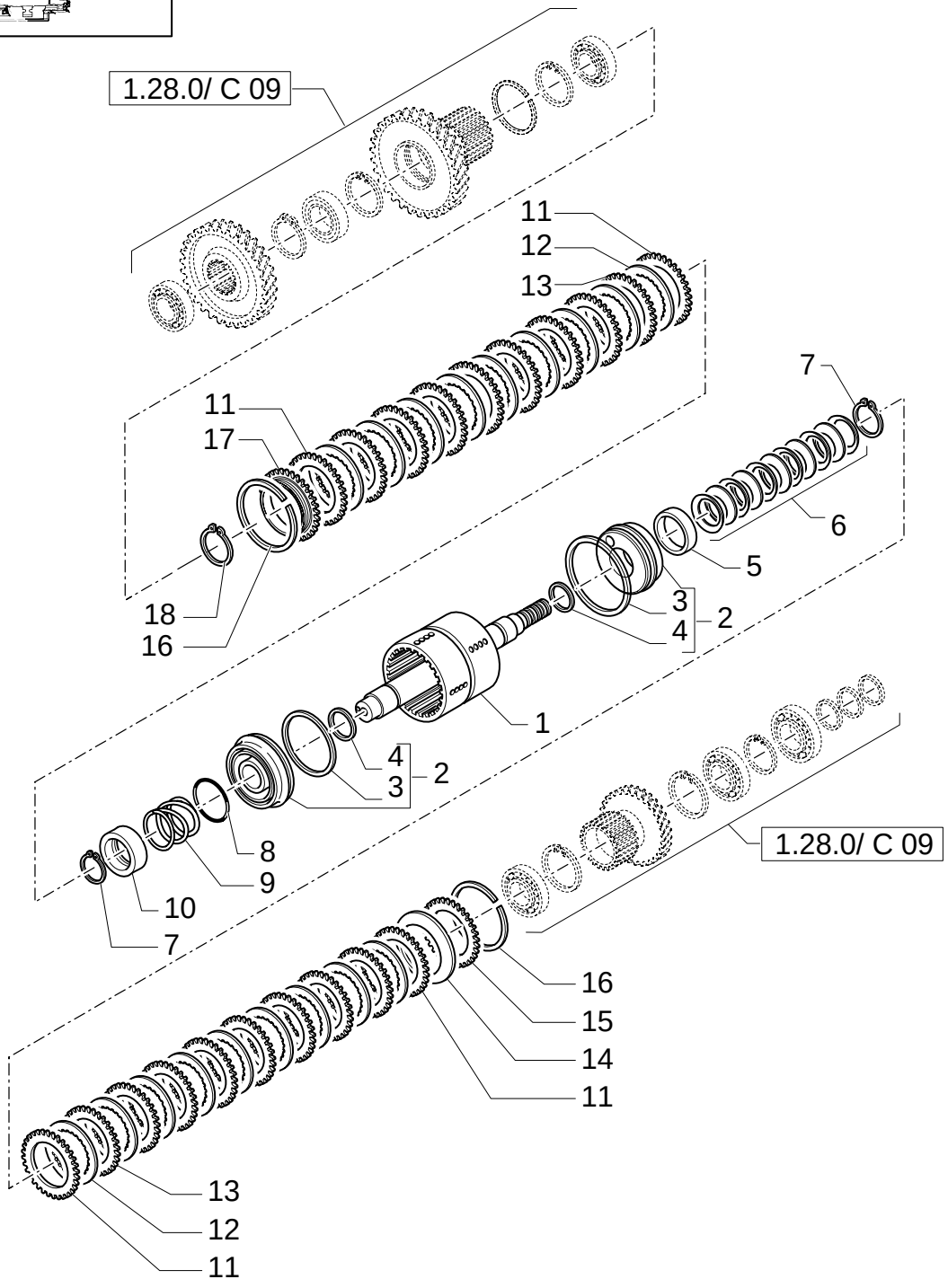

TRANSMISSIONGEARING SPEED GEAR (4WD POWER-SHIFT)

REF	FN	PART NUMBER	YR/SN	QTY	DESCRIPTION
1		85823872		1	SHAFT
2	1	9969045		2	PISTON
3		9969046		2	O-RING
4		9969047		2	O-RING
5		85808351		1	RING
6		9969072		1	KIT
7		9969051		2	RING, SNAP
8		9969048		1	PLATE, COVER
9		9969049		1	SPRING
10		9969050		1	STOP
11		85808338		4	HALF-DISC
12		85808339		16	DISC MM.2.5
13		85808340		14	DISC MM.2.5
14		9969073		1	SPRING
15		85808343		1	DISC
16		9969057		2	RING
17		85823863		1	DISC
18		9969059		1	CIRCLIP

(1) Includes 3, 4

REVERSE/1ST SHAFT AND GEARS GROUP

1.28.0/ C	09	p1	12/05

TRANSMISSIONGEARING SPEED GEAR (4WD POWER-SHIFT)

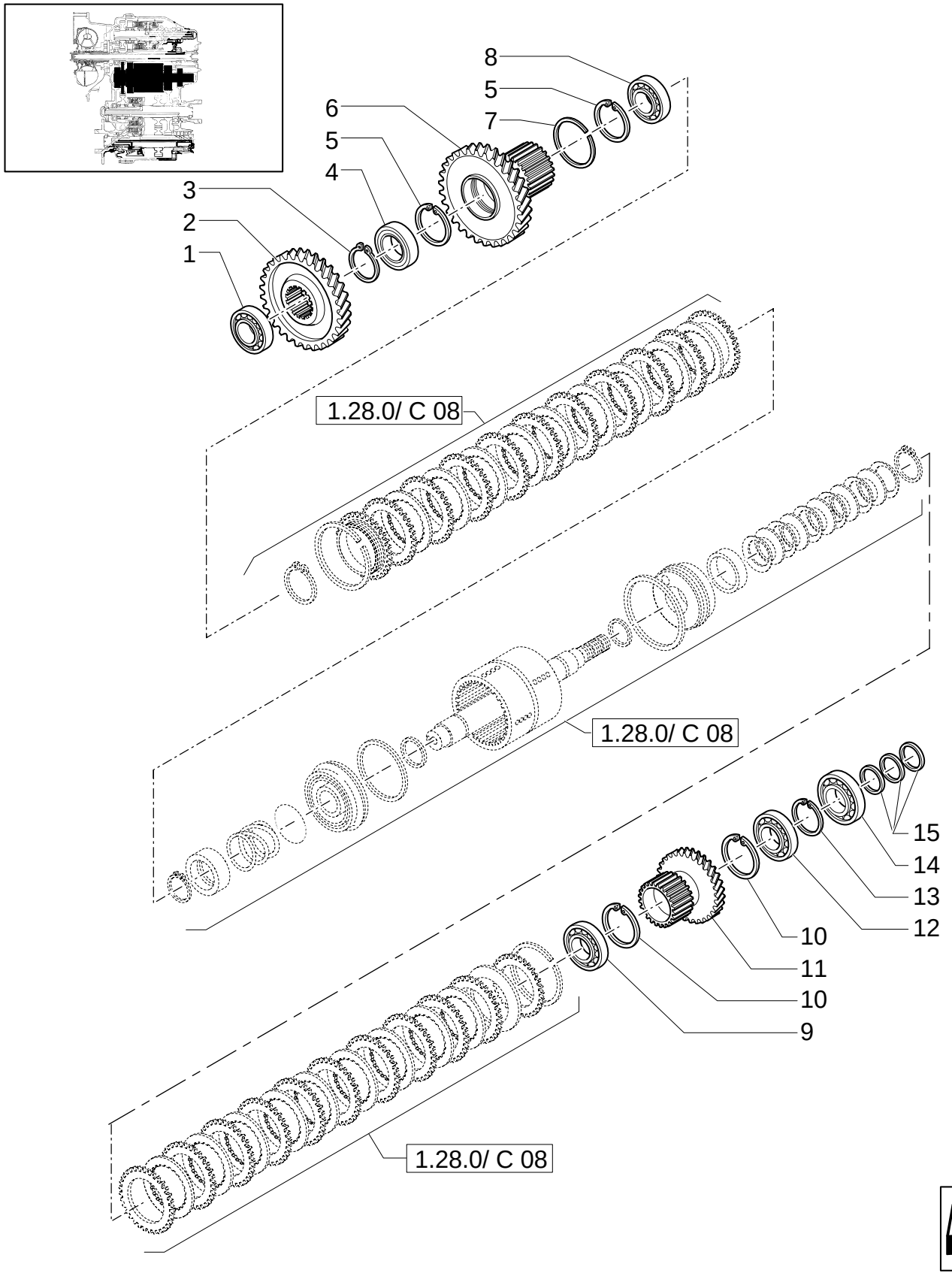

TRANSMISSIONGEARING SPEED GEAR (4WD POWER-SHIFT)

REF	FN	PART NUMBER	YR/SN	QTY	DESCRIPTION
1		85808348		1	BEARING ASSY
2		85808352		1	GEAR, RING
3		9969059		1	CIRCLIP
4		85808346		1	BEARING ASSY
5		9969061		2	CIRCLIP
6		85823864		1	GEAR, RING
7		85823865		1	RING
8		9969062		1	BEARING ASSY
9		9969077		1	BEARING ASSY
10		9969076		2	CIRCLIP
11		85808353		1	GEAR, RING
12		9969078		1	BEARING ASSY
13		9969079		1	RING, SNAP
14		9970010		1	BEARING ASSY
15		9969070		3	RING, PISTON

REVERSE/1ST SHAFT AND GEARS GROUP

1.28.0/ C	10	p1	12/05

TRANSMISSIONGEARING SPEED GEAR (4WD POWER-SHIFT)

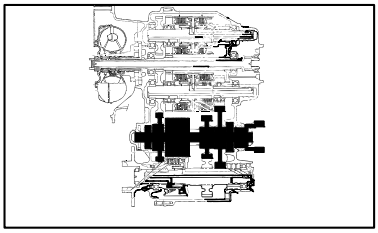

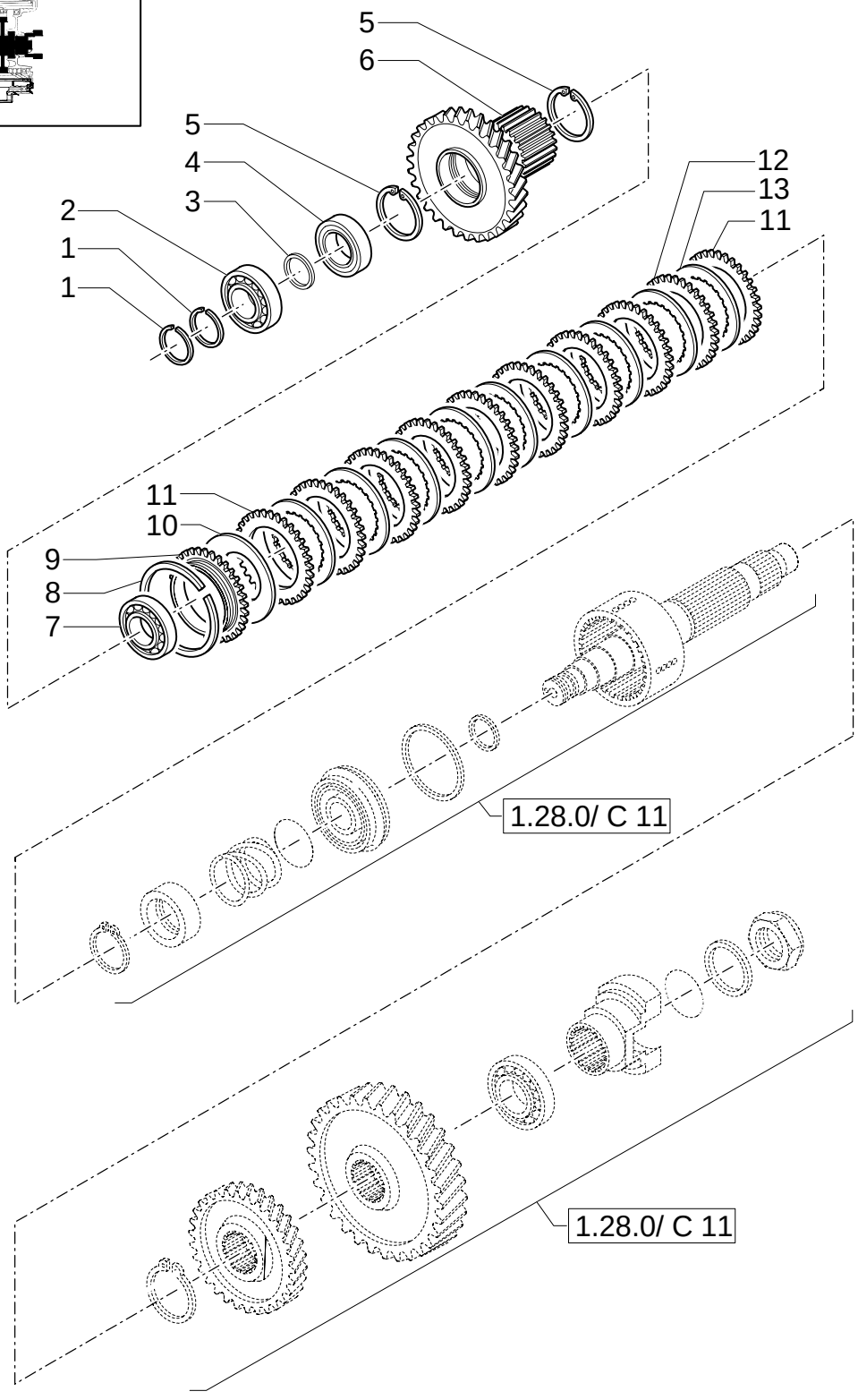

TRANSMISSIONGEARING SPEED GEAR (4WD POWER-SHIFT)

REF	FN	PART NUMBER	YR/SN	QTY	DESCRIPTION
1		9969070		2	RING, PISTON
2		9970010		1	BEARING ASSY
3		9969085		1	RING
4		9969078		1	BEARING ASSY
5		9969076		2	CIRCLIP
6		85808359		1	GEAR, RING
7		9969077		1	BEARING ASSY
8		9969057		1	RING
9		85808343		1	DISC
10		9969073		1	SPRING
11		85808338		2	HALF-DISC
12		85808340		7	DISC
13		85808339		8	DISC

2ND SHAFT GROUP

1.28.0/ C	11A	p1	12/05

TRANSMISSION (4WD, 4WS, POWER-SHIFT)

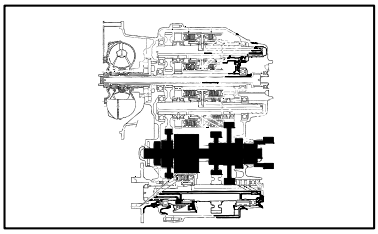

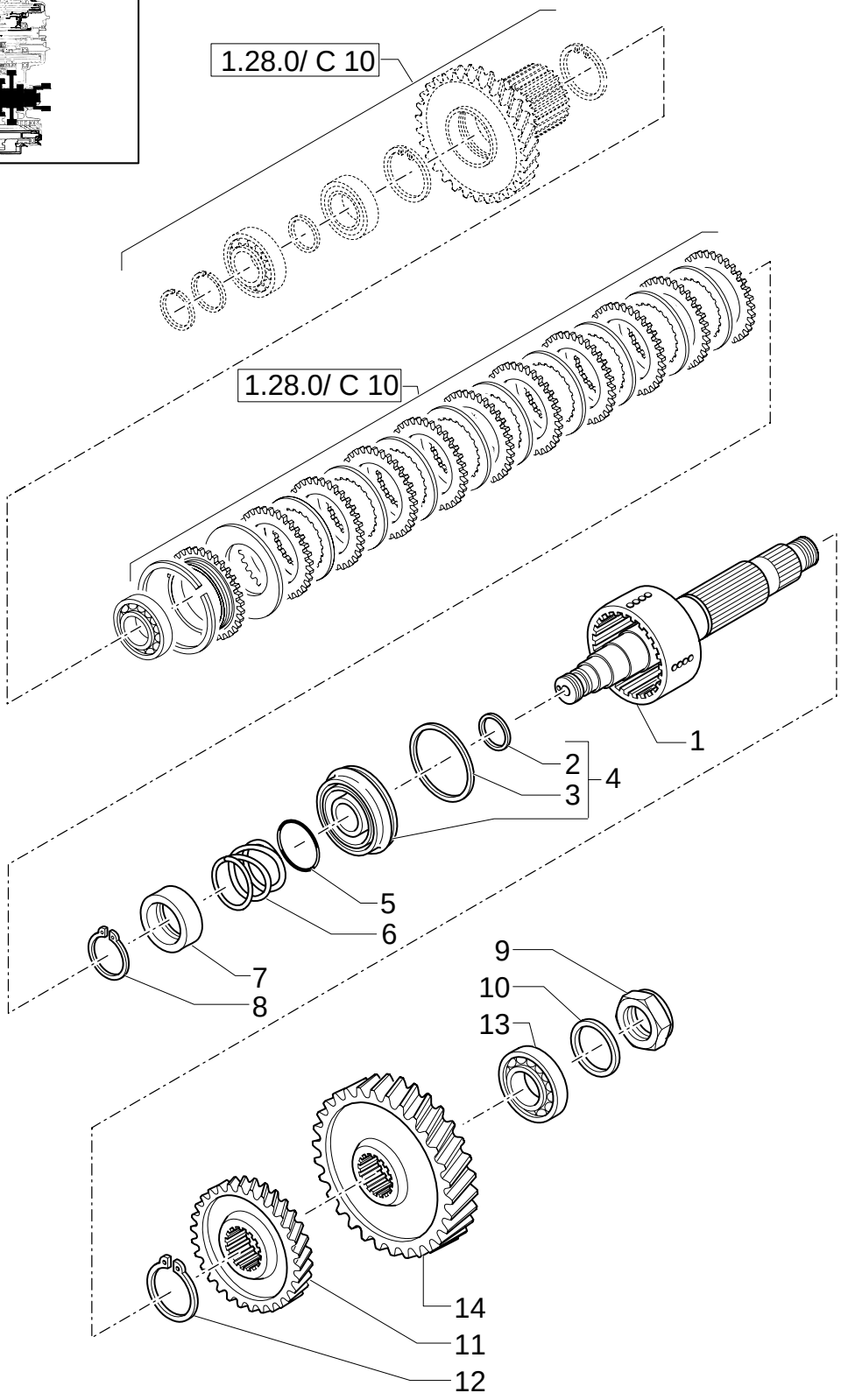

TRANSMISSION (4WD, 4WS, POWER-SHIFT)

REF	FN	PART NUMBER	YR/SN	QTY	DESCRIPTION
1		85808358		1	SHAFT
2		9969047		1	O-RING
3		9969046		1	O-RING
4	1	9969045		1	PISTON
5		9969048		1	PLATE, COVER
6		9969049		1	SPRING
7		9969050		1	STOP
8		9969051		1	RING, SNAP
9		9969093		1	NUT
10		9969092		1	WASHER
11		85808360		1	GEAR, RING
12		9970054		1	RING, LOCKING
13		85808362		1	BEARING ASSY
14		85808361		1	GEAR, RING

(1) Includes 2, 3

2ND SHAFT GROUP

1.28.0/ C	12	p1	12/05

TRANSMISSIONGEARING SPEED GEAR (4WD POWER-SHIFT)

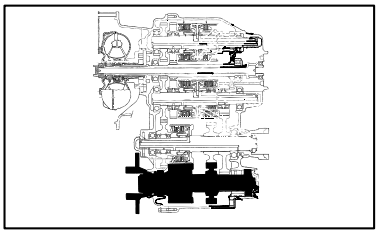

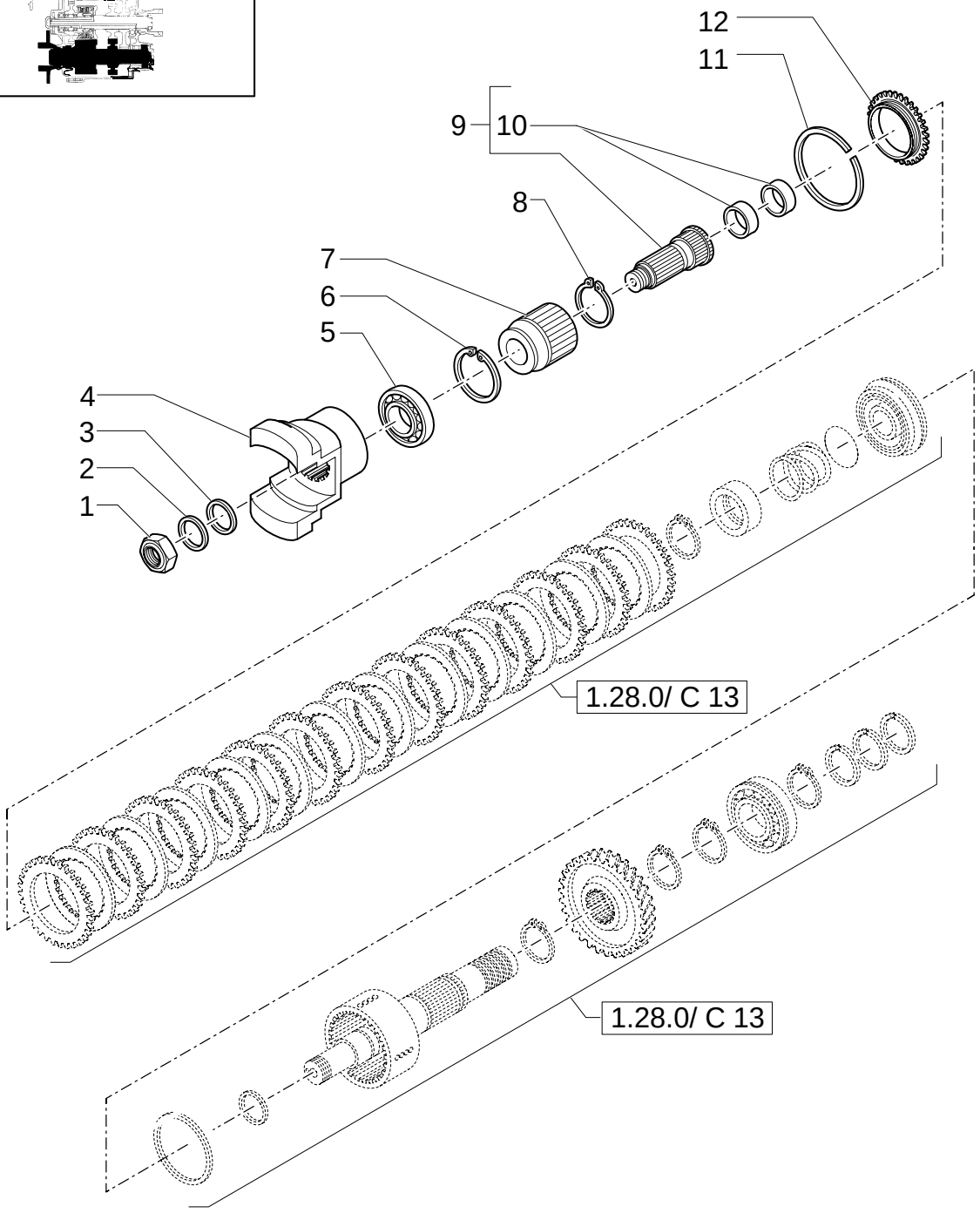

TRANSMISSIONGEARING SPEED GEAR (4WD POWER-SHIFT)

REF	FN	PART NUMBER	YR/SN	QTY	DESCRIPTION
1		9969093		1	NUT
2		9969092		1	WASHER
3		9970059		1	O-RING
4		9969090		1	HUB
5		9970068		1	BEARING ASSY
6		9969100		1	RING
7		85808335		1	HUB
8		9970054		1	RING, LOCKING
9	1	85808478		1	SHAFT
10		85813307		2	BUSHING
11		9969057		1	RING
12		85808343		1	DISC

(1) Includes 10

OUTPUT SHAFT W/INTERNAL DISCONNECT GROUP

1.28.0/ C	13A	p1	12/05

TRANSMISSION (4WD, 4WS POWER-SHIFT)

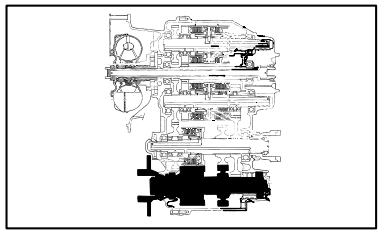

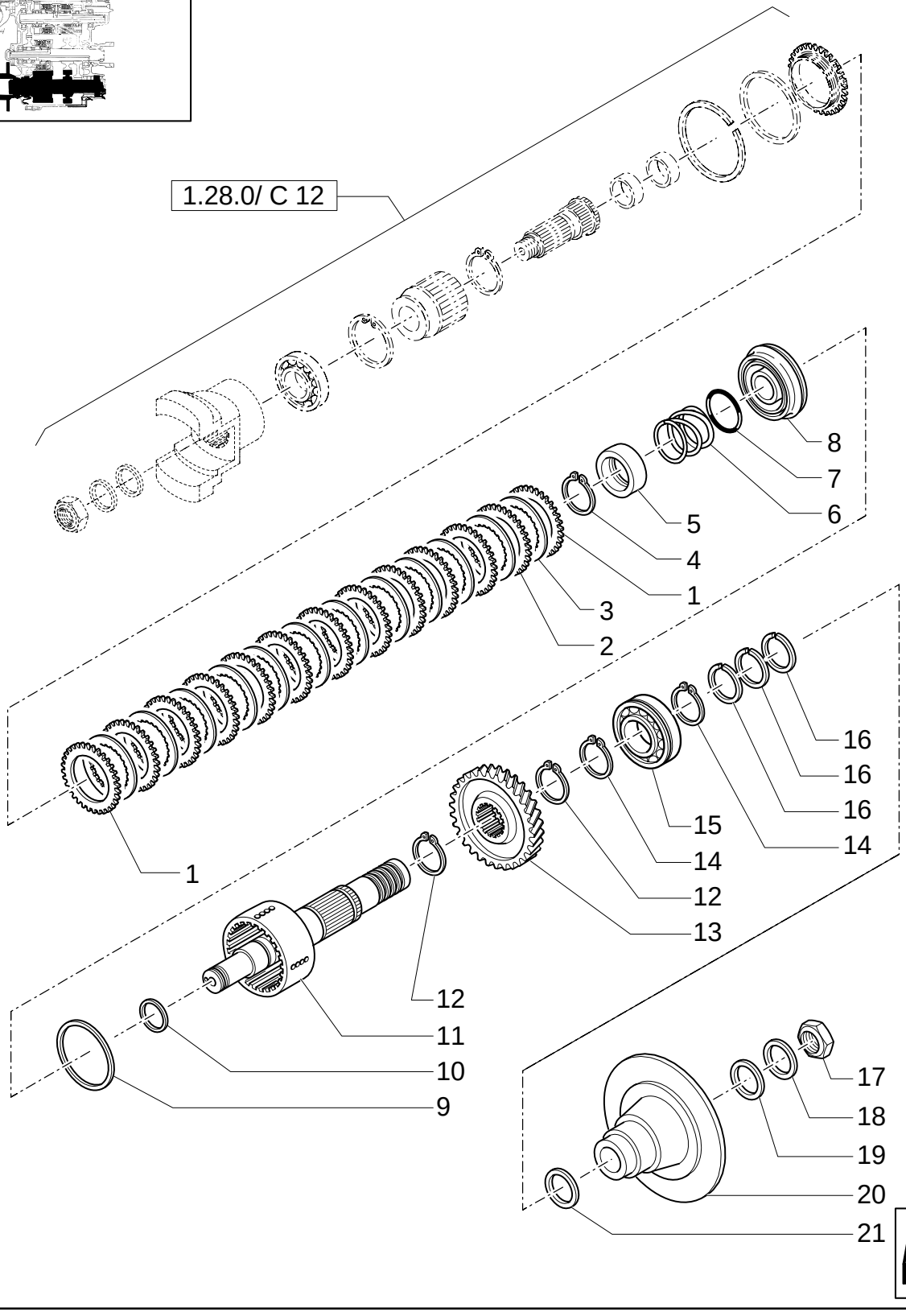

TRANSMISSION (4WD, 4WS POWER-SHIFT)

REF	FN	PART NUMBER	YR/SN	QTY	DESCRIPTION
1		85808338		2	HALF-DISC
2		85808340		11	DISC MM.2.5
3		85808339		12	DISC MM.2.5
4		9969051		1	RING, SNAP
5		9969050		1	STOP
6		9969049		1	SPRING
7		9969048		1	PLATE, COVER
8		9969045		1	PISTON
9		9969046		1	O-RING
10		9969047		1	O-RING
11		85823852		1	SHAFT
12		9969095		2	RING
13		85808334		1	GEAR
14		9969086		2	CIRCLIP
15		85808365		1	BEARING ASSY
16		9969097		3	RING, PISTON
17		9969093		1	NUT
18		9969092		1	WASHER
19		9970059		1	O-RING
20		9969101		1	BRAKE DISC
21		85808366		1	SPACER

OUPUT SHAFT W/INTERNAL DISCONNECT GROUP

TRANSMISSION (4WD, 4WS POWER-SHIFT)

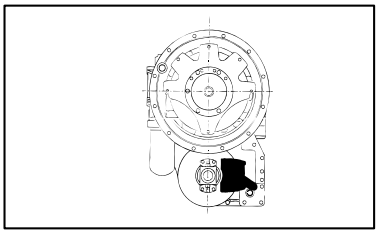

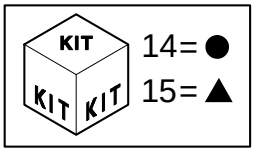

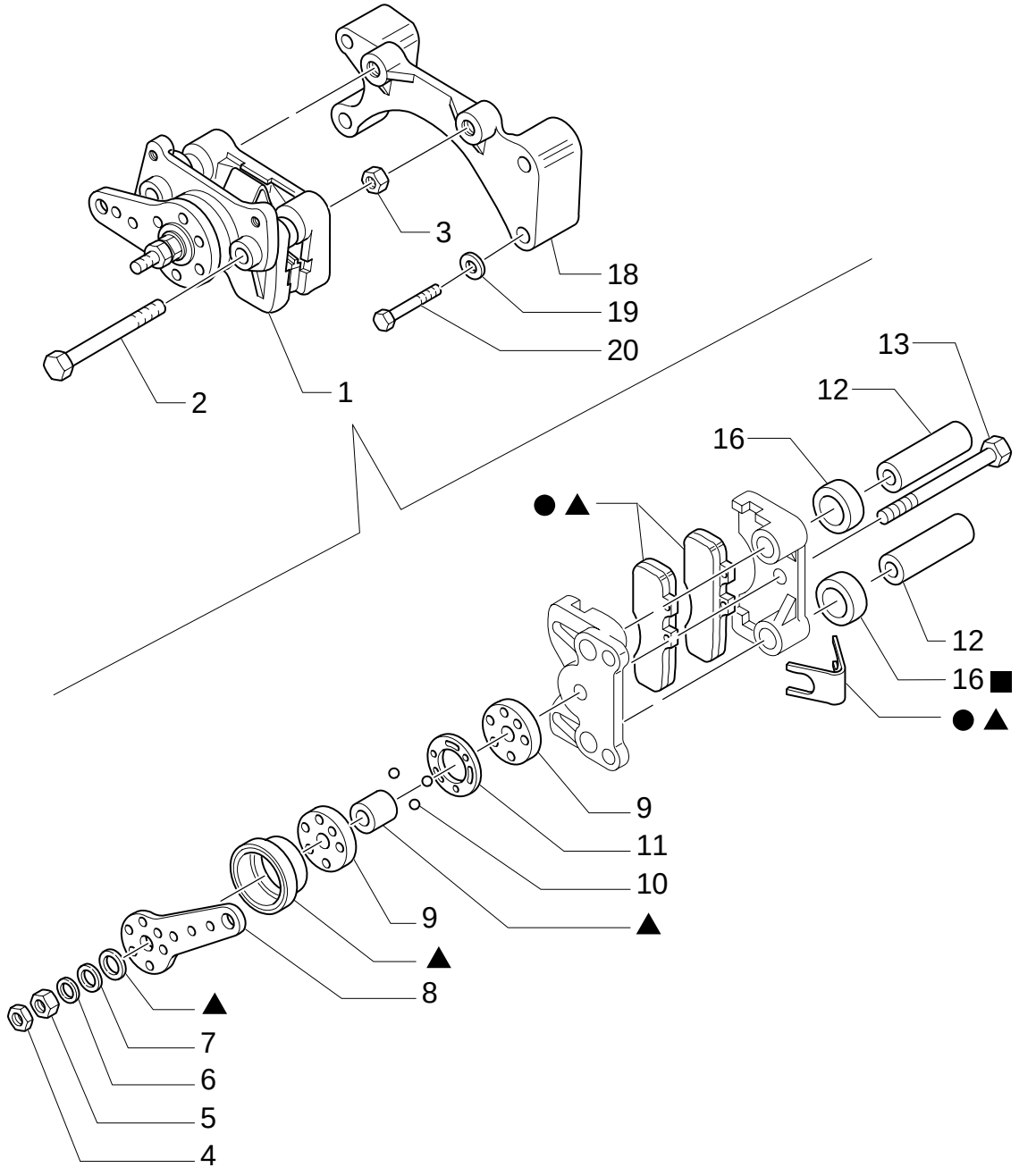

TRANSMISSION (4WD, 4WS POWER-SHIFT)

REF	FN	PART NUMBER	YR/SN	QTY	DESCRIPTION
1		85813303		1	BRAKE
2		9969103		2	SCREW
3		9969104		2	NUT
4		9969105		1	NUT
5		9969106		1	NUT
6		9969107		1	WASHER
7		9969108		1	WASHER
8		9969109		1	LEVER
9		9969110		2	CAM
10		9969111		3	BALL
11		9969112		1	STOP
12		9969113		2	SLEEVE
13		9969114		1	SCREW
14		9969115		1	KIT
15		9969116		1	KIT
16		85813302		2	BUSHING, RUBBER
18		85808377		1	PLATE, RETAINING
19		85808379		4	WASHER, LOCK
20		85808378		4	SCREW

PARKING BRAKE GROUP

1.28.0/ C	15	p1	12/05

TRANSMISSIONGEARING SPEED GEAR (4WD POWER-SHIFT)

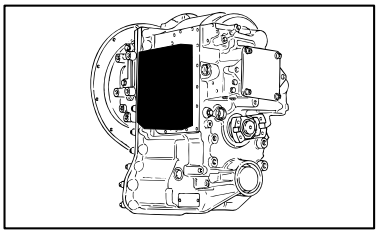

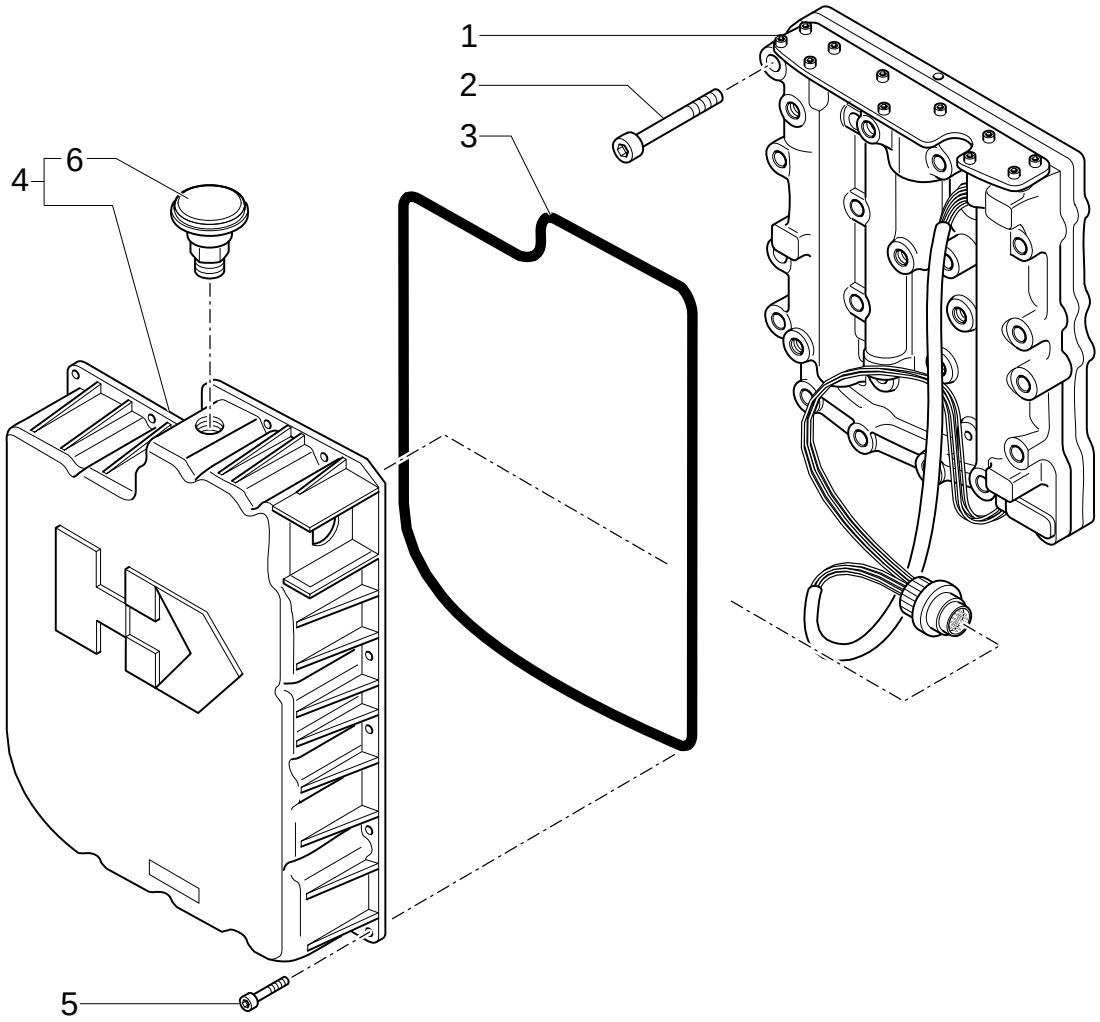

TRANSMISSIONGEARING SPEED GEAR (4WD POWER-SHIFT)

REF	FN	PART NUMBER	YR/SN	QTY	DESCRIPTION
1		85817030		1	VALVE, CONTROL
2		9970071		17	SCREW
3		85808368		1	GASKET
4	1	85808369		1	COVER
5		9970074		20	SCREW
6		9970075		1	BREATHER

(1) Includes 6

CONTROL VALVE MOUNTING GROUP

1.28.0/ C	16	p1	12/05

TRANSMISSIONGEARING SPEED GEAR (4WD POWER-SHIFT)

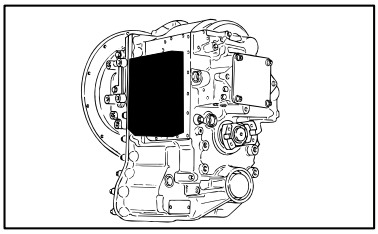

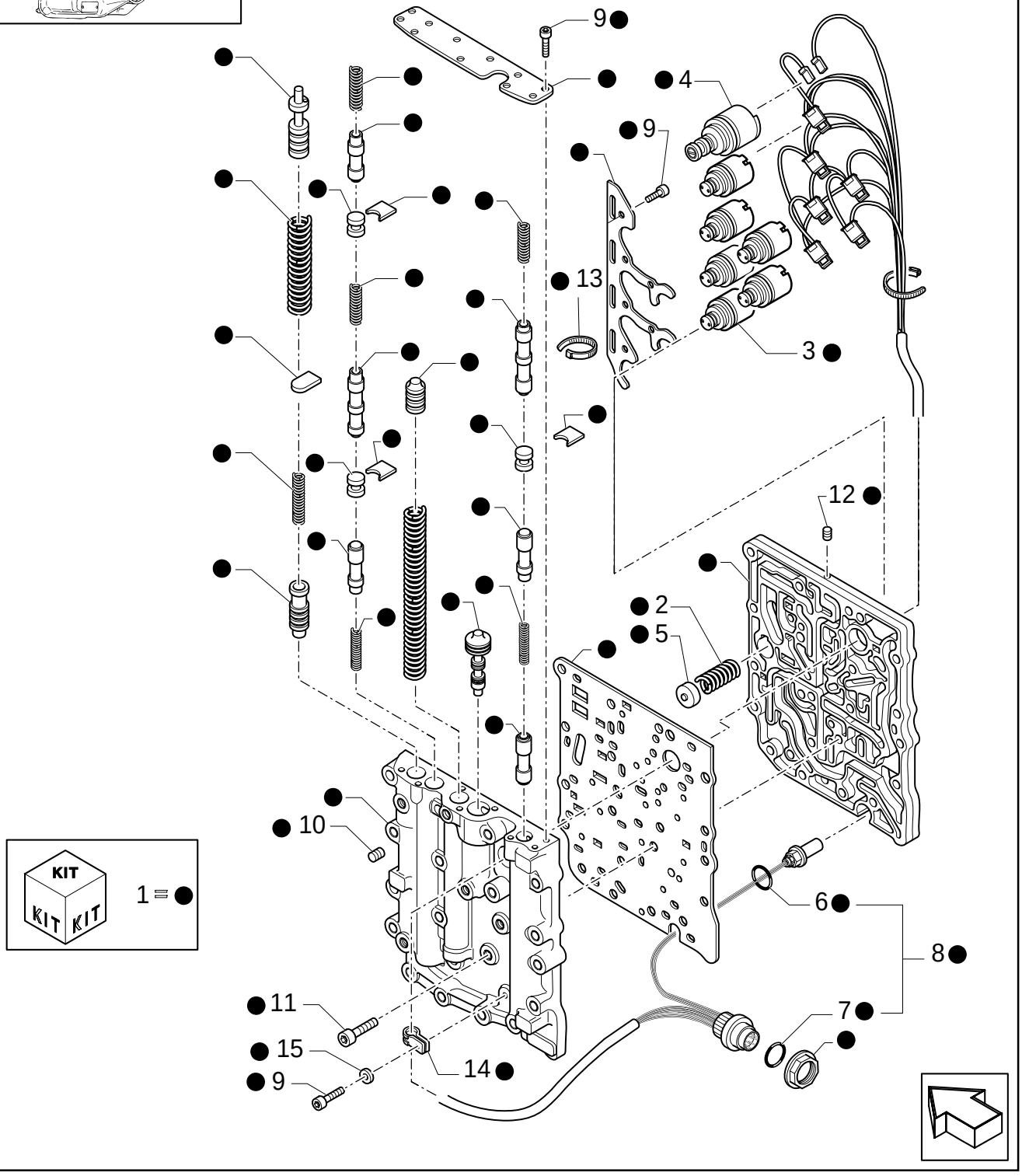

TRANSMISSIONGEARING SPEED GEAR (4WD POWER-SHIFT)

REF	FN	PART NUMBER	YR/SN	QTY	DESCRIPTION
1		85817030		1	VALVE, CONTROL
2		9970286		1	SPRING
3		9970078		6	ELECTROMAGNET
4		9970079		1	VALVE, HYDRAULIC
5		85808373		1	COIL
6		85813308		1	O-RING
7		9970082		1	O-RING
8	1	85817029		1	SENSOR
9		85808370		18	SCREW
10		85808371		2	PLUG
11		85808372		3	SCREW
12		85808374		6	PLUG
13		9969363		6	COLLAR
14		85808375		1	CLIP
15		85808376		1	WASHER, LOCK

(1) Includes 6, 7

CONTROL VALVE ASSEMBLY

1.28.6/ 1	01	p1	02/05

GEAR FILTER PIPES (POWER-SHIFT)

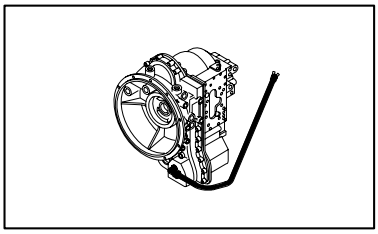

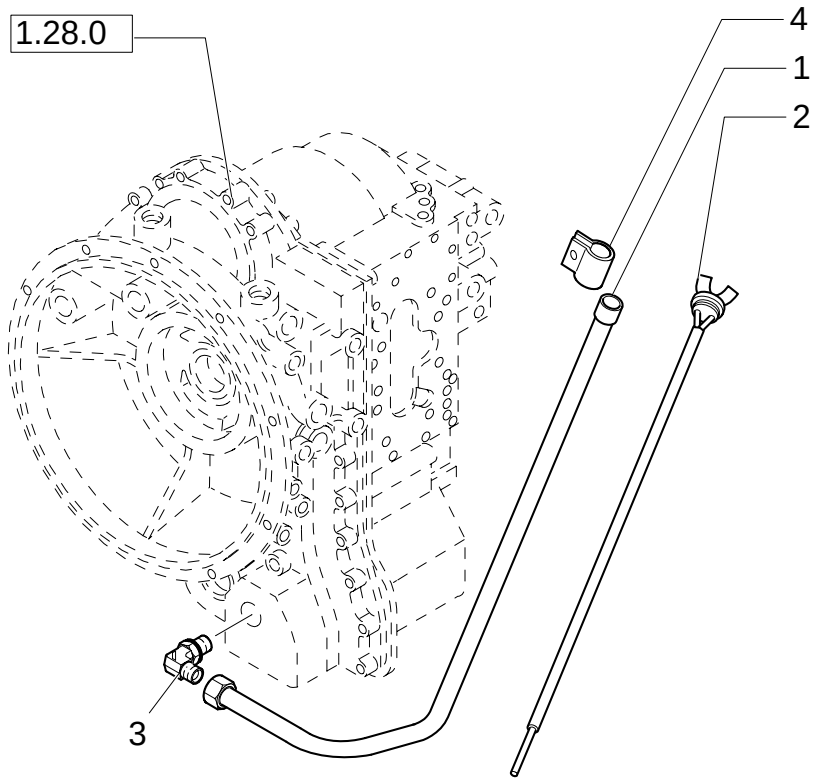

GEAR FILTER PIPES (POWER-SHIFT)

REF	FN	PART NUMBER	YR/SN	QTY	DESCRIPTION
1		87400239		1	TUBE, RIGID
2		87400371		1	DIPSTICK
3		47050658		1	CONNECTOR, HYD.
4		47049176		1	COLLAR

FRONT & REAR DRIVESHAFT (POWER-SHIFT)

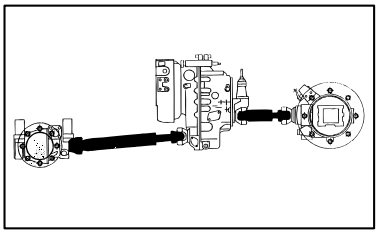

KIT KIT KIT 3 = ●

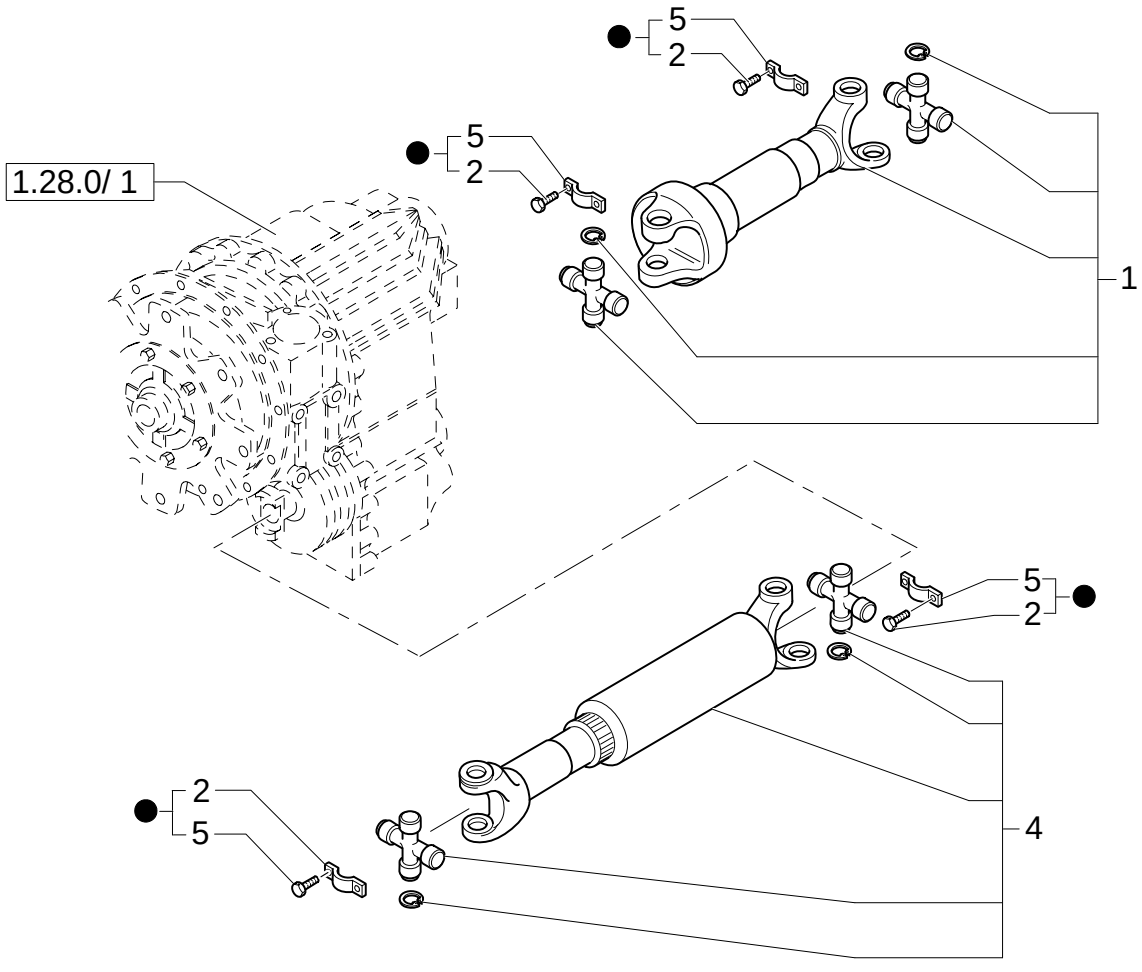

FRONT & REAR DRIVESHAFT (POWER-SHIFT)

REF	FN	PART NUMBER	YR/SN	QTY	DESCRIPTION
1		85827426		1	SHAFT, PROPELLOR ASSY,REAR
2		{87311153}		4	
3		87311154		4	BRACKET
4		85827425		1	SHAFT, PROPELLOR ASSY,FRONT
5		{87311152}		4	

1.39.8	01	p1	11/05

TRANSMISSION OIL COOLING PIPES (POWER-SHUTTLE)

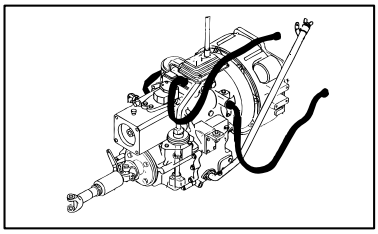

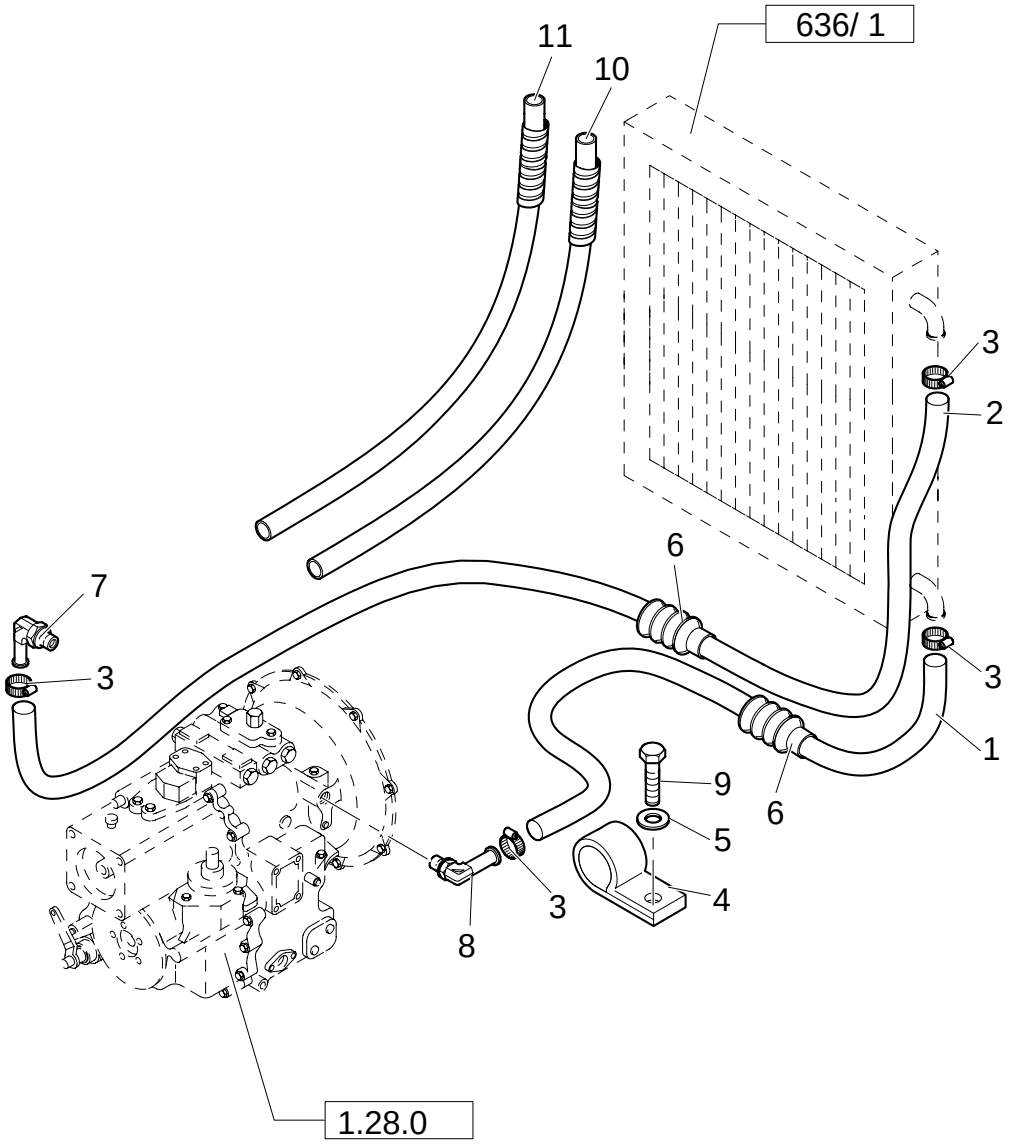

TRANSMISSION OIL COOLING PIPES (POWER-SHUTTLE)

REF	FN	PART NUMBER	YR/SN	QTY	DESCRIPTION
1		87302506		1	HOSE, FLEXIBLE
2		87302507		1	HOSE, FLEXIBLE
3		87314076		4	COLLAR
4		47048664		1	COLLAR
5		47048964		1	WASHER
6		87345955		2	SHIELD
7		87017744		1	CONNECTOR, HYD.
8		87017743		1	CONNECTOR, HYD.
9		47042364		1	SCREW
10		87326808		1	HOSE, FLEXIBLE
11		87326809		1	HOSE, FLEXIBLE

1.39.8/ 1	01	p1	11/05

TRANSMISSION OIL COOLING PIPES (POWER-SHIFT)

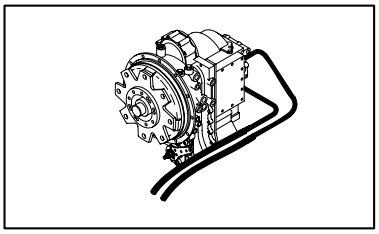

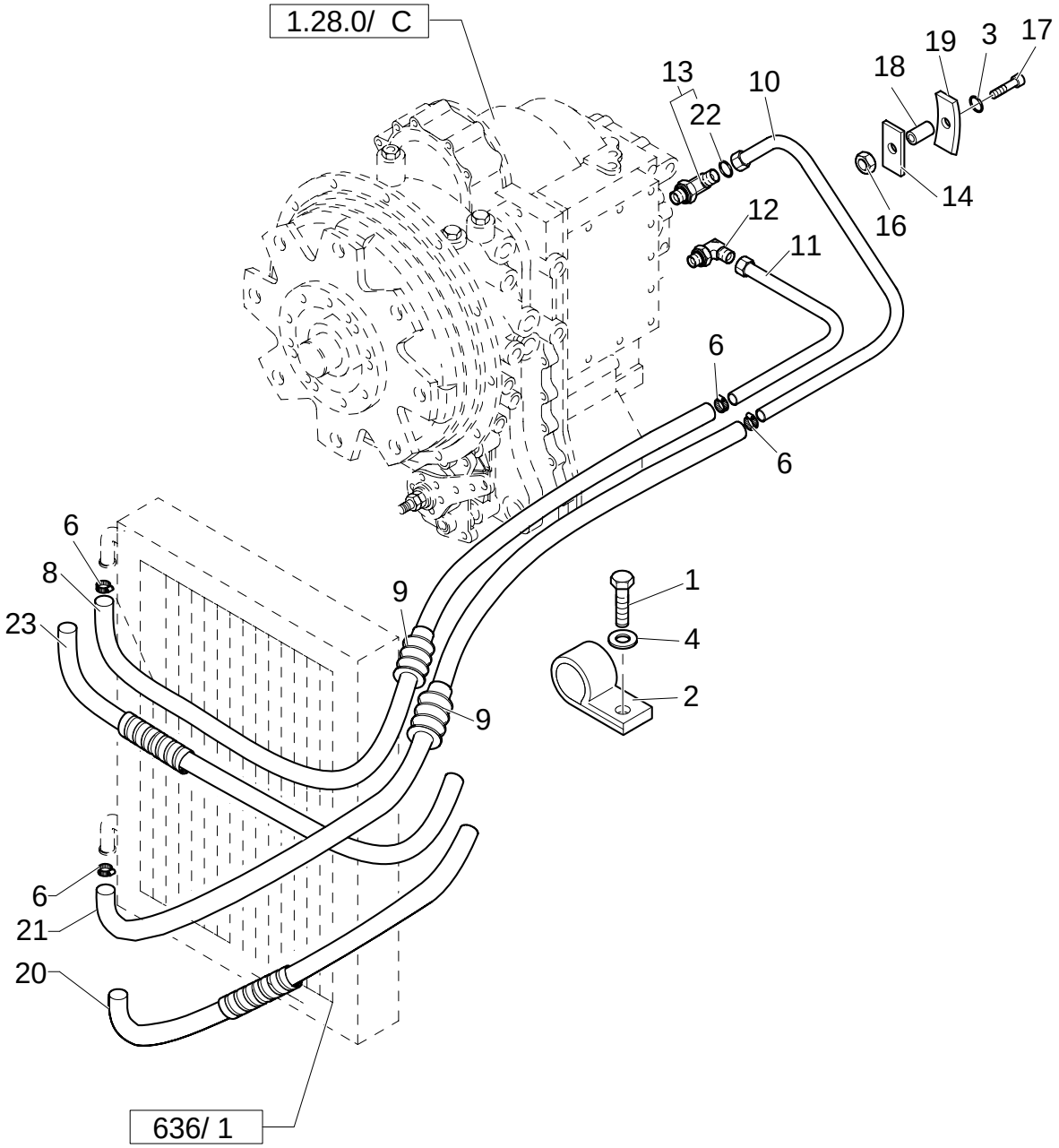

TRANSMISSION OIL COOLING PIPES (POWER-SHIFT)

REF	FN	PART NUMBER	YR/SN	QTY	DESCRIPTION
1		47042364		1	SCREW
2		47048664		1	COLLAR
3		47048962		1	WASHER 9x16x16
4		47048964		1	WASHER
6		87314076		4	COLLAR
8		87302504		1	HOSE, FLEXIBLE
9		87345955		2	SHIELD
10		87403231		1	TUBE, RIGID
11		87403229		1	HOSE, FLEXIBLE
12		47050660		1	CONNECTOR, HYD.
13		100197		1	ELBOW
14		87400407		1	BRACKET
16		47049030		1	NUT M8x10
17		47049082		1	SCREW M8x35
18		47048328		1	SPACER
19		47048735		1	COLLAR
20		87326808		2	HOSE, FLEXIBLE
21		87302505		1	HOSE, FLEXIBLE
22		167266		1	O-RING
23		87326810		1	HOSE, FLEXIBLE

NOTES

SECTION INDEX

SEC. 04	00	FRONT AXLE
400	01	FRONT AXLE (4WS) - BOX
400	02	FRONT AXLE (4WS) - BOX
400	03	FRONT AXLE (4WS) - STEERING AXLES
400	04	FRONT AXLE (4WS) - BEVEL GEAR PAIR
400	05	FRONT AXLE (4WS) - BEVEL GEAR PAIR
400	06	FRONT AXLE (4WS) - DIFFERENTIAL LOCKING
400	06A	SELF-LOCKING FRONT AXLE: DIFFERENTIAL AUTOMATIC LOCKING 4WS
400	07	FRONT AXLE (4WS) - AXLE-SHAFT ARTICULATED
400	08	FRONT AXLE (4WS) - HUBS
400	09	FRONT AXLE (4WS) - HUBS

FRONT AXLE

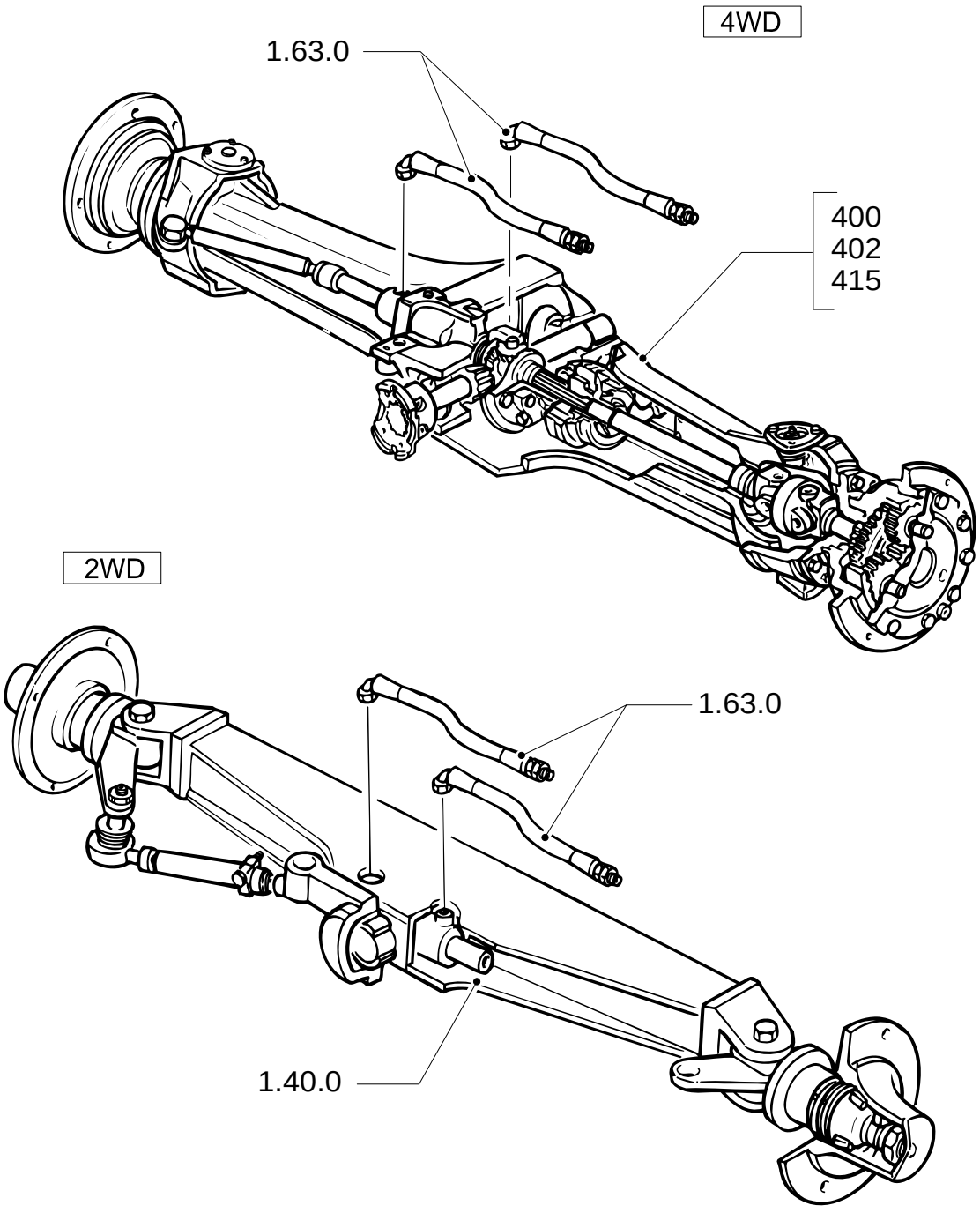

FRONT AXLE

REF	FN	PART NUMBER	YR/SN	QTY	DESCRIPTION

FRONT AXLE (4WS) - BOX

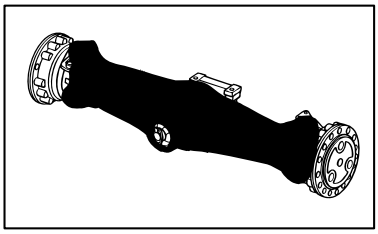

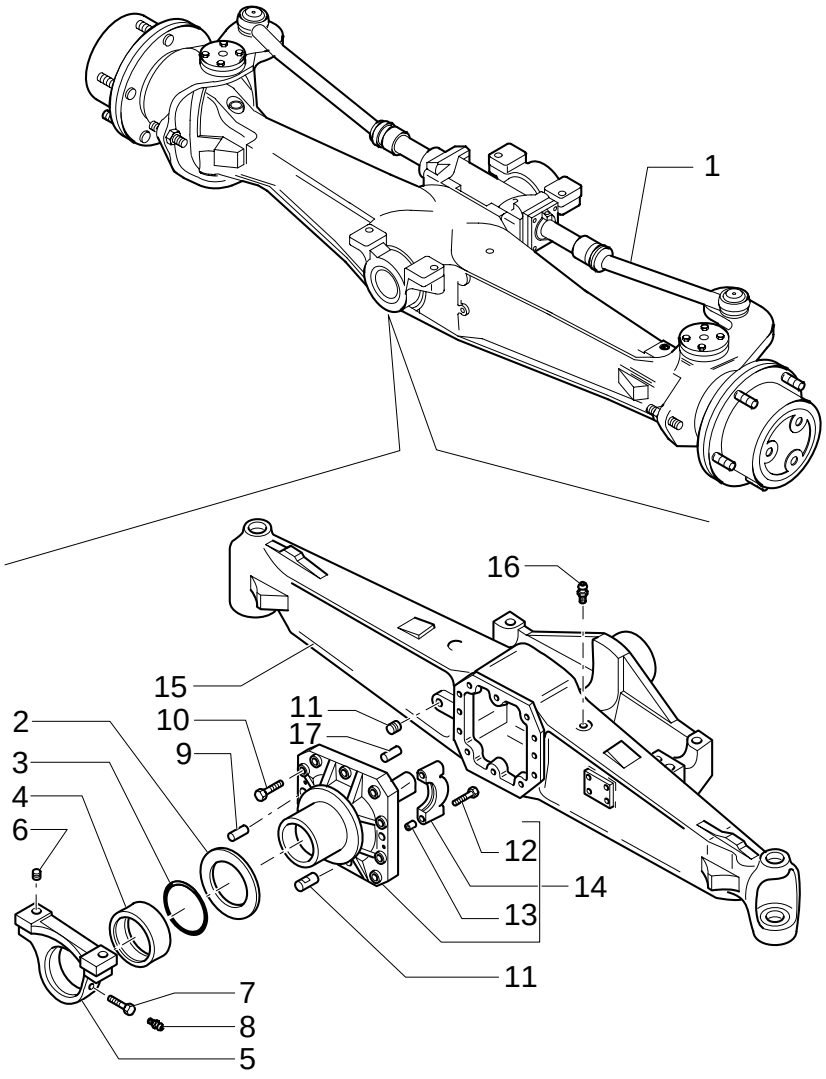

FRONT AXLE (4WS) - BOX

REF	FN	PART NUMBER	YR/SN	QTY	DESCRIPTION
1	1	85821297		1	AXLE
1	2	85821298		1	AXLE
2		85807957		1	WASHER, THRUST
3		85807958		1	O-RING
4		9967992		1	BUSHING
5		85807959		1	SUPPORT
6		9967990		2	BUSHING, DRIVE
7		9967995		1	SCREW
8		9967996		1	NIPPLE, LUBE
9		9967683		2	PIN, ROLL 15X35
10		9967769		10	SCREW M12X1,75X33
11		9968005		2	PLUG, DRAIN
12		9967681		4	SCREW
13		9967682		4	BUSHING
14		85817778		1	DIFF. CARRIER & GEARS ASSY
15		85821293		1	BODY
16		9967672		1	PLUG M10
17		85817794		1	PIN, ROLL

(1) Standard
(2) Self Locking

FRONT AXLE (4WS) - BOX

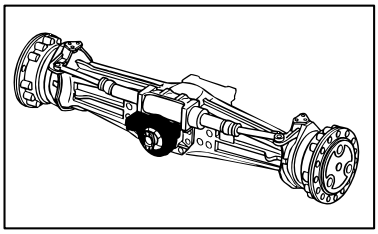

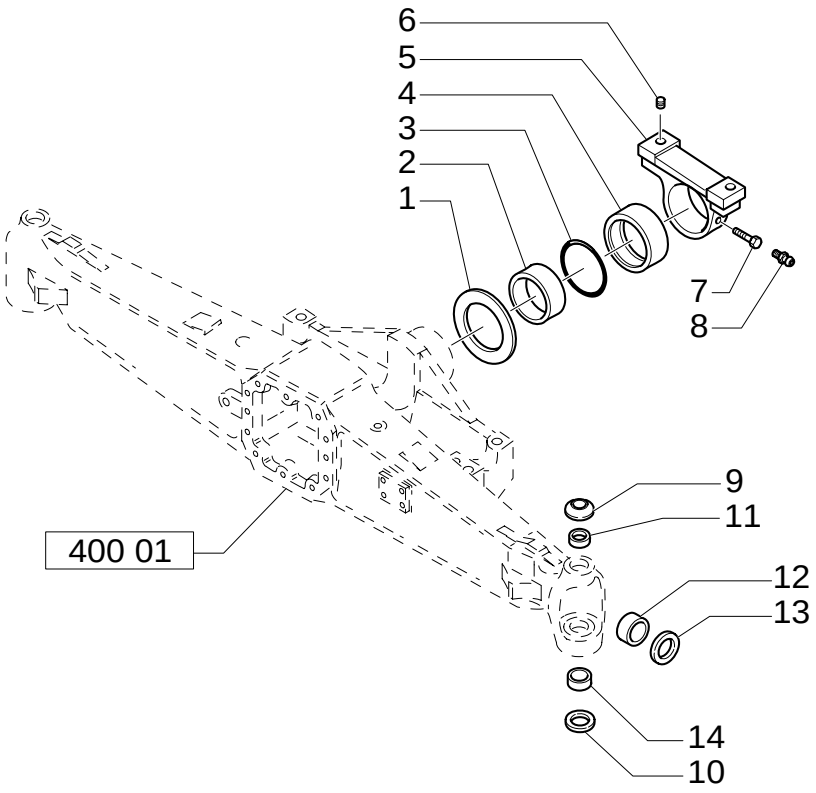

FRONT AXLE (4WS) - BOX

REF	FN	PART NUMBER	YR/SN	QTY	DESCRIPTION
1		9967994		1	WASHER, THRUST
2		9967993		1	BUSHING
3		85807958		1	O-RING
4		9967992		1	BUSHING
5		85807959		1	SUPPORT
6		9967990		2	BUSHING, DRIVE
7		9967995		1	SCREW
8		9967996		1	NIPPLE, LUBE
9		85807961		2	WASHER
10		85807967		2	WASHER
11		85824470		2	BUSHING
12		85807965		2	BUSHING
13		85821295		2	RING M40 ID x 60 OD x 18.5 Thick
14		85807966		2	ARTICULATION

FRONT AXLE (4WS) - STEERING AXLES

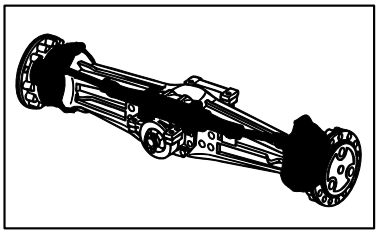

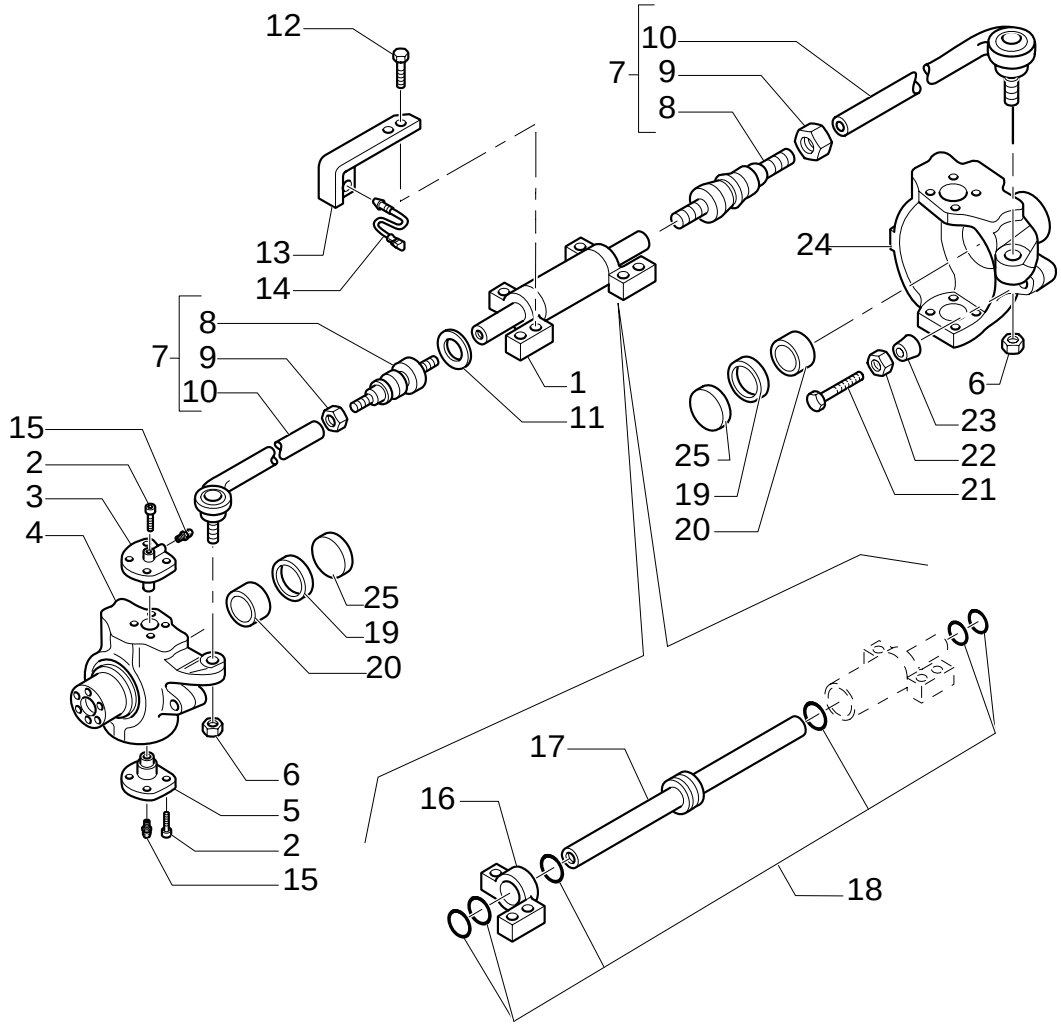

FRONT AXLE (4WS) - STEERING AXLES

REF	FN	PART NUMBER	YR/SN	QTY	DESCRIPTION
1		85807979		1	HYDRAULIC CYLINDER ASSY
2		85807969		16	SCREW M16X2X38
3		85807970		2	PIN
4		85821289		1	CUP, COVER LH
5		85807972		2	PIN
6		85807973		2	NUT M24X1,5
7		85807974		2	ROD ASSY
8		85807975		2	ARTICULATION
9		9968017		2	NUT M24X1,5
10		85807976		2	TIE-ROD
11		85807977		1	WASHER
12		85807978		6	SCREW M20X80
13		85807986		1	BRACKET
14		85807987		1	SENSOR
15		9968021		4	NIPPLE, LUBE M6
16		85807983		2	PISTON SWIVEL HEAD
17		85807984		1	ROD
18		85807985		1	KIT Seal, 42mm rod
19		85821287		2	RING
20		85807981		2	BUSHING
21		85805987		4	SCREW M16X100
22		85805986		4	NUT M16
23		85807982		8	SLEEVE
24		85821290		1	CUP, COVER RH
25		85825033		2	COVER

FRONT AXLE (4WS) - BEVEL GEAR PAIR

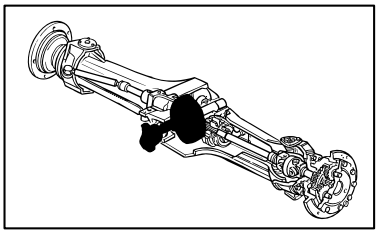

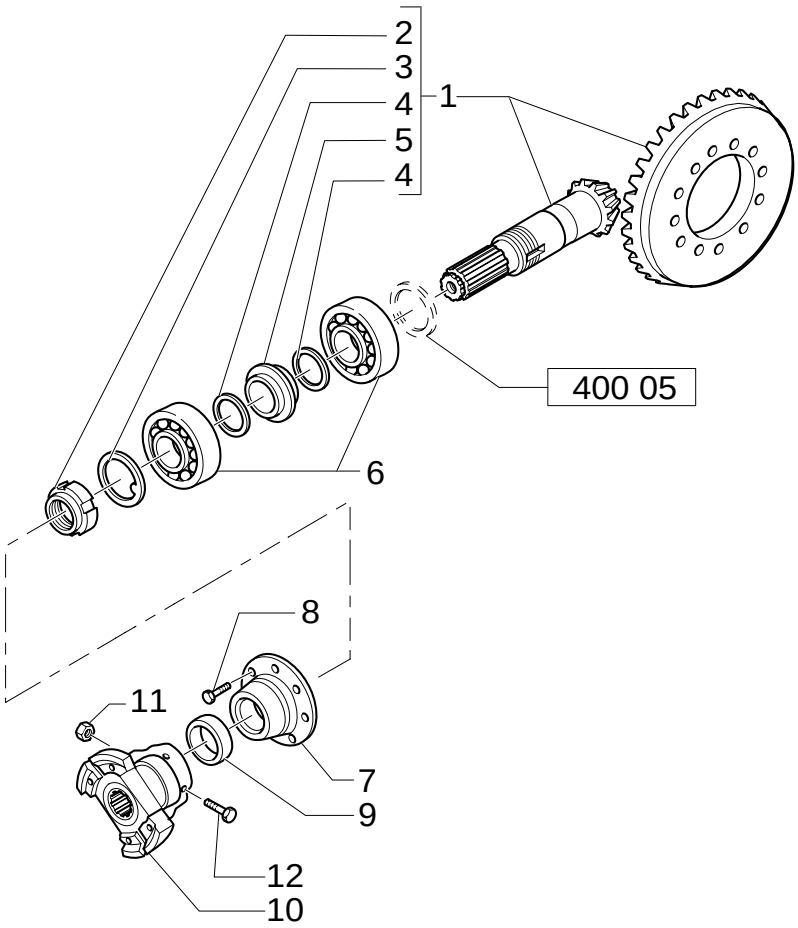

FRONT AXLE (4WS) - BEVEL GEAR PAIR

REF	FN	PART NUMBER	YR/SN	QTY	DESCRIPTION
1		85807988		1	GEAR, BEVEL (Z=12/32)
2		9968031		1	WASHER, SEALING
3		9968032		1	NUT, RING M40X1 ,5
4		9968033		2	WASHER 50X40,5X2
5		9968034		1	SPACER
6		9968047		2	BEARING ASSY
7		85827005		1	FLANGE
8		85807990		6	SCREW M6X16
9		85821296		1	DIFFUSER
10		9968049		1	FLANGE
11		9968050		2	NUT M19X1,5
12		9968048		2	SCREW M10X60

FRONT AXLE (4WS) - BEVEL GEAR PAIR

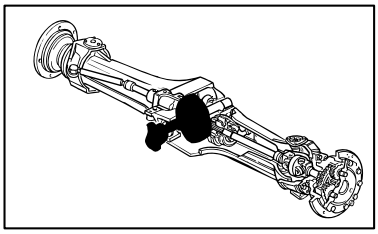

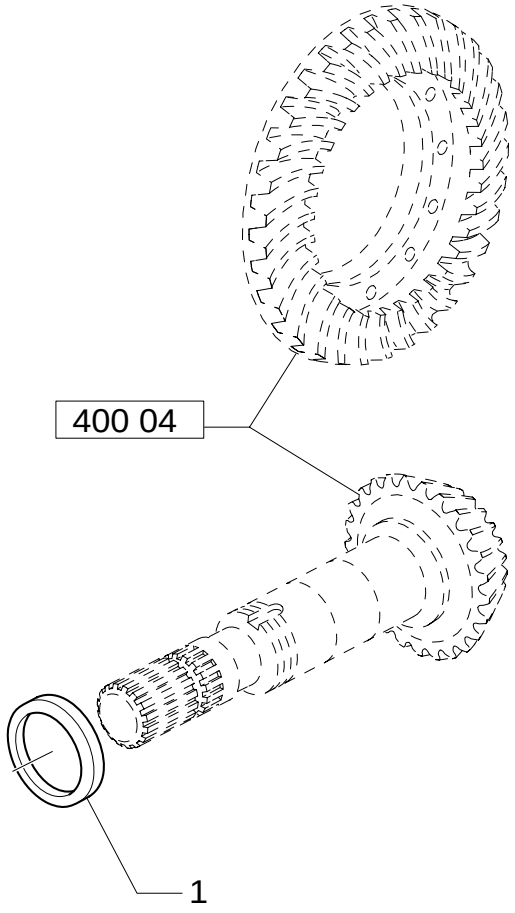

FRONT AXLE (4WS) - BEVEL GEAR PAIR

REF	FN	PART NUMBER	YR/SN	QTY	DESCRIPTION
1		9968037		AR	SHIM MM2,5
1		9968038		AR	SHIM MM2,6
1		9968039		AR	SHIM MM2,7
1		9968040		AR	SHIM MM2,8
1		9968041		AR	SHIM MM2,9
1		9968042		AR	SHIM MM3,0
1		9968043		AR	SHIM MM3,1
1		9968044		AR	SHIM MM3,2
1		9968045		AR	SHIM MM3,3
1		9968046		AR	SHIM MM3,4

FRONT AXLE (4WS) - DIFFERENTIAL LOCKING

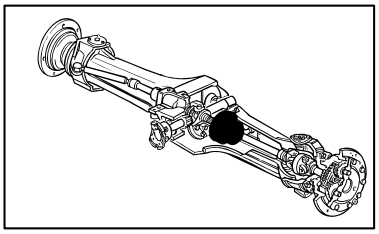

KIT 10 = ●

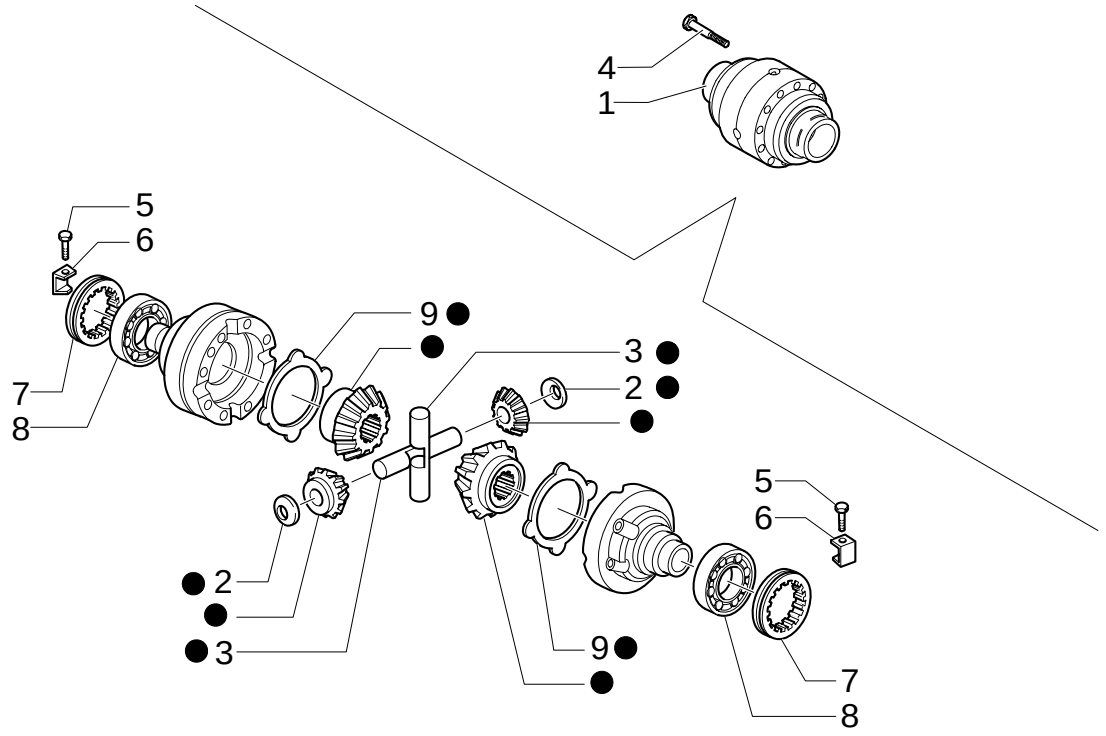

FRONT AXLE (4WS) - DIFFERENTIAL LOCKING

REF	FN	PART NUMBER	YR/SN	QTY	DESCRIPTION
1		85807993		1	BOX
2		9966352		4	WASHER, THRUST
3		85807992		2	PIN
4		9967736		12	SCREW M10X1,5X75
5		9967739		2	SCREW M6X10
6		85817785		2	CLIP
7		9967741		2	NUT, RING
8		9968054		2	BEARING ASSY
9		9967734		2	DISC
10		85807991		1	KIT

400	06A	p1	12/05

SELF-LOCKING FRONT AXLE: DIFFERENTIAL AUTOMATIC LOCKING 4WS

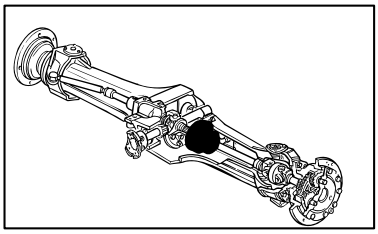

KIT KIT KIT 8 = ●

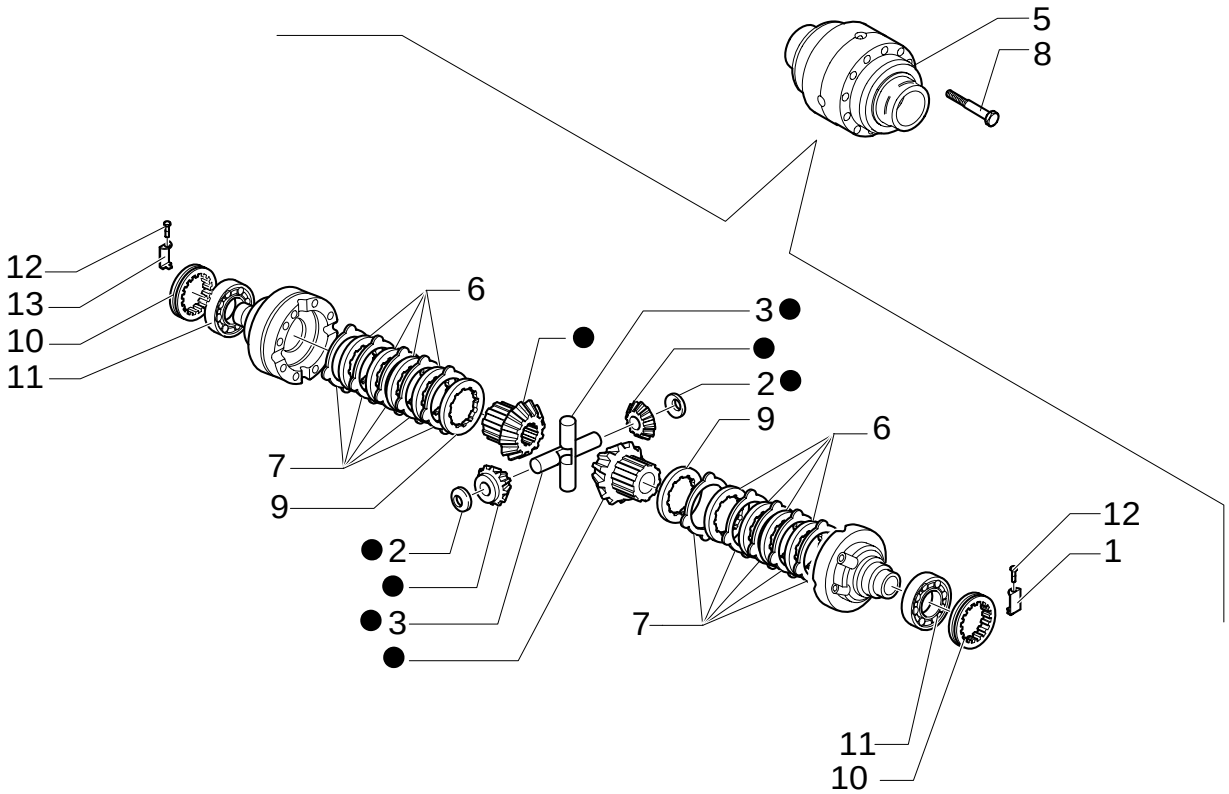

SELF-LOCKING FRONT AXLE: DIFFERENTIAL AUTOMATIC LOCKING 4WS

REF	FN	PART NUMBER	YR/SN	QTY	DESCRIPTION
1		85817785		2	CLIP
2		9966352		4	WASHER, THRUST
3		85807992		2	PIN
4		9967736		12	SCREW M10X1,5X75
5		85807993		1	BOX
6		9966310		8	PLATE
7		9966309		10	DISC
8		85812250		1	KIT M27X2
9		9966308		2	PLATE
10		9967741		2	NUT, RING
11		9968054		2	BEARING ASSY
12		9967739		2	SCREW

400	07	p1	06/05

FRONT AXLE (4WS) - AXLE-SHAFT ARTICULATED

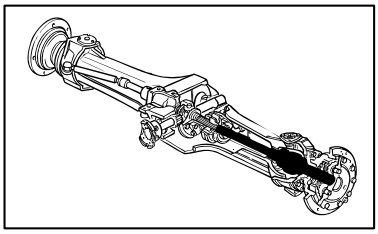

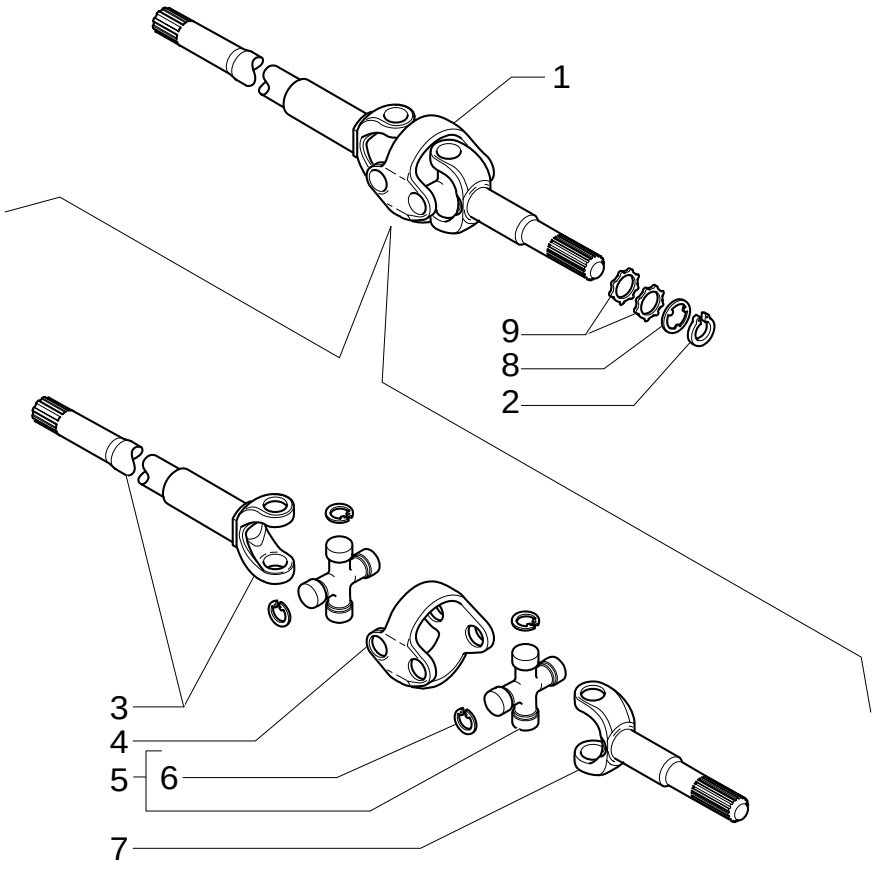

FRONT AXLE (4WS) - AXLE-SHAFT ARTICULATED

REF	FN	PART NUMBER	YR/SN	QTY	DESCRIPTION
1		87306642		2	JOINT, UNIVERSAL
2		85826293		2	RING
3		85827004		2	AXLE-SHAFT
4		87306744		2	BODY
5		85827008		4	SPIDER ASSY
6		85826290		16	RING, SNAP
7		85826291		1	SHAFT
8		85826292		2	WASHER
9		85825176		4	BUSHING 58x47x2.5

FRONT AXLE (4WS) - HUBS

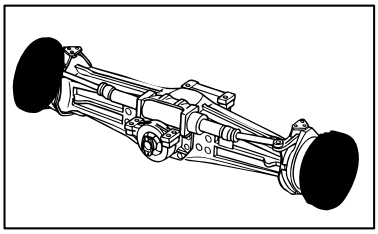

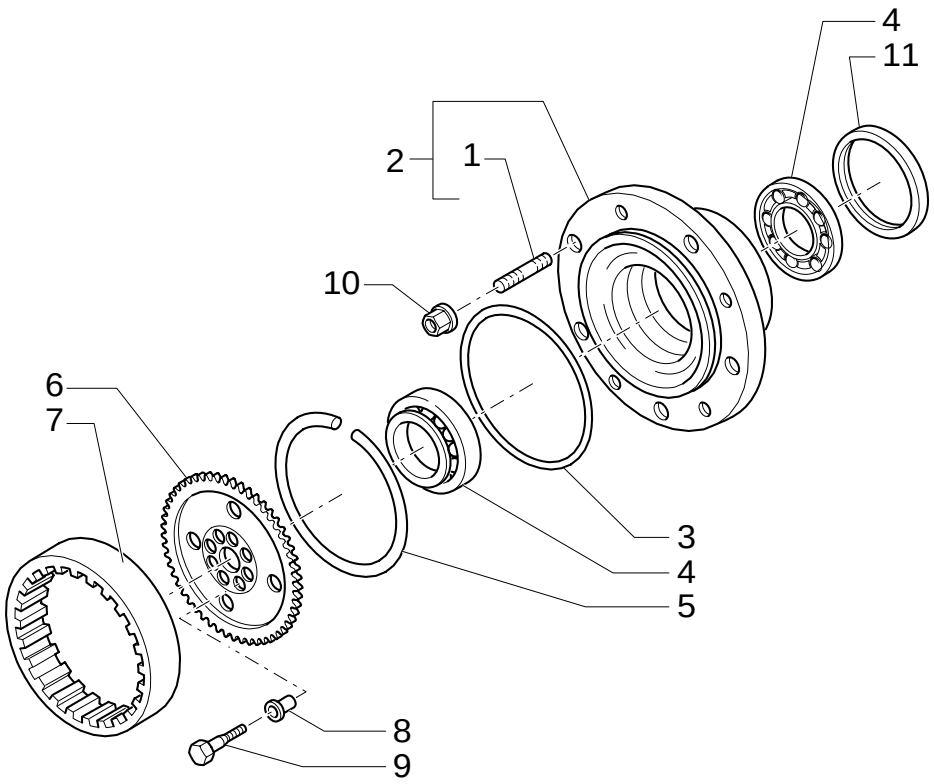

FRONT AXLE (4WS) - HUBS

REF	FN	PART NUMBER	YR/SN	QTY	DESCRIPTION
1		85808260		20	STUD
2		85827000		2	KIT
2		85821286		2	HUB
3		85808262		2	O-RING
4		85827001		4	BEARING ASSY
4		9967690		4	RING
5		85808263		2	RING, LOCKING
6		85817684		2	HUB
7		85808265		2	GEAR, RING (Z=77)
8		9968067		16	BUSHING, DRIVE DIAM.20
9		9968068		16	BOLT M14X1,5X65
10		85808266		10	NUT M221,5
11		85821288		2	GASKET
11		85825035		2	GASKET

FRONT AXLE (4WS) - HUBS

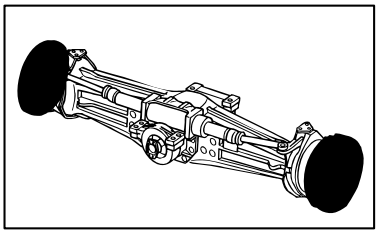

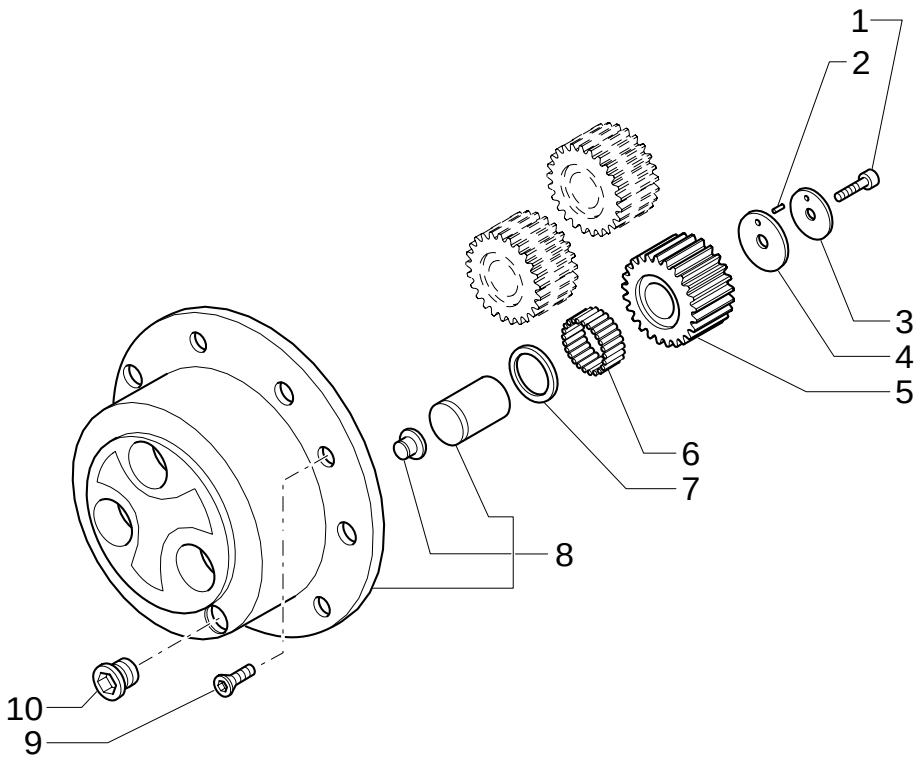

FRONT AXLE (4WS) - HUBS

REF	FN	PART NUMBER	YR/SN	QTY	DESCRIPTION
1		85808267		6	SCREW M10X1,25X50
2		85808268		6	KIT
3		85808269		6	WASHER, SEALING 60X11X3
4		85808270		6	WASHER, SEALING 60X11X3
5		85808271		6	GEAR
6		85808272		AR	KIT (Q.TY 1=10 PIECES)
7		85808273		6	WASHER, SEALING 60X40X1,5
8		85808274		2	KIT ASSY
9		85805709		4	SCREW M8X20
10		85806012		2	PLUG M30X2

NOTES

SECTION INDEX

SEC. 05	00	REAR AXLE
400A	01	REAR AXLE, RH & CENTER HOUSING
400A	02	REAR AXLE, LH HOUSING & BUSHINGS
400A	03	REAR AXLE, RH SWIVEL HOUSING, STEERING CYLINDER & SENSOR
400A	04	REAR AXLE, LH SWIVEL HOUSING
400A	05	REAR AXLE, RING GEAR & PINION ASSEMBLY
400A	06	REAR AXLE, PINION SHIMS
400A	07	REAR AXLE, DIFFERENTIAL (STANDARD)
400A	08	SELF-LOCKING REAR AXLE, DIFFERENTIAL (SELF LOCKING)
400A	09	REAR AXLE, BRAKES
400A	10	REAR AXLE, WHEEL CARRIER & HUB
400A	11	REAR AXLE, PLANETARY GEARS & COVER

REAR AXLE

4WS

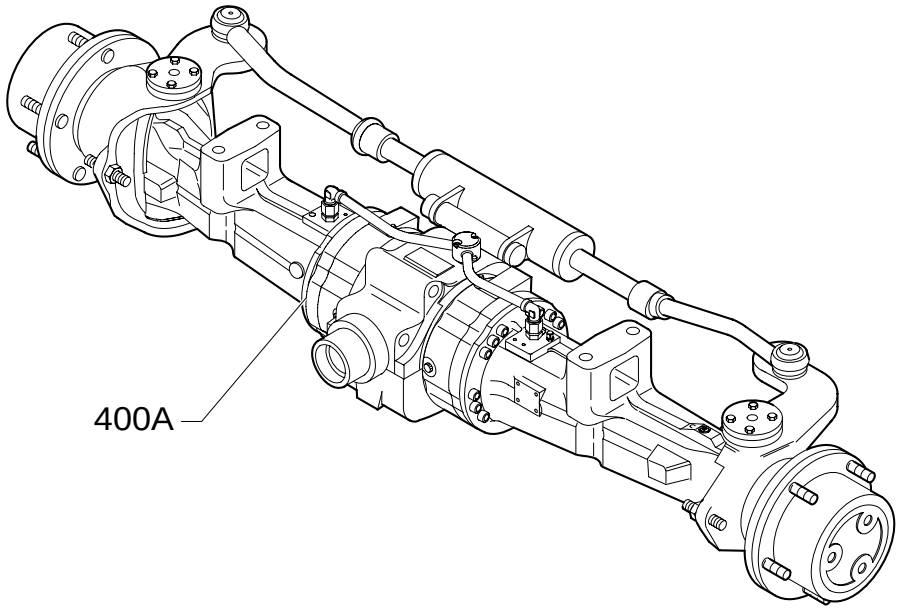

2WS

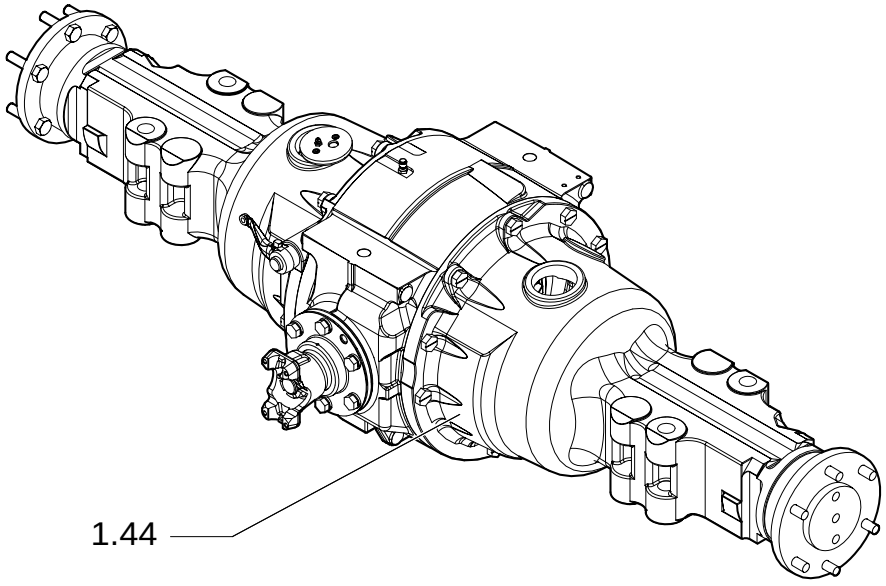

REAR AXLE

REF	FN	PART NUMBER	YR/SN	QTY	DESCRIPTION

400A	01	p1	12/05

REAR AXLE, RH & CENTER HOUSING

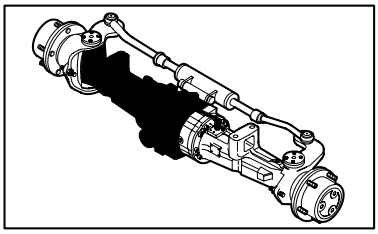

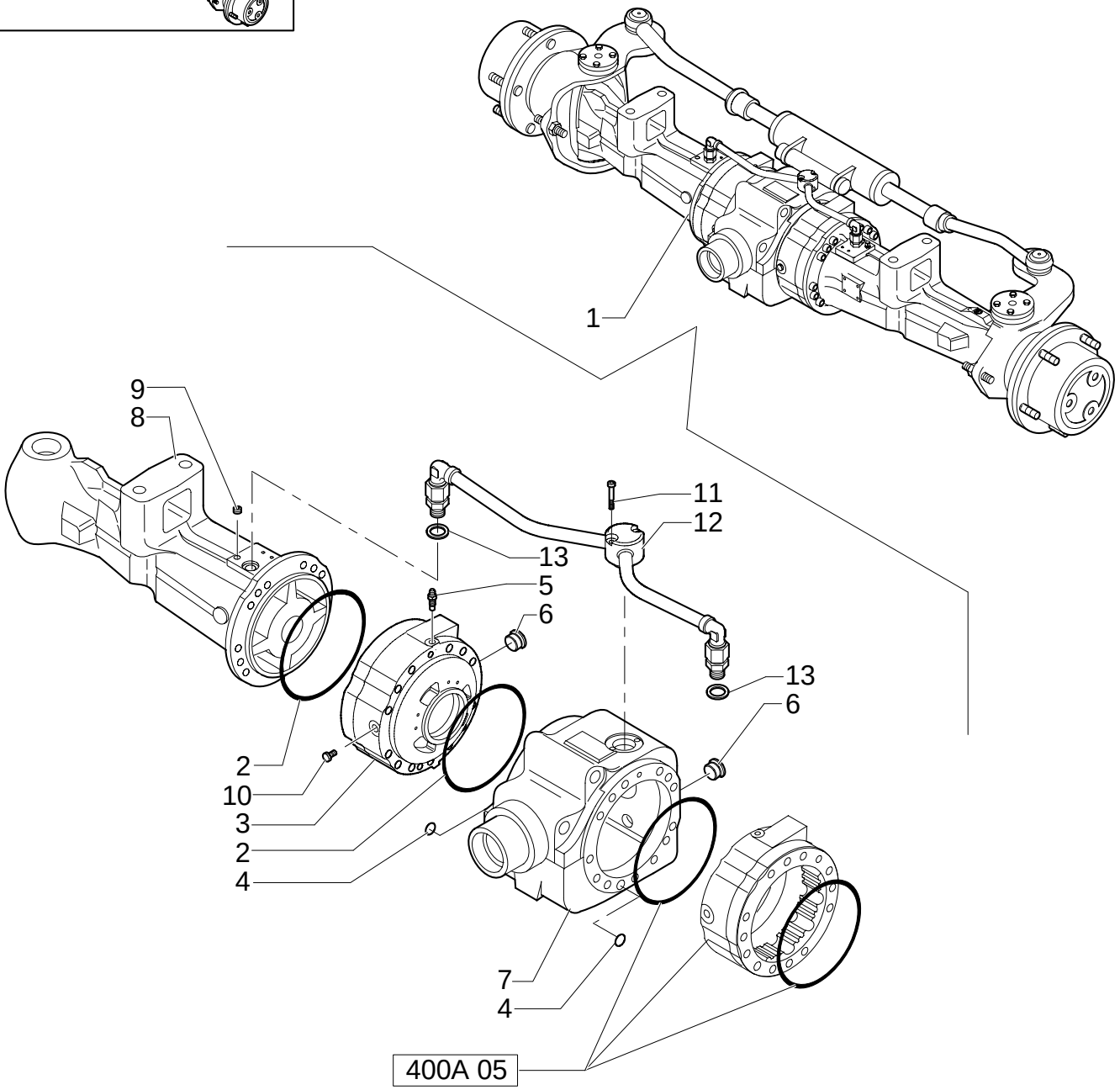

REAR AXLE, RH & CENTER HOUSING

REF	FN	PART NUMBER	YR/SN	QTY	DESCRIPTION
1	1, 2	85826234		1	AXLE ASSY
1	3, 2	85826235		1	AXLE ASSY
2		85808276		2	O-RING
3		{85817753}		1	REAR RH
4		85808278		2	O-RING
5		85808282		1	BREATHER M10x1
6		85806012		2	PLUG M30
7		85827755		1	BARREL
8		85827756		1	BODY
9		85805703		1	PLUG
10		87317057			PIN
11		85827762			SCREW M8x45
12		87306639			TUBE, RIGID
13		85827760			WASHER Ø 8

(1) Standard Axle
(2) Consists Of 2 to 9, Also Page 400A 02 to 400A 11
(3) Self Locking Axle

REAR AXLE, LH HOUSING & BUSHINGS

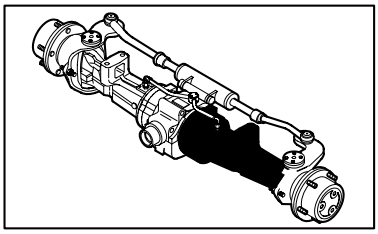

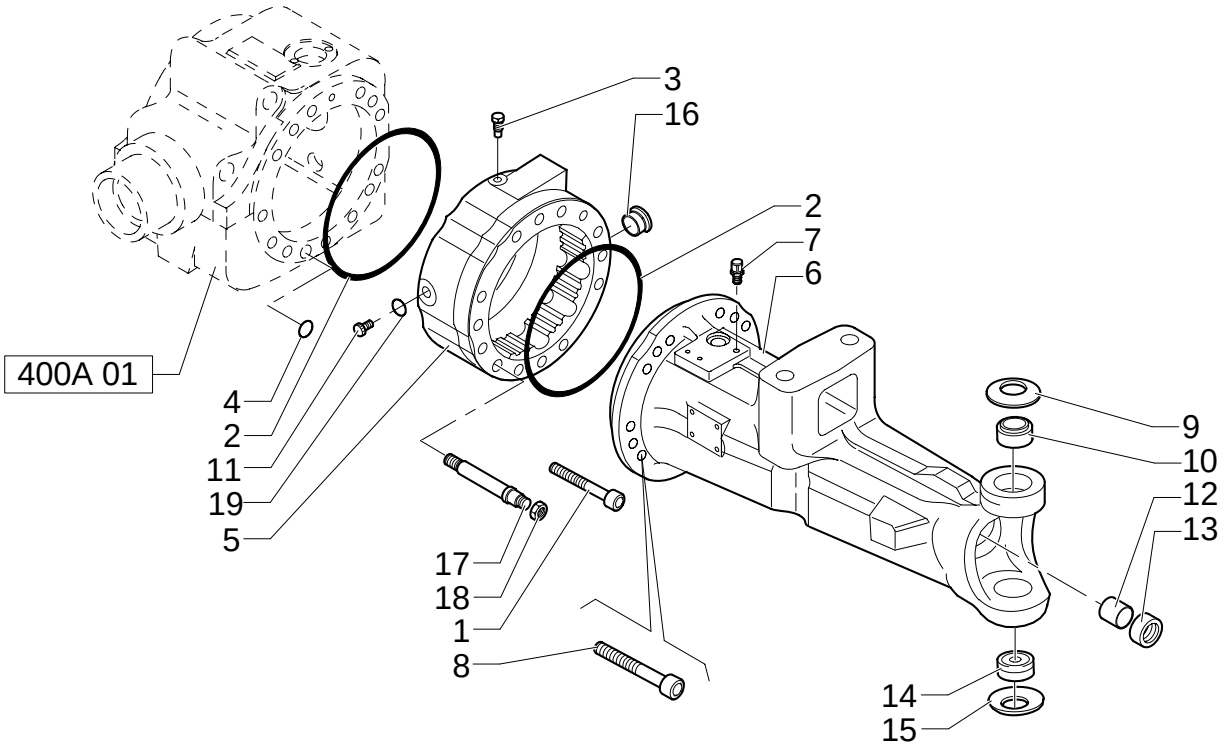

REAR AXLE, LH HOUSING & BUSHINGS

REF	FN	PART NUMBER	YR/SN	QTY	DESCRIPTION
1		85808283		2	SCREW M12x110
2		85808276		2	O-RING
3		85808282		1	BREATHER M10x1
4		85808278		1	O-RING
5		85827754		1	BRAKE CYLINDER
6		85827756		1	BODY
7		9967672		1	PLUG M10x1
8		85808281		24	SCREW
9		85807961		2	WASHER
10		85824470		2	BUSHING
11		87317057		2	PIN
12		85807965		2	BUSHING
13		87415749		2	SEAL, OIL M40 ID x 60 OD x 18.5 Thick
14		85807966		2	ARTICULATION
15		85807967		2	WASHER
16		85806012		1	PLUG M30x2
17		85817678		2	STUD M16x2
18		85817680		2	NUT M16x2
19		87317058		2	WASHER

400A	03	p1	12/05

REAR AXLE, RH SWIVEL HOUSING, STEERING CYLINDER & SENSOR

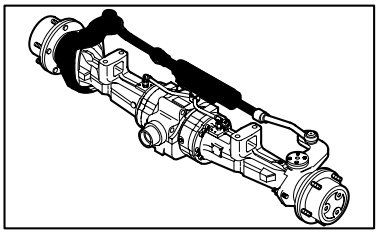

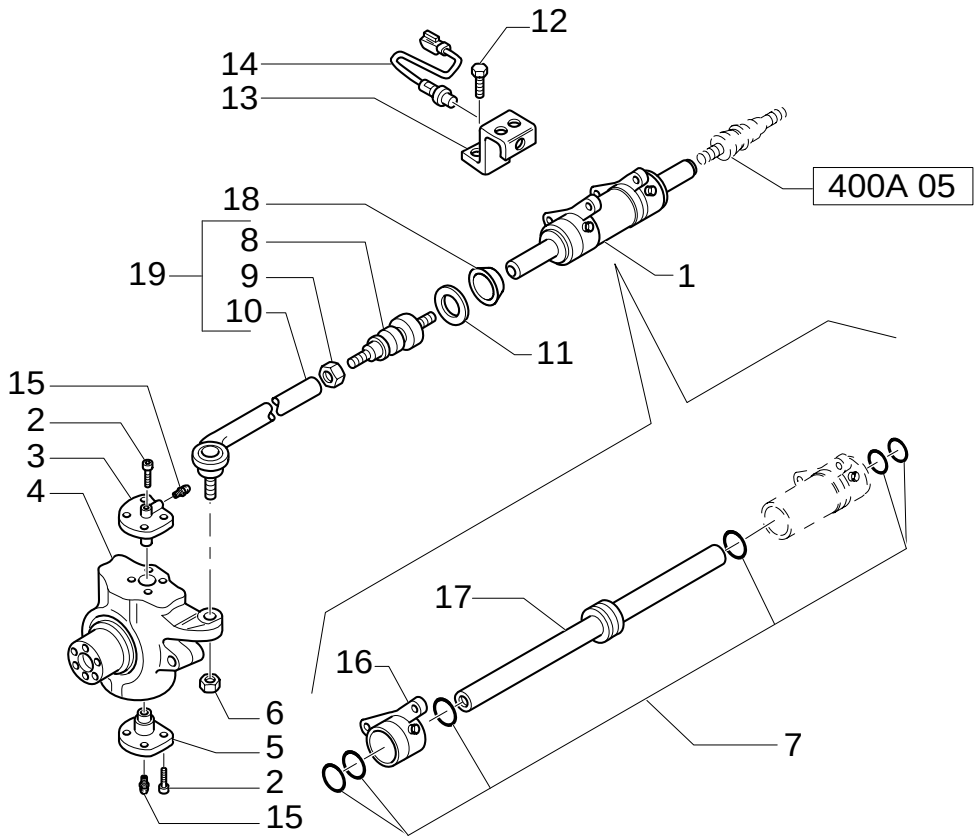

REAR AXLE, RH SWIVEL HOUSING, STEERING CYLINDER & SENSOR

REF	FN	PART NUMBER	YR/SN	QTY	DESCRIPTION
1		85808289		1	HYDRAULIC CYLINDER
2		85807969		16	SCREW M16x38
3		85807970		2	PIN
4		85825029		1	CUP, COVER REAR RH
5		85807972		2	PIN
6		85807973		1	NUT M24x1,5
7		85820809		1	KIT Seal, 40mm rod
8		85807975		1	ARTICULATION
9		9968017		1	NUT M24x1,5
10		85825030		1	TIE-ROD REAR
11		85807977		1	WASHER
12		85808295		2	SCREW M8x20
13		85826285		1	BRACKET
14		85807987		1	SENSOR
15		9968021		4	NIPPLE, LUBE M6x1
16		85820808		2	FLANGE
17		85820807		1	ROD
18	1, 2	85825033		2	COVER
18	3, 4	85825033		2	COVER
19		{85825031}		2	

(1) Self Locking Axle
(2) UP TO S/N 031049356
(3) Standard
(4) FROM TO S/N 031050239

REAR AXLE, LH SWIVEL HOUSING

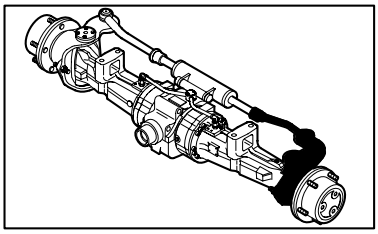

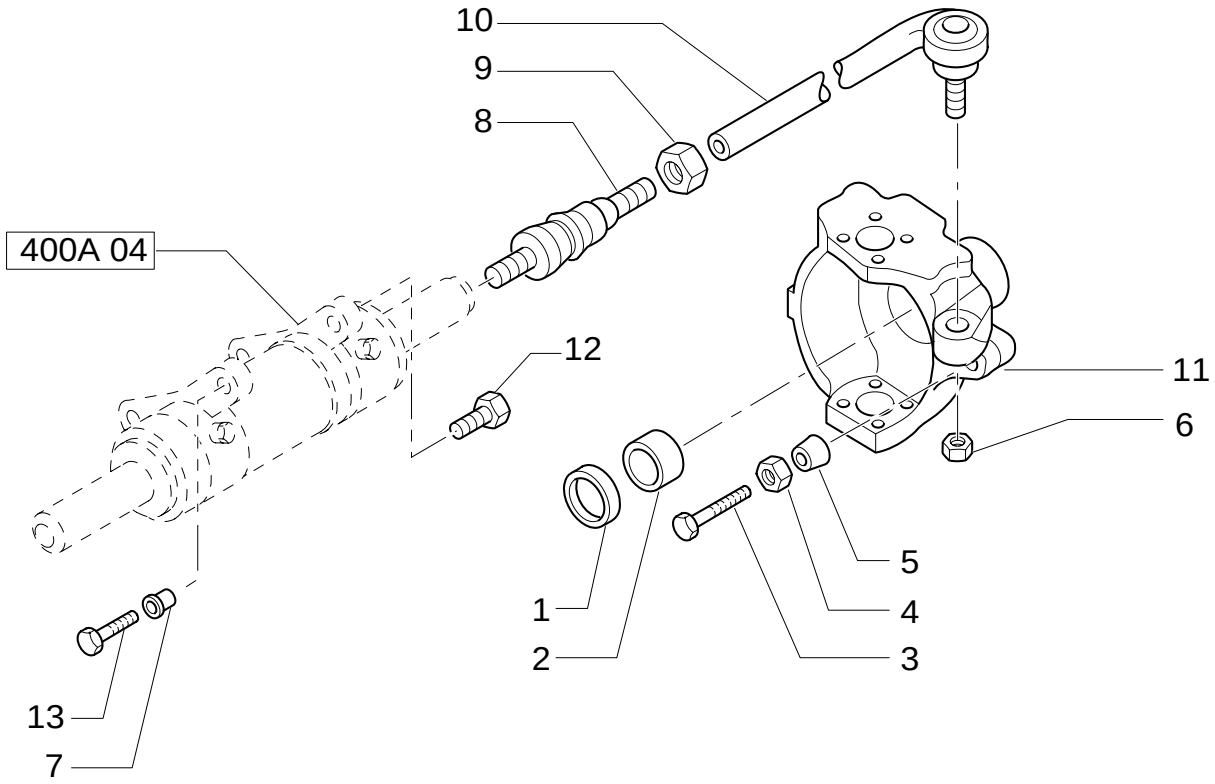

REAR AXLE, LH SWIVEL HOUSING

REF	FN	PART NUMBER	YR/SN	QTY	DESCRIPTION
1		85821287		2	RING
2		85807981		2	BUSHING
3		85812281		4	SCREW M16X130
4		85805986		4	NUT M16
5		85807982		4	SLEEVE
6		85807973		1	NUT M24X1,5
7		85808294		1	SLEEVE
8		85807975		1	ARTICULATION
9		9968017		1	NUT
10		85825030		1	TIE-ROD REAR
11		85825032		1	CUP, COVER REAR LH
12		85808293		2	SCREW M22X55
13		9968068		2	BOLT M14x65

REAR AXLE, RING GEAR & PINION ASSEMBLY

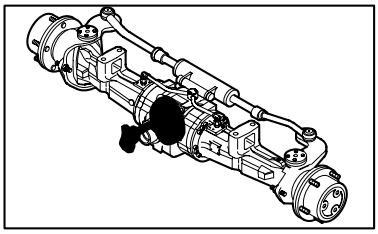

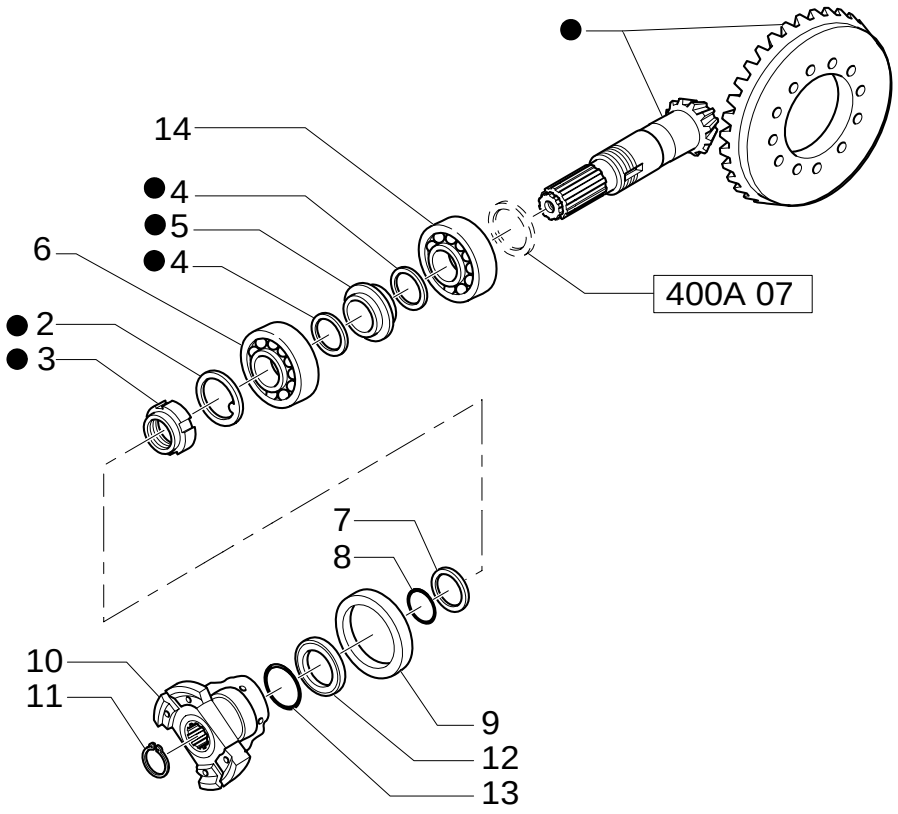

KIT 1 = ●

REAR AXLE, RING GEAR & PINION ASSEMBLY

REF	FN	PART NUMBER	YR/SN	QTY	DESCRIPTION
1		85812286		1	GEAR, BEVEL (Z=12/33)
2		9968031		1	WASHER, SEALING
3		9968032		1	NUT, RING M40X1,5
4		9968033		2	WASHER 50X40,5X2
5		85812287		1	SPACER
6		9968047		1	BEARING ASSY
7		85808297		1	WASHER
8		85808298		1	O-RING
9		85825034		1	SEAL 65X92X14
10		85808300		1	FLANGE
11		9968083		1	CIRCLIP
12		85808301		1	SPACER
13		85808302		1	O-RING
14	1	85812298	BSN 031049357	1	BEARING ASSY
14	2	85812298	BSN 031050239	1	BEARING ASSY
14	1	9968047	ASN 031049357	1	BEARING ASSY
14	2	9968047	ASN 031050240	1	BEARING ASSY

(1) Self Locking Axle
(2) Standard Axle

REAR AXLE, PINION SHIMS

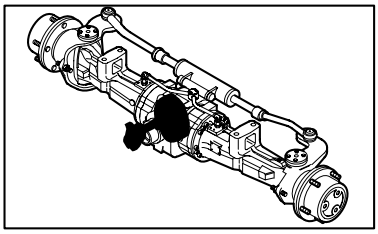

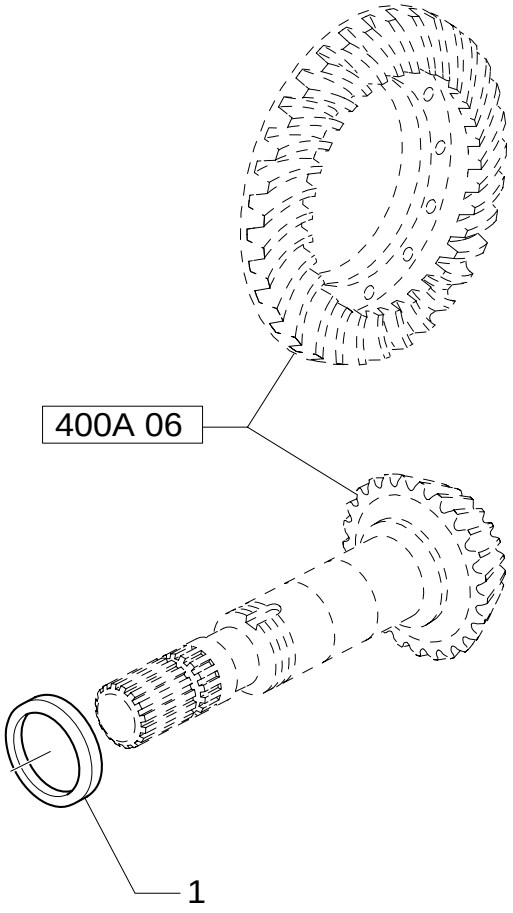

REAR AXLE, PINION SHIMS

REF	FN	PART NUMBER	YR/SN	QTY	DESCRIPTION
1		85812288		AR	SHIM MM2,5
1		85812289		AR	SHIM MM2,6
1		85812290		AR	SHIM MM2,7
1		85812291		AR	SHIM MM2,8
1		85812292		AR	SHIM MM2,9
1		85812293		AR	SHIM MM3,0
1		85812294		AR	SHIM MM3,1
1		85812295		AR	SHIM MM3,2
1		85812296		AR	SHIM MM3,3
1		85812297		AR	SHIM MM3,4

REAR AXLE, DIFFERENTIAL (STANDARD)

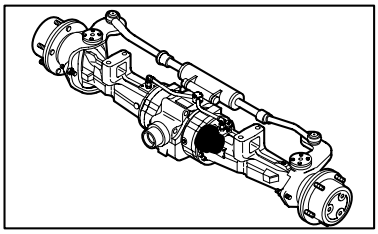

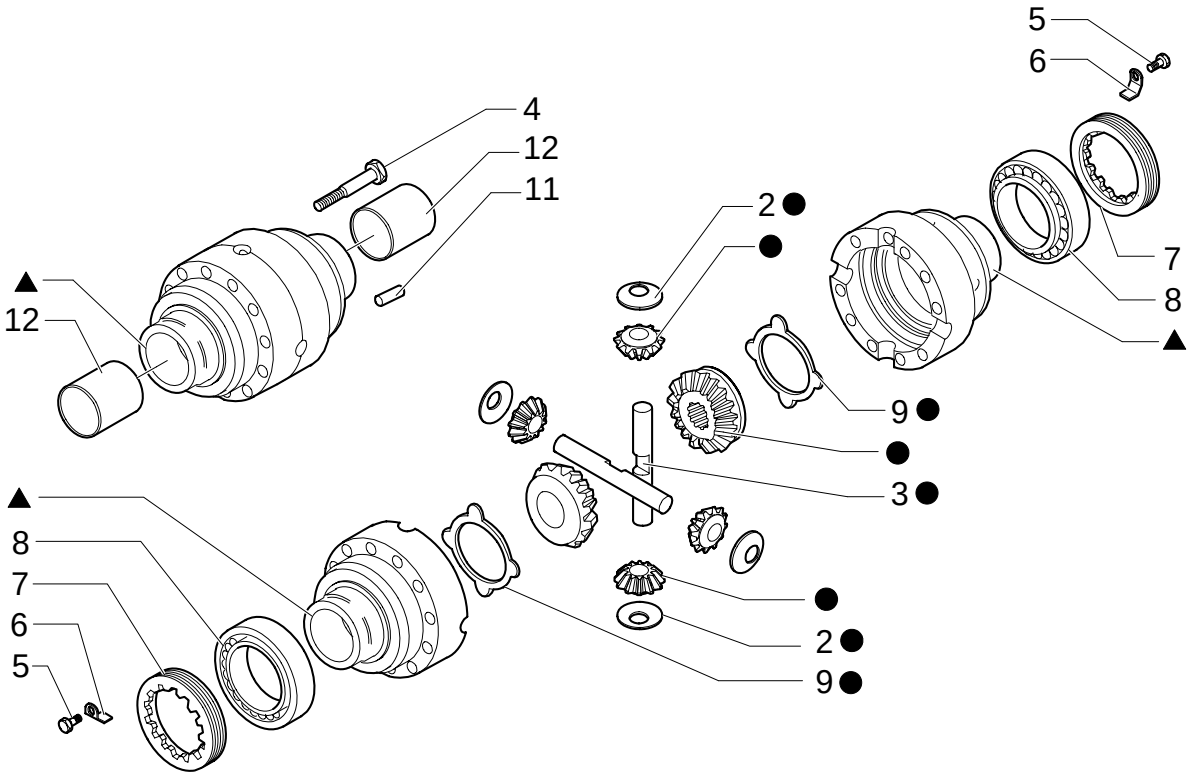

KIT 10 = ●
1 = ▲

REAR AXLE, DIFFERENTIAL (STANDARD)

REF	FN	PART NUMBER	YR/SN	QTY	DESCRIPTION
1		85827752		1	DIFFERENTIAL GEAR
2		85812301		4	WASHER
3		85812300		2	PIN
4		85812308		10	SCREW M10x90
5		9967739		2	SCREW M6x10
6		85817785		2	CLIP
7		85827745		2	NUT, RING
8		85827751		2	BEARING ASSY
9		85812343		2	DISC
10		85812342		1	KIT
11		85812306		2	PIN, ROLL
12		85827758		2	BUSHING

400A	08	p1	12/05

SELF-LOCKING REAR AXLE, DIFFERENTIAL (SELF LOCKING)

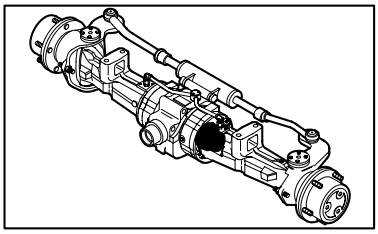

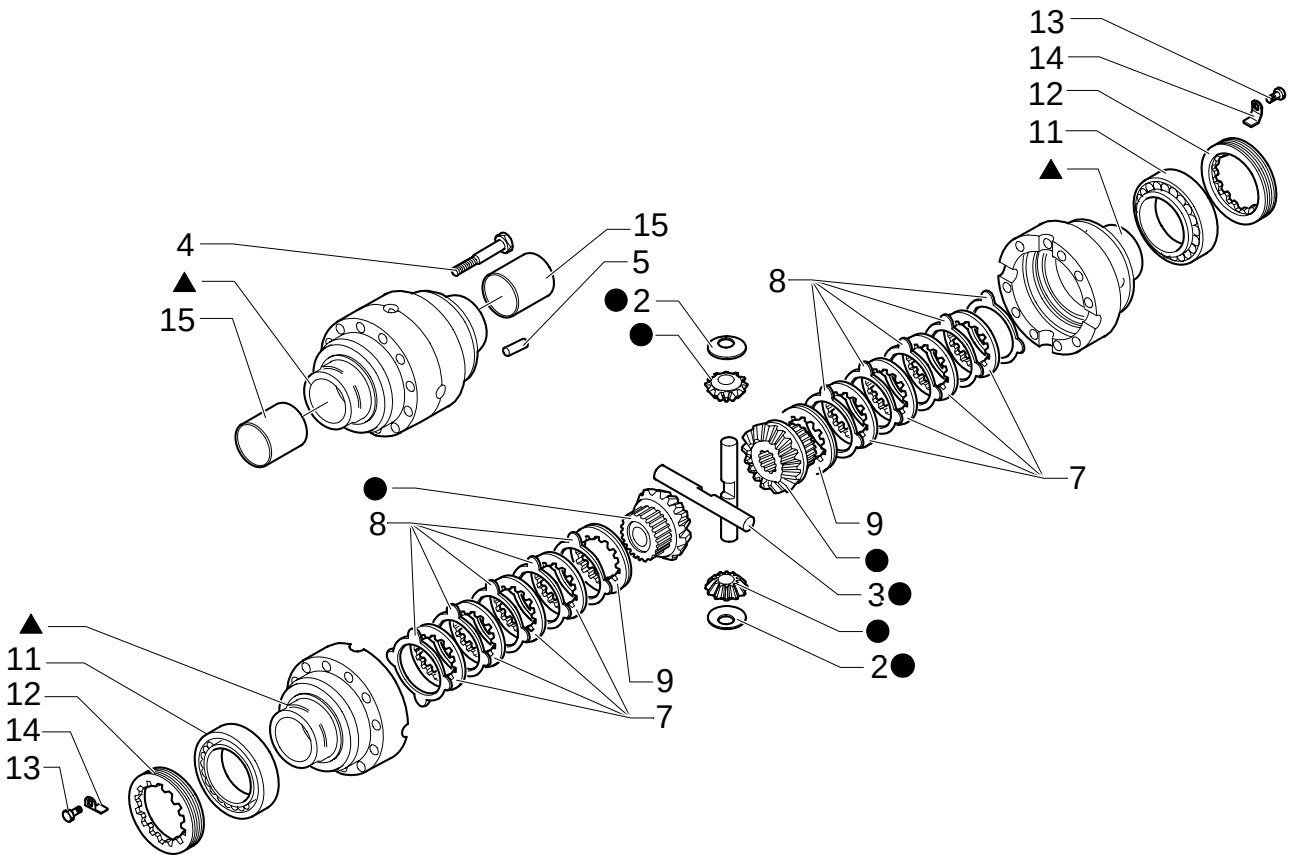

KIT

10 = ●

6 = ▲

SELF-LOCKING REAR AXLE, DIFFERENTIAL (SELF LOCKING)

REF	FN	PART NUMBER	YR/SN	QTY	DESCRIPTION
2		85812301		4	WASHER
3		85812300		2	PIN
4		85812308		10	SCREW M12x75
5		85812306		2	PIN, ROLL
6		85827752		1	DIFFERENTIAL GEAR
7		85812304		8	DISC
8		85812303		10	DISC
9		85812302		2	DISC
10		85812299		1	KIT
11		85827751		2	BEARING ASSY
12		85827745		2	NUT, RING
13		9967739		2	SCREW M6x10
14		85817785		2	CLIP
15		85827758		2	BUSHING

REAR AXLE, BRAKES

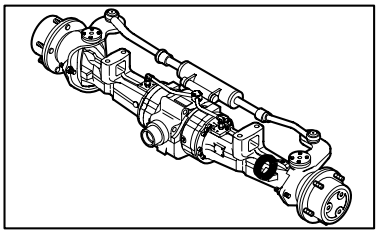

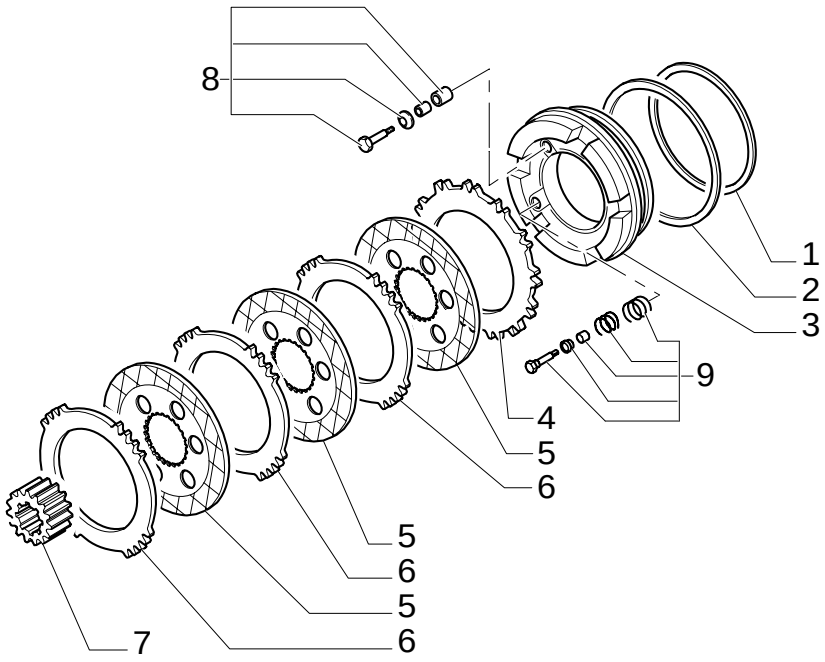

REAR AXLE, BRAKES

REF	FN	PART NUMBER	YR/SN	QTY	DESCRIPTION
1		85819719		2	RING
2		85819720		2	RING
3		85827746		2	PISTON
4		85827748		2	BRAKE DISC
5		85827747		6	BRAKE DISC
6		85808316		6	BRAKE DISC
7		85808311		2	SLEEVE
8		85827750		2	KIT
9		85827749		2	KIT

REAR AXLE, WHEEL CARRIER & HUB

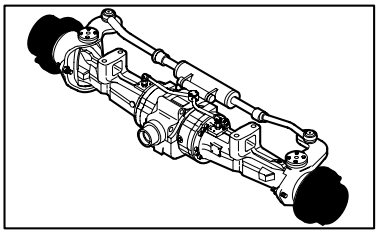

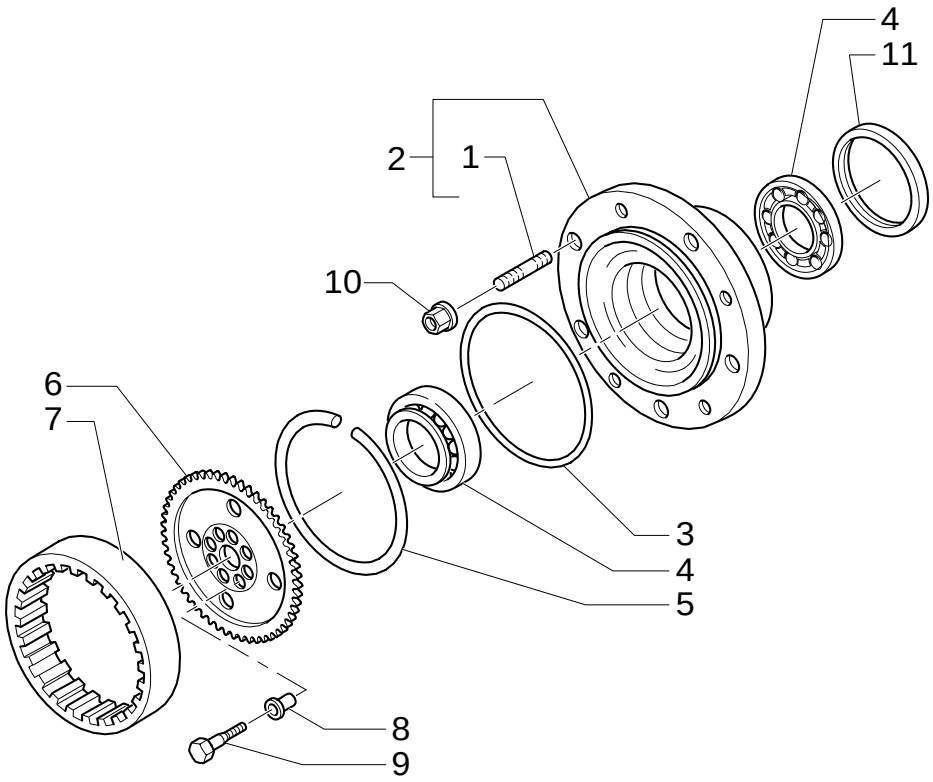

REAR AXLE, WHEEL CARRIER & HUB

REF	FN	PART NUMBER	YR/SN	QTY	DESCRIPTION
1		85808260		20	STUD
2		85825037		2	BODY
3		85808262		2	O-RING
4		85825036		4	BEARING ASSY
5		85808263		2	RING, LOCKING
6		85817684		2	HUB
7		85808265		2	GEAR, RING Z=77
8		9968067		16	BUSHING, DRIVE DIAM.20
9		9968068		16	BOLT M14x65
10		85808266		10	NUT M22x1,5
11		85825035		2	GASKET M150x180x14.5

REAR AXLE, PLANETARY GEARS & COVER

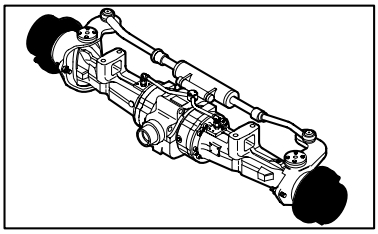

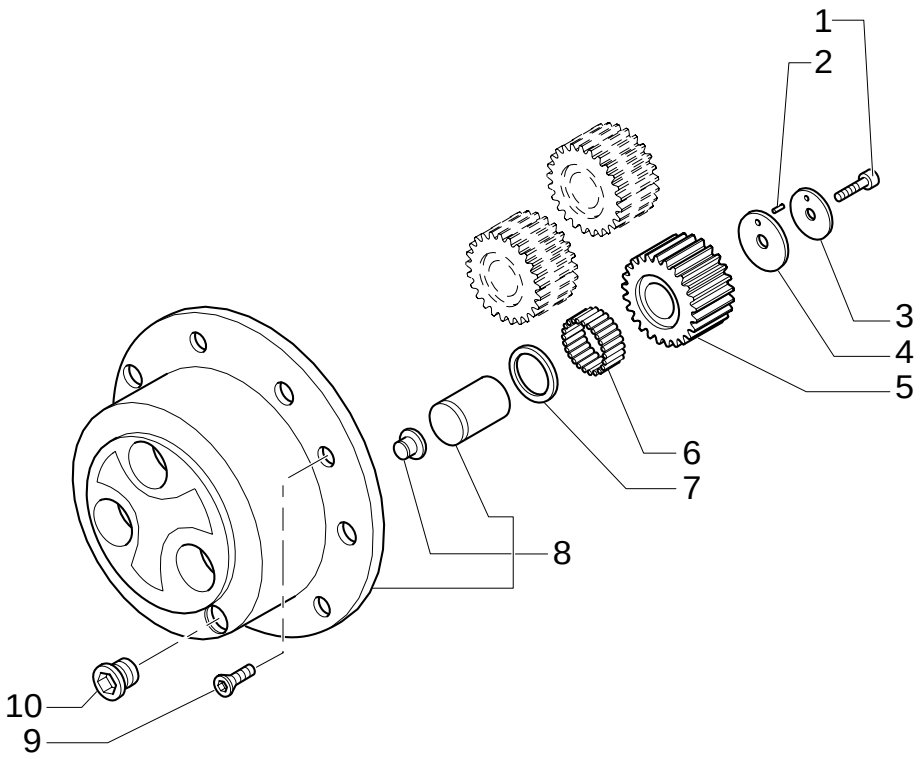

REAR AXLE, PLANETARY GEARS & COVER

REF	FN	PART NUMBER	YR/SN	QTY	DESCRIPTION
1		85808267		6	SCREW M10x50
2		85808268		6	KIT
3		85808269		6	WASHER, SEALING 60X11X3
4		85808270		6	WASHER, SEALING 60X11X3
5		85808271		6	GEAR
6		85808272		AR	KIT (Q.TY 1=10PIECES)
7		85808273		6	WASHER, SEALING 60X40X1,5
8		85808274		2	KIT ASSY
9		85805709		4	SCREW M8X20
10		85806012		2	PLUG M30 x 2

NOTES

SECTION INDEX

SEC. 06	00	ELECTRICAL
1.75.2/ 5	01	CHASSIS HARNESS & GROUND WIRE (POWER SHIFT)
1.75.2/ 5	02	BATTERY LOCK-OUT SWITCH & GROUND WIRE (POWER SHIFT)
1.75.2/ 5	03	ENGINE HARNESS (POWER SHIFT)
131	01	SINGLE BATTERY
321	01	DOUBLE BATTERY
995	01	COLD START
995	02	COLD START

ELECTRICAL

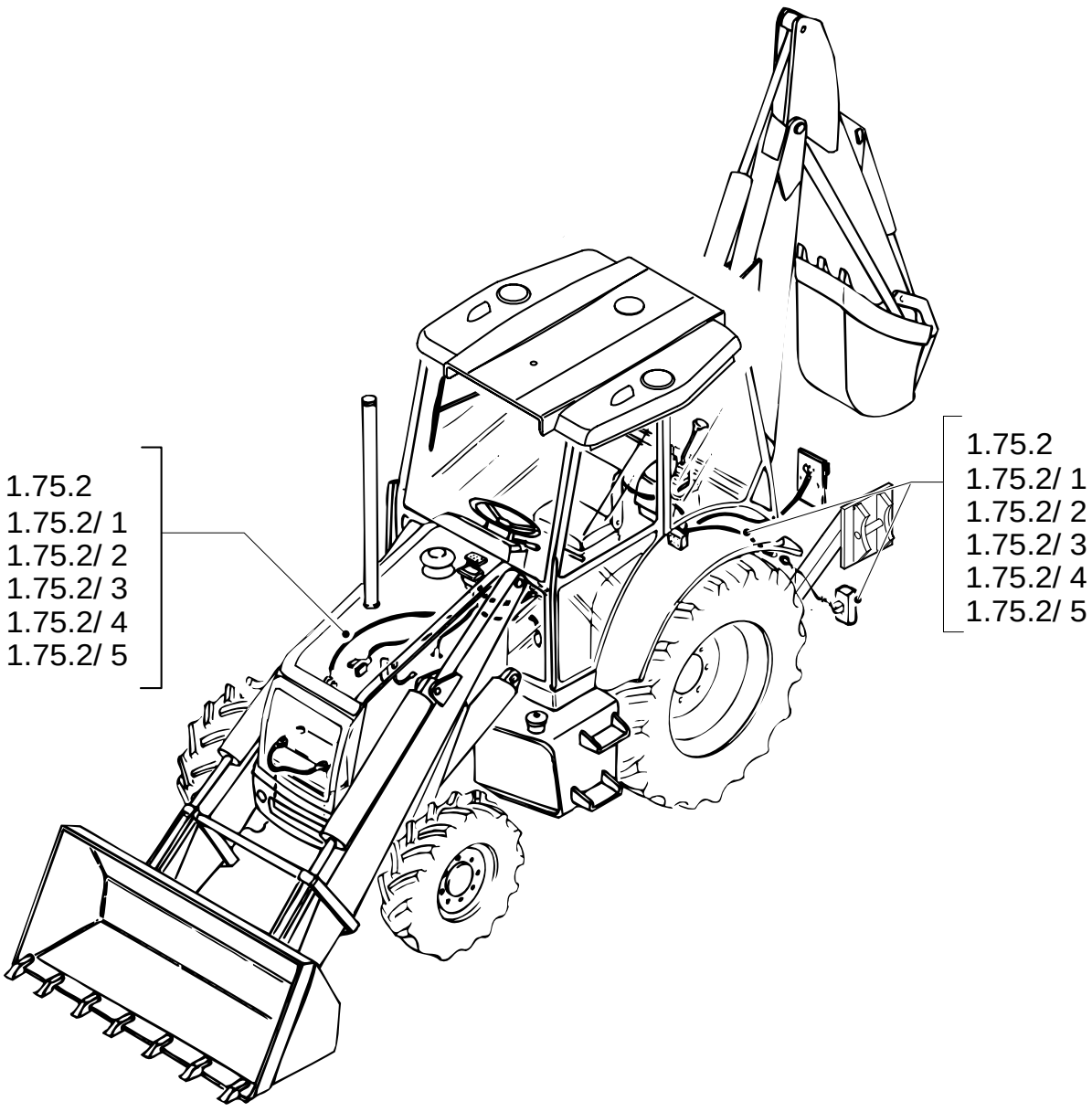
1.75.2
1.75.2/ 1
1.75.2/ 2
1.75.2/ 3
1.75.2/ 4
1.75.2/ 5
1.75.2
1.75.2/ 1
1.75.2/ 2
1.75.2/ 3
1.75.2/ 4
1.75.2/ 5

ELECTRICAL

REF	FN	PART NUMBER	YR/SN	QTY	DESCRIPTION

1.75.2/ 5	01	p1	02/05

CHASSIS HARNESS & GROUND WIRE (POWER SHIFT)

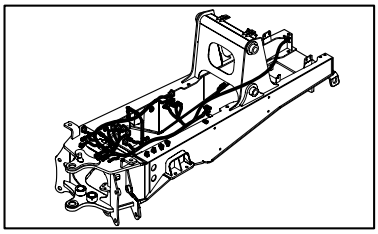

KIT KIT KIT =10

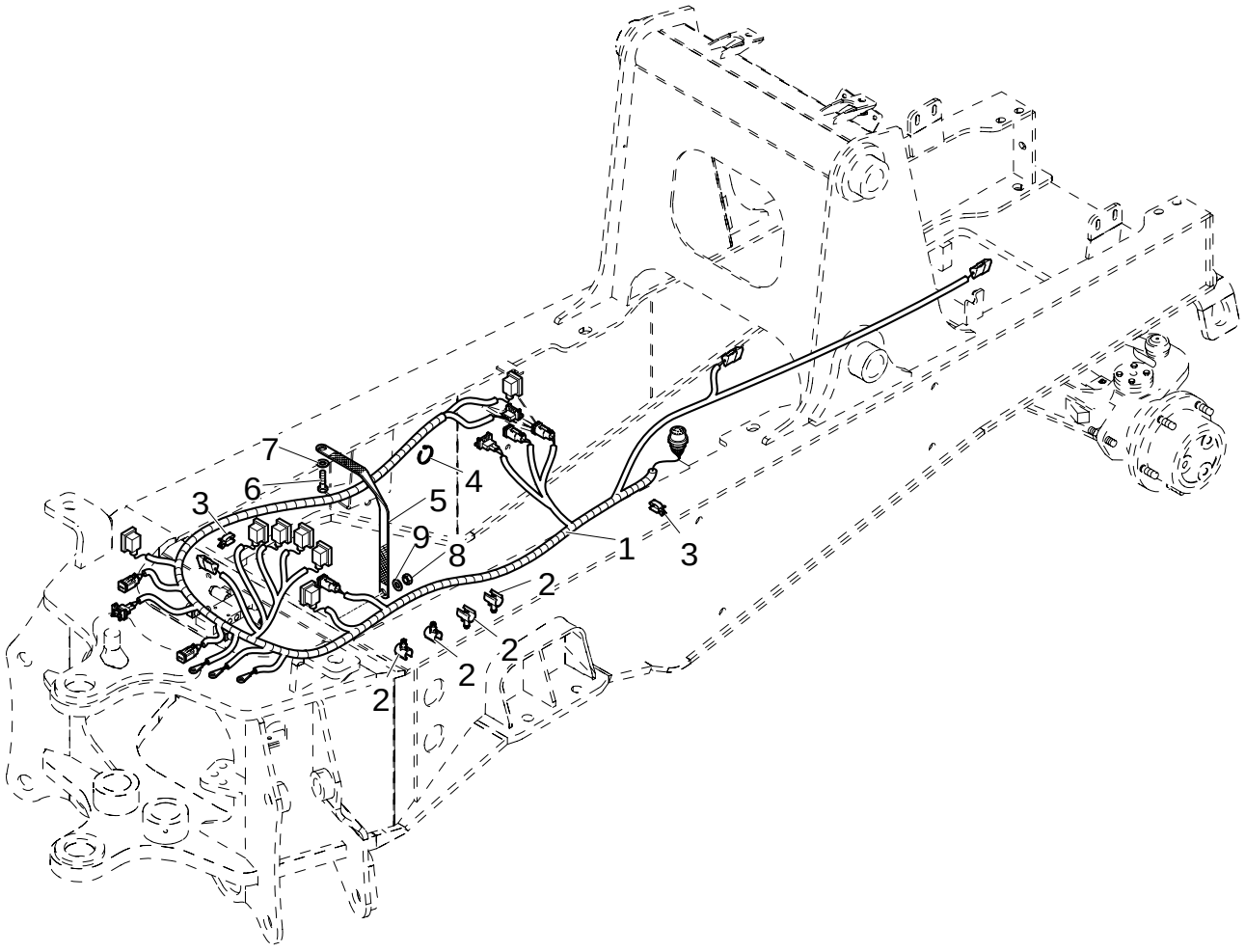

CHASSIS HARNESS & GROUND WIRE (POWER SHIFT)

REF	FN	PART NUMBER	YR/SN	QTY	DESCRIPTION
1		87406407		1	CABLE, ELECTRIC
2		85805686		4	CLIP, HOSE
3		85805685		3	CLIP, HOSE
4		14560187		55	COLLAR
5		85803884		1	CABLE, ELECTRIC
6		16043021		1	SCREW M8X12
7		11193879		1	WASHER, LOCK
8		14048221		1	NUT
9		12647121		1	WASHER M8
10		87406396		1	CABLE, ELECTRIC

1.75.2/ 5	02	p1	02/05

BATTERY LOCK-OUT SWITCH & GROUND WIRE (POWER SHIFT)

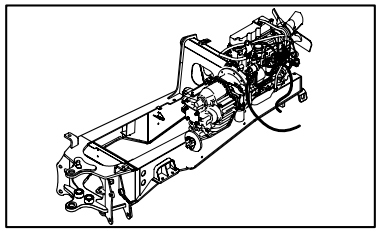

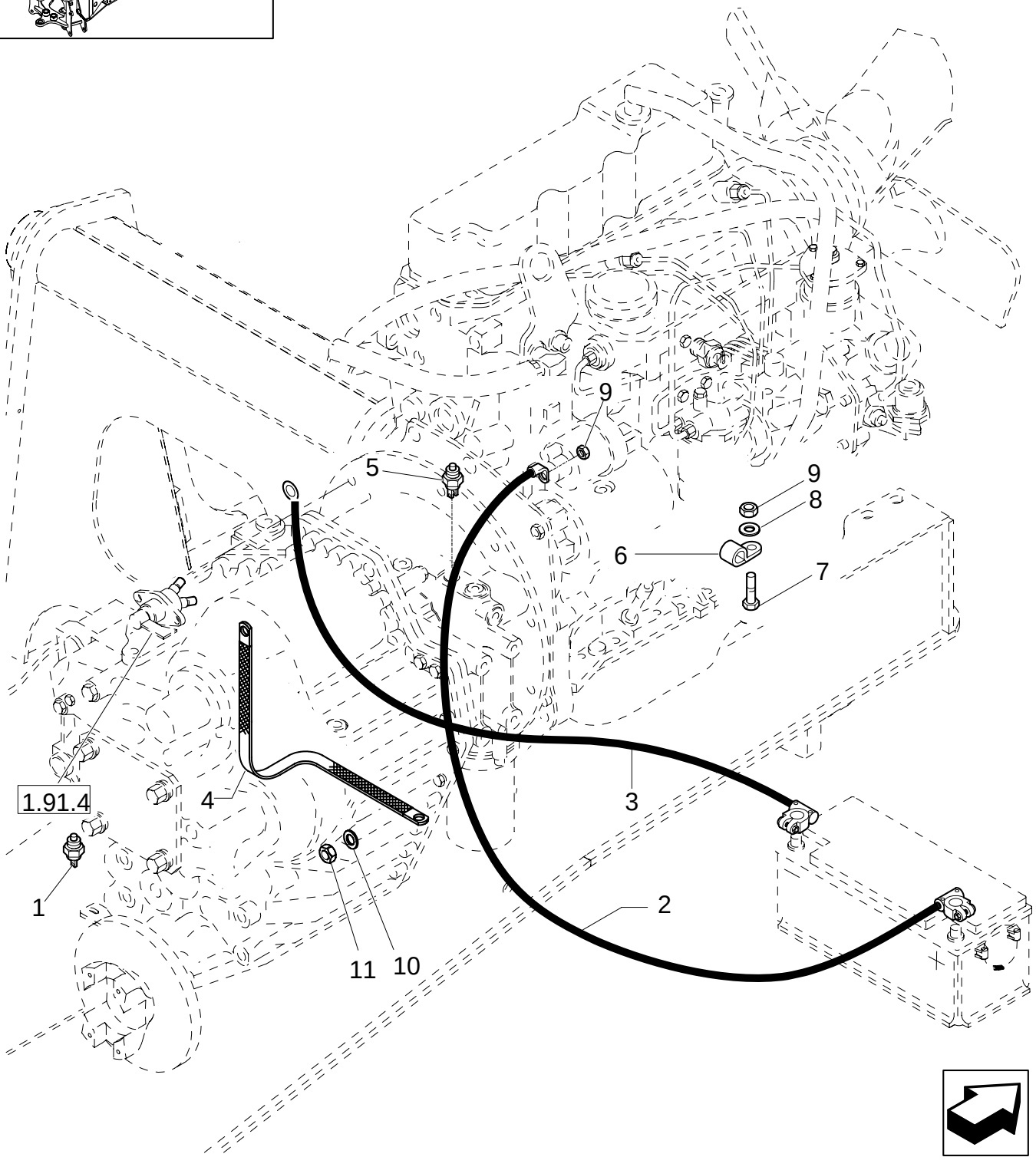

BATTERY LOCK-OUT SWITCH & GROUND WIRE (POWER SHIFT)

REF	FN	PART NUMBER	YR/SN	QTY	DESCRIPTION
1		85802381		1	SENDER UNIT
2		87424795		1	CABLE, GROUND
3		87404248		1	CABLE, GROUND
4		87405018		1	CABLE, GROUND
5		85818894		1	SWITCH, PRESSURE
6		47050861		2	COLLAR
7		47049010		1	SCREW
8		47048993		1	WASHER
9		47049031		3	NUT
10		12647121		1	WASHER M8
11		16104111		1	NUT

ENGINE HARNESS (POWER SHIFT)

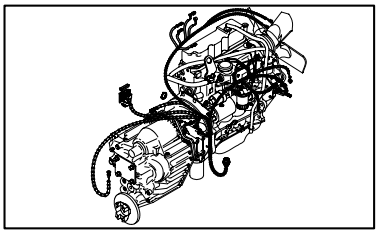

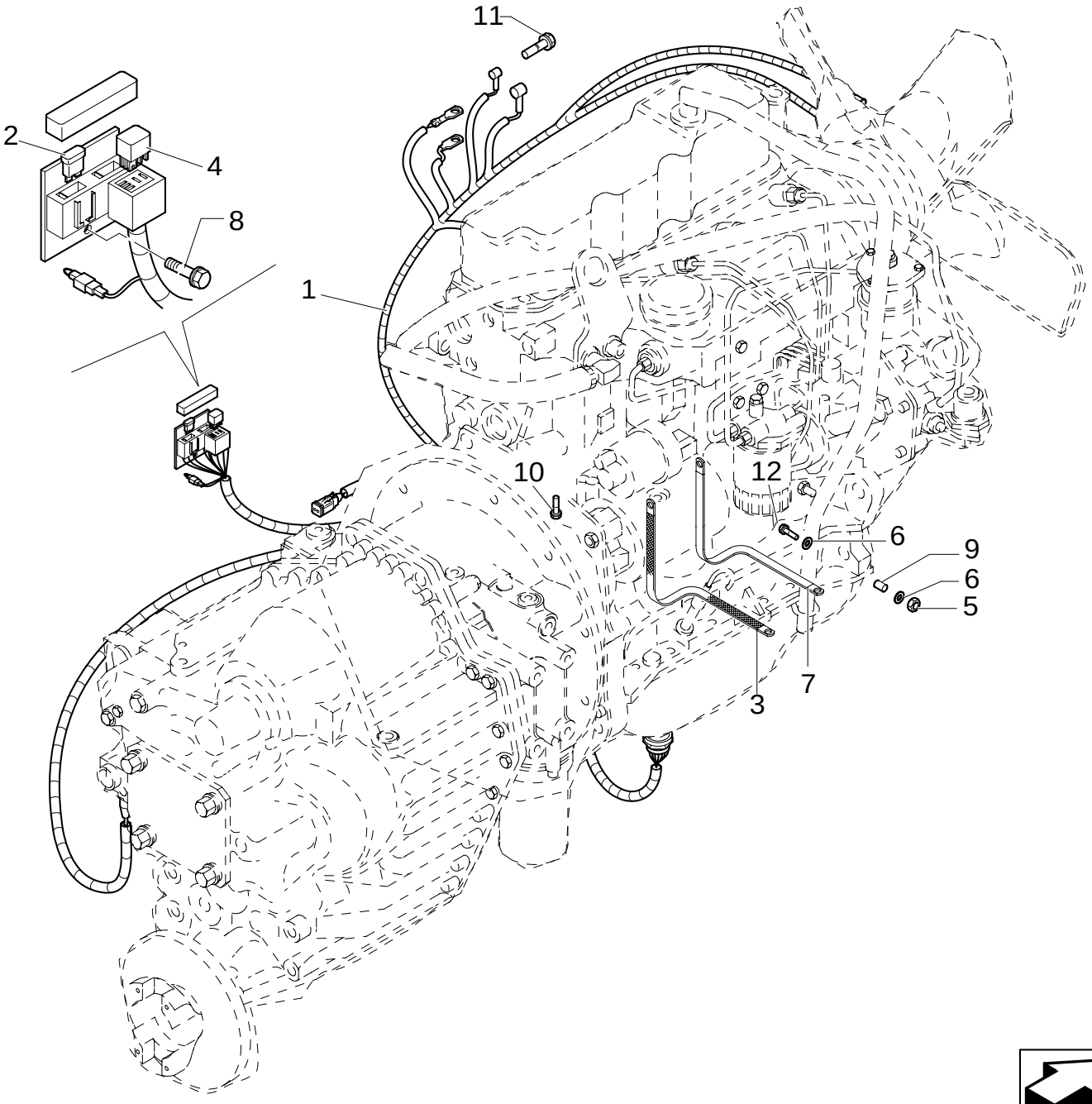

ENGINE HARNESS (POWER SHIFT)

REF	FN	PART NUMBER	YR/SN	QTY	DESCRIPTION
1	1	87406403		1	CABLE, ELECTRIC
2		11055890		1	FUSE 80A
2		11055790		1	FUSE 70A
4		85805162		1	RELAY 12V-70A
5		14048211		1	NUT
6		12638511		2	WASHER
7		87410268		1	CABLE, GROUND
8		16043824		1	SCREW
9		87415208		1	SPACER
10		47049185		2	SCREW
11		47049186		1	BOLT
12		16044221		1	SCREW

(1) Includes 2, 3, 4

131	01	p1	08/05

SINGLE BATTERY

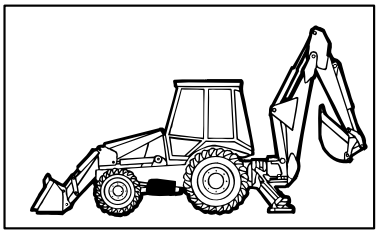

SINGLE BATTERY

REF	FN	PART NUMBER	YR/SN	QTY	DESCRIPTION
1		F910DSW		1	BATTERY, WET U.S.
1		9673604DS		1	BATTERY, DRY CANADIAN.
2		87416929		1	BRACKET
3		412005		2	BOLT
4		47048963		2	WASHER
5		47049041		2	NUT
6		47048788		2	ANGLE BAR
7		47049590		1	DECAL
8		87407281		1	DECAL
9		87311592		1	CABLE, GROUND
10		87311611		1	CABLE, GROUND

321	01	p1	05/05

DOUBLE BATTERY

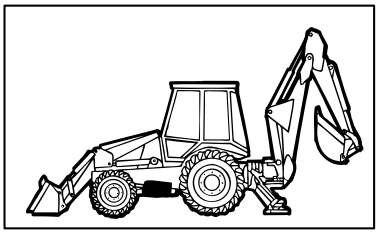

DOUBLE BATTERY

REF	FN	PART NUMBER	YR/SN	QTY	DESCRIPTION
1		F960DS		1	BATTERY, WET U.S.
1		CF960WDS		1	BATTERY, WET CAN.
2		412005		4	BOLT
3		85827072		1	CABLE, ELECTRIC
4		87427922		1	CABLE, GROUND
5		47049041		4	NUT M10
6		47049590		0,5	DECAL
7		87404127		2	DECAL
8		87415781		2	BRACKET
9		47048788		4	ANGLE BAR
10		47048963		4	WASHER
11		87303506		4	PLATE, RETAINING
12		85827416		1	CABLE, GROUND
13		87427925		1	CABLE, GROUND
14		85826906		1	GUARD

995	01	p1	03/05

COLD START

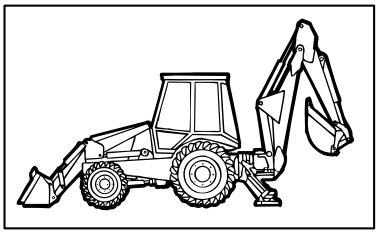

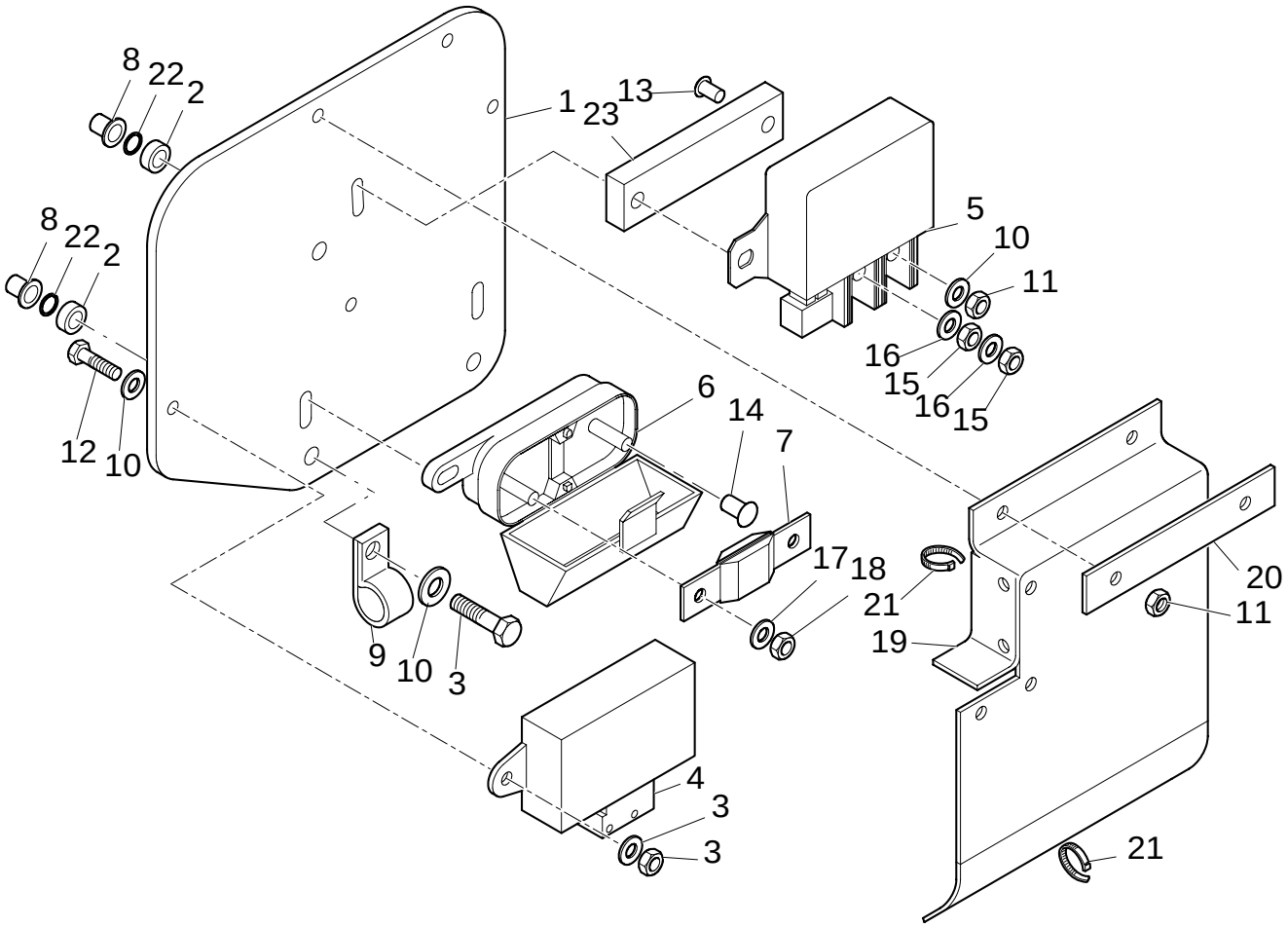

COLD START

REF	FN	PART NUMBER	YR/SN	QTY	DESCRIPTION
1		87410603		1	PLATE
2		85825169		3	SPACER
3		47049164		3	SCREW THD TO HD M8x40 CL8.8 ZND
4		87409046		1	ELECTRONIC UNIT, CONTROL
5		86619908		1	RELAY
6		76088638		1	CONNECTOR
7		87410602		1	FUSE 300 AMP
8		85801492		3	INSERT, THREADED
9		47049195		1	COLLAR M8
10		47048961		15	WASHER
11		47054518		8	NUT M6
12		47049157		5	BOLT M6x20
13		47120207		2	SCREW M6x35
14		85821538		1	SCREW M6x16
15		47049029		4	NUT M6
16		322357		2	WASHER, LOCK Belleville, M6
17		47048992		5	WASHER 8mm Spring Lock
18		47049030		2	NUT M8
19		87411092		1	COVER
20		87411090		1	PLATE, COVER
21		47048702		5	COLLAR, RETAINER
22		85821539		3	O-RING
23		87414237		1	PLATE M14

995	02	p1	02/05

COLD START

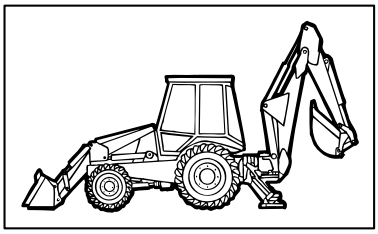

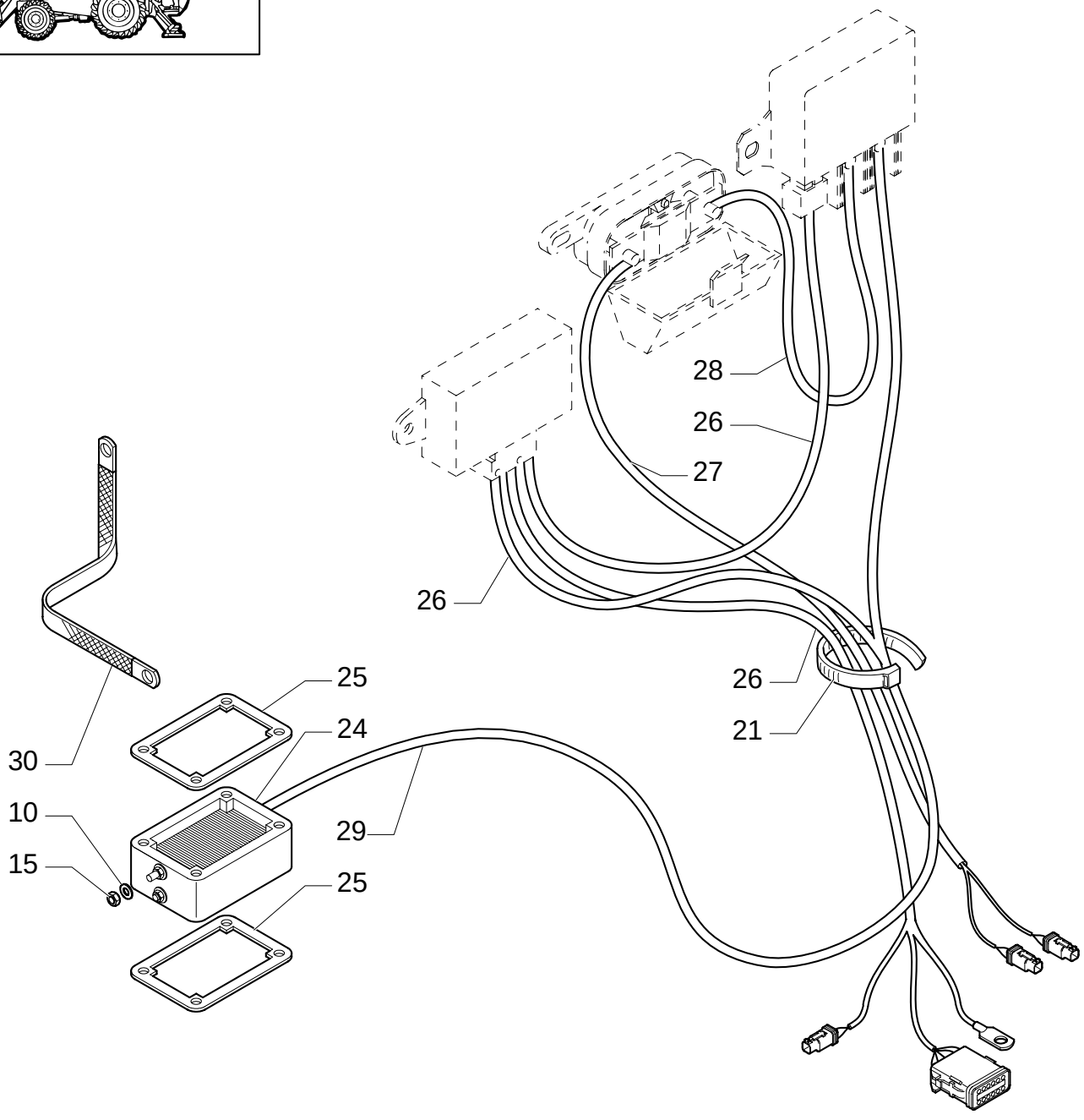

COLD START

REF	FN	PART NUMBER	YR/SN	QTY	DESCRIPTION
10		47048961		15	WASHER
15		47049029		4	NUT M6
21		47048702		5	COLLAR, RETAINER
24		82017872		3	HEATER
25		86014151		1	GASKET
26		87410263		1	CABLE, ELECTRIC
27		87410264		1	CABLE, GROUND
28		87410265		1	CABLE
29		87410266		1	CABLE, GROUND
30		87413162		1	CABLE, GROUND

SECTION INDEX

SEC. 07	00	SLIDES VALVES
1.82.0	01	HYDRAULIC OIL RESERVOIR
1.82.3	01	HYDRAULIC PUMP (35+35-154L/MM)
1.82.3/ 1	01	HYDRAULIC PUMP (40+35-165L/MM)
1.82.3/ 2	01	HYDRAULIC PUMP (40+35-165L/MM)
1.82.6	01	HYDRAULIC SYSTEM PIPING
1.82.6	02	HYDRAULIC SYSTEM PIPING
1.82.6	04C	HYDRAULIC SYSTEM PIPING(CENTER PIVOT)
1.82.6	05B	HYDRAULIC SYSTEM PIPING(CENTER PIVOT)
1.82.6	05C	HYDRAULIC SYSTEM PIPING(CENTER PIVOT)
1.82.6	06B	FILTER ASSEMBLY & HOSE TO RETURN MANIFOLD (CENTER PIVOT)
1.82.6	07A	HYDRAULIC SYSTEM PIPING
1.82.6	08B	HYDRAULIC SYSTEM PIPING
1.82.6	10	HYDRAULIC SYSTEM PIPING NA 4WS (CENTER PIVOT)
1.82.6	11B	HYDRAULIC SYSTEM PIPING(CENTER PIVOT)
1.82.6	12B	HYDRAULIC SYSTEM PIPING(CENTER PIVOT)
1.82.6	13B	HYDRAULIC SYSTEM PIPING(CENTER PIVOT)
300	01	BACKHOE CONTROL VALVE, 6 SECTIONS (CENTER PIVOT)
300	02	BACKHOE CONTROL VALVE, INLET SECTION
300	03	BACKHOE CONTROL VALVE, BOOM SECTION
300	04	BACKHOE CONTROL VALVE, SWING SECTION
300	05	BACKHOE CONTROL VALVE, BUCKET SECTION
300	06	BACKHOE CONTROL VALVE, DIPPERSTICK SECTION
300	07	BACKHOE CONTROL VALVE, STABILIZER SECTION (CENTER PIVOT)
302	01	TWO-SECTION CONTROL VALVE FOR LOADER
302	02	TWO-SECTION CONTROL VALVE FOR LOADER
302	03	TWO-SECTION CONTROL VALVE FOR LOADER
302	04	TWO-SECTION CONTROL VALVE FOR LOADER
304	01	LOCK VALVE ON TILTING CYLINDER
304	02	LOCK VALVE ON LIFTING CYLINDER
304	03	LOCK VALVE
331	01	BACKHOE CONTROL VALVE, 6 SECTIONS (CENTER PIVOT) NORTH AMERICA
331/ A	01	6 SECTION PILOT CONTROL VALVE SUPPORT, COMPLETE
331/ A	02	2 SECTION PILOT CONTROL VALVE SUPPORT, COMPLETE
331/ B	01	PILOT CONTROL VALVE SUPPORT, COMPLETE
331/ C	01	6 SECTION PILOT CONTROL VALVE SUPPORT, COMPLETE
331/ C	02	6 SECTION PILOT CONTROL VALVE SUPPORT, COMPLETE
331/ C	03	6 SECTION PILOT CONTROL VALVE SUPPORT, COMPLETE
331/ C	04	6 SECTION PILOT CONTROL VALVE SUPPORT, COMPLETE
331/ C	05	6 SECTION PILOT CONTROL VALVE SUPPORT, COMPLETE
331/ C	06	6 SECTION PILOT CONTROL VALVE SUPPORT, COMPLETE (CENTER PIVOT)
331/ D	03	VALVE, JOYSTICK PILOT CONTROLS - EXTENDED VERSION - (RIGTH HAND)
333/ A	01	7 SECTION PILOT CONTROL VALVE SUPPORT, COMPLETE
333/ A	02	7 SECTION PILOT CONTROL VALVE SUPPORT, COMPLETE
333/ A	03	7 SECTION PILOT CONTROL VALVE SUPPORT, COMPLETE
333/ B	01	7 SECTION PILOT CONTROL VALVE SUPPORT, COMPLETE
333/ B	03	7 SECTION PILOT CONTROL VALVE SUPPORT, COMPLETE
333/ B	04	7 SECTION PILOT CONTROL VALVE SUPPORT, COMPLETE
333/ B	05	7 SECTION PILOT CONTROL VALVE SUPPORT, COMPLETE
333/ B	06	7 SECTION PILOT CONTROL VALVE SUPPORT, COMPLETE (CENTER PIVOT) EUROPE

SECTION INDEX

333/ B	07	7 SECTION PILOT CONTROL VALVE SUPPORT, COMPLETE (CENTER PIVOT) EUROPE
333/ B	08	7 SECTION PILOT CONTROL VALVE SUPPORT, COMPLETE
333/ B	09	7 SECTION PILOT CONTROL VALVE SUPPORT, COMPLETE (CENTER PIVOT) EUROPE
333/ B	10	6 SECTION PILOT CONTROL VALVE SUPPORT,COMPLETE
333/ C	01	VALVE, JOYSTICK PILOT CONTROLS (RIGHT HAND)
333/ C	02	VALVE, JOYSTICK PILOT CONTROLS (LEFT HAND)
333/ 1	01	7-SECTIONS EXCAVATOR CONTROL VALVE (CENTER PIVOT) NORTH AMERICA
333/ 1	02	7-SECTIONS EXCAVATOR CONTROL VALVE (CENTER PIVOT) NORTH AMERICA
333/ 1	03	7-SECTIONS EXCAVATOR CONTROL VALVE (CENTER PIVOT) NORTH AMERICA
333/ 1	04	7-SECTIONS EXCAVATOR CONTROL VALVE (CENTER PIVOT) NORTH AMERICA
333/ 1	05	7-SECTIONS EXCAVATOR CONTROL VALVE (CENTER PIVOT) NORTH AMERICA
333/ 1	06	7-SECTIONS EXCAVATOR CONTROL VALVE (CENTER PIVOT) NORTH AMERICA
333/ 1	07	7-SECTIONS EXCAVATOR CONTROL VALVE (CENTER PIVOT) NORTH AMERICA
333/ 1	08	7-SECTIONS EXCAVATOR CONTROL VALVE (CENTER PIVOT) NORTH AMERICA
334	09	7-SECTIONS EXCAVATOR CONTROL VALVE
334	11	7-SECTIONS EXCAVATOR CONTROL VALVE
392	01	LOCKING VALVE ON BACKHOE LIFT AND DIPP. CYLINDER
392	02	BACKHOE LIFT & DIPPERSTICK CYLINDER LOCK VALVE
437/ 1	01	GLIDE RIDE VALVE,HYDRAULIC SYSTEM FOR MACHINE FRAME LEVELLING & ON/OFF SWITCH
698	01	GLIDE RIDE VALVE,HYDRAULIC SYSTEM FOR MACHINE FRAME LEVELLING & ON/OFF SWITCH
702/ 1	02	PEDAL-OPERATED TELESCOPIC DIPPER HYDRAULIC SYSTEM (CENTER PIVOT)
703	01	PEDAL-OPERATED TELESCOPIC DIPPER HYDRAULIC SYSTEM
703	02	PEDAL-OPERATED TELESCOPIC DIPPER HYDRAULIC SYSTEM
703	03	PEDAL-OPERATED TELESCOPIC DIPPER HYDRAULIC SYSTEM
703	04	PEDAL-OPERATED TELESCOPIC DIPPER HYDRAULIC SYSTEM
703	05	PEDAL-OPERATED TELESCOPIC DIPPER HYDRAULIC SYSTEM
708	01	THREE-SECTION CONTROL VALVE FOR LOADER
708/ 1	01	KIT OF CONVERSION FROM 2 TO 3 SPOOLS
727/ 3	01	HYDRAULIC SYSTEM PRESETTING FOR TELESCOPIC LINKS PEDAL OPERATED(CENTER PIVOT)

SLIDES VALVES

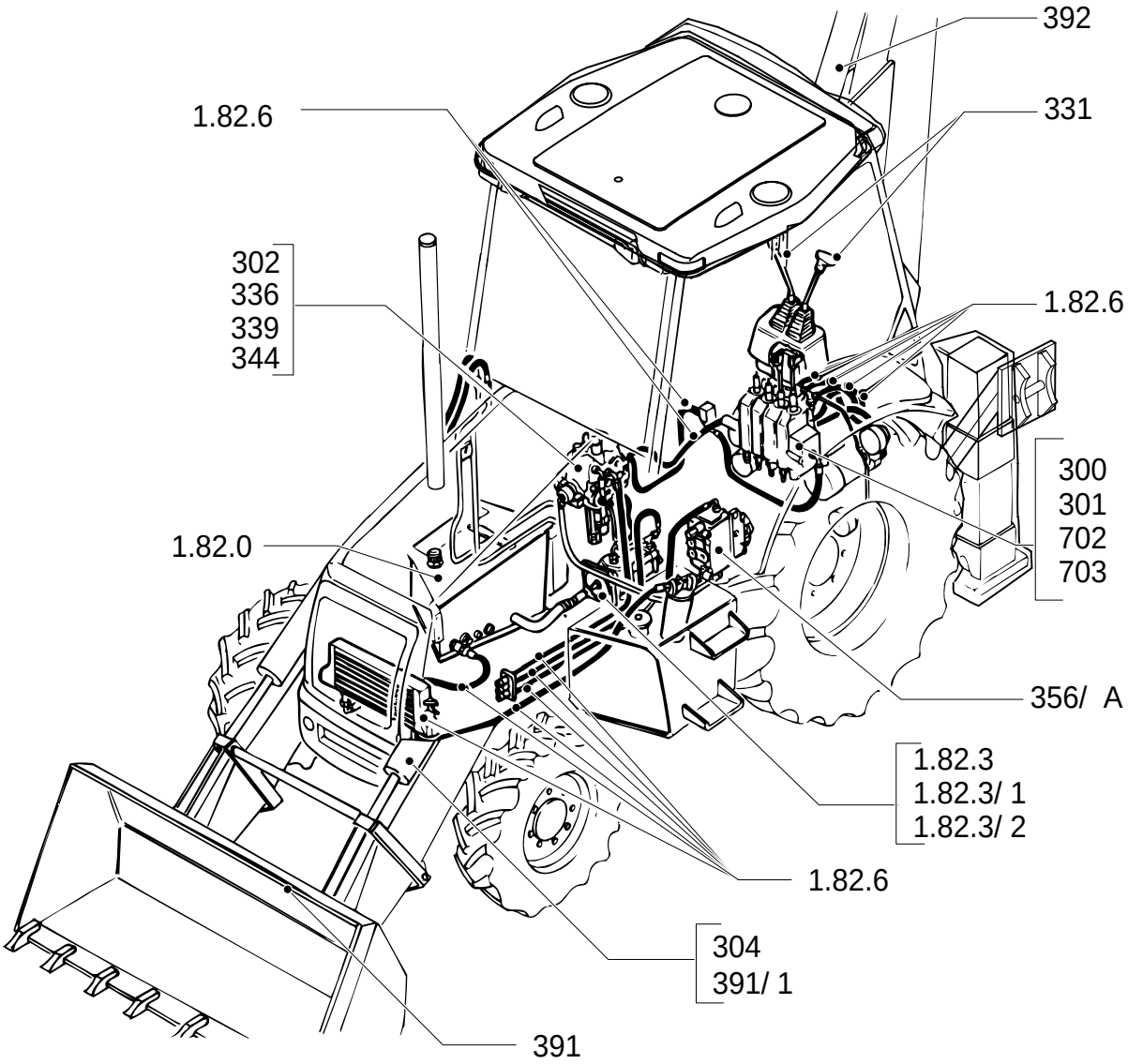

SLIDES VALVES

REF	FN	PART NUMBER	YR/SN	QTY	DESCRIPTION

1.82.0	01	p1	01/06

HYDRAULIC OIL RESERVOIR

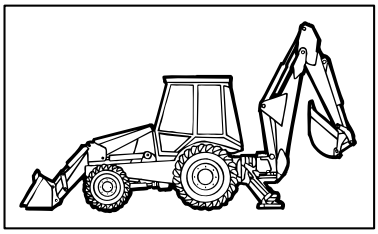

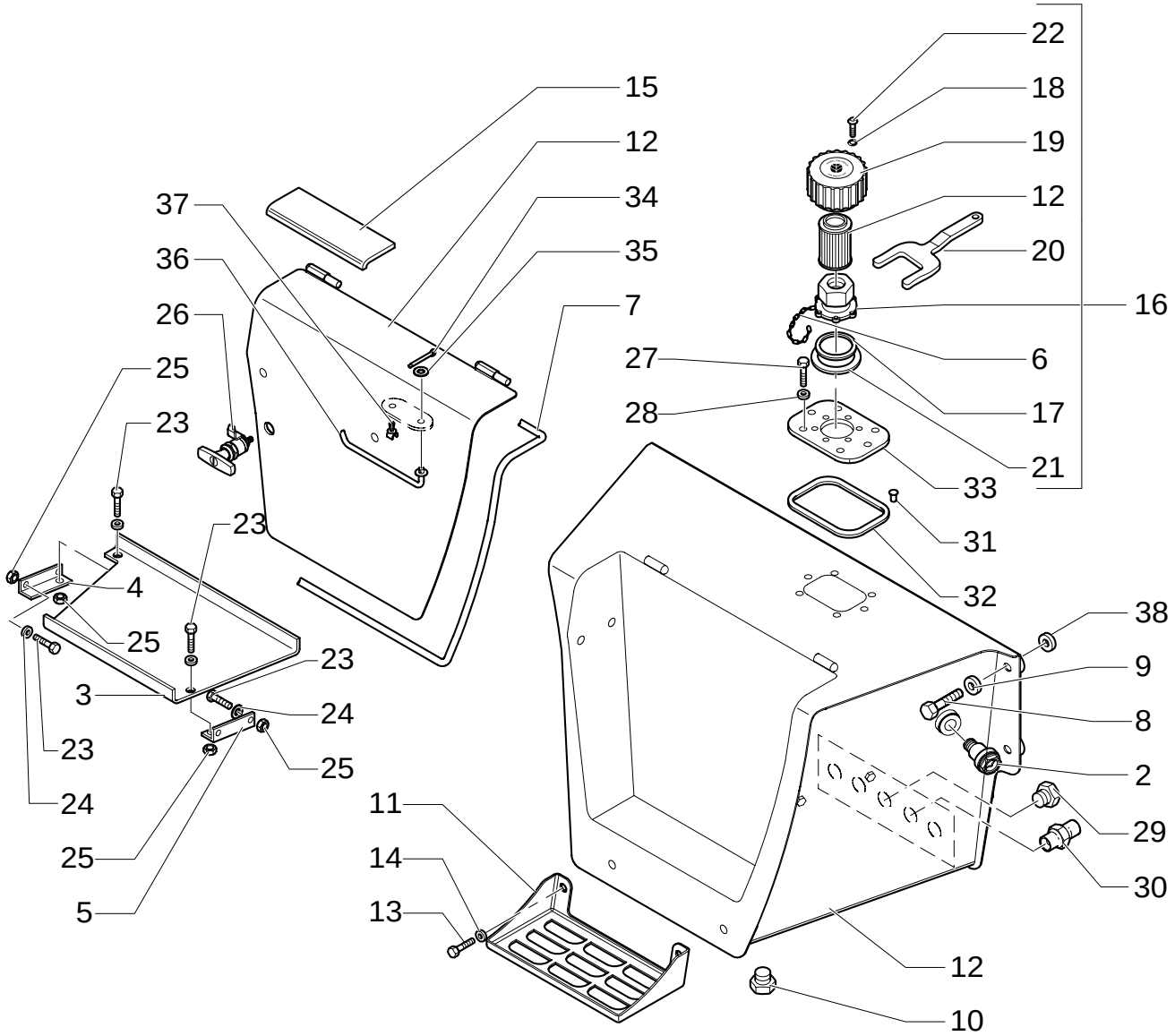

HYDRAULIC OIL RESERVOIR

REF	FN	PART NUMBER	YR/SN	QTY	DESCRIPTION
	1			1	
2		85801249		1	GAUGE, LEVEL
3		87407463		1	BOX, TOOL
4		87407464		1	BRACKET
5		87407465		1	BRACKET M6x22
6		85813352		1	FLANGE
7		87417207		1	GASKET
8		15540721		4	SCREW M12x1,25x45
9		47048976		4	WASHER
10		47050671		2	PLUG M33x2
11		85801218		2	FOOT REST
12				1	
13		15540721		4	SCREW M12x30
14		47048973		4	WASHER
15		87404910		1	FOOT BOARD
16		87403241		1	VALVE, HYDRAULIC ASSY
17		85813351		1	O-RING 39,35x2,62
18		85813354		6	O-RING 6x1.5
19		85813350		1	PLUG
20		85802580		1	KEY, LOCK
21		9969380		1	GASKET
22		85813353		6	SCREW M5x16
23		47049185		4	SCREW M10x25
24		47048972		4	WASHER
25		47049041		4	NUT M10
26		87406289		1	LOCK
27		16043421		6	SCREW
28		47048962		6	WASHER
29		85825154		3	PLUG
30		85825155		1	CONNECTOR, HYD.
31		85826382		7	NUT M8
32		85826383		1	GASKET
33		85828107		1	PLATE
34		47042074		1	PIN
35		47044758		1	WASHER
36		85828017		1	LEVER

(1) Includes 2 To 37

1.82.0	01	p2	01/06

HYDRAULIC OIL RESERVOIR

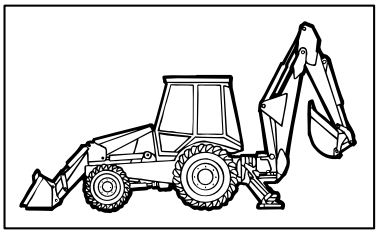

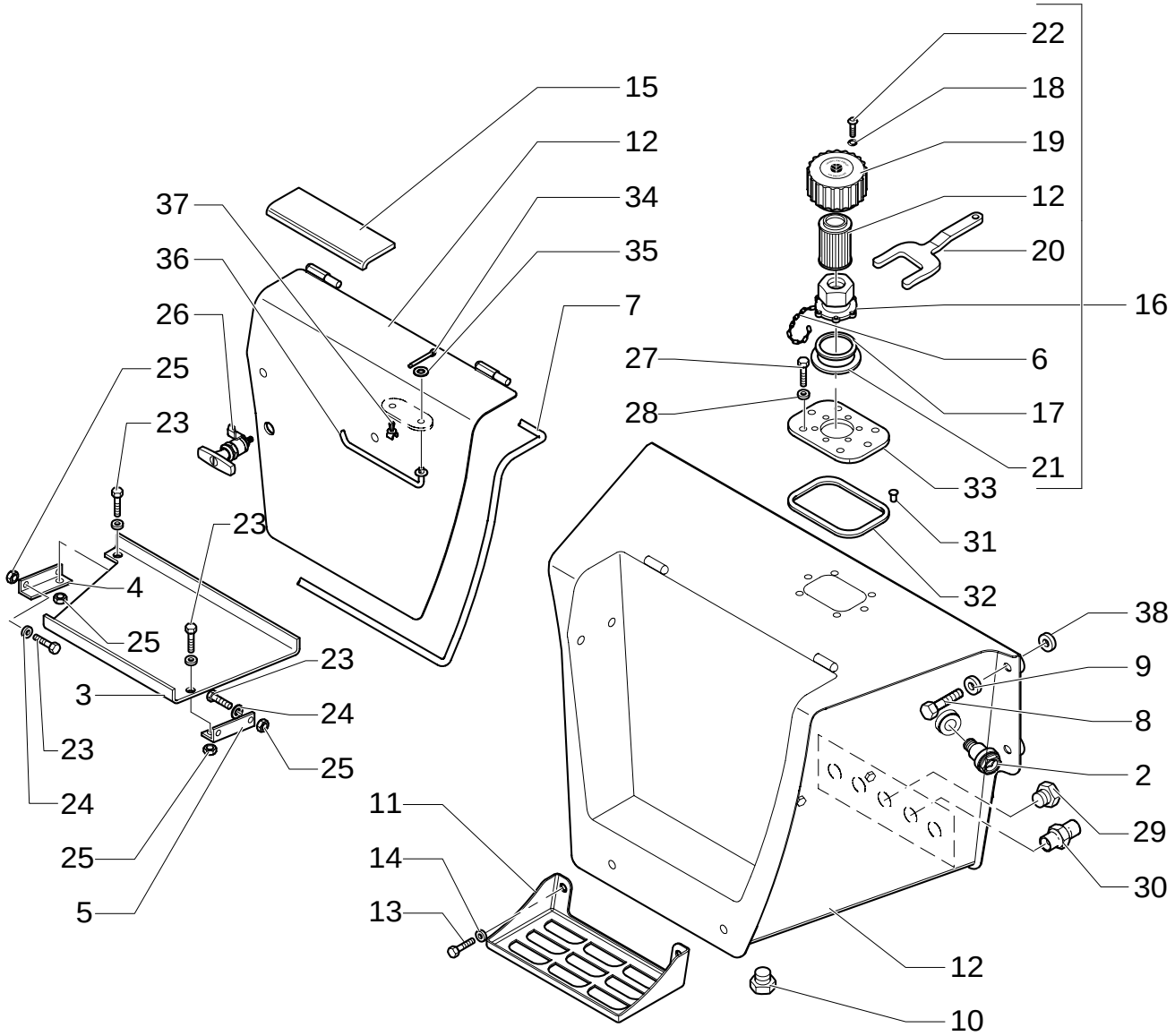

HYDRAULIC OIL RESERVOIR

REF	FN	PART NUMBER	YR/SN	QTY	DESCRIPTION
37		47043563		1	CLIP
38		87353741		4	SPACER

1.82.3	01	p1	11/05

HYDRAULIC PUMP (35+35-154L/MM)

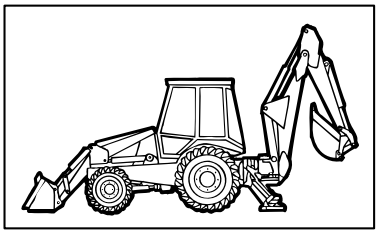

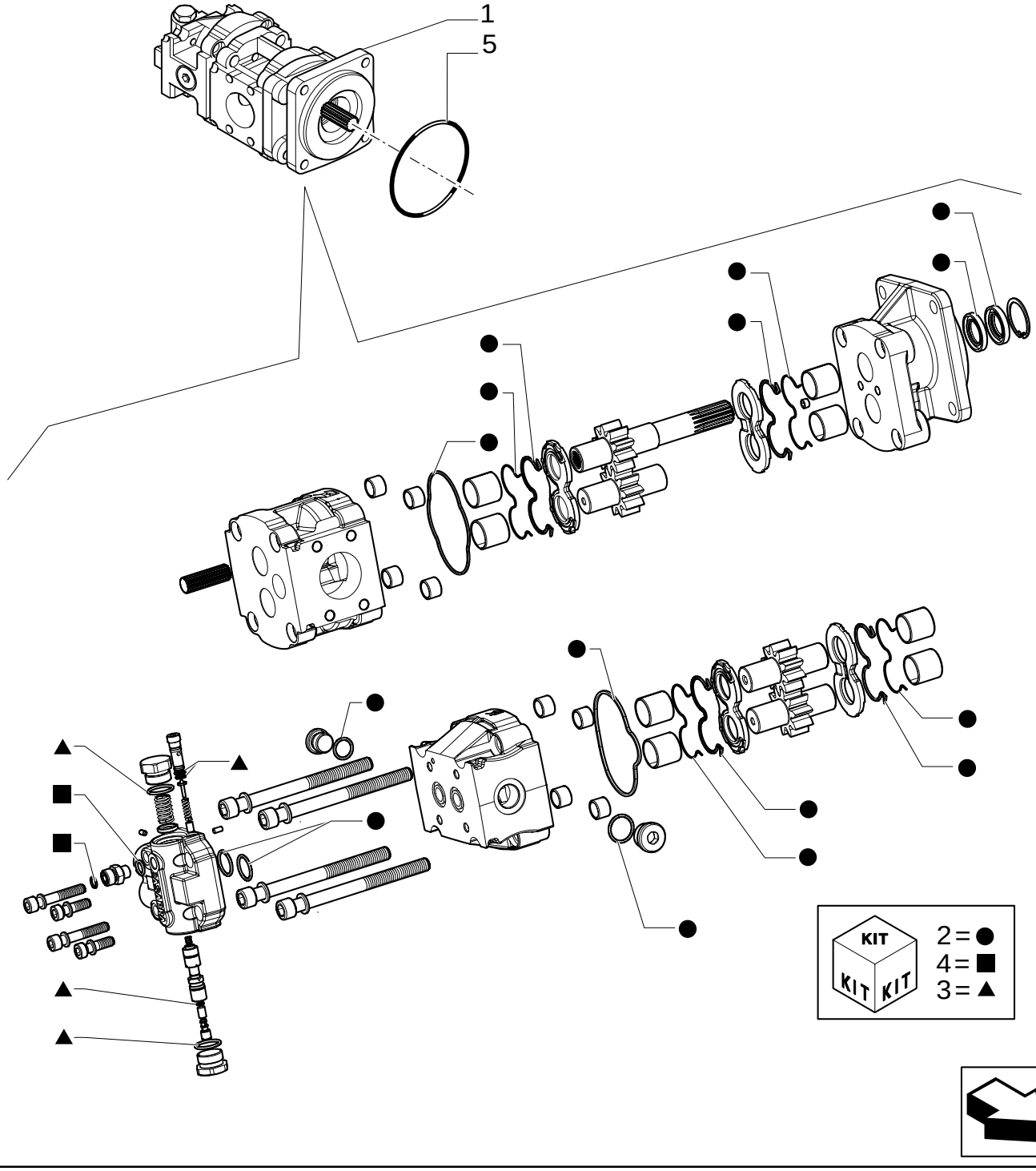

HYDRAULIC PUMP (35+35-154L/MM)

REF	FN	PART NUMBER	YR/SN	QTY	DESCRIPTION
1	1, 2	85826147		1	PUMP, HYDRAULIC
1	1, 3	87362336		1	PUMP, HYDRAULIC
2		85813244		1	KIT Seal
3	2	85819027		1	VALVE, HYDRAULIC Kit
3	3	87373943		1	COVER
4		85824196		1	CONNECTOR, HYD.
5		14466880		1	O-RING

(1) Includes 2, 3, 4
(2) UP TO S/N XXX
(3) FROM TO S/N XXX

1.82.3/ 1	01	p1	11/05

HYDRAULIC PUMP (40+35-165L/MM)

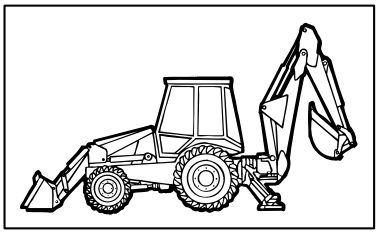

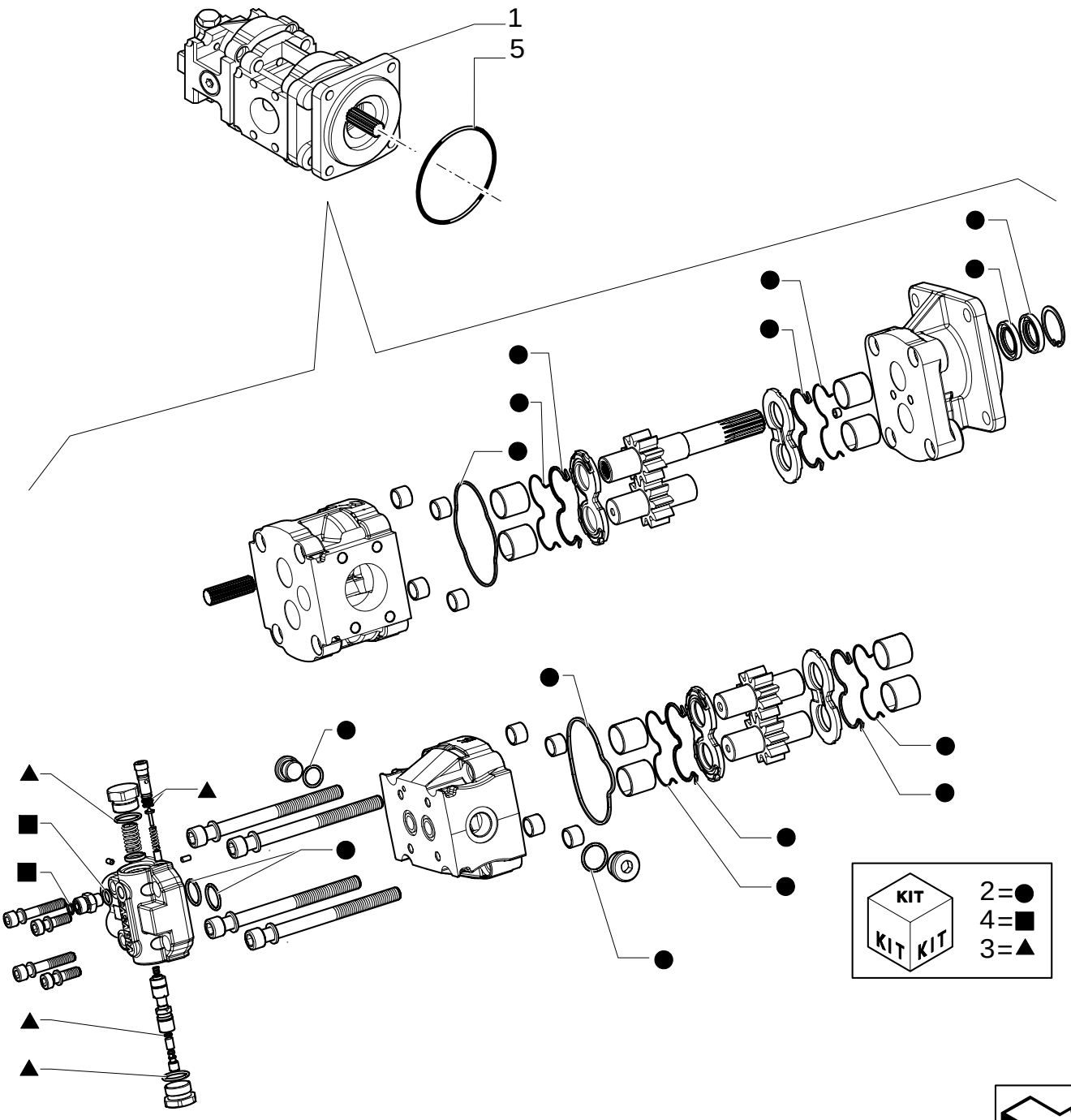

HYDRAULIC PUMP (40+35-165L/MM)

REF	FN	PART NUMBER	YR/SN	QTY	DESCRIPTION
1	1, 2	85826148		1	PUMP, HYDRAULIC
1	1, 3	87362337		1	PUMP, HYDRAULIC
2		85813244		1	KIT Seal
3	2	85819027		1	VALVE, HYDRAULIC Kit
3	3	87373943		1	COVER
4		85824196		1	CONNECTOR, HYD.
5		14466880		1	O-RING

(1) Includes 2, 3, 4
(2) UP TO S/N XXX
(3) FROM TO S/N XXX

1.82.3/ 2	01	p1	02/05

HYDRAULIC PUMP (40+35-165L/MM)

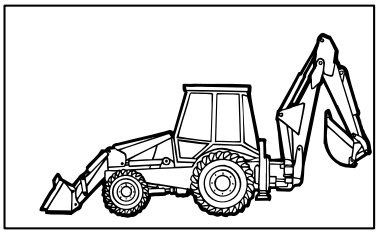

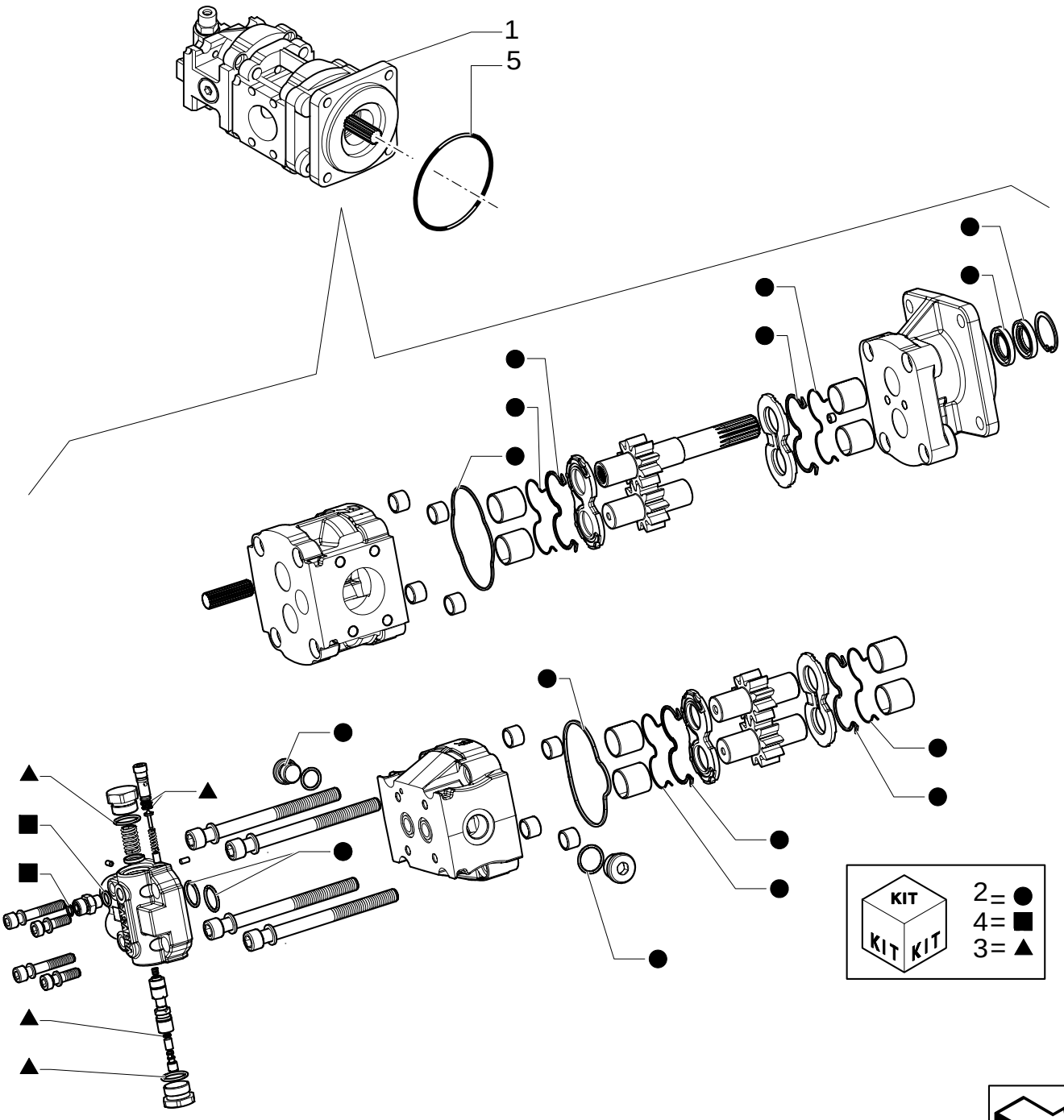

HYDRAULIC PUMP (40+35-165L/MM)

REF	FN	PART NUMBER	YR/SN	QTY	DESCRIPTION
1	1	85826149		1	PUMP, HYDRAULIC
2		85813244		1	KIT Seal
3		85819027		1	VALVE, HYDRAULIC Kit
4		85824196		1	CONNECTOR, HYD.
5		14466880		1	O-RING

(1) Includes 2, 3, 4

Up To S/N XXX

1.82.6	01	p1	11/05

HYDRAULIC SYSTEM PIPING

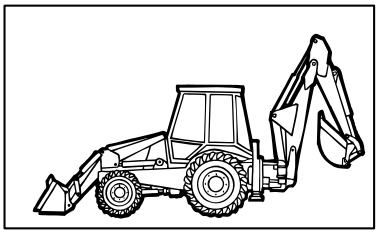

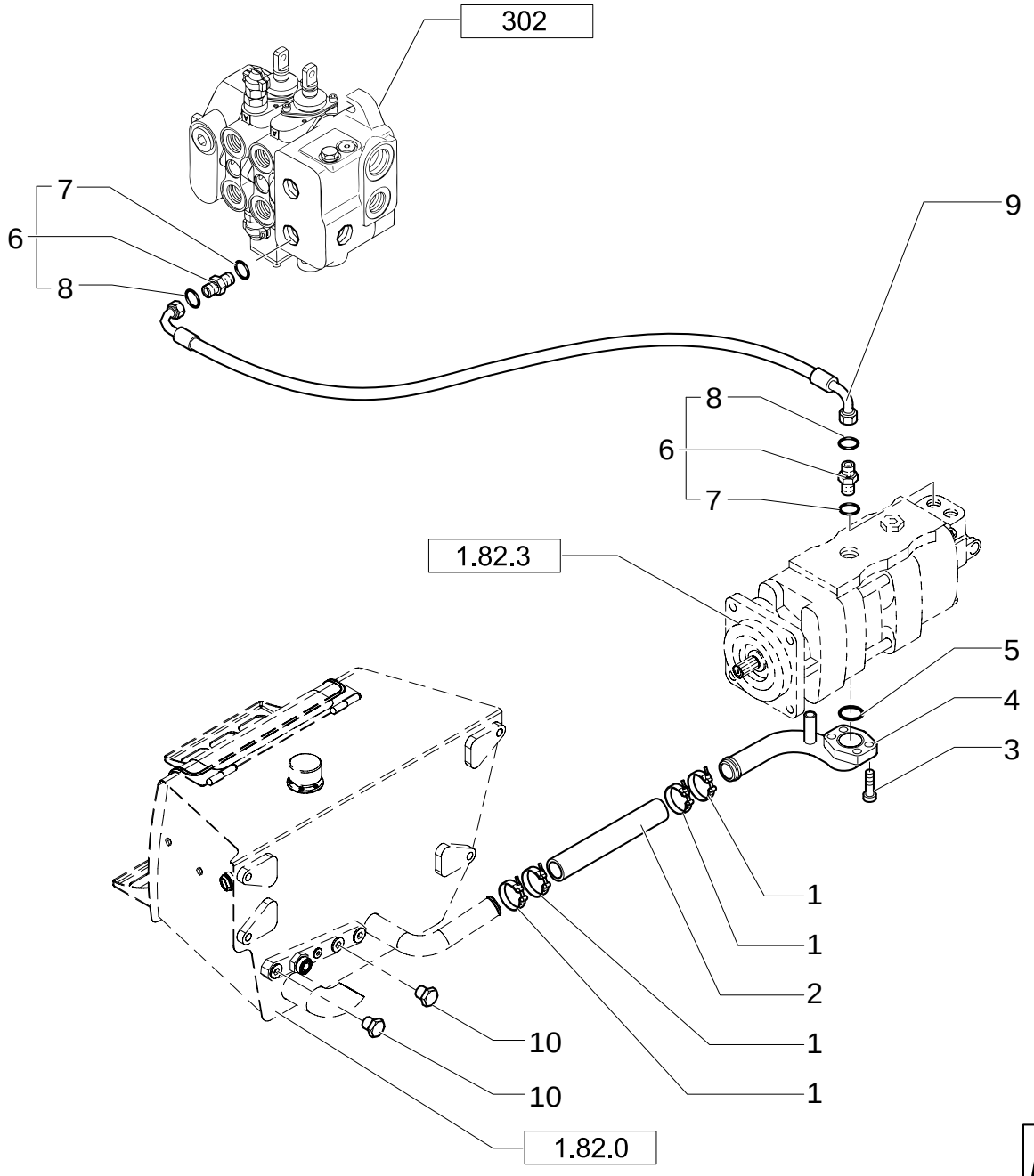

HYDRAULIC SYSTEM PIPING

REF	FN	PART NUMBER	YR/SN	QTY	DESCRIPTION
1		85803012		4	CLAMP
2		85811870		1	HOSE
3		14422021		3	SCREW M12X30
4		85827041		1	TUBE, RIGID
5		14464680		1	GASKET
6	1	390937S36		2	CONNECTOR, HYD.
7		167266		2	O-RING 90 Duro, .924" ID x .116" Thk
8		9991976		2	O-RING 90 Duro, .739" ID x .070" Thk
9		87360332		1	HOSE, FLEXIBLE
10	2	85802800		2	PLUG

(1) Includes 7, 8
(2) Pilot Control Version

1.82.6	02	p1	11/05

HYDRAULIC SYSTEM PIPING

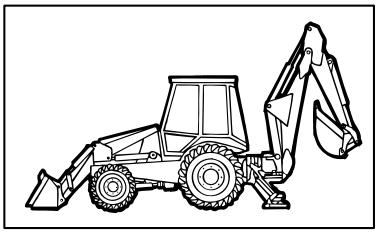

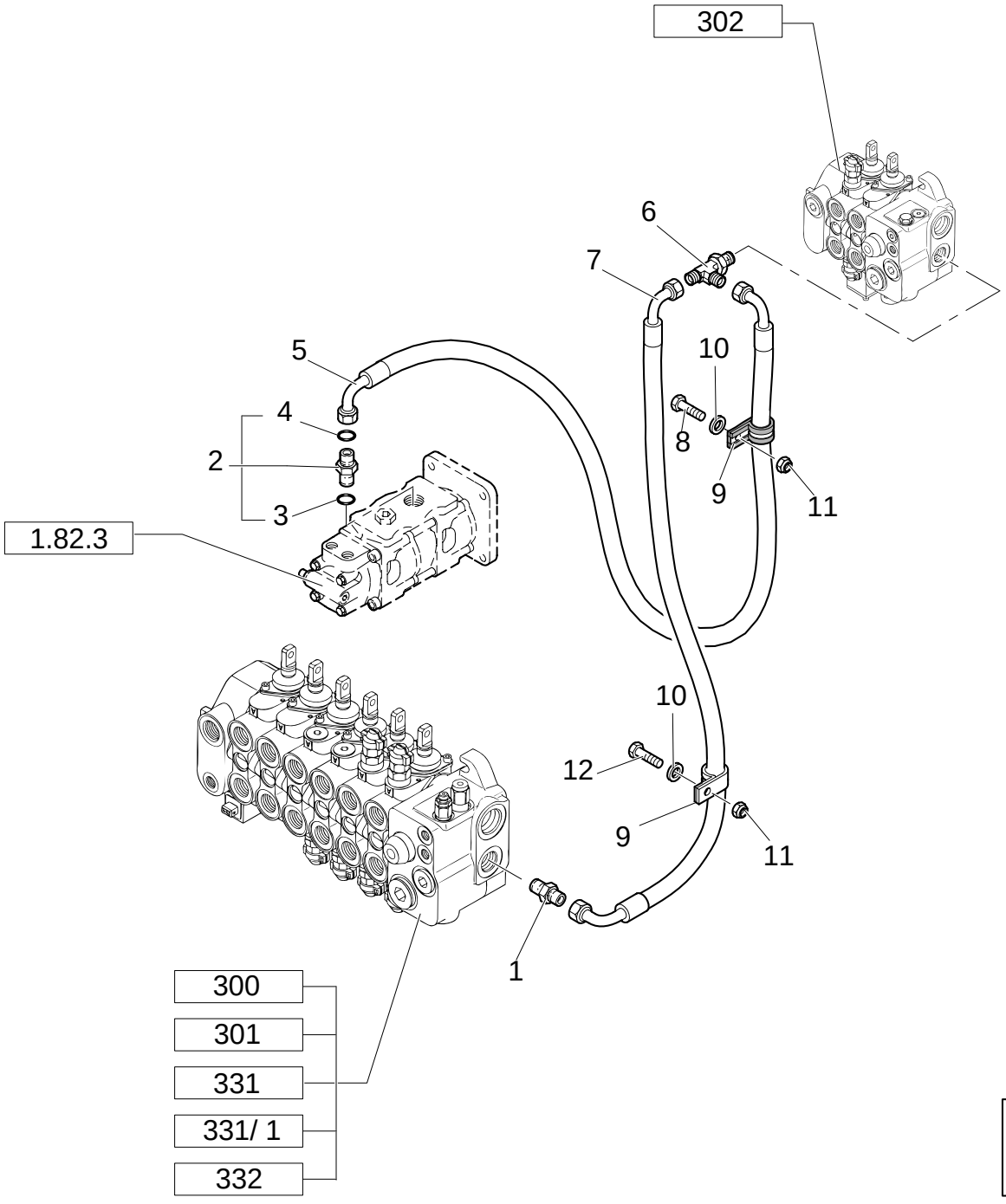

HYDRAULIC SYSTEM PIPING

REF	FN	PART NUMBER	YR/SN	QTY	DESCRIPTION
1		85803486		1	CONNECTOR, HYD.
2	1	390828S36		1	CONNECTOR, HYD.
3		167269		1	O-RING 90 Duro, .755" ID x .097" Thk
4		87016S95		1	O-RING 90 Duro, .625" ID x .070" Thk
5		87360331		1	HOSE, FLEXIBLE
6		85826093		1	CONNECTOR, HYD.
7		85817220		1	HOSE, FLEXIBLE L=MM.1080
8		47049082		1	SCREW
9		85802890		2	COLLAR, RETAINER
10		11193979		2	WASHER, LOCK
11		14048211		2	NUT
12		47049161		1	SCREW

(1) Includes 3, 4

1.82.6	04C	p1	02/05

HYDRAULIC SYSTEM PIPING(CENTER PIVOT)

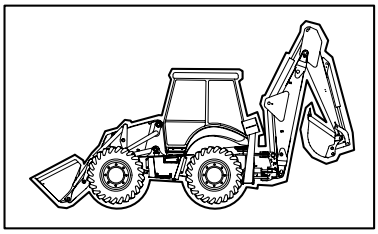

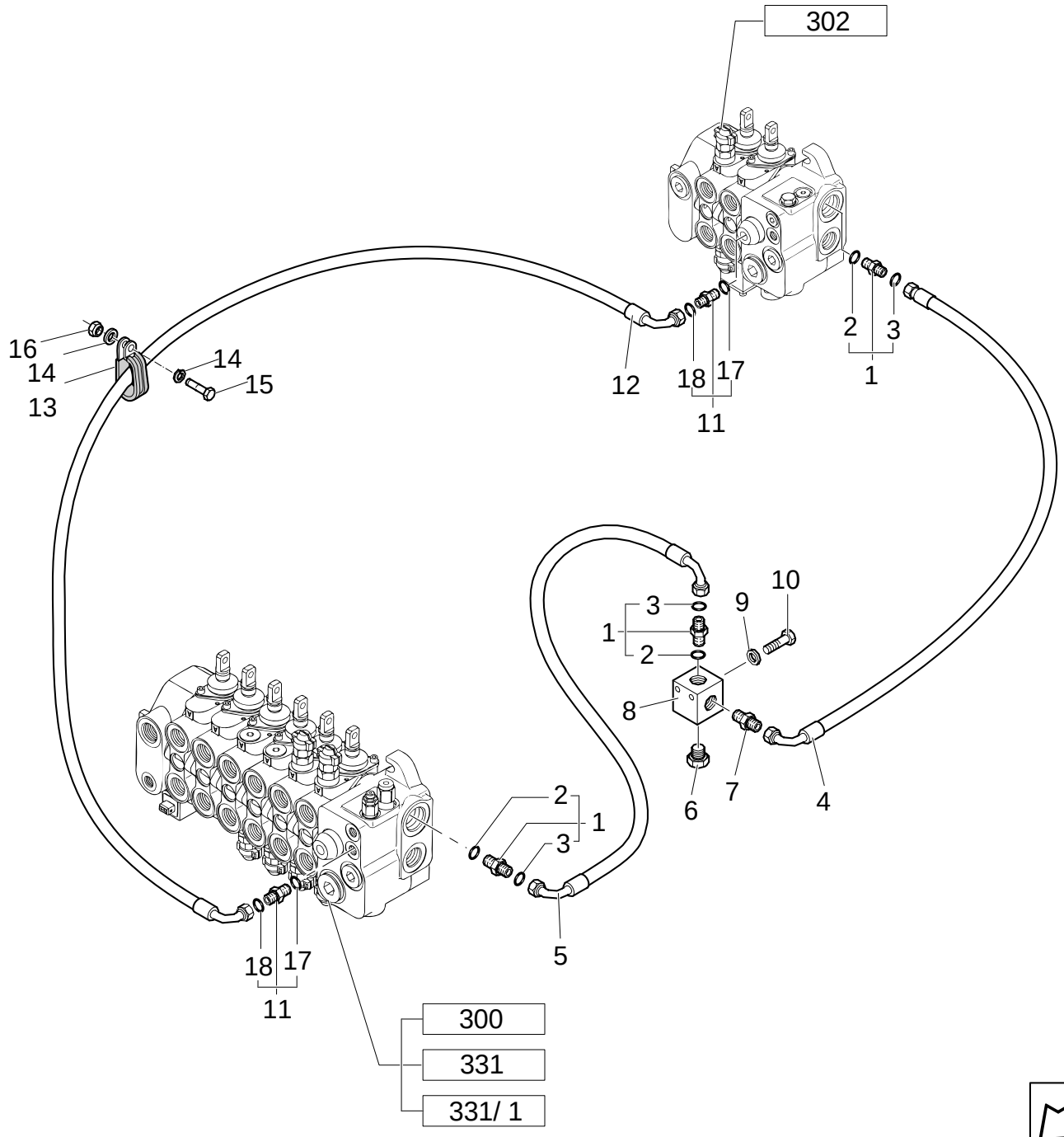

HYDRAULIC SYSTEM PIPING(CENTER PIVOT)

REF	FN	PART NUMBER	YR/SN	QTY	DESCRIPTION
1	1	390954S36		3	CONNECTOR, HYD.
2		167268		3	O-RING 90 Duro, 1.171" ID x .116" Thk
3		9824050		3	O-RING 90 Duro, .926" ID x .070" Thk
4		85818909		1	HOSE, FLEXIBLE L=MM.1150
5	2	85827823		1	HOSE, FLEXIBLE
5	3	85805167		1	HOSE, FLEXIBLE
6		85802955		1	PLUG
7		85805168		1	CONNECTOR, HYD.
8		85805166		1	BLOCK
9		11190779		2	WASHER, LOCK
10		15541621		2	SCREW
11	4	390951S36		2	CONNECTOR, HYD.
12		85812174		1	HOSE, FLEXIBLE
13		85802954		1	COLLAR, RETAINER
14		10519411		2	WASHER
15		10902221		1	SCREW
16		12574211		1	NUT
17		86482S95		2	O-RING 90 Duro, .468" ID x .078" Thk
18		87008S95		2	O-RING 90 Duro, .375" ID x .070" Thk

(1) Includes 2, 3
(2) Pilot Control Version
(3) Mechanical Control Version
(4) Includes 17, 18

1.82.6	05B	p1	11/05

HYDRAULIC SYSTEM PIPING(CENTER PIVOT)

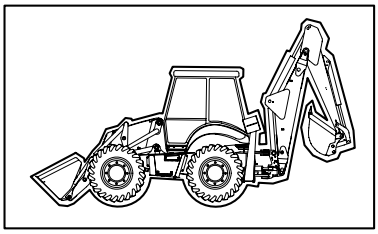

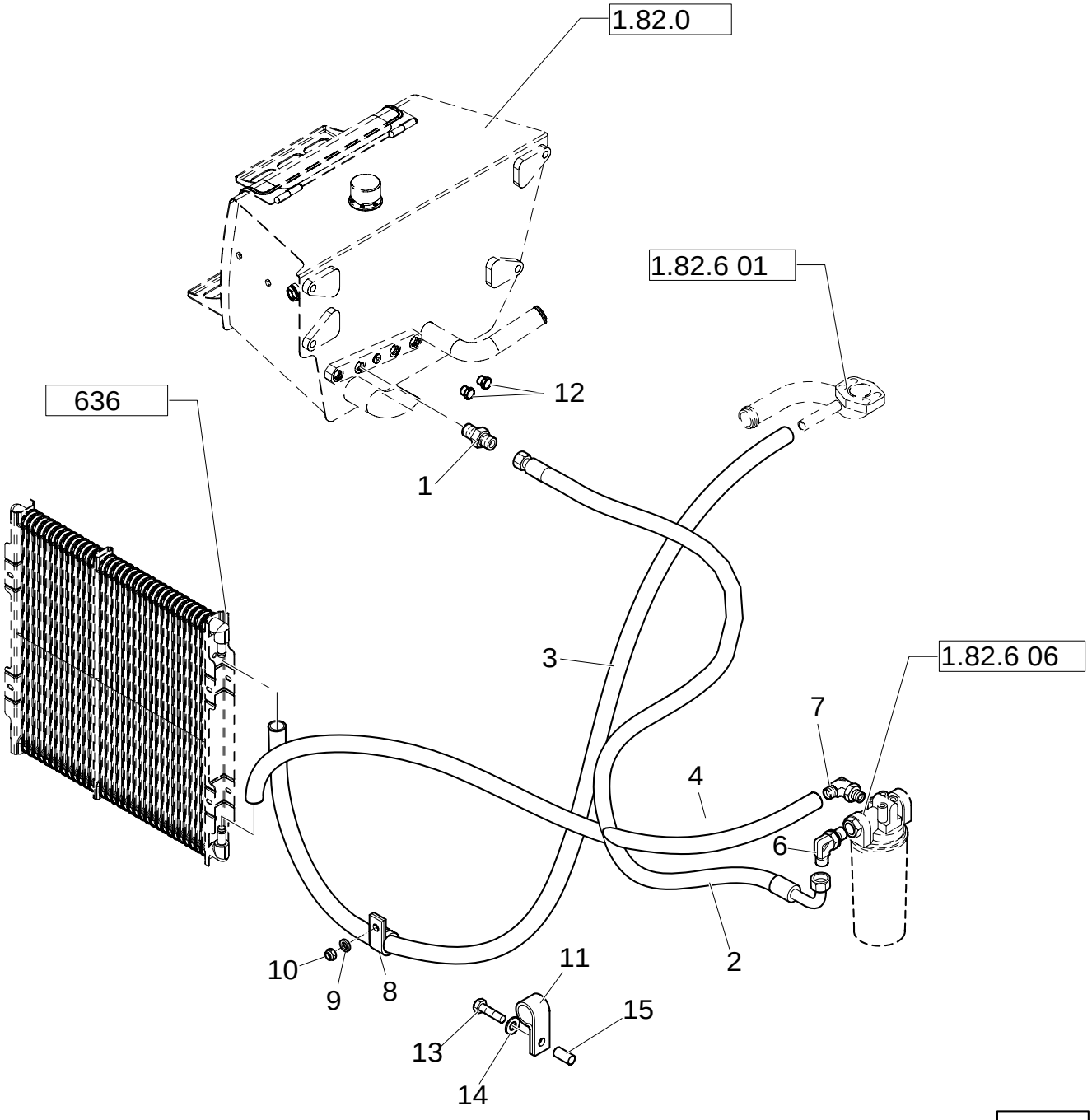

HYDRAULIC SYSTEM PIPING(CENTER PIVOT)

REF	FN	PART NUMBER	YR/SN	QTY	DESCRIPTION
1		85802801		1	CONNECTOR, HYD. 1-11/16"-12 ORS x 1-5/16"-12 SAE O-ring
2		85827824		1	TUBE, RIGID
3		87416576		1	TUBE, RIGID
4		87326808		1	HOSE, FLEXIBLE
6		87024874		1	CONNECTOR, HYD.
7		85824060		1	CONNECTOR, HYD.
8		85802890		1	COLLAR, RETAINER
9		11193979		1	WASHER, LOCK
10		14048221		1	NUT
11		47048664		1	COLLAR
12		85802800		2	PLUG 1-5/16"-12 SAE O-ring
13		47049161		1	SCREW
14		47048964		1	WASHER
15		47048328		1	SPACER

Mechanical Version

1.82.6	05C	p1	11/05

HYDRAULIC SYSTEM PIPING(CENTER PIVOT)

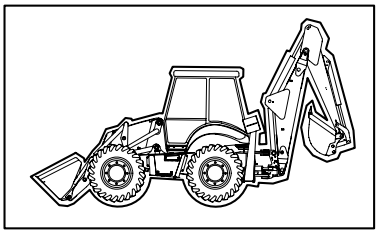

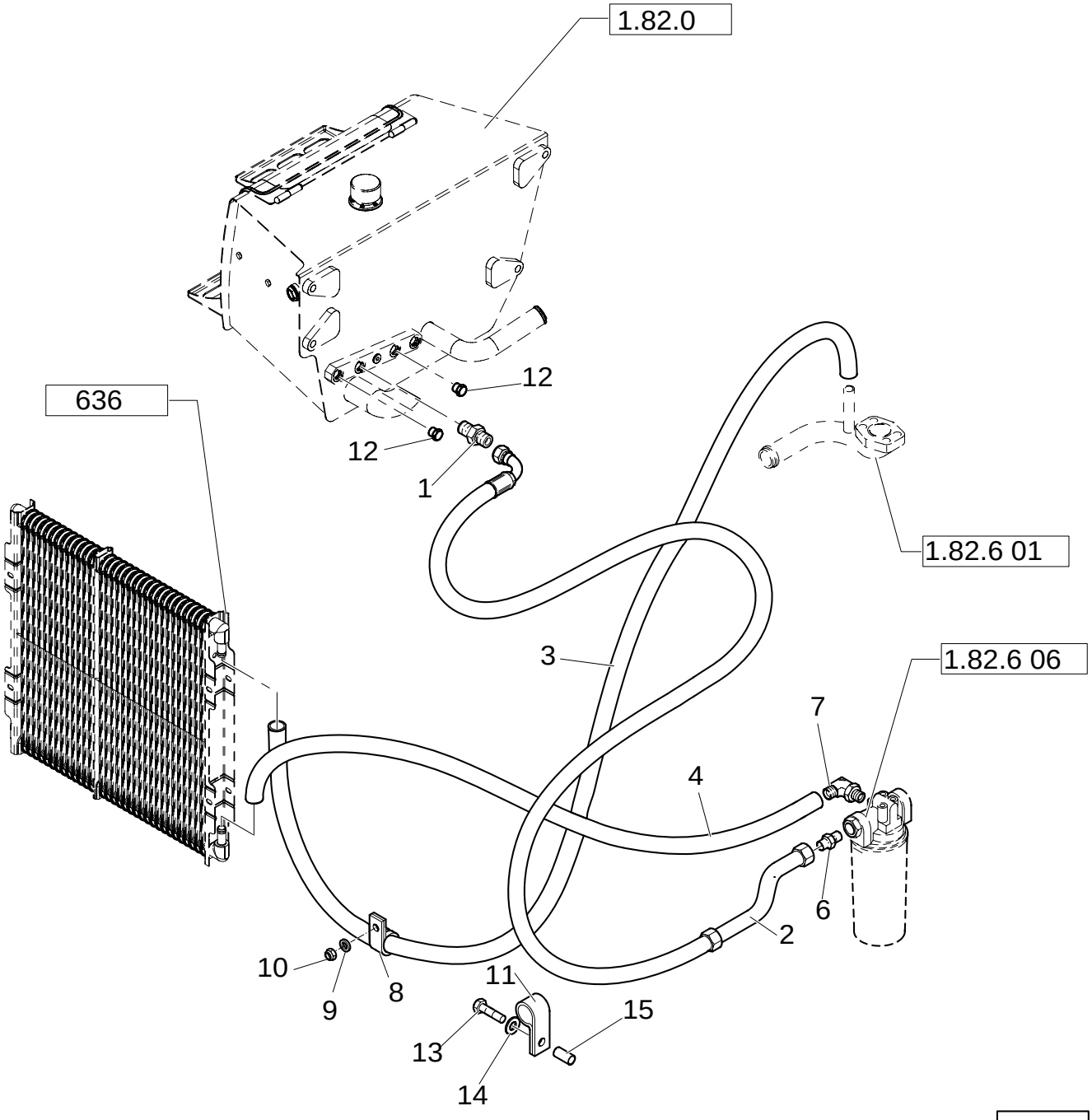

HYDRAULIC SYSTEM PIPING(CENTER PIVOT)

REF	FN	PART NUMBER	YR/SN	QTY	DESCRIPTION
1		85802801		1	CONNECTOR, HYD. 1-11/16"-12 ORS x 1-5/16"-12 SAE O-ring
2		85827824		1	TUBE, RIGID
3		87416576		1	TUBE, RIGID
4		87326808		1	HOSE, FLEXIBLE
6		85802960		1	CONNECTOR, HYD.
7		85824060		1	CONNECTOR, HYD.
8		85802890		1	COLLAR, RETAINER
9		11193979		1	WASHER, LOCK
10		14048221		1	NUT
11		47048664		1	COLLAR
12		85802800		2	PLUG 1-5/16"-12 SAE O-ring
13		47049161		1	SCREW
14		47048964		1	WASHER
15		47048328		1	SPACER

Pilot Control Version

1.82.6	06B	p1	11/05

FILTER ASSEMBLY & HOSE TO RETURN MANIFOLD (CENTER PIVOT)

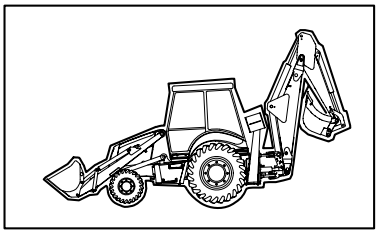

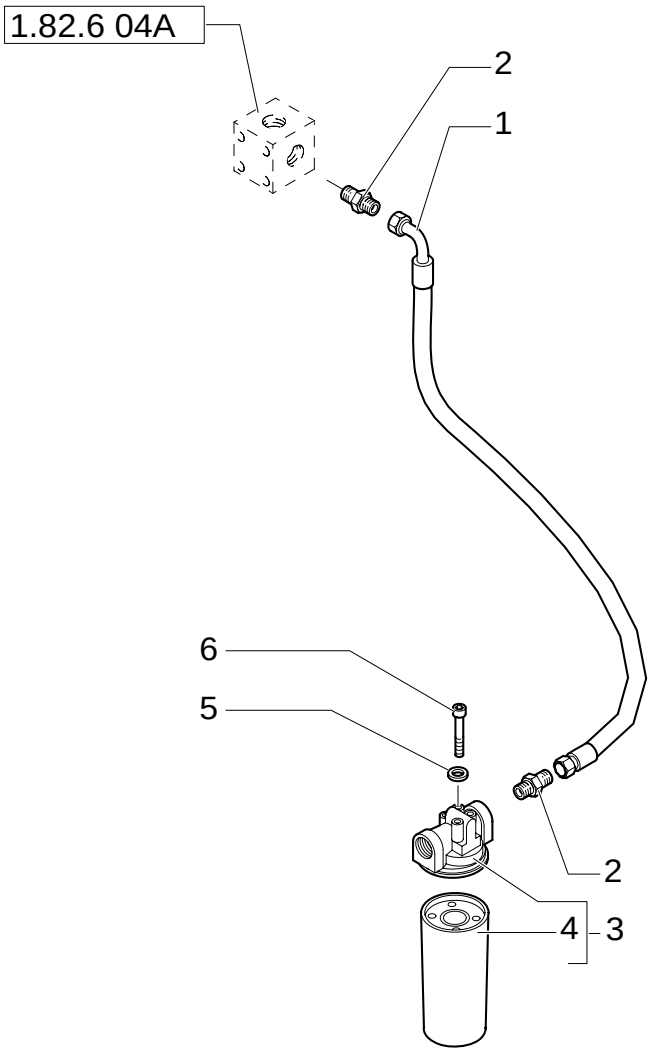

FILTER ASSEMBLY & HOSE TO RETURN MANIFOLD (CENTER PIVOT)

REF	FN	PART NUMBER	YR/SN	QTY	DESCRIPTION
1		87414983		1	HOSE, FLEXIBLE
2		85802960		2	CONNECTOR, HYD.
3		87315438		1	FILTER, HYDRAULIC OIL
4		86989733		1	FILTER, ELEMENT
5		11190579		4	WASHER, LOCK
6		11106221		4	SCREW

Pilot Control Version

1.82.6	07A	p1	02/05

HYDRAULIC SYSTEM PIPING

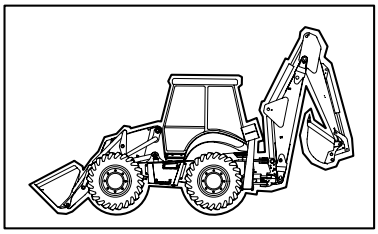

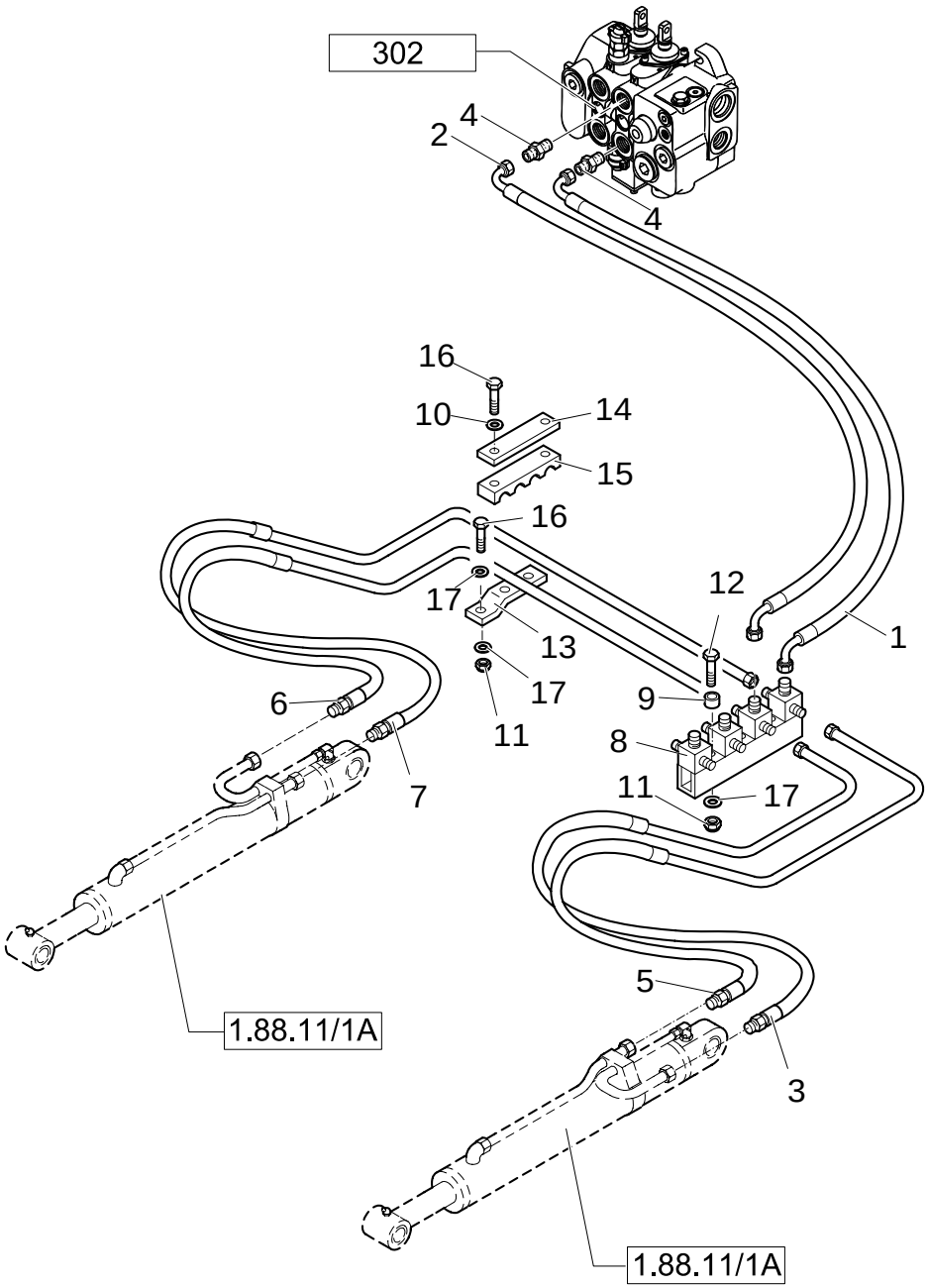

HYDRAULIC SYSTEM PIPING

REF	FN	PART NUMBER	YR/SN	QTY	DESCRIPTION
1		85826087		1	HOSE, FLEXIBLE
2		85826089		1	HOSE, FLEXIBLE
3		85805181		1	HOSE, FLEXIBLE
4		390938S36		2	CONNECTOR, HYD.
5		85805182		1	HOSE, FLEXIBLE
6		85805183		1	HOSE, FLEXIBLE
7		85805184		1	HOSE, FLEXIBLE
8		85805203		1	CONNECTOR, HYD.
9		85802891		1	SPACER
10		11193879		1	WASHER, LOCK
11		14048221		2	NUT
12		16044021		1	SCREW Hex, M8 x 40, 8.8
13		85805206		1	PLATE
14		85805207		1	PLATE
15		85805208		1	CLAMP
16		16043821		3	SCREW
17		12647121		3	WASHER M8

HYDRAULIC SYSTEM PIPING

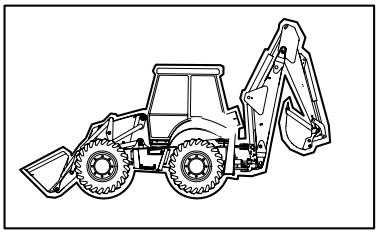

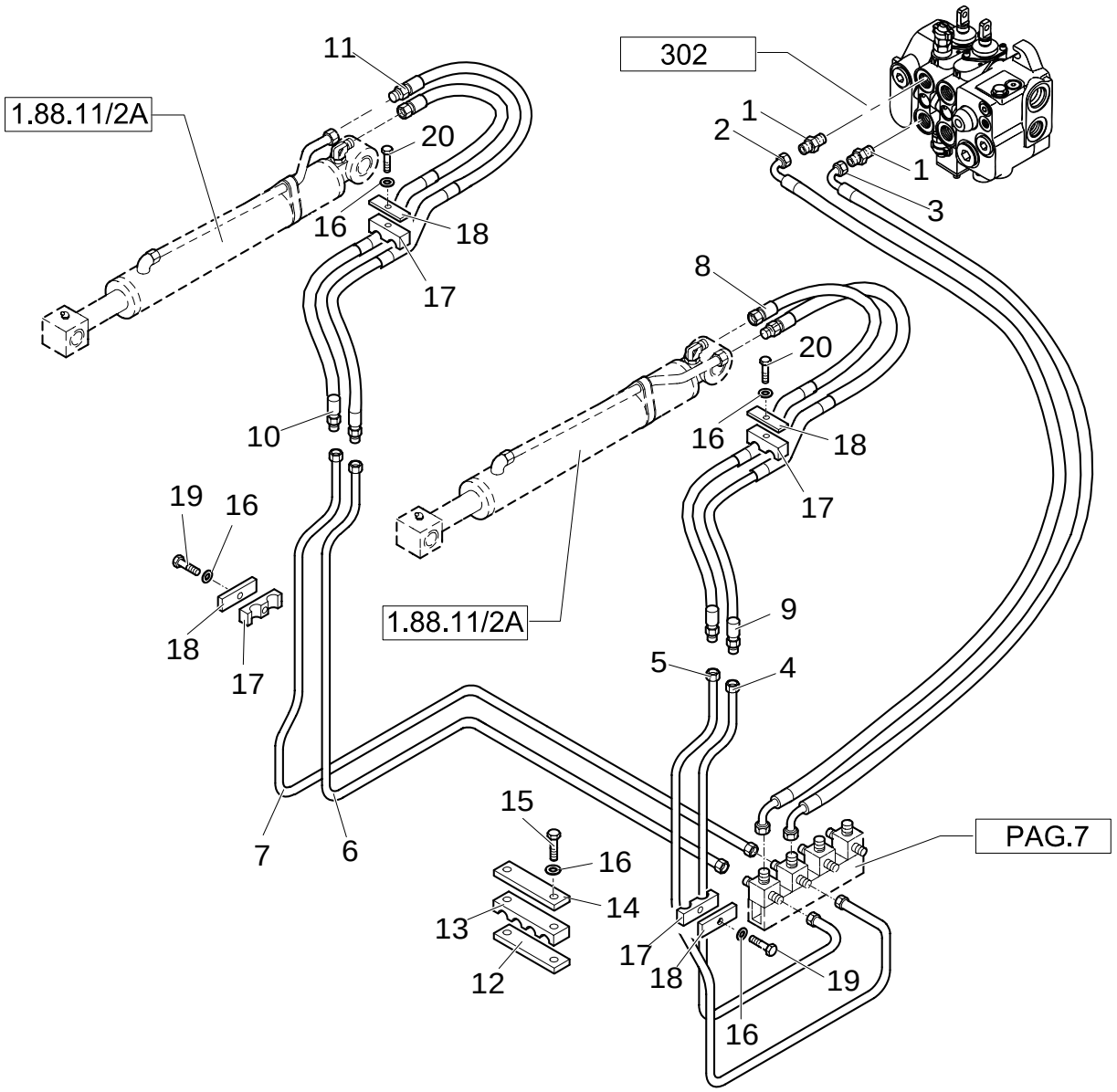

HYDRAULIC SYSTEM PIPING

REF	FN	PART NUMBER	YR/SN	QTY	DESCRIPTION
1		390938S36		2	CONNECTOR, HYD.
2		85826088		1	HOSE, FLEXIBLE
3		85826086		1	HOSE, FLEXIBLE
4		85805189		1	TUBE, HYD
5		85805191		1	TUBE, HYD
6		85805185		1	TUBE, HYD
7		85805187		1	TUBE, HYD
8		85813373		1	TUBE, RIGID
9		85813374		1	TUBE, RIGID
10		85813375		1	TUBE, RIGID
11		85813376		1	TUBE, RIGID
12		85805210		2	PLATE
13		85805211		2	CLAMP
14		85805209		2	PLATE
15		16043821		4	SCREW
16		11193979		8	WASHER, LOCK
17		85805193		6	CLAMP
18		85805195		6	PLATE
19		16044021		2	SCREW Hex, M8 x 40, 8.8
20		16044221		2	SCREW

1.82.6	10	p1	12/05

HYDRAULIC SYSTEM PIPING NA 4WS (CENTER PIVOT)

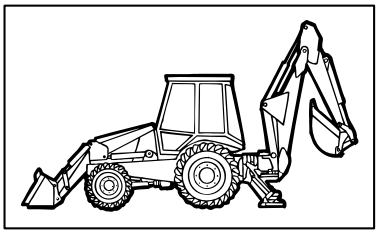

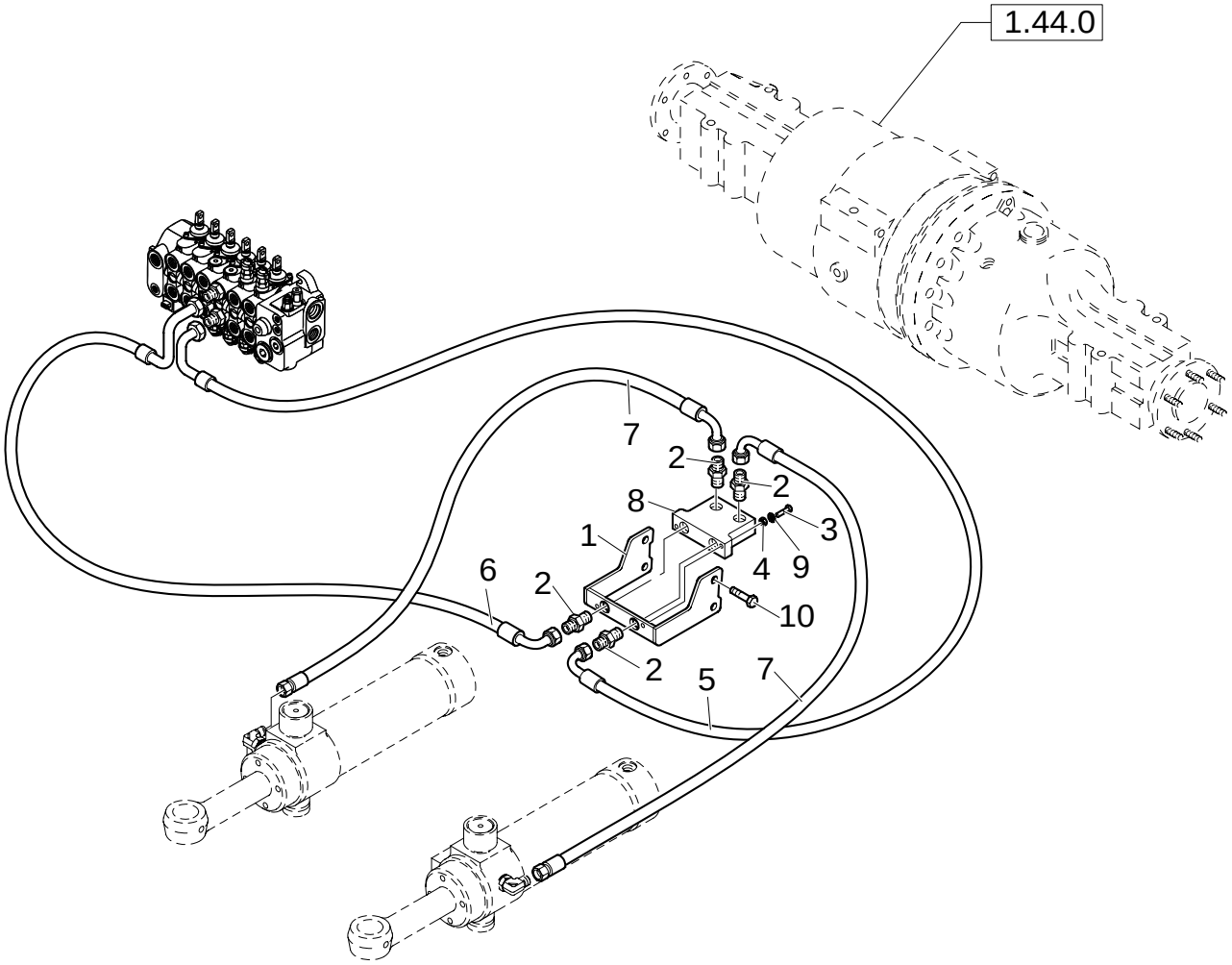

HYDRAULIC SYSTEM PIPING NA 4WS (CENTER PIVOT)

REF	FN	PART NUMBER	YR/SN	QTY	DESCRIPTION
1		87371811		1	SUPPORT
2		201-112		4	CONNECTOR
3		614-10040		2	BOLT M10x40
4		829-1410		2	NUT
5		87356499		1	HOSE, FLEXIBLE
6		87356501		1	HOSE, FLEXIBLE
7		87361461		2	HOSE, FLEXIBLE
8		87449373		1	VALVE, DAMPING
9		895-11010		4	WASHER 11x21x2
10		413-1036		4	BOLT

Pilot Control Version

1.82.6	11B	p1	02/05

HYDRAULIC SYSTEM PIPING(CENTER PIVOT)

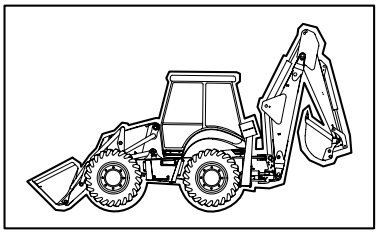

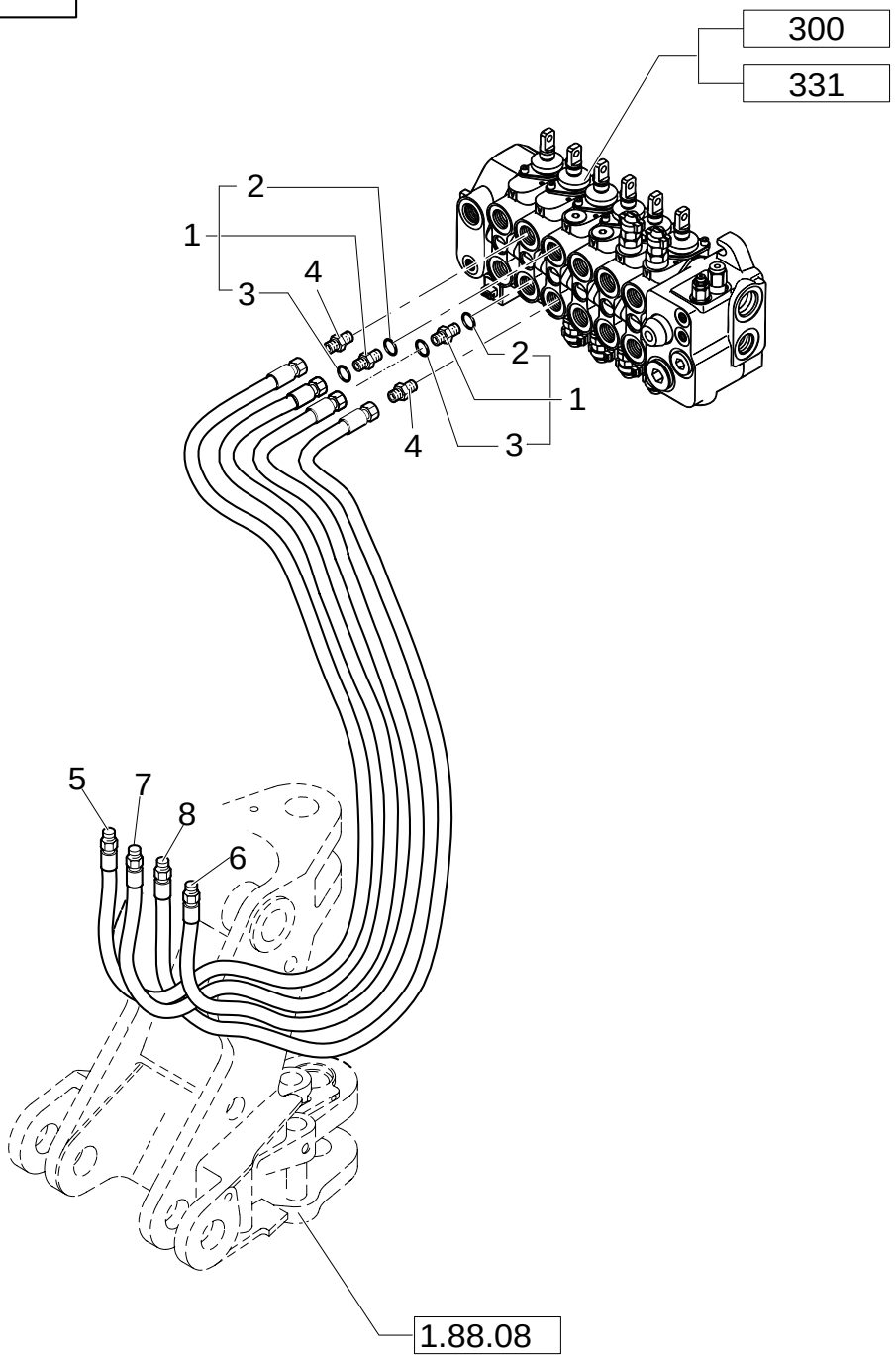

HYDRAULIC SYSTEM PIPING(CENTER PIVOT)

REF	FN	PART NUMBER	YR/SN	QTY	DESCRIPTION
1	1	390937S36		2	CONNECTOR, HYD. 1-3/16"-12 ORS x 1-1/16"-12 SAE O-Ring
2		167266		2	O-RING 90 Duro, .924" ID x .116" Thk
3		9991976		2	O-RING 90 Duro, .739" ID x .070" Thk
4		390938S36		2	CONNECTOR, HYD.
5		85812176		1	HOSE, FLEXIBLE
6		85812152		1	HOSE, FLEXIBLE
7		85812177		1	HOSE, FLEXIBLE
8	2	85812155		1	HOSE, FLEXIBLE
8	3	85826222		1	HOSE, FLEXIBLE

(1) Includes 2, 3
(2) Mechanical Control Version
(3) Pilot Control Version

1.82.6	12B	p1	02/05

HYDRAULIC SYSTEM PIPING(CENTER PIVOT)

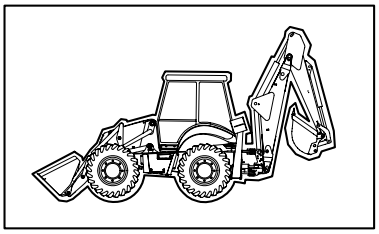

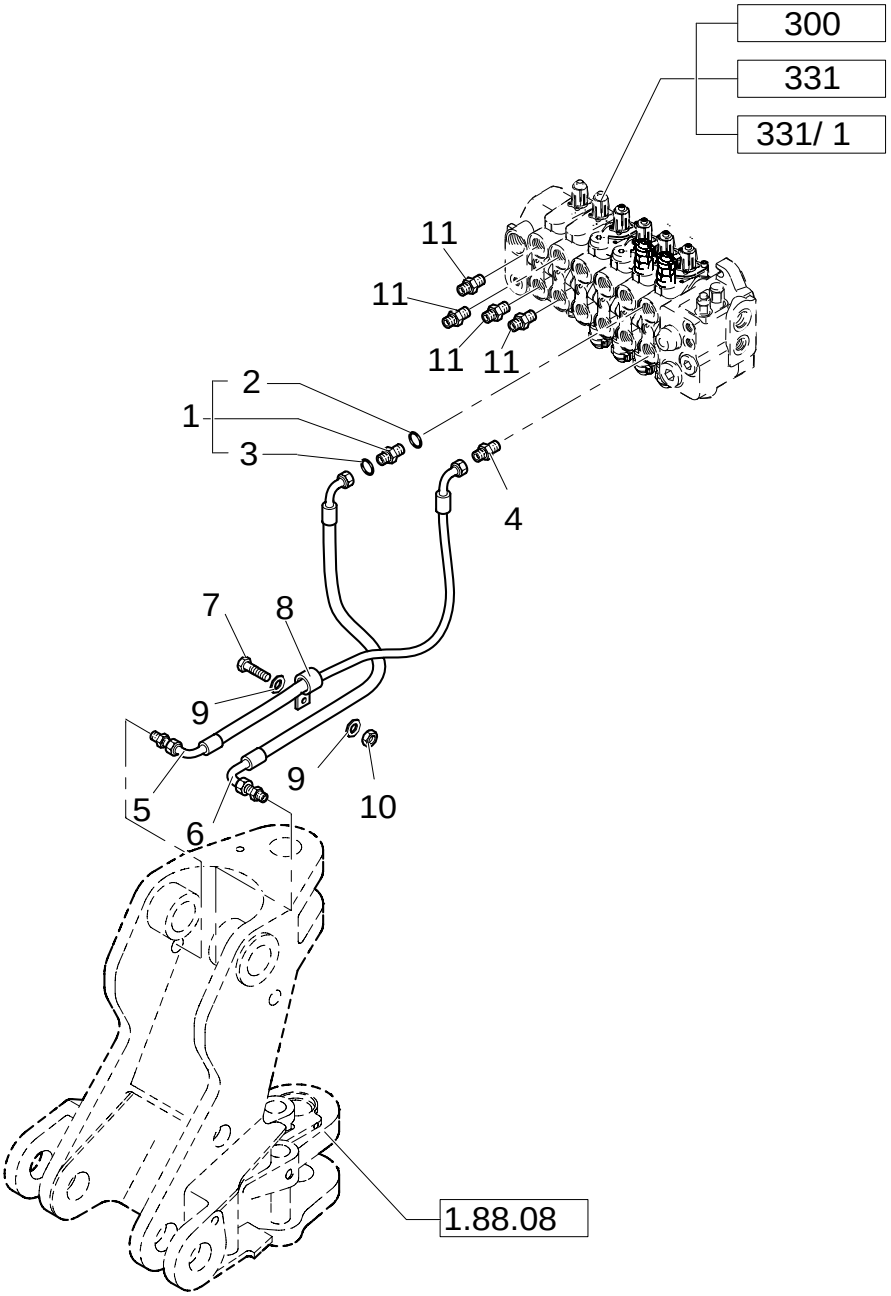

HYDRAULIC SYSTEM PIPING(CENTER PIVOT)

REF	FN	PART NUMBER	YR/SN	QTY	DESCRIPTION
1	1	390937S36		1	CONNECTOR, HYD. 1-3/16"-12 ORS x 1-1/16"-12 SAE O-Ring
2		167266		1	O-RING 90 Duro, .924" ID x .116" Thk
3		9991976		1	O-RING 90 Duro, .739" ID x .070" Thk
4		390938S36		1	CONNECTOR, HYD.
5		85812143		1	HOSE, FLEXIBLE
6		85812151		1	HOSE, FLEXIBLE
7		10902221		1	SCREW
8		85804947		1	COLLAR, RETAINER
9		10519411		2	WASHER
10		12574211		1	NUT
11	2	85805258		4	CONNECTOR, HYD.

(1) Includes 2, 3
(2) Pilot Control Version

1.82.6	13B	p1	11/05

HYDRAULIC SYSTEM PIPING(CENTER PIVOT)

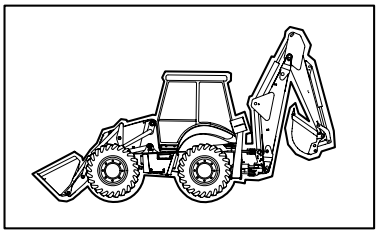

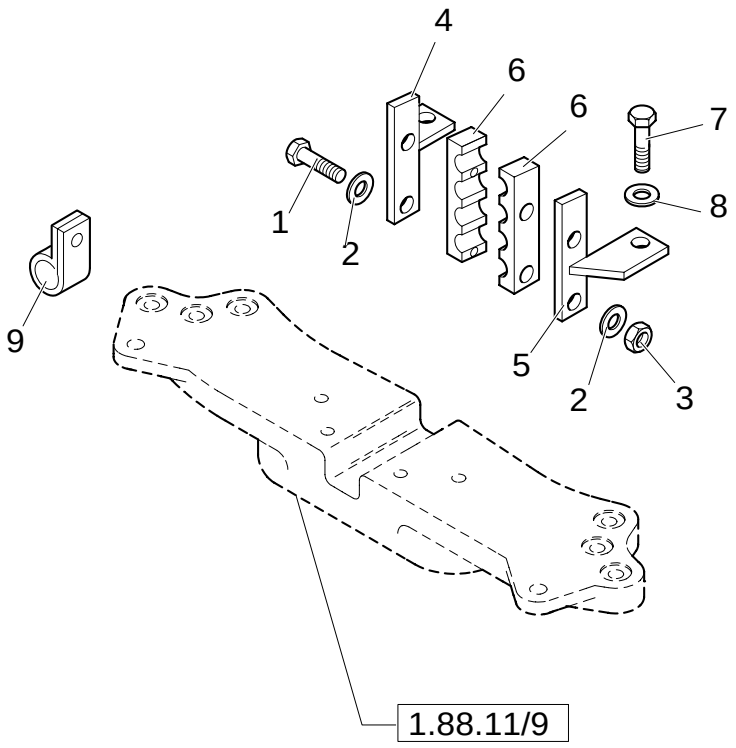

HYDRAULIC SYSTEM PIPING(CENTER PIVOT)

REF	FN	PART NUMBER	YR/SN	QTY	DESCRIPTION
1		16044421		1	SCREW
2		12647121		2	WASHER M8
3		16104111		1	NUT
4		85804573		1	SUPPORT
5		85804574		1	SUPPORT
6		85802731		2	BRACKET
8		11190579		2	WASHER, LOCK
9		47049644		1	COLLAR
7		11106221		2	SCREW

300	01	p1	11/05

BACKHOE CONTROL VALVE, 6 SECTIONS (CENTER PIVOT)

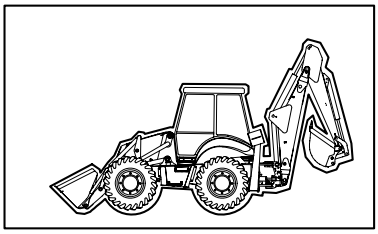

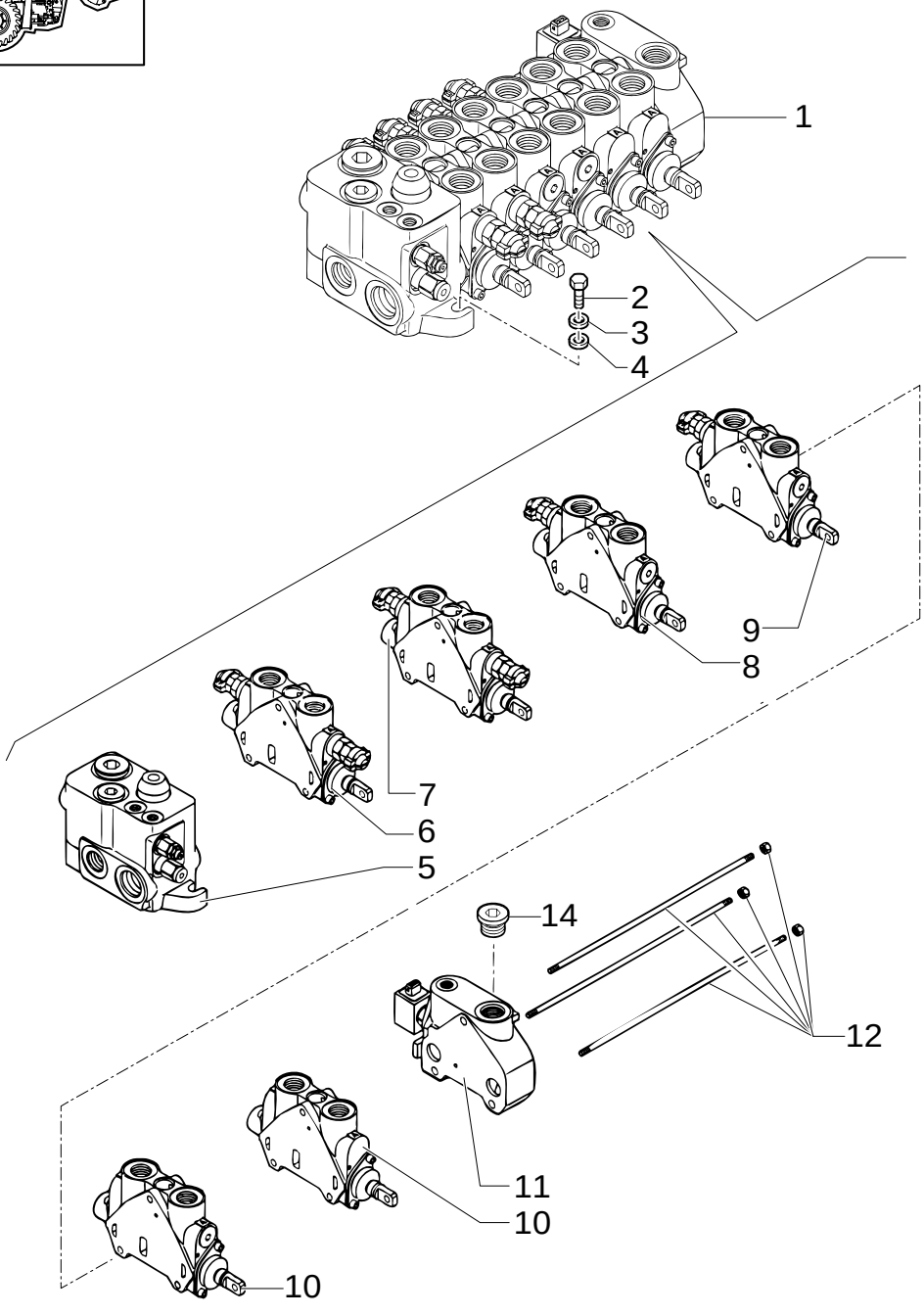

BACKHOE CONTROL VALVE, 6 SECTIONS (CENTER PIVOT)

REF	FN	PART NUMBER	YR/SN	QTY	DESCRIPTION
1		85824220		1	DISTRIBUTOR ASSY
2		15888724		3	SCREW M10 x 55
3		11190679		3	WASHER, LOCK
4		85818943		3	SPACER
5	1	85826255		1	SECTOR, TOOTHED
6	2, 3	85826245		1	SECTOR, TOOTHED
7	4, 5	85826253		1	SECTOR, TOOTHED
8	6, 7	85826246		1	SECTOR, TOOTHED
9	8, 9	85826248		1	SECTOR, TOOTHED
10	10, 11	85826251		2	SECTOR, TOOTHED
11	12	85826250		1	SECTOR, TOOTHED
12		85811958		1	KIT
14		85811921		1	PLUG 1-1/16"-12 UNF 2A

(1) See Page 300 02
(2) Boom Cylinder
(3) See Page 300 03
(4) Swing Cylinder
(5) See Page 300 04
(6) Bucket Cylinder
(7) See Page 300 05
(8) Arm Cylinder
(9) See Page 300 06
(10) Stabilizer Cylinder
(11) See Page 300 07
(12) Clamps Cylinder

Mechanical Version

300	02	p1	11/05

BACKHOE CONTROL VALVE, INLET SECTION

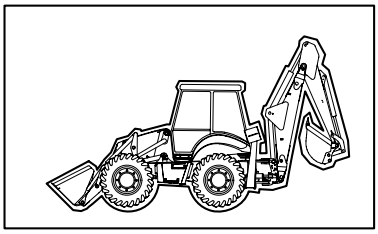

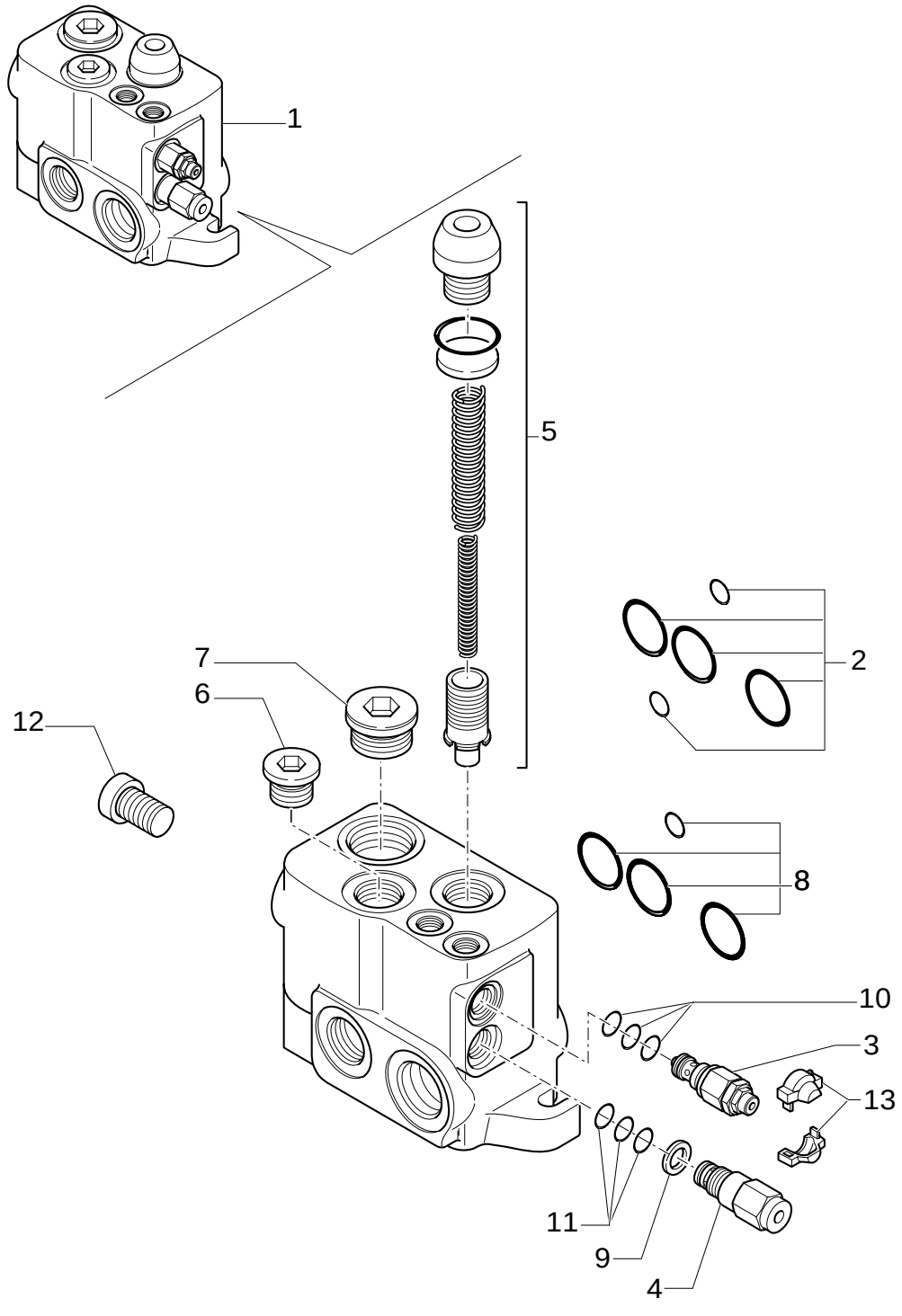

BACKHOE CONTROL VALVE, INLET SECTION

REF	FN	PART NUMBER	YR/SN	QTY	DESCRIPTION
1		85826255		1	SECTOR, TOOTHED ASSY
2		85825477		1	KIT
3		85811946		1	VALVE, HYDRAULIC
4		85820128		1	VALVE, HYDRAULIC
5		85820129		1	KIT Regulation
6		85811921		1	PLUG 1-1/16"-12 UNF 2A
7		85811922		1	PLUG 1-5/16"-12 UNF 2A
8		85825473		1	KIT SEALS
9		85817669		1	GASKET
10		85821236		1	KIT Seal, LS Pressure Relief
11		85821235		1	KIT Seal, Flow Regulator
12		85811923		1	PLUG
13		85811934		1	KIT

Mechanical Version

300	03	p1	11/05

BACKHOE CONTROL VALVE, BOOM SECTION

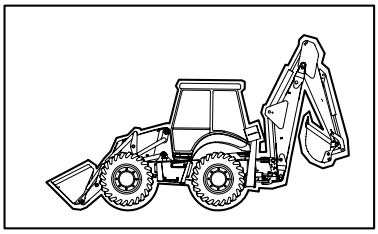

KIT
KIT KIT
12 = ●
14 = ▲

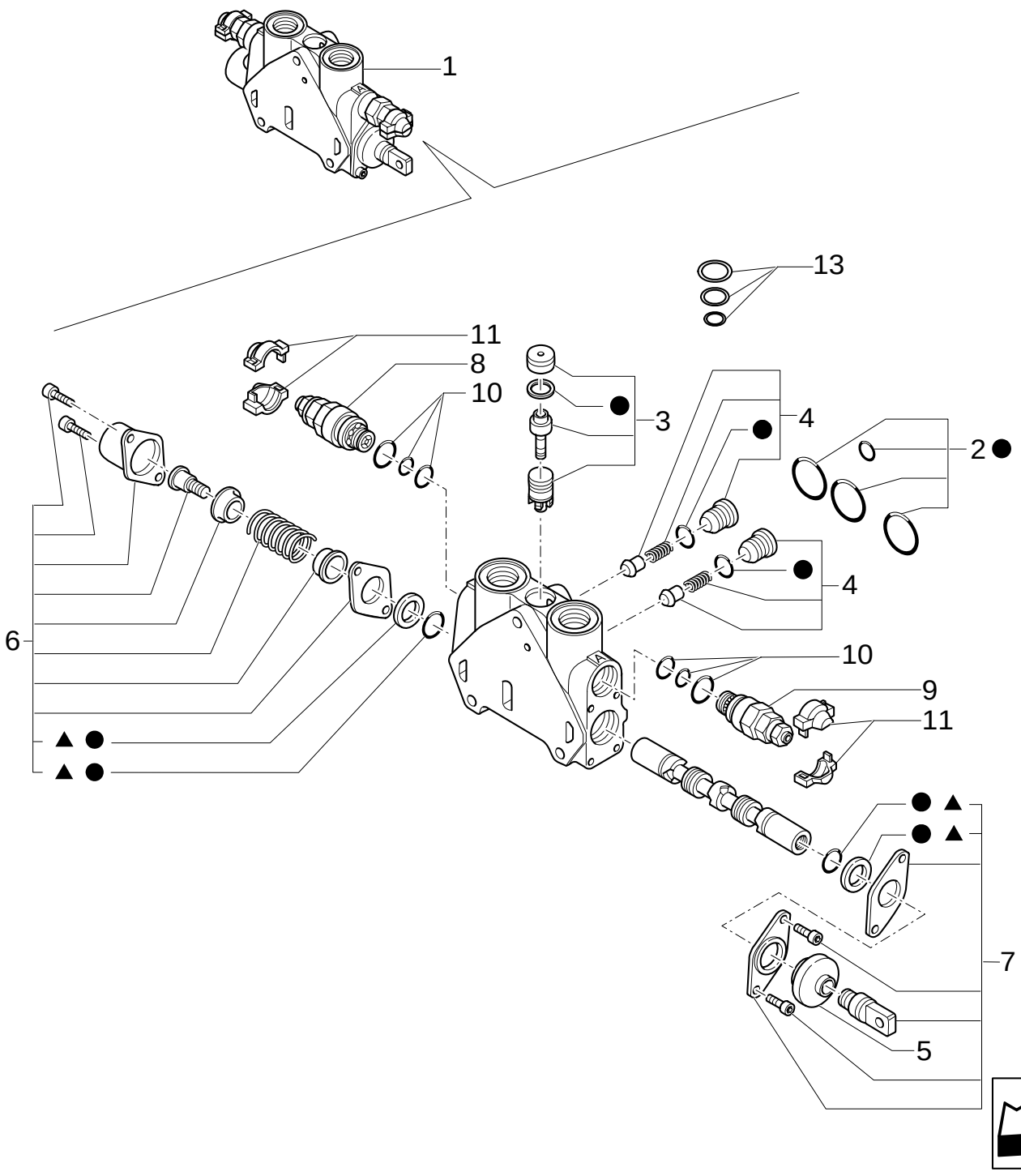

BACKHOE CONTROL VALVE, BOOM SECTION

REF	FN	PART NUMBER	YR/SN	QTY	DESCRIPTION
1		85826245		1	SECTOR, TOOTHED ASSY
2		85819148		1	KIT Seals
3		85819378		1	KIT Seals
4		85811938		2	KIT Valve
5		85820130		1	BELLOWS
6		85824279		1	KIT Seals
7		85824278		1	KIT Working Section
8	1, 2	85812117		1	VALVE, HYDRAULIC
9	1, 3	85812116		1	VALVE, HYDRAULIC
10		85811933		2	KIT Seals
11		85811934		2	KIT Cover
12		85824281		1	KIT Seals
13		85819040		1	KIT Compensator Seals
14		85824283		1	KIT Spool Seal

(1) Includes 10, 11
(2) 315 BAR
(3) 240 BAR

Mechanical Version

BACKHOE CONTROL VALVE, SWING SECTION

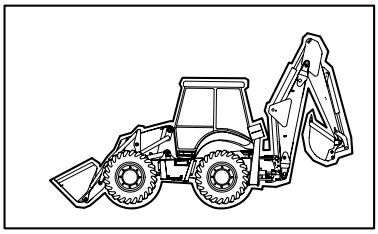

KIT
KIT KIT
9 = ●
13 = ▲

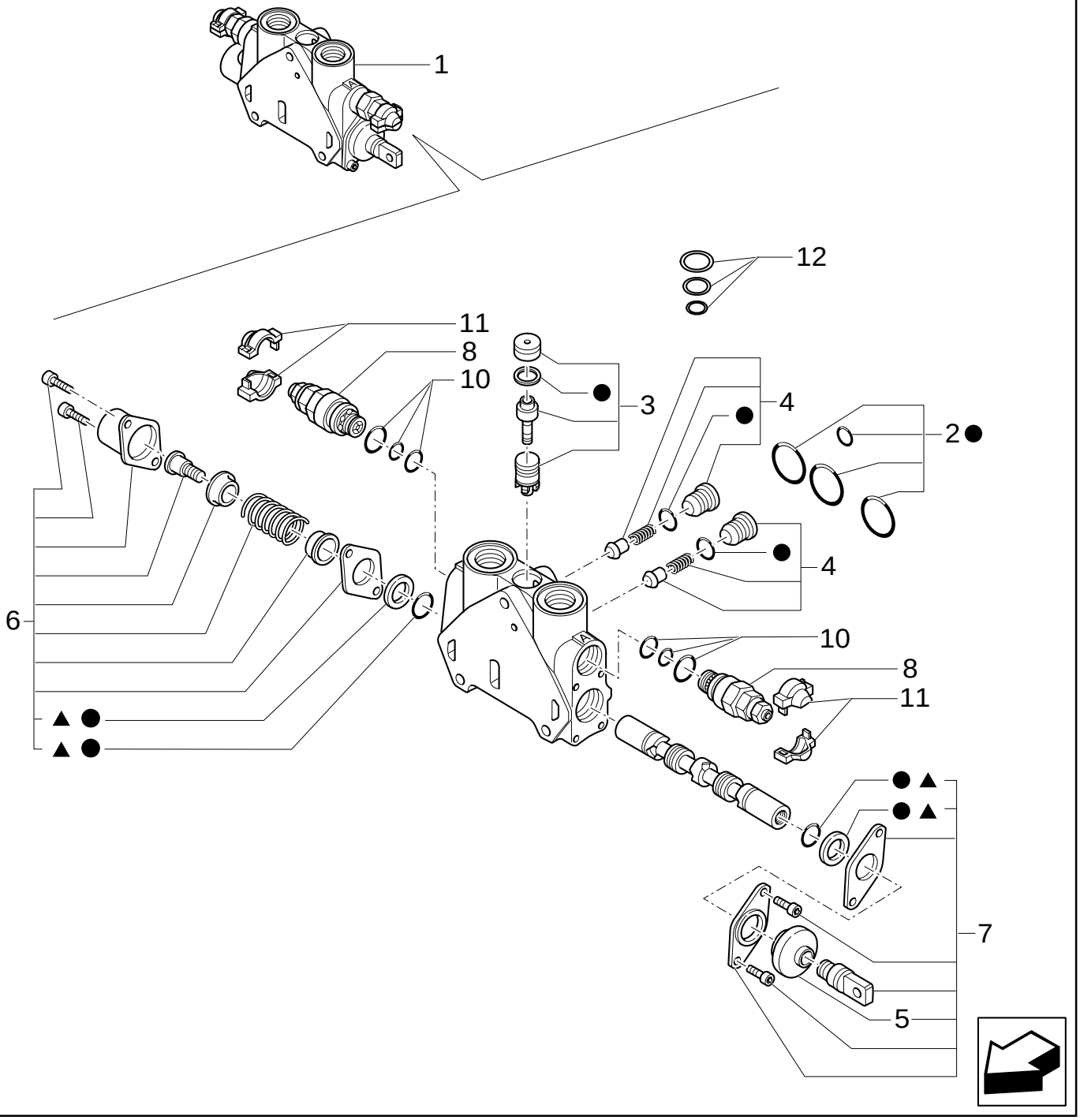

BACKHOE CONTROL VALVE, SWING SECTION

REF	FN	PART NUMBER	YR/SN	QTY	DESCRIPTION
1		85826253		1	SECTOR, TOOTHED ASSY
2		85819148		1	KIT Seals
3		85819378		1	KIT Seals
4		85811938		2	KIT Valve
5		85820130		1	BELLOWS
6		85824279		1	KIT Cover Assy
7		85824278		1	KIT Working Section
8	1, 2	85812114		2	VALVE, HYDRAULIC
9		85824282		1	KIT Seals
10		85811933		2	KIT Seals
11		85811934		2	KIT Cover
12		85819040		1	KIT Compensator Seal
13		85825248		1	KIT Spool Seal

(1) Includes 10, 11
(2) 205 BAR

Mechanical Version

300	05	p1	11/05

BACKHOE CONTROL VALVE, BUCKET SECTION

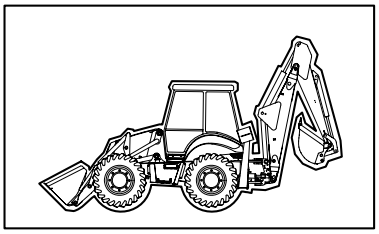

KIT
KIT KIT
12 = ●
14 = ▲

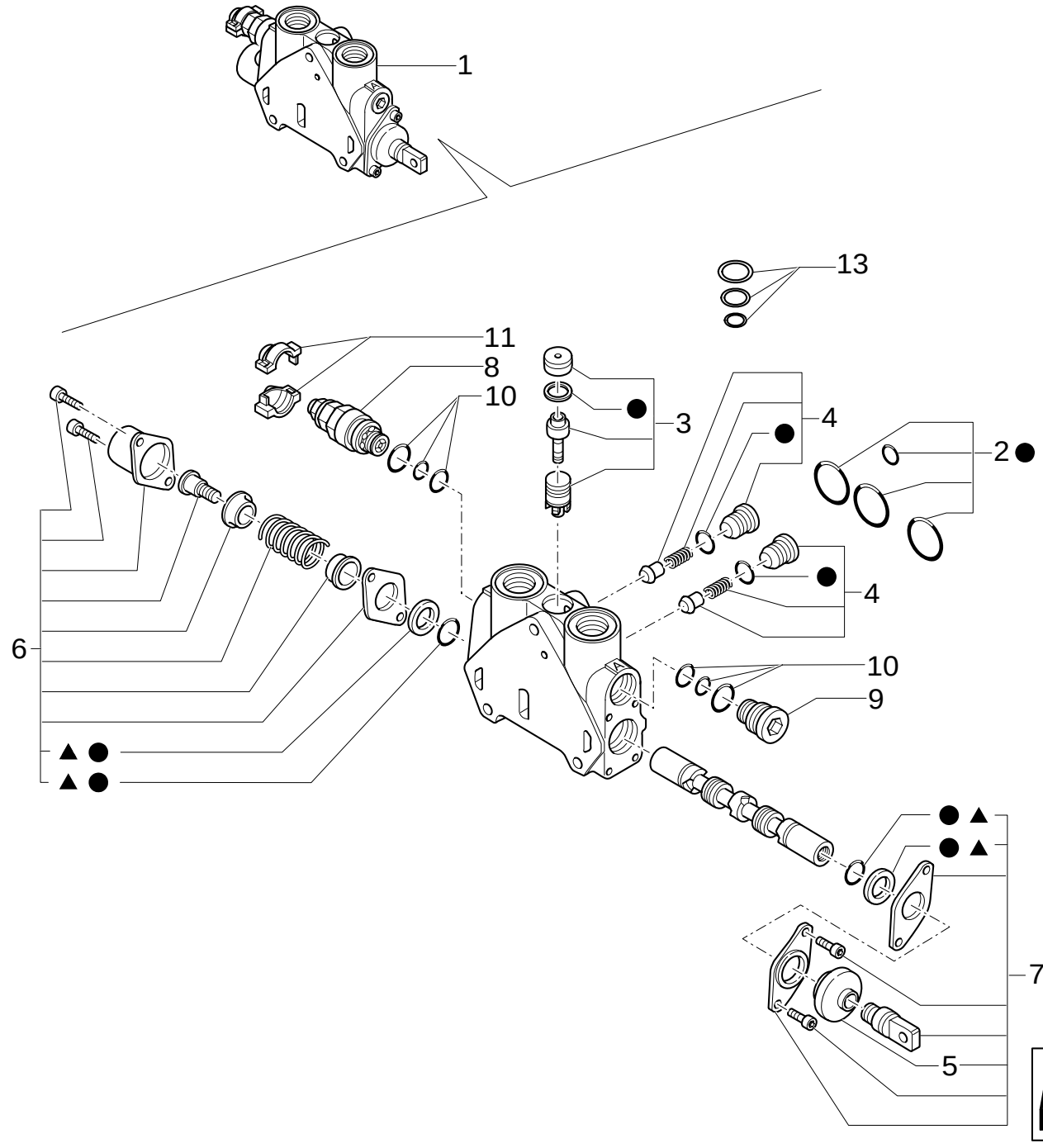

BACKHOE CONTROL VALVE, BUCKET SECTION

REF	FN	PART NUMBER	YR/SN	QTY	DESCRIPTION
1		85826246		1	SECTOR, TOOTHED ASSY
2		85811948		1	KIT Seals
3		85819378		1	KIT Seals
4		85811938		2	KIT VALVE
5		85820130		1	BELLOWS
6		85824279		1	KIT Cover Assy
7		85824278		1	KIT Working section
8	1, 2	85812115		1	VALVE, HYDRAULIC
9	3	85811937		1	PLUG
10		85811933		2	KIT Seals
11		85811934		1	KIT Cover
12		85824281		1	KIT Seals
13		85819040		1	KIT Compensator Seal
14		85824283		1	KIT Spool Seal

(1) Includes 10, 11
(2) 220 BAR
(3) Includes 10

Mechanical Version

300	06	p1	11/05

BACKHOE CONTROL VALVE, DIPPERSTICK SECTION

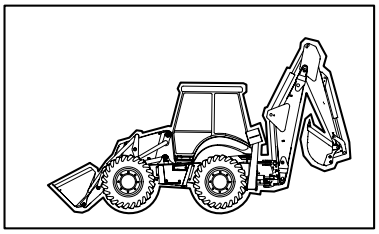

KIT
KIT KIT
12 = ●
9 = ▲

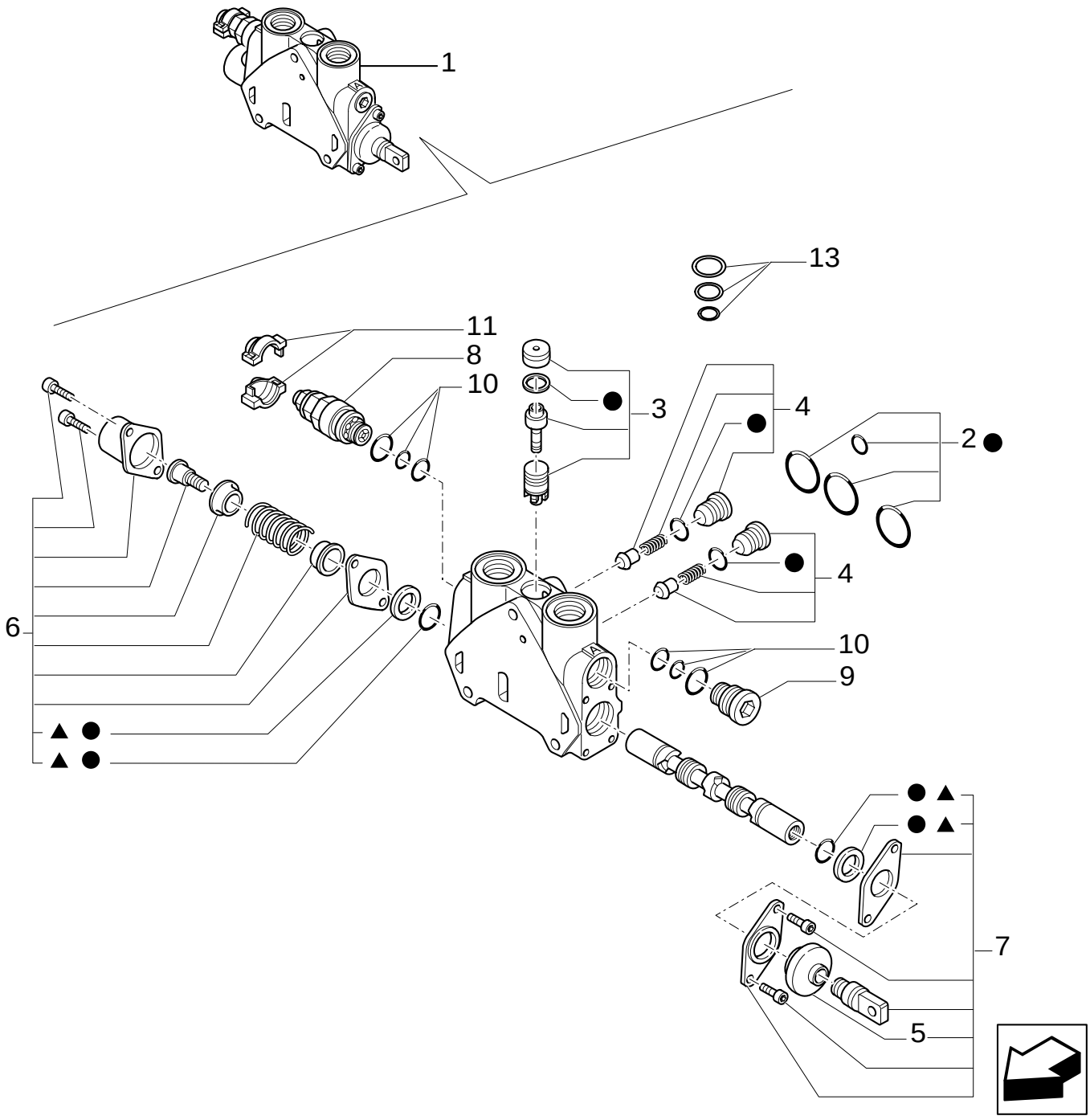

BACKHOE CONTROL VALVE, DIPPERSTICK SECTION

REF	FN	PART NUMBER	YR/SN	QTY	DESCRIPTION
1		85826248		1	SECTOR, TOOTHED ASSY
2		85819148		1	KIT Seals
3		85819378		1	KIT Seals
4		85811938		2	KIT Valve
5		85820130		1	BELLOWS
6		85824279		1	KIT Cover Assy
7		85824278		1	KIT Working Section
8	1, 2	85812116		1	VALVE, HYDRAULIC
9	3	85824283		1	KIT Spool Seals
10		85811933		1	KIT Valve Seals
11		85811934		1	KIT Cover
12		85824281		1	KIT Seals
13		85819040		1	KIT Compensator Seal

(1) Includes 10, 11
(2) 240 BAR
(3) Includes 10

Mechanical Version

300	07	p1	11/05

BACKHOE CONTROL VALVE, STABILIZER SECTION (CENTER PIVOT)

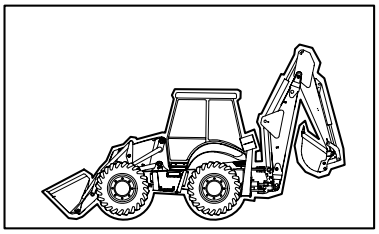

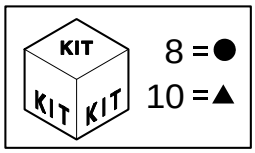

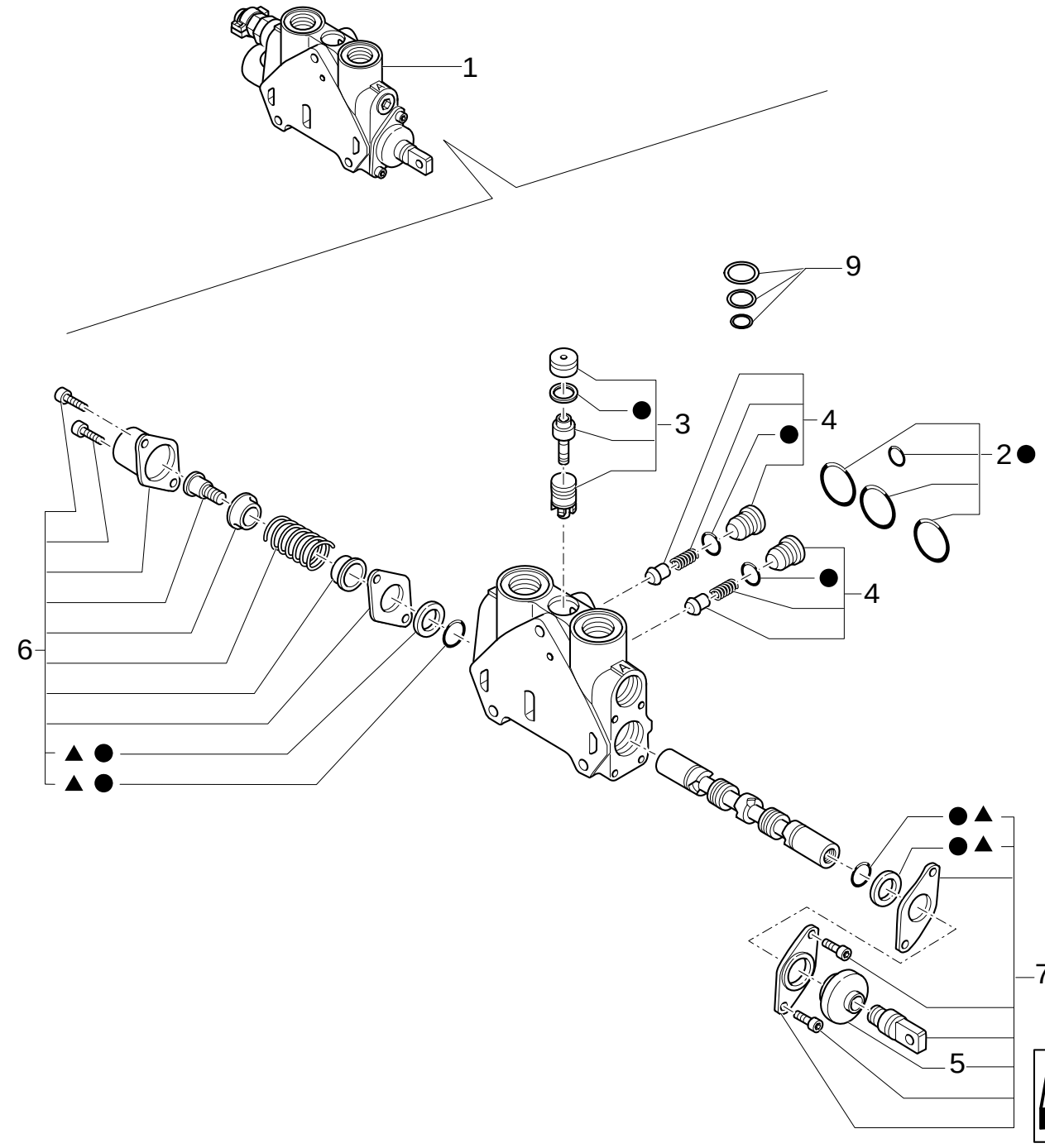

BACKHOE CONTROL VALVE, STABILIZER SECTION (CENTER PIVOT)

REF	FN	PART NUMBER	YR/SN	QTY	DESCRIPTION
1		85826251		1	SECTOR, TOOTHED ASSY
2		85819148		1	KIT Seals
3		85819378		1	KIT Seals
4		85811938		2	KIT Valve
5		85820130		1	BELLOWS
6		85824279		1	KIT Cover Assy
7		85824278		1	KIT Working Assy
8		85824281		1	KIT Seals
9		85819040		1	KIT Compensator Seal
10		85824283		1	KIT Spool Seal

Mechanical Version

302	01	p1	06/05

TWO-SECTION CONTROL VALVE FOR LOADER

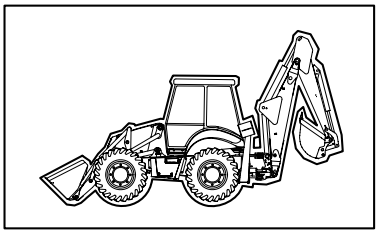

KIT KIT KIT 17= ●

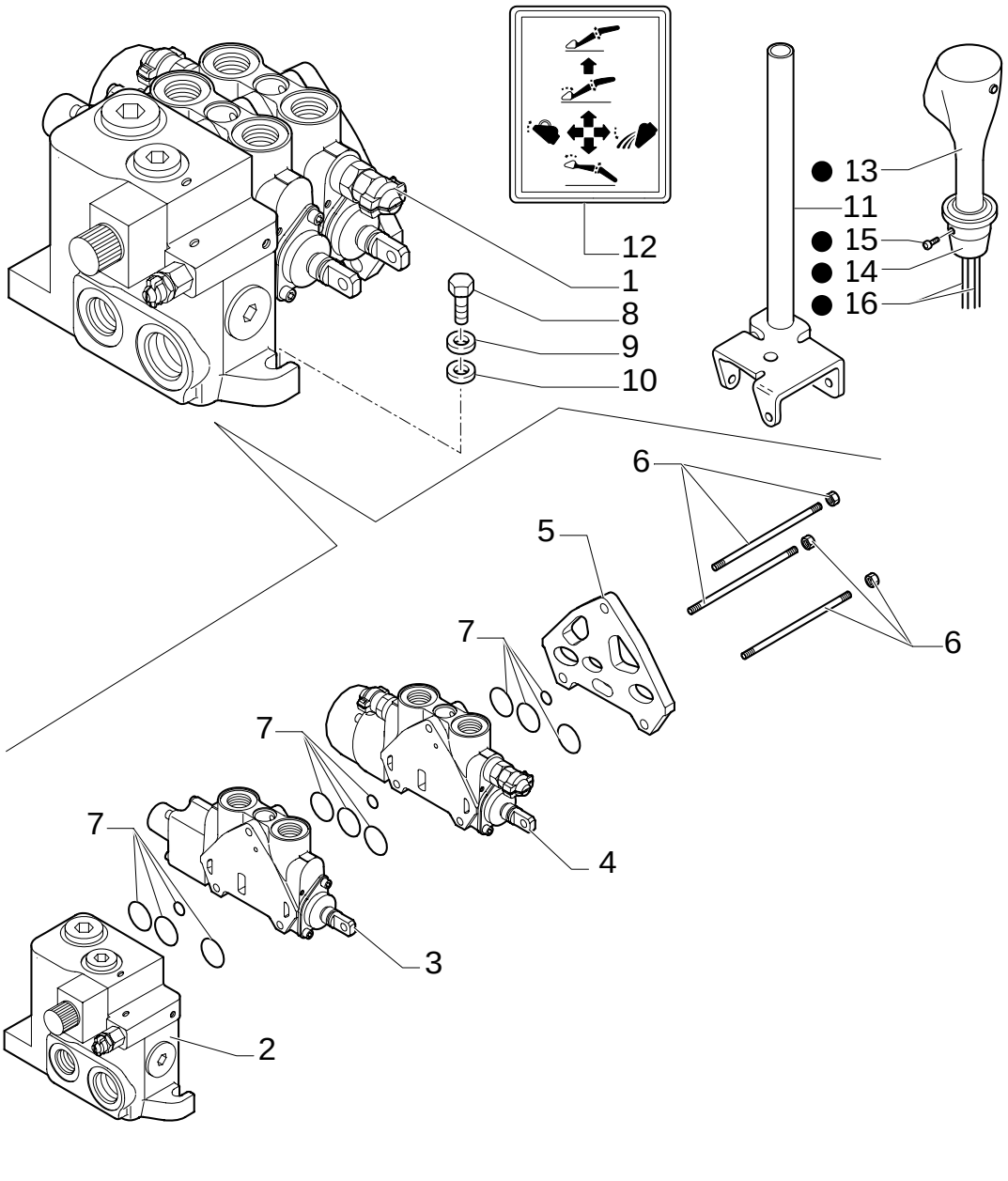

TWO-SECTION CONTROL VALVE FOR LOADER

REF	FN	PART NUMBER	YR/SN	QTY	DESCRIPTION
1		85825188		1	VALVE, CONTROL ASSY
2	1	85825468		1	SECTOR, TOOTHED ASSY
3	2, 3	85813484		1	SECTOR, TOOTHED
4	4, 5	85825469		1	SECTOR, TOOTHED
5		85825470		1	SECTOR, TOOTHED ASSY
6		85825475		1	TIE-ROD, THREADED TIE RODS
7		85825473		3	KIT Seal
8		11234721		3	SCREW M10x45
9		13578621		3	WASHER 10x30x2
10		11190679		3	WASHER, LOCK
11	6	85805813		1	LEVER
11	7	87304793		1	LEVER
12		85804346		1	DECAL
13	6	87304800		1	CONTROL UNIT
13	7	87304799		1	CONTROL UNIT
13	8	87311302		1	HANDLE GRIP
13	9	87311306		1	HANDLE GRIP
14		87311303		1	HUB
15		13789621		2	PLUG M8x10
16		87311836		1	CABLE, ELECTRIC
16		87311838		1	CABLE, ELECTRIC
17		87304799		1	CONTROL UNIT
17	8	87311102		1	MANIPULATOR
17	9	87311103		1	MANIPULATOR

(1) See Page 332 02
(2) LOADER
(3) See Page 332 03
(4) Bucket
(5) See Page 332 04
(6) Only for LB90.B - LB95.B - LB110.B
(7) Only for LB110.B - LB115.B
(8) Only for POWER SHIFT
(9) Only for POWER SHUTTLE

302	02	p1	02/05

TWO-SECTION CONTROL VALVE FOR LOADER

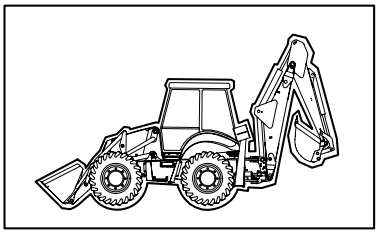

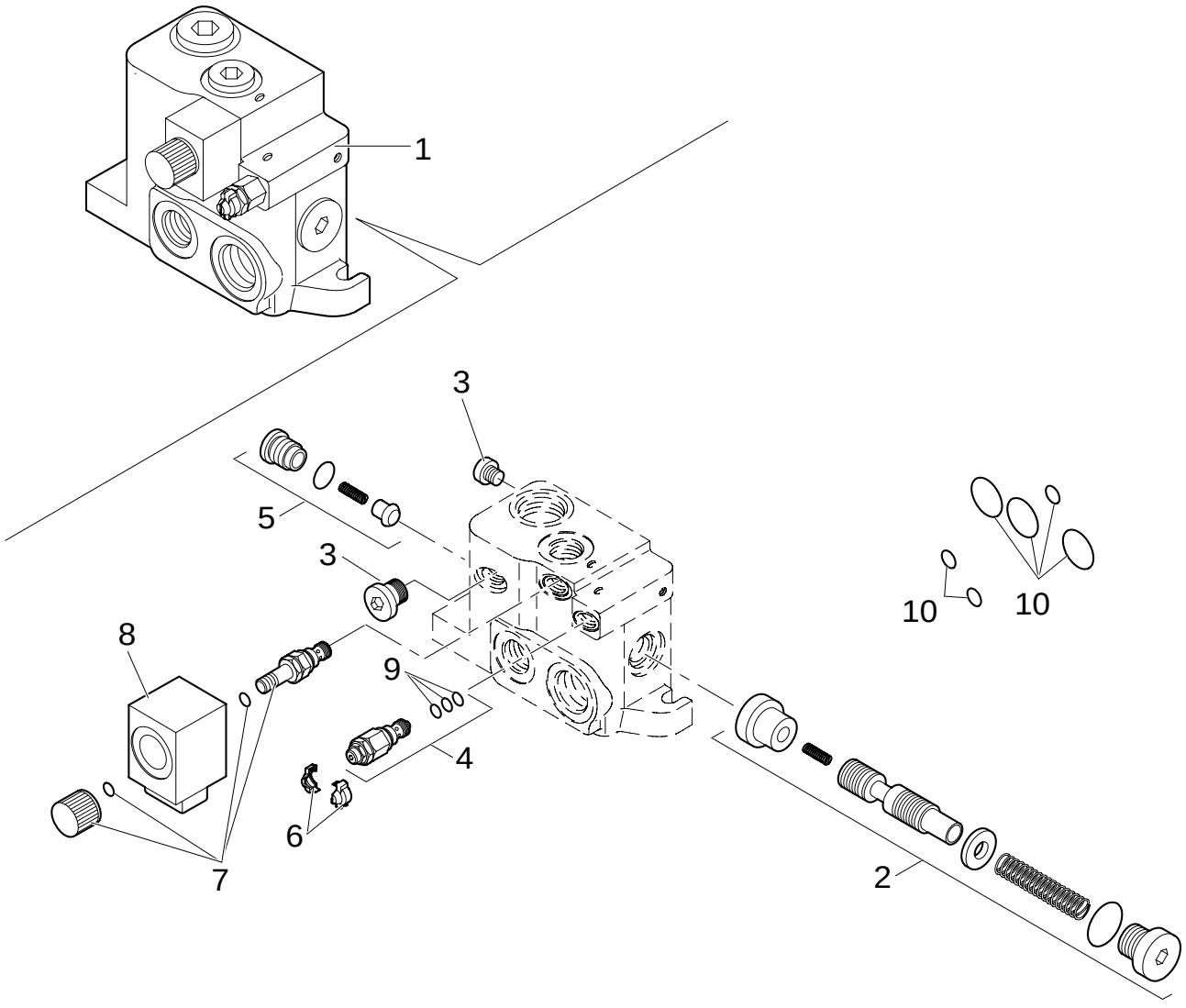

TWO-SECTION CONTROL VALVE FOR LOADER

REF	FN	PART NUMBER	YR/SN	QTY	DESCRIPTION
1		85825468		1	SECTOR, TOOTHED ASSY
2		85825472		1	KIT Spool Assy
3		85811923		2	PLUG
4		85811946		1	VALVE, HYDRAULIC
5		85811938		1	KIT Valve
6		85811934		1	KIT Cover
7		85811954		1	KIT 1" 1/16-12 UNF 2A
8		85811953		1	COIL 9/16-18 UNF
9		85821236		1	KIT Seal, LS Pressure Relief
10		85819148		1	KIT Seal

302	03	p1	02/05

TWO-SECTION CONTROL VALVE FOR LOADER

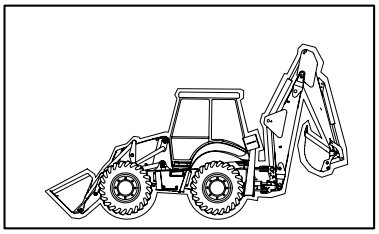

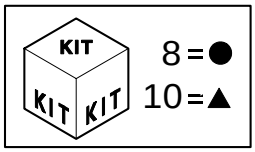

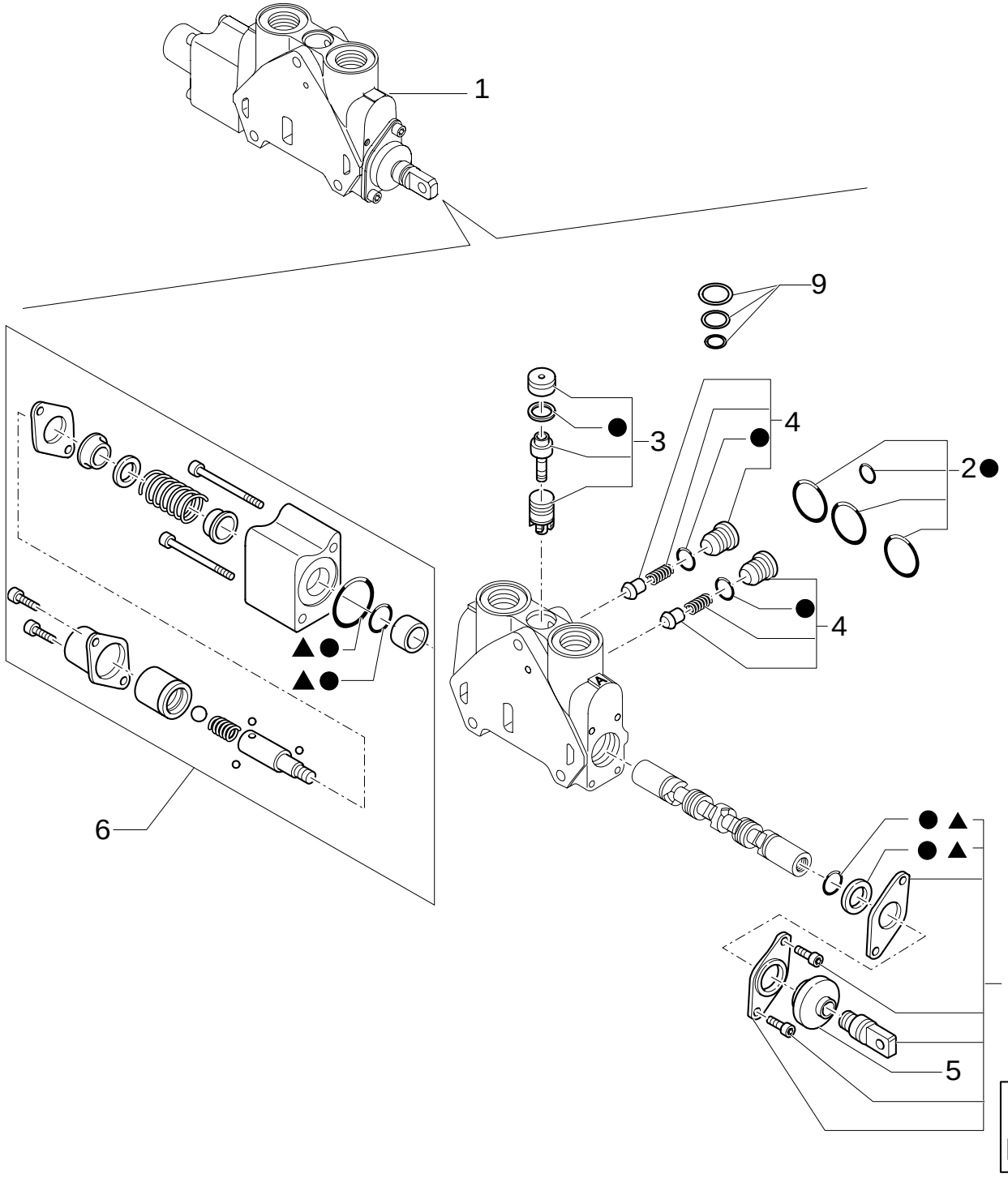

TWO-SECTION CONTROL VALVE FOR LOADER

REF	FN	PART NUMBER	YR/SN	QTY	DESCRIPTION
1		85813484		1	SECTOR, TOOTHED ASSY
2		85819148		1	KIT Seals
3		85819378		1	KIT Valve
4		85811938		2	KIT Valve
5		85820130		1	BELLOWS
6		85824280		1	KIT Cover Assy
7		85824278		1	KIT Working Assy
8		85824281		1	KIT Seals
9		85819040		1	KIT Compensator Seal
10		85824283		1	KIT Spool Seal

302	04	p1	02/05

TWO-SECTION CONTROL VALVE FOR LOADER

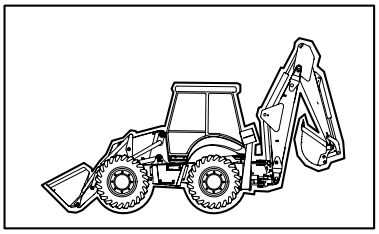

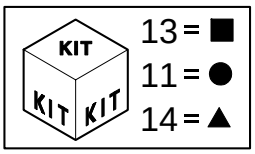

TWO-SECTION CONTROL VALVE FOR LOADER

REF	FN	PART NUMBER	YR/SN	QTY	DESCRIPTION
1		85825469		1	SECTOR, TOOTHED ASSY
2		85819148		1	KIT Seals
3		85819378		1	KIT Valve
4		85811938		2	KIT Valve
5		85820130		1	BELLOWS
6		85825471		1	KIT Cover Assy
7		85824278		1	KIT Working Assy
8	1, 2	85812116		1	VALVE, HYDRAULIC
9		85811933		2	KIT Valve Seals
10		85811934		2	KIT Cover
11		85824281		1	KIT Seals
12	1, 3	85812113		1	VALVE, HYDRAULIC
13		85819040		1	KIT Compensator Seal
14		85824283		1	KIT Spool Seal

(1) Includes 9, 10
(2) 230 BAR
(3) 160 BAR

304	01	p1	11/05

LOCK VALVE ON TILTING CYLINDER

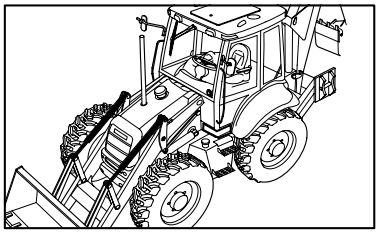

KIT 18 = ●

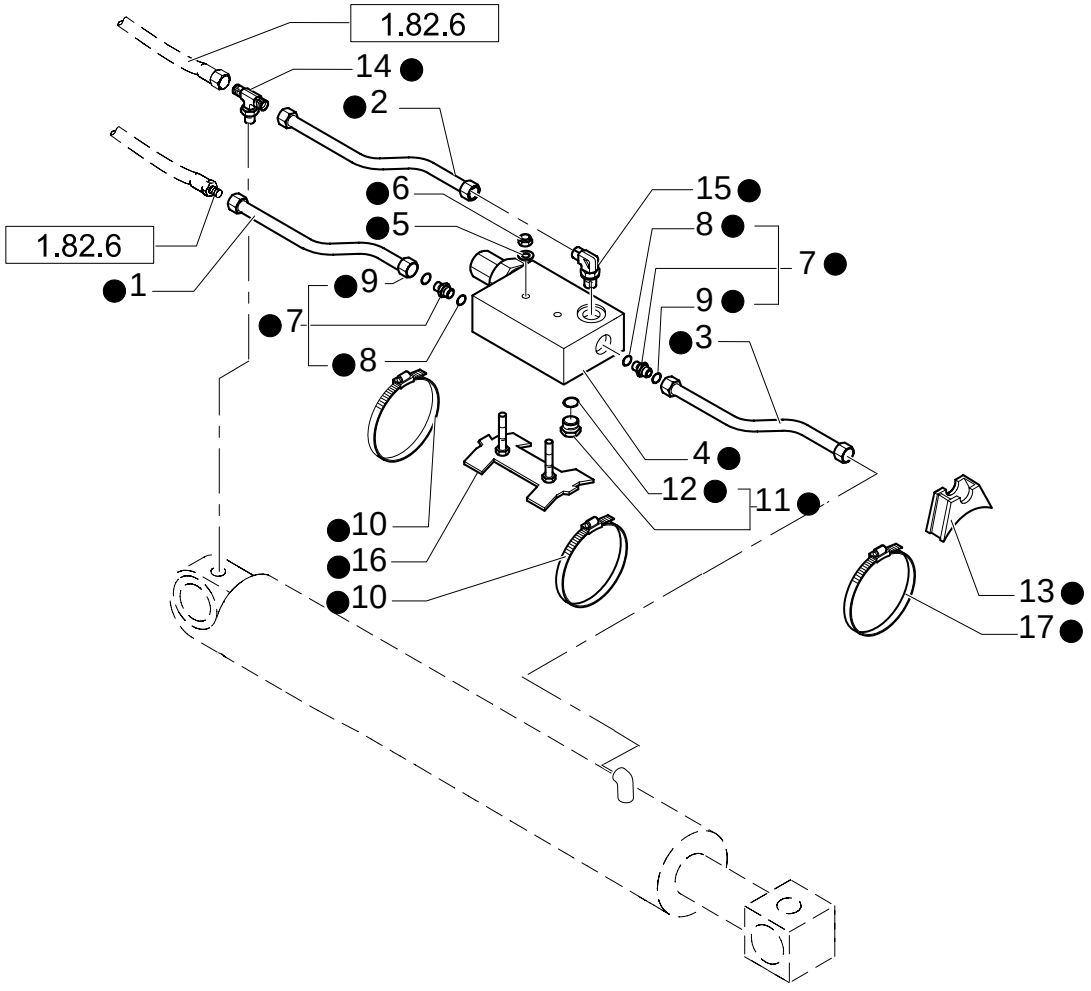

LOCK VALVE ON TILTING CYLINDER

REF	FN	PART NUMBER	YR/SN	QTY	DESCRIPTION
1		85812004		2	TUBE, RIGID
2		85812005		2	TUBE, RIGID
3		85812006		2	TUBE, RIGID
4		85813118		2	VALVE, HYDRAULIC
5		11193879		4	WASHER, LOCK D.8
6		14048211		4	NUT M8
7	1	390953S36		4	CONNECTOR, HYD.
8		128825		4	O-RING 8-1, 90 Duro, .644" ID x .087" Thk
10		85803010		2	CLAMP
11	2	85802805		2	PLUG M8X1,25
12		9825770		2	O-RING 90 Duro, .301" ID x .070" Thk
13		87303910		2	SPACER
14		85805218		2	CONNECTOR, HYD.
15		85805220		2	CONNECTOR, HYD.
16		85805221		2	SUPPORT
17		85803008		2	COLLAR
18	3	NSS		1	NOT SERVICED SEPARATELY
9		9992298		4	O-RING 90 Duro, .489" ID x .070" Thk

(1) Includes 8, 9
(2) Includes 12
(3) Includes 1 To 17 Also Page 304 02, 304 03

304	02	p1	11/05

LOCK VALVE ON LIFTING CYLINDER

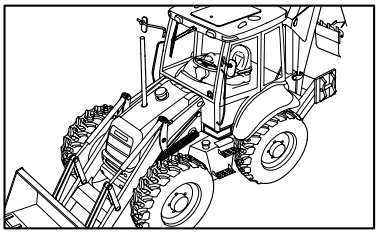

KIT KIT KIT 18 = ●

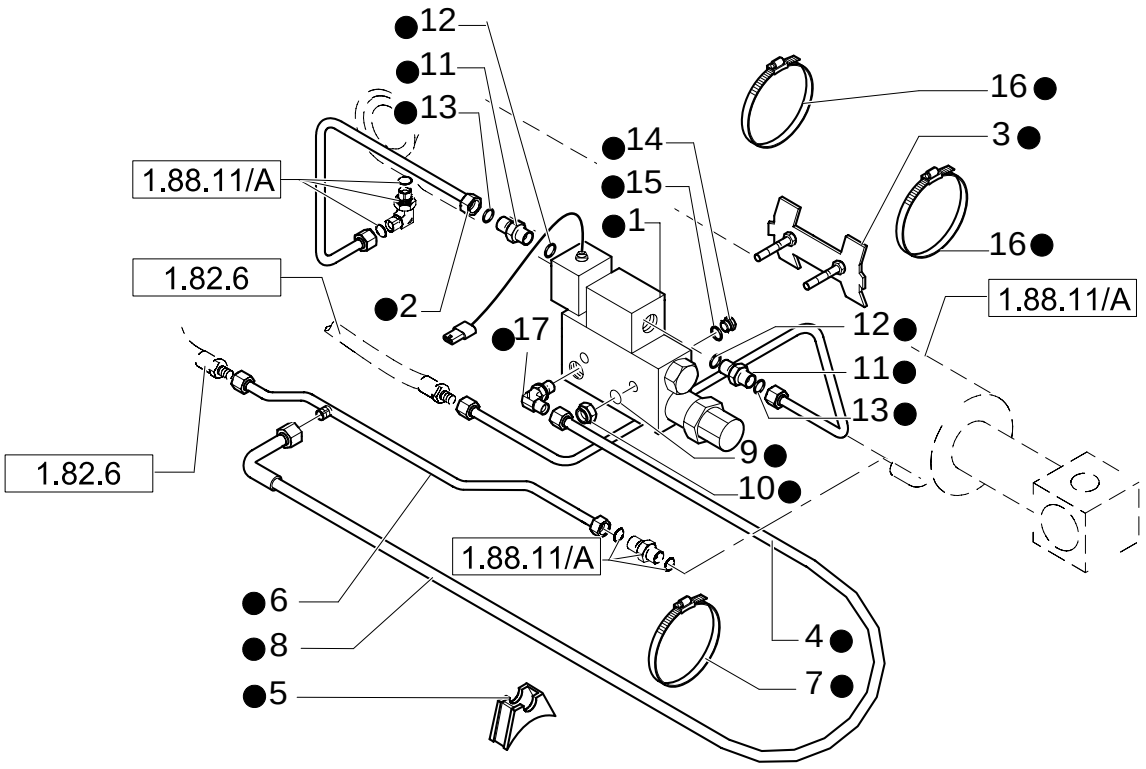

LOCK VALVE ON LIFTING CYLINDER

REF	FN	PART NUMBER	YR/SN	QTY	DESCRIPTION
1		85805223		2	VALVE, HYDRAULIC
2		85811998		1	TUBE, RIGID RH
2		85812324		1	TUBE, RIGID LH
3		85805221		2	SUPPORT
4		85812000		1	TUBE, RIGID RH
4		85812323		1	TUBE, RIGID LH
5		7708312		4	SPACER
6		85812002		1	TUBE, RIGID LH
6		85812326		1	TUBE, RIGID RH
7		85803008		2	COLLAR
8		85815506		2	HOSE, FLEXIBLE
9		11193879		4	WASHER, LOCK
10		14048211		4	NUT M8X1,25
11	1	390953S36		4	CONNECTOR, HYD.
12		128825		4	O-RING 8-1, 90 Duro, .644" ID x .087" Thk
14	2	85802805		2	PLUG
15		9825770		2	O-RING 90 Duro, .301" ID x .070" Thk
16		85802743		4	SEALING RING COLLAR
17		85805220		2	CONNECTOR, HYD.
18	3	NSS		1	NOT SERVICED SEPARATELY SEE PAGE 1,3
13		9992298		4	O-RING 90 Duro, .489" ID x .070" Thk

(1) Includes 12, 13
(2) Includes 15
(3) Includes 1 To 17 Also Page 304 01, 304 03

304	03	p1	02/05

LOCK VALVE

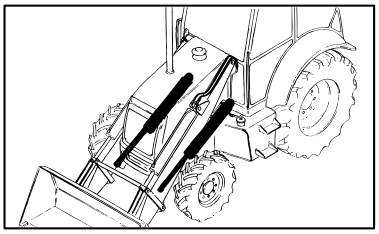

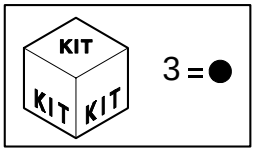

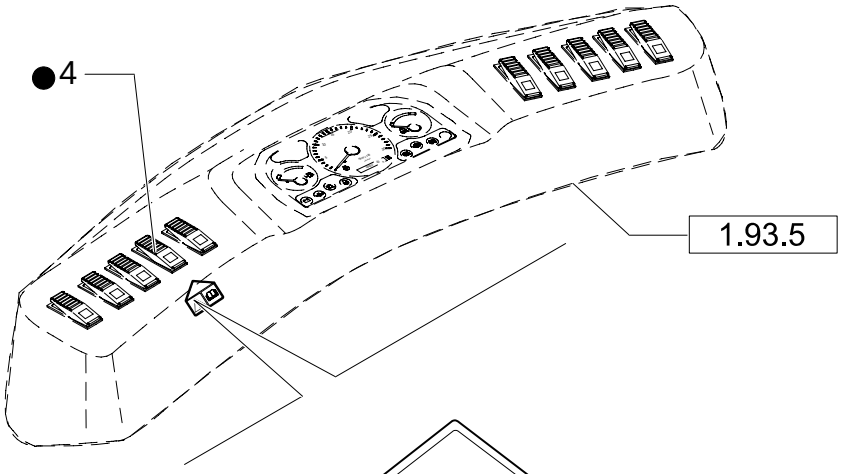

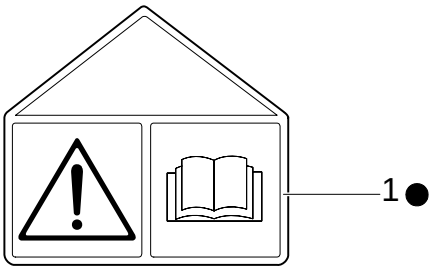

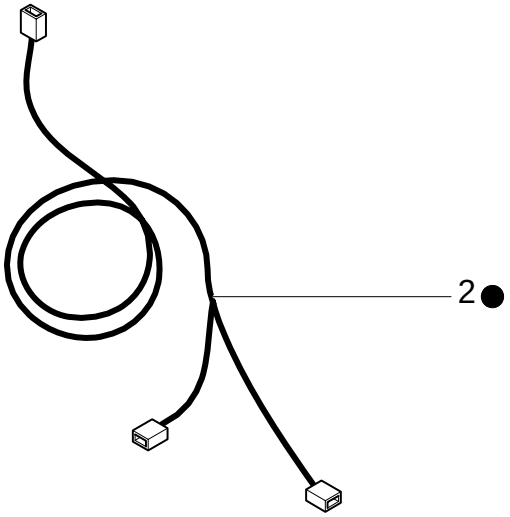

LOCK VALVE

REF	FN	PART NUMBER	YR/SN	QTY	DESCRIPTION
1		85805228		1	DECAL
2		{85826274}		1	
3	1	NSS		1	NOT SERVICED SEPARATELY
4		85819074		1	SWITCH

(1) Includes 1, 2, 4 Also page 304 01, 304 02

331	01	p1	11/05

BACKHOE CONTROL VALVE, 6 SECTIONS (CENTER PIVOT) NORTH AMERICA

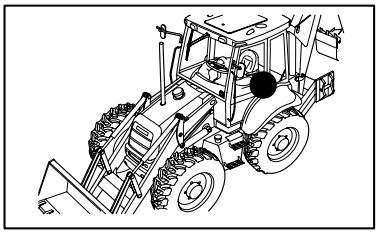

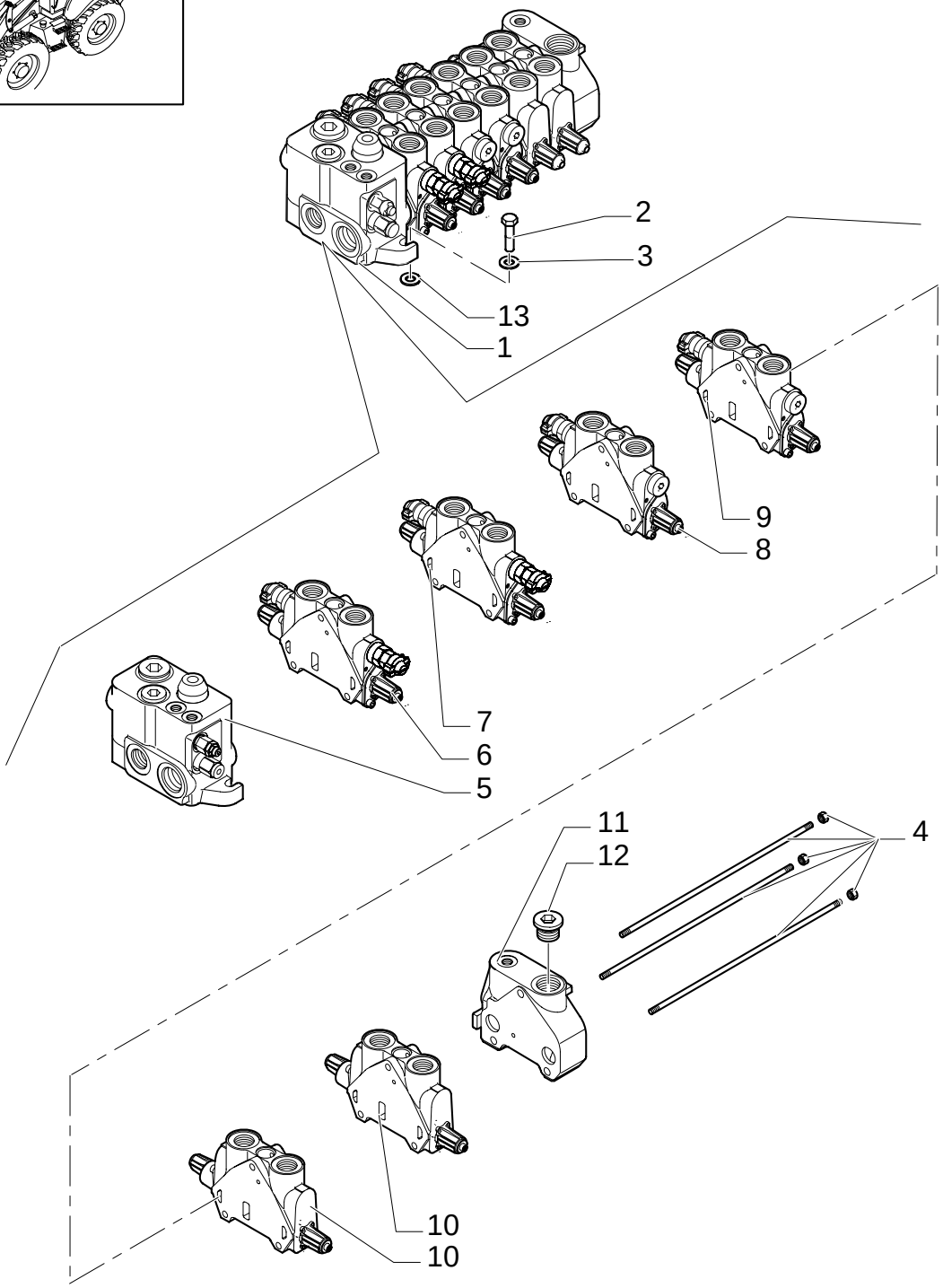

BACKHOE CONTROL VALVE, 6 SECTIONS (CENTER PIVOT) NORTH AMERICA

REF	FN	PART NUMBER	YR/SN	QTY	DESCRIPTION
1		87302745		1	VALVE, CONTROL
2		614-10045		3	SCREW M10x45
3		11190679		5	WASHER, LOCK M10
4		85811958		1	KIT
5	1	87308747		1	VALVE SECTION, HYD
6	2, 3	85826901		1	SECTOR, TOOTHED
7	4, 5	85826339		1	VALVE SECTION, HYD
8	6, 7	85826903		1	SECTOR, TOOTHED
9	8, 9	85826902		1	SECTOR, TOOTHED
10	10, 11	85826340		2	VALVE SECTION, HYD
11	12	85826250		1	SECTOR, TOOTHED
12		85811921		1	PLUG 1-1/16"-12 UNF 2A
13		13578621		3	WASHER

(1) See Page 331/1 02
(2) Boom Cylinder
(3) See Page 333/1 03
(4) Swing Cylinder
(5) See Page 333/1 04
(6) Bucket Cylinder
(7) See Page 333/1 05
(8) Arm Cylinder
(9) See Page 333/1 06
(10) Stabilizer Cylinder
(11) See Page 333/1 07
(12) Includes 12

Pilot Control Version

331/ A	01	p1	02/05

6 SECTION PILOT CONTROL VALVE SUPPORT, COMPLETE

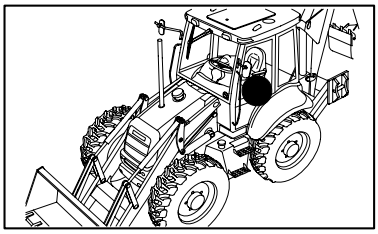

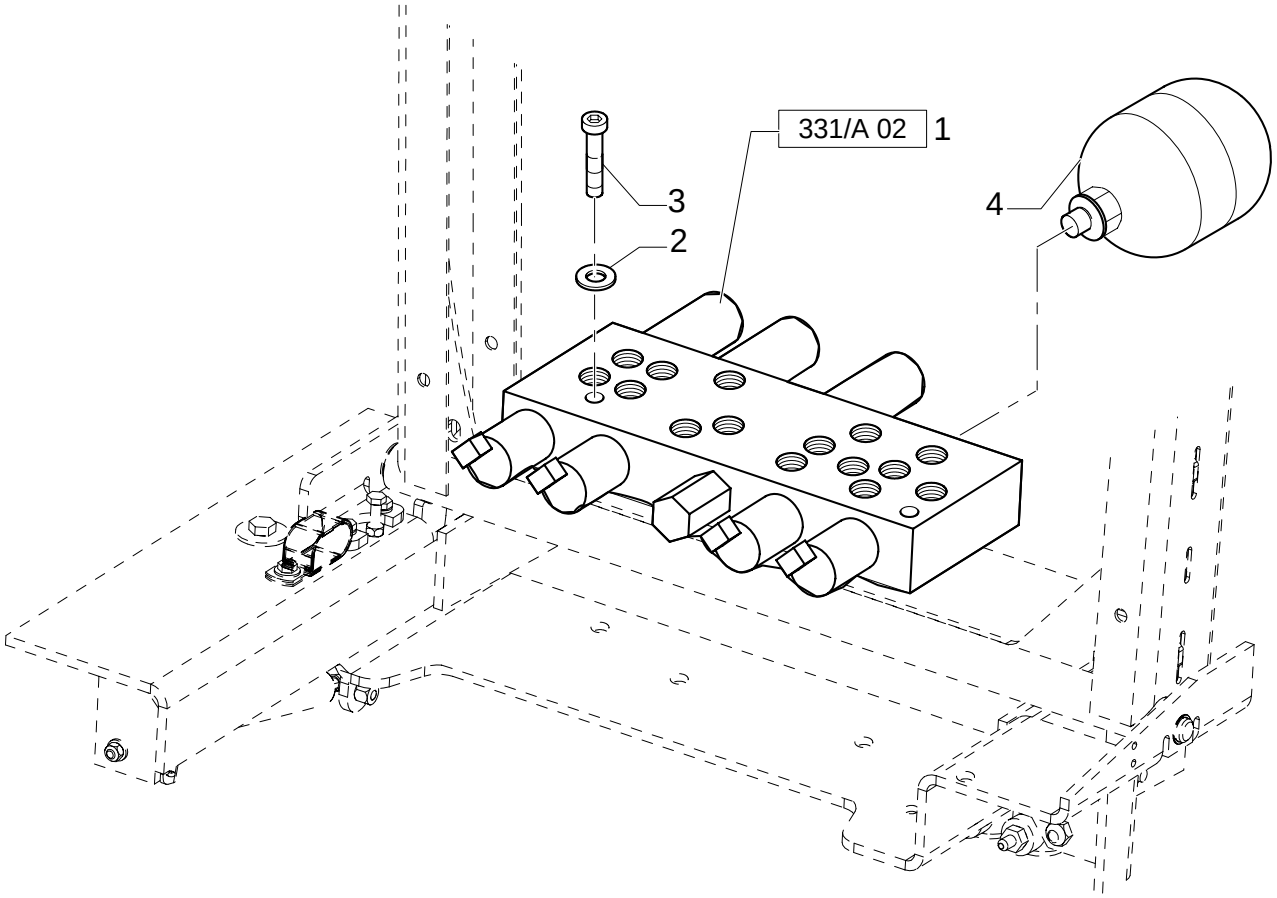

6 SECTION PILOT CONTROL VALVE SUPPORT, COMPLETE

REF	FN	PART NUMBER	YR/SN	QTY	DESCRIPTION
1		85827472		1	VALVE, HYDRAULIC
2		47048961		2	WASHER
3		47049078		2	SCREW M6x60
4		87425225		1	ACCUMULATOR

Pilot Control Version

331/ A	02	p1	02/05

2 SECTION PILOT CONTROL VALVE SUPPORT, COMPLETE

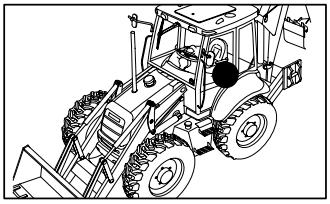

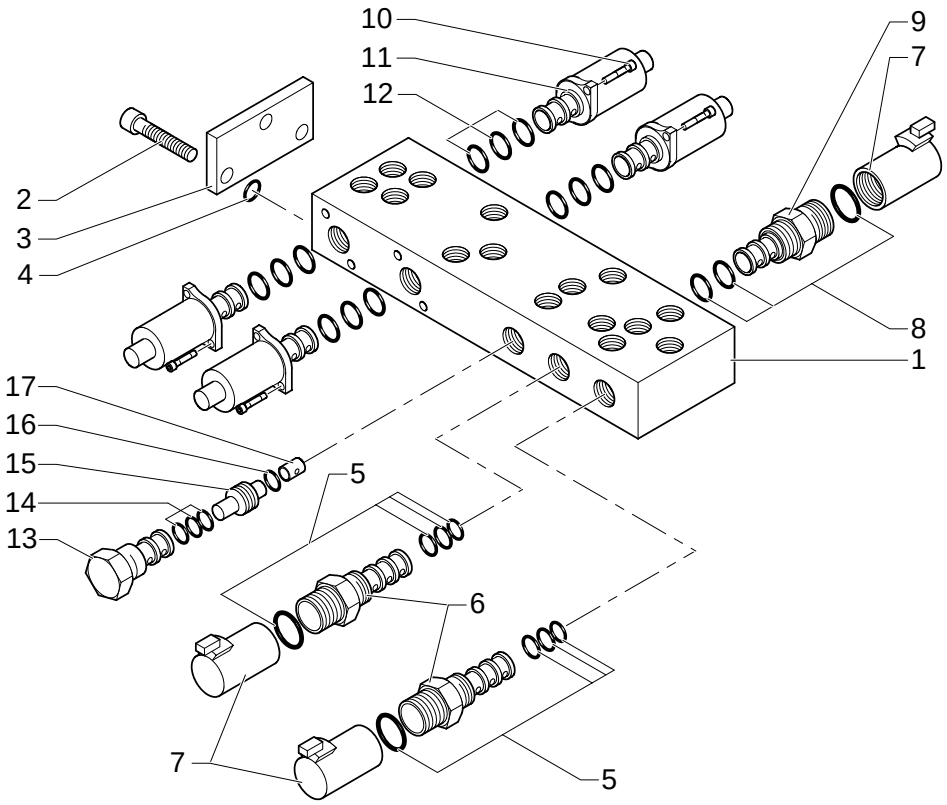

2 SECTION PILOT CONTROL VALVE SUPPORT, COMPLETE

REF	FN	PART NUMBER	YR/SN	QTY	DESCRIPTION
1		85828013		1	BODY
2		14304021		3	SCREW
3		85827991		1	PLATE
4		85827999		1	KIT
5		85828002		2	KIT
6	1	85827996		2	SOLENOID
7		85827995		3	COIL
8		85827998		1	KIT
9	2	85827994		1	SOLENOID
10		14302921		8	BOLT M4x10
11		85827993		4	ELECTRO-VALVE
12		85828000		4	KIT
13		85827997		1	GEAR REDUCTION UNIT CARTRIDGE, HYDRAULIC PRESSURE REDUCING VALVE
14		85828001		1	KIT
15		85827992		1	VALVE, HYDRAULIC
16		85828003		1	O-RING
17		85828005		1	ORIFICE

(1) Includes 5, 7
(2) Includes 7, 8

Pilot Control Version

331/ B	01	p1	08/05

PILOT CONTROL VALVE SUPPORT, COMPLETE

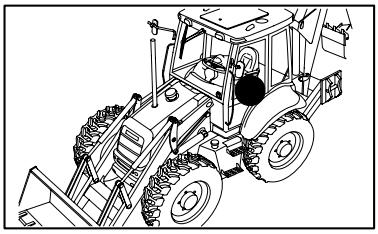

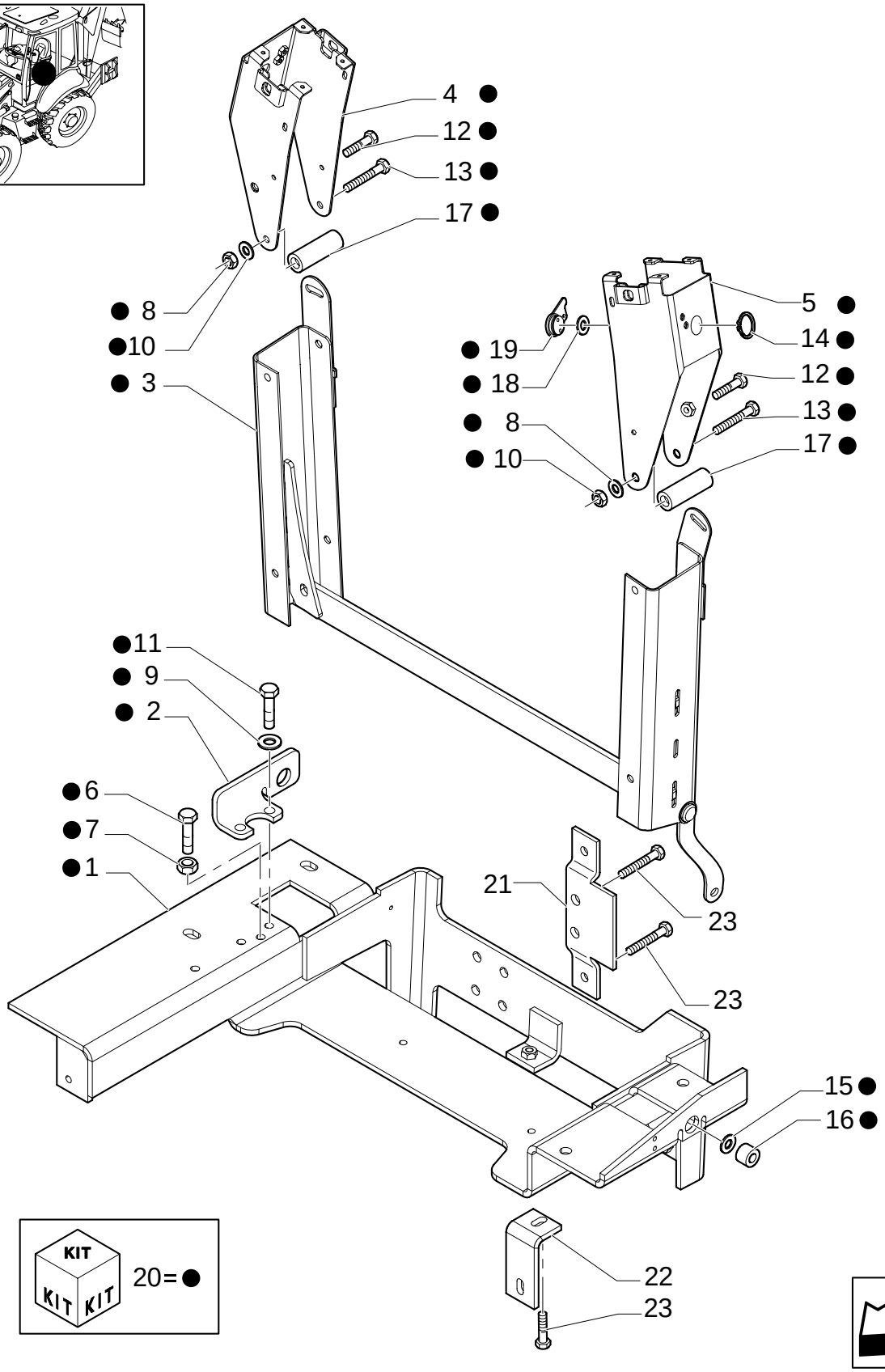

PILOT CONTROL VALVE SUPPORT, COMPLETE

REF	FN	PART NUMBER	YR/SN	QTY	DESCRIPTION
1		87434992		1	SUPPORT
2		87427004		1	SUPPORT
3		{87453109}		1	
4		87453116		1	SUPPORT
5		87453117		1	SUPPORT
6		15213721		1	SCREW M8 x 60
7		16100811		1	NUT M8
8		47048969		6	WASHER M11 x 24
9		47048992		2	WASHER M8
10		47049041		2	NUT M10
11		47049082		2	SCREW M8 x 35
12		47049184		2	SCREW M8 x 20
13		84058418		2	SCREW
14		85824053		1	RING
15		85824054		4	WASHER
16		85824059		2	BUSHING
17		87453110		2	SPACER
18		87405706		1	WASHER
19		87453118		1	LEVER
20	1	NSS		1	NOT SERVICED SEPARATELY
21		86990460		1	PLATE, MOUNTING
22		87402306		1	BRACKET
23		16040821		3	BOLT M10 x 40

(1) Includes 1 To 19

Pilot Control Version

331/ C	01	p1	12/05

6 SECTION PILOT CONTROL VALVE SUPPORT, COMPLETE

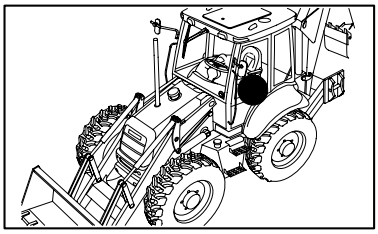

6 SECTION PILOT CONTROL VALVE SUPPORT, COMPLETE

REF	FN	PART NUMBER	YR/SN	QTY	DESCRIPTION
1	1	87309923		1	
1	2	{87449734}		1	
2	1	87309924		1	
2	2	{87449735}		1	
3		87437689		2	KNOB
4		87437688		2	KNOB
5		87437366		1	ARMREST
6		87437369		1	SUPPORT
7		87423802		1	SWITCH
8		87410105		1	SWITCH
9	1	87435372		2	BRACKET
9	2	87410723		2	PLATE
10		85821519		8	PIN, ROLL
11	1	87307656		1	BRACKET
11	2	87436396		1	GUARD
12	1, 3	87308844		1	VALVE, CONTROL
12	2, 4	87443740		1	MANIPULATOR
13		47050686		7	CONNECTOR, HYD.
14	5	87431301		1	GUARD
14	6	87427962		1	PLATE
15		87016552		8	SCREW
16		87022296		8	SCREW M3x8
17		87310085		2	SCREW, SELF TAPPING
18		10902321		3	SCREW 11x24x3
19	1, 7	87443743		1	MANIPULATOR
19	2, 8	87308840		1	VALVE, CONTROL
20		87418368		1	ROD
21		87418369		1	ROD
22		87310098		4	BOLT M6 x 20

(1) UP TO S/N XXX
(2) FROM TO S/N XXX
(3) See Page 333/ C 02
(4) See Page 333/C 03
(5) Only for Center Pivot
(6) Only for Side Shift
(7) See Page 331/ D 03
(8) See Page 331/ C03

Pilot Control Version

331/ C	01	p2	12/05

6 SECTION PILOT CONTROL VALVE SUPPORT, COMPLETE

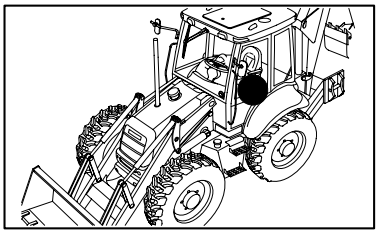

6 SECTION PILOT CONTROL VALVE SUPPORT, COMPLETE

REF	FN	PART NUMBER	YR/SN	QTY	DESCRIPTION
23		87424301		1	SEAL, RUBBER
24		87427991		1	SEAL, RUBBER
25		87427989		1	SEAL, RUBBER
26		87427993		1	SEAL, RUBBER
27		87425696		2	SEAL, RUBBER
28		87414205			DECAL
29	1	87431300		1	GUARD
29	2	87427963		1	PLATE
30		85803312		21	CONNECTOR, HYD.
31		87306512		2	GASKET
32		87310186		2	WASHER
33		87423812		1	DECAL
34		87310085		2	SCREW, SELF TAPPING
35		87452511		2	NUT
36		87423401		1	FITTING

(1) Only for Center Pivot
(2) Only for Side Shift

Pilot Control Version

331/ C	02	p1	12/05

6 SECTION PILOT CONTROL VALVE SUPPORT, COMPLETE

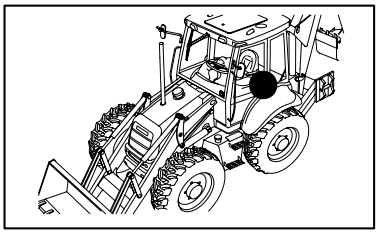

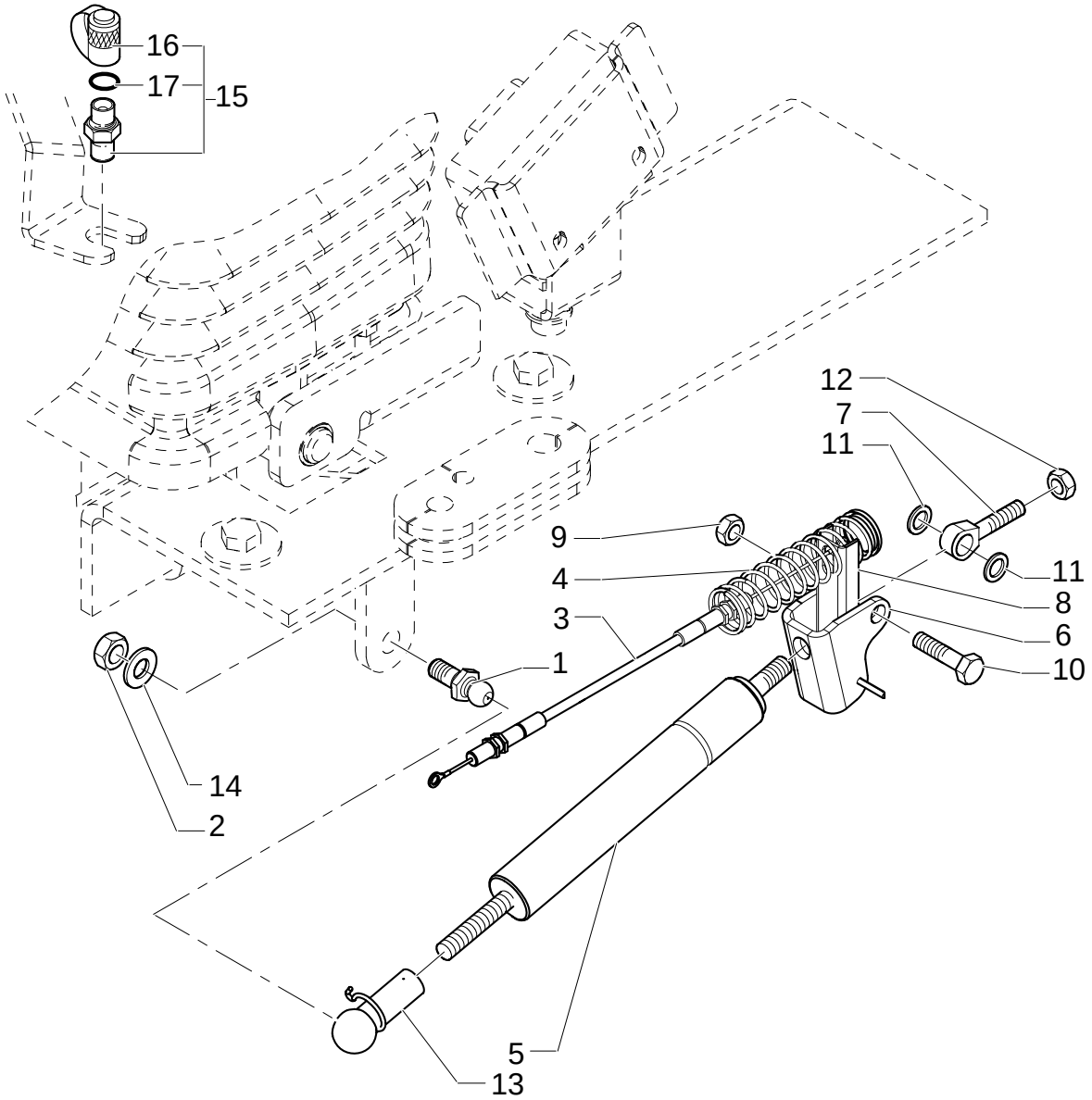

6 SECTION PILOT CONTROL VALVE SUPPORT, COMPLETE

REF	FN	PART NUMBER	YR/SN	QTY	DESCRIPTION
1		85824067		1	TRACK ROD END
2		47049041		1	NUT M10
3		87430028		1	CABLE
4		87443692		1	SPRING, TENSION
5		86989616		1	GAS STRUT
6		85824080		1	BRACKET
7		85821514		2	PIN
7		85824081		1	BALL JOINT
8		86984549		1	EXTRUSION
9		85821516		1	NUT
10		85821515		1	BOLT
11		85821520		2	SPACER
12		47049442		2	NUT
13		86999310		1	CLIP
14		47049404		1	WASHER
15	1	85817226		1	CONNECTOR, HYD.
16		9968791		1	PLUG
17		87008S95		1	O-RING 90 Duro, .375" ID x .070" Thk

(1) Includes 16, 17

Pilot Control Version

331/ C	03	p1	02/05

6 SECTION PILOT CONTROL VALVE SUPPORT, COMPLETE

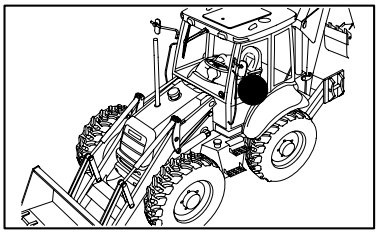

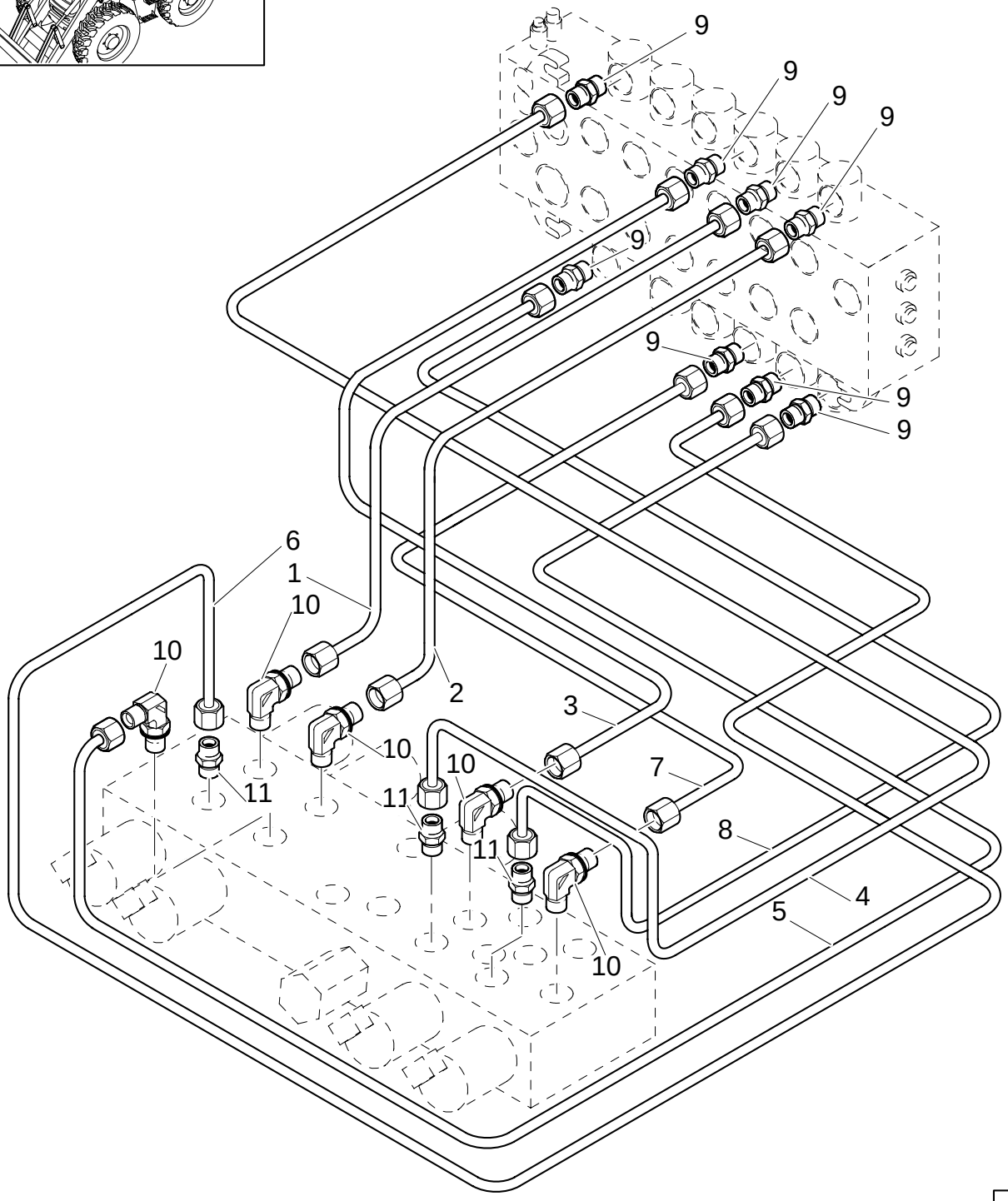

6 SECTION PILOT CONTROL VALVE SUPPORT, COMPLETE

REF	FN	PART NUMBER	YR/SN	QTY	DESCRIPTION
1		85827093		1	TUBE, RIGID
2		85827094		1	TUBE, RIGID
3		85827091		1	TUBE, RIGID
4		85827089		1	TUBE, RIGID
5		85827092		1	TUBE, RIGID
6		85827095		1	TUBE, RIGID
7		85827090		1	TUBE, RIGID
8		85827088		1	TUBE, RIGID
9		85803312		8	CONNECTOR, HYD.
10		47050653		5	CONNECTOR, HYD.
11		47050685		3	CONNECTOR, HYD.

Pilot Control Version

331/ C	04	p1	02/05

6 SECTION PILOT CONTROL VALVE SUPPORT, COMPLETE

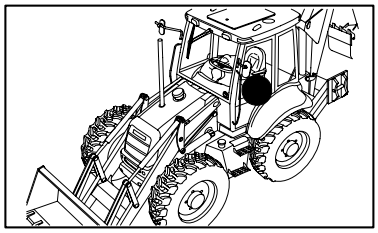

6 SECTION PILOT CONTROL VALVE SUPPORT, COMPLETE

REF	FN	PART NUMBER	YR/SN	QTY	DESCRIPTION
1		85827084		1	HOSE, FLEXIBLE
2		85827085		1	HOSE, FLEXIBLE
3		85827086		1	HOSE, FLEXIBLE
4		85827077		1	HOSE, FLEXIBLE
5		85827087		1	HOSE, FLEXIBLE
6		85827082		2	HOSE, FLEXIBLE
7		85827467		1	CONNECTOR, HYD.
8		85827466		2	CONNECTOR, HYD.
9		85827076		2	HOSE, FLEXIBLE
10		85827080		2	HOSE, FLEXIBLE
11		85827078		2	HOSE, FLEXIBLE
12		47120173		2	CONNECTOR, HYD.
13		47050686		3	CONNECTOR, HYD.
14		47050653		3	CONNECTOR, HYD.
15		85803312		3	CONNECTOR, HYD.
16		87423401		1	FITTING

Pilot Control Version

331/ C	05	p1	02/05

6 SECTION PILOT CONTROL VALVE SUPPORT, COMPLETE

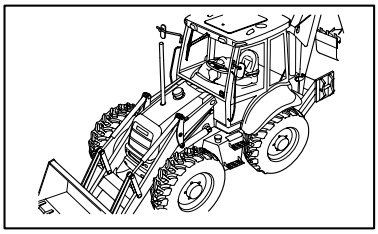

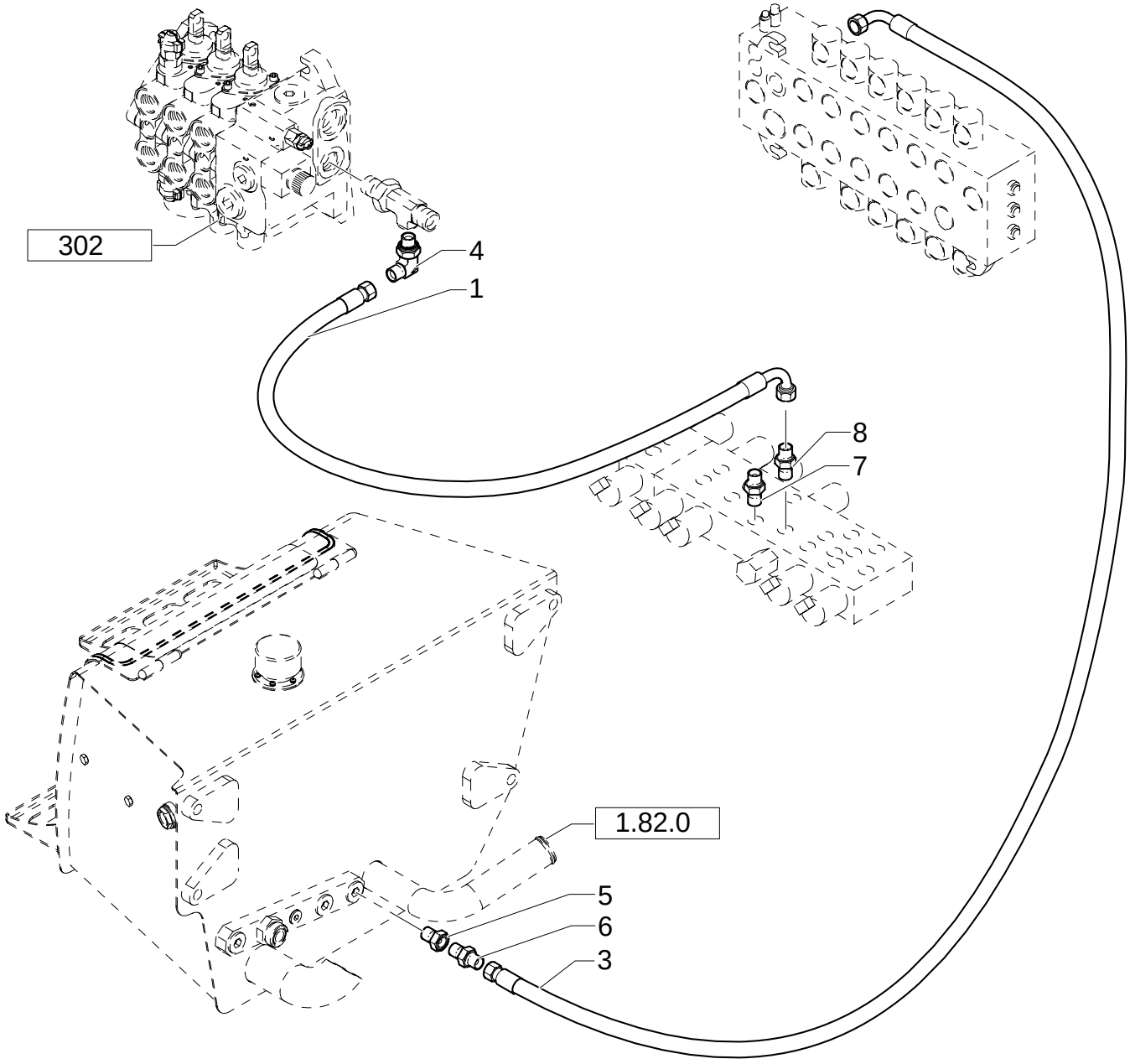

6 SECTION PILOT CONTROL VALVE SUPPORT, COMPLETE

REF	FN	PART NUMBER	YR/SN	QTY	DESCRIPTION
1		85827476		1	HOSE, FLEXIBLE
3		85827475		1	HOSE, FLEXIBLE
4		85805318		1	ELBOW
5		85826100		1	GEAR REDUCTION UNIT
6		47050686		1	CONNECTOR, HYD.
7		47050653		1	CONNECTOR, HYD.
8		85828212		1	ADAPTER

Pilot Control Version

331/ C	06	p1	03/05

6 SECTION PILOT CONTROL VALVE SUPPORT, COMPLETE (CENTER PIVOT)

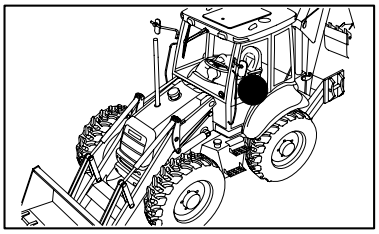

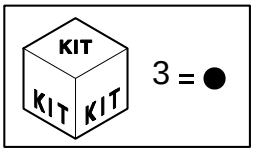

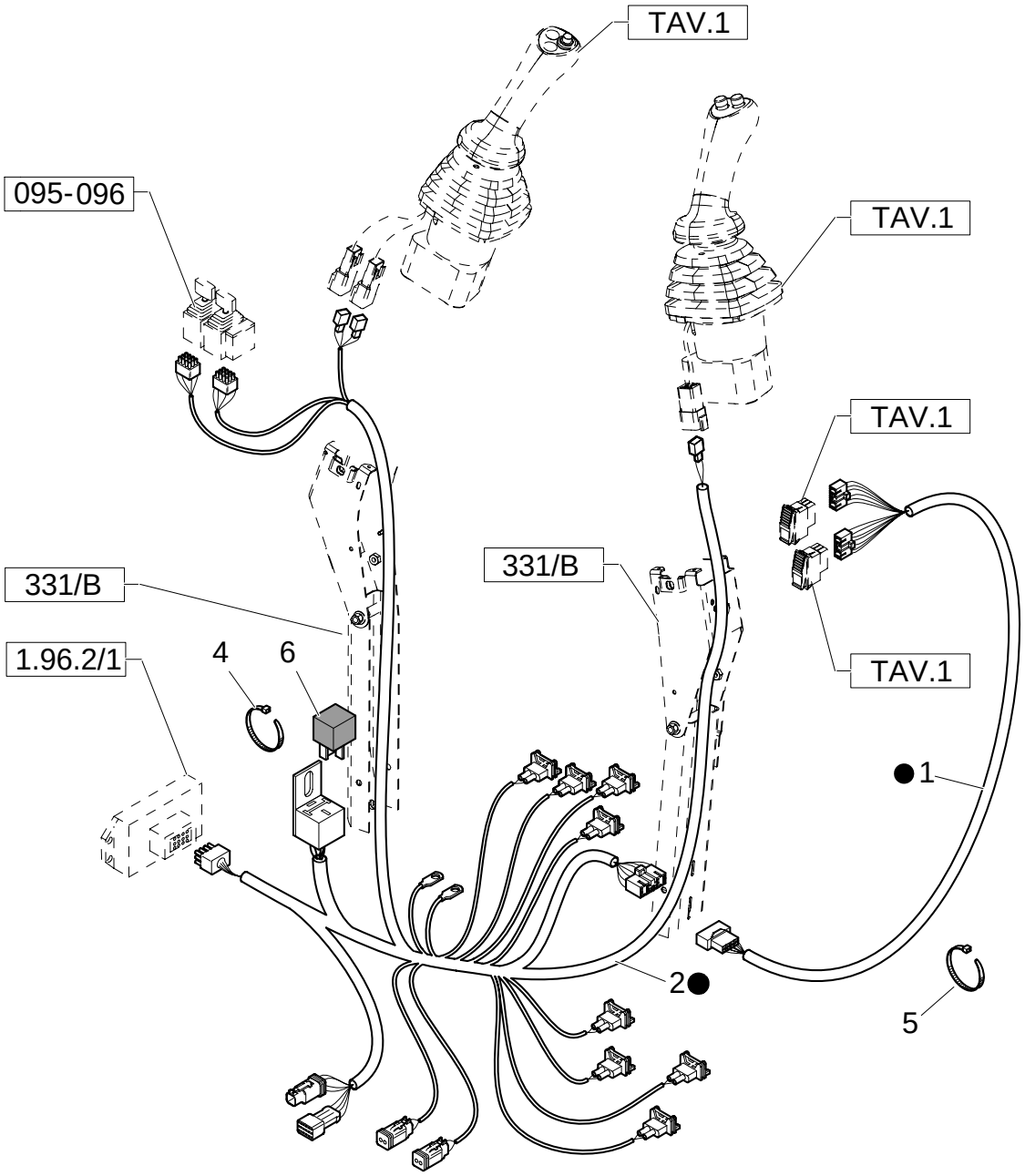

6 SECTION PILOT CONTROL VALVE SUPPORT, COMPLETE (CENTER PIVOT)

REF	FN	PART NUMBER	YR/SN	QTY	DESCRIPTION
1		85828216		1	CABLE, ELECTRIC
2		87305611		1	CABLE, ELECTRIC
3	1	87305604		1	CABLE, ELECTRIC
4		14560187		6	COLLAR
5		386170C1		4	STRAP
6		85821537		1	RELAY

(1) Includes 1, 2, 6

Pilot Control Version

331/ D	03	p1	11/05

VALVE, JOYSTICK PILOT CONTROLS - EXTENDED VERSION - (RIGTH HAND)

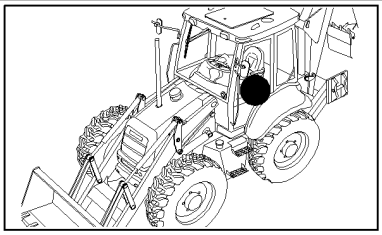

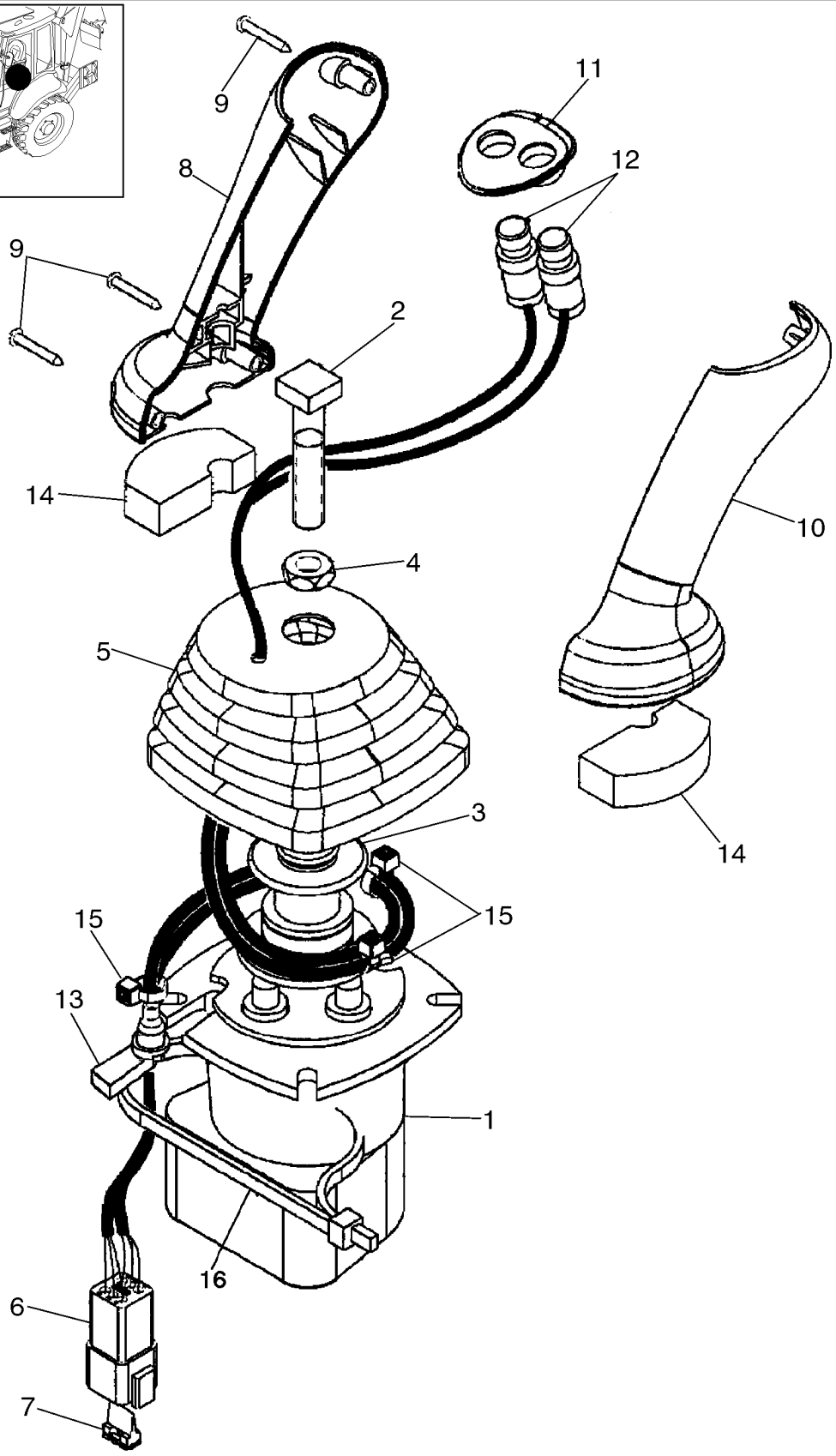

VALVE, JOYSTICK PILOT CONTROLS - EXTENDED VERSION - (RIGTH HAND)

REF	FN	PART NUMBER	YR/SN	QTY	DESCRIPTION
1	1	87443743		1	MANIPULATOR
1		86983311		1	VALVE, CONTROL
2		87428023		1	BOLT
3		87436225		1	RETAINER
4		87037944		1	NUT
5		87443721		1	
6		225350C1		1	CONNECTOR
7		225353C1		1	WEDGE
8		87428164		1	HANDLE GRIP
9		15687475		3	SCREW, SELF TAPPING 3.5x25
10		87428165		1	HANDLE GRIP
11		87435242		1	BEZEL
12		87437371		2	SWITCH, ASSY
13		87424267		1	GROMMET
14		87435506		2	GASKET
15		87000312		3	RETAINER
16		87438046		1	STRAP

(1) Includes 1 To 16

Pilot Control Version, Up To S/N XXX

333/ A	01	p1	02/05

7 SECTION PILOT CONTROL VALVE SUPPORT, COMPLETE

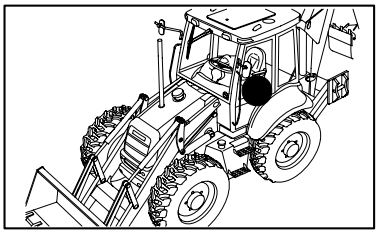

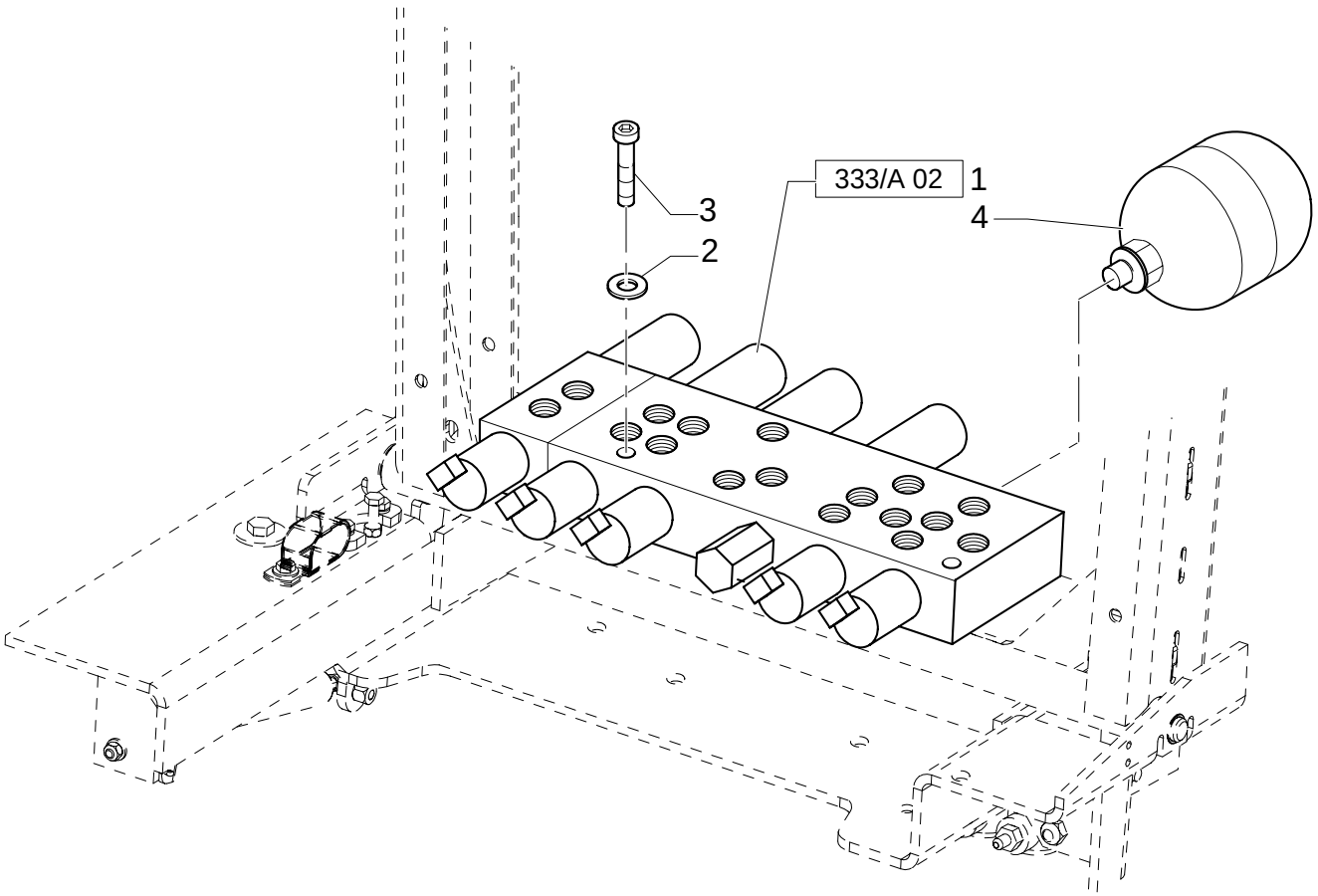

7 SECTION PILOT CONTROL VALVE SUPPORT, COMPLETE

REF	FN	PART NUMBER	YR/SN	QTY	DESCRIPTION
1		85827471		1	VALVE, HYDRAULIC
2		47048961		2	WASHER
3		47049078		2	SCREW M6x60
4		87425225		1	ACCUMULATOR

Pilot Control Version

333/ A	02	p1	02/05

7 SECTION PILOT CONTROL VALVE SUPPORT, COMPLETE

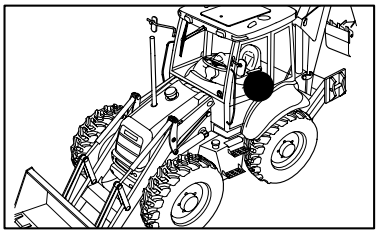

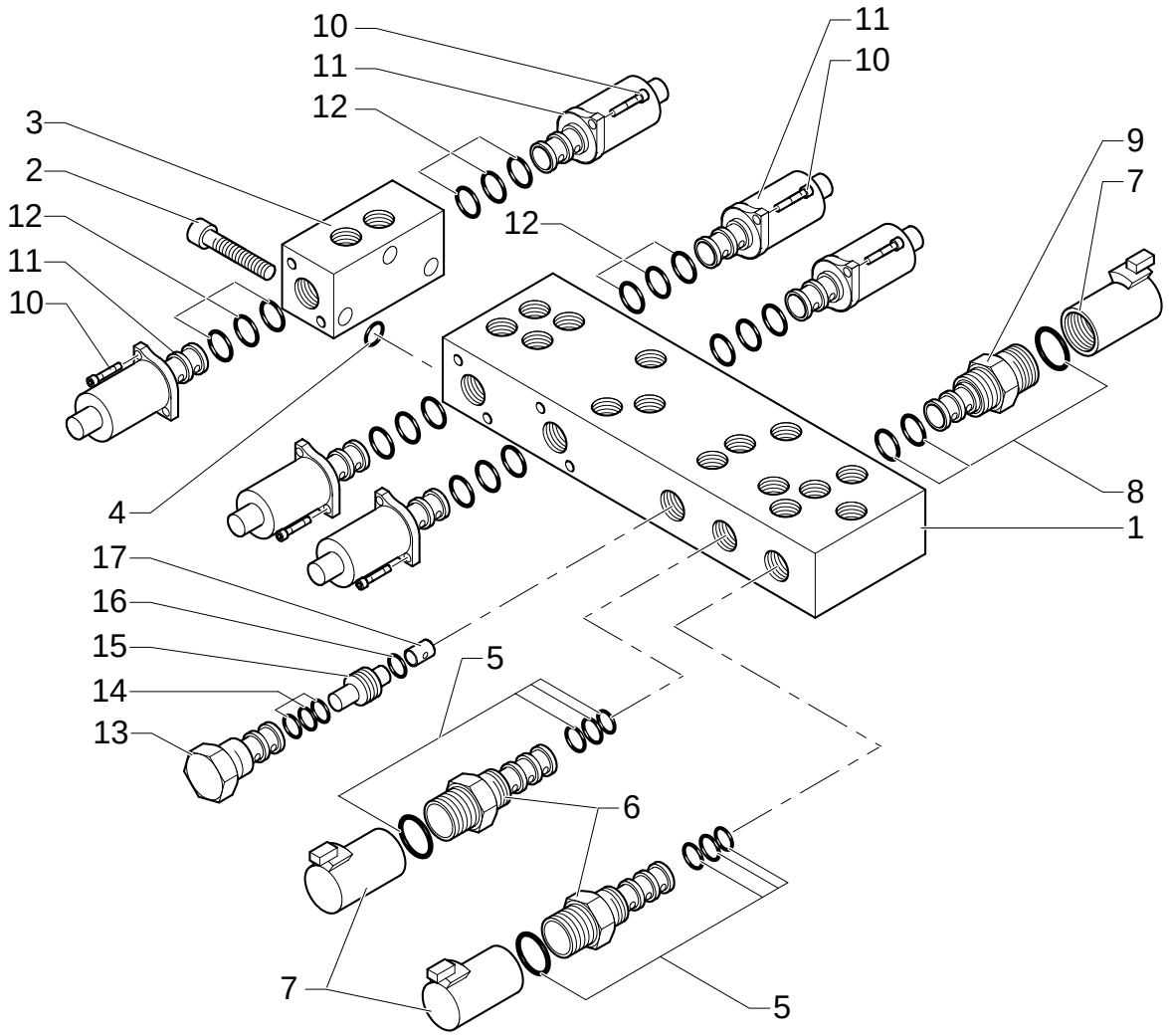

7 SECTION PILOT CONTROL VALVE SUPPORT, COMPLETE

REF	FN	PART NUMBER	YR/SN	QTY	DESCRIPTION
1		85828015		1	BODY
2		14358921		3	SCREW
3		85828004		1	BODY M6x60
4		85827999		1	KIT
5		85828002		2	KIT
6	1	85827996		2	SOLENOID
7		85827995		3	COIL
8		85827998		1	KIT
9	2	85827994		1	SOLENOID
10		14302921		12	BOLT
11		85827993		6	ELECTRO-VALVE
12		85828000		6	KIT
13		85827997		1	GEAR REDUCTION UNIT CARTRIDGE, HYDRAULIC PRESSURE REDUCING VALVE
14		85828001		1	KIT
15		85827992		1	VALVE, HYDRAULIC
16		85828003		1	O-RING
17		85828005		1	ORIFICE

(1) Includes 5, 7
(2) Includes 7, 8

Pilot Control Version

333/ A	03	p1	02/05

7 SECTION PILOT CONTROL VALVE SUPPORT, COMPLETE

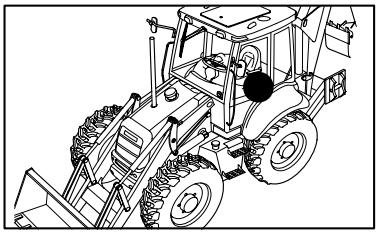

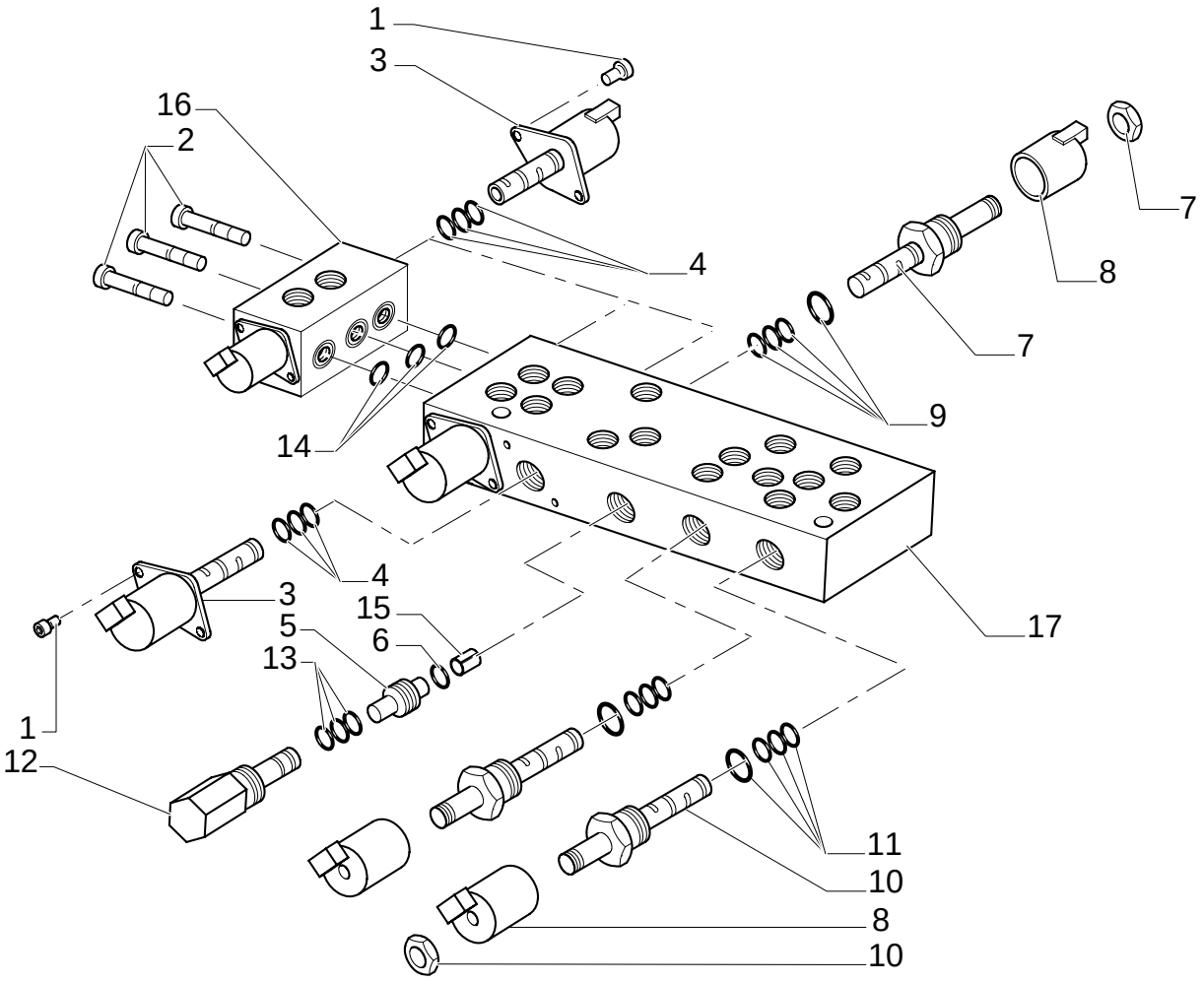

7 SECTION PILOT CONTROL VALVE SUPPORT, COMPLETE

REF	FN	PART NUMBER	YR/SN	QTY	DESCRIPTION
1		14302921		12	BOLT M4x10
2		14358921		3	SCREW M5x45
3		85827993		6	ELECTRO-VALVE
4		85828000		1	KIT
5		85827992		1	VALVE, HYDRAULIC
6		85828003		1	O-RING
7	1	85827994		1	SOLENOID
8		85827995		3	COIL
9		85827998		0	KIT
10	2	85827996		2	SOLENOID
11		85828002		0	KIT
12		85827997		1	GEAR REDUCTION UNIT CARTRIDGE, HYDRAULIC PRESSURE REDUCING VALVE
13		85828001		0	KIT
14		85827999		0	KIT
15		85828005		1	ORIFICE
16		{85828014}			
17		85828013		1	BODY

(1) Includes 8, 9
(2) Includes 8, 11

Pilot Control Version

333/ B	01	p1	11/05

7 SECTION PILOT CONTROL VALVE SUPPORT, COMPLETE

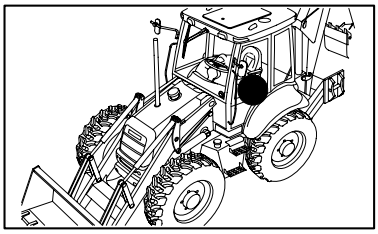

7 SECTION PILOT CONTROL VALVE SUPPORT, COMPLETE

REF	FN	PART NUMBER	YR/SN	QTY	DESCRIPTION
1	1	87309923		1	
1	2	{87449734}		1	
2	1	87309924		1	
2	2	{87449735}		1	
3		87437689		2	KNOB
4		87437688		2	KNOB
5		87437366		1	ARMREST
6		87437369		1	SUPPORT
7		87423802		1	SWITCH
8		87410105		1	SWITCH
9		87435372		2	BRACKET
10		85821519		8	PIN, ROLL
11	1	87307656		1	BRACKET
11	2	87436396		1	GUARD
12	1, 3	87308844		1	VALVE, CONTROL
12	2	87443740		1	MANIPULATOR
13		47050686		7	CONNECTOR, HYD.
14		87431301		1	GUARD
15		87016552		8	SCREW M6x13
16		87022296		8	SCREW M3x8
17		87310085		2	SCREW, SELF TAPPING
18		10902321		3	SCREW M10
19	1, 4	87308840		1	VALVE, CONTROL
19	2, 5	87443743		1	MANIPULATOR
20		87418368		1	ROD
21		87418369		1	ROD
22		87310098		4	BOLT M6 x 20
23		87424301		1	SEAL, RUBBER
24		87427991		1	SEAL, RUBBER
25		87427989		1	SEAL, RUBBER
26		87427993		1	SEAL, RUBBER
27		87425696		2	SEAL, RUBBER

(1) UP TO S/N XXX
(2) FROM TO S/N XXX
(3) See Page 333/ C 03
(4) See Page 331/D 02
(5) See Page 331/D 03

Pilot Control Version

333/ B	01	p2	11/05

7 SECTION PILOT CONTROL VALVE SUPPORT, COMPLETE

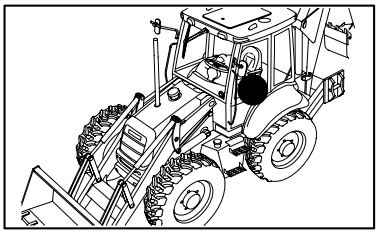

7 SECTION PILOT CONTROL VALVE SUPPORT, COMPLETE

REF	FN	PART NUMBER	YR/SN	QTY	DESCRIPTION
28		87414205		1	DECAL
29		87431300		1	GUARD
30		85803312		21	CONNECTOR, HYD.
31		87306512		2	GASKET
32		87310186		2	WASHER
33		87423812		1	DECAL
34		87310085		2	SCREW, SELF TAPPING
35		87452511		2	NUT
36		87423401		1	FITTING

Pilot Control Version

333/ B	03	p1	02/05

7 SECTION PILOT CONTROL VALVE SUPPORT, COMPLETE

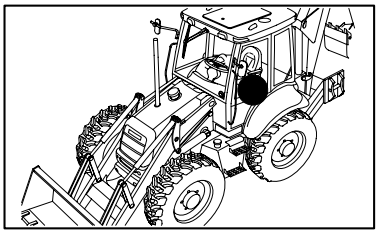

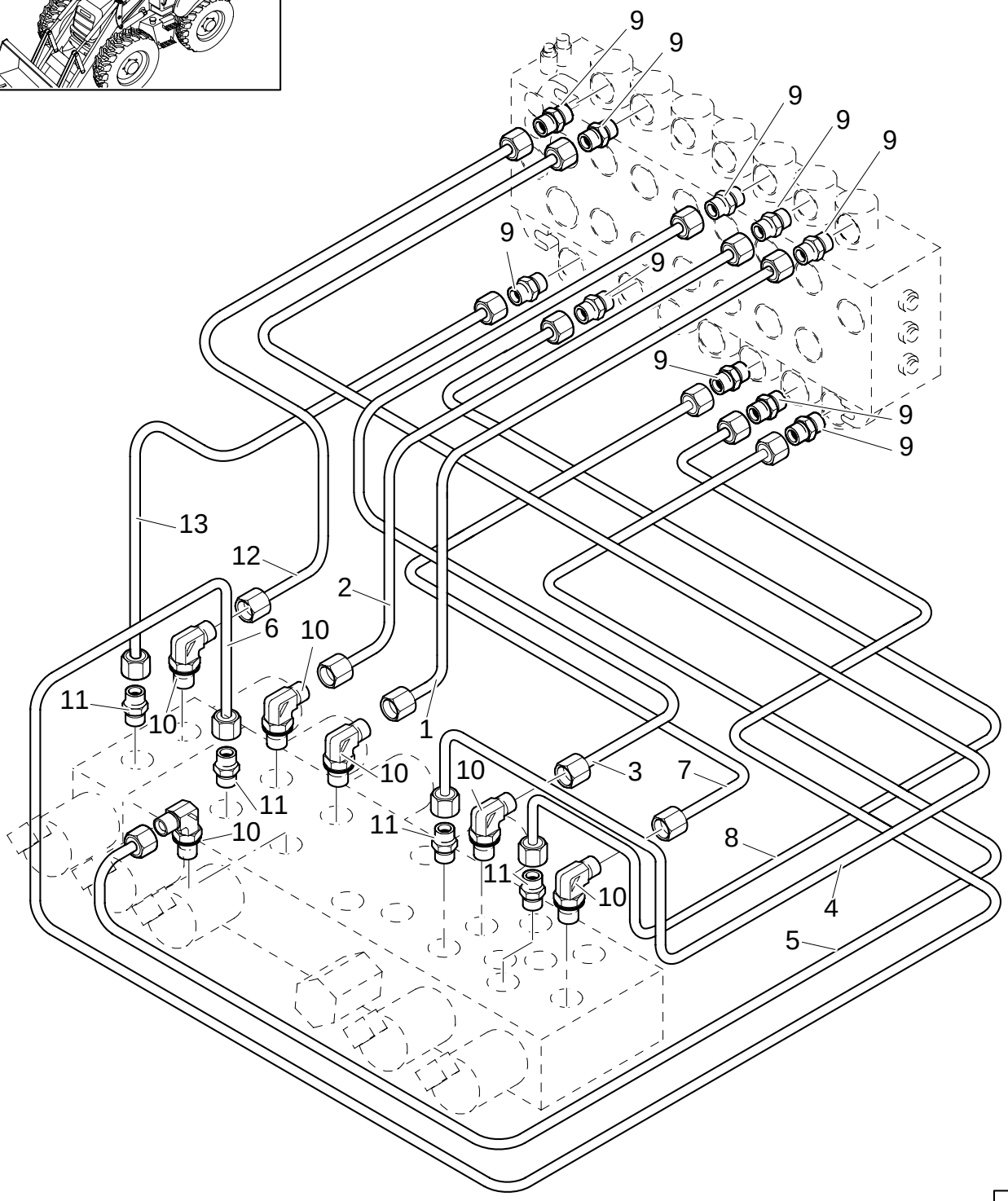

7 SECTION PILOT CONTROL VALVE SUPPORT, COMPLETE

REF	FN	PART NUMBER	YR/SN	QTY	DESCRIPTION
1		85827093		1	TUBE, RIGID
2		85827094		1	TUBE, RIGID
3		85827091		1	TUBE, RIGID
4		85827089		1	TUBE, RIGID
5		85827092		1	TUBE, RIGID
6		85827095		1	TUBE, RIGID
7		85827090		1	TUBE, RIGID
8		85827088		1	TUBE, RIGID
9		85803312		10	CONNECTOR, HYD.
10		47050653		6	CONNECTOR, HYD.
11		47050685		4	CONNECTOR, HYD.
12		85827097		1	TUBE, RIGID
13		87306186		1	TUBE, RIGID

Pilot Control Version

333/ B	04	p1	02/05

7 SECTION PILOT CONTROL VALVE SUPPORT, COMPLETE

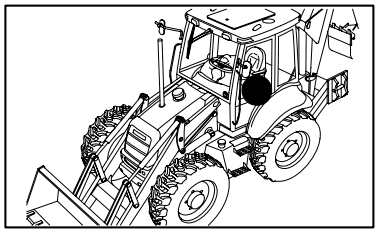

7 SECTION PILOT CONTROL VALVE SUPPORT, COMPLETE

REF	FN	PART NUMBER	YR/SN	QTY	DESCRIPTION
1		85827084		1	HOSE, FLEXIBLE
2		85827085		1	HOSE, FLEXIBLE
3		85827086		2	HOSE, FLEXIBLE
4		85827077		1	HOSE, FLEXIBLE
5		85827087		1	HOSE, FLEXIBLE
6		85827082		2	HOSE, FLEXIBLE
7		85827467		1	CONNECTOR, HYD.
8		85827466		2	CONNECTOR, HYD.
9		85827076		2	HOSE, FLEXIBLE
10		85827080		2	HOSE, FLEXIBLE
11		85827078		1	HOSE, FLEXIBLE
12		47120173		2	CONNECTOR, HYD.
13		47050686		3	CONNECTOR, HYD.
14		47050653		3	CONNECTOR, HYD.
15		85803312		3	CONNECTOR, HYD.
16		87423401		1	FITTING

Pilot Control Version

333/ B	05	p1	02/05

7 SECTION PILOT CONTROL VALVE SUPPORT, COMPLETE

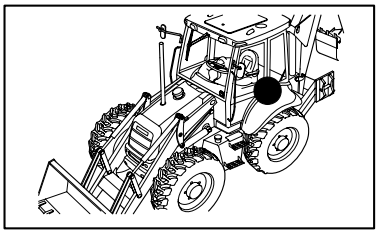

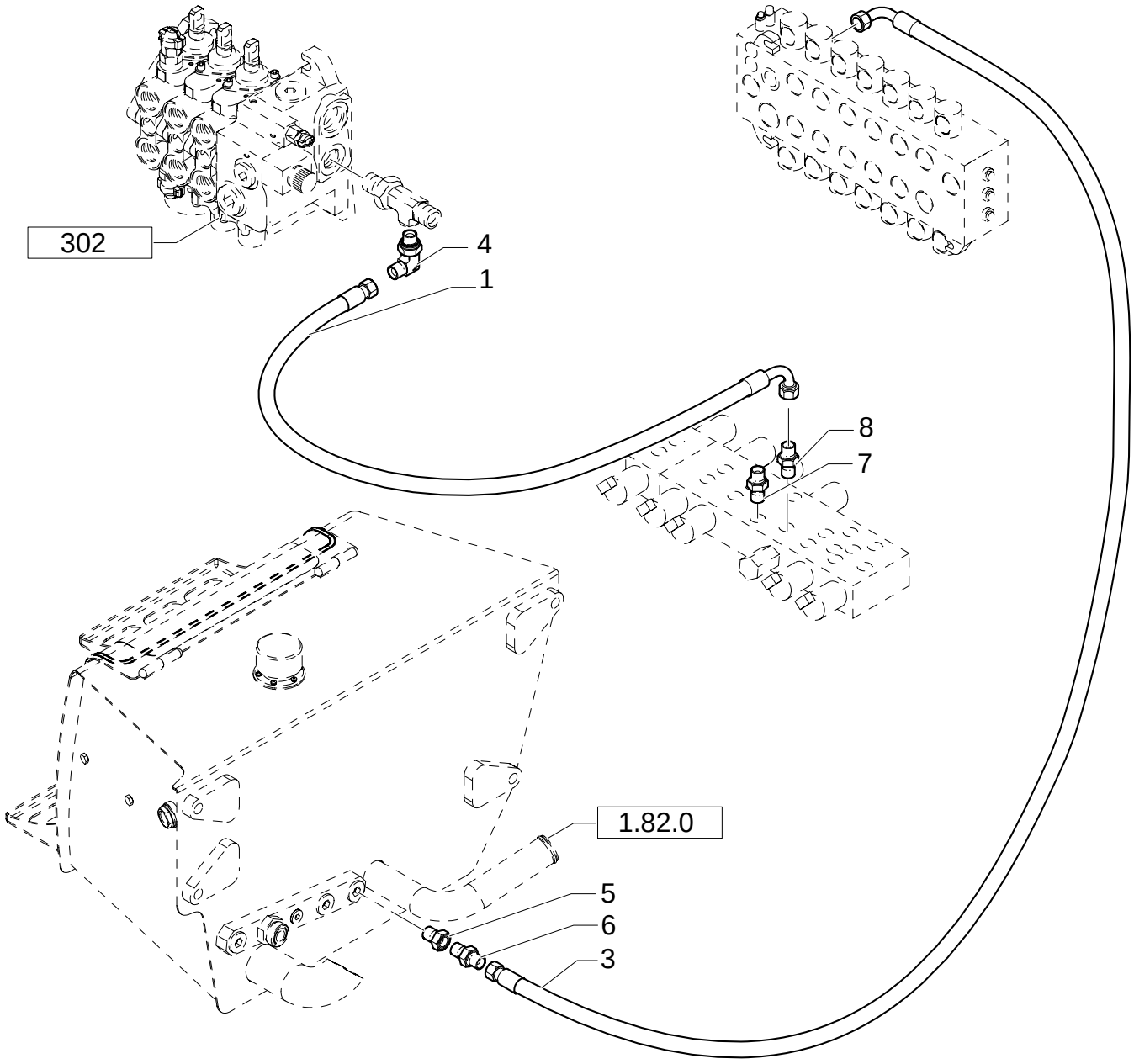

7 SECTION PILOT CONTROL VALVE SUPPORT, COMPLETE

REF	FN	PART NUMBER	YR/SN	QTY	DESCRIPTION
1		85827476		1	HOSE, FLEXIBLE
2		85827477		1	HOSE, FLEXIBLE
3		85827475		1	HOSE, FLEXIBLE
4		85805318		1	ELBOW
5		85826100		1	GEAR REDUCTION UNIT
6		47050686		1	CONNECTOR, HYD.
7		47050653		1	CONNECTOR, HYD.
8		85828212		1	ADAPTER

Pilot Control Version

333/ B	06	p1	03/05

7 SECTION PILOT CONTROL VALVE SUPPORT, COMPLETE (CENTER PIVOT) EUROPE

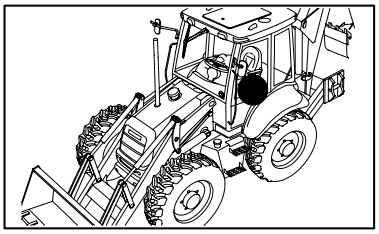

KIT KIT KIT 3 = ●

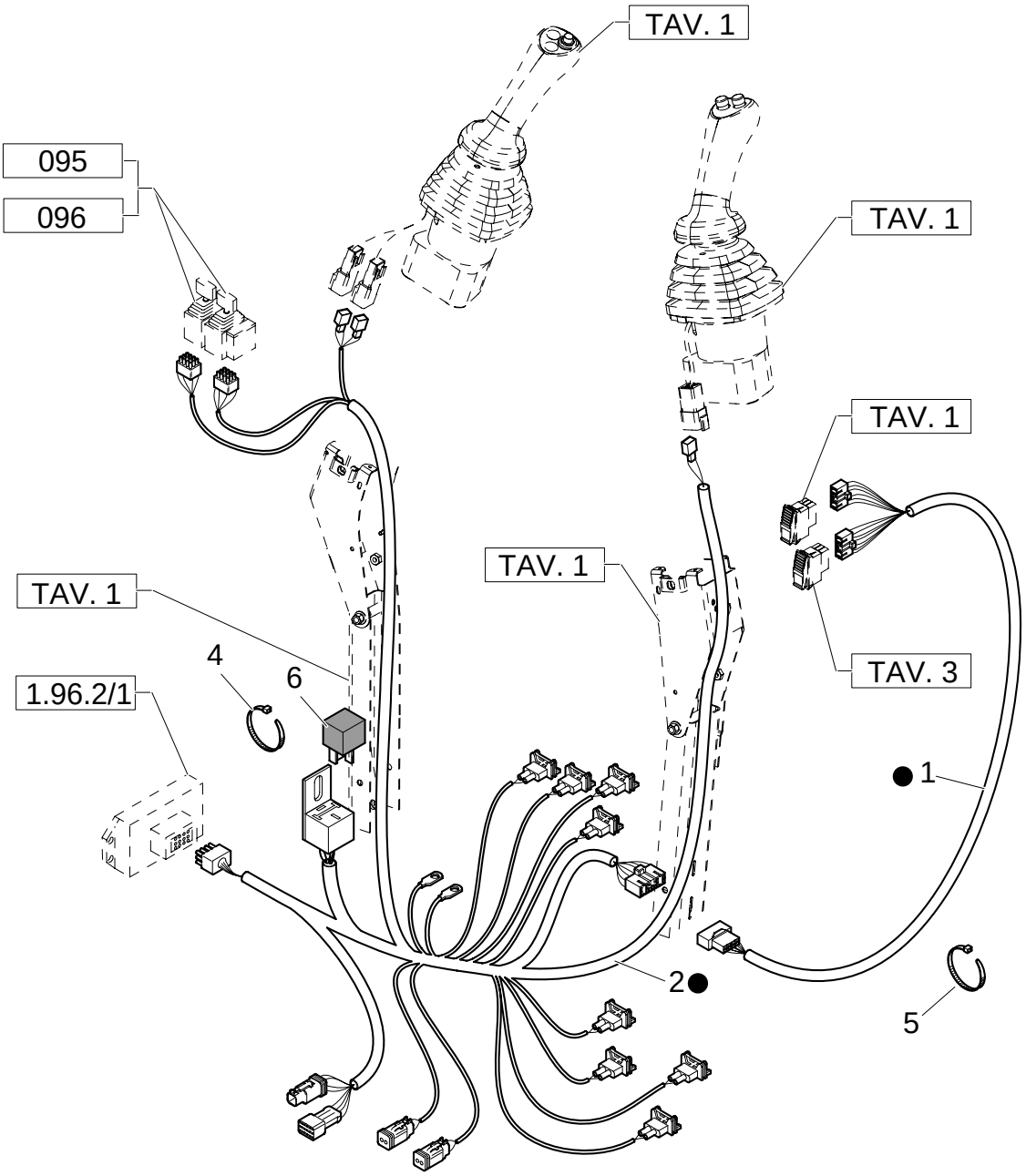

7 SECTION PILOT CONTROL VALVE SUPPORT, COMPLETE (CENTER PIVOT) EUROPE

REF	FN	PART NUMBER	YR/SN	QTY	DESCRIPTION
1		85828216		1	CABLE, ELECTRIC
2		87305611		1	CABLE, ELECTRIC
3	1	87305604		1	CABLE, ELECTRIC
4		14560187		6	COLLAR
5		386170C1		4	STRAP
6		85821537		1	RELAY

(1) Includes 1, 2, 6

Pilot Control Version

333/ B	07	p1	02/05

7 SECTION PILOT CONTROL VALVE SUPPORT, COMPLETE (CENTER PIVOT) EUROPE

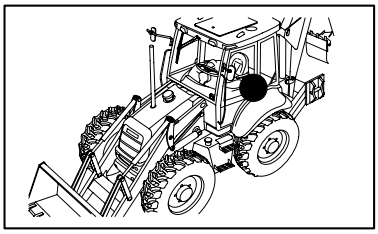

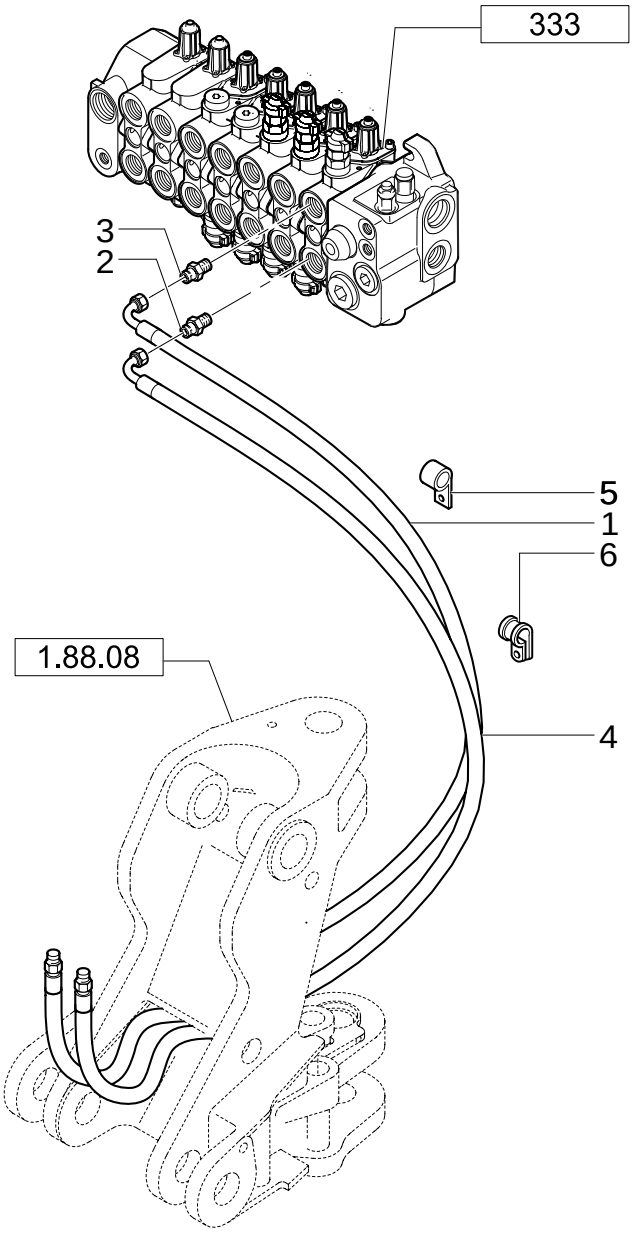

7 SECTION PILOT CONTROL VALVE SUPPORT, COMPLETE (CENTER PIVOT) EUROPE

REF	FN	PART NUMBER	YR/SN	QTY	DESCRIPTION
1		85812192		1	HOSE, FLEXIBLE
2		85805258		1	CONNECTOR, HYD.
3		390938S36		1	CONNECTOR, HYD.
4		85812211		1	HOSE, FLEXIBLE
5		85803393		2	COLLAR, RETAINER
6		85812029		4	COLLAR, RETAINER

Pilot Control Version

333/ B	08	p1	02/05

7 SECTION PILOT CONTROL VALVE SUPPORT, COMPLETE

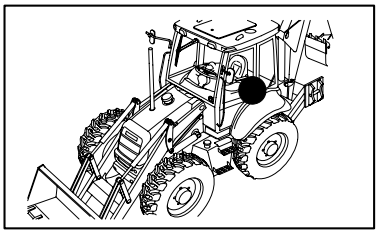

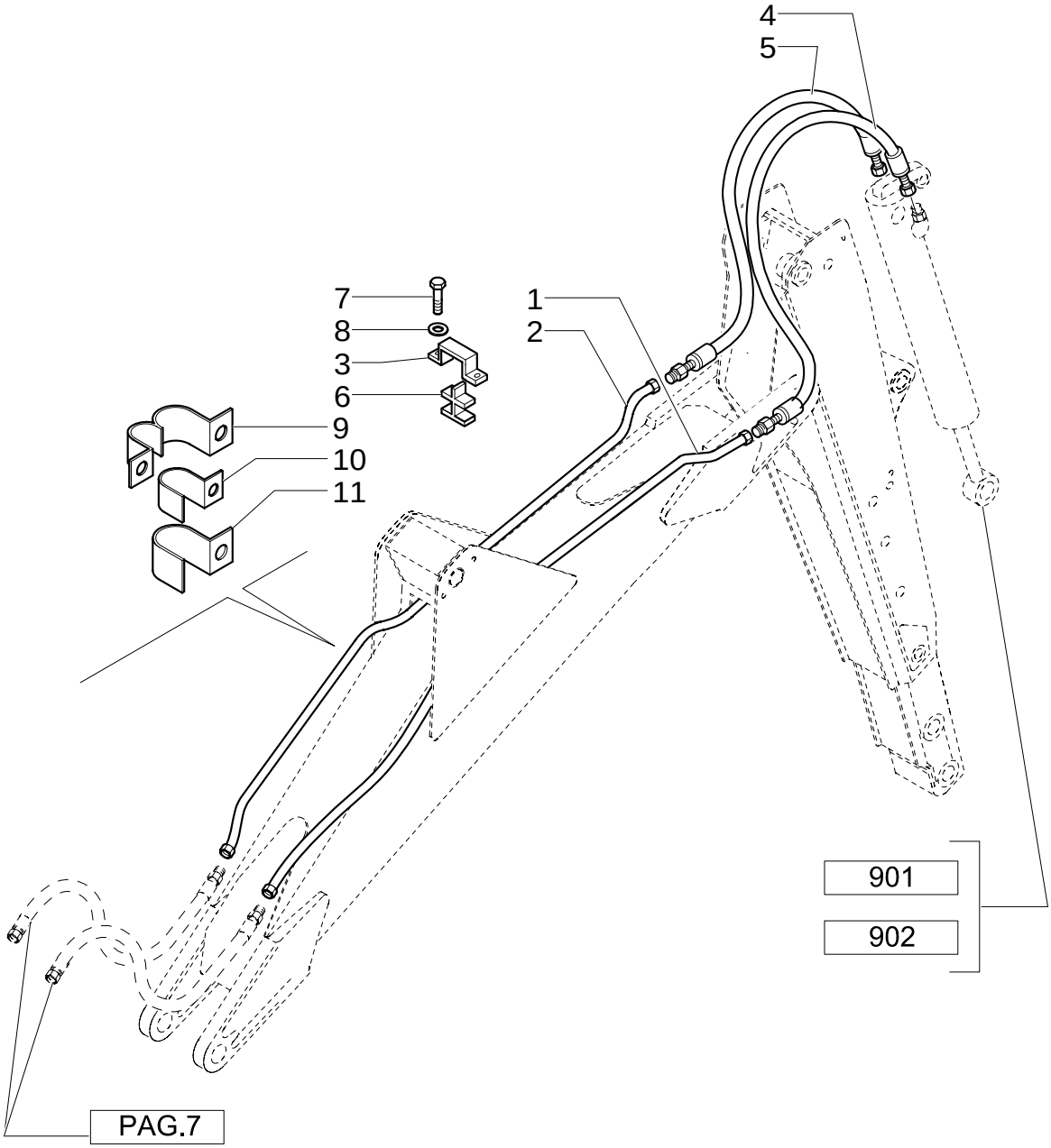

7 SECTION PILOT CONTROL VALVE SUPPORT, COMPLETE

REF	FN	PART NUMBER	YR/SN	QTY	DESCRIPTION
1		85815642		1	TUBE, RIGID
2		85815640		1	TUBE, RIGID
3		85803402		1	PLATE
4		85817109		1	HOSE, FLEXIBLE
5		85817108		1	HOSE, FLEXIBLE
6		85802532		1	CLIP, HOSE
7		16043621		2	SCREW
8		11193879		2	WASHER, LOCK
9		85802529		2	CLIP
10		85802527		2	CLIP
11		85802528		2	CLIP

Pilot Control Version

333/ B	09	p1	02/05

7 SECTION PILOT CONTROL VALVE SUPPORT, COMPLETE (CENTER PIVOT) EUROPE

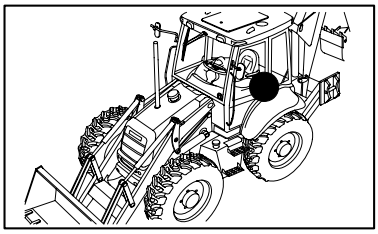

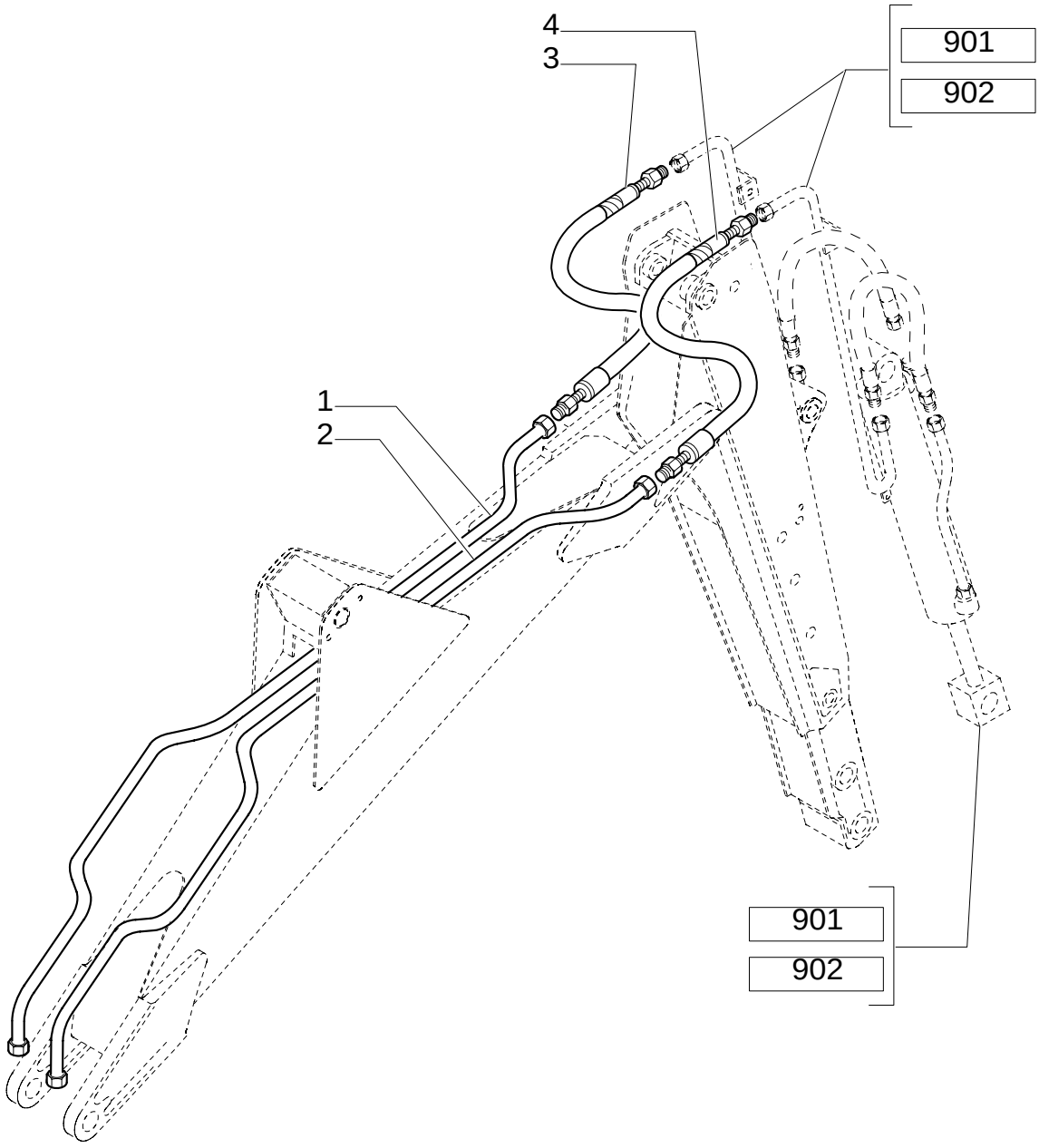

7 SECTION PILOT CONTROL VALVE SUPPORT, COMPLETE (CENTER PIVOT) EUROPE

REF	FN	PART NUMBER	YR/SN	QTY	DESCRIPTION
1		85815674		1	TUBE, RIGID
2		85815676		1	TUBE, RIGID
3		85817106		1	HOSE, FLEXIBLE
4		85817107		1	HOSE, FLEXIBLE

Pilot Control Version

333/ B	10	p1	11/05

6 SECTION PILOT CONTROL VALVE SUPPORT,COMPLETE

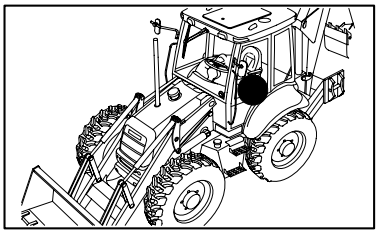

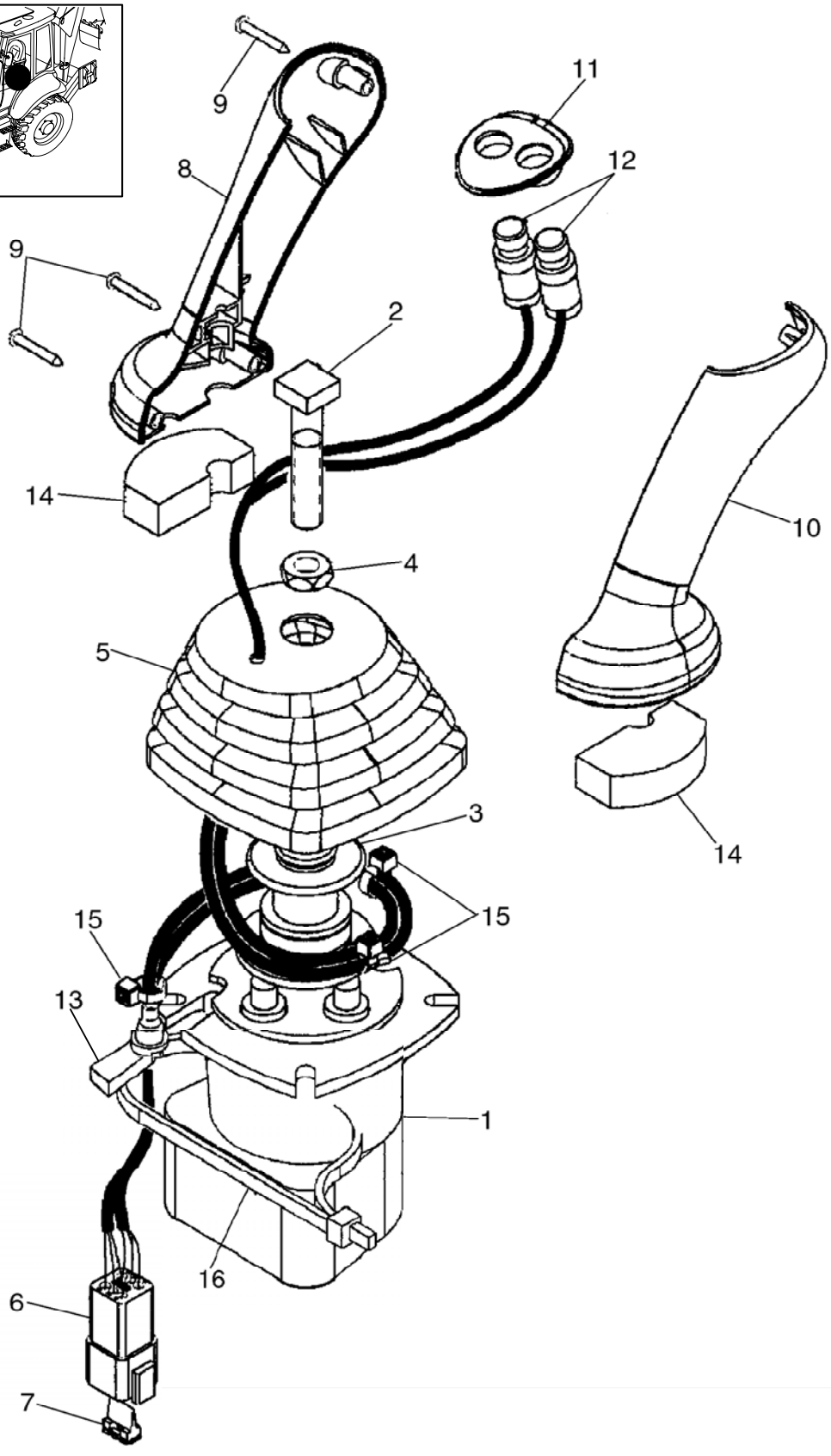

6 SECTION PILOT CONTROL VALVE SUPPORT,COMPLETE

REF	FN	PART NUMBER	YR/SN	QTY	DESCRIPTION
	1	87443743		1	MANIPULATOR
1		86983311		1	VALVE, CONTROL
2		87428023		1	BOLT
3		87436225		1	RETAINER
4		87037944		1	NUT
5		87443721		1	
6		225350C1		1	CONNECTOR
7		225353C1		1	WEDGE
8		87428164		1	HANDLE GRIP
9		15687475		3	SCREW, SELF TAPPING
10		87428165		1	HANDLE GRIP
11		87435242		1	BEZEL
12		87437371		1	SWITCH, ASSY
13		87424267		1	GROMMET
14		87435506		2	GASKET
15		87000312		1	RETAINER
16		87438046		1	STRAP

(1) Includes 1 To 15

Pilot Control Version, Up To S/N XXX

333/ C	01	p1	11/05

VALVE, JOYSTICK PILOT CONTROLS (RIGHT HAND)

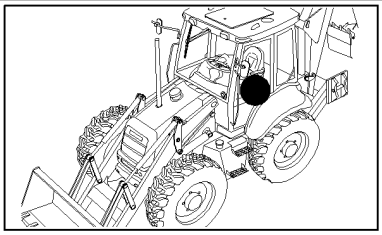

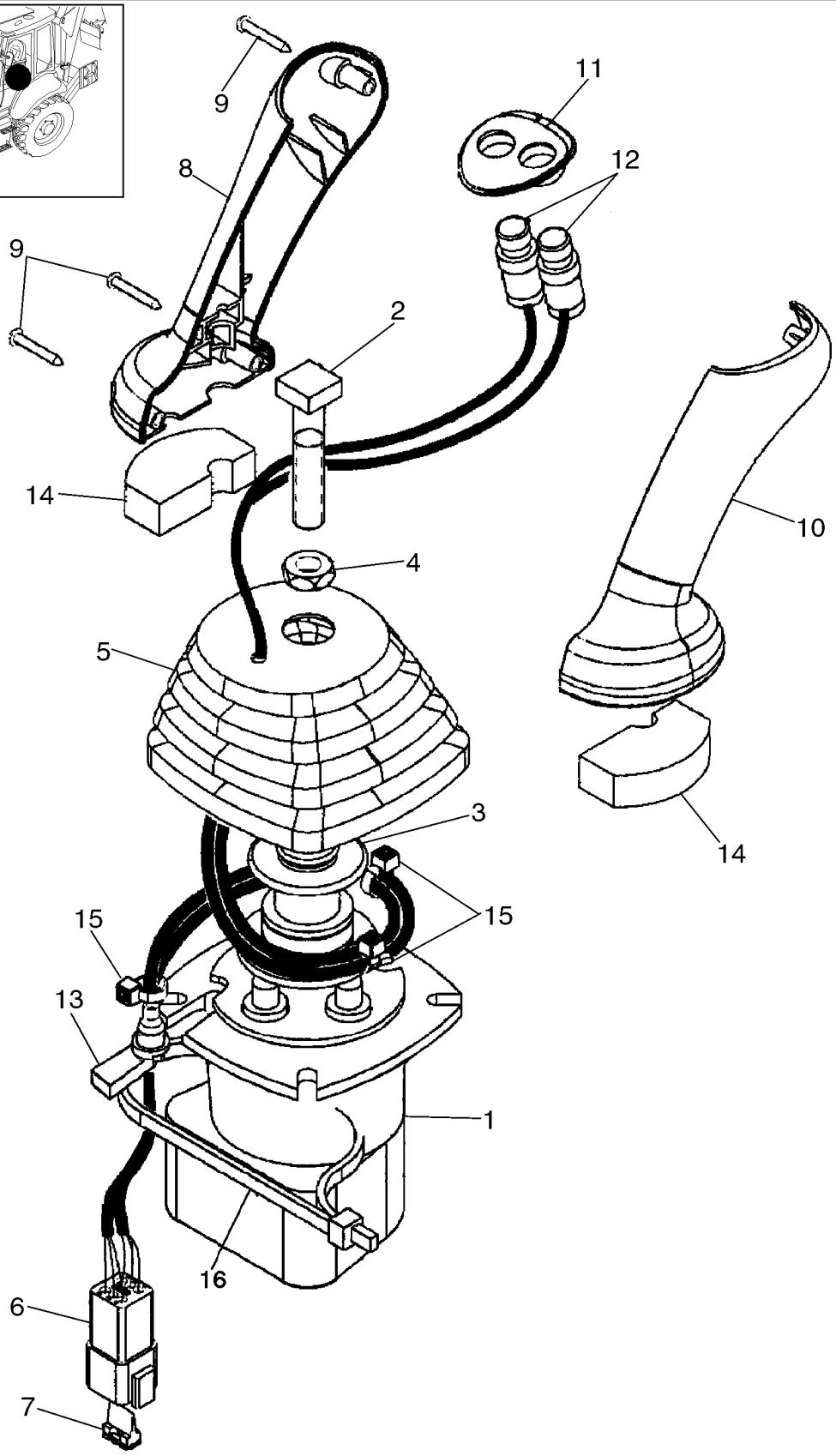

VALVE, JOYSTICK PILOT CONTROLS (RIGHT HAND)

REF	FN	PART NUMBER	YR/SN	QTY	DESCRIPTION
1	[1]	87443743		1	MANIPULATOR
1		86983311		1	VALVE, CONTROL
2		87428023		1	BOLT
3		87436225		1	RETAINER
4		87037944		1	NUT
5		87443721		1	
6		225350C1		1	CONNECTOR
7		225353C1		1	WEDGE
8		87428164		1	HANDLE GRIP
9		15687475		3	SCREW, SELF TAPPING 3.5x25
10		87428165		1	HANDLE GRIP
11		87435242		1	BEZEL
12		87437371		2	SWITCH, ASSY
13		87424267		1	GROMMET
14		87435506		2	GASKET
15		87000312		3	RETAINER
16		87438046		1	STRAP

(1) Includes 1 To 16

Pilot Control Version

333/ C	02	p1	11/05

VALVE, JOYSTICK PILOT CONTROLS (LEFT HAND)

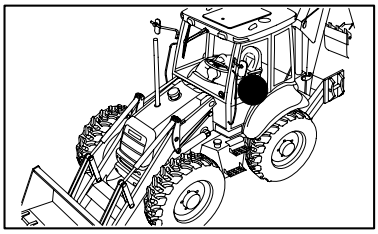

VALVE, JOYSTICK PILOT CONTROLS (LEFT HAND)

REF	FN	PART NUMBER	YR/SN	QTY	DESCRIPTION
1	1	87443740		1	MANIPULATOR
1		86983311		1	VALVE, CONTROL
2		87436225		1	RETAINER
3		87428023		1	BOLT
4		87037944		1	NUT
5		87443721		1	
6		225315C1		1	CONNECTOR
7		225318C1		1	WEDGE
8		87428164		1	HANDLE GRIP
9		15687475		3	SCREW, SELF TAPPING 3.5x25
10		87428165		1	HANDLE GRIP
11		87435243		1	BEZEL
12		87437372		2	SWITCH
13		86625128		1	PLUG
14		87424267		2	GROMMET
15		87435506		3	GASKET
16		87438046		1	STRAP
17		87000312		1	RETAINER

(1) Includes 1 To 17

Pilot Control Version, Up To S/N XXX

333/ 1	01	p1	11/05

7-SECTIONS EXCAVATOR CONTROL VALVE (CENTER PIVOT) NORTH AMERICA

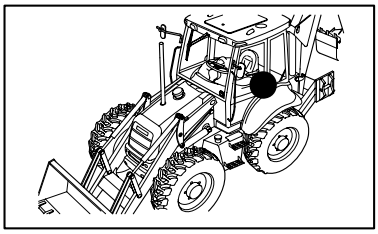

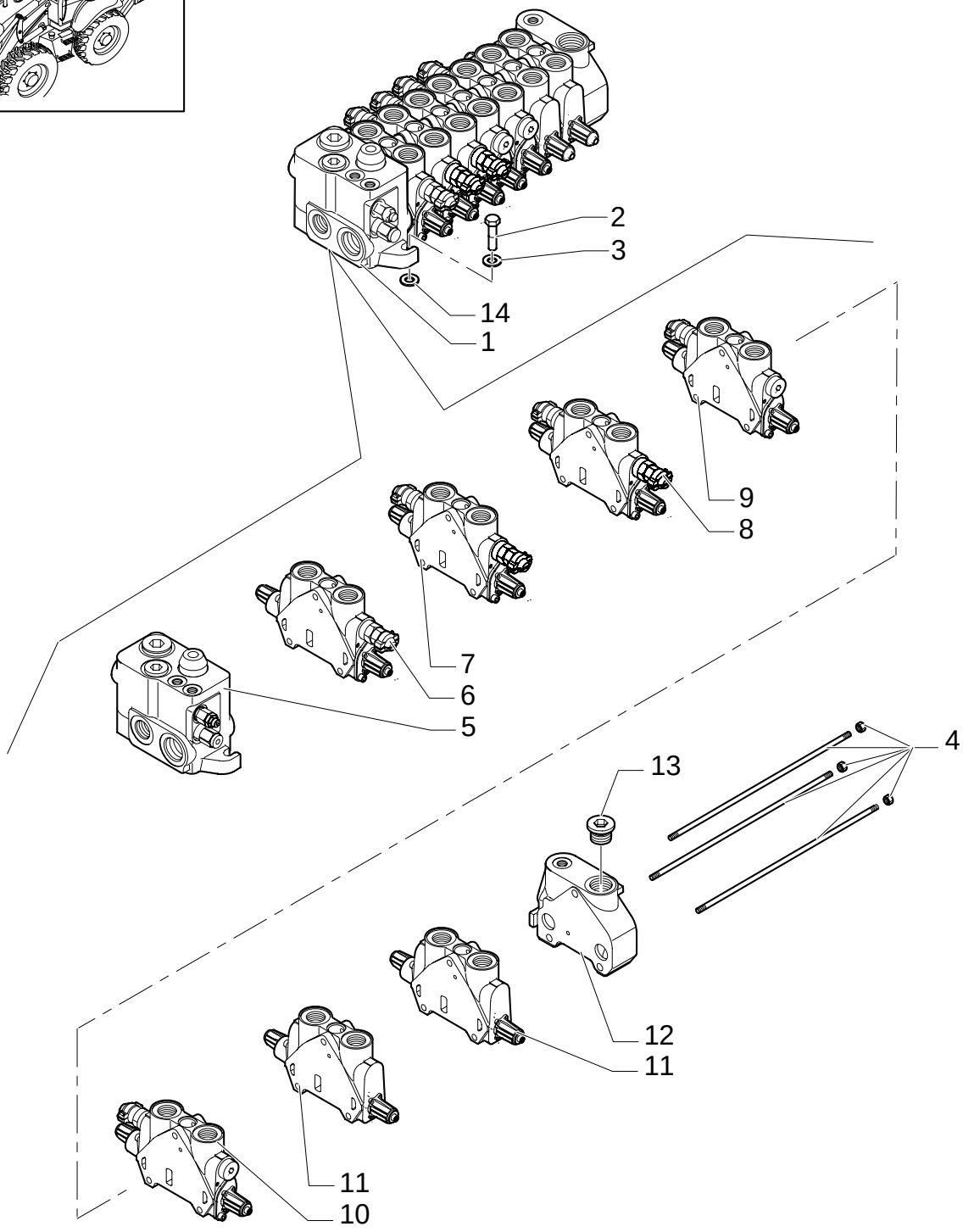

7-SECTIONS EXCAVATOR CONTROL VALVE (CENTER PIVOT) NORTH AMERICA

REF	FN	PART NUMBER	YR/SN	QTY	DESCRIPTION
1	1	87302744		1	VALVE, CONTROL
1	2	87327768		1	VALVE, CONTROL
2		614-10045		3	SCREW M10x45
3		11190679		5	WASHER, LOCK M10
4		85811959		1	KIT
5	3	87308747		1	VALVE SECTION, HYD
6	1, 4, 5	85826904		1	SECTOR, TOOTHED
6	2, 4, 6	87343616		1	DISTRIBUTOR
7	7, 8	85826901		1	SECTOR, TOOTHED
8	9, 10	85826339		1	VALVE SECTION, HYD
9	11, 12	85826903		1	SECTOR, TOOTHED
10	13, 14	85826902		1	SECTOR, TOOTHED
11	15, 16	85826340		2	VALVE SECTION, HYD
12	17	85826250		1	SECTOR, TOOTHED
13		85811921		1	PLUG 1-1/16"-12 UNF 2A
14		13578621		3	WASHER

(1) UP TO S/N XXX
(2) FROM TO S/N XXX
(3) See Page 331/1 02
(4) Telescopic Cylinder
(5) See Page 333/1 02
(6) See Page 333/1 08
(7) Boom Cylinder
(8) See Page 333/1 03
(9) Swing Cylinder
(10) See Page 333/1 04
(11) Bucket Cylinder
(12) See Page 333/1 05
(13) Arm Cylinder
(14) See Page 333/1 06
(15) Stabilizer Cylinder
(16) See Page 333/1 07
(17) Includes 13

Pilot Control Version

333/ 1	02	p1	11/05

7-SECTIONS EXCAVATOR CONTROL VALVE (CENTER PIVOT) NORTH AMERICA

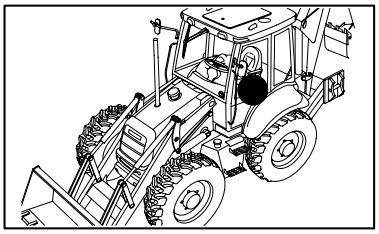

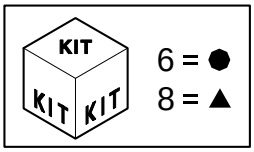

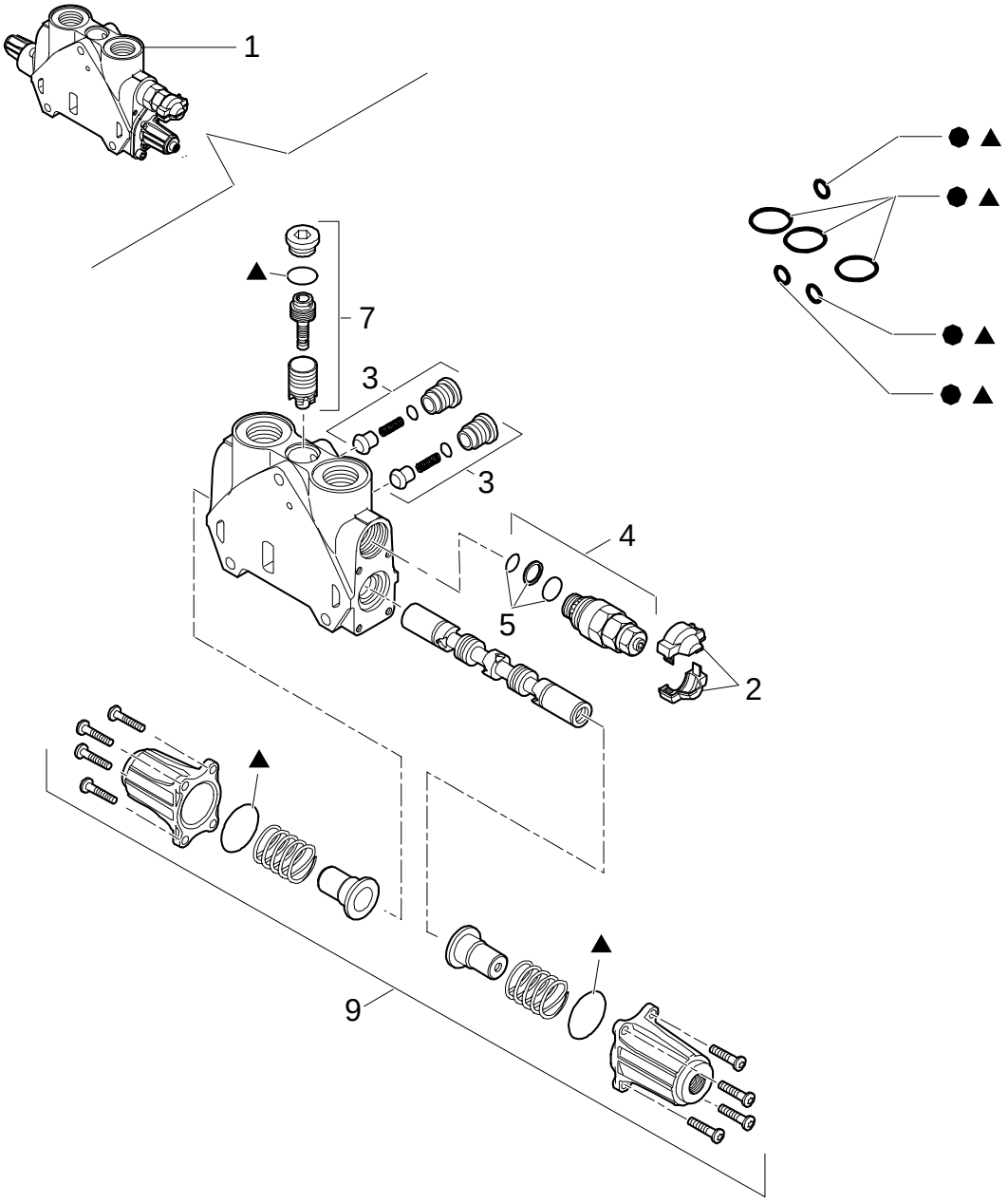

7-SECTIONS EXCAVATOR CONTROL VALVE (CENTER PIVOT) NORTH AMERICA

REF	FN	PART NUMBER	YR/SN	QTY	DESCRIPTION
1		85826904		1	SECTOR, TOOTHED
2		85811934		2	KIT Cover
3		85811938		2	KIT Valve
4	1, 2	85812113		2	VALVE, HYDRAULIC
5		85811933		1	KIT Valve Seals
6		85819148		1	KIT Seals
7		85819378		1	KIT Valve
8		85824281		1	KIT Seals
9		85826344		1	KIT Cover Assy

(1) Includes 4
(2) 165 BAR

Pilot Control Version

333/ 1	03	p1	11/05

7-SECTIONS EXCAVATOR CONTROL VALVE (CENTER PIVOT) NORTH AMERICA

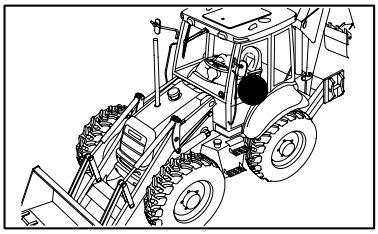

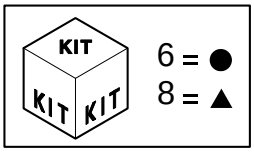

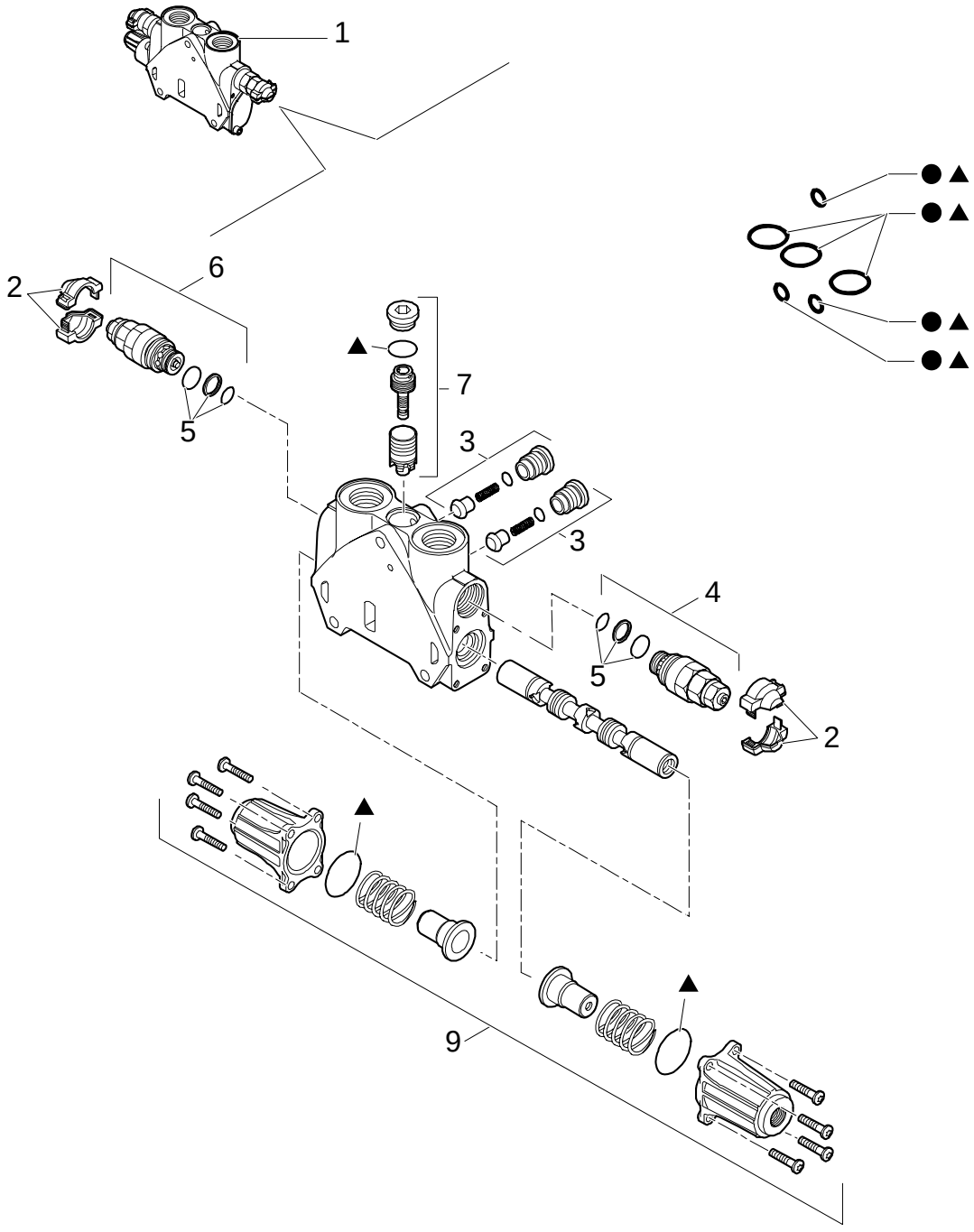

7-SECTIONS EXCAVATOR CONTROL VALVE (CENTER PIVOT) NORTH AMERICA

REF	FN	PART NUMBER	YR/SN	QTY	DESCRIPTION
1		85826901		1	SECTOR, TOOTHED
2		85811934		2	KIT Cover
3		85811938		2	KIT Valve
4	1, 2	85812116		1	VALVE, HYDRAULIC
5		85811933		1	KIT
6	1, 3	85812117		1	VALVE, HYDRAULIC
6		85819148		1	KIT Seals
7		85819378		1	KIT Valve
8		85824281		1	KIT Seals
9		85826344		1	KIT Cover Assy

(1) Includes 5
(2) 240 BAR
(3) 315 BAR

Pilot Control Version

333/ 1	04	p1	11/05

7-SECTIONS EXCAVATOR CONTROL VALVE (CENTER PIVOT) NORTH AMERICA

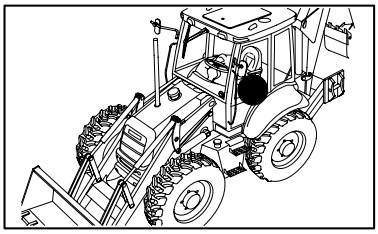

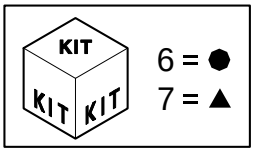

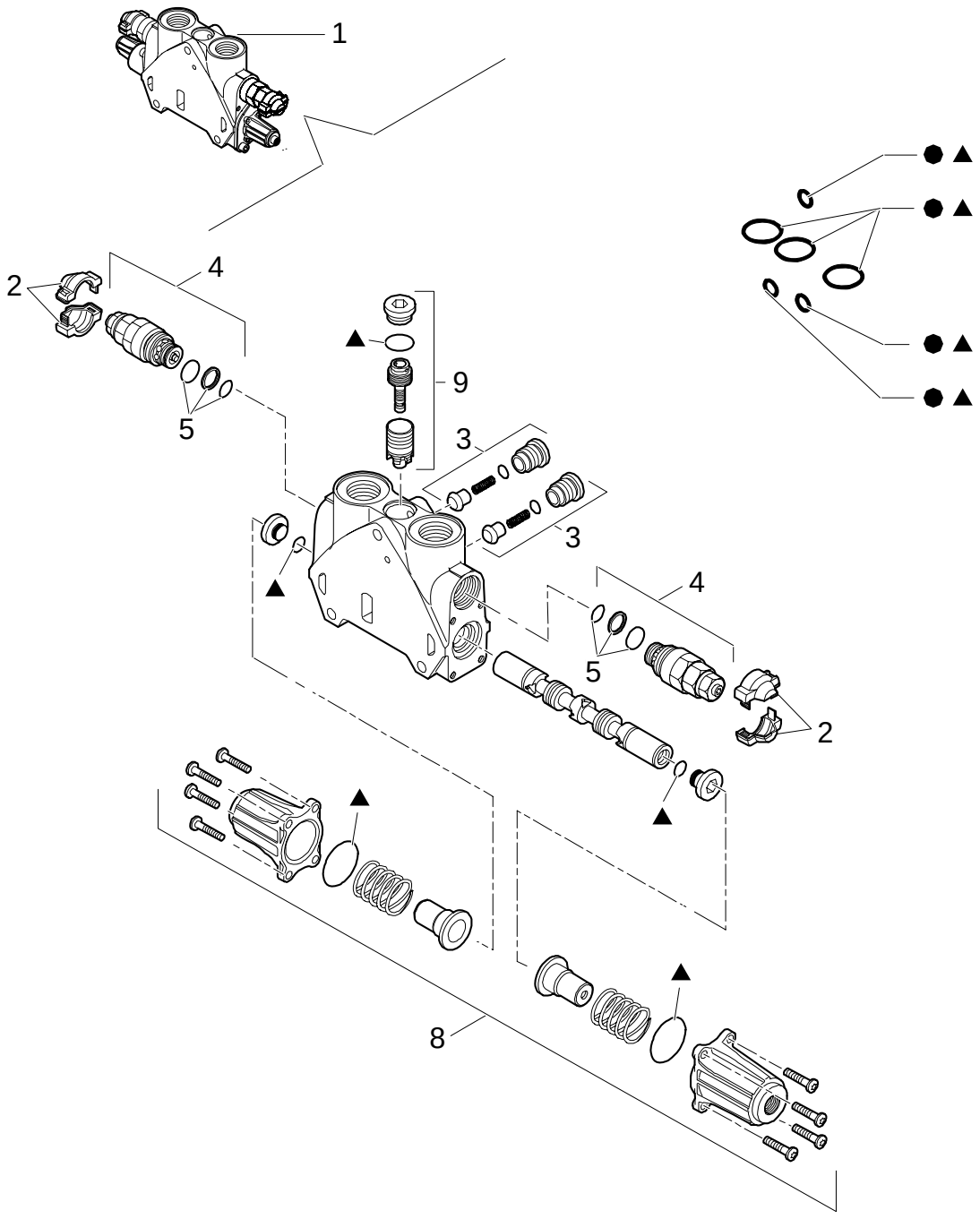

7-SECTIONS EXCAVATOR CONTROL VALVE (CENTER PIVOT) NORTH AMERICA

REF	FN	PART NUMBER	YR/SN	QTY	DESCRIPTION
1		85826339		1	VALVE SECTION, HYD
2		85811934		2	KIT Cover
3		85811938		2	KIT Valve
4	1, 2	85812114		2	VALVE, HYDRAULIC
5		85811933		2	KIT Valve Seals
6		85819148		1	KIT Seals
7		85824282		1	KIT Seals
8		85826344		1	KIT Cover Assy
9		85826345		1	KIT Valve

(1) Includes 5
(2) 205 BAR

Pilot Control Version

333/ 1	05	p1	11/05

7-SECTIONS EXCAVATOR CONTROL VALVE (CENTER PIVOT) NORTH AMERICA

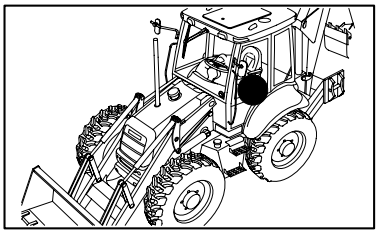

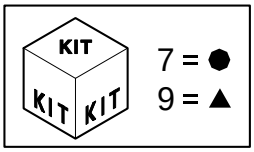

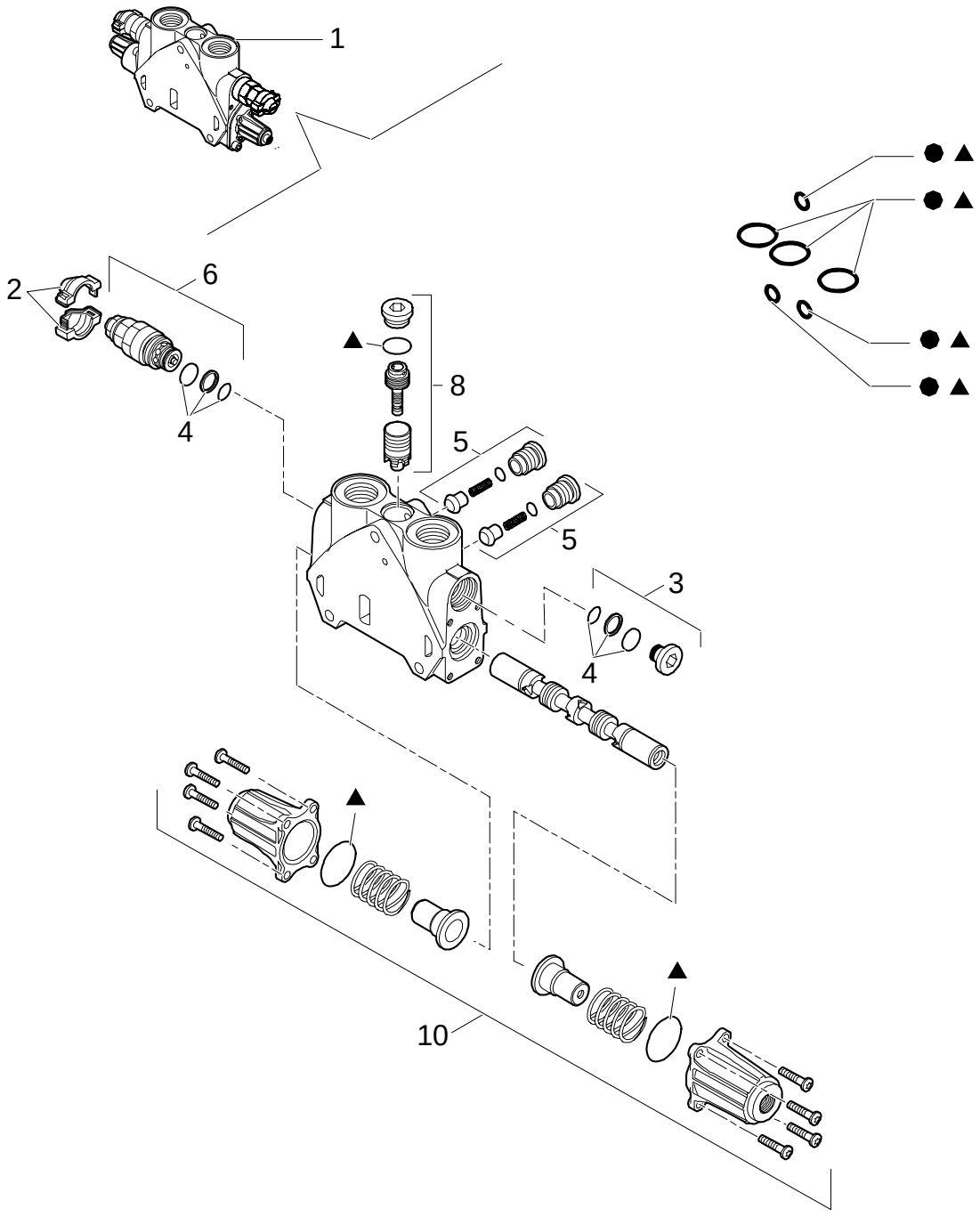

7-SECTIONS EXCAVATOR CONTROL VALVE (CENTER PIVOT) NORTH AMERICA

REF	FN	PART NUMBER	YR/SN	QTY	DESCRIPTION
1		85826903		1	SECTOR, TOOTHED
2		85811934		1	KIT Cover
3	1, 2	85811937		1	PLUG
4		85811933		1	KIT Valve Seals
5		85811938		2	KIT Valve
6	1, 2	85812115		1	VALVE, HYDRAULIC
7		85819148		1	KIT Seals
8		85819378		1	KIT Valve
9		85824281		1	KIT Seals
10		85826344		1	KIT Cover Assy

(1) 220 BAR
(2) Includes 4

Pilot Control Version

333/ 1	06	p1	11/05

7-SECTIONS EXCAVATOR CONTROL VALVE (CENTER PIVOT) NORTH AMERICA

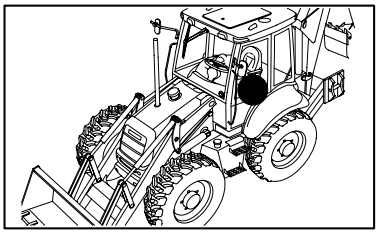

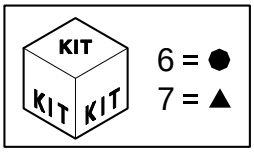

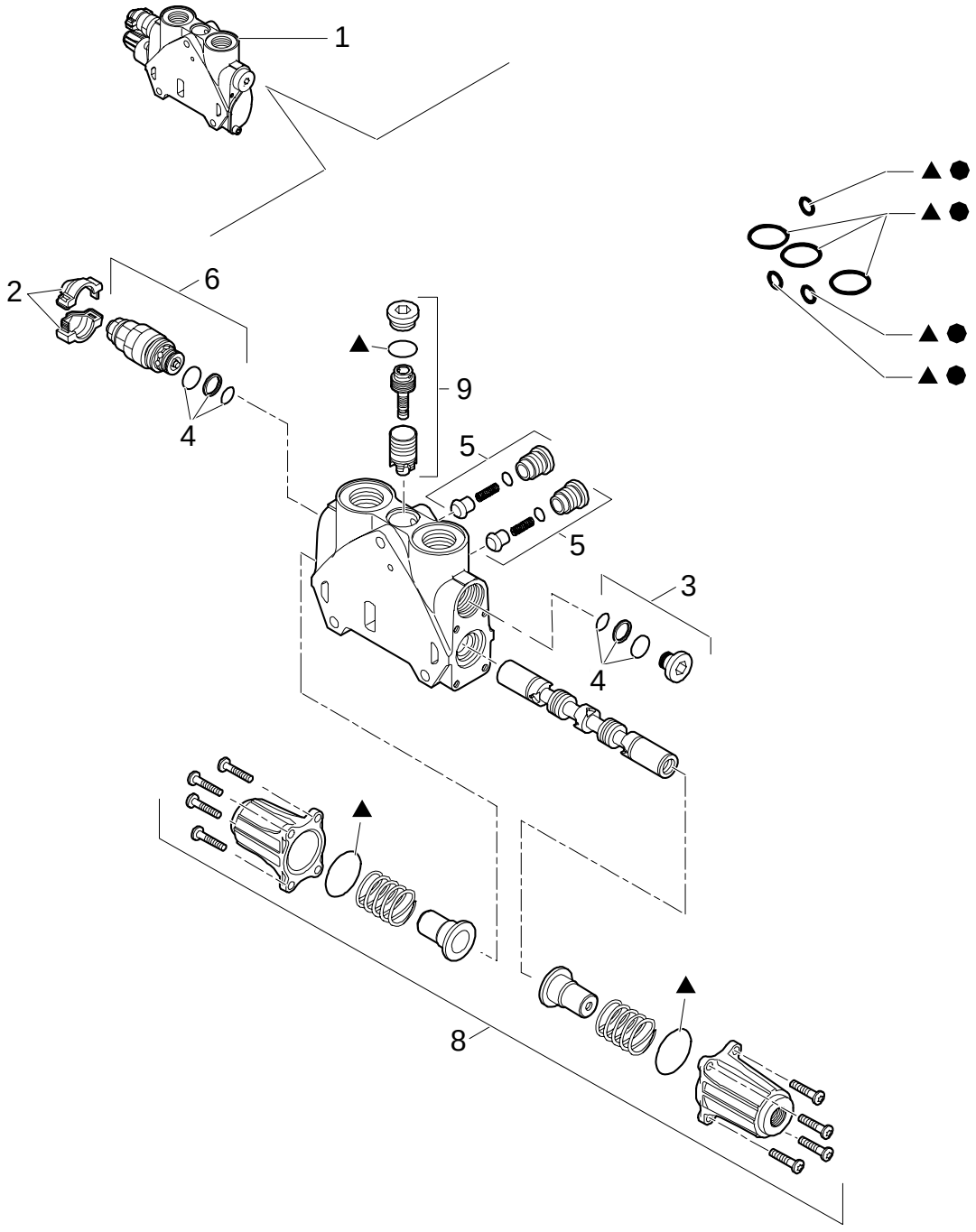

7-SECTIONS EXCAVATOR CONTROL VALVE (CENTER PIVOT) NORTH AMERICA

REF	FN	PART NUMBER	YR/SN	QTY	DESCRIPTION
1		85826902		1	SECTOR, TOOTHED
2		85811934		1	KIT Cover
3	1, 2	85811937		1	PLUG
4		85811933		1	KIT Valve Seals
5		85811938		2	KIT Valve
6	1, 2	85812116		1	VALVE, HYDRAULIC
6		85819148		1	KIT Valve
7		85824281		1	KIT Seals
8		85826344		1	KIT Cover Assy
9		85826345		1	KIT Valve

(1) 240 BAR
(2) Includes 4

Pilot Control Version

333/ 1	07	p1	11/05

7-SECTIONS EXCAVATOR CONTROL VALVE (CENTER PIVOT) NORTH AMERICA

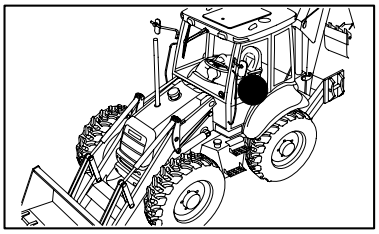

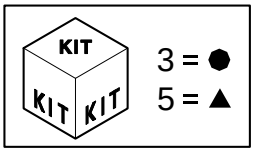

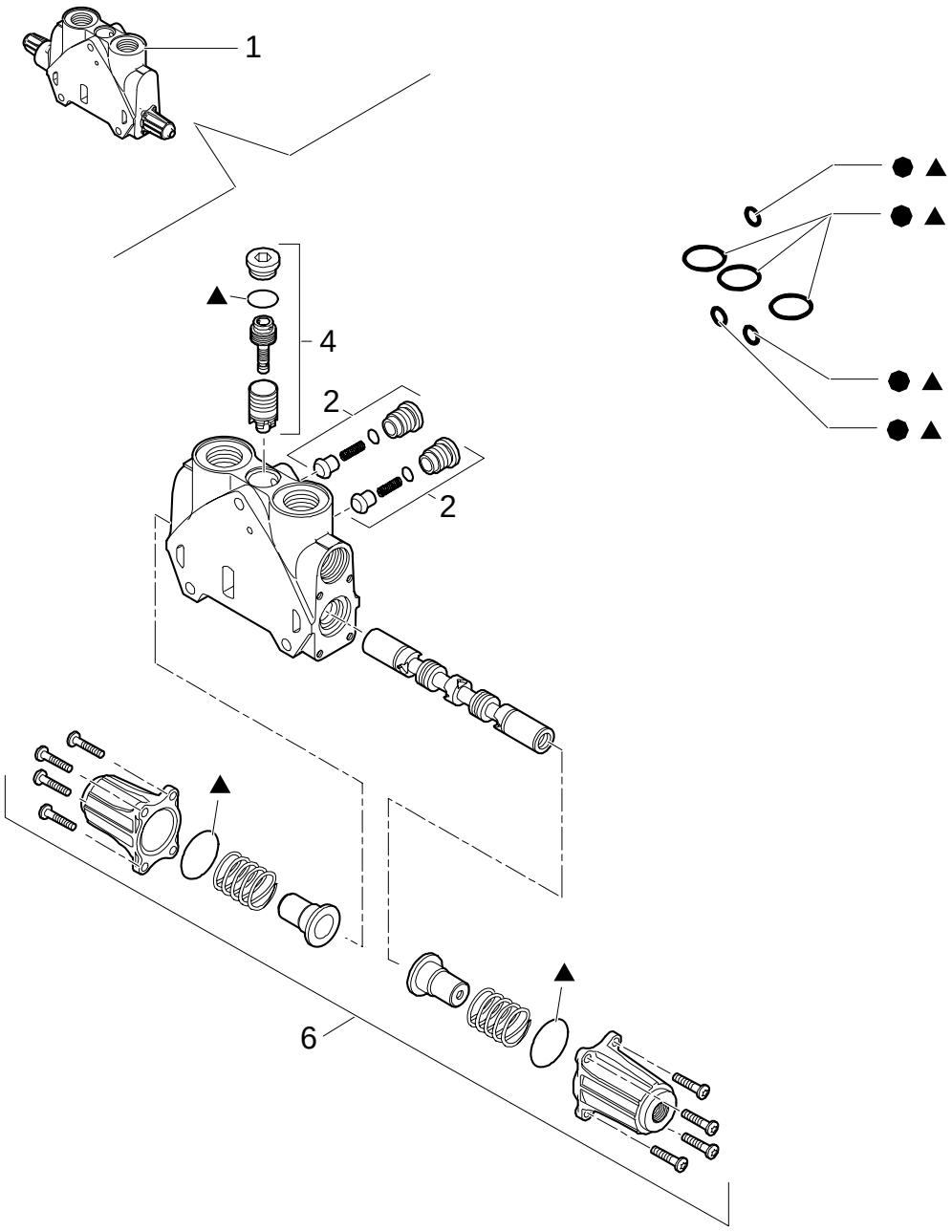

7-SECTIONS EXCAVATOR CONTROL VALVE (CENTER PIVOT) NORTH AMERICA

REF	FN	PART NUMBER	YR/SN	QTY	DESCRIPTION
1		85826340		2	VALVE SECTION, HYD
2		85811938		2	KIT Valve
3		85819148		1	KIT Seals
4		85819378		1	KIT Valve
5		85824281		1	KIT Seals
6		85826344		1	KIT Cover Assy

Pilot Control Version

333/ 1	08	p1	11/05

7-SECTIONS EXCAVATOR CONTROL VALVE (CENTER PIVOT) NORTH AMERICA

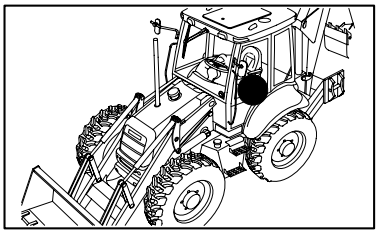

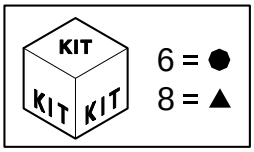

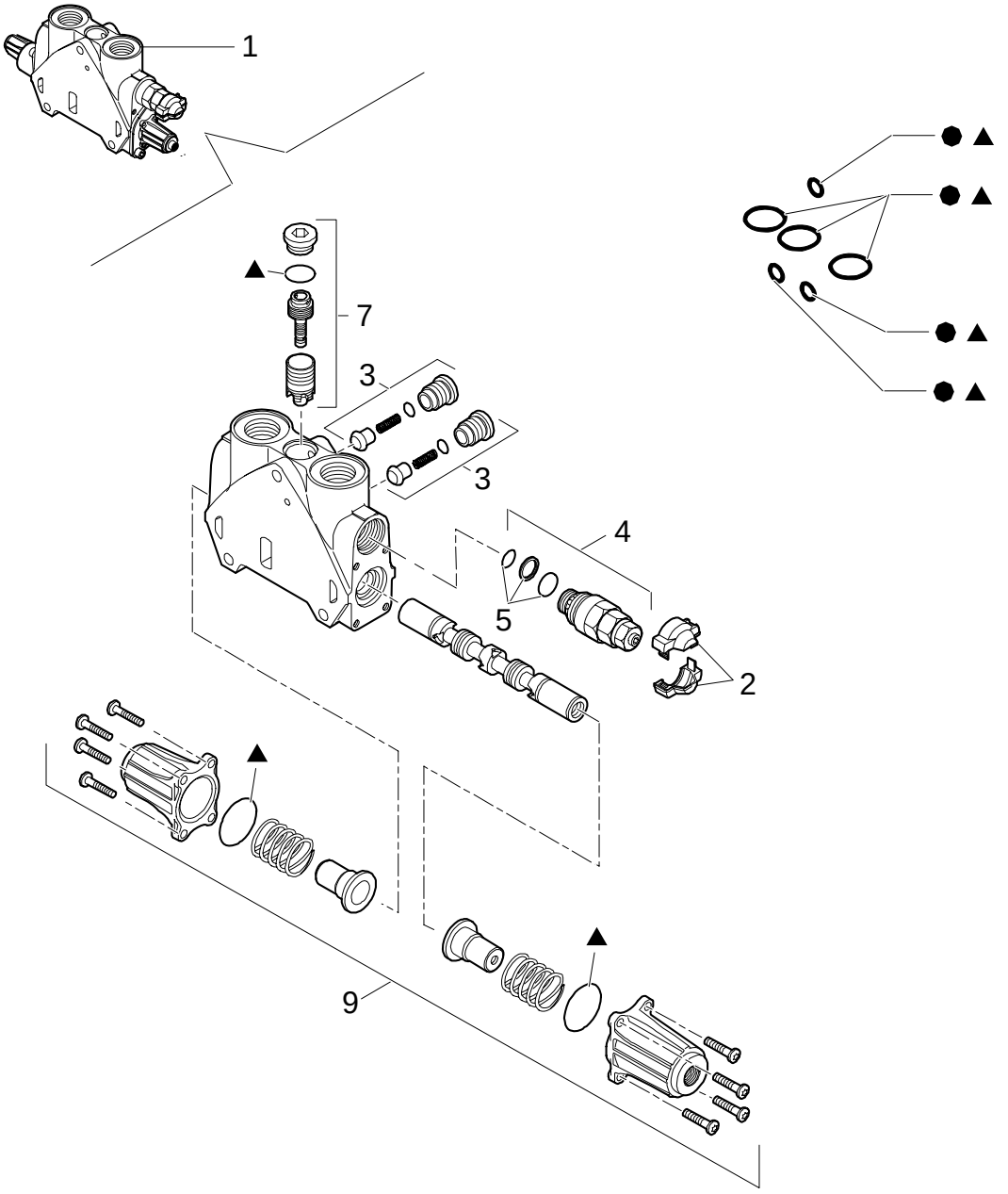

7-SECTIONS EXCAVATOR CONTROL VALVE (CENTER PIVOT) NORTH AMERICA

REF	FN	PART NUMBER	YR/SN	QTY	DESCRIPTION
1		87343616		1	DISTRIBUTOR
2		85811934		2	KIT Cover
3		85811938		2	KIT Valve
4	1, 2	87341088		2	VALVE, HYDRAULIC
5		85811933		1	KIT Valve Seals
6		85819148		1	KIT Seals
7		85819378		1	KIT Valve
8		85824281		1	KIT Seals
9		85826344		1	KIT Cover Assy

(1) Includes 4
(2) 124 BAR

Pilot Control Version

334	09	p1	02/05

7-SECTIONS EXCAVATOR CONTROL VALVE

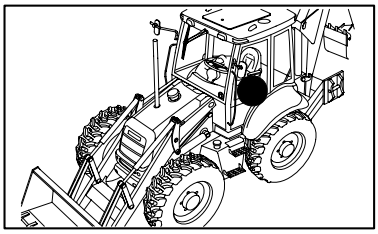

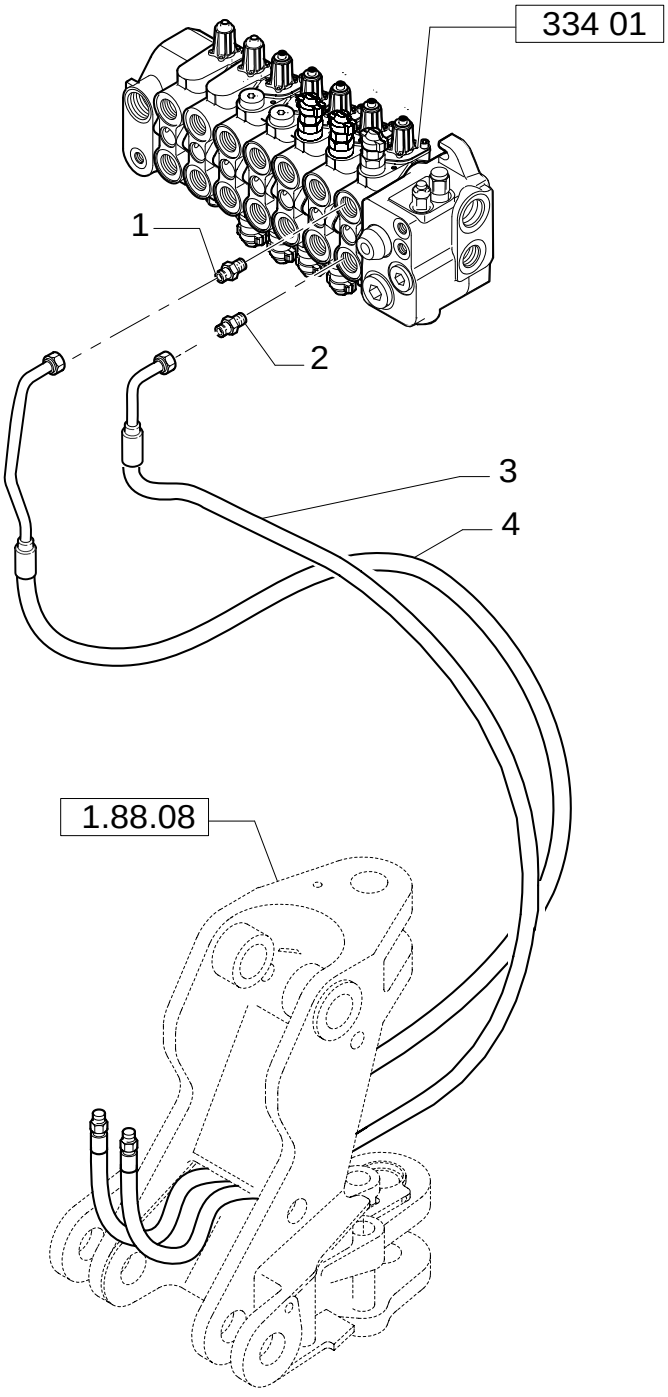

7-SECTIONS EXCAVATOR CONTROL VALVE

REF	FN	PART NUMBER	YR/SN	QTY	DESCRIPTION
1		390938S36		1	CONNECTOR, HYD.
2		85805258		1	CONNECTOR, HYD.
3		85819067		1	HOSE, FLEXIBLE
4		85819066		1	HOSE, FLEXIBLE

334	11	p1	02/05

7-SECTIONS EXCAVATOR CONTROL VALVE

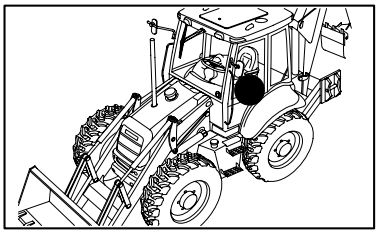

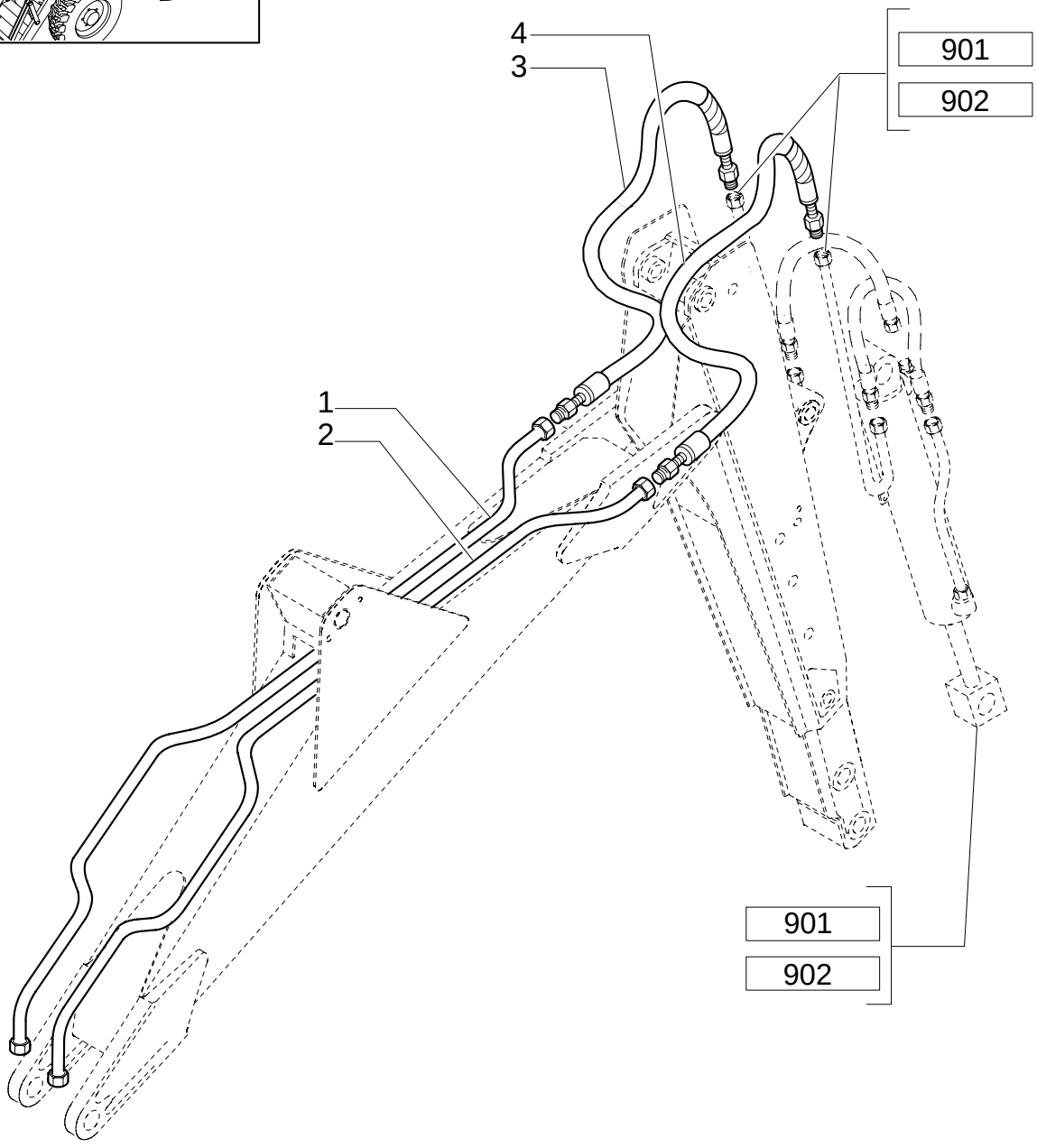

7-SECTIONS EXCAVATOR CONTROL VALVE

REF	FN	PART NUMBER	YR/SN	QTY	DESCRIPTION
1		85815674		1	TUBE, RIGID
2		85815676		1	TUBE, RIGID
3	1	85817106		1	HOSE, FLEXIBLE
3A		9991976		2	O-RING 90 Duro, .739" ID x .070" Thk
4	2	85817107		1	HOSE, FLEXIBLE
4A		9992069		2	O-RING

(1) Includes 3A
(2) Includes 4A

392	01	p1	11/05

LOCKING VALVE ON BACKHOE LIFT AND DIPP. CYLINDER

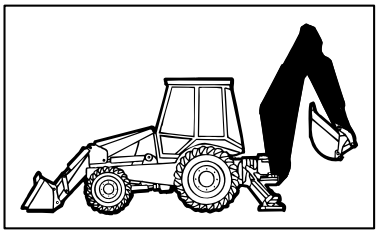

KIT 15= ●

SEE ALSO PAG.2

KIT 16= ▲

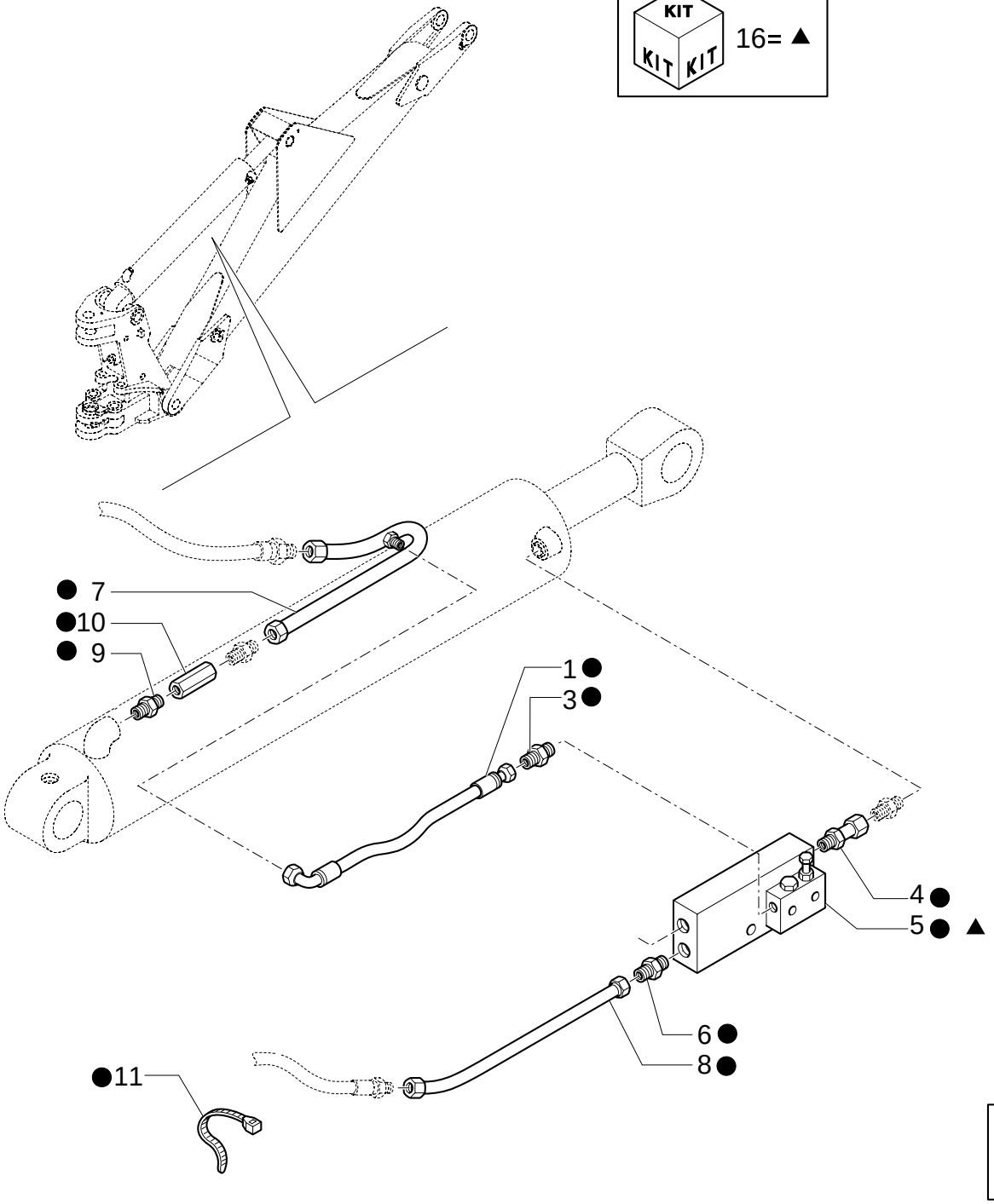

LOCKING VALVE ON BACKHOE LIFT AND DIPP. CYLINDER

REF	FN	PART NUMBER	YR/SN	QTY	DESCRIPTION
1		85815505		2	HOSE, FLEXIBLE
3		85802803		3	CONNECTOR, HYD.
4		85805124		2	CONNECTOR, HYD.
5	1	87353316		1	VALVE, SAFETY ASSY
6		390828S36		2	CONNECTOR, HYD.
7		85820835		1	TUBE, RIGID
8		85820836		1	TUBE, RIGID
9		85804879		1	CONNECTOR, HYD.
10		85824308		1	VALVE, HYDRAULIC
11		79072960		4	COLLAR
15		{87325632}		1	
16		85820912		1	KIT

(1) Includes 16

392	02	p1	11/05

BACKHOE LIFT & DIPPERSTICK CYLINDER LOCK VALVE

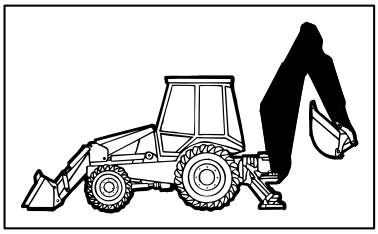

KIT KIT KIT 15= ●
SEE ALSO PAG.1

KIT KIT KIT 14= ▲

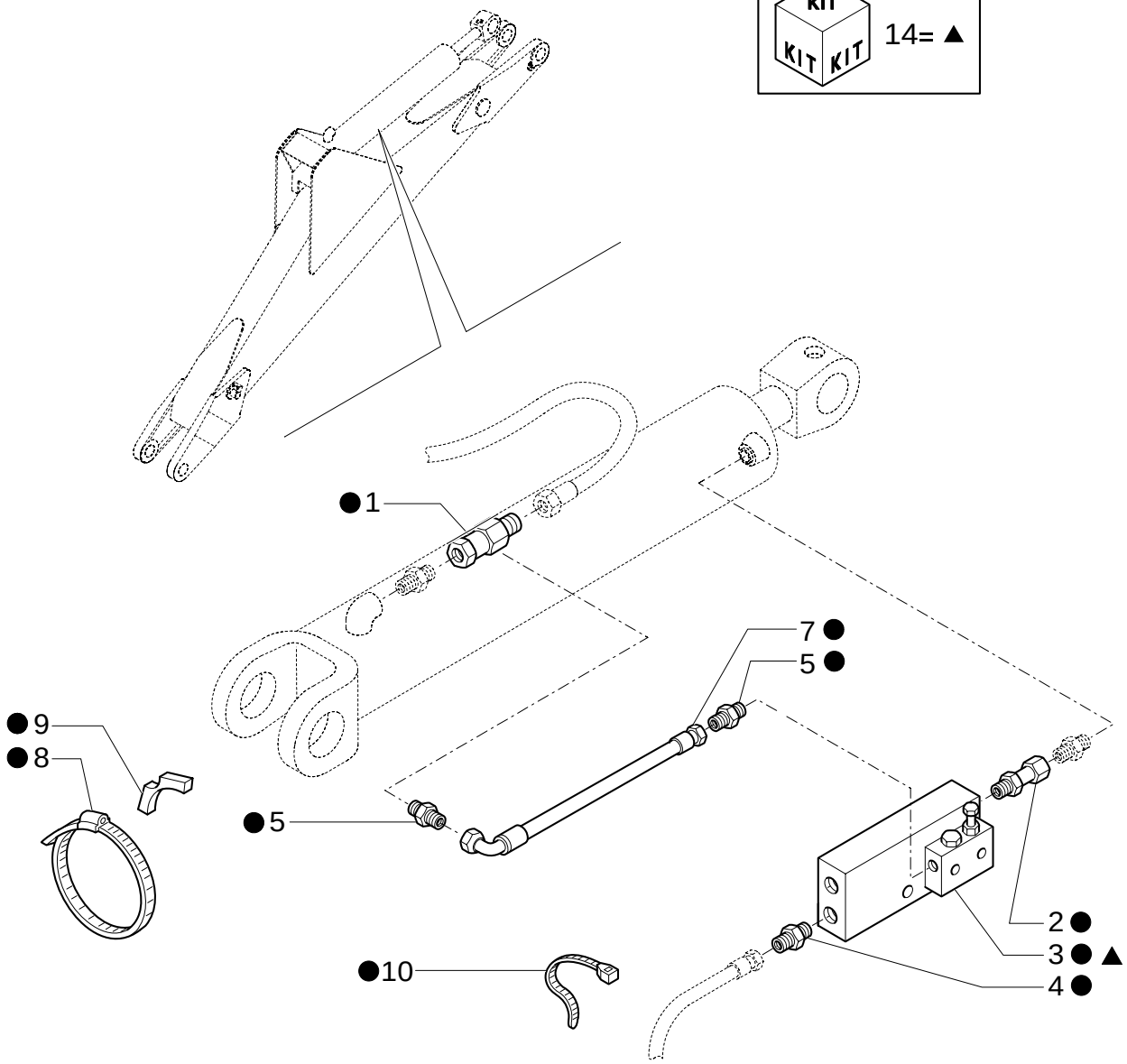

BACKHOE LIFT & DIPPERSTICK CYLINDER LOCK VALVE

REF	FN	PART NUMBER	YR/SN	QTY	DESCRIPTION
1		85805115		1	CONNECTOR, HYD.
2		85805124		2	CONNECTOR, HYD.
3	1	87353314		1	VALVE, SAFETY ASSY
4		390828S36		2	CONNECTOR, HYD.
5		85802803		3	CONNECTOR, HYD.
7		85815505		2	HOSE, FLEXIBLE
8		85805126		1	COLLAR
9		85805123		1	PLATE, FIXING
10		79072960		4	COLLAR
14		85820913		1	KIT
15		{87325632}		1	

(1) Includes 14

437/ 1	01	p1	11/05

GLIDE RIDE VALVE,HYDRAULIC SYSTEM FOR MACHINE FRAME LEVELLING & ON/OFF SWITCH

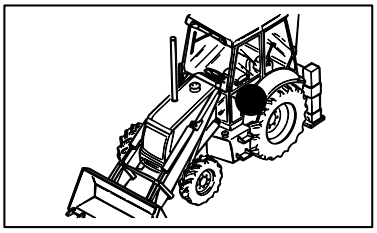

KIT KIT KIT 22= ●

GLIDE RIDE VALVE,HYDRAULIC SYSTEM FOR MACHINE FRAME LEVELLING & ON/OFF SWITCH

REF	FN	PART NUMBER	YR/SN	QTY	DESCRIPTION
1		87358815		2	HOSE, FLEXIBLE
2		85815620		1	HOSE, FLEXIBLE
3		85817222		1	HOSE, FLEXIBLE
4	1	390967S36		4	ELBOW
5	2	390953S36		2	CONNECTOR, HYD.
8		87358817		1	VALVE, HYDRAULIC
9	3, 4	87342882		1	ACCUMULATOR
9	5	87358818		1	ACCUMULATOR
10		87358816		1	HOSE, FLEXIBLE
11		11106421		2	SCREW M10x30
12		85817223		1	HOSE, FLEXIBLE
13		11190579		5	WASHER, LOCK
14	6	85815583		2	CONNECTOR, HYD. 13x20x2.3
15		87016S95		1	O-RING 90 Duro, .625" ID x .070" Thk
16		9992298		2	O-RING 90 Duro, .489" ID x .070" Thk
18		128825		1	O-RING 8-1, 90 Duro, .644" ID x .087" Thk
20		86982600		2	DECAL
21		87358808		1	BRACKET
22		85824211		1	CABLE, ELECTRIC M10
23		15971321		1	SCREW M10x1.25x75
24		11106221		2	SCREW M10x25

(1) Includes 16, 18
(2) Includes 6, 7
(3) Only for EUROPE Version
(4) UP TO S/N xxx
(5) FROM TO S/N XXX
(6) Includes 15, 16

From To S/N XXX

698	01	p1	11/05

GLIDE RIDE VALVE,HYDRAULIC SYSTEM FOR MACHINE FRAME LEVELLING & ON/OFF SWITCH

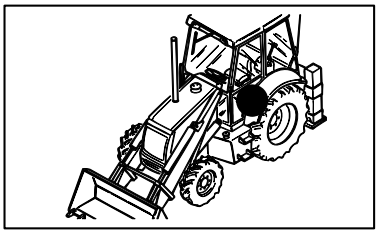

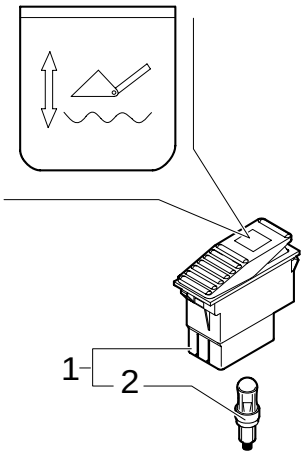

GLIDE RIDE VALVE,HYDRAULIC SYSTEM FOR MACHINE FRAME LEVELLING & ON/OFF SWITCH

REF	FN	PART NUMBER	YR/SN	QTY	DESCRIPTION
1		85817674		1	SWITCH
2		14143790		1	BULB

702/ 1	02	p1	11/05

PEDAL-OPERATED TELESCOPIC DIPPER HYDRAULIC SYSTEM (CENTER PIVOT)

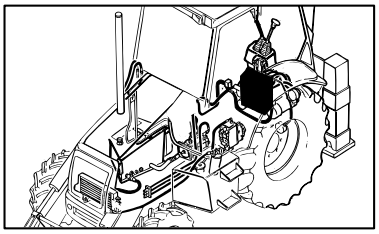

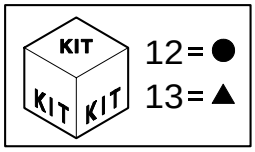

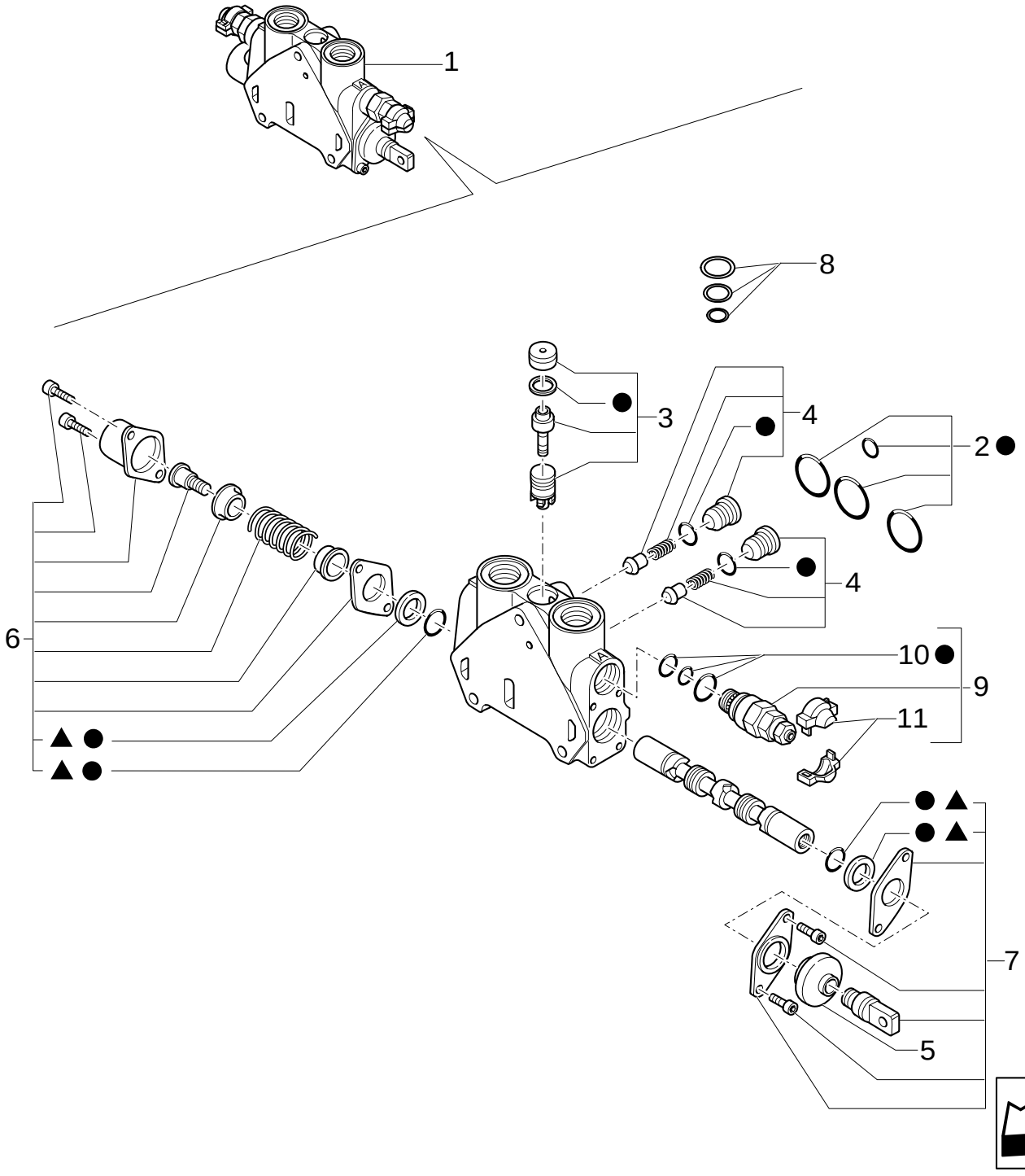

PEDAL-OPERATED TELESCOPIC DIPPER HYDRAULIC SYSTEM (CENTER PIVOT)

REF	FN	PART NUMBER	YR/SN	QTY	DESCRIPTION
1		87341283		1	VALVE, CONTROL
2		85819148		1	KIT
3		85819378		1	KIT
4		85811938		2	KIT
5		85820130		1	BELLOWS
6		85824279		1	KIT
7		85824278		1	KIT
8		85819040		1	KIT
9		87341088		1	VALVE, HYDRAULIC
10		85811933		1	KIT
11		85811935		1	KIT
12		85824281		1	KIT
13		85824283		1	KIT

Mechanical Version FROM TO S/N XXX

703	01	p1	12/05

PEDAL-OPERATED TELESCOPIC DIPPER HYDRAULIC SYSTEM

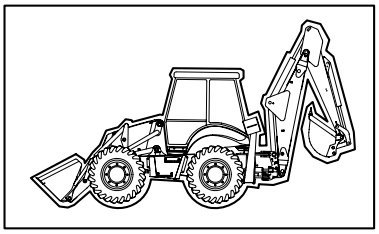

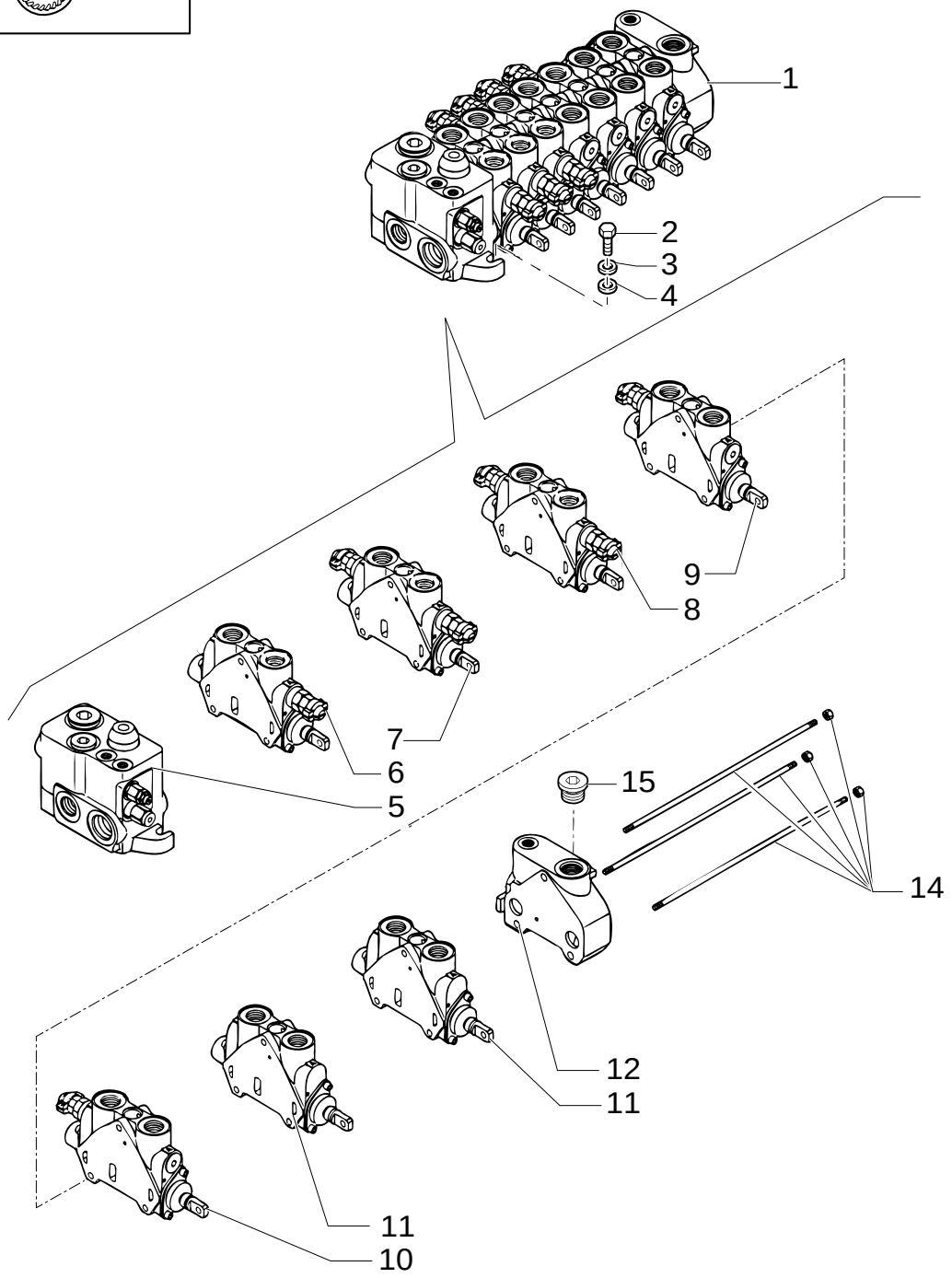

PEDAL-OPERATED TELESCOPIC DIPPER HYDRAULIC SYSTEM

REF	FN	PART NUMBER	YR/SN	QTY	DESCRIPTION
1	1	85824223		1	DISTRIBUTOR
1	2	87327762		1	VALVE, HYDRAULIC
2		15888721		3	SCREW M10x1.25x55
3		11190679		3	WASHER, LOCK
4		85818943		3	SPACER
5	3	85826255		1	SECTOR, TOOTHED
6	1, 4, 5	85826254		1	SECTOR, TOOTHED
6	2, 4	87341283		1	VALVE, CONTROL
7	6, 7	85826245		1	SECTOR, TOOTHED
8	8, 9	85826253		1	SECTOR, TOOTHED
9	10, 11	85826246		1	SECTOR, TOOTHED
10	12, 13	85826248		1	SECTOR, TOOTHED
11	14, 15	85826251		2	SECTOR, TOOTHED
12	16	85826250		1	SECTOR, TOOTHED
14		85811959		1	KIT
15		85811921		1	PLUG 1-1/16"-12 UNF 2A

(1) UP TO S/N XXX
(2) FROM TO S/N XXX
(3) See Page 300 02
(4) Telescopic Cylinder
(5) See Page 702 02
(6) Boom Cylinder
(7) See Page 300 03
(8) Swing Cylinder
(9) See Page 300 04
(10) Bucket Cylinder
(11) See Page 300 05
(12) Arm Cylinder
(13) See Page 300 06
(14) Stabilizer Cylinder
(15) See Page 300 07
(16) Includes 15

Mechanical Version

703	02	p1	02/05

PEDAL-OPERATED TELESCOPIC DIPPER HYDRAULIC SYSTEM

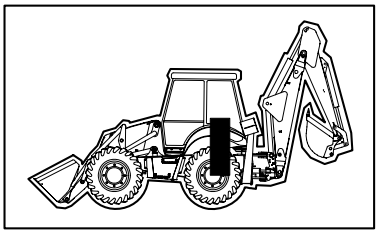

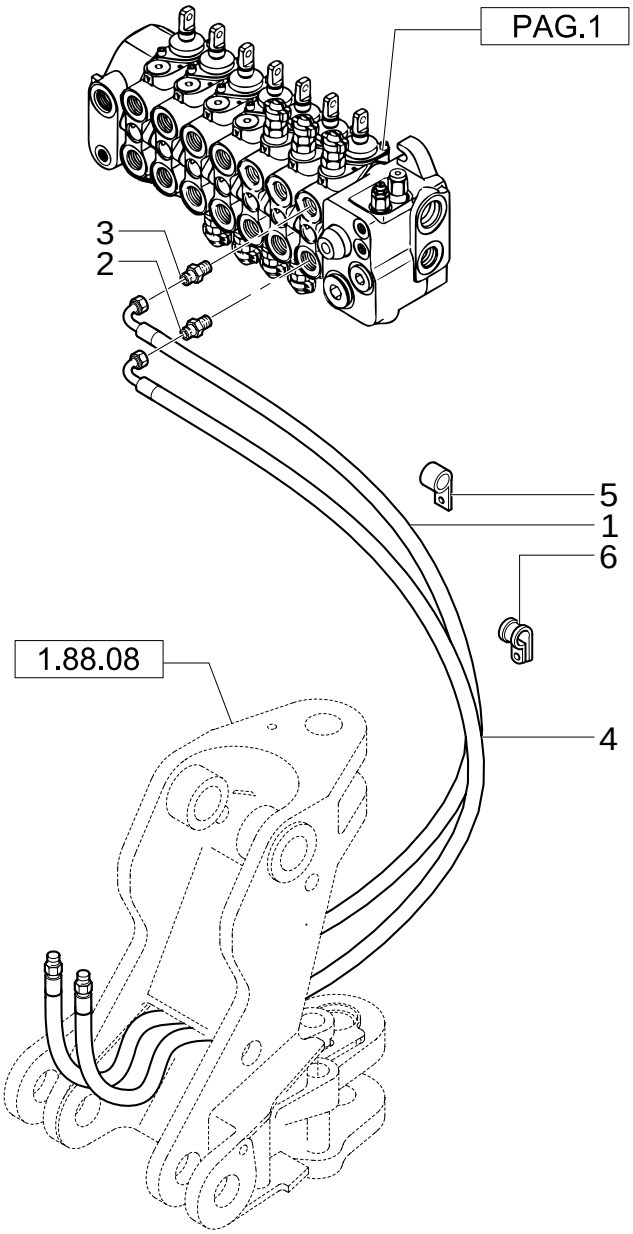

PEDAL-OPERATED TELESCOPIC DIPPER HYDRAULIC SYSTEM

REF	FN	PART NUMBER	YR/SN	QTY	DESCRIPTION
1		85812192		1	HOSE, FLEXIBLE
2		85805258		1	CONNECTOR, HYD.
3		390938S36		1	CONNECTOR, HYD.
4		85812211		1	HOSE, FLEXIBLE
5		85803393		2	COLLAR, RETAINER
6		85812029		5	COLLAR, RETAINER

Mechanical Version

703	03	p1	02/05

PEDAL-OPERATED TELESCOPIC DIPPER HYDRAULIC SYSTEM

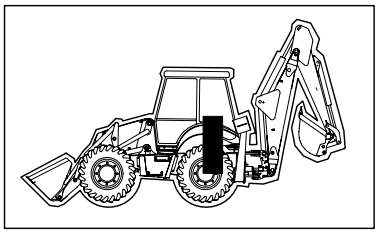

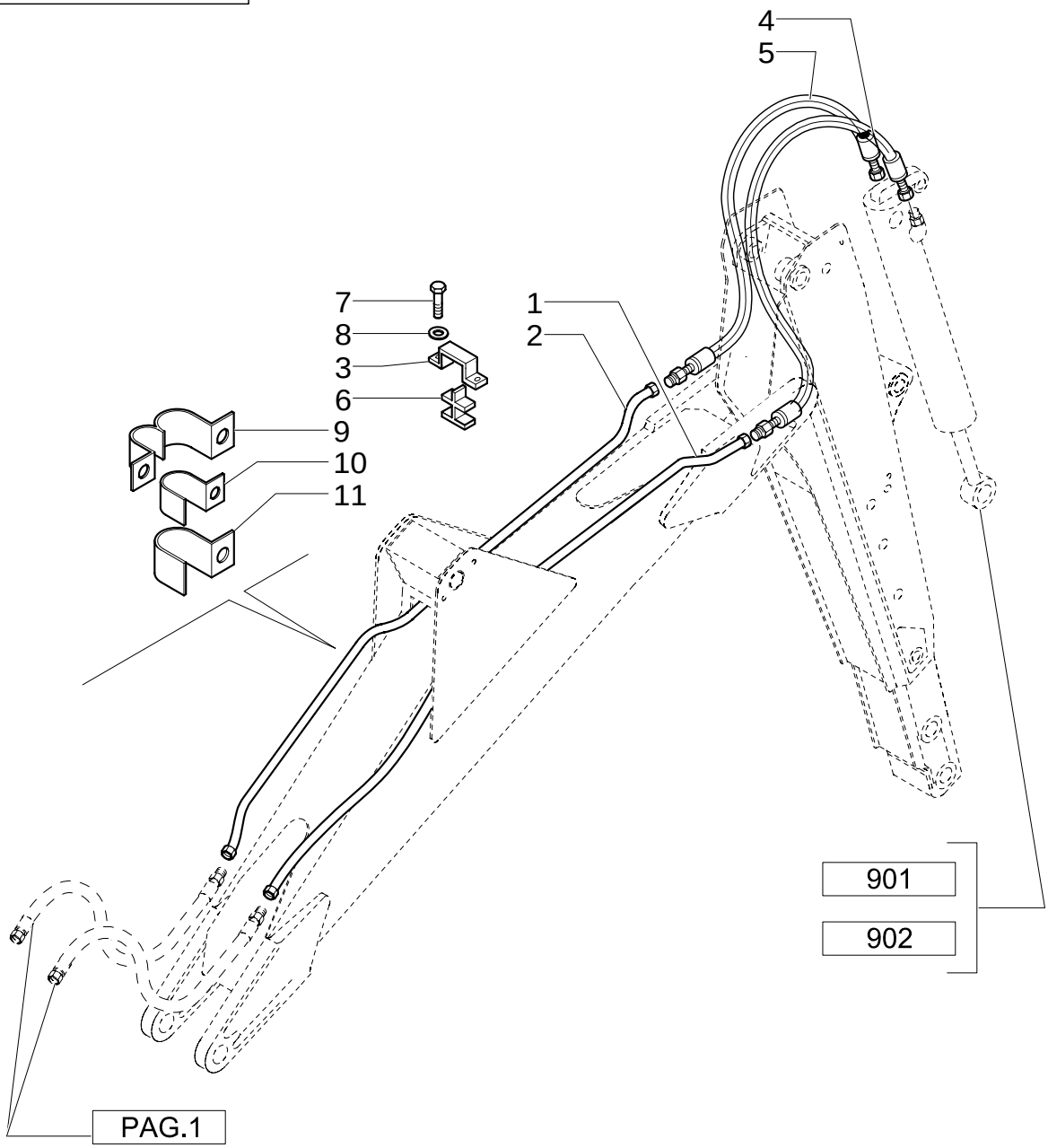

PEDAL-OPERATED TELESCOPIC DIPPER HYDRAULIC SYSTEM

REF	FN	PART NUMBER	YR/SN	QTY	DESCRIPTION
1		85815642		1	TUBE, RIGID
2		85815640		1	TUBE, RIGID
3		85803402		1	PLATE
4		85817109		1	HOSE, FLEXIBLE
5		85817108		1	HOSE, FLEXIBLE
6		85802532		1	CLIP, HOSE
7		16043621		2	SCREW
8		11193879		2	WASHER, LOCK
9		85802529		2	CLIP
10		85802527		2	CLIP
11		85802528		2	CLIP

Mechanical Version

703	04	p1	02/05

PEDAL-OPERATED TELESCOPIC DIPPER HYDRAULIC SYSTEM

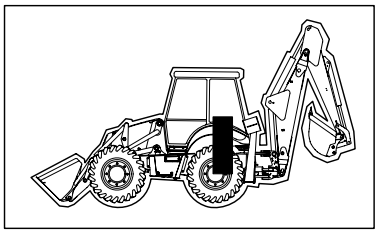

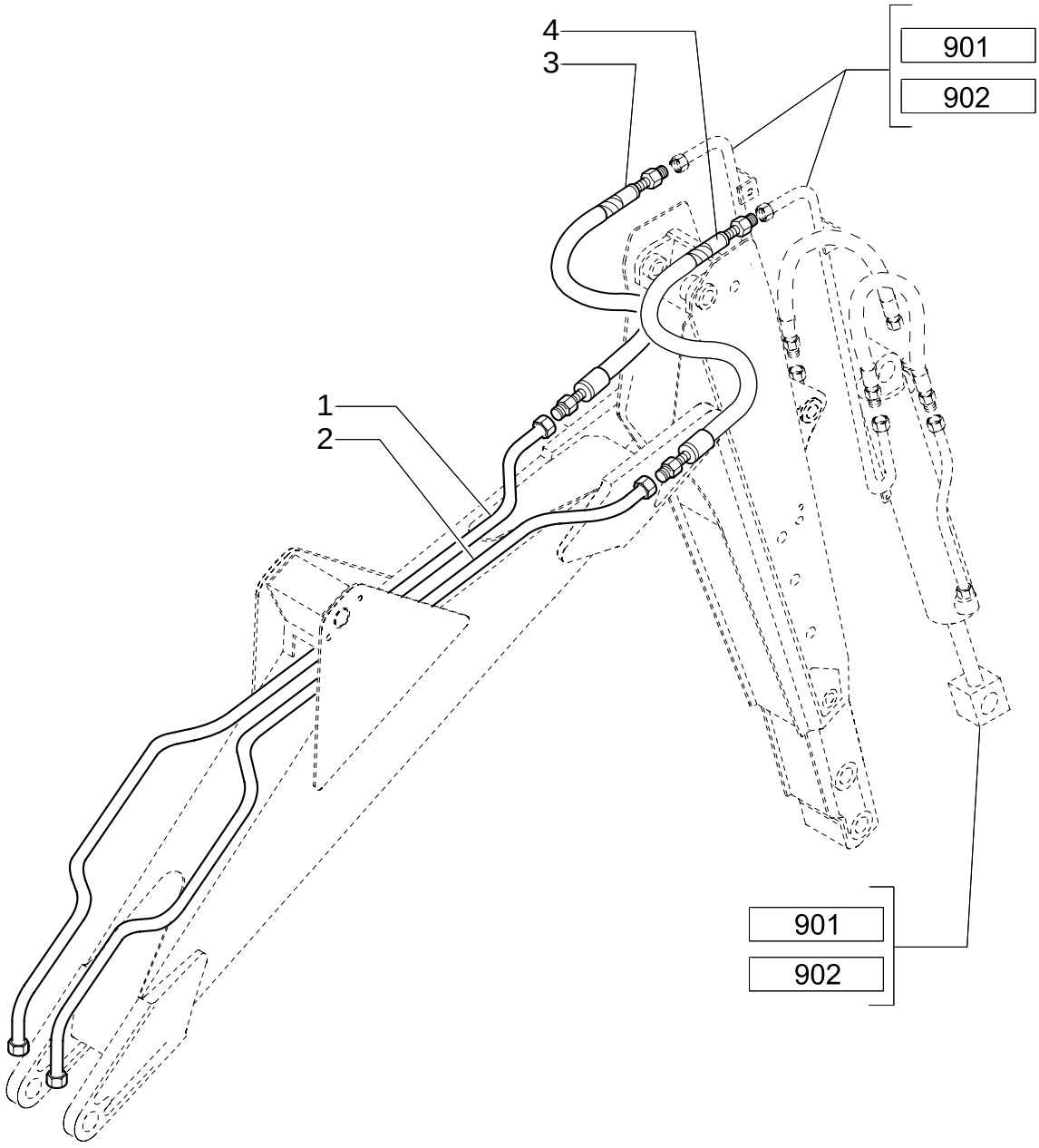

PEDAL-OPERATED TELESCOPIC DIPPER HYDRAULIC SYSTEM

REF	FN	PART NUMBER	YR/SN	QTY	DESCRIPTION
1		85815674		1	TUBE, RIGID
2		85815676		1	TUBE, RIGID
3	1	85817106		1	HOSE, FLEXIBLE
3A		9991976		2	O-RING 90 Duro, .739" ID x .070" Thk
4	2	85817107		1	HOSE, FLEXIBLE
4A		9992069		2	O-RING 90 Duro, .614" ID x .070" Thk

(1) Includes 3A
(2) Includes 4A

Mechanical Version

703	05	p1	02/05

PEDAL-OPERATED TELESCOPIC DIPPER HYDRAULIC SYSTEM

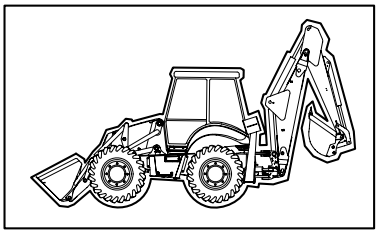

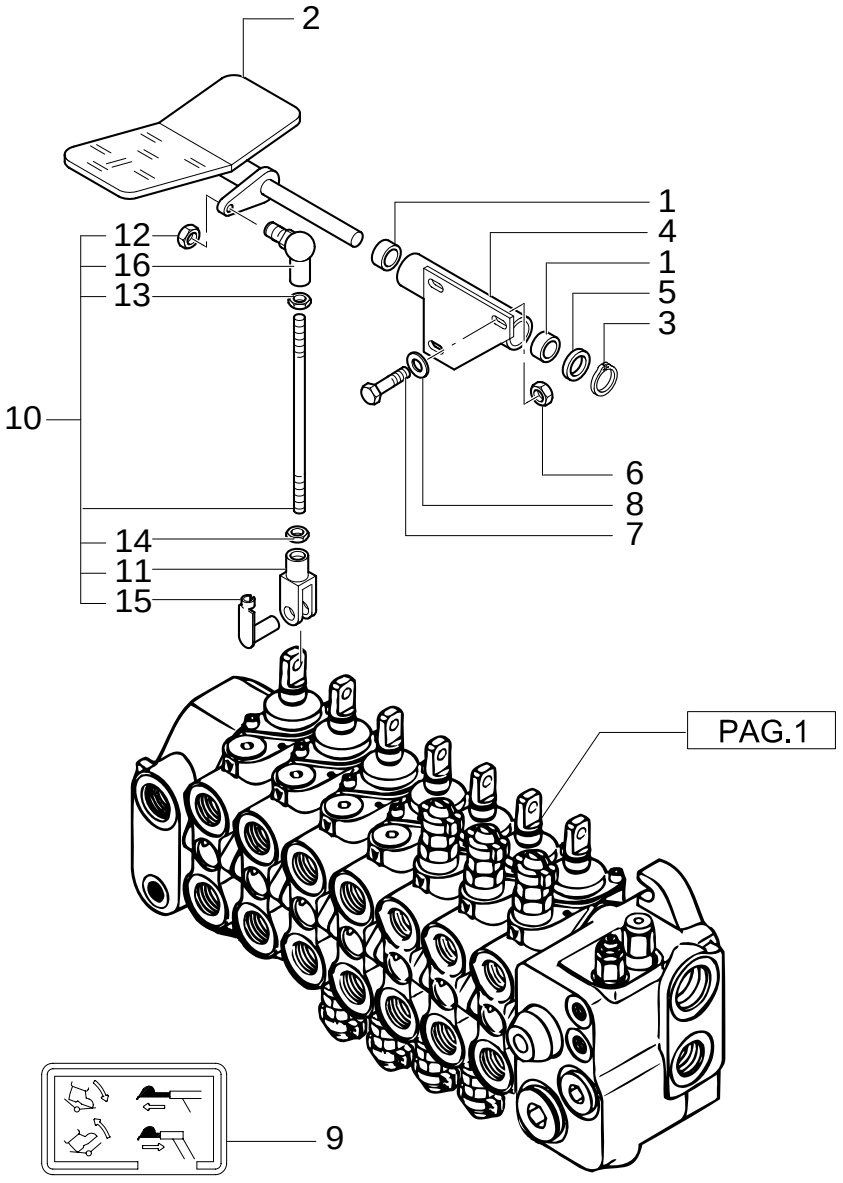

PEDAL-OPERATED TELESCOPIC DIPPER HYDRAULIC SYSTEM

REF	FN	PART NUMBER	YR/SN	QTY	DESCRIPTION
1		85802494		1	BUSHING ASSY
2		85805362		1	PEDAL
3		N663114S36		1	RING
4		85805358		1	SUPPORT
5		14496901		1	WASHER
6		16104111		3	NUT
7		16043621		3	SCREW
8		11193879		3	WASHER, LOCK
9		85803786		1	DECAL
10		85805364		1	TIE-ROD
11		11991971		1	YOKE
12		14048221		1	NUT
13		16102311		1	NUT
14		16102911		1	NUT
15		85802738		1	PIN
16		85804375		1	JOINT, UNIVERSAL

Mechanical Version

708	01	p1	10/05

THREE-SECTION CONTROL VALVE FOR LOADER

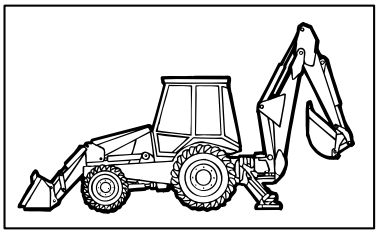

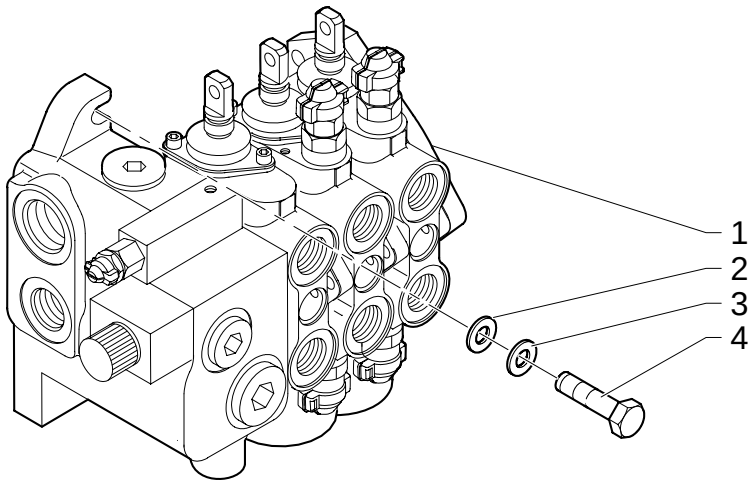

THREE-SECTION CONTROL VALVE FOR LOADER

REF	FN	PART NUMBER	YR/SN	QTY	DESCRIPTION
1		87305111		1	VALVE, CONTROL
2		11190679		3	WASHER, LOCK
3		13578621		3	WASHER M10x45
4		11234721		3	SCREW 10x30x2

708/ 1	01	p1	06/05

KIT OF CONVERSION FROM 2 TO 3 SPOOLS

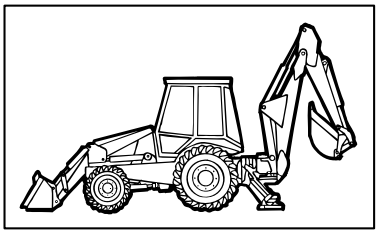

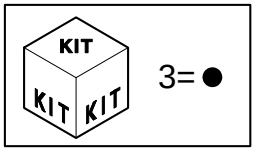

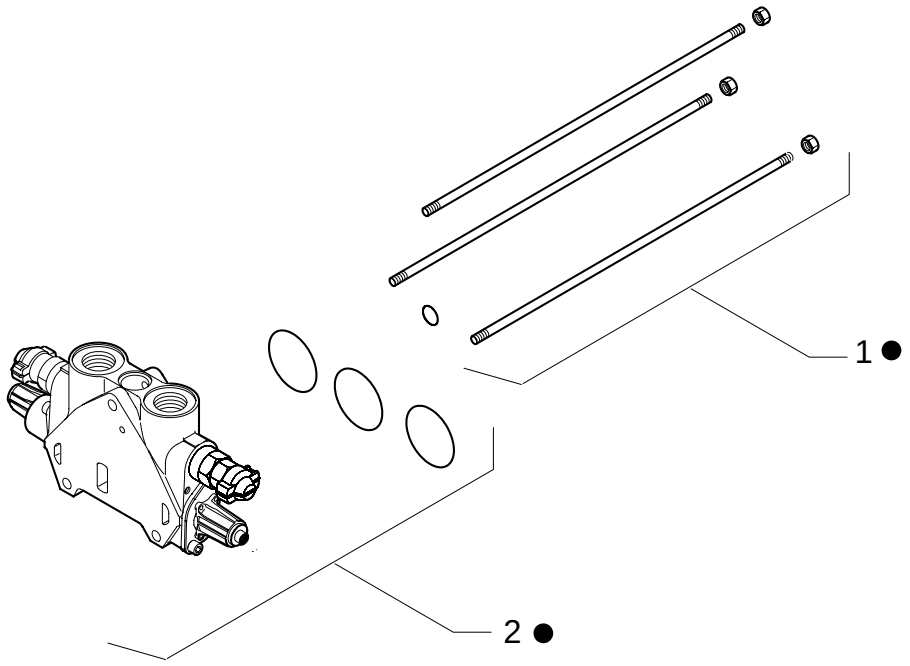

KIT OF CONVERSION FROM 2 TO 3 SPOOLS

REF	FN	PART NUMBER	YR/SN	QTY		DESCRIPTION
1		85811916		1	KIT	
2		87306000		1	KIT	
3		87305999		1	KIT	

727/ 3	01	p1	11/05

HYDRAULIC SYSTEM PRESETTING FOR TELESCOPIC LINKS PEDAL OPERATED(CENTER PIVOT)

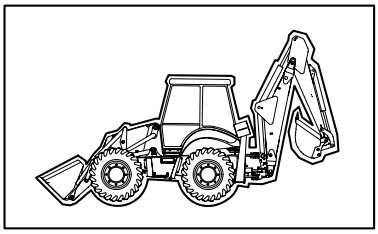

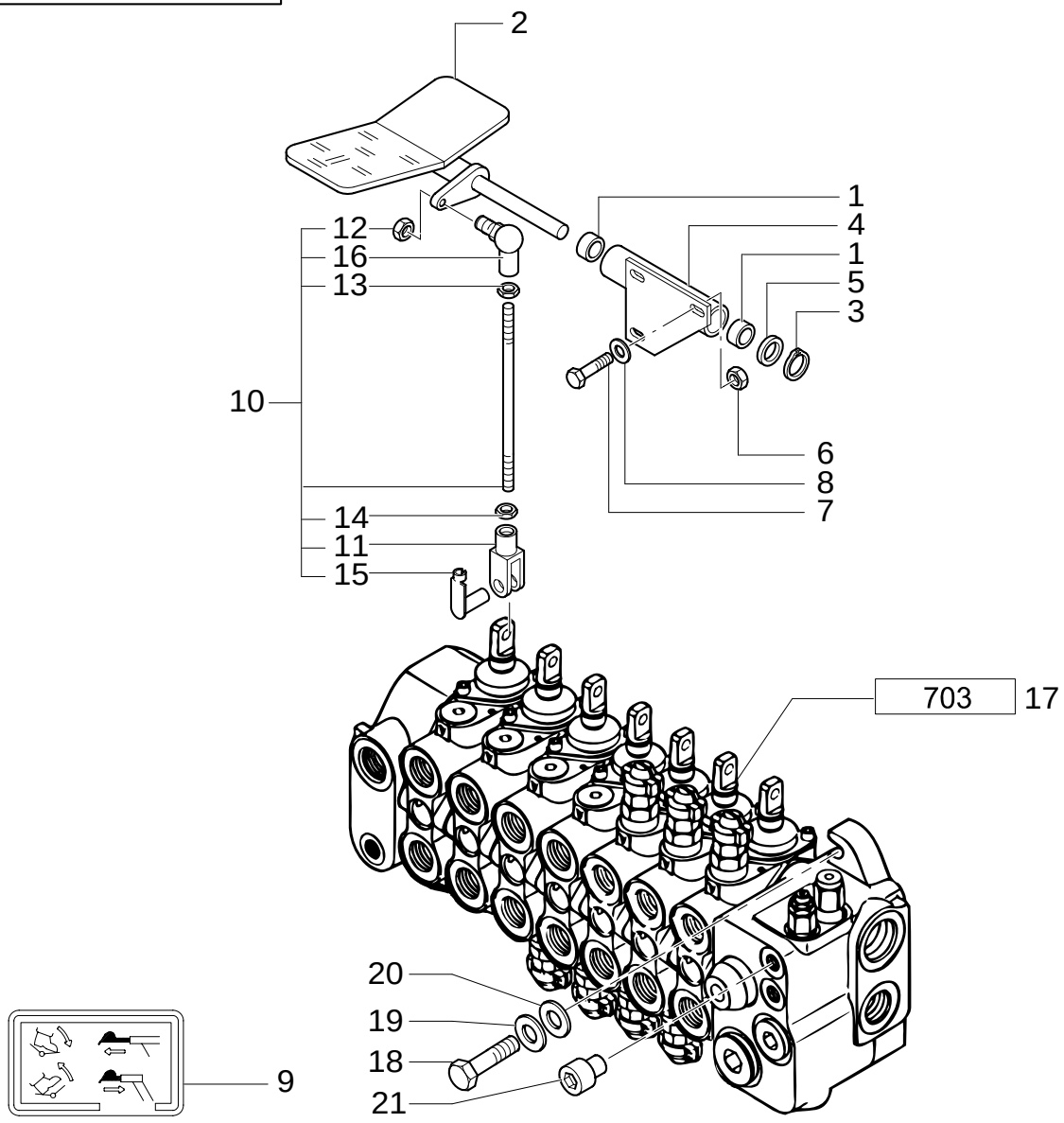

HYDRAULIC SYSTEM PRESETTING FOR TELESCOPIC LINKS PEDAL OPERATED(CENTER PIVOT)

REF	FN	PART NUMBER	YR/SN	QTY	DESCRIPTION
1		85802494		1	BUSHING ASSY
2		85805362		1	PEDAL
3		N663114S36		1	RING
4		85805358		1	SUPPORT
5		14496901		1	WASHER
6		16104111		3	NUT
7		16043621		3	SCREW
8		11193879		3	WASHER, LOCK
9		85803786		1	DECAL
10		85805364		1	TIE-ROD
11		11991971		1	YOKE
12		14048221		1	NUT
13		16102311		1	NUT
14		16102911		1	NUT
15		85802738		1	PIN
16		85804375		1	JOINT, UNIVERSAL
17	1	85824223		1	DISTRIBUTOR
17	2	87327762		1	VALVE, HYDRAULIC
18		15888724		3	SCREW
19		11190679		3	WASHER, LOCK
20		85818943		3	SPACER
21		85802457		1	PLUG

(1) UP TO S/N XXX
(2) FROM TO S/N XXX

Mechanical Version

NOTES

SECTION INDEX

SEC. 08	00	BODY & HOOD
1.87.2	01	CAB SCREEN
1.87.8	01	CAB FASTENERS

BODY & HOOD

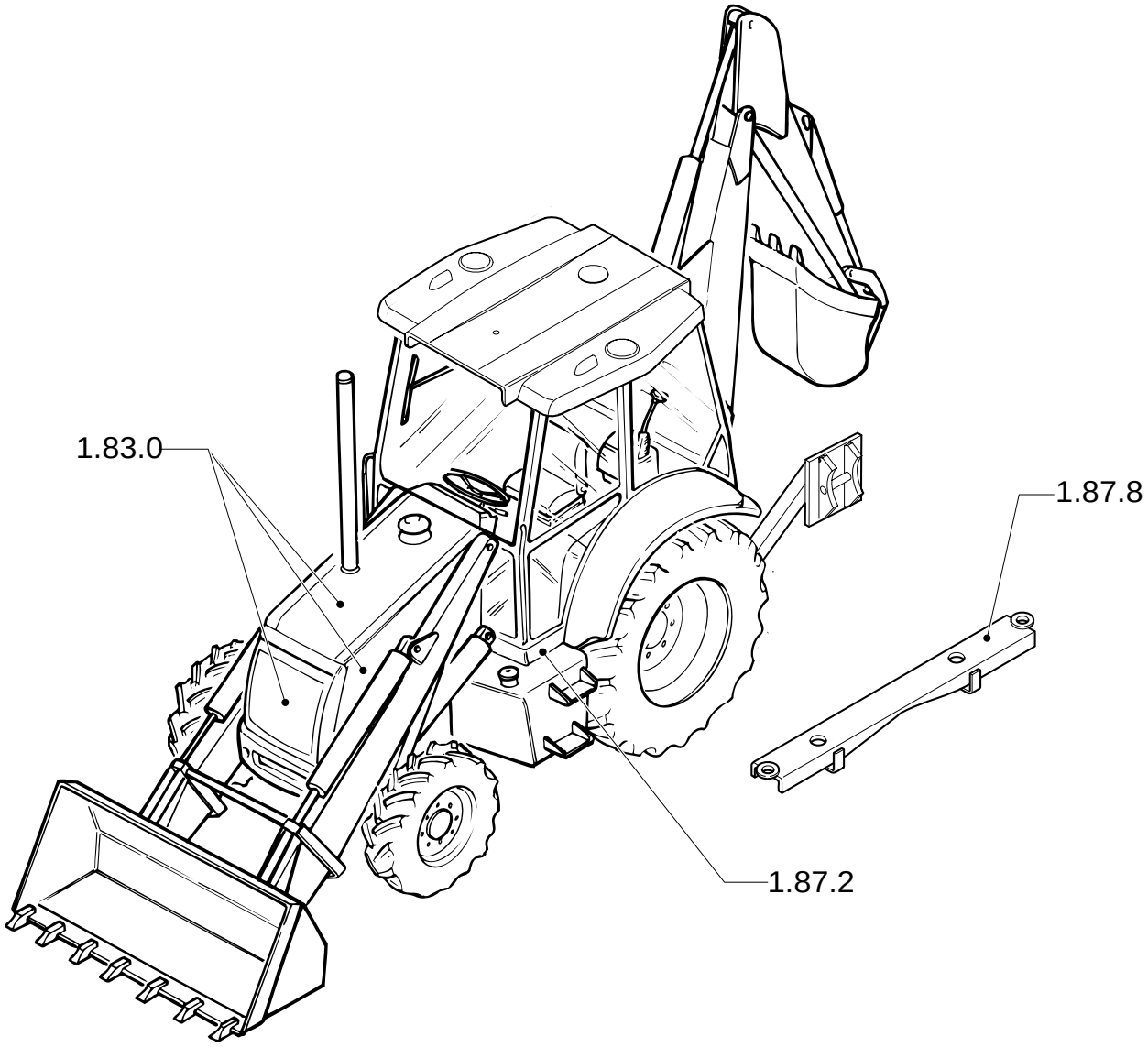

BODY & HOOD

REF	FN	PART NUMBER	YR/SN	QTY	DESCRIPTION

1.87.2	01	p1	06/05

CAB SCREEN

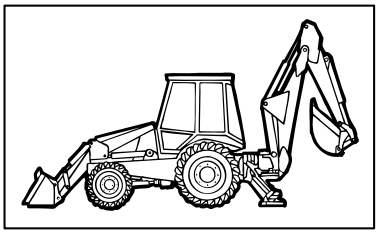

KIT KIT KIT 13=●

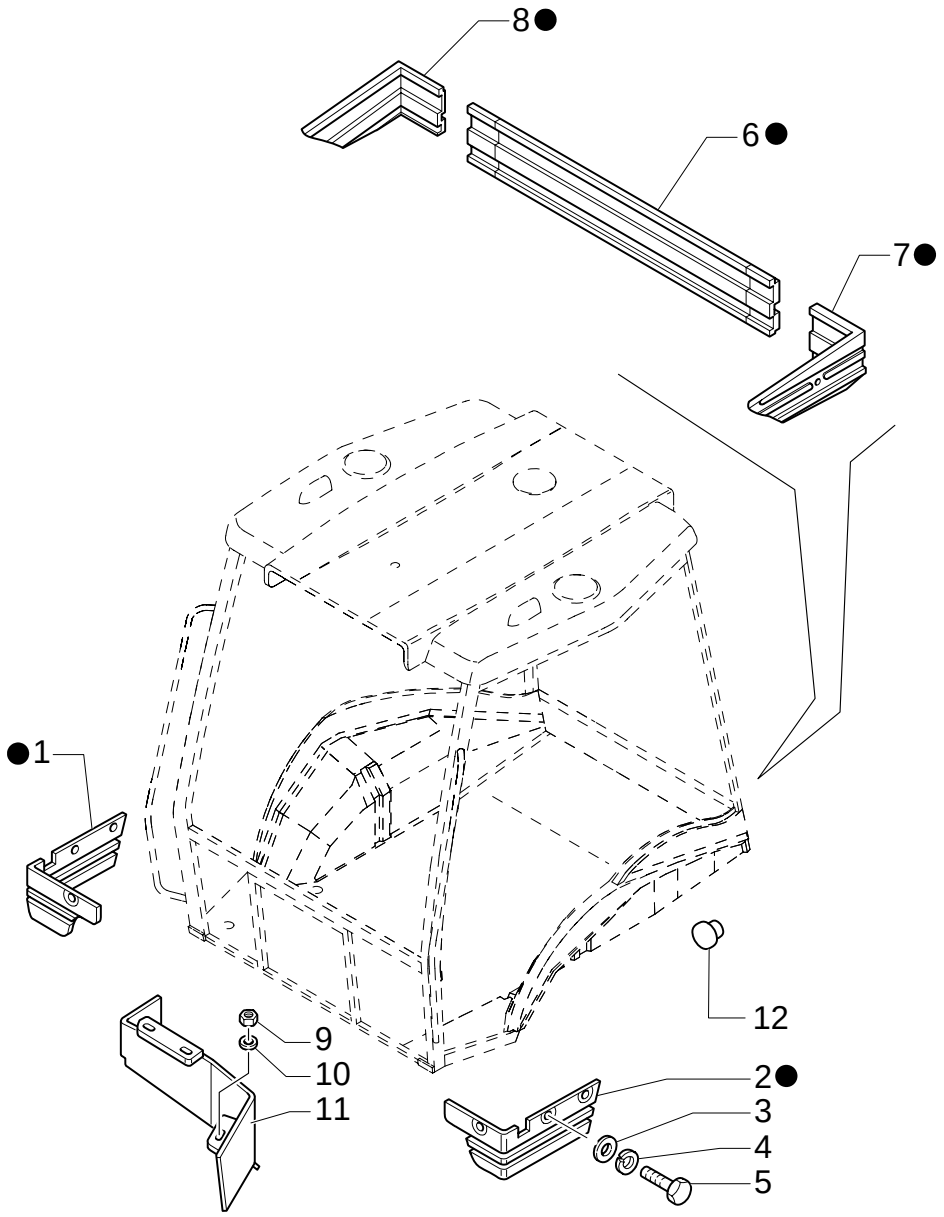

CAB SCREEN

REF	FN	PART NUMBER	YR/SN	QTY	DESCRIPTION
1		87315641		1	GUARD RH
2		87315643		1	GUARD LH
3		12643721		11	WASHER
4		11194679		11	WASHER
5		10902421		11	SCREW M6X20
6		85805303		1	GUARD
7		85805304		1	GUARD LH
8		85805305		1	GUARD RH
9		16104111		3	NUT M8
10		11193979		3	WASHER, LOCK 8X22X1,5
11		85805142		1	GUARD
12		85808422		2	PLUG
13		87315628		1	KIT
14		85805301		1	GUARD
15		85805302		1	GUARD
16	1	85825067		1	KIT

(1) Only for NA Version

1.87.8	01	p1	02/05

CAB FASTENERS

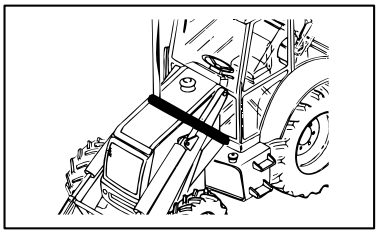

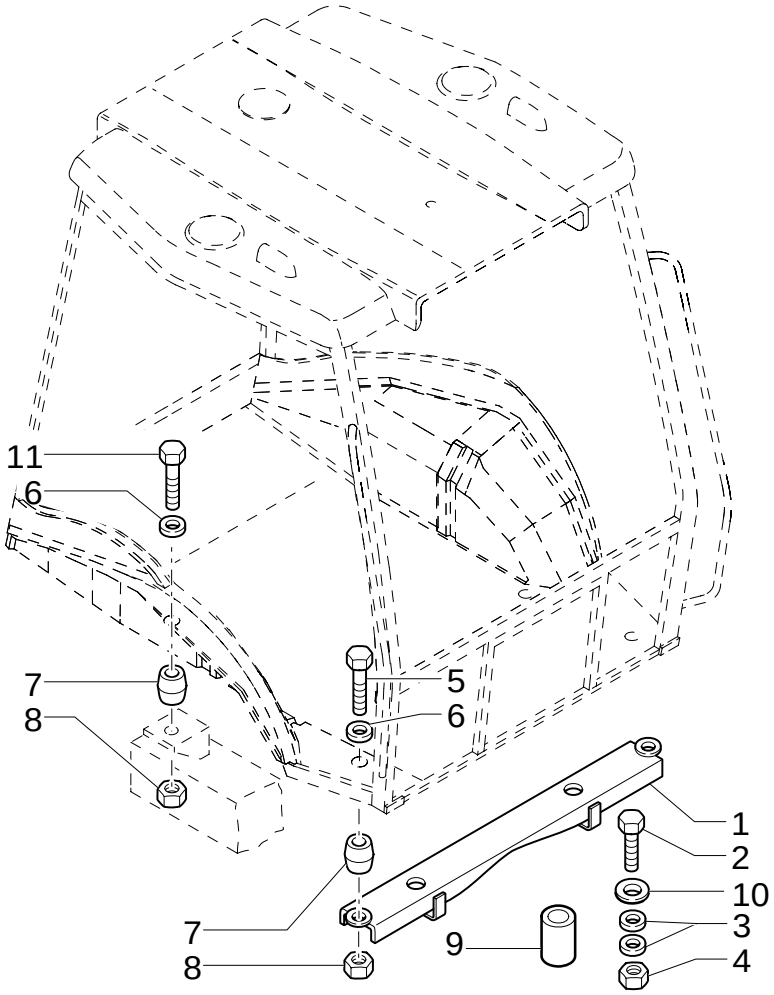

CAB FASTENERS

REF	FN	PART NUMBER	YR/SN	QTY	DESCRIPTION
1		85801319		1	CROSSRAIL
1		87303780		1	SUPPORT
2		15989334		2	SCREW M20X1,5X110
3		10520431		4	WASHER
4		12575121		2	NUT M20X1,5
5		15982134		2	SCREW M16X1,5X140
6		14496931		4	WASHER
7		85802970		4	SHOCK ABSORBER
8		12574921		4	NUT M16X1,5
9		85801324		2	TUBE, RIGID
10		85804493		2	WASHER 21X40X6
11		15981834		2	SCREW M16X1,5X120

SECTION INDEX

SEC. 09	00	LOADER 1/1
SEC. 09	01	BACKHOE 1/2
SEC. 09	02	BACKHOE 2/2
1.88.01/ 2	02	TRANSPORT LOCK HOOK, CYLINDER & HOSE (SIDE SHIFT,CENTER PIVOT)
1.88.01/ 3	01	HYDRAULIC SYSTEM FOR "TRANSPORT LOCK" REAR LOCKING
1.88.01/ 3	02	HYDRAULIC SYSTEM FOR "TRANSPORT LOCK" REAR LOCKING
1.88.08	01	SWING POST ASSEMBLY, BUSHINGS & PINS
1.88.08	02	SWING POST PINS & TRANSPORT LOCK HOOK
1.88.09/ 1	01	DISTRIBUTOR VALVE SUPPORT (SIDE SHIFT)
1.88.11/ A	01	ARMS AND JOINTS
1.88.11/ 1C	01	LIFT CYLINDER
1.88.11/ 2B	01	LOADER BUCKET CONTROL CYLINDER
1.88.11/ 3A	01	LIFT CYLINDER AND BUCKET PIPES
1.88.11/ 6	02	STABILIZER CYLINDERS (CENTER PIVOT)
1.88.11/ 7A	01	PIPES FOR STABILIZER CYLINDERS (CENTER PIVOT)
1.88.11/ 8	01	RETURN TO DIG SENSOR
1.88.11/ 9A	01	CYLINDERS AND ROTATION PLATE
1.88.11/ 9C	01	SWING CYLINDERS BACKHOE
1.88.12/ 3	01	FRONT CONTROL VALVE SUPPORT AND TRANSMISSIONS (CENTER PIVOT)
120	01	SILENT HAMMER CB65S
120/ 1	01	HAMMER CB65B
200	01	SHOVEL AND REAR LIFTING HOOKS
416-417	01	SYSTEM HAMMER COMPONENTS (CAB)
469	01	BUCKET 6X1 (1,15 M3) WITH BLADE
469	02	BUCKET 6X1 (1,15 M3) WITH BLADE
469/ A	01	HYDRAULIC CYLINDER (BUCKET 4X1-6X1)
469/ 1	01	BUCKET 6X1 (1,15 M3) WITH BLADE "COMMON GREY"
469/ 2	01	BUCKET 6X1 (1,15 M3) WITH BLADE "COMMON GREY"
470	01	BUCKET 6X1 (1,15 M3) WITH TINE
470	02	BUCKET 6X1 (1,15 M3) WITH TINE
470/ 1	01	BUCKET 6X1 (1,15 M3) WITH TINE "COMMON GREY"
470/ 2	01	BUCKET 6X1 (1,15 M3) WITH TINE "COMMON GREY"
475	01	BUCKET 4X1 (1,15 M3) WITH BLADE
475	02	BUCKET 4X1 (1,15 M3) WITH BLADE
475/ 1	01	BUCKET 4X1 (1,15 M3) WITH BLADE "COMMON GREY"
475/ 2	01	BUCKET 6X1 (1,15 M3) WITH BLADE
476	01	BUCKET 4X1 (1,15 M3) WITH TINE
476	02	BUCKET 4X1 (1,15 M3) WITH TINE
476/ 1	01	BUCKET 4X1 (1,15 M3) WITH TINE "COMMON GREY"
476/ 2	01	BUCKET 6X1 (1,15 M3) WITH TINE "COMMON GREY"
500	01	1,13 M3 BUCKET
501	01	1,13 M3 BUCKET W/TINES
502	01	1,13 M3 BUCKET WITH EXTRA REVERSIBLE BLADE
505	01	EXTRA REVERSIBLE BLADE
514/ C	01	HYDRAULIC BUCKET CYLINDER
514/ E	01	HYDRAULIC DITCHING CYLINDER
515	01	12" (305MM) BACKHOE BUCKET WITH PIN TEETH
515	02	12" (305MM) BACKHOE BUCKET WITH BOLT-ON TEETH
516	01	18" (457MM) BACKHOE BUCKET WITH PIN TEETH
516	02	18" (457MM) BACKHOE BUCKET WITH BOLT-ON TEETH
517	01	24" (610MM) BACKHOE BUCKET WITH PIN TEETH
517	02	24" (610MM) BACKHOE BUCKET WITH BOLT-ON TEETH

SECTION INDEX

518	01	30" (762MM) BACKHOE BUCKET WITH PIN TEETH
518	02	30" (762MM) BACKHOE BUCKET WITH BOLT-ON TEETH
519	01	36" (914MM) BACKHOE BUCKET WITH PIN TEETH
519	02	36" (914MM) BACKHOE BUCKET WITH BOLT-ON TEETH
526	01	BOLT-ON TOOTH KIT, 12" (305MM) BACKHOE BUCKET
527	01	BOLT-ON TOOTH KIT, 18" (457MM) & 24" (610MM) BACKHOE BUCKETS
528	01	BOLT-ON TOOTH KIT, 30" (762MM) BACKHOE BUCKET
529	01	BOLT-ON TOOTH KIT, 36" (914MM) BACKHOE BUCKET
530	01	PIN TOOTH KIT, 12" (305MM) BACKHOE BUCKET
532	01	PIN TOOTH KIT, 30" (762MM) BACKHOE BUCKET
533	01	PIN TOOTH KIT, 36" (914MM) BACKHOE BUCKET
533/ 1	01	1.15 M3 BUCKET WITH FORKS AND CUTTER BLADE
533/ 1	02	1.15 M3 BUCKET WITH FORKS AND CUTTER BLADE
534	01	1,15 M3 BUCKET WITH FORKS AND EXTRA REVERSIBLE BLADE
534	02	1,15 M3 BUCKET WITH FORKS AND EXTRA REVERSIBLE BLADE
535/ 2	01	1,15MC BUCKET WITH FORKS AND TINE
535/ 2	02	1,15MC BUCKET WITH FORKS AND TINE
548	01	DITCH CLEANING BUCKET
555	01	FRONT BUCKET TEETH
649	01	1.15 BUCKET FORK KIT FOR CONVERSION FROM 4X1 TO 6X1
699	01	HAND HAMMER SWITCH
700	01	4X1 & 6X1 BUCKET HYDRAULIC LINES (4WS)
700	02	4X1 & 6X1 BUCKET HYDRAULIC LINES (4WS)
704	01	MANUAL HAMMER SYSTEM
704	02	MANUAL HAMMER SYSTEM
704/ A	01	MANUAL HAMMER VALVE
707	01	KIT-HYDRAULIC SYSTEM WITH 3 SECTION FOR BUCKET 4X1 / 6X1
707	02	KIT-HYDRAULIC SYSTEM WITH 3 SECTION FOR BUCKET 4X1 / 6X1
724	01	HYDRAULIC SYSTEM FOR HAMMER (CENTER PIVOT)
724	02	HYDRAULIC SYSTEM FOR HAMMER (CENTER PIVOT)
724/ A	01	REAR HAMMER CONTROL VALVE
724/ 2	01	HYDRAULIC SYSTEM FOR HAMMER (CENTER PIVOT)
724/ 2	02	HYDRAULIC SYSTEM FOR HAMMER
724/ 3	01	HYDRAULIC SYSTEM FOR HAMMER (CENTER PIVOT)
724/ 3	02	HYDRAULIC SYSTEM FOR HAMMER (CENTER PIVOT)
724/ 5	01	HYDRAULIC SYSTEM FOR HAMMER (4WS)
724/ 6	01	HYDRAULIC SYSTEM FOR HAMMER (SIDE SHIFT EUROPA)
732	01	REAR MECHANICAL QUICK-COUPLING
732/ A	01	REAR MECHANICAL QUICK-COUPLING
900	01	BOOM - LONG DIPPER
900	02	LONG DIPPER
900	03	LONG DIPPER - BUCKET MOTION
900	04	LONG DIPPÊR - HYDRAULIC SYSTEM
900	05	LONG DIPPER - HYDRAULIC SYSTEM
900	06	LONG DIPPER - HYDRAULIC SYSTEM
900	07	LONG DIPPER - HYDRAULIC SYSTEM
900	08	LONG DIPPER - HYDRAULIC SYSTEM
901	03	TELESCOPIC DIPPER LONG - HYDRAULIC SYSTEM
901/ A	01	TELESCOPIC DIPPER LONG
901/ B	01	TELESCOPIC DIPPER LONG
901/ C	01	TELESCOPIC DIPPER LONG
901/ D	01	TELESCOPIC DIPPER LONG - HYDRAULIC LIFTING CYLINDER

SEC. 09	00	p1	02/05

LOADER 1/1

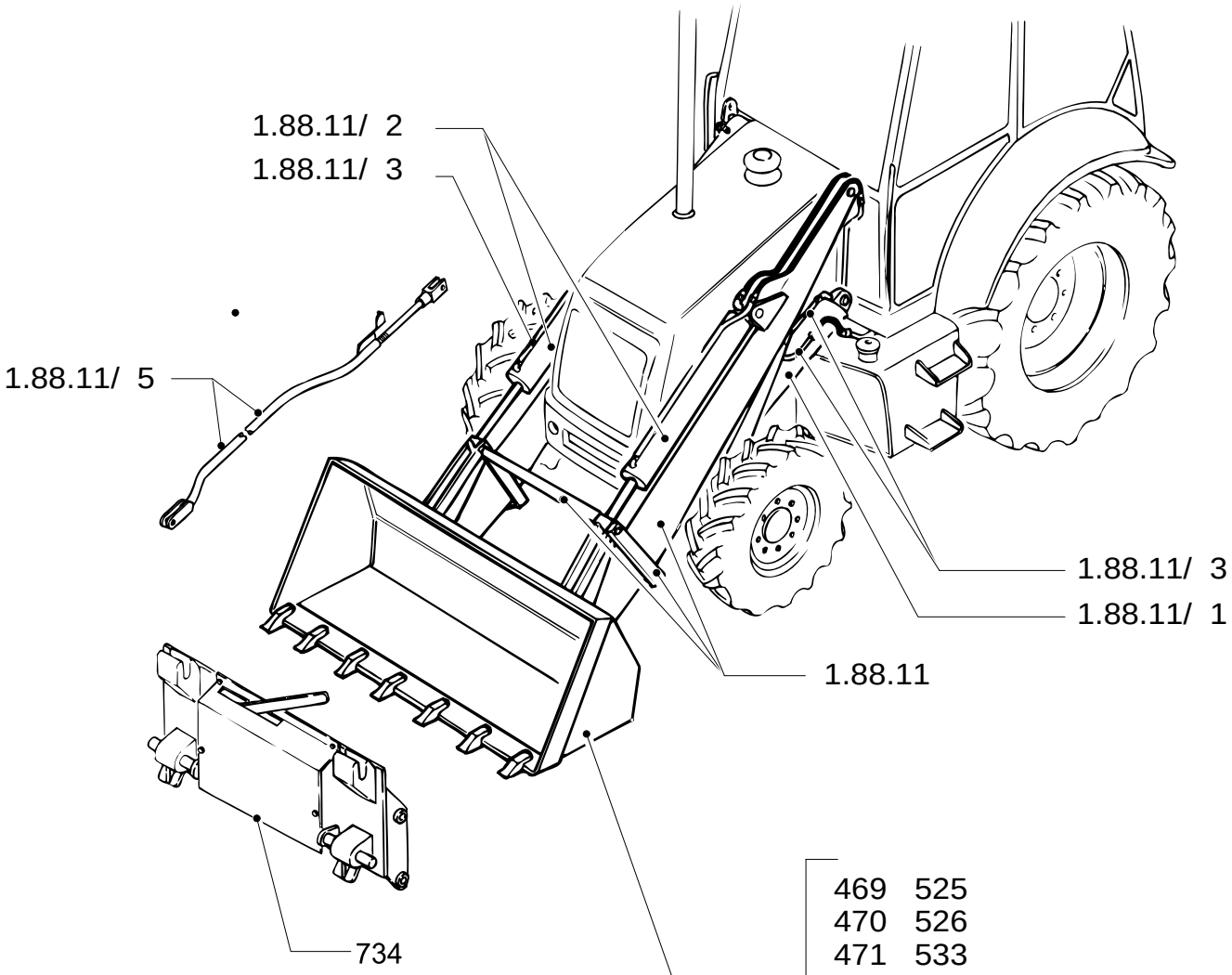

469 525
470 526
471 533
472 534
473 535/ 2
474 536/ 1
475 537/ 1
476 548
500 555
501 556
502

LOADER 1/1

REF	FN	PART NUMBER	YR/SN	QTY	DESCRIPTION

SIDE SHIFT

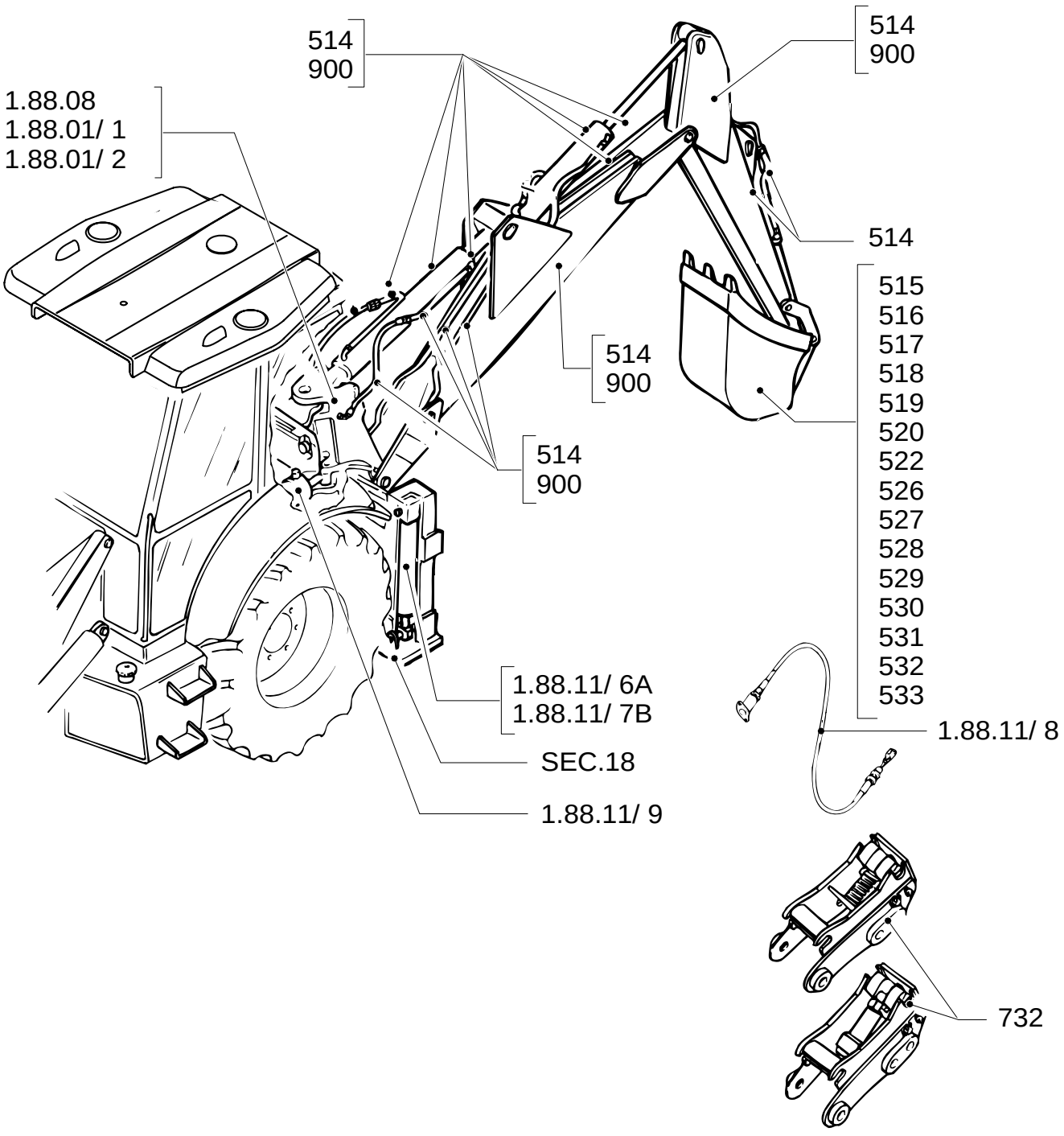
514
900
514
900
1.88.08
1.88.01/ 1
1.88.01/ 2
514
515
516
517
518
519
520
522
526
527
528
529
530
531
532
533
514
900
514
900
1.88.11/ 6A
1.88.11/ 7B
1.88.11/ 8
SEC.18
1.88.11/ 9
732

BACKHOE 1/2

REF	FN	PART NUMBER	YR/SN	QTY	DESCRIPTION

CENTER PIVOT

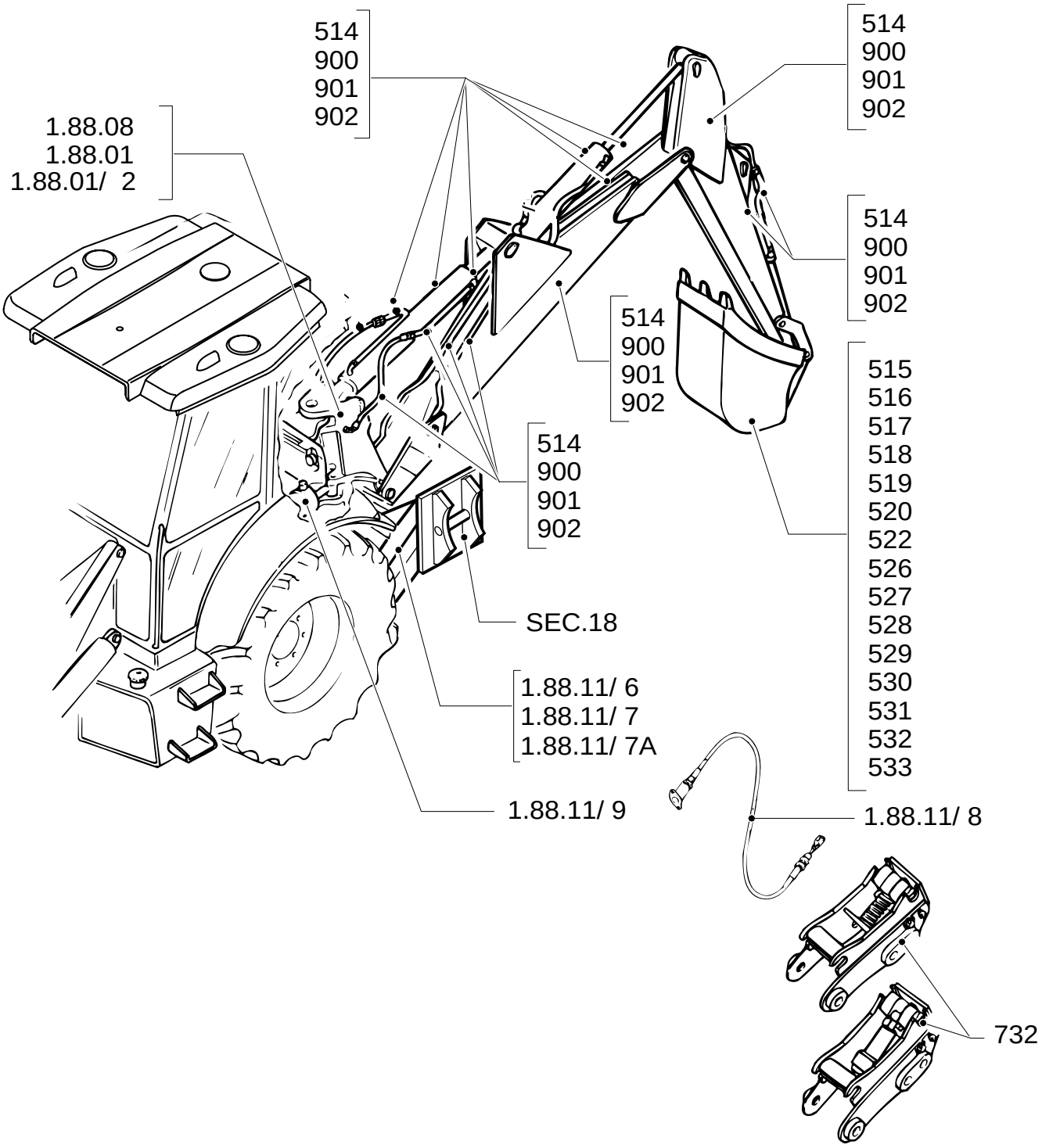

BACKHOE 2/2

REF	FN	PART NUMBER	YR/SN	QTY	DESCRIPTION

1.88.01/ 2	02	p1	11/05

TRANSPORT LOCK HOOK, CYLINDER & HOSE (SIDE SHIFT,CENTER PIVOT)

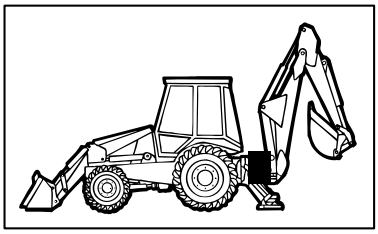

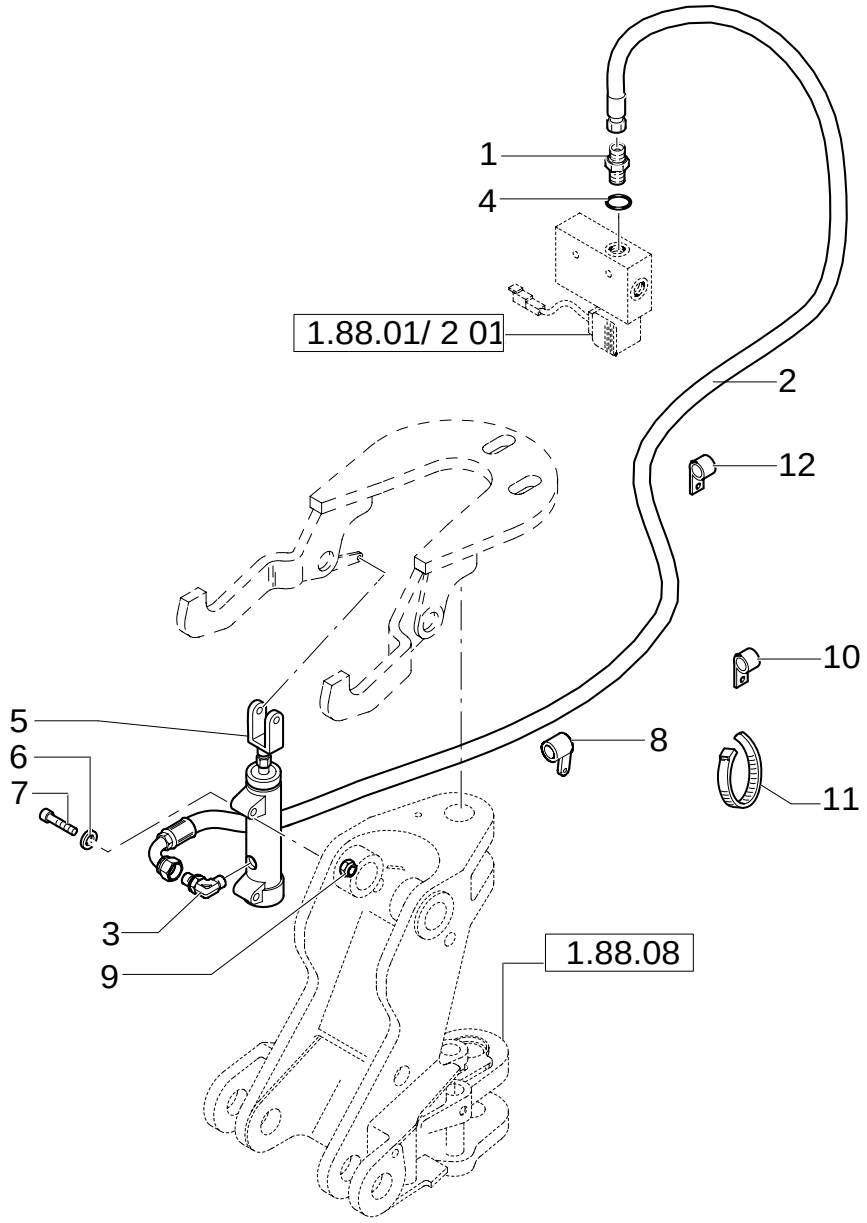

TRANSPORT LOCK HOOK, CYLINDER & HOSE (SIDE SHIFT,CENTER PIVOT)

REF	FN	PART NUMBER	YR/SN	QTY	DESCRIPTION
1		85803312		1	CONNECTOR, HYD.
2		85819071		1	HOSE, FLEXIBLE
3		85824089		1	CONNECTOR, HYD.
4		9617873		1	O-RING 6-1, 90 Duro, .468" ID x .078" Thk
5	1	87337288		1	CYLINDER
5	2	87362349		1	CYLINDER
6		11193879		2	WASHER, LOCK
7		16044221		2	SCREW M8x1,25x50
8		85802890		1	COLLAR, RETAINER
9		16100821		2	NUT M8
10		85802336		1	COLLAR, RETAINER
11		85803332		4	COLLAR
12		79072960		1	COLLAR

(1) UP TO S/N 031056559
(2) FROM TO S/N 031056560

1.88.01/ 3	01	p1	02/05

HYDRAULIC SYSTEM FOR "TRANSPORT LOCK" REAR LOCKING

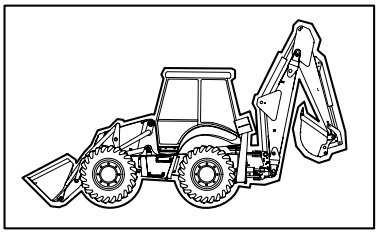

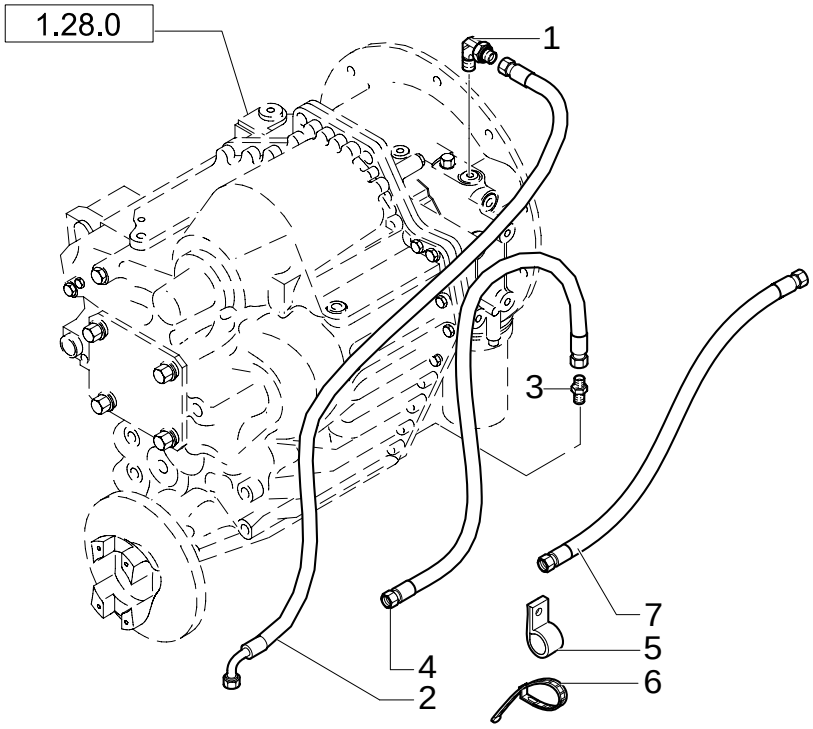

HYDRAULIC SYSTEM FOR "TRANSPORT LOCK" REAR LOCKING

REF	FN	PART NUMBER	YR/SN	QTY	DESCRIPTION
1		85826962		1	CONNECTOR, HYD.
2		85805260		1	HOSE, FLEXIBLE
3		87403805		1	CONNECTOR, HYD.
4		85805261		1	HOSE, FLEXIBLE
5		85802336		1	COLLAR, RETAINER
6		79072960		1	COLLAR
7		85827681		1	HOSE, FLEXIBLE

1.88.01/ 3	02	p1	11/05

HYDRAULIC SYSTEM FOR "TRANSPORT LOCK" REAR LOCKING

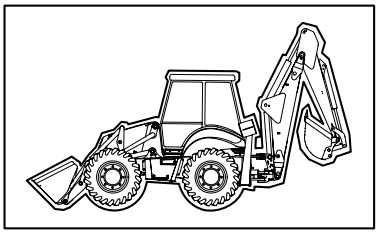

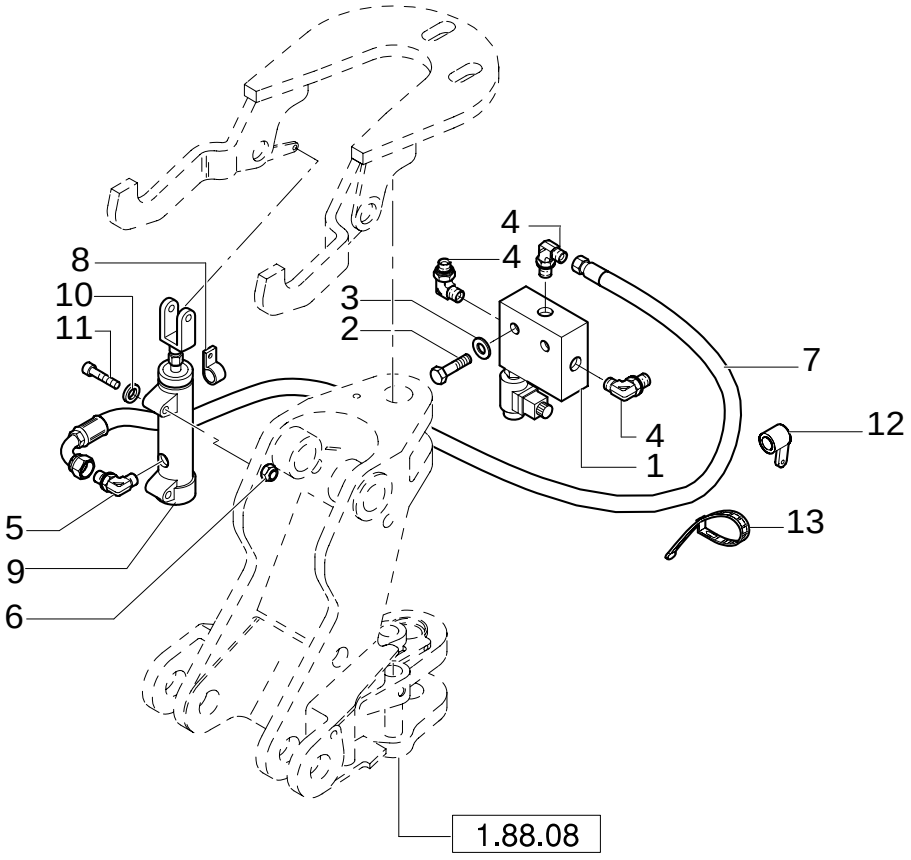

HYDRAULIC SYSTEM FOR "TRANSPORT LOCK" REAR LOCKING

REF	FN	PART NUMBER	YR/SN	QTY	DESCRIPTION
1		85809298		1	ELECTRO-VALVE
2		10903221		2	SCREW Hex, M6 x 40, 8.8
3		11197779		2	WASHER, LOCK
4		85802234		3	CONNECTOR, HYD.
5		85824089		1	CONNECTOR, HYD.
6		16100821		2	NUT M8
7		85819068		1	HOSE, FLEXIBLE
8		85802890		1	COLLAR, RETAINER
9	1	87337288		1	CYLINDER
9	2	87362349		1	CYLINDER
10		11193879		2	WASHER, LOCK
11		16044221		2	SCREW M8x1,25x50
12		14560187		1	COLLAR
13		85803332		4	COLLAR

(1) UP TO S/N 031056559
(2) FROM TO S/N 031056560

1.88.08	01	p1	11/05

SWING POST ASSEMBLY, BUSHINGS & PINS

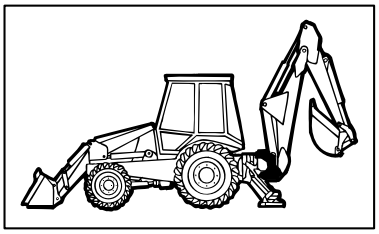

KIT 18=●

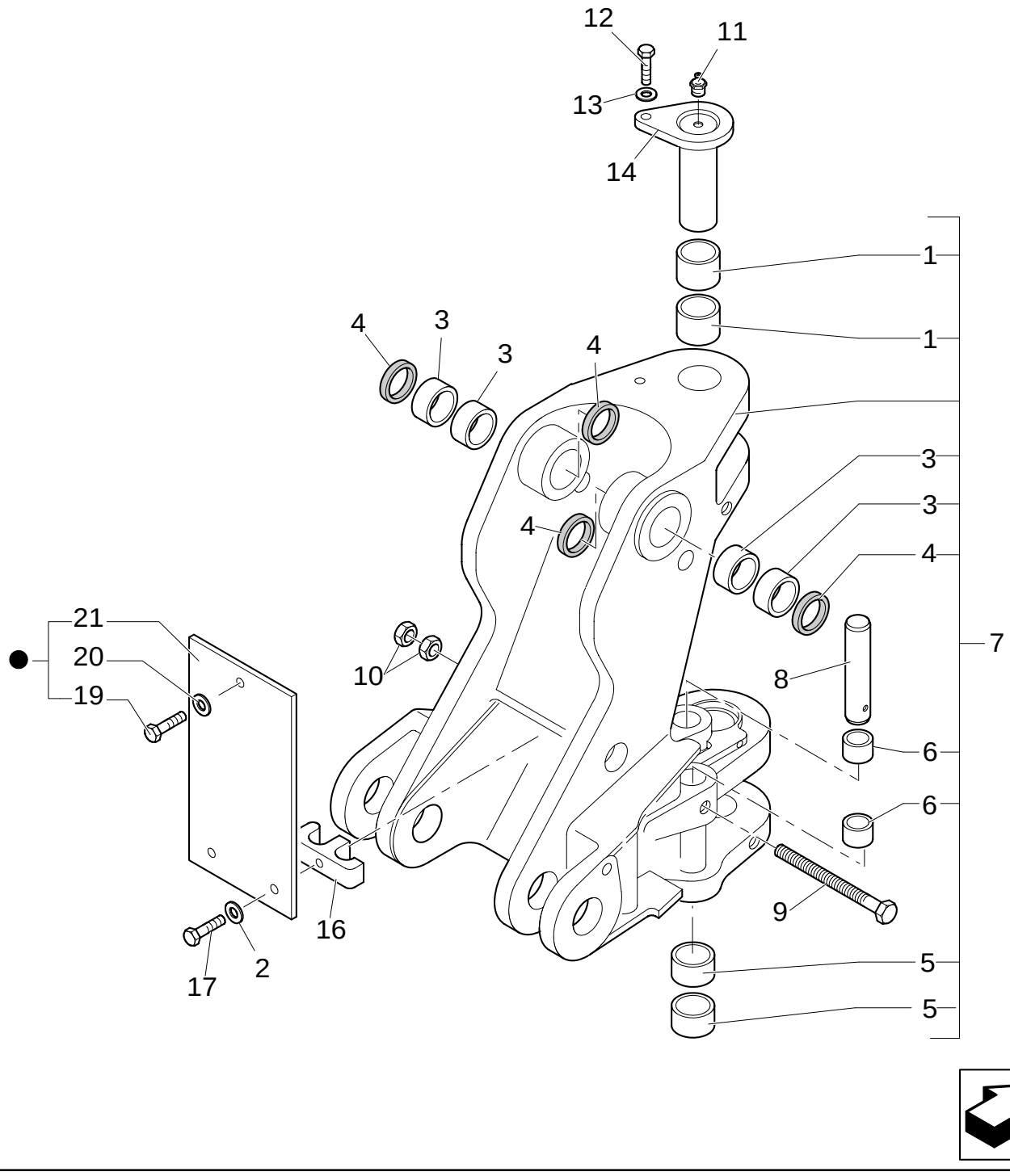

SWING POST ASSEMBLY, BUSHINGS & PINS

REF	FN	PART NUMBER	YR/SN	QTY	DESCRIPTION
1		85803196		2	BUSHING
2		11190579		2	WASHER, LOCK
3		85801029		4	BUSHING
4		85801025		4	SEAL
5		85803197		2	BUSHING
6		85803193		4	BUSHING
7	1	85803623		1	SUPPORT
8		85803192		2	PIN
9		87363478		2	SCREW M10x270
10		10717421		2	NUT M14
11		87901S8		AR	NIPPLE, LUBE 1/8"-27
12		85802397		1	SCREW M16X40
13		85802396		1	WASHER
14		85801076		1	PIN
15		85803194		1	PIN
16		87310285		1	CLAMP
17		11107321		2	SCREW M10X55
18		85805648		1	KIT
19		16043621		1	SCREW M8X25
20		11193979		1	WASHER, LOCK
21		85805137		1	PLATE

(1) Includes 1, 3 To 6

1.88.08	02	p1	11/05

SWING POST PINS & TRANSPORT LOCK HOOK

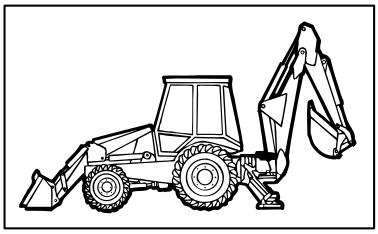

KIT KIT KIT 17=●

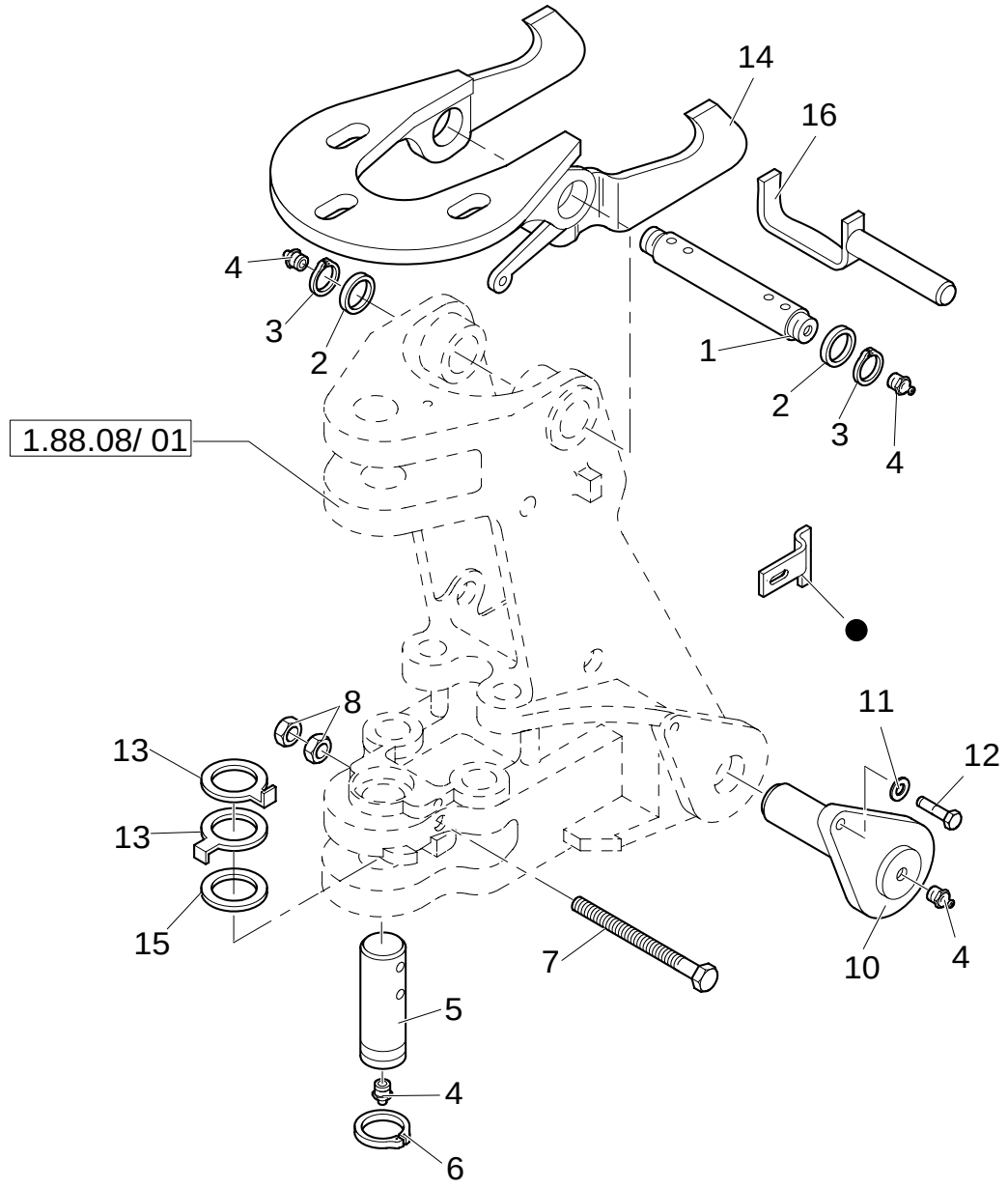

SWING POST PINS & TRANSPORT LOCK HOOK

REF	FN	PART NUMBER	YR/SN	QTY	DESCRIPTION
1		85801026		1	SPINDLE
2		D7NNC622C		2	SPACER M45X66X3
3		N800271S36M		2	RING
4		87901S8		AR	NIPPLE, LUBE 1/8"-27
5		85801079		1	PIN
6		85803198		1	RING, SNAP
7		15201934		2	SCREW M14x170
8		10717421		2	NUT M14
9		85803246		1	PIN
10		85802872		2	PIN
11		85802396		2	WASHER
12		85802397		2	SCREW M16X40
13		85801191		2	SPACER
14	1	85803637		1	HOOK
14	2	85819493		1	HOOK
15		8274447		1	SHIM
16	1	85819613		1	PIN
16	2	85819702		1	PIN
17	3	85816776		1	KIT

(1) Only for LB110.B - LB115.B - B115
(2) Only for LB90.B - LB95.B - LB110.B - B95 - B95LR - B95TC - B110 - B115
(3) Kit composed of N.4 LH retaining plate and N.4 RH retaining plate

1.88.09/ 1	01	p1	08/05

DISTRIBUTOR VALVE SUPPORT (SIDE SHIFT)

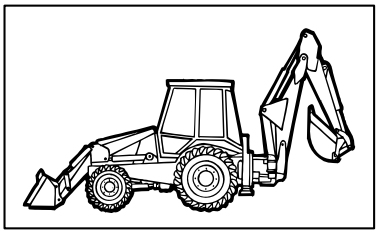

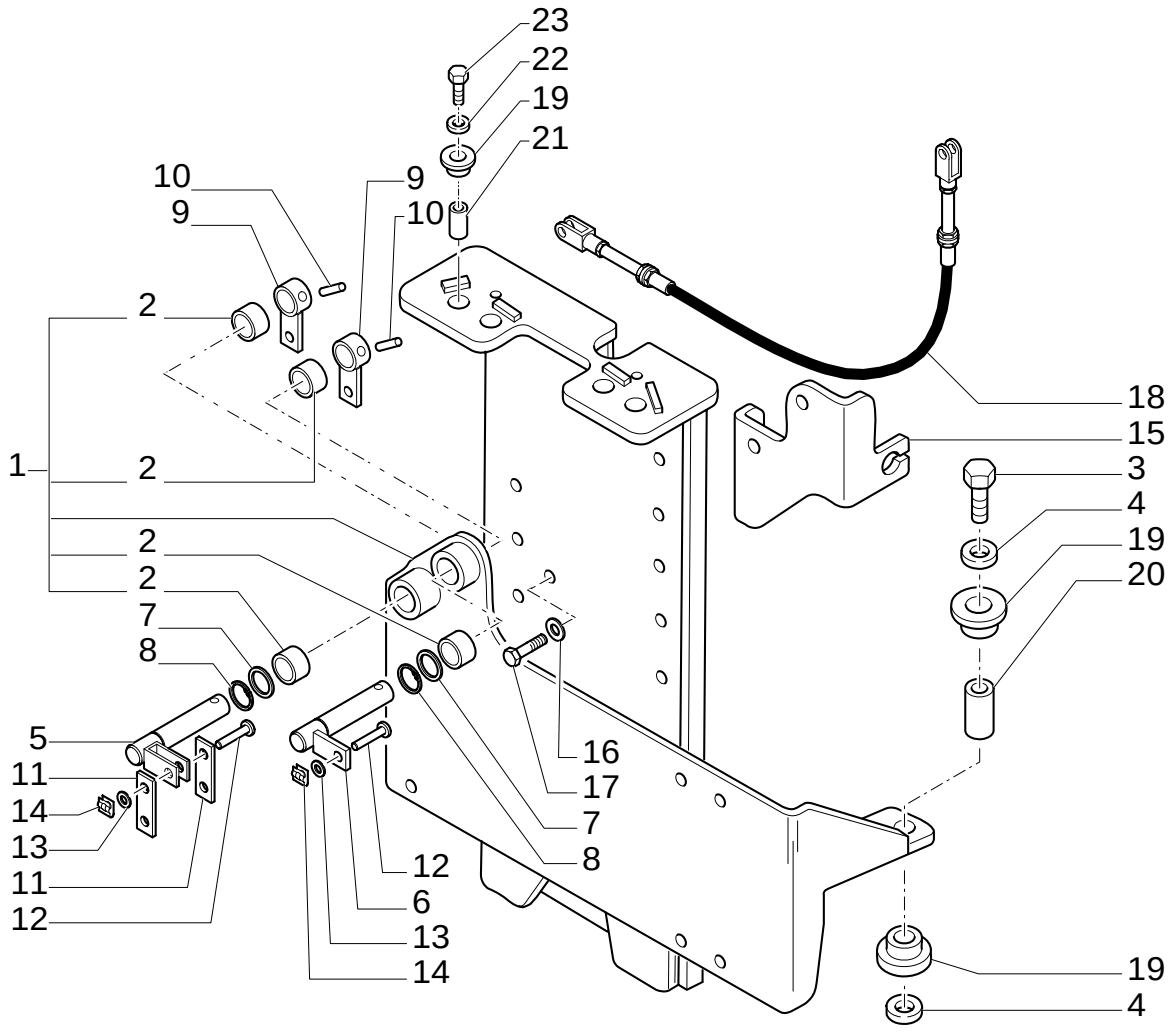

DISTRIBUTOR VALVE SUPPORT (SIDE SHIFT)

REF	FN	PART NUMBER	YR/SN	QTY	DESCRIPTION
1		85820168		1	SUPPORT
2		85802494		4	BUSHING
3		15215821		2	SCREW M12X60
4		85802618		5	WASHER, SEALING 13X41X3
5		85805328		1	LEVER, IDLER
6		85805331		1	LEVER, IDLER
7		14496901		2	WASHER
8		N663114S36		2	RING
10		85805616		2	PIN
11		85805338		2	LINK CONROD
12		85805408		3	PIN, ROLL
13		14499401		3	WASHER
14		11064071		3	CLIP
15		85805097		1	SUPPORT
16		11193879		2	WASHER, LOCK
17		16043121		2	SCREW
18		85805409		2	CABLE
19		87348165		6	BUSHING, SHEAR BOLT
20		85817252		2	BUSHING 12,5 X16,5X24
21		85820172		1	BUSHING
22		85820170		1	SPACER
23		15216421		1	SCREW M12X90

Mechanical Version

1.88.11/ A	01	p1	11/05

ARMS AND JOINTS

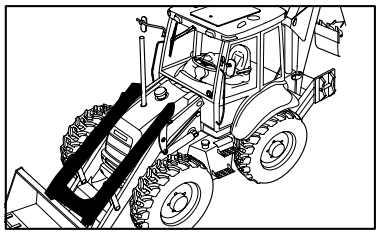

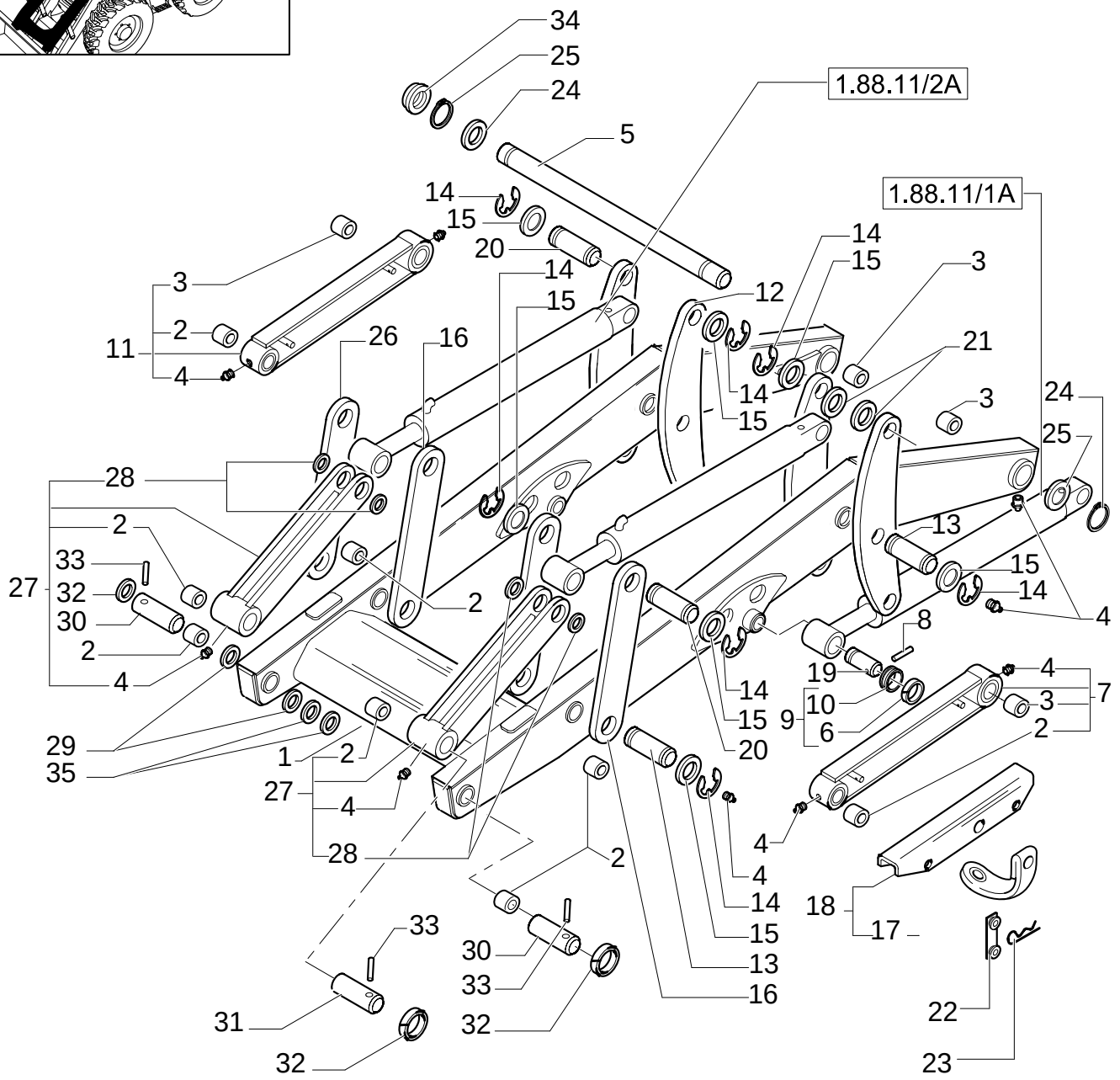

ARMS AND JOINTS

REF	FN	PART NUMBER	YR/SN	QTY	DESCRIPTION
1	1	85825446		1	ARM, LIFT
2		85804475		10	BUSHING
3		85804468		4	BUSHING
4		87901S8		12	NIPPLE, LUBE 1/8"-27
5		87400102		1	PIN
6		85802991		2	O-RING
7	1	85804578		1	LINK CONROD
8		85802994		2	PIN
9		85804504		2	SUPPORT
10		85804465		2	RING
11	1	85804497		1	LINK CONROD
12		85804505		4	PANEL, SIDE
13		85804469		4	PIN, ROLL
14		85805654		20	RING, LOCKING
15		D7NNC622C		20	SPACER
16		85804509		3	PANEL, SIDE
17		85811977		1	BELT
18		85811995		1	KIT
19		87400400		2	PIN
20		85804508		6	PIN, ROLL
21		85804495		4	SPACER
22		85804587		2	INSULATOR BLOCK
23		85804588		2	PIN, SPLIT (COTTER)
24		87401079		2	WASHER
25		11069876		2	RING, LOCKING
26		87305181		1	PANEL, SIDE
27	2	85804513		2	LINK CONROD
28		85804515		4	BUSHING
29		85818916		8	SHIM
30		85804533		2	PIN, ROLL
31		85805306		2	PIN, ROLL
32		85802974		4	RING
33		85804534		4	PIN, ROLL
34		85804504		2	SUPPORT
35		85828253		2	SHIM

(1) Includes 2, 3, 4
(2) Includes 2, 4, 28

1.88.11/ 1C	01	p1	09/05

LIFT CYLINDER

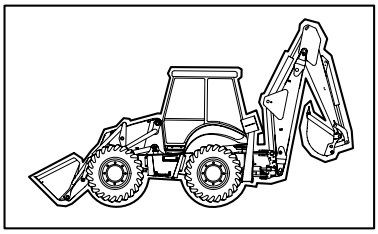

KIT
KIT KIT
18= ●
25= ■

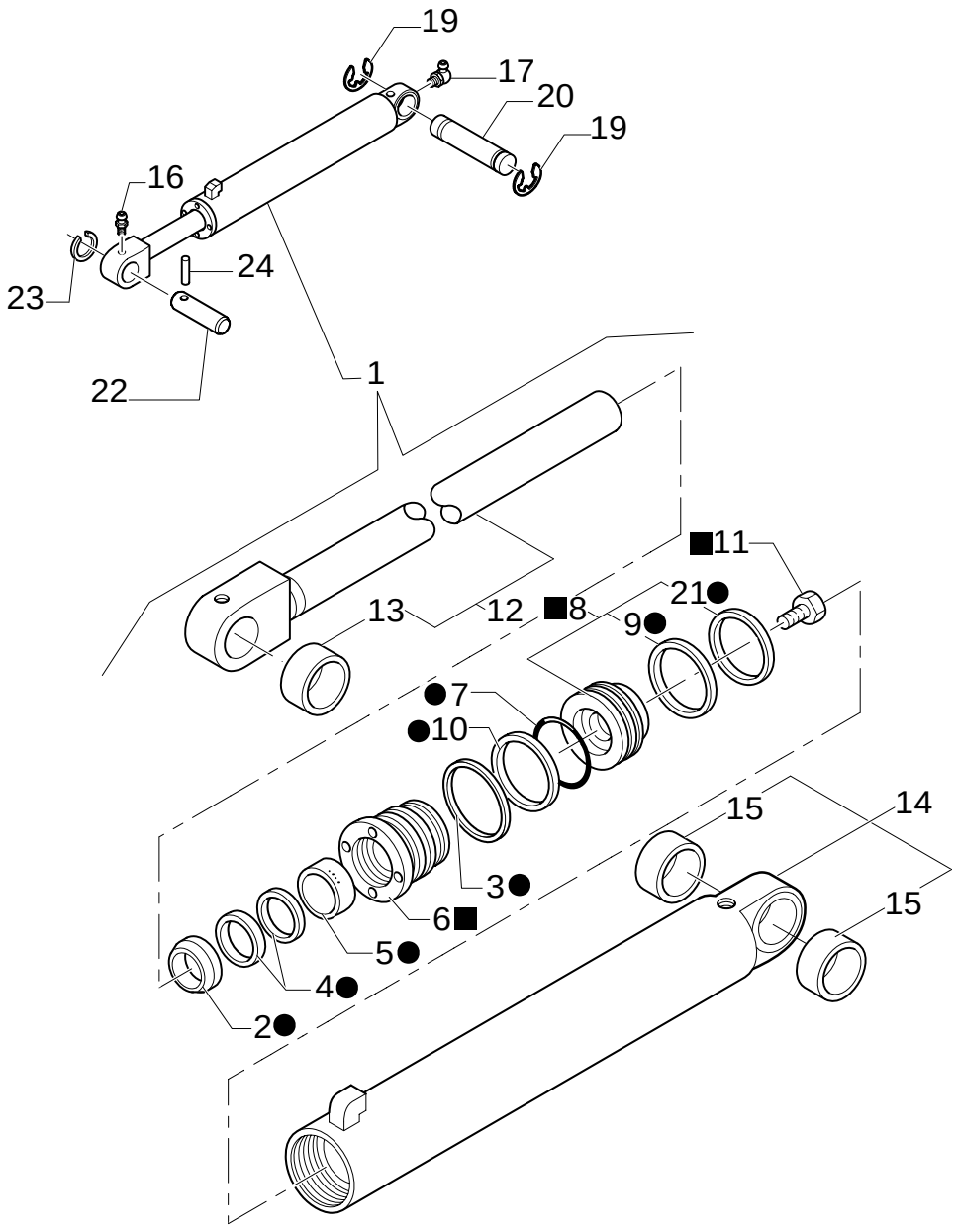

LIFT CYLINDER

REF	FN	PART NUMBER	YR/SN	QTY	DESCRIPTION
1		87315524		2	HYDRAULIC CYLINDER ASSY
2		87414969		2	WIPER
3		87440401		2	BACK-UP RING
4		87414970		2	PACKAGE, SEALS
5		87414966		2	BEARING, NYLON
6		87415116		2	PISTON
7		87414341		2	RING
8	1	87405859		2	PLUNGER
9		87414333		2	SEAL, HYD-CYLINDER
10		87421144		2	O-RING
11		87428020		2	SCREW
12	2	85800013		2	ROD
13		85800016		2	BUSHING
13		87450315		2	BUSHING
14	3	85800011		2	TUBE, RIGID
15		291550		2	BUSHING
16		87901S8		2	NIPPLE, LUBE 1/8"-27
17		87916S8		2	NIPPLE, LUBE 1/827-90GR
18		87428628		1	KIT, SEALS D=50
19		87402741		2	PIN
20		47049094		4	CIRCLIP
21		87408634		2	Ring, Wear
22		85804538		2	PIN, ROLL
23		85802974		2	RING
24		85804534		2	PIN, ROLL
25		87424196		2	CYLINDER HEAD

(1) Includes 9, 21
(2) Includes 13
(3) Includes 15

1.88.11/ 2B	01	p1	11/05

LOADER BUCKET CONTROL CYLINDER

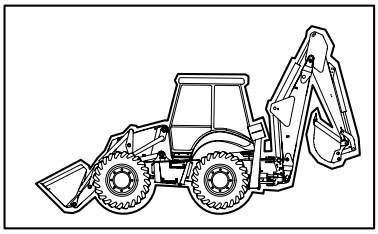

KIT
KIT KIT
19= ●
20= ■

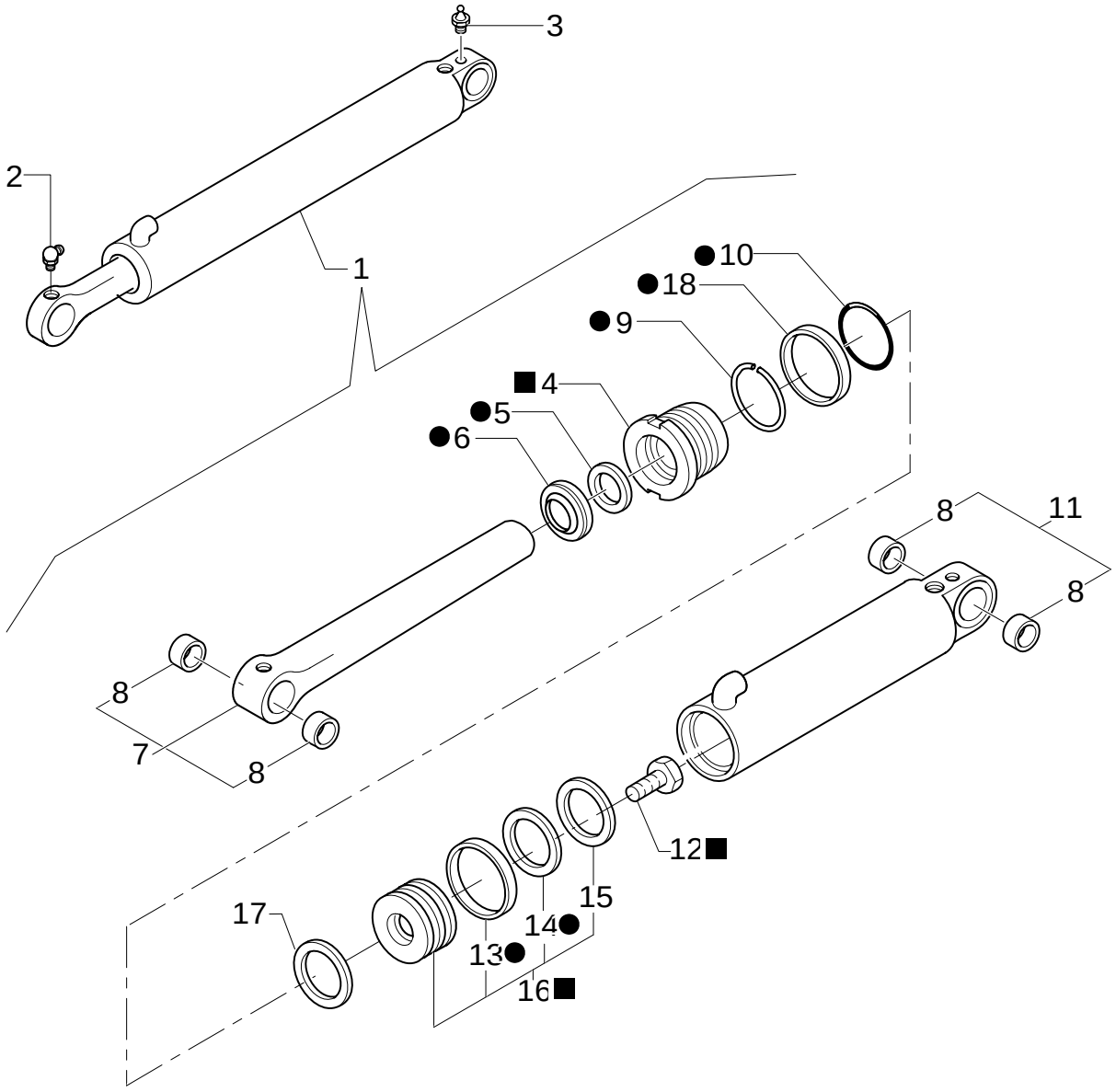

LOADER BUCKET CONTROL CYLINDER

REF	FN	PART NUMBER	YR/SN	QTY	DESCRIPTION
1		87315523		1	HYDRAULIC CYLINDER ASSY,LOADER BUCKET
2		87916S8		2	NIPPLE, LUBE 1/8-27-90GR
3		87901S8		4	NIPPLE, LUBE 1/8"-27
4		{87432511}		2	
5		87414970		2	PACKAGE, SEALS
6		87414969		4	WIPER
7	1	85800053		2	ROD
8		85800016		4	BUSHING
8		87450315		2	BUSHING
9		87440396		2	BACK-UP RING
10		87421143		2	GASKET
11	1	85800051		2	TUBE, RIGID
12		87428020		2	SCREW
13		87414340		1	O-RING
14		87414332		2	PACKAGE, SEALS
15		87408633		2	RING
16	2	87445497		2	PISTON
17		85800090		2	GASKET
18		87408633		2	RING
19		87432515		1	KIT, SEALS
20		87445498		1	CYLINDER HEAD

(1) Includes 8
(2) Includes 13 To 15

1.88.11/ 3A	01	p1	11/05

LIFT CYLINDER AND BUCKET PIPES

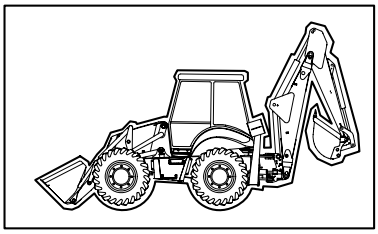

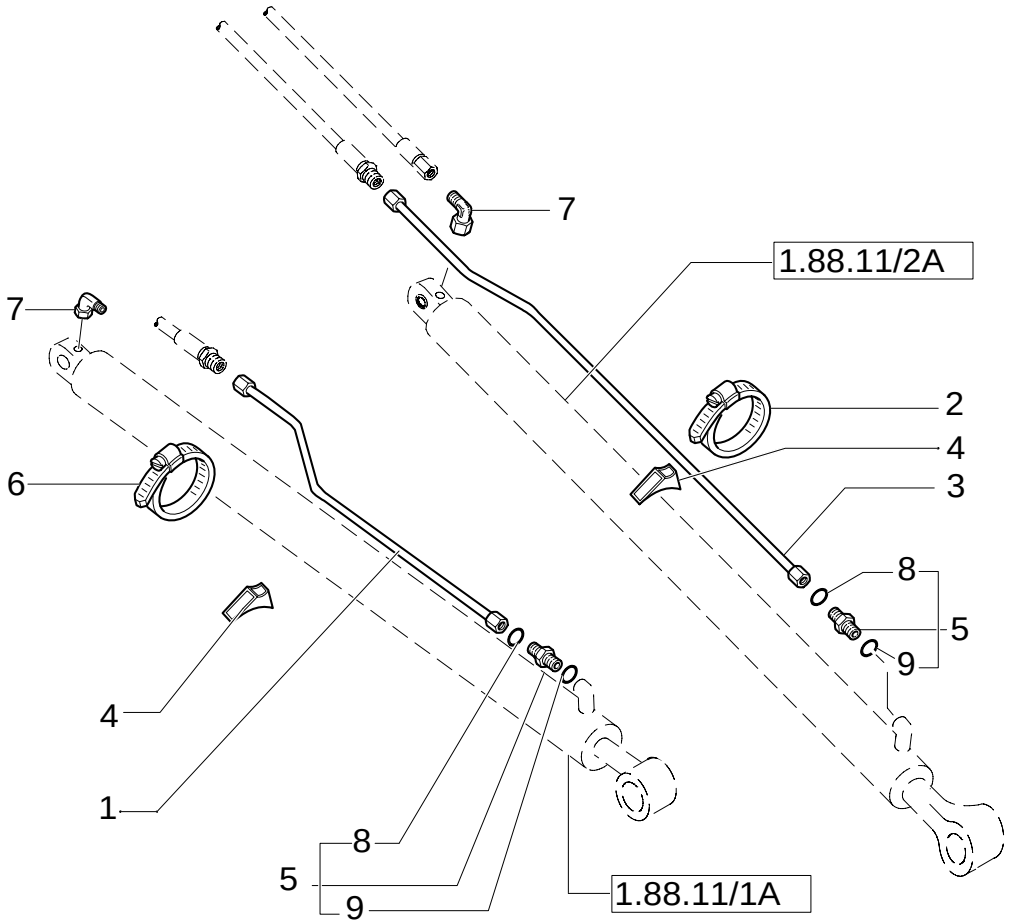

LIFT CYLINDER AND BUCKET PIPES

REF	FN	PART NUMBER	YR/SN	QTY	DESCRIPTION
1		85805171		1	TUBE, HYD RH
1		85805311		1	TUBE, HYD LH
2		85802743		2	SEALING RING COLLAR
3		85805170		2	TUBE, HYD
4		87303910		4	SPACER
5	1	390955S36		4	CONNECTOR, HYD.
6		85803008		2	COLLAR
7		85802961		4	CONNECTOR, HYD.
9		167269		8	O-RING 90 Duro, .755" ID x .097" Thk
8		9992298		8	O-RING 90 Duro, .489" ID x .070" Thk

(1) Includes 8, 9

1.88.11/ 6	02	p1	07/05

STABILIZER CYLINDERS (CENTER PIVOT)

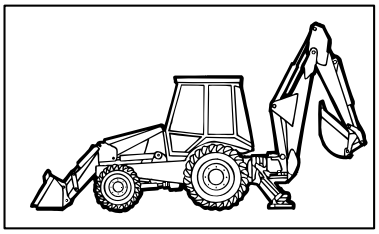

KIT
KIT KIT
15=●
17=■

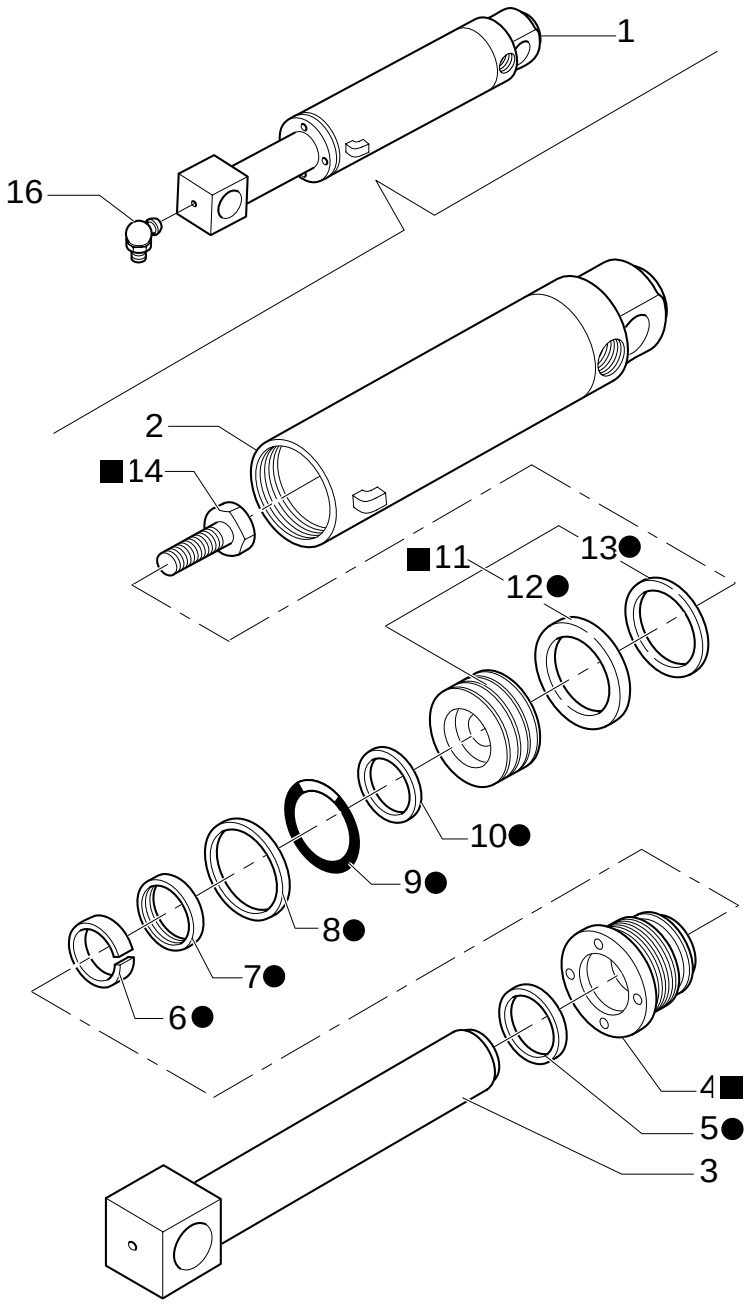

STABILIZER CYLINDERS (CENTER PIVOT)

REF	FN	PART NUMBER	YR/SN	QTY	DESCRIPTION
1		87315528		2	HYDRAULIC CYLINDER
2		85800604		2	LINER, ENGINE CYLINDER
3		85800603		2	ROD
4		87412400		2	PISTON
5		87414974		2	WIPER
6		87414971		2	O-RING
7		87414975		2	GASKET
8		87440410		2	BACK-UP RING
9		87421145		2	O-RING
10		87414342		2	GASKET
11	1	87406921		2	PLUNGER
12		87414334		2	GASKET
13		87408635		2	Ring, Wear
14		87428011		2	BOLT
15		87428630		1	KIT, SEALS
16		87916S8		2	NIPPLE, LUBE
17		87424198		2	CYLINDER HEAD 1/8"-27

(1) Includes 12, 13

1.88.11/ 7A	01	p1	11/05

PIPES FOR STABILIZER CYLINDERS (CENTER PIVOT)

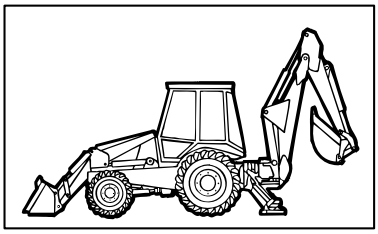

KIT KIT KIT 22 = ●

PIPES FOR STABILIZER CYLINDERS (CENTER PIVOT)

REF	FN	PART NUMBER	YR/SN	QTY	DESCRIPTION
1	1	390953S36		2	CONNECTOR, HYD.
2		85802910		4	CLAMP
3		85802620		2	TUBE, RIGID
4		E9NN3R862AA		8	CONNECTOR, HYD.
5	2	85802820		2	VALVE, HYDRAULIC
6		85807877		4	HOSE, FLEXIBLE L=1232 MM
7		85802965		2	CONNECTOR, HYD.
8		85803008		2	COLLAR
9		87303912		2	SPACER
10		85802911		2	PLATE, COVER
11		15213621		2	SCREW M8X55
12		14048211		2	NUT M8
13		11193879		6	WASHER, LOCK
14		85802912		2	PLATE, COVER
15	3	85807878		2	HOSE, FLEXIBLE L=1416 MM RH
15	3	85807879		2	HOSE, FLEXIBLE L=1829 MM LH
18		128825		2	O-RING 8-1, 90 Duro, .644" ID x .087" Thk
19		16044421		2	SCREW M8X60 LH
19		16044821		2	SCREW M8X80 RH
20		85803517		2	BUSHING, RUBBER
21		85802891		2	SPACER RH
22		85821126		1	KIT
23		85820160		2	VALVE, HYDRAULIC
24		85820159		1	PLUNGER
16		9992298		4	O-RING
17		9992298		2	O-RING 90 Duro, .489" ID x .070" Thk

(1) Includes 17, 18
(2) Includes 22 To 24
(3) Includes 16

1.88.11/ 8	01	p1	02/05

RETURN TO DIG SENSOR

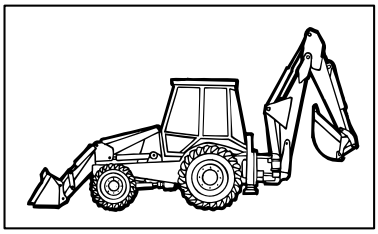

LB90.B-LB95.B-LB110.B

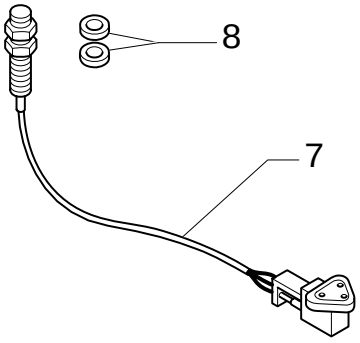

LB115.B

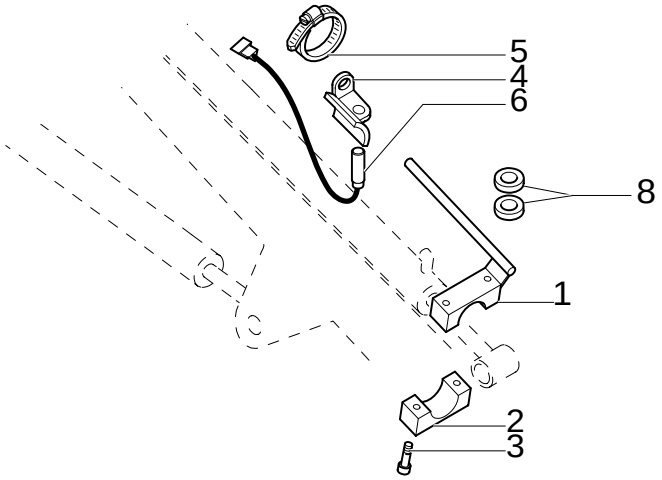

RETURN TO DIG SENSOR

REF	FN	PART NUMBER	YR/SN	QTY	DESCRIPTION
1		85805108		1	ROD
2		85805111		1	BLOCK
3		14305621		2	SCREW M6X35
4		85805113		1	SUPPORT
5		85803010		2	CLAMP
6		85805619		1	SENSOR
7		85802950		1	SENSOR
8		14497001		4	WASHER, LOCK 19X34X3

1.88.11/ 9A	01	p1	11/05

CYLINDERS AND ROTATION PLATE

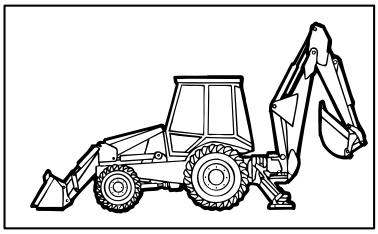

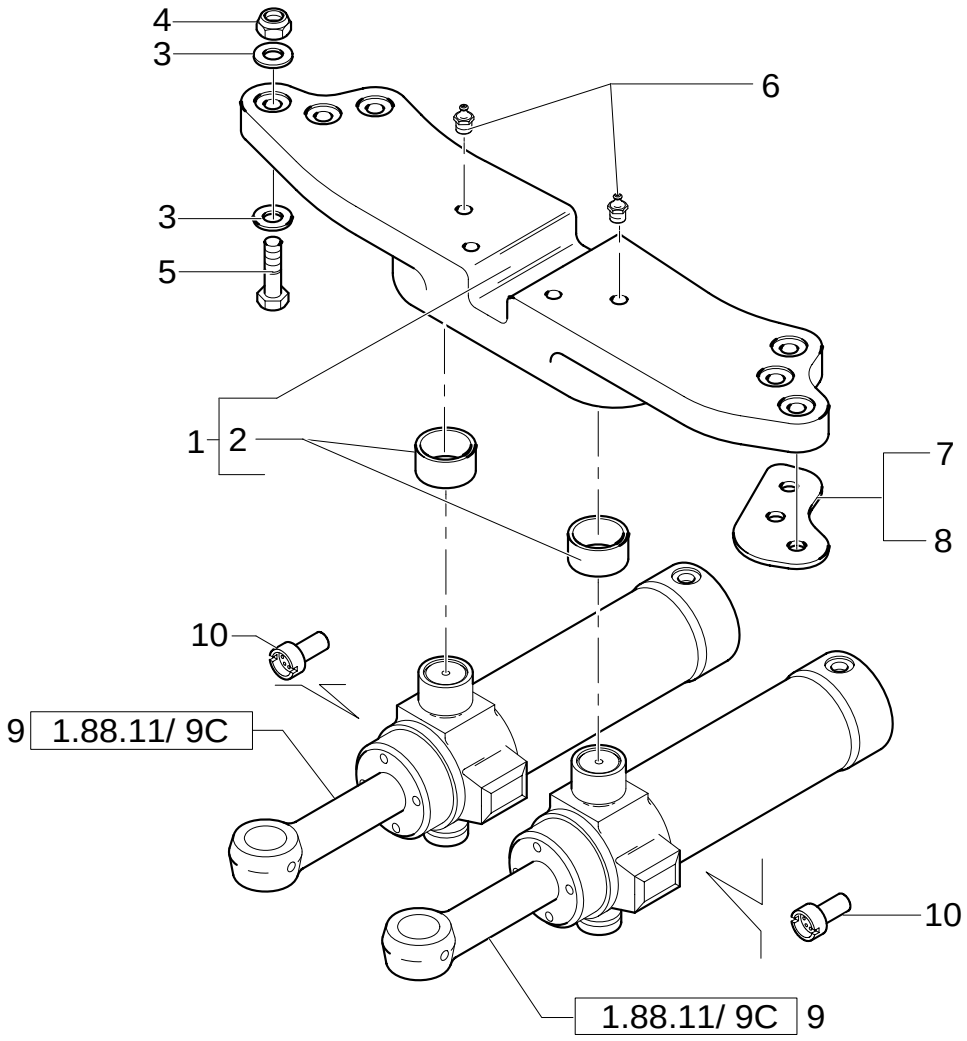

CYLINDERS AND ROTATION PLATE

REF	FN	PART NUMBER	YR/SN	QTY	DESCRIPTION
1		85803617		1	PLATE
2		83910645		2	BUSHING
3		10520431		12	WASHER
4		12575121		6	NUT M10x1.5
5		15988934		6	SCREW M20x1.5x90
6		87901S8		4	NIPPLE, LUBE 1/8"-27
7		85801153		4	SHIM
8		85803039		2	SHIM
9	1	87450926		2	HYDRAULIC CYLINDER
9	2	87315529		2	HYDRAULIC CYLINDER
10		85800965		2	REDUCER

(1) UP TO S/N XXX
(2) FROM TO S/N XXX

1.88.11/ 9C	01	p1	11/05

SWING CYLINDERS BACKHOE

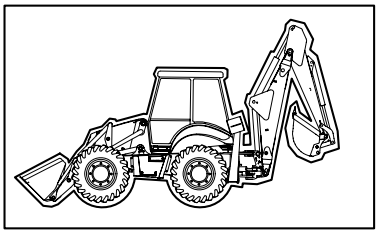

KIT
KIT KIT
30= ▲
11= ●

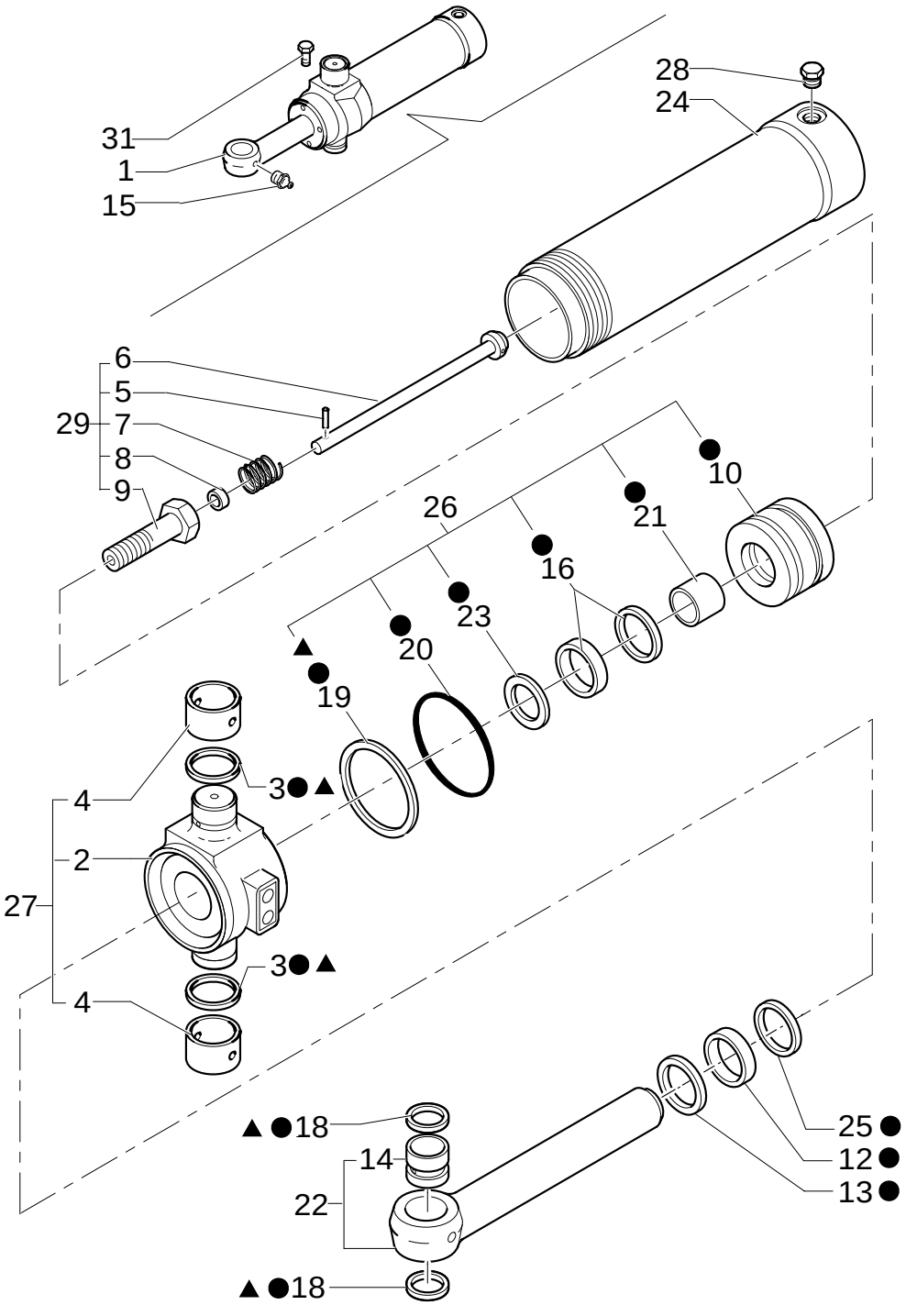

SWING CYLINDERS BACKHOE

REF	FN	PART NUMBER	YR/SN	QTY	DESCRIPTION
1		87315529		1	HYDRAULIC CYLINDER
2		87422783		1	TRUNNION
3		D7NNC513E		2	SEAL PROTECTION Seal
4		83912378		2	BUSHING
5		D7NNC511A		1	PIN
6		85800990		1	SPINDLE
7		E0NNB543AA		1	SPRING
8		E9NNE602AA		1	RING
9		87428014		1	SCREW M30x2x100
10		87424838		1	PISTON
11		87428631		1	KIT, SEALS
12		87408636		1	RING
13		87414335		1	SEAL, HYD-CYLINDER
14		85800303		1	BUSHING
15		87901S8		2	NIPPLE, LUBE 1/8"-27
16		87414970		1	PACKAGE, SEALS 50 MM ROD
18		D9NNC513BA		2	SEAL PROTECTION
19		85800007		1	RING Back-up
20		87421149		1	O-RING 0.139x4.734 Inch
21		87414966		1	BEARING, NYLON 50 MM ROD
22		87433032		1	ROD
23		87414969		1	WIPER 50 MM ROD
24		87455335		1	PIPE
25		87414343		1	RING
26		87445307		1	PISTON
27		87445758		1	TRUNNION
28		{353-779}		1	3/4-16
29		87424935		1	BOLT
30		85819353		1	KIT
31		85827130		1	SCREW 10-24x3/8

1.88.12/ 3	01	p1	10/05

FRONT CONTROL VALVE SUPPORT AND TRANSMISSIONS (CENTER PIVOT)

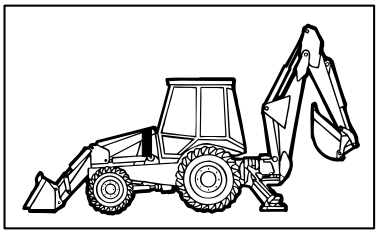

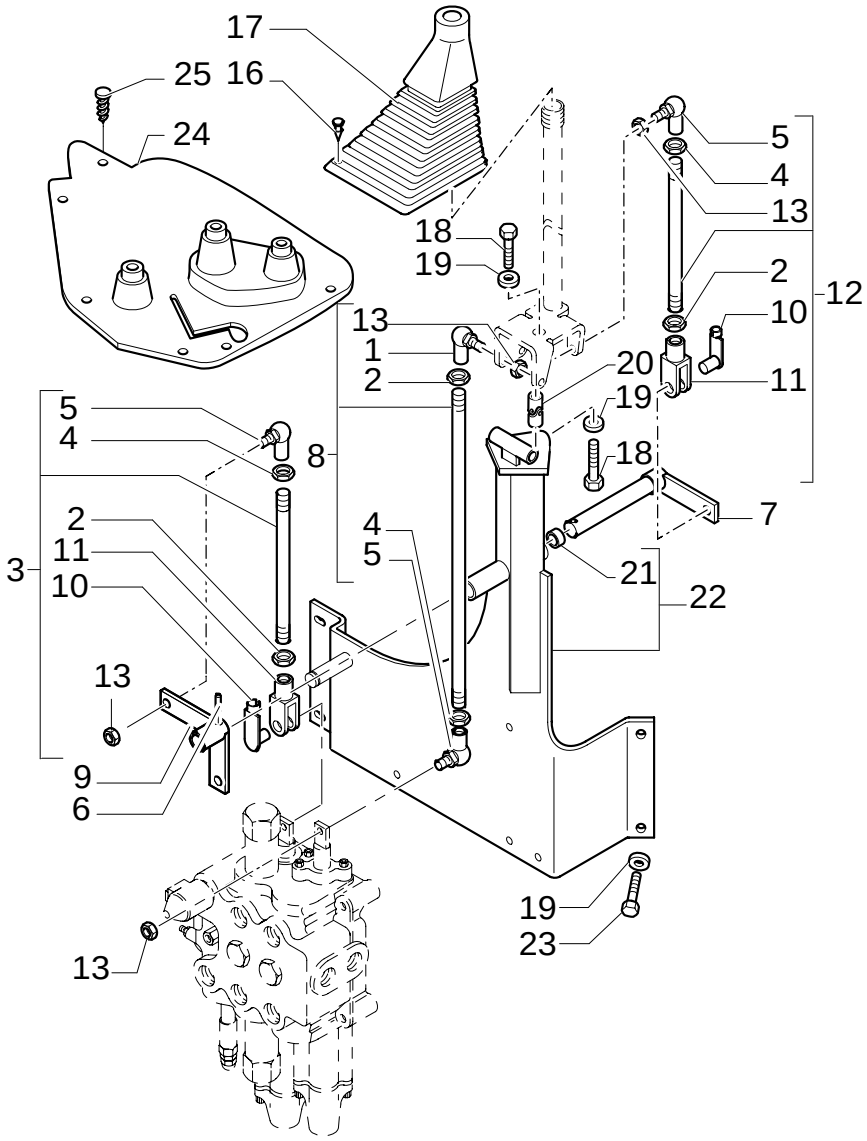

FRONT CONTROL VALVE SUPPORT AND TRANSMISSIONS (CENTER PIVOT)

REF	FN	PART NUMBER	YR/SN	QTY	DESCRIPTION
1		85804376		1	JOINT, UNIVERSAL
2		16102311		3	NUT
3		85801564		1	TIE-ROD
4		16102911		3	NUT LH
5		85804375		3	JOINT, UNIVERSAL
6		85805616		1	PIN
7		85805692		1	PIN
8		85801566		1	TIE-ROD
9		85805690		1	LEVER, IDLER
10		85802738		2	PIN
11		11991971		2	YOKE
12		85801562		1	TIE-ROD
13		14048211		4	NUT M8X1,25
16		14568887		AR	BUTTON
17		85802842		1	BOOT
18		15540321		2	SCREW Cap, HH, CL 8.8, M12 x 1.25 x 25
19		11190779		6	WASHER, LOCK
20		85801518		1	JOINT, UNIVERSAL
21		85802494		2	BUSHING
22	1	85817789		1	SUPPORT
22	2	87312027		1	SUPPORT
23		11112821		4	BOLT M12X40
24		85804539		1	BOOT W/CAB
25		85808422		6	PLUG W/CAB

(1) UP TO S/N XXX
(2) FROM TO S/N XXX

120	01	p1	11/05

SILENT HAMMER CB65S

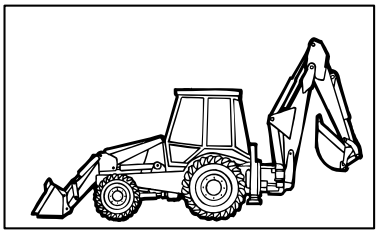

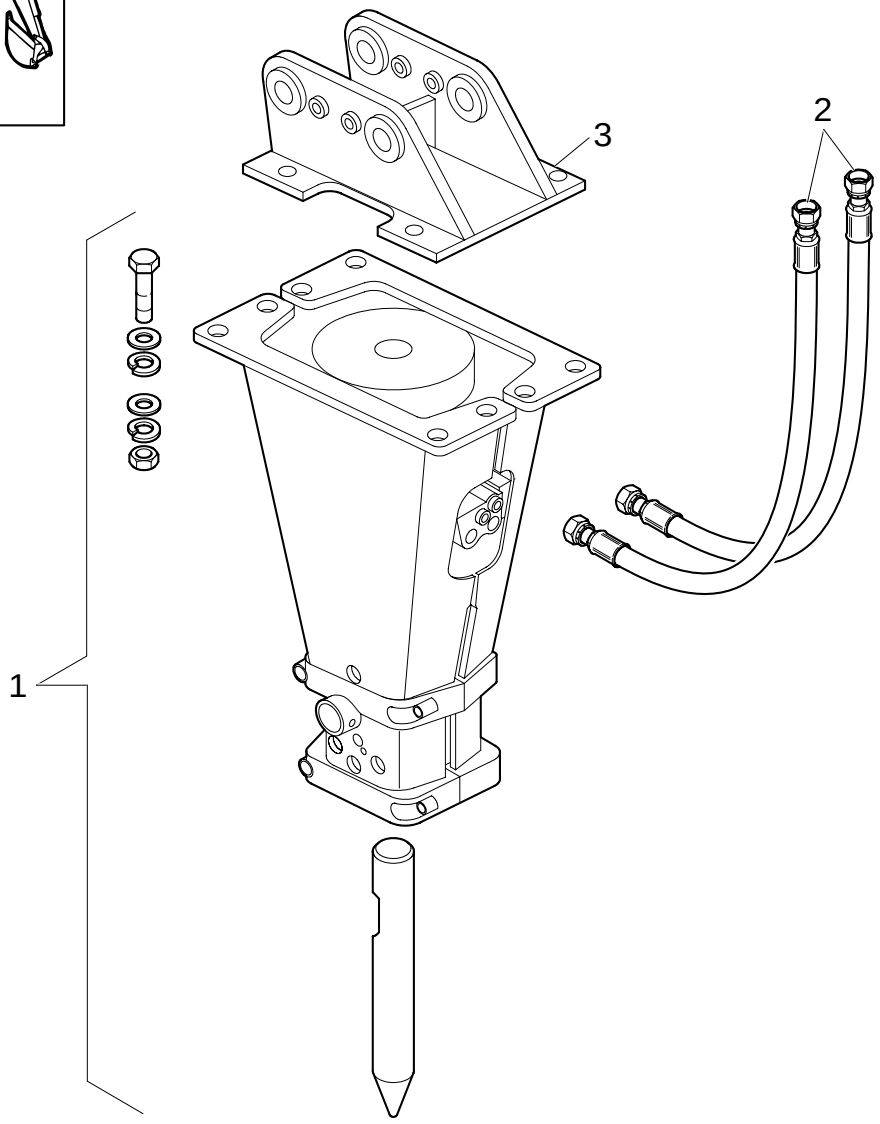

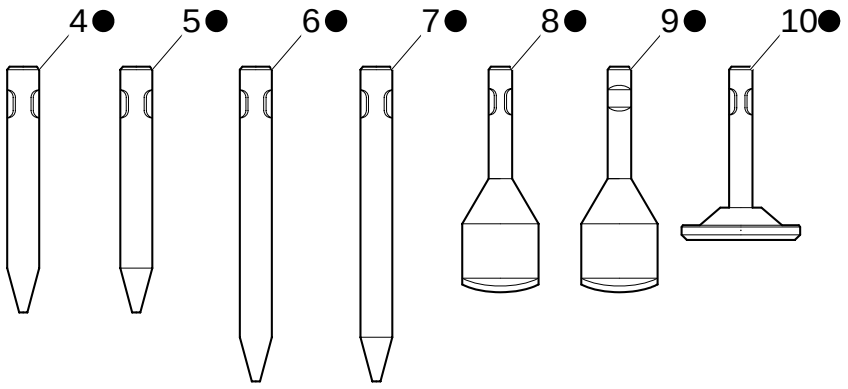

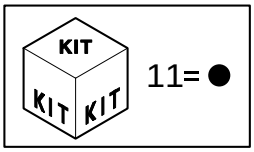

SILENT HAMMER CB65S

REF	FN	PART NUMBER	YR/SN	QTY	DESCRIPTION
1		82848120		1	HAMMER -ASSY
2		82848343		1	HOSE KIT L=2380
3		87335337		1	BRACKET LB
4		87779459		1	POINT
5		87779461		1	POINT
6		87779460		1	POINT
7		{85848133}		1	
8		87779462		1	TOOL
9		87779444		1	TOOL, GENERAL
10		87779474		1	TOOL
11		{87335146}		1	

120/ 1	01	p1	10/05

HAMMER CB65B

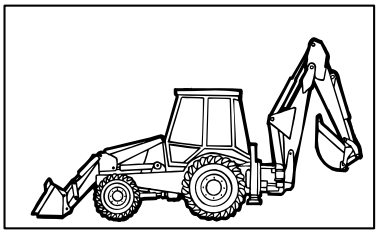

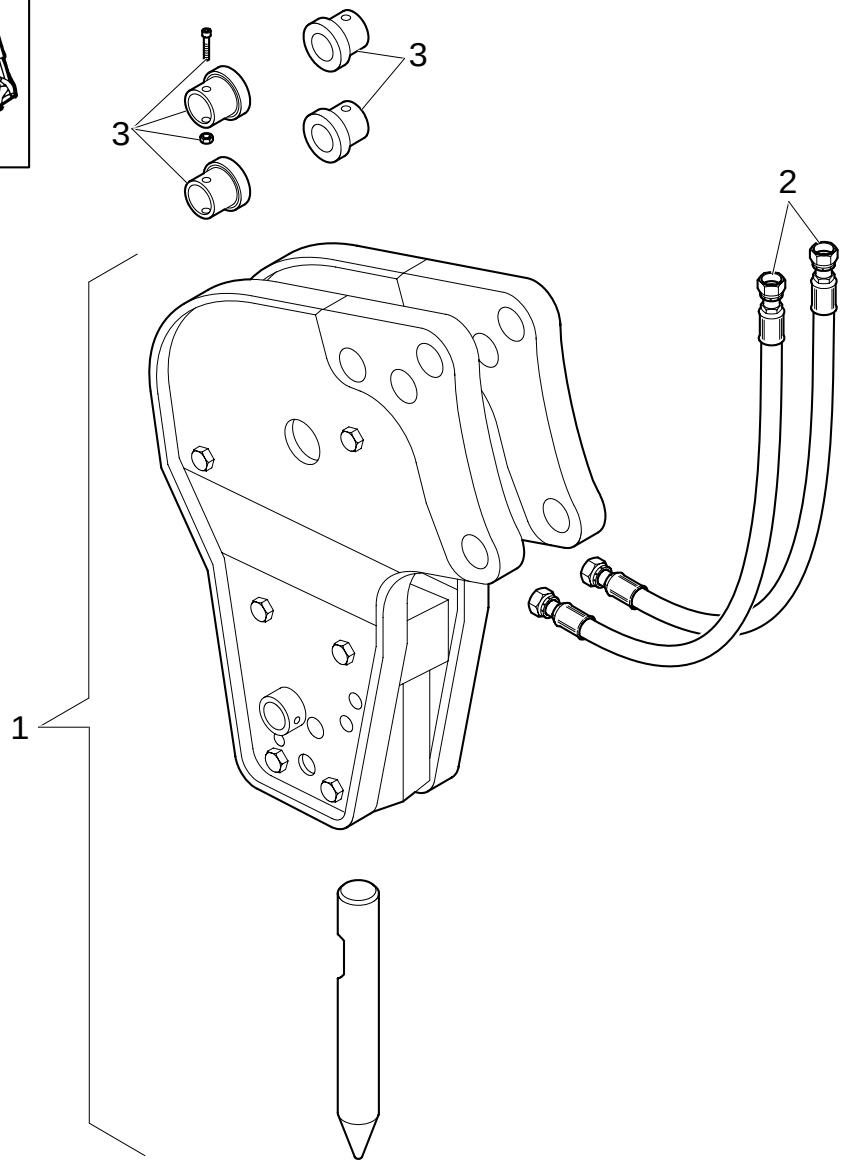

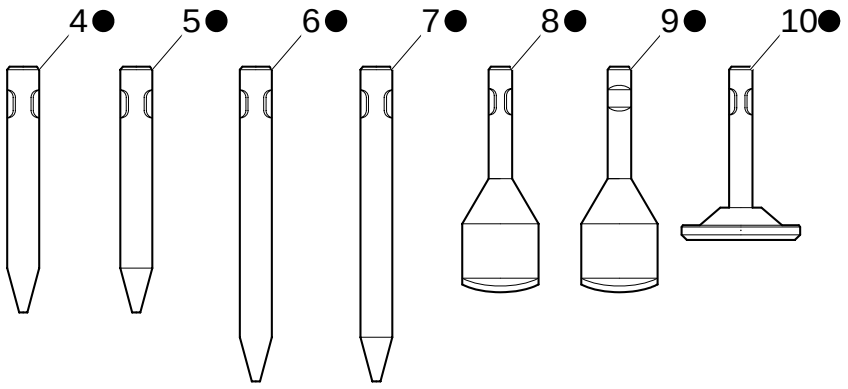

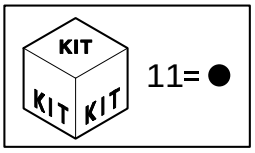

HAMMER CB65B

REF	FN	PART NUMBER	YR/SN	QTY	DESCRIPTION
1		82848118		1	HAMMER -ASSY
2		82848343		1	HOSE KIT L=2380
3		82848344		1	SET, BRUSHES LB
4		87779459		1	POINT
5		87779461		1	POINT
6		87779460		1	POINT
7		{85848133}		1	
8		87779462		1	TOOL
9		87779444		1	TOOL, GENERAL
10		87779474		1	TOOL
11		{87335146}		1	

SHOVEL AND REAR LIFTING HOOKS

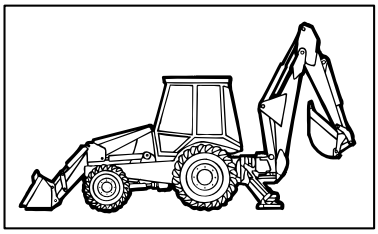

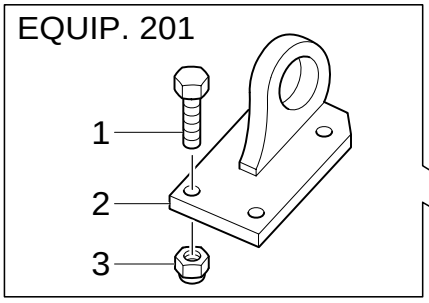

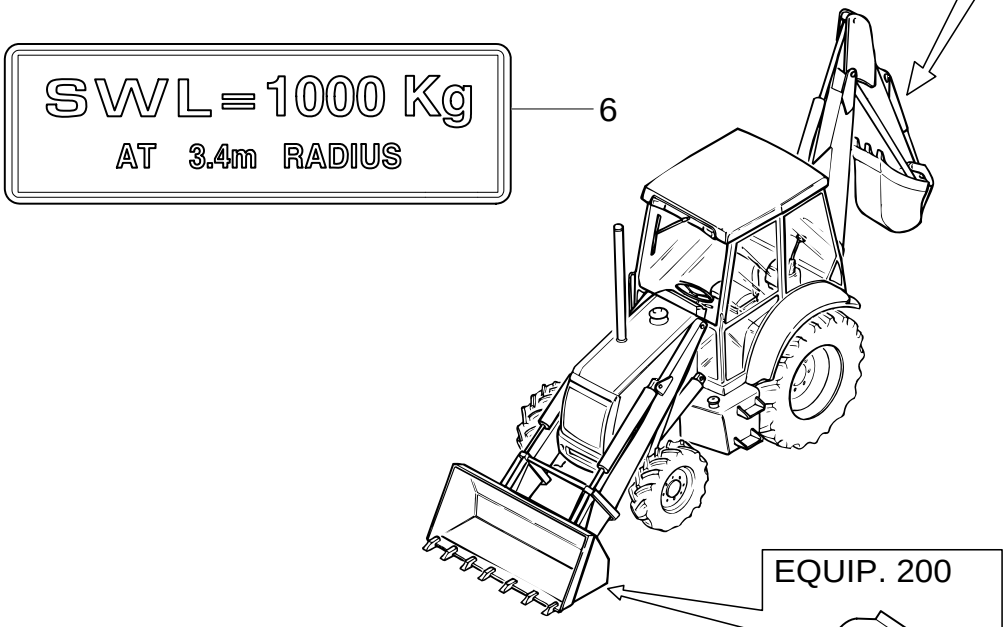

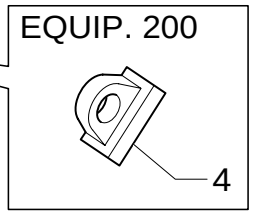

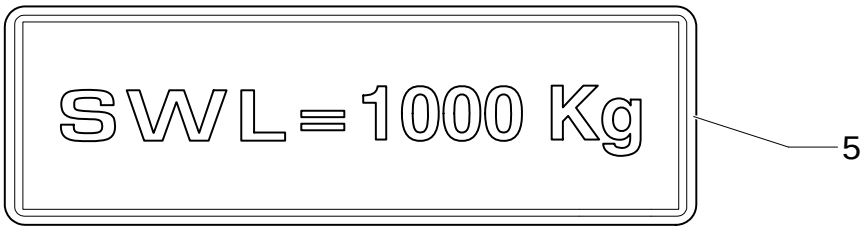

SHOVEL AND REAR LIFTING HOOKS

REF	FN	PART NUMBER	YR/SN	QTY	DESCRIPTION
1		11394334		4	SCREW M14X1,5X45(EQUIP.201)
2		85802599		1	HOOK (EQUIP.201)
3		12574825		4	NUT M14X1,5(EQUIP.201)
4		85805807		1	HOOK (EQUIP.200)
5		85805663		1	DECAL (EQUIP.200)
6		85805664		1	DECAL (EQUIP.201)

Mechanical Version

416-417	01	p1	02/05

SYSTEM HAMMER COMPONENTS (CAB)

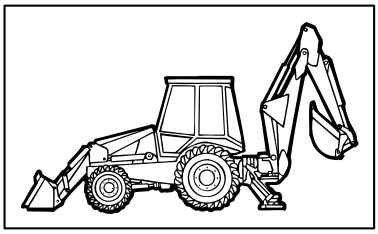

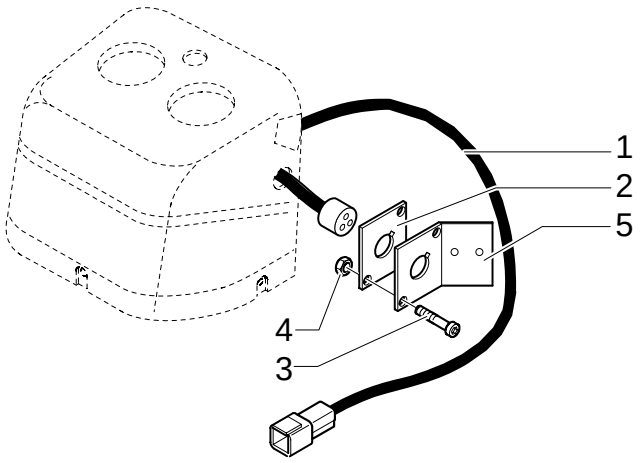

SYSTEM HAMMER COMPONENTS (CAB)

REF	FN	PART NUMBER	YR/SN	QTY	DESCRIPTION
1		85819237		1	CABLE, ELECTRIC
2		85816760		1	PLATE, COVER
3		13272477		2	SCREW
4		12574011		2	NUT M4
5	1	85827822		1	PLATE, MOUNTING

(1) Only for ROPS

469	01	p1	02/05

BUCKET 6X1 (1,15 M3) WITH BLADE

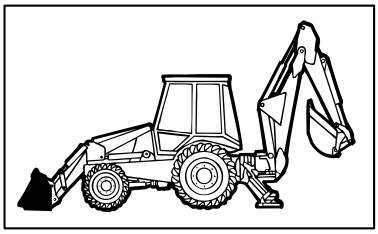

BUCKET 6X1 (1,15 M3) WITH BLADE

REF	FN	PART NUMBER	YR/SN	QTY	DESCRIPTION
1		85820075		1	BUCKET
2		85820076		1	BUCKET
3		85820018		4	SCREW M10X90
4		85820035		4	NUT M10X1,5
5		85820021		1	SCREW M8X120
6		85820031		5	NUT M8
7		85820034		12	SCREW M6X30
8		85820026		2	PLATE
9		85820028		12	CLAMP
10		85820081		2	PIN
11		85824249		2	SUPPORT
12		85820014		8	NIPPLE, LUBE M10X1
13		85820062		2	FORK, BUCKET
14		85820067		2	PIN
15		85820068		2	PIN, SPLIT (COTTER)
16		85820016		2	PIN, ROLL 10X80
17		85820017		2	PIN
18		85820005		2	CYLINDER
19		85820013		4	BUSHING
20		85820015		2	PIN
21		85820007		8	SCREW M14X35
22		85820009		8	WASHER, SEALING
23		85820008		10	NUT M14X2
24		85820072		1	BLADE, KNIFE
25		85820025		4	CONNECTOR, HYD.
26		NSS		3	NOT SERVICED SEPARATELY
27		85824362		2	HOSE, FLEXIBLE
28		85824361		2	HOSE, FLEXIBLE
29		85820039		2	TUBE, RIGID
30		85820040		2	CONNECTOR, HYD.
31		85820038		2	TUBE, RIGID
32		85820064		2	PIN
33		85820069		2	PLUG
34		85820065		2	BRACKET
35		85820027		4	CLAMP
36		85820019		2	PIN
37		85820020		2	SCREW M14X30

469	01	p2	02/05

BUCKET 6X1 (1,15 M3) WITH BLADE

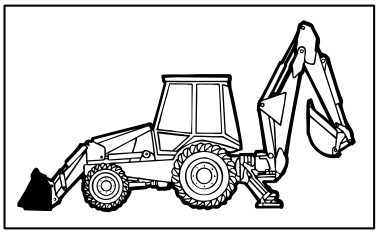

BUCKET 6X1 (1,15 M3) WITH BLADE

REF	FN	PART NUMBER	YR/SN	QTY	DESCRIPTION
38		85820011		4	SCREW M8X16
39		85820012		4	WASHER, SEALING
40		85820010		2	GUARD
41		85820030		2	SCREW M8X45
42		NSS		1	NOT SERVICED SEPARATELY

469	02	p1	11/05

BUCKET 6X1 (1,15 M3) WITH BLADE

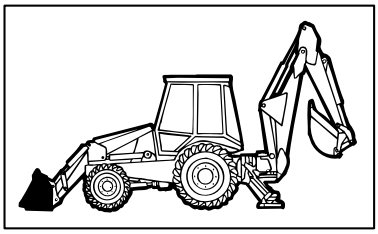

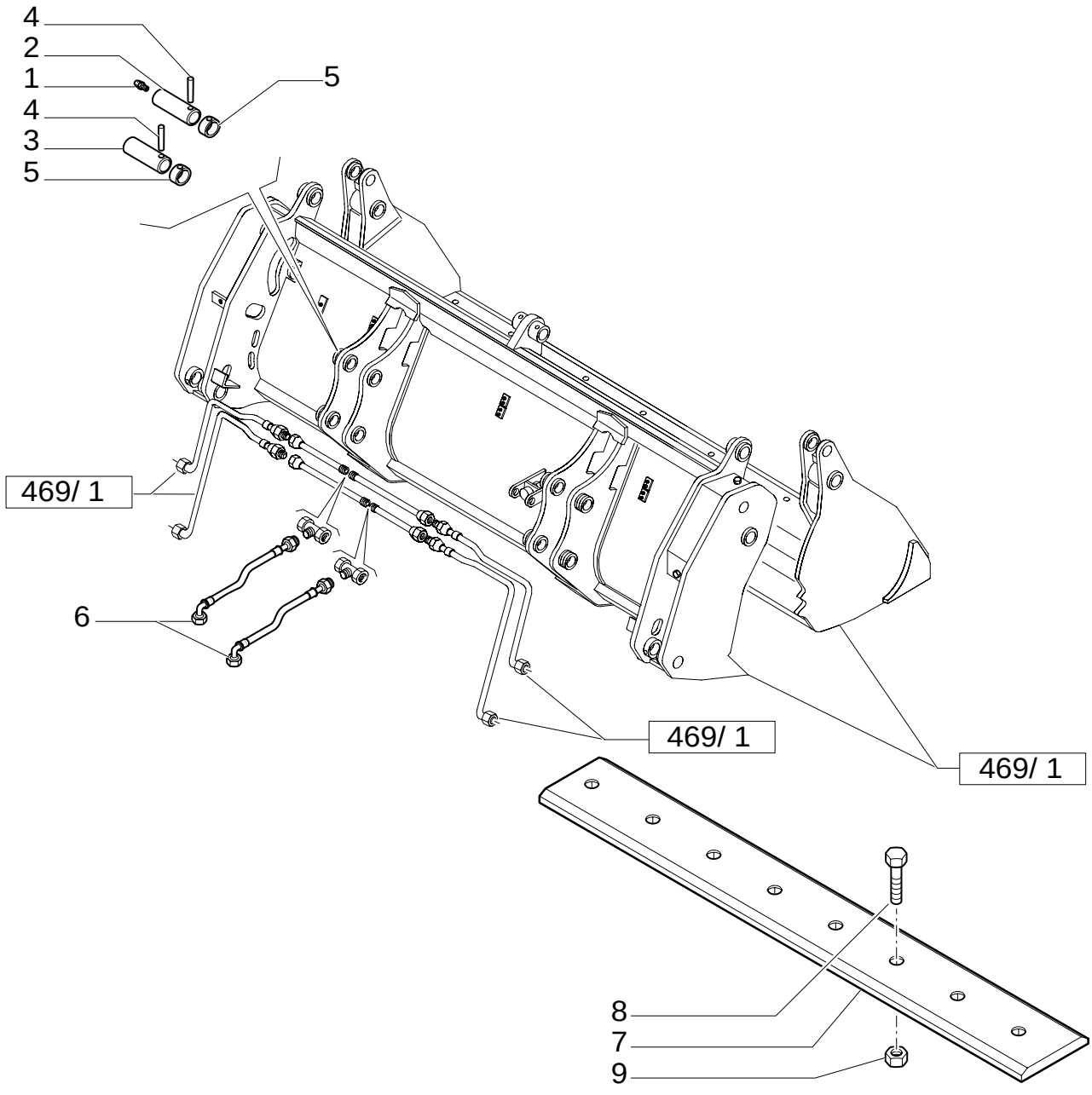

BUCKET 6X1 (1,15 M3) WITH BLADE

REF	FN	PART NUMBER	YR/SN	QTY	DESCRIPTION
1		87901S8		2	NIPPLE, LUBE 1/8"-27
2		85804533		2	PIN, ROLL
4		85804534		4	PIN, ROLL
3		85805306		2	PIN, ROLL
5		85802974		4	RING
6		85820819		2	HOSE, FLEXIBLE L=800 MM.
7		85812242		1	BLADE, KNIFE L=2400 MM.
8		85801371		8	BOLT
9		85801470		8	NUT 5/8"-11

469/ A	01	p1	11/05

HYDRAULIC CYLINDER (BUCKET 4X1-6X1)

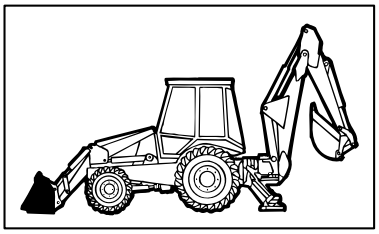

HYDRAULIC CYLINDER (BUCKET 4X1-6X1)

REF	FN	PART NUMBER	YR/SN	QTY	DESCRIPTION
1		85820005		1	CYLINDER
2		85820051		1	BARREL
3		85820057		1	RING, OIL SCRAPER
4		85820058		1	GASKET
5		85820053		1	PLATE, BASE
6		85820061		1	GASKET
7		85820059		1	GASKET
8		85820060		1	GASKET
9		85820055		1	PIN, ROLL
10		85820054		1	PISTON
11		85820052		1	ROD
12		85820056		1	BUSHING

469/ 1	01	p1	01/06

BUCKET 6X1 (1,15 M3) WITH BLADE "COMMON GREY"

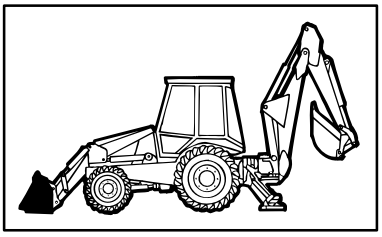

KIT KIT KIT 8=●

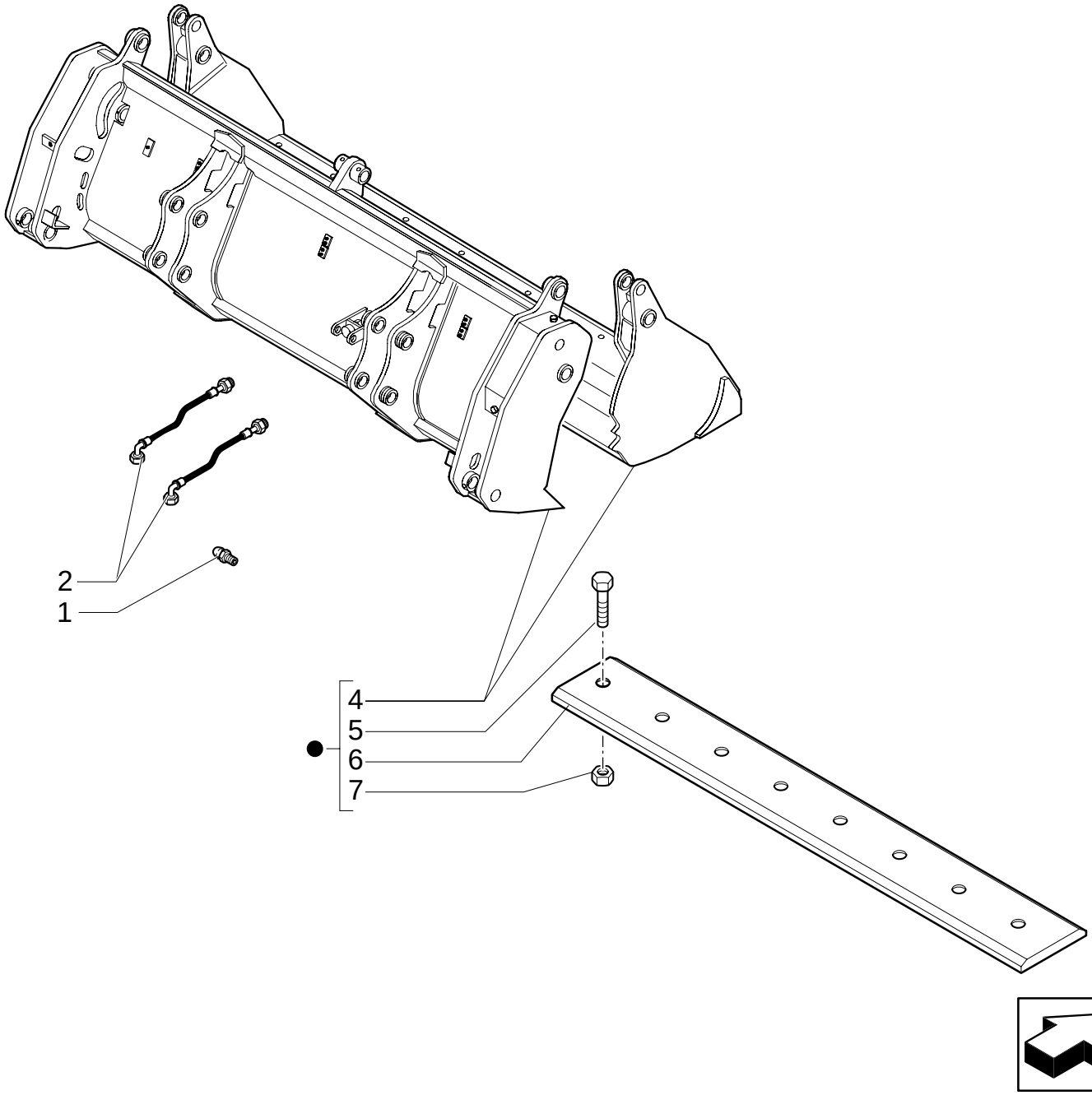

BUCKET 6X1 (1,15 M3) WITH BLADE "COMMON GREY"

REF	FN	PART NUMBER	YR/SN	QTY	DESCRIPTION
1		87901S8		2	NIPPLE, LUBE 1/8"- 27 NPTF
2		85820819		1	HOSE, FLEXIBLE L=800 MM.
4		87308850		1	BUCKET 6x1
5		85801371		8	BOLT
6		85820230		1	BLADE, KNIFE
7		85801470		8	NUT
8		{47334640}		1	

469/ 2	01	p1	02/05

BUCKET 6X1 (1,15 M3) WITH BLADE "COMMON GREY"

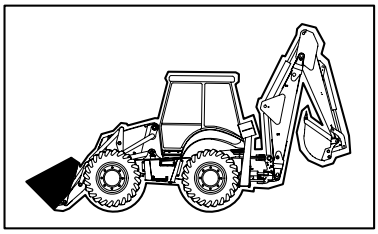

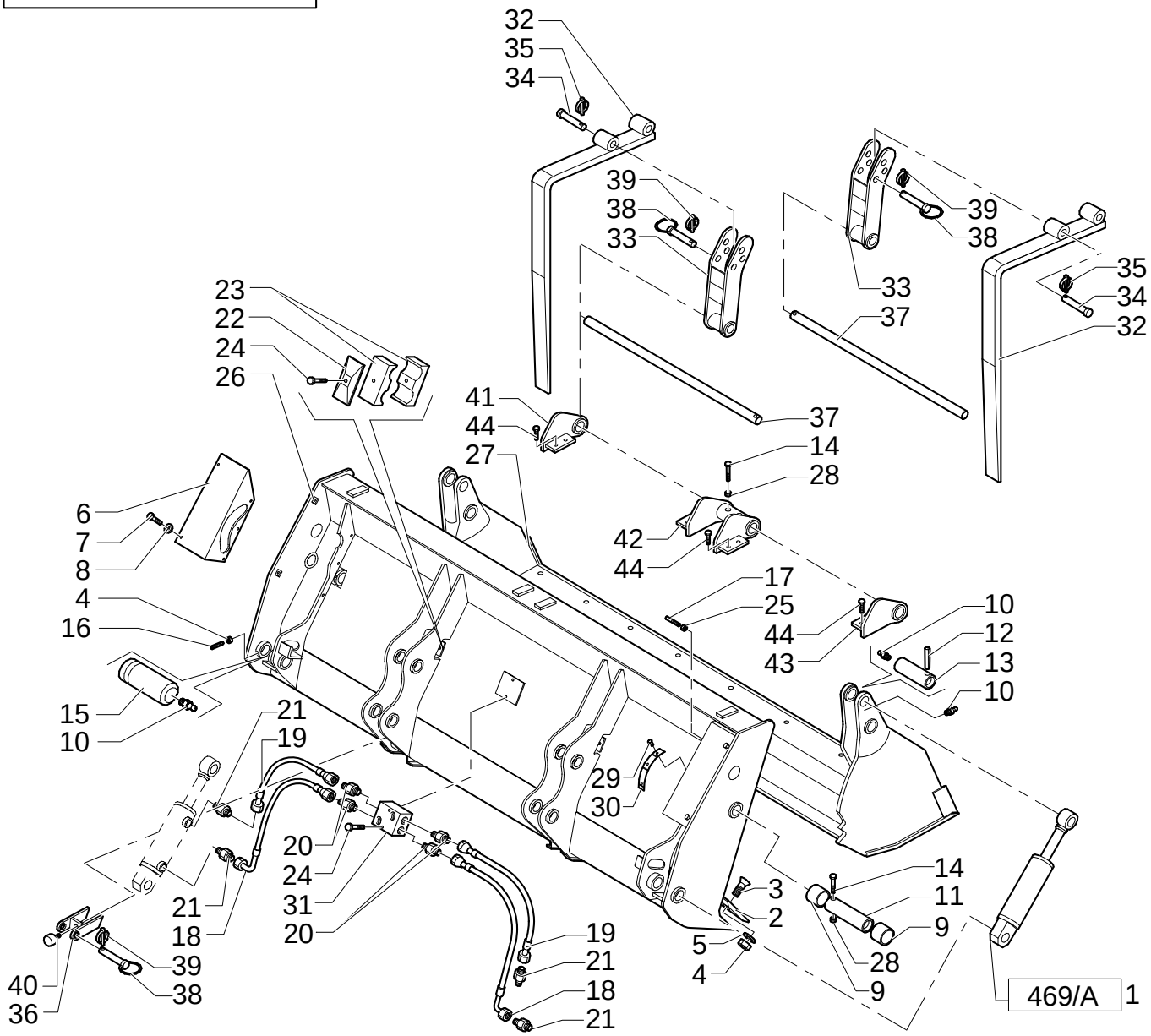

BUCKET 6X1 (1,15 M3) WITH BLADE "COMMON GREY"

REF	FN	PART NUMBER	YR/SN	QTY	DESCRIPTION
1		85820005		2	CYLINDER
2		87308642		1	BLADE, DOZER
3		87312328		8	SCREW M14x40
4		85820008		10	NUT M14x2
5		85820009		8	WASHER, SEALING
6		87312330		2	GUARD M8x16
7		85820011		10	SCREW
8		85820012		10	WASHER, SEALING
9		85820013		4	BUSHING
10		85820014		6	NIPPLE, LUBE M10x1
11		85820015		2	PIN
12		85820016		2	PIN, ROLL 10x80
13		85820017		2	PIN
14		85820018		4	SCREW M10x90
15		87310286		2	PIN
16		85820020		2	SCREW M14x30
17		87312331		1	SCREW M8x120
18		87312427		2	HOSE, FLEXIBLE
19		87312436		2	HOSE, FLEXIBLE
20		87312343		4	CONNECTOR, HYD.
21		87312333		2	CONNECTOR, HYD.
22		85820026		2	PLATE
23		85820027		4	CLAMP
24		85820030		4	SCREW M8x45
25		85820031		5	NUT M8
26		87308638		1	LOADER
27		87308915		1	LOADER
28		85820035		4	NUT M10x1,5
29		{85820036}		3	4x10
30		{85820037}		1	
31		87312335		1	VALVE, HYDRAULIC
32		87310367		2	FORK, BUCKET
33		87310368		2	SUPPORT
34		87310369		2	PIN
35		85825177		2	PIN, SPLIT (COTTER) D=8
36		87310370		2	BRACKET
37		87310378		2	SHAFT

469/ 2	01	p2	02/05

BUCKET 6X1 (1,15 M3) WITH BLADE "COMMON GREY"

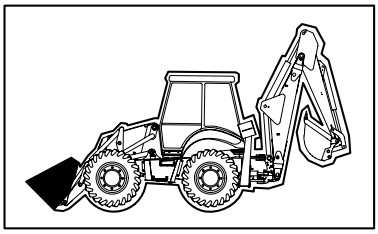

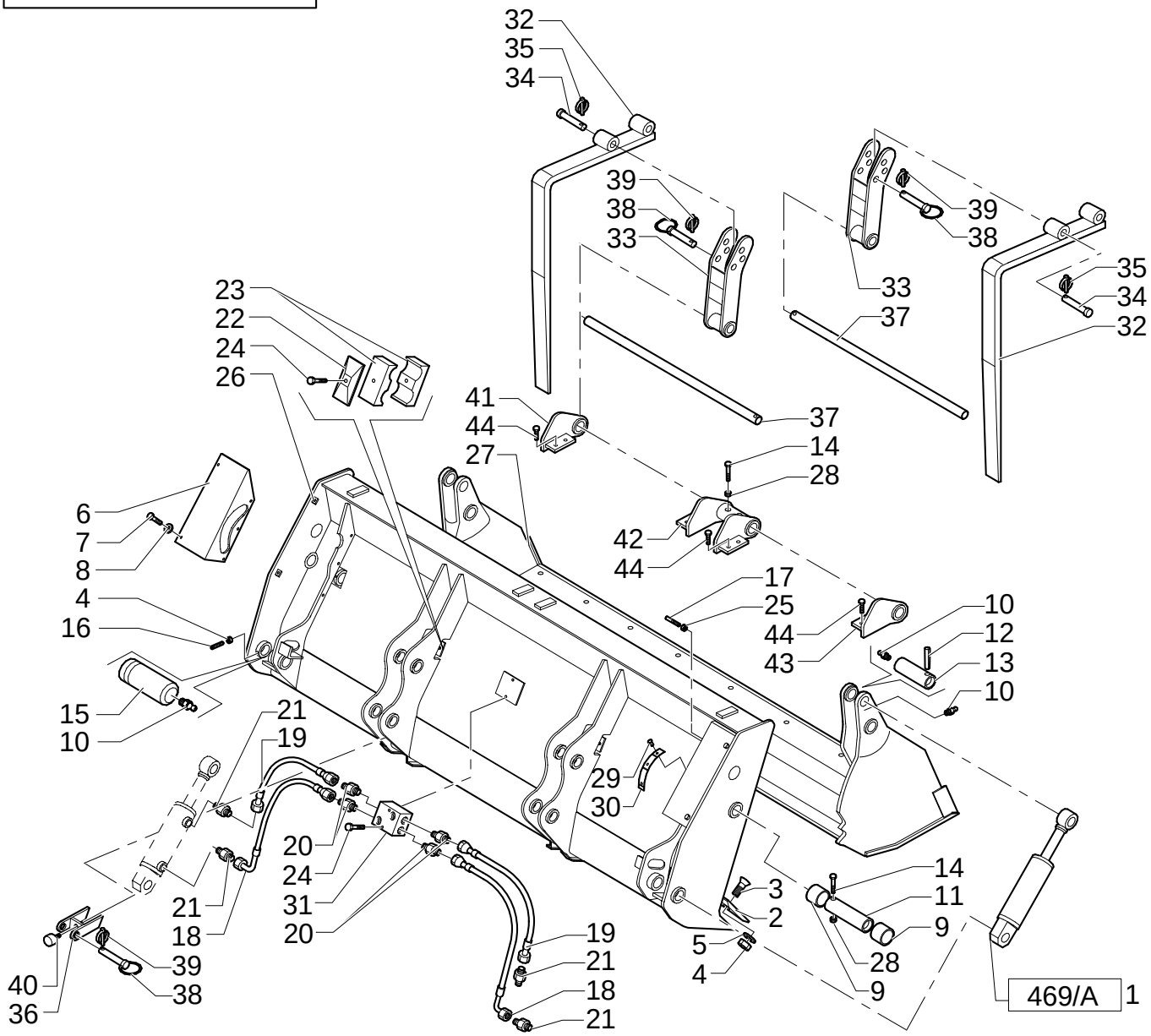

BUCKET 6X1 (1,15 M3) WITH BLADE "COMMON GREY"

REF	FN	PART NUMBER	YR/SN	QTY	DESCRIPTION
38		85820064		2	PIN
39		85820068		2	PIN, SPLIT (COTTER) D=11
40		85820069		2	PLUG
41		87310373		1	SUPPORT LH
42		87310374		1	SUPPORT
43		87310375		1	SUPPORT RH
44		87310376		8	SCREW M16x30

470	01	p1	02/05

BUCKET 6X1 (1,15 M3) WITH TINE

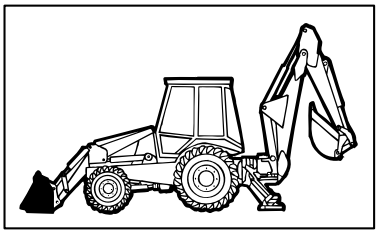

BUCKET 6X1 (1,15 M3) WITH TINE

REF	FN	PART NUMBER	YR/SN	QTY	DESCRIPTION
1		85820075		1	BUCKET
2		85820076		1	BUCKET
3		85820018		4	SCREW M10X90
4		85820035		4	NUT M10X1,5
5		85820021		1	SCREW M8X120
6		85820031		5	NUT M8
7		85820034		12	SCREW M6X30
8		85820026		2	PLATE
9		85820028		12	CLAMP
10		85820081		2	PIN
11		85824249		2	SUPPORT
12		85820014		5	NIPPLE, LUBE M10X1
13		85820062		2	FORK, BUCKET
14		85820067		2	PIN
15		85820068		2	PIN, SPLIT (COTTER)
16		85820016		2	PIN, ROLL 10X80
17		85820017		2	PIN
18		85820005		2	CYLINDER
19		85820013		4	BUSHING
20		85820015		2	PIN
21		85820007		8	SCREW M14X35
22		85820009		8	WASHER, SEALING
23		85820008		10	NUT M14X2
24		85820072		1	BLADE, KNIFE
25		85820025		4	CONNECTOR, HYD.
26		NSS		3	NOT SERVICED SEPARATELY
27		85824362		2	HOSE, FLEXIBLE
28		85824361		2	HOSE, FLEXIBLE
29		85820039		2	TUBE, RIGID
30		85820040		2	CONNECTOR, HYD.
31		85820038		2	TUBE, RIGID
32		85820064		2	PIN
33		85820069		2	PLUG
34		85820065		2	BRACKET
35		85820027		4	CLAMP
36		85820019		2	PIN
37		85820020		2	SCREW M14X30

470	01	p2	02/05

BUCKET 6X1 (1,15 M3) WITH TINE

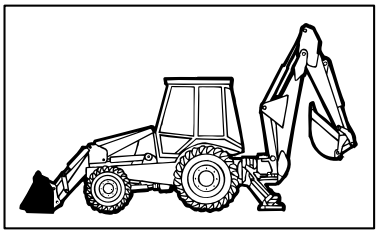

BUCKET 6X1 (1,15 M3) WITH TINE

REF	FN	PART NUMBER	YR/SN	QTY	DESCRIPTION
38		85820011		4	SCREW M8X16
39		85820012		4	WASHER, SEALING
40		85820010		2	GUARD
41		85820030		2	SCREW M8X45
42		NSS		1	NOT SERVICED SEPARATELY

470	02	p1	02/05

BUCKET 6X1 (1,15 M3) WITH TINE

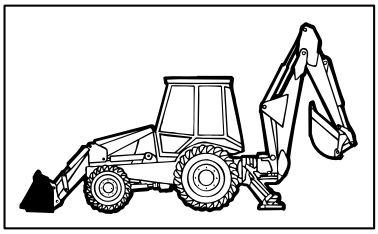

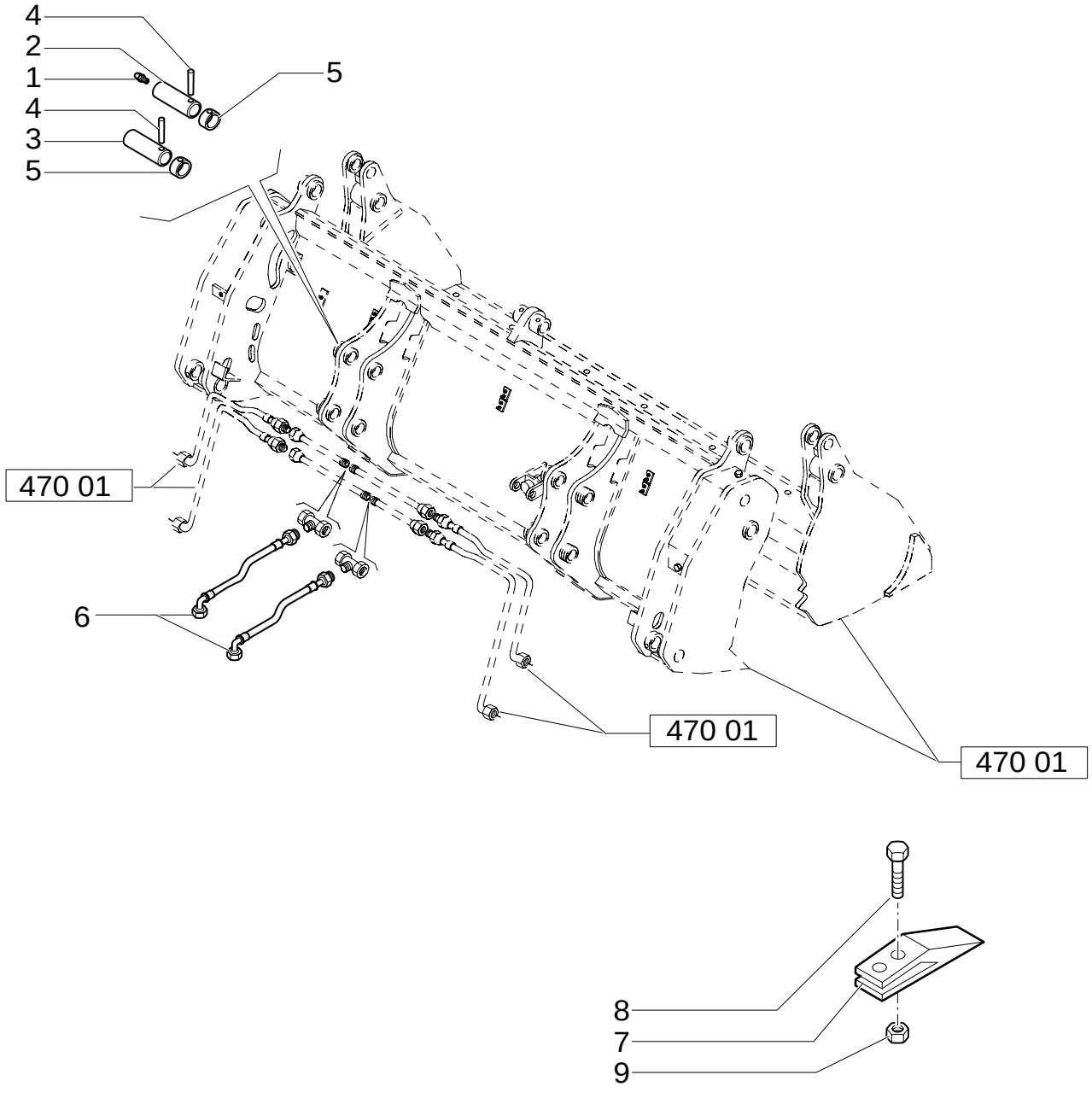

BUCKET 6X1 (1,15 M3) WITH TINE

REF	FN	PART NUMBER	YR/SN	QTY	DESCRIPTION
1		87901S8		2	NIPPLE, LUBE 1/8"-27
2		85804533		2	PIN, ROLL
3		85805306		2	PIN, ROLL
4		85804534		4	PIN, ROLL
5		85802974		4	RING
6		85820819		2	HOSE, FLEXIBLE L=800 MM.
7		85811440		8	LUG
8		85801371		16	BOLT
9		85801470		16	NUT 5/8"-11

470/ 1	01	p1	11/05

BUCKET 6X1 (1,15 M3) WITH TINE "COMMON GREY"

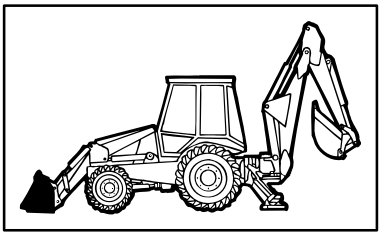

KIT KIT KIT 8=●

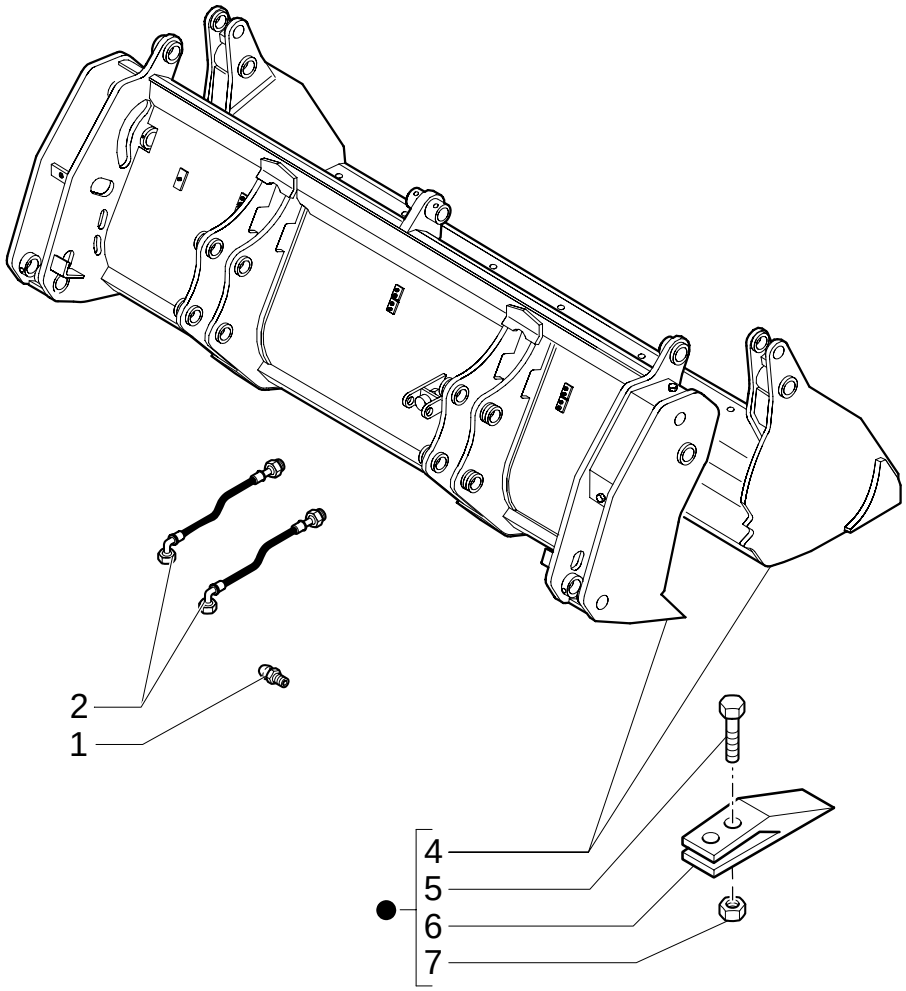

BUCKET 6X1 (1,15 M3) WITH TINE "COMMON GREY"

REF	FN	PART NUMBER	YR/SN	QTY	DESCRIPTION
1		87901S8		2	NIPPLE, LUBE 1/8"-27 NPTF
2		85820819		2	HOSE, FLEXIBLE L=800 MM.
4		87308850		1	BUCKET 6x1
5		85801371		8	BOLT
6		85811440		8	LUG
7		85801470		8	NUT
8		{47334650}		1	

470/ 2	01	p1	02/05

BUCKET 6X1 (1,15 M3) WITH TINE "COMMON GREY"

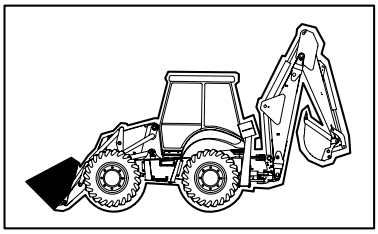

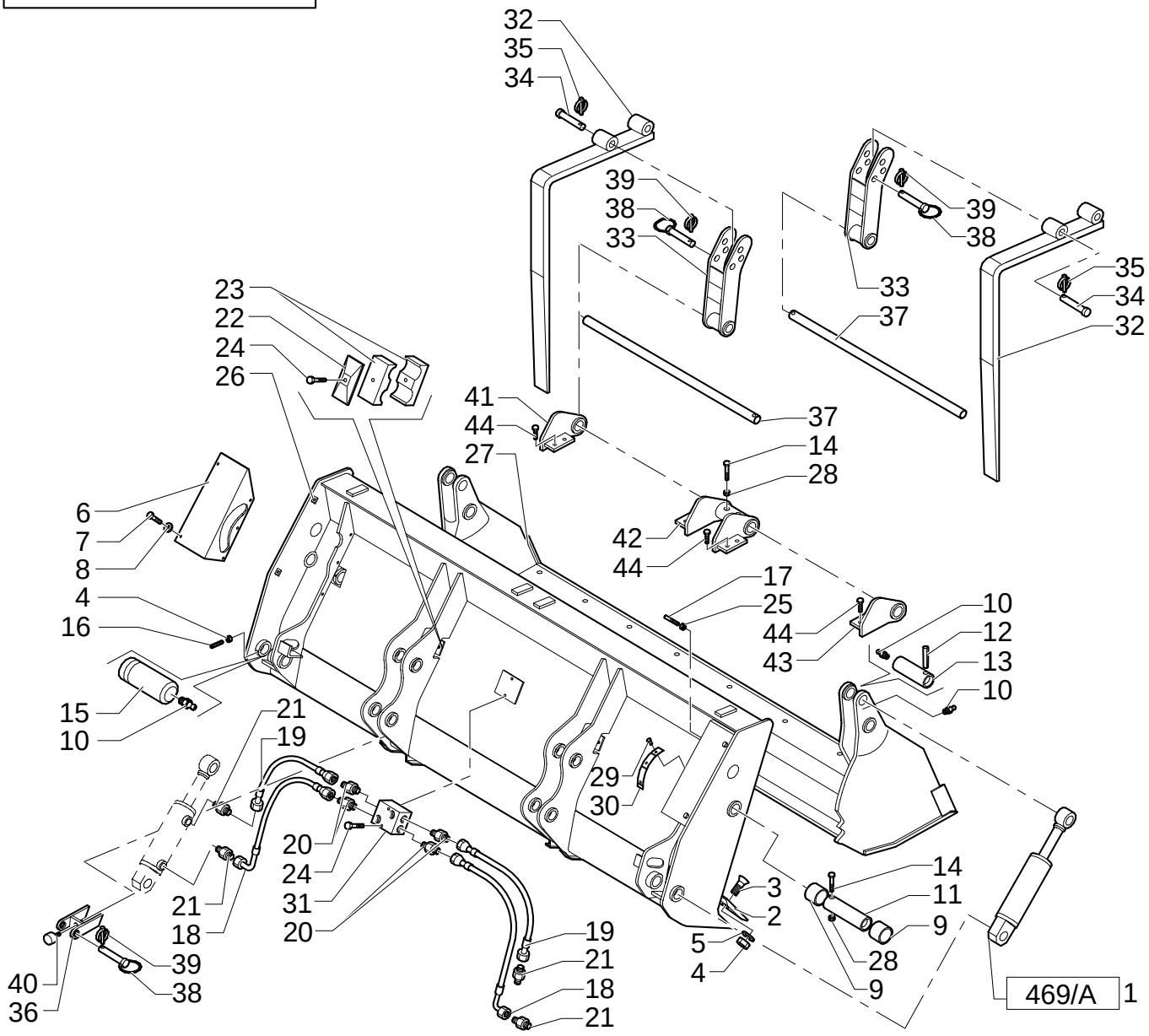

BUCKET 6X1 (1,15 M3) WITH TINE "COMMON GREY"

REF	FN	PART NUMBER	YR/SN	QTY	DESCRIPTION
1		85820005		2	CYLINDER
2		87308642		1	BLADE, DOZER
3		87312328		8	SCREW M14x40
4		85820008		10	NUT M14x2
5		85820009		8	WASHER, SEALING
6		87312330		2	GUARD M8x16
7		85820011		10	SCREW
8		85820012		10	WASHER, SEALING
9		85820013		4	BUSHING
10		85820014		6	NIPPLE, LUBE M10x1
11		85820015		2	PIN
12		85820016		2	PIN, ROLL 10x80
13		85820017		2	PIN
14		85820018		4	SCREW M10x90
15		87310286		2	PIN
16		85820020		2	SCREW M14x30
17		87312331		1	SCREW M8x120
18		87312427		2	HOSE, FLEXIBLE
19		87312436		2	HOSE, FLEXIBLE
20		87312343		4	CONNECTOR, HYD.
21		87312333		2	CONNECTOR, HYD.
22		85820026		2	PLATE
23		85820027		4	CLAMP
24		85820030		4	SCREW M8x45
25		85820031		5	NUT M8
26		87308638		1	LOADER
27		87308915		1	LOADER
28		85820035		4	NUT M10x1,5
29		{85820036}		3	4x10
30		{85820037}		1	
31		87312335		1	VALVE, HYDRAULIC
32		87310367		2	FORK, BUCKET
33		87310368		2	SUPPORT
34		87310369		2	PIN
35		85825177		2	PIN, SPLIT (COTTER) D=8
36		87310370		2	BRACKET
37		87310378		2	SHAFT

470/ 2	01	p2	02/05

BUCKET 6X1 (1,15 M3) WITH TINE "COMMON GREY"

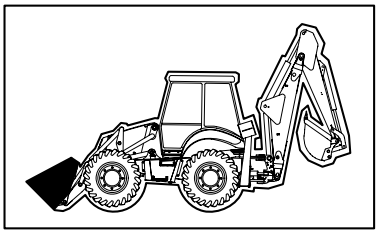

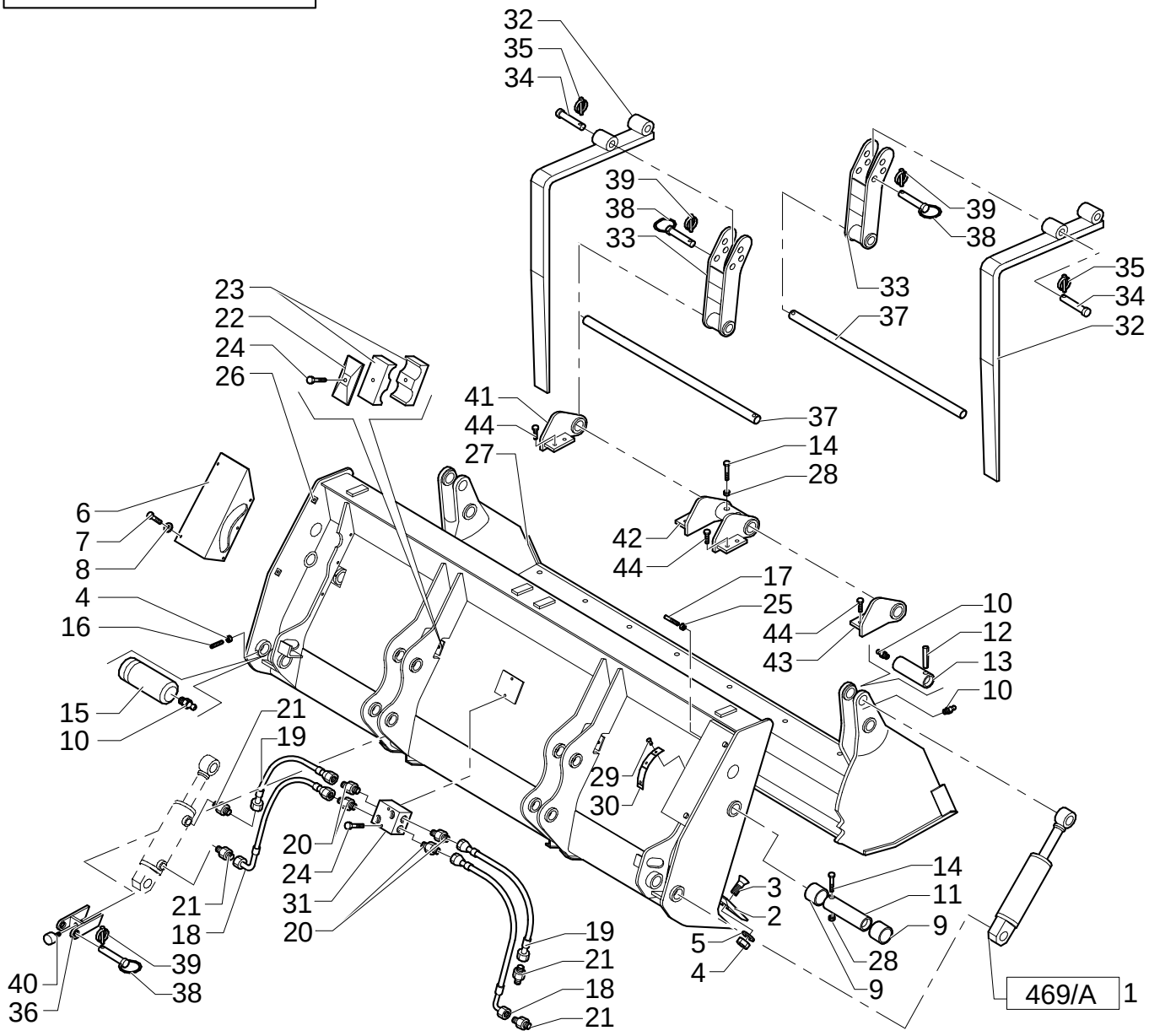

BUCKET 6X1 (1,15 M3) WITH TINE "COMMON GREY"

REF	FN	PART NUMBER	YR/SN	QTY	DESCRIPTION
38		85820064		2	PIN
39		85820068		2	PIN, SPLIT (COTTER) D=11
40		85820069		2	PLUG
41		87310373		1	SUPPORT LH
42		87310374		1	SUPPORT
43		87310375		1	SUPPORT RH
44		87310376		8	SCREW M16x30

475	01	p1	02/05

BUCKET 4X1 (1,15 M3) WITH BLADE

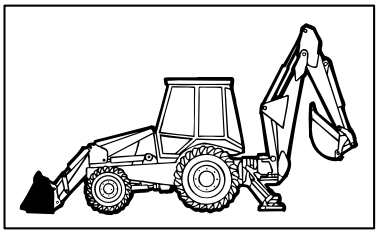

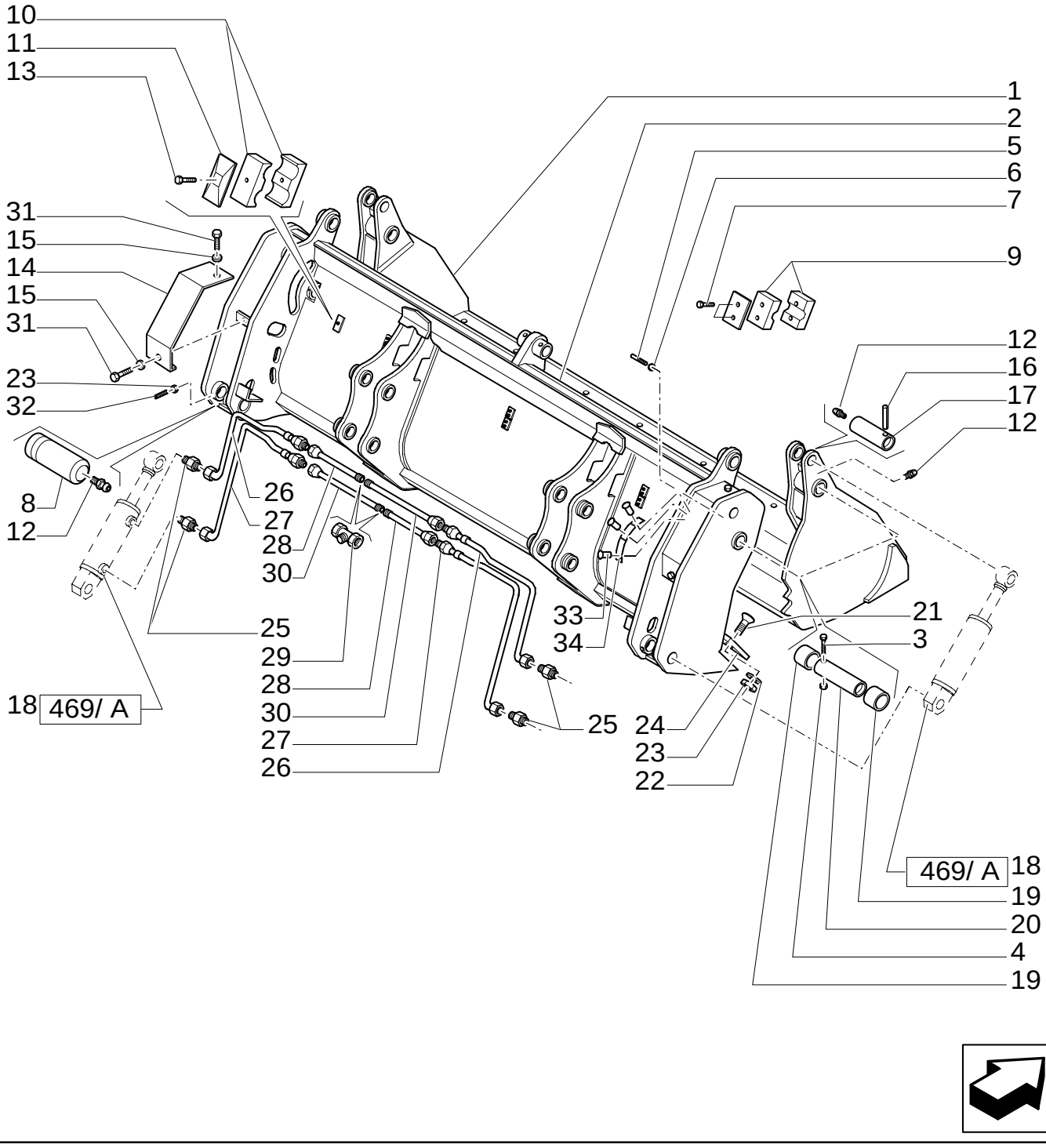

BUCKET 4X1 (1,15 M3) WITH BLADE

REF	FN	PART NUMBER	YR/SN	QTY	DESCRIPTION
1		85820075		1	BUCKET
2		85820076		1	BUCKET
3		85820018		2	SCREW M10X90
4		85820035		2	NUT M10X1,5
5		85820021		1	SCREW M8X120
6		85820031		1	NUT M8
7		85820034		12	SCREW M6X30
8		85820019		2	PIN
9		85820028		12	CLAMP
10		85820027		2	CLAMP
11		85820026		2	PLATE
12		85820014		6	NIPPLE, LUBE M10X1
13		85820030		2	SCREW
14		85820010		2	GUARD
15		85820012		4	WASHER, SEALING
16		85820016		2	PIN, ROLL 10X80
17		85820017		2	PIN
18		85820005		2	CYLINDER
19		85820013		4	BUSHING
20		85820015		2	PIN
21		85820007		8	SCREW M14X35
22		85820009		8	WASHER, SEALING
23		85820008		10	NUT M14X2
24		85820072		1	BLADE, KNIFE
25		85820025		4	CONNECTOR, HYD.
26		85824362		2	HOSE, FLEXIBLE
27		85824361		2	HOSE, FLEXIBLE
28		85820039		2	TUBE, RIGID
29		85820040		2	CONNECTOR, HYD.
30		85820038		2	TUBE, RIGID
31		85820011		2	SCREW
32		85820020		2	SCREW
33		NSS		3	NOT SERVICED SEPARATELY
34		NSS		1	NOT SERVICED SEPARATELY

475	02	p1	02/05

BUCKET 4X1 (1,15 M3) WITH BLADE

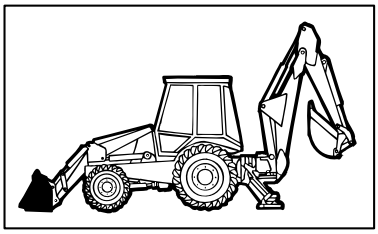

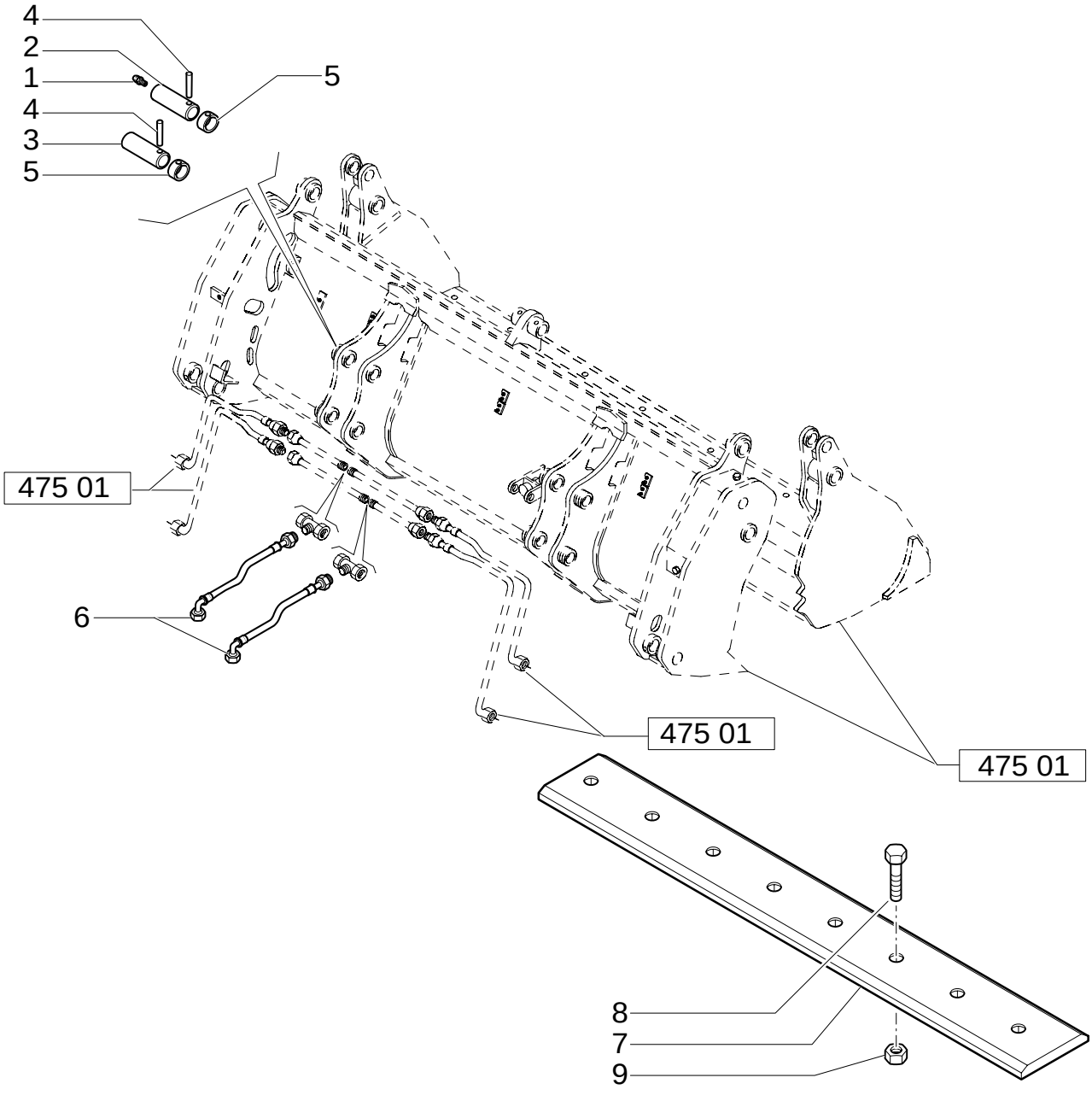

BUCKET 4X1 (1,15 M3) WITH BLADE

REF	FN	PART NUMBER	YR/SN	QTY	DESCRIPTION
1		87901S8		2	NIPPLE, LUBE 1/8"-27
2		85804533		2	PIN, ROLL
3		85805306		2	PIN, ROLL
4		85804534		4	PIN, ROLL
5		85802974		4	RING
6		85820819		2	HOSE, FLEXIBLE L=800 MM.
7		85812242		1	BLADE, KNIFE L=2400 MM.
8		85801371		8	BOLT
9		85801470		8	NUT 5/8"-11

475/ 1	01	p1	11/05

BUCKET 4X1 (1,15 M3) WITH BLADE "COMMON GREY"

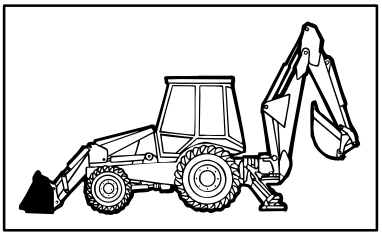

KIT KIT KIT 7=●

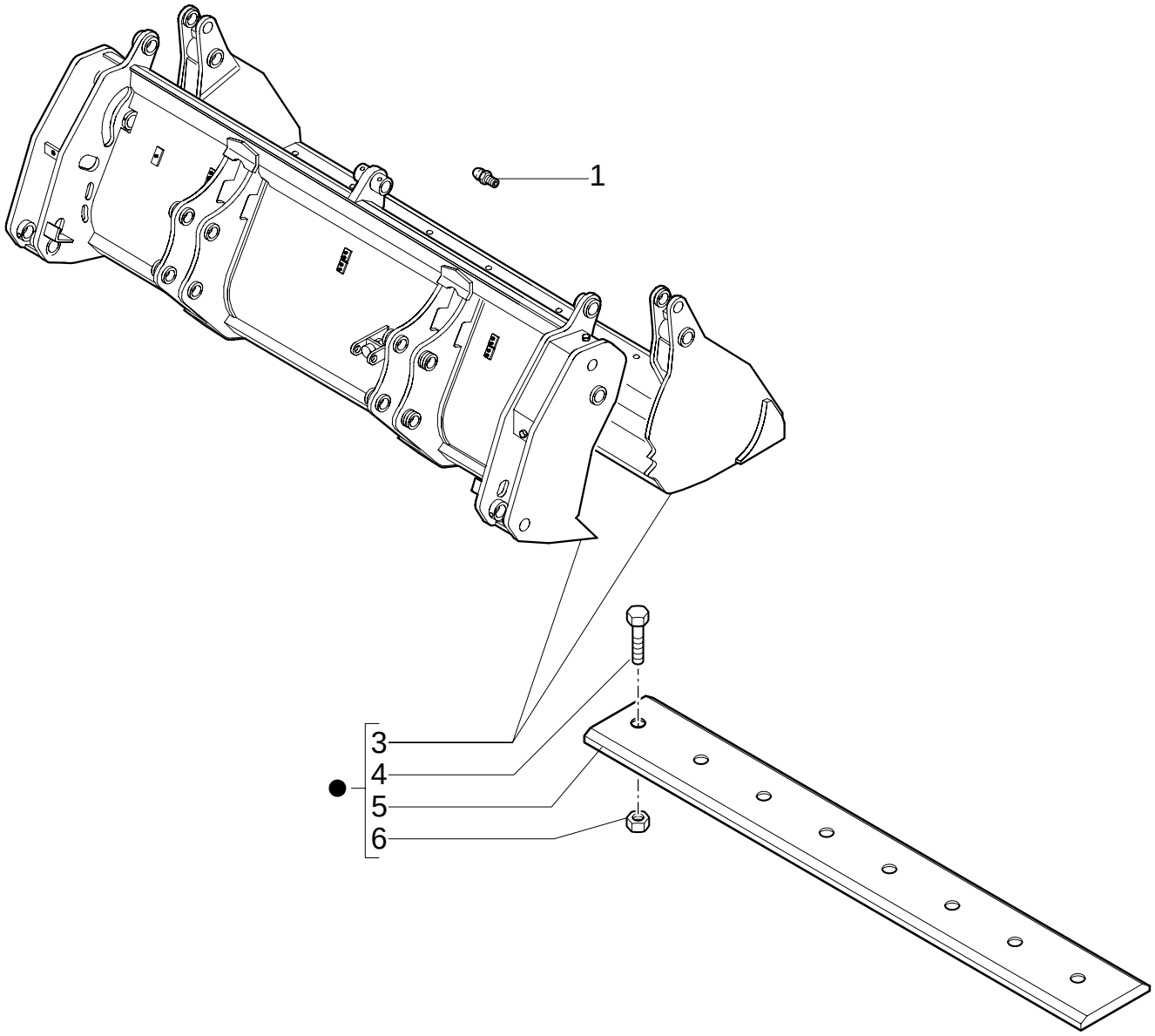

BUCKET 4X1 (1,15 M3) WITH BLADE "COMMON GREY"

REF	FN	PART NUMBER	YR/SN	QTY	DESCRIPTION
1		87901S8		2	NIPPLE, LUBE 1/8"-27 NPTF
3		87308843		1	BUCKET 4x1
4		85801371		8	BOLT
5		85812242		1	BLADE, KNIFE
6		85801470		8	NUT
7		{47334610}		1	

475/ 2	01	p1	02/05

BUCKET 6X1 (1,15 M3) WITH BLADE

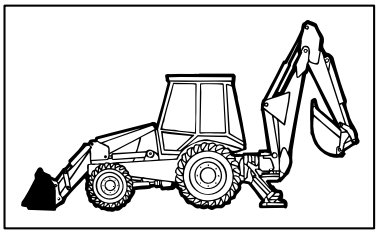

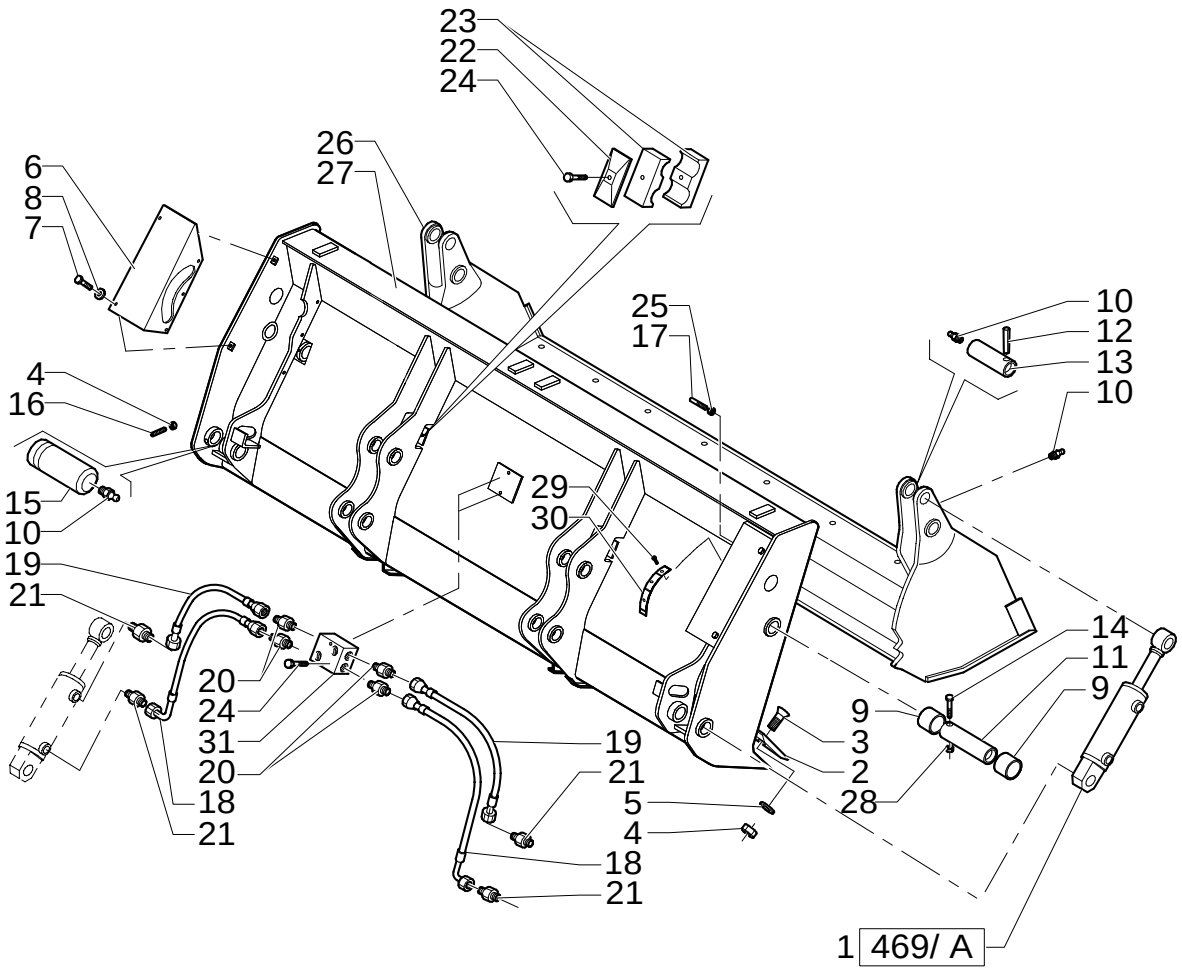

BUCKET 6X1 (1,15 M3) WITH BLADE

REF	FN	PART NUMBER	YR/SN	QTY	DESCRIPTION
1		85820005		2	CYLINDER
2		87308642		1	BLADE, DOZER
3		87312328		8	SCREW M14x40
4		85820008		8	NUT M14x2
5		85820009		10	WASHER, SEALING
6		87312330		2	GUARD
7		85820011		10	SCREW M8x16
8		85820012		10	WASHER, SEALING
9		85820013		4	BUSHING
10		85820014		6	NIPPLE, LUBE M10x1
11		85820015		2	PIN
12		85820016		2	PIN, ROLL 10x80
13		85820017		2	PIN
14		85820018		2	SCREW M10x90
15		87310286		2	PIN
16		85820020		2	SCREW M14x30
17		87312331		1	SCREW M8x120
18		87312427		2	HOSE, FLEXIBLE
19		87312436		2	HOSE, FLEXIBLE
20		87312343		4	CONNECTOR, HYD.
21		87312333		2	CONNECTOR, HYD.
22		85820026		2	PLATE
23		85820027		4	CLAMP
24		85820030		4	SCREW M8x45
25		85820031		1	NUT M8
26		87308915		1	LOADER
27		87308638		1	LOADER
28		85820035		2	NUT M10x1,5
29		{85820036}		3	4x10
30		{85820037}		1	
31		87312335		1	VALVE, HYDRAULIC

476	01	p1	02/05

BUCKET 4X1 (1,15 M3) WITH TINE

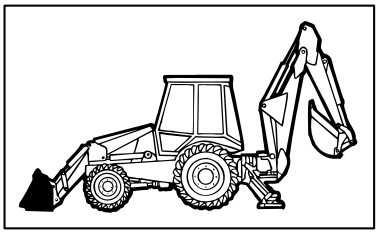

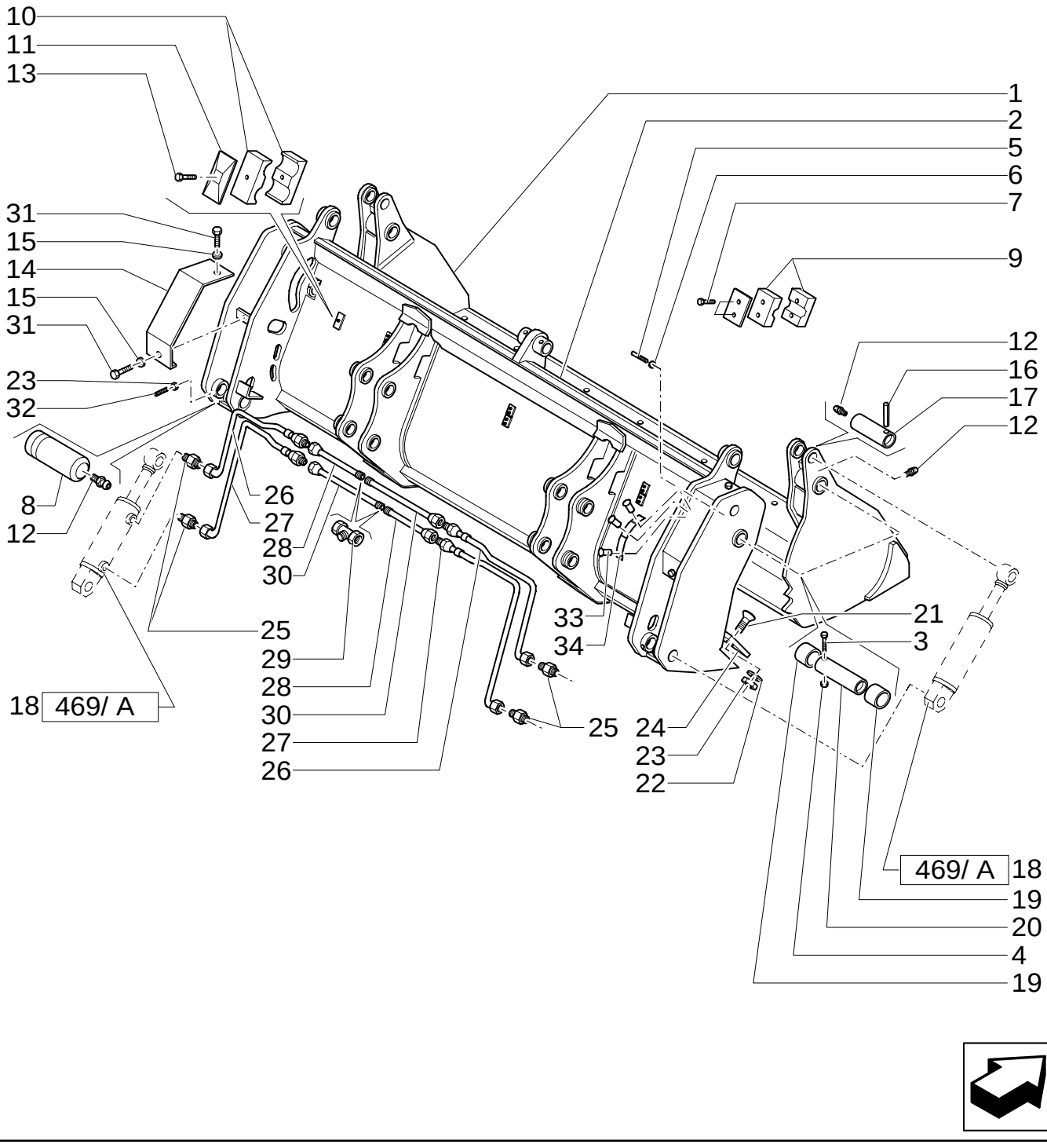

BUCKET 4X1 (1,15 M3) WITH TINE

REF	FN	PART NUMBER	YR/SN	QTY	DESCRIPTION
1		85820075		1	BUCKET
2		85820076		1	BUCKET
3		85820018		2	SCREW M10X90
4		85820035		2	NUT M10X1,5
5		85820021		1	SCREW M8X120
6		85820031		1	NUT M8
7		85820034		12	SCREW M6X30
8		85820019		2	PIN
9		85820028		12	CLAMP
10		85820027		2	CLAMP
11		85820026		2	PLATE
12		85820014		6	NIPPLE, LUBE M10X1
13		85820030		2	SCREW
14		85820010		2	GUARD
15		85820012		4	WASHER, SEALING
16		85820016		2	PIN, ROLL 10X80
17		85820017		2	PIN
18		85820005		2	CYLINDER
19		85820013		4	BUSHING
20		85820015		2	PIN
21		85820007		8	SCREW M14X35
22		85820009		8	WASHER, SEALING
23		85820008		10	NUT M14X2
24		85820072		1	BLADE, KNIFE
25		85820025		4	CONNECTOR, HYD.
26		85824362		2	HOSE, FLEXIBLE
27		85824361		2	HOSE, FLEXIBLE
28		85820039		2	TUBE, RIGID
29		85820040		2	CONNECTOR, HYD.
30		85820038		2	TUBE, RIGID
31		85820011		2	SCREW
32		85820020		2	SCREW
33		NSS		3	NOT SERVICED SEPARATELY
34		NSS		1	NOT SERVICED SEPARATELY

476	02	p1	02/05

BUCKET 4X1 (1,15 M3) WITH TINE

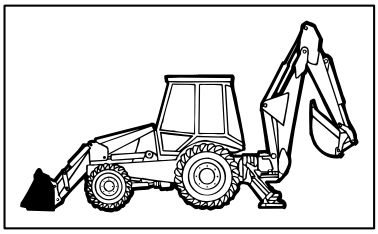

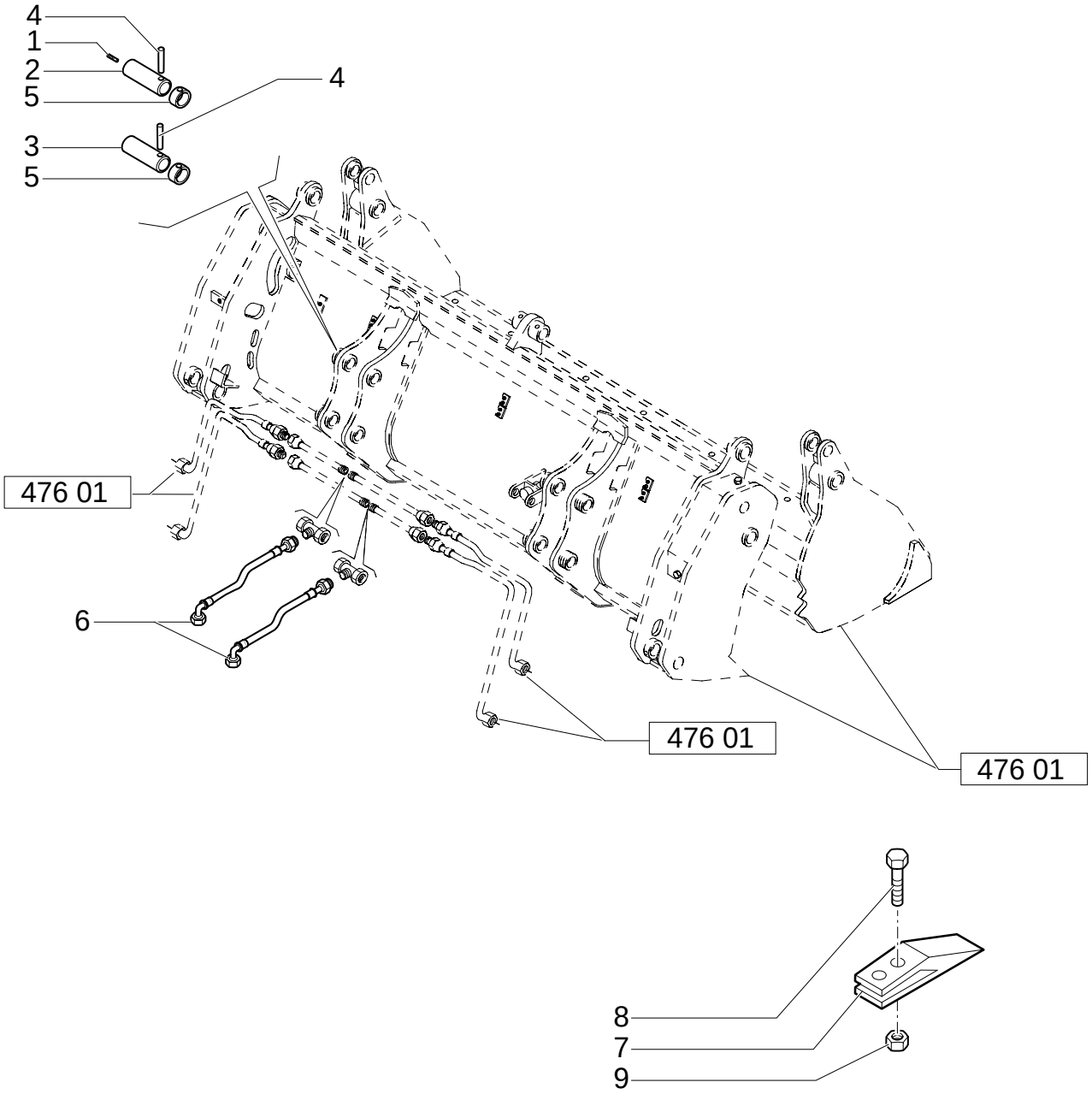

BUCKET 4X1 (1,15 M3) WITH TINE

REF	FN	PART NUMBER	YR/SN	QTY	DESCRIPTION
1		85816242		2	FILTER, AIR
2		85804533		2	PIN, ROLL
3		85805306		2	PIN, ROLL
4		85804534		4	PIN, ROLL
5		85802974		4	RING
6		85820819		2	HOSE, FLEXIBLE L=800 MM.
7		85811440		8	LUG
8		85801371		16	BOLT
9		85801470		16	NUT 5/8"-11

476/ 1	01	p1	11/05

BUCKET 4X1 (1,15 M3) WITH TINE "COMMON GREY"

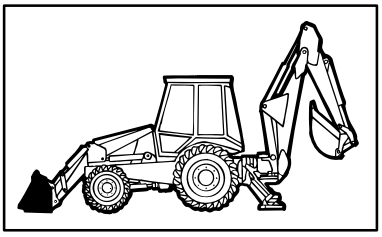

KIT KIT KIT 8=●

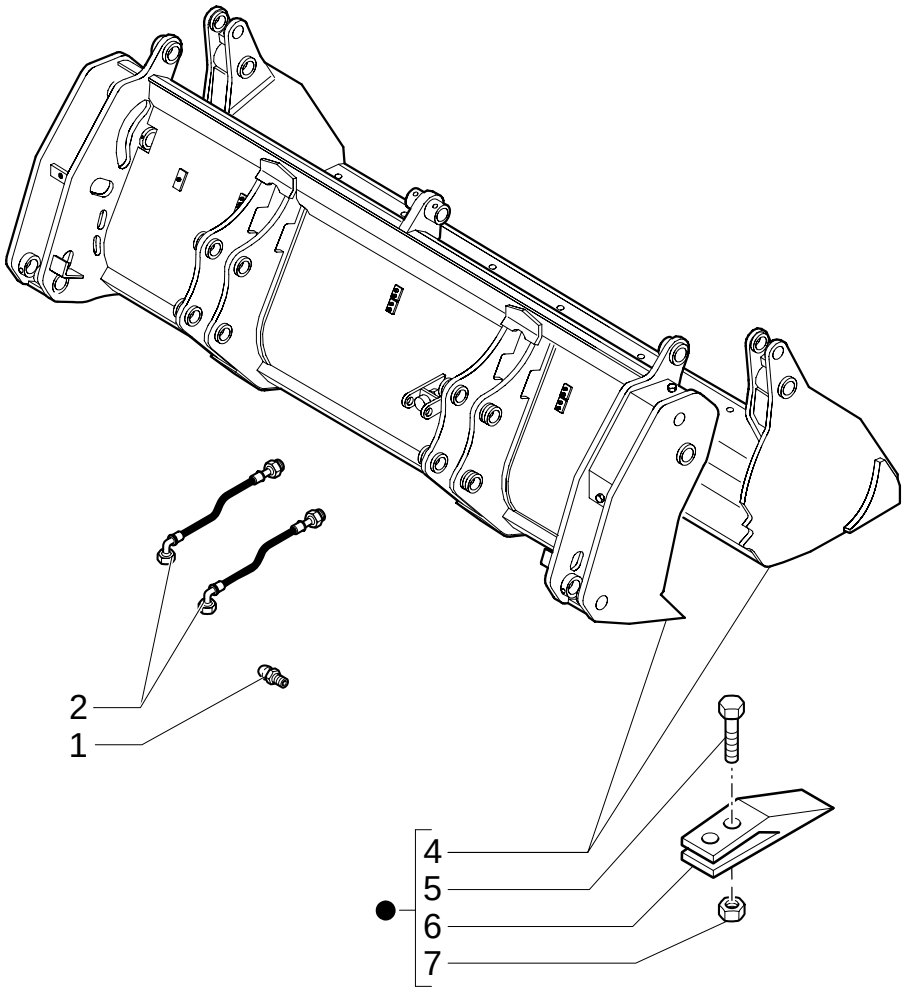

BUCKET 4X1 (1,15 M3) WITH TINE "COMMON GREY"

REF	FN	PART NUMBER	YR/SN	QTY	DESCRIPTION
1		87901S8		2	NIPPLE, LUBE 1/8 - 27 NPTF
2		85820819		2	HOSE, FLEXIBLE L=800 MM.
4		87308843		1	BUCKET 4x1
5		85801371		8	BOLT
6		85811440		8	LUG
7		85801470		8	NUT
8		{47334660}		1	

476/ 2	01	p1	02/05

BUCKET 6X1 (1,15 M3) WITH TINE "COMMON GREY"

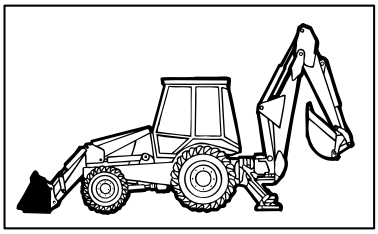

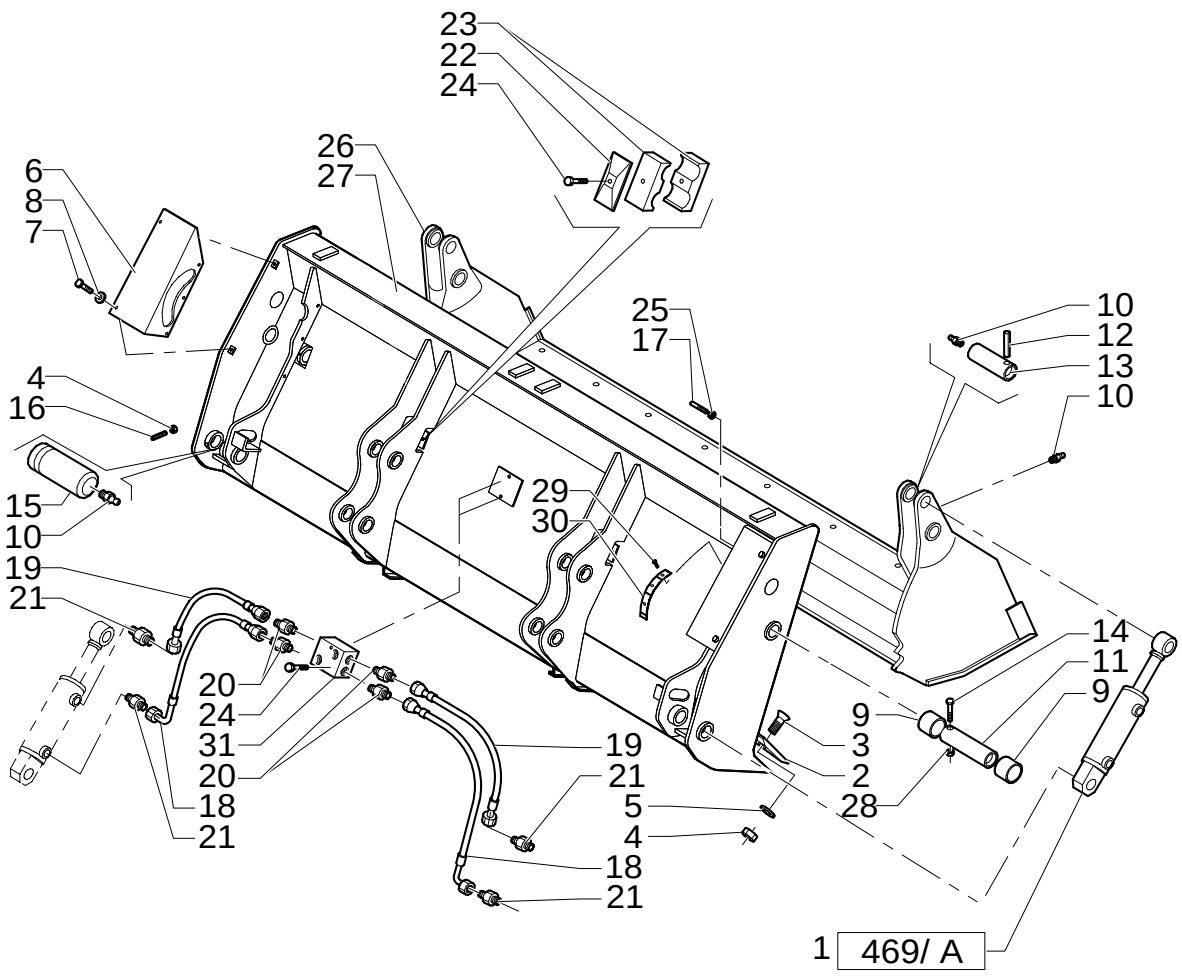

BUCKET 6X1 (1,15 M3) WITH TINE "COMMON GREY"

REF	FN	PART NUMBER	YR/SN	QTY	DESCRIPTION
1		85820005		2	CYLINDER
2		87308642		1	BLADE, DOZER
3		87312328		8	SCREW M14x40
4		85820008		8	NUT M14x2
5		85820009		10	WASHER, SEALING
6		87312330		2	GUARD
7		85820011		10	SCREW M8x16
8		85820012		10	WASHER, SEALING
9		85820013		4	BUSHING
10		85820014		6	NIPPLE, LUBE M10x1
11		85820015		2	PIN
12		85820016		2	PIN, ROLL 10x80
13		85820017		2	PIN
14		85820018		2	SCREW M10x90
15		87310286		2	PIN
16		85820020		2	SCREW M14x30
17		87312331		1	SCREW M8x120
18		87312427		2	HOSE, FLEXIBLE
19		87312436		2	HOSE, FLEXIBLE
20		87312343		4	CONNECTOR, HYD.
21		87312333		2	CONNECTOR, HYD.
22		85820026		2	PLATE
23		85820027		4	CLAMP
24		85820030		4	SCREW M8x45
25		85820031		1	NUT M8
26		87308915		1	LOADER
27		87308638		1	LOADER
28		85820035		2	NUT M10x1,5
29		{85820036}		3	4x10
30		{85820037}		1	
31		87312335		1	VALVE, HYDRAULIC

500	01	p1	02/05

1,13 M3 BUCKET

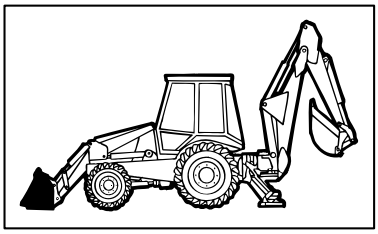

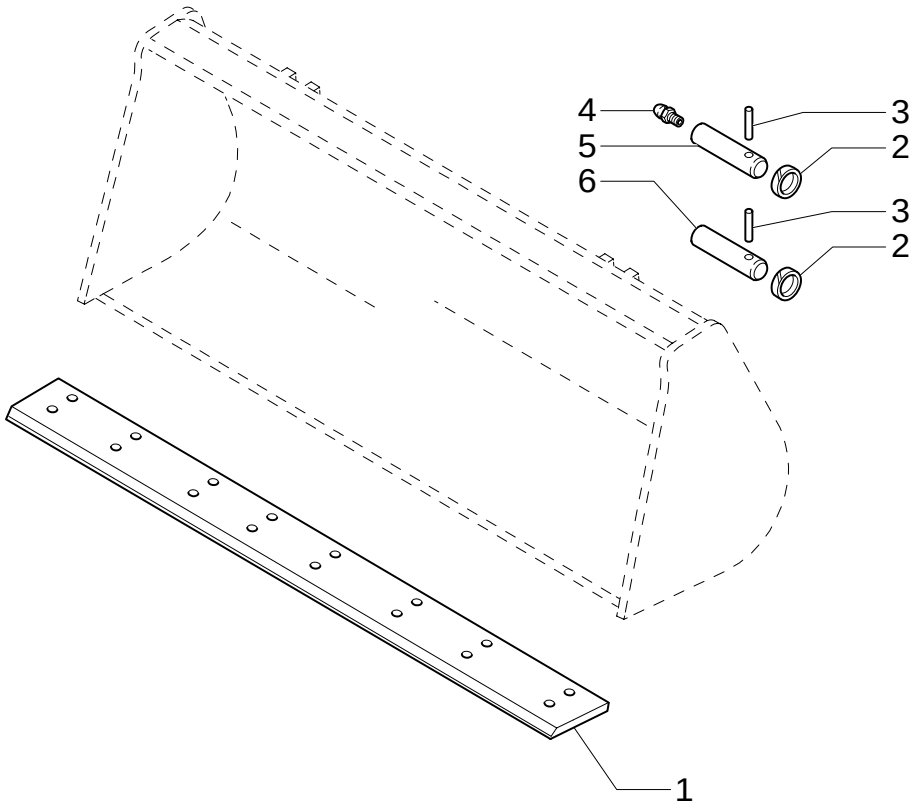

1,13 M3 BUCKET

REF	FN	PART NUMBER	YR/SN	QTY	DESCRIPTION
1	1	85812238		1	BLADE, KNIFE
2		85802974		4	RING
3		85804534		4	PIN, ROLL
4		87901S8		2	NIPPLE, LUBE 1/8"-27
5		85804533		2	PIN, ROLL
6		85805306		2	PIN, ROLL

(1) PART WELDED TO BUCKET

501	01	p1	02/05

1,13 M3 BUCKET W/TINES

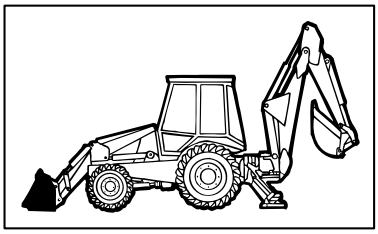

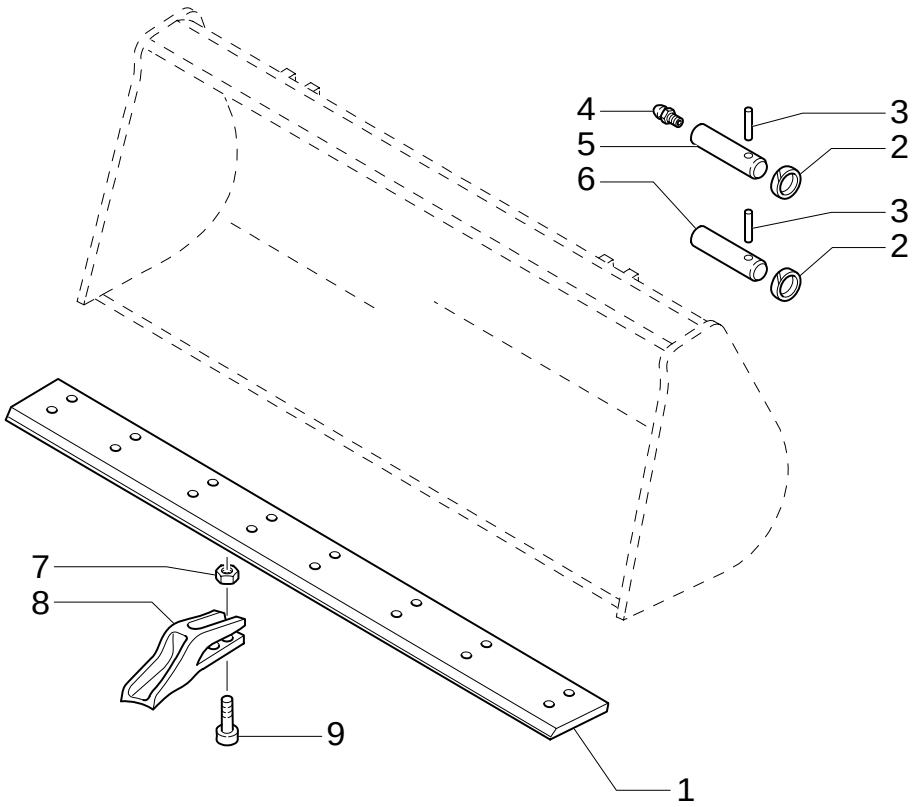

1,13 M3 BUCKET W/TINES

REF	FN	PART NUMBER	YR/SN	QTY	DESCRIPTION
1	1	85812238		1	BLADE, KNIFE
2		85802974		4	RING
3		85804534		4	PIN, ROLL
4		87901S8		2	NIPPLE, LUBE 1/8"-27
5		85804533		2	PIN, ROLL
6		85805306		2	PIN, ROLL
7		85801470		16	NUT 5/8"-11
8		85811440		8	LUG
9		85801371		16	BOLT

(1) PART WELDED TO BUCKET

502	01	p1	02/05

1,13 M3 BUCKET WITH EXTRA REVERSIBLE BLADE

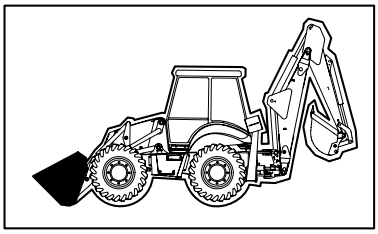

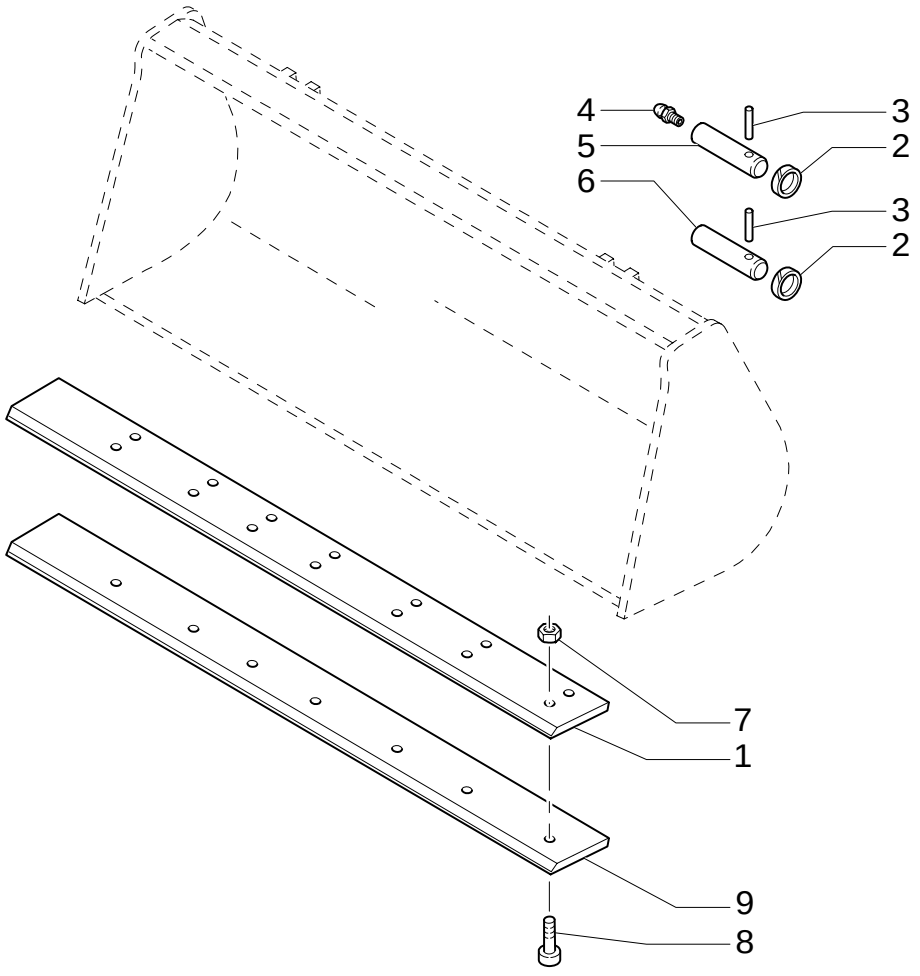

1,13 M3 BUCKET WITH EXTRA REVERSIBLE BLADE

REF	FN	PART NUMBER	YR/SN	QTY	DESCRIPTION
1	1	85812238		1	BLADE, KNIFE
2		85802974		4	RING
3		85804534		4	PIN, ROLL
4		87901S8		2	NIPPLE, LUBE 1/8"-27
5		85804533		2	PIN, ROLL
6		85805306		2	PIN, ROLL
7		85801470		8	NUT 5/8"-11
8		85801371		8	BOLT
9		85812242		1	BLADE, KNIFE REVERSIBLE, L=2400 MM.

(1) PART WELDED TO BUCKET

505	01	p1	02/05

EXTRA REVERSIBLE BLADE

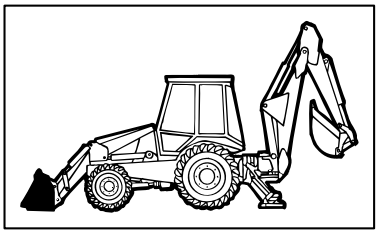

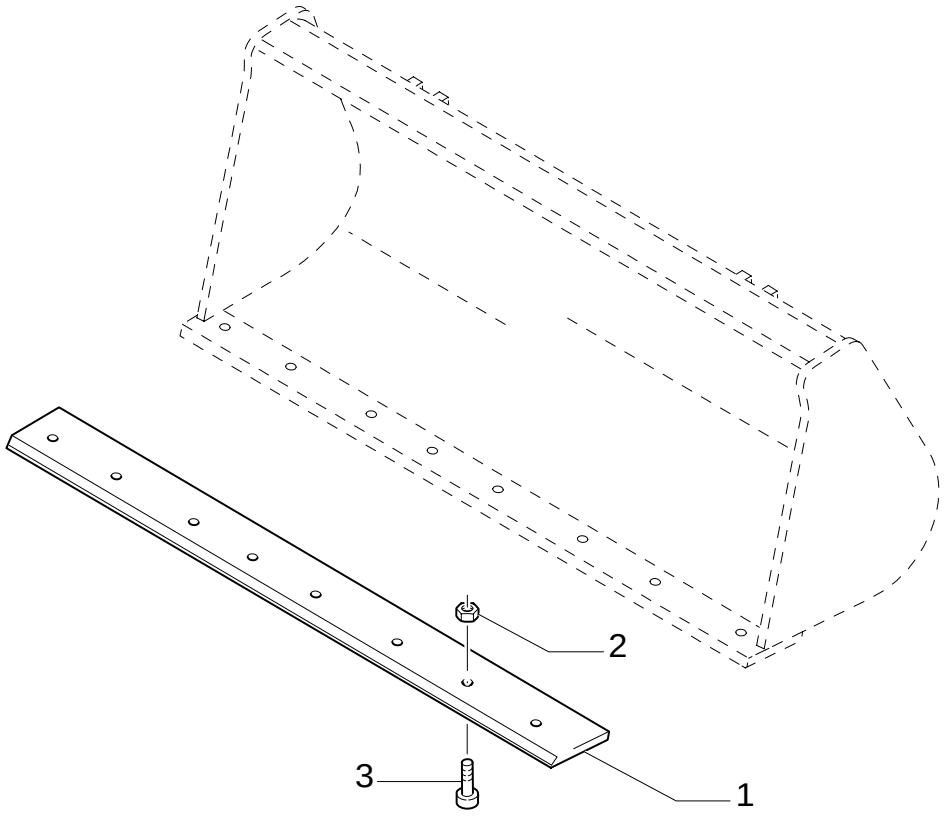

EXTRA REVERSIBLE BLADE

REF	FN	PART NUMBER	YR/SN	QTY	DESCRIPTION
1		85812242		1	BLADE, KNIFE L= 2400 MM.
2		85801470		8	NUT 5/8"-11
3		85801371		8	BOLT

514/ C	01	p1	11/05

HYDRAULIC BUCKET CYLINDER

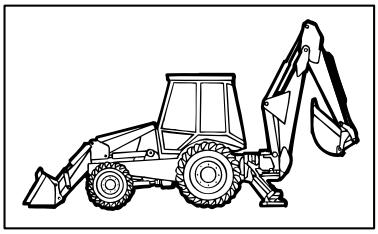

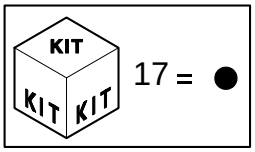

HYDRAULIC BUCKET CYLINDER

REF	FN	PART NUMBER	YR/SN	QTY	DESCRIPTION
1		87414976		1	BEARING, NYLON
2		87414506		1	GLAND
3		87427999		1	SCREW
4		87421144		1	O-RING
5	1	87408120		1	PLUNGER
6	2	83963252		1	ROD
7		D7NNC512G		4	BUSHING
8		87440401		1	BACK-UP RING
9		87408634		1	Ring, Wear
10	2	E7NNC501AA		1	BARREL
11		87414980		1	PACKAGE, SEALS
12		87901S8		2	NIPPLE, LUBE 1/8"-27
13		87414979		1	WIPER
14		D9NNC513BA		4	SEAL PROTECTION
15		87414333		1	SEAL, HYD-CYLINDER
16		87414341		1	RING
17		87424197		1	CYLINDER HEAD
18		87315527		1	HYDRAULIC CYLINDER

(1) Includes 9, 15, 16
(2) Includes 7

514/ E	01	p1	11/05

HYDRAULIC DITCHING CYLINDER

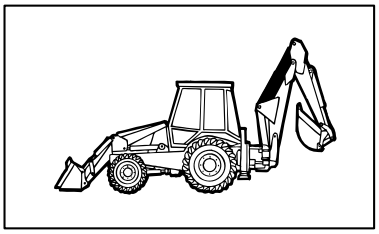

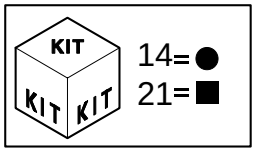

HYDRAULIC DITCHING CYLINDER

REF	FN	PART NUMBER	YR/SN	QTY	DESCRIPTION
1		87315531		1	HYDRAULIC CYLINDER
2		86982444		1	BOLT, SPECIAL
3		{86621058}		1	
4	1	87425174		1	PLUNGER
5		87414336		1	SEAL, HYD-CYLINDER
6		87414344		1	RING
7		D9NNC513BA		1	SEAL PROTECTION
8		87414976		1	BEARING, NYLON
9		87421147		1	O-RING
10		87440411		1	BACK-UP RING
11		87415119		1	KIT
12		87414980		1	PACKAGE, SEALS
13		87414979		1	WIPER
14		87428632		1	KIT, SEALS
15	2	87425131		1	ROD
16		D7NNC512G		2	BUSHING
17		87901S8		1	NIPPLE, LUBE 1/8"-27
18		D9NNC513CA		1	SEAL PROTECTION
19	3	87425142		1	LINER, ENGINE CYLINDER
20		D7NNC512D		2	BUSHING
21		87424199		1	CYLINDER HEAD

(1) Includes 5, 6
(2) Includes 16
(3) Includes 20

515	01	p1	02/05

12" (305MM) BACKHOE BUCKET WITH PIN TEETH

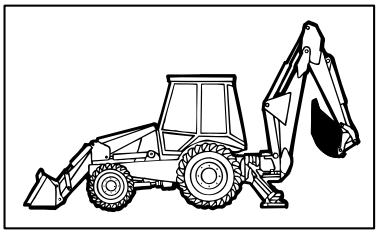

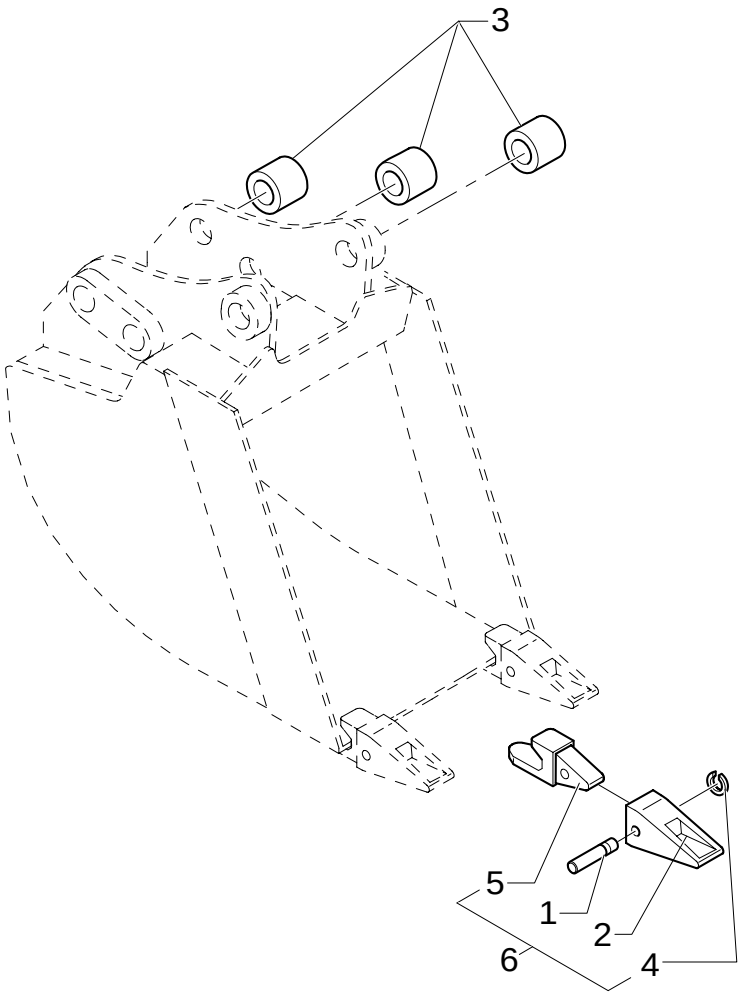

12" (305MM) BACKHOE BUCKET WITH PIN TEETH

REF	FN	PART NUMBER	YR/SN	QTY	DESCRIPTION
1		85801097		3	PIN
2		85811432		3	TOOTH, BUCKET
3		D7NNC584A		6	BUSHING
4		85801098		3	STOP
5		85821788		3	TOOTH, BUCKET
6	1	NSS		3	NOT SERVICED SEPARATELY

(1) Includes 1 To 5

12" (305MM) BACKHOE BUCKET WITH BOLT-ON TEETH

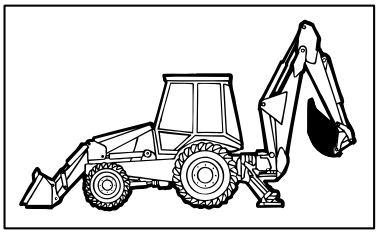

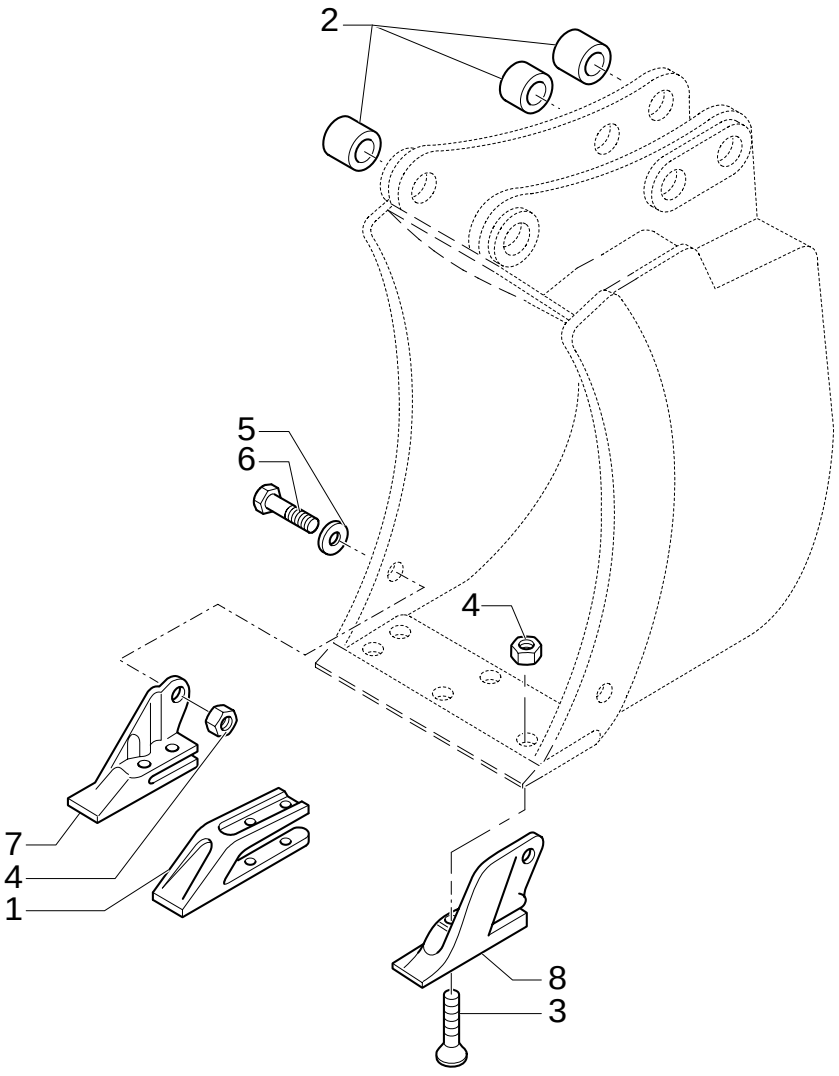

12" (305MM) BACKHOE BUCKET WITH BOLT-ON TEETH

REF	FN	PART NUMBER	YR/SN	QTY	DESCRIPTION
1		85811440		1	LUG
2		D7NNC584A		6	BUSHING
3		85801371		6	BOLT
4		85801470		8	NUT 5/8"-11
5		10520211		2	WASHER
6		D5NN94420N02B		2	WEATHERSTRIP 5/8"-11X1.75
7		85801377		1	LUG RH
8		85801376		1	LUG LH

516	01	p1	02/05

18" (457MM) BACKHOE BUCKET WITH PIN TEETH

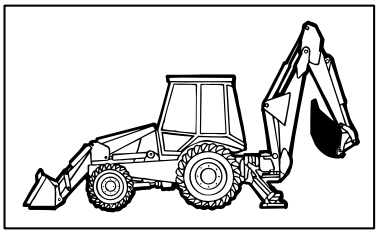

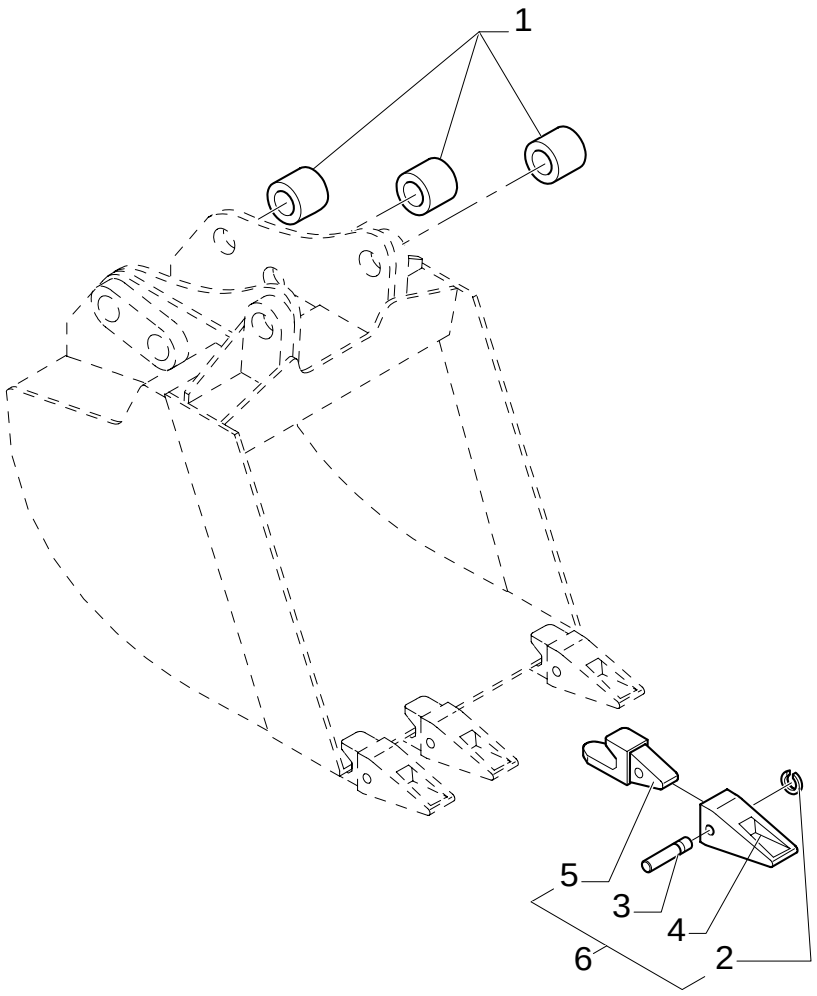

18" (457MM) BACKHOE BUCKET WITH PIN TEETH

REF	FN	PART NUMBER	YR/SN	QTY	DESCRIPTION
1		D7NNC584A		6	BUSHING
2		85801098		4	STOP
3		85801097		4	PIN
4		85811432		4	TOOTH, BUCKET
5		85821788		4	TOOTH, BUCKET
6	1	NSS		4	NOT SERVICED SEPARATELY

(1) Includes 1 To 5

516	02	p1	02/05

18" (457MM) BACKHOE BUCKET WITH BOLT-ON TEETH

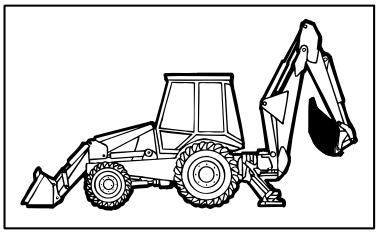

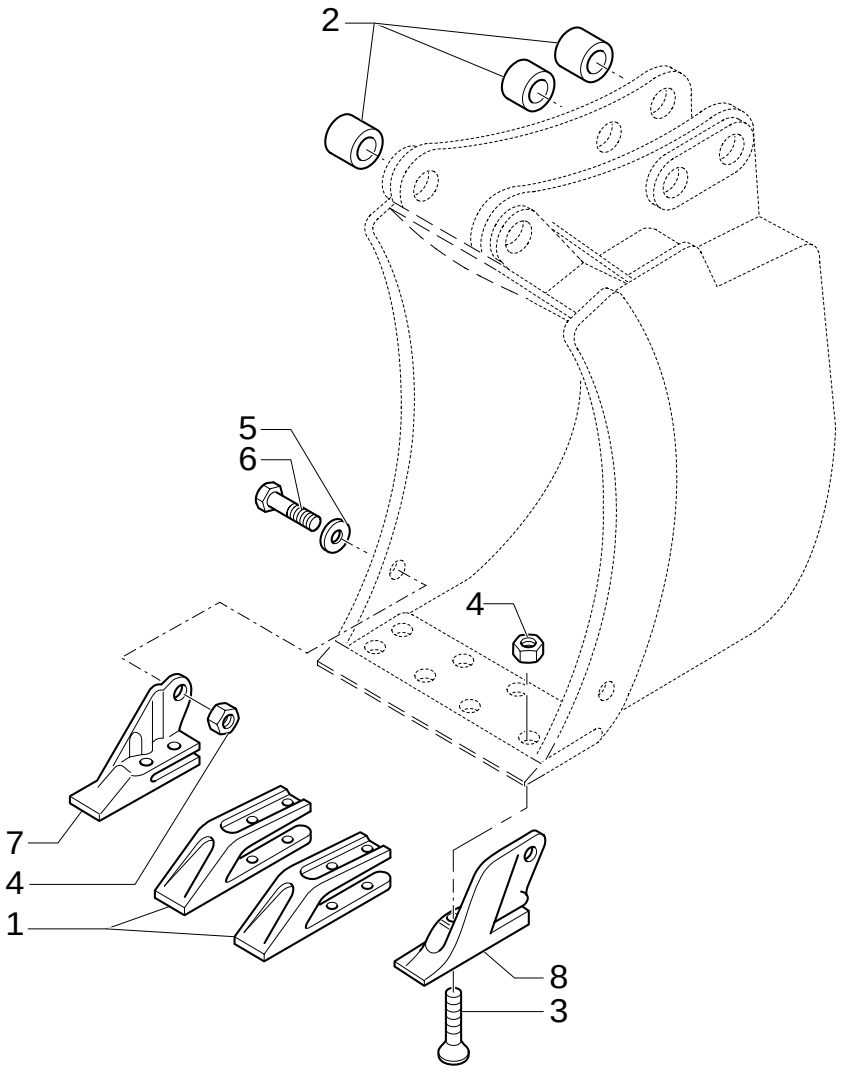

18" (457MM) BACKHOE BUCKET WITH BOLT-ON TEETH

REF	FN	PART NUMBER	YR/SN	QTY	DESCRIPTION
1		85811440		2	LUG
2		D7NNC584A		6	BUSHING
3		85801371		8	BOLT
4		85801470		10	NUT 5/8"-11
5		10520211		2	WASHER
6		D5NN94420N02B		2	WEATHERSTRIP 5/8"-11X1.75
7		85801377		1	LUG RH
8		85801376		1	LUG LH

517	01	p1	02/05

24" (610MM) BACKHOE BUCKET WITH PIN TEETH

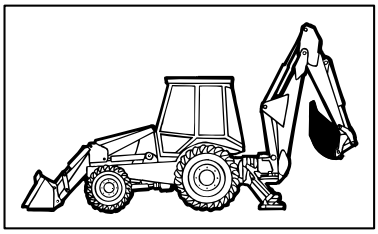

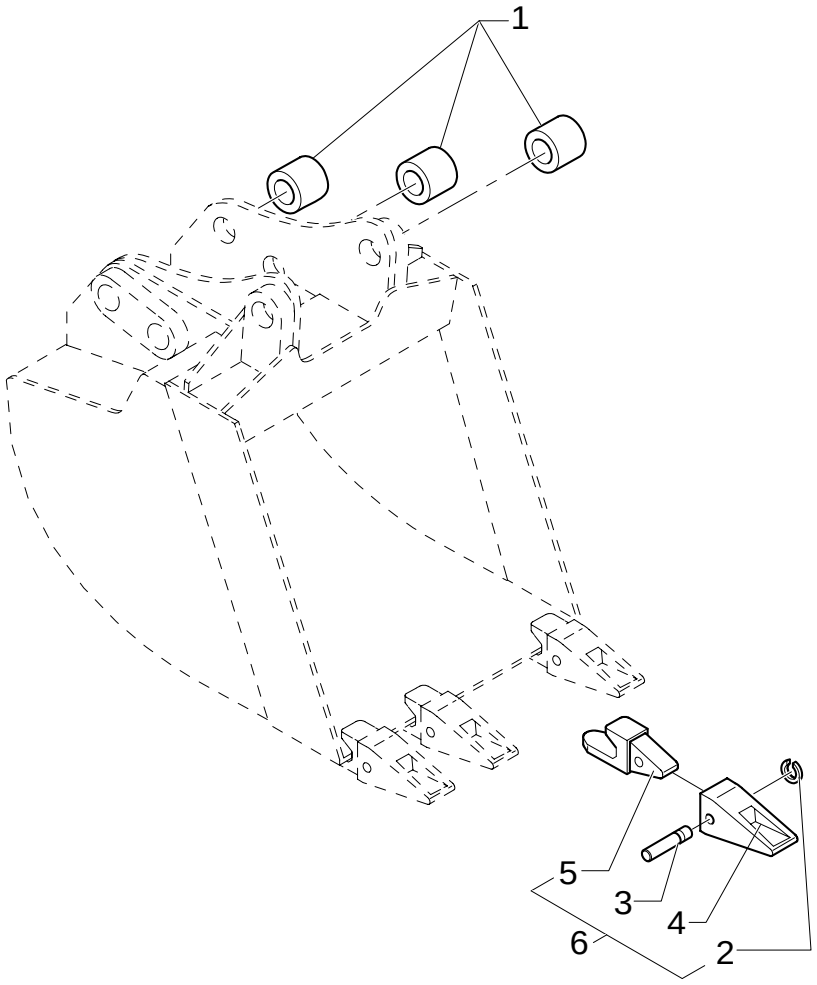

24" (610MM) BACKHOE BUCKET WITH PIN TEETH

REF	FN	PART NUMBER	YR/SN	QTY	DESCRIPTION
1		D7NNC584A		6	BUSHING
2		85801098		4	STOP
3		85801097		4	PIN
4		85811432		4	TOOTH, BUCKET
5		85821788		4	TOOTH, BUCKET
6	1	NSS		4	NOT SERVICED SEPARATELY

(1) Includes 1 To 5

517	02	p1	02/05

24" (610MM) BACKHOE BUCKET WITH BOLT-ON TEETH

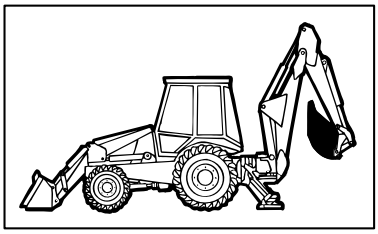

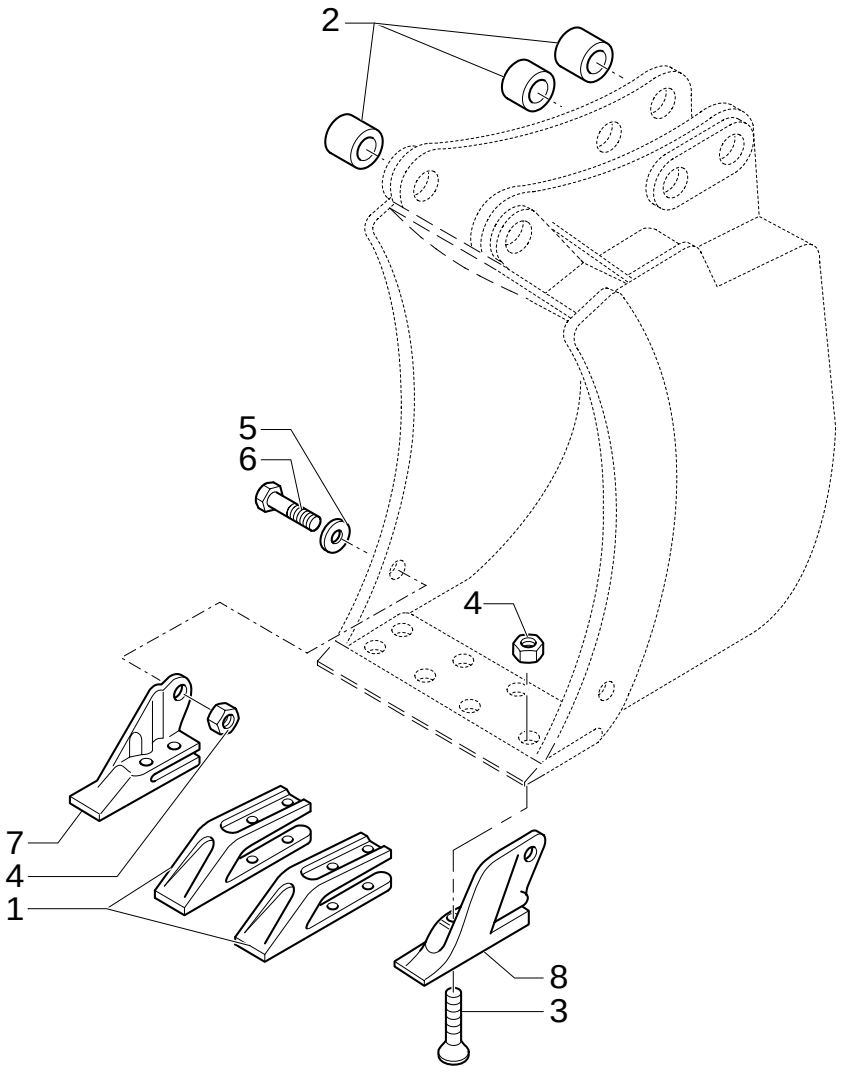

24" (610MM) BACKHOE BUCKET WITH BOLT-ON TEETH

REF	FN	PART NUMBER	YR/SN	QTY	DESCRIPTION
1		85811440		2	LUG
2		D7NNC584A		6	BUSHING
3		85801371		8	BOLT
4		85801470		10	NUT 5/8"-11
5		10520211		2	WASHER
6		88706		2	BOLT Cap, HH, G8, 5/8"-11 x 1-3/4"
7		85801377		1	LUG RH
8		85801376		1	LUG LH

518	01	p1	02/05

30" (762MM) BACKHOE BUCKET WITH PIN TEETH

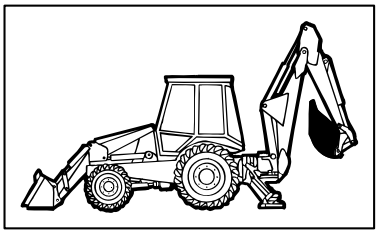

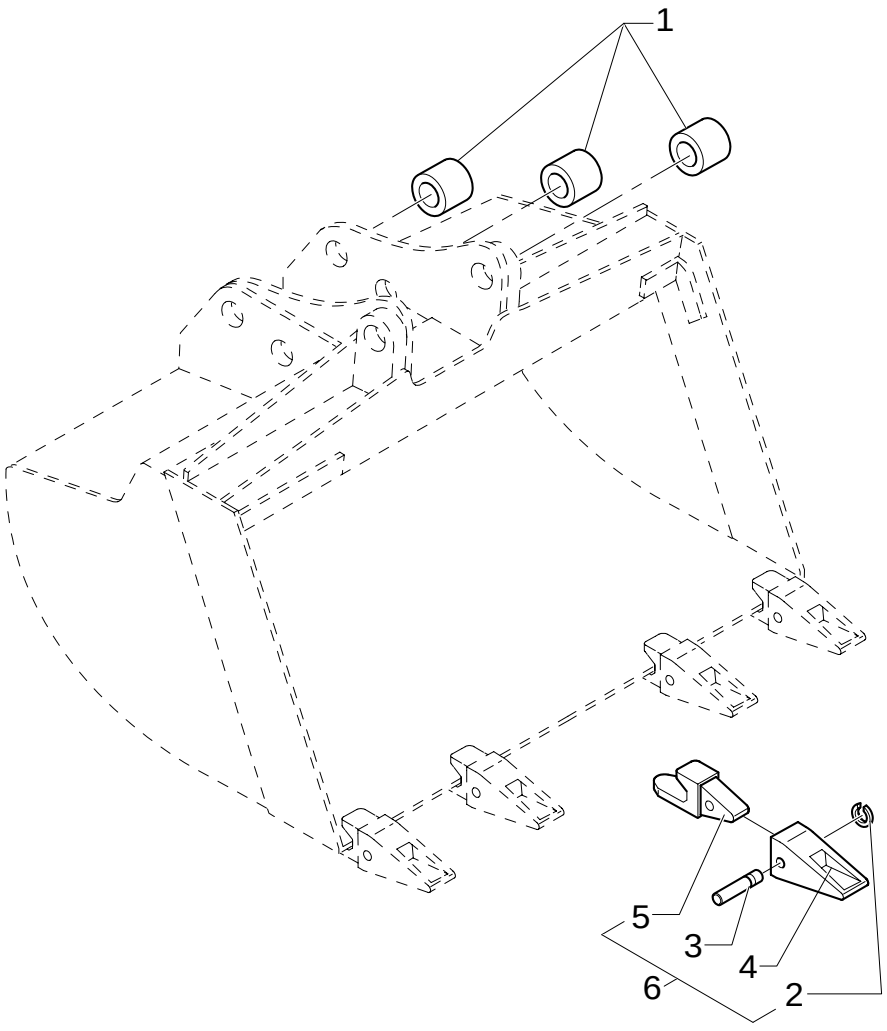

30" (762MM) BACKHOE BUCKET WITH PIN TEETH

REF	FN	PART NUMBER	YR/SN	QTY	DESCRIPTION
1		D7NNC584A		6	BUSHING
2		85801098		5	STOP
3		85801097		5	PIN
4		85811432		5	TOOTH, BUCKET
5		85821788		5	TOOTH, BUCKET
6		{85824018}		5	

518	02	p1	02/05

30" (762MM) BACKHOE BUCKET WITH BOLT-ON TEETH

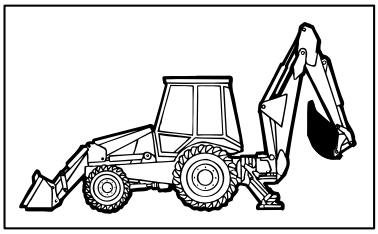

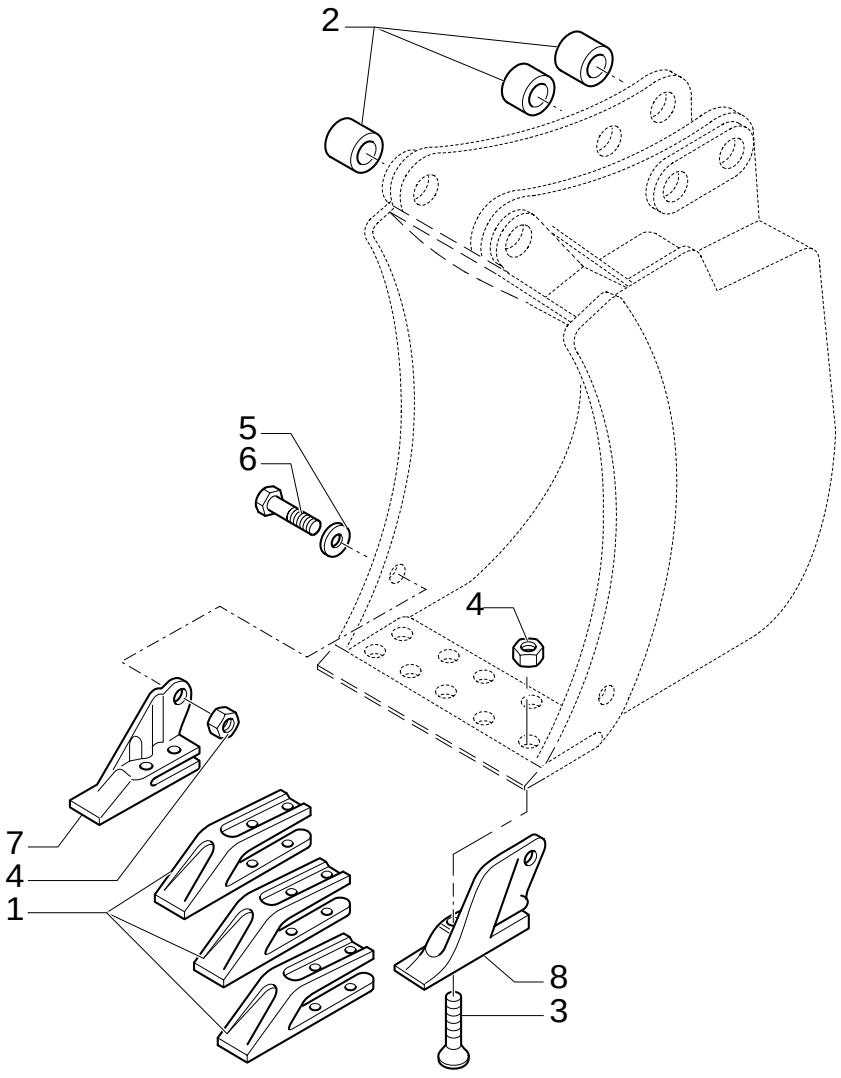

30" (762MM) BACKHOE BUCKET WITH BOLT-ON TEETH

REF	FN	PART NUMBER	YR/SN	QTY	DESCRIPTION
1		85811440		3	LUG
2		D7NNC584A		6	BUSHING
3		85801371		10	BOLT
4		85801470		12	NUT 5/8"-11
5		10520211		2	WASHER
6		88706		2	BOLT Cap, HH, G8, 5/8"-11 x 1-3/4"
7		85801377		1	LUG RH
8		85801376		1	LUG LH

519	01	p1	02/05

36" (914MM) BACKHOE BUCKET WITH PIN TEETH

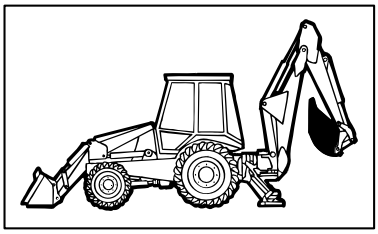

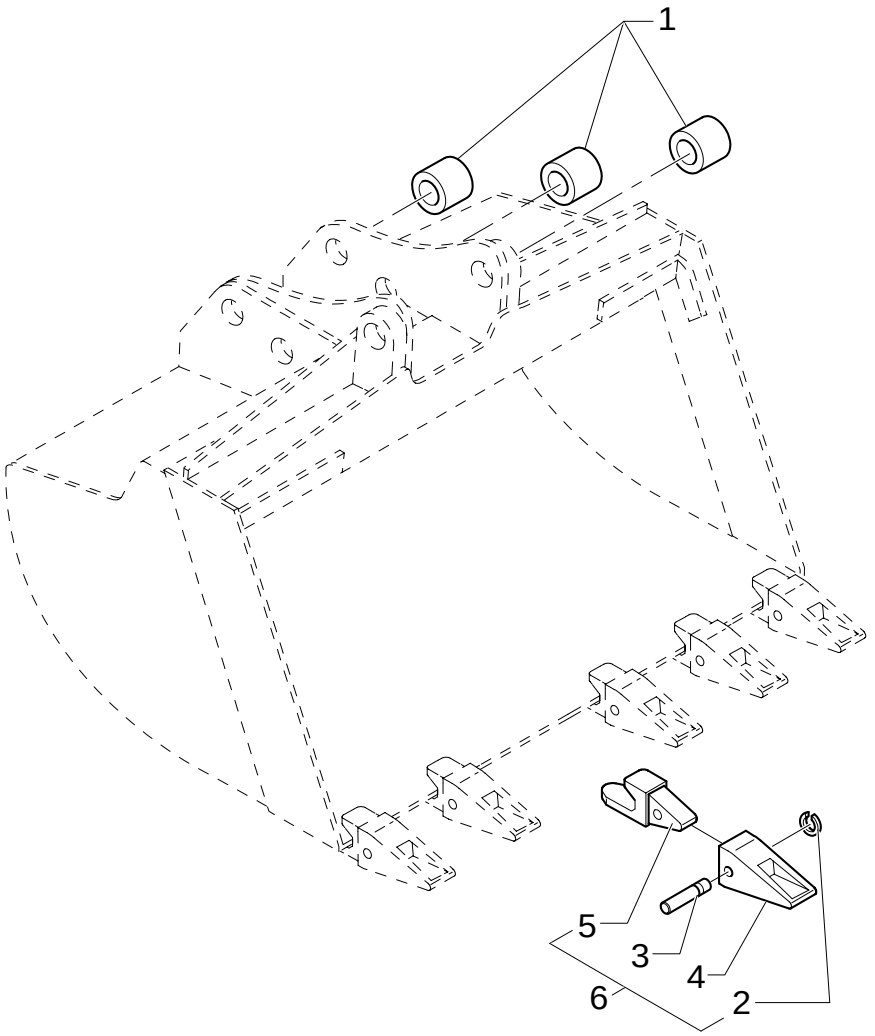

36" (914MM) BACKHOE BUCKET WITH PIN TEETH

REF	FN	PART NUMBER	YR/SN	QTY	DESCRIPTION
1		D7NNC584A		6	BUSHING
2		85801098		6	STOP
3		85801097		6	PIN
4		85811432		6	TOOTH, BUCKET
5		85821788		6	TOOTH, BUCKET
6	1	NSS		6	NOT SERVICED SEPARATELY

(1) Includes 1 To 5

519	02	p1	02/05

36" (914MM) BACKHOE BUCKET WITH BOLT-ON TEETH

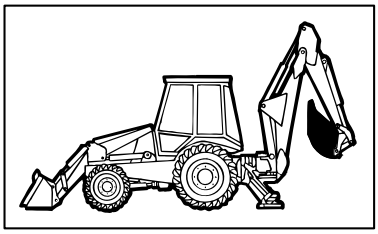

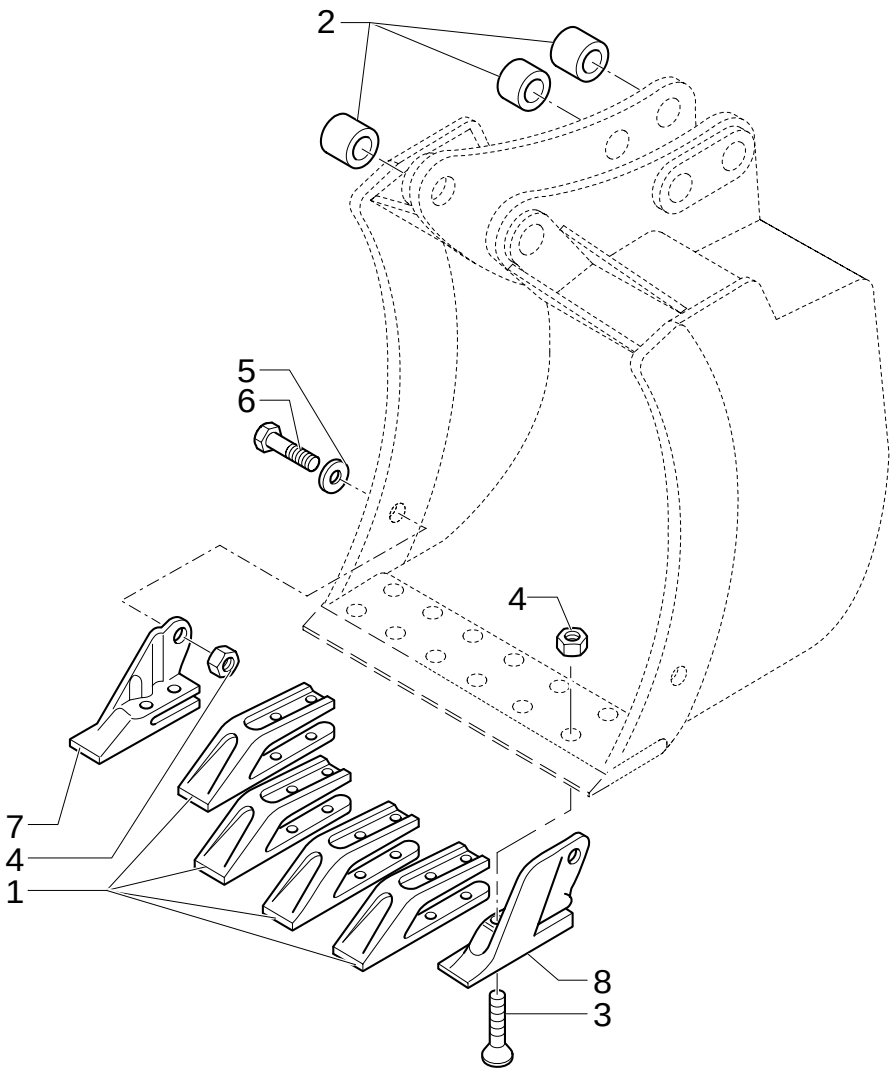

36" (914MM) BACKHOE BUCKET WITH BOLT-ON TEETH

REF	FN	PART NUMBER	YR/SN	QTY	DESCRIPTION
1		85811440		4	LUG
2		D7NNC584A		6	BUSHING
3		85801371		12	BOLT
4		85801470		14	NUT 5/8"-11
5		10520211		2	WASHER
6		88706		2	BOLT Cap, HH, G8, 5/8"-11 x 1-3/4"
7		85801377		1	LUG RH
8		85801376		1	LUG LH

526	01	p1	02/05

BOLT-ON TOOTH KIT, 12" (305MM) BACKHOE BUCKET

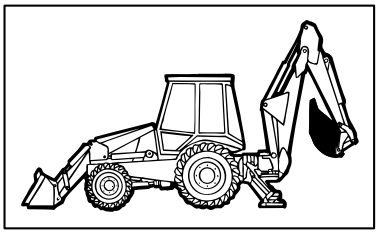

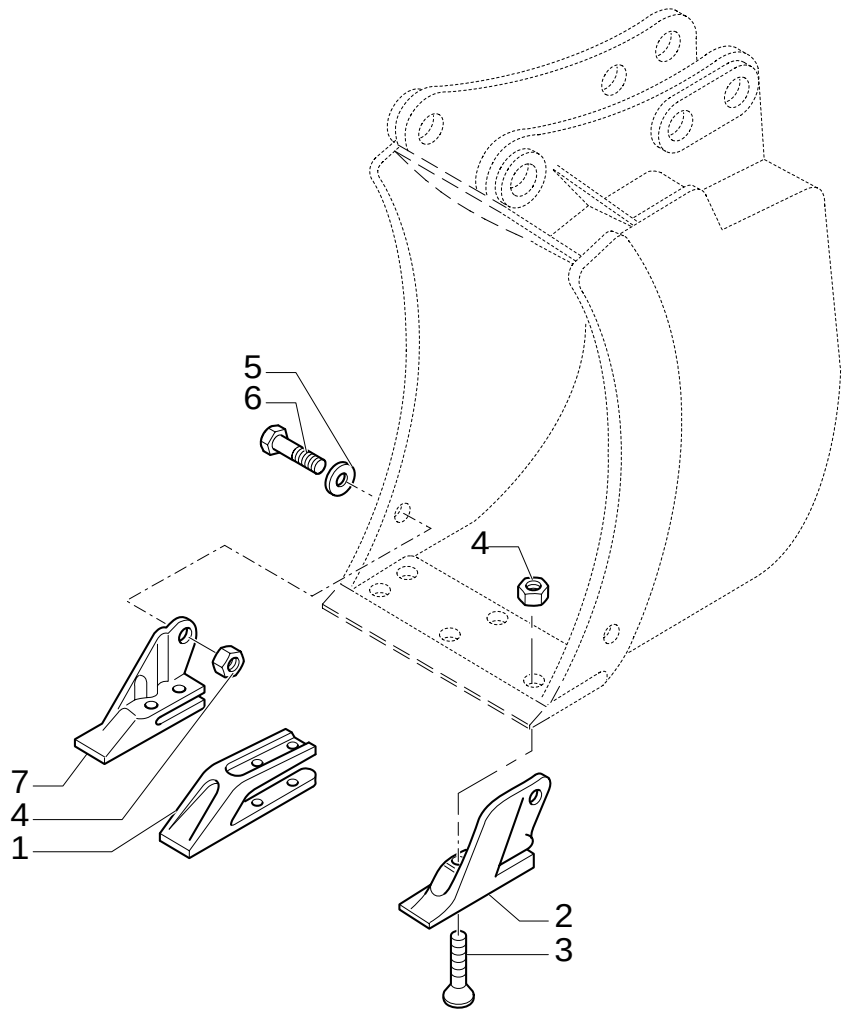

BOLT-ON TOOTH KIT, 12" (305MM) BACKHOE BUCKET

REF	FN	PART NUMBER	YR/SN	QTY	DESCRIPTION
1		85811440		1	LUG
2		85801376		1	LUG LH
3		85801371		6	BOLT
4		85801470		8	NUT 5/8"-11
5		10520211		2	WASHER
6		88706		2	BOLT Cap, HH, G8, 5/8"-11 x 1-3/4"
7		85801377		1	LUG RH

527	01	p1	02/05

BOLT-ON TOOTH KIT, 18" (457MM) & 24" (610MM) BACKHOE BUCKETS

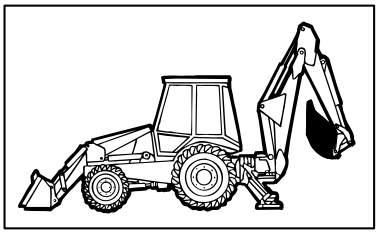

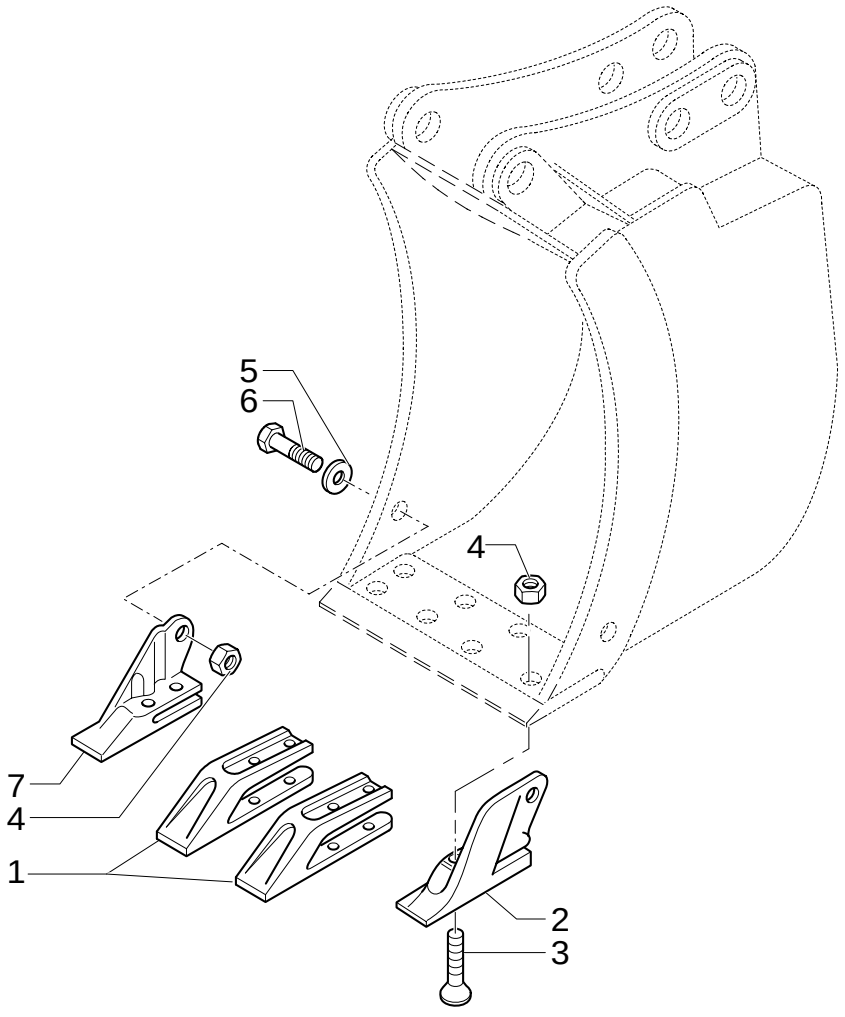

BOLT-ON TOOTH KIT, 18" (457MM) & 24" (610MM) BACKHOE BUCKETS

REF	FN	PART NUMBER	YR/SN	QTY	DESCRIPTION
1		85811440		2	LUG
2		85801376		1	LUG LH
3		85801371		8	BOLT
4		85801470		10	NUT 5/8"-11
5		10520211		2	WASHER
6		88706		2	BOLT Cap, HH, G8, 5/8"-11 x 1-3/4"
7		85801377		1	LUG RH

528	01	p1	02/05

BOLT-ON TOOTH KIT, 30" (762MM) BACKHOE BUCKET

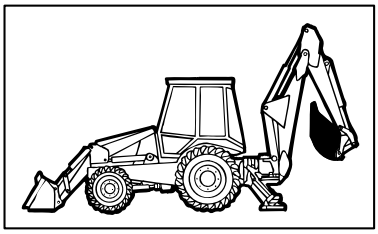

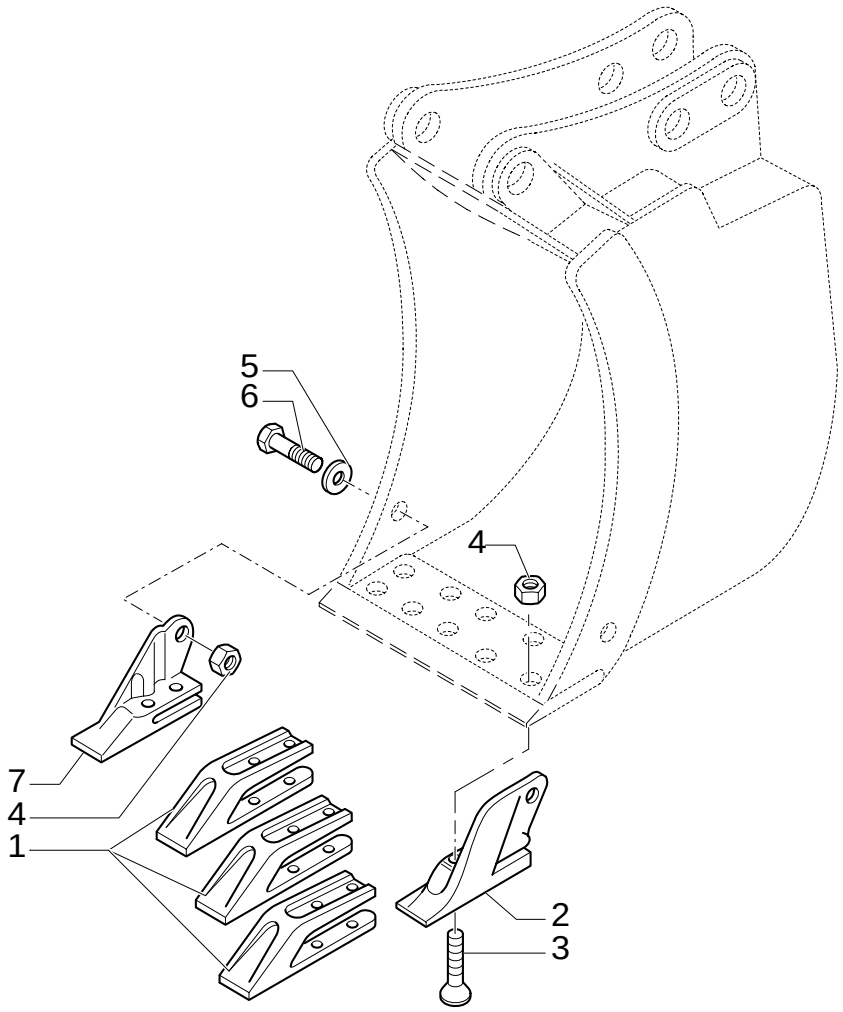

BOLT-ON TOOTH KIT, 30" (762MM) BACKHOE BUCKET

REF	FN	PART NUMBER	YR/SN	QTY	DESCRIPTION
1		85811440		3	LUG
2		85801376		1	LUG LH
3		85801371		10	BOLT
4		85801470		12	NUT 5/8"-11
5		10520211		2	WASHER
6		88706		2	BOLT Cap, HH, G8, 5/8"-11 x 1-3/4"
7		85801377		1	LUG RH

529	01	p1	02/05

BOLT-ON TOOTH KIT, 36" (914MM) BACKHOE BUCKET

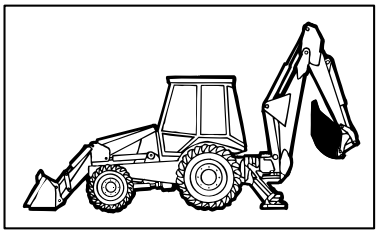

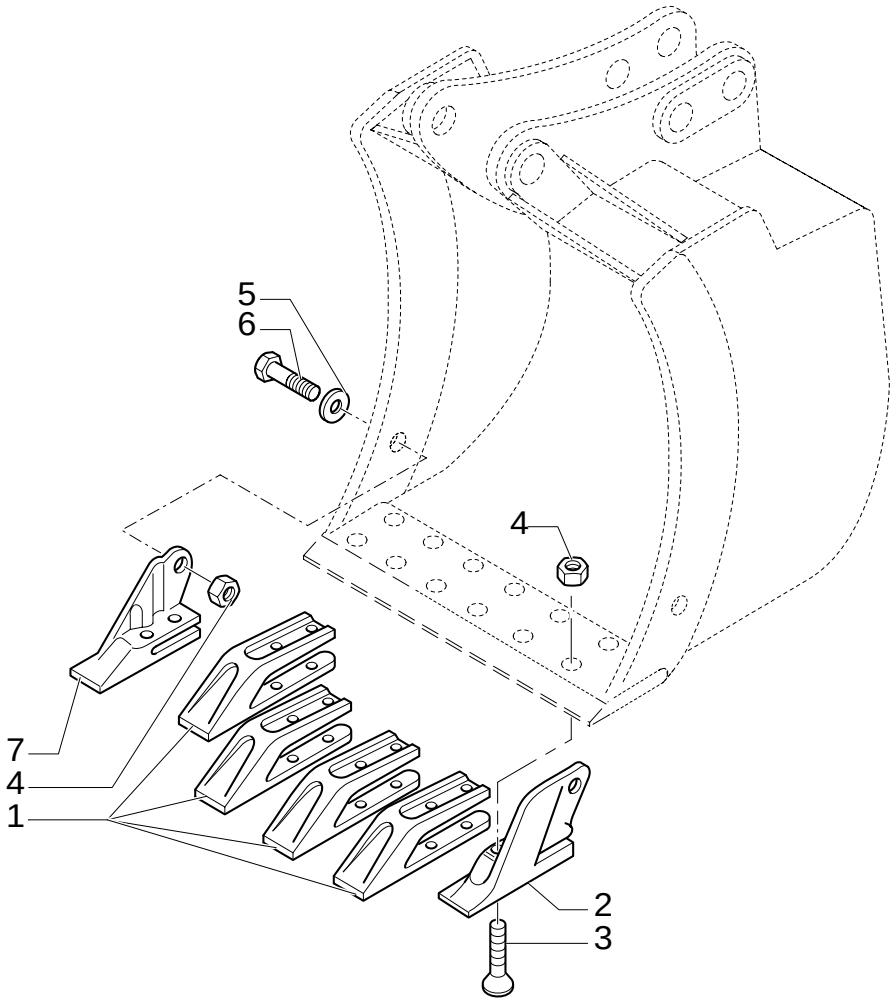

BOLT-ON TOOTH KIT, 36" (914MM) BACKHOE BUCKET

REF	FN	PART NUMBER	YR/SN	QTY	DESCRIPTION
1		85811440		4	LUG
2		85801376		1	LUG LH
3		85801371		12	BOLT
4		85801470		14	NUT 5/8"-11
5		10520211		2	WASHER
6		88706		2	BOLT Cap, HH, G8, 5/8"-11 x 1-3/4"
7		85801377		1	LUG RH

530	01	p1	02/05

PIN TOOTH KIT, 12" (305MM) BACKHOE BUCKET

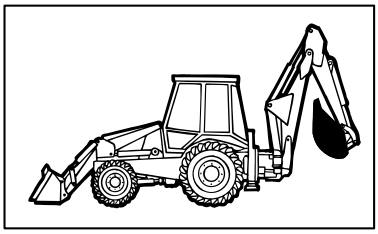

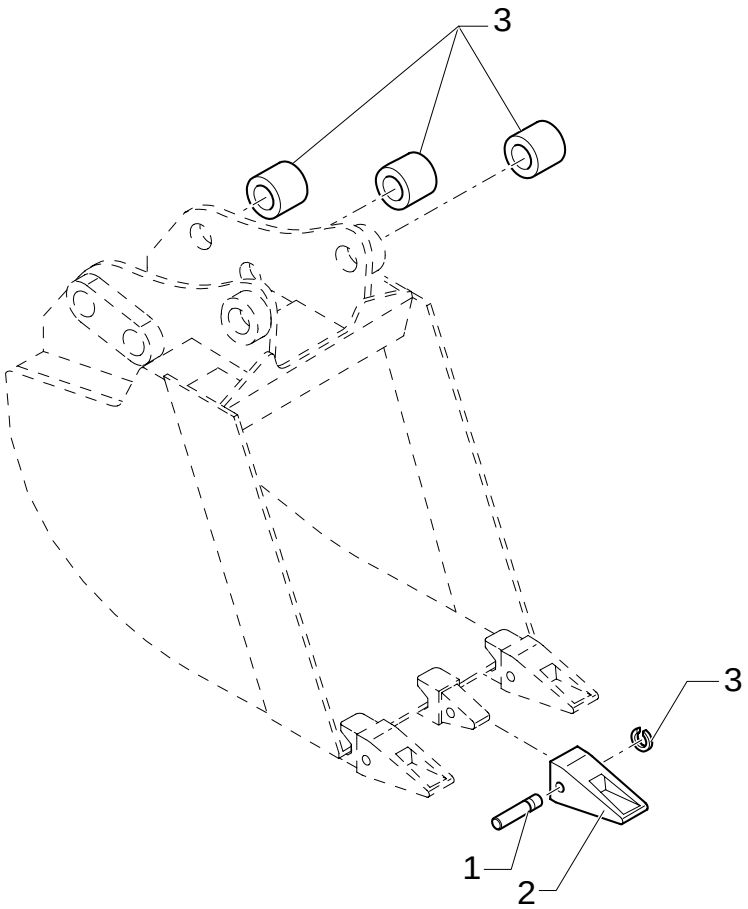

PIN TOOTH KIT, 12" (305MM) BACKHOE BUCKET

REF	FN	PART NUMBER	YR/SN	QTY	DESCRIPTION
1		85801097		3	PIN
2		85811432		3	TOOTH, BUCKET
3		85801098		3	STOP

532	01	p1	02/05

PIN TOOTH KIT, 30" (762MM) BACKHOE BUCKET

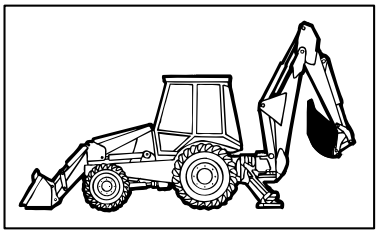

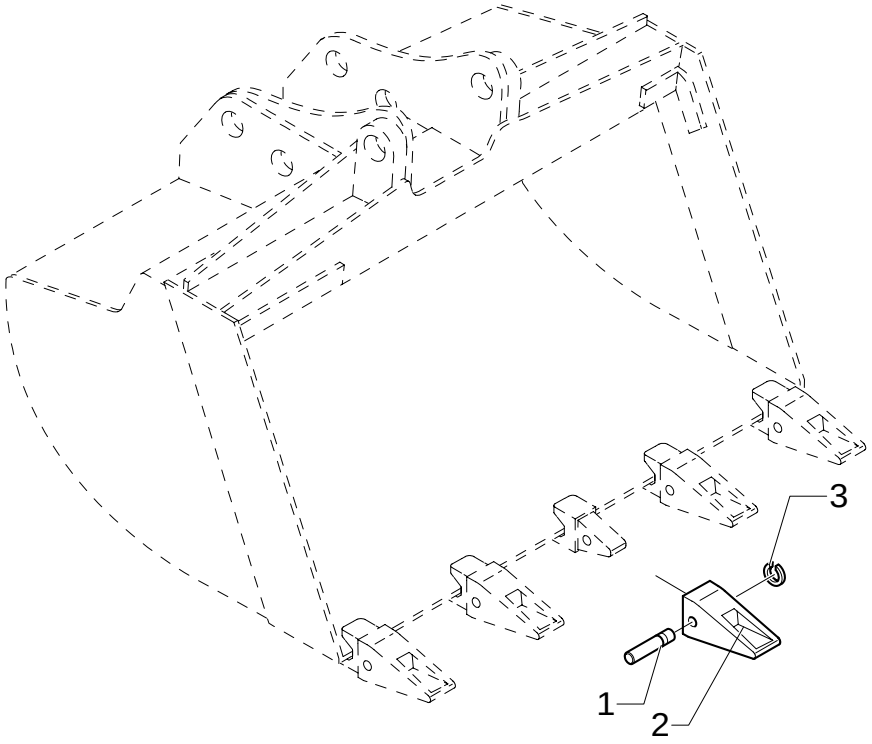

PIN TOOTH KIT, 30" (762MM) BACKHOE BUCKET

REF	FN	PART NUMBER	YR/SN	QTY	DESCRIPTION
1		85801097		5	PIN
2		85811432		5	TOOTH, BUCKET
3		85801098		5	STOP

533	01	p1	02/05

PIN TOOTH KIT, 36" (914MM) BACKHOE BUCKET

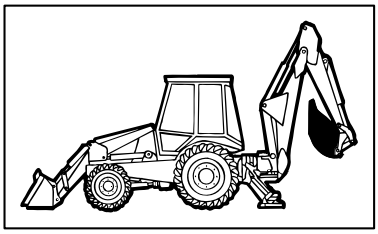

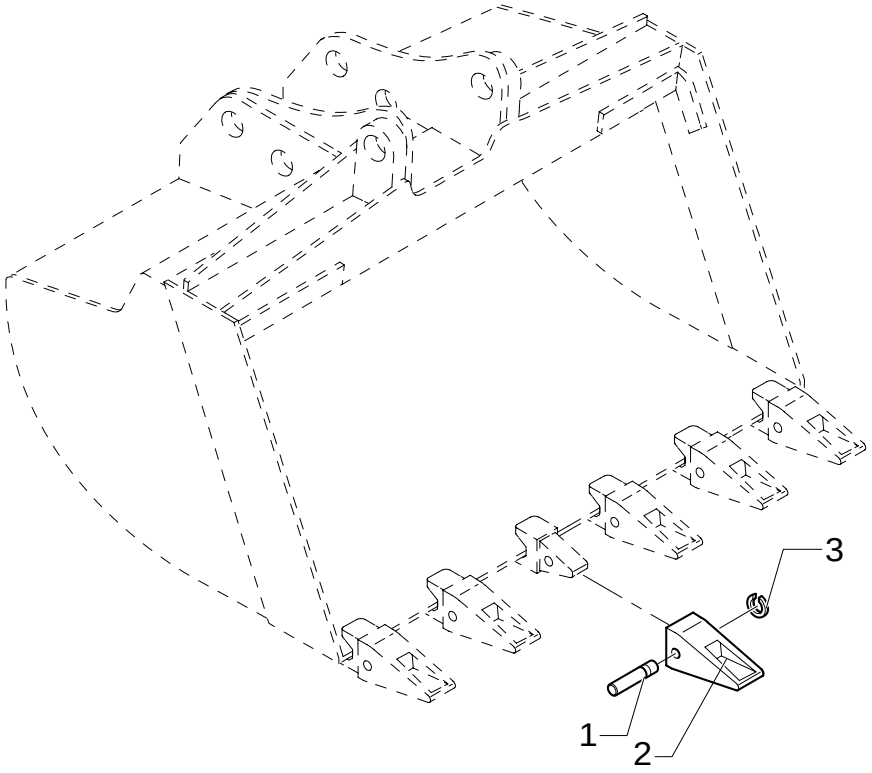

PIN TOOTH KIT, 36" (914MM) BACKHOE BUCKET

REF	FN	PART NUMBER	YR/SN	QTY	DESCRIPTION
1		85801097		6	PIN
2		85811432		6	TOOTH, BUCKET
3		85801098		6	STOP

533/ 1	01	p1	02/05

1.15 M3 BUCKET WITH FORKS AND CUTTER BLADE

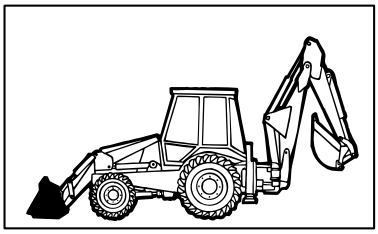

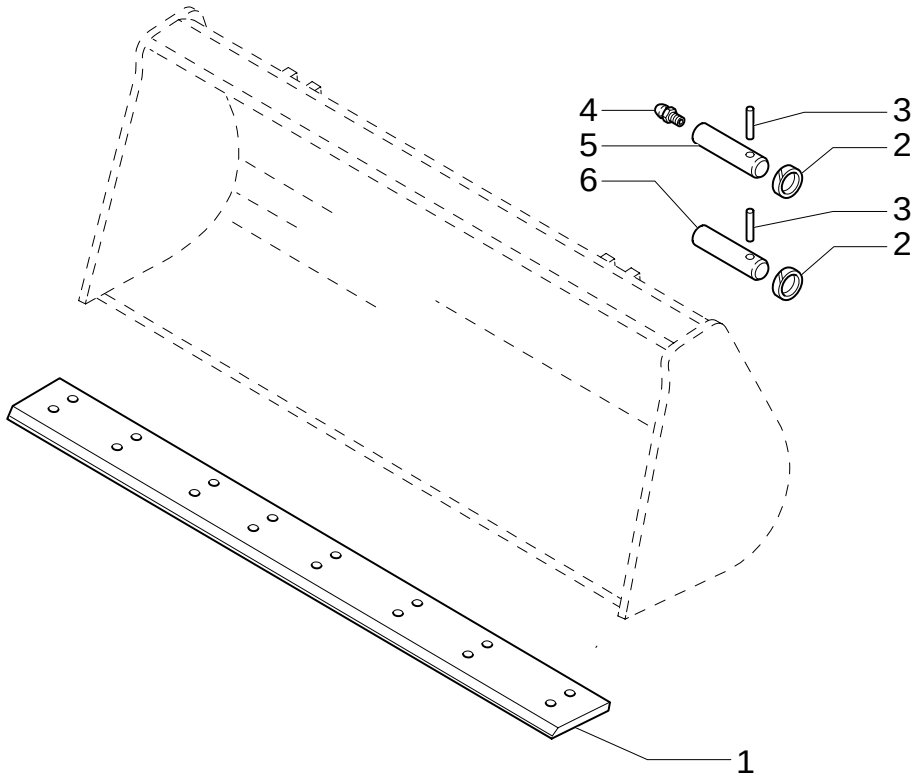

1.15 M3 BUCKET WITH FORKS AND CUTTER BLADE

REF	FN	PART NUMBER	YR/SN	QTY	DESCRIPTION
1	1	85812238		1	BLADE, KNIFE
2		85802974		4	RING
3		85804534		4	PIN, ROLL
4		87901S8		2	NIPPLE, LUBE 1/8"-27
5		85804533		2	PIN, ROLL
6		85805306		2	PIN, ROLL

(1) PART WELDED TO BUCKET

533/ 1	02	p1	02/05

1.15 M3 BUCKET WITH FORKS AND CUTTER BLADE

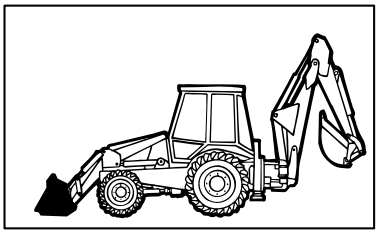

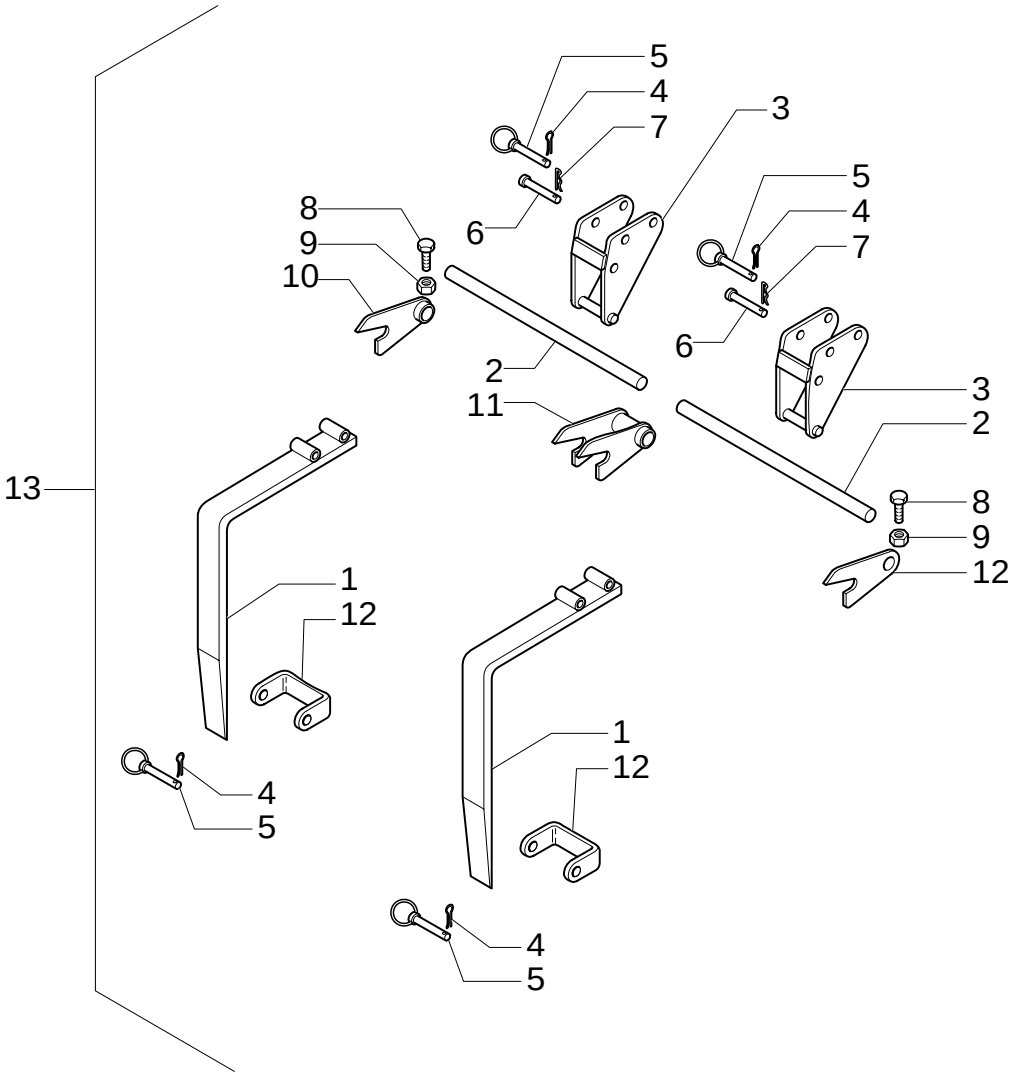

1.15 M3 BUCKET WITH FORKS AND CUTTER BLADE

REF	FN	PART NUMBER	YR/SN	QTY	DESCRIPTION
1		85805932		2	FORK
2		9968585		2	ROD
3		85805933		2	SUPPORT
4		9968147		4	PIN, ROLL
5		9968148		4	PIN
6		9968149		2	PIN
7		9968150		2	PIN, SPLIT (COTTER)
8		9968586		2	SCREW
9		9968152		2	NUT
10		85805935		2	BRACKET
11		85805936		1	BRACKET
12		85805934		2	U-BRACKET
13		85805931		1	KIT (BUCKET)

534	01	p1	02/05

1,15 M3 BUCKET WITH FORKS AND EXTRA REVERSIBLE BLADE

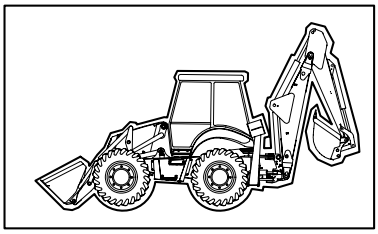

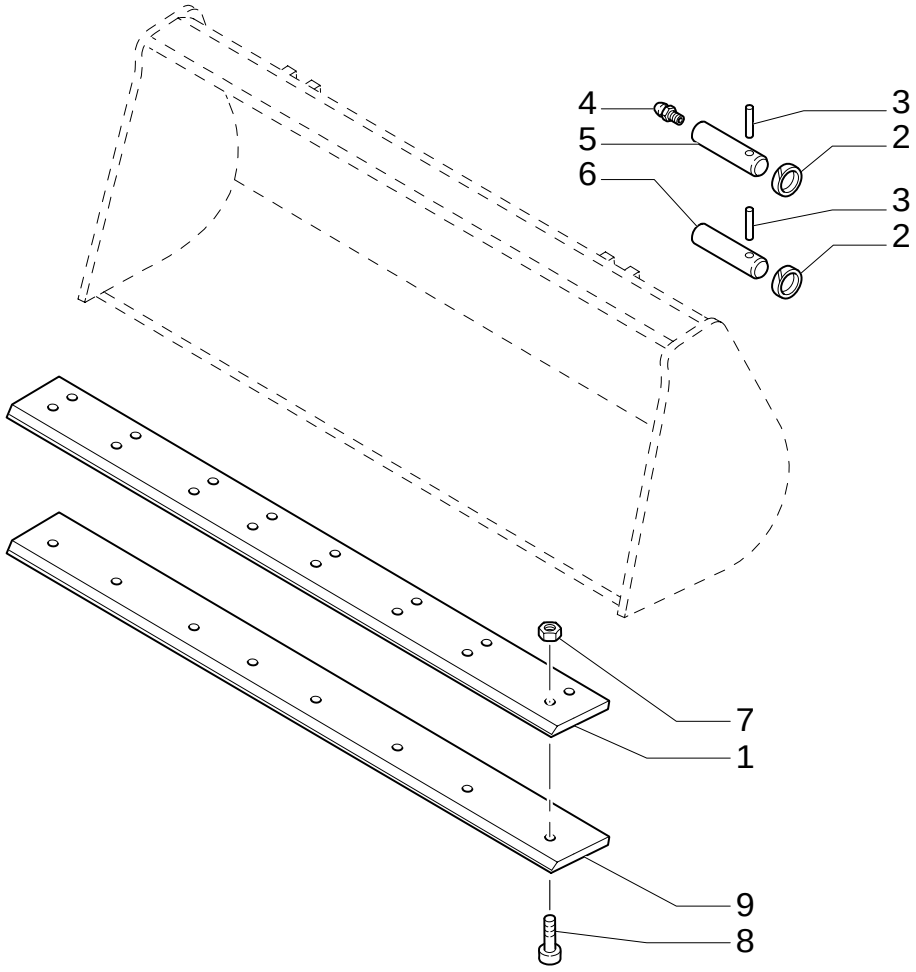

1,15 M3 BUCKET WITH FORKS AND EXTRA REVERSIBLE BLADE

REF	FN	PART NUMBER	YR/SN	QTY	DESCRIPTION
1	1	85812238		1	BLADE, KNIFE
2		85802974		4	RING
3		85804534		4	PIN, ROLL
4		87901S8		2	NIPPLE, LUBE 1/8"-27
5		85804533		2	PIN, ROLL
6		85805306		2	PIN, ROLL
7		85801470		8	NUT 5/8"-11
8		85801371		8	BOLT
9		85812242		1	BLADE, KNIFE REVERSIBLE, L= 2400 MM.

(1) PART WELDED TO BUCKET

534	02	p1	02/05

1,15 M3 BUCKET WITH FORKS AND EXTRA REVERSIBLE BLADE

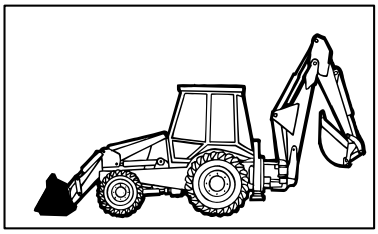

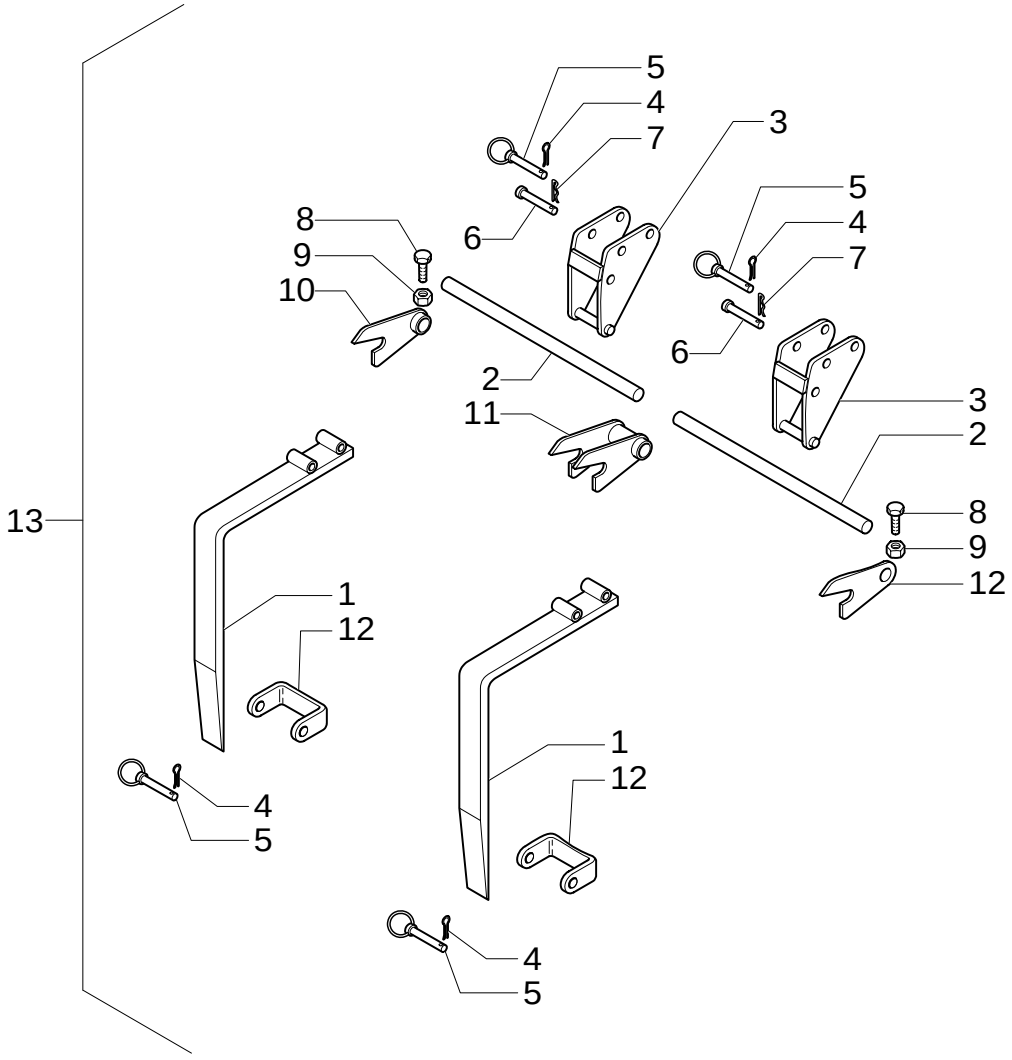

1,15 M3 BUCKET WITH FORKS AND EXTRA REVERSIBLE BLADE

REF	FN	PART NUMBER	YR/SN	QTY	DESCRIPTION
1		85805932		2	FORK
2		9968585		2	ROD
3		85805933		2	SUPPORT
4		9968147		4	PIN, ROLL
5		9968148		4	PIN
6		9968149		2	PIN
7		9968150		2	PIN, SPLIT (COTTER)
8		9968586		2	SCREW
9		9968152		2	NUT
10		85805935		2	BRACKET
11		85805936		1	BRACKET
12		85805934		2	U-BRACKET
13		85805931		1	KIT

535/ 2	01	p1	02/05

1,15MC BUCKET WITH FORKS AND TINE

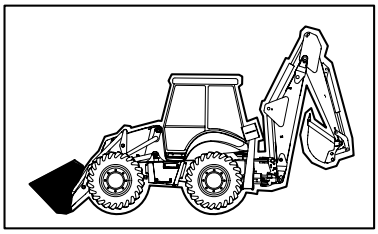

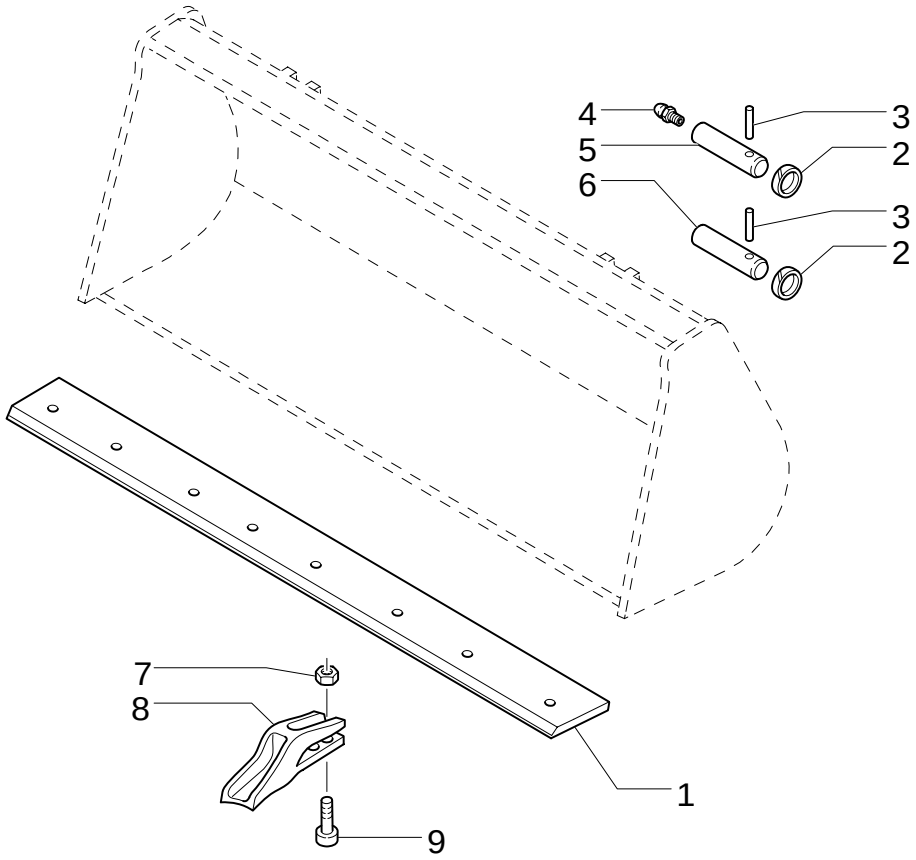

1,15MC BUCKET WITH FORKS AND TINE

REF	FN	PART NUMBER	YR/SN	QTY	DESCRIPTION
1	1	85812238		1	BLADE, KNIFE
2		85802974		4	RING
3		85804534		4	PIN, ROLL
4		87901S8		2	NIPPLE, LUBE 1/8"-27
5		85804533		2	PIN, ROLL
6		85805306		2	PIN, ROLL
7		85801470		16	NUT 5/8"-11
8		85811440		8	LUG
9		85801371		16	BOLT

(1) PART WELDED TO BUCKET

535/ 2	02	p1	02/05

1,15MC BUCKET WITH FORKS AND TINE

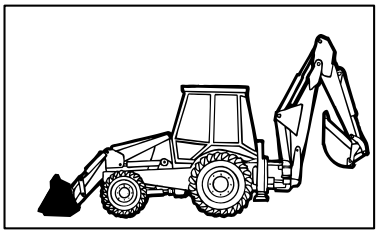

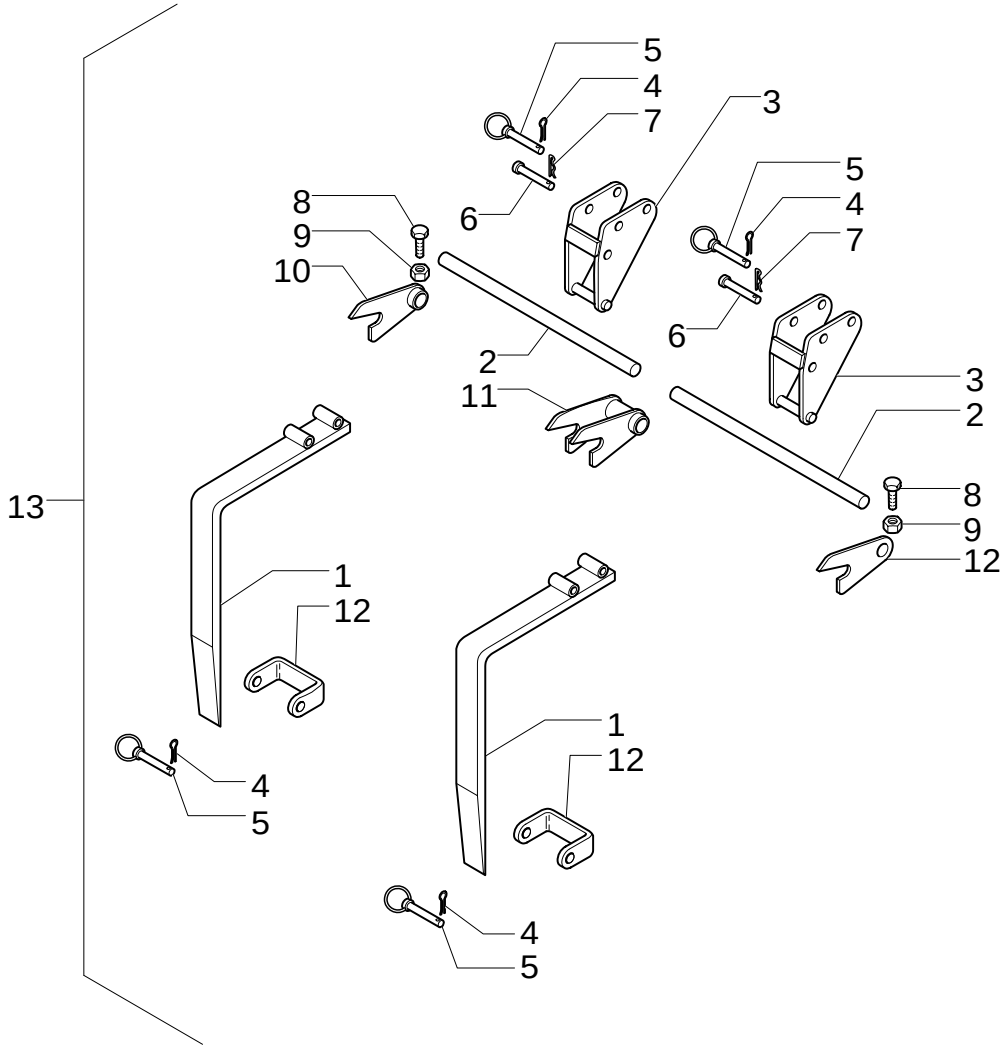

1,15MC BUCKET WITH FORKS AND TINE

REF	FN	PART NUMBER	YR/SN	QTY	DESCRIPTION
1		85805932		2	FORK
2		9968585		2	ROD
3		85805933		2	SUPPORT
4		9968147		4	PIN, ROLL
5		9968148		4	PIN
6		9968149		2	PIN
7		9968150		2	PIN, SPLIT (COTTER)
8		9968586		2	SCREW M10X90
9		9968152		2	NUT M10
10		85805935		2	BRACKET
11		85805936		1	BRACKET
12		85805934		2	U-BRACKET
13		85805931		1	KIT

548	01	p1	02/05

DITCH CLEANING BUCKET

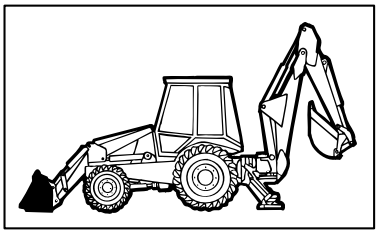

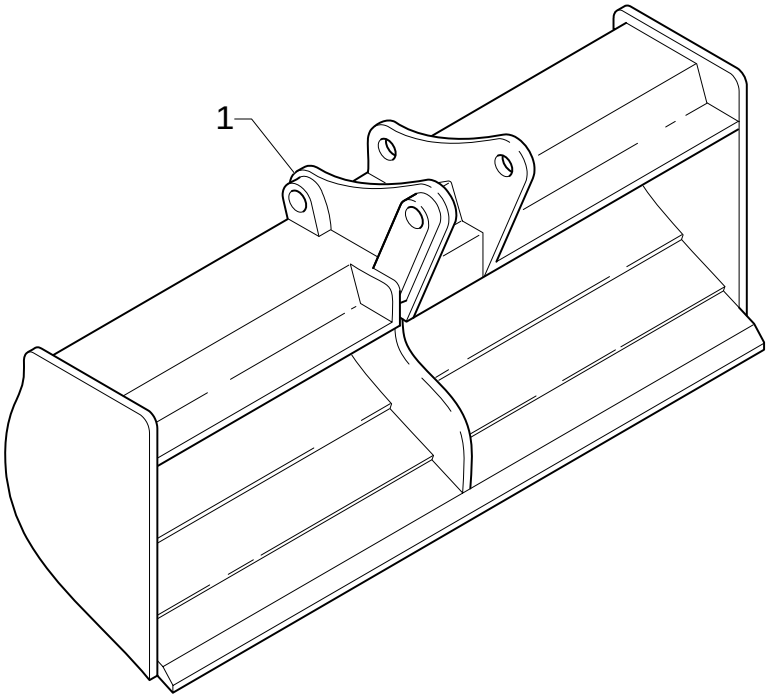

DITCH CLEANING BUCKET

REF	FN	PART NUMBER	YR/SN	QTY	DESCRIPTION
1		85824356		1	BUCKET

555	01	p1	02/05

FRONT BUCKET TEETH

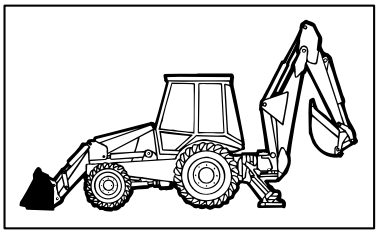

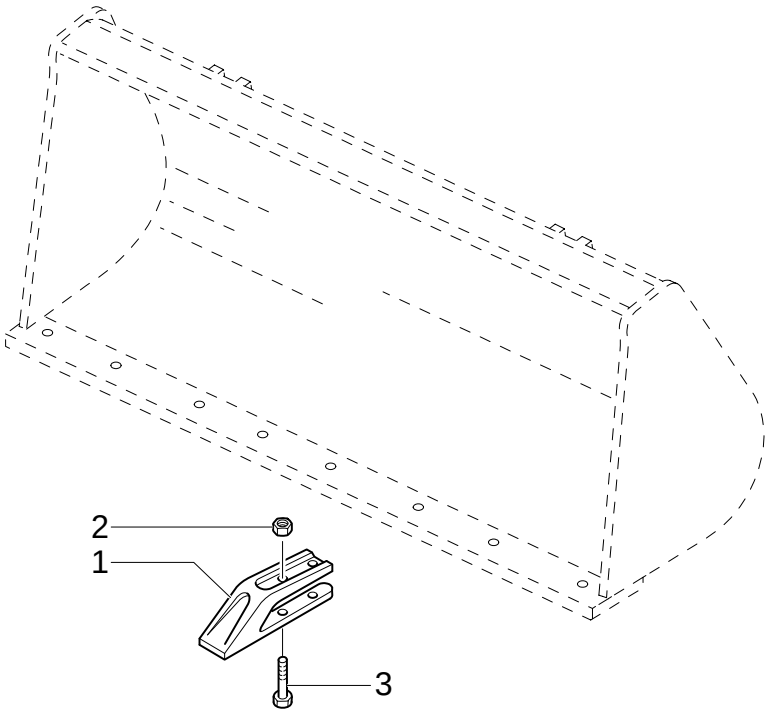

FRONT BUCKET TEETH

REF	FN	PART NUMBER	YR/SN	QTY	DESCRIPTION
1		85811440		8	LUG
2		85801470		16	NUT 5/8"-11
3		85801371		16	BOLT 5/8"

649	01	p1	12/05

1.15 BUCKET FORK KIT FOR CONVERSION FROM 4X1 TO 6X1

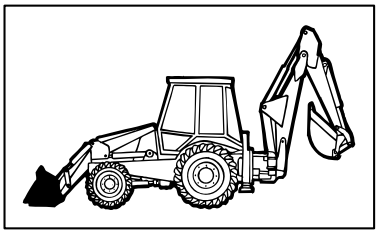

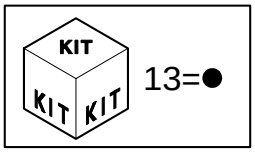

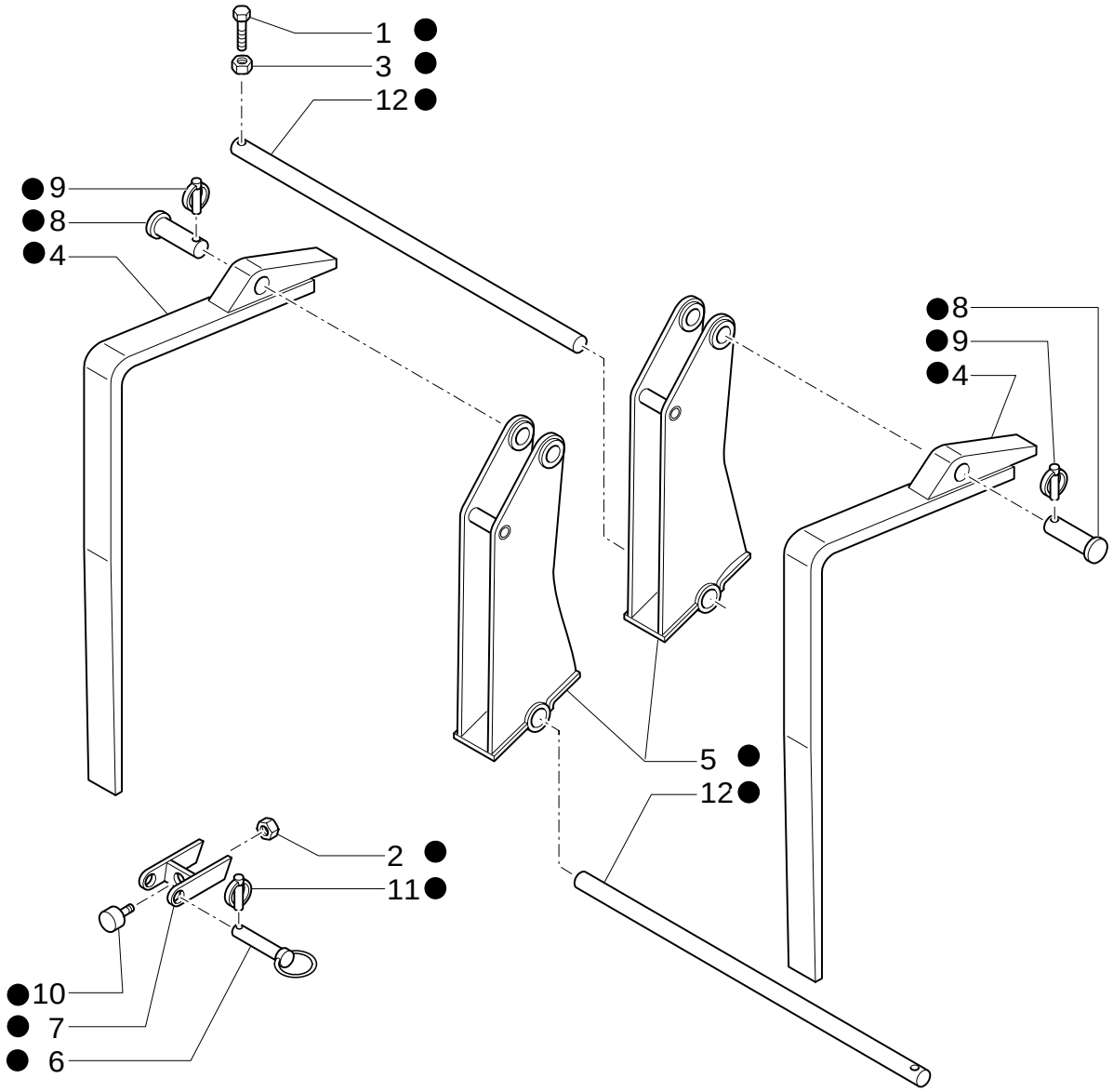

1.15 BUCKET FORK KIT FOR CONVERSION FROM 4X1 TO 6X1

REF	FN	PART NUMBER	YR/SN	QTY	DESCRIPTION
1		85820018		2	SCREW M10x90
2		85820031		2	NUT M8
3		85820035		2	NUT M10
4		85820062		2	FORK, BUCKET
5		85824249		2	SUPPORT
6		85820064		2	PIN
7		85820065		2	BRACKET
8		85820067		2	PIN
9		85820068		2	PIN, SPLIT (COTTER)
10		85820069		2	PLUG
11		85825177		2	PIN, SPLIT (COTTER)
12		85820081		2	PIN
13		85820907		1	KIT, CONVERSION

699	01	p1	02/05

HAND HAMMER SWITCH

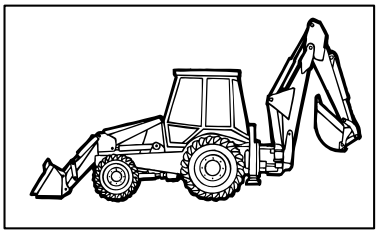

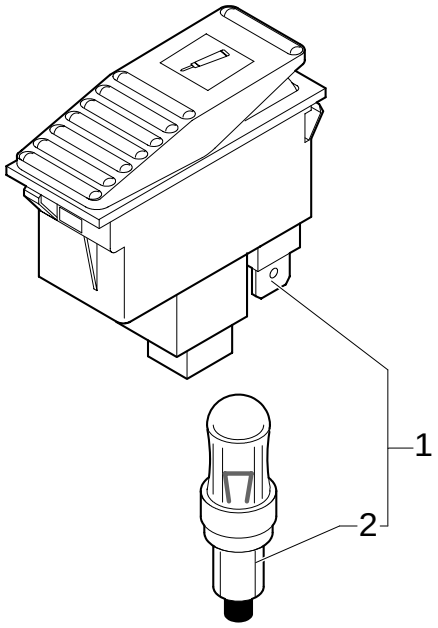

HAND HAMMER SWITCH

REF	FN	PART NUMBER	YR/SN	QTY	DESCRIPTION
1		85819072		1	SWITCH
2		14143790		1	BULB

700	01	p1	12/05

4X1 & 6X1 BUCKET HYDRAULIC LINES (4WS)

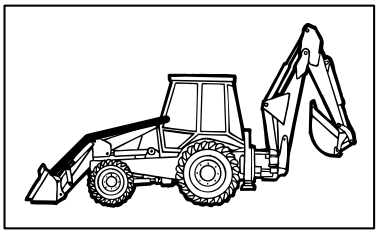

KIT KIT KIT 2=▲

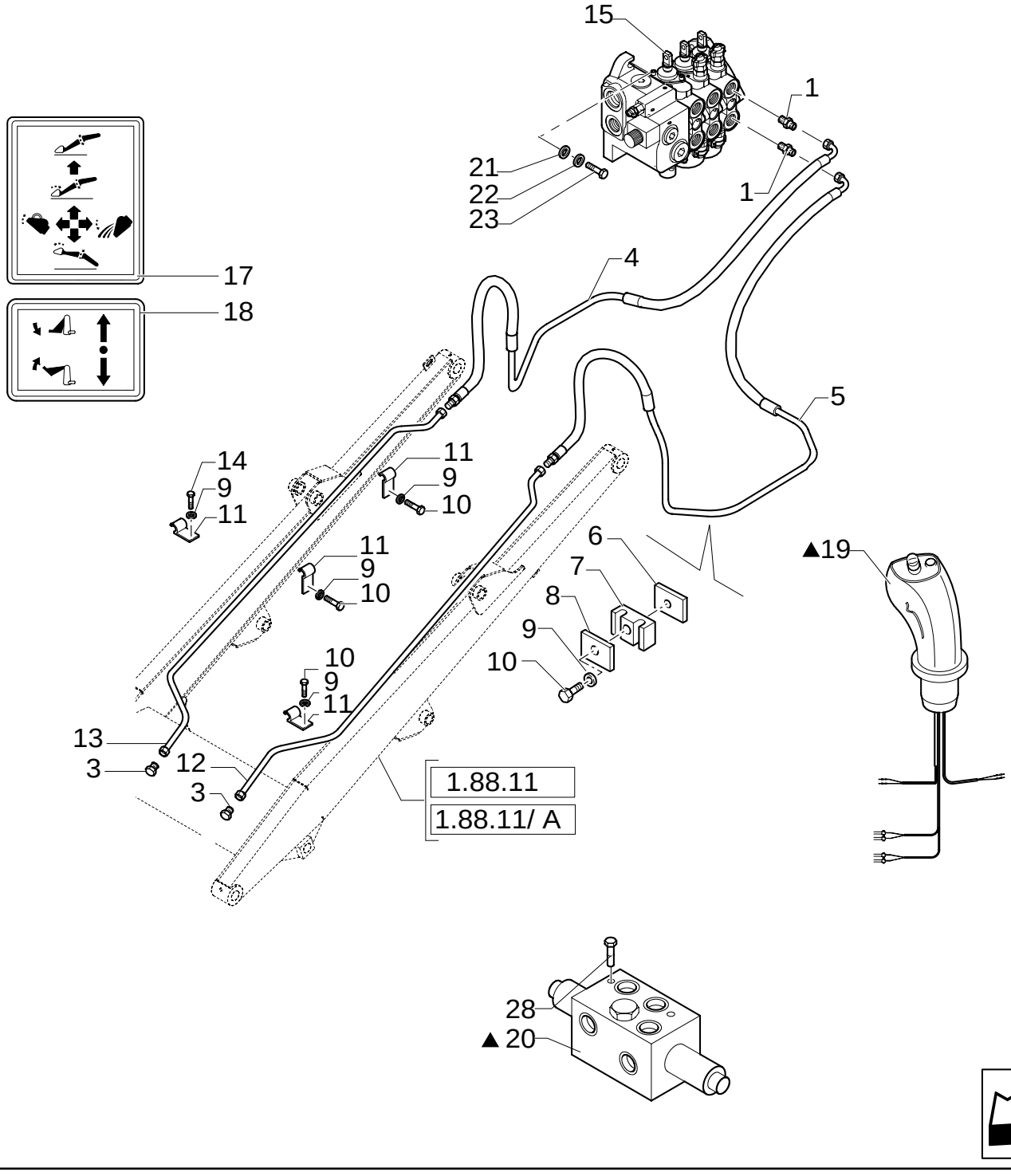

4X1 & 6X1 BUCKET HYDRAULIC LINES (4WS)

REF	FN	PART NUMBER	YR/SN	QTY	DESCRIPTION
1		85805258		2	CONNECTOR, HYD.
2		87311104		1	JOYSTICK
3		85803408		2	PLUG
4		85805341		1	TUBE, RIGID RH
5		85805342		1	TUBE, RIGID LH
6		85805340		2	PLATE, COVER
7		85805193		2	CLAMP
8		85805195		2	PLATE
9		11193979		8	WASHER, LOCK 8x22x1.5
10		16043821		8	SCREW M8x30
11		85805247		6	CLAMP
12		87307151		1	TUBE, RIGID LH
13		87307150		1	TUBE, RIGID RH
14		16044021		2	SCREW Hex, M8x40, 8.8
15		87305111		1	VALVE, CONTROL
17		85804346		1	DECAL
18		87305209		1	DECAL
19		{87382109}		1	
20		87304801		1	VALVE, HYDRAULIC
21		11190679		3	WASHER, LOCK
22		13578621		3	WASHER 10x30x2
23		11234721		3	SCREW M10x1.25x45
28		14300521		2	SCREW M6x75

700	02	p1	12/05

4X1 & 6X1 BUCKET HYDRAULIC LINES (4WS)

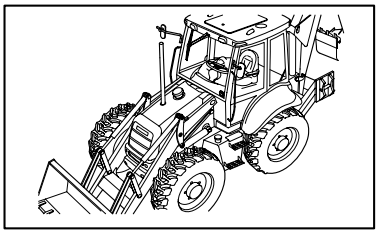

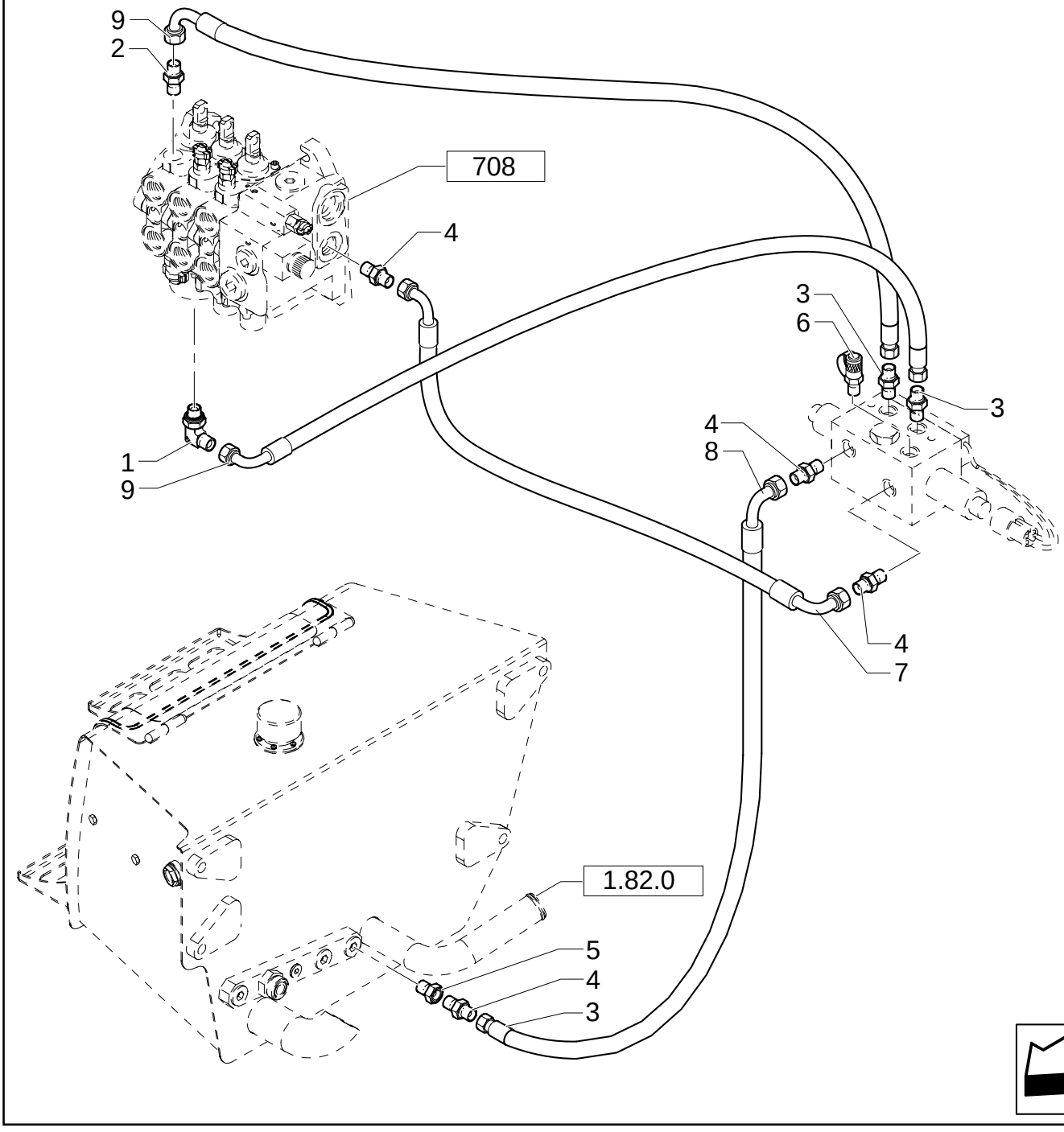

4X1 & 6X1 BUCKET HYDRAULIC LINES (4WS)

REF	FN	PART NUMBER	YR/SN	QTY	DESCRIPTION
1		85802234		1	CONNECTOR, HYD.
2		85803312		1	CONNECTOR, HYD.
3		47050685		2	CONNECTOR, HYD.
4	1	47050686		3	CONNECTOR, HYD.
4	2	47050686		4	CONNECTOR, HYD.
5		85826100		1	GEAR REDUCTION UNIT
6		85828211		1	INSERT
7		87305211		1	HOSE, FLEXIBLE
8		87303401		1	HOSE, FLEXIBLE
9		87303400		2	HOSE, FLEXIBLE

(1) UP TO S/N 031054045
(2) FROM TO S/N 031054046

704	01	p1	12/05

MANUAL HAMMER SYSTEM

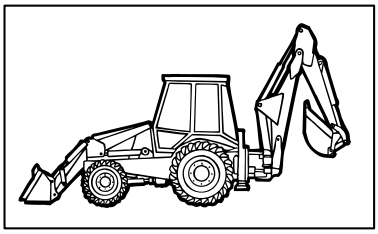

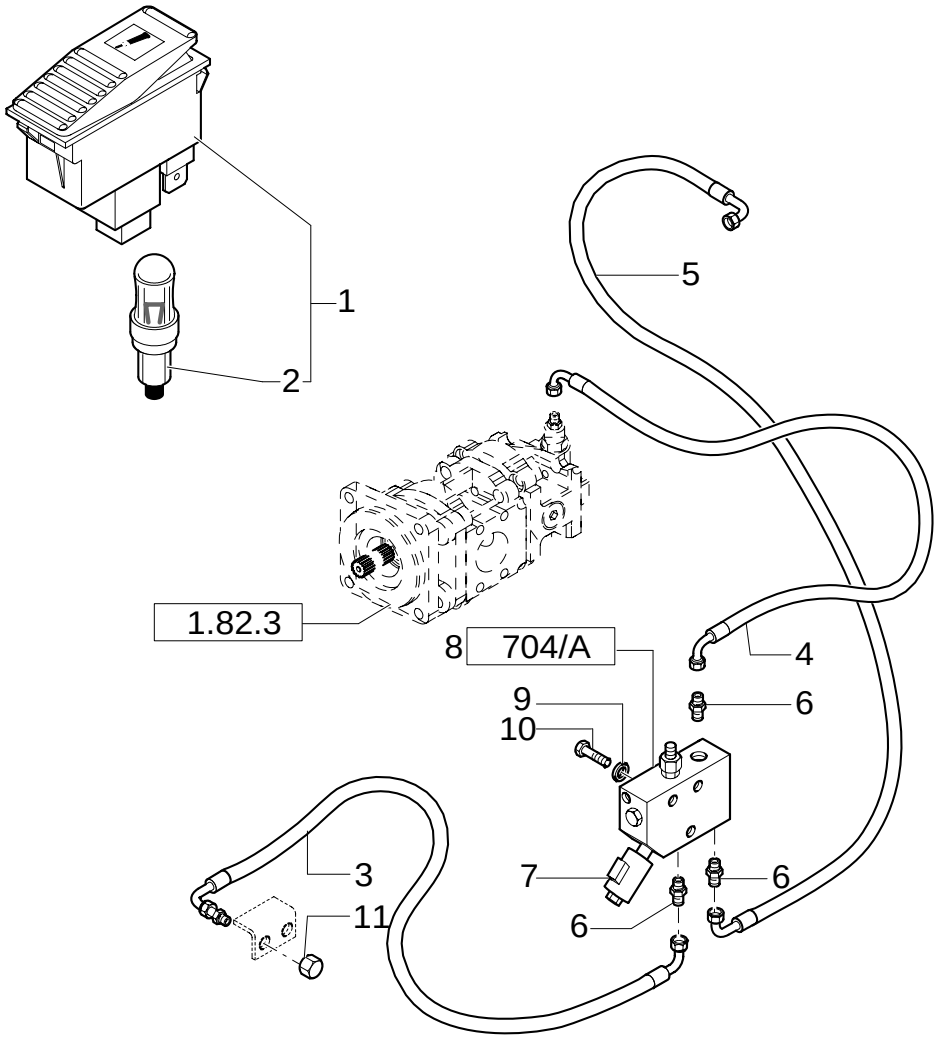

MANUAL HAMMER SYSTEM

REF	FN	PART NUMBER	YR/SN	QTY	DESCRIPTION
1		85819072		1	SWITCH
2		14143790		1	BULB 12V - 1,2W
3		85812184		1	HOSE, FLEXIBLE 1230 MM.
4	1	85825187		1	HOSE, FLEXIBLE 680 MM.
5		85826092		1	HOSE, FLEXIBLE
6		85803234		3	CONNECTOR, HYD.
7		87357715		1	SENDER UNIT
8		87358190		1	VALVE, HYDRAULIC
9		11193879		3	WASHER, LOCK
10		16044521		3	SCREW M8x65
11		E9NNP864BA		1	PLUG

(1) Only for Side Shift

MANUAL HAMMER SYSTEM

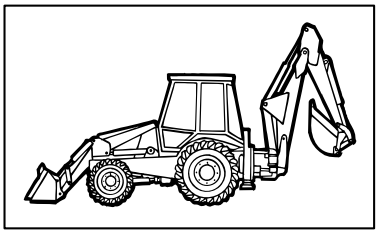

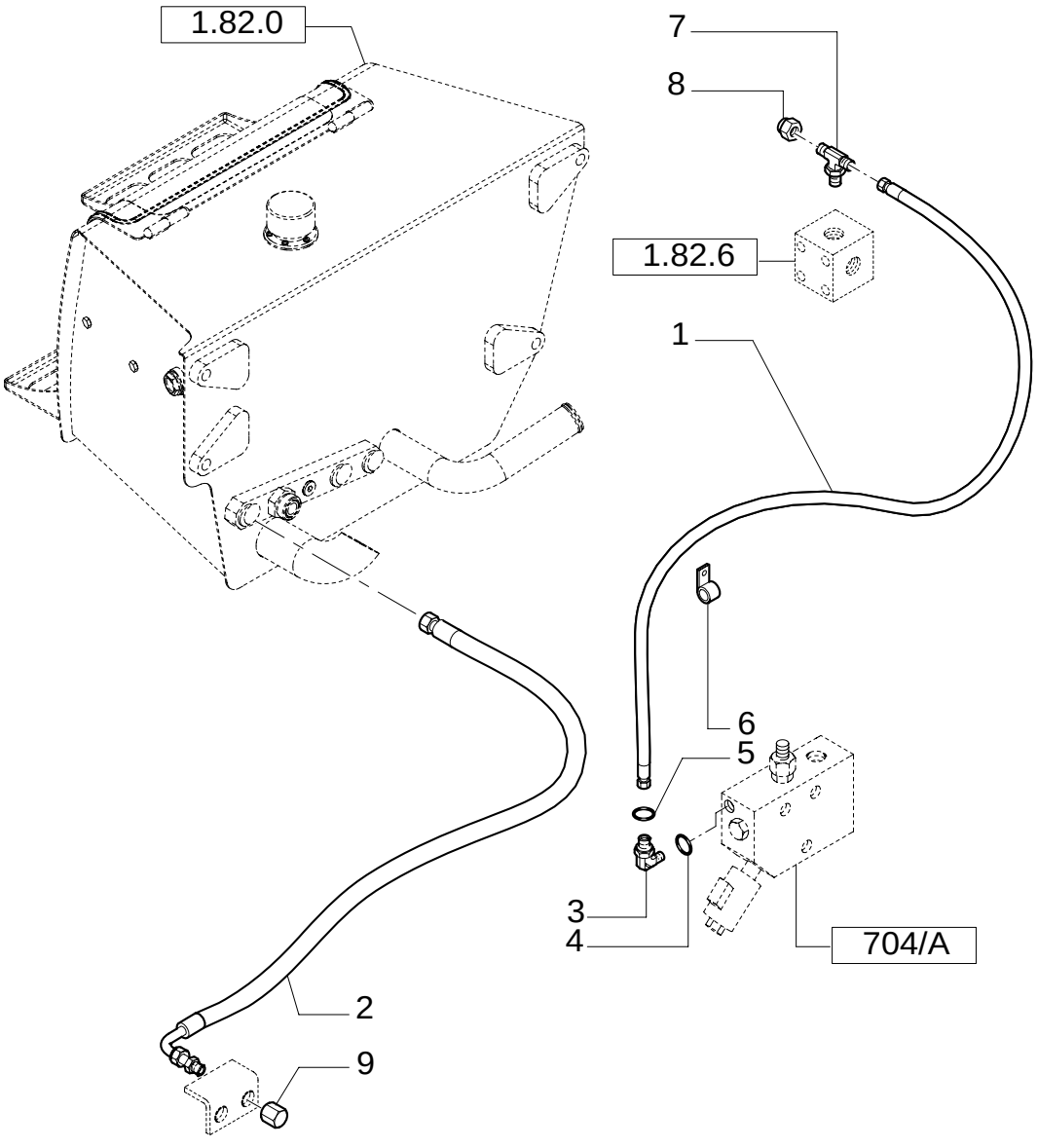

MANUAL HAMMER SYSTEM

REF	FN	PART NUMBER	YR/SN	QTY	DESCRIPTION
1		85803230		1	HOSE, FLEXIBLE 1050MM.
2		85803231		1	HOSE, FLEXIBLE 900 MM.
3	1	390989S36		1	ELBOW
4		87008S95		1	O-RING 90 Duro, .375" ID x .070" Thk
5		86482S95		1	O-RING 90 Duro, .468" ID x .078" Thk
6		85803393		1	COLLAR, RETAINER
7		85802780		1	CONNECTOR, HYD.
8		E9NNP864CA		1	COVER
9		E9NNP864BA		1	PLUG

(1) Includes 4, 5

704/ A	01	p1	11/05

MANUAL HAMMER VALVE

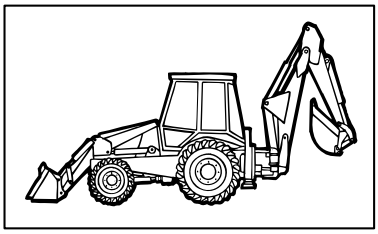

KIT KIT KIT = 2

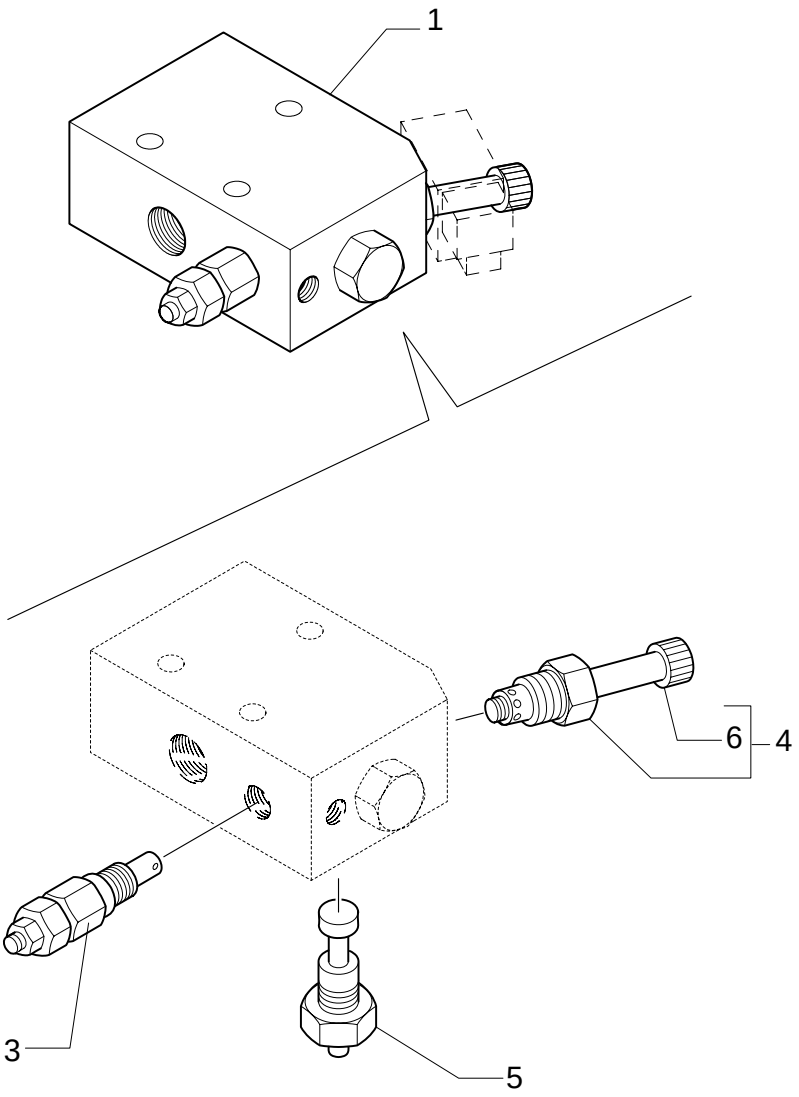

MANUAL HAMMER VALVE

REF	FN	PART NUMBER	YR/SN	QTY	DESCRIPTION
1		87358190		1	VALVE, HYDRAULIC
2		9970382		1	SET OF PARTS GASKETS
3		9970178		1	VALVE, PRESSURE RELIEF
4		9970180		1	VALVE, HYDRAULIC
5		9970383		1	VALVE, HYDRAULIC
6		9970384		1	NUT, RING

707	01	p1	02/05

KIT-HYDRAULIC SYSTEM WITH 3 SECTION FOR BUCKET 4X1 / 6X1

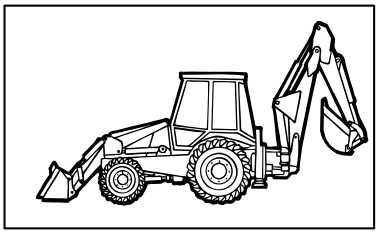

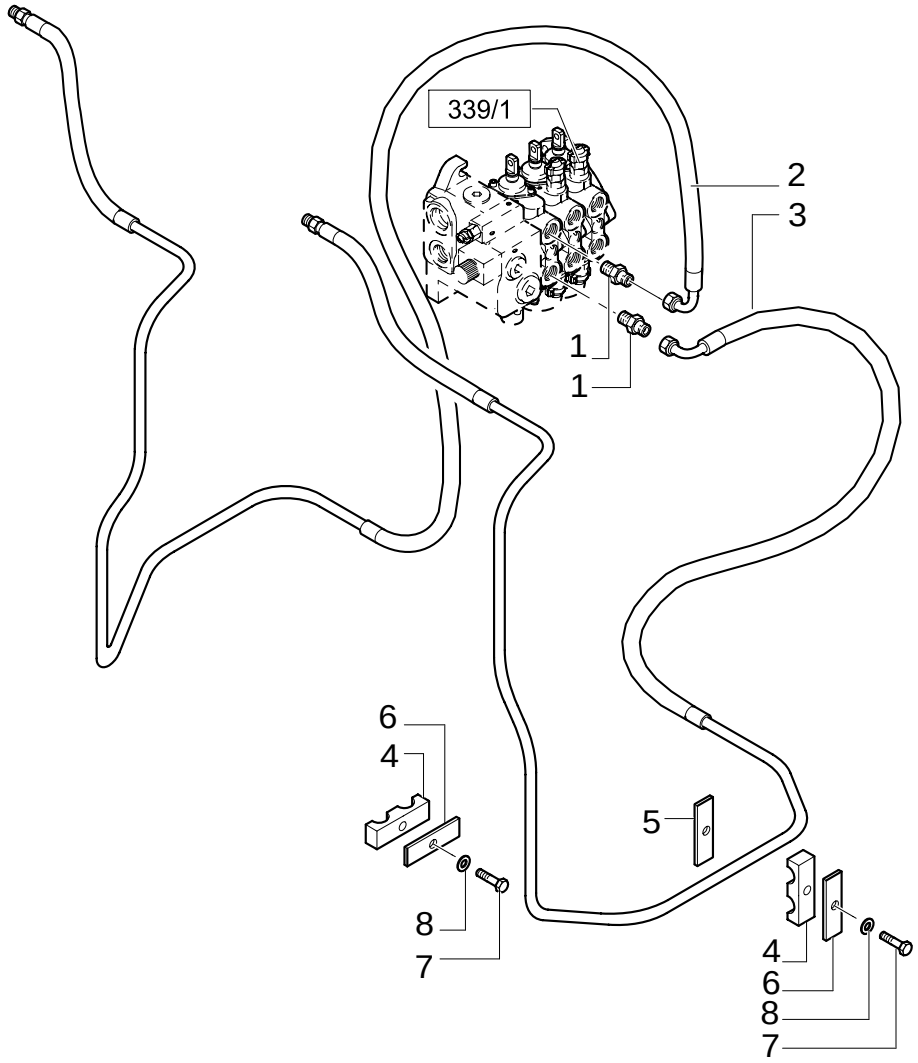

KIT-HYDRAULIC SYSTEM WITH 3 SECTION FOR BUCKET 4X1 / 6X1

REF	FN	PART NUMBER	YR/SN	QTY	DESCRIPTION
1		85805258		2	CONNECTOR, HYD.
2		85805341		1	TUBE, RIGID RH
3		85805342		1	TUBE, RIGID LH
4		85805193		4	CLAMP
5		85805340		2	PLATE, COVER
6		85805195		4	PLATE
7		16043821		4	SCREW
8		11193979		4	WASHER, LOCK

707	02	p1	12/05

KIT-HYDRAULIC SYSTEM WITH 3 SECTION FOR BUCKET 4X1 / 6X1

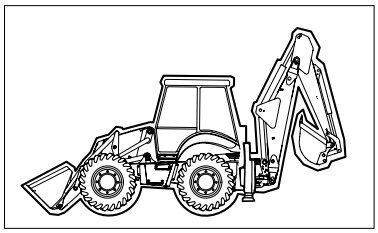

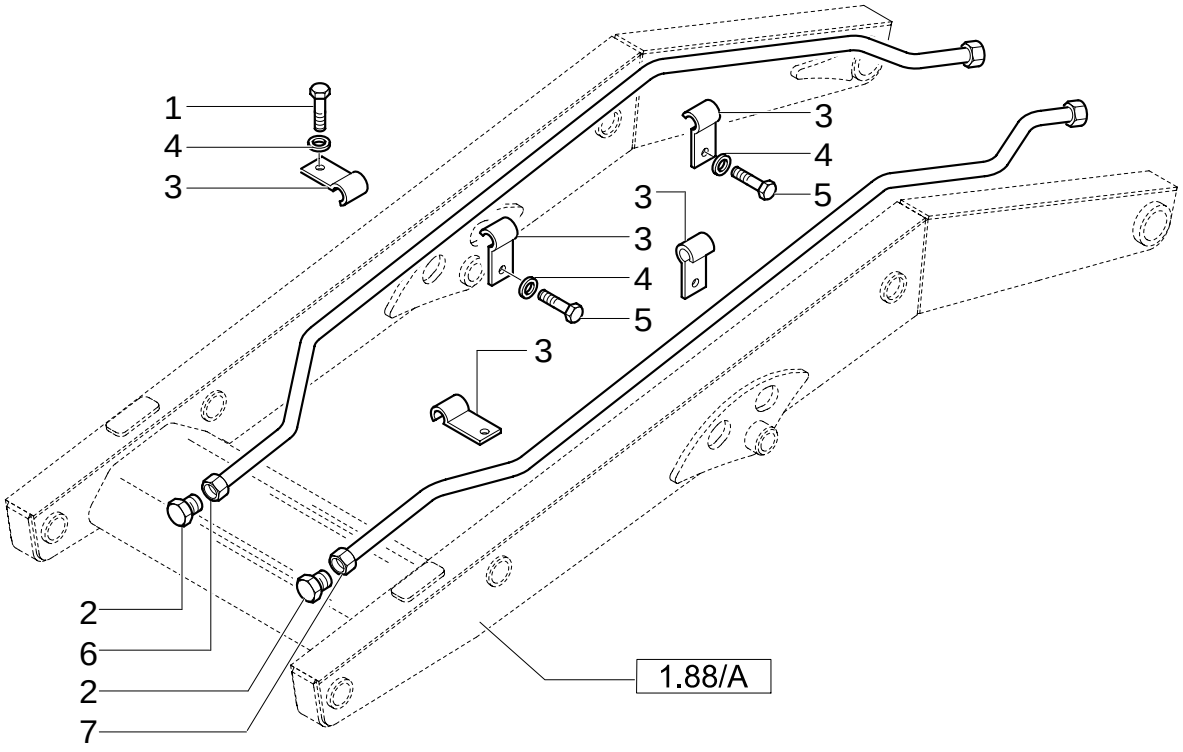

KIT-HYDRAULIC SYSTEM WITH 3 SECTION FOR BUCKET 4X1 / 6X1

REF	FN	PART NUMBER	YR/SN	QTY	DESCRIPTION
1		16044021		2	SCREW Hex, M8x40, 8.8
2		85803408		2	PLUG
3		85805247		6	CLAMP
4		11193979		6	WASHER, LOCK
5		16043821		4	SCREW
6		85813052		1	TUBE, RIGID RH
7		85813053		1	TUBE, RIGID LH

724	01	p1	12/05

HYDRAULIC SYSTEM FOR HAMMER (CENTER PIVOT)

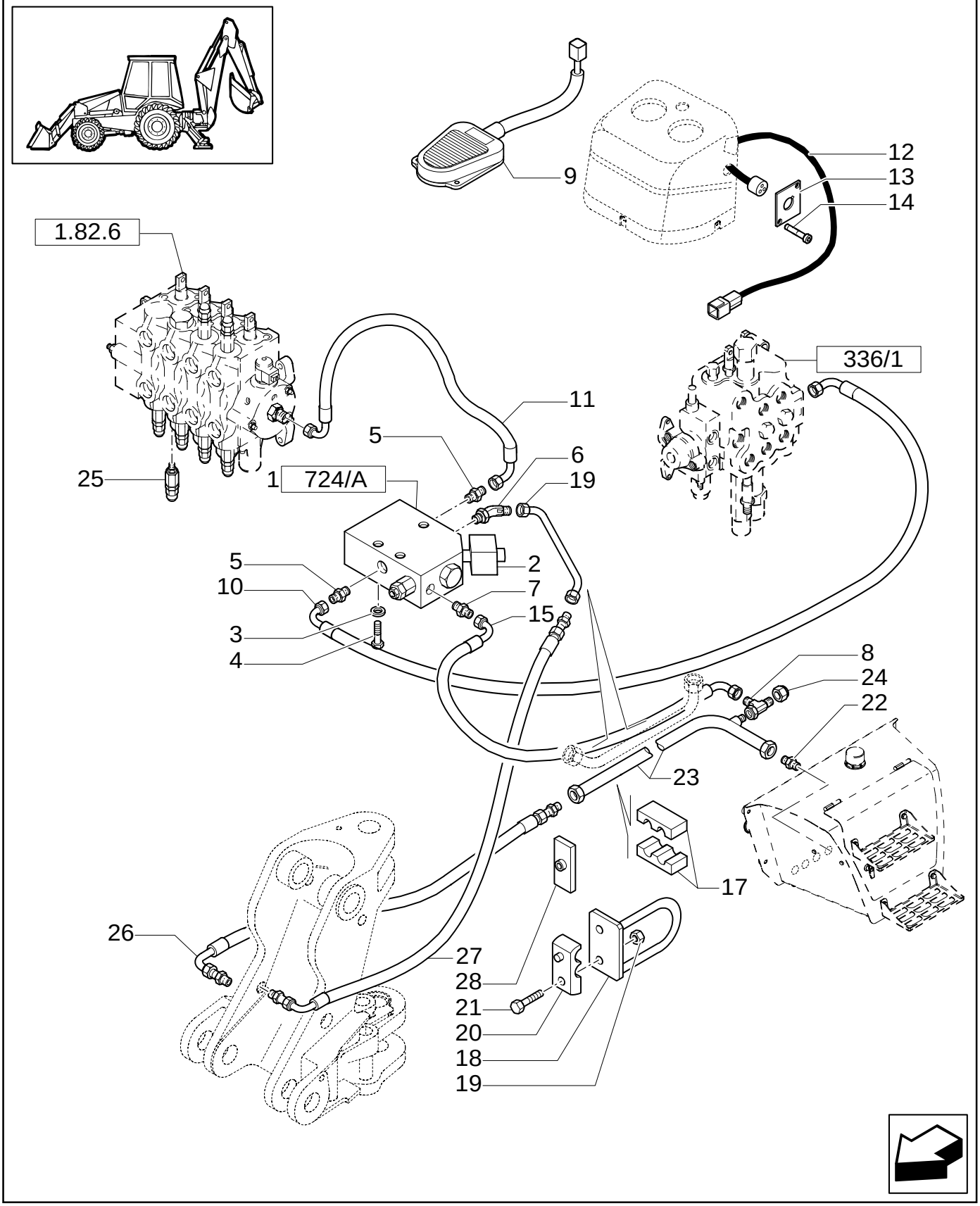

HYDRAULIC SYSTEM FOR HAMMER (CENTER PIVOT)

REF	FN	PART NUMBER	YR/SN	QTY	DESCRIPTION
1		87358199		1	VALVE, HYDRAULIC
2		87357715		1	SENDER UNIT
3		11193879		3	WASHER, LOCK
4		16044821		3	SCREW M8x80
5		85803486		2	CONNECTOR, HYD.
6		85803487		1	ELBOW
7		390951S36		1	CONNECTOR, HYD.
8		85807876		1	CONNECTOR, HYD.
9		85826123		1	SWITCH, ASSY
10		85802776		1	HOSE, FLEXIBLE
11		85803428		1	HOSE, FLEXIBLE
12		85819237		1	CABLE, ELECTRIC
13		85816760		1	PLATE, COVER
14		13272477		2	SCREW
15		85817633		1	HOSE, FLEXIBLE
16		85817629		1	TUBE, RIGID
17		85819492		1	CLAMP
18		85802214		2	SUPPORT
19		16104111		1	NUT
20		85804442		2	BRACKET
21		16044221		1	SCREW M8x1.25x50
22		85802801		1	CONNECTOR, HYD. 1-11/16"-12 ORS x 1-5/16"-12 SAE O-ring
23		85827926		1	TUBE, RIGID
24		E9NNP864BA		1	PLUG
25		9968595		1	VALVE, HYDRAULIC
26		85817635		1	HOSE, FLEXIBLE 1400 mm (55-1/8 in)
27		85817634		1	HOSE, FLEXIBLE 1750 mm (68-29/32 in)
28		85820222		1	PLATE, COVER
30		167266		2	O-RING 90 Duro, .924" ID x .116" Thk
29		9993141		2	O-RING 90 Duro, .364" ID x .070" Thk

724	02	p1	06/05

HYDRAULIC SYSTEM FOR HAMMER (CENTER PIVOT)

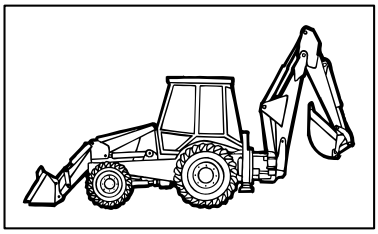

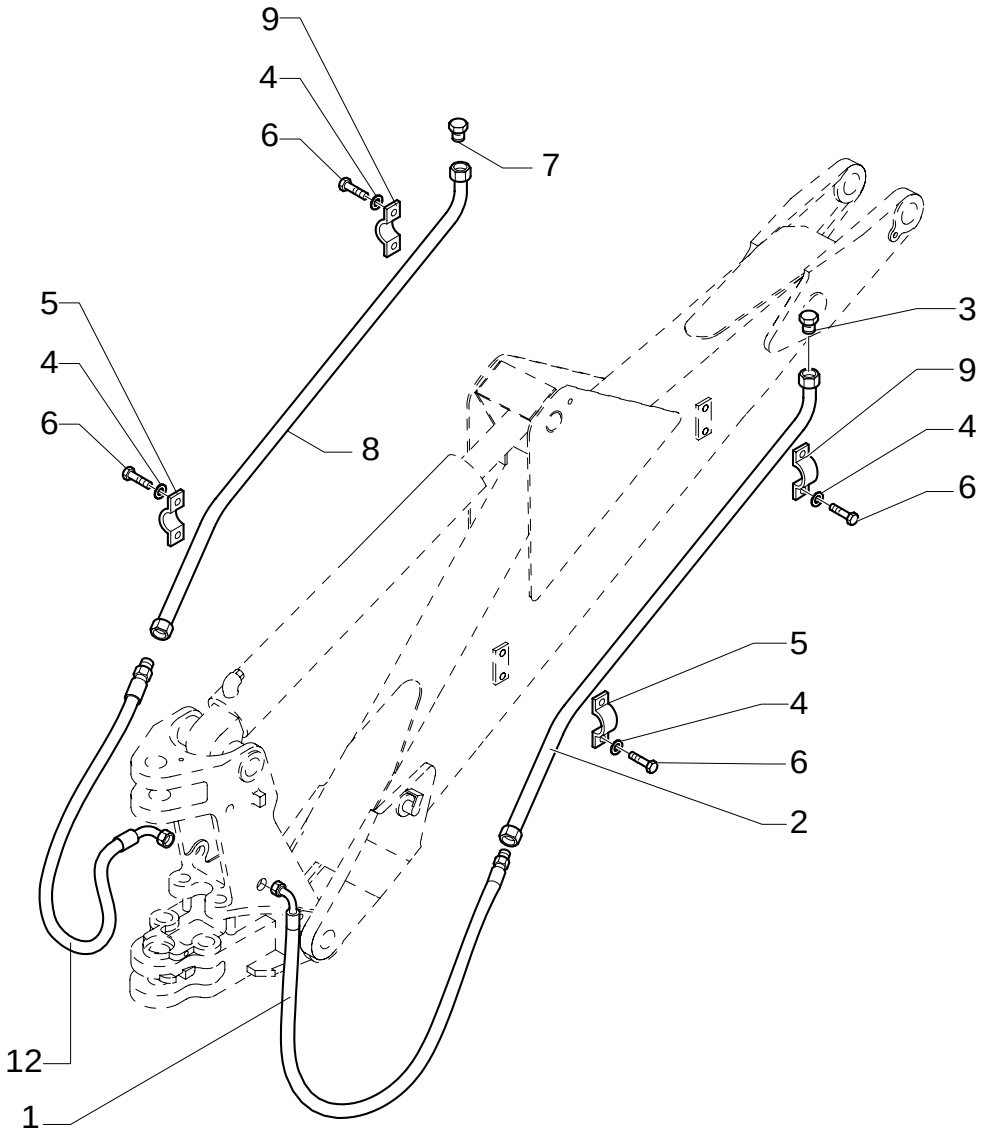

HYDRAULIC SYSTEM FOR HAMMER (CENTER PIVOT)

REF	FN	PART NUMBER	YR/SN	QTY	DESCRIPTION
1		85819619		1	HOSE, FLEXIBLE
2		85802454		1	TUBE, RIGID
3		85801397		1	PLUG
4		11190579		8	WASHER, LOCK
5		87310951		2	CLIP, HOSE
6		10979221		8	SCREW M6x16
7		85801452		1	PLUG
8		85803184		1	TUBE, RIGID
9		87310952		2	CLIP, HOSE
12		85819618		1	HOSE, FLEXIBLE

REAR HAMMER CONTROL VALVE

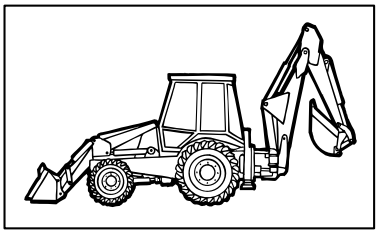

KIT = 2

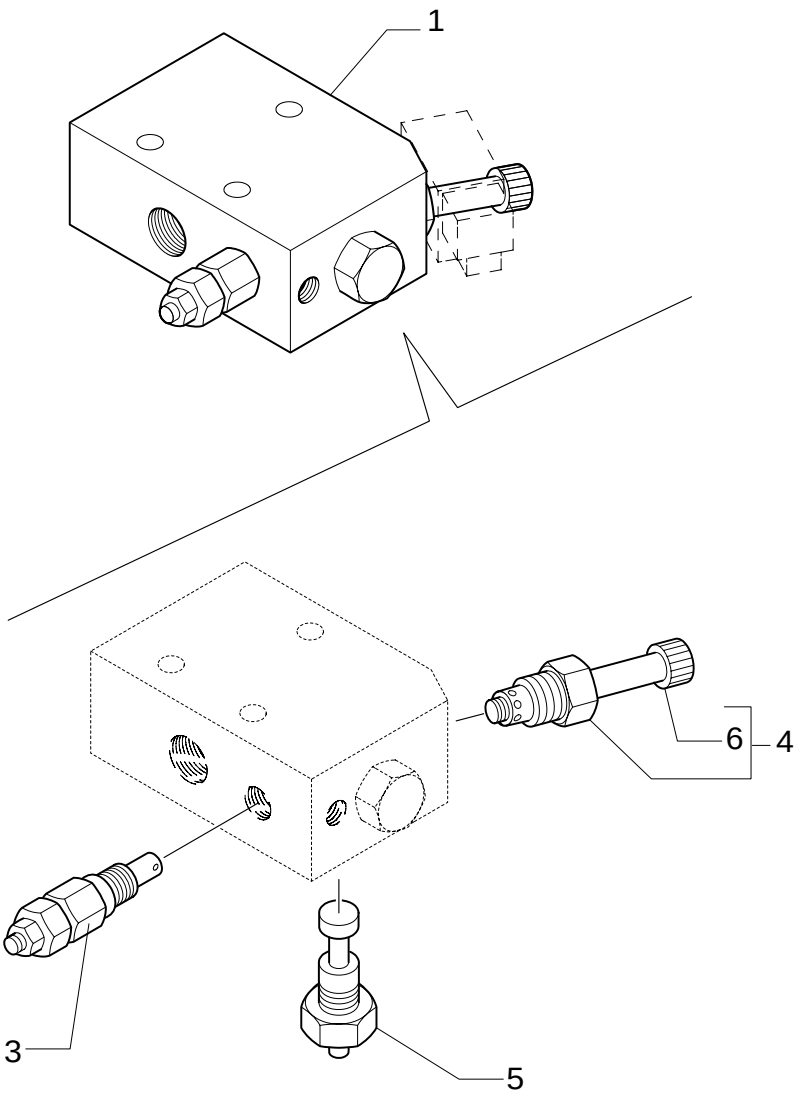

REAR HAMMER CONTROL VALVE

REF	FN	PART NUMBER	YR/SN	QTY	DESCRIPTION
1		87358199		1	VALVE, HYDRAULIC ASSY
2		9970181		1	KIT, SEALS GASKETS
3		9970178		1	VALVE, PRESSURE RELIEF ASSY
4		9970180		1	VALVE, HYDRAULIC ASSY
5		9970179		1	REGULATOR, VOLTAGE ASSY
6		9970384		1	NUT, RING

724/ 2	01	p1	12/05

HYDRAULIC SYSTEM FOR HAMMER (CENTER PIVOT)

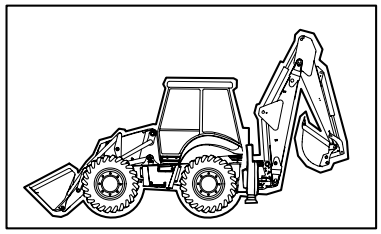

HYDRAULIC SYSTEM FOR HAMMER (CENTER PIVOT)

REF	FN	PART NUMBER	YR/SN	QTY	DESCRIPTION
1		87358199		1	VALVE, HYDRAULIC
2		87357715		1	SENDER UNIT
3		11193879		3	WASHER, LOCK
4		16044821		3	SCREW M8x80
5		85803486		2	CONNECTOR, HYD.
6		85803487		1	ELBOW 45°
7		390951S36		1	CONNECTOR, HYD.
8		85807876		1	CONNECTOR, HYD.
9		85826123		1	SWITCH, ASSY
10		85817220		1	HOSE, FLEXIBLE L=MM.1150
11		85803428		1	HOSE, FLEXIBLE
12		85819237		1	CABLE, ELECTRIC
13		85816760		1	PLATE, COVER
14		13272477		2	SCREW
15		85817633		1.	HOSE, FLEXIBLE
16		85817629		1	TUBE, RIGID
17		85819492		1	CLAMP
18		85802214		2	SUPPORT
19		16104111		1	NUT
20		85804442		2	BRACKET
21		16044221		1	SCREW M8x50
22		85802801		1	CONNECTOR, HYD. 1-11/16"-12 ORS x 1-5/16"-12 SAE O-ring
23		85826987		1	TUBE, RIGID
24		E9NNP864BA		1	PLUG
25		85812116		1	VALVE, HYDRAULIC
26		85817635		1	HOSE, FLEXIBLE 1400 mm (55-1/8 in)
27		85817634		1	HOSE, FLEXIBLE 1750 mm (68-29/32 in)
28		85820222		1	PLATE, COVER

Mechanical Version

724/ 2	02	p1	11/05

HYDRAULIC SYSTEM FOR HAMMER

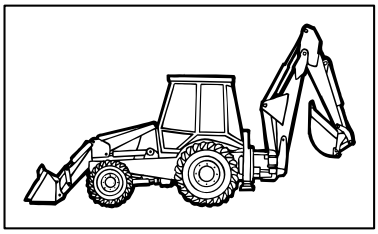

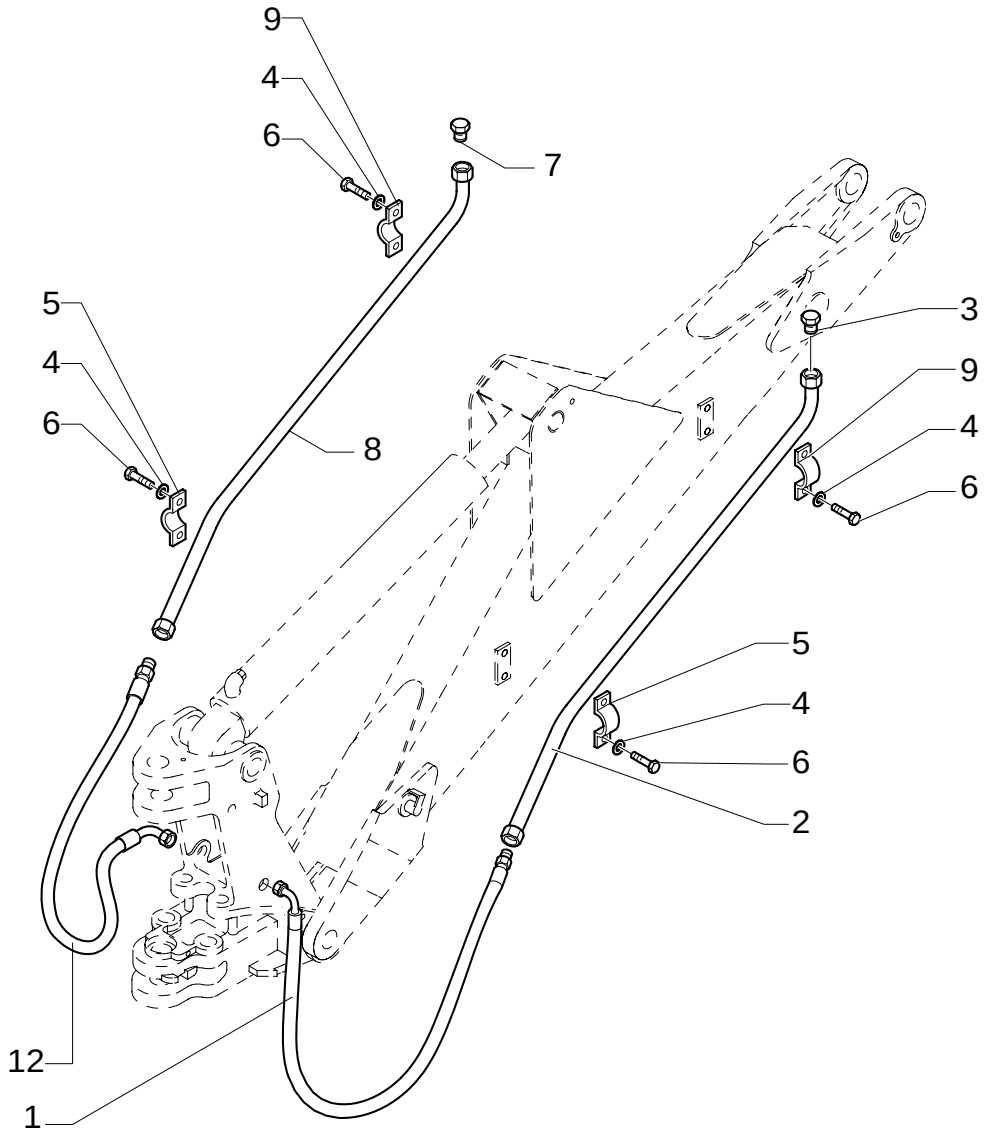

HYDRAULIC SYSTEM FOR HAMMER

REF	FN	PART NUMBER	YR/SN	QTY	DESCRIPTION
1		85819619		1	HOSE, FLEXIBLE
2		85802454		1	TUBE, RIGID
3		85801397		1	PLUG
4		11190579		8	WASHER, LOCK
5		87310951		2	CLIP, HOSE
6		10979221		8	SCREW M10x16
7		85801452		1	PLUG
8		85803184		1	TUBE, RIGID
9		87310952		2	CLIP, HOSE
12		85819618		1	HOSE, FLEXIBLE

Mechanical Version

724/ 3	01	p1	12/05

HYDRAULIC SYSTEM FOR HAMMER (CENTER PIVOT)

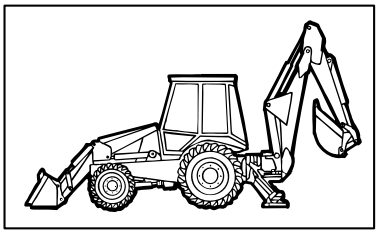

HYDRAULIC SYSTEM FOR HAMMER (CENTER PIVOT)

REF	FN	PART NUMBER	YR/SN	QTY	DESCRIPTION
1		87358199		1	VALVE, HYDRAULIC
2		87357715		1	SENDER UNIT
3		11193879		3	WASHER, LOCK
4		16044821		3	SCREW M8x80
5		85803486		2	CONNECTOR, HYD.
6		85803487		1	ELBOW
7		390951S36		1	CONNECTOR, HYD.
8		85807876		1	CONNECTOR, HYD.
9		85826123		1	SWITCH, ASSY
10		85802776		1	HOSE, FLEXIBLE
11		85803428		1	HOSE, FLEXIBLE
12		85819237		1	CABLE, ELECTRIC
13		85816760		1	PLATE, COVER
14		13272477		2	SCREW
15		85817633		1	HOSE, FLEXIBLE
16		85817629		1	TUBE, RIGID
17		85819492		1	CLAMP
18		85802214		2	SUPPORT
19		16104111		1	NUT
20		85804442		2	BRACKET
21		16044221		1	SCREW M8x1.25x50
22		85802801		1	CONNECTOR, HYD. 1-11/16"-12 ORSx1-5/16"-12 SAE O-ring
23	1	85826987		1	TUBE, RIGID
24		E9NNP864BA		1	PLUG
25		85812116		1	VALVE, HYDRAULIC
26		85817635		1	HOSE, FLEXIBLE 1400 mm (55-1/8 in)
27		85817634		1	HOSE, FLEXIBLE 1750 mm (68-29/32 in)
28		85820222		1	PLATE, COVER
30		167266		2	O-RING 90 Duro, .924" ID x .116" Thk
29		9993141		2	O-RING 90 Duro, .364" ID x .070" Thk

(1) Only for LB 90.B - LB95.B - LB110.B - LB115.B

Pilot Control Version

724/ 3	02	p1	06/05

HYDRAULIC SYSTEM FOR HAMMER (CENTER PIVOT)

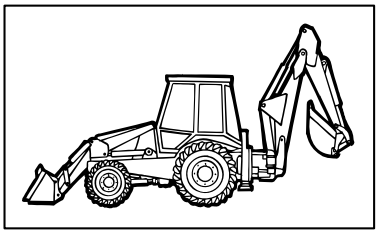

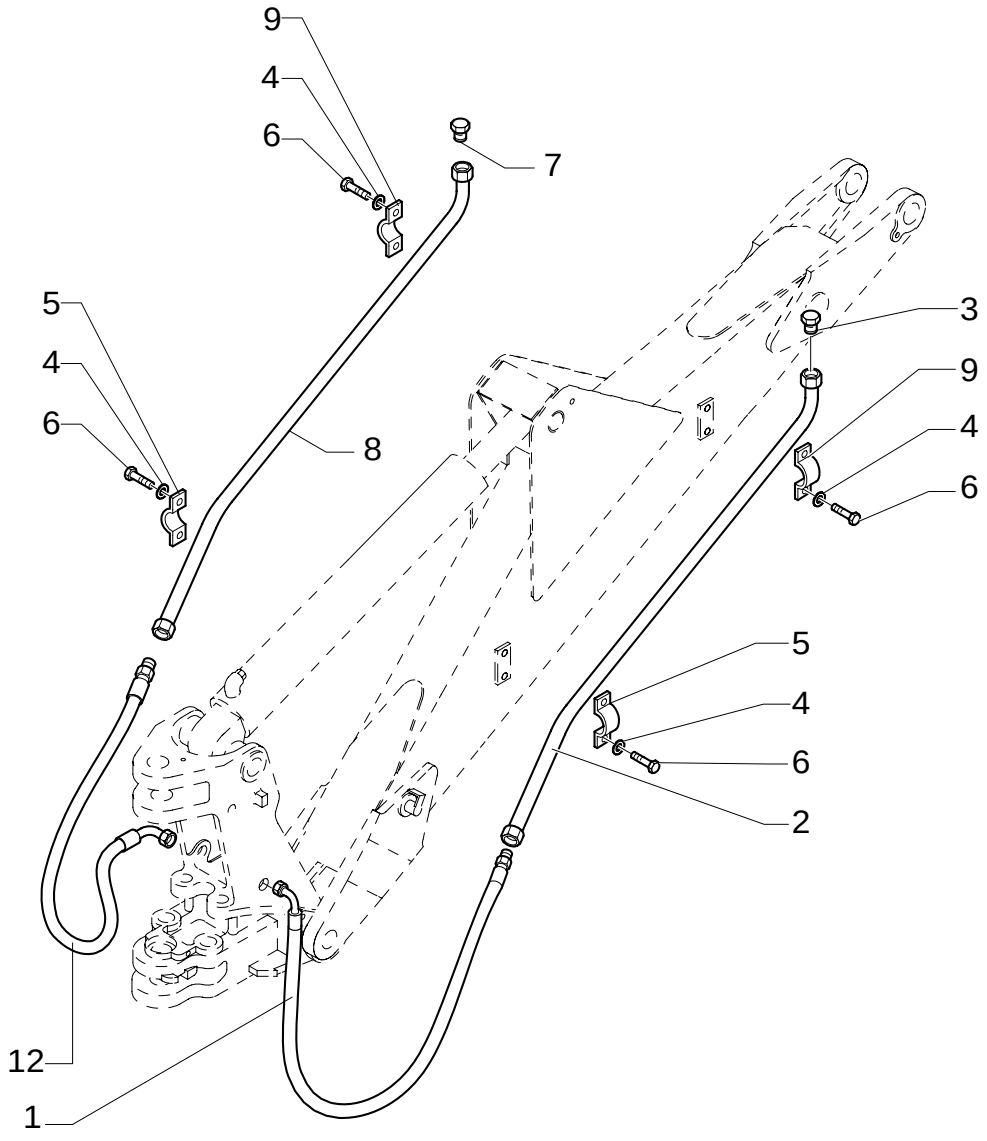

HYDRAULIC SYSTEM FOR HAMMER (CENTER PIVOT)

REF	FN	PART NUMBER	YR/SN	QTY	DESCRIPTION
1		85819619		1	HOSE, FLEXIBLE
2		85802454		1	TUBE, RIGID
3		85801397		1	PLUG
4		11190579		8	WASHER, LOCK
5		87310951		2	CLIP, HOSE
6		10979221		4	SCREW M6x16
7		85801452		1	PLUG
8		85803184		1	TUBE, RIGID
9		87310952		2	CLIP, HOSE

Pilot Control Version

724/ 5	01	p1	12/05

HYDRAULIC SYSTEM FOR HAMMER (4WS)

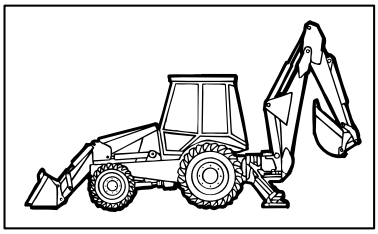

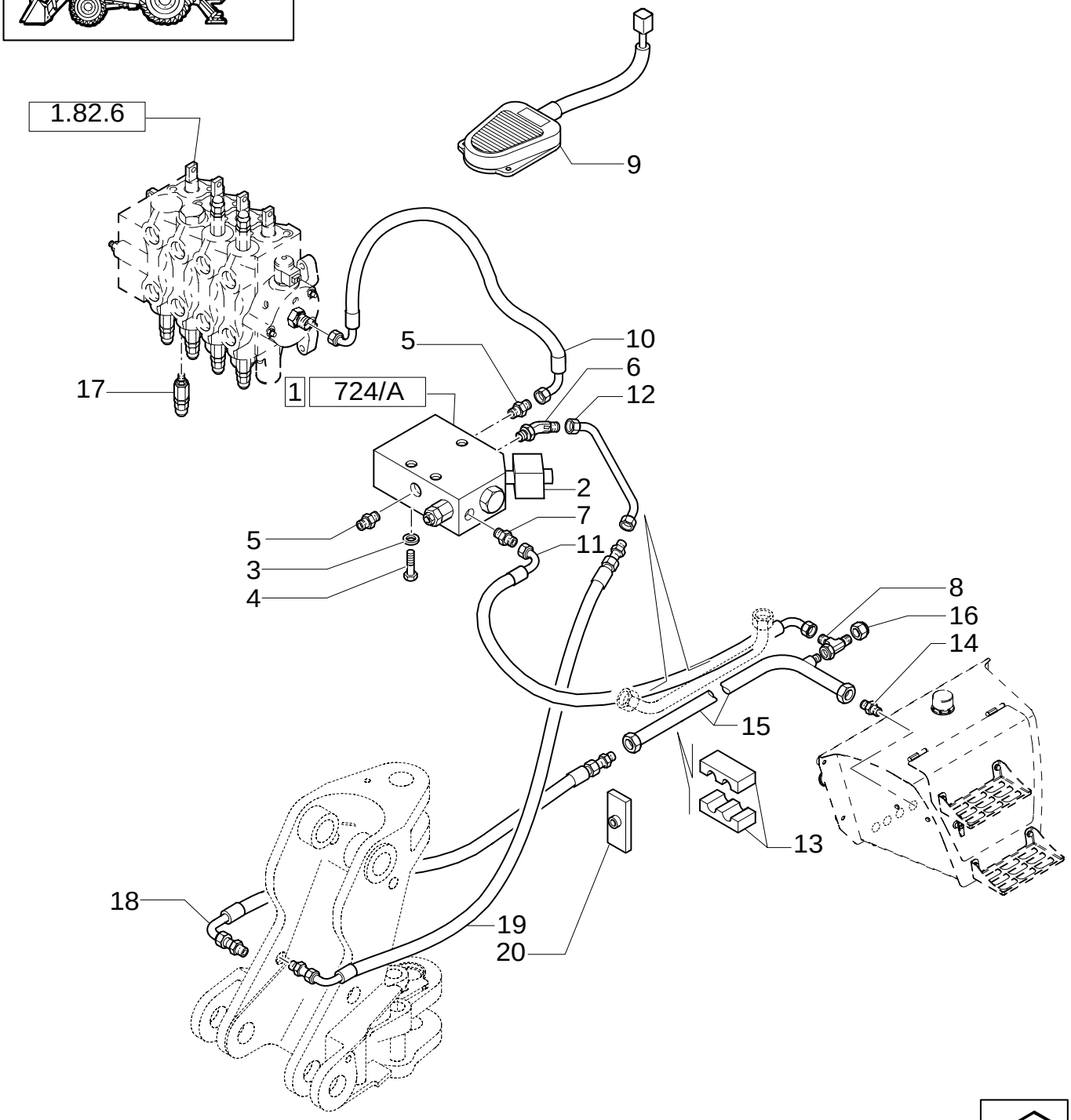

HYDRAULIC SYSTEM FOR HAMMER (4WS)

REF	FN	PART NUMBER	YR/SN	QTY	DESCRIPTION
1		87358199		1	VALVE, HYDRAULIC
2		87357715		1	SENDER UNIT
3		11193879		3	WASHER, LOCK
4		16044821		3	SCREW M8x80
5		85803486		2	CONNECTOR, HYD.
6		85803487		1	ELBOW
7		390951S36		1	CONNECTOR, HYD.
8		85807876		1	CONNECTOR, HYD.
9		85826123		1	SWITCH, ASSY
10		85803428		1	HOSE, FLEXIBLE
11		85817633		1	HOSE, FLEXIBLE
12		85817629		1	TUBE, RIGID
13		85819492		1	CLAMP
14		85802801		1	CONNECTOR, HYD. 1-11/16"-12 ORSx1-5/16"-12 SAE O-ring
15		85826987	BSN XXX	1	TUBE, RIGID
16		E9NNP864BA	ASN XXX	1	PLUG
17		85812116		1	VALVE, HYDRAULIC
18		85817635		1	HOSE, FLEXIBLE 1400 mm (55-1/8 in)
19		85817634		1	HOSE, FLEXIBLE 1750 mm (68-29/32 in)
20		85820222		1	PLATE, COVER

724/ 6	01	p1	12/05

HYDRAULIC SYSTEM FOR HAMMER (SIDE SHIFT EUROPA)

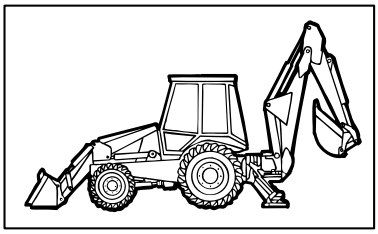

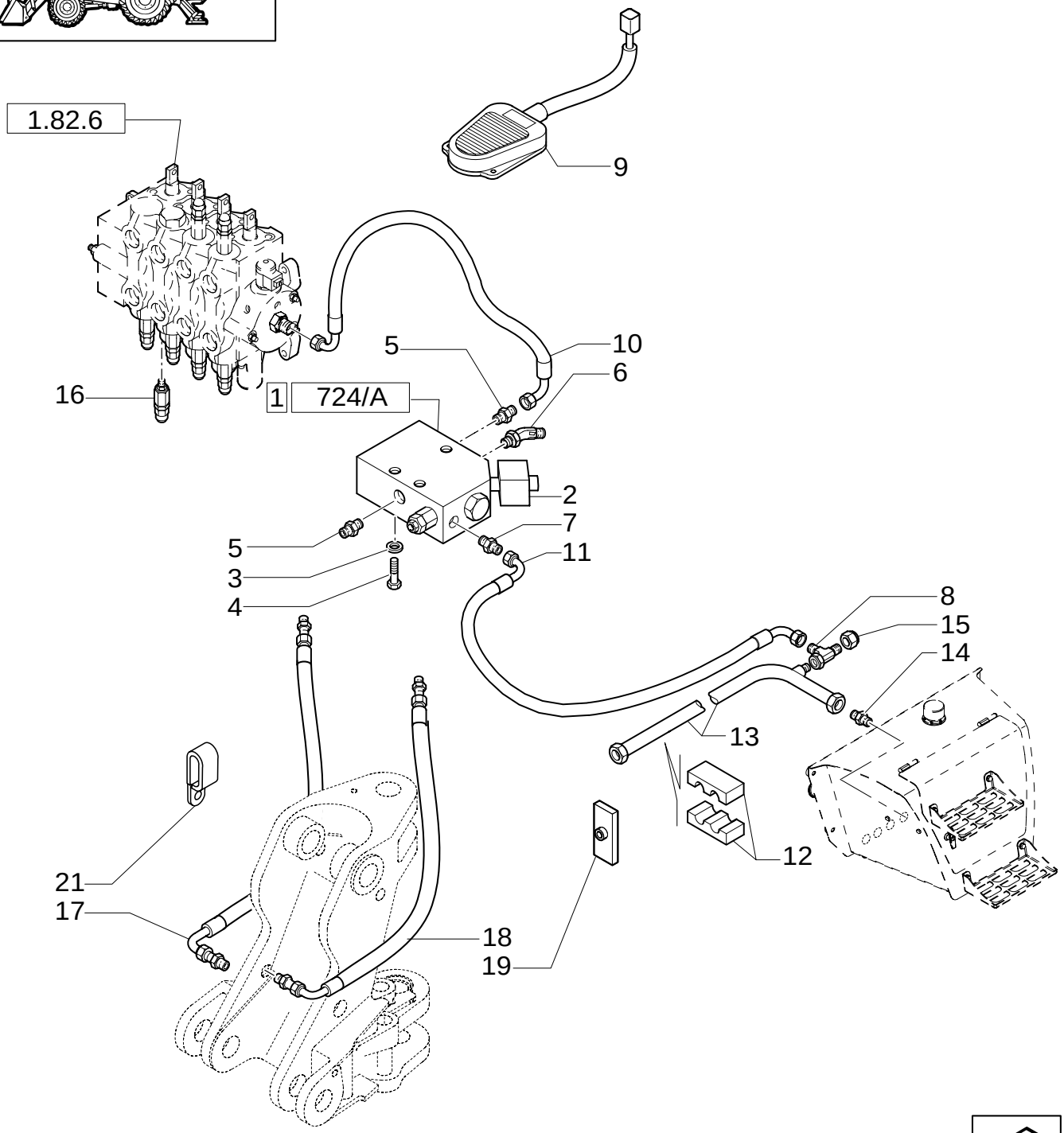

HYDRAULIC SYSTEM FOR HAMMER (SIDE SHIFT EUROPA)

REF	FN	PART NUMBER	YR/SN	QTY	DESCRIPTION
1		87358199		1	VALVE, HYDRAULIC
2		87357715		1	SENDER UNIT
3		11193879		3	WASHER, LOCK
4		16044821		3	SCREW M8x80
5		85803486		2	CONNECTOR, HYD.
6		85803487		1	ELBOW
7		390951S36		1	CONNECTOR, HYD.
8		85807876		2	CONNECTOR, HYD.
9		85826123		1	SWITCH, ASSY
10		85803428		1	HOSE, FLEXIBLE
11		85817633		1	HOSE, FLEXIBLE
12		85819492		1	CLAMP
13		85802801		1	CONNECTOR, HYD. 1-11/16"-12 ORSx1-5/16"-12 SAE O-ring
14		85827926	BSN XXX	1	TUBE, RIGID
15		E9NNP864BA		1	PLUG
16		85812116		1	VALVE, HYDRAULIC
17		85820122		1	HOSE, FLEXIBLE
18		85820123		1	HOSE, FLEXIBLE
19		85820222		1	PLATE, COVER
21		85803346		2	BRACKET

732	01	p1	12/05

REAR MECHANICAL QUICK-COUPLING

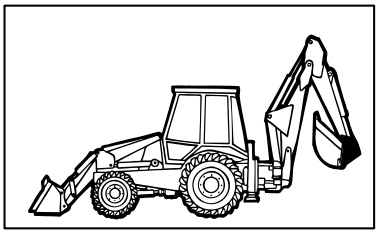

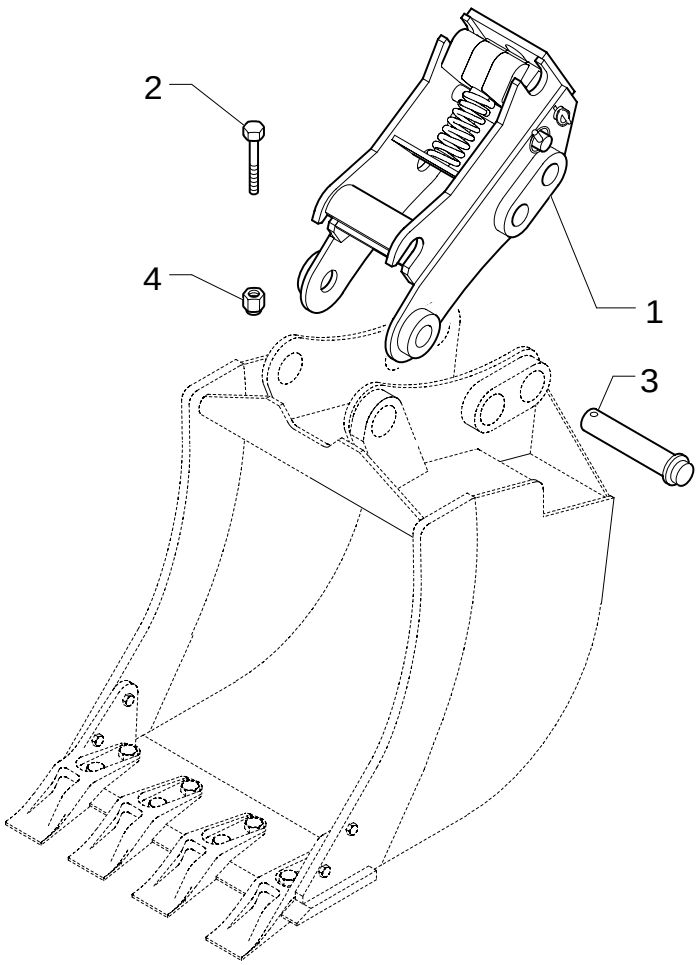

REAR MECHANICAL QUICK-COUPLING

REF	FN	PART NUMBER	YR/SN	QTY	DESCRIPTION
1		85801542		1	COUPLING, QUICK, MALE
2		15972034		2	BOLT M10x1.25x110
3		85803005		2	PIN
4		12574511		2	NUT M10x1.25

Mechanical Version

732/ A	01	p1	12/05

REAR MECHANICAL QUICK-COUPLING

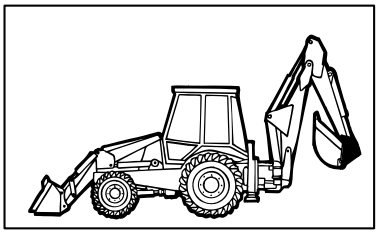

KIT 1= ●

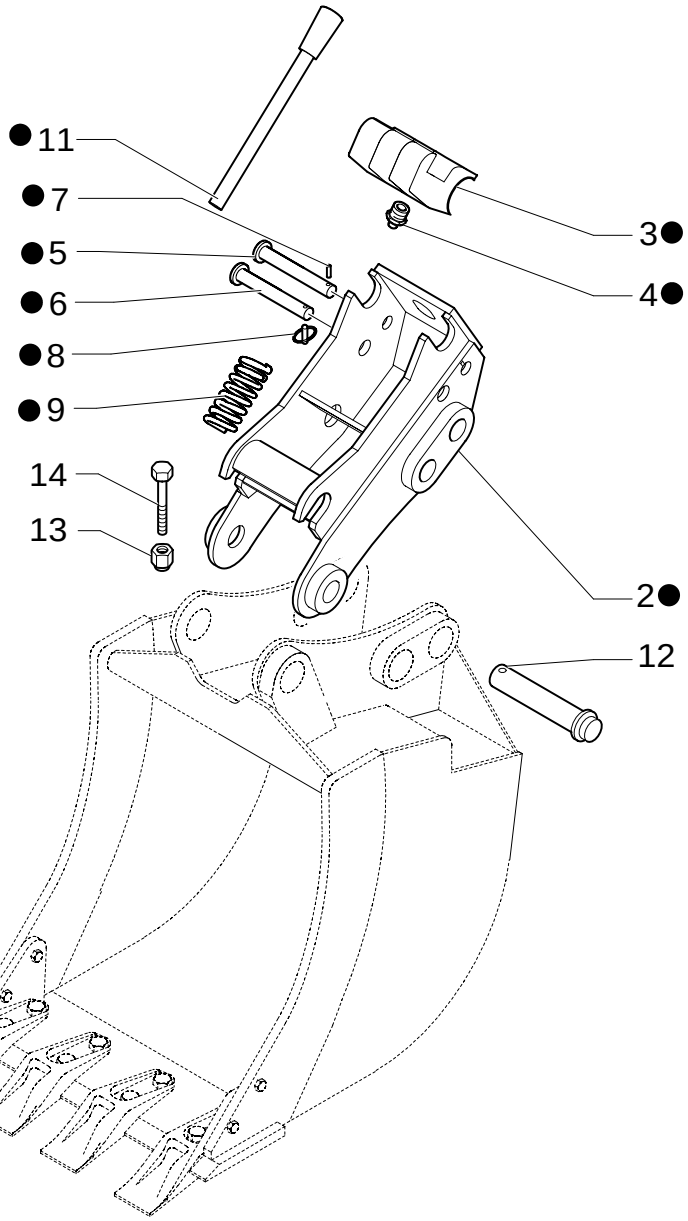

REAR MECHANICAL QUICK-COUPLING

REF	FN	PART NUMBER	YR/SN	QTY	DESCRIPTION
1		85801542		1	COUPLING, QUICK, MALE
2		{85827551}		1	
3		{87302836}		1	
4		85824266		1	NIPPLE, LUBE
5		87302837		1	PIN
6		87302838		1	PIN
7		85825285		1	PIN
8		85824265		1	PIN
9		87302840		1	SPRING
11		85824267		1	HANDLE
12		85803005		2	PIN
13		12574511		2	NUT
14		15972034		2	BOLT M10x110

900	01	p1	02/05

BOOM - LONG DIPPER

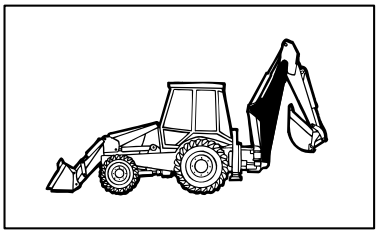

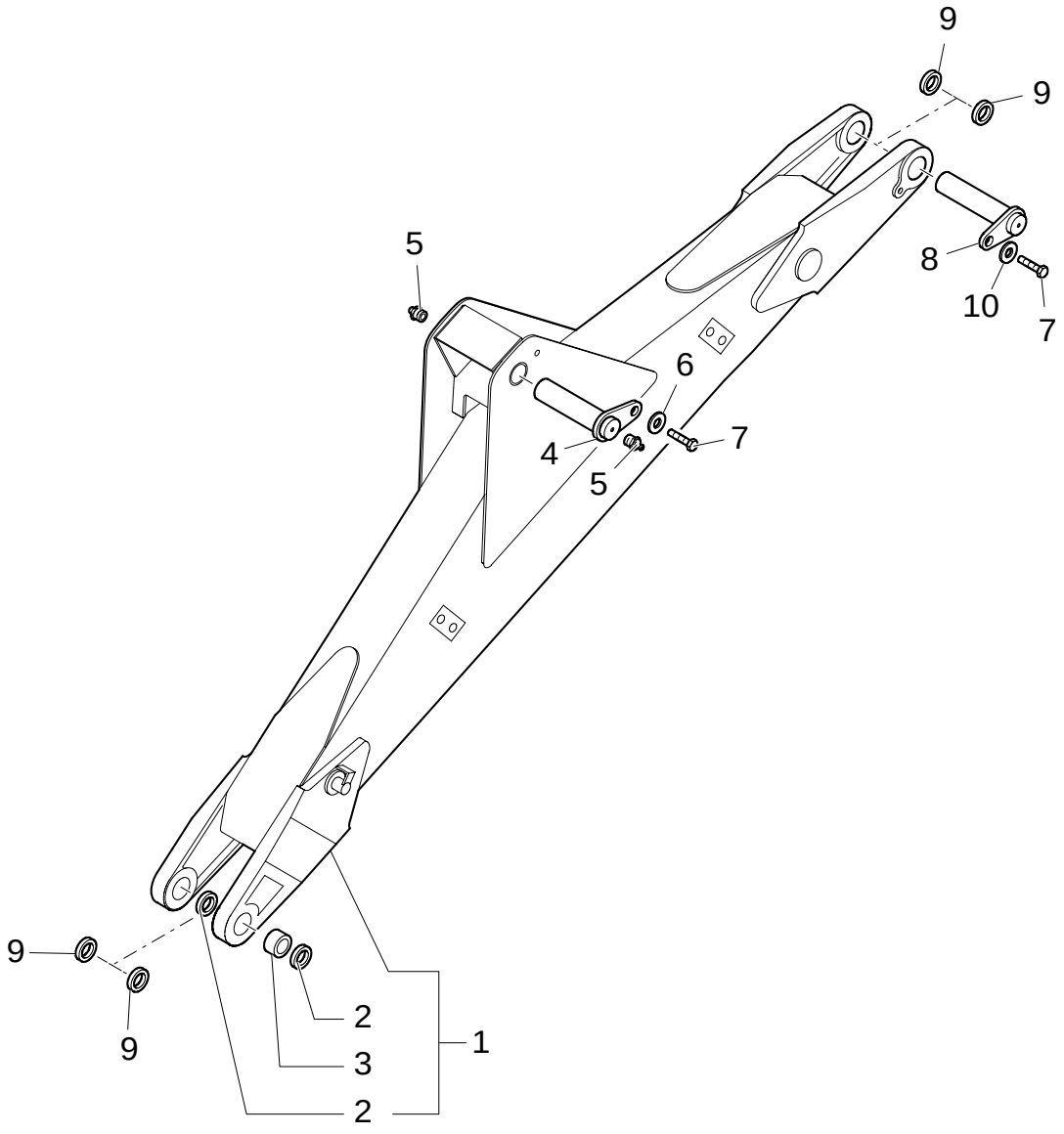

BOOM - LONG DIPPER

REF	FN	PART NUMBER	YR/SN	QTY	DESCRIPTION
1	1	85816801		1	ARM
2		D7NNC512C		2	BUSHING, DRIVE
3		D9NNC513CA		4	SEAL PROTECTION
4		85815698		1	PIN
5		87901S8		2	NIPPLE, LUBE 1/8"-27
6		85802396		1	WASHER
7		85802397		2	SCREW
8		85815607		1	PIN
9		85818916		4	SHIM
10		85815609		1	WASHER

(1) Includes 2, 3

900	02	p1	09/05

LONG DIPPER

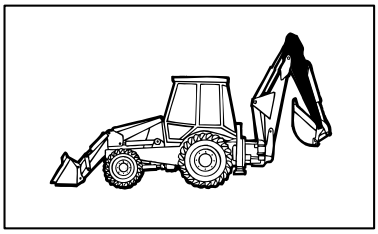

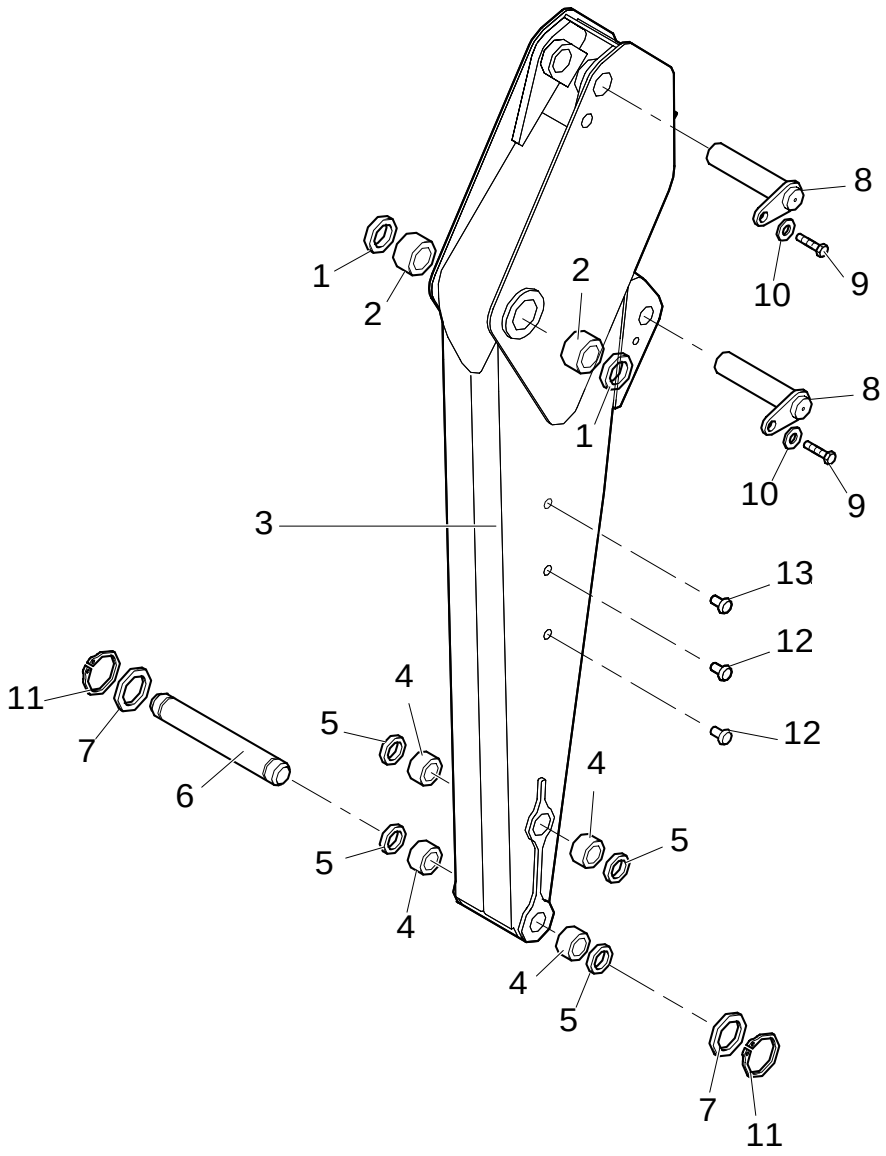

LONG DIPPER

REF	FN	PART NUMBER	YR/SN	QTY	DESCRIPTION
1		D9NNC513CA		2	SEAL PROTECTION
2		D7NNC512F		2	BUSHING 2.175" ID x 2.80" OD x 1.969"
3	1	85817039		1	ARM
4		D7NNC512H		4	BUSHING
5		D9NNC513BA		4	SEAL PROTECTION
6		86992966		1	PIN
7		D7NNC622C		2	SPACER
8		85803002		2	PIN
9		85802397		2	SCREW
10		85802396		2	WASHER
11		11069071		2	RING, LOCKING
12		85804447		4	PLUG
13		F1NN94000Z36AA		7	STUD

(1) Includes 1, 2, 4, 5

900	03	p1	02/05

LONG DIPPER - BUCKET MOTION

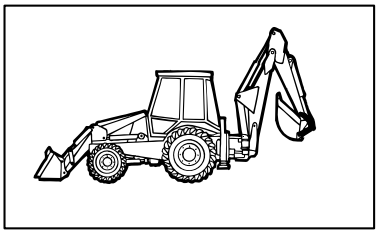

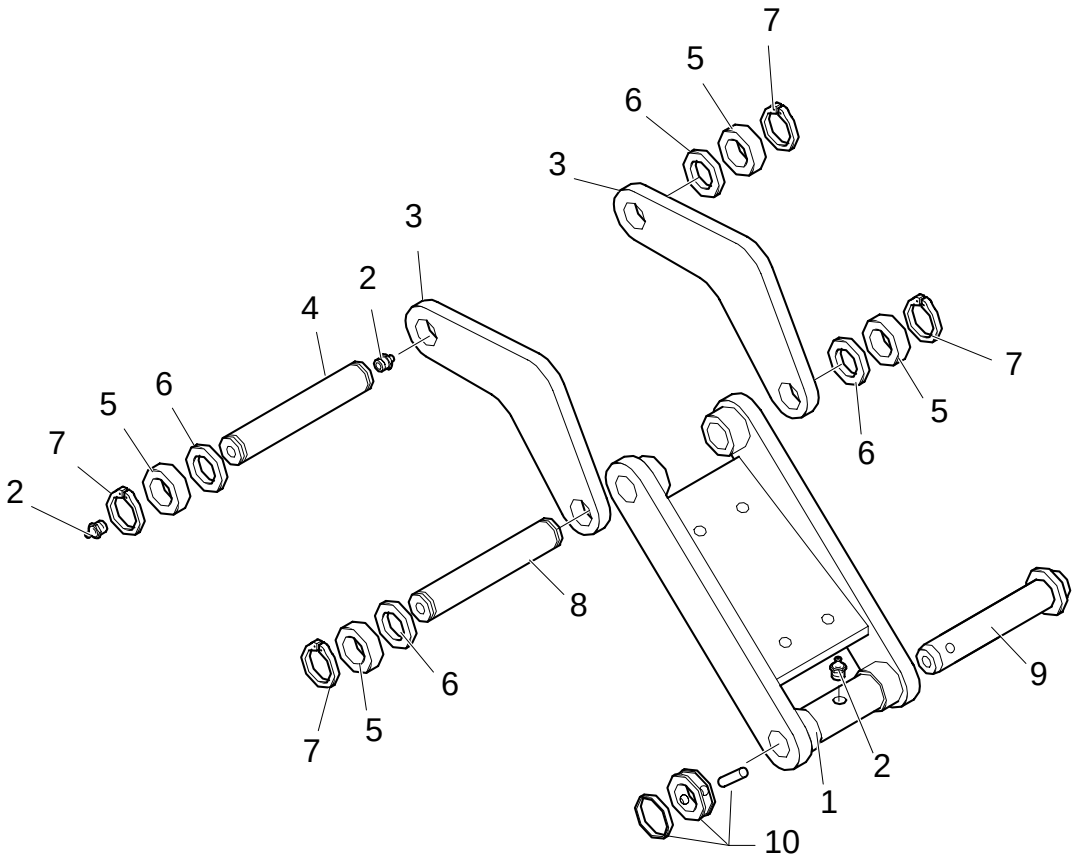

LONG DIPPER - BUCKET MOTION

REF	FN	PART NUMBER	YR/SN	QTY	DESCRIPTION
1		85803613		1	LINK CONROD
2		87901S8		5	NIPPLE, LUBE 1/8"-27
3		{85817133}		2	
4		85815517		1	PIN
5		D7NNC622C		4	SPACER
6		85818916		4	SHIM
7		11069071		4	RING, LOCKING
8		85813469		1	PIN
9		85803005		1	PIN
10		85802975		1	PIN

900	04	p1	11/05

LONG DIPPÊR - HYDRAULIC SYSTEM

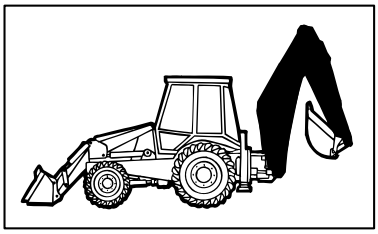

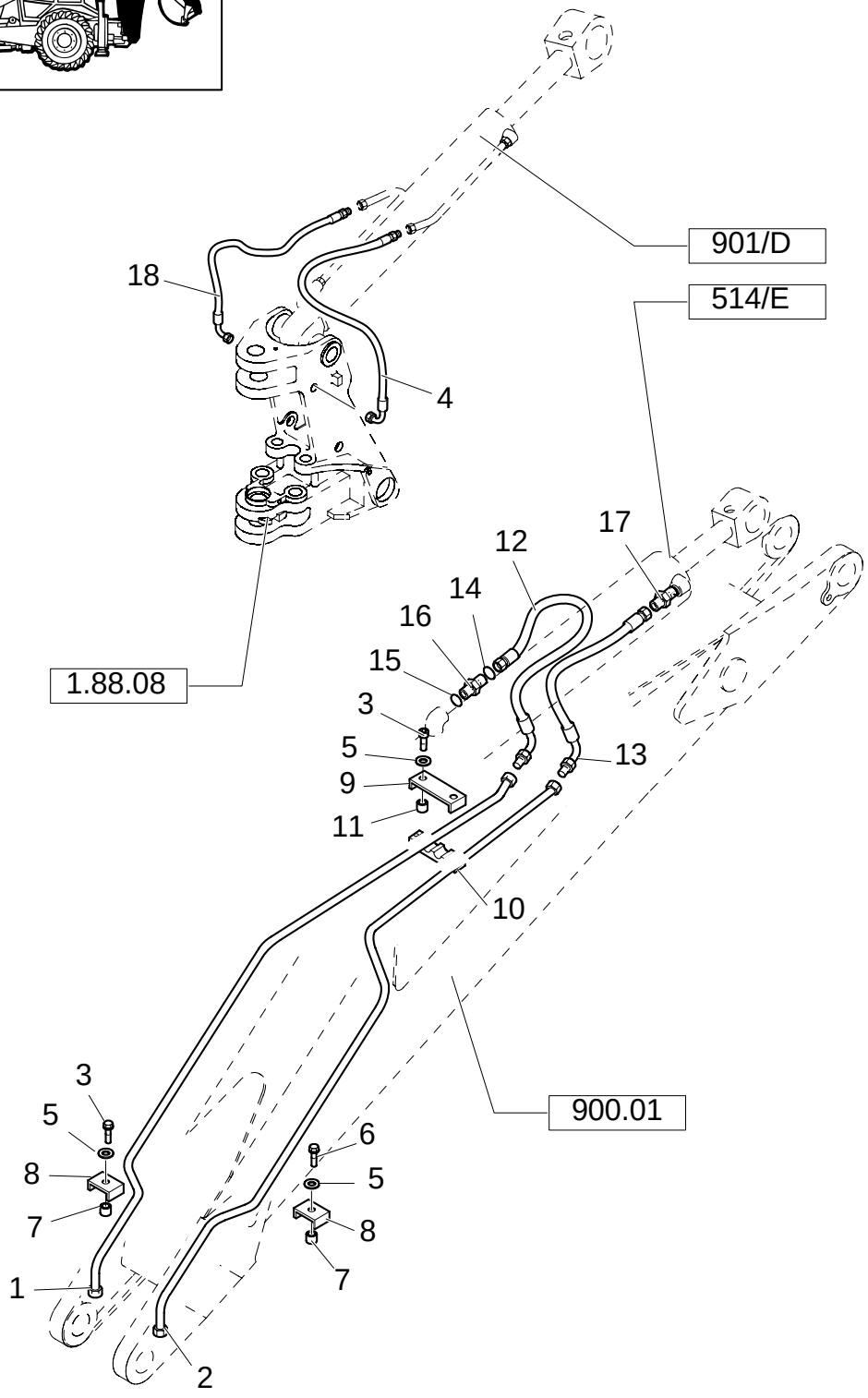

LONG DIPPÊR - HYDRAULIC SYSTEM

REF	FN	PART NUMBER	YR/SN	QTY	DESCRIPTION
1		85815632		1	TUBE, RIGID
2		85815630		1	TUBE, RIGID
3		16044421		1	SCREW M8x60
4		85812142		1	HOSE, FLEXIBLE
5		11193979		4	WASHER, LOCK
6		16044221		1	SCREW M8x50
7		85802902		1	SPACER
8		85802900		1	CLAMP
9		85802894		1	U-BRACKET
10		85802895		1	CLAMP
11		85802893		2	SPACER
12		85812154		1	HOSE, FLEXIBLE
13		85812178		1	HOSE, FLEXIBLE
14		9991976		1	O-RING 90 Duro, .739" ID x .070" Thk
15		167266		1	O-RING 90 Duro, .924" ID x .116" Thk
16	1	390937S36		1	CONNECTOR, HYD. 1-3/16"-12 ORS x 1-1/16"-12 SAE O-Ring
17		390938S36		1	CONNECTOR, HYD.
18		85812150		1	HOSE, FLEXIBLE

(1) Includes 14, 15

900	05	p1	12/05

LONG DIPPER - HYDRAULIC SYSTEM

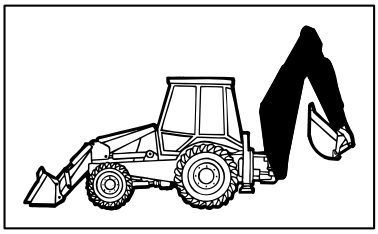

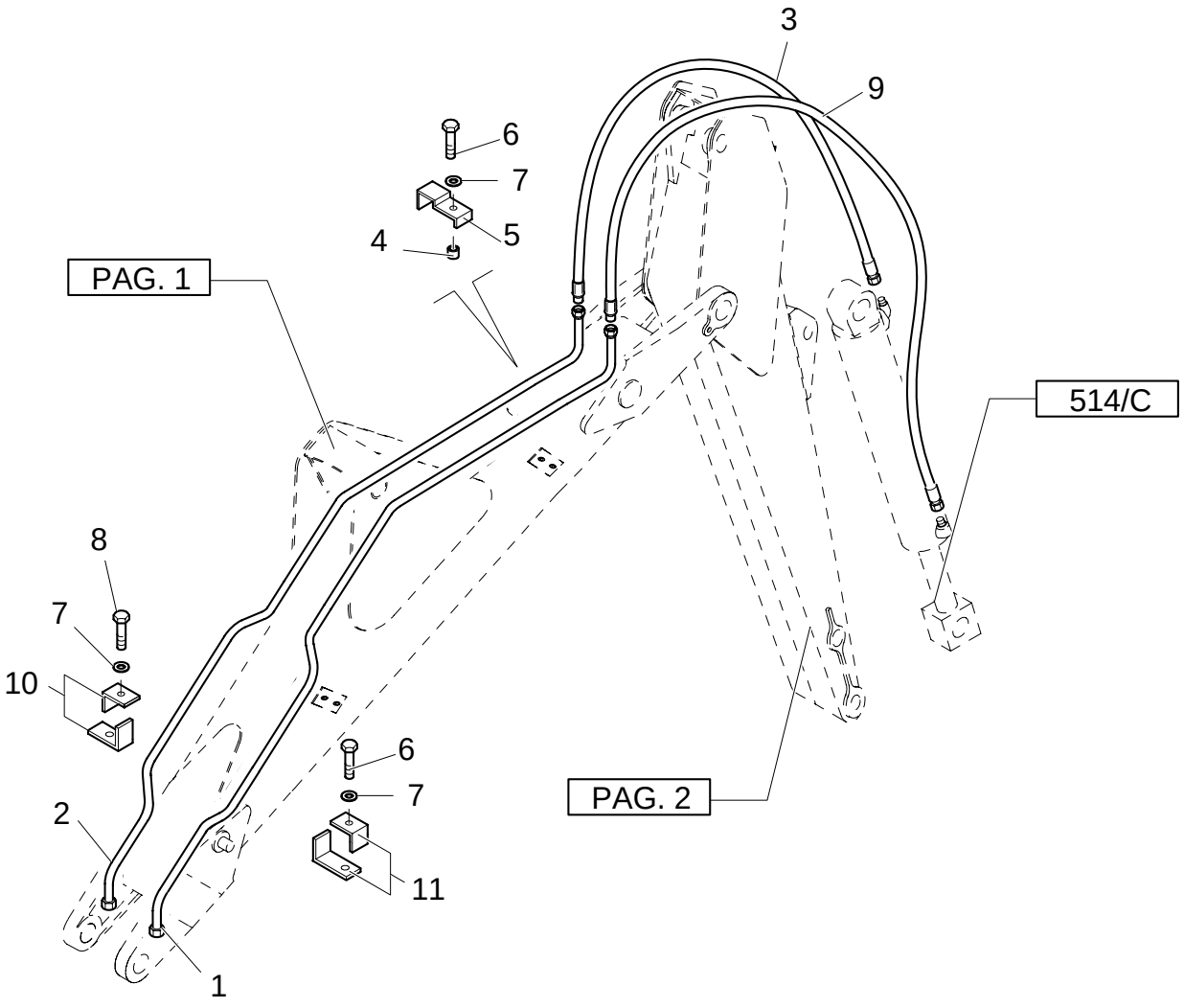

LONG DIPPER - HYDRAULIC SYSTEM

REF	FN	PART NUMBER	YR/SN	QTY	DESCRIPTION
1		85815636		1	TUBE, RIGID
2		85815634		1	TUBE, RIGID
3		85826222		1	HOSE, FLEXIBLE
4		85802901		1	SPACER
5		85802909		1	CLAMP
6		16044221		2	SCREW M8x50
7		11193979		3	WASHER, LOCK
8		16044421		1	SCREW
9		85826224		1	HOSE, FLEXIBLE
10		85815628		2	HALF-CONNECTOR
11		85815627		2	HALF-CONNECTOR

LONG DIPPER - HYDRAULIC SYSTEM

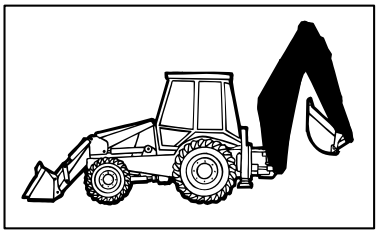

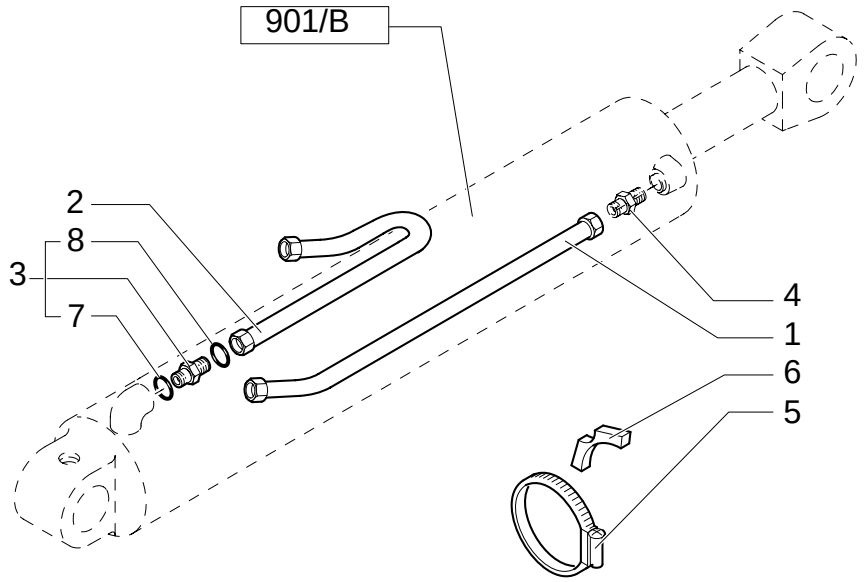

LONG DIPPER - HYDRAULIC SYSTEM

REF	FN	PART NUMBER	YR/SN	QTY	DESCRIPTION
1		85815683		1	TUBE, RIGID
2		85816813		1	TUBE, RIGID
3	1	390937S36		1	CONNECTOR, HYD. 1-3/16"-12 ORS x 1-1/16"-12 SAE O-Ring
4		390938S36		1	CONNECTOR, HYD.
5		85802744		1	CLAMP
6		87303912		2	SPACER
7		167266		1	O-RING 90 Duro, .924" ID x .116" Thk
8		9991976		1	O-RING 90 Duro, .739" ID x .070" Thk

(1) Includes 7, 8

900	07	p1	03/05

LONG DIPPER - HYDRAULIC SYSTEM

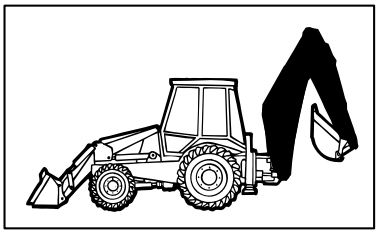

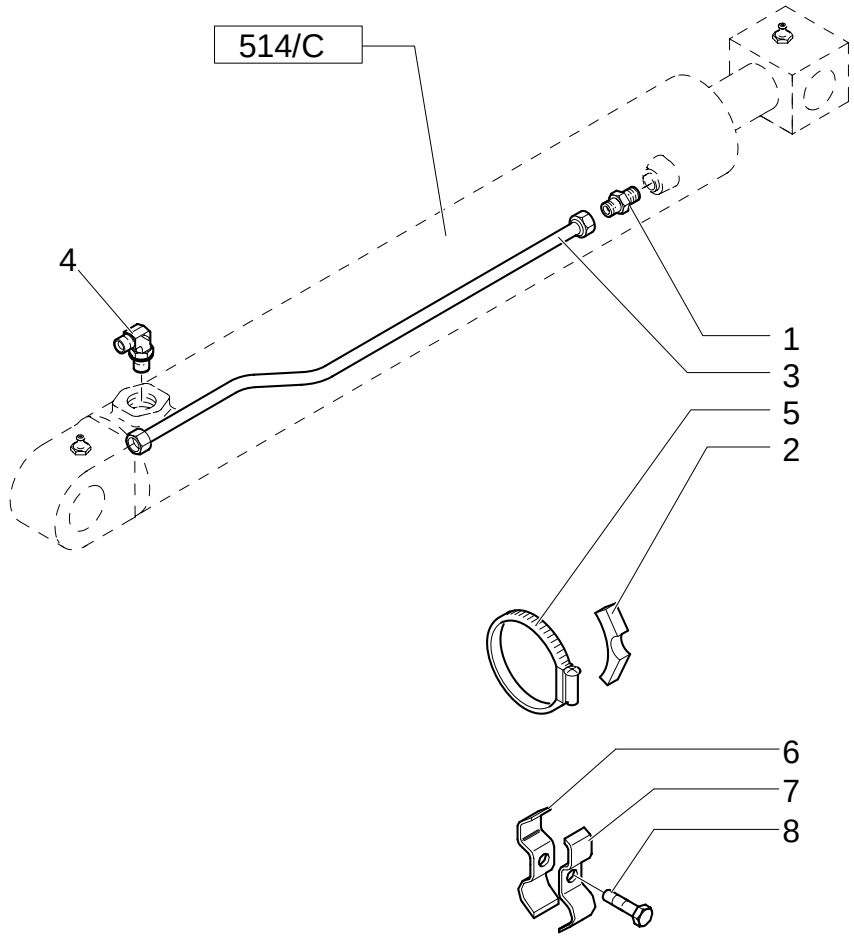

LONG DIPPER - HYDRAULIC SYSTEM

REF	FN	PART NUMBER	YR/SN	QTY	DESCRIPTION
1		390938S36		1	CONNECTOR, HYD.
2		87303910		1	SPACER
3		85815638		1	TUBE, RIGID
4		85802957		1	ELBOW
5		85803008		1	COLLAR
6		85825442		1	COLLAR
7		85825441		1	CLIP
8		14305321		1	SCREW

900	08	p1	02/05

LONG DIPPER - HYDRAULIC SYSTEM

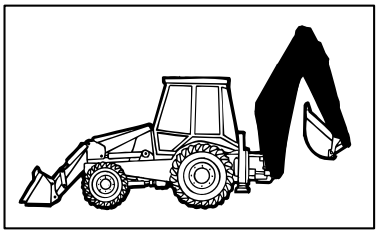

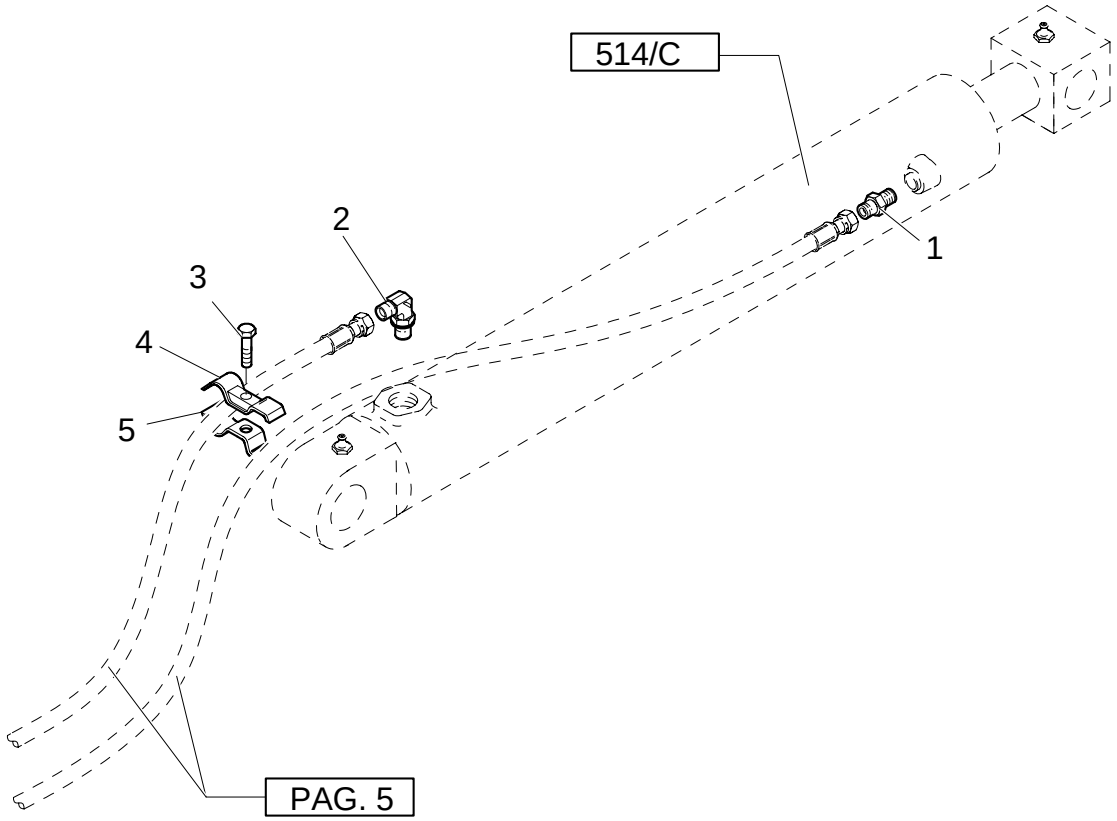

LONG DIPPER - HYDRAULIC SYSTEM

REF	FN	PART NUMBER	YR/SN	QTY	DESCRIPTION
1		390938S36		1	CONNECTOR, HYD.
2		85802957		1	ELBOW
3		14305321		1	SCREW
4		85825441		1	CLIP
5		85825442		1	COLLAR

901	03	p1	12/05

TELESCOPIC DIPPER LONG - HYDRAULIC SYSTEM

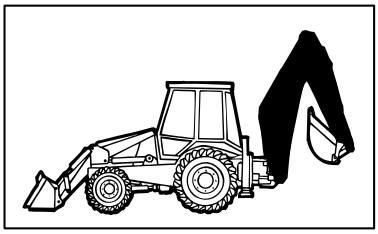

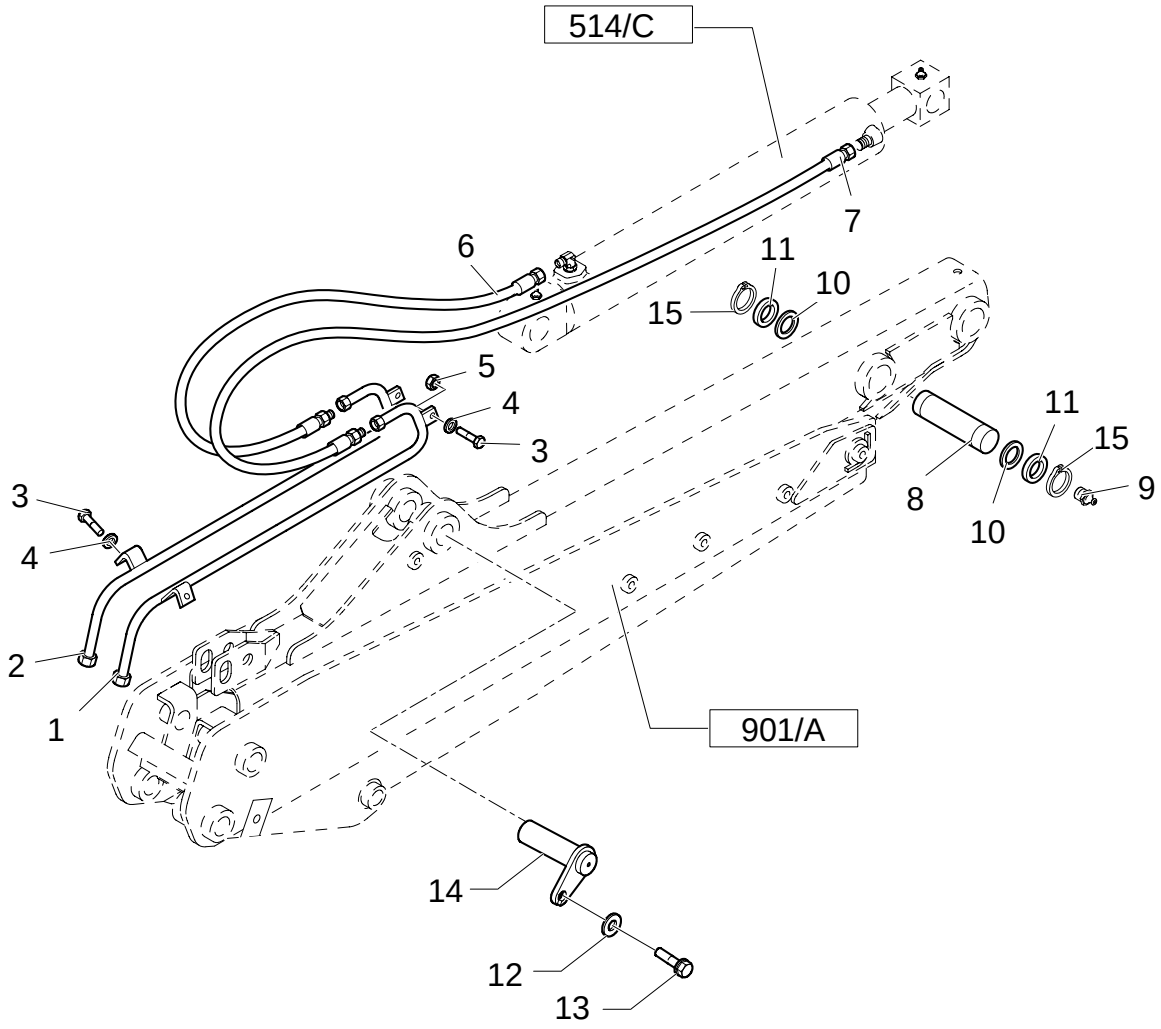

TELESCOPIC DIPPER LONG - HYDRAULIC SYSTEM

REF	FN	PART NUMBER	YR/SN	QTY	DESCRIPTION
1		85816815		1	TUBE, RIGID
2		85816817		1	TUBE, RIGID
3		16043621		4	SCREW M8x25
4		11193979		4	WASHER, LOCK
5		14048221		2	NUT M8x1.25
6		85812165		1	HOSE, FLEXIBLE
7		85826110		1	HOSE, FLEXIBLE
8		86992966		1	PIN
9		87901S8		1	NIPPLE, LUBE 1/8"-27
10		85818916		2	SHIM
11		D7NNC622C		2	SPACER ASSY
12		85802396		1	WASHER
13		85802397		1	SCREW
14		85803002		1	PIN
15		11069071		1	RING, LOCKING

901/ A	01	p1	12/05

TELESCOPIC DIPPER LONG

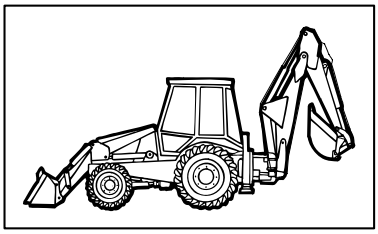

KIT
KIT KIT
25 = ●
26 = △

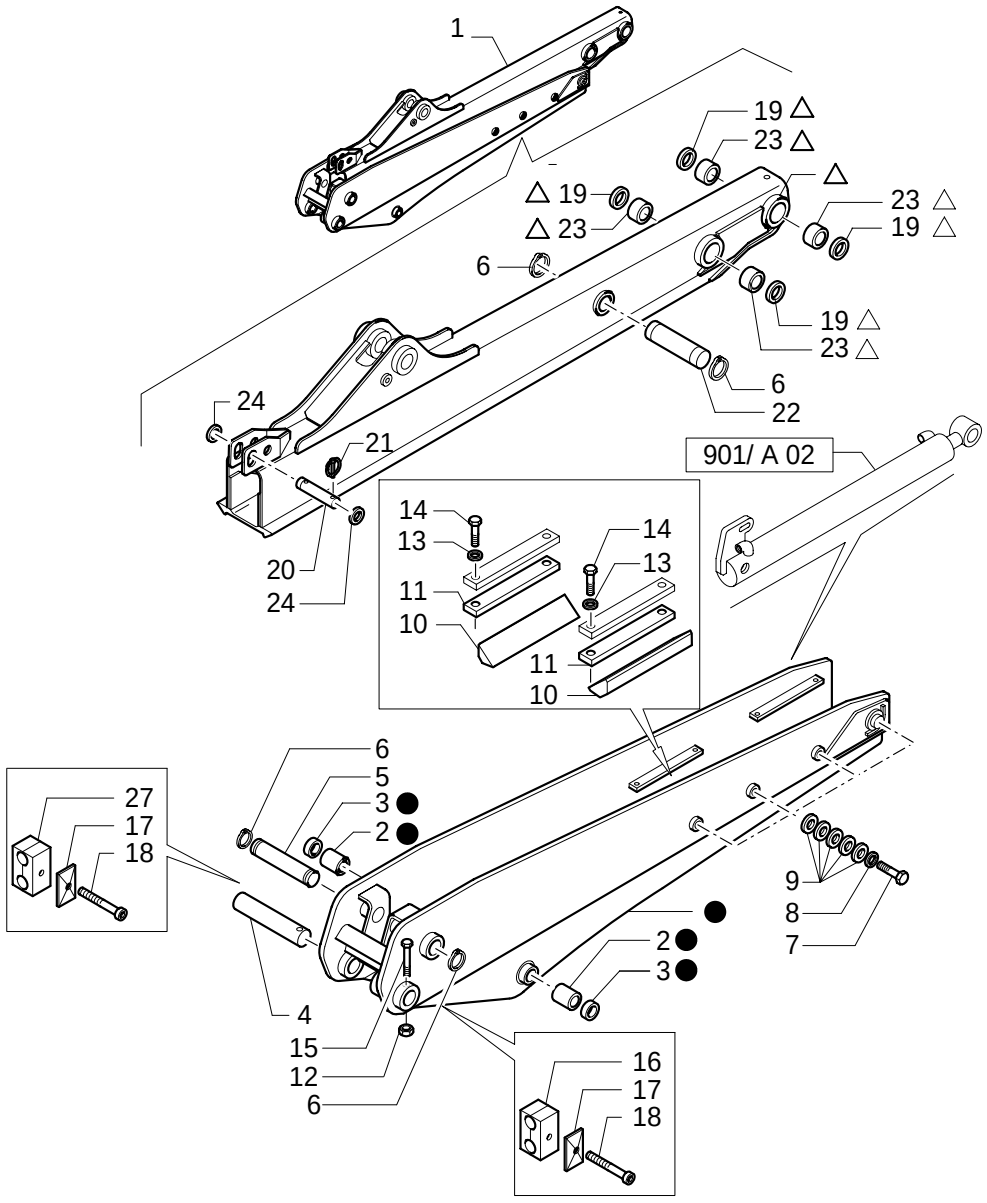

TELESCOPIC DIPPER LONG

REF	FN	PART NUMBER	YR/SN	QTY	DESCRIPTION
1		85817137		1	ARM, LIFT
2		D7NNC512F		2	BUSHING
3		D9NNC513CA		2	SEAL PROTECTION
4		85801310		1	PIN
5		85801309		1	PIN
6		N800271S36M		4	RING
7		11124421		8	SCREW
8		14497121		8	WASHER
9		85801307		40	WASHER
10		85808473		4	PAD, SLIDING
11		85808472		4	PAD, SLIDING
12		16105011		1	NUT
13		11190579		8	WASHER, LOCK
14		11106721		8	SCREW
15		14332521		1	SCREW
16		85802534		2	KIT
17		85803289		2	PLATE, COVER
18		16044121		2	SCREW
19		D9NNC513BA		4	SEAL PROTECTION
20		85801314		1	PIN
21		7704794		2	PIN, SPLIT (COTTER)
22		85801308		1	PIN
23		D7NNC512H		4	BUSHING
24		14497401		2	WASHER, LOCK
25	1	85817138		1	ARM, LIFT
26	2	85802750		1	ARM
27		85803088		2	CLAMP

(1) Includes 2, 3
(2) Includes 19, 23

901/ B	01	p1	11/05

TELESCOPIC DIPPER LONG

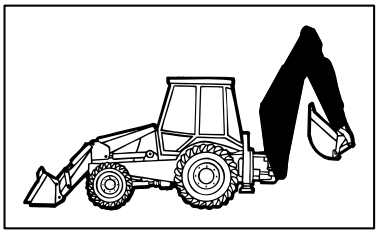

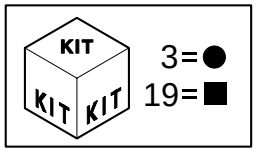

TELESCOPIC DIPPER LONG

REF	FN	PART NUMBER	YR/SN	QTY	DESCRIPTION
1		87411473		1	HYDRAULIC CYLINDER
2		85815681		1	TUBE, RIGID
3		87428620		1	KIT, SEALS
5		E9NN3R862AA		2	CONNECTOR, HYD.
4		87414339		1	GASKET
6		87303910		1	SPACER
7		87414331		1	GASKET
8		85800705		1	ROD
9		87414969		1	WIPER
10		87415113		1	PLATE, BASE
11		87414970		1	PACKAGE, SEALS
12		D8NNA233AB		1	WIRE, RETAINING
13		85800706		1	LINER, ENGINE CYLINDER
14		87428020		1	SCREW
15	1	87405560		1	PISTON
16		87421142		1	O-RING
17		87440399		1	BACK-UP RING
18		85803010		1	CLAMP
19		87424184		1	CYLINDER HEAD
20		86482S95		2	O-RING

(1) Includes 7

Up to S/N XXX

901/ C	01	p1	11/05

TELESCOPIC DIPPER LONG

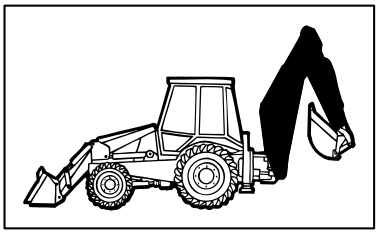

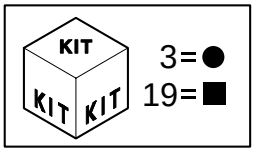

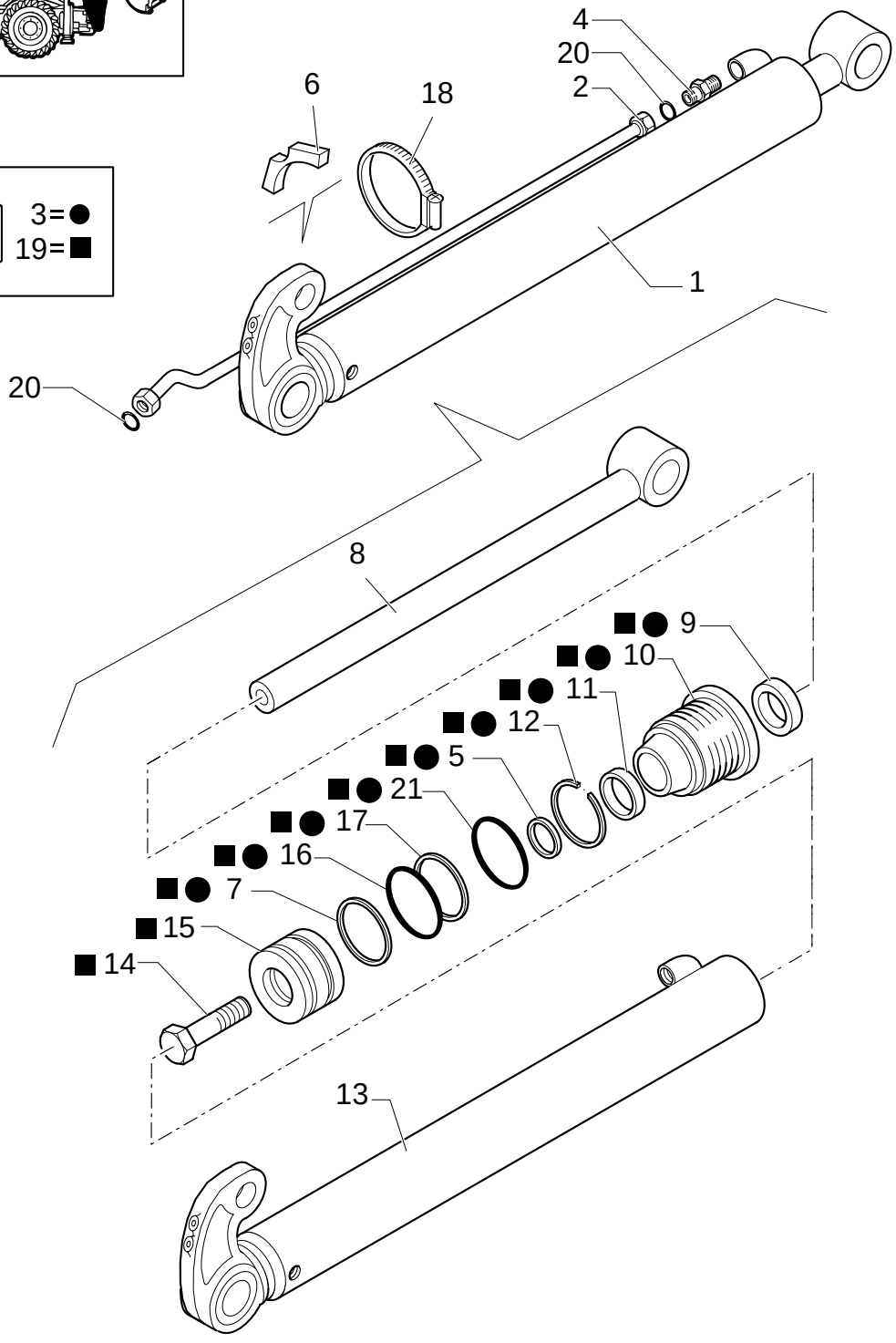

TELESCOPIC DIPPER LONG

REF	FN	PART NUMBER	YR/SN	QTY	DESCRIPTION
1	1	87327256		1	HYDRAULIC CYLINDER
1	2	87327259		1	HYDRAULIC CYLINDER
2		87327251		1	TUBE, RIGID
3		87342131		1	KIT
4		E9NN3R862AA		2	CONNECTOR, HYD.
5		1542875C1		1	SET OF PARTS
6		87303910		1	SPACER
7		G100444		1	SEAL
8		87313722		1	ROD
9		D95143		1	SEAL
10		297281A1		1	CAP CYLINDER END
11		G102425		1	BUSHING, LARGE
12		G109298		1	RING
13		87313720		1	LINER, ENGINE CYLINDER
14		86982435		1	BOLT, SPECIAL
15		{G107277}		1	
16		{G100443}		1	
17		G100449		1	Ring, Wear
18		85803010		1	CLAMP
19		{110692A4}		1	
20		86482S95		2	O-RING
21		238-5231		1	O-RING

(1) Only for NA Version
(2) Only for EUROPE Version

From To S/N XXX

901/ D	01	p1	11/05

TELESCOPIC DIPPER LONG - HYDRAULIC LIFTING CYLINDER

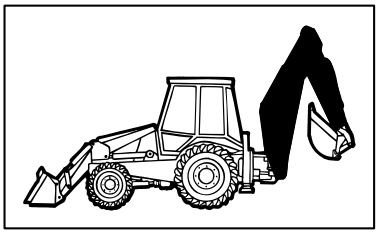

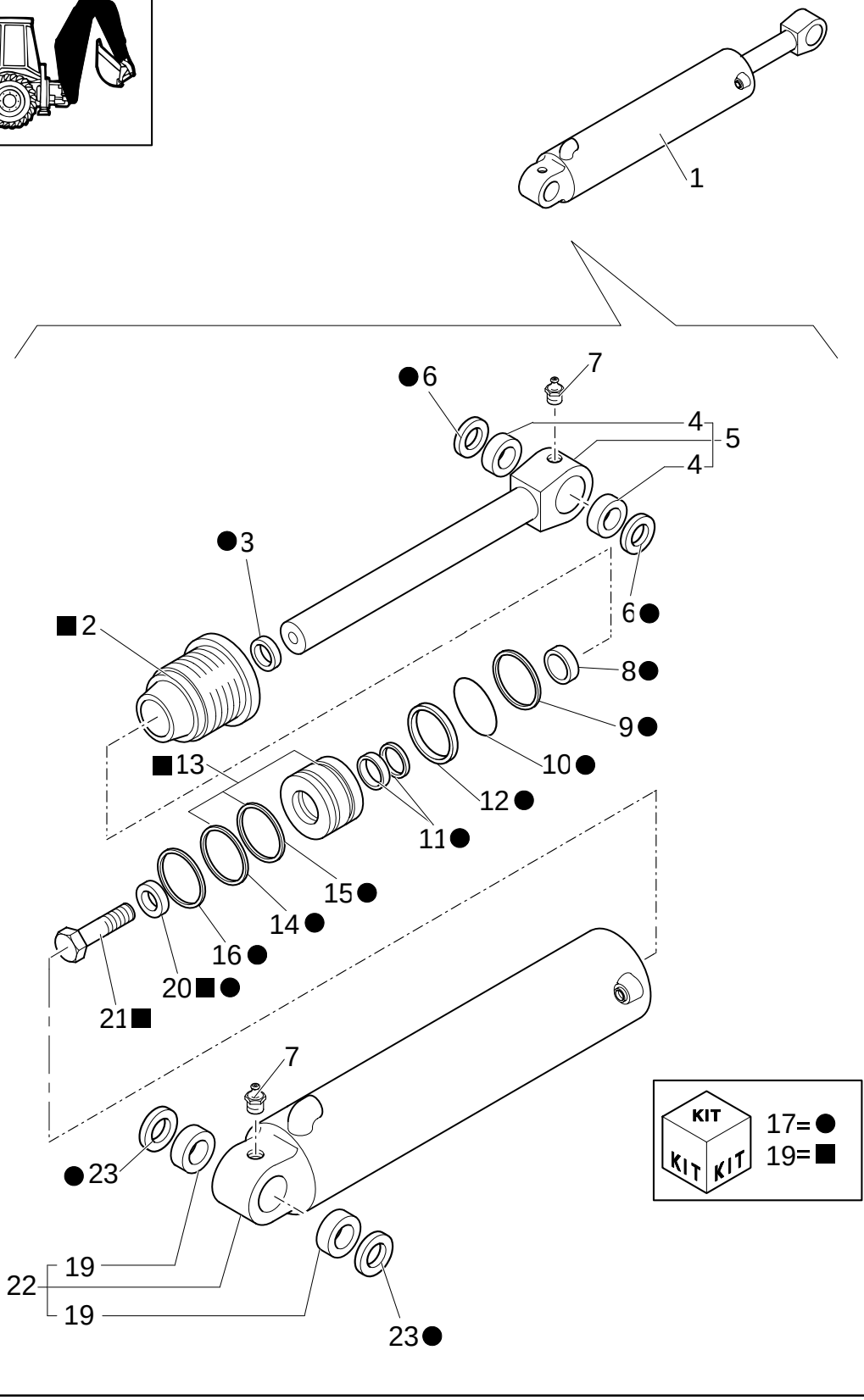

TELESCOPIC DIPPER LONG - HYDRAULIC LIFTING CYLINDER

REF	FN	PART NUMBER	YR/SN	QTY	DESCRIPTION
1		87315535		1	HYDRAULIC CYLINDER ASSY
2		87415120		1	CYLINDER HEAD
3		87414979		1	WIPER
4		D7NNC512L		2	BUSHING
5	1	E7NN171DA		1	ROD
6		D9NNC513CA		2	SEAL PROTECTION
7		87901S8		2	NIPPLE, LUBE 1/8"-27
8		87414976		1	BEARING, NYLON
9		87414346		1	RING
10		87421149		1	O-RING
11		87414980		1	PACKAGE, SEALS
12		87441149		1	BACK-UP RING
13	2	87407249		1	PLUNGER
14		87401160		1	Ring, Wear
15		87414338		1	SEAL, HYD-CYLINDER
16		85800823		1	O-RING
17		87428634		1	KIT, SEALS
18		85800822		1	PLUNGER
19		85800202		2	BUSHING
20		E8NN337AA		1	WASHER
21		87428018		1	SCREW
22	3	85800824		1	LINER, ENGINE CYLINDER
23		85801025		2	SEAL
24		87424201		1	CYLINDER HEAD

(1) Includes 4
(2) Includes 14, 15
(3) Includes 19

NOTES

SECTION INDEX

SEC. 10	00	BODY, HOOD & DRIVER"S POST 1/3
SEC. 10	01	BODY, HOOD & DRIVER"S POST 2/3
SEC. 10	02	BODY, HOOD & DRIVER"S POST 3/3
095	01	STABILIZER CONTROL WITHOUT AUTO-UP (CENTER PIVOT)
096/ 1	01	STABILIZER CONTROL WITH AUTO-UP (CENTER PIVOT)
1.63.0	01	POWER STEERING HYDRAULIC SYSTEM
1.63.0/ A	01	POWER STEERING HYDRAULIC SYSTEM (4WS)
1.91.1	01	CAB / CEILING LIGHT
1.91.3	01	BACK-UP ALARM
1.91.4/ 6	01	IGNITON SWITCH, POWER POINT, FUSE PANEL & SIDE CONSOLE HARNESS (CAB CP POWER SHIFT)
1.91.4/ 6	02	IGNITON SWITCH, POWER POINT, FUSE PANEL & SIDE CONSOLE HARNESS (CAB CP POWER SHIFT)
1.91.4/ 6	03	IGNITON SWITCH, POWER POINT, FUSE PANEL & SIDE CONSOLE HARNESS (CAB CP POWER SHIFT)
1.91.4/ 6	04	IGNITON SWITCH, POWER POINT, FUSE PANEL & SIDE CONSOLE HARNESS (CAB CP POWER SHIFT)
1.91.4/ 6	05	IGNITON SWITCH, POWER POINT, FUSE PANEL & SIDE CONSOLE HARNESS (CAB CP POWER SHIFT)
1.91.4/ 6	06	FRONT DASH (CAB CP POWER SHIFT)
1.91.4/ 6	07	IGNITON SWITCH, POWER POINT, FUSE PANEL & SIDE CONSOLE HARNESS (CAB CP POWER SHIFT)
1.91.5	01	FRONT AND REAR WINDSCREEN WIPERS
1.91.5	02	WINDSCREEN WIPERS RESERVOIR & NOZZLES
1.91.6	01	RADIO ANTENNA & SPEAKER COVER
1.91.7/ 2	01	LAMPS & LIGHTS - CAB (USA)
1.91.8	01	CAB-SAFETY FRAME / EXTINGUISHER
1.92.1	01	CAB - FRAME-DOOR
1.92.1/ 2	01	CAB - FRAME-DOOR
1.92.1/ 3	01	ROPS - SAFETY FRAME
1.92.3	01	WINDOWS
1.92.4	01	WINDOWS
1.92.4	02	WINDOWS
1.92.4	03	WINDOWS
1.92.5	01	FENDERS, REAR
1.92.6	01	DOOR COMPONENTS
1.92.6	02	DOOR COMPONENTS
1.92.6	03	DOOR COMPONENTS
1.92.9	01	REAR WINDOWS
1.92.9	02	REAR WINDOWS
1.92.9	03	REAR WINDOWS
1.93.0	01	CAB / SOFT TRIM
1.93.0	02	CAB / SOFT TRIM (POWER SHUTTLE)
1.93.0	03	CAB / SOFT TRIM
1.93.0	04	CAB / SOFT TRIM
1.93.0/ 1	02	CAB / SOFT TRIM (POWER SHIFT)
1.93.0/ 1	03	CAB / SOFT TRIM (POWER SHIFT)
1.93.0/ 3	01	CAB / SOFT TRIM
1.93.0/ 3	04	CAB / SOFT TRIM
1.93.4	01	REAR MIRROR- SUN SCREEN
1.93.5	01	FRONT CONSOLE - ROPS (POWER SHUTTLE)
1.93.5/ 1	01	CAB / PANEL DASH

SECTION INDEX

1.93.5/ 1	02	CAB / PANEL DASH
1.93.5/ 3	01	CAB / PANEL DASH
1.94.0	01	CAB/ CANOPY
1.94.2	03	HEATER WATER HOSES
1.94.2/ 1	03	HEATER WATER HOSES
1.95.0	01	CAB-SAFETY FRAME / BRAKE PEDAL
1.95.0	02	CAB-SAFETY FRAME / BRAKE PEDAL
1.95.0	03	CAB-SAFETY FRAME / BRAKE PEDAL
1.95.0/ B	01	CAB- BRAKE PEDAL
1.95.1/1	01	CAB-SAFETY FRAME / HAND BRAKE (EUR)
1.95.5/ C	01	POWER STEERING MOTOR
1.95.5/ C	02	POWER STEERING MOTOR
1.95.5/ 4	01	POWER STEERING MOTOR, WHEEL & COLUMN (4WS)
1.96.0/ 2	01	FOWARD/REVERSE & MULTI-PURPOSE LEVER, CAB (POWER-SHIFT)
1.96.2	01	STABILIZER CONTROL
1.96.2/ 1	01	PILOT CONTROL DIAGNOSTICS
1.96.7/ 2	01	CAB / MISCELLANEOUS CAPS (CENTER PIVOT) USA
1.96.7/ 8	01	CAB / MISCELLANEOUS CAPS (CENTER PIVOT) USA
1.98.0/ 1	01	INFORMATION SYMBOL DECALS (POWER SHUTTLE)
1.98.0/ 1	02	WARNING SYMBOL DECALS
1.98.0/ 1	03	CAB WARNING & INFORMATION DECALS
1.98.0/ 1	04	BACKHOE, LOADER & ENGINE WARNING DECALS
1.98.0/ 3	01	INFORMATION SYMBOL DECALS (POWER SHIFT)
1.98.0/ 3	05	BACKHOE, LOADER & ENGINE WARNING DECALS
1.98.0/ 3	06	FOWARD/REVERSE & STEERING DECALS
1.98.1	11	B115 MODEL IDENTIFICATIO
346	01	A/C HOUSING & FILTERS
346	02	A/C BLOWER & COILS
346	03	HEATER COIL HOSES
346	04	A/C & HEATER CONTROL PANEL
346	05	A/C & HEATER CONSOLE DUCTS
346/1	01	TRANSFORMATION SET FROM HEATING TO AIR CONDITIONING
346/1	02	TRANSFORMATION SET FROM HEATING TO AIR CONDITIONING
347	01	HOUSING & FILTERS
347	02	HEATER BLOWER & COILS
347	03	HEATER COIL HOSES
347	04	A/C & HEATER CONTROL PANEL
347	05	A/C & HEATER CONSOLE DUCTS
347	06	CAB HEATING COATING PLUG
350	01	2 LEVER BACKHOE CONTROLS, LEVER, BOOT & DECALS
350	02	2 LEVER BACKHOE CONTROLS, LEVER TIE-ROD ASSEMBLY
351	03	JCB 2 LEVER BACKHOE CONTROLS, LOWER TIE-ROD ASSEMBLY
353	01	4 LEVER BACKHOE CONTROLS, CONSOLE, LEVERS & BELLCRANK
353	02	4 LEVER BACKHOE CONTROLS, UPPER TIE-ROD ASSEMBLY
353	03	4 LEVER BACKHOE CONTROLS, LOWER TIE-ROD ASSEMBLY
358	01	ISO 2 LEVER BACKHOE CONTROLS, LEVERS, BOOT & DECALS
358	02	ISO 2 LEVER BACKHOE CONTROLS, TIE-ROD ASSEMBLY
393	03	LOCKING VALVE ON BACKHOE LIFT CYLINDER
622	01	INTERNAL FAN
642	01	EGS CONTROL, 20 & 40KM/H (POWER SHIFT)
646/1	01	MACHINE PART AIR CONDITIONING SET
646/1	02	A/C COMPRESSOR ATTACHING GROUP

SECTION INDEX

646/1	03	A/C COMPRESSOR
646/1	04	A/C FILTER & CONDENSER ATTACHING GROUP
646A	01	A/C COMPRESSOR ATTACHING GROUP
705	01	SEAT BELTS, 2" & 3"
758	01	ROTATING BEACON
792	01	RH CONSOLE WITH INSTRUMENTS AND DIAGNOSTICS
795	01	RH CONSOLE WITH INSTRUMENTS AND DIAGNOSTICS
796	01	ANTITHEFT
851/ 2	01	CLOTH SEAT & ATTACHING HARDWARE - CABINE
855/ 2	01	AIR RIDE CLOTH SEAT & ATTACHING HARDWARE - CABINE
990/ 1	01	TOOL KIT
993	01	SAFETY PLATES - USA

BODY, HOOD & DRIVER'S POST 1/3

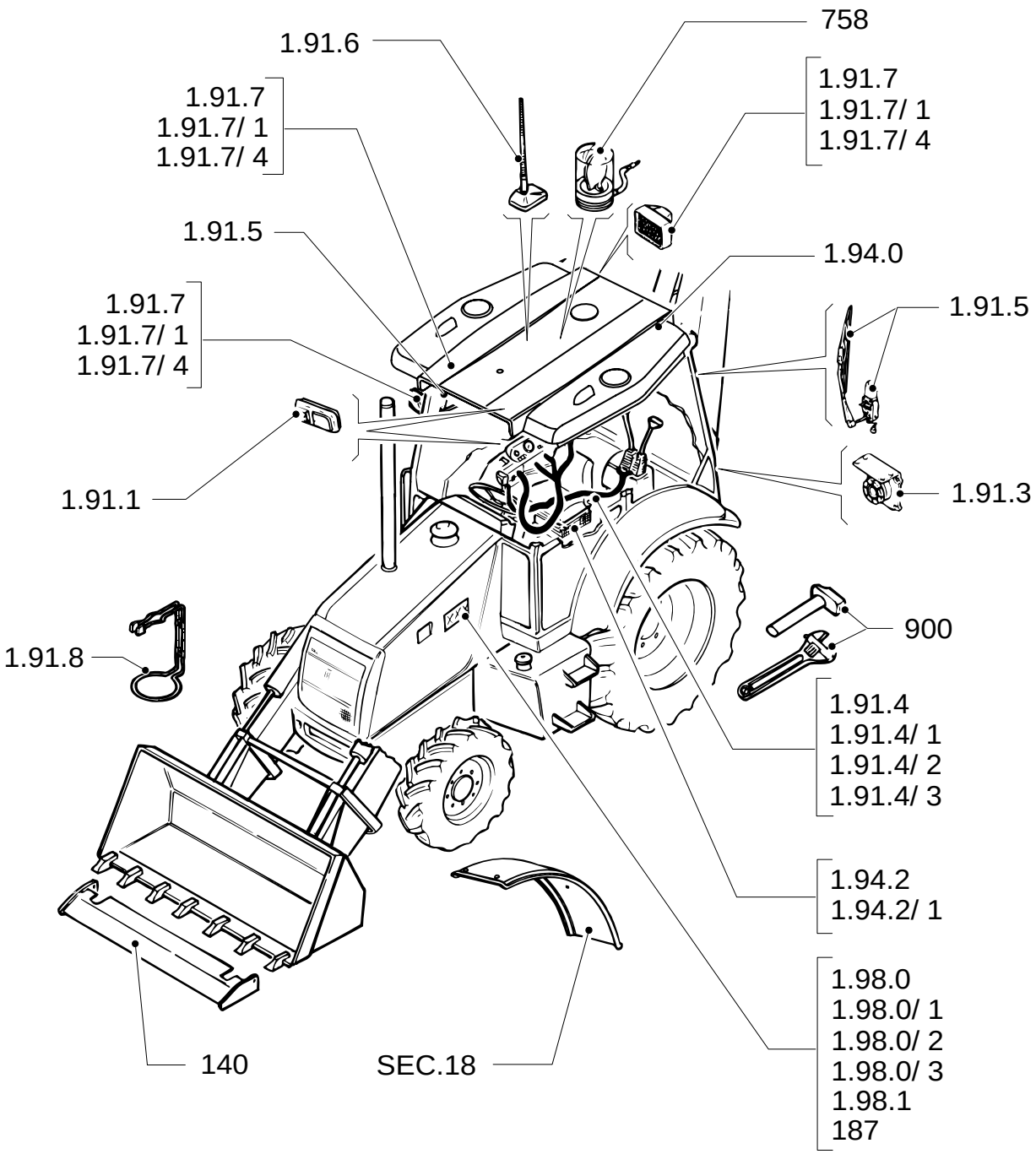

BODY, HOOD & DRIVER'S POST 1/3

REF	FN	PART NUMBER	YR/SN	QTY	DESCRIPTION

BODY, HOOD & DRIVER'S POST 2/3

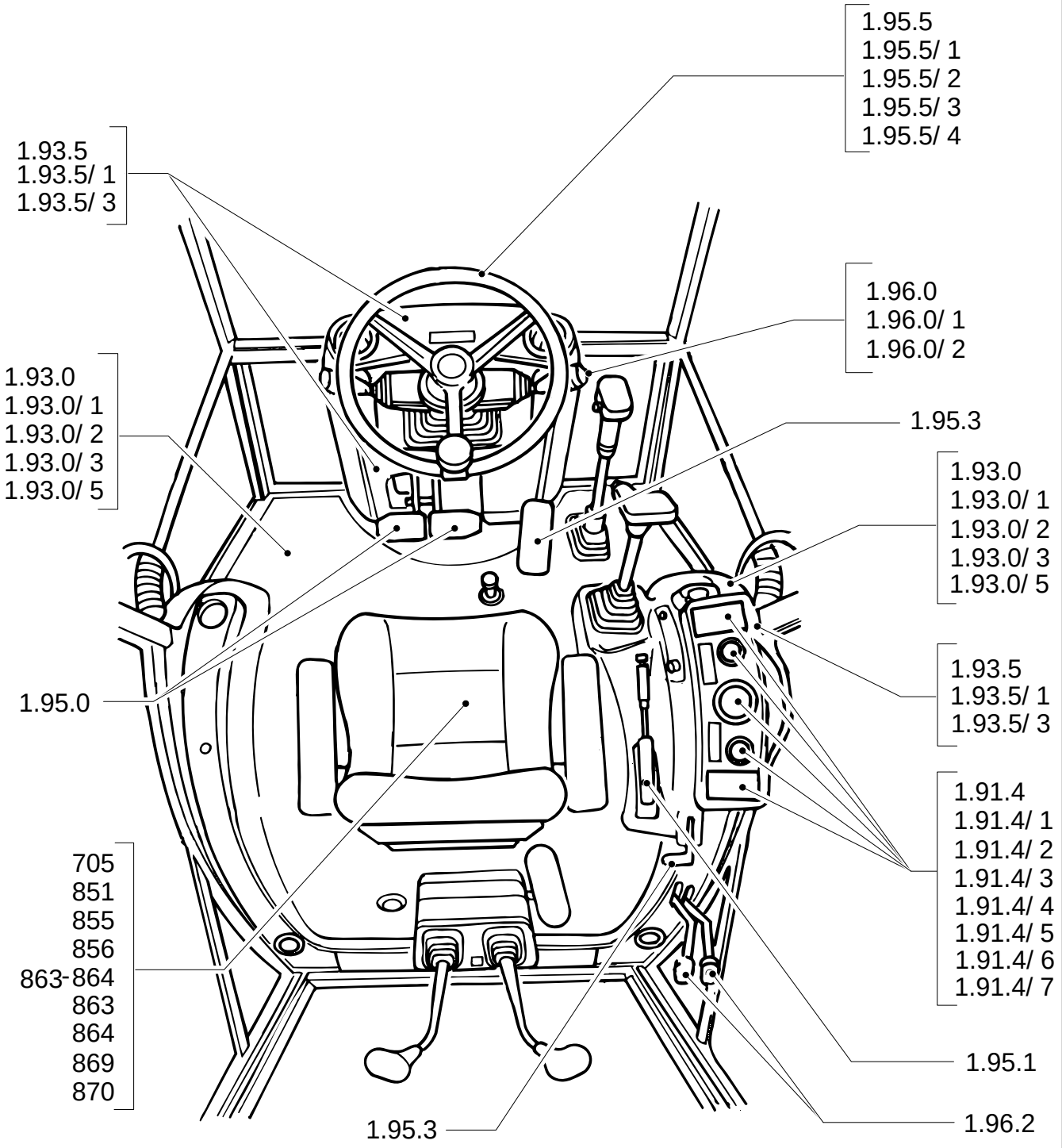

BODY, HOOD & DRIVER'S POST 2/3

REF	FN	PART NUMBER	YR/SN	QTY	DESCRIPTION

BODY, HOOD & DRIVER'S POST 3/3

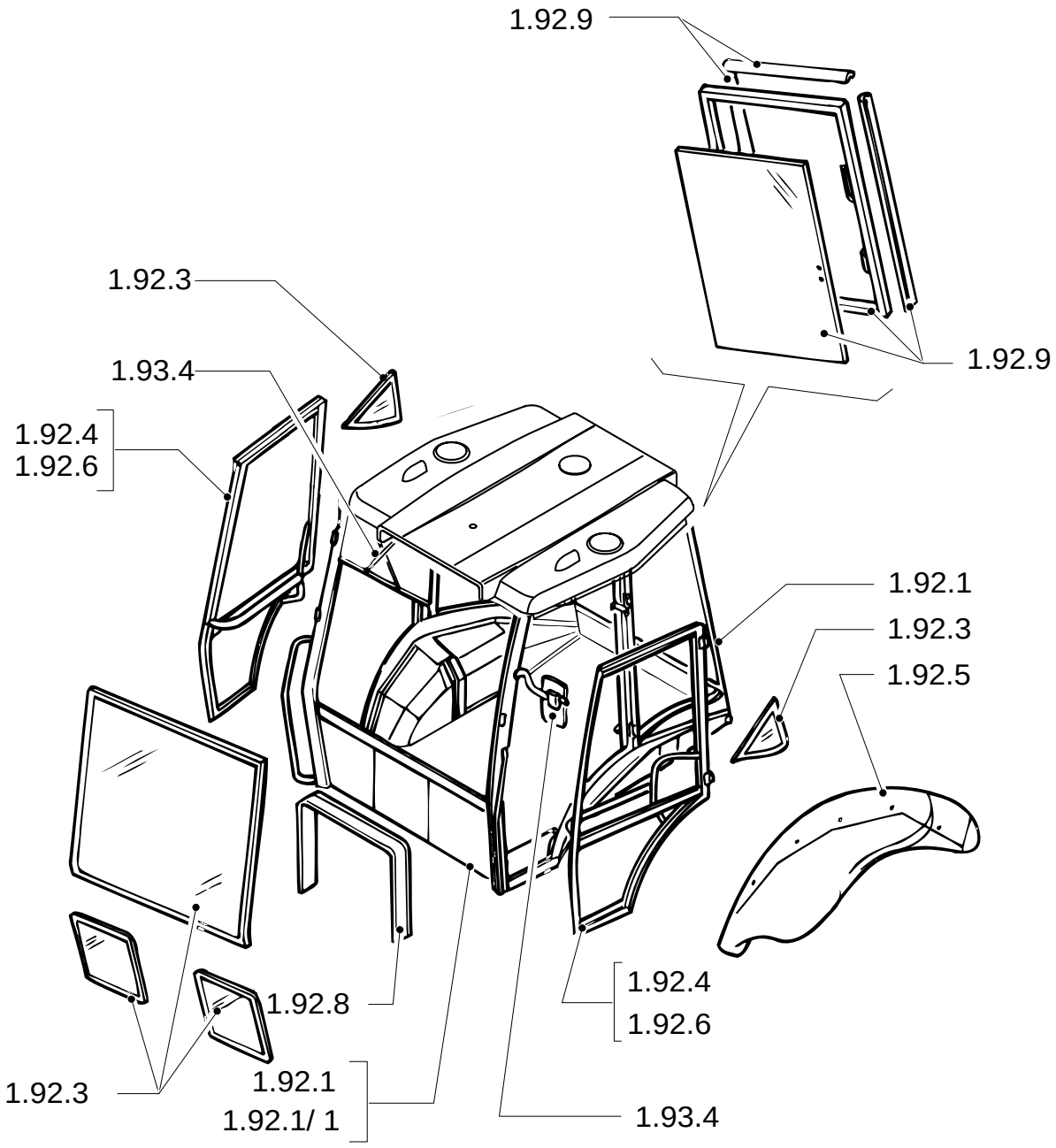

BODY, HOOD & DRIVER'S POST 3/3

REF	FN	PART NUMBER	YR/SN	QTY	DESCRIPTION

095	01	p1	02/05

STABILIZER CONTROL WITHOUT AUTO-UP (CENTER PIVOT)

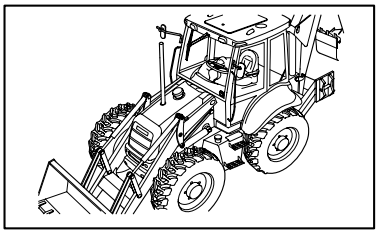

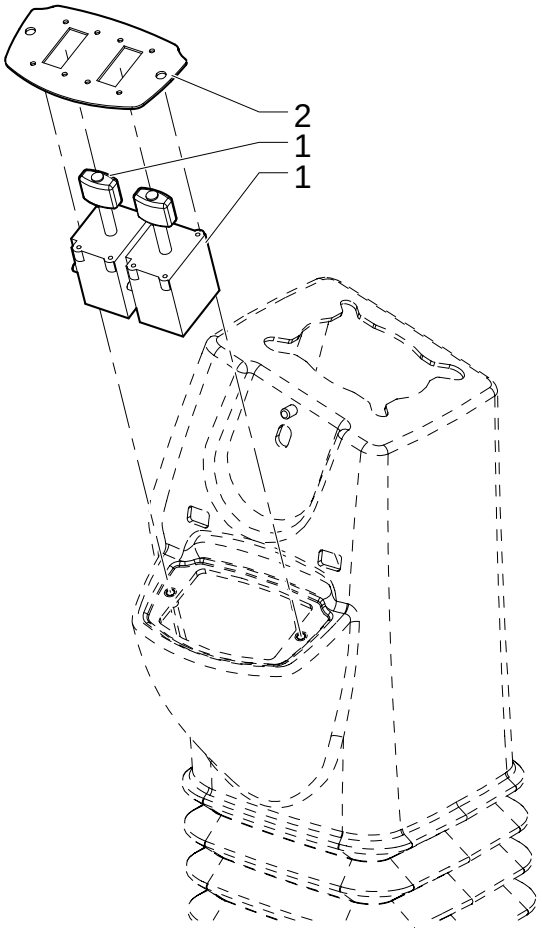

STABILIZER CONTROL WITHOUT AUTO-UP (CENTER PIVOT)

REF	FN	PART NUMBER	YR/SN	QTY	DESCRIPTION
1		86988086		2	SWITCH, TOGGLE
2		87435381		1	PLATE, MOUNTING

Pilot Control Version

096/ 1	01	p1	02/05

STABILIZER CONTROL WITH AUTO-UP (CENTER PIVOT)

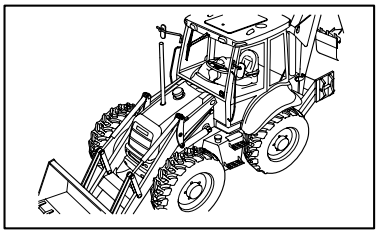

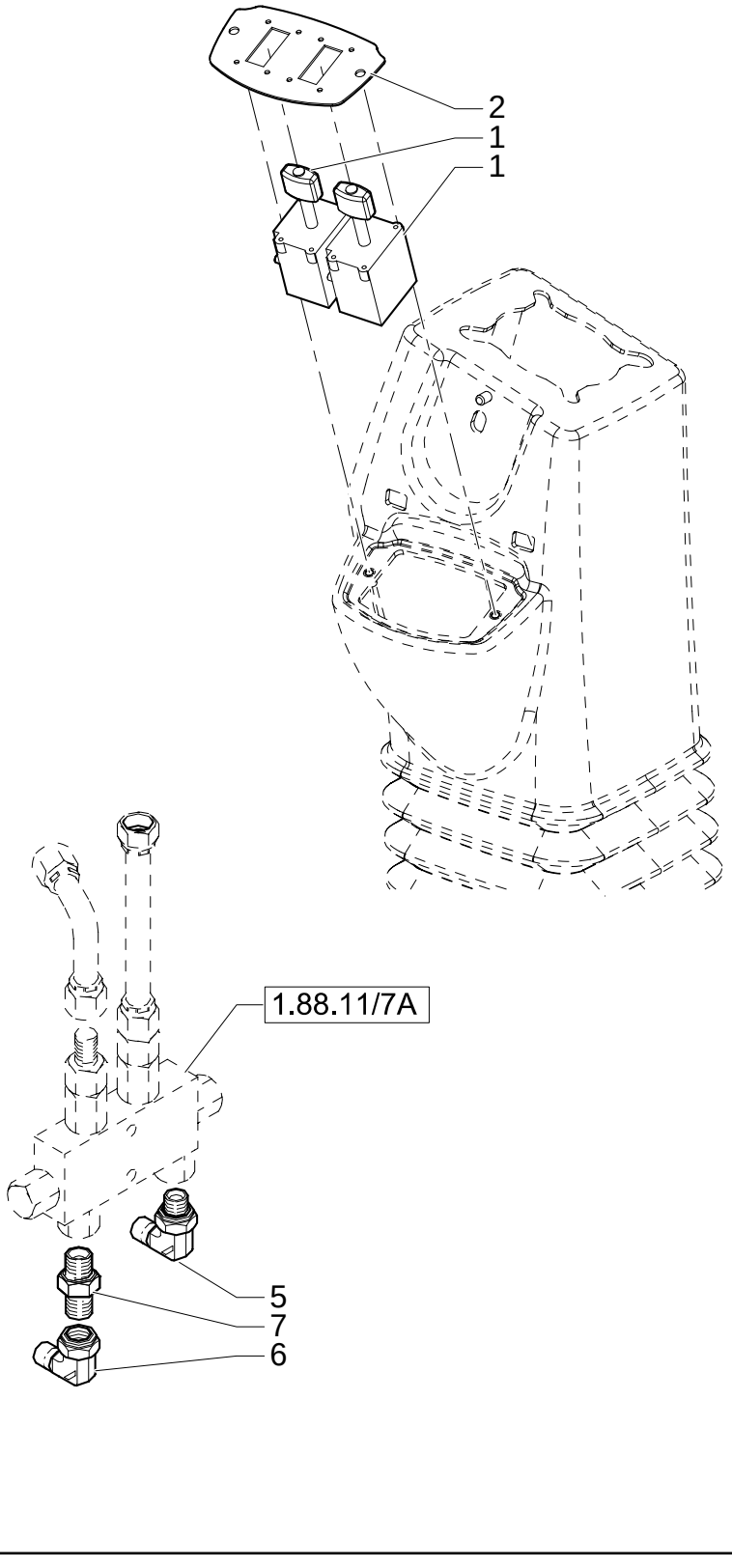

STABILIZER CONTROL WITH AUTO-UP (CENTER PIVOT)

REF	FN	PART NUMBER	YR/SN	QTY	DESCRIPTION
1		86988086		2	SWITCH, TOGGLE
2		87435381		1	PLATE, MOUNTING
5		86511208		2	ELBOW
6		85824062		2	CONNECTOR, HYD.
7		85805258		2	CONNECTOR, HYD.

Pilot Control Version

1.63.0	01	p1	12/05

POWER STEERING HYDRAULIC SYSTEM

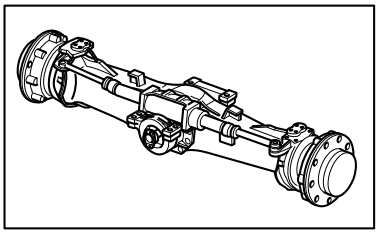

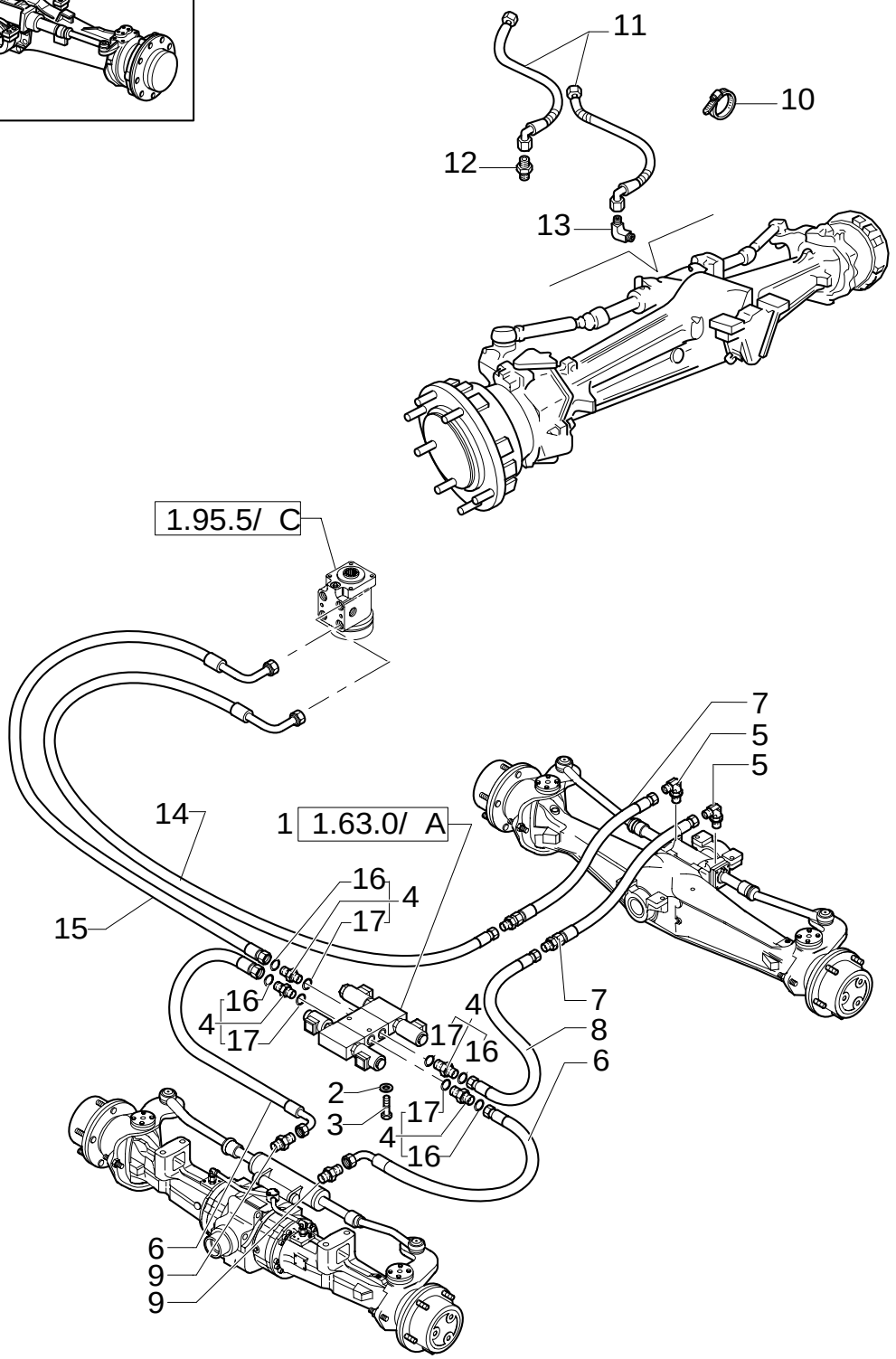

POWER STEERING HYDRAULIC SYSTEM

REF	FN	PART NUMBER	YR/SN	QTY	DESCRIPTION
1		85805232		1	VALVE, HYDRAULIC
2		11193879		2	WASHER, LOCK 8x16x1.4
3		16043421		2	SCREW M8x1.25x20
4		390951S36		4	CONNECTOR, HYD.
5		85805318		2	ELBOW
6		85815615		2	HOSE, FLEXIBLE
7		85813377		2	HOSE, FLEXIBLE
8		85812202		1	HOSE, FLEXIBLE
9		85815614		2	CONNECTOR, HYD.
10		85803332		1	COLLAR
11		85812212		2	HOSE, FLEXIBLE
12		E9NN3R862AA		1	CONNECTOR, HYD.
13		E9NNK917CA		1	ADAPTER
14		85826080		1	HOSE, FLEXIBLE L=MM.1200
15		85805231		1	HOSE, FLEXIBLE L=MM.2100
16		87008S95		1	O-RING
17		9617873		1	O-RING

1.63.0/ A	01	p1	12/05

POWER STEERING HYDRAULIC SYSTEM (4WS)

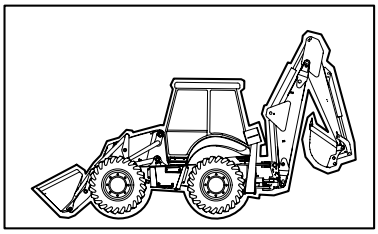

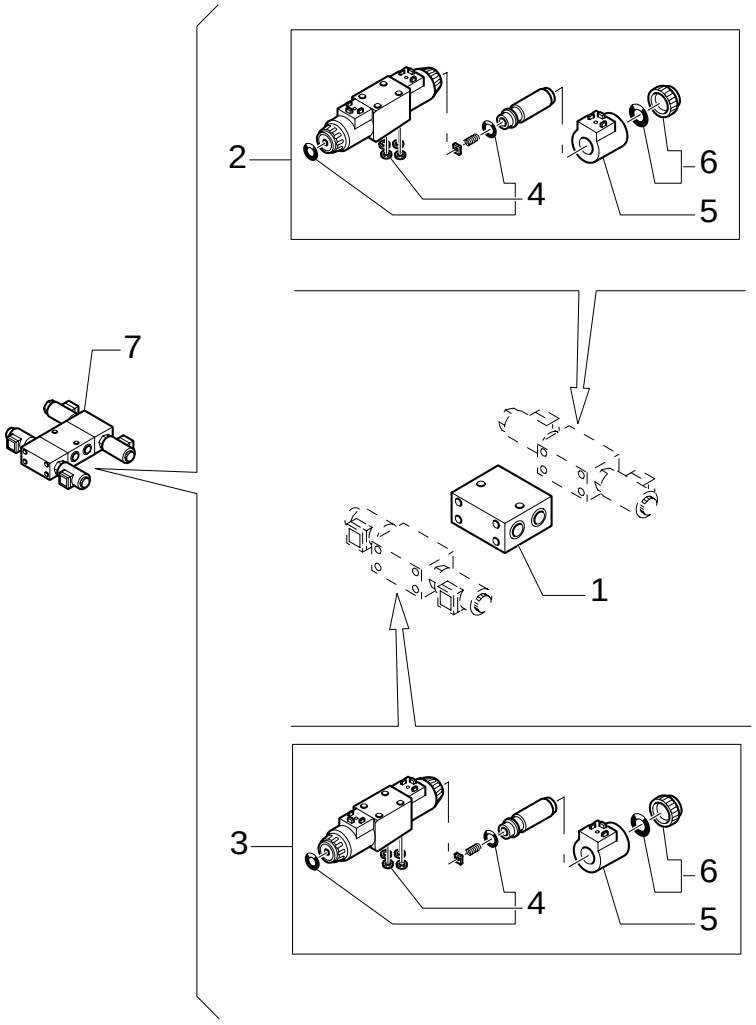

POWER STEERING HYDRAULIC SYSTEM (4WS)

REF	FN	PART NUMBER	YR/SN	QTY	DESCRIPTION
1		85812014		1	PLATE, COVER PLATE
2	1	85812017		1	VALVE, REMOTE CONTROL FRONT
3	1	85812019		1	VALVE, REMOTE CONTROL REAR
4		85812018		2	KIT
5		85812015		4	COIL
6		85812016		4	KIT
7		85805232		1	VALVE, HYDRAULIC ASSY

(1) Includes 4, 5, 6

CAB / CEILING LIGHT

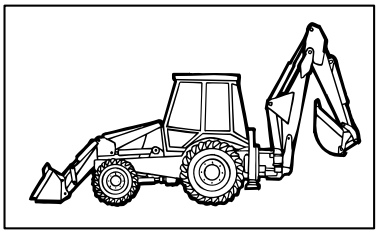

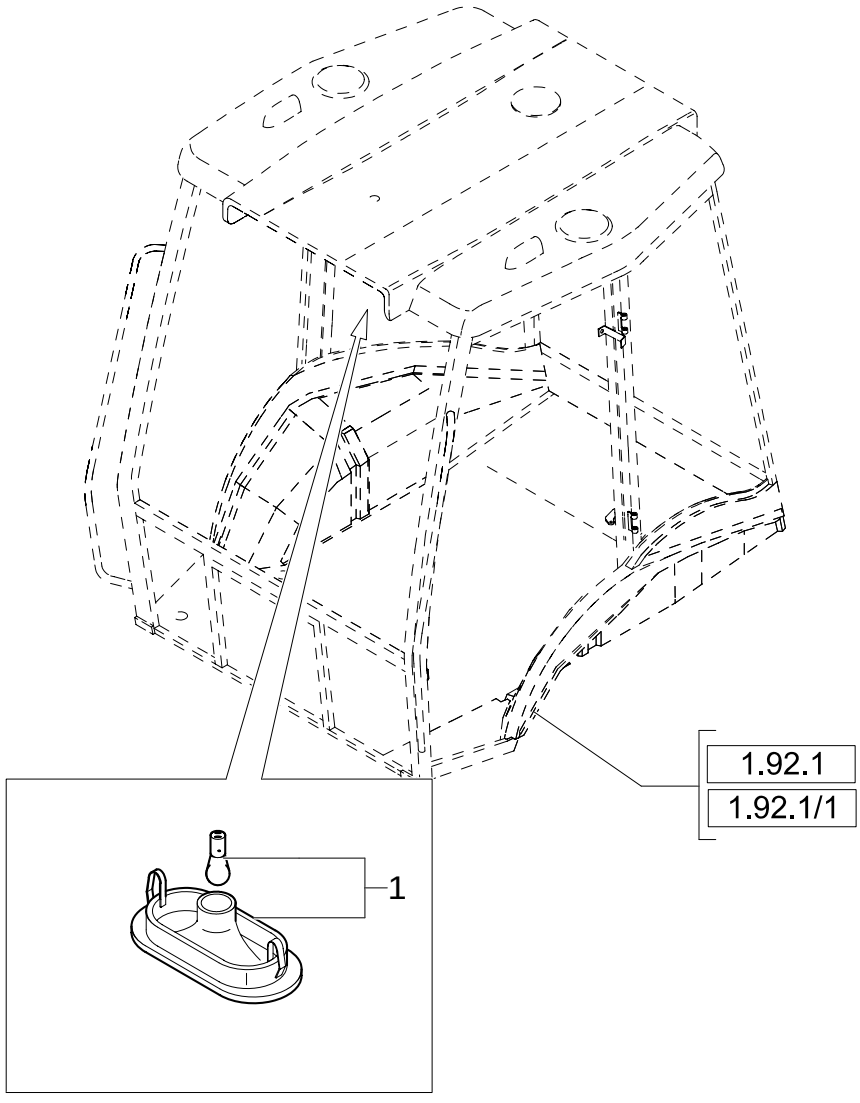

CAB / CEILING LIGHT

REF	FN	PART NUMBER	YR/SN	QTY	DESCRIPTION
1		82022833		1	LAMP, CEILING

BACK-UP ALARM

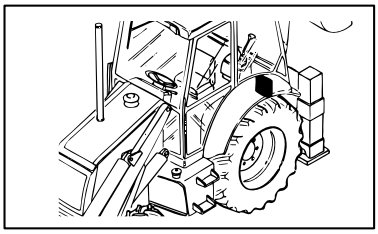

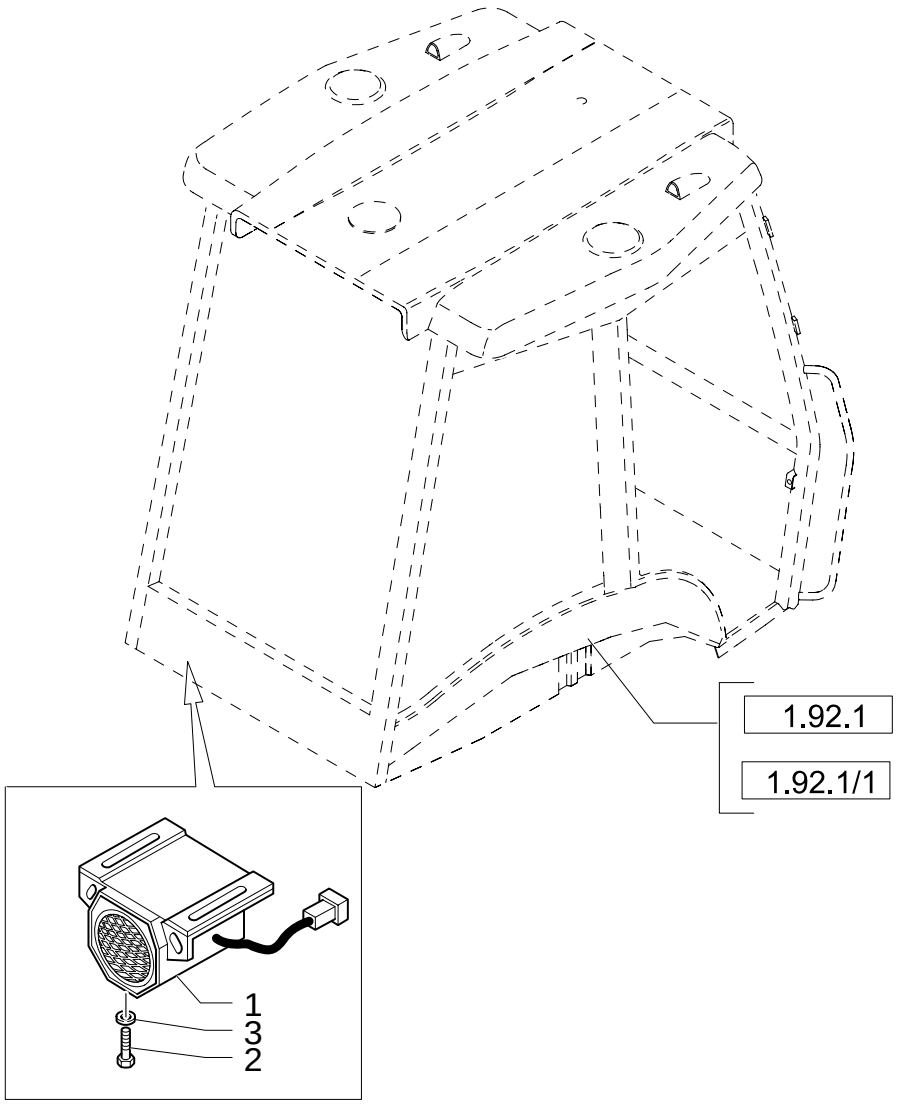

BACK-UP ALARM

REF	FN	PART NUMBER	YR/SN	QTY	DESCRIPTION
1		87303261		1	ALARM
2		13276424		2	SCREW M6X20
3		11197774		2	WASHER, LOCK 6X15X1.2

1.91.4/ 6	01	p1	06/05

IGNITON SWITCH, POWER POINT, FUSE PANEL & SIDE CONSOLE HARNESS (CAB CP POWER SHIFT)

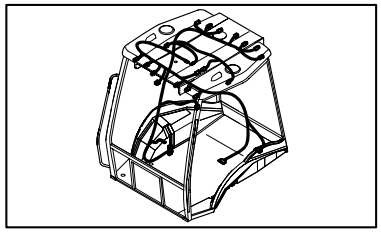

KIT KIT KIT 1 = ● see also PAG. 2. 3. 4. 5.

IGNITON SWITCH, POWER POINT, FUSE PANEL & SIDE CONSOLE HARNESS (CAB CP POWER SHIFT)

REF	FN	PART NUMBER	YR/SN	QTY	DESCRIPTION
1	1	87406392		1	CABLE, ELECTRIC
1	2	{87325293}		1	
2		85825330		1	CABLE, ELECTRIC
3		85819568		1	CABLE, ELECTRIC Rotary Beacon
4		85825331		1	CABLE

(1) UP TO S/N XXX
(2) FROM TO S/N XXX

1.91.4/ 6	02	p1	06/05

IGNITON SWITCH, POWER POINT, FUSE PANEL & SIDE CONSOLE HARNESS (CAB CP POWER SHIFT)

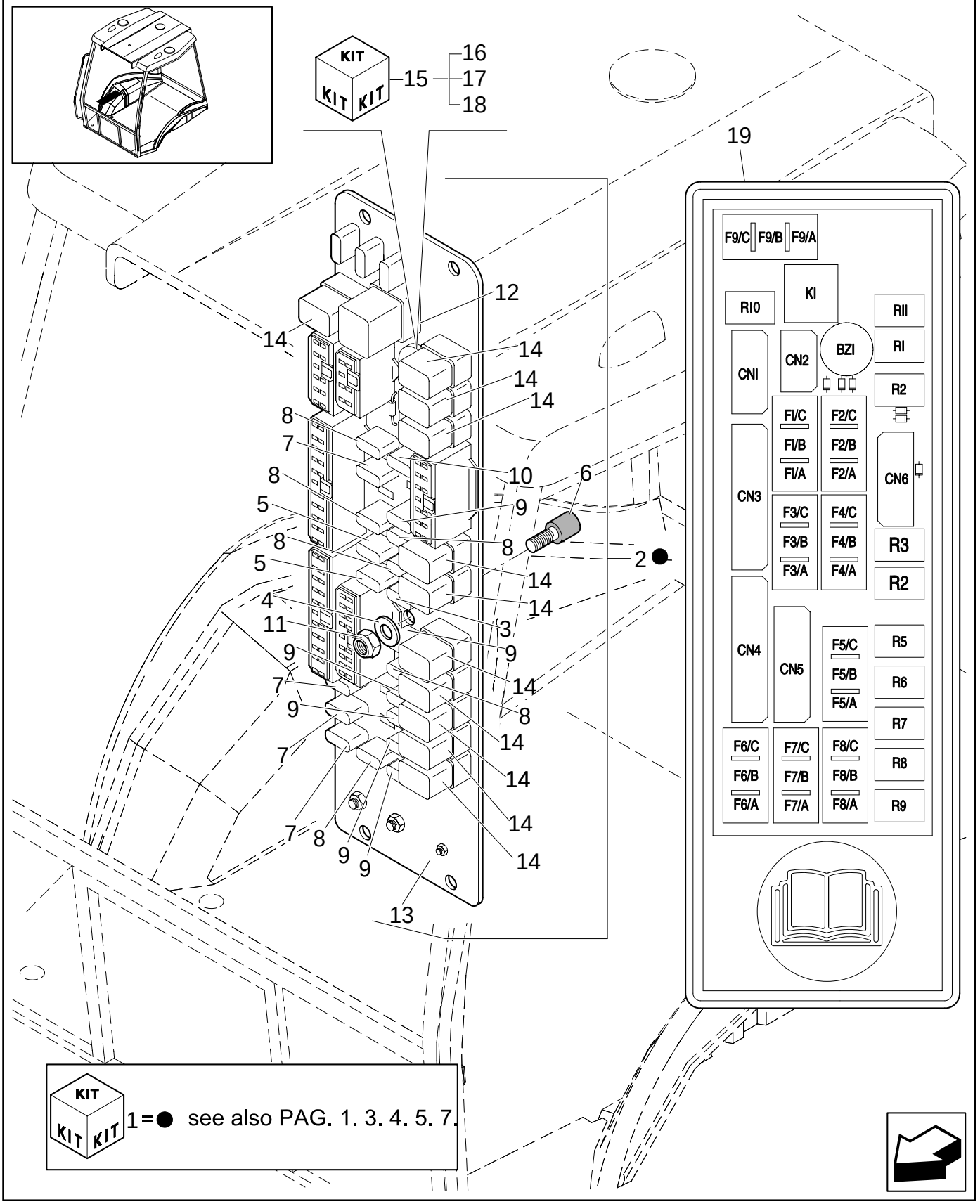

IGNITON SWITCH, POWER POINT, FUSE PANEL & SIDE CONSOLE HARNESS (CAB CP POWER SHIFT)

REF	FN	PART NUMBER	YR/SN	QTY	DESCRIPTION
1	1	87406392		1	CABLE, ELECTRIC
1	2	{87325293}		1	
2		87431454		1	PANEL
3		85806134		1	FUSE
4		10519204		1	WASHER
5		11054590		2	FUSE
6		85806135		1	SILENTBLOC
7		11054890		5	FUSE
8		11054990		7	FUSE
9		11055090		8	FUSE
10		11055190		1	FUSE
11		12574011		1	NUT
12		85803986		1	RELAY
13		85825504		1	BODY
14		85825198		9	RELAY
15	3	85826012		1	KIT
16		NSS		1	NOT SERVICED SEPARATELY
17		85826014		1	CABLE, ELECTRIC
18		NSS		1	NOT SERVICED SEPARATELY
19		85826071		1	DECAL

(1) UP TO S/N XXX
(2) FROM TO S/N XXX
(3) Includes 16 To 18

1.91.4/ 6	03	p1	08/05

IGNITON SWITCH, POWER POINT, FUSE PANEL & SIDE CONSOLE HARNESS (CAB CP POWER SHIFT)

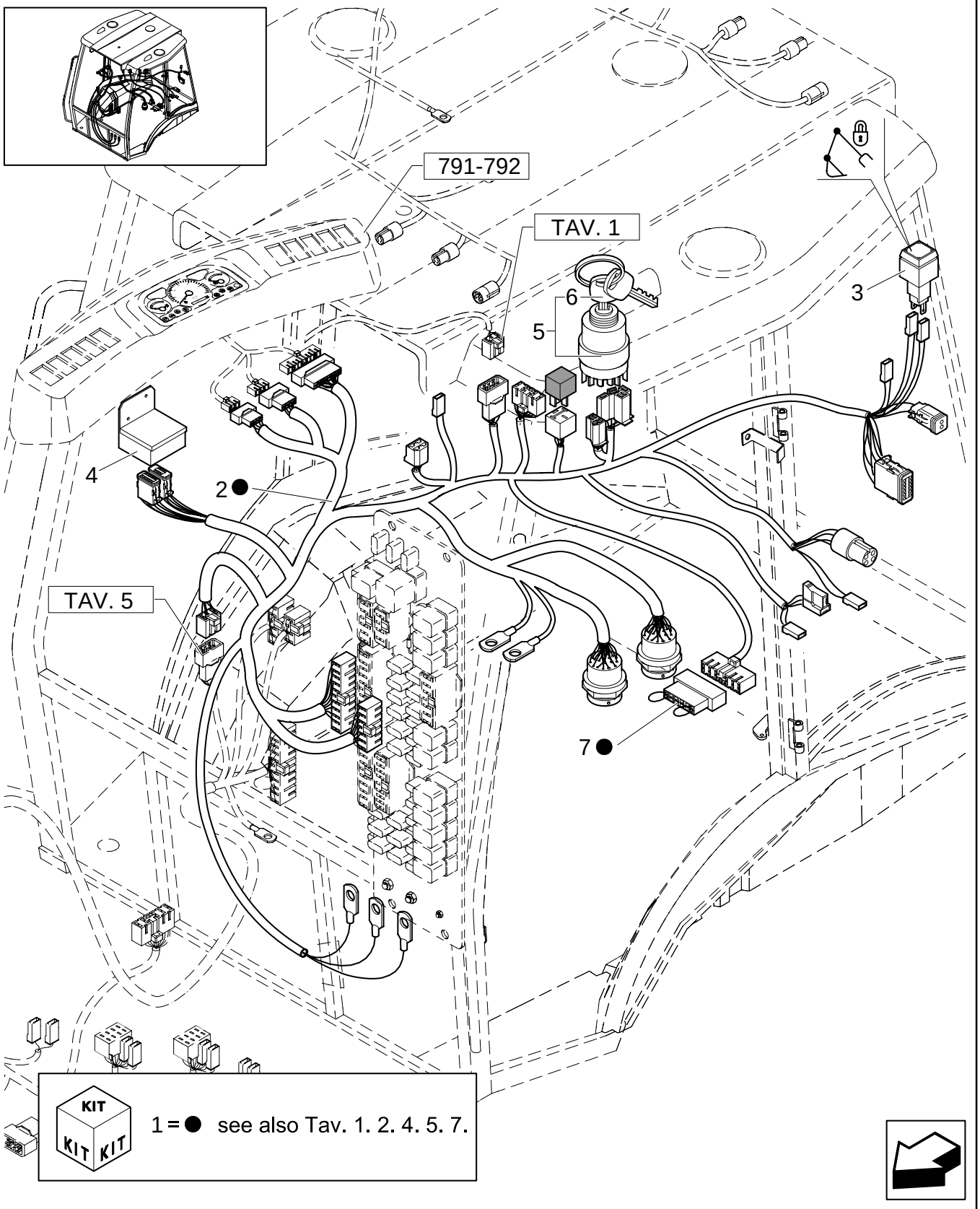

IGNITON SWITCH, POWER POINT, FUSE PANEL & SIDE CONSOLE HARNESS (CAB CP POWER SHIFT)

REF	FN	PART NUMBER	YR/SN	QTY	DESCRIPTION
1	1	87406392		1	CABLE, ELECTRIC
1	2	{87325293}		1	
2	1	87431456		1	CABLE, ELECTRIC
2	2	87325298		1	CABLE, ELECTRIC
3		85802160		1	LIGHT, WARNING
4		85819450		2	ELECTRONIC UNIT, CONTROL M4
5		87431469		1	SWITCH 3A
6		85804675		2	KEY, LOCK
7		85821410		1	BLOCK 7,5A

(1) UP TO S/N XXX
(2) FROM TO S/N XXX

1.91.4/ 6	04	p1	06/05

IGNITON SWITCH, POWER POINT, FUSE PANEL & SIDE CONSOLE HARNESS (CAB CP POWER SHIFT)

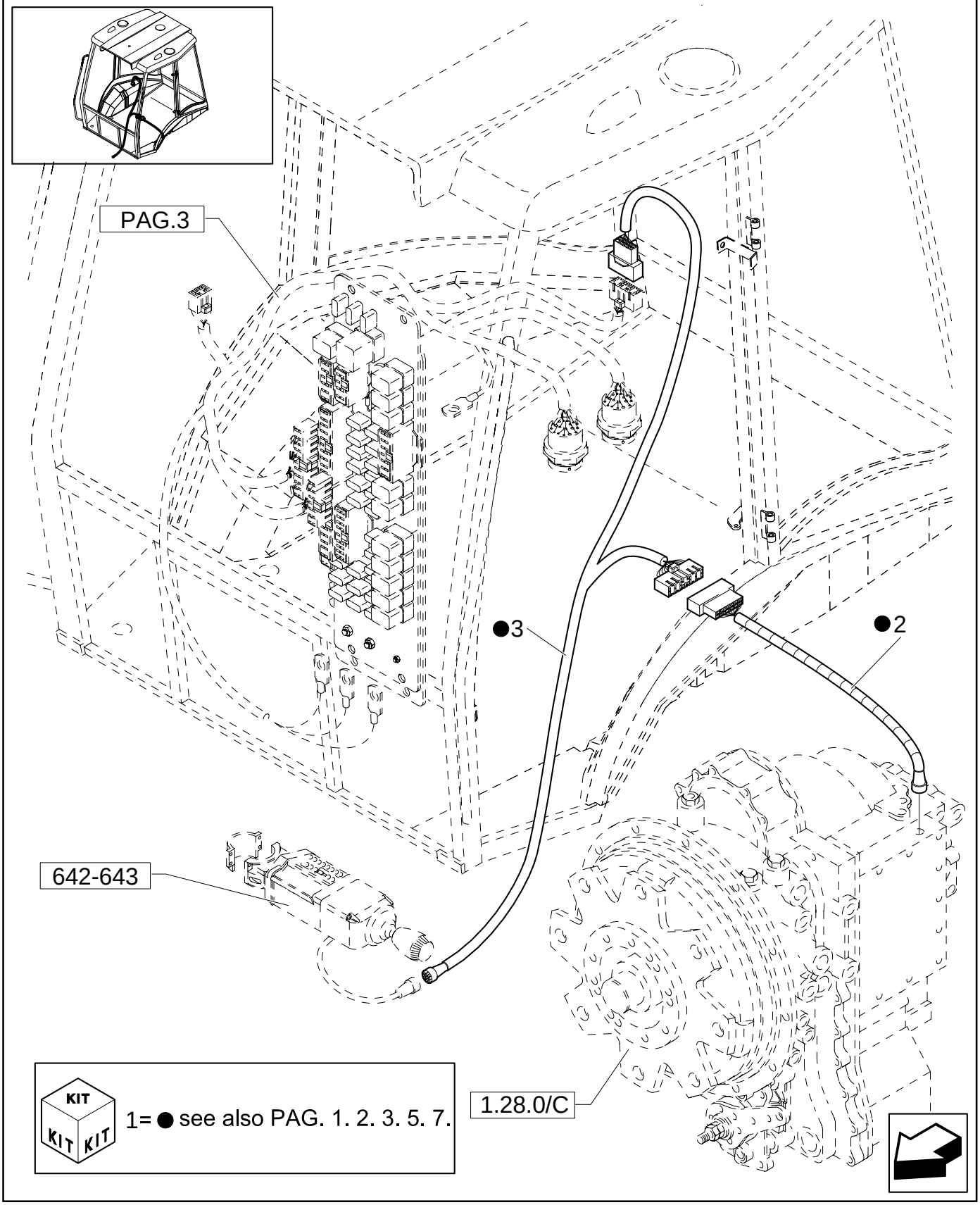

KIT

1= ● see also PAG. 1. 2. 3. 5. 7.

IGNITON SWITCH, POWER POINT, FUSE PANEL & SIDE CONSOLE HARNESS (CAB CP POWER SHIFT)

REF	FN	PART NUMBER	YR/SN	QTY	DESCRIPTION
1	1	87406392		1	CABLE, ELECTRIC
1	2	{87325293}		1	
2		85802426		1	HARNESS, WIRE Trans.
3		85802427		1	CABLE, ELECTRIC Electronic Gear Selector (EGS)

(1) UP TO S/N XXX
(2) FROM TO S/N XXX

1.91.4/ 6	05	p1	08/05

IGNITON SWITCH, POWER POINT, FUSE PANEL & SIDE CONSOLE HARNESS (CAB CP POWER SHIFT)

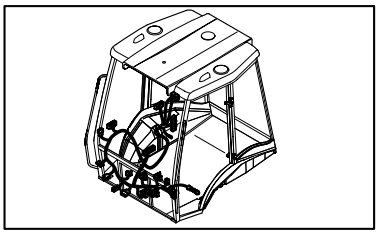

KIT KIT KIT

1 = ● see also PAG. 1. 2. 3. 4. 7.

IGNITON SWITCH, POWER POINT, FUSE PANEL & SIDE CONSOLE HARNESS (CAB CP POWER SHIFT)

REF	FN	PART NUMBER	YR/SN	QTY	DESCRIPTION
1	1	87406392		1	CABLE, ELECTRIC
1	2	{87325293}		1	
2		85817575		1	CABLE, ELECTRIC
3		85806133		1	PUSH BUTTON
4		85805833		1	CLIP
5		85805834		1	SWITCH
6		85805832		1	PLATE, COVER
7		85812118		1	KNOB
8		87326065		1	SCREW

(1) UP TO S/N XXX
(2) FROM TO S/N XXX

1.91.4/ 6	06	p1	02/05

FRONT DASH (CAB CP POWER SHIFT)

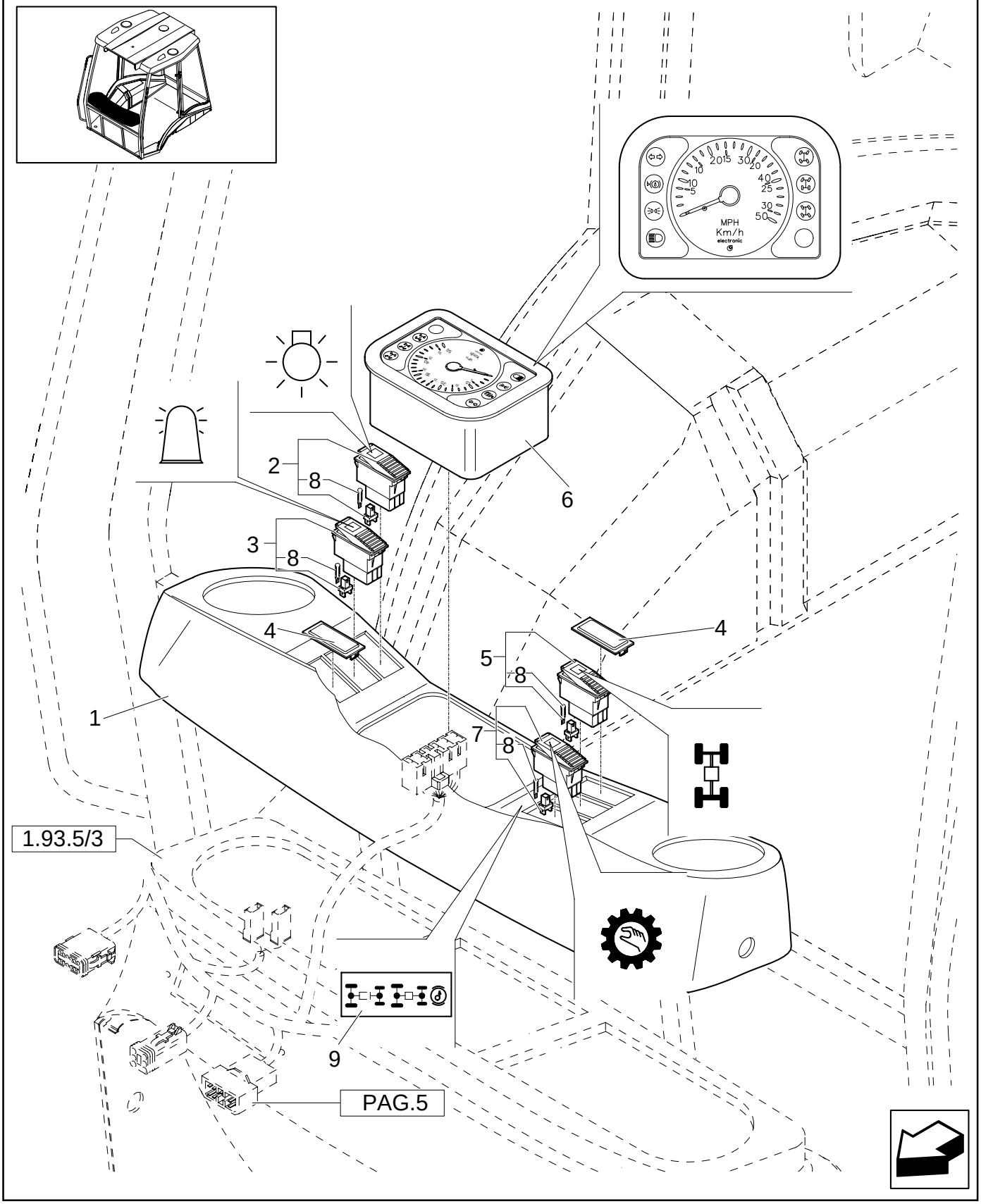

FRONT DASH (CAB CP POWER SHIFT)

REF	FN	PART NUMBER	YR/SN	QTY	DESCRIPTION
1		85818826		1	DASHBOARD
2		85818828		1	SWITCH
3		85818827		1	SWITCH
4		85825254		2	PLUG
5		85819134		1	SWITCH
6		85817589		1	INSTRUMENT CLUSTER
7		85819145		1	SWITCH
8		14143790		4	BULB
9		85807944		1	DECAL

1.91.4/ 6	07	p1	11/05

IGNITON SWITCH, POWER POINT, FUSE PANEL & SIDE CONSOLE HARNESS (CAB CP POWER SHIFT)

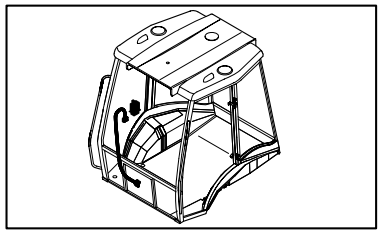

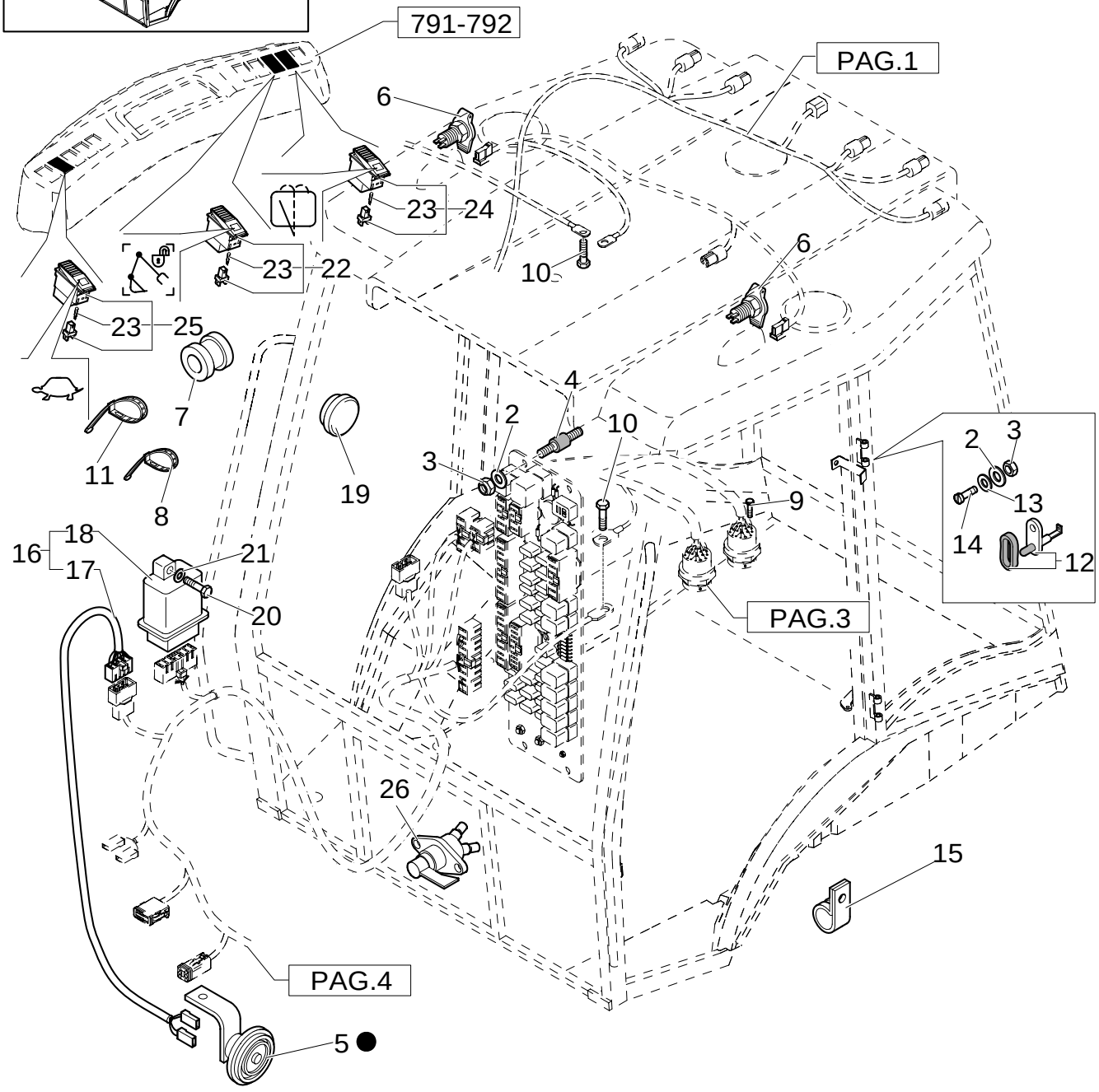

KIT KIT KIT 1 = ● see also PAG. 1. 2. 3. 4. 5.

IGNITON SWITCH, POWER POINT, FUSE PANEL & SIDE CONSOLE HARNESS (CAB CP POWER SHIFT)

REF	FN	PART NUMBER	YR/SN	QTY	DESCRIPTION
1	1	87406392		1	CABLE, ELECTRIC
1	2	{87325293}		1	
2		10615274		6	WASHER, LOCK
3		12574011		6	NUT
4		85802478		4	SILENTBLOC
5		5169413		1	HORN
6		82002966		2	SOCKET, POWER
7		10398980		1	RING, INSULATING
8		5112712		5	COLLAR
9		13272214		2	SCREW M4X16
10		16042924		2	SCREW M8X10
11		85805383		30	RETAINER, CABLE
12		E7NN14A103EA		2	HARNESS, WIRE
13		10519204		2	WASHER M4
14		13309417		2	SCREW M4X20
15		10450090		1	COLLAR, RETAINER
16	3	NSS		1	NOT SERVICED SEPARATELY
17		87410259		1	CABLE, ELECTRIC
18		85806132		1	ELECTRONIC UNIT, CONTROL
19		85808460		1	PLUG
21		11193274		1	WASHER, LOCK
22		85819141		1	SWITCH
23		14143790		2	BULB
24		85818823		1	SWITCH
25		85819142		1	SWITCH
26		87409316		1	SWITCH
20		10902624		1	SCREW M6X25

(1) UP TO S/N XXX
(2) FROM TO S/N XXX
(3) Includes 17, 18

1.91.5	01	p1	02/05

FRONT AND REAR WINDSCREEN WIPERS

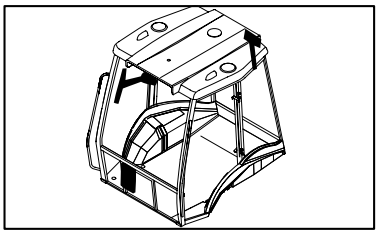

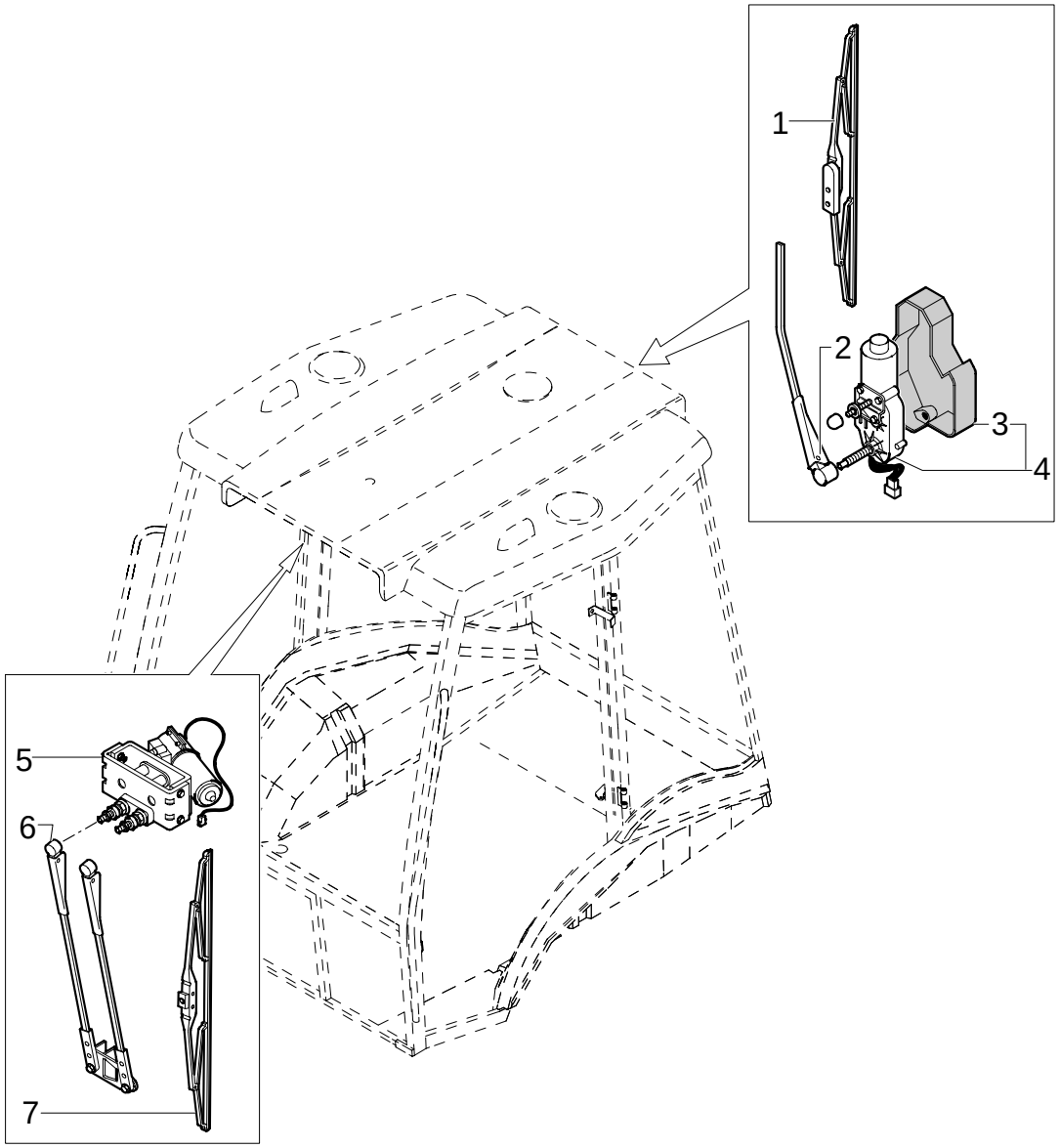

FRONT AND REAR WINDSCREEN WIPERS

REF	FN	PART NUMBER	YR/SN	QTY	DESCRIPTION
1		85819827		1	WIPER BLADE REAR
2		85806098		1	WIPER ARM REAR
3		85806095		1	BOX REAR
4	1	85806097		1	MOTOR, ELECTRIC, SMALL REAR
5		85806184		1	MOTOR, ELECTRIC, SMALL FRONT
6		85806185		1	WIPER ARM FRONT
7		85819826		1	WIPER BLADE FRONT

(1) Includes 3

1.91.5	02	p1	02/05

WINDSCREEN WIPERS RESERVOIR & NOZZLES

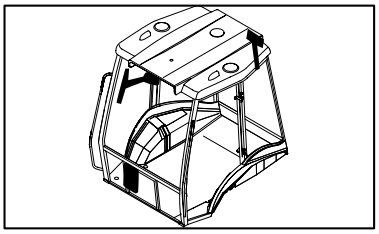

KIT KIT KIT 1 = ●

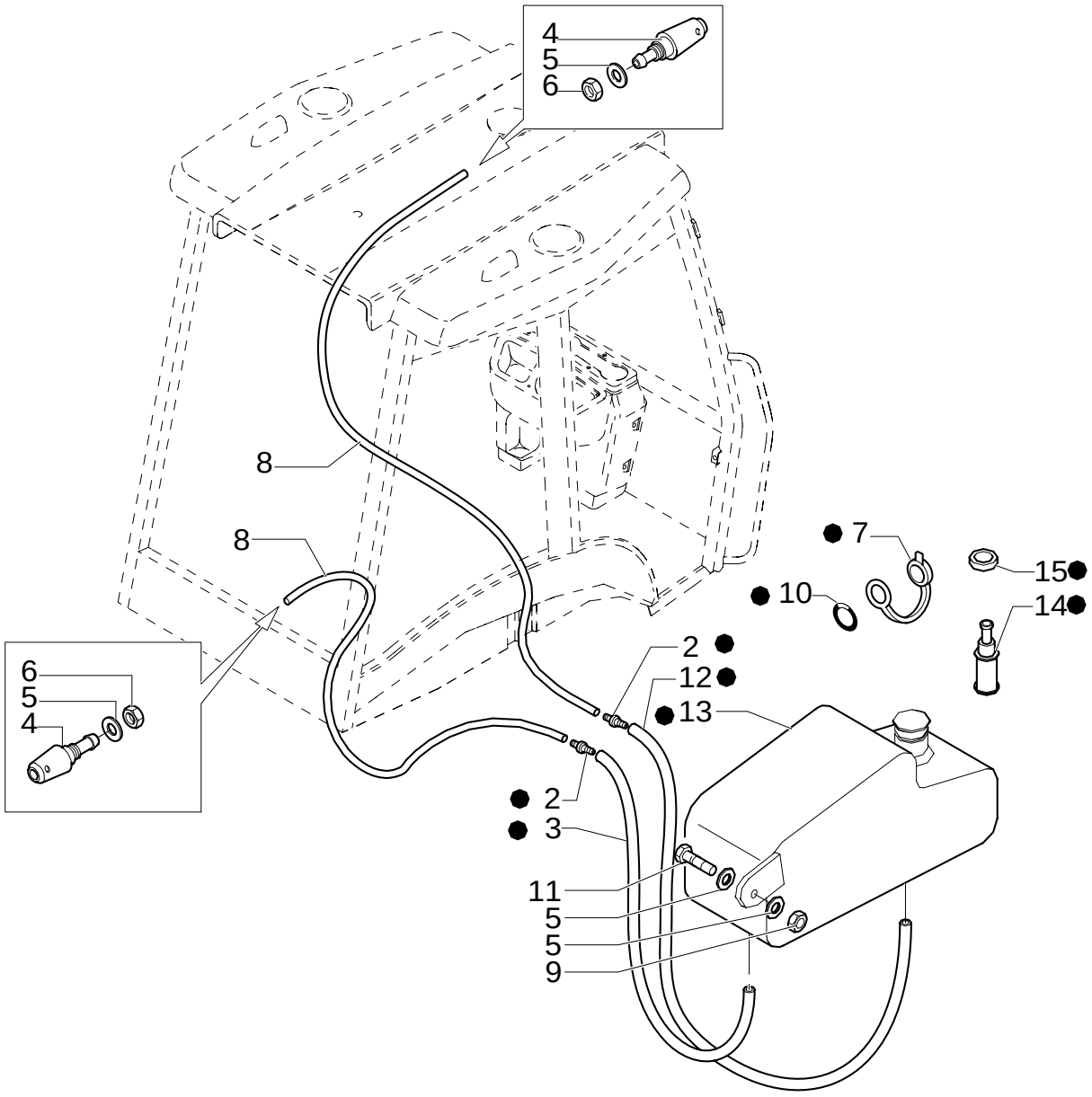

WINDSCREEN WIPERS RESERVOIR & NOZZLES

REF	FN	PART NUMBER	YR/SN	QTY	DESCRIPTION
1		85821153		1	PAN
2		85821337		2	VALVE, HYDRAULIC
3		85821335		2	HOSE, FLEXIBLE
4		85802398		2	TOOL, SPECIAL
5		12646704		4	WASHER
6		16102411		2	NUT
7		5175736		1	PLUG
8		85821338		2	HOSE, FLEXIBLE
9		12574211		1	NUT
10		85820237		1	RING
11		13313417		1	SCREW
12		85824450		1	HOSE, FLEXIBLE
13		{85821334}		1	
14		85821333		2	PUMP, HYDRAULIC
15		85821336		2	SEAL, RUBBER

1.91.6	01	p1	02/05

RADIO ANTENNA & SPEAKER COVER

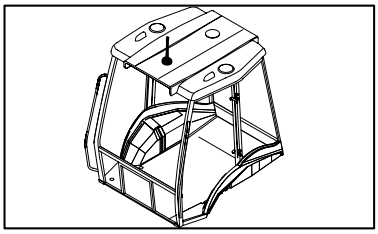

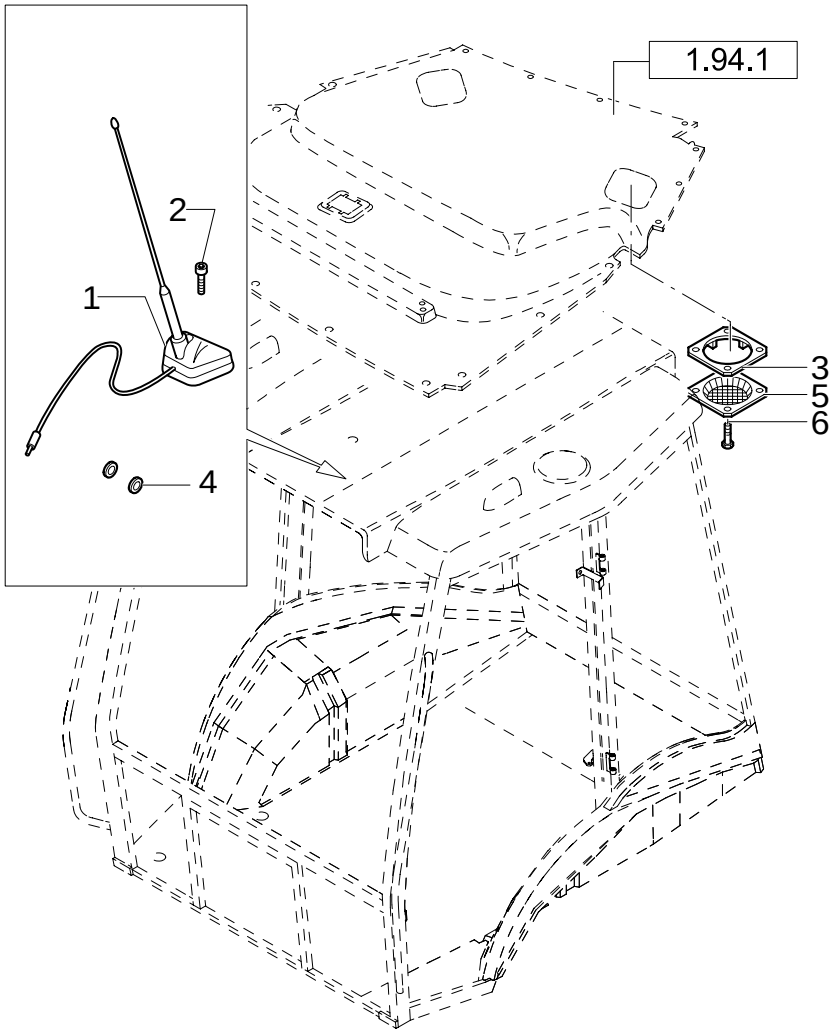

RADIO ANTENNA & SPEAKER COVER

REF	FN	PART NUMBER	YR/SN	QTY	DESCRIPTION
1		85819569		1	ANTENNA
2		13311817		1	SCREW M5X40
3		85802107		2	PLATE, MOUNTING
4		10399580		1	RING, INSULATING
5		85804362		2	GRILLE
6		13297842		8	SCREW

1.91.7/ 2	01	p1	01/06

LAMPS & LIGHTS - CAB (USA)

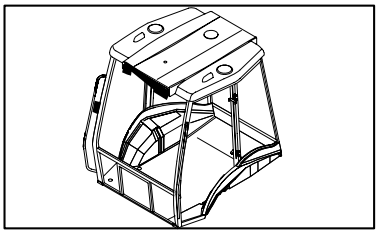

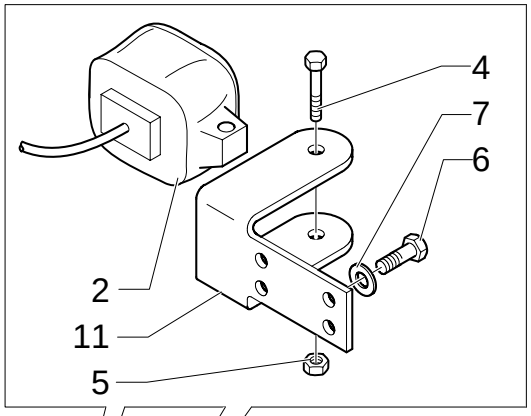

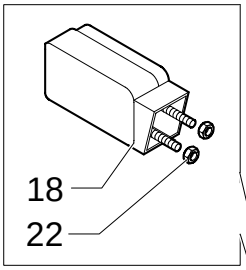

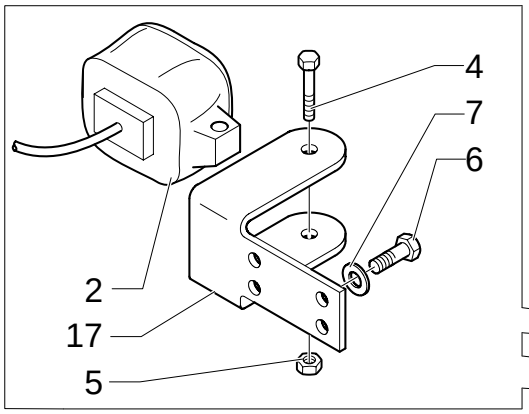

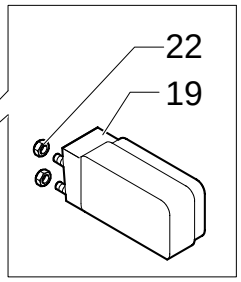

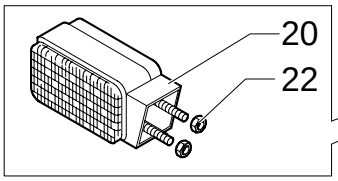

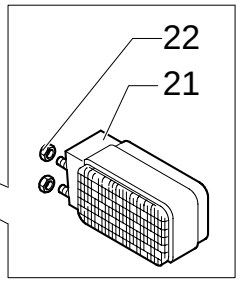

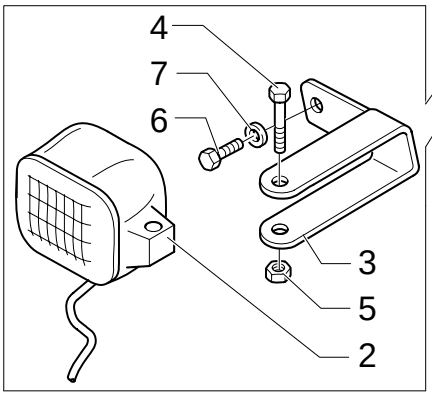

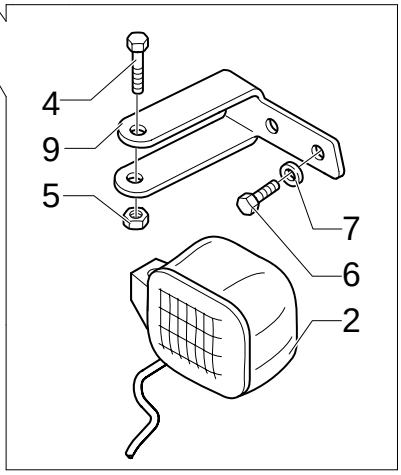

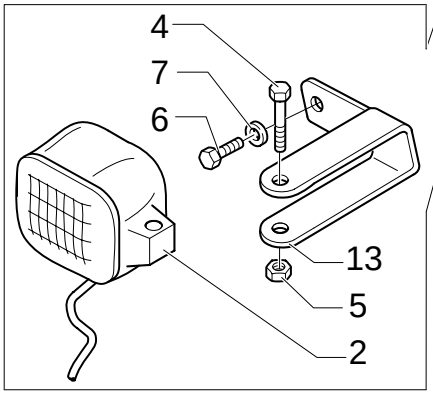

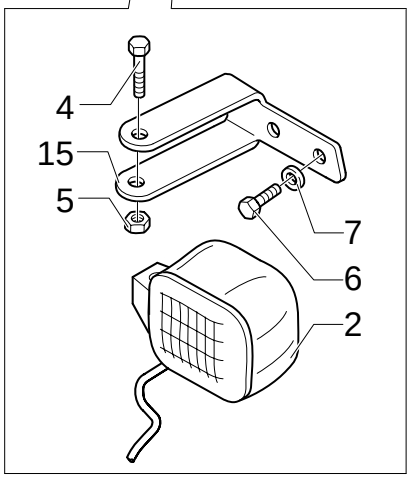



LAMPS & LIGHTS - CAB (USA)

REF	FN	PART NUMBER	YR/SN	QTY	DESCRIPTION
2		85819200		8	HEADLAMP Includes H3 12V 55W Bulb, Order 9703399 For Bulb
3		85819190		1	BRACKET RH
4		16044324		8	SCREW M8X55
5		16104111		8	NUT M8
6		10902124		24	SCREW Cap, HH, CL 8.8, M6 x 1 x 14
7		11197774		24	WASHER, LOCK Ø 6
9		85819191		1	BRACKET LH
11		85819194		2	BRACKET
13		85819188		1	BRACKET
15		85819189		1	BRACKET LH
17		85819192		2	BRACKET LH
18		85819198		1	LAMP, TAIL RH; Red/Amber Lens
19		85819199		1	LAMP, TAIL LH; Red/Amber Lens
20		85819196		1	LAMP, FRONT RH; Solid Amber Lens
21		85819197		1	LAMP, FRONT LH; Solid Amber Lens
22		14084111		8	NUT

CAB-SAFETY FRAME / EXTINGUISHER

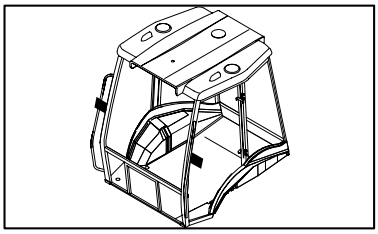

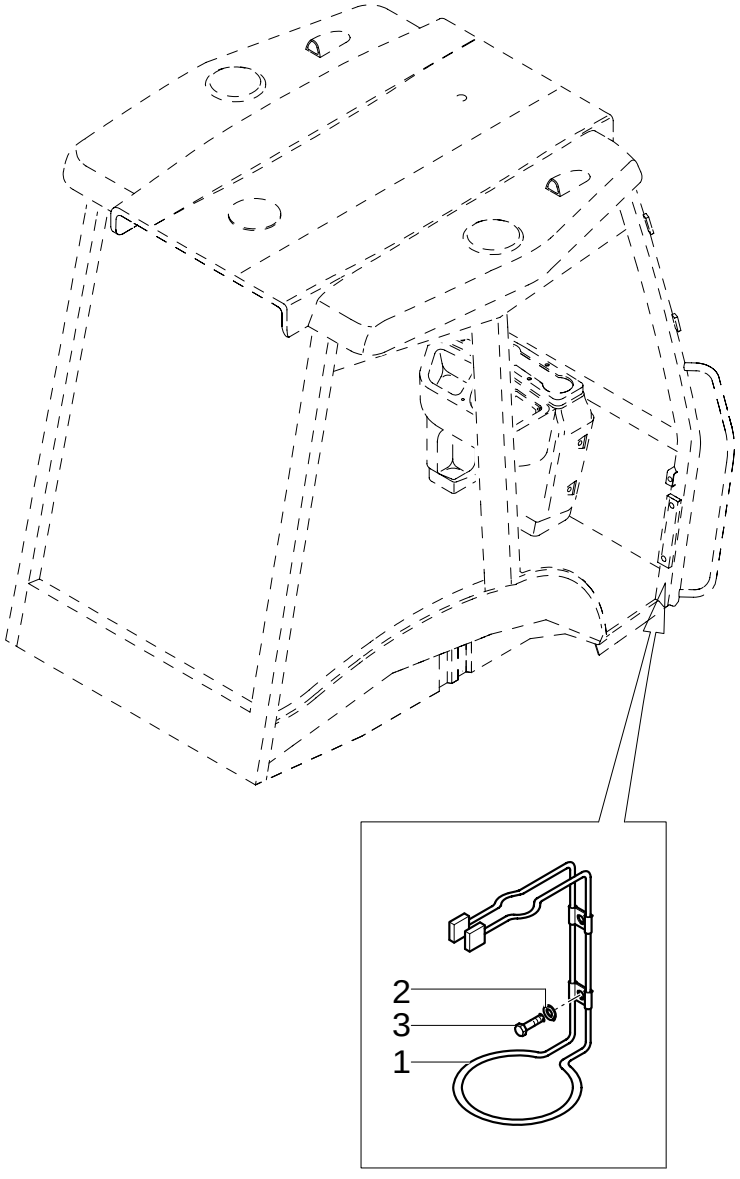

CAB-SAFETY FRAME / EXTINGUISHER

REF	FN	PART NUMBER	YR/SN	QTY	DESCRIPTION
1		85802276		1	SUPPORT
2		11193274		2	WASHER, LOCK M6X15X1.2
3		13275914		2	SCREW M6X10

1.92.1	01	p1	11/05

CAB - FRAME-DOOR

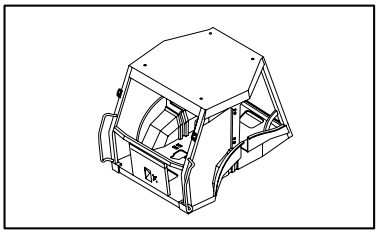

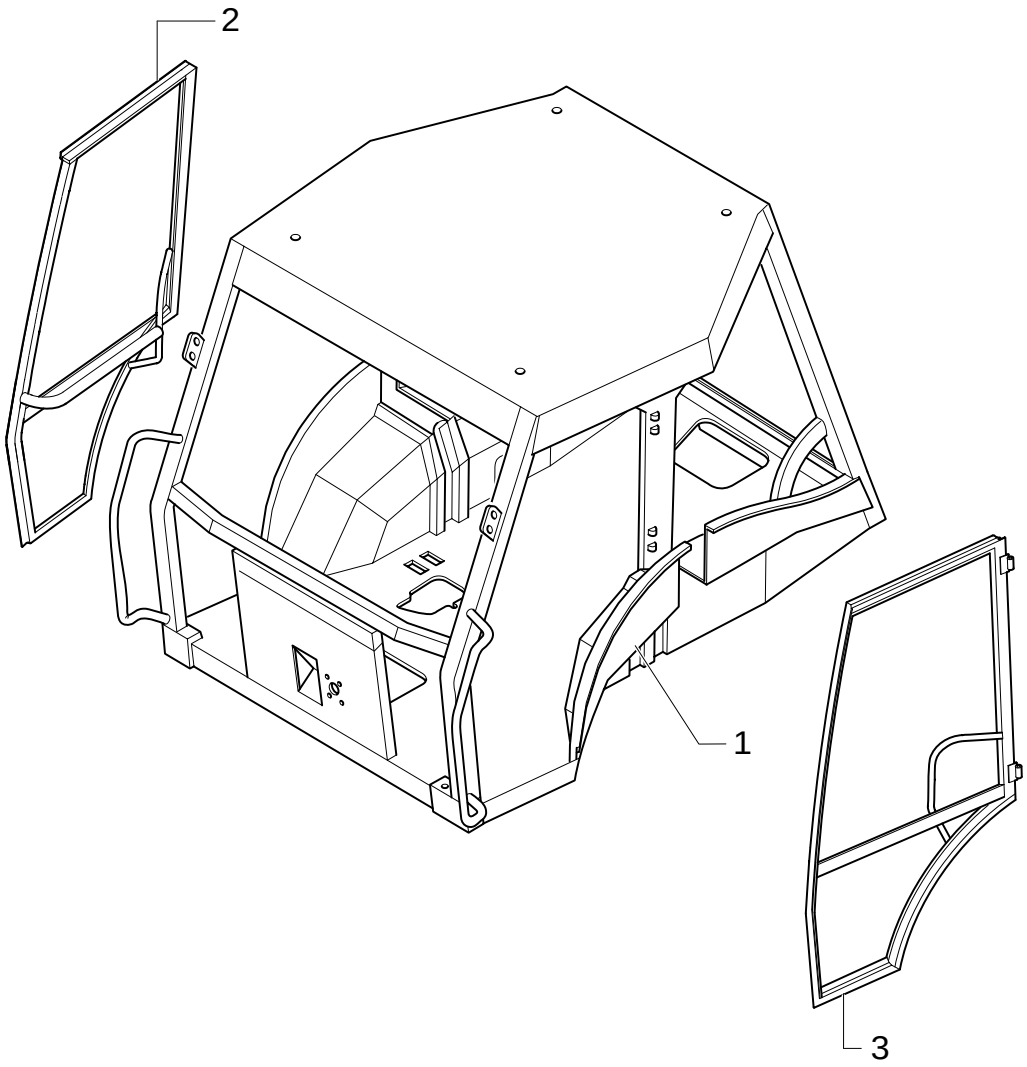

CAB - FRAME-DOOR

REF	FN	PART NUMBER	YR/SN	QTY	DESCRIPTION
1	1, 2	85826042		1	SHELL, CAB
1	3	87354654		1	FRAME
2	1	85801654		1	FRAME RH
2	3	87354650		1	FRAME RH
3	1	85801655		1	FRAME LH
3	3	87354652		1	FRAME LH

(1) UP TO S/N XXX
(2) Only for EUROPE Version
(3) FROM TO S/N XXX

Mechanical Version

1.92.1/ 2	01	p1	11/05

CAB - FRAME-DOOR

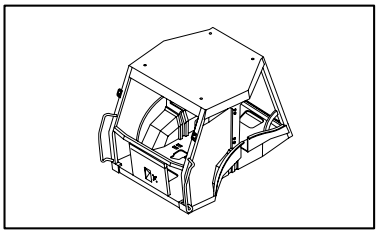

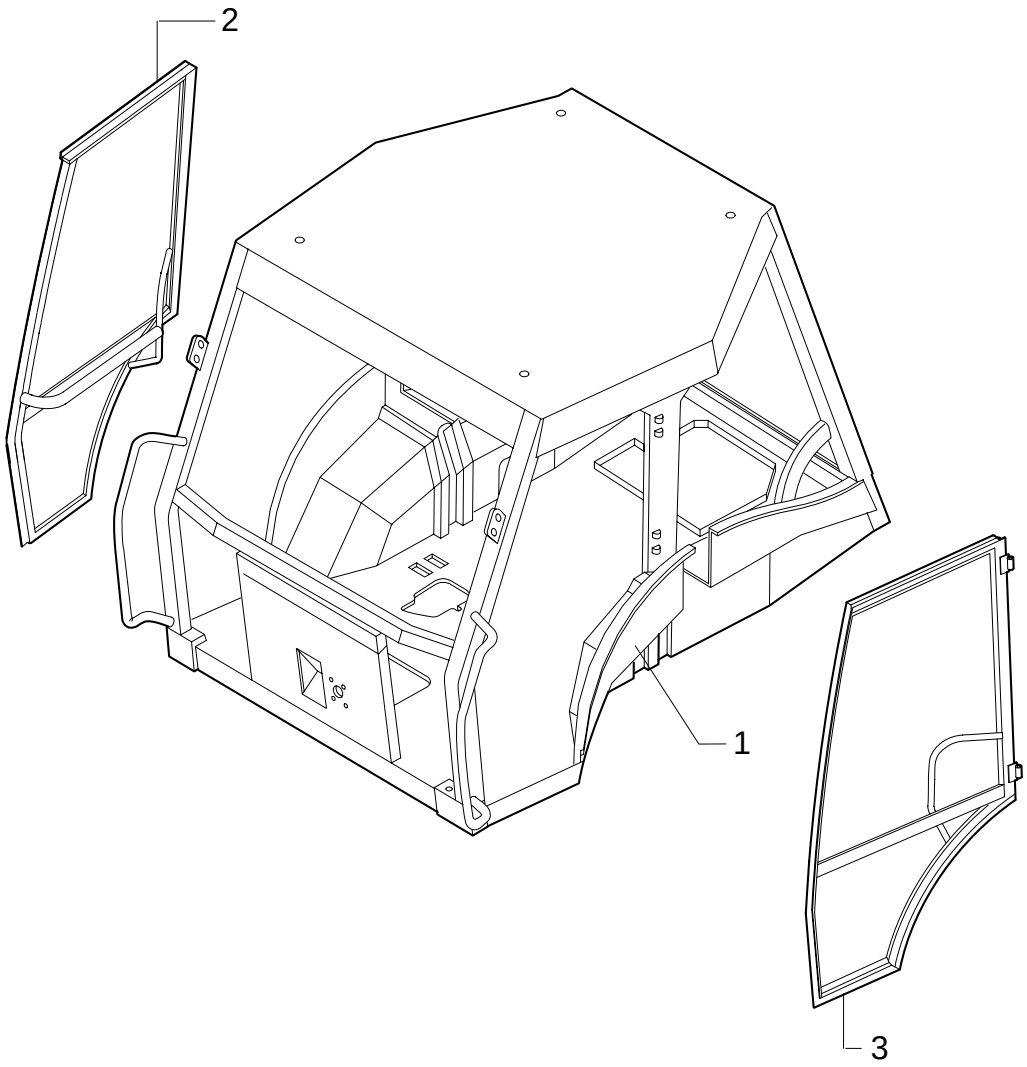

CAB - FRAME-DOOR

REF	FN	PART NUMBER	YR/SN	QTY	DESCRIPTION
1	1, 2	87410408		1	SHELL, CAB
1	3	87354656		1	FRAME
2	1, 2	85801654		1	FRAME RH
2	3	87354650		1	FRAME RH
3	1, 2	85801655		1	FRAME LH
3	3	87354652		1	FRAME LH

(1) UP TO S/N XXX
(2) Only for EUROPE Version
(3) FROM TO S/N XXX

Pilot Control Version

1.92.1/ 3	01	p1	02/05

ROPS - SAFETY FRAME

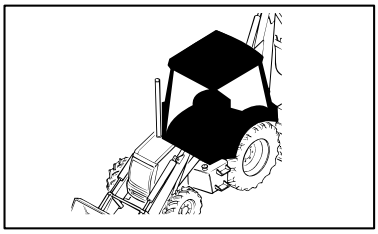

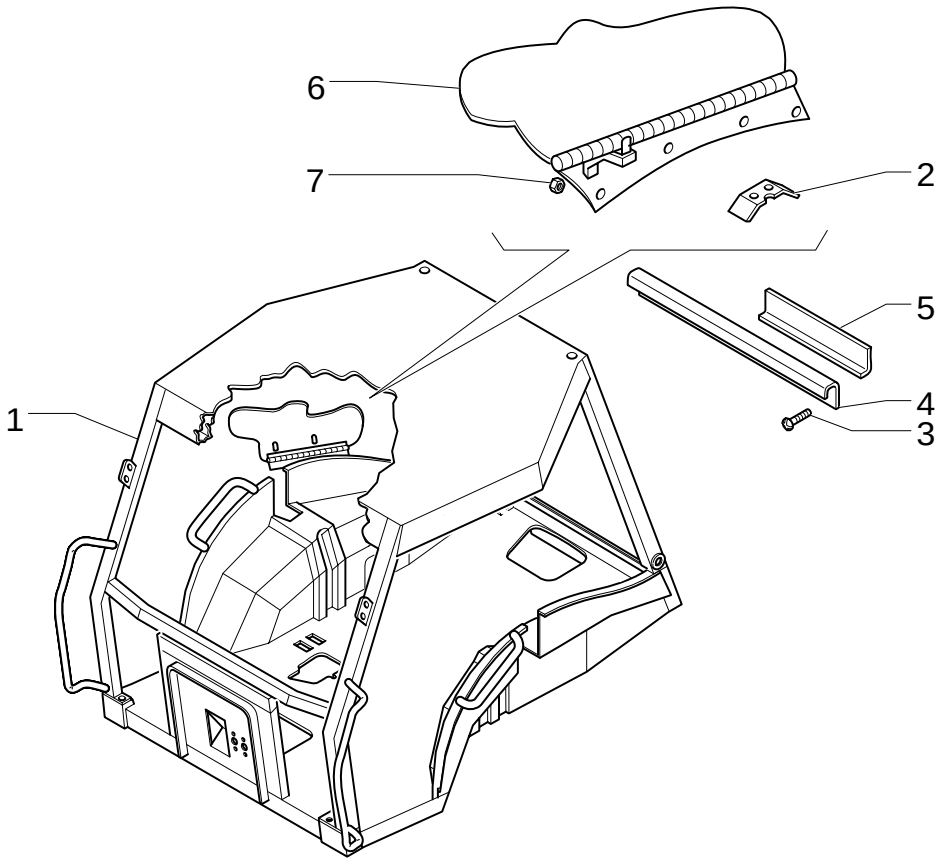

ROPS - SAFETY FRAME

REF	FN	PART NUMBER	YR/SN	QTY	DESCRIPTION
1	1	87410409		1	FRAME ASSY
2		85801863		1	BRACKET
3		13271814		6	SCREW M4X8
4		85805067		2	COVER
5		85807880		8	PLATE
6		NSS		1	NOT SERVICED SEPARATELY
7		15896219		4	NUT M6

(1) Includes 2, 6, 7

Pilot Control Version

1.92.3	01	p1	02/05

WINDOWS

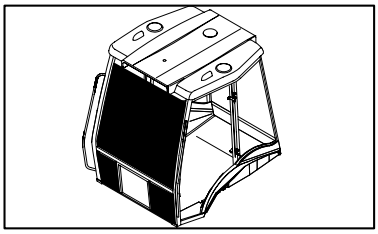

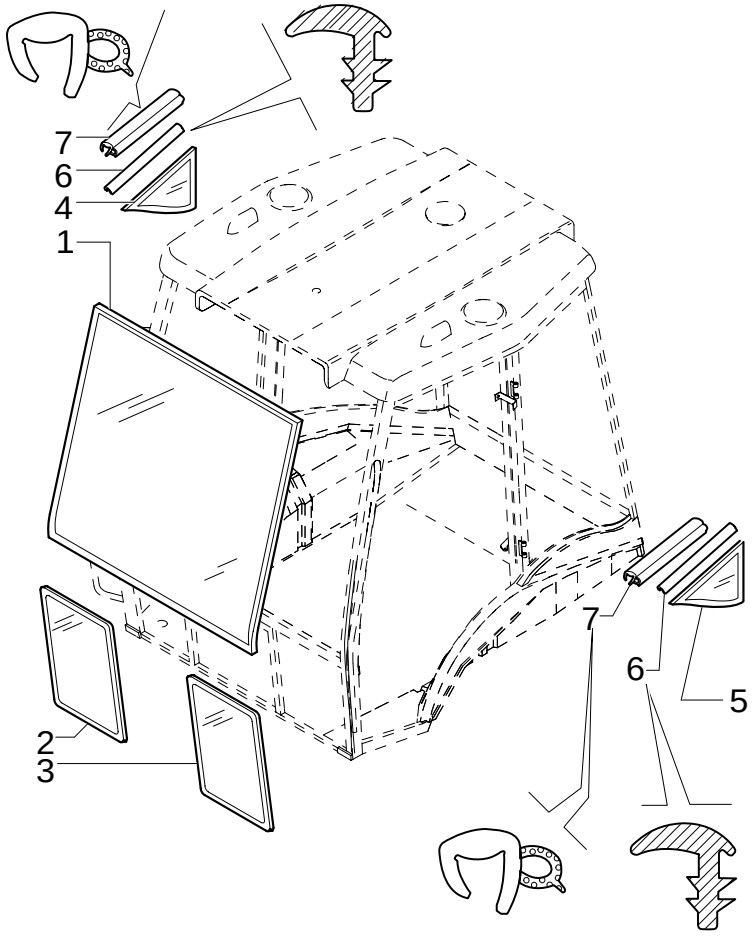

WINDOWS

REF	FN	PART NUMBER	YR/SN	QTY	DESCRIPTION
1		85801621		1	GLASS
2		85801622		1	GLASS ASSY, CAB RH
3		85801623		1	GLASS ASSY, CAB LH
4		85801630		1	GLASS ASSY, CAB RH
5		85801631		1	GLASS ASSY, CAB LH
6		85802334		M	GASKET
7		85805065		2	GASKET

1.92.4	01	p1	11/05

WINDOWS

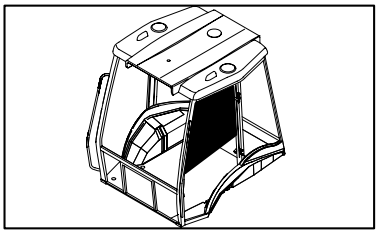

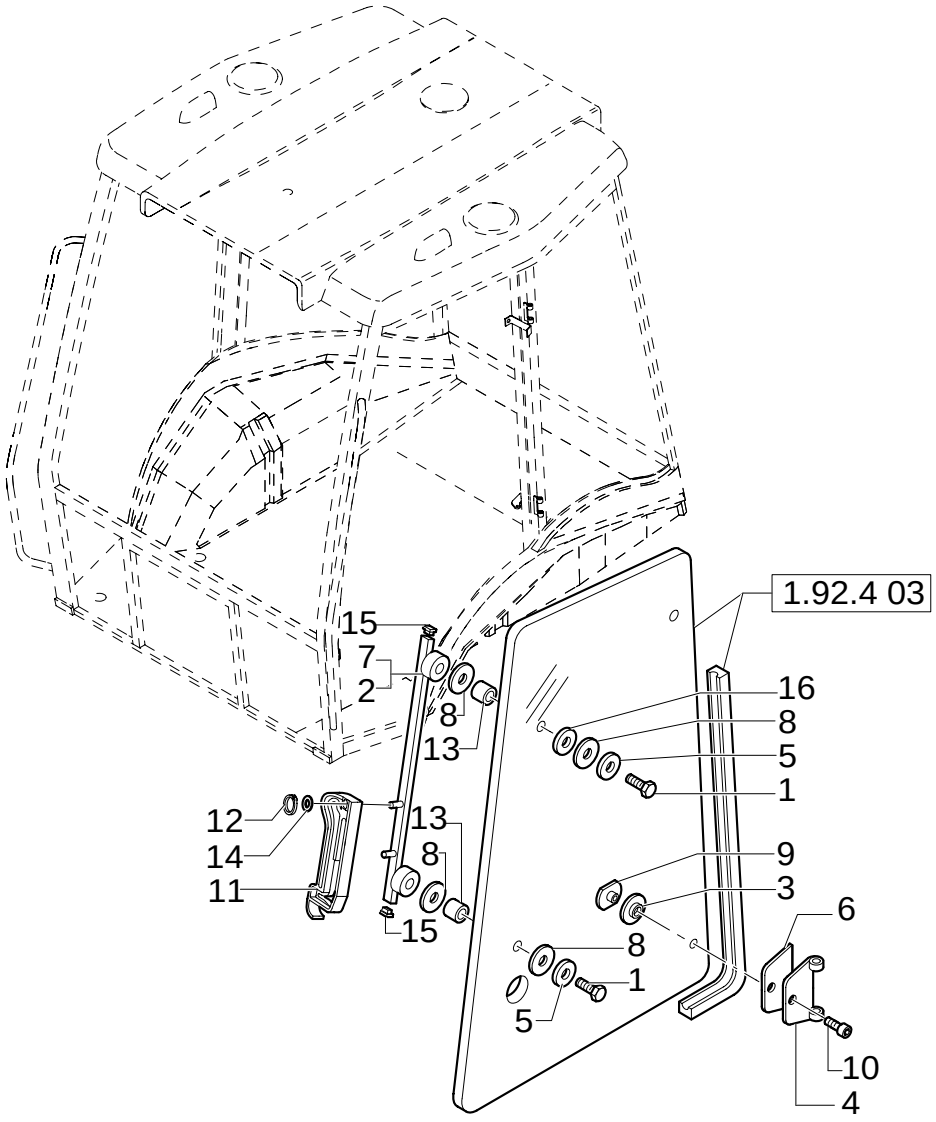

WINDOWS

REF	FN	PART NUMBER	YR/SN	QTY	DESCRIPTION
1		82859922		4	SCREW
2		85802063		1	SUPPORT RH
3		83961985		4	SPACER
4		85804869		4	HINGE
5		E7NN94305N22BA		4	SPACER
6		E9NN94305N24BB		4	GASKET
7		85802062		1	SUPPORT LH
8		E7NN94201N27CA		12	SPACER
9		85805448		4	NUT, RING
10		81871864		4	SCREW Socket Drive, M8 x 1.25 x 16
11	1, 2	85801804		4	HANDLE
11	3	{87345870}		4	
12	1, 2	11087871		4	RING, LOCKING
12	3	11087776		4	RING, LOCKING
13		E7NN94305N22AA		4	SPACER
14		10519404		2	WASHER
15		E9NN94296N08AB		8	COVER, CAP
16		12638504		4	WASHER 8X15

(1) UP TO S/N XXX
(2) Only for EUROPE Version
(3) FROM TO S/N XXX

1.92.4	02	p1	06/05

WINDOWS

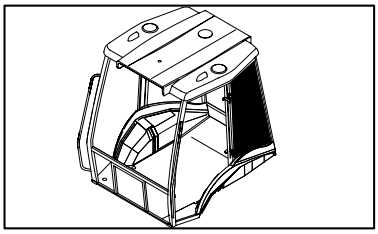

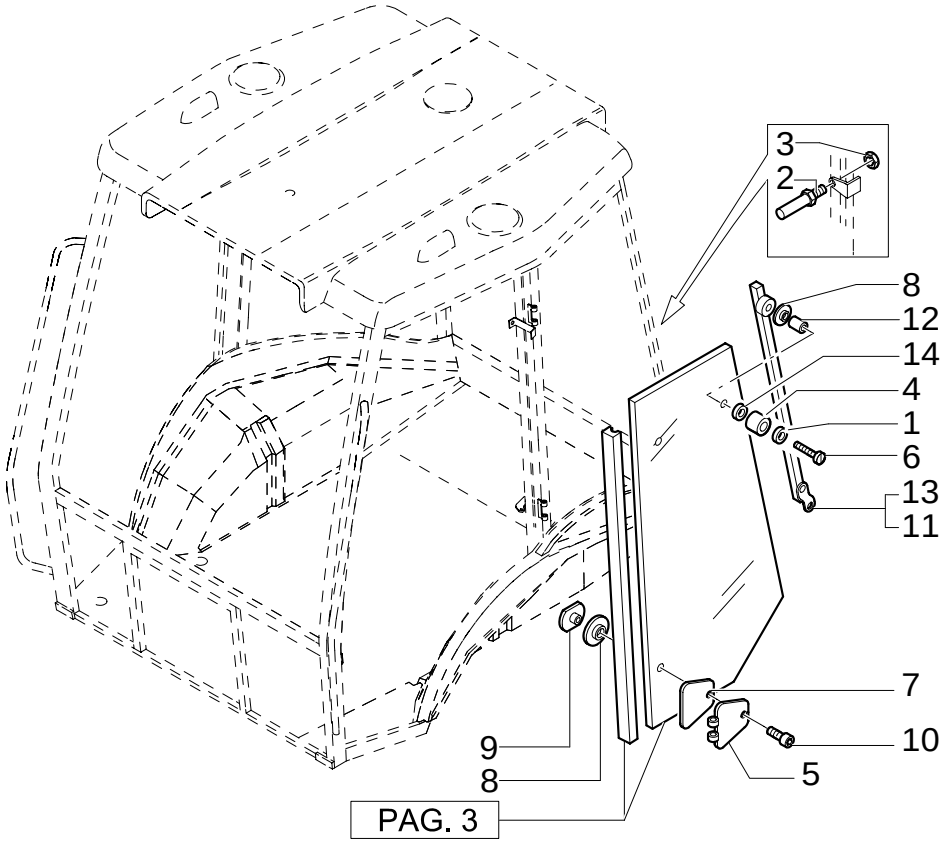

WINDOWS

REF	FN	PART NUMBER	YR/SN	QTY	DESCRIPTION
1		10519404		2	WASHER
2		85827848		4	PIN
3		14039611		4	NUT
4		E8NN9423036AA		2	BUMPER
5		85804870		4	HINGE
6		10903224		2	VALVE, HYDRAULIC M6X40
7		E9NN94305N24AB		4	RING
8		83961985		8	SPACER
9		85805448		4	NUT, RING
10		81871864		4	SCREW Socket Drive, M8 x 1.25 x 16
11		85801883		1	SUPPORT RH
12		E7NN94305N22AA		2	SPACER
13		85801884		1	SUPPORT LH
14		12638504		2	WASHER

WINDOWS

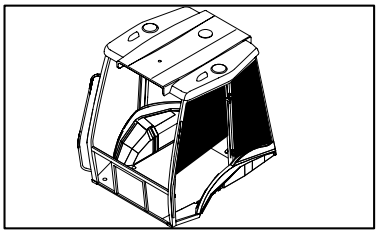

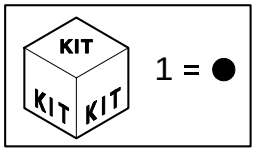

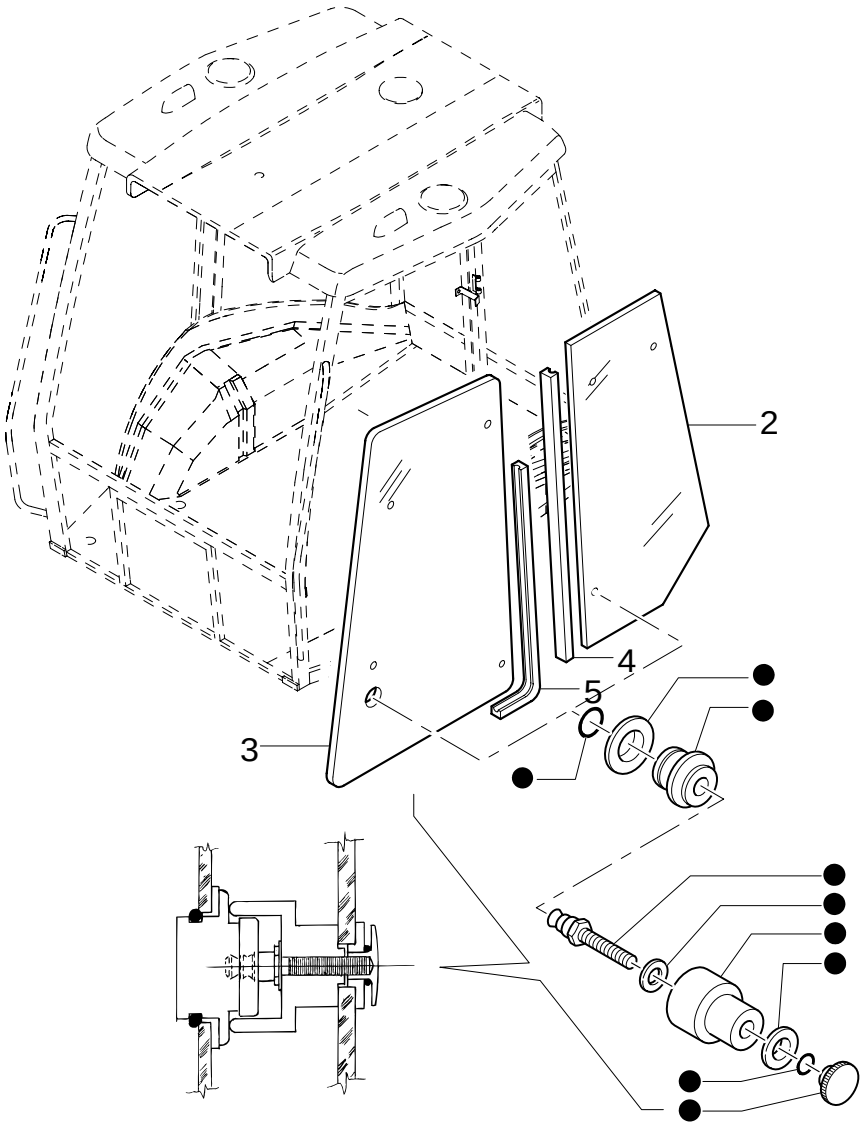

WINDOWS

REF	FN	PART NUMBER	YR/SN	QTY	DESCRIPTION
1		85804617		2	KIT
2		85801628		2	GLASS ASSY, CAB
3		85801626		2	GLASS ASSY, CAB
4		85812254		2	SEAL, RUBBER L=3150
5		85812255		2	SEAL, RUBBER L=3315

1.92.5	01	p1	02/05

FENDERS, REAR

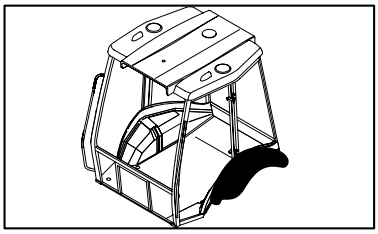

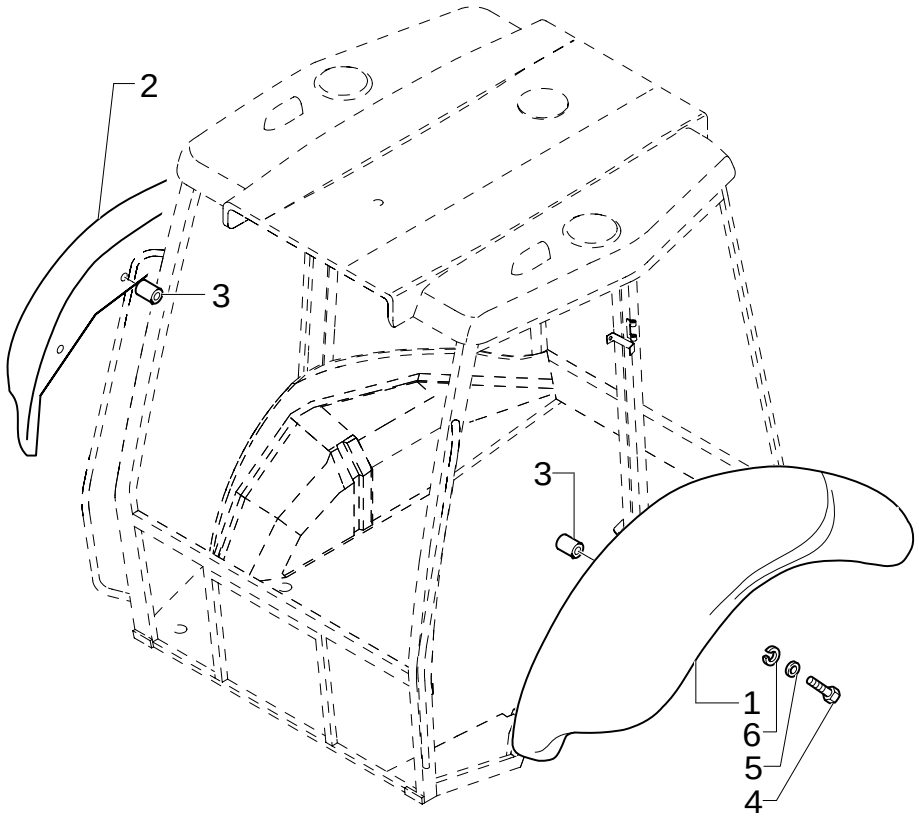

FENDERS, REAR

REF	FN	PART NUMBER	YR/SN	QTY	DESCRIPTION
1	1	85817211		1	FENDER, REAR LH
1	2	85817213		1	FENDER, REAR LH
2	1	85817210		1	FENDER, REAR RH
2	2	85817212		1	FENDER, REAR RH
3		85812338		12	INSERT, THREADED
4		16044124		10	SCREW M8X1,25X45
5		12646204		10	WASHER 8X35
6		11193874		10	WASHER, LOCK 8X16X1.4

(1) Only for LB90.B - LB95.B - LB110.B
(2) Only for LB115.B 4WS

1.92.6	01	p1	01/06

DOOR COMPONENTS

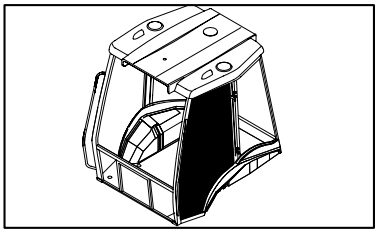

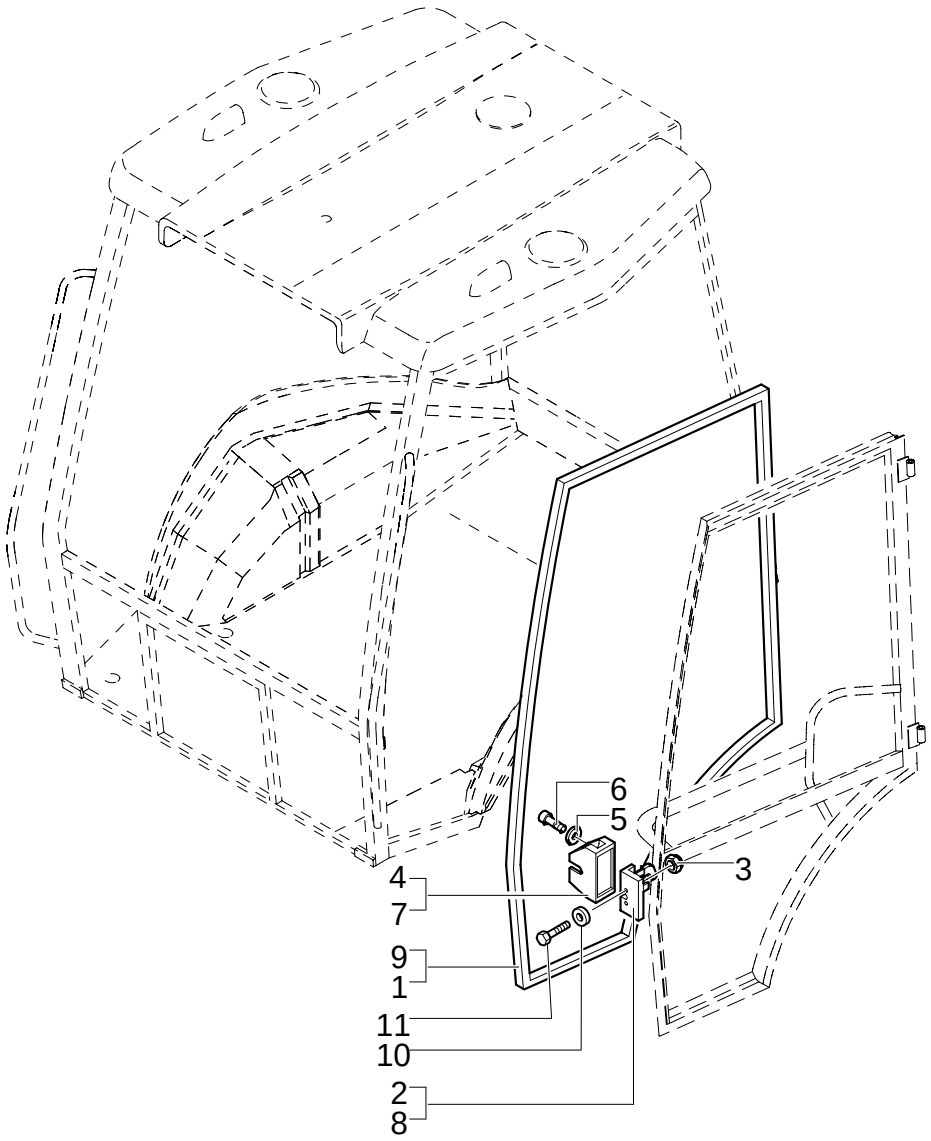

DOOR COMPONENTS

REF	FN	PART NUMBER	YR/SN	QTY	DESCRIPTION
1		85812252		1	SEAL, RUBBER RH
2		44910052		1	LOCK RH
3		14048214		4	NUT M8X1.25
4		85805771		1	COVER RH
5		12643701		4	WASHER
6		13273911		4	SCREW M5X10
7		85805770		1	COVER LH
8		44910053		1	LOCK, CYLINDER LH
9		85812253		1	SEAL, RUBBER LH
10		10519604		2	WASHER
11		14442421		2	SCREW

1.92.6	02	p1	02/05

DOOR COMPONENTS

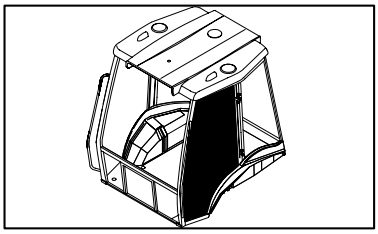

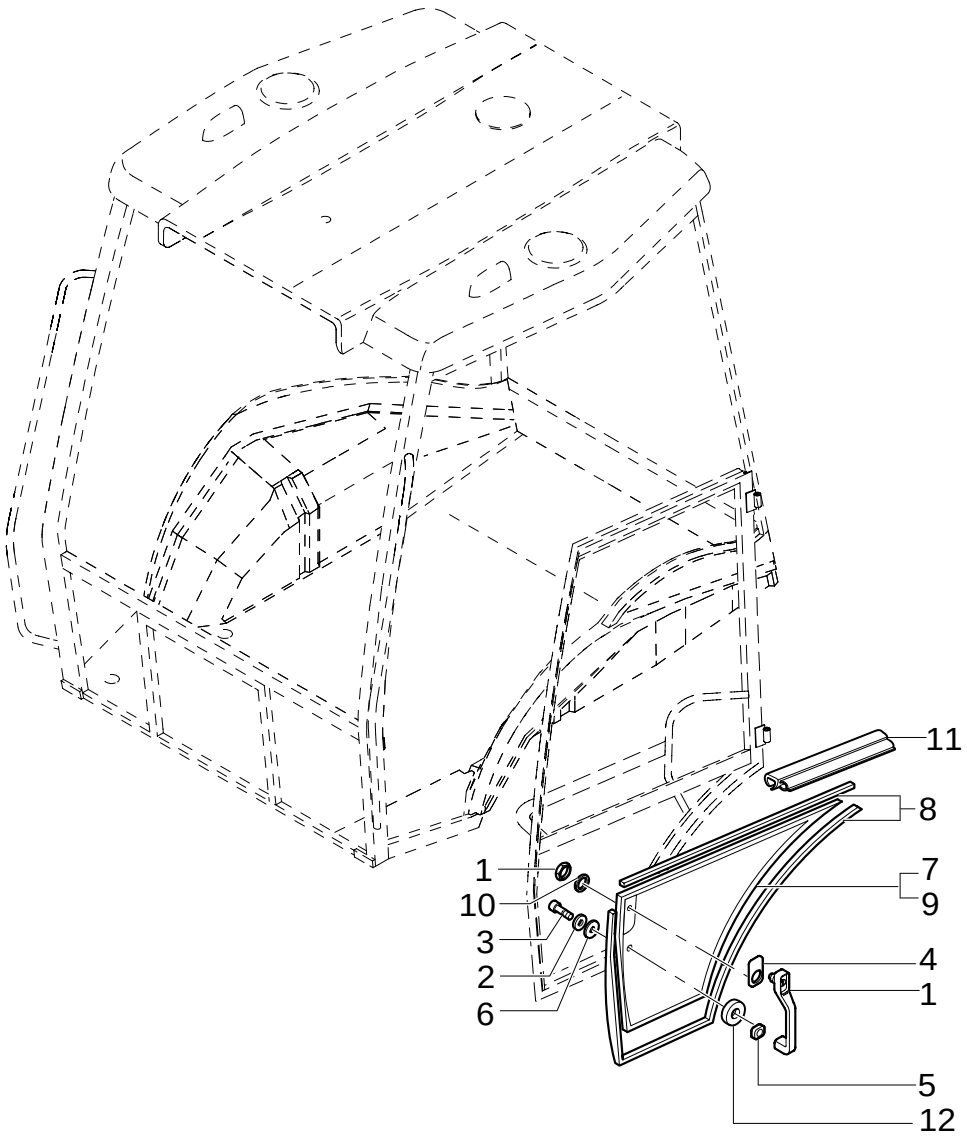

DOOR COMPONENTS

REF	FN	PART NUMBER	YR/SN	QTY	DESCRIPTION
1		85805659		2	HANDLE
2		12640601		2	WASHER
3		13276621		2	SCREW M6
4		85801799		2	GASKET
5		85801800		2	GASKET
6		E7NN94305N22AA		4	SPACER
7		85801624		1	GLASS ASSY, CAB RH
8		85802334		MT	GASKET
9		85801625		1	GLASS ASSY, CAB LH
10		85802307		2	GASKET
11		85805065		2	GASKET
12		85801801		2	GASKET 24X6X2

1.92.6	03	p1	06/05

DOOR COMPONENTS

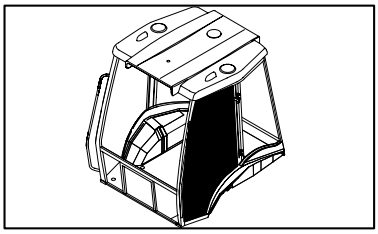

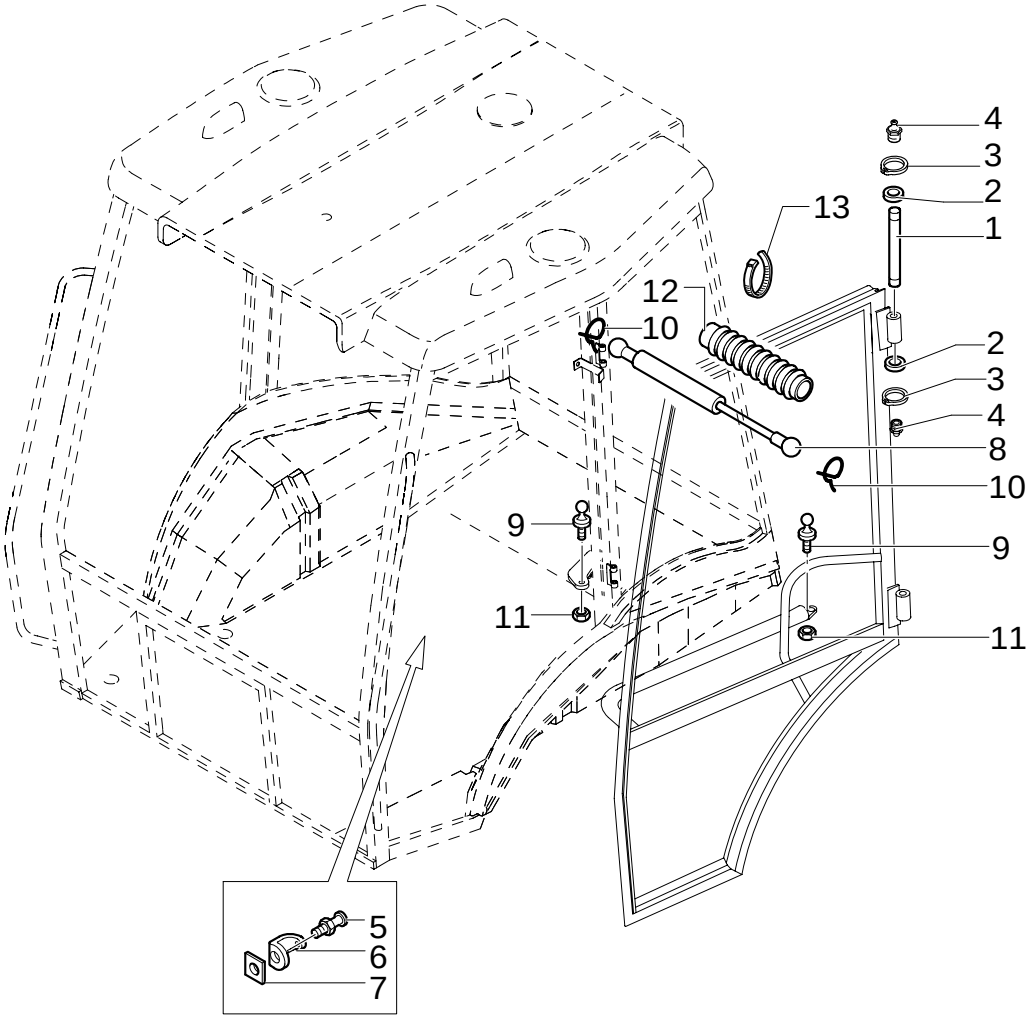

DOOR COMPONENTS

REF	FN	PART NUMBER	YR/SN	QTY	DESCRIPTION
1		87304810		4	PIN
2		E8NN16N647AA		8	WASHER
3		11088076		8	RING, LOCKING D.9
4		13406911		4	NIPPLE, LUBE
5		E9NN9422196AA		2	PLATE, STEEL
6		E9NN94218N45AA		2	COVER
7		E9NN94218N36AA		2	NUT M12 x 1
8		5183854		2	SHOCK ABSORBER
9		82000409		4	BALL JOINT
10		F1NN94231N19AA		4	CLIP
11		16104511		4	NUT
12		E9NN94231N12AB		2	SUPPORT
13		5112712		4	COLLAR

1.92.9	01	p1	11/05

REAR WINDOWS

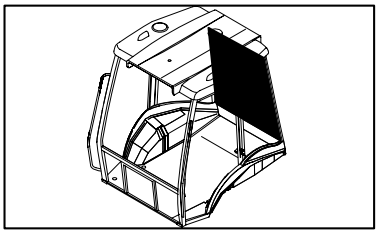

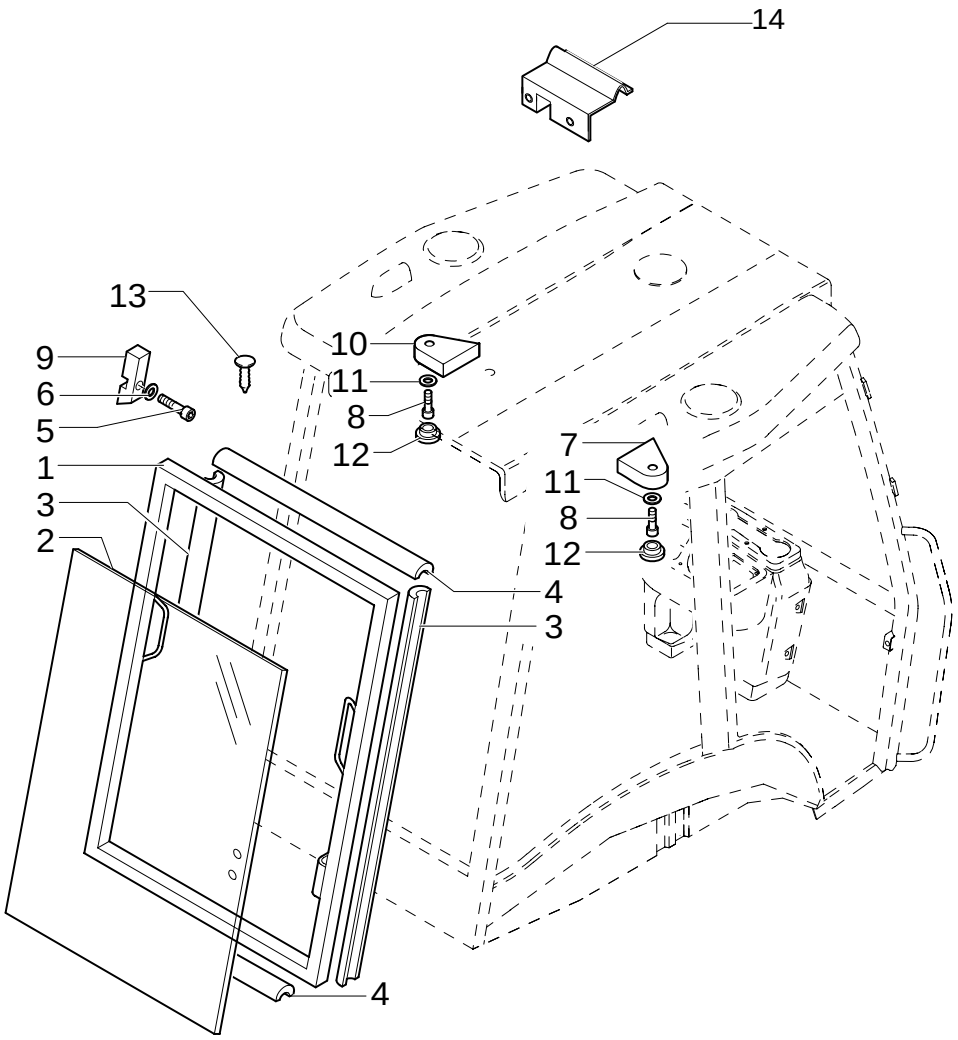

REAR WINDOWS

REF	FN	PART NUMBER	YR/SN	QTY	DESCRIPTION
1		85801739		1	LID
2		85801632		1	GLASS ASSY, CAB
3		85801811		2	EXTRUSION
4		85819017		1	GASKET L=1010
4		85819018		1	GASKET L=965
6		12646704		6	WASHER
7		85801828		1	PAD RH
8		13313417		2	SCREW
9		85801826		2	STOP
10		85801829		1	PAD LH
11		85801991		2	WASHER
12		79111978		2	PLUG
13		E9NN94218N48AA		2	FASTENER
14		85812365		1	COLLAR, RETAINER
5		16043324		6	SCREW

1.92.9	02	p1	02/05

REAR WINDOWS

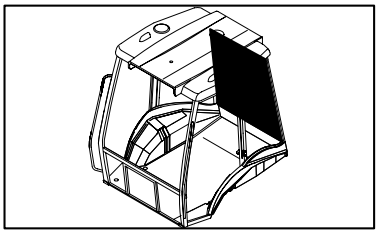

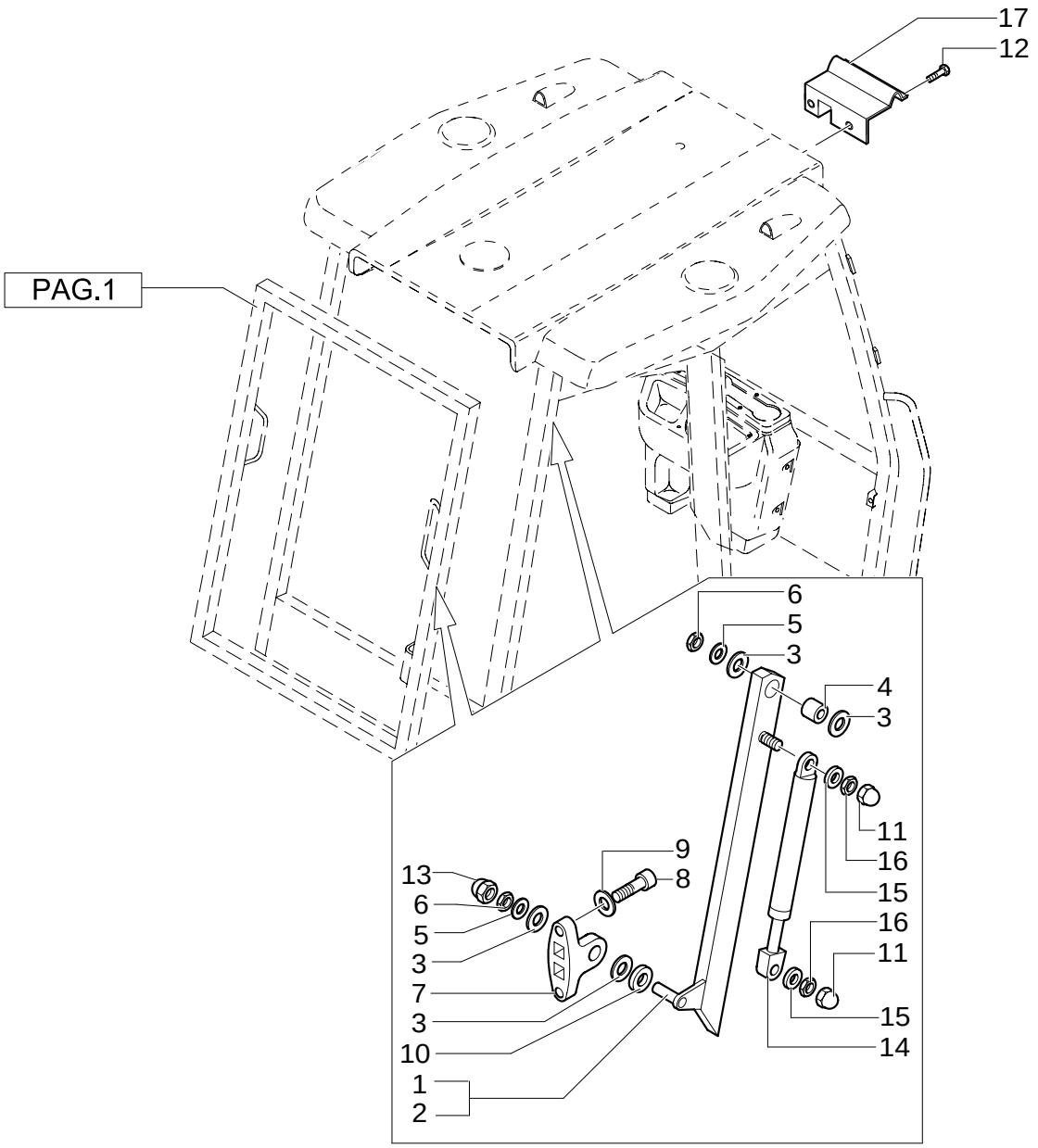

REAR WINDOWS

REF	FN	PART NUMBER	YR/SN	QTY	DESCRIPTION
1		85801812		1	TIE-ROD RH
2		85801813		1	TIE-ROD LH
3		85801814		12	SPACER
4		85801815		2	BUSHING
5		12646904		4	WASHER
6		16104111		4	NUT
7		85801816		2	SUPPORT
8		12638501		4	WASHER
9		14306424		4	SCREW
10		12647004		2	WASHER
11		15811387		4	PROTECTION CAP
12		13276217		2	SCREW M6X16
13		5132136		2	GUARD
14		85801827		2	SHOCK ABSORBER
15		14496407		4	WASHER
16		12574215		4	NUT
17		85812364		1	COLLAR, RETAINER

1.92.9	03	p1	11/05

REAR WINDOWS

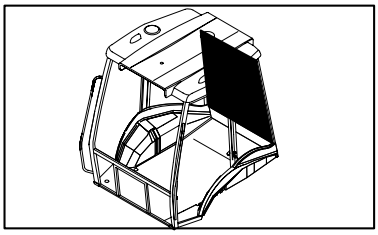

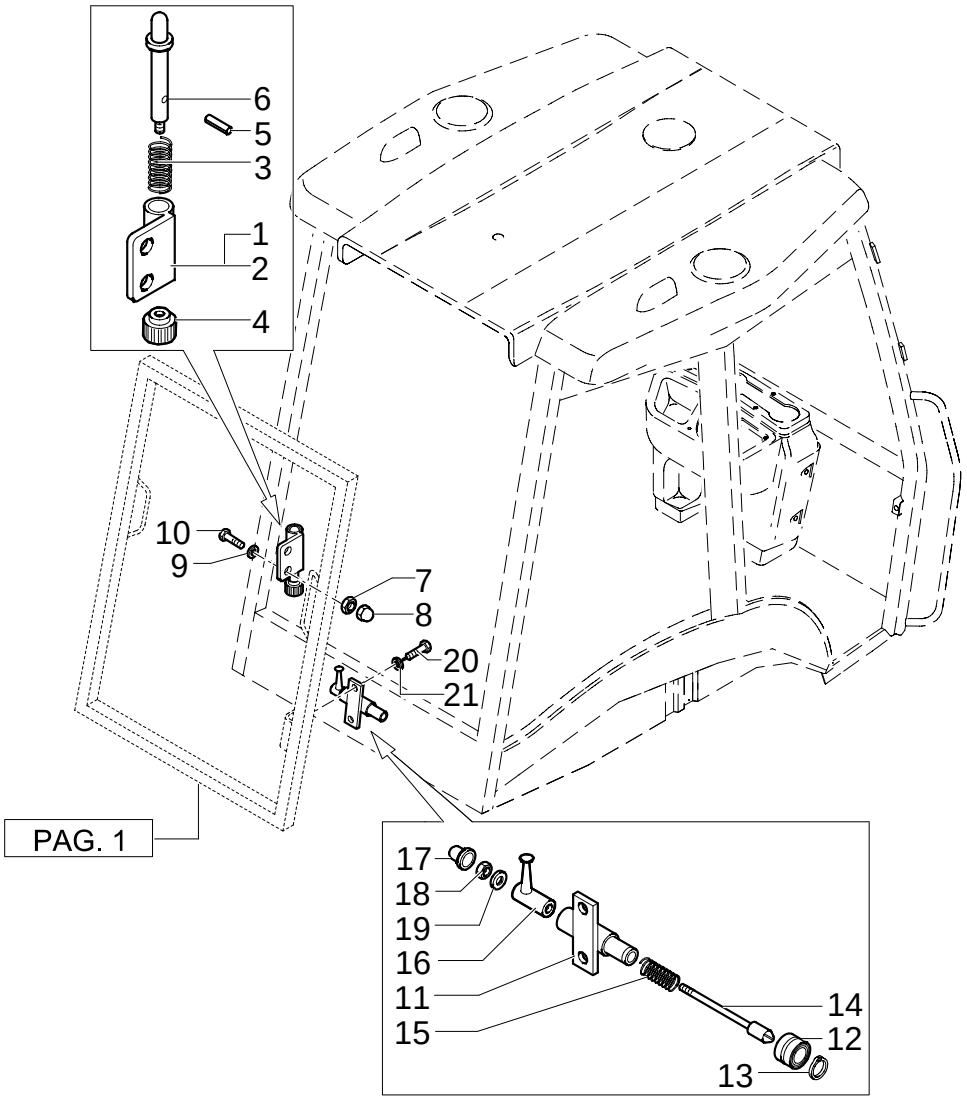

REAR WINDOWS

REF	FN	PART NUMBER	YR/SN	QTY	DESCRIPTION
1		85801831		1	CLIP LH
2		85801830		1	BLOCK RH
3		85801832		2	SPRING
4		85801833		2	KNOB
5		14161771		2	PIN, ROLL
6		85801834		2	PIN
7		16104111		4	NUT
8		5132136		4	GUARD
9		11198074		4	WASHER, SEALING
10		85827836		4	SCREW Cap, HH, CL 8.8, M8 x 1.25 x 25
11		85801820		1	PIN RH
11		85801821		2	PIN LH
12		85802018		2	BEARING ASSY
13		85802351		2	RING, LOCKING
14		85801823		2	PIN
15		85801824		2	SPRING
16		85801825		2	ARM, TRIP
17		15811387		2	PROTECTION CAP
19		12637821		4	WASHER
20		14306424		4	SCREW
21		11198074		4	WASHER, SEALING
18		12574111		4	NUT

1.93.0	01	p1	11/05

CAB / SOFT TRIM

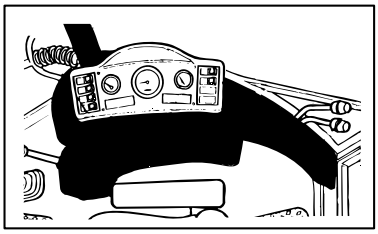

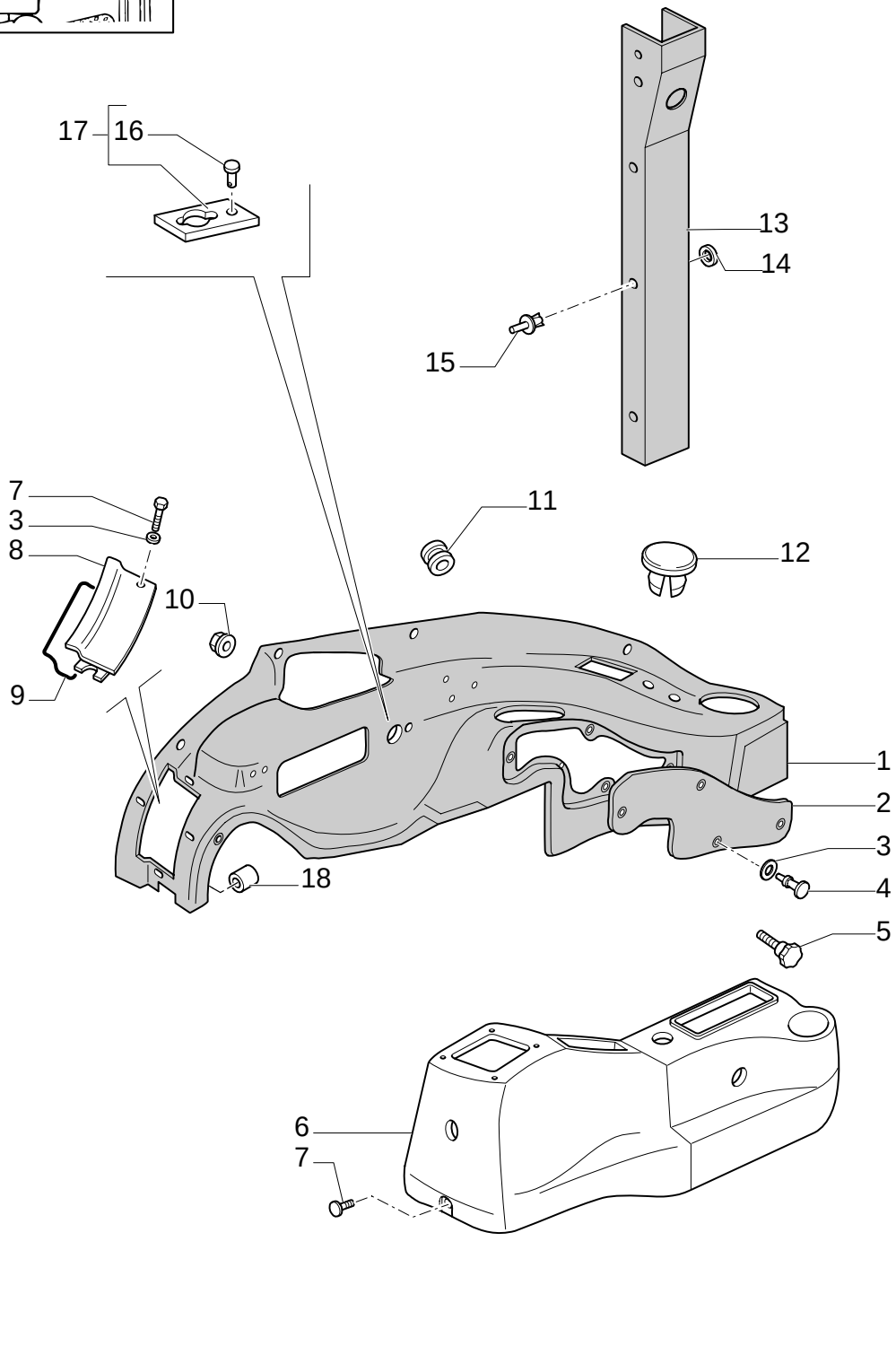

CAB / SOFT TRIM

REF	FN	PART NUMBER	YR/SN	QTY	DESCRIPTION
1	1, 2	85821318		1	SOFT TRIM RH
1	3, 2	87362096		1	SOFT TRIM
2		85801649		1	SOFT TRIM
3		85801991		AR	WASHER
4		13311217		5	SCREW M5X20
5		85805323		1	KNOB
6		87319785		1	SOFT TRIM
7		13311017		AR	SCREW M5X16
8		85825191		1	COVER
9		85806023		1	GASKET
10		14084814		5	NUT M8
11		10398980		1	RING, INSULATING 46X5
12		79111815		1	PLUG
13		85819285		1	SOFT TRIM RH
14		85801991		4	WASHER
15		F1NN94000Z36AA		6	STUD
16		10427200		1	RIVET
17		85827548		1	SEAT/SLOT
18		85805819		6	BUSHING, THREADED

(1) UP TO S/N XXX
(2) Includes 2, 8, 9, 18
(3) FROM TO S/N XXX

1.93.0	02	p1	11/05

CAB / SOFT TRIM (POWER SHUTTLE)

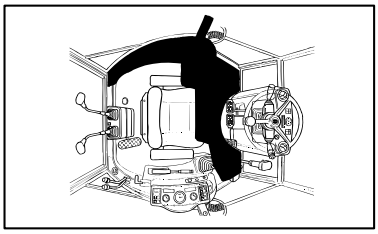

CAB / SOFT TRIM (POWER SHUTTLE)

REF	FN	PART NUMBER	YR/SN	QTY	DESCRIPTION
1	1	85819277		1	SOFT TRIM LH
1	2	87362098		1	SOFT TRIM
2		79089592		6	WASHER D=24
3		13313417		6	SCREW M6X20
4		85819287		1	SOFT TRIM LH
5		5178468		1	GRAB STRAP
6		14084011		1	NUT M4
7		14084814		4	NUT M8
8		85801991		4	WASHER
9		15627011		12	RIVET
10		E7NN94290N06AA		1	STRAP
11		12638107		1	SPACER 5X14
12		85806154		1	RIVET
13		79111978		1	PLUG
14		5148132		1	SOCKET, LAMP
15		14143790		1	BULB 1,2W
16		F1NN94000Z36AA		6	STUD
17		5148131		1	SEAT/SLOT
18		79111978		1	PLUG D=23
19		85808460		1	PLUG

(1) UP TO S/N XXX
(2) FROM TO S/N XXX

CAB / SOFT TRIM

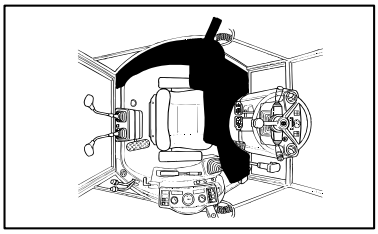

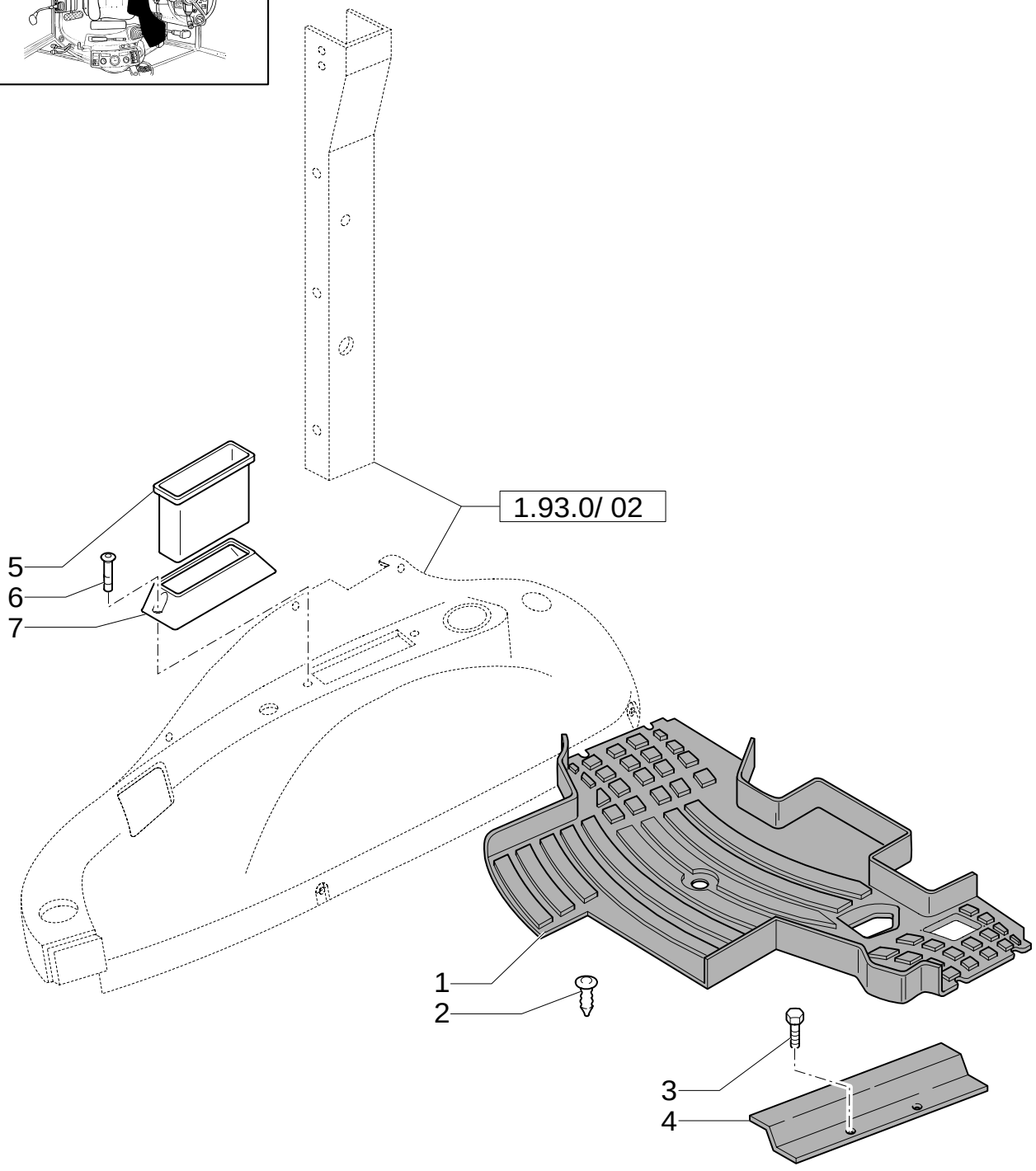

CAB / SOFT TRIM

REF	FN	PART NUMBER	YR/SN	QTY	DESCRIPTION
1		85804865		1	MAT
2		14568887		2	BUTTON
3		14441521		5	SCREW M6X25
4		85805591		2	MOULDING, DOOR SILL
5		85801979		1	CONTAINER
6		13276617		2	SCREW
7		85801651		1	HOUSING

1.93.0	04	p1	11/05

CAB / SOFT TRIM

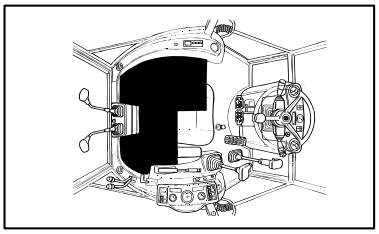

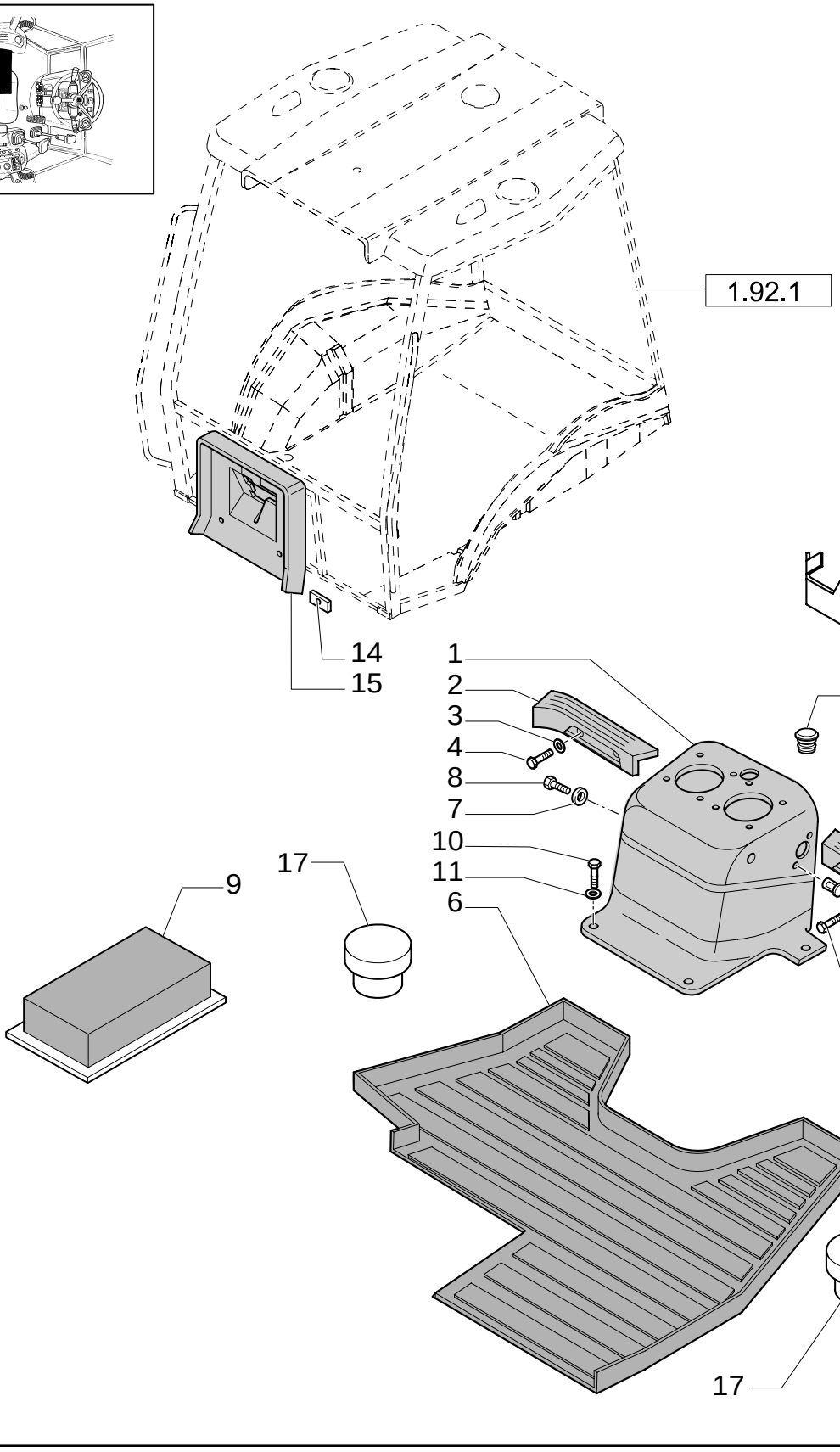

CAB / SOFT TRIM

REF	FN	PART NUMBER	YR/SN	QTY	DESCRIPTION
1		87319801		1	BLISTER
2		85804863		1	FOOT REST
3		10519604		4	WASHER
4		16043824		4	SCREW
5		85804864		1	FOOT REST
6		85804866		1	MAT
7		79089592		1	WASHER
8		79105220		1	SCREW
9		4999021		1	GASKET
11		12640621		4	WASHER
12		85802259		2	BUSHING, THREADED
13		82001909		1	PLUG
14		85812080		4	NUT
15		87408893		1	PANEL
16		87323749		1	BRACKET
17		87319803		2	PLUG
10		10902624		4	SCREW

1.93.0/ 1	02	p1	11/05

CAB / SOFT TRIM (POWER SHIFT)

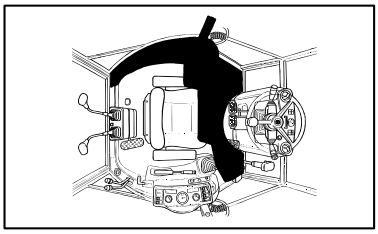

CAB / SOFT TRIM (POWER SHIFT)

REF	FN	PART NUMBER	YR/SN	QTY	DESCRIPTION
1	1, 2	85819279		1	SOFT TRIM
1	1, 3	85819277		1	SOFT TRIM LH
1	4, 2	87362094		1	SOFT TRIM
1	4, 3	87362098		1	SOFT TRIM
2		79089592		6	WASHER D=24
3		13313417		6	SCREW M6X20
4		85819287		1	SOFT TRIM LH
5		5178468		1	GRAB STRAP
6		14084011		1	NUT M4
7		{14059314}		4	M8
8		85801991		4	WASHER
9		15627011		6	RIVET
10		E7NN94290N06AA		1	STRAP
11		12638107		1	SPACER 5X14
12		85806154		1	RIVET
13		79111978		1	PLUG
14		5148132		1	SOCKET, LAMP
15		14143790		1	BULB 1,2W
16		F1NN94000Z36AA		6	STUD
17		5148131		1	SEAT/SLOT
18		85808460		1	PLUG

(1) UP TO S/N XXX
(2) Only for IDRAULIC TRANSPORT LOCK
(3) Only for MECHANICAL TRANSPORT LOCK
(4) FROM TO S/N XXX

CAB / SOFT TRIM (POWER SHIFT)

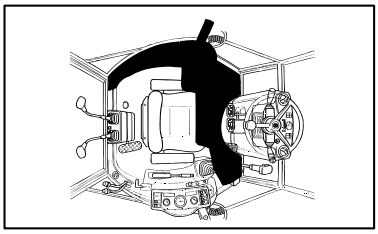

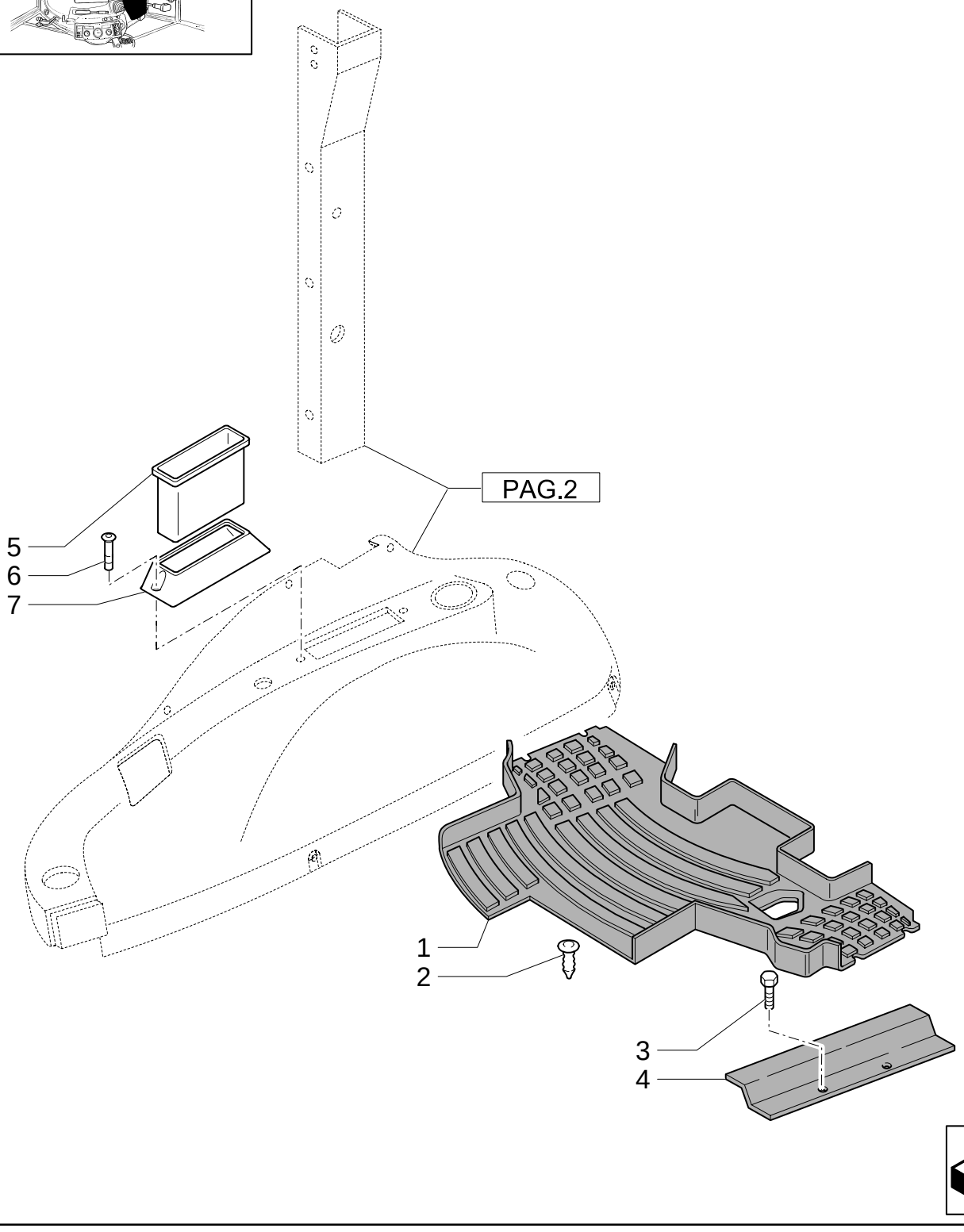

CAB / SOFT TRIM (POWER SHIFT)

REF	FN	PART NUMBER	YR/SN	QTY	DESCRIPTION
1		85804867		1	MAT
2		14568887		2	BUTTON
3		14441521		5	SCREW M6X25
4		85805591		2	MOULDING, DOOR SILL
5		85801979		1	CONTAINER
6		13276617		2	SCREW
7		85801651		1	HOUSING

Mechanical Version

1.93.0/ 3	01	p1	11/05

CAB / SOFT TRIM

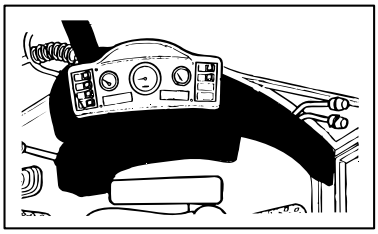

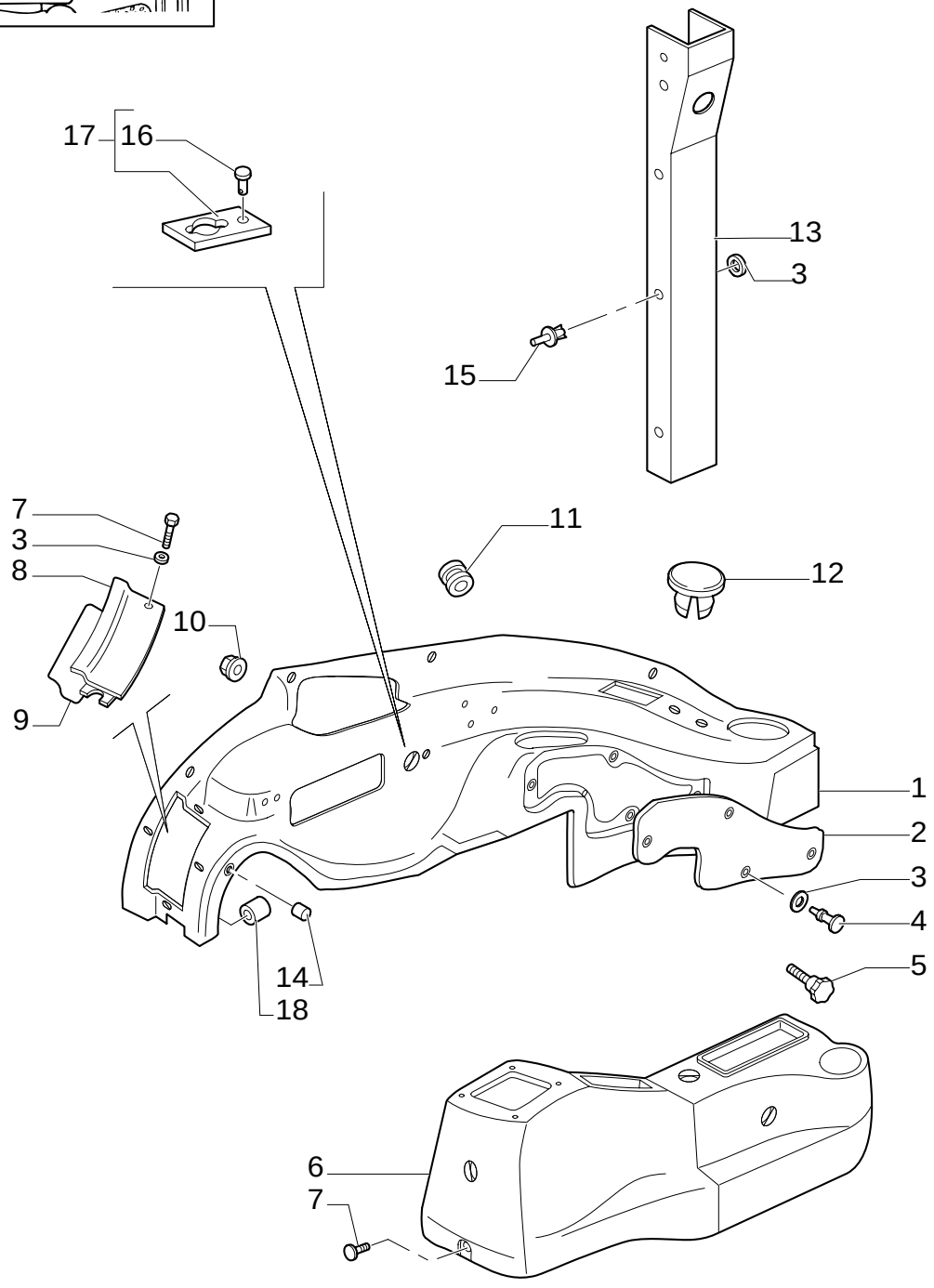

CAB / SOFT TRIM

REF	FN	PART NUMBER	YR/SN	QTY	DESCRIPTION
1	1, 2	85825277		1	SOFT TRIM RH
1	3, 2	87362092		1	SOFT TRIM
2		85801649		1	SOFT TRIM
3		85801991		AR	WASHER
4		13311217		5	SCREW M5X20
5		85805323		1	KNOB
6		87319785		1	SOFT TRIM
7		13311017		AR	SCREW M5X16
8		85825191		1	COVER
9		85806023		1	GASKET
10		14084814		5	NUT M8
11		10398980		1	RING, INSULATING 46X5
12		79111815		1	PLUG
13		85819285		1	SOFT TRIM RH
14		85805819		4	BUSHING, THREADED
15		F1NN94000Z36AA		6	STUD
16		10427200		1	RIVET
17		85827548		1	SEAT/SLOT
18		85804750		6	BUSHING, THREADED

(1) UP TO S/N XXX
(2) Includes 2, 8, 9, 14, 18
(3) FROM TO S/N XXX

Pilot Control Version

1.93.0/ 3	04	p1	11/05

CAB / SOFT TRIM

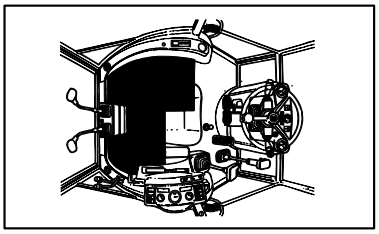

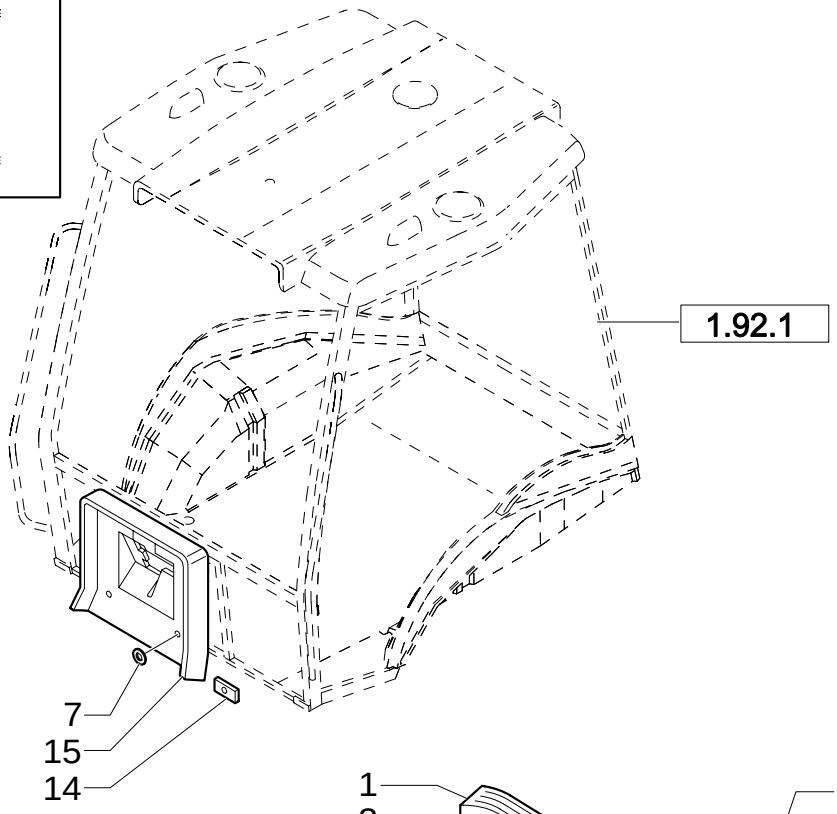

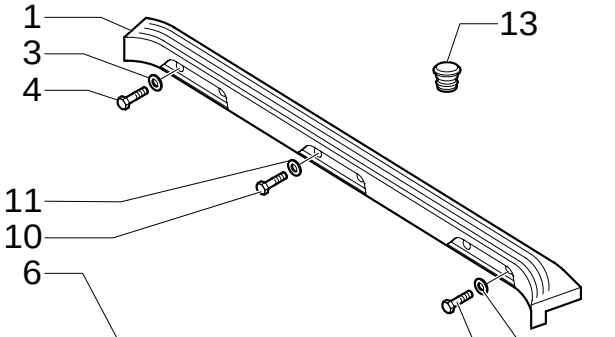

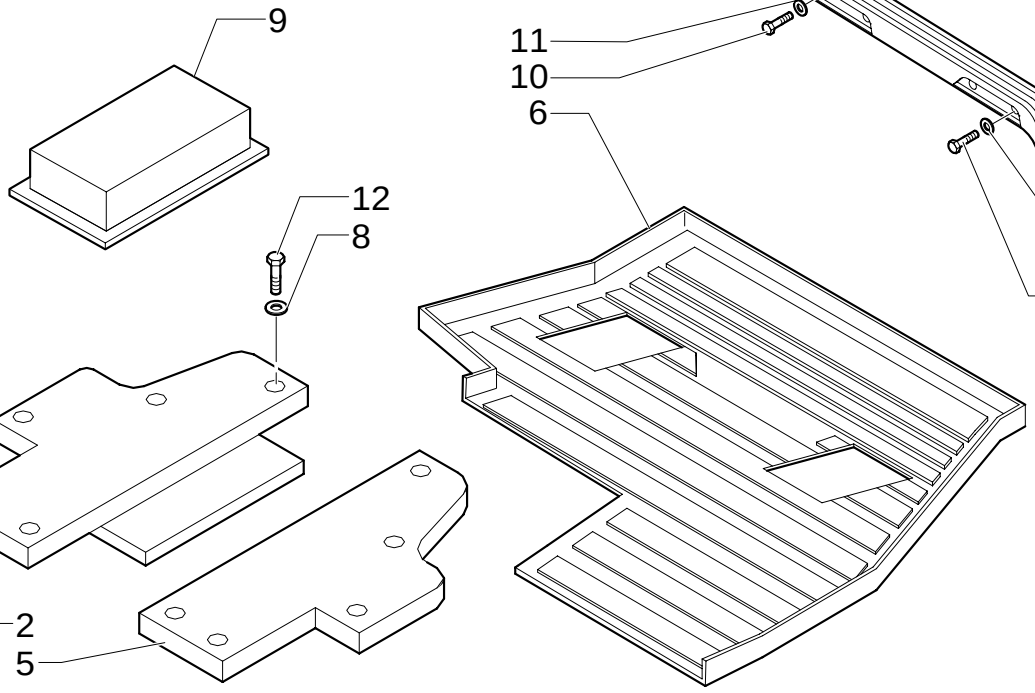

CAB / SOFT TRIM

REF	FN	PART NUMBER	YR/SN	QTY	DESCRIPTION
1		87410385		1	PANEL
2		87426550		1	COVER, TOP
3		10519604		4	WASHER
4		16043824		4	SCREW
5		87426546		1	COVER, TOP
6		87410108		1	MAT
7		79089592		1	WASHER
8		11193274		10	WASHER, LOCK
9		4999021		1	GASKET
11		12640621		4	WASHER
12		10902524		10	SCREW
13		82001909		1	PLUG
14		85812080		4	NUT
15		87408893		1	PANEL
10		10902624		4	SCREW

1.93.4	01	p1	02/05

REAR MIRROR- SUN SCREEN

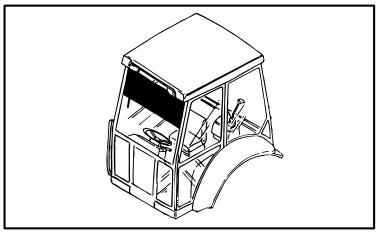

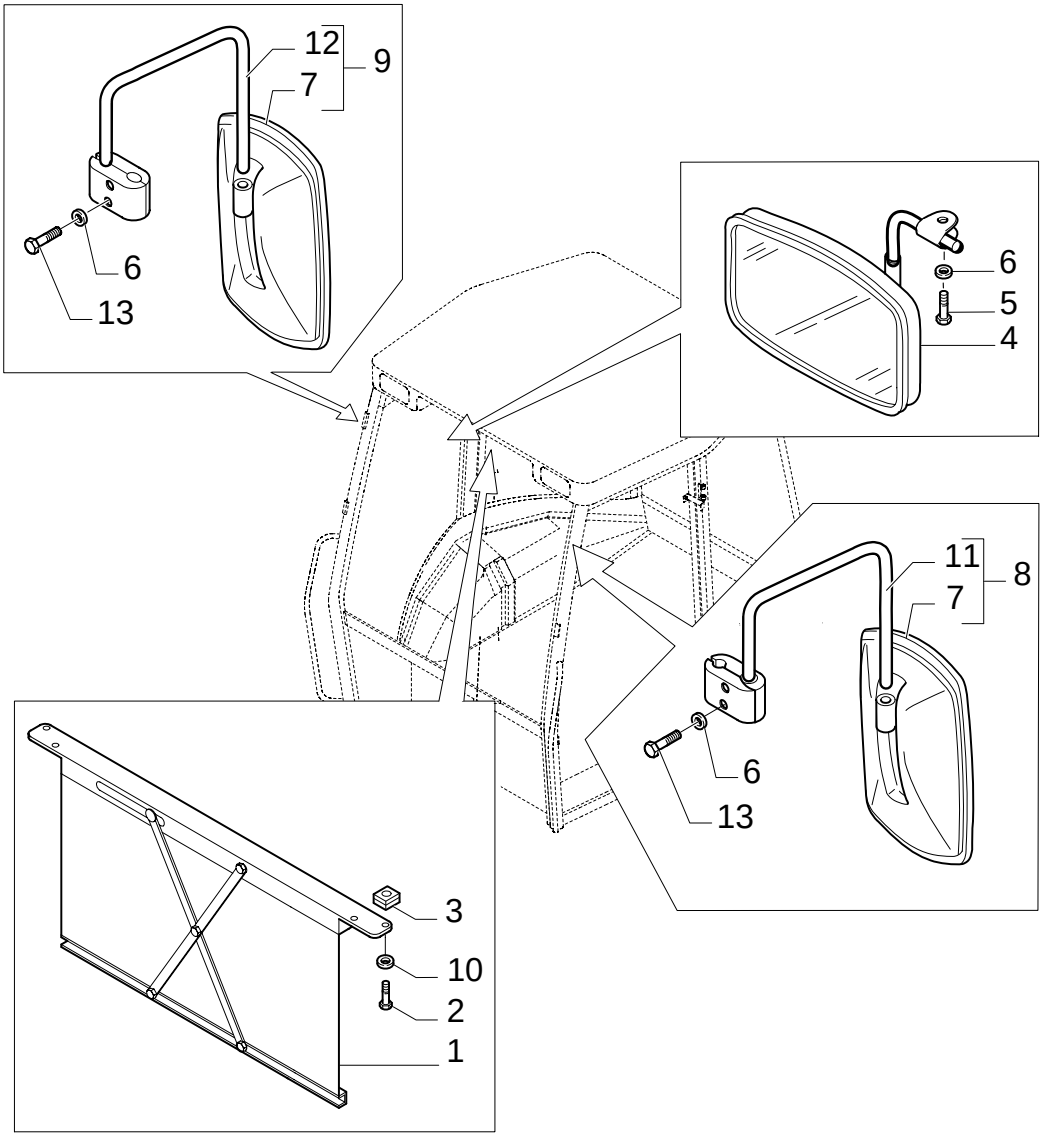

REAR MIRROR- SUN SCREEN

REF	FN	PART NUMBER	YR/SN	QTY	DESCRIPTION
1		5176441		1	SUN CURTAIN
2		14303324		4	SCREW
3		14197790		4	NUT
4		83995298		1	MIRROR, LH SX (CAB)
5		13313417		1	SCREW M6x25 (CAB)
6		11193274		4	WASHER, LOCK (ROPS)
7		85820138		2	MIRROR, REAR-VIEW
8		85820139		1	MIRROR, LH SX
9		85820136		1	MIRROR, RH DX
10		12642821		4	WASHER, LOCK
11		{85820140}		1	SX
12		{85820137}		1	DH
13		10902127		4	SCREW

1.93.5	01	p1	02/05

FRONT CONSOLE - ROPS (POWER SHUTTLE)

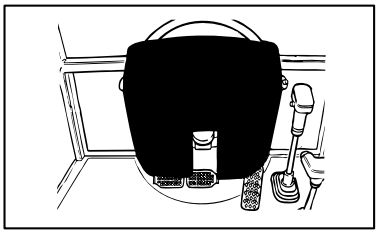

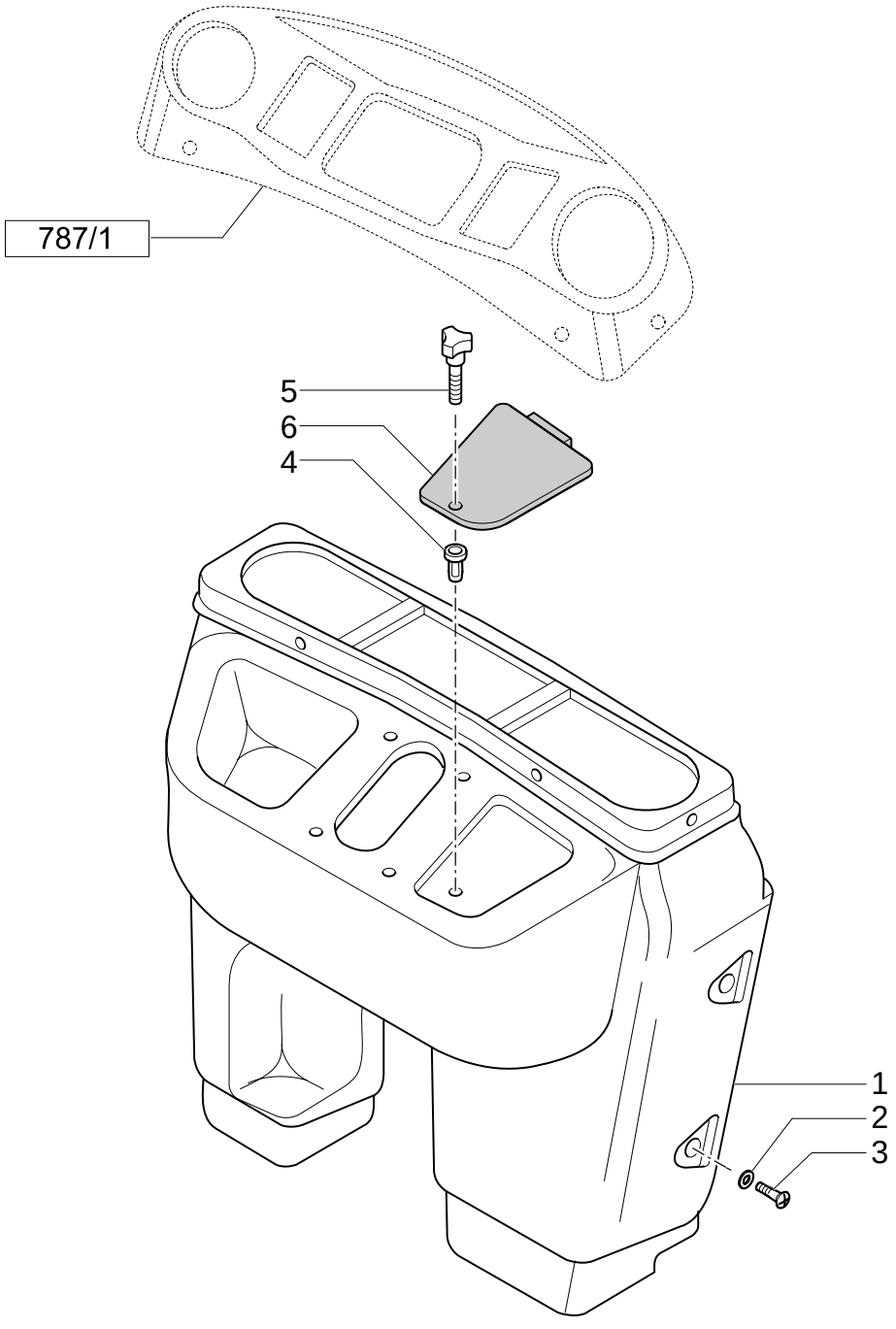

FRONT CONSOLE - ROPS (POWER SHUTTLE)

REF	FN	PART NUMBER	YR/SN	QTY	DESCRIPTION
1	1	85819407		1	PANEL, DASH ASSY ROPS
2		79089592		2	WASHER D=24
3		79105220		2	SCREW M6X20
4		85804750		4	BUSHING, THREADED M5
5		85805323		1	KNOB M5
6		85806089		1	COVER

(1) Includes 4 To 6

1.93.5/ 1	01	p1	02/05

CAB / PANEL DASH

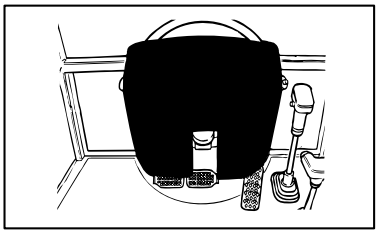

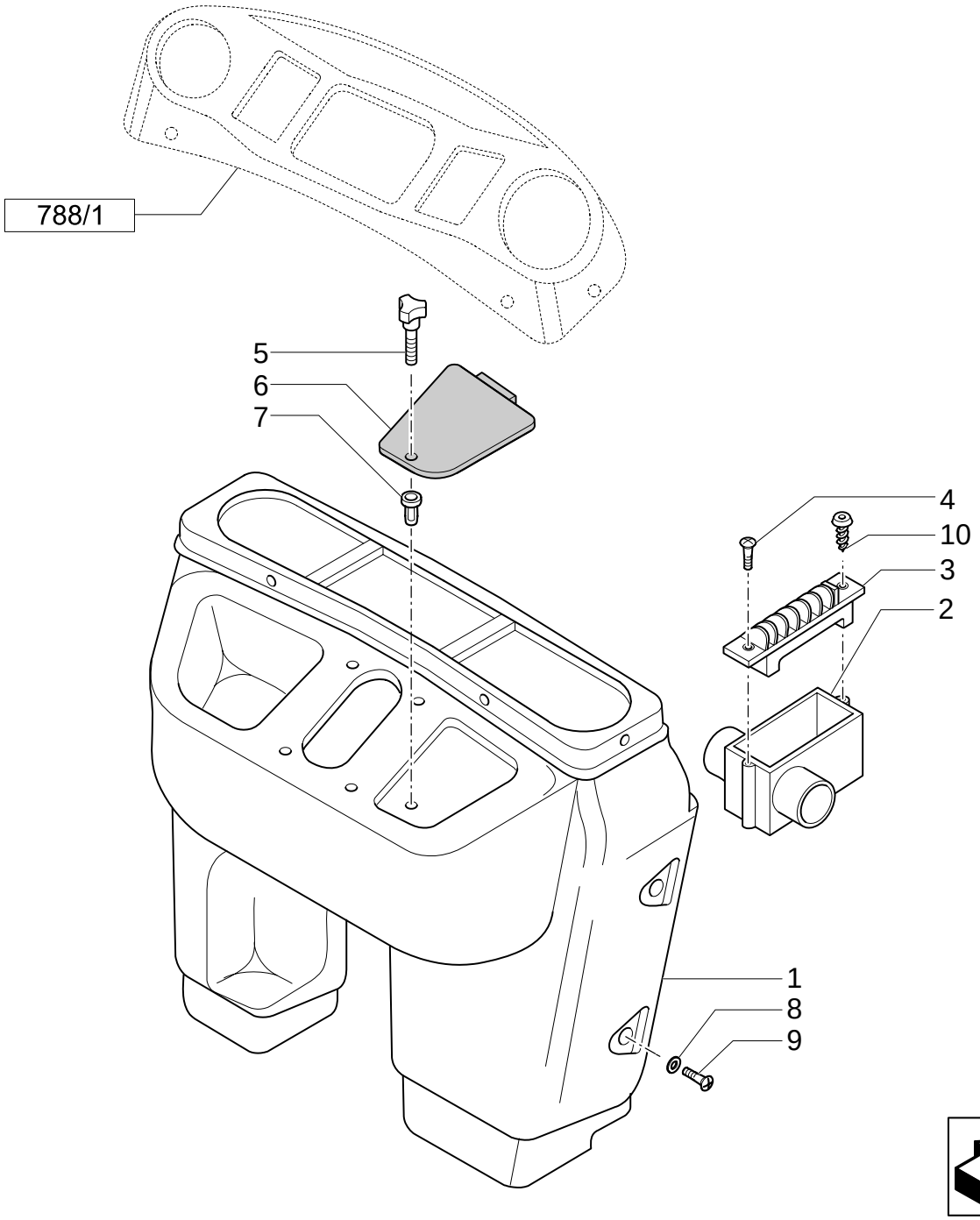

CAB / PANEL DASH

REF	FN	PART NUMBER	YR/SN	QTY	DESCRIPTION
1	1	85819289		1	PANEL, DASH ASSY CAB
2		85819567		2	CONVEYOR CAB
3		85819454		2	DIFFUSER CAB
4		14440327		4	SCREW CAB M4X20
5		85805323		1	KNOB M5
6		85806089		1	COVER
7		85804750		5	BUSHING, THREADED M5
8		79089592		AR	WASHER D=24
9		79105220		AR	SCREW M6X20
10		14568887		4	BUTTON CAB 8X20

(1) Includes 2 To 6

1.93.5/ 1	02	p1	02/05

CAB / PANEL DASH

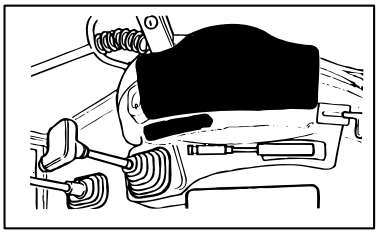

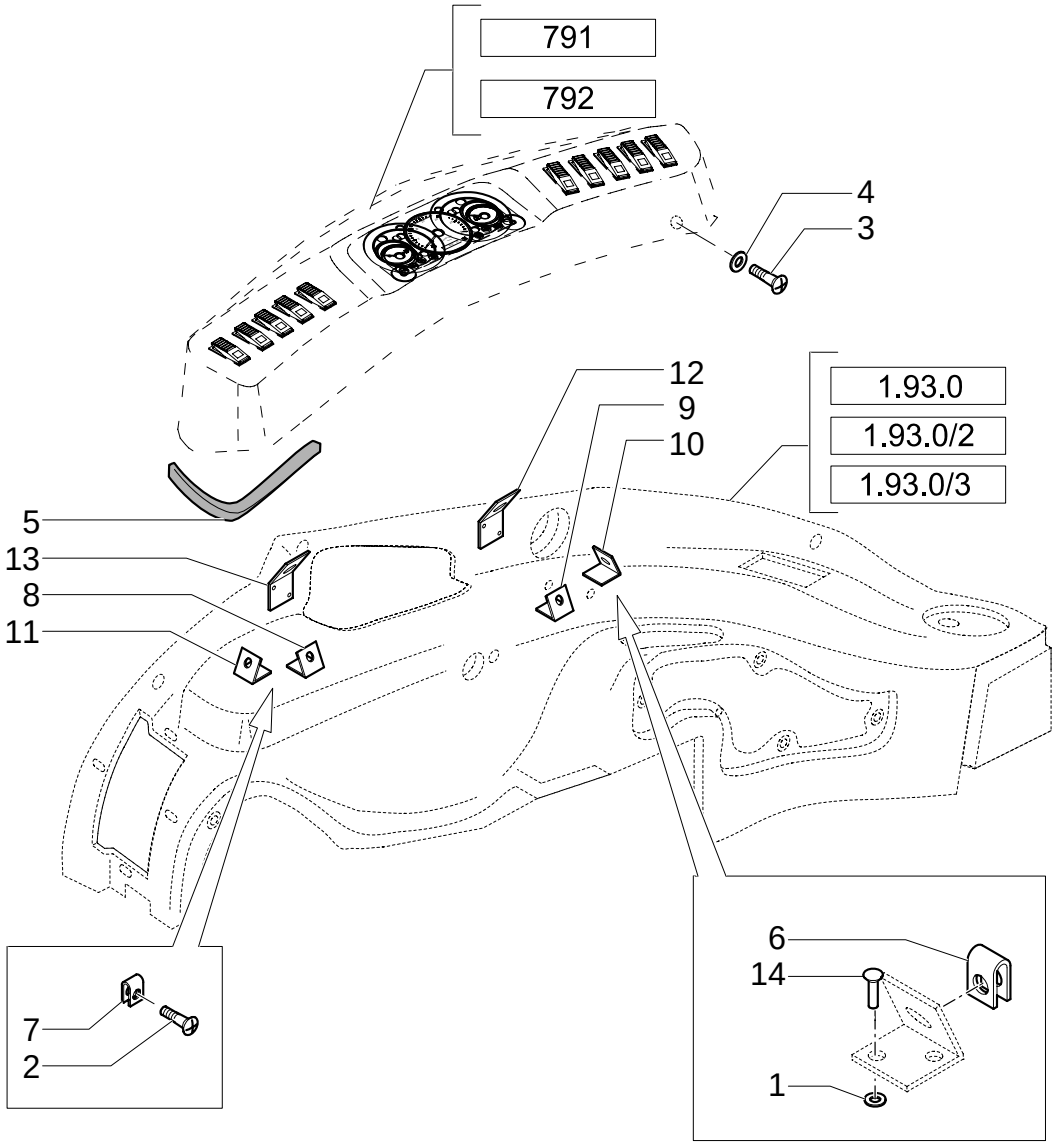

CAB / PANEL DASH

REF	FN	PART NUMBER	YR/SN	QTY	DESCRIPTION
1		12642804		1	WASHER
2		15693301		2	SCREW CAB
3		15693507		AR	SCREW
4		85801991		AR	WASHER
5		85824393		1	SEAL, RUBBER
6		14189176		6	COLLAR, RETAINER
7		14372671		2	NUT CAB
8		85802141		1	COLLAR, RETAINER
9		85802142		1	COLLAR, RETAINER
10		85802143		1	COLLAR, RETAINER
11		85802144		1	COLLAR, RETAINER
12		85802145		1	COLLAR, RETAINER
13		85802146		1	COLLAR, RETAINER
14		14642192		12	RIVET

1.93.5/ 3	01	p1	11/05

CAB / PANEL DASH

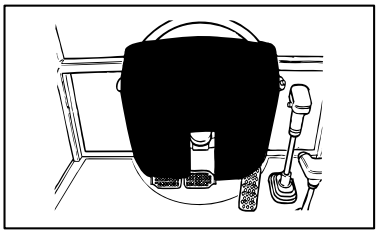

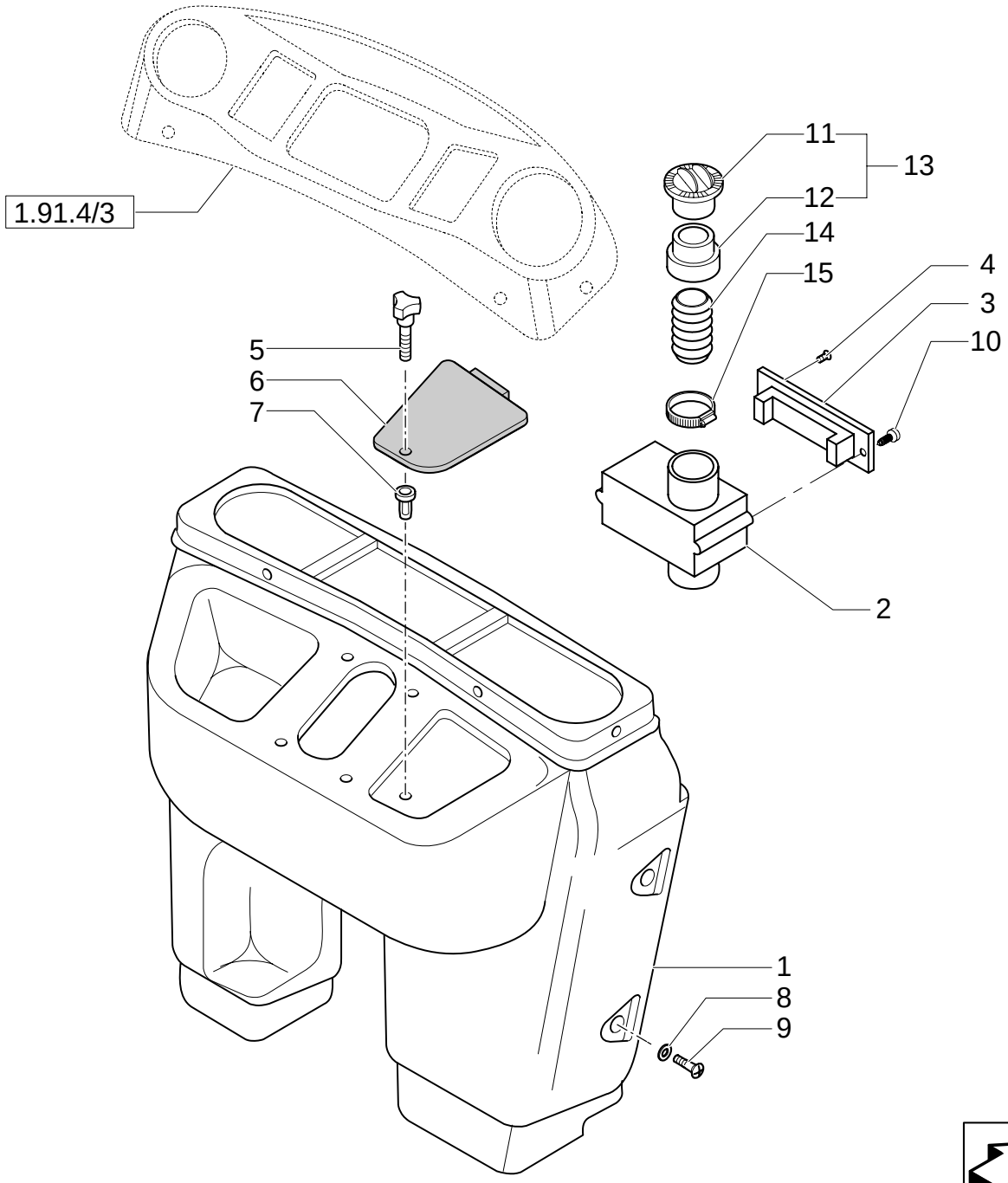

CAB / PANEL DASH

REF	FN	PART NUMBER	YR/SN	QTY	DESCRIPTION
1	1	85819291		1	PANEL, DASH ASSY
2		85819567		2	CONVEYOR
3		85819454		2	DIFFUSER
4		14440327		4	SCREW M4X20
5		85805323		1	KNOB M5
6		85806089		1	COVER
7		85804750		5	BUSHING, THREADED M5
8		79089592		AR	WASHER D=24
9		79105220		AR	SCREW M6X20
10		14568887		4	BUTTON 8X20
11		85819544		2	DIFFUSER
12	2	85819545		2	REDUCER
12	2	87358811		2	REDUCER
13	3	85819543		2	DIFFUSER
13	3	87358807		2	DIFFUSER
14		85819592		2	SLEEVE
15		13000990		2	CLIP, HOSE

(1) Includes 2 To 7
(2) UP TO S/N XXX
(3) FROM TO S/N XXX

1.94.0	01	p1	02/05

CAB/ CANOPY

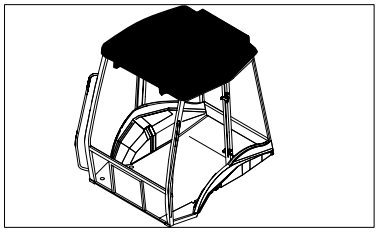

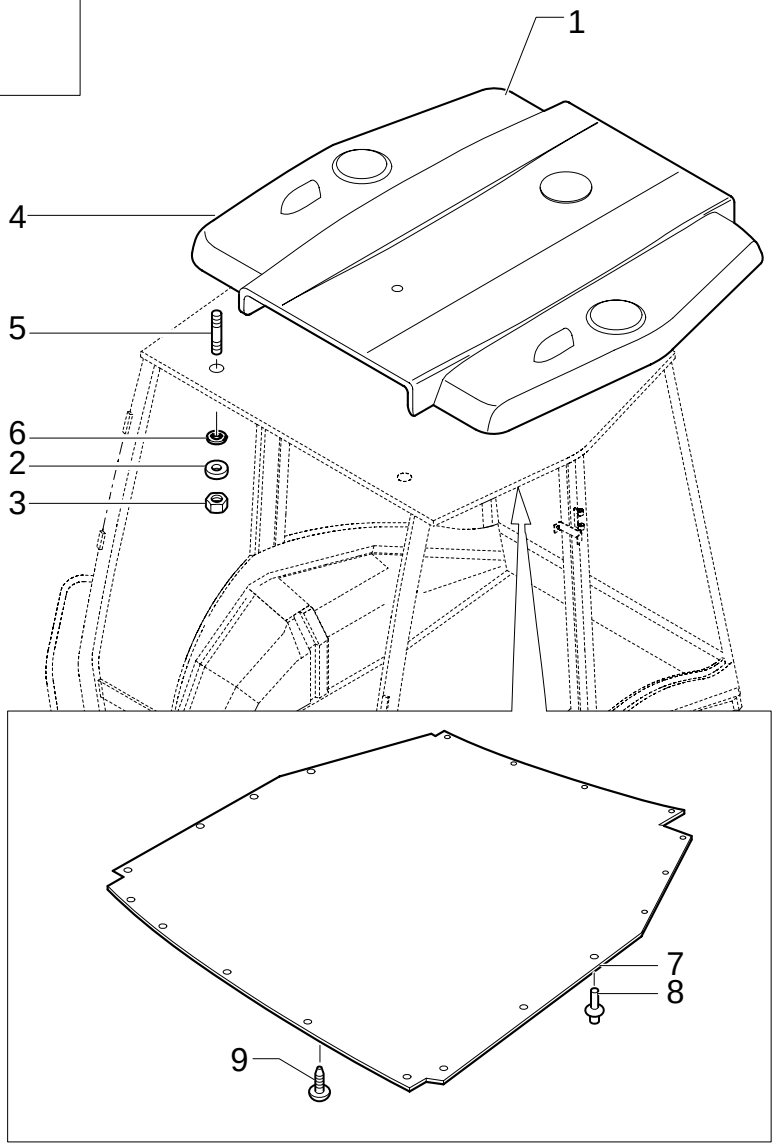

CAB/ CANOPY

REF	FN	PART NUMBER	YR/SN	QTY	DESCRIPTION
1		85817287		1	STRIP-GASKET CAB
2		13311217		5	SCREW
3		85801991		5	WASHER

1.94.2	03	p1	08/05

HEATER WATER HOSES

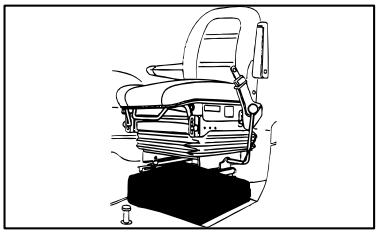

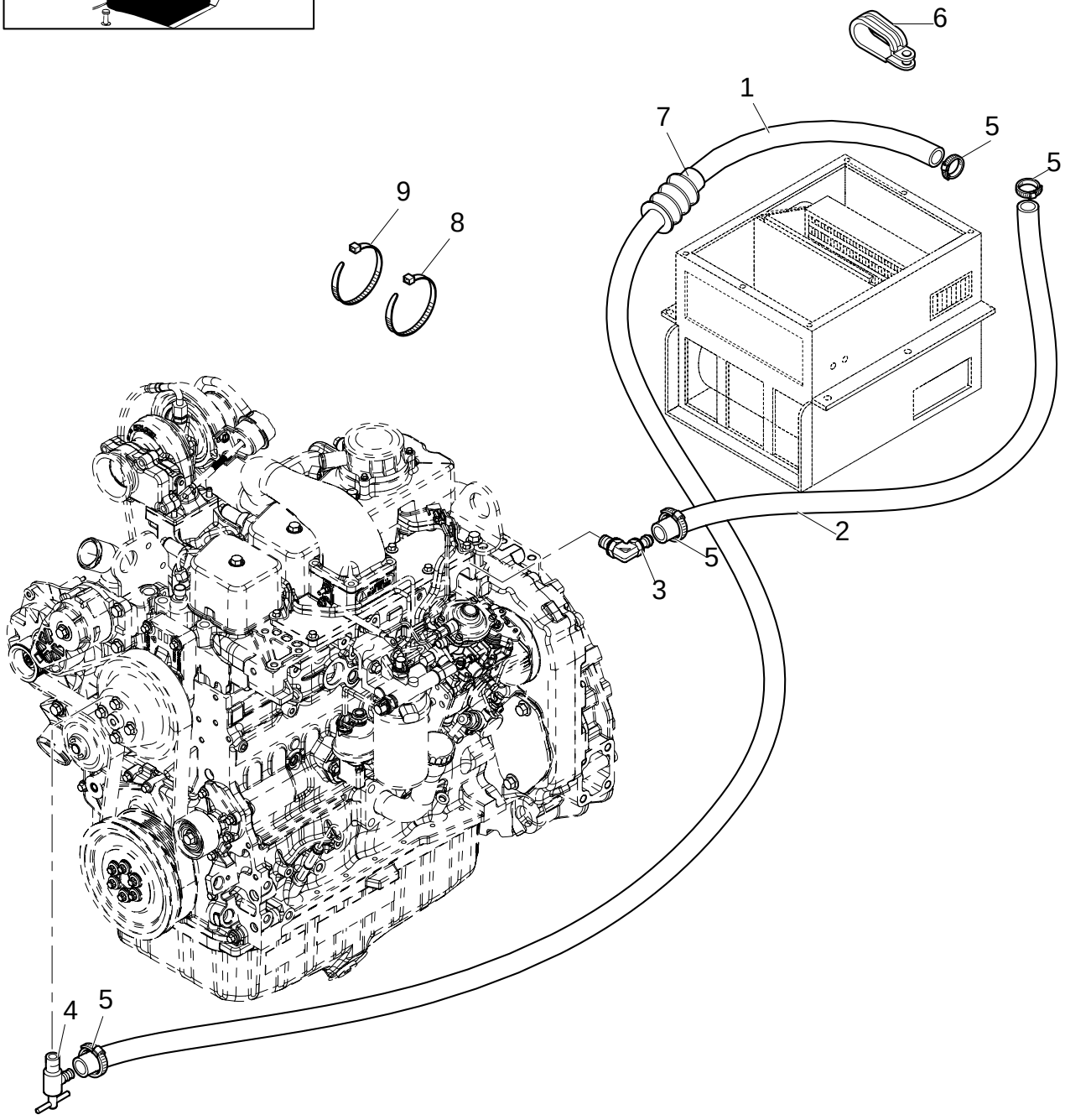

HEATER WATER HOSES

REF	FN	PART NUMBER	YR/SN	QTY	DESCRIPTION
1		87403646		1	HOSE, FLEXIBLE
2		87403647		1	HOSE, FLEXIBLE
3		86637716		1	STEM
4		47048896		1	VALVE, HYDRAULIC
5		85803079		4	CLAMP
6		47048653		2	COLLAR
7		87345955		3	SHIELD
8		47048448		1	COLLAR
9		47048451		3	COLLAR

Up To S/N XXX

1.94.2/ 1	03	p1	08/05

HEATER WATER HOSES

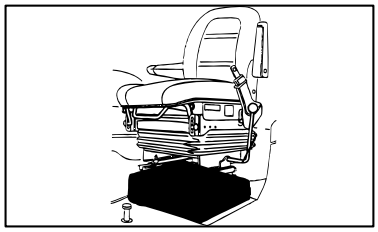

HEATER WATER HOSES

REF	FN	PART NUMBER	YR/SN	QTY	DESCRIPTION
1		87324991		1	HOSE, FLEXIBLE
2		87324999		1	HOSE, FLEXIBLE
3		86637716		1	STEM
4		47048896		1	VALVE, HYDRAULIC
5		85803079		4	CLAMP
6		85802336		2	COLLAR, RETAINER
7		87345955		3	SHIELD
8		47044673		2	WASHER
9		47048451		3	COLLAR
10		11112221		2	SCREW

Pilot Control Version, From S/N XXX

1.95.0	01	p1	11/05

CAB-SAFETY FRAME / BRAKE PEDAL

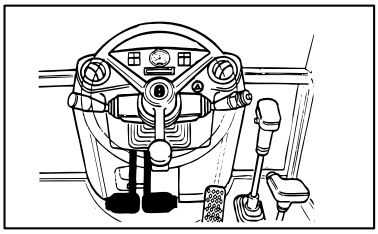

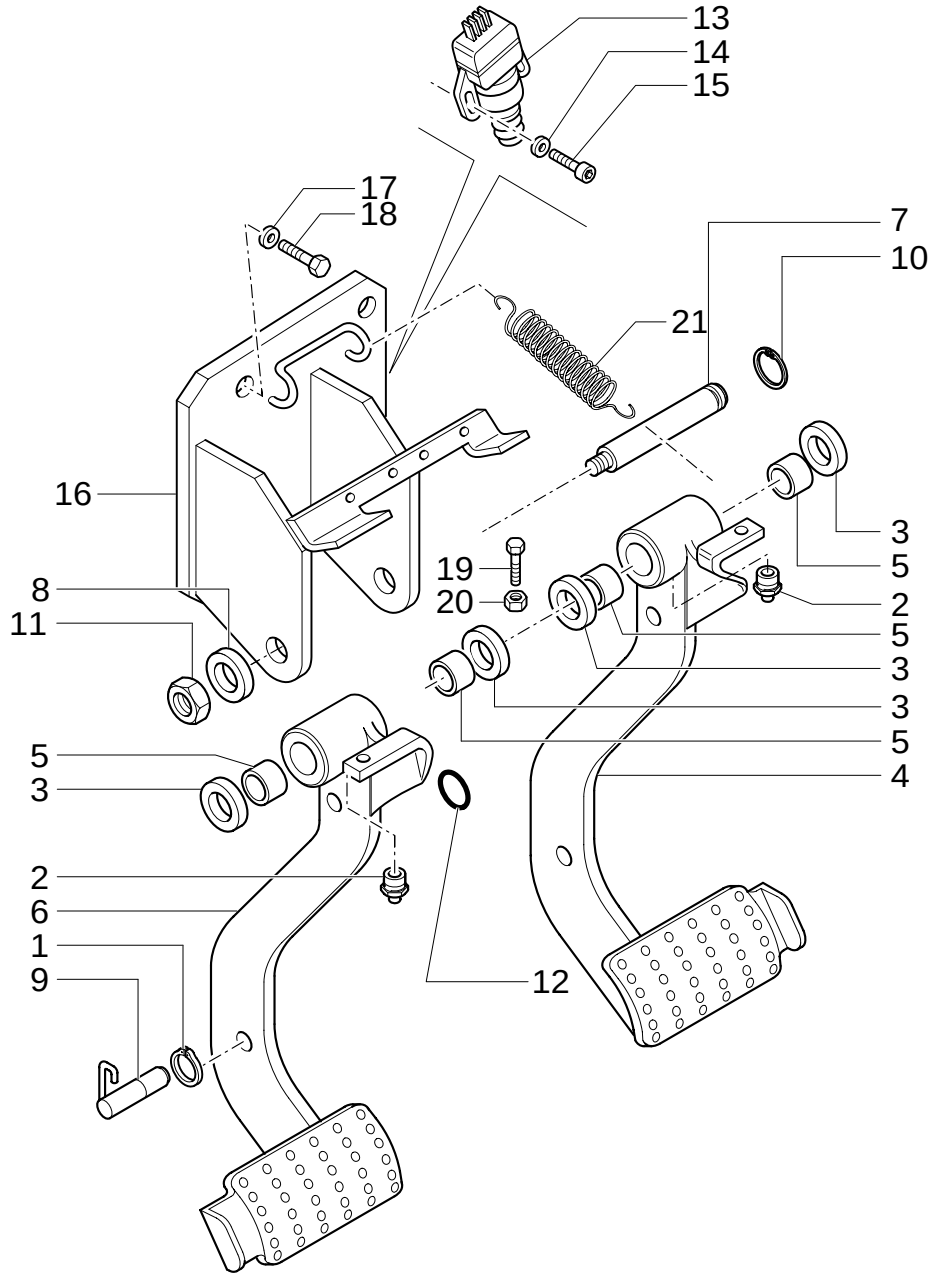

CAB-SAFETY FRAME / BRAKE PEDAL

REF	FN	PART NUMBER	YR/SN	QTY	DESCRIPTION
1		11088176		1	RING, LOCKING
2		13407214		2	NIPPLE, LUBE
3		5148062		4	WASHER
4		85805285		1	PEDAL RH
5		4983992		4	BEARING ASSY
6		85805283		1	PEDAL LH
7		85801860		1	PIN
8		10517274		1	WASHER, LOCK
9		87316455		1	BLOCK
10		11067376		1	RING, LOCKING
11		12164114		1	NUT
12		13399076		2	RING
13		82026949		2	SWITCH Brake
14		12642821		4	WASHER, LOCK W/CAB
15		14303324		4	SCREW M4 x 20 W/CAB
16		85805277		1	SUPPORT
17		11190574		4	WASHER, LOCK
19		16043921		2	SCREW M8 x 1,25 x 35
20		11701621		2	NUT M8
21		5153180		1	SPRING
18		15970524		4	SCREW

1.95.0	02	p1	11/05

CAB-SAFETY FRAME / BRAKE PEDAL

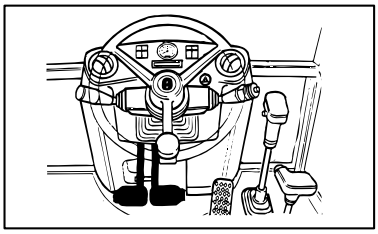

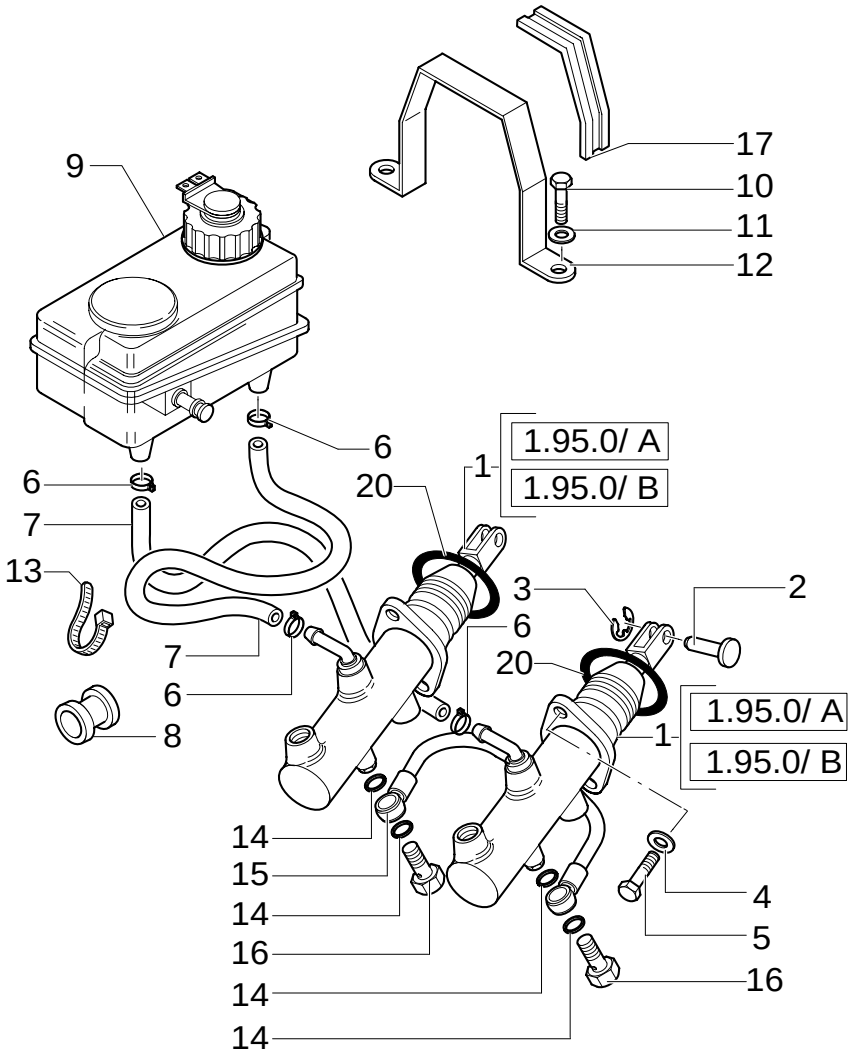

CAB-SAFETY FRAME / BRAKE PEDAL

REF	FN	PART NUMBER	YR/SN	QTY	DESCRIPTION
1	1	85805257		2	MASTER CYLINDER
2		5155381		2	PIN
3		11064176		2	CLIP
4	2	11193874		4	WASHER, LOCK
5	3	14306324		4	SCREW M8X20
6		13423271		4	CLIP, HOSE
7		87302705		2	SHEATH, FLEXIBLE
8		85801941		2	RING, RUBBER
9	4	82003369		1	TANK
11		11193274		2	WASHER, LOCK M6X15X1.2
12		85801092		1	BRACKET
13		14560187		1	COLLAR
14		4858607		8	GASKET
15		5155701		1	TUBE, RIGID
16		5155703		4	CONNECTOR, HYD.
17		85801093		1	STRIP-GASKET
19		85824114		2	PUMP, HYDRAULIC
20		13399076		2	RING
21	5	85806176		AR	PLUG
10		10902624		2	SCREW

(1) Only for LB90.B - LB95.B - LB110.B
(2) Only for ROPS
(3) Only for CAB
(4) Brake Fluid, Cap is P/N 85806176
(5) Not Illustrated

CAB-SAFETY FRAME / BRAKE PEDAL

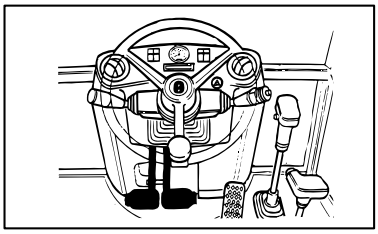

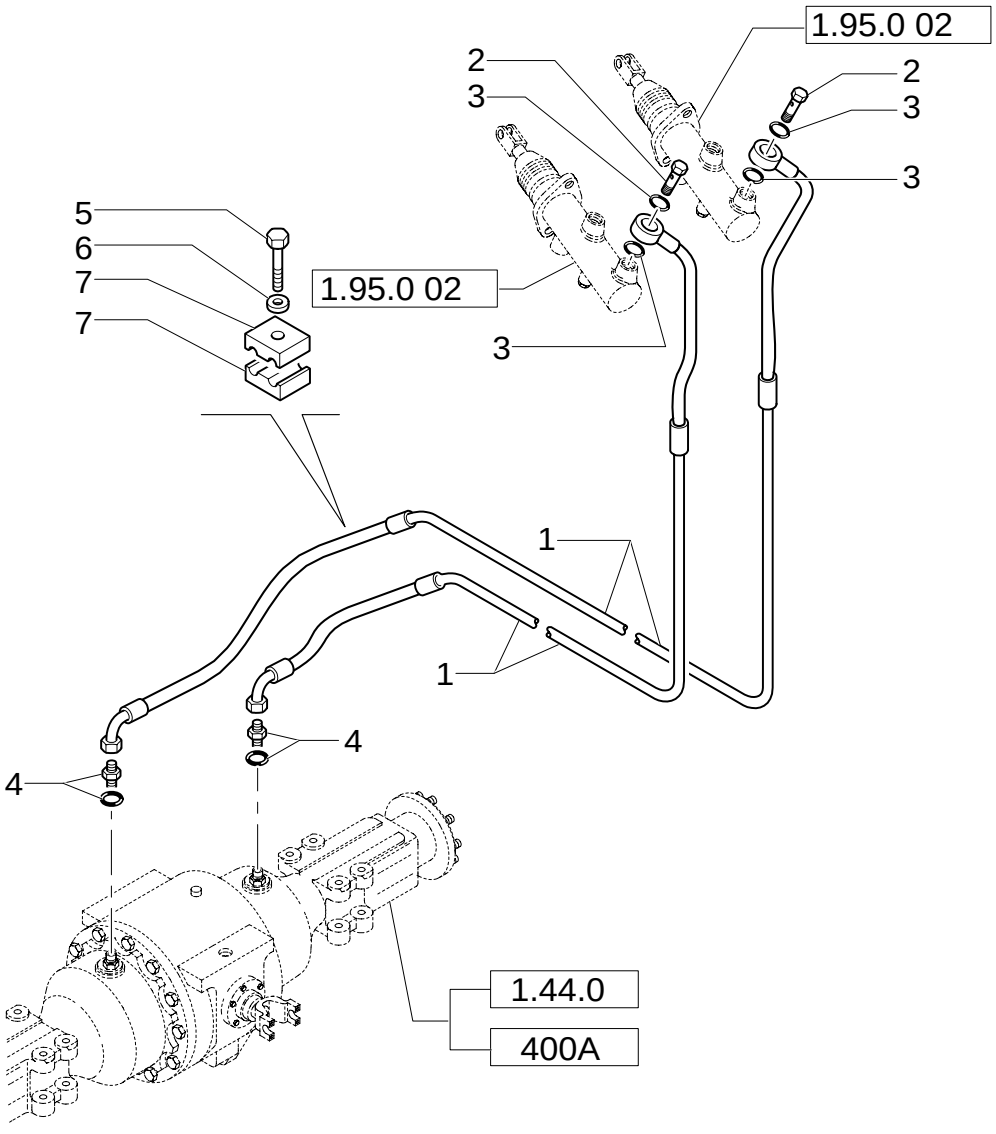

CAB-SAFETY FRAME / BRAKE PEDAL

REF	FN	PART NUMBER	YR/SN	QTY	DESCRIPTION
1		85819177		2	TUBE, RIGID
2		5155703		2	CONNECTOR, HYD.
3		4858607		4	GASKET
4		85803312		2	CONNECTOR, HYD.
5		15212721		2	SCREW Hex, M6 x 40 8.8, Full Thd
6		14447021		2	WASHER
7		85805548		4	CLIP

CAB- BRAKE PEDAL

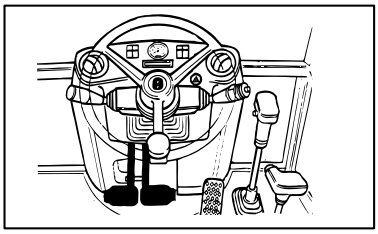

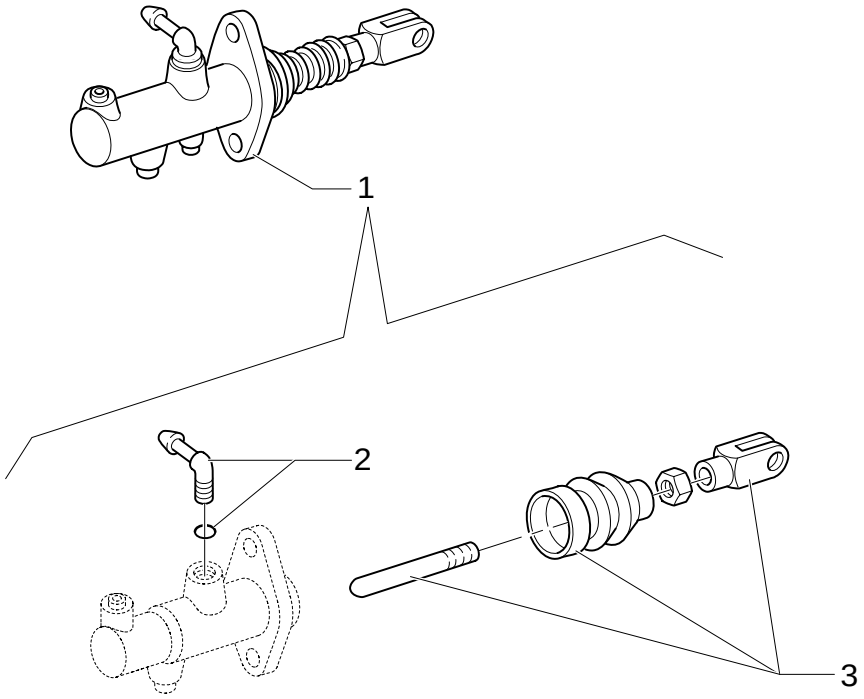

CAB- BRAKE PEDAL

REF	FN	PART NUMBER	YR/SN	QTY	DESCRIPTION
1		85824114		1	PUMP, HYDRAULIC ASSY
2		85824160		1	KIT
3		85824161		1	KIT

CAB-SAFETY FRAME / HAND BRAKE (EUR)

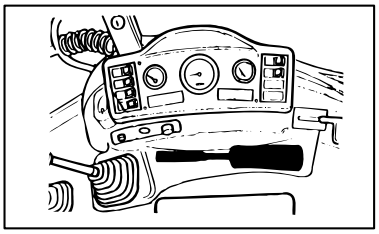

KIT KIT KIT 19= ●

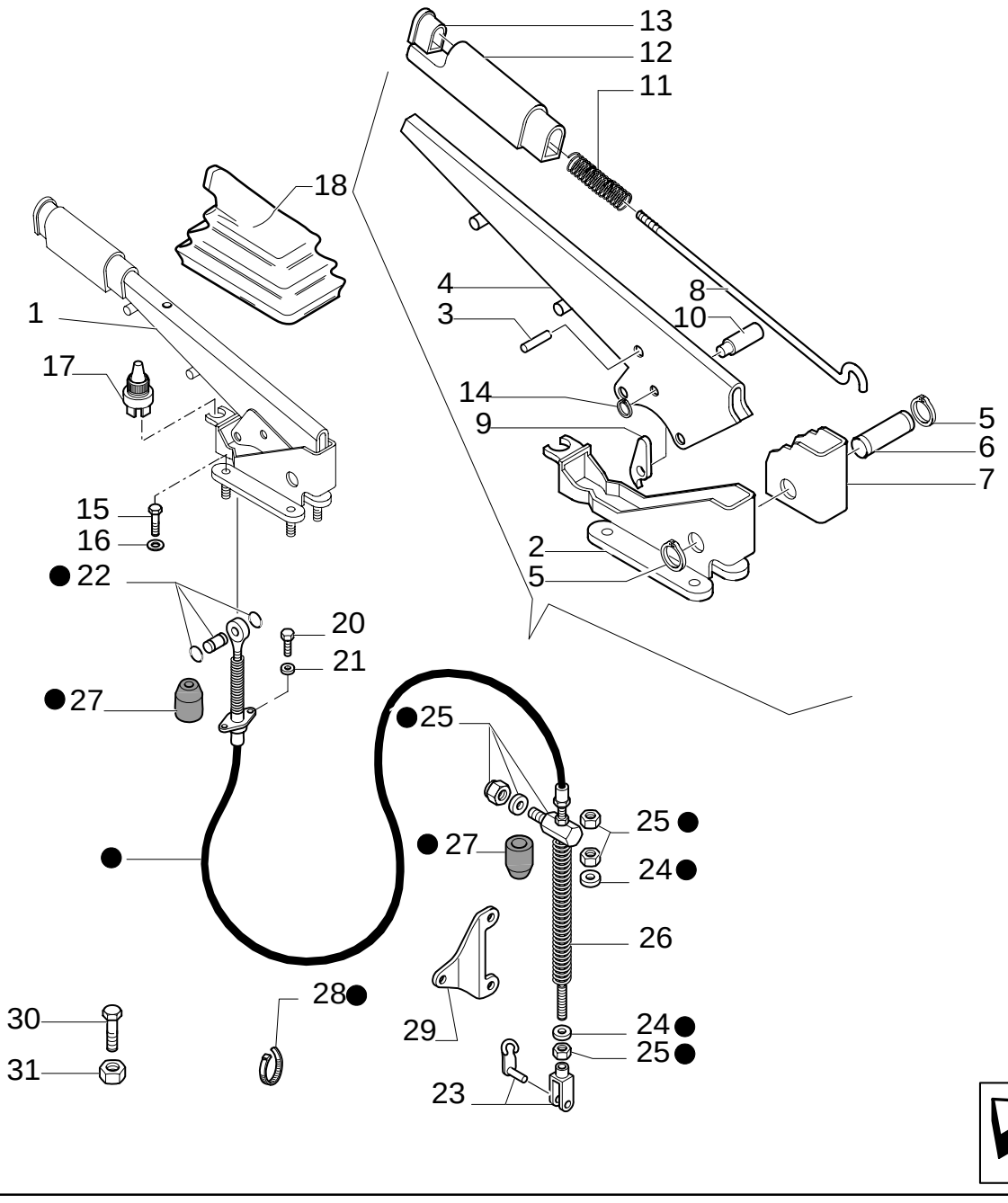

CAB-SAFETY FRAME / HAND BRAKE (EUR)

REF	FN	PART NUMBER	YR/SN	QTY	DESCRIPTION
1		85827832		1	LEVER
2		85805441		1	SUPPORT
3		4985127		1	RIVET
4		85805440		1	LEVER
5		13400776		2	RING, LOCKING
6		4988275		1	PIN
7		5110153		1	TOOTHED SECTOR
8		85827833		1	DIPSTICK
9		5110155		1	PAWL
10		5131437		1	PIN
11		5105729		1	SPRING
12		86021837		1	HANDLE GRIP
13		4985122		1	BUTTON
14		11065476		1	RING, SNAP
15		14306424		4	SCREW M8X25
16		11197874		4	WASHER, LOCK 8X16X1.4
17		85816770		1	SWITCH, ASSY
18		5106733		1	BOOT
19		85815537		1	CABLE
20		10978024		2	SCREW M5X20
21		10615371		2	WASHER, LOCK
22		85815550		1	CONNECTOR
23		85815556		1	CONNECTOR
24		85815555		1	WASHER 22X10.2X2
25		85815552		1	JOINT, UNIVERSAL
26		85821173		1	SPRING
27		85821172		2	GASKET
28		85815549		1	COLLAR
29		85805251		1	SUPPORT
30		13272319		1	SCREW
31		10794011		1	NUT

1.95.5/ C	01	p1	02/05

POWER STEERING MOTOR

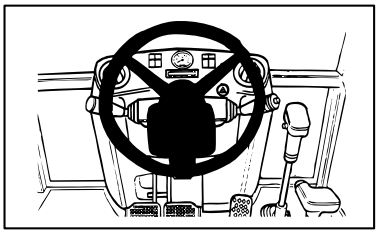

KIT KIT KIT 2 = ●

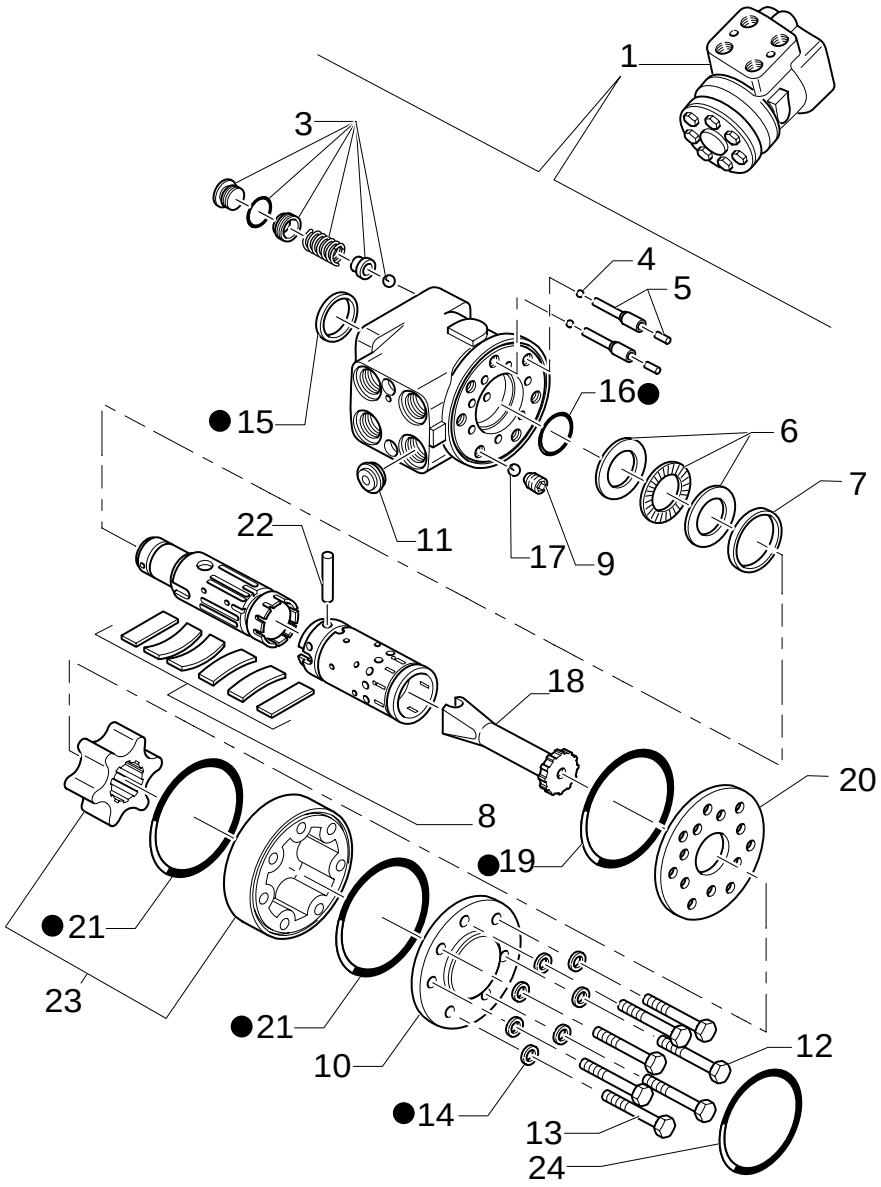

POWER STEERING MOTOR

REF	FN	PART NUMBER	YR/SN	QTY	DESCRIPTION
1		85804837		1	STEERING HYDRAULIC ASSY
2		85808390		1	KIT
3		9970370		2	VALVE, HYDRAULIC
4		85808385		2	BALL
5		9961829		2	PIN
6		9961810		1	KIT
7		85812133		1	RING
8		9960181		1	SET OF PARTS
9		85812132		1	BUSHING, THREADED
10		85812134		1	COVER
11		85808386		1	VALVE, HYDRAULIC
12		85808389		6	SCREW
13		85808388		1	SCREW W/PIN
14		85812112		7	WASHER
15		85812109		1	O-RING
16		85808380		1	O-RING
17		85812131		1	BALL
18		85808381		1	SHAFT
19		85812110		1	O-RING
20		85808382		1	PLATE
21		85812111		2	O-RING
22		9932887		1	PIN
23		85808387		1	KIT
24		85808384		1	PLAQUE, DATA

Up To S/N XXX

POWER STEERING MOTOR

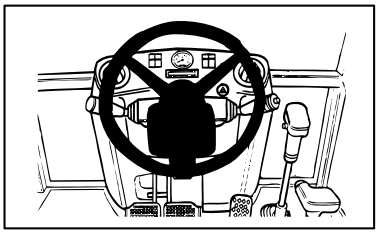

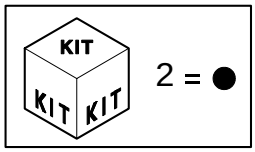

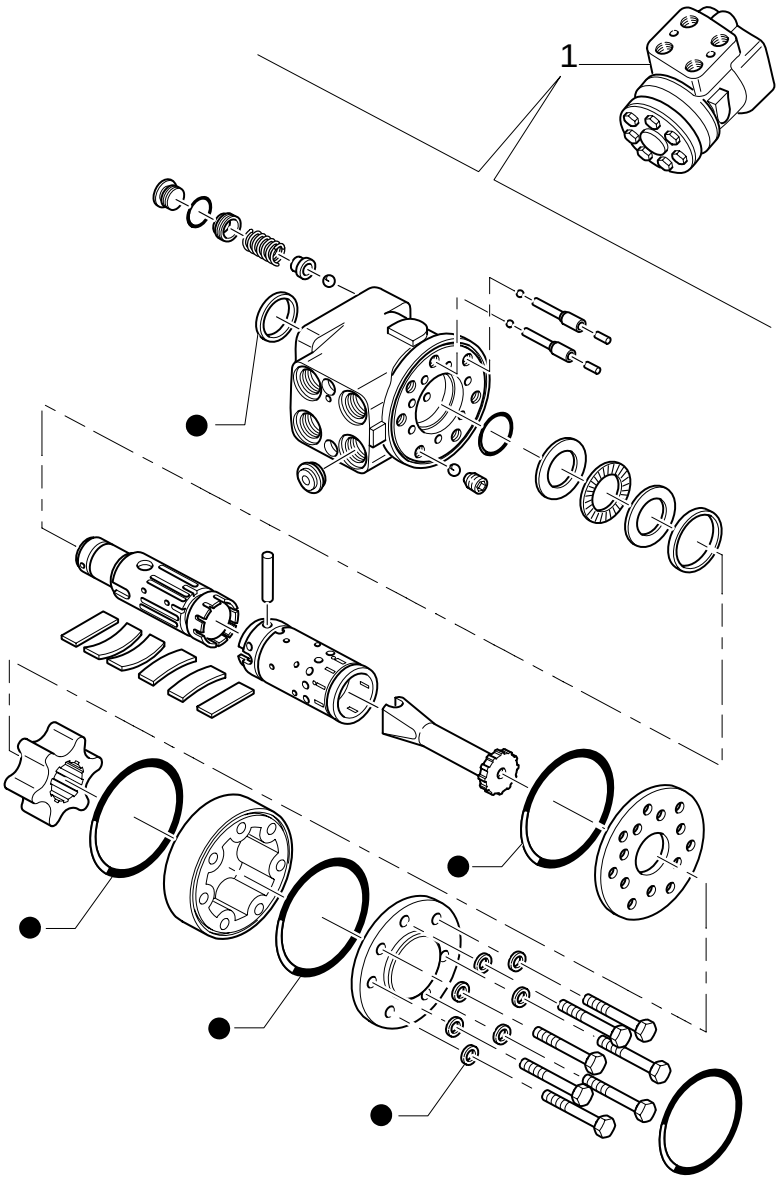

POWER STEERING MOTOR

REF	FN	PART NUMBER	YR/SN	QTY	DESCRIPTION
1		87360432		1	STEERING HYDRAULIC ASSY
2		85808390		1	KIT

From To S/N XXX

1.95.5/ 4	01	p1	12/05

POWER STEERING MOTOR, WHEEL & COLUMN (4WS)

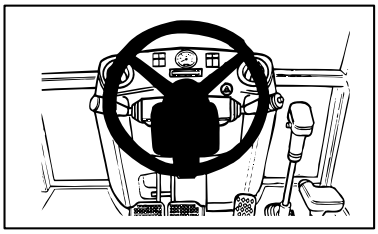

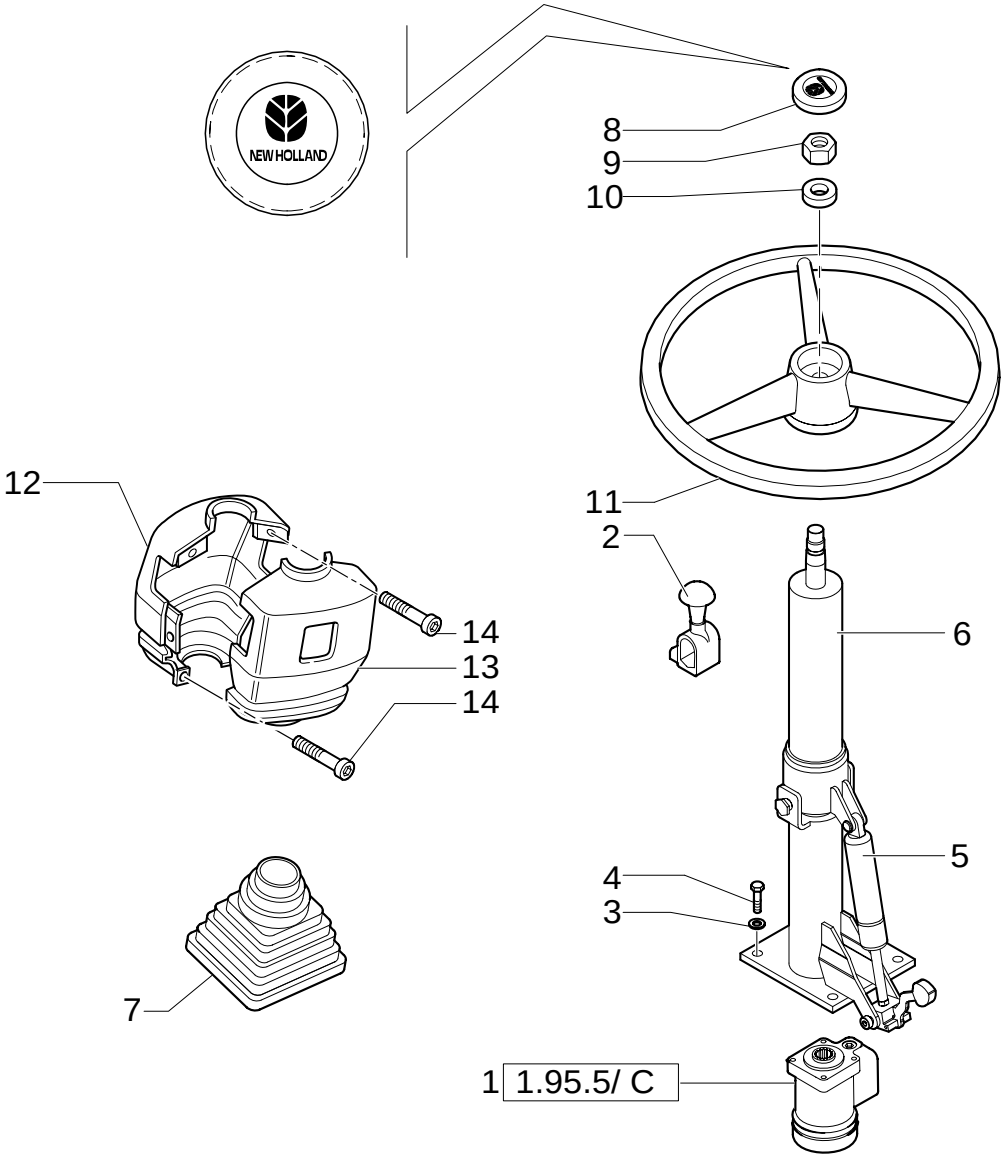

POWER STEERING MOTOR, WHEEL & COLUMN (4WS)

REF	FN	PART NUMBER	YR/SN	QTY	DESCRIPTION
1	1	85804837		1	STEERING HYDRAULIC
1	2	87360432		1	STEERING HYDRAULIC
2		85801879		1	KNOB
3		10615774		4	WASHER, LOCK 10x18x2
4	1	85804705		4	SCREW 3/8"-16x7/8"
4	2	14432334		4	SCREW M10x22
5	1, 3	85824197		1	GAS STRUT
5	2	87328136		1	SHOCK ABSORBER
6	1	85805545		1	STEERING COLUMN
6	2	87324867		1	STEERING COLUMN
7		85801976		1	BELLOWS
8		85820105		1	COVER, CAP
9		10791414		1	NUT M16x1.5
10		4998760		1	WASHER M16x1.5
11		5148946		1	STEERING WHEEL
12		85805774		1	SOFT TRIM
13		85805773		1	SOFT TRIM
14		14303324		4	SCREW
15		11190574		4	WASHER, LOCK 10x20x2.3
16	3	85824197		1	GAS STRUT

(1) UP TO S/N XXX
(2) FROM TO S/N XXX
(3) Only for 85805545

1.96.0/ 2	01	p1	02/05

FOWARD/REVERSE & MULTI-PURPOSE LEVER, CAB (POWER-SHIFT)

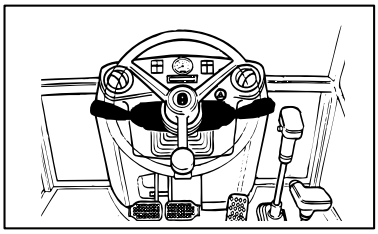

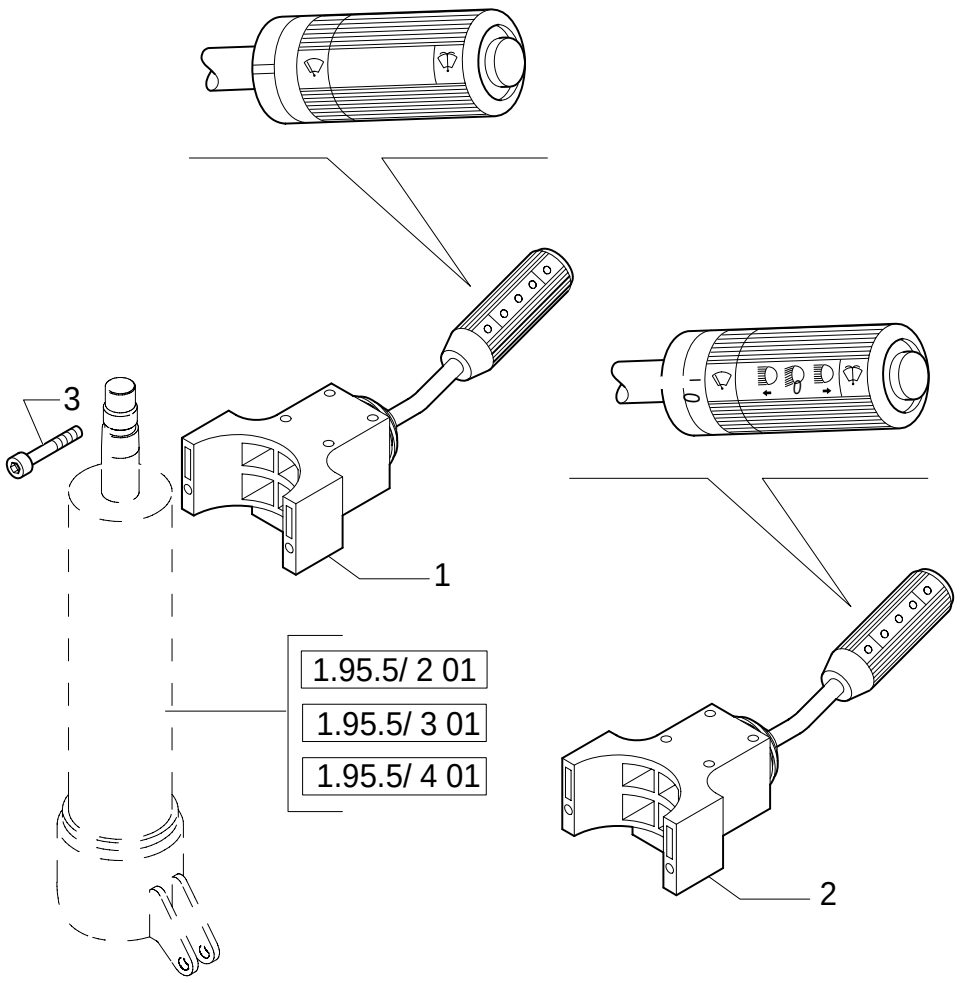

FOWARD/REVERSE & MULTI-PURPOSE LEVER, CAB (POWER-SHIFT)

REF	FN	PART NUMBER	YR/SN	QTY	DESCRIPTION
1		85801939		1	SHUNTER
2		85828252		1	SWITCH, ASSY
3		14304724		2	SCREW M5X35

1.96.2	01	p1	11/05

STABILIZER CONTROL

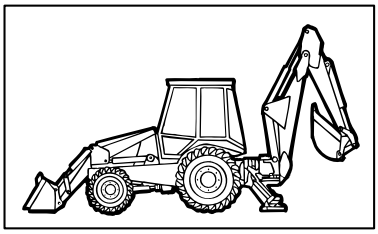

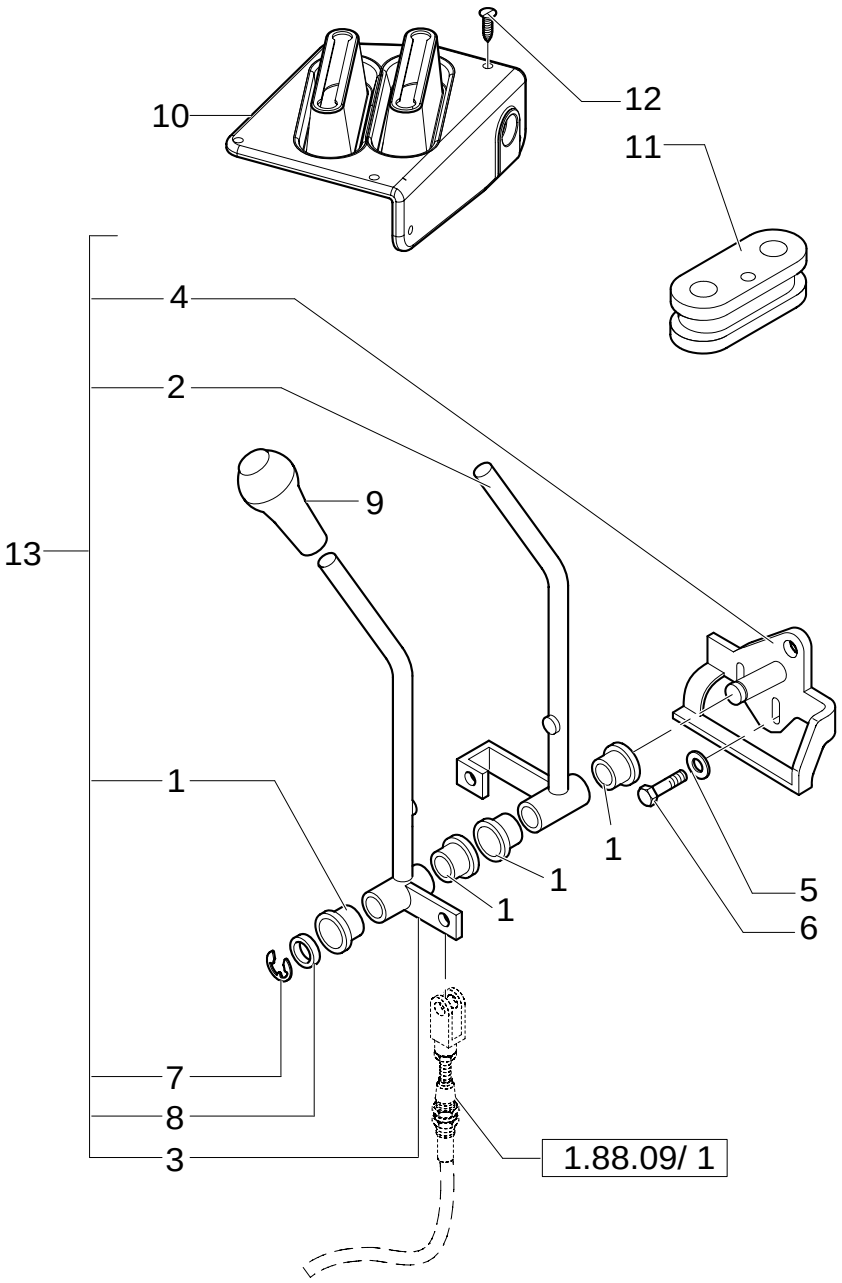

STABILIZER CONTROL

REF	FN	PART NUMBER	YR/SN	QTY	DESCRIPTION
1		85813136		4	BUSHING
2		85813134		1	LEVER RH
3		85813135		1	LEVER LH
4		85813133		1	SUPPORT
5		11193874		2	WASHER, LOCK
6		16043624		2	SCREW Cap, HH, CL 8.8, M8x25
7		85813138		1	CIRCLIP
8		85813137		1	WASHER
9		85802763		2	KNOB
10		85821316		1	BOOT
11		87407927		1	INSULATOR BLOCK
12		85827850		6	PLUG
13	1	85813100		1	ARM, TRIP

(1) Includes 1 To 4, 7, 8

Mechanical Version

PILOT CONTROL DIAGNOSTICS

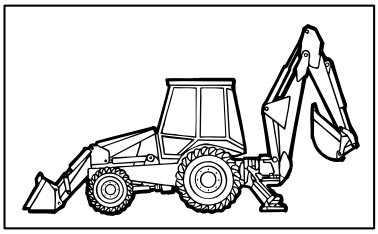

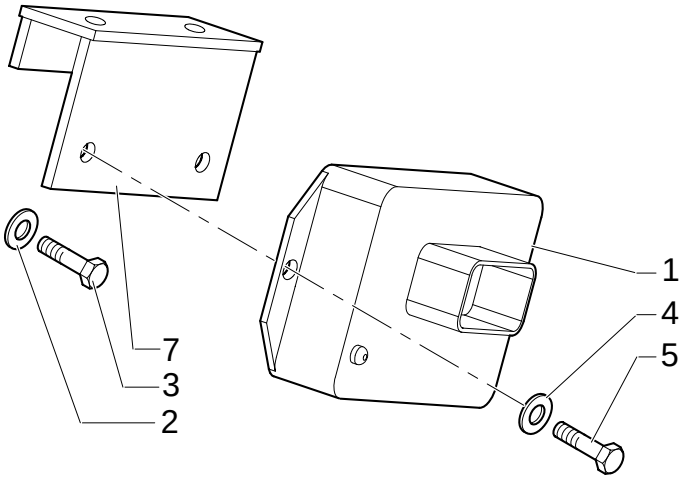

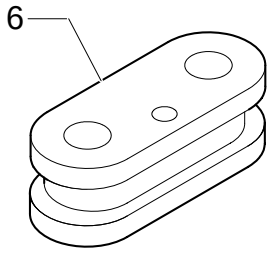

PILOT CONTROL DIAGNOSTICS

REF	FN	PART NUMBER	YR/SN	QTY	DESCRIPTION
1	1	87419454		1	BOX
1	2	87419455		1	CONTROL UNIT
2		11193874		2	WASHER, LOCK
3		16043624		2	SCREW TE M8x25
4		47048959		2	WASHER
5		85824079		2	SCREW M4x20
6		87407927		1	INSULATOR BLOCK
7		85828213		1	SUPPORT

(1) 6 function black color
(2) 8 function white color

Pilot Control Version

1.96.7/ 2	01	p1	05/05

CAB / MISCELLANEOUS CAPS (CENTER PIVOT) USA

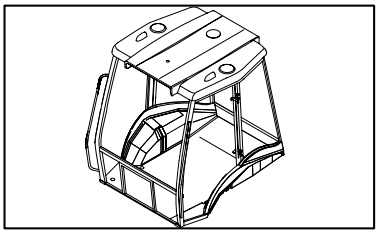

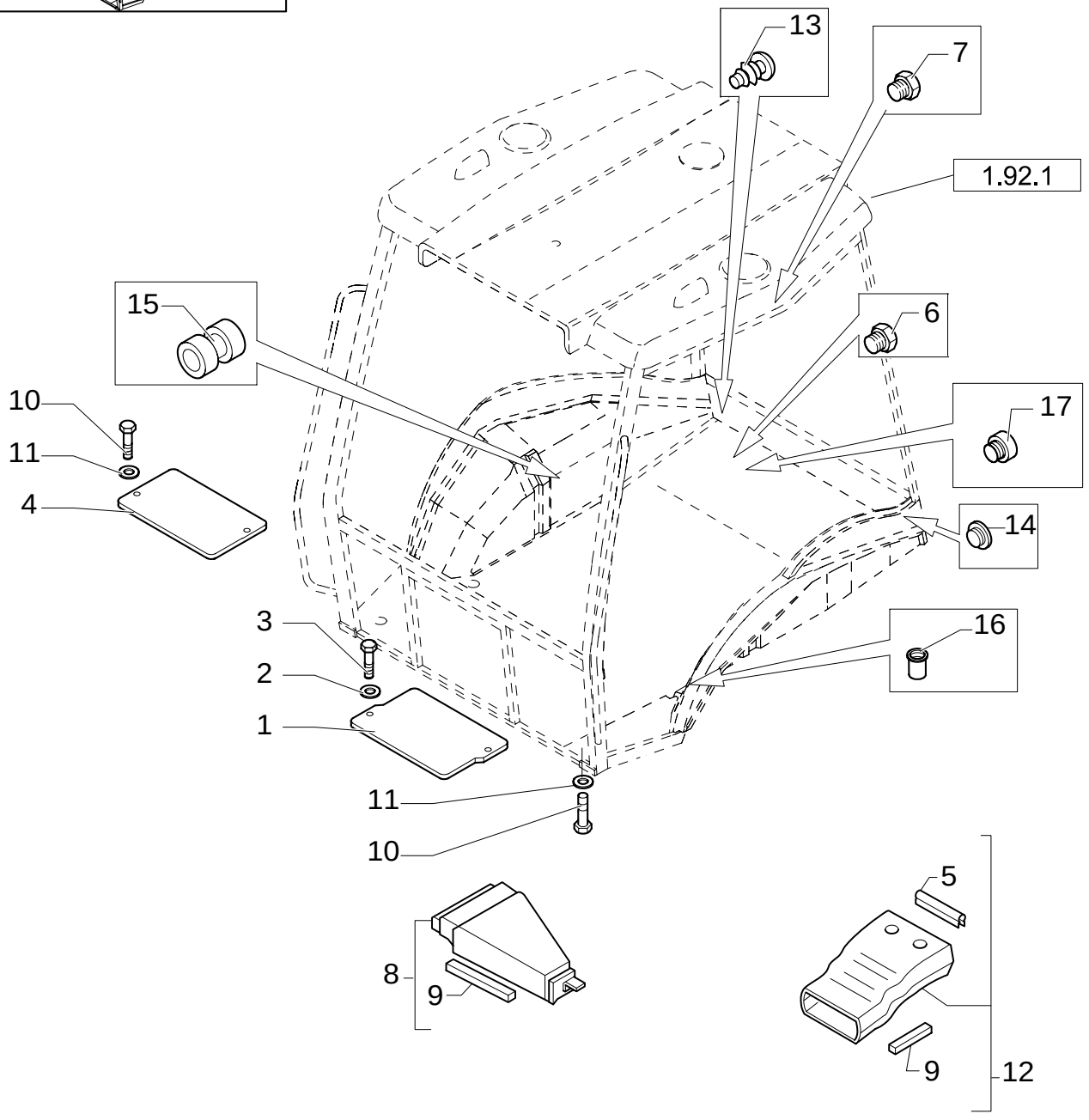

CAB / MISCELLANEOUS CAPS (CENTER PIVOT) USA

REF	FN	PART NUMBER	YR/SN	QTY	DESCRIPTION
1		85801968		1	PLATE
2		11198074		2	WASHER, SEALING
3		16043424		2	SCREW M8X20
4		85802225		1	COVER
5		85812021		1	GASKET
6		79111978		5	PLUG
7		E9NN94218N48AA		2	FASTENER
8		85805200		1	CONVEYOR FRONT
9		85806023		1	GASKET
10		10902224		5	SCREW Cap, HH, CL 8.8, M6 x 1 x 16
11		11193274		5	WASHER, LOCK M6X15X1.2
12		85820141		1	CONVEYOR
13		85802310		4	PLUG
14		85802227		1	PLUG
15		10398580		2	RING
16		85801953		2	RIVET
17		85802309		2	PLUG

Mechanical Version

1.96.7/ 8	01	p1	08/05

CAB / MISCELLANEOUS CAPS (CENTER PIVOT) USA

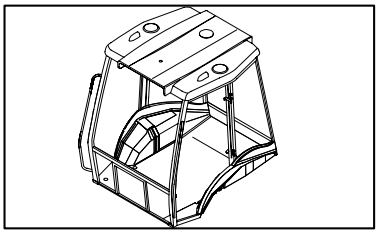

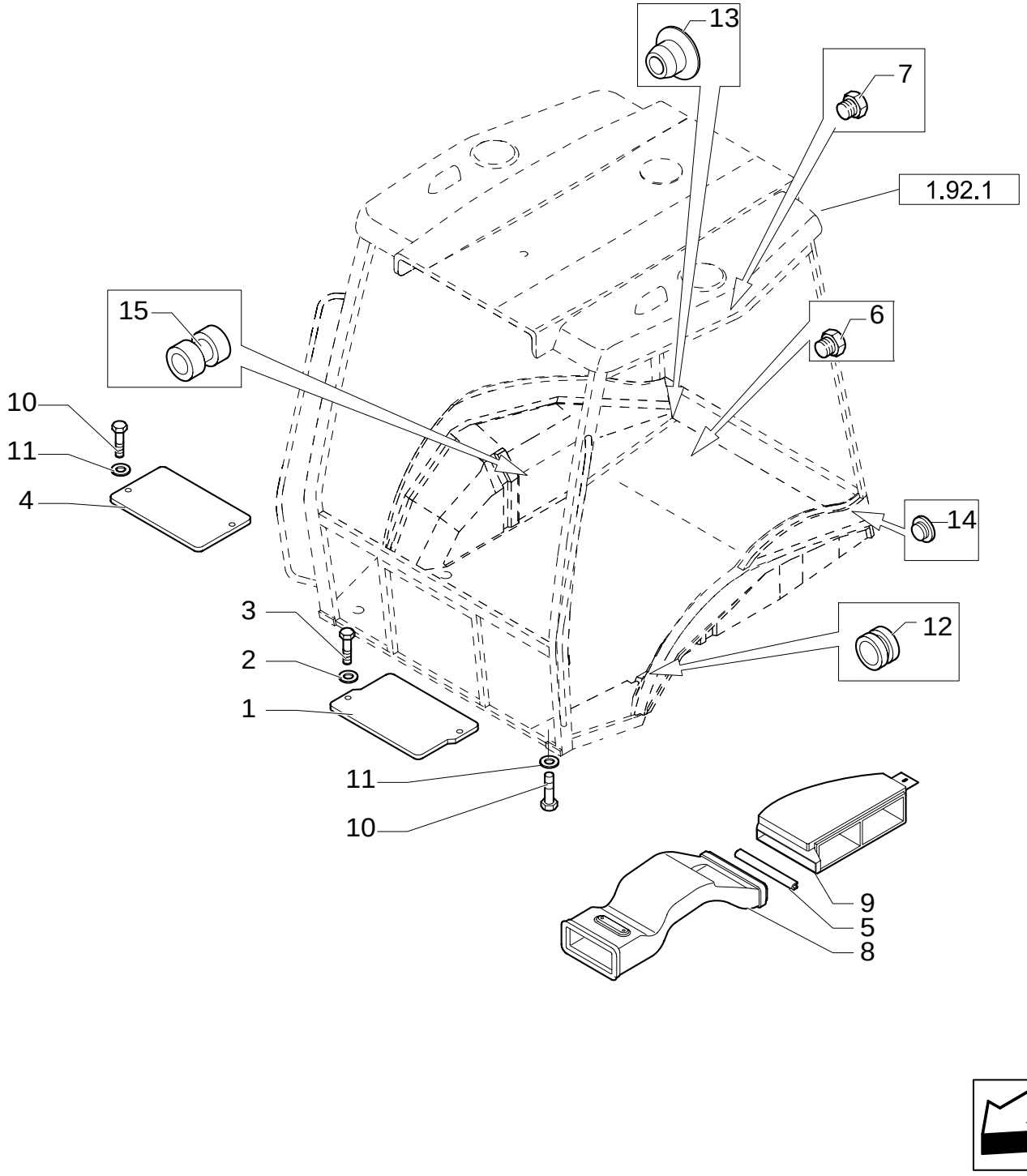

CAB / MISCELLANEOUS CAPS (CENTER PIVOT) USA

REF	FN	PART NUMBER	YR/SN	QTY	DESCRIPTION
1		85801968		1	PLATE
2		11198074		2	WASHER, SEALING
3		16043424		2	SCREW M8X20
4		85802225		1	COVER
5		85812021		1	GASKET
6		79111978		5	PLUG
7		E9NN94218N48AA		2	FASTENER
8		87408277		1	DUCT, AIR FRONT
9		87319754		1	BOX
10		10902224		5	SCREW Cap, HH, CL 8.8, M6 x 1 x 16
11		11193274		5	WASHER, LOCK M6X15X1.2
12		85801941		1	RING, RUBBER
13		82003283		4	PLUG
14		85802227		1	PLUG
15		10398580		2	RING

Pilot Control Version

INFORMATION SYMBOL DECALS (POWER SHUTTLE)

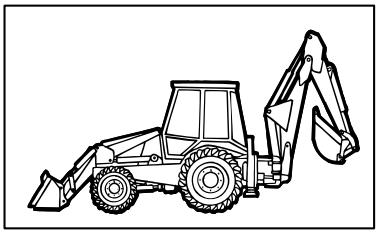

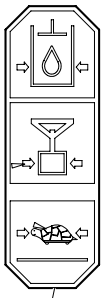

1

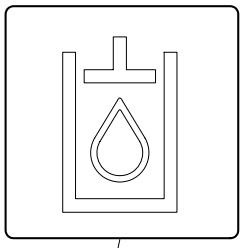

2

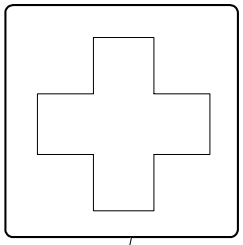

3

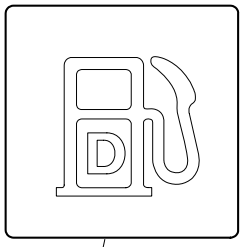

4

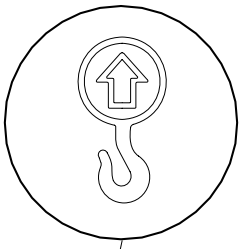

5

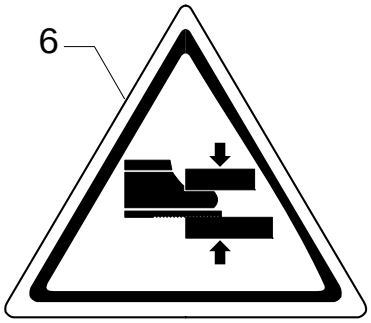

6

11

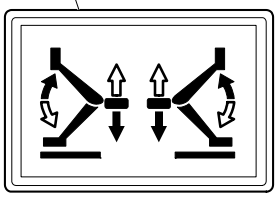

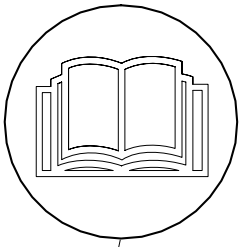

7

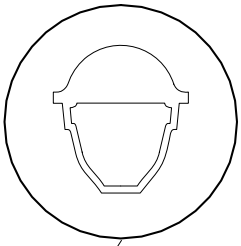

8

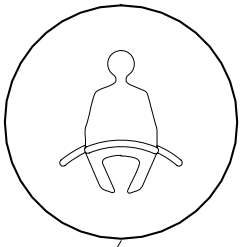

9

12

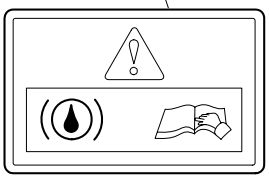

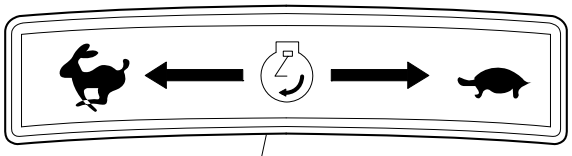

10

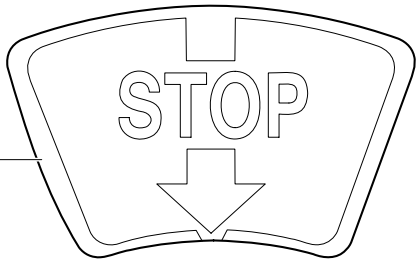

13

14





INFORMATION SYMBOL DECALS (POWER SHUTTLE)

REF	FN	PART NUMBER	YR/SN	QTY	DESCRIPTION
1		85825415		1	DECAL
2		85804341		1	DECAL
3		85804339		1	DECAL
4		85804338		1	DECAL
5		85804336		4	DECAL
6		85804332		1	DECAL
7		85804333		3	DECAL
8		85804334		2	DECAL
9		85804335		1	DECAL
10		85803789		1	DECAL
11		85803788		1	DECAL
12		85807870		1	DECAL
13		85802441		1	DECAL
14		85804083		1	DECAL MM.600X60

1.98.0/ 1	02	p1	02/05

WARNING SYMBOL DECALS

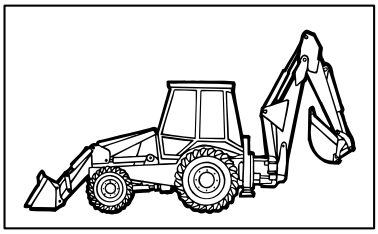



3

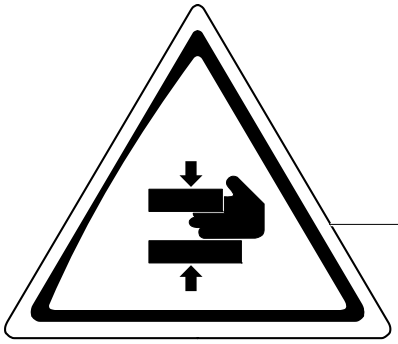

4



1

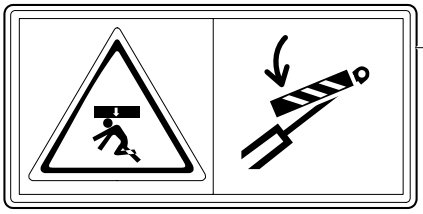

5



6

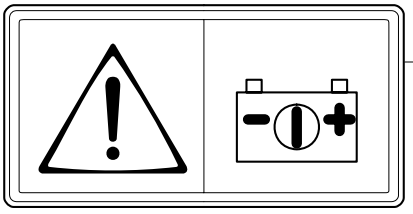

2

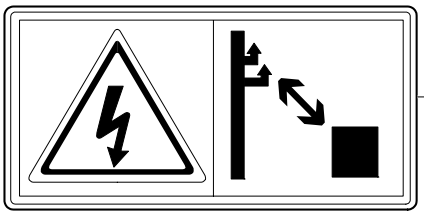

7

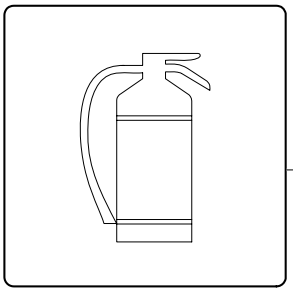

8



WARNING SYMBOL DECALS

REF	FN	PART NUMBER	YR/SN	QTY	DESCRIPTION
1		85804324		2	DECAL
2		85804330		1	DECAL
3		85804331		4	DECAL
4		85804329		6	DECAL
5		85804325		1	DECAL
6		85804326		1	DECAL
7		85804327		1	DECAL
8		85804337		1	DECAL

CAB WARNING & INFORMATION DECALS

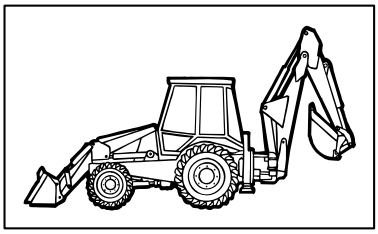

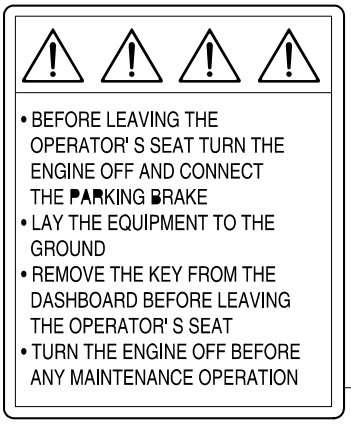

5



6

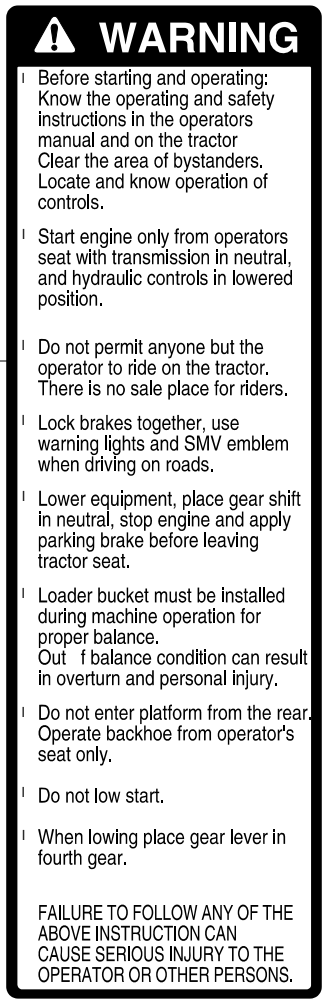

3

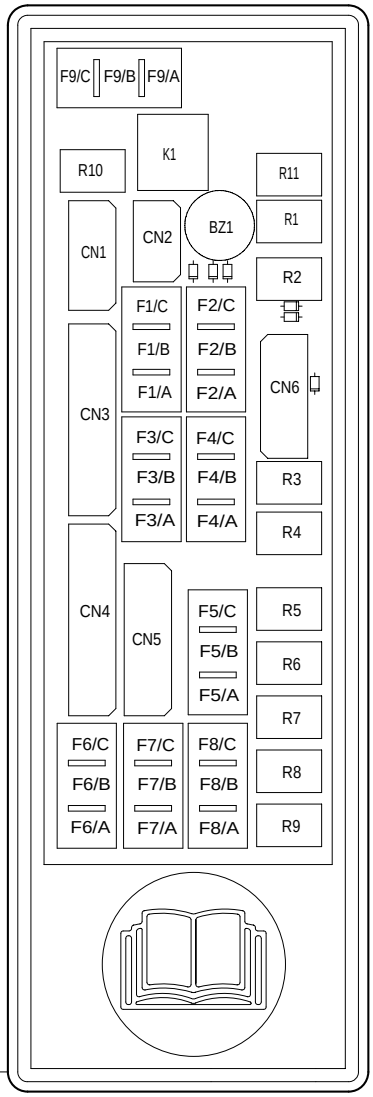

2

WATCH YOUR PROOF - METER HOURS

LUBRICATION AND MAINTENANCE SERVICE INTERVALS

LUBRICATION AND MAINTENANCE ITEM	CHECK	CLEAN	LUBE	SERVIC INTERVAL
AIR CLEANER OUTER ELEMENT (I) HYDRAULIC SYSTEM OIL FILTER		● ●		WHE IN INDICATED
HYDRAULIC OIL LEVEL ENGIME OIL LEVEL RADIATOR COOLANT LEVEL	● ● ●			DAILY
BACKHOE PIVOTS LOADER PIVOTS SEAT RAILS FRONT AXLE AND STEERING PIVOTS DIFF LOCK PEDAL PIVOT			● ● ● ● ●	EVERY 50 HOURS

I) NOTE: IMPROPER CLEANING CAN DAMAGE THE FILTER. REFER TO THE OPERATOR'S MANUAL FOR CORRECT CLEANING PROCEDURE. (LUBRICATION AND MAINTENANCE SECTION).

● **REFER TO YOUR OPERATOR'S MANUAL FOR EXTENOED SERVICE INTERVAL REQUIREMENTS PF OTHER MAJOR COMPONENTS.**

ALWAYS USE BENUINE NEWHOLLAND PARTS AND LUBRICANTS

1

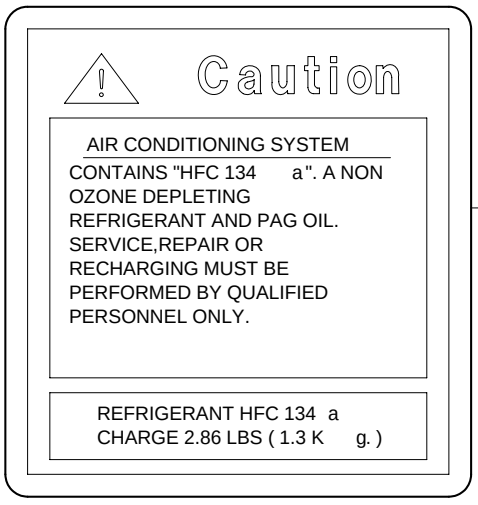

4

CAB WARNING & INFORMATION DECALS

REF	FN	PART NUMBER	YR/SN	QTY	DESCRIPTION
1		85802243		1	DECAL FINNISH
1		85802246		1	DECAL SWEDISH
1		85802249		1	DECAL NORWEGIAN
1		85802261		1	DECAL DANISH
1		85803868		1	DECAL ENGLISH
1		85803874		1	DECAL FRENCH
1		85803876		1	DECAL SPANISH
1		85802252		1	DECAL PORTUGUESE
1		85802255		1	DECAL DUTCH
1		85802258		1	DECAL GREEK
1		85803867		1	DECAL ITALIAN
1		85803875		1	DECAL GERMAN
2		85826071		1	DECAL
3		85804087		1	DECAL ENGLISH
3		85804550		1	DECAL FRENCH
3		85804563		1	DECAL SPANISH
4		85812064		1	DECAL ENGLISH
4		85819180		1	DECAL FRENCH
4		85819181		1	DECAL SPANISH
5		85802242		2	DECAL FINNISH
5		85802245		2	DECAL SWEDISH
5		85802248		2	DECAL NORWEGIAN
5		85802251		2	DECAL DUTCH
5		85802254		2	DECAL PORTUGUESE
5		85802257		2	DECAL GREEK
5		85802260		2	DECAL DANISH
5		85804328		2	DECAL ITALIAN
5		85804400		2	DECAL ENGLISH
5		85804401		2	DECAL FRENCH
5		85804402		2	DECAL GERMAN
5		85804403		2	DECAL SPANISH
6		85804358		3	DECAL

BACKHOE, LOADER & ENGINE WARNING DECALS

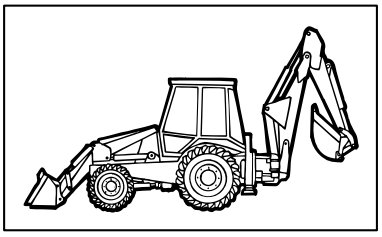

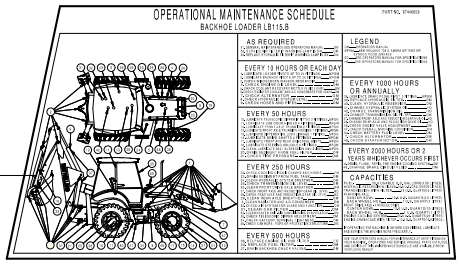

8



1



6

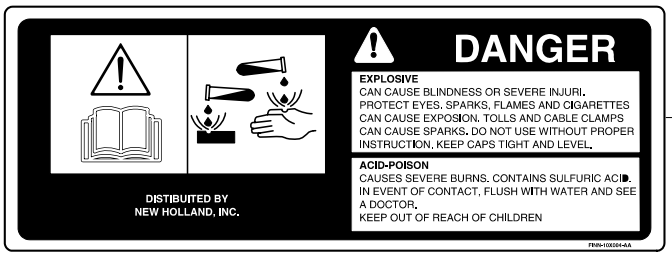

2



3

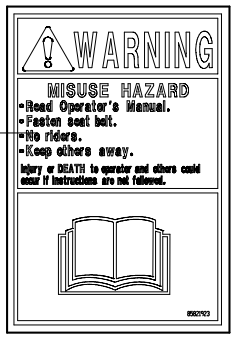

9



5

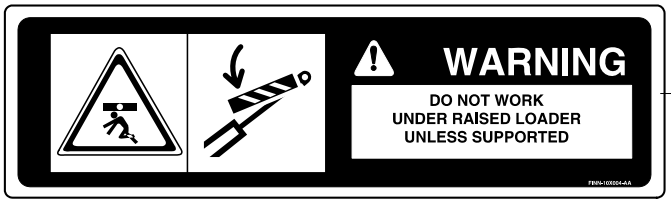

4

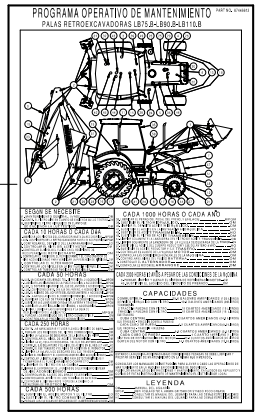

7

BACKHOE, LOADER & ENGINE WARNING DECALS

REF	FN	PART NUMBER	YR/SN	QTY	DESCRIPTION
1		85804077		1	DECAL ENGLISH
1		85804542		1	DECAL FRENCH
1		85804555		1	DECAL SPANISH
2		85804079		1	DECAL ENGLISH
2		85804544		1	DECAL FRENCH
2		85804557		1	DECAL SPANISH
3		85804080		1	DECAL ENGLISH
3		85804545		1	DECAL FRENCH
3		85804558		1	DECAL SPANISH
4		85804549		1	DECAL FRENCH
4		85804562		1	DECAL SPANISH
4		85804086		1	DECAL ENGLISH
5		85804089		1	DECAL ENGLISH
5		85804552		1	DECAL FRENCH
5		85804565		1	DECAL SPANISH
6		85804556		1	DECAL SPANISH
6		85804543		1	DECAL FRENCH
6		85804078		1	DECAL ENGLISH
7		87446608		1	DECAL ENGLISH
7		87446610		1	DECAL FRENCH
7		87446612		1	DECAL SPANISH
8		87446609		1	DECAL ENGLISH
8		87446611		1	DECAL FRENCH
8		87446613		1	DECAL SPANISH
9		85821923		1	DECAL ENGLISH
9		85828065		1	DECAL FRENCH
9		85828066		1	DECAL SPANISH

INFORMATION SYMBOL DECALS (POWER SHIFT)

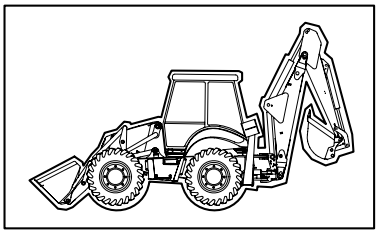

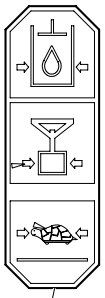

1

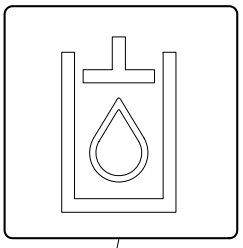

2

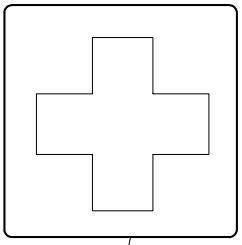

3

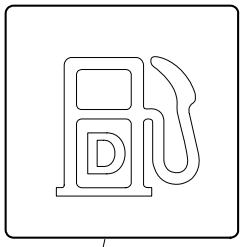

4

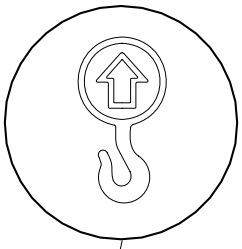

5

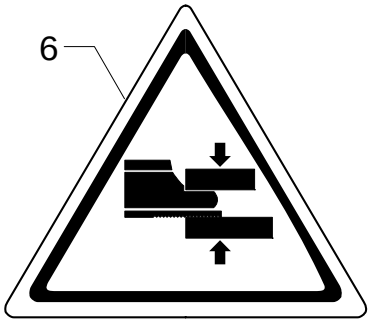

6

11

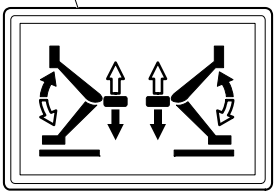

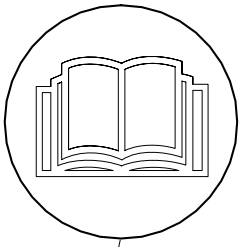

7

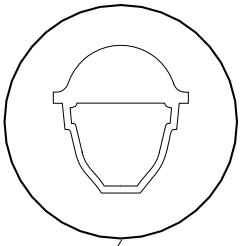

8

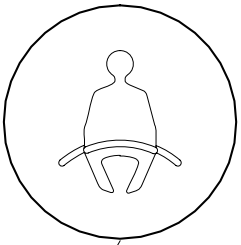

9

12

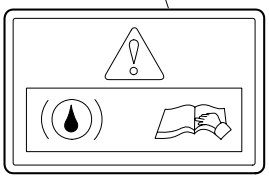

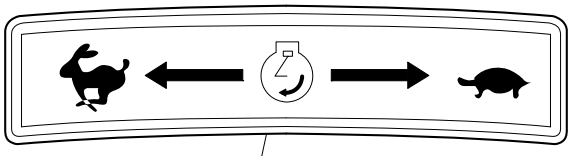

10

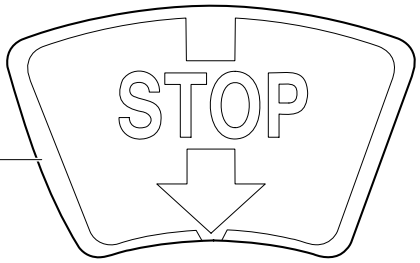

13

14





INFORMATION SYMBOL DECALS (POWER SHIFT)

REF	FN	PART NUMBER	YR/SN	QTY	DESCRIPTION
1		85825415		1	DECAL
2		85804341		1	DECAL
3		85804339		1	DECAL
4		85804338		1	DECAL
5		85804336		4	DECAL
6		85804332		1	DECAL
7		85804333		3	DECAL
8		85804334		2	DECAL
9		85804335		1	DECAL
10		85803789		1	DECAL
11		85803788		1	DECAL
12		85807870		1	DECAL
13		85802441		1	DECAL
14		85805910		1	DECAL MM.460X60

BACKHOE, LOADER & ENGINE WARNING DECALS

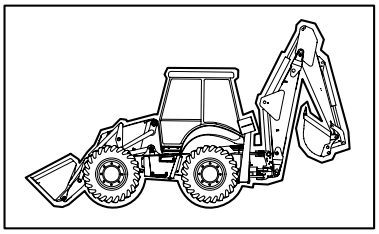

TRANSPORT HEIGHT
13' 3.5"
(4069 mm)

1

WARNING

LOADER SAFETY

- know all operation, warning and safety instructions in the operator' s manual before operating.
- Operate only from the operator's seat.
- Stay out from under raised loader arms unless supported
- Carry bucket low during transport for better visibility and to avoid overturns.
- Using front end loaders without special attachments for handling large heavy object such as large bales, logs, and oil drums, is NOT recommended.
  Handling large heavy object with the loader can be extremely dangerous due to the object rolling or sliding down the loader arms onto the operator.
- Use wheel ballast and/or rear weight for stabilty as recommended In the operator' s manual.
- When parking or servicing:
  -Lower the bucket to the ground.
  -Stop the engine.
  -Set the parking brake.

FAILURE TO FOLLOW ANY OF THE INSTRUCTIONS ABOVE CAN CAUSE SERIOUS INJURY TO THE OPERATOR OR OTHER PERSONS.

2

3

EMERGENCY STOPPING
AND PARKING BRAKE

TORQUE CONVERTER TRANSMISSION WITH CLUTCH DISCONNECT

F
N
R

BEFORE STARTING - Place both shuttle (power reversing) and gear shift lever in neutral and assure parking brake is applied.

TO SHIFT - Select operating gear (1, 2, 3, or 4), then use shuttle lever to select direction of travel

1 3 N 2 4

SHUTTLE SHIFTING - Reduce engine speed when changing direction of travel from (F) to (R)

CLUTCH DISCONNECT - Press button on loader control or gear shift levers to disconnect hydraulic clutch during loader lift cycle or gear changes.

4

"NOTE"

WARRANTY ON THIS ENGINE AND/OR POWER TRAIN COMPONENTS SMALL NOT APPLY TO ANY FAILURE RESULTING FROM UNSPECIFIED ADJUSTMENTS OF THE FUEL INJECTION SYSTEM.

5

WARNING

- Start engine only from operator's seat. If safety start switch is bypassed engine can start with transmission in gear.
- Do not connector or short across terminals on starter solenoid.
- Attach beester cables as shown on battery decal.

Starting in gear causing runaway can result in serious ingury.

6

WARNING

KEEP HANDS AND CLOTHING AWAY FROM ROTATING FAN AND BELTS TO PREVENT SERIOUS INJURY

7

BACKHOE, LOADER & ENGINE WARNING DECALS

REF	FN	PART NUMBER	YR/SN	QTY	DESCRIPTION
1		85812279		1	DECAL
2		85804088		1	DECAL ENGLISH
2		85804551		1	DECAL FRENCH
2		85804564		1	DECAL SPANISH
3		85804081		1	DECAL ENGLISH
3		85804546		1	DECAL FRENCH
3		85804559		1	DECAL SPANISH
4		85804091		1	DECAL ENGLISH
4		85804554		1	DECAL FRENCH
4		85804567		1	DECAL SPANISH
5		85804090		1	DECAL ENGLISH
5		85804553		1	DECAL FRENCH
5		85804566		1	DECAL SPANISH
6		85804084		1	DECAL ENGLISH
6		85804547		1	DECAL FRENCH
6		85804560		1	DECAL SPANISH
7		85804085		2	DECAL ENGLISH
7		85804548		2	DECAL FRENCH
7		85804561		2	DECAL SPANISH

FOWARD/REVERSE & STEERING DECALS

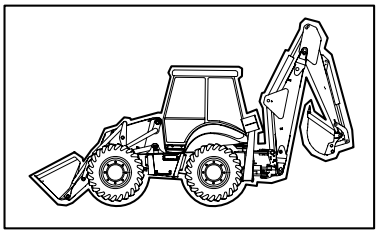

1

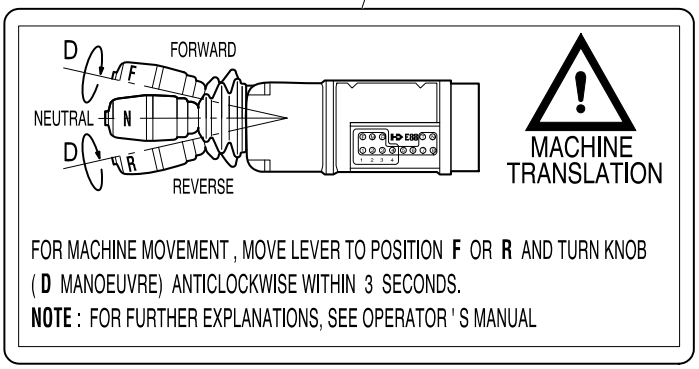

2

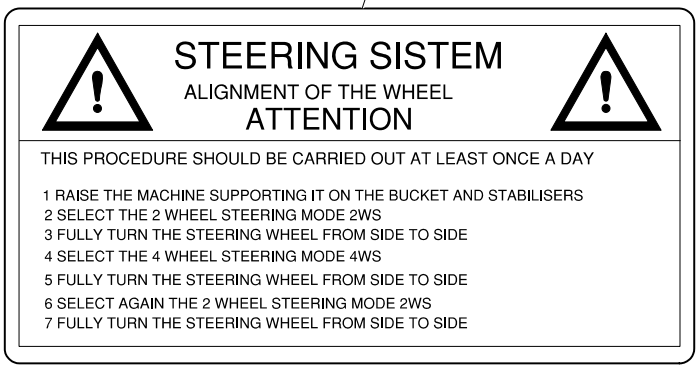

FOWARD/REVERSE & STEERING DECALS

REF	FN	PART NUMBER	YR/SN	QTY	DESCRIPTION
1		85804959		1	DECAL ENGLISH
1		85805671		1	DECAL DANISH
1		85805672		1	DECAL FINNISH
1		85805673		1	DECAL DUTCH
1		85805674		1	DECAL SWEDISH
1		85805675		1	DECAL PORTUGUESE
1		85805676		1	DECAL NORWEGIAN
1		85805677		1	DECAL GREEK
1		85805678		1	DECAL ITALIAN
1		85805679		1	DECAL FRENCH
1		85805680		1	DECAL GERMAN
1		85805681		1	DECAL SPANISH
2		85813493		1	DECAL ITALIAN
2		85813494		1	DECAL ENGLISH
2		85813495		1	DECAL FRENCH
2		85813496		1	DECAL GERMAN
2		85813497		1	DECAL SPANISH
2		85813498		1	DECAL FINNISH
2		85813499		1	DECAL SWEDISH
2		85815500		1	DECAL NORWEGIAN
2		85815501		1	DECAL DUTCH
2		85815502		1	DECAL PORTUGUESE
2		85815503		1	DECAL GREEK
2		85815504		1	DECAL DANISH

B115 MODEL IDENTIFICATIO

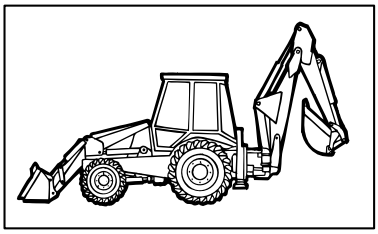

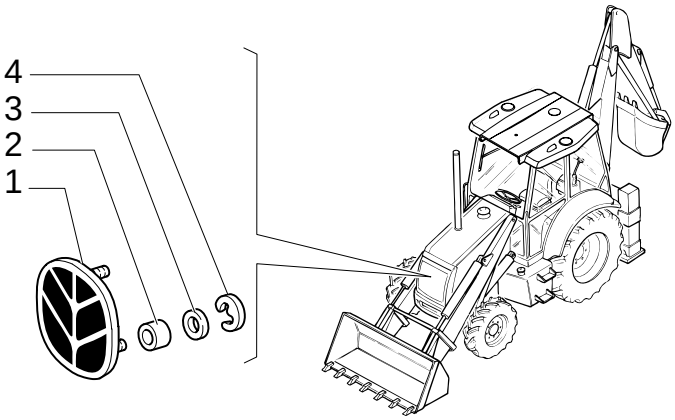



5



7

8

6

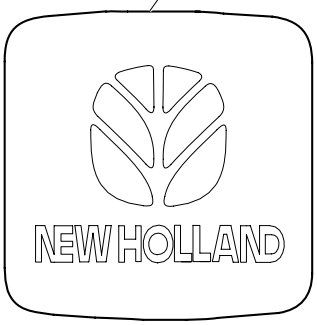



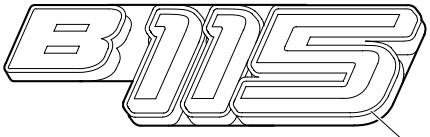

10

9





B115 MODEL IDENTIFICATIO

REF	FN	PART NUMBER	YR/SN	QTY	DESCRIPTION
1		85820107		1	EMBLEM
2		12643711		2	WASHER
3		5138360		2	RING
4		5135069		2	CLIP
5		87363419		2	DECAL
6		87319147		2	DECAL L=MM.1100
7		87319148		2	DECAL L=MM.570
8		87415930		3	DECAL
9		87360275		2	DECAL L=MM.420
10		87359829		2	DECAL L=MM.560

346	01	p1	11/05

A/C HOUSING & FILTERS

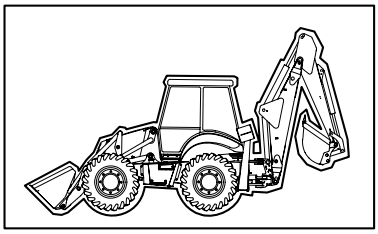

KIT KIT KIT = 16

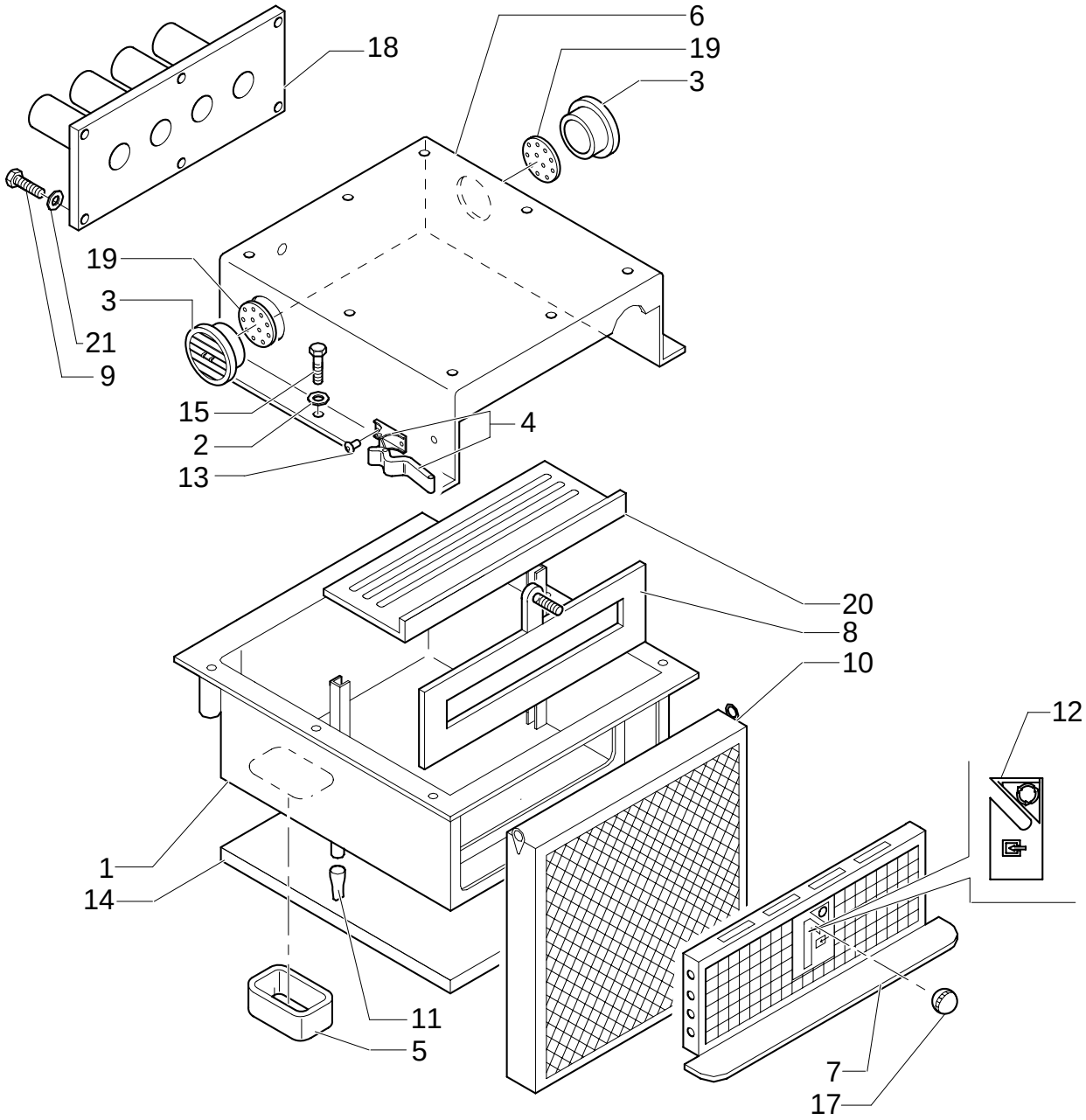

A/C HOUSING & FILTERS

REF	FN	PART NUMBER	YR/SN	QTY	DESCRIPTION
1		87314323		1	PANEL, BOXED
2		11193974		6	WASHER, LOCK
3		87314728		2	INTAKE, AIR
4		87358142		2	HOSE, FLEXIBLE
5		87314730		1	SHIELD
6		87314328		1	INTAKE, AIR
7		87314330		1	GRILLE
8		87314350		1	LID
9		85819184		6	SCREW
10		87314367		1	FILTER, AIR
11		87315029		2	STOP DEVICE
12		87314351		1	DECAL
13		{87358141}		4	
14		87314520		1	INSULATOR
15		16043624		6	SCREW
16		87314518		1	INSULATOR - KIT
17		87314353		1	KNOB
18		87314357		1	CONVEYOR
19		87314362		2	BULKHEAD
20		87314355		1	PANEL, BOXED
21		11193974		6	WASHER, LOCK

Mechanical Version, From To S/N XXX

346	02	p1	10/05

A/C BLOWER & COILS

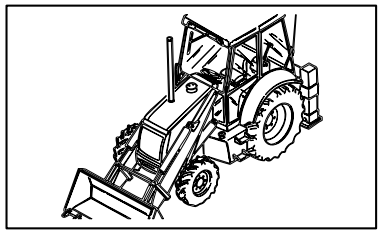

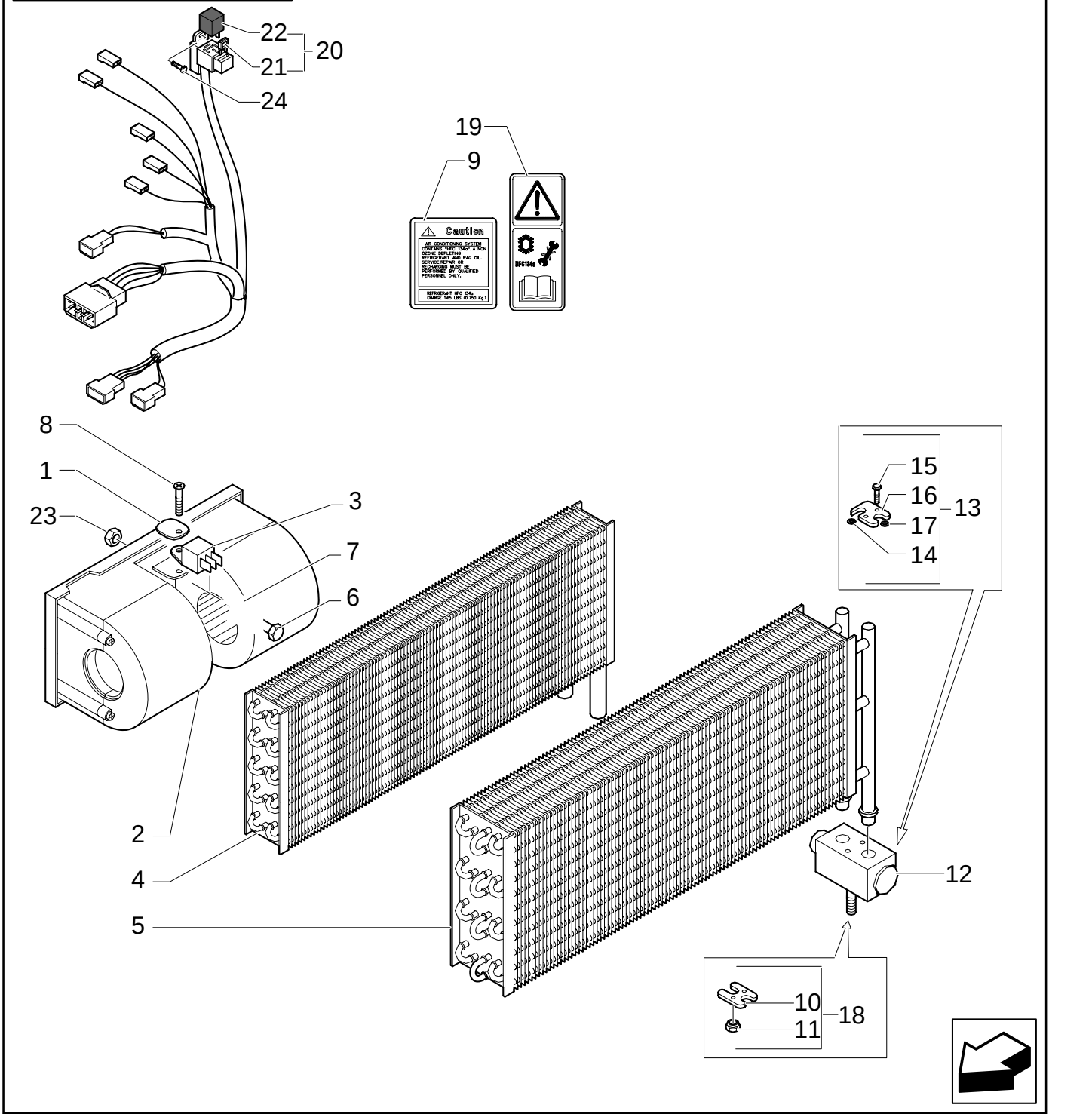

A/C BLOWER & COILS

REF	FN	PART NUMBER	YR/SN	QTY	DESCRIPTION
1		85817289		1	COLLAR, RETAINER
2		85813079		1	MOTOR, ELECTRIC, SMALL
3		85804041		1	RESISTOR
4		87314527		1	HEATER
5		87314369		1	EVAPORATOR
6		10902424		1	SCREW
7		11197774		1	WASHER, LOCK
8		85817189		1	SCREW
9		87324469		1	DECAL
10		85805008		1	FLANGE
11		14040611		1	NUT
12		87314524		1	VALVE, HYDRAULIC
13		85804038		1	FLANGE
14		85805003		1	O-RING
15		85805004		2	SCREW
16		85805005		1	FLANGE
17		85805006		1	O-RING
18		85821131		1	FLANGE
19		85804441		1	DECAL
20		87314517		1	CABLE, ELECTRIC
21		11055290		1	FUSE
22		85805144		1	RELAY
23		12574211		1	NUT
24		85819184		1	SCREW

Mechanical Version, From To S/N XXX

346	03	p1	08/05

HEATER COIL HOSES

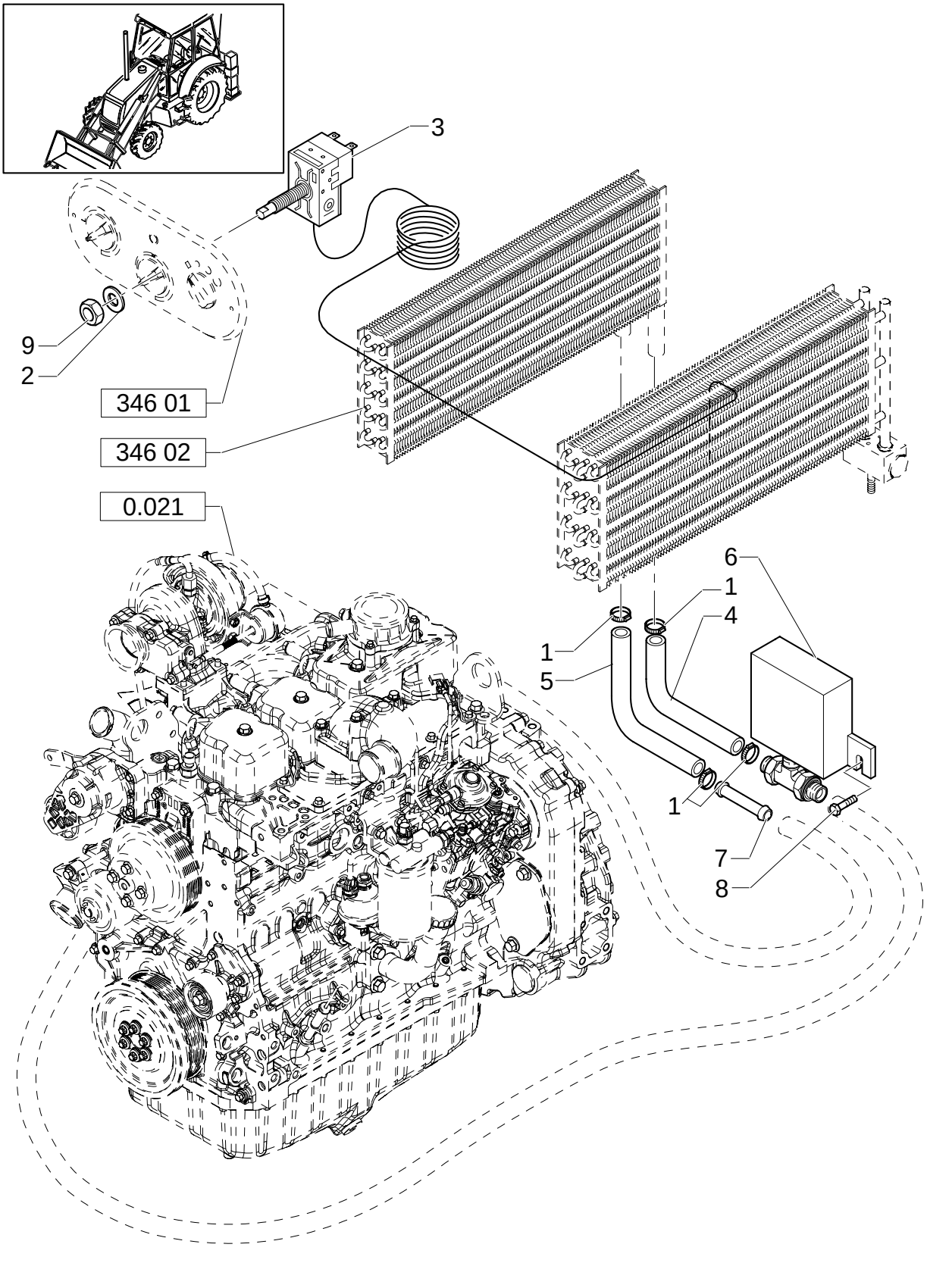

HEATER COIL HOSES

REF	FN	PART NUMBER	YR/SN	QTY	DESCRIPTION
1		87314726		4	COLLAR
2		85817295		1	NUT
3		87314526		1	THERMOSTAT
4		87318747		1	HOSE, FLEXIBLE
5		87318750		1	HOSE, FLEXIBLE
6		87314554		1	DRAINCOCK/TAP, SUPPLY
7		85804051		1	JOINT, UNIVERSAL
8		85819184		2	SCREW
9		87358348		1	WASHER

Mechanical Version, From To S/N XXX

A/C & HEATER CONTROL PANEL

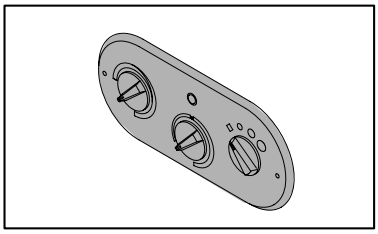

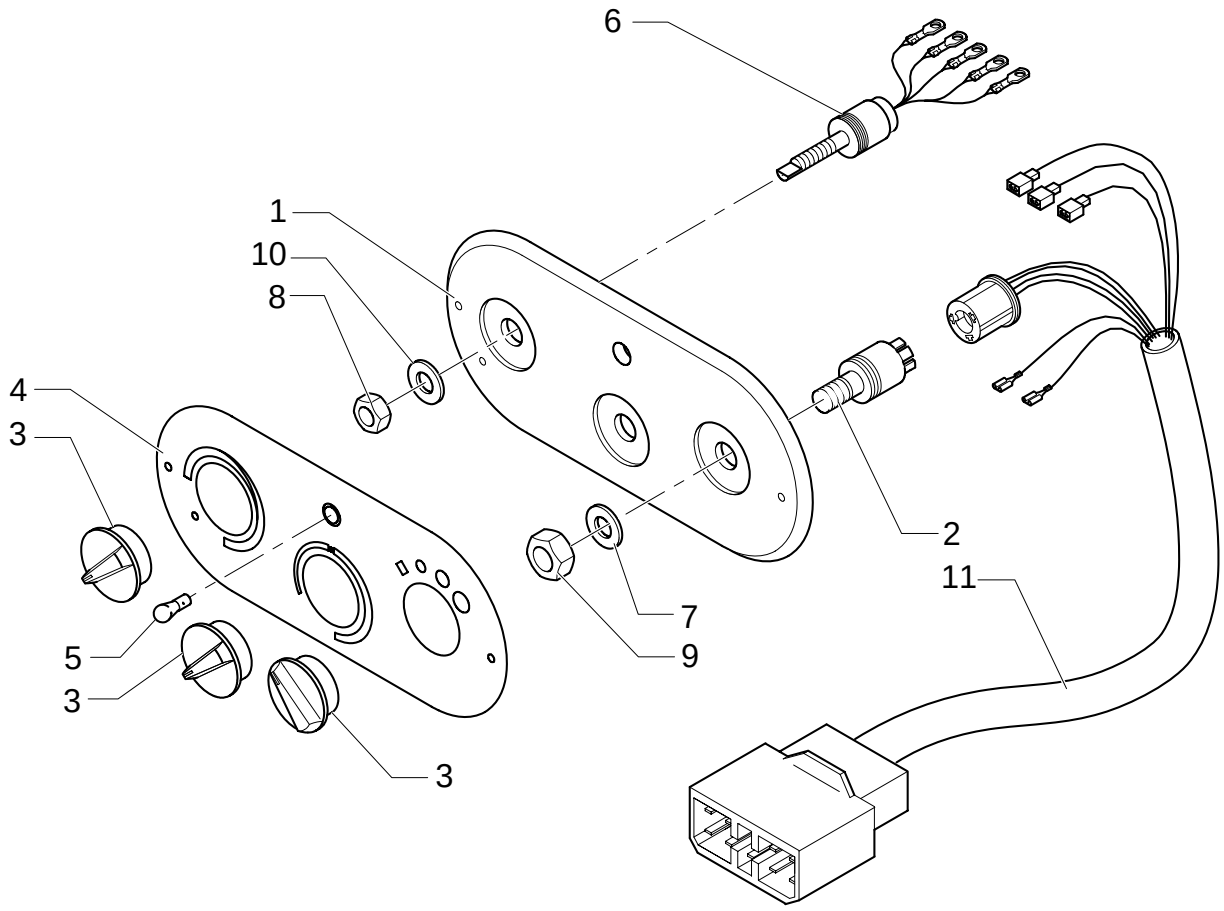

A/C & HEATER CONTROL PANEL

REF	FN	PART NUMBER	YR/SN	QTY	DESCRIPTION
1		87314743		1	DASHBOARD
2		87314747		1	SWITCH
3		87314749		3	DASHBOARD
4		87314750		1	DECAL
5		87314751		1	DIODE
6		87314753		1	POTENTIOMETER
7		87358348		1	WASHER 13X20
8		87334860		1	NUT
9		87334861		1	NUT 12,5X18X1,5
10		87358349		1	WASHER 10,5X16X1,5
11		87314522		1	CABLE, ELECTRIC

Mechanical Version, From To S/N XXX

346	05	p1	11/05

A/C & HEATER CONSOLE DUCTS

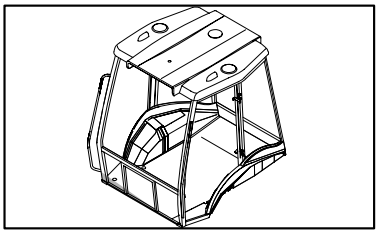

A/C & HEATER CONSOLE DUCTS

REF	FN	PART NUMBER	YR/SN	QTY	DESCRIPTION
1		85819452		5	PIPE
2		85819451		1	PIPE
3		87314771		1	HOSE, FLEXIBLE
4		87314772		2	HOSE, FLEXIBLE
5		87314773		1	HOSE, FLEXIBLE
6		87319448		1	HOSE, FLEXIBLE
7		85819454		2	DIFFUSER
8		87314946		1	SPOUT, DISCHARGE
9		87314947		1	SPOUT, DISCHARGE
10		87314948		1	SPOUT, DISCHARGE
11		85819453		1	CONNECTOR, HYD.
12	1	85819544		2	DIFFUSER
13	1	70741298		2	DIFFUSER
13	2	{87362068}		4	
14		{15915901}		4	
15		87319437		1	HOSE, FLEXIBLE
17		87314767		2	HOSE, FLEXIBLE
18		87314769		2	HOSE, FLEXIBLE
20		13000990		2	CLIP, HOSE
21		87319443		1	HOSE, FLEXIBLE
22		5112712		12	COLLAR
23		87319453		2	CONNECTOR
24	1	85818891		1	JOINT, UNIVERSAL
25		85813324		6	COLLAR
26		14440327		4	SCREW

(1) UP TO S/N XXX
(2) FROM TO S/N XXX

Mechanical Version, From To S/N XXX

346/1	01	p1	10/05

TRANSFORMATION SET FROM HEATING TO AIR CONDITIONING

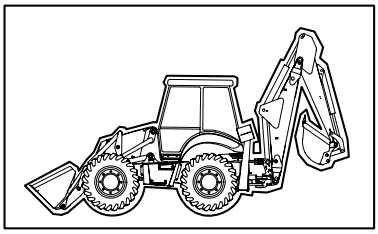

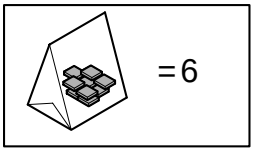

TRANSFORMATION SET FROM HEATING TO AIR CONDITIONING

REF	FN	PART NUMBER	YR/SN	QTY	DESCRIPTION
1		87314730		1	SHIELD
2		87314350		1	LID
4		87314351		1	DECAL
5		87314520		1	INSULATOR
6		87314518		1	INSULATOR
7		87314353		1	KNOB
8		87314357		1	CONVEYOR
9		87314362		2	BULKHEAD
10		87314369		1	EVAPORATOR
11		87314524		1	VALVE, HYDRAULIC
12		85804038		1	FLANGE
13		85805003		1	O-RING
14		85805004		2	SCREW
15		85805005		1	FLANGE
16		85805006		1	O-RING
17		85821131		1	FLANGE
18		85805008		1	FLANGE
19		14040611		1	NUT
23		85817295		1	NUT
24		87314526		1	THERMOSTAT
25		87314749		1	DASHBOARD
26		87314750		1	DECAL
27		87314751		1	DIODE
28		87314757		1	WASHER, SEALING

Mechanical Version, From To S/N XXX

346/1	02	p1	11/05

TRANSFORMATION SET FROM HEATING TO AIR CONDITIONING

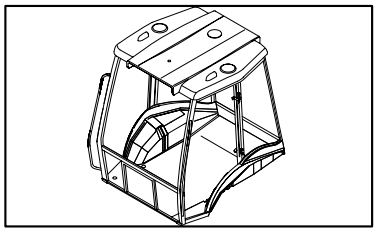

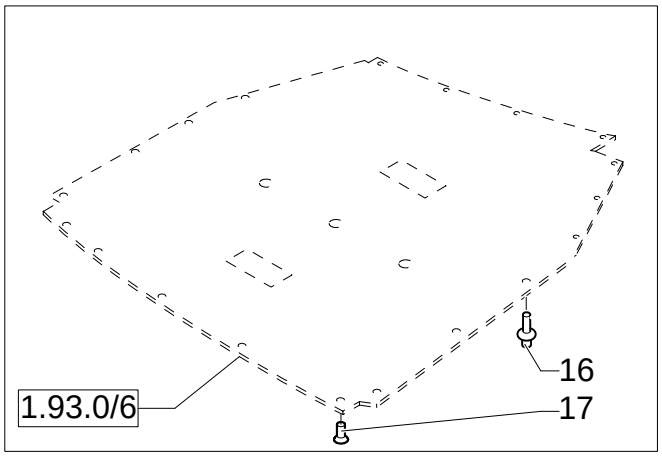

TRANSFORMATION SET FROM HEATING TO AIR CONDITIONING

REF	FN	PART NUMBER	YR/SN	QTY	DESCRIPTION
1		85819452		3	PIPE
2		85819451		1	PIPE
3		87314771		1	HOSE, FLEXIBLE
4		87314772		2	HOSE, FLEXIBLE
5		87314773		1	HOSE, FLEXIBLE
6		87319448		1	HOSE, FLEXIBLE
7		85819454		2	DIFFUSER
8		87314946		1	SPOUT, DISCHARGE
9		87314947		1	SPOUT, DISCHARGE
10		87314948		1	SPOUT, DISCHARGE
11		85819453		2	CONNECTOR, HYD.
12	1	85819544		2	DIFFUSER
12	2	{87362068}		4	
13		5112712		3	COLLAR
14		13000690		4	CLIP, HOSE
15		14440327		4	SCREW
16		5162852		21	BUTTON
17		85805777		1	PLUG
18		F1NN94000Z36AA		12	STUD

(1) UP TO S/N XXX
(2) FROM TO S/N XXX

Mechanical Version, From To S/N XXX

347	01	p1	11/05

HOUSING & FILTERS

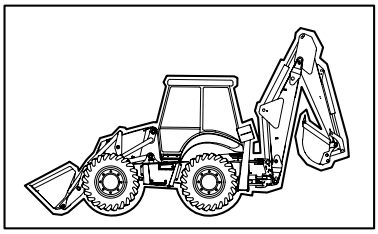

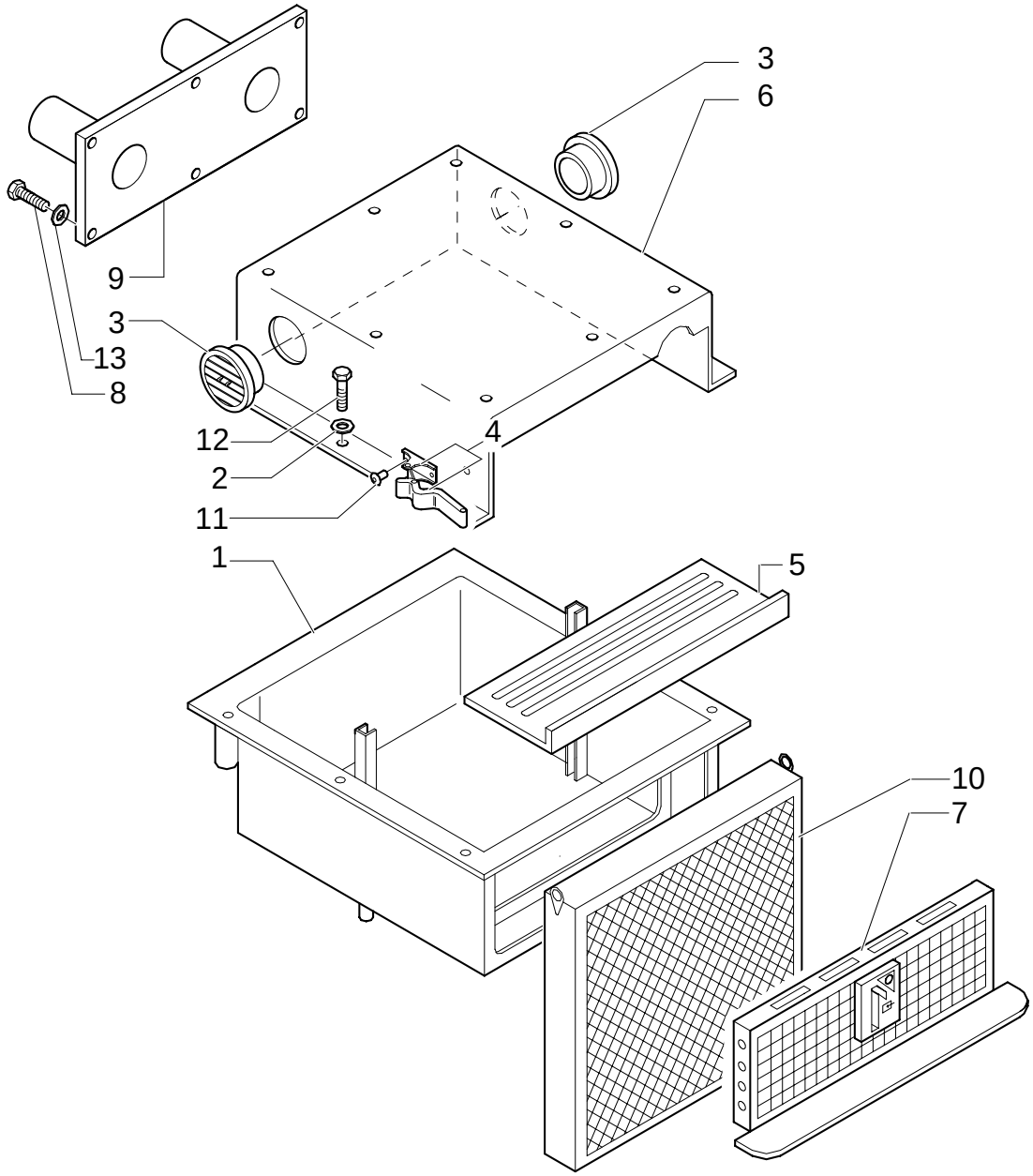

HOUSING & FILTERS

REF	FN	PART NUMBER	YR/SN	QTY	DESCRIPTION
1		87314323		1	PANEL, BOXED
2		11193974		6	WASHER, LOCK
3		87314728		2	INTAKE, AIR
4		87358142		2	HOSE, FLEXIBLE
5		87314355		1	PANEL, BOXED
6		87314328		1	INTAKE, AIR
7		87314330		1	GRILLE
8		85819184		6	SCREW
9		87316439		1	CONVEYOR
10		87314367		1	FILTER, AIR
11		{87358141}		4	
12		16043624		6	SCREW
13		11193974		1	WASHER, LOCK

Mechanical Version, From To S/N XXX

347	02	p1	06/05

HEATER BLOWER & COILS

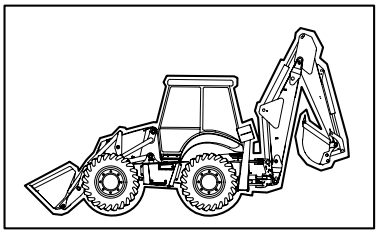

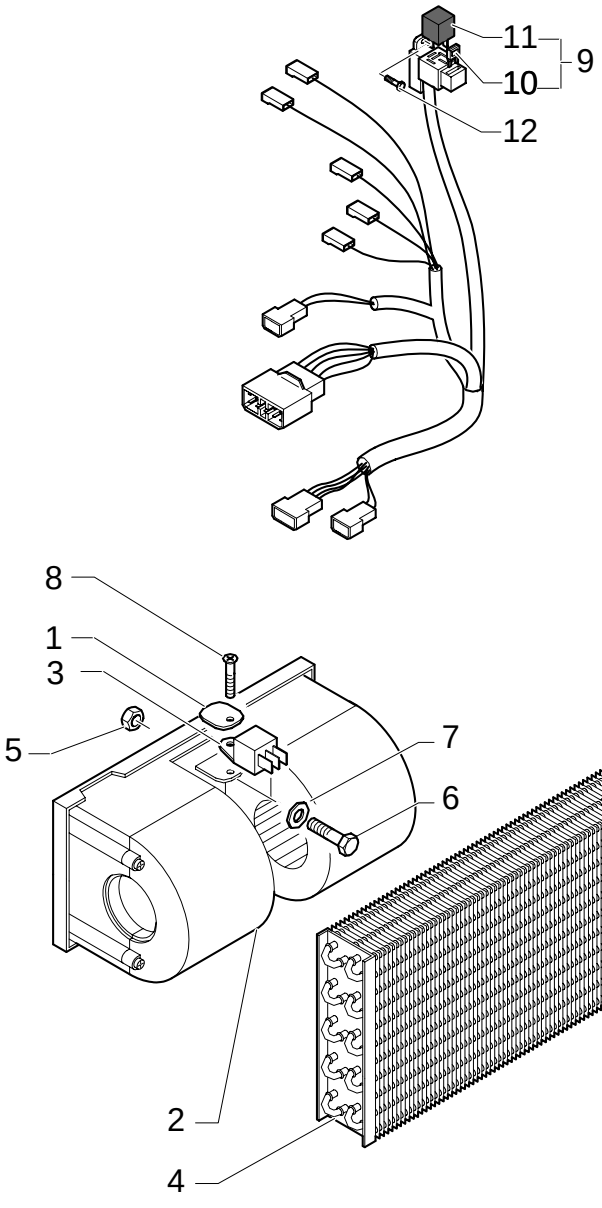

HEATER BLOWER & COILS

REF	FN	PART NUMBER	YR/SN	QTY	DESCRIPTION
1		85817289		1	COLLAR, RETAINER
2		85813079		1	MOTOR, ELECTRIC, SMALL
3		85804041		1	RESISTOR
4		87314527		1	HEATER
5		12574211		1	NUT
6		10902424		1	SCREW
7		11197774		1	WASHER, LOCK
8		85817189		1	SCREW
9		87314517		1	CABLE, ELECTRIC
10		11054990		1	FUSE
11		85821537		1	RELAY
12		85819184		1	SCREW

Mechanical Version, From To S/N XXX

347	03	p1	08/05

HEATER COIL HOSES

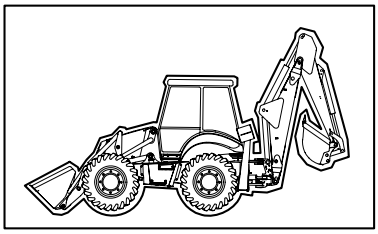

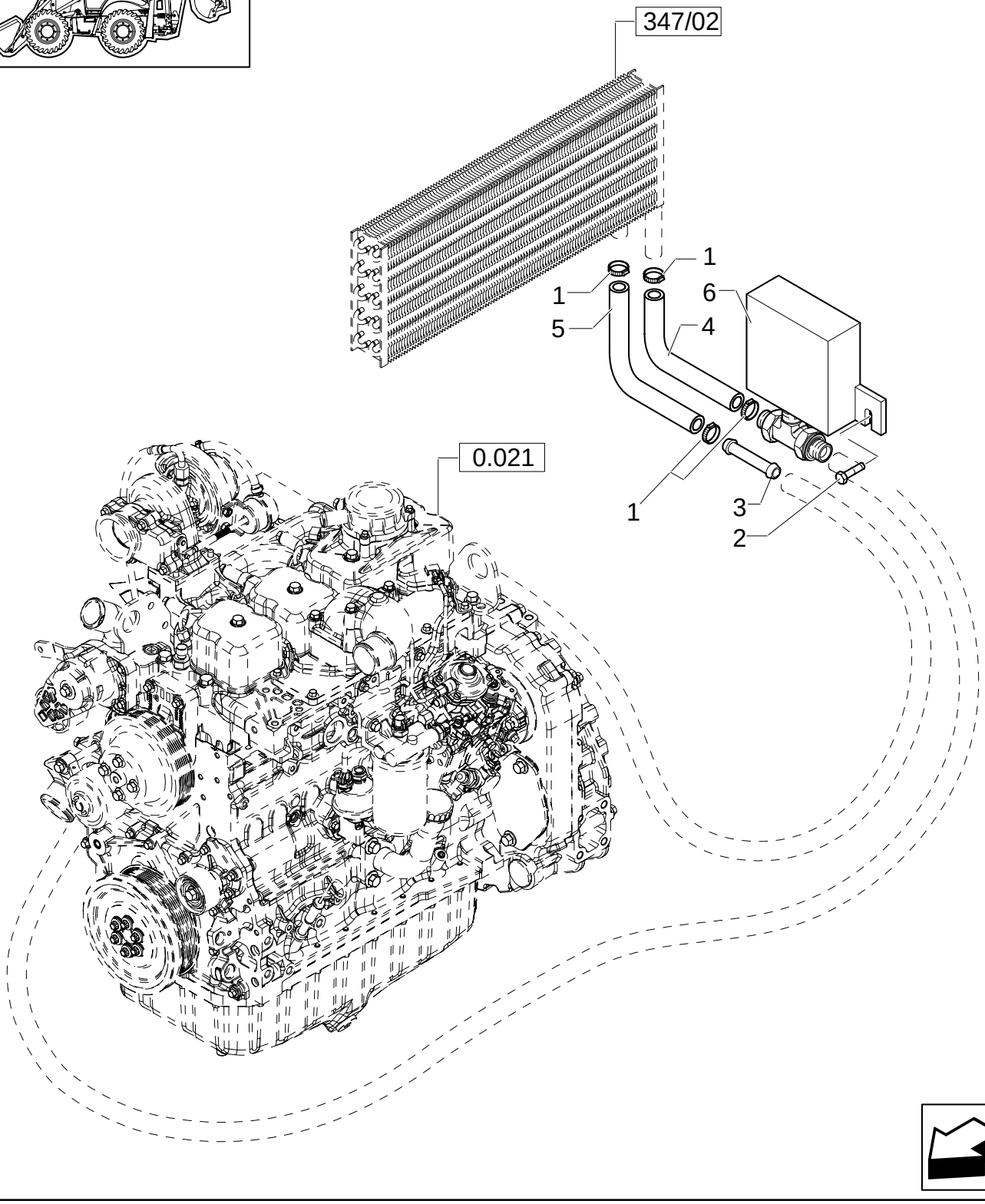

HEATER COIL HOSES

REF	FN	PART NUMBER	YR/SN	QTY	DESCRIPTION
1		87314726		4	COLLAR
2		85819184		2	SCREW
3		85804051		1	JOINT, UNIVERSAL
4		87318747		1	HOSE, FLEXIBLE
5		87318750		1	HOSE, FLEXIBLE
6		87314554		1	DRAINCOCK/TAP, SUPPLY

Mechanical Version, From To S/N XXX

347	04	p1	12/05

A/C & HEATER CONTROL PANEL

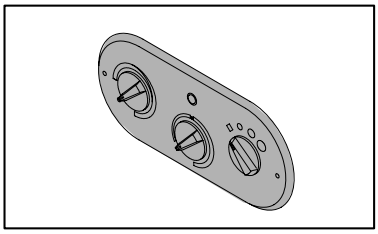

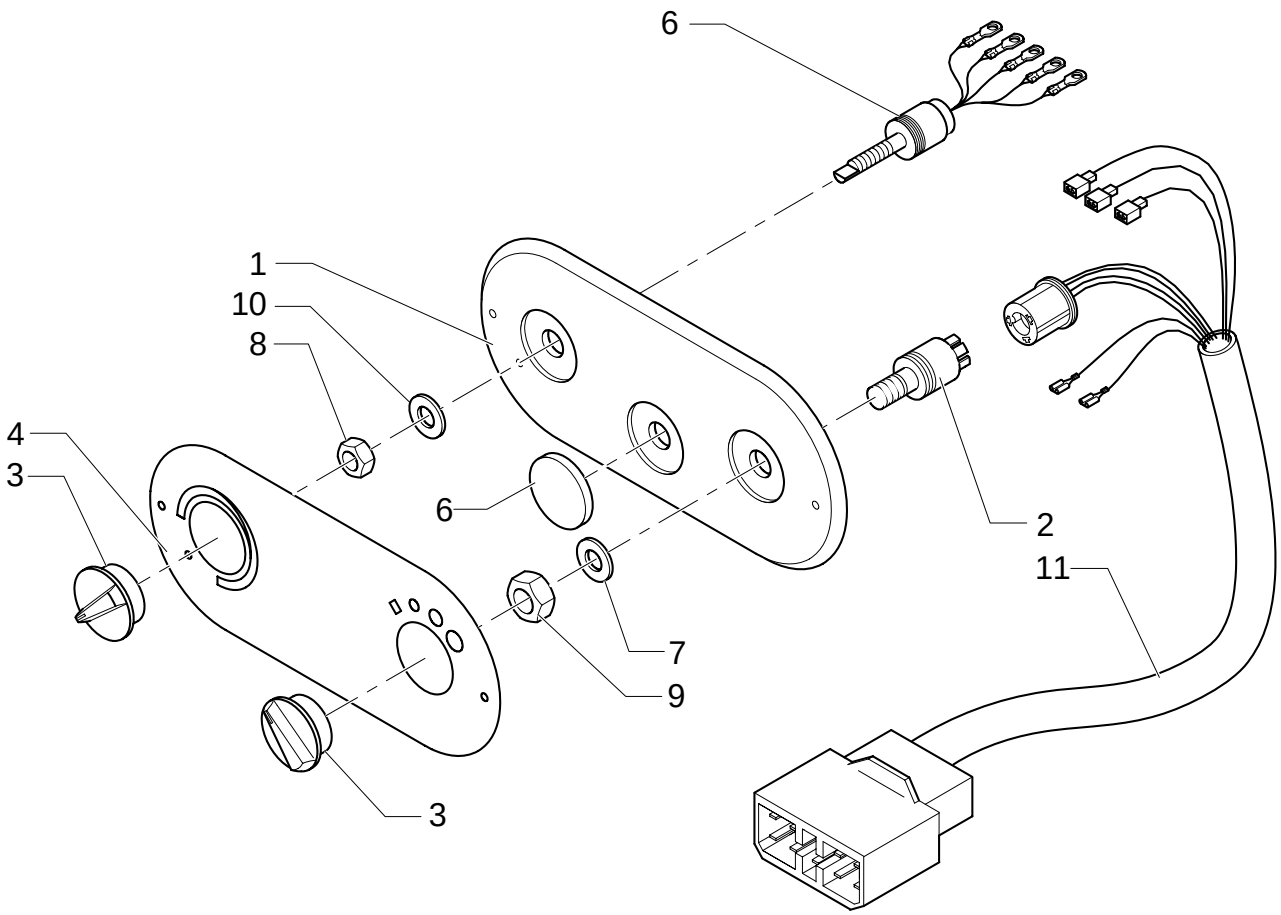

A/C & HEATER CONTROL PANEL

REF	FN	PART NUMBER	YR/SN	QTY	DESCRIPTION
1		87314743		1	DASHBOARD
2		87314747		1	SWITCH
3		87314749		2	DASHBOARD
4		87314753		1	POTENTIOMETER
5		87314757		2	WASHER, SEALING 13X20
6		87316442		1	PLUG
7		87358348		1	WASHER 12,5X18X1,5
8		87334860		1	NUT
9		87334861		1	NUT
10		87358349		1	WASHER 10,5X16X1,5
11		87314522		1	CABLE, ELECTRIC

Mechanical Version, From To S/N XXX

347	05	p1	11/05

A/C & HEATER CONSOLE DUCTS

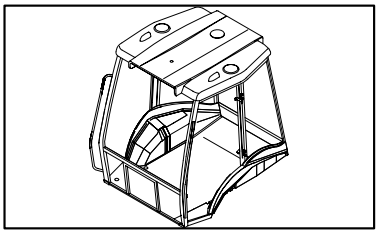

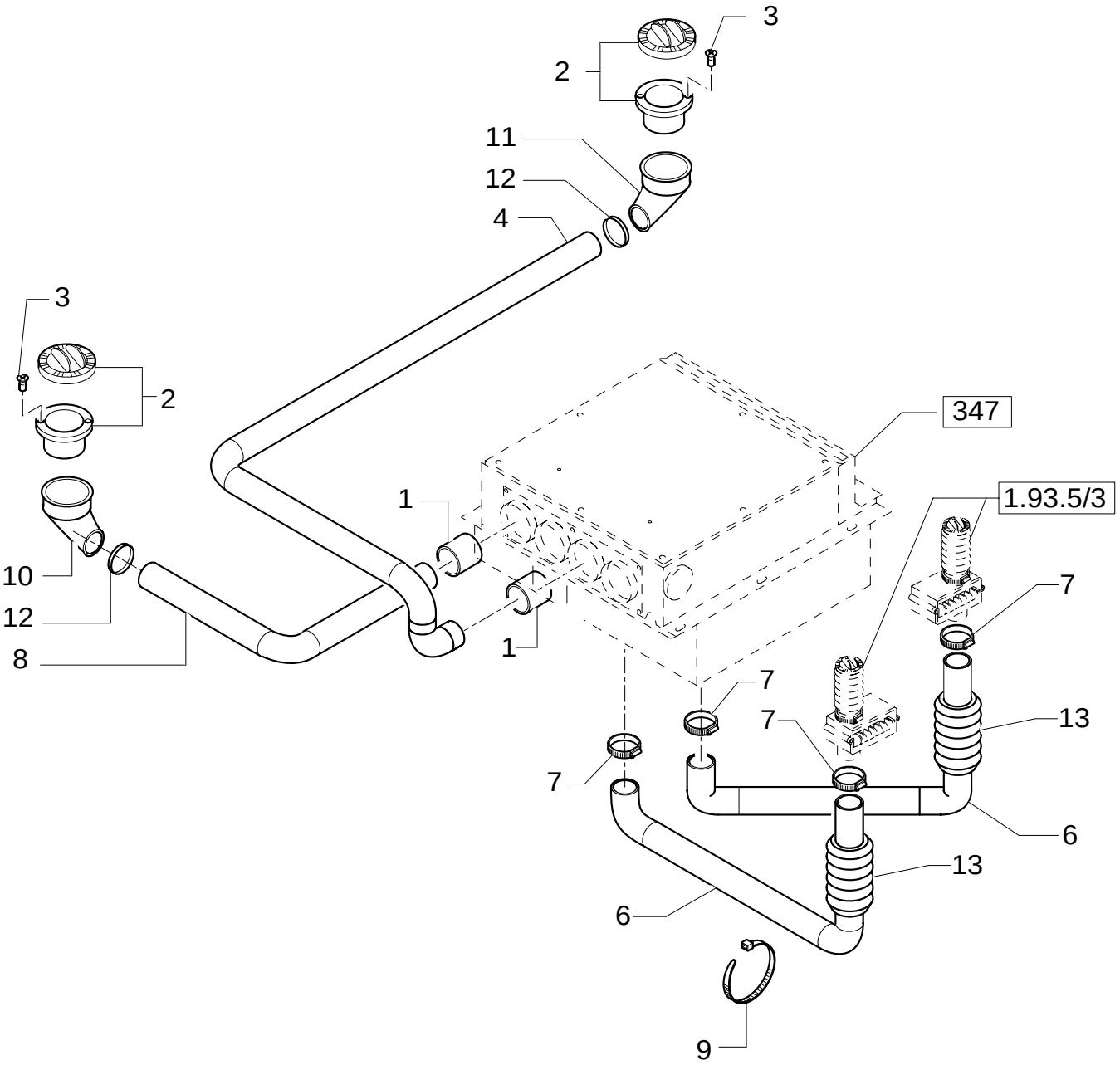

A/C & HEATER CONSOLE DUCTS

REF	FN	PART NUMBER	YR/SN	QTY	DESCRIPTION
1		85819452		2	PIPE
2	1	70741298		2	DIFFUSER
2	2	{87362068}		2	
3		{15915901}		4	
4		87319437		1	HOSE, FLEXIBLE
6		87314767		2	HOSE, FLEXIBLE
7		13000990		4	CLIP, HOSE
8		87319443		1	HOSE, FLEXIBLE
9		5112712		12	COLLAR
10		87319453		2	CONNECTOR
11	1	85818891		1	JOINT, UNIVERSAL
12		85813324		2	COLLAR
13		87314769		2	HOSE, FLEXIBLE

(1) UP TO S/N XXX
(2) FROM TO S/N XXX

Mechanical Version, From To S/N XXX

347	06	p1	08/05

CAB HEATING COATING PLUG

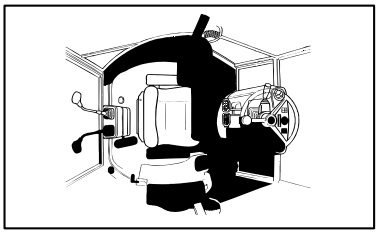

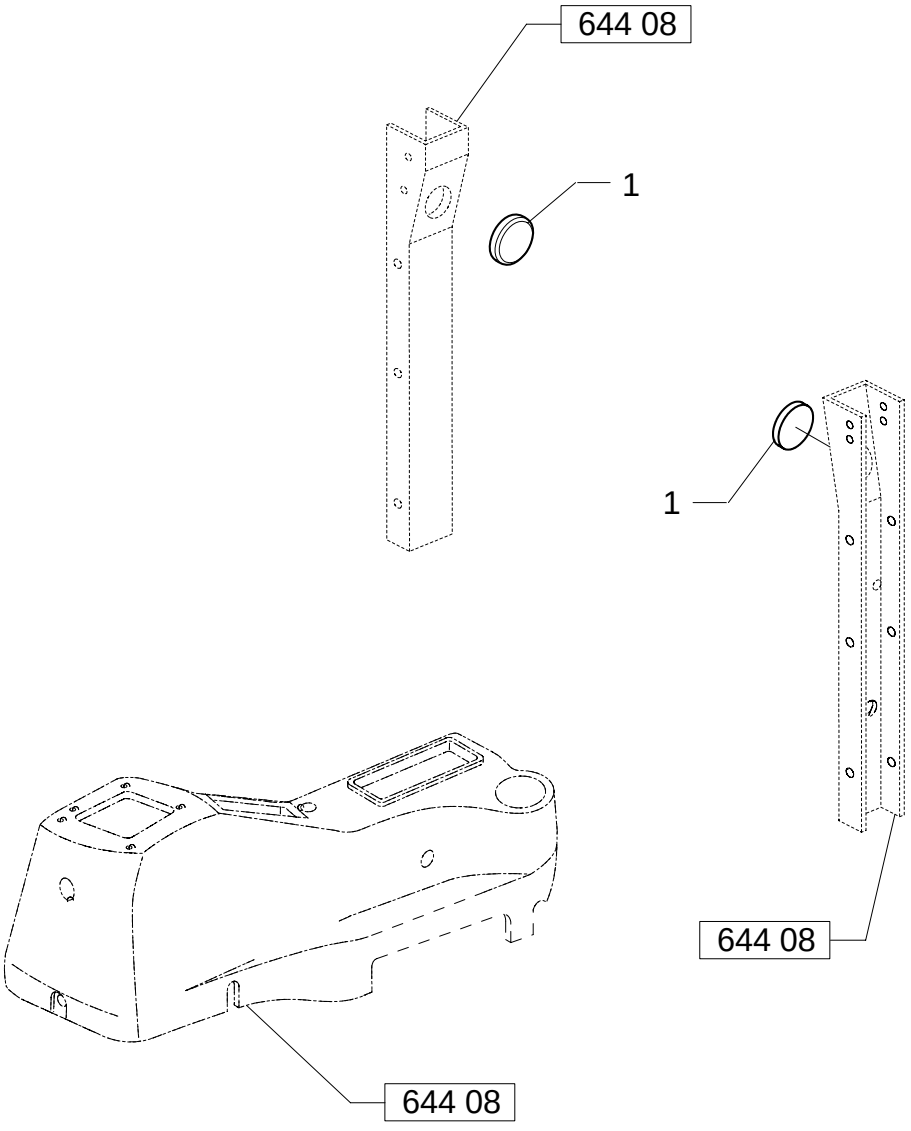

CAB HEATING COATING PLUG

REF	FN	PART NUMBER	YR/SN	QTY	DESCRIPTION
1		87319018		2	PLUG

Mechanical Version, From To S/N XXX

350	01	p1	12/05

2 LEVER BACKHOE CONTROLS, LEVER, BOOT & DECALS

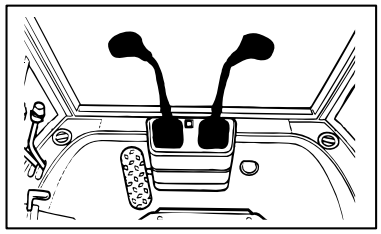

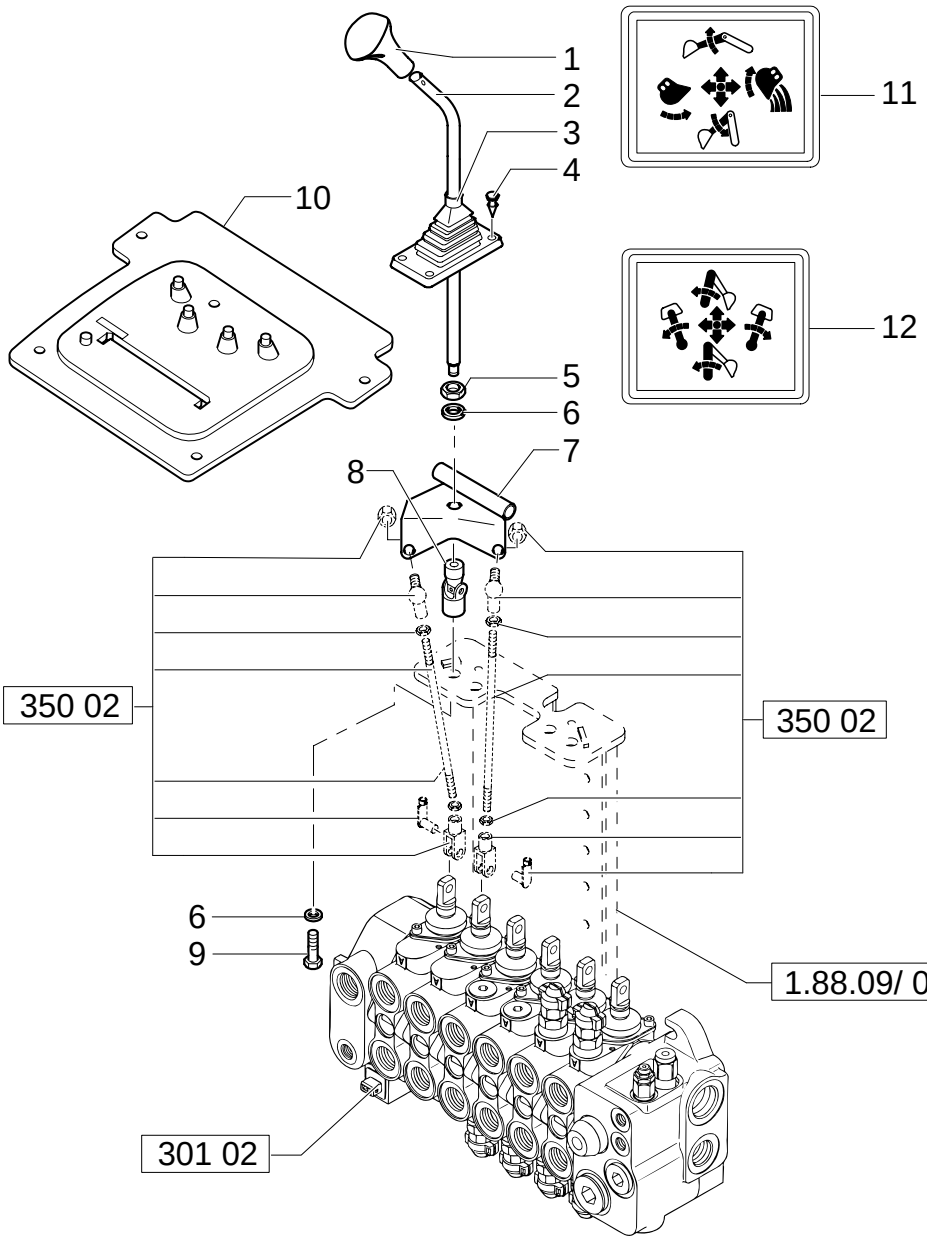

2 LEVER BACKHOE CONTROLS, LEVER, BOOT & DECALS

REF	FN	PART NUMBER	YR/SN	QTY	DESCRIPTION
1		85801502		1	KNOB REAR CONTROL
1		85802682		1	KNOB FOR SWITCH - REAR CONTROL
2		85801488		2	ARM, TRIP
3		85802843		2	BOOT
4		14568887		8	BUTTON
5		16101511		2	NUT
6		11190779		4	WASHER, LOCK 12x24x2.8
7		85803124		1	BRACKET LH
7		85803107		1	BRACKET RH
8		85801518		2	JOINT, UNIVERSAL
9		15540321		2	SCREW Cap, HH, CL 8.8, M12 x 1.25 x 25
10		85804540		1	BOOT
11		85804344		1	DECAL
12		85804345		1	DECAL

Mechanical Version

2 LEVER BACKHOE CONTROLS, LEVER TIE-ROD ASSEMBLY

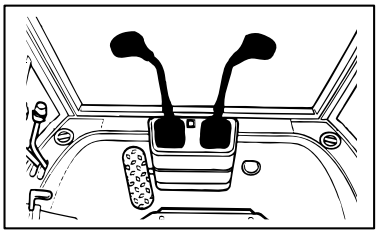

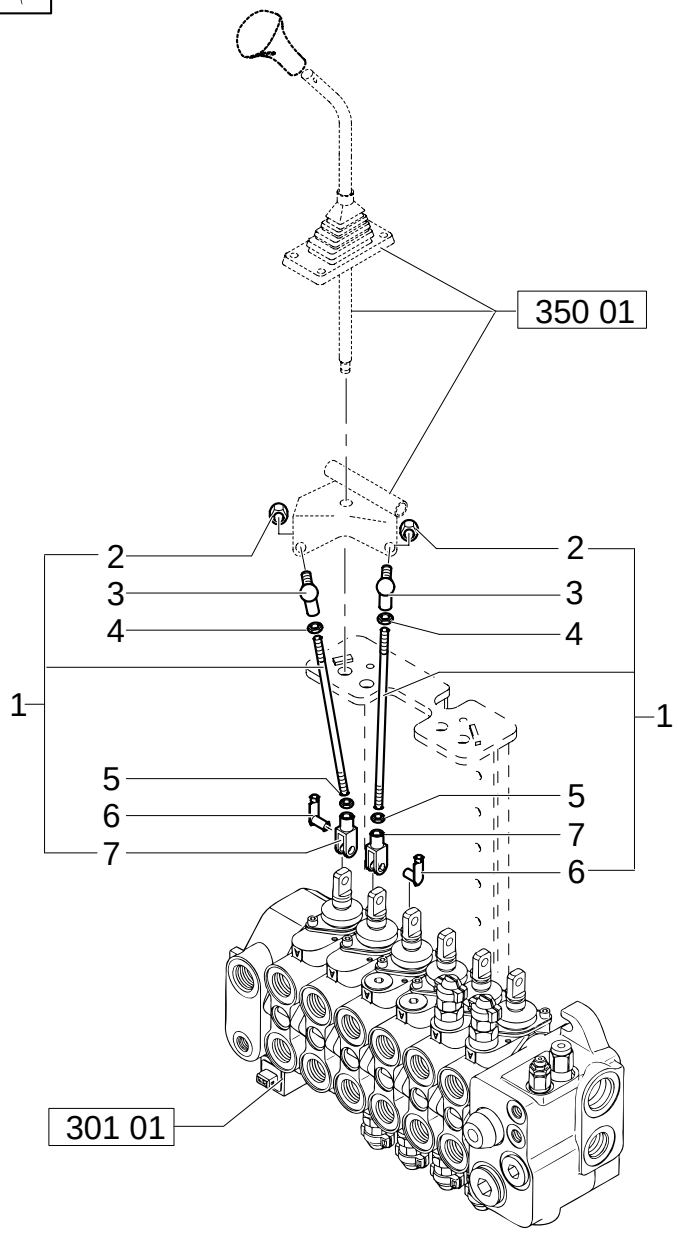

2 LEVER BACKHOE CONTROLS, LEVER TIE-ROD ASSEMBLY

REF	FN	PART NUMBER	YR/SN	QTY	DESCRIPTION
1		85805237		4	TIE-ROD
2		14048211		4	NUT
3		85804375		4	JOINT, UNIVERSAL
4		16102311		4	NUT M8
5		16102911		4	NUT M8
6		85802738		4	PIN
7		11991971		4	YOKE

Mechanical Version

351	03	p1	12/05

JCB 2 LEVER BACKHOE CONTROLS, LOWER TIE-ROD ASSEMBLY

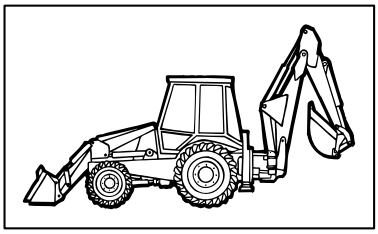

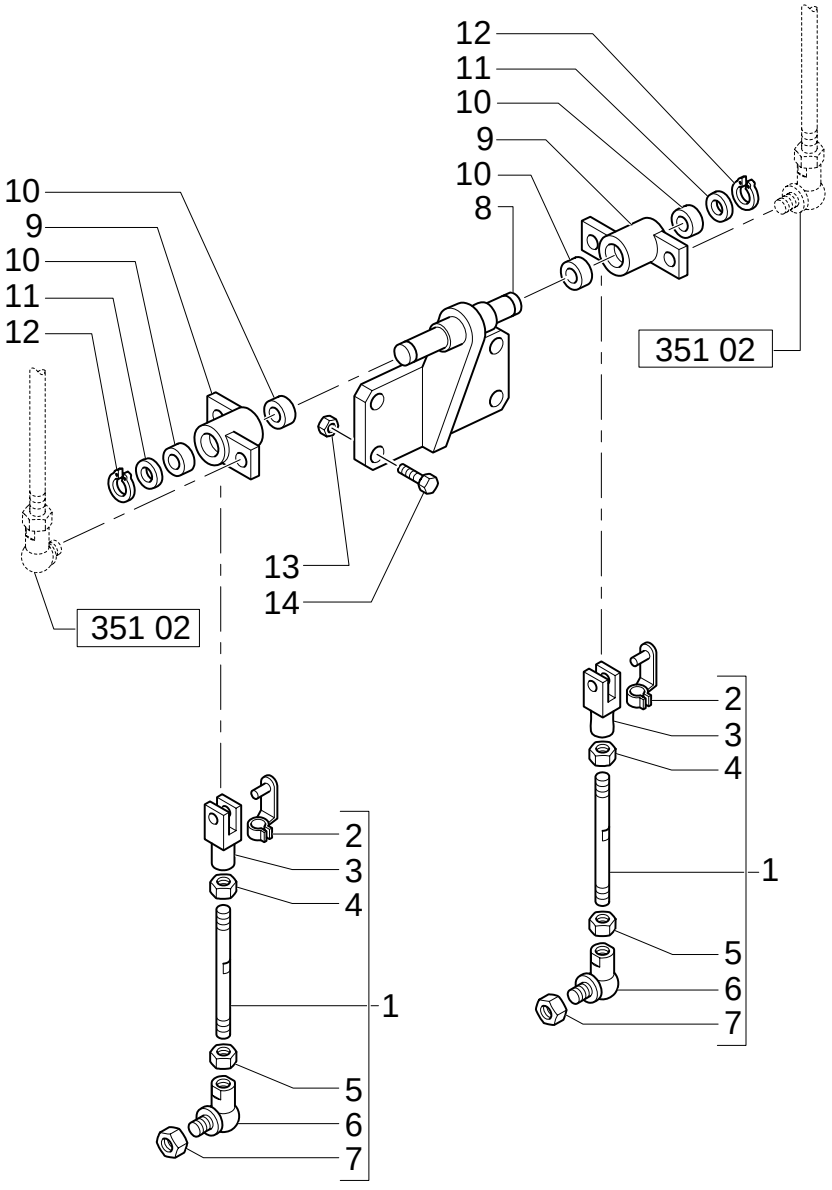

JCB 2 LEVER BACKHOE CONTROLS, LOWER TIE-ROD ASSEMBLY

REF	FN	PART NUMBER	YR/SN	QTY	DESCRIPTION
1		85806165		2	TIE-ROD ASSY
2		85802738		2	PIN
3		11991971		2	YOKE
4		16102911		2	NUT M8/LH
5		16102311		2	NUT M8
6		85804375		2	JOINT, UNIVERSAL
7		14048211		2	NUT M8
8		85804899		1	SUPPORT
9	1	85804895		2	LEVER, IDLER
10		85802494		4	BUSHING
11		13507714		2	WASHER
12		N663114S36		2	RING
13		16104111		4	NUT M8
14		16043821		4	SCREW M8X30

(1) Includes 10

Mechanical Version

353	01	p1	12/05

4 LEVER BACKHOE CONTROLS, CONSOLE, LEVERS & BELLCRANK

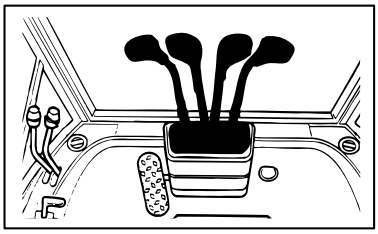

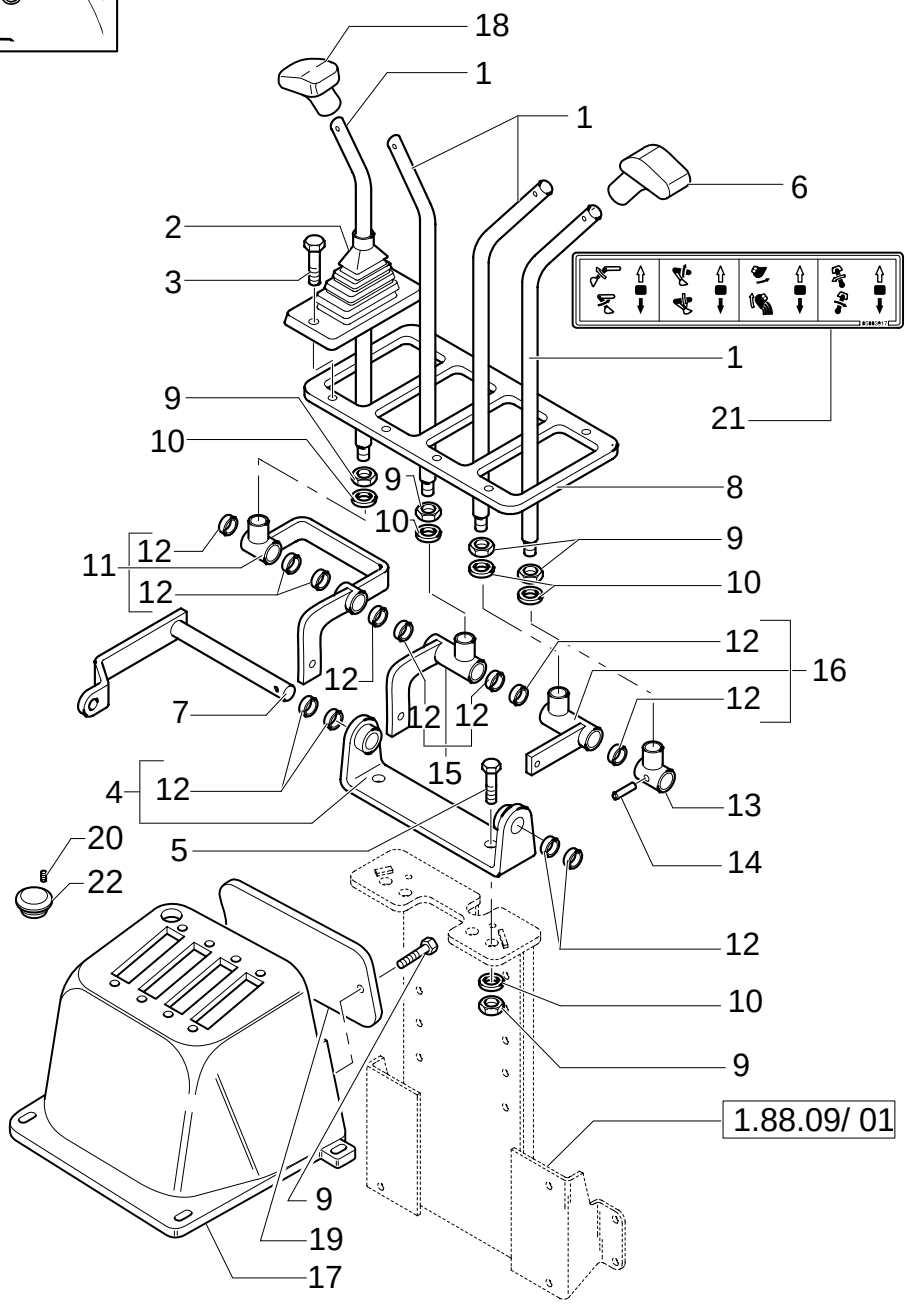

4 LEVER BACKHOE CONTROLS, CONSOLE, LEVERS & BELLCRANK

REF	FN	PART NUMBER	YR/SN	QTY	DESCRIPTION
1		85804780		4	ARM, TRIP
2		85803382		4	BOOT
3		13272477		10	SCREW M4x20
4		85802647		1	SUPPORT
5		15540421		2	SCREW
6		83962919		2	HANDLE R.H.
7		85804782		1	PIN
8		85803540		1	PLATE
9		16101511		6	NUT M12x1.25
10		11190779		6	WASHER, LOCK
11		85804801		1	LEVER, IDLER
12		85802494		12	BUSHING
13		85804787		1	LEVER, IDLER
14		13940370		1	PIN, ROLL
15		85804794		1	LEVER, IDLER
16		85804791		1	LEVER, IDLER
17		85805239		1	CONSOLE
18		83962918		2	HANDLE L.H.
19		85804781		1	COVER
20		13812631		1	DOWEL M12x1.25
21		85803917		1	DECAL
22		85802227		1	PLUG

Mechanical Version

353	02	p1	12/05

4 LEVER BACKHOE CONTROLS, UPPER TIE-ROD ASSEMBLY

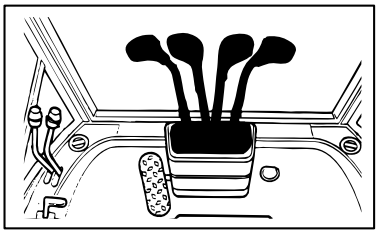

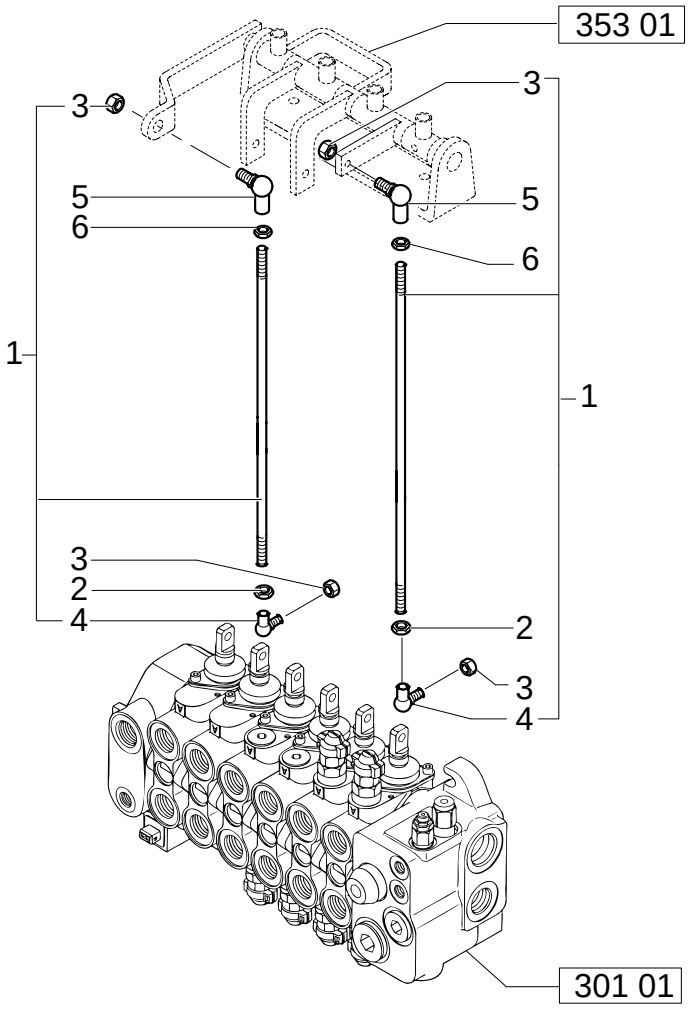

4 LEVER BACKHOE CONTROLS, UPPER TIE-ROD ASSEMBLY

REF	FN	PART NUMBER	YR/SN	QTY	DESCRIPTION
1		85804736		2	TIE-ROD
2		16102911		2	NUT M8
3		14048211		4	NUT M8x1.25
4		85804376		2	JOINT, UNIVERSAL
5		85804375		2	JOINT, UNIVERSAL
6		16102311		2	NUT M8x1.25

Mechanical Version

4 LEVER BACKHOE CONTROLS, LOWER TIE-ROD ASSEMBLY

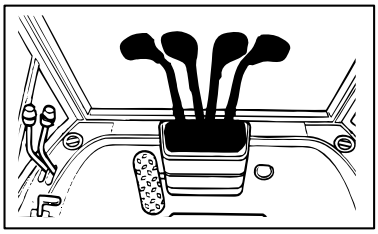

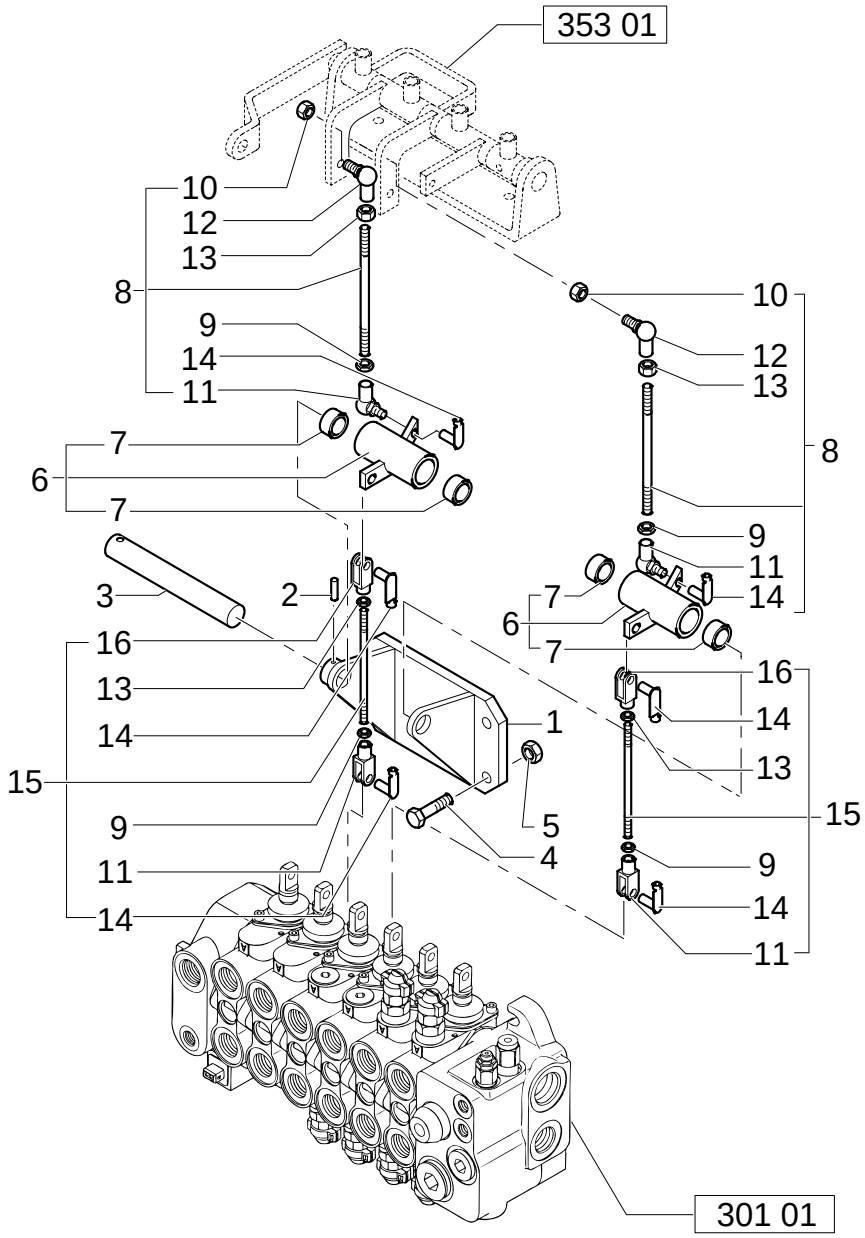

4 LEVER BACKHOE CONTROLS, LOWER TIE-ROD ASSEMBLY

REF	FN	PART NUMBER	YR/SN	QTY	DESCRIPTION
1		85803360		1	SUPPORT
2		13940370		1	PIN, ROLL
3		85803364		1	PIN
4		16043621		4	SCREW M8x1.25x25
5		16104111		4	NUT M8
6		85807926		2	LEVER, IDLER
7		85802494		4	BUSHING
8		85805498		2	TIE-ROD
9		16102911		4	NUT M8
10		14048211		2	NUT
11		11991971		4	YOKE
12		85804375		2	JOINT, UNIVERSAL
13		16102311		4	NUT M8x1.25
14		85802738		6	PIN
15		85807914		2	TIE-ROD
16		10007871		2	YOKE

Mechanical Version

358	01	p1	12/05

ISO 2 LEVER BACKHOE CONTROLS, LEVERS, BOOT & DECALS

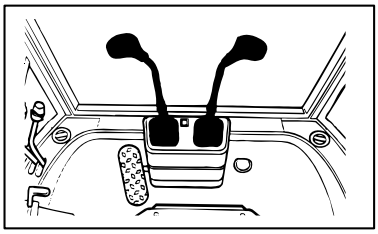

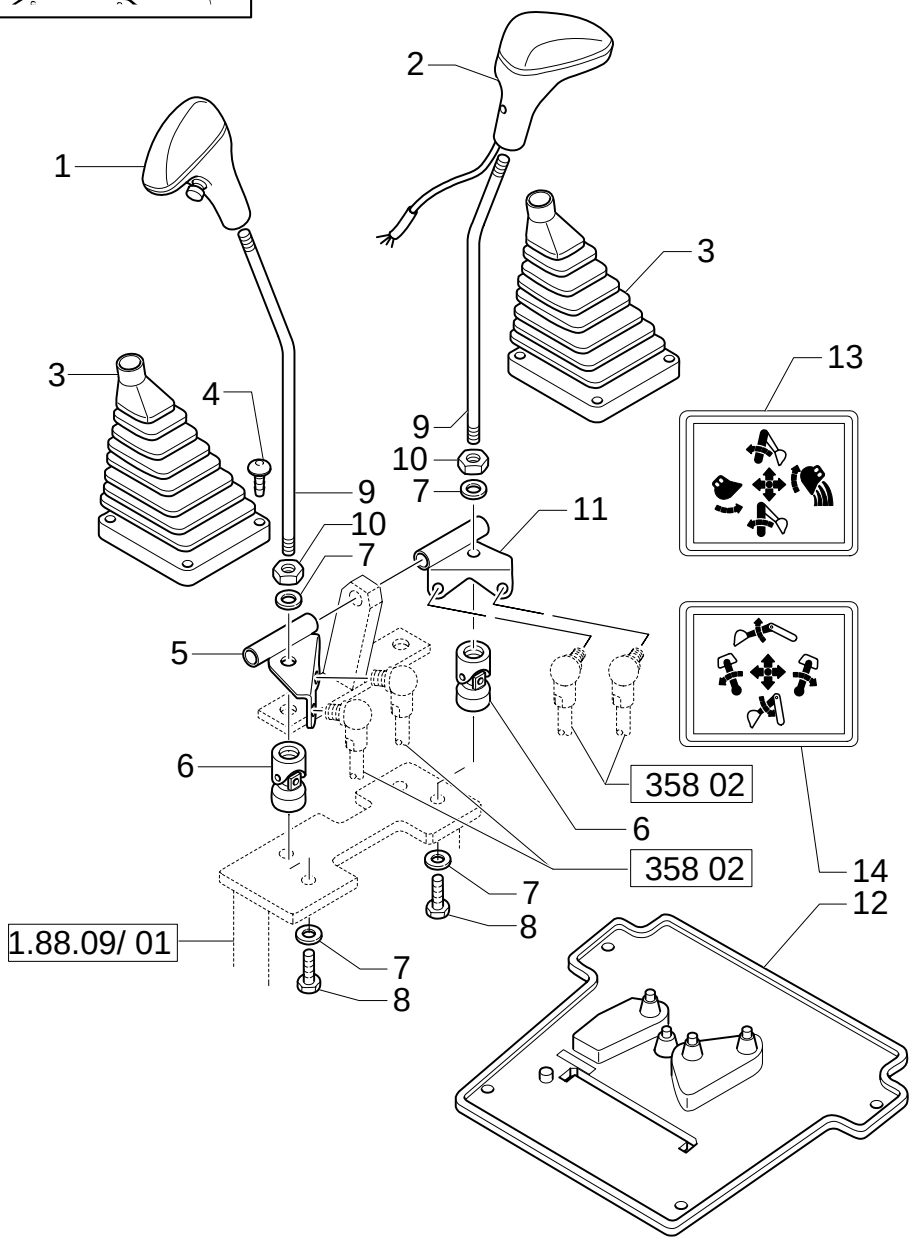

ISO 2 LEVER BACKHOE CONTROLS, LEVERS, BOOT & DECALS

REF	FN	PART NUMBER	YR/SN	QTY	DESCRIPTION
1		85801502		1	KNOB
2		85802682		1	KNOB
3		85802843		2	BOOT
4		14568887		8	BUTTON 8X20
5		85803124		1	BRACKET LH
6		85801518		2	JOINT, UNIVERSAL
7		11190779		4	WASHER, LOCK
8		15540321		2	SCREW Cap, HH, CL 8.8, M12 x 1.25 x 25
9		85801488		2	ARM, TRIP
10		16101511		2	NUT M12X1.25
11		85803107		1	BRACKET RH
12		85804541		1	BOOT
13		85803783		1	DECAL
14		85803782		1	DECAL

Mechanical Version

ISO 2 LEVER BACKHOE CONTROLS, TIE-ROD ASSEMBLY

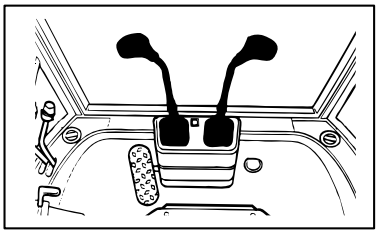

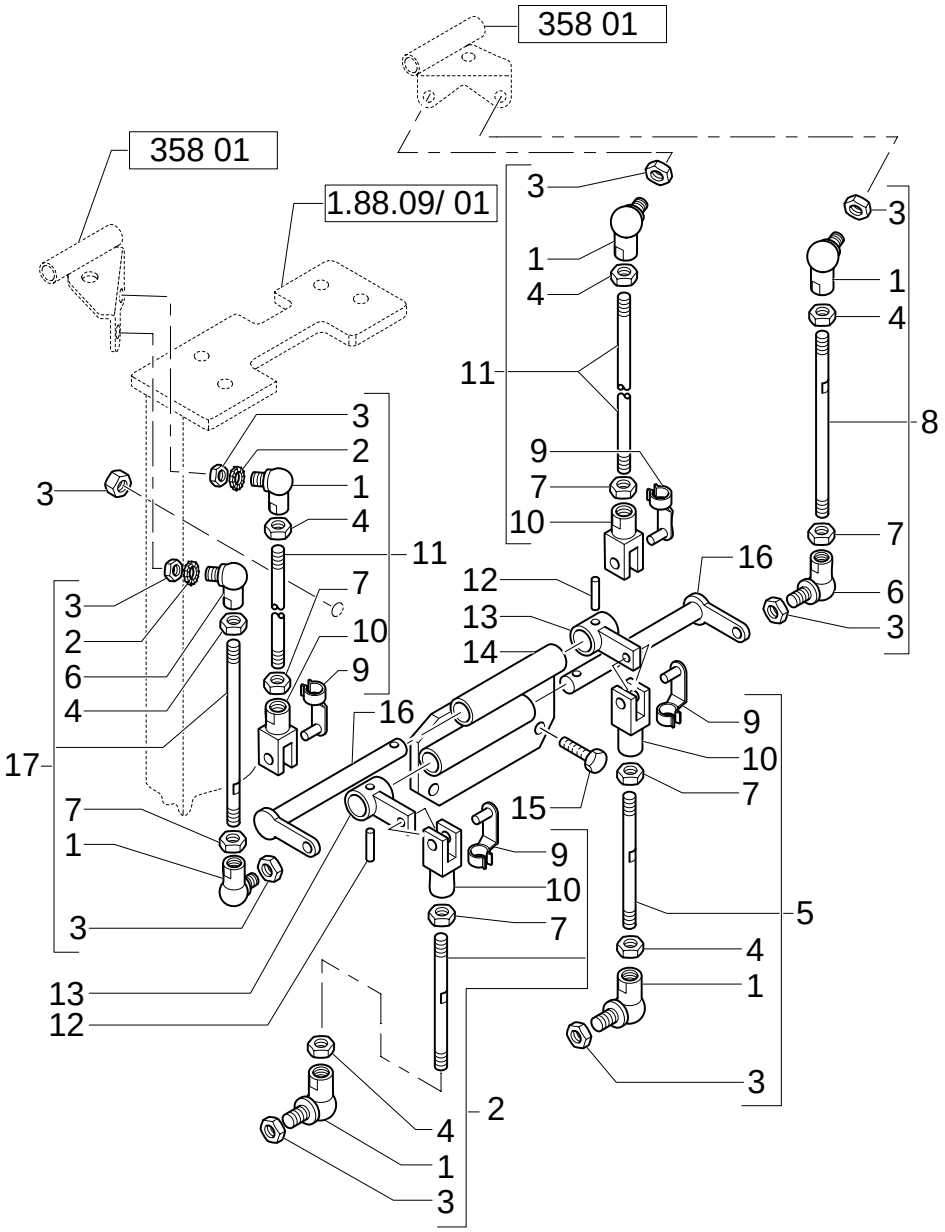

ISO 2 LEVER BACKHOE CONTROLS, TIE-ROD ASSEMBLY

REF	FN	PART NUMBER	YR/SN	QTY	DESCRIPTION
1		85804375		6	JOINT, UNIVERSAL
2		85805806		1	TIE-ROD ASSY
3		14048211		8	NUT M8X1.25
4		16102311		4	NUT M8X1.25
5		85805867		1	TIE-ROD ASSY
6		85804376		2	JOINT, UNIVERSAL
7		16102911		6	NUT M8
8		85803477		1	TIE-ROD, THREADED ASSY
9		85802738		4	PIN
10		11991971		4	YOKE LH
11		85805237		2	TIE-ROD ASSY
12		13940370		2	PIN, ROLL
13		85805866		2	LEVER, IDLER
14		85803493		1	SUPPORT
15		16043621		3	SCREW M8X1.25X25
16		85803489		2	PIN
17		85803474		1	TIE-ROD

Mechanical Version

393	03	p1	12/05

LOCKING VALVE ON BACKHOE LIFT CYLINDER

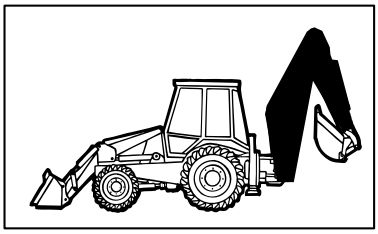

KIT KIT KIT 2=●

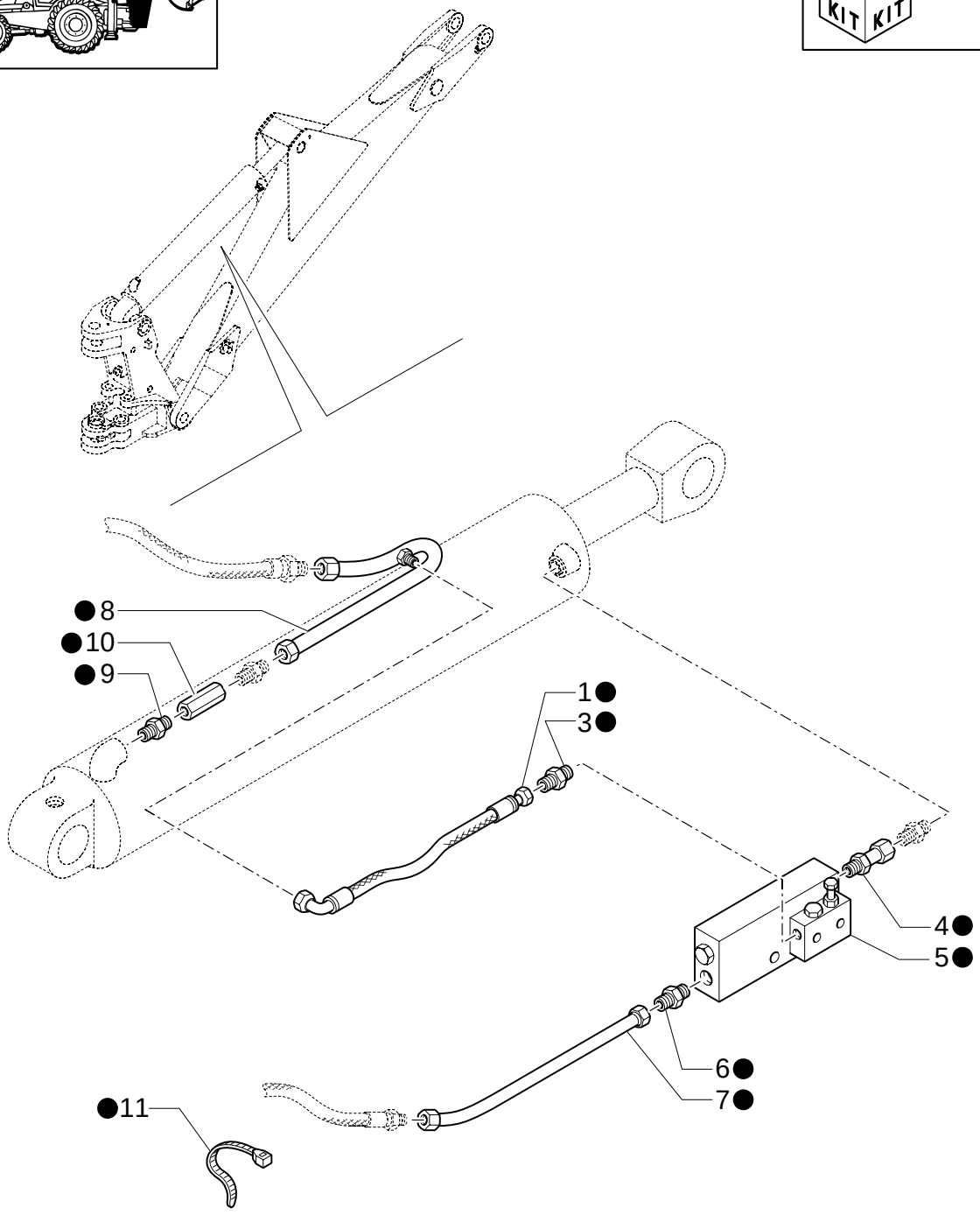

LOCKING VALVE ON BACKHOE LIFT CYLINDER

REF	FN	PART NUMBER	YR/SN	QTY	DESCRIPTION
1		85815505		1	HOSE, FLEXIBLE
2		{87356233}		1	
3		85802803		1	CONNECTOR, HYD.
4		85805124		1	CONNECTOR, HYD.
5		87353316		1	VALVE, SAFETY ASSY
6		390828S36		1	CONNECTOR, HYD.
7		85820835		1	TUBE, RIGID
8		85820836		1	TUBE, RIGID
9		85804879		1	CONNECTOR, HYD.
10		85824308		1	VALVE, HYDRAULIC
11		79072960		2	COLLAR

622	01	p1	02/05

INTERNAL FAN

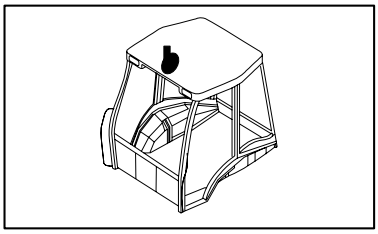

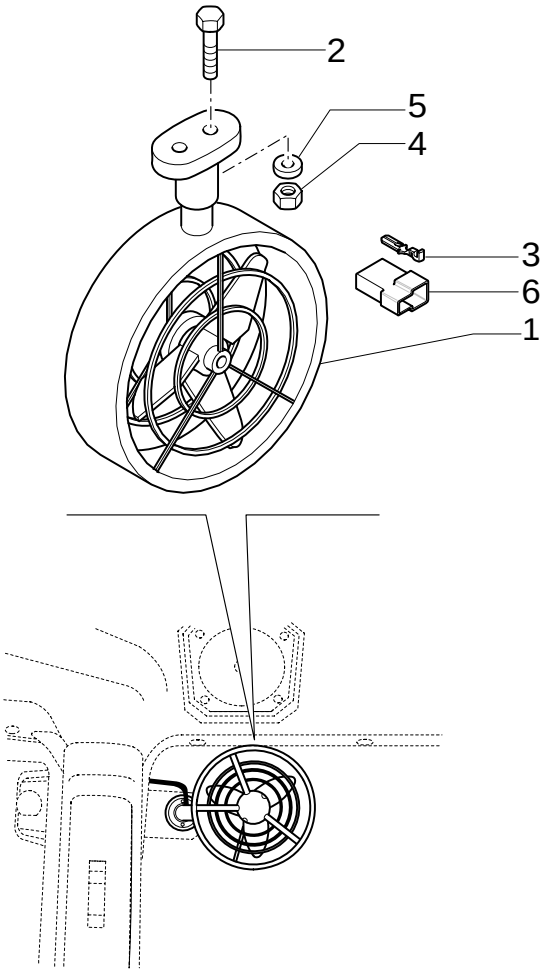

INTERNAL FAN

REF	FN	PART NUMBER	YR/SN	QTY	DESCRIPTION
1		85804323		1	FAN
2		14303324		2	SCREW M4X20
3		10250644		2	CABLE TERMINAL
4		12574011		2	NUT M4
5		12642804		2	WASHER
6		12059980		1	JOINT, UNIVERSAL

642	01	p1	02/05

EGS CONTROL, 20 & 40KM/H (POWER SHIFT)

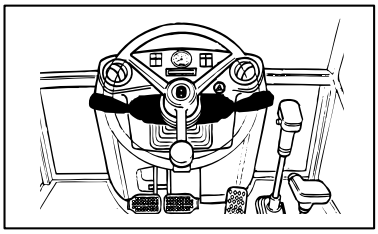

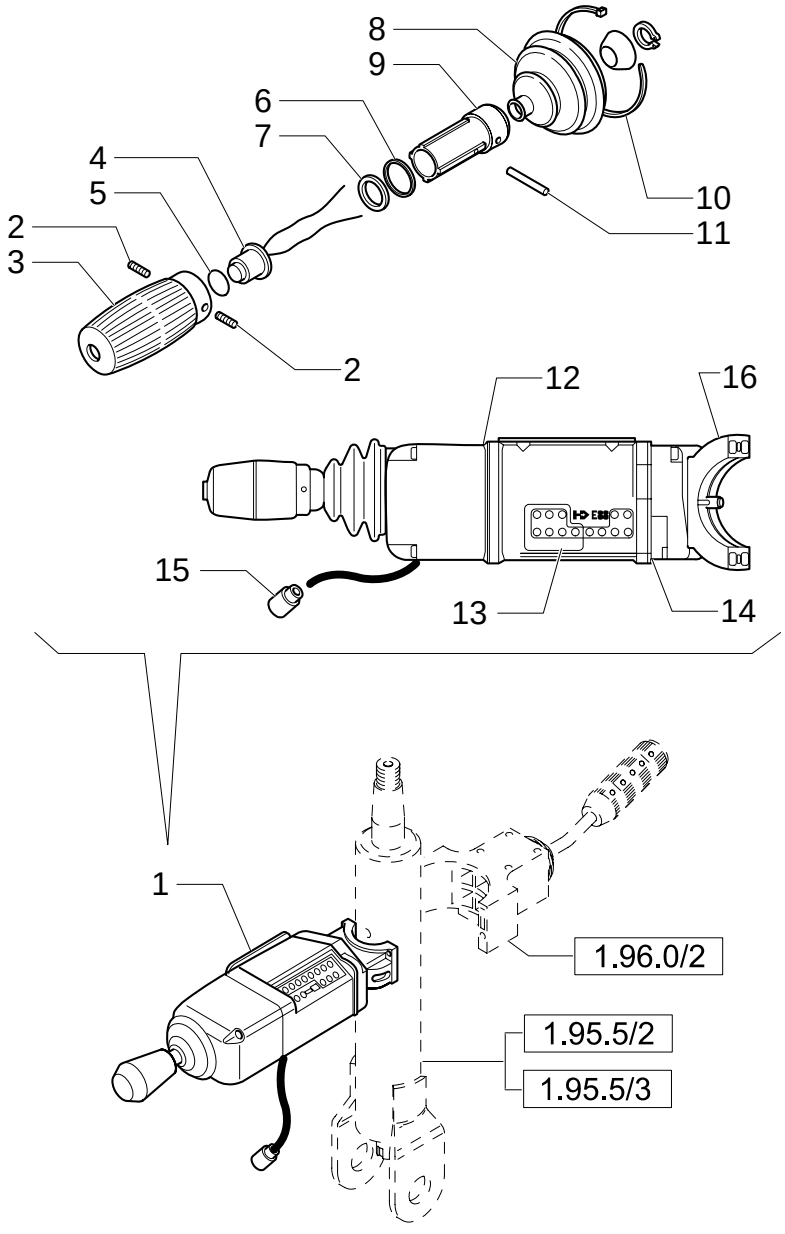

EGS CONTROL, 20 & 40KM/H (POWER SHIFT)

REF	FN	PART NUMBER	YR/SN	QTY	DESCRIPTION
1		85818993		1	CONTROL (EQUIP.642)40KM/H
1		85818992		1	CONTROL (EQUIP.643)20KM/H
2		9969356		2	SCREW
3		9969351		1	HANDLE GRIP
4		9969358		1	SWITCH
5		9969357		1	O-RING
6		9969360		1	O-RING
7		9969359		1	SHIM
8		9969352		1	BOOT
9		9969361		1	BODY
10		9969363		1	COLLAR
11		9969362		1	PIN, GUIDE
12		9969353		1	GASKET TRANSMISSION
13		9969354		1	DECAL
14		9969355		1	COVER REAR
15		85819152		1	CABLE, ELECTRIC
16		85817619		1	CLIP, HOSE

646/1	01	p1	06/05

MACHINE PART AIR CONDITIONING SET

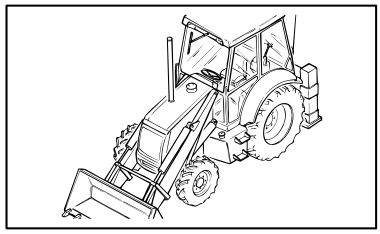

MACHINE PART AIR CONDITIONING SET

REF	FN	PART NUMBER	YR/SN	QTY	DESCRIPTION
1	1	87315364		1	HOSE, FLEXIBLE
2	1	87315368		1	HOSE, FLEXIBLE
3	2	87315371		1	HOSE, FLEXIBLE
4	3	87315381		1	HOSE, FLEXIBLE
5		85817287		1	STRIP-GASKET
6		14560187		2	COLLAR
7		47048451		4	COLLAR
8		85805013		4	O-RING
9		85805006		1	O-RING
10		85817186		2	O-RING
11		85805014		1	O-RING

(1) Includes 8 in q.ty 2
(2) Includes 9, 10 in q.ty 1
(3) Includes 10 in q.ty 1, 11

From To S/N XXX

646/1	02	p1	11/05

A/C COMPRESSOR ATTACHING GROUP

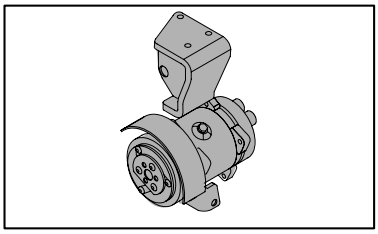

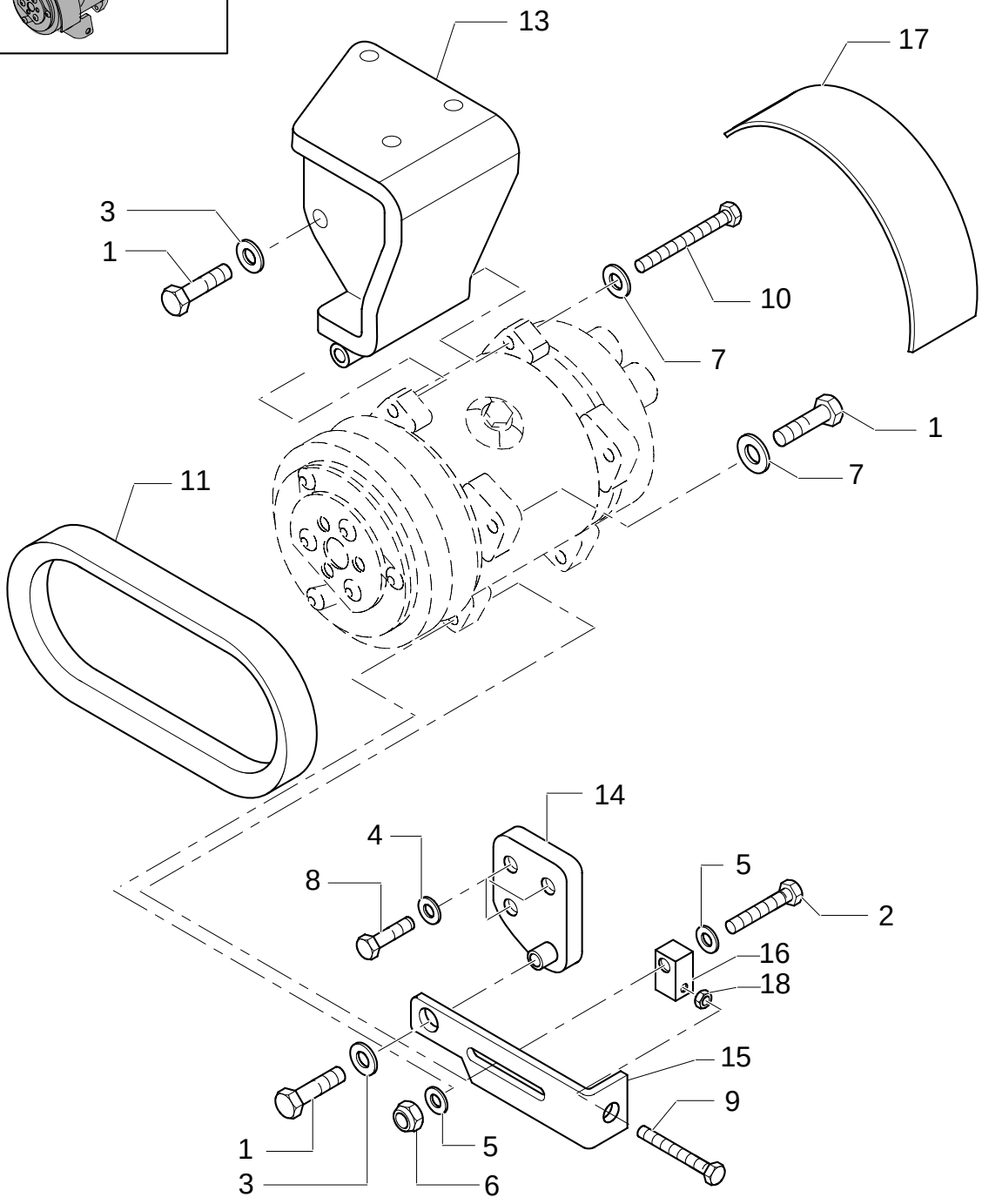

A/C COMPRESSOR ATTACHING GROUP

REF	FN	PART NUMBER	YR/SN	QTY	DESCRIPTION
1		11106421		3	SCREW
2		11107421		1	SCREW
3		11190574		2	WASHER, LOCK
4		11193874		3	WASHER, LOCK
5		14496601		2	WASHER
6		12577211		1	NUT
7		12601471		2	WASHER, LOCK
8		16043621		3	SCREW
9		15214521		1	SCREW
10		11108821		1	SCREW
11		87304910		1	BELT
13		87315441		1	SUPPORT
14		87315446		1	SUPPORT
15		87315457		1	TENSIONER, BELT
16		87315459		1	BLOCK
17		87315460		1	GUARD
18		16102211		1	NUT

From To S/N XXX

646/1	03	p1	05/05

A/C COMPRESSOR

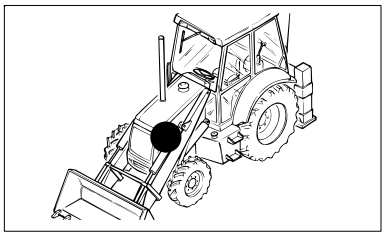

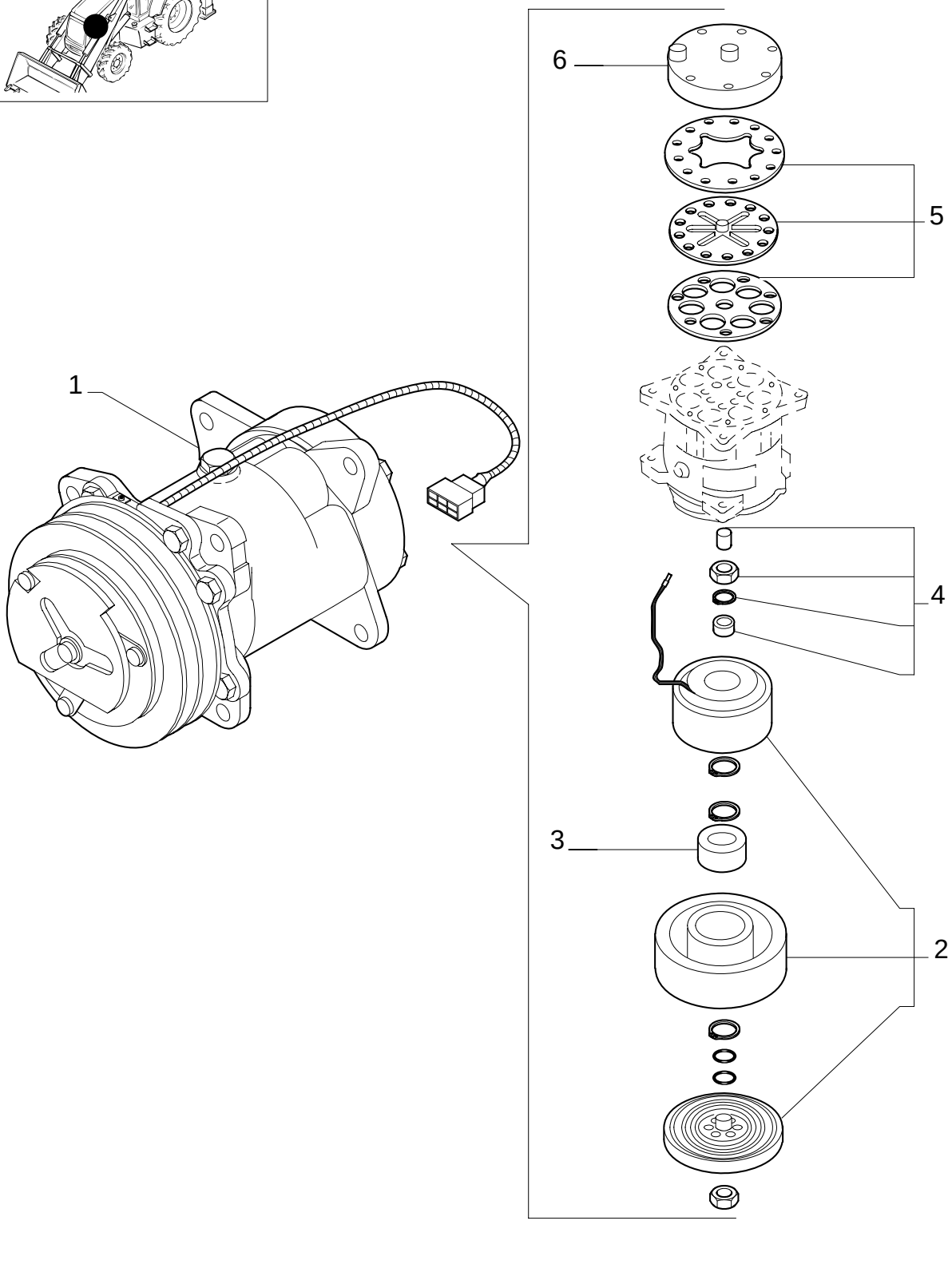

A/C COMPRESSOR

REF	FN	PART NUMBER	YR/SN	QTY	DESCRIPTION
1		85817170		1	COMPRESSOR, AIRCOND. (SD7H15) ASSY
2		85817171		1	KIT
3		85817172		3	BEARING ASSY
4		85817173		1	KIT
5		85817174		1	KIT
6		85817175		1	KIT

646/1	04	p1	08/05

A/C FILTER & CONDENSER ATTACHING GROUP

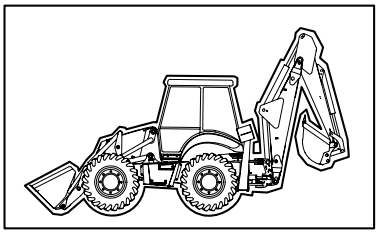

A/C FILTER & CONDENSER ATTACHING GROUP

REF	FN	PART NUMBER	YR/SN	QTY	DESCRIPTION
1		14496534		4	WASHER
2		16043421		2	SCREW
3		16104111		2	NUT
4		87315252		1	BRACKET
5		85819184		7	SCREW
6	1	85804065		1	SENDER UNIT
7		87315214		1	BRACKET
8		87315219		1	BRACKET
9		87315221		1	BRACKET RH
10		87315225		1	BRACKET LH
11		87315236		1	BRACKET
12		87315239		2	COLLAR
13		87314566		1	CONDENSER
14		87315241		1	FILTER, AIR
15		16043621		4	SCREW
16		85819185		1	GASKET
17	2	87319438		1	SUPPORT
18	2	14040711		8	WASHER
19	2	87319441		1	SUPPORT

(1) Includes 20
(2) Only For Version Without Intercooler

From To S/N XXX

646A	01	p1	02/05

A/C COMPRESSOR ATTACHING GROUP

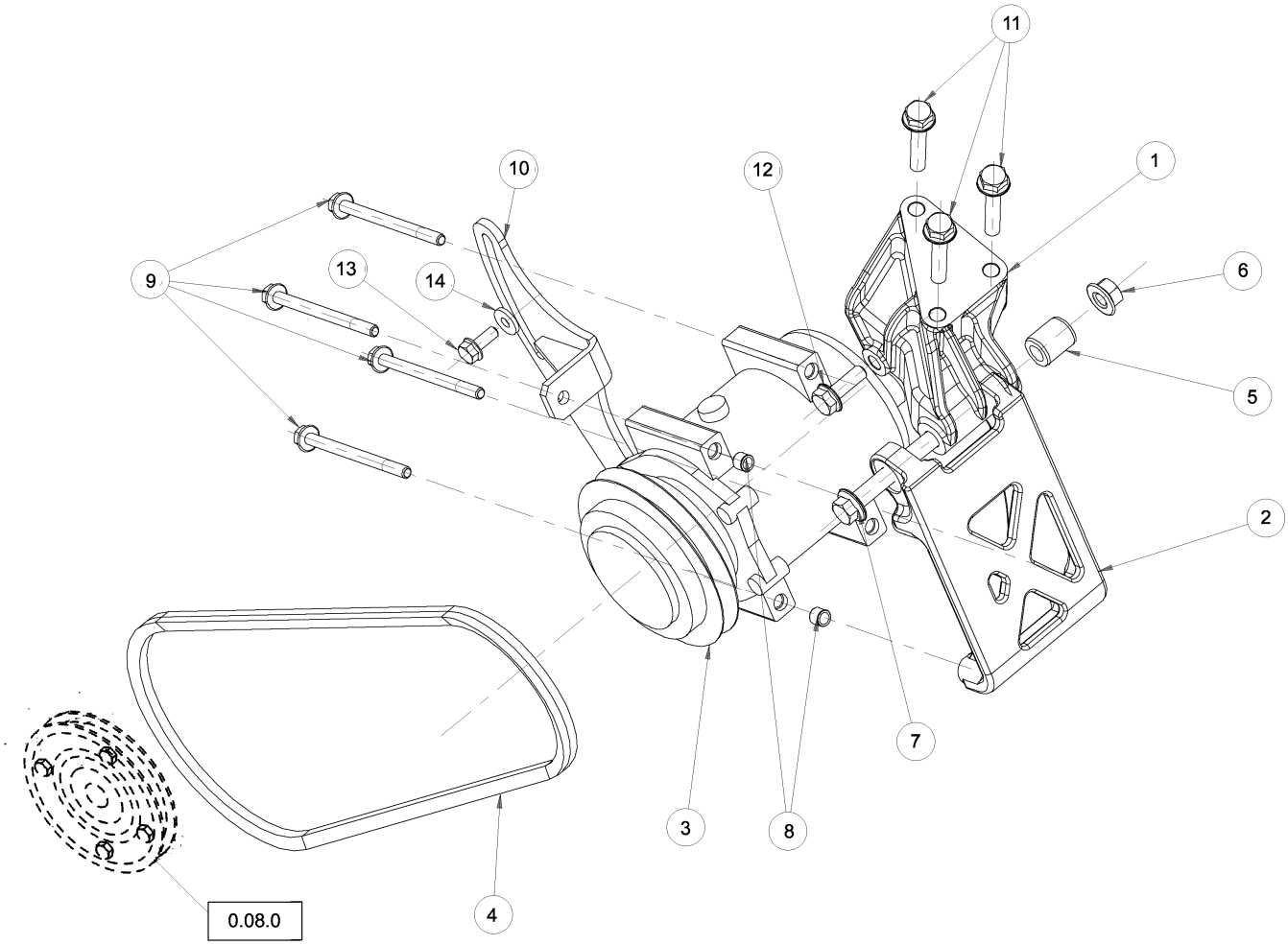

A/C COMPRESSOR ATTACHING GROUP

REF	FN	PART NUMBER	YR/SN	QTY	DESCRIPTION
1		2852622		1	SUPPORT
2		2852623		1	SUPPORT
3		87430122		1	COMPRESSOR, AIRCOND.
4		2852625		1	BELT
5		98433179		1	SPACER
6		17044921		1	NUT M12
7		2852925		1	SCREW
8		4895227		2	DOWEL
9		2852628		4	SCREW
10		2852629		1	TENSIONER
11		2852630		3	SCREW
12		16675834		1	SCREW
13		87803136		1	SCREW
14		12647121		1	WASHER

Up To S/N XXX

705	01	p1	02/05

SEAT BELTS, 2" & 3"

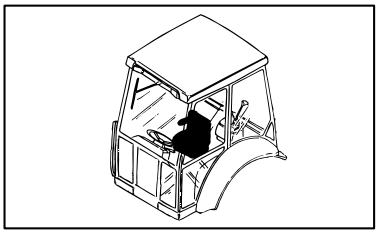

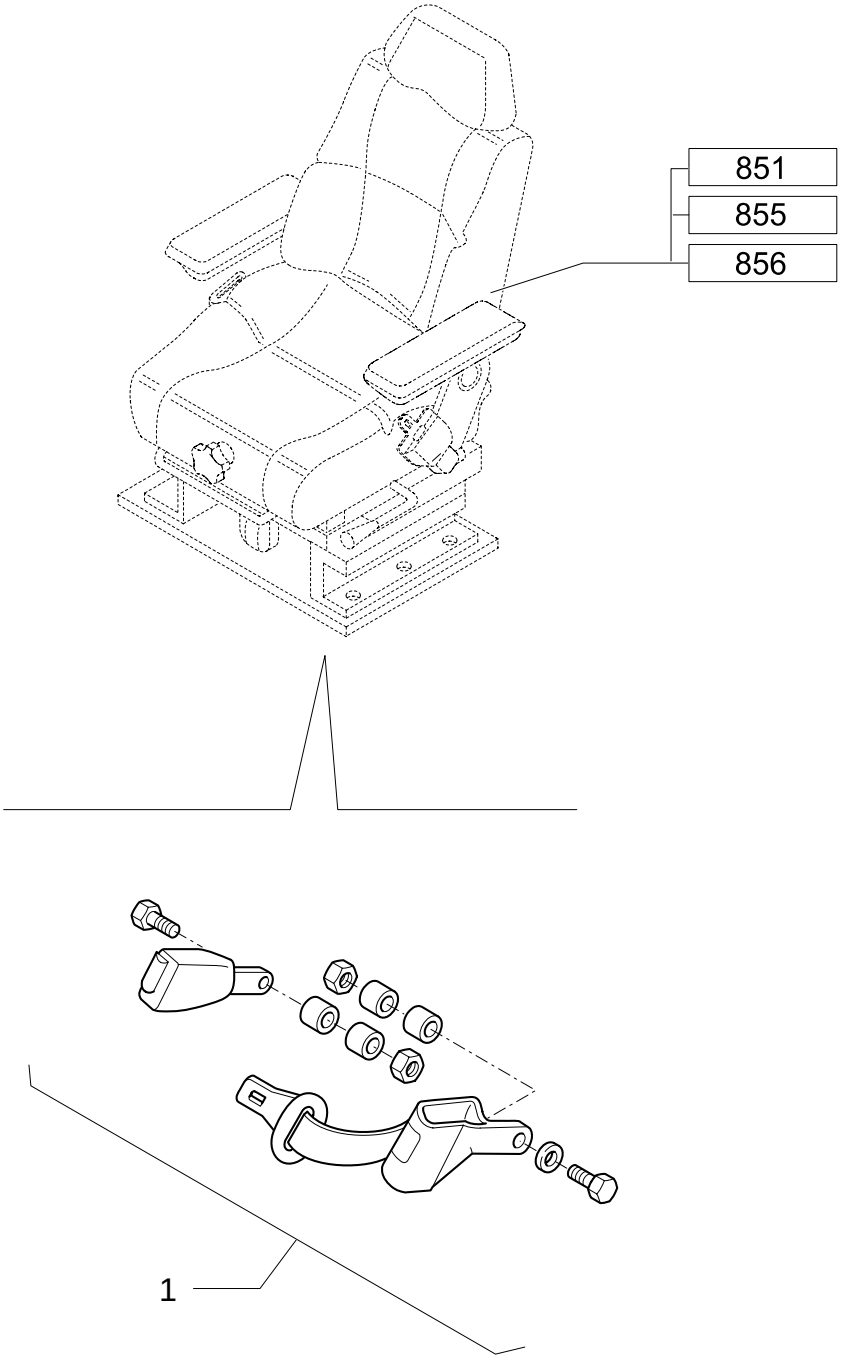

SEAT BELTS, 2" & 3"

REF	FN	PART NUMBER	YR/SN	QTY	DESCRIPTION
1		85815578		1	SEAT BELT 2" (EQUIP.705)
1		85815579		1	SEAT BELT 3" (EQUIP.706)

758	01	p1	02/05

ROTATING BEACON

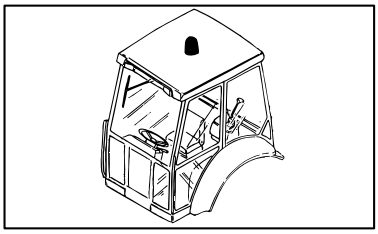

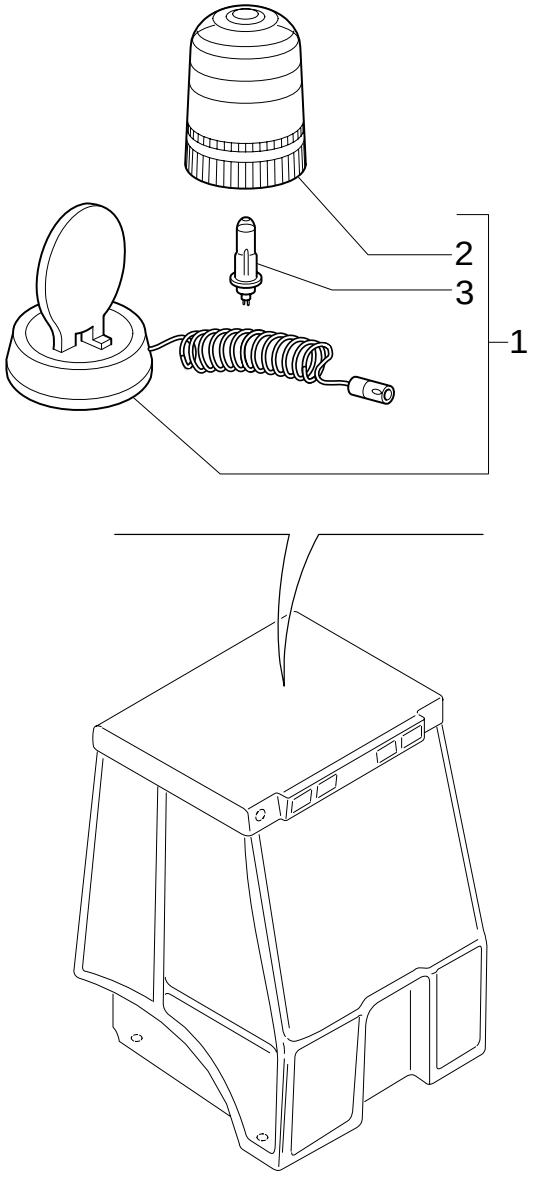

ROTATING BEACON

REF	FN	PART NUMBER	YR/SN	QTY	DESCRIPTION
1		85817129		1	BEACON, ROTATING
2		85817131		1	LENS
3		85817130		1	BULB

792	01	p1	02/05

RH CONSOLE WITH INSTRUMENTS AND DIAGNOSTICS

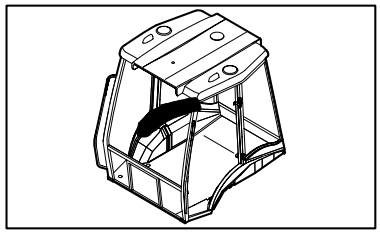

RH CONSOLE WITH INSTRUMENTS AND DIAGNOSTICS

REF	FN	PART NUMBER	YR/SN	QTY	DESCRIPTION
1		85825254		7	PLUG
2		87412252		1	TESTER
3		85818817		1	DASHBOARD
4		85818818		1	SWITCH
5		14143790		2	BULB
6		85818819		1	SWITCH
7		87431463		1	CABLE, ELECTRIC
8		85819214		1	CABLE, ELECTRIC

795	01	p1	02/05

RH CONSOLE WITH INSTRUMENTS AND DIAGNOSTICS

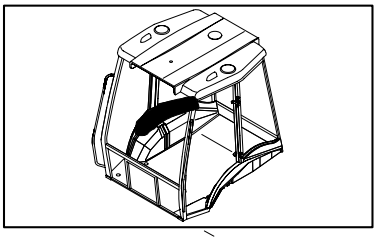

RH CONSOLE WITH INSTRUMENTS AND DIAGNOSTICS

REF	FN	PART NUMBER	YR/SN	QTY	DESCRIPTION
1		85819758		1	TOOL, SPECIAL
2		297449		1	CABLE, ELECTRIC
3		NSS		1	NOT SERVICED SEPARATELY
4		NSS		1	NOT SERVICED SEPARATELY

796	01	p1	02/05

ANTITHEFT

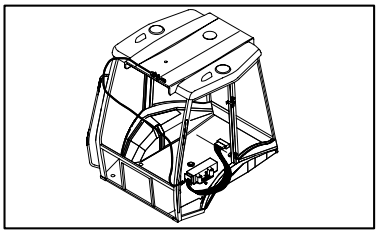

ANTITHEFT

REF	FN	PART NUMBER	YR/SN	QTY	DESCRIPTION
1		85819765		1	KIT
2		12574011		2	NUT
3		12642821		2	WASHER, LOCK
4		14303324		2	SCREW
5		85819766		1	COVER
6		NSS		1	NOT SERVICED SEPARATELY

851/ 2	01	p1	12/05

CLOTH SEAT & ATTACHING HARDWARE - CABINE

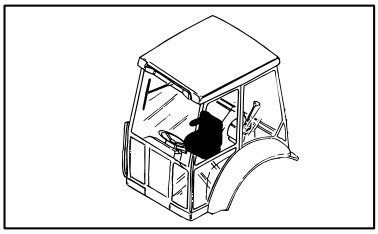

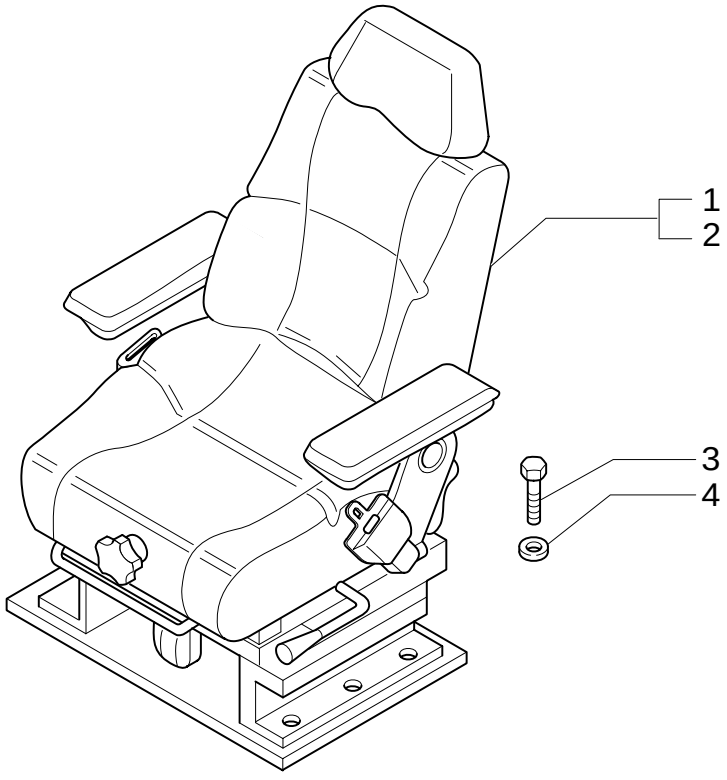

CLOTH SEAT & ATTACHING HARDWARE - CABINE

REF	FN	PART NUMBER	YR/SN	QTY	DESCRIPTION
1	1, 2	87363998		1	SEAT ASSY.
1	1, 3, 4	87364043		1	SEAT ASSY.
2	5, 2	87364212		1	SEAT ASSY.
2	5, 3, 4	87364214		1	SEAT ASSY.
3		16043424		8	SCREW Cap, HH, CL 8.8, M8x1,25x20
4		11198074		8	WASHER, SEALING

(1) Mechanical Control Version
(2) 3" Seat Belt
(3) Only for EUROPE Version
(4) 2" Seat Belt
(5) Pilot Control Version

855/ 2	01	p1	12/05

AIR RIDE CLOTH SEAT & ATTACHING HARDWARE - CABINE

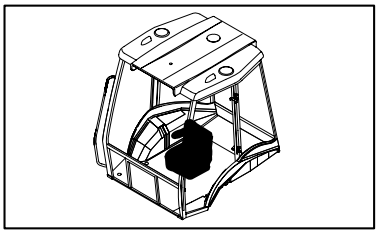

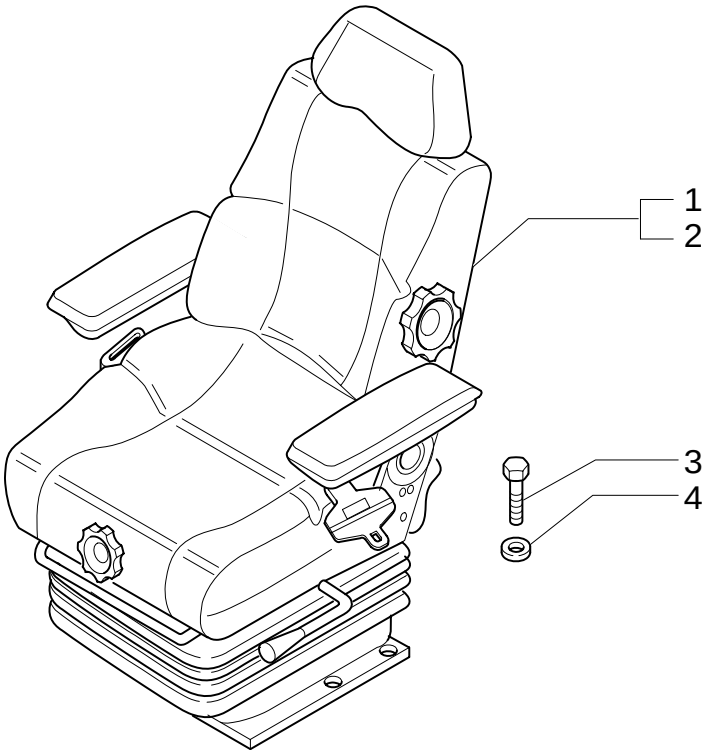

AIR RIDE CLOTH SEAT & ATTACHING HARDWARE - CABINE

REF	FN	PART NUMBER	YR/SN	QTY	DESCRIPTION
1	1, 2, 3	87364045		1	SEAT ASSY.
1	1, 4	87364046		1	SEAT ASSY.
2	5, 2, 3	87364215		1	SEAT ASSY.
2	5, 4	87364216		1	SEAT ASSY.
3		16043424		8	SCREW Cap, HH, CL 8.8, M8x1.25x20
4		11198074		8	WASHER, SEALING

(1) Mechanical Control Version
(2) Only for EUROPE Version
(3) 2" Seat Belt
(4) 3" Seat Belt
(5) Pilot Control Version

990/ 1	01	p1	02/05

TOOL KIT

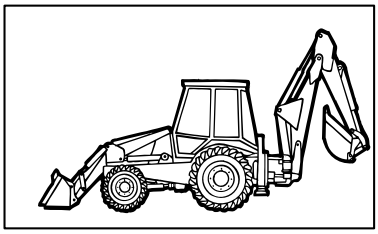

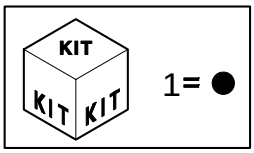

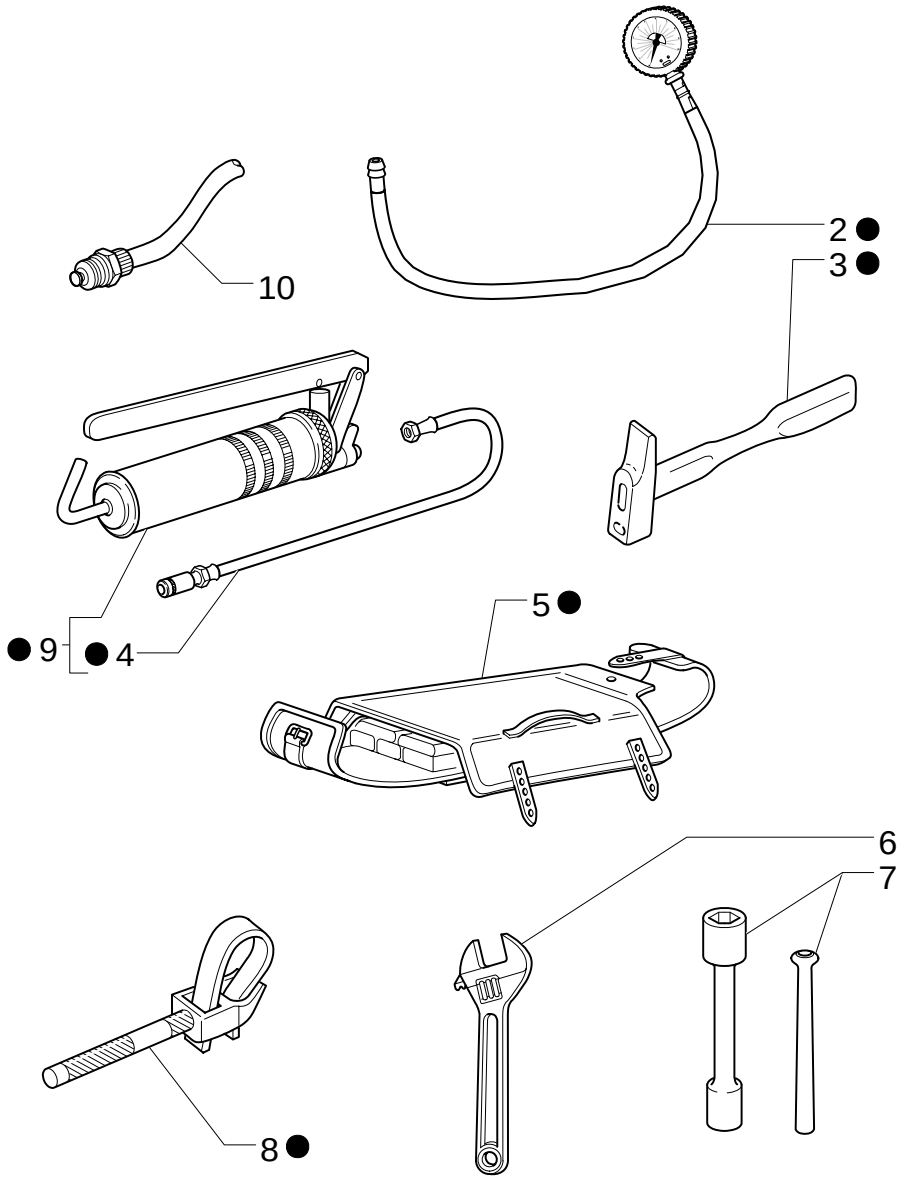

TOOL KIT

REF	FN	PART NUMBER	YR/SN	QTY	DESCRIPTION
1		85813111		1	VALVE, HYDRAULIC
2		85803396		1	INSTRUMENT, MEASURING
3		14582790		1	HAMMER
4		79028981		1	HOSE, FLEXIBLE
5		79062734		1	TOOL BAG
6		71431438		1	KEY, LOCK
7		85813110		1	SPANNER, BOX
8		71304923		1	KEY, LOCK
9		79028977		1	PUMP, HYDRAULIC
10		85826260		1	VALVE, HYDRAULIC

SAFETY PLATES - USA

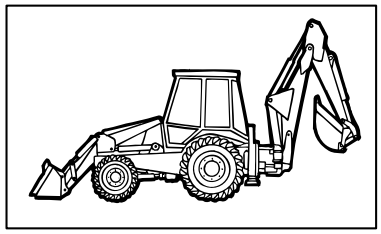



1

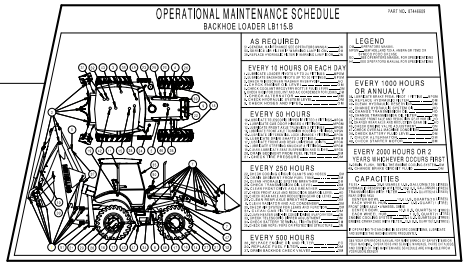

5

7

2



8



11

10

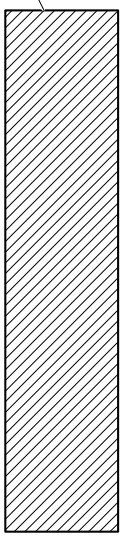

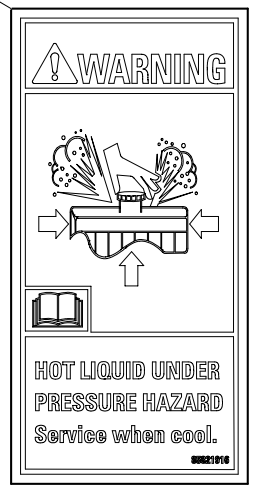

13



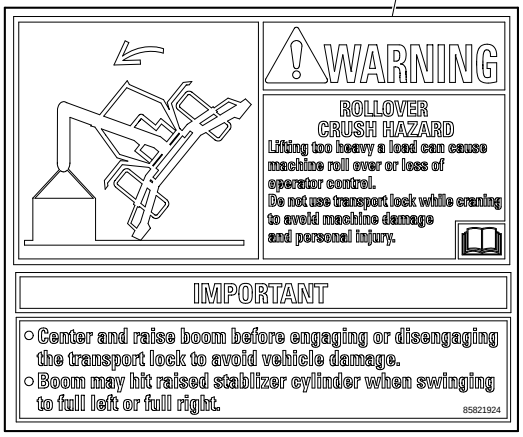

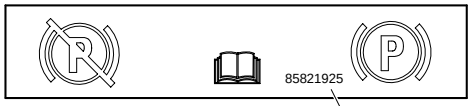



9

4

12

3

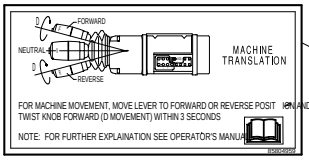

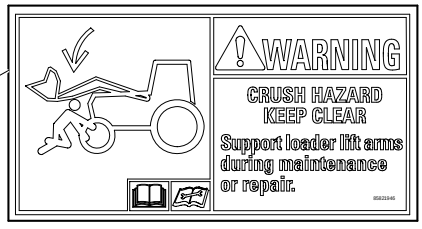

6

14

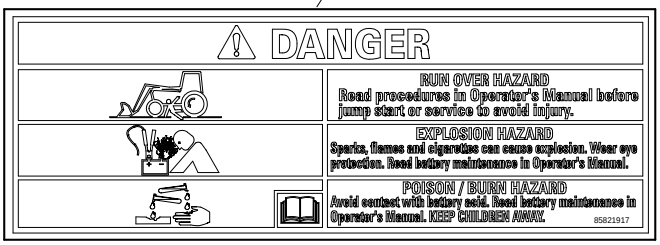

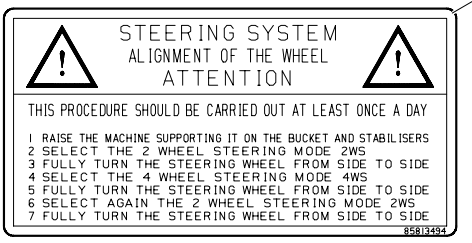

SAFETY PLATES - USA

REF	FN	PART NUMBER	YR/SN	QTY	DESCRIPTION
1		87446609		1	DECAL
2		85821924		1	DECAL
3		85821917		1	DECAL
4		85821925		1	DECAL
5		85821918		1	DECAL
6		85821919		2	DECAL
7		85821921		1	DECAL
8		85821922		2	DECAL
9	1	85821946		1	DECAL
10		86547781		2	DECAL
11		85821916		1	DECAL
12		85804959		1	DECAL
13		85821927		2	DECAL
14		85813494		1	DECAL

(1) FROM TO S/N 031056415

NOTES

SECTION INDEX

SEC. 11	00	WHEELS
85.00	01	WHEELS

WHEELS

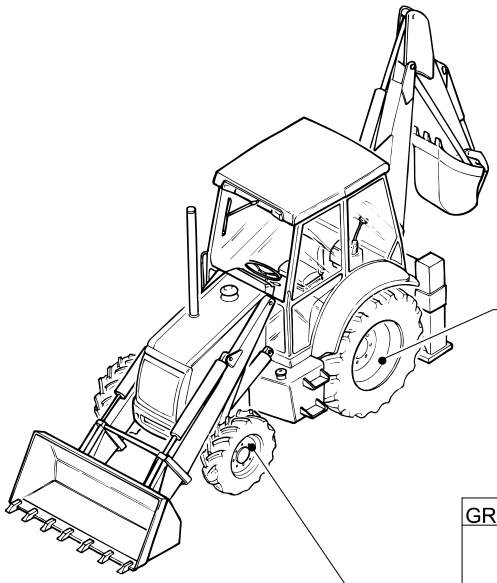

GROUP	EQUIP	TIRE SIZE	RIM
83.00	83.52	16.9 - 28 R4-10PLY TITAN	W14LX28Z
	83.62	16.9 - 28 R4 - 12PR	W14LX 28
	83.64	16.9 - 24 R4 - 10PR	W15LX 24
	83.65	17.5 - L24 R4 - 10PR	W15LX 24
	83.91	19.5 - 24 R4 - 10PR	W16LX 24
	83.92	18.4 - 26 R4 - 12PR	DW16L X26
	83.92	21L24 R4 - 10PR	W18L X24
	83.93	18.4 - 26 R1 - 12PR	DW16L X26
	83.93	19,5 x 24 "JUMBO NJLK"	W16L X24
	83.96	480/80 R26 IT520	DW16LX26

GROUP	EQUIP	TIRE SIZE	RIM
82.00	82.75	14 -17.5NHS - 8PR	10.5 X 17.5
	82.76	12 -16.5NHS -8PR	9,75 X 16,5
	82.78	10.5/80 -18I3 - 10PR	9 X 18
	82.79	12.5/80 -18I3 - 10PR	9 X 18
	82.80	12.5/80 -18I3 - 10PR	9 X 18
	82.86	340/80-R18-136A8	9 X 18
	82.87	320/80-R18-IT520	9 X 18

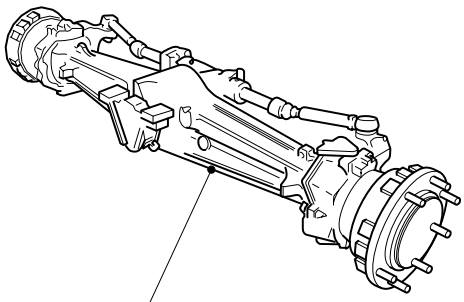

GROUP	EQUIP	TIRE SIZE	RIM
81.00	81.35	11L - 16F3 - 10PR	W8LX 16
	81.38	11L - 16SLF3 - 10PR	W8LX 16

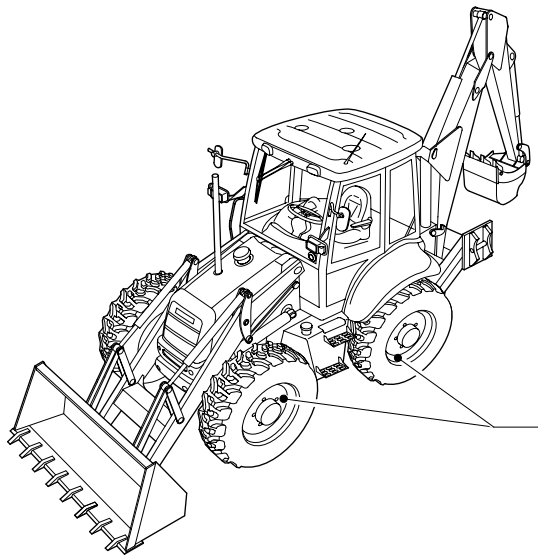

GROUP	EQUIP	TIRE SIZE	RIM
85.00	85.64	16.9 - 24 R4 - 12PR	W14LX 24
	85.64	16.9 - 24 R4 - 12PR (I.S.G.)	W15LX 24
	85.65	16.9 - 28 R4 - 12PR	W15LX 28
	85.65	16.9 - 28 R4 12PLY GY (I.S.G.T.)	W15LX 28
	85.66	440/80 R28 156A8 IT530	W14LX 28
	85.67	440/80 R28 156A8 IT520	W14LX 28

WHEELS

REF	FN	PART NUMBER	YR/SN	QTY	DESCRIPTION

From To S/N XXX

WHEELS

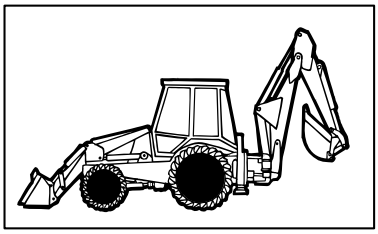

CENTER PIVOT

EQUIP	TIRE SIZE	RIM
85.64	16.9-24 R4-12PR	W14LX24
85.65	16.9-28 R4-12PR	W15LX28

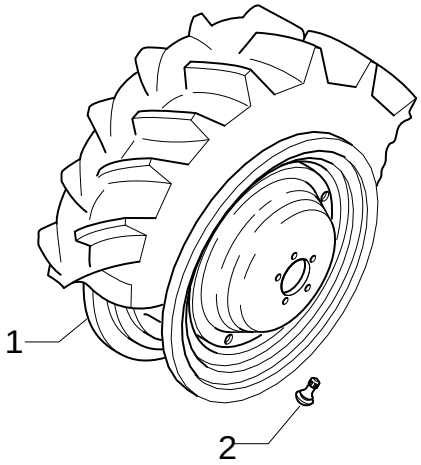

SIDE SHIFT

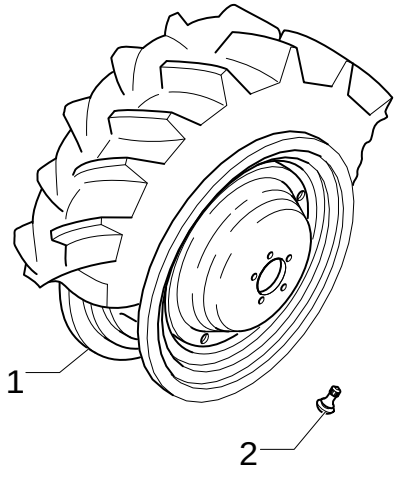

EQUIP	TIRE SIZE	RIM
85.64	16.9-24 R4-12PR(I.S.G.)	W15LX24
85.65	16.9-28 R4-12PLY GY(I.S.G.T)	W15LX28
85.66	440/80R28 156A8 IT530	W14LX28
85.67	440/80R28 156A8 IT520	W14LX28

WHEELS

REF	FN	PART NUMBER	YR/SN	QTY	DESCRIPTION
1	1	87344446		4	RIM W15Lx24
1	1	87344529		4	RIM W15Lx28
1		87305221		4	RIM W15Lx28
2		85700224		4	VALVE, HYDRAULIC

(1) Only for B115

NOTES

SECTION INDEX

SEC. 18	00	VARIATION
535	01	STABILIZER FOOT GROUND (CENTER PIVOT)
535/ 1	01	STABILIZER FOOT STREET PAD (CENTER PIVOT)
536	01	REVERSIBLE STABILIZER FOOT (CENTER PIVOT)
537	01	STABILIZER FOOT STREET PAD (CENTER PIVOT)
628	01	4WD STEERING LOCK
848	01	BATTERY CONNECTION
860	01	FENDERS, FRONT

VARIATION

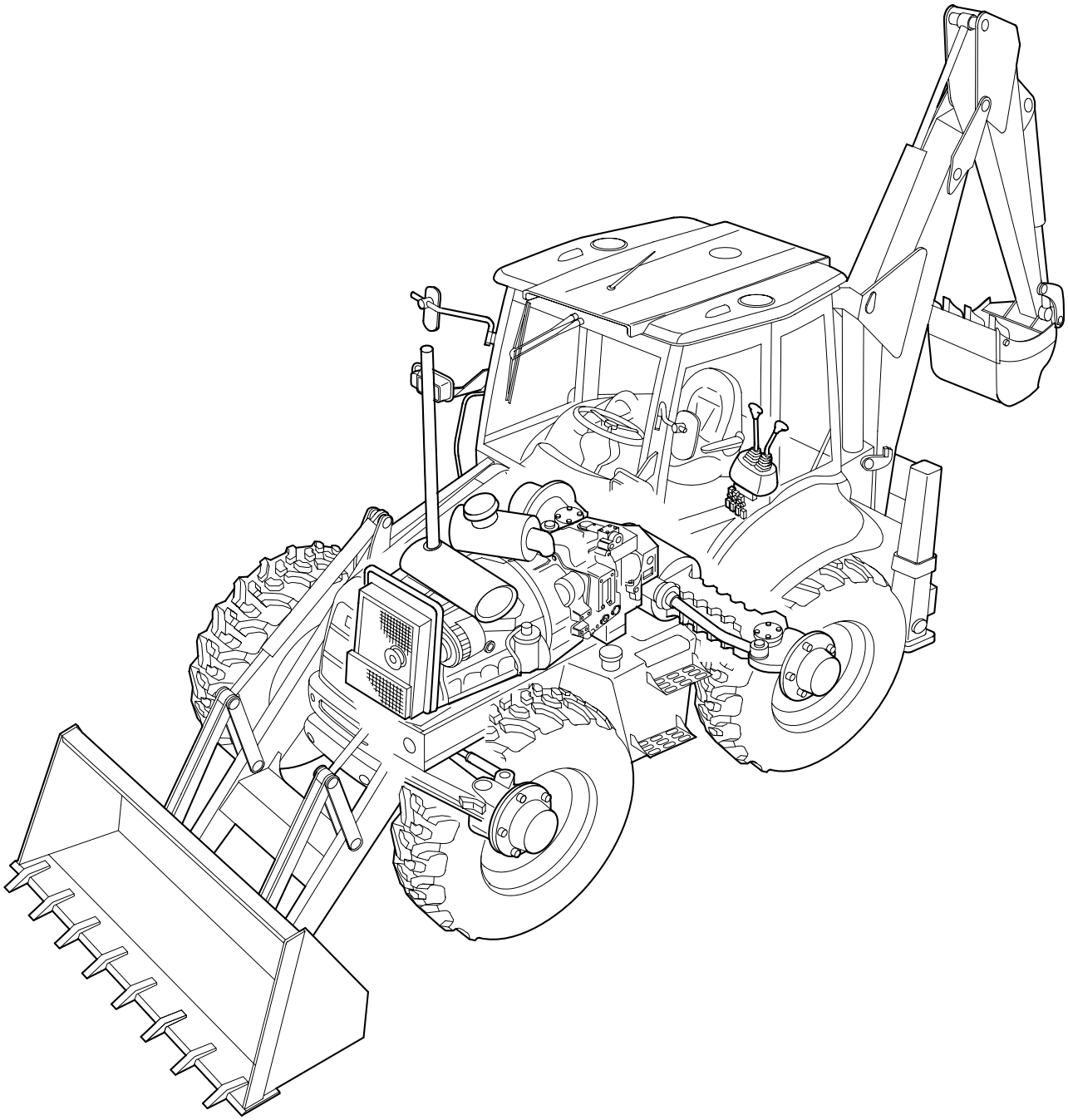

VARIATION

REF	FN	PART NUMBER	YR/SN	QTY	DESCRIPTION

535	01	p1	02/05

STABILIZER FOOT GROUND (CENTER PIVOT)

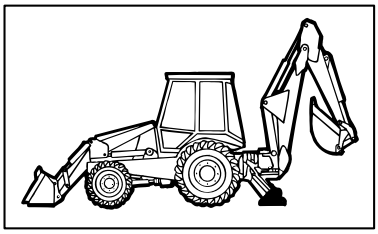

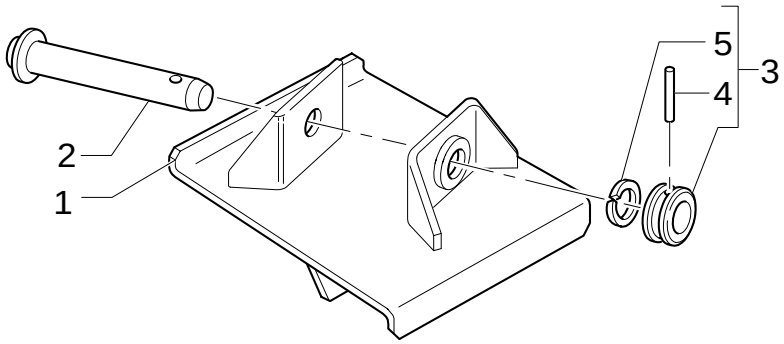

STABILIZER FOOT GROUND (CENTER PIVOT)

REF	FN	PART NUMBER	YR/SN	QTY	DESCRIPTION
1		85804847		1	SUPPORT RH
1		85804848		1	SUPPORT LH
2		85803141		2	PIN
3	1	85803139		2	PIN, LOCK ASSY
4		85802992		2	O-RING
5		85802993		2	PIN

(1) Includes 4, 5

535/ 1	01	p1	02/05

STABILIZER FOOT STREET PAD (CENTER PIVOT)

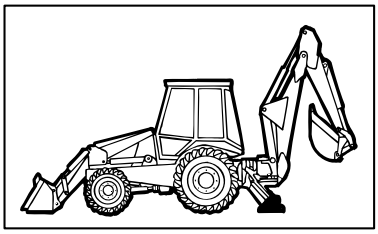

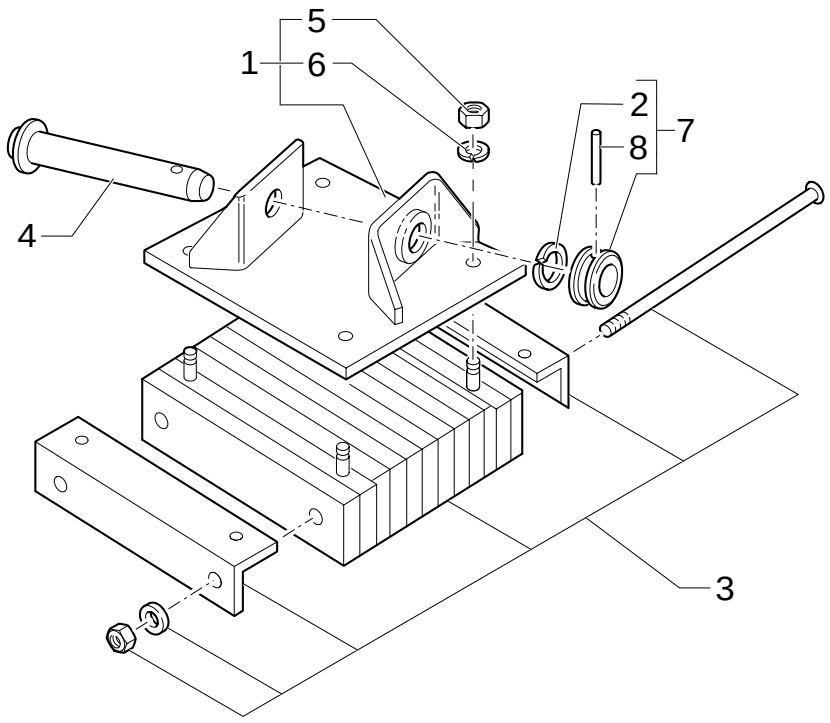

STABILIZER FOOT STREET PAD (CENTER PIVOT)

REF	FN	PART NUMBER	YR/SN	QTY	DESCRIPTION
1	1	85804845		1	SUPPORT RH
1	1	85804846		1	SUPPORT LH
2		85802992		2	O-RING
3		D7NNB694A12Z		2	PAD, RUBBER ASSY
4		85803141		2	PIN
5		N620017S36		8	NUT M20x2.5
6		N630177S36		8	WASHER, LOCK D=20
7	2	85803139		2	PIN, LOCK ASSY
8		85802993		2	PIN

(1) Includes 3, 5, 6
(2) Includes 2, 8

536	01	p1	02/05

REVERSIBLE STABILIZER FOOT (CENTER PIVOT)

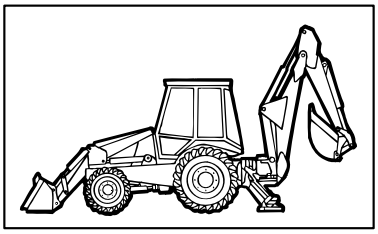

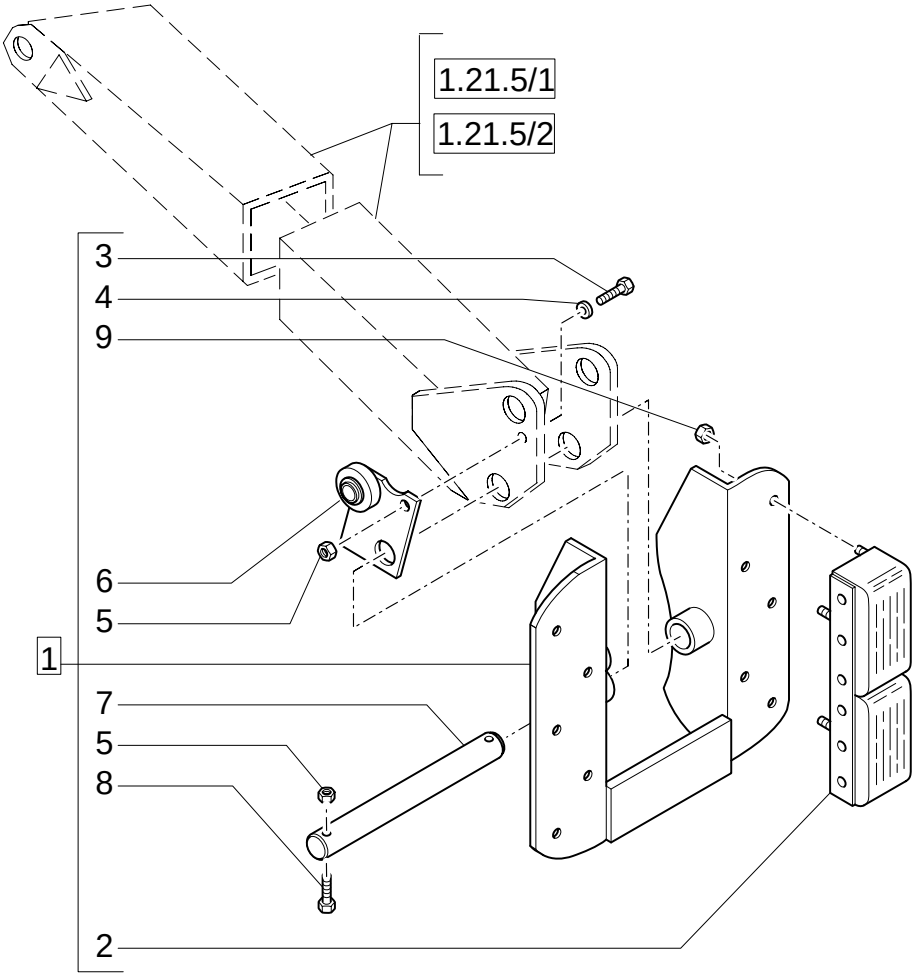

REVERSIBLE STABILIZER FOOT (CENTER PIVOT)

REF	FN	PART NUMBER	YR/SN	QTY	DESCRIPTION
1		85811985		1	SUPPORT LH
1		85811986		1	SUPPORT RH
2		85811992		4	PAD, RUBBER
3		304760S36		2	SCREW 3/8"-16x1"1/2
4		12641004		2	WASHER 10x20
5		33799S36		6	NUT 3/8"-16
6		85811990		1	BRACKET
6		85811991		1	BRACKET
7		85811989		2	PIN
8		85804878		2	SCREW
9		34670S36		20	NUT 7/16"-14

537	01	p1	02/05

STABILIZER FOOT STREET PAD (CENTER PIVOT)

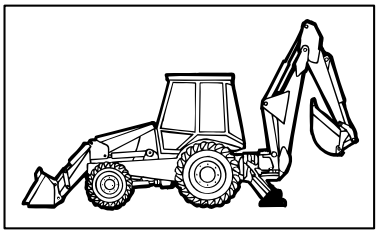

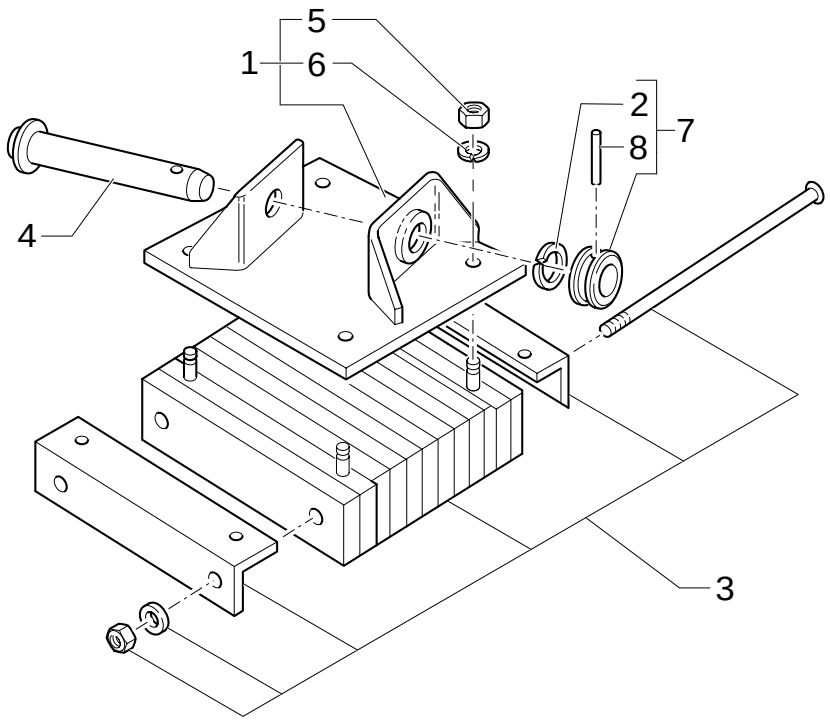

STABILIZER FOOT STREET PAD (CENTER PIVOT)

REF	FN	PART NUMBER	YR/SN	QTY	DESCRIPTION
1	1	85824095		1	SHOCK ABSORBER RH
1	1	85825000		1	SHOCK ABSORBER LH
2		85802992		2	O-RING
3		D7NNB694A12Z		2	PAD, RUBBER ASSY
4		85825003		2	PIN
5		N620017S36		8	NUT
6		N630177S36		8	WASHER, LOCK
7	2	85803139		2	PIN, LOCK ASSY
8		85802993		2	PIN

(1) Includes 3, 5, 6
(2) Includes 2, 8

628	01	p1	02/05

4WD STEERING LOCK

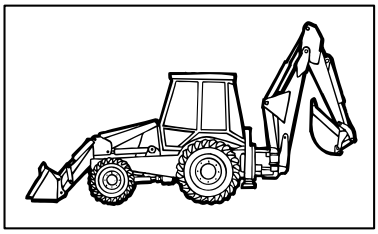

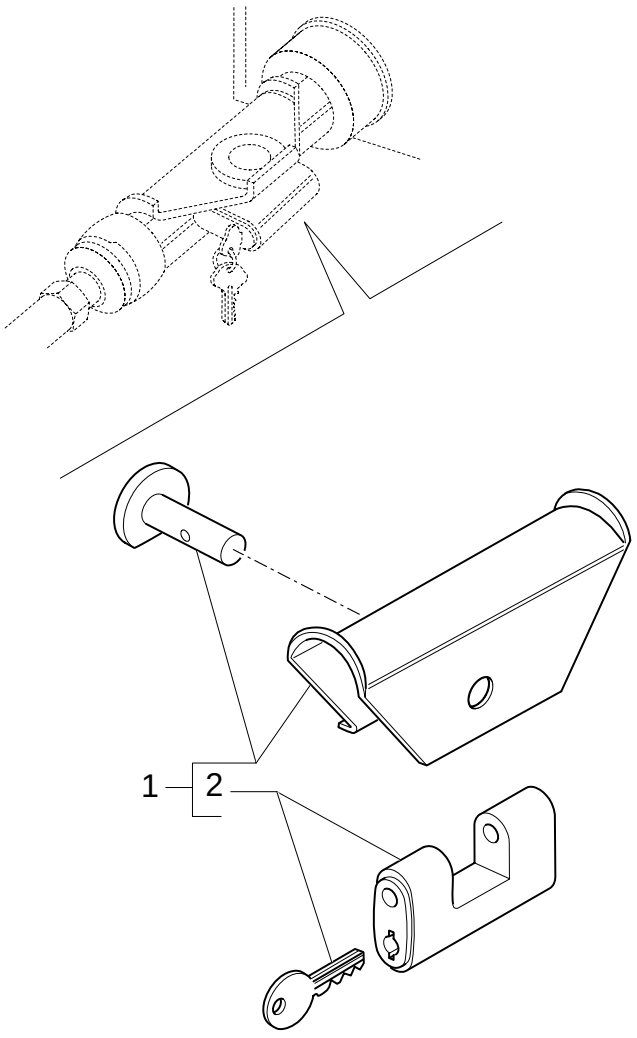

4WD STEERING LOCK

REF	FN	PART NUMBER	YR/SN	QTY	DESCRIPTION
1		85816802		1	LOCK, CYLINDER
2		85803372		1	LOCK, CYLINDER

848	01	p1	02/05

BATTERY CONNECTION

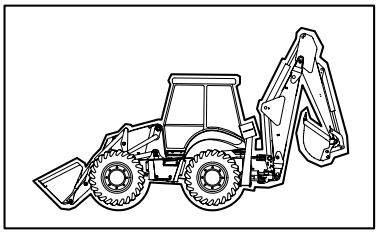

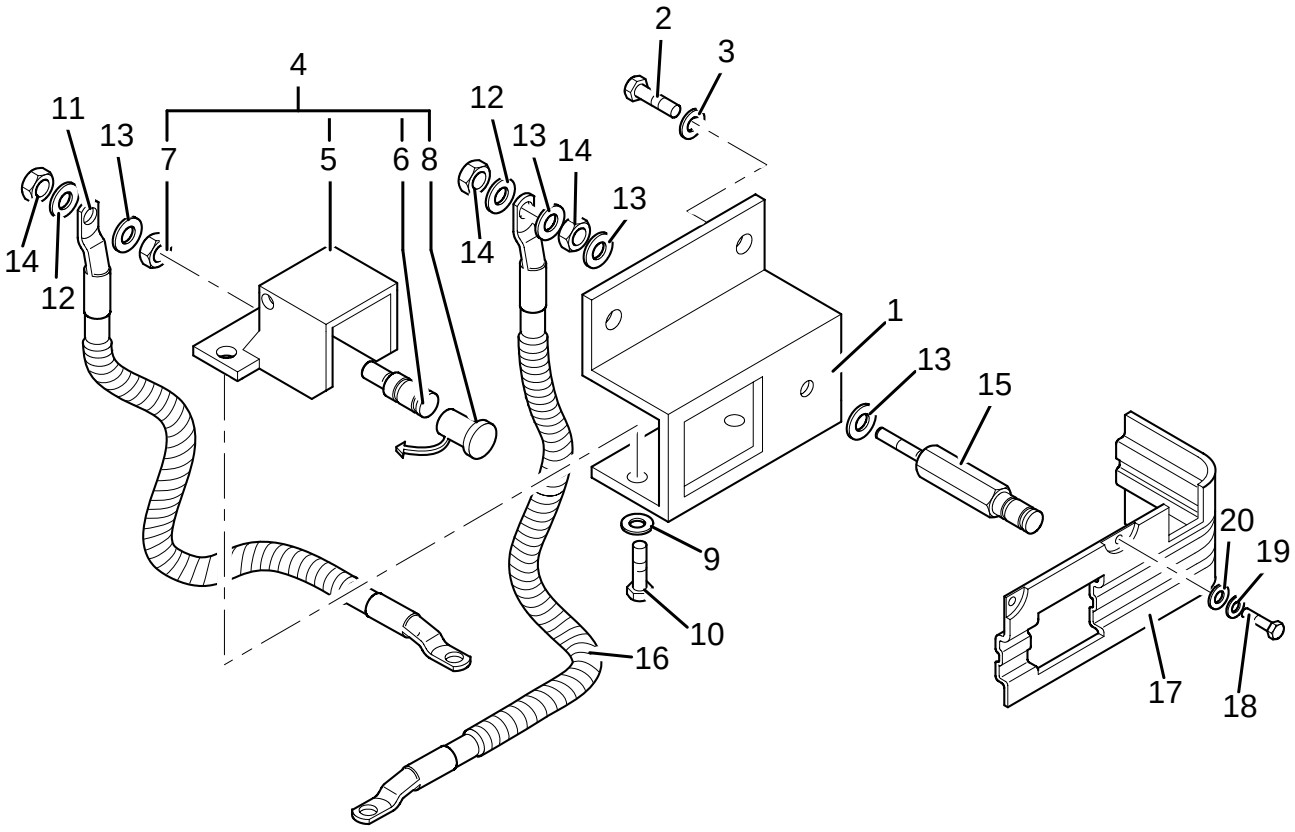

BATTERY CONNECTION

REF	FN	PART NUMBER	YR/SN	QTY	DESCRIPTION
1		85821205		1	SUPPORT
2		10902424		2	SCREW
3		11197774		2	WASHER, LOCK
4		82013379		1	BRACKET
5		{82013446}		1	
6		82014590		1	TERMINAL
7		10717511		1	NUT
8		82013445		1	COVER, CAP
9		10571474		2	WASHER, LOCK
10		13274214		2	SCREW
11		85827743		1	CABLE, GROUND
12		11190579		2	WASHER, LOCK
13		14496601		4	WASHER
14		15500111		3	NUT
15		82012402		1	TERMINAL
16		85827744		1	CABLE, GROUND
17		85824113		1	GUARD
18		10902421		3	SCREW
19		11194679		3	WASHER
20		12643721		3	WASHER

860	01	p1	12/05

FENDERS, FRONT

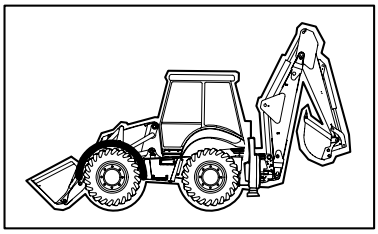

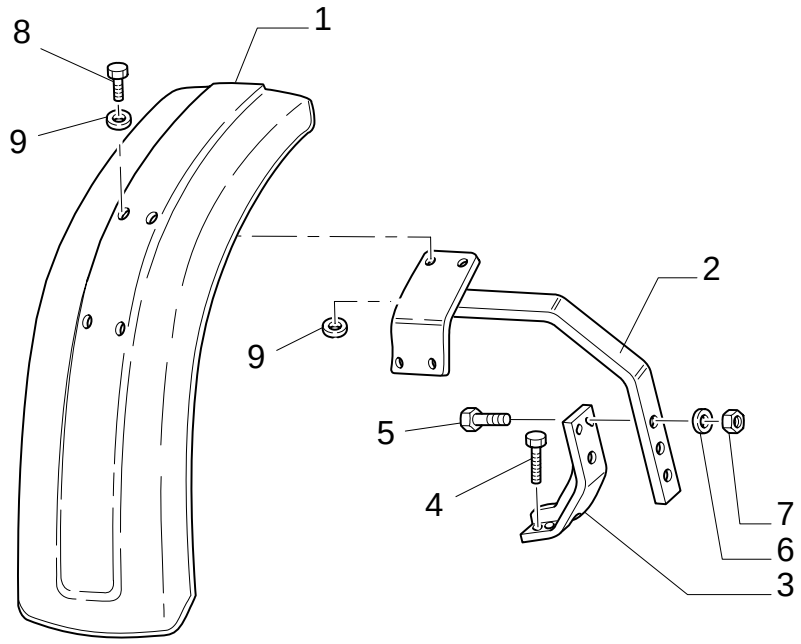

FENDERS, FRONT

REF	FN	PART NUMBER	YR/SN	QTY	DESCRIPTION
1		85817214		1	FENDER, FRONT RH
1		85817215		1	FENDER, FRONT LH
2		85806215		1	SUPPORT RH
2		85806219		1	SUPPORT LH
3		85806220		2	BRACKET
4		87345246		8	SCREW M16x2x48
5		15540821		4	SCREW M12x1.25x50
6		11190879		4	WASHER, LOCK M12x30x3
7		16105011		4	NUT
8		16043421		8	SCREW M8x1.25x20
9		11193979		8	WASHER, LOCK

Mechanical Version

Number	Figure	Sequence	Ref.	Number	Figure	Sequence	Ref.
{110692A4}	901/ C	01	19	10398980	1.91.4/ 6	07	7
{14059314}	1.93.0/ 1	02	7		1.93.0	01	11
{15915901}	346	05	14		1.93.0/ 3	01	11
	347	05	3	10399580	1.91.6	01	4
{17295480}	0.270/A	01	10	10427200	1.93.0	01	16
{2831303}	0.105	02	5		1.93.0/ 3	01	16
{2831304}	0.105	02	6	10450090	1.91.4/ 6	07	15
{353-779}	1.88.11/ 9C	01	28	10517274	1.95.0	01	8
{47334610}	475/ 1	01	7	10519204	1.91.4/ 6	02	4
{47334640}	469/ 1	01	8		1.91.4/ 6	07	13
{47334650}	470/ 1	01	8	10519404	1.92.4	01	14
{47334660}	476/ 1	01	8		1.92.4	02	1
{500301568}	0.270/A	01	9	10519411	1.82.6	04C	14
{504087621}	0.270/A	01	6		1.82.6	12B	9
{504095659}	0.080	01	1	10519604	1.92.6	01	10
{504097164}	0.043	01	5		1.93.0	04	3
{8094739}	0.082	01	4		1.93.0/ 3	04	3
{8094740}	0.082	01	1	10520211	515	02	5
{8094752}	0.082	01	4		516	02	5
{8094753}	0.082	01	1		517	02	5
{82013446}	848	01	5		518	02	5
{85803959}	1.21.5/ 2	01	15		519	02	5
{85803960}	1.21.5/ 2	01	14		526	01	5
{85817133}	900	03	3		527	01	5
{85817753}	400A	01	3		528	01	5
{85820036}	469/ 2	01	29		529	01	5
	470/ 2	01	29	10520431	1.21.5/ 2	01	9
	475/ 2	01	29		1.87.8	01	3
	476/ 2	01	29		1.88.11/ 9A	01	3
{85820037}	469/ 2	01	30		202	01	3
	470/ 2	01	30	10571474	848	01	9
	475/ 2	01	30	10615274	1.91.4/ 6	07	2
	476/ 2	01	30	10615371	1.95.1/1	01	21
{85820137}	1.93.4	01	12	10615774	1.95.5/ 4	01	3
{85820140}	1.93.4	01	11	10717421	1.88.08	01	10
{85821334}	1.91.5	02	13		1.88.08	02	8
{85824018}	518	01	6	10717511	848	01	7
{85825031}	400A	03	19	10791414	1.95.5/ 4	01	9
{85826274}	304	03	2	10794011	1.95.1/1	01	31
{85827551}	732/ A	01	2	10902124	1.91.7/ 2	01	6
{85828014}	333/ A	03	16	10902127	1.93.4	01	13
{85848133}	120	01	7	10902221	1.82.6	04C	15
	120/ 1	01	7		1.82.6	12B	7
{86621058}	514/ E	01	3	10902224	1.96.7/ 2	01	10
{87302836}	732/ A	01	3		1.96.7/ 8	01	10
{87311152}	1.38.1/ 1	01	5	10902321	331/ C	01	18
{87311153}	1.38.1/ 1	01	2		333/ B	01	18
{87325293}	1.91.4/ 6	01	1	10902421	1.87.2	01	5
	1.91.4/ 6	02	1		848	01	18
	1.91.4/ 6	03	1	10902424	346	02	6
	1.91.4/ 6	04	1		347	02	6
	1.91.4/ 6	05	1		848	01	2
	1.91.4/ 6	07	1	10902524	1.93.0/ 3	04	12
{87325632}	392	01	15	10902624	1.91.4/ 6	07	20
	392	02	15		1.93.0	04	10
{87335146}	120	01	11		1.93.0/ 3	04	10
	120/ 1	01	11		1.95.0	02	10
{87345870}	1.92.4	01	11	10903221	1.88.01/ 3	02	2
{87345950}	639	01	20	10903224	1.92.4	02	6
{87345951}	639	01	21	10978024	1.95.1/1	01	20
{87356233}	393	03	2	10979221	638	02	3
{87358141}	346	01	13		639	03	3
	347	01	11		724	02	6
{87362068}	346	05	13		724/ 2	02	6
	346/1	02	12		724/ 3	02	6
	347	05	2	11054590	1.91.4/ 6	02	5
{87382109}	700	01	19	11054890	1.91.4/ 6	02	7
{87432511}	1.88.11/ 2B	01	4	11054990	1.91.4/ 6	02	8
{87437661}	636A	05	1		347	02	10
	638A	05	1	11055090	1.91.4/ 6	02	9
{87449734}	331/ C	01	1	11055190	1.91.4/ 6	02	10
	333/ B	01	1	11055290	346	02	21
{87449735}	331/ C	01	2	11055790	1.75.2/ 5	03	2
	333/ B	01	2	11055890	1.75.2/ 5	03	2
{87453109}	331/ B	01	3	11064071	1.88.09/ 1	01	14
{G100443}	901/ C	01	16	11064176	1.95.0	02	3
{G107277}	901/ C	01	15	11065476	1.95.1/1	01	14
10007871	353	03	16	11067376	1.95.0	01	10
100197	1.39.8/ 1	01	13	11069071	900	02	11
10250644	622	01	3		900	03	7
10398580	1.96.7/ 2	01	15		901	03	15
	1.96.7/ 8	01	15	11069876	1.88.11/ A	01	25

Number	Figure	Sequence	Ref.
11087776	1.92.4	01	12
11087871	1.92.4	01	12
11088076	1.92.6	03	3
11088176	1.95.0	01	1
11106021	1.28.0/ A	01	25
	639A	04	2
11106221	1.82.6	06B	6
	1.82.6	13B	7
	437/ 1	01	24
11106421	437/ 1	01	11
	646/1	02	1
11106434	1.28.0	01	20
11106721	901/ A	01	14
11107321	1.88.08	01	17
11107421	646/1	02	2
11108821	646/1	02	10
11112221	1.94.2/ 1	03	10
11112421	636A	01	4
	638A	01	4
	639	01	6
	639A	01	4
11112434	1.28.0	01	17
11112634	1.28.0	01	15
11112821	1.88.12/ 3	01	23
11124421	901/ A	01	7
11190574	1.95.0	01	17
	1.95.5/ 4	01	15
	646/1	02	3
11190579	1.82.6	06B	5
	1.82.6	13B	8
	1.88.08	01	2
	437/ 1	01	13
	724	02	4
	724/ 2	02	4
	724/ 3	02	4
	848	01	12
	901/ A	01	13
11190679	300	01	3
	302	01	10
	331	01	3
	333/ 1	01	3
	700	01	21
	703	01	3
	708	01	2
	727/ 3	01	19
11190779	1.28.0/ A	02	15
	1.82.6	04C	9
	1.88.12/ 3	01	19
	350	01	6
	353	01	10
	358	01	7
11190879	860	01	6
11193274	1.91.4/ 6	07	21
	1.91.8	01	2
	1.93.0/ 3	04	8
	1.93.4	01	6
	1.95.0	02	11
	1.96.7/ 2	01	11
	1.96.7/ 8	01	11
11193874	1.21.5/ 2	01	27
	1.92.5	01	6
	1.95.0	02	4
	1.96.2	01	5
	1.96.2/ 1	01	2
	646/1	02	4
11193879	1.63.0	01	2
	1.75.2/ 5	01	7
	1.82.6	07A	10
	1.88.01/ 2	02	6
	1.88.01/ 3	02	10
	1.88.09/ 1	01	16
	1.88.11/ 7A	01	13
	304	01	5
	304	02	9
	333/ B	08	8
	639	01	18
	703	03	8
	703	05	8
	704	01	9
	724	01	3
	724/ 2	01	3
	724/ 3	01	3
11193879	724/ 5	01	3
	724/ 6	01	3
	727/ 3	01	8
11193974	346	01	2
	346	01	21
	347	01	13
	347	01	2
11193979	1.17.2	01	9
	1.82.6	02	10
	1.82.6	05B	9
	1.82.6	05C	9
	1.82.6	08B	16
	1.87.2	01	10
	1.88.08	01	20
	700	01	9
	707	01	8
	707	02	4
	860	01	9
	900	04	5
	900	05	7
	901	03	4
11194679	1.87.2	01	4
	848	01	19
11197774	1.91.3	01	3
	1.91.7/ 2	01	7
	346	02	7
	347	02	7
	848	01	3
11197779	1.88.01/ 3	02	3
11197874	1.95.1/1	01	16
11198074	1.92.9	03	21
	1.92.9	03	9
	1.96.7/ 2	01	2
	1.96.7/ 8	01	2
	851/ 2	01	4
	855/ 2	01	4
11198679	1.21.5/ 2	01	24
	1.28.0	01	14
11234721	302	01	8
	700	01	23
	708	01	4
11394334	200	01	1
11701621	1.95.0	01	20
11991971	1.88.12/ 3	01	11
	350	02	7
	351	03	3
	353	03	11
	358	02	10
	703	05	11
	727/ 3	01	11
12059980	622	01	6
12164114	1.95.0	01	11
12574011	1.91.4/ 6	02	11
	1.91.4/ 6	07	3
	416-417	01	4
	622	01	4
	796	01	2
12574111	1.92.9	03	18
12574211	1.82.6	04C	16
	1.82.6	12B	10
	1.91.5	02	9
	346	02	23
	347	02	5
12574215	1.92.9	02	16
12574511	732	01	4
	732/ A	01	13
12574825	200	01	3
12574921	1.87.8	01	8
12575121	1.87.8	01	4
	1.88.11/ 9A	01	4
	202	01	2
12577211	646/1	02	6
12601471	646/1	02	7
12637821	1.92.9	03	19
12638107	1.93.0	02	11
	1.93.0/ 1	02	11
12638501	1.92.9	02	8
12638504	1.92.4	01	16
	1.92.4	02	14
12638511	1.75.2/ 5	03	6
12640601	1.92.6	02	2
12640621	1.93.0	04	11

Number	Figure	Sequence	Ref.	Number	Figure	Sequence	Ref.
12640621	1.93.0/ 3	04	11	14048211	1.82.6	02	11
12641004	536	01	4		1.88.11/ 7A	01	12
12642804	1.93.5/ 1	02	1		1.88.12/ 3	01	13
	622	01	5		304	01	6
12642821	1.93.4	01	10		304	02	10
	1.95.0	01	14		350	02	2
	796	01	3		351	03	7
12643701	1.92.6	01	5		353	02	3
12643711	1.98.1	11	2		353	03	10
12643721	1.87.2	01	3		358	02	3
	848	01	20	14048214	1.92.6	01	3
12646204	1.92.5	01	5	14048221	1.75.2/ 5	01	8
12646701	639	01	11		1.82.6	05B	10
12646704	1.91.5	02	5		1.82.6	05C	10
	1.92.9	01	6		1.82.6	07A	11
12646901	639	01	5		703	05	12
12646904	1.92.9	02	5		727/ 3	01	12
12647004	1.92.9	02	10		901	03	5
12647121	1.75.2/ 5	01	9	14084011	1.93.0	02	6
	1.75.2/ 5	02	10		1.93.0/ 1	02	6
	1.82.6	07A	17	14084111	1.91.7/ 2	01	22
	1.82.6	13B	2	14084814	1.93.0	01	10
	646A	01	14		1.93.0	02	7
128825	1.88.11/ 7A	01	18		1.93.0/ 3	01	10
	304	01	8	14143790	1.91.4/ 6	06	8
	304	02	12		1.91.4/ 6	07	23
	437/ 1	01	18		1.93.0	02	15
13000690	346/1	02	14		1.93.0/ 1	02	15
13000990	1.93.5/ 3	01	15		698	01	2
	346	05	20		699	01	2
	347	05	7		704	01	2
13271814	1.92.1/ 3	01	3		792	01	5
13272214	1.91.4/ 6	07	9	14161771	1.92.9	03	5
13272319	1.95.1/1	01	30	14189176	1.93.5/ 1	02	6
13272477	353	01	3	14197790	1.93.4	01	3
	416-417	01	3	14300521	700	01	28
	724	01	14	14302921	331/ A	02	10
	724/ 2	01	14		333/ A	02	10
	724/ 3	01	14		333/ A	03	1
13273911	1.92.6	01	6	14303324	1.93.4	01	2
13274214	848	01	10		1.95.0	01	15
13275914	1.91.8	01	3		1.95.5/ 4	01	14
13276217	1.92.9	02	12		622	01	2
13276424	1.91.3	01	2		796	01	4
13276617	1.93.0	03	6	14304021	331/ A	02	2
	1.93.0/ 1	03	6	14304724	1.96.0/ 2	01	3
13276621	1.92.6	02	3	14305321	900	07	8
13297842	1.91.6	01	6		900	08	3
13309417	1.91.4/ 6	07	14	14305621	1.88.11/ 8	01	3
13311017	1.93.0	01	7	14306324	1.95.0	02	5
	1.93.0/ 3	01	7	14306424	1.92.9	02	9
13311217	1.93.0	01	4		1.92.9	03	20
	1.93.0/ 3	01	4		1.95.1/1	01	15
	1.94.0	01	2	14332521	901/ A	01	15
13311817	1.91.6	01	2	14358921	333/ A	02	2
13313417	1.91.5	02	11		333/ A	03	2
	1.92.9	01	8	14372671	1.93.5/ 1	02	7
	1.93.0	02	3	14422021	1.82.6	01	3
	1.93.0/ 1	02	3	14432334	1.95.5/ 4	01	4
	1.93.4	01	5	14440327	1.93.5/ 1	01	4
13399076	1.95.0	01	12		1.93.5/ 3	01	4
	1.95.0	02	20		346	05	26
13400776	1.95.1/1	01	5		346/1	02	15
13406911	1.92.6	03	4	14441521	1.93.0	03	3
13407214	1.95.0	01	2		1.93.0/ 1	03	3
13423271	1.95.0	02	6	14442421	1.92.6	01	11
13507714	351	03	11	14447021	1.95.0	03	6
13578621	302	01	9	14464680	1.82.6	01	5
	331	01	13	14466880	1.82.3	01	5
	333/ 1	01	14		1.82.3/ 1	01	5
	700	01	22		1.82.3/ 2	01	5
	708	01	3	14496407	1.92.9	02	15
13789621	302	01	15	14496534	646/1	04	1
13812631	353	01	20	14496601	638	02	2
13940370	353	01	14		639	03	2
	353	03	2		646/1	02	5
	358	02	12		848	01	13
14039611	1.92.4	02	3	14496901	1.88.09/ 1	01	7
14040611	346	02	11		703	05	5
	346/1	01	19		727/ 3	01	5
14040711	646/1	04	18	14496931	1.87.8	01	6
14048211	1.75.2/ 5	03	5	14497001	1.88.11/ 8	01	8

Number	Figure	Sequence	Ref.	Number	Figure	Sequence	Ref.
14497121	901/ A	01	8	16043621	358	02	15
14497401	901/ A	01	24		636A	04	2
14499401	1.88.09/ 1	01	13		638A	04	2
14560187	1.14.0	01	13		639A	04	2
	1.17.2	01	13		646/1	02	8
	1.75.2/ 5	01	4		646/1	04	15
	1.88.01/ 3	02	12		703	03	7
	1.95.0	02	13		703	05	7
	331/ C	06	4		727/ 3	01	7
	333/ B	06	4		901	03	3
	646/1	01	6	16043624	1.96.2	01	6
14568887	1.88.12/ 3	01	16		1.96.2/ 1	01	3
	1.93.0	03	2		346	01	15
	1.93.0/ 1	03	2		347	01	12
	1.93.5/ 1	01	10	16043821	1.17.2	01	10
	1.93.5/ 3	01	10		1.19.1	01	5
	350	01	4		1.82.6	07A	16
	358	01	4		1.82.6	08B	15
14582790	990/ 1	01	3		351	03	14
14642192	1.93.5/ 1	02	14		639	01	19
15201934	1.88.08	02	7		700	01	10
15212721	1.95.0	03	5		707	01	7
15213621	1.88.11/ 7A	01	11		707	02	5
15213721	331/ B	01	6	16043824	1.75.2/ 5	03	8
15214521	646/1	02	9		1.93.0	04	4
15215821	1.88.09/ 1	01	3		1.93.0/ 3	04	4
15216421	1.88.09/ 1	01	23	16043921	1.95.0	01	19
1542875C1	901/ C	01	5	16044021	1.82.6	07A	12
15500111	848	01	14		1.82.6	08B	19
15540321	1.88.12/ 3	01	18		700	01	14
	350	01	9		707	02	1
	358	01	8	16044121	901/ A	01	18
15540421	353	01	5	16044124	1.92.5	01	4
15540534	1.21.5/ 2	01	25	16044221	1.75.2/ 5	03	12
15540721	1.14.0	01	11		1.82.6	08B	20
	1.14.0	01	3		1.88.01/ 2	02	7
	1.82.0	01	13		1.88.01/ 3	02	11
	1.82.0	01	8		724	01	21
15540821	860	01	5		724/ 2	01	21
15541621	1.82.6	04C	10		724/ 3	01	21
15627011	1.93.0	02	9		900	04	6
	1.93.0/ 1	02	9		900	05	6
15687475	331/ D	03	9	16044324	1.91.7/ 2	01	4
	333/ B	10	9	16044421	1.82.6	13B	1
	333/ C	01	9		1.88.11/ 7A	01	19
	333/ C	02	9		900	04	3
15693301	1.93.5/ 1	02	2		900	05	8
15693507	1.93.5/ 1	02	3	16044521	704	01	10
15811387	1.92.9	02	11	16044821	1.88.11/ 7A	01	19
	1.92.9	03	17		724	01	4
15888721	703	01	2		724/ 2	01	4
15888724	300	01	2		724/ 3	01	4
	727/ 3	01	18		724/ 5	01	4
15896219	1.92.1/ 3	01	7		724/ 6	01	4
15970524	1.95.0	01	18	16100811	331/ B	01	7
15971321	437/ 1	01	23	16100821	1.88.01/ 2	02	9
15972034	732	01	2		1.88.01/ 3	02	6
	732/ A	01	14	16101511	350	01	5
15981834	1.87.8	01	11		353	01	9
15982134	1.87.8	01	5		358	01	10
15988934	1.88.11/ 9A	01	5	16102211	646/1	02	18
15989134	1.21.5/ 2	01	10	16102311	1.88.12/ 3	01	2
15989334	1.87.8	01	2		350	02	4
	202	01	4		351	03	5
16040821	331/ B	01	23		353	02	6
16042924	1.91.4/ 6	07	10		353	03	13
16043021	1.75.2/ 5	01	6		358	02	4
16043121	1.88.09/ 1	01	17		703	05	13
16043221	639	01	2		727/ 3	01	13
16043324	1.92.9	01	5	16102411	1.91.5	02	6
16043421	1.21.5/ 2	01	28	16102911	1.88.12/ 3	01	4
	1.63.0	01	3		350	02	5
	1.82.0	01	27		351	03	4
	646/1	04	2		353	02	2
	860	01	8		353	03	9
16043424	1.96.7/ 2	01	3		358	02	7
	1.96.7/ 8	01	3		703	05	14
	851/ 2	01	3		727/ 3	01	14
	855/ 2	01	3	16104111	1.75.2/ 5	02	11
16043621	1.88.08	01	19		1.82.6	13B	3
	333/ B	08	7		1.87.2	01	9
	353	03	4		1.91.7/ 2	01	5

Number	Figure	Sequence	Ref.
16104111	1.92.9	02	6
	1.92.9	03	7
	351	03	13
	353	03	5
	646/1	04	3
	703	05	6
	724	01	19
	724/ 2	01	19
	724/ 3	01	19
	727/ 3	01	6
16104511	1.92.6	03	11
16105011	1.28.0	01	12
	636A	01	5
	638A	01	5
	639A	01	5
	860	01	7
	901/ A	01	12
16586624	0.326	01	1
16587924	0.270	01	7
	0.270/A	01	7
16592624	0.326	01	1
16598224	0.071/ 1	01	3
16598624	0.071/ 1	01	3
16675834	646A	01	12
16676834	0.345/A	01	8
167266	1.39.8/ 1	01	22
	1.82.6	01	7
	1.82.6	11B	2
	1.82.6	12B	2
	724	01	30
	724/ 3	01	30
	900	04	15
	900	06	7
167268	1.82.6	04C	2
167269	1.82.6	02	3
	1.88.11/ 3A	01	9
16746824	0.142	01	3
16784504	0.063	01	2
16866473	0.105	01	1
16979231	0.140/ 1	01	4
17044625	0.305	01	12
17044921	646A	01	6
17278780	0.043	01	7
17282280	0.042/ 1	01	5
17283181	0.270	01	8
	0.270/A	01	8
17285481	0.043	03	7
18137824	0.305	01	14
18138324	0.305	01	13
18139524	0.360	01	2
1930010	MPARTS	00	1
	0.200	01	6
201-112	1.82.6	10	2
225315C1	333/ C	02	6
225318C1	333/ C	02	7
225350C1	331/ D	03	6
	333/ B	10	6
	333/ C	01	6
225353C1	331/ D	03	7
	333/ B	10	7
	333/ C	01	7
238-5231	901/ C	01	21
2830082	0.040	01	1
2830156	0.201	01	2
2830266	0.201	01	1
2830433	0.105	01	7
2830559	0.315	01	10
2830775	0.063	01	5
2830784	0.063	01	7
2830905	0.105	02	4
2830919	0.060	01	15
2830948	0.105	02	3
2831031	0.105	01	8
2831297	0.081	01	3
2831298	0.081	01	1
2831300	0.105	01	10
2831305	0.105	02	1
2852098	0.200	01	1
2852105	0.203	01	1
2852111	0.203	01	3
2852594	0.203	01	2
2852622	646A	01	1
2852623	646A	01	2
2852625	646A	01	4
2852628	646A	01	9
2852629	646A	01	10
2852630	646A	01	11
2852741	0.140/ 1	01	6
2852865	0.043	03	2
2852925	646A	01	7
2854073	0.043	03	12
290885	1.21.5/ 2	01	7
291550	1.88.11/ 1C	01	15
297281A1	901/ C	01	10
297449	795	01	2
2992147	0.080	01	4
2992148	0.080	01	4
2992149	0.080	01	4
2992153	0.080	01	3
2992154	0.080	01	3
2992155	0.080	01	3
304760S36	536	01	3
322357	995	01	16
33799S36	536	01	5
34670S36	536	01	9
386170C1	331/ C	06	5
	333/ B	06	5
390828S36	1.82.6	02	2
	392	01	6
	392	02	4
	393	03	6
390937S36	1.82.6	01	6
	1.82.6	11B	1
	1.82.6	12B	1
	900	04	16
	900	06	3
390938S36	1.82.6	07A	4
	1.82.6	08B	1
	1.82.6	11B	4
	1.82.6	12B	4
	333/ B	07	3
	334	09	1
	703	02	3
	900	04	17
	900	06	4
	900	07	1
	900	08	1
390951S36	1.63.0	01	4
	1.82.6	04C	11
	724	01	7
	724/ 2	01	7
	724/ 3	01	7
	724/ 5	01	7
	724/ 6	01	7
390953S36	1.88.11/ 7A	01	1
	304	01	7
	304	02	11
	437/ 1	01	5
390954S36	1.82.6	04C	1
390955S36	1.88.11/ 3A	01	5
390967S36	437/ 1	01	4
390989S36	704	02	3
412005	131	01	3
	321	01	2
413-1036	1.82.6	10	10
44910052	1.92.6	01	2
44910053	1.92.6	01	8
47042074	1.82.0	01	34
47042342	638A	02	6
	639A	02	7
47042364	1.39.8	01	9
	1.39.8/ 1	01	1
47043563	1.82.0	01	37
47044673	1.94.2/ 1	03	8
47044758	1.82.0	01	35
47048328	1.39.8/ 1	01	18
	1.82.6	05B	15
	1.82.6	05C	15
47048440	638	02	6
	639	03	6
47048448	1.94.2	03	8
47048450	1.19.1	01	13
47048451	1.94.2	03	9
	1.94.2/ 1	03	9

Number	Figure	Sequence	Ref.	Number	Figure	Sequence	Ref.
47048451	646/1	01	7	47049160	636A	04	2
47048646	638	02	9		638A	04	2
	639	01	7	47049161	1.82.6	02	12
	639	03	9		1.82.6	05B	13
47048653	1.94.2	03	6		1.82.6	05C	13
47048664	1.39.8	01	4	47049164	995	01	3
	1.39.8/ 1	01	2	47049176	1.28.6/ 1	01	4
	1.82.6	05B	11	47049184	331/ B	01	12
	1.82.6	05C	11	47049185	1.75.2/ 5	03	10
47048668	638	02	12		1.82.0	01	23
	639	03	12	47049186	1.15.0	01	8
47048702	995	01	21		1.75.2/ 5	03	11
	995	02	21		638A	02	4
47048735	1.39.8/ 1	01	19		639A	02	5
47048759	638	02	8	47049187	638	02	7
	639	03	8		639	03	7
47048788	131	01	6	47049195	995	01	9
	321	01	9	47049372	1.28.0	01	19
47048896	1.94.2	03	4		1.28.0/ A	01	26
	1.94.2/ 1	03	4	47049404	331/ C	02	14
47048898	1.15.0	01	5	47049442	331/ C	02	12
47048959	1.96.2/ 1	01	4	47049590	131	01	7
47048961	331/ A	01	2		321	01	6
	333/ A	01	2	47049644	1.82.6	13B	9
	995	01	10	47049809	638A	02	1
	995	02	10		639A	02	4
47048962	1.19.1	01	6	47049943	638A	02	3
	1.39.8/ 1	01	3		639A	02	3
	1.82.0	01	28	47050653	331/ C	03	10
47048963	131	01	4		331/ C	04	14
	321	01	10		331/ C	05	7
	638	02	11		333/ B	03	10
	639	03	11		333/ B	04	14
47048964	1.39.8	01	5		333/ B	05	7
	1.39.8/ 1	01	4	47050658	1.28.6/ 1	01	3
	1.82.6	05B	14	47050660	1.39.8/ 1	01	12
	1.82.6	05C	14	47050671	1.14.0	01	5
47048969	331/ B	01	8		1.82.0	01	10
47048972	1.15.0	01	6	47050685	331/ C	03	11
	1.82.0	01	24		333/ B	03	11
	638A	02	8		700	02	3
	639A	02	1	47050686	331/ C	01	13
47048973	1.14.0	01	4		331/ C	04	13
	1.82.0	01	14		331/ C	05	6
47048976	1.14.0	01	8		333/ B	01	13
	1.82.0	01	9		333/ B	04	13
	636A	01	6		333/ B	05	6
	638A	01	6		700	02	4
	639A	01	6		700	02	4
47048992	331/ B	01	9	47050861	1.75.2/ 5	02	6
	636A	04	3	47054518	995	01	11
	638A	02	7	47055750	1.15.0	02	1
	638A	04	3	47120173	331/ C	04	12
	639A	02	8		333/ B	04	12
	639A	04	3	47120207	995	01	13
	995	01	17	4858605	0.142	01	8
47048993	1.75.2/ 5	02	8	4858607	1.95.0	02	14
47049010	1.75.2/ 5	02	7		1.95.0	03	3
47049029	995	01	15	4890343	0.345/A	01	4
	995	02	15	4890732	0.345/A	01	9
47049030	1.39.8/ 1	01	16	4890832	0.043	02	4
	995	01	18	4890833	0.043	03	8
47049031	1.75.2/ 5	02	9	4890964	0.201	01	4
47049041	1.15.0	01	7	4891209	0.043	02	5
	1.82.0	01	25		0.105	02	7
	131	01	5	4891252	0.320	01	1
	321	01	5	4891353	0.040	01	6
	331/ B	01	10	4892426	0.345/A	01	6
	331/ C	02	2	4892708	0.081	01	2
	638	02	14	4892712	0.082	01	2
	639	03	14	4892713	0.082	01	3
47049078	331/ A	01	3	4892732	0.345/A	01	7
	333/ A	01	3	4892859	0.060	01	2
47049082	1.39.8/ 1	01	17	4892860	0.066	01	4
	1.82.6	02	8	4892861	0.060	01	1
	331/ B	01	11	4892867	0.084	01	2
47049088	638	02	10	4892915	0.043	03	2
	639	03	10	4893386	0.080	01	2
47049094	1.88.11/ 1C	01	20	4893391	0.315	01	8
47049098	1.15.0	01	4	4893518	0.142	01	6
47049157	995	01	12	4894095	0.203	01	4
47049160	1.19.1	01	7	4894139	0.042/ 1	01	6

Number	Figure	Sequence	Ref.	Number	Figure	Sequence	Ref.
4894218	0.040	02	1	4897480	0.300	01	1
4894641	0.083	01	3	4897934	0.105	01	11
4894721	0.201	01	5	4898301	0.042/ 1	01	3
4895038	0.040	01	4	4898482	0.240/ 1	01	6
4895039	0.040	01	3	4899003	0.142	01	4
4895040	0.040	01	7	4899009	0.040	02	4
4895043	0.315	01	3		0.060	01	10
4895045	0.315	01	5	4899019	0.315	01	1
4895049	0.040	02	8	4899020	0.042/ 1	01	1
4895078	0.060	01	16		0.043	03	3
4895107	0.305	01	2		0.200	01	3
4895133	0.240/ 1	01	2	4899026	0.040	01	2
4895155	0.043	03	11		0.043	01	1
4895164	0.305	01	1		0.043	03	1
4895166	0.200	01	5	4899027	0.105	02	2
	0.400	01	6	4899031	0.201	01	3
4895179	0.060	01	12	4899035	0.315	01	6
4895180	0.040	02	9	4899036	0.270	01	3
4895183	0.060	01	4		0.270/A	01	3
4895184	0.060	01	9	4899039	0.071/ 1	01	2
4895187	0.060	01	6	4899053	0.345/A	01	1
4895188	0.060	01	5	4899058	0.305	01	9
4895195	0.066	01	1	4899063	0.043	02	3
4895196	0.066	01	7	4899068	0.043	03	9
4895198	0.066	01	9		0.120	01	3
4895199	0.066	01	10		0.149	01	2
4895200	0.066	01	11	4899072	0.040	02	5
4895204	0.066	01	12		0.060	01	11
4895214	0.063	01	3	4899073	0.043	01	3
4895215	0.060	01	8		0.450	01	2
4895227	646A	01	8	4899074	0.043	03	2
4895228	0.040	01	5	4899076	0.043	03	2
4895244	0.204	01	1	4899078	0.043	02	2
4895291	0.345/A	01	2	4899079	0.043	03	6
	0.400	01	4		0.320	01	3
4895297	0.140/ 1	02	2		0.340	01	5
4895305	0.204	01	2	4899080	0.120	01	6
4895323	0.105	02	8	4899090	0.300	01	2
	0.120	01	1	4899091	0.042/ 1	01	2
4895327	0.350	01	3		0.043	01	2
4895347	0.060	01	7	4899093	0.043	01	3
4895355	0.043	01	4		0.200	01	4
4895360	0.063	01	1	4899106	0.305	01	7
4895361	0.066	01	2	4899107	0.305	01	3
4895363	0.066	01	5	4899108	0.305	01	4
4895364	0.066	01	6	4899109	0.043	03	2
4895365	0.066	01	8		0.105	01	11
4895378	0.043	03	4		0.323	01	1
4895379	0.043	03	5		0.340	01	6
4895392	0.040	02	6	4899110	0.045	01	3
	0.323	01	6	4899115	0.040	02	3
4895393	0.040	02	7		0.270	01	11
	0.323	01	7	4899118	0.240/ 1	01	1
4895489	0.042/ 1	01	2	4899119	0.077/ 1	01	4
4895538	0.042/ 1	01	10	4899121	0.305	01	11
	0.400	01	5	4899143	0.043	03	2
4895576	0.323	01	4	4899467	0.305	01	5
4895586	0.105	01	6	4899519	0.305	01	6
4895605	0.040	02	2	4899610	0.120	01	5
4895610	0.270	01	5	4899643	0.315	01	2
	0.270/A	01	5	4899921	0.071/ 1	01	5
4895623	0.323	01	8	4983992	1.95.0	01	5
4895625	0.323	01	9	4985122	1.95.1/1	01	13
4895648	0.071/ 1	01	4	4985127	1.95.1/1	01	3
4895790	0.060	01	3	4988275	1.95.1/1	01	6
4896404	0.315	01	4	4998760	1.95.5/ 4	01	10
4896406	0.315	01	9	4999021	1.93.0	04	9
4896409	0.315	01	11		1.93.0/ 3	04	9
4896410	0.315	01	7	500315794	0.045	01	1
4896770	0.142	01	7	500315795	0.045	01	2
4896773	0.084	01	1	500395697	0.345/A	01	5
4896897	0.350	01	2	504001088	0.200	01	2
4896947	0.105	01	5	504010786	0.240/ 1	01	4
4897024	0.043	02	1	504011329	0.270	01	1
4897048	0.105	01	4		0.270/A	01	1
4897071	0.105	01	3	504011338	0.270	01	6
4897123	0.105	01	2	504025599	0.326	01	6
4897178	0.060	01	13	504026078	0.450	01	1
4897179	0.060	01	14	504028028	0.340	01	2
4897330	0.270	01	4	504031929	0.360	01	1
	0.270/A	01	4	504032877	0.140/ 1	01	2
4897457	0.120	01	4	504034954	0.120	01	7

Number	Figure	Sequence	Ref.	Number	Figure	Sequence	Ref.
504035094	0.240/ 1	01	5	5178468	1.93.0/ 1	02	5
504035148	0.345/A	01	3	5183854	1.92.6	03	8
504036358	0.270	01	10	614-10040	1.82.6	10	3
504038890	0.326	01	5	614-10045	331	01	2
504042116	0.149	01	1		333/ 1	01	2
504047260	0.040	02	10	70741298	346	05	13
504049033	0.350	01	1		347	05	2
504051210	0.326	01	2	71304923	990/ 1	01	8
504051276	0.204	01	3	71431438	990/ 1	01	6
504051886	0.042/ 1	01	4	72219391	0.140/ 1	01	5
504051893	0.042/ 1	01	9	76088638	995	01	6
504052013	0.326	01	3	7704794	901/ A	01	21
504053166	0.305	01	10	7708312	304	02	5
504053173	0.305	01	8	79028977	990/ 1	01	9
504053512	0.326	01	4	79028981	990/ 1	01	4
504053522	0.063	01	6	79062734	990/ 1	01	5
504053894	0.305	01	15	79072960	1.88.01/ 2	02	12
504054020	0.140/ 1	01	1		1.88.01/ 3	01	6
504057286	0.240/ 1	01	3		392	01	11
504057292	0.142	01	5		392	02	10
504057736	0.083	01	1		393	03	11
504060728	0.140/ 1	01	3	79089592	1.93.0	02	2
504060839	0.400	01	2		1.93.0	04	7
504061464	0.400	01	3		1.93.0/ 1	02	2
504061622	0.084	01	3		1.93.0/ 3	04	7
504062460	0.083	01	2		1.93.5	01	2
504062464	0.071/ 1	01	6		1.93.5/ 1	01	8
504062710	0.323	01	2		1.93.5/ 3	01	8
504062752	0.120	01	2	79105220	1.93.0	04	8
504062795	0.270	01	2		1.93.5	01	3
	0.270/A	01	2		1.93.5/ 1	01	9
504062812	0.042/ 1	01	8		1.93.5/ 3	01	9
504062856	0.320	01	2	79111815	1.93.0	01	12
504063465	0.140/ 1	02	1		1.93.0/ 3	01	12
504064336	0.323	01	3	79111978	1.92.9	01	12
504064340	0.340	01	1		1.93.0	02	13
504064865	0.071/ 1	01	1		1.93.0	02	18
504065040	0.063	01	4		1.93.0/ 1	02	13
504065880	0.340	01	3		1.96.7/ 2	01	6
504066618	0.077/ 1	01	1		1.96.7/ 8	01	6
504067723	0.066	01	3	8093882	0.081	01	4
504069775	0.043	03	10	81871864	1.92.4	01	10
504069777	0.042/ 1	01	7		1.92.4	02	10
504074001	0.043	01	6	82000409	1.92.6	03	9
504074178	0.323	01	5	82001909	1.93.0	04	13
504081248	0.077/ 1	01	2		1.93.0/ 3	04	13
504083433	0.142	01	2	82002966	1.91.4/ 6	07	6
504084983	0.270/A	01	11	82003283	1.96.7/ 8	01	13
504085705	0.077/ 1	01	3	82003369	1.95.0	02	9
504088119	0.105	01	9	82012402	848	01	15
504088120	0.105	01	12	82013379	848	01	4
504093385	0.142	01	1	82013445	848	01	8
5105729	1.95.1/1	01	11	82014590	848	01	6
5106733	1.95.1/1	01	18	82017872	995	02	24
5110153	1.95.1/1	01	7	82022833	1.91.1	01	1
5110155	1.95.1/1	01	9	82026949	1.95.0	01	13
5112712	1.91.4/ 6	07	8	8274447	1.88.08	02	15
	1.92.6	03	13	82848118	120/ 1	01	1
	346	05	22	82848120	120	01	1
	346/1	02	13	82848343	120	01	2
	347	05	9		120/ 1	01	2
5131437	1.95.1/1	01	10	82848344	120/ 1	01	3
5132136	1.92.9	02	13	82859922	1.92.4	01	1
	1.92.9	03	8	829-1410	1.82.6	10	4
5135069	1.98.1	11	4	83910645	1.21.5/ 2	01	5
5138360	1.98.1	11	3		1.88.11/ 9A	01	2
5148062	1.95.0	01	3	83912378	1.88.11/ 9C	01	4
5148131	1.93.0	02	17	83961985	1.92.4	01	3
	1.93.0/ 1	02	17		1.92.4	02	8
5148132	1.93.0	02	14	83962918	353	01	18
	1.93.0/ 1	02	14	83962919	353	01	6
5148946	1.95.5/ 4	01	11	83963252	514/ C	01	6
5153180	1.95.0	01	21	83995298	1.93.4	01	4
5155381	1.95.0	02	2	84058418	331/ B	01	13
5155701	1.95.0	02	15	85700224	85.00	01	2
5155703	1.95.0	02	16	85700728	1.21.5/ 2	01	2
	1.95.0	03	2	85800007	1.88.11/ 9C	01	19
5162852	346/1	02	16	85800011	1.88.11/ 1C	01	14
5169413	1.91.4/ 6	07	5	85800013	1.88.11/ 1C	01	12
5175736	1.91.5	02	7	85800016	1.88.11/ 1C	01	13
5176441	1.93.4	01	1		1.88.11/ 2B	01	8
5178468	1.93.0	02	5	85800051	1.88.11/ 2B	01	11

Number	Figure	Sequence	Ref.	Number	Figure	Sequence	Ref.
85800053	1.88.11/ 2B	01	7	85801377	515	02	7
85800090	1.88.11/ 2B	01	17		516	02	7
85800202	901/ D	01	19		517	02	7
85800303	1.88.11/ 9C	01	14		518	02	7
85800603	1.88.11/ 6	02	3		519	02	7
85800604	1.88.11/ 6	02	2		526	01	7
85800705	901/ B	01	8		527	01	7
85800706	901/ B	01	13		528	01	7
85800822	901/ D	01	18		529	01	7
85800823	901/ D	01	16	85801397	724	02	3
85800824	901/ D	01	22		724/ 2	02	3
85800965	1.88.11/ 9A	01	10		724/ 3	02	3
85800990	1.88.11/ 9C	01	6	85801452	724	02	7
85801025	1.88.08	01	4		724/ 2	02	7
	901/ D	01	23		724/ 3	02	7
85801026	1.88.08	02	1	85801470	469	02	9
85801029	1.88.08	01	3		469/ 1	01	7
85801076	1.88.08	01	14		470	02	9
85801079	1.88.08	02	5		470/ 1	01	7
85801092	1.95.0	02	12		475	02	9
85801093	1.95.0	02	17		475/ 1	01	6
85801097	515	01	1		476	02	9
	516	01	3		476/ 1	01	7
	517	01	3		501	01	7
	518	01	3		502	01	7
	519	01	3		505	01	2
	530	01	1		515	02	4
	532	01	1		516	02	4
	533	01	1		517	02	4
85801098	515	01	4		518	02	4
	516	01	2		519	02	4
	517	01	2		526	01	4
	518	01	2		527	01	4
	519	01	2		528	01	4
	530	01	3		529	01	4
	532	01	3		534	01	7
	533	01	3		535/ 2	01	7
85801153	1.88.11/ 9A	01	7		555	01	2
85801191	1.88.08	02	13	85801488	350	01	2
85801218	1.14.0	01	6		358	01	9
	1.82.0	01	11	85801492	995	01	8
85801249	1.82.0	01	2	85801502	350	01	1
85801262	1.21.5/ 2	01	22		358	01	1
85801307	901/ A	01	9	85801518	1.88.12/ 3	01	20
85801308	901/ A	01	22		350	01	8
85801309	901/ A	01	5		358	01	6
85801310	901/ A	01	4	85801542	732	01	1
85801314	901/ A	01	20		732/ A	01	1
85801319	1.87.8	01	1	85801562	1.88.12/ 3	01	12
85801324	1.87.8	01	9	85801564	1.88.12/ 3	01	3
85801371	469	02	8	85801566	1.88.12/ 3	01	8
	469/ 1	01	5	85801585	1.28.0	01	9
	470	02	8		636A	01	7
	470/ 1	01	5		638A	01	7
	475	02	8		639A	01	7
	475/ 1	01	4	85801621	1.92.3	01	1
	476	02	8	85801622	1.92.3	01	2
	476/ 1	01	5	85801623	1.92.3	01	3
	501	01	9	85801624	1.92.6	02	7
	502	01	8	85801625	1.92.6	02	9
	505	01	3	85801626	1.92.4	03	3
	515	02	3	85801628	1.92.4	03	2
	516	02	3	85801630	1.92.3	01	4
	517	02	3	85801631	1.92.3	01	5
	518	02	3	85801632	1.92.9	01	2
	519	02	3	85801649	1.93.0	01	2
	526	01	3		1.93.0/ 3	01	2
	527	01	3	85801651	1.93.0	03	7
	528	01	3		1.93.0/ 1	03	7
	529	01	3	85801654	1.92.1	01	2
	534	01	8		1.92.1/ 2	01	2
	535/ 2	01	9	85801655	1.92.1	01	3
	555	01	3		1.92.1/ 2	01	3
85801376	515	02	8	85801739	1.92.9	01	1
	516	02	8	85801799	1.92.6	02	4
	517	02	8	85801800	1.92.6	02	5
	518	02	8	85801801	1.92.6	02	12
	519	02	8	85801804	1.92.4	01	11
	526	01	2	85801811	1.92.9	01	3
	527	01	2	85801812	1.92.9	02	1
	528	01	2	85801813	1.92.9	02	2
	529	01	2	85801814	1.92.9	02	3

Number	Figure	Sequence	Ref.	Number	Figure	Sequence	Ref.
85801815	1.92.9	02	4	85802336	1.94.2/ 1	03	6
85801816	1.92.9	02	7	85802338	1.21.5/ 2	01	13
85801820	1.92.9	03	11	85802351	1.92.9	03	13
85801821	1.92.9	03	11	85802381	1.75.2/ 5	02	1
85801823	1.92.9	03	14	85802396	1.88.08	01	13
85801824	1.92.9	03	15		1.88.08	02	11
85801825	1.92.9	03	16		900	01	6
85801826	1.92.9	01	9		900	02	10
85801827	1.92.9	02	14		901	03	12
85801828	1.92.9	01	7	85802397	1.88.08	01	12
85801829	1.92.9	01	10		1.88.08	02	12
85801830	1.92.9	03	2		900	01	7
85801831	1.92.9	03	1		900	02	9
85801832	1.92.9	03	3		901	03	13
85801833	1.92.9	03	4	85802398	1.91.5	02	4
85801834	1.92.9	03	6	85802426	1.91.4/ 6	04	2
85801860	1.95.0	01	7	85802427	1.91.4/ 6	04	3
85801863	1.92.1/ 3	01	2	85802441	1.98.0/ 1	01	13
85801879	1.95.5/ 4	01	2		1.98.0/ 3	01	13
85801883	1.92.4	02	11	85802454	724	02	2
85801884	1.92.4	02	13		724/ 2	02	2
85801939	1.96.0/ 2	01	1		724/ 3	02	2
85801941	1.95.0	02	8	85802457	727/ 3	01	21
	1.96.7/ 8	01	12	85802478	1.91.4/ 6	07	4
85801953	1.96.7/ 2	01	16	85802494	1.88.09/ 1	01	2
85801968	1.96.7/ 2	01	1		1.88.12/ 3	01	21
	1.96.7/ 8	01	1		351	03	10
85801976	1.95.5/ 4	01	7		353	01	12
85801979	1.93.0	03	5		353	03	7
	1.93.0/ 1	03	5		703	05	1
85801991	1.92.9	01	11		727/ 3	01	1
	1.93.0	01	14	85802527	333/ B	08	10
	1.93.0	01	3		703	03	10
	1.93.0	02	8	85802528	333/ B	08	11
	1.93.0/ 1	02	8		703	03	11
	1.93.0/ 3	01	3	85802529	333/ B	08	9
	1.93.5/ 1	02	4		703	03	9
	1.94.0	01	3	85802532	333/ B	08	6
85802018	1.92.9	03	12		703	03	6
85802062	1.92.4	01	7	85802534	901/ A	01	16
85802063	1.92.4	01	2	85802580	1.82.0	01	20
85802107	1.91.6	01	3	85802599	200	01	2
85802141	1.93.5/ 1	02	8	85802618	1.28.0	01	11
85802142	1.93.5/ 1	02	9		1.88.09/ 1	01	4
85802143	1.93.5/ 1	02	10		636A	01	8
85802144	1.93.5/ 1	02	11		638A	01	8
85802145	1.93.5/ 1	02	12		639A	01	8
85802146	1.93.5/ 1	02	13	85802620	1.88.11/ 7A	01	3
85802160	1.91.4/ 6	03	3	85802647	353	01	4
85802214	724	01	18	85802682	350	01	1
	724/ 2	01	18		358	01	2
	724/ 3	01	18	85802683	1.28.0/ A	02	13
85802225	1.96.7/ 2	01	4	85802684	1.28.0/ A	02	14
	1.96.7/ 8	01	4		1.28.0/ C	03	21
85802227	1.96.7/ 2	01	14	85802731	1.82.6	13B	6
	1.96.7/ 8	01	14	85802738	1.88.12/ 3	01	10
	353	01	22		350	02	6
85802234	1.88.01/ 3	02	4		351	03	2
	700	02	1		353	03	14
85802242	1.98.0/ 1	03	5		358	02	9
85802243	1.98.0/ 1	03	1		703	05	15
85802245	1.98.0/ 1	03	5		727/ 3	01	15
85802246	1.98.0/ 1	03	1	85802743	1.19.1	01	14
85802248	1.98.0/ 1	03	5		1.88.11/ 3A	01	2
85802249	1.98.0/ 1	03	1		176	01	2
85802251	1.98.0/ 1	03	5		176	01	4
85802252	1.98.0/ 1	03	1		304	02	16
85802254	1.98.0/ 1	03	5	85802744	900	06	5
85802255	1.98.0/ 1	03	1	85802750	901/ A	01	26
85802257	1.98.0/ 1	03	5	85802763	1.96.2	01	9
85802258	1.98.0/ 1	03	1	85802776	724	01	10
85802259	1.93.0	04	12		724/ 3	01	10
85802260	1.98.0/ 1	03	5	85802780	704	02	7
85802261	1.98.0/ 1	03	1	85802800	1.82.6	01	10
85802276	1.91.8	01	1		1.82.6	05B	12
85802307	1.92.6	02	10		1.82.6	05C	12
85802309	1.96.7/ 2	01	17	85802801	1.82.6	05B	1
85802310	1.96.7/ 2	01	13		1.82.6	05C	1
85802334	1.92.3	01	6		724	01	22
	1.92.6	02	8		724/ 2	01	22
85802336	1.88.01/ 2	02	10		724/ 3	01	22
	1.88.01/ 3	01	5		724/ 5	01	14

Number	Figure	Sequence	Ref.	Number	Figure	Sequence	Ref.
85802801	724/ 6	01	13	85803079	1.94.2/ 1	03	5
85802803	392	01	3	85803088	901/ A	01	27
	392	02	5	85803107	350	01	7
	393	03	3		358	01	11
85802804	1.17.2	01	11	85803124	350	01	7
85802805	304	01	11		358	01	5
	304	02	14	85803139	535	01	3
85802820	1.88.11/ 7A	01	5		535/ 1	01	7
85802829	176	01	7		537	01	7
85802842	1.88.12/ 3	01	17	85803141	535	01	2
85802843	350	01	3		535/ 1	01	4
	358	01	3	85803184	724	02	8
85802872	1.88.08	02	10		724/ 2	02	8
85802890	1.82.6	02	9		724/ 3	02	8
	1.82.6	05B	8	85803192	1.88.08	01	8
	1.82.6	05C	8	85803193	1.88.08	01	6
	1.88.01/ 2	02	8	85803194	1.88.08	01	15
	1.88.01/ 3	02	8	85803196	1.88.08	01	1
85802891	1.82.6	07A	9	85803197	1.88.08	01	5
	1.88.11/ 7A	01	21	85803198	1.88.08	02	6
85802893	900	04	11	85803226	1.17.2	01	8
85802894	900	04	9	85803230	704	02	1
85802895	900	04	10	85803231	704	02	2
85802900	900	04	8	85803234	704	01	6
85802901	900	05	4	85803246	1.88.08	02	9
85802902	900	04	7	85803289	901/ A	01	17
85802909	900	05	5	85803312	1.88.01/ 2	02	1
85802910	1.88.11/ 7A	01	2		1.95.0	03	4
85802911	1.88.11/ 7A	01	10		331/ C	01	30
85802912	1.88.11/ 7A	01	14		331/ C	03	9
85802950	1.88.11/ 8	01	7		331/ C	04	15
85802954	1.82.6	04C	13		333/ B	01	30
85802955	1.82.6	04C	6		333/ B	03	9
85802957	900	07	4		333/ B	04	15
	900	08	2		700	02	2
85802960	1.82.6	05C	6	85803332	1.63.0	01	10
	1.82.6	06B	2		1.88.01/ 2	02	11
85802961	1.88.11/ 3A	01	7		1.88.01/ 3	02	13
85802965	1.88.11/ 7A	01	7	85803346	724/ 6	01	21
85802970	1.87.8	01	7	85803360	353	03	1
85802974	1.88.11/ A	01	32	85803364	353	03	3
	1.88.11/ 1C	01	23	85803372	628	01	2
	469	02	5	85803382	353	01	2
	470	02	5	85803393	333/ B	07	5
	475	02	5		703	02	5
	476	02	5		704	02	6
	500	01	2	85803396	990/ 1	01	2
	501	01	2	85803402	333/ B	08	3
	502	01	2		703	03	3
	533/ 1	01	2	85803408	700	01	3
	534	01	2		707	02	2
	535/ 2	01	2	85803428	724	01	11
85802975	900	03	10		724/ 2	01	11
85802991	1.88.11/ A	01	6		724/ 3	01	11
85802992	535	01	4		724/ 5	01	10
	535/ 1	01	2		724/ 6	01	10
	537	01	2	85803474	358	02	17
85802993	535	01	5	85803477	358	02	8
	535/ 1	01	8	85803486	1.82.6	02	1
	537	01	8		724	01	5
85802994	1.88.11/ A	01	8		724/ 2	01	5
85803002	900	02	8		724/ 3	01	5
	901	03	14		724/ 5	01	5
85803005	732	01	3		724/ 6	01	5
	732/ A	01	12	85803487	724	01	6
	900	03	9		724/ 2	01	6
85803008	1.88.11/ 3A	01	6		724/ 3	01	6
	1.88.11/ 7A	01	8		724/ 5	01	6
	304	01	17		724/ 6	01	6
	304	02	7	85803489	358	02	16
	900	07	5	85803493	358	02	14
85803010	1.19.1	01	10	85803517	1.21.5/ 2	01	8
	1.88.11/ 8	01	5		1.88.11/ 7A	01	20
	304	01	10	85803540	353	01	8
	901/ B	01	18	85803613	900	03	1
	901/ C	01	18	85803617	1.88.11/ 9A	01	1
85803012	1.82.6	01	1	85803623	1.88.08	01	7
85803013	1.17.2	01	5	85803637	1.88.08	02	14
	1.19.1	01	12	85803782	358	01	14
85803019	1.17.2	01	12	85803783	358	01	13
85803039	1.88.11/ 9A	01	8	85803786	703	05	9
85803079	1.94.2	03	5		727/ 3	01	9

Number	Figure	Sequence	Ref.	Number	Figure	Sequence	Ref.
85803788	1.98.0/ 1	01	11	85804376	353	02	4
	1.98.0/ 3	01	11		358	02	6
85803789	1.98.0/ 1	01	10	85804400	1.98.0/ 1	03	5
	1.98.0/ 3	01	10	85804401	1.98.0/ 1	03	5
85803867	1.98.0/ 1	03	1	85804402	1.98.0/ 1	03	5
85803868	1.98.0/ 1	03	1	85804403	1.98.0/ 1	03	5
85803874	1.98.0/ 1	03	1	85804441	346	02	19
85803875	1.98.0/ 1	03	1	85804442	724	01	20
85803876	1.98.0/ 1	03	1		724/ 2	01	20
85803884	1.75.2/ 5	01	5		724/ 3	01	20
85803917	353	01	21	85804447	900	02	12
85803986	1.91.4/ 6	02	12	85804465	1.88.11/ A	01	10
85803991	1.28.0/ C	03	20	85804468	1.21.5/ 2	01	3
85804038	346	02	13		1.88.11/ A	01	3
	346/1	01	12	85804469	1.88.11/ A	01	13
85804041	346	02	3	85804475	1.88.11/ A	01	2
	347	02	3	85804493	1.87.8	01	10
85804051	346	03	7	85804495	1.88.11/ A	01	21
	347	03	3	85804497	1.88.11/ A	01	11
85804065	646/1	04	6	85804504	1.88.11/ A	01	34
85804077	1.98.0/ 1	04	1		1.88.11/ A	01	9
85804078	1.98.0/ 1	04	6	85804505	1.88.11/ A	01	12
85804079	1.98.0/ 1	04	2	85804508	1.88.11/ A	01	20
85804080	1.98.0/ 1	04	3	85804509	1.88.11/ A	01	16
85804081	1.98.0/ 3	05	3	85804513	1.88.11/ A	01	27
85804083	1.98.0/ 1	01	14	85804515	1.88.11/ A	01	28
85804084	1.98.0/ 3	05	6	85804533	1.88.11/ A	01	30
85804085	1.98.0/ 3	05	7		469	02	2
85804086	1.98.0/ 1	04	4		470	02	2
85804087	1.98.0/ 1	03	3		475	02	2
85804088	1.98.0/ 3	05	2		476	02	2
85804089	1.98.0/ 1	04	5		500	01	5
85804090	1.98.0/ 3	05	5		501	01	5
85804091	1.98.0/ 3	05	4		502	01	5
85804171	1.21.5/ 2	01	23		533/ 1	01	5
85804275	1.28.0	01	18		534	01	5
85804276	1.28.0	01	2		535/ 2	01	5
85804302	1.17.2	01	7	85804534	1.88.11/ A	01	33
85804323	622	01	1		1.88.11/ 1C	01	24
85804324	1.98.0/ 1	02	1		469	02	4
85804325	1.98.0/ 1	02	5		470	02	4
85804326	1.98.0/ 1	02	6		475	02	4
85804327	1.98.0/ 1	02	7		476	02	4
85804328	1.98.0/ 1	03	5		500	01	3
85804329	1.98.0/ 1	02	4		501	01	3
85804330	1.98.0/ 1	02	2		502	01	3
85804331	1.98.0/ 1	02	3		533/ 1	01	3
85804332	1.98.0/ 1	01	6		534	01	3
	1.98.0/ 3	01	6		535/ 2	01	3
85804333	1.98.0/ 1	01	7	85804538	1.88.11/ 1C	01	22
	1.98.0/ 3	01	7	85804539	1.88.12/ 3	01	24
85804334	1.98.0/ 1	01	8	85804540	350	01	10
	1.98.0/ 3	01	8	85804541	358	01	12
85804335	1.98.0/ 1	01	9	85804542	1.98.0/ 1	04	1
	1.98.0/ 3	01	9	85804543	1.98.0/ 1	04	6
85804336	1.98.0/ 1	01	5	85804544	1.98.0/ 1	04	2
	1.98.0/ 3	01	5	85804545	1.98.0/ 1	04	3
85804337	1.98.0/ 1	02	8	85804546	1.98.0/ 3	05	3
85804338	1.98.0/ 1	01	4	85804547	1.98.0/ 3	05	6
	1.98.0/ 3	01	4	85804548	1.98.0/ 3	05	7
85804339	1.98.0/ 1	01	3	85804549	1.98.0/ 1	04	4
	1.98.0/ 3	01	3	85804550	1.98.0/ 1	03	3
85804341	1.98.0/ 1	01	2	85804551	1.98.0/ 3	05	2
	1.98.0/ 3	01	2	85804552	1.98.0/ 1	04	5
85804344	350	01	11	85804553	1.98.0/ 3	05	5
85804345	350	01	12	85804554	1.98.0/ 3	05	4
85804346	302	01	12	85804555	1.98.0/ 1	04	1
	700	01	17	85804556	1.98.0/ 1	04	6
85804347	176	01	1	85804557	1.98.0/ 1	04	2
	176	01	3	85804558	1.98.0/ 1	04	3
85804349	176	01	5	85804559	1.98.0/ 3	05	3
85804358	1.98.0/ 1	03	6	85804560	1.98.0/ 3	05	6
85804362	1.91.6	01	5	85804561	1.98.0/ 3	05	7
85804375	1.88.12/ 3	01	5	85804562	1.98.0/ 1	04	4
	350	02	3	85804563	1.98.0/ 1	03	3
	351	03	6	85804564	1.98.0/ 3	05	2
	353	02	5	85804565	1.98.0/ 1	04	5
	353	03	12	85804566	1.98.0/ 3	05	5
	358	02	1	85804567	1.98.0/ 3	05	4
	703	05	16	85804573	1.82.6	13B	4
	727/ 3	01	16	85804574	1.82.6	13B	5
85804376	1.88.12/ 3	01	1	85804578	1.88.11/ A	01	7

Number	Figure	Sequence	Ref.	Number	Figure	Sequence	Ref.
85804587	1.88.11/ A	01	22	85805189	1.82.6	08B	4
85804588	1.88.11/ A	01	23	85805191	1.82.6	08B	5
85804602	175	01	1	85805193	1.82.6	08B	17
85804617	1.92.4	03	1		700	01	7
85804675	1.14.0	01	16		707	01	4
	1.91.4/ 6	03	6	85805195	1.82.6	08B	18
85804705	1.95.5/ 4	01	4		700	01	8
85804725	202	01	1		707	01	6
85804736	353	02	1	85805200	1.96.7/ 2	01	8
85804750	1.93.0/ 3	01	18	85805203	1.82.6	07A	8
	1.93.5	01	4	85805206	1.82.6	07A	13
	1.93.5/ 1	01	7	85805207	1.82.6	07A	14
	1.93.5/ 3	01	7	85805208	1.82.6	07A	15
85804780	353	01	1	85805209	1.82.6	08B	14
85804781	353	01	19	85805210	1.82.6	08B	12
85804782	353	01	7	85805211	1.82.6	08B	13
85804787	353	01	13	85805218	304	01	14
85804791	353	01	16	85805220	304	01	15
85804794	353	01	15		304	02	17
85804801	353	01	11	85805221	304	01	16
85804837	1.95.5/ C	01	1		304	02	3
	1.95.5/ 4	01	1	85805223	304	02	1
85804845	535/ 1	01	1	85805228	304	03	1
85804846	535/ 1	01	1	85805231	1.63.0	01	15
85804847	535	01	1	85805232	1.63.0	01	1
85804848	535	01	1		1.63.0/ A	01	7
85804863	1.93.0	04	2	85805237	350	02	1
85804864	1.93.0	04	5		358	02	11
85804865	1.93.0	03	1	85805239	353	01	17
85804866	1.93.0	04	6	85805247	700	01	11
85804867	1.93.0/ 1	03	1		707	02	3
85804869	1.92.4	01	4	85805251	1.95.1/1	01	29
85804870	1.92.4	02	5	85805256	1.17.2	01	6
85804878	536	01	8	85805257	1.95.0	02	1
85804879	392	01	9	85805258	096/ 1	01	7
	393	03	9		1.82.6	12B	11
85804895	351	03	9		333/ B	07	2
85804899	351	03	8		334	09	2
85804947	1.82.6	12B	8		700	01	1
85804959	1.98.0/ 3	06	1		703	02	2
	993	01	12		707	01	1
85805003	346	02	14	85805260	1.88.01/ 3	01	2
	346/1	01	13	85805261	1.88.01/ 3	01	4
85805004	346	02	15	85805277	1.95.0	01	16
	346/1	01	14	85805283	1.95.0	01	6
85805005	346	02	16	85805285	1.95.0	01	4
	346/1	01	15	85805301	1.87.2	01	14
85805006	346	02	17	85805302	1.87.2	01	15
	346/1	01	16	85805303	1.87.2	01	6
	646/1	01	9	85805304	1.87.2	01	7
85805008	346	02	10	85805305	1.87.2	01	8
	346/1	01	18	85805306	1.88.11/ A	01	31
85805013	646/1	01	8		469	02	3
85805014	646/1	01	11		470	02	3
85805065	1.92.3	01	7		475	02	3
	1.92.6	02	11		476	02	3
85805067	1.92.1/ 3	01	4		500	01	6
85805097	1.88.09/ 1	01	15		501	01	6
85805108	1.88.11/ 8	01	1		502	01	6
85805111	1.88.11/ 8	01	2		533/ 1	01	6
85805113	1.88.11/ 8	01	4		534	01	6
85805115	392	02	1		535/ 2	01	6
85805123	392	02	9	85805311	1.88.11/ 3A	01	1
85805124	392	01	4	85805318	1.63.0	01	5
	392	02	2		331/ C	05	4
	393	03	4		333/ B	05	4
85805126	392	02	8	85805323	1.93.0	01	5
85805137	1.88.08	01	21		1.93.0/ 3	01	5
85805142	1.87.2	01	11		1.93.5	01	5
85805144	346	02	22		1.93.5/ 1	01	5
85805162	1.75.2/ 5	03	4		1.93.5/ 3	01	5
85805166	1.82.6	04C	8	85805328	1.88.09/ 1	01	5
85805167	1.82.6	04C	5	85805331	1.88.09/ 1	01	6
85805168	1.82.6	04C	7	85805338	1.88.09/ 1	01	11
85805170	1.88.11/ 3A	01	3	85805340	700	01	6
85805171	1.88.11/ 3A	01	1		707	01	5
85805181	1.82.6	07A	3	85805341	700	01	4
85805182	1.82.6	07A	5		707	01	2
85805183	1.82.6	07A	6	85805342	700	01	5
85805184	1.82.6	07A	7		707	01	3
85805185	1.82.6	08B	6	85805358	703	05	4
85805187	1.82.6	08B	7		727/ 3	01	4

Number	Figure	Sequence	Ref.
85805362	703	05	2
	727/ 3	01	2
85805364	703	05	10
	727/ 3	01	10
85805383	1.91.4/ 6	07	11
85805408	1.88.09/ 1	01	12
85805409	1.88.09/ 1	01	18
85805440	1.95.1/1	01	4
85805441	1.95.1/1	01	2
85805448	1.92.4	01	9
	1.92.4	02	9
85805498	353	03	8
85805545	1.95.5/ 4	01	6
85805548	1.95.0	03	7
85805591	1.93.0	03	4
	1.93.0/ 1	03	4
85805616	1.88.09/ 1	01	10
	1.88.12/ 3	01	6
85805619	1.88.11/ 8	01	6
85805648	1.88.08	01	18
85805654	1.88.11/ A	01	14
85805659	1.92.6	02	1
85805663	200	01	5
85805664	200	01	6
85805671	1.98.0/ 3	06	1
85805672	1.98.0/ 3	06	1
85805673	1.98.0/ 3	06	1
85805674	1.98.0/ 3	06	1
85805675	1.98.0/ 3	06	1
85805676	1.98.0/ 3	06	1
85805677	1.98.0/ 3	06	1
85805678	1.98.0/ 3	06	1
85805679	1.98.0/ 3	06	1
85805680	1.98.0/ 3	06	1
85805681	1.98.0/ 3	06	1
85805685	1.75.2/ 5	01	3
85805686	1.75.2/ 5	01	2
85805690	1.88.12/ 3	01	9
85805692	1.88.12/ 3	01	7
85805703	400A	01	9
85805709	400	09	9
	400A	11	9
85805770	1.92.6	01	7
85805771	1.92.6	01	4
85805773	1.95.5/ 4	01	13
85805774	1.95.5/ 4	01	12
85805777	346/1	02	17
85805806	358	02	2
85805807	200	01	4
85805813	302	01	11
85805819	1.93.0	01	18
	1.93.0/ 3	01	14
85805832	1.91.4/ 6	05	6
85805833	1.91.4/ 6	05	4
85805834	1.91.4/ 6	05	5
85805866	358	02	13
85805867	358	02	5
85805910	1.98.0/ 3	01	14
85805931	533/ 1	02	13
	534	02	13
	535/ 2	02	13
85805932	533/ 1	02	1
	534	02	1
	535/ 2	02	1
85805933	533/ 1	02	3
	534	02	3
	535/ 2	02	3
85805934	533/ 1	02	12
	534	02	12
	535/ 2	02	12
85805935	533/ 1	02	10
	534	02	10
	535/ 2	02	10
85805936	533/ 1	02	11
	534	02	11
	535/ 2	02	11
85805986	400	03	22
	400A	04	4
85805987	400	03	21
85806012	400	09	10
	400A	01	6
	400A	02	16
85806012	400A	11	10
85806019	1.28.0	01	16
85806023	1.93.0	01	9
	1.93.0/ 3	01	9
	1.96.7/ 2	01	9
85806089	1.93.5	01	6
	1.93.5/ 1	01	6
	1.93.5/ 3	01	6
85806095	1.91.5	01	3
85806097	1.91.5	01	4
85806098	1.91.5	01	2
85806132	1.91.4/ 6	07	18
85806133	1.91.4/ 6	05	3
85806134	1.91.4/ 6	02	3
85806135	1.91.4/ 6	02	6
85806154	1.93.0	02	12
	1.93.0/ 1	02	12
85806165	351	03	1
85806176	1.95.0	02	21
85806184	1.91.5	01	5
85806185	1.91.5	01	6
85806215	860	01	2
85806219	860	01	2
85806220	860	01	3
85807870	1.98.0/ 1	01	12
	1.98.0/ 3	01	12
85807876	724	01	8
	724/ 2	01	8
	724/ 3	01	8
	724/ 5	01	8
	724/ 6	01	8
85807877	1.88.11/ 7A	01	6
85807878	1.88.11/ 7A	01	15
85807879	1.88.11/ 7A	01	15
85807880	1.92.1/ 3	01	5
85807914	353	03	15
85807926	353	03	6
85807944	1.91.4/ 6	06	9
85807957	400	01	2
85807958	400	01	3
	400	02	3
85807959	400	01	5
	400	02	5
85807961	400	02	9
	400A	02	9
85807965	400	02	12
	400A	02	12
85807966	400	02	14
	400A	02	14
85807967	400	02	10
	400A	02	15
85807969	400	03	2
	400A	03	2
85807970	400	03	3
	400A	03	3
85807972	400	03	5
	400A	03	5
85807973	400	03	6
	400A	03	6
	400A	04	6
85807974	400	03	7
85807975	400	03	8
	400A	03	8
	400A	04	8
85807976	400	03	10
85807977	400	03	11
	400A	03	11
85807978	400	03	12
85807979	400	03	1
85807981	400	03	20
	400A	04	2
85807982	400	03	23
	400A	04	5
85807983	400	03	16
85807984	400	03	17
85807985	400	03	18
85807986	400	03	13
85807987	400	03	14
	400A	03	14
85807988	400	04	1
85807990	400	04	8
85807991	400	06	10

Number	Figure	Sequence	Ref.	Number	Figure	Sequence	Ref.
85807992	400	06	3	85808346	1.28.0/ C	07	4
	400	06A	3		1.28.0/ C	09	4
85807993	400	06	1	85808347	1.28.0/ C	07	2
	400	06A	5	85808348	1.28.0/ C	07	1
85808260	400	08	1		1.28.0/ C	09	1
	400A	10	1	85808349	1.28.0/ C	07	11
85808262	400	08	3	85808351	1.28.0/ C	08	5
	400A	10	3	85808352	1.28.0/ C	09	2
85808263	400	08	5	85808353	1.28.0/ C	09	11
	400A	10	5	85808354	1.28.0/ C	04	6
85808265	400	08	7	85808355	1.28.0/ C	04	15
	400A	10	7	85808356	1.28.0/ C	04	5
85808266	400	08	10	85808357	1.28.0/ C	04	7
	400A	10	10	85808358	1.28.0/ C	11A	1
85808267	400	09	1	85808359	1.28.0/ C	10	6
	400A	11	1	85808360	1.28.0/ C	11A	11
85808268	400	09	2	85808361	1.28.0/ C	11A	14
	400A	11	2	85808362	1.28.0/ C	11A	13
85808269	400	09	3	85808365	1.28.0/ C	13A	15
	400A	11	3	85808366	1.28.0/ C	13A	21
85808270	400	09	4	85808368	1.28.0/ C	15	3
	400A	11	4	85808369	1.28.0/ C	15	4
85808271	400	09	5	85808370	1.28.0/ C	16	9
	400A	11	5	85808371	1.28.0/ C	16	10
85808272	400	09	6	85808372	1.28.0/ C	16	11
	400A	11	6	85808373	1.28.0/ C	16	5
85808273	400	09	7	85808374	1.28.0/ C	16	12
	400A	11	7	85808375	1.28.0/ C	16	14
85808274	400	09	8	85808376	1.28.0/ C	16	15
	400A	11	8	85808377	1.28.0/ C	14A	18
85808276	400A	01	2	85808378	1.28.0/ C	14A	20
	400A	02	2	85808379	1.28.0/ C	14A	19
85808278	400A	01	4	85808380	1.95.5/ C	01	16
	400A	02	4	85808381	1.95.5/ C	01	18
85808281	400A	02	8	85808382	1.95.5/ C	01	20
85808282	400A	01	5	85808384	1.95.5/ C	01	24
	400A	02	3	85808385	1.95.5/ C	01	4
85808283	400A	02	1	85808386	1.95.5/ C	01	11
85808289	400A	03	1	85808387	1.95.5/ C	01	23
85808293	400A	04	12	85808388	1.95.5/ C	01	13
85808294	400A	04	7	85808389	1.95.5/ C	01	12
85808295	400A	03	12	85808390	1.95.5/ C	01	2
85808297	400A	05	7		1.95.5/ C	02	2
85808298	400A	05	8	85808422	1.21.5/ 2	01	29
85808300	400A	05	10		1.87.2	01	12
85808301	400A	05	12		1.88.12/ 3	01	25
85808302	400A	05	13	85808460	1.91.4/ 6	07	19
85808311	400A	09	7		1.93.0	02	19
85808316	400A	09	6		1.93.0/ 1	02	18
85808319	1.28.0/ C	02	8	85808472	901/ A	01	11
85808320	1.28.0/ C	02	6	85808473	901/ A	01	10
85808321	1.28.0/ C	02	2	85808478	1.28.0/ C	12	9
85808322	1.28.0/ C	02	12	85809298	1.88.01/ 3	02	1
85808323	1.28.0/ C	02	3	85811432	515	01	2
	1.28.0/ C	03	10		516	01	4
85808324	1.28.0/ C	01	10		517	01	4
85808325	1.28.0/ C	01	11		518	01	4
85808326	1.28.0/ C	01	16		519	01	4
85808327	1.28.0/ C	03	5		530	01	2
85808328	1.28.0/ C	03	3		532	01	2
85808330	1.28.0/ C	03	4		533	01	2
85808331	1.28.0/ C	03	18	85811440	470	02	7
85808333	1.28.0/ C	04	8		470/ 1	01	6
85808334	1.28.0/ C	13A	13		476	02	7
85808335	1.28.0/ C	12	7		476/ 1	01	6
85808336	1.28.0/ C	05	3		501	01	8
85808338	1.28.0/ C	06	10		515	02	1
	1.28.0/ C	08	11		516	02	1
	1.28.0/ C	10	11		517	02	1
	1.28.0/ C	13A	1		518	02	1
85808339	1.28.0/ C	06	11		519	02	1
	1.28.0/ C	08	12		526	01	1
	1.28.0/ C	10	13		527	01	1
	1.28.0/ C	13A	3		528	01	1
85808340	1.28.0/ C	06	12		529	01	1
	1.28.0/ C	08	13		535/ 2	01	8
	1.28.0/ C	10	12		555	01	1
	1.28.0/ C	13A	2	85811870	1.82.6	01	2
85808343	1.28.0/ C	06	13	85811916	708/ 1	01	1
	1.28.0/ C	08	15	85811921	300	01	14
	1.28.0/ C	10	9		300	02	6
	1.28.0/ C	12	12		331	01	12

Number	Figure	Sequence	Ref.	Number	Figure	Sequence	Ref.
85811921	333/ 1	01	13	85812021	1.96.7/ 8	01	5
	703	01	15	85812029	333/ B	07	6
85811922	300	02	7		703	02	6
85811923	300	02	12	85812064	1.98.0/ 1	03	4
	302	02	3	85812080	1.93.0	04	14
85811933	300	03	10		1.93.0/ 3	04	14
	300	04	10	85812085	1.28.0/ A	03	5
	300	05	10	85812086	1.28.0/ A	03	2
	300	06	10	85812087	1.28.0/ A	03	1
	302	04	9	85812091	1.28.0/ A	03	15
	333/ 1	02	5	85812092	1.28.0/ A	04	3
	333/ 1	03	5	85812094	1.28.0/ A	02	16
	333/ 1	04	5	85812096	1.28.0/ A	01	3
	333/ 1	05	4	85812109	1.95.5/ C	01	15
	333/ 1	06	4	85812110	1.95.5/ C	01	19
	333/ 1	08	5	85812111	1.95.5/ C	01	21
	702/ 1	02	10	85812112	1.95.5/ C	01	14
85811934	300	02	13	85812113	302	04	12
	300	03	11		333/ 1	02	4
	300	04	11	85812114	300	04	8
	300	05	11		333/ 1	04	4
	300	06	11	85812115	300	05	8
	302	02	6		333/ 1	05	6
	302	04	10	85812116	300	03	9
	333/ 1	02	2		300	06	8
	333/ 1	03	2		302	04	8
	333/ 1	04	2		333/ 1	03	4
	333/ 1	05	2		333/ 1	06	6
	333/ 1	06	2		724/ 2	01	25
	333/ 1	08	2		724/ 3	01	25
85811935	702/ 1	02	11		724/ 5	01	17
85811937	300	05	9		724/ 6	01	16
	333/ 1	05	3	85812117	300	03	8
	333/ 1	06	3		333/ 1	03	6
85811938	300	03	4	85812118	1.91.4/ 6	05	7
	300	04	4	85812131	1.95.5/ C	01	17
	300	05	4	85812132	1.95.5/ C	01	9
	300	06	4	85812133	1.95.5/ C	01	7
	300	07	4	85812134	1.95.5/ C	01	10
	302	02	5	85812142	900	04	4
	302	03	4	85812143	1.82.6	12B	5
	302	04	4	85812150	900	04	18
	333/ 1	02	3	85812151	1.82.6	12B	6
	333/ 1	03	3	85812152	1.82.6	11B	6
	333/ 1	04	3	85812154	900	04	12
	333/ 1	05	5	85812155	1.82.6	11B	8
	333/ 1	06	5	85812165	901	03	6
	333/ 1	07	2	85812174	1.82.6	04C	12
	333/ 1	08	3	85812176	1.82.6	11B	5
	702/ 1	02	4	85812177	1.82.6	11B	7
85811946	300	02	3	85812178	900	04	13
	302	02	4	85812184	704	01	3
85811948	300	05	2	85812192	333/ B	07	1
85811953	302	02	8		703	02	1
85811954	302	02	7	85812202	1.63.0	01	8
85811958	300	01	12	85812211	333/ B	07	4
	331	01	4		703	02	4
85811959	333/ 1	01	4	85812212	1.63.0	01	11
	703	01	14	85812225	1.28.0/ C	03	1
85811975	176	01	6	85812238	500	01	1
85811977	1.88.11/ A	01	17		501	01	1
85811985	536	01	1		502	01	1
85811986	536	01	1		533/ 1	01	1
85811989	536	01	7		534	01	1
85811990	536	01	6		535/ 2	01	1
85811991	536	01	6	85812242	469	02	7
85811992	536	01	2		475	02	7
85811995	1.88.11/ A	01	18		475/ 1	01	5
85811998	304	02	2		502	01	9
85812000	304	02	4		505	01	1
85812002	304	02	6		534	01	9
85812004	304	01	1	85812250	400	06A	8
85812005	304	01	2	85812252	1.92.6	01	1
85812006	304	01	3	85812253	1.92.6	01	9
85812014	1.63.0/ A	01	1	85812254	1.92.4	03	4
85812015	1.63.0/ A	01	5	85812255	1.92.4	03	5
85812016	1.63.0/ A	01	6	85812279	1.98.0/ 3	05	1
85812017	1.63.0/ A	01	2	85812281	400A	04	3
85812018	1.63.0/ A	01	4	85812286	400A	05	1
85812019	1.63.0/ A	01	3	85812287	400A	05	5
85812020	1.28.0/ C	01	12	85812288	400A	06	1
85812021	1.96.7/ 2	01	5	85812289	400A	06	1

Number	Figure	Sequence	Ref.	Number	Figure	Sequence	Ref.
85812290	400A	06	1	85815505	392	02	7
85812291	400A	06	1		393	03	1
85812292	400A	06	1	85815506	304	02	8
85812293	400A	06	1	85815517	900	03	4
85812294	400A	06	1	85815537	1.95.1/1	01	19
85812295	400A	06	1	85815549	1.95.1/1	01	28
85812296	400A	06	1	85815550	1.95.1/1	01	22
85812297	400A	06	1	85815552	1.95.1/1	01	25
85812298	400A	05	14	85815555	1.95.1/1	01	24
	400A	05	14	85815556	1.95.1/1	01	23
85812299	400A	08	10	85815578	705	01	1
85812300	400A	07	3	85815579	705	01	1
	400A	08	3	85815583	437/1	01	14
85812301	400A	07	2	85815607	900	01	8
	400A	08	2	85815609	900	01	10
85812302	400A	08	9	85815614	1.63.0	01	9
85812303	400A	08	8	85815615	1.63.0	01	6
85812304	400A	08	7	85815620	437/1	01	2
85812306	400A	07	11	85815627	900	05	11
	400A	08	5	85815628	900	05	10
85812308	400A	07	4	85815630	900	04	2
	400A	08	4	85815632	900	04	1
85812323	304	02	4	85815634	900	05	2
85812324	304	02	2	85815636	900	05	1
85812326	304	02	6	85815638	900	07	3
85812338	1.92.5	01	3	85815640	333/ B	08	2
85812342	400A	07	10		703	03	2
85812343	400A	07	9	85815642	333/ B	08	1
85812364	1.92.9	02	17		703	03	1
85812365	1.92.9	01	14	85815674	333/ B	09	1
85813052	707	02	6		334	11	1
85813053	707	02	7		703	04	1
85813079	346	02	2	85815676	333/ B	09	2
	347	02	2		334	11	2
85813100	1.96.2	01	13		703	04	2
85813110	990/1	01	7	85815681	901/ B	01	2
85813111	990/1	01	1	85815683	900	06	1
85813118	304	01	4	85815698	900	01	4
85813133	1.96.2	01	4	85816242	476	02	1
85813134	1.96.2	01	2	85816760	416-417	01	2
85813135	1.96.2	01	3		724	01	13
85813136	1.96.2	01	1		724/2	01	13
85813137	1.96.2	01	8		724/3	01	13
85813138	1.96.2	01	7	85816770	1.95.1/1	01	17
85813244	1.82.3	01	2	85816776	1.88.08	02	17
	1.82.3/1	01	2	85816801	900	01	1
	1.82.3/2	01	2	85816802	628	01	1
85813300	1.28.0/ A	04	7	85816813	900	06	2
85813302	1.28.0/ C	14A	16	85816815	901	03	1
85813303	1.28.0/ C	14A	1	85816817	901	03	2
85813307	1.28.0/ C	12	10	85817001	1.28.0/ A	01	13
85813308	1.28.0/ C	16	6	85817002	1.28.0/ A	03	9
85813318	1.28.0/ A	04	15	85817004	MPARTS	00	8
85813324	346	05	25		1.28.0/ A	03	11
	347	05	12	85817006	1.28.0/ A	04	21
85813350	1.82.0	01	19	85817007	1.28.0/ A	04	22
85813351	1.82.0	01	17	85817029	1.28.0/ C	16	8
85813352	1.82.0	01	6	85817030	1.28.0/ C	15	1
85813353	1.82.0	01	22		1.28.0/ C	16	1
85813354	1.82.0	01	18	85817039	900	02	3
85813373	1.82.6	08B	8	85817106	333/ B	09	3
85813374	1.82.6	08B	9		334	11	3
85813375	1.82.6	08B	10		703	04	3
85813376	1.82.6	08B	11	85817107	333/ B	09	4
85813377	1.63.0	01	7		334	11	4
85813469	900	03	8		703	04	4
85813484	302	01	3	85817108	333/ B	08	5
	302	03	1		703	03	5
85813493	1.98.0/3	06	2	85817109	333/ B	08	4
85813494	1.98.0/3	06	2		703	03	4
	993	01	14	85817129	758	01	1
85813495	1.98.0/3	06	2	85817130	758	01	3
85813496	1.98.0/3	06	2	85817131	758	01	2
85813497	1.98.0/3	06	2	85817137	901/ A	01	1
85813498	1.98.0/3	06	2	85817138	901/ A	01	25
85813499	1.98.0/3	06	2	85817163	1.28.0/ A	01	12
85815500	1.98.0/3	06	2		1.28.0/ A	04	5
85815501	1.98.0/3	06	2	85817164	1.28.0/ A	01	6
85815502	1.98.0/3	06	2	85817165	1.28.0/ A	03	10
85815503	1.98.0/3	06	2	85817169	1.28.0/ A	01	18
85815504	1.98.0/3	06	2	85817170	646/1	03	1
85815505	392	01	1	85817171	646/1	03	2

Number	Figure	Sequence	Ref.	Number	Figure	Sequence	Ref.
85817172	646/1	03	3	85819027	1.82.3/ 2	01	3
85817173	646/1	03	4	85819040	300	03	13
85817174	646/1	03	5		300	04	12
85817175	646/1	03	6		300	05	13
85817186	646/1	01	10		300	06	13
85817189	346	02	8		300	07	9
	347	02	8		302	03	9
85817210	1.92.5	01	2		302	04	13
85817211	1.92.5	01	1		702/ 1	02	8
85817212	1.92.5	01	2	85819066	334	09	4
85817213	1.92.5	01	1	85819067	334	09	3
85817214	860	01	1	85819068	1.88.01/ 3	02	7
85817215	860	01	1	85819071	1.88.01/ 2	02	2
85817220	1.82.6	02	7	85819072	699	01	1
	724/ 2	01	10		704	01	1
85817222	437/ 1	01	3	85819074	304	03	4
85817223	437/ 1	01	12	85819134	1.91.4/ 6	06	5
85817226	331/ C	02	15	85819141	1.91.4/ 6	07	22
85817252	1.88.09/ 1	01	20	85819142	1.91.4/ 6	07	25
85817287	1.94.0	01	1	85819145	1.91.4/ 6	06	7
	646/1	01	5	85819148	300	03	2
85817289	346	02	1		300	04	2
	347	02	1		300	06	2
85817295	346	03	2		300	07	2
	346/1	01	23		302	02	10
85817575	1.91.4/ 6	05	2		302	03	2
85817589	1.91.4/ 6	06	6		302	04	2
85817619	642	01	16		333/ 1	02	6
85817629	724	01	16		333/ 1	03	6
	724/ 2	01	16		333/ 1	04	6
	724/ 3	01	16		333/ 1	05	7
	724/ 5	01	12		333/ 1	06	6
85817633	724	01	15		333/ 1	07	3
	724/ 2	01	15		333/ 1	08	6
	724/ 3	01	15		702/ 1	02	2
	724/ 5	01	11	85819152	642	01	15
	724/ 6	01	11	85819177	1.95.0	03	1
85817634	724	01	27	85819180	1.98.0/ 1	03	4
	724/ 2	01	27	85819181	1.98.0/ 1	03	4
	724/ 3	01	27	85819184	346	01	9
	724/ 5	01	19		346	02	24
85817635	724	01	26		346	03	8
	724/ 2	01	26		347	01	8
	724/ 3	01	26		347	02	12
	724/ 5	01	18		347	03	2
85817669	300	02	9		646/1	04	5
85817674	698	01	1	85819185	646/1	04	16
85817678	400A	02	17	85819188	1.91.7/ 2	01	13
85817680	400A	02	18	85819189	1.91.7/ 2	01	15
85817684	400	08	6	85819190	1.91.7/ 2	01	3
	400A	10	6	85819191	1.91.7/ 2	01	9
85817778	400	01	14	85819192	1.91.7/ 2	01	17
85817785	400	06	6	85819194	1.91.7/ 2	01	11
	400	06A	1	85819196	1.91.7/ 2	01	20
	400A	07	6	85819197	1.91.7/ 2	01	21
	400A	08	14	85819198	1.91.7/ 2	01	18
85817789	1.88.12/ 3	01	22	85819199	1.91.7/ 2	01	19
85817794	400	01	17	85819200	1.91.7/ 2	01	2
85818817	792	01	3	85819214	792	01	8
85818818	792	01	4	85819237	416-417	01	1
85818819	792	01	6		724	01	12
85818823	1.91.4/ 6	07	24		724/ 2	01	12
85818826	1.91.4/ 6	06	1		724/ 3	01	12
85818827	1.91.4/ 6	06	3	85819277	1.93.0	02	1
85818828	1.91.4/ 6	06	2		1.93.0/ 1	02	1
85818891	346	05	24	85819279	1.93.0/ 1	02	1
	347	05	11	85819285	1.93.0	01	13
85818894	1.75.2/ 5	02	5		1.93.0/ 3	01	13
85818909	1.82.6	04C	4	85819287	1.93.0	02	4
85818916	1.88.11/ A	01	29		1.93.0/ 1	02	4
	900	01	9	85819289	1.93.5/ 1	01	1
	900	03	6	85819291	1.93.5/ 3	01	1
	901	03	10	85819353	1.88.11/ 9C	01	30
85818943	300	01	4	85819378	300	03	3
	703	01	4		300	04	3
	727/ 3	01	20		300	05	3
85818992	642	01	1		300	06	3
85818993	642	01	1		300	07	3
85819017	1.92.9	01	4		302	03	3
85819018	1.92.9	01	4		302	04	3
85819027	1.82.3	01	3		333/ 1	02	7
	1.82.3/ 1	01	3		333/ 1	03	7

Number	Figure	Sequence	Ref.	Number	Figure	Sequence	Ref.
85819378	333/ 1	05	8	85820011	470	01	38
	333/ 1	07	4		470/ 2	01	7
	333/ 1	08	7		475	01	31
	702/ 1	02	3		475/ 2	01	7
85819407	1.93.5	01	1		476	01	31
85819450	1.91.4/ 6	03	4		476/ 2	01	7
85819451	346	05	2	85820012	469	01	39
	346/1	02	2		469/ 2	01	8
85819452	346	05	1		470	01	39
	346/1	02	1		470/ 2	01	8
	347	05	1		475	01	15
85819453	346	05	11		475/ 2	01	8
	346/1	02	11		476	01	15
85819454	1.93.5/ 1	01	3		476/ 2	01	8
	1.93.5/ 3	01	3	85820013	469	01	19
	346	05	7		469/ 2	01	9
	346/1	02	7		470	01	19
85819492	724	01	17		470/ 2	01	9
	724/ 2	01	17		475	01	19
	724/ 3	01	17		475/ 2	01	9
	724/ 5	01	13		476	01	19
	724/ 6	01	12		476/ 2	01	9
85819493	1.88.08	02	14	85820014	469	01	12
85819543	1.93.5/ 3	01	13		469/ 2	01	10
85819544	1.93.5/ 3	01	11		470	01	12
	346	05	12		470/ 2	01	10
	346/1	02	12		475	01	12
85819545	1.93.5/ 3	01	12		475/ 2	01	10
85819567	1.93.5/ 1	01	2		476	01	12
	1.93.5/ 3	01	2		476/ 2	01	10
85819568	1.91.4/ 6	01	3	85820015	469	01	20
85819569	1.91.6	01	1		469/ 2	01	11
85819592	1.93.5/ 3	01	14		470	01	20
85819613	1.88.08	02	16		470/ 2	01	11
85819618	724	02	12		475	01	20
	724/ 2	02	12		475/ 2	01	11
85819619	724	02	1		476	01	20
	724/ 2	02	1		476/ 2	01	11
	724/ 3	02	1	85820016	469	01	16
85819702	1.88.08	02	16		469/ 2	01	12
85819719	400A	09	1		470	01	16
85819720	400A	09	2		470/ 2	01	12
85819758	795	01	1		475	01	16
85819765	796	01	1		475/ 2	01	12
85819766	796	01	5		476	01	16
85819826	1.91.5	01	7		476/ 2	01	12
85819827	1.91.5	01	1	85820017	469	01	17
85820005	469	01	18		469/ 2	01	13
	469/ A	01	1		470	01	17
	469/ 2	01	1		470/ 2	01	13
	470	01	18		475	01	17
	470/ 2	01	1		475/ 2	01	13
	475	01	18		476	01	17
	475/ 2	01	1		476/ 2	01	13
	476	01	18	85820018	469	01	3
	476/ 2	01	1		469/ 2	01	14
85820007	469	01	21		470	01	3
	470	01	21		470/ 2	01	14
	475	01	21		475	01	3
	476	01	21		475/ 2	01	14
85820008	469	01	23		476	01	3
	469/ 2	01	4		476/ 2	01	14
	470	01	23		649	01	1
	470/ 2	01	4	85820019	469	01	36
	475	01	23		470	01	36
	475/ 2	01	4		475	01	8
	476	01	23		476	01	8
	476/ 2	01	4	85820020	469	01	37
85820009	469	01	22		469/ 2	01	16
	469/ 2	01	5		470	01	37
	470	01	22		470/ 2	01	16
	470/ 2	01	5		475	01	32
	475	01	22		475/ 2	01	16
	475/ 2	01	5		476	01	32
	476	01	22		476/ 2	01	16
	476/ 2	01	5	85820021	469	01	5
85820010	469	01	40		470	01	5
	470	01	40		475	01	5
	475	01	14		476	01	5
	476	01	14	85820025	469	01	25
85820011	469	01	38		470	01	25
	469/ 2	01	7		475	01	25

Number	Figure	Sequence	Ref.
85820025	476	01	25
85820026	469	01	8
	469/ 2	01	22
	470	01	8
	470/ 2	01	22
	475	01	11
	475/ 2	01	22
	476	01	11
	476/ 2	01	22
85820027	469	01	35
	469/ 2	01	23
	470	01	35
	470/ 2	01	23
	475	01	10
	475/ 2	01	23
	476	01	10
	476/ 2	01	23
85820028	469	01	9
	470	01	9
	475	01	9
	476	01	9
85820030	469	01	41
	469/ 2	01	24
	470	01	41
	470/ 2	01	24
	475	01	13
	475/ 2	01	24
	476	01	13
	476/ 2	01	24
85820031	469	01	6
	469/ 2	01	25
	470	01	6
	470/ 2	01	25
	475	01	6
	475/ 2	01	25
	476	01	6
	476/ 2	01	25
	649	01	2
85820034	469	01	7
	470	01	7
	475	01	7
	476	01	7
85820035	469	01	4
	469/ 2	01	28
	470	01	4
	470/ 2	01	28
	475	01	4
	475/ 2	01	28
	476	01	4
	476/ 2	01	28
	649	01	3
85820038	469	01	31
	470	01	31
	475	01	30
	476	01	30
85820039	469	01	29
	470	01	29
	475	01	28
	476	01	28
85820040	469	01	30
	470	01	30
	475	01	29
	476	01	29
85820051	469/ A	01	2
85820052	469/ A	01	11
85820053	469/ A	01	5
85820054	469/ A	01	10
85820055	469/ A	01	9
85820056	469/ A	01	12
85820057	469/ A	01	3
85820058	469/ A	01	4
85820059	469/ A	01	7
85820060	469/ A	01	8
85820061	469/ A	01	6
85820062	469	01	13
	470	01	13
	649	01	4
85820064	469	01	32
	469/ 2	01	38
	470	01	32
	470/ 2	01	38
	649	01	6
85820065	469	01	34
	470	01	34
	649	01	7
85820067	469	01	14
	470	01	14
	649	01	8
85820068	469	01	15
	469/ 2	01	39
	470	01	15
	470/ 2	01	39
	649	01	9
85820069	469	01	33
	469/ 2	01	40
	470	01	33
	470/ 2	01	40
	649	01	10
85820072	469	01	24
	470	01	24
	475	01	24
	476	01	24
85820075	469	01	1
	470	01	1
	475	01	1
	476	01	1
85820076	469	01	2
	470	01	2
	475	01	2
	476	01	2
85820081	469	01	10
	470	01	10
	649	01	12
85820105	1.95.5/ 4	01	8
85820107	1.98.1	11	1
85820122	724/ 6	01	17
85820123	724/ 6	01	18
85820128	300	02	4
85820129	300	02	5
85820130	300	03	5
	300	04	5
	300	05	5
	300	06	5
	300	07	5
	302	03	5
	302	04	5
	702/ 1	02	5
85820136	1.93.4	01	9
85820138	1.93.4	01	7
85820139	1.93.4	01	8
85820141	1.96.7/ 2	01	12
85820159	1.88.11/ 7A	01	24
85820160	1.88.11/ 7A	01	23
85820168	1.88.09/ 1	01	1
85820170	1.88.09/ 1	01	22
85820172	1.88.09/ 1	01	21
85820222	724	01	28
	724/ 2	01	28
	724/ 3	01	28
	724/ 5	01	20
	724/ 6	01	19
85820230	469/ 1	01	6
85820237	1.91.5	02	10
85820807	400A	03	17
85820808	400A	03	16
85820809	400A	03	7
85820819	469	02	6
	469/ 1	01	2
	470	02	6
	470/ 1	01	2
	475	02	6
	476	02	6
	476/ 1	01	2
85820835	392	01	7
	393	03	7
85820836	392	01	8
	393	03	8
85820907	649	01	13
85820909	1.28.0/ A	06	4
85820912	392	01	16
85820913	392	02	14
85821126	1.88.11/ 7A	01	22
85821131	346	02	18
	346/1	01	17

Number	Figure	Sequence	Ref.	Number	Figure	Sequence	Ref.
85821153	1.91.5	02	1	85824196	1.82.3	01	4
85821172	1.95.1/1	01	27		1.82.3/ 1	01	4
85821173	1.95.1/1	01	26		1.82.3/ 2	01	4
85821205	848	01	1	85824197	1.95.5/ 4	01	16
85821235	300	02	11		1.95.5/ 4	01	5
85821236	300	02	10	85824211	437/ 1	01	22
	302	02	9	85824220	300	01	1
85821286	400	08	2	85824223	703	01	1
85821287	400	03	19		727/ 3	01	17
	400A	04	1	85824249	469	01	11
85821288	400	08	11		470	01	11
85821289	400	03	4		649	01	5
85821290	400	03	24	85824265	732/ A	01	8
85821293	400	01	15	85824266	732/ A	01	4
85821295	400	02	13	85824267	732/ A	01	11
85821296	400	04	9	85824278	300	03	7
85821297	400	01	1		300	04	7
85821298	400	01	1		300	05	7
85821316	1.96.2	01	10		300	06	7
85821318	1.93.0	01	1		300	07	7
85821333	1.91.5	02	14		302	03	7
85821335	1.91.5	02	3		302	04	7
85821336	1.91.5	02	15		702/ 1	02	7
85821337	1.91.5	02	2	85824279	300	03	6
85821338	1.91.5	02	8		300	04	6
85821410	1.91.4/ 6	03	7		300	05	6
85821452	1.28.0/ A	05	15		300	06	6
85821454	1.28.0/ A	05	16		300	07	6
85821514	331/ C	02	7		702/ 1	02	6
85821515	331/ C	02	10	85824280	302	03	6
85821516	331/ C	02	9	85824281	300	03	12
85821519	331/ C	01	10		300	05	12
	333/ B	01	10		300	06	12
85821520	331/ C	02	11		300	07	8
85821537	331/ C	06	6		302	03	8
	333/ B	06	6		302	04	11
	347	02	11		333/ 1	02	8
85821538	995	01	14		333/ 1	03	8
85821539	995	01	22		333/ 1	05	9
85821788	515	01	5		333/ 1	06	7
	516	01	5		333/ 1	07	5
	517	01	5		333/ 1	08	8
	518	01	5		702/ 1	02	12
	519	01	5	85824282	300	04	9
85821916	993	01	11		333/ 1	04	7
85821917	993	01	3	85824283	300	03	14
85821918	993	01	5		300	05	14
85821919	993	01	6		300	06	9
85821921	993	01	7		300	07	10
85821922	993	01	8		302	03	10
85821923	1.98.0/ 1	04	9		302	04	14
85821924	993	01	2		702/ 1	02	13
85821925	993	01	4	85824308	392	01	10
85821927	993	01	13		393	03	10
85821946	993	01	9	85824356	548	01	1
85823852	1.28.0/ C	13A	11	85824361	469	01	28
85823862	1.28.0/ C	06	1		470	01	28
85823863	1.28.0/ C	06	14		475	01	27
	1.28.0/ C	08	17		476	01	27
85823864	1.28.0/ C	07	12	85824362	469	01	27
	1.28.0/ C	09	6		470	01	27
85823865	1.28.0/ C	07	13		475	01	26
	1.28.0/ C	09	7		476	01	26
85823872	1.28.0/ C	08	1	85824381	1.14.0	01	14
85824053	331/ B	01	14		1.17.2	01	14
85824054	331/ B	01	15	85824393	1.93.5/ 1	02	5
85824059	331/ B	01	16	85824450	1.91.5	02	12
85824060	1.82.6	05B	7	85824470	400	02	11
	1.82.6	05C	7		400A	02	10
85824062	096/ 1	01	6	85825000	537	01	1
85824067	331/ C	02	1	85825003	537	01	4
85824079	1.96.2/ 1	01	5	85825029	400A	03	4
85824080	331/ C	02	6	85825030	400A	03	10
85824081	331/ C	02	7		400A	04	10
85824089	1.88.01/ 2	02	3	85825032	400A	04	11
	1.88.01/ 3	02	5	85825033	400	03	25
85824095	537	01	1		400A	03	18
85824113	848	01	17		400A	03	18
85824114	1.95.0	02	19	85825034	400A	05	9
	1.95.0/ B	01	1	85825035	400	08	11
85824160	1.95.0/ B	01	2		400A	10	11
85824161	1.95.0/ B	01	3	85825036	400A	10	4

Number	Figure	Sequence	Ref.	Number	Figure	Sequence	Ref.
85825037	400A	10	2	85826248	703	01	10
85825067	1.87.2	01	16	85826250	300	01	11
85825154	1.82.0	01	29		331	01	11
85825155	1.82.0	01	30		333/ 1	01	12
85825158	1.14.0	01	7		703	01	12
85825169	995	01	2	85826251	300	01	10
85825176	400	07	9		300	07	1
85825177	469/ 2	01	35		703	01	11
	470/ 2	01	35	85826253	300	01	7
	649	01	11		300	04	1
85825187	704	01	4		703	01	8
85825188	302	01	1	85826254	703	01	6
85825191	1.93.0	01	8	85826255	300	01	5
	1.93.0/ 3	01	8		300	02	1
85825198	1.91.4/ 6	02	14		703	01	5
85825248	300	04	13	85826260	990/ 1	01	10
85825254	1.91.4/ 6	06	4	85826285	400A	03	13
	792	01	1	85826290	400	07	6
85825277	1.93.0/ 3	01	1	85826291	400	07	7
85825285	732/ A	01	7	85826292	400	07	8
85825330	1.91.4/ 6	01	2	85826293	400	07	2
85825331	1.91.4/ 6	01	4	85826339	331	01	7
85825392	1.14.0	01	2		333/ 1	01	8
85825415	1.98.0/ 1	01	1		333/ 1	04	1
	1.98.0/ 3	01	1	85826340	331	01	10
85825441	900	07	7		333/ 1	01	11
	900	08	4		333/ 1	07	1
85825442	900	07	6	85826344	333/ 1	02	9
	900	08	5		333/ 1	03	9
85825446	1.88.11/ A	01	1		333/ 1	04	8
85825468	302	01	2		333/ 1	05	10
	302	02	1		333/ 1	06	8
85825469	302	01	4		333/ 1	07	6
	302	04	1		333/ 1	08	9
85825470	302	01	5	85826345	333/ 1	04	9
85825471	302	04	6		333/ 1	06	9
85825472	302	02	2	85826382	1.82.0	01	31
85825473	300	02	8	85826383	1.82.0	01	32
	302	01	7	85826901	331	01	6
85825475	302	01	6		333/ 1	01	7
85825477	300	02	2		333/ 1	03	1
85825504	1.91.4/ 6	02	13	85826902	331	01	9
85825506	1.28.0/ A	06	5		333/ 1	01	10
85826012	1.91.4/ 6	02	15		333/ 1	06	1
85826014	1.91.4/ 6	02	17	85826903	331	01	8
85826026	MPARTS	00	6		333/ 1	01	9
85826032	MPARTS	00	7		333/ 1	05	1
85826042	1.92.1	01	1	85826904	333/ 1	01	6
85826071	1.91.4/ 6	02	19		333/ 1	02	1
	1.98.0/ 1	03	2	85826906	321	01	14
85826080	1.63.0	01	14	85826962	1.88.01/ 3	01	1
85826086	1.82.6	08B	3	85826987	724/ 2	01	23
85826087	1.82.6	07A	1		724/ 3	01	23
85826088	1.82.6	08B	2		724/ 5	01	15
85826089	1.82.6	07A	2	85827000	400	08	2
85826092	704	01	5	85827001	400	08	4
85826093	1.82.6	02	6	85827004	400	07	3
85826100	331/ C	05	5	85827005	400	04	7
	333/ B	05	5	85827008	400	07	5
	700	02	5	85827041	1.82.6	01	4
85826110	901	03	7	85827072	321	01	3
85826123	724	01	9	85827076	331/ C	04	9
	724/ 2	01	9		333/ B	04	9
	724/ 3	01	9	85827077	331/ C	04	4
	724/ 5	01	9		333/ B	04	4
	724/ 6	01	9	85827078	331/ C	04	11
85826147	1.82.3	01	1		333/ B	04	11
85826148	1.82.3/ 1	01	1	85827080	331/ C	04	10
85826149	1.82.3/ 2	01	1		333/ B	04	10
85826222	1.82.6	11B	8	85827082	331/ C	04	6
	900	05	3		333/ B	04	6
85826224	900	05	9	85827084	331/ C	04	1
85826234	400A	01	1		333/ B	04	1
85826235	400A	01	1	85827085	331/ C	04	2
85826245	300	01	6		333/ B	04	2
	300	03	1	85827086	331/ C	04	3
	703	01	7		333/ B	04	3
85826246	300	01	8	85827087	331/ C	04	5
	300	05	1		333/ B	04	5
	703	01	9	85827088	331/ C	03	8
85826248	300	01	9		333/ B	03	8
	300	06	1	85827089	331/ C	03	4

Number	Figure	Sequence	Ref.
85827089	333/ B	03	4
85827090	331/ C	03	7
	333/ B	03	7
85827091	331/ C	03	3
	333/ B	03	3
85827092	331/ C	03	5
	333/ B	03	5
85827093	331/ C	03	1
	333/ B	03	1
85827094	331/ C	03	2
	333/ B	03	2
85827095	331/ C	03	6
	333/ B	03	6
85827097	333/ B	03	12
85827130	1.88.11/ 9C	01	31
85827416	321	01	12
85827425	1.38.1/ 1	01	4
85827426	1.38.1/ 1	01	1
85827466	331/ C	04	8
	333/ B	04	8
85827467	331/ C	04	7
	333/ B	04	7
85827471	333/ A	01	1
85827472	331/ A	01	1
85827475	331/ C	05	3
	333/ B	05	3
85827476	331/ C	05	1
	333/ B	05	1
85827477	333/ B	05	2
85827548	1.93.0	01	17
	1.93.0/ 3	01	17
85827681	1.88.01/ 3	01	7
85827743	848	01	11
85827744	848	01	16
85827745	400A	07	7
	400A	08	12
85827746	400A	09	3
85827747	400A	09	5
85827748	400A	09	4
85827749	400A	09	9
85827750	400A	09	8
85827751	400A	07	8
	400A	08	11
85827752	400A	07	1
	400A	08	6
85827754	400A	02	5
85827755	400A	01	7
85827756	400A	01	8
	400A	02	6
85827758	400A	07	12
	400A	08	15
85827760	400A	01	13
85827762	400A	01	11
85827764	1.28.0/ A	04	1
85827769	1.28.0/ A	01	1
85827770	1.28.0/ A	01	2
85827771	1.28.0/ A	05	7
85827772	1.28.0/ A	05	8
85827773	1.28.0/ A	05	13
85827774	1.28.0/ A	05	14
85827776	1.28.0/ A	04	20
	1.28.0/ A	04	23
	1.28.0/ A	04	23
85827779	1.28.0/ A	04	8
85827803	1.28.0/ A	06	24
85827822	416-417	01	5
85827823	1.82.6	04C	5
85827824	1.82.6	05B	2
	1.82.6	05C	2
85827830	639	01	16
85827831	639	01	17
85827832	1.95.1/1	01	1
85827833	1.95.1/1	01	8
85827836	1.92.9	03	10
85827848	1.92.4	02	2
85827850	1.96.2	01	12
85827926	724	01	23
	724/ 6	01	14
85827991	331/ A	02	3
85827992	331/ A	02	15
	333/ A	02	15
	333/ A	03	5
85827993	331/ A	02	11
	333/ A	02	11
	333/ A	03	3
85827994	331/ A	02	9
	333/ A	02	9
	333/ A	03	7
85827995	331/ A	02	7
	333/ A	02	7
	333/ A	03	8
85827996	331/ A	02	6
	333/ A	02	6
	333/ A	03	10
85827997	331/ A	02	13
	333/ A	02	13
	333/ A	03	12
85827998	331/ A	02	8
	333/ A	02	8
	333/ A	03	9
85827999	331/ A	02	4
	333/ A	02	4
	333/ A	03	14
85828000	331/ A	02	12
	333/ A	02	12
	333/ A	03	4
85828001	331/ A	02	14
	333/ A	02	14
	333/ A	03	13
85828002	331/ A	02	5
	333/ A	02	5
	333/ A	03	11
85828003	331/ A	02	16
	333/ A	02	16
	333/ A	03	6
85828004	333/ A	02	3
85828005	331/ A	02	17
	333/ A	02	17
	333/ A	03	15
85828013	331/ A	02	1
	333/ A	03	17
85828015	333/ A	02	1
85828017	1.82.0	01	36
85828065	1.98.0/ 1	04	9
85828066	1.98.0/ 1	04	9
85828107	1.82.0	01	33
85828168	639	01	12
85828211	700	02	6
85828212	331/ C	05	8
	333/ B	05	8
85828213	1.96.2/ 1	01	7
85828216	331/ C	06	1
	333/ B	06	1
85828252	1.96.0/ 2	01	2
85828253	1.88.11/ A	01	35
86014151	995	02	25
86021837	1.95.1/1	01	12
86482S95	1.82.6	04C	17
	704	02	5
	901/ B	01	20
	901/ C	01	20
86511208	096/ 1	01	5
86511845	636A	06	2
	638A	03	2
	639A	03	2
86547781	993	01	10
86619908	995	01	5
86624194	638	01	4
	639	02	4
86625128	333/ C	02	13
86637716	1.94.2	03	3
	1.94.2/ 1	03	3
86982435	901/ C	01	14
86982444	514/ E	01	2
86982600	437/ 1	01	20
86982635	0.021/ 2	01	1
86982960	638	01	3
	639	02	3
86982962	638	01	2
	639	02	2
86982964	638	01	7
	639	02	7
86983163	638	01	9
	639	02	9

Number	Figure	Sequence	Ref.
86983311	331/ D	03	1
	333/ B	10	1
	333/ C	01	1
	333/ C	02	1
86984549	331/ C	02	8
86985587	1.14.0	01	9
86988086	095	01	1
	096/ 1	01	1
86989616	331/ C	02	5
86989733	MPARTS	00	3
	1.82.6	06B	4
86990460	331/ B	01	21
86990712	1.28.0	01	3
86990713	1.28.0	01	4
86990714	1.28.0	01	5
86990715	1.28.0	01	6
86992395	636A	06	1
	638A	03	1
	639A	03	1
86992966	900	02	6
	901	03	8
86993546	1.28.0/ A	01	22
86994498	638	01	8
	639	02	8
86999310	331/ C	02	13
87000312	331/ D	03	15
	333/ B	10	15
	333/ C	01	15
	333/ C	02	17
87008S95	1.63.0	01	16
	1.82.6	04C	18
	331/ C	02	17
	704	02	4
87016552	331/ C	01	15
	333/ B	01	15
87016S95	1.82.6	02	4
	437/ 1	01	15
87017743	1.39.8	01	8
87017744	1.39.8	01	7
87019767	1.28.0/ A	01	8
87022296	331/ C	01	16
	333/ B	01	16
87024874	1.82.6	05B	6
87037944	331/ D	03	4
	333/ B	10	4
	333/ C	01	4
	333/ C	02	4
87302151	1.21.5/ 2	01	26
87302279	639	01	10
87302280	639	01	1
87302283	638	02	5
	639	03	5
87302284	638	02	4
	639	03	4
87302504	1.39.8/ 1	01	8
87302505	1.39.8/ 1	01	21
87302506	1.39.8	01	1
87302507	1.39.8	01	2
87302508	639	01	8
87302705	1.95.0	02	7
87302744	333/ 1	01	1
87302745	331	01	1
87302837	732/ A	01	5
87302838	732/ A	01	6
87302840	732/ A	01	9
87302922	639	01	13
87303100	1.21.5/ 2	01	1
87303120	639	01	3
87303261	1.91.3	01	1
87303400	700	02	9
87303401	700	02	8
87303506	321	01	11
87303780	1.87.8	01	1
87303910	1.88.11/ 3A	01	4
	304	01	13
	900	07	2
	901/ B	01	6
	901/ C	01	6
87303912	1.88.11/ 7A	01	9
	900	06	6
87304793	302	01	11
87304799	302	01	13
87304799	302	01	17
87304800	302	01	13
87304801	700	01	20
87304810	1.92.6	03	1
87304910	646/1	02	11
87305111	700	01	15
	708	01	1
87305181	1.88.11/ A	01	26
87305209	700	01	18
87305211	700	02	7
87305221	85.00	01	1
87305604	331/ C	06	3
	333/ B	06	3
87305611	331/ C	06	2
	333/ B	06	2
87305999	708/ 1	01	3
87306000	708/ 1	01	2
87306186	333/ B	03	13
87306512	331/ C	01	31
	333/ B	01	31
87306639	400A	01	12
87306642	400	07	1
87306744	400	07	4
87306886	639	01	15
87306887	639	01	14
87307150	700	01	13
87307151	700	01	12
87307656	331/ C	01	11
	333/ B	01	11
87308638	469/ 2	01	26
	470/ 2	01	26
	475/ 2	01	27
	476/ 2	01	27
87308642	469/ 2	01	2
	470/ 2	01	2
	475/ 2	01	2
	476/ 2	01	2
87308747	331	01	5
	333/ 1	01	5
87308840	331/ C	01	19
	333/ B	01	19
87308843	475/ 1	01	3
	476/ 1	01	4
87308844	331/ C	01	12
	333/ B	01	12
87308850	469/ 1	01	4
	470/ 1	01	4
87308915	469/ 2	01	27
	470/ 2	01	27
	475/ 2	01	26
	476/ 2	01	26
87309923	331/ C	01	1
	333/ B	01	1
87309924	331/ C	01	2
	333/ B	01	2
87310085	331/ C	01	17
	331/ C	01	34
	333/ B	01	17
	333/ B	01	34
87310098	331/ C	01	22
	333/ B	01	22
87310186	331/ C	01	32
	333/ B	01	32
87310285	1.88.08	01	16
87310286	469/ 2	01	15
	470/ 2	01	15
	475/ 2	01	15
	476/ 2	01	15
87310367	469/ 2	01	32
	470/ 2	01	32
87310368	469/ 2	01	33
	470/ 2	01	33
87310369	469/ 2	01	34
	470/ 2	01	34
87310370	469/ 2	01	36
	470/ 2	01	36
87310373	469/ 2	01	41
	470/ 2	01	41
87310374	469/ 2	01	42
	470/ 2	01	42
87310375	469/ 2	01	43
	470/ 2	01	43

Number	Figure	Sequence	Ref.	Number	Figure	Sequence	Ref.
87310376	469/ 2	01	44	87314517	347	02	9
	470/ 2	01	44	87314518	346	01	16
87310378	469/ 2	01	37		346/1	01	6
	470/ 2	01	37	87314520	346	01	14
87310951	724	02	5		346/1	01	5
	724/ 2	02	5	87314522	346	04	11
	724/ 3	02	5		347	04	11
87310952	724	02	9	87314524	346	02	12
	724/ 2	02	9		346/1	01	11
	724/ 3	02	9	87314526	346	03	3
87311102	302	01	17		346/1	01	24
87311103	302	01	17	87314527	346	02	4
87311104	700	01	2		347	02	4
87311154	1.38.1/ 1	01	3	87314554	346	03	6
87311302	302	01	13		347	03	6
87311303	302	01	14	87314566	646/1	04	13
87311306	302	01	13	87314726	346	03	1
87311592	131	01	9		347	03	1
87311611	131	01	10	87314728	346	01	3
87311836	302	01	16		347	01	3
87311838	302	01	16	87314730	346	01	5
87312027	1.88.12/ 3	01	22		346/1	01	1
87312328	469/ 2	01	3	87314743	346	04	1
	470/ 2	01	3		347	04	1
	475/ 2	01	3	87314747	346	04	2
	476/ 2	01	3		347	04	2
87312330	469/ 2	01	6	87314749	346	04	3
	470/ 2	01	6		346/1	01	25
	475/ 2	01	6		347	04	3
	476/ 2	01	6	87314750	346	04	4
87312331	469/ 2	01	17		346/1	01	26
	470/ 2	01	17	87314751	346	04	5
	475/ 2	01	17		346/1	01	27
	476/ 2	01	17	87314753	346	04	6
87312333	469/ 2	01	21		347	04	4
	470/ 2	01	21	87314757	346/1	01	28
	475/ 2	01	21		347	04	5
	476/ 2	01	21	87314767	346	05	17
87312335	469/ 2	01	31		347	05	6
	470/ 2	01	31	87314769	346	05	18
	475/ 2	01	31		347	05	13
	476/ 2	01	31	87314771	346	05	3
87312343	469/ 2	01	20		346/1	02	3
	470/ 2	01	20	87314772	346	05	4
	475/ 2	01	20		346/1	02	4
	476/ 2	01	20	87314773	346	05	5
87312427	469/ 2	01	18		346/1	02	5
	470/ 2	01	18	87314946	346	05	8
	475/ 2	01	18		346/1	02	8
	476/ 2	01	18	87314947	346	05	9
87312436	469/ 2	01	19		346/1	02	9
	470/ 2	01	19	87314948	346	05	10
	475/ 2	01	19		346/1	02	10
	476/ 2	01	19	87315029	346	01	11
87313720	901/ C	01	13	87315214	646/1	04	7
87313722	901/ C	01	8	87315219	646/1	04	8
87314076	1.39.8	01	3	87315221	646/1	04	9
	1.39.8/ 1	01	6	87315225	646/1	04	10
	639	01	9	87315236	646/1	04	11
87314323	346	01	1	87315239	646/1	04	12
	347	01	1	87315241	646/1	04	14
87314328	346	01	6	87315252	646/1	04	4
	347	01	6	87315364	646/1	01	1
87314330	346	01	7	87315368	646/1	01	2
	347	01	7	87315371	646/1	01	3
87314350	346	01	8	87315381	646/1	01	4
	346/1	01	2	87315438	1.82.6	06B	3
87314351	346	01	12	87315441	646/1	02	13
	346/1	01	4	87315446	646/1	02	14
87314353	346	01	17	87315457	646/1	02	15
	346/1	01	7	87315459	646/1	02	16
87314355	346	01	20	87315460	646/1	02	17
	347	01	5	87315523	1.88.11/ 2B	01	1
87314357	346	01	18	87315524	1.88.11/ 1C	01	1
	346/1	01	8	87315527	514/ C	01	18
87314362	346	01	19	87315528	1.88.11/ 6	02	1
	346/1	01	9	87315529	1.88.11/ 9A	01	9
87314367	346	01	10		1.88.11/ 9C	01	1
	347	01	10	87315531	514/ E	01	1
87314369	346	02	5	87315535	901/ D	01	1
	346/1	01	10	87315628	1.87.2	01	13
87314517	346	02	20	87315641	1.87.2	01	1

Number	Figure	Sequence	Ref.	Number	Figure	Sequence	Ref.
87315643	1.87.2	01	2	87353741	1.82.0	01	38
87316439	347	01	9	87354650	1.92.1	01	2
87316442	347	04	6		1.92.1/ 2	01	2
87316455	1.95.0	01	9	87354652	1.92.1	01	3
87317057	400A	01	10		1.92.1/ 2	01	3
	400A	02	11	87354654	1.92.1	01	1
87317058	400A	02	19	87354656	1.92.1/ 2	01	1
87318747	346	03	4	87355226	1.14.0	01	1
	347	03	4	87356499	1.82.6	10	5
87318750	346	03	5	87356501	1.82.6	10	6
	347	03	5	87357715	704	01	7
87319018	347	06	1		724	01	2
87319147	1.98.1	11	6		724/ 2	01	2
87319148	1.98.1	11	7		724/ 3	01	2
87319437	346	05	15		724/ 5	01	2
	347	05	4		724/ 6	01	2
87319438	646/1	04	17	87358142	346	01	4
87319441	646/1	04	19		347	01	4
87319443	346	05	21	87358190	704	01	8
	347	05	8		704/ A	01	1
87319448	346	05	6	87358199	724	01	1
	346/1	02	6		724/ A	01	1
87319453	346	05	23		724/ 2	01	1
	347	05	10		724/ 3	01	1
87319754	1.96.7/ 8	01	9		724/ 5	01	1
87319785	1.93.0	01	6		724/ 6	01	1
	1.93.0/ 3	01	6	87358348	346	03	9
87319801	1.93.0	04	1		346	04	7
87319803	1.93.0	04	17		347	04	7
87323749	1.93.0	04	16	87358349	346	04	10
87324469	346	02	9		347	04	10
87324867	1.95.5/ 4	01	6	87358807	1.93.5/ 3	01	13
87324991	1.94.2/ 1	03	1	87358808	437/ 1	01	21
87324999	1.94.2/ 1	03	2	87358811	1.93.5/ 3	01	12
87325298	1.91.4/ 6	03	2	87358815	437/ 1	01	1
87326065	1.91.4/ 6	05	8	87358816	437/ 1	01	10
87326808	1.39.8	01	10	87358817	437/ 1	01	8
	1.39.8/ 1	01	20	87358818	437/ 1	01	9
	1.82.6	05B	4	87359829	1.98.1	11	10
	1.82.6	05C	4	87360275	1.98.1	11	9
87326809	1.39.8	01	11	87360331	1.82.6	02	5
87326810	1.39.8/ 1	01	23	87360332	1.82.6	01	9
87327251	901/ C	01	2	87360432	1.95.5/ C	02	1
87327256	901/ C	01	1		1.95.5/ 4	01	1
87327259	901/ C	01	1	87361461	1.82.6	10	7
87327762	703	01	1	87362092	1.93.0/ 3	01	1
	727/ 3	01	17	87362094	1.93.0/ 1	02	1
87327768	333/ 1	01	1	87362096	1.93.0	01	1
87328136	1.95.5/ 4	01	5	87362098	1.93.0	02	1
87334860	346	04	8		1.93.0/ 1	02	1
	347	04	8	87362336	1.82.3	01	1
87334861	346	04	9	87362337	1.82.3/ 1	01	1
	347	04	9	87362349	1.88.01/ 2	02	5
87335337	120	01	3		1.88.01/ 3	02	9
87335345	1.19.1	01	9	87363419	1.98.1	11	5
87337288	1.88.01/ 2	02	5	87363478	1.88.08	01	9
	1.88.01/ 3	02	9	87363998	851/ 2	01	1
87340008	638A	02	5	87364043	851/ 2	01	1
	639A	02	6	87364045	855/ 2	01	1
87341088	333/ 1	08	4	87364046	855/ 2	01	1
	702/ 1	02	9	87364212	851/ 2	01	2
87341283	702/ 1	02	1	87364214	851/ 2	01	2
	703	01	6	87364215	855/ 2	01	2
87342131	901/ C	01	3	87364216	855/ 2	01	2
87342414	0.021/ 2	01	1	87371811	1.82.6	10	1
87342882	437/ 1	01	9	87373943	1.82.3	01	3
87343616	333/ 1	01	6		1.82.3/ 1	01	3
	333/ 1	08	1	87400102	1.88.11/ A	01	5
87344446	85.00	01	1	87400114	1.28.0/ A	01	11
87344529	85.00	01	1	87400239	1.28.6/ 1	01	1
87345246	860	01	4	87400371	1.28.6/ 1	01	2
87345955	1.39.8	01	6	87400400	1.88.11/ A	01	19
	1.39.8/ 1	01	9	87400407	1.39.8/ 1	01	14
	1.94.2	03	7	87401079	1.88.11/ A	01	24
	1.94.2/ 1	03	7	87401160	901/ D	01	14
87347670	1.15.0	01	1	87402306	331/ B	01	22
87347671	1.15.0	01	2	87402741	1.88.11/ 1C	01	19
87348165	1.88.09/ 1	01	19	87403229	1.39.8/ 1	01	11
87353314	392	02	3	87403231	1.39.8/ 1	01	10
87353316	392	01	5	87403241	1.82.0	01	16
	393	03	5	87403646	1.94.2	03	1
87353741	1.14.0	01	17	87403647	1.94.2	03	2

Number	Figure	Sequence	Ref.	Number	Figure	Sequence	Ref.
87403672	1.14.0	01	12	87411090	995	01	20
87403805	1.88.01/ 3	01	3	87411092	995	01	19
87404127	321	01	7	87411473	901/ B	01	1
87404248	1.75.2/ 5	02	3	87412252	792	01	2
87404427	638	02	13	87412400	1.88.11/ 6	02	4
	639	03	13	87412754	1.19.1	01	8
87404910	1.14.0	01	10	87412988	1.15.0	01	3
	1.82.0	01	15	87413162	995	02	30
87405018	1.75.2/ 5	02	4	87414205	331/ C	01	28
87405560	901/ B	01	15		333/ B	01	28
87405628	1.28.0	01	13	87414237	995	01	23
87405629	1.28.0	01	13	87414331	901/ B	01	7
87405706	331/ B	01	18	87414332	1.88.11/ 2B	01	14
87405859	1.88.11/ 1C	01	8	87414333	1.88.11/ 1C	01	9
87406289	1.82.0	01	26		514/ C	01	15
87406392	1.91.4/ 6	01	1	87414334	1.88.11/ 6	02	12
	1.91.4/ 6	02	1	87414335	1.88.11/ 9C	01	13
	1.91.4/ 6	03	1	87414336	514/ E	01	5
	1.91.4/ 6	04	1	87414338	901/ D	01	15
	1.91.4/ 6	05	1	87414339	901/ B	01	4
	1.91.4/ 6	07	1	87414340	1.88.11/ 2B	01	13
87406396	1.75.2/ 5	01	10	87414341	1.88.11/ 1C	01	7
87406403	1.75.2/ 5	03	1		514/ C	01	16
87406407	1.75.2/ 5	01	1	87414342	1.88.11/ 6	02	10
87406921	1.88.11/ 6	02	11	87414343	1.88.11/ 9C	01	25
87406934	1.28.0/ A	01	23	87414344	514/ E	01	6
87407249	901/ D	01	13	87414346	901/ D	01	9
87407275	636A	01	1	87414506	514/ C	01	2
	638A	01	1	87414560	1.14.0	01	15
	639A	01	1	87414966	1.88.11/ 1C	01	5
87407276	636A	01	2		1.88.11/ 9C	01	21
	638A	01	2	87414969	1.88.11/ 1C	01	2
	639A	01	2		1.88.11/ 2B	01	6
87407281	131	01	8		1.88.11/ 9C	01	23
87407463	1.82.0	01	3		901/ B	01	9
87407464	1.82.0	01	4	87414970	1.88.11/ 1C	01	4
87407465	1.82.0	01	5		1.88.11/ 2B	01	5
87407758	1.28.0	01	1		1.88.11/ 9C	01	16
87407927	1.96.2	01	11		901/ B	01	11
	1.96.2/ 1	01	6	87414971	1.88.11/ 6	02	6
87408120	514/ C	01	5	87414974	1.88.11/ 6	02	5
87408277	1.96.7/ 8	01	8	87414975	1.88.11/ 6	02	7
87408633	1.88.11/ 2B	01	15	87414976	514/ C	01	1
	1.88.11/ 2B	01	18		514/ E	01	8
87408634	1.88.11/ 1C	01	21		901/ D	01	8
	514/ C	01	9	87414979	514/ C	01	13
87408635	1.88.11/ 6	02	13		514/ E	01	13
87408636	1.88.11/ 9C	01	12		901/ D	01	3
87408660	638	01	1	87414980	514/ C	01	11
	639	02	1		514/ E	01	12
87408893	1.93.0	04	15		901/ D	01	11
	1.93.0/ 3	04	15	87414983	1.82.6	06B	1
87409046	995	01	4	87415113	901/ B	01	10
87409201	1.28.0/ A	01	24	87415116	1.88.11/ 1C	01	6
87409316	1.91.4/ 6	07	26	87415119	514/ E	01	11
87410100	638	02	1	87415120	901/ D	01	2
	639	03	1	87415208	1.75.2/ 5	03	9
87410105	331/ C	01	8	87415749	400A	02	13
	333/ B	01	8	87415774	638A	02	2
87410108	1.93.0/ 3	04	6		639A	02	2
87410259	1.91.4/ 6	07	17	87415781	321	01	8
87410263	995	02	26	87415930	1.98.1	11	8
87410264	995	02	27	87415977	638	01	6
87410265	995	02	28		639	02	6
87410266	995	02	29	87416576	1.82.6	05B	3
87410268	1.75.2/ 5	03	7		1.82.6	05C	3
87410385	1.93.0/ 3	04	1	87416643	1.15.0	02	2
87410408	1.92.1/ 2	01	1	87416929	131	01	2
87410409	1.92.1/ 3	01	1	87416966	636A	01	3
87410546	1.17.2	01	1		638A	01	3
87410547	1.17.2	01	4		639A	01	3
87410602	995	01	7	87416967	1.28.0	01	10
87410603	995	01	1	87417207	1.82.0	01	7
87410612	1.28.0/ C	05	6	87418364	1.19.1	01	3
87410613	1.28.0/ C	05	4	87418365	1.19.1	01	4
87410647	1.28.0	01	8	87418368	331/ C	01	20
	636A	01	9		333/ B	01	20
	638A	01	9	87418369	331/ C	01	21
	639A	01	9		333/ B	01	21
87410723	331/ C	01	9	87419454	1.96.2/ 1	01	1
87410724	638	01	5	87419455	1.96.2/ 1	01	1
	639	02	5	87421142	901/ B	01	16

Number	Figure	Sequence	Ref.	Number	Figure	Sequence	Ref.
87421143	1.88.11/ 2B	01	10	87431300	331/ C	01	29
87421144	1.88.11/ 1C	01	10		333/ B	01	29
	514/ C	01	4	87431301	331/ C	01	14
87421145	1.88.11/ 6	02	9		333/ B	01	14
87421147	514/ E	01	9	87431454	1.91.4/ 6	02	2
87421149	1.88.11/ 9C	01	20	87431456	1.91.4/ 6	03	2
	901/ D	01	10	87431463	792	01	7
87422777	0.400	01	1	87431469	1.91.4/ 6	03	5
	636A	04	1	87432515	1.88.11/ 2B	01	19
	638A	04	1	87433032	1.88.11/ 9C	01	22
	639A	04	1	87434992	331/ B	01	1
87422783	1.88.11/ 9C	01	2	87435242	331/ D	03	11
87423401	331/ C	01	36		333/ B	10	11
	331/ C	04	16		333/ C	01	11
	333/ B	01	36	87435243	333/ C	02	11
	333/ B	04	16	87435372	331/ C	01	9
87423802	331/ C	01	7		333/ B	01	9
	333/ B	01	7	87435381	095	01	2
87423812	331/ C	01	33		096/ 1	01	2
	333/ B	01	33	87435506	331/ D	03	14
87424184	901/ B	01	19		333/ B	10	14
87424196	1.88.11/ 1C	01	25		333/ C	01	14
87424197	514/ C	01	17		333/ C	02	15
87424198	1.88.11/ 6	02	17	87436225	331/ D	03	3
87424199	514/ E	01	21		333/ B	10	3
87424201	901/ D	01	24		333/ C	01	3
87424267	331/ D	03	13		333/ C	02	2
	333/ B	10	13	87436396	331/ C	01	11
	333/ C	01	13		333/ B	01	11
	333/ C	02	14	87436824	1.15.0	01	1
87424301	331/ C	01	23	87436825	1.15.0	01	2
	333/ B	01	23	87437366	331/ C	01	5
87424795	1.75.2/ 5	02	2		333/ B	01	5
87424838	1.88.11/ 9C	01	10	87437369	331/ C	01	6
87424935	1.88.11/ 9C	01	29		333/ B	01	6
87425131	514/ E	01	15	87437371	331/ D	03	12
87425142	514/ E	01	19		333/ B	10	12
87425174	514/ E	01	4		333/ C	01	12
87425225	331/ A	01	4	87437372	333/ C	02	12
	333/ A	01	4	87437688	331/ C	01	4
87425696	331/ C	01	27		333/ B	01	4
	333/ B	01	27	87437689	331/ C	01	3
87426546	1.93.0/ 3	04	5		333/ B	01	3
87426550	1.93.0/ 3	04	2	87438046	331/ D	03	16
87427004	331/ B	01	2		333/ B	10	16
87427922	321	01	4		333/ C	01	16
87427925	321	01	13		333/ C	02	16
87427962	331/ C	01	14	87438246	MPARTS	00	5
87427963	331/ C	01	29	87438249	MPARTS	00	4
87427989	331/ C	01	25	87440396	1.88.11/ 2B	01	9
	333/ B	01	25	87440399	901/ B	01	17
87427991	331/ C	01	24	87440401	1.88.11/ 1C	01	3
	333/ B	01	24		514/ C	01	8
87427993	331/ C	01	26	87440410	1.88.11/ 6	02	8
	333/ B	01	26	87440411	514/ E	01	10
87427999	514/ C	01	3	87441149	901/ D	01	12
87428011	1.88.11/ 6	02	14	87442309	1.19.1	01	9
87428014	1.88.11/ 9C	01	9	87442310	1.19.1	01	11
87428018	901/ D	01	21	87442601	1.19.1	01	2
87428020	1.88.11/ 1C	01	11	87442705	1.19.1	01	1
	1.88.11/ 2B	01	12	87443692	331/ C	02	4
	901/ B	01	14	87443721	331/ D	03	5
87428023	331/ D	03	2		333/ B	10	5
	333/ B	10	2		333/ C	01	5
	333/ C	01	2		333/ C	02	5
	333/ C	02	3	87443740	331/ C	01	12
87428164	331/ D	03	8		333/ B	01	12
	333/ B	10	8		333/ C	02	1
	333/ C	01	8	87443743	331/ C	01	19
	333/ C	02	8		331/ D	03	1
87428165	331/ D	03	10		333/ B	01	19
	333/ B	10	10		333/ B	10	
	333/ C	01	10		333/ C	01	1
	333/ C	02	10	87445307	1.88.11/ 9C	01	26
87428620	901/ B	01	3	87445497	1.88.11/ 2B	01	16
87428628	1.88.11/ 1C	01	18	87445498	1.88.11/ 2B	01	20
87428630	1.88.11/ 6	02	15	87445758	1.88.11/ 9C	01	27
87428631	1.88.11/ 9C	01	11	87446608	1.98.0/ 1	04	7
87428632	514/ E	01	14	87446609	1.98.0/ 1	04	8
87428634	901/ D	01	17		993	01	1
87430028	331/ C	02	3	87446610	1.98.0/ 1	04	7
87430122	646A	01	3	87446611	1.98.0/ 1	04	8

Number	Figure	Sequence	Ref.
87446612	1.98.0/ 1	04	7
87446613	1.98.0/ 1	04	8
87449373	1.82.6	10	8
87450315	1.88.11/ 1C	01	13
	1.88.11/ 2B	01	8
87450926	1.88.11/ 9A	01	9
87452511	331/ C	01	35
	333/ B	01	35
87453110	331/ B	01	17
87453116	331/ B	01	4
87453117	331/ B	01	5
87453118	331/ B	01	19
87455335	1.88.11/ 9C	01	24
87779444	120	01	9
	120/ 1	01	9
87779459	120	01	4
	120/ 1	01	4
87779460	120	01	6
	120/ 1	01	6
87779461	120	01	5
	120/ 1	01	5
87779462	120	01	8
	120/ 1	01	8
87779474	120	01	10
	120/ 1	01	10
87803136	646A	01	13
87803260	MPARTS	00	2
	0.302	01	1
87901S8	1.21.5/ 2	01	12
	1.88.08	01	11
	1.88.08	02	4
	1.88.11/ A	01	4
	1.88.11/ 1C	01	16
	1.88.11/ 2B	01	3
	1.88.11/ 9A	01	6
	1.88.11/ 9C	01	15
	469	02	1
	469/ 1	01	1
	470	02	1
	470/ 1	01	1
	475	02	1
	475/ 1	01	1
	476/ 1	01	1
	500	01	4
	501	01	4
	502	01	4
	514/ C	01	12
	514/ E	01	17
	533/ 1	01	4
	534	01	4
	535/ 2	01	4
	900	01	5
	900	03	2
	901	03	9
	901/ D	01	7
87916S8	1.21.5/ 2	01	16
	1.88.11/ 1C	01	17
	1.88.11/ 2B	01	2
	1.88.11/ 6	02	16
88352	1.28.0	01	7
88706	517	02	6
	518	02	6
	519	02	6
	526	01	6
	527	01	6
	528	01	6
	529	01	6
895-11010	1.82.6	10	9
9617873	1.63.0	01	17
	1.88.01/ 2	02	4
9673604DS	131	01	1
9824050	1.82.6	04C	3
9825770	304	01	12
	304	02	15
98429552	0.270	01	9
98429625	0.204	01	4
98433179	646A	01	5
98442879	0.270	01	12
98445111	0.270	01	12
9932887	1.95.5/ C	01	22
9960181	1.95.5/ C	01	8
9961810	1.95.5/ C	01	6
9961829	1.95.5/ C	01	5
9966308	400	06A	9
9966309	400	06A	7
9966310	400	06A	6
9966352	400	06	2
	400	06A	2
9967672	400	01	16
	400A	02	7
9967681	400	01	12
9967682	400	01	13
9967683	400	01	9
9967690	400	08	4
9967734	400	06	9
9967736	400	06	4
	400	06A	4
9967739	400	06	5
	400	06A	12
	400A	07	5
	400A	08	13
9967741	400	06	7
	400	06A	10
9967769	400	01	10
9967990	400	01	6
	400	02	6
9967992	400	01	4
	400	02	4
9967993	400	02	2
9967994	400	02	1
9967995	400	01	7
	400	02	7
9967996	400	01	8
	400	02	8
9968005	400	01	11
9968017	400	03	9
	400A	03	9
	400A	04	9
9968021	400	03	15
	400A	03	15
9968031	400	04	2
	400A	05	2
9968032	400	04	3
	400A	05	3
9968033	400	04	4
	400A	05	4
9968034	400	04	5
9968037	400	05	1
9968038	400	05	1
9968039	400	05	1
9968040	400	05	1
9968041	400	05	1
9968042	400	05	1
9968043	400	05	1
9968044	400	05	1
9968045	400	05	1
9968046	400	05	1
9968047	400	04	6
	400A	05	14
	400A	05	14
	400A	05	6
9968048	400	04	12
9968049	400	04	10
9968050	400	04	11
9968054	400	06	8
	400	06A	11
9968067	400	08	8
	400A	10	8
9968068	400	08	9
	400A	04	13
	400A	10	9
9968083	400A	05	11
9968147	533/ 1	02	4
	534	02	4
	535/ 2	02	4
9968148	533/ 1	02	5
	534	02	5
	535/ 2	02	5
9968149	533/ 1	02	6
	534	02	6
	535/ 2	02	6
9968150	533/ 1	02	7
	534	02	7
	535/ 2	02	7

Number	Figure	Sequence	Ref.
9968152	533/ 1	02	9
	534	02	9
	535/ 2	02	9
9968218	1.28.0/ A	01	4
	1.28.0/ A	02	11
	1.28.0/ A	03	7
	1.28.0/ A	07	14
9968219	1.28.0/ A	01	5
	1.28.0/ A	02	9
	1.28.0/ A	03	6
	1.28.0/ A	07	10
9968223	1.28.0/ A	06	15
9968226	1.28.0/ A	05	18
9968228	1.28.0/ A	05	2
9968230	1.28.0/ A	05	30
9968246	1.28.0/ A	06	18
9968247	1.28.0/ A	06	16
9968248	1.28.0/ A	06	13
9968250	1.28.0/ A	06	11
9968251	1.28.0/ A	06	12
9968252	1.28.0/ A	06	10
9968253	1.28.0/ A	06	21
9968260	1.28.0/ A	06	23
9968261	1.28.0/ A	05	27
9968262	1.28.0/ A	05	26
9968263	1.28.0/ A	05	26
9968264	1.28.0/ A	05	26
9968265	1.28.0/ A	05	26
9968266	1.28.0/ A	05	26
9968267	1.28.0/ A	05	26
9968268	1.28.0/ A	05	24
9968269	1.28.0/ A	06	17
9968270	1.28.0/ A	06	8
	1.28.0/ A	07	3
9968271	1.28.0/ A	06	6
	1.28.0/ A	07	5
9968272	1.28.0/ A	06	7
	1.28.0/ A	07	4
9968273	1.28.0/ A	06	7
	1.28.0/ A	07	4
9968274	1.28.0/ A	06	7
	1.28.0/ A	07	4
9968275	1.28.0/ A	06	7
	1.28.0/ A	07	4
9968276	1.28.0/ A	05	31
9968277	1.28.0/ A	07	1
9968278	1.28.0/ A	06	22
9968279	1.28.0/ A	05	1
9968280	1.28.0/ A	07	2
9968281	1.28.0/ A	05	25
9968282	1.28.0/ A	05	28
9968285	1.28.0/ A	05	21
9968286	1.28.0/ A	05	5
9968287	1.28.0/ A	05	9
9968288	1.28.0/ A	05	10
9968289	1.28.0/ A	05	12
9968290	1.28.0/ A	05	11
9968291	1.28.0/ A	05	6
9968299	1.28.0/ A	04	14
9968302	1.28.0/ A	05	4
9968304	1.28.0/ A	05	3
9968305	1.28.0/ A	05	22
9968306	1.28.0/ A	06	2
9968307	1.28.0/ A	06	14
9968308	1.28.0/ A	06	1
9968309	1.28.0/ A	06	3
9968311	1.28.0/ A	01	9
9968312	1.28.0/ A	01	10
9968313	1.28.0/ A	01	14
9968314	1.28.0/ A	05	29
9968315	1.28.0/ A	07	9
9968316	1.28.0/ A	07	8
9968317	1.28.0/ A	07	11
9968318	1.28.0/ A	07	12
9968319	1.28.0/ A	07	6
9968322	1.28.0/ A	07	7
9968323	1.28.0/ A	07	13
9968324	1.28.0/ A	04	9
9968326	1.28.0/ A	04	11
9968327	1.28.0/ A	04	10
9968328	1.28.0/ A	04	12
9968333	1.28.0/ A	02	6
9968334	1.28.0/ A	02	2
9968336	1.28.0/ A	03	3
9968339	1.28.0/ A	01	20
9968341	1.28.0/ A	05	19
9968342	1.28.0/ A	05	20
9968343	1.28.0/ A	05	20
9968344	1.28.0/ A	05	20
9968345	1.28.0/ A	05	20
9968347	1.28.0/ A	05	23
9968350	1.28.0/ A	02	1
9968354	1.28.0/ A	03	12
9968356	1.28.0/ A	01	7
9968358	1.28.0/ A	06	20
9968359	1.28.0/ A	01	15
9968360	1.28.0/ A	01	17
9968361	1.28.0/ A	01	16
9968362	1.28.0/ A	01	19
9968364	1.28.0/ A	02	12
9968365	1.28.0/ A	01	21
9968368	1.28.0/ A	02	10
9968370	1.28.0/ A	04	19
9968371	1.28.0/ A	02	5
9968374	1.28.0/ A	03	13
9968375	1.28.0/ A	03	14
9968396	1.28.0/ A	06	19
9968585	533/ 1	02	2
	534	02	2
	535/ 2	02	2
9968586	533/ 1	02	8
	534	02	8
	535/ 2	02	8
9968595	724	01	25
9968676	1.28.0/ A	03	8
9968791	331/ C	02	16
9968926	1.28.0/ A	04	17
9968927	1.28.0/ A	04	18
9968979	1.28.0/ C	01	1
9968984	1.28.0/ C	02	9
9968985	1.28.0/ C	02	7
9968986	1.28.0/ C	02	5
9968987	1.28.0/ C	02	4
9968988	MPARTS	00	8
	1.28.0/ C	01	3
9968989	1.28.0/ C	02	11
	1.28.0/ C	03	13
9968996	1.28.0/ C	01	4
	1.28.0/ C	03	7
9968997	1.28.0/ C	01	5
9969000	1.28.0/ C	01	17
	1.28.0/ C	03	8
9969001	1.28.0/ C	01	13
	1.28.0/ C	03	15
9969002	1.28.0/ C	01	2
9969007	1.28.0/ C	01	8
9969008	1.28.0/ C	01	14
9969016	1.28.0/ C	01	15
9969017	1.28.0/ C	03	2
9969021	1.28.0/ C	04	9
9969022	1.28.0/ C	04	10
9969023	1.28.0/ C	04	3
9969024	1.28.0/ C	04	11
9969027	1.28.0/ C	04	13
9969039	1.28.0/ C	05	2
9969040	1.28.0/ C	05	9
9969041	1.28.0/ C	05	5
9969042	1.28.0/ C	05	7
9969043	1.28.0/ C	05	8
9969045	1.28.0/ C	06	2
	1.28.0/ C	08	2
	1.28.0/ C	11A	4
	1.28.0/ C	13A	8
9969046	1.28.0/ C	06	3
	1.28.0/ C	08	3
	1.28.0/ C	11A	3
	1.28.0/ C	13A	9
9969047	1.28.0/ C	06	4
	1.28.0/ C	08	4
	1.28.0/ C	11A	2
	1.28.0/ C	13A	10
9969048	1.28.0/ C	06	5
	1.28.0/ C	08	8
	1.28.0/ C	11A	5

Number	Figure	Sequence	Ref.	Number	Figure	Sequence	Ref.
9969048	1.28.0/ C	13A	7	9969363	1.28.0/ C	16	13
9969049	1.28.0/ C	06	6		642	01	10
	1.28.0/ C	08	9	9969380	1.82.0	01	21
	1.28.0/ C	11A	6	9969420	1.28.0/ C	01	6
	1.28.0/ C	13A	6	9969421	1.28.0/ C	01	7
9969050	1.28.0/ C	06	7	9969424	1.28.0/ C	01	9
	1.28.0/ C	08	10		1.28.0/ C	03	6
	1.28.0/ C	11A	7	9969429	1.28.0/ C	03	14
	1.28.0/ C	13A	5	9969445	1.28.0/ A	04	4
9969051	1.28.0/ C	06	8	9969449	1.28.0/ A	03	4
	1.28.0/ C	08	7	9970002	1.28.0/ C	03	11
	1.28.0/ C	11A	8	9970003	1.28.0/ C	03	19
	1.28.0/ C	13A	4	9970004	1.28.0/ C	03	17
9969057	1.28.0/ C	06	9	9970010	1.28.0/ C	04	2
	1.28.0/ C	08	16		1.28.0/ C	09	14
	1.28.0/ C	10	8		1.28.0/ C	10	2
	1.28.0/ C	12	11	9970015	1.28.0/ C	04	12
9969059	1.28.0/ C	04	4	9970016	1.28.0/ C	04	14
	1.28.0/ C	07	3	9970017	1.28.0/ C	05	1
	1.28.0/ C	08	18	9970044	1.28.0/ C	07	7
	1.28.0/ C	09	3	9970054	1.28.0/ C	11A	12
9969061	1.28.0/ C	07	5		1.28.0/ C	12	8
	1.28.0/ C	09	5	9970059	1.28.0/ C	12	3
9969062	1.28.0/ C	07	14		1.28.0/ C	13A	19
	1.28.0/ C	09	8	9970068	1.28.0/ C	12	5
9969065	1.28.0/ C	07	9	9970071	1.28.0/ C	15	2
9969066	1.28.0/ C	07	8	9970074	1.28.0/ C	15	5
9969067	1.28.0/ C	07	10	9970075	1.28.0/ C	15	6
9969070	1.28.0/ C	04	1	9970078	1.28.0/ C	16	3
	1.28.0/ C	07	6	9970079	1.28.0/ C	16	4
	1.28.0/ C	09	15	9970082	1.28.0/ C	16	7
	1.28.0/ C	10	1	9970178	704/ A	01	3
9969072	1.28.0/ C	08	6		724/ A	01	3
9969073	1.28.0/ C	08	14	9970179	724/ A	01	5
	1.28.0/ C	10	10	9970180	704/ A	01	4
9969076	1.28.0/ C	09	10		724/ A	01	4
	1.28.0/ C	10	5	9970181	724/ A	01	2
9969077	1.28.0/ C	09	9	9970283	1.28.0/ C	02	1
	1.28.0/ C	10	7		1.28.0/ C	03	9
9969078	1.28.0/ C	09	12	9970284	1.28.0/ C	02	10
	1.28.0/ C	10	4		1.28.0/ C	03	12
9969079	1.28.0/ C	09	13	9970285	1.28.0/ C	03	16
9969085	1.28.0/ C	10	3	9970286	1.28.0/ C	16	2
9969086	1.28.0/ C	13A	14	9970370	1.95.5/ C	01	3
9969090	1.28.0/ C	12	4	9970382	704/ A	01	2
9969092	1.28.0/ C	11A	10	9970383	704/ A	01	5
	1.28.0/ C	12	2	9970384	704/ A	01	6
	1.28.0/ C	13A	18		724/ A	01	6
9969093	1.28.0/ C	11A	9	9991976	1.82.6	01	8
	1.28.0/ C	12	1		1.82.6	11B	3
	1.28.0/ C	13A	17		1.82.6	12B	3
9969095	1.28.0/ C	13A	12		334	11	3A
9969097	1.28.0/ C	13A	16		703	04	3A
9969100	1.28.0/ C	12	6		900	04	14
9969101	1.28.0/ C	13A	20		900	06	8
9969103	1.28.0/ C	14A	2	9992069	334	11	4A
9969104	1.28.0/ C	14A	3		703	04	4A
9969105	1.28.0/ C	14A	4	9992298	1.88.11/ 3A	01	8
9969106	1.28.0/ C	14A	5		1.88.11/ 7A	01	16
9969107	1.28.0/ C	14A	6		1.88.11/ 7A	01	17
9969108	1.28.0/ C	14A	7		304	01	9
9969109	1.28.0/ C	14A	8		304	02	13
9969110	1.28.0/ C	14A	9		437/ 1	01	16
9969111	1.28.0/ C	14A	10	9993141	724	01	29
9969112	1.28.0/ C	14A	11		724/ 3	01	29
9969113	1.28.0/ C	14A	12	CF960WDS	321	01	1
9969114	1.28.0/ C	14A	13	D5NN94420N02B	515	02	6
9969115	1.28.0/ C	14A	14		516	02	6
9969116	1.28.0/ C	14A	15	D7NNB694A12Z	535/ 1	01	3
9969281	1.28.0/ A	04	13		537	01	3
9969351	642	01	3	D7NNC511A	1.88.11/ 9C	01	5
9969352	642	01	8	D7NNC512C	900	01	2
9969353	642	01	12	D7NNC512D	514/ E	01	20
9969354	642	01	13	D7NNC512F	900	02	2
9969355	642	01	14		901/ A	01	2
9969356	642	01	2	D7NNC512G	514/ C	01	7
9969357	642	01	5		514/ E	01	16
9969358	642	01	4	D7NNC512H	900	02	4
9969359	642	01	7		901/ A	01	23
9969360	642	01	6	D7NNC512L	901/ D	01	4
9969361	642	01	9	D7NNC513E	1.88.11/ 9C	01	3
9969362	642	01	11	D7NNC584A	515	01	3

Number	Figure	Sequence	Ref.
D7NNC584A	515	02	2
	516	01	1
	516	02	2
	517	01	1
	517	02	2
	518	01	1
	518	02	2
	519	01	1
	519	02	2
D7NNC622A	1.21.5/ 2	01	18
D7NNC622C	1.21.5/ 2	01	21
	1.88.08	02	2
	1.88.11/ A	01	15
	900	02	7
	900	03	5
	901	03	11
D7NNC669A	1.21.5/ 2	01	11
D8NNA233AB	901/ B	01	12
D95143	901/ C	01	9
D9NNC513BA	1.88.11/ 9C	01	18
	514/ C	01	14
	514/ E	01	7
	900	02	5
	901/ A	01	19
D9NNC513CA	514/ E	01	18
	900	01	3
	900	02	1
	901/ A	01	3
	901/ D	01	6
E0NNB543AA	1.88.11/ 9C	01	7
E7NN14A103EA	1.91.4/ 6	07	12
E7NN171DA	901/ D	01	5
E7NN94201N27CA	1.92.4	01	8
E7NN94290N06AA	1.93.0	02	10
	1.93.0/ 1	02	10
E7NN94305N22AA	1.92.4	01	13
	1.92.4	02	12
	1.92.6	02	6
E7NN94305N22BA	1.92.4	01	5
E7NNC501AA	514/ C	01	10
E8NN16N647AA	1.92.6	03	2
E8NN337AA	901/ D	01	20
E8NN9423036AA	1.92.4	02	4
E8NNC667AA	1.21.5/ 2	01	19
E9NN3R862AA	1.63.0	01	12
	1.88.11/ 7A	01	4
	901/ B	01	5
	901/ C	01	4
E9NN94218N36AA	1.92.6	03	7
E9NN94218N45AA	1.92.6	03	6
E9NN94218N48AA	1.92.9	01	13
	1.96.7/ 2	01	7
	1.96.7/ 8	01	7
E9NN9422196AA	1.92.6	03	5
E9NN94231N12AB	1.92.6	03	12
E9NN94296N08AB	1.92.4	01	15
E9NN94305N24AB	1.92.4	02	7
E9NN94305N24BB	1.92.4	01	6
E9NNE602AA	1.88.11/ 9C	01	8
E9NNK917CA	1.63.0	01	13
E9NNP864BA	704	01	11
	704	02	9
	724	01	24
	724/ 2	01	24
	724/ 3	01	24
	724/ 5	01	16
	724/ 6	01	15
E9NNP864CA	704	02	8
F1NN94000Z36AA	1.93.0	01	15
	1.93.0	02	16
	1.93.0/ 1	02	16
	1.93.0/ 3	01	15
	346/1	02	18
	900	02	13
F1NN94231N19AA	1.92.6	03	10
F2NNC513AA	1.21.5/ 2	01	4
F910DSW	131	01	1
F960DS	321	01	1
G100444	901/ C	01	7
G100449	901/ C	01	17
G102425	901/ C	01	11
G109298	901/ C	01	12
N620017S36	535/ 1	01	5
	537	01	5
N630177S36	535/ 1	01	6
	537	01	6
N663114S36	1.88.09/ 1	01	8
	351	03	12
	703	05	3
	727/ 3	01	3
N800270S36M	1.21.5/ 2	01	17
N800271S36M	1.21.5/ 2	01	20
	1.88.08	02	3
	901/ A	01	6
N800272S36M	1.21.5/ 2	01	6
NSS	1.91.4/ 6	02	16
	1.91.4/ 6	02	18
	1.91.4/ 6	07	16
	1.92.1/ 3	01	6
	304	01	18
	304	02	18
	304	03	3
	331/ B	01	20
	469	01	26
	469	01	42
	470	01	26
	470	01	42
	475	01	33
	475	01	34
	476	01	33
	476	01	34
	515	01	6
	516	01	6
	517	01	6
	519	01	6
	795	01	3
	795	01	4
	796	01	6
REF	0.340	01	4

NOTES