EN

Bobcat®

RUTHZIL TRATOR COMERCIAL DE PEÇAS LTDA 11 97083-6812 ROLANDO CITRANGULO

Parts Manual
B730 Backhoe Loader

JANEIRO 2017

S/N B4B611001 & Above

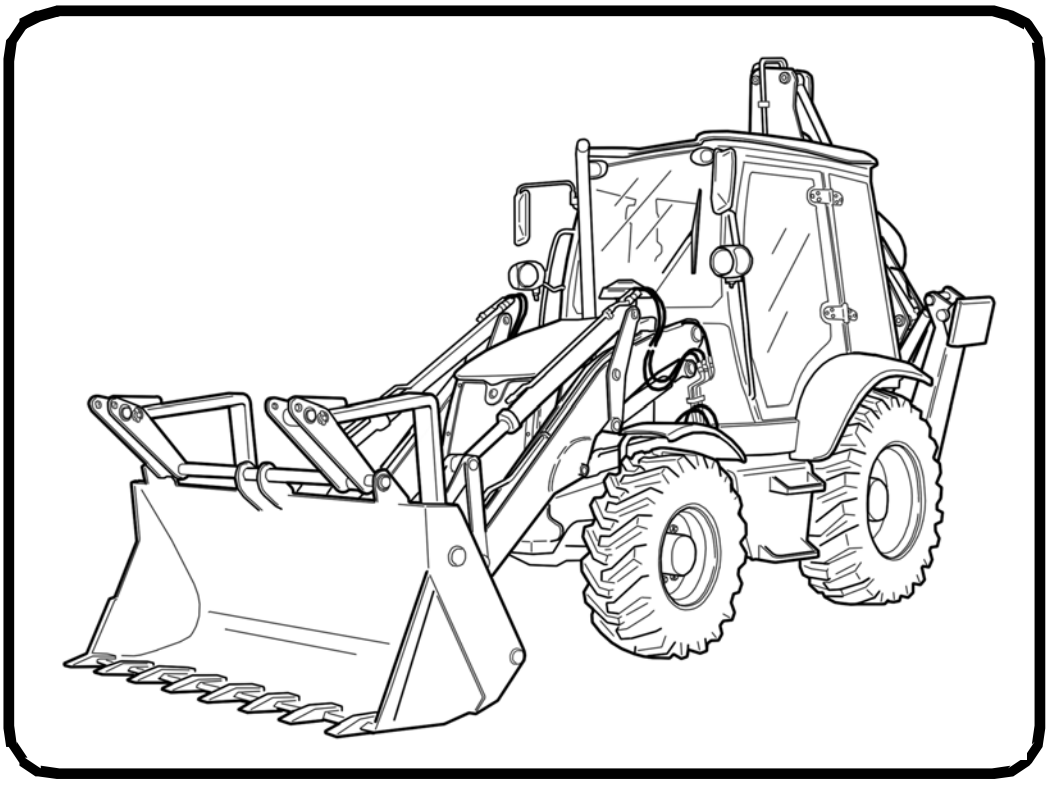

7310237 (01-17) (0)

Printed in Belgium
Original Instructions

©2016 Bobcat Company. All rights reserved.
LAAP T2

GENERAL INFORMATION

Before ordering parts, ALWAYS provide dealer with your product model number and complete serial number information. Before ordering parts, verify correct part numbers and / or serial numbers with your dealer. When using the machine serial number, use the complete number.

The number shown in the quantity column in this manual is the number of parts needed for the illustration on the page. For some parts, an "x" is shown in the quantity column. This "x" indicates that the quantity to be ordered / used is "As Needed".

When references to LH (Left Hand) and RH (Right Hand) are used in this manual, they apply when an operator is situated in the operator's seat in the operating position.

When "See Illustration…." appears in the Remarks column, refer to the Contents page for the illustration title to find page number location.

When "See BTI…." appears in the remarks column, contact a Bobcat dealer.

For additional information on the Bobcat website visit:
www.bobcat.com **or** www.bobcat.eu

TRANSLATED DECAL KITS

AR = Argentina (Spanish)
BR = Brazil (Portuguese)
CA = French Canadian
JP = Japanese

DISPOSITION

(Found in the Remarks Column)
[A] = Use Up
[B] = Use Up on Other Applications
[C] = File SDR Report with Bobcat Parts Sales
[D] = Part Number Error

ABBREVIATIONS/ACRONYM LIST

AC = Air Condition
ACD = Active Center Differential
ACS = Advanced Control System
AGM = Absorbent Glass Mat
AHC = Advanced Hand Controls
AIC = Air Idle Control
ALTNTR = Alternator
AMP = Ampere
ASSY = Assembly
AUX = Auxiliary
AWS = All Wheel Steer
BICS= Bobcat Interlock Control System
BPV = Bucket Positioning Valve
BT = Bluetooth®
BTI = Bobcat Technical Information Bulletin
CD = Compact Disk
C/I = Construction/Industrial
COMPL = Complete
CRS = Common Rail System
CT = Compact Tractor
CTL = Compact Track Loader
CVT = Continuously Variable Transmission
CYL = Cylinder
DEF = Diesel Exhaust Fluid
DIA = Diameter
DIFF = Differential
DIN = (German Institute for Standardization)
DIR = Directory
DLX = Deluxe
DOC = Diesel Oxidation Catalyst
DPF = Diesel Particulate Filter
ECU = Electronic Control Unit
EF = EarthForce™
EGR = Exhaust Gas Recirculation
ELHYD = Electro-Hydraulic
ELEC = Electrical
EMEA = Europe/Middle East/Africa
ENG = Engine
EPA = Environmental Protection Agency
EU = Europe
EXC = Excavator
EXT = Extendable
FF = Flush Face
FM = Front Mounted
FOPS = Falling Object Protective Structure
FSR = Forward, Stop, Reverse
FT = Feet
GA = Gauge
GAL = Gallon
GCR = Grade Control Receiver
GFCI = Ground Fault Circuit Interrupter
GPM = Gallons per Minute
GPS = Global Positioning System
HD = Heavy Duty
HEX = Hexagon
HI-LO = High-Low
HP = Horse Power
HYDRST = Hydrostatic
HVAC = Heating Ventilation & Air Condition
HYDR = Hydraulic
HZ = Hertz
ID = Inside Diameter
IGN = Ignition
IN = Inches
INDL = Industrial
INJ = Injection
ISO = International Organization for Standardization
IT4 = Interim Tier Four
JPS = Joystick Pattern Selector
KG = Kilogram
KM/H = Kilometers per Hour
KW = Kilowatt
L = Liter
LA = Long Arm
LASD = Lift Arm Safety Device
LB = Pound
LCD = Liquid Crystal Display
LDR = Loader
LED = Light Emitting Diode
LF = Large Frame
LH = Left Hand
LORS™ = Lateral Operator Restrain System
L/min. = Liters per Minute
L/P = Low Profile
MAX = Maximum
MEA = Middle East Africa
MNFRM = Main Frame
MID = Middle
MLS = Mita Load Sensing
MM = Millimeters
MSHA = Mine Safety & Health Administration
N/A = Not Applicable
NA = North America
NIA = No Illustration Available
NLA = No Longer Available
NSS = Not Serviced Separately

ABBREVIATIONS/ACRONYM LIST

NO = Number
OD = Outside Diameter
OHB = Operator's Handbook
OM = Operation & Maintenance Manual
OZ = Ounce
PKG = Package
PM = Parts Manual
POLY = Polycarbonate
PRESS = Pressure
PSI = Pounds per Square Inch
PT = Point
PTO = Power Take Off
PVC = Polyvinyl Chloride
PWM = Pulse Width Modulation
QT = Quart
QTY = Quantity
RD = Round Drive
REF = Reference
REM = Remanufactured
RFID = Radio Frequency Identification
RH = Right Hand
ROC = Rated Operating Capacity
ROPS = Rollover Protective Structure
RPM = Revolutions per Minute
SA = Standard Arm
SALES = (Order through Sales Department)
SCPA = Standard Controls W/Power Assist
SCR = Selective Catalytic Reduction
SD = Severe Duty
SDR = Shipping Discrepancy Report
SEA = Southeast Asia
SF = Small Frame
SJC = Selectable Joystick Controls
SL = Service Letter
SM = Service Manual
SSL = Skid Steer Loader
STC = Snap To Connect
STD = Standard
STG = Stage
STRG = Steering
T1 = Tier 1
T2 = Tier 2
T3 = Tier 3
T4 = Tier 4
TEMP = Temperature
THL = (Control Pattern)
THRU = Through
TICS = Toolcat® Interlock Control System
XMSN = Transmission
UBS = Universal Bearing Stress
USB = Universal Serial Bus
UTV = Utility Vehicle
VEH = Vehicle
W/A = Welded Assembly
W/ = With
W/O = Without
WM = Work Machine

CONTENTS

MAINTENANCE ITEMS..... 1-22
MAINTENANCE ITEMS..... 1-6
SCHEDULED MAINTENANCE ITEMS..... 7-22
ENGINE GROUP..... 23-154
ENGINE AND ITS CONNECTIONS..... 23
CYLINDER BLOCK AND LINES..... 25
CRANK SHAFT,MAIN AND BIG END BEARINGS..... 27-30
PISTONS AND RINGS..... 31
CONNECTION RODS..... 33-36
REAR END OIL SEAL..... 37
CYLINDER HEAD ASSEMBLY..... 39
ROCKER SHAFT ASSEMBLY..... 41
TIMING GEAR AND CAMSHAFT..... 43
FUEL INJECTION PUMP..... 45
HIGH PRESSURE FUEL PIPES..... 47
ATOMISER..... 49
PICK-UP SENSOR..... 51
PIPES..... 53-96
FUEL LEAK-OFF HOSE..... 55
PLUG..... 57-82
FLYWHEEL HOUSING..... 59
FLYWHEEL AND STARTER RING..... 61
FAN CONNECTIONS..... 63
STARTER MOTOR..... 65
SUMP..... 67
OIL DIPSTICK..... 69
SUCTION PIPE..... 71
CYLINDER HEAD COVER..... 73-76
OIL FILLER..... 77
ENGINE CONNECTIONS..... 79-124
OIL COOLER..... 83
OIL FILTER..... 85
OIL FILTER JOINT..... 87
FRONT AND DRIVE INPUT..... 89
WATER PUMP KIT..... 91
WATER PUMP REPAIR KIT..... 93
WATER OUTLET HOUSING..... 97-100
FAN..... 101
ALTERNATOR AND ITS BRACKETS..... 103
TIMING CASE..... 105
TIME GEARS..... 107
FRONT COVER..... 109
BLANKING PLUG..... 111
LUBRICATION OIL PUMP..... 113
TURBOCHARGER..... 115
EXHAUST ELBOW..... 121
EXHAUST MANIFOLD..... 125
CONNECTIONS..... 127-138
LIFT PUMP..... 129
FUEL- PUMP CONNECTIONS..... 131
HEATER PLUGS..... 133
LIFTING BRACKETS..... 135
LUBRICATING OIL PRESSURE SWITCH/GAUGE..... 139
AUXILIARIES..... 141
FUEL FILTER (WATER TRAP)..... 143-146
RADIATOR AND ITS CONNECTIONS..... 147
EXHAUST SYSTEM..... 149
AIR FILTER AND ITS CONNECTIONS..... 151
FUEL HOSES..... 153
TRANSMISSION GROUP..... 155-188
ENGINE AND TRANSMISSION CONNECTIONS..... 155
TRANSMISSION/ ENGINE CONNECTION..... 157

CONTENTS (Cont'd)

TRANSMISSION GROUP..... 155-188
TRANSMISSION/ INPUT..... 159
TRANSMISSION/ GEARBOX HOUSING..... 161-164
TRANSMISSION/ COUPLING..... 165-176
TRANSMISSION/ OUTPUT..... 177
TRANSMISSION/ CONTROL UNIT..... 179
TRANSMISSION/ OIL PUMP..... 181
TRANSMISSION/ TRANSMITTER..... 183
TRANSMISSION/ OIL FILTER..... 185
TRANSMISSION DIPSTICK..... 187
ELECTRICAL SYSTEM..... 189-206
CONSOLE AND GAUGES..... 189-192
ENGINE ELECTRICLINE GROUP..... 193
BACKHOE FITTING GROUP..... 195
RELAY FITTING GROUP..... 197
FUSE FITTING GROUP..... 199
REAR LAMP..... 201
BATTERY AND ITS CONNECTIONS..... 203
WINDSHIELD WIPER RESERVOIR..... 205
HYDRAULIC SYSTEM..... 207-262
CLAMSHELL CYLINDER CIRCUIT..... 207
LIFT CYLINDERS CIRCUIT..... 209
TILT CYLINDERS CIRCUIT..... 211
STEERING CYLINDER CIRCUIT..... 213
BRAKE CIRCUIT..... 215
TRANSMISSION - OIL COOLER CIRCUIT..... 217
LEAK COLLECTION BLOCK CIRCUIT..... 219
BACKHOE HOSE CONNECTIONS..... 221
INTAKE AND PRIORITY VALVE CIRCUIT..... 223
HYDRAULIC PUMP..... 225
STABILIZER CYLINDER CIRCUIT..... 227
SWING CYLINDER CIRCUIT..... 229
REAR BOOM CYLINDER CIRCUIT..... 231
STICK CYLINDER CIRCUIT..... 233
BUCKET CYLNDER CIRCUIT..... 235
CLAMSHELL CYLINDER..... 237
LIFT CYLINDER..... 239
TILT CYLINDER..... 241
STABILIZER CYLINDER..... 243
SWING CYLINDER..... 245
STICK CYLINDER..... 247
BOOM CYLINDER..... 249
REAR BUCKET CYLINDER..... 251
HYDRAULIC CONNECTIONS..... 253-256
LOADER CONTROL VALVE CONNECTIONS..... 257
LOADER CONTROL VALVE..... 259
BACKHOE CONTROL VALVE AND ITS CONNECTIONS..... 261
TRAVELLING..... 263-314
WHEEL AND AXLE CONNECTIONS..... 263
REAR AXLE/ INPUT..... 265-272
REAR AXLE/ DIFFERENTIAL..... 273
REAR AXLE/ BRAKE DISC..... 275
REAR AXLE/ AXLE CASING..... 277-282
REAR AXLE/ OUTPUT..... 283-286
REAR AXLE/ LOOSE PARTS..... 287
FRONT AXLE/ INPUT..... 289-294
SHAFT CONNECTIONS..... 291
FRONT AXLE/ DIFFERENTIAL..... 295
FRONT AXLE/ AXLE CASING..... 297-300
FRONT AXLE/ JOINT HOUSING..... 301
FRONT AXLE/ PLANETARY DRIVE..... 303
FRONT AXLE/ STEERING GEAR..... 305

CONTENTS (Cont'd)

TRAVELLING..... 263-314
STEERING COLUMN AND UNIT..... 307
BRAKE PEDAL CONNECTIONS..... 309
ACCELERATOR PEDAL AND ITS CONNECTIONS..... 311
HAND BRAKE CONNECTIONS..... 313
FRAME AND BODY..... 315-332
COUNTER WEIGHT..... 315
ENGINE BONNET AND ITS CONNECTIONS GROUP..... 317-320
FUEL TANK..... 321
HYDRAULIC TANK AND ITS CONNECTIONS..... 323
FRAME..... 325
DECALS..... 327-332
CABIN AND ITS EQUIPMENT..... 333-368
EXTERIOR POLYESTER AND ITS CONNECTIONS..... 333
CABIN INTERIOR POLYESTER AND ITS CONNECTIONS..... 335
CABIN AND FRAME CONNECTIONS..... 337
HEATER AND ITS CONNECTIONS..... 339
SEAT PLATE AND ITS CONNECTIONS..... 341
SEAT..... 343-346
CABIN AND FRONT ASSEMBLY..... 347
CABIN RIGHT REAR SIDE DOOR FRAME ASSEMBLY..... 349
CABIN RIGHT DOOR FRAME ASSEMBLY..... 351
CABIN RIGHT SIDE ASSEMBLY..... 353
CABIN LEFT REAR SIDE DOOR FRAME ASSEMBLY..... 355
CABIN LEFT DOOR FRAME ASSEMBLY..... 357
CABIN LEFT SIDE ASSEMBLY..... 359
REAR FRAME COMPLETE ASSEMBLY..... 361
CABIN REAR AND FRAME ASSEMBLY..... 363
CABIN ROOF ASSEMBLY..... 365
INTERIOR CABIN ASSEMBLY..... 367
BACKHOE EQUIPMENT..... 369-380
CHASSIS AND SWING CYLINDERS CONNECTIONS..... 369
SWING JOINT AND CHASSIS CONNECTIONS..... 371
BOOM CONNECTIONS..... 373
STANDARD STICK AND BUCKET CONNECTIONS..... 375
STABILIZER CONNECTIONS..... 377
LOCKING MECHANISM..... 379
LOADER EQUIPMENT..... 381-392
FRONT BOOM - CYLINDER CONNECTIONS (FOR 18" RIM)..... 381
BOOM AND LEVER CONNECTIONS..... 383
FRONT BOOM BUCKET CONNECTIONS..... 385
CLAMSHELL CONNECTIONS..... 387
BOOM CONTROL ROD AND SAFETY BAR..... 389
FRONT AXLE GREASING GROUP..... 391
EXTENSION GROUP..... 393-404
EXTENSION PEDAL GROUP..... 393
EXTENDED CYLINDER CIRCUIT..... 395
EXTENDED CYLINDER..... 397
EXTENDED STICK AND CONNECTIONS..... 399
EXTENDED STICK AND BUCKET CONNECTIONS..... 401
HAMMER CONNECTIONS - EXTENDED..... 403
OPTIONAL GROUPS..... 405-430
CRANKCASE SHAFT GUARD..... 405
NAMEPLATE CONNECTION..... 407
HYDRAULIC ACCUMULATOR AND EHSS SYSTEM..... 409
HAMMER CONNECTIONS-STANDARD..... 411
AIR-CONDITIONER LINE..... 413
AIR-CONDITIONER AND ITS CONNECTIONS..... 415-418
MECHANIC QUICK ATTACHMENT..... 419
FRONT BUCKET..... 421
FORK ATTACHMENT BUCKET..... 423
FORK ATTACHMENT CLAMSHELL BUCKET..... 425

CONTENTS (Cont'd)

OPTIONAL GROUPS..... 405-430
BOLT-ON SEGMENT..... 427
ENGINE BONNET INSULATION GROUP..... 429
NUMERICAL INDEX..... 431-485

Use only Bobcat belts and hoses to maintain maximum service life.

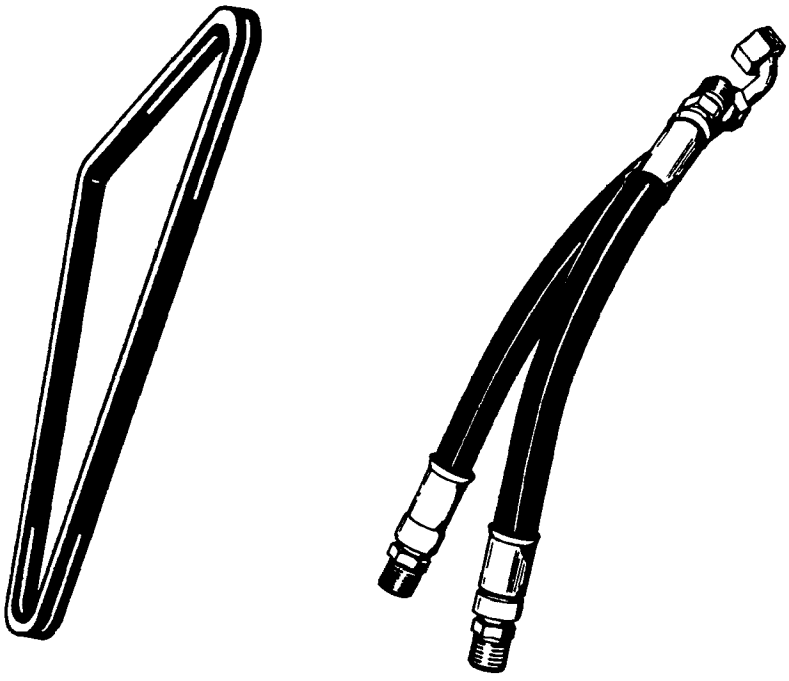

Available from Bobcat Parts.

Bobcat

MAINTENANCE ITEMS
(Service Parts)

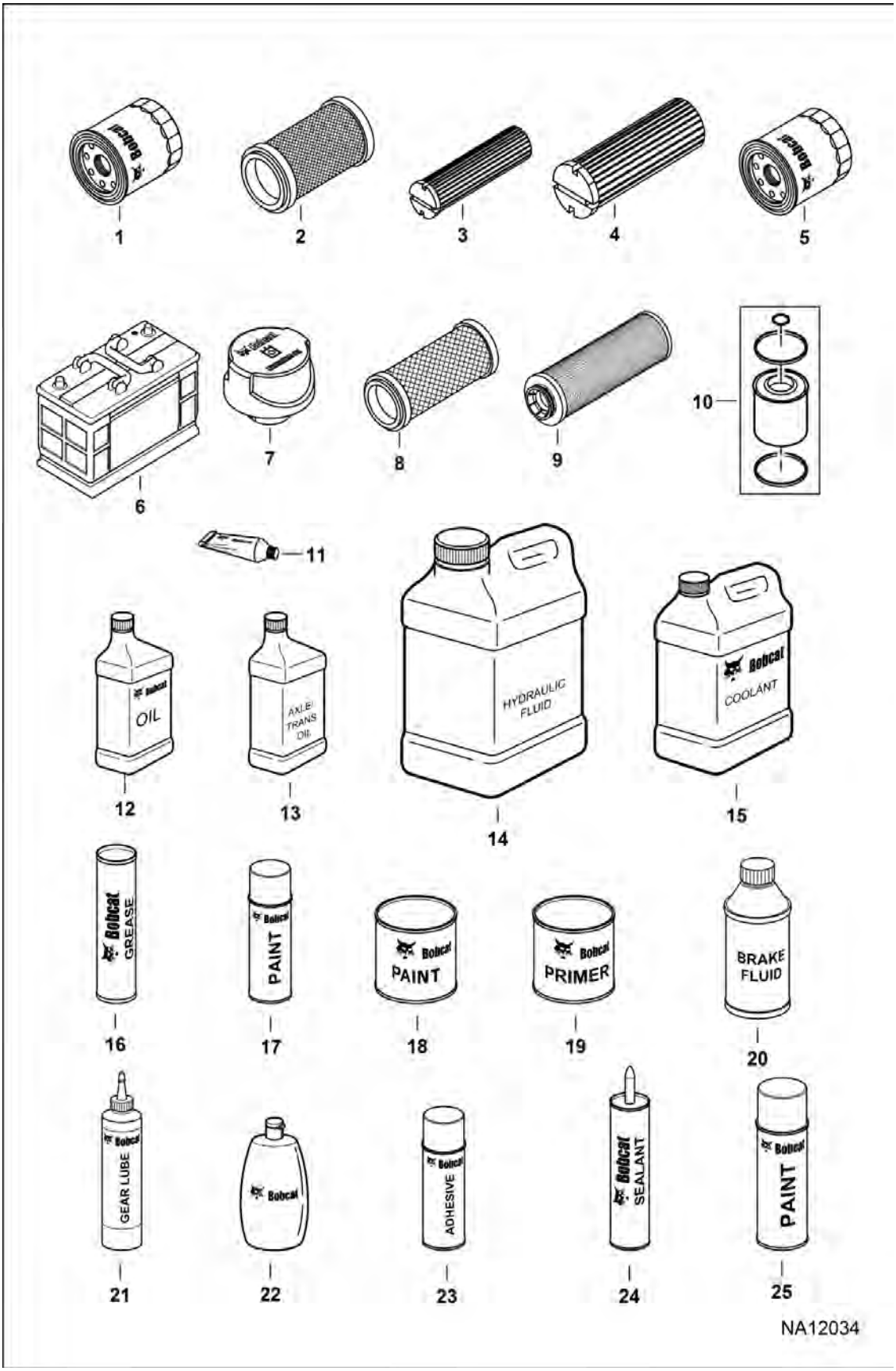

MAINTENANCE ITEMS (Cont'd)
(Service Parts)

Ref No	Part Number	Description	Remarks	Serial Number	Qty
1	7289106	OIL FILTER	See Illustration OIL FILTER / A883231-0510-R00 - engine		1
2	6911907	FUEL FILTER ELEMENT KIT	See Illustration LIFT PUMP / A883253-0510-R00		1
3	7289294	AIR FILTER INNER	See Illustration AIR FILTER AND ITS CONNECTIONS / A883501-0316-R05		1
4	7289295	AIR FILTER OUTER	See Illustration AIR FILTER AND ITS CONNECTIONS / A883501-0316-R05		1
5	7291240	FILTER	See Illustration TRANSMISSION/ OIL FILTER / B883215-0514-R01 - transmission		1
6	7289600	BATTERY	See Illustration BATTERY AND ITS CONNECTIONS / C883801-0914-R01		1
7	7290383	CAP	See Illustration HYDRAULIC TANK AND ITS CONNECTIONS / F883401-0316-R05 - W/breather filter		1
8	7290377	FILTER	See Illustration HYDRAULIC TANK AND ITS CONNECTIONS / F883401-0316-R05 - hydraulic suction		1
9	7290371	FILTER	See Illustration HYDRAULIC TANK AND ITS CONNECTIONS / F883401-0316-R05 - hydraulic return		1
10	7289231	FUEL PREFILTER KIT	See Illustration FUEL FILTER (WATER TRAP) / A883261-0510-R00		1
11	6599360	SEALANT, ELEC .3 OZ			x
12	6987789A	OIL, 10W30 5L 4			x
12	6987789B	OIL, 10W30 20L			x
12	6987789C	OIL, 10W30 205L			x
12	6987789D	OIL, 10W30 1000L			x
12	6987790A	OIL, 15W40 5L 4			x
12	6987790B	OIL, 15W40 20L			x
12	6987790C	OIL, 15W40 205L			x
12	6987790D	OIL, 15W40 1000L			x
13		FLUID, OIL TRANSMISSION	See Operation & Maintenance Manual for recommended fluid		x
13		FLUID, OIL AXLE	See Operation & Maintenance Manual for recommended fluid		x
14		FLUID, OIL HYDRAULIC	See Operation & Maintenance Manual for recommended fluid		x
15	6987803A	ANTIFREEZE/COOLANT, EG CONCENTRATE 5L 4			x
15	6987803B	ANTIFREEZE/COOLANT, EG CONCENTRATE 20L			x
15	6987803C	ANTIFREEZE/COOLANT, EG CONCENTRATE 210L			x
15	6987803D	ANTIFREEZE/COOLANT, EG CONCENTRATE 1000L			x

MAINTENANCE ITEMS (Cont'd)
(Service Parts)

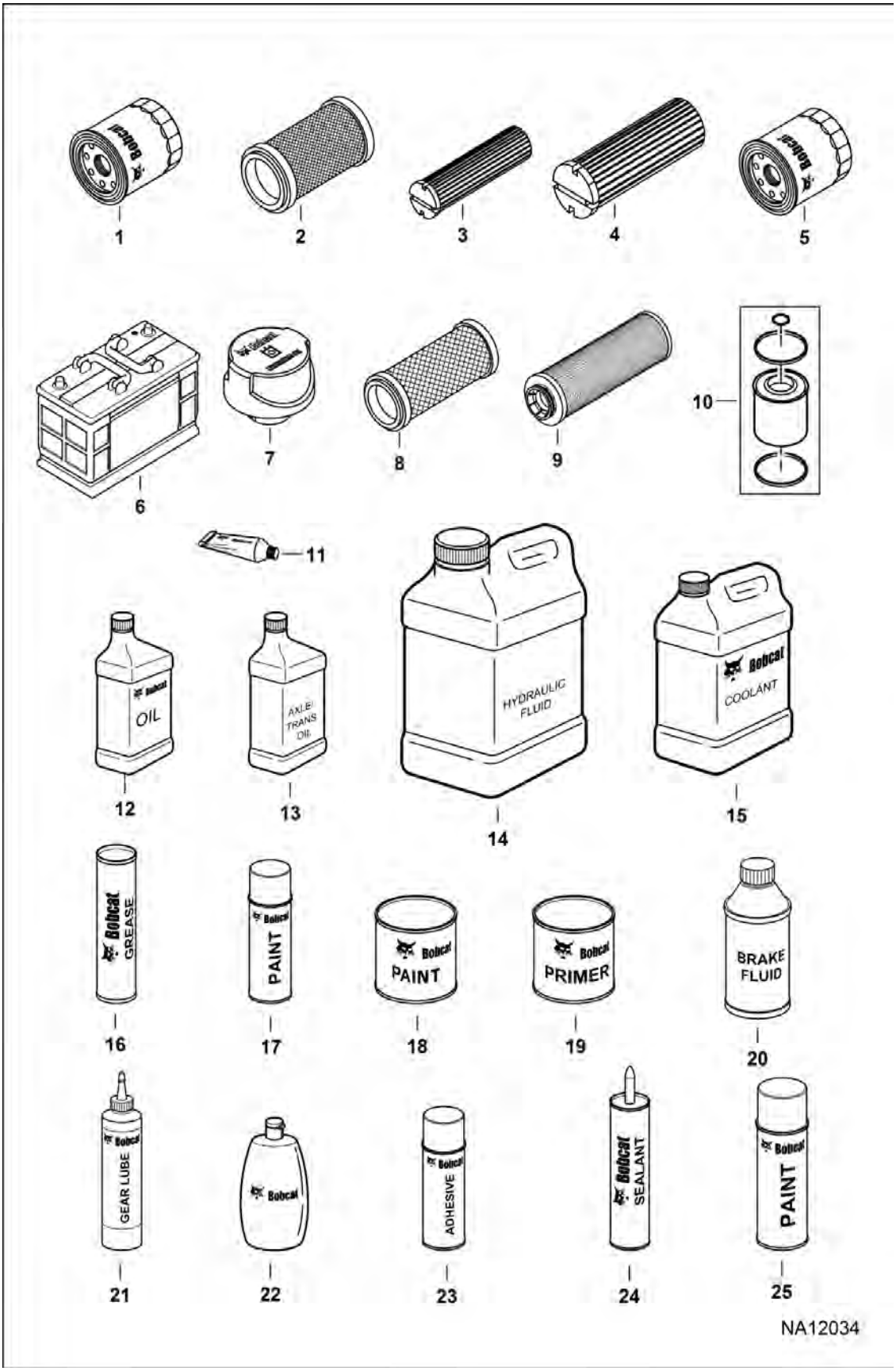

MAINTENANCE ITEMS (Cont'd)
(Service Parts)

Ref No	Part Number	Description	Remarks	Serial Number	Qty
15	6987804A	ANTIFREEZE/COOLANT, EG 53/47 PREMIX 5L 4			x
15	6987804B	ANTIFREEZE/COOLANT, EG 53/47 PREMIX 20L			x
15	6987804C	ANTIFREEZE/COOLANT, EG 53/47 PREMIX 205L			x
15	6987804D	ANTIFREEZE/COOLANT, EG 53/47 PREMIX 1000L			x
16	6987888	GREASE, MULTIPURPOSE #2 - 10			x
16	6987889	GREASE, HD SUPREME 10			x
16	6987890	GREASE, HP EXTREME 10			x
17	6902228	PAINT, ORANGE SPRAY CAN 6	original shade		x
17	7251693	PAINT, CHARCOAL SPRAY CAN 6			x
17	7251701	PAINT, WHITE SPRAY CAN 6			x
18	7251689	PAINT, ORANGE QT 6	original shade - EMEA		x
18	7251692	PAINT, CHARCOAL QT 6			x
18	7251695	PAINT, WHITE QT 6			x
19	7251705	PRIMER, QT 6			x
20		FLUID, OIL BRAKE	See Operation & Maintenance Manual for recommended fluid		x
21	6903121	LUBE, GEAR			x
22	6630189	POLISH			x
23	6675380	ADHESIVE, SPRAY 10.5 oz			x
24	6988018	SEALANT, GASKET LIQUID 50ML			x
25	7251691	PAINT, ORANGE .5 OZ	original shade - EMEA		x
25	7251694	PAINT, CHARCOAL .5 OZ			x
25	7251702	PAINT, WHITE .5 OZ			x
25	7251704	PAINT, RED .5 OZ			x

MAINTENANCE ITEMS
(Literature)

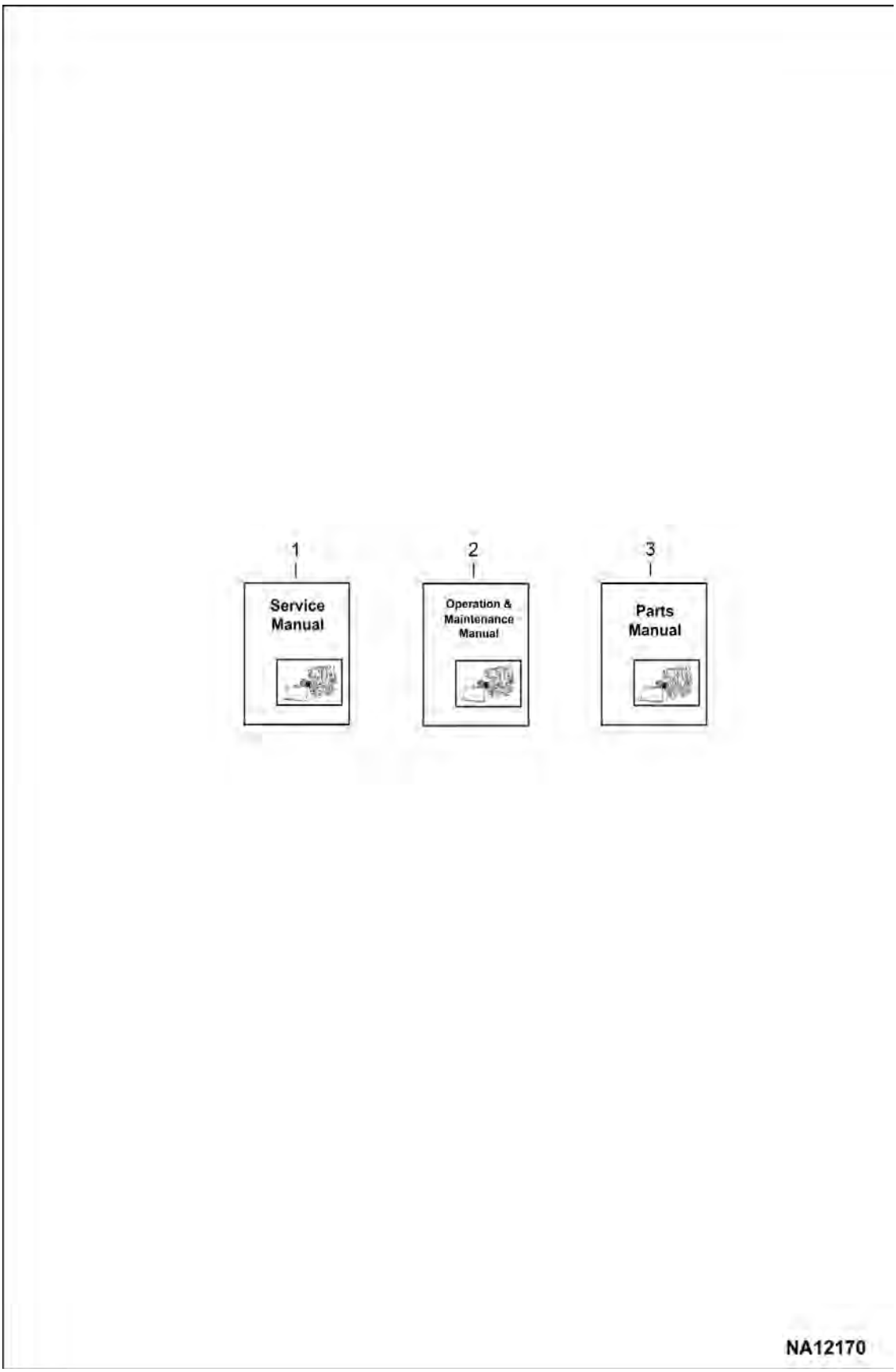

MAINTENANCE ITEMS (Cont'd)
(Literature)

Ref No	Part Number	Description	Remarks	Serial Number	Qty
1	7286757	MANUAL, SERVICE			1
2	7286755ENGB	MANUAL, OPERATION & MAINTENANCE			1
3	7310237	MANUAL PARTS			1

SCHEDULED MAINTENANCE ITEMS
(Every 8 Hours)

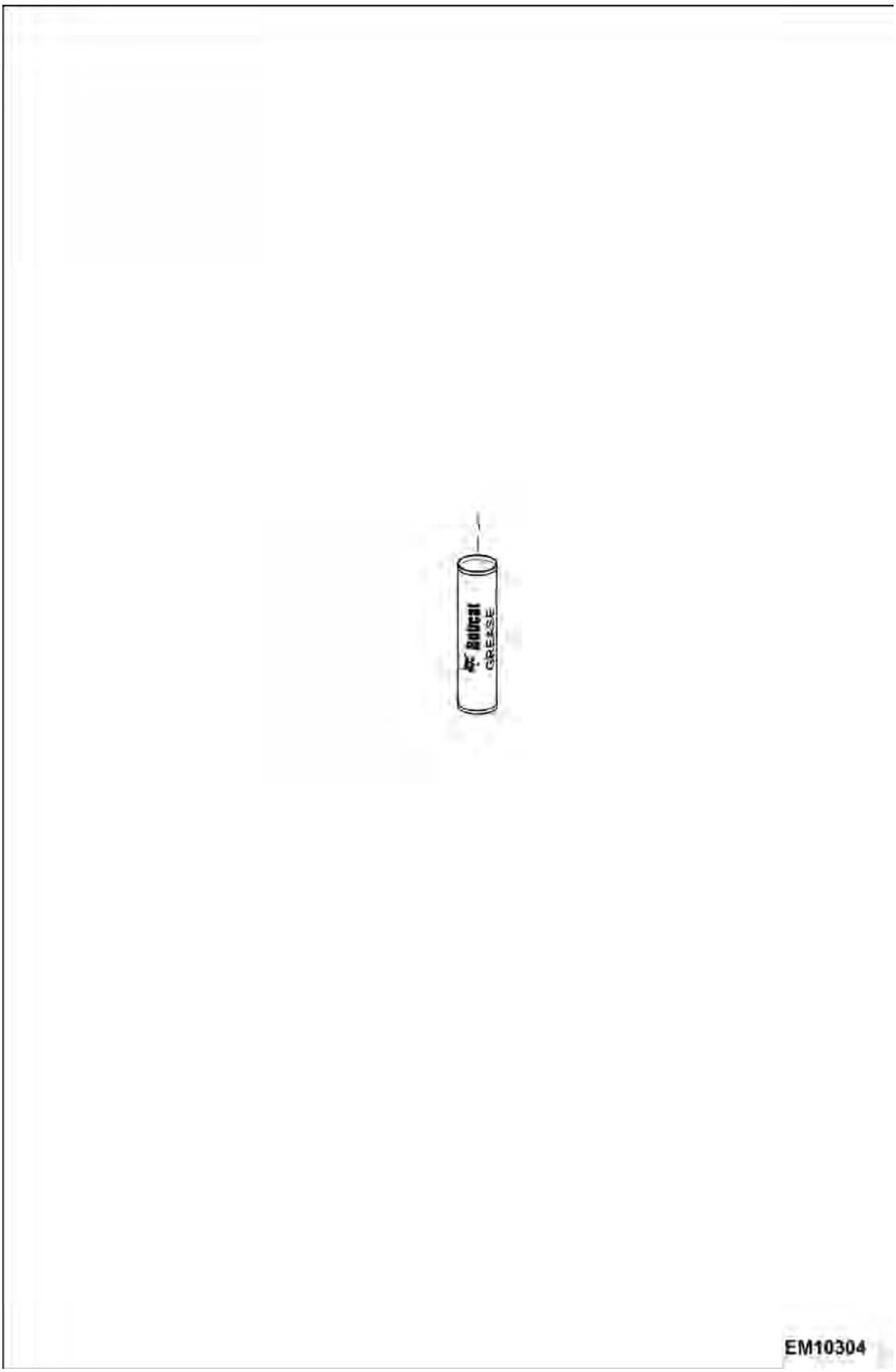

SCHEDULED MAINTENANCE ITEMS (Cont'd)
(Every 8 Hours)

Ref No	Part Number	Description	Remarks	Serial Number	Qty
1	6987888	GREASE, MULTIPURPOSE #2 - 10			x
1	6987889	GREASE, HD SUPREME 10			x
1	6987890	GREASE, HP EXTREME 10			x

SCHEDULED MAINTENANCE ITEMS
(Every 50 Hours)

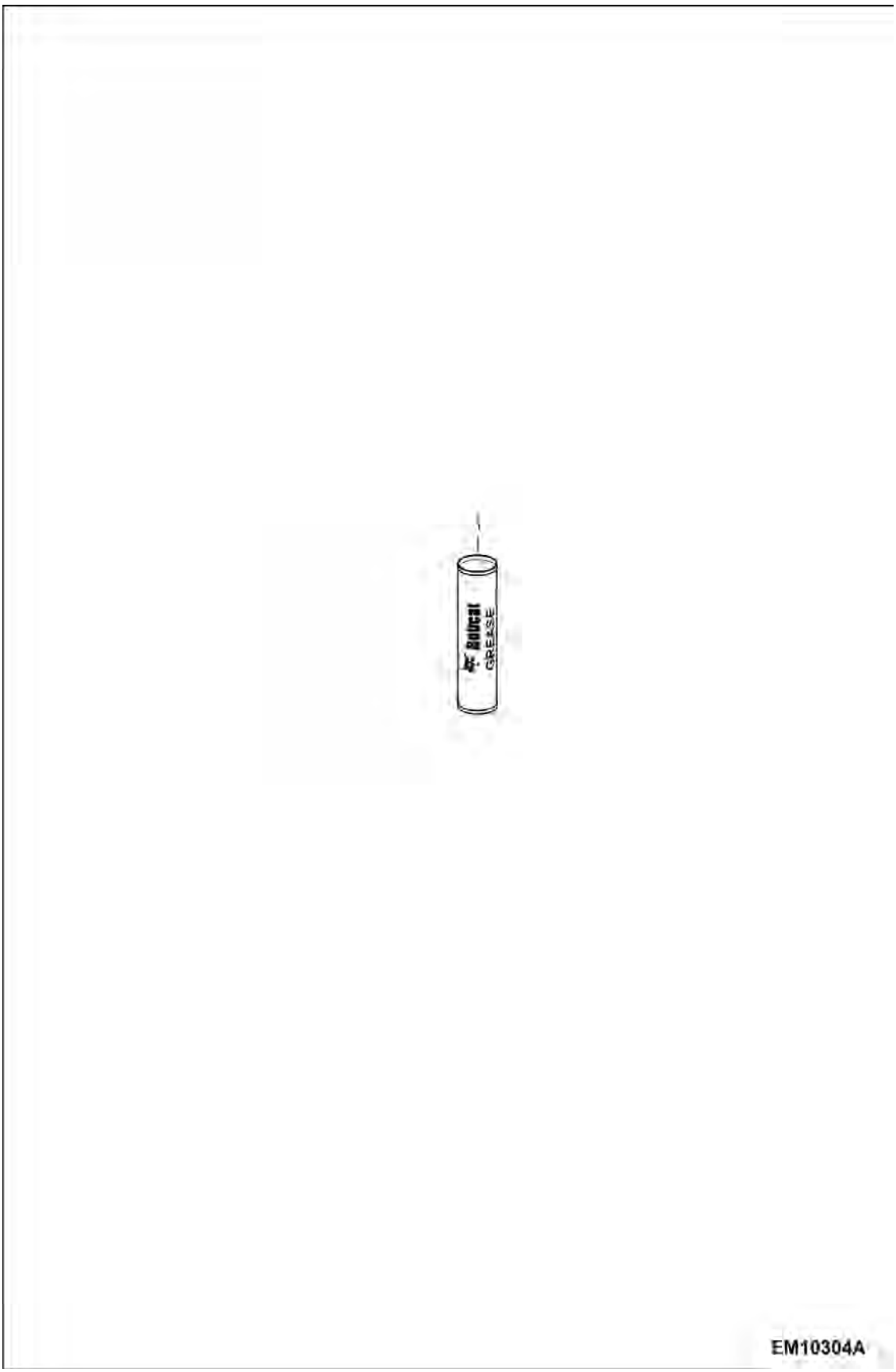

SCHEDULED MAINTENANCE ITEMS (Cont'd)
(Every 50 Hours)

Ref No	Part Number	Description	Remarks	Serial Number	Qty
1	6987888	GREASE, MULTIPURPOSE #2 - 10			x
2	6987889	GREASE, HD SUPREME 10			x
3	6987890	GREASE, HP EXTREME 10			x

SCHEDULED MAINTENANCE ITEMS
(First 100 Hours)

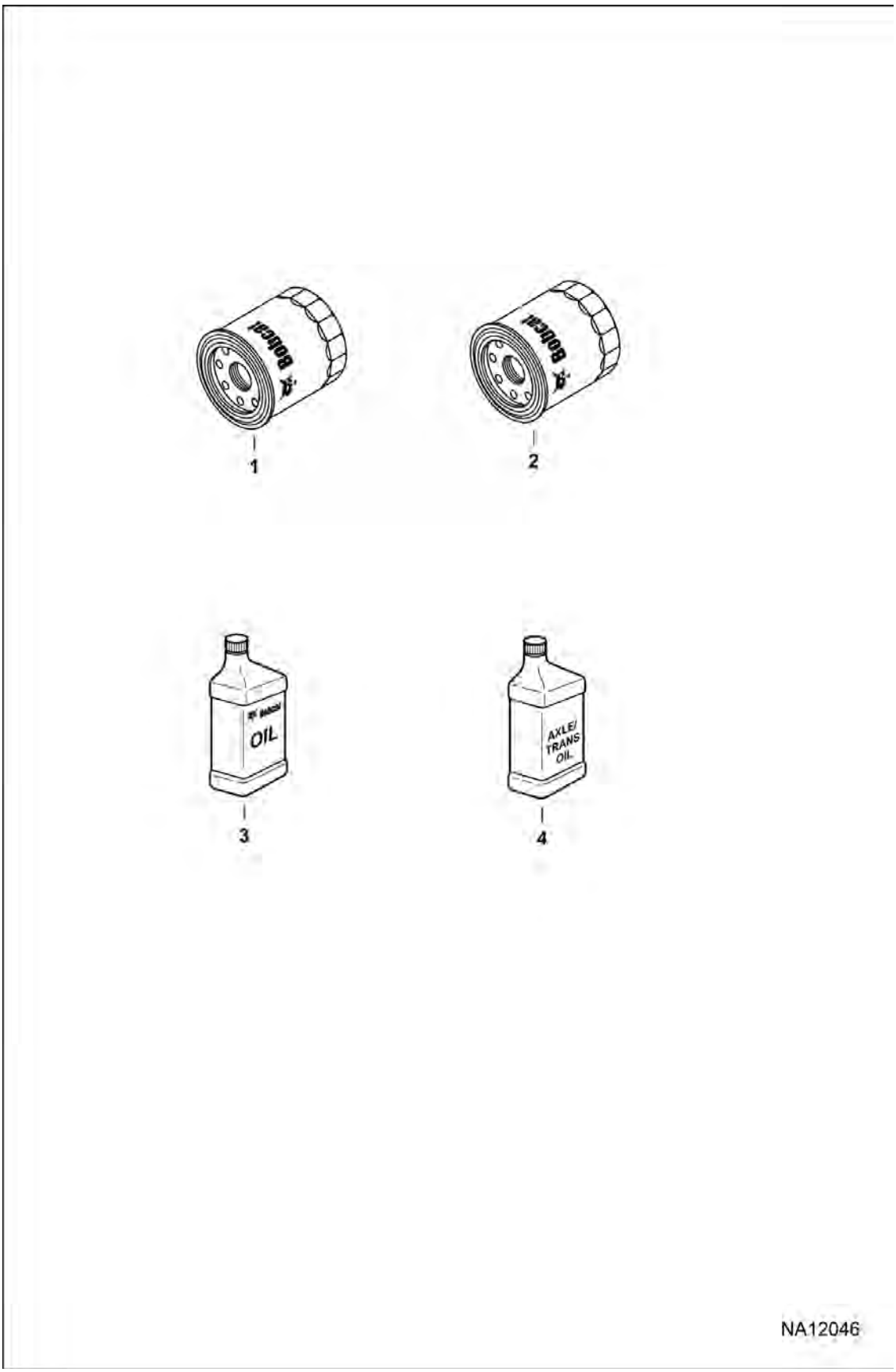

SCHEDULED MAINTENANCE ITEMS (Cont'd)
(First 100 Hours)

Ref No	Part Number	Description	Remarks	Serial Number	Qty
1	7289106	OIL FILTER	See Illustration OIL FILTER / A883231-0510-R00 - engine		1
2	7291240	FILTER	See Illustration TRANSMISSION/ OIL FILTER / B883215-0514-R01 - transmission		1
3	6987789A	OIL, 10W30 5L 4			x
3	6987789B	OIL, 10W30 20L			x
3	6987789C	OIL, 10W30 205L			x
3	6987789D	OIL, 10W30 1000L			x
3	6987790A	OIL, 15W40 5L 4			x
3	6987790B	OIL, 15W40 20L			x
3	6987790C	OIL, 15W40 205L			x
3	6987790D	OIL, 15W40 1000L			x
4		FLUID, OIL TRANSMISSION	See Operation & Maintenance Manual for recommended fluid		x

SCHEDULED MAINTENANCE ITEMS
(Every 250 Hours)

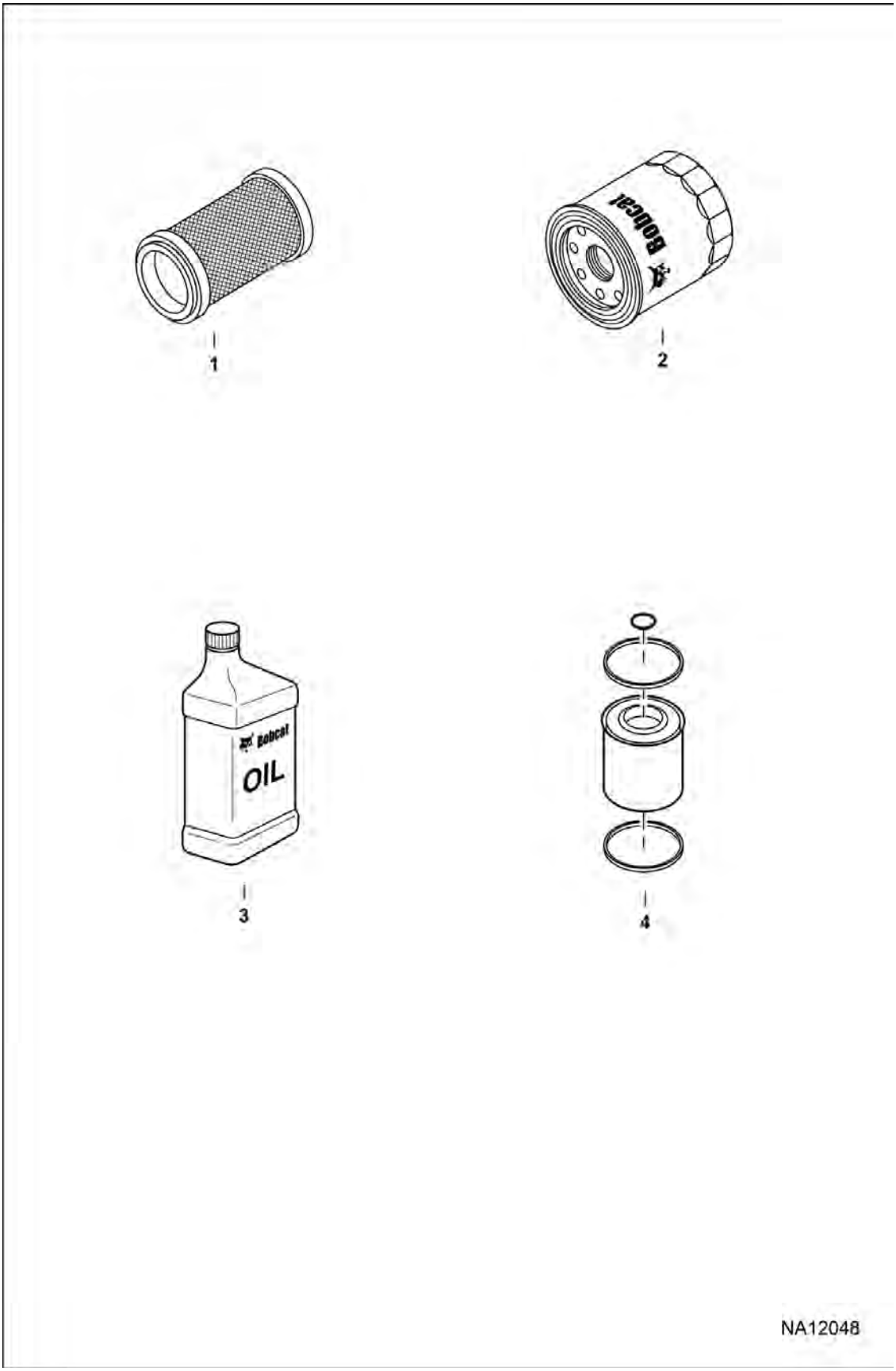

SCHEDULED MAINTENANCE ITEMS (Cont'd)
(Every 250 Hours)

Ref No	Part Number	Description	Remarks	Serial Number	Qty
1	6911907	FUEL FILTER ELEMENT KIT	See Illustration LIFT PUMP / A883253-0510-R00		1
2	7289106	OIL FILTER	See Illustration OIL FILTER / A883231-0510-R00 - engine		1
3	6987789A	OIL, 10W30 5L 4			x
3	6987789B	OIL, 10W30 20L			x
3	6987789C	OIL, 10W30 205L			x
3	6987789D	OIL, 10W30 1000L			x
3	6987790A	OIL, 15W40 5L 4			x
3	6987790B	OIL, 15W40 20L			x
3	6987790C	OIL, 15W40 205L			x
3	6987790D	OIL, 15W40 1000L			x
4	7289231	FUEL PREFILTER KIT	See Illustration FUEL FILTER (WATER TRAP) / A883261-0510-R00		1

SCHEDULED MAINTENANCE ITEMS
(First 500 Hours)



1

NA12049

SCHEDULED MAINTENANCE ITEMS (Cont'd)
(First 500 Hours)

Ref No	Part Number	Description	Remarks	Serial Number	Qty
1		FLUID, OIL AXLE	See Operation & Maintenance Manual for recommended fluid		x

SCHEDULED MAINTENANCE ITEMS
(Every 500 Hours)

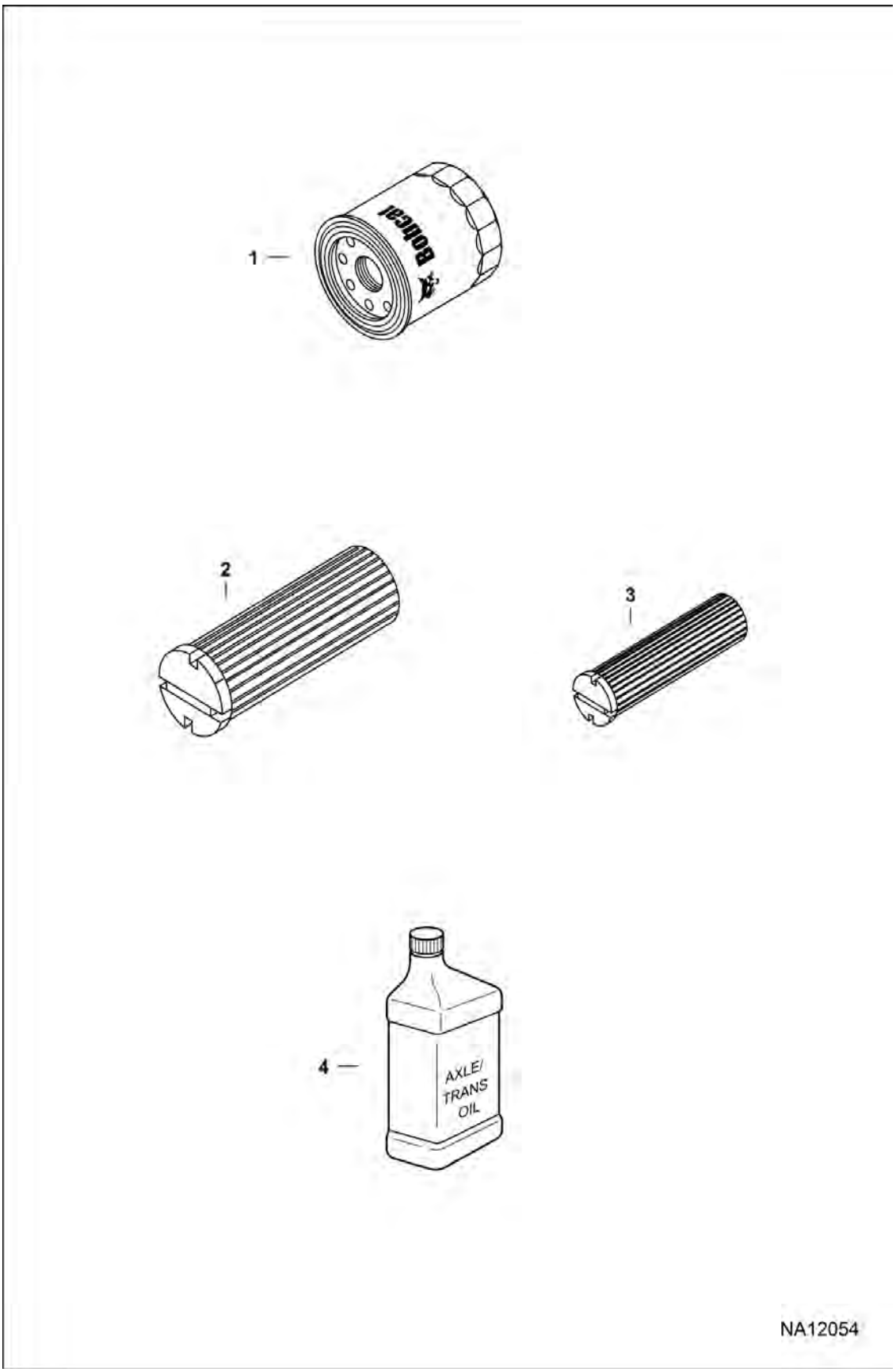

SCHEDULED MAINTENANCE ITEMS (Cont'd)
(Every 500 Hours)

Ref No	Part Number	Description	Remarks	Serial Number	Qty
1	7291240	FILTER	See Illustration TRANSMISSION/ OIL FILTER / B883215-0514-R01 - transmission		1
2	7289295	AIR FILTER OUTER	See Illustration AIR FILTER AND ITS CONNECTIONS / A883501-0316-R05		1
3	7289294	AIR FILTER INNER	See Illustration AIR FILTER AND ITS CONNECTIONS / A883501-0316-R05		1
4		FLUID, OIL TRANSMISSION	See Operation & Maintenance Manual for recommended fluid		x

SCHEDULED MAINTENANCE ITEMS
(Every 1000 Hours)

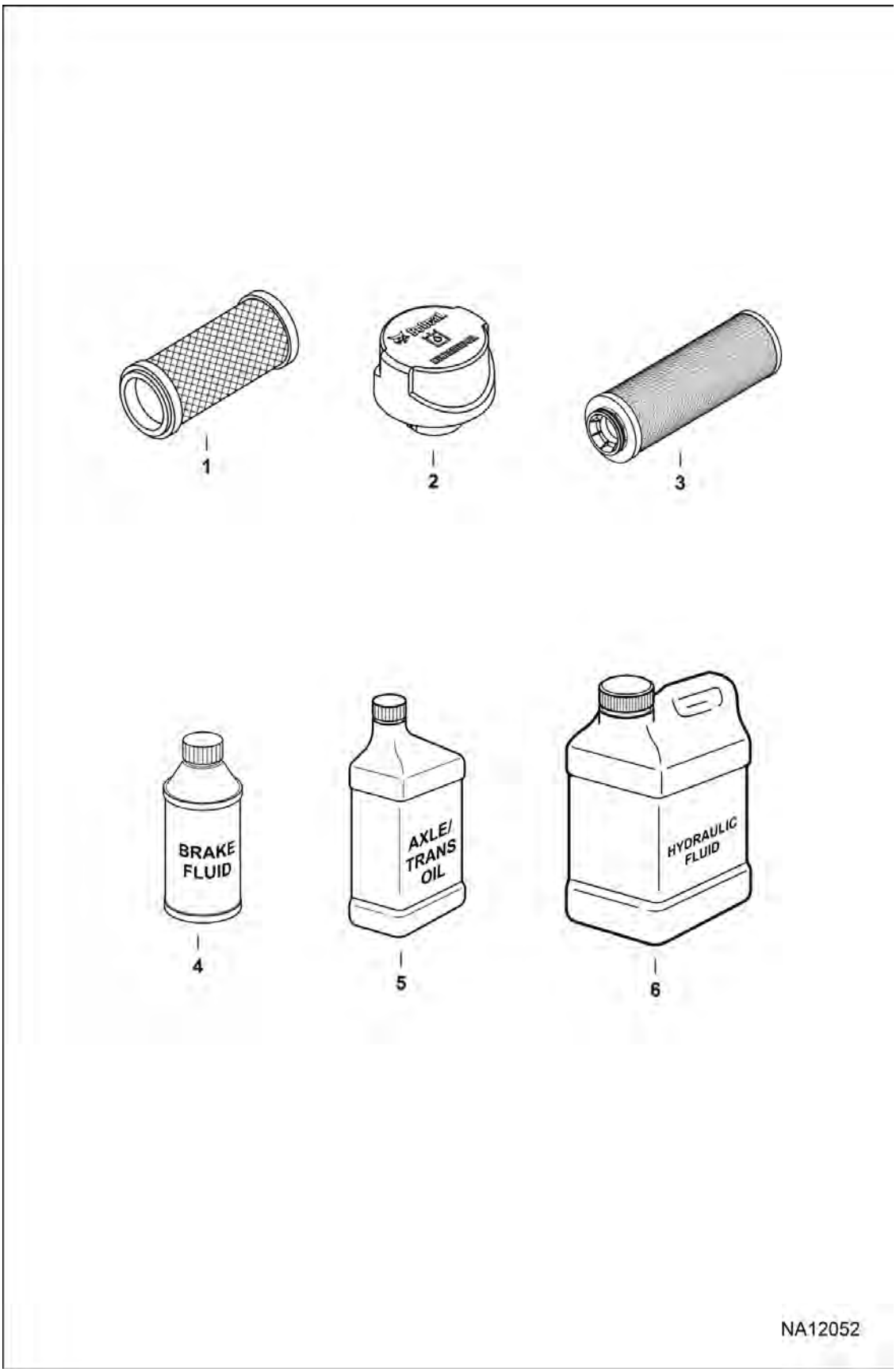

SCHEDULED MAINTENANCE ITEMS (Cont'd)
(Every 1000 Hours)

Ref No	Part Number	Description	Remarks	Serial Number	Qty
1	7290371	FILTER	See Illustration HYDRAULIC TANK AND ITS CONNECTIONS / F883401-0316-R05 - hydraulic return		1
2	7290383	CAP	See Illustration HYDRAULIC TANK AND ITS CONNECTIONS / F883401-0316-R05 - W/breather filter		1
3	7290377	FILTER	See Illustration HYDRAULIC TANK AND ITS CONNECTIONS / F883401-0316-R05 - hydraulic suction		1
4		FLUID, OIL BRAKE	See Operation & Maintenance Manual for recommended fluid		x
5		FLUID, OIL AXLE	See Operation & Maintenance Manual for recommended fluid		x
6		FLUID, OIL HYDRAULIC	See Operation & Maintenance Manual for recommended fluid		x

SCHEDULED MAINTENANCE ITEMS
(Every 2000 Hours)



EM9008

Illustration EM9008

SCHEDULED MAINTENANCE ITEMS (Cont'd)
(Every 2000 Hours)

Ref No	Part Number	Description	Remarks	Serial Number	Qty
1	6987803A	ANTIFREEZE/COOLANT, EG CONCENTRATE 5L 4			x
1	6987803B	ANTIFREEZE/COOLANT, EG CONCENTRATE 20L			x
1	6987803C	ANTIFREEZE/COOLANT, EG CONCENTRATE 210L			x
1	6987803D	ANTIFREEZE/COOLANT, EG CONCENTRATE 1000L			x
1	6987804A	ANTIFREEZE/COOLANT, EG 53/47 PREMIX 5L 4			x
1	6987804B	ANTIFREEZE/COOLANT, EG 53/47 PREMIX 20L			x
1	6987804C	ANTIFREEZE/COOLANT, EG 53/47 PREMIX 205L			x
1	6987804D	ANTIFREEZE/COOLANT, EG 53/47 PREMIX 1000L			x

ENGINE AND ITS CONNECTIONS

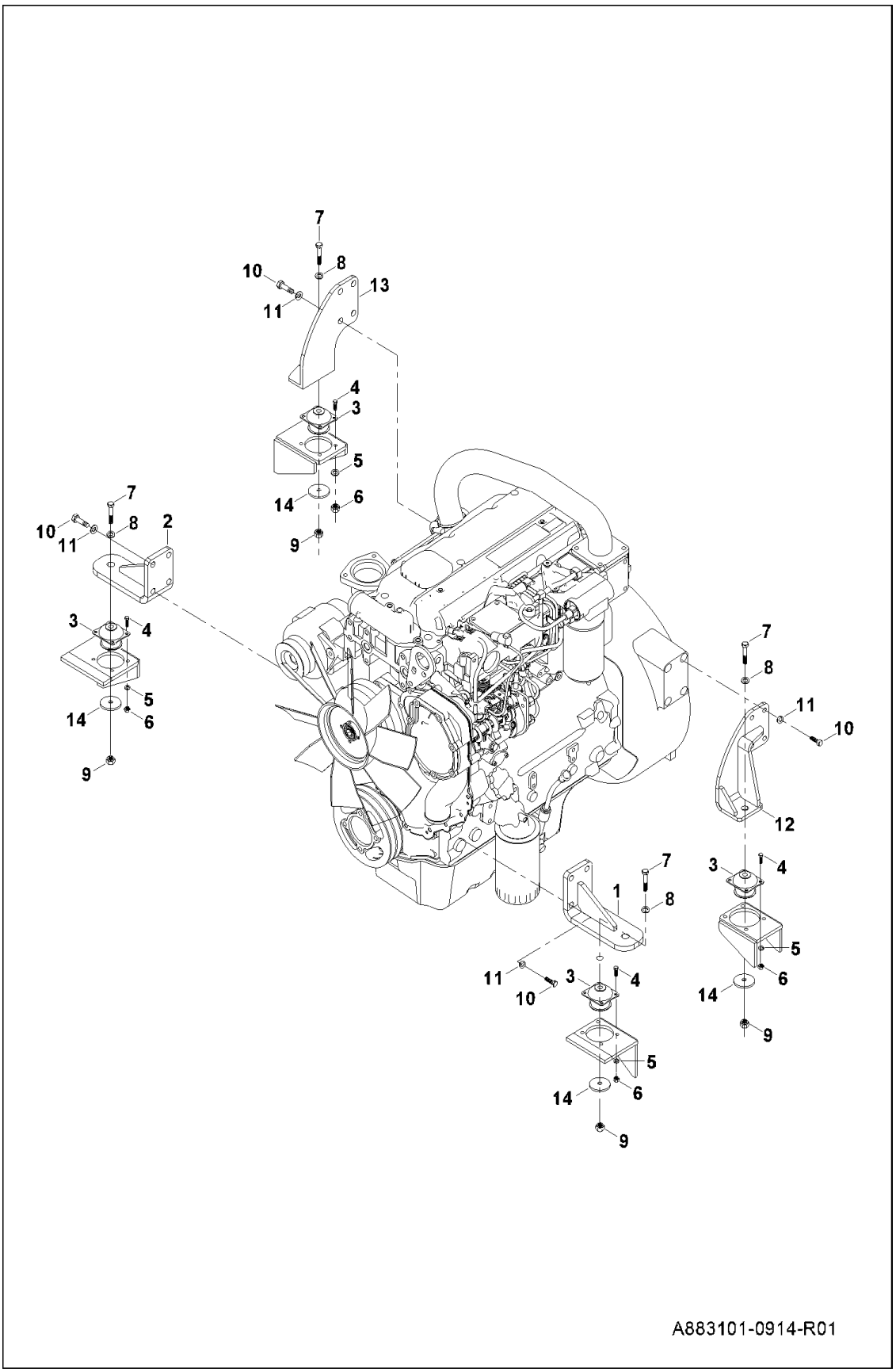

ENGINE AND ITS CONNECTIONS (Cont'd)

Ref No	Part Number	Description	Remarks	Serial Number	Qty
1	7290984	BRACKET LEFT FRONT			1
2	7290985	BRACKET RIGHT FRONT			1
3	7290986	RUBBER ENG.MOUNT			4
4	7289258	BOLT			16
5	7289259	LOCK WASHER			16
6	7289637	NUT			16
7	7288883	BOLT			4
8	7290965	WASHER			4
9	7288885	NUT			4
10	7290987	BOLT			16
11	7288887	WASHER			16
12	7290988	BRACKET LEFT BACK			1
13	7290989	BRACKET RIGHT BACK			1
14	7290990	WASHER			4

CYLINDER BLOCK AND LINES

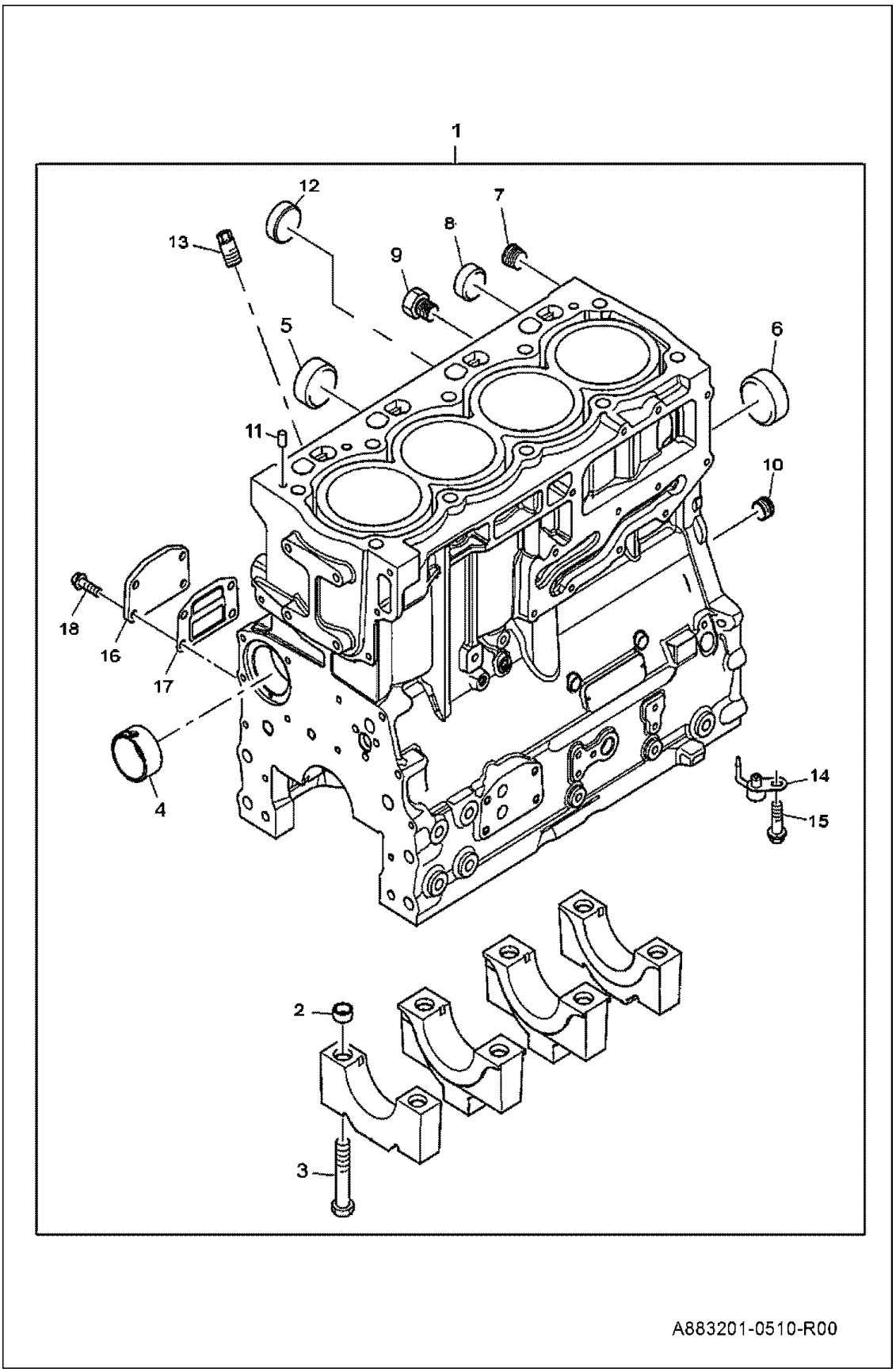

CYLINDER BLOCK AND LINES (Cont'd)

Ref No	Part Number	Description	Remarks	Serial Number	Qty
1	7288898	CYLINDER BLOCK ASSY			1
2	7288899	THIMBLE			10
3	7288900	SCREW			10
4	7023999	BUSHING CAMSHAFT			1
5	7288902	PLUG			2
6	7288903	PLUG			1
7	7288904	PLUG			1
8	6662035	WASHER			1
9	7288906	PLUG			2
10	7288907	PLUG			1
11	7288908	DOWEL			2
12	7288909	PLUG			1
13	7288910	PLUG			1
14	6924924	PISTON COOLING JET			4
15	7288912	SCREW			4
16	7288913	BLANKING PLATE			1
17	6911983	SEAL			1
18	6668495	SCREW			4

CRANK SHAFT,MAIN AND BIG END BEARINGS

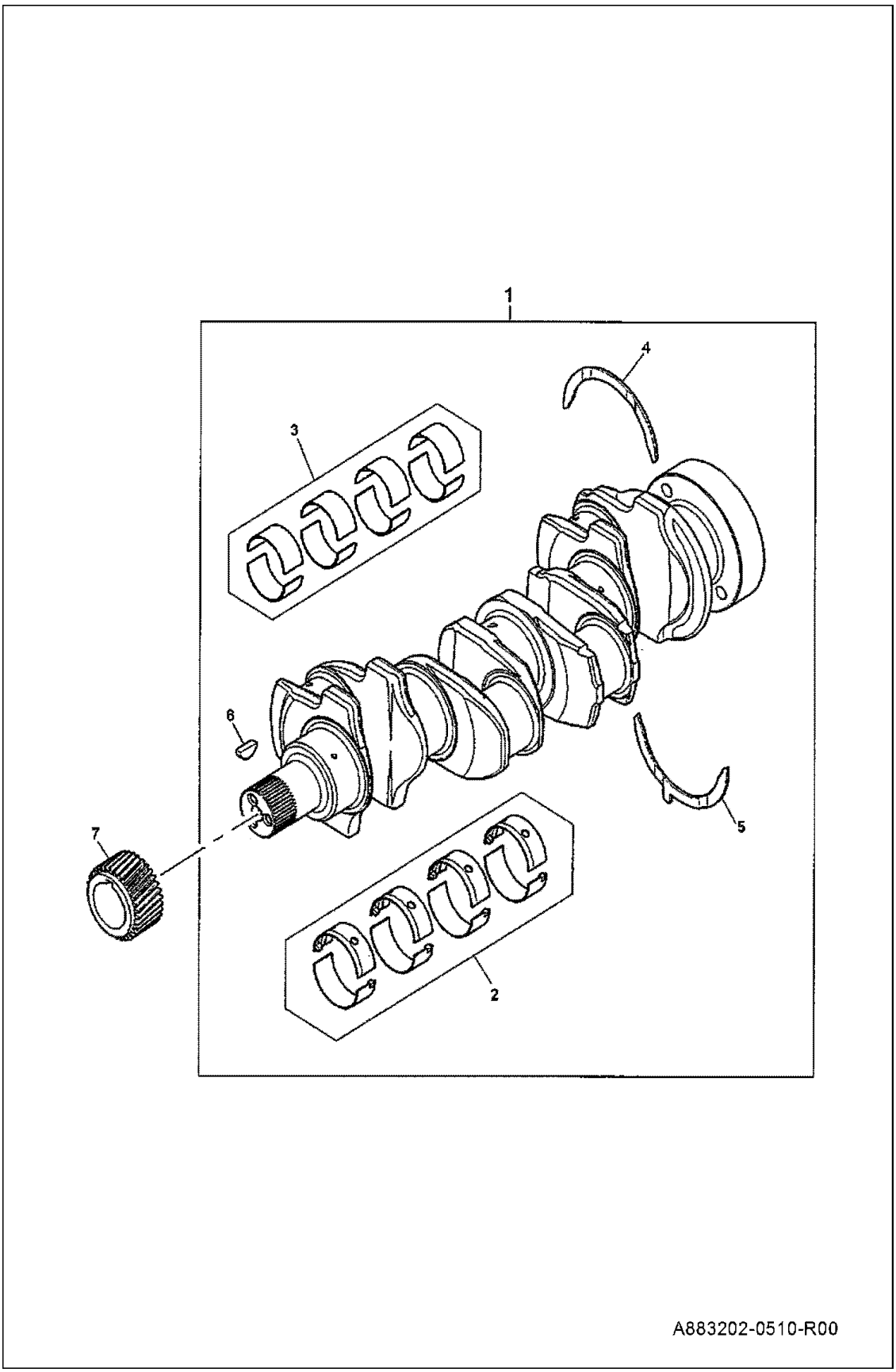

CRANK SHAFT,MAIN AND BIG END BEARINGS (Cont'd)

Ref No	Part Number	Description	Remarks	Serial Number	Qty
1	7024011	KIT CRANKSHAFT			1
1	7288917	CRANKSHAFT KIT	SERVICE OPTION		1
2	7288918	MAIN BEARING KIT			1
2	7288919	MAIN BEARING KIT	(+) 0.01"		1
2	7288920	MAIN BEARING KIT	(+) 0.02"		1
2	7288921	MAIN BEARING KIT	(+) 0.03"		1
3	7288922	BIG END BEARING KIT			1
3	7288923	BIG END BEARING KIT	(+) 0.25 mm		1
3	7288924	BIG END BEARING KIT	(+) 0.50 mm		1
3	7288925	BIG END BEARING KIT	(+) 0.75 mm		1
4	6662035	WASHER			2
4	7288927	THRUST WASHER	(+) 0.007"		2
5	6668230	WASHER, THRUST			2
5	3725402	WASHER	(+) 0.007"		2
6	7017233	KEY			1
7	6912046	CRANKSHAFT GEAR			1

CRANK SHAFT,MAIN AND BIG END BEARINGS

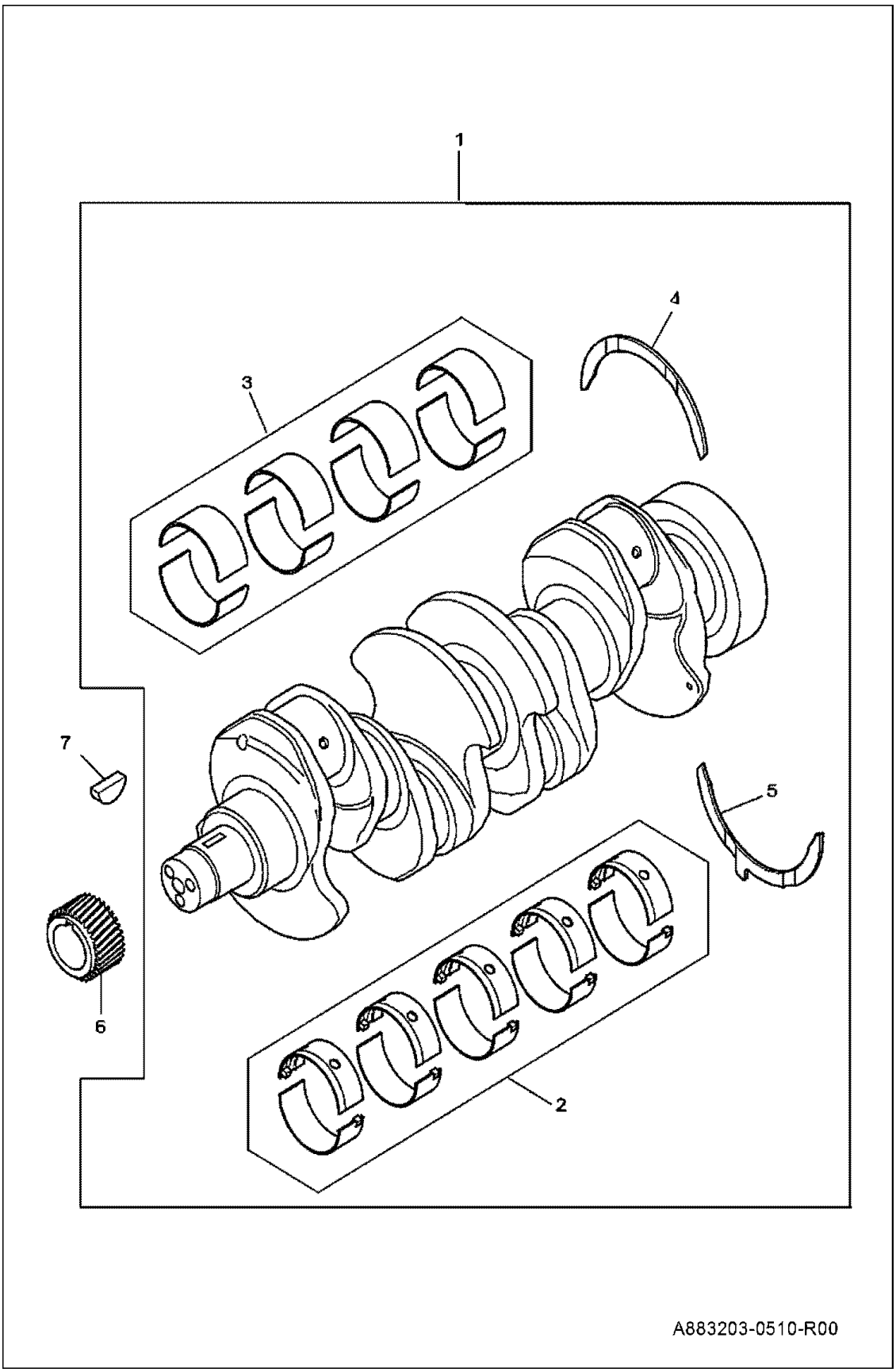

CRANK SHAFT,MAIN AND BIG END BEARINGS (Cont'd)

Ref No	Part Number	Description	Remarks	Serial Number	Qty
1	7022484	KIT, CRANKSHAFT			1
2	6912021	KIT BEARING MAIN			1
2	7288934	MAIN BEARING KIT	(-) 0.25 mm		1
2	7288935	MAIN BEARING KIT	(-) 0.50 mm		1
2	7288936	MAIN BEARING KIT	(-) 0.75 mm		1
3	7288937	BIG END BEARING KIT			1
4	6662035	WASHER			2
4	7288927	THRUST WASHER	(+) 0.007"		2
5	6668230	WASHER, THRUST			2
5	3725402	WASHER	(+) 0.007"		2
6	6912046	CRANKSHAFT GEAR			1
7	7017233	KEY			1

PISTONS AND RINGS

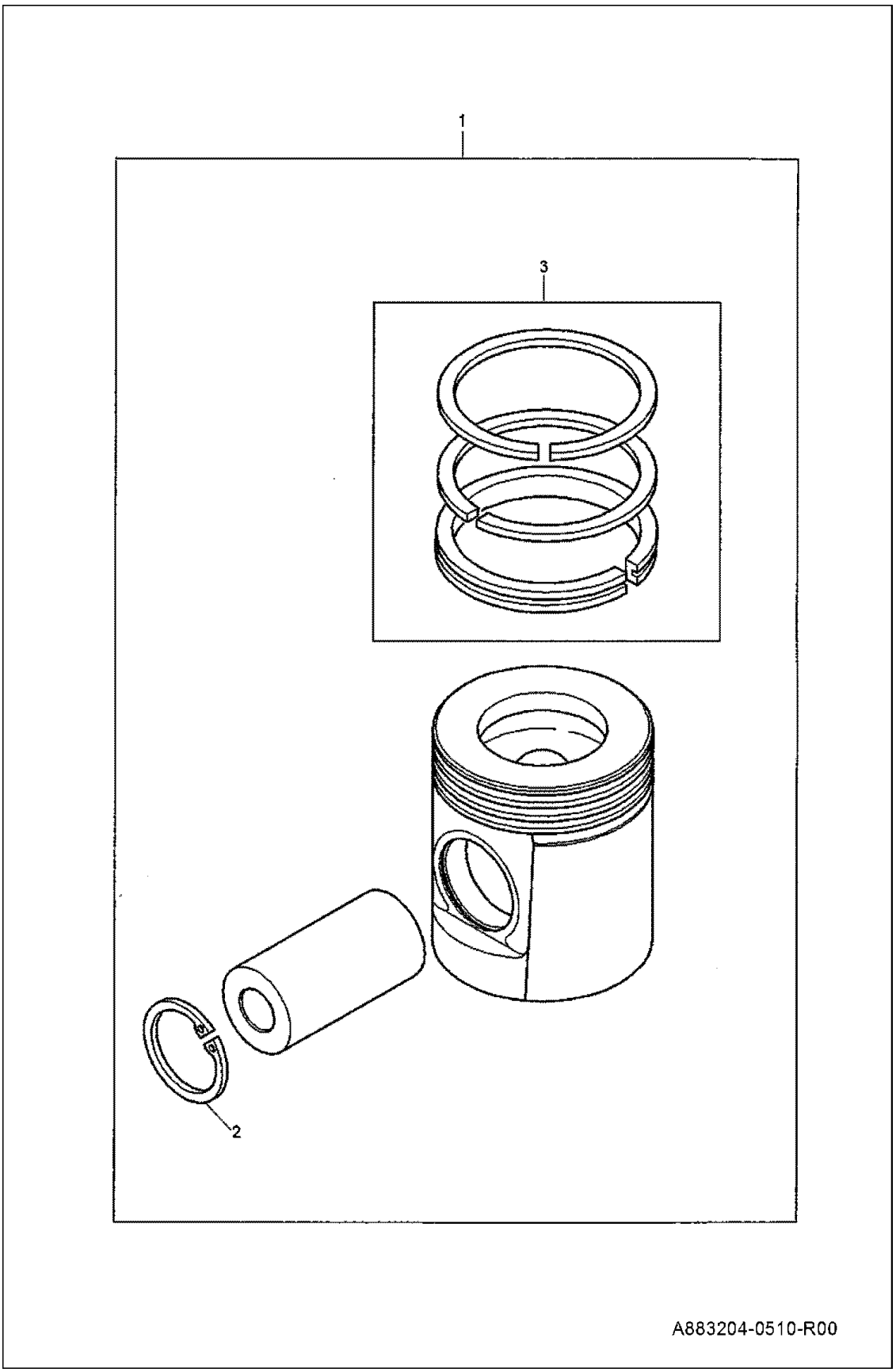

PISTONS AND RINGS (Cont'd)

Ref No	Part Number	Description	Remarks	Serial Number	Qty
1	6912050	PISTON AND RING KIT			4
1	7288939	PISTON AND RING KIT	(+) 0.50 mm		4
1	7288940	PISTON AND RING KIT	(+) 1.00 mm		4
2	7288941	CIRCLIP			2
3	6912026	PISTON RING KIT			1
3	7288943	PISTON RING KIT	(+) 1.00 mm		1
3	7288944	PISTON RING KIT	(+) 0.50 mm		1

CONNECTION RODS

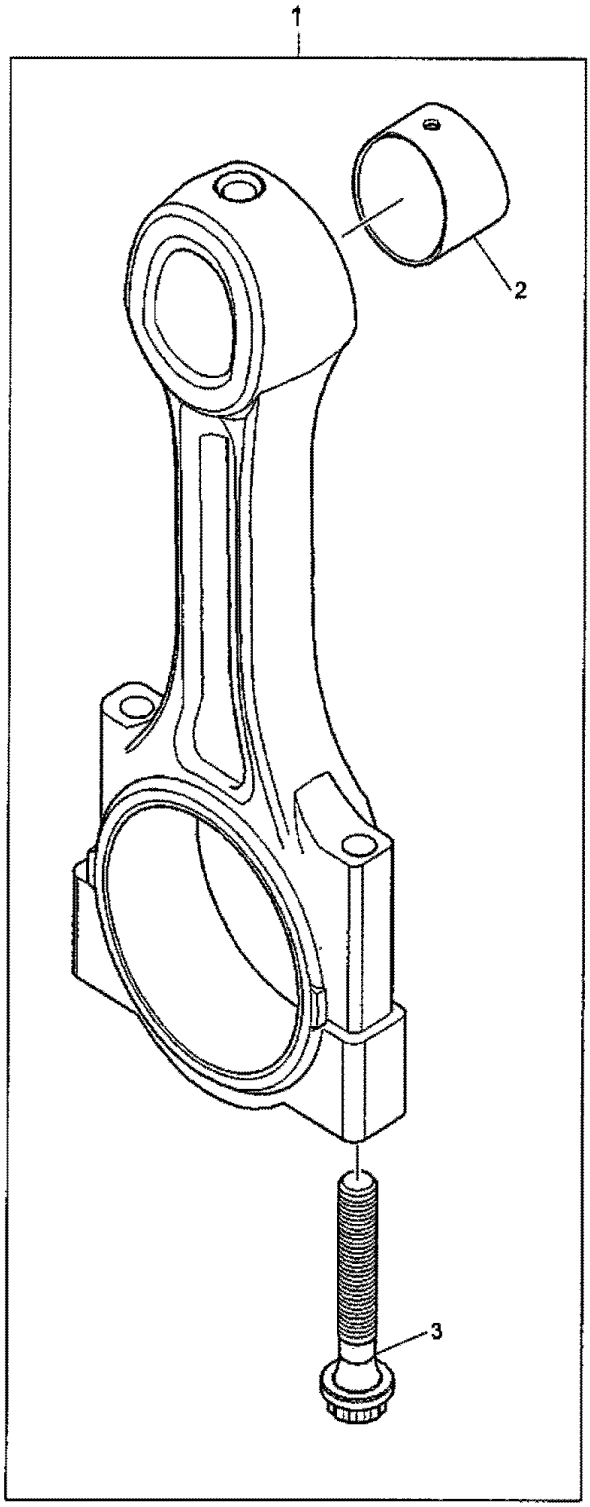

A883205-0510-R00

CONNECTION RODS (Cont'd)

Ref No	Part Number	Description	Remarks	Serial Number	Qty
1	6911897	CON ROD KIT	RED		4
1	7288946	CONROD KIT - ORANGE	ORANGE		4
1	6912041	CONROD KIT GRADE H WHITE	WHITE		4
1	6912042	CONROD KIT GRADE J GREEN	GREEN		4
1	6912043	CONROD KIT GRADE K PURPLE	PURPLE		4
1	6912044	CONROD KIT GRADE L BLUE	BLUE		4
2	7017235	BUSHING			1
3	7017236	CON ROD BOLT			2

CONNECTION RODS

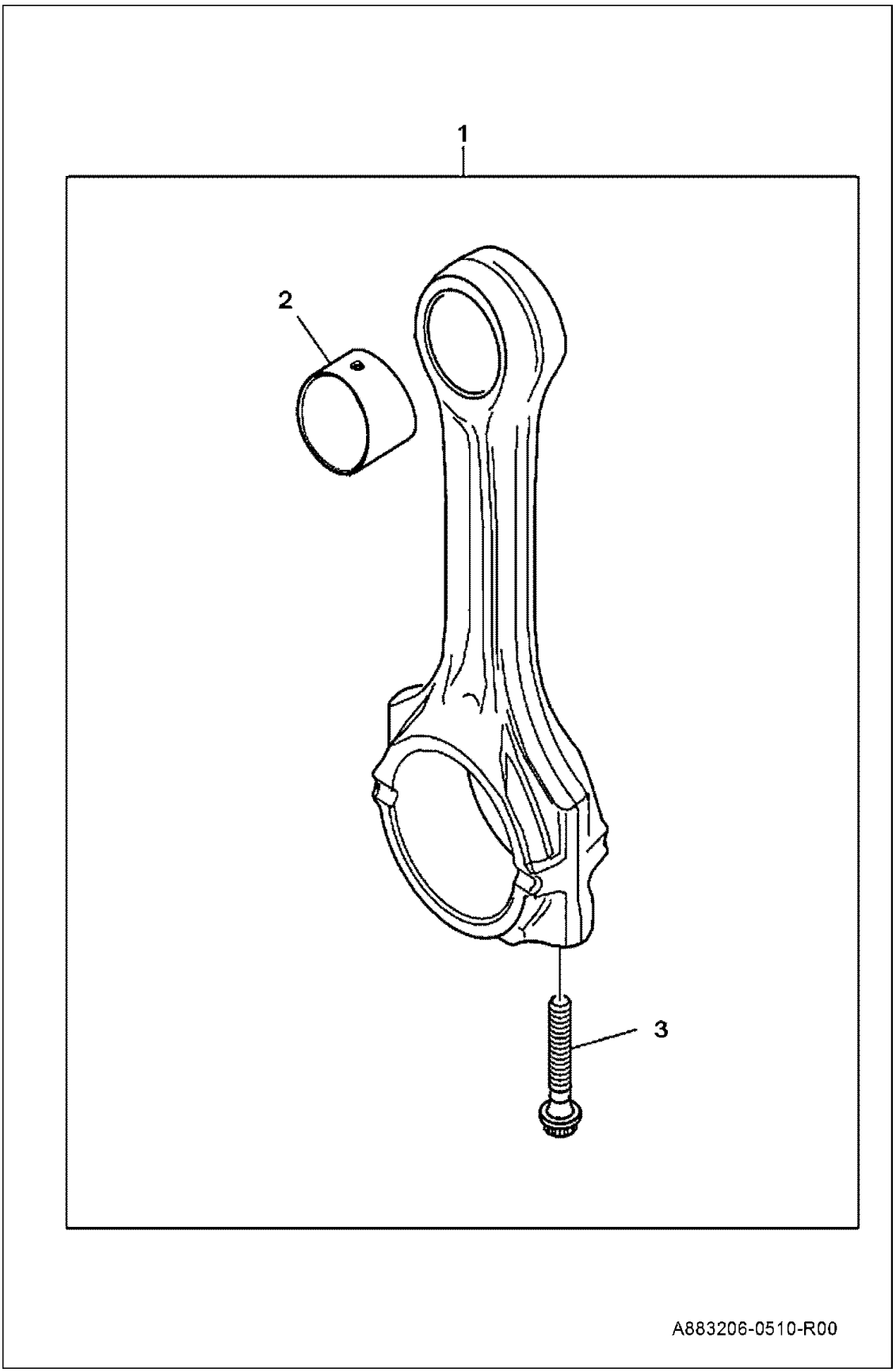

CONNECTION RODS (Cont'd)

Ref No	Part Number	Description	Remarks	Serial Number	Qty
1	7022489	KIT, CONNECTING ROD	RED		4
1	7022490	KIT, CONNECTION ROD	ORANGE		4
1	7022491	KIT, CONNECTING ROD	WHITE		4
1	7288956	CONROD KIT - GREEN	GREEN		4
1	7288957	CONROD KIT - PURPLE	PURPLE		4
1	7288958	CONROD KIT - BLUE	BLUE		4
2	7017235	BUSHING			1
3	7288959	CON ROD BOLT			2

REAR END OIL SEAL

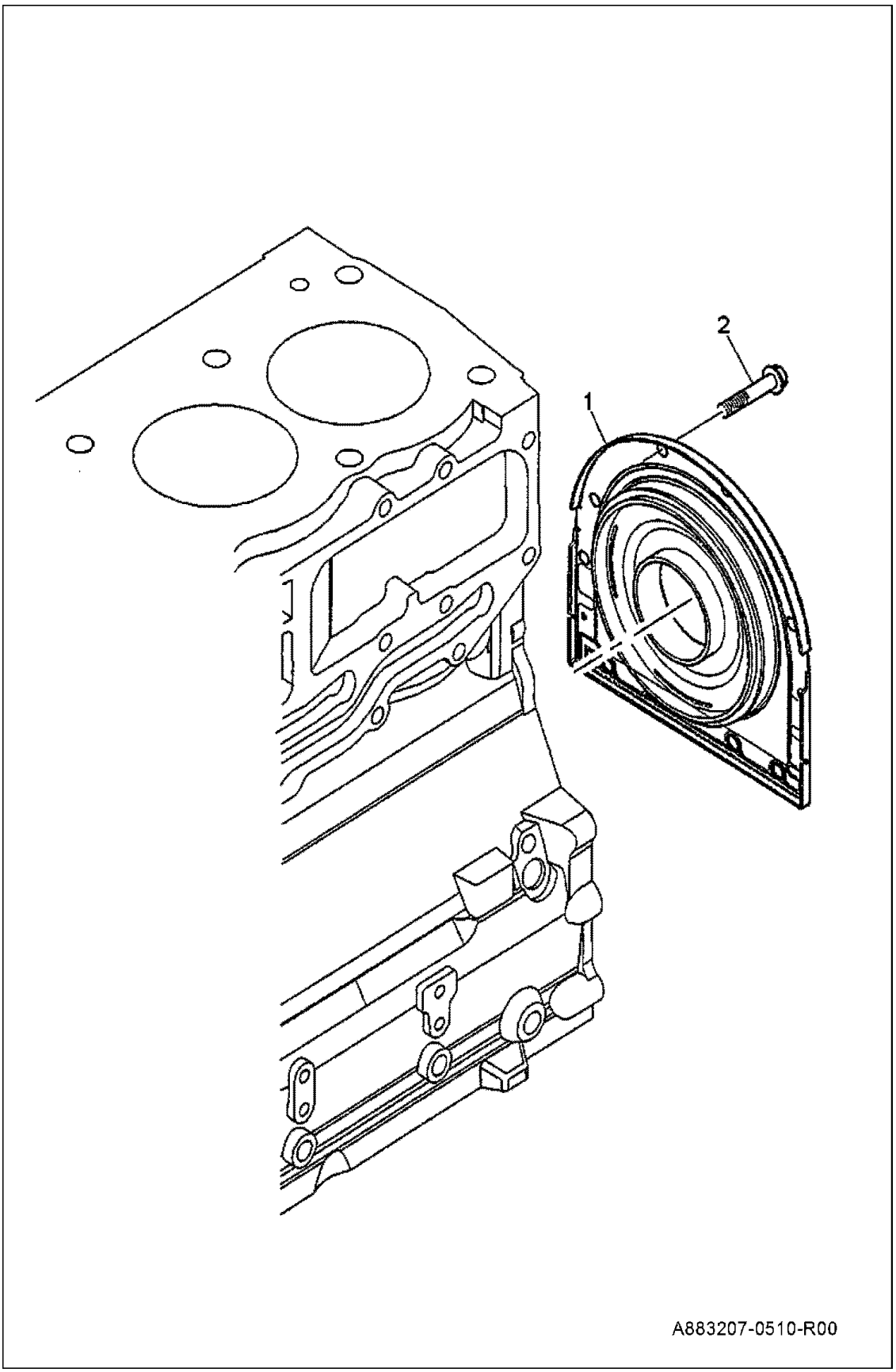

REAR END OIL SEAL (Cont'd)

Ref No	Part Number	Description	Remarks	Serial Number	Qty
1	7017227	SEAL - OIL HOUSING			1
2	7288961	BOLT			10

CYLINDER HEAD ASSEMBLY

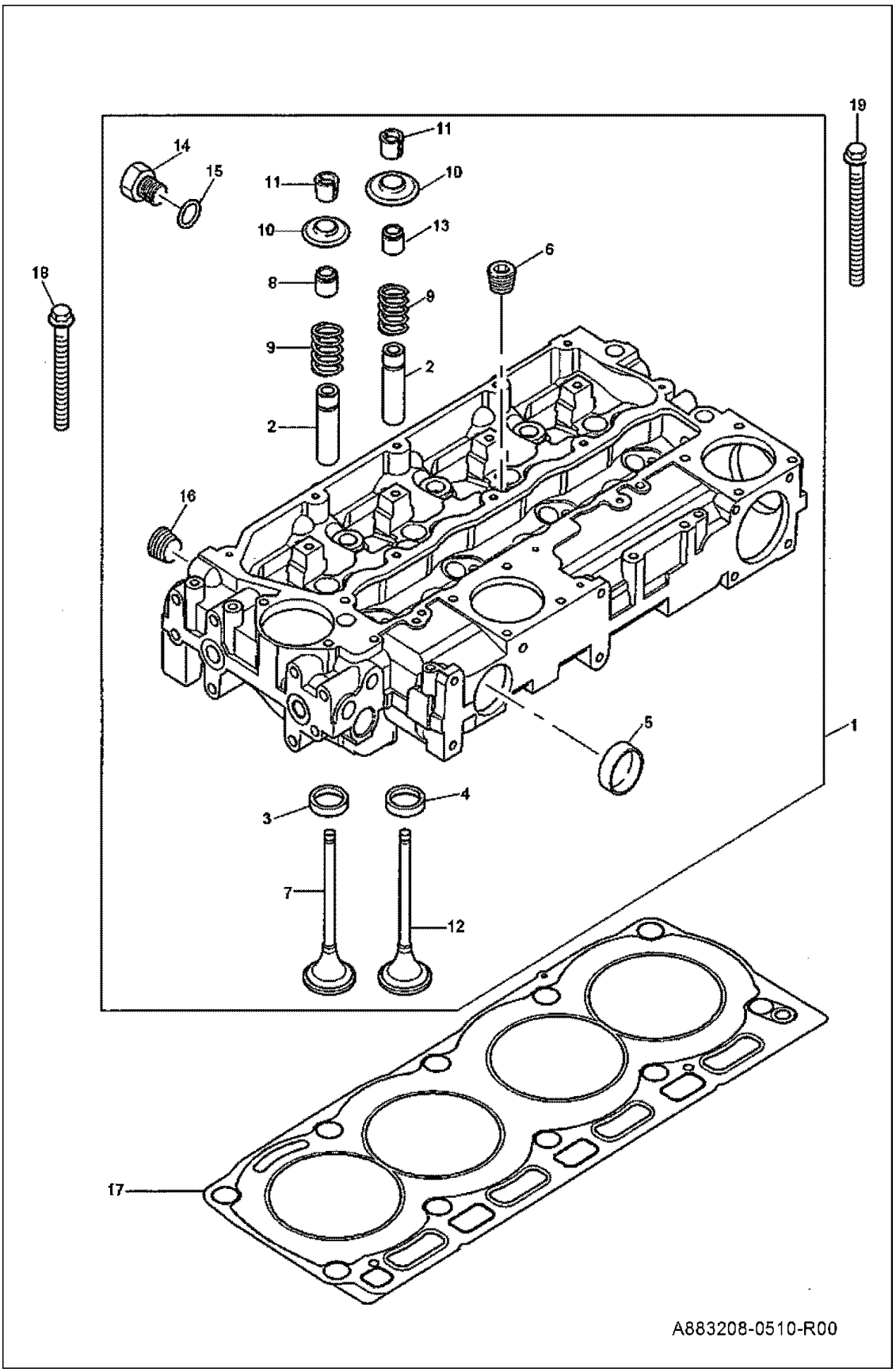

CYLINDER HEAD ASSEMBLY (Cont'd)

Ref No	Part Number	Description	Remarks	Serial Number	Qty
1	6912028	CYLINDER HEAD KIT			1
2	6670891	INLETGUID			8
3	6911945	INLET VALVE INSERT			4
4	7022475	SEAT INSERT, VALVE			4
5	7288966	PLUG			2
6	7288904	PLUG			4
7	6911923	INLET VALVE			4
8	6686295	SEAL INLET VALVE			4
9	7288969	VALVE SPRING			8
10	7288970	VALVE CAP			8
11	6670895	COTTER			16
12	6911922	EXHAUST VALVE			4
13	6686296	SEAL EXHAUST VALVE			4
14	7288974	PLUG			1
15	7288975	O-RING			1
16	7288976	PLUG			1
17	7288977	CYLINDER HEAD GASKET			1
18	6911933	SCREW			7
19	6911934	SCREW			3

ROCKER SHAFT ASSEMBLY

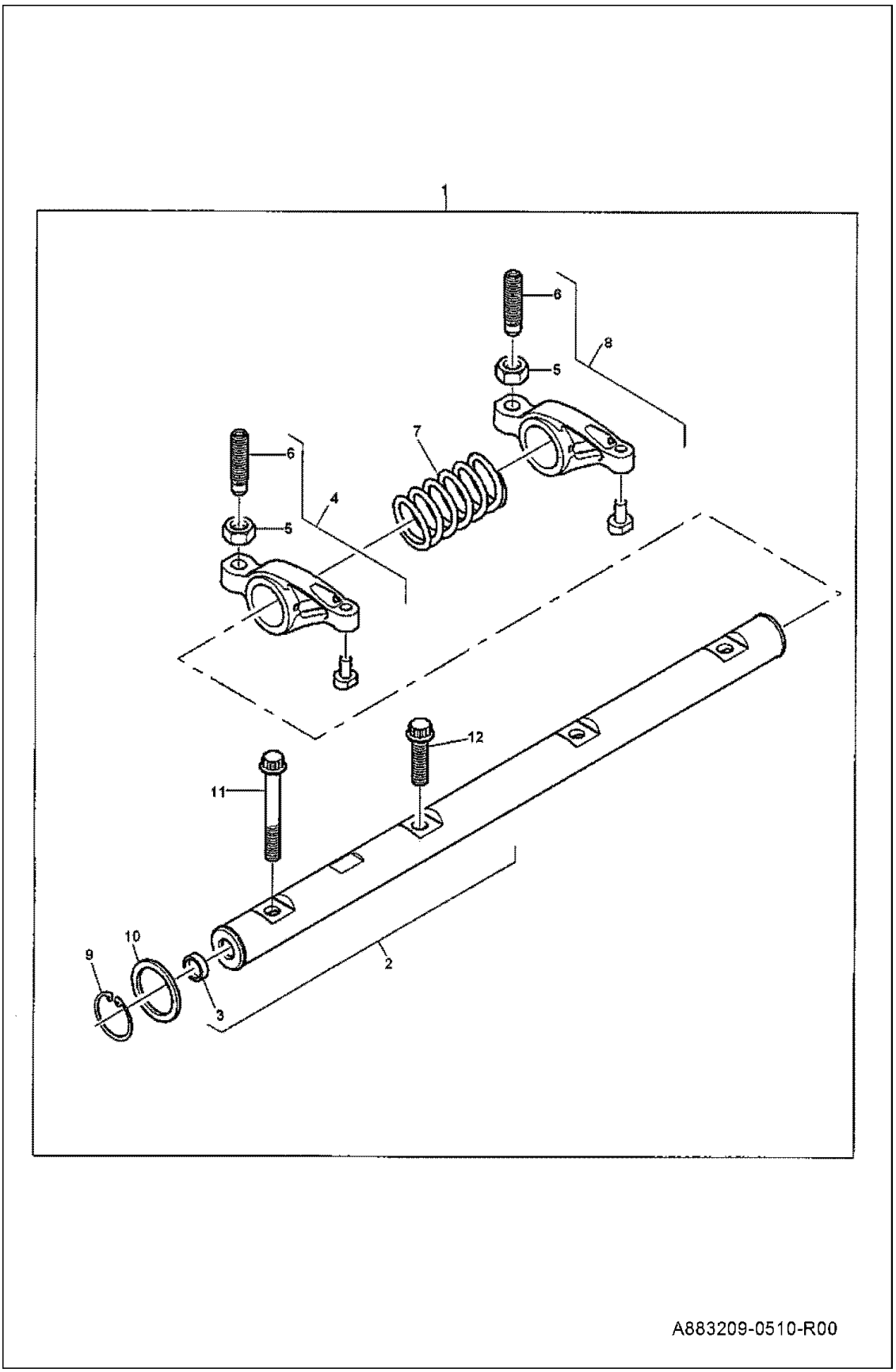

ROCKER SHAFT ASSEMBLY (Cont'd)

Ref No	Part Number	Description	Remarks	Serial Number	Qty
1	6912004	ROCKER ASSY			1
2	7288981	ROCKER SHAFT ASSEMBLY			1
3	7288982	PLUG			2
4	7288983	ROCKER ARM ASSEMBLY			4
5	7288984	NUT			2
6	7288985	SCREW			2
7	7288986	ROCKER SHAFT SPRING			3
8	7288987	ROCKER ARM ASSEMBLY			4
9	7288988	CIRCLIP			2
10	7288989	WASHER			2
11	7288990	SCREW			1
12	7288991	SCREW			3

TIMING GEAR AND CAMSHAFT

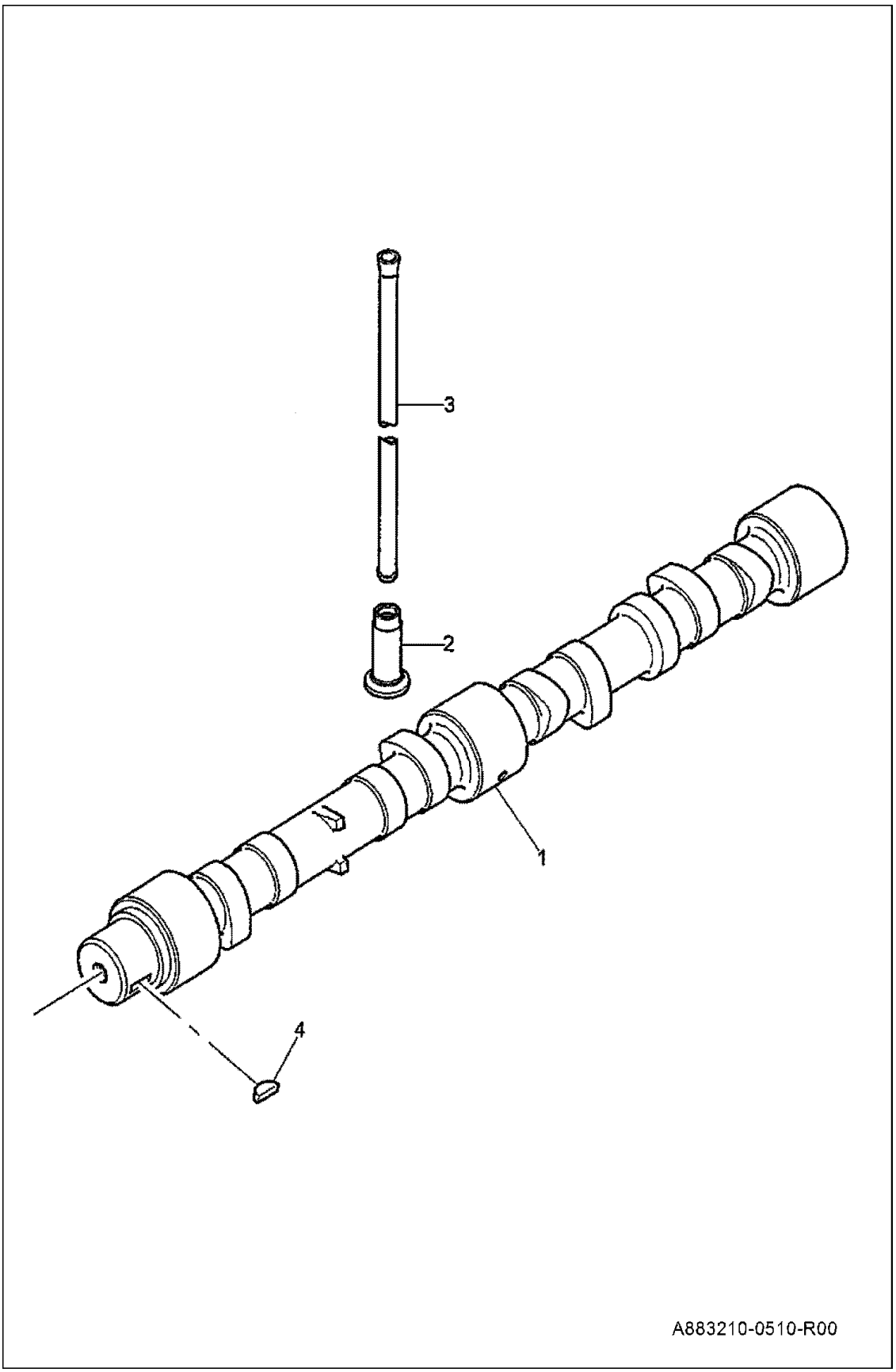

TIMING GEAR AND CAMSHAFT (Cont'd)

Ref No	Part Number	Description	Remarks	Serial Number	Qty
1	7288992	CAMSHAFT			1
2	6670281	TAPPET			8
3	3725455	ROD			8
4	7017233	KEY			1

FUEL INJECTION PUMP

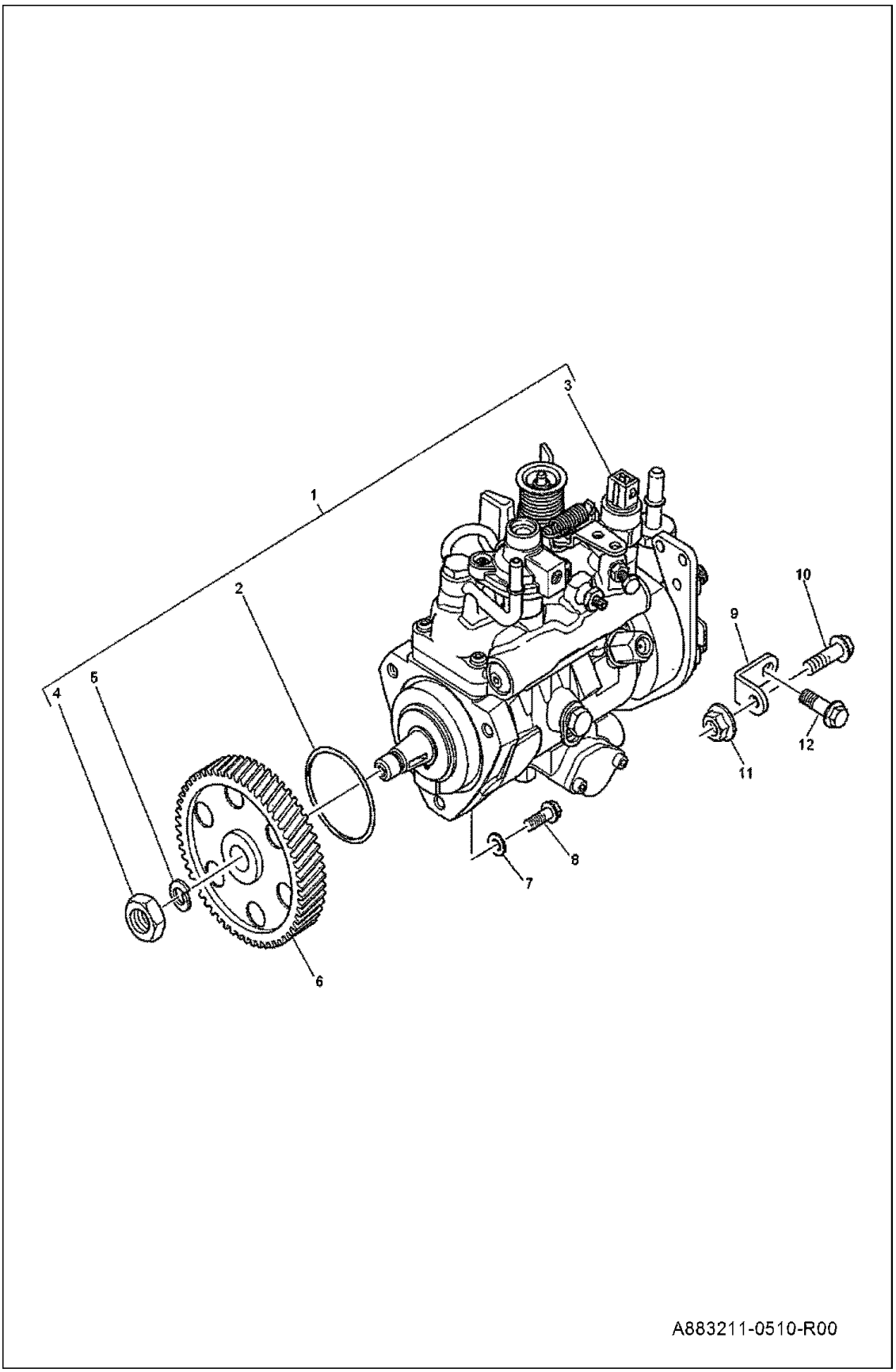

FUEL INJECTION PUMP (Cont'd)

Ref No	Part Number	Description	Remarks	Serial Number	Qty
1	7288995	FUEL INJECTION PUMP			1
2	7022462	O-RING			1
3	7022466	SOLENOID			1
4	7288998	NUT			1
5	7288999	WASHER			1
6	7289000	INJECTION PUMP GEAR			1
7	7289001	WASHER			3
8	6668278	SCREW			3
9	6911966	BRACKET			1
10	7289004	SCREW			1
11	7289005	NUT			1
12	7289006	SCREW			1

HIGH PRESSURE FUEL PIPES

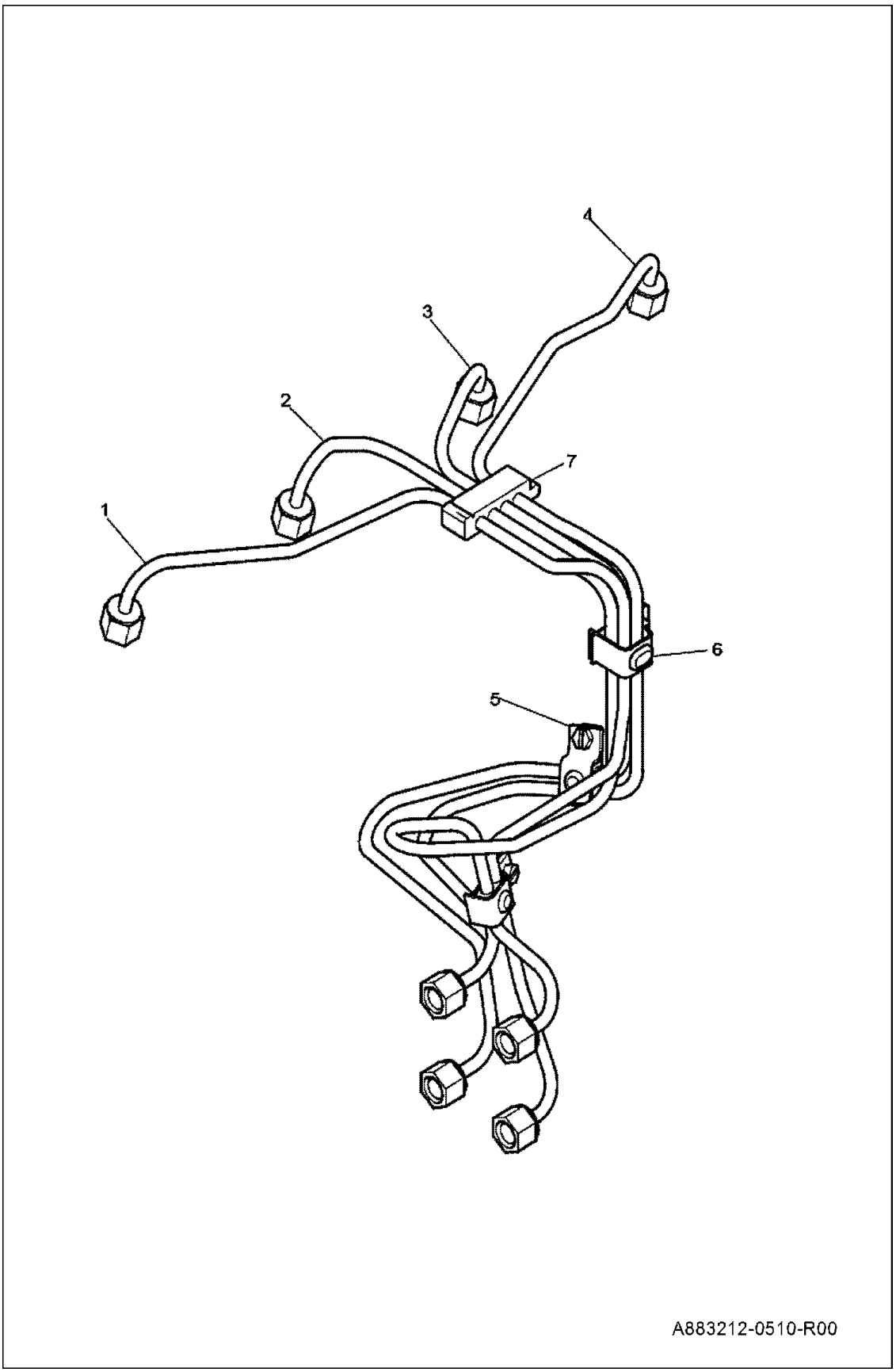

HIGH PRESSURE FUEL PIPES (Cont'd)

Ref No	Part Number	Description	Remarks	Serial Number	Qty
1	6911951	FUEL INJECTION PIPE NO 1 CYL			1
2	6911952	FUEL INJECTION PIPE NO 2 CYL			1
3	6911953	FUEL INJECTION PIPE NO 3 CYL			1
4	6911954	FUEL INJECTION PIPE NO 4 CYL			1
5	7289011	CLIP			1
6	7289012	CLIP			1
7	7289013	CLIP			1

ATOMISER

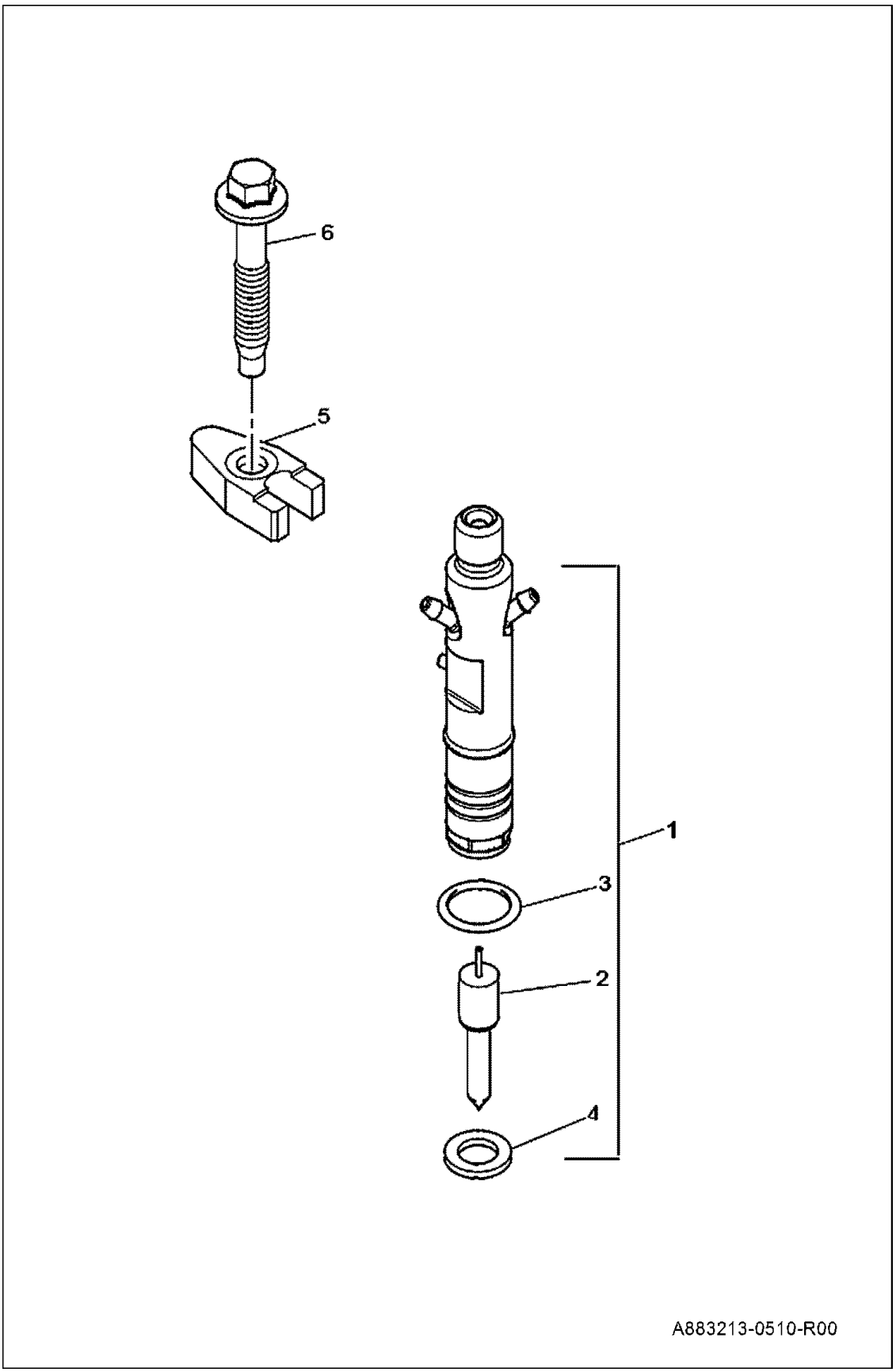

ATOMISER (Cont'd)

Ref No	Part Number	Description	Remarks	Serial Number	Qty
1	6911899	INJECTOR			4
2	6911900	NOZZLE			1
3	6924936	SEAL - INJECTOR			1
4	6670929	WASHER			1
5	7289018	INJECTOR CLAMP			4
6	7289019	SCREW			4

PICK-UP SENSOR

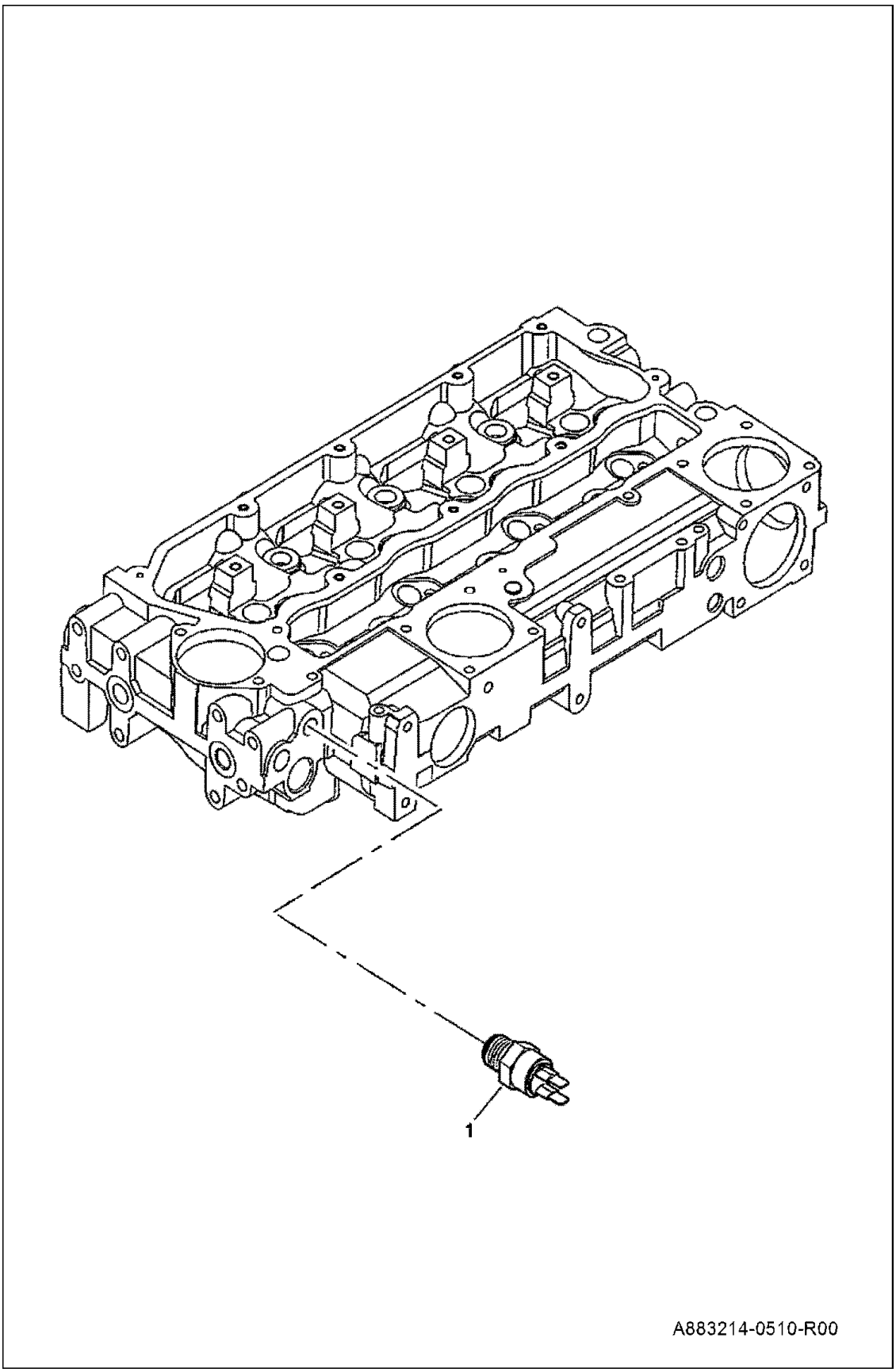

PICK-UP SENSOR (Cont'd)

Ref No	Part Number	Description	Remarks	Serial Number	Qty
1	6911911	SENDER			1

PIPES

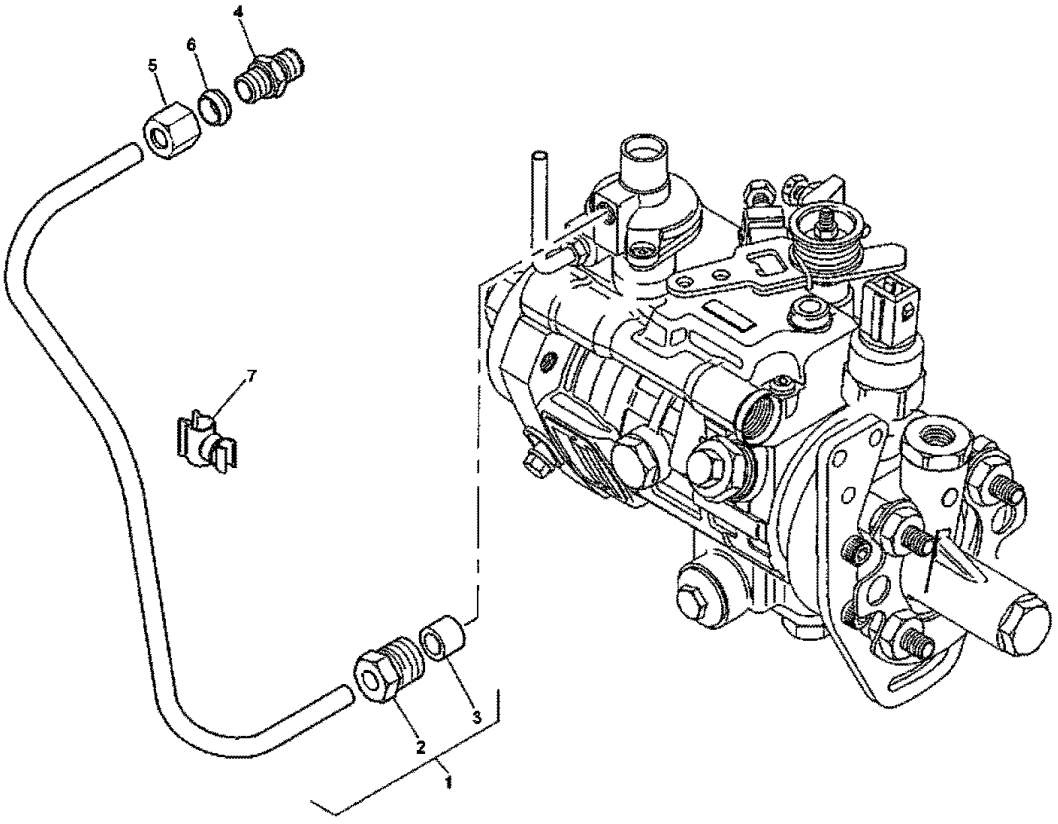

PIPES (Cont'd)

Ref No	Part Number	Description	Remarks	Serial Number	Qty
1	7289021	PIPE			1
2	7289022	NUT			1
3	7289023	OLIVE			1
4	7289024	UNION			1
5	6911857	NUT			1
6	6911855	OLIVE			1
7	6924921	PIPE CLIP			1

FUEL LEAK-OFF HOSE

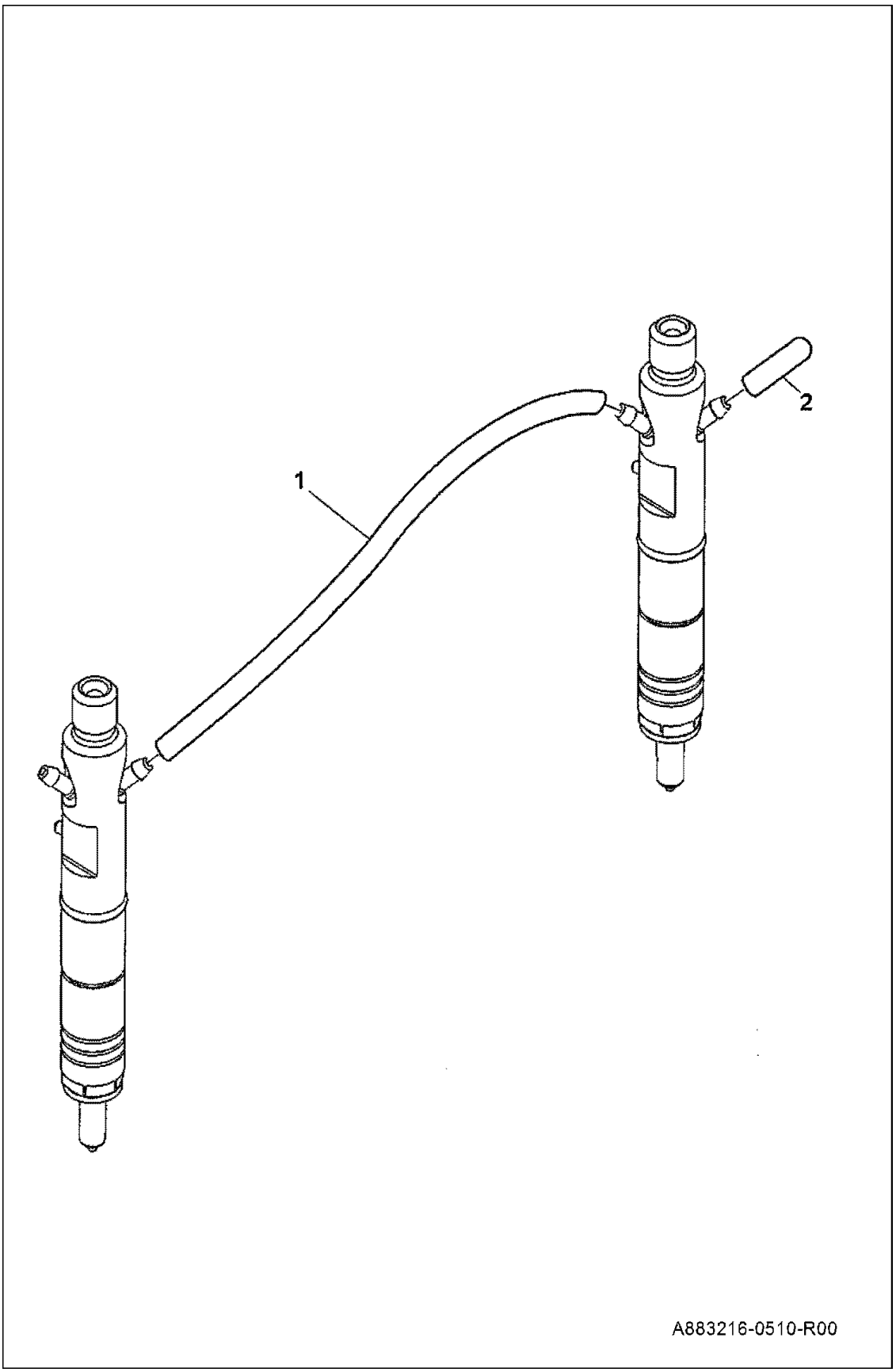

FUEL LEAK-OFF HOSE (Cont'd)

Ref No	Part Number	Description	Remarks	Serial Number	Qty
1	6911904	FLEXIBLE HOSE			3
2	7289029	CAP			1

PLUG

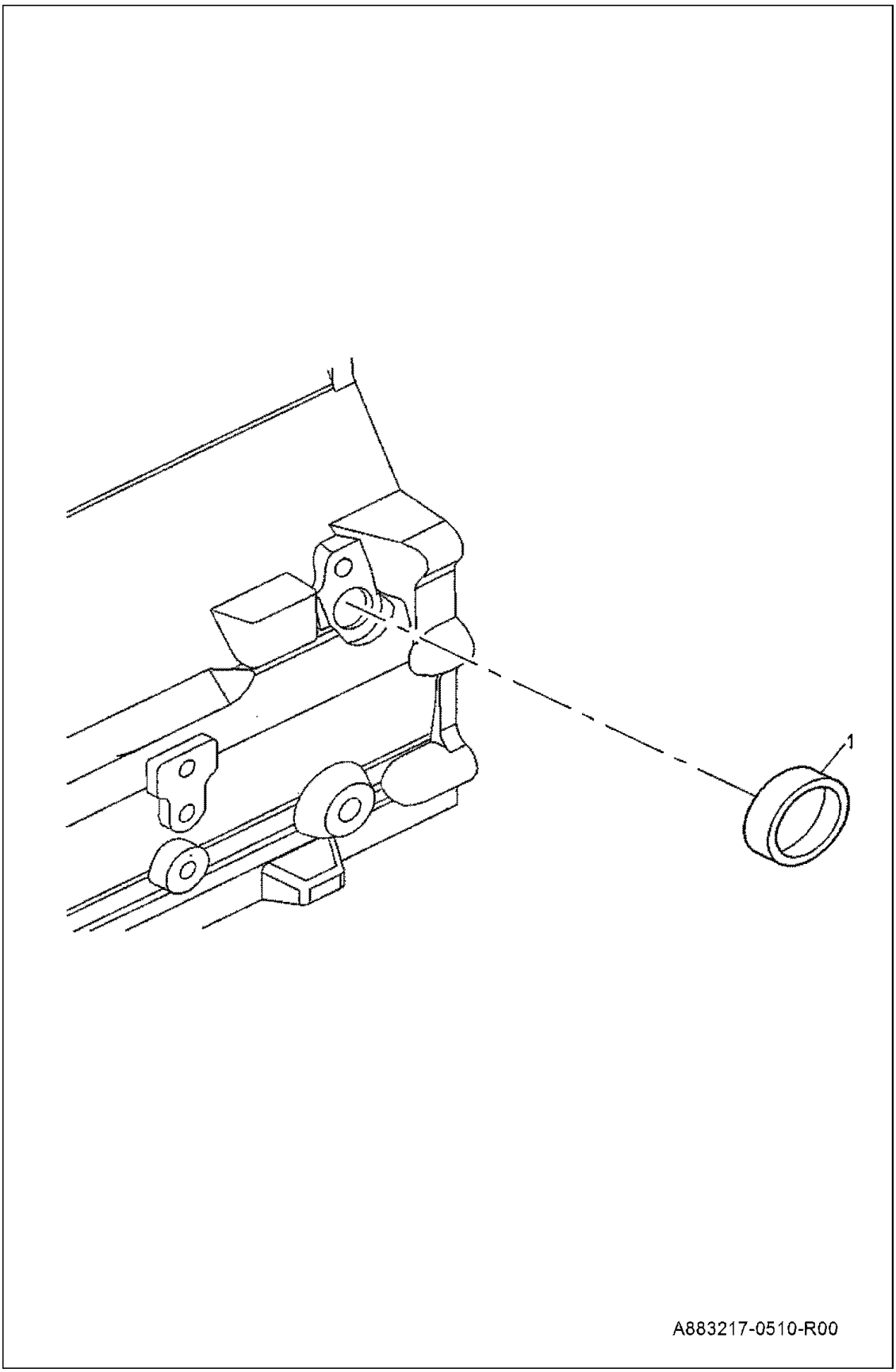

PLUG (Cont'd)

Ref No	Part Number	Description	Remarks	Serial Number	Qty
1	6911893	CORE PLUG			1

FLYWHEEL HOUSING

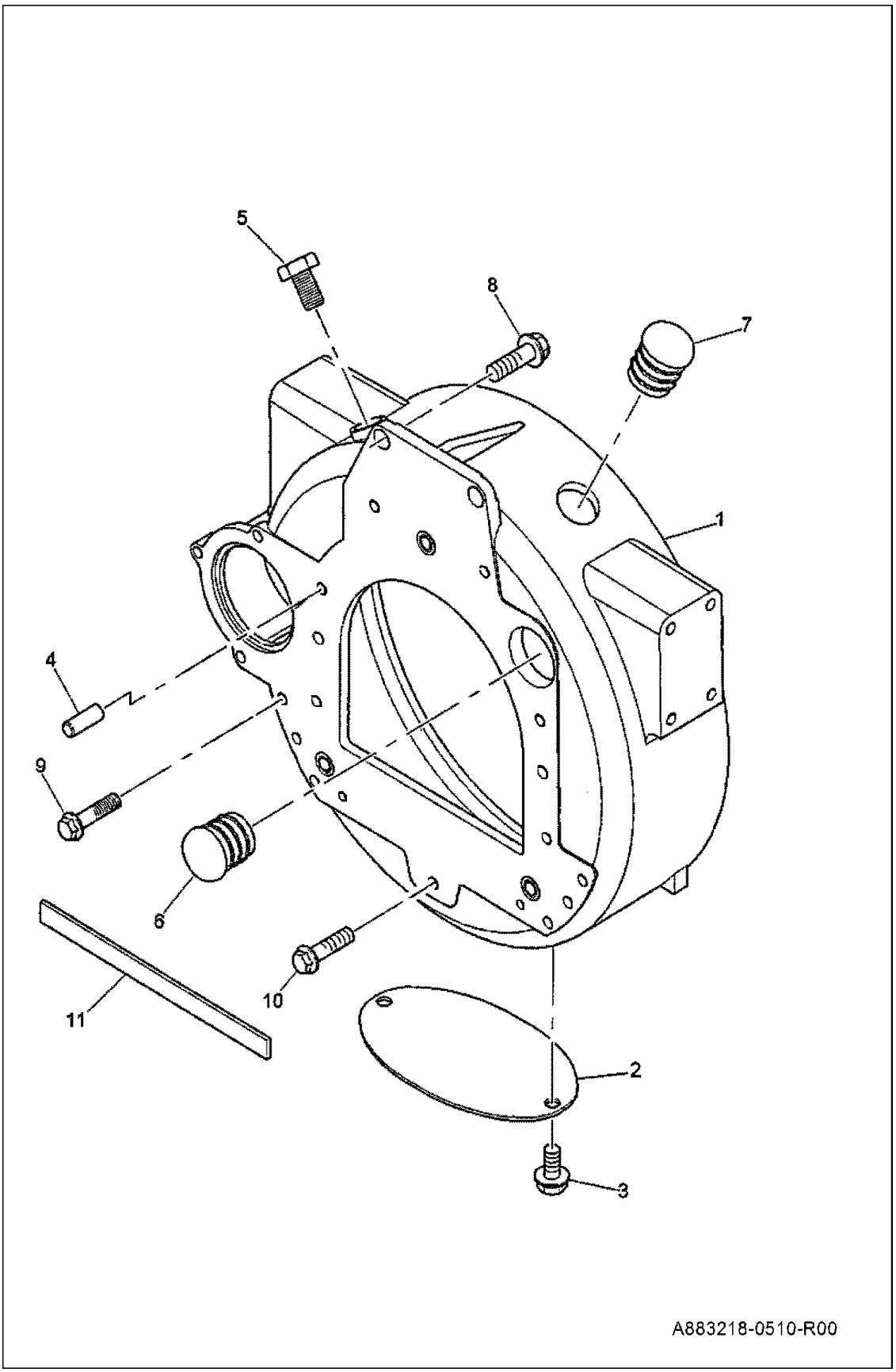

FLYWHEEL HOUSING (Cont'd)

Ref No	Part Number	Description	Remarks	Serial Number	Qty
1	7289031	FLYWHEEL HOUSING			1
2	7017146	PLATE			1
3	6668492	SCREW			2
4	7289034	DOWEL			2
5	7289035	PLUG			1
6	7017155	BLANKING PLUG			1
7	7017156	BLANKING PLUG			1
8	7289038	SCREW			2
9	7289039	SCREW			6
10	7289040	SCREW			3
11	7017248	SEAL			1

FLYWHEEL AND STARTER RING

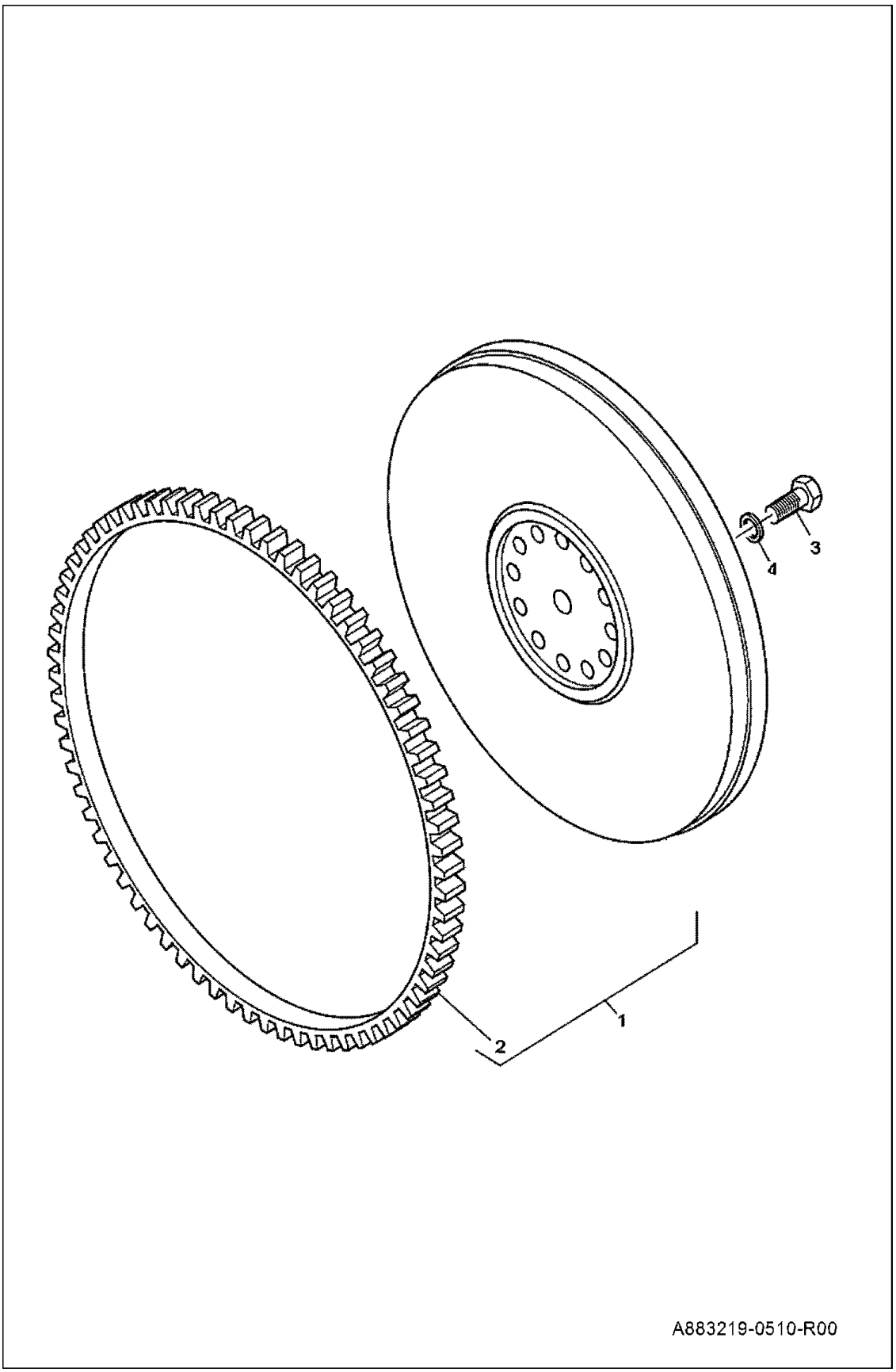

FLYWHEEL AND STARTER RING (Cont'd)

Ref No	Part Number	Description	Remarks	Serial Number	Qty
1	7289042	FLYWHEEL			1
1	7289043	FLYWHEEL	SERVICE OPTION		1
2	6515771	GEAR, RING			1
2	6515771	GEAR, RING	SERVICE OPTION		1
3	6911851	SCREW			10
4	7289046	WASHER			10

FAN CONNECTIONS

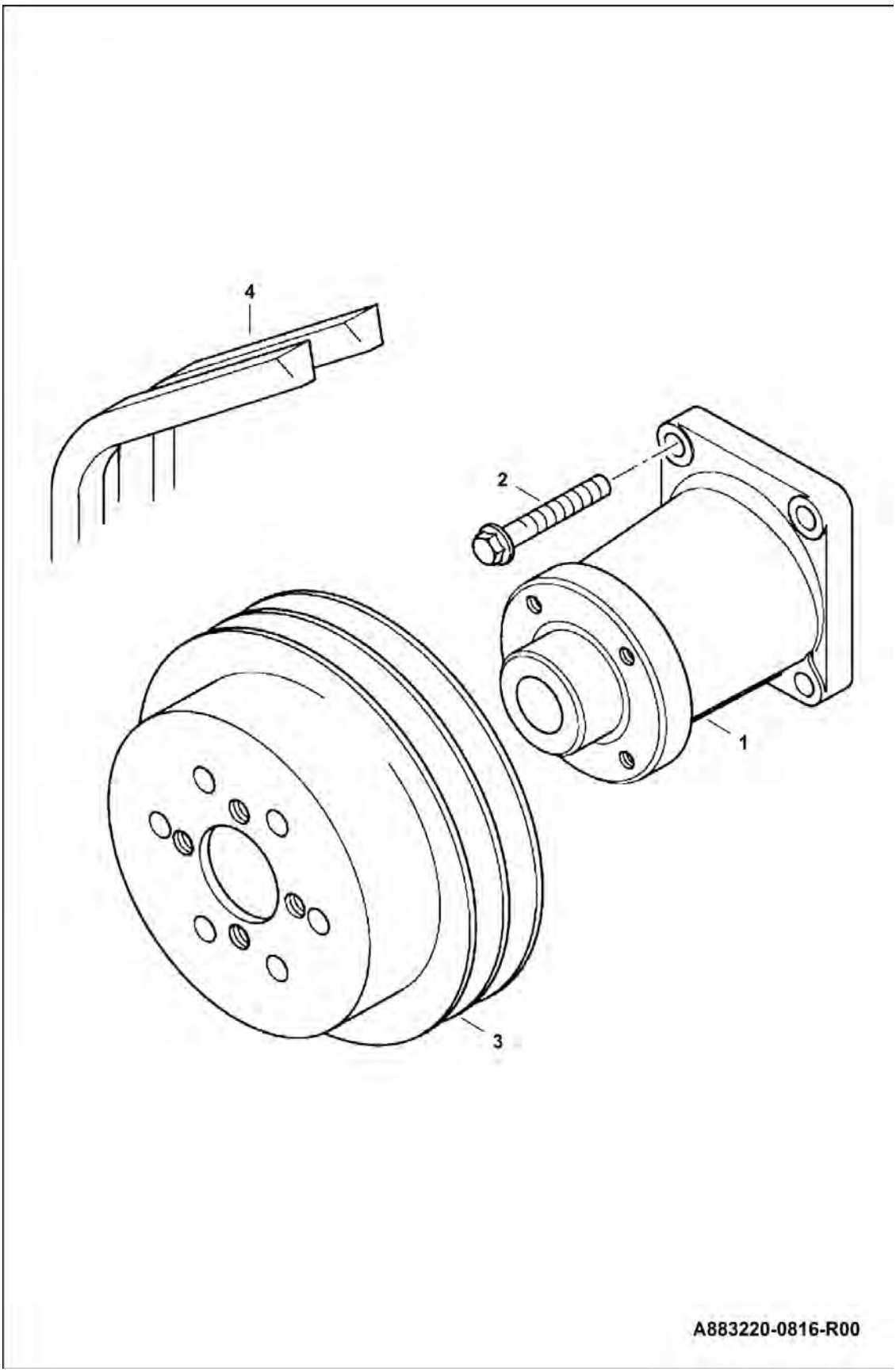

FAN CONNECTIONS (Cont'd)

Ref No	Part Number	Description	Remarks	Serial Number	Qty
1	7289047	FAN DRIVE HOUSING			1
2	7289048	SCREW			4
3	7294929	FAN DRIVE PULLEY			1
4	7289050	FAN BELT			1
4	7292687	AC BELT			1

STARTER MOTOR

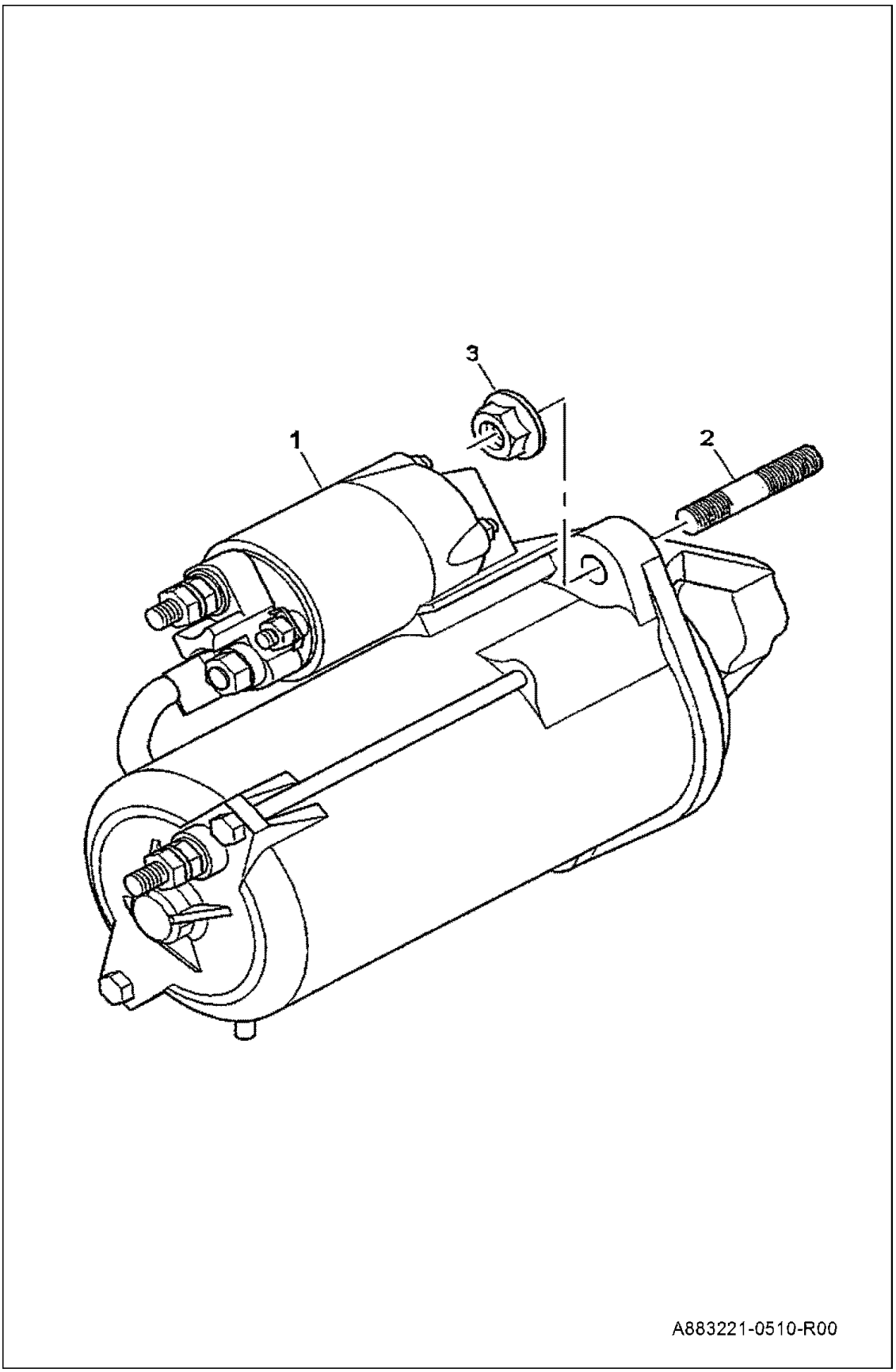

STARTER MOTOR (Cont'd)

Ref No	Part Number	Description	Remarks	Serial Number	Qty
1	7281253	STARTER			1
2	7289052	STUD			3
3	6668313	NUT			3

SUMP

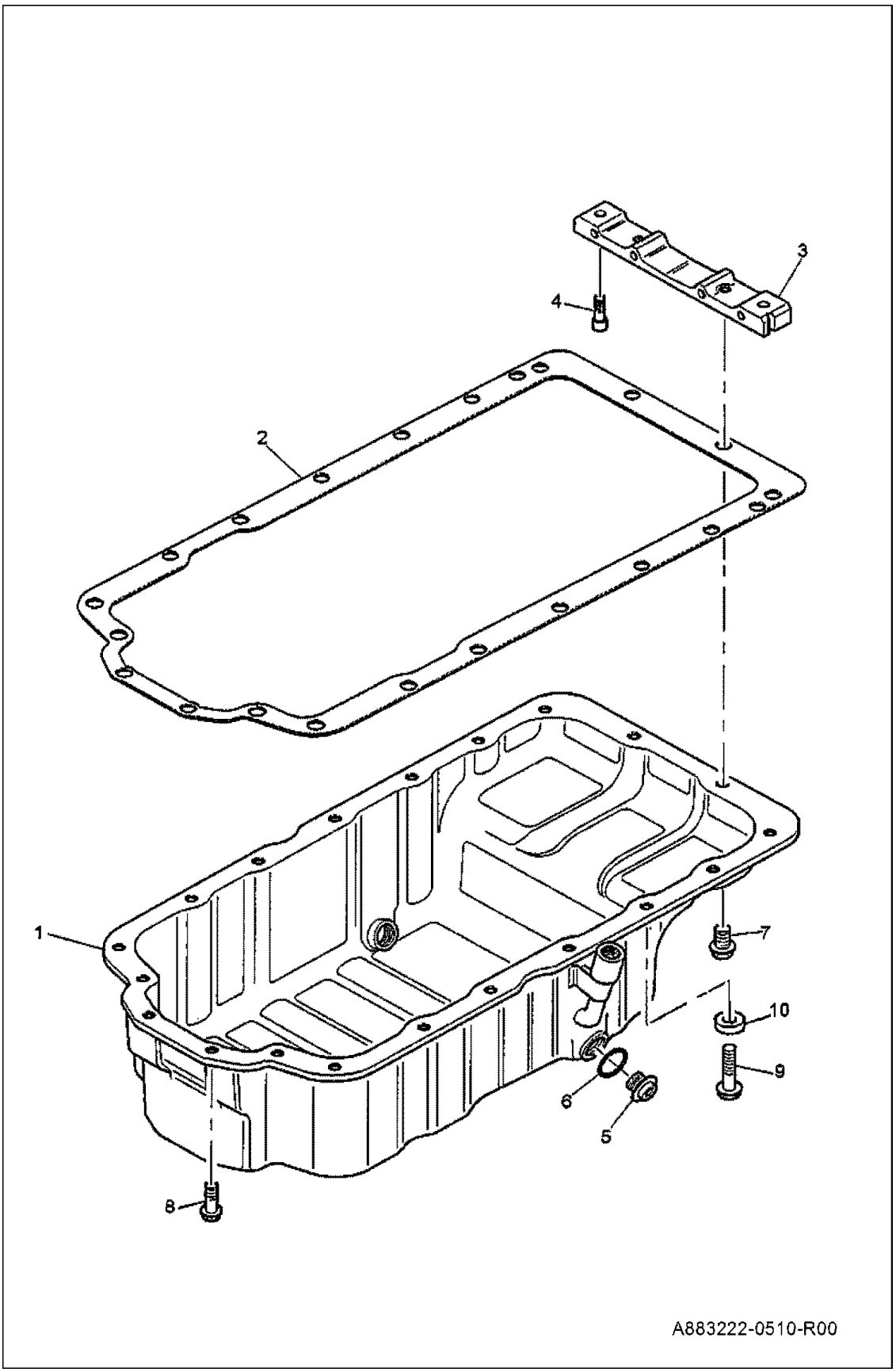

SUMP (Cont'd)

Ref No	Part Number	Description	Remarks	Serial Number	Qty
1	6911986	OIL PAN			1
2	6911970	SUMP JOINT			1
3	6911965	BRIDGE PIECE			1
4	6668478	SCREW			2
5	6649446	PLUG			2
6	6649447	O-RING			2
7	7289060	SCREW			2
8	7289061	SCREW			17
9	7289004	SCREW			1
10	7289062	SPACER			1

OIL DIPSTICK

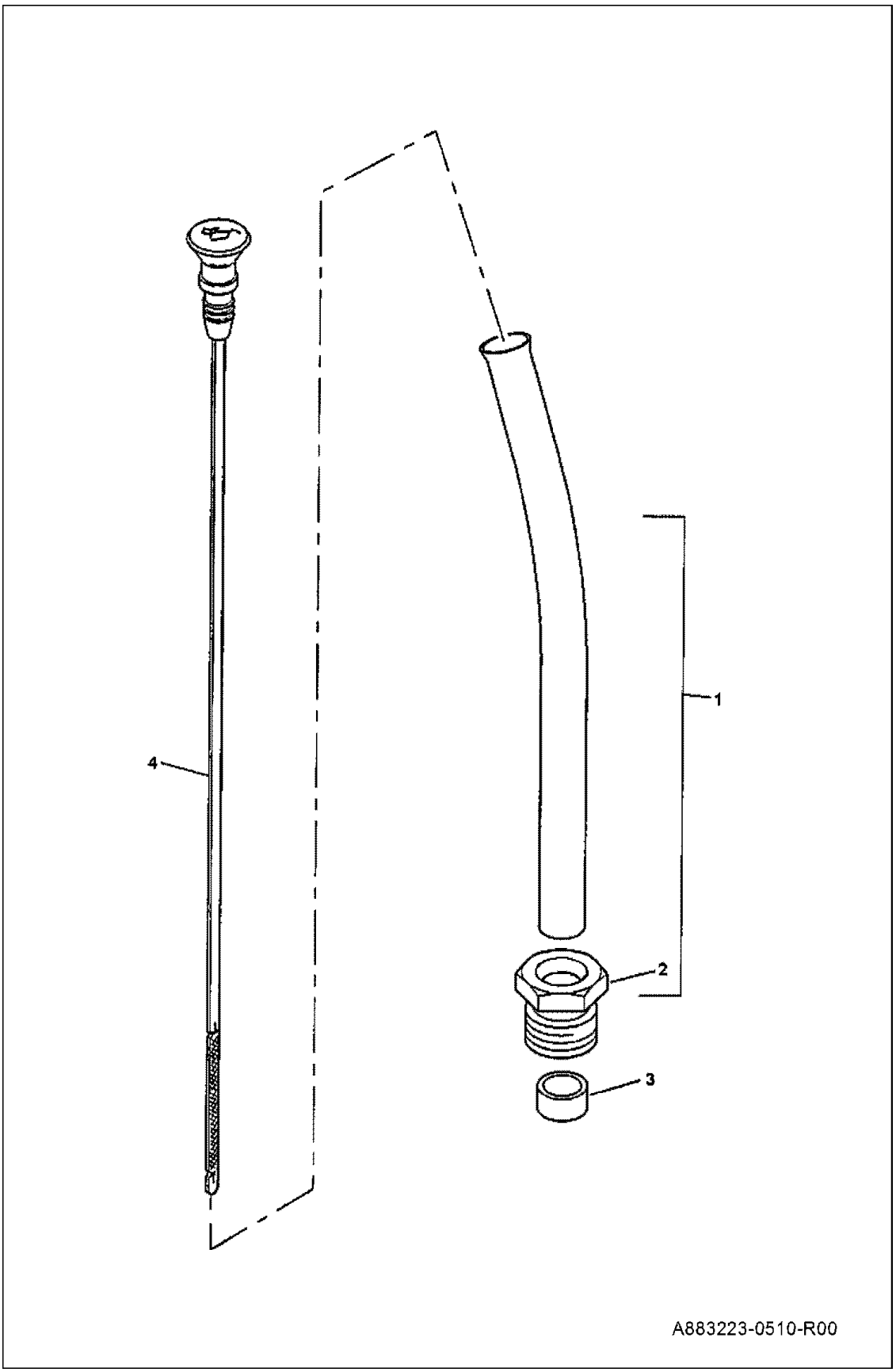

OIL DIPSTICK (Cont'd)

Ref No	Part Number	Description	Remarks	Serial Number	Qty
1	7025274	TUBE, DIPSTICK			1
2	7289064	NUT			1
3	6668485	SEAL			1
4	81068.9	DIPSTICK			1

SUCTION PIPE

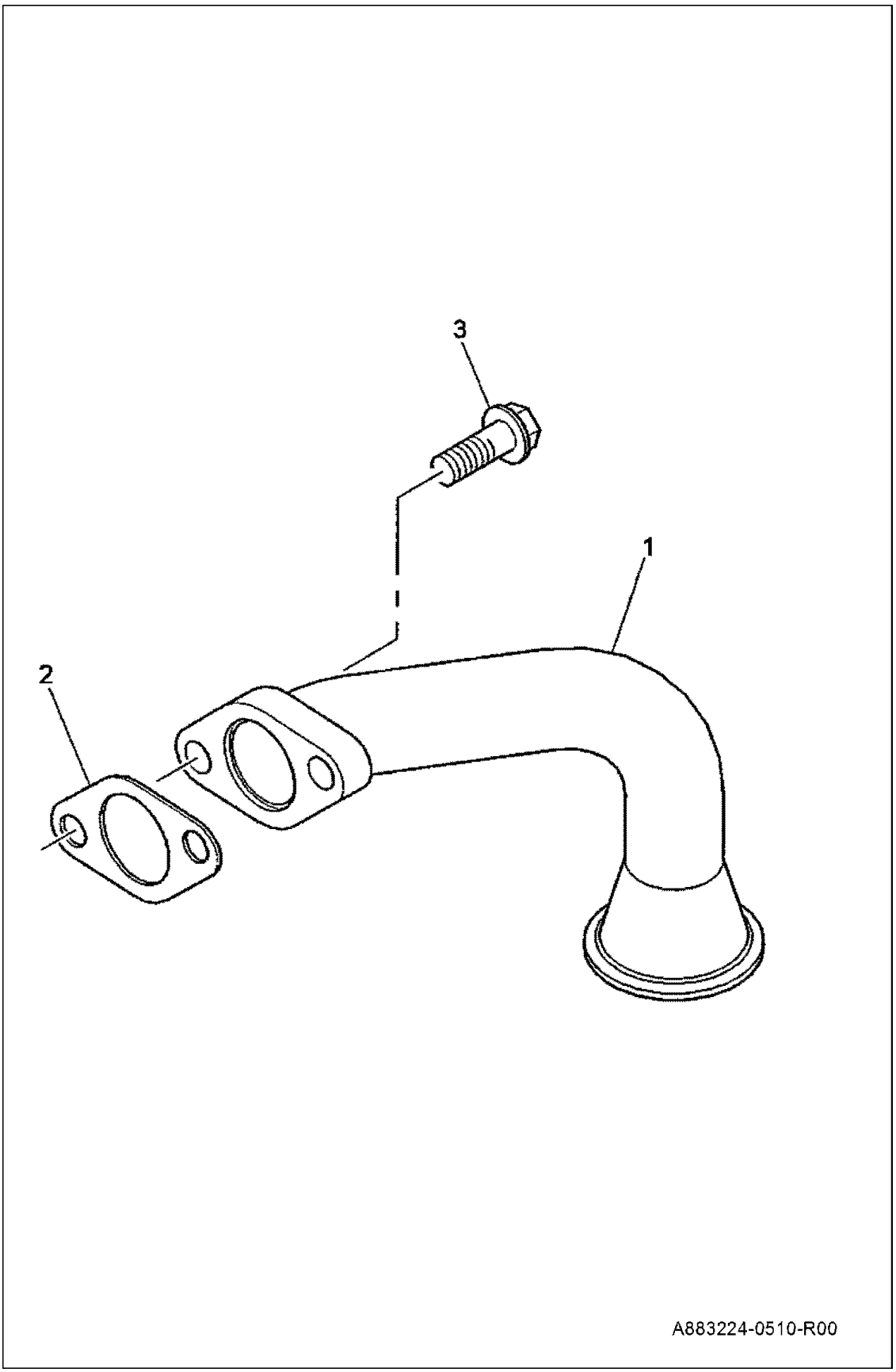

SUCTION PIPE (Cont'd)

Ref No	Part Number	Description	Remarks	Serial Number	Qty
1	6911956	SUCTION PIPE			1
2	7289068	JOINT			1
3	6668278	SCREW			2

CYLINDER HEAD COVER

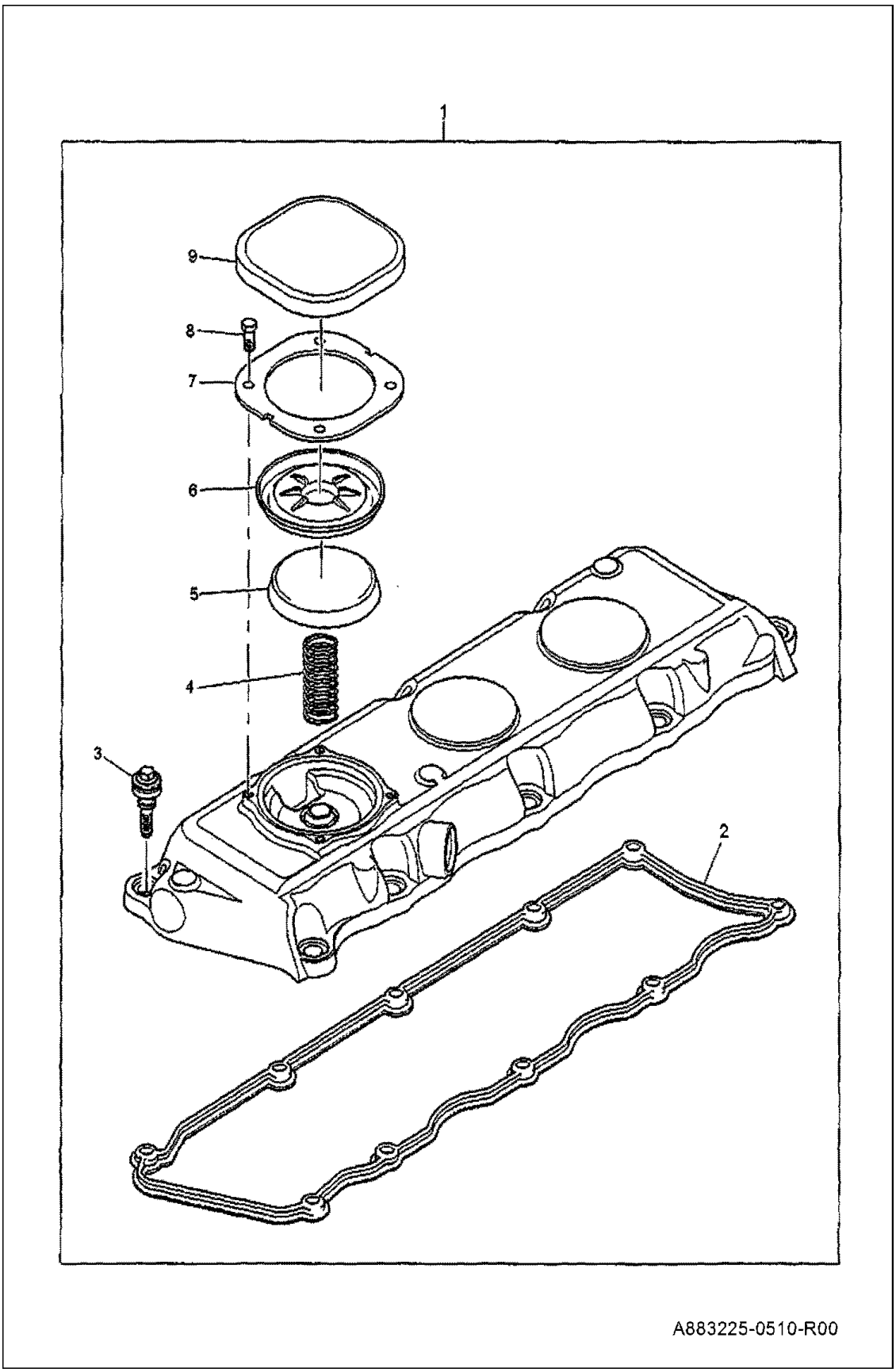

CYLINDER HEAD COVER (Cont'd)

Ref No	Part Number	Description	Remarks	Serial Number	Qty
1	7289069	CYL. HEAD COVER ASSY.			1
2	6911968	ROCKER COVER JOINT			1
3	7289071	SCREW			10
4	7289072	SPRING			1
5	7289073	CAP			1
6	7289074	DIAPHRAGM			1
7	7289075	COVER PLATE			1
8	7289076	SCREW			4
9	6911995	CAP			1

CYLINDER HEAD COVER

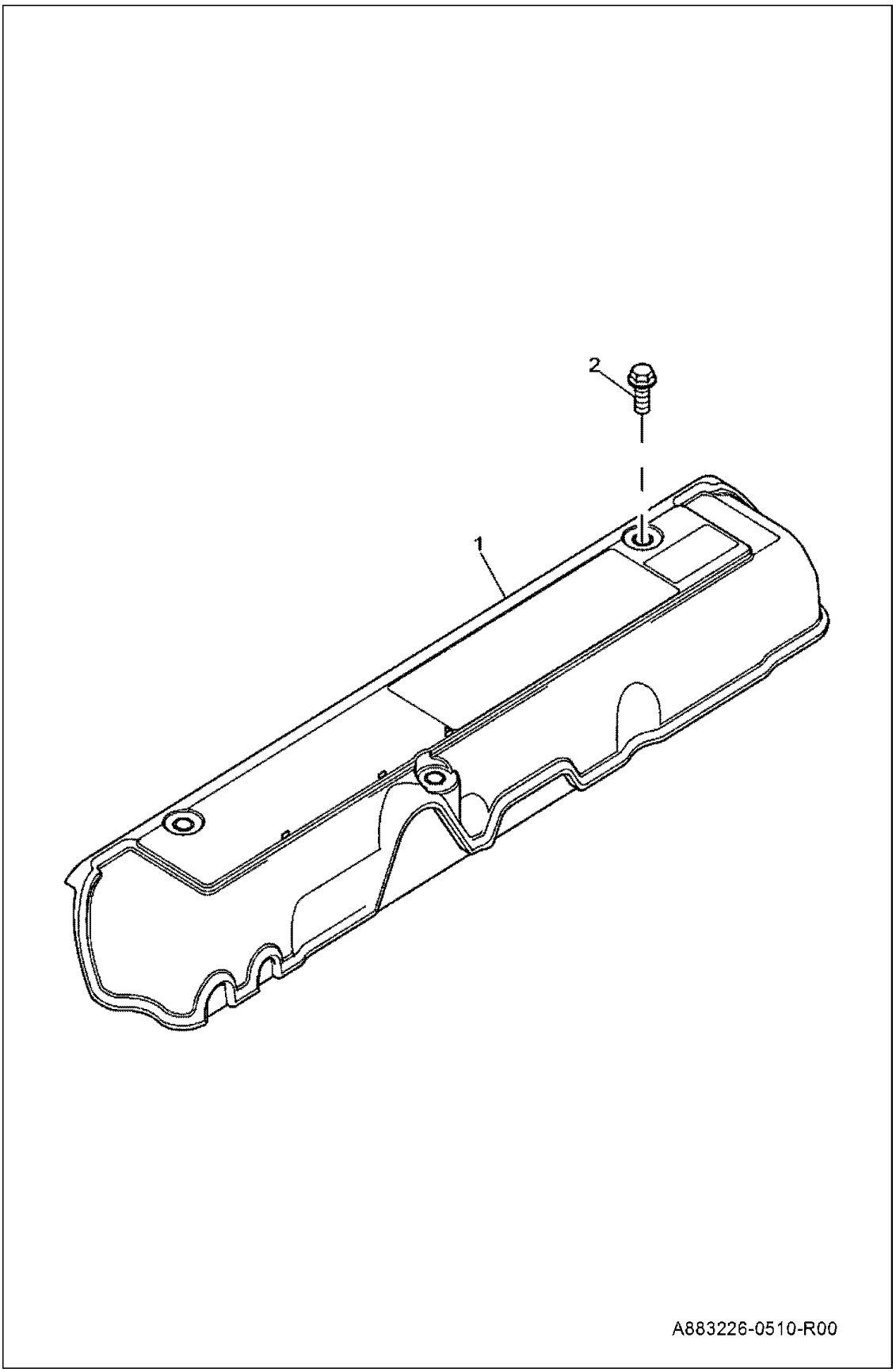

CYLINDER HEAD COVER (Cont'd)

Ref No	Part Number	Description	Remarks	Serial Number	Qty
1	6911996	COVER			1
2	7289079	SCREW			3

OIL FILLER

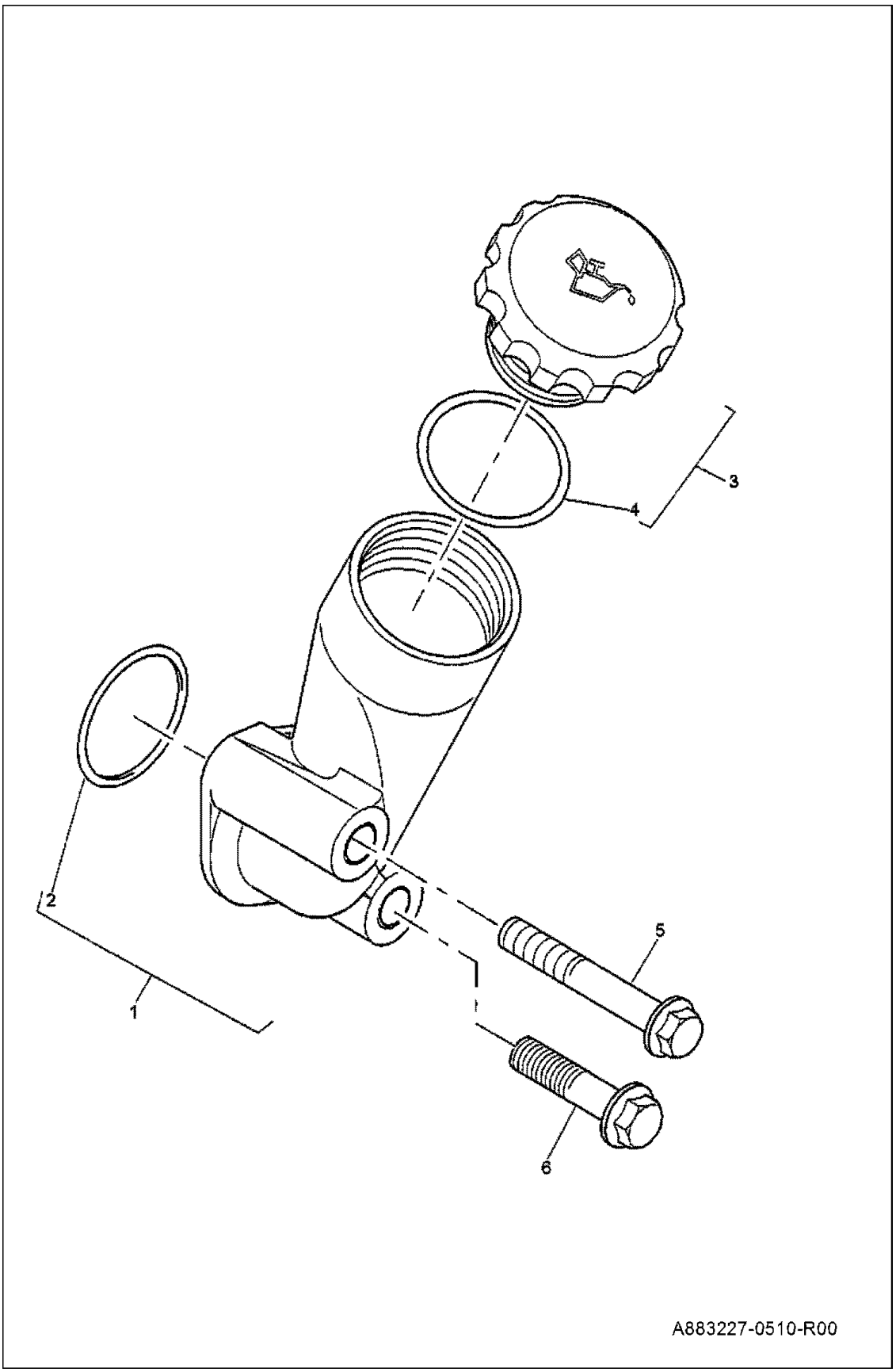

OIL FILLER (Cont'd)

Ref No	Part Number	Description	Remarks	Serial Number	Qty
1	7289080	FILLER			1
1	7289081	FILLER	SERVICE OPTION		1
2	7289082	O-RING			1
3	6668505	CAP			1
4	7289084	O-RING			1
5	7289085	SCREW			1
6	7289086	SCREW			1

ENGINE CONNECTIONS

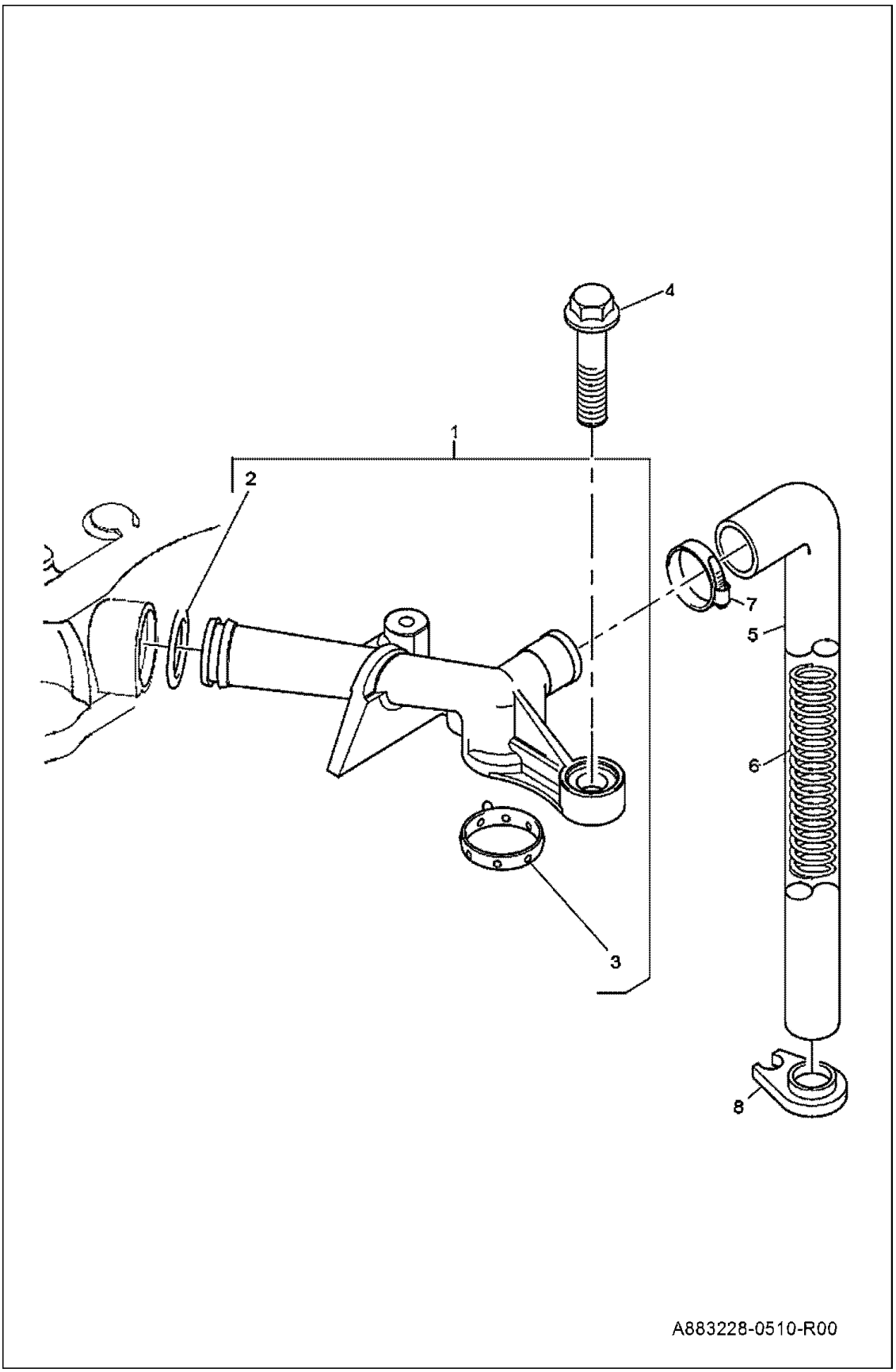

ENGINE CONNECTIONS (Cont'd)

Ref No	Part Number	Description	Remarks	Serial Number	Qty
1	7289087	BREATHER PIPE			1
2	7289088	SEAL-O RING			1
3	7289089	SEAL-O RING			1
4	7289090	SCREW			2
5	6911950	HOSE			1
6	7014211	SPRING			1
7	7289093	HOSE CLIP			1
8	7289094	SUPPORT BRACKET			1

PLUG

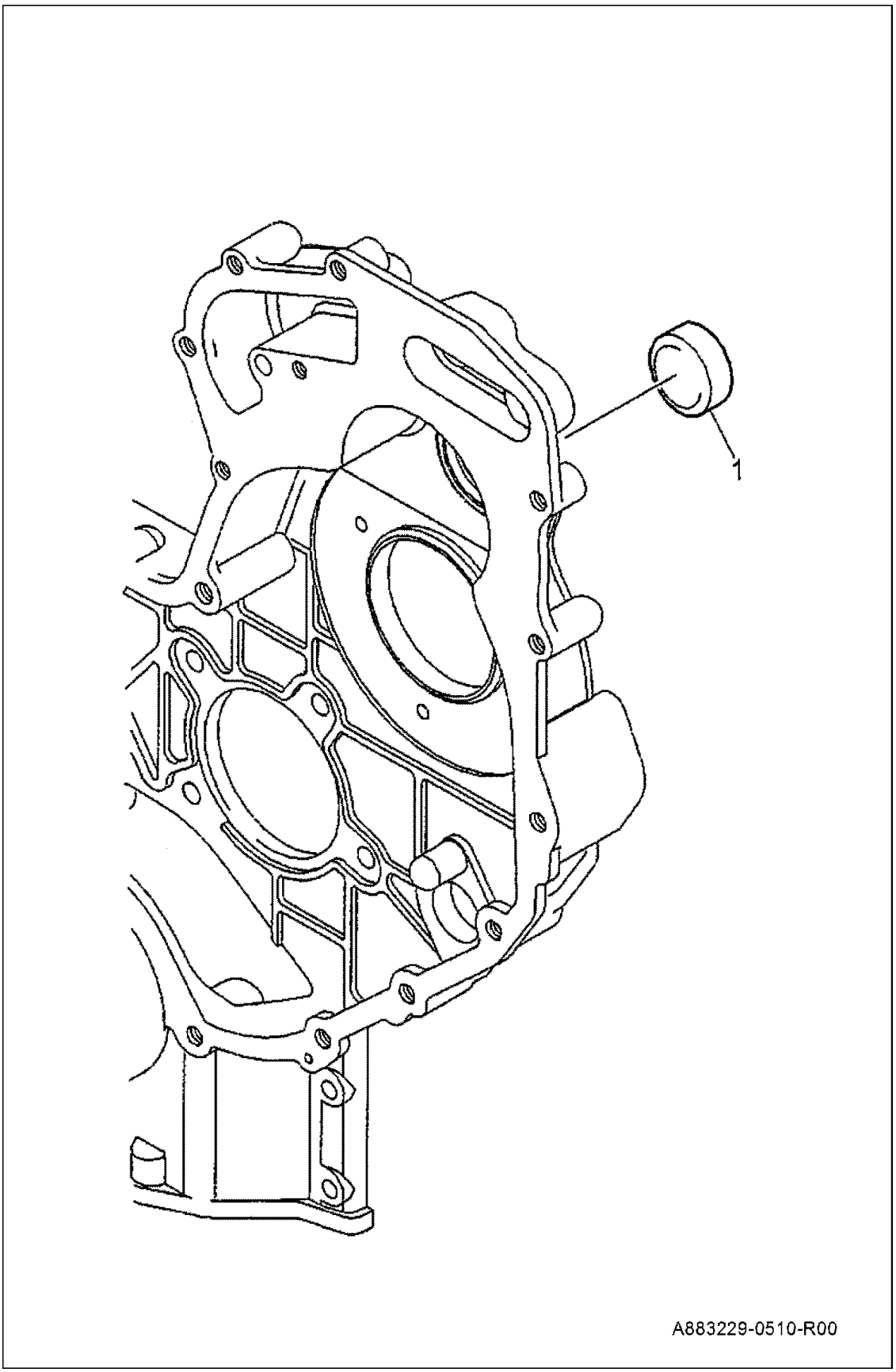

PLUG (Cont'd)

Ref No	Part Number	Description	Remarks	Serial Number	Qty
1	7289095	CUP PLUG			1

OIL COOLER

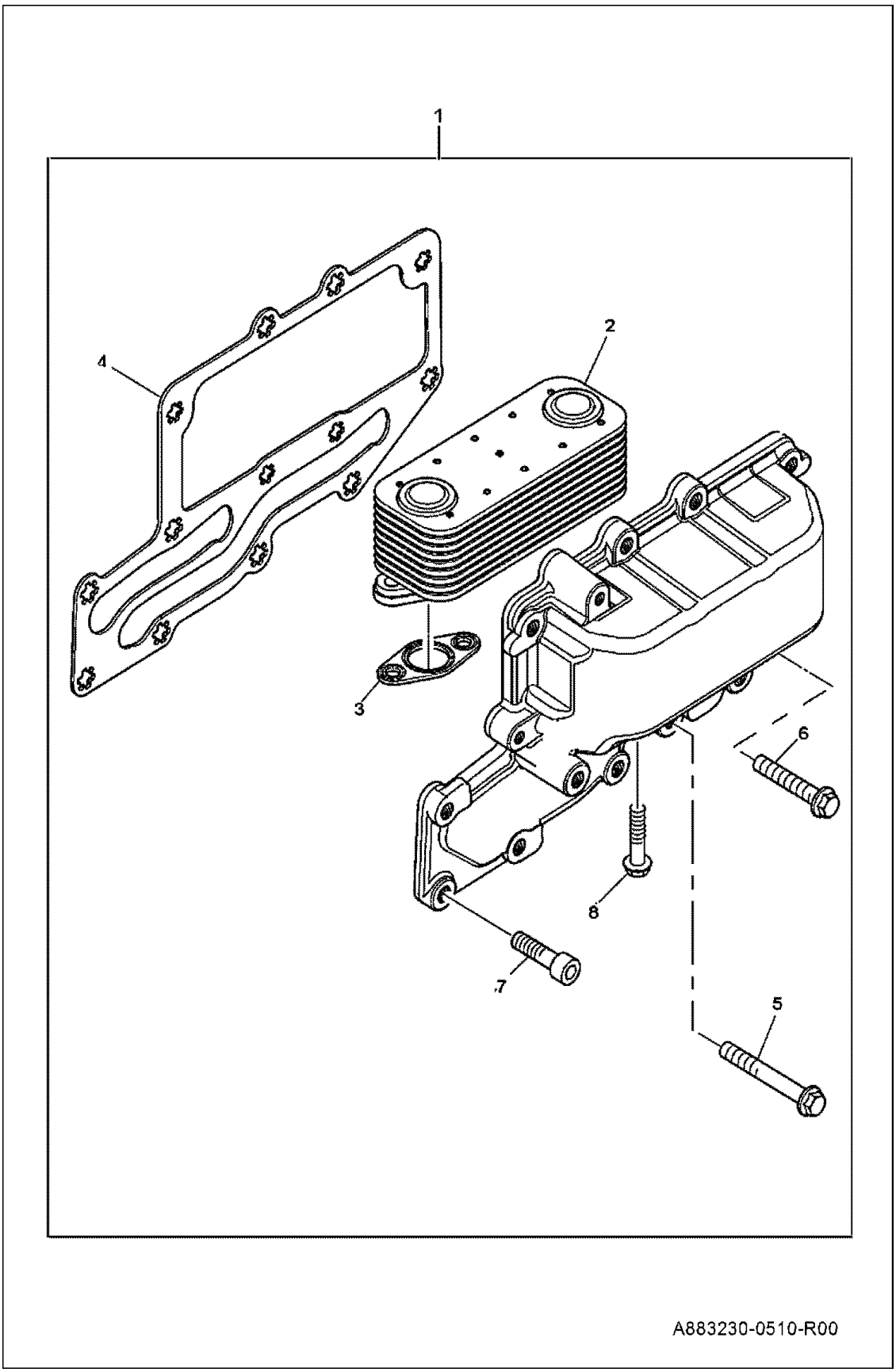

OIL COOLER (Cont'd)

Ref No	Part Number	Description	Remarks	Serial Number	Qty
1	7022467	OIL COOLER, ASSY			1
2	6911896	OIL COOLER			1
3	6911977	SEAL			2
4	6924901	GASKET - OIL COOLER			1
5	7289085	SCREW			3
6	6668278	SCREW			8
7	7289100	SCREW			2
8	7289101	SCREW			4

OIL FILTER

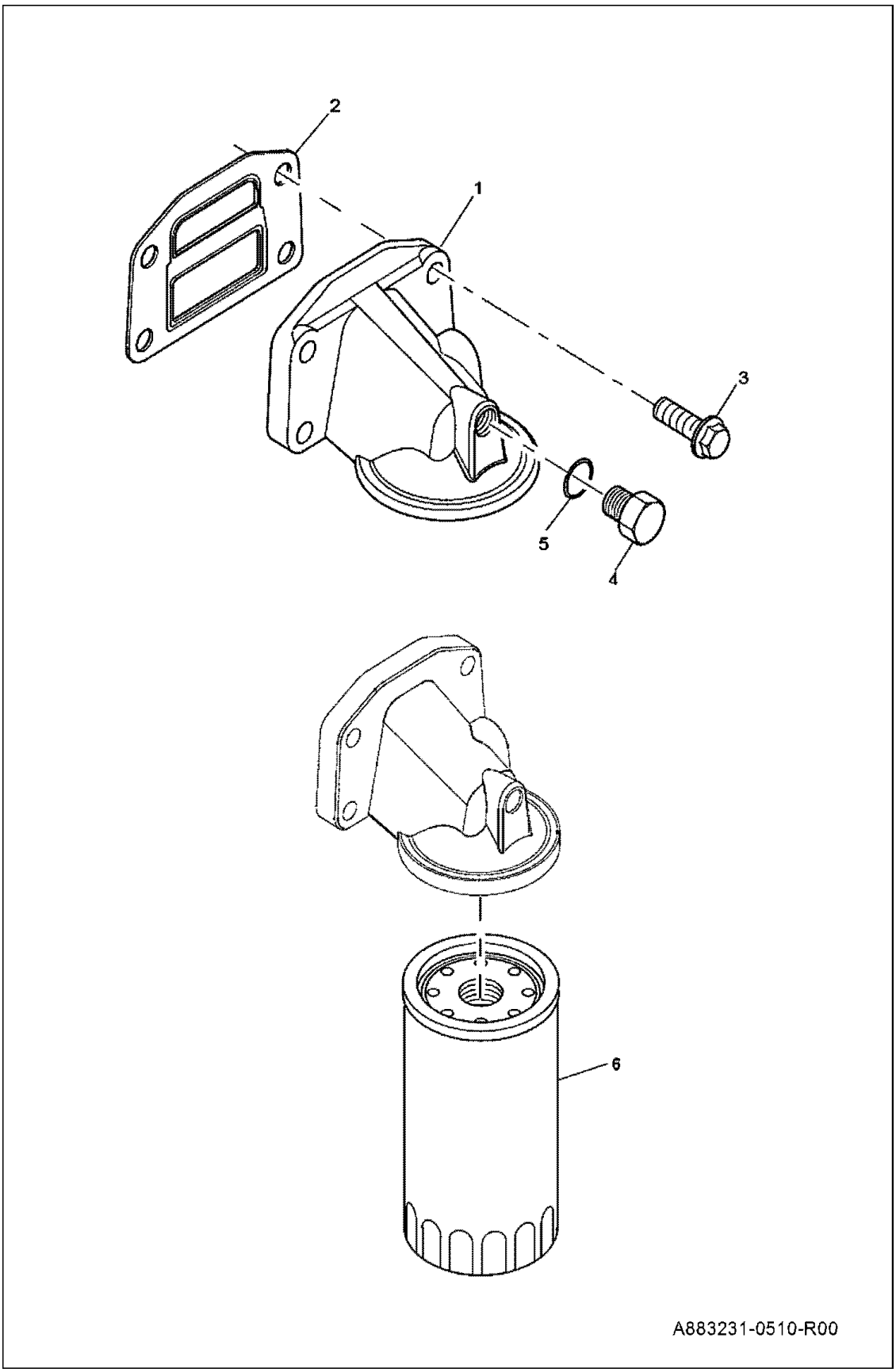

OIL FILTER (Cont'd)

Ref No	Part Number	Description	Remarks	Serial Number	Qty
1	6911912	OIL FILTER HEAD			1
2	6911983	SEAL			1
3	7289103	SCREW			4
4	7289104	PLUG			1
5	6911883	O RING			1
6	7289106	OIL FILTER			1

OIL FILTER JOINT

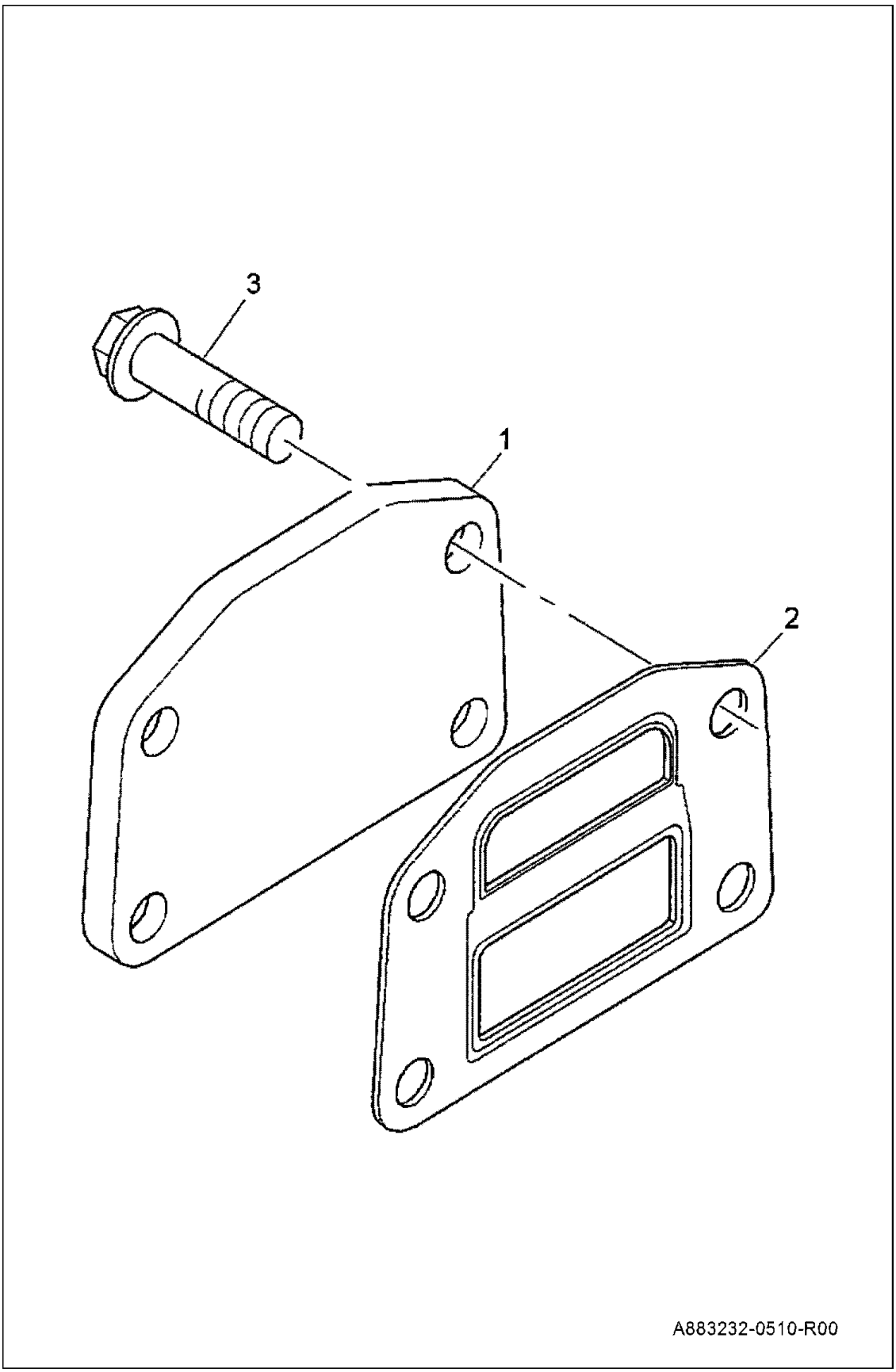

OIL FILTER JOINT (Cont'd)

Ref No	Part Number	Description	Remarks	Serial Number	Qty
1	7288913	BLANKING PLATE			1
2	6911983	SEAL			1
3	6668495	SCREW			4

FRONT AND DRIVE INPUT

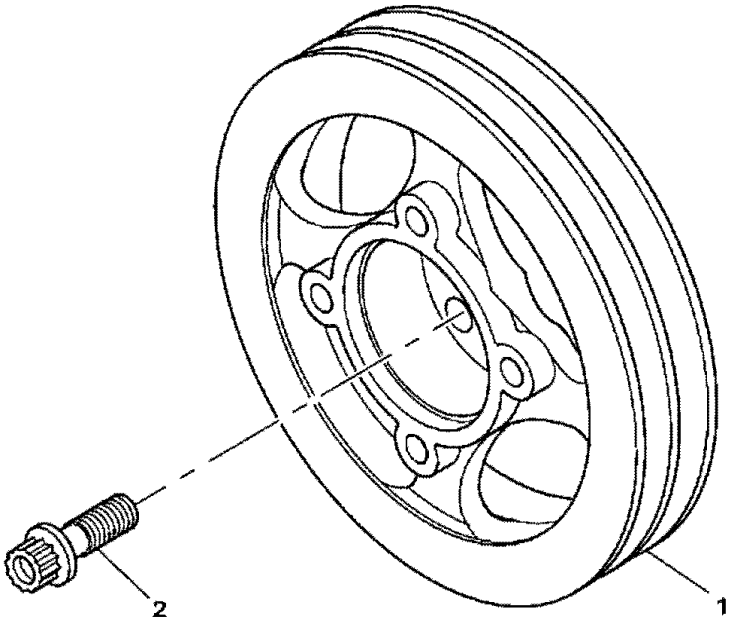

A883233-0510-R00

FRONT AND DRIVE INPUT (Cont'd)

Ref No	Part Number	Description	Remarks	Serial Number	Qty
1	7289107	CRANKSHAFT PULLEY			1
2	7022498	BOLT			3

WATER PUMP KIT

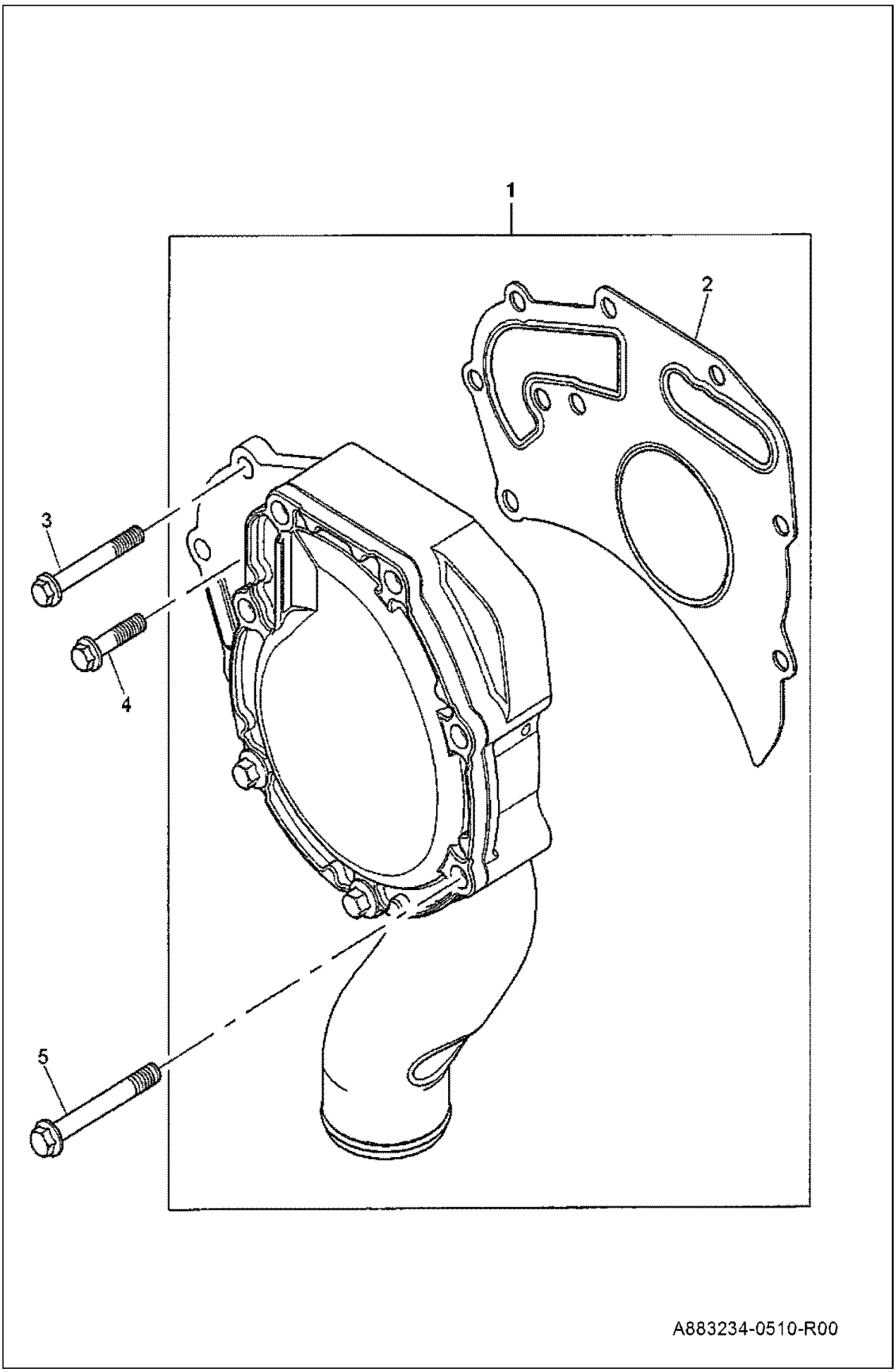

WATER PUMP KIT (Cont'd)

Ref No	Part Number	Description	Remarks	Serial Number	Qty
1	7289109	WATER PUMP KIT			1
2	6911974	WATER PUMP JOINT			1
3	7289111	SCREW			2
4	7289112	SCREW			2
5	7289113	SCREW			5

WATER PUMP REPAIR KIT

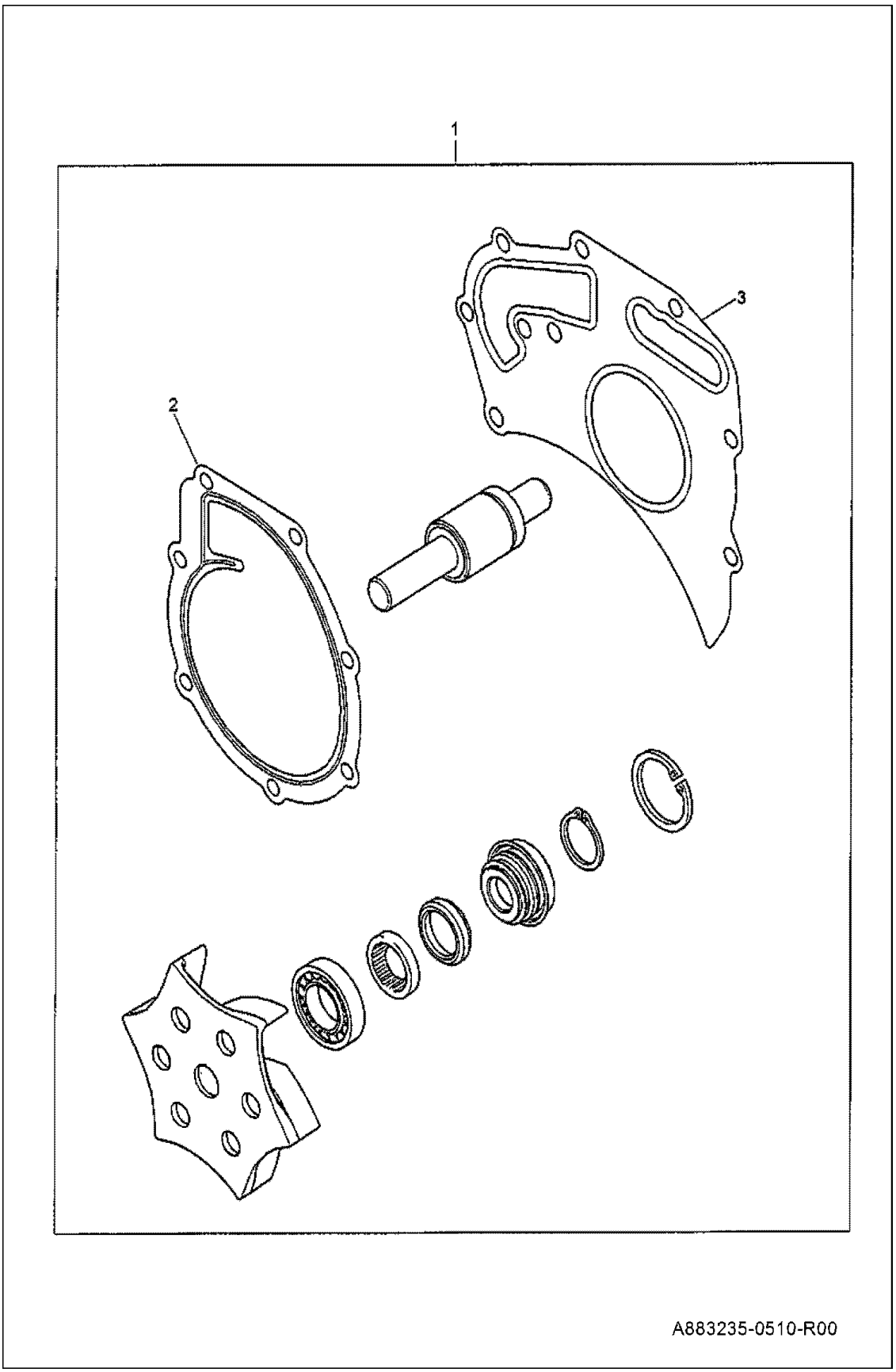

WATER PUMP REPAIR KIT (Cont'd)

Ref No	Part Number	Description	Remarks	Serial Number	Qty
1	6912025	WATER PUMP REPAIR KIT			1
2	6924904	GASKET - WATER PUMP			1
3	6911974	WATER PUMP JOINT			1

PIPES

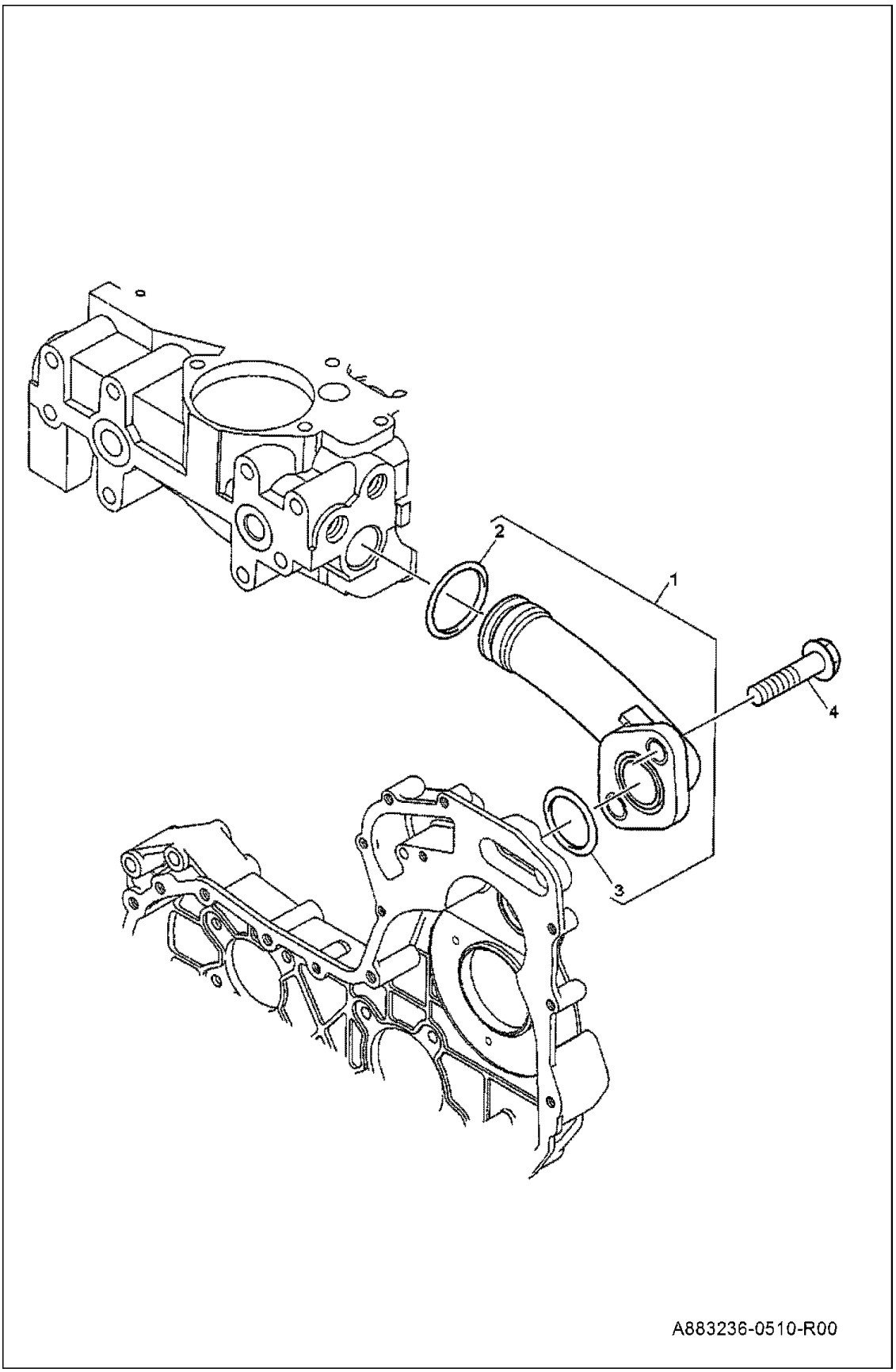

PIPES (Cont'd)

Ref No	Part Number	Description	Remarks	Serial Number	Qty
1	6912011	CONNECTION			1
2	6911886	O RING			1
3	6911885	O RING			1
4	7289004	SCREW			2

WATER OUTLET HOUSING

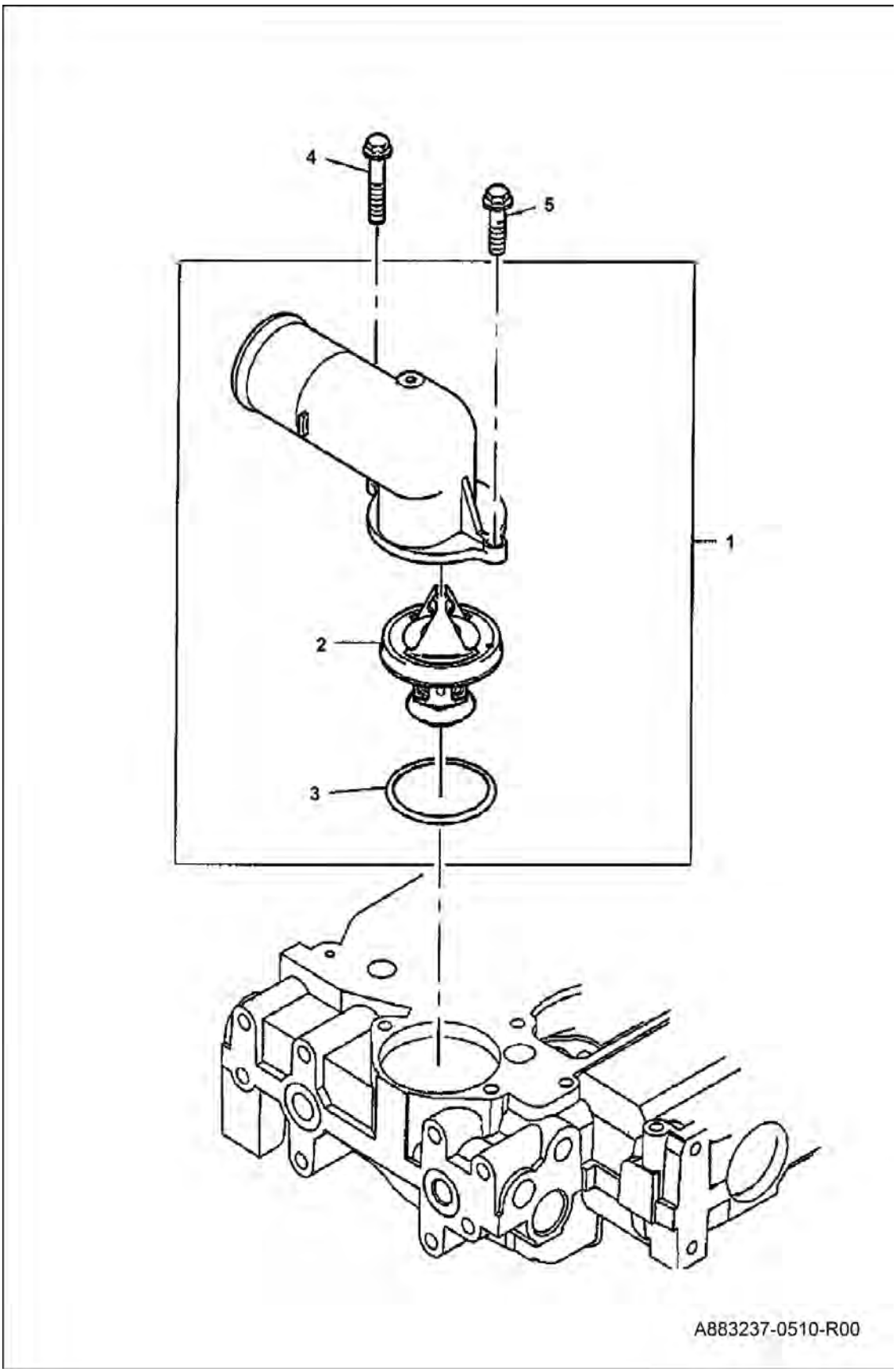

WATER OUTLET HOUSING (Cont'd)

Ref No	Part Number	Description	Remarks	Serial Number	Qty
1	7289119	CONNECTION			1
2		THERMOSTAT	NLA - Order 7289119 connection		1
3	6924940	SEAL - WATER OUTLET			1
4	7289113	SCREW			1
5	6668278	SCREW			1

WATER OUTLET HOUSING

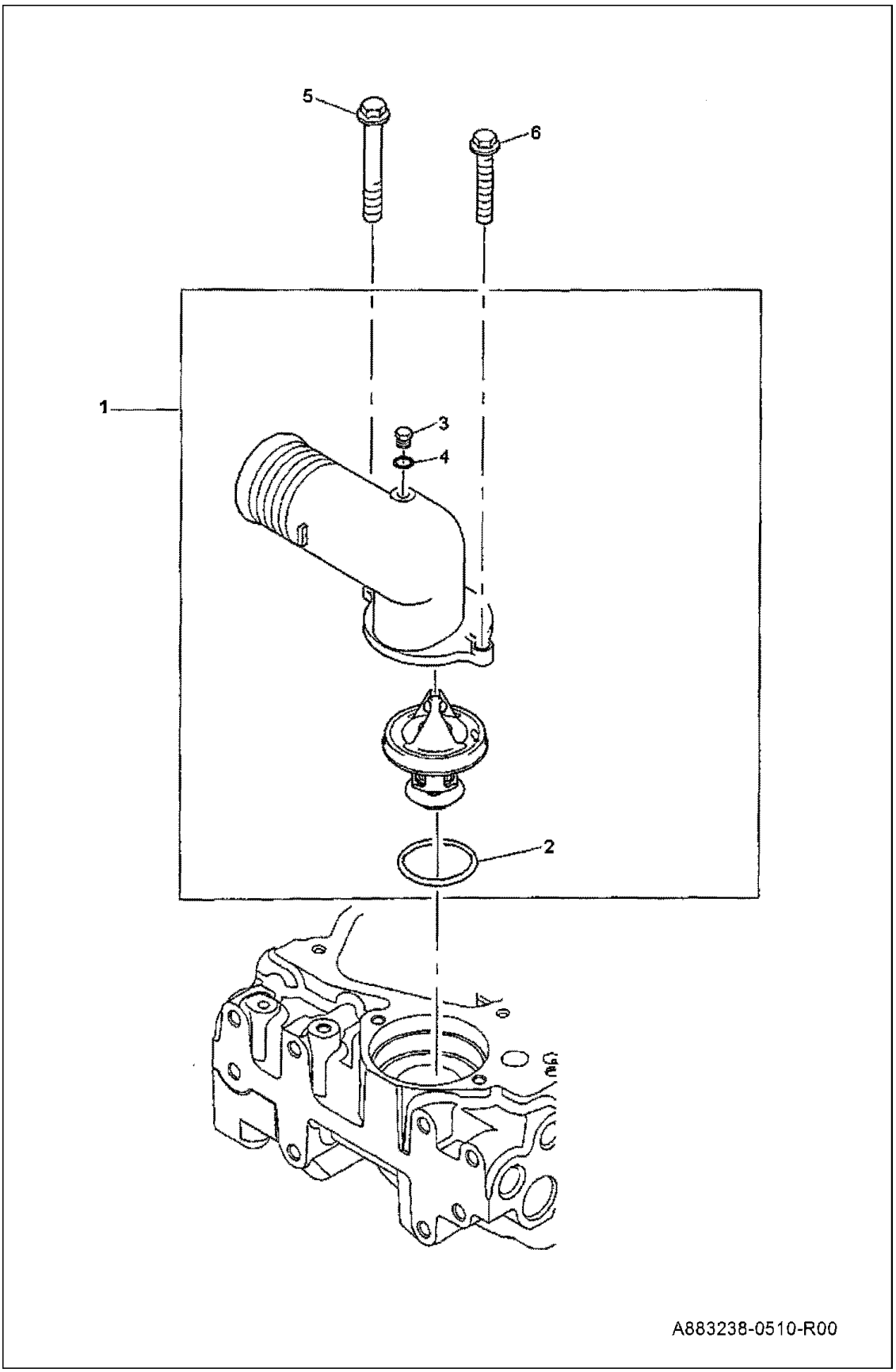

WATER OUTLET HOUSING (Cont'd)

Ref No	Part Number	Description	Remarks	Serial Number	Qty
1	7289122	CONNECTION			1
2	6924940	SEAL - WATER OUTLET			1
3	7289145	PLUG			1
4	6924937	SEAL - O RING			1
5	7289113	SCREW			1
6	6668278	SCREW			1

FAN

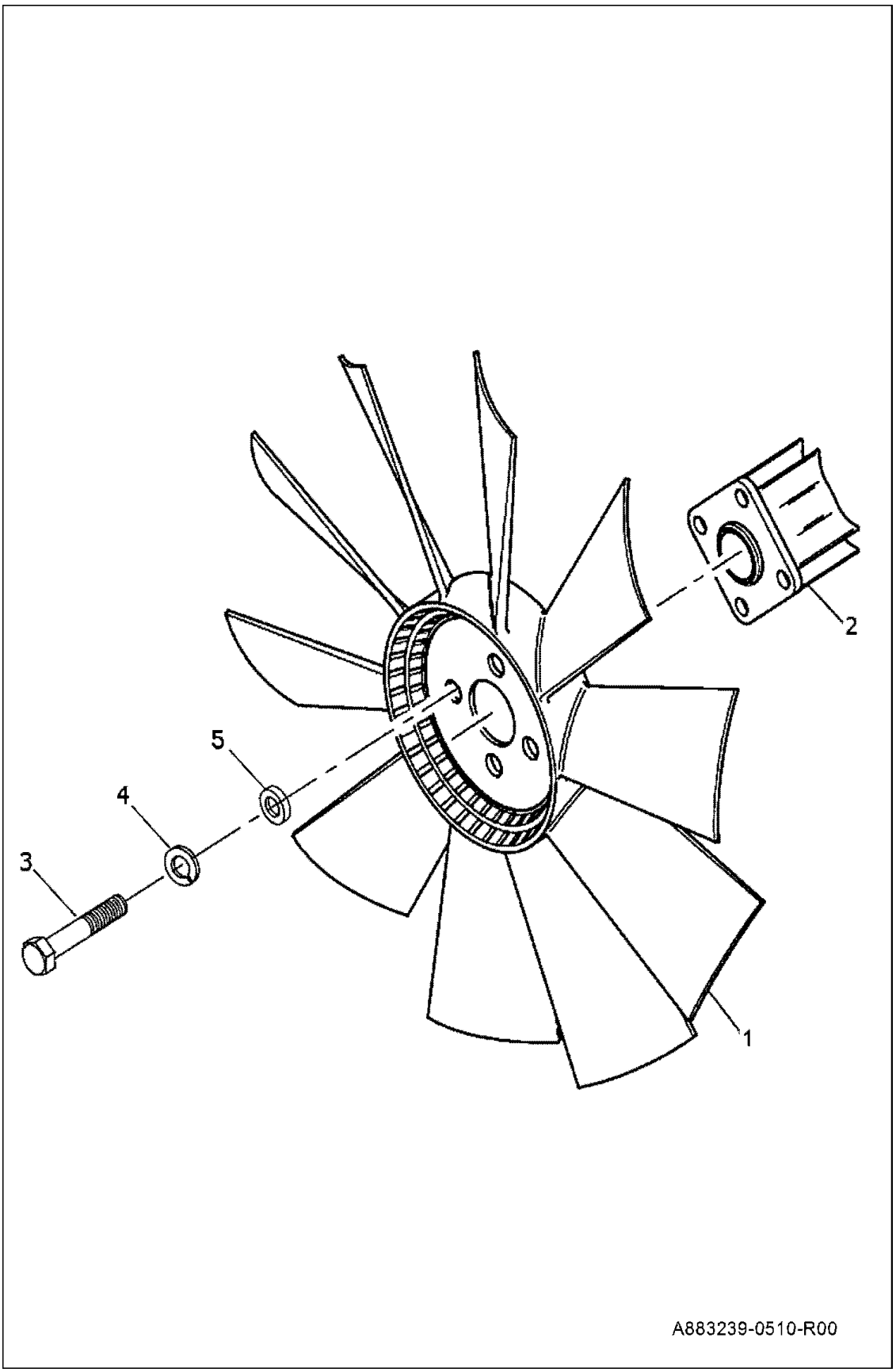

FAN (Cont'd)

Ref No	Part Number	Description	Remarks	Serial Number	Qty
1	7288893	FAN			1
2	7289147	EXTENSION			1
3	7289148	BOLT			4
4	7288891	LOCK WASHER			4
5	7288892	WASHER			4

ALTERNATOR AND ITS BRACKETS

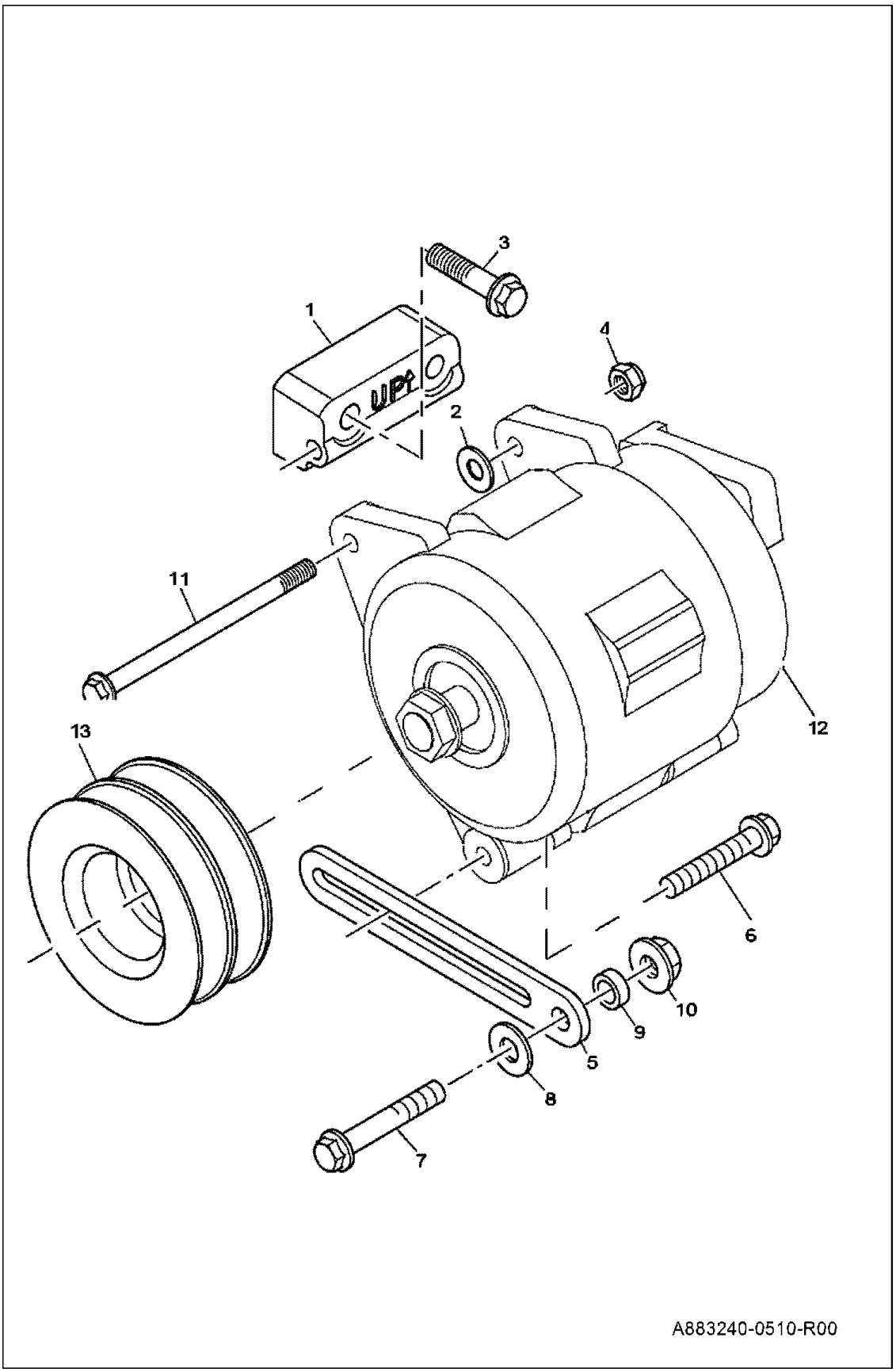

ALTERNATOR AND ITS BRACKETS (Cont'd)

Ref No	Part Number	Description	Remarks	Serial Number	Qty
1	7270428	BRACKET			1
2	7289150	WASHER			1
3	7014152	SCREW			2
4	7289152	NUT			1
5	6911959	LEVER			1
6	6668278	SCREW			1
7	7014153	SCREW			1
8	7289150	WASHER			1
9	6911860	SPACER			1
10	6668313	NUT			1
11	7289156	SCREW			1
12	7289157	ALTERNATOR			1
13	6918295	DOBLE PULLEY			1

TIMING CASE

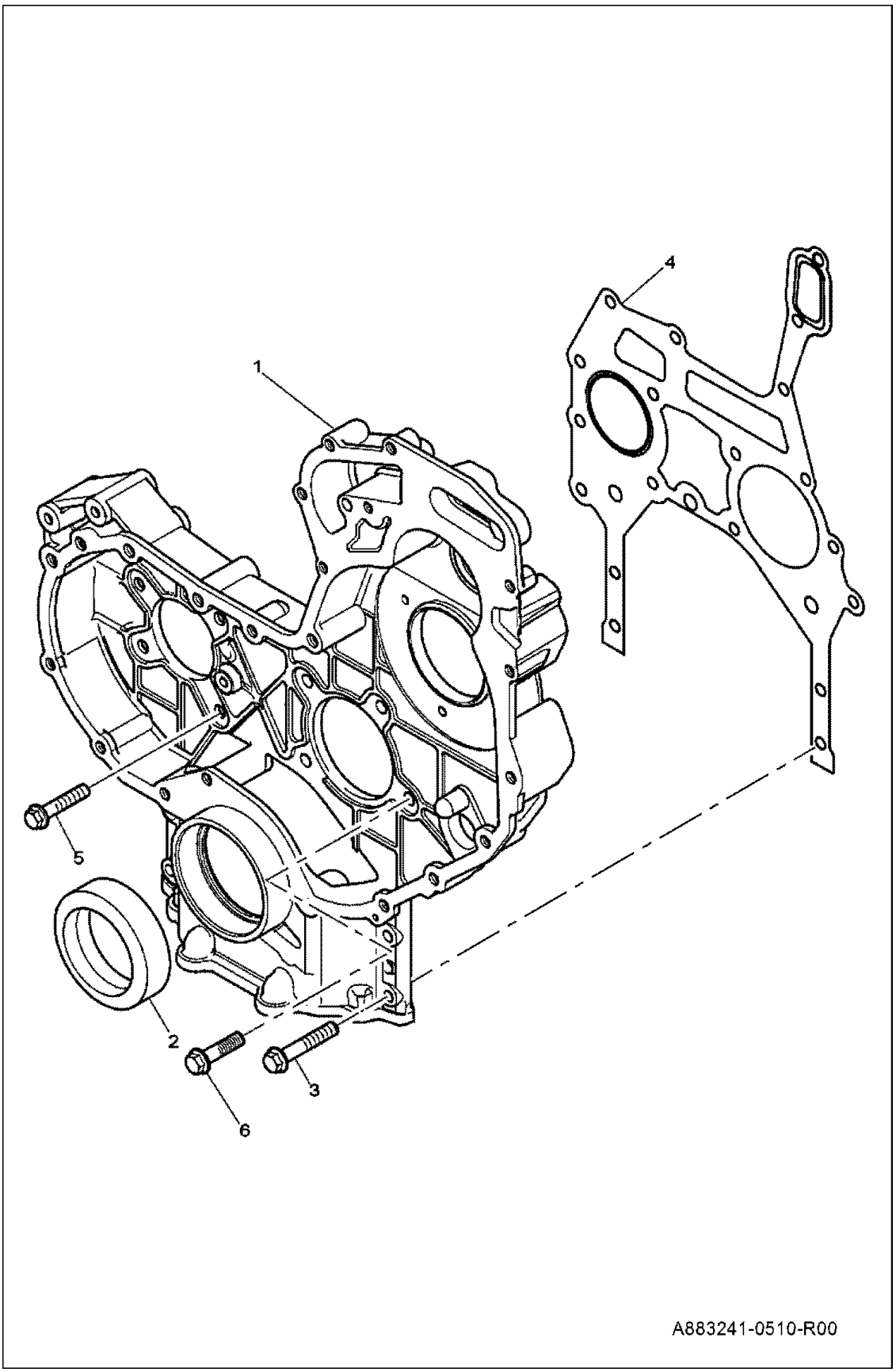

TIMING CASE (Cont'd)

Ref No	Part Number	Description	Remarks	Serial Number	Qty
1	6924943	TIMING CASE			1
2	6924348	SEAL OIL FRONT			1
3	7289103	SCREW			4
4	6924902	GASKET - TIMING CASE			1
5	7289004	SCREW			6
6	7289101	SCREW			2

TIME GEARS

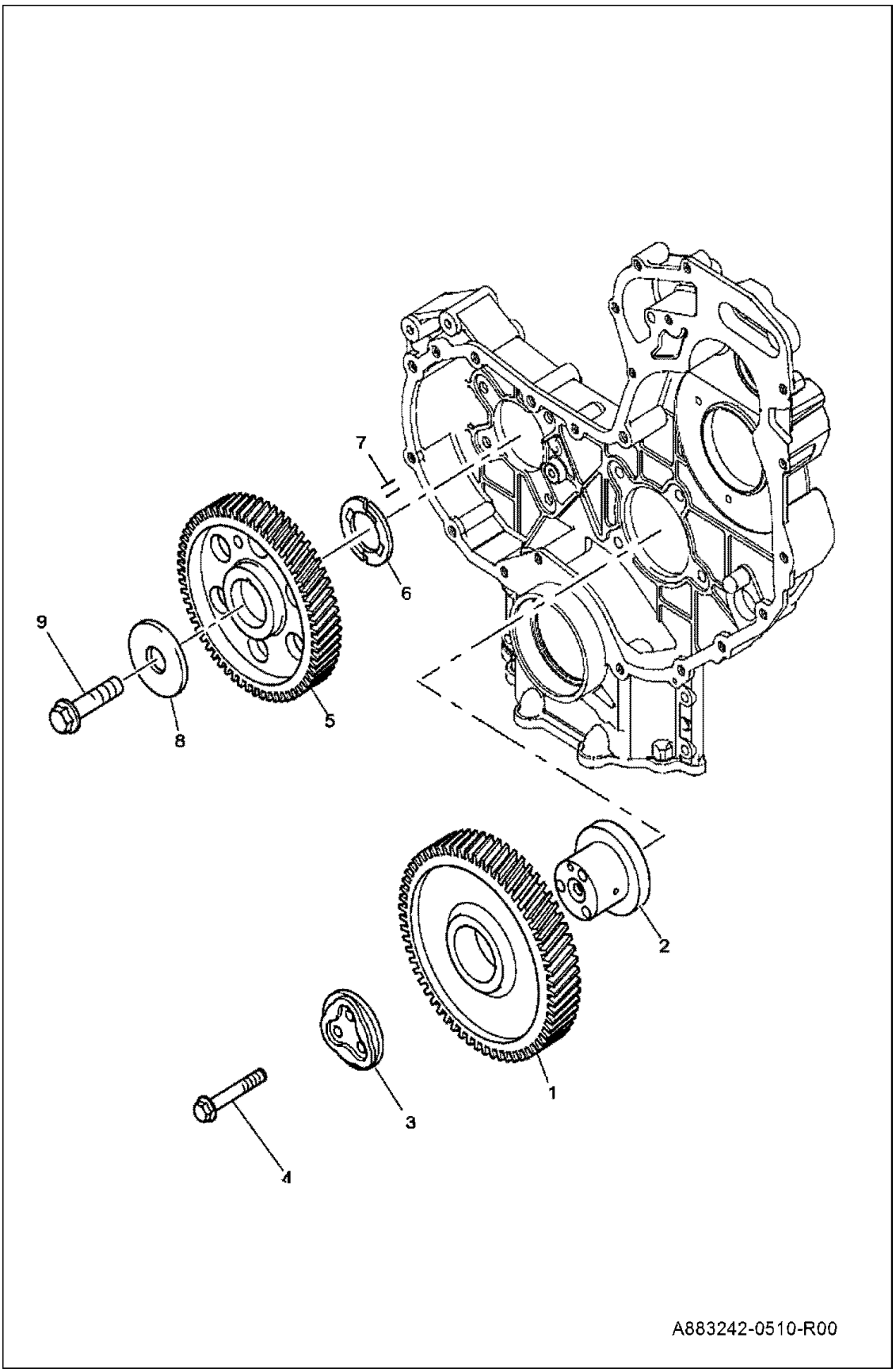

TIME GEARS (Cont'd)

Ref No	Part Number	Description	Remarks	Serial Number	Qty
1	7289162	IDLER GEAR			1
2	7289163	HUB			1
3	7289164	PLATE			1
4	7289165	SCREW			1
5	6911919	CAMSHAFT GEAR			3
6	7289167	THRUST WASHER			1
7	7289168	DOWEL			1
8	7289169	WASHER			1
9	7289170	SCREW			1

FRONT COVER

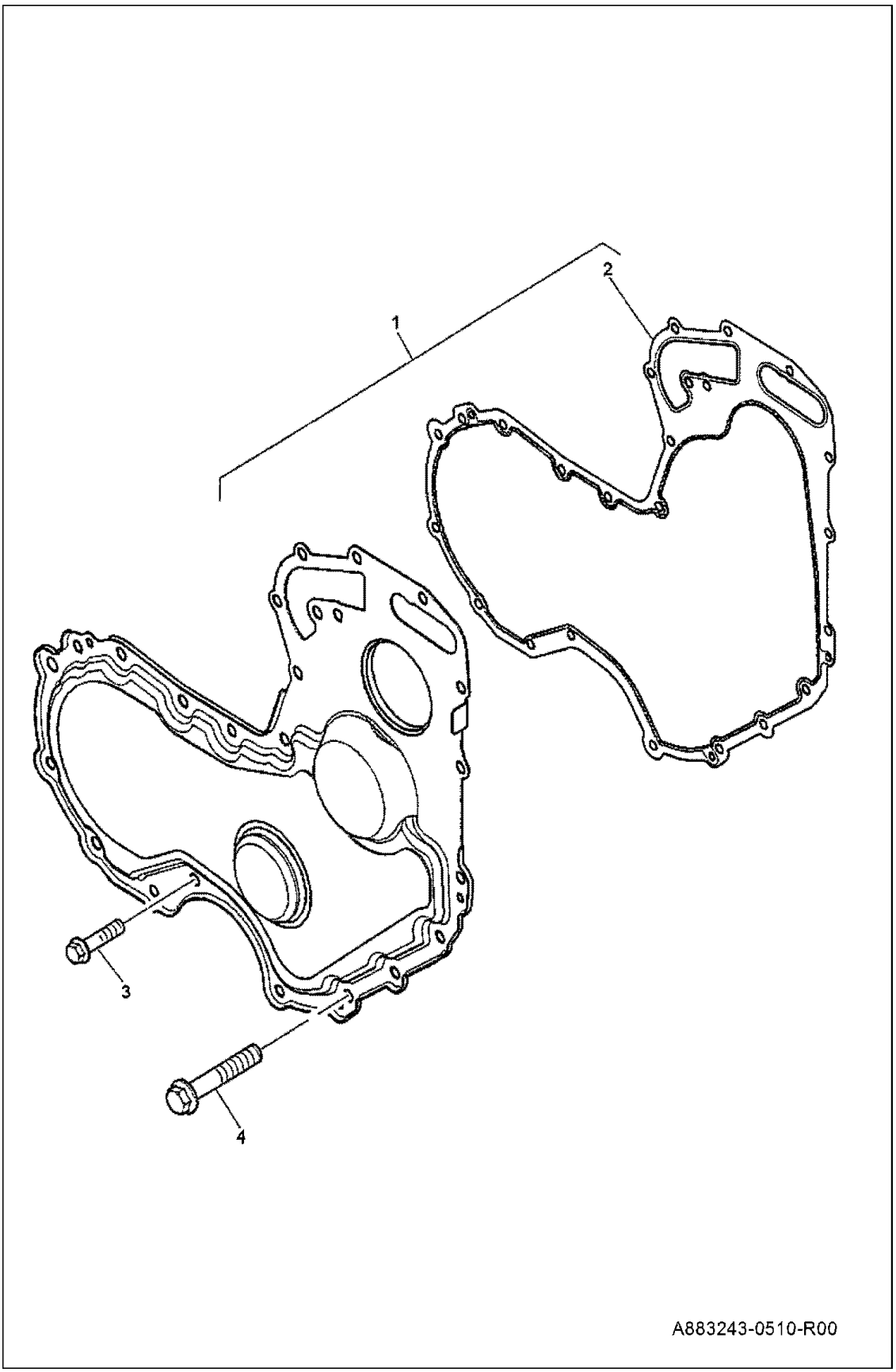

FRONT COVER (Cont'd)

Ref No	Part Number	Description	Remarks	Serial Number	Qty
1	6924347	FRONT COVER KIT			1
2	6911971	TIMING COVER JOINT			1
3	7289061	SCREW			10
4	7289113	SCREW			5

BLANKING PLUG

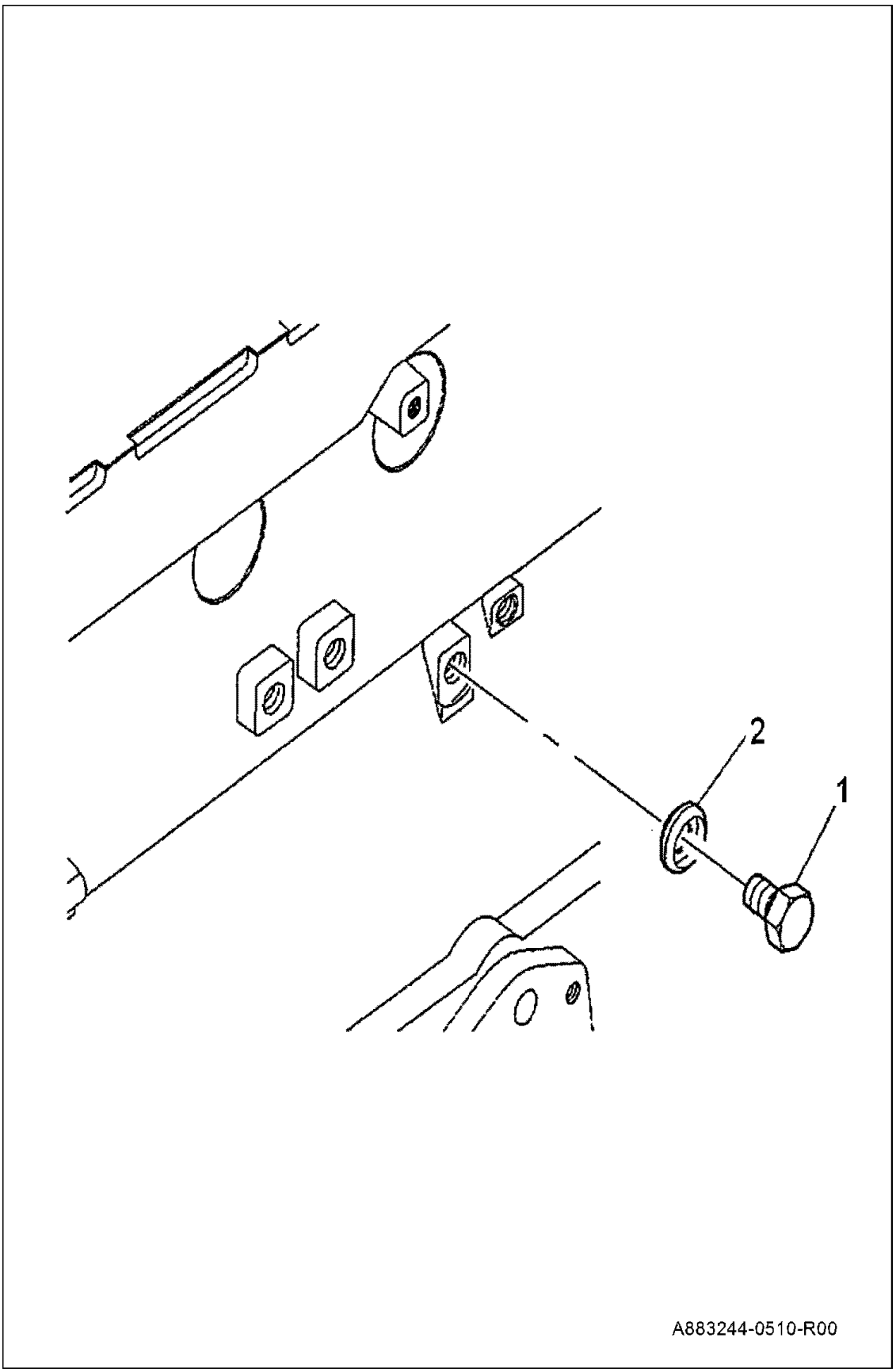

BLANKING PLUG (Cont'd)

Ref No	Part Number	Description	Remarks	Serial Number	Qty
1	7289173	SCREW			1
2	7289174	PLAIN WASHER			1

LUBRICATION OIL PUMP

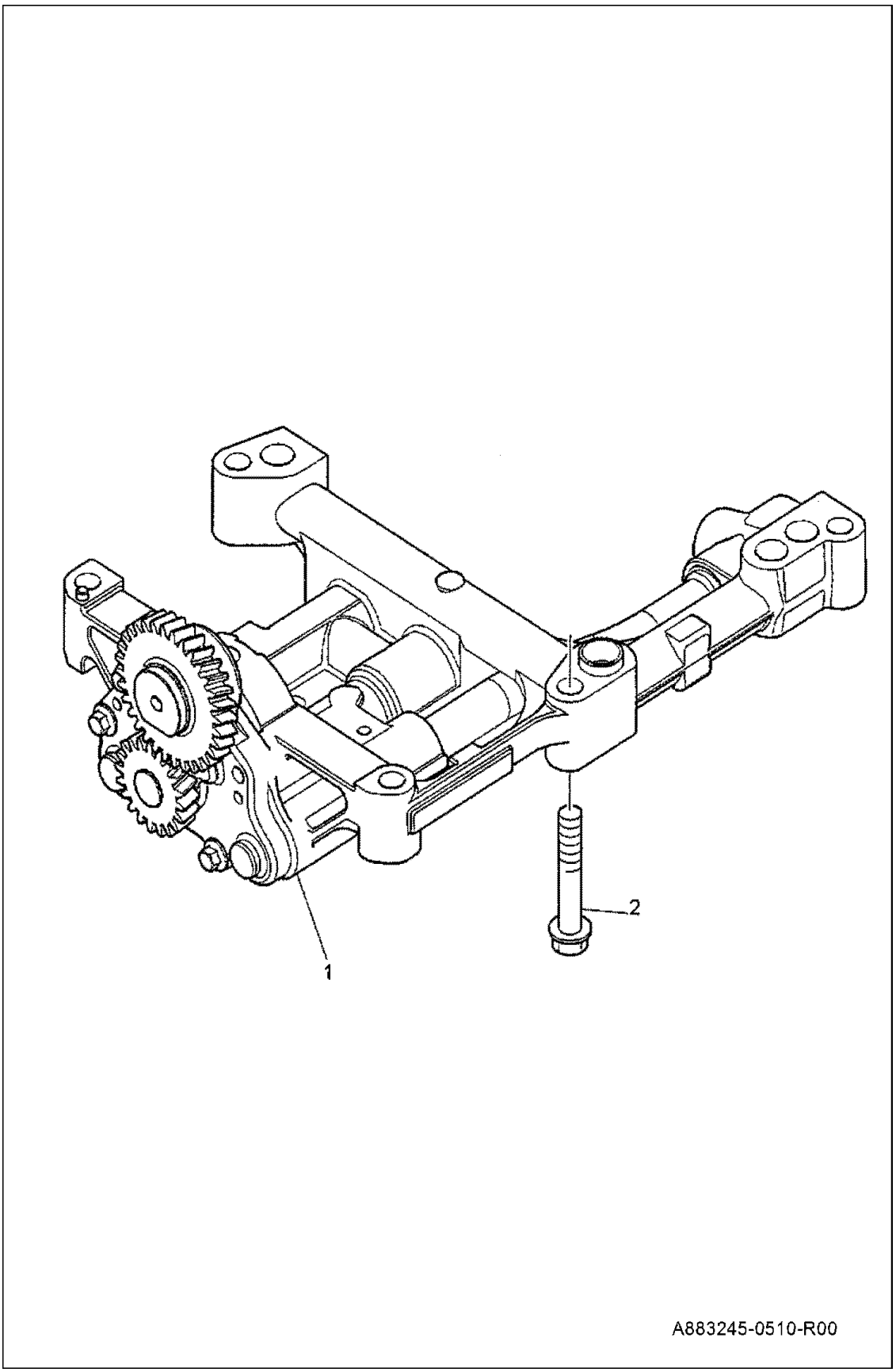

LUBRICATION OIL PUMP (Cont'd)

Ref No	Part Number	Description	Remarks	Serial Number	Qty
1	6912010	OIL PUMP			1
2	7289176	SCREW			5

TURBOCHARGER

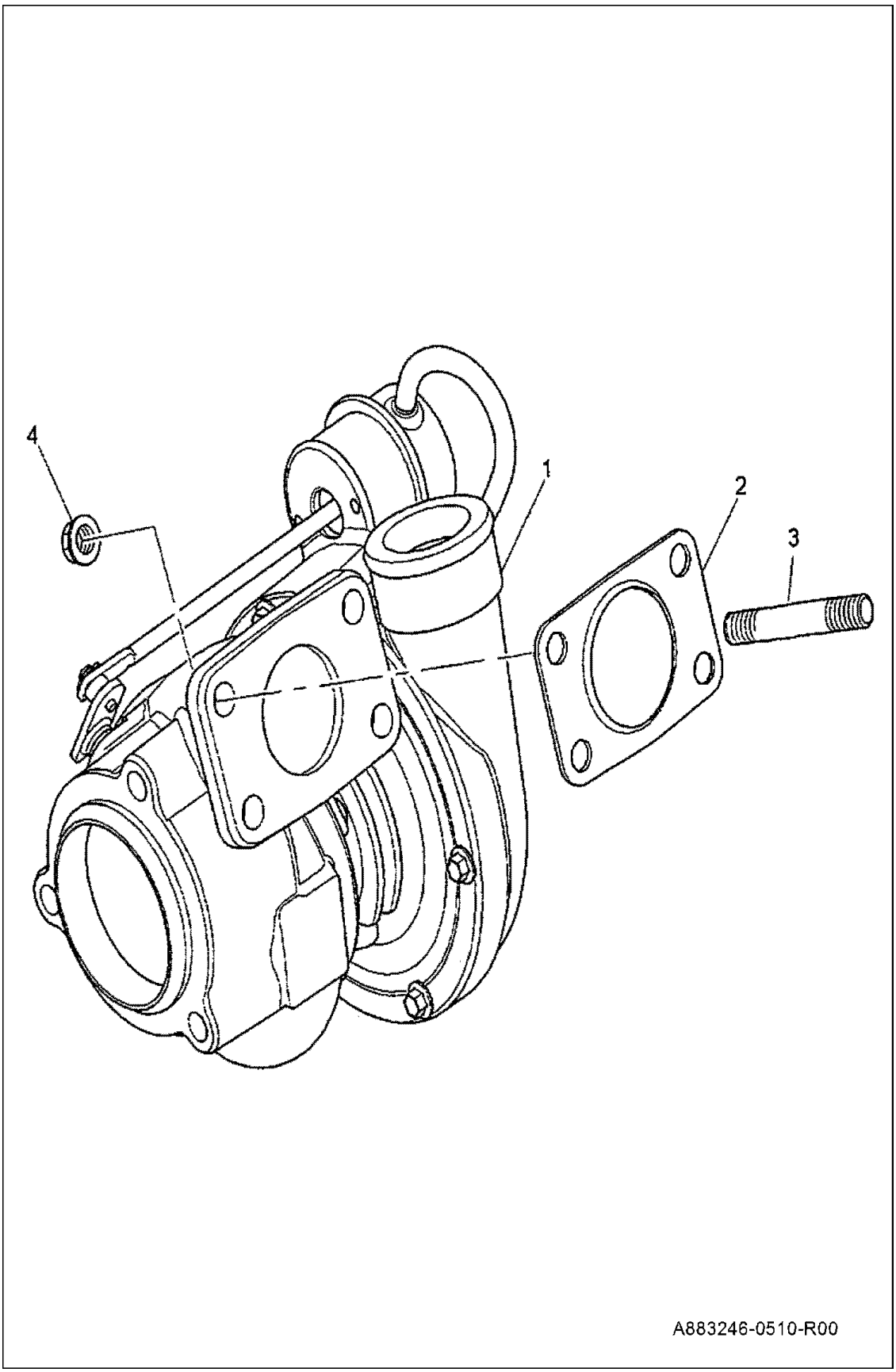

TURBOCHARGER (Cont'd)

Ref No	Part Number	Description	Remarks	Serial Number	Qty
1	6911909	TURBOCHARGER			1
2	6911978	SEAL			1
3	6911867	STUD			4
4	6668569	NUT			4

ENGINE CONNECTIONS

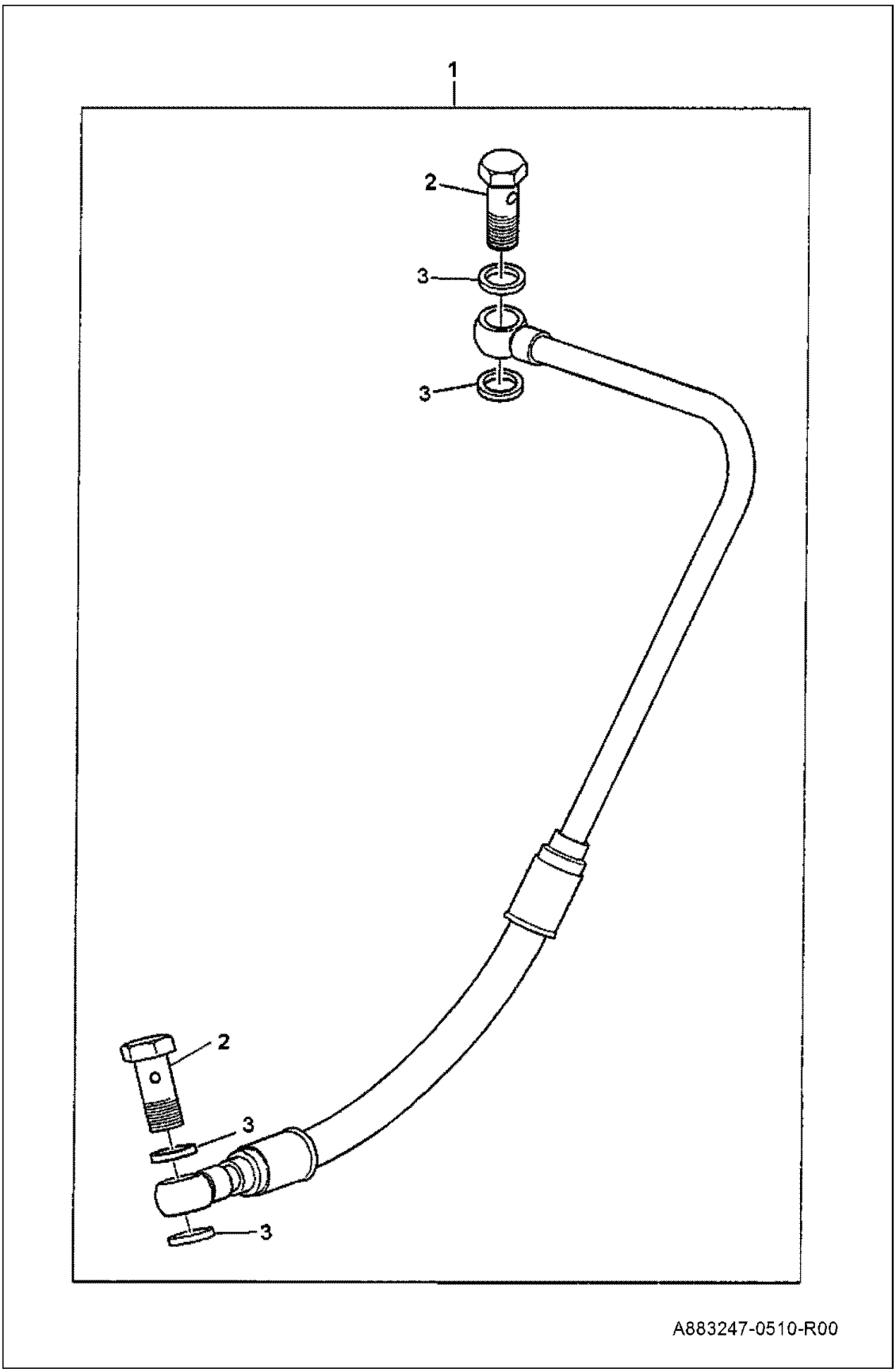

ENGINE CONNECTIONS (Cont'd)

Ref No	Part Number	Description	Remarks	Serial Number	Qty
1	6912008	TURBO FEED PIPE			1
2	6911935	BANJO BOLT			2
3	6911862	WASHER			4

ENGINE CONNECTIONS

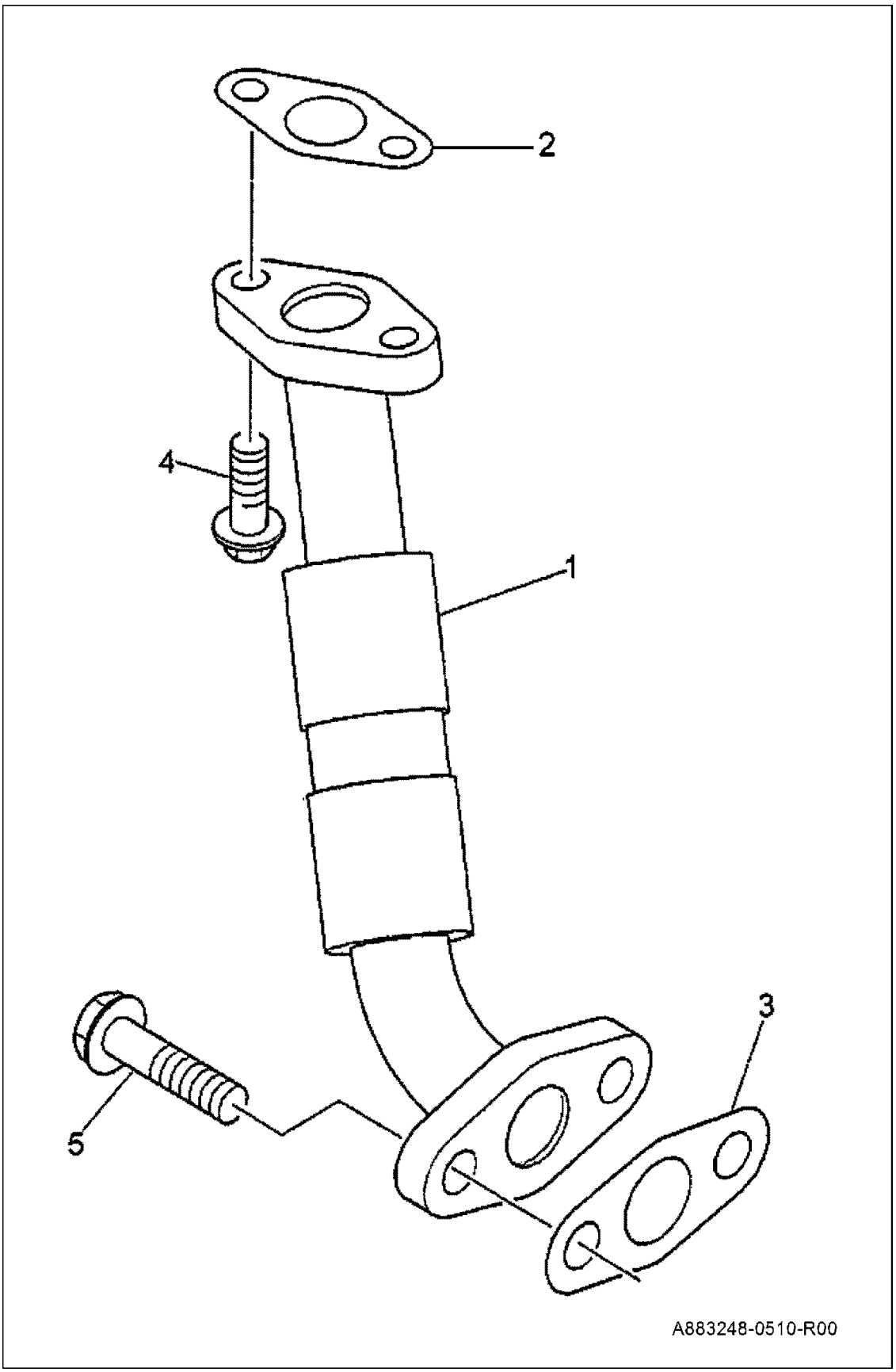

ENGINE CONNECTIONS (Cont'd)

Ref No	Part Number	Description	Remarks	Serial Number	Qty
1	6911957	TURBO DRAIN PIPE			1
2	7289185	JOINT			1
3	7289186	JOINT			1
4	7289187	SCREW			2
5	7289004	SCREW			2

EXHAUST ELBOW

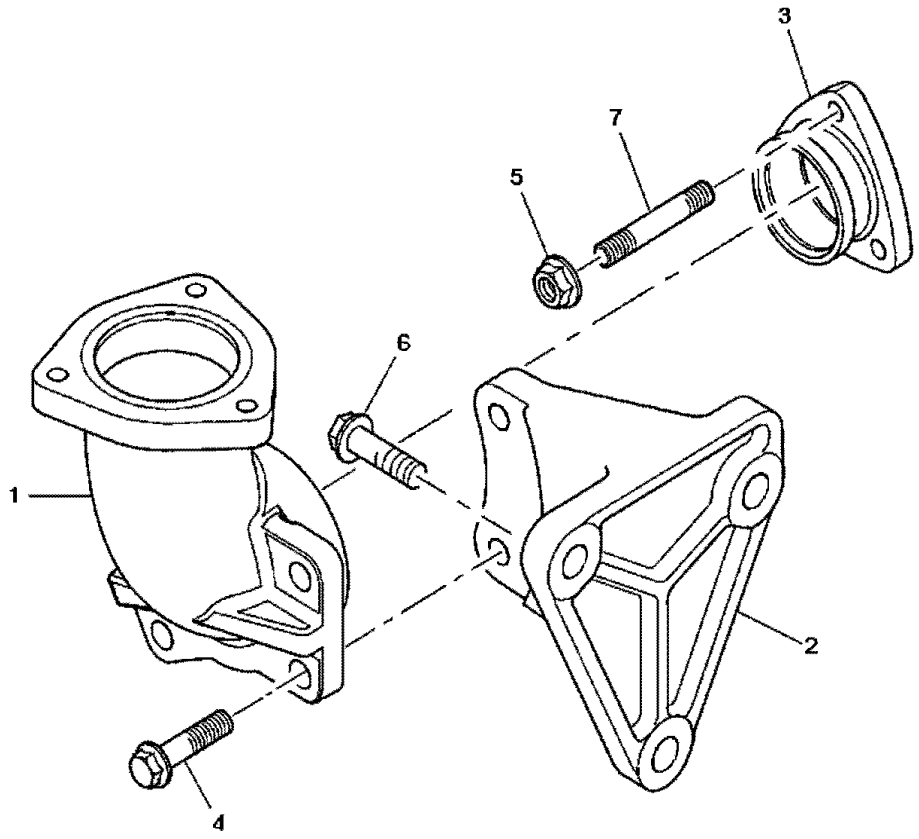

A883249-0510-R00

EXHAUST ELBOW (Cont'd)

Ref No	Part Number	Description	Remarks	Serial Number	Qty
1	6911992	EXHAUST ELBOW			1
2	7289189	BRACKET			1
3	7289190	ADAPTOR			1
4	7289191	SCREW			3
5	6668569	NUT			3
6	7289192	SCREW			2
7	6911867	STUD			3

ENGINE CONNECTIONS

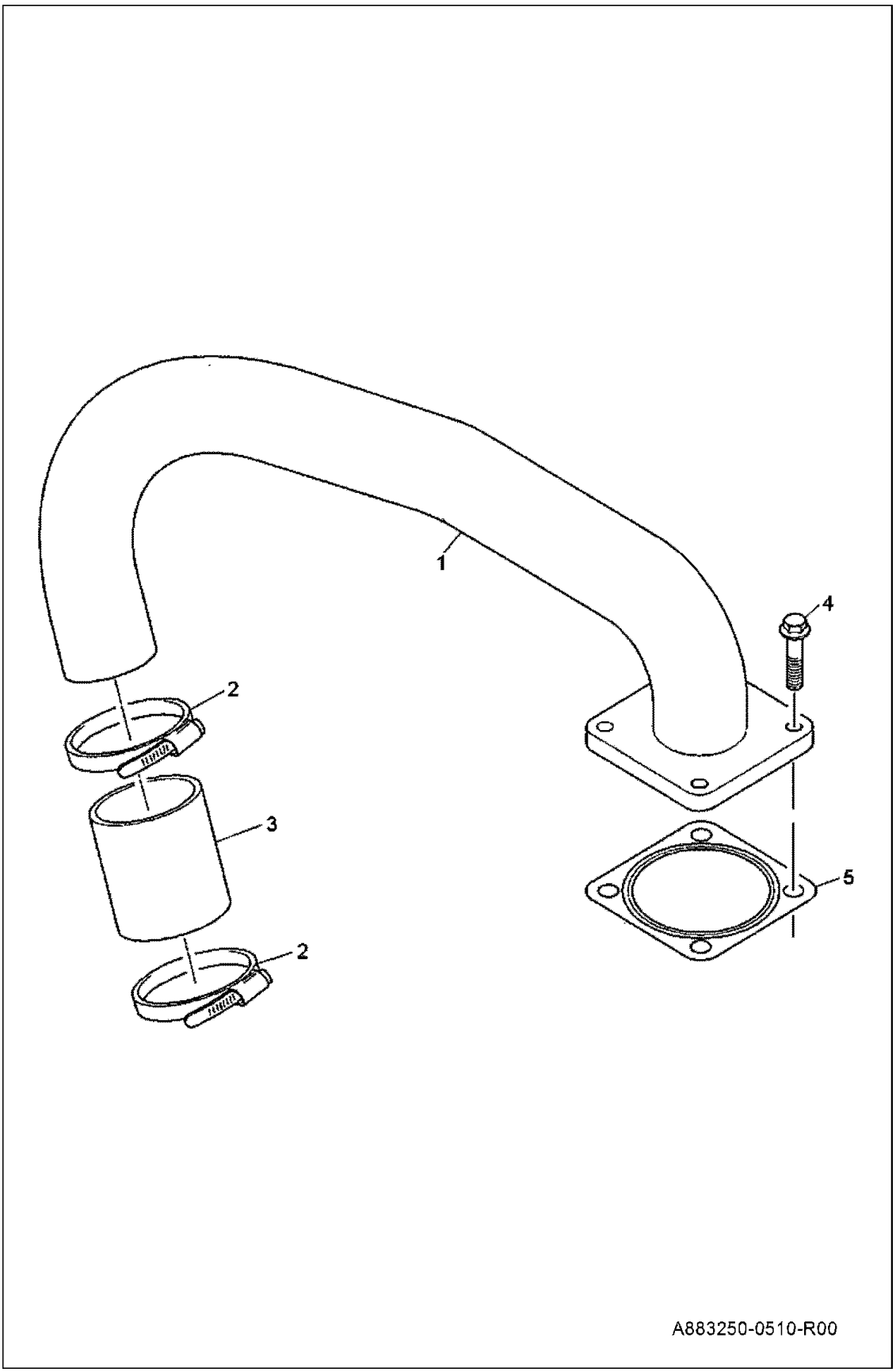

ENGINE CONNECTIONS (Cont'd)

Ref No	Part Number	Description	Remarks	Serial Number	Qty
1	7289193	AIR PIPE			1
2	6911889	HOSE CLIP			2
3	6911949	HOSE			1
4	6668495	SCREW			4
5	6923517	INLET SEAL			1

EXHAUST MANIFOLD

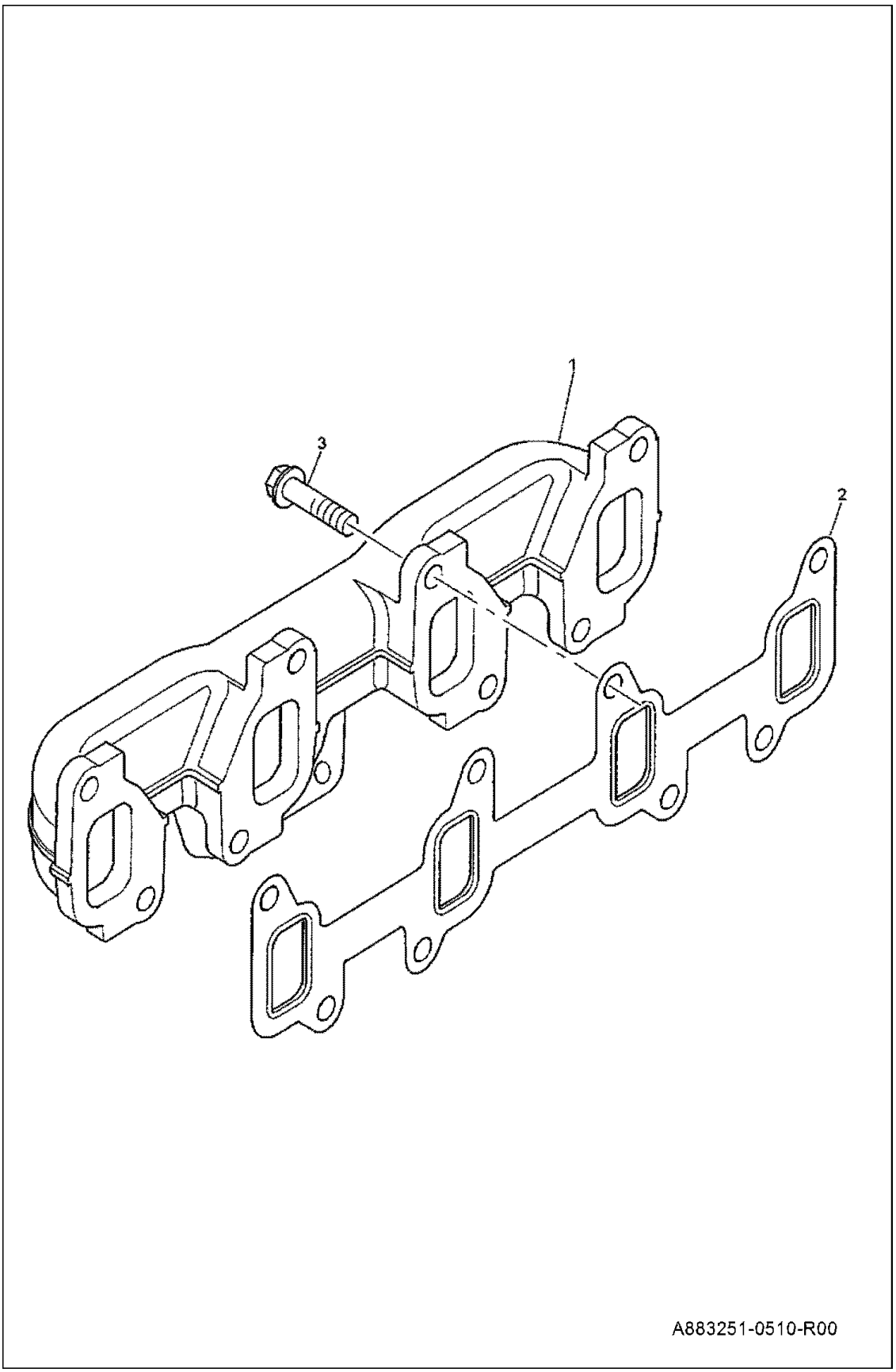

EXHAUST MANIFOLD (Cont'd)

Ref No	Part Number	Description	Remarks	Serial Number	Qty
1	7289197	EXHAUST MANIFOLD			1
2	6911973	EXHAUST MANIFOLD JOINT			1
3	7022465	SCREW			8

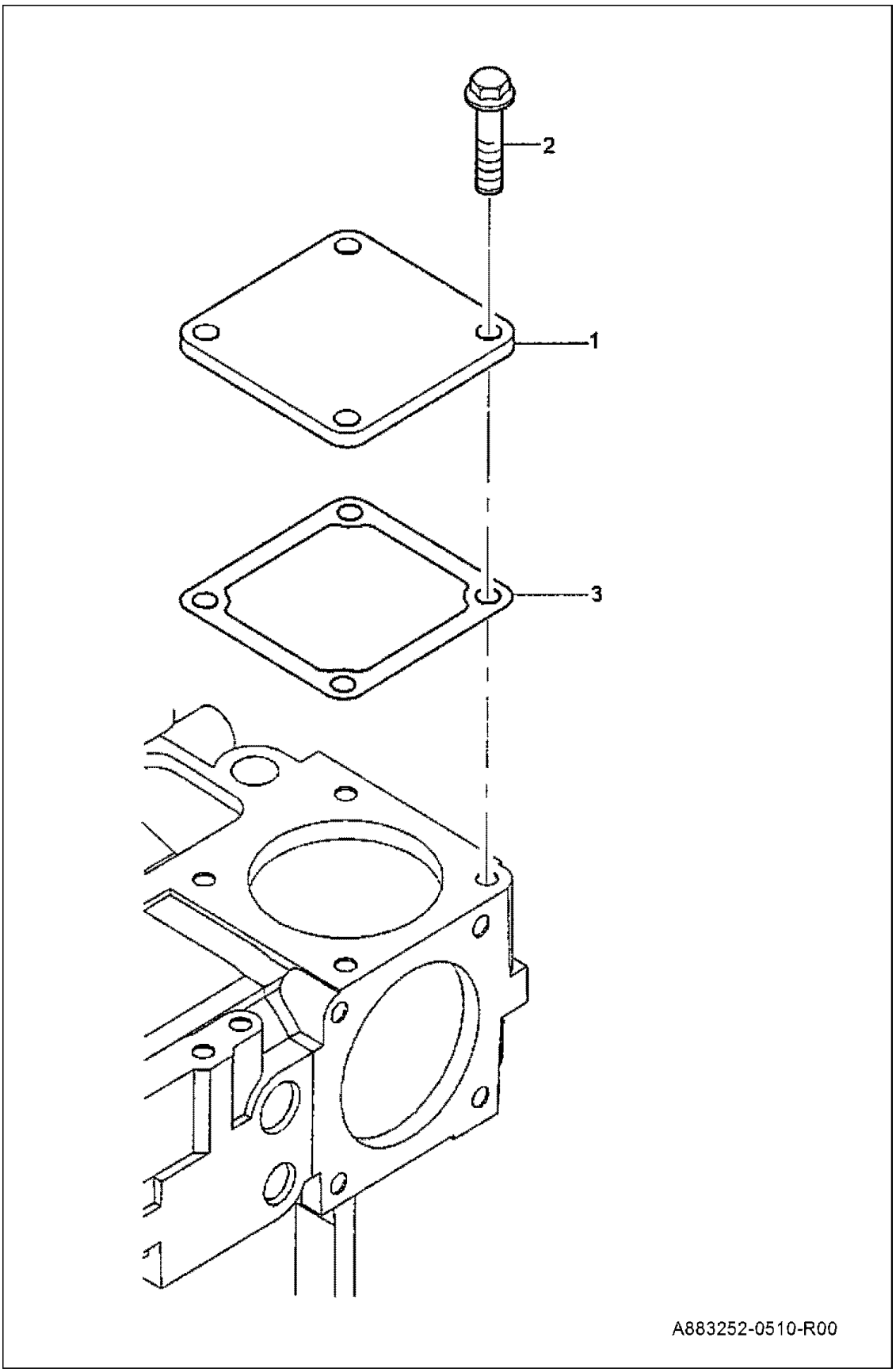
2
1
3
A883252-0510-R00

CONNECTIONS (Cont'd)

Ref No	Part Number	Description	Remarks	Serial Number	Qty
1	6911958	PLATE			3
2	6668495	SCREW			12
3	6911975	SEAL			3

LIFT PUMP

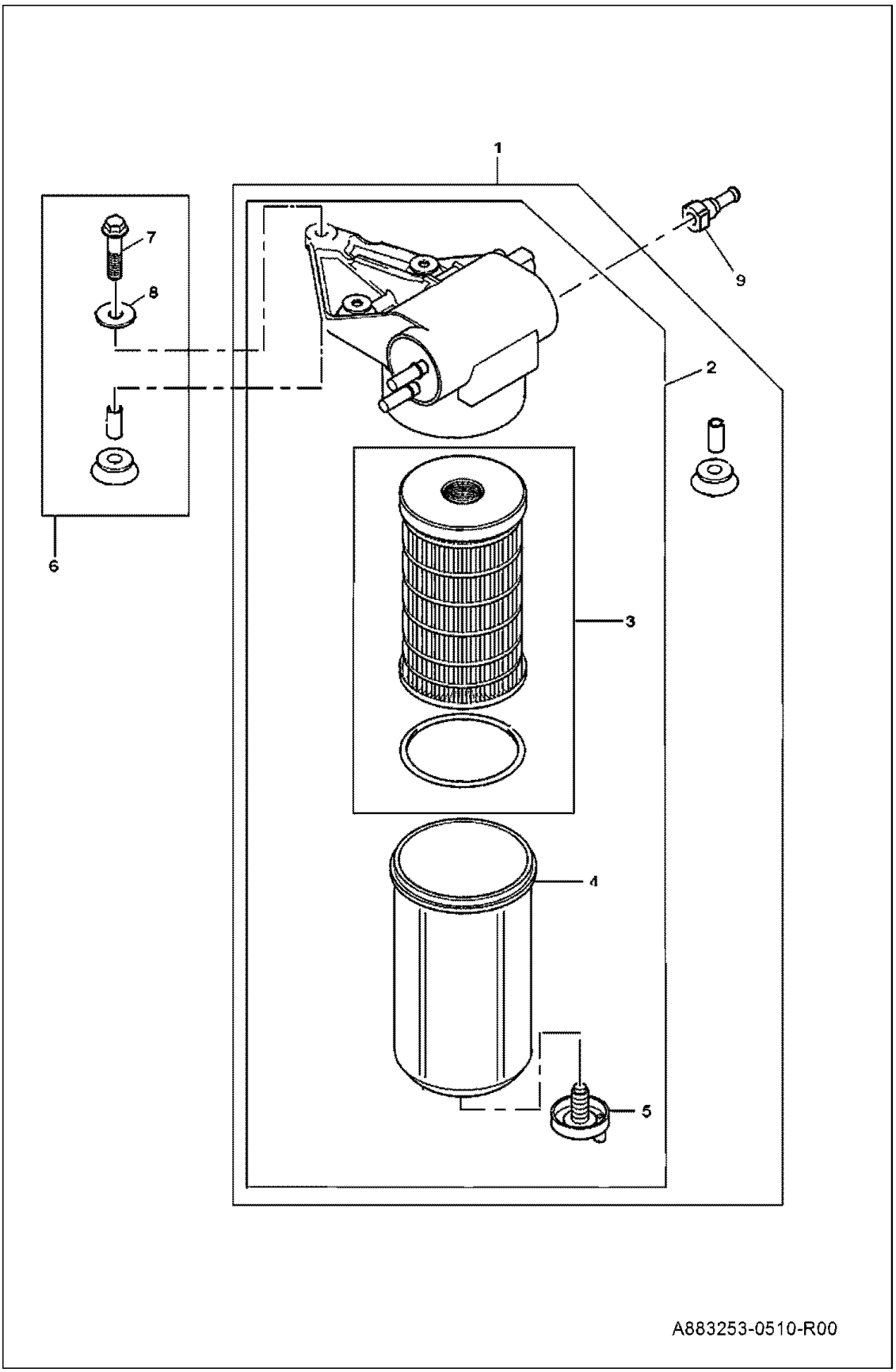

LIFT PUMP (Cont'd)

Ref No	Part Number	Description	Remarks	Serial Number	Qty
1	7022483	PUMP, LIFT			1
2	7289203	LIFT PUMP			1
3	6911907	FUEL FILTER ELEMENT KIT			1
4	6924330	BOWL			1
5	6924345	DRAIN PLUG			1
6	6912023	MOUNTING KIT			1
7	7289208	SCREW			3
8	7289209	WASHER			3
9	6911991	CONNECTION			1

FUEL- PUMP CONNECTIONS

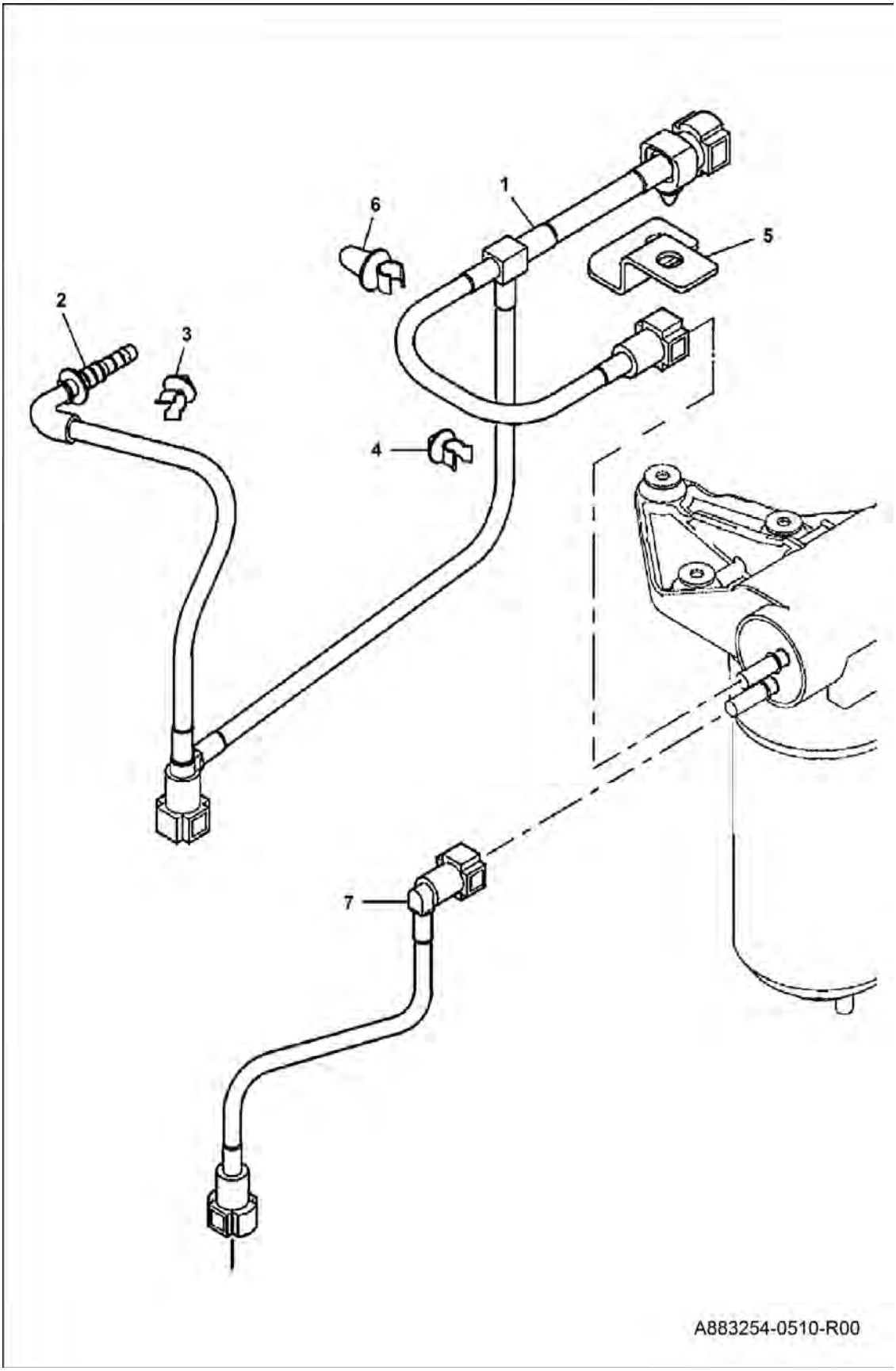

FUEL- PUMP CONNECTIONS (Cont'd)

Ref No	Part Number	Description	Remarks	Serial Number	Qty
1	6686083	FUEL PIPE			1
2	6912039	CONNECTION			1
3	6924921	PIPE CLIP			1
4	6911890	CLIP			1
5	7289214	BRACKET			1
6	7289215	PIPE CLIP			1
7	6911902	FUEL FEED PIPE			1

HEATER PLUGS

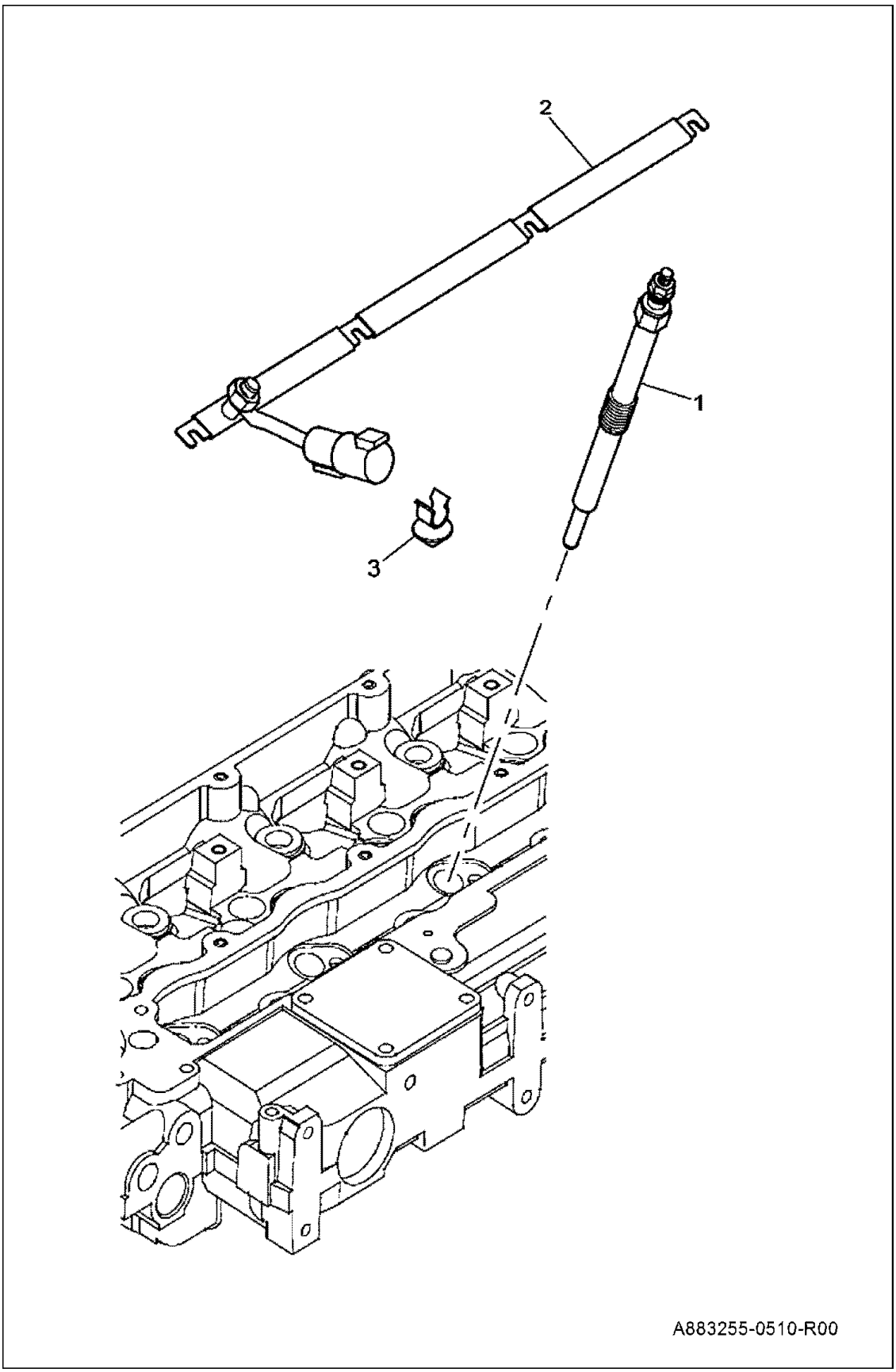

HEATER PLUGS (Cont'd)

Ref No	Part Number	Description	Remarks	Serial Number	Qty
1	6911908	GLOW PLUG			4
2	7289218	BAR			1
3	6911890	CLIP			1

LIFTING BRACKETS

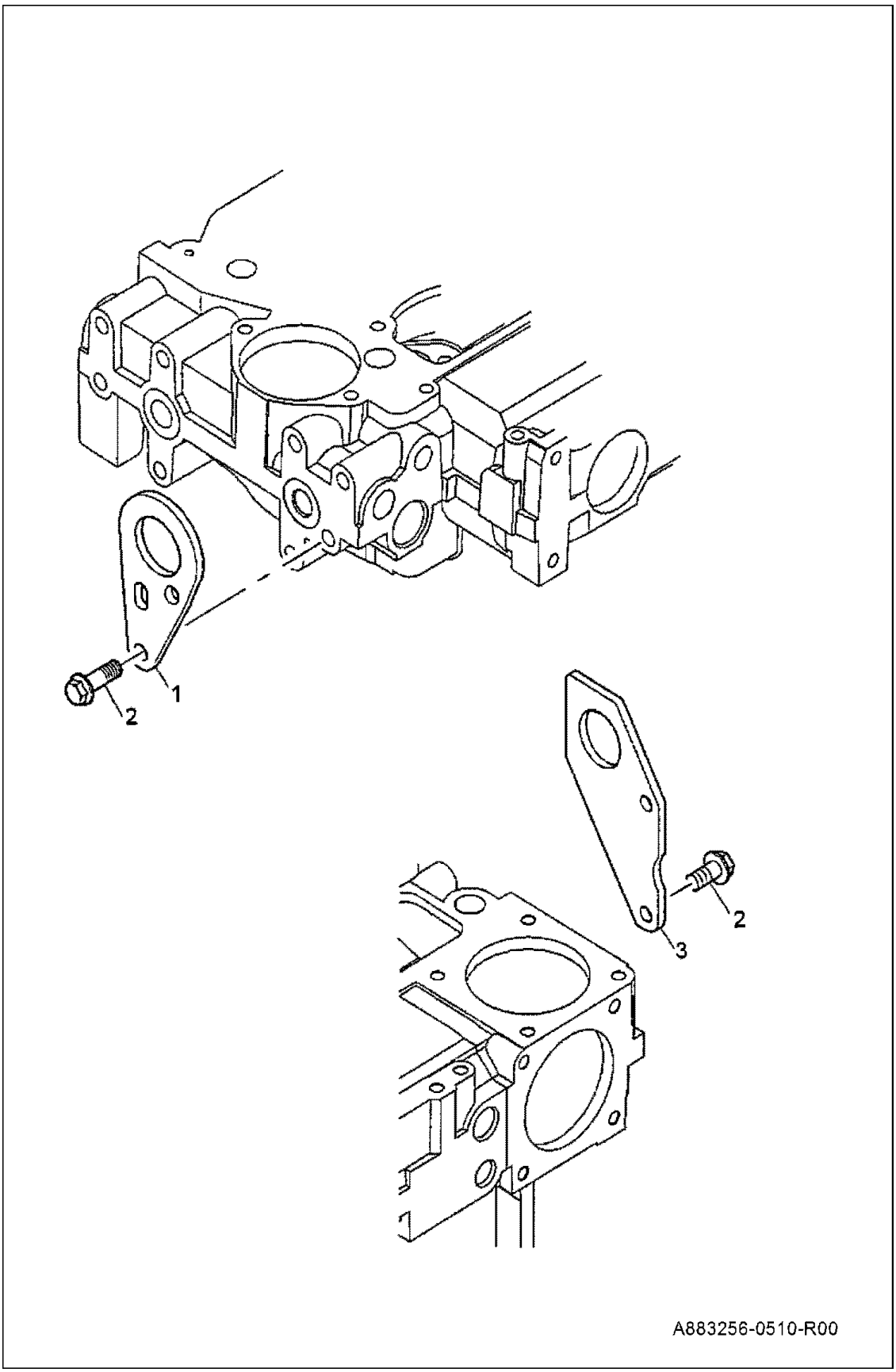

LIFTING BRACKETS (Cont'd)

Ref No	Part Number	Description	Remarks	Serial Number	Qty
1	7289219	LIFTING BRACKET			1
2	7289006	SCREW			4
3	7022476	BRACKET			1

CONNECTIONS

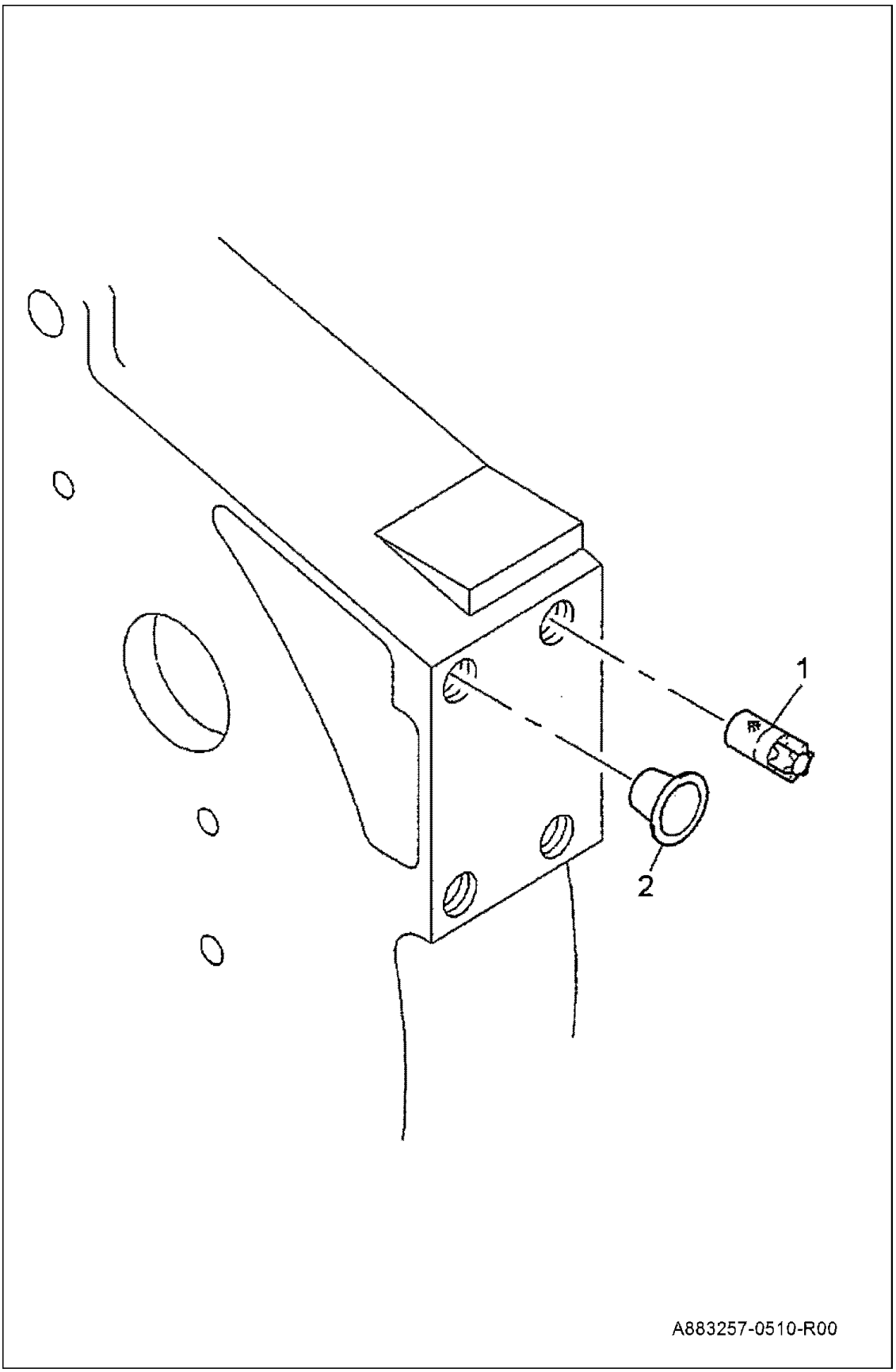

CONNECTIONS (Cont'd)

Ref No	Part Number	Description	Remarks	Serial Number	Qty
1	7022473	PLUG			4
2	7289222	PLUG			6

LUBRICATING OIL PRESSURE SWITCH/GAUGE

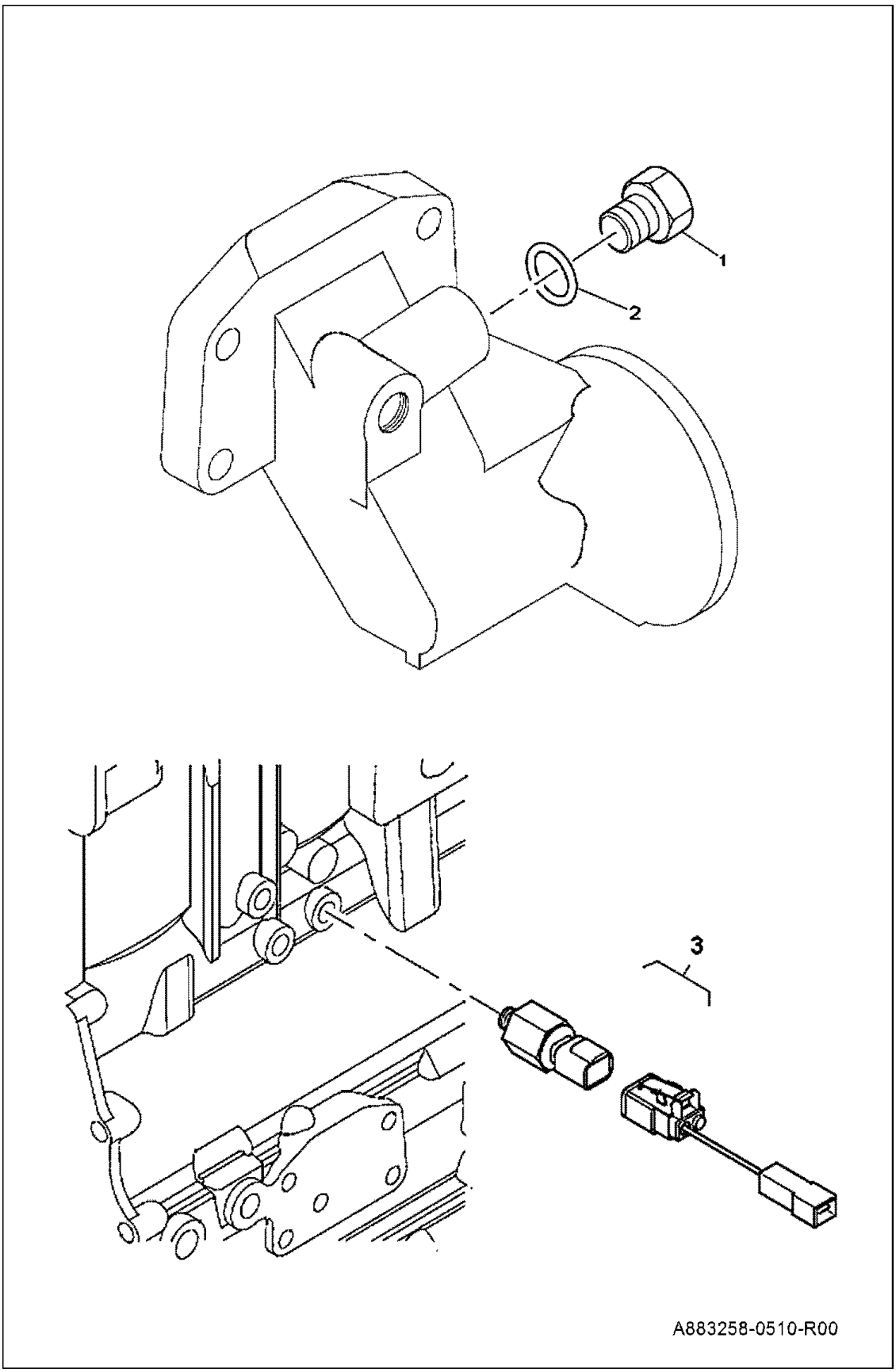

LUBRICATING OIL PRESSURE SWITCH/GAUGE (Cont'd)

Ref No	Part Number	Description	Remarks	Serial Number	Qty
1	7289223	PLUG			1
2	7289224	SEAL-O RING			1
3	7289225	SWITCH			1

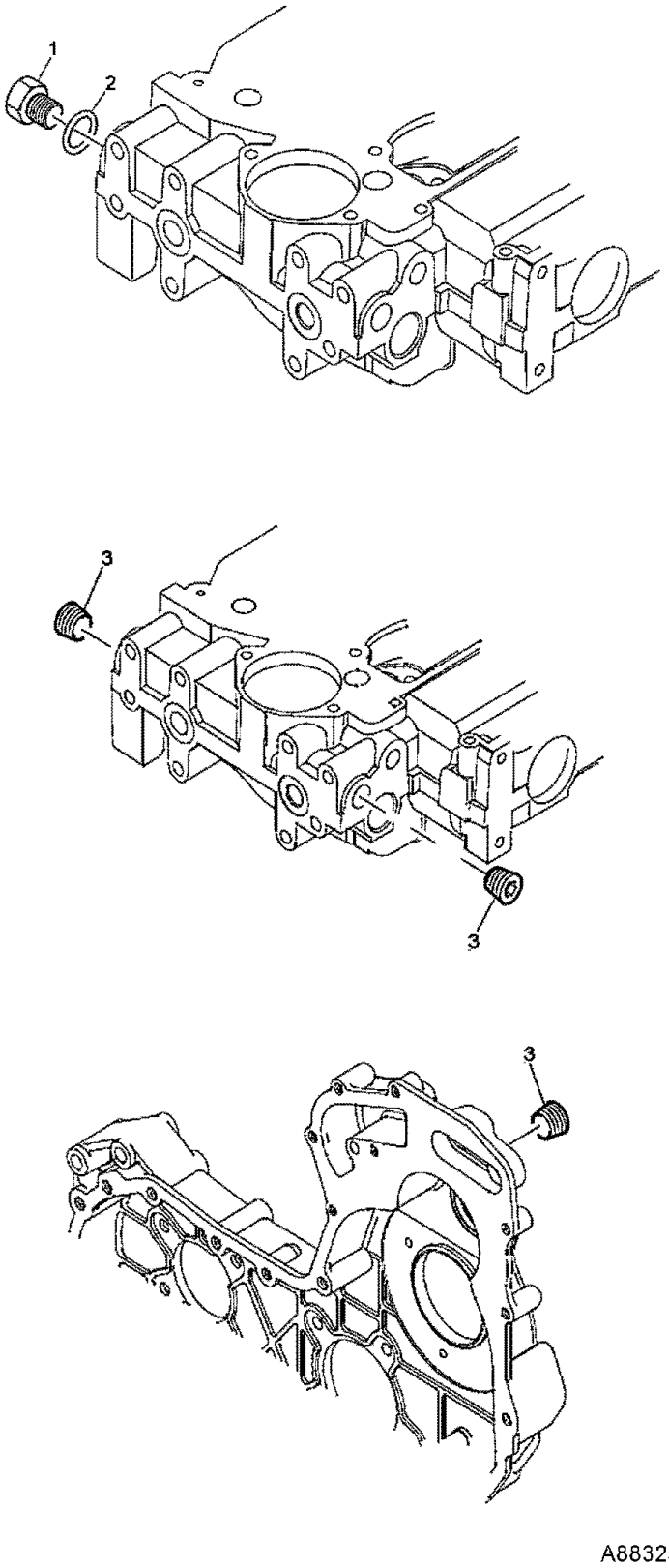
1
2
3
3
3
A883259-0510-R00

AUXILIARIES (Cont'd)

Ref No	Part Number	Description	Remarks	Serial Number	Qty
1	7288974	PLUG			1
2	7288975	O-RING			1
3	7288976	PLUG			3

FUEL FILTER (WATER TRAP)

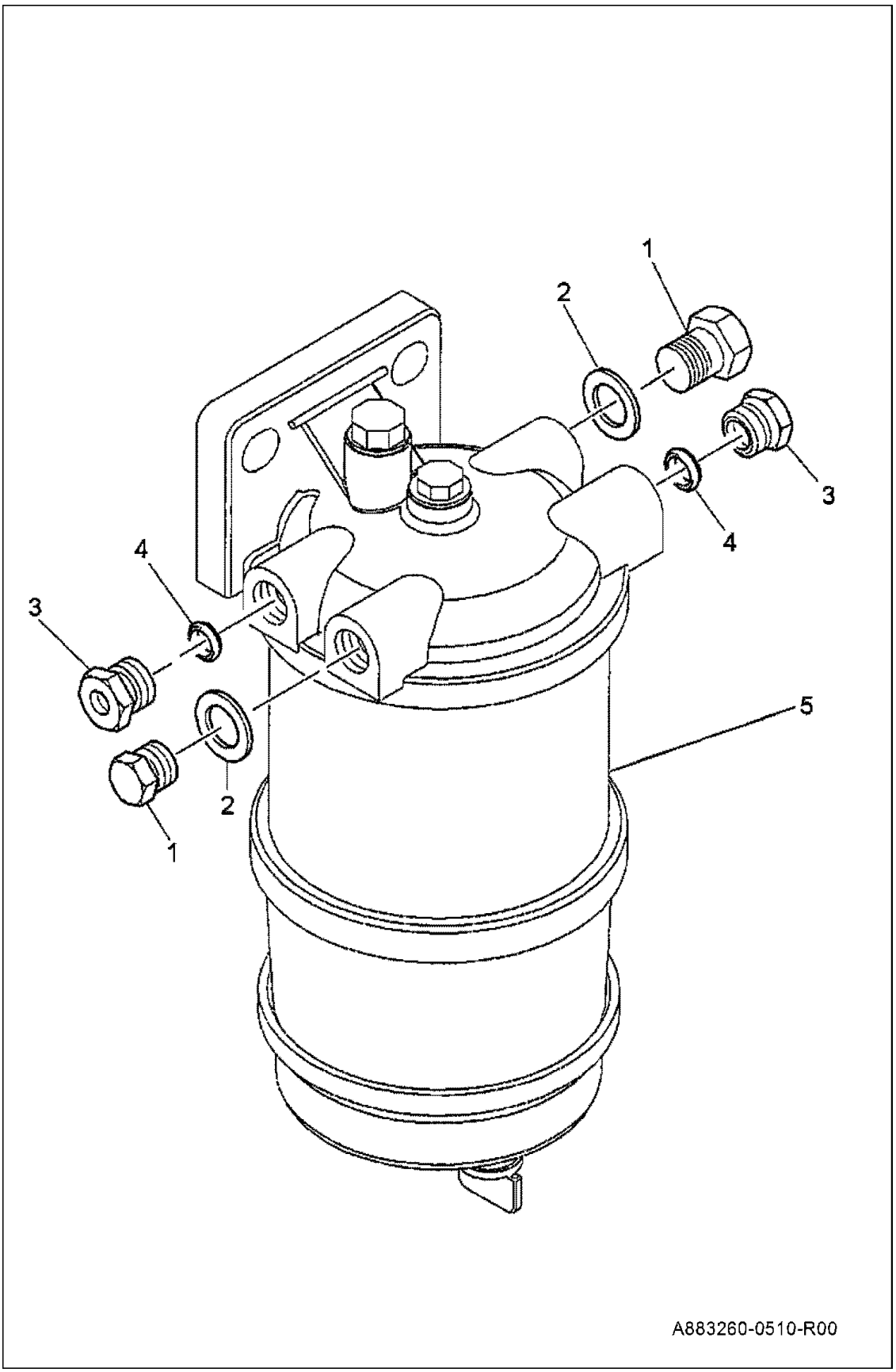

FUEL FILTER (WATER TRAP) (Cont'd)

Ref No	Part Number	Description	Remarks	Serial Number	Qty
1	6515682	PLUG			2
2	7289227	WASHER			2
3	7289228	NUT			2
4	7289229	OLIVE			2
5	7289230	PRE-FUEL FILTER ASSY			1

FUEL FILTER (WATER TRAP)

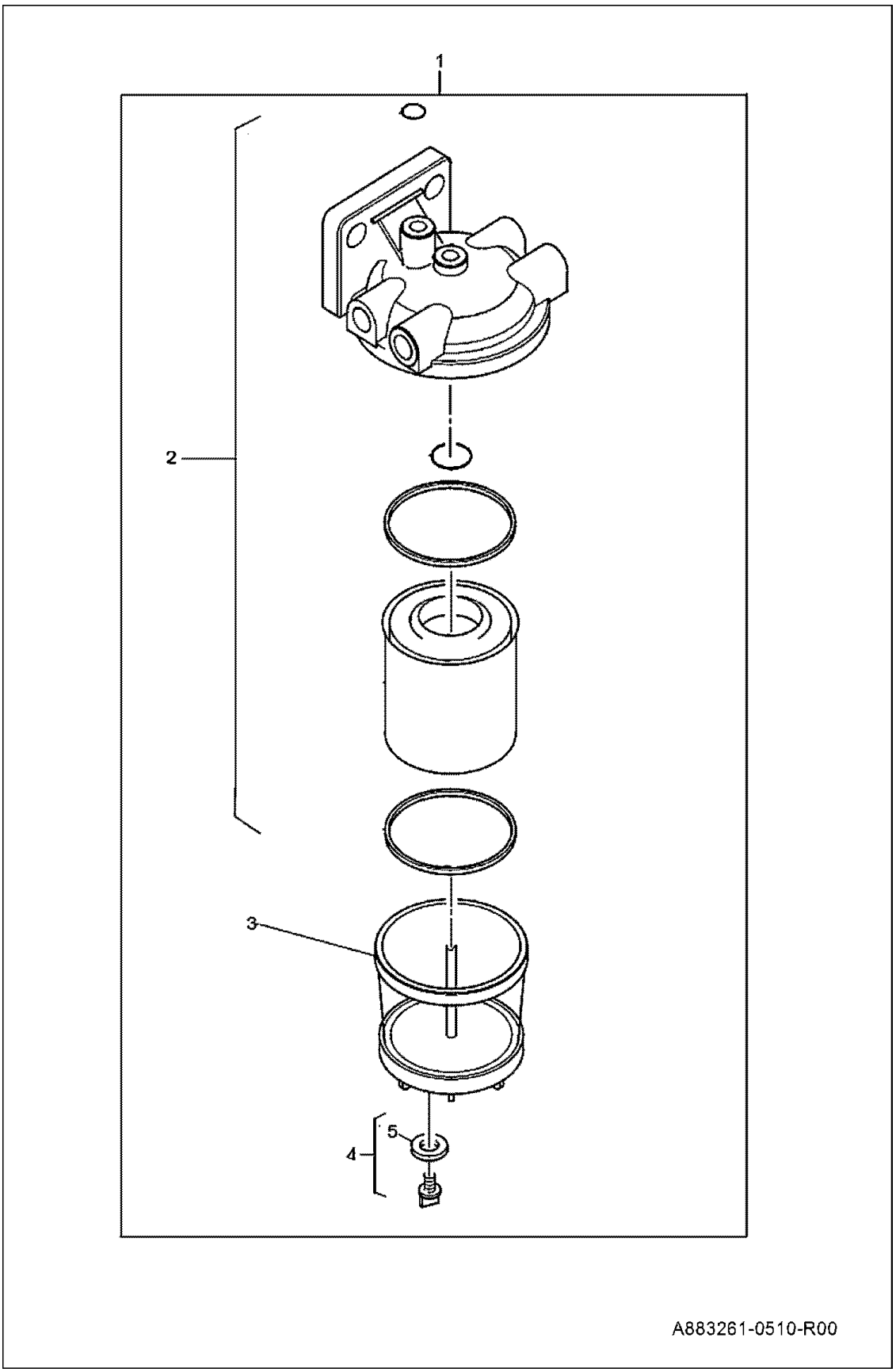

FUEL FILTER (WATER TRAP) (Cont'd)

Ref No	Part Number	Description	Remarks	Serial Number	Qty
1	7289230	PRE-FUEL FILTER ASSY			1
2	7289231	FUEL PREFILTER KIT			1
3	7001035	BOWL (CLEAR GLASS)			1
4	6668886	PLUG			1
5	7289234	WASHER			1

RADIATOR AND ITS CONNECTIONS

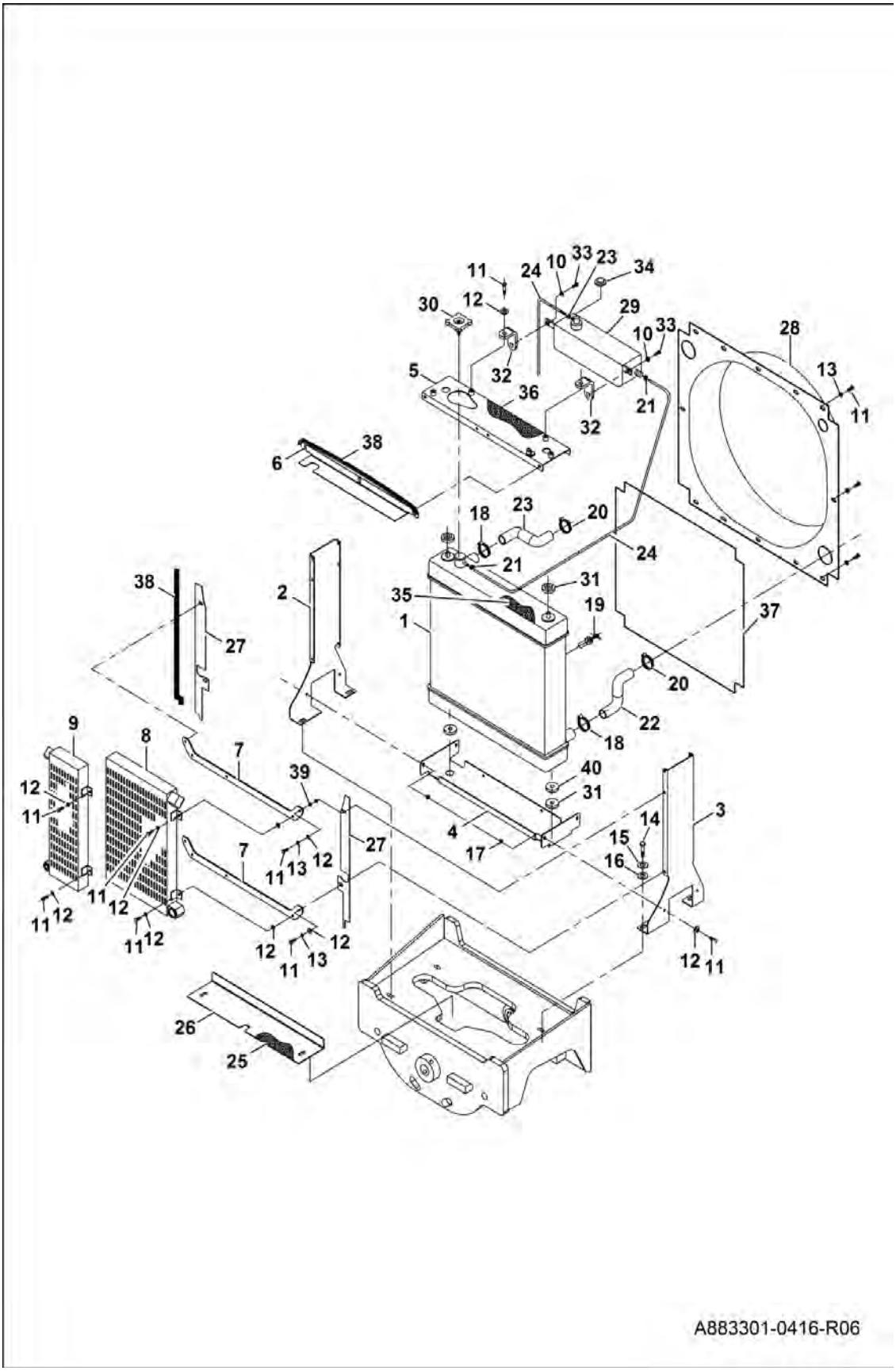

RADIATOR AND ITS CONNECTIONS (Cont'd)

Ref No	Part Number	Description	Remarks	Serial Number	Qty
1	7289236	WATER RADIATOR			1
2	7290991	BRACKET LEFT			1
3	7290992	BRACKET RIGHT			1
4	7289239	BRACKET			1
5	7290993	BRACKET			1
6	7290994	BRACKET			1
7	7289244	BRACKET			2
8	7289237	OIL COOLER			1
9	7289238	OIL COOLER			1
10	7289268	WASHER			2
11	7289273	BOLT			30
12	7288892	WASHER			30
13	7288891	LOCK WASHER			4
14	7289258	BOLT			4
15	7289259	LOCK WASHER			4
16	7289260	WASHER			4
17	7289263	NUT			4
18	7289266	CLAMP			2
19	7289252	TAP			1
20	7289267	CLAMP			2
21	7289264	CLAMP			3
22	7290996	HOSE			1
23	7289249	HOSE			1
24	7304083	HOSE			1
25	7290424	ISOLATION			1
26	7290998	BRACKET			1
27	7299177	BRACKET			2
28	7291000	PADDLE BOX			1
29	7289255	OVERFLOW TANK			1
30	7289248	LID			1
31	7289251	RUBBER BUMPER			4
32	7289257	BRACKET			2
33	7288896	BOLT			2
34	7289256	COVER			1
35	7291001	ISOLATION RUBBER			2
36	7291002	TAMPON			1
37	7291003	FRAME BAND			1
38	7291004	BELLOWS SEAL			1
39	7289272	BUSH			4
40	7291005	RUBBER BUMPER			2

EXHAUST SYSTEM

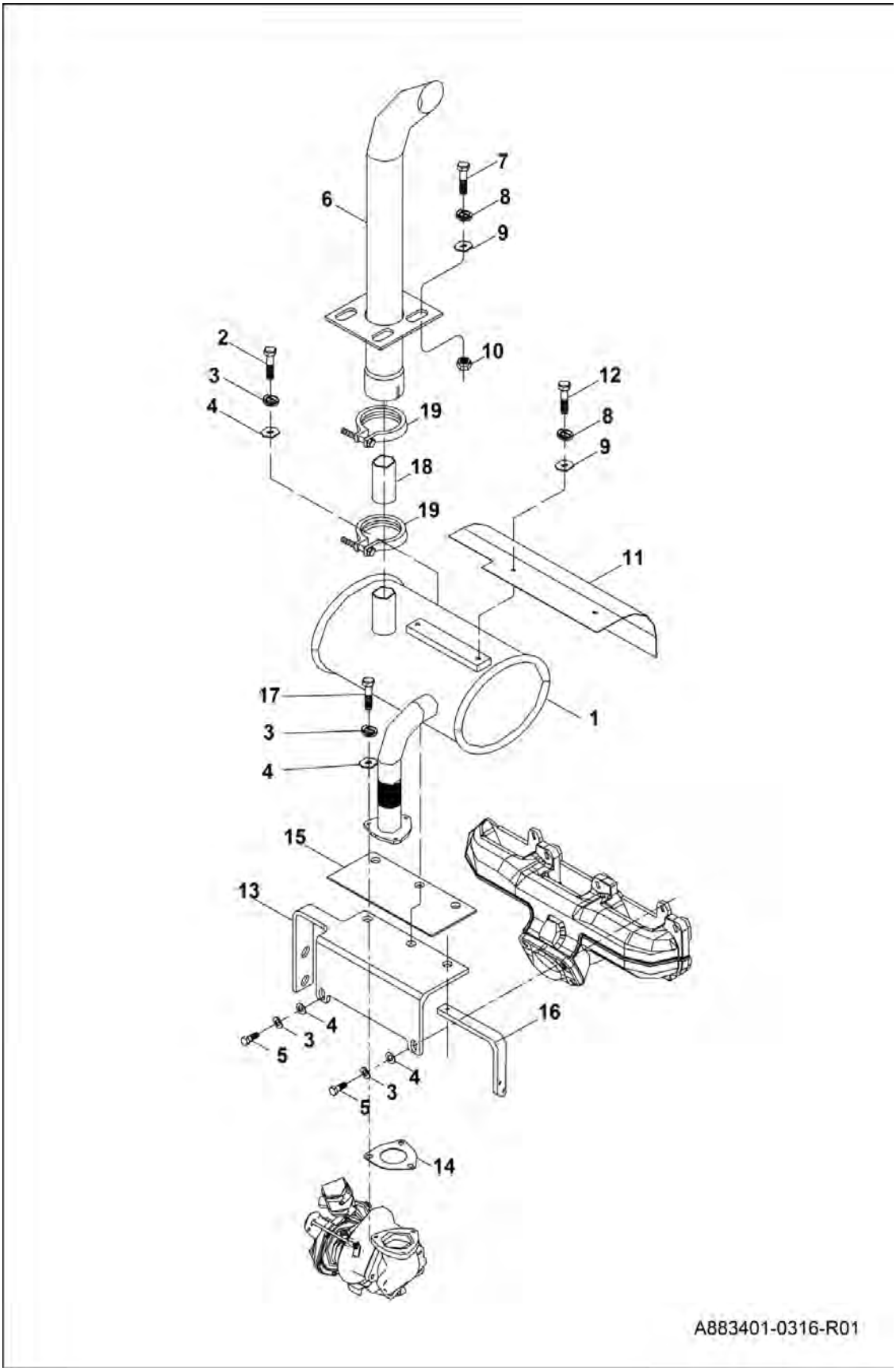

EXHAUST SYSTEM (Cont'd)

Ref No	Part Number	Description	Remarks	Serial Number	Qty
1	7291007	SILENCER			1
2	7289258	BOLT			6
3	7289259	LOCK WASHER			13
4	7289260	WASHER			13
5	7289849	BOLT			4
6	7291008	PIPE			1
7	7289279	BOLT			4
8	7288891	LOCK WASHER			4
9	7289262	WASHER			12
10	7289263	NUT			4
11	7291009	BRACKET			1
12	7289261	BOLT			4
13	7291011	BRACKET			1
14	7289281	GASKET			1
15	7291012	GASKET			1
16	7291014	SUPPORT PLATE			1
17	7289642	BOLT			3
18	7304026	HOSE			1
19	7289284	CLAMP			2

AIR FILTER AND ITS CONNECTIONS

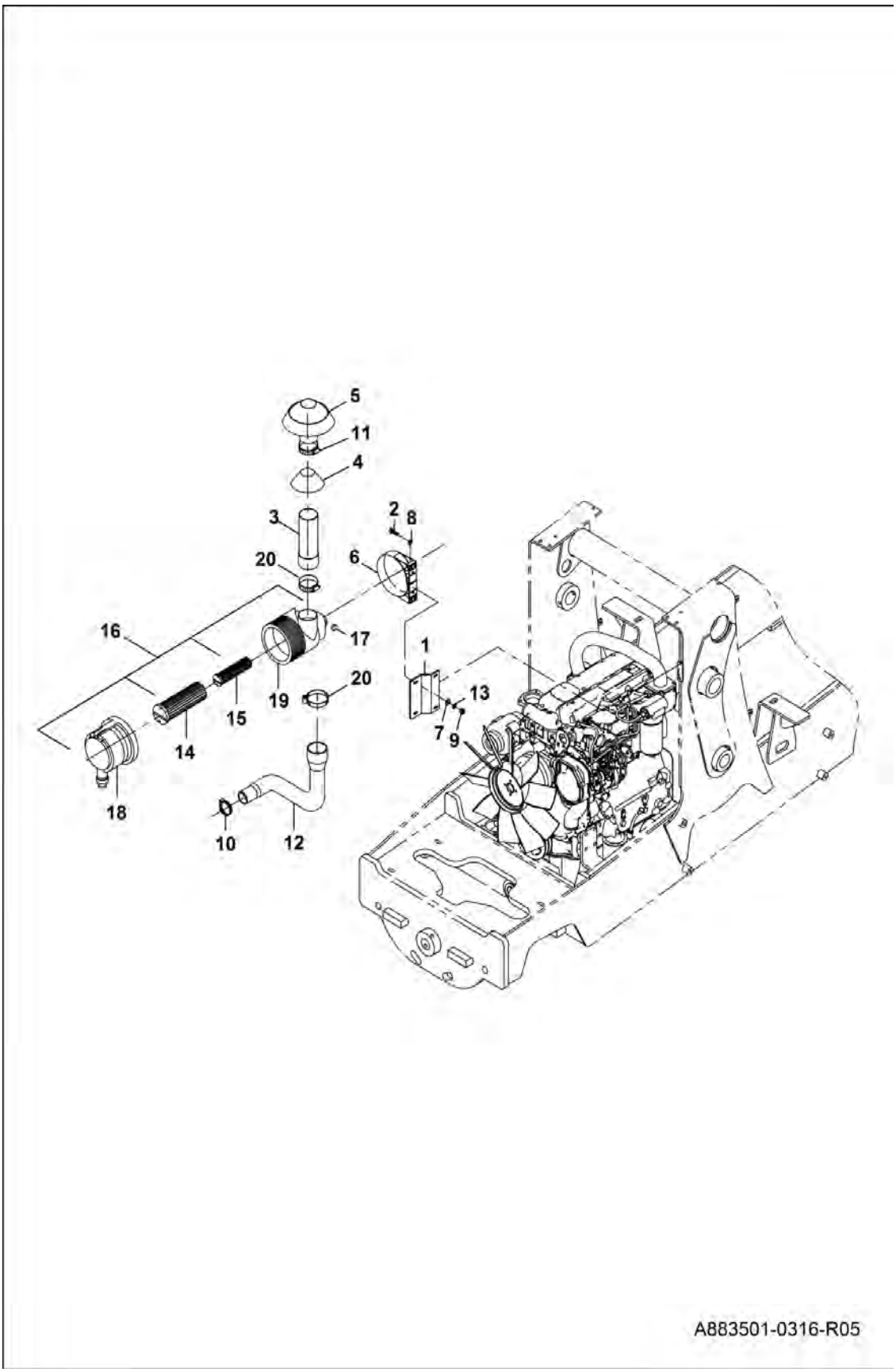

AIR FILTER AND ITS CONNECTIONS (Cont'd)

Ref No	Part Number	Description	Remarks	Serial Number	Qty
1	7291016	PLATE			1
2	7289273	BOLT			2
3	7304197	PIPE			1
4	7289288	DUST RUBBER			1
5	7291018	CAP			1
6	7289290	CLAMP			1
7	7288892	WASHER			2
8	7289268	WASHER			2
9	7289263	NUT			2
10	7291019	CLAMP			1
11	7289301	CLAMP			1
12	7291020	AIR FILTER HOSE			1
13	7288891	LOCK WASHER			2
14	7289294	AIR FILTER INNER			1
15	7289295	AIR FILTER OUTER			1
16	7289296	AIR FILTER			1
17	7289297	INDICATOR			1
18	7289298	CAP			1
19	7289299	BODY			1
20	7291021	CLAMP			2

FUEL HOSES

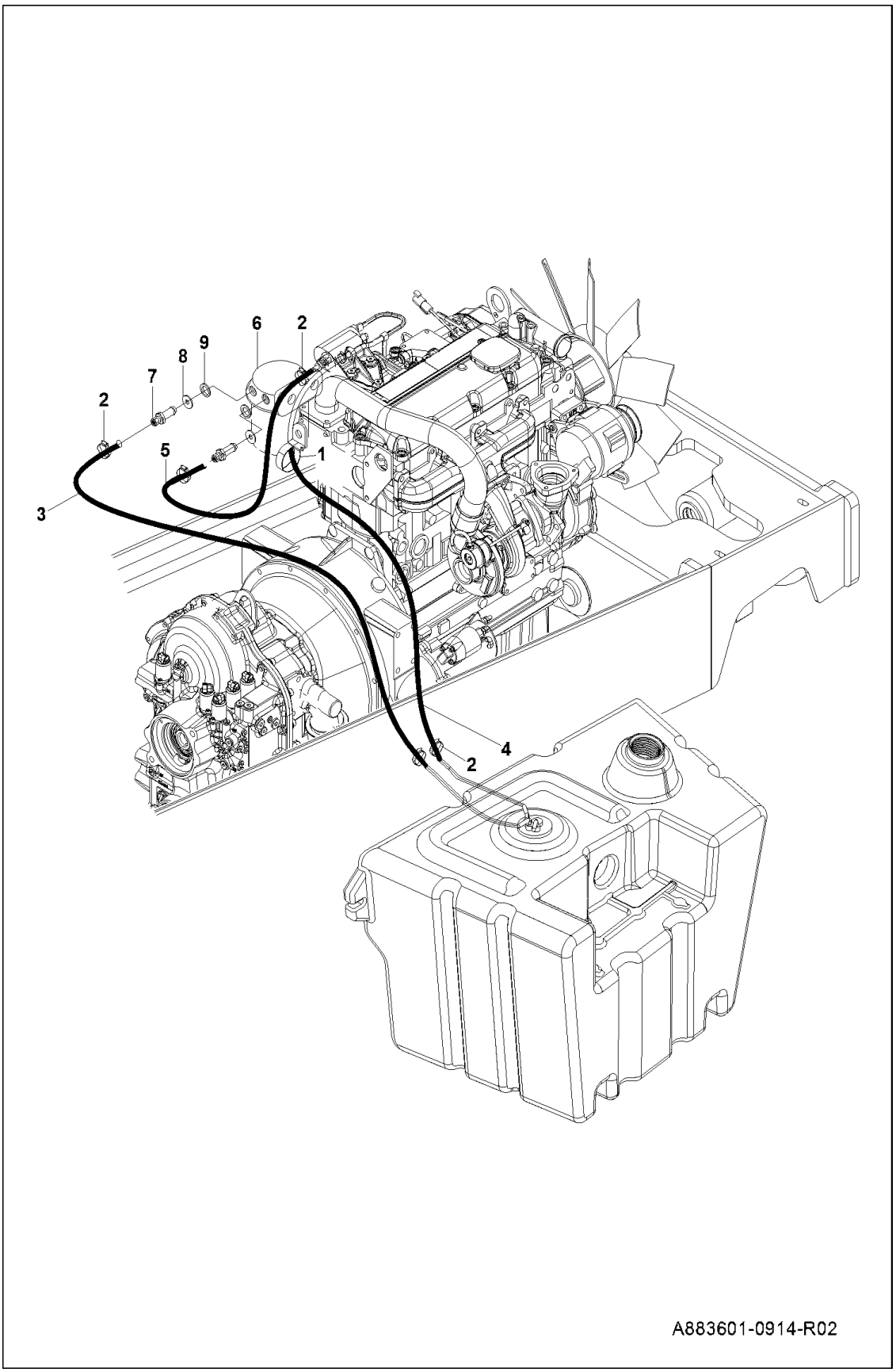

FUEL HOSES (Cont'd)

Ref No	Part Number	Description	Remarks	Serial Number	Qty
1	7289303	CLAMP			1
2	7289264	CLAMP			7
3	7289304	HOSE			1
4	7289305	HOSE			1
5	7289306	HOSE			1
6	7291022	FUEL OIL HEATER	OPTIONAL		1
7	7291023	ADAPTER			2
8	7291024	WASHER			2
9	7291025	O-RING			2

ENGINE AND TRANSMISSION CONNECTIONS

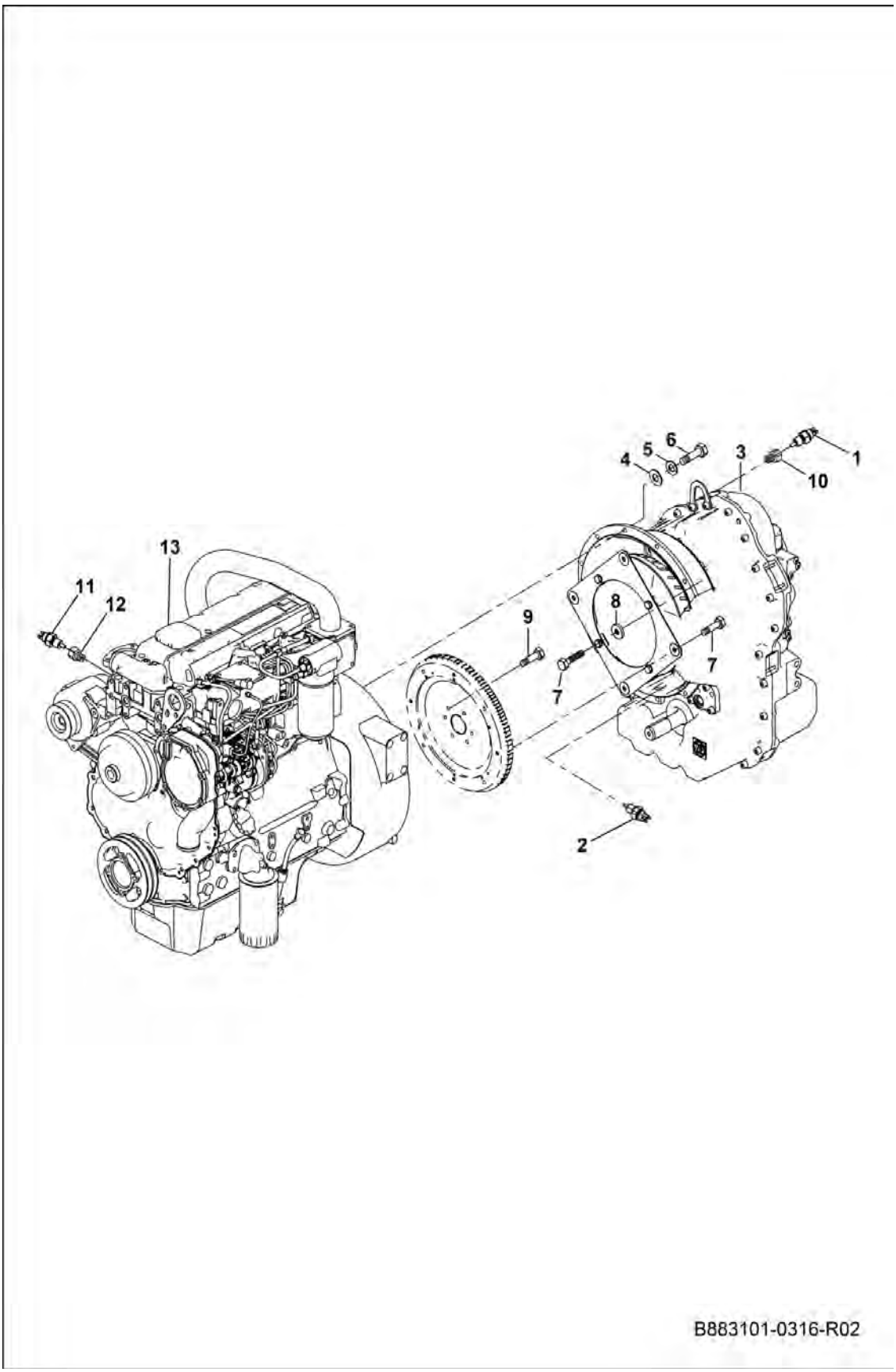

ENGINE AND TRANSMISSION CONNECTIONS (Cont'd)

Ref No	Part Number	Description	Remarks	Serial Number	Qty
1	7291027	SENSOR			1
2	7291028	SENSOR			1
3	7291029	TRANSMISSION			1
4	7289278	WASHER			12
5	7289259	LOCK WASHER			12
6	7289258	BOLT			12
7	7289691	BOLT			8
8	7291030	WASHER			4
9	7299312	CABLE			6
10	7291031	ADAPTER			1
11	7291032	SENDER			1
12	7291033	ADAPTER			1
13	7288897	ENGINE			1

TRANSMISSION/ ENGINE CONNECTION

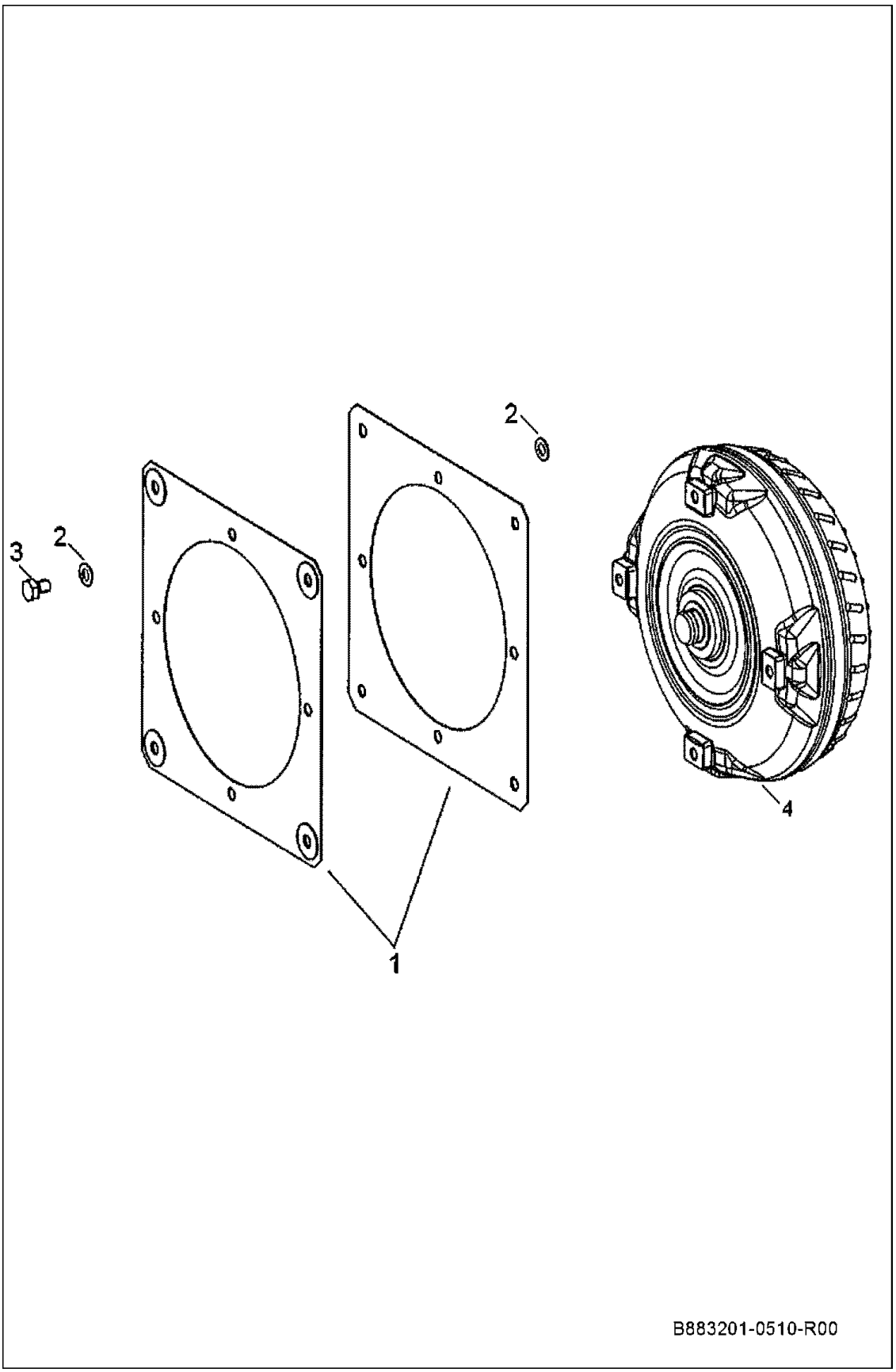

TRANSMISSION/ ENGINE CONNECTION (Cont'd)

Ref No	Part Number	Description	Remarks	Serial Number	Qty
1	7291034	DIAPHRAGM			2
2	7291035	WASHER			8
3	7291036	SCREW			4
4	7291037	CONVERTER			1

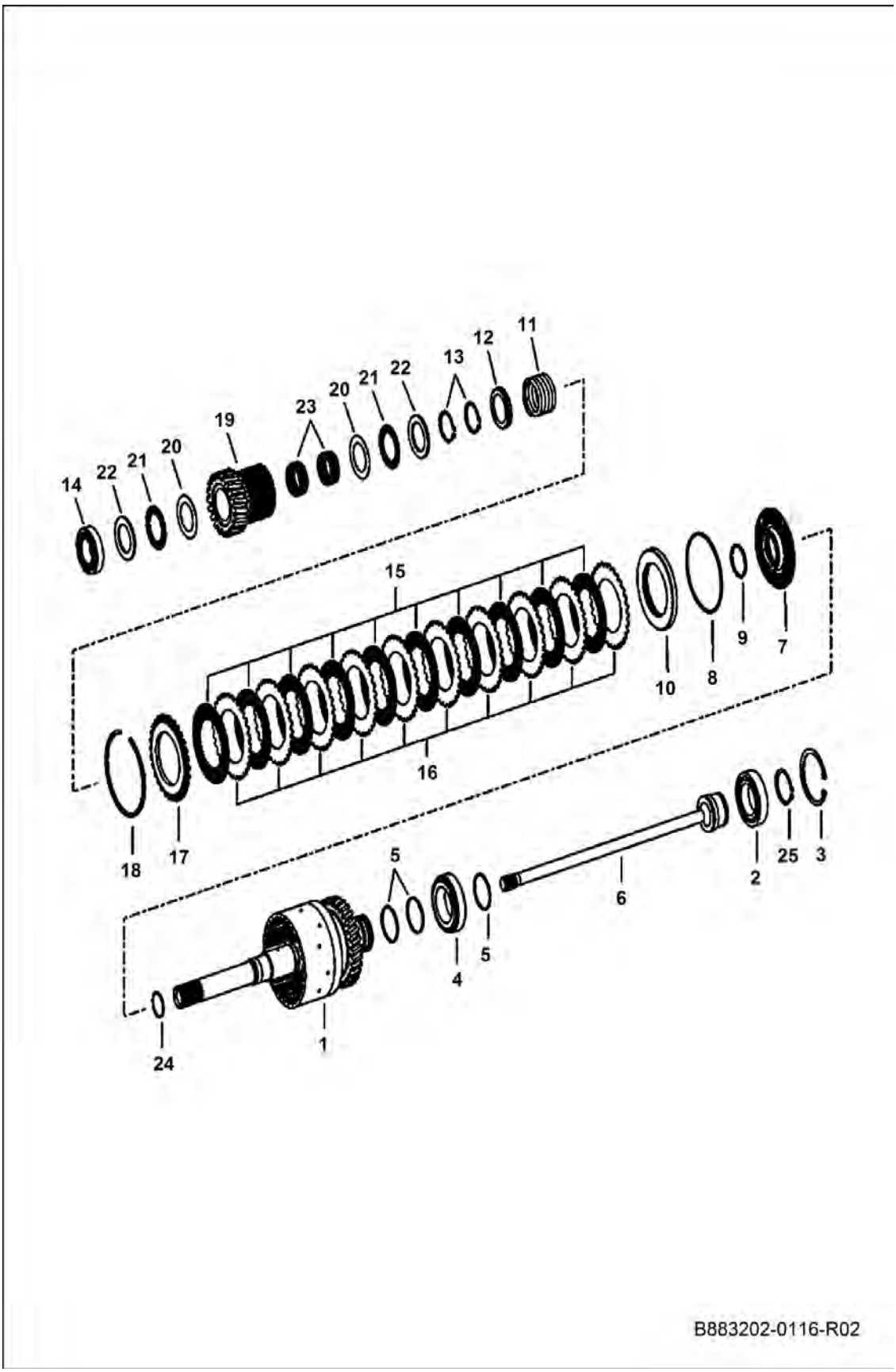
11
12
13
22
21
20
23
19
20
21
22
14
15
9
7
10
8
16
18
17
5
6
2
25
3
4
5
1
24
B883202-0116-R02

TRANSMISSION/ INPUT (Cont'd)

Ref No	Part Number	Description	Remarks	Serial Number	Qty
1	7291038	INPUT SHAFT			1
2	7291039	BALL BEARING			1
3	7291040	RETAINING RING			1
4	7291041	ROLL BEARING			1
5	7291042	PISTON RING			3
6	7291043	SHAFT			1
7	7291044	PISTON			1
8	7291045	O-RING			1
9	7291046	O-RING			1
10	7291047	SHEET			1
11	7291048	SPRING			1
12	7291049	SPRING CUP			1
13	7291050	RETAINING RING			2
14	7291051	ROLL BEARING			1
15	7291052	I. CLUTCH DISC			10
16	7291053	O. CLUTCH DISC			10
17	7291054	SHIM			1
18	7291055	SNAP RING A=2.0			1
18	7291056	SNAP RING A=2.25			1
18	7291057	SNAP RING A=2.5			1
18	7291058	SNAP RING A=2.75			1
18	7291059	SNAP RING A=3.0			1
18	7291060	SNAP RING A=3.25			1
18	7291061	SNAP RING A=2.25			1
18	7291062	SEGMAN A=3.75			1
18	7291063	SEGMAN A=4.0			1
19	7291064	DISC CARRIER			1
20	7291065	WASHER			2
21	7291066	NEEDLE CAGE			2
22	7291067	DISC			2
23	7291068	NEEDLE CAGE			2
24	7291069	PISTON RING			1
25	7291070	RING			1

TRANSMISSION/ GEARBOX HOUSING

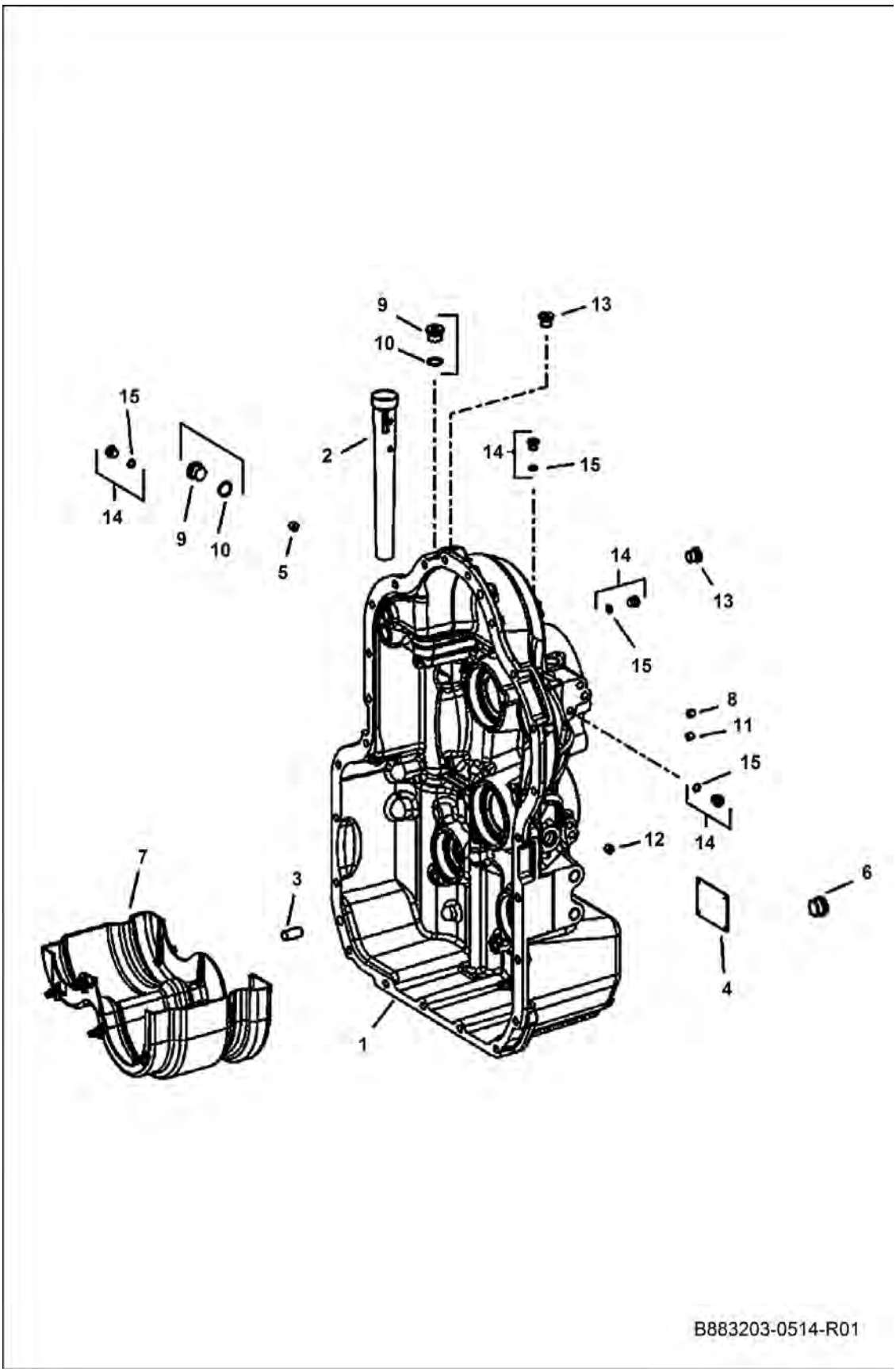

TRANSMISSION/ GEARBOX HOUSING (Cont'd)

Ref No	Part Number	Description	Remarks	Serial Number	Qty
1	7291071	HOUSING			1
2	7291072	PIPE			1
3	7291073	PIN			2
4	7291074	NAME PLATE			1
4	7291075	NAME PLATE			1
4	7291076	NAME PLATE			1
4	7291077	NAME PLATE			1
5	7291078	MEME			1
6	7291079	PLUG			1
7	7291080	SCREEN SHEET			1
8	7291081	NOZZLE D:1.7			2
9	7291082	PLUG			2
10	7291083	O-RING			2
11	7291084	NOZZLE D:1.5			2
12	7291085	NOZZLE			1
13	7291086	PLUG			3
14	7291087	PLUG			37
15	7291088	O-RING			1

TRANSMISSION/ GEARBOX HOUSING

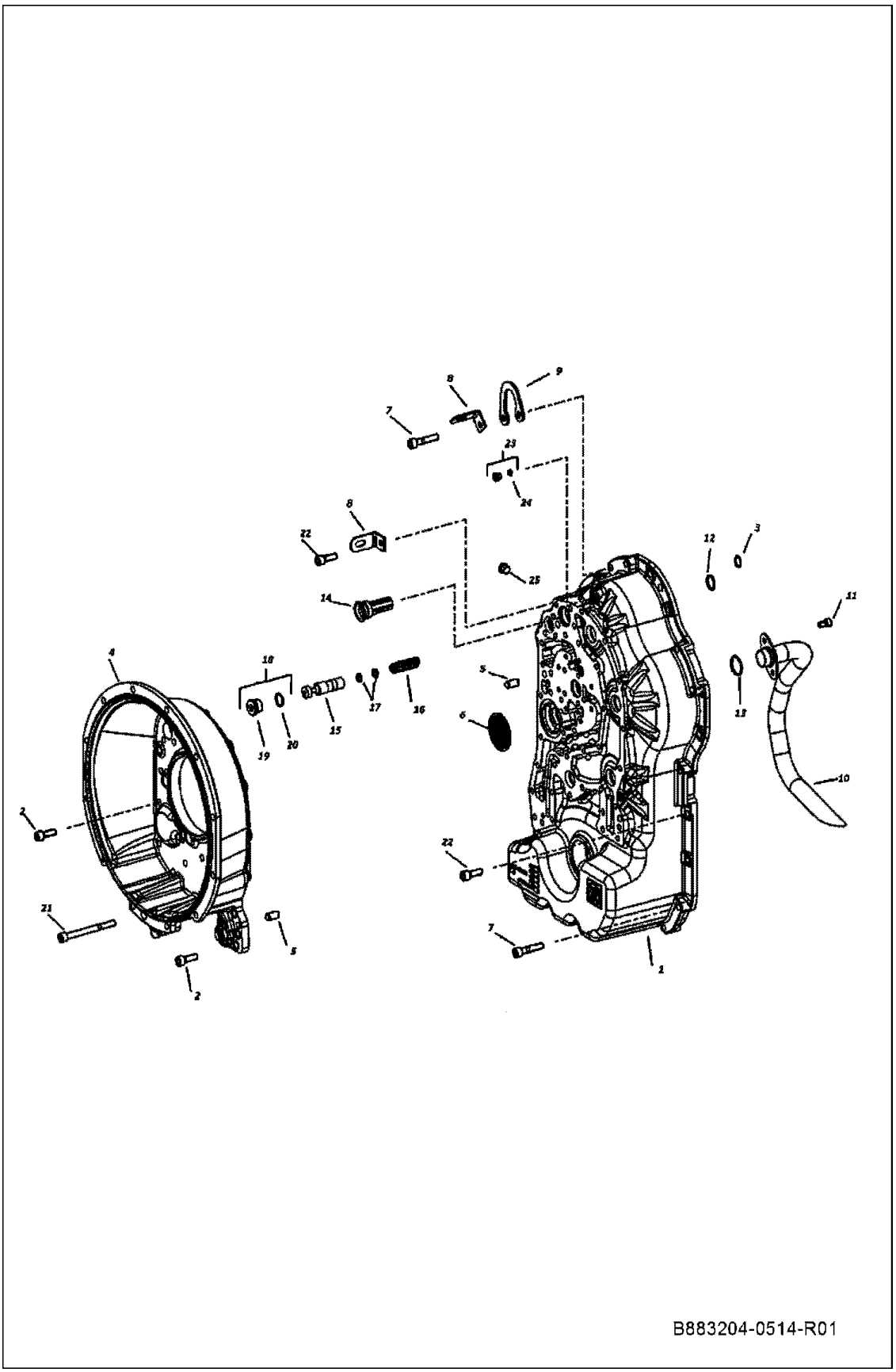

TRANSMISSION/ GEARBOX HOUSING (Cont'd)

Ref No	Part Number	Description	Remarks	Serial Number	Qty
1	7291089	HOUSING			1
2	7291090	SCREW			40
3	7291091	O-RING			3
4	7291092	CONVERTER BELL			1
5	7291073	PIN			2
6	7291093	FILTER			1
7	7291094	SCREW			10
8	7291095	BRACKET			2
9	7291096	BRACKET			1
10	7291097	SUCTION PIPE			1
11	7291098	SCREW			2
12	7291099	O-RING			1
13	7291100	O-RING			1
14	7291101	VALVE			1
15	7291102	PISTON			1
16	7291103	SPRING			1
17	7291104	RING A=0.8			1
17	7291105	RING A=1.0			1
17	7291106	RING A=1.2			1
17	7291107	RING A=2.4			1
17	7291108	RING A=2.0			1
17	7291109	RING A=2.2			1
17	7291110	RING A=1.4			1
17	7291111	RING A=2.8			1
17	7291112	RING A=1.6			1
17	7291113	RING A=1.8			1
17	7291091	O-RING			1
18	7291114	PLUG			1
19	7291115	PLUG			1
20	7291116	O-RING			1
21	7291117	BOLT			2
22	7291118	BOLT			14
23	7291119	SCREW PLUG			1
24	7291120	O-RING			1
25	7291121	SCREW PLUG			2

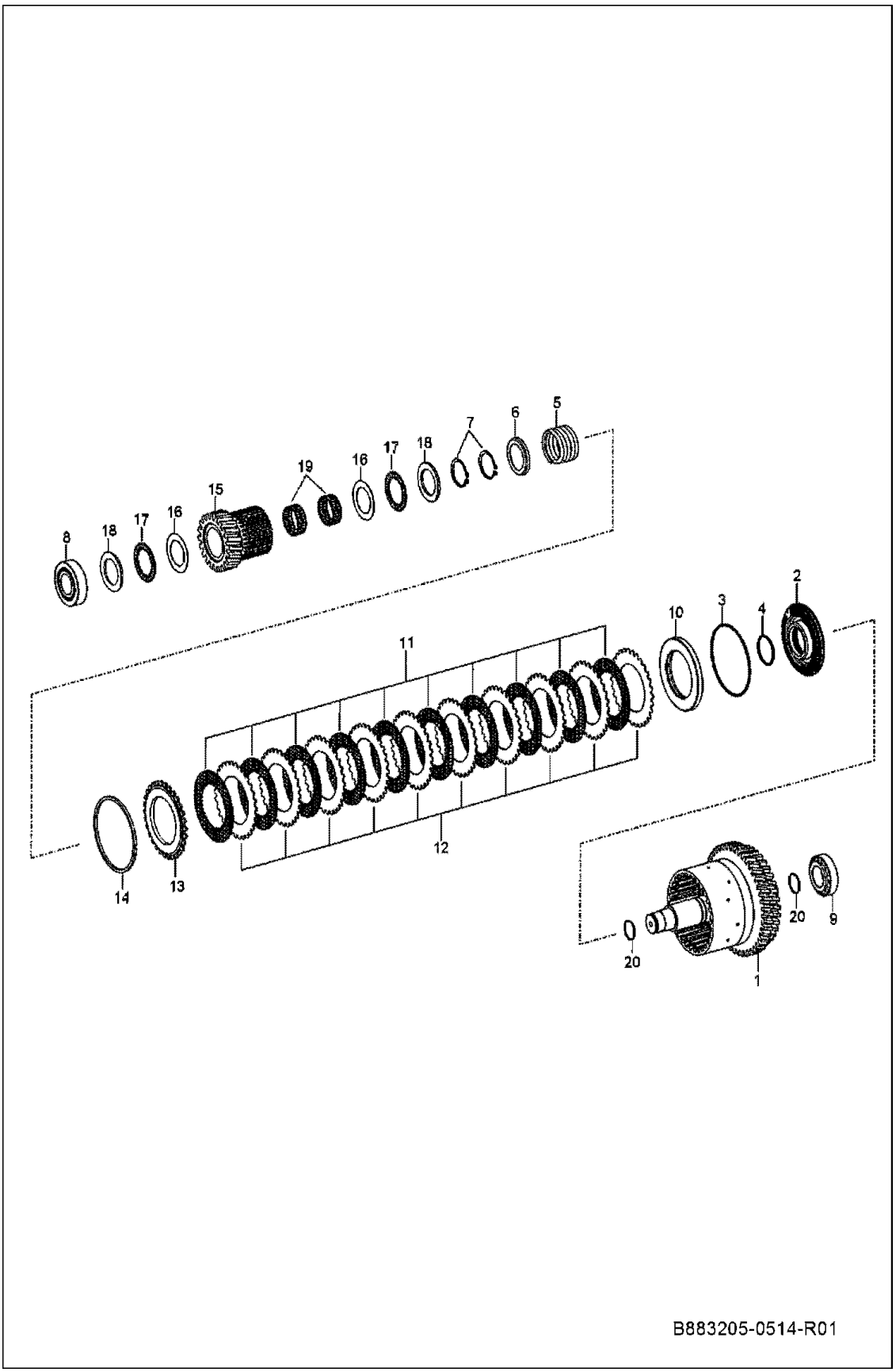
B883205-0514-R01

TRANSMISSION/ COUPLING (Cont'd)

Ref No	Part Number	Description	Remarks	Serial Number	Qty
1	7291122	COUPLING			1
2	7291044	PISTON			1
3	7291045	O-RING			1
4	7291046	O-RING			1
5	7291048	SPRING			1
6	7291049	SPRING CUP			1
7	7291050	RETAINING RING			2
8	7291123	ROLLER BEARING			1
9	7291124	ROLLER BEARING			1
10	7291047	SHEET			1
10	7291125	SHEET			1
11	7291052	I. CLUTCH DISC			10
12	7291053	O. CLUTCH DISC			10
13	7291054	SHIM			1
14	7291126	SNAP RING A=2			1
14	7291127	SNAP RING A=2.25			1
14	7291128	SNAP RING A=2.5			1
14	7291129	SEGMAN A=2.75			1
14	7291130	SEGMAN A=3.0			1
14	7291131	SEGMAN A=3.25			1
14	7291132	SEGMAN A=3.5			1
14	7291133	SEGMAN A=3.75			1
14	7291134	SEGMAN A=4.0			1
15	7291064	DISC CARRIER			1
16	7291065	WASHER			2
17	7291066	NEEDLE CAGE			2
18	7291067	DISC			2
19	7291068	NEEDLE CAGE			2
20	7291135	RING			2

TRANSMISSION/ COUPLING

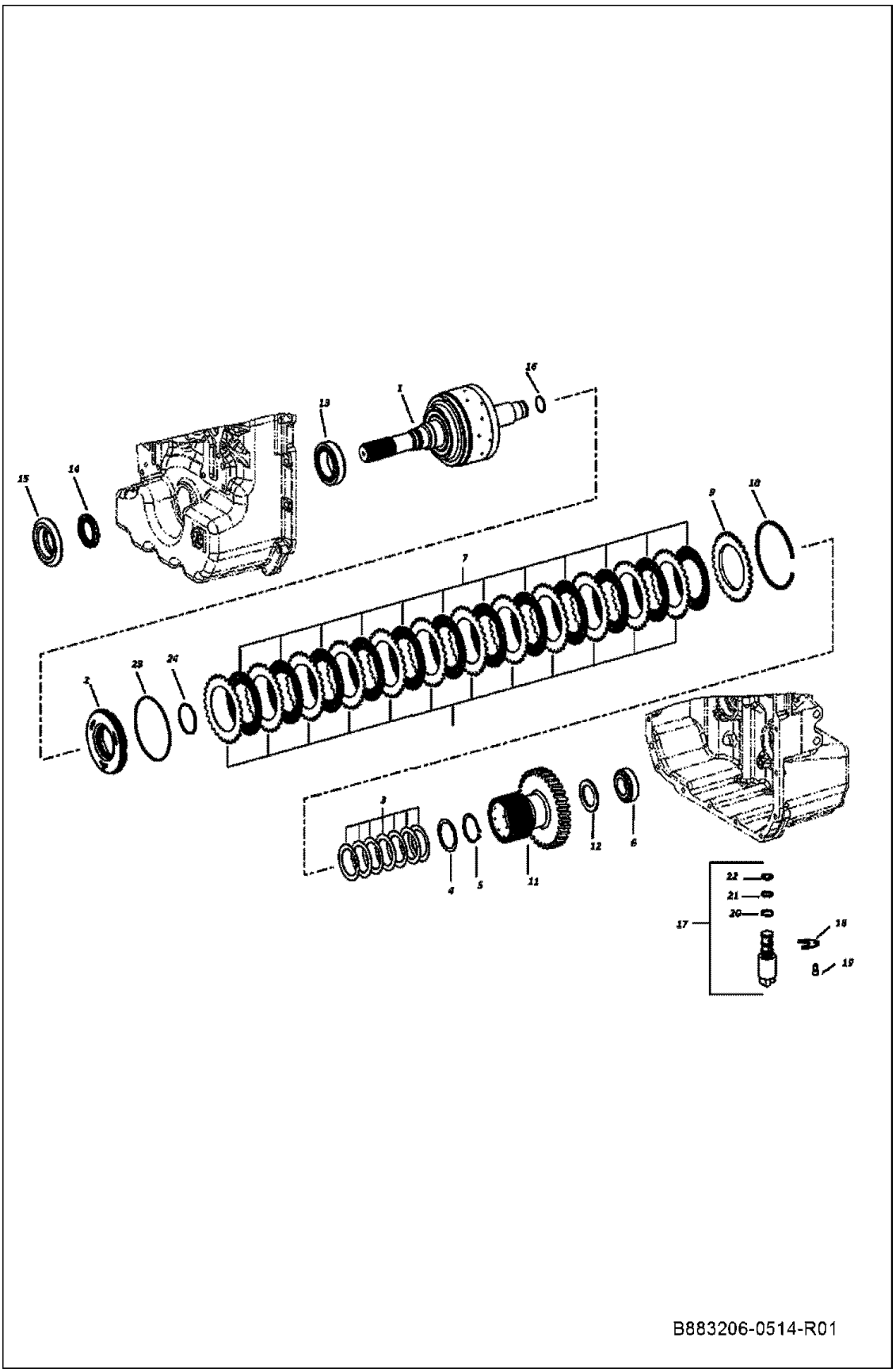

TRANSMISSION/ COUPLING (Cont'd)

Ref No	Part Number	Description	Remarks	Serial Number	Qty
1	7291136	COUPLING			1
2	7291137	PISTON			1
3	7291138	SPRING			7
4	7291139	WASHER			1
5	7291140	RETAINING RING			1
6	7291124	ROLLER BEARING			1
7	7291141	CLUTCH DISC			12
8	7291142	O. CLUTCH DISC			12
9	7291143	SHIM			1
10	7291144	SNAP RING A=2.0			1
10	7291145	SNAP RING A=2.25			1
10	7291146	SNAP RING A=2.5			1
10	7291147	SNAP RING A=2.75			1
10	7291148	SNAP RING A=3.0			1
10	7291149	SNAP RING A=3.25			1
10	7291150	SNAP RING A=3.5			1
10	7291151	SNAP RING A=3.75			1
10	7291152	SNAP RING A=4.0			1
11	7291153	DISC CARRIER			1
12	7291067	DISC			1
13	7291154	BEARING			1
14	7291155	SHAFT SEAL			1
15	7291156	SCREEN SHEET			1
16	7291157	RING			1
17	7291158	SOLENOID VALVE			1
18	7291159	BRACKET			1
19	7291160	CAP SCREW			1
20	7291161	O-RING			1
21	7291162	O-RING			1
22	7291163	O-RING			1
23	7291164	O-RING			1
24	7291165	O-RING			1

TRANSMISSION/ COUPLING

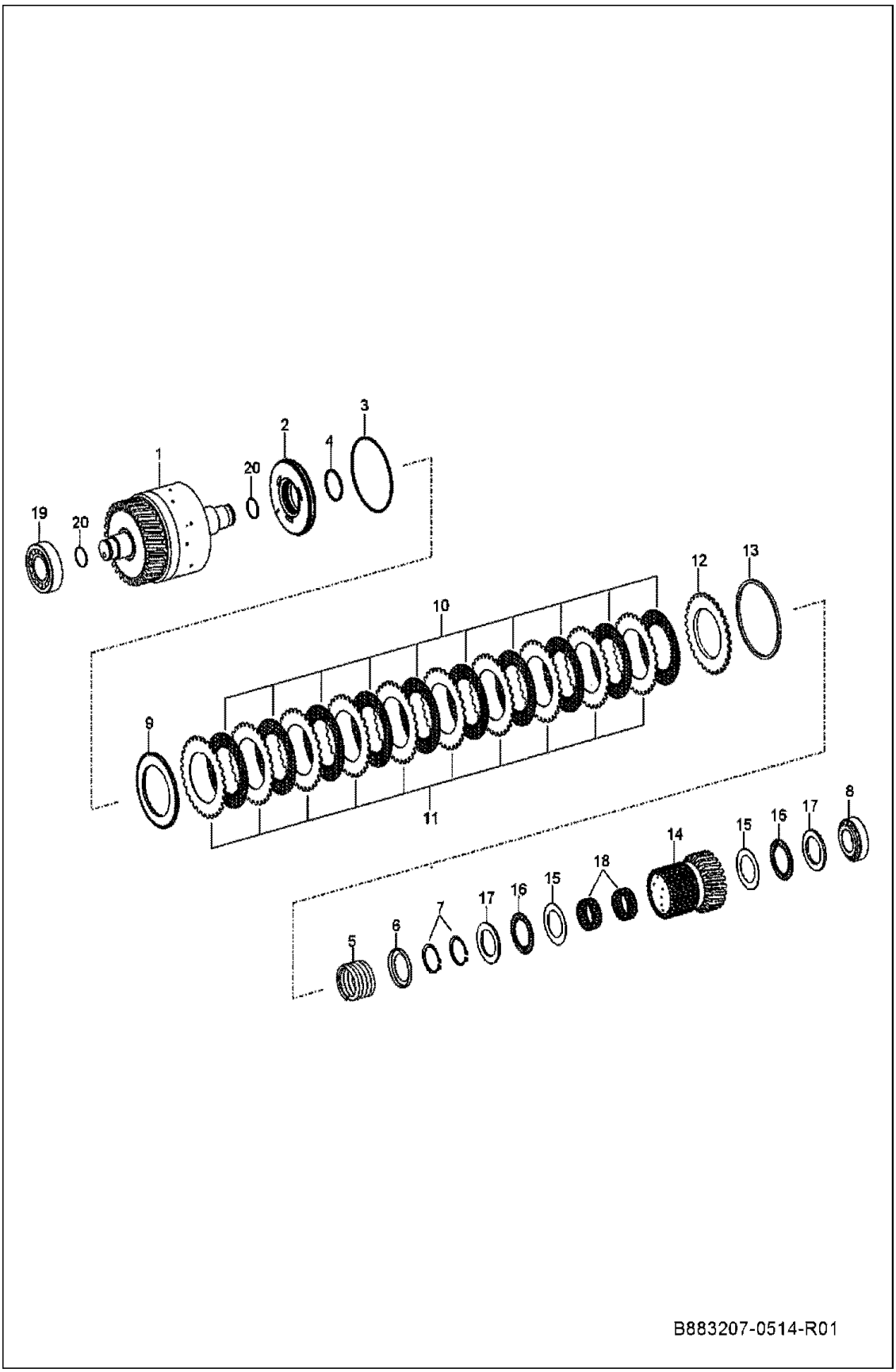

TRANSMISSION/ COUPLING (Cont'd)

Ref No	Part Number	Description	Remarks	Serial Number	Qty
1	7291166	COUPLING			1
2	7291044	PISTON			1
3	7291045	O-RING			1
4	7291046	O-RING			1
5	7291048	SPRING			1
6	7291049	SPRING CUP			1
7	7291050	RETAINING RING			2
8	7291124	ROLLER BEARING			1
9	7291167	SPRING			1
9	7291168	SHEET			1
10	7291052	I. CLUTCH DISC			10
11	7291053	O. CLUTCH DISC			10
12	7291054	SHIM			1
13	7291169	SNAP RING A=2.0			1
13	7291170	SNAP RING A=2.25			1
13	7291171	SNAP RING A=2.5			1
13	7291172	SNAP RING A=2.75			1
13	7291173	SNAP RING A=3.0			1
13	7291174	SNAP RING A=3.25			1
13	7291175	SNAP RING A=3.5			1
13	7291176	SNAP RING A=3.75			1
13	7291177	SNAP RING A=4.0			1
14	7291178	DISC CARRIER			1
15	7291065	WASHER			2
16	7291066	NEEDLE CAGE			2
17	7291067	DISC			2
18	7291068	NEEDLE CAGE			2
19	7291179	BEARING			1
20	7291157	RING			2

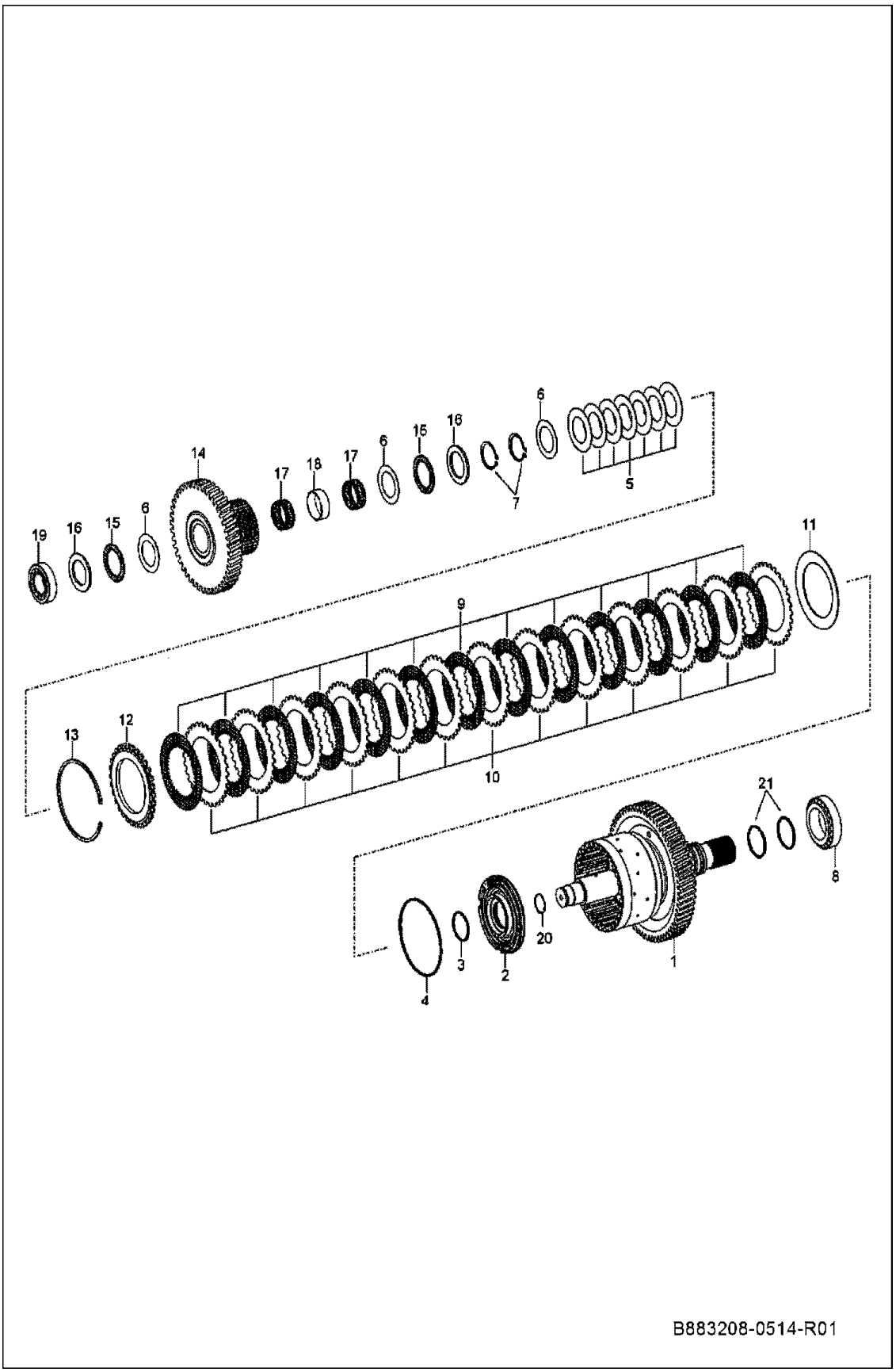
B883208-0514-R01

TRANSMISSION/ COUPLING (Cont'd)

Ref No	Part Number	Description	Remarks	Serial Number	Qty
1	7291180	COUPLING			1
2	7291181	PISTON			1
3	7291046	O-RING			1
4	7291182	O-RING			1
5	7291183	DISC			7
6	7291065	WASHER			3
7	7291050	RETAINING RING			2
8	7291184	ROLLER BEARING			1
9	7291141	CLUTCH DISC			13
10	7291142	O. CLUTCH DISC			13
11	7291185	CUP SPRING			1
12	7291186	SHIM			1
13	7291187	SNAP RING A=2.0			1
13	7291188	SNAP RING A=2.25			1
13	7291189	SNAP RING A=2.5			1
13	7291190	SNAP RING A=2.75			1
13	7291191	SNAP RING A=3.0			1
13	7291192	SNAP RING A=3.25			1
13	7291193	SNAP RING A=3.50			1
13	7291194	SNAP RING A=3.75			1
13	7291195	SNAP RING A=4.0			1
14	7291196	DISC CARRIER			1
15	7291066	NEEDLE CAGE			2
16	7291067	DISC			2
17	7291068	NEEDLE CAGE			2
18	7291197	BUSH			1
19	7291124	ROLLER BEARING			1
20	7291157	RING			1
21	7291198	PISTON RING			2

TRANSMISSION/ COUPLING

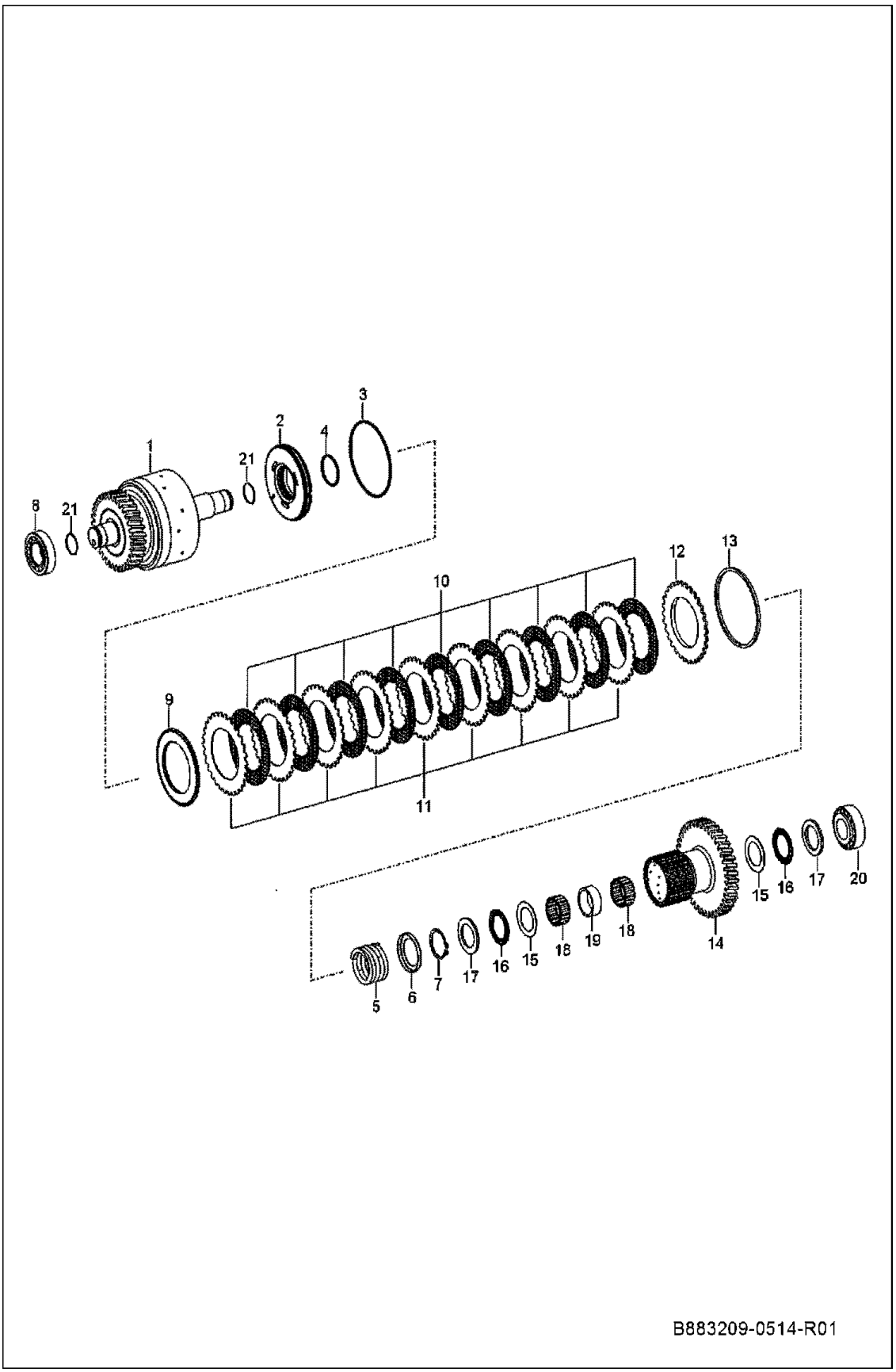

TRANSMISSION/ COUPLING (Cont'd)

Ref No	Part Number	Description	Remarks	Serial Number	Qty
1	7291199	COUPLING			1
2	7291044	PISTON			1
3	7291045	O-RING			1
4	7291046	O-RING			1
5	7291048	SPRING			1
6	7291049	SPRING CUP			1
7	7291050	RETAINING RING			1
8	7291179	BEARING			1
9	7291167	SPRING			1
9	7291168	SHEET			1
10	7291052	I. CLUTCH DISC			9
11	7291053	O. CLUTCH DISC			9
12	7291054	SHIM			1
13	7291200	SNAP RING A=2.0			1
13	7291201	SNAP RING A=2.25			1
13	7291202	SNAP RING A=2.5			1
13	7291203	SNAP RING A=2.75			1
13	7291204	SNAP RING A=3.0			1
13	7291205	SNAP RING A=3.25			1
13	7291206	SNAP RING A=3.5			1
13	7291207	SNAP RING A=3.75			1
13	7291208	SNAP RING A=4.0			1
14	7291209	DISC CARRIER			1
15	7291210	WASHER			2
16	7291211	NEEDLE CAGE			2
17	7291212	RUNNING DISC			2
18	7291213	NEEDLE CAGE			2
19	7291214	BUSHING			1
20	7291124	ROLLER BEARING			1
21	7291157	RING			2

TRANSMISSION/ COUPLING

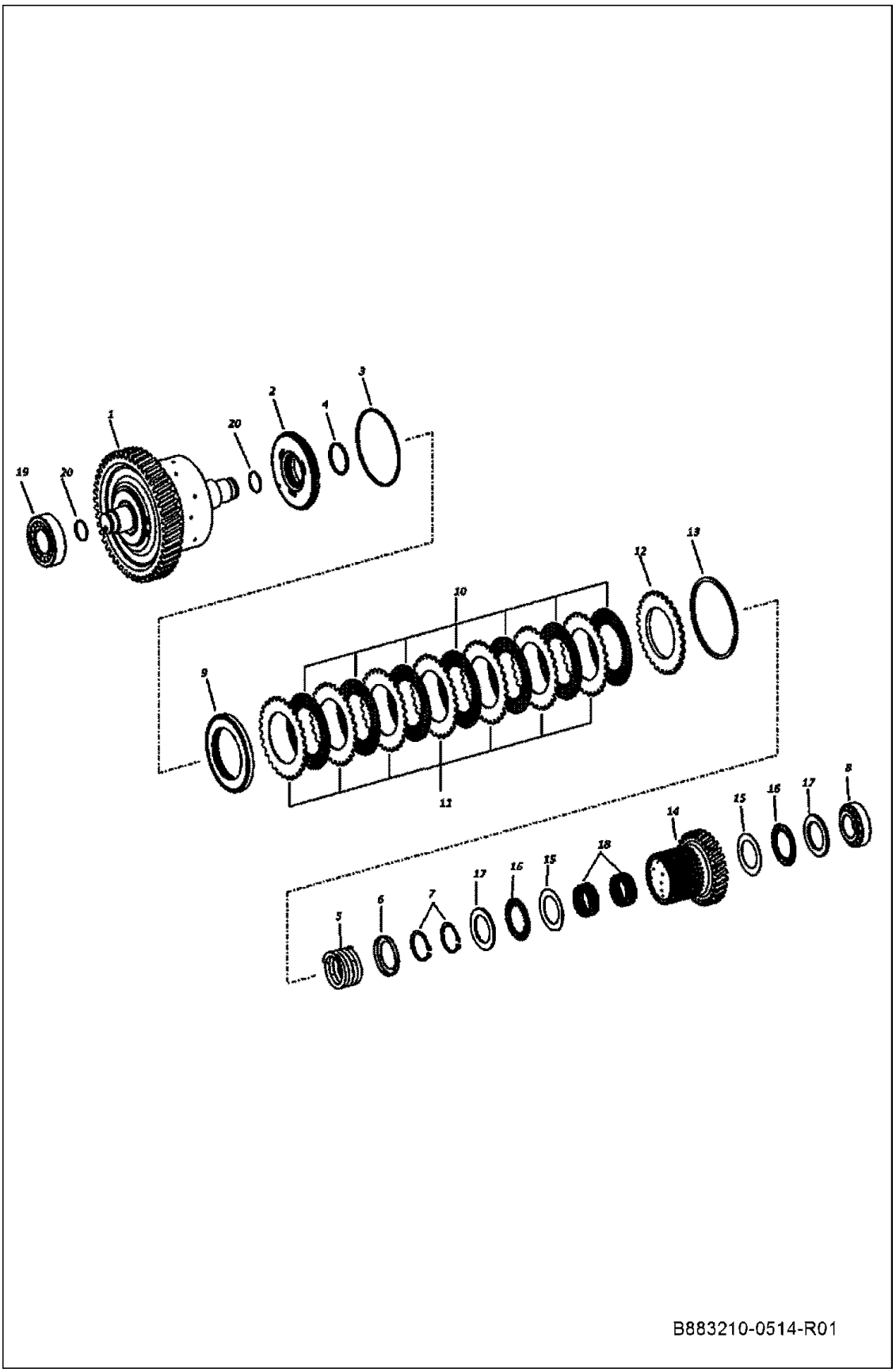

TRANSMISSION/ COUPLING (Cont'd)

Ref No	Part Number	Description	Remarks	Serial Number	Qty
1	7291215	COUPLING			1
2	7291044	PISTON			1
3	7291045	O-RING			1
4	7291046	O-RING			1
5	7291048	SPRING			1
6	7291049	SPRING CUP			1
7	7291050	RETAINING RING			1
8	7291124	ROLLER BEARING			1
9	7291047	SHEET			1
9	7291216	SHEET			1
10	7291052	I. CLUTCH DISC			7
11	7291053	O. CLUTCH DISC			7
12	7291054	SHIM			1
13	7291200	SNAP RING A=2.0			1
13	7291201	SNAP RING A=2.25			1
13	7291202	SNAP RING A=2.5			1
13	7291203	SNAP RING A=2.75			1
13	7291204	SNAP RING A=3.0			1
13	7291205	SNAP RING A=3.25			1
13	7291206	SNAP RING A=3.5			1
13	7291207	SNAP RING A=3.75			1
13	7291208	SNAP RING A=4.0			1
14	7291217	DISC CARRIER			1
15	7291065	WASHER			2
16	7291066	NEEDLE CAGE			2
17	7291067	DISC			2
18	7291068	NEEDLE CAGE			2
19	7291179	BEARING			1
20	7291157	RING			2

TRANSMISSION/ OUTPUT

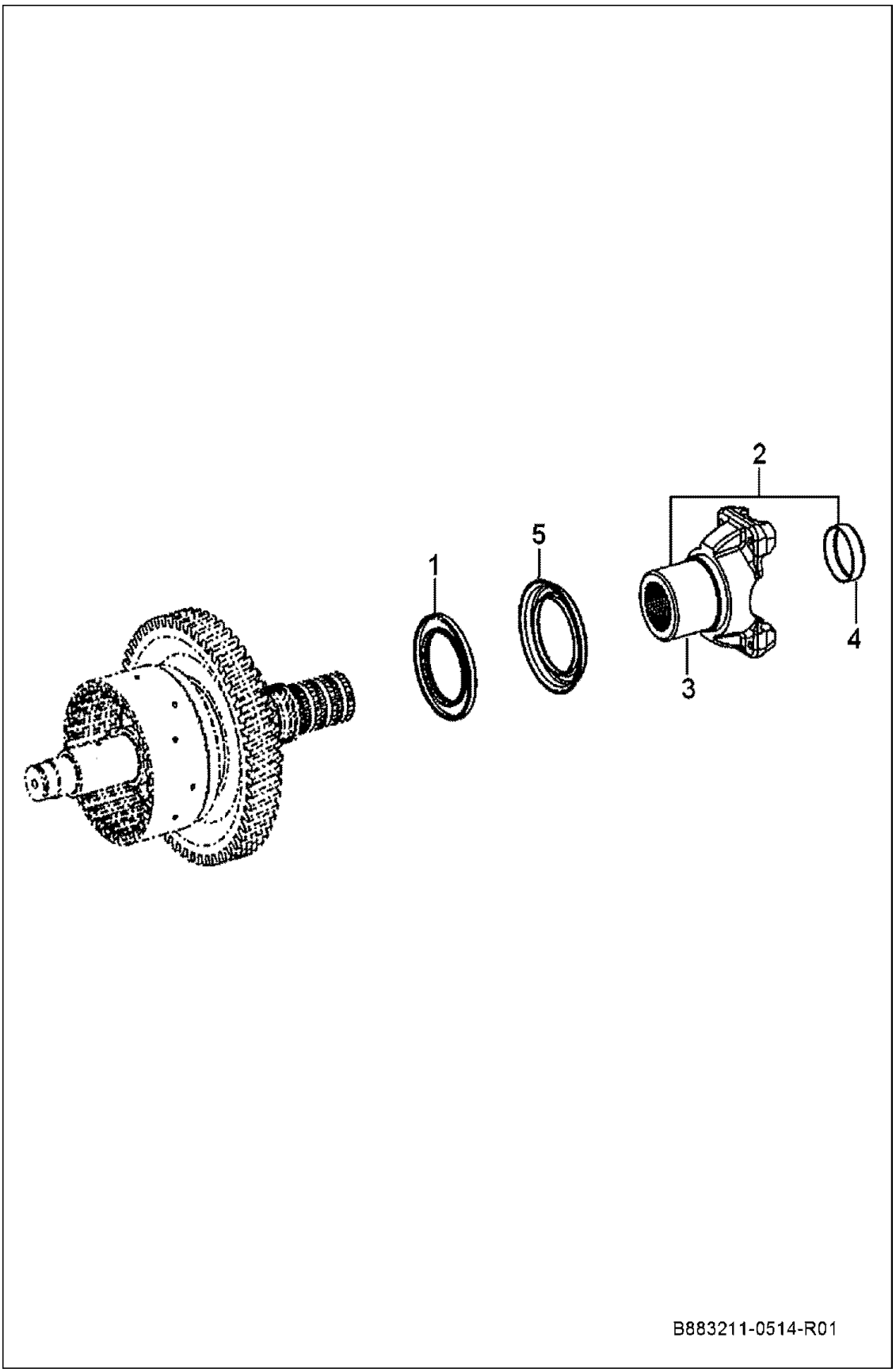

TRANSMISSION/ OUTPUT (Cont'd)

Ref No	Part Number	Description	Remarks	Serial Number	Qty
1	7291218	SHAFT SEAL			1
2	7291219	OUTPUT FLANGE			1
3	7291220	OUTPUT FLANGE			1
4	7291221	SEALING CAP			1
5	7291222	SCREEN SHEET			1

TRANSMISSION/ CONTROL UNIT

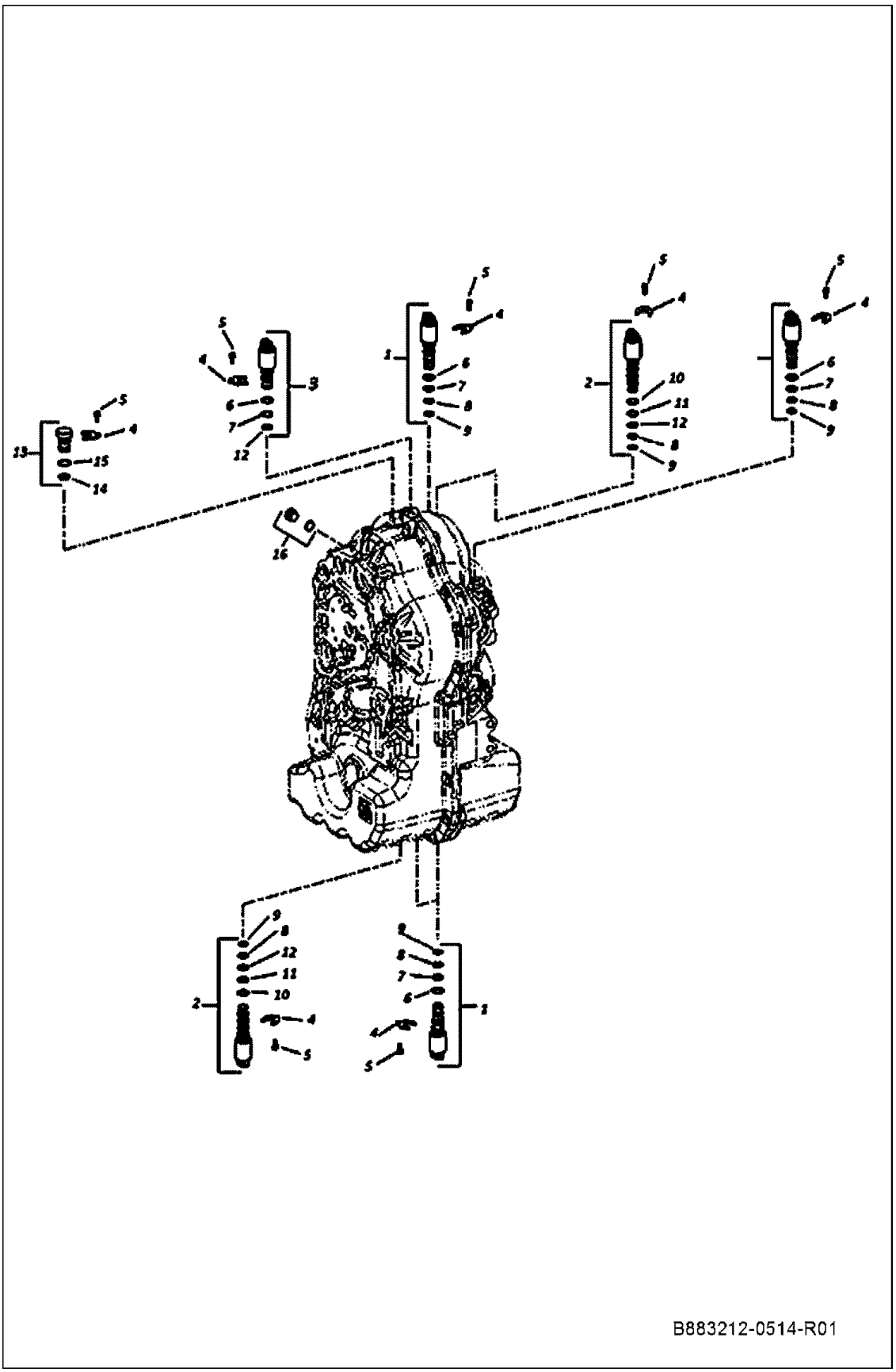

TRANSMISSION/ CONTROL UNIT (Cont'd)

Ref No	Part Number	Description	Remarks	Serial Number	Qty
1	7291223	SOLENOID VALVE			4
2	7291224	SOLENOID VALVE			2
3	7291158	SOLENOID VALVE			2
4	7291159	BRACKET			8
5	7291160	CAP SCREW			8
6	7291161	O-RING			5
7	7291162	O-RING			5
8	7291225	O-RING			6
9	7291226	O-RING			6
10	7291227	O-RING			2
11	7291162	O-RING			2
12	7291163	O-RING			3
13	7291228	PLUG			1
14	7291229	O-RING			1
15	7291230	O-RING			1
16	7291082	PLUG			1

TRANSMISSION/ OIL PUMP

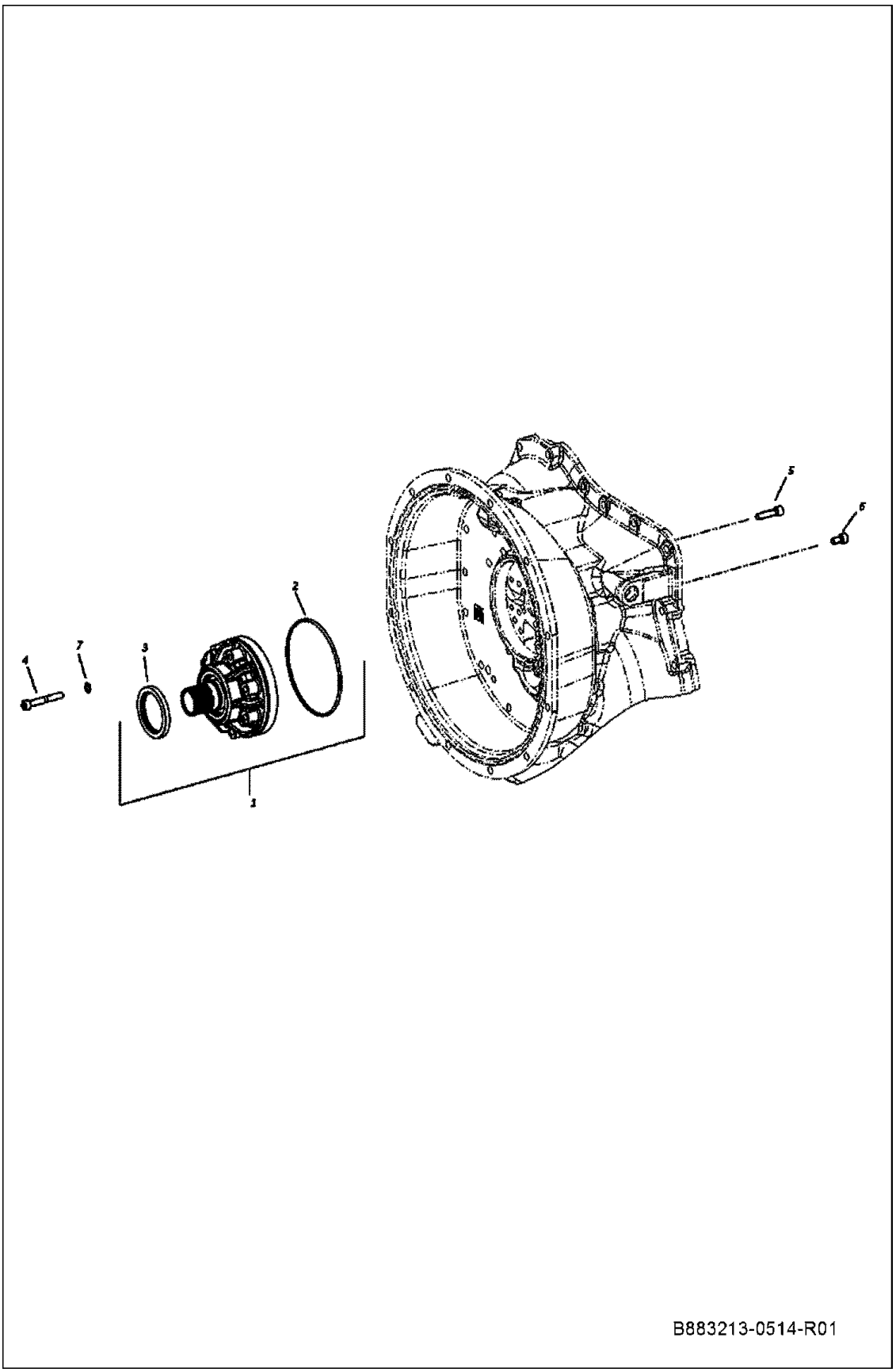

TRANSMISSION/ OIL PUMP (Cont'd)

Ref No	Part Number	Description	Remarks	Serial Number	Qty
1	7291231	PUMP			1
2	7291232	O-RING			1
3	7291233	SHAFT SEAL			1
4	7291234	CAP SCREW			8
5	7291235	CAP SCREW			2
6	7291236	CAP SCREW			2
7	7291237	O-RING			8

TRANSMISSION/ TRANSMITTER

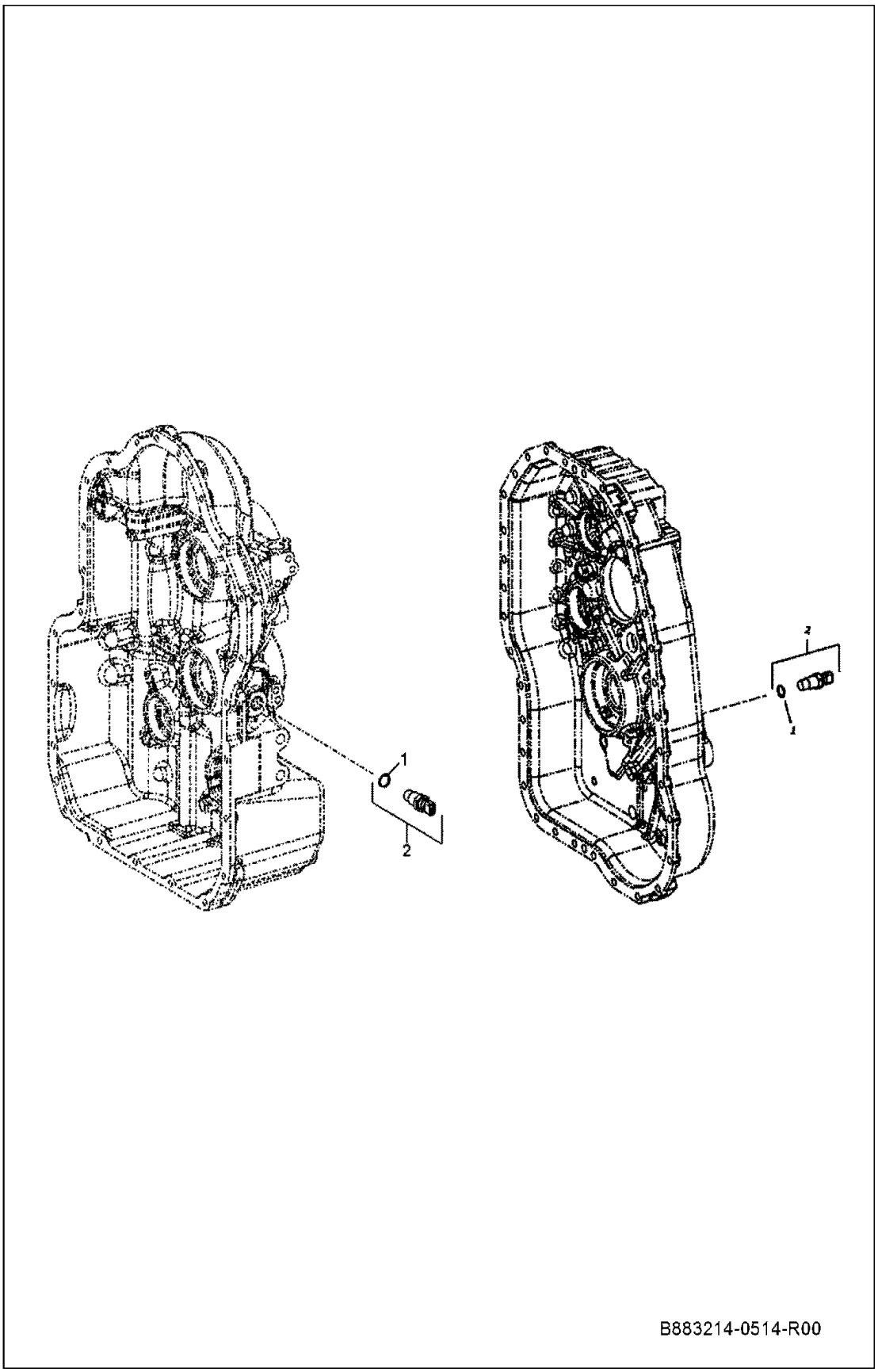

TRANSMISSION/ TRANSMITTER (Cont'd)

Ref No	Part Number	Description	Remarks	Serial Number	Qty
1	7291238	O-RING			2
2	7291239	TRANSMITTER			2

TRANSMISSION/ OIL FILTER

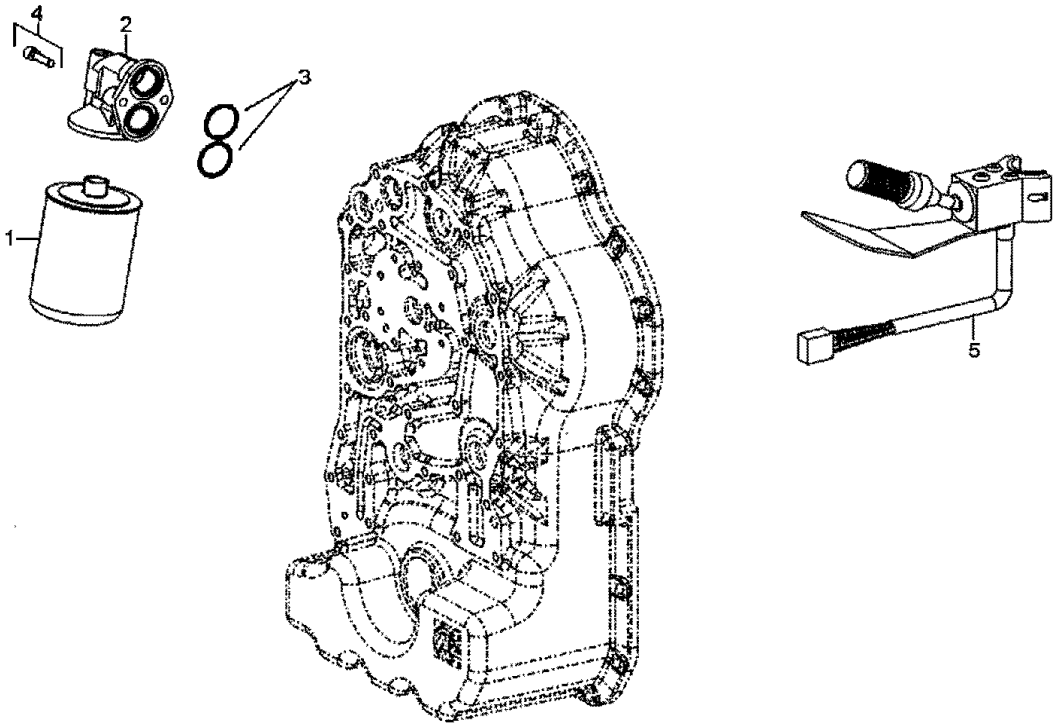

TRANSMISSION/ OIL FILTER (Cont'd)

Ref No	Part Number	Description	Remarks	Serial Number	Qty
1	7291240	FILTER			1
2	7291241	FILTER HEAD			1
3	7291242	O-RING			2
4	7291243	SCREW			2
5	7291244	RANGE SELECTOR			1

TRANSMISSION DIPSTICK

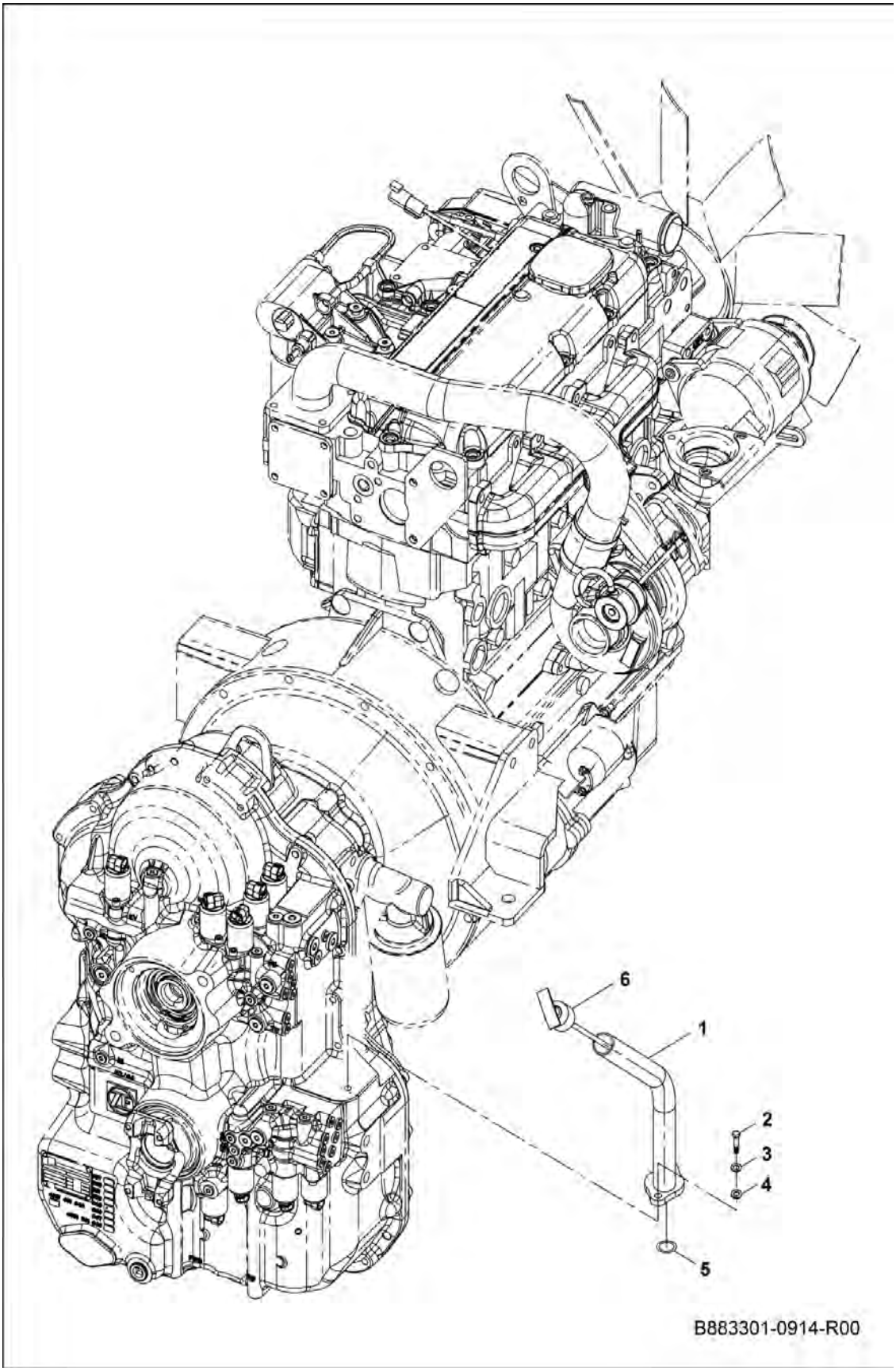

TRANSMISSION DIPSTICK (Cont'd)

Ref No	Part Number	Description	Remarks	Serial Number	Qty
1	7291252	PIPE			1
2	7289279	BOLT			2
3	7288891	LOCK WASHER			2
4	7288892	WASHER			2
5	7291251	O-RING			1
6	7291253	DIPSTICK			1

CONSOLE AND GAUGES

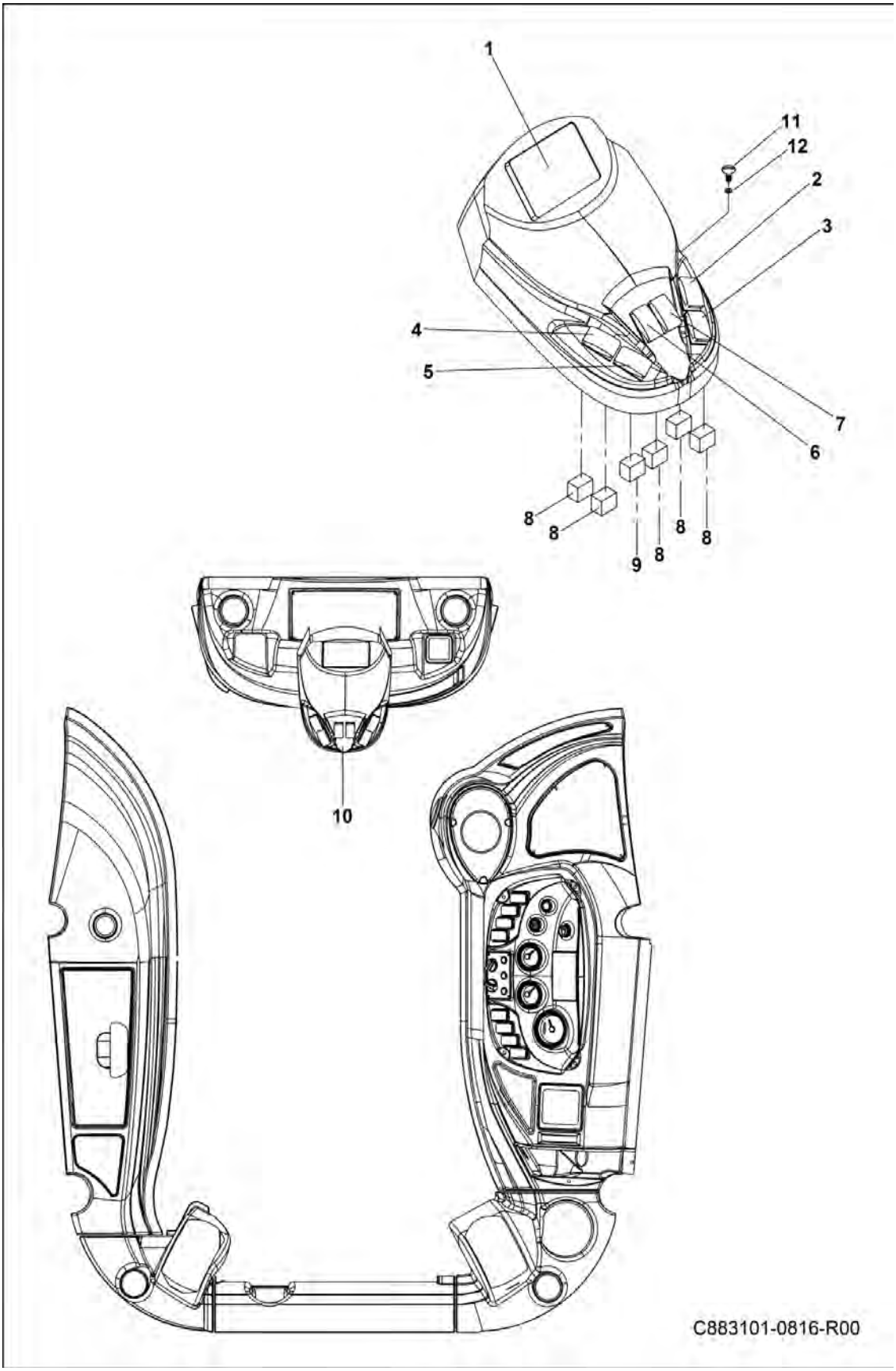

CONSOLE AND GAUGES (Cont'd)

Ref No	Part Number	Description	Remarks	Serial Number	Qty
1	7299049	WARNING LAMP			1
2	7289524	SWITCH			1
3	7291254	COVER			1
4	7289538	SWITCH			1
5	7289536	HEADLIGHT SWITCH			1
6	7289526	FLASHER SWITCH			1
7	7289523	SWITCH			1
8	7289529	SOCKET			5
9	7289530	SOCKET			1
10	7291255	POLYESTER			1
11	7290285	BOLT			4
12	7289525	WASHER			4

CONSOLE AND GAUGES

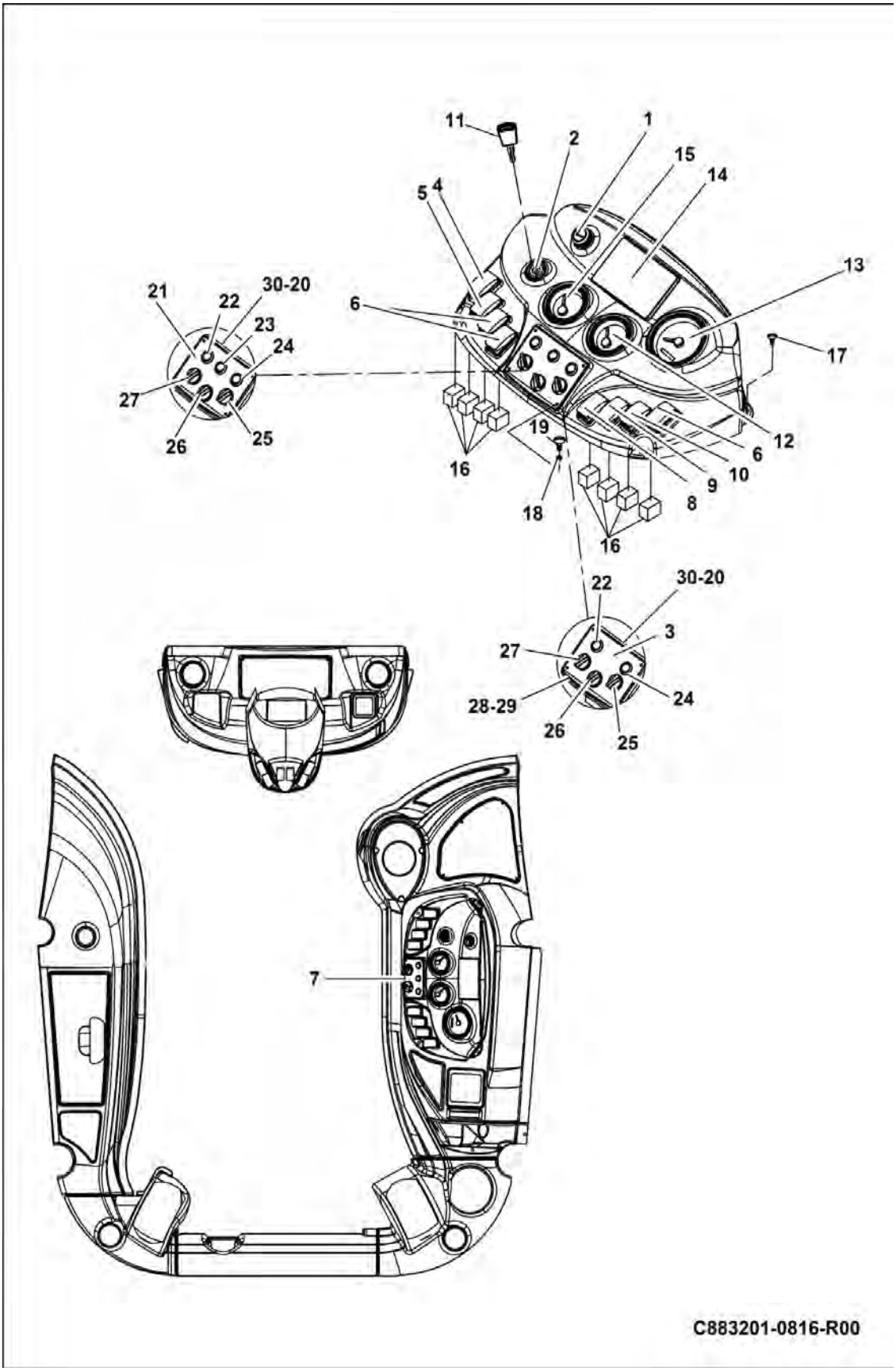

CONSOLE AND GAUGES (Cont'd)

Ref No	Part Number	Description	Remarks	Serial Number	Qty
1	7289533	LIGHTER			1
2	7289534	STARTER SWITCH			1
3	7291256	HEATER BUTTON			1
3	7291257	AIR CONDITIONER BUTTON			1
4	7291258	TEST SWITCH			1
5	7289537	BEACON LAMP SWITCH			1
6	7291254	COVER			3
7	7291259	POLYESTER			1
8	7289540	REAR WORKING LAMP SWITCH			1
9	7289541	WIPER SWITCH			1
10	7291260	PUMP UNLOADER SWITCH			1
11	7299050	DRAIN SWITCH			1
12	7291262	FUEL GAUGE			1
13	7291263	WORKING HOURS GAUGE			1
14	7299156	WARNING LAMP			1
15	7291265	ENGINE TEMP. GAUGE			1
16	7289529	SOCKET			8
17	7290285	BOLT			4
18	7289543	WASHER			4
19	7291266	BOLT			4
20	7291267	CONNECTOR	22-23-24 E AIT		1
21	7291257	AIR CONDITIONER BUTTON			1
22	7291268	IN-OUT AIR SWITCH			1
23	7291269	AIR CONDITIONER SWITCH			1
24	7311409	REAR GLASS HEATER SWITCH			1
25	7291271	DEFRUZ SWITCH			1
26	7291272	STEP ADJUSTMENT SWICH			1
27	7291273	HOT-COLD VANE SWICH			1
28	7291274	POT			1
29	7291275	POT			1
30	7291276	CONNECTOR	22-23-24 E AIT		2

ENGINE ELECTRICLINE GROUP

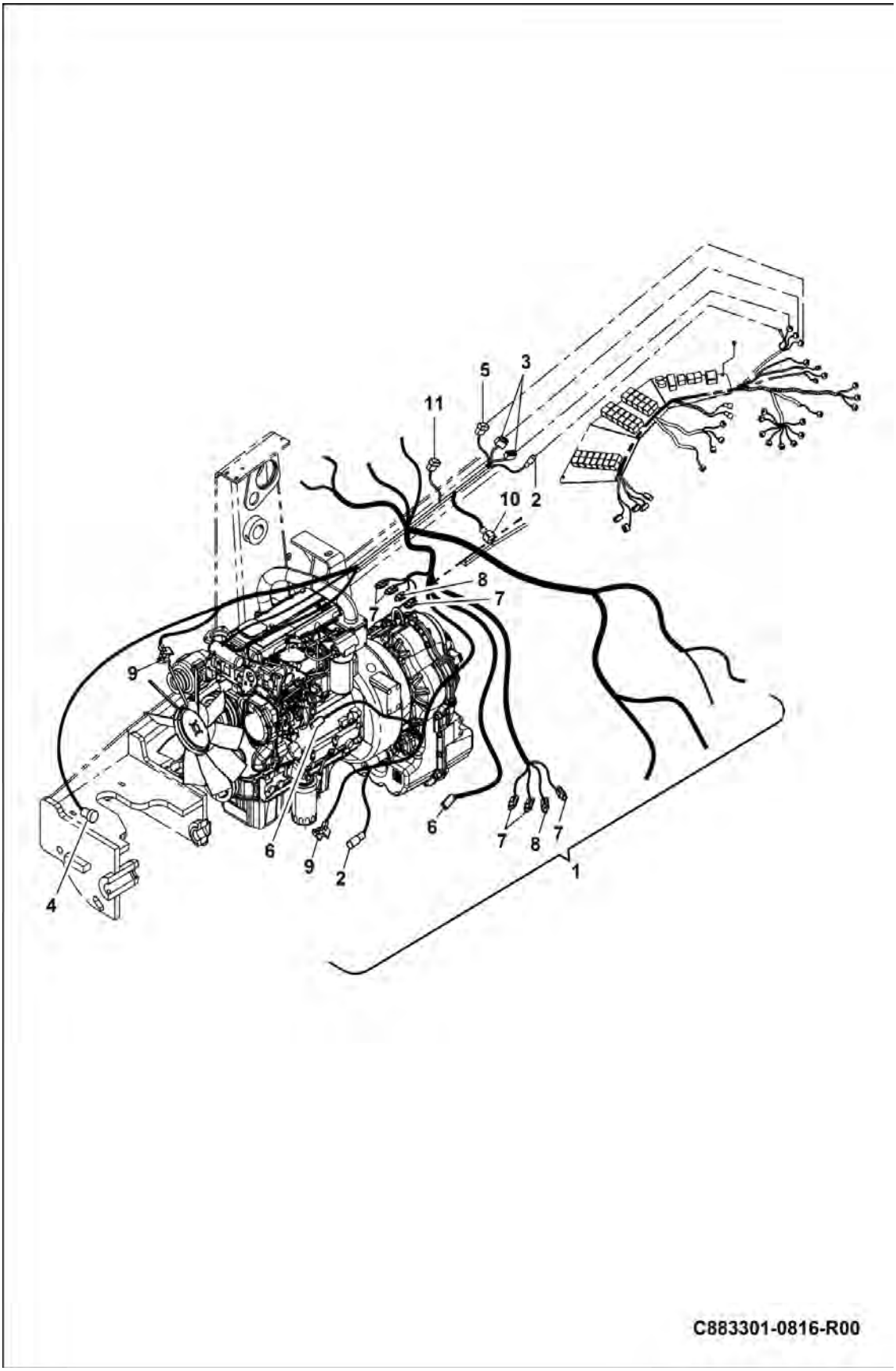

ENGINE ELECTRICLINE GROUP (Cont'd)

Ref No	Part Number	Description	Remarks	Serial Number	Qty
1	7291277	ENGINE ELECTRICLINE			1
2	7289548	SOCKET			1
3	7289546	SOCKET			2
4	7289551	HORN			1
5	7289545	SOCKET			1
6	7289550	SOCKET			2
7	7291278	SOCKET			6
8	7291279	SOCKET			2
9	7289549	SOCKET			2
10	7289559	SOCKET			1
11	7289554	SOCKET			1

BACKHOE FITTING GROUP

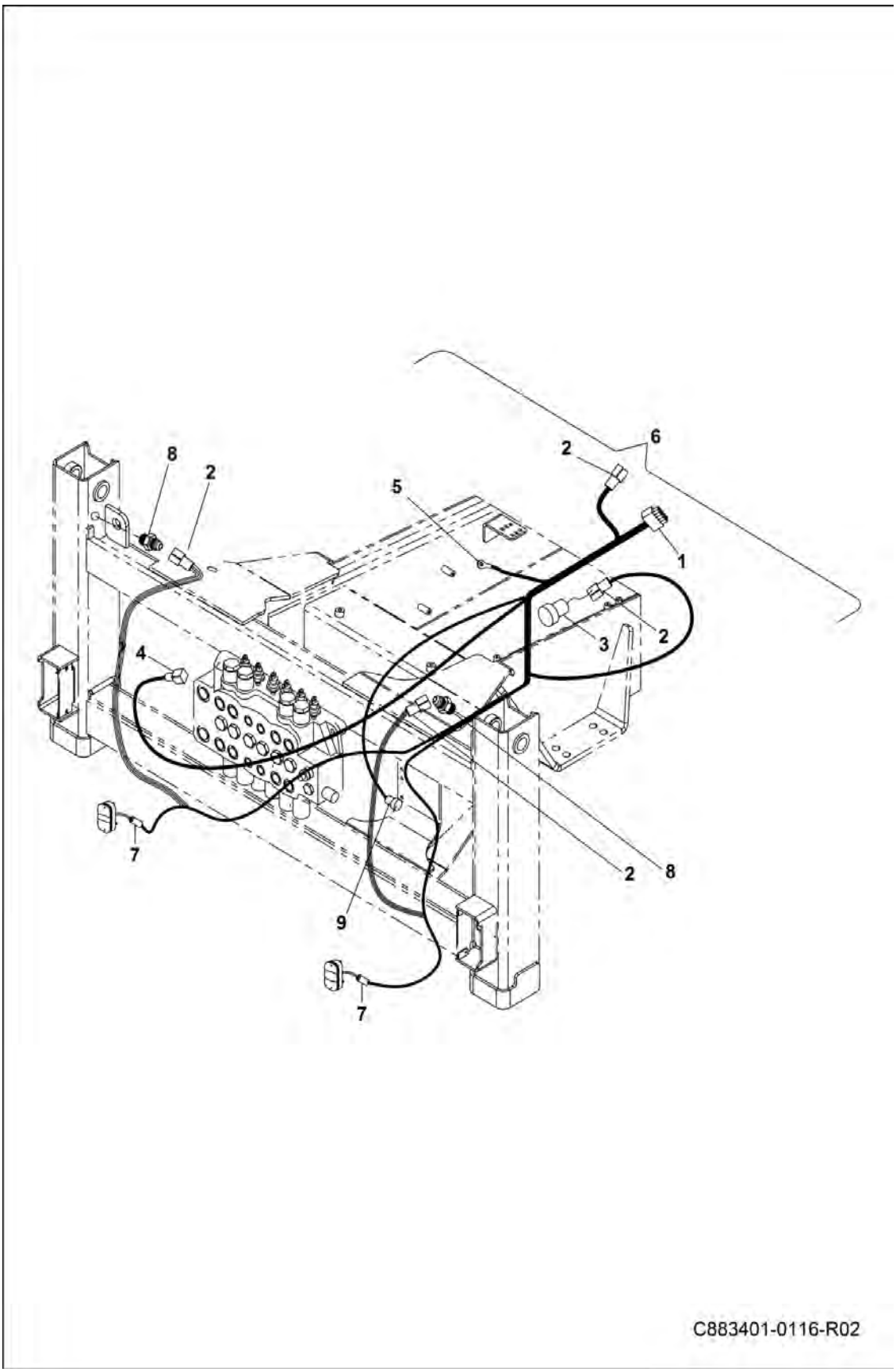

BACKHOE FITTING GROUP (Cont'd)

Ref No	Part Number	Description	Remarks	Serial Number	Qty
1	7289546	SOCKET			1
2	7289550	SOCKET			1
3	7299053	WARNING HORN			1
4	7289559	SOCKET			1
5	7289560	TERMINAL			1
6	7299171	BACKHOE ELECTRILINE			1
7	7289562	SOCKET			2
8	7299055	SENSOR	stabilizer		2
9	7289551	HORN			1

RELAY FITTING GROUP

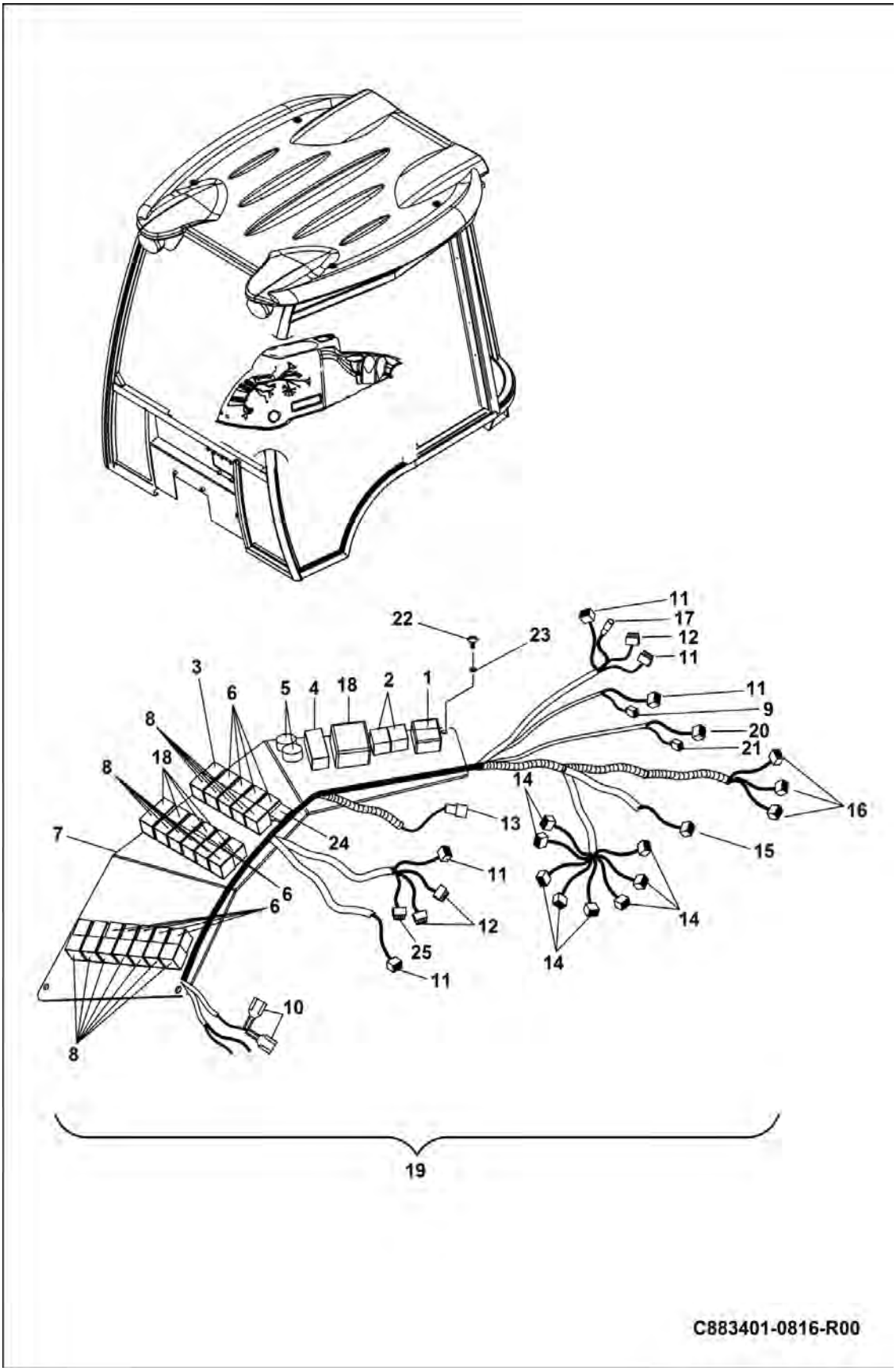

RELAY FITTING GROUP (Cont'd)

Ref No	Part Number	Description	Remarks	Serial Number	Qty
1	7289564	RELAY			1
2	7289565	RELAY			2
3	7291281	RELAY			1
3	7299059	RELAY			1
4	7289566	FLASOR			1
5	7291282	INSIDE WARNING BUZZER			2
6	7289568	RELAY			11
7	7291283	PLATE			1
8	7289569	SOCKET			20
9	7290922	SOCKET			1
10	7289574	PLUG			1
11	7289545	SOCKET			5
12	7289546	SOCKET			3
13	7291286	SOCKET			1
14	7289529	SOCKET			8
15	7291287	SOCKET			1
16	7291288	SOCKET			3
17	7289547	SOCKET			1
18	7289567	RELAY			7
19	7299172	RELAY FITTING ASSY			1
20	7289582	SOCKET			1
21	7291291	SOCKET			1
22	7291292	BOLT			3
23	7291293	WASHER			3
24	7299307	FUSE BOX WITH SOCKET			1
25	7289555	SOCKET			1

FUSE FITTING GROUP

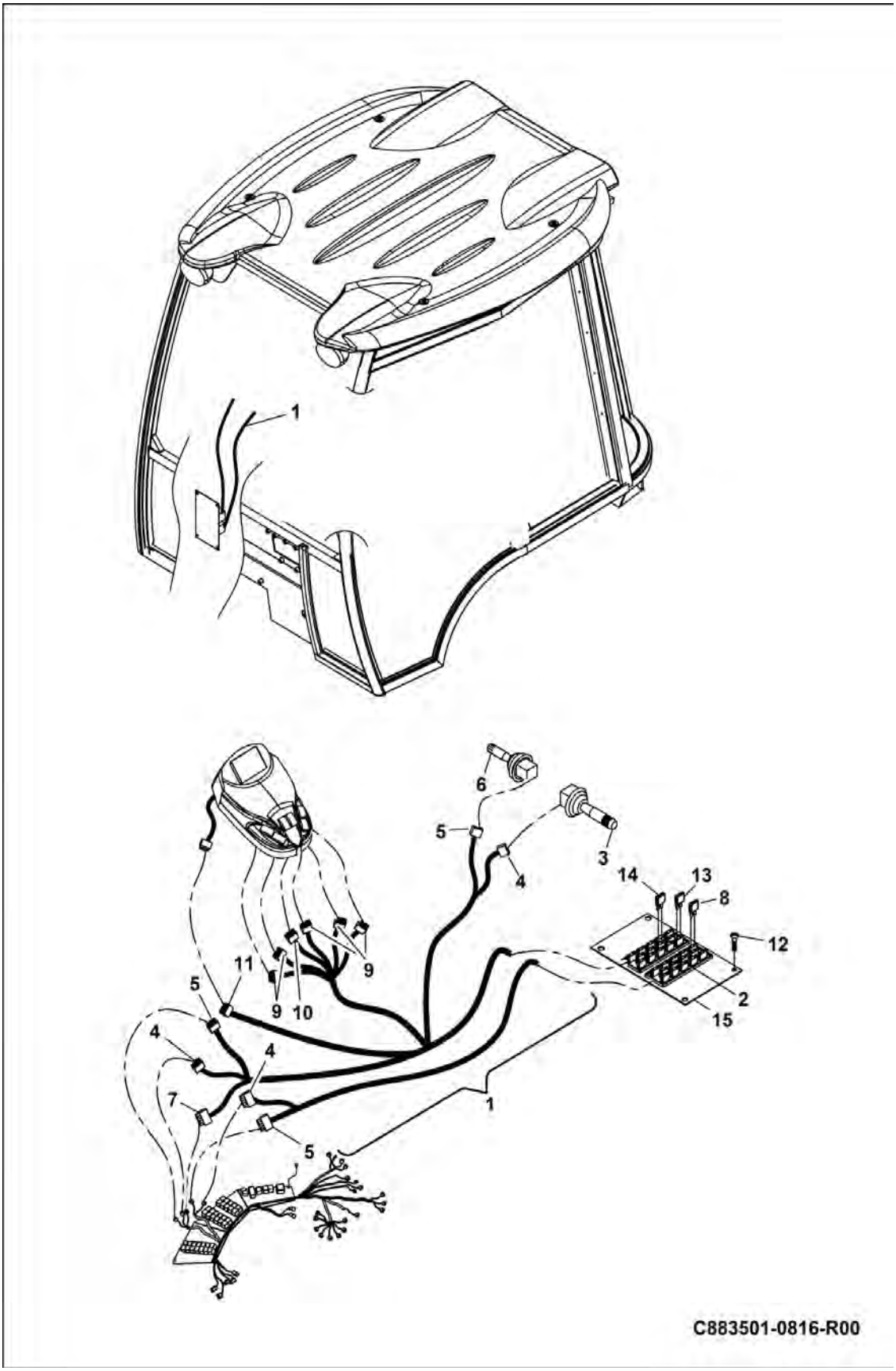

FUSE FITTING GROUP (Cont'd)

Ref No	Part Number	Description	Remarks	Serial Number	Qty
1	7291294	FUSE FITTING			1
1	7299173	FUSE FITTING			1
2	7289572	FUSE BOX			2
3	7291295	DIRECT IND. LEVER RIGHT			1
4	7289546	SOCKET			3
5	7289545	SOCKET			3
6	7291299	DIRECT IND. LEVER LEFT			1
7	7289578	SOCKET			1
8	7291296	20A FUSE			2
9	7289529	SOCKET			5
10	7289530	SOCKET			1
11	7291287	SOCKET			1
12	7291297	BOLT			4
13	7289570	FUSE (15 AMPERE)			17
14	7289571	FUSE (10 AMPERE)			9
15	7291298	FUSE PLATE			1

REAR LAMP

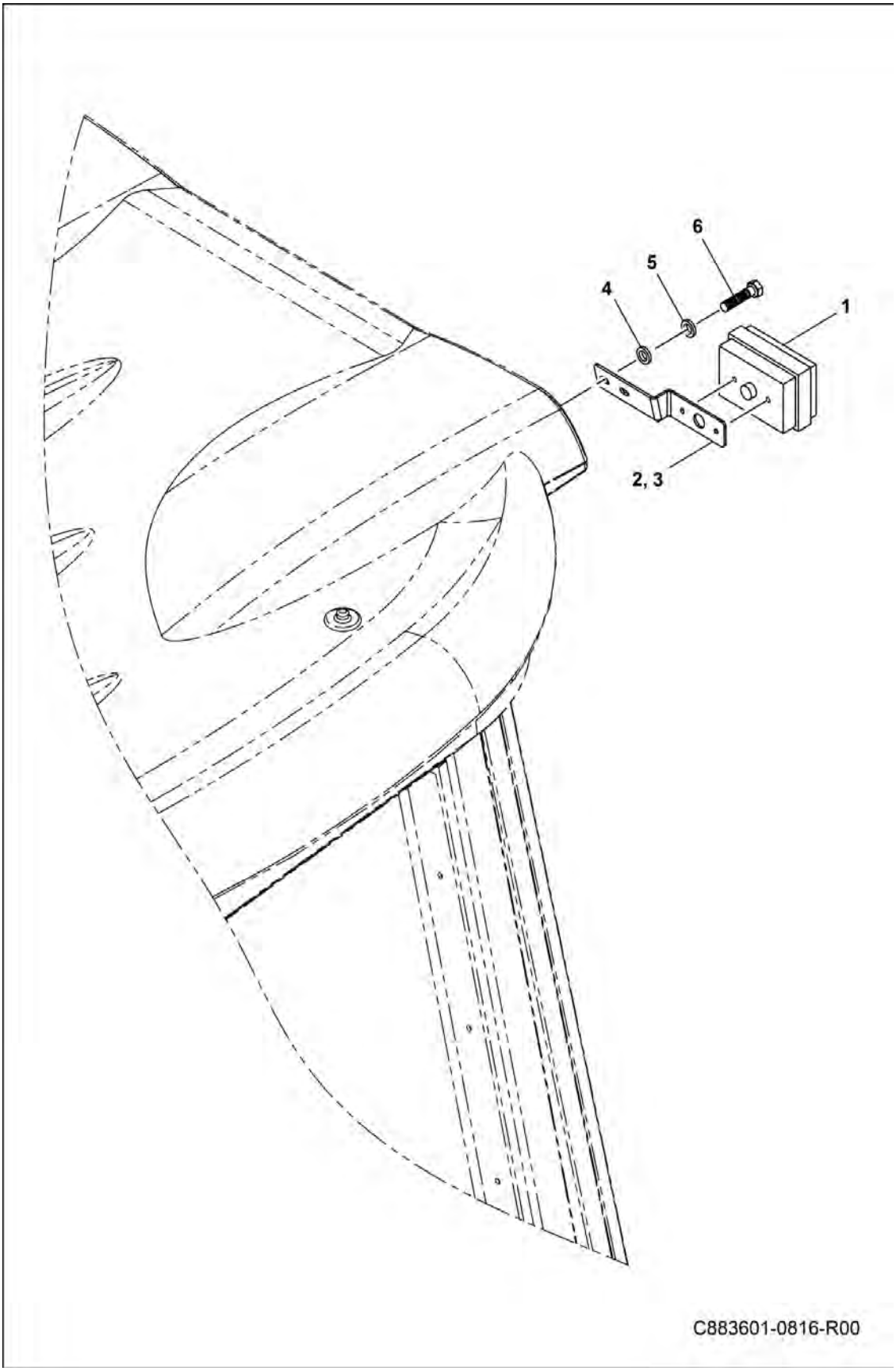

REAR LAMP (Cont'd)

Ref No	Part Number	Description	Remarks	Serial Number	Qty
1	7311410	STOP LAMP			2
2	7311411	PLATE RIGHT			1
3	7311412	PLATE LEFT			1
4	7292190	WASHER			4
5	7288891	LOCK WASHER			4
6	7288896	BOLT			4

BATTERY AND ITS CONNECTIONS

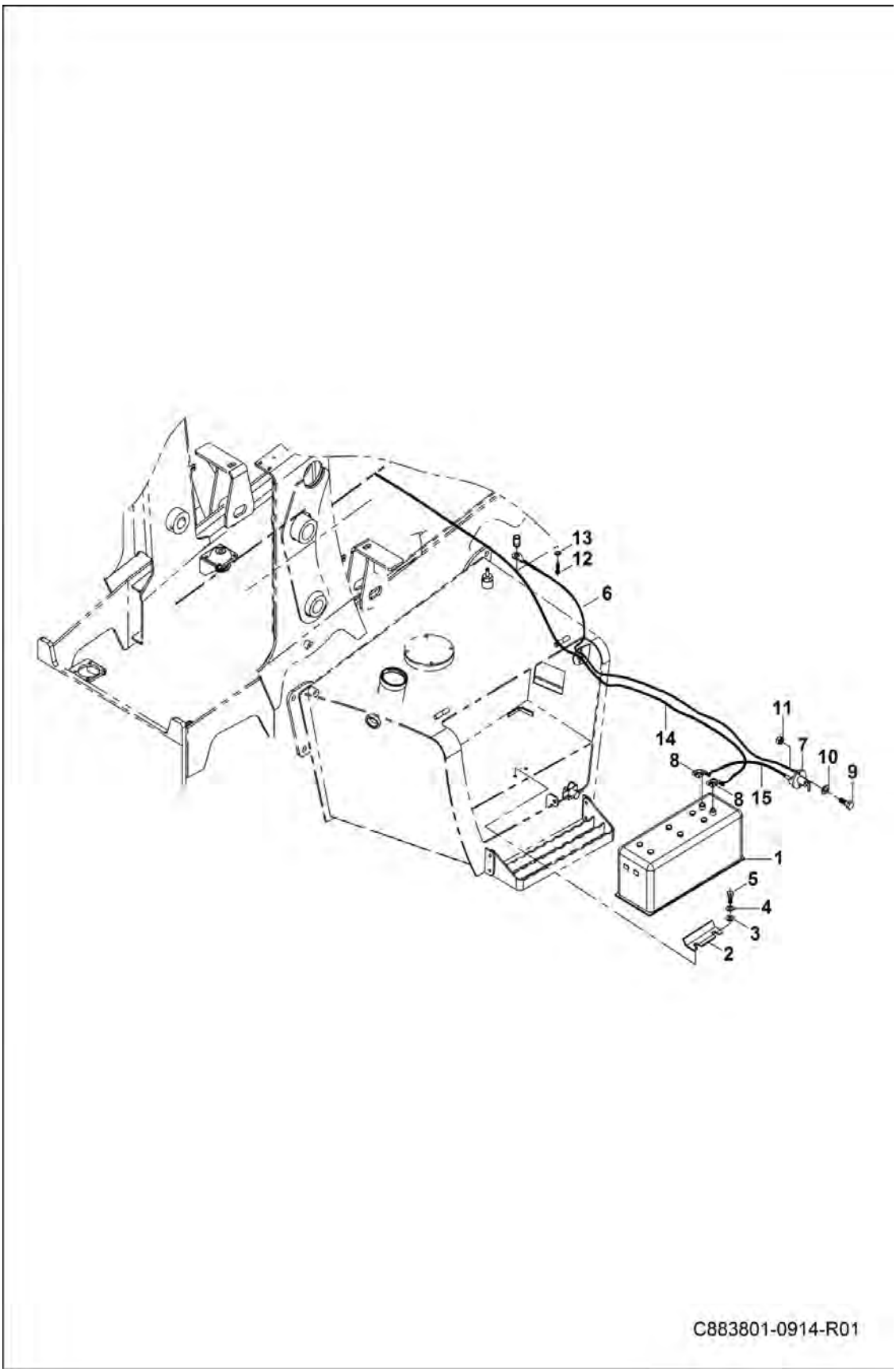

BATTERY AND ITS CONNECTIONS (Cont'd)

Ref No	Part Number	Description	Remarks	Serial Number	Qty
1	7289600	BATTERY			1
2	7289602	BATTERY BRACKET			1
3	7289262	WASHER			2
4	7288891	LOCK WASHER			2
5	7289261	BOLT			2
6	7291301	BATTERY CABLE			1
7	7289590	POWER SWITCH			1
8	7289594	BATTERY POLE			1
9	7290316	BOLT			2
10	7289596	LOCK WASHER			2
11	7289597	NUT			2
12	7288895	BOLT			1
13	7289604	WASHER			1
14	7291302	BATTERY CABLE			1
15	7291303	BATTERY CABLE			1

WINDSHIELD WIPER RESERVOIR

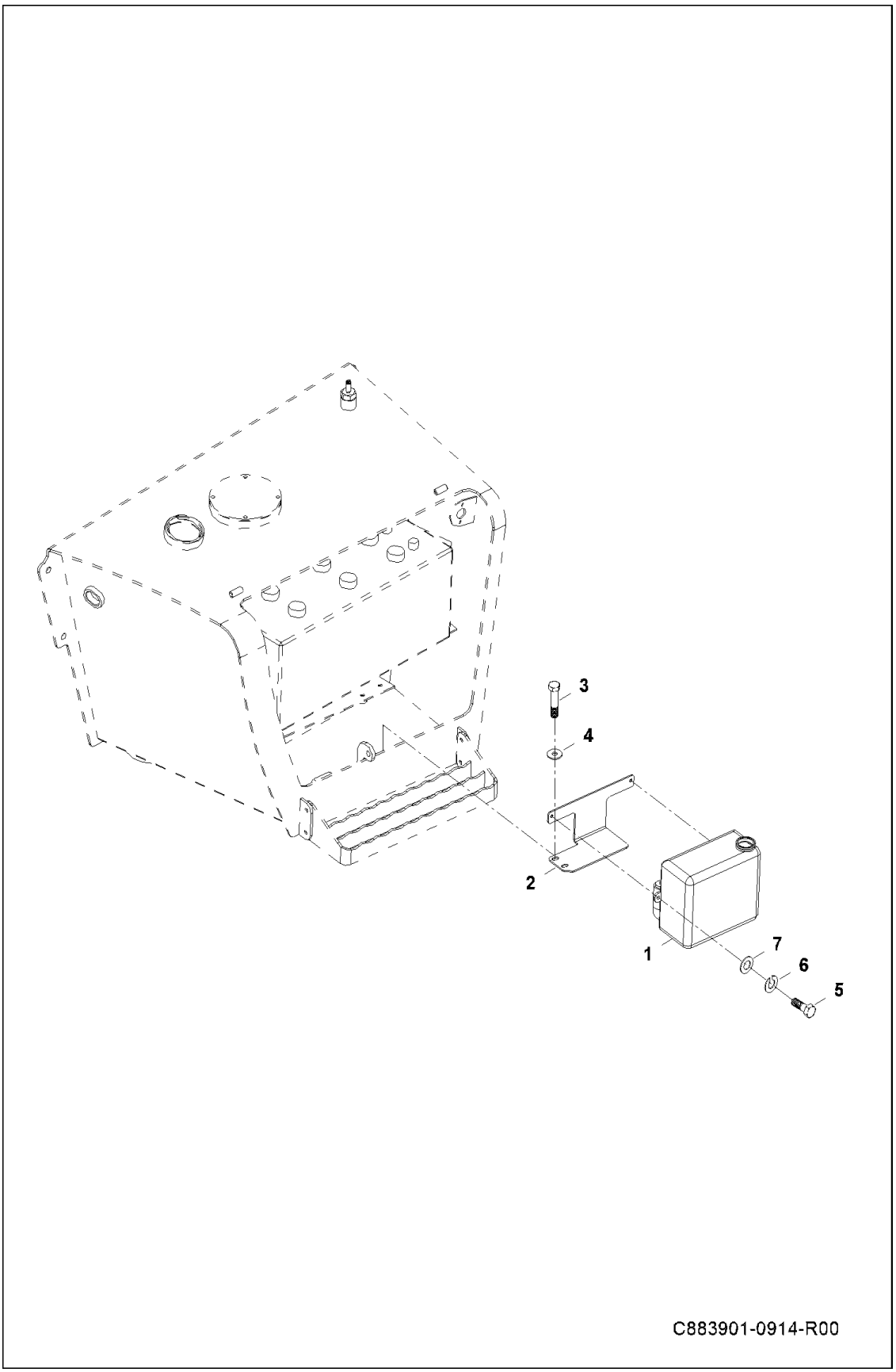

WINDSHIELD WIPER RESERVOIR (Cont'd)

Ref No	Part Number	Description	Remarks	Serial Number	Qty
1	7289607	RESERVOIR			1
2	7289608	PLATE			1
3	7289609	BOLT			2
4	7289610	WASHER			2
5	7289261	BOLT			1
6	7288891	LOCK WASHER			1
7	7289262	WASHER			1

CLAMSHELL CYLINDER CIRCUIT

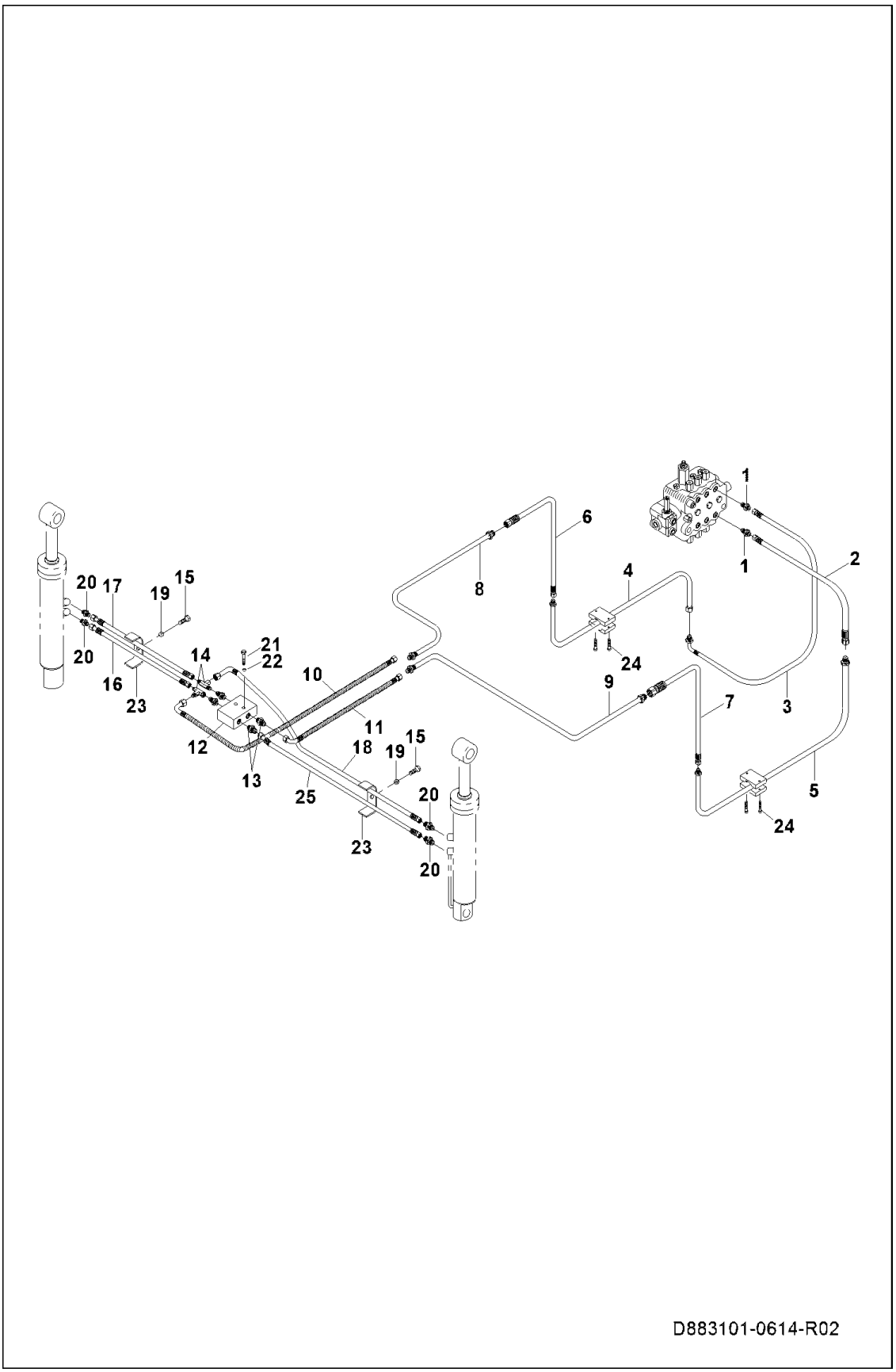

CLAMSHELL CYLINDER CIRCUIT (Cont'd)

Ref No	Part Number	Description	Remarks	Serial Number	Qty
1	7291308	FITTING			2
2	7291309	HOSE			1
3	7291310	HOSE			1
4	7291311	PIPE-RIGHT			1
5	7291312	PIPE-LEFT			1
6	7291313	HOSE			1
7	7291314	HOSE			1
8	7291315	PIPE-RIGHT			1
9	7291316	PIPE-LEFT			1
10	7291341	HOSE			1
11	7291342	HOSE			1
12	7289823	BLOCK			1
13	7289718	FITTING			4
14	7289833	FITTING			2
15	7289691	BOLT			2
16	7291322	HOSE			1
17	7291323	HOSE			1
18	7291340	HOSE			1
19	7291343	WASHER			2
20	7289829	FITTING			4
21	7288890	BOLT			2
22	7288892	WASHER			2
23	7289831	CLAMP			2
24	7291339	BOLT			4
25	7291324	HOSE			1

LIFT CYLINDERS CIRCUIT

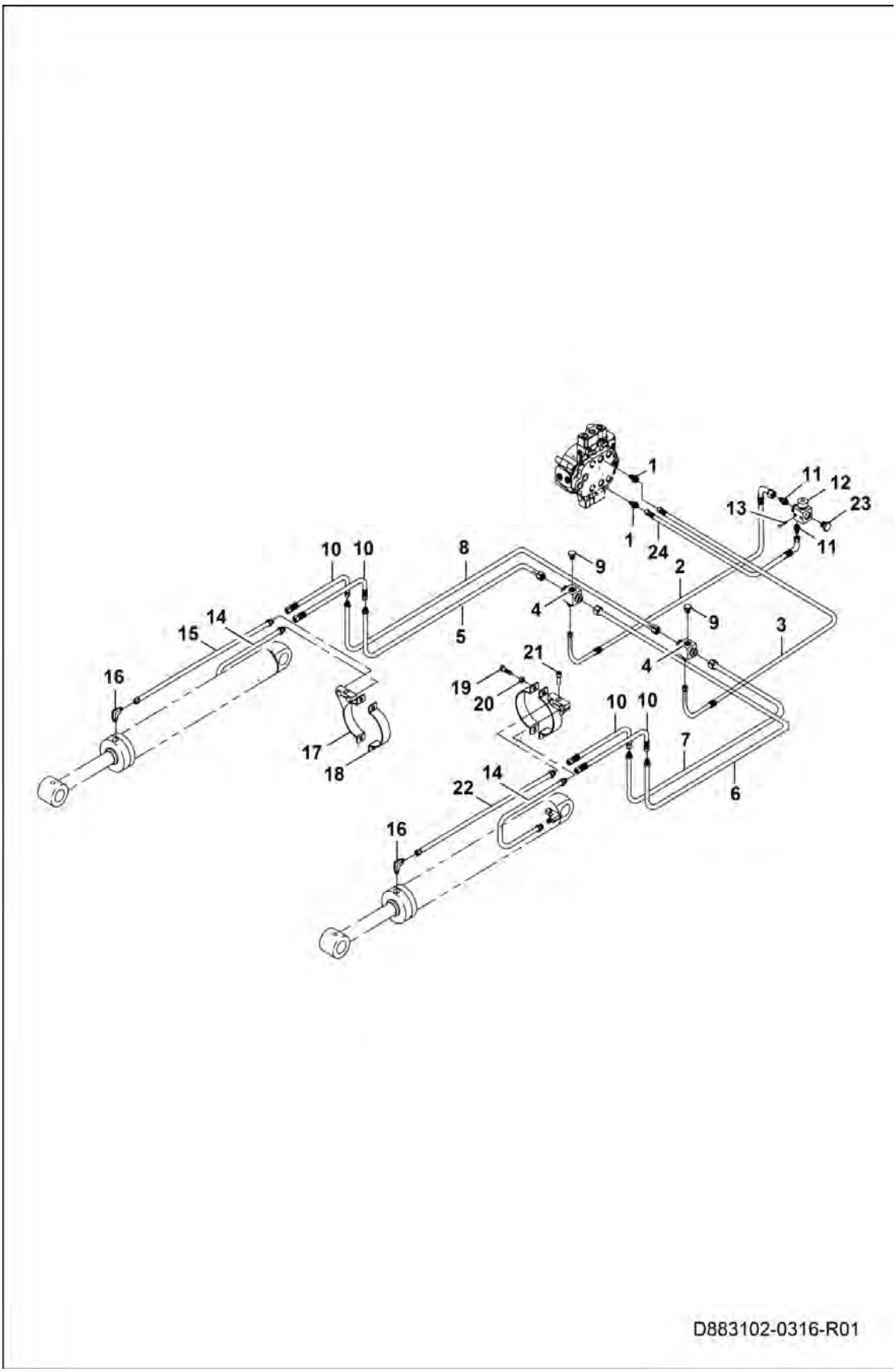

LIFT CYLINDERS CIRCUIT (Cont'd)

Ref No	Part Number	Description	Remarks	Serial Number	Qty
1	7291308	FITTING			2
2	7304198	HOSE			1
3	7291345	HOSE			1
4	7291346	FITTING			2
5	7291347	PIPE RIGHT			1
6	7291348	PIPE LEFT			1
7	7291349	PIPE LEFT			1
8	7291350	PIPE LEFT			1
9	7289761	PLUG			2
10	7291313	HOSE			4
11	7304199	FITTING			2
12	7304061	VALVE			1
13	7291457	BOLT			2
14	7291355	PIPE			2
15	7291356	PIPE			1
16	7291357	FITTING			2
17	7291358	CLAMP			2
18	7291359	CLAMP			2
19	7289258	BOLT			4
20	7288888	NUT			4
21	7291360	BOLT			2
22	7291361	PIPE			1
23	7304062	PLUG			1
24	7293261	HOSE			1

TILT CYLINDERS CIRCUIT

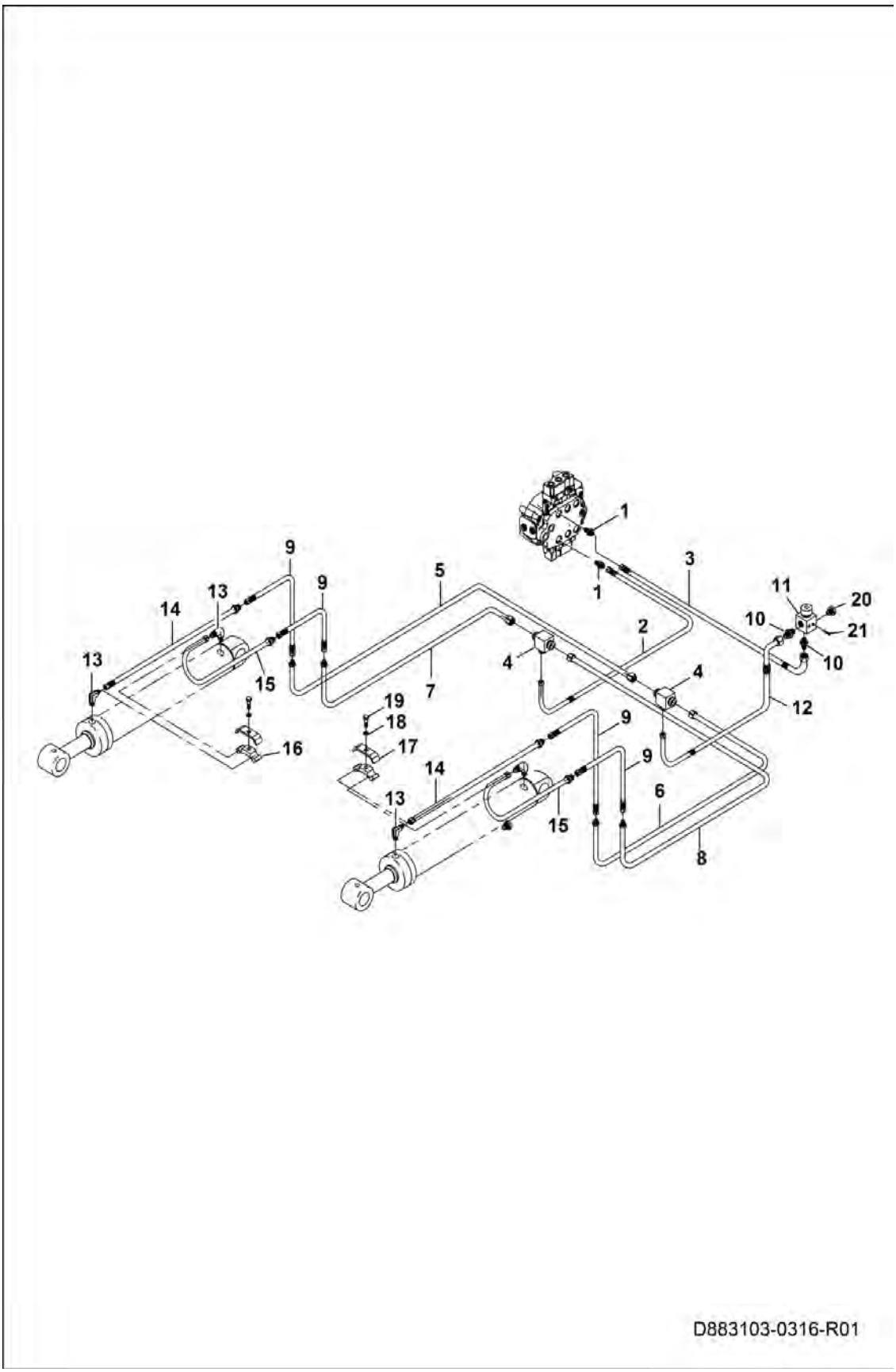

TILT CYLINDERS CIRCUIT (Cont'd)

Ref No	Part Number	Description	Remarks	Serial Number	Qty
1	7291308	FITTING			2
2	7291362	HOSE			1
3	7291363	HOSE			1
4	7291364	FITTING			2
5	7291365	PIPE RIGHT			1
6	7291366	PIPE LEFT			1
7	7291367	PIPE RIGHT			1
8	7291368	PIPE LEFT			1
9	7291369	HOSE			4
10	7304199	FITTING			2
11	7304061	VALVE			1
12	7304200	HOSE			1
13	7291357	FITTING			2
14	7291373	PIPE			2
15	7291374	PIPE			2
16	7291375	CLAMP			2
17	7291376	CLAMP			2
18	7289278	WASHER			2
19	7291377	BOLT			2
20	7304062	PLUG			1
21	7291457	BOLT			2

STEERING CYLINDER CIRCUIT

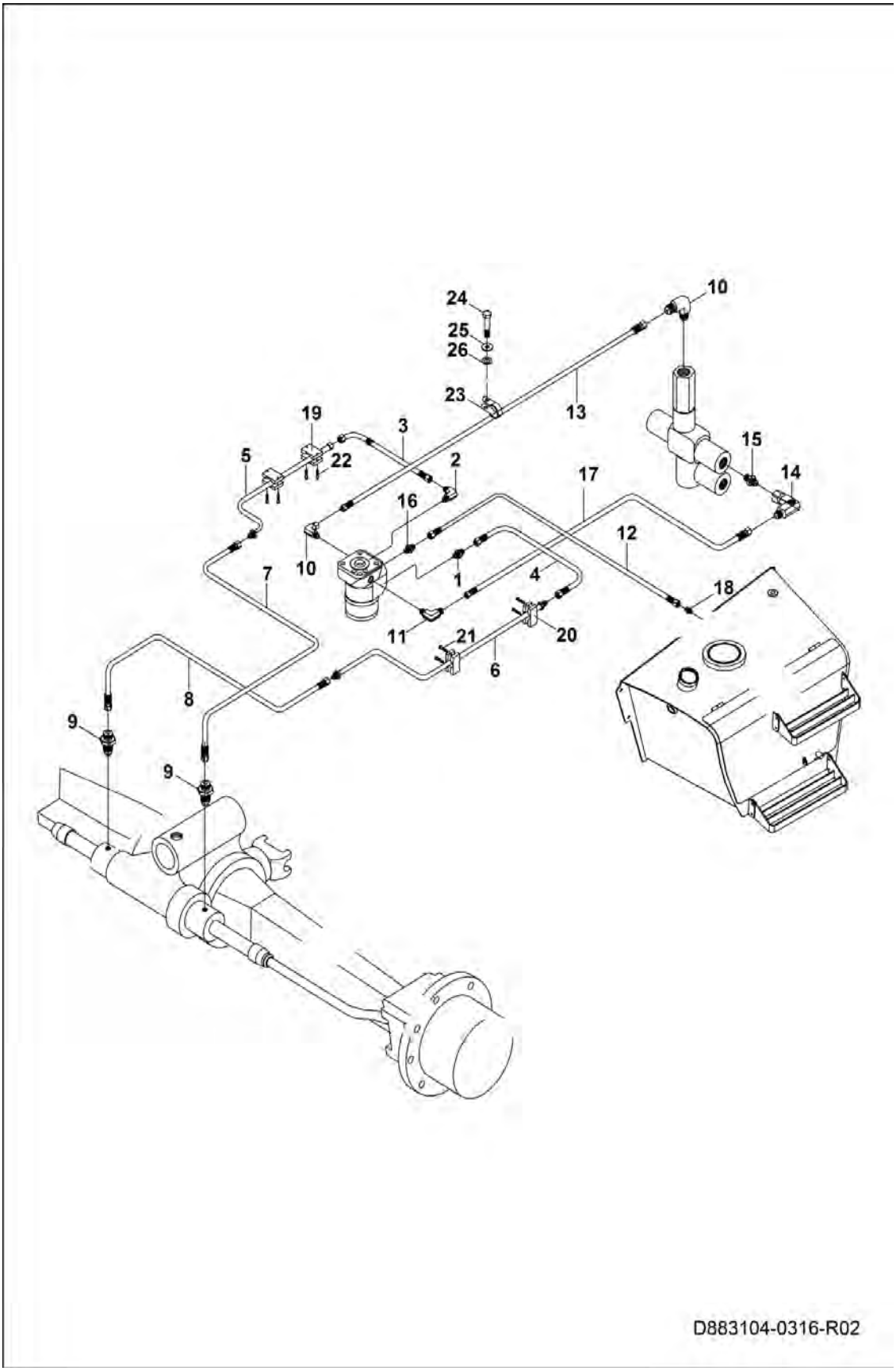

STEERING CYLINDER CIRCUIT (Cont'd)

Ref No	Part Number	Description	Remarks	Serial Number	Qty
1	7289718	FITTING			1
2	7289720	FITTING			1
3	7291378	HOSE			1
4	7291379	HOSE			1
5	7291380	STEERING PIPE-RIGHT			1
6	7291381	STEERING PIPE-LEFT			1
7	7291382	HOSE			1
8	7291383	HOSE			1
9	7289732	FITTING			2
10	7289717	FITTING			2
11	7289721	FITTING			1
12	7301987	HOSE			1
13	7292875	HOSE			1
14	7291387	FITTING			1
15	7291386	FITTING			1
16	7289719	FITTING			1
17	7292878	HOSE			1
18	7289724	FITTING			1
19	7291389	CLAMP			2
20	7291390	CLAMP			2
21	7291391	BOLT			4
22	7291392	BOLT			4
23	7291393	CLAMP			1
24	7289691	BOLT			1
25	7289278	WASHER			1
26	7289259	LOCK WASHER			1

BRAKE CIRCUIT

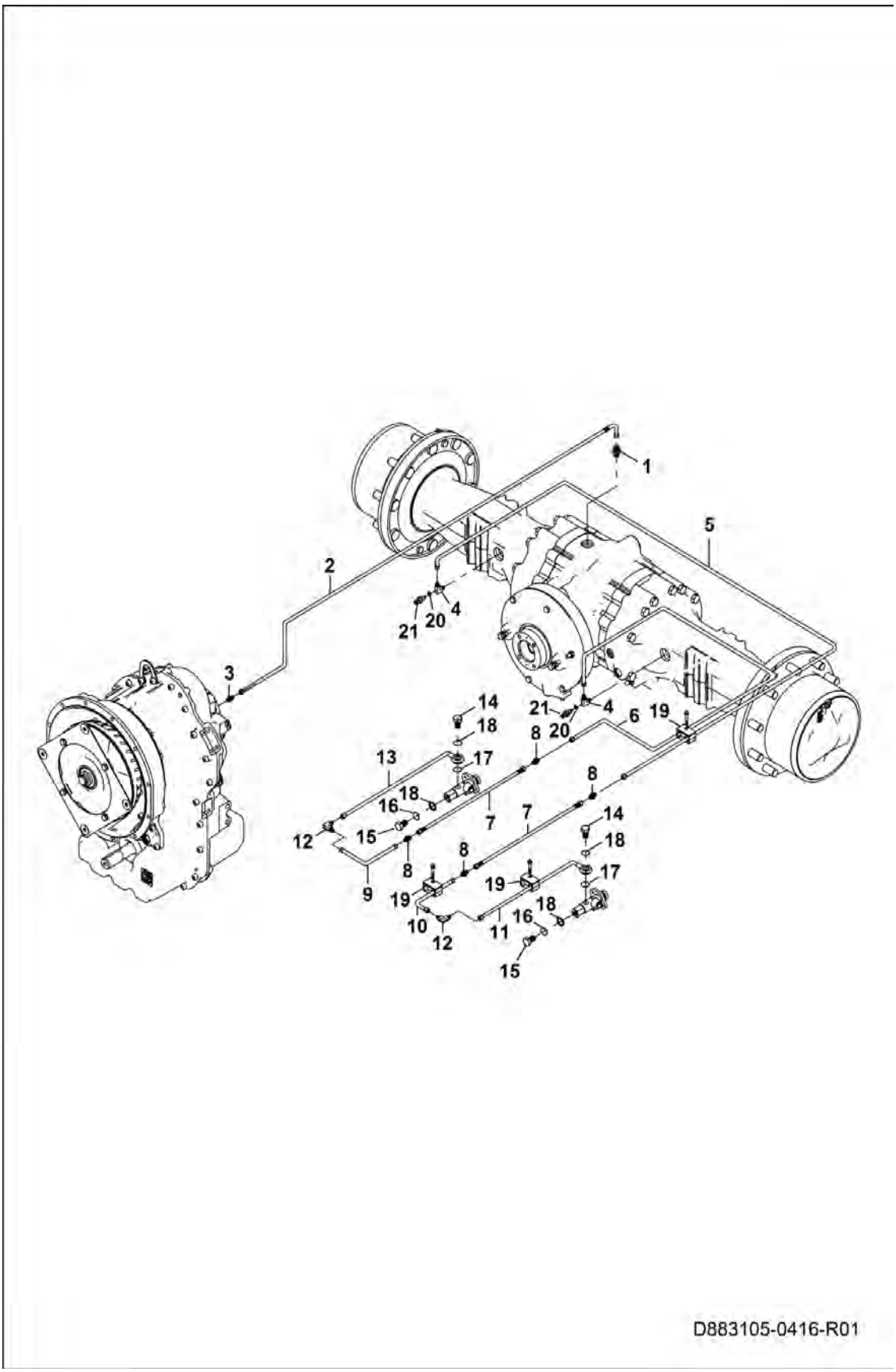

BRAKE CIRCUIT (Cont'd)

Ref No	Part Number	Description	Remarks	Serial Number	Qty
1	7289731	FITTING			1
2	7291394	HOSE			1
3	7289732	FITTING			1
4	7304205	ADAPTER			2
5	7291396	PIPE			1
6	7291397	PIPE			1
7	7291398	HOSE			2
8	7289730	FITTING			4
9	7291399	PIPE			1
10	7291400	PIPE			1
12	7291401	HOSE			21
12	7291402	PIPE			2
13	7291403	PIPE			1
14	7289733	BOLT			2
15	7290269	PLUG			2
16	7291404	O-RING			2
17	7289734	WASHER			4
18	7291405	WASHER			2
19	7291406	CLAMP			3
20	7304206	COPPER WASHER			2
21	7291026	INDICATOR			2

TRANSMISSION - OIL COOLER CIRCUIT

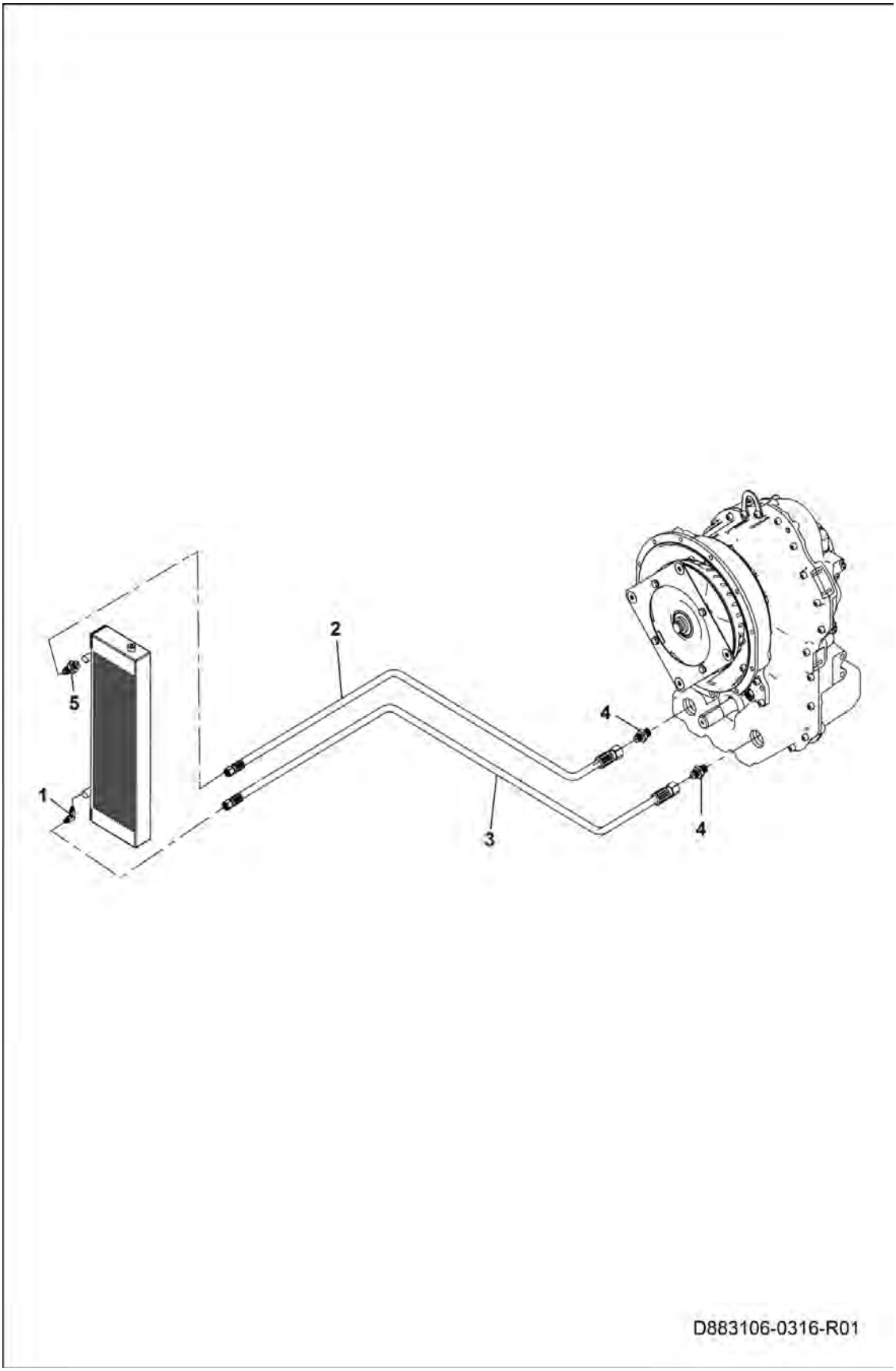

TRANSMISSION - OIL COOLER CIRCUIT (Cont'd)

Ref No	Part Number	Description	Remarks	Serial Number	Qty
1	7289739	FITTING			1
2	7304207	HOSE			1
3	7304208	HOSE			1
4	7289738	FITTING			2
5	7289740	FITTING			1

LEAK COLLECTION BLOCK CIRCUIT

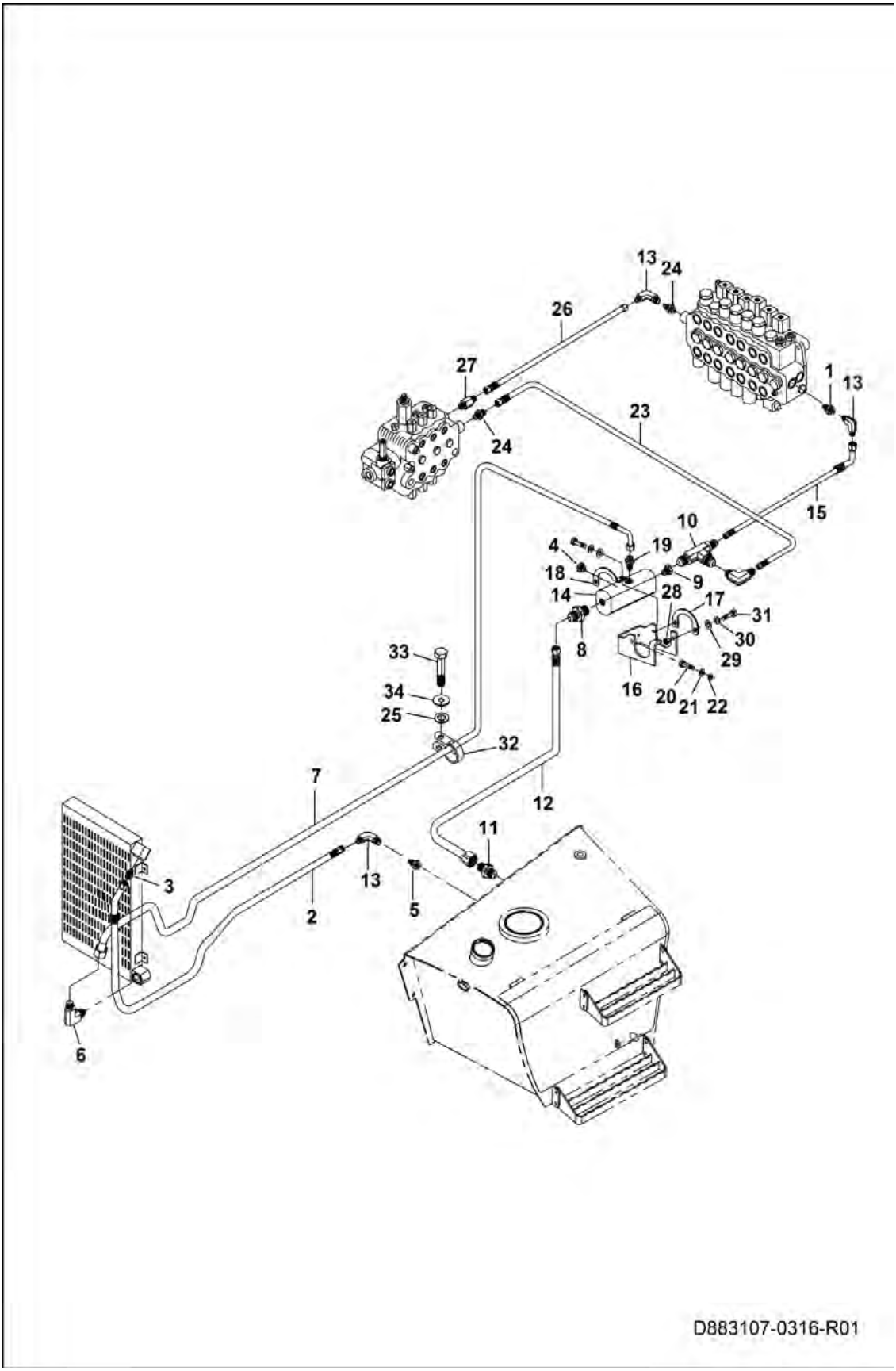

LEAK COLLECTION BLOCK CIRCUIT (Cont'd)

Ref No	Part Number	Description	Remarks	Serial Number	Qty
1	7289777	FITTING			1
2	7304239	HOSE			1
3	7289784	FITTING			1
4	7289787	BLIND PLUG			1
5	7289769	FITTING			1
6	7289783	FITTING			1
7	7304240	PIPE			1
8	7289786	ADAPTER			1
9	7289772	ADAPTER			1
10	7289773	FITTING			1
11	7299144	FITTING			1
12	7289767	HOSE			1
13	7289779	FIITING			2
14	7289771	CHECK VALVE			1
15	7291423	HOSE			2
16	7289774	BRACKET			1
17	7289775	CLAMP PLATE			1
18	7289776	CLAMP PLATE			1
19	7289749	FITTING			1
20	7289261	BOLT			2
21	7288892	WASHER			2
22	7288891	LOCK WASHER			2
23	7291427	HOSE			1
24	7289782	HOSE			3
25	7289259	LOCK WASHER			1
26	7291429	HOSE			1
27	7289781	FITTING			1
28	7289785	NUT			4
29	7289598	WASHER			4
30	7289610	WASHER			4
31	7289595	BOLT			4
32	7291393	CLAMP			1
33	7289691	BOLT			1
34	7289278	WASHER			1

BACKHOE HOSE CONNECTIONS

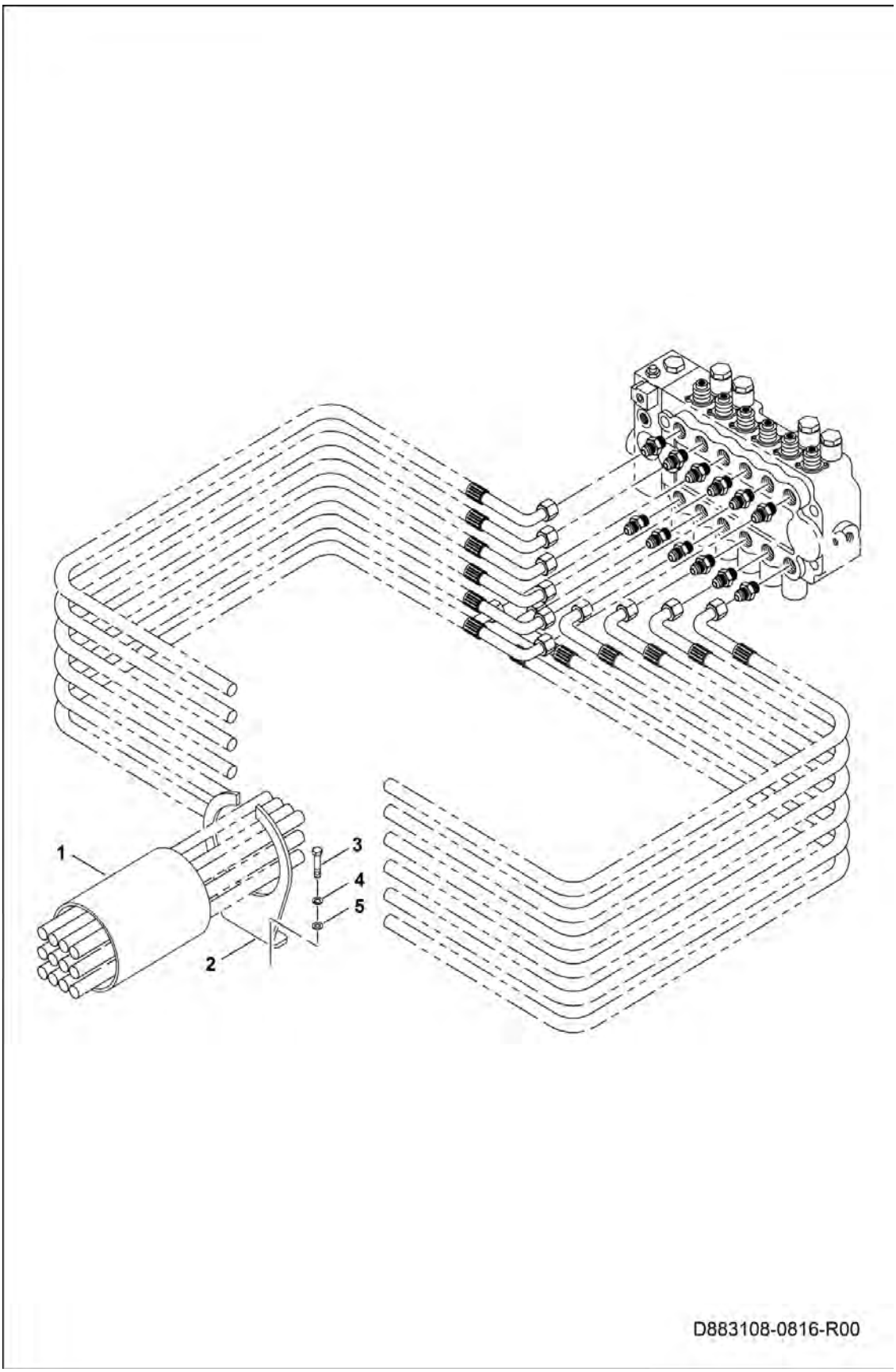

BACKHOE HOSE CONNECTIONS (Cont'd)

Ref No	Part Number	Description	Remarks	Serial Number	Qty
1	7289693	HOSE COVER			1
2	7289690	PLATE			1
3	7289691	BOLT			2
4	7289259	LOCK WASHER			2
5	7289278	WASHER			2

INTAKE AND PRIORITY VALVE CIRCUIT

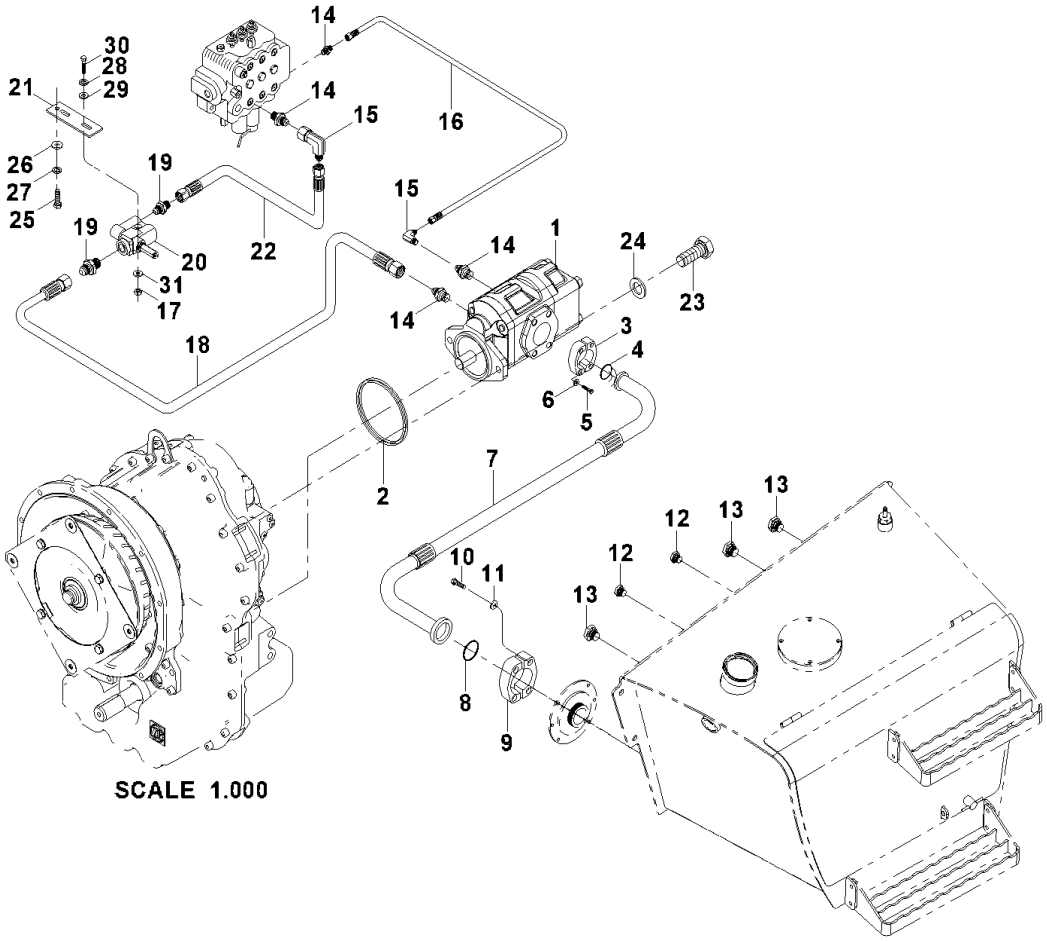

D883109-0914-R00

INTAKE AND PRIORITY VALVE CIRCUIT (Cont'd)

Ref No	Part Number	Description	Remarks	Serial Number	Qty
1	7291463	PUMP			1
2	7291464	O-RING			1
3	7289743	FLANGE			1
4	7291465	O-RING			1
5	7289752	BOLT			4
6	7289635	LOCK WASHER			4
7	7291466	HOSE			1
8	7289755	O-RING			1
9	7289756	FLANGE			1
10	7289757	BOLT			4
11	7289758	LOCK WASHER			4
12	7289761	PLUG			2
13	7289762	PLUG			3
14	7289748	FITTING			4
15	7291467	FITTING			2
16	7291468	HOSE ASS'Y			1
17	7289263	NUT			2
18	7291469	HOSE ASS'Y			1
19	7289740	FITTING			2
20	7289742	PRIORITY VALVE			1
21	7291470	BRACKET			1
22	7291471	HOSE ASS'Y			1
23	7289750	BOLT			2
24	7289751	WASHER			2
25	7289849	BOLT			1
26	7289278	WASHER			1
27	7289259	LOCK WASHER			1
28	7288891	LOCK WASHER			2
29	7291472	WASHER			2
30	7289753	BOLT			2
31	7288892	WASHER			2

HYDRAULIC PUMP

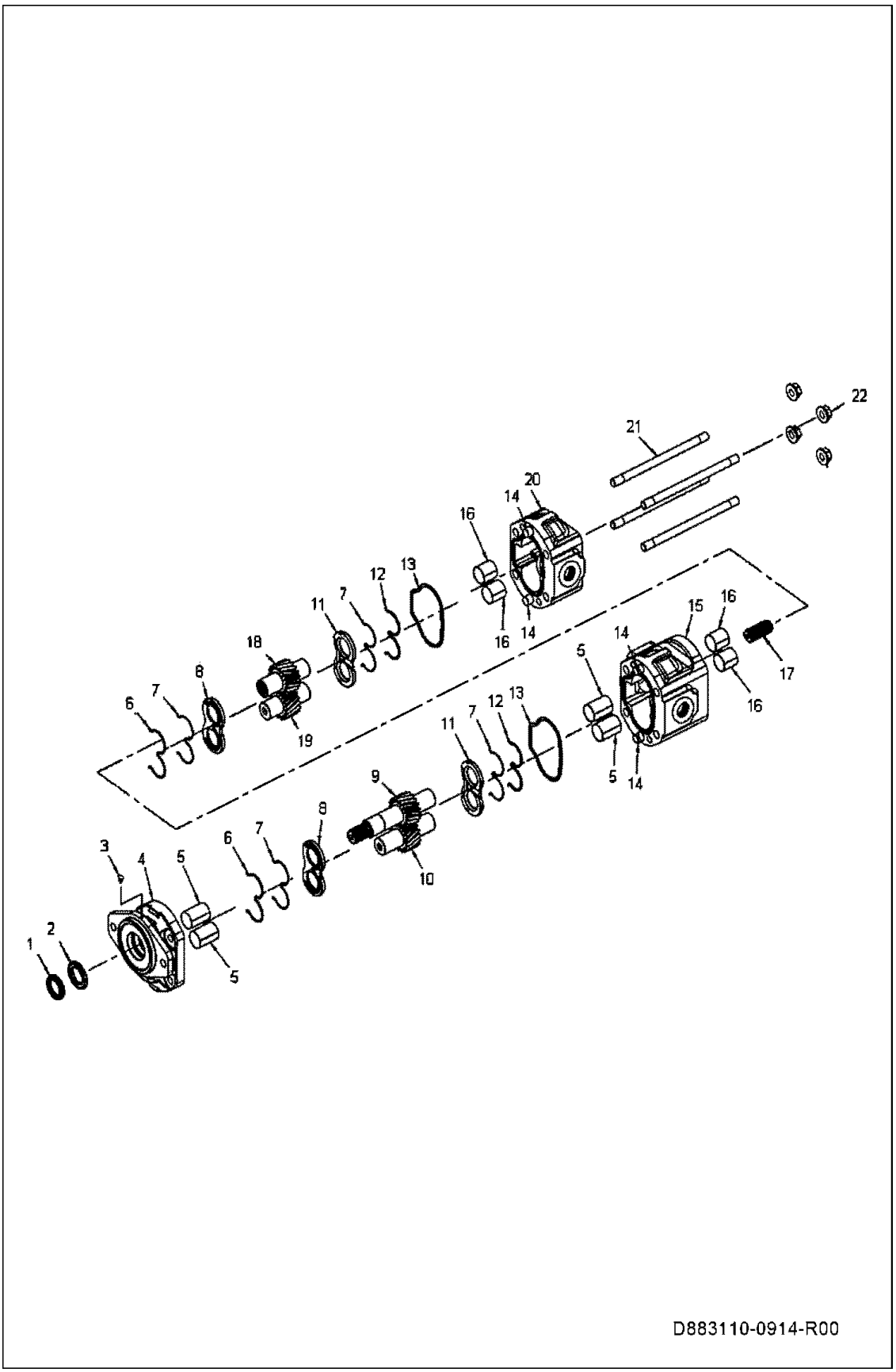

HYDRAULIC PUMP (Cont'd)

Ref No	Part Number	Description	Remarks	Serial Number	Qty
1	7291473	SHAFT SEAL RING			1
2	7291474	SHAFT SEAL RING			1
3	7291475	PLUG			1
4	7291476	ADAPTOR SAE'C' 2 HOLE			1
5	7291477	TEFLON BUSHING			4
6	7291478	SEAL RING			2
7	7291479	SEAL RING			4
8	7291480	WORN PLATE			2
9	7291481	GEAR			1
10	7291482	GEAR			1
11	7291483	WORN PLATE			2
12	7291484	SEAL RING			2
13	7291485	SEAL RING			2
14	7291486	DOWEL PIN			4
15	7291487	FRONT BODY			1
16	7291488	TEFLON BUSHING			4
17	7291489	COUPLING			1
18	7291490	GEAR			1
19	7291491	GEAR			1
20	7291492	REAR BODY			1
21	7291493	STUD			4
22	7291494	NUT			4

STABILIZER CYLINDER CIRCUIT

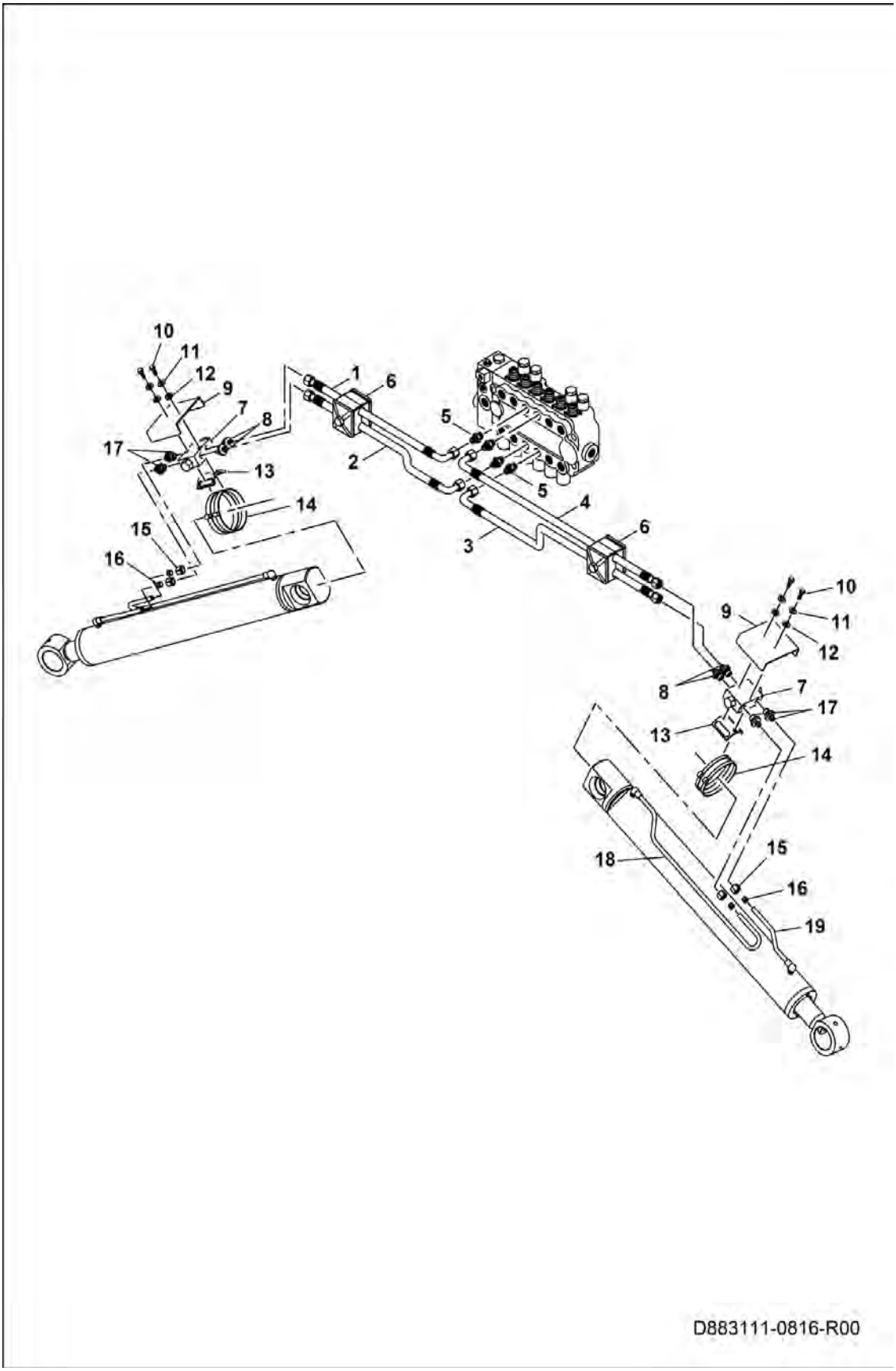

STABILIZER CYLINDER CIRCUIT (Cont'd)

Ref No	Part Number	Description	Remarks	Serial Number	Qty
1	7311414	HOSE			1
2	7311415	HOSE			1
3	7311416	HOSE			1
4	7311417	HOSE			1
5	7289792	FITTING			4
6	7289735	CLAMP			2
7	7311418	SAFETY VALVE			2
8	7311419	FITTING			4
9	7311420	SAFETY VALVE BRACKET			2
10	7289799	BOLT			4
11	7288892	WASHER			4
12	7288891	LOCK WASHER			4
13	7311421	SAFETY VALVE ASSEMBLY			2
14	7292874	CLAMP			4
15	7311422	STANDARD NUT			4
16	7311423	STANDARD FERRULE			4
17	7311424	FITTING			4
18	7311425	PIPE			2
19	7311426	PIPE			2

SWING CYLINDER CIRCUIT

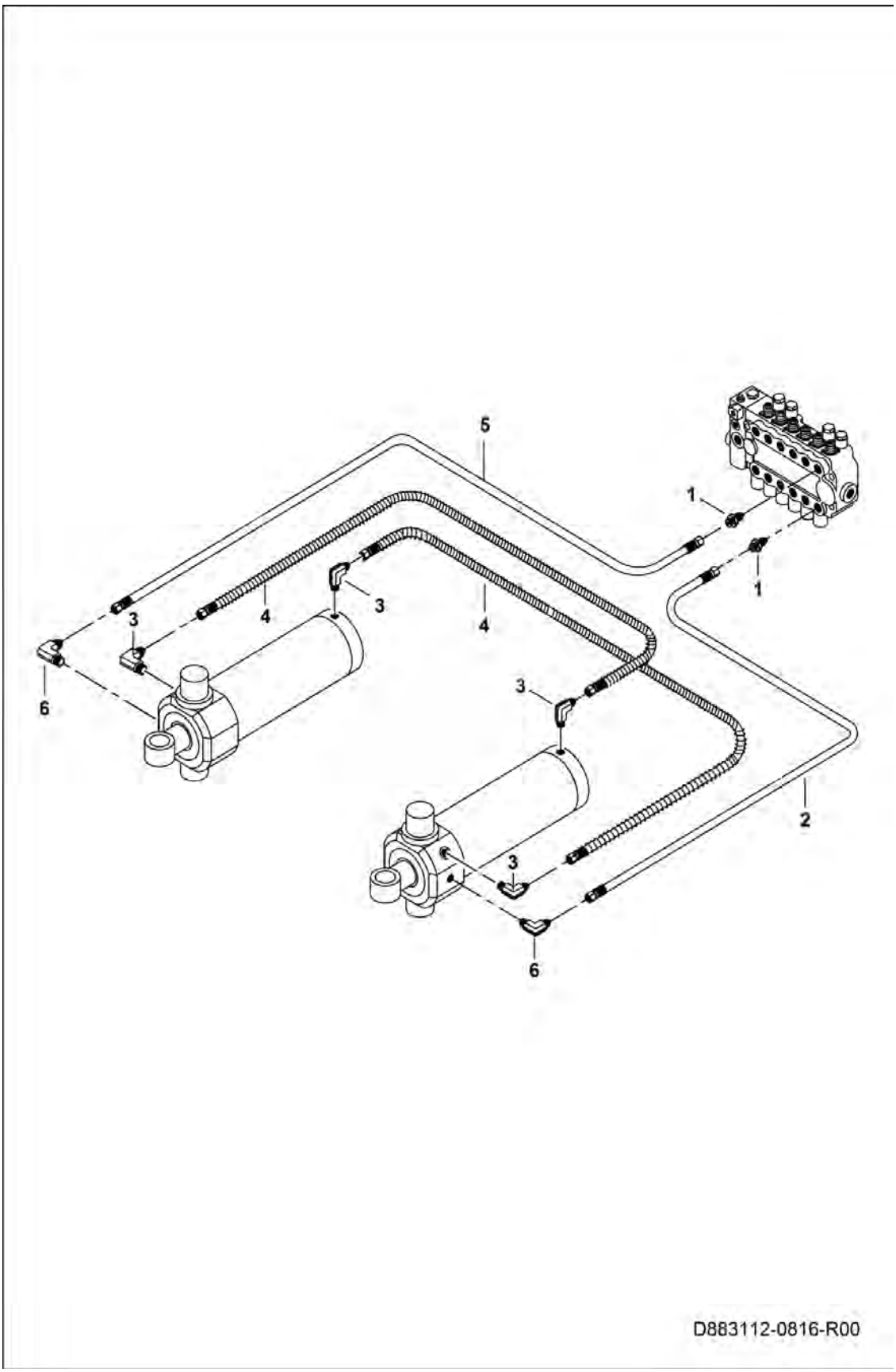

SWING CYLINDER CIRCUIT (Cont'd)

Ref No	Part Number	Description	Remarks	Serial Number	Qty
1	7289718	FITTING			2
2	7311429	HOSE			1
3	7289806	FITTING			4
4	7291510	HOSE			2
5	7304325	HOSE			1
6	7289807	FITTING			2

REAR BOOM CYLINDER CIRCUIT

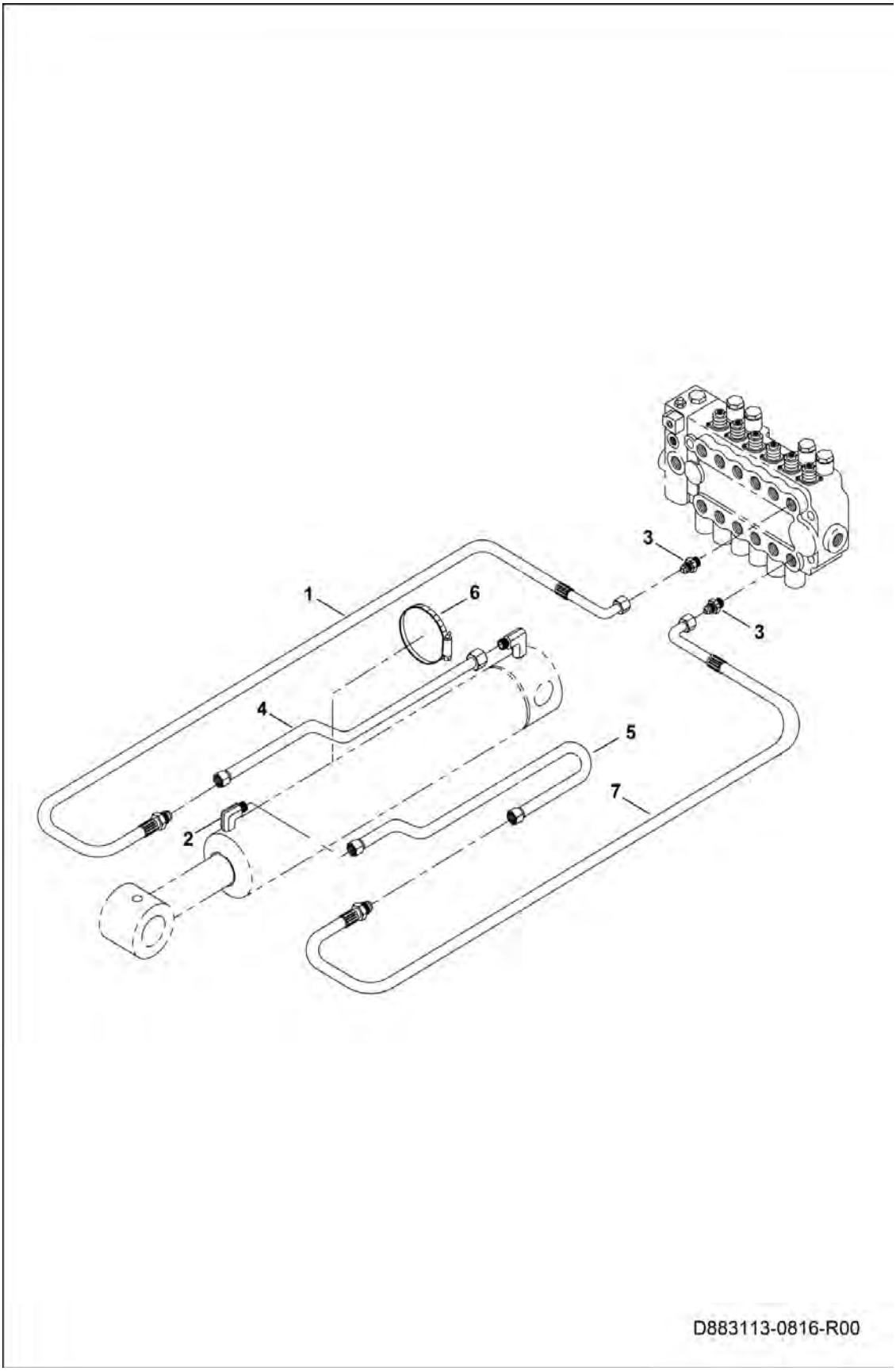

REAR BOOM CYLINDER CIRCUIT (Cont'd)

Ref No	Part Number	Description	Remarks	Serial Number	Qty
1	7311433	HOSE			1
2	7291518	FITTING			1
3	7290911	FITTING			2
4	7291515	PIPE			1
5	7291517	PIPE			1
6	7291520	CLAMP			1
7	7311434	FITTING			1

STICK CYLINDER CIRCUIT

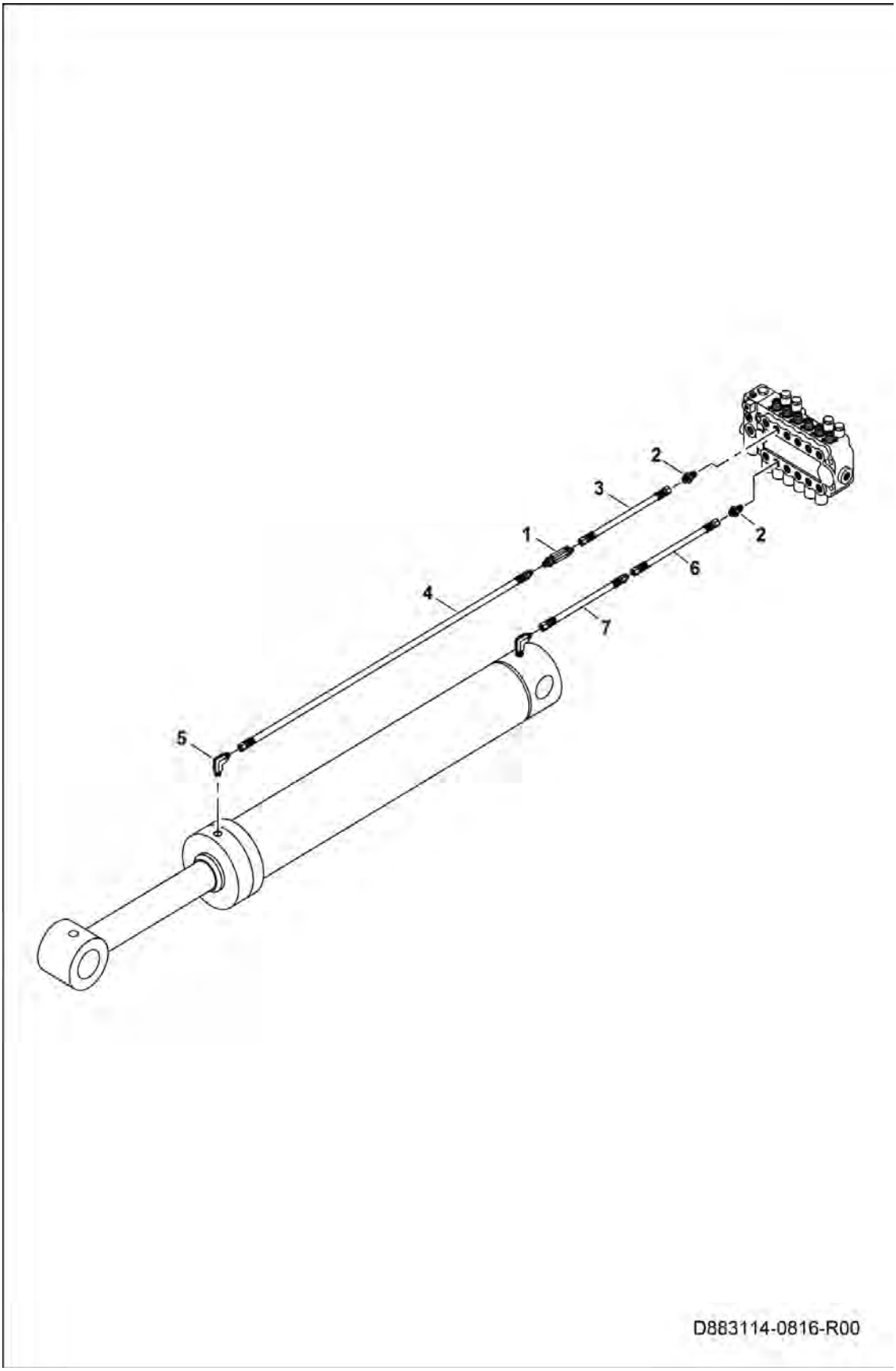

STICK CYLINDER CIRCUIT (Cont'd)

Ref No	Part Number	Description	Remarks	Serial Number	Qty
1	7311432	FITTING			1
2	7290911	FITTING			2
3	7311433	HOSE			1
4	7291524	HOSE			1
5	7291357	FITTING			1
6	7311434	FITTING			1
7	7291525	HOSE			1

BUCKET CYLNDER CIRCUIT

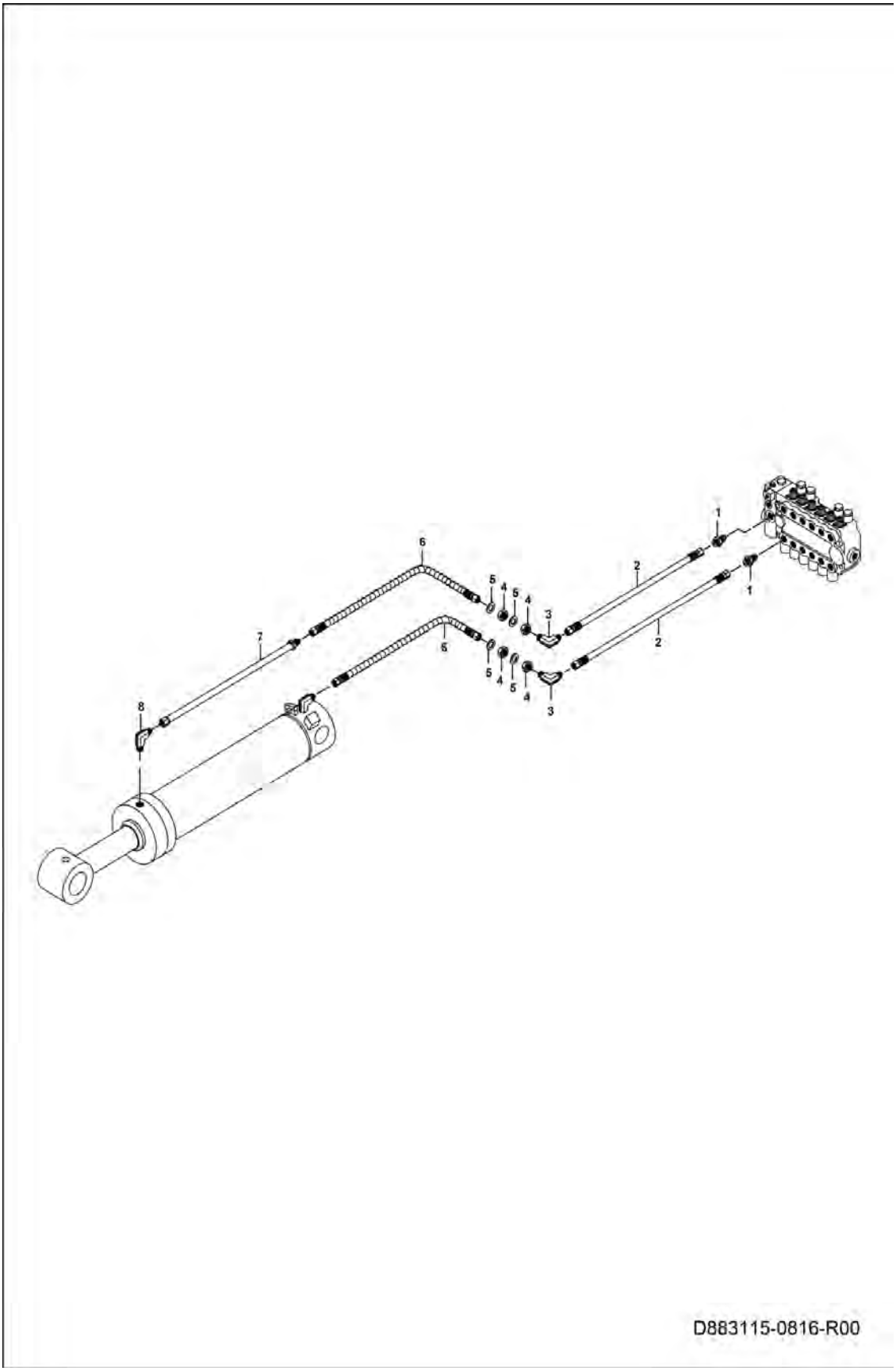

BUCKET CYLNDER CIRCUIT (Cont'd)

Ref No	Part Number	Description	Remarks	Serial Number	Qty
1	7290911	FITTING			2
2	7311434	FITTING			2
2	7311481	HOSE	if extended and hammer		2
3	7291528	FITTING			2
4	7291529	NUT			4
5	7292177	WASHER			4
6	7291531	HOSE			2
7	7291533	PIPE			1
8	7291518	FITTING			1

CLAMSHELL CYLINDER

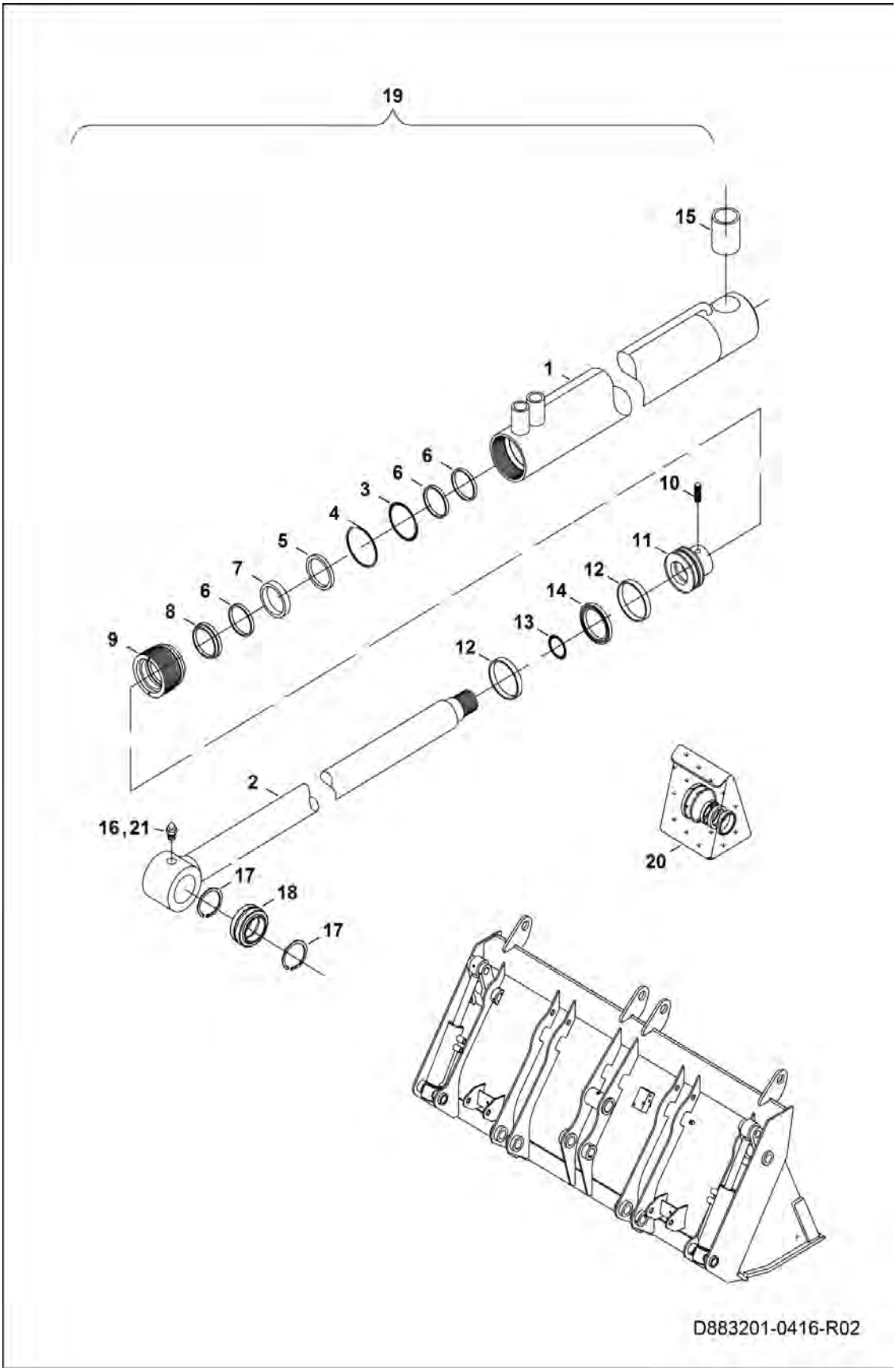

CLAMSHELL CYLINDER (Cont'd)

Ref No	Part Number	Description	Remarks	Serial Number	Qty
1	7289955	CYLINDER PIPE ASSY.			1
2	7289956	CYLINDER ROD			1
3	7289888	O-RING			1
4	7289887	BACK-UP RING			1
5	7289957	OMEGAT			1
6	7289958	TEFLON RING			3
7	7289959	NUTRING			1
8	7289891	DUST SEAL			1
9	7289960	GUIDE			1
10	7289859	SCREW			1
11	7289961	PISTON			1
12	7289962	TEFLON RING			2
13	7289898	O-RING			1
14	7289963	OMEGAT			1
15	7289964	BUSHING			1
16	7289862	GREASER			1
17	7289965	SEGMENT			2
18	7289966	JOINT			1
19	7289967	BUCKET CYLINDER			2
20	7289968	REPAIR SET			1
21	7289871	GREASER COVER			1

LIFT CYLINDER

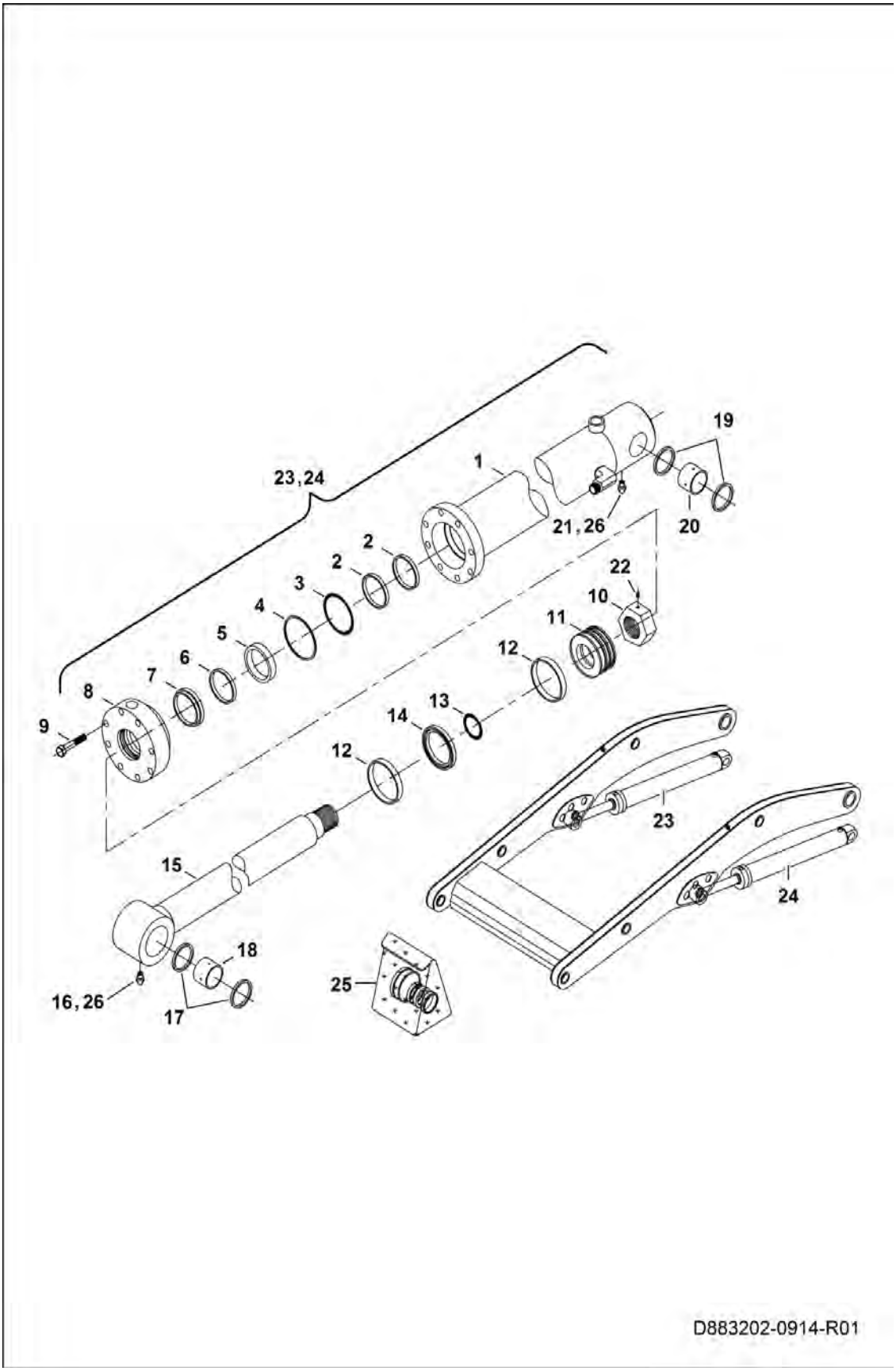

LIFT CYLINDER (Cont'd)

Ref No	Part Number	Description	Remarks	Serial Number	Qty
1	7291546	CYL. PIPE RIGHT ASSEMBLY	RIGHT		1
1	7291547	CYL. PIPE LEFT ASSEMBLY	LEFT		1
2	7291548	TEFLON RING			3
3	7291549	ORING			1
4	7291550	BACK-UP RING			1
5	7289854	OMEGAT			1
6	7289855	NUTRING			1
7	7289857	DUST SEAL			1
8	7291551	GUIDE			1
9	7291552	BOLT			8
10	7291553	NUT			1
11	7291554	PISTON			1
12	7291555	TEFLON RING			4
13	7289898	O-RING			1
14	7289932	OMEGAT			1
15	7291556	ROD ASSEMBLY			1
16	7289862	GREASER			1
17	7289943	DUST SEAL			2
18	7291557	BUSHING			1
19	7291558	DUST SEAL			2
20	7291559	BUSHING			1
21	7290677	GREASER			1
22	7291544	SET SCREW			1
23	7291560	LIFT CYL. RIGHT			1
24	7291561	LIFT CYL. LEFT			1
25	7291562	REPAIR KIT			1
26	7291563	GREASER COVER			2

TILT CYLINDER

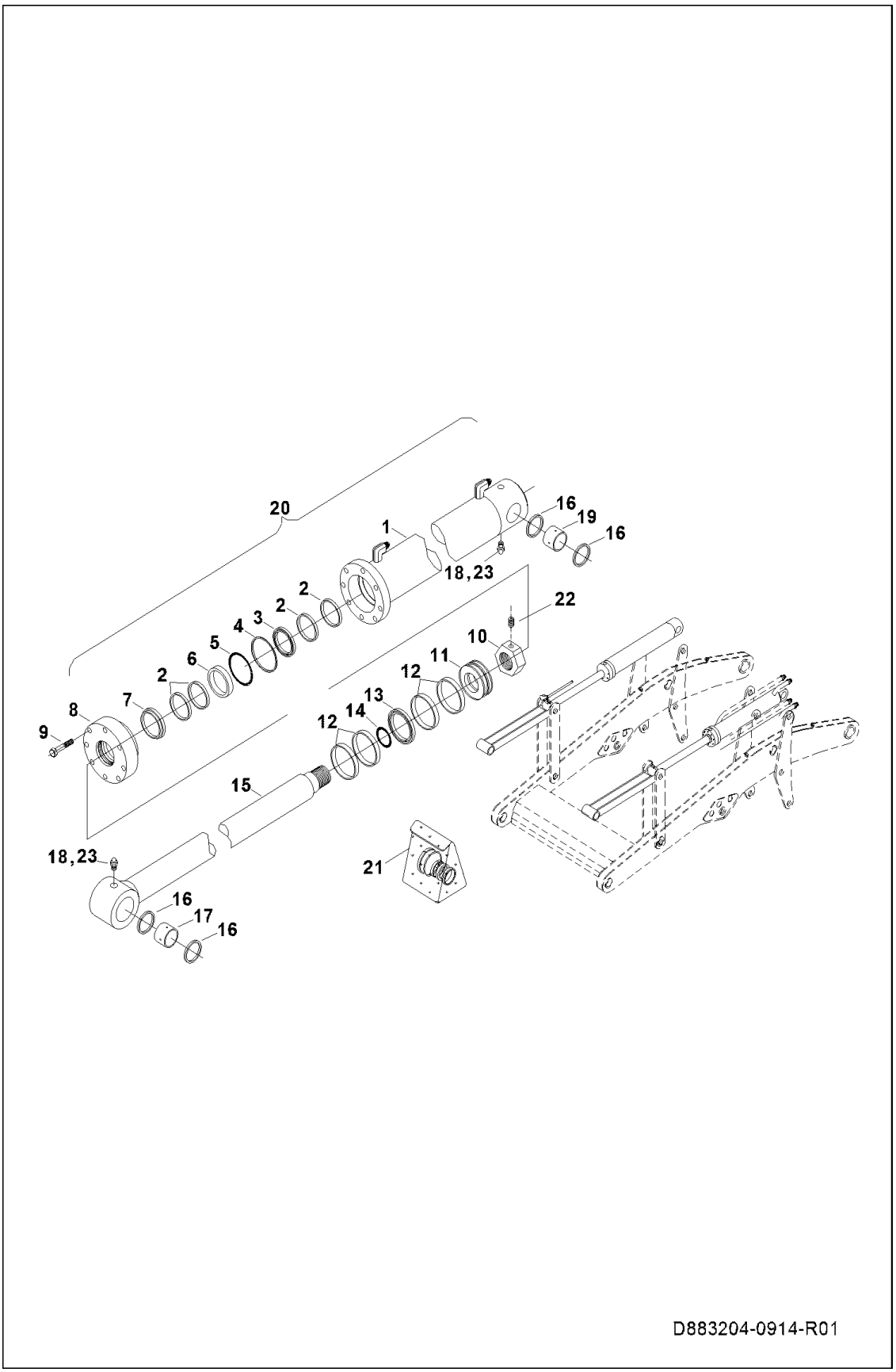

TILT CYLINDER (Cont'd)

Ref No	Part Number	Description	Remarks	Serial Number	Qty
1	7291564	CYLINDER PIPE ASSEMBLY			1
2	7291548	TEFLON RING			4
3	7289854	OMEGAT			1
4	7291565	O-RING			1
5	7291566	BACK-UP RING			1
6	7289855	NUTRING			1
7	7289857	DUST SEAL			1
8	7291567	GUIDE			1
9	7291568	BOLT			8
10	7291569	NUT			1
11	7291570	PISTON			1
12	7291571	TEFLON RING			4
13	7289898	O-RING			1
14	7289863	OMEGAT			1
15	7291572	ROD ASSEMBLY			1
16	7289943	DUST SEAL			4
17	7291557	BUSHING			1
18	7289862	GREASER			2
19	7291573	BUSHING			1
20	7291574	TILT CYL. ASSY.			1
21	7291575	REPAIR KIT			1
22	7291544	SET SCREW			1
23	7289871	GREASER COVER			2

STABILIZER CYLINDER

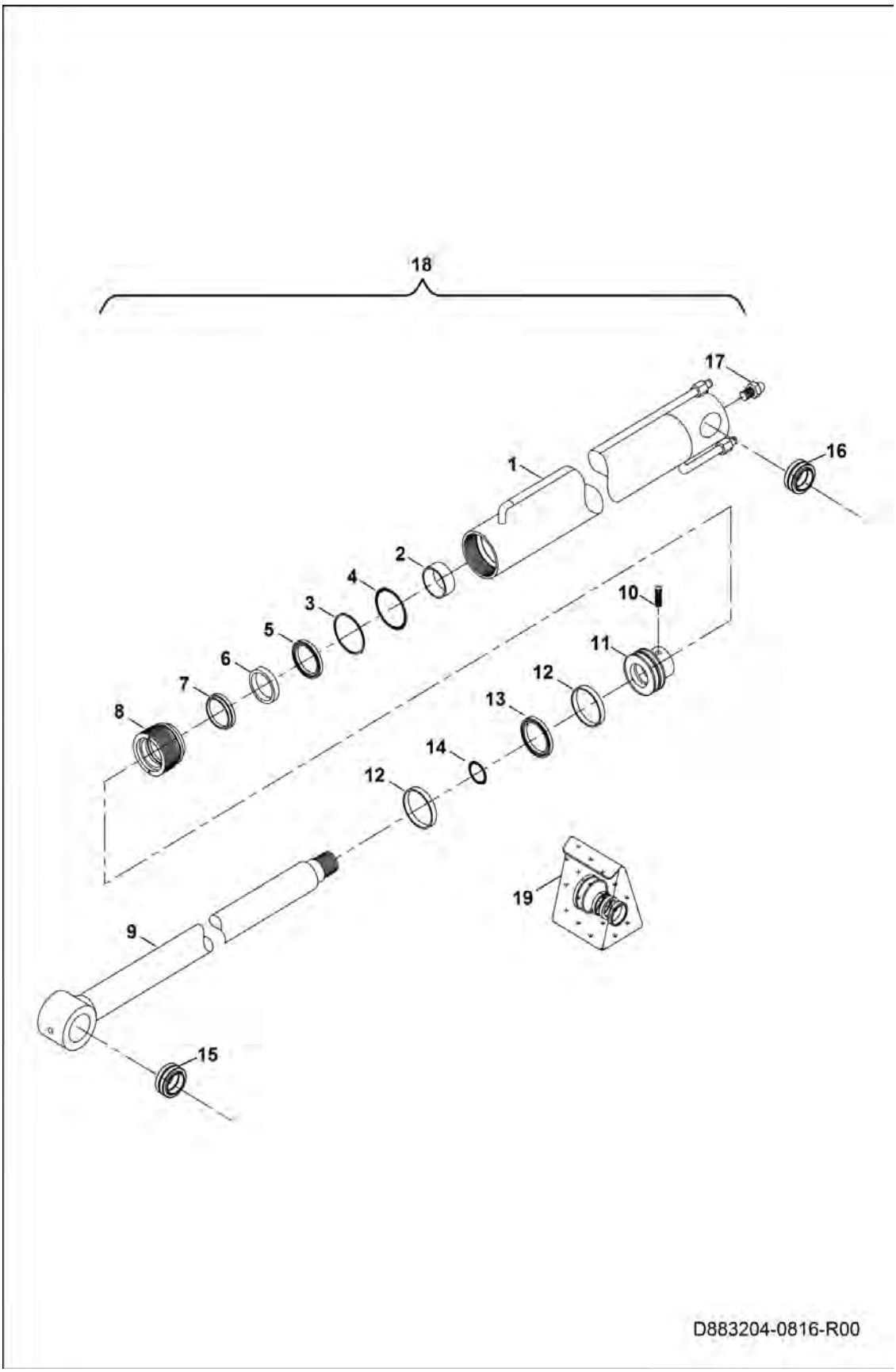

STABILIZER CYLINDER (Cont'd)

Ref No	Part Number	Description	Remarks	Serial Number	Qty
1	7311446	CYLINDER PIPE ASSY			1
2	7289906	TEFLON RING			1
3	7289927	BACK-UP RING			1
4	7289926	O-RING			1
5	7289909	OMEGAT			1
6	7311447	NUTRING			1
7	7289911	DUST SEAL			1
8	7311448	GUIDE			1
9	7311449	ROD			1
10	7289859	SCREW			1
11	7311450	PISTON			1
12	7289931	TEFLON RING			2
13	7289932	OMEGAT			1
14	7289919	O-RING			1
15	7311451	BUSHING			1
16	7291559	BUSHING			1
17	7289862	GREASER			1
18	7289901	STABILIZER CYL. ASSY.			1
19	7311452	REPAIR KIT			1

SWING CYLINDER

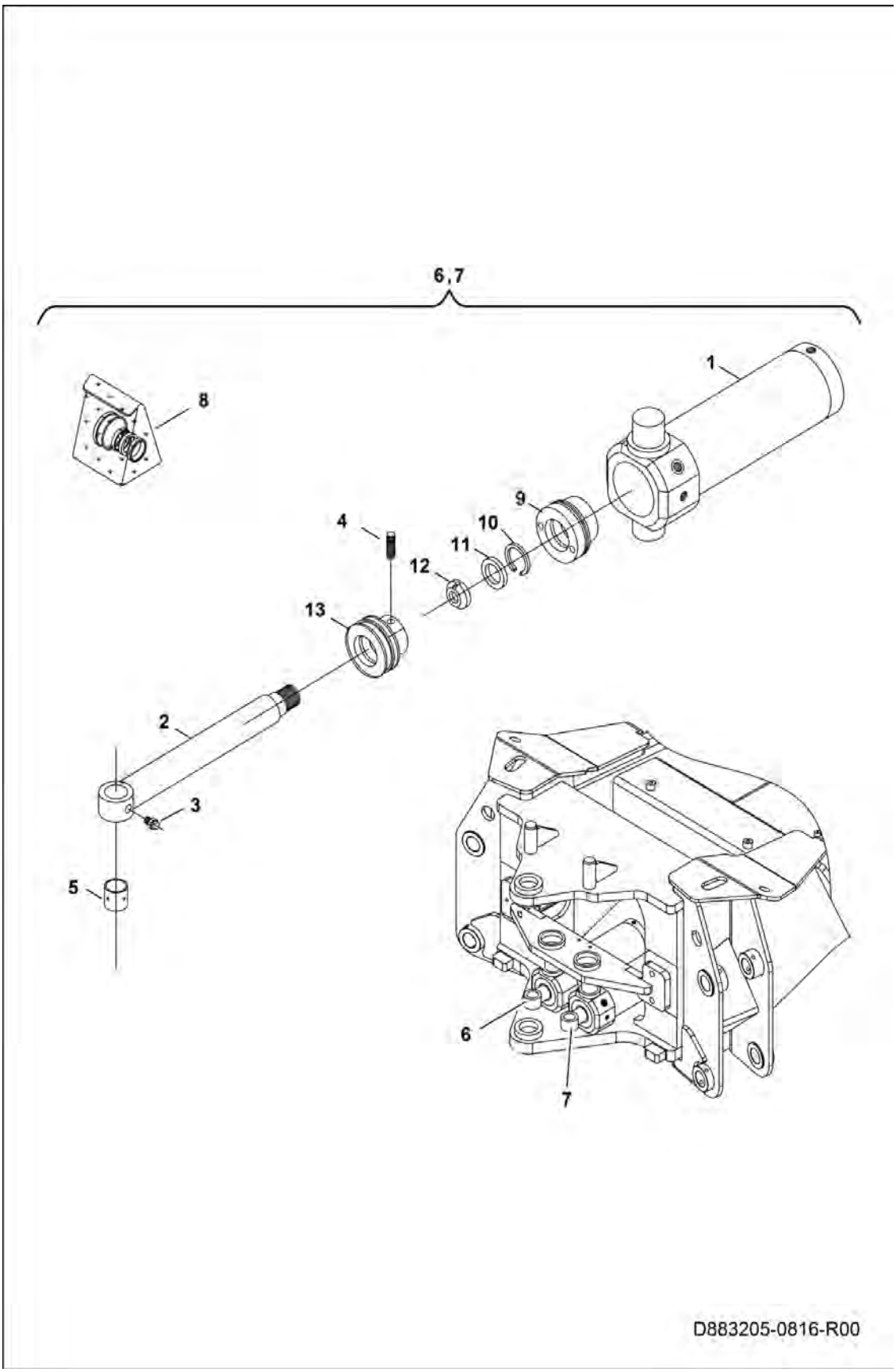

SWING CYLINDER (Cont'd)

Ref No	Part Number	Description	Remarks	Serial Number	Qty
1	7311459	CYLINDER PIPE ASSY (LEFT)			1
1	7311460	CYLINDER PIPE ASSY (RIGHT)			1
2	7291589	ROD ASSY.			1
3	7289862	GREASER			1
4	7289917	SCREW			1
5	7289921	BUSHING			1
6	7311461	SWING CYL. ASSY. LEFT			1
7	7311462	SWING CYL. ASSY. RIGHT			1
8	7289924	REPAIR KIT			1
9	7289912	GUIDE			1
10	7289913	SEGMENT			1
11	7289914	WASHER			1
12	7289915	WASHER			1
13	7289916	PISTON			1

STICK CYLINDER

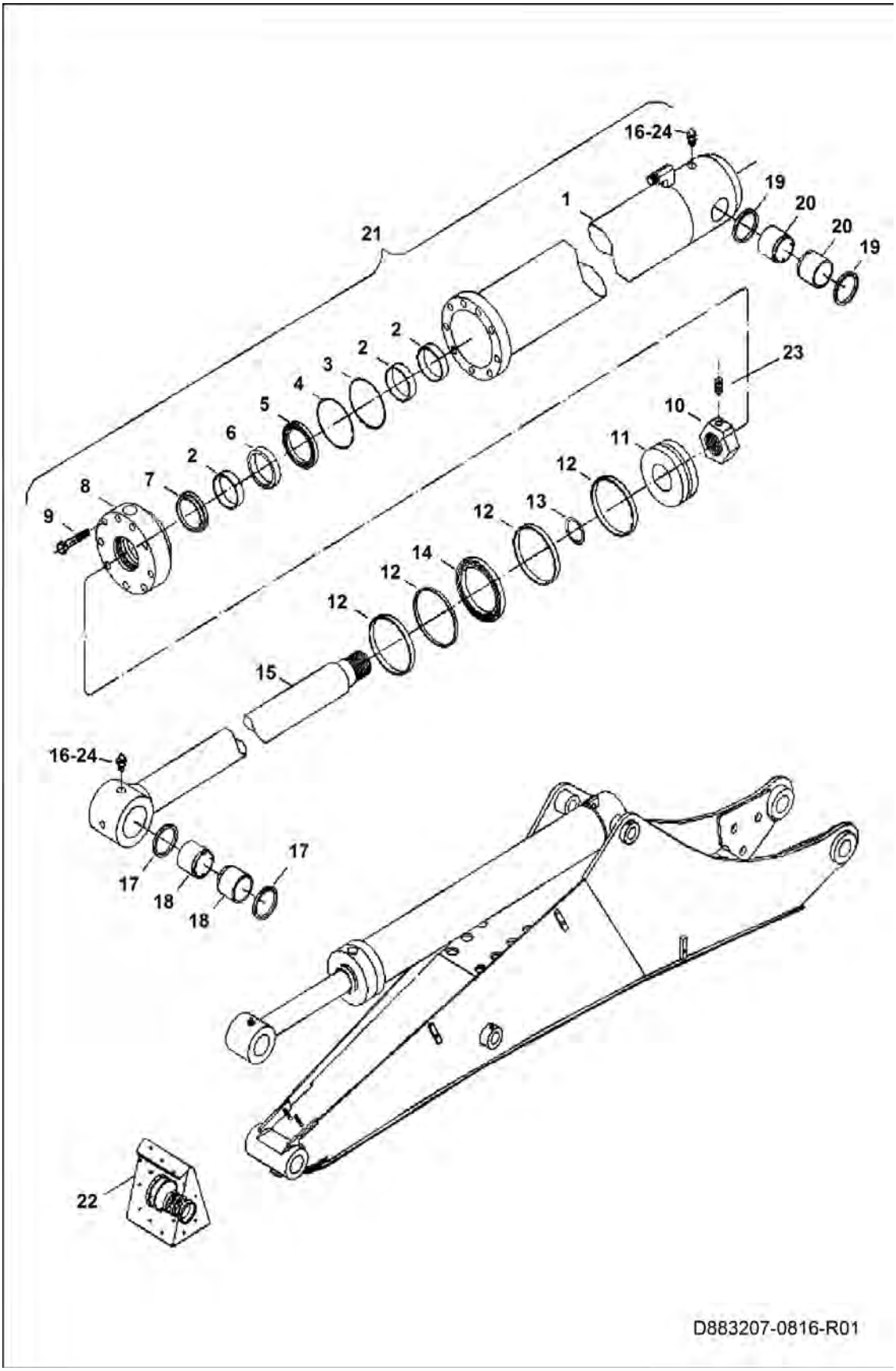

STICK CYLINDER (Cont'd)

Ref No	Part Number	Description	Remarks	Serial Number	Qty
1	7291603	CYLINDER PIPE ASSEMBLY			1
2	7291591	TEFLON RING			3
3	7289874	BACK-UP RING			1
4	7289873	O-RING			1
5	7291604	OMEGAT			1
6	7289845	NUTRING			1
7	7289911	DUST SEAL			1
8	7291605	GUIDE			1
9	7291594	BOLT			8
10	7291606	NUT			1
11	7311463	PISTON			1
12	7289918	TEFLON RING			4
13	7291608	O-RING			1
14	7289879	OMEGAT			1
15	7304246	ROD ASSEMBLY			1
16	7289862	GREASER			2
17	7291610	DUST SEAL			1
18	7291611	BUSHING			2
19	7289943	DUST SEAL			1
20	7291612	BUSHING			2
21	7311464	STICK CYLINDER ASSY			1
22	7291614	REPAIR KIT			1
23	7291544	SET SCREW			1
24	7289871	GREASER COVER			1

BOOM CYLINDER

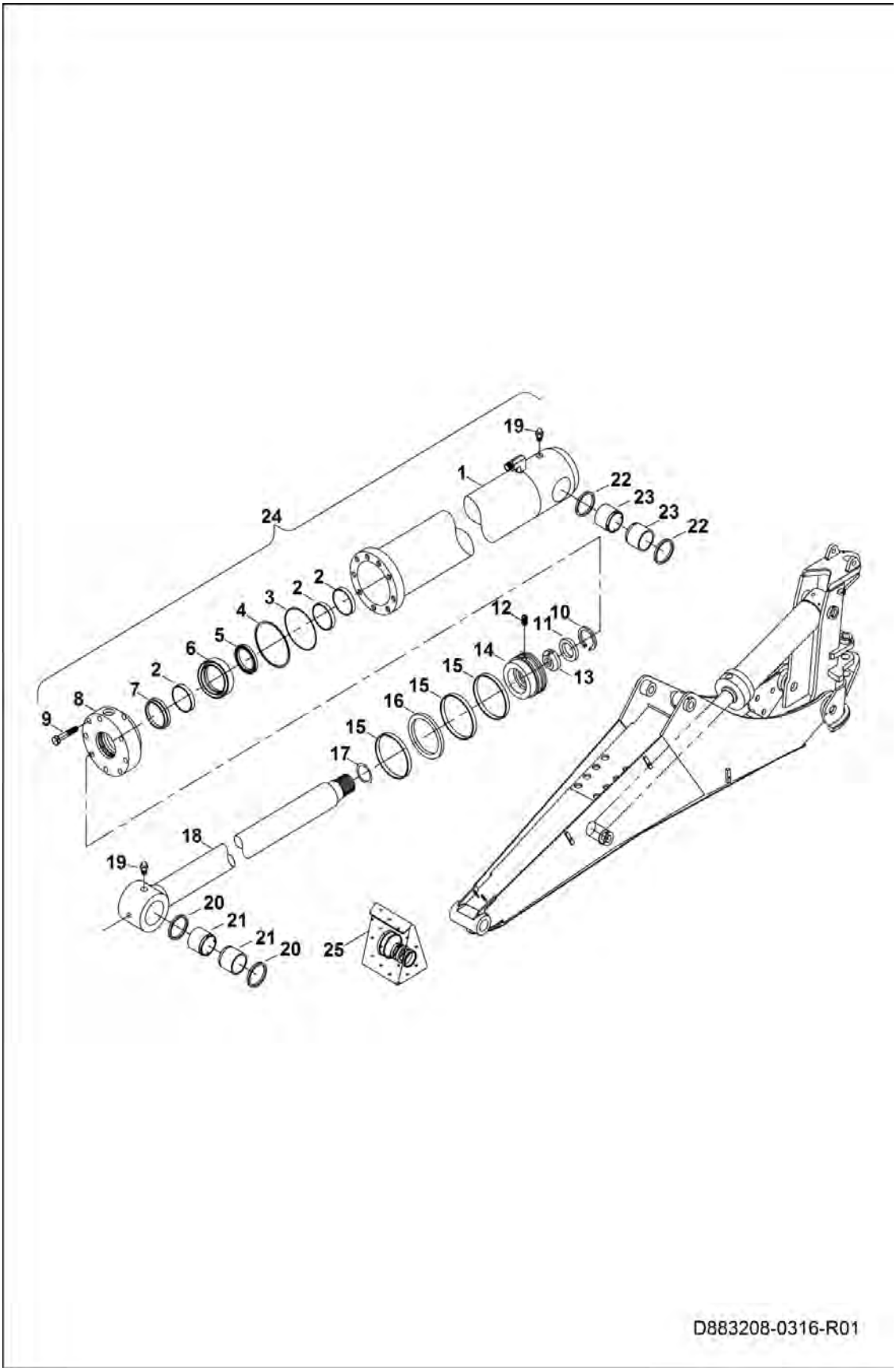

BOOM CYLINDER (Cont'd)

Ref No	Part Number	Description	Remarks	Serial Number	Qty
1	7291590	CYLINDER PIPE ASSEMBLY			1
2	7291591	TEFLON RING			3
3	7291592	BACK-UP RING			1
4	7290378	O-RING			1
5	7289909	OMEGAT			1
6	7289845	NUTRING			1
7	7289911	DUST SEAL			1
8	7291593	GUIDE			1
9	7291594	BOLT			9
10	7289913	SEGMENT			1
11	7289914	WASHER			1
12	7289917	SCREW			1
13	7289915	WASHER			1
14	7291595	PISTON			1
15	7304244	TEFLON RING			3
16	7304245	SEAL			1
17	7289864	O-RING			1
18	7291598	ROD ASSEMBLY			1
19	7289862	GREASER			2
20	7289943	DUST SEAL			2
21	7289934	BUSHING			2
22	7289943	DUST SEAL			4
23	7291599	BUSHING			2
24	7291601	BOOM CYLINDER ASSY.			1
25	7291602	REPAIR KIT			1

REAR BUCKET CYLINDER

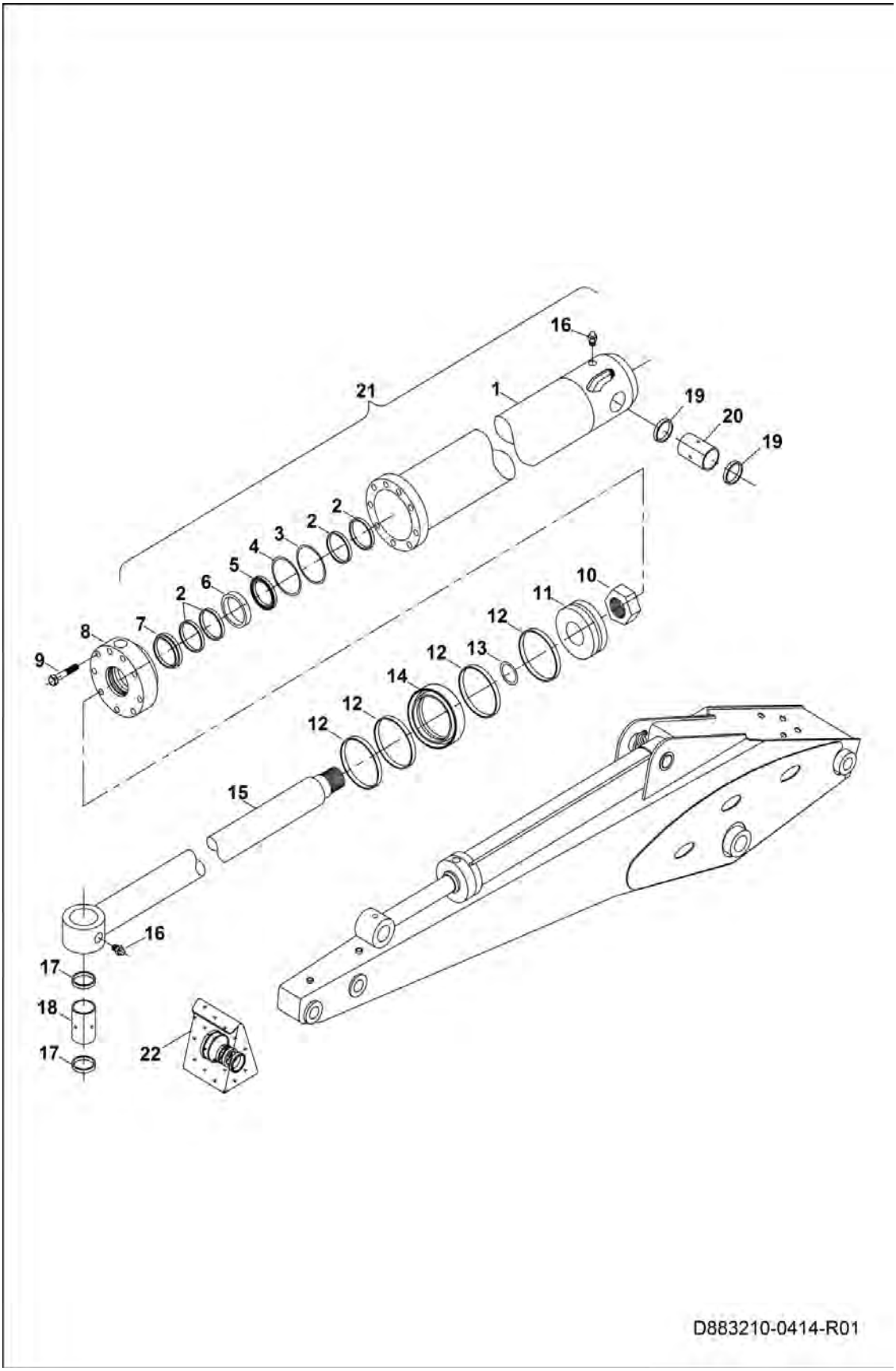

REAR BUCKET CYLINDER (Cont'd)

Ref No	Part Number	Description	Remarks	Serial Number	Qty
1	7291615	CYLINDER PIPE ASSEMBLY			1
2	7291591	TEFLON RING			4
3	7289874	BACK-UP RING			1
4	7289873	O-RING			1
5	7291604	OMEGAT			1
6	7289845	NUTRING			1
7	7289911	DUST SEAL			1
8	7291616	GUIDE			1
9	7291594	BOLT			8
10	7291606	NUT			1
11	7291607	PISTON			1
12	7289918	TEFLON RING			4
13	7291608	O-RING			1
14	7289879	OMEGAT			1
15	7291617	ROD ASSEMBLY			1
16	7289862	GREASER			2
17	7289943	DUST SEAL			2
18	7291618	BUSHING			1
19	7291610	DUST SEAL			2
20	7291559	BUSHING			1
21	7291620	BUCKET CYL. ASSY.			1
22	7291621	REPAIR KIT			1

HYDRAULIC CONNECTIONS

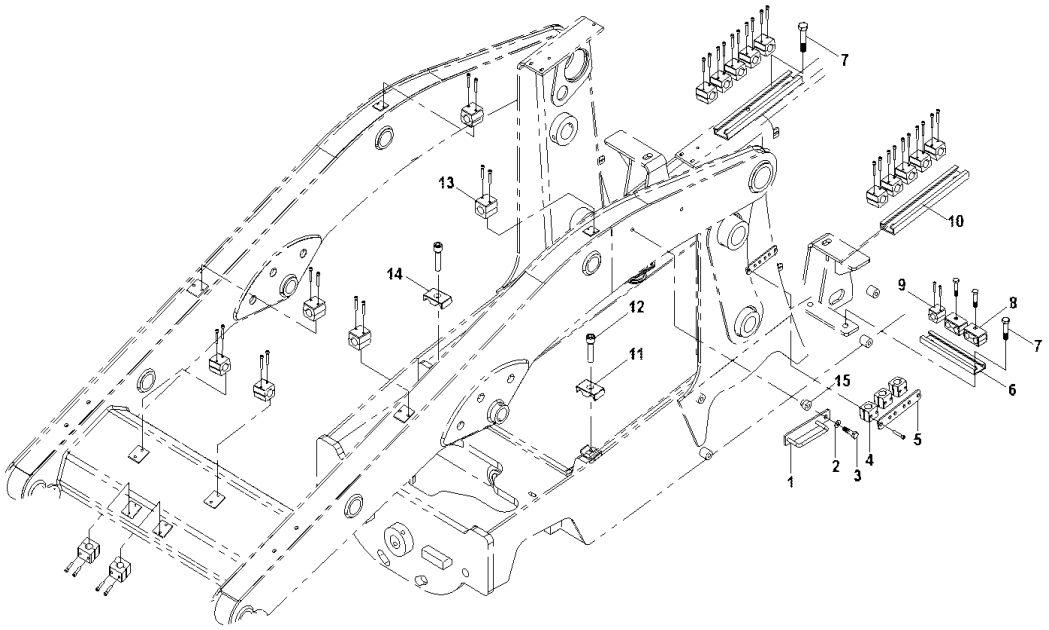

D883301-0914-R00

HYDRAULIC CONNECTIONS (Cont'd)

Ref No	Part Number	Description	Remarks	Serial Number	Qty
1	7291622	HOSE GUARD			2
2	7289604	WASHER			2
3	7291623	BOLT			2
4	7291624	POLYAMIDE CLAMP			6
5	7291625	CLAMP PLATE			2
6	7291626	RAIL			2
7	7291360	BOLT			8
8	7291505	CLAMP			4
9	7291627	POLYAMIDE CLAMP			12
10	7291628	RAIL			2
11	7291629	CLAMP			1
12	7291630	ALLEN BOLT			2
13	7290909	POLYAMIDE CLAMP			8
14	7291631	CLAMP			1
15	7291632	ADAPTER			2

HYDRAULIC CONNECTIONS

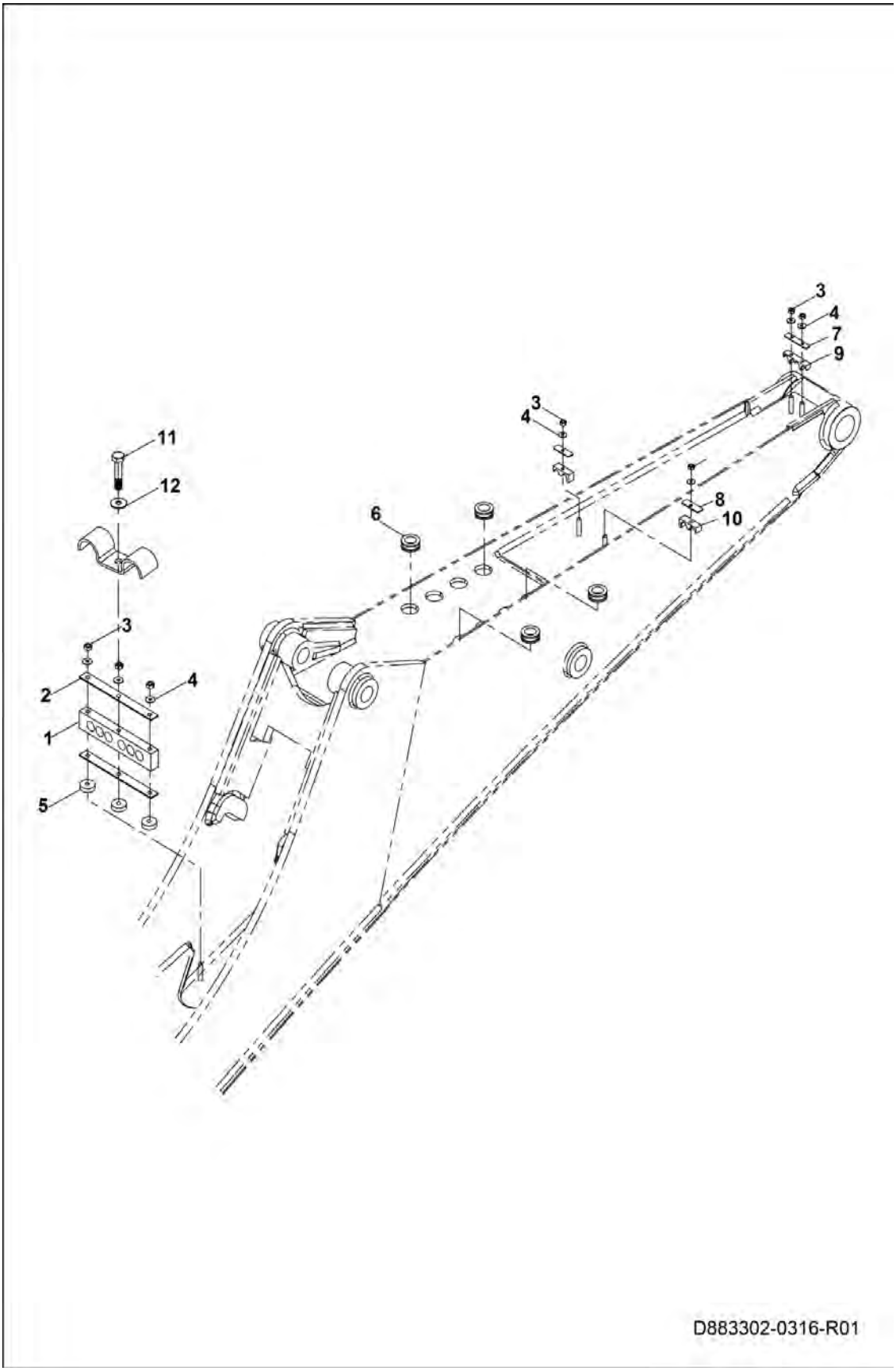

HYDRAULIC CONNECTIONS (Cont'd)

Ref No	Part Number	Description	Remarks	Serial Number	Qty
1	7291633	CLAMP			1
2	7291634	PLATE			2
3	7289641	NUT			7
4	7288892	WASHER			7
5	7291635	BUSHING			3
6	7291636	GROMMET			4
7	7291637	CLAMP			1
8	7291638	CLAMP			2
9	7291639	CLAMP			1
10	7291640	CLAMP			2
11	7289691	BOLT			1
12	7289278	WASHER			1

LOADER CONTROL VALVE CONNECTIONS

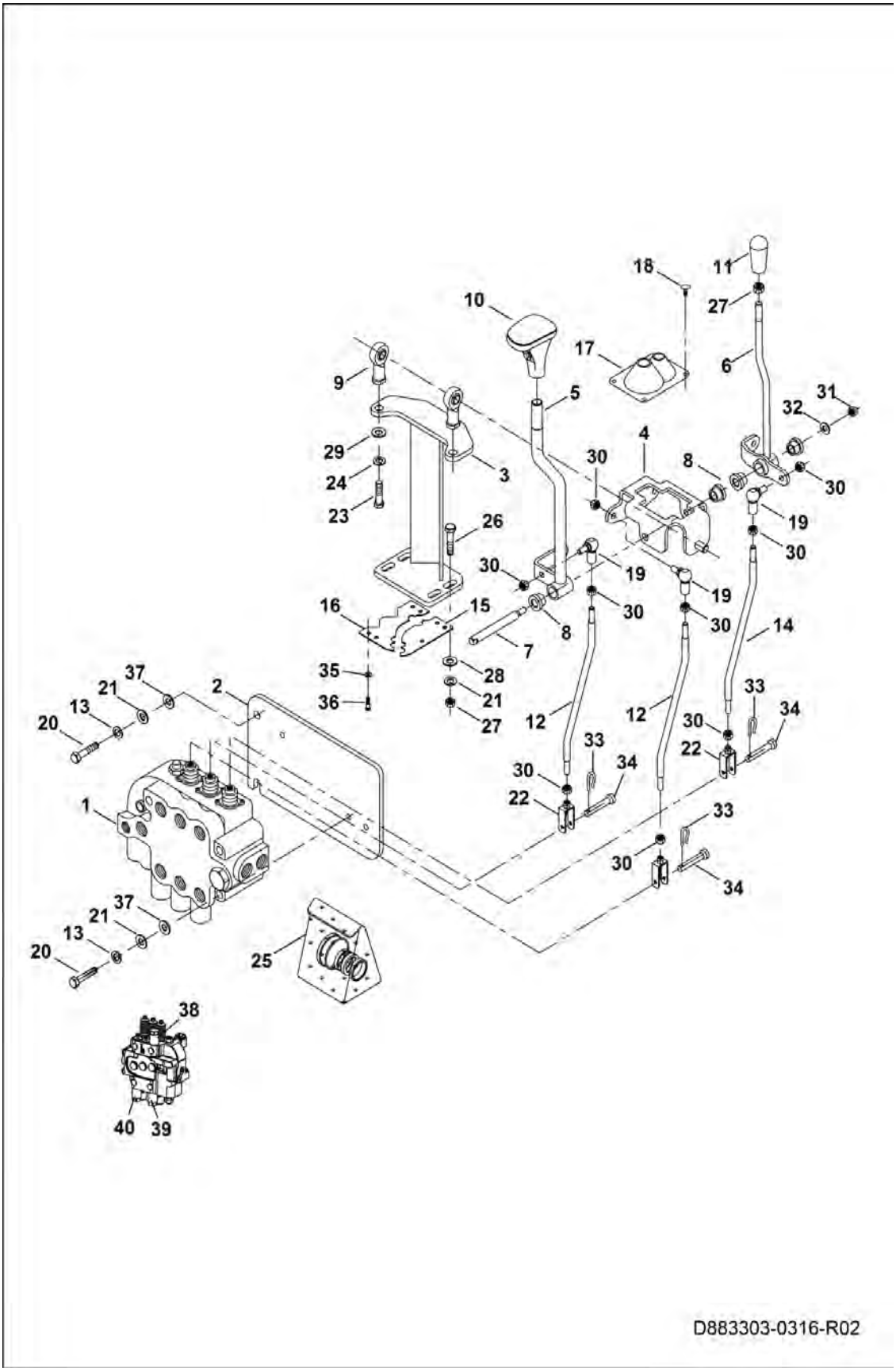

LOADER CONTROL VALVE CONNECTIONS (Cont'd)

Ref No	Part Number	Description	Remarks	Serial Number	Qty
1	7289616	LOADER CONTROL VALVE			1
2	7291641	BRACKET SHEET			1
3	7291642	BODY			1
4	7289619	MECHANISM			1
5	7291643	LOADER LEVER			1
6	7291646	BUCKET LEVER			1
7	7289622	PIN			1
8	7289623	POLYAMID			4
9	7289624	JOINT			2
10	7289519	KNOB			1
11	7289625	KNOB			1
12	7291645	LIFT LEVER			2
13	7289278	WASHER			3
14	7291646	BUCKET LEVER			1
15	7291647	PLATE			1
16	7291648	PLATE			1
17	7304247	COVER, RUBBER			1
18	7289632	DUBEL			4
19	7289648	JOINT			3
20	7290711	BOLT			3
21	7289259	LOCK WASHER			5
22	7290254	ROD HEAD			13
23	7289638	BOLT			2
24	7289635	LOCK WASHER			2
25	7302510	REPAIR KIT			1
26	7289642	BOLT			4
27	7289637	NUT			4
28	7289260	WASHER			4
29	7289314	WASHER			2
30	7289263	NUT			9
31	7289641	NUT			1
32	7289639	WASHER			1
33	7292110	COTTER PIN			3
34	7291650	PIN			3
35	7289610	WASHER			6
36	7289609	BOLT			6
37	7291651	ADJUST SHIM			3
38	7304041	VALVE			1
39	7304042	VALVE			1
40	7304040	VALVE			1

LOADER CONTROL VALVE

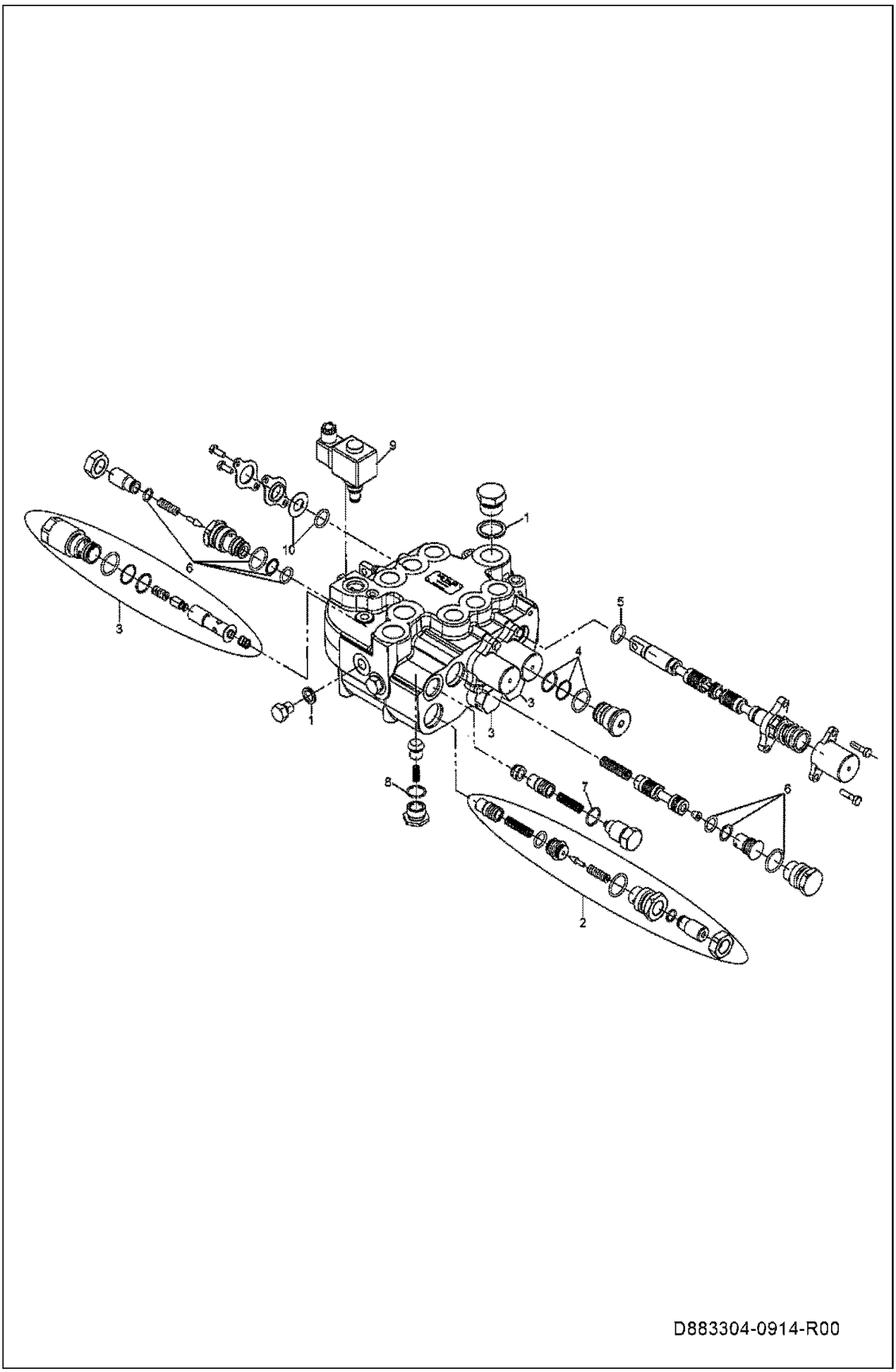

LOADER CONTROL VALVE (Cont'd)

Ref No	Part Number	Description	Remarks	Serial Number	Qty
1	7291652	COMPLETE VALVE REPAIR KIT			1
2	7291653	MAIN RELIEF VALVE REPAIR KIT			1
3	7291654	PORT RELIEF VALVE REPAIR KIT			3
4	7291655	SPOOL CENTER REPAIR KIT			3
5	7291656	UNLOADER REPAIR KIT			1
6	7291657	UNLOADER CHECK REPAIR KIT			1
7	7291658	LOAD HOLD CHECK REPAIR KIT			3
8	7291659	SOLENOID REPAIR KIT			1
9	7291660	EYE GROUP REPAIR KIT			3
10	7291661	OVERLOAD PLUG REPAIR KIT			3

BACKHOE CONTROL VALVE AND ITS CONNECTIONS

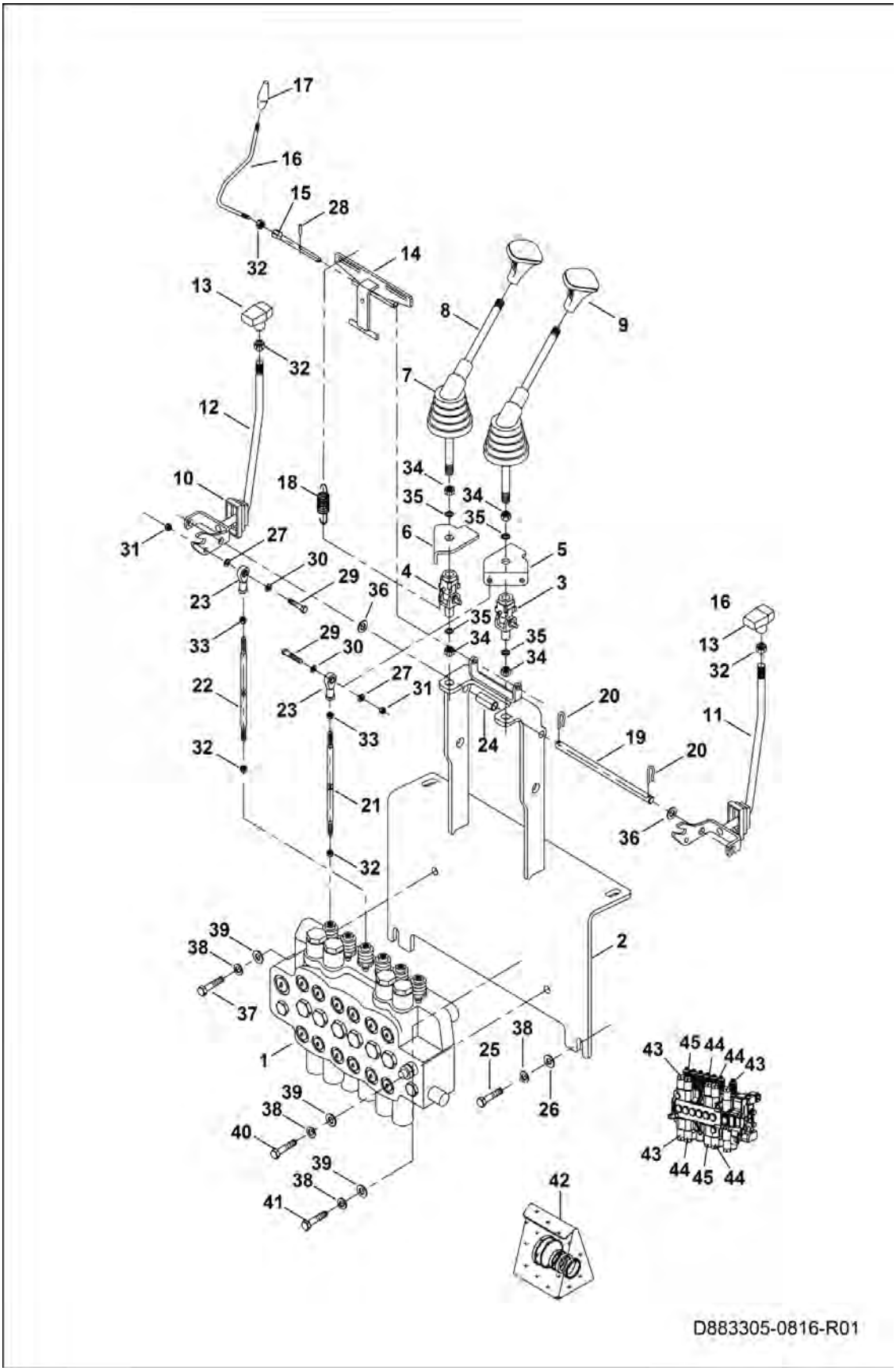

BACKHOE CONTROL VALVE AND ITS CONNECTIONS (Cont'd)

Ref No	Part Number	Description	Remarks	Serial Number	Qty
1	7289651	CONTROL VALVE			1
2	7289652	CONTROL FRAME			1
3	7289653	JOINT			1
4	7289654	JOINT			1
5	7289655	PLATE LEFT			1
6	7289656	PLATE RIGHT			1
7	7289657	RUBBER COVER			2
8	7304050	CONTROL LEVER			2
9	7289519	KNOB			2
10	7289660	RUBBER COVER			2
11	7289661	CONTROL LEVER			1
12	7289662	CONTROL LEVER			1
13	7289663	KNOB			2
14	7289664	PLATE			1
15	7289665	ROD			1
16	7304051	CONTROL LOCKING LEVER			1
17	7289667	KNOB			1
18	7289668	SPRING			1
19	7289669	PIN			1
20	7289670	COTTER PIN			2
21	7289671	ROD			4
22	7289672	ROD			2
23	7289673	JOINT			6
24	7289674	BUSHING			1
25	7289638	BOLT			4
26	7289636	WASHER			4
27	7289675	BUSHING			4
28	7289676	PIN			1
29	7289273	BOLT			6
30	7288892	WASHER			4
31	7289641	NUT			4
32	7289263	NUT			10
33	7289677	NUT			6
34	7289678	NUT			4
35	7289679	LOCK WASHER			4
36	7289521	WASHER			2
37	7289680	BOLT			1
38	7289635	LOCK WASHER			6
39	7289604	WASHER			3
40	7290295	BOLT			1
41	7289682	BOLT			1
42	7302512	REPAIR KIT			1
43	7304041	VALVE			3
44	7304042	VALVE			4
45	7304052	VALVE			2

WHEEL AND AXLE CONNECTIONS

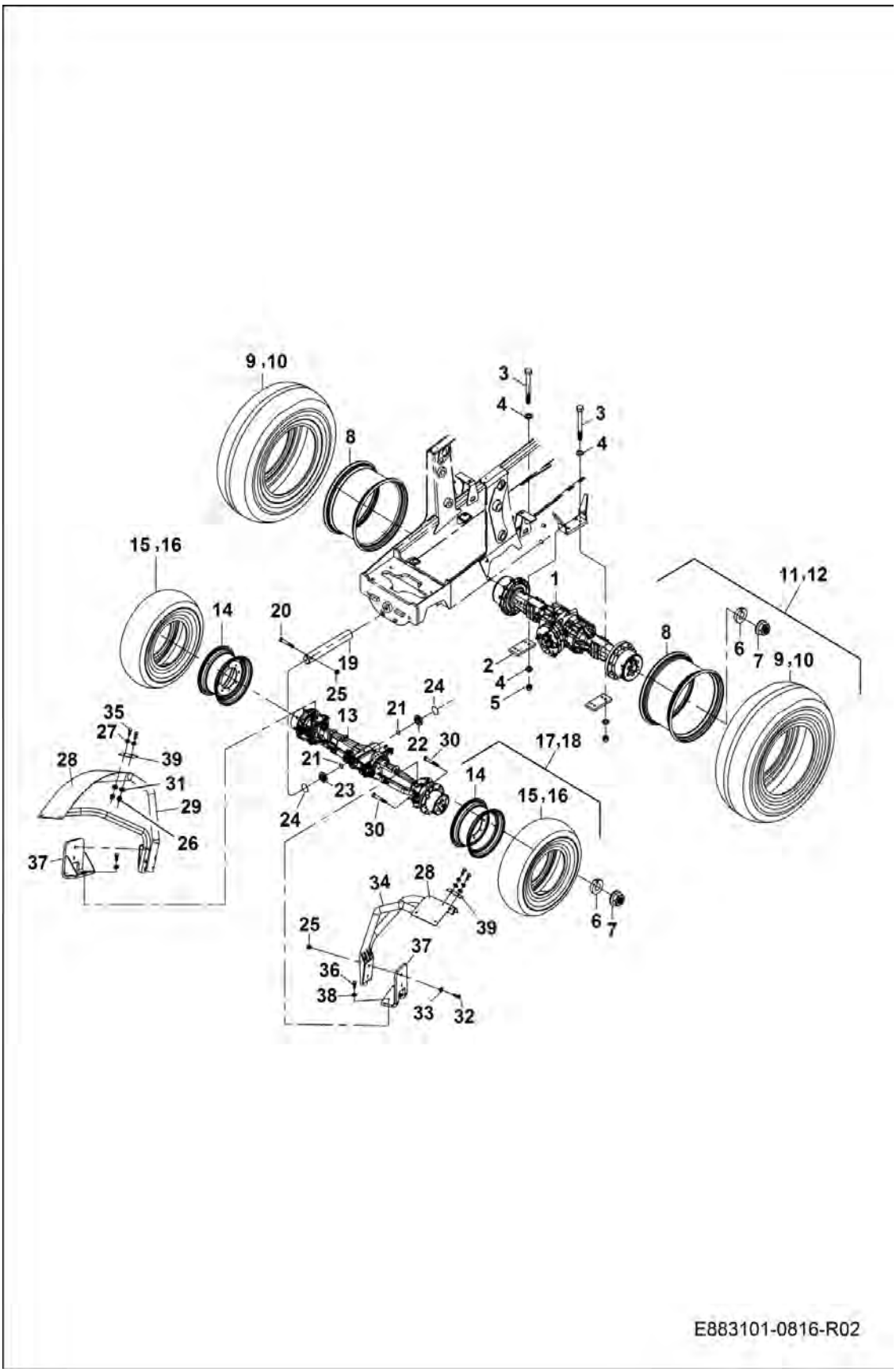

WHEEL AND AXLE CONNECTIONS (Cont'd)

Ref No	Part Number	Description	Remarks	Serial Number	Qty
1	7291673	REAR AXLE			1
2	7291674	BRACKET			2
3	7291675	BOLT			8
4	7289972	WASHER			16
5	7289973	NUT			8
6	7289974	WASHER, LOCK			36
7	7289975	NUT, WHEEL			36
8	7291676	REAR RIM			2
9	7301870	REAR TIRE	MICHELIN		2
10	7289982	REAR TIRE	PETLAS (OPTIONAL)		2
11	7310482	REAR WHEEL ASSEMBLY	MICHELIN		2
12	7310997	REAR WHEEL ASSEMBLY	PETLAS (OPTIONAL)		2
13	7291677	FRONT AXLE			1
14	7291678	FRONT RIM			2
15	7301868	FRONT TIRE	MICHELIN		2
16	7289983	FRONT TIRE	PETLAS (OPTIONAL)		2
17	7310481	FRONT WHEEL ASSEMBLY	MICHELIN		2
18	7310998	FRONT WHEEL ASSEMBLY	PETLAS (OPTIONAL)		2
19	7291679	PIN			1
20	7289980	BOLT			1
21	7291680	O-RING			2
22	7291681	BUSHING			1
23	7291682	BUSHING			1
24	7291683	O-RING			2
25	7289514	NUT			5
26	7289641	NUT			8
27	7288892	WASHER			8
28	7289990	MUDGUARD			2
29	7291689	MUDGUARD PLATE RIGHT			2
30	7304255	BOLT			2
31	7289262	WASHER			8
32	7289991	BOLT			4
33	7289314	WASHER			8
34	7291686	MUDGUARD PLATE LEFT			1
35	7289279	BOLT			8
36	7289996	BOLT			4
37	7291690	BRACKET			2
38	7289999	WASHER			4
39	7290000	BRACKET			4

REAR AXLE/ INPUT

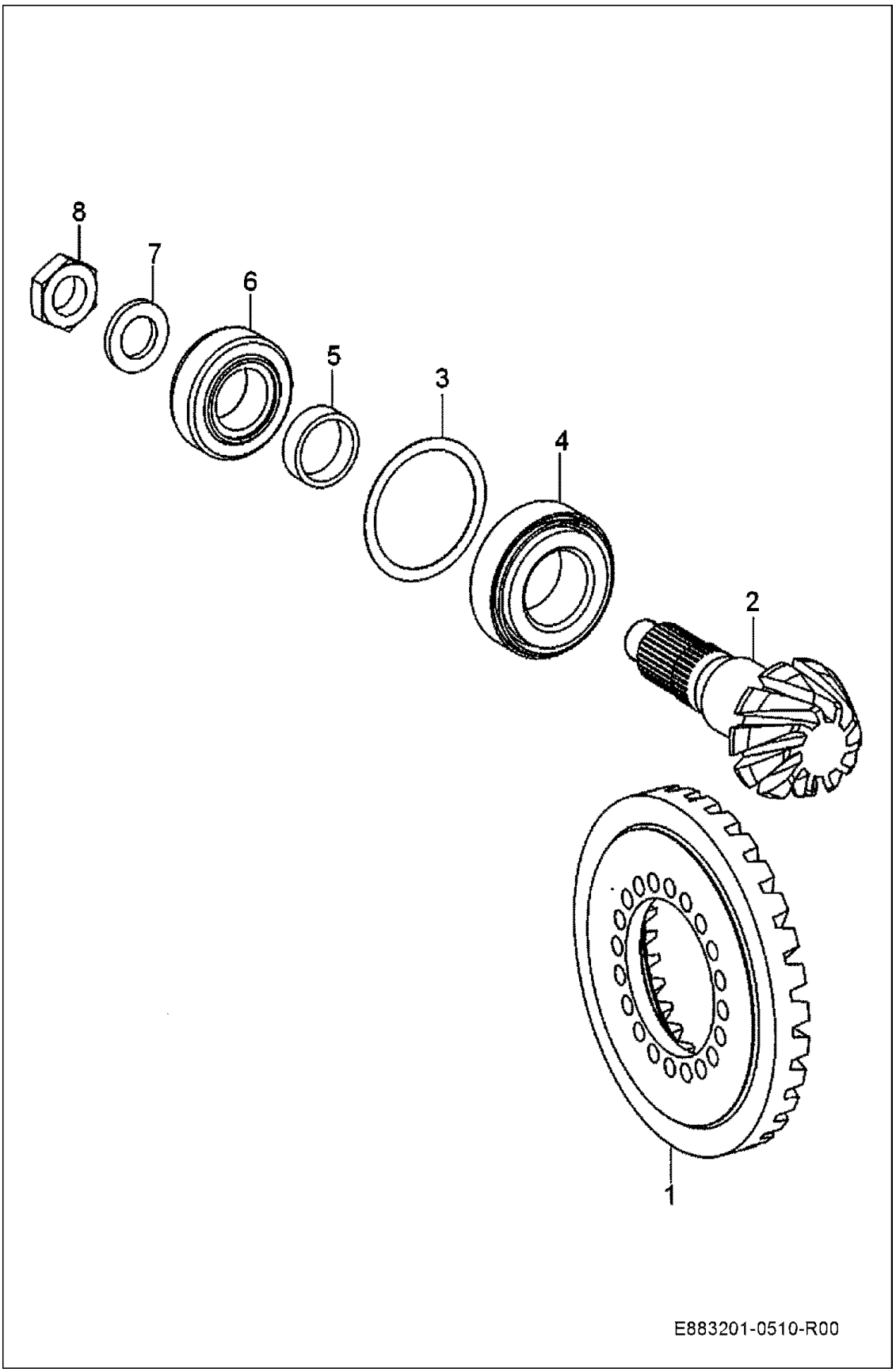

REAR AXLE/ INPUT (Cont'd)

Ref No	Part Number	Description	Remarks	Serial Number	Qty
1	7291693	CROWN WHEEL			1
2	7291694	PINION			1
3	7291695	WASHER S=2.0			1
3	7291696	WASHER S=1.8			1
3	7291697	WASHER S=1.5			1
3	7291698	WASHER S=1.2			1
3	7291699	WASHER S=1.9			1
3	7291700	WASHER S=1.7			1
3	7291701	WASHER S=1.6			1
3	7291702	WASHER S=1.4			1
3	7291703	WASHER S=1.3			1
3	7291704	WASHER S=1.0			1
3	7291705	WASHER S=0.9			1
3	7291706	WASHER S=0.8			1
3	7291707	WASHER S=0.7			1
3	7291708	WASHER S=0.6			1
3	7291709	WASHER S=0.5			1
3	7291710	WASHER S=0.3			1
3	7291711	WASHER S=0.2			1
3	7291712	WASHER S=0.1			1
3	7291713	WASHER S=0.75			1
3	7291714	WASHER S=0.65			1
3	7291715	WASHER S=1.25			1
3	7291716	WASHER S=1.35			1
3	7291717	WASHER S=1.45			1
3	7291718	WASHER S=1.55			1
3	7291719	WASHER S=1.65			1
3	7291720	WASHER S=1.75			1
3	7291721	WASHER S=1.85			1
4	7291722	ROLLER BEARING			1
4	7291723	ROLLER BEARING			1
5	7291724	RING S=16.0			1
5	7291725	RING S=16.1			1
5	7291726	RING S=16.2			1
5	7291727	RING S=16.3			1
5	7291728	RING S=16.4			1
5	7291729	RING S=16.5			1
5	7291730	RING S=16.6			1
5	7291731	RING S=16.7			1
5	7291732	RING S=16.8			1
5	7291733	RING S=16.92			1
5	7291734	RING S=17.10			1
5	7291735	RING S=17.2			1
5	7291736	RING S=17.3			1
5	7291737	RING S=17.4			1
5	7291738	RING S=16.86			1
5	7291739	RING S=16.98			1
5	7291740	RING S=17.04			1

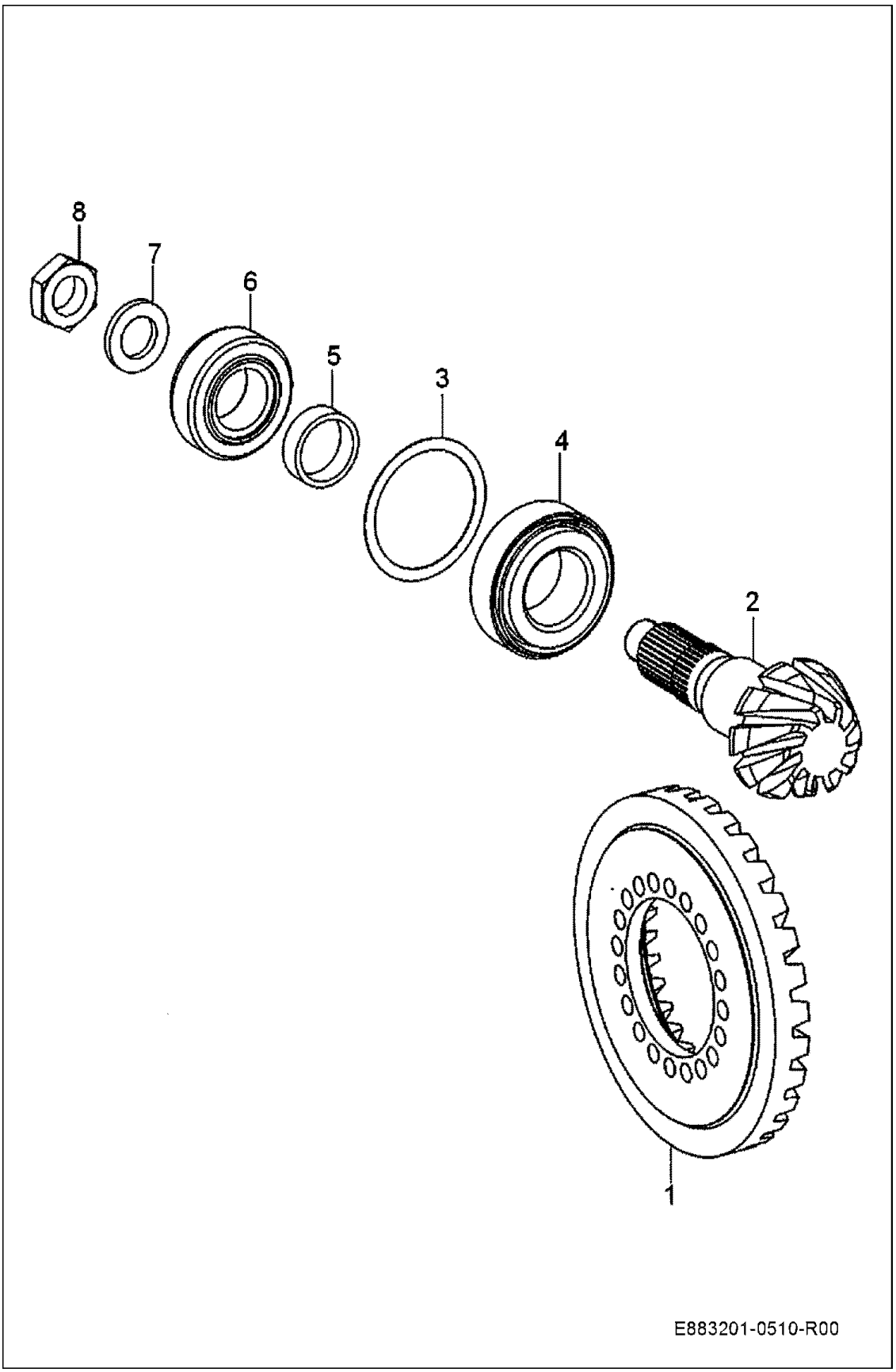
8
7
6
5
3
4
2
1
E883201-0510-R00

REAR AXLE/ INPUT (Cont'd)

Ref No	Part Number	Description	Remarks	Serial Number	Qty
5	7291741	RING S=16.56			1
5	7291742	RING S=16.62			1
5	7291743	RING S=16.64			1
5	7291744	RING S=16.68			1
5	7291745	RING S=16.72			1
5	7291746	RING S=16.74			1
5	7291747	RING S=16.76			1
5	7291748	RING S=16.78			1
5	7291749	RING S=16.82			1
5	7291750	RING S=16.84			1
5	7291751	RING S=16.88			1
5	7291752	RING S=16.9			1
5	7291753	RING S=16.94			1
5	7291754	RING S=16.66			1
5	7291755	RING S=16.96			1
5	7291756	RING S=17.0			1
5	7291757	RING S=17.02			1
5	7291758	RING S=17.06			1
5	7291759	RING S=17.08			1
5	7291760	RING S=17.12			1
5	7291761	RING S=17.14			1
5	7291762	RING S=17.16			1
5	7291763	RING S=17.18			1
5	7291764	RING S=17.22			1
5	7291765	RING S=17.26			1
5	7291766	RING S=17.28			1
5	7291767	RING S=17.28			1

REAR AXLE/ INPUT

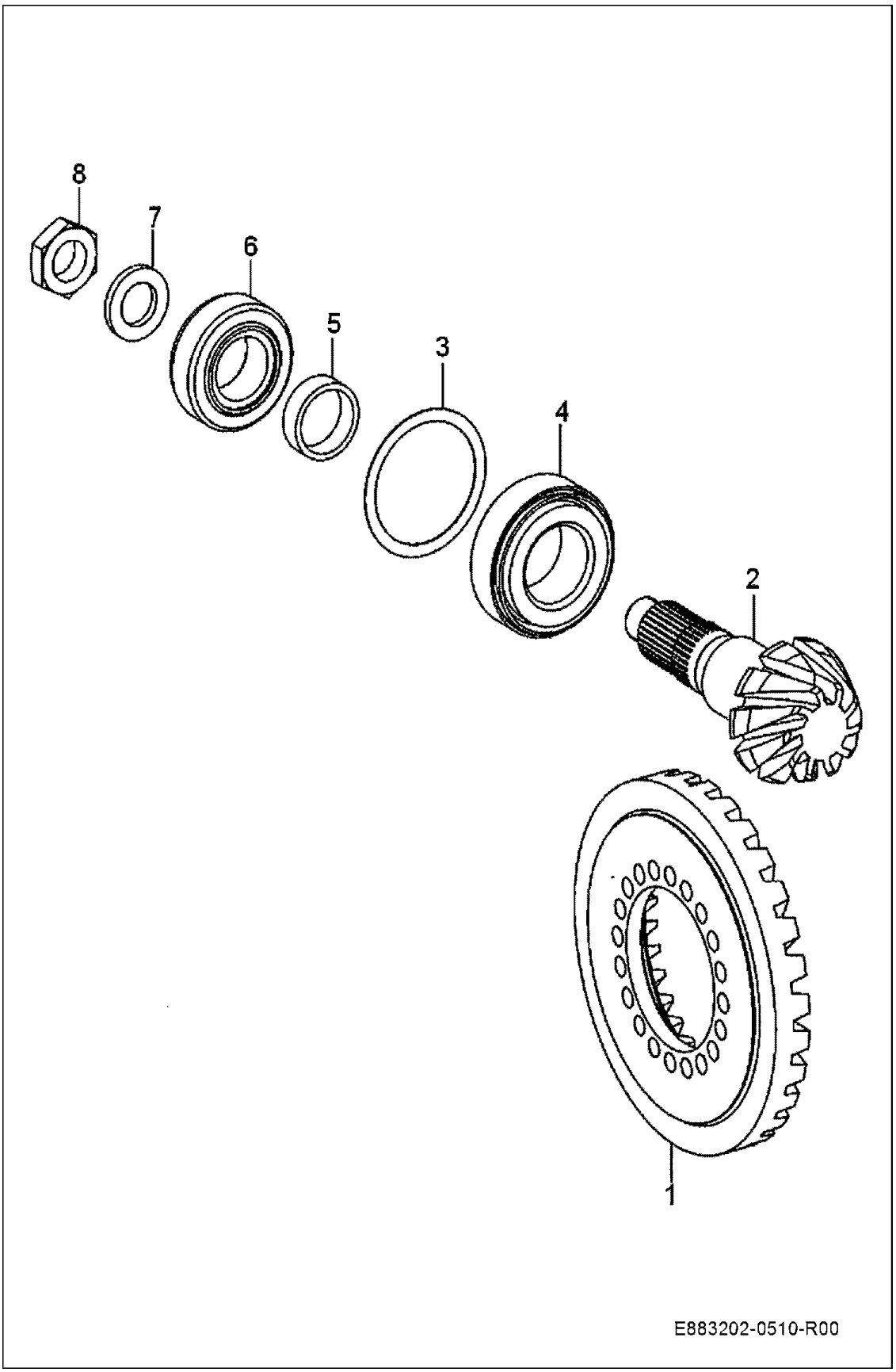

REAR AXLE/ INPUT (Cont'd)

Ref No	Part Number	Description	Remarks	Serial Number	Qty
5	7291760	RING S=17.12			1
5	7291761	RING S=17.14			1
5	7291762	RING S=17.16			1
5	7291763	RING S=17.18			1
5	7291764	RING S=17.22			1
5	7291765	RING S=17.26			1
5	7291766	RING S=17.28			1
5	7291767	RING S=17.28			1
6	7291768	ROLLER BEARING			1
7	7291769	WASHER			1
8	7291770	NUT			1

REAR AXLE/ INPUT

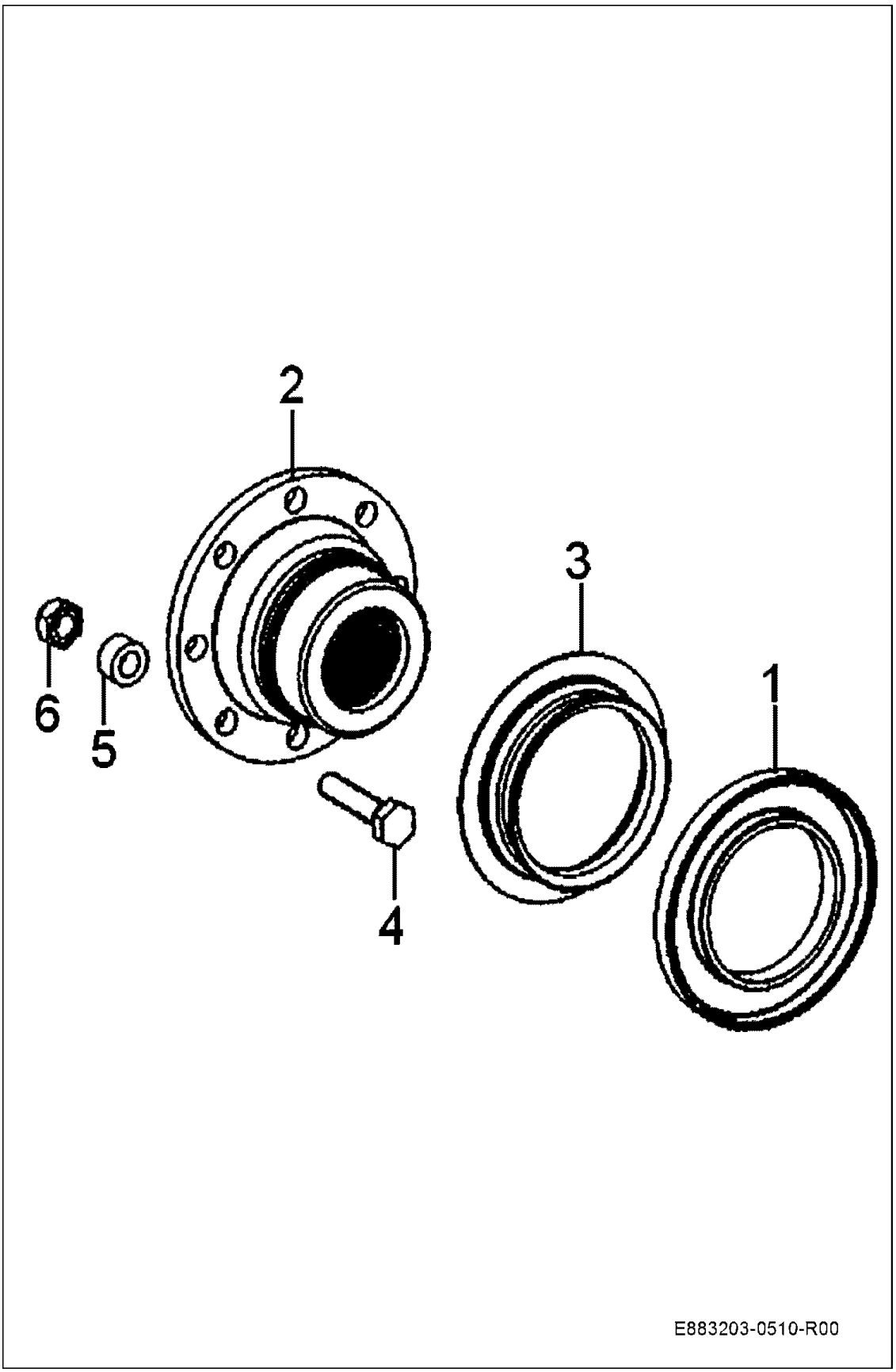

REAR AXLE/ INPUT (Cont'd)

Ref No	Part Number	Description	Remarks	Serial Number	Qty
1	7291771	SHAFT SEAL			1
2	7291772	INPUT FLANGE			1
3	7291773	SCREEN SHEET			1
4	7291774	SCREW			8
5	7291775	PIPE			2
6	7291776	NUT			2

REAR AXLE/ DIFFERENTIAL

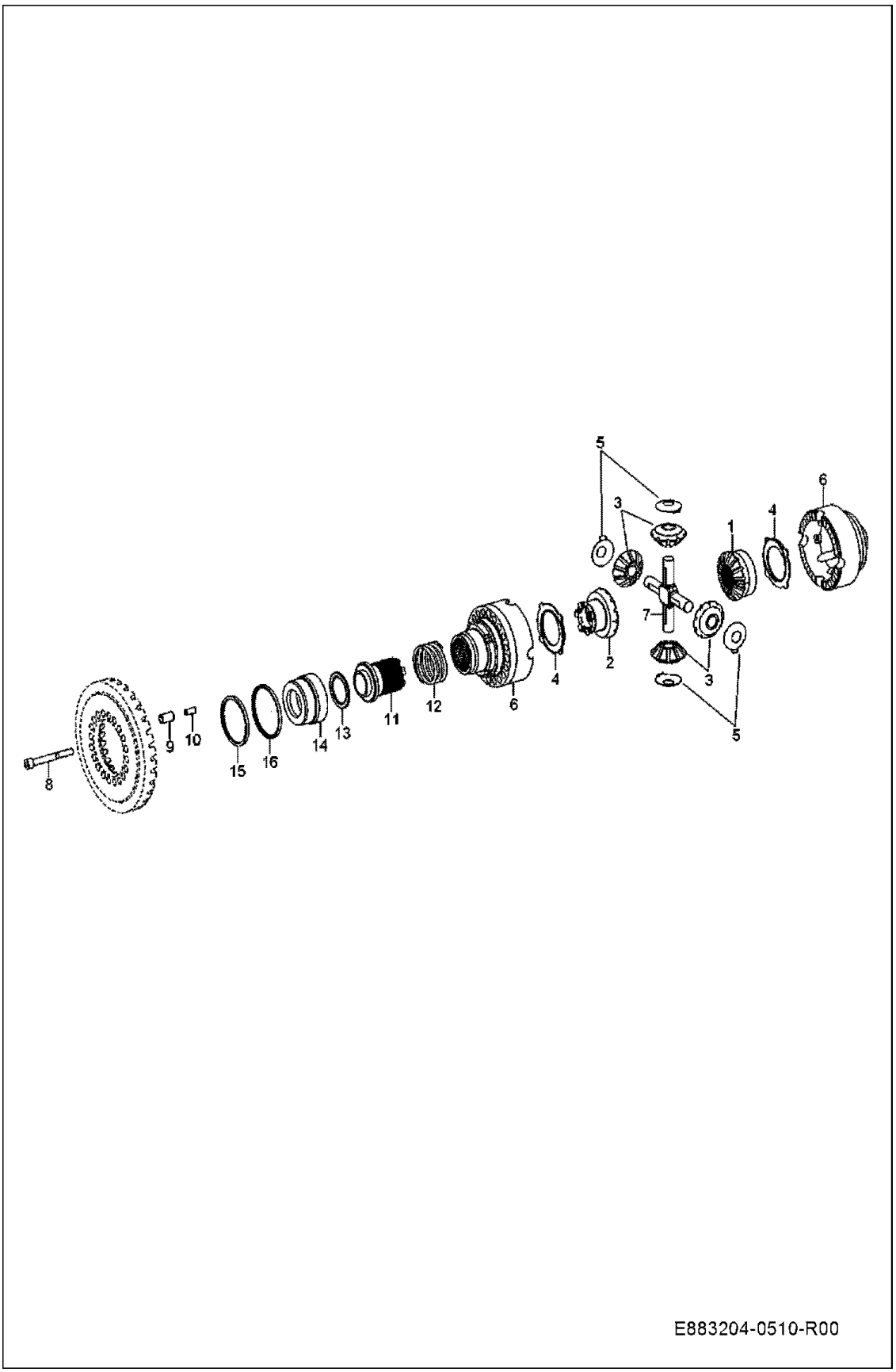

REAR AXLE/ DIFFERENTIAL (Cont'd)

Ref No	Part Number	Description	Remarks	Serial Number	Qty
1	7291777	AXLE BEVEL GEAR			1
2	7291778	AXLE BEVEL GEAR			1
3	7291779	DIFF. BEVEL GEAR			4
4	7291780	THRUST WASHER			2
5	7291781	THRUST WASHER			4
6	7291782	DIFF. CASE			1
7	7291783	DIFF. SPIDER			1
8	7291784	SCREW			16
9	7291785	PIN			4
10	7291786	PIN			4
11	7291787	LOCKING SLIDE			1
12	7291788	SPRING			1
13	7291789	NEEDLE CAGE			1
14	7291790	PISTON			1
15	7291791	O-RING			1
16	7291792	O-RING			1

REAR AXLE/ BRAKE DISC

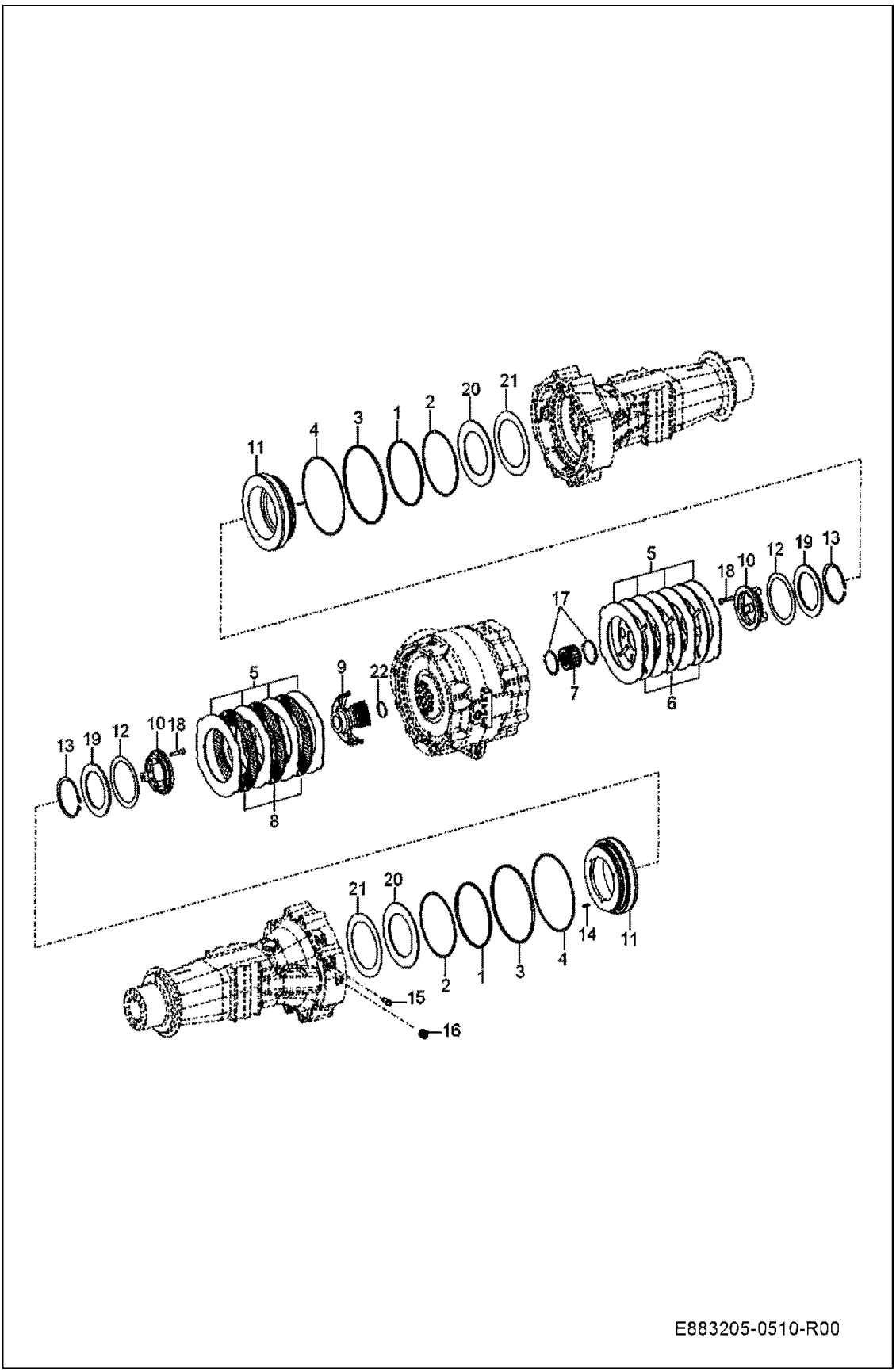

REAR AXLE/ BRAKE DISC (Cont'd)

Ref No	Part Number	Description	Remarks	Serial Number	Qty
1	7291793	O-RING			2
2	7291794	BACK-UP RING			2
3	7291795	O-RING			2
4	7291796	BACK-UP RING			2
5	7291797	O. CLUTCH DISC			8
6	7291798	I. CLUTCH DISC			3
7	7291799	DISC CARRIER			1
8	7291800	I. CLUTCH DISC			3
9	7291801	DISC CARRIER			1
10	7291802	RING			2
11	7291803	PISTON			2
12	7291804	CUP SPRING			2
13	7291805	RETAINING RING			2
14	7291806	PIN			8
15	7291807	VENT VALVE			2
16	7291808	PLUG			2
16	7291809	PLUG			2
17	7291810	RETAINING RING			2
18	7291811	CAP SCREW			6
19	7291812	WASHER			2
20	7291813	WASHER			2
21	7291814	CUP SPRING			1
22	7291815	RETAINING RING			1

REAR AXLE/ AXLE CASING

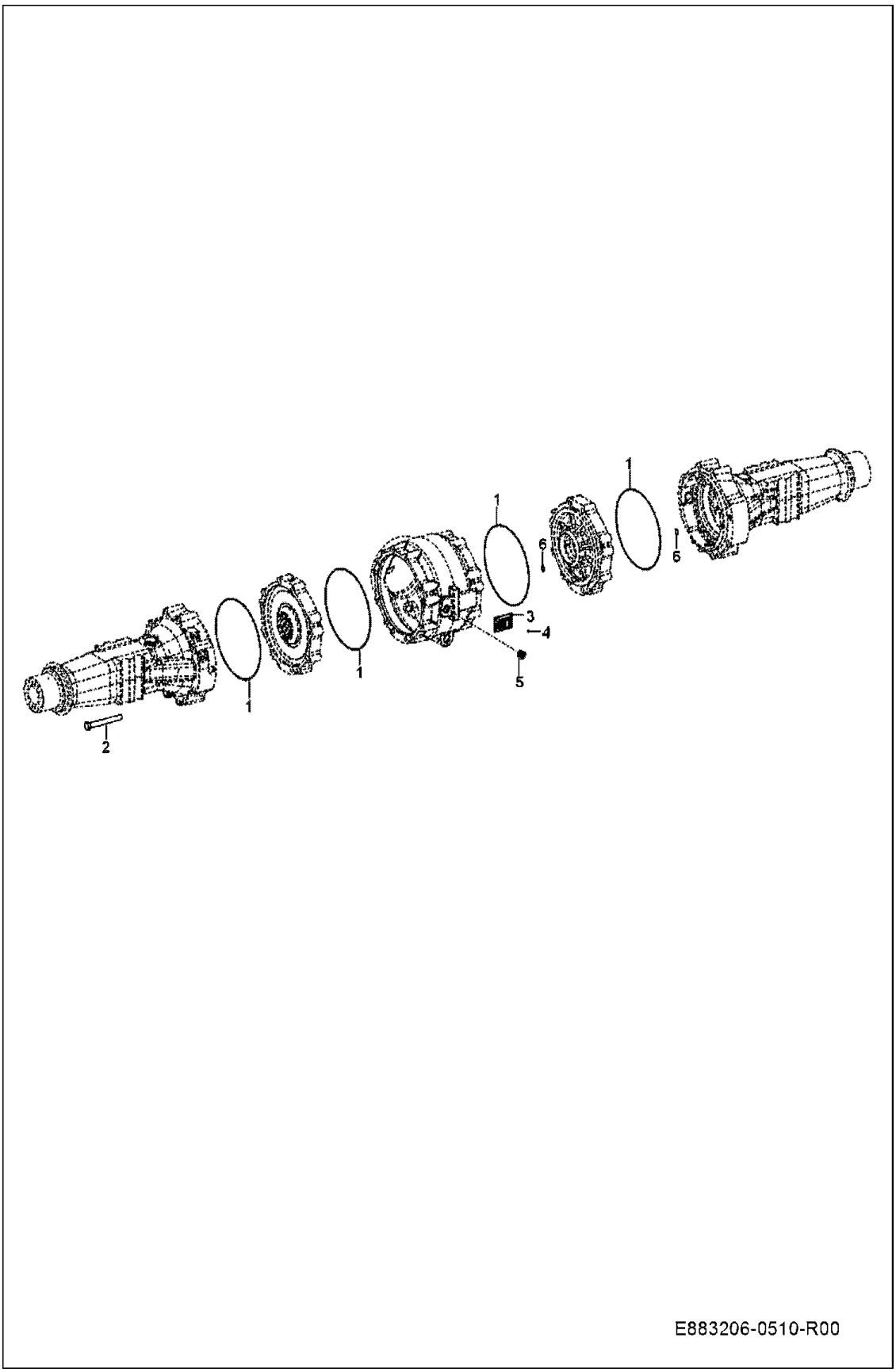

REAR AXLE/ AXLE CASING (Cont'd)

Ref No	Part Number	Description	Remarks	Serial Number	Qty
1	7291816	O-RING			4
2	7291817	SCREW			20
3	7291074	NAME PLATE			1
4	7291747	RING S=16.76			4
5	7291808	PLUG			2
6	7291818	O-RING			8

REAR AXLE/ AXLE CASING

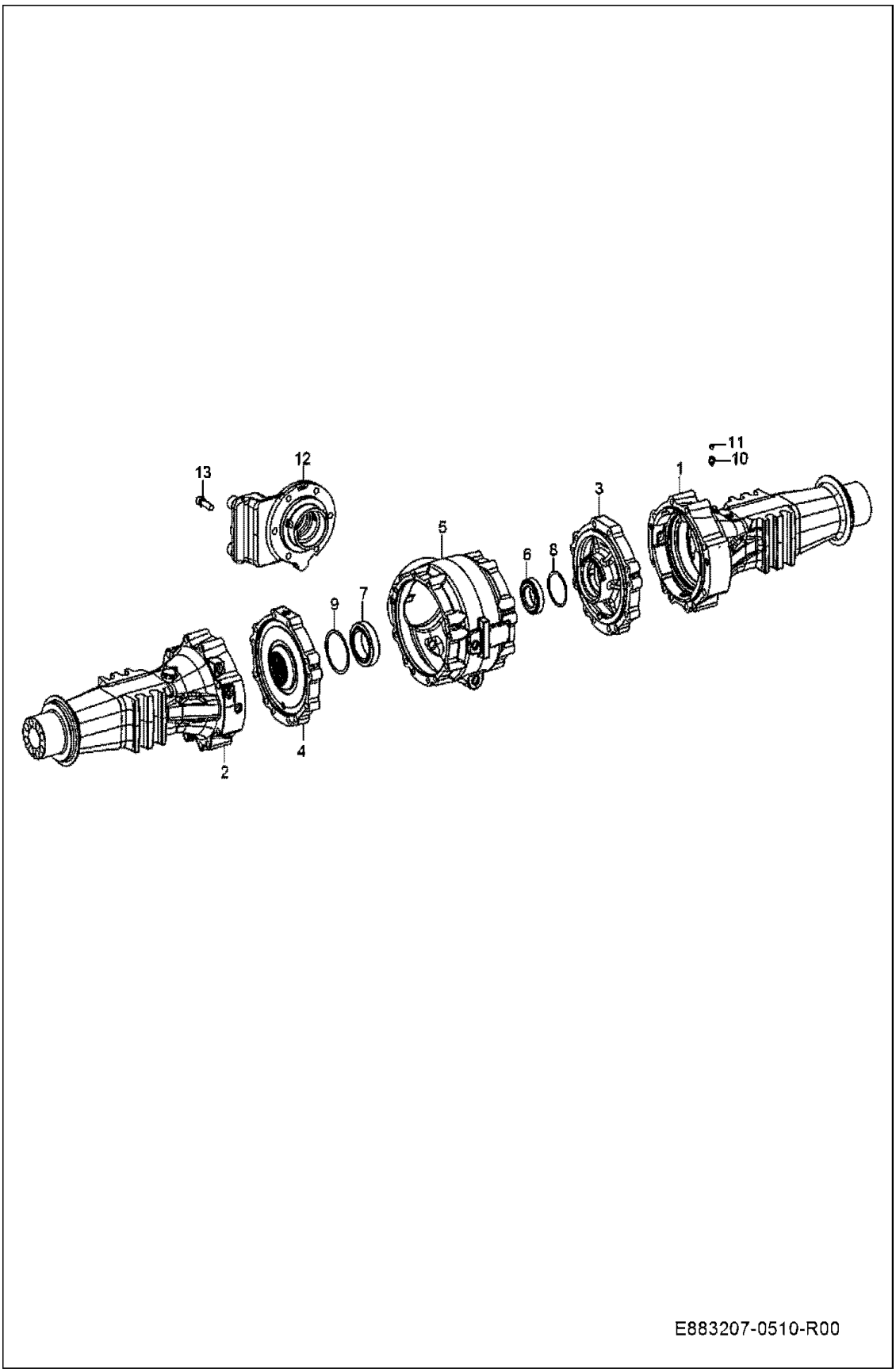

REAR AXLE/ AXLE CASING (Cont'd)

Ref No	Part Number	Description	Remarks	Serial Number	Qty
1	7291819	AXLE CASING			1
2	7291820	AXLE CASING			1
3	7291821	HOUSING			1
4	7291822	HOUSING			1
5	7291823	HOUSING			1
6	7291824	ROLLER HOUSING			1
7	7291825	ROLLER HOUSING			1
8	7291826	SHIM S=2.0			1
8	7291827	SHIM S=1.95			1
8	7291828	SHIM S=1.90			1
8	7291829	SHIM S=1.85			1
8	7291830	SHIM S=1.8			1
8	7291831	SHIM S=1.75			1
8	7291832	SHIM S=1.70			1
8	7291833	SHIM S=1.65			1
8	7291834	SHIM S=1.60			1
8	7291835	SHIM S=1.55			1
8	7291836	SHIM S=1.5			1
8	7291837	SHIM S=1.45			1
8	7291838	SHIM S=1.40			1
8	7291839	SHIM S=1.35			1
8	7291840	SHIM S=1.3			1
8	7291841	SHIM S=1.25			1
8	7291842	SHIM S=1.2			1
8	7291843	SHIM S=1.15			1
8	7291844	SHIM S=1.1			1
8	7291845	SHIM S=1.05			1
8	7291846	SHIM S=1.0			1
8	7291847	SHIM S=0.95			1
8	7291848	SHIM S=0.9			1
9	7291849	SHIM S=0.3			1
9	7291850	SHIM S=0.5			1
9	7291851	SHIM S=1.0			1
9	7291852	SHIM S=0.2			1
9	7291853	SHIM S=0.1			1
9	7291854	SHIM S=0.15			1
9	7291855	SHIM S=1.1			1
9	7291856	SHIM S=1.2			1
9	7291857	SHIM S=1.3			1
9	7291858	SHIM S=1.4			1
9	7291859	SHIM S=1.5			1
9	7291860	SHIM S=1.6			1
9	7291861	SHIM S=1.7			1
9	7291862	SHIM S=1.8			1
9	7291863	SHIM S=2.6			1
9	7291864	SHIM S=2.7			1
9	7291865	SHIM S=2.8			1
9	7291866	SHIM S=2.9			1

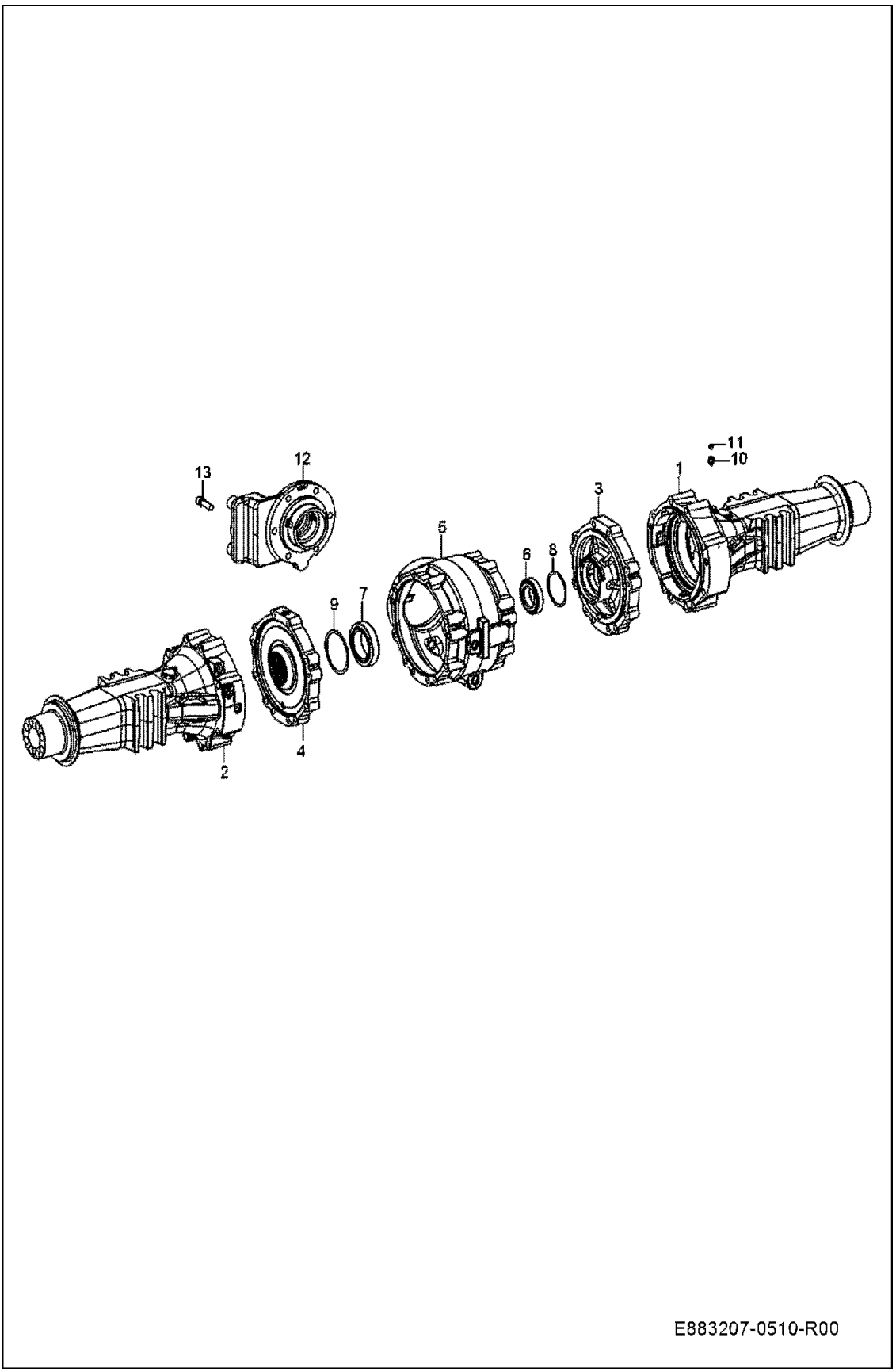
13
12
11
10
1
3
5
6
8
9
7
4
2
E883207-0510-R00

REAR AXLE/ AXLE CASING (Cont'd)

Ref No	Part Number	Description	Remarks	Serial Number	Qty
9	7291867	SHIM S=3.0			1
9	7291868	SHIM S=3.1			1
9	7291869	SHIM S=3.2			1
9	7291870	SHIM S=3.3			1
9	7291871	SHIM S=3.4			1
9	7291872	SHIM S=2.0			1
9	7291873	SHIM S=2.05			1
9	7291874	SHIM S=2.10			1
9	7291875	SHIM S=2.15			1
9	7291876	SHIM S=2.2			1
9	7291877	SHIM S=2.25			1
9	7291878	SHIM S=2.30			1
9	7291879	SHIM S=2.35			1
9	7291880	SHIM S=2.40			1
9	7291881	SHIM S=2.45			1
9	7291882	SHIM S=2.5			1
9	7291883	SHIM S=0.75			1
10	7291884	VENT VALVE			1
11	7291885	SCREW PLUG			1
12	7291886	HOUSING			1
13	7291887	SCREW			6

REAR AXLE/ OUTPUT

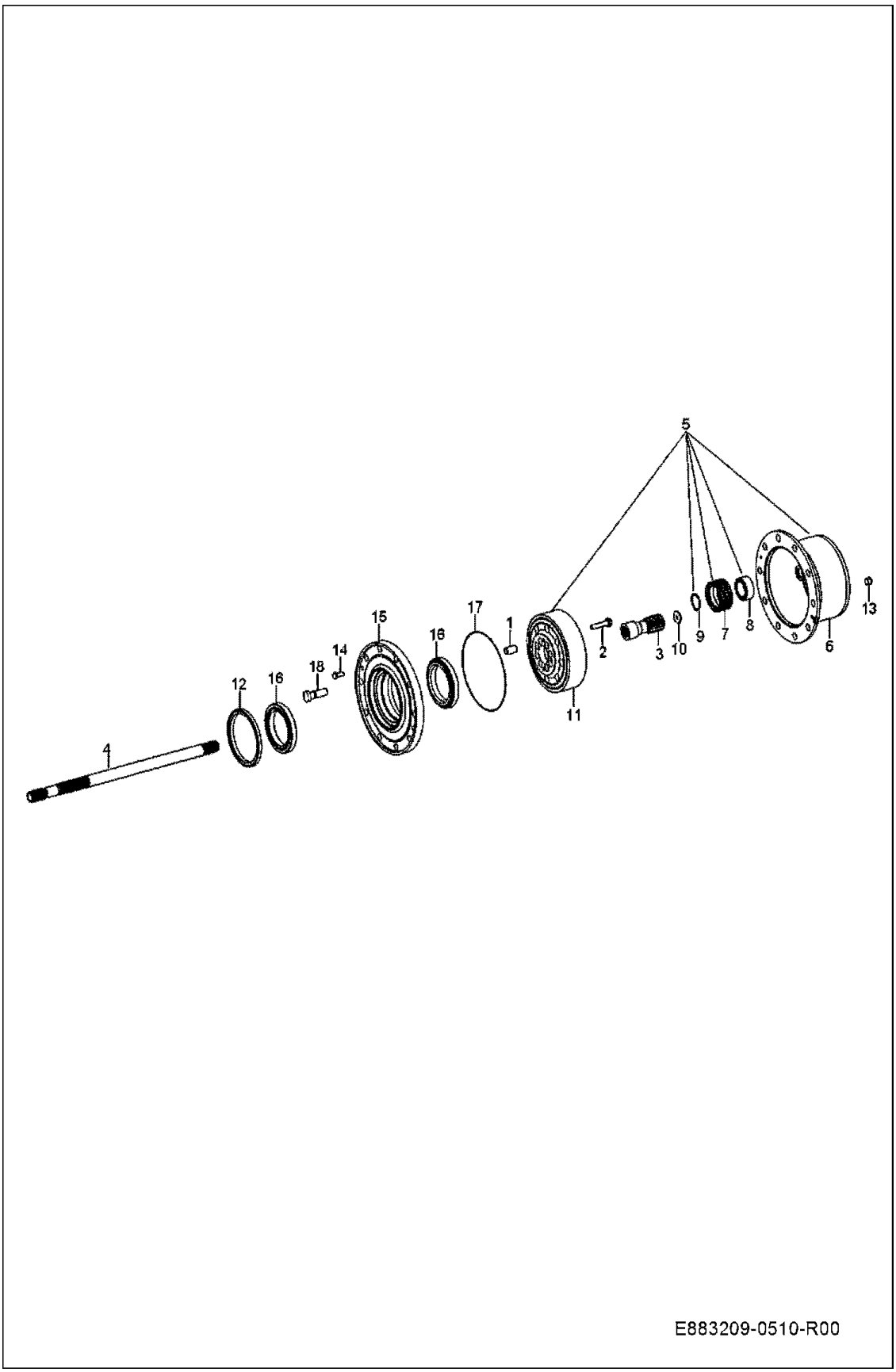

REAR AXLE/ OUTPUT (Cont'd)

Ref No	Part Number	Description	Remarks	Serial Number	Qty
1	7291888	BUSHING			16
2	7291889	SCREW			16
3	7291890	SUN GEAR SHAFT			2
4	7291891	STUB SHAFT			2
5	7291892	PLANET CARRIER			2
6	7291893	PLANET CARRIER			2
7	7291894	PLANET GEAR			8
8	7291895	ROLLER BEARING			8
9	7291140	RETAINING RING			8
10	7291896	BOLT			2
11	7291897	GEAR			2
12	7291898	SHAFT SEAL			2
13	7291808	PLUG			2
14	7291899	SCREW			4
15	7291900	HUB			2
16	7291901	ROLLER BEARING			4
17	7291816	O-RING			2
18	7291902	WHEEL BOLT			20

REAR AXLE/ OUTPUT

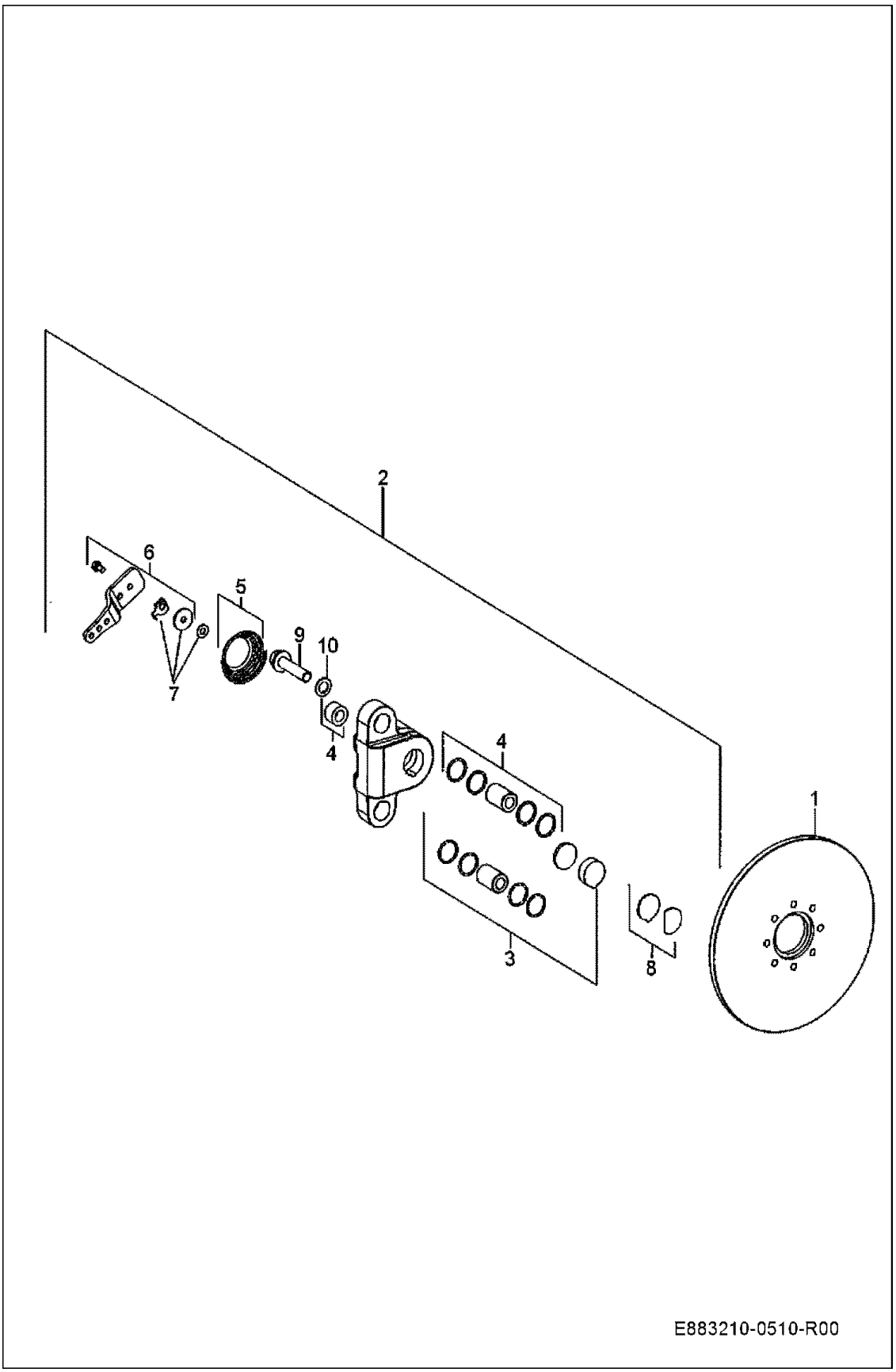

REAR AXLE/ OUTPUT (Cont'd)

Ref No	Part Number	Description	Remarks	Serial Number	Qty
1	7291903	BRAKE DISC			1
2	7291904	BRAKE			1
3	7291905	SEALING SET			1
4	7291906	SEALING SET			1
5	7291907	REPAIR KIT			1
6	7291908	REPAIR KIT			1
7	7291909	REPAIR KIT			1
8	7291910	SEALING SET			1
9	7291911	SCREW			2
10	7291912	WASHER			2

REAR AXLE/ LOOSE PARTS

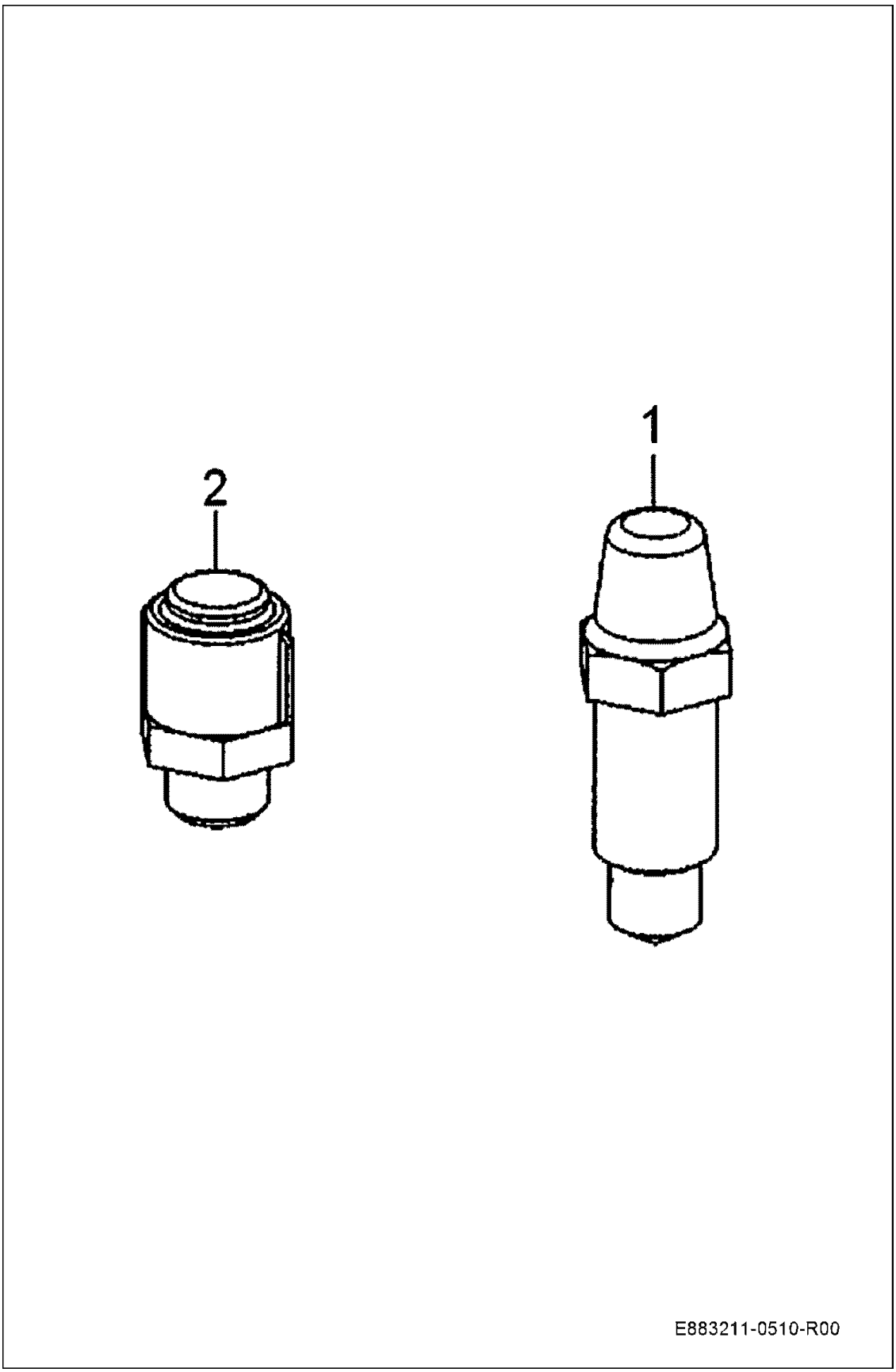

REAR AXLE/ LOOSE PARTS (Cont'd)

Ref No	Part Number	Description	Remarks	Serial Number	Qty
1	7291807	VENT VALVE			2
2	7291884	VENT VALVE			1

FRONT AXLE/ INPUT

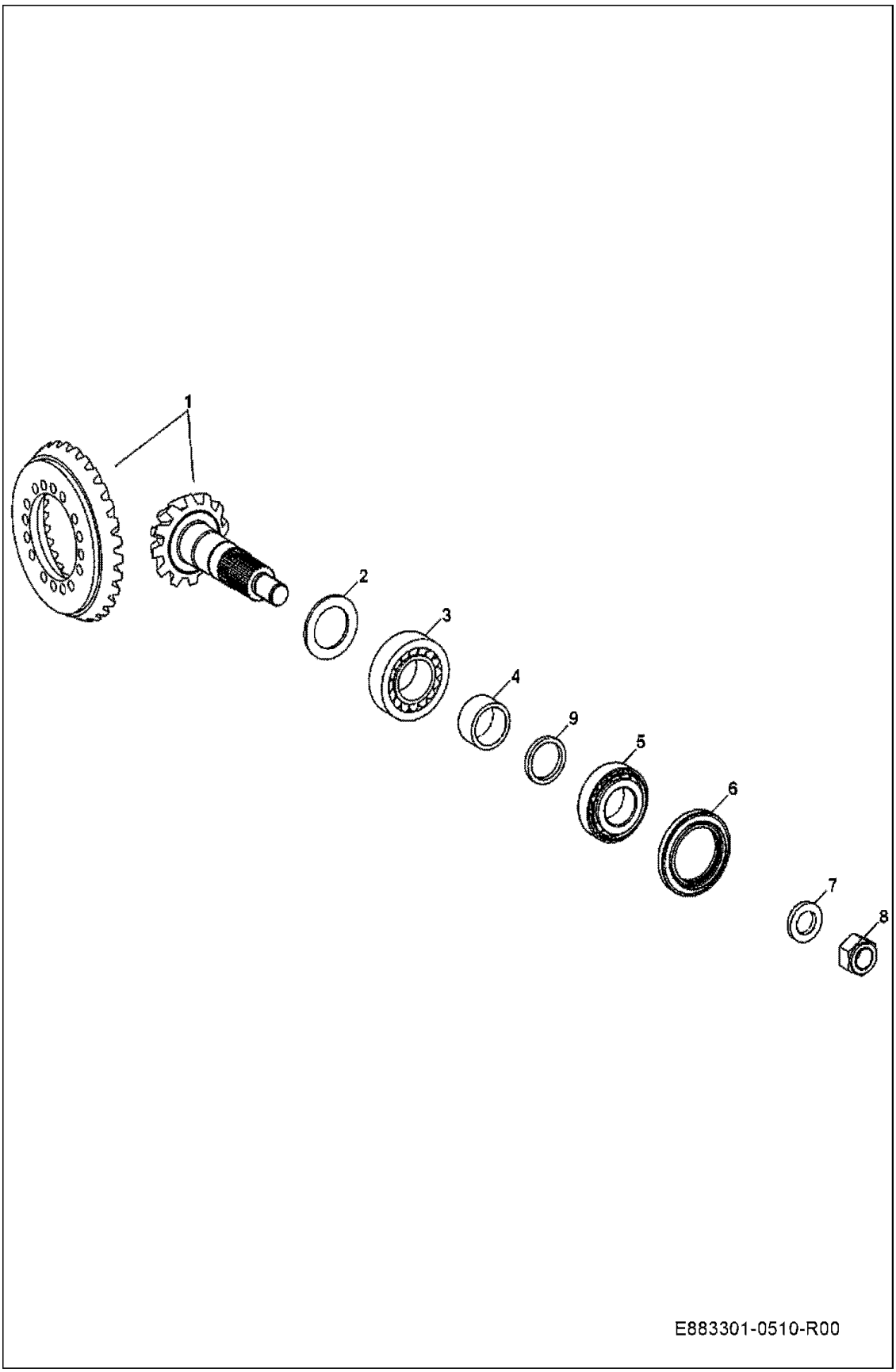

FRONT AXLE/ INPUT (Cont'd)

Ref No	Part Number	Description	Remarks	Serial Number	Qty
1	7291913	BEVEL GEAR SET			1
2	7291914	WASHER A=3.3			1
2	7291915	WASHER A=3.4			1
2	7291916	WASHER A=3.5			1
2	7291917	WASHER A=3.6			1
2	7291918	WASHER A=3.7			1
3	7291768	ROLLER BEARING			1
4	7291919	BUSHING			1
5	7291920	ROLLER BEARING			1
6	7291921	SHAFT SEAL			1
7	7291922	WASHER			1
8	7291923	NUT			1
9	7291924	RING A=5.55			1
9	7291925	RING A=5.6			1
9	7291926	RING A=5.65			1
9	7291927	RING A=5.70			1
9	7291928	RING A=5.75			1
9	7291929	RING A=5.80			1
9	7291930	RING A=5.85			1
9	7291931	RING A=5.90			1
9	7291932	RING A=5.95			1
9	7291933	RING A=6.10			1
9	7291934	RING A=6.15			1
9	7291935	RING A=6.20			1
9	7291936	RING A=6.25			1
9	7291937	RING A=6.30			1
9	7291938	RING A=6.35			1
9	7291939	RING A=6.40			1
9	7291940	RING A=6.45			1
9	7291941	RING A=6.5			1
9	7291942	RING A=6.55			1
9	7291943	RING A=6.60			1
9	7291944	RING A=6.65			1
9	7291945	RING A=6.7			1
9	7291946	RING A=5.98			1
9	7291947	RING A=6.00			1
9	7291948	RING A=6.02			1
9	7291949	RING A=6.04			1
9	7291950	RING A=6.07			1

SHAFT CONNECTIONS

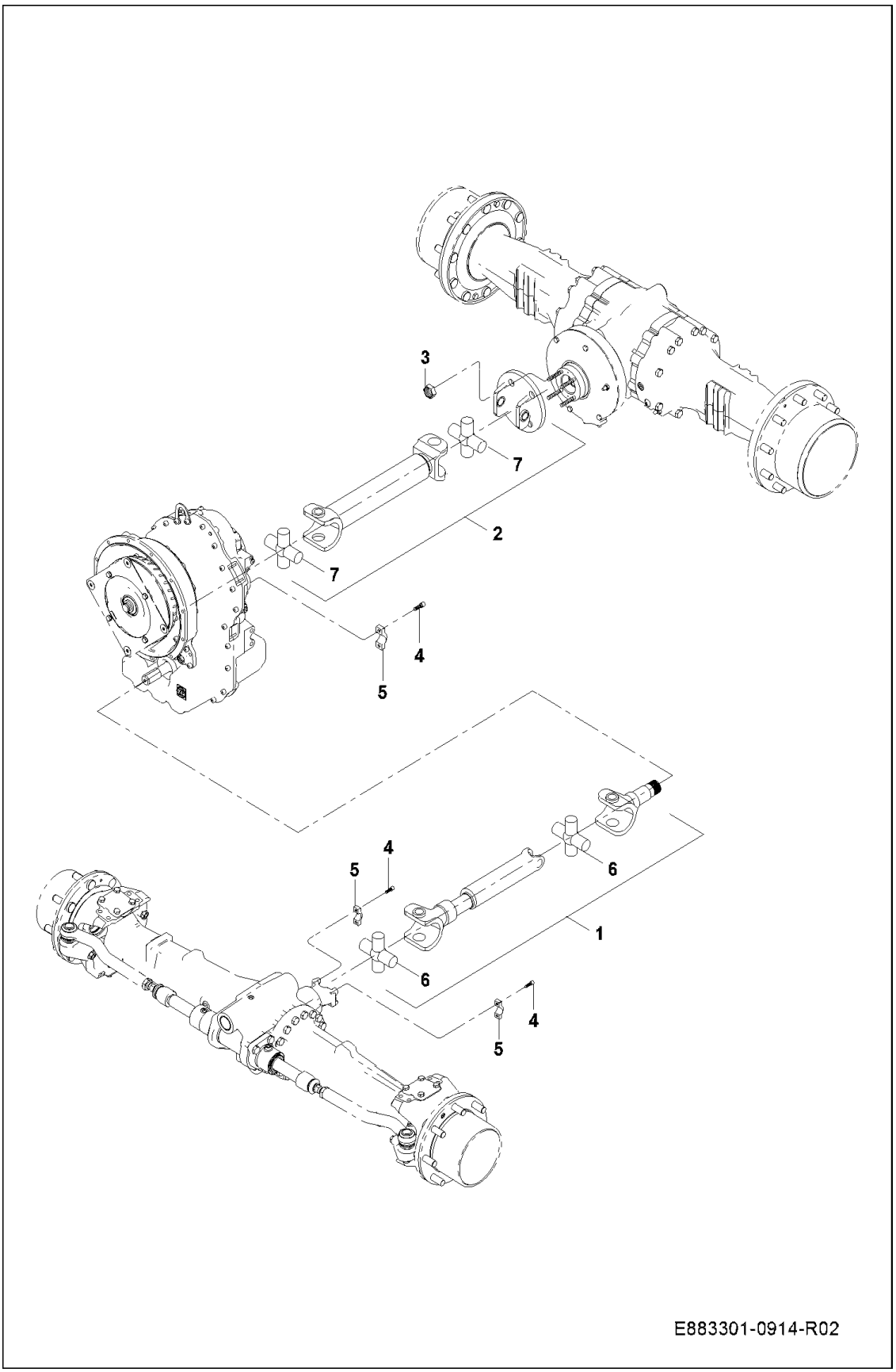

SHAFT CONNECTIONS (Cont'd)

Ref No	Part Number	Description	Remarks	Serial Number	Qty
1	7292071	FRONT SHAFT			1
2	7292072	REAR SHAFT			1
3	7290218	NUT			8
4	7290219	BOLT			8
5	7290221	CLAMP			4
6	7292073	PINION			2
7	7292074	PINION			2

FRONT AXLE/ INPUT

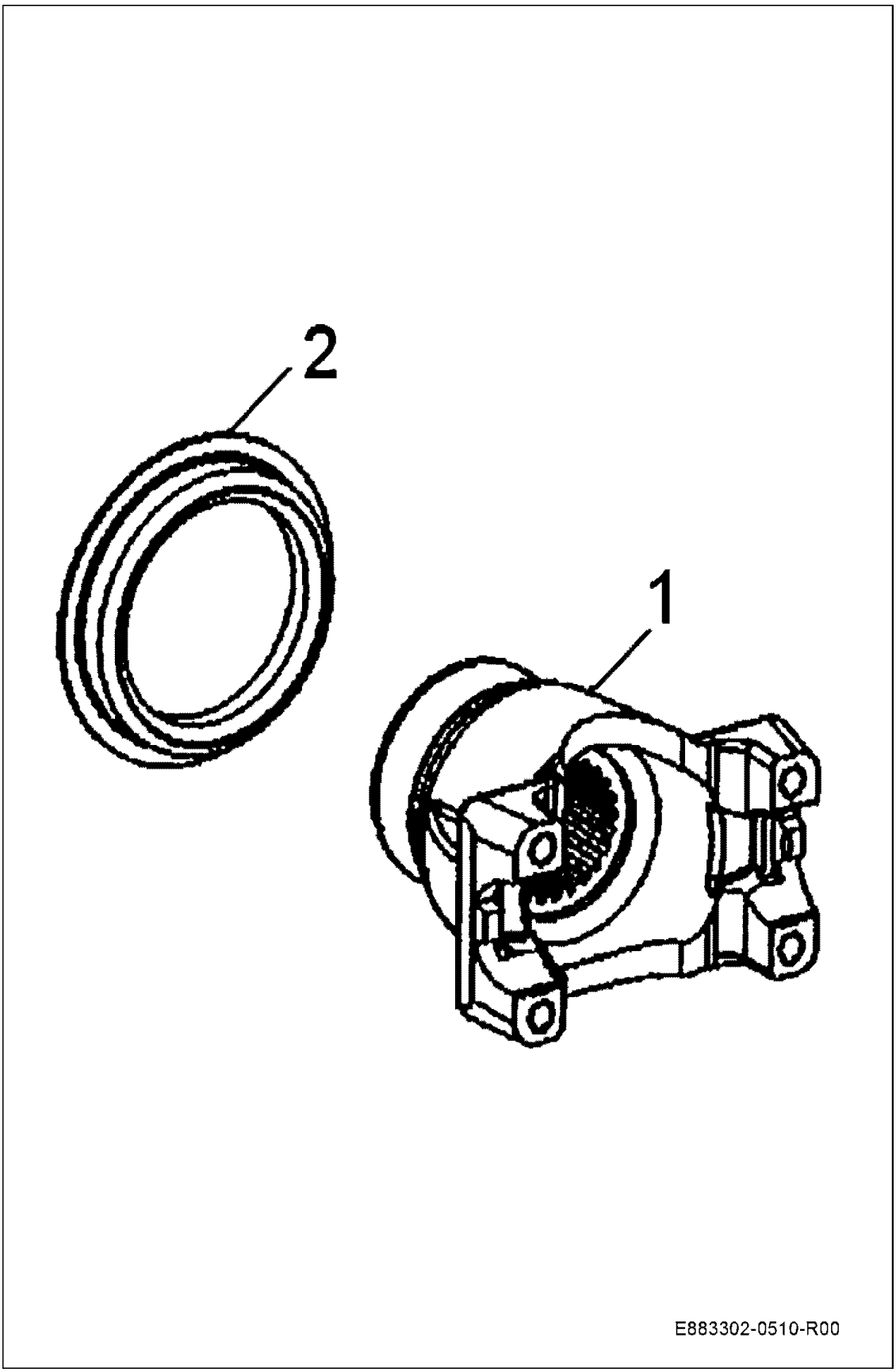

FRONT AXLE/ INPUT (Cont'd)

Ref No	Part Number	Description	Remarks	Serial Number	Qty
1	7291951	END YOKE			1
2	7291952	SCREEN SHEET			1

FRONT AXLE/ DIFFERENTIAL

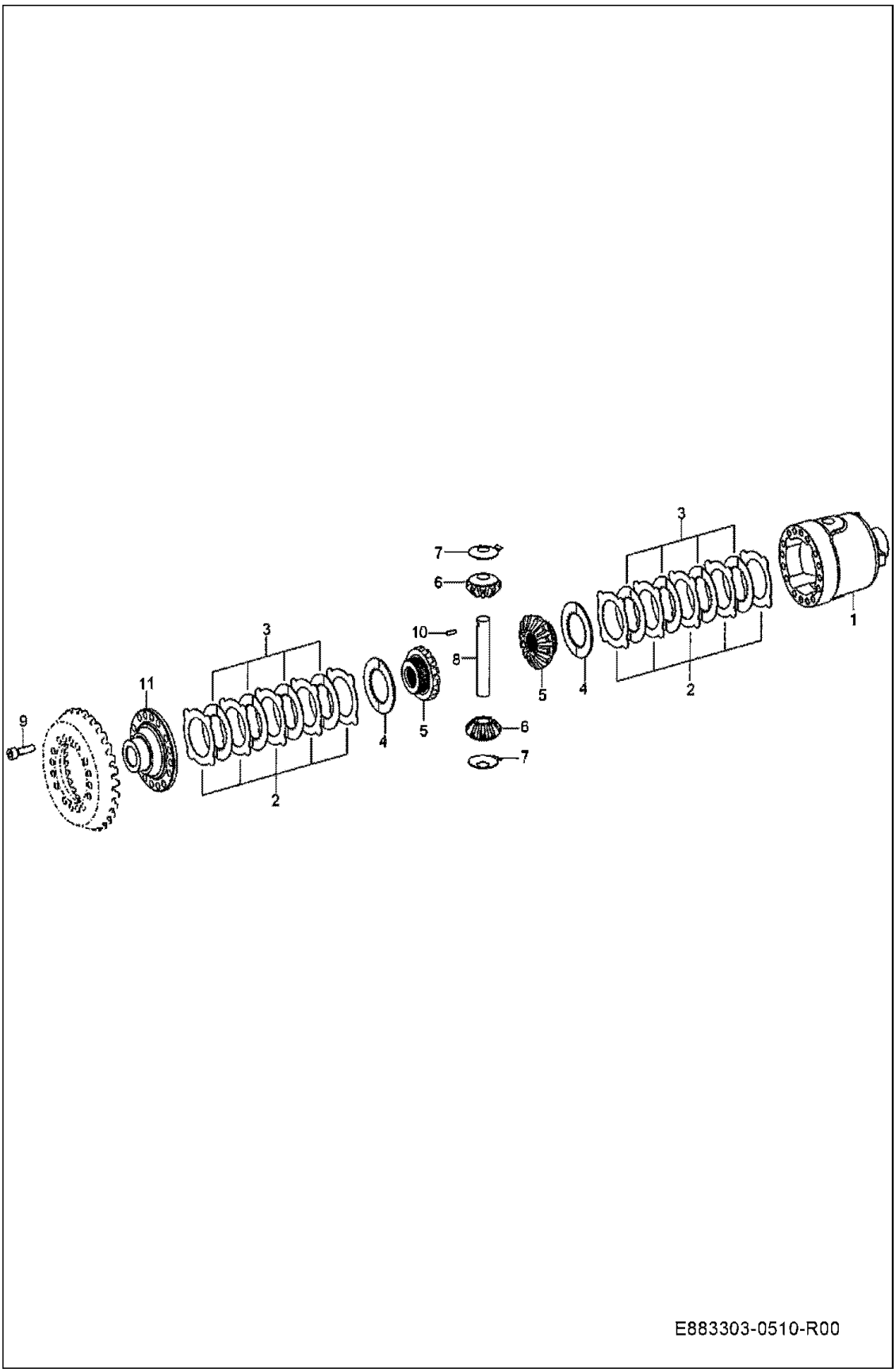

FRONT AXLE/ DIFFERENTIAL (Cont'd)

Ref No	Part Number	Description	Remarks	Serial Number	Qty
1	7291953	DIFF. CASE			1
2	7291954	O. CLUTCH DISC			10
2	7291955	O. CLUTCH DISC			10
3	7291956	I. CLUTCH DISC			8
4	7291957	PRESSURE DISC			2
5	7291958	BEVEL GEAR			2
6	7291959	BEVEL GEAR			2
7	7291960	THRUST WASHER			2
8	7291961	DIFF. AXLE			1
9	7291962	CAP SCREW			16
10	7291963	PIN			1
11	7291964	COVER			1

FRONT AXLE/ AXLE CASING

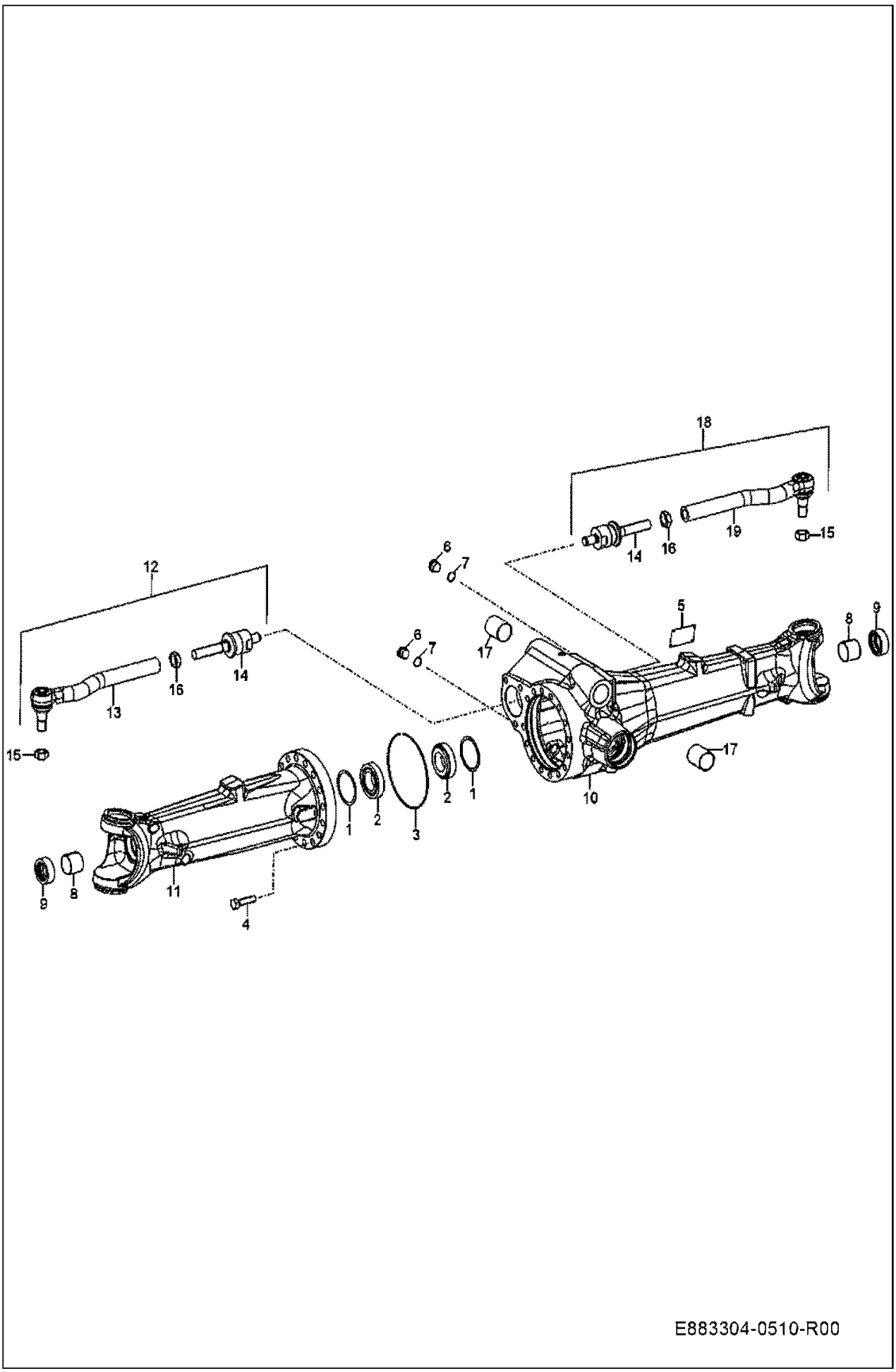

FRONT AXLE/ AXLE CASING (Cont'd)

Ref No	Part Number	Description	Remarks	Serial Number	Qty
1	7291965	SHIM A=2.0			2
1	7291966	SHIM A=1.95			2
1	7291967	SHIM A=1.90			2
1	7291968	SHIM A=1.85			2
1	7291969	SHIM A=1.80			2
1	7291970	SHIM A=1.75			2
1	7291971	SHIM A=1.70			2
1	7291972	SHIM A=1.65			2
1	7291973	SHIM A=1.60			2
1	7291974	SHIM A=1.55			2
1	7291975	SHIM A=1.50			2
1	7291976	SHIM A=1.45			2
1	7291977	SHIM A=1.40			2
1	7291978	SHIM A=1.20			2
1	7291979	SHIM A=1.0			2
1	7291980	SHIM A=0.8			2
1	7291981	SHIM A=0.6			2
1	7291982	SHIM A=0.5			2
1	7291983	SHIM A=0.4			2
1	7291984	SHIM A=0.3			2
1	7291985	SHIM A=0.2			2
1	7291986	SHIM A=0.1			2
1	7291987	SHIM A=0.65			2
1	7291988	SHIM A=0.70			2
1	7291989	SHIM A=0.75			2
1	7291990	SHIM A=0.85			2
1	7291991	SHIM A=0.90			2
1	7291992	SHIM A=0.95			2
1	7291993	SHIM A=1.10			2
1	7291994	SHIM A=1.15			2
1	7291995	SHIM A=1.25			2
1	7291996	SHIM A=1.30			2
1	7291997	SHIM A=1.35			2
1	7291998	SHIM A=0.45			2
1	7291999	SHIM A=0.55			2
1	7292000	SHIM A=1.05			2
1	7292001	SHIM A=2.05			2
1	7292002	SHIM A=2.10			2
1	7292003	SHIM A=2.15			2
1	7292004	SHIM A=2.20			2
1	7292005	SHIM A=2.25			2
1	7292006	SHIM A=2.30			2
1	7292007	SHIM A=2.35			2
1	7292008	SHIM A=2.40			2
1	7292009	SHIM A=2.45			2
1	7292010	SHIM A=2.50			2
2	7292011	ROLLER BEARING			2
3	7292012	O-RING			1
4	7292013	SCREW			15

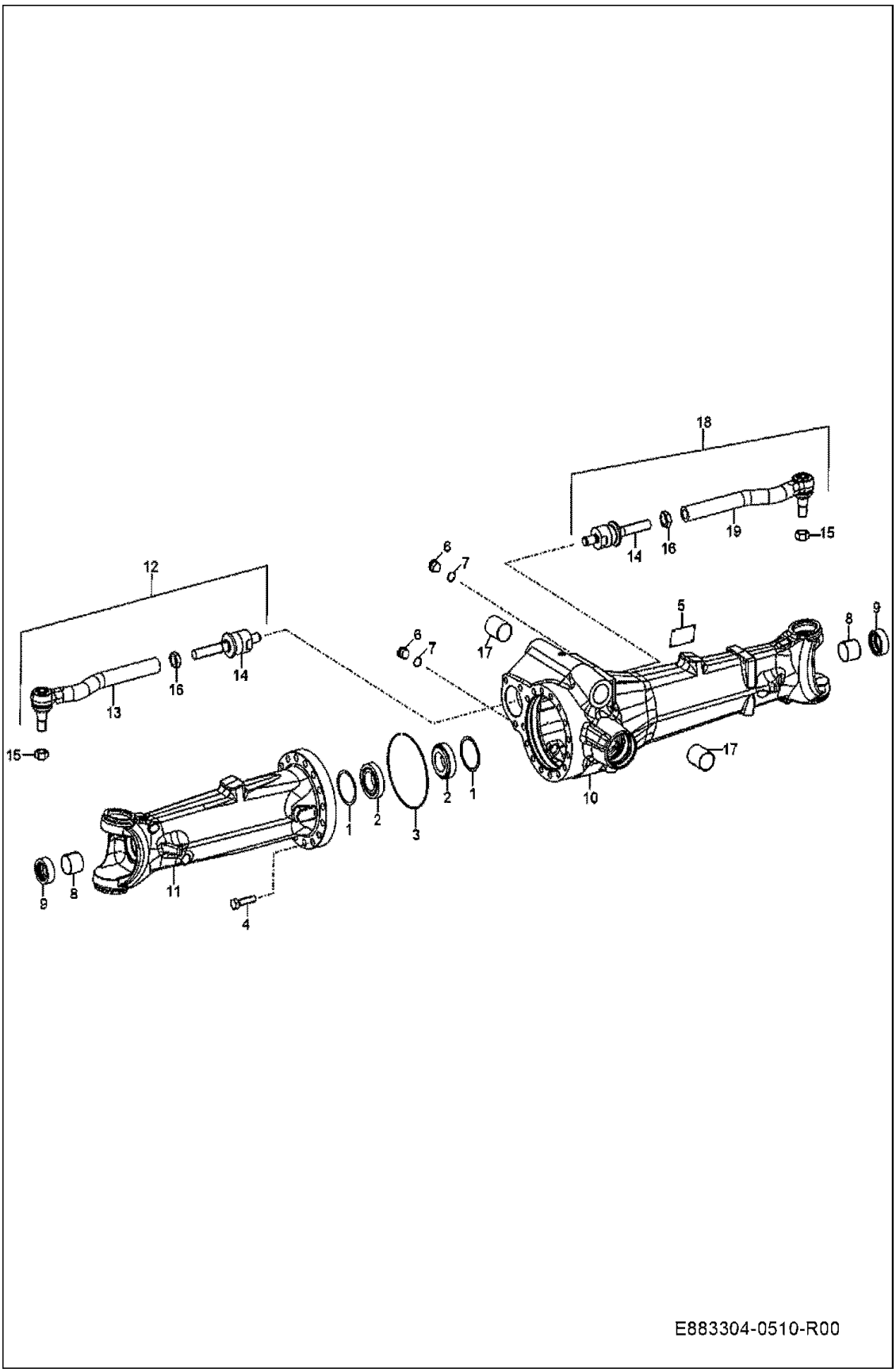
18
19
15
14
16
6
7
12
5
8
9
17
13
16
14
6
7
17
15
1
2
3
2
1
10
17
1
11
8
9
4
E883304-0510-R00

FRONT AXLE/ AXLE CASING (Cont'd)

Ref No	Part Number	Description	Remarks	Serial Number	Qty
5	7292014	TYPE PLATE			1
6	7292015	SCREW PLUG			2
7	7292016	O-RING			2
8	7292017	BUSH			2
9	7292018	SHAFT SEAL			2
10	7292019	AXLE CASING			1
11	7292020	AXLE CASING			1
12	7292021	ROD			1
13	7292022	BALL JOINT			1
14	7292023	AXIAL JOINT			2
15	7292024	NUT			2
16	7292025	NUT			2
17	7292026	BUSH			2
18	7292027	ROD			1
19	7292028	BALL JOINT			1

FRONT AXLE/ JOINT HOUSING

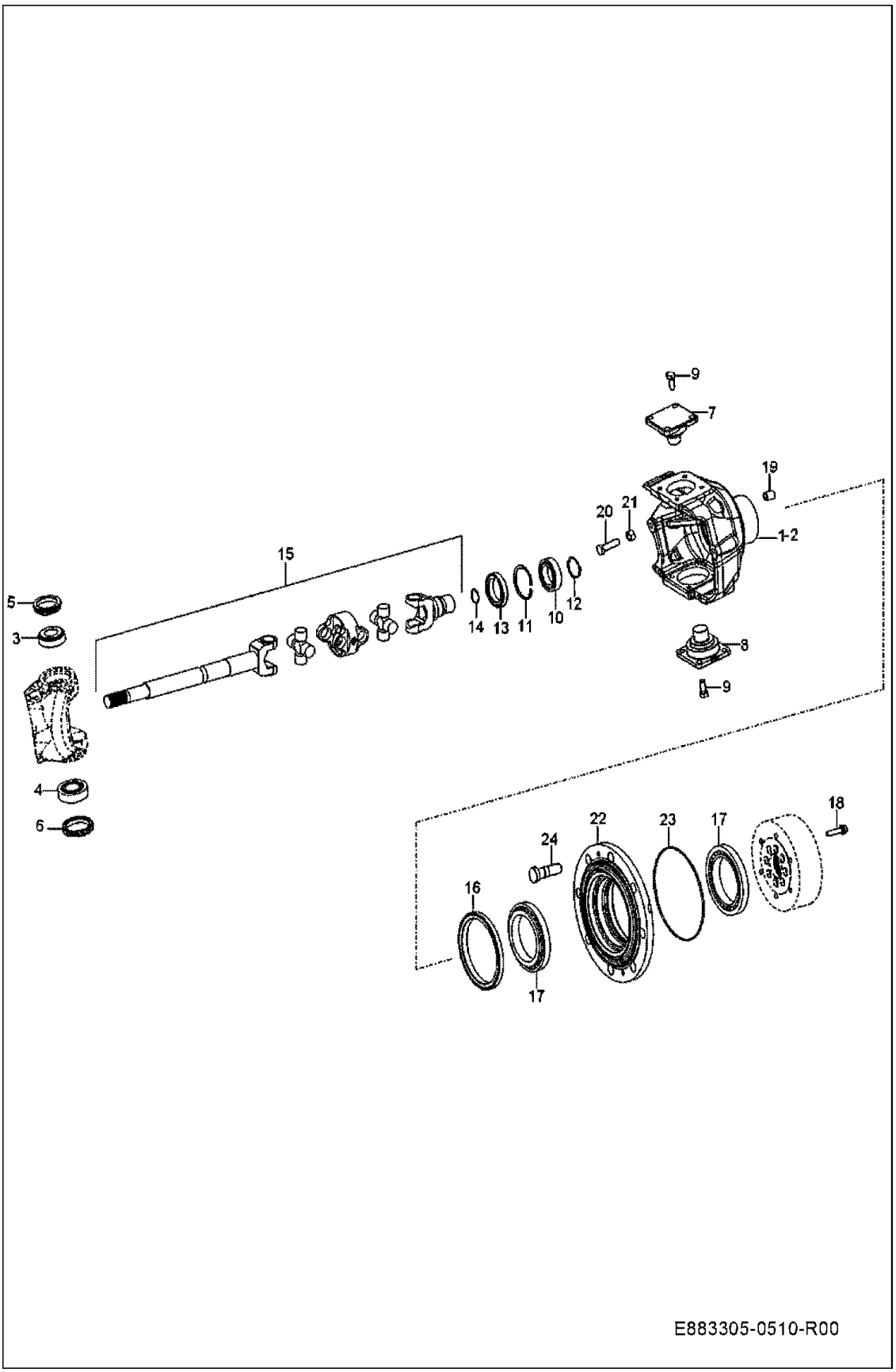

FRONT AXLE/ JOINT HOUSING (Cont'd)

Ref No	Part Number	Description	Remarks	Serial Number	Qty
1	7292029	JOINT HOUSING LEFT			1
2	7292030	JOINT HOUSING RIGHT			1
3	7292031	ROLLER BEARING			2
4	7292032	ROLLER BEARING			2
5	7292033	RING			2
6	7292034	RING			2
7	7292035	PIN			2
8	7292036	PIN			2
9	7292037	SCREW			16
10	7292038	BEARING			2
11	7291040	RETAINING RING			2
12	7292039	RETAINING RING			2
13	7292040	RING			2
14	7292041	RETAINING RING			2
15	7292042	SHAFT			2
16	7292043	RING			2
17	7292044	ROLLER BEARING			4
18	7292045	SCREW			16
19	7292046	BUSHING			16
19	7292047	BUSHING			16
20	7292048	SCREW			4
21	7292049	NUT			4
22	7292050	HUB			2
23	7292051	O-RING			2
24	7291902	WHEEL BOLT			16

FRONT AXLE/ PLANETARY DRIVE

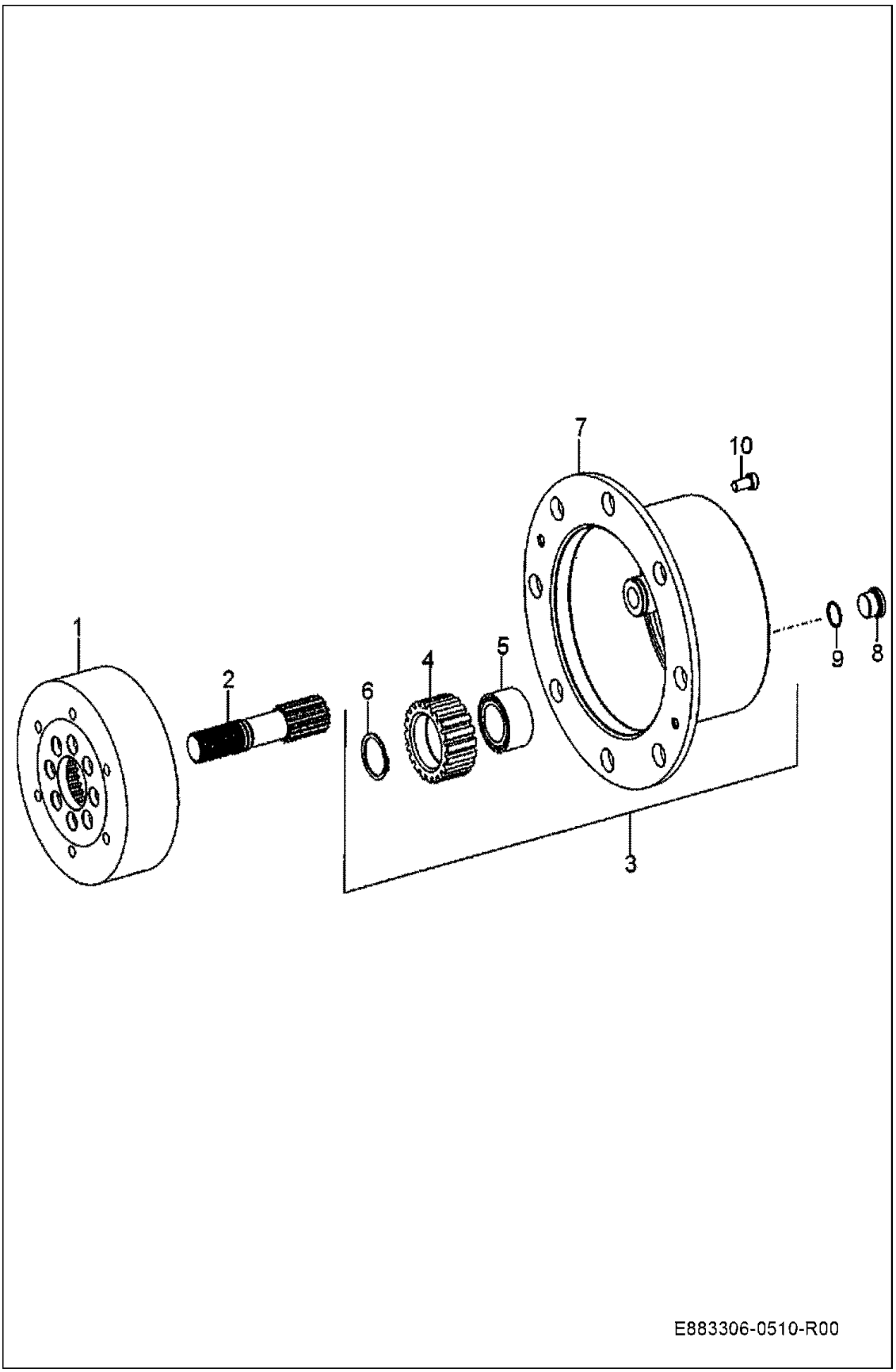

FRONT AXLE/ PLANETARY DRIVE (Cont'd)

Ref No	Part Number	Description	Remarks	Serial Number	Qty
1	7292052	RING GEAR			2
2	7292053	SUN GEAR SHAFT			2
3	7292054	PLANET CARRIER			2
4	7292055	PLANET GEAR			6
5	7292056	BEARING			6
6	7291815	RETAINING RING			6
7	7292057	PLANET CARRIER			2
8	7292015	SCREW PLUG			2
9	7292016	O-RING			2
10	7292058	CAP SCREW			4

FRONT AXLE/ STEERING GEAR

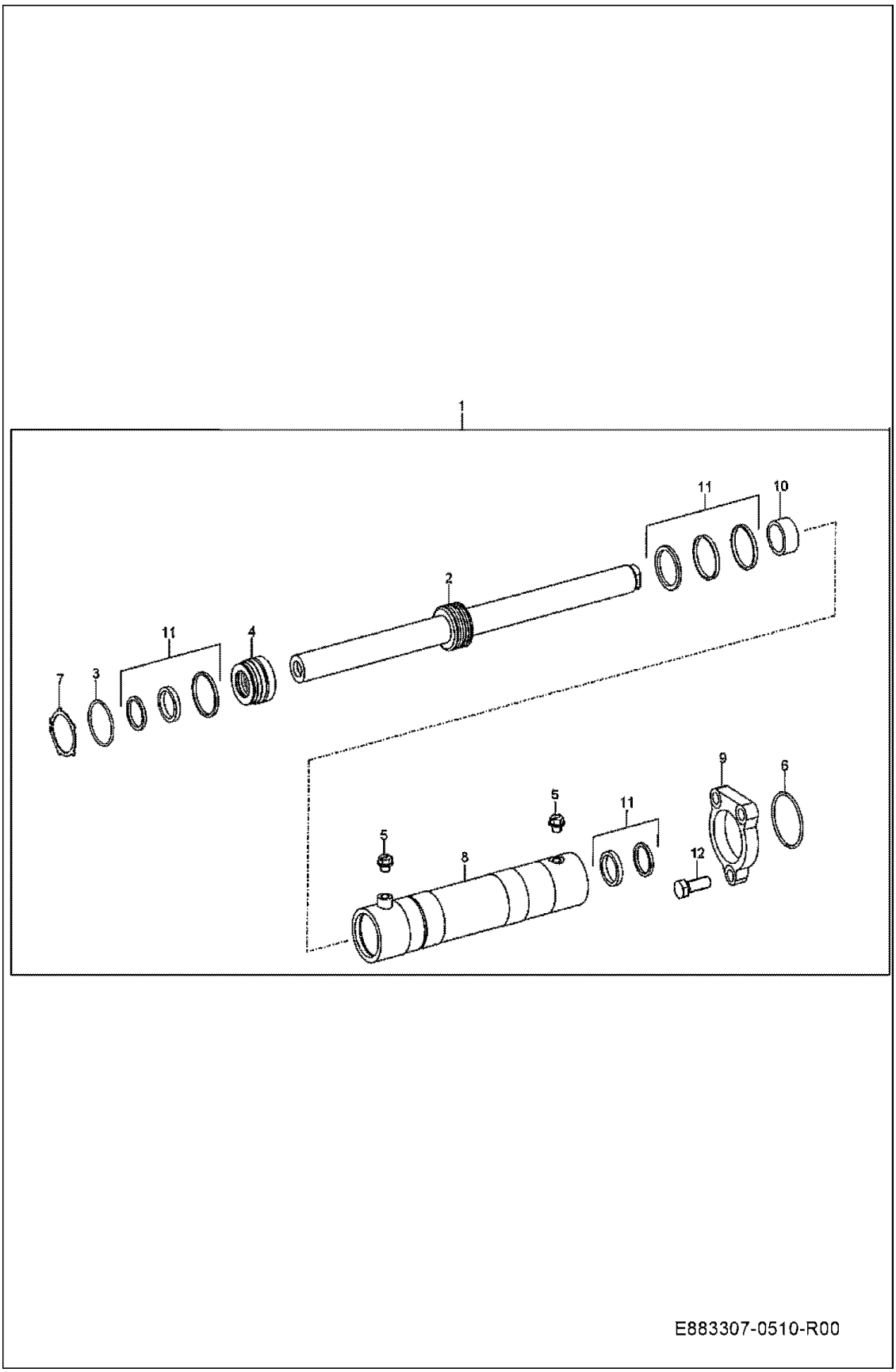

FRONT AXLE/ STEERING GEAR (Cont'd)

Ref No	Part Number	Description	Remarks	Serial Number	Qty
1	7292059	STEERING CYLINDER			1
2	7292060	PISTON ROD			1
3	7292061	RING			1
4	7292062	PLUG			1
5	7292063	PLUG			1
6	7292064	RING			1
7	7292065	RING			2
8	7292066	CYLINDER PIPE			1
9	7292067	FLANGE			1
10	7292068	SPACER			1
11	7292069	REPAIR KIT			1
12	7292070	SCREW			3

STEERING COLUMN AND UNIT

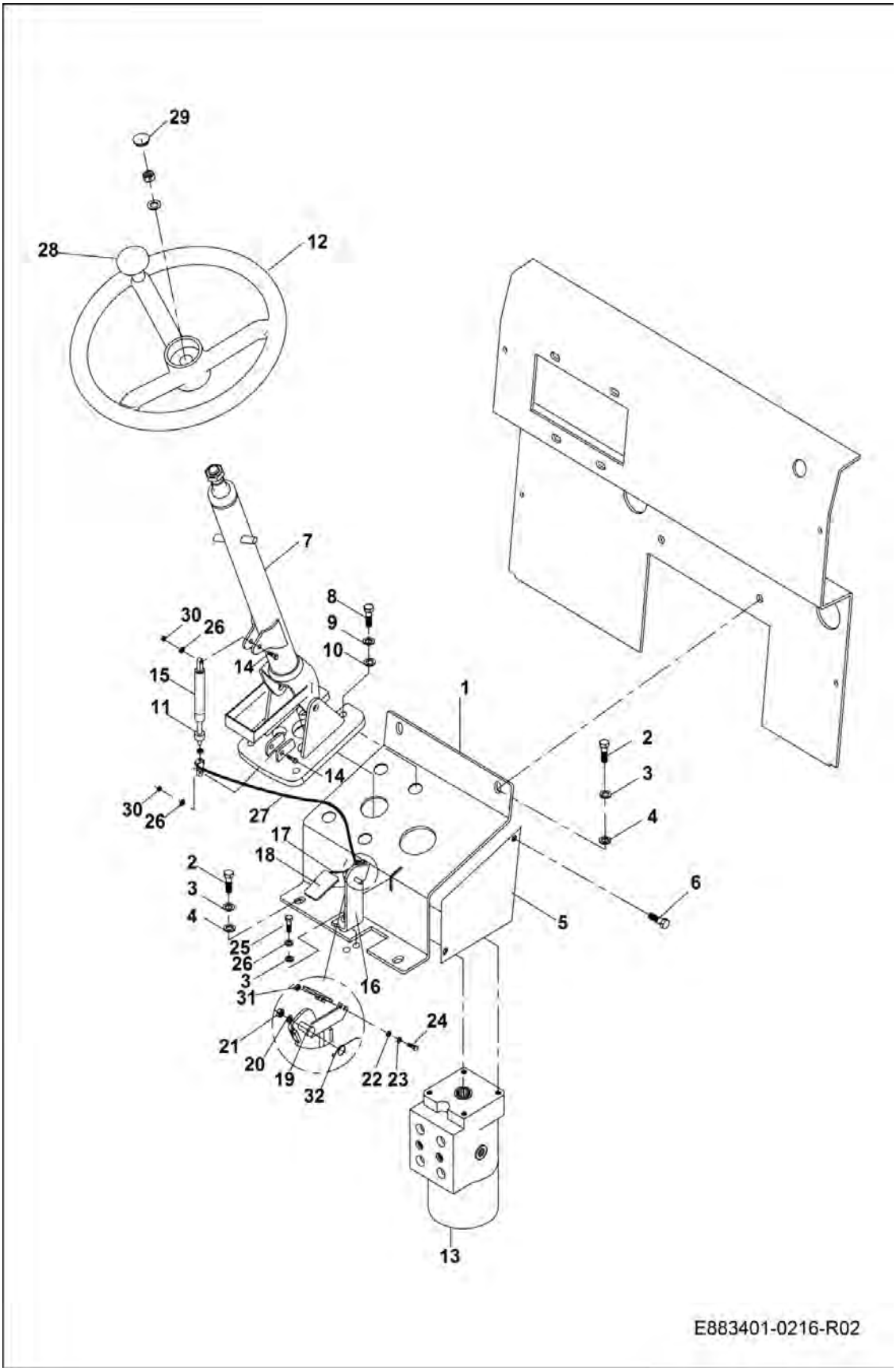

STEERING COLUMN AND UNIT (Cont'd)

Ref No	Part Number	Description	Remarks	Serial Number	Qty
1	7292075	PLATE			1
2	7289273	BOLT			4
3	7288891	LOCK WASHER			6
4	7289262	WASHER			4
5	7292076	COVER PLATE			2
6	7290224	BOLT			4
7	7290225	STEERING COLUMN			1
8	7289642	BOLT			4
9	7289259	LOCK WASHER			4
10	7289604	WASHER			4
11	7290226	WEDGE			1
12	7290227	STEERING WHEEL			1
13	7290229	STEERING UNIT			1
14	7290230	BOLT			2
15	7290231	DAMPER			1
16	7290232	PEDAL LOWER PLATE			1
17	7290233	PEDAL			1
18	7290234	FOOT PLATE			1
19	7290235	PIN			1
20	7289610	WASHER			1
21	7289785	NUT			1
22	7290236	LOCK WASHER			2
23	7290237	WASHER			2
24	7290238	BOLT			2
25	7289261	BOLT			2
26	7288892	WASHER			4
27	7290239	ROPE			1
28	7290240	STEERING KNOB			1
29	7290241	STEERING WHEEL COVER			1
30	7289641	NUT			2
31	7290242	WASHER			2
32	7290243	PEDAL SPRING			1

BRAKE PEDAL CONNECTIONS

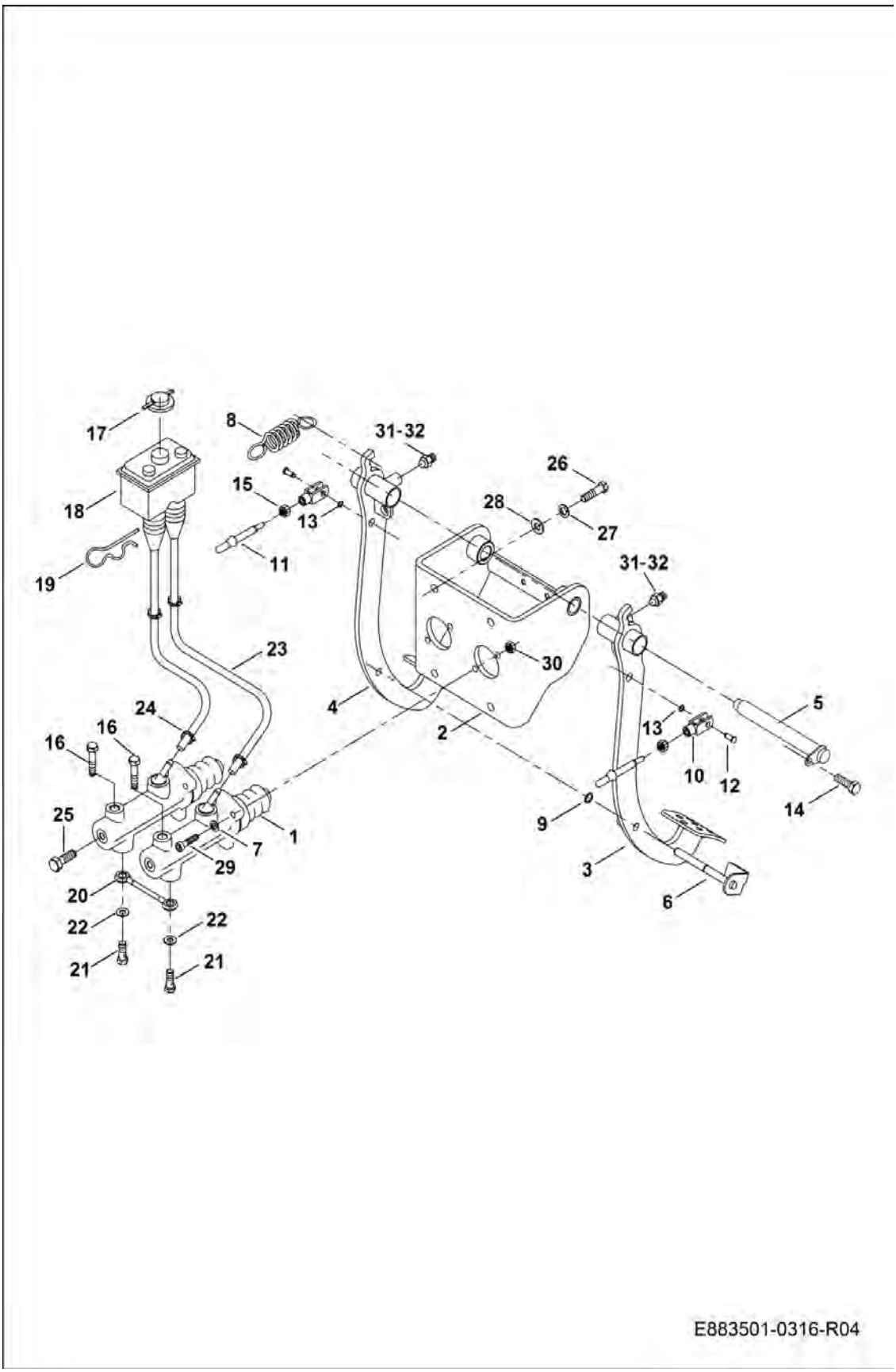

BRAKE PEDAL CONNECTIONS (Cont'd)

Ref No	Part Number	Description	Remarks	Serial Number	Qty
1	7290244	MASTER CLINDER			2
2	7290246	MASTER CLINDER PLATE			1
3	7290247	BRAKE PEDAL LEFT			1
4	7290248	BRAKE PEDAL RIGHT			1
5	7290249	SHAFT			1
6	7290250	LOCKING PIN			1
7	7288891	LOCK WASHER			4
8	7290252	BRAKE SPRING			2
9	7290253	SEGMENT			1
10	7290255	ROD HEAD			2
11	7290257	ROD			2
12	7290258	PIN			2
13	7290259	SEGMENT			2
14	7289609	BOLT			1
15	7289637	NUT			6
16	7289733	BOLT			2
17	7304080	COVER			1
18	7304081	TANK			1
19	7290264	COTTER PIN			2
20	7304082	PIPE			1
21	7290266	BOLT			2
22	7290267	WASHER			4
23	7304083	HOSE			2
24	7289264	CLAMP			4
25	7290269	PLUG			2
26	7289642	BOLT			4
27	7289259	LOCK WASHER			4
28	7289278	WASHER			4
29	7290270	BOLT			4
30	7288891	LOCK WASHER			4
31	7289871	GREASER COVER			2
32	7289862	GREASER			2

ACCELERATOR PEDAL AND ITS CONNECTIONS

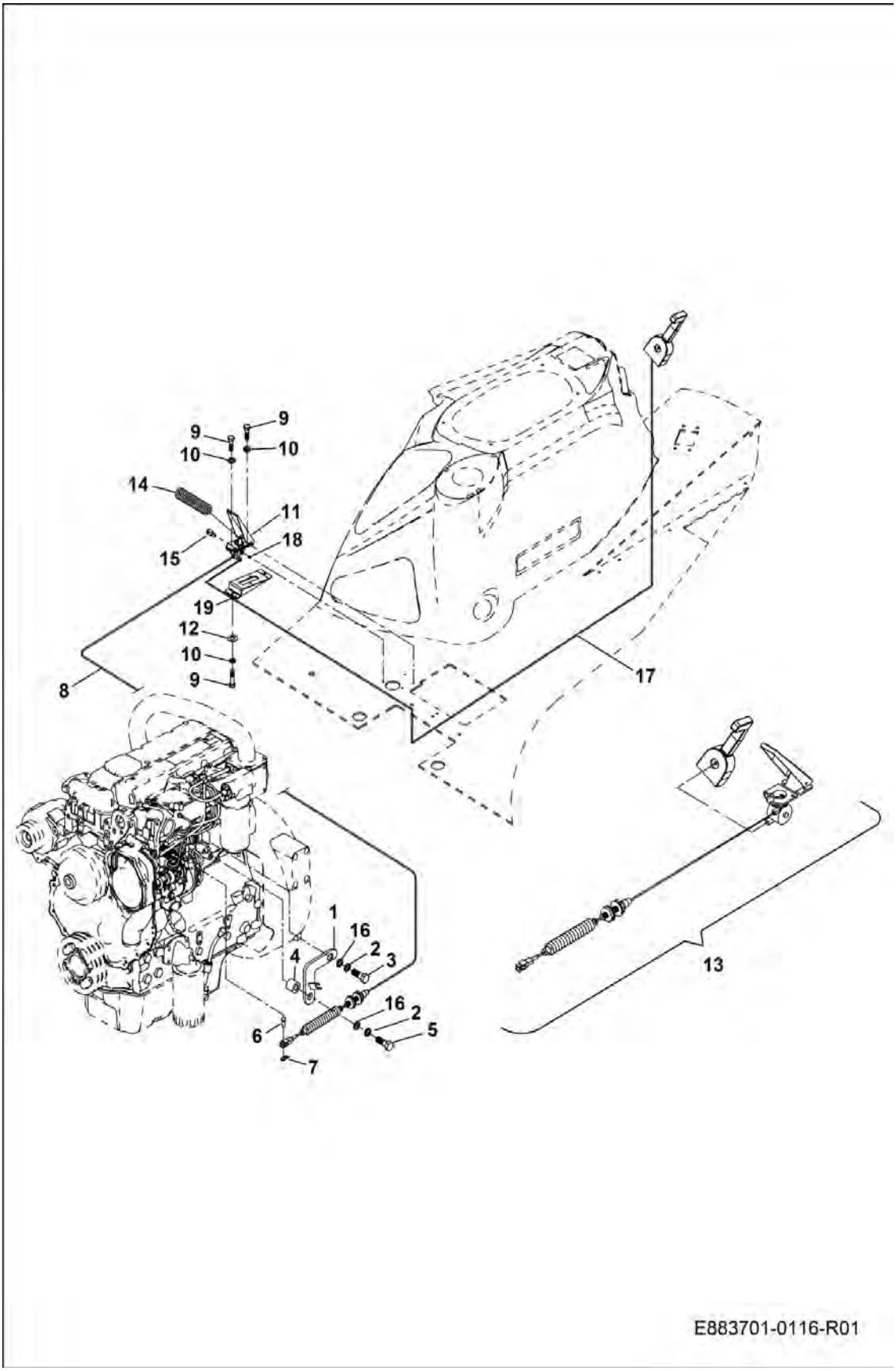

ACCELERATOR PEDAL AND ITS CONNECTIONS (Cont'd)

Ref No	Part Number	Description	Remarks	Serial Number	Qty
1	7290279	BRACKET			1
2	7288891	LOCK WASHER			2
3	7289261	BOLT			1
4	7290283	BUSHING			1
5	7289799	BOLT			1
6	7292094	PIN			1
7	7290331	COTTER PIN			1
8	7292096	ACCELERATOR PEDAL ROPE			1
9	7289595	BOLT			4
10	7289610	WASHER			6
11	7292098	ACCELERATOR PEDAL			1
12	7289596	LOCK WASHER			2
13	7292101	ACCELERATOR PEDAL ASSY.			1
14	7304267	ACCELERATOR PEDAL SPRING			1
15	7292104	HAND THROTTLE ROPE BRACKET			1
16	7288892	WASHER			2
17	7304085	THROTTLE LEVER ROPE			1
18	7289785	NUT			1
19	7292105	PLATE			1

HAND BRAKE CONNECTIONS

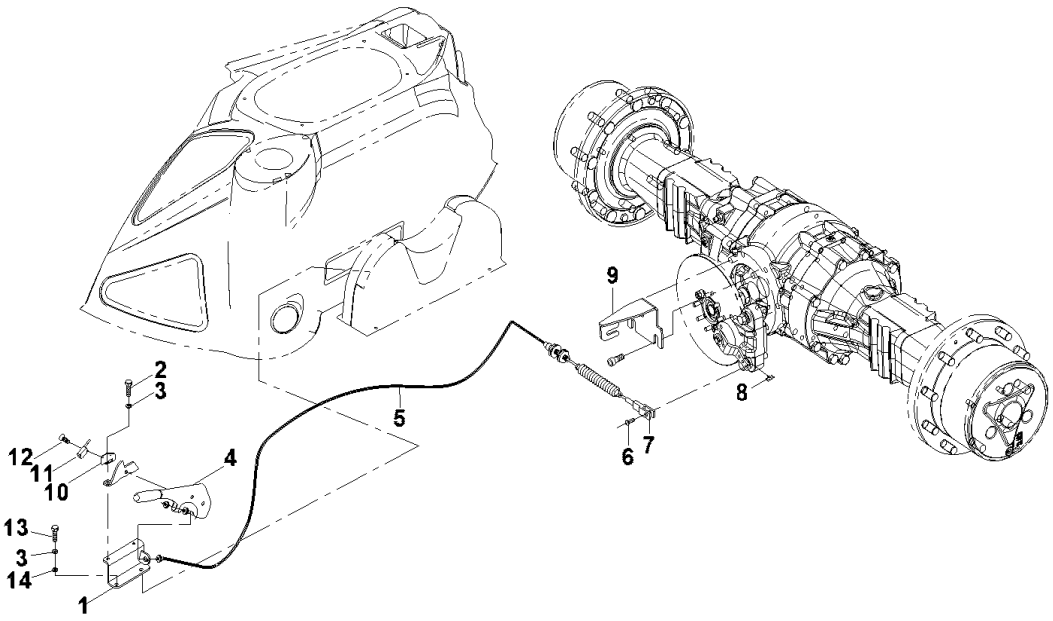

E883701-0914-R01

HAND BRAKE CONNECTIONS (Cont'd)

Ref No	Part Number	Description	Remarks	Serial Number	Qty
1	7292107	BRACKET			1
2	7288896	BOLT			2
3	7289262	WASHER			4
4	7290757	HAND BRAKE LEVER			1
5	7292108	HAND BRAKE ROPE			1
6	7291650	PIN			1
7	7292109	ROD HEAD			1
8	7292110	COTTER PIN			1
9	7292111	BRACKET SHEET			1
10	7292112	SWITCH PLATE			1
11	7292113	SWITCH			1
12	7289527	SCREW			2
13	7289261	BOLT			2
14	7288891	LOCK WASHER			2

COUNTER WEIGHT

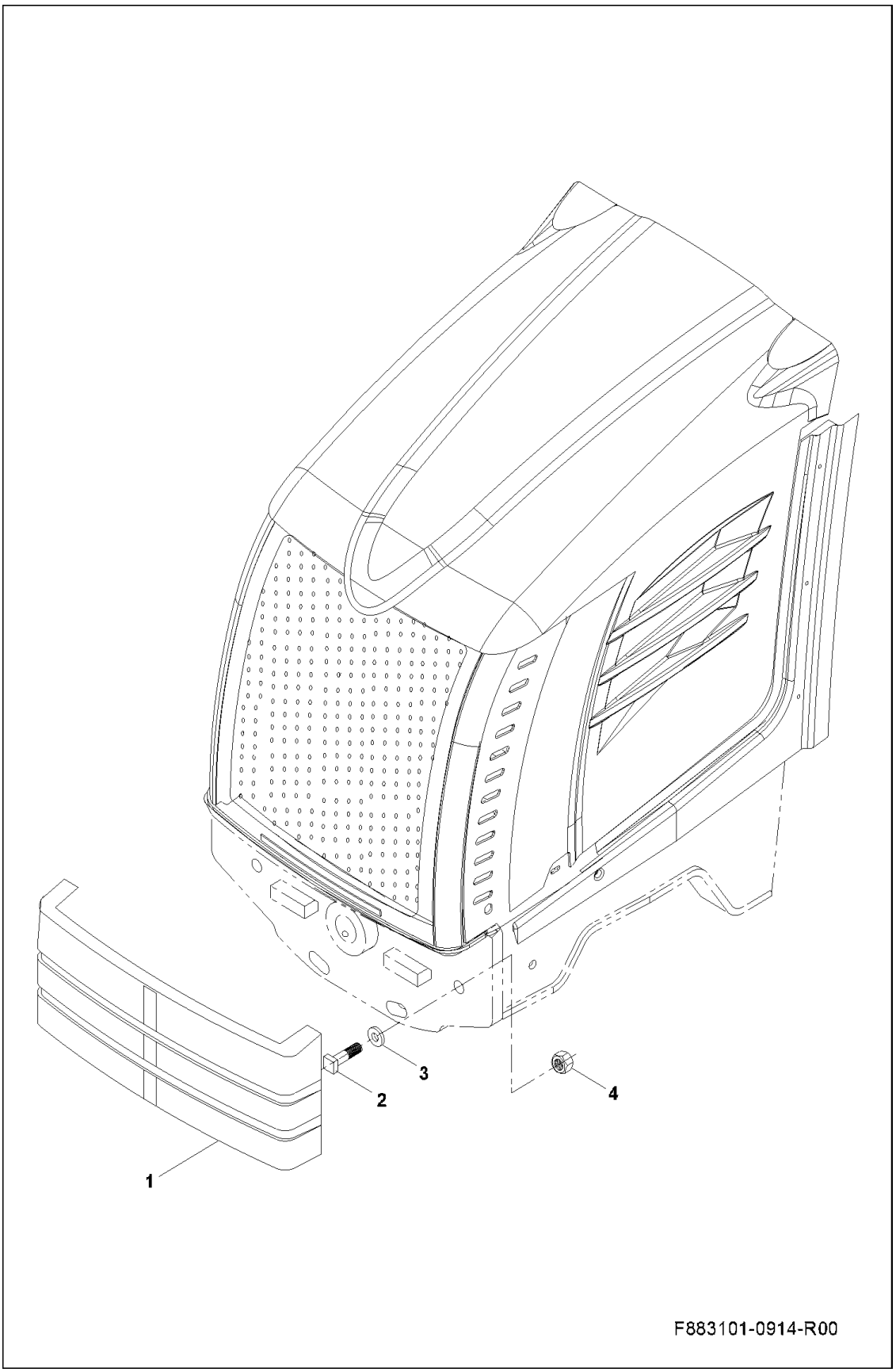

COUNTER WEIGHT (Cont'd)

Ref No	Part Number	Description	Remarks	Serial Number	Qty
1	7292114	COUNTER WEIGHT			1
2	7292115	BOLT			2
3	7292116	WASHER			2
4	7292117	NUT			2

ENGINE BONNET AND ITS CONNECTIONS GROUP

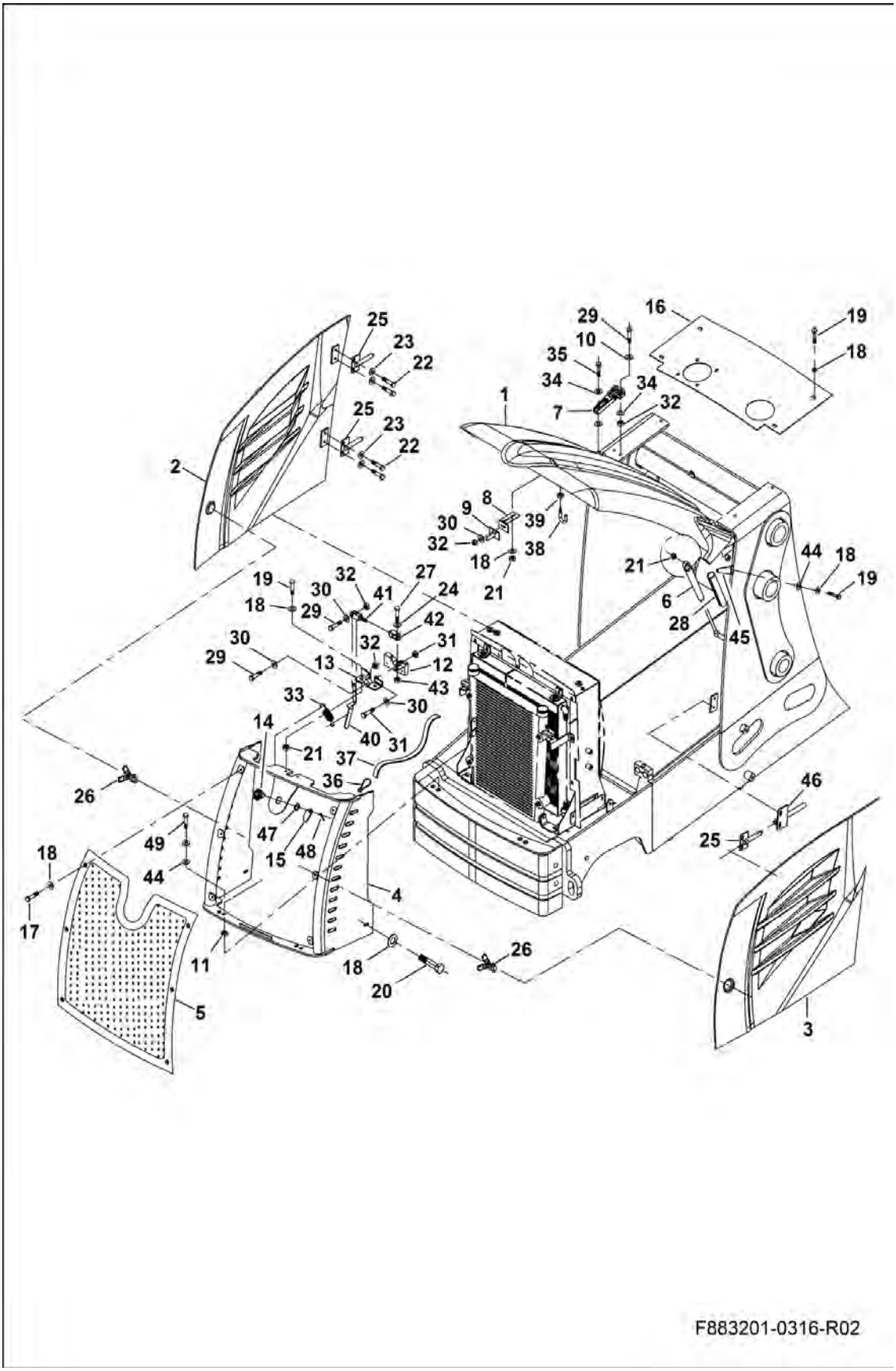

ENGINE BONNET AND ITS CONNECTIONS GROUP (Cont'd)

Ref No	Part Number	Description	Remarks	Serial Number	Qty
1	7304273	ENGINE BONNET			1
2	7304274	ENGINE BONNET RIGHT LAP			1
3	7304275	ENGINE BONNET LEFT LAP			1
4	7292135	GRILLE			1
5	7292122	PERFORATED SHEET			1
6	7290301	DAMPER			2
7	7290302	HINGE			2
8	7301560	BRACKET			1
9	7304095	BRACKET			1
10	7289507	WASHER			8
11	7289263	NUT			6
12	7290305	LOCK			1
13	7290306	LOCK BRACKET			1
14	7290385	LOCK			1
15	7292136	BRACKET			1
16	7292137	ENGINE BONNET REAR PLATE			1
17	7288896	BOLT			6
18	7289262	WASHER			22
19	7289273	BOLT			10
20	7292138	BOLT			2
21	7289641	NUT			6
22	7291292	BOLT			8
23	7289615	WASHER			8
24	7292139	WASHER			2
25	7304096	BRACKET			4
26	7290312	LOCK			3
27	7290238	BOLT			2
28	7290315	DAMPER ISOLATION			1
29	7290316	BOLT			4
30	7290820	WASHER			12
31	7290375	BOLT			2
32	7289785	NUT			11
33	7290332	SPRING			1
34	7289598	WASHER			8
35	7289595	BOLT			6
36	7290320	HOOK			1
37	7290321	ROPE			1
38	7290322	HOOK			1
39	7289597	NUT			1
40	7290323	LOCK BRACKET			1
41	7290324	FORK			1
42	7290325	FORK			1
43	7290326	NUT			2
44	7288891	LOCK WASHER			8
45	7304098	PLATE			2
46	7304099	LOCK BRACKET			4

ENGINE BONNET AND ITS CONNECTIONS GROUP (Cont'd)

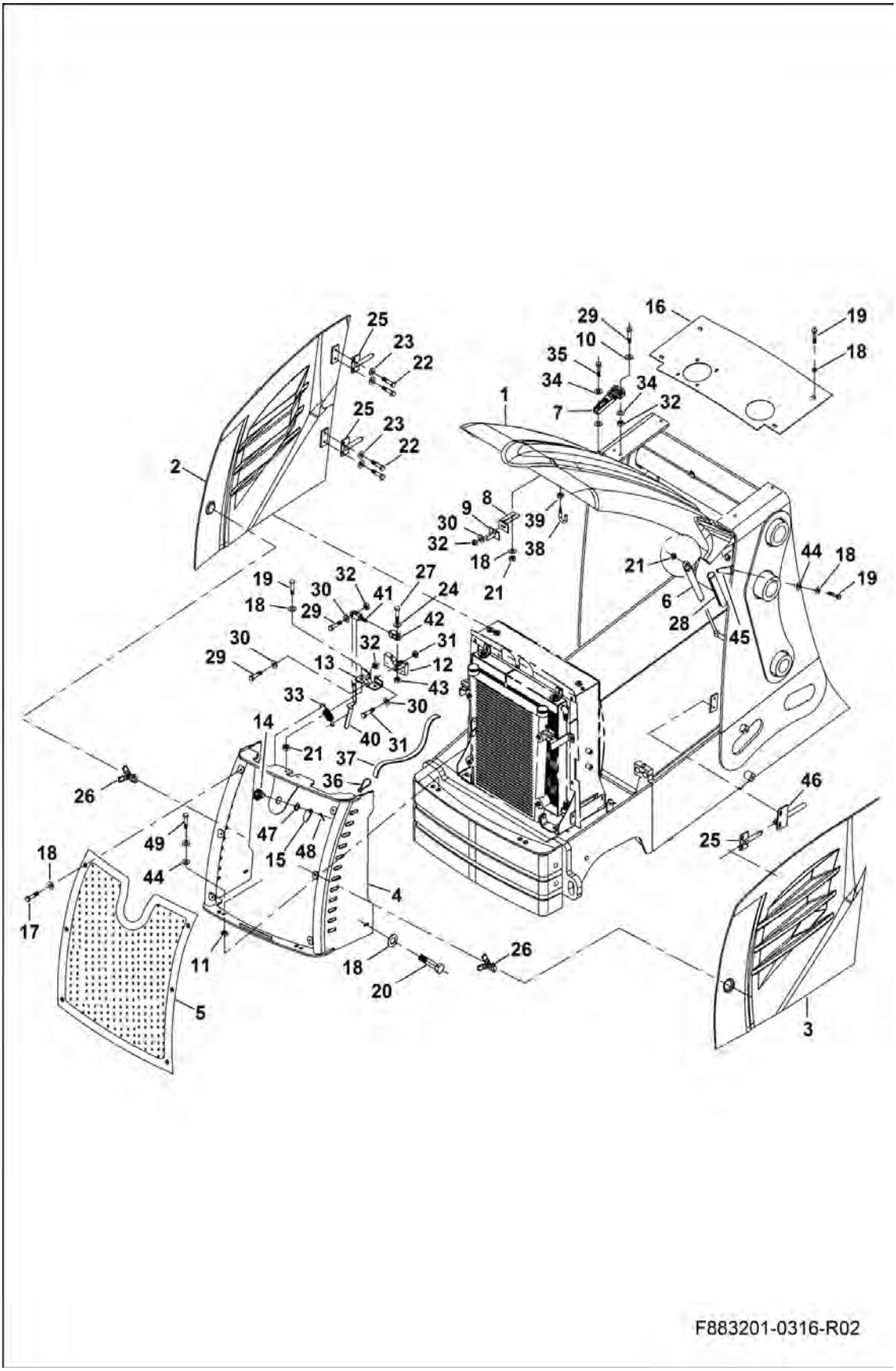

ENGINE BONNET AND ITS CONNECTIONS GROUP (Cont'd)

Ref No	Part Number	Description	Remarks	Serial Number	Qty
47	7290330	SEGMAN			1
48	7290331	COTTER PIN			1
49	7292127	BOLT			4

FUEL TANK

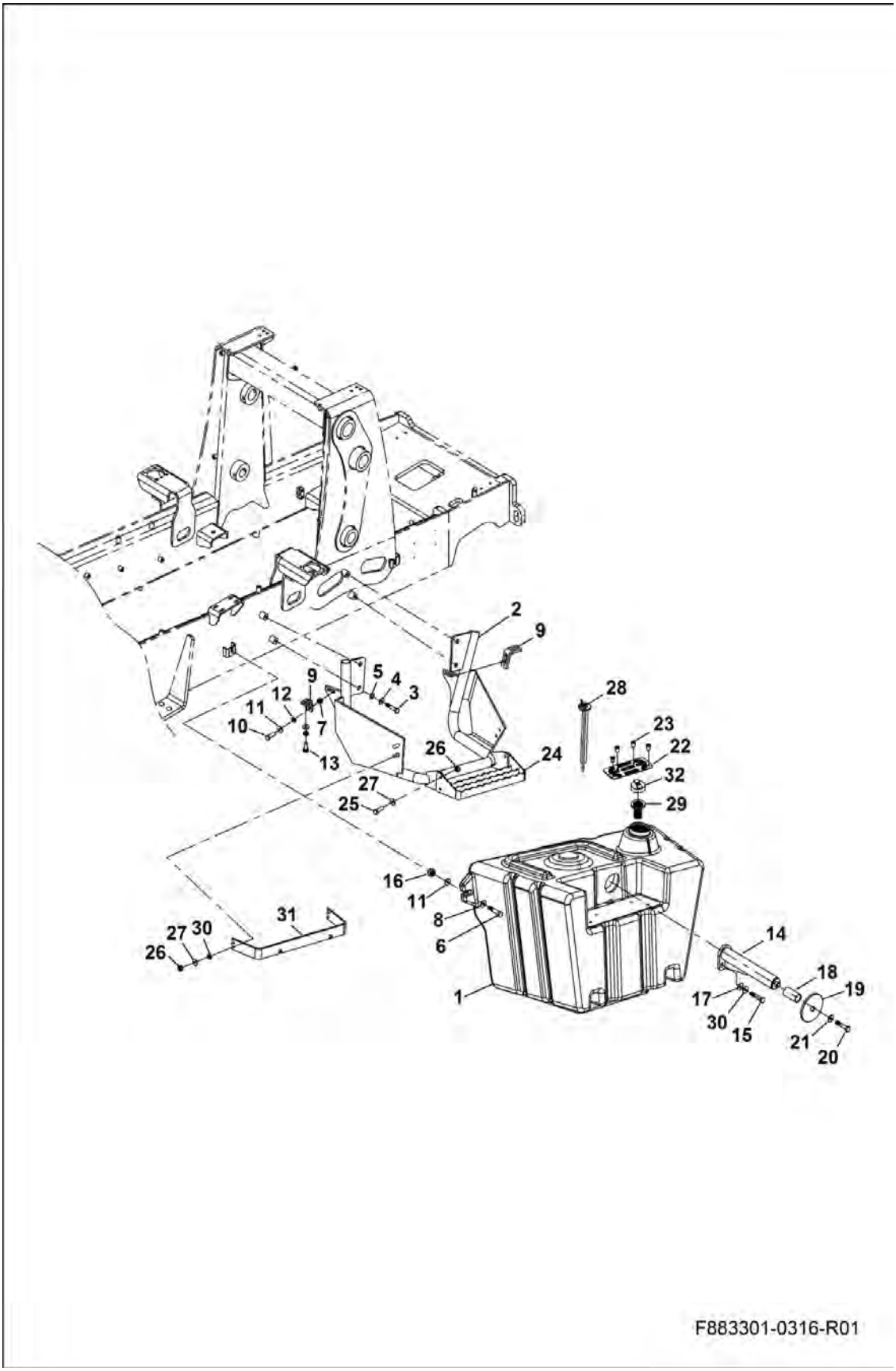

FUEL TANK (Cont'd)

Ref No	Part Number	Description	Remarks	Serial Number	Qty
1	7290350	FUEL TANK			1
2	7290351	PIPE			1
3	7290352	BOLT			4
4	7289999	WASHER			4
5	7290001	LOCK WASHER			4
6	7290354	BOLT			2
7	7290355	NUT			2
8	7290356	PLATE			2
9	7290357	BRACKET			2
10	7289515	BOLT			2
11	7289314	WASHER			4
12	7289635	LOCK WASHER			4
13	7289991	BOLT			2
14	7290358	PIN			1
15	7289849	BOLT			2
16	7289514	NUT			2
17	7289259	LOCK WASHER			2
18	7290359	PIPE			1
19	7290360	COWER			1
20	7290361	BOLT			1
21	7290362	WASHER			1
22	7290363	STEP PLATE			1
23	7289614	BOLT			4
24	7290342	STEP BOTTOM			1
25	7289279	BOLT			4
26	7289641	NUT			8
27	7288892	WASHER			12
28	7290364	LEVEL FLOAT			1
29	7290384	FILTER			1
30	7288891	LOCK WASHER			4
31	7290365	PLATE			1
32	7290338	CAP			1

HYDRAULIC TANK AND ITS CONNECTIONS

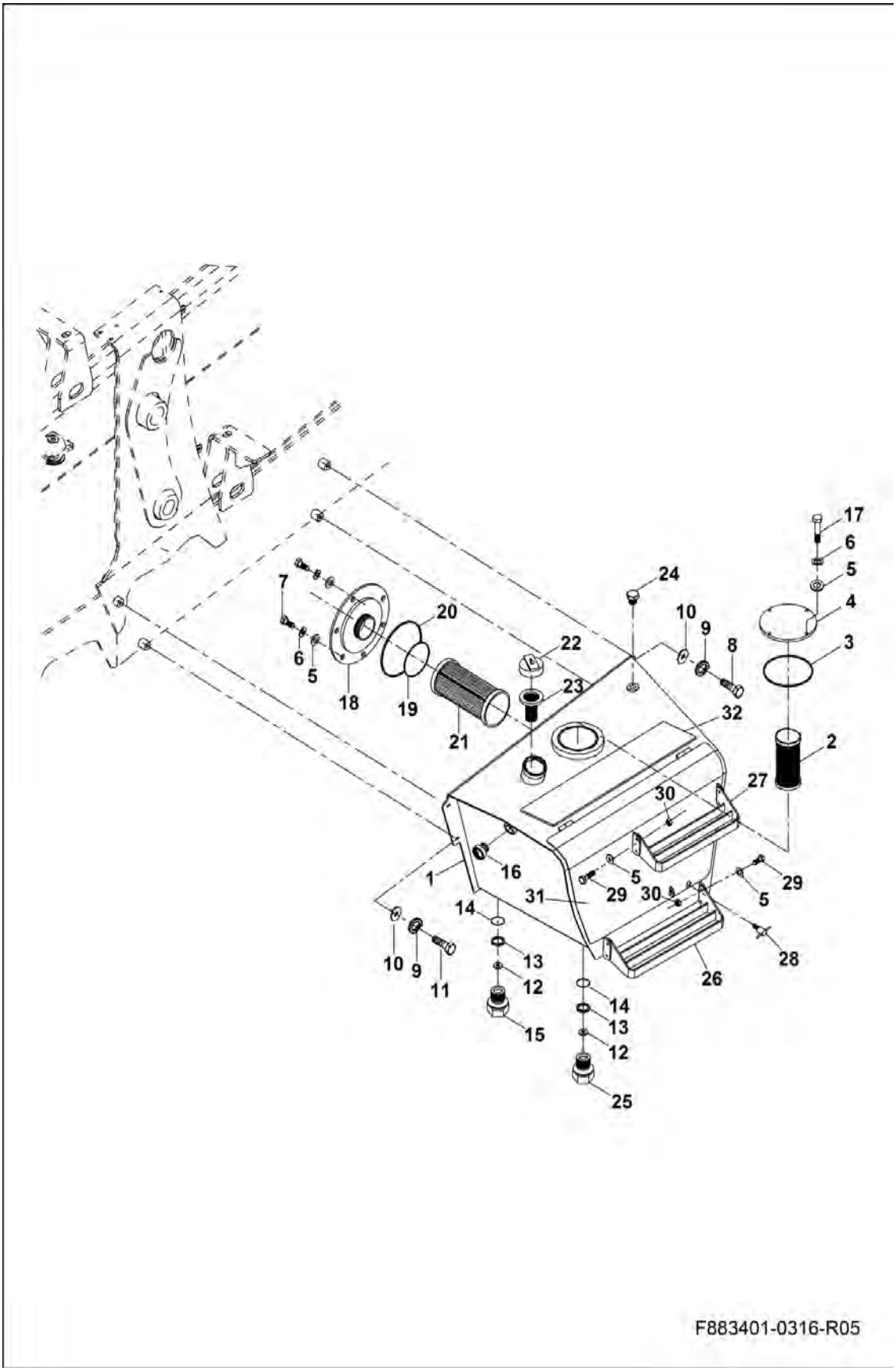

HYDRAULIC TANK AND ITS CONNECTIONS (Cont'd)

Ref No	Part Number	Description	Remarks	Serial Number	Qty
1	7290376	HYDRAULIC TANK			1
2	7290377	FILTER	suction		1
3	7290378	O-RING			1
4	7290379	CAP			1
5	7288892	WASHER			26
6	7288891	LOCK WASHER			10
7	7289261	BOLT			6
8	7290334	BOLT			3
9	7290335	WASHER			4
10	7290336	WASHER			4
11	7290380	BOLT			1
12	7290345	MAGNET			1
13	7290346	WASHER			1
14	7290347	O-RING			1
15	7290344	BLOCK			1
16	7290374	GAUGE			1
17	7288896	BOLT			4
18	7290381	FLANGE			1
19	7289755	O-RING			1
20	7290382	O-RING			1
21	7290371	FILTER	return		1
22	7290383	CAP	W/breather filter		1
23	7290384	FILTER			1
24	7290348	BLOCK			1
25	7289762	PLUG			1
26	7290342	STEP BOTTOM			81
27	7290341	STEP TOP			1
28	7290385	LOCK			1
29	7289279	BOLT			8
30	7289641	NUT			8
31	7292142	HYDRAULIC TANK COVER			1
32	7304138	STEP BAND	0.7 m		1

FRAME

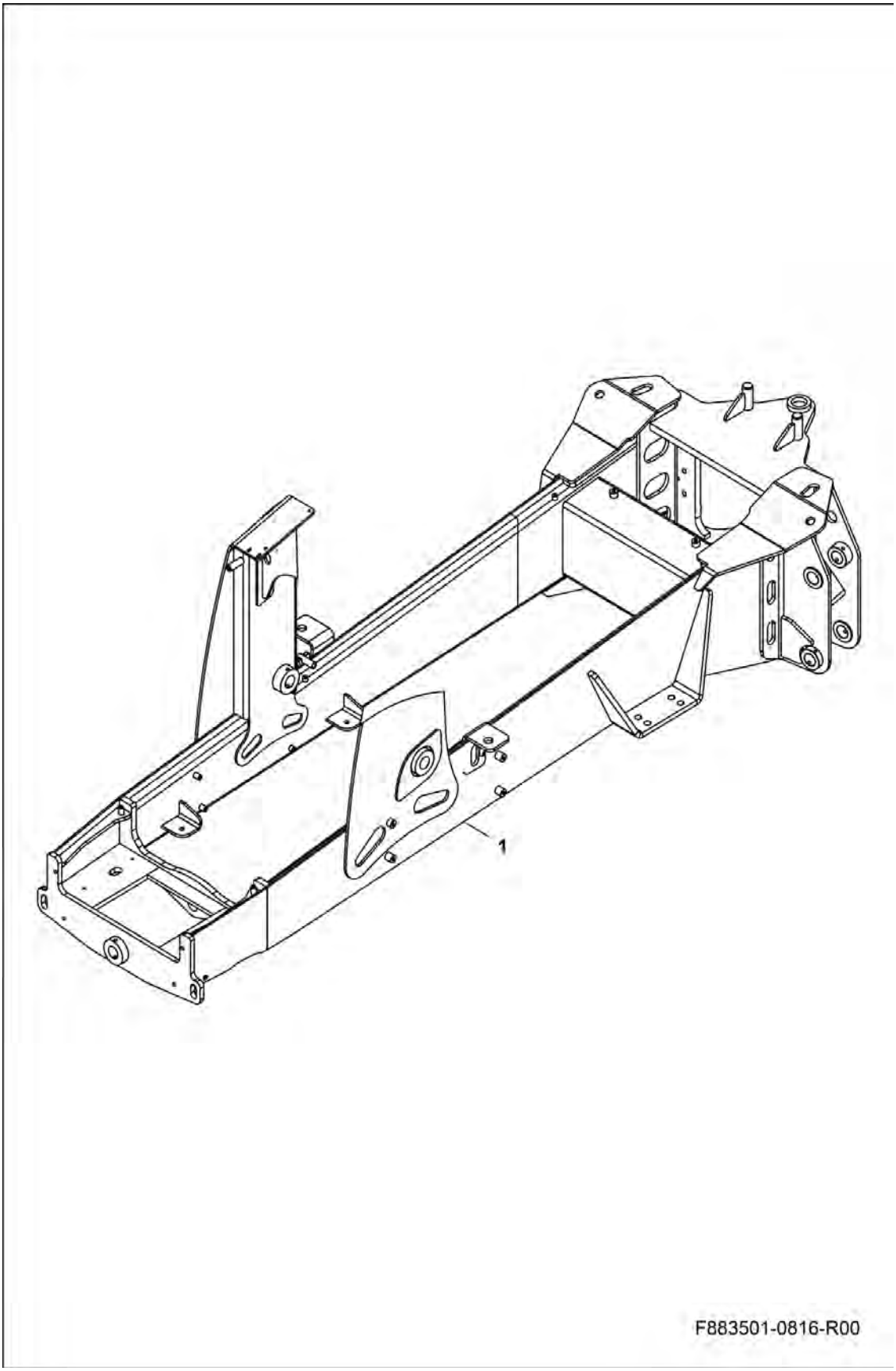

FRAME (Cont'd)

Ref No	Part Number	Description	Remarks	Serial Number	Qty
1	7311465	CHASSIS FRAME			1

DECALS
(INSIDE)

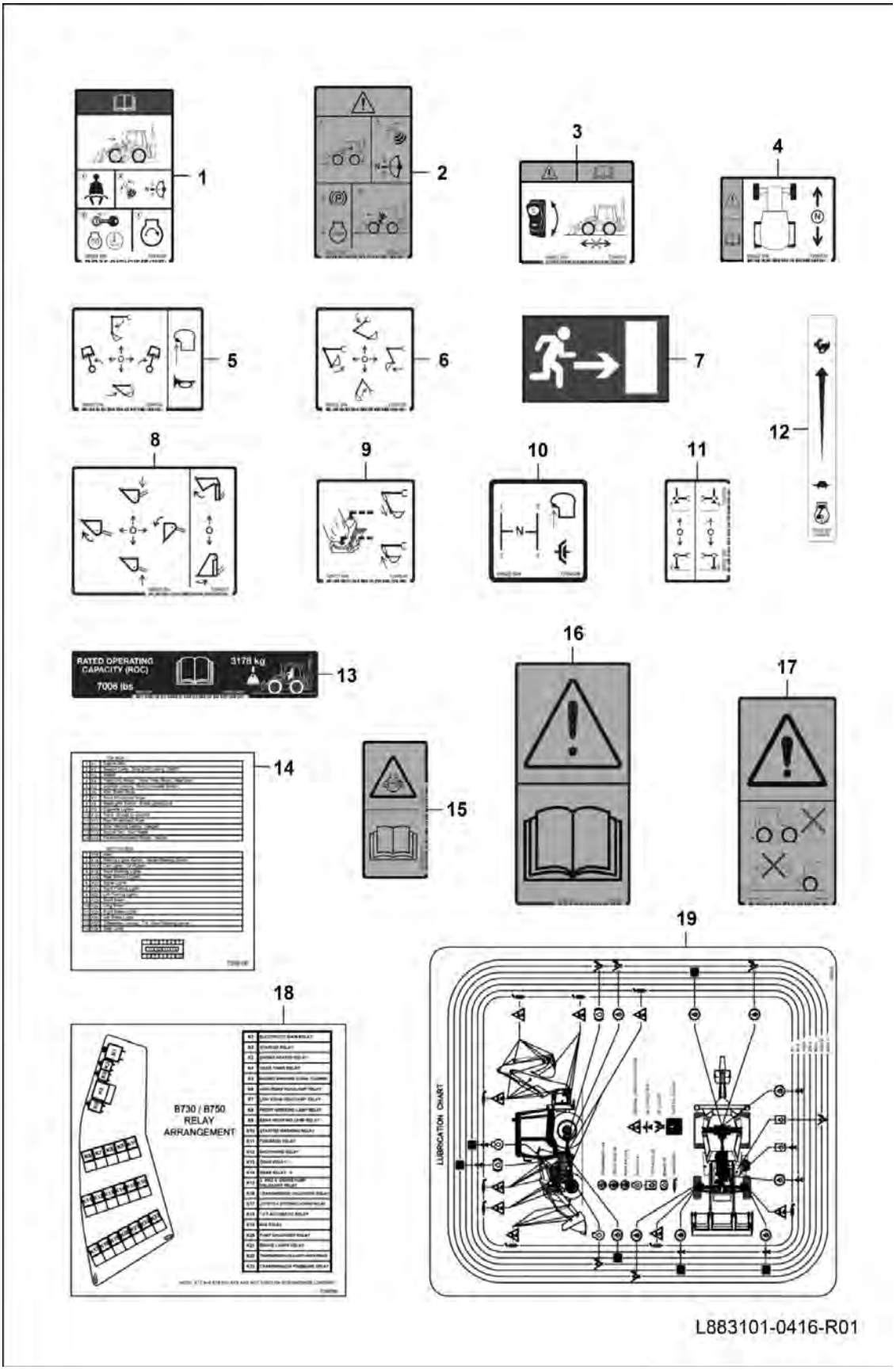

DECALS (Cont'd)
(INSIDE)

Ref No	Part Number	Description	Remarks	Serial Number	Qty
1	7294539	DECAL INSTRUCTION			1
2	7294528	DECAL WARNING			1
3	7314390	DECAL WARNING			1
4	7294538	DECAL WARNING			1
5	7313823	DECAL INSTRUCTION			1
6	7313822	DECAL INSTRUCTION			1
7	7169014	DECAL, EXIT			1
8	7294537	DECAL INSTRUCTION			1
9	7294530	DECAL INSTRUCTION			1
10	7294536	DECAL INSTRUCTION			1
11	7313819	DECAL INSTRUCTION			1
12	7294535	DECAL ENGINE RPM			1
13	7294542	DECAL ROC 3178			1
14	7298100	FUSE ARRANGEMENT			1
15	7294527	DECAL DANGER			1
16	7163221	DECAL, WARNING			1
17	7314391	DECAL WARNING			1
18	7298099	RELAY ARRANGEMENT			1
19	7314538	DECAL LUBRICANT			1

DECALS
(OUTSIDE)

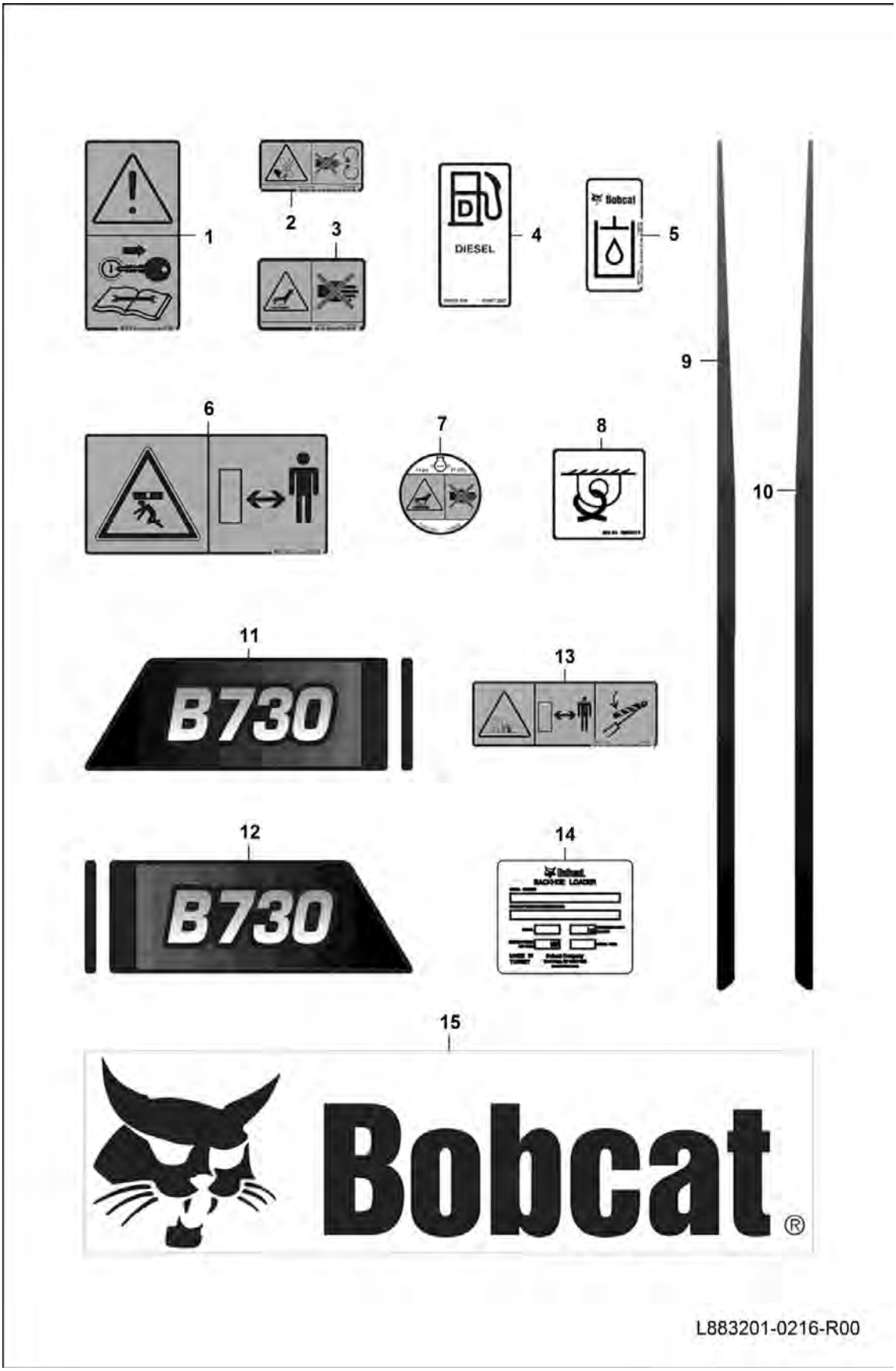

DECALS (Cont'd)
(OUTSIDE)

Ref No	Part Number	Description	Remarks	Serial Number	Qty
1	7163222	DECAL, WARNING			1
2	7120928	DECAL			1
3	7185935	DECAL, WARNING			1
4	6589739	DECAL 5			1
5	7120570	DECAL			1
6	6713507	DECAL			1
7	7169699	DECAL			1
8	6595014	DECAL			1
9	7294556	DECAL BACKHOE LOADER			1
10	7294555	DECAL BACKHOE LOADER			1
11	7294547	DECAL B730			1
12	7294548	DECAL B730			1
13	7294525	DECAL BACKHOE LOADER			1
14		DECAL SERIAL NUMBER	NLA		1
15	7294162	DECAL BOBCAT			1

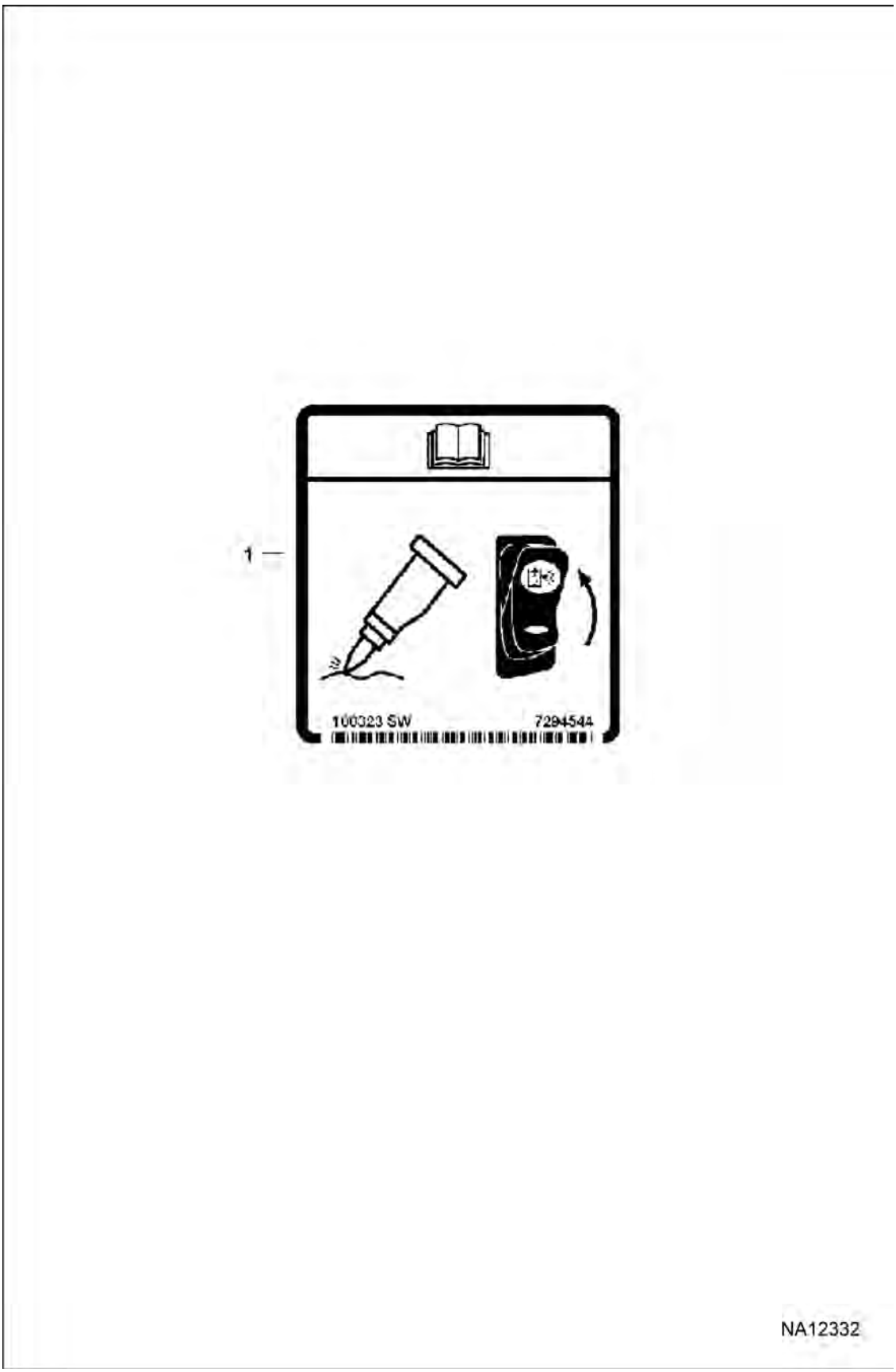
1
100323 SW
7294544
NA12332

DECALS (Cont'd)

Ref No	Part Number	Description	Remarks	Serial Number	Qty
1	7294544	DECAL HYD HAMMER			1

EXTERIOR POLYESTER AND ITS CONNECTIONS

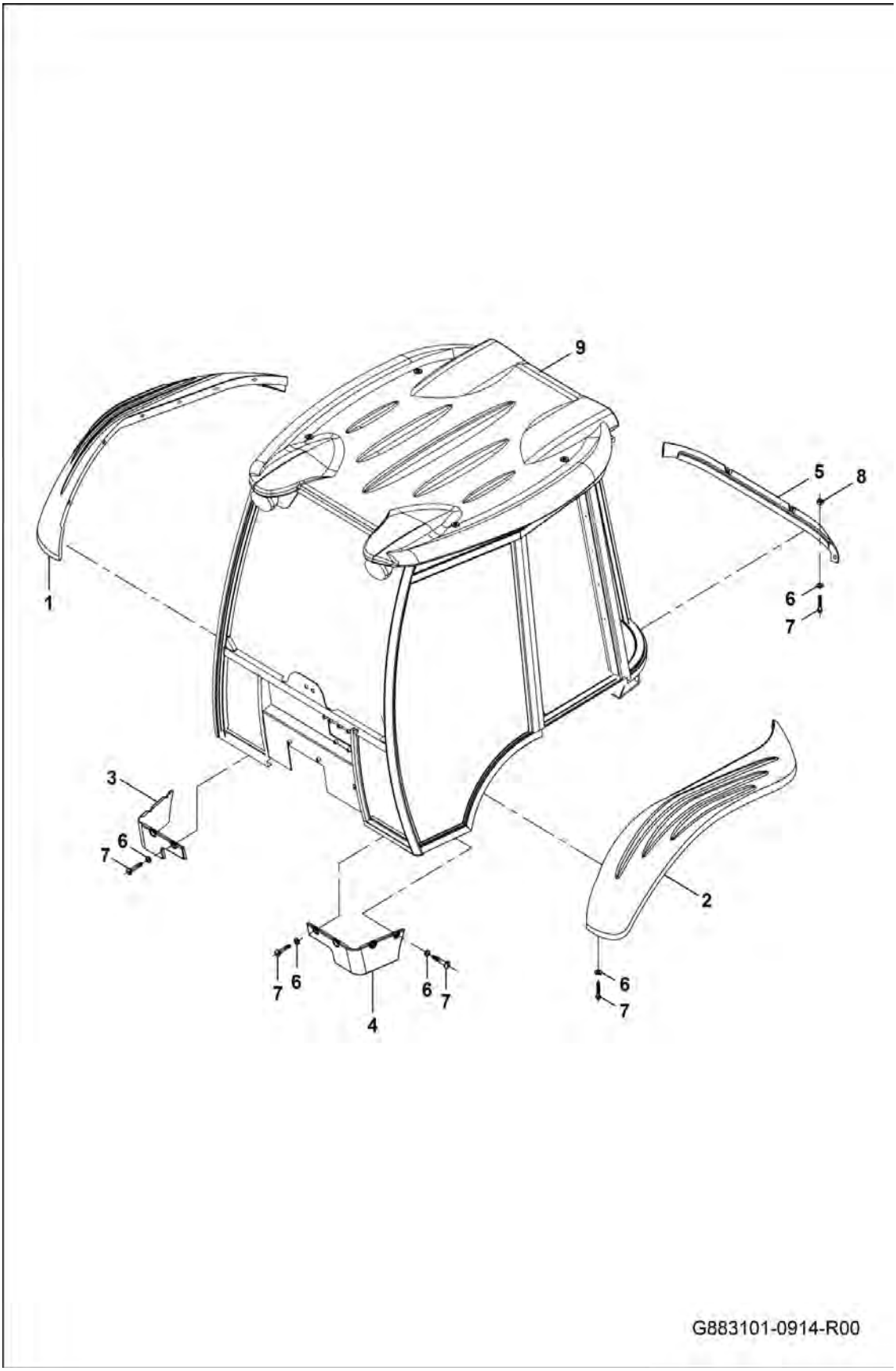

EXTERIOR POLYESTER AND ITS CONNECTIONS (Cont'd)

Ref No	Part Number	Description	Remarks	Serial Number	Qty
1	7292148	RIGHT REAR MUDGUARD			1
2	7292149	LEFT REAR MUDGUARD			1
3	7292150	RIGHT FRONT SKIRT POLYESTER			1
4	7292151	LEFT FRONT SKIRT POLYESTER			1
5	7292152	BACK SKIRT POLYESTER			1
6	7289268	WASHER			27
7	7289273	BOLT			27
8	7289263	NUT			2
9	7292153	CABIN ASS'Y			1
9	7299273	CANOPY CABIN ASSY	OPTIONAL		1

CABIN INTERIOR POLYESTER AND ITS CONNECTIONS

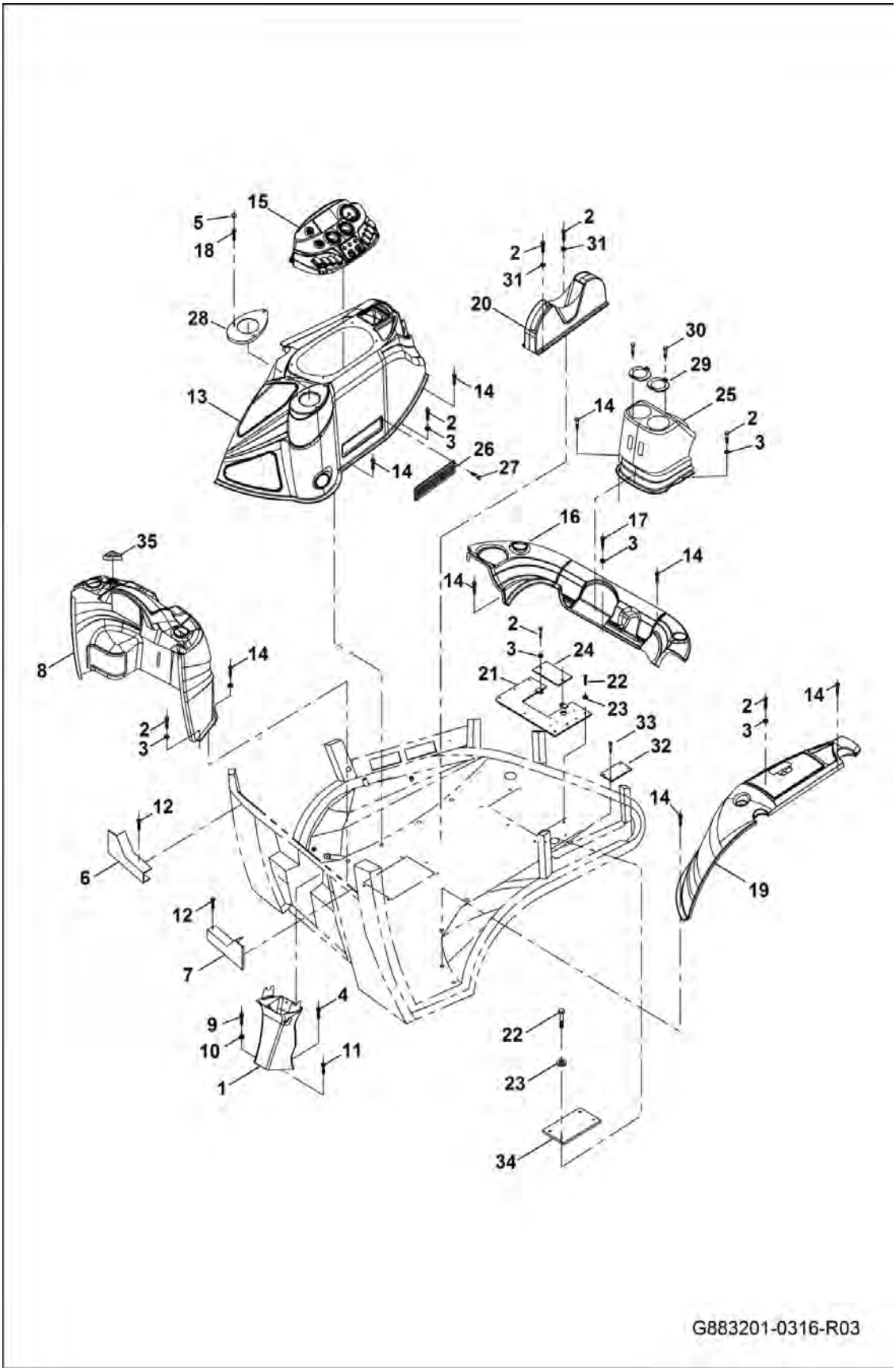

CABIN INTERIOR POLYESTER AND ITS CONNECTIONS (Cont'd)

Ref No	Part Number	Description	Remarks	Serial Number	Qty
1	7292154	POLYESTER			1
2	7289609	BOLT			16
3	7289598	WASHER			14
4	7290407	BOLT			1
5	7289543	WASHER			3
6	7292156	FRONT RIGHT B. POLYESTER			1
7	7304309	FRONT LEFT B. POLYESTER			1
8	7304310	FRONT CONSOLE GROUP			1
9	7289273	BOLT			2
10	7288892	WASHER			2
11	7289272	BUSH			1
12	7304311	BOLT			2
13	7304312	RIGHT CONSOLE GROUP			1
14	7304144	BOLT			16
15	7291259	POLYESTER			1
16	7304313	RIGHT R. CORNER POLYESTER			1
17	7293561	BOLT			2
18	7289542	BOLT			3
19	7304314	LEFT CONSOLE GROUP			1
20	7292166	HAND BRAKE CONSOLE GROUP			1
21	7292167	COVER			1
22	7289279	BOLT			9
23	7289262	WASHER			9
24	7292168	COVER SHEET			1
25	7304315	REAR CONSOLE GROUP			1
26	7292170	COVER			1
27	7292171	BOLT			6
28	7304316	JOYSTICK COVER			1
29	7304140	PLATE			2
30	7290413	BOLT			4
31	7289507	WASHER			4
32	7292173	COVER SHEET			2
33	7289614	BOLT			8
34	7292174	COVER SHEET			1
35	7304317	CUP HOLDER			1

CABIN AND FRAME CONNECTIONS

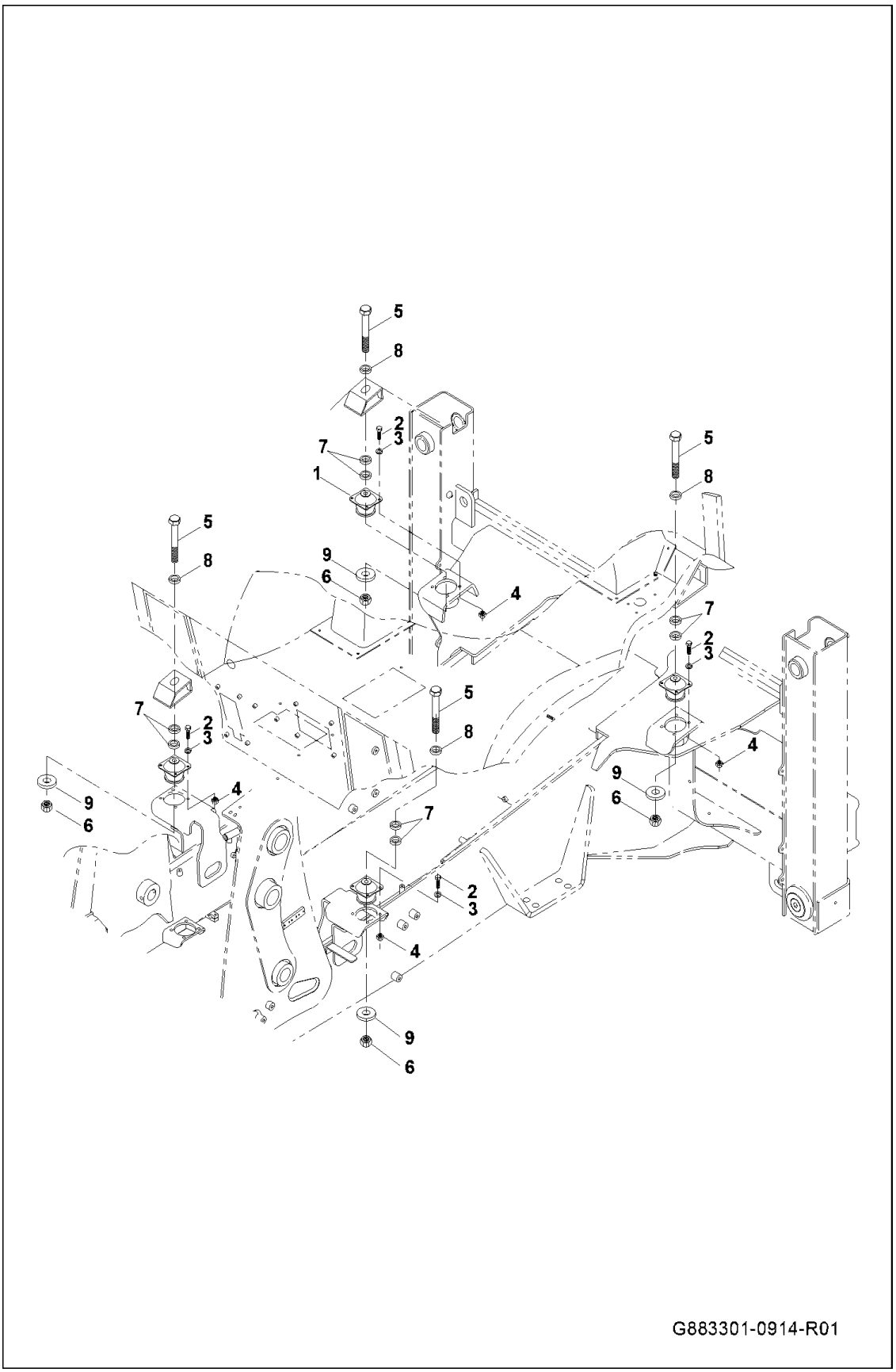

CABIN AND FRAME CONNECTIONS (Cont'd)

Ref No	Part Number	Description	Remarks	Serial Number	Qty
1	7292175	RUBBER BUMPER			4
2	7289258	BOLT			16
3	7289259	LOCK WASHER			16
4	7289637	NUT			16
5	7292176	BOLT			4
6	7288885	NUT			6
7	7292177	WASHER			8
8	7288884	WASHER			4
9	7290990	WASHER			4

HEATER AND ITS CONNECTIONS

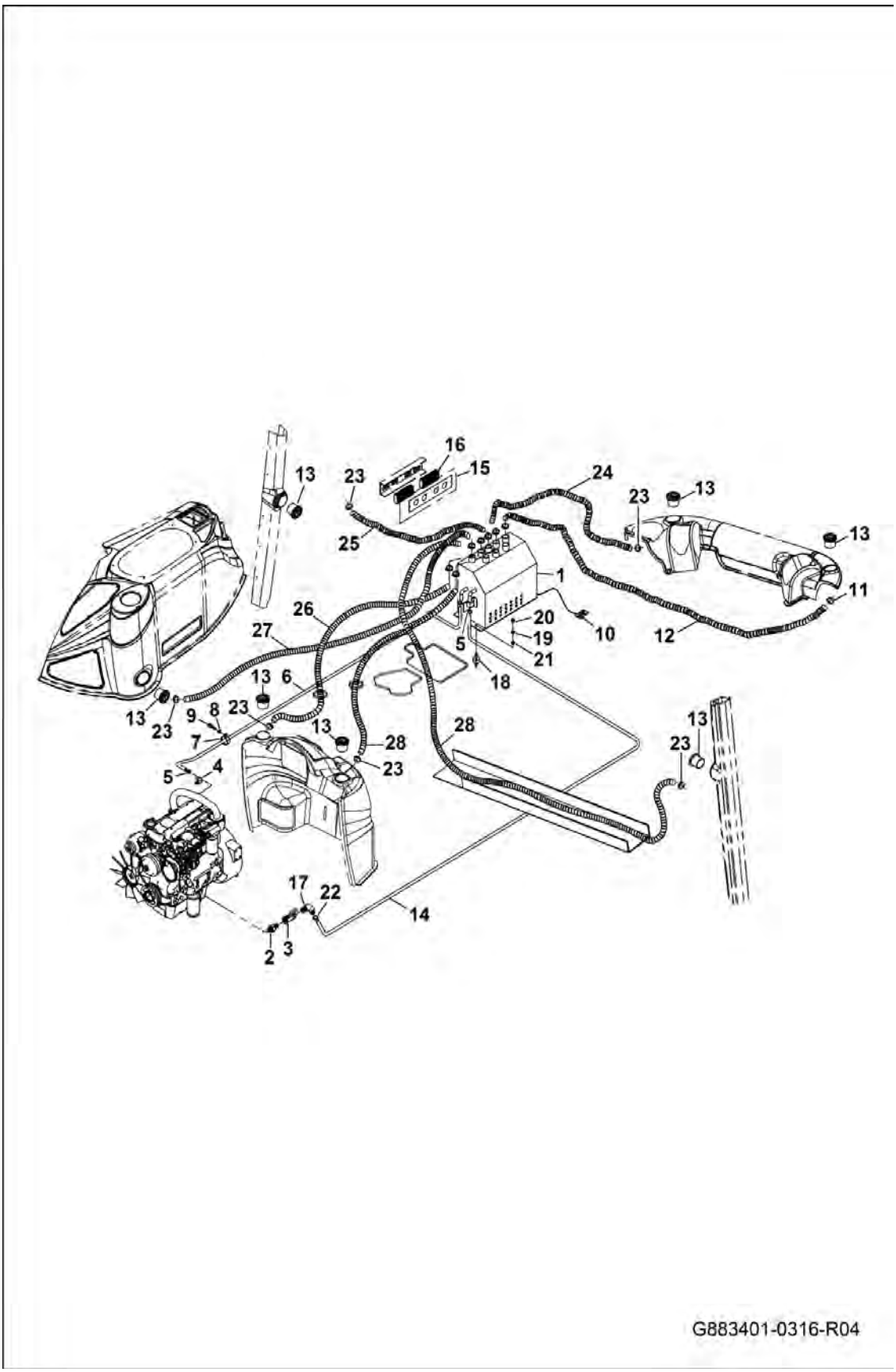

HEATER AND ITS CONNECTIONS (Cont'd)

Ref No	Part Number	Description	Remarks	Serial Number	Qty
1	7292179	HEATER			1
2	7290429	ADAPTER			1
3	7290430	VALVE			1
4	7290431	ADAPTER			1
5	7290433	CLAMP			2
6	7304322	HOSE	2.5 m		1
7	7289303	CLAMP			1
8	7289604	WASHER			1
9	7289691	BOLT			1
10	7291256	HEATER BUTTON			1
11	7292181	CLAMP			2
12	7290426	HEATER HOSE	2.5 m		1
13	7290422	ROUND BLOWER			6
14	7304322	HOSE	2.3 m		1
15	7304324	AIR-CONDITIONING PLATE			1
16	7292187	AIR FILTER			2
17	7290425	ADAPTER			1
18	7292188	WEDGE			4
19	7292189	LOCK WASHER			4
20	7289263	NUT			4
21	7292190	WASHER			4
22	7290432	CLAMP			1
23	7290421	CLAMP			8
24	7290427	HEATER HOSE	1.2 m		1
25	7290427	HEATER HOSE	1.3 m		1
26	7290427	HEATER HOSE	2.4 m		1
27	7290427	HEATER HOSE	1 m		1
28	7290427	HEATER HOSE	6.6 m		1

SEAT PLATE AND ITS CONNECTIONS

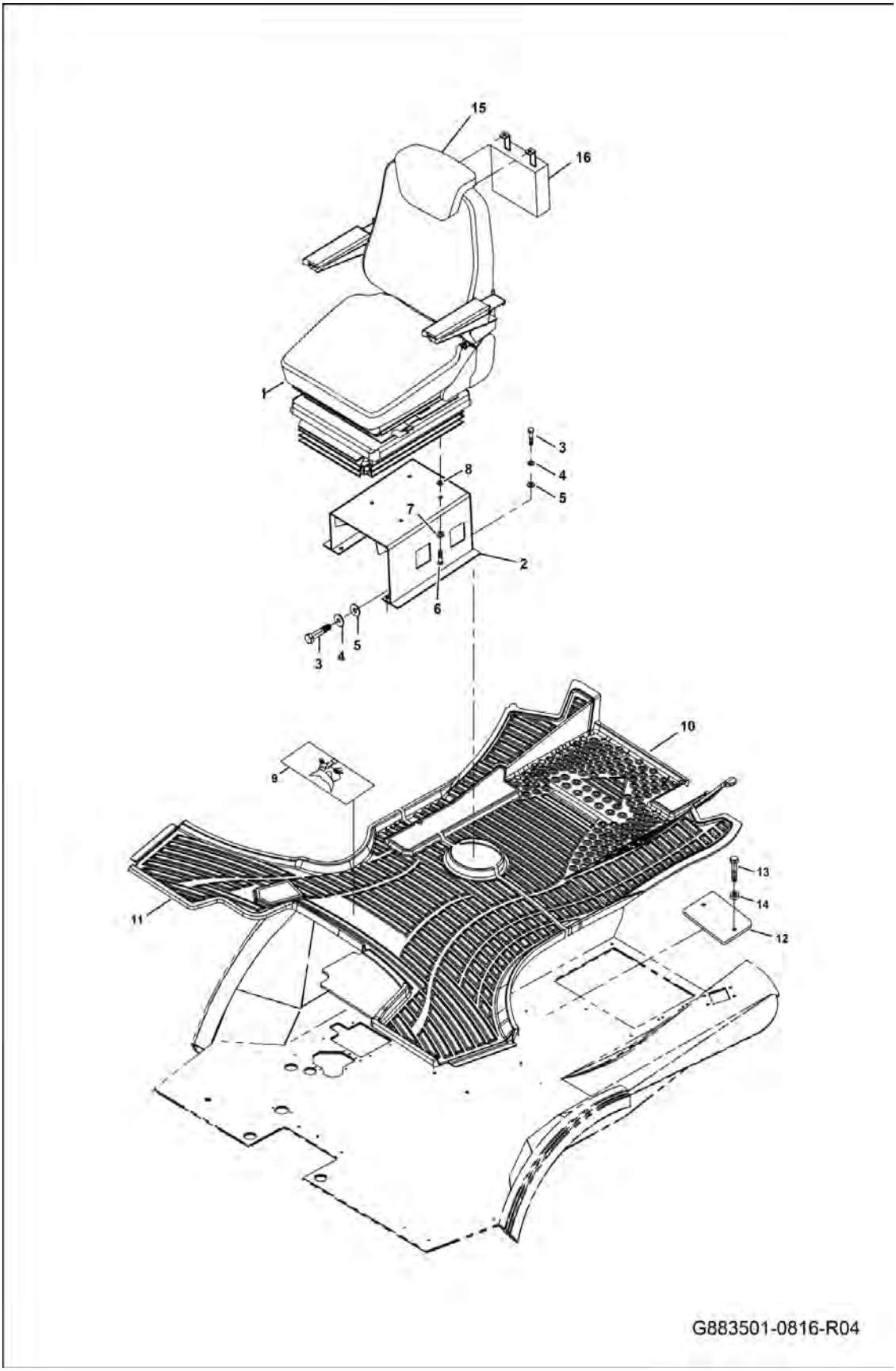

SEAT PLATE AND ITS CONNECTIONS (Cont'd)

Ref No	Part Number	Description	Remarks	Serial Number	Qty
1	7292191	SEAT			1
2	7292193	PLATE			1
3	7289258	BOLT			4
4	7289259	LOCK WASHER			4
5	7289278	WASHER			4
6	7289261	BOLT			4
7	7288891	LOCK WASHER			4
8	7288892	WASHER			4
9	7292194	COVER			1
10	7292196	MAT (REAR)			1
11	7292198	MAT (FRONT)			1
12	7292199	PLATE			1
13	7291292	BOLT			2
14	7289598	WASHER			2
15	7292200	SEAT HEAD			1
16	7304146	BAG			1

SEAT

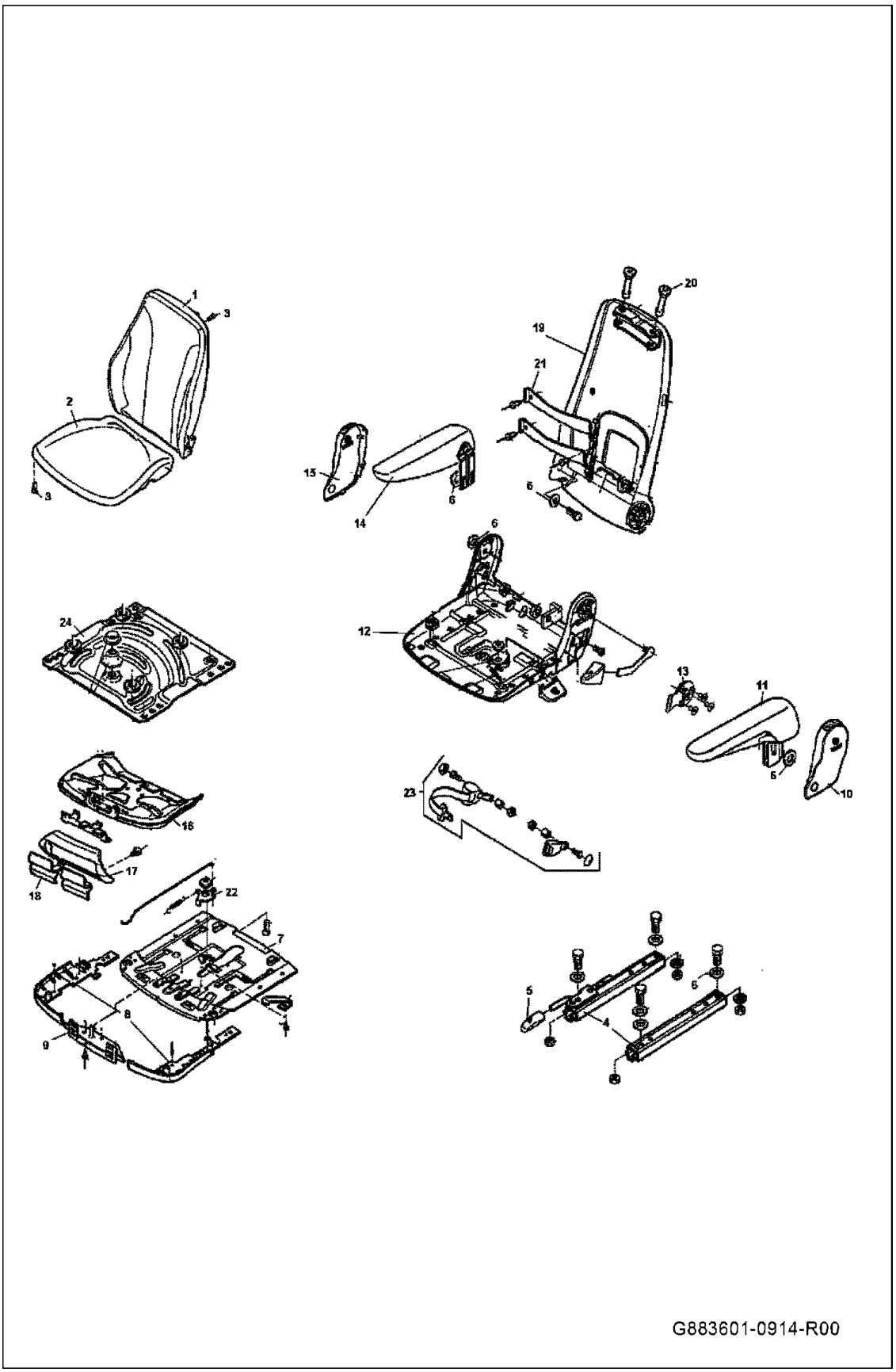
1
3
2
3
20
19
21
15
14
6
6
6
12
24
13
11
6
10
23
16
17
18
22
7
8
9
5
6
4
G883601-0914-R00

SEAT (Cont'd)

Ref No	Part Number	Description	Remarks	Serial Number	Qty
1	7292201	BACK PART			1
2	7292202	SEAT PART			1
3	7292203	BOLT			10
4	97157.2	Seat Rails			1
5	7292205	HANDLE			1
6	7292206	WASHER			6
7	7292207	PLATE			1
8	7292208	COVER			1
9	7292209	LOCKING			1
10	7292210	SIDE COVER			1
11	7292211	ARM-REST			1
12	7292212	SEAT PART			1
13	7292213	ADAPTER			1
14	7292214	ARM-REST			1
15	7292215	SIDE COVER			1
16	7292216	PLATE			1
17	7292217	COVER			1
18	7292218	HANDLE			1
19	7292219	BACK PART			1
20	7292220	HEAD PART			1
21	7292221	PLATE			1
22	7292222	ADJUST PARTS			1
23	7292223	SEAT BELT			1
24	7292224	TURN TABLE			1

SEAT

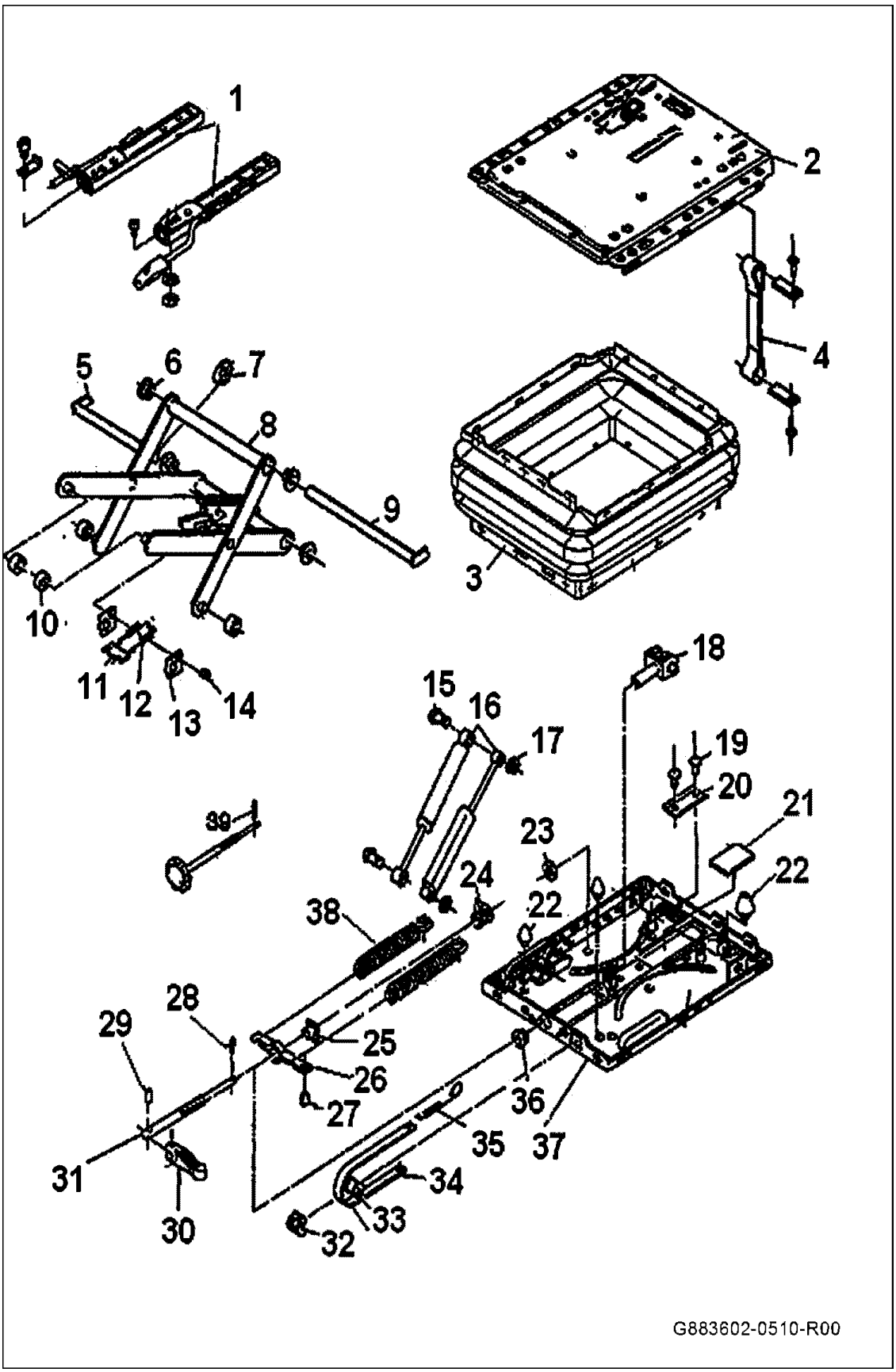
1
2
3
4
5
6
7
8
9
10
11
12
13
14
15
16
17
18
19
20
21
22
23
24
25
26
27
28
29
30
31
32
33
34
35
36
37
38
39
G883602-0510-R00

SEAT (Cont'd)

Ref No	Part Number	Description	Remarks	Serial Number	Qty
1	97157.2	Seat Rails			1
2	7292225	UPPER FLEXIBLE PLATE			1
3	7292226	RUBBER COVER			1
4	7292227	BELT			1
5	7292228	PIN			1
6	7292229	BUSHING			4
7	7292230	SEGMENT			1
8	7292231	SCISSORS			1
9	7292232	PIN			1
10	7292233	ROLLER			4
11	7292234	SUPPORT PLATE			1
12	7292235	SPRING			2
13	7292236	PLATE			2
14	7292237	PIN			1
15	7292238	PIN			2
16	97118.4	Cylinder			1
17	7292240	SEGMENT			2
18	7292241	LEVER			1
19	7292242	RIVET			2
20	7292243	PLATE			1
21	7292244	RUBBER PART			1
22	7292245	RUBBER BUMPER			1
23	7292246	WASHER			1
24	7292247	HOUSING			1
25	7292248	NUT			1
26	7292249	SPRING HANDLE			1
27	7292250	WEDGE			1
28	7292251	PIN			1
29	97132.5	Pin			1
30	7292253	HANDLE			1
31	7292254	HANDLE CONNECTION PARTS			1
32	7292255	GAUGE SPACE			1
33	7292256	ROLLER			1
34	7292257	WEIGHT GAUGE			1
35	7292258	SPRING			1
36	7292259	BUSHING			1
37	7292260	BOTTOM FLEXIBLE PART			1
38	97127.5	Spring			2

CABIN AND FRONT ASSEMBLY

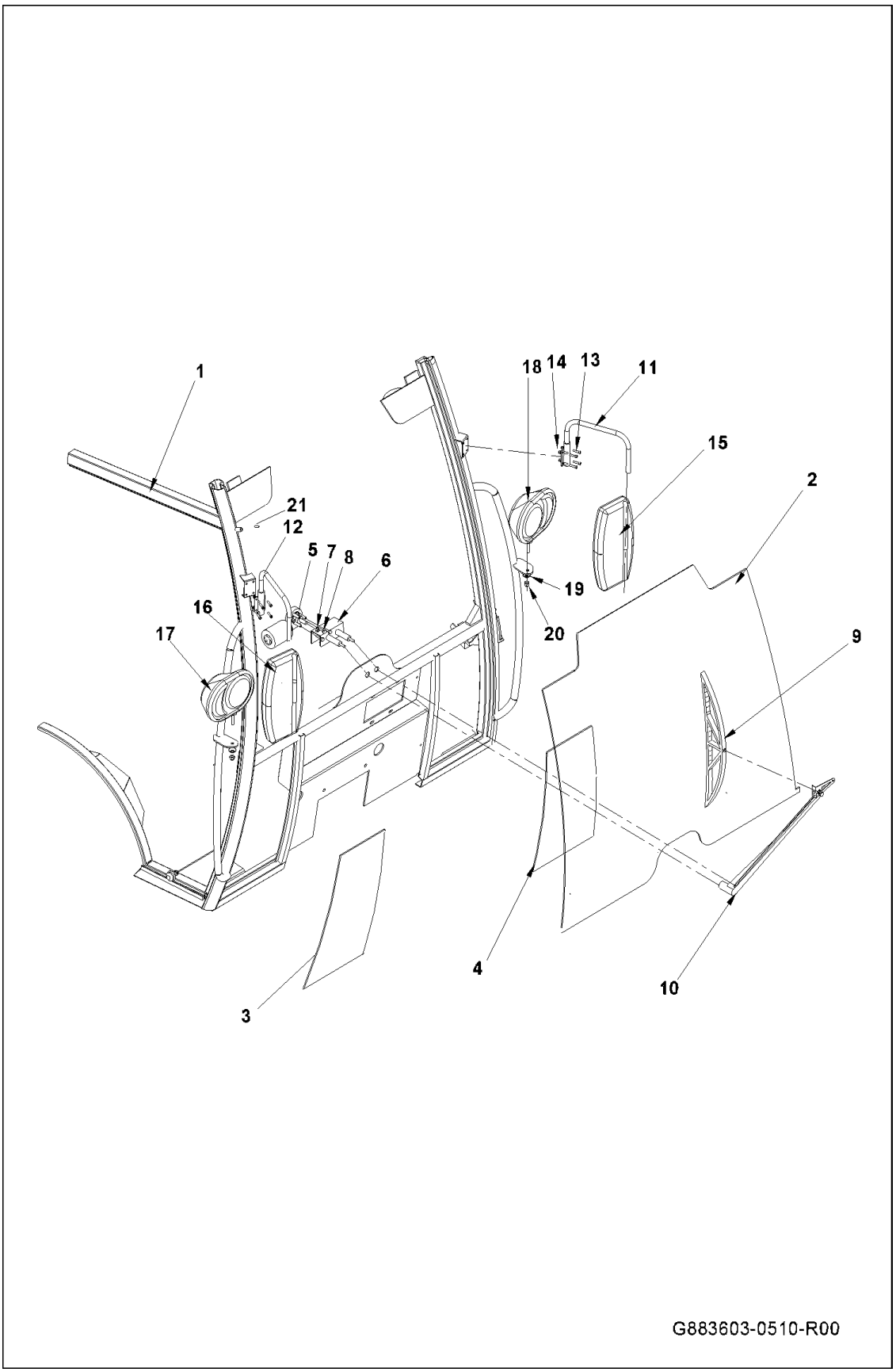

CABIN AND FRONT ASSEMBLY (Cont'd)

Ref No	Part Number	Description	Remarks	Serial Number	Qty
1	7292262	CABIN FRAME			1
2	7292263	WINDSHIELD			1
3	7292264	BOTTOM WINDSHIELD (RIGHT)			1
4	7292265	BOTTOM WINDSHIELD (LEFT)			1
5	7292266	FRONT WIPER MOTOR			1
6	7292267	FRONT WIPER MECHANISM			1
7	7292268	NUT			1
8	7292269	BOLT			3
9	7292270	WINDSHIELD WIPER BLADE			1
10	7292271	WINDSHIELD WIPER ARM			1
11	7292272	R. VIEW MIRROR H. (LEFT)			1
12	7292273	R. VIEW MIRROR H. (RIGHT)			1
13	7292274	HEAD SOCKET CAP SCREW			8
14	7292275	FIBER NUT			8
15	7292276	REAR VIEW MIRROR (LEFT)			1
16	7292277	REAR VIEW MIRROR (RIGHT)			1
17	7290573	BOTTOM HEADLIGHT (RIGHT)			1
18	7290570	BOTTOM HEADLIGHT (LEFT)			1
19	7292278	BOTTOM HEADLGHT C. WASHER			2
20	7292279	FIBER NUT			2
21	7292280	WATER NOZZLE			1

CABIN RIGHT REAR SIDE DOOR FRAME ASSEMBLY

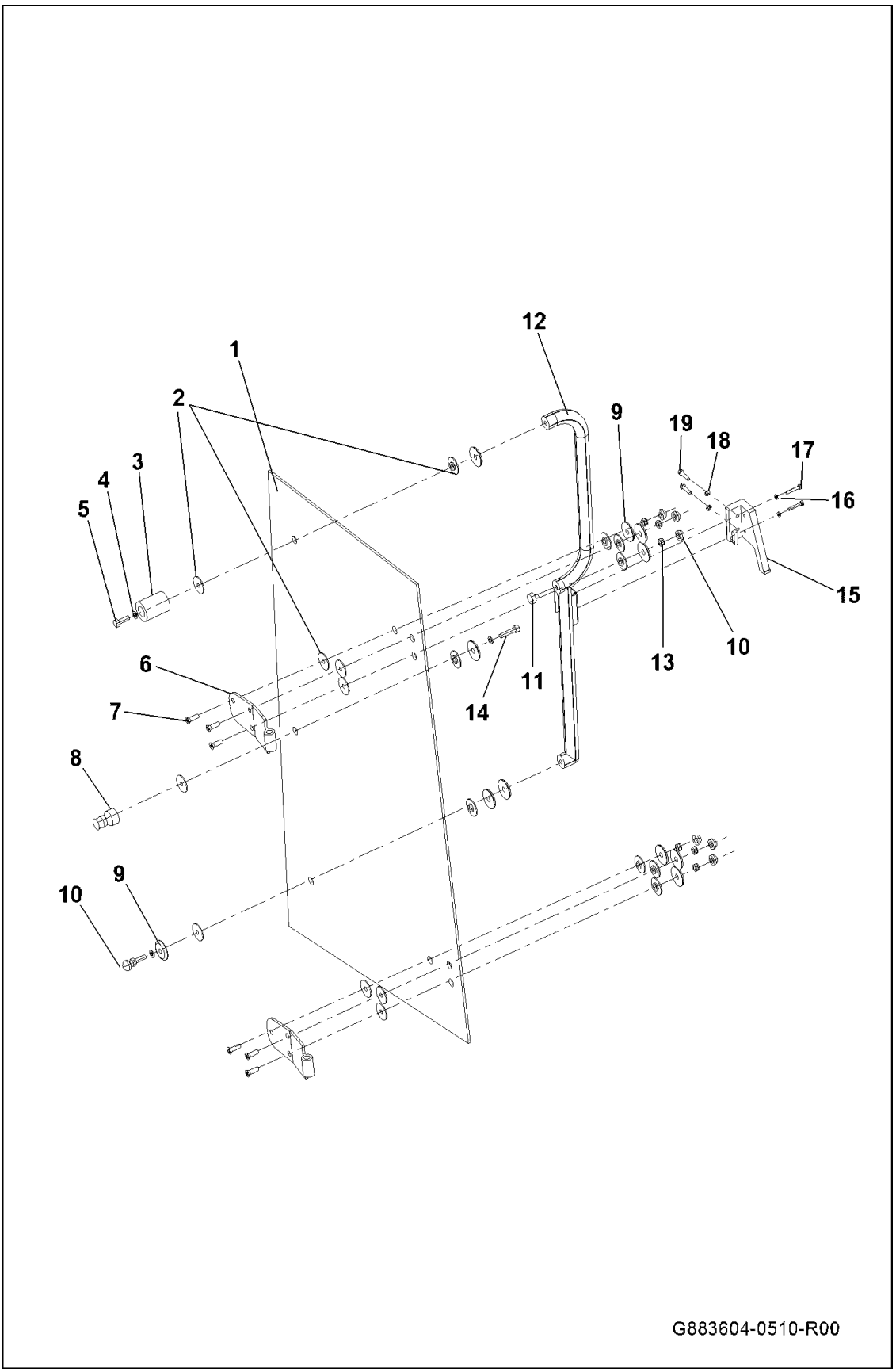

CABIN RIGHT REAR SIDE DOOR FRAME ASSEMBLY (Cont'd)

Ref No	Part Number	Description	Remarks	Serial Number	Qty
1	7292281	SIDE GLASS (RIGHT)			1
2	7292282	GLASS WASHER			18
3	7292283	SIDE GLASS BACK LOCKING			1
4	7292284	WASHER			3
5	7292285	BOLT			2
6	7292286	SIDE GLASS DOOR HINGE STEEL			2
7	7292287	COUNTERS. STAR-HEAD BOLT			6
8	7292288	SIDE GLASS BACK LOCKING			1
9	7292289	GLASS WASHER			11
10	7292290	PLASTIC STOPPER			7
11	7292291	RUBBER BLOCK			1
12	7292292	WELDED SIDE HANDLE PIPE			1
13	7292293	FIBER NUT			6
14	7292294	BOLT			1
15	7292295	SIDE GLASS LOCK (RIGHT)			1
16	7292296	WASHER			2
17	7292297	BOLT			2
18	7292298	WASHER			2
19	7292299	BOLT			2

CABIN RIGHT DOOR FRAME ASSEMBLY

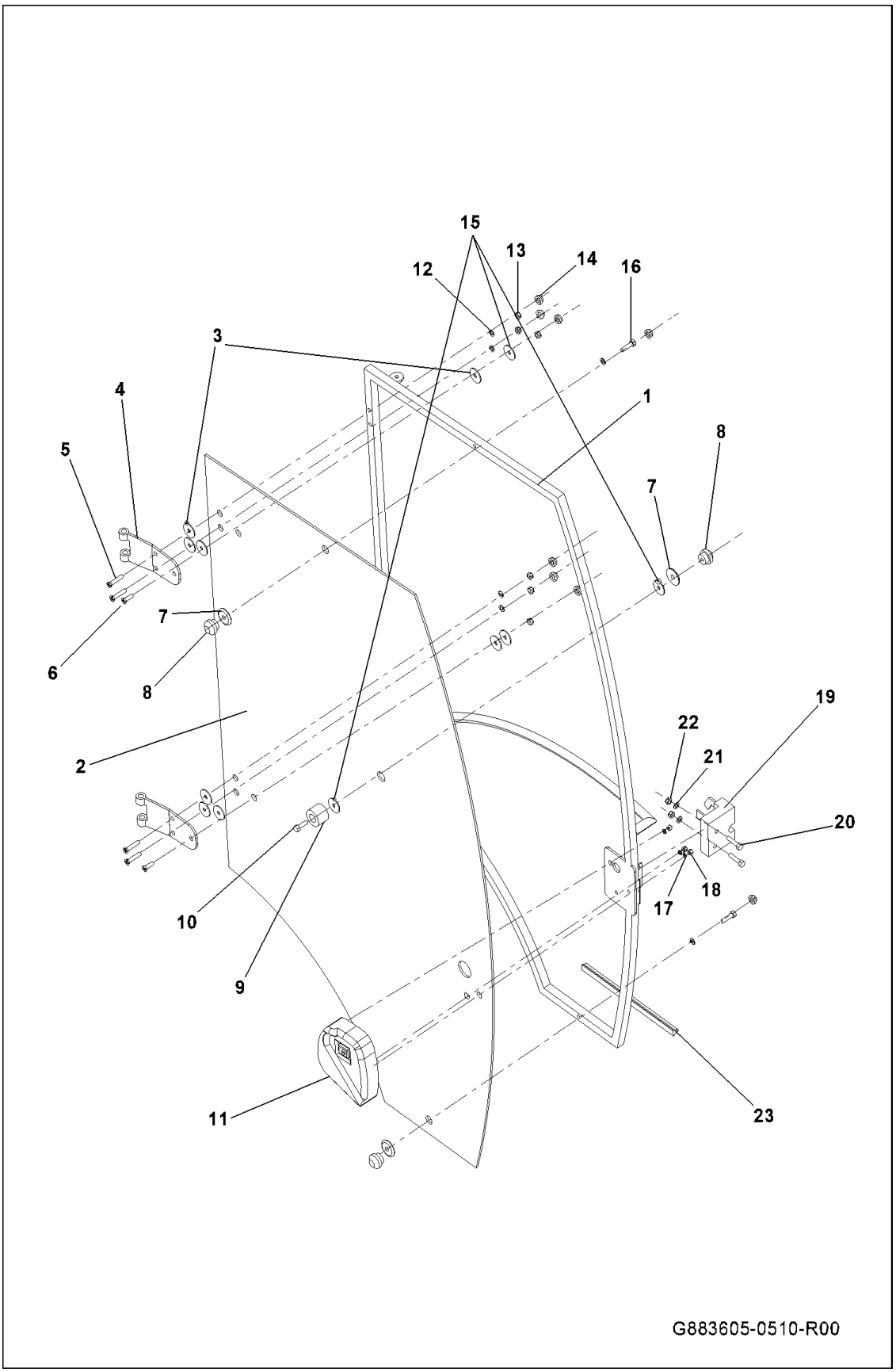

CABIN RIGHT DOOR FRAME ASSEMBLY (Cont'd)

Ref No	Part Number	Description	Remarks	Serial Number	Qty
1	7292300	DOOR PROFIL WELDED FRAME			1
2	7292301	DOOR GLASS (RIGHT)			1
3	7292302	GLASS WASHER			8
4	7292303	DOOR HINGE STEEL			2
5	7292304	COUNTERS. STAR-HEAD BOLT			4
6	7292305	COUNTERS. STAR-HEAD BOLT			2
7	7292306	GLASS PLASTIC NUT WASHER			3
8	7292307	GLASS PLASTIC NUT			3
9	7292308	BACK-LOCKING WEDGE			3
10	7292309	BOLT			1
11	7292310	DOOR HANDLE (RIGHT)			1
12	7292311	WASHER			6
13	7292312	FIBER NUT			6
14	7292313	PLASTIC STOPPER			8
15	7292314	GLASS WASHER			4
16	7292315	BOLT			2
17	7292316	WASHER			3
18	7292317	FIBER NUT			3
19	7292318	DOOR LOCK (RIGHT)			1
20	7292319	BOLT			2
21	7292320	WASHER			2
22	7292321	FIBER NUT			2
23	7292322	DOOR GLASS RUBBER			1

CABIN RIGHT SIDE ASSEMBLY

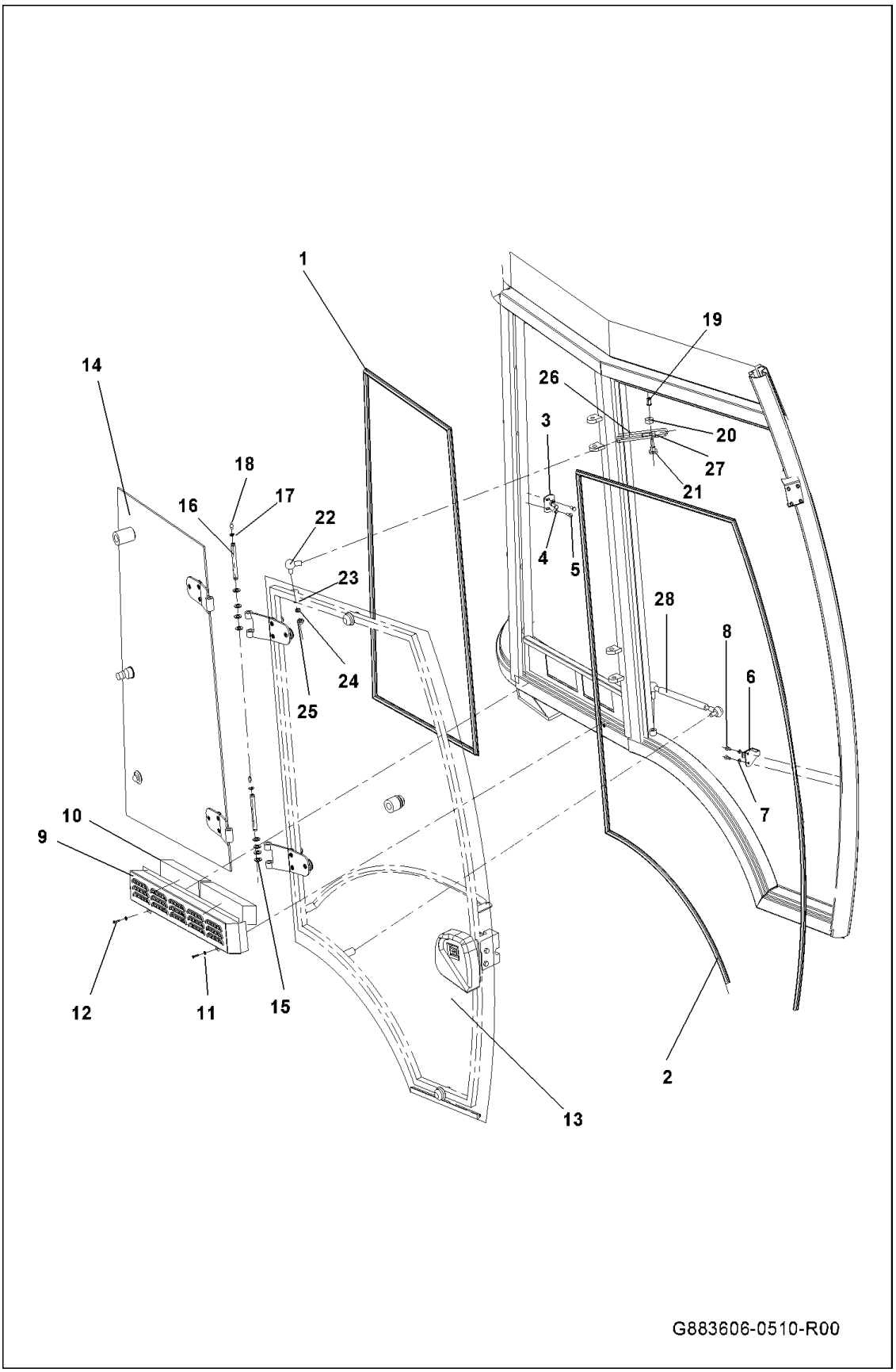

CABIN RIGHT SIDE ASSEMBLY (Cont'd)

Ref No	Part Number	Description	Remarks	Serial Number	Qty
1	7292323	R. REAR SIDE FRAME RUBBER			-
2	7292324	RIGHT DOOR FRAME RUBBER			-
3	7292325	REAR SIDE LOCK STRIKER			1
4	7292326	WASHER			2
5	7292327	BOLT			2
6	7292328	DOOR LOCK STRIKER			1
7	7292329	WASHER			2
8	7292330	BOLT			2
9	7292331	VENTILATION FILTER BOX			1
10	7292332	VENTILATION FILTER			2
11	7292333	STEEL SCREW WASHER			2
12	7292334	STEEL SCREW			2
13	7292335	RIGHT DOOR FRAME			1
14	7292336	RIGHT REAR SIDE DOOR FRAME			1
15	7292337	HINGE WASHER			8
16	7292338	HINGE SHAFT			2
17	7292339	PISTON RING			2
18	7292340	GREASE NIPPLE			2
19	7292341	RIVET NUT			1
20	7292342	DOOR STOPPER WASHER			1
21	7292343	DOOR STOPPER GUIDE			1
22	7292344	DOOR STOPPER JOINT			1
23	7292345	WASHER			1
24	7292346	FIBER NUT			1
25	7292347	PLASTIC STOPPER			1
26	7292348	STOPPER			1
27	7292349	ALLEN HEAD BOLT			1
28	7292350	DOOR SHOCK ABSORBER			1

CABIN LEFT REAR SIDE DOOR FRAME ASSEMBLY

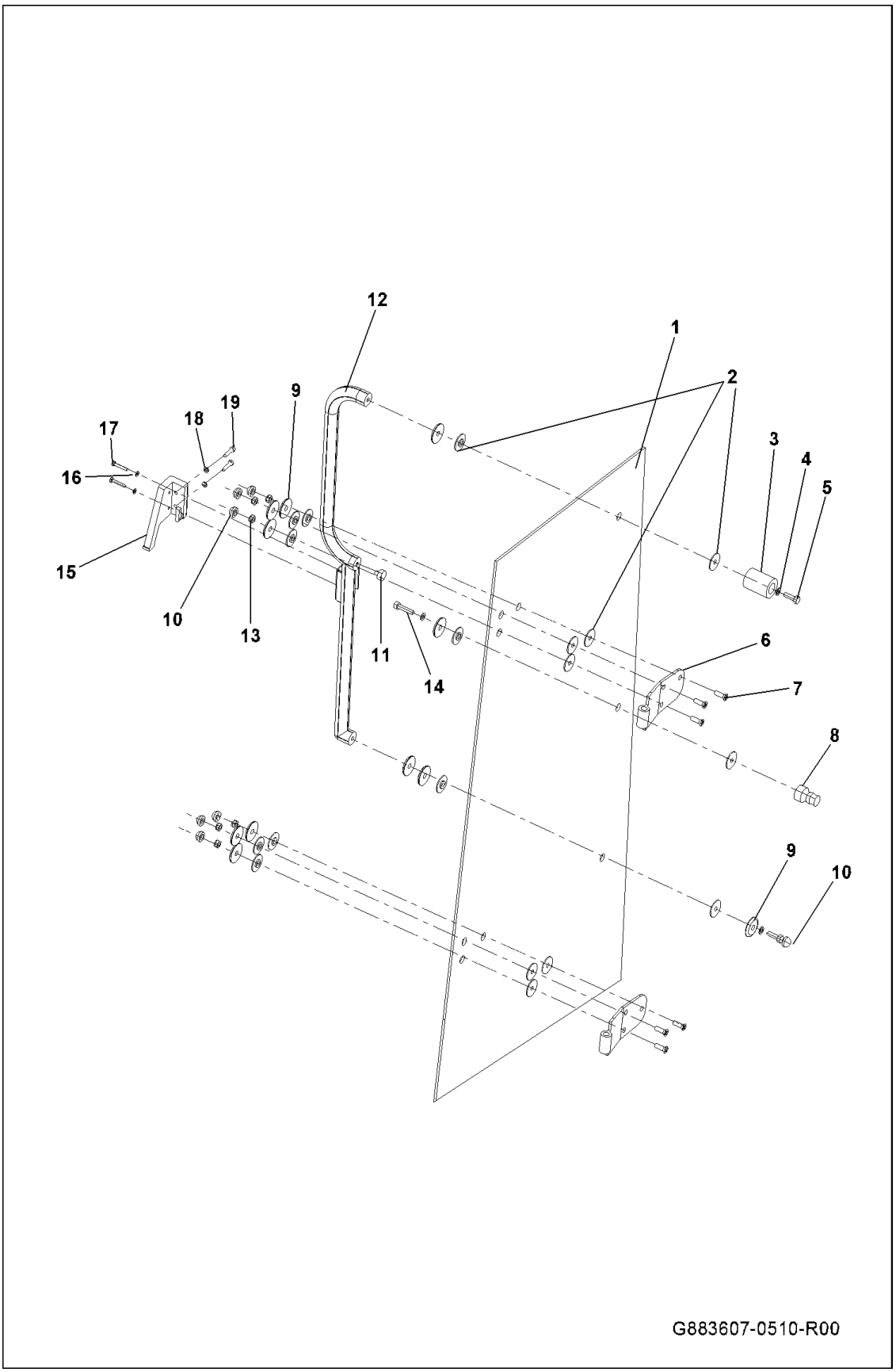

CABIN LEFT REAR SIDE DOOR FRAME ASSEMBLY (Cont'd)

Ref No	Part Number	Description	Remarks	Serial Number	Qty
1	7292351	SIDE GLASS (LEFT)			1
2	7292352	GLASS WASHER			18
3	7292353	SIDE GLASS BACK LOCKING			1
4	7292354	WASHER			3
5	7292355	BOLT			2
6	7292356	SIDE GLASS DOOR HINGE STEEL			2
7	7292357	COUNTERSUNK STAR-HEAD BOLT			6
8	7292358	SIDE GLASS BACK LOCKING			1
9	7292359	GLASS WASHER			11
10	7292360	PLASTIC STOPPER			7
11	7292361	RUBBER BLOCK			1
12	7292362	SIDE HANDLE PIPE			1
13	7292363	FIBER NUT			6
14	7292364	BOLT			1
15	7292365	SIDE GLASS LOCK (LEFT)			1
16	7292366	WASHER			2
17	7292367	BOLT			2
18	7292368	WASHER			2
19	7292369	BOLT			2

CABIN LEFT DOOR FRAME ASSEMBLY

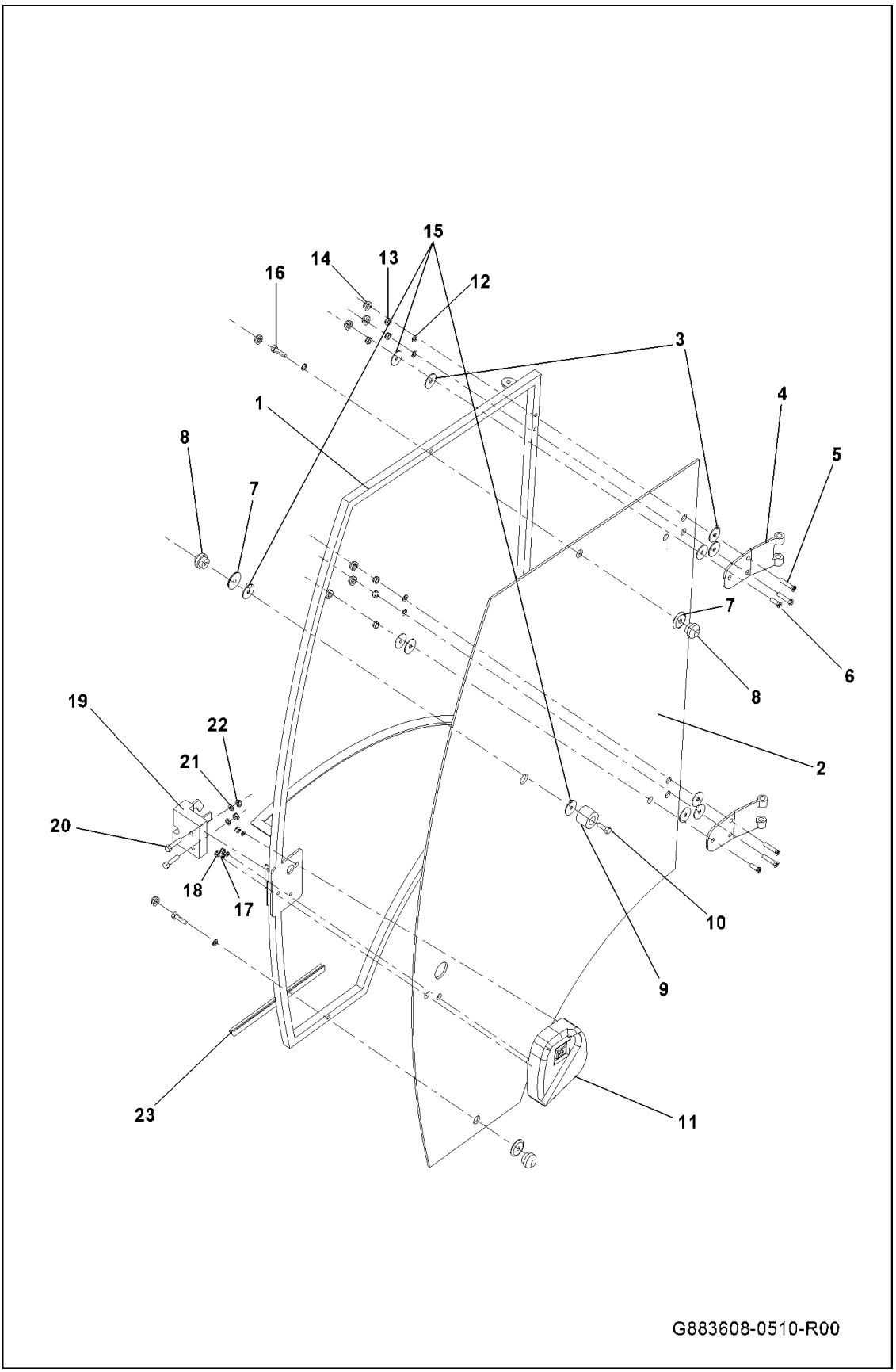

CABIN LEFT DOOR FRAME ASSEMBLY (Cont'd)

Ref No	Part Number	Description	Remarks	Serial Number	Qty
1	7292370	DOOR PROFIL WELDED FRAME			1
2	7292371	DOOR GLASS (LEFT)			1
3	7292372	GLASS WASHER			8
4	7292373	DOOR HINGE STEEL			2
5	7292374	COUNTERSUNK STAR-HEAD BOLT			4
6	7292375	COUNTERSUNK STAR-HEAD BOLT			2
7	7292376	GLASS PLASTIC NUT WASHER			3
8	7292377	GLASS PLASTIC NUT			3
9	7292378	BACK-LOCKING WEDGE			3
10	7292379	BOLT			1
11	7292380	DOOR HANDLE (LEFT)			1
12	7292381	WASHER			6
13	7292382	FIBER NUT			6
14	7292383	PLASTIC STOPPER			8
15	7292384	GLASS WASHER			4
16	7292385	BOLT			2
17	7292386	WASHER			3
18	7292387	FIBER NUT			3
19	7292388	DOOR LOCK (LEFT)			1
20	7292389	BOLT			2
21	7292390	WASHER			2
22	7292391	FIBER NUT			2
23	7292392	DOOR GLASS RUBBER			-

CABIN LEFT SIDE ASSEMBLY

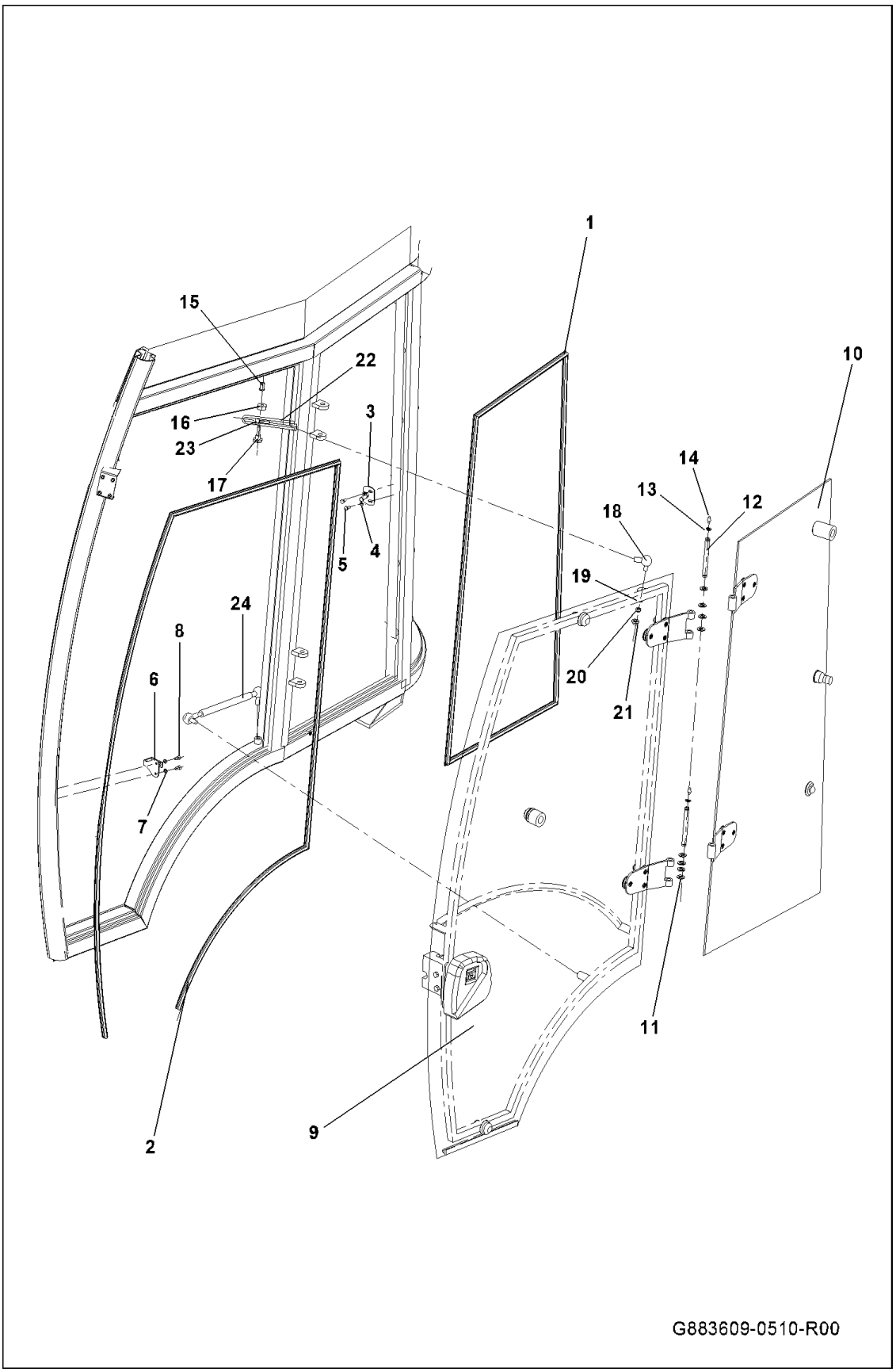

CABIN LEFT SIDE ASSEMBLY (Cont'd)

Ref No	Part Number	Description	Remarks	Serial Number	Qty
1	7292393	LEFT REAR SIDE FRAME RUBBER			-
2	7292394	LEFT DOOR FRAME RUBBER			-
3	7292395	REAR SIDE LOCK STRIKER			1
4	7292396	WASHER			2
5	7292397	BOLT			2
6	7292398	DOOR LOCK STRIKER			1
7	7292329	WASHER			2
8	7292399	BOLT			2
9	7292400	LEFT DOOR FRAME			1
10	7292401	LEFT REAR SIDE DOOR FRAME			1
11	7292402	HINGE WASHER			8
12	7292403	HINGE SHAFT			2
13	7292404	PISTON RING			2
14	7292405	GREASE NIPPLE			2
15	7292406	RIVET NUT			1
16	7292407	DOOR STOPPER WASHER			1
17	7292408	DOOR STOPPER GUIDE			1
18	7292409	DOOR STOPPER JOINT			1
19	7292410	WASHER			1
20	7292411	FIBER NUT			1
21	7292412	PLASTIC STOPPER			1
22	7292413	STOPPER			1
23	7292414	ALLEN HEAD BOLT			1
24	7292415	DOOR SHOCK ABSORBER			1

REAR FRAME COMPLETE ASSEMBLY

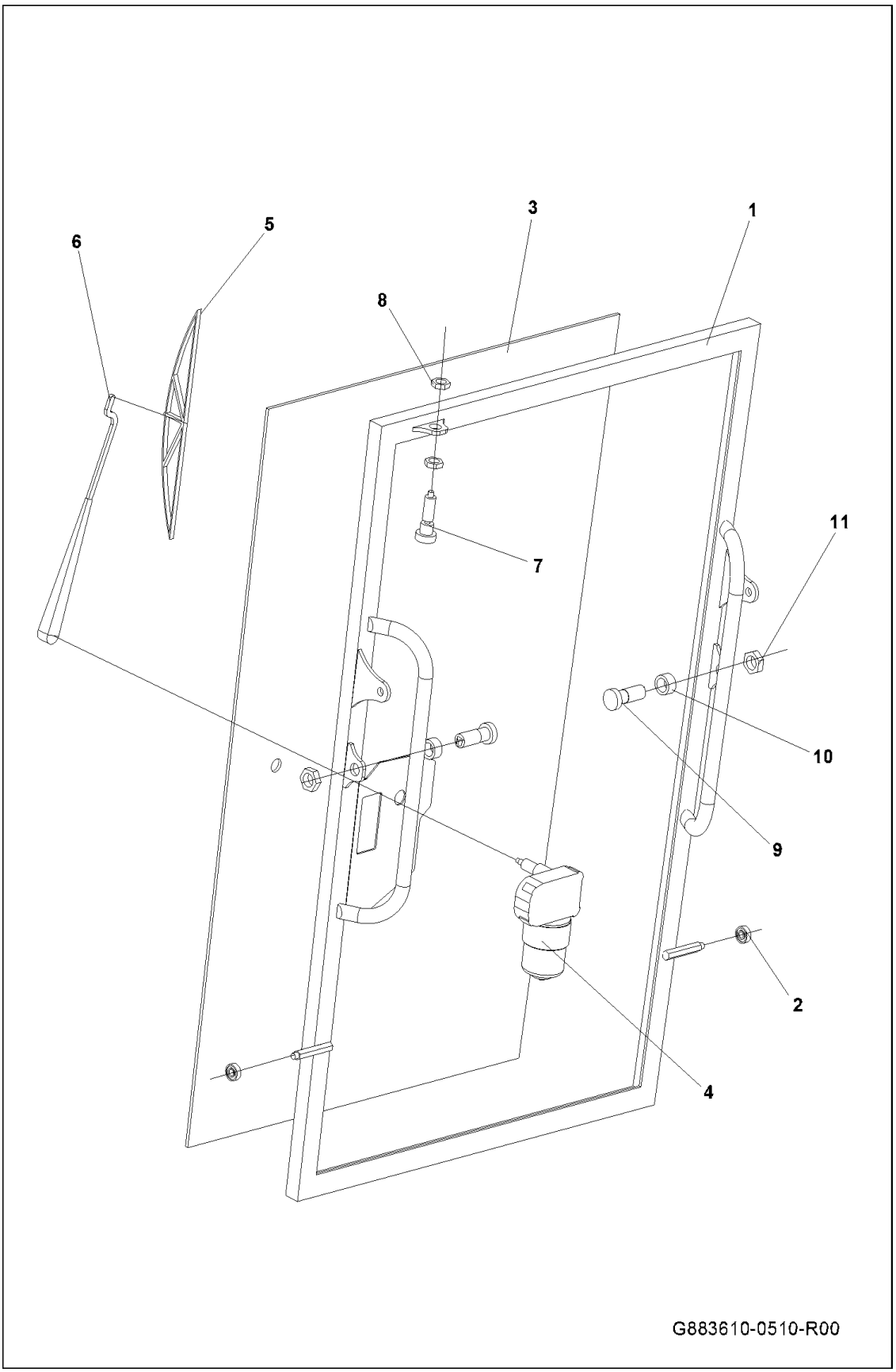

REAR FRAME COMPLETE ASSEMBLY (Cont'd)

Ref No	Part Number	Description	Remarks	Serial Number	Qty
1	7292416	WELDED REAR FRAME ASSY			1
2	7292417	ROLLER BEARING			2
3	7292418	REAR FRAME GLASS			1
4	7292419	REAR FRAME WIPER MOTOR			1
5	7292420	REAR FRAME WIPER MOTOR F.			1
6	7292421	REAR FRAME WIPER M. ARM			1
7	7292422	REAR FRAME TOP LOCKER			1
8	7292423	NUT			2
9	7292424	REAR FRAME SIDE LOCKER			2
10	7292425	BUSHING			2
11	7292426	WASHER			2

CABIN REAR AND FRAME ASSEMBLY

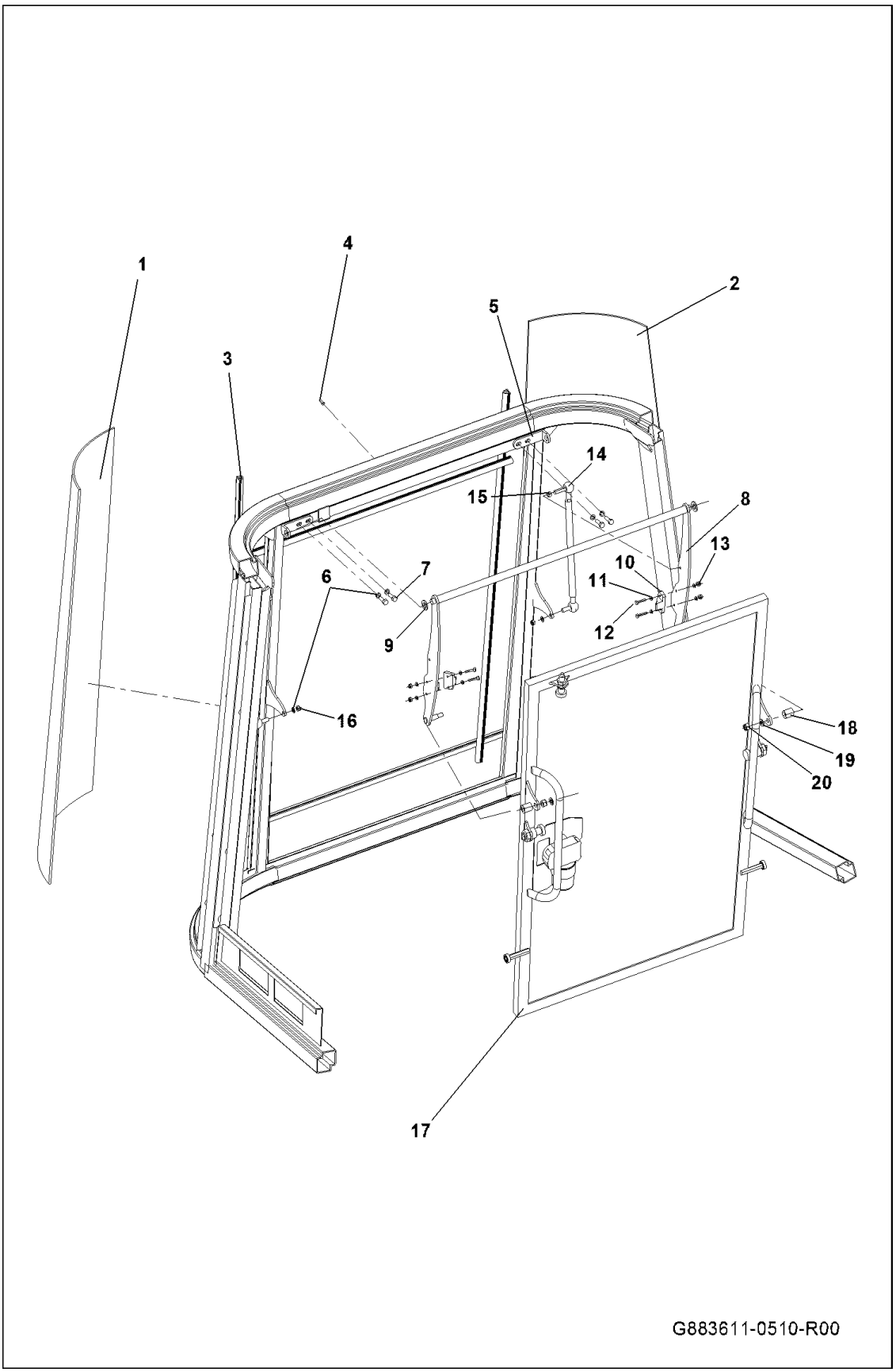

CABIN REAR AND FRAME ASSEMBLY (Cont'd)

Ref No	Part Number	Description	Remarks	Serial Number	Qty
1	7292427	REAR C. CONVEX GLASS (LEFT)			1
2	7292428	REAR C. CONVEX G. (RIGHT)			1
3	7292429	DUST TYRE OF REAR FRAME			-
4	7292430	WATER NOZZLE OF REAR GLASS			1
5	7292431	MECHANISM ARM CON. STEEL			2
6	7292432	WASHER			6
7	7292433	BOLT			4
8	7292434	MECHANISM ARM (WELDED)			1
9	7292435	WASHER			2
10	7292436	REAR FRAME STRIKER			2
11	7292437	WASHER			8
12	7292438	BOLT			4
13	7292439	FIBER NUT			4
14	7292440	REAR FRAME SHOCK ABSORBER			2
15	7292441	NUT			2
16	7292442	FIBER NUT			2
17	7292443	REAR FRAME COMPLE			1
18	7292444	ADAPTER			2
19	7292445	WASHER			2
20	7292446	FIBER NUT			2

CABIN ROOF ASSEMBLY

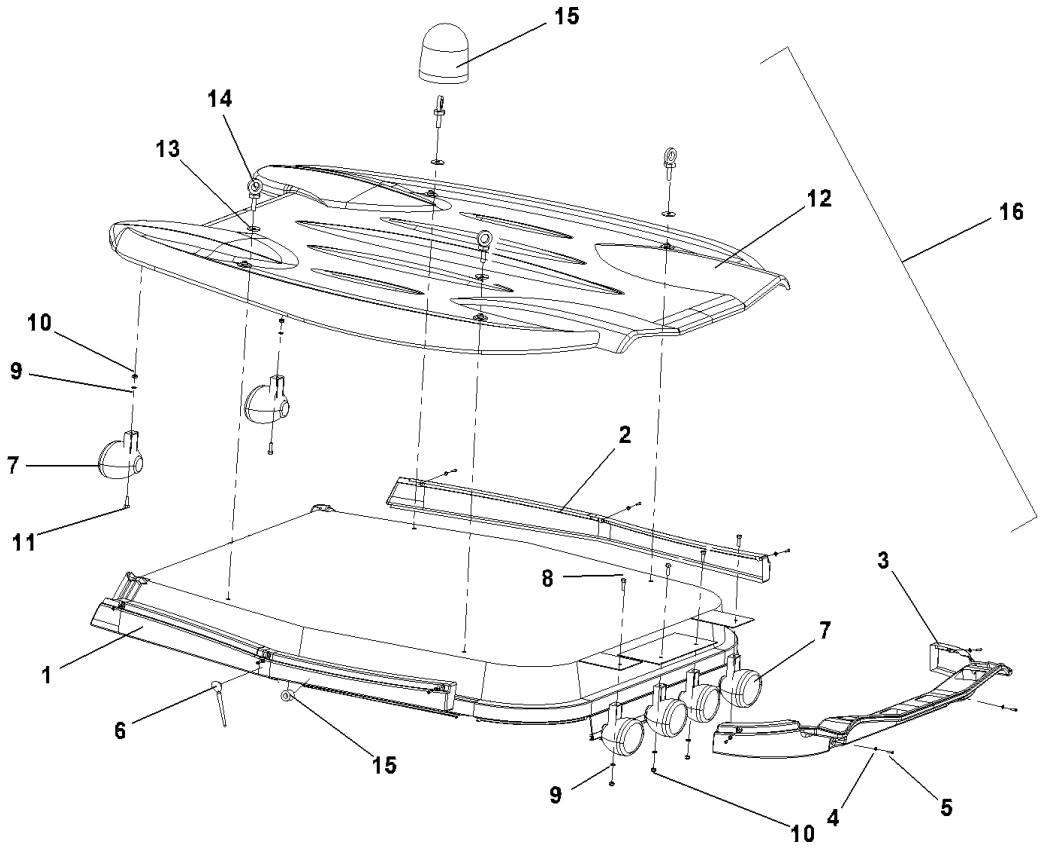

CABIN ROOF ASSEMBLY (Cont'd)

Ref No	Part Number	Description	Remarks	Serial Number	Qty
1	7292447	LEFT SIDE OF EXTERIOR ROOF			1
2	7292448	RIGHT SIDE OF EXTERIOR ROOF			1
3	7292449	BACK OF EXTERIOR ROOF			1
4	7292450	STEEL SCREW WASHER			10
5	7292451	STEEL SCREW			10
6	7292452	ANTENNA			1
7	7292453	WORKLAMP			6
8	7292454	BOLT			4
9	7292455	WASHER			6
10	7292456	FIBER NUT			6
11	7292457	BOLT			2
12	7292458	TOP OF EXTERIOR ROOF			1
13	7292459	LIFTING EYEBOLT WASHER			4
14	7292460	LIFTING EYEBOLT			4
15	7292461	BEACON LAMP			1
16	7292462	CABIN ROOF ASSAMBLY			1

INTERIOR CABIN ASSEMBLY

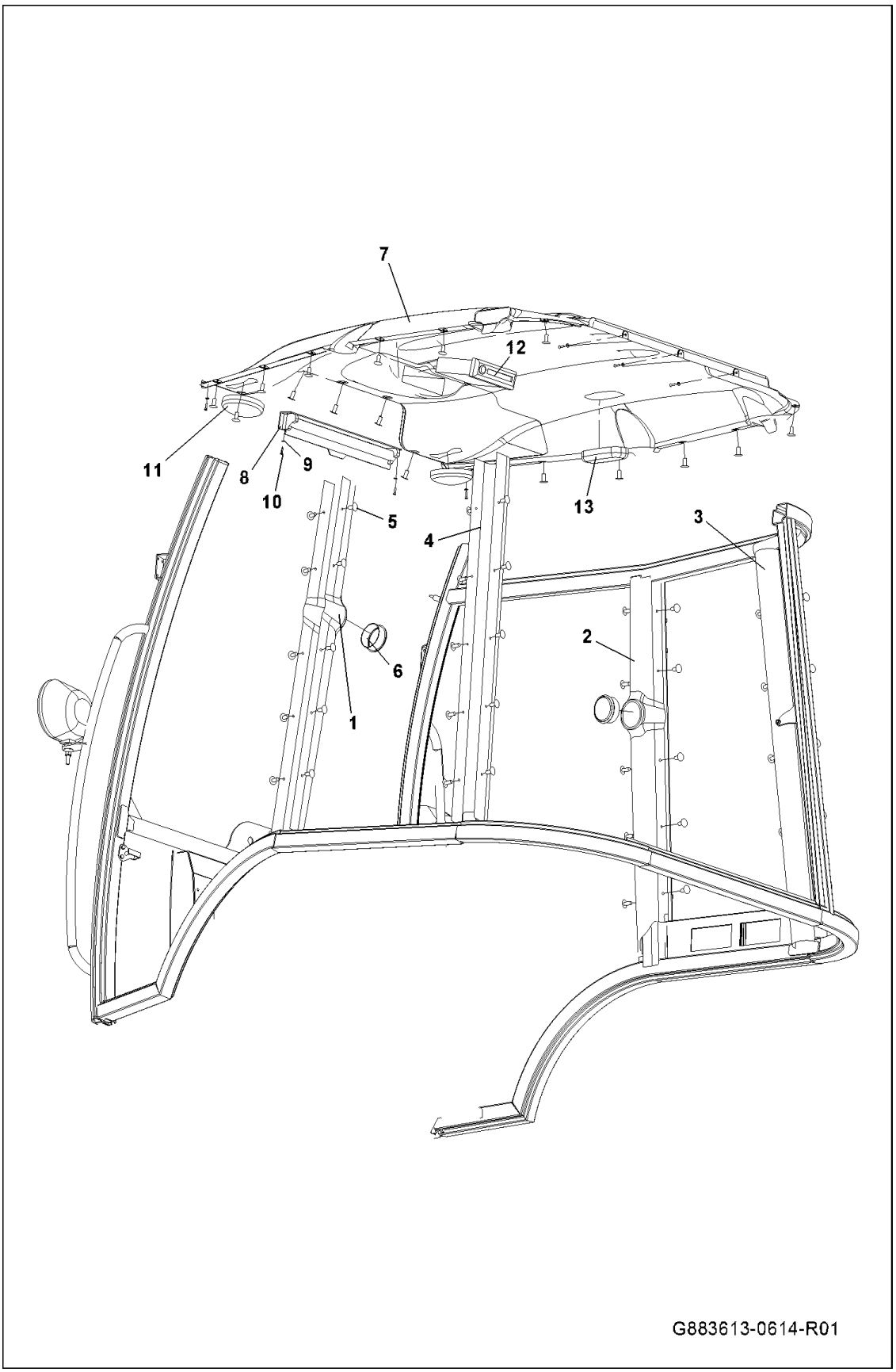

INTERIOR CABIN ASSEMBLY (Cont'd)

Ref No	Part Number	Description	Remarks	Serial Number	Qty
1	7292463	LEFT MIDDLE BRACKET C.			1
2	7292464	RIGHT MIDDLE BRACKET C.			1
3	7292465	RIGHT REAR BRACKET C.			1
4	7292466	LEFT REAR BRACKET COVERING			1
5	7292467	WALL PLUG			57
6	7292468	AIR DIRECTION			2
7	7292469	INTERIOR ROOF			1
8	7292470	SUN VISOR			1
9	7292471	STEEL SCREW WASHER			7
10	7292472	STEEL SCREW			7
11	7292473	SPEAKER			2
12	7292474	RADIO-CD PLAYER			1
13	7290555	INTERIOR LAMP			1

CHASSIS AND SWING CYLINDERS CONNECTIONS

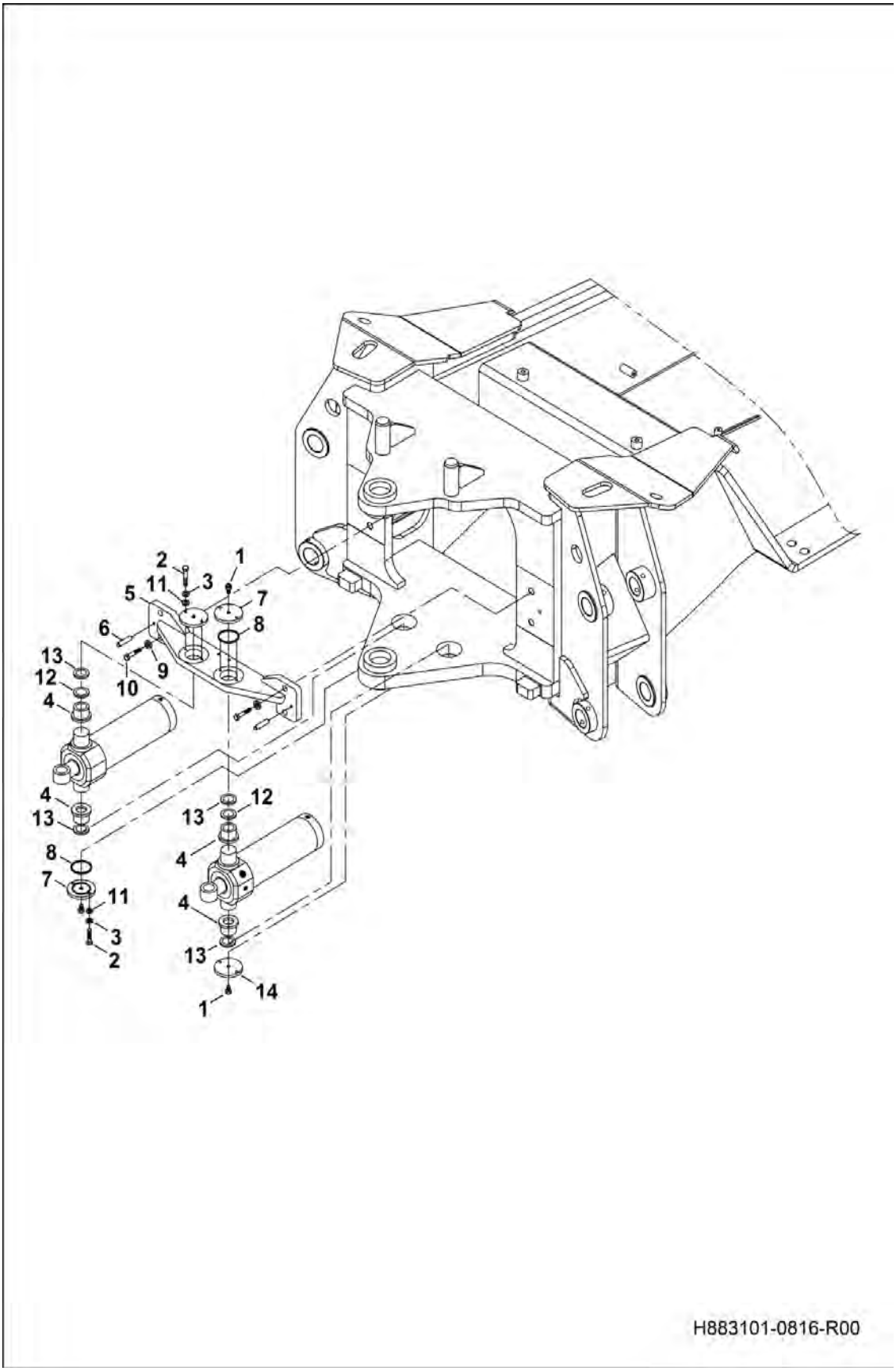

CHASSIS AND SWING CYLINDERS CONNECTIONS (Cont'd)

Ref No	Part Number	Description	Remarks	Serial Number	Qty
1	7289862	GREASER			4
2	7289261	BOLT			8
3	7288891	LOCK WASHER			8
4	7290659	BUSHING			4
5	7311466	PLATE			1
6	7311467	PIN			2
7	7290662	FLANGE			4
8	7290663	O-RING			4
9	7290664	WASHER			4
10	7290665	BOLT			4
11	7288892	WASHER			8
12	7290674	SHIM			2
13	7290673	SHIM			4
14	7289871	GREASER COVER			4

SWING JOINT AND CHASSIS CONNECTIONS

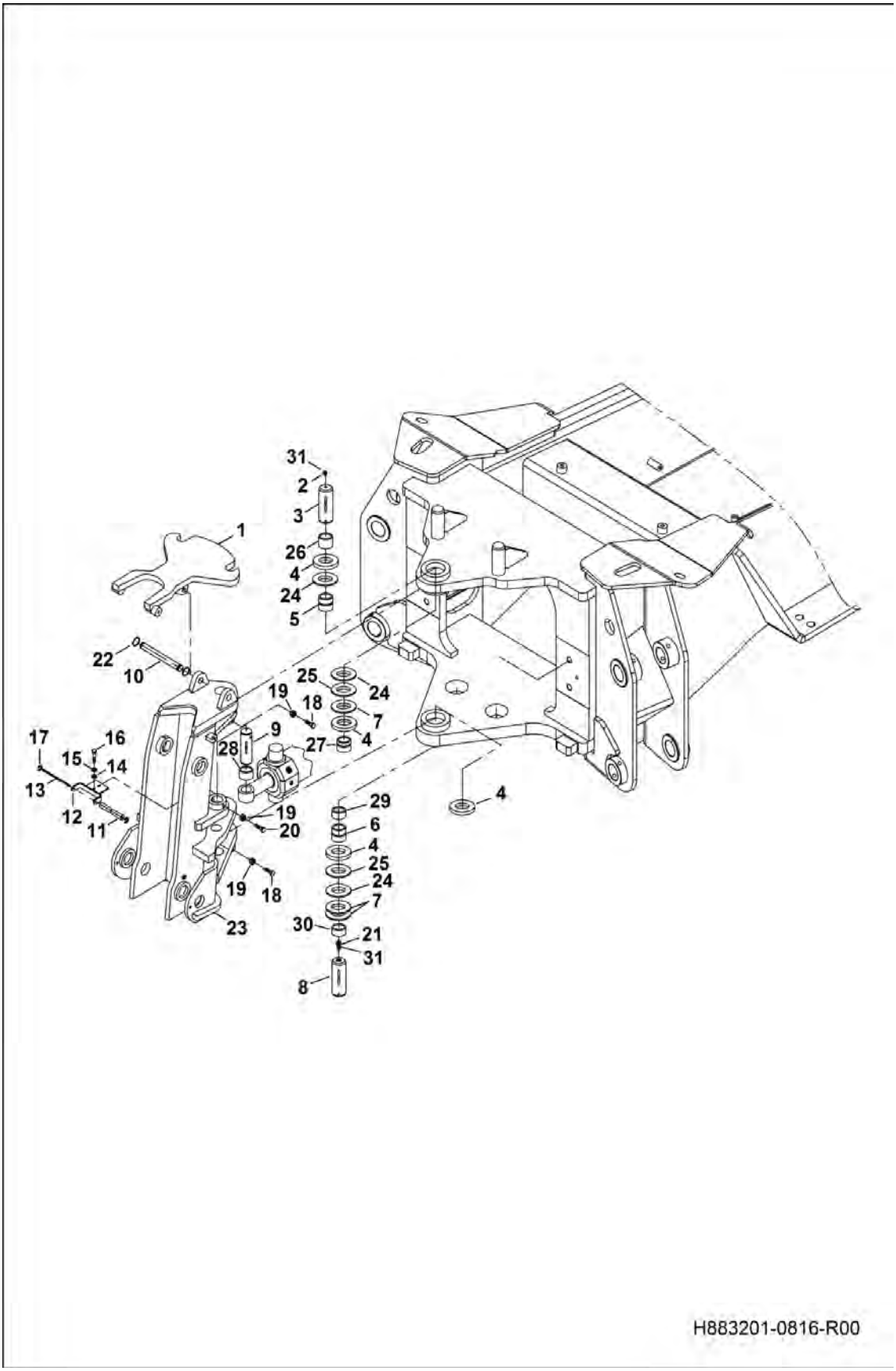

SWING JOINT AND CHASSIS CONNECTIONS (Cont'd)

Ref No	Part Number	Description	Remarks	Serial Number	Qty
1	7292478	PLATE			1
2	7290677	GREASER			1
3	7290678	PIN			1
4	7290679	WASHER			4
5	7290680	BUSHING			1
6	7290681	BUSHING			1
7	7290682	WASHER			1
8	7290683	PIN			1
9	7290684	PIN			1
10	7290685	PIN			1
11	7290686	ROLLER			1
12	7290687	PLATE			1
13	7290688	PIN			1
14	7289262	WASHER			2
15	7288891	LOCK WASHER			2
16	7289261	BOLT			2
17	7290689	COTTER PIN			2
18	7290690	BOLT			2
19	7288888	NUT			4
20	7290691	BOLT			2
21	7289862	GREASER			1
22	7290692	SEGMENT			2
23	7290693	SWING FRAME			1
24	7290694	SHIM			4
25	7290695	SHIM			3
26	7290696	BUSHING			1
27	7290697	BUSHING			1
28	7290698	BUSHING			2
29	7290699	BUSHING			1
30	7290700	BUSHING			1
31	7289871	GREASER COVER			2

BOOM CONNECTIONS

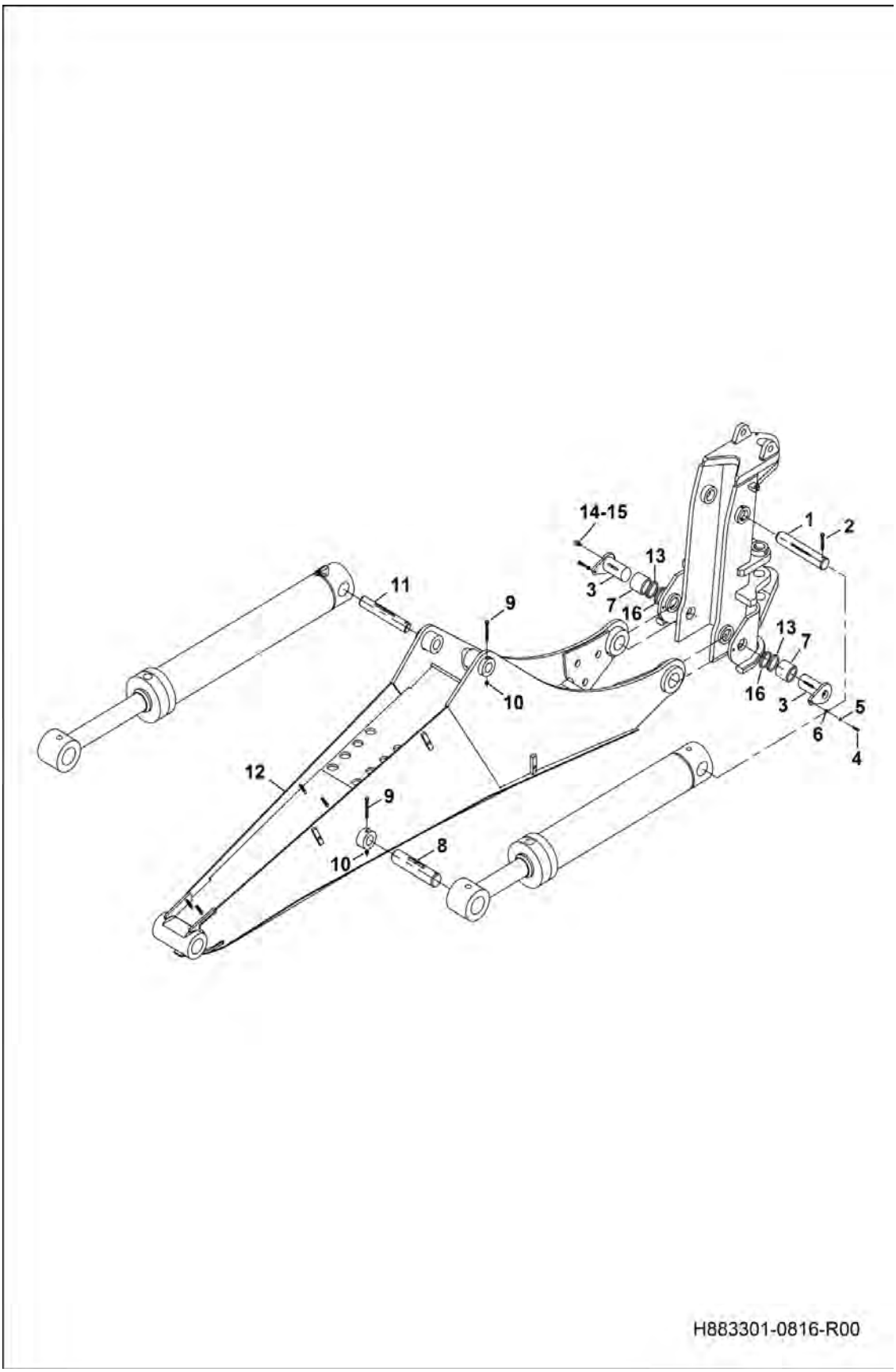

BOOM CONNECTIONS (Cont'd)

Ref No	Part Number	Description	Remarks	Serial Number	Qty
1	7290702	PIN			1
2	7290780	ALLEN BOLT			1
3	7290703	PIN			2
4	7288895	BOLT			4
5	7289260	WASHER			4
6	7289259	LOCK WASHER			4
7	7290704	BUSHING			2
8	7292482	PIN			2
9	7290707	BOLT			2
10	7288888	NUT			2
11	7292483	PIN			2
12	7292484	BACK BOOM ASSEMBLY			1
13	7304899	SHIM			2
14	7289862	GREASER			2
15	7289871	GREASER COVER			2
16	7292555	WASHER			2

STANDARD STICK AND BUCKET CONNECTIONS

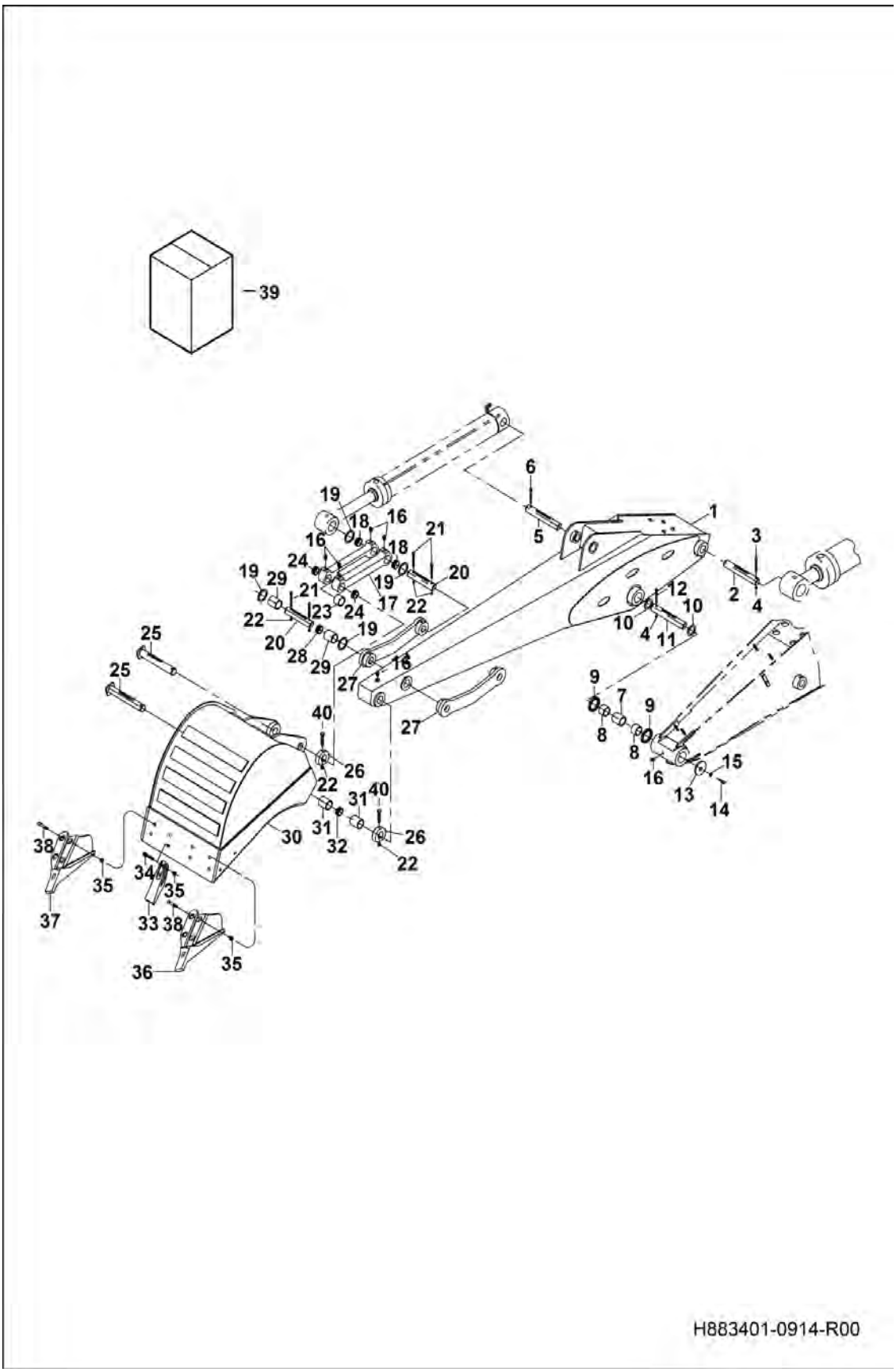

STANDARD STICK AND BUCKET CONNECTIONS (Cont'd)

Ref No	Part Number	Description	Remarks	Serial Number	Qty
1	7292485	STICK ASSEMBLY			1
2	7292486	PIN			1
3	7290719	BOLT			1
4	7289514	NUT			2
5	7292487	PIN			1
6	7290708	BOLT			1
7	7292488	BUSHING			1
8	7292489	BUSHING			2
9	7292490	DUST SEAL			2
10	7292491	WASHER			2
11	7292492	PIN			1
12	7289980	BOLT			1
13	7292493	WASHER			1
14	7292494	BOLT			1
15	7290335	WASHER			1
16	7289862	GREASER			7
17	7292495	LEVER			1
18	7290721	BUSHING			2
19	7290713	SHIM			4
20	7290723	PIN			2
21	7290690	BOLT			4
22	7288888	NUT			6
23	7290724	BUSHING			1
24	7290725	BUSHING			2
25	7290726	PIN			2
26	7290902	BUSHING			2
27	7290728	LEVER			2
28	7290729	BUSHING			1
29	7290730	BUSHING			2
30	7292496	BUCKET	(600 mm)		1
30	7292498	BUCKET	OPTIONAL (300 mm)		1
30	7292500	BUCKET	OPTIONAL (800 mm)		1
31	7290732	SHIM			2
32	7290733	BUSHING			1
33	7290734	TOOTH			2
34	7290735	BOLT			4
35	7290736	NUT			8
36	7292501	CUTTER SIDE RIGHT			1
37	7292502	CUTTER SIDE LEFT			1
38	7292503	BOLT			4
39	7292504	TOOTH SET			1
40	7290722	BOLT			2

STABILIZER CONNECTIONS

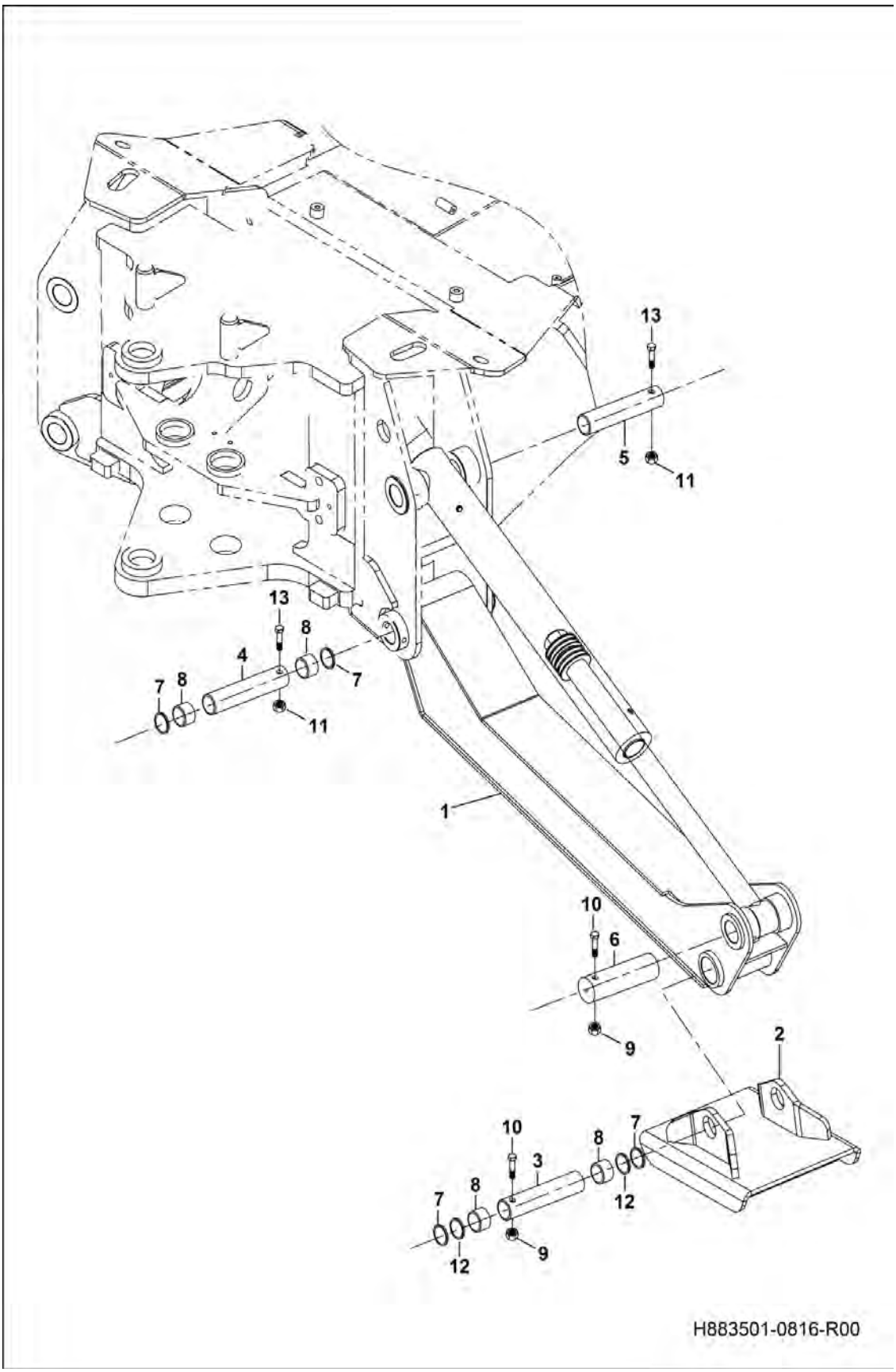

STABILIZER CONNECTIONS (Cont'd)

Ref No	Part Number	Description	Remarks	Serial Number	Qty
1	7311468	FOOT BASE LEFT			1
1	7311469	FOOT BASE RIGHT			1
2	7311470	CENTERMOUNT SHOE			2
3	7311471	PIN			2
4	7311472	PIN			2
5	7311473	PIN			2
6	7311474	PIN			2
7	7291610	DUST SEAL			8
8	7311475	BUSHING			8
9	7288888	NUT			4
10	7290690	BOLT			4
11	7289637	NUT			4
12	7311476	SHIM			8
13	7311477	BOLT			4

LOCKING MECHANISM

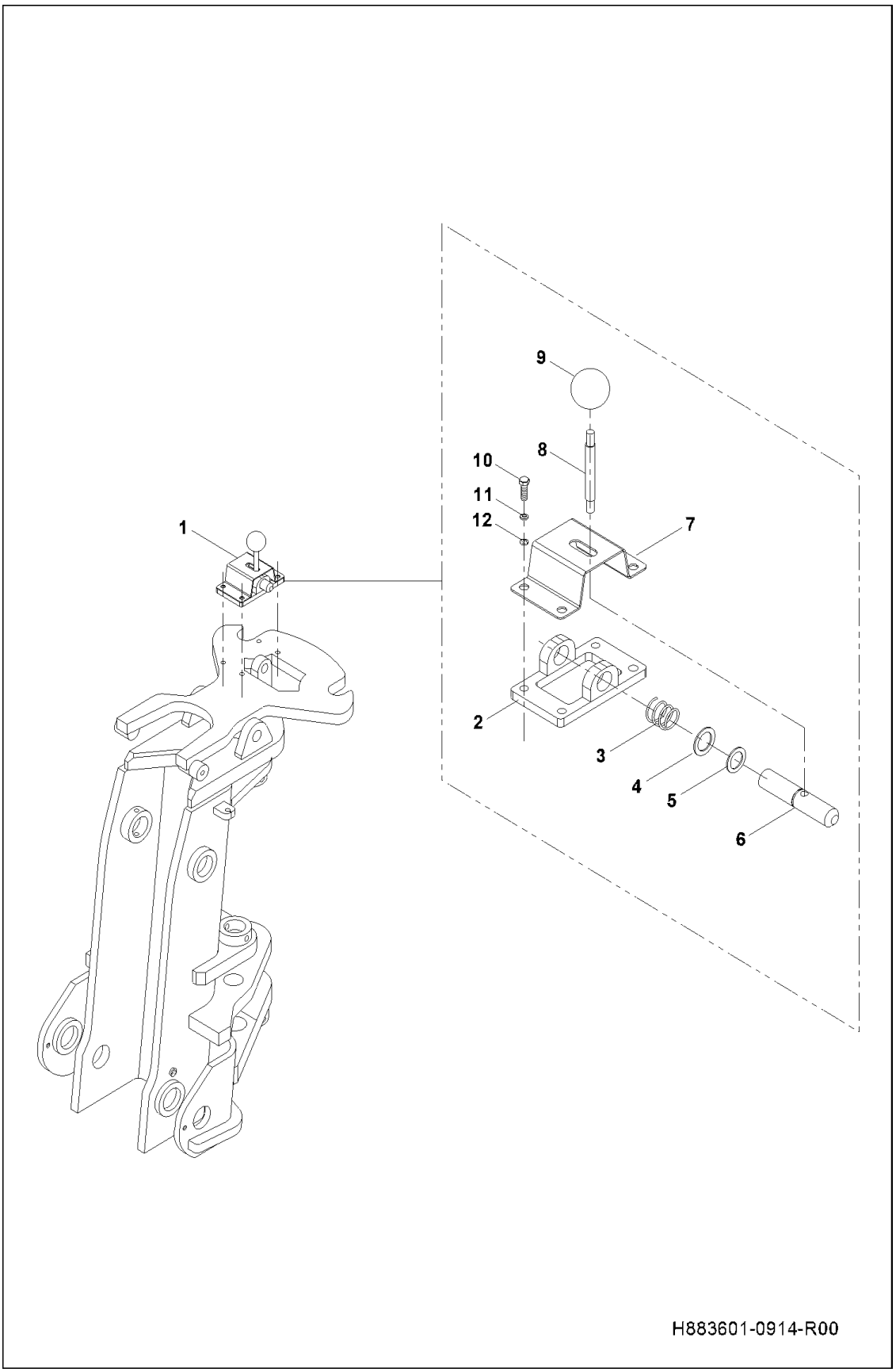

LOCKING MECHANISM (Cont'd)

Ref No	Part Number	Description	Remarks	Serial Number	Qty
1	7292517	LOCKING ASSY			1
2	7292518	LOCKING LOWER BRACKET			1
3	7290761	SPRING			1
4	7292519	WASHER			1
5	7290762	WASHER			1
6	7290763	PIN			1
7	7290764	COVER PLATE			1
8	7290765	LOCKING ARM			1
9	7290766	KNOB			1
10	7289279	BOLT			4
11	7288891	LOCK WASHER			4
12	7288892	WASHER			4

FRONT BOOM - CYLINDER CONNECTIONS (FOR 18" RIM)

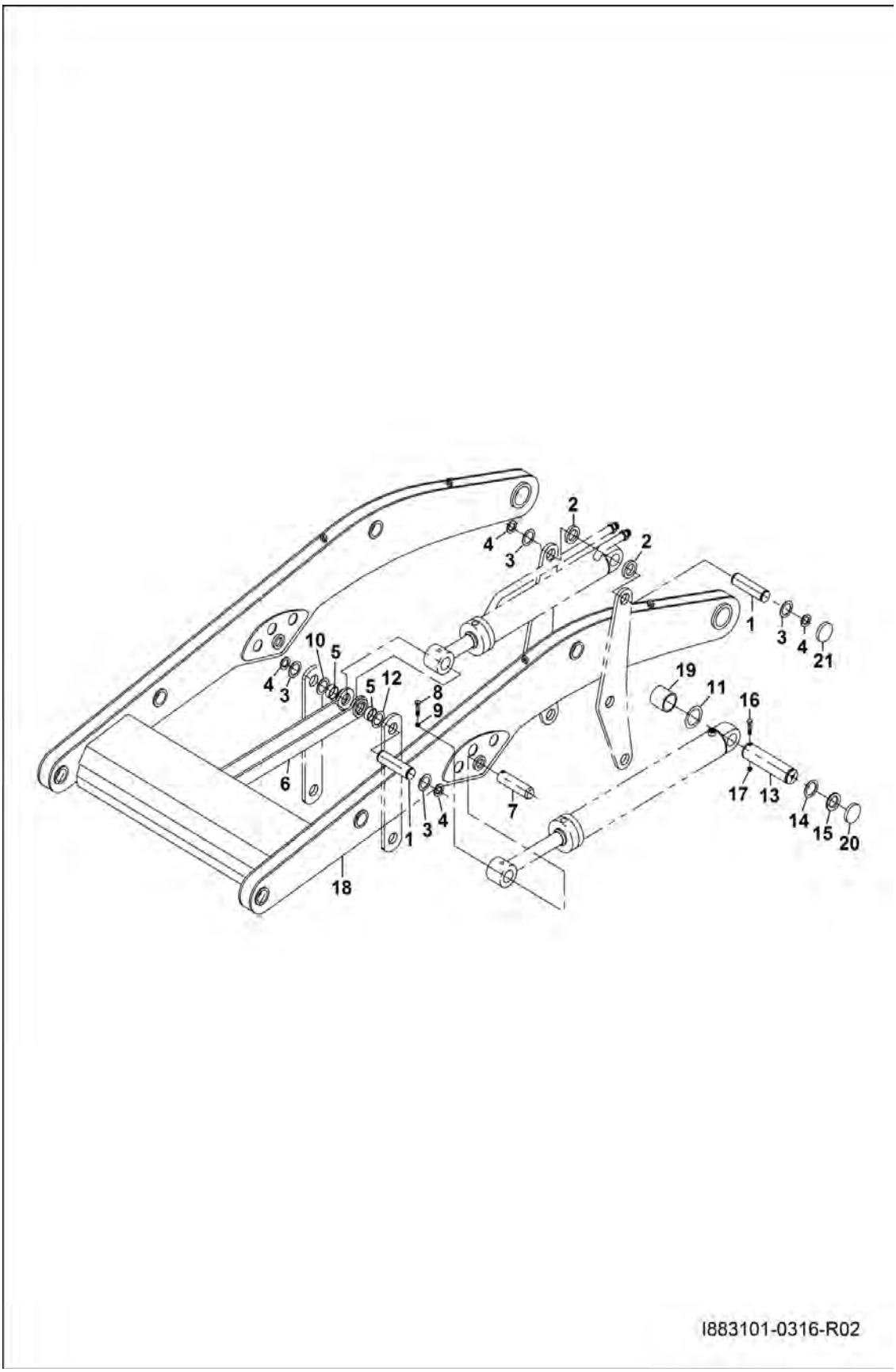

FRONT BOOM - CYLINDER CONNECTIONS (FOR 18" RIM) (Cont'd)

Ref No	Part Number	Description	Remarks	Serial Number	Qty
1	7292520	PIN			4
2	7292521	WASHER			4
3	7290745	WASHER			8
4	7290746	WASHER			8
5	7292522	BUSHING			4
6	7304328	LEVER ASSEMBLY			2
7	7292524	PIN			2
8	7292525	BOLT			2
9	7288888	NUT			2
10	7292526	SHIM			2
11	7290679	WASHER			2
12	7292527	SHIM			2
13	7292528	PIN			2
14	7290774	WASHER			2
15	7290773	SEGMENT			2
16	7290719	BOLT			2
17	7289514	NUT			2
18	7292529	LOADER BOOM ASSEMBLY			1
19	7292531	BUSHING			2
20	7292532	PLUG			2
21	7292533	PLUG			2

BOOM AND LEVER CONNECTIONS

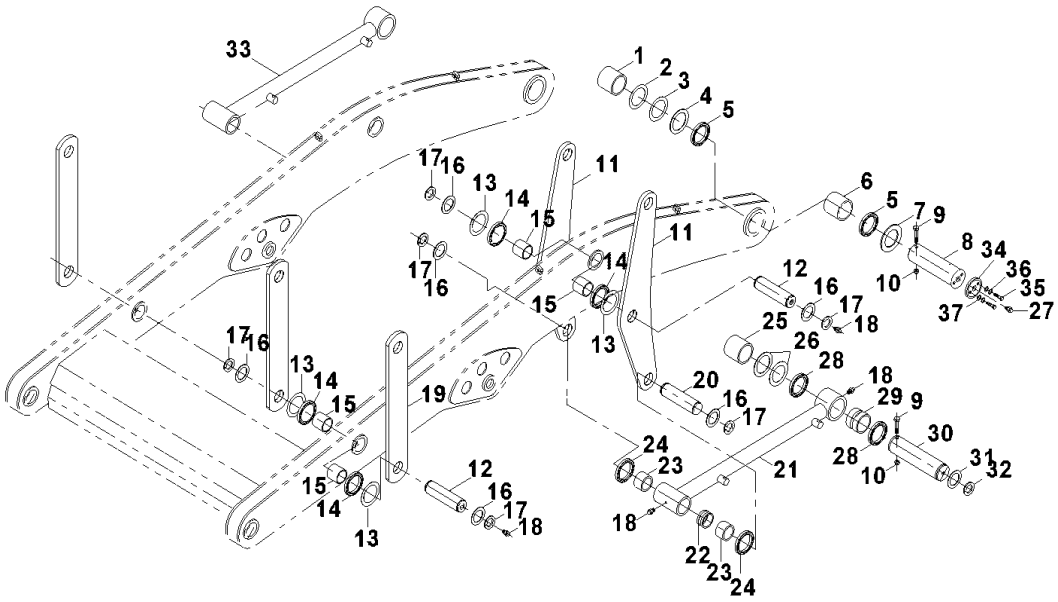

BOOM AND LEVER CONNECTIONS (Cont'd)

Ref No	Part Number	Description	Remarks	Serial Number	Qty
1	7292534	BUSHING			2
2	7292535	SHIM			2
3	7292536	SHIM			2
4	7292537	SHIM			2
5	7292538	DUST SEAL			4
6	7292539	BUSHING			2
7	7292540	WASHER			2
8	7292541	PIN			2
9	7289980	BOLT			4
10	7289514	NUT			4
11	7292542	LEVER			4
12	7292543	PIN			4
13	7292527	SHIM			4
14	7289943	DUST SEAL			4
15	7292544	BUSHING			4
16	7290745	WASHER			4
17	7290746	WASHER			4
18	7289862	GREASER			8
19	7292545	FLAT LEVER			4
20	7292546	PIN			2
21	7292547	ARM LEFT ASSEMBLY			1
22	7292548	BUSHING			2
23	7292549	BUSHING			4
24	7289920	DUST SEAL			4
25	7292550	BUSHING			2
26	7292551	SHIM			4
27	7292552	GREASER			2
28	7292490	DUST SEAL			4
29	7292553	BUSHING			2
30	7292554	PIN			2
31	7292555	WASHER			2
32	7292556	SEGMENT			2
33	7292557	ARM RIGHT ASSEMBLY			1
34	7292558	FLANGE			1
35	7292559	BOLT			2
36	7292560	WASHER			2
37	7289259	LOCK WASHER			2

FRONT BOOM BUCKET CONNECTIONS

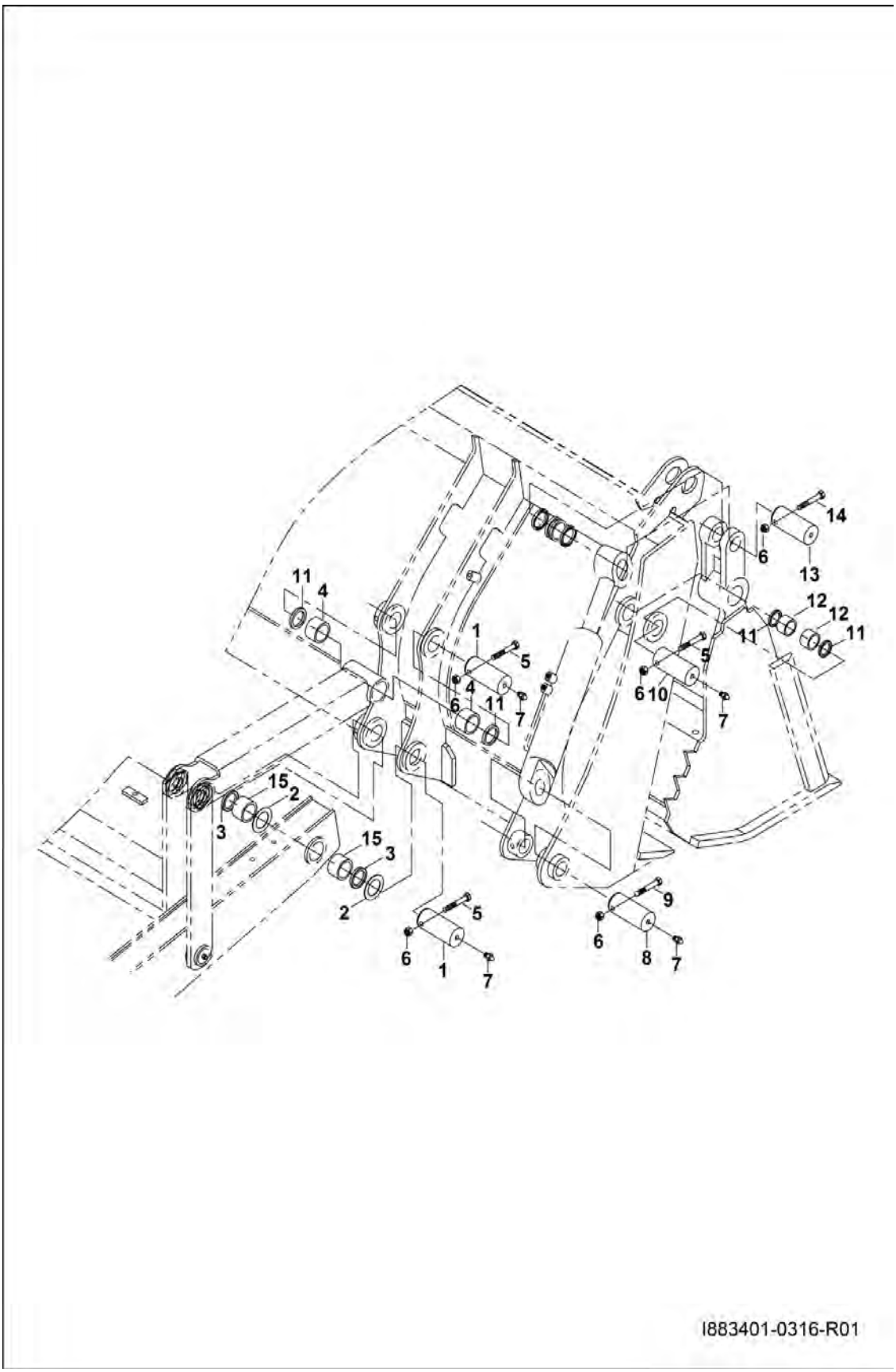

FRONT BOOM BUCKET CONNECTIONS (Cont'd)

Ref No	Part Number	Description	Remarks	Serial Number	Qty
1	7292561	PIN			4
2	7292527	SHIM			4
3	7289943	DUST SEAL			4
4	7292562	BUSHING			4
5	7290707	BOLT			6
6	7288888	NUT			10
7	7289862	GREASER			8
8	7290938	PIN			2
9	7290887	BOLT			2
10	7290939	PIN			2
11	7289920	DUST SEAL			8
12	7290940	BUSHING			4
13	7290937	PIN			2
14	7290722	BOLT			2
15	7292544	BUSHING			4

CLAMSHELL CONNECTIONS

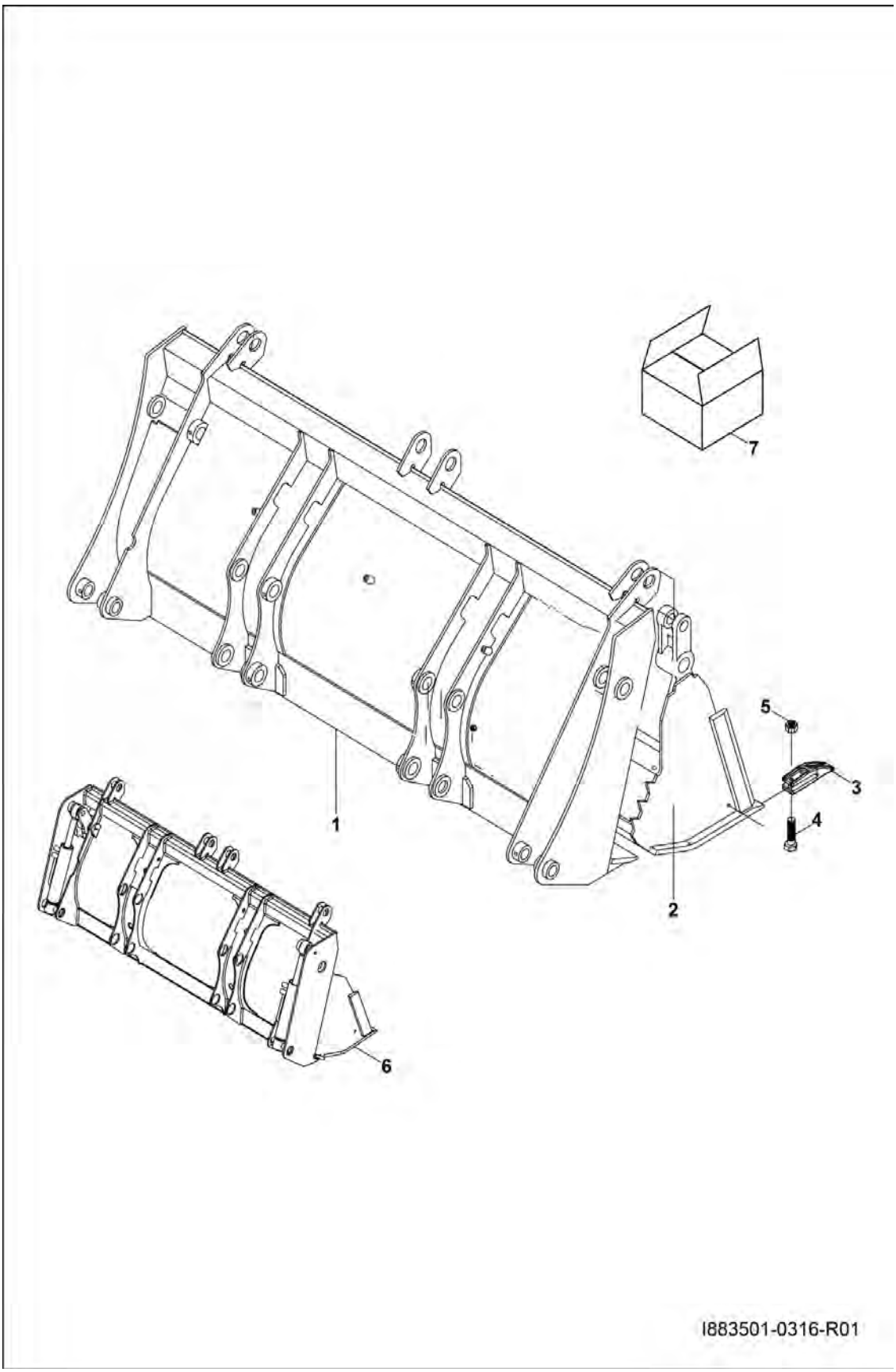

CLAMSHELL CONNECTIONS (Cont'd)

Ref No	Part Number	Description	Remarks	Serial Number	Qty
1	7293082	BUCKET-REAR			1
2	7293083	BUCKET-FRONT			1
3	7290734	TOOTH			8
4	7290735	BOLT			2
5	7290736	NUT			2
6	7304336	CLAMSHELL ASSY.			1
7	7290798	TOOTH SET			1

BOOM CONTROL ROD AND SAFETY BAR

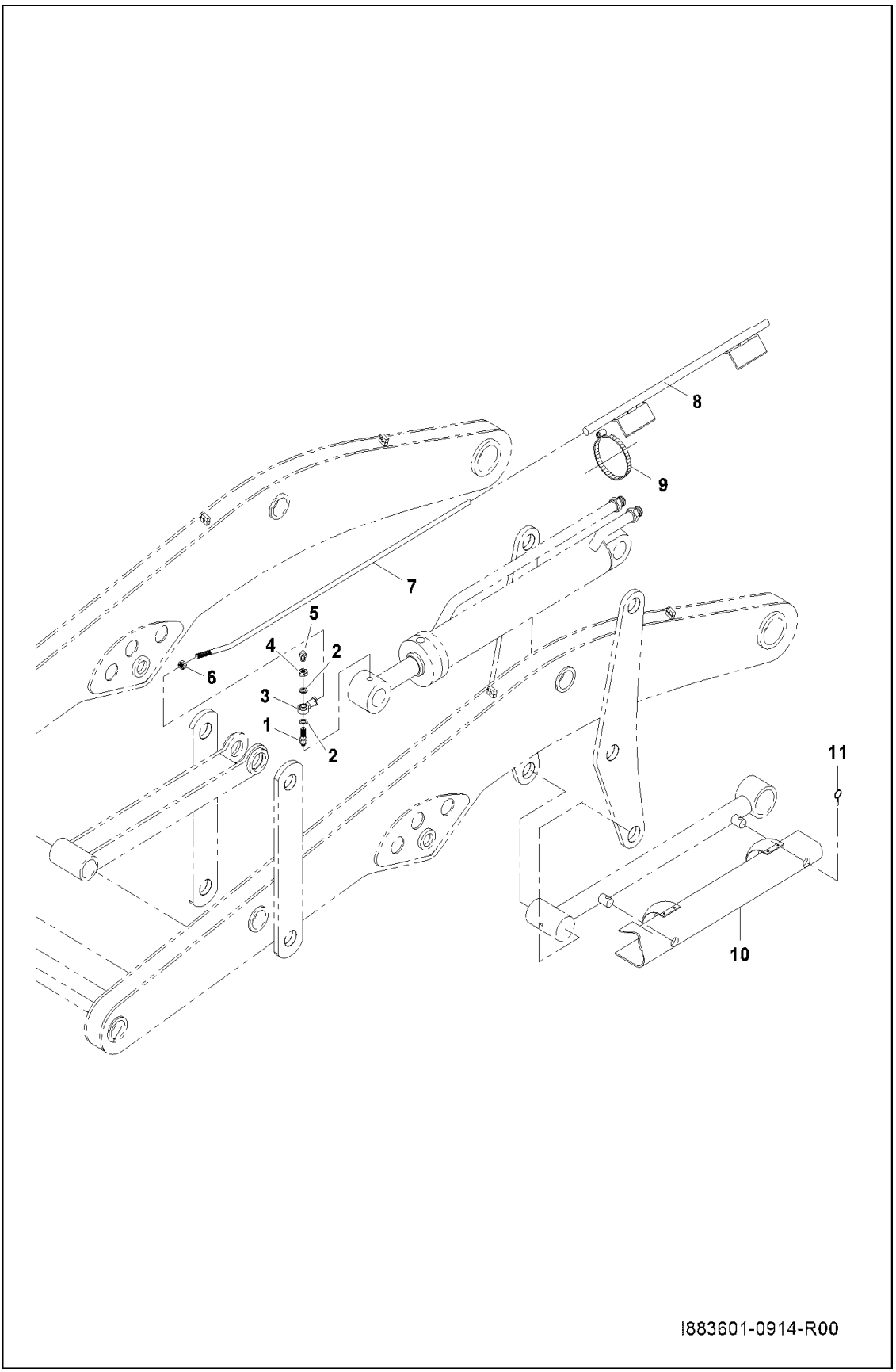

BOOM CONTROL ROD AND SAFETY BAR (Cont'd)

Ref No	Part Number	Description	Remarks	Serial Number	Qty
1	7292574	ADAPTER			1
2	7289314	WASHER			2
3	7289624	JOINT			1
4	7290355	NUT			1
5	7292575	GREASER			1
6	7289514	NUT			1
7	7292576	ROD			1
8	7292577	PIPE			1
9	7289301	CLAMP			4
10	7292578	SAFETY BAR			1
11	7290897	COTTER PIN			2

FRONT AXLE GREASING GROUP

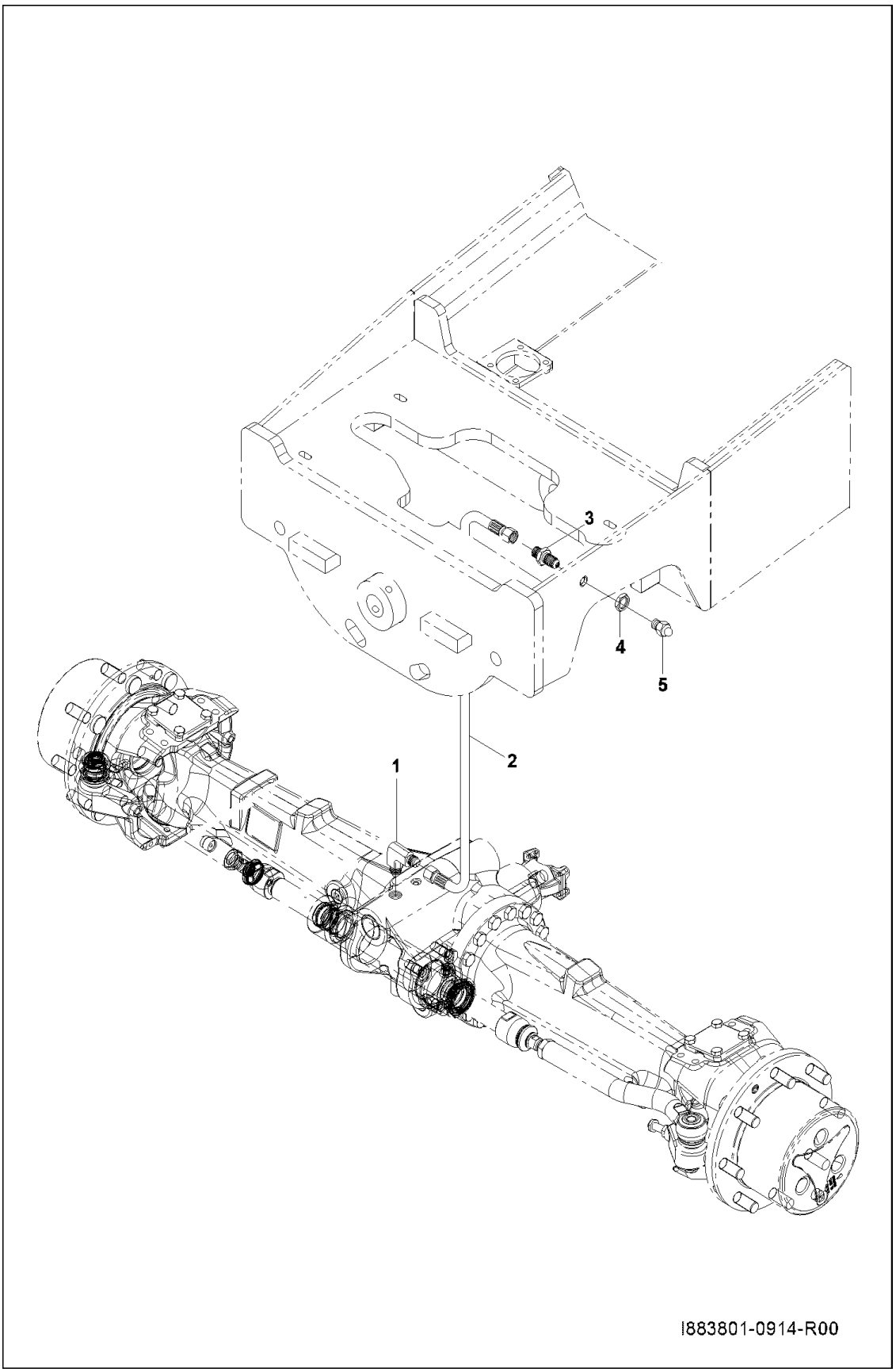

FRONT AXLE GREASING GROUP (Cont'd)

Ref No	Part Number	Description	Remarks	Serial Number	Qty
1	7292579	FITTING			1
2	7292580	HOSE			1
3	7290827	FITTING			1
4	7290828	NUT			1
5	7289862	GREASER			1

EXTENSION PEDAL GROUP

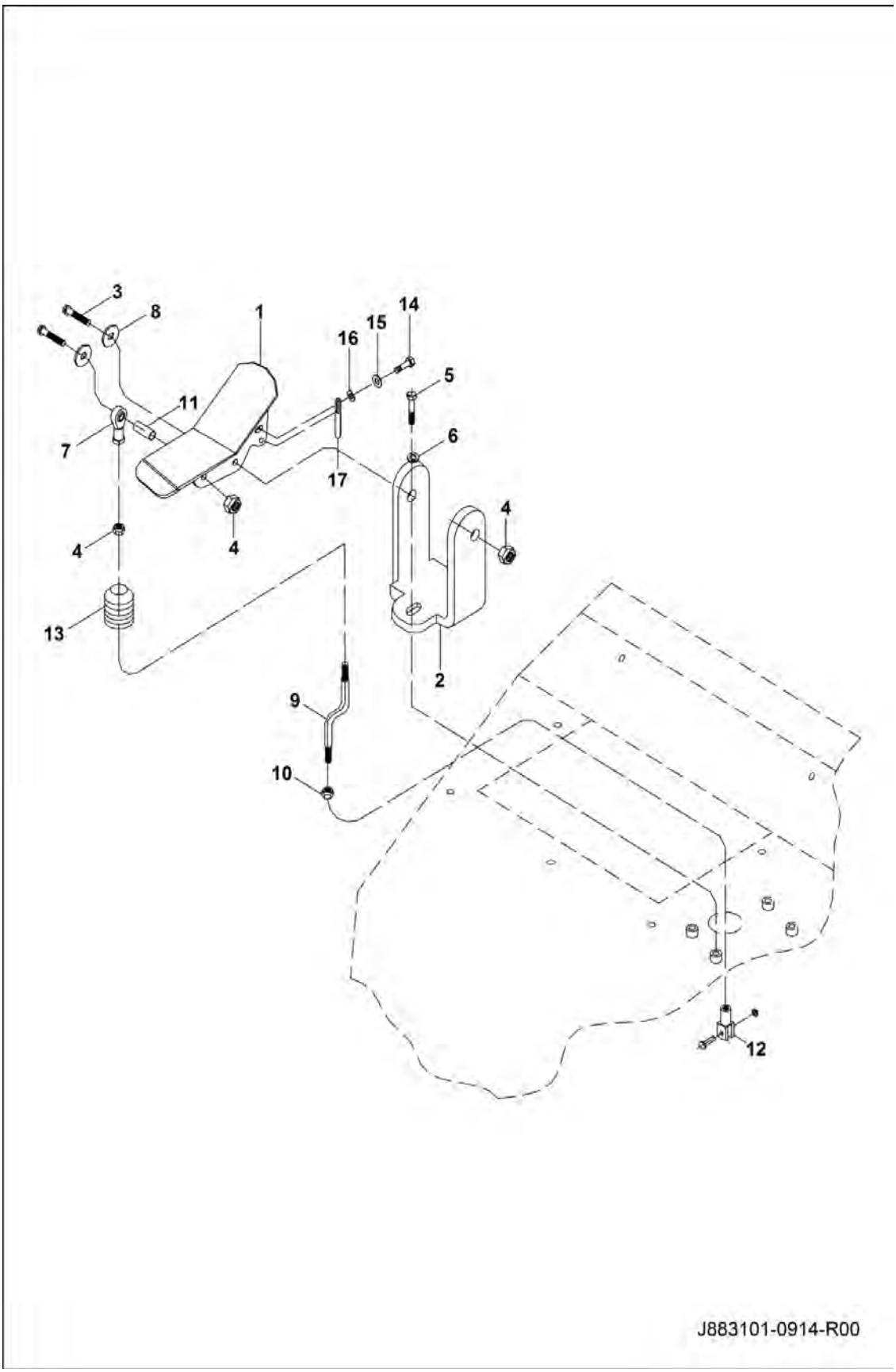

EXTENSION PEDAL GROUP (Cont'd)

Ref No	Part Number	Description	Remarks	Serial Number	Qty
1	7290837	PEDAL			1
2	7290838	JOINT			1
3	7289148	BOLT			2
4	7289641	NUT			2
5	7289279	BOLT			4
6	7289262	WASHER			4
7	7290832	JOINT			1
8	7288892	WASHER			2
9	7292581	ROD			1
10	7289263	NUT			2
11	7290835	BUSHING			1
12	7290254	ROD HEAD			1
13	7290836	BOOT			1
14	7289595	BOLT			2
15	7289610	WASHER			2
16	7289596	LOCK WASHER			2
17	7290840	SUPPORT PLATE			1

EXTENDED CYLINDER CIRCUIT

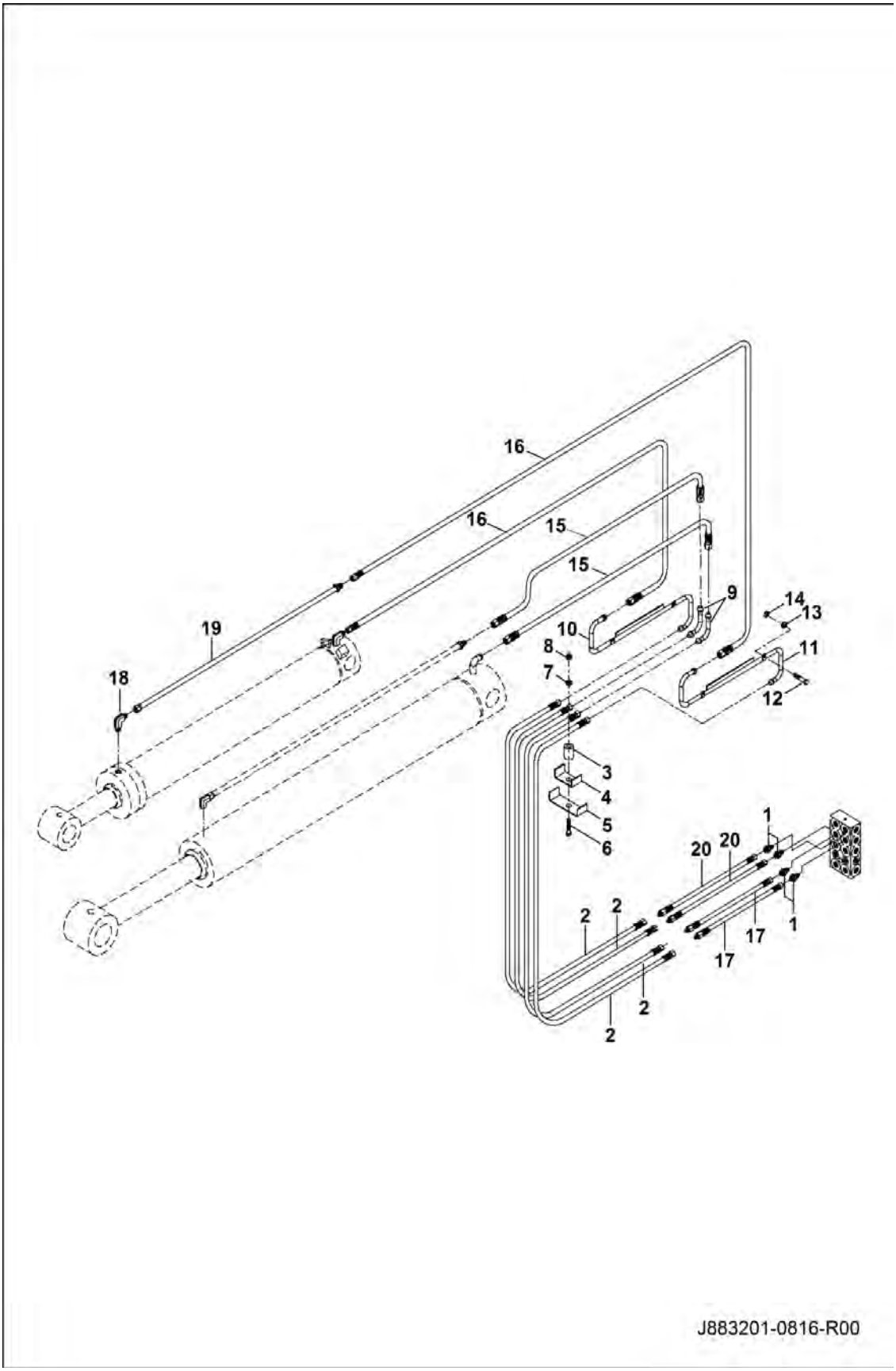

EXTENDED CYLINDER CIRCUIT (Cont'd)

Ref No	Part Number	Description	Remarks	Serial Number	Qty
1	7291437	FITTING			4
2	7292582	HOSE			4
3	7292594	BUSHING			1
4	7289831	CLAMP			1
5	7292595	CLAMP PLATE			1
6	7291330	BOLT			1
7	7289604	WASHER			1
8	7288888	NUT			1
9	7292596	PIPE			2
10	7292597	PIPE			1
11	7292598	PIPE			1
12	7289279	BOLT			4
13	7288892	WASHER			4
14	7289641	NUT			4
15	7292587	HOSE			2
16	7292599	HOSE			2
17	7291526	HOSE			2
18	7291518	FITTING			1
19	7291533	PIPE			1
20	7292600	HOSE			2

EXTENDED CYLINDER

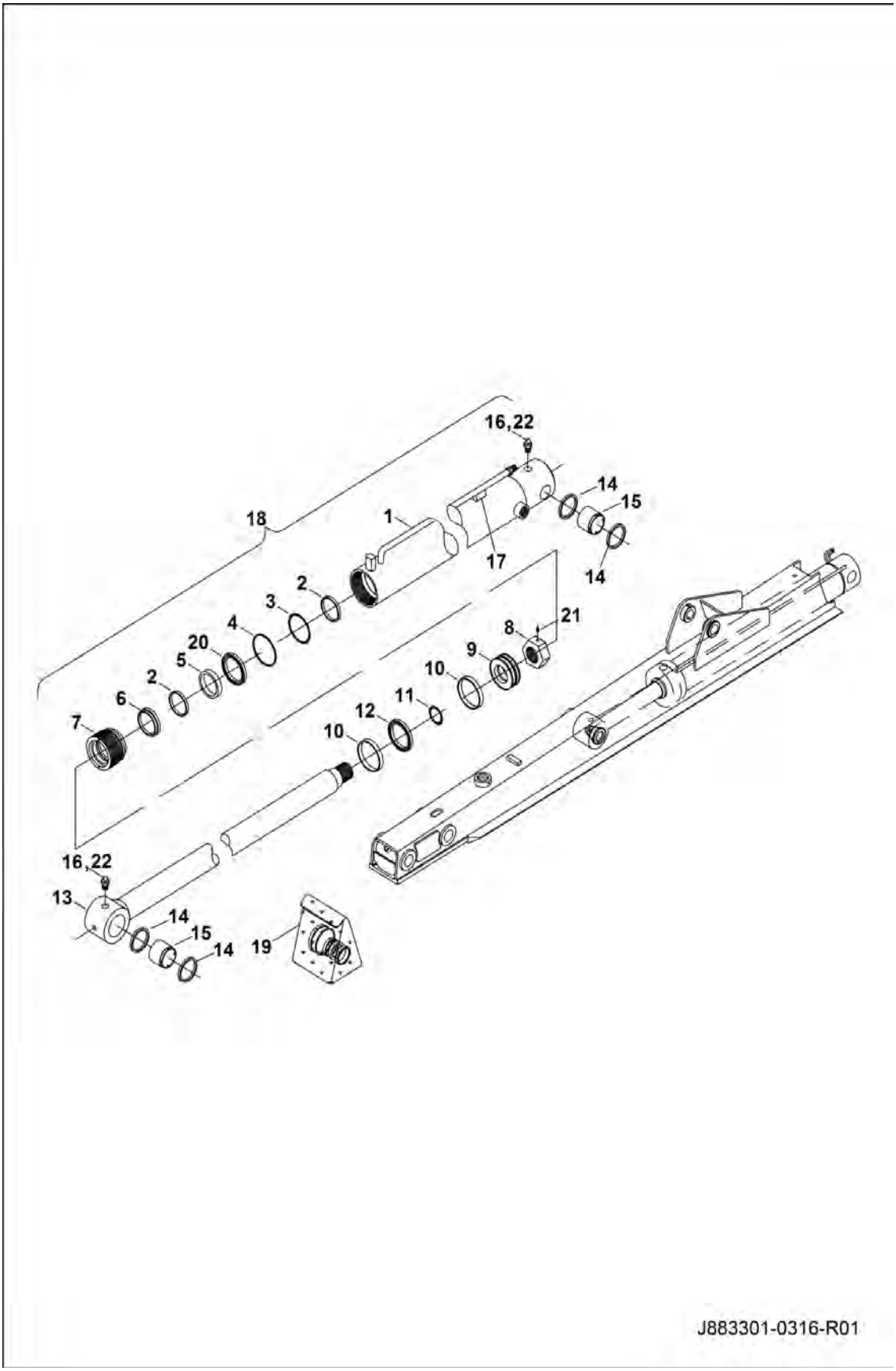

EXTENDED CYLINDER (Cont'd)

Ref No	Part Number	Description	Remarks	Serial Number	Qty
1	7304342	CYLINDER PIPE ASSEMBLY			1
2	7291548	TEFLON RING			2
3	7289888	O-RING			1
4	7289887	BACK-UP RING			1
5	7289855	NUTRING			1
6	7289857	DUST SEAL			1
7	7292602	GUIDE			1
8	7292603	NUTRING			1
9	7292604	PISTON			1
10	7289962	TEFLON RING			4
11	7289898	O-RING			1
12	7289897	OMEGAT			1
13	7304343	ROD ASSEMBLY			1
14	7289943	DUST SEAL			4
15	7292606	BUSHING			4
16	7289862	GREASER			2
17	7292607	RUBBER BUMPER			1
18	7301561	EXTENDED CYLINDER ASSY			1
19	7292609	REPAIR KIT			1
20	7289948	OMEGAT			1
21	7291544	SET SCREW			1
22	7289871	GREASER COVER			2

EXTENDED STICK AND CONNECTIONS

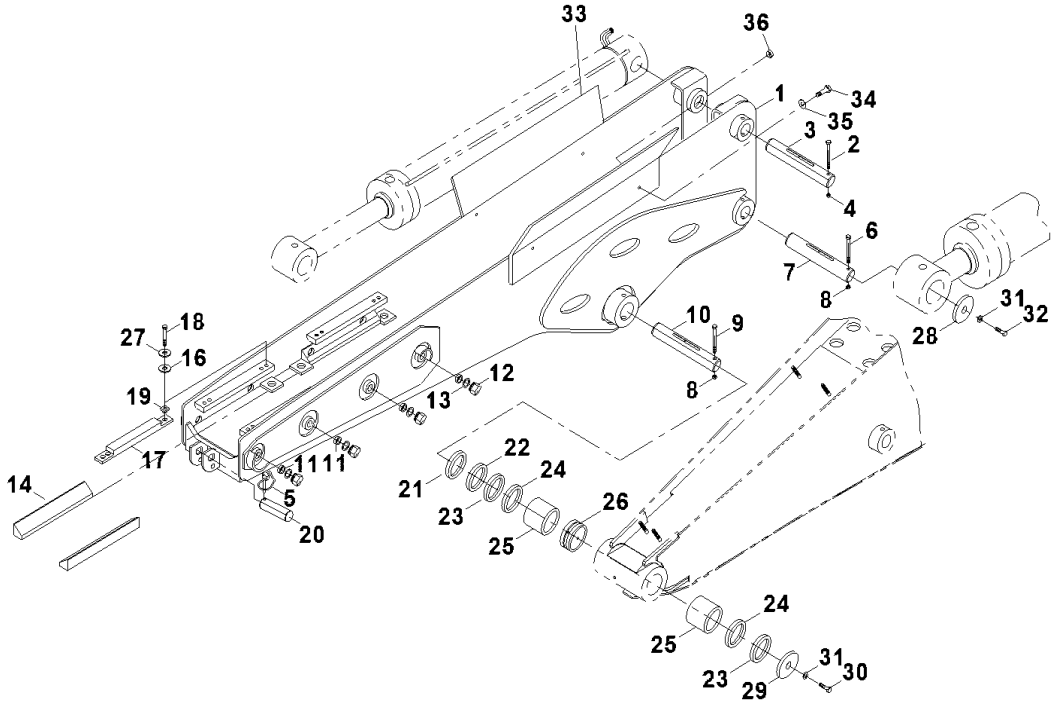

J883401-0914-R04

EXTENDED STICK AND CONNECTIONS (Cont'd)

Ref No	Part Number	Description	Remarks	Serial Number	Qty
1	7292611	EXTENDED STICK ASS'Y			1
2	7290722	BOLT			1
3	7292612	PIN			1
4	7288888	NUT			1
5	7290943	PIN			2
6	7292613	BOLT			1
7	7292614	PIN			1
8	7289514	NUT			1
9	7289980	BOLT			1
10	7292492	PIN			1
11	7292615	WASHER			2
12	7292617	SETSCREW			8
13	7292619	NUT			8
14	7292620	HOUSING			4
15	7290337	BOLT			1
16	7289278	WASHER			16
17	7292622	SLIDING BLOCK			4
18	7289642	BOLT			16
19	7292623	BOLT ADAPTER			4
20	7292625	PIN			1
21	7292626	SHIM	(1.0 mm)		2
22	7292627	SHIM	(0.5 mm)		2
23	7292491	WASHER			2
24	7292490	DUST SEAL			2
25	7292489	BUSHING			2
26	7292488	BUSHING			1
27	7289259	LOCK WASHER			16
28	7292628	PIN WASHER			1
29	7292493	WASHER			1
30	7292494	BOLT			1
31	7290335	WASHER			2
32	7290337	BOLT			2
33	7292629	COVER PLATE			2
34	7292630	BOLT			4
35	7292190	WASHER			4
36	7289641	NUT			4

EXTENDED STICK AND BUCKET CONNECTIONS

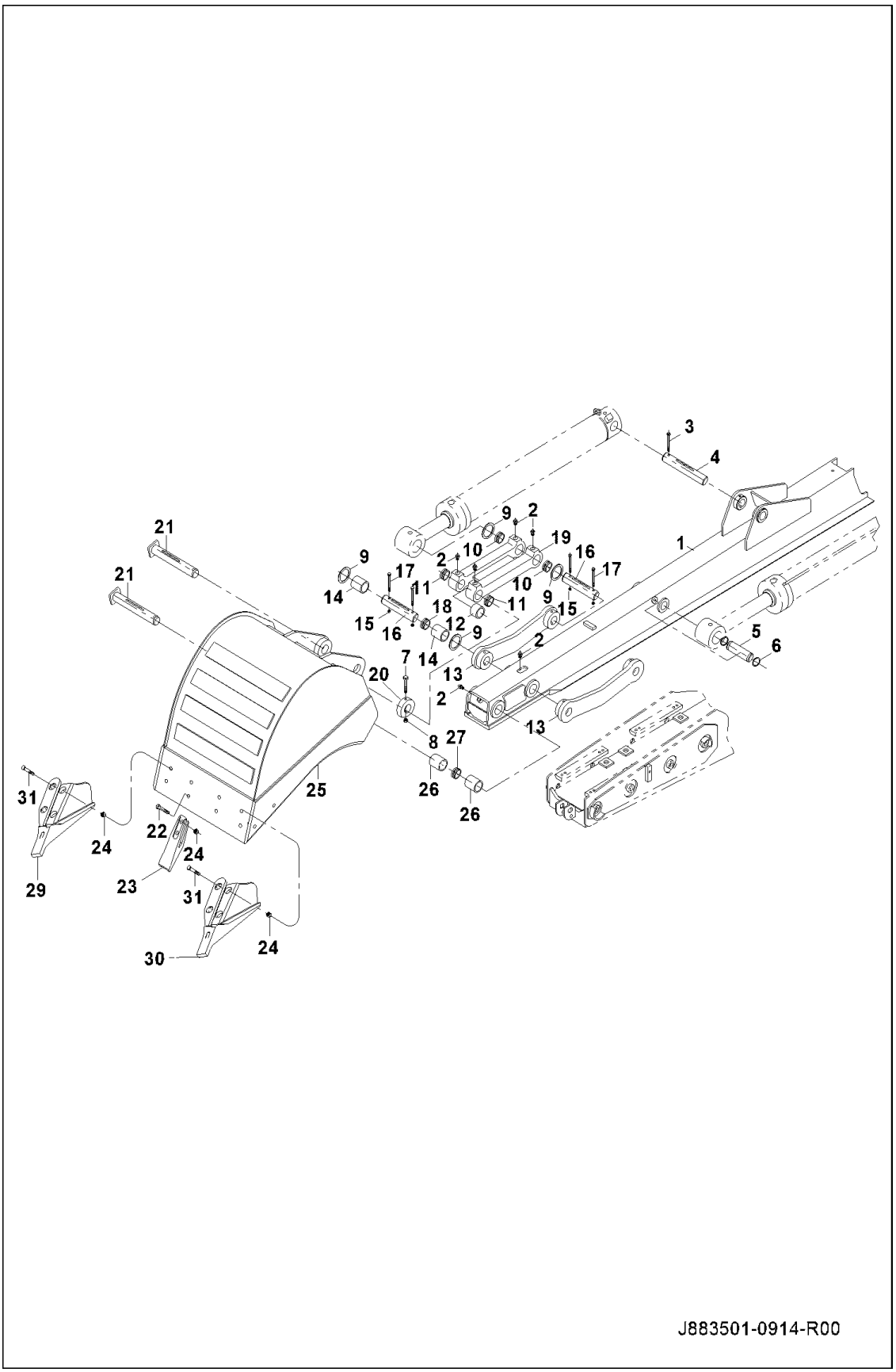

EXTENDED STICK AND BUCKET CONNECTIONS (Cont'd)

Ref No	Part Number	Description	Remarks	Serial Number	Qty
1	7292631	BOOM ASSEMBLY			1
2	7289862	GREASER			6
3	7290708	BOLT			1
4	7292487	PIN			1
5	7292632	PIN			1
6	7290746	WASHER			1
7	7290690	BOLT			2
8	7288888	NUT			2
9	7290713	SHIM			4
10	7290721	BUSHING			2
11	7290725	BUSHING			2
12	7290724	BUSHING			1
13	7290728	LEVER			2
14	7290730	BUSHING			2
15	7288888	NUT			4
16	7290723	PIN			2
17	7290690	BOLT			4
18	7290729	BUSHING			1
19	7292495	LEVER			1
20	7290902	BUSHING			2
21	7290726	PIN			2
22	7290735	BOLT			4
23	7290734	TOOTH			2
24	7290736	NUT			8
25	7292496	BUCKET	(600 mm)		1
25	7292498	BUCKET	OPTIONAL (300 mm)		1
25	7292500	BUCKET	OPTIONAL (800 mm)		1
26	7290732	SHIM			2
27	7290733	BUSHING			1
28	7292504	TOOTH SET			1
29	7292501	CUTTER SIDE RIGHT			1
30	7292502	CUTTER SIDE LEFT			1
31	7292503	BOLT			2

HAMMER CONNECTIONS - EXTENDED

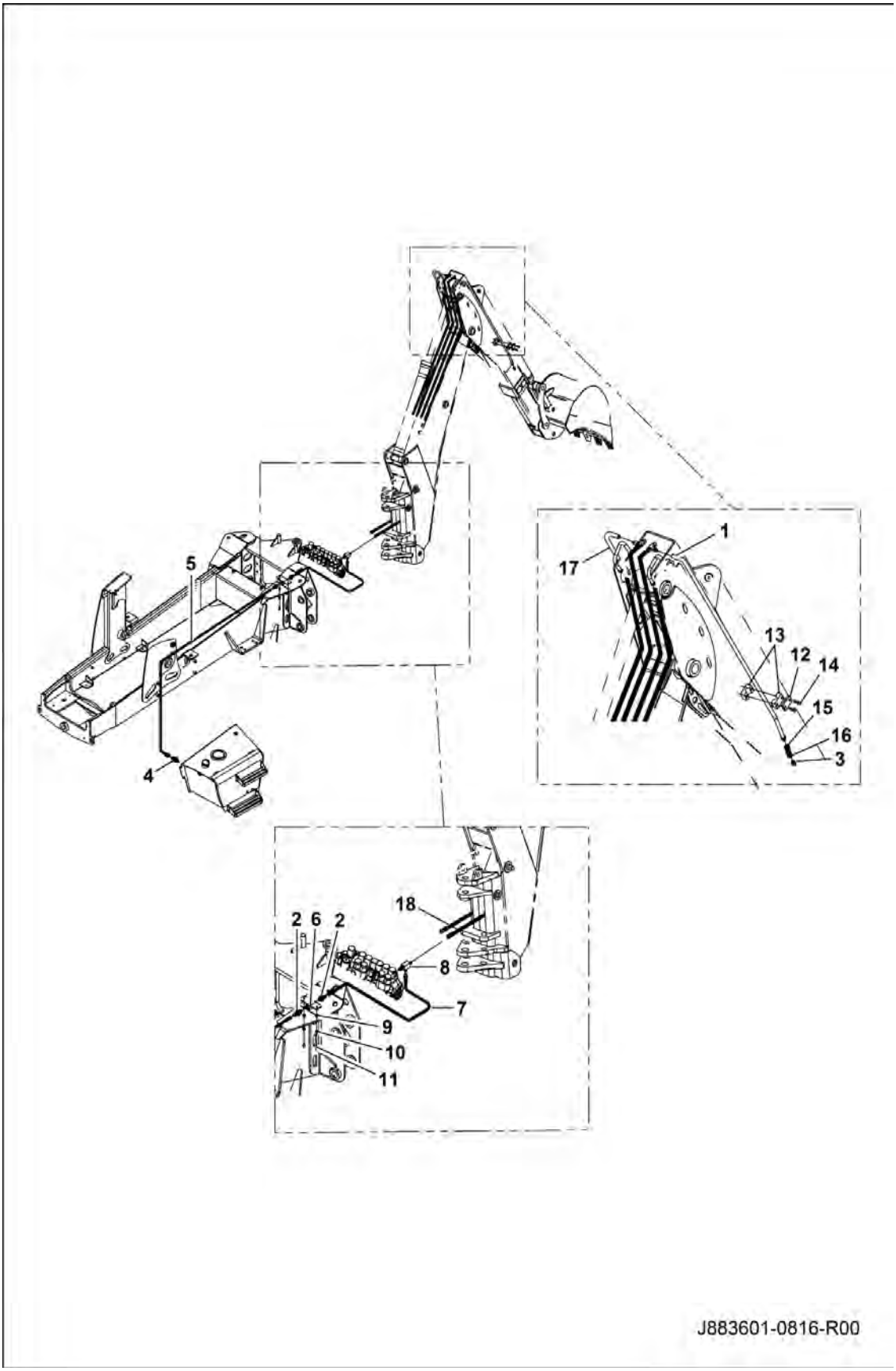

HAMMER CONNECTIONS - EXTENDED (Cont'd)

Ref No	Part Number	Description	Remarks	Serial Number	Qty
1	7301327	EXT. STICK HAMMER TUBE RIGHT			1
2	7290911	FITTING			2
3	7290910	NUT			2
4	7290916	FITTING			1
5	7290915	HOSE			1
6	7290912	CUTTING LINE VALVE ASS'Y			1
7	7290914	HOSE			1
8	7311479	T-FITTING			1
9	7288892	WASHER			2
10	7288891	LOCK WASHER			2
11	7289261	BOLT			2
12	7301328	CLAMP TOP PLATE			1
13	7301329	CLAMP BLOCK			2
14	7291450	BOLT			2
15	7304325	HOSE			2
16	7290918	COUPLER, MALE			2
17	7301330	EXT. STICK HAMMER TUBE LEFT			1
18	7311481	HOSE			1

CRANKCASE SHAFT GUARD

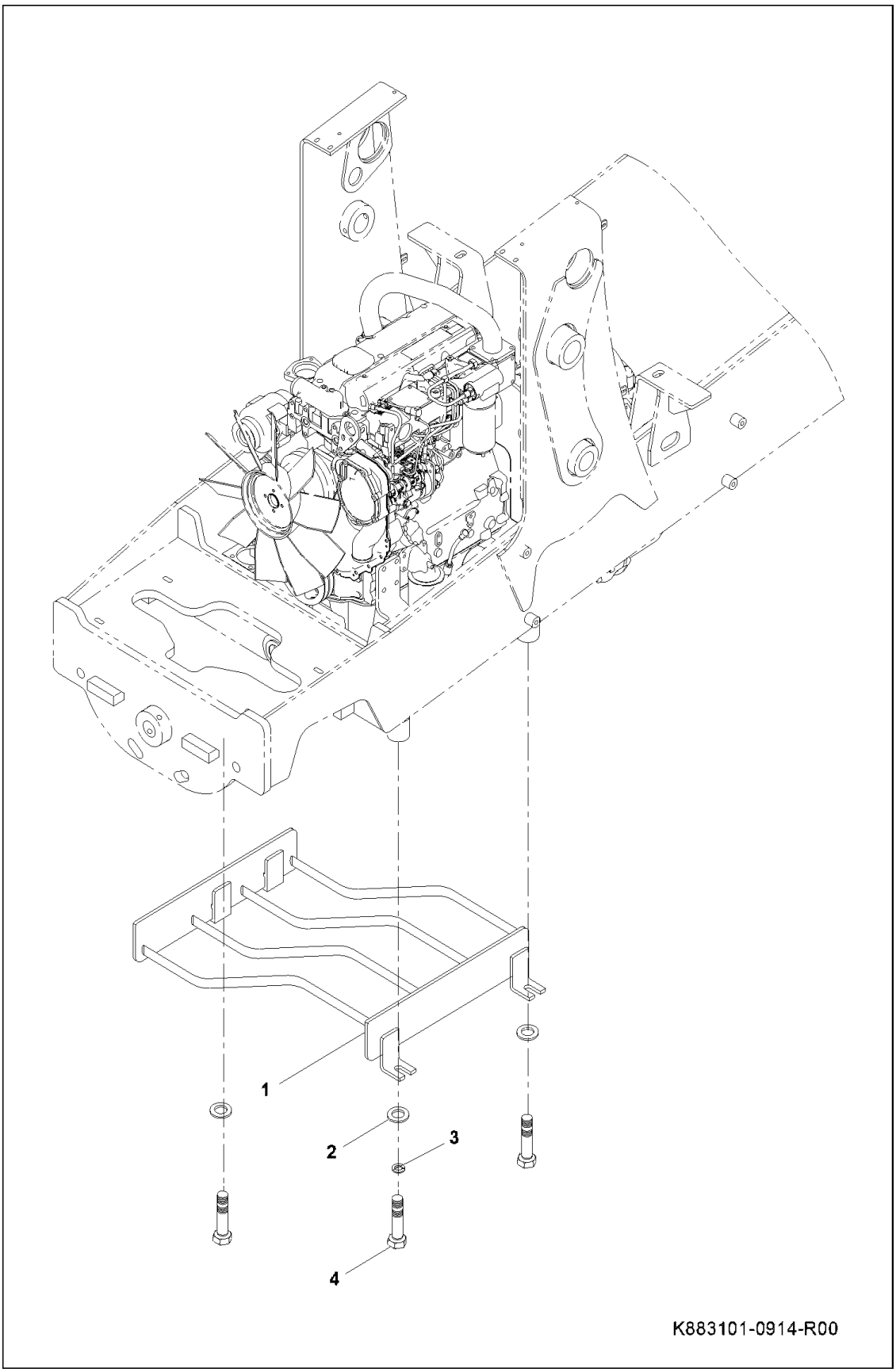

CRANKCASE SHAFT GUARD (Cont'd)

Ref No	Part Number	Description	Remarks	Serial Number	Qty
1	7292648	GUARD			1
2	7288884	WASHER			4
3	7290001	LOCK WASHER			4
4	7289996	BOLT			4

NAMEPLATE CONNECTION

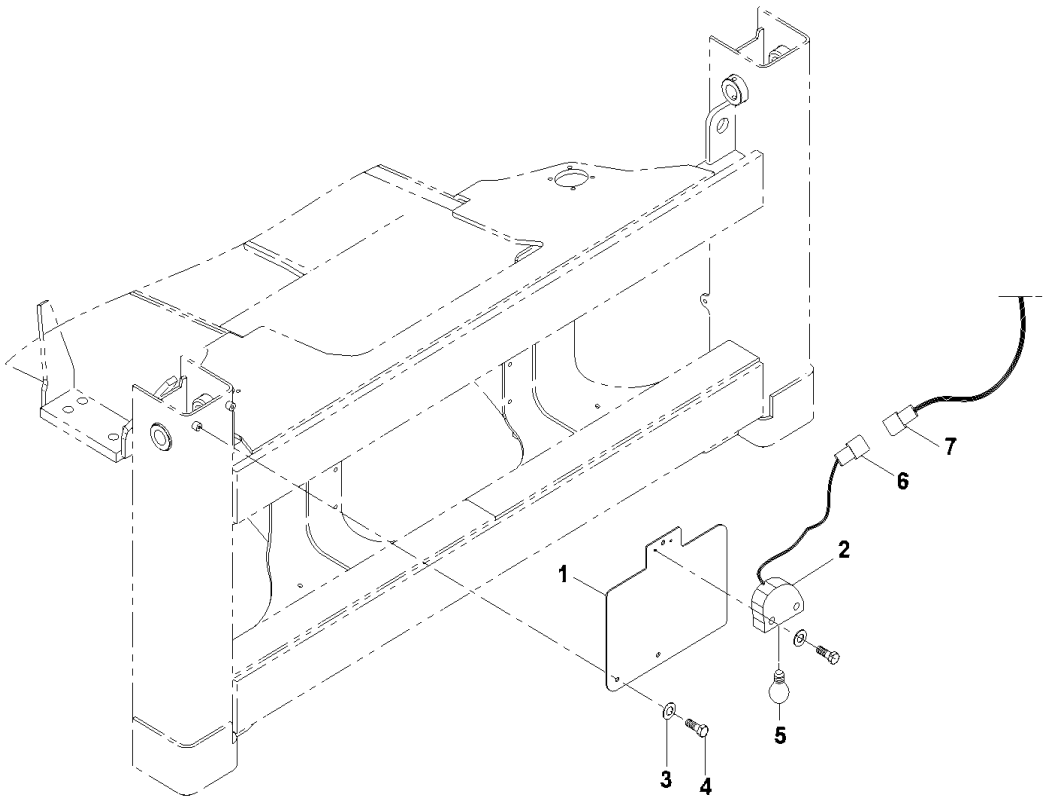

K883201-0914-R00

NAMEPLATE CONNECTION (Cont'd)

Ref No	Part Number	Description	Remarks	Serial Number	Qty
1	7290919	BRACKET			1
2	7290920	BRACKET			1
3	7289262	WASHER			2
4	7288896	BOLT			2
5	7290921	AMPOUL			1
6	7290922	SOCKET			1
7	7289550	SOCKET			1

HYDRAULIC ACCUMULATOR AND EHSS SYSTEM

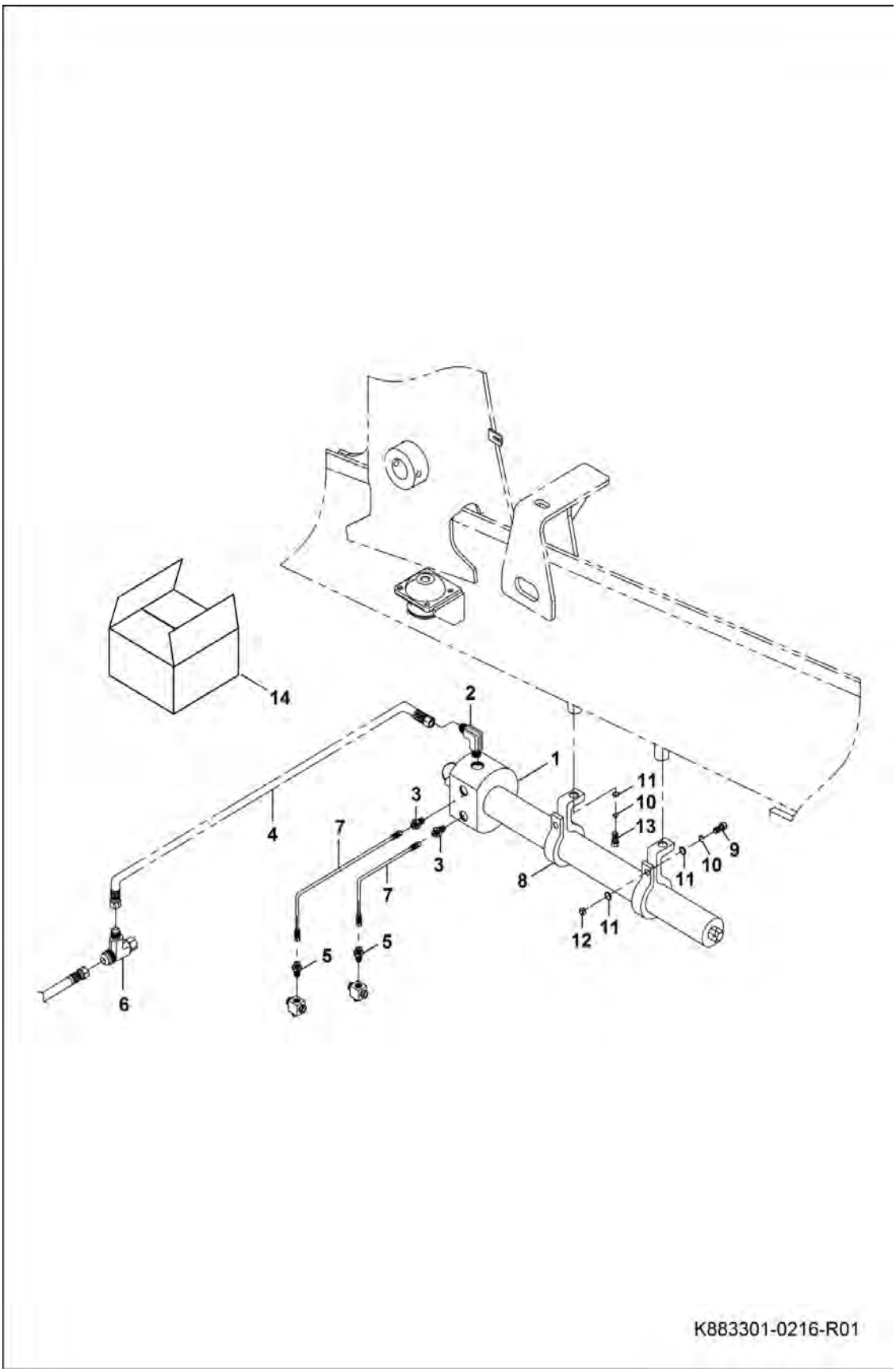

HYDRAULIC ACCUMULATOR AND EHSS SYSTEM (Cont'd)

Ref No	Part Number	Description	Remarks	Serial Number	Qty
1	7290923	ACCUMULATOR			1
2	7289721	FITTING			1
3	7289718	FITTING			2
4	7292649	HOSE			1
5	7292650	FITTING			2
6	7289724	FITTING			1
7	7292652	HOSE			2
8	7290927	CLAMP			2
9	7289849	BOLT			2
10	7289259	LOCK WASHER			4
11	7289604	WASHER			6
12	7289637	NUT			2
13	7289642	BOLT			2
14	7292653	EHSS SET			1

HAMMER CONNECTIONS-STANDARD

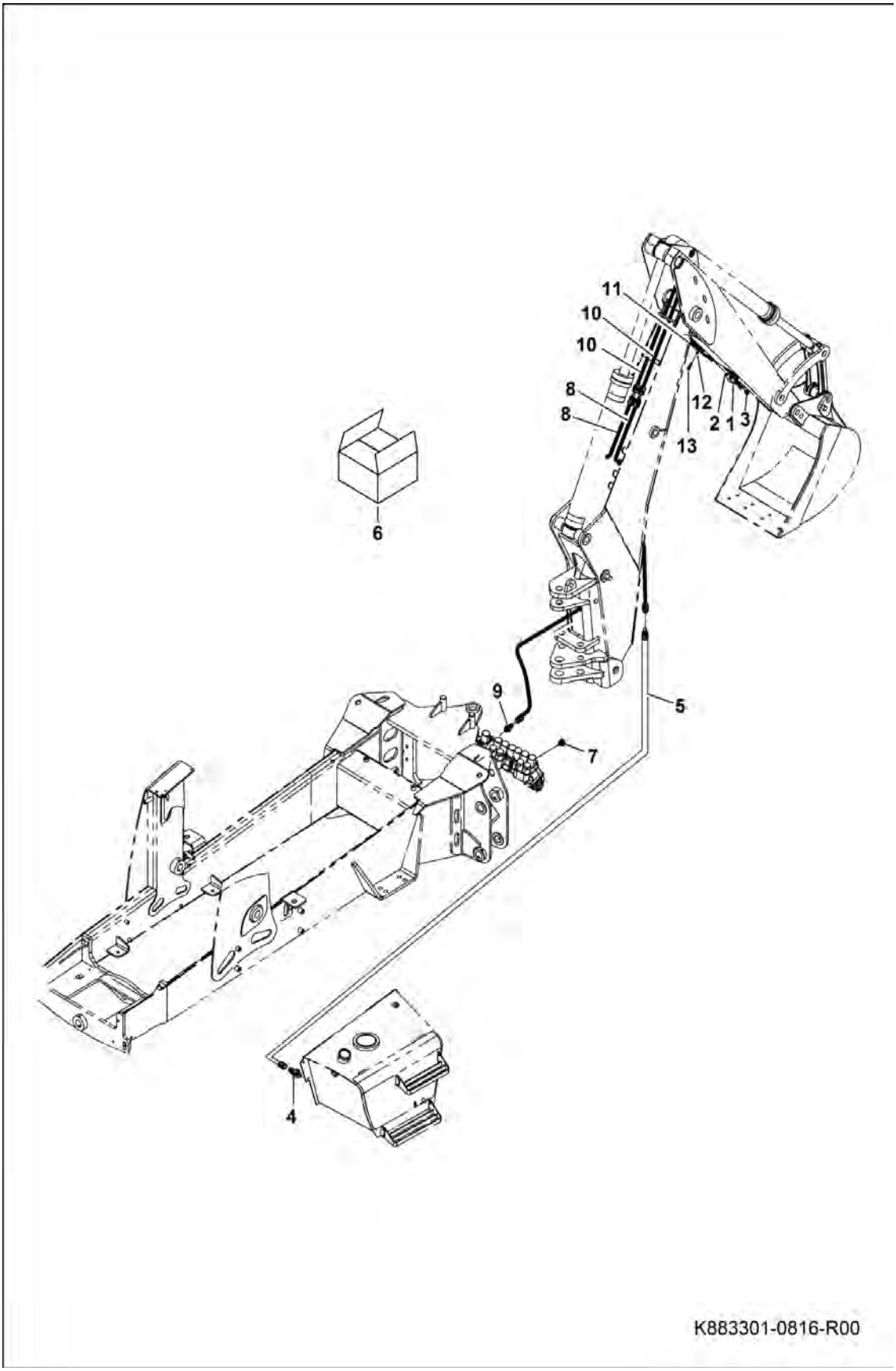

HAMMER CONNECTIONS-STANDARD (Cont'd)

Ref No	Part Number	Description	Remarks	Serial Number	Qty
1	7292662	HOSE BRACKET			1
2	7292663	SL FITTING			2
3	7290910	NUT			2
4	7290916	FITTING			1
5	7312122	HOSE			1
6	7292661	CUTTING LINE SET			1
7	7290386	PLUG			1
8	7292657	HOSE			2
9	7311434	FITTING			1
10	7292659	HOSE			2
11	7289831	CLAMP			1
12	7289259	LOCK WASHER			1
13	7289691	BOLT			1

AIR-CONDITIONER LINE

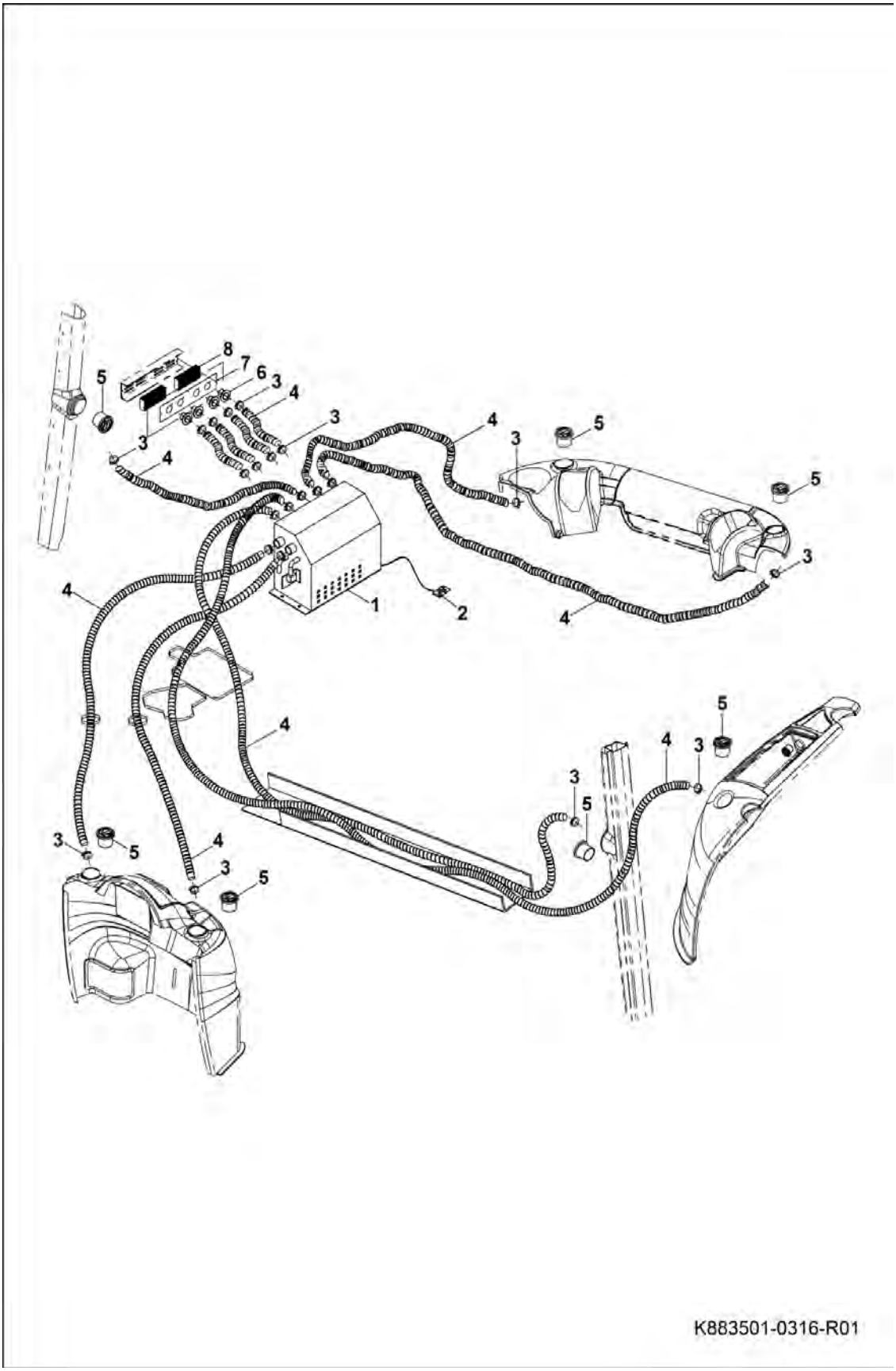

AIR-CONDITIONER LINE (Cont'd)

Ref No	Part Number	Description	Remarks	Serial Number	Qty
1	7292665	AIR CONDITIONER			1
2	7291257	AIR CONDITIONER BUTTON			1
3	7292181	CLAMP			2
4	7292666	AIR CONDITIONER HOSE			11
5	7290422	ROUND BLOWER			7
6	7292184	AIR VENT			4
7	7304324	AIR-CONDITIONING PLATE			1
8	7292187	AIR FILTER			2

AIR-CONDITIONER AND ITS CONNECTIONS

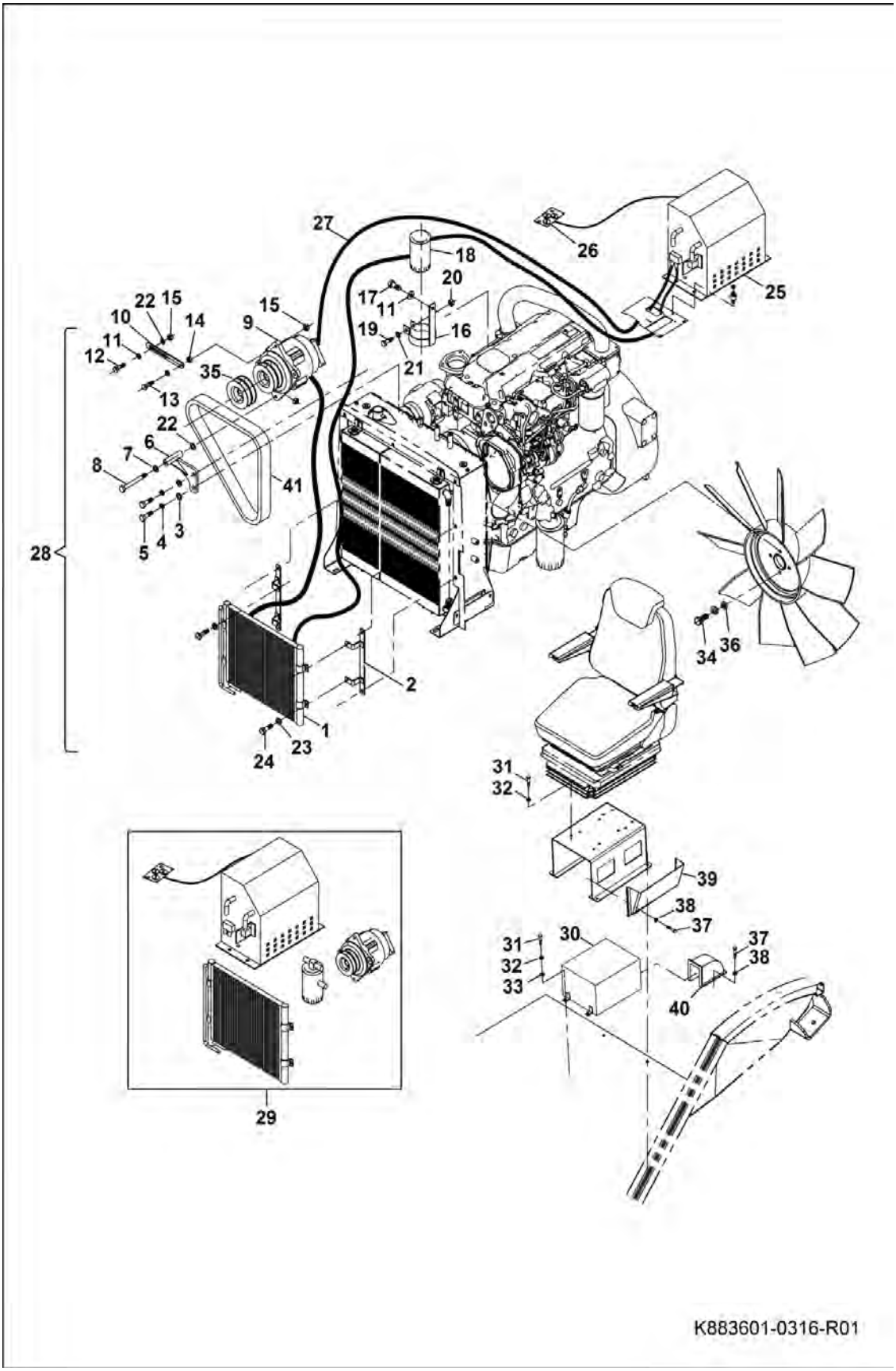

AIR-CONDITIONER AND ITS CONNECTIONS (Cont'd)

Ref No	Part Number	Description	Remarks	Serial Number	Qty
1	7293093	AC CONDENSER			1
2	7292668	AIR-CONDITIONER BRACKET			2
3	7290965	WASHER			2
4	7289635	LOCK WASHER			2
5	7292669	BOLT			2
6	7292671	MOTOR CONNECTION SHEET			1
7	7289604	WASHER			1
8	7289634	BOLT			1
9	7304358	MOTOR			1
10	7292674	MOTOR CONNECTION SHEET			1
11	7289278	WASHER			4
12	7291623	BOLT			1
13	7290887	BOLT			1
14	7292675	AIR-CONDITIONER WEDGE			1
15	7288888	NUT			3
16	7290961	TUBE CONNECTION SHEET			1
17	7304359	BOLT			1
18	7304360	TUBE			1
19	7289273	BOLT			1
20	7289641	NUT			1
21	7289268	WASHER			1
22	7289259	LOCK WASHER			1
23	7292677	WASHER			4
24	7289520	BOLT			4
25	7304361	AIR-CONDITIONER BODY			1
26	7291257	AIR CONDITIONER BUTTON			1
27	7292666	AIR CONDITIONER HOSE			1
28	7306796	AIR-CONDITIONER ASSEMBLY			1
29	7292665	AIR CONDITIONER			1
30	7304362	AIR CONDITIONER UNDER SEAT			1
31	7289691	BOLT			8
32	7288891	LOCK WASHER			8
33	7292190	WASHER			4
34	7289148	BOLT			4
35	7292685	PULLEY			1
36	7292560	WASHER			4

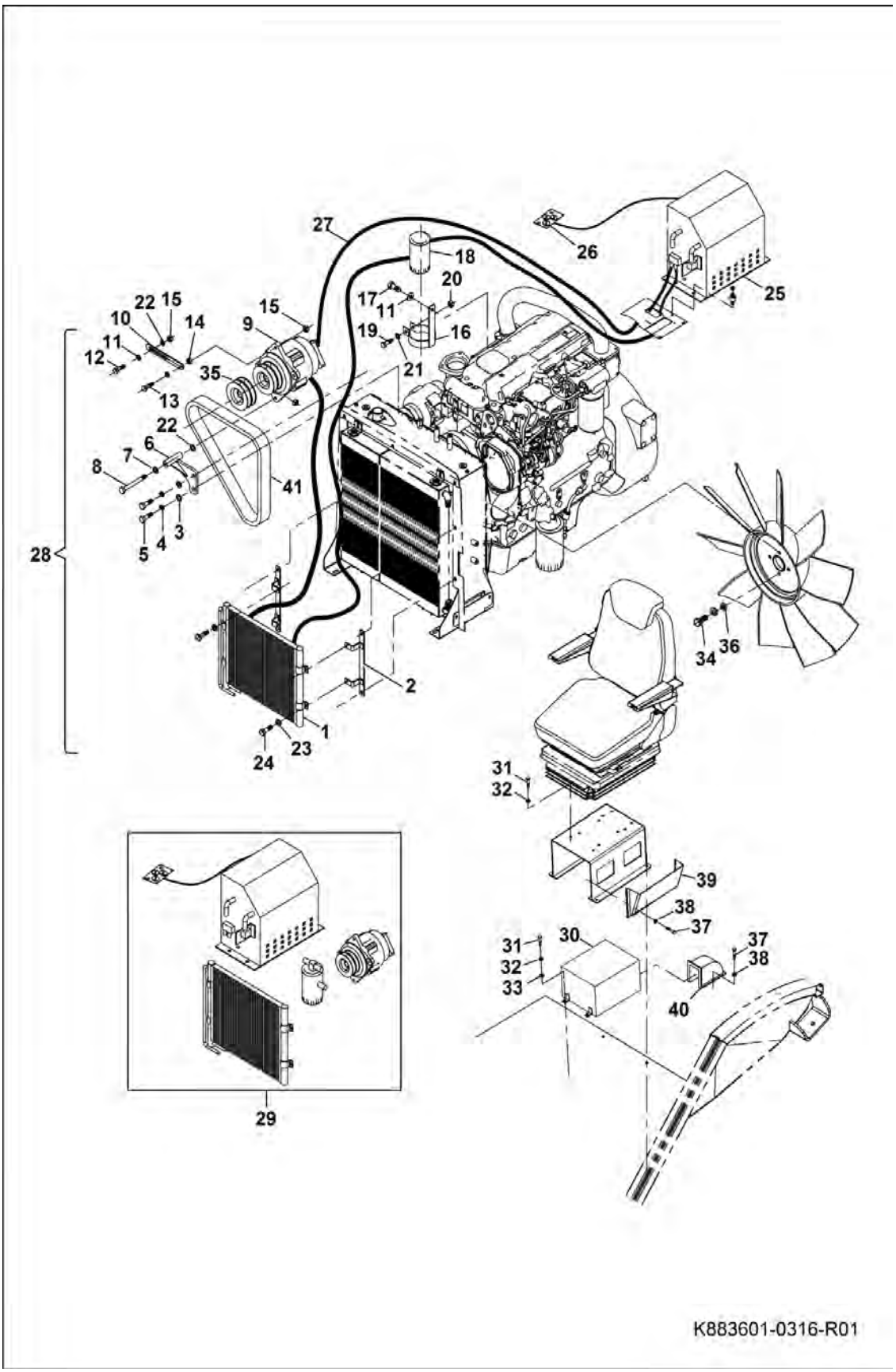
K883601-0316-R01

AIR-CONDITIONER AND ITS CONNECTIONS (Cont'd)

Ref No	Part Number	Description	Remarks	Serial Number	Qty
37	7289609	BOLT			8
38	7289610	WASHER			8
39	7292683	BLOWER PLATE			1
40	7292684	POLYESTER COVER			1
41	7292687	AC BELT			1

MECHANIC QUICK ATTACHMENT

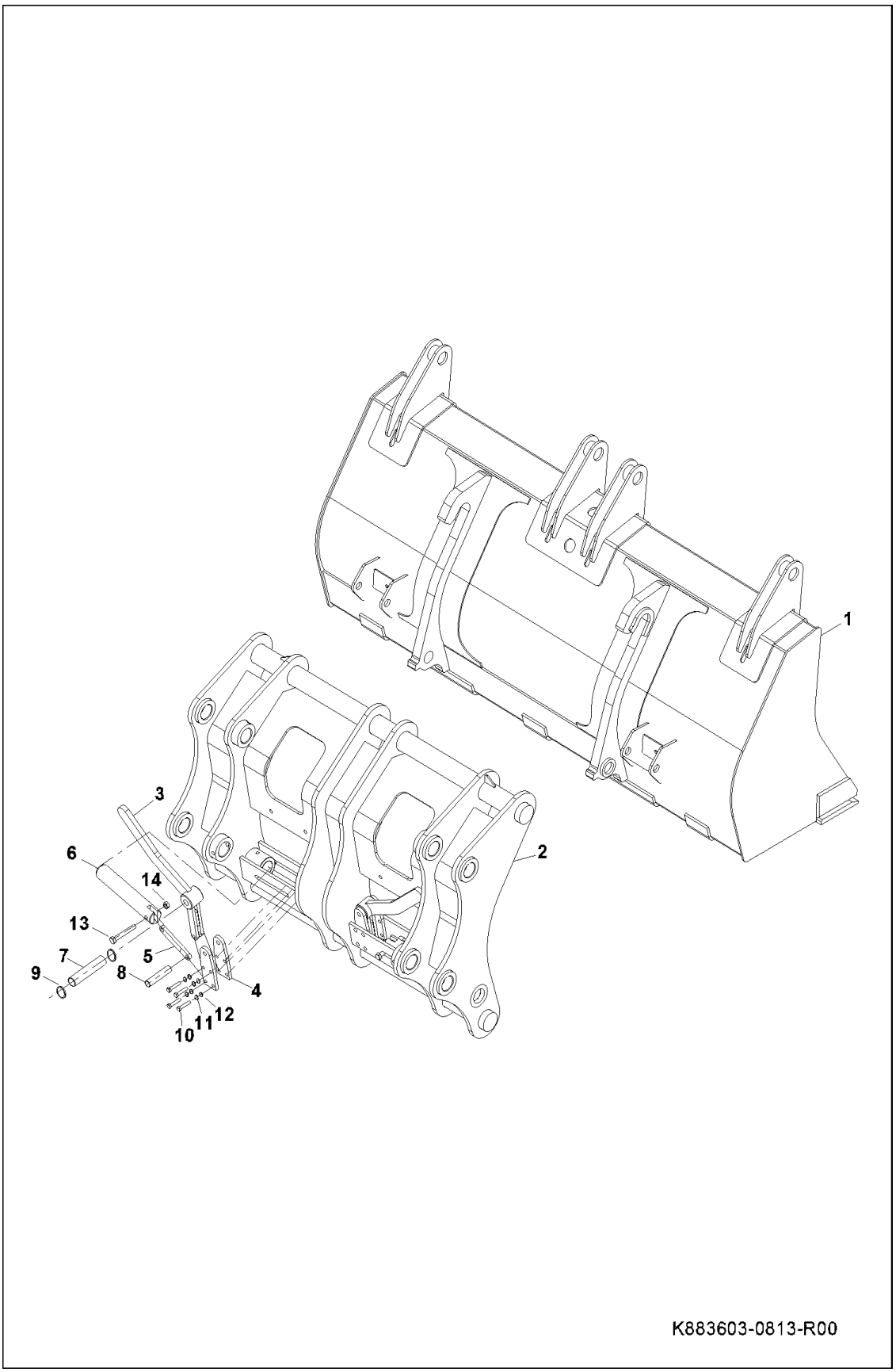

MECHANIC QUICK ATTACHMENT (Cont'd)

Ref No	Part Number	Description	Remarks	Serial Number	Qty
1	7292849	QUICK ATTACHMENT BUCKET			1
2	7292850	QUICK HITCH ATTACHMENT			1
3	7292851	LEVER			2
4	7292852	PLATE			4
5	7292853	PLATE			2
6	7292854	PIN			2
7	7292855	PIN			2
8	7292856	PIN			2
9	7292857	SEGMENT			2
10	7289515	BOLT			8
11	7289521	WASHER			8
12	7289635	LOCK WASHER			8
13	7289980	BOLT			2
14	7289514	NUT			2

FRONT BUCKET

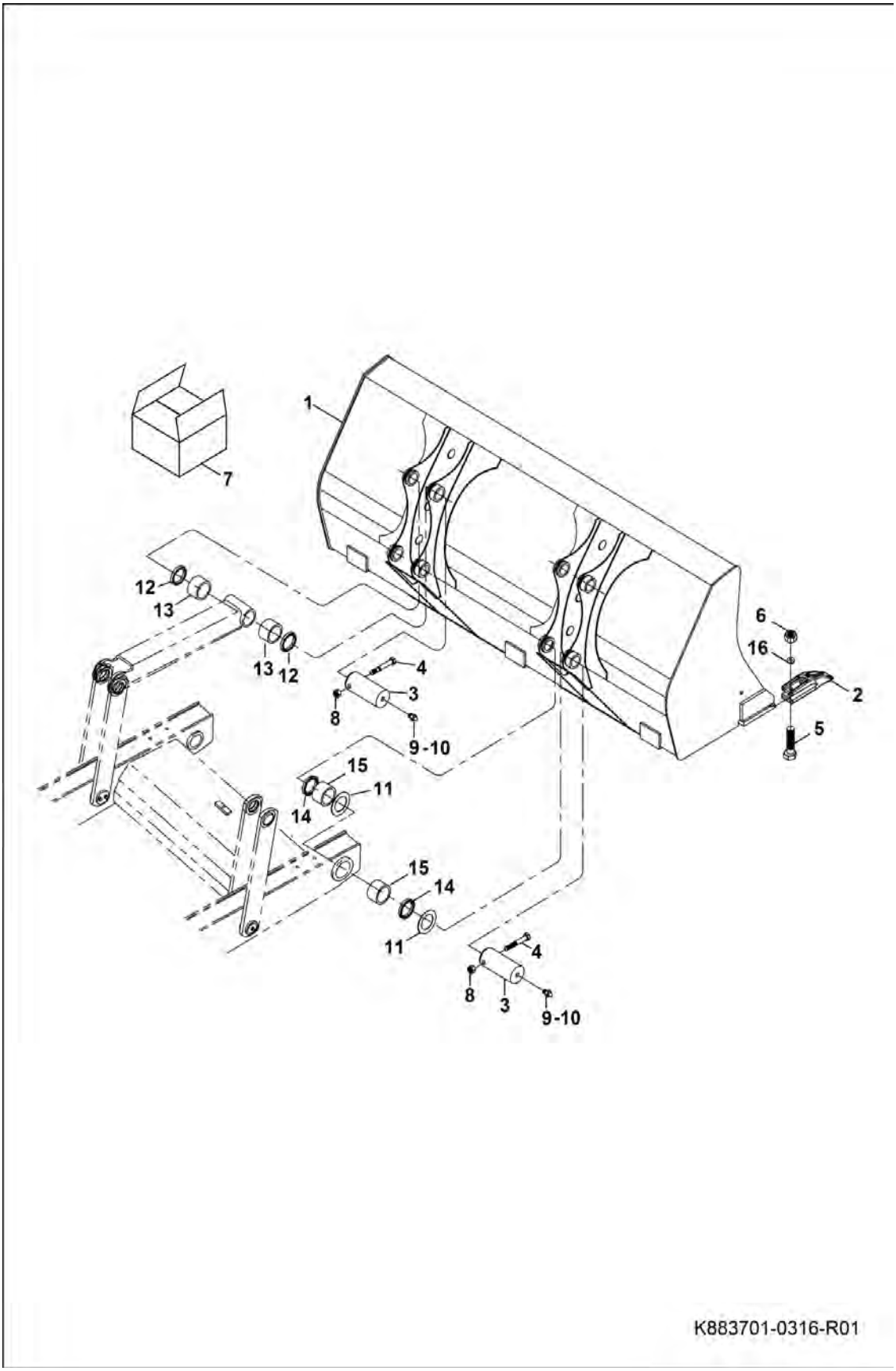

FRONT BUCKET (Cont'd)

Ref No	Part Number	Description	Remarks	Serial Number	Qty
1	7292700	BUCKET			1
2	7290734	TOOTH			7
3	7292561	PIN			4
4	7290707	BOLT			4
5	7290735	BOLT			14
6	7290736	NUT			14
7	7292691	TOOTH SET			1
8	7288888	NUT			4
9	7289862	GREASER			4
10	7289871	GREASER COVER			4
11	7292527	SHIM			4
12	7289920	DUST SEAL			4
13	7292562	BUSHING			4
14	7289943	DUST SEAL			4
15	7292544	BUSHING			4
16	7304368	ADJUSTING SHIM			10

FORK ATTACHMENT BUCKET

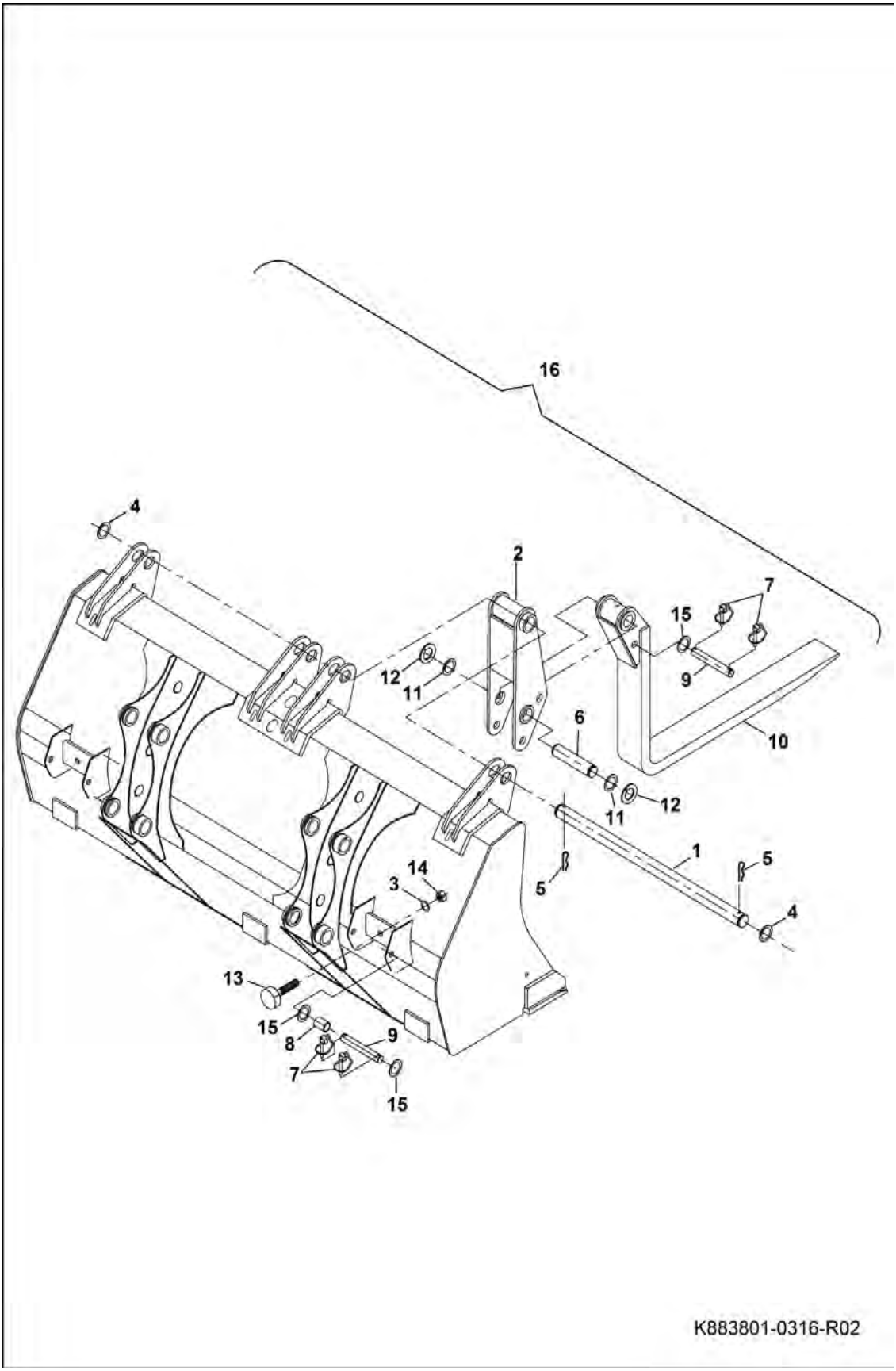

FORK ATTACHMENT BUCKET (Cont'd)

Ref No	Part Number	Description	Remarks	Serial Number	Qty
1	7290941	PIN			1
2	7290951	JOINT			2
3	7289314	WASHER			2
4	7290774	WASHER			2
5	7290773	SEGMENT			4
6	7290942	PIN			2
7	7290943	PIN			8
8	7290944	BUSHING			2
9	7290945	PIN			4
10	7290946	FORK			2
11	7290745	WASHER			4
12	7290746	WASHER			4
13	7290947	RUBBER BUMPER			2
14	7289514	NUT			2
15	7290948	WASHER			8
16	7290949	FORK ATTACHMENT SET			1

FORK ATTACHMENT CLAMSHELL BUCKET

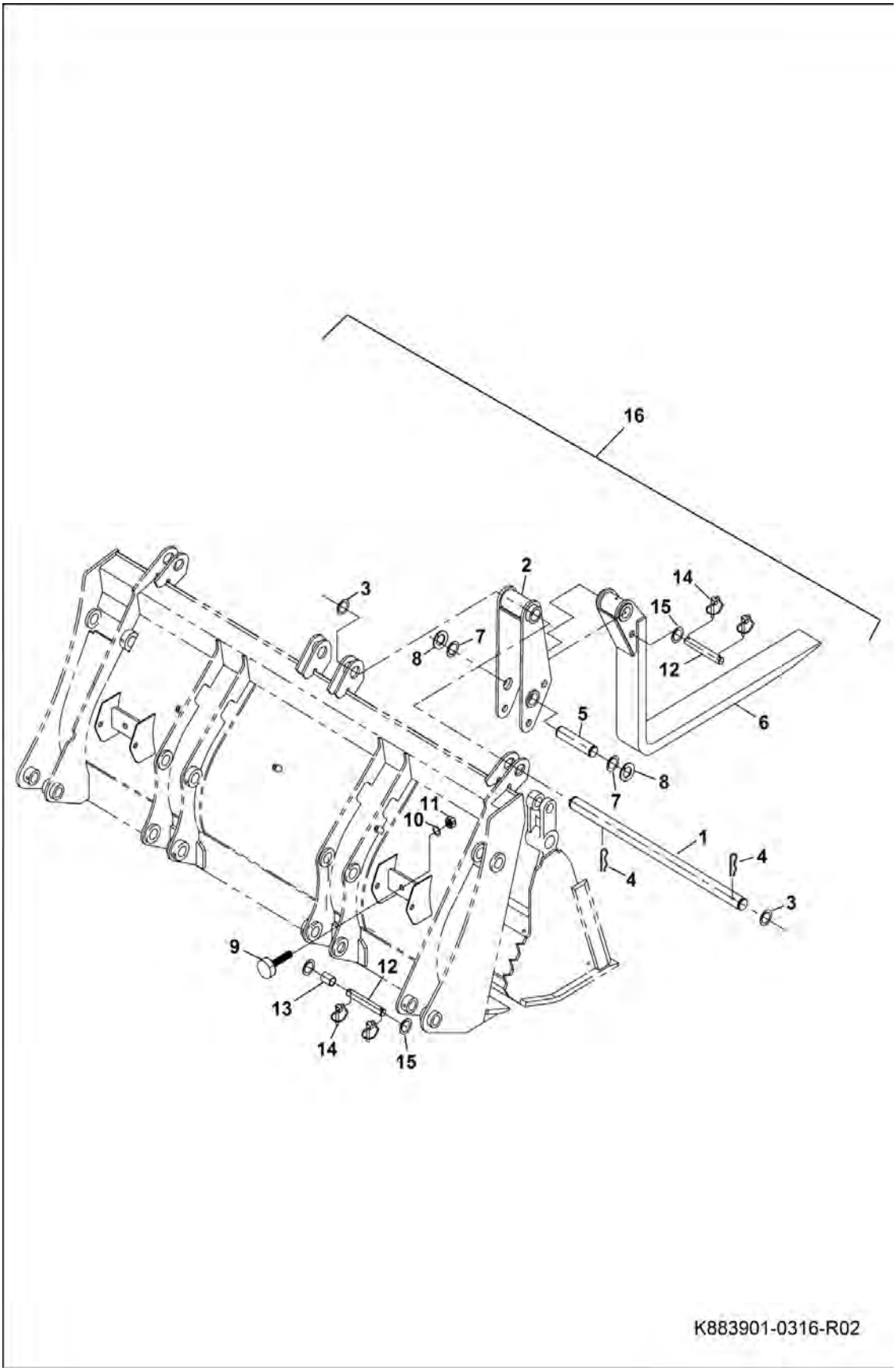

FORK ATTACHMENT CLAMSHELL BUCKET (Cont'd)

Ref No	Part Number	Description	Remarks	Serial Number	Qty
1	7290950	PIN			1
2	7290951	JOINT			2
3	7290774	WASHER			4
4	7290773	SEGMENT			4
5	7290942	PIN			2
6	7290946	FORK			2
7	7290745	WASHER			4
8	7290746	WASHER			4
9	7290947	RUBBER BUMPER			2
10	7289314	WASHER			2
11	7289514	NUT			2
12	7290945	PIN			4
13	7290944	BUSHING			2
14	7290943	PIN			8
15	7290948	WASHER			8
16	7290952	FORK ATTACHMENT SET			1

BOLT-ON SEGMENT

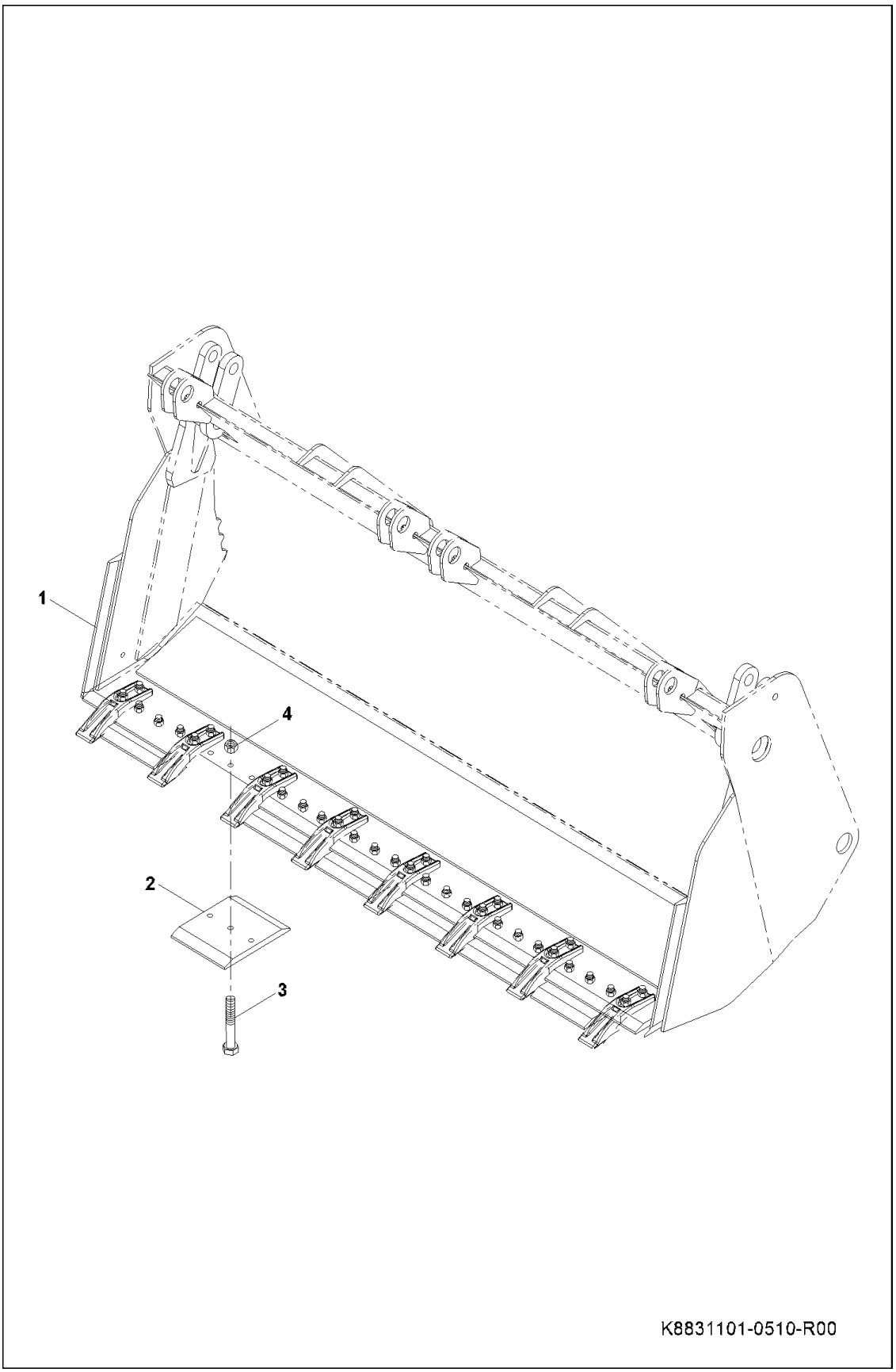

BOLT-ON SEGMENT (Cont'd)

Ref No	Part Number	Description	Remarks	Serial Number	Qty
1	7292709	PLATE	2280 mm FOR BUCKET		1
2	7292710	EDGE SEGMENT			7
3	7292711	BOLT			21
4	7292712	NUT			21

ENGINE BONNET INSULATION GROUP

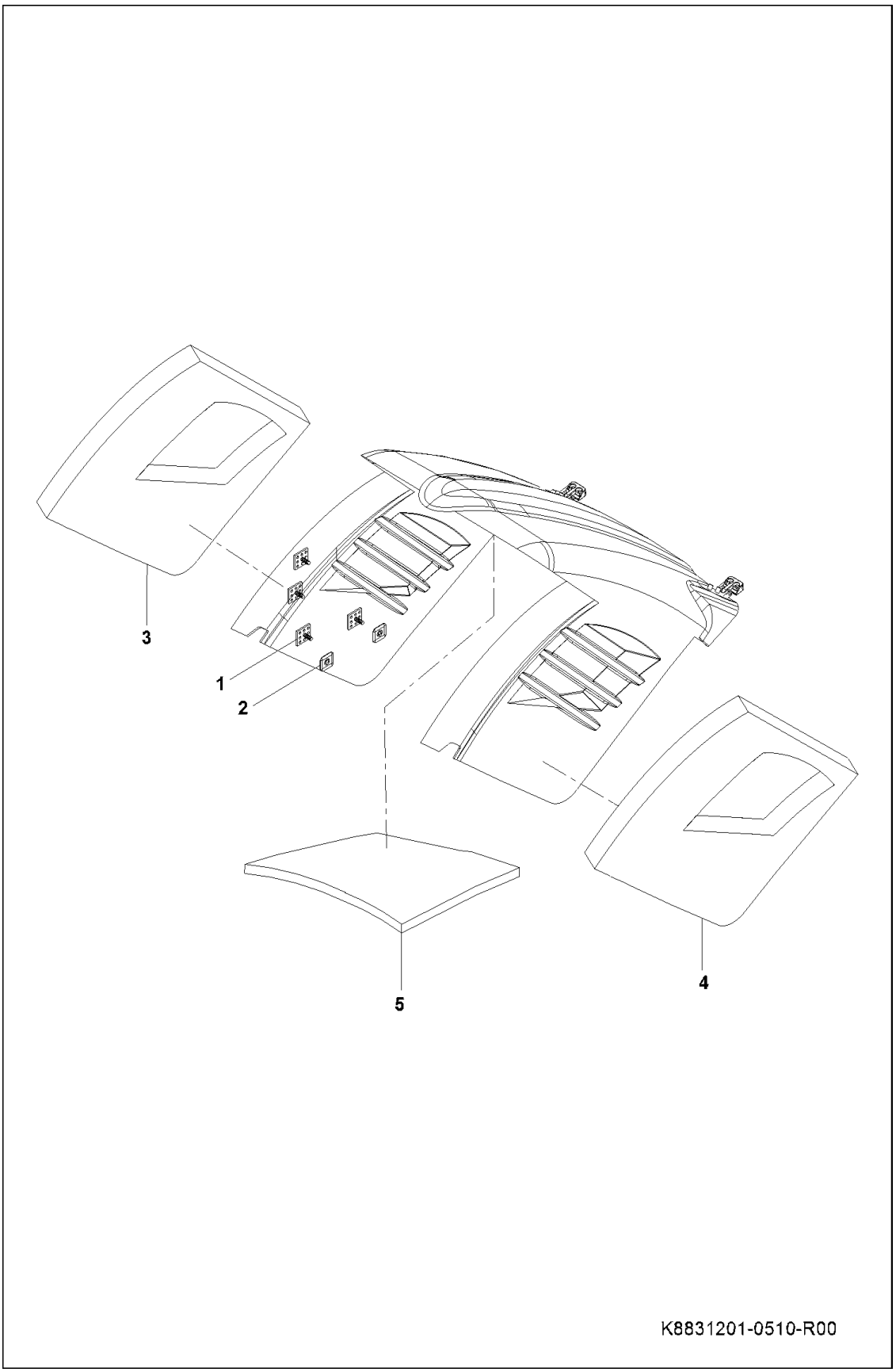

ENGINE BONNET INSULATION GROUP (Cont'd)

Ref No	Part Number	Description	Remarks	Serial Number	Qty
1	7290328	INSULATION PIN			35
2	7290329	INSULATION WASHER			35
3	7292713	INSULATION SPANGE - RIGHT S.			1
4	7292714	INSULATION SPANGE - LEFT S.			1
5	7292715	INSULATION SPANGE - TOP			1

NUMERICAL INDEX

Part Number	Description	Was	Code	Page
3725402	WASHER			27, 29
3725455	ROD			43
6515682	PLUG			143
6515771	GEAR, RING			61
6589739	DECAL 5			329
6595014	DECAL			329
6599360	SEALANT, ELEC .3 OZ			1
6630189	POLISH			1
6649446	PLUG			67
6649447	O-RING			67
6662035	WASHER			25, 27, 29
6668230	WASHER, THRUST			27, 29
6668278	SCREW			45, 71, 83, 97, 99, 103
6668313	NUT			65, 103
6668478	SCREW			67
6668485	SEAL			69
6668492	SCREW			59
6668495	SCREW			25, 87, 123, 127
6668505	CAP			77
6668569	NUT			115, 121
6668886	PLUG			145
6670281	TAPPET			43
6670891	INLETGUID			39
6670895	COTTER			39
6670929	WASHER			49
6675380	ADHESIVE, SPRAY 10.5 oz			1
6686083	FUEL PIPE			131
6686295	SEAL INLET VALVE			39
6686296	SEAL EXHAUST VALVE			39
6713507	DECAL			329
6902228	PAINT, ORANGE SPRAY CAN 6			1
6903121	LUBE, GEAR			1
6911851	SCREW			61
6911855	OLIVE			53
6911857	NUT			53
6911860	SPACER			103
6911862	WASHER			117
6911867	STUD			115, 121
6911883	O RING			85
6911885	O RING			95
6911886	O RING			95
6911889	HOSE CLIP			123
6911890	CLIP			131, 133
6911893	CORE PLUG			57
6911896	OIL COOLER			83
6911897	CON ROD KIT			33
6911899	INJECTOR			49

Code for disposition of old part number

A -- Use up
B -- Use on other application (See PNI)
C -- File PDR Report with Bobcat Parts Sales
D -- Part Number Error

NUMERICAL INDEX (Cont'd)

Part Number	Description	Was	Code	Page
6911900	NOZZLE			49
6911902	FUEL FEED PIPE			131
6911904	FLEXIBLE HOSE			55
6911907	FUEL FILTER ELEMENT KIT			1, 13, 129
6911908	GLOW PLUG			133
6911909	TURBOCHARGER			115
6911911	SENDER			51
6911912	OIL FILTER HEAD			85
6911919	CAMSHAFT GEAR			107
6911922	EXHAUST VALVE			39
6911923	INLET VALVE			39
6911933	SCREW			39
6911934	SCREW			39
6911935	BANJO BOLT			117
6911945	INLET VALVE INSERT			39
6911949	HOSE			123
6911950	HOSE			79
6911951	FUEL INJECTION PIPE NO 1 CYL			47
6911952	FUEL INJECTION PIPE NO 2 CYL			47
6911953	FUEL INJECTION PIPE NO 3 CYL			47
6911954	FUEL INJECTION PIPE NO 4 CYL			47
6911956	SUCTION PIPE			71
6911957	TURBO DRAIN PIPE			119
6911958	PLATE			127
6911959	LEVER			103
6911965	BRIDGE PIECE			67
6911966	BRACKET			45
6911968	ROCKER COVER JOINT			73
6911970	SUMP JOINT			67
6911971	TIMING COVER JOINT			109
6911973	EXHAUST MANIFOLD JOINT			125
6911974	WATER PUMP JOINT			91, 93
6911975	SEAL			127
6911977	SEAL			83
6911978	SEAL			115
6911983	SEAL			25, 85, 87
6911986	OIL PAN			67
6911991	CONNECTION			129
6911992	EXHAUST ELBOW			121
6911995	CAP			73
6911996	COVER			75
6912004	ROCKER ASSY			41
6912008	TURBO FEED PIPE			117

Code for disposition of old part number

A -- Use up
B -- Use on other application (See PNI)
C -- File PDR Report with Bobcat Parts Sales
D -- Part Number Error

Part Number	Description	Was	Code	Page
6912010	OIL PUMP			113
6912011	CONNECTION			95
6912021	KIT BEARING MAIN			29
6912023	MOUNTING KIT			129
6912025	WATER PUMP REPAIR KIT			93
6912026	PISTON RING KIT			31
6912028	CYLINDER HEAD KIT			39
6912039	CONNECTION			131
6912041	CONROD KIT GRADE H WHITE			33
6912042	CONROD KIT GRADE J GREEN			33
6912043	CONROD KIT GRADE K PURPLE			33
6912044	CONROD KIT GRADE L BLUE			33
6912046	CRANKSHAFT GEAR			27, 29
6912050	PISTON AND RING KIT			31
6918295	DOBLE PULLEY			103
6923517	INLET SEAL			123
6924330	BOWL			129
6924345	DRAIN PLUG			129
6924347	FRONT COVER KIT			109
6924348	SEAL OIL FRONT			105
6924901	GASKET - OIL COOLER			83
6924902	GASKET - TIMING CASE			105
6924904	GASKET - WATER PUMP			93
6924921	PIPE CLIP			53, 131
6924924	PISTON COOLING JET			25
6924936	SEAL - INJECTOR			49
6924937	SEAL - O RING			99
6924940	SEAL - WATER OUTLET			97, 99
6924943	TIMING CASE			105
6987789A	OIL, 10W30 5L 4			1, 11, 13
6987789B	OIL, 10W30 20L			1, 11, 13
6987789C	OIL, 10W30 205L			1, 11, 13
6987789D	OIL, 10W30 1000L			1, 11, 13
6987790A	OIL, 15W40 5L 4			1, 11, 13
6987790B	OIL, 15W40 20L			1, 11, 13
6987790C	OIL, 15W40 205L			1, 11, 13
6987790D	OIL, 15W40 1000L			1, 11, 13
6987803A	ANTIFREEZE/COOLANT EG CONCENTRATE 5L 4			1, 21

Code for disposition of old part number
A -- Use up
B -- Use on other application (See PNI)
C -- File PDR Report with Bobcat Parts Sales
D -- Part Number Error

NUMERICAL INDEX (Cont'd)

Part Number	Description	Was	Code	Page
6987803B	ANTIFREEZE/COOLANT, EG CONCENTRATE 20L			1, 21
6987803C	ANTIFREEZE/COOLANT EG CONCENTRATE 210L			1, 21
6987803D	ANTIFREEZE/COOLANT, EG CONCENTRATE 1000L			1, 21
6987804A	ANTIFREEZE/COOLANT EG 53/47 PREMIX 5L 4			1, 21
6987804B	ANTIFREEZE/COOLANT, EG 53/47 PREMIX 20L			1, 21
6987804C	ANTIFREEZE/COOLANT EG 53/47 PREMIX 205L			1, 21
6987804D	ANTIFREEZE/COOLANT, EG 53/47 PREMIX 1000L			1, 21
6987888	GREASE, MULTIPURPOSE #2 - 10			1, 7, 9
6987889	GREASE, HD SUPREME 10			1, 7, 9
6987890	GREASE, HP EXTREME 10			1, 7, 9
6988018	SEALANT, GASKET LIQUID 50ML			1
7001035	BOWL (CLEAR GLASS)			145
7014152	SCREW			103
7014153	SCREW			103
7014211	SPRING			79
7017146	PLATE			59
7017155	BLANKING PLUG			59
7017156	BLANKING PLUG			59
7017227	SEAL - OIL HOUSING			37
7017233	KEY			27, 29, 43
7017235	BUSHING			33, 35
7017236	CON ROD BOLT			33
7017248	SEAL			59
7022462	O-RING			45
7022465	SCREW			125
7022466	SOLENOID			45
7022467	OIL COOLER, ASSY			83
7022473	PLUG			137
7022475	SEAT INSERT, VALVE			39
7022476	BRACKET			135
7022483	PUMP, LIFT			129
7022484	KIT, CRANKSHAFT			29
7022489	KIT, CONNECTING ROD			35
7022490	KIT, CONNECTION ROD			35

Code for disposition of old part number

A -- Use up
B -- Use on other application (See PNI)
C -- File PDR Report with Bobcat Parts Sales
D -- Part Number Error

Part Number	Description	Was	Code	Page
7022491	KIT, CONNECTING ROD			35
7022498	BOLT			89
7023999	BUSHING CAMSHAFT			25
7024011	KIT CRANKSHAFT			27
7025274	TUBE, DIPSTICK			69
7120570	DECAL			329
7120928	DECAL			329
7163221	DECAL, WARNING			327
7163222	DECAL, WARNING			329
7169014	DECAL, EXIT			327
7169699	DECAL			329
7185935	DECAL, WARNING			329
7251689	PAINT, ORANGE QT 6			1
7251691	PAINT, ORANGE .5 OZ			1
7251692	PAINT, CHARCOAL QT 6			1
7251693	PAINT, CHARCOAL SPRAY CAN 6			1
7251694	PAINT, CHARCOAL .5 OZ			1
7251695	PAINT, WHITE QT 6			1
7251701	PAINT, WHITE SPRAY CAN 6			1
7251702	PAINT, WHITE .5 OZ			1
7251704	PAINT, RED .5 OZ			1
7251705	PRIMER, QT 6			1
7270428	BRACKET			103
7281253	STARTER			65
7286755ENGB	MANUAL, OPERATION & MAINTENANCE			5
7286757	MANUAL, SERVICE			5
7288883	BOLT			23
7288884	WASHER			337, 405
7288885	NUT			23, 337
7288887	WASHER			23
7288888	NUT			209, 371, 373, 375, 377, 381, 385, 395, 399, 401, 415, 421
7288890	BOLT			207
7288891	LOCK WASHER			101, 147, 149, 151, 187, 201, 203, 205, 219, 223, 227, 307, 309, 311, 313, 317, 321, 323, 341, 369, 371, 379, 403, 415
7288892	WASHER			101, 147, 151, 187, 207, 219, 223, 227, 255, 261, 263, 307, 311, 321, 323, 335, 341, 369, 379, 393, 395, 403
7288893	FAN			101
7288895	BOLT			203, 373
7288896	BOLT			147, 201, 313, 317, 323, 407
7288897	ENGINE			155
7288898	CYLINDER BLOCK ASSY			25

Code for disposition of old part number
A -- Use up
B -- Use on other application (See PNI)
C -- File PDR Report with Bobcat Parts Sales
D -- Part Number Error

Part Number	Description	Was	Code	Page
7288899	THIMBLE			25
7288900	SCREW			25
7288902	PLUG			25
7288903	PLUG			25
7288904	PLUG			25, 39
7288906	PLUG			25
7288907	PLUG			25
7288908	DOWEL			25
7288909	PLUG			25
7288910	PLUG			25
7288912	SCREW			25
7288913	BLANKING PLATE			25, 87
7288917	CRANKSHAFT KIT			27
7288918	MAIN BEARING KIT			27
7288919	MAIN BEARING KIT			27
7288920	MAIN BEARING KIT			27
7288921	MAIN BEARING KIT			27
7288922	BIG END BEARING KIT			27
7288923	BIG END BEARING KIT			27
7288924	BIG END BEARING KIT			27
7288925	BIG END BEARING KIT			27
7288927	THRUST WASHER			27, 29
7288934	MAIN BEARING KIT			29
7288935	MAIN BEARING KIT			29
7288936	MAIN BEARING KIT			29
7288937	BIG END BEARING KIT			29
7288939	PISTON AND RING KIT			31
7288940	PISTON AND RING KIT			31
7288941	CIRCLIP			31
7288943	PISTON RING KIT			31
7288944	PISTON RING KIT			31
7288946	CONROD KIT - ORANGE			33
7288956	CONROD KIT - GREEN			35
7288957	CONROD KIT - PURPLE			35
7288958	CONROD KIT - BLUE			35
7288959	CON ROD BOLT			35
7288961	BOLT			37
7288966	PLUG			39
7288969	VALVE SPRING			39
7288970	VALVE CAP			39
7288974	PLUG			39, 141
7288975	O-RING			39, 141
7288976	PLUG			39, 141
7288977	CYLINDER HEAD GASKET			39
7288981	ROCKER SHAFT ASSEMBLY			41
7288982	PLUG			41

Code for disposition of old part number
A -- Use up
B -- Use on other application (See PNI)
C -- File PDR Report with Bobcat Parts Sales
D -- Part Number Error

Part Number	Description	Was	Code	Page
7288983	ROCKER ARM ASSEMBLY			41
7288984	NUT			41
7288985	SCREW			41
7288986	ROCKER SHAFT SPRING			41
7288987	ROCKER ARM ASSEMBLY			41
7288988	CIRCLIP			41
7288989	WASHER			41
7288990	SCREW			41
7288991	SCREW			41
7288992	CAMSHAFT			43
7288995	FUEL INJECTION PUMP			45
7288998	NUT			45
7288999	WASHER			45
7289000	INJECTION PUMP GEAR			45
7289001	WASHER			45
7289004	SCREW			45, 67, 95, 105, 119
7289005	NUT			45
7289006	SCREW			45, 135
7289011	CLIP			47
7289012	CLIP			47
7289013	CLIP			47
7289018	INJECTOR CLAMP			49
7289019	SCREW			49
7289021	PIPE			53
7289022	NUT			53
7289023	OLIVE			53
7289024	UNION			53
7289029	CAP			55
7289031	FLYWHEEL HOUSING			59
7289034	DOWEL			59
7289035	PLUG			59
7289038	SCREW			59
7289039	SCREW			59
7289040	SCREW			59
7289042	FLYWHEEL			61
7289043	FLYWHEEL			61
7289046	WASHER			61
7289047	FAN DRIVE HOUSING			63
7289048	SCREW			63
7289050	FAN BELT			63
7289052	STUD			65
7289060	SCREW			67
7289061	SCREW			67, 109
7289062	SPACER			67
7289064	NUT			69

Code for disposition of old part number

A -- Use up
B -- Use on other application (See PNI)
C -- File PDR Report with Bobcat Parts Sales
D -- Part Number Error

NUMERICAL INDEX (Cont'd)

Part Number	Description	Was	Code	Page
7289068	JOINT			71
7289069	CYL. HEAD COVER ASSY.			73
7289071	SCREW			73
7289072	SPRING			73
7289073	CAP			73
7289074	DIAPHRAGM			73
7289075	COVER PLATE			73
7289076	SCREW			73
7289079	SCREW			75
7289080	FILLER			77
7289081	FILLER			77
7289082	O-RING			77
7289084	O-RING			77
7289085	SCREW			77, 83
7289086	SCREW			77
7289087	BREATHER PIPE			79
7289088	SEAL-O RING			79
7289089	SEAL-O RING			79
7289090	SCREW			79
7289093	HOSE CLIP			79
7289094	SUPPORT BRACKET			79
7289095	CUP PLUG			81
7289100	SCREW			83
7289101	SCREW			83, 105
7289103	SCREW			85, 105
7289104	PLUG			85
7289106	OIL FILTER			1, 11, 13, 85
7289107	CRANKSHAFT PULLEY			89
7289109	WATER PUMP KIT			91
7289111	SCREW			91
7289112	SCREW			91
7289113	SCREW			91, 97, 99, 109
7289119	CONNECTION			97
7289122	CONNECTION			99
7289145	PLUG			99
7289147	EXTENSION			101
7289148	BOLT			101, 393, 415
7289150	WASHER			103
7289152	NUT			103
7289156	SCREW			103
7289157	ALTERNATOR			103
7289162	IDLER GEAR			107
7289163	HUB			107
7289164	PLATE			107
7289165	SCREW			107
7289167	THRUST WASHER			107
7289168	DOWEL			107

Code for disposition of old part number

A -- Use up
B -- Use on other application (See PNI)
C -- File PDR Report with Bobcat Parts Sales
D -- Part Number Error

Part Number	Description	Was	Code	Page
7289169	WASHER			107
7289170	SCREW			107
7289173	SCREW			111
7289174	PLAIN WASHER			111
7289176	SCREW			113
7289185	JOINT			119
7289186	JOINT			119
7289187	SCREW			119
7289189	BRACKET			121
7289190	ADAPTOR			121
7289191	SCREW			121
7289192	SCREW			121
7289193	AIR PIPE			123
7289197	EXHAUST MANIFOLD			125
7289203	LIFT PUMP			129
7289208	SCREW			129
7289209	WASHER			129
7289214	BRACKET			131
7289215	PIPE CLIP			131
7289218	BAR			133
7289219	LIFTING BRACKET			135
7289222	PLUG			137
7289223	PLUG			139
7289224	SEAL-O RING			139
7289225	SWITCH			139
7289227	WASHER			143
7289228	NUT			143
7289229	OLIVE			143
7289230	PRE-FUEL FILTER ASSY			143, 145
7289231	FUEL PREFILTER KIT			1, 13, 145
7289234	WASHER			145
7289236	WATER RADIATOR			147
7289237	OIL COOLER			147
7289238	OIL COOLER			147
7289239	BRACKET			147
7289244	BRACKET			147
7289248	LID			147
7289249	HOSE			147
7289251	RUBBER BUMPER			147
7289252	TAP			147
7289255	OVERFLOW TANK			147
7289256	COVER			147
7289257	BRACKET			147
7289258	BOLT			23, 147, 149, 155, 209, 337, 341
7289259	LOCK WASHER			23, 147, 149, 155, 213, 219, 221, 223, 257, 307, 309, 321, 337, 341, 373, 383, 399, 409, 411, 415
7289260	WASHER			147, 149, 257, 373
7289261	BOLT			149, 203, 205, 219, 307, 311, 313, 323, 341, 369, 371, 403

Code for disposition of old part number
A -- Use up
B -- Use on other application (See PNI)
C -- File PDR Report with Bobcat Parts Sales
D -- Part Number Error

NUMERICAL INDEX (Cont'd)

Part Number	Description	Was	Code	Page
7289262	WASHER			149, 203, 205, 263, 307, 313, 317, 335, 371, 393, 407
7289263	NUT			147, 149, 151, 223, 257, 261, 317, 333, 339, 393
7289264	CLAMP			147, 153, 309
7289266	CLAMP			147
7289267	CLAMP			147
7289268	WASHER			147, 151, 333, 415
7289272	BUSH			147, 335
7289273	BOLT			147, 151, 261, 307, 317, 333, 335, 415
7289278	WASHER			155, 211, 213, 219, 221, 223, 255, 257, 309, 341, 399, 415
7289279	BOLT			149, 187, 263, 321, 323, 335, 379, 393, 395
7289281	GASKET			149
7289284	CLAMP			149
7289288	DUST RUBBER			151
7289290	CLAMP			151
7289294	AIR FILTER INNER			1, 17, 151
7289295	AIR FILTER OUTER			1, 17, 151
7289296	AIR FILTER			151
7289297	INDICATOR			151
7289298	CAP			151
7289299	BODY			151
7289301	CLAMP			151, 389
7289303	CLAMP			153, 339
7289304	HOSE			153
7289305	HOSE			153
7289306	HOSE			153
7289314	WASHER			257, 263, 321, 389, 423, 425
7289507	WASHER			317, 335
7289514	NUT			263, 321, 375, 381, 383, 389, 399, 419, 423, 425
7289515	BOLT			321, 419
7289519	KNOB			257, 261
7289520	BOLT			415
7289521	WASHER			261, 419
7289523	SWITCH			189
7289524	SWITCH			189
7289525	WASHER			189
7289526	FLASHER SWITCH			189
7289527	SCREW			313
7289529	SOCKET			189, 191, 197, 199
7289530	SOCKET			189, 199
7289533	LIGHTER			191
7289534	STARTER SWITCH			191
7289536	HEADLIGHT SWITCH			189
7289537	BEACON LAMP SWITCH			191
7289538	SWITCH			189
7289540	REAR WORKING LAMP SWITCH			191
7289541	WIPER SWITCH			191

Code for disposition of old part number
A -- Use up
B -- Use on other application (See PNI)
C -- File PDR Report with Bobcat Parts Sales
D -- Part Number Error

NUMERICAL INDEX (Cont'd)

Part Number	Description	Was	Code	Page
7289542	BOLT			335
7289543	WASHER			191, 335
7289545	SOCKET			193, 197, 199
7289546	SOCKET			193, 195, 197, 199
7289547	SOCKET			197
7289548	SOCKET			193
7289549	SOCKET			193
7289550	SOCKET			193, 195, 407
7289551	HORN			193, 195
7289554	SOCKET			193
7289555	SOCKET			197
7289559	SOCKET			193, 195
7289560	TERMINAL			195
7289562	SOCKET			195
7289564	RELAY			197
7289565	RELAY			197
7289566	FLASOR			197
7289567	RELAY			197
7289568	RELAY			197
7289569	SOCKET			197
7289570	FUSE (15 AMPERE)			199
7289571	FUSE (10 AMPERE)			199
7289572	FUSE BOX			199
7289574	PLUG			197
7289578	SOCKET			199
7289582	SOCKET			197
7289590	POWER SWITCH			203
7289594	BATTERY POLE			203
7289595	BOLT			219, 311, 317, 393
7289596	LOCK WASHER			203, 311, 393
7289597	NUT			203, 317
7289598	WASHER			219, 317, 335, 341
7289600	BATTERY			1, 203
7289602	BATTERY BRACKET			203
7289604	WASHER			203, 253, 261, 307, 339, 395, 409, 415
7289607	RESERVOIR			205
7289608	PLATE			205
7289609	BOLT			205, 257, 309, 335, 415
7289610	WASHER			205, 219, 257, 307, 311, 393, 415
7289614	BOLT			321, 335
7289615	WASHER			317
7289616	LOADER CONTROL VALVE			257
7289619	MECHANISM			257
7289622	PIN			257
7289623	POLYAMID			257
7289624	JOINT			257, 389
7289625	KNOB			257
7289632	DUBEL			257

Code for disposition of old part number

A -- Use up
B -- Use on other application (See PNI)
C -- File PDR Report with Bobcat Parts Sales
D -- Part Number Error

Part Number	Description	Was	Code	Page
7289634	BOLT			415
7289635	LOCK WASHER			223, 257, 261, 321, 415, 419
7289636	WASHER			261
7289637	NUT			23, 257, 309, 337, 377, 409
7289638	BOLT			257, 261
7289639	WASHER			257
7289641	NUT			255, 257, 261, 263, 307, 317, 321, 323, 393, 395, 399, 415
7289642	BOLT			149, 257, 307, 309, 399, 409
7289648	JOINT			257
7289651	CONTROL VALVE			261
7289652	CONTROL FRAME			261
7289653	JOINT			261
7289654	JOINT			261
7289655	PLATE LEFT			261
7289656	PLATE RIGHT			261
7289657	RUBBER COVER			261
7289660	RUBBER COVER			261
7289661	CONTROL LEVER			261
7289662	CONTROL LEVER			261
7289663	KNOB			261
7289664	PLATE			261
7289665	ROD			261
7289667	KNOB			261
7289668	SPRING			261
7289669	PIN			261
7289670	COTTER PIN			261
7289671	ROD			261
7289672	ROD			261
7289673	JOINT			261
7289674	BUSHING			261
7289675	BUSHING			261
7289676	PIN			261
7289677	NUT			261
7289678	NUT			261
7289679	LOCK WASHER			261
7289680	BOLT			261
7289682	BOLT			261
7289690	PLATE			221
7289691	BOLT			155, 207, 213, 219, 221, 255, 339, 411, 415
7289693	HOSE COVER			221
7289717	FITTING			213
7289718	FITTING			207, 213, 229, 409
7289719	FITTING			213
7289720	FITTING			213
7289721	FITTING			213, 409
7289724	FITTING			213, 409
7289730	FITTING			215
7289731	FITTING			215

Code for disposition of old part number
A -- Use up
B -- Use on other application (See PNI)
C -- File PDR Report with Bobcat Parts Sales
D -- Part Number Error

NUMERICAL INDEX (Cont'd)

Part Number	Description	Was	Code	Page
7289732	FITTING			213, 215
7289733	BOLT			215, 309
7289734	WASHER			215
7289735	CLAMP			227
7289738	FITTING			217
7289739	FITTING			217
7289740	FITTING			217, 223
7289742	PRIORITY VALVE			223
7289743	FLANGE			223
7289748	FITTING			223
7289749	FITTING			219
7289750	BOLT			223
7289751	WASHER			223
7289752	BOLT			223
7289753	BOLT			223
7289755	O-RING			223, 323
7289756	FLANGE			223
7289757	BOLT			223
7289758	LOCK WASHER			223
7289761	PLUG			209, 223
7289762	PLUG			223, 323
7289767	HOSE			219
7289769	FITTING			219
7289771	CHECK VALVE			219
7289772	ADAPTER			219
7289773	FITTING			219
7289774	BRACKET			219
7289775	CLAMP PLATE			219
7289776	CLAMP PLATE			219
7289777	FITTING			219
7289779	FIITING			219
7289781	FITTING			219
7289782	HOSE			219
7289783	FITTING			219
7289784	FITTING			219
7289785	NUT			219, 307, 311, 317
7289786	ADAPTER			219
7289787	BLIND PLUG			219
7289792	FITTING			227
7289799	BOLT			227, 311
7289806	FITTING			229
7289807	FITTING			229
7289823	BLOCK			207
7289829	FITTING			207
7289831	CLAMP			207, 395, 411
7289833	FITTING			207
7289845	NUTRING			247, 249, 251
7289849	BOLT			149, 223, 321, 409
7289854	OMEGAT			239, 241

Code for disposition of old part number

A -- Use up
B -- Use on other application (See PNI)
C -- File PDR Report with Bobcat Parts Sales
D -- Part Number Error

Part Number	Description	Was	Code	Page
7289855	NUTRING			239, 241, 397
7289857	DUST SEAL			239, 241, 397
7289859	SCREW			237, 243
7289862	GREASER			237, 239, 241, 243, 245, 247, 249, 251, 309, 369, 371, 373, 375, 383, 385, 391, 397, 401, 421
7289863	OMEGAT			241
7289864	O-RING			249
7289871	GREASER COVER			237, 241, 247, 309, 369, 371, 373, 397, 421
7289873	O-RING			247, 251
7289874	BACK-UP RING			247, 251
7289879	OMEGAT			247, 251
7289887	BACK-UP RING			237, 397
7289888	O-RING			237, 397
7289891	DUST SEAL			237
7289897	OMEGAT			397
7289898	O-RING			237, 239, 241, 397
7289901	STABILIZER CYL. ASSY.			243
7289906	TEFLON RING			243
7289909	OMEGAT			243, 249
7289911	DUST SEAL			243, 247, 249, 251
7289912	GUIDE			245
7289913	SEGMENT			245, 249
7289914	WASHER			245, 249
7289915	WASHER			245, 249
7289916	PISTON			245
7289917	SCREW			245, 249
7289918	TEFLON RING			247, 251
7289919	O-RING			243
7289920	DUST SEAL			383, 385, 421
7289921	BUSHING			245
7289924	REPAIR KIT			245
7289926	O-RING			243
7289927	BACK-UP RING			243
7289931	TEFLON RING			243
7289932	OMEGAT			239, 243
7289934	BUSHING			249
7289943	DUST SEAL			239, 241, 247, 249, 251, 383, 385, 397, 421
7289948	OMEGAT			397
7289955	CYLINDER PIPE ASSY.			237
7289956	CYLINDER ROD			237
7289957	OMEGAT			237
7289958	TEFLON RING			237
7289959	NUTRING			237
7289960	GUIDE			237
7289961	PISTON			237
7289962	TEFLON RING			237, 397
7289963	OMEGAT			237
7289964	BUSHING			237

Code for disposition of old part number
A -- Use up
B -- Use on other application (See PNI)
C -- File PDR Report with Bobcat Parts Sales
D -- Part Number Error

Part Number	Description	Was	Code	Page
7289965	SEGMENT			237
7289966	JOINT			237
7289967	BUCKET CYLINDER			237
7289968	REPAIR SET			237
7289972	WASHER			263
7289973	NUT			263
7289974	WASHER, LOCK			263
7289975	NUT, WHEEL			263
7289980	BOLT			263, 375, 383, 399, 419
7289982	REAR TIRE			263
7289983	FRONT TIRE			263
7289990	MUDGUARD			263
7289991	BOLT			263, 321
7289996	BOLT			263, 405
7289999	WASHER			263, 321
7290000	BRACKET			263
7290001	LOCK WASHER			321, 405
7290218	NUT			291
7290219	BOLT			291
7290221	CLAMP			291
7290224	BOLT			307
7290225	STEERING COLUMN			307
7290226	WEDGE			307
7290227	STEERING WHEEL			307
7290229	STEERING UNIT			307
7290230	BOLT			307
7290231	DAMPER			307
7290232	PEDAL LOWER PLATE			307
7290233	PEDAL			307
7290234	FOOT PLATE			307
7290235	PIN			307
7290236	LOCK WASHER			307
7290237	WASHER			307
7290238	BOLT			307, 317
7290239	ROPE			307
7290240	STEERING KNOB			307
7290241	STEERING WHEEL COVER			307
7290242	WASHER			307
7290243	PEDAL SPRING			307
7290244	MASTER CLINDER			309
7290246	MASTER CLINDER PLATE			309
7290247	BRAKE PEDAL LEFT			309
7290248	BRAKE PEDAL RIGHT			309
7290249	SHAFT			309
7290250	LOCKING PIN			309
7290252	BRAKE SPRING			309
7290253	SEGMENT			309

Code for disposition of old part number
A -- Use up
B -- Use on other application (See PNI)
C -- File PDR Report with Bobcat Parts Sales
D -- Part Number Error

Part Number	Description	Was	Code	Page
7290254	ROD HEAD			257, 393
7290255	ROD HEAD			309
7290257	ROD			309
7290258	PIN			309
7290259	SEGMENT			309
7290264	COTTER PIN			309
7290266	BOLT			309
7290267	WASHER			309
7290269	PLUG			215, 309
7290270	BOLT			309
7290279	BRACKET			311
7290283	BUSHING			311
7290285	BOLT			189, 191
7290295	BOLT			261
7290301	DAMPER			317
7290302	HINGE			317
7290305	LOCK			317
7290306	LOCK BRACKET			317
7290312	LOCK			317
7290315	DAMPER ISOLATION			317
7290316	BOLT			203, 317
7290320	HOOK			317
7290321	ROPE			317
7290322	HOOK			317
7290323	LOCK BRACKET			317
7290324	FORK			317
7290325	FORK			317
7290326	NUT			317
7290328	INSULATION PIN			429
7290329	INSULATION WASHER			429
7290330	SEGMAN			317
7290331	COTTER PIN			311, 317
7290332	SPRING			317
7290334	BOLT			323
7290335	WASHER			323, 375, 399
7290336	WASHER			323
7290337	BOLT			399
7290338	CAP			321
7290341	STEP TOP			323
7290342	STEP BOTTOM			321, 323
7290344	BLOCK			323
7290345	MAGNET			323
7290346	WASHER			323
7290347	O-RING			323
7290348	BLOCK			323
7290350	FUEL TANK			321
7290351	PIPE			321
7290352	BOLT			321
7290354	BOLT			321

Code for disposition of old part number
A -- Use up
B -- Use on other application (See PNI)
C -- File PDR Report with Bobcat Parts Sales
D -- Part Number Error

Part Number	Description	Was	Code	Page
7290355	NUT			321, 389
7290356	PLATE			321
7290357	BRACKET			321
7290358	PIN			321
7290359	PIPE			321
7290360	COWER			321
7290361	BOLT			321
7290362	WASHER			321
7290363	STEP PLATE			321
7290364	LEVEL FLOAT			321
7290365	PLATE			321
7290371	FILTER			1, 19, 323
7290374	GAUGE			323
7290375	BOLT			317
7290376	HYDRAULIC TANK			323
7290377	FILTER			1, 19, 323
7290378	O-RING			249, 323
7290379	CAP			323
7290380	BOLT			323
7290381	FLANGE			323
7290382	O-RING			323
7290383	CAP			1, 19, 323
7290384	FILTER			321, 323
7290385	LOCK			317, 323
7290386	PLUG			411
7290407	BOLT			335
7290413	BOLT			335
7290421	CLAMP			339
7290422	ROUND BLOWER			339, 413
7290424	ISOLATION			147
7290425	ADAPTER			339
7290426	HEATER HOSE			339
7290427	HEATER HOSE			339
7290429	ADAPTER			339
7290430	VALVE			339
7290431	ADAPTER			339
7290432	CLAMP			339
7290433	CLAMP			339
7290555	INTERIOR LAMP			367
7290570	BOTTOM HEADLIGHT (LEFT)			347
7290573	BOTTOM HEADLIGHT (RIGHT)			347
7290659	BUSHING			369
7290662	FLANGE			369
7290663	O-RING			369
7290664	WASHER			369
7290665	BOLT			369
7290673	SHIM			369

Code for disposition of old part number

A -- Use up
B -- Use on other application (See PNI)
C -- File PDR Report with Bobcat Parts Sales
D -- Part Number Error

Part Number	Description	Was	Code	Page
7290674	SHIM			369
7290677	GREASER			239, 371
7290678	PIN			371
7290679	WASHER			371, 381
7290680	BUSHING			371
7290681	BUSHING			371
7290682	WASHER			371
7290683	PIN			371
7290684	PIN			371
7290685	PIN			371
7290686	ROLLER			371
7290687	PLATE			371
7290688	PIN			371
7290689	COTTER PIN			371
7290690	BOLT			371, 375, 377, 401
7290691	BOLT			371
7290692	SEGMENT			371
7290693	SWING FRAME			371
7290694	SHIM			371
7290695	SHIM			371
7290696	BUSHING			371
7290697	BUSHING			371
7290698	BUSHING			371
7290699	BUSHING			371
7290700	BUSHING			371
7290702	PIN			373
7290703	PIN			373
7290704	BUSHING			373
7290707	BOLT			373, 385, 421
7290708	BOLT			375, 401
7290711	BOLT			257
7290713	SHIM			375, 401
7290719	BOLT			375, 381
7290721	BUSHING			375, 401
7290722	BOLT			375, 385, 399
7290723	PIN			375, 401
7290724	BUSHING			375, 401
7290725	BUSHING			375, 401
7290726	PIN			375, 401
7290728	LEVER			375, 401
7290729	BUSHING			375, 401
7290730	BUSHING			375, 401
7290732	SHIM			375, 401
7290733	BUSHING			375, 401
7290734	TOOTH			375, 387, 401, 421
7290735	BOLT			375, 387, 401, 421
7290736	NUT			375, 387, 401, 421
7290745	WASHER			381, 383, 423, 425
7290746	WASHER			381, 383, 401, 423, 425

Code for disposition of old part number
A -- Use up
B -- Use on other application (See PNI)
C -- File PDR Report with Bobcat Parts Sales
D -- Part Number Error

Part Number	Description	Was	Code	Page
7290757	HAND BRAKE LEVER			313
7290761	SPRING			379
7290762	WASHER			379
7290763	PIN			379
7290764	COVER PLATE			379
7290765	LOCKING ARM			379
7290766	KNOB			379
7290773	SEGMENT			381, 423, 425
7290774	WASHER			381, 423, 425
7290780	ALLEN BOLT			373
7290798	TOOTH SET			387
7290820	WASHER			317
7290827	FITTING			391
7290828	NUT			391
7290832	JOINT			393
7290835	BUSHING			393
7290836	BOOT			393
7290837	PEDAL			393
7290838	JOINT			393
7290840	SUPPORT PLATE			393
7290887	BOLT			385, 415
7290897	COTTER PIN			389
7290902	BUSHING			375, 401
7290909	POLYAMIDE CLAMP			253
7290910	NUT			403, 411
7290911	FITTING			231, 233, 235, 403
7290912	CUTTING LINE VALVE ASS'Y			403
7290914	HOSE			403
7290915	HOSE			403
7290916	FITTING			403, 411
7290918	COUPLER, MALE			403
7290919	BRACKET			407
7290920	BRACKET			407
7290921	AMPOUL			407
7290922	SOCKET			197, 407
7290923	ACCUMULATOR			409
7290927	CLAMP			409
7290937	PIN			385
7290938	PIN			385
7290939	PIN			385
7290940	BUSHING			385
7290941	PIN			423
7290942	PIN			423, 425
7290943	PIN			399, 423, 425
7290944	BUSHING			423, 425
7290945	PIN			423, 425
7290946	FORK			423, 425
7290947	RUBBER BUMPER			423, 425

Code for disposition of old part number
A -- Use up
B -- Use on other application (See PNI)
C -- File PDR Report with Bobcat Parts Sales
D -- Part Number Error

Part Number	Description	Was	Code	Page
7290948	WASHER			423, 425
7290949	FORK ATTACHMENT SET			423
7290950	PIN			425
7290951	JOINT			423, 425
7290952	FORK ATTACHMENT SET			425
7290961	TUBE CONNECTION SHEET			415
7290965	WASHER			23, 415
7290984	BRACKET LEFT FRONT			23
7290985	BRACKET RIGHT FRONT			23
7290986	RUBBER ENG.MOUNT			23
7290987	BOLT			23
7290988	BRACKET LEFT BACK			23
7290989	BRACKET RIGHT BACK			23
7290990	WASHER			23, 337
7290991	BRACKET LEFT			147
7290992	BRACKET RIGHT			147
7290993	BRACKET			147
7290994	BRACKET			147
7290996	HOSE			147
7290998	BRACKET			147
7291000	PADDLE BOX			147
7291001	ISOLATION RUBBER			147
7291002	TAMPON			147
7291003	FRAME BAND			147
7291004	BELLOWS SEAL			147
7291005	RUBBER BUMPER			147
7291007	SILENCER			149
7291008	PIPE			149
7291009	BRACKET			149
7291011	BRACKET			149
7291012	GASKET			149
7291014	SUPPORT PLATE			149
7291016	PLATE			151
7291018	CAP			151
7291019	CLAMP			151
7291020	AIR FILTER HOSE			151
7291021	CLAMP			151
7291022	FUEL OIL HEATER			153
7291023	ADAPTER			153
7291024	WASHER			153
7291025	O-RING			153
7291026	INDICATOR			215
7291027	SENSOR			155
7291028	SENSOR			155

Code for disposition of old part number
A -- Use up
B -- Use on other application (See PNI)
C -- File PDR Report with Bobcat Parts Sales
D -- Part Number Error

NUMERICAL INDEX (Cont'd)

Part Number	Description	Was	Code	Page
7291029	TRANSMISSION			155
7291030	WASHER			155
7291031	ADAPTER			155
7291032	SENDER			155
7291033	ADAPTER			155
7291034	DIAPHRAGM			157
7291035	WASHER			157
7291036	SCREW			157
7291037	CONVERTER			157
7291038	INPUT SHAFT			159
7291039	BALL BEARING			159
7291040	RETAINING RING			159, 301
7291041	ROLL BEARING			159
7291042	PISTON RING			159
7291043	SHAFT			159
7291044	PISTON			159, 165, 169, 173, 175
7291045	O-RING			159, 165, 169, 173, 175
7291046	O-RING			159, 165, 169, 171, 173, 175
7291047	SHEET			159, 165, 175
7291048	SPRING			159, 165, 169, 173, 175
7291049	SPRING CUP			159, 165, 169, 173, 175
7291050	RETAINING RING			159, 165, 169, 171, 173, 175
7291051	ROLL BEARING			159
7291052	I. CLUTCH DISC			159, 165, 169, 173, 175
7291053	O. CLUTCH DISC			159, 165, 169, 173, 175
7291054	SHIM			159, 165, 169, 173, 175
7291055	SNAP RING A=2.0			159
7291056	SNAP RING A=2.25			159
7291057	SNAP RING A=2.5			159
7291058	SNAP RING A=2.75			159
7291059	SNAP RING A=3.0			159
7291060	SNAP RING A=3.25			159
7291061	SNAP RING A=2.25			159
7291062	SEGMAN A=3.75			159
7291063	SEGMAN A=4.0			159
7291064	DISC CARRIER			159, 165
7291065	WASHER			159, 165, 169, 171, 175
7291066	NEEDLE CAGE			159, 165, 169, 171, 175
7291067	DISC			159, 165, 167, 169, 171, 175
7291068	NEEDLE CAGE			159, 165, 169, 171, 175
7291069	PISTON RING			159
7291070	RING			159
7291071	HOUSING			161
7291072	PIPE			161
7291073	PIN			161, 163
7291074	NAME PLATE			161, 277
7291075	NAME PLATE			161
7291076	NAME PLATE			161
7291077	NAME PLATE			161

Code for disposition of old part number

A -- Use up
B -- Use on other application (See PNI)
C -- File PDR Report with Bobcat Parts Sales
D -- Part Number Error

Part Number	Description	Was	Code	Page
7291078	MEME			161
7291079	PLUG			161
7291080	SCREEN SHEET			161
7291081	NOZZLE D:1.7			161
7291082	PLUG			161, 179
7291083	O-RING			161
7291084	NOZZLE D:1.5			161
7291085	NOZZLE			161
7291086	PLUG			161
7291087	PLUG			161
7291088	O-RING			161
7291089	HOUSING			163
7291090	SCREW			163
7291091	O-RING			163
7291092	CONVERTER BELL			163
7291093	FILTER			163
7291094	SCREW			163
7291095	BRACKET			163
7291096	BRACKET			163
7291097	SUCTION PIPE			163
7291098	SCREW			163
7291099	O-RING			163
7291100	O-RING			163
7291101	VALVE			163
7291102	PISTON			163
7291103	SPRING			163
7291104	RING A=0.8			163
7291105	RING A=1.0			163
7291106	RING A=1.2			163
7291107	RING A=2.4			163
7291108	RING A=2.0			163
7291109	RING A=2.2			163
7291110	RING A=1.4			163
7291111	RING A=2.8			163
7291112	RING A=1.6			163
7291113	RING A=1.8			163
7291114	PLUG			163
7291115	PLUG			163
7291116	O-RING			163
7291117	BOLT			163
7291118	BOLT			163
7291119	SCREW PLUG			163
7291120	O-RING			163
7291121	SCREW PLUG			163
7291122	COUPLING			165
7291123	ROLLER BEARING			165
7291124	ROLLER BEARING			165, 167, 169, 171, 173, 175
7291125	SHEET			165
7291126	SNAP RING A=2			165

Code for disposition of old part number

A -- Use up
B -- Use on other application (See PNI)
C -- File PDR Report with Bobcat Parts Sales
D -- Part Number Error

Part Number	Description	Was	Code	Page
7291127	SNAP RING A=2.25			165
7291128	SNAP RING A=2.5			165
7291129	SEGMAN A=2.75			165
7291130	SEGMAN A=3.0			165
7291131	SEGMAN A=3.25			165
7291132	SEGMAN A=3.5			165
7291133	SEGMAN A=3.75			165
7291134	SEGMAN A=4.0			165
7291135	RING			165
7291136	COUPLING			167
7291137	PISTON			167
7291138	SPRING			167
7291139	WASHER			167
7291140	RETAINING RING			167, 283
7291141	CLUTCH DISC			167, 171
7291142	O. CLUTCH DISC			167, 171
7291143	SHIM			167
7291144	SNAP RING A=2.0			167
7291145	SNAP RING A=2.25			167
7291146	SNAP RING A=2.5			167
7291147	SNAP RING A=2.75			167
7291148	SNAP RING A=3.0			167
7291149	SNAP RING A=3.25			167
7291150	SNAP RING A=3.5			167
7291151	SNAP RING A=3.75			167
7291152	SNAP RING A=4.0			167
7291153	DISC CARRIER			167
7291154	BEARING			167
7291155	SHAFT SEAL			167
7291156	SCREEN SHEET			167
7291157	RING			167, 169, 171, 173, 175
7291158	SOLENOID VALVE			167, 179
7291159	BRACKET			167, 179
7291160	CAP SCREW			167, 179
7291161	O-RING			167, 179
7291162	O-RING			167, 179
7291163	O-RING			167, 179
7291164	O-RING			167
7291165	O-RING			167
7291166	COUPLING			169
7291167	SPRING			169, 173
7291168	SHEET			169, 173
7291169	SNAP RING A=2.0			169
7291170	SNAP RING A=2.25			169
7291171	SNAP RING A=2.5			169
7291172	SNAP RING A=2.75			169
7291173	SNAP RING A=3.0			169
7291174	SNAP RING A=3.25			169
7291175	SNAP RING A=3.5			169

Code for disposition of old part number
A -- Use up
B -- Use on other application (See PNI)
C -- File PDR Report with Bobcat Parts Sales
D -- Part Number Error

Part Number	Description	Was	Code	Page
7291176	SNAP RING A=3.75			169
7291177	SNAP RING A=4.0			169
7291178	DISC CARRIER			169
7291179	BEARING			169, 173, 175
7291180	COUPLING			171
7291181	PISTON			171
7291182	O-RING			171
7291183	DISC			171
7291184	ROLLER BEARING			171
7291185	CUP SPRING			171
7291186	SHIM			171
7291187	SNAP RING A=2.0			171
7291188	SNAP RING A=2.25			171
7291189	SNAP RING A=2.5			171
7291190	SNAP RING A=2.75			171
7291191	SNAP RING A=3.0			171
7291192	SNAP RING A=3.25			171
7291193	SNAP RING A=3.50			171
7291194	SNAP RING A=3.75			171
7291195	SNAP RING A=4.0			171
7291196	DISC CARRIER			171
7291197	BUSH			171
7291198	PISTON RING			171
7291199	COUPLING			173
7291200	SNAP RING A=2.0			173, 175
7291201	SNAP RING A=2.25			173, 175
7291202	SNAP RING A=2.5			173, 175
7291203	SNAP RING A=2.75			173, 175
7291204	SNAP RING A=3.0			173, 175
7291205	SNAP RING A=3.25			173, 175
7291206	SNAP RING A=3.5			173, 175
7291207	SNAP RING A=3.75			173, 175
7291208	SNAP RING A=4.0			173, 175
7291209	DISC CARRIER			173
7291210	WASHER			173
7291211	NEEDLE CAGE			173
7291212	RUNNING DISC			173
7291213	NEEDLE CAGE			173
7291214	BUSHING			173
7291215	COUPLING			175
7291216	SHEET			175
7291217	DISC CARRIER			175
7291218	SHAFT SEAL			177
7291219	OUTPUT FLANGE			177
7291220	OUTPUT FLANGE			177
7291221	SEALING CAP			177
7291222	SCREEN SHEET			177
7291223	SOLENOID VALVE			179
7291224	SOLENOID VALVE			179

Code for disposition of old part number

A -- Use up
B -- Use on other application (See PNI)
C -- File PDR Report with Bobcat Parts Sales
D -- Part Number Error

Part Number	Description	Was	Code	Page
7291225	O-RING			179
7291226	O-RING			179
7291227	O-RING			179
7291228	PLUG			179
7291229	O-RING			179
7291230	O-RING			179
7291231	PUMP			181
7291232	O-RING			181
7291233	SHAFT SEAL			181
7291234	CAP SCREW			181
7291235	CAP SCREW			181
7291236	CAP SCREW			181
7291237	O-RING			181
7291238	O-RING			183
7291239	TRANSMITTER			183
7291240	FILTER			1, 11, 17, 185
7291241	FILTER HEAD			185
7291242	O-RING			185
7291243	SCREW			185
7291244	RANGE SELECTOR			185
7291251	O-RING			187
7291252	PIPE			187
7291253	DIPSTICK			187
7291254	COVER			189, 191
7291255	POLYESTER			189
7291256	HEATER BUTTON			191, 339
7291257	AIR CONDITIONER BUTTON			191, 413, 415
7291258	TEST SWITCH			191
7291259	POLYESTER			191, 335
7291260	PUMP UNLOADER SWITCH			191
7291262	FUEL GAUGE			191
7291263	WORKING HOURS GAUGE			191
7291265	ENGINE TEMP. GAUGE			191
7291266	BOLT			191
7291267	CONNECTOR			191
7291268	IN-OUT AIR SWITCH			191
7291269	AIR CONDITIONER SWITCH			191
7291271	DEFRUZ SWITCH			191
7291272	STEP ADJUSTMENT SWICH			191
7291273	HOT-COLD VANE SWICH			191
7291274	POT			191
7291275	POT			191
7291276	CONNECTOR			191

Code for disposition of old part number

A -- Use up
B -- Use on other application (See PNI)
C -- File PDR Report with Bobcat Parts Sales
D -- Part Number Error

Part Number	Description	Was	Code	Page
7291277	ENGINE ELECTRICLINE			193
7291278	SOCKET			193
7291279	SOCKET			193
7291281	RELAY			197
7291282	INSIDE WARNING BUZZER			197
7291283	PLATE			197
7291286	SOCKET			197
7291287	SOCKET			197, 199
7291288	SOCKET			197
7291291	SOCKET			197
7291292	BOLT			197, 317, 341
7291293	WASHER			197
7291294	FUSE FITTING			199
7291295	DIRECT IND. LEVER RIGHT			199
7291296	20A FUSE			199
7291297	BOLT			199
7291298	FUSE PLATE			199
7291299	DIRECT IND. LEVER LEFT			199
7291301	BATTERY CABLE			203
7291302	BATTERY CABLE			203
7291303	BATTERY CABLE			203
7291308	FITTING			207, 209, 211
7291309	HOSE			207
7291310	HOSE			207
7291311	PIPE-RIGHT			207
7291312	PIPE-LEFT			207
7291313	HOSE			207, 209
7291314	HOSE			207
7291315	PIPE-RIGHT			207
7291316	PIPE-LEFT			207
7291322	HOSE			207
7291323	HOSE			207
7291324	HOSE			207
7291330	BOLT			395
7291339	BOLT			207
7291340	HOSE			207
7291341	HOSE			207
7291342	HOSE			207
7291343	WASHER			207
7291345	HOSE			209
7291346	FITTING			209
7291347	PIPE RIGHT			209
7291348	PIPE LEFT			209
7291349	PIPE LEFT			209
7291350	PIPE LEFT			209
7291355	PIPE			209

Code for disposition of old part number
A -- Use up
B -- Use on other application (See PNI)
C -- File PDR Report with Bobcat Parts Sales
D -- Part Number Error

Part Number	Description	Was	Code	Page
7291356	PIPE			209
7291357	FITTING			209, 211, 233
7291358	CLAMP			209
7291359	CLAMP			209
7291360	BOLT			209, 253
7291361	PIPE			209
7291362	HOSE			211
7291363	HOSE			211
7291364	FITTING			211
7291365	PIPE RIGHT			211
7291366	PIPE LEFT			211
7291367	PIPE RIGHT			211
7291368	PIPE LEFT			211
7291369	HOSE			211
7291373	PIPE			211
7291374	PIPE			211
7291375	CLAMP			211
7291376	CLAMP			211
7291377	BOLT			211
7291378	HOSE			213
7291379	HOSE			213
7291380	STEERING PIPE-RIGHT			213
7291381	STEERING PIPE-LEFT			213
7291382	HOSE			213
7291383	HOSE			213
7291386	FITTING			213
7291387	FITTING			213
7291389	CLAMP			213
7291390	CLAMP			213
7291391	BOLT			213
7291392	BOLT			213
7291393	CLAMP			213, 219
7291394	HOSE			215
7291396	PIPE			215
7291397	PIPE			215
7291398	HOSE			215
7291399	PIPE			215
7291400	PIPE			215
7291401	HOSE			215
7291402	PIPE			215
7291403	PIPE			215
7291404	O-RING			215
7291405	WASHER			215
7291406	CLAMP			215
7291423	HOSE			219
7291427	HOSE			219
7291429	HOSE			219
7291437	FITTING			395

Code for disposition of old part number
A -- Use up
B -- Use on other application (See PNI)
C -- File PDR Report with Bobcat Parts Sales
D -- Part Number Error

NUMERICAL INDEX (Cont'd)

Part Number	Description	Was	Code	Page
7291450	BOLT			403
7291457	BOLT			209, 211
7291463	PUMP			223
7291464	O-RING			223
7291465	O-RING			223
7291466	HOSE			223
7291467	FITTING			223
7291468	HOSE ASS'Y			223
7291469	HOSE ASS'Y			223
7291470	BRACKET			223
7291471	HOSE ASS'Y			223
7291472	WASHER			223
7291473	SHAFT SEAL RING			225
7291474	SHAFT SEAL RING			225
7291475	PLUG			225
7291476	ADAPTOR SAE'C' 2 HOLE			225
7291477	TEFLON BUSHING			225
7291478	SEAL RING			225
7291479	SEAL RING			225
7291480	WORN PLATE			225
7291481	GEAR			225
7291482	GEAR			225
7291483	WORN PLATE			225
7291484	SEAL RING			225
7291485	SEAL RING			225
7291486	DOWEL PIN			225
7291487	FRONT BODY			225
7291488	TEFLON BUSHING			225
7291489	COUPLING			225
7291490	GEAR			225
7291491	GEAR			225
7291492	REAR BODY			225
7291493	STUD			225
7291494	NUT			225
7291505	CLAMP			253
7291510	HOSE			229
7291515	PIPE			231
7291517	PIPE			231
7291518	FITTING			231, 235, 395
7291520	CLAMP			231
7291524	HOSE			233
7291525	HOSE			233
7291526	HOSE			395
7291528	FITTING			235
7291529	NUT			235
7291531	HOSE			235
7291533	PIPE			235, 395
7291544	SET SCREW			239, 241, 247, 397

Code for disposition of old part number

A -- Use up
B -- Use on other application (See PNI)
C -- File PDR Report with Bobcat Parts Sales
D -- Part Number Error

Part Number	Description	Was	Code	Page
7291546	CYL. PIPE RIGHT ASSEMBLY			239
7291547	CYL. PIPE LEFT ASSEMBLY			239
7291548	TEFLON RING			239, 241, 397
7291549	ORING			239
7291550	BACK-UP RING			239
7291551	GUIDE			239
7291552	BOLT			239
7291553	NUT			239
7291554	PISTON			239
7291555	TEFLON RING			239
7291556	ROD ASSEMBLY			239
7291557	BUSHING			239, 241
7291558	DUST SEAL			239
7291559	BUSHING			239, 243, 251
7291560	LIFT CYL. RIGHT			239
7291561	LIFT CYL. LEFT			239
7291562	REPAIR KIT			239
7291563	GREASER COVER			239
7291564	CYLINDER PIPE ASSEMBLY			241
7291565	O-RING			241
7291566	BACK-UP RING			241
7291567	GUIDE			241
7291568	BOLT			241
7291569	NUT			241
7291570	PISTON			241
7291571	TEFLON RING			241
7291572	ROD ASSEMBLY			241
7291573	BUSHING			241
7291574	TILT CYL. ASSY.			241
7291575	REPAIR KIT			241
7291589	ROD ASSY.			245
7291590	CYLINDER PIPE ASSEMBLY			249
7291591	TEFLON RING			247, 249, 251
7291592	BACK-UP RING			249
7291593	GUIDE			249
7291594	BOLT			247, 249, 251
7291595	PISTON			249
7291598	ROD ASSEMBLY			249
7291599	BUSHING			249
7291601	BOOM CYLINDER ASSY.			249
7291602	REPAIR KIT			249
7291603	CYLINDER PIPE ASSEMBLY			247
7291604	OMEGAT			247, 251
7291605	GUIDE			247

Code for disposition of old part number
A -- Use up
B -- Use on other application (See PNI)
C -- File PDR Report with Bobcat Parts Sales
D -- Part Number Error

Part Number	Description	Was	Code	Page
7291606	NUT			247, 251
7291607	PISTON			251
7291608	O-RING			247, 251
7291610	DUST SEAL			247, 251, 377
7291611	BUSHING			247
7291612	BUSHING			247
7291614	REPAIR KIT			247
7291615	CYLINDER PIPE ASSEMBLY			251
7291616	GUIDE			251
7291617	ROD ASSEMBLY			251
7291618	BUSHING			251
7291620	BUCKET CYL. ASSY.			251
7291621	REPAIR KIT			251
7291622	HOSE GUARD			253
7291623	BOLT			253, 415
7291624	POLYAMIDE CLAMP			253
7291625	CLAMP PLATE			253
7291626	RAIL			253
7291627	POLYAMIDE CLAMP			253
7291628	RAIL			253
7291629	CLAMP			253
7291630	ALLEN BOLT			253
7291631	CLAMP			253
7291632	ADAPTER			253
7291633	CLAMP			255
7291634	PLATE			255
7291635	BUSHING			255
7291636	GROMMET			255
7291637	CLAMP			255
7291638	CLAMP			255
7291639	CLAMP			255
7291640	CLAMP			255
7291641	BRACKET SHEET			257
7291642	BODY			257
7291643	LOADER LEVER			257
7291645	LIFT LEVER			257
7291646	BUCKET LEVER			257
7291647	PLATE			257
7291648	PLATE			257
7291650	PIN			257, 313
7291651	ADJUST SHIM			257
7291652	COMPLETE VALVE REPAIR KIT			259
7291653	MAIN RELIEF VALVE REPAIR KIT			259
7291654	PORT RELIEF VALVE REPAIR KIT			259
7291655	SPOOL CENTER REPAIR KIT			259

Code for disposition of old part number
A -- Use up
B -- Use on other application (See PNI)
C -- File PDR Report with Bobcat Parts Sales
D -- Part Number Error

Part Number	Description	Was	Code	Page
7291656	UNLOADER REPAIR KIT			259
7291657	UNLOADER CHECK REPAIR KIT			259
7291658	LOAD HOLD CHECK REPAIR KIT			259
7291659	SOLENOID REPAIR KIT			259
7291660	EYE GROUP REPAIR KIT			259
7291661	OVERLOAD PLUG REPAIR KIT			259
7291673	REAR AXLE			263
7291674	BRACKET			263
7291675	BOLT			263
7291676	REAR RIM			263
7291677	FRONT AXLE			263
7291678	FRONT RIM			263
7291679	PIN			263
7291680	O-RING			263
7291681	BUSHING			263
7291682	BUSHING			263
7291683	O-RING			263
7291686	MUDGUARD PLATE LEFT			263
7291689	MUDGUARD PLATE RIGHT			263
7291690	BRACKET			263
7291693	CROWN WHEEL			265
7291694	PINION			265
7291695	WASHER S=2.0			265
7291696	WASHER S=1.8			265
7291697	WASHER S=1.5			265
7291698	WASHER S=1.2			265
7291699	WASHER S=1.9			265
7291700	WASHER S=1.7			265
7291701	WASHER S=1.6			265
7291702	WASHER S=1.4			265
7291703	WASHER S=1.3			265
7291704	WASHER S=1.0			265
7291705	WASHER S=0.9			265
7291706	WASHER S=0.8			265
7291707	WASHER S=0.7			265
7291708	WASHER S=0.6			265
7291709	WASHER S=0.5			265
7291710	WASHER S=0.3			265
7291711	WASHER S=0.2			265
7291712	WASHER S=0.1			265
7291713	WASHER S=0.75			265
7291714	WASHER S=0.65			265

Code for disposition of old part number
A -- Use up
B -- Use on other application (See PNI)
C -- File PDR Report with Bobcat Parts Sales
D -- Part Number Error

Part Number	Description	Was	Code	Page
7291715	WASHER S=1.25			265
7291716	WASHER S=1.35			265
7291717	WASHER S=1.45			265
7291718	WASHER S=1.55			265
7291719	WASHER S=1.65			265
7291720	WASHER S=1.75			265
7291721	WASHER S=1.85			265
7291722	ROLLER BEARING			265
7291723	ROLLER BEARING			265
7291724	RING S=16.0			265
7291725	RING S=16.1			265
7291726	RING S=16.2			265
7291727	RING S=16.3			265
7291728	RING S=16.4			265
7291729	RING S=16.5			265
7291730	RING S=16.6			265
7291731	RING S=16.7			265
7291732	RING S=16.8			265
7291733	RING S=16.92			265
7291734	RING S=17.10			265
7291735	RING S=17.2			265
7291736	RING S=17.3			265
7291737	RING S=17.4			265
7291738	RING S=16.86			265
7291739	RING S=16.98			265
7291740	RING S=17.04			265
7291741	RING S=16.56			265
7291742	RING S=16.62			265
7291743	RING S=16.64			265
7291744	RING S=16.68			265
7291745	RING S=16.72			265
7291746	RING S=16.74			265
7291747	RING S=16.76			265, 277
7291748	RING S=16.78			265
7291749	RING S=16.82			265
7291750	RING S=16.84			265
7291751	RING S=16.88			265
7291752	RING S=16.9			265
7291753	RING S=16.94			265
7291754	RING S=16.66			265
7291755	RING S=16.96			265
7291756	RING S=17.0			265
7291757	RING S=17.02			265
7291758	RING S=17.06			265
7291759	RING S=17.08			265
7291760	RING S=17.12			265, 269
7291761	RING S=17.14			265, 269
7291762	RING S=17.16			265, 269
7291763	RING S=17.18			265, 269

Code for disposition of old part number
A -- Use up
B -- Use on other application (See PNI)
C -- File PDR Report with Bobcat Parts Sales
D -- Part Number Error

Part Number	Description	Was	Code	Page
7291764	RING S=17.22			265, 269
7291765	RING S=17.26			265, 269
7291766	RING S=17.28			265, 269
7291767	RING S=17.28			265, 269
7291768	ROLLER BEARING			269, 289
7291769	WASHER			269
7291770	NUT			269
7291771	SHAFT SEAL			271
7291772	INPUT FLANGE			271
7291773	SCREEN SHEET			271
7291774	SCREW			271
7291775	PIPE			271
7291776	NUT			271
7291777	AXLE BEVEL GEAR			273
7291778	AXLE BEVEL GEAR			273
7291779	DIFF. BEVEL GEAR			273
7291780	THRUST WASHER			273
7291781	THRUST WASHER			273
7291782	DIFF. CASE			273
7291783	DIFF. SPIDER			273
7291784	SCREW			273
7291785	PIN			273
7291786	PIN			273
7291787	LOCKING SLIDE			273
7291788	SPRING			273
7291789	NEEDLE CAGE			273
7291790	PISTON			273
7291791	O-RING			273
7291792	O-RING			273
7291793	O-RING			275
7291794	BACK-UP RING			275
7291795	O-RING			275
7291796	BACK-UP RING			275
7291797	O. CLUTCH DISC			275
7291798	I. CLUTCH DISC			275
7291799	DISC CARRIER			275
7291800	I. CLUTCH DISC			275
7291801	DISC CARRIER			275
7291802	RING			275
7291803	PISTON			275
7291804	CUP SPRING			275
7291805	RETAINING RING			275
7291806	PIN			275
7291807	VENT VALVE			275, 287
7291808	PLUG			275, 277, 283
7291809	PLUG			275
7291810	RETAINING RING			275
7291811	CAP SCREW			275
7291812	WASHER			275

Code for disposition of old part number
A -- Use up
B -- Use on other application (See PNI)
C -- File PDR Report with Bobcat Parts Sales
D -- Part Number Error

Part Number	Description	Was	Code	Page
7291813	WASHER			275
7291814	CUP SPRING			275
7291815	RETAINING RING			275, 303
7291816	O-RING			277, 283
7291817	SCREW			277
7291818	O-RING			277
7291819	AXLE CASING			279
7291820	AXLE CASING			279
7291821	HOUSING			279
7291822	HOUSING			279
7291823	HOUSING			279
7291824	ROLLER HOUSING			279
7291825	ROLLER HOUSING			279
7291826	SHIM S=2.0			279
7291827	SHIM S=1.95			279
7291828	SHIM S=1.90			279
7291829	SHIM S=1.85			279
7291830	SHIM S=1.8			279
7291831	SHIM S=1.75			279
7291832	SHIM S=1.70			279
7291833	SHIM S=1.65			279
7291834	SHIM S=1.60			279
7291835	SHIM S=1.55			279
7291836	SHIM S=1.5			279
7291837	SHIM S=1.45			279
7291838	SHIM S=1.40			279
7291839	SHIM S=1.35			279
7291840	SHIM S=1.3			279
7291841	SHIM S=1.25			279
7291842	SHIM S=1.2			279
7291843	SHIM S=1.15			279
7291844	SHIM S=1.1			279
7291845	SHIM S=1.05			279
7291846	SHIM S=1.0			279
7291847	SHIM S=0.95			279
7291848	SHIM S=0.9			279
7291849	SHIM S=0.3			279
7291850	SHIM S=0.5			279
7291851	SHIM S=1.0			279
7291852	SHIM S=0.2			279
7291853	SHIM S=0.1			279
7291854	SHIM S=0.15			279
7291855	SHIM S=1.1			279
7291856	SHIM S=1.2			279
7291857	SHIM S=1.3			279
7291858	SHIM S=1.4			279
7291859	SHIM S=1.5			279
7291860	SHIM S=1.6			279
7291861	SHIM S=1.7			279

Code for disposition of old part number

A -- Use up
B -- Use on other application (See PNI)
C -- File PDR Report with Bobcat Parts Sales
D -- Part Number Error

Part Number	Description	Was	Code	Page
7291862	SHIM S=1.8			279
7291863	SHIM S=2.6			279
7291864	SHIM S=2.7			279
7291865	SHIM S=2.8			279
7291866	SHIM S=2.9			279
7291867	SHIM S=3.0			279
7291868	SHIM S=3.1			279
7291869	SHIM S=3.2			279
7291870	SHIM S=3.3			279
7291871	SHIM S=3.4			279
7291872	SHIM S=2.0			279
7291873	SHIM S=2.05			279
7291874	SHIM S=2.10			279
7291875	SHIM S=2.15			279
7291876	SHIM S=2.2			279
7291877	SHIM S=2.25			279
7291878	SHIM S=2.30			279
7291879	SHIM S=2.35			279
7291880	SHIM S=2.40			279
7291881	SHIM S=2.45			279
7291882	SHIM S=2.5			279
7291883	SHIM S=0.75			279
7291884	VENT VALVE			279, 287
7291885	SCREW PLUG			279
7291886	HOUSING			279
7291887	SCREW			279
7291888	BUSHING			283
7291889	SCREW			283
7291890	SUN GEAR SHAFT			283
7291891	STUB SHAFT			283
7291892	PLANET CARRIER			283
7291893	PLANET CARRIER			283
7291894	PLANET GEAR			283
7291895	ROLLER BEARING			283
7291896	BOLT			283
7291897	GEAR			283
7291898	SHAFT SEAL			283
7291899	SCREW			283
7291900	HUB			283
7291901	ROLLER BEARING			283
7291902	WHEEL BOLT			283, 301
7291903	BRAKE DISC			285
7291904	BRAKE			285
7291905	SEALING SET			285
7291906	SEALING SET			285
7291907	REPAIR KIT			285
7291908	REPAIR KIT			285
7291909	REPAIR KIT			285
7291910	SEALING SET			285

Code for disposition of old part number

A -- Use up
B -- Use on other application (See PNI)
C -- File PDR Report with Bobcat Parts Sales
D -- Part Number Error

NUMERICAL INDEX (Cont'd)

Part Number	Description	Was	Code	Page
7291911	SCREW			285
7291912	WASHER			285
7291913	BEVEL GEAR SET			289
7291914	WASHER A=3.3			289
7291915	WASHER A=3.4			289
7291916	WASHER A=3.5			289
7291917	WASHER A=3.6			289
7291918	WASHER A=3.7			289
7291919	BUSHING			289
7291920	ROLLER BEARING			289
7291921	SHAFT SEAL			289
7291922	WASHER			289
7291923	NUT			289
7291924	RING A=5.55			289
7291925	RING A=5.6			289
7291926	RING A=5.65			289
7291927	RING A=5.70			289
7291928	RING A=5.75			289
7291929	RING A=5.80			289
7291930	RING A=5.85			289
7291931	RING A=5.90			289
7291932	RING A=5.95			289
7291933	RING A=6.10			289
7291934	RING A=6.15			289
7291935	RING A=6.20			289
7291936	RING A=6.25			289
7291937	RING A=6.30			289
7291938	RING A=6.35			289
7291939	RING A=6.40			289
7291940	RING A=6.45			289
7291941	RING A=6.5			289
7291942	RING A=6.55			289
7291943	RING A=6.60			289
7291944	RING A=6.65			289
7291945	RING A=6.7			289
7291946	RING A=5.98			289
7291947	RING A=6.00			289
7291948	RING A=6.02			289
7291949	RING A=6.04			289
7291950	RING A=6.07			289
7291951	END YOKE			293
7291952	SCREEN SHEET			293
7291953	DIFF. CASE			295
7291954	O. CLUTCH DISC			295
7291955	O. CLUTCH DISC			295
7291956	I. CLUTCH DISC			295
7291957	PRESSURE DISC			295
7291958	BEVEL GEAR			295
7291959	BEVEL GEAR			295

Code for disposition of old part number

A -- Use up
B -- Use on other application (See PNI)
C -- File PDR Report with Bobcat Parts Sales
D -- Part Number Error

Part Number	Description	Was	Code	Page
7291960	THRUST WASHER			295
7291961	DIFF. AXLE			295
7291962	CAP SCREW			295
7291963	PIN			295
7291964	COVER			295
7291965	SHIM A=2.0			297
7291966	SHIM A=1.95			297
7291967	SHIM A=1.90			297
7291968	SHIM A=1.85			297
7291969	SHIM A=1.80			297
7291970	SHIM A=1.75			297
7291971	SHIM A=1.70			297
7291972	SHIM A=1.65			297
7291973	SHIM A=1.60			297
7291974	SHIM A=1.55			297
7291975	SHIM A=1.50			297
7291976	SHIM A=1.45			297
7291977	SHIM A=1.40			297
7291978	SHIM A=1.20			297
7291979	SHIM A=1.0			297
7291980	SHIM A=0.8			297
7291981	SHIM A=0.6			297
7291982	SHIM A=0.5			297
7291983	SHIM A=0.4			297
7291984	SHIM A=0.3			297
7291985	SHIM A=0.2			297
7291986	SHIM A=0.1			297
7291987	SHIM A=0.65			297
7291988	SHIM A=0.70			297
7291989	SHIM A=0.75			297
7291990	SHIM A=0.85			297
7291991	SHIM A=0.90			297
7291992	SHIM A=0.95			297
7291993	SHIM A=1.10			297
7291994	SHIM A=1.15			297
7291995	SHIM A=1.25			297
7291996	SHIM A=1.30			297
7291997	SHIM A=1.35			297
7291998	SHIM A=0.45			297
7291999	SHIM A=0.55			297
7292000	SHIM A=1.05			297
7292001	SHIM A=2.05			297
7292002	SHIM A=2.10			297
7292003	SHIM A=2.15			297
7292004	SHIM A=2.20			297
7292005	SHIM A=2.25			297
7292006	SHIM A=2.30			297
7292007	SHIM A=2.35			297
7292008	SHIM A=2.40			297

Code for disposition of old part number

A -- Use up
B -- Use on other application (See PNI)
C -- File PDR Report with Bobcat Parts Sales
D -- Part Number Error

NUMERICAL INDEX (Cont'd)

Part Number	Description	Was	Code	Page
7292009	SHIM A=2.45			297
7292010	SHIM A=2.50			297
7292011	ROLLER BEARING			297
7292012	O-RING			297
7292013	SCREW			297
7292014	TYPE PLATE			297
7292015	SCREW PLUG			297, 303
7292016	O-RING			297, 303
7292017	BUSH			297
7292018	SHAFT SEAL			297
7292019	AXLE CASING			297
7292020	AXLE CASING			297
7292021	ROD			297
7292022	BALL JOINT			297
7292023	AXIAL JOINT			297
7292024	NUT			297
7292025	NUT			297
7292026	BUSH			297
7292027	ROD			297
7292028	BALL JOINT			297
7292029	JOINT HOUSING LEFT			301
7292030	JOINT HOUSING RIGHT			301
7292031	ROLLER BEARING			301
7292032	ROLLER BEARING			301
7292033	RING			301
7292034	RING			301
7292035	PIN			301
7292036	PIN			301
7292037	SCREW			301
7292038	BEARING			301
7292039	RETAINING RING			301
7292040	RING			301
7292041	RETAINING RING			301
7292042	SHAFT			301
7292043	RING			301
7292044	ROLLER BEARING			301
7292045	SCREW			301
7292046	BUSHING			301
7292047	BUSHING			301
7292048	SCREW			301
7292049	NUT			301
7292050	HUB			301
7292051	O-RING			301
7292052	RING GEAR			303
7292053	SUN GEAR SHAFT			303
7292054	PLANET CARRIER			303
7292055	PLANET GEAR			303
7292056	BEARING			303

Code for disposition of old part number

A -- Use up
B -- Use on other application (See PNI)
C -- File PDR Report with Bobcat Parts Sales
D -- Part Number Error

NUMERICAL INDEX (Cont'd)

Part Number	Description	Was	Code	Page
7292057	PLANET CARRIER			303
7292058	CAP SCREW			303
7292059	STEERING CYLINDER			305
7292060	PISTON ROD			305
7292061	RING			305
7292062	PLUG			305
7292063	PLUG			305
7292064	RING			305
7292065	RING			305
7292066	CYLINDER PIPE			305
7292067	FLANGE			305
7292068	SPACER			305
7292069	REPAIR KIT			305
7292070	SCREW			305
7292071	FRONT SHAFT			291
7292072	REAR SHAFT			291
7292073	PINION			291
7292074	PINION			291
7292075	PLATE			307
7292076	COVER PLATE			307
7292094	PIN			311
7292096	ACCELERATOR PEDAL ROPE			311
7292098	ACCELERATOR PEDAL			311
7292101	ACCELERATOR PEDAL ASSY.			311
7292104	HAND THROTTLE ROPE BRACKET			311
7292105	PLATE			311
7292107	BRACKET			313
7292108	HAND BRAKE ROPE			313
7292109	ROD HEAD			313
7292110	COTTER PIN			257, 313
7292111	BRACKET SHEET			313
7292112	SWITCH PLATE			313
7292113	SWITCH			313
7292114	COUNTER WEIGHT			315
7292115	BOLT			315
7292116	WASHER			315
7292117	NUT			315
7292122	PERFORATED SHEET			317
7292127	BOLT			317
7292135	GRILLE			317
7292136	BRACKET			317
7292137	ENGINE BONNET REAR PLATE			317
7292138	BOLT			317
7292139	WASHER			317

Code for disposition of old part number

A -- Use up
B -- Use on other application (See PNI)
C -- File PDR Report with Bobcat Parts Sales
D -- Part Number Error

Part Number	Description	Was	Code	Page
7292142	HYDRAULIC TANK COVER			323
7292148	RIGHT REAR MUDGUARD			333
7292149	LEFT REAR MUDGUARD			333
7292150	RIGHT FRONT SKIRT POLYESTER			333
7292151	LEFT FRONT SKIRT POLYESTER			333
7292152	BACK SKIRT POLYESTER			333
7292153	CABIN ASS'Y			333
7292154	POLYESTER			335
7292156	FRONT RIGHT B. POLYESTER			335
7292166	HAND BRAKE CONSOLE GROUP			335
7292167	COVER			335
7292168	COVER SHEET			335
7292170	COVER			335
7292171	BOLT			335
7292173	COVER SHEET			335
7292174	COVER SHEET			335
7292175	RUBBER BUMPER			337
7292176	BOLT			337
7292177	WASHER			235, 337
7292179	HEATER			339
7292181	CLAMP			339, 413
7292184	AIR VENT			413
7292187	AIR FILTER			339, 413
7292188	WEDGE			339
7292189	LOCK WASHER			339
7292190	WASHER			201, 339, 399, 415
7292191	SEAT			341
7292193	PLATE			341
7292194	COVER			341
7292196	MAT (REAR)			341
7292198	MAT (FRONT)			341
7292199	PLATE			341
7292200	SEAT HEAD			341
7292201	BACK PART			343
7292202	SEAT PART			343
7292203	BOLT			343
7292205	HANDLE			343
7292206	WASHER			343
7292207	PLATE			343
7292208	COVER			343
7292209	LOCKING			343
7292210	SIDE COVER			343

Code for disposition of old part number
A -- Use up
B -- Use on other application (See PNI)
C -- File PDR Report with Bobcat Parts Sales
D -- Part Number Error

Part Number	Description	Was	Code	Page
7292211	ARM-REST			343
7292212	SEAT PART			343
7292213	ADAPTER			343
7292214	ARM-REST			343
7292215	SIDE COVER			343
7292216	PLATE			343
7292217	COVER			343
7292218	HANDLE			343
7292219	BACK PART			343
7292220	HEAD PART			343
7292221	PLATE			343
7292222	ADJUST PARTS			343
7292223	SEAT BELT			343
7292224	TURN TABLE			343
7292225	UPPER FLEXIBLE PLATE			345
7292226	RUBBER COVER			345
7292227	BELT			345
7292228	PIN			345
7292229	BUSHING			345
7292230	SEGMENT			345
7292231	SCISSORS			345
7292232	PIN			345
7292233	ROLLER			345
7292234	SUPPORT PLATE			345
7292235	SPRING			345
7292236	PLATE			345
7292237	PIN			345
7292238	PIN			345
7292240	SEGMENT			345
7292241	LEVER			345
7292242	RIVET			345
7292243	PLATE			345
7292244	RUBBER PART			345
7292245	RUBBER BUMPER			345
7292246	WASHER			345
7292247	HOUSING			345
7292248	NUT			345
7292249	SPRING HANDLE			345
7292250	WEDGE			345
7292251	PIN			345
7292253	HANDLE			345
7292254	HANDLE CONNECTION PARTS			345
7292255	GAUGE SPACE			345
7292256	ROLLER			345
7292257	WEIGHT GAUGE			345
7292258	SPRING			345
7292259	BUSHING			345

Code for disposition of old part number
A -- Use up
B -- Use on other application (See PNI)
C -- File PDR Report with Bobcat Parts Sales
D -- Part Number Error

Part Number	Description	Was	Code	Page
7292260	BOTTOM FLEXIBLE PART			345
7292262	CABIN FRAME			347
7292263	WINDSHIELD			347
7292264	BOTTOM WINDSHIELD (RIGHT)			347
7292265	BOTTOM WINDSHIELD (LEFT)			347
7292266	FRONT WIPER MOTOR			347
7292267	FRONT WIPER MECHANISM			347
7292268	NUT			347
7292269	BOLT			347
7292270	WINDSHIELD WIPER BLADE			347
7292271	WINDSHIELD WIPER ARM			347
7292272	R. VIEW MIRROR H. (LEFT)			347
7292273	R. VIEW MIRROR H. (RIGHT)			347
7292274	HEAD SOCKET CAP SCREW			347
7292275	FIBER NUT			347
7292276	REAR VIEW MIRROR (LEFT)			347
7292277	REAR VIEW MIRROR (RIGHT)			347
7292278	BOTTOM HEADLGHT C. WASHER			347
7292279	FIBER NUT			347
7292280	WATER NOZZLE			347
7292281	SIDE GLASS (RIGHT)			349
7292282	GLASS WASHER			349
7292283	SIDE GLASS BACK LOCKING			349
7292284	WASHER			349
7292285	BOLT			349
7292286	SIDE GLASS DOOR HINGE STEEL			349
7292287	COUNTERS. STAR-HEAD BOLT			349
7292288	SIDE GLASS BACK LOCKING			349
7292289	GLASS WASHER			349
7292290	PLASTIC STOPPER			349
7292291	RUBBER BLOCK			349
7292292	WELDED SIDE HANDLE PIPE			349
7292293	FIBER NUT			349
7292294	BOLT			349

Code for disposition of old part number
A -- Use up
B -- Use on other application (See PNI)
C -- File PDR Report with Bobcat Parts Sales
D -- Part Number Error

Part Number	Description	Was	Code	Page
7292295	SIDE GLASS LOCK (RIGHT)			349
7292296	WASHER			349
7292297	BOLT			349
7292298	WASHER			349
7292299	BOLT			349
7292300	DOOR PROFIL WELDED FRAME			351
7292301	DOOR GLASS (RIGHT)			351
7292302	GLASS WASHER			351
7292303	DOOR HINGE STEEL			351
7292304	COUNTERS. STAR-HEAD BOLT			351
7292305	COUNTERS. STAR-HEAD BOLT			351
7292306	GLASS PLASTIC NUT WASHER			351
7292307	GLASS PLASTIC NUT			351
7292308	BACK-LOCKING WEDGE			351
7292309	BOLT			351
7292310	DOOR HANDLE (RIGHT)			351
7292311	WASHER			351
7292312	FIBER NUT			351
7292313	PLASTIC STOPPER			351
7292314	GLASS WASHER			351
7292315	BOLT			351
7292316	WASHER			351
7292317	FIBER NUT			351
7292318	DOOR LOCK (RIGHT)			351
7292319	BOLT			351
7292320	WASHER			351
7292321	FIBER NUT			351
7292322	DOOR GLASS RUBBER			351
7292323	R. REAR SIDE FRAME RUBBER			353
7292324	RIGHT DOOR FRAME RUBBER			353
7292325	REAR SIDE LOCK STRIKER			353
7292326	WASHER			353
7292327	BOLT			353
7292328	DOOR LOCK STRIKER			353
7292329	WASHER			353, 359
7292330	BOLT			353
7292331	VENTILATION FILTER BOX			353
7292332	VENTILATION FILTER			353

Code for disposition of old part number
A -- Use up
B -- Use on other application (See PNI)
C -- File PDR Report with Bobcat Parts Sales
D -- Part Number Error

Part Number	Description	Was	Code	Page
7292333	STEEL SCREW WASHER			353
7292334	STEEL SCREW			353
7292335	RIGHT DOOR FRAME			353
7292336	RIGHT REAR SIDE DOOR FRAME			353
7292337	HINGE WASHER			353
7292338	HINGE SHAFT			353
7292339	PISTON RING			353
7292340	GREASE NIPPLE			353
7292341	RIVET NUT			353
7292342	DOOR STOPPER WASHER			353
7292343	DOOR STOPPER GUIDE			353
7292344	DOOR STOPPER JOINT			353
7292345	WASHER			353
7292346	FIBER NUT			353
7292347	PLASTIC STOPPER			353
7292348	STOPPER			353
7292349	ALLEN HEAD BOLT			353
7292350	DOOR SHOCK ABSORBER			353
7292351	SIDE GLASS (LEFT)			355
7292352	GLASS WASHER			355
7292353	SIDE GLASS BACK LOCKING			355
7292354	WASHER			355
7292355	BOLT			355
7292356	SIDE GLASS DOOR HINGE STEEL			355
7292357	COUNTERSUNK STAR-HEAD BOLT			355
7292358	SIDE GLASS BACK LOCKING			355
7292359	GLASS WASHER			355
7292360	PLASTIC STOPPER			355
7292361	RUBBER BLOCK			355
7292362	SIDE HANDLE PIPE			355
7292363	FIBER NUT			355
7292364	BOLT			355
7292365	SIDE GLASS LOCK (LEFT)			355
7292366	WASHER			355
7292367	BOLT			355
7292368	WASHER			355
7292369	BOLT			355
7292370	DOOR PROFIL WELDED FRAME			357
7292371	DOOR GLASS (LEFT)			357

Code for disposition of old part number

A -- Use up
B -- Use on other application (See PNI)
C -- File PDR Report with Bobcat Parts Sales
D -- Part Number Error

Part Number	Description	Was	Code	Page
7292372	GLASS WASHER			357
7292373	DOOR HINGE STEEL			357
7292374	COUNTERSUNK STAR-HEAD BOLT			357
7292375	COUNTERSUNK STAR-HEAD BOLT			357
7292376	GLASS PLASTIC NUT WASHER			357
7292377	GLASS PLASTIC NUT			357
7292378	BACK-LOCKING WEDGE			357
7292379	BOLT			357
7292380	DOOR HANDLE (LEFT)			357
7292381	WASHER			357
7292382	FIBER NUT			357
7292383	PLASTIC STOPPER			357
7292384	GLASS WASHER			357
7292385	BOLT			357
7292386	WASHER			357
7292387	FIBER NUT			357
7292388	DOOR LOCK (LEFT)			357
7292389	BOLT			357
7292390	WASHER			357
7292391	FIBER NUT			357
7292392	DOOR GLASS RUBBER			357
7292393	LEFT REAR SIDE FRAME RUBBER			359
7292394	LEFT DOOR FRAME RUBBER			359
7292395	REAR SIDE LOCK STRIKER			359
7292396	WASHER			359
7292397	BOLT			359
7292398	DOOR LOCK STRIKER			359
7292399	BOLT			359
7292400	LEFT DOOR FRAME			359
7292401	LEFT REAR SIDE DOOR FRAME			359
7292402	HINGE WASHER			359
7292403	HINGE SHAFT			359
7292404	PISTON RING			359
7292405	GREASE NIPPLE			359
7292406	RIVET NUT			359
7292407	DOOR STOPPER WASHER			359
7292408	DOOR STOPPER GUIDE			359
7292409	DOOR STOPPER JOINT			359
7292410	WASHER			359

Code for disposition of old part number

A -- Use up
B -- Use on other application (See PNI)
C -- File PDR Report with Bobcat Parts Sales
D -- Part Number Error

Part Number	Description	Was	Code	Page
7292411	FIBER NUT			359
7292412	PLASTIC STOPPER			359
7292413	STOPPER			359
7292414	ALLEN HEAD BOLT			359
7292415	DOOR SHOCK ABSORBER			359
7292416	WELDED REAR FRAME ASSY			361
7292417	ROLLER BEARING			361
7292418	REAR FRAME GLASS			361
7292419	REAR FRAME WIPER MOTOR			361
7292420	REAR FRAME WIPER MOTOR F.			361
7292421	REAR FRAME WIPER M. ARM			361
7292422	REAR FRAME TOP LOCKER			361
7292423	NUT			361
7292424	REAR FRAME SIDE LOCKER			361
7292425	BUSHING			361
7292426	WASHER			361
7292427	REAR C. CONVEX GLASS (LEFT)			363
7292428	REAR C. CONVEX G. (RIGHT)			363
7292429	DUST TYRE OF REAR FRAME			363
7292430	WATER NOZZLE OF REAR GLASS			363
7292431	MECHANISM ARM CON. STEEL			363
7292432	WASHER			363
7292433	BOLT			363
7292434	MECHANISM ARM (WELDED)			363
7292435	WASHER			363
7292436	REAR FRAME STRIKER			363
7292437	WASHER			363
7292438	BOLT			363
7292439	FIBER NUT			363
7292440	REAR FRAME SHOCK ABSORBER			363
7292441	NUT			363
7292442	FIBER NUT			363
7292443	REAR FRAME COMPLE			363
7292444	ADAPTER			363
7292445	WASHER			363
7292446	FIBER NUT			363

Code for disposition of old part number
A -- Use up
B -- Use on other application (See PNI)
C -- File PDR Report with Bobcat Parts Sales
D -- Part Number Error

Part Number	Description	Was	Code	Page
7292447	LEFT SIDE OF EXTERIOR ROOF			365
7292448	RIGHT SIDE OF EXTERIOR ROOF			365
7292449	BACK OF EXTERIOR ROOF			365
7292450	STEEL SCREW WASHER			365
7292451	STEEL SCREW			365
7292452	ANTENNA			365
7292453	WORKLAMP			365
7292454	BOLT			365
7292455	WASHER			365
7292456	FIBER NUT			365
7292457	BOLT			365
7292458	TOP OF EXTERIOR ROOF			365
7292459	LIFTING EYEBOLT WASHER			365
7292460	LIFTING EYEBOLT			365
7292461	BEACON LAMP			365
7292462	CABIN ROOF ASSAMBLY			365
7292463	LEFT MIDDLE BRACKET C.			367
7292464	RIGHT MIDDLE BRACKET C.			367
7292465	RIGHT REAR BRACKET C.			367
7292466	LEFT REAR BRACKET COVERING			367
7292467	WALL PLUG			367
7292468	AIR DIRECTION			367
7292469	INTERIOR ROOF			367
7292470	SUN VISOR			367
7292471	STEEL SCREW WASHER			367
7292472	STEEL SCREW			367
7292473	SPEAKER			367
7292474	RADIO-CD PLAYER			367
7292478	PLATE			371
7292482	PIN			373
7292483	PIN			373
7292484	BACK BOOM ASSEMBLY			373
7292485	STICK ASSEMBLY			375
7292486	PIN			375
7292487	PIN			375, 401
7292488	BUSHING			375, 399
7292489	BUSHING			375, 399
7292490	DUST SEAL			375, 383, 399

Code for disposition of old part number
A -- Use up
B -- Use on other application (See PNI)
C -- File PDR Report with Bobcat Parts Sales
D -- Part Number Error

Part Number	Description	Was	Code	Page
7292491	WASHER			375, 399
7292492	PIN			375, 399
7292493	WASHER			375, 399
7292494	BOLT			375, 399
7292495	LEVER			375, 401
7292496	BUCKET			375, 401
7292498	BUCKET			375, 401
7292500	BUCKET			375, 401
7292501	CUTTER SIDE RIGHT			375, 401
7292502	CUTTER SIDE LEFT			375, 401
7292503	BOLT			375, 401
7292504	TOOTH SET			375, 401
7292517	LOCKING ASSY			379
7292518	LOCKING LOWER BRACKET			379
7292519	WASHER			379
7292520	PIN			381
7292521	WASHER			381
7292522	BUSHING			381
7292524	PIN			381
7292525	BOLT			381
7292526	SHIM			381
7292527	SHIM			381, 383, 385, 421
7292528	PIN			381
7292529	LOADER BOOM ASSEMBLY			381
7292531	BUSHING			381
7292532	PLUG			381
7292533	PLUG			381
7292534	BUSHING			383
7292535	SHIM			383
7292536	SHIM			383
7292537	SHIM			383
7292538	DUST SEAL			383
7292539	BUSHING			383
7292540	WASHER			383
7292541	PIN			383
7292542	LEVER			383
7292543	PIN			383
7292544	BUSHING			383, 385, 421
7292545	FLAT LEVER			383
7292546	PIN			383
7292547	ARM LEFT ASSEMBLY			383
7292548	BUSHING			383
7292549	BUSHING			383
7292550	BUSHING			383
7292551	SHIM			383
7292552	GREASER			383
7292553	BUSHING			383

Code for disposition of old part number

A -- Use up
B -- Use on other application (See PNI)
C -- File PDR Report with Bobcat Parts Sales
D -- Part Number Error

NUMERICAL INDEX (Cont'd)

Part Number	Description	Was	Code	Page
7292554	PIN			383
7292555	WASHER			373, 383
7292556	SEGMENT			383
7292557	ARM RIGHT ASSEMBLY			383
7292558	FLANGE			383
7292559	BOLT			383
7292560	WASHER			383, 415
7292561	PIN			385, 421
7292562	BUSHING			385, 421
7292574	ADAPTER			389
7292575	GREASER			389
7292576	ROD			389
7292577	PIPE			389
7292578	SAFETY BAR			389
7292579	FITTING			391
7292580	HOSE			391
7292581	ROD			393
7292582	HOSE			395
7292587	HOSE			395
7292594	BUSHING			395
7292595	CLAMP PLATE			395
7292596	PIPE			395
7292597	PIPE			395
7292598	PIPE			395
7292599	HOSE			395
7292600	HOSE			395
7292602	GUIDE			397
7292603	NUTRING			397
7292604	PISTON			397
7292606	BUSHING			397
7292607	RUBBER BUMPER			397
7292609	REPAIR KIT			397
7292611	EXTENDED STICK ASS'Y			399
7292612	PIN			399
7292613	BOLT			399
7292614	PIN			399
7292615	WASHER			399
7292617	SETSCREW			399
7292619	NUT			399
7292620	HOUSING			399
7292622	SLIDING BLOCK			399
7292623	BOLT ADAPTER			399
7292625	PIN			399
7292626	SHIM			399
7292627	SHIM			399
7292628	PIN WASHER			399
7292629	COVER PLATE			399

Code for disposition of old part number

A -- Use up
B -- Use on other application (See PNI)
C -- File PDR Report with Bobcat Parts Sales
D -- Part Number Error

Part Number	Description	Was	Code	Page
7292630	BOLT			399
7292631	BOOM ASSEMBLY			401
7292632	PIN			401
7292648	GUARD			405
7292649	HOSE			409
7292650	FITTING			409
7292652	HOSE			409
7292653	EHSS SET			409
7292657	HOSE			411
7292659	HOSE			411
7292661	CUTTING LINE SET			411
7292662	HOSE BRACKET			411
7292663	SL FITTING			411
7292665	AIR CONDITIONER			413, 415
7292666	AIR CONDITIONER HOSE			413, 415
7292668	AIR-CONDITIONER BRACKET			415
7292669	BOLT			415
7292671	MOTOR CONNECTION SHEET			415
7292674	MOTOR CONNECTION SHEET			415
7292675	AIR-CONDITIONER WEDGE			415
7292677	WASHER			415
7292683	BLOWER PLATE			415
7292684	POLYESTER COVER			415
7292685	PULLEY			415
7292687	AC BELT			63, 415
7292691	TOOTH SET			421
7292700	BUCKET			421
7292709	PLATE			427
7292710	EDGE SEGMENT			427
7292711	BOLT			427
7292712	NUT			427
7292713	INSULATION SPANGE - RIGHT S.			429
7292714	INSULATION SPANGE - LEFT S.			429
7292715	INSULATION SPANGE - TOP			429
7292849	QUICK ATTACHMENT BUCKET			419
7292850	QUICK HITCH ATTACHMENT			419
7292851	LEVER			419
7292852	PLATE			419
7292853	PLATE			419
7292854	PIN			419
7292855	PIN			419

Code for disposition of old part number
A -- Use up
B -- Use on other application (See PNI)
C -- File PDR Report with Bobcat Parts Sales
D -- Part Number Error

Part Number	Description	Was	Code	Page
7292856	PIN			419
7292857	SEGMENT			419
7292874	CLAMP			227
7292875	HOSE			213
7292878	HOSE			213
7293082	BUCKET-REAR			387
7293083	BUCKET-FRONT			387
7293093	AC CONDENSER			415
7293261	HOSE			209
7293561	BOLT			335
7294162	DECAL BOBCAT			329
7294525	DECAL BACKHOE LOADER			329
7294527	DECAL DANGER			327
7294528	DECAL WARNING			327
7294530	DECAL INSTRUCTION			327
7294535	DECAL ENGINE RPM			327
7294536	DECAL INSTRUCTION			327
7294537	DECAL INSTRUCTION			327
7294538	DECAL WARNING			327
7294539	DECAL INSTRUCTION			327
7294542	DECAL ROC 3178			327
7294544	DECAL HYD HAMMER			331
7294547	DECAL B730			329
7294548	DECAL B730			329
7294555	DECAL BACKHOE LOADER			329
7294556	DECAL BACKHOE LOADER			329
7294929	FAN DRIVE PULLEY			63
7298099	RELAY ARRANGEMENT			327
7298100	FUSE ARRANGEMENT			327
7299049	WARNING LAMP			189
7299050	DRAIN SWITCH			191
7299053	WARNING HORN			195
7299055	SENSOR			195
7299059	RELAY			197
7299144	FITTING			219
7299156	WARNING LAMP			191
7299171	BACKHOE ELECTRILINE			195
7299172	RELAY FITTING ASSY			197
7299173	FUSE FITTING			199
7299177	BRACKET			147
7299273	CANOPY CABIN ASSY			333
7299307	FUSE BOX WITH SOCKET			197
7299312	CABLE			155

Code for disposition of old part number
A -- Use up
B -- Use on other application (See PNI)
C -- File PDR Report with Bobcat Parts Sales
D -- Part Number Error

NUMERICAL INDEX (Cont'd)

Part Number	Description	Was	Code	Page
7301327	EXT. STICK HAMMER TUBE RIGHT			403
7301328	CLAMP TOP PLATE			403
7301329	CLAMP BLOCK			403
7301330	EXT. STICK HAMMER TUBE LEFT			403
7301560	BRACKET			317
7301561	EXTENDED CYLINDER ASSY			397
7301868	FRONT TIRE			263
7301870	REAR TIRE			263
7301987	HOSE			213
7302510	REPAIR KIT			257
7302512	REPAIR KIT			261
7304026	HOSE			149
7304040	VALVE			257
7304041	VALVE			257, 261
7304042	VALVE			257, 261
7304050	CONTROL LEVER			261
7304051	CONTROL LOCKING LEVER			261
7304052	VALVE			261
7304061	VALVE			209, 211
7304062	PLUG			209, 211
7304080	COVER			309
7304081	TANK			309
7304082	PIPE			309
7304083	HOSE			147, 309
7304085	THROTTLE LEVER ROPE			311
7304095	BRACKET			317
7304096	BRACKET			317
7304098	PLATE			317
7304099	LOCK BRACKET			317
7304138	STEP BAND			323
7304140	PLATE			335
7304144	BOLT			335
7304146	BAG			341
7304197	PIPE			151
7304198	HOSE			209
7304199	FITTING			209, 211
7304200	HOSE			211
7304205	ADAPTER			215
7304206	COPPER WASHER			215
7304207	HOSE			217
7304208	HOSE			217
7304239	HOSE			219
7304240	PIPE			219
7304244	TEFLON RING			249
7304245	SEAL			249

Code for disposition of old part number

A -- Use up
B -- Use on other application (See PNI)
C -- File PDR Report with Bobcat Parts Sales
D -- Part Number Error

Part Number	Description	Was	Code	Page
7304246	ROD ASSEMBLY			247
7304247	COVER, RUBBER			257
7304255	BOLT			263
7304267	ACCELERATOR PEDAL SPRING			311
7304273	ENGINE BONNET			317
7304274	ENGINE BONNET RIGHT LAP			317
7304275	ENGINE BONNET LEFT LAP			317
7304309	FRONT LEFT B. POLYESTER			335
7304310	FRONT CONSOLE GROUP			335
7304311	BOLT			335
7304312	RIGHT CONSOLE GROUP			335
7304313	RIGHT R. CORNER POLYESTER			335
7304314	LEFT CONSOLE GROUP			335
7304315	REAR CONSOLE GROUP			335
7304316	JOYSTICK COVER			335
7304317	CUP HOLDER			335
7304322	HOSE			339
7304324	AIR-CONDITIONING PLATE			339, 413
7304325	HOSE			229, 403
7304328	LEVER ASSEMBLY			381
7304336	CLAMSHELL ASSY.			387
7304342	CYLINDER PIPE ASSEMBLY			397
7304343	ROD ASSEMBLY			397
7304358	MOTOR			415
7304359	BOLT			415
7304360	TUBE			415
7304361	AIR-CONDITIONER BODY			415
7304362	AIR CONDITIONER UNDER SEAT			415
7304368	ADJUSTING SHIM			421
7304899	SHIM			373
7306796	AIR-CONDITIONER ASSEMBLY			415
7310237	MANUAL PARTS			5
7310481	FRONT WHEEL ASSEMBLY			263
7310482	REAR WHEEL ASSEMBLY			263
7310997	REAR WHEEL ASSEMBLY			263

Code for disposition of old part number
A -- Use up
B -- Use on other application (See PNI)
C -- File PDR Report with Bobcat Parts Sales
D -- Part Number Error

NUMERICAL INDEX (Cont'd)

Part Number	Description	Was	Code	Page
7310998	FRONT WHEEL ASSEMBLY			263
7311409	REAR GLASS HEATER SWITCH			191
7311410	STOP LAMP			201
7311411	PLATE RIGHT			201
7311412	PLATE LEFT			201
7311414	HOSE			227
7311415	HOSE			227
7311416	HOSE			227
7311417	HOSE			227
7311418	SAFETY VALVE			227
7311419	FITTING			227
7311420	SAFETY VALVE BRACKET			227
7311421	SAFETY VALVE ASSEMBLY			227
7311422	STANDARD NUT			227
7311423	STANDARD FERRULE			227
7311424	FITTING			227
7311425	PIPE			227
7311426	PIPE			227
7311429	HOSE			229
7311432	FITTING			233
7311433	HOSE			231, 233
7311434	FITTING			231, 233, 235, 411
7311446	CYLINDER PIPE ASSY			243
7311447	NUTRING			243
7311448	GUIDE			243
7311449	ROD			243
7311450	PISTON			243
7311451	BUSHING			243
7311452	REPAIR KIT			243
7311459	CYLINDER PIPE ASSY (LEFT)			245
7311460	CYLINDER PIPE ASSY (RIGHT)			245
7311461	SWING CYL. ASSY. LEFT			245
7311462	SWING CYL. ASSY. RIGHT			245
7311463	PISTON			247
7311464	STICK CYLINDER ASSY			247
7311465	CHASSIS FRAME			325
7311466	PLATE			369
7311467	PIN			369
7311468	FOOT BASE LEFT			377
7311469	FOOT BASE RIGHT			377
7311470	CENTERMOUNT SHOE			377
7311471	PIN			377

Code for disposition of old part number

A -- Use up
B -- Use on other application (See PNI)
C -- File PDR Report with Bobcat Parts Sales
D -- Part Number Error

NUMERICAL INDEX (Cont'd)

Part Number	Description	Was	Code	Page
7311472	PIN			377
7311473	PIN			377
7311474	PIN			377
7311475	BUSHING			377
7311476	SHIM			377
7311477	BOLT			377
7311479	T-FITTING			403
7311481	HOSE			235, 403
7312122	HOSE			411
7313819	DECAL INSTRUCTION			327
7313822	DECAL INSTRUCTION			327
7313823	DECAL INSTRUCTION			327
7314390	DECAL WARNING			327
7314391	DECAL WARNING			327
7314538	DECAL LUBRICANT			327
81068.9	DIPSTICK			69
97118.4	Cylinder			345
97127.5	Spring			345
97132.5	Pin			345
97157.2	Seat Rails			343, 345

Code for disposition of old part number

A -- Use up
B -- Use on other application (See PNI)
C -- File PDR Report with Bobcat Parts Sales
D -- Part Number Error