RUTHZIL TRATOR COMERCIAL DE PEÇAS LTDA 11 97083-6812 ROLANDO CITRANGULO

FEVEREIRO 2008

NEW HOLLAND

PARTS CATALOG

BACKHOE LOADER

B95B
TIER 3

Bur • Issued 01Feb 08
Printed in U.S.A. • Book/Form Number 87659788 NA
Copyright © 2007. CNH America, LLC. All Rights Reserved.

CNH America LLC reserves the right to make improvements in design or changes in specifications at any time without incurring any obligation to install them on units previously sold.

All data given in this publication is subject to production variations. Dimensions and weights are only approximate. Illustrations do not necessarily show products in standard condition. For exact information about any particular product, please consult your Dealer.

This unit first became available 02-2008			
REVISION HISTORY			
Issue	Issue Date	Applicable Machines	Remarks
First Edition	01Feb 08	B95B Tier 3 Backhoe Loader	87659788 NA

Any use of editorial or pictorial content is strictly prohibited without express written permission from
CNH America LLC. Carol Stream, IL 60188 U.S.A.

TABLE OF CONTENTS

MAIN		SECTIONS
MPARTS	00	MAINTENANCE PARTS
SEC. 01	03	ENGINE
SEC. 01	04	ENGINE
SEC. 02		FUEL TANK - MUFFLER - RADIATOR - AIR CLEANER - CHASSIS
SEC. 03	01	TRANSMISSION
SEC. 04		FRONT AXLE
SEC. 05		REAR AXLE
SEC. 06		ELECTRICAL
SEC. 07		SLIDES VALVES
SEC. 08		BODY & HOOD
SEC. 09	01	LOADER
SEC. 09	03	BACKHOE
SEC. 11		WHEELS
SEC. 18		VARIATION
0.0040/01	01	OPTIONAL EQUIPMENT - NA
0.0040/01	02	OPTIONAL EQUIPMENT - NA
0.0040/01	03	OPTIONAL EQUIPMENT - NA
0.02.1/01		ENGINE
0.04.0/01		CRANKCASE
0.04.2		ENGINE OIL SUMP
0.04.3/01	01	CRANKCASE COVERS
0.04.3/01	02	CRANKCASE COVERS
0.04.3/01	03	CRANKCASE COVERS
0.06.0/01		CYLINDER HEAD
0.06.3/01	01	CYLINDER HEAD COVERS
0.06.3/01	02	CYLINDER HEAD COVERS
0.06.6/01		ROCKER SHAFT
0.07.1/01		MANIFOLD - INTAKE
0.07.7/01		EXHAUST MANIFOLD
0.08.0		CRANKSHAFT
0.08.1/01		CONNECTING ROD
0.08.2/01		PISTON - ENGINE
0.08.3		FLYWHEEL - ENGINE
0.08.4		PULLEY - CRANKSHAFT
0.10.5	01	DYNAMIC BALANCER, GEARS & SHAFTS
0.10.5	02	DYNAMIC BALANCER, GEARS & SHAFTS
0.12.0/01		CAMSHAFT - TIMING CONTROL
0.14.0/01	01	INJECTION PUMP
0.14.0/01	02	INJECTION EQUIPMENT - INJECTOR
0.14.0/01A		INJECTION PUMP - COMPONENTS
0.14.9/01		INJECTION EQUIPMENT - PIPING
0.17.0		ELECTRONIC INJECTION
0.17.3		MOTOR ELECTRIC INSTALLATION
0.20.0/01		FUEL FILTER
0.20.3/01		PIPING - FUEL
0.20.4/01		INJECTION EQUIPMENT - PIPING
0.24.0/01		TURBOCHARGER
0.27.0/01		ENGINE OIL DIPSTICK
0.30.0		OIL PUMP - ENGINE
0.30.2		OIL FILTERS - ENGINE

TABLE OF CONTENTS

0.30.5/01		PIPING - ENGINE OIL
0.31.5/01		HEAT EXCHANGER - ENGINE
0.32.0		WATER PUMP
0.32.3/01		COOLING SYSTEM - ENGINE
0.32.6/01		THERMOSTAT - ENGINE COOLING SYSTEM
0.34.0/01		WATER PUMP - CONTROL
0.34.5		FAN DRIVE
0.36.0		ACCESSORY ENGINE
0.40.0/01		ALTERNATOR
0.45.0/01		HOOKS - ENGINE
1.14.0		FUEL TANK & RELATED PARTS
1.14.6		FUEL PIPE
1.14.6/ A		FILTER FUEL - BREAKDOWN
1.15.0	01	MUFFLER & EXTENSIONS
1.15.0	02	EXHAUST TUBE
1.19.1		AIR CLEANER & HOSES
1.21.5		FRAME (CENTER PIVOT)
1.28.0		TRANSMISSION
1.28.0/ A	01	TORQUE CONVERTER COMPONENTS (2WD POWER-SHUTTLE)
1.28.0/ A	02	GEARSHIFT OUTER COMPONENTS (2WD POWER-SHUTTLE)
1.28.0/ A	03	GEARSHIFT HYDRAULIC COMPONENTS (2WD POWER-SHUTTLE)
1.28.0/ A	04	PARKING BRAKE (2WD POWER-SHUTTLE)
1.28.0/ A	05	TRANSMISSIONGEARING SPEED GEAR (2WD POWER-SHUTTLE)
1.28.0/ A	06	FRONT TRANSMISSION SHAFT (2WD POWER-SHUTTLE)
1.28.0/ A	07	GEARSHIFT GEAR DRIVES (2WD POWER-SHUTTLE)
1.28.0/ B	01	TORQUE CONVERTER COMPONENTS AND GEARSHIFT GEAR DRIVES (4WD POWER-SHUTTLE)
1.28.0/ B	02	GEARSHIFT OUTER COMPONENTS (4WD POWER-SHUTTLE)
1.28.0/ B	03	GEARSHIFT HYDRAULIC COMPONENTS (4WD POWER-SHUTTLE)
1.28.0/ B	04	PARKING BRAKE (4WD POWER-SHUTTLE)
1.28.0/ B	05	TRANSMISSIONGEARING SPEED GEAR (4WD POWER-SHUTTLE)
1.28.0/ B	06	FRONT TRANSMISSION SHAFT (4WD POWER-SHUTTLE)
1.28.0/ B	07	GEARSHIFT GEAR DRIVES (4WD POWER-SHUTTLE)
1.28.0/ B	08	REAR DRIVE SHAFT GEARS (4WD POWER-SHUTTLE)
1.28.6		OIL DIPSTICK / TOP UP (POWER-SHUTTLE)
1.29.1		TRANSMISSION ESTERNALSHIFTING CONTROLS (POWER-SHUTTLE)
1.38.1		FRONT AND REAR TRANSMISSION SHAFT (POWER-SHUTTLE)
1.39.8		TRANSMISSION OIL COOLING PIPES (POWER-SHUTTLE)
1.40.0	01	FRONT AXLE (2WD)
1.40.0	02	STEERING ASSY AND FRONT HUBS (2WD)
1.42.0		POWER STEERING HYDRAULIC SYSTEM
1.44.0/ B	01	REAR AXLE (POWER-SHUTTLE) (CENTER PIVOT) - NA
1.44.0/ B	02	DIFFERENTIAL LOCK ASSY AND ENGAGEMENT (POWER SHUTTLE) (CENTER PIVOT): NA
1.44.0/ B	03	REAR AXLE BEVEL GEAR SET ASSY (POWER SHUTTLE) (CENTER PIVOT): NA
1.44.1		DIFFERENTIAL CONTROL (POWER-SHUTTLE)
1.44.1/01		DIFFERENTIAL CONTROL (POWER-SHUTTLE) (CENTER PIVOT) - NA
1.75.2	01	FRAME REAR HARNESS AND GROUND CABLE (POWER SHUTTLE): NA
1.75.2	02	BATTERY LOCK-OUT SWITCH & GROUND WIRE (POWER SHUTTLE) - NA
1.75.2	04	ENGINE HARNESS (POWER SHUTTLE) - NA
1.82.0		HYDRAULIC OIL RESERVOIR

TABLE OF CONTENTS

1.82.3/01		HYDRAULIC PUMP (35+35-154L/MM)
1.82.6	01	HYDRAULIC SYSTEM PIPES: PUMP OIL DELIVERY
1.82.6	02	HYDRAULIC SYSTEM PIPES: CONTROL VALVE DELIVERY
1.82.6	03	HYDRAULIC SYSTEM PIPES: PRESSURE INTAKE
1.82.6	04	HYDRAULIC SYSTEM PIPES: CONTROL VALVE DISCHARGE
1.82.6	05	HYDRAULIC SYSTEM PIPES: RETURN TO TANK
1.82.6	06	HYDRAULIC SYSTEM PIPES: OIL FILTER AND CHECK VALVE
1.82.6	07	HYDRAULIC SYSTEM PIPES: LOADER ATTACHMENT CYLINDERS
1.82.6	10	HYDRAULIC SYSTEM PIPING
1.82.6	11	HYDRAULIC SYSTEM PIPING
1.82.6	12	HYDRAULIC SYSTEM PIPES 4WS (CENTER PIVOT): NA
1.82.6	13	HYDRAULIC SYSTEM PIPES: SWING CYLINDER
1.82.6	14	HYDRAULIC SYSTEM PIPES: BACKHOE ATTACHMENT CYLINDER
1.82.6	15	HYDRAULIC SYSTEM PIPES: BACKHOE ATTACHMENT BOOM CYLINDER
1.82.6	16	ROTATION PLATE HOSE CLAMPS (CENTER PIVOT)
1.82.6/01	01	FRONT HYDRAULIC PUMP INTAKE & OUTLET HOSES (CENTER PIVOT) - NA
1.82.6/01	02	REAR HYDRAULIC PUMP STABILIZER, LOADER & BACKHOE VALVE HOSES (CP) - NA
1.82.6/01	03	HYDRAULIC SYSTEM PIPES (CENTER PIVOT): NA: PRESSURE INTAKE
1.82.6/01	04	RETURN MANIFOLD HOSES - NA
1.82.6/01	05	FILTER ASSEMBLY & HOSE TO RETURN MANIFOLD (CENTER PIVOT) - NA
1.82.6/01	06	HYDRAULIC SYSTEM PIPES (CENTER PIVOT): NA: RETURN TO TANK
1.82.6/01	07	LOADER LIFT CYLINDER HOSES (CENTER PIVOT) - NA
1.82.6/01	08	LOADER BUCKET CYLINDER HOSES (CENTER PIVOT) - NA
1.82.6/01	09	BACKHOE SWING CYLINDER HOSES (CENTER PIVOT) - NA
1.82.6/01	10	BACKHOE CONTROL VALVE HOSES (CENTER PIVOT) - NA
1.82.6/01	11	ROTATION PLATE HOSE CLAMPS (CENTER PIVOT) - NA
1.82.6/01	12	BACKHOE CONTROL VALVE (CENTER PIVOT) - NA
1.82.6/01	13	DIPPER VALVE SECTION (CENTER PIVOT) - NA
1.82.6/01	14	BUCKET, SWING, & BOOM VALVE SECTION (CENTER PIVOT) - NA
1.83.0	01	GRID AND ACCESSORIES
1.83.0	02	GUARD AND ACCESSORIES
1.83.0	03	DOOR LOCK KIT
1.83.0	04	LOCK PLATE ASSY
1.83.0	05	TIPPING GUARD HINGE KIT
1.83.0	06	TIPPING GUARD ASSY COMPONENTS
1.87.2		CAB SCREEN
1.87.8		CAB FASTENERS
1.88.01	01	REAR ATTACHMENT TRANSPORT LOCK TIE ROD (CENTER PIVOT): NA
1.88.01	02	REAR ATTACHMENT TRANSPORT LOCK CABLE (CENTER PIVOT): NA
1.88.08	01	SWING POST ASSEMBLY, BUSHINGS & PINS
1.88.08	02	SWING POST PINS & TRANSPORT LOCK HOOK
1.88.11		ARMS AND JOINTS
1.88.11/01		LOADER CYLINDER
1.88.11/02	01	LOADER BUCKET CONTROL CYLINDER
1.88.11/02	02	LOADER BUCKET CONTROL CYLINDER
1.88.11/03		LIFT CYLINDER AND BUCKET PIPES
1.88.11/05A	01	SELF-LEVELING LINKAGE, LOADER CONTROLS (CENTER PIVOT MECHANIC) - NA
1.88.11/05A	02	SELF-LEVELING LINKAGE, LOADER ARM (CENTER PIVOT) - NA
1.88.11/06A		STABILIZER CYLINDERS (CENTER PIVOT)
1.88.11/07A		PIPES FOR STABILIZER CYLINDERS (CENTER PIVOT PILOT)

TABLE OF CONTENTS

1.88.11/07C		PIPES FOR STABILIZER CYLINDERS (CENTER PIVOT MECHANIC) - NA
1.88.11/08		RETURN TO DIG SENSOR
1.88.11/09	02	SWING CYLINDERS BACKHOE
1.88.11/09A		CYLINDERS AND ROTATION PLATE (CENTER PIVOT)
1.88.12/03		FRONT CONTROL VALVE SUPPORT AND TRANSMISSIONS (CENTER PIVOT - SIDE SHIFT)
1.88.12/03A		FRONT CONTROL VALVE SUPPORT AND TRANSMISSIONS (CENTER PIVOT) - NA
1.89.9/01		DISTRIBUTOR VALVE SUPPORT HUSCO (CENTER PIVOT) - NA
1.91.1		CAB : CEILING LIGHT
1.91.1/01		SAFETY FRAME: INSTRUMENTS AND GAUGES (ROPS) - NA
1.91.3		BACK-UP ALARM
1.91.4	01	CAB ROOF HARNESS (CAB, POWER SHUTTLE)
1.91.4	02	FUSE BOX CONTROL UNIT (CAB, POWER SHUTTLE)
1.91.4	03	IGNITON SWITCH, POWER POINT, FUSE PANEL & SIDE CONSOLE HARNESS (CAB PT)
1.91.4	04	FRONT HARNESS AND CONTROL UNIT (CAB, POWER SHUTTLE)
1.91.4	05	FRONT DASH (CAB POWER SHUTTLE)
1.91.4	06	CAB ELECTRIC SYSTEM COMPONENTS (CAB, POWER SHUTTLE)
1.91.4/02	01	CAB ROOF HARNESS (ROPS POWER SHUTTLE)
1.91.4/02	02	FUSE BOX CONTROL UNIT (ROPS POWER SHUTTLE)
1.91.4/02	03	IGNITON SWITCH, POWER POINT, FUSE PANEL & SIDE CONSOLE HARNESS (ROPS PT)
1.91.4/02	04	FRONT HARNESS AND CONTROL UNIT (ROPS POWER SHUTTLE)
1.91.4/02	05	RH CONSOLE WITH INSTRUMENTS (ROPS POWER SHUTTLE) - NA
1.91.4/02	06	CAB ELECTRIC SYSTEM COMPONENTS (ROPS POWER SHUTTLE)
1.91.5	01	FRONT AND REAR WINDSCREEN WIPERS
1.91.5	02	WINDSCREEN WIPERS RESERVOIR & NOZZLES
1.91.6		RADIO ANTENNA & SPEAKER COVER
1.91.7/01		LAMPS & LIGHTS - ROPS - NA
1.91.7/02		LAMPS & LIGHTS - CAB - NA
1.92.2		CAB: FRAME-DOOR
1.92.3		FRONT GLASSES AND SEALS
1.92.4	01	DOOR LATERAL GLASS FASTENERS
1.92.4	02	CAB SIDE GLASS FASTENERS
1.92.4	03	SIDE GLASSES
1.92.5		FENDERS, REAR
1.92.6	01	DOOR COMPONENTS
1.92.6	02	DOOR COMPLETION COMPONENTS: LOWER SIDE
1.92.6	03	DOOR CLOSURE HINGE COMPONENTS
1.92.8		FLAME TRAP SEAL, ROPS (POWER SHUTTLE)
1.92.9	01	REAR GLASSES AND COMPONENTS
1.92.9	02	REAR GLASS CLOSURE HINGE
1.92.9	03	HINGES AND REAR GLASS CLOSURE
1.93.0	01	CAB : SOFT TRIM (POWER SHUTTLE, POWER SHIFT)
1.93.0	02	CAB : SOFT TRIM (POWER SHUTTLE, POWER SHIFT)
1.93.0	03	CAB / SIDE COVERING AND FRONT FLOOR (POWER SHUTTLE: POWER SHIFT)
1.93.0	04	CAB / REAR CONSOLE AND FLOOR COVERING (POWER SHUTTLE: POWER SHIFT)
1.93.0/01	01	CAB : SOFT TRIM (POWER SHUTTLE, POWER SHIFT)
1.93.0/01	02	CAB / FLOOR COVERING AND COMPONENTS (POWER SHUTTLE: POWER SHIFT)
1.93.0/02	01	RIGHT SIDE COVERING, REAR CONSOLE ROPS (CENTER PIVOT): NA
1.93.0/03		MACHINES SOFT TRIMS (ROPS) - NA

TABLE OF CONTENTS

1.93.4		CAB: REAR MIRROR - SUN SCREEN
1.93.5	01	CAB / FRONT DASHBOARD
1.93.5	02	CAB / DASHBOARD FASTENERS AND GASKETS
1.93.5/01	01	FRONT CONSOLE - ROPS (POWER SHUTTLE) - NA
1.93.5/01	02	RH SIDE CONSOLE SEAL & CLIPS - ROPS (POWER SHUTTLE) - NA
1.93.7		INNER REAR VIEW MIRROR (POWER SHUTTLE) ROPS
1.94.0/01		CAB / ROPS: ROOF AND INNER COVERING: NA
1.94.2		HEATER WATER HOSES
1.95.0	01	CAB / ROPS : BRAKE PEDAL
1.95.0	02	CAB / ROPS / BRAKE PUMP
1.95.0	03	CAB / ROPS / BRAKE SYSTEM PIPES
1.95.0/ A		CAB / ROPS / BRAKE PUMP CYLINDER
1.95.1		CAB / ROPS / PARKING BRAKE LEVER AND CONTROL CABLE
1.95.2		TRANSPORT LOCK CONTROL - NA
1.95.3		HAND/PEDAL ELECTRONIC ACCELERATOR CONTROL
1.95.5	01	STEERING COLUMN AND COVERING: NA
1.95.5	02	STEERING SYSTEM SLEEVES: NA
1.95.5/ A	01	POWER STEERING: NA
1.96.0		FOWARD/REVERSE & MULTI-PURPOSE LEVER
1.96.2	01	STABILIZER CONTROL (SIDE SHIFT - EU) - (CENTER PIVOT - NA)
1.96.2	02	STABILIZER CONTROL (CENTER PIVOT) - NA
1.96.2/01		PILOT CONTROL DIAGNOSTICS
1.96.7/04		CLOSING PINS AND PLUGS ROPS (CENTER PIVOT): NA
1.96.7/05		CAB / VARIOUS COMPONENTS (CENTER PIVOT): NA
1.96.7/06		CAB: VARIOUS COMPONENTS (CENTER PIVOT): NA
1.96.7/07		CLOSING PINS AND PLUGS ROPS (CENTER PIVOT): NA
1.98.0/01		INFORMATION SYMBOL DECALS (POWER SHUTTLE - POWER SHIFT) - NA
1.98.1	08	IDENTIFICATION MODEL: GUARD DECALS
1.98.1	09	MODEL IDENTIFICATION B90B / B90BLR - B959B / B95BLR - B100B / B100BLR
81.00		FRONT WHEELS (2WD) - NA
82.00	01	DRIVING WHEELS(4WD) - NA
83.00	01	REAR WHEELS - NA
095		STABILIZER CONTROL WITHOUT AUTO-UP (CENTER PIVOT)
096		STABILIZER CONTROL WITH AUTO-UP (CENTER PIVOT)
131		SINGLE BATTERY
175		AIR INTAKE CAP & PRE-CLEANER
176		AIR INTAKE CAP & PRE-CLEANER
201		SHOVEL AND REAR LIFTING HOOKS
284		REAR MIRROR (CAB) - NA
290		FRONT COUNTERWEIGHT: 2WS
291		FRONT COUNTERWEIGHT: 2WS
302	01	TWO-SECTION CONTROL VALVE FOR LOADER
302	02	LOADER ATTACHMENT 2-SECTION CONTROL VALVE: INTAKE SECTION
302	03	LOADER ATTACHMENT 2-SECTION CONTROL VALVE: BOOM SECTION
302	04	TWO-SECTION CONTROL VALVE FOR LOADER
321		DOUBLE BATTERY
331	01	TOWER ASSY 6 SECTIONS (CENTER PIVOT)
331	02	PILOT CONTROL VALVE SUPPORT, COMPLETE
331	03	PILOT CONTROL VALVE SUPPORT, COMPLETE
331	04	PILOT CONTROL VALVE SUPPORT, COMPLETE
331	05	PILOT CONTROL VALVE SUPPORT, COMPLETE

TABLE OF CONTENTS

331	06	6 SECTION PILOT CONTROL VALVE SUPPORT, COMPLETE
331	07	PILOT CONTROL VALVE SUPPORT, COMPLETE
331	08	PILOT CONTROL VALVE SUPPORT, COMPLETE
331	09	PILOT CONTROL VALVE SUPPORT, COMPLETE
331/ A		PROPORTIONAL CONTROL VALVE 6 SECTIONS
331/ B	01	BACKHOE CONTROL VALVE, 6 SECTIONS (CENTER PIVOT)
331/ B	02	BACKHOE CONTROL VALVE, INLET SECTION (CENTER PIVOT)
331/ B	03	BACKHOE CONTROL VALVE, BOOM SECTION (CENTER PIVOT)
331/ B	04	BACKHOE CONTROL VALVE, SWING SECTION (CENTER PIVOT)
331/ B	05	BACKHOE CONTROL VALVE, BUCKET SECTION (CENTER PIVOT)
331/ B	06	BACKHOE CONTROL VALVE, DIPPERSTICK SECTION (CENTER PIVOT)
331/ B	07	BACKHOE CONTROL VALVE, STABILIZER SECTION (CENTER PIVOT)
331/ B	08	BACKHOE CONTROL VALVE, BOOM SECTION (CENTER PIVOT)
331/ B	09	BACKHOE CONTROL VALVE, SWING SECTION (CENTER PIVOT)
331/ B	10	BACKHOE CONTROL VALVE, BUCKET SECTION (CENTER PIVOT)
331/ B	11	BACKHOE CONTROL VALVE, DIPPERSTICK SECTION (CENTER PIVOT)
331/ B	12	BACKHOE CONTROL VALVE, STABILIZER SECTION (CENTER PIVOT)
331/ C	01	PILOT VALVE OF HYDRAULIC CONTROL LEVER (RIGHT HAND)
331/ C	02	VALVE, JOYSTICK PILOT CONTROLS (LEFT HAND)
333	01	TOWER ASSY 7 SECTIONS (CENTER PIVOT)
333	02	TOWER ASSY FOR 7-SECTION PILOT CONTROL: CONTROL VALVE HYDRAULIC SYSTEM, PROPORTIONAL VALVE
333	03	TOWER ASSY FOR 7-SECTION PILOT CONTROL (CENTER PIVOT): CONTROL VALVE INSTALLATION
333	04	TOWER ASSY FOR 7-SECTION PILOT CONTROL (CENTER PIVOT): TELESCOPIC CYLINDER SYSTEM
333	05	TOWER ASSY FOR 7-SECTION PILOT CONTROL (CENTER PIVOT): BUCKET CYLINDER SYSTEM
333/ A		PROPORTIONAL CONTROL VALVE 7 SECTIONS
333/ C	01	PILOT VALVE OF HYDRAULIC CONTROL LEVER (RIGHT HANDS) 7 SPOOLS
333/ C	02	PILOT VALVE OF HYDRAULIC CONTROL LEVER (RIGHT HANDS) 7 SPOOLS
333/01B	01	7 SECTIONS EXCAVATOR CONTROL VALVE (CENTER PIVOT) - NA
333/01B	02	BACKHOE ATTACHMENT 7-SECTION CONTROL VALVE (CENTER PIVOT): NA: TELESCOPIC CYLINDER
335		TOWER ASSY 7 SECTIONS (CENTER PIVOT)
336/01	01	TWO SECTION LOADER CONTROL VALVE (CENTER PIVOT) - NA
336/01	02	LOADER CONTROL VALVE, TWO SECTION, CAP & UNLOAD VALVE (CENTER PIVOT) - NA
336/01	03	LOADER CONTROL VALVE, TWO SECTION, RELIEF & CHECK VALVES (CENTER PIVOT) - NA
336/01	04	LOADER CONTROL VALVE, TWO SECTION, BY-PASS KIT (CENTER PIVOT) - NA
336/01	05	LOADER CONTROL VALVE, TWO SECTION, UNLOAD KIT OR DUMP VALVE (CENTER PIVOT) - NA
337	01	LOCKING VALVE ON LOADER ATTACHMENT TIPPING CYLINDERS
337	02	LOCK VALVE ON LOADER LIFT CYLINDERS
338		LOCK VALVE ON LOADER LIFT CYLINDERS
344	01	STABILIZER CONTROL VALVE, TWO SECTION (CENTER PIVOT) - NA
344	02	STABILIZER CONTROL VALVE, LH & RH SECTION (CENTER PIVOT) - NA
346	01	A/C HOUSING & FILTERS
346	02	A/C BLOWER & COILS
346	03	HEATER COIL HOSES

TABLE OF CONTENTS

346	04	A/C & HEATER CONTROL PANEL
346	05	A/C & HEATER CONSOLE DUCTS
347	01	HOUSING & FILTERS
347	02	HEATER BLOWER & COILS
347	03	HEATER COIL HOSES
347	04	A/C & HEATER CONTROL PANEL
347	05	A/C & HEATER CONSOLE DUCTS
347	06	CAB HEATING COATING PLUG
386		12" (305MM) HD BACKHOE BUCKET WITH PIN TEETH - NA
387		18" (457MM) HD BACKHOE BUCKET WITH PIN TEETH - NA
388		24" (610MM) HD BACKHOE BUCKET WITH PIN TEETH - NA
389		30" (762MM) HD BACKHOE BUCKET WITH PIN TEETH - NA
390		LOADER CONTROL VALVE, TWO SECTION, LEVER - NA
390/01		36" (910MM) HD BACKHOE BUCKET WITH PIN TEETH - NA
391		LOCK VALVE FOR BUCKET 4X1 / 6X1
392	01	LOCKING VALVE ON BOOM CYLINDER AND BACKHOE ATTACHMENT
392	02	LOCKING VALVE ON CYLINDER AND BACKHOE ATTACHMENT
393		2 LEVER BACKHOE CONTROLS, LEVER, BOOT & DECALS - NA
394	01	4-LEVER BACKHOE ATTACHMENT CONTROLS, CONSOLE, LEVERS AND SQUARE LEVER (CENTER PIVOT: SIDE SHIFT): CONTROL LEVERS
394	02	4-LEVER BACKHOE ATTACHMENT CONTROLS, UPPER TIE ROD ASSY (CENTER PIVOT: SIDE SHIFT): UPPER TIE RODS
394	03	4-LEVER BACKHOE ATTACHMENT CONTROLS, LOWER TIE ROD ASSY (CENTER PIVOT: SIDE SHIFT): LOWER TIE RODS
394/01	01	2-LEVER ISO BACKHOE ATTACHMENT CONTROLS, LEVERS, DUSTPROOF, DECALS (CENTER PIVOT) - NA -CONTROL LEVERS
402	01	(4WD) FRONT AXLE, HOUSING, BUSHINGS & SUPPORTS - NA
402	02	(4WD) FRONT AXLE, SWIVEL HOUSING & STEERING CYLINDER - NA
402	03	(4WD) FRONT AXLE, HUBS - NA
402	04	(4WD) FRONT AXLE, RING GEAR & PINION ASSEMBLY - NA
402	05	(4WD) FRONT AXLE, DIFFERENTIAL - NA
402	06	FRONT AXLE 4WD, ARTICULATED AXLE SHAFT
416		SYSTEM HAMMER COMPONENTS (CAB - ROPS)
437		GLIDE RIDE VALVE,HYDRAULIC SYSTEM FOR MACHINE FRAME LEVELLING
471	01	BUCKET 4X1 (1 M³) WITH BLADE "COMMON GREY"
471	02	4X1 BUCKET (1 M3) WITH “COMMON GREY” BLADE: BUCKET BREAKDOWN
471/01		HYDRAULIC CYLINDER (BUCKET 4X1-6X1)
472	01	BUCKET 4X1 (1 M³) WITH TINE "COMMON GREY"
472	02	4X1 BUCKET (1 M3) WITH “COMMON GREY” TEETH: BUCKET BREAKDOWN
473	01	BUCKET 6X1 (1 M³) WITH BLADE "COMMON GREY"
473	02	6X1 BUCKET (1 M3) WITH “COMMON GREY” BLADE: BUCKET BREAKDOWN
474	01	BUCKET 6X1 (1 M³) WITH TINE "COMMON GREY"
474	02	6X1 BUCKET (1 M3) WITH “COMMON GREY” TEETH: BUCKET BREAKDOWN
514	01	SHORT DIPPER
514	02	SHORT DIPPER
514	03	HYDRAULIC LIFTING CYLINDER
514	04	HYDRAULIC DITCHING CYLINDER
515/01		12" (305MM) BACKHOE BUCKET WITH PIN TEETH - NA
516/01		18" (457MM) BACKHOE BUCKET WITH PIN TEETH - NA
517/01		24" (610MM) BACKHOE BUCKET WITH PIN TEETH - NA
518/01		30" (762MM) BACKHOE BUCKET WITH PIN TEETH - NA

TABLE OF CONTENTS

519/01		36" (910MM) BACKHOE BUCKET WITH PIN TEETH - NA
520		(0.88 M³) BUCKET WITHOUT TINES
520/01		18" (457MM) BACKHOE BUCKET WITH PIN TEETH (EXTRA HD) - NA
521		24" (610MM) BACKHOE BUCKET WITH PIN TEETH (EXTRA HD) - NA
522		(1 M³) BUCKET WITHOUT TINES
522/01		STANDARD (1 M³) BUCKET WITH FORKS
525		STANDARD (1 M³) BUCKET WITH FORKS AND REVERSIBLE BLADE
527		(0.88 M³) BUCKET AND EXTRA REVERSIBLE BLADE
535		STABILIZER FOOT GROUND (CENTER PIVOT)
536		STANDARD (1 M³) BUCKET WITH TINE
536/02		REVERSIBLE STABILIZER FOOT (CENTER PIVOT)
537		STANDARD (1 M³) BUCKET WITH EXTRA REVERSIBLE BLADE
548		DITCH CLEANING BUCKET
622		INTERNAL FAN - CAB
636	07	ENGINE VERSION: STARTER MOTOR
636	08	ACCESSORY ENGINE - ALTERNATOR
638	01	RADIATOR GUARDS
638	02	COOLANT RADIATOR, HYDRAULIC FLUID AND TRANSMISSION OIL
638	03	AFTER-COOLER COOLING PIPING
638	04	PARKEERREM (CABINE: ROPS)
638	05	ENGINE VERSION: SUPPORTS
638	06	ENGINE OUTFIT: FAN WITH VISCOUS JOINT: EU
638	07	ACCESSORY ENGINE - STARTER
638	08	ACCESSORY ENGINE: ALTERNATOR
639	01	RADIATOR GUARDS
639	02	COOLANT RADIATOR, HYDRAULIC FLUID AND TRANSMISSION OIL
639	03	AFTER-COOLER COOLING PIPING
639	04	PARKEERREM (CABINE: ROPS)
639	05	ENGINE VERSION: SUPPORTS
639	06	ENGINE OUTFIT: FAN WITH VISCOUS JOINT
639	07	ENGINE VERSION: STARTER MOTOR
639	08	ACCESSORY ENGINE
646	01	MACHINE PART AIR CONDITIONING SET
646	02	A/C COMPRESSOR ATTACHING GROUP
646	03	A/C COMPRESSOR
646	04	A/C FILTER & CONDENSER ATTACHING GROUP
650		STEERING COLUMN, FIXED & ADJUSTABLE
698		GLIDE RIDE VALVE,HYDRAULIC SYSTEM FOR MACHINE FRAME LEVELLING & ON/OFF SWITCH
699		HAND HAMMER SWITCH
700	01	4X1 AND 6X1 BUCKET ARM HYDRAULIC DUCTS (POWER SHIFT, POWER SHUTTLE)
700	02	4X1 AND 6X1 BUCKET MACHINE HYDRAULIC DUCTS (POWER SHIFT, POWER SHUTTLE)
700	03	THREE-SECTION CONTROL VALVE FOR LOADER (POWER SHIFT , POWER SHUTTLE)
721	01	TELESCOPIC DIPPER AT PEDAL CONTROL (CENTER PIVOT): CONTROL VALVE: NA
721	02	
721	03	HED TELESCOPIC CONTORL VALVE, SECTION HOSES(CENTER PIVOT) - NA
721	04	TELESCOPIC DIPPER AT PEDAL CONTROL (CENTER PIVOT): TELESCOPIC DIPPER SYSTEM: TELESCOPIC CYLINDER: NA

TABLE OF CONTENTS

721	05	TELESCOPIC DIPPER AT PEDAL CONTROL (CENTER PIVOT): TELESCOPIC DIPPER SYSTEM: BUCKET CYLINDER: NA
721	06	TELESCOPIC DIPPER AT PEDAL CONTROL (CENTER PIVOT): NA
724/ A		REAR HAMMER CONTROL VALVE
724/01	01	MACHINE HYDRAULIC SYSTEM FOR HAMMER (CENTER PIVOT)
724/01	02	HAMMER ARM HYDRAULIC SYSTEM (CENTER PIVOT)
724/02		HYDRAULIC SYSTEM FOR HAMMER (CENTER PIVOT)
725		HAMMER KIT FROM LIFTING ARM TO DEMOLITION ARM
725/01	01	4X1 AND 6X1 BUCKET ARM ASSY HYDRAULIC SYSTEM (POWER SHUTTLE): NA
725/01	02	4X1 AND 6X1 BUCKET MACHINE HYDRAULIC DUCT ASSY (POWER SHUTTLE): NA
725/01	03	LOADER CONTROL VALVE, THREE SECTION (CENTER PIVOT) - NA
725/01	04	LOADER CONTROL VALVE, THREE SECTION, CAP & UNLOAD VALVE (CENTER PIVOT) - NA
725/01	05	LOADER CONTROL VALVE, THREE SECTION, RELIEF & CHECK VALVES (CENTER PIVOT) - NA
725/01	06	THREE-SECTION CONTROL VALVE FOR LOADER - BUCKET SECTION 4X1 - 6X1(CENTER PIVOT) - NA
727/01		HED FOOT PEDAL, CABLE & DECALS (CENTER PIVOT) - NA
728	01	HAND HAMMER SYSTEM: DELIVERY
728	02	HAND HAMMER SYSTEM: RETURN
728	03	MANUAL HAMMER VALVE
733		REAR MECHANICAL QUICK-COUPLING
734		FRONT MECHANICAL QUICK-COUPLING
758		ROTATING BEACON
787		FRONT CONSOLE WITHOUT SPEEDOMETER (POWER SHUTTLE, ROPS)
787/01		FRONT CONSOLE WITHOUT SPEEDOMETER (POWER SHUTTLE, CAB)
788		FRONT CONSOLE WITH SPEEDOMETER (ROPS)
788/01		FRONT CONSOLE WITH SPEEDOMETER (CAB) (POWER SHUTTLE)
789		SPEED SENSOR(P.SHUTTLE)
793		FRONT WORKING LIGHT - CAB
793/01		FRONT WORKING LIGHT (ROPS)
794		LAMPS & LIGHTS - CAB
794/01		LAMPS & LIGHTS (ROPS)
796		ANTITHEFT
803		FENDERS, FRONT
835		REAR MUDGUARD AND ROOF (ROPS: CAB): NA
851		CLOTH SEAT & ATTACHING HARDWARE - CABINE
851/01	01	CLOTH SEAT CUSHIONS, ARMRESTS & RELATED PARTS
851/01	02	CLOTH SEAT MOUNTING PLATE, ADJUSTING RAILS & SEAT BELT
851/01	03	CLOTH SEAT UPPER SUSPENSION PARTS
851/01	04	CLOTH SEAT LOWER SUSPENSION PARTS
855		AIR RIDE CLOTH SEAT & ATTACHING HARDWARE - CABINE
855/01	01	AIR RIDE CLOTH SEAT CUSHIONS, ARMRESTS & RELATED PARTS
855/01	02	AIR RIDE CLOTH SEAT MOUNTING PLATE, ADJUSTING RAILS & SEAT BELT
855/01	03	AIR RIDE CLOTH SEAT UPPER SUSPENSION PARTS
855/01	04	AIR RIDE CLOTH SEAT LOWER SUSPENSION PARTS
855/01	05	AIR RIDE CLOTH SEAT COMPRESSOR & TUBING
856		VINYL SEAT CUSHIONS, ARMRESTS & RELATED PARTS (ROPS)
856/01	01	VINYL SEAT WITH ARMRESTS & MOUNTING HARDWARE (ROPS)
856/01	02	VINYL SEAT MOUNTING PLATE, ADJUSTING RAILS & SEAT BELT (ROPS)
856/01	03	VINYL SEAT UPPER SUSPENSION PARTS (ROPS)

TABLE OF CONTENTS

856/01	04	VINYL SEAT LOWER SUSPENSION PARTS (ROPS)
879		CAB RIGHT REAR MIRROR
888		GUARD AND DIPPER DECAL
900	01	LONG DIPPER: ASSY
900	02	BOOM - LONG DIPPER
900	03	LONG DIPPER
900	04	LONG/SHORT DIPPER - BUCKET MOTION
900	05	DIPPER: DIPPER SYSTEM, BOOM AND DIPPER CYLINDER
900	06	DIPPER: BUCKET CYLINDER HYDRAULIC SYSTEM
900	07	DIPPER: BOOM CYLINDER HYDRAULIC SYSTEM
900	08	DIPPER - HYDRAULIC SYSTEM
900	09	HYDRAULIC LIFTING CYLINDER - TELESCOPIC DIPPER LONG
900	10	HYDRAULIC DITCHING CYLINDER
900	11	HYDRAULIC BUCKET CYLINDER
901	01	LONG TELESCOPIC DIPPER: ASSY
901	02	TELESCOPIC DIPPER LONG
901	03	TELESCOPIC DIPPER - HYDRAULIC SYSTEM
901	04	LONG TELESCOPIC DIPPER: TELESCOPIC HYDRAULIC CYLINDER
902	01	SHORT TELESCOPIC DIPPER: ASSY
902	02	TELESCOPIC DIPPER SHORT
902	03	SHORT TELESCOPIC DIPPER: TELESCOPIC HYDRAULIC CYLINDER
990		TOOL KIT
993	01	PLATES - NA
993	02	PLATES - NA
995		COLD START

GENERAL INFORMATION

PROPRIETARY NOTICE

The contents of this manual are proprietary data of this company. Reproduction or use of any part for other than the operation and maintenance of our equipment is permissible only if expressly authorized in writing.

Additional copies may be obtained from your dealer. Address requests for copies to your Dealer and refer to the publication part number appearing on the bottom of the rear catalog cover or on the title page.

COMPANY POLICY

Company policy, which is one of continuous improvement, reserves the right to change prices and to make changes in design and specification at any time without notice and without obligation to modify units previously built.

All data given in this book is subject to production variations. Dimensions and weights are approximate only and the illustrations do not necessarily show machines in standard condition. For exact information about any particular machine please consult your dealer.

PARTS AND ACCESSORIES

Genuine parts and accessories have been specifically designed for these machines.

We would like to point out that “non-genuine” parts and accessories have NOT been examined and released by the Company. The installation and or use of such products could have negative effects upon the design characteristics of your machine and thereby affect its safety. The company is not liable for any damage caused by the use of “non-genuine” parts and accessories.

IMPROVEMENTS

We are continually striving to improve our products. We reserve the right to make improvements or changes when it becomes practical and possible to do so, without incurring any obligation to make changes or additions to the equipment sold previously.

MODEL CODES

The range of machines listed may not be available in all countries or markets therefore, for the latest information consult your local dealer.

OWNER ASSISTANCE

We want you to be completely satisfied with your investment. Normally any problems with your equipment will be handled by your dealer's Service Department; however, misunderstandings can occur. If your problem has not been handled to your satisfaction, we suggest the following:

1. Contact the owner or General Manager of the dealership, explain the problem, and request assistance. When additional assistance is needed, your dealer has direct access to our office.
2. Provide your dealer with:
   - Your Name, Address, and Telephone number
   - Machine Model and Serial Number
   - Dealership Name and Address
   - Machine purchase date and amount of use
   - Nature of problem

Be aware that your problem will likely be resolved in the dealership using the dealer's facilities, equipment, and personnel. So it is important that your initial contact be with the dealer.

SPARE PARTS

To maintain operating efficiency, use original spare parts.

When ordering parts, give the following information:

- Machine Model
- Machine and Engine Serial Numbers
- Part Number from the Parts Catalog

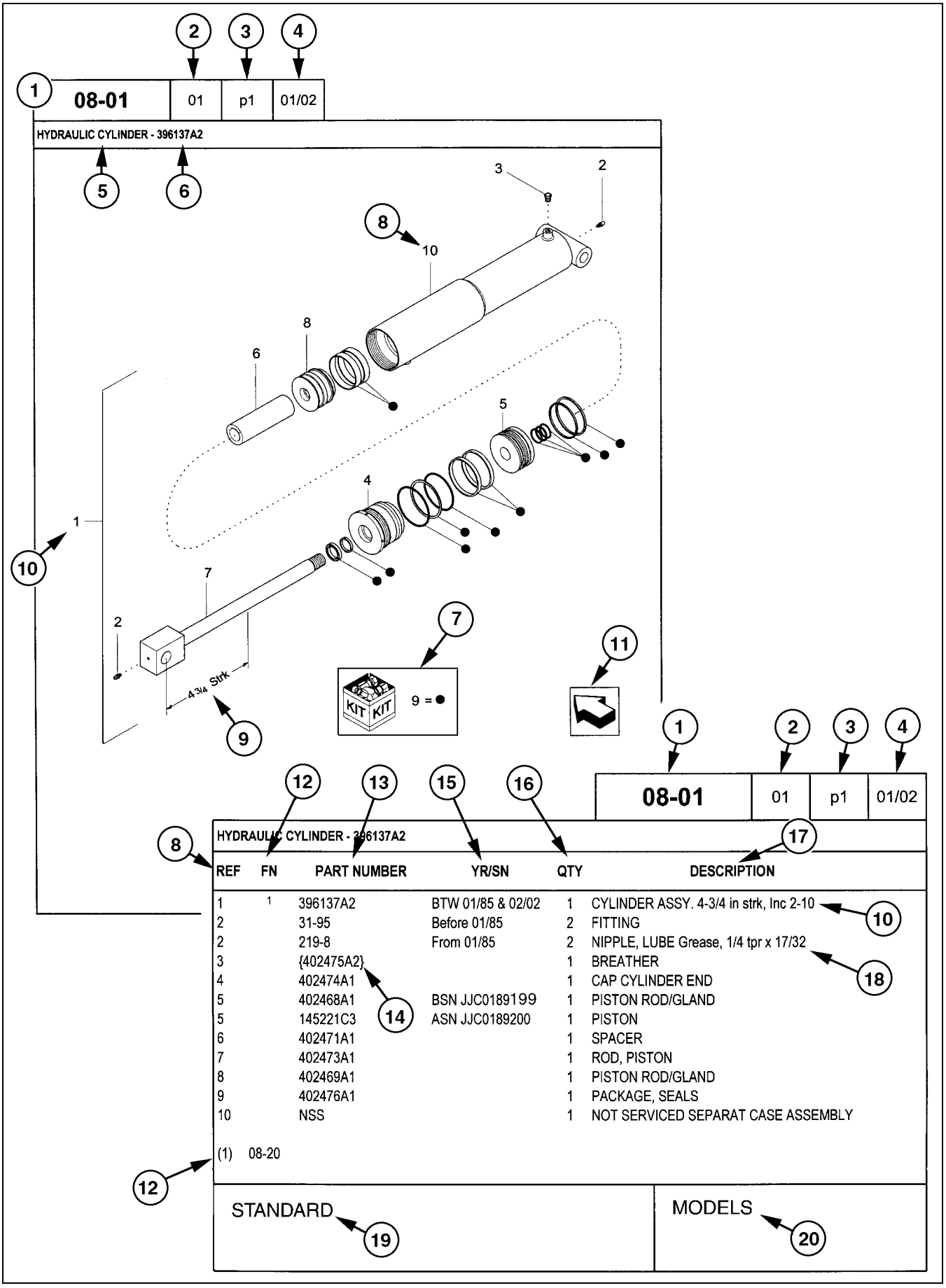

REF	FN	PART NUMBER	YR/SN	QTY	DESCRIPTION
1	1	396137A2	BTW 01/85 & 02/02	1	CYLINDER ASSY. 4-3/4 in strk, Inc 2-10
2		31-95	Before 01/85	2	FITTING
2		219-8	From 01/85	2	NIPPLE, LUBE Grease, 1/4 tpr x 17/32
3		{402475A2}		1	BREATHER
4		402474A1		1	CAP CYLINDER END
5		402468A1	BSN JJC0189199	1	PISTON ROD/GLAND
5		145221C3	ASN JJC0189200	1	PISTON
6		402471A1		1	SPACER
7		402473A1		1	ROD, PISTON
8		402469A1		1	PISTON ROD/GLAND
9		402476A1		1	PACKAGE, SEALS
10		NSS		1	NOT SERVICED SEPARAT CASE ASSEMBLY

(1) 08-20

STANDARD

MODELS

HOW TO USE YOUR PARTS CATALOG

1. Figure Number
2. Sequence Code within the Figure Number
3. Page Number within the Sequence Code
4. Date of Printing (month / year)
5. Figure Description
6. General information regarding the figure
7. Parts supplied in repair kits per symbol reference
8. Figure call-out of the part number (REF)
9. Technical specifications relating to the part indicated
10. Figure call-out includes bracketed items, the included items may also be listed in the additional description area
11. Orientation - Arrow indicates front of the machine
12. Footnote - Additional information relating to the part number. In this example, 08-20 equals another figure that this part is shown on
13. Part Number
    NSS = Not Serviced Separately (Non-serviced parts)
    Bracketed numbers = not available as service parts in this market
14. Not Available as service part in this market
15. YR/SN
    Year
    Before 01/85 = Part valid for production January 1985 and before
    From 01/85 = Part valid for production from January 1985 and after
    BTW 01/85 & 02/02 = Part valid for machines produced between January 1985 and February 2002.
    Serial Number (P.I.N.)
    BSN JJC0268800 = Part valid for serial number JJC0268800 and below
    ASN JJC0268800 = Part valid for serial number JJC0268800 and above
    BTW JJC0178000 & JJC0179000 = Part valid for serial numbers between JJC0178000 & JJC0179000
16. Total Quantity of the Part referred to in the page. The quantity can be replaced by the following indications:
    AR = As Required
    X = As required
17. Part Description
18. Additional description of the part to help confirm identification
19. Figure Notes
20. Model Number(s)

RIGHT-HAND AND LEFT-HAND

The reference to right-hand and left-hand in this catalog is identified by the operator standing at the rear of the basic unit (without rear attachment), looking toward the front of the machine (in normal forward travel).

For pages covering any machine attachments, right-hand and left-hand are defined by the operator sitting in the position for proper operation of the attachment.

DIMENSIONS

Metric and U.S. hardware dimensions do not show the numeric designations of standard coarse threads. A number following a semi colon (;) is the class or grade of hardware. A comma (,) represents the decimal point (.) used in U.S. dimensions.

EXPLANATION OF ABBREVIATIONS

AC	Alternating Current
adj	adjustable
amp	ampere
AR	As required
ASN	Serial number and after P.I.N. and after
blkhd	bulkhead
br	branch
BSN	before Serial number before P.I.N.
BTW	between
cc	cubic centimetre
cl	class
cmprsn	compression
cn pt	cone point
cp pt	cup point
CRS	Chrome Alloy Steel
CST	Carbon Steel
cu yd	cubic yard
DC	Direct Current
deg	degree
dg pt	dog point
dia	diameter
dr type	drive type
fc	face
fc sl	face seal
fem	female
fem PT	female pipe thread
fl	flare
flat pt	flat point
ft	feet or foot
ga	gauge
gal	gallon or gallons
gpm	gallons per minute
gr	grade
hd	head
hdg pt	half dog point
hp	horsepower
ID	inside diameter
in	inch or inches
Incl.	Includes
inv fl	inverted flare
K	kilo
kg	kilogram
km/h	kilometers per hour
L	litre
lb	pounds
lb-ft	pound-foot
lg	long
LH	left-hand
LH thd	left-hand thread
M	(prefix) metric thread size
m	metre
ml	milliliter
mm	millimetre
NF	National Fine
No.	number
NPT	National Pipe Thread
NS	National Super Fine
OD	outside diameter
ohm	electrical unit of resistance
Or	O-ring
ORB	O-ring boss
ORFS	O-ring face seal
ov cntr	over center
ov pt	oval point
oz	ounce
P	pitch
psi	pounds per square inch
pt	pint
PT	pipe thread
rd	round
rd holes	round holes
RH	right-hand
RH thd	right-hand thread
rpm	revolutions per minute
sl	self-locking
sq	square
SST	Stainless Steel
st	self-tapping
strk	stroke
sw	swivel
T	teeth
thk	thick
tpr	taper
tube OD	tube outside diameter
V	volt or volts
W	watt or watts
X	as required
yd	yard

SECTION INDEX
General

MAIN		SECTIONS
MPARTS	00	MAINTENANCE PARTS
SEC. 01	03	ENGINE
SEC. 01	04	ENGINE
SEC. 02		FUEL TANK - MUFFLER - RADIATOR - AIR CLEANER - CHASSIS
SEC. 03	01	TRANSMISSION
SEC. 04		FRONT AXLE
SEC. 05		REAR AXLE
SEC. 06		ELECTRICAL
SEC. 07		SLIDES VALVES
SEC. 08		BODY & HOOD
SEC. 09	01	LOADER
SEC. 09	03	BACKHOE
SEC. 11		WHEELS
SEC. 18		VARIATION
0.0040/01	01	OPTIONAL EQUIPMENT - NA
0.0040/01	02	OPTIONAL EQUIPMENT - NA
0.0040/01	03	OPTIONAL EQUIPMENT - NA

SECTIONS

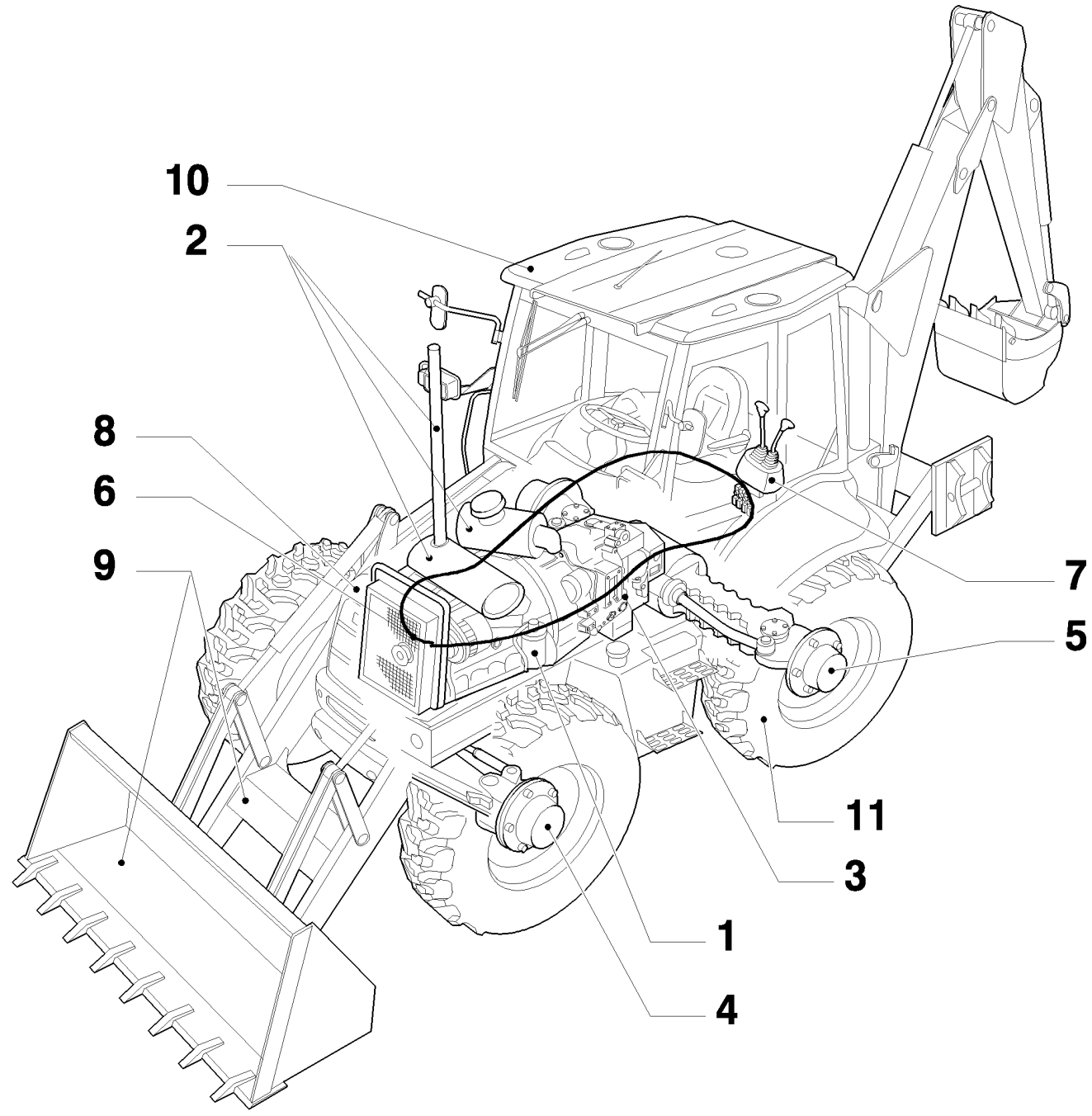

SECTIONS

REF	FN	PART NUMBER	YR/SN	QTY	DESCRIPTION

B95B

MAINTENANCE PARTS

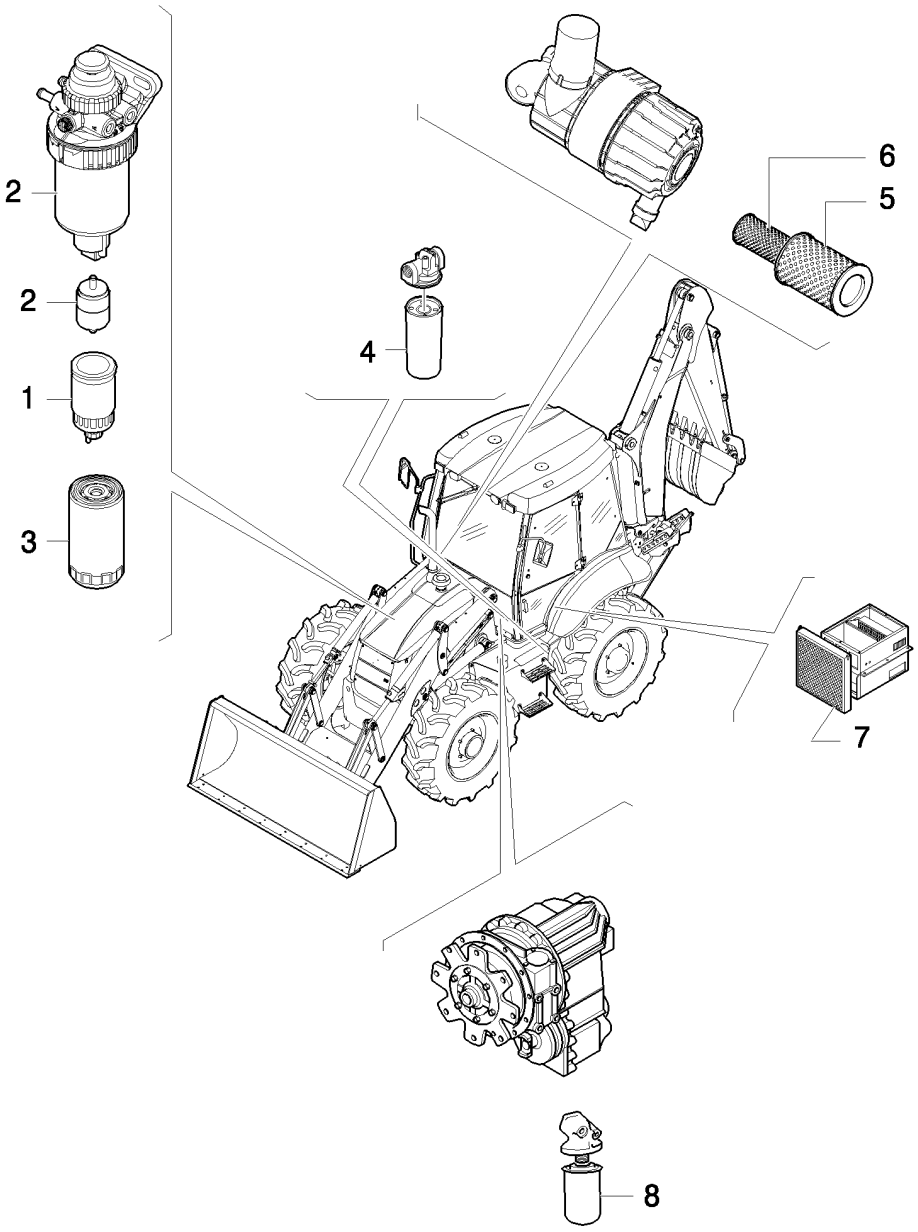

MAINTENANCE PARTS

REF	FN	PART NUMBER	YR/SN	QTY	DESCRIPTION
1		87803197		1	FILTER, FUEL
1		87803192		1	FILTER, FUEL
2		87803444		1	FILTER, FUEL
2		D139225		1	FILTER, FUEL
3		87803260		1	FILTER, ENGINE OIL
4		86989733		1	FILTER, HYDRAULIC OIL
5		87631623		1	FILTER, AIR
6		87631625		1	FILTER, AIR
7		87314367		1	FILTER, CAB
8		85817004		1	FILTER
8		85826020		1	FILTER, HYDRAULIC OIL

ENGINE

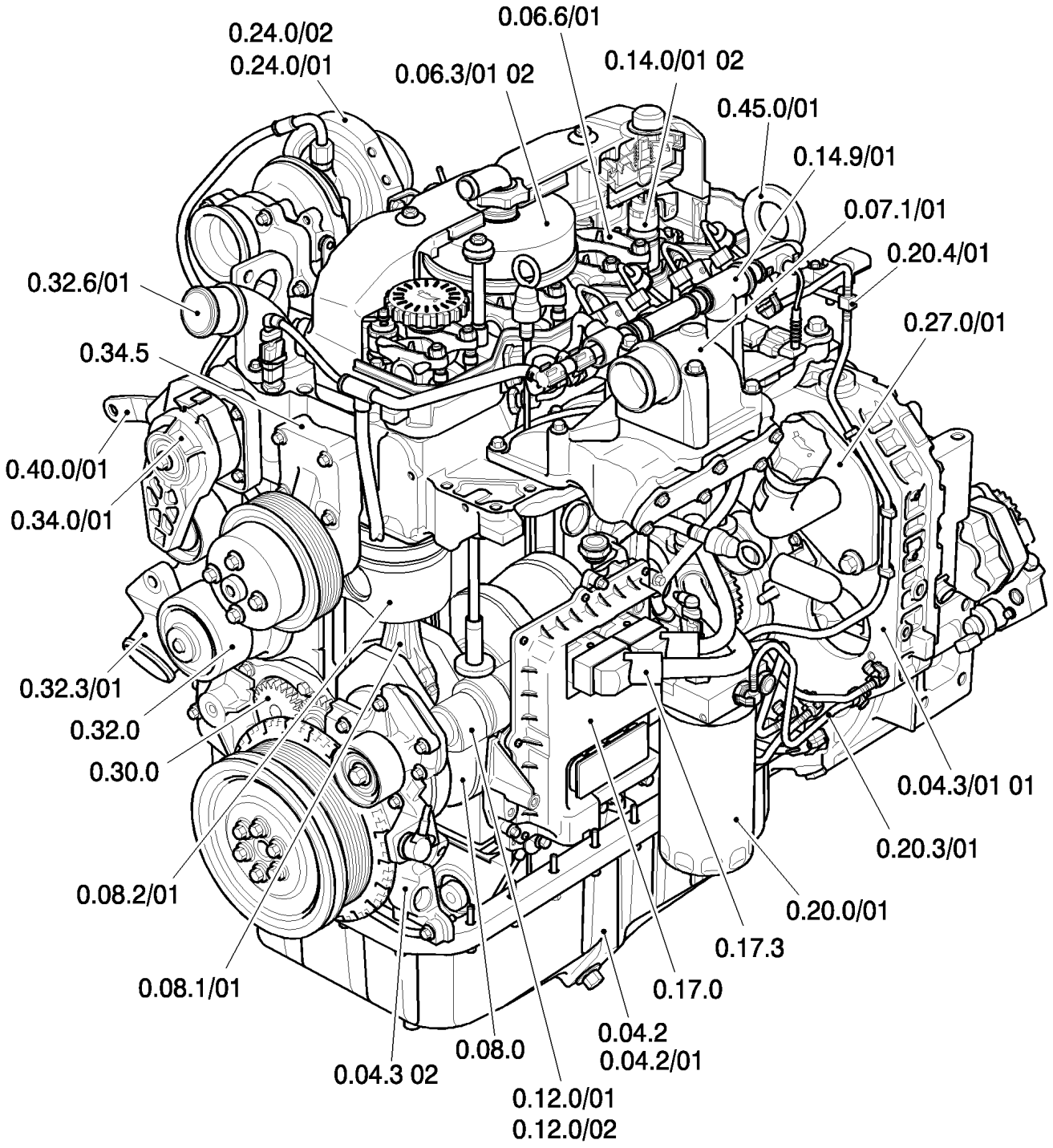
0.24.0/02
0.24.0/01
0.06.6/01
0.06.3/01 02
0.14.0/01 02
0.45.0/01
0.14.9/01
0.07.1/01
0.20.4/01
0.27.0/01
0.32.6/01
0.34.5
0.40.0/01
0.34.0/01
0.32.3/01
0.32.0
0.30.0
0.08.2/01
0.08.1/01
0.04.3 02
0.08.0
0.12.0/01
0.12.0/02
0.04.2
0.04.2/01
0.17.0
0.17.3
0.20.0/01
0.20.3/01
0.04.3/01 01

ENGINE

REF	FN	PART NUMBER	YR/SN	QTY	DESCRIPTION

ENGINE

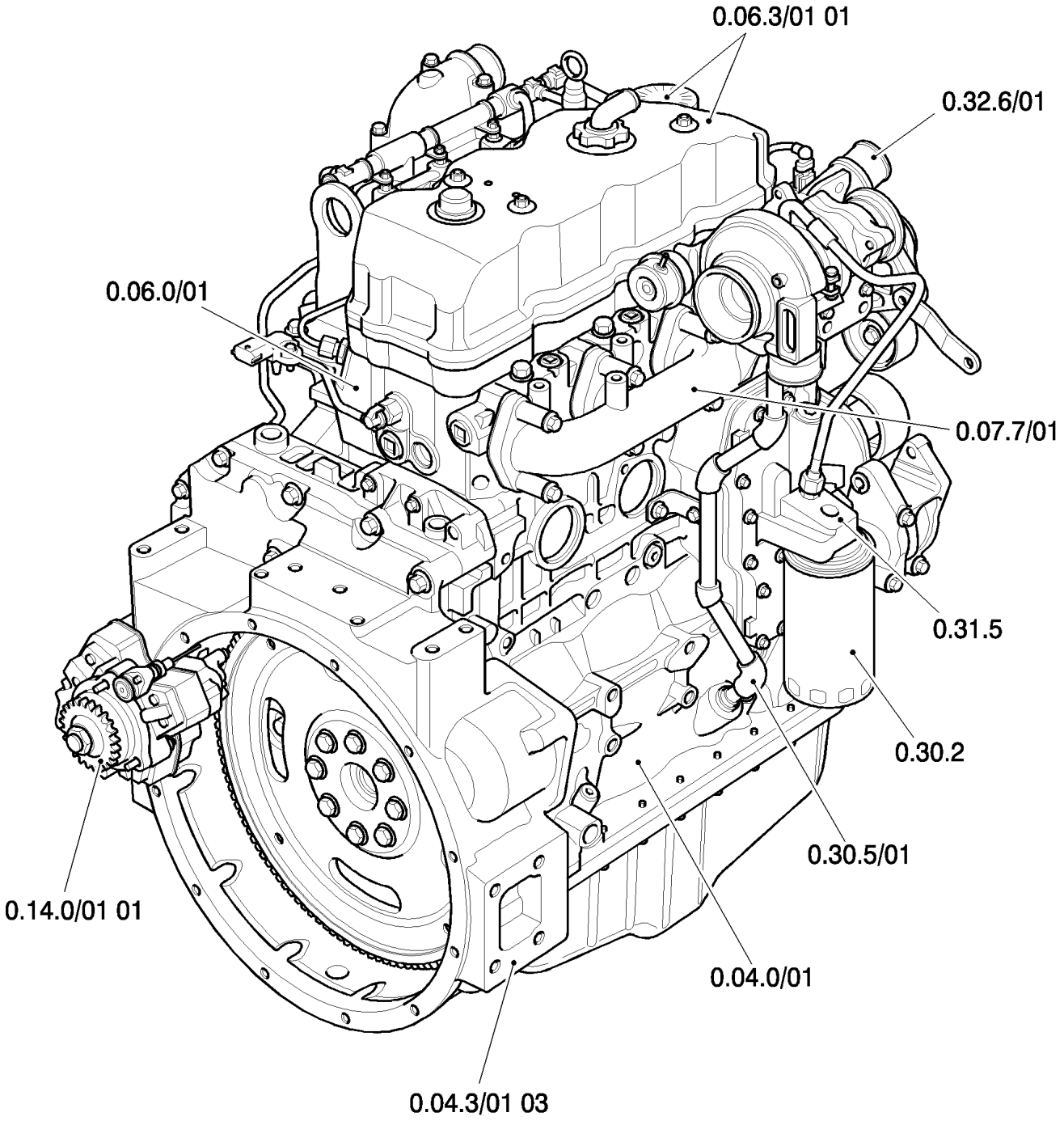
0.06.3/01 01
0.32.6/01
0.06.0/01
0.07.7/01
0.31.5
0.30.2
0.30.5/01
0.14.0/01 01
0.04.0/01
0.04.3/01 03

ENGINE

REF	FN	PART NUMBER	YR/SN	QTY	DESCRIPTION

FUEL TANK - MUFFLER - RADIATOR - AIR CLEANER - CHASSIS

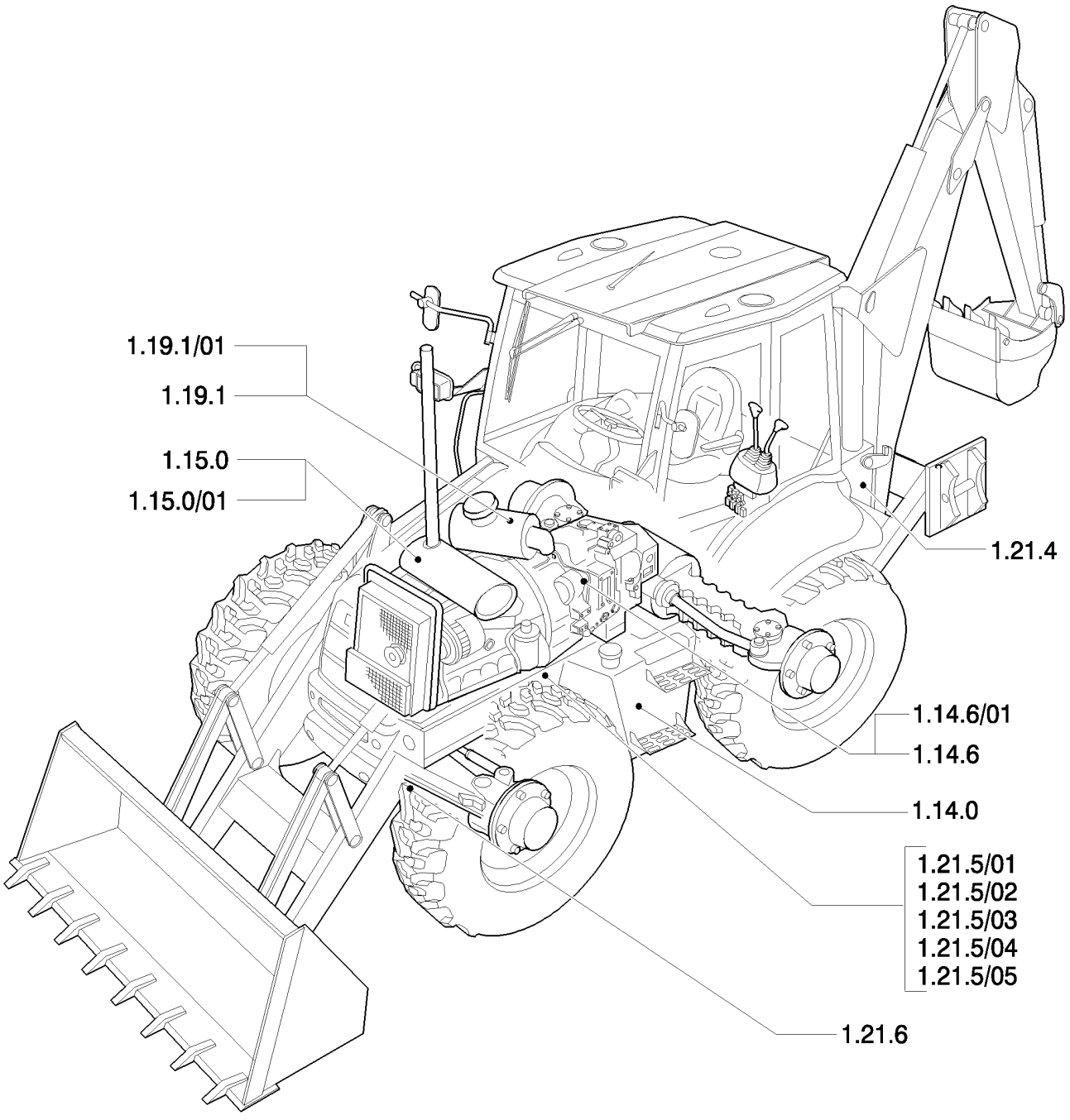

FUEL TANK - MUFFLER - RADIATOR - AIR CLEANER - CHASSIS

REF	FN	PART NUMBER	YR/SN	QTY	DESCRIPTION

TRANSMISSION

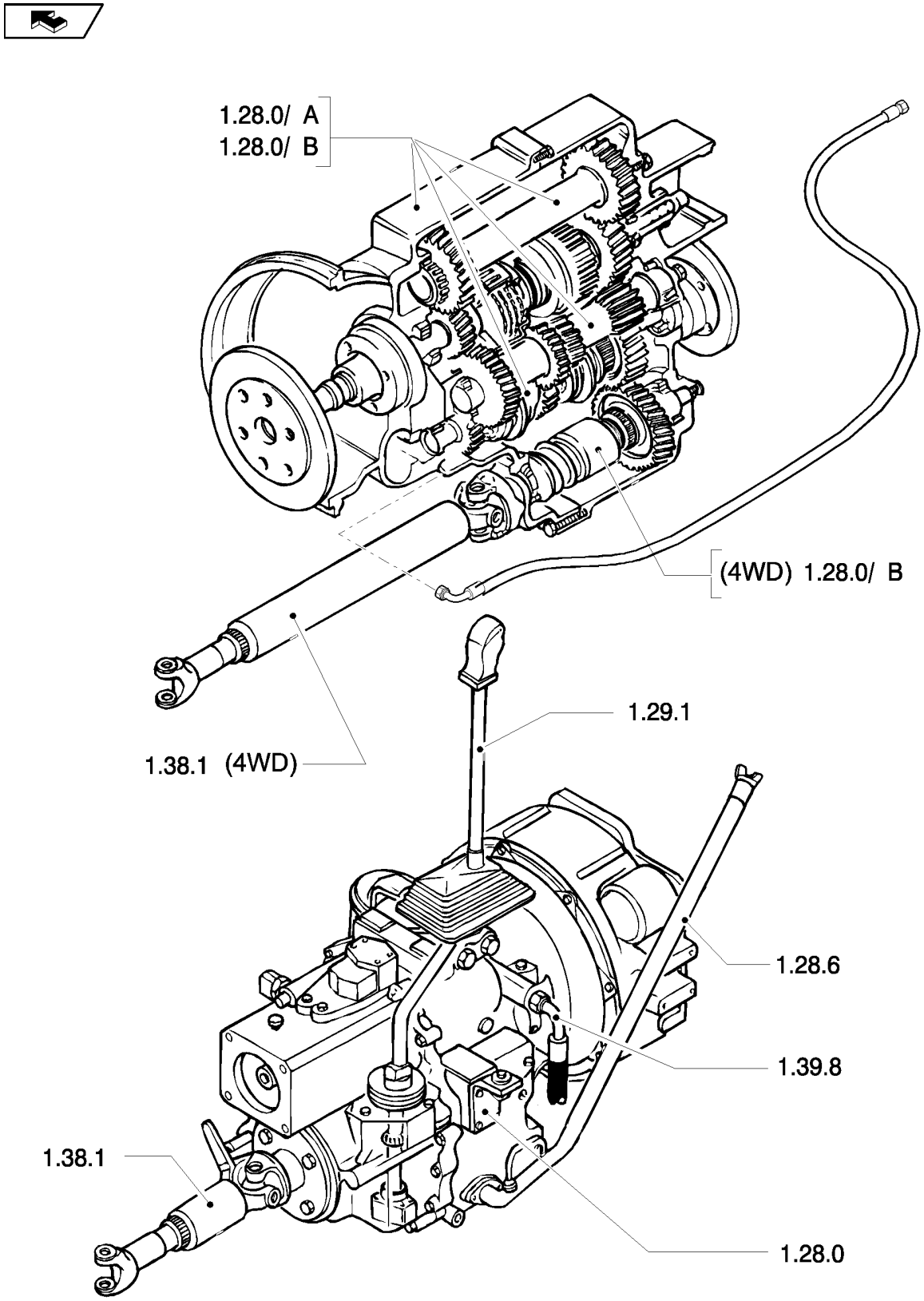

TRANSMISSION

REF	FN	PART NUMBER	YR/SN	QTY	DESCRIPTION

FRONT AXLE

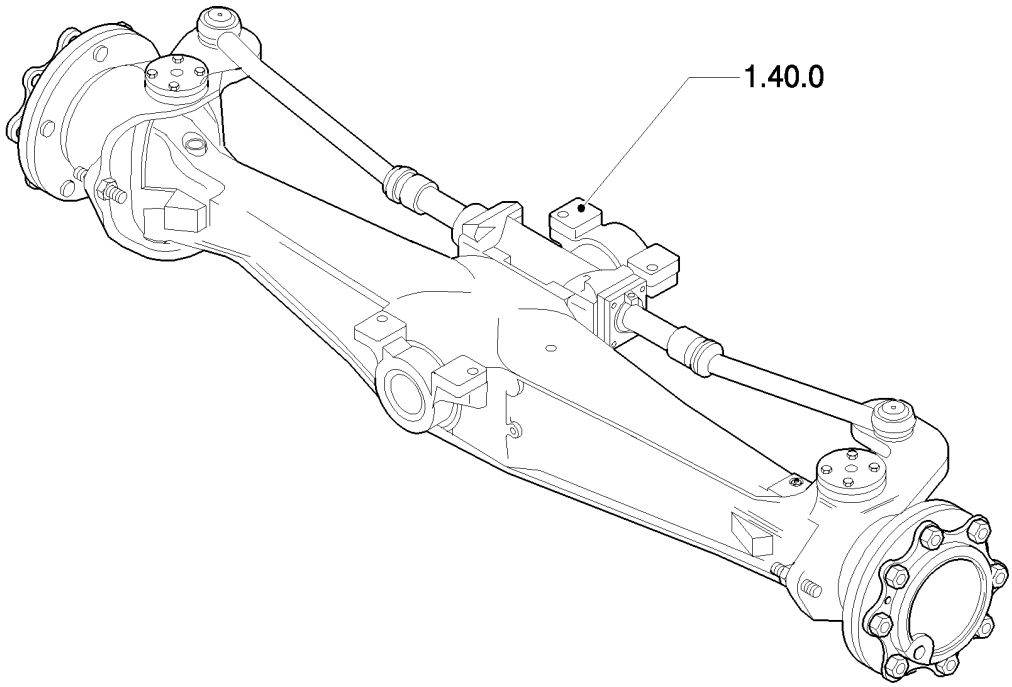

FRONT AXLE

REF	FN	PART NUMBER	YR/SN	QTY	DESCRIPTION

REAR AXLE

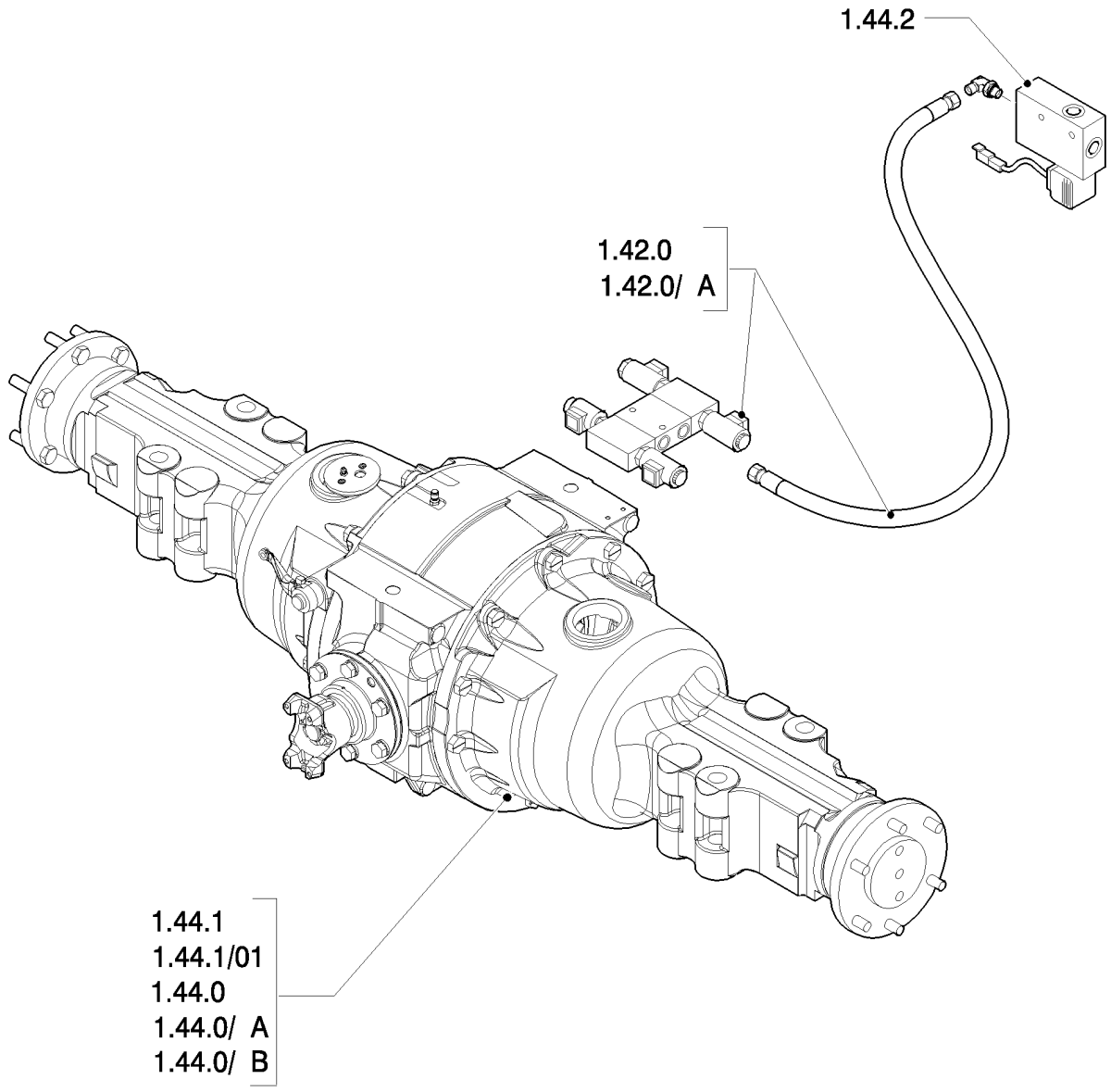

REAR AXLE

REF	FN	PART NUMBER	YR/SN	QTY	DESCRIPTION

ELECTRICAL

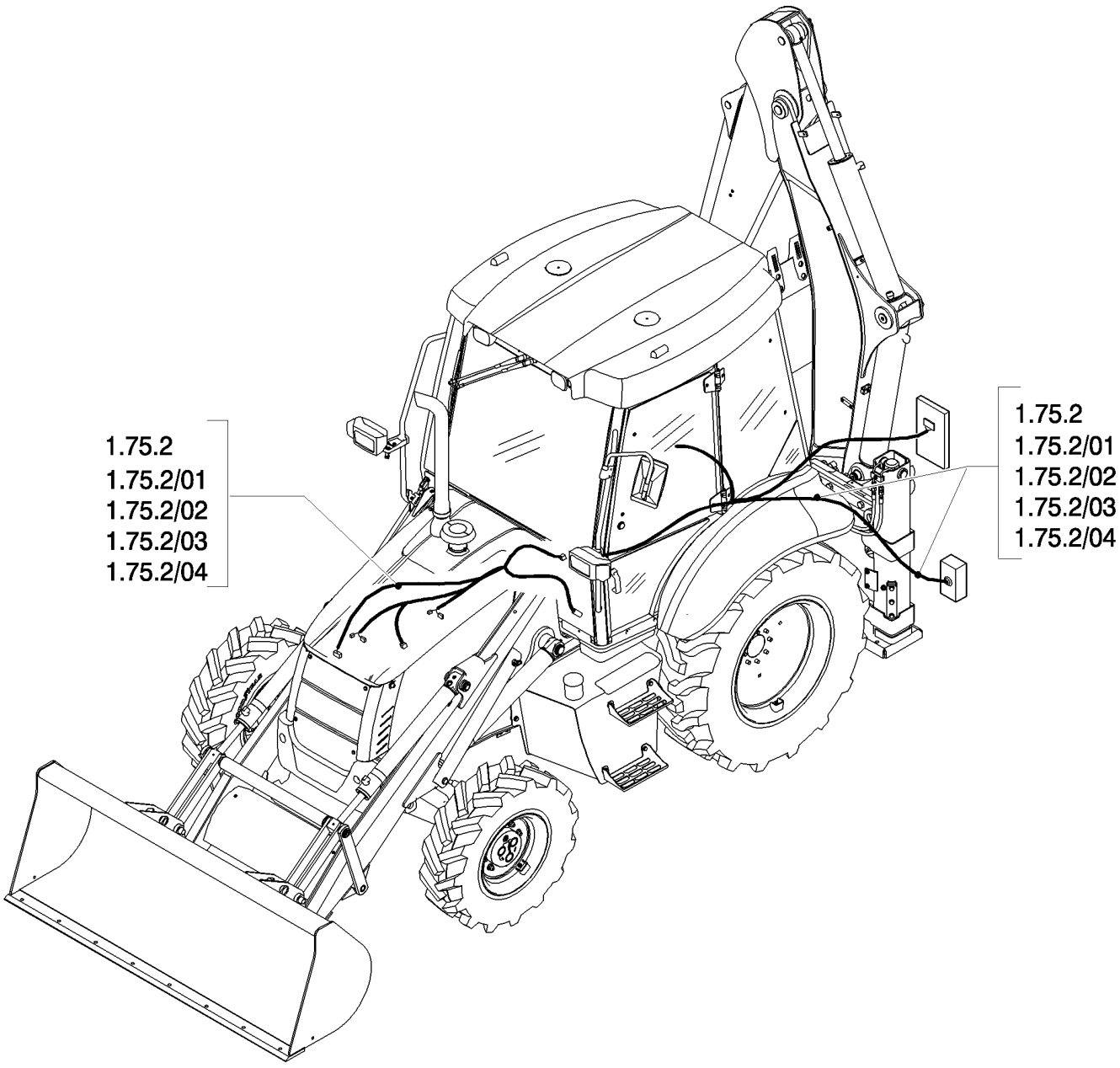
1.75.2
1.75.2/01
1.75.2/02
1.75.2/03
1.75.2/04
1.75.2
1.75.2/01
1.75.2/02
1.75.2/03
1.75.2/04

ELECTRICAL

REF	FN	PART NUMBER	YR/SN	QTY	DESCRIPTION

SLIDES VALVES

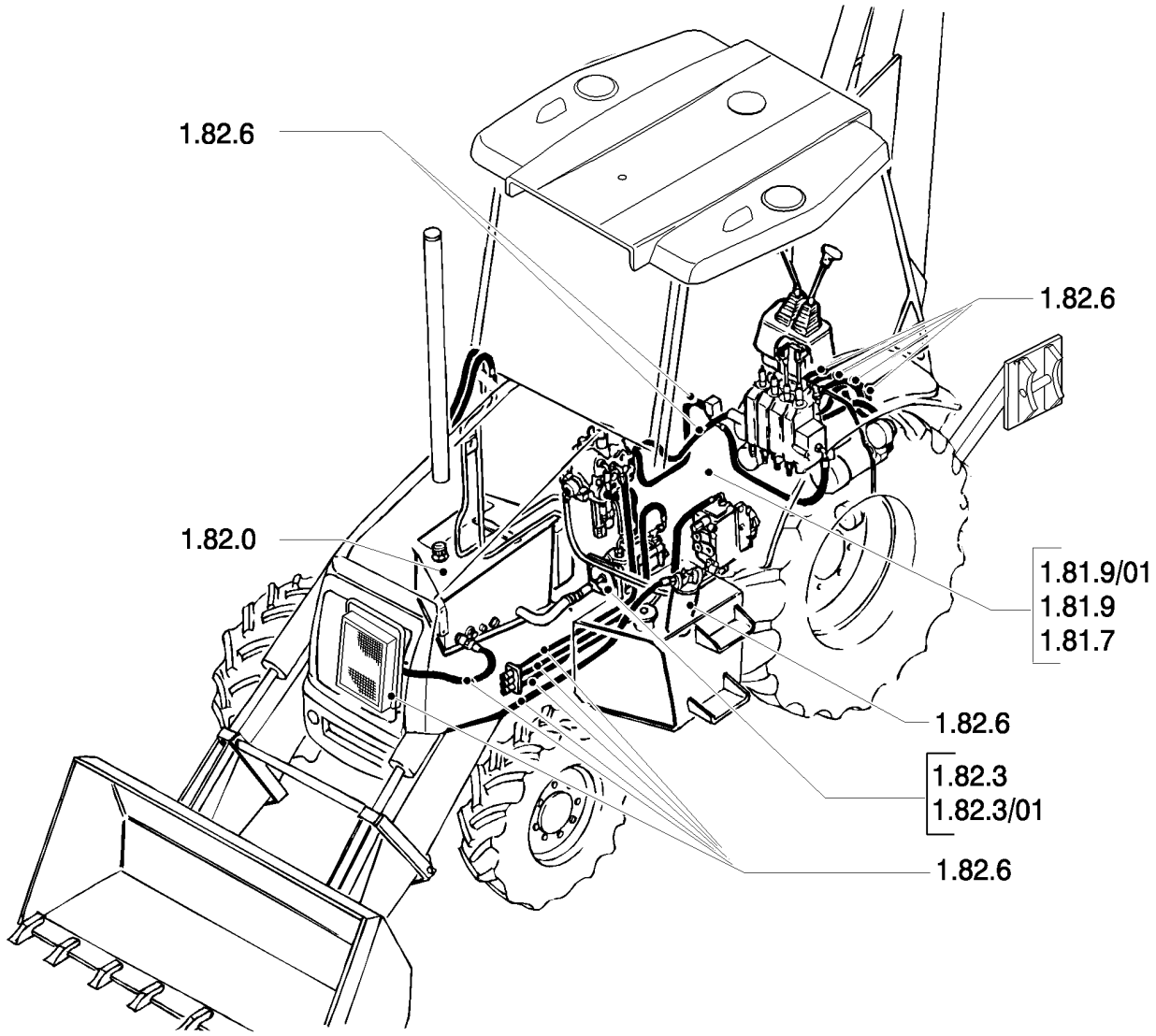

SLIDES VALVES

REF	FN	PART NUMBER	YR/SN	QTY	DESCRIPTION

BODY & HOOD

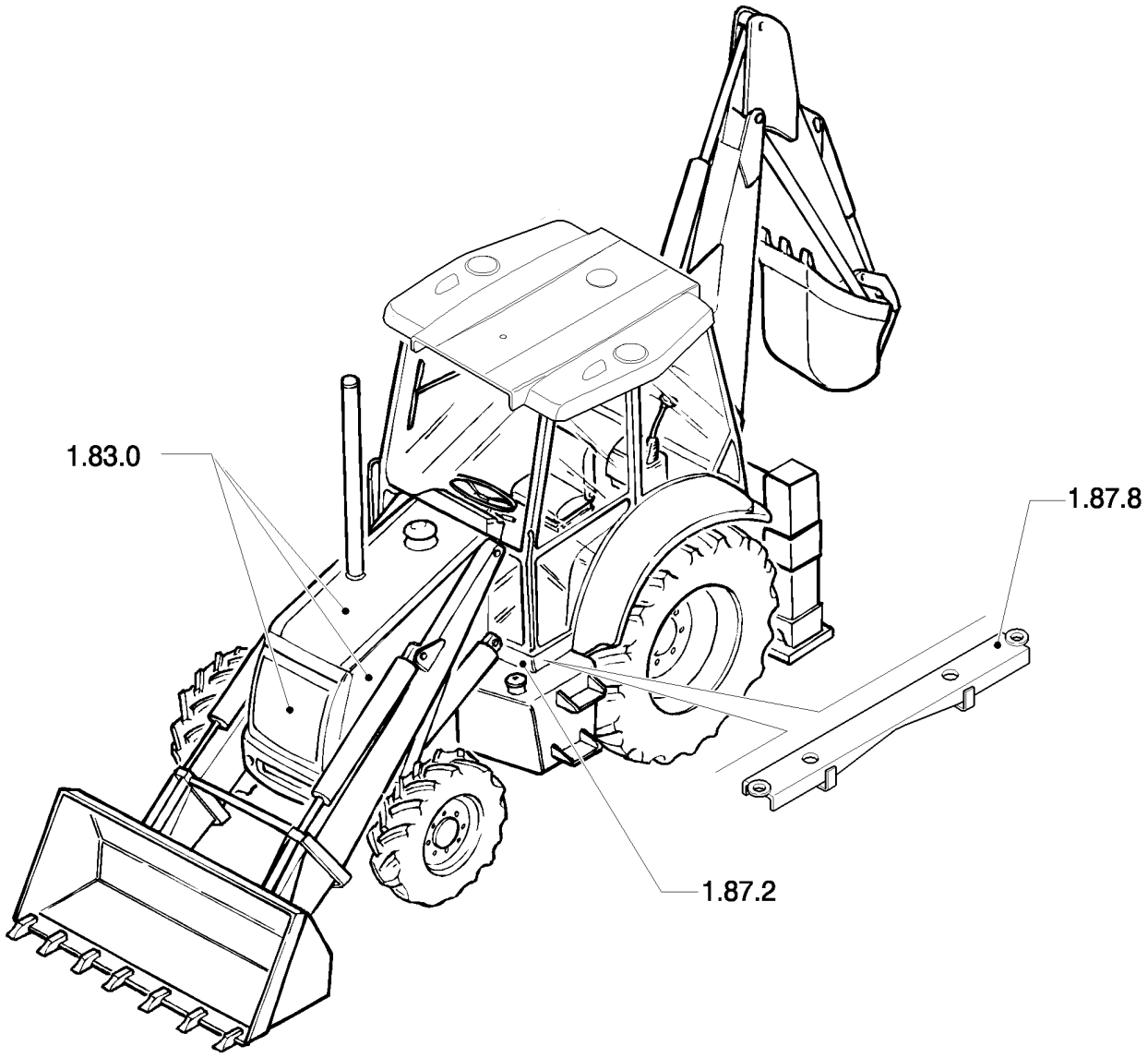

BODY & HOOD

REF	FN	PART NUMBER	YR/SN	QTY	DESCRIPTION

LOADER

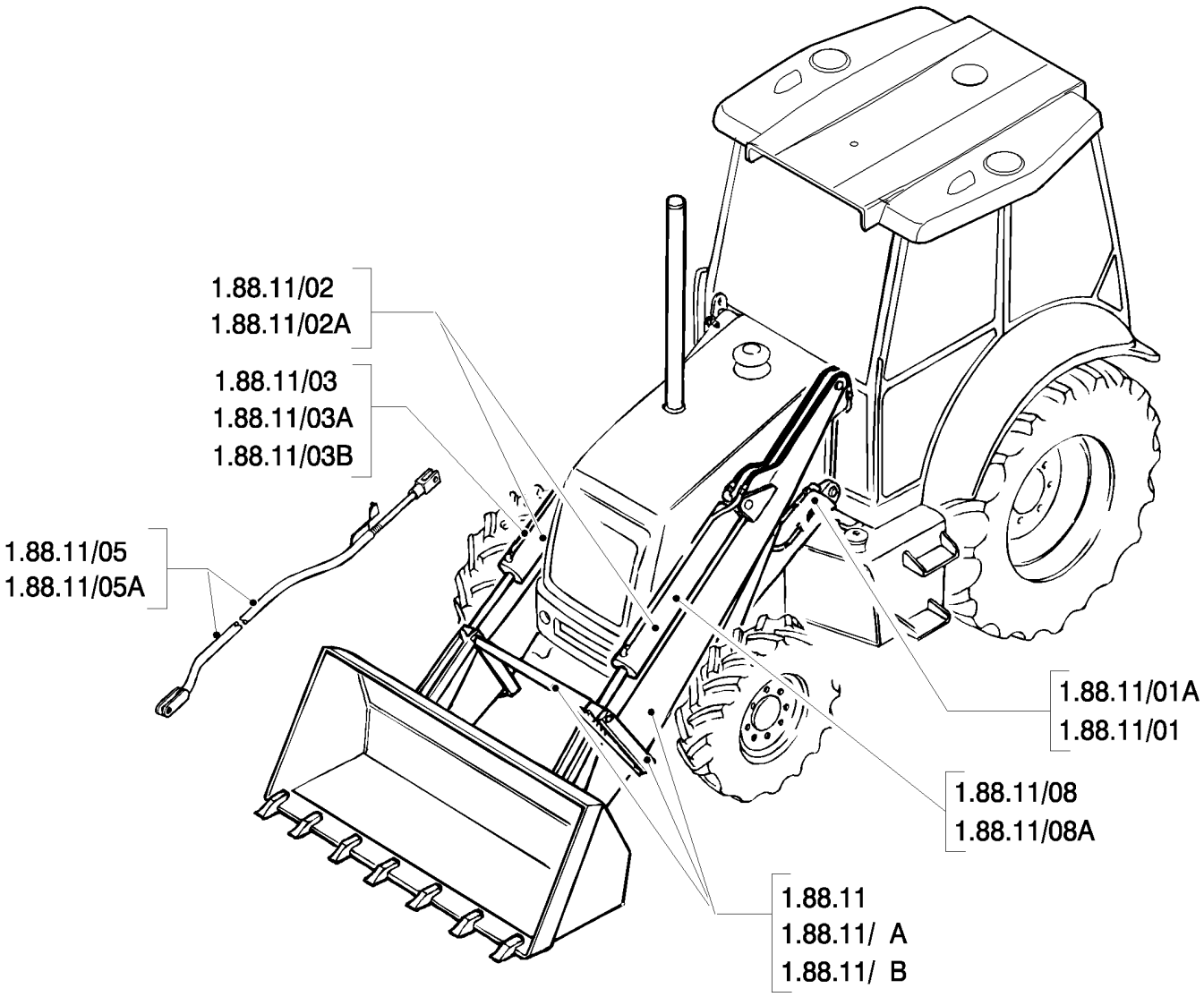
1.88.11/02
1.88.11/02A
1.88.11/03
1.88.11/03A
1.88.11/03B
1.88.11/05
1.88.11/05A
1.88.11/01A
1.88.11/01
1.88.11/08
1.88.11/08A
1.88.11
1.88.11/ A
1.88.11/ B

LOADER

REF	FN	PART NUMBER	YR/SN	QTY	DESCRIPTION

CENTER PIVOT

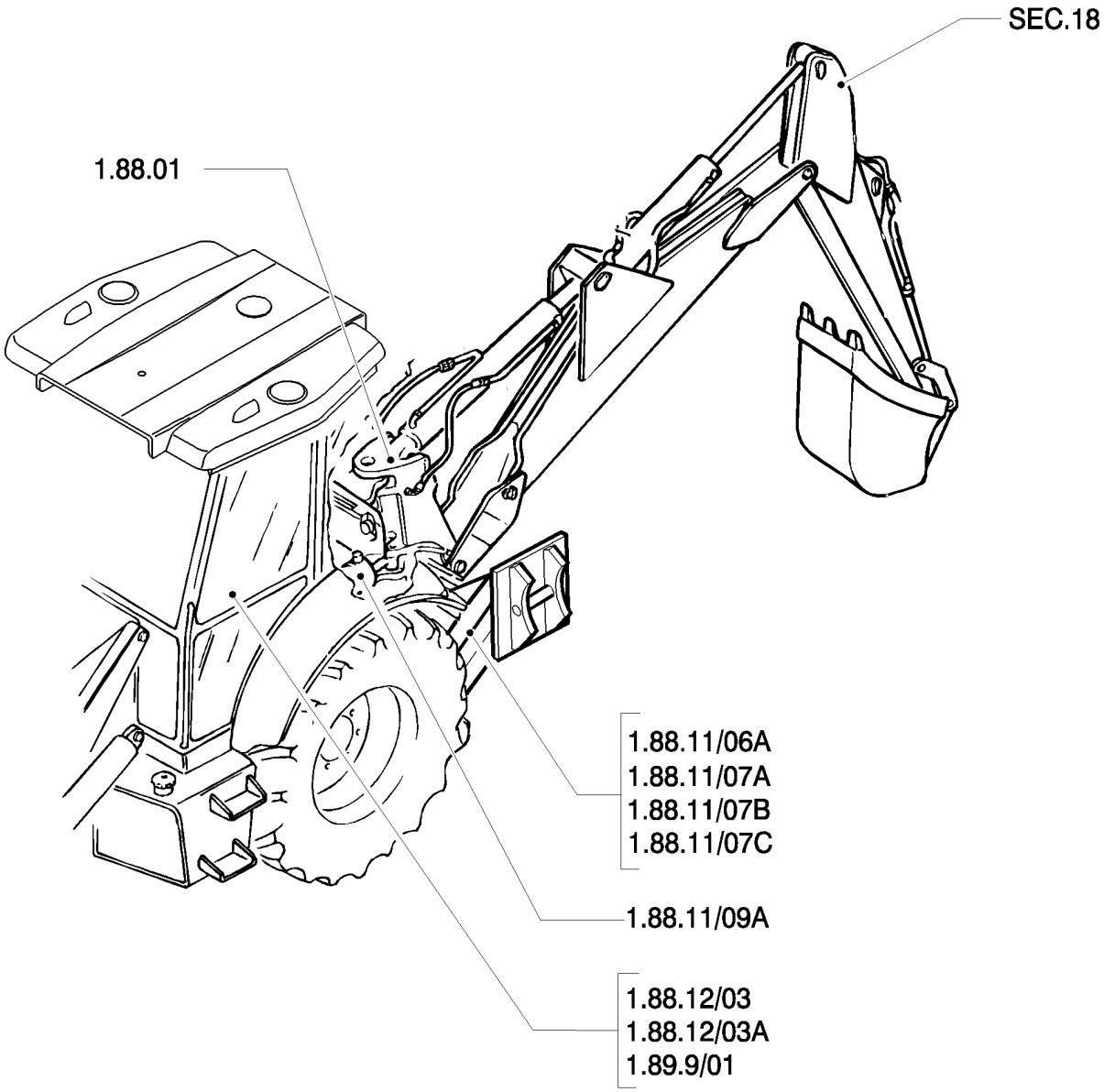

BACKHOE

REF	FN	PART NUMBER	YR/SN	QTY	DESCRIPTION

WHEELS

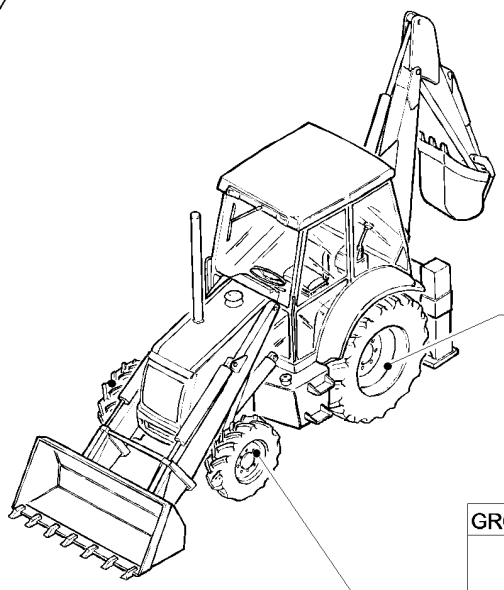

GROUP	EQUIP	TIRE SIZE	RIM
83.00	83.52	16.9 - 28 R4-10PLY TITAN	W15LX 28
	83.62	16.9 - 28 R4 - 12PR	W14LX 28
	83.64	16.9 - 24 R4 - 10PR	W15LX 24
	83.65	17.5 - L24 R4 - 10PR	W15LX 24
	83.91	19.5 - 24 R4 - 10PR	W16LX 24
	83.92	18.4 - 26 R4 - 12PR	DW16L X26
	83.92	21L24 R4 - 10PR	W18L X24
	83.93	18.4 - 26 R1 - 12PR	DW16L X26
	83.93	19.5 x 24 "JUMBO HULK"	W16L X24
	83.96	480/80 R26 IT520	DW16LX26
	83.97	16.9 - 28	W14L X28Z
	83.98	18.4 - 26	DW16L X26

GROUP	EQUIP	TIRE SIZE	RIM
82.00	82.75	14 -17.5NHS - 8PR	10.5 X 17.5
	82.76	12 -16.5NHS -8PR	9,75 X 16,5
	82.76	12 - 16.3 HULK	9,75 X 16,5
	82.76	12 - 16.5 HULK	9,75 X 16,5
	82.78	10.5/80 -18I3 - 10PR	9 X 18
	82.79	12.5/80 -18I3 - 10PR	9 X 18
	82.80	12.5/80 -18I3 - 10PR	9 X 18
	82.87	320/80-R18-IT520	9 X 18
	82.89	12.5 - 18	9 X 18

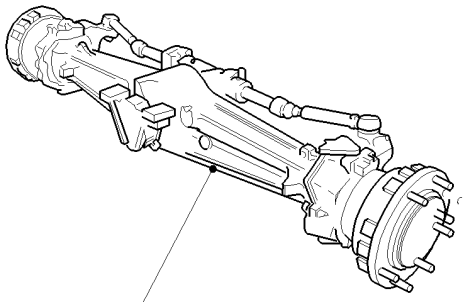

GROUP	EQUIP	TIRE SIZE	RIM
81.00	81.38	11L - 16SLF3 - 10PR	W8LX 16

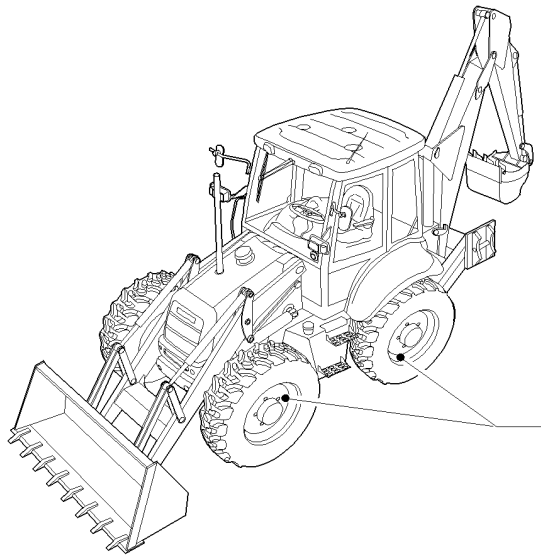

GROUP	EQUIP	TIRE SIZE	RIM
85.00	85.64	16.9 - 24 R4 - 12PR	W14LX 24
	85.64	16.9 - 24 R4 - 12PR (I.S.G.)	W15LX 24
	85.65	16.9 - 28 R4 - 12PR	W15LX 28
	85.65	16.9 - 28 R4 12PLY GY (I.S.G.T.)	W14LX 28
	85.66	440/80 R28 156A8 IT530	W14LX 28
	85.67	440/80 R28 156A8 IT520	W14LX 28

WHEELS

REF	FN	PART NUMBER	YR/SN	QTY	DESCRIPTION

VARIATION

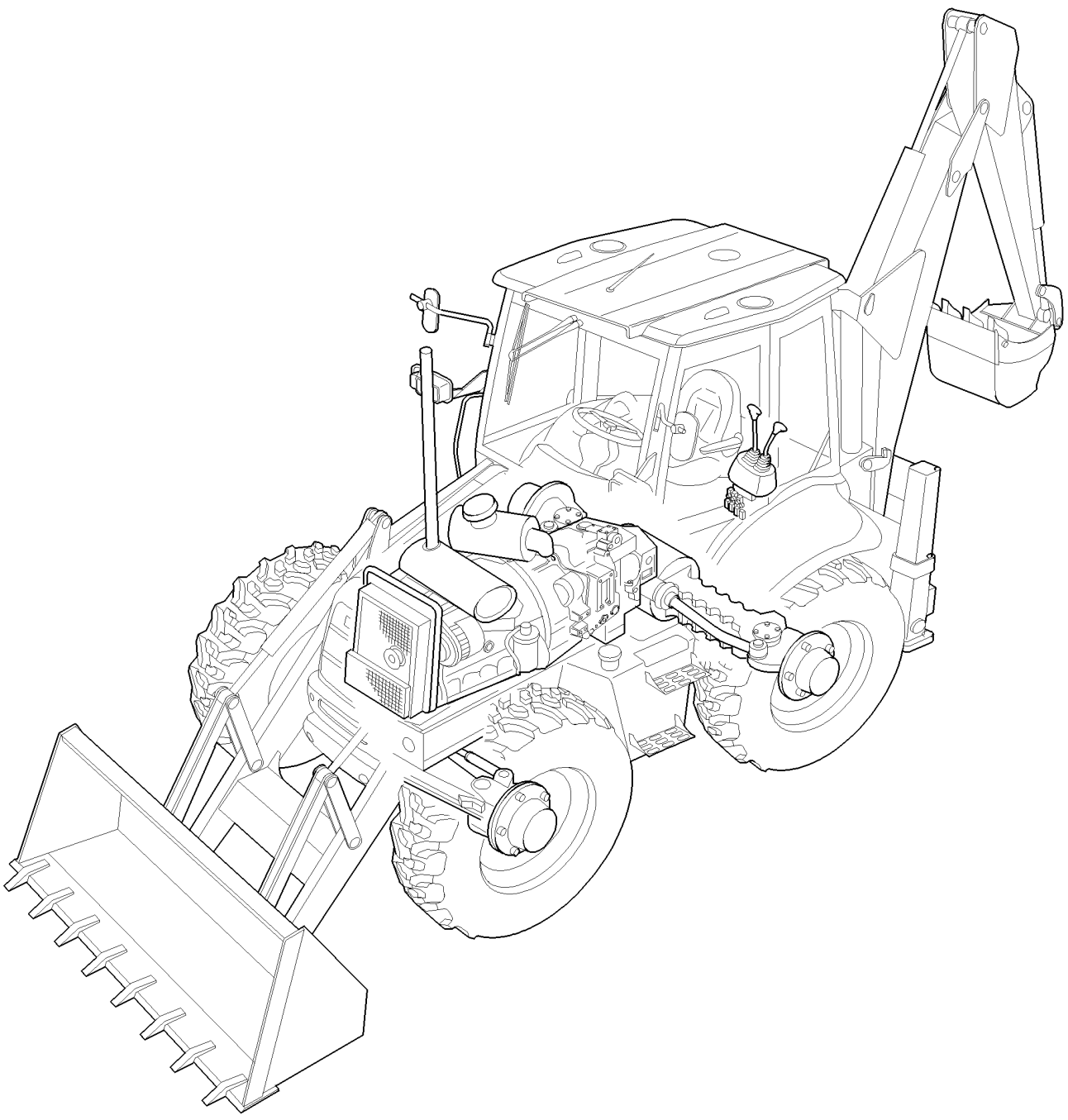

VARIATION

REF	FN	PART NUMBER	YR/SN	QTY	DESCRIPTION

OPTIONAL EQUIPMENT - NA

VARIANT CODE	DESCRIPTION	APPLICATION					
		B90B	B95B	B95BLR	B95BTC	B110B	B115B
095	Stabilizer control without auto-up (CENTER PIVOT)	●	●	●	●	●	●
096	Stabilizer control with auto-up (CENTER PIVOT)	●	●	●	●	●	●
130	Approval for Europe	●	●	●	●	●	●
131 - 131/01	Single Battery	●	●	●	●	●	●
141	Approval for France	●	●	●	●	●	●
142	Approval for Russia	●	●	●	●	●	●
175	Air intake cap & pre-cleaner	●	●	●	●	●	●
176	Air intake cap & pre-cleaner	●	●	●	●	●	●
201	Shovel and rear lifting hooks	●	●	●	●	●	●
207	Rear counterweight	●					
284	Rear mirror (CAB)	●	●	●	●	●	
290 - 291 293	Front counterweight	●	●	●	●	●	●
300	Backhoe control valve, 6 sections (CENTER PIVOT)						●
302	Two-section control valve for loader	●	●	●	●	●	●
321 - 321/01	Double battery	●	●	●	●	●	●
331	Tower assy 6 sections (CENTER PIVOT)	●	●	●	●	●	●
331/ A	Proportional control valve 6 sections	●	●	●	●	●	●
331/ B	Backhoe control valve, 6 sections (CENTER PIVOT)	●	●	●	●	●	●
331/ C	Pilot valve of hydraulic control lever (RIGHT HAND - LEFT HAND)	●	●	●	●	●	●
333	Tower assy 7 sections (CENTER PIVOT)	●	●	●	●	●	●
333/01B	7-sections excavator control valve (CENTER PIVOT)	●	●	●	●	●	●
333/ A	Proportional control valve 7 sections	●	●	●	●	●	●
333/ C	Pilot valve of hydraulic control lever (RIGHT HANDS) 7 spools	●	●	●	●	●	●
335	Tower assy 7 sections (CENTER PIVOT)	●	●	●	●	●	●
337	Lock valve on loader cylinders	●	●	●	●	●	
338	Lock valve on loader lift cylinders	●	●	●	●	●	●
339	Lock valve on bucket cylinder						●
341/ A	Proportional valve 4 operations	●	●	●	●	●	●
342	Valve with viscous joint	●					
344	Stabilizer control valve, two sections (CENTER PIVOT)	●	●	●	●	●	
346	A/C housing & filters	●	●	●	●	●	●
347	Housing & filters	●	●	●	●	●	●
350	2 lever backhoe controls						●
351	JCB 2 lever backhoe controls						●
358	ISO 2 lever backhoe controls						●
386	Backhoe bucket 12" (305MM) HD with thorned tines	●	●	●	●	●	●
387	Backhoe bucket 18" (457MM) HD with thorned tines	●	●	●	●	●	●
388	Backhoe bucket 24" (610MM) HD with thorned tines	●	●	●	●	●	●
389	Backhoe bucket 30" (762MM) HD with thorned tines	●	●	●	●	●	●
390	Loader control valve, two section, lever & decal	●	●	●	●	●	
390/01	Backhoe bucket 36" (910MM) HD with thorned tines	●	●	●	●	●	●
391	Lock valve for bucket 4X1 / 6X1	●	●	●	●	●	●
392	Locking valve on backhoe lift and dipp. Cylinder	●	●	●	●	●	●
393	2 lever backhoe controls, lever, boot & decals	●	●	●	●	●	●
394	4 lever backhoe controls, console, levers & bellcrannk (CENTER PIVOT - SIDE SHIFT)	●	●	●	●	●	
394/01	ISO 2 lever backhoe controls, lever, boot & decals (CENTER PIVOT)	●	●	●	●	●	
397	Suspended load handling on machine side	●	●	●	●	●	●
398	Lock valve on loader boom cylinder and backhoe dipper cylinder	●	●	●	●	●	●
400	Front axle (4WS) - box						●
401	Rear axle, RH & center housing (4WS)						●
402	4WD front axle. Housing, bushing & supportt	●	●	●	●	●	
415	Front axle - (4WD) w/gear, bevel					●	
416	System hammer components (CAB - ROPS)	●	●	●	●	●	●
431 - 432	1 M3 standard bucket				●		
433	Bucket 4X1 with blade				●		
434	Bucket 4X1 with tines				●		
437	Glide ride valve, hydraulic system for machine frame levelling	●	●	●	●	●	●
469	Bucket 6X1 (1,15 M3) with blade "COMMON GRAY"						●
470	Bucket 6X1 (1,15 M3) with blade "COMMON GRAY"						●
471	Bucket 4X1 (1 M3) with blade "COMMON GRAY"	●	●	●		●	
471/01	Hydraulic cylinder (BUCKET 4X1 - 6X1)	●	●	●	●	●	●
471/02	Bucket 4X1 (1 M3) with blade "COMMON GRAY"				●		
472 - 472/01	Bucket 4X1 (1 M3) with tines "COMMON GRAY"	●	●	●	●	●	
473	Bucket 6X1 (1 M3) with blade "COMMON GRAY"	●	●	●		●	

OPTIONAL EQUIPMENT - NA

REF	FN	PART NUMBER	YR/SN	QTY	DESCRIPTION

OPTIONAL EQUIPMENT - NA

VARIANT CODE	DESCRIPTION	APPLICATION					
		B90B	B95B	B95BLR	B95BTC	B110B	B115B
474	Bucket 6X1 (1 M3) with tines "COMMON GRAY"	●	●	●		●	
475	Bucket 4X1 (1,15 M3) with blade "COMMON GRAY"						●
476	Bucket 4X1 (1,15 M3) with tines "COMMON GRAY"						●
487	24" (610MM) backhoe bucket with pin teeth						●
500	1,13 M3 bucket						●
501	1,13 M3 bucket w/tines						●
502	1,13 M3 bucket with extra reversible blade						●
515/01	12" (350MM) backhoe bucket with pin teeth	●	●	●	●	●	●
516/01	18" (457MM) backhoe bucket with pin teeth	●	●	●	●	●	●
517/01	24" (610MM) backhoe bucket with pin teeth	●	●	●	●	●	●
518/01	30" (762MM) backhoe bucket with pin teeth	●	●	●	●	●	●
519/01	36" (914MM) backhoe bucket with pin teeth	●	●	●	●	●	●
520	0.88 M3 bucket without tines	●	●	●	●		
520/01	18" (457MM) backhoe bucket with pin teeth (EXTRA HD)	●	●	●	●	●	●
521	Pin tooth kit, 24" (610MM) backhoe buckets (EXTRA HD)	●	●	●	●	●	●
522	1,13 M3 bucket	●	●	●		●	
522/01	Standard 1MC bucket with forks	●	●	●		●	
522/02	1 M3 bucket with cutter				●		
525	Standard 1MC bucket with forks and reversible blade	●	●	●		●	
527	0.88 M3 bucket and extra reversible blade	●	●	●			
533	1,15 M3 bucket with forks and cutter blade						●
534	1,15 M3 bucket with forks and extra reversible blade						●
535	Stabilizer foot ground (CENTER PIVOT)	●	●	●	●	●	●
536	Standard 1MC bucket with tines	●	●	●		●	
536/01	1 M3 bucket with tines and cutter				●		
536/02	Reversible stabilizer leg (CENTER PIVOT)	●	●	●	●	●	●
537	Standard 1MC bucket with extra reversible blade	●	●	●		●	
537/01	1 M3 bucket with additional reversible blade				●		
548	Ditch cleaning bucket	●	●	●	●	●	●
622	Internal fan	●	●	●	●	●	●
636 - 637 638 - 639	Radiator	●	●	●	●	●	●
642	Egs control, 20 & 40km/h (POWER SHIFT)					●	●
646	Machine part air conditioning set	●	●	●	●	●	●
650	Steering column, fixed & adjustable	●	●	●	●	●	●
698	Glide ride valve, hydraulic system for machine frame levelling & ON/OFF switch	●	●	●	●	●	●
699	Hand hammer switch	●	●	●	●	●	
700	4X1 & 6X1 bucket hydraulic lines (POWER SHIFT, POWER SHUTTLE)	●	●	●	●	●	●
700/01	4X1 & 6X1 bucket hydraulic lines (4WS)						●
700/02	4X1 & 6X1 bucket hydraulic lines				●		
703	Pedal-operated telescopic dipper hydraulic system (7 SECTION)						●
721	Telescopic control valve, 3 sections (CENTER PIVOT)	●	●	●	●	●	
724/01	Hydraulic system for hammer (CENTER PIVOT)	●	●	●	●	●	●
724/02	Hydraulic system for hammer (CENTER PIVOT)	●	●	●	●	●	
724/ A	Rear hammer control valve	●	●	●	●	●	●
725	Hammer kit from lifting arm to demolition arm	●	●	●	●	●	●
725/01	4X1 & 6X1 bucket hydraulic lines (POWER SHUTTLE)	●	●	●	●	●	
725/02	4X1 & 6X1 bucket hydraulic lines (POWER SHIFT)	●	●	●	●		●
725/03	4X1 & 6X1 bucket hyraulic lines (POWER SHUTTLE)				●		
727	Hydraulic system presetting for telescopic links pedal operated						●
727/01	Hydraulic system prearrangement (CENTER PIVOT)	●	●	●	●	●	
728	Manual hammer system	●	●	●	●	●	●
733	Rear mechanical quick-coupling	●	●	●	●	●	●
734	Front mechanical quick-coupling	●	●	●		●	
758	Rotating beacon	●	●	●	●	●	●
787	Front console without speedometer (POWER SHUTTLE, ROPS)	●	●	●	●	●	
787/01	Front console without speedometer (POWER SHUTTLE, CAB)	●	●	●	●	●	
788	Front console with speedometer (ROPS)	●	●	●	●	●	
788/01	Front console with speedometer (CAB)	●	●	●	●	●	
789	Speed sensor (POWER SHUTTLE)	●	●	●	●	●	
793	Front working light (CAB)	●	●	●	●	●	●
793/01	Front working light (ROPS)	●	●	●	●	●	
794	Lamps & lights (CAB)	●	●	●	●	●	●
794/01	Lamps & lights (ROPS)	●	●	●	●	●	
796	Antitheft	●	●	●	●	●	●

OPTIONAL EQUIPMENT - NA

REF	FN	PART NUMBER	YR/SN	QTY	DESCRIPTION

OPTIONAL EQUIPMENT - NA

VARIANT CODE	DESCRIPTION	APPLICATION					
		B90B	B95B	B95BLR	B95BTC	B110B	B115B
803	Fenders, front	●	●	●	●	●	
851	Cloth seat & attaching hardware - cabine	●	●	●	●	●	●
851/01	Cloth seat cushinos, armrests & related parts	●	●	●	●	●	●
853	Rear mudguards and roof (ROPS - CAB)	●	●	●	●	●	●
855	Air ride cloth seat & attaching hardware - cabine	●	●	●	●	●	●
855/01	Air ride cloth seat cushinos, armrests & related parts	●	●	●	●	●	●
856	Vinyl seat cushinos, armrests & related parts (ROPS)	●	●	●	●	●	
856/01	Vinyl seat with armrests & mounting hardware (ROPS)	●	●	●	●	●	
860	Fenders, front						●
879	Right back view mirror	●	●	●	●	●	●
888	Arm and guard decal	●	●	●	●		
900	Boom - long dipper	●	●	●	●	●	●
901	Telescopic dipper long	●	●	●	●	●	●
902	Short telescopic dipper	●	●	●	●		
987	Foward/Reverse & steering decals - POWER SHIFT						●
990	Tool kit	●	●	●	●	●	●
992	Cab warning & information decals (POWER SHUTTLE - POWER SHIFT)	●	●	●	●	●	●
993	Plates	●	●	●	●	●	●
995 - 995/01	Cold start	●	●	●	●	●	●
998	Foward/Reverse & steering decals - POWER SHIFT					●	●

OPTIONAL EQUIPMENT - NA

REF	FN	PART NUMBER	YR/SN	QTY	DESCRIPTION

NOTES

SECTION INDEX
Engine

0.02.1/01		ENGINE
0.04.0/01		CRANKCASE
0.04.2		ENGINE OIL SUMP
0.04.3/01	01	CRANKCASE COVERS
0.04.3/01	02	CRANKCASE COVERS
0.04.3/01	03	CRANKCASE COVERS
0.06.0/01		CYLINDER HEAD
0.06.3/01	01	CYLINDER HEAD COVERS
0.06.3/01	02	CYLINDER HEAD COVERS
0.06.6/01		ROCKER SHAFT
0.07.1/01		MANIFOLD - INTAKE
0.07.7/01		EXHAUST MANIFOLD
0.08.0		CRANKSHAFT
0.08.1/01		CONNECTING ROD
0.08.2/01		PISTON - ENGINE
0.08.3		FLYWHEEL - ENGINE
0.08.4		PULLEY - CRANKSHAFT
0.10.5	01	DYNAMIC BALANCER, GEARS & SHAFTS
0.10.5	02	DYNAMIC BALANCER, GEARS & SHAFTS
0.12.0/01		CAMSHAFT - TIMING CONTROL
0.14.0/01	01	INJECTION PUMP
0.14.0/01	02	INJECTION EQUIPMENT - INJECTOR
0.14.0/01A		INJECTION PUMP - COMPONENTS
0.14.9/01		INJECTION EQUIPMENT - PIPING
0.17.0		ELECTRONIC INJECTION
0.17.3		MOTOR ELECTRIC INSTALLATION
0.20.0/01		FUEL FILTER
0.20.3/01		PIPING - FUEL
0.20.4/01		INJECTION EQUIPMENT - PIPING
0.24.0/01		TURBOCHARGER
0.27.0/01		ENGINE OIL DIPSTICK
0.30.0		OIL PUMP - ENGINE
0.30.2		OIL FILTERS - ENGINE
0.30.5/01		PIPING - ENGINE OIL
0.31.5/01		HEAT EXCHANGER - ENGINE
0.32.0		WATER PUMP
0.32.3/01		COOLING SYSTEM - ENGINE
0.32.6/01		THERMOSTAT - ENGINE COOLING SYSTEM
0.34.0/01		WATER PUMP - CONTROL
0.34.5		FAN DRIVE
0.36.0		ACCESSORY ENGINE
0.40.0/01		ALTERNATOR
0.45.0/01		HOOKS - ENGINE

ENGINE

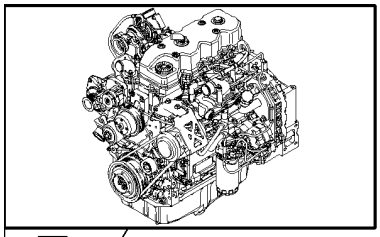

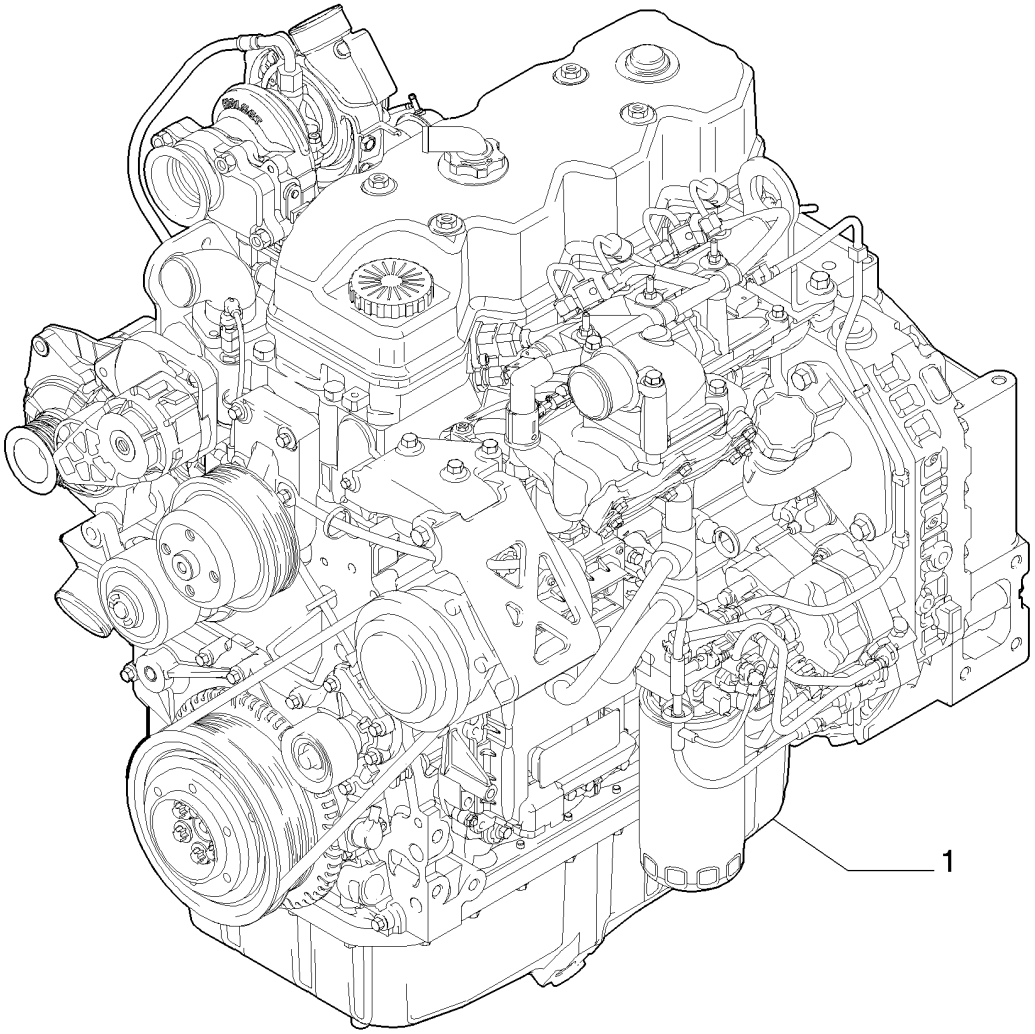

ENGINE

REF	FN	PART NUMBER	YR/SN	QTY	DESCRIPTION
1		87587692		1	ENGINE, - ASSY

CRANKCASE

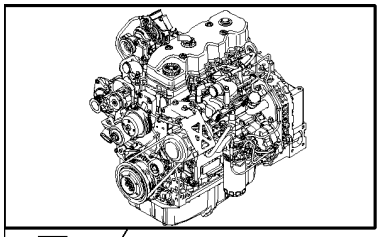

KIT KIT ● = 1

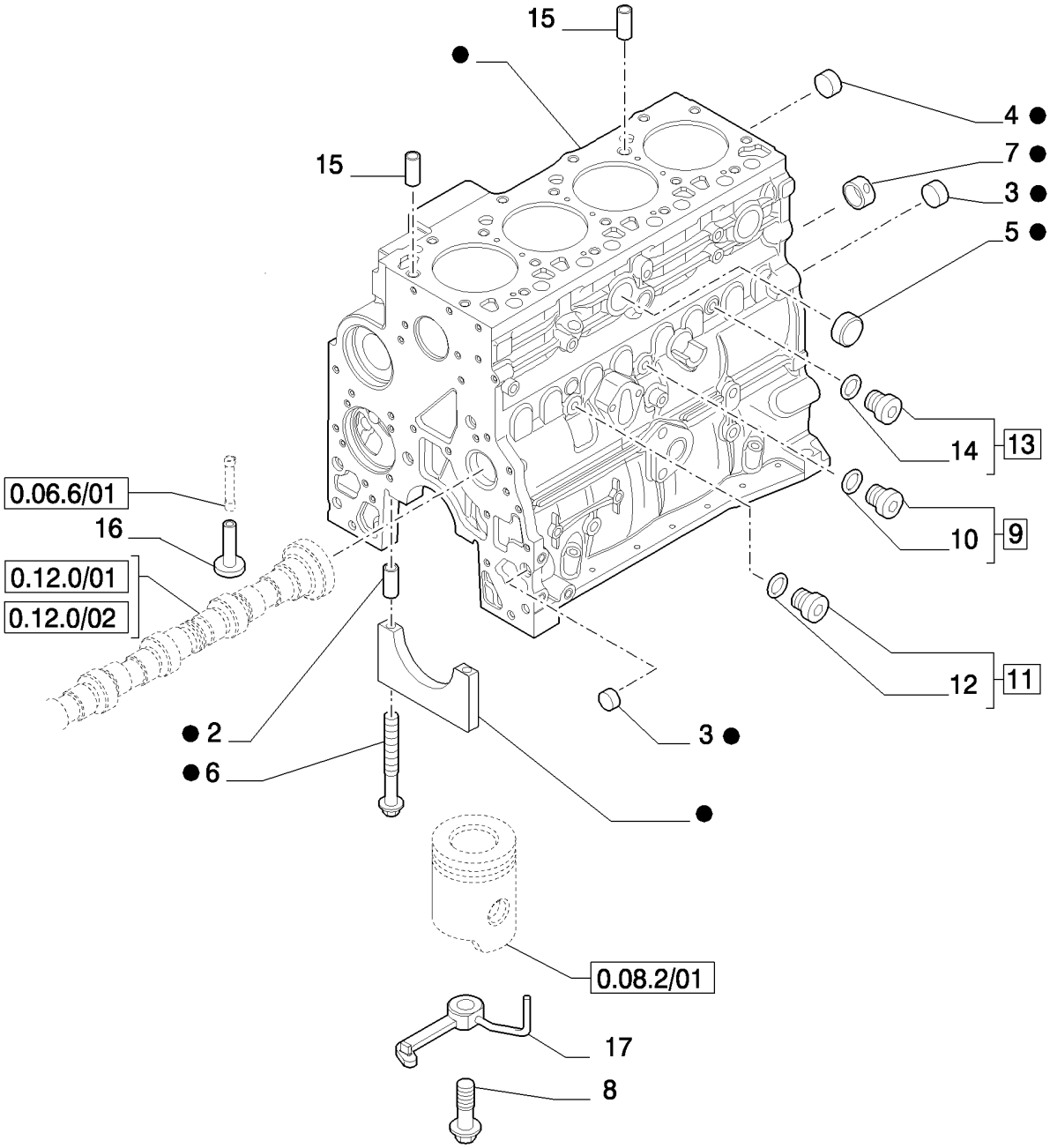

CRANKCASE

REF	FN	PART NUMBER	YR/SN	QTY	DESCRIPTION
1		2830082		1	CYLINDER BLOCK, - ASSY
2		4899026		10	DOWEL
3		4895039		3	PLUG
4		4895038		4	PLUG
5		4895228		2	PLUG
6		4891353		10	SCREW, Flg Hd, M12 x 1.5 x 120
7		4895040		1	BUSHING
8		4894218		4	SCREW
9		4895605		1	PLUG, 14x1.5 - ASSY
10		4899115		1	O-RING
11		4899009		1	PLUG, 10x1.5 - ASSY
12		4899072		1	O-RING
13		4895392		1	PLUG, 18x1.5 - ASSY
14		4895393		1	O-RING
15		4895049		2	DOWEL
16		4899803		8	TAPPET
17		2852202		4	NOZZLE, LUB. OIL JET

ENGINE OIL SUMP

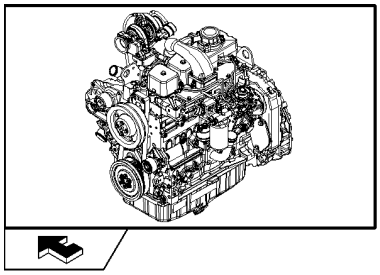

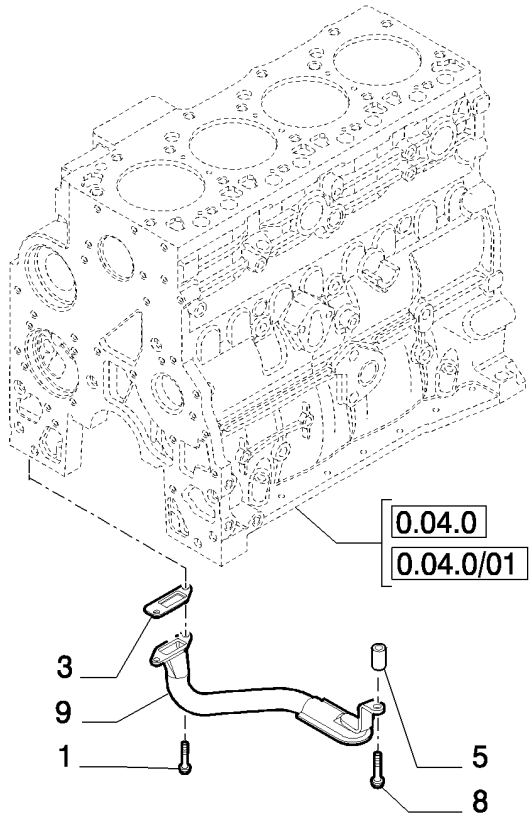

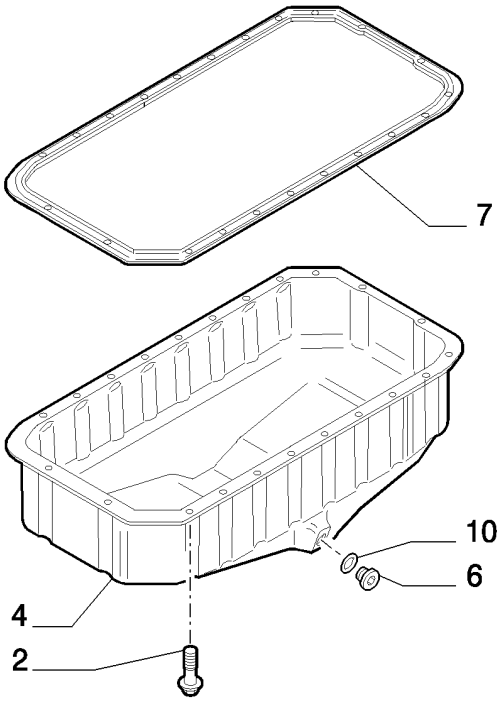

ENGINE OIL SUMP

REF	FN	PART NUMBER	YR/SN	QTY	DESCRIPTION
1		2852234		2	SCREW, Hex Flg, M8 x 1.25 x 20
2		4899091		22	SCREW, Hex Flg, M8 x 1.25 x 40
2		4895489		2	SCREW
3		4898301		1	GASKET, - ASSY
4		2852011		1	PAN, ENGINE OIL
5		2852016		1	SPACER
6		2856086		1	PLUG
7		2852012		1	GASKET
8		4895538		1	SCREW
9		2852013		1	STRAINER, ELEMENT
10		2853728		1	O-RING

CRANKCASE COVERS

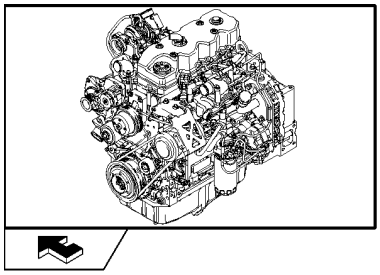

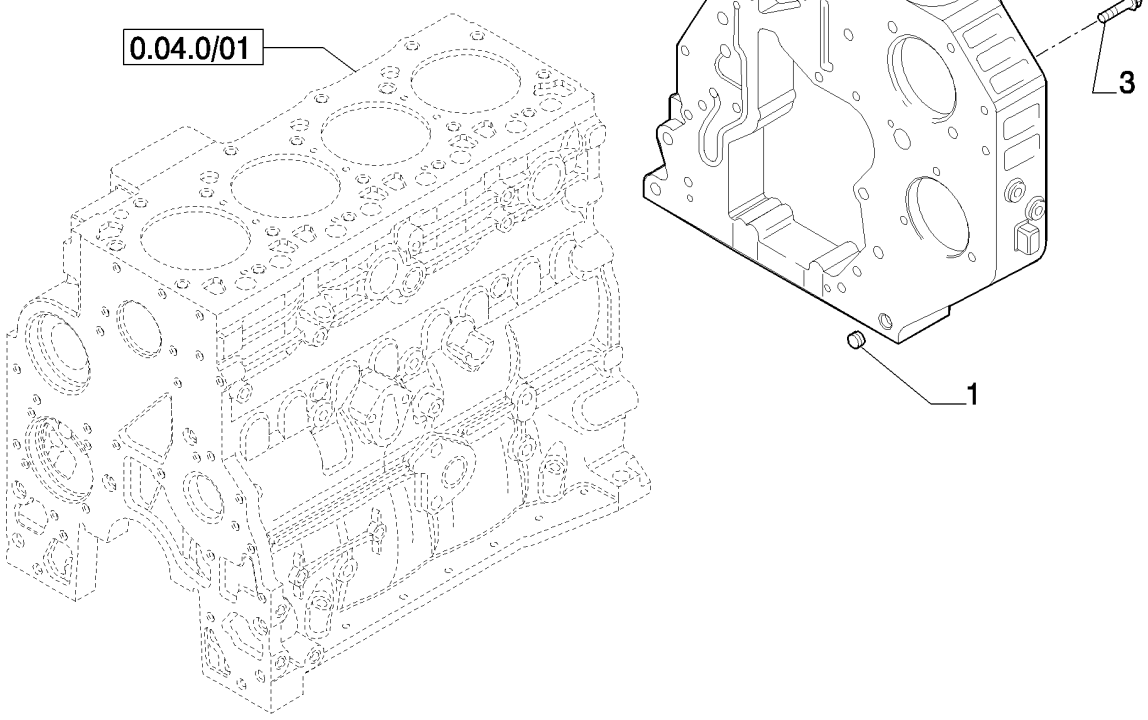

CRANKCASE COVERS

REF	FN	PART NUMBER	YR/SN	QTY	DESCRIPTION
1		4899026		2	DOWEL
2		4899078		4	SCREW, Hex Flg, M8 x 1.25 x 45
3		4899093		2	SCREW, Hex Flg, M10 x 1.5 x 30
3		4899073		1	SCREW, Hex Flg, M12 x 1.75 x 30
3		4896939		3	SCREW, M10x1.5x50
4		2855801		1	HOUSING

CRANKCASE COVERS

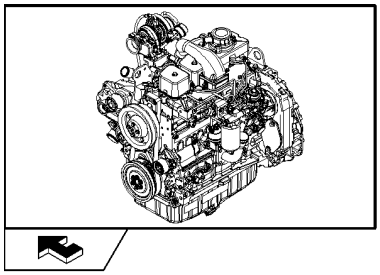

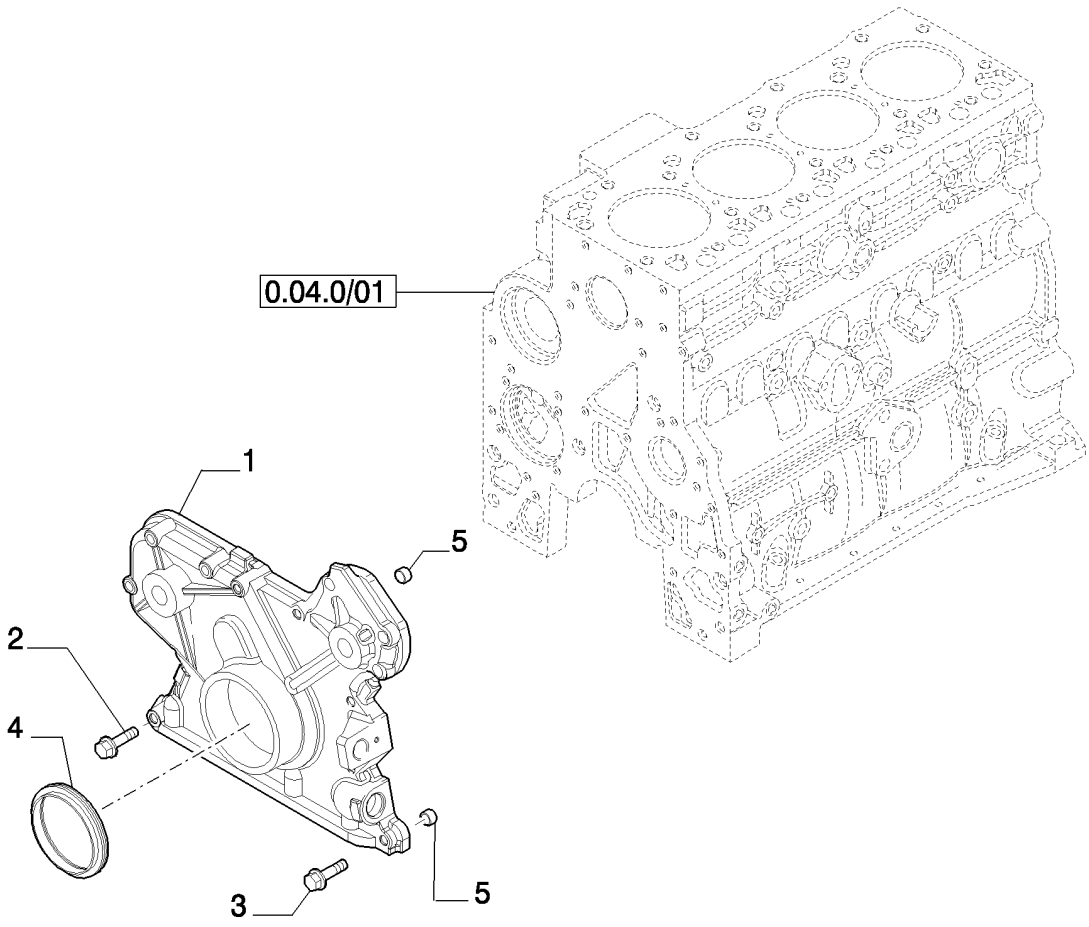

CRANKCASE COVERS

REF	FN	PART NUMBER	YR/SN	QTY	DESCRIPTION
1		4897024		1	COVER, - FRONT
2		4899078		5	SCREW, Hex Flg, M8 x 1.25 x 45
3		4899063		8	SCREW, Hex Flg, M8 x 1.25 x 30
4		4890832		1	SEAL
5		4891209		2	DOWEL

CRANKCASE COVERS

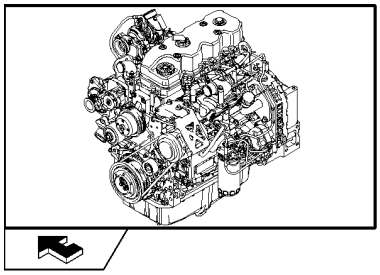

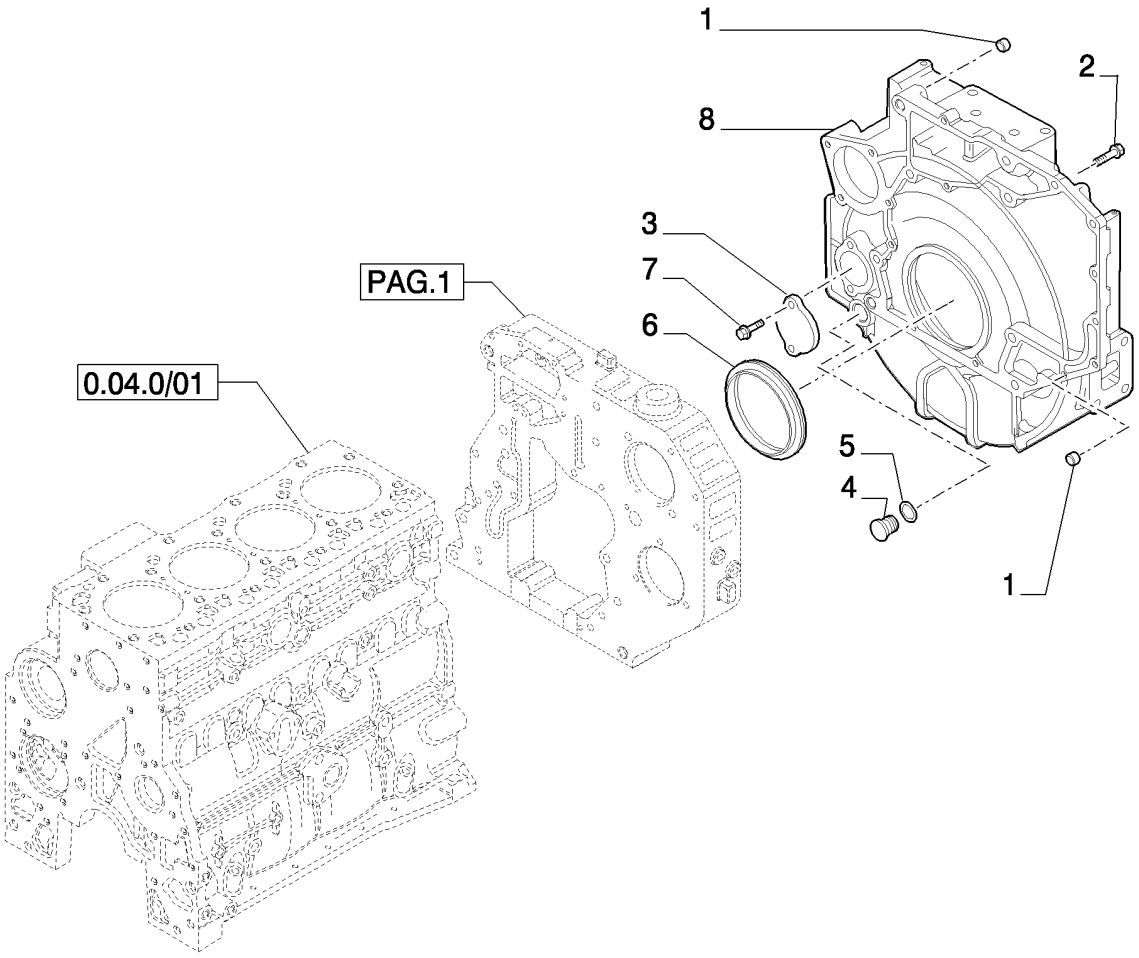

CRANKCASE COVERS

REF	FN	PART NUMBER	YR/SN	QTY	DESCRIPTION
1		4899026		2	DOWEL
2		4899109		2	SCREW, Hex, M10 x 1.5 x 80
2		4892915		7	SCREW, M10x1.5x40
2		4899076		6	SCREW, Hex Flg, M12 x 1.75 x 80
2		4897499		2	SCREW, M12x1.75x120
2		4899068		2	SCREW, Hex Flg , M8 x 1.25 x 16
2		2852865		2	SCREW, M10x35
3		4895155		1	COVER
4		4895378		1	PLUG
5		4895379		1	O-RING, M21.82 ID x 3.53 Thk
6		4890833		1	SEAL
7		4899143		2	SCREW, Hex Flg, M10 x 1.5 x 140
8		2855803		1	HOUSING

CYLINDER HEAD

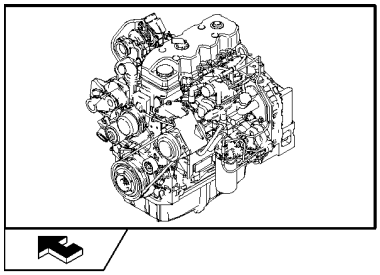

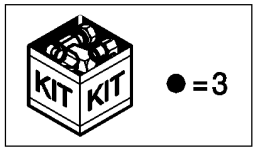

CYLINDER HEAD

REF	FN	PART NUMBER	YR/SN	QTY	DESCRIPTION
1		4891024		8	SCREW
2		4891025		10	SCREW
3		2831266		1	CYLINDER HEAD, -ASSY
4		4899081		32	COTTER, ROCKER ARM
5		4895051		8	VALVE, ENG EXHAUST, STD
6		4895052		8	VALVE, ENGINE, INLET, STD
7		2831287		16	SEAT, SPRING
8		4895073		16	SPRING, VALVE
9		4895074		16	CUP
10		4893036		1	PLUG
11		4895085		9	PLUG, 25.74mm OD
12		4895089		7	PLUG, .886" OD
13		4895406		5	PLUG, 9.8mm OD
14		4895407		1	PLUG, 38.28mm OD
15		4895408		2	PLUG, .511" OD
16		4893244		16	VALVE SEAT
17		2830706		1	GASKET, CYLINDER HEAD, SP=1.25
17		2830707		1	GASKET, CYLINDER HEAD, SP=1.15

CYLINDER HEAD COVERS

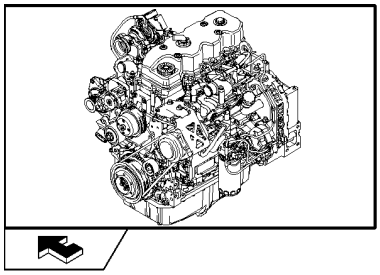

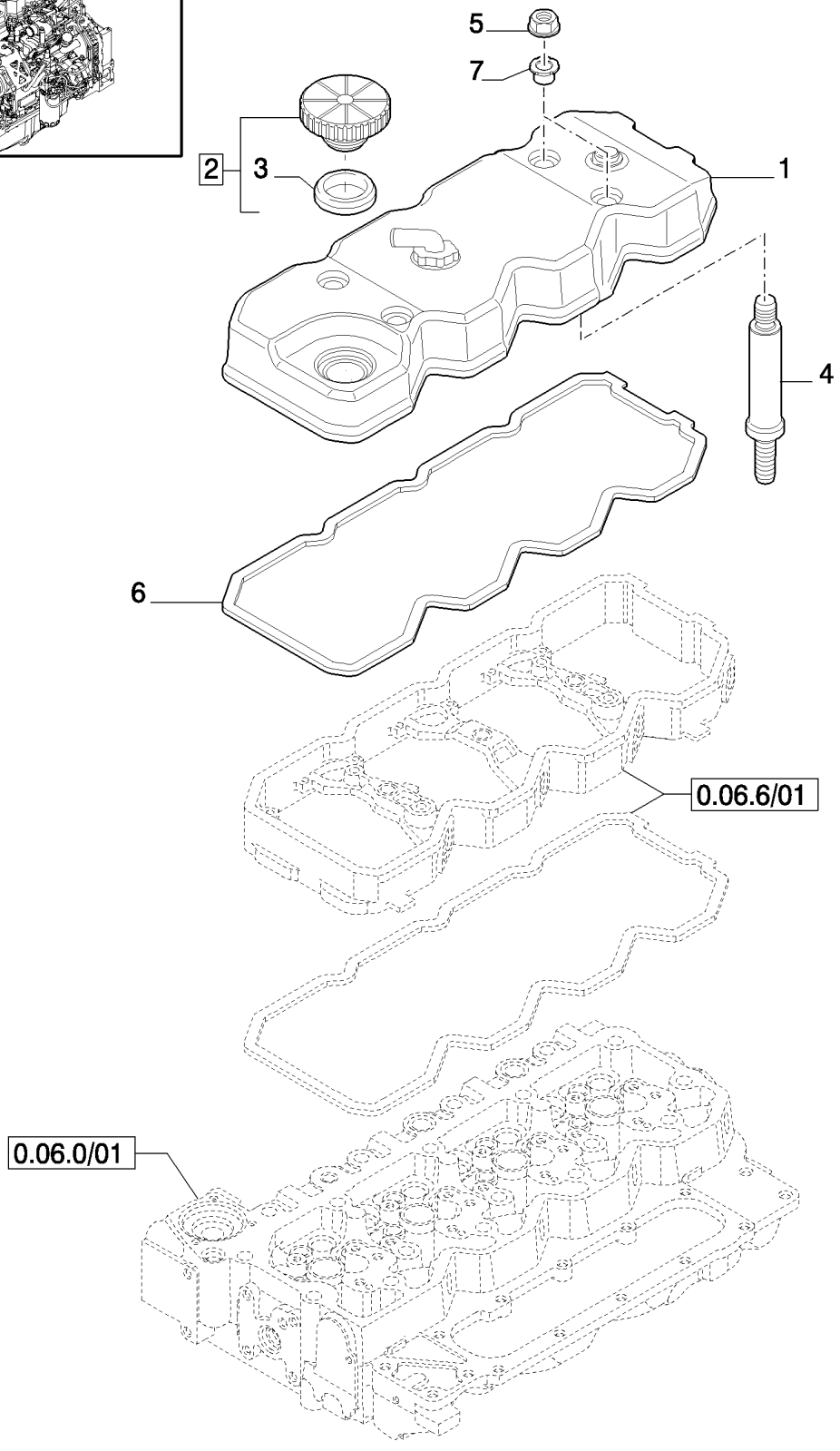

CYLINDER HEAD COVERS

REF	FN	PART NUMBER	YR/SN	QTY	DESCRIPTION
1	1	2853858		1	COVER, VALVE, - ASSY
2		2856707		1	CAP, FILLER, - ASSY
3		2852774		1	GASKET
4		2854812		4	STUD
5		4893936		4	NUT
6		4899228		1	GASKET
7		4899239		4	SILENTBLOC

(1) See Page 2 (Incl. p/n 2853826)

CYLINDER HEAD COVERS

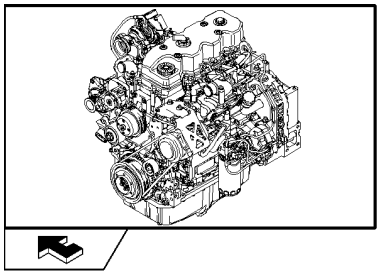

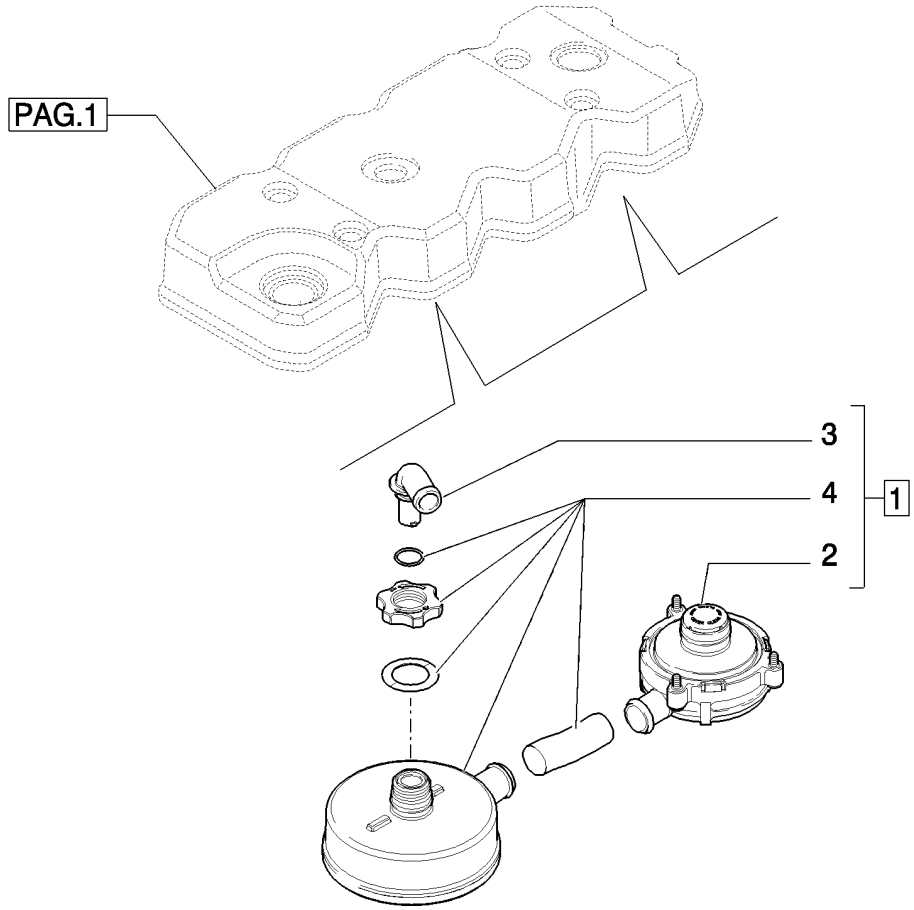

CYLINDER HEAD COVERS

REF	FN	PART NUMBER	YR/SN	QTY	DESCRIPTION
1		2853826		1	BREATHER, - ASSY
2		504153150		1	VALVE
3		87307807		1	ELBOW
4		504153151		1	ELEMENT

ROCKER SHAFT

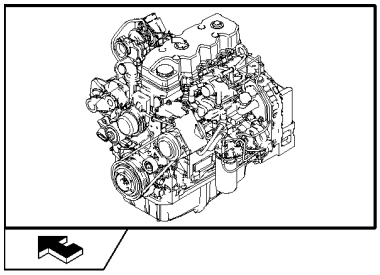

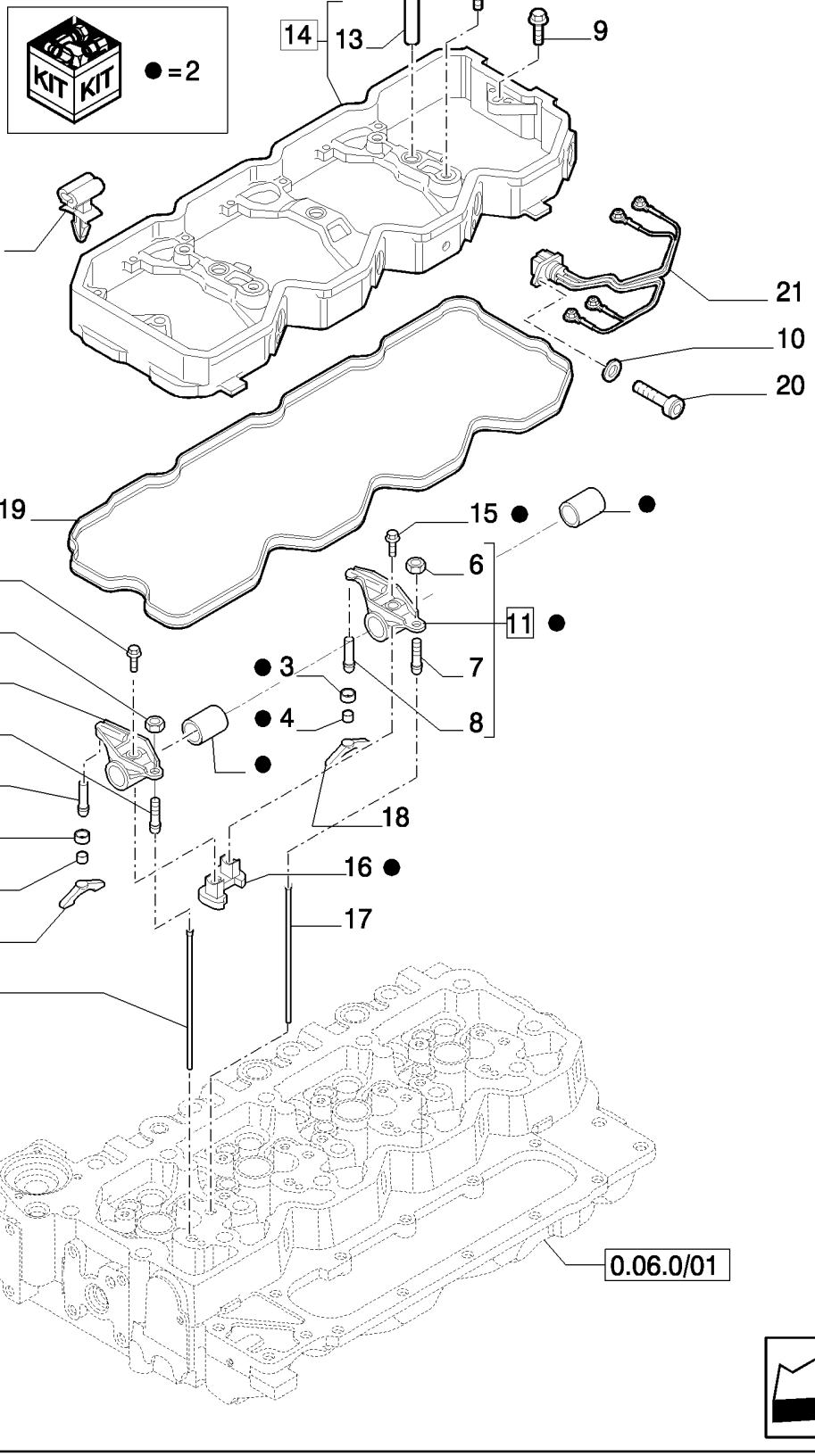

ROCKER SHAFT

REF	FN	PART NUMBER	YR/SN	QTY	DESCRIPTION
1		4895432		3	SCREW, M8x1.25x70
2		2856458		4	ROCKER ARM, - ASSY
3		4897248		2	RETAINER
4		4897245		2	SOCKET
5		4895068		1	ROCKER ARM, - ASSY
6		4895198		2	NUT
7		2830222		2	SCREW, ADJUSTMENT
8		4895065		2	SPACER
9		4899089		2	SCREW, Hex Flg, M8 x 1.25 x 50
10		2852776		2	WASHER, 6x11
11		4895067		1	ROCKER ARM, - ASSY
12		2852428		4	CLIP
13		4899245		3	SLEEVE
14		4899256		1	HOUSING, - ASSY
15		2856460		2	SCREW
16		4893487		4	SUPPORT
17		4895031		8	ROD, PUSH
18		2854530		8	CROSSBAR
19		2853535		1	GASKET
20		2852602		2	SCREW, 6x16
21		4896052		2	HARNESS, WIRE

MANIFOLD - INTAKE

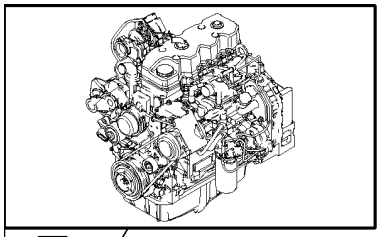

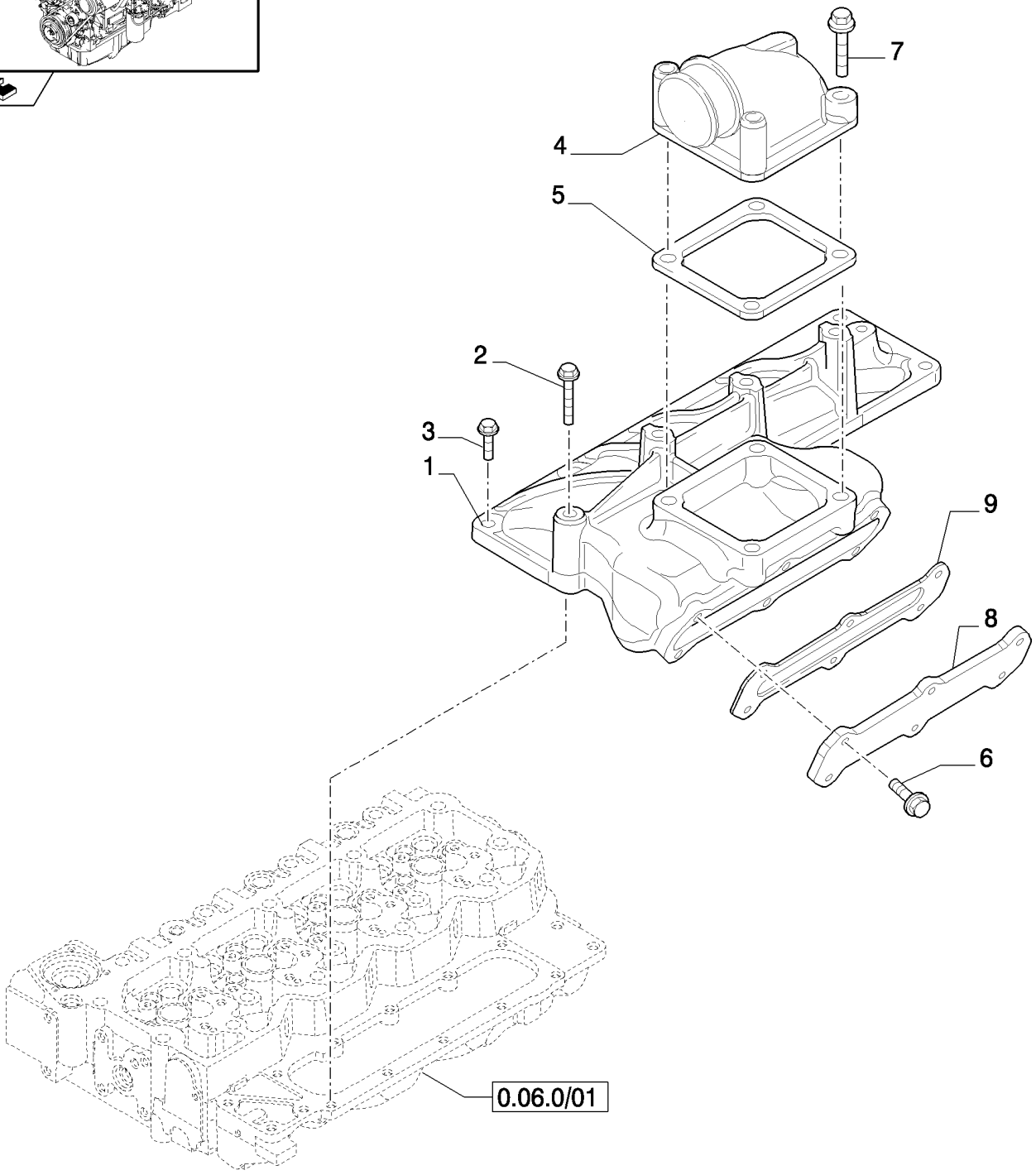

MANIFOLD - INTAKE

REF	FN	PART NUMBER	YR/SN	QTY	DESCRIPTION
1		2855805		1	MANIFOLD, INLET
2		4895432		1	SCREW
3		4899039		6	SCREW, Hex Flg, M8 x 1.25 x 25
4		2855809		1	MANIFOLD
5		4899921		1	GASKET
6		2854702		6	SCREW, M6x20
7		2852267		2	SCREW
8		2854700		1	COVER
9		2854701		1	GASKET

EXHAUST MANIFOLD

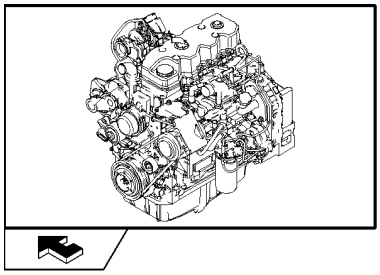

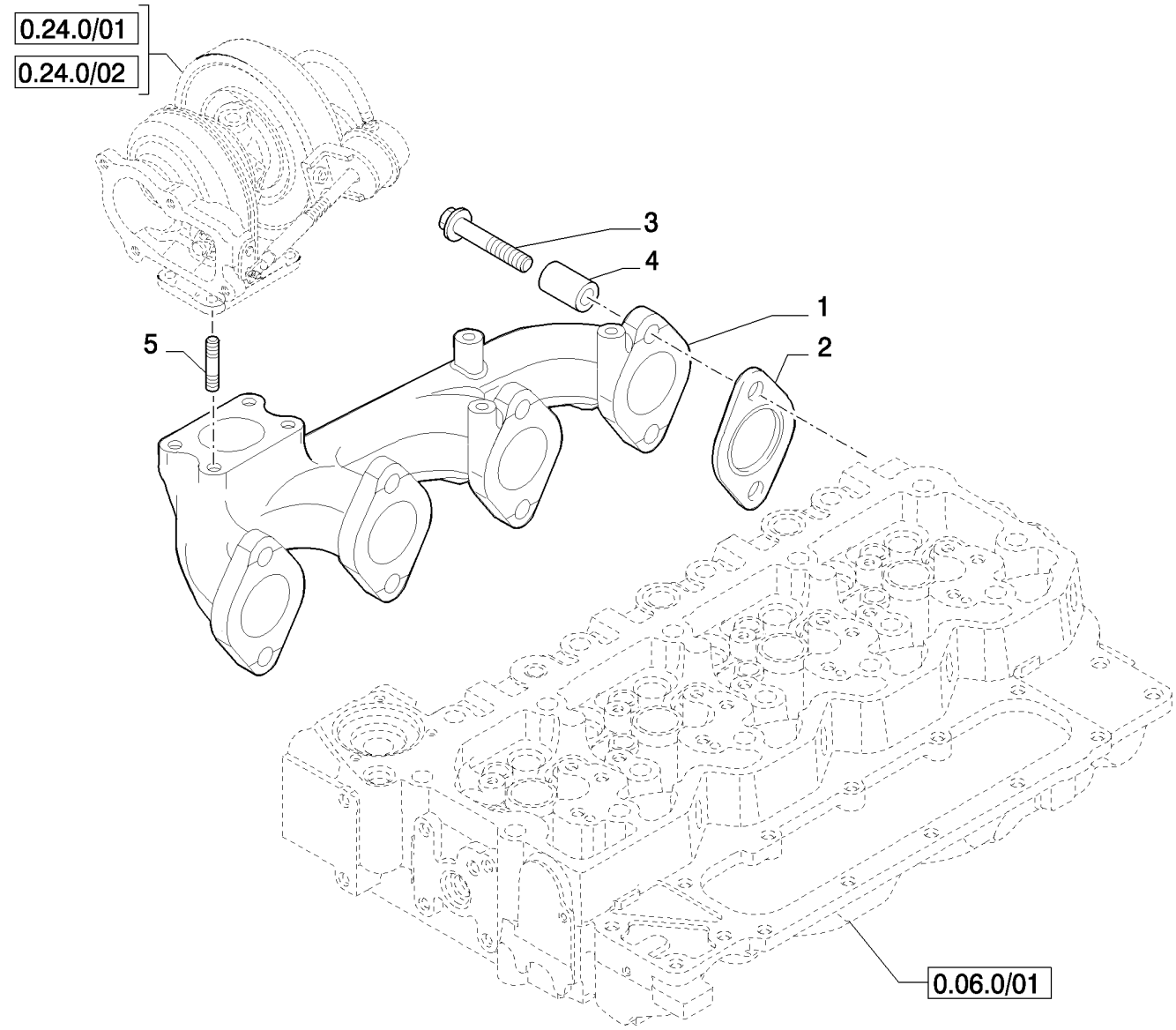

EXHAUST MANIFOLD

REF	FN	PART NUMBER	YR/SN	QTY	DESCRIPTION
1		2855807		1	MANIFOLD, EXHAUST
2		2830444		4	GASKET
3		2852744		8	SCREW
4		4895336		8	SPACER
5		4899119		4	STUD

CRANKSHAFT

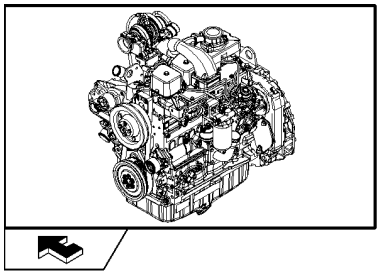

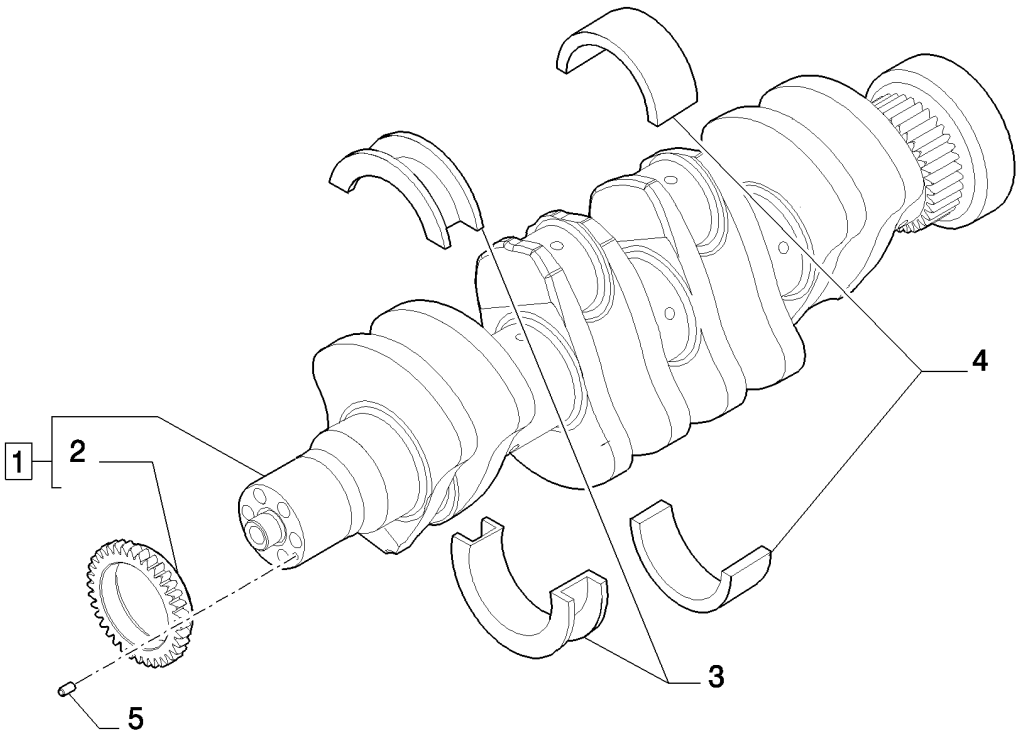

CRANKSHAFT

REF	FN	PART NUMBER	YR/SN	QTY	DESCRIPTION
1		2853822		1	CRANKSHAFT, - ASSY
2		4893386		1	GEAR
3		2992153		1	SET, THRUST WASHERS (STD), STD (THRUST)
3		2992154		1	SET,THRUST WASHERS +0.508, + 0.250 (THRUST)
3		2992155		1	SET, THRUST WASHERS +0.25, + 0.500 (THRUST)
4		2992147		4	SET OF MAIN BRGS.STD
4		2992148		4	SET OF MAIN BRGS -0.254
4		2992149		4	SET OF MAIN BRGS -0.508mm
5		4899046		1	DOWEL

CONNECTING ROD

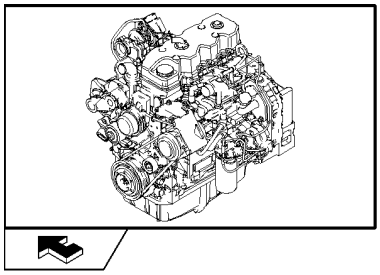

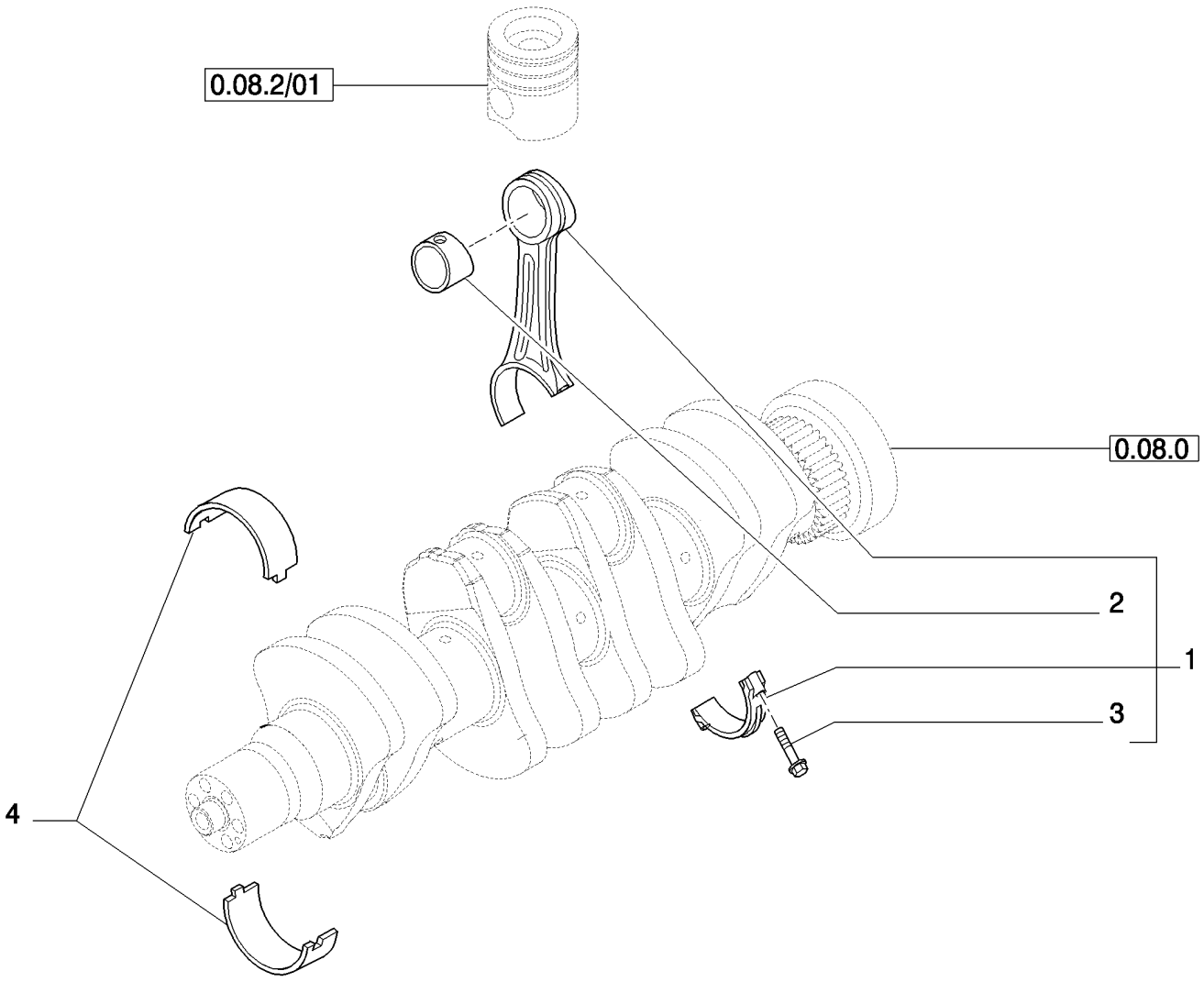

CONNECTING ROD

REF	FN	PART NUMBER	YR/SN	QTY	DESCRIPTION
1		2831298		4	ROD, CONNECTING, - ASSY
2		4892708		1	BUSHING
3		2831297		2	SCREW
4		8093882		4	SET, CONN ROD BRGS (STD)
4		8094960		4	SET, CONN ROD BRGS (STD), (-0.250)
4		8094961		4	SET, CONN ROD BRGS (STD), (-0.500)

PISTON - ENGINE

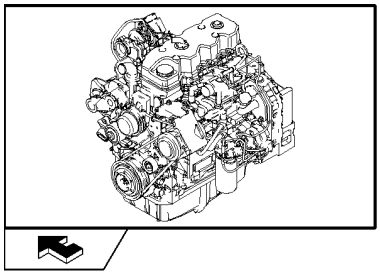

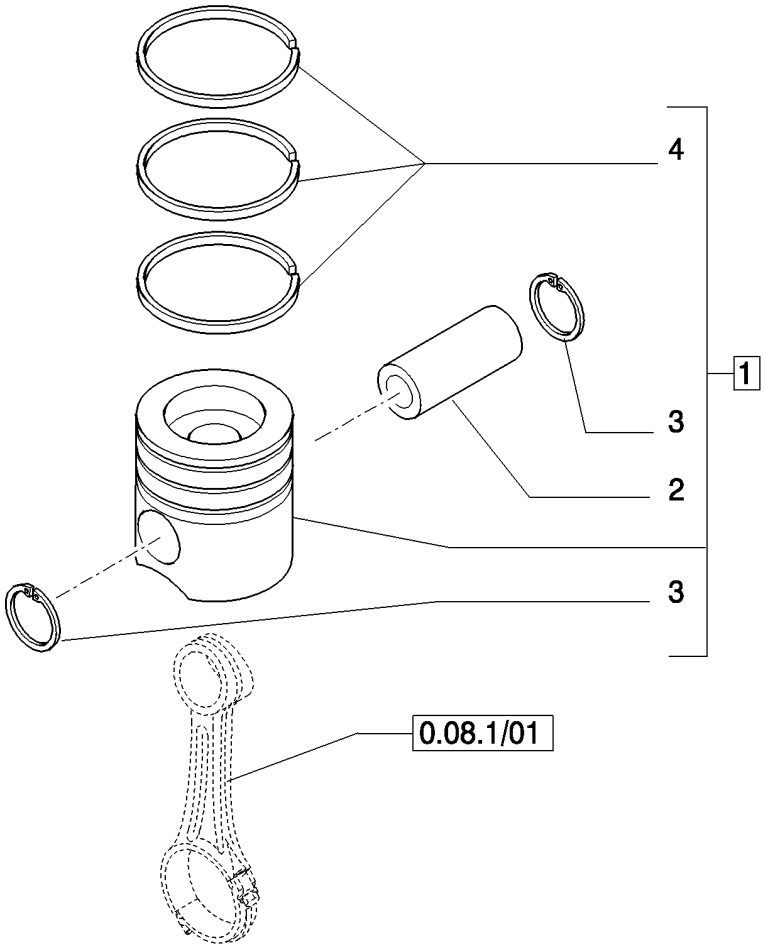

PISTON - ENGINE

REF	FN	PART NUMBER	YR/SN	QTY	DESCRIPTION
1		8094853		4	KIT, PISTON & RINGS, - ASSY (STD)
1		8094854		4	KIT, PISTON & RINGS, - ASSY (+0.4)
2		4892712		1	PIN, PISTON
3		2854030		2	RING, SNAP
4		87582179		1	KIT, PISTON RINGS, (STD)
4		87582180		1	KIT, PISTON RINGS, (+0.4)

FLYWHEEL - ENGINE

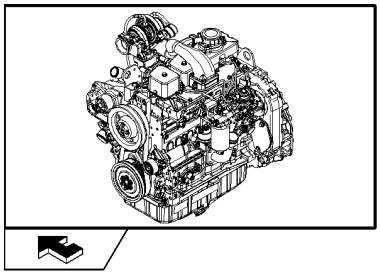

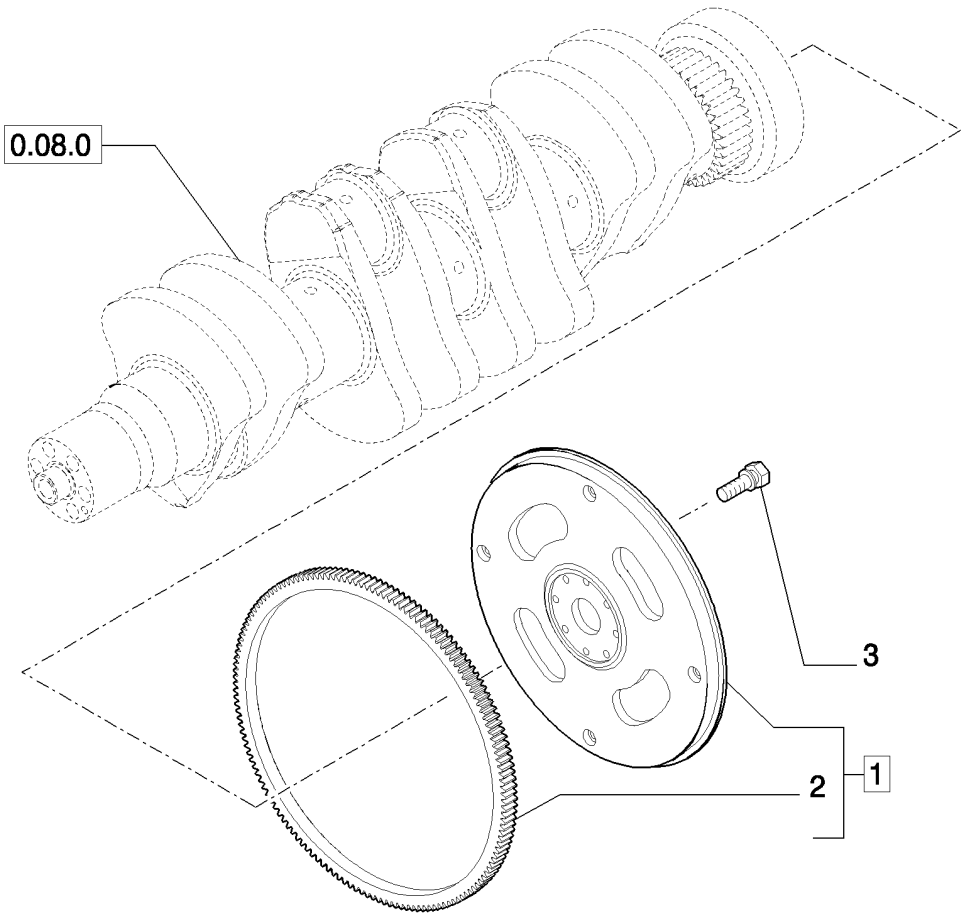

FLYWHEEL - ENGINE

REF	FN	PART NUMBER	YR/SN	QTY	DESCRIPTION
1		2852049		1	FLYWHEEL, ENGINE, - ASSY
2		2852051		1	GEAR, RING
3		4894641		8	SCREW, Wash Hd, M12 x 1.25 x 31

PULLEY - CRANKSHAFT

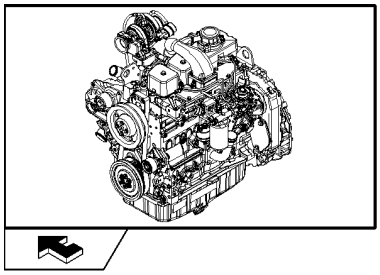

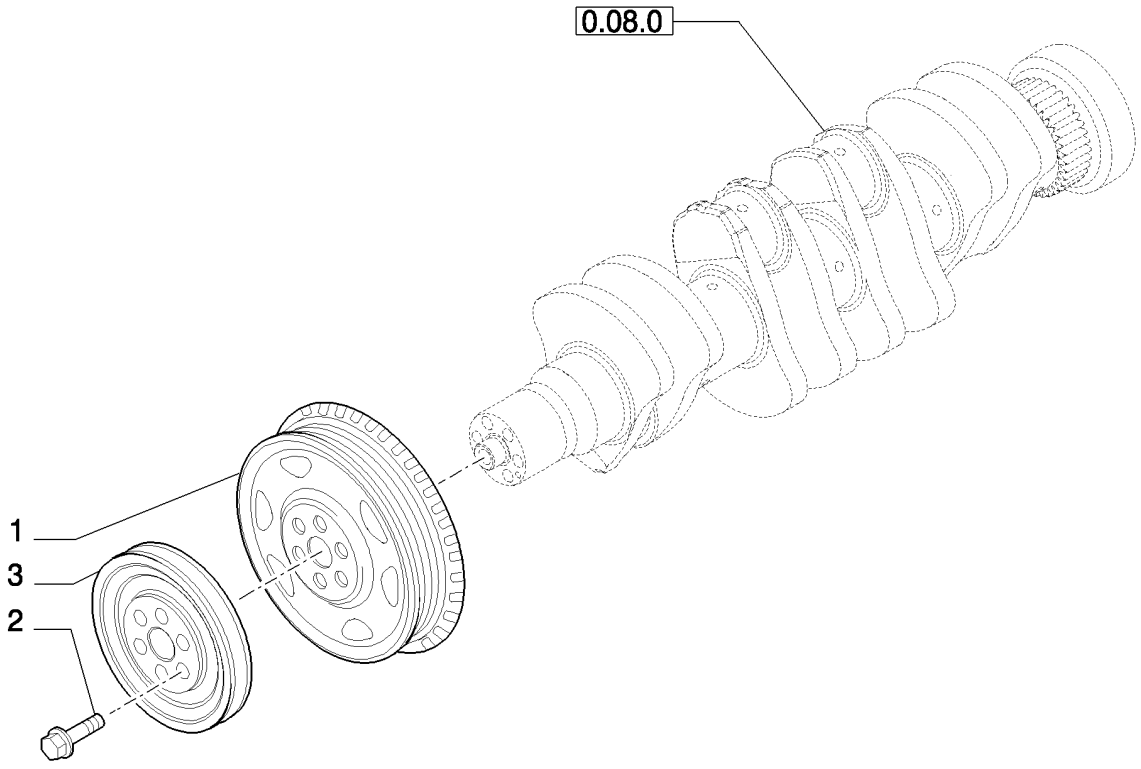

PULLEY - CRANKSHAFT

REF	FN	PART NUMBER	YR/SN	QTY	DESCRIPTION
1		4896773		1	PULLEY
2		4892867		6	SCREW, Torx Wash Hd, M12 x 1.25 x 78.5
3		2852054		1	PULLEY

DYNAMIC BALANCER, GEARS & SHAFTS

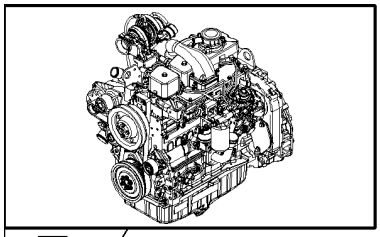

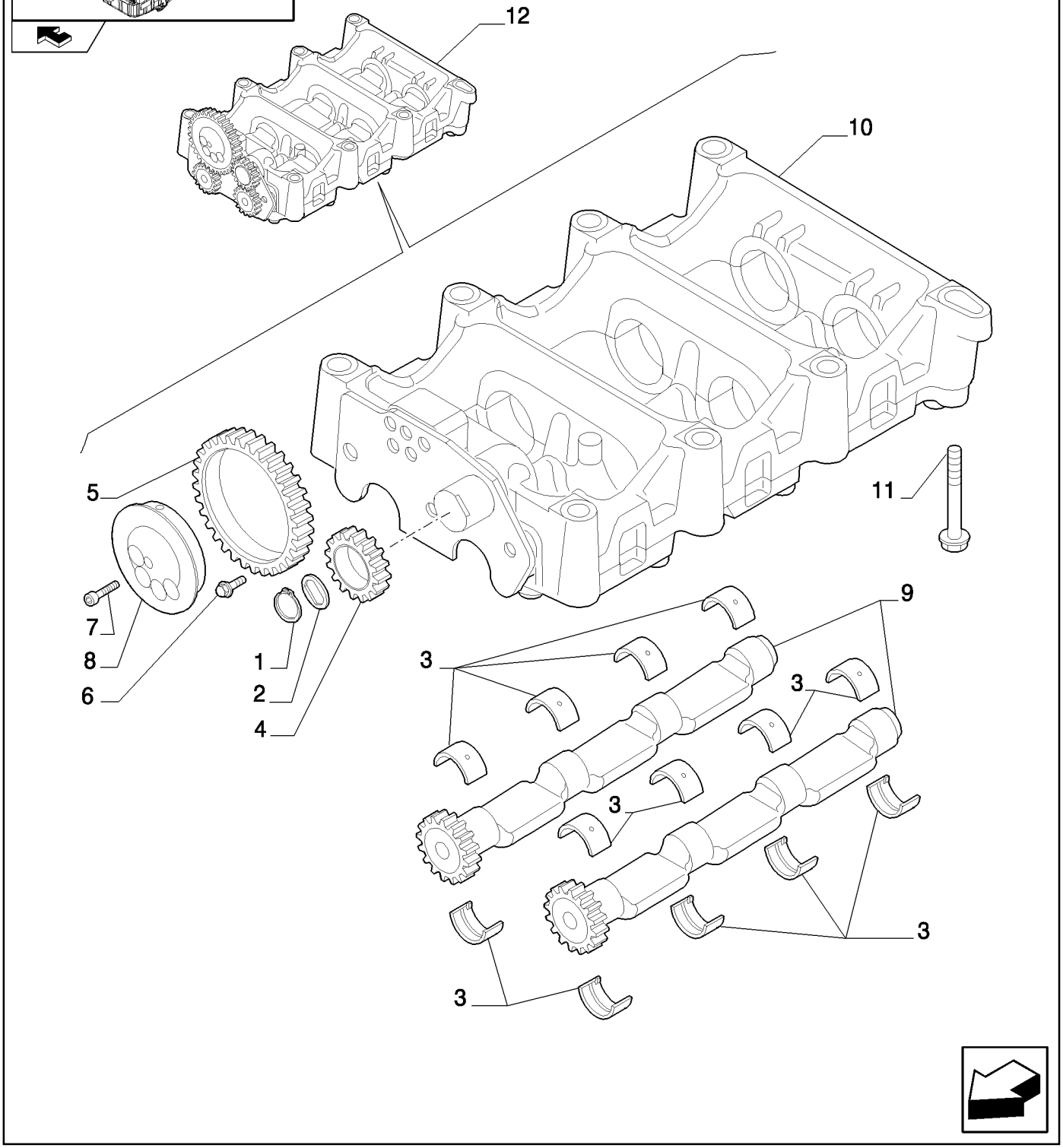

DYNAMIC BALANCER, GEARS & SHAFTS

REF	FN	PART NUMBER	YR/SN	QTY	DESCRIPTION
1		4897125		1	RING, SNAP
2		2855753		1	PLATE, THRUST
3		4897071		16	BUSHING
4		4897048		1	GEAR, IDLER
5		4896947		1	GEAR, IDLER
6		4895586		3	SCREW
7		2830433		5	SCREW
8		2831031		1	SHAFT, IDLE
9		2831354		2	SHAFT
10	1	2855744		1	HOUSING, - ASSY
11		4899109		7	SCREW, Hex, M10 x 1.5 x 80
11		4897934		1	SCREW
12		2855743		1	BALANCER, - ASSY

(1) See Page 2

DYNAMIC BALANCER, GEARS & SHAFTS

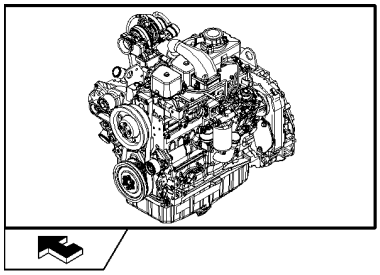

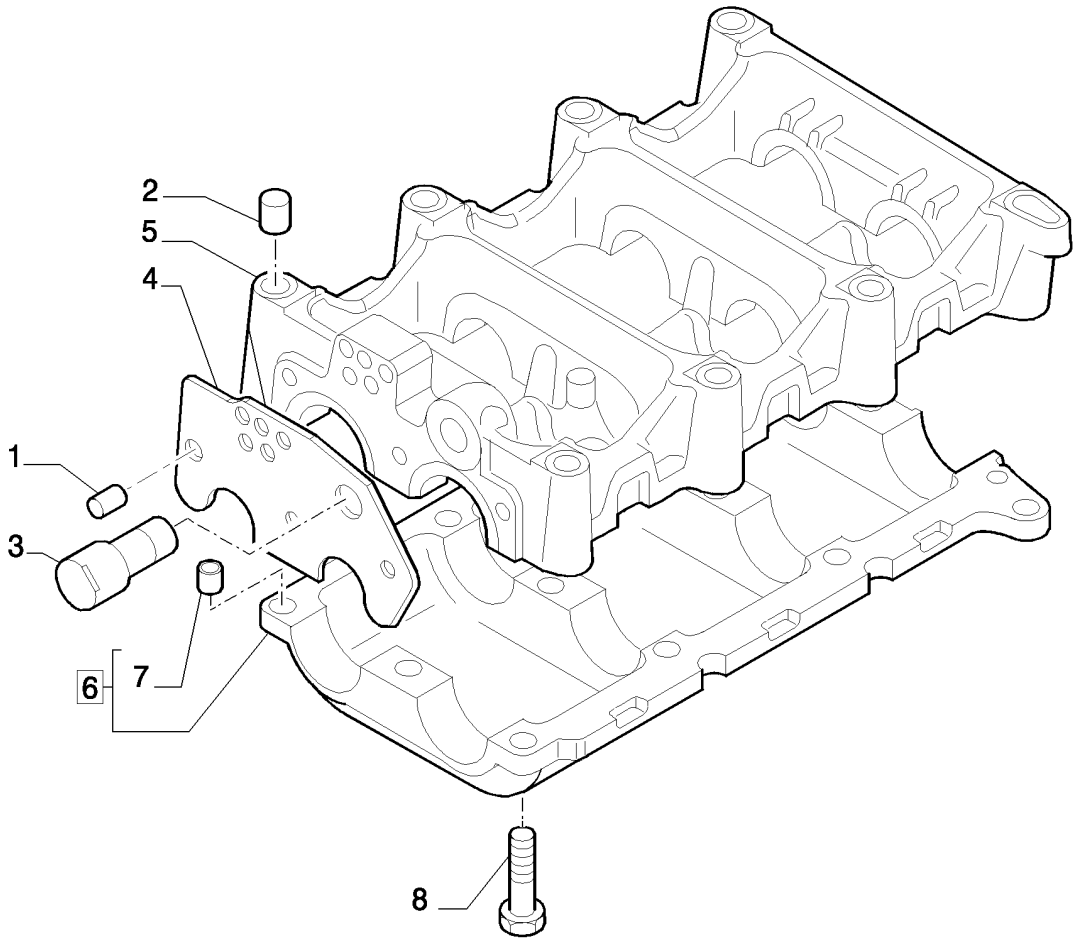

DYNAMIC BALANCER, GEARS & SHAFTS

REF	FN	PART NUMBER	YR/SN	QTY	DESCRIPTION
1		2831305		1	DOWEL
2		4899027		2	DOWEL
3		2830948		1	SHAFT, IDLE
4		2855746		1	PLATE, THRUST
5		2831303		1	FRAME
6		2831302		1	FRAME, - ASSY
7		4891209		6	DOWEL
8		4895323		12	SCREW

CAMSHAFT - TIMING CONTROL

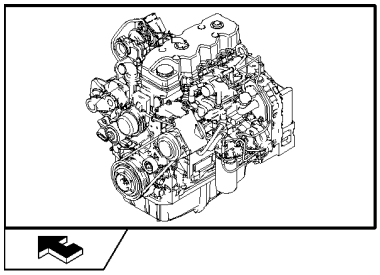

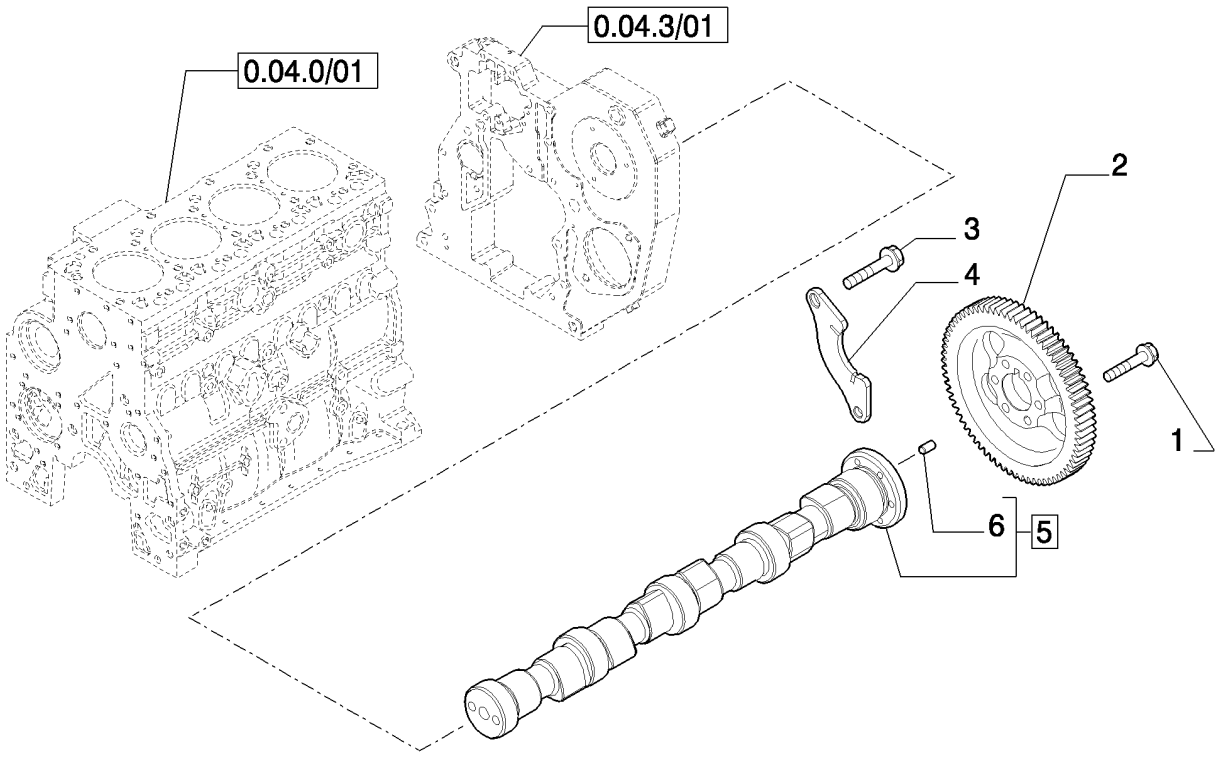

CAMSHAFT - TIMING CONTROL

REF	FN	PART NUMBER	YR/SN	QTY	DESCRIPTION
1		4899079		6	SCREW, Hex Flg, M8 x 1.25 x 25
2		4896381		1	GEAR
3		4899068		2	SCREW, Hex Flg , M8 x 1.25 x 16
4		4897457		1	SUPPORT
5		4896419		1	CAMSHAFT, - ASSY
6		4899080		1	DOWEL

INJECTION PUMP

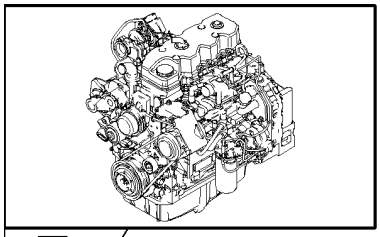

KIT KIT ● = 5

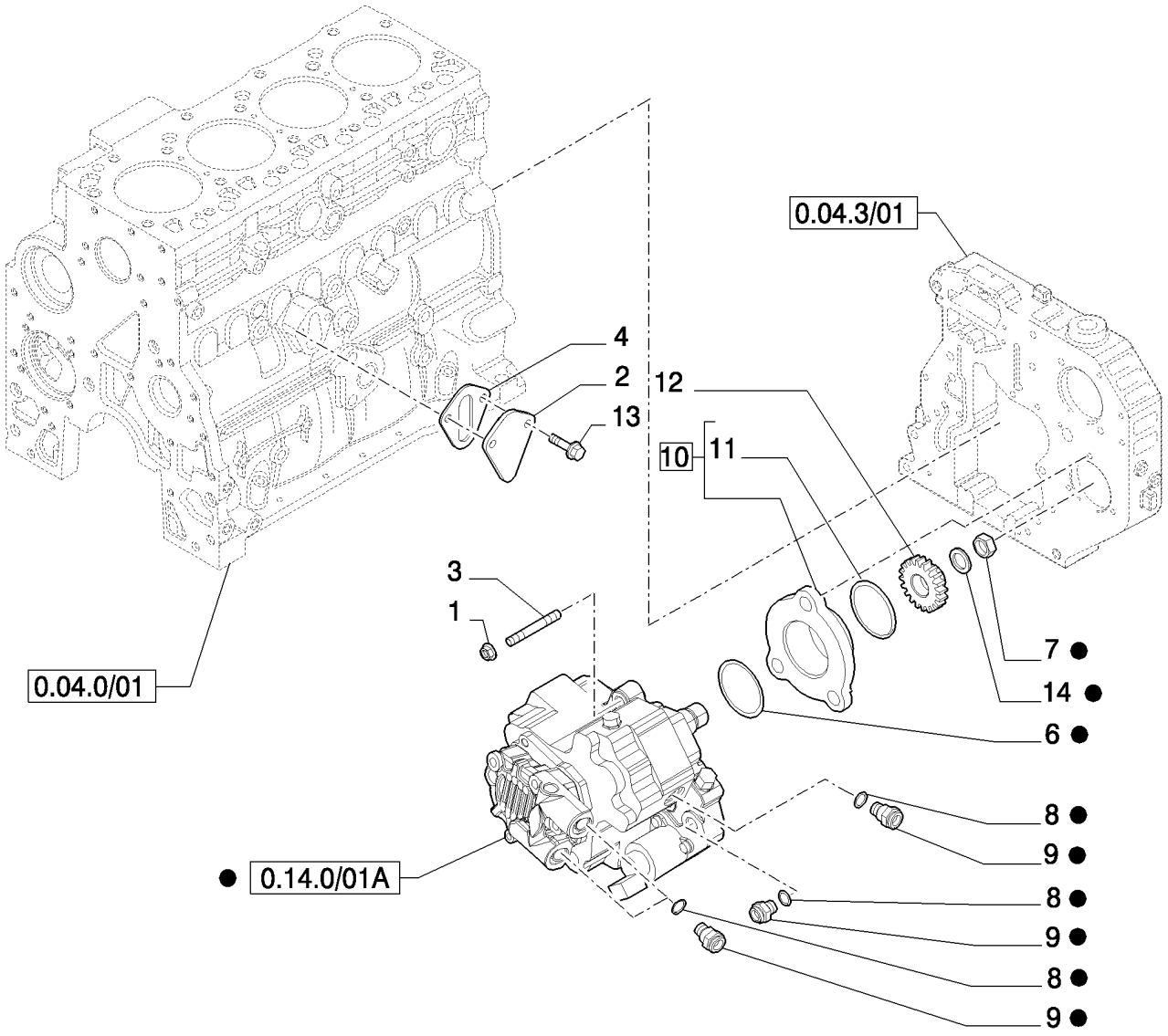

INJECTION PUMP

REF	FN	PART NUMBER	YR/SN	QTY	DESCRIPTION
1		4899003		3	NUT
2		4896952		1	COVER
3		2852488		1	STUD, M8x1.25x50
4		4890700		1	GASKET
5	1	4898921		1	PUMP, FUEL INJECTION, - ASSY
6		4890088		1	O-RING
7		4890634		1	NUT
8		4891385		4	GASKET
9		4893962		4	COUPLING, QUICK, MALE
10		2852804		1	HUB
11		2852805		1	O-RING
12		4893389		1	GEAR, DRIVEN
13		2852234		2	SCREW, Hex Flg, M8 x 1.25 x 20
14		4890635		1	WASHER

(1) See Page 0.14.0/01A

INJECTION EQUIPMENT - INJECTOR

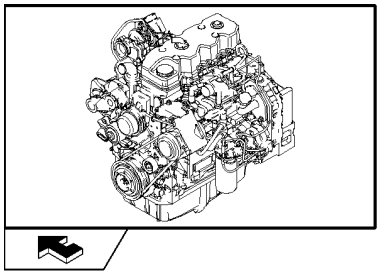

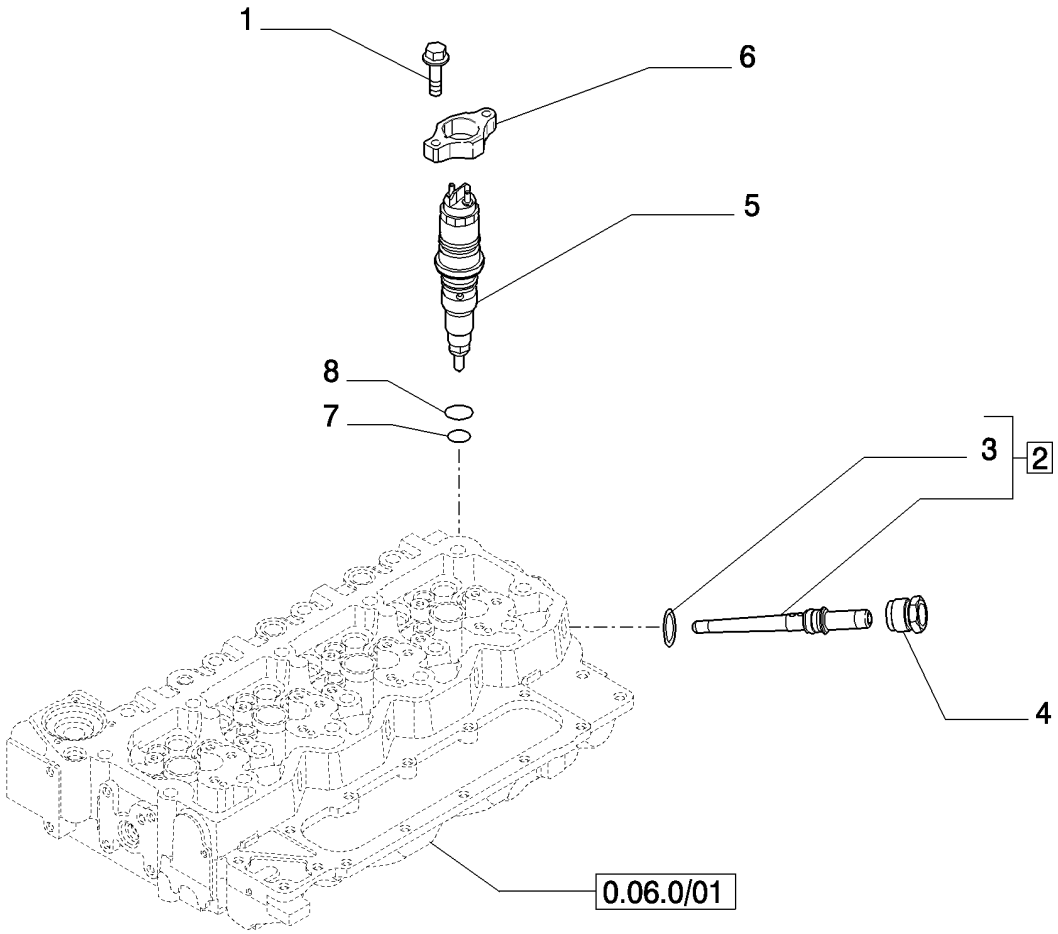

INJECTION EQUIPMENT - INJECTOR

REF	FN	PART NUMBER	YR/SN	QTY	DESCRIPTION
1		4895483		8	SCREW, M6x1.0x25
2		2854606		4	FITTING, - ASSY
3		4890929		1	O-RING
4		4893739		4	NUT, TUBE
5		2855491		4	INJECTOR, FUEL SYSTEM
6		2854609		4	BRACKET
7		4899689		4	WASHER, SEALING
8		4890926		4	O-RING

INJECTION PUMP - COMPONENTS

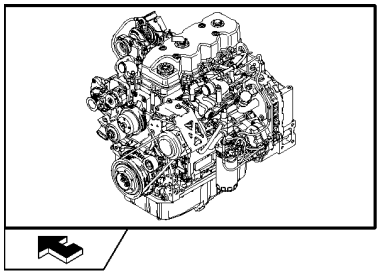

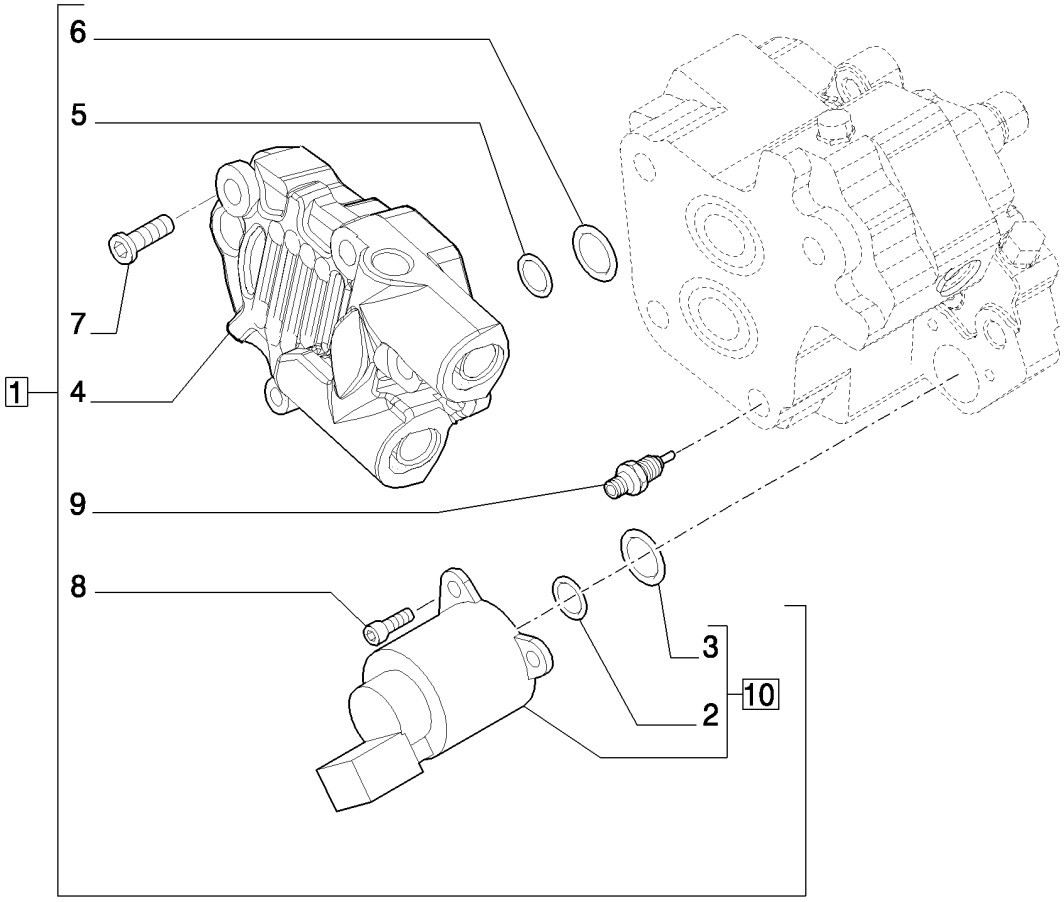

INJECTION PUMP - COMPONENTS

REF	FN	PART NUMBER	YR/SN	QTY	DESCRIPTION
1		4898921		1	PUMP, FUEL INJECTION, - ASSY
2		42541850		1	O-RING
3		42541849		1	O-RING
4		42547619		1	PUMP, FUEL
5		42550488		1	O-RING
6		42548060		1	O-RING
7		42550487		4	SCREW
8		42550932		3	SCREW
9		42550486		1	VALVE
10		42541851		1	SOLENOID, - ASSY

INJECTION EQUIPMENT - PIPING

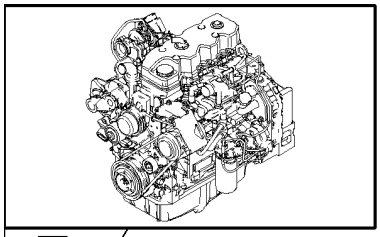

KIT KIT ● = 1

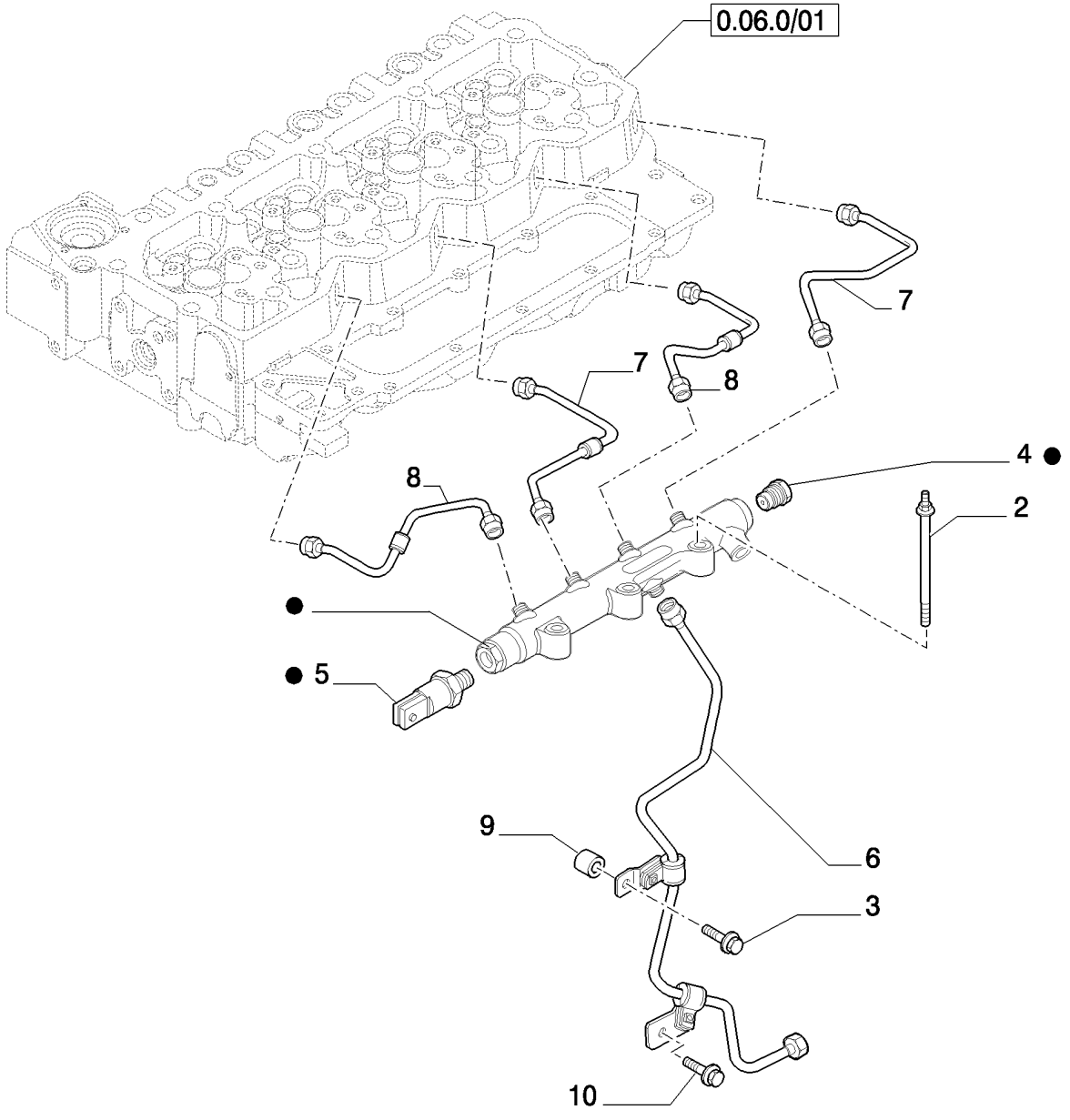

INJECTION EQUIPMENT - PIPING

REF	FN	PART NUMBER	YR/SN	QTY	DESCRIPTION
1		2855503		1	MANIFOLD, - ASSY
2		2853537		3	BOLT
3		4899020		1	SCREW, M8x1.25x16
4		2854543		1	VALVE, PRESSURE RELIEF
5		2854542		1	SENSOR
6		2855819		1	PIPE INJECTION
7		2855818		2	PIPE INJECTION
8		2854544		2	PIPE INJECTION
9		2852434		1	SPACER
10		4896884		1	SCREW

ELECTRONIC INJECTION

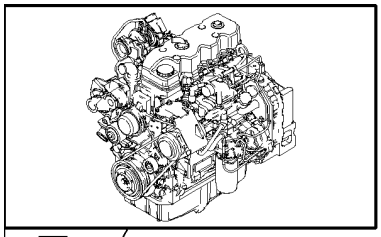

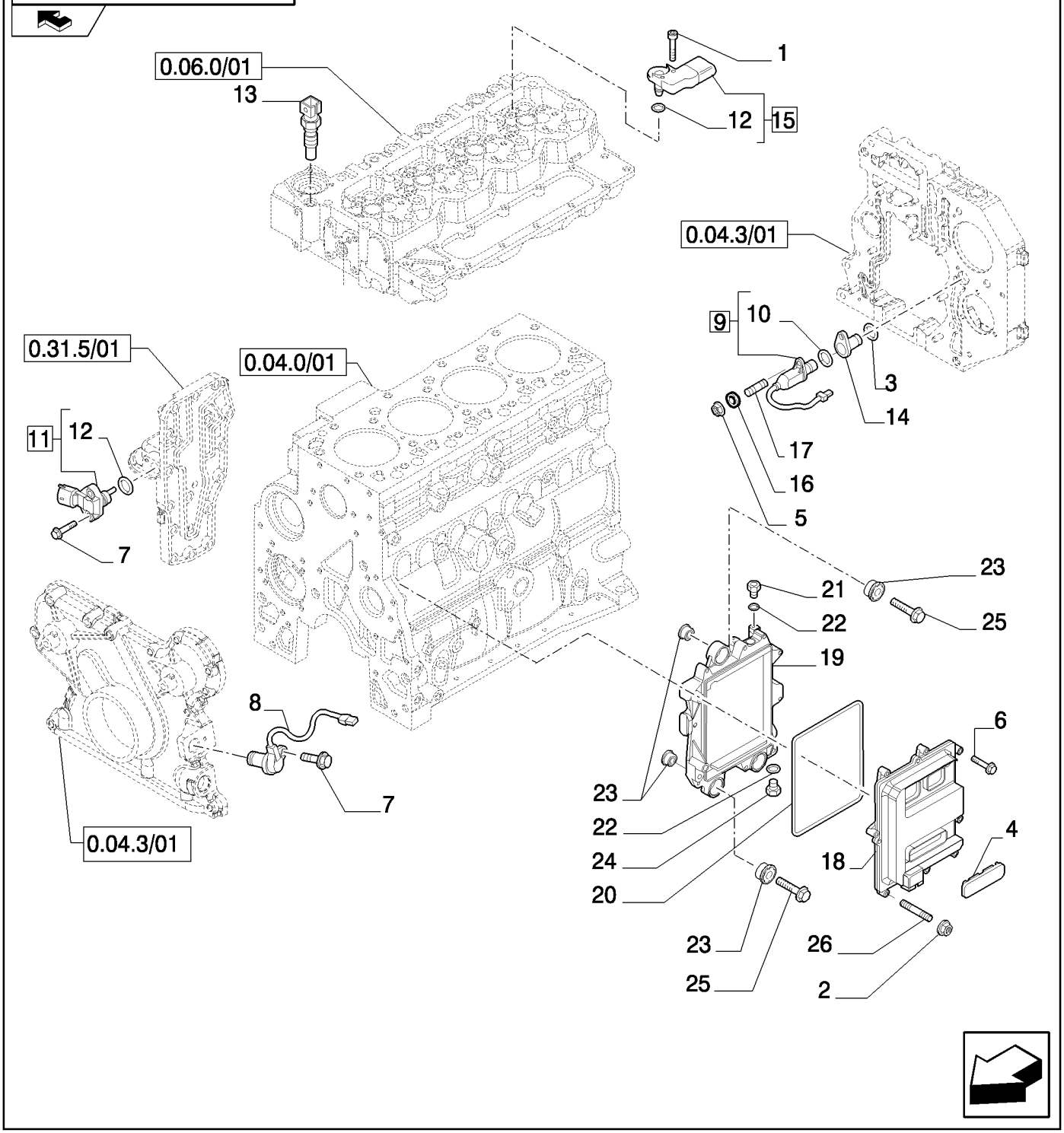

ELECTRONIC INJECTION

REF	FN	PART NUMBER	YR/SN	QTY	DESCRIPTION
1		4895817		1	SCREW
2		4899057		1	NUT
3		2852817		1	O-RING, 23.5x1.7
4		2852825		1	PLUG
5		2854282		1	NUT
6		2852818		7	SCREW, M6x30
7		4899110		3	SCREW, Hex Flg, M6 x 1 x 20
8		4890189		1	SENSOR
9		4890190		1	SENSOR, - ASSY
10		2852820		1	O-RING, 17.17x1.78
11		4890193		1	SENSOR, - ASSY
12		4895477		1	O-RING
13		4897224		1	SENSOR, Temperature
14		4892255		1	HOUSING
15		2852821		1	SENSOR, - ASSY
16		4899124		1	WASHER
17		4895157		1	STUD
18		2854594		1	MODULE
19		2854596		1	BRACKET
20		2854079		1	GASKET
21		4896542		1	CONNECTOR, HYD., M12x1.5
22		2854292		2	SEAL WASHER
23		2855150		6	INSULATOR BLOCK
24		4890964		1	FITTING
25		4899078		3	SCREW, Hex Flg, M8 x 1.25 x 45
26		2854593		1	STUD

MOTOR ELECTRIC INSTALLATION

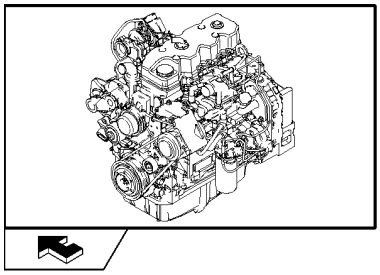

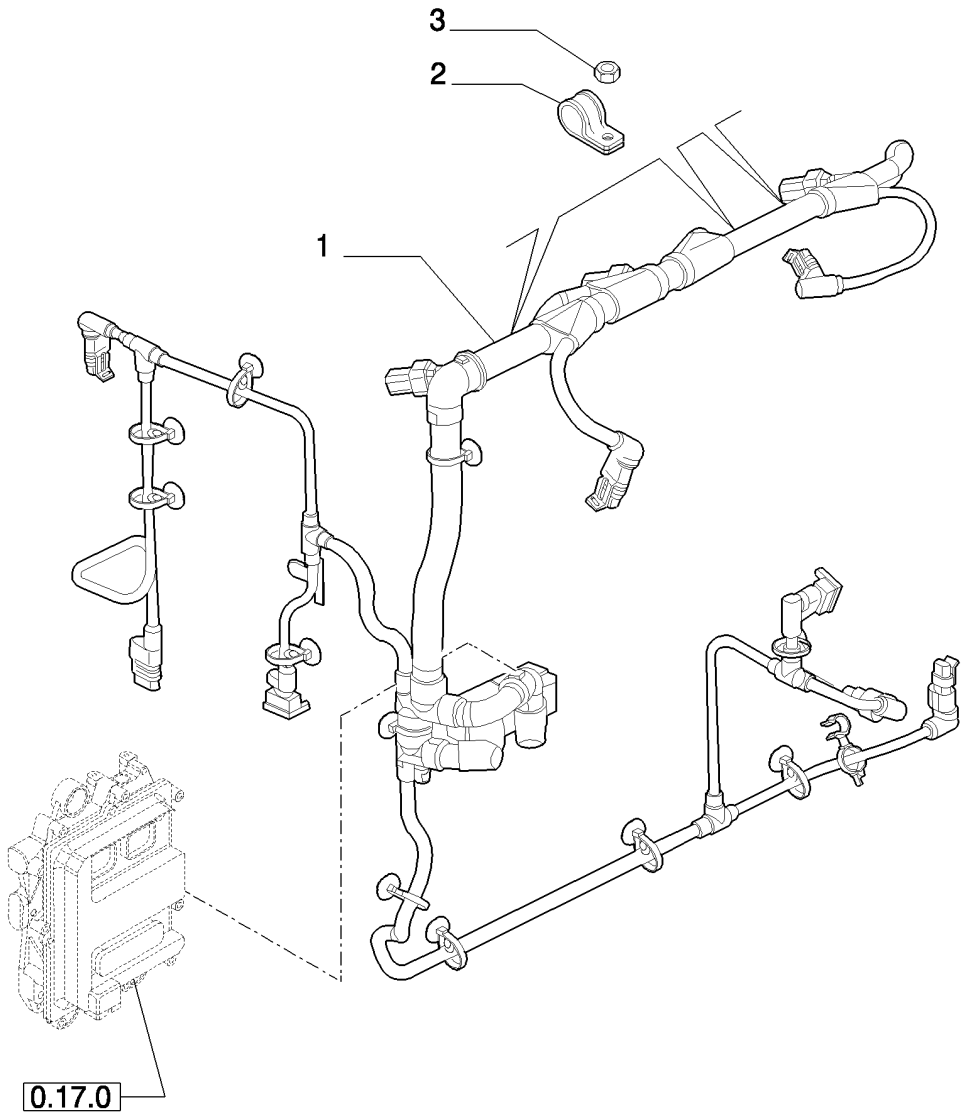

MOTOR ELECTRIC INSTALLATION

REF	FN	PART NUMBER	YR/SN	QTY	DESCRIPTION
1		2855886		1	HARNESS, WIRE
2		4899815		2	COLLAR, RETAINER
2		2852500		1	CLAMP
3		2852484		3	NUT

FUEL FILTER

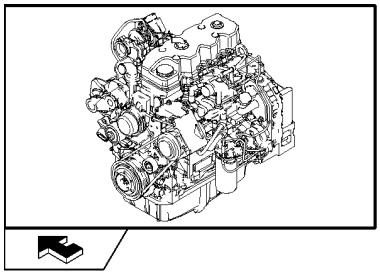

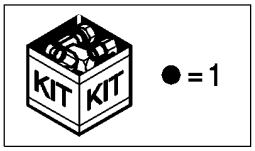

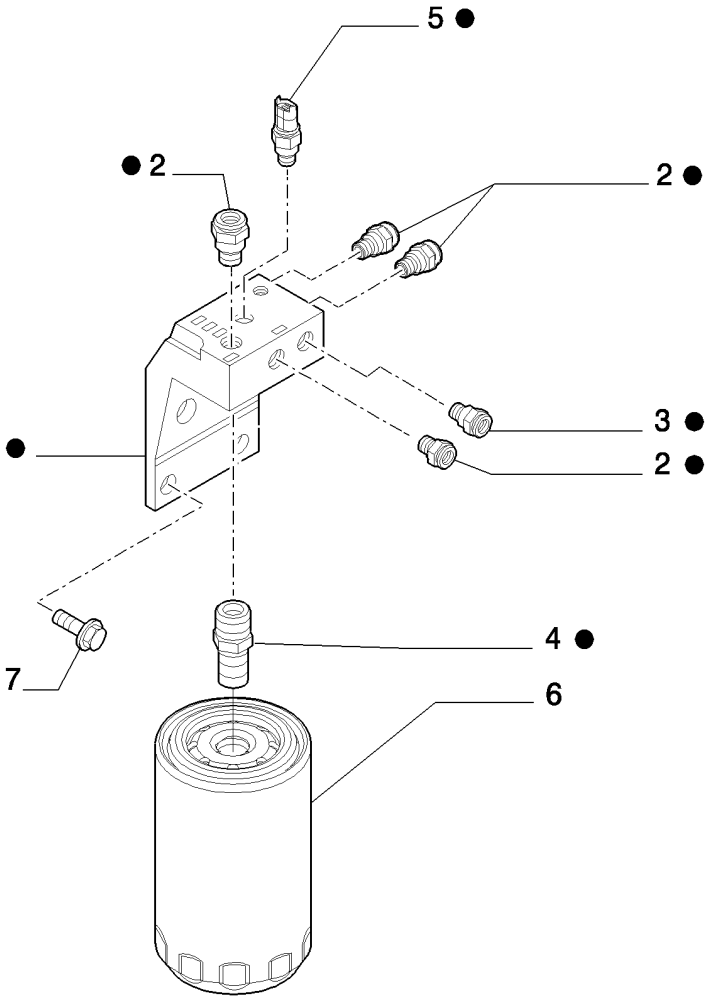

FUEL FILTER

REF	FN	PART NUMBER	YR/SN	QTY	DESCRIPTION
1		2855792		1	HOUSING, - ASSY
2		2854563		4	FITTING
3		2854564		1	FITTING
4		4898877		1	FITTING
5		4897224		1	SENSOR, Temperature
6		87803197		1	FILTER, FUEL
7		2854566		2	SCREW, M12x30

PIPING - FUEL

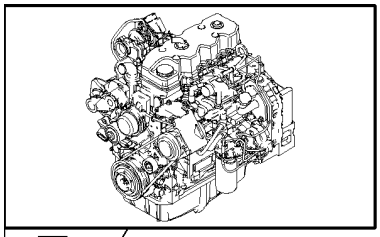

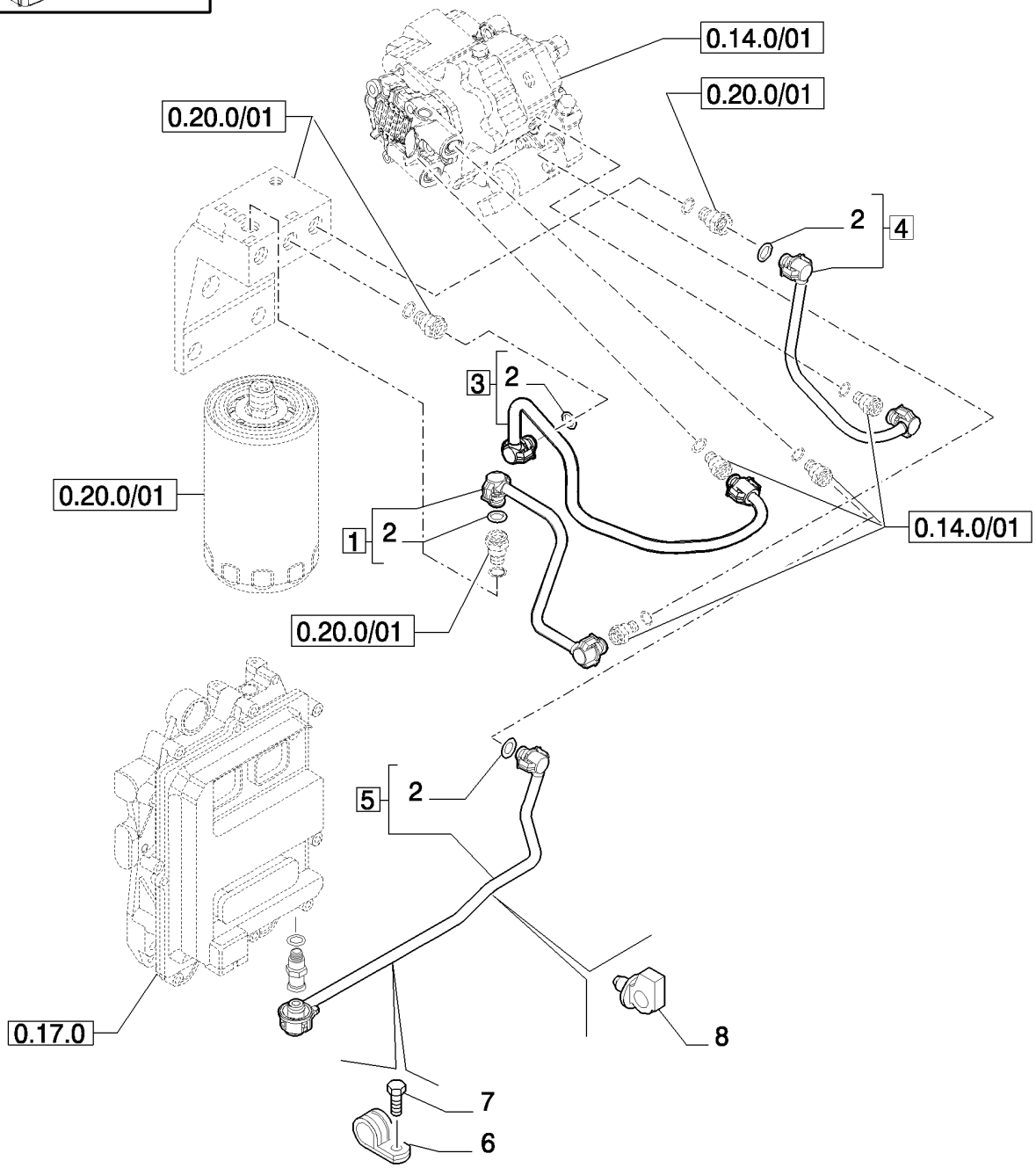
0.14.0/01
0.20.0/01
0.20.0/01
2
4
3
2
0.20.0/01
1
2
0.14.0/01
0.20.0/01
5
2
0.17.0
8
7
6

PIPING - FUEL

REF	FN	PART NUMBER	YR/SN	QTY	DESCRIPTION
1		2855427		1	PIPE, - ASSY
2		4894095		6	O-RING
3		2855428		1	PIPE, - ASSY
4		2855430		1	PIPE, - ASSY
5		2855795		1	PIPE INJECTION, - ASSY
6		4895462		1	CLAMP
7		4899103		1	SCREW, Hex Flg, M8 x 1.25 x 12
8		4896996		1	CLAMP

INJECTION EQUIPMENT - PIPING

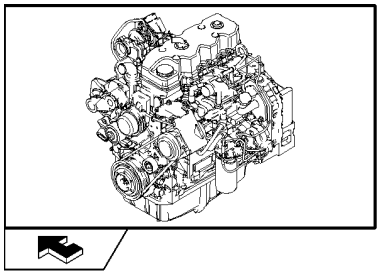

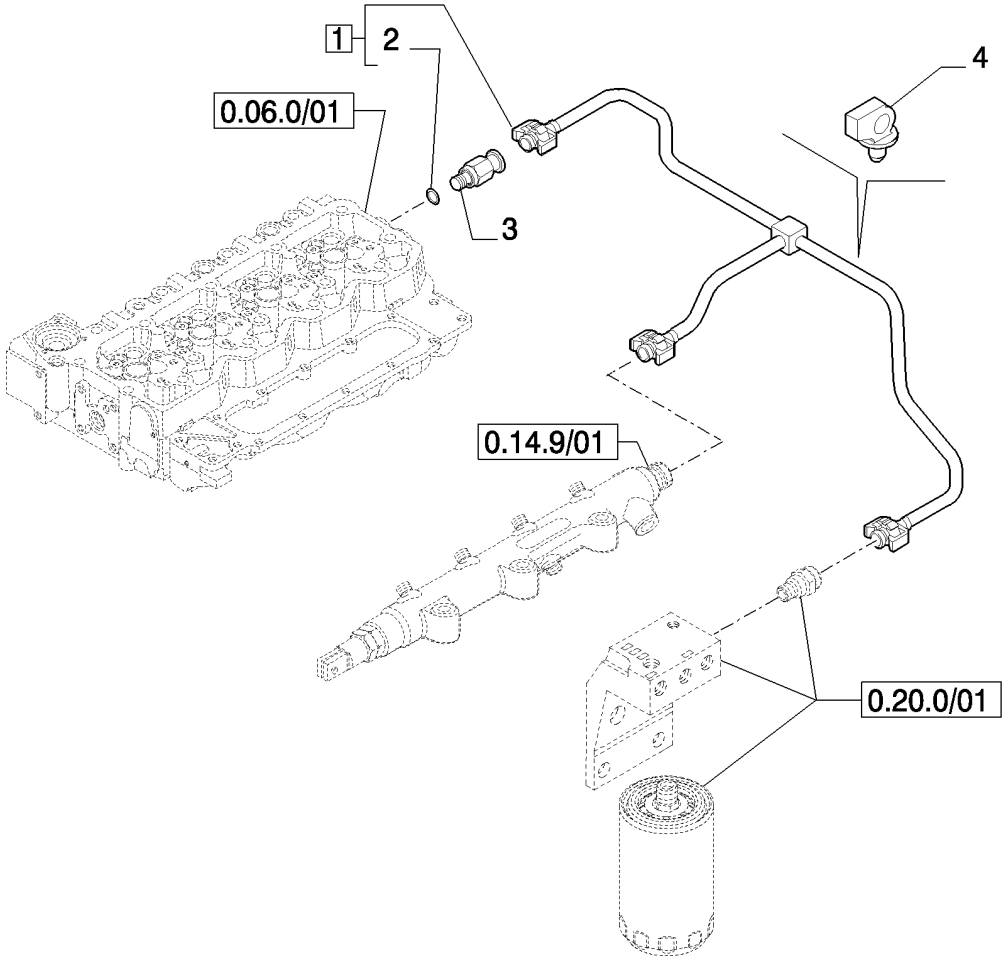

INJECTION EQUIPMENT - PIPING

REF	FN	PART NUMBER	YR/SN	QTY	DESCRIPTION
1		2855336		1	PIPE, RETURN, - ASSY
2		4894095		3	O-RING
3		4896329		1	VALVE, PRESSURE RELIEF
4		4896996		1	CLAMP

TURBOCHARGER

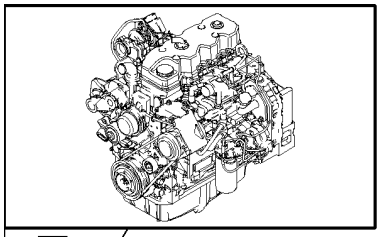



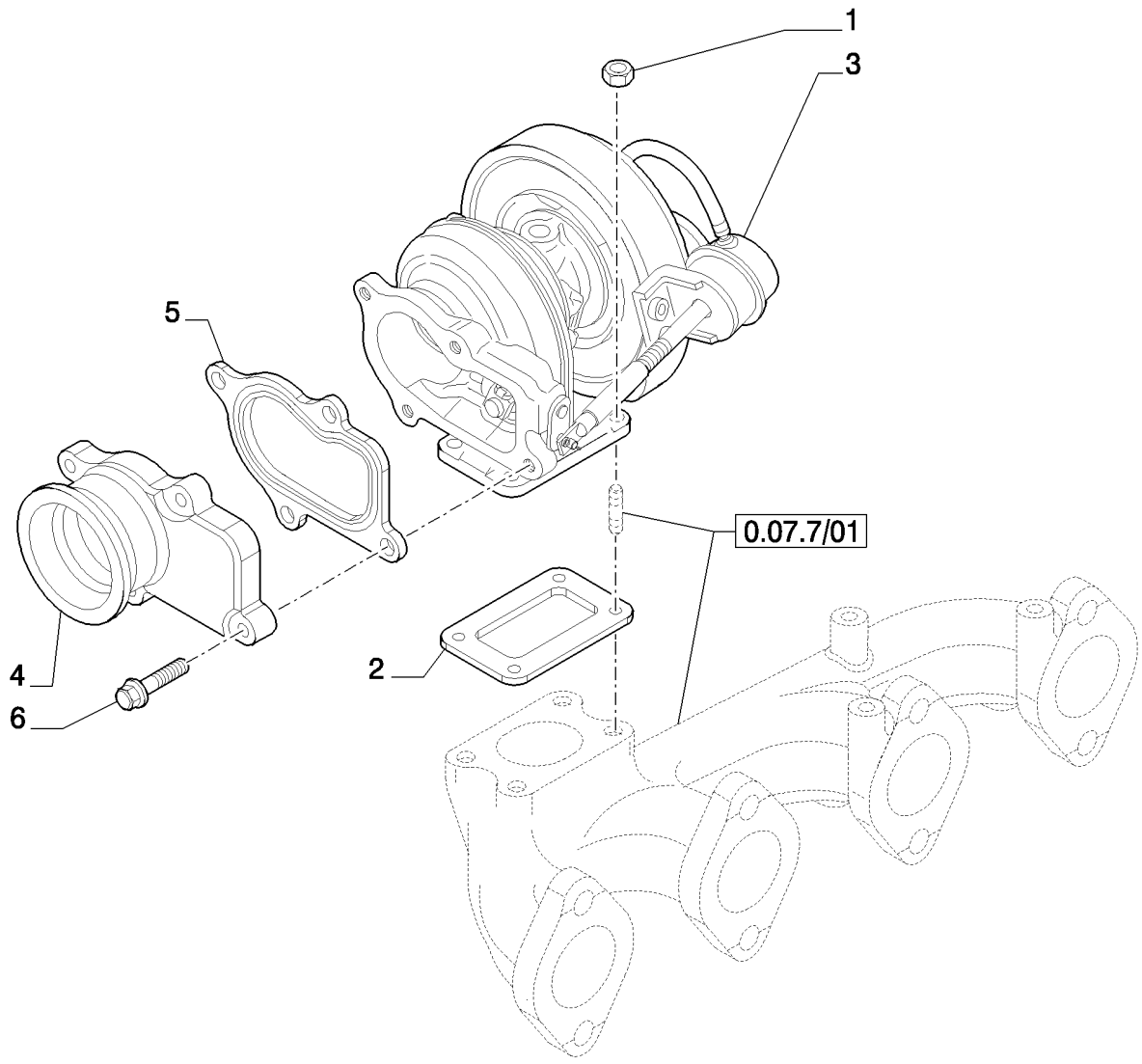



TURBOCHARGER

REF	FN	PART NUMBER	YR/SN	QTY	DESCRIPTION
1		4899118		4	NUT
2		4895133		1	GASKET
3		2856701		1	TURBOCHARGER
4		2852072		1	MANIFOLD, EXHAUST
5		2852071		1	GASKET
6		4898482		4	SCREW, Flg Hd, M8 x 1.25 x 30

ENGINE OIL DIPSTICK

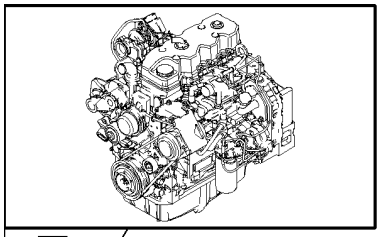

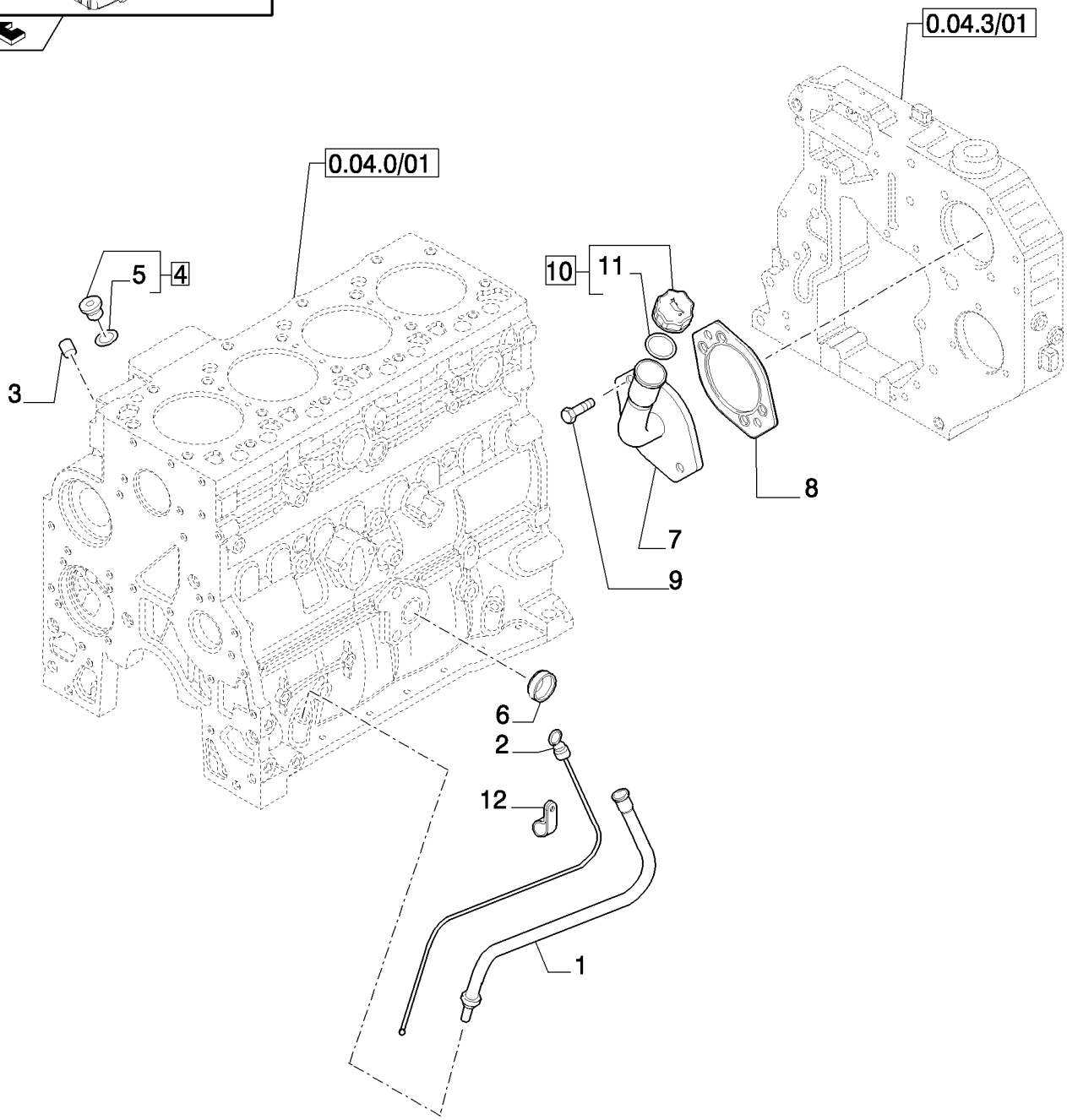

ENGINE OIL DIPSTICK

REF	FN	PART NUMBER	YR/SN	QTY	DESCRIPTION
1		2855813		1	TUBE, - OIL LEVEL
2		2855815		1	DIPSTICK
3		4895406		2	PLUG
4		4897330		2	PLUG, - ASSY
5		4895610		1	O-RING
6		4895037		1	PLUG
7		2855787		1	TUBE
8		4896897		1	GASKET
9		2856035		2	SCREW
10		2853410		1	CAP, INTRODUCTION, - ASSY
11		2853412		1	O-RING
12		2852485		1	BRACKET

OIL PUMP - ENGINE

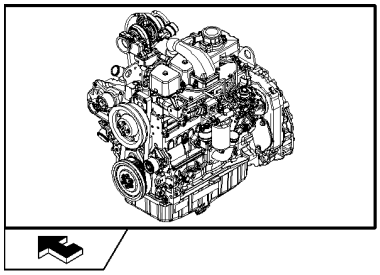

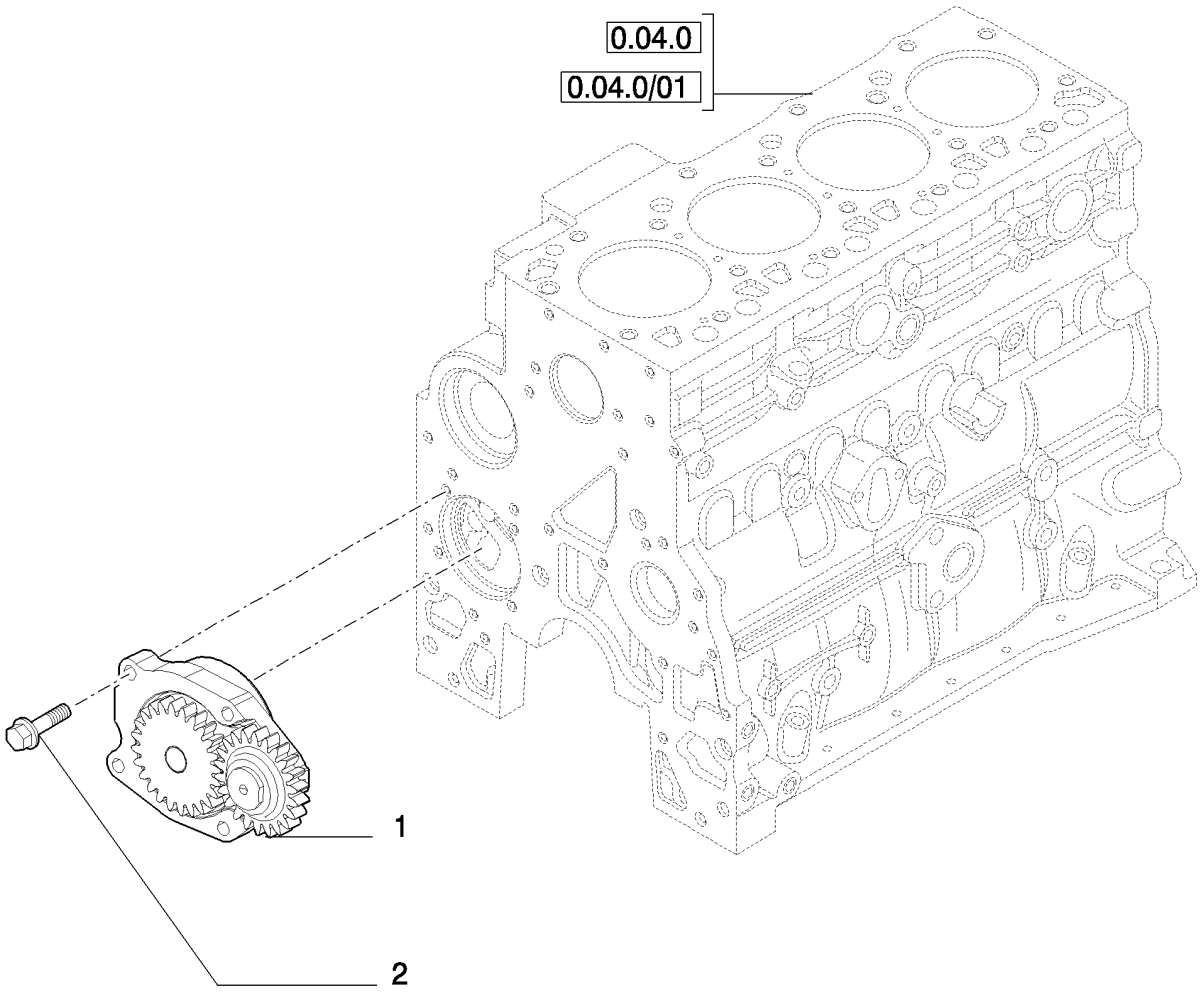

OIL PUMP - ENGINE

REF	FN	PART NUMBER	YR/SN	QTY	DESCRIPTION
1		4897480		1	PUMP, ENGINE OIL, In alternative
1		2853414		1	PUMP, ENGINE OIL, In alternative
2		4899090		4	SCREW, Hex Flg, M8 x 1.25 x 30

OIL FILTERS - ENGINE

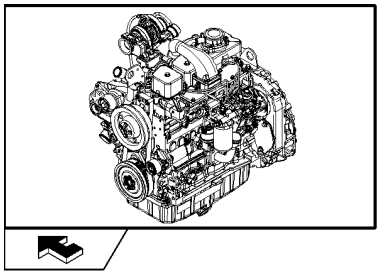

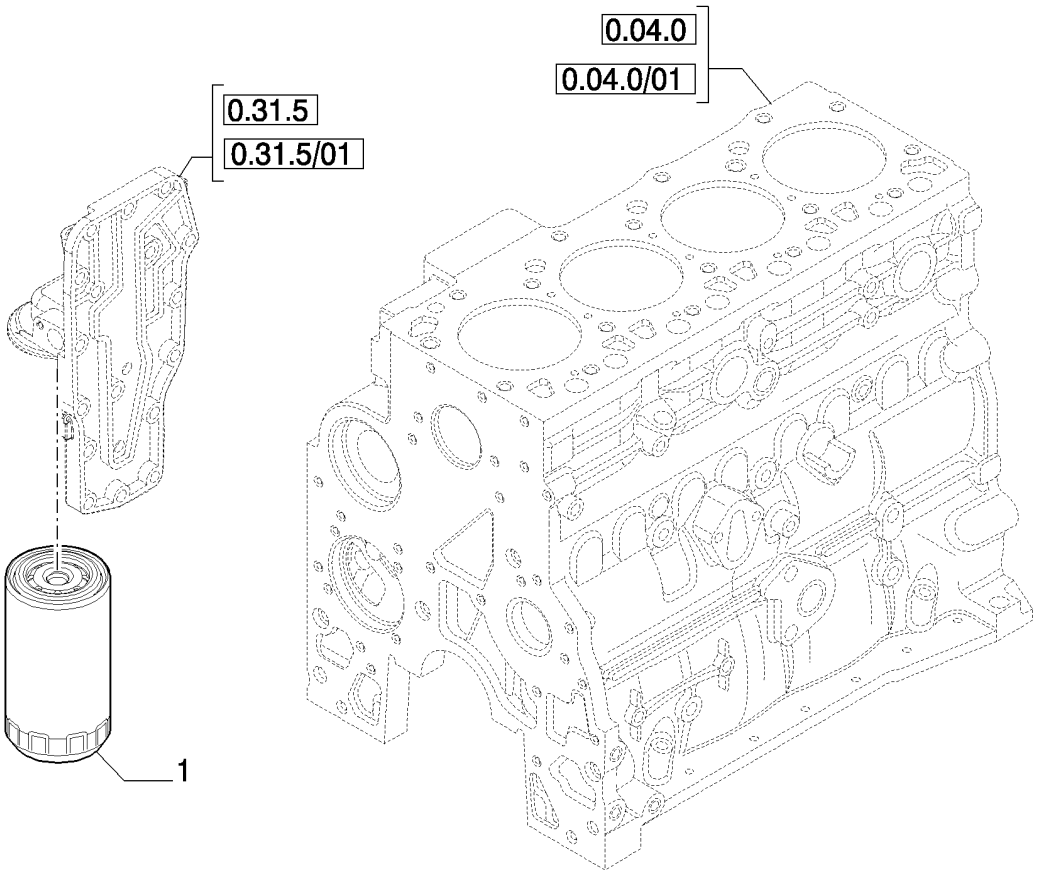

OIL FILTERS - ENGINE

REF	FN	PART NUMBER	YR/SN	QTY	DESCRIPTION
1		87803260		1	FILTER, ENGINE OIL, 2/4 Valve

PIPING - ENGINE OIL

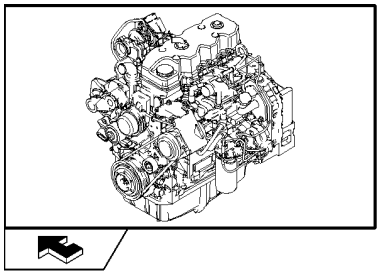

PIPING - ENGINE OIL

REF	FN	PART NUMBER	YR/SN	QTY	DESCRIPTION
1		4895164		2	SCREW
2		4895107		1	CONNECTOR, HYD., - ASSY
3		4899107		1	O-RING
4		4899108		2	O-RING
5		4899467		1	GASKET
6		4899519		1	CLAMP
7		4899106		1	CONNECTOR, HYD., - ASSY
8		2852195		1	HOSE, HYDRAULIC
9		4899058		2	O-RING, M17.12 ID x 2.62 Thk
10		2855780		1	PIPE, - ASSY
11		4899121		1	WASHER, SEALING
12		2852197		1	NUT, M6
13		2852100		1	SCREW, M8x1.25x16
14		2852101		1	SCREW, M6x16
15		2852196		1	BRACKET

HEAT EXCHANGER - ENGINE

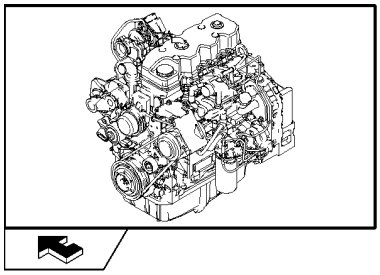

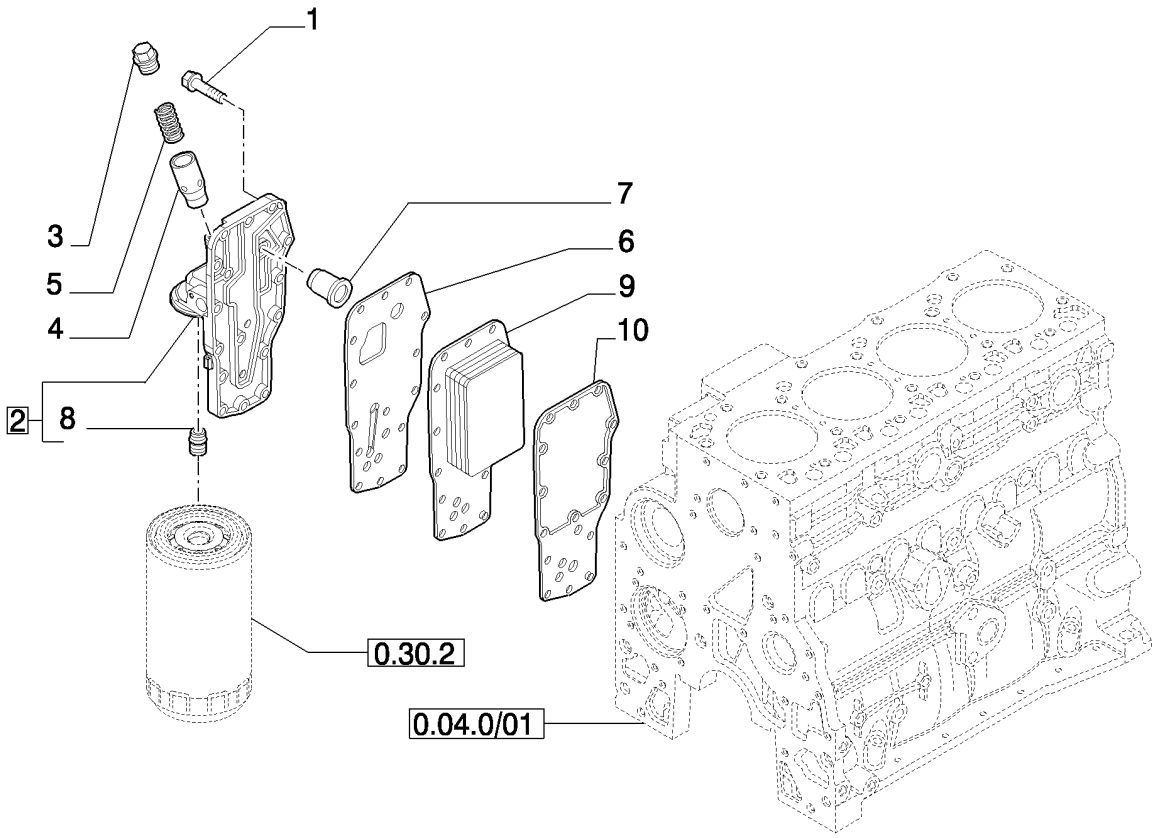

HEAT EXCHANGER - ENGINE

REF	FN	PART NUMBER	YR/SN	QTY	DESCRIPTION
1		4899019		15	SCREW, Hex Flg, M8 x 1.25 x 35
2		2853780		1	Head, Filter, - ASSY
3		2853781		1	PLUG, - ASSY
4		4896404		1	PLUNGER
5		4895045		1	SPRING
6		4896409		1	GASKET
7		4896410		1	VALVE, PRESSURE RELIEF
8		4893391		1	ADAPTER
9		2853722		1	HEAT EXCHANGER
9		4896406		1	COOLER, OIL
10		2830559		1	GASKET

WATER PUMP

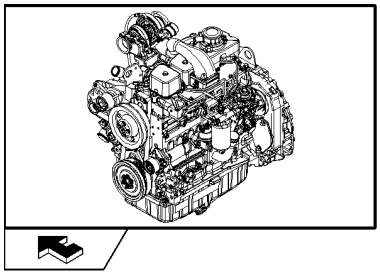

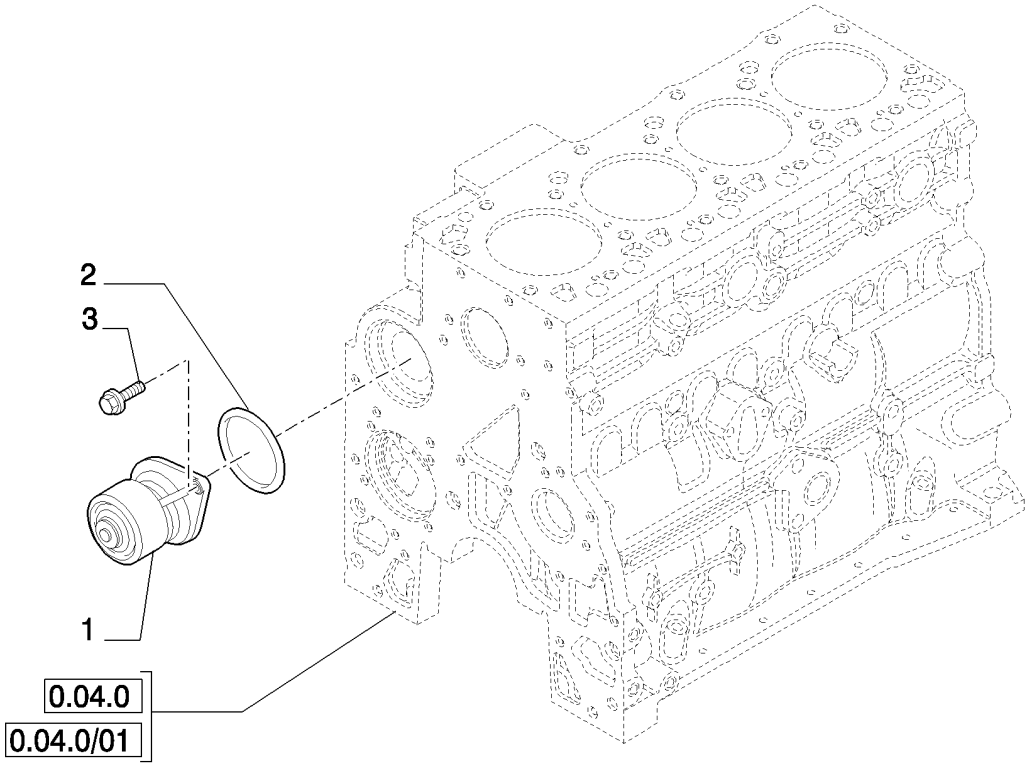

WATER PUMP

REF	FN	PART NUMBER	YR/SN	QTY	DESCRIPTION
1		2852114		1	PUMP, WATER
2		2852047		1	SEALRING
3		4899079		2	SCREW, Hex Flg, M8 x 1.25 x 25

COOLING SYSTEM - ENGINE

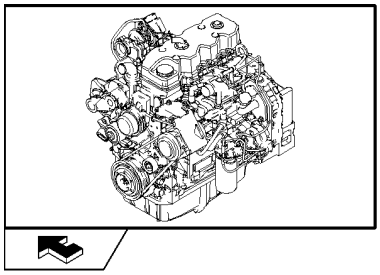

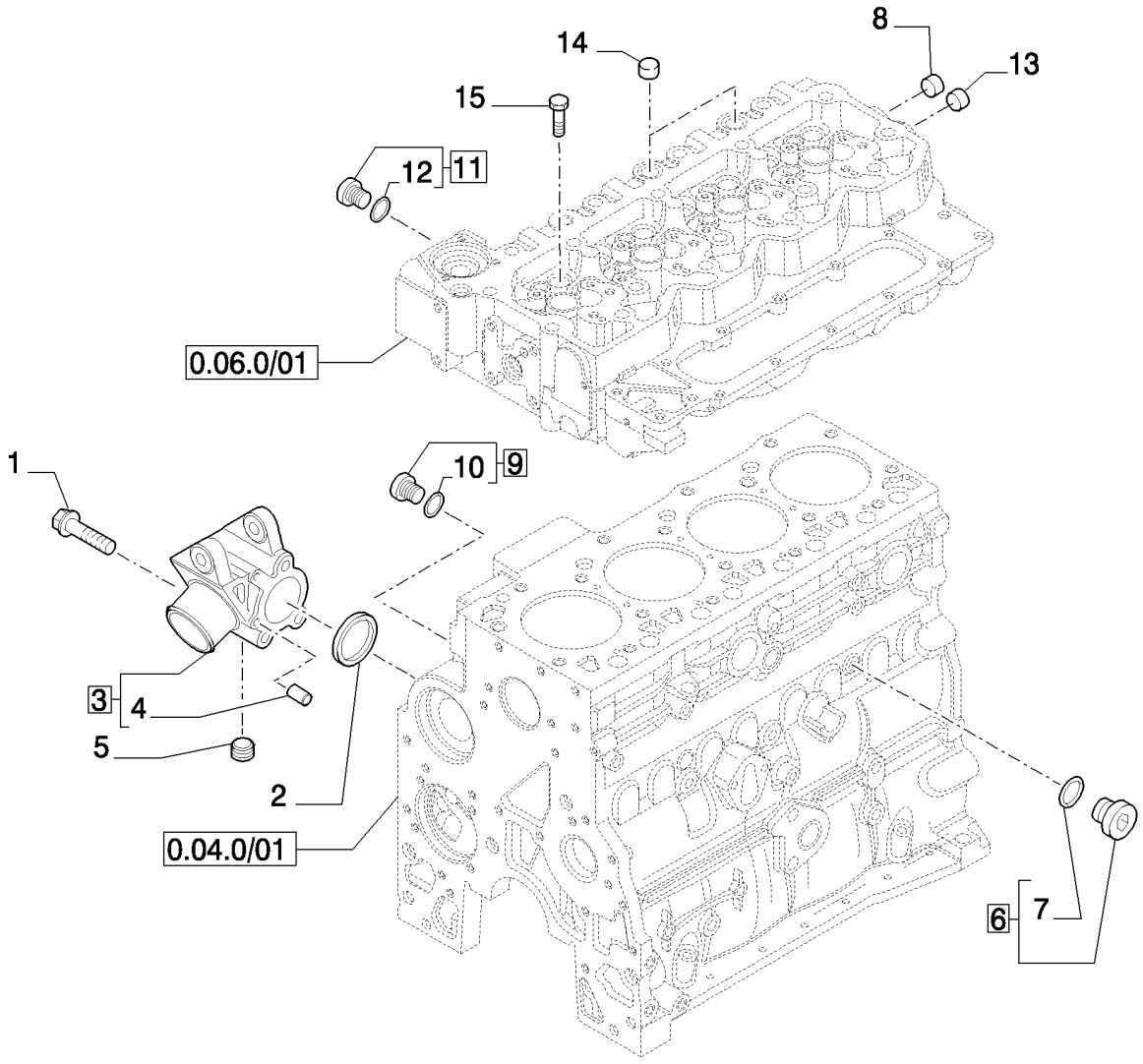

COOLING SYSTEM - ENGINE

REF	FN	PART NUMBER	YR/SN	QTY	DESCRIPTION
1		4899109		3	SCREW, Hex, M10 x 1.5 x 80
2		2854072		1	O-RING
3		2855776		1	SUPPORT, - ASSY
4		2852181		2	SPACER
5		2852511		1	PLUG
6		4895623		1	PLUG
7		4895625		1	O-RING
8		4893036		1	PLUG
9		4895392		1	PLUG, - ASSY
10		4895393		1	O-RING
11		4895080		1	PLUG, - ASSY
12		4895082		1	O-RING
13		4893036		1	PLUG
14		4895078		2	PLUG
15		2854491		1	PLUG

THERMOSTAT - ENGINE COOLING SYSTEM

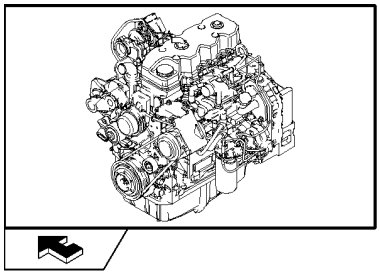

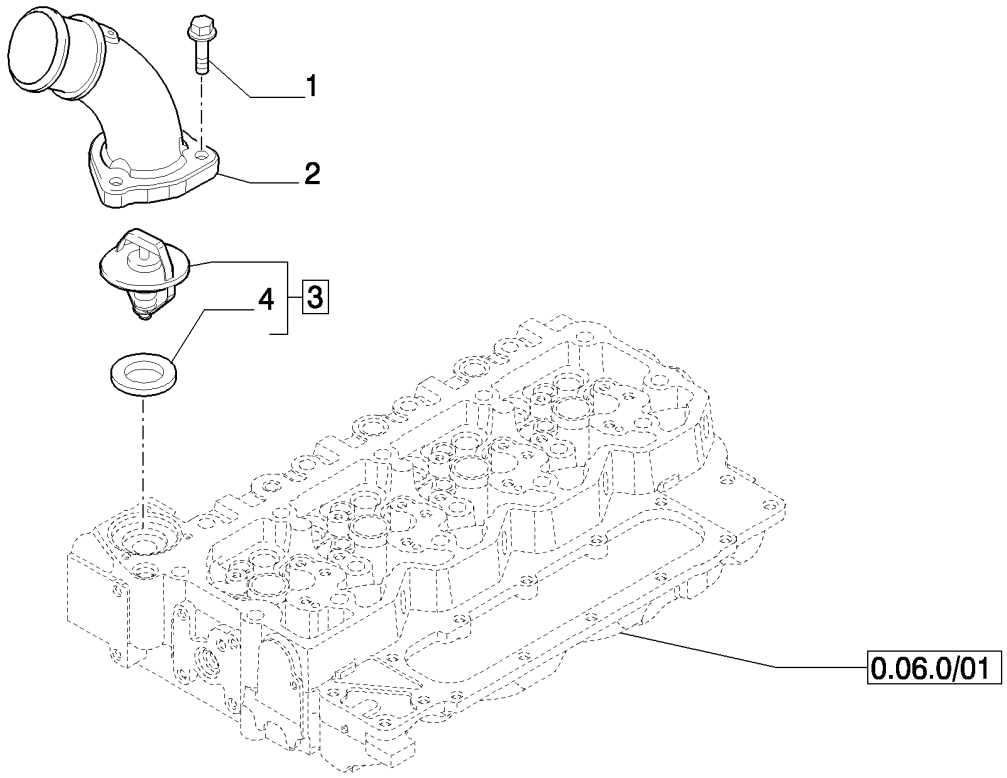

THERMOSTAT - ENGINE COOLING SYSTEM

REF	FN	PART NUMBER	YR/SN	QTY	DESCRIPTION
1		4899110		3	SCREW, Hex Flg, M6 x 1 x 20
2		2855823		1	COVER
3		2856543		1	THERMOSTAT, - ASSY
4		2852473		1	GASKET

WATER PUMP - CONTROL

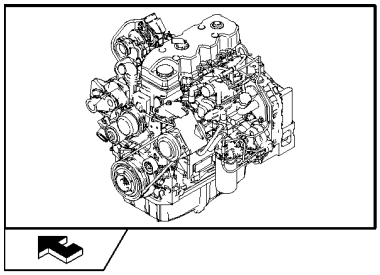

WATER PUMP - CONTROL

REF	FN	PART NUMBER	YR/SN	QTY	DESCRIPTION
1		2855949		1	SUPPORT
2		2852161		1	TENSIONER, BELT
3		2852162		1	PULLEY
4		2855950		1	BELT
5		4899079		2	SCREW, Hex Flg, M8 x 1.25 x 25
6		4895292		1	SCREW

FAN DRIVE

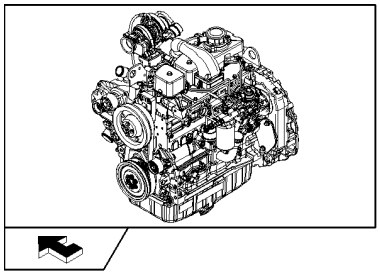

KIT KIT ● = 1

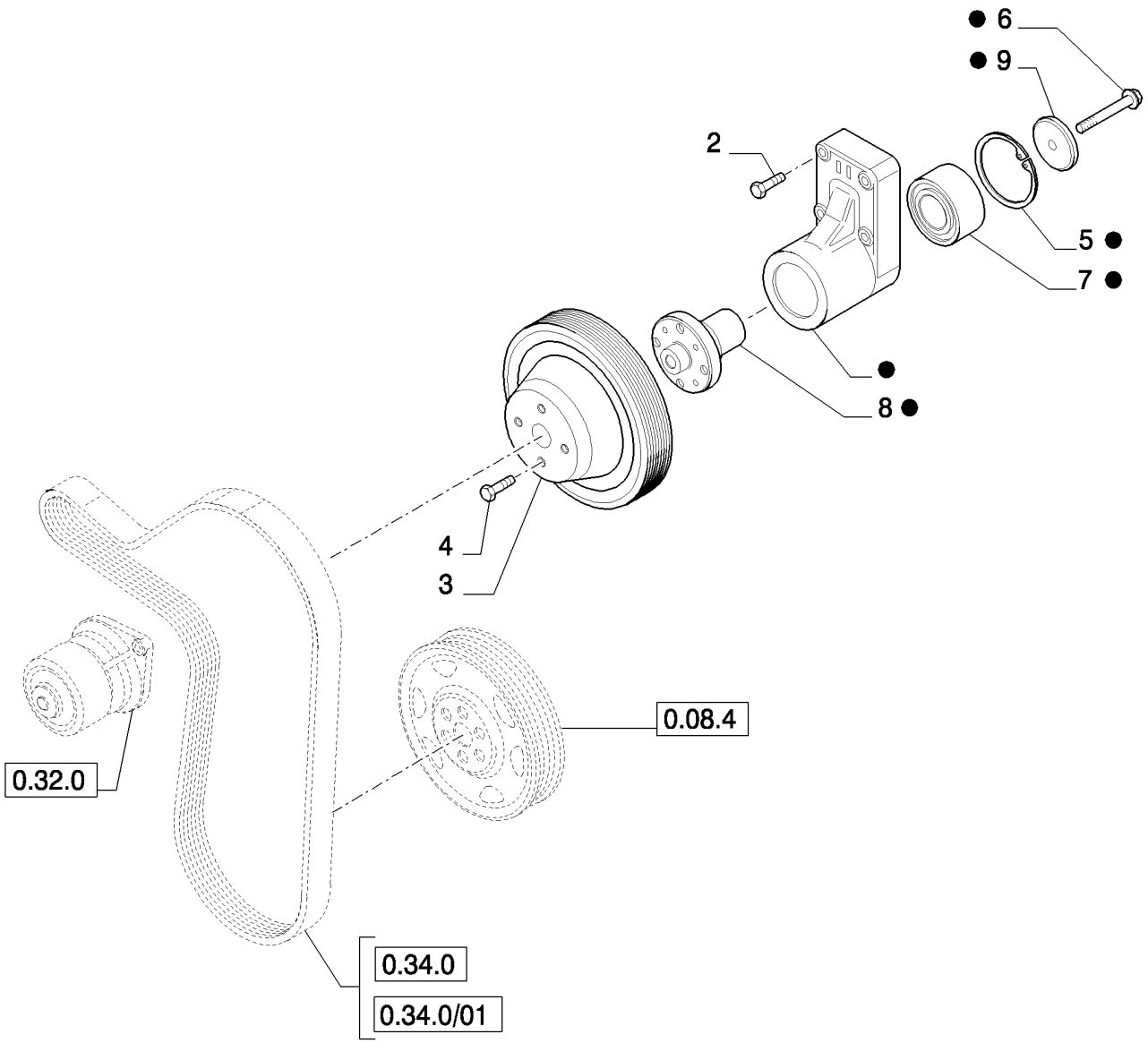

FAN DRIVE

REF	FN	PART NUMBER	YR/SN	QTY	DESCRIPTION
1		2852170		1	SUPPORT, - ASSY
2		4899053		4	SCREW, Hex Flg, M8 x 45
3		4890343		1	PULLEY
4		4895291		4	SCREW, Hex Flg, M10 x 1.5 x 20, M10x1.5x20
5		2852171		1	RING, SNAP
6		2852172		1	SCREW
7		4892732		1	BEARING, BALL
8		4892426		1	HUB
9		4890732		1	RETAINER

ACCESSORY ENGINE

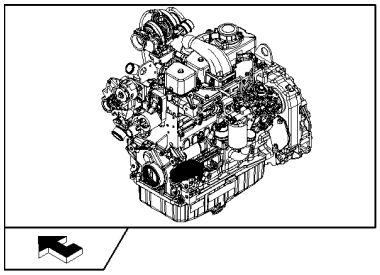

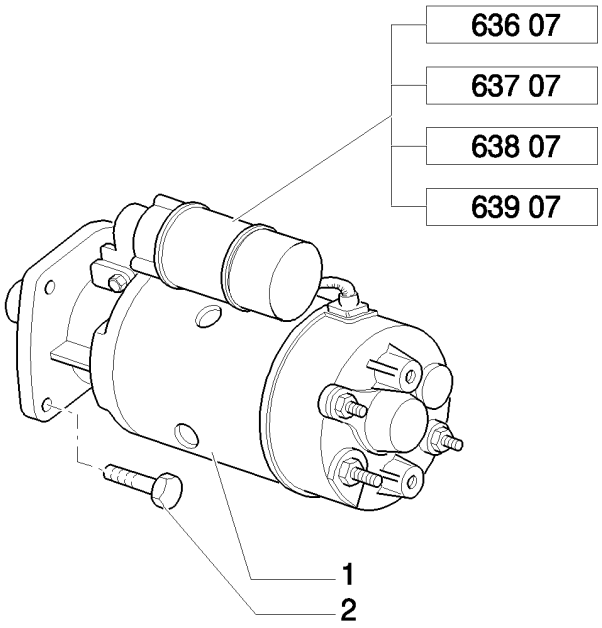

ACCESSORY ENGINE

REF	FN	PART NUMBER	YR/SN	QTY	DESCRIPTION
1		86992395		1	MOTOR, STARTER
2		86511845		1	BOLT, Hex Flg, M10 x 35, 8.8

ALTERNATOR

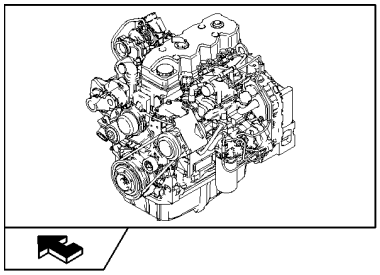

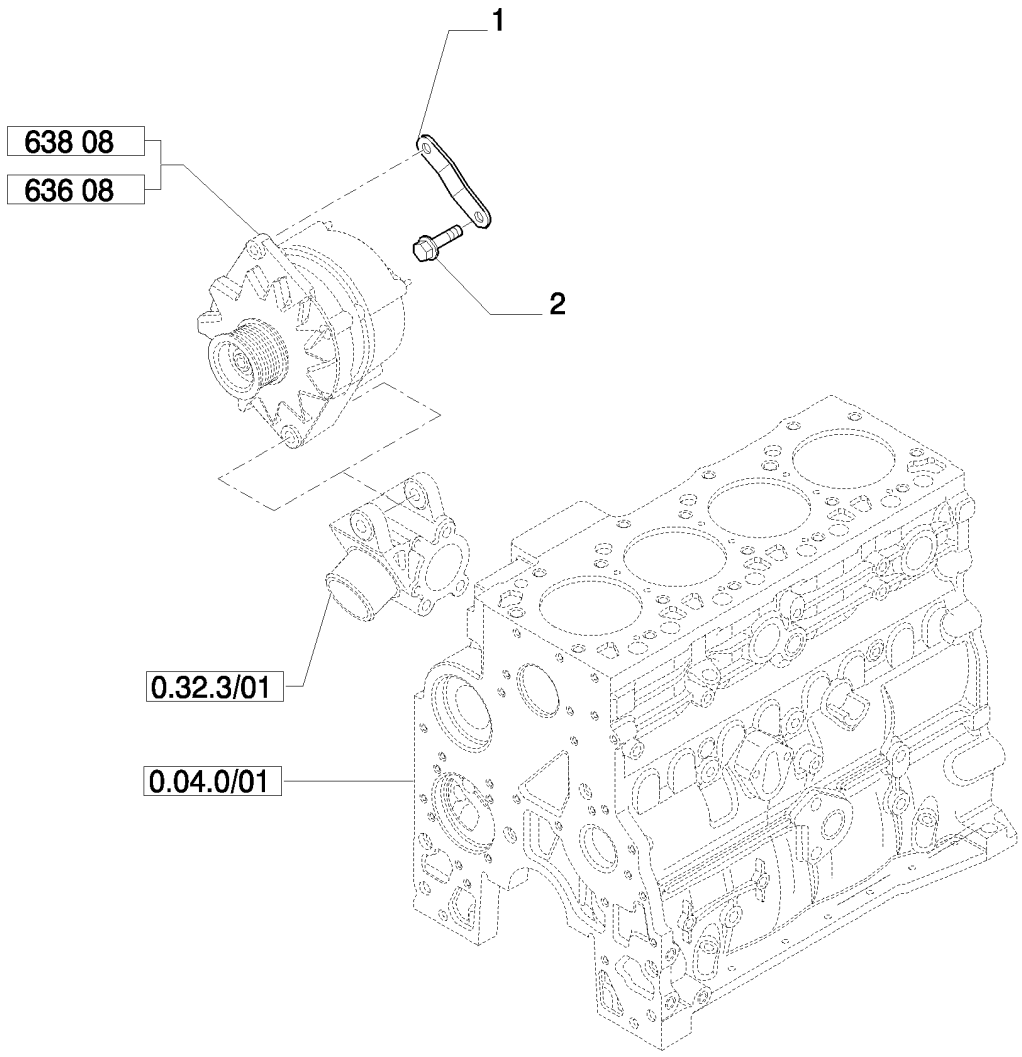

ALTERNATOR

REF	FN	PART NUMBER	YR/SN	QTY	DESCRIPTION
1		2852180		1	BRACKET
2		4895291		1	SCREW, Hex Flg, M10 x 1.5 x 20, M10x1.5x20

HOOKS - ENGINE

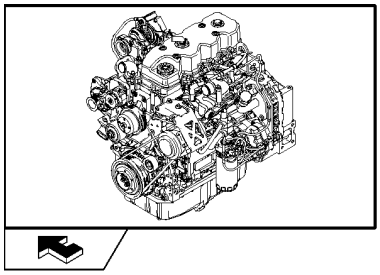

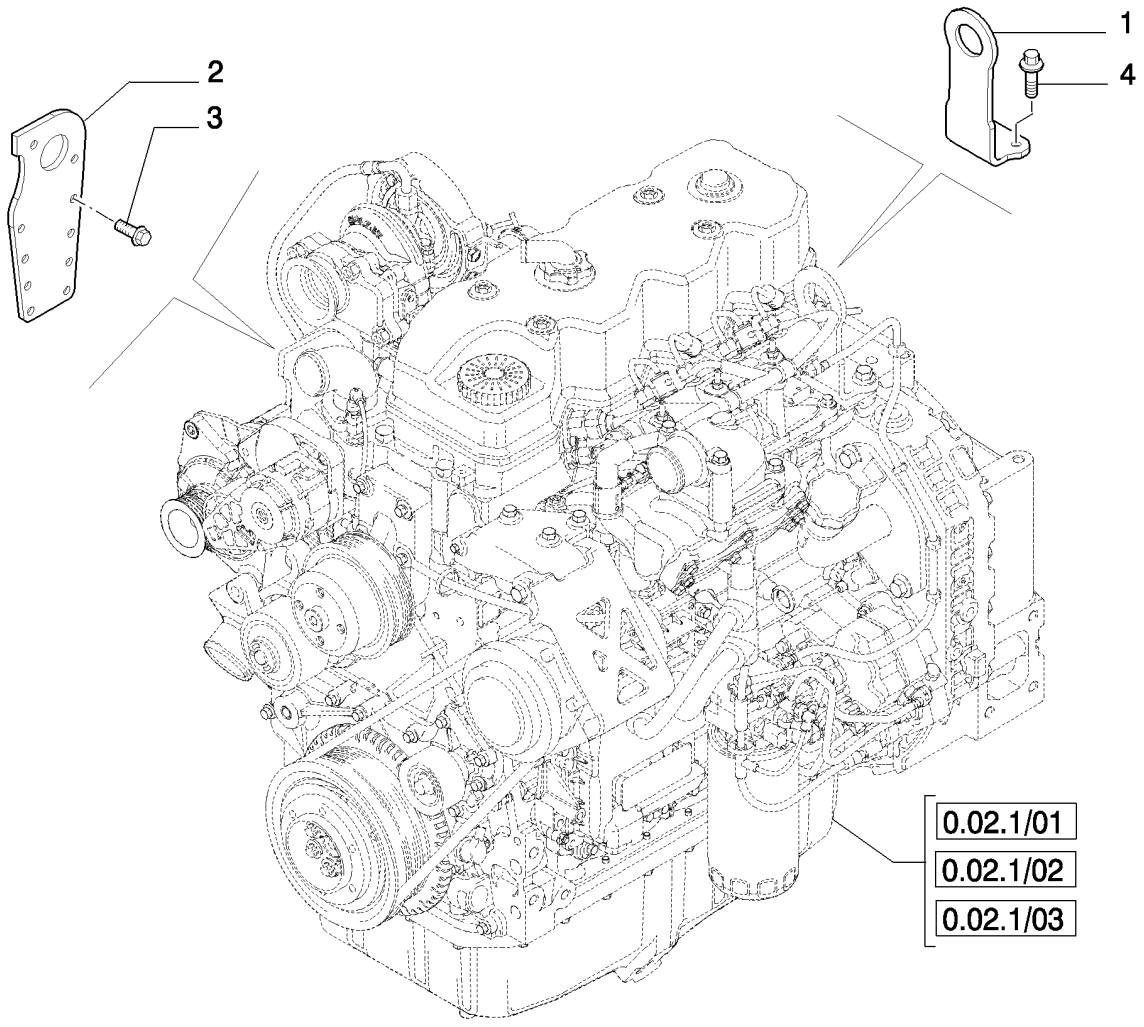

HOOKS - ENGINE

REF	FN	PART NUMBER	YR/SN	QTY	DESCRIPTION
1		2855773		1	BRACKET
2		2855774		1	BRACKET
3		4899079		4	SCREW, Hex Flg, M8 x 1.25 x 25
4		4899037		2	SCREW

NOTES

SECTION INDEX
Engine Equipment

1.14.0		FUEL TANK & RELATED PARTS
1.14.6		FUEL PIPE
1.14.6/ A		FILTER FUEL - BREAKDOWN
1.15.0	01	MUFFLER & EXTENSIONS
1.15.0	02	EXHAUST TUBE
1.19.1		AIR CLEANER & HOSES
1.21.5		FRAME (CENTER PIVOT)

FUEL TANK & RELATED PARTS

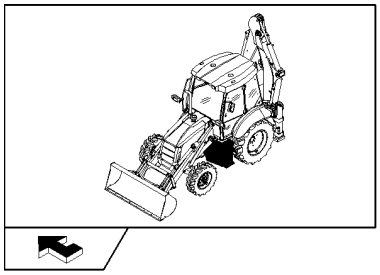

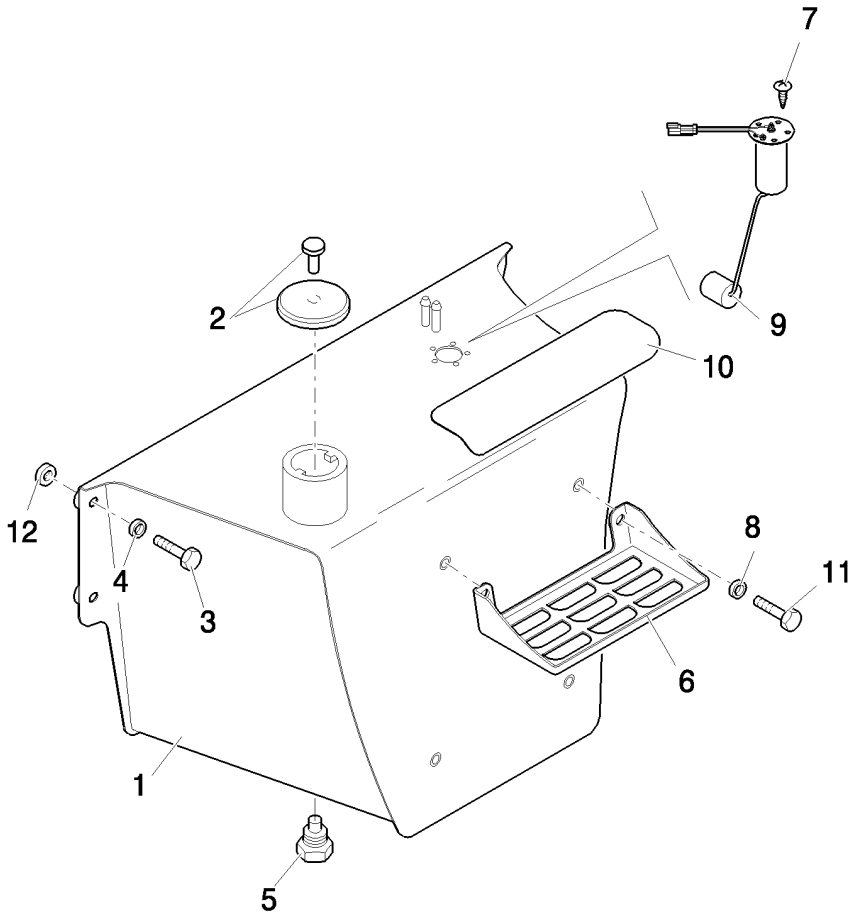

FUEL TANK & RELATED PARTS

REF	FN	PART NUMBER	YR/SN	QTY	DESCRIPTION
1		87355226		1	FUEL TANK
2		85825392		1	CAP FUEL, LOCKABLE
3		15540721		4	BOLT, Hex, M12 x 1.25 x 45, 8.8, Full Thd
4		47048973		4	WASHER
5		47050671		1	PLUG
6		85801218		2	PLATE, STEP
7		85825158		5	SCREW, M5x12
8		47048976		4	WASHER, M12
9		86985587		1	SENDER UNIT
10		87702352		1	STRIP, ANTI-SKID
11		11112421		4	BOLT, Hex, M12 x 30, 8.8
12		87353741		4	SPACER

1.14.6		p1	03/08

FUEL PIPE

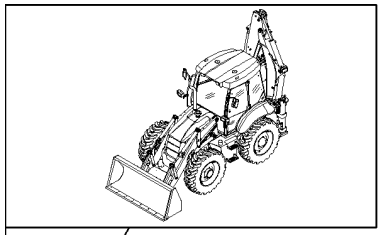

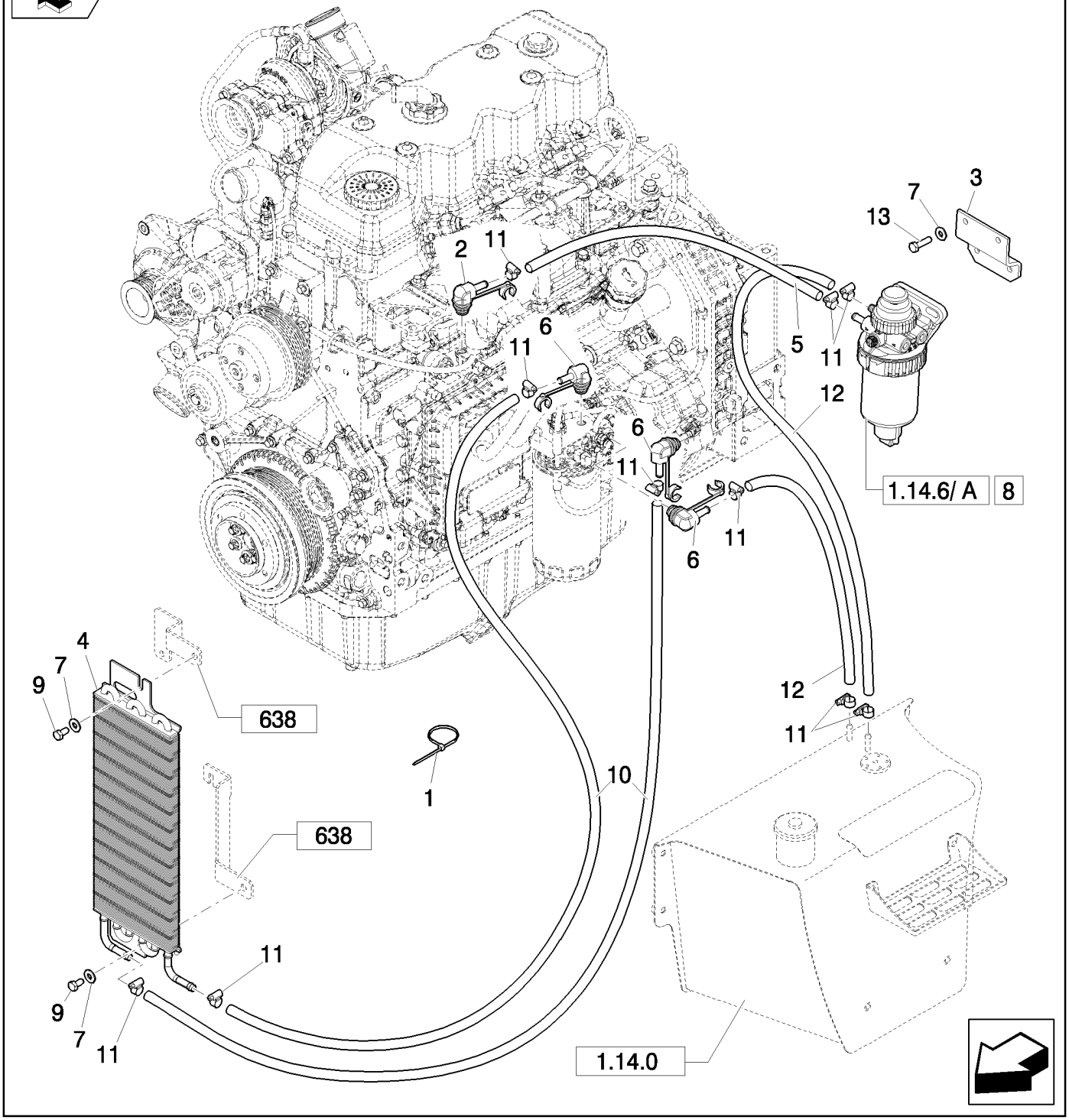

FUEL PIPE

REF	FN	PART NUMBER	YR/SN	QTY	DESCRIPTION
1		14560187		7	STRAP, CABLE, 178mm lg, L=203.2 mm
2		8605735		1	FITTING
3		87638778		1	BRACKET
4		87571706		1	COOLER
5		87609039		1	HOSE, FLEXIBLE
6		87414560		3	FITTING
7		12646701		6	WASHER, M8 x 20 x 2
8		87563601		1	FILTER, FUEL, Assy
9		16043221		2	SCREW, Hex, M8 x 16, 8.8
10		87651689		2	HOSE, FLEXIBLE
11		85824381		10	CLAMP, HOSE
12		87403672		2	HOSE, FLEXIBLE
13		16043821		6	BOLT, Hex, M8 x 30, 8.8

FILTER FUEL - BREAKDOWN

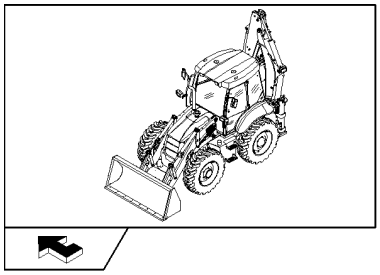

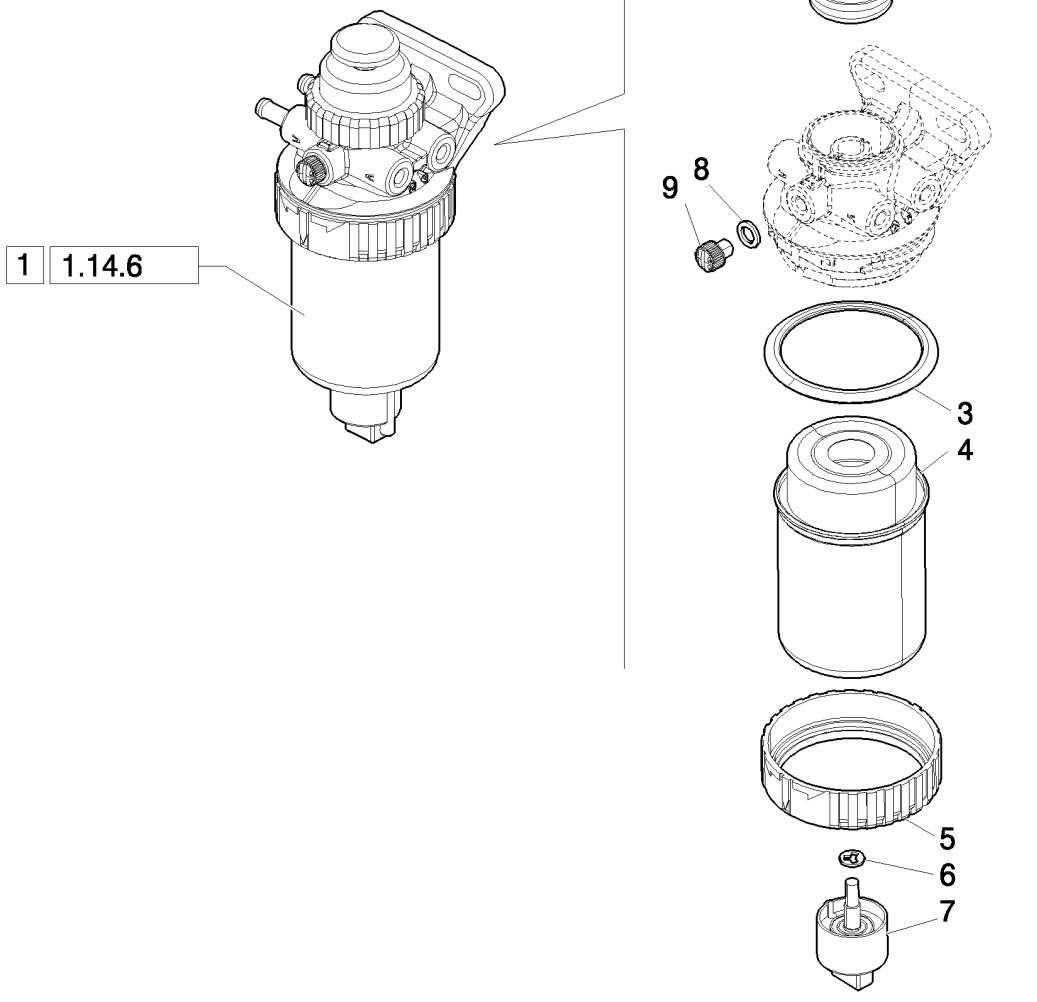

FILTER FUEL - BREAKDOWN

REF	FN	PART NUMBER	YR/SN	QTY	DESCRIPTION
1		87563601		1	FILTER, FUEL, Assy
2		87612472		1	KIT
3		87840171		1	SEAL
4		87803444		1	FILTER, FUEL
5		87840170		1	CIRCLIP
6		87612469		1	SEAL
7		87612475		1	KIT
8		87840177		1	O-RING
9		87840178		1	PLUG
10		87840173		1	RETAINER

1.15.0	01	p1	03/08

MUFFLER & EXTENSIONS

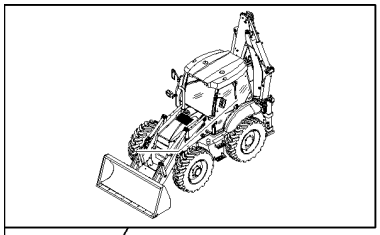

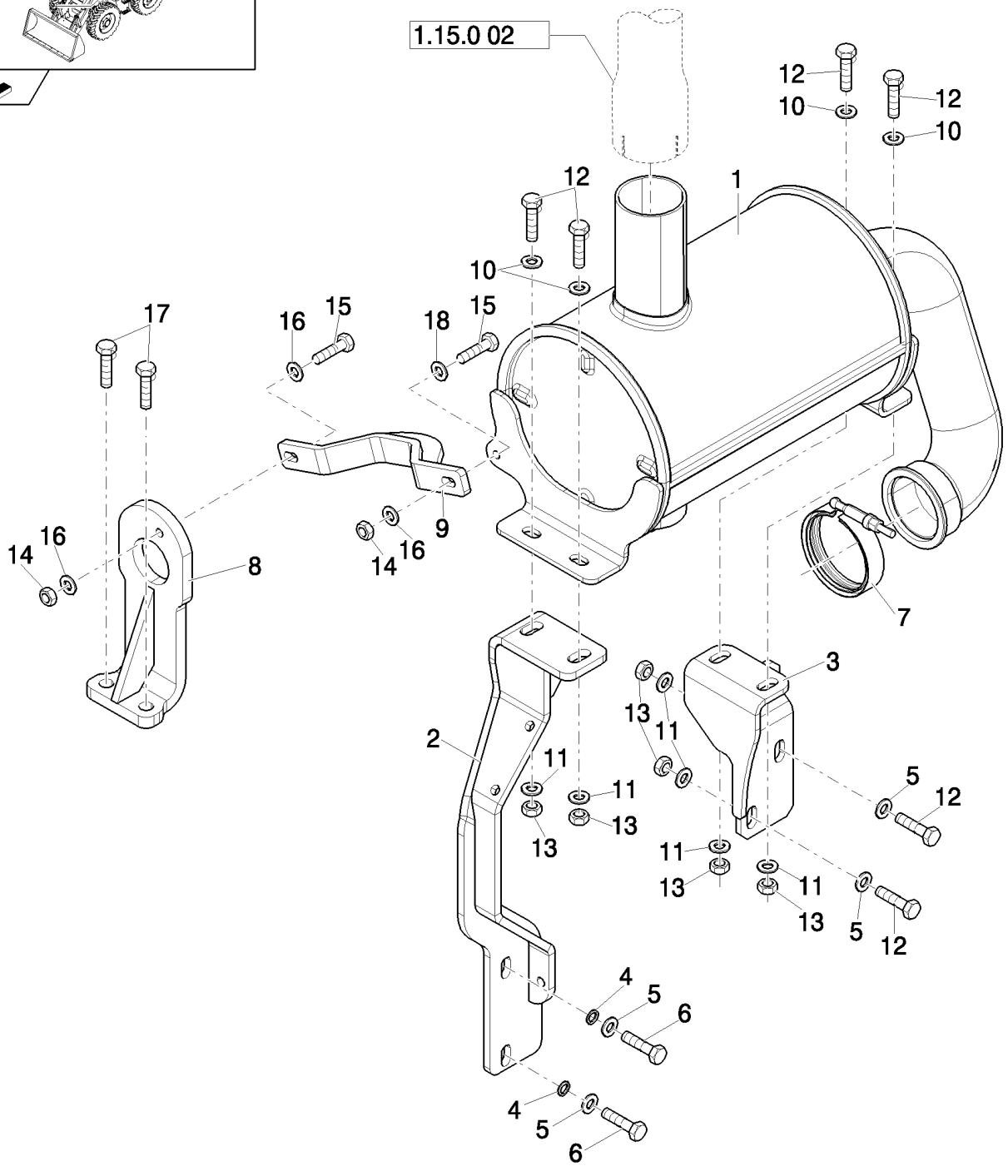

MUFFLER & EXTENSIONS

REF	FN	PART NUMBER	YR/SN	QTY	DESCRIPTION
1	1	87618524		1	MUFFLER
1	2	87474192		1	MUFFLER
2		87639182		1	BRACKET
3		87658926		1	SUPPORT
4		14496621		2	WASHER, M10 x 21 x 2
5		11198379		4	WASHER, SPRING, Belleville, M10.5
6		16040834		2	SCREW
7		47048898		1	CLAMP
8		87473026		1	HOOK
9		87473250		1	SUPPORT
10		11198479		4	WASHER
11		12638621		6	WASHER
12		11106634		6	BOLT, Hex, M10 x 35, 10.9, Full Thd
13		12577221		6	NUT, LOCK, M10 x 1.5, Cl 10
14		16100821		2	NUT, M8, Cl 10
15		15213334		2	SCREW
16		12646721		3	WASHER, M8 x 20 x 2
17		87030508		2	BOLT, Hex Flg, M12 x 30, 10.9, Full Thd
18		14499421		2	WASHER

(1) Only for B95B, B95BLR, B95BTC, B110B, B115B
(2) Only for B100B, B100BLR

EXHAUST TUBE

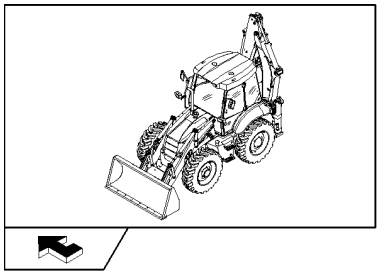

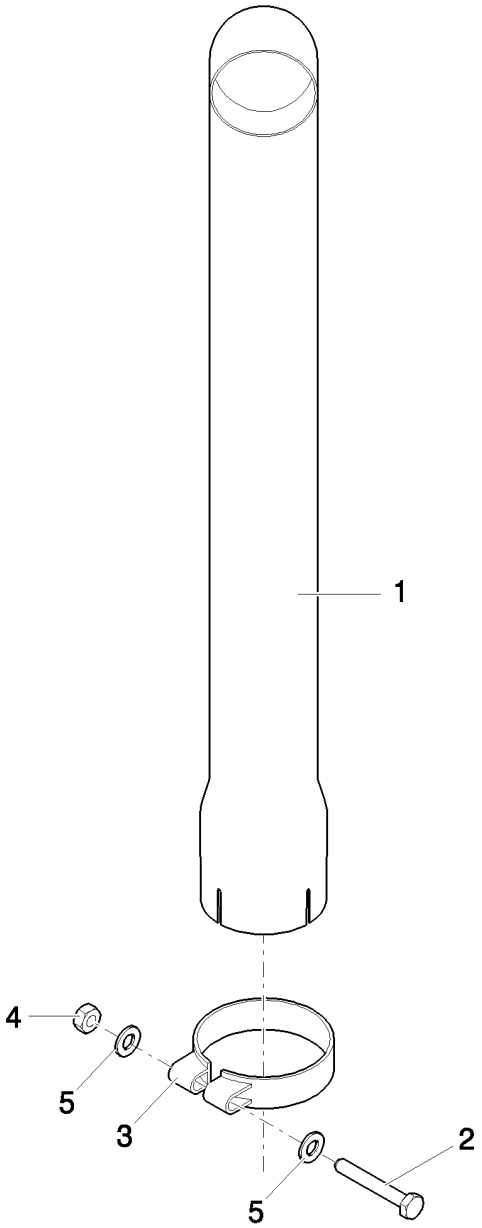

EXHAUST TUBE

REF	FN	PART NUMBER	YR/SN	QTY	DESCRIPTION
1		87673905		1	PIPE, EXHAUST SYSTEM
2		11107634		1	SCREW
3		87437804		1	PIPE CLAMP
4		11701721		1	NUT, M10, Cl 10
5		12638621		2	WASHER

AIR CLEANER & HOSES

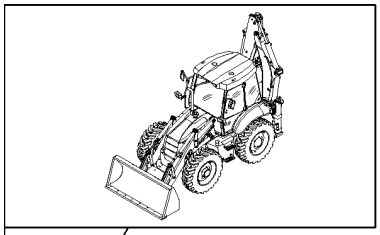

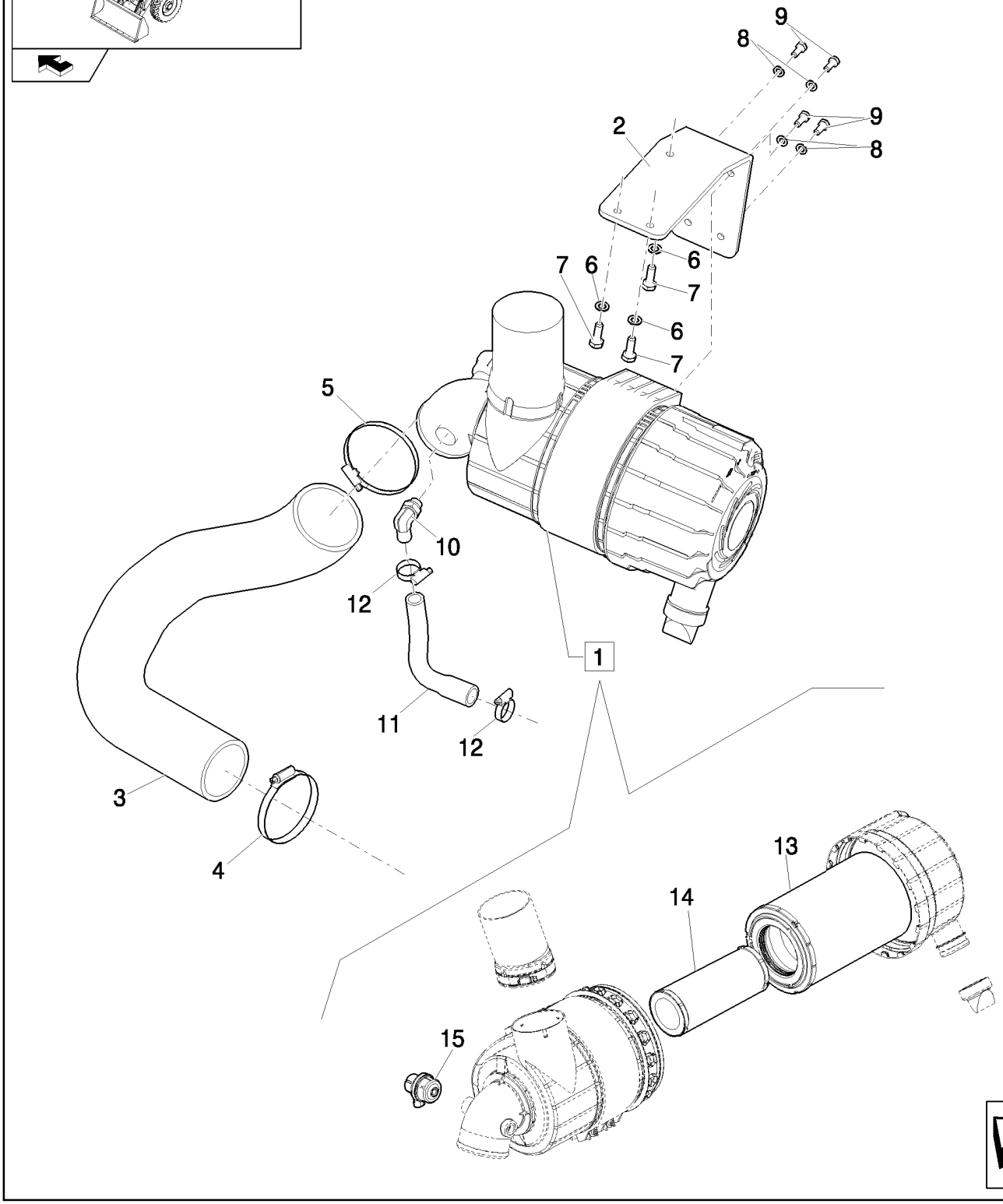

AIR CLEANER & HOSES

REF	FN	PART NUMBER	YR/SN	QTY	DESCRIPTION
1		87637579		1	FILTER ASSY
2		87701725		1	SUPPORT
3		87639183		1	HOSE, FLEXIBLE
4		87750941		1	CLAMP
5		85802743		1	CLAMP, HOSE
6		12638601		3	WASHER, M10 x 18 x 2
7		11106421		3	BOLT, Hex, M10 x 30, 8.8
8		12638511		4	WASHER, M8 x 15 x 1.5
9		16043421		4	SCREW, Hex, M8 x 20, 8.8
10		87647474		1	FITTING
11		87647609		1	HOSE, FLEXIBLE
12		85803013		2	CLAMP, HOSE
13		87631623		1	FILTER, AIR
14		87631625		1	FILTER, AIR
15		87631670		1	POINTER

1.21.5		p1	04/08

FRAME (CENTER PIVOT)

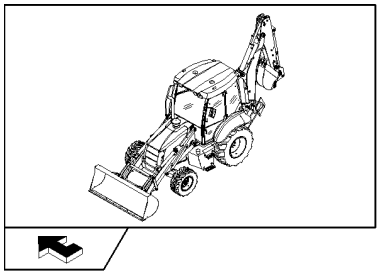

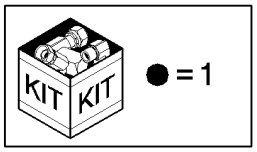

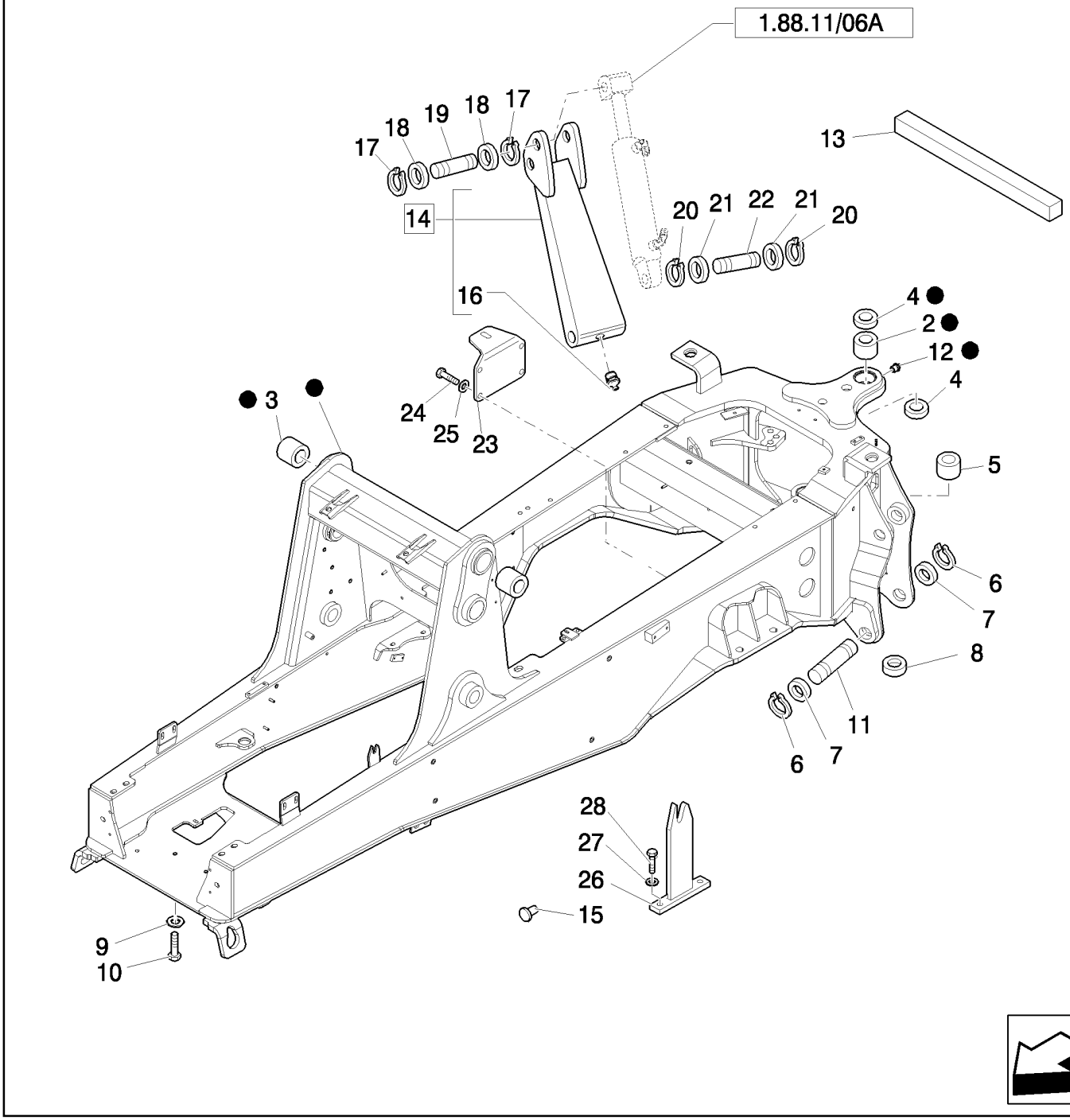

FRAME (CENTER PIVOT)

REF	FN	PART NUMBER	YR/SN	QTY	DESCRIPTION
1	1	87626855		1	FRAME
2		85700728		2	BUSHING
3		85801110		2	BUSHING
4		81875248		4	GASKET
5		83910645		2	BUSHING
6		83911020		4	RING, SNAP
7		81901837		4	WASHER
8	2	85802903		1	INSULATOR
9		10520431		6	WASHER, 20x35
10		15989134		6	BOLT, Hex, M20 x 100, 10.9
11		83911000		2	PIN
12		83416242		2	NIPPLE, LUBE
13		85802338		1	STRIP-GASKET
14		85803959		1	STABILIZER, Assy, LH
14		85803960		1	STABILIZER, Assy, RH
15		85808422		2	PLUG
16		81818824		2	NIPPLE, LUBE, 90º, 1/8"-27 NPT
17		83910630		4	RING
18		83910629		4	WASHER
19		83999466		2	PIN
20		83911019		4	CIRCLIP
21		83910977		4	SPACER
22		85801262		2	PIN
23		85804171		1	SUPPORT
24		15540534		4	BOLT, Hex, M12 x 1.25 x 35, 10.9, Full Thd
25		11198679		4	WASHER, SPRING, Belleville, M13
26		87302151		1	SUPPORT, RH
27		11193874		2	WASHER, SPRING, Belleville, M8.4
28		16043421		2	SCREW, Hex, M8 x 20, 8.8

(1) Includes 2, 3, 5
(2) Only for NA

NOTES

SECTION INDEX

Transmission and Power take-off

1.28.0		TRANSMISSION
1.28.0/ A	01	TORQUE CONVERTER COMPONENTS (2WD POWER-SHUTTLE)
1.28.0/ A	02	GEARSHIFT OUTER COMPONENTS (2WD POWER-SHUTTLE)
1.28.0/ A	03	GEARSHIFT HYDRAULIC COMPONENTS (2WD POWER-SHUTTLE)
1.28.0/ A	04	PARKING BRAKE (2WD POWER-SHUTTLE)
1.28.0/ A	05	TRANSMISSIONGEARING SPEED GEAR (2WD POWER-SHUTTLE)
1.28.0/ A	06	FRONT TRANSMISSION SHAFT (2WD POWER-SHUTTLE)
1.28.0/ A	07	GEARSHIFT GEAR DRIVES (2WD POWER-SHUTTLE)
1.28.0/ B	01	TORQUE CONVERTER COMPONENTS AND GEARSHIFT GEAR DRIVES (4WD POWER-SHUTTLE)
1.28.0/ B	02	GEARSHIFT OUTER COMPONENTS (4WD POWER-SHUTTLE)
1.28.0/ B	03	GEARSHIFT HYDRAULIC COMPONENTS (4WD POWER-SHUTTLE)
1.28.0/ B	04	PARKING BRAKE (4WD POWER-SHUTTLE)
1.28.0/ B	05	TRANSMISSIONGEARING SPEED GEAR (4WD POWER-SHUTTLE)
1.28.0/ B	06	FRONT TRANSMISSION SHAFT (4WD POWER-SHUTTLE)
1.28.0/ B	07	GEARSHIFT GEAR DRIVES (4WD POWER-SHUTTLE)
1.28.0/ B	08	REAR DRIVE SHAFT GEARS (4WD POWER-SHUTTLE)
1.28.6		OIL DIPSTICK / TOP UP (POWER-SHUTTLE)
1.29.1		TRANSMISSION ESTERNALSHIFTING CONTROLS (POWER-SHUTTLE)
1.38.1		FRONT AND REAR TRANSMISSION SHAFT (POWER-SHUTTLE)
1.39.8		TRANSMISSION OIL COOLING PIPES (POWER-SHUTTLE)

TRANSMISSION

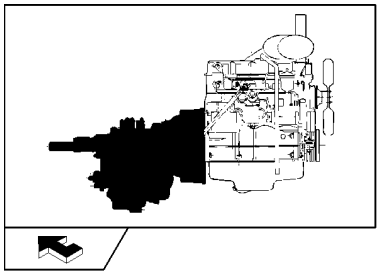

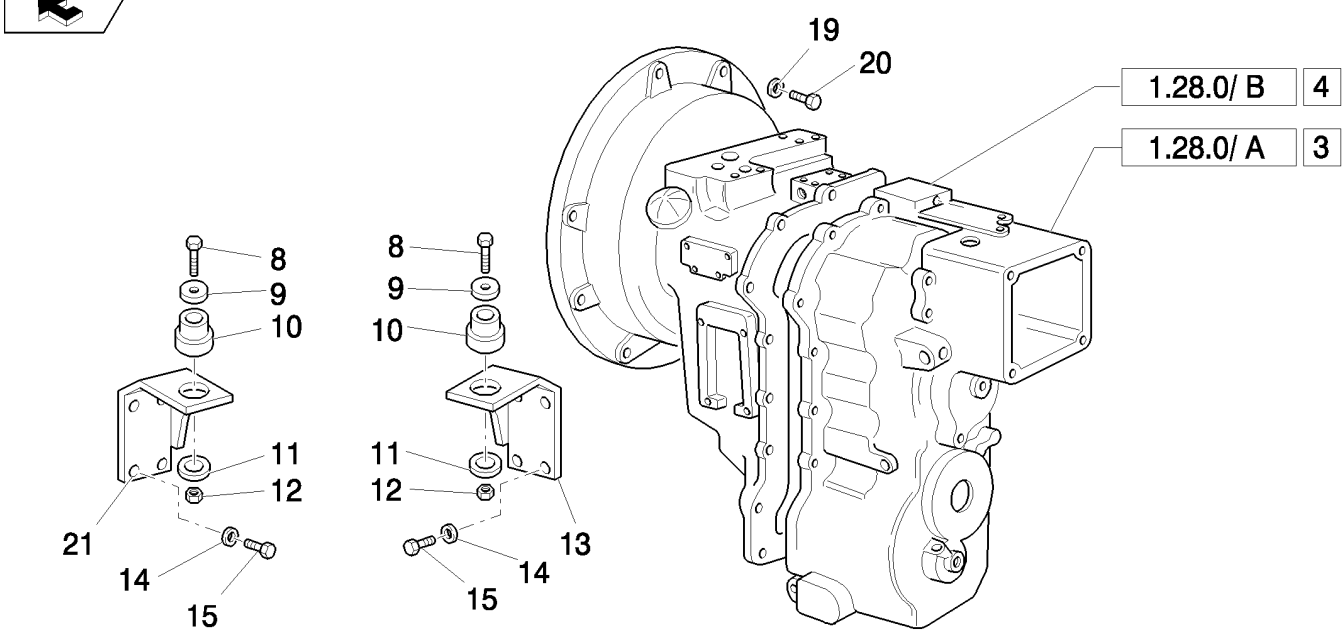

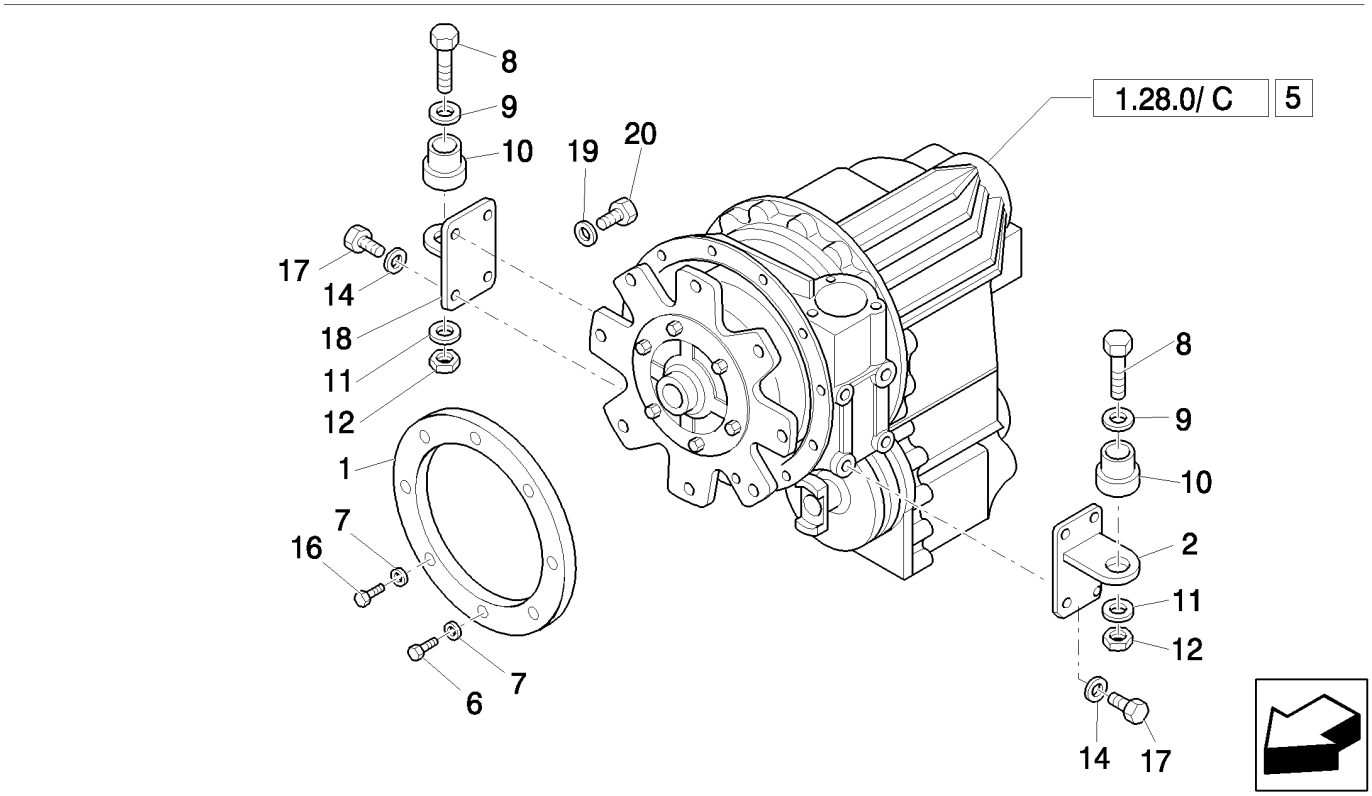

TRANSMISSION

REF	FN	PART NUMBER	YR/SN	QTY	DESCRIPTION
1		87407758		1	RING
2		85804276		1	SUPPORT, LH
3	1	86990712		1	TRANSMISSION, Assy
4	2, 3	86990713		1	TRANSMISSION, Assy
5	4	87749355		1	TRANSMISSION, 2WS, Assy
5	5	87749354		1	TRANSMISSION, 4WS, Assy
6		87021704		4	SCREW, 12 Pt Hd, M10 x 1.25 x 50, 12.9
7		11190779		4	WASHER, SPRING, Belleville, M13
8		87410647		2	SCREW, M12x1.25x90
9		85801585		2	WASHER, SEALING, 65mm OD
10		87416967		2	SUPPORT
11		85802618		2	WASHER, SEALING
12		16105011		2	NUT, LOCK, M12x1.75x1.25
13		87405629		1	SUPPORT, LH
14		11198679		8	WASHER, SPRING, Belleville, M13
15		11112634		8	SCREW, M12x35
16		87019767		4	SCREW, 12 Pt Hd, M10 x 1.25 x 30, 12.9
17		11112434		8	BOLT, Hex, M12 x 30, 10.9, Full Thd
18		85804275		1	SUPPORT, RH
19		47049372		12	WASHER
20		11106434		12	BOLT, Hex, M10 x 30, 10.9, Full Thd
21		87405628		1	SUPPORT, RH

(1) Only for 2WD, Power Shuttle
(2) Only for 4WD, Power Shuttle
(3) Repair and exchange component available - call Avatar Components, 1-800-453-3544, ext. 122
(4) Only for B110B 4WD, Power Shift
(5) Only for B115B 4WD, Power Shift

TORQUE CONVERTER COMPONENTS (2WD POWER-SHUTTLE)

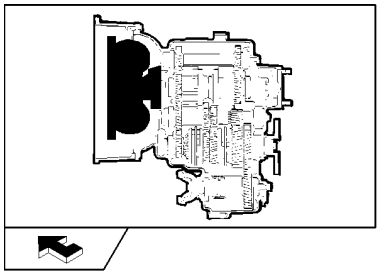

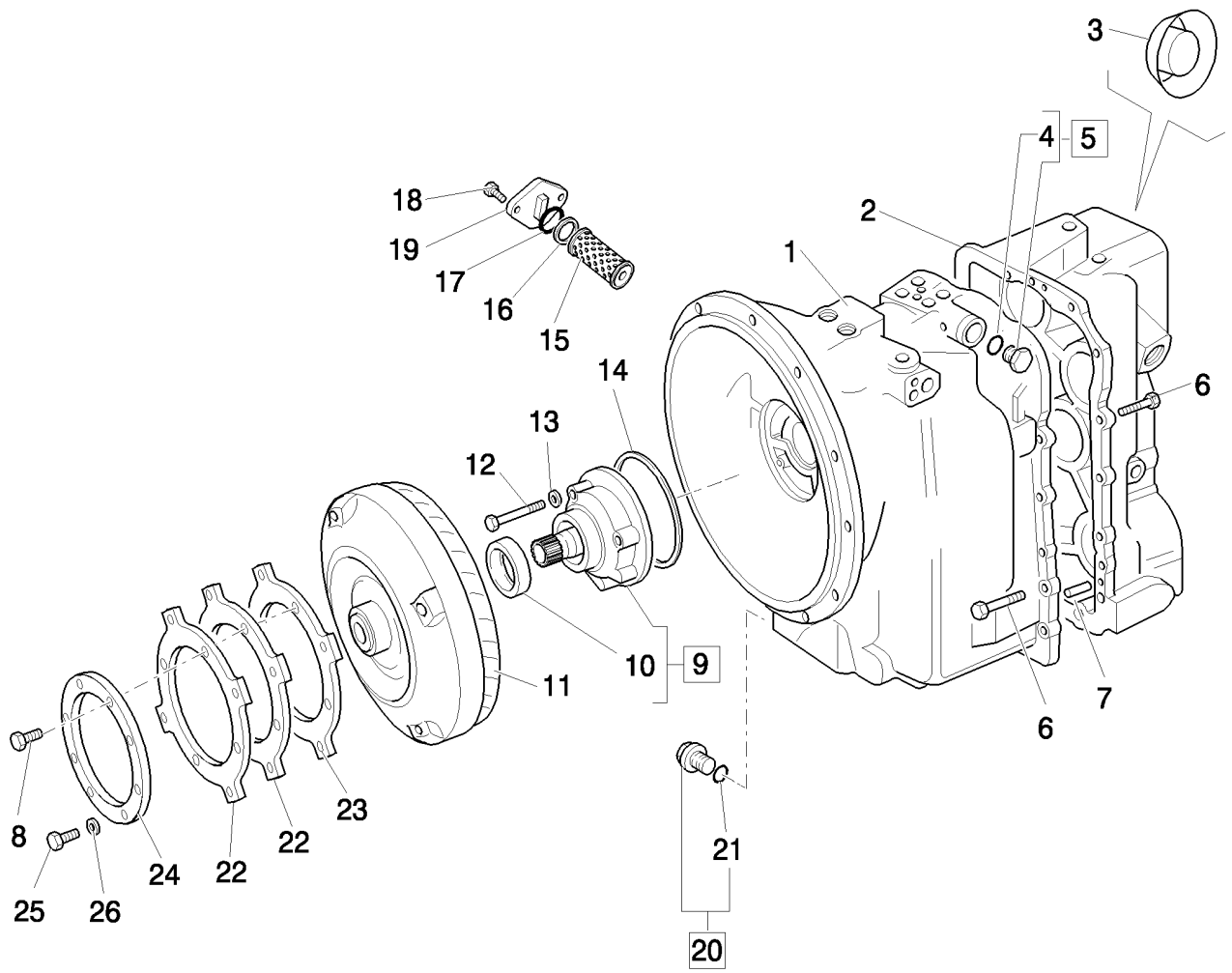

TORQUE CONVERTER COMPONENTS (2WD POWER-SHUTTLE)

REF	FN	PART NUMBER	YR/SN	QTY	DESCRIPTION
1		85827769		1	TRANSMISSION HOUSING
2		85827770		1	TRANSMISSION HOUSING
3		85812096		1	PLUG
4		9968218		1	O-RING, 9/16"
5		9968219		1	PLUG, Assy, 9/16" UNF, 2
6		85817164		17	SCREW
7		9968356		2	DOWEL
8		87019767		4	SCREW, 12 Pt Hd, M10 x 1.25 x 30, 12.9, M10x1.25x90
9		9968311		1	PUMP, Assy, M10x30
10		9968312		1	SEAL
11		87400114		1	TORQUE CONVERTER
12		85817163		7	SCREW
13		85817001		4	WASHER
14		9968313		1	SEALRING
15		9968359		1	FILTER
16		9968361		1	WASHER
17		9968360		1	O-RING
18		85817169		2	SCREW
19		9968362		1	BELL HOUSING
20		9968339		1	PLUG, Assy
21		9968365		1	O-RING
22		86993546		1	PLATE
23		87406934		1	PLATE
24		87409201		1	Plate, Backing
25		11106021		4	BOLT, Hex, M10 x 20, 8.8, Full Thd
26		47049372		4	WASHER

GEARSHIFT OUTER COMPONENTS (2WD POWER-SHUTTLE)

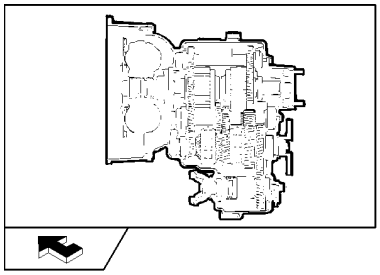

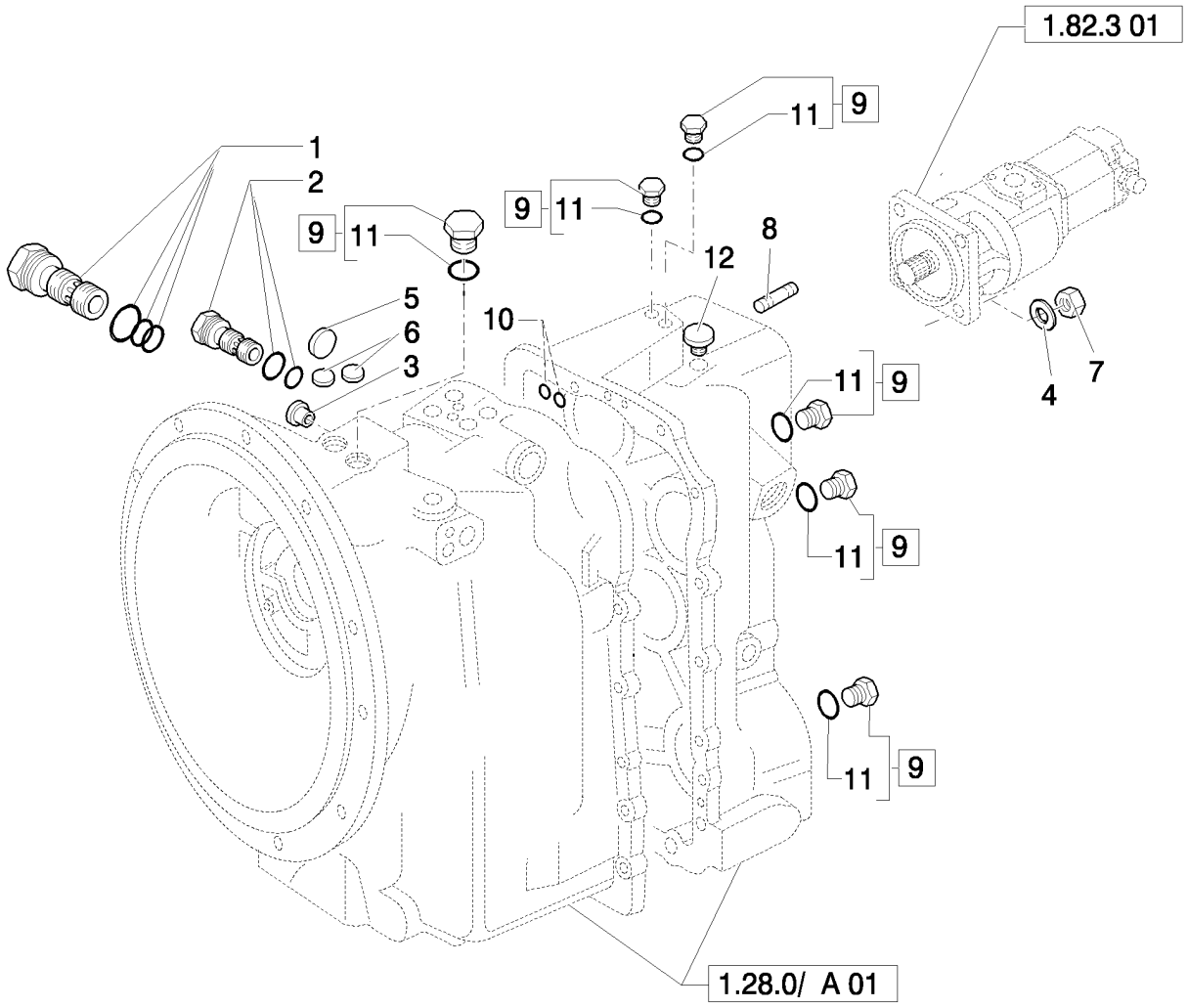

GEARSHIFT OUTER COMPONENTS (2WD POWER-SHUTTLE)

REF	FN	PART NUMBER	YR/SN	QTY	DESCRIPTION
1		9968350		1	VALVE, CONTROL, ydraulic Pressure Regulator
2		9968334		1	VALVE, PRESSURE RELIEF, Hydraulic Converter Relief
3		85812094		2	PLUG
4		11190779		4	WASHER, SPRING, Belleville, M13
5		9968371		1	PLUG, Expansion, 1"
6		9968333		2	PLUG, Tyers, .5"
7		85802684		4	NUT
8		85802683		4	STUD, 1/2"
9		9968219		AR	PLUG, Assy, 9/16" UNF
10		9968368		3	O-RING, .512" ID x .094" Thk
11		9968218		AR	O-RING, 9/16"
12		9968364		1	BREATHER

GEARSHIFT HYDRAULIC COMPONENTS (2WD POWER-SHUTTLE)

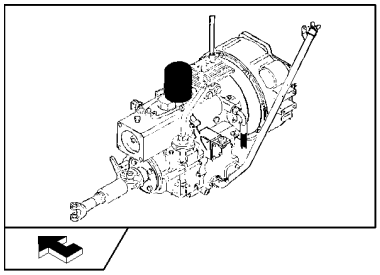

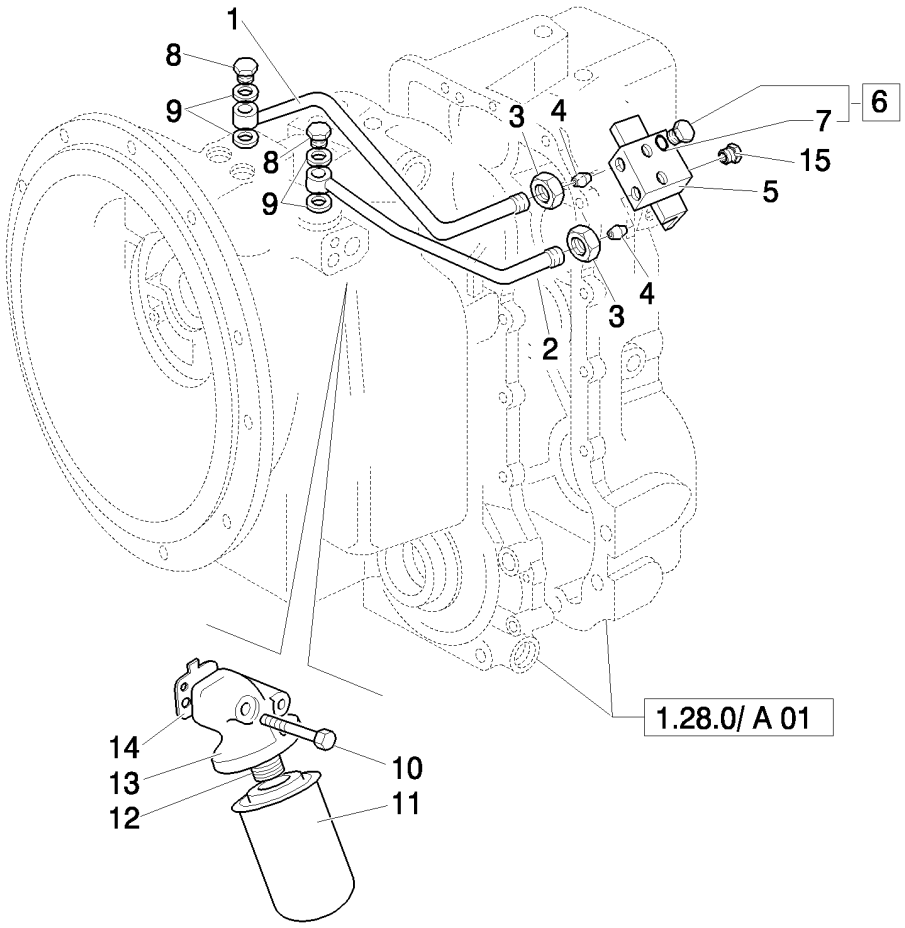

GEARSHIFT HYDRAULIC COMPONENTS (2WD POWER-SHUTTLE)

REF	FN	PART NUMBER	YR/SN	QTY	DESCRIPTION
1		85812087		1	TUBE
2		85812086		1	TUBE
3		9968336		2	NUT
4		9969449		4	CONNECTOR, HYD.
5		85812085		1	BLOCK, CONNECTING
6		9968219		2	PLUG, Assy, 9/16" UNF
7		9968218		2	O-RING, 9/16"
8		9968676		2	BOLT, BANJO
9		85817002		4	WASHER
10		85817165		2	SCREW
11		85817004		1	FILTER
12		9968354		1	ADAPTER
13		9968374		1	Head, Filter
14		9968375		1	GASKET
15		85812091		1	PLUG

1.28.0/ A	04	p1	04/08

PARKING BRAKE (2WD POWER-SHUTTLE)

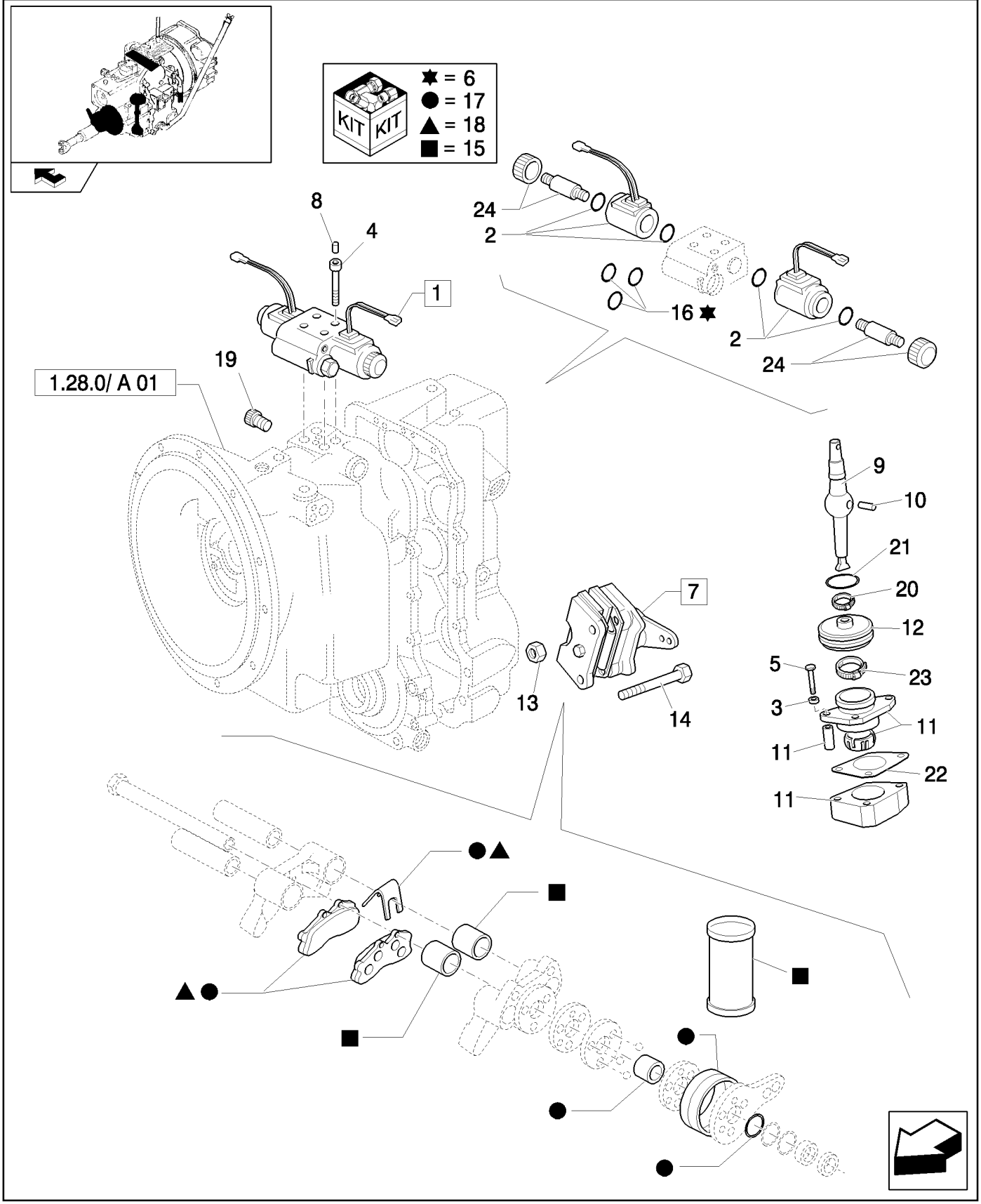

PARKING BRAKE (2WD POWER-SHUTTLE)

REF	FN	PART NUMBER	YR/SN	QTY	DESCRIPTION
1		85827764		1	VALVE, HYDRAULIC, Assy
2		85827798		2	COIL
3		85812092		3	WASHER
4		9969445		4	SCREW
5		85817163		3	SCREW
6		85827797		1	KIT, REPAIR
7		85813300		1	BRAKE, PARKING, Assy
8		85827779		4	PLUG
9		9968324		1	LEVER
10		9968327		1	PIN
11		9968326		1	SUPPORT
12		9968328		1	BOOT
13		9969281		2	NUT
14		9968299		2	BOLT
15		85813318		2	KIT, REPAIR
16		85806019		1	KIT, O-RING
17		9968926		1	KIT
18		9968927		1	KIT
19		9968370		2	PLUG
20		85827777		1	STRAP, CABLE
21		85817006		1	O-RING
22		85817007		1	GASKET
23		85827776		1	STRAP, CABLE
24		85827799		1	KIT

TRANSMISSIONGEARING SPEED GEAR (2WD POWER-SHUTTLE)

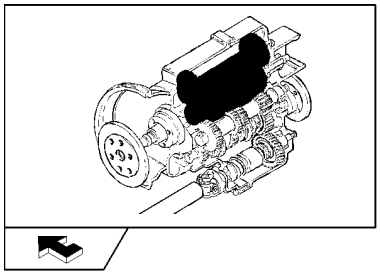

TRANSMISSIONGEARING SPEED GEAR (2WD POWER-SHUTTLE)

REF	FN	PART NUMBER	YR/SN	QTY	DESCRIPTION
1		9968279		3	WASHER
2		9968228		2	BEARING, THRUST
3		9968304		4	BEARING, NEEDLE, 50x5x17
4		9968302		2	SPACER
5		9968286		1	GEAR, 30T
6		9968291		3	RING, SNAP
7		85827771		2	SPRING-CHECK
8		85827772		2	SPRING
9		9968287		2	CIRCLIP
10		9968288		2	PLATE, BACK
11		9968290		12	CLUTCH PLATE
12		9968289		12	CLUTCH, PLATE
13		85827773		2	PISTON
14		85827774		2	SPRING
15		85821452		1	SHAFT
16		85821454		1	SLEEVE, 2.234" IDx.139" Thk
17		9968276		1	BEARING, ROLLER, TAPERED
18		9968226		4	GASKET
19		9968341		1	O-RING, M80 x 70 x 2
20		9968342		AR	SHIM, 24T-25T
20		9968343		AR	SHIM, M80 x 70 x .076
20		9968344		AR	SHIM, M80 x 70 x .178
20		9968345		AR	SHIM, M80 x 70 x .599
21		9968285		1	GEAR, 24T
22		9968305		1	BEARING, ROLLER, TAPERED
23		9968347		1	SHAFT
24		9968268		2	BEARING, ROLLER, TAPERED
25		9968281		1	GEAR, 24T-25T
26		9968262		AR	SHIM, 0.002mm Thk
26		9968263		AR	SHIM, 0.003mm Thk
26		9968264		AR	SHIM, 0.003mm Thk
26		9968265		AR	SHIM, 0.007mm Thk
26		9968266		AR	SHIM, 0.015mm Thk
26		9968267		AR	SHIM, 0.020mm Thk
27		9968261		1	SPACER

TRANSMISSIONGEARING SPEED GEAR (2WD POWER-SHUTTLE)

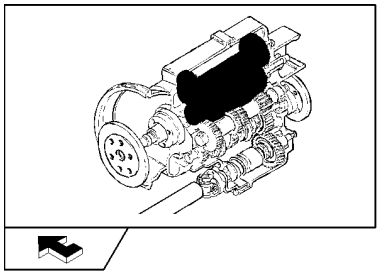

TRANSMISSIONGEARING SPEED GEAR (2WD POWER-SHUTTLE)

REF	FN	PART NUMBER	YR/SN	QTY	DESCRIPTION
28		9968282		1	SHAFT, Assy
29		9968314		1	SEALRING, 40 mm
30		9968230		1	WASHER, M40 x 70 x 4

FRONT TRANSMISSION SHAFT (2WD POWER-SHUTTLE)

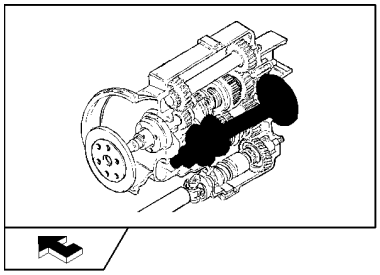

FRONT TRANSMISSION SHAFT (2WD POWER-SHUTTLE)

REF	FN	PART NUMBER	YR/SN	QTY	DESCRIPTION
1		9968308		1	SCREW
2		9968306		1	WASHER
3		9968309		1	O-RING, 1.29" IDx.139" Thk
4		85820909		1	FLANGE
5		85825506		1	SEAL, M48x62x8
6		9968271		1	SPACER
7		9968272		AR	SHIM, 0.051mm Thk
7		9968273		AR	SHIM, 0.076mm Thk
7		9968274		AR	SHIM, 0.178mm Thk
7		9968275		AR	SHIM, 0.559mm Thk
8		9968270		1	BEARING, BALL
9		85827803		1	GEAR, 4th Output Shaft 19T
10		9968252		1	SPACER
11		9968250		2	BEARING, NEEDLE
12		9968251		1	SPACER
13		9968248		1	GEAR, 43T, 1ST
14		9968307		2	SYNCHRONIZER
15		9968223		2	SLEEVE
16		9968247		1	GEAR, 37T, 2ND
17		9968269		1	SHAFT
18		9968246		1	GEAR, 28T, 3RD
19		9968396		1	SPACER
20		9968358		1	CAP, Sealing Cap, 2.25"
21		9968253		1	RING, SNAP
22		9968278		1	BEARING, ROLLER, TAPERED
23		9968260		1	WASHER, 55x4

GEARSHIFT GEAR DRIVES (2WD POWER-SHUTTLE)

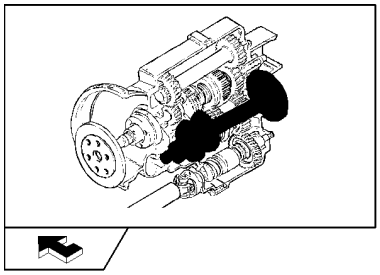

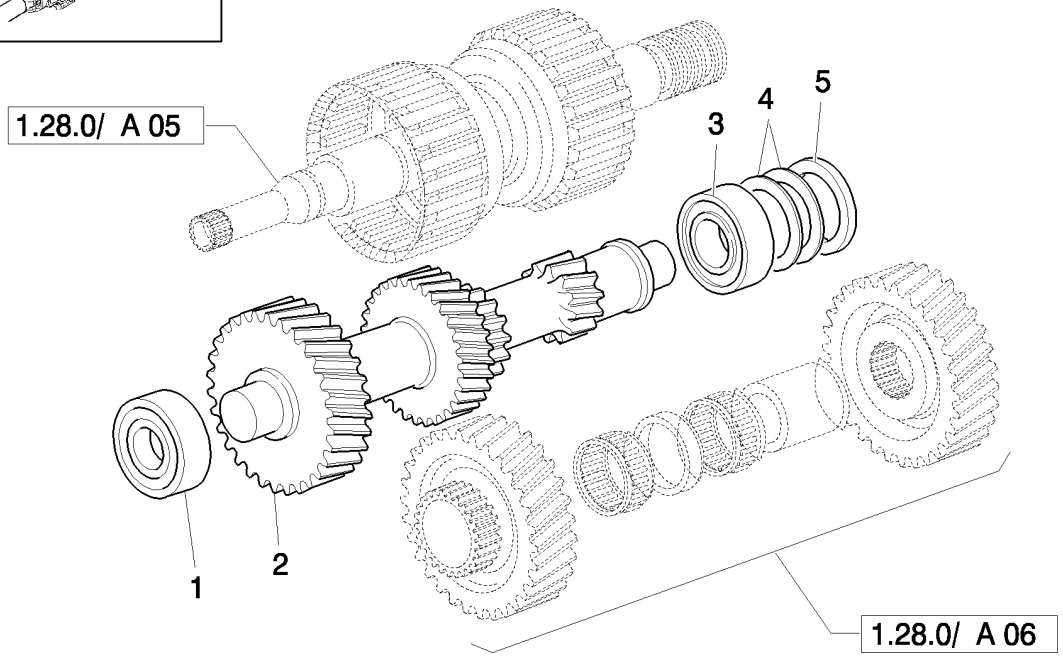

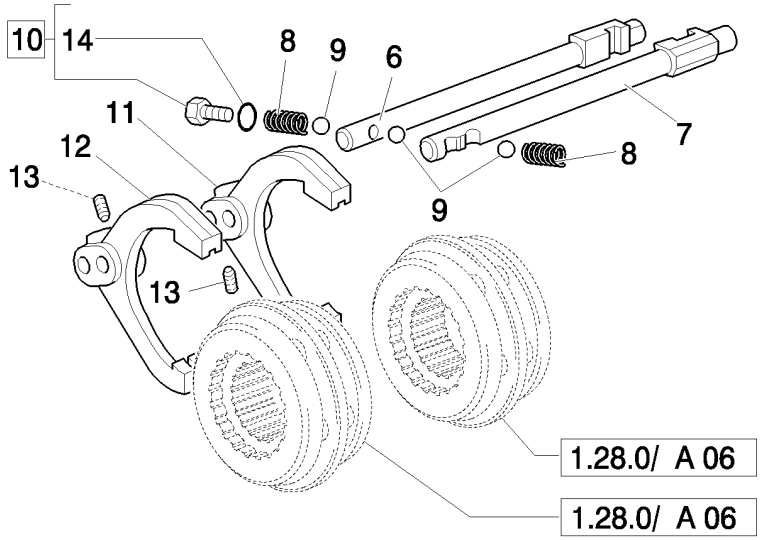

GEARSHIFT GEAR DRIVES (2WD POWER-SHUTTLE)

REF	FN	PART NUMBER	YR/SN	QTY	DESCRIPTION
1		9968277		1	BEARING, ROLLER, TAPERED
2		9968280		1	SHAFT, 35T-29T-20T-13T
3		9968270		1	BEARING, BALL
4		9968272		AR	SHIM, 0.051mm Thk
4		9968273		AR	SHIM, 0.076mm Thk
4		9968274		AR	SHIM, 0.178mm Thk
4		9968275		AR	SHIM, 0.559mm Thk
5		9968271		1	SPACER
6		9968319		1	SHIFT RAIL, 1st-2nd
7		9968322		1	SHIFT RAIL, 3rd-4th
8		9968316		2	SPRING
9		9968315		3	BALL
10		9968219		1	PLUG, Assy, 9/16" UNF
11		9968317		1	FORK, SHIFTER, 1st-2nd
12		9968318		1	FORK, SHIFTER, 3rd-4th
13		9968323		2	SCREW
14		9968218		AR	O-RING, 9/16"

TORQUE CONVERTER COMPONENTS AND GEARSHIFT GEAR DRIVES (4WD POWER-SHUTTLE)

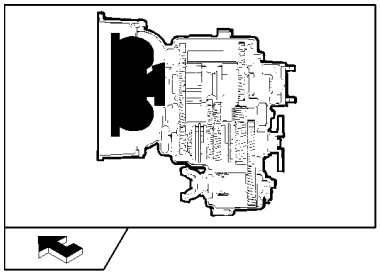

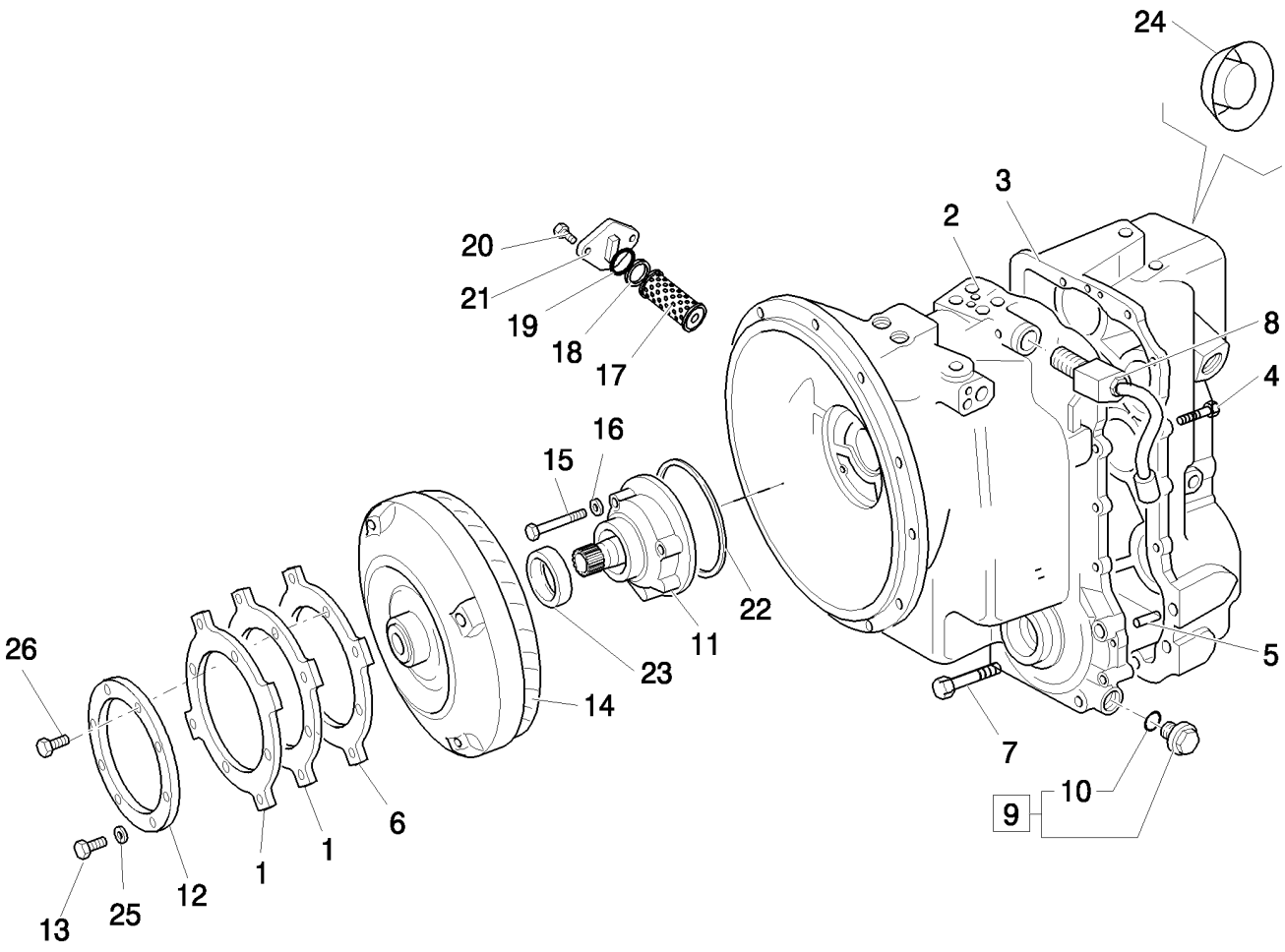

TORQUE CONVERTER COMPONENTS AND GEARSHIFT GEAR DRIVES (4WD POWER-SHUTTLE)

REF	FN	PART NUMBER	YR/SN	QTY	DESCRIPTION
1		86993546		2	PLATE
2		85827783		1	TRANSMISSION HOUSING
3		85827784		1	TRANSMISSION HOUSING
4		85817164		14	SCREW
5		9968356		2	DOWEL
6		87406934		1	PLATE
7		85817190		4	SCREW
8		9968351		1	VALVE, SOLENOID, 4WD Solenoid
9		9968339		1	PLUG, Assy
10		9968365		1	O-RING
11		9968311		1	PUMP
12		87409201		1	Plate, Backing
13		11106021		4	BOLT, Hex, M10 x 20, 8.8, Full Thd
14		87400114		1	TORQUE CONVERTER
15		85817163		7	SCREW
16		85817001		4	WASHER
17		9968359		1	FILTER
18		9968361		1	WASHER
19		9968360		1	O-RING
20		85817169		2	SCREW
21		9968362		1	BELL HOUSING
22		9968313		1	SEALRING
23		85825506		1	SEAL
24		85812096		1	PLUG
25		47049372		4	WASHER
26		87019767		4	SCREW, 12 Pt Hd, M10 x 1.25 x 30, 12.9, M10x1.25x90

GEARSHIFT OUTER COMPONENTS (4WD POWER-SHUTTLE)

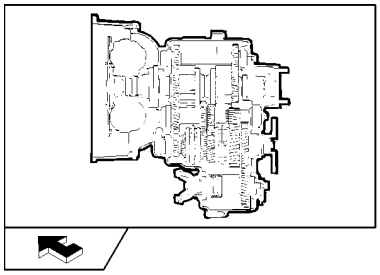

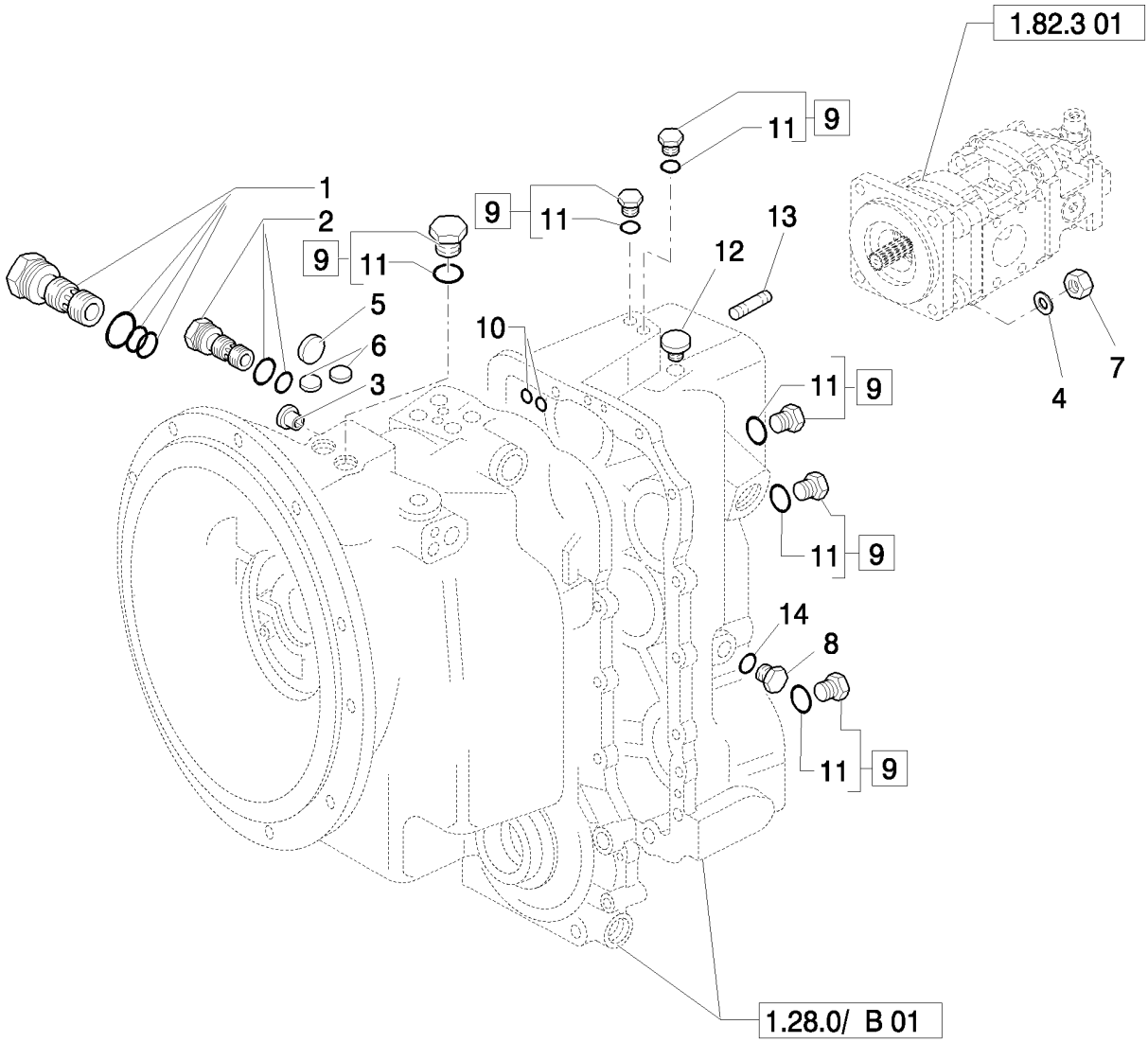

GEARSHIFT OUTER COMPONENTS (4WD POWER-SHUTTLE)

REF	FN	PART NUMBER	YR/SN	QTY	DESCRIPTION
1		9968350		1	VALVE, CONTROL, Hydraulic Pressure Regulator
2		9968334		1	VALVE, PRESSURE RELIEF, Hydraulic Converter Relief
3		85812094		2	PLUG
4		11190779		4	WASHER, SPRING, Belleville, M13
5		9968371		1	PLUG, Expansion, 1"
6		9968333		2	PLUG, Tyers, .5"
7		85802684		4	NUT
8		9968382		1	PLUG
9		9968219		AR	PLUG, Assy, 9/16" UNF
10		9968368		4	O-RING, .512" IDx.094"Thk
11		9968218		AR	O-RING, 9/16"
12		9968364		1	BREATHER
13		85802683		4	STUD, 1/2"
14		9968383		1	WASHER

GEARSHIFT HYDRAULIC COMPONENTS (4WD POWER-SHUTTLE)

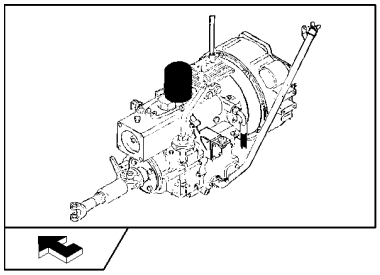

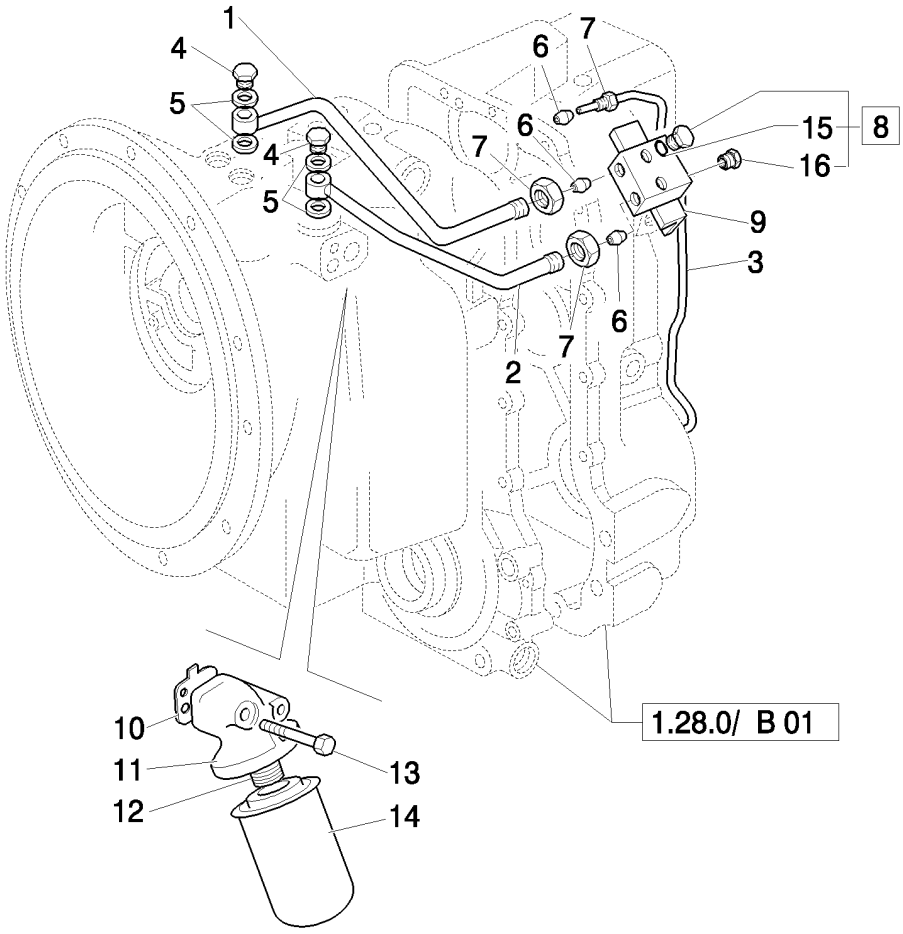

GEARSHIFT HYDRAULIC COMPONENTS (4WD POWER-SHUTTLE)

REF	FN	PART NUMBER	YR/SN	QTY	DESCRIPTION
1		85812086		1	TUBE
2		85812087		1	TUBE
3		9968337		1	TUBE, 4WD
4		9968676		2	BOLT, BANJO
5		85817002		4	WASHER
6		9968340		AR	CONNECTOR, HYD.
7		9968336		AR	NUT
8		9968219		2	PLUG, Assy, 9/16" UNF
9		85812085		1	BLOCK, CONNECTING
10		9968375		1	GASKET
11		9968374		1	Head, Filter
12		9968354		1	ADAPTER
13		85817165		2	SCREW
14		85817004		1	FILTER
15		9968218		AR	O-RING, 9/16"
16		85812091		1	PLUG

1.28.0/ B	04	p1	04/08

PARKING BRAKE (4WD POWER-SHUTTLE)

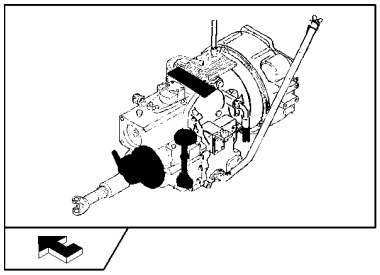

PARKING BRAKE (4WD POWER-SHUTTLE)

REF	FN	PART NUMBER	YR/SN	QTY	DESCRIPTION
1		85827764		1	VALVE, HYDRAULIC, Assy
2		85827798		2	COIL
3		85812092		3	WASHER
4		9969445		4	SCREW
5		85817163		3	SCREW
6		85827797		1	KIT, REPAIR
7		85813300		1	BRAKE, PARKING, Assy
8		85827779		4	PLUG, 2WD
9		9968324		1	LEVER
10		9968327		1	PIN
11		9968326		1	SUPPORT
12		9968328		1	BOOT
13		9969281		2	NUT
14		9968299		2	BOLT
15		85813318		1	KIT, REPAIR
16		85806019		1	KIT, O-RING
17		9968926		1	KIT
18		9968927		1	KIT
19		9968370		2	PLUG, Plastic, .25"
20		85827777		1	STRAP, CABLE
21		85817006		1	O-RING
22		85817007		1	GASKET
23		85827776		1	STRAP, CABLE
24		85827799		1	KIT

TRANSMISSIONGEARING SPEED GEAR (4WD POWER-SHUTTLE)

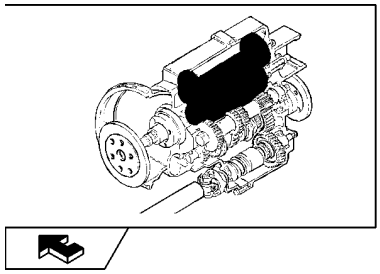

TRANSMISSIONGEARING SPEED GEAR (4WD POWER-SHUTTLE)

REF	FN	PART NUMBER	YR/SN	QTY	DESCRIPTION
1		9968279		3	WASHER, 50x70x4
2		9968228		2	BEARING, THRUST
3		9968304		4	BEARING, NEEDLE, 50x5x17
4		9968302		2	SPACER
5		9968286		1	GEAR, 30T
6		9968291		3	RING, SNAP
7		85827771		2	SPRING-CHECK
8		85827772		2	SPRING
9		9968287		2	CIRCLIP
10		9968288		2	PLATE, BACK
11		9968290		12	CLUTCH PLATE
12		9968289		12	CLUTCH, PLATE
13		85827773		2	PISTON
14		85827774		2	SPRING
15		85821452		1	SHAFT
16		85821454		1	SLEEVE
17		9968276		1	BEARING, ROLLER, TAPERED
18		9968226		4	GASKET
19		9968341		1	O-RING, M80 x 70 x 2
20		9968342		AR	SHIM, 24T-25T
20		9968343		AR	SHIM, M80 x 70 x .076
20		9968344		AR	SHIM, M80 x 70 x .178
20		9968345		AR	SHIM, M80 x 70 x .599
21		9968285		1	GEAR, 24T
22		9968305		1	BEARING, ROLLER, TAPERED
23		9968347		1	SHAFT
24		9968268		2	BEARING, ROLLER, TAPERED
25		9968281		1	GEAR, 24T-25T
26		9968262		AR	SHIM, 0.002mm Thk
26		9968263		AR	SHIM, 0.003mm Thk
26		9968264		AR	SHIM, 0.003mm Thk
26		9968265		AR	SHIM, 0.007mm Thk
26		9968266		AR	SHIM, 0.015mm Thk
26		9968267		AR	SHIM, 0.020mm Thk
27		9968261		1	SPACER

1.28.0/ B	05	p2	04/08

TRANSMISSIONGEARING SPEED GEAR (4WD POWER-SHUTTLE)

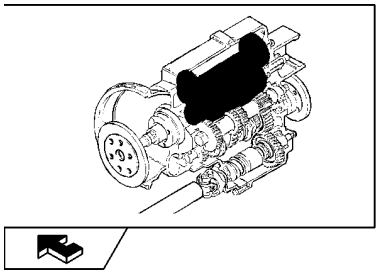

TRANSMISSIONGEARING SPEED GEAR (4WD POWER-SHUTTLE)

REF	FN	PART NUMBER	YR/SN	QTY	DESCRIPTION
28		9968282		1	SHAFT, Assy
29		9968314		1	SEALRING, 40 mm
30		9968230		1	WASHER, M40 x 70 x 4

FRONT TRANSMISSION SHAFT (4WD POWER-SHUTTLE)

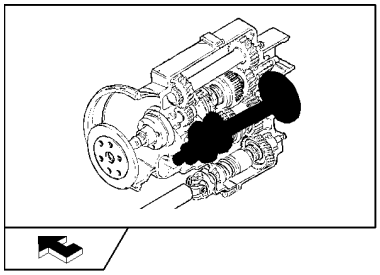

FRONT TRANSMISSION SHAFT (4WD POWER-SHUTTLE)

REF	FN	PART NUMBER	YR/SN	QTY	DESCRIPTION
1		9968308		1	SCREW
2		9968306		1	WASHER
3		9968309		1	O-RING, 1.29"IDx.139"Thk
4		85820909		1	FLANGE
5		85825506		1	SEAL, M48x62x8
6		9968271		1	SPACER
7		9968272		AR	SHIM, 0.051mm Thk
7		9968273		AR	SHIM, 0.076mm Thk
7		9968274		AR	SHIM, 0.178mm Thk
7		9968275		AR	SHIM, 0.559mm Thk
8		9968270		1	BEARING, BALL
9		9968249		1	GEAR, 4WD
10		9968252		1	SPACER
11		9968250		2	BEARING, NEEDLE
12		9968251		1	SPACER
13		9968248		1	GEAR, 43T, 1ST
14		9968307		2	SYNCHRONIZER
15		9968223		2	SLEEVE
16		9968247		1	GEAR, 37T, 2ND
17		9968269		1	SHAFT
18		9968246		1	GEAR, 28T 3RD
19		9968278		1	BEARING, ROLLER, TAPERED
20		9968358		1	CAP, Sealing Cap, 2.25"
21		9968253		1	RING, SNAP
22		85827803		1	GEAR, 4th Output Shaft 19T
23		9968260		1	WASHER, 55x35x4

GEARSHIFT GEAR DRIVES (4WD POWER-SHUTTLE)

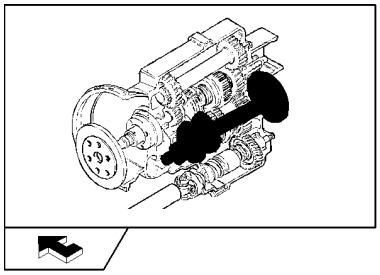

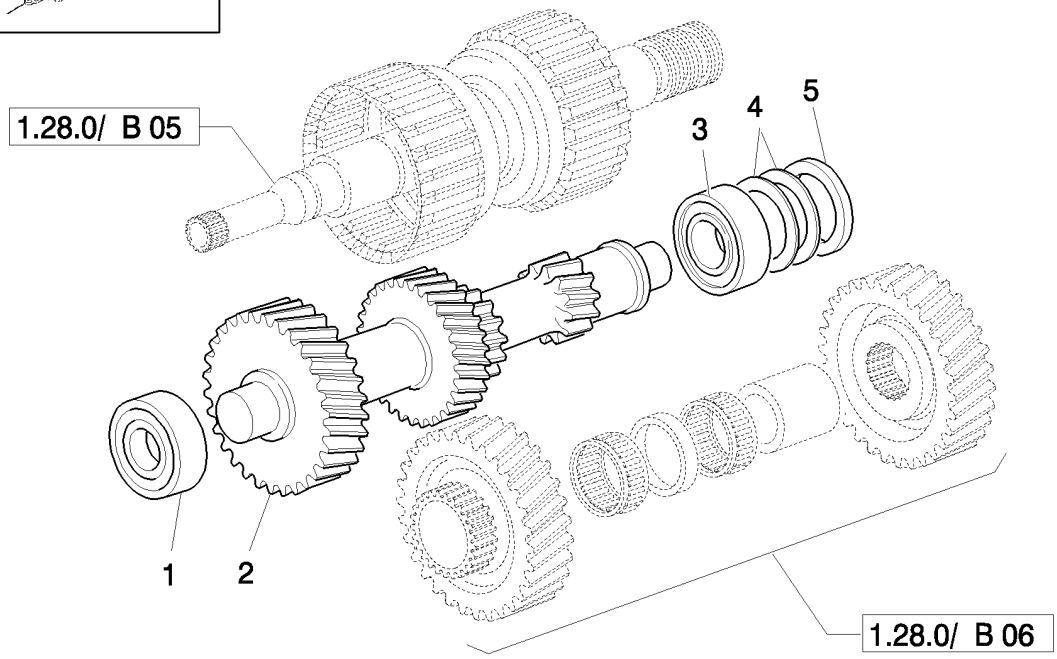

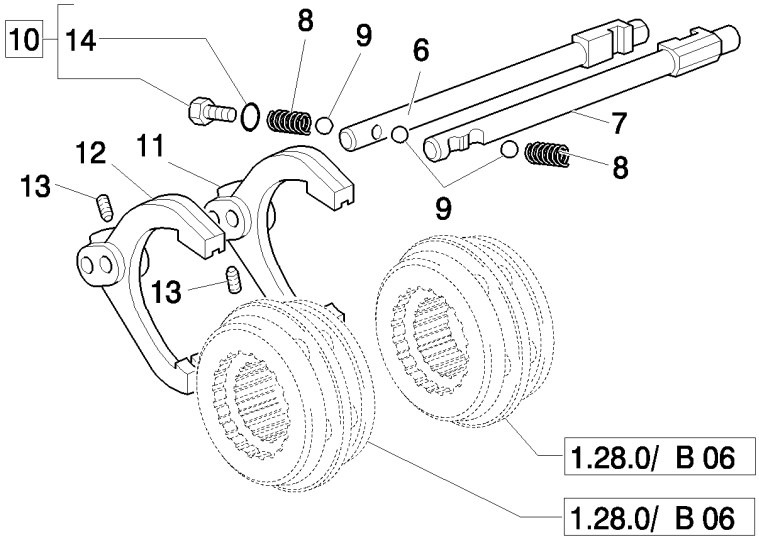

GEARSHIFT GEAR DRIVES (4WD POWER-SHUTTLE)

REF	FN	PART NUMBER	YR/SN	QTY	DESCRIPTION
1		9968277		1	BEARING, ROLLER, TAPERED
2		9968280		1	SHAFT, 35T-29T-20T-13T
3		9968270		1	BEARING, BALL
4		9968272		AR	SHIM, 0.051mm Thk
4		9968273		AR	SHIM, 0.076mm Thk
4		9968274		AR	SHIM, 0.178mm Thk
4		9968275		AR	SHIM, 0.559mm Thk
5		9968271		1	SPACER
6		9968319		1	SHIFT RAIL, 1st-2nd
7		9968322		1	SHIFT RAIL, 3rd-4th
8		9968316		2	SPRING
9		9968315		3	BALL
10		9968219		AR	PLUG, Assy, 9/16" UNF
11		9968317		1	FORK, SHIFTER, 1st-2nd
12		9968318		1	FORK, SHIFTER, 3rd-4th
13		9968323		2	SCREW
14		9968218		AR	O-RING, 9/16"

REAR DRIVE SHAFT GEARS (4WD POWER-SHUTTLE)

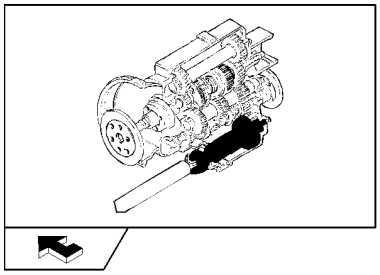

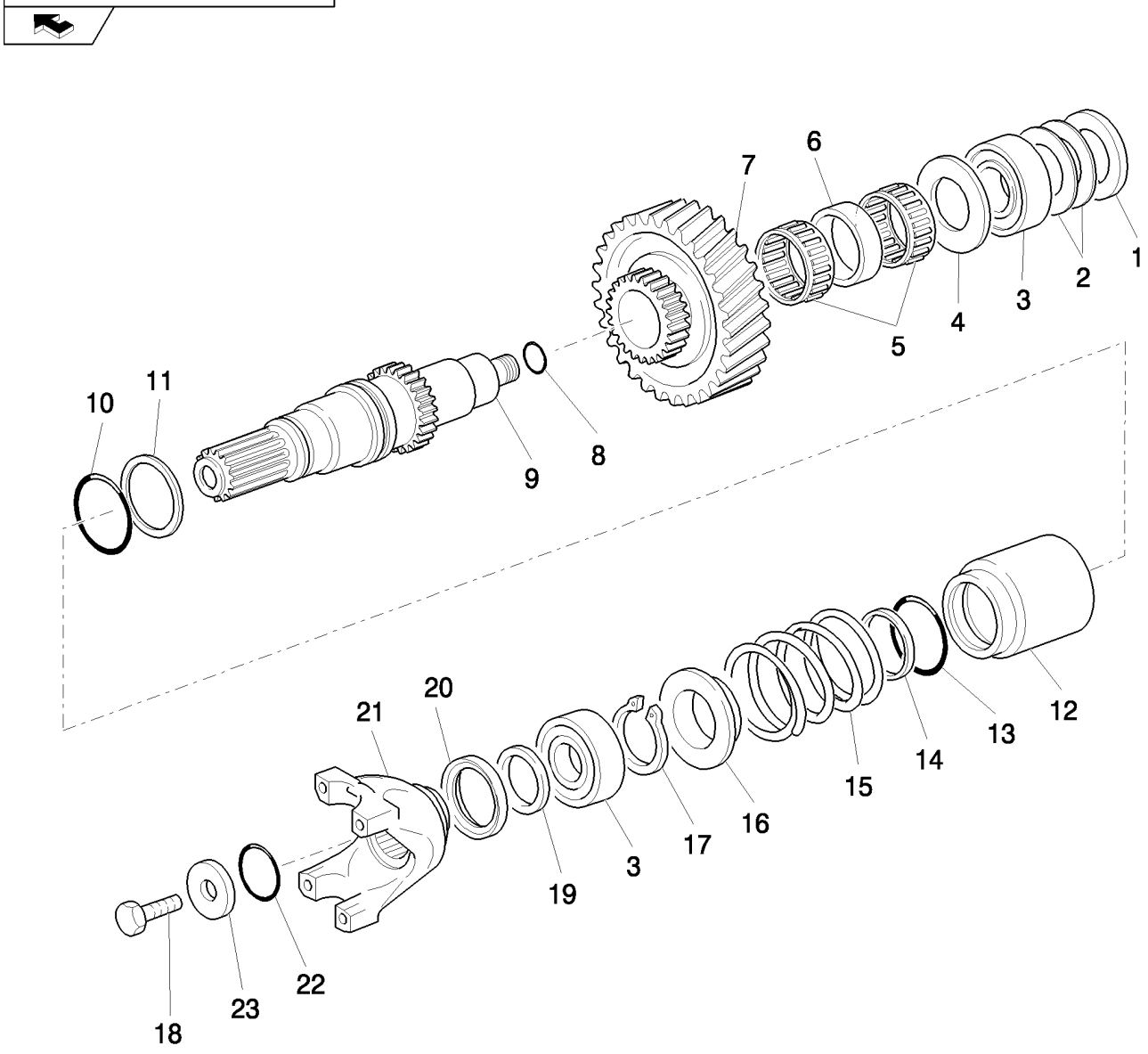

REAR DRIVE SHAFT GEARS (4WD POWER-SHUTTLE)

REF	FN	PART NUMBER	YR/SN	QTY	DESCRIPTION
1		9968255		1	SPACER
2		9968256		AR	SHIM, 67.5 x 58 x 0.051 mm
2		9968257		AR	SHIM, 67.5 x 58 x 0.076 mm
2		9968258		AR	SHIM, 67.5x58x0.178
2		9968259		AR	SHIM, 67.5 x 58 x 0.599 mm
3		9968276		2	BEARING, ROLLER, TAPERED
4		9968244		1	WASHER, THRUST, 65 x 40.5 x 4
5		85827782		2	BEARING, NEEDLE
6		9968393		1	SPACER
7		9968240		1	GEAR, 35T
8		9968254		1	O-RING
9		9968239		1	SHAFT
10		9968232		1	O-RING, 1.859"IDx.139"Thk
11		9968229		1	GASKET
12		9968234		1	CLUTCH
13		9968298		1	O-RING, 2.234"IDx.139"Thk
14		9968297		1	O-RING
15		9968235		1	SPRING
16		9968236		1	SUPPORT
17		9968233		1	RING, SNAP
18		9968308		1	SCREW
19		9968301		1	SPACER
20		85825506		1	SEAL, M48x62x8
21		9968300		1	YOKE, Mudfinger Dust Cap Not Serviced Separately, Order 9968300 Yoke
22		9968309		1	O-RING, 1.29"IDx.139"Thk
23		9968306		1	WASHER

OIL DIPSTICK / TOP UP (POWER-SHUTTLE)

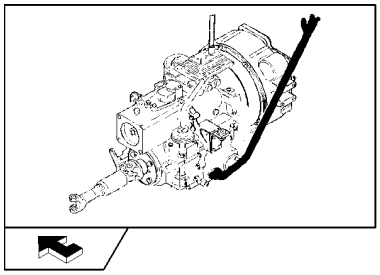

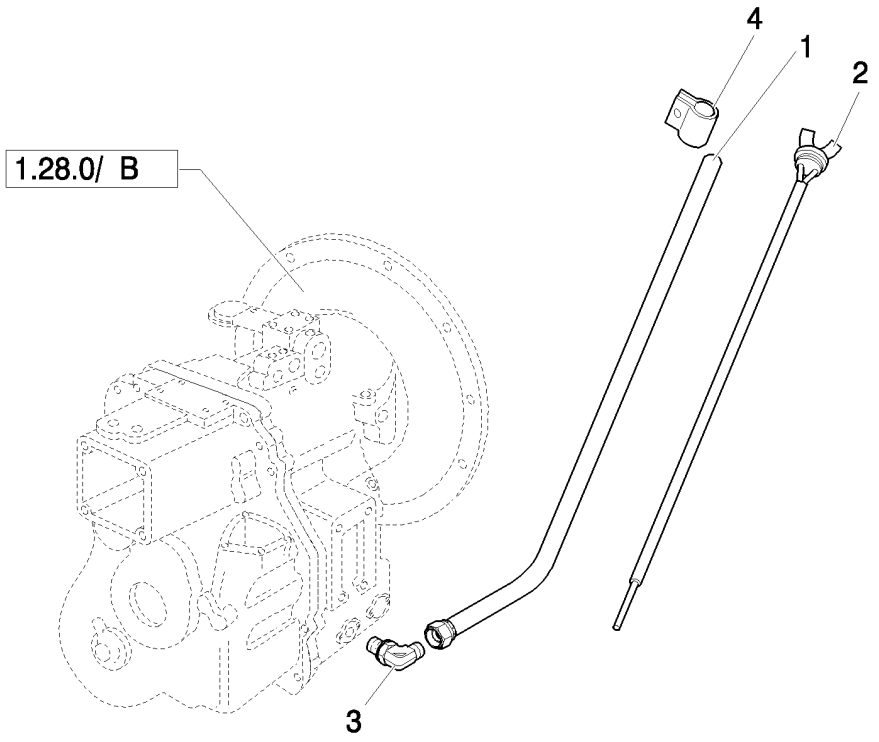

OIL DIPSTICK / TOP UP (POWER-SHUTTLE)

REF	FN	PART NUMBER	YR/SN	QTY	DESCRIPTION
1		87408479		1	TUBE
2		87408557		1	DIPSTICK
3		47050658		1	ELBOW
4		47049176		1	CLAMP

TRANSMISSION ESTERNALSHIFTING CONTROLS (POWER-SHUTTLE)

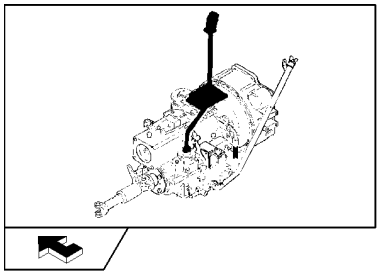

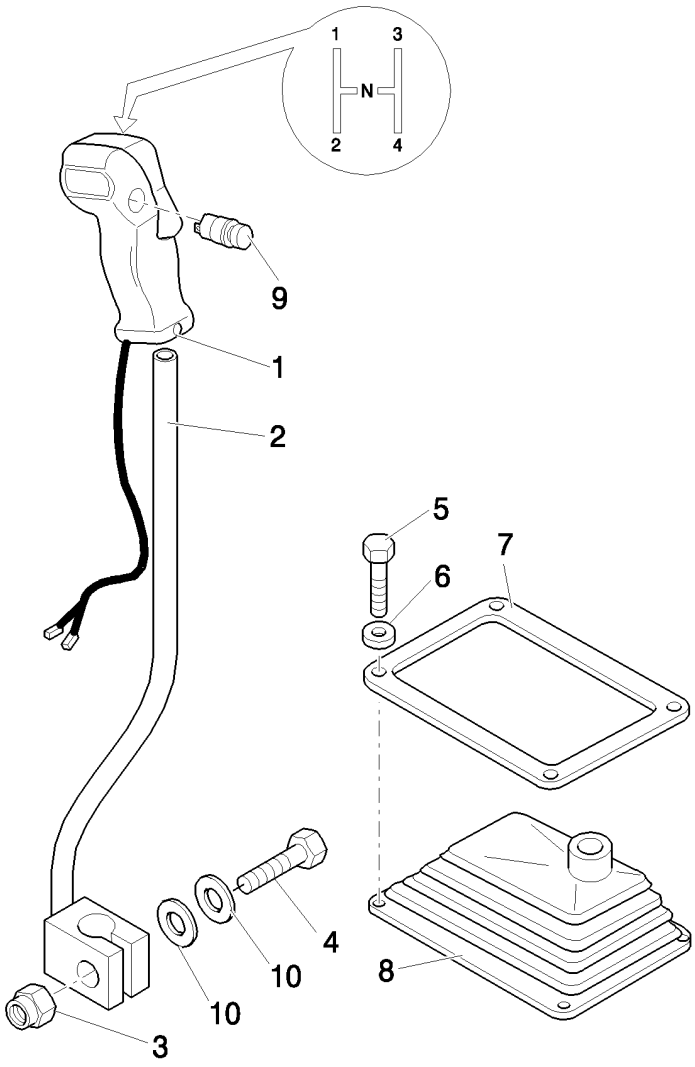

TRANSMISSION ESTERNALSHIFTING CONTROLS (POWER-SHUTTLE)

REF	FN	PART NUMBER	YR/SN	QTY	DESCRIPTION
1		85802947		1	KNOB, Assy
2		85826943		1	LEVER
3		16105011		1	NUT, LOCK, M12x1.25
4		15540821		1	BOLT, Hex, M12 x 1.25 x 50, 8.8
5		10903021		4	BOLT, Hex, M6 x 35, 8.8
6		11197779		4	WASHER, SPRING, Belleville, M6.4
7		85824187		1	RETAINER
8		85802847		1	BOOT
9		87447132		1	SWITCH ASSY
10		14496721		2	WASHER, M12 x 24 x 2.5

FRONT AND REAR TRANSMISSION SHAFT (POWER-SHUTTLE)

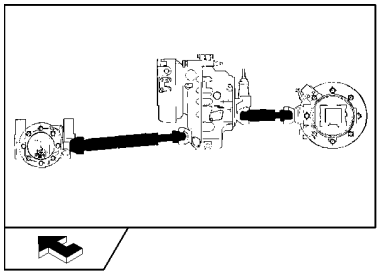

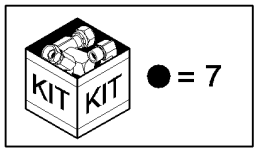

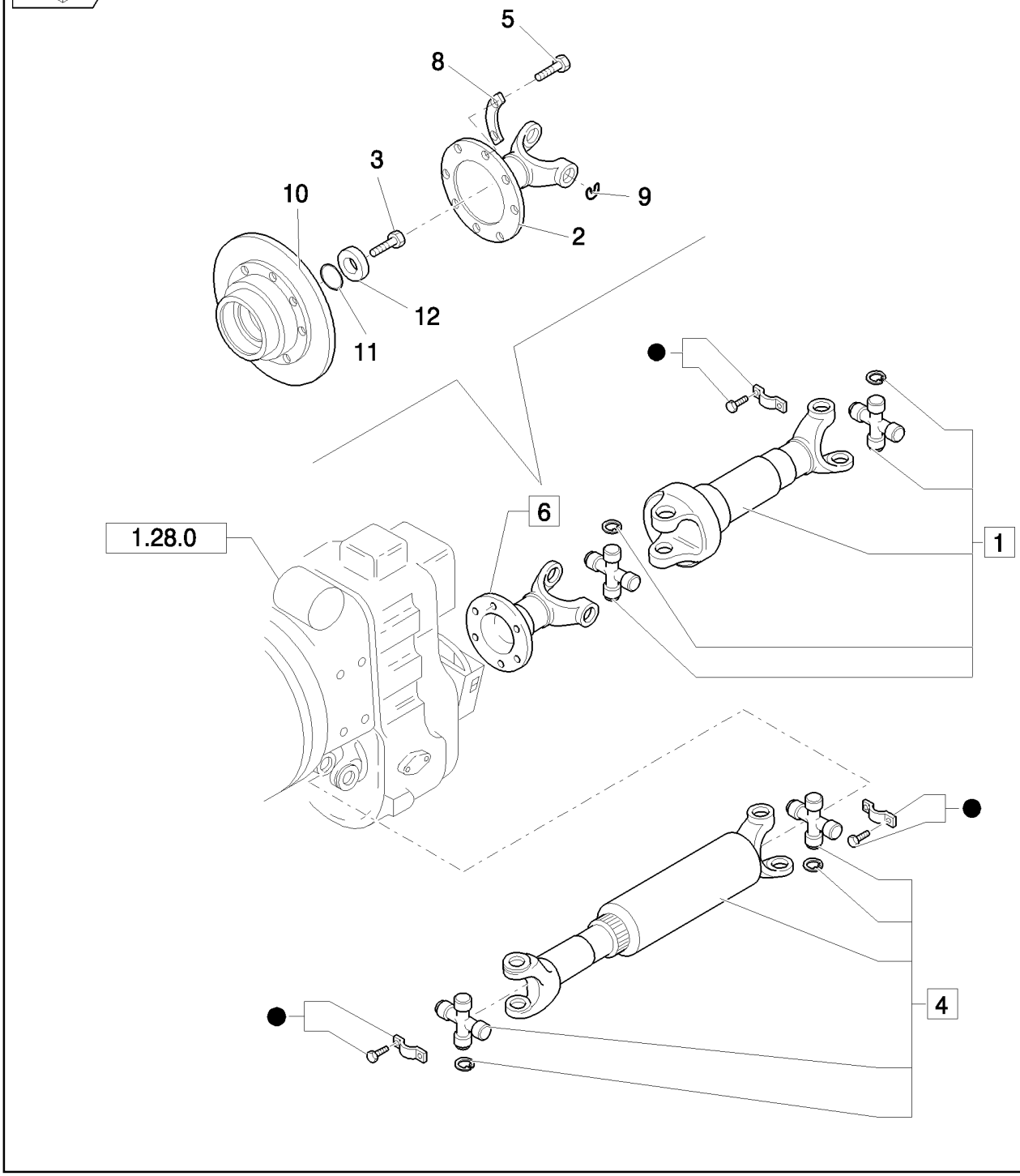

FRONT AND REAR TRANSMISSION SHAFT (POWER-SHUTTLE)

REF	FN	PART NUMBER	YR/SN	QTY	DESCRIPTION
1		87552418		1	PROPELLER SHAFT, Assy
2		85820157		1	FLANGE
3		9968308		1	SCREW
4		87552416		1	PROPELLER SHAFT, Assy
5		85820154		8	SCREW, M10 x 1.5
6	1	85820908		1	KIT, SERVICE
7		87311154		4	BRACKET, Front
8		85819186		4	COVER
9		85820914		2	CIRCLIP
10		85820909		1	FLANGE
11		9968309		1	O-RING, 1.29"IDx.139"Thk
12		9968306		1	WASHER

(1) Trasformation Kit from DIN100 to DIN120

TRANSMISSION OIL COOLING PIPES (POWER-SHUTTLE)

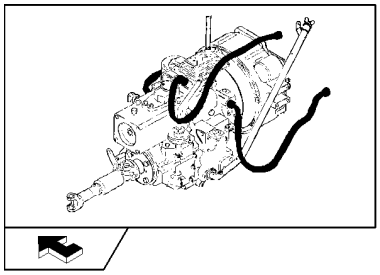

TRANSMISSION OIL COOLING PIPES (POWER-SHUTTLE)

REF	FN	PART NUMBER	YR/SN	QTY	DESCRIPTION
1		87590894		1	PIPE
2		87591241		1	PIPE
3		87314076		4	COLLAR
4		47048664		1	CLAMP
5		47048964		1	WASHER
6		87345955		2	SHIELD
7		87017744		1	FITTING, 90º, 5/8" Hose x 1 5/16"-12 ORB Beaded
8		87017743		1	FITTING, 45º, 5/8" Hose x 1 5/16"-12 ORB Beaded
9		47042364		1	BOLT
10		87592724		1	PIPE
11		87592822		1	PIPE
12		87612722		2	BRACKET
13		87589951		2	CLAMP
14		14305321		2	SCREW, Hex Soc Hd, M6 x 20, 8.8

NOTES

SECTION INDEX
Front Axle

1.40.0	01	FRONT AXLE (2WD)
1.40.0	02	STEERING ASSY AND FRONT HUBS (2WD)

FRONT AXLE (2WD)

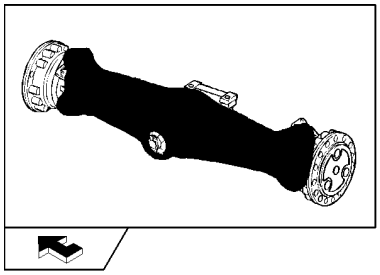

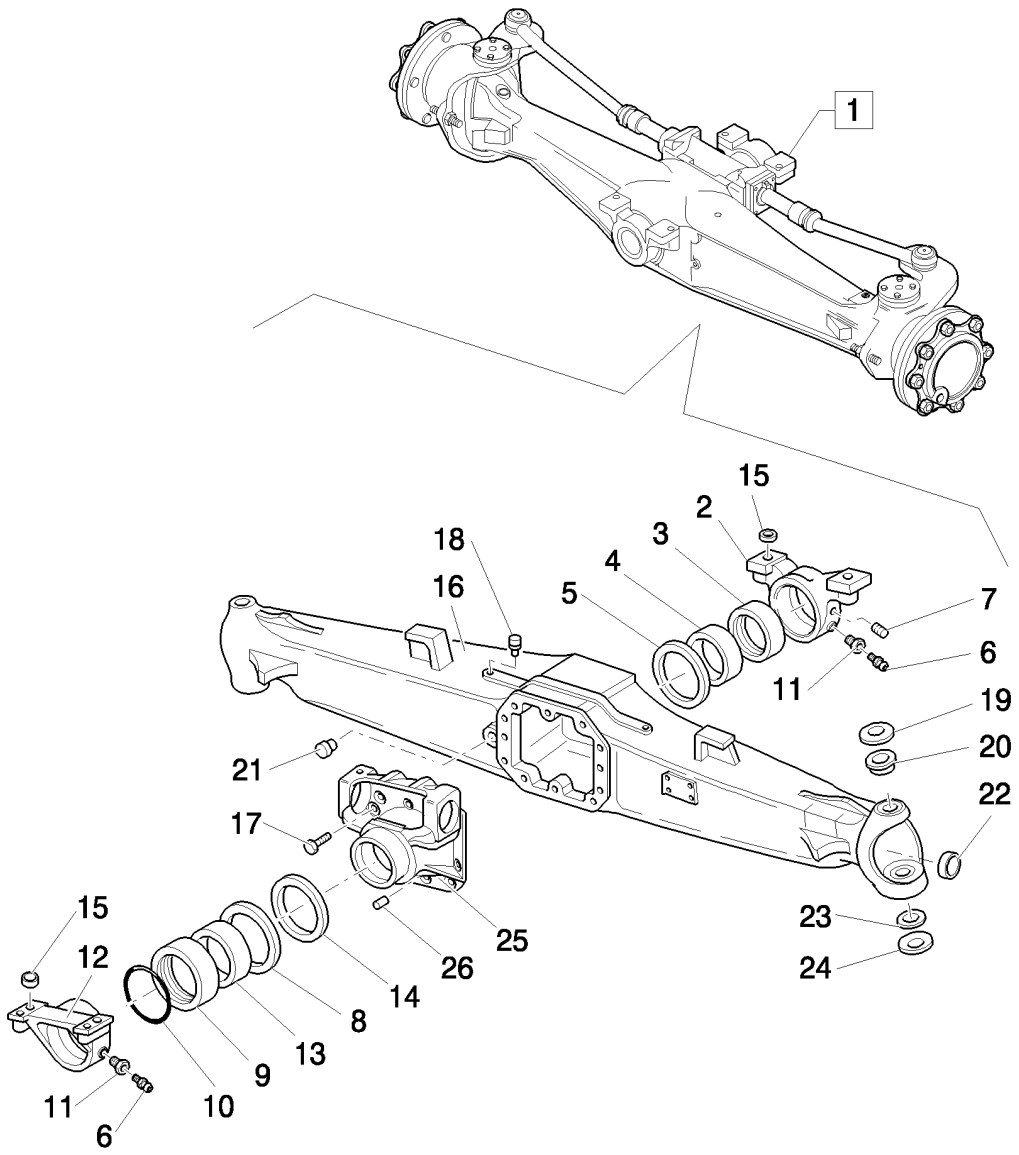

FRONT AXLE (2WD)

REF	FN	PART NUMBER	YR/SN	QTY	DESCRIPTION
1		85824339		1	AXLE, FRONT, LIVE, Assy
2		9967991		1	SUPPORT
3		9967992		1	BUSHING, 125x115x5
4		9967993		1	BUSHING, 115x105x44
5		9967994		1	WASHER, THRUST
6		9967996		2	NIPPLE, LUBE
7		85805973		1	SCREW, M8x1
8		9968006		1	WASHER, THRUST
9		9968007		1	RING, 135x125x5
10		9968008		1	O-RING
11		9967995		2	SCREW
12		9968009		1	SUPPORT
13		9968010		1	BUSHING
14		85805706		1	PLUG, DIA=92x12
15		9967990		4	BUSHING, 30x21x16.5
16		85824347		1	HOUSING, AXLE
17		9967769		10	SCREW, M12x1.75x33
18		85805703		1	PLUG, M10 x 1
19		9967673		2	WASHER
20		85824469		2	BUSHING
21		85805707		1	PLUG, M22 x 1.5
22		85805704		2	PLUG
23		9967678		2	RACE
24		9967679		2	WASHER
25		85805705		1	SUPPORT
26		9967683		2	PIN, ROLL, 15x35

1.40.0	02	p1	04/08

STEERING ASSY AND FRONT HUBS (2WD)

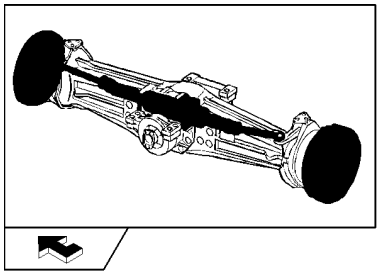

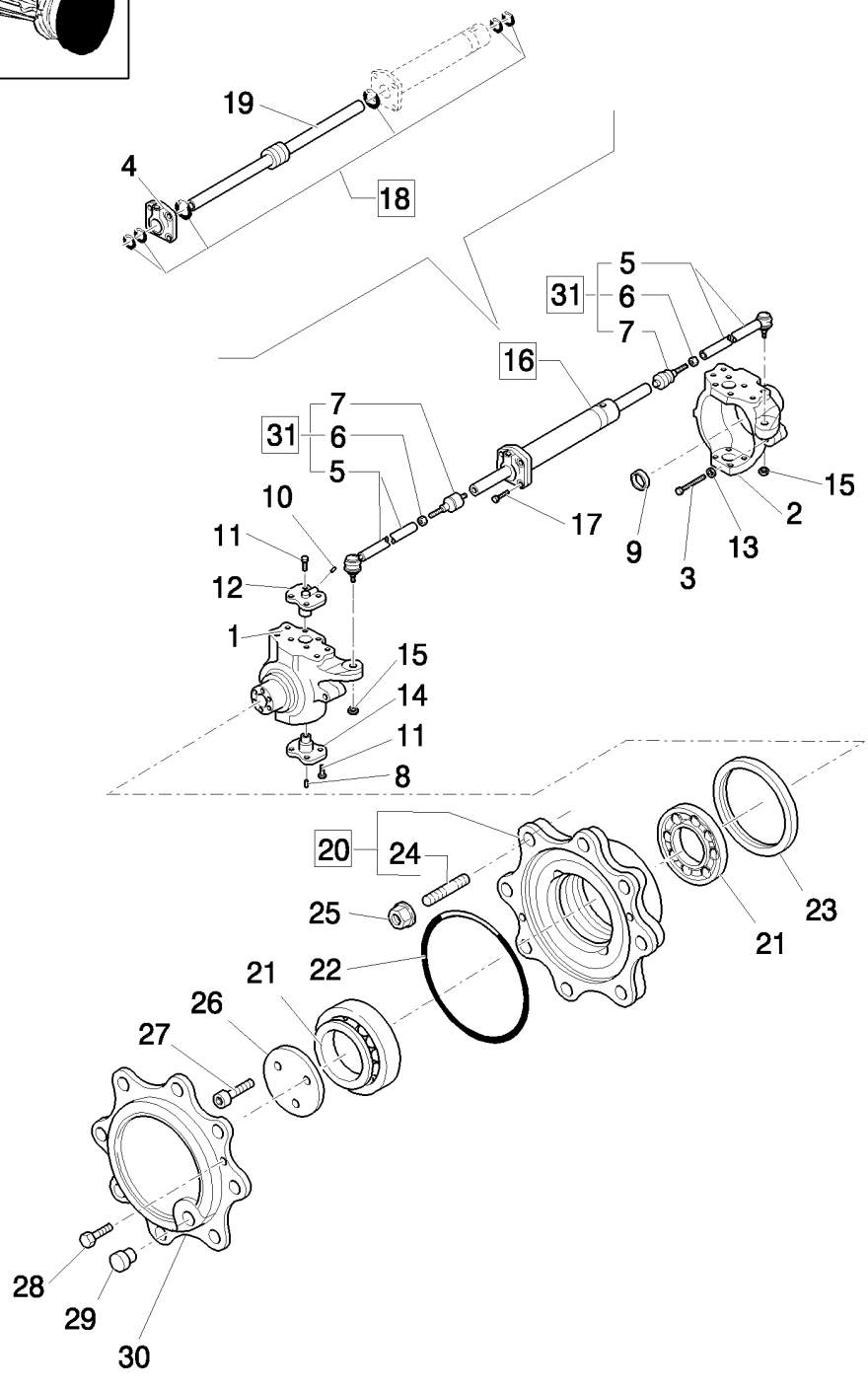

STEERING ASSY AND FRONT HUBS (2WD)

REF	FN	PART NUMBER	YR/SN	QTY	DESCRIPTION
1		87673991		1	HOUSING
2		87673972		1	SWIVEL, HYDRAULIC
3		85805987		2	SCREW, M16x100
4		85805989		1	CYLINDER HEAD
5		85805977		2	TIE-ROD
6		85805976		2	NUT, M18x1.5
7		85805975		2	BALL JOINT
8		85805984		2	NIPPLE, LUBE, M6x1
9		85824352		2	PLUG
10		9968021		2	NIPPLE, LUBE, M6x2
11		85805979		16	SCREW, M12x1.75x30
12		85805980		2	PIN
13		85805986		2	NUT, M16
14		85805983		2	PIN
15		85805982		2	NUT, M18x1,5
16		85805978		1	CYLINDER STEERING, Assy
17		9968028		4	SCREW, M12x45
18		85805990		1	KIT, SEALS
19		85805992		1	ROD
20		85806003		2	KIT, Assy
21		9967687		4	BEARING ASSY
22		85805711		2	O-RING
23		85827067		2	SEAL, OIL
24		9968070		16	STUD
25		9968071		16	NUT, Wheel, M18 x 1.5
26		85813054		2	WASHER, THRUST
27		85806010		6	SCREW, M10x4.5
28		85805709		4	SCREW, M8x20
29		85805707		2	PLUG, M22 x 1.5
30		85805710		2	COVER
31		85805974		2	TIE-ROD, Assy

NOTES

SECTION INDEX
Rear Axle

1.42.0		POWER STEERING HYDRAULIC SYSTEM
1.44.0/ B	01	REAR AXLE (POWER-SHUTTLE) (CENTER PIVOT) - NA
1.44.0/ B	02	DIFFERENTIAL LOCK ASSY AND ENGAGEMENT (POWER SHUTTLE) (CENTER PIVOT): NA
1.44.0/ B	03	REAR AXLE BEVEL GEAR SET ASSY (POWER SHUTTLE) (CENTER PIVOT): NA
1.44.1		DIFFERENTIAL CONTROL (POWER-SHUTTLE)
1.44.1/01		DIFFERENTIAL CONTROL (POWER-SHUTTLE) (CENTER PIVOT) - NA

POWER STEERING HYDRAULIC SYSTEM

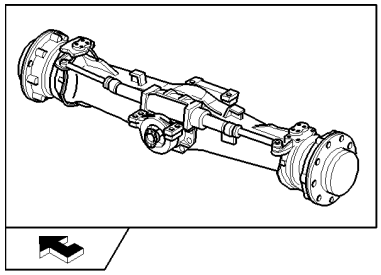

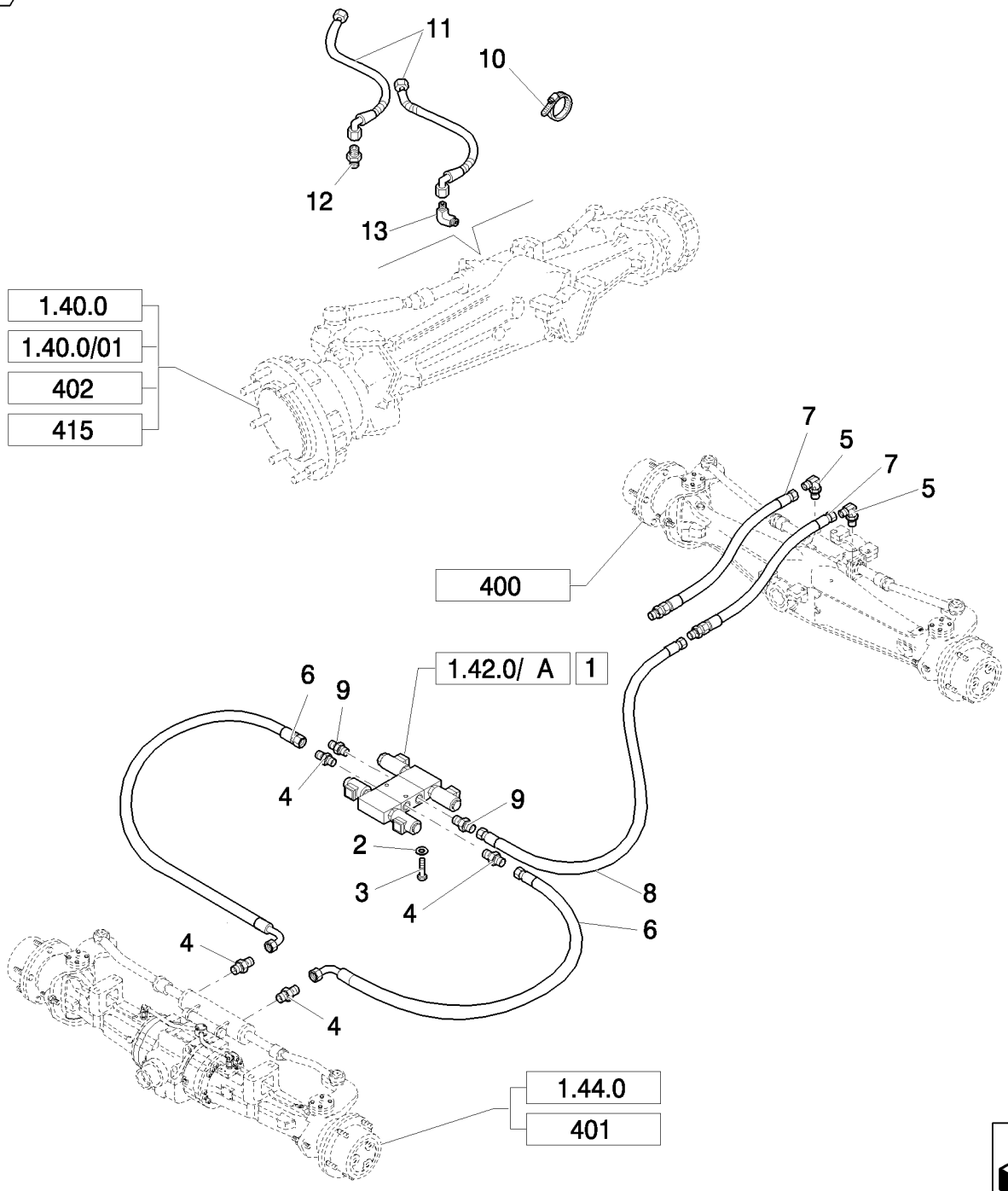

POWER STEERING HYDRAULIC SYSTEM

REF	FN	PART NUMBER	YR/SN	QTY	DESCRIPTION
1	1	85805232		1	VALVE, HYDRAULIC, Assy
2	1	11193879		2	WASHER, SPRING, Belleville, M8.4
3	1	16043421		2	SCREW, Hex, M8 x 20, 8.8
4		83963371		4	CONNECTOR, HYD.
5	1	85805318		2	ELBOW, 90º, 9/16"-18, 37º x 9/16"-18, O-Ring
6	1	85815615		2	HOSE, HYDRAULIC
7	1	85813377		2	HOSE, FLEXIBLE
8	1	85812202		1	HOSE, HYDRAULIC
9	1	85815614		2	CONNECTOR, HYD., 11/16"-16 ORS x 9/16"-18, O-Ring
10	2	85803332		1	STRAP, CABLE, M4.8 x 180
11	2	85812212		2	HOSE, HYDRAULIC, 1050mm lg
12	2	83985067		1	CONNECTOR, HYD., Includes O-Rings 9617873 & 9992298
13	2	83983763		1	CONNECTOR, HYD.

(1) Only for B115B (EU) - B115B (NA)

(2) Only for B95B, B95BTC, B100B, B100BTC, B110B (NA) - B95B, B95BLR, B100B, B100BLR, B110B (EU)

REAR AXLE (POWER-SHUTTLE) (CENTER PIVOT) - NA

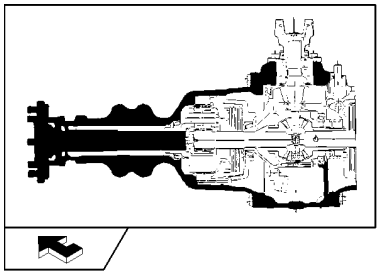

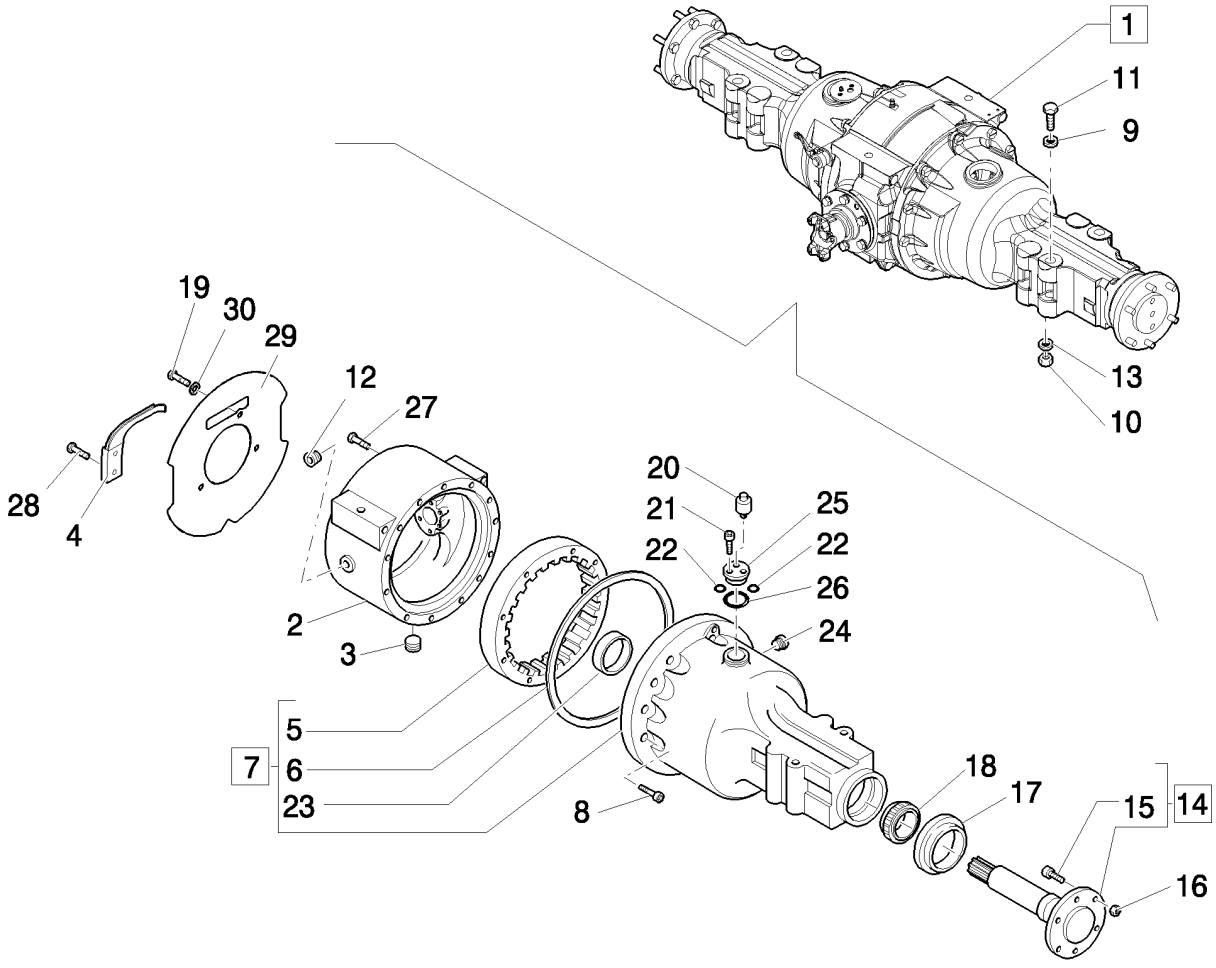

REAR AXLE (POWER-SHUTTLE) (CENTER PIVOT) - NA

REF	FN	PART NUMBER	YR/SN	QTY	DESCRIPTION
1		87542398		1	AXLE, Assy, 4,62
2		83955462		1	HOUSING
3		83909107		1	PLUG
4		87314211		4	BLOCK, 9/16"-12-18 x 7.88"
5		86536749		2	GEAR, PLANETARY
6		83417133		2	O-RING
7		86552793		1	HOUSING, AXLE, Assy, LH
7		86552794		1	HOUSING, AXLE, Assy, RH
8		86505999		25	BOLT, Hex, 5/8"-11 x 2", G5
8		81809406		1	BOLT
9		14497331		4	WASHER
10		12575321		4	NUT, LOCK, M24 x 2, Cl 10
11		15999434		4	SCREW, M24 x 2 x 220
12		80263136		1	PLUG, MAGNETIC
13		11200679		4	WASHER, LOCK
14		86511646		2	AXLE, Assy
15		83955490		16	BOLT, 3/4"-16 x 2.32"
16		87348000		16	NUT
17		81866390		2	SEAL, SHAFT
18		81818397		2	BEARING, CONE
19		87313966		2	BOLT
20		81820047		2	SCREW, BLEED
21		82895716		4	SCREW, 1/4-20X1,75
22		83925620		4	O-RING, 90 Duro, .375" ID x .103" Thk
23		82959373		2	CUP
24		81812912		1	PLUG, 1/2"-11 x 1/2"
25		81878514		2	MANIFOLD
26		81845041		2	O-RING
27		86597537		2	BOLT
28		89706729		2	SCREW
29		87334836		1	PLATE, RETAINING
30		86632588		3	WASHER, 13/32" x 13/16" x .065", HDN

DIFFERENTIAL LOCK ASSY AND ENGAGEMENT (POWER SHUTTLE) (CENTER PIVOT): NA

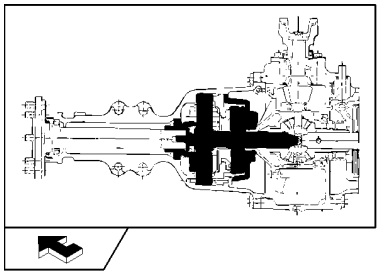

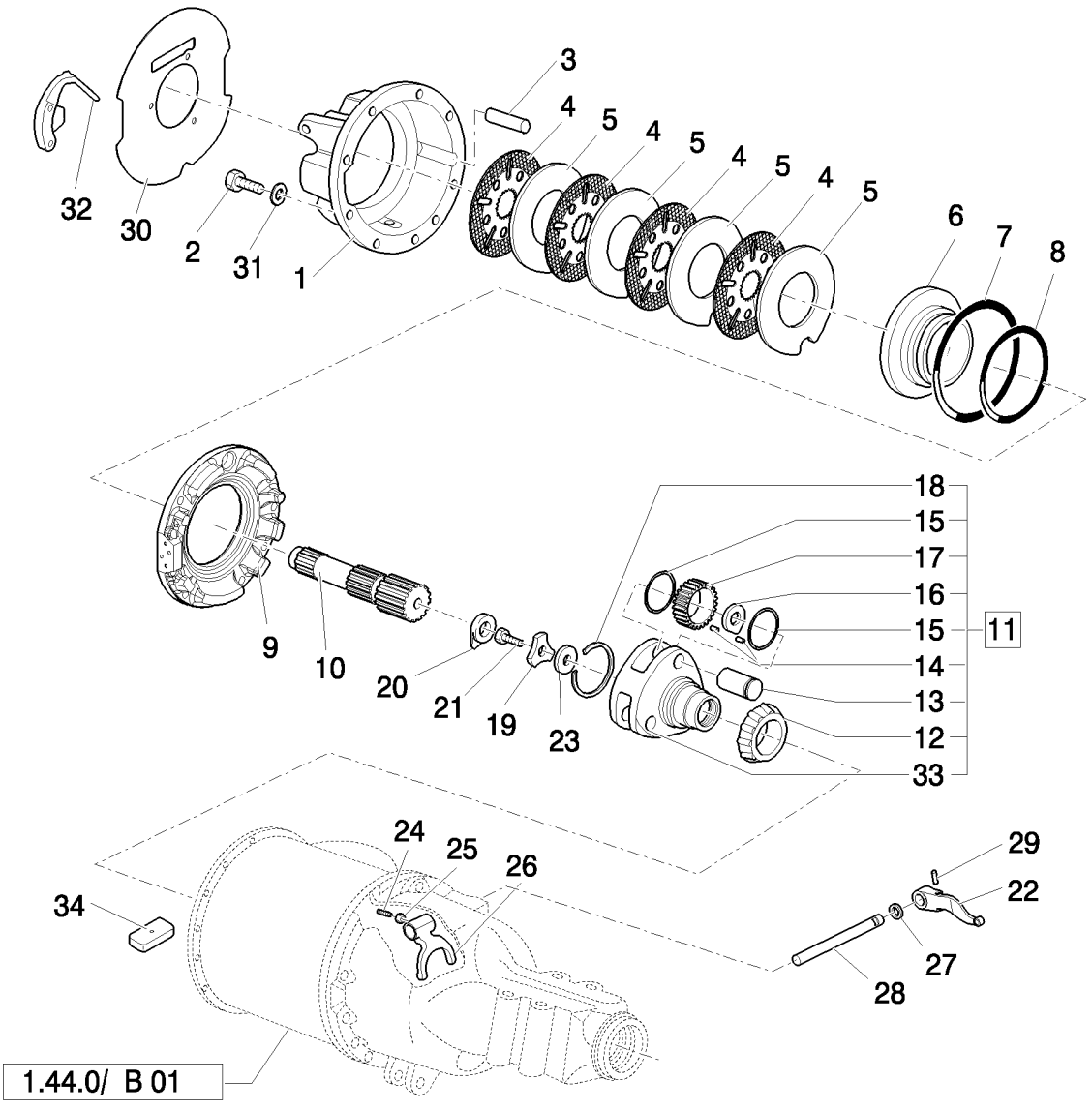

DIFFERENTIAL LOCK ASSY AND ENGAGEMENT (POWER SHUTTLE) (CENTER PIVOT): NA

REF	FN	PART NUMBER	YR/SN	QTY	DESCRIPTION
1		87304345		1	HOUSING, RH
1		87304344		1	HOUSING, LH
2		87313966		3	BOLT, Cap, HH, G8, 9/16"-12 x 5"
3		81802548		4	PIN, G8, 9/16"-18
4		87308018		8	BRAKE DISC
5		87305713		8	BRAKE DISC
6		87542345		2	PISTON
7		87302760		2	O-RING, -253, 5.359" ID x .139" Thk
8		87302761		2	O-RING, -253, 7.484" ID x .139" Thk
9		87542348		1	HOUSING, RH
9		87542350		1	HOUSING, LH
10		81803334		2	SUN GEAR
11		86584273		2	CARRIER, Assy
12		81854753		2	BEARING, CONE
13		81820849		6	SHAFT
14		81823610		AR	BEARING ASSY
15		81803273		12	WASHER, THRUST
16		81803275		6	SPACER
17		86584272		6	GEAR, PLANETARY
18		81820846		2	RETAINER
19		87326170		2	WASHER
20		83949811		2	PLATE, LOCKING
21		81846884		2	BOLT, HH, 7/8"-14 x 1-5/8"
22		81802560		1	LEVER
23		81803491		1	SPACER, .050/.049" Thk
23		81803502		AR	SPACER, .054/.053" Thk, (1.372/1.346 mm)
23		81803503		AR	SPACER, .058/.057" Thk, (1.473/1.448 mm)
23		81803504		AR	SPACER, .062/.061" Thk, (1.575/1.549 mm)
23		81803505		AR	SPACER, .066/.065" Thk, (1.676/1.651 mm)
23		81803506		AR	SPACER, .070/.069" Thk, (1.778/1.753 mm)
23		81803507		AR	SPACER, .074/.073" Thk, (1.880/1.854 mm)
23		81803508		AR	SPACER, .078/.077" Thk, (1.981/1.956 mm)
23		81803509		AR	SPACER, .082/.081" Thk, (2.083/2.057 mm)
23		81803510		AR	SPACER, .086/.085" Thk, (2.184/2.159 mm)
23		81803511		AR	SPACER, .090/.089" Thk, (2.286/2.261 mm)

DIFFERENTIAL LOCK ASSY AND ENGAGEMENT (POWER SHUTTLE) (CENTER PIVOT): NA

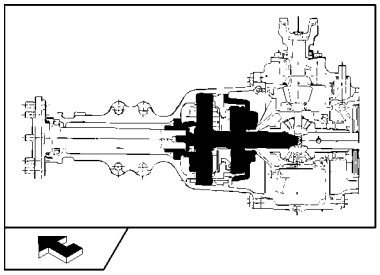

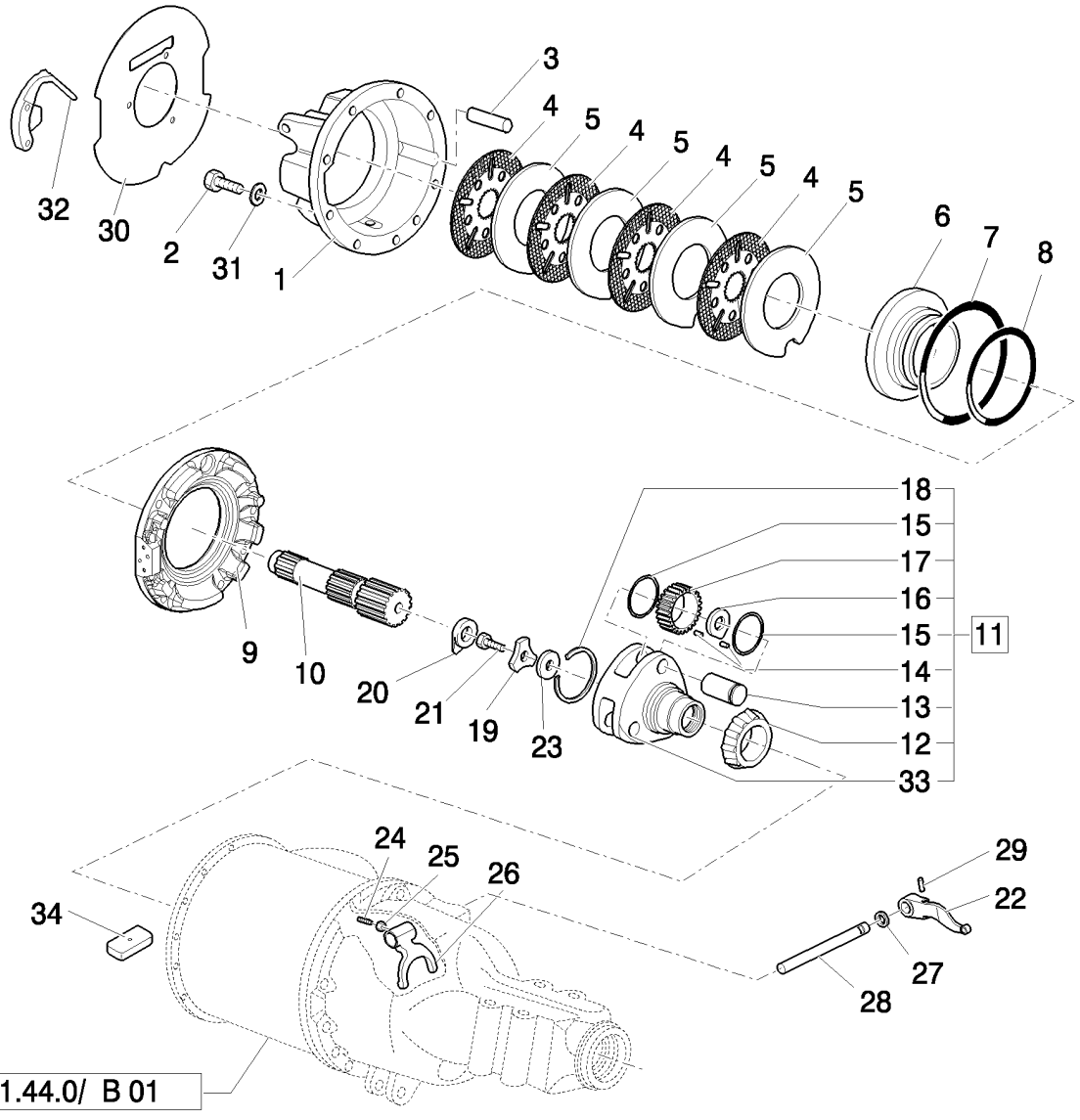

DIFFERENTIAL LOCK ASSY AND ENGAGEMENT (POWER SHUTTLE) (CENTER PIVOT): NA

REF	FN	PART NUMBER	YR/SN	QTY	DESCRIPTION
24		81804978		1	SCREW, Set, 3/8"-24 x 7/16"
25		80087308		1	NUT
26		81803336		1	FORK
27		82979988		1	GASKET
28		81803345		1	SHAFT
29		82958118		1	PIN, ROLL
30		87334836		1	PLATE, RETAINING
31		86632588		1	WASHER, 13/32" x 13/16" x .065", HDN
32		87314211		1	BLOCK
33		86576091		1	CARRIER
34		328955A1		2	

REAR AXLE BEVEL GEAR SET ASSY (POWER SHUTTLE) (CENTER PIVOT): NA

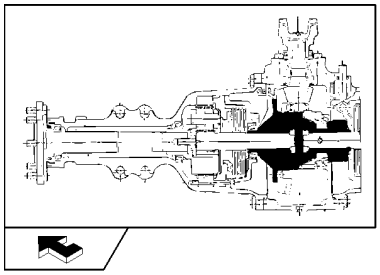

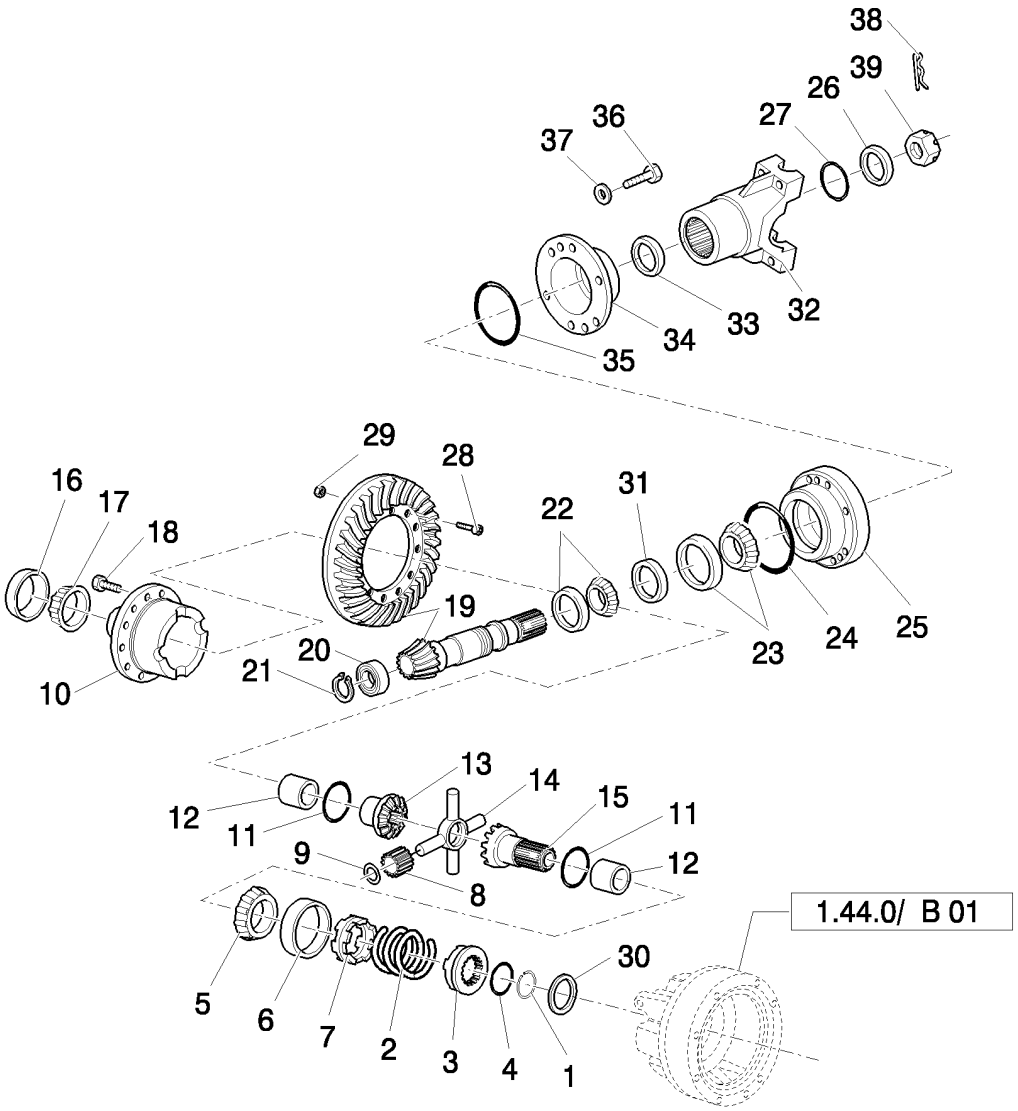

REAR AXLE BEVEL GEAR SET ASSY (POWER SHUTTLE) (CENTER PIVOT): NA

REF	FN	PART NUMBER	YR/SN	QTY	DESCRIPTION
1		81803474		1	RING, LOCKING
2		81800474		1	SPRING, Differential Lock Coupler
3		81812261		1	ADAPTER
4		81800475		1	WASHER, Differential Lock, Coupler Stop
5		81803413		1	BEARING, CONE
6		80510892		1	BEARING, CUP, RH
7		81800472		1	ADAPTER, Differential Lock Gear Case
8		81728114		4	PINION
9		83989915		4	WASHER, LOCK
10		81816246		1	HOUSING
11		81803424		2	WASHER, THRUST, RH
12		81800471		2	BUSHING, RH
13		81803445		1	GEAR
14		81876885		1	SPIDER
15		81803451		1	GEAR, RH
16		82959375		1	BEARING, CUP
17		80510884		1	BEARING, CONE
18		83994579		8	SCREW, Cap, HH, G8, Self-Locking, 1/2"-13 x 2-7/8"
19		83937179		1	GEAR SET, 4,62
20		81824478		1	BEARING, ROLLER
21		81803542		1	RING, LOCKING
22		82958961		1	BEARING, ROLLER, TAPERED
23		81845711		1	BEARING, CONE
24		81827354		1	O-RING, 4.625" ID x .139" Thk
25		81847146		1	RETAINER
26		81834042		1	WASHER
27		81845714		1	SEAL
28		83957533		12	BOLT, HH, G8, 1/2"-20 x 1-5/8"
29		83417169		12	NUT, LOCK, 1/2"-20, GA, Lock, G2, 1/2"-20
30		81803515		AR	SHIM, 0,965/1,016
30		81803516		AR	SHIM, .046/.044" Thk, (1.118-1.168 mm)
30		81803517		AR	SHIM, .052/.050" Thk, (1.321/1.270 mm)
30		81803519		AR	SHIM, .064/.062" Thk, (1.626/1.575 mm)
30		81803520		AR	SHIM, .070/.068" Thk, (1.778/1.727 mm)
30		81803521		AR	SHIM, .076/.074" Thk, (1.930/1.880 mm)

REAR AXLE BEVEL GEAR SET ASSY (POWER SHUTTLE) (CENTER PIVOT): NA

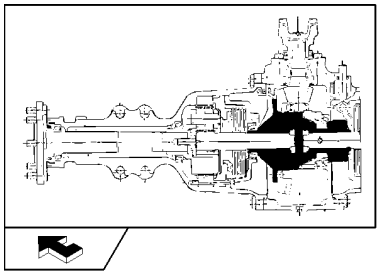

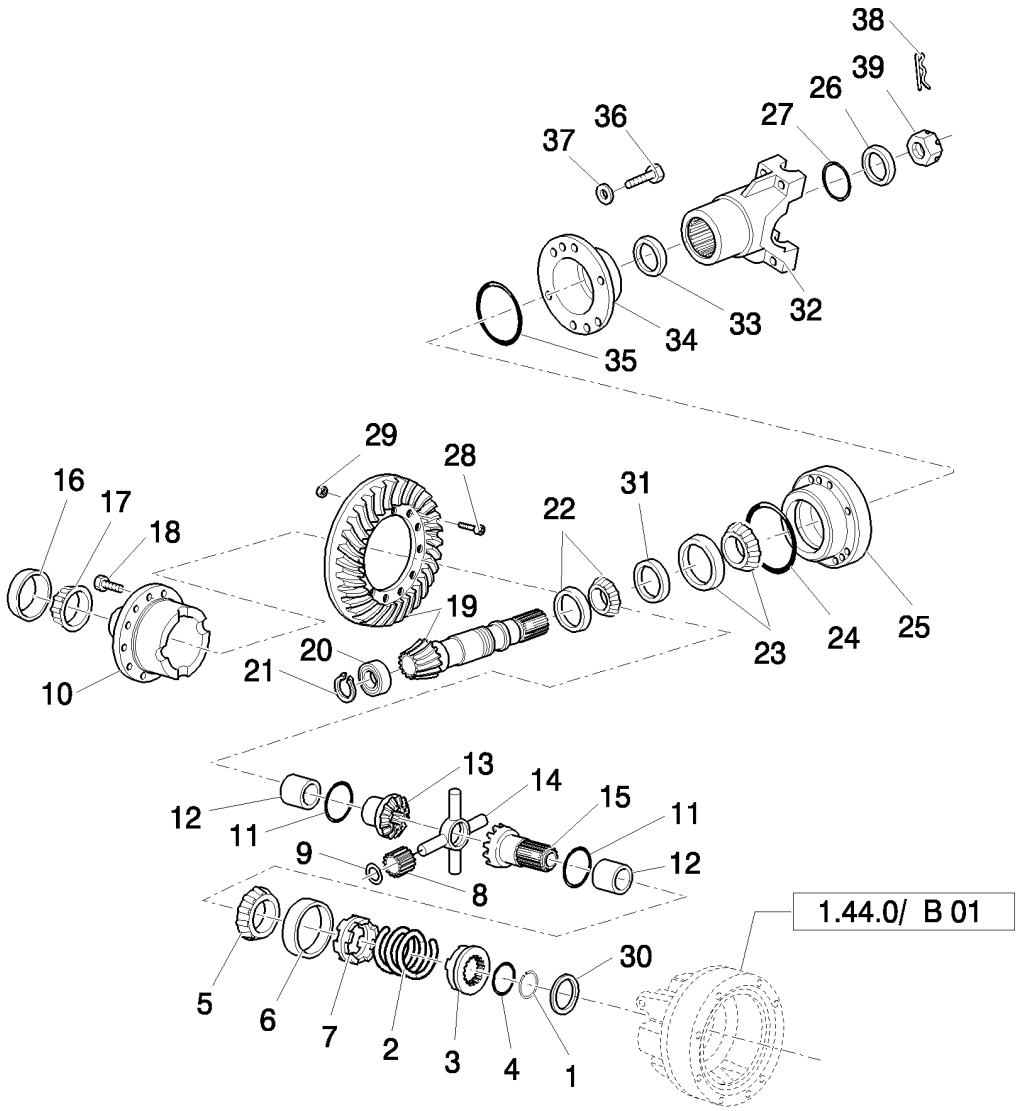

REAR AXLE BEVEL GEAR SET ASSY (POWER SHUTTLE) (CENTER PIVOT): NA

REF	FN	PART NUMBER	YR/SN	QTY	DESCRIPTION
30		81803522		AR	SHIM, .082/.080" Thk, (2.083/2.032 mm)
31		81847148		AR	SPACER, 31,852/31,864
31		81847149		AR	SPACER, 31,902/31,915
31		81847150		AR	SPACER, 31,953/31,966
31		81847151		AR	SPACER, 32,004/32,017
31		81847152		AR	SPACER, 32,055/32,068
31		81847153		AR	SPACER, 32,106/32,118
31		81847154		AR	SPACER, 32,156/32,169
31		81847155		AR	SPACER, 32,207/32,220
31		81847156		AR	SPACER, 32,258/32,271
31		81847157		AR	SPACER, 32,309/32,322
31		81847158		AR	SPACER, 32,360/32,372
31		81847159		AR	SPACER, 32,410/32,423
31		81847160		AR	SPACER, 32,461/32,474
31		81847161		AR	SPACER, 32,512/32,525
31		81847162		AR	SPACER, 32,563/32,576
32		83949810		1	FLANGE
33		81834073		1	SEAL, OIL
34		83912246		1	RETAINER
35		81845713		1	SEAL
36		81821267		6	BOLT, 9/16-12X1,50
37		80280248		6	WASHER, LOCK
38		83947107		1	PIN, Cotter, 3/16" x 2.125"
39		83949812		1	NUT, Slotted, 1-1/4"-18

DIFFERENTIAL CONTROL (POWER-SHUTTLE)

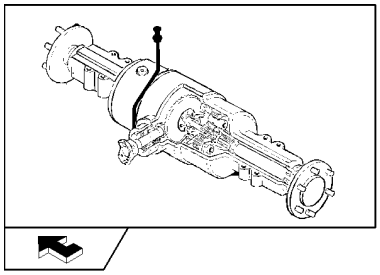

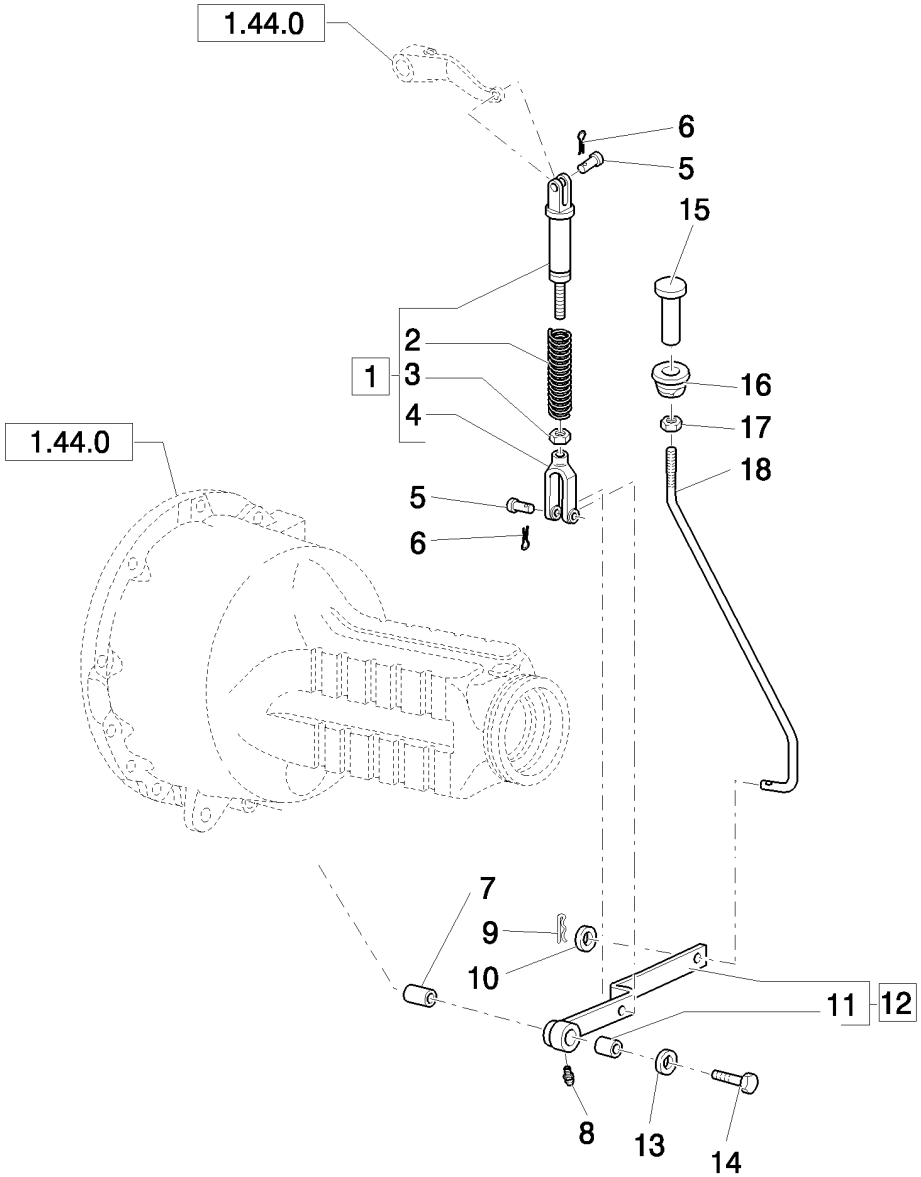

DIFFERENTIAL CONTROL (POWER-SHUTTLE)

REF	FN	PART NUMBER	YR/SN	QTY	DESCRIPTION
1		83949838		1	ROD, Assy
2		81800486		1	SPRING
3		81821691		1	NUT
4		83952932		1	CLEVIS
5		83948308		2	PIN
6		10802801		2	PIN, SPLIT (COTTER), M2.5 x 25
7		81800488		1	SPACER
8		13406911		1	NIPPLE, LUBE, 1/4"-28
9		10766901		1	PIN, SPLIT (COTTER), M3.2 x 25
10		12644921		1	WASHER, M14 x 32 x 4
11		81805231		1	BUSHING
12		85802513		1	LEVER
13		14497121		1	WASHER, M20 x 37 x 3
14		83911686		1	SCREW
15		83971567		1	PEDAL
16		83904750		1	BUSHING
17		81822462		1	NUT, Jam, 1/2"-20, G2
18		85819013		1	TIE-ROD

DIFFERENTIAL CONTROL (POWER-SHUTTLE) (CENTER PIVOT) - NA

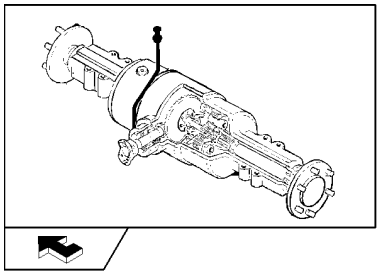

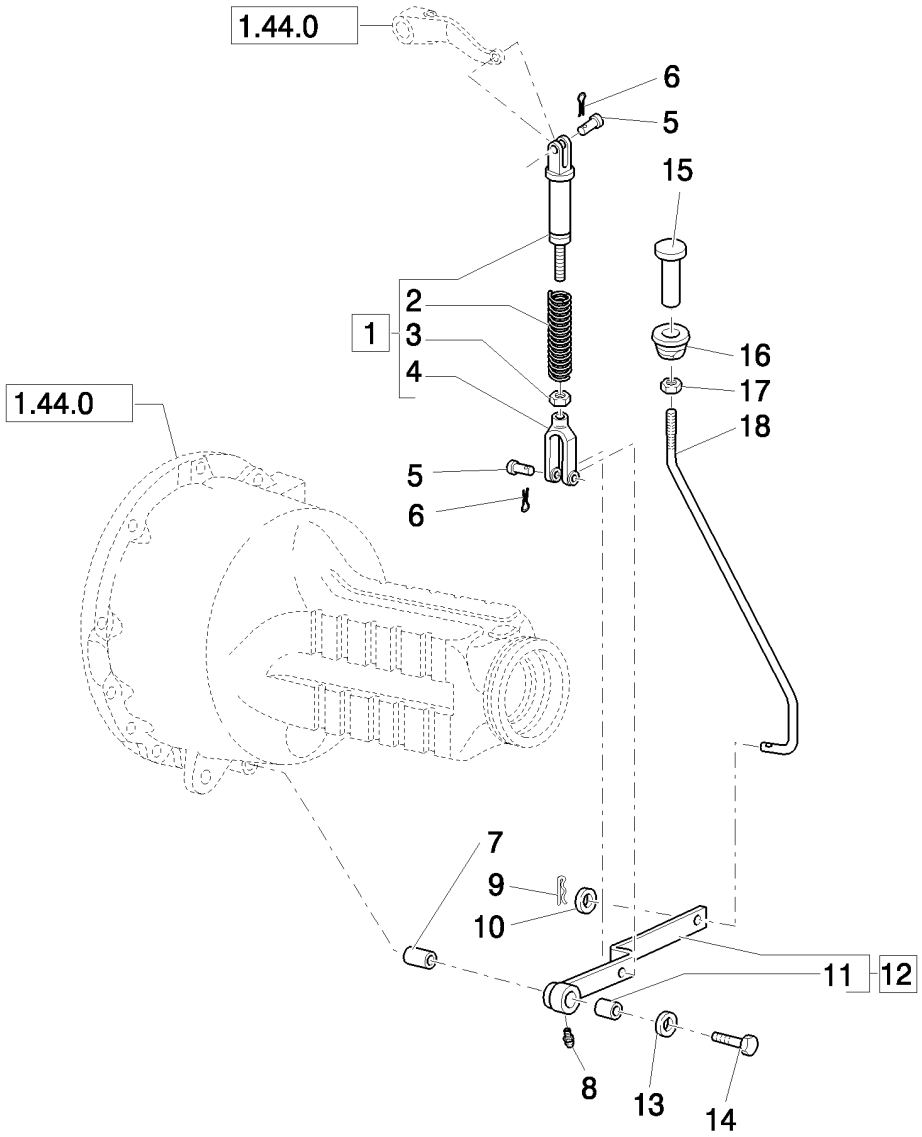

DIFFERENTIAL CONTROL (POWER-SHUTTLE) (CENTER PIVOT) - NA

REF	FN	PART NUMBER	YR/SN	QTY	DESCRIPTION
1		83949838		1	ROD, Assy
2		81800486		1	SPRING, Inside Rod Tube
3		81821691		1	NUT
4		83952932		1	CLEVIS
5		83948308		2	PIN
6		10802801		2	PIN, SPLIT (COTTER), M2.5 x 25
7		81800488		1	SPACER
8		13406911		1	NIPPLE, LUBE, 1/4"-28
9		10766901		1	PIN, SPLIT (COTTER), M3.2 x 25
10		12644921		1	WASHER, M14 x 32 x 4
11		81805231		1	BUSHING
12		85802513		1	LEVER, Assy
13		14497121		1	WASHER, M20 x 37 x 3
14		83911686		1	SCREW
15		83971567		1	PEDAL
16		83904750		1	BUSHING
17		81822462		1	NUT, Jam, 1/2"-20, G2
18		85802515		1	ROD

NOTES

1.75.2	01	FRAME REAR HARNESS AND GROUND CABLE (POWER SHUTTLE): NA
1.75.2	02	BATTERY LOCK-OUT SWITCH & GROUND WIRE (POWER SHUTTLE) - NA
1.75.2	04	ENGINE HARNESS (POWER SHUTTLE) - NA

1.75.2	01	p1	03/08

FRAME REAR HARNESS AND GROUND CABLE (POWER SHUTTLE): NA

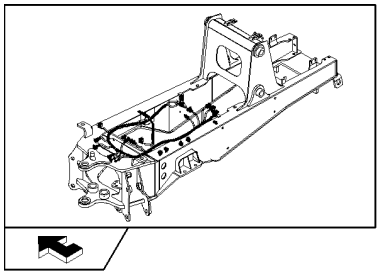

FRAME REAR HARNESS AND GROUND CABLE (POWER SHUTTLE): NA

REF	FN	PART NUMBER	YR/SN	QTY	DESCRIPTION
1	1	87544169		1	HARNESS
1	2	87564242		1	HARNESS
2		85805686		4	CLIP, HOSE
3		85805685		2	CLIP, HOSE
4		14560187		55	STRAP, CABLE, 178mm lg, L=203.2 mm
5		85803884		1	Strap, Ground
6		16043021		1	BOLT, Hex, M8 x 12, 8.8, Full Thd
7		11193879		1	WASHER, SPRING, Belleville, M8.4
8		14048211		1	NUT, LOCK, M8 x 1.25, Cl 8
9		12647121		1	WASHER, M8 x 20 x 3

(1) Only for B90B
(2) Only for B95B, B95BLR, B95BTC, B110B

BATTERY LOCK-OUT SWITCH & GROUND WIRE (POWER SHUTTLE) - NA

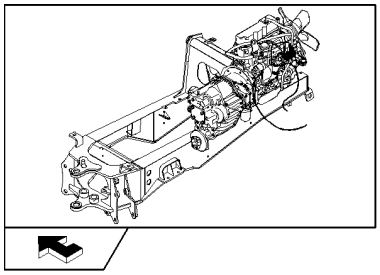

BATTERY LOCK-OUT SWITCH & GROUND WIRE (POWER SHUTTLE) - NA

REF	FN	PART NUMBER	YR/SN	QTY	DESCRIPTION
1		47048895		2	SENSOR
2		16104111		1	NUT, LOCK, M8 x 1.25, Cl 8
3		12647121		1	WASHER, M8 x 20 x 3
4		85820156		1	ADAPTER
5		85817672		1	SWITCH, PRESSURE, Trans. Oil Pressure
6	1	11197879		2	WASHER, SPRING, Belleville, M8.4
7	1	87409316		1	SWITCH
8	1	87613641		1	SUPPORT
9		47048993		1	WASHER
10		47049010		1	SCREW, M10x20
11		47049031		1	NUT, M10
12	1	87427925		1	CABLE
13	1	16043421		2	SCREW, Hex, M8 x 20, 8.8
14		85826964		1	CONNECTOR, HYD.

(1) Only for B95B, B95BLR, B95BTC, B110B

ENGINE HARNESS (POWER SHUTTLE) - NA

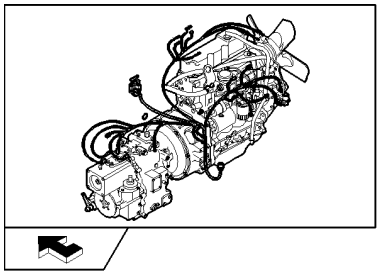

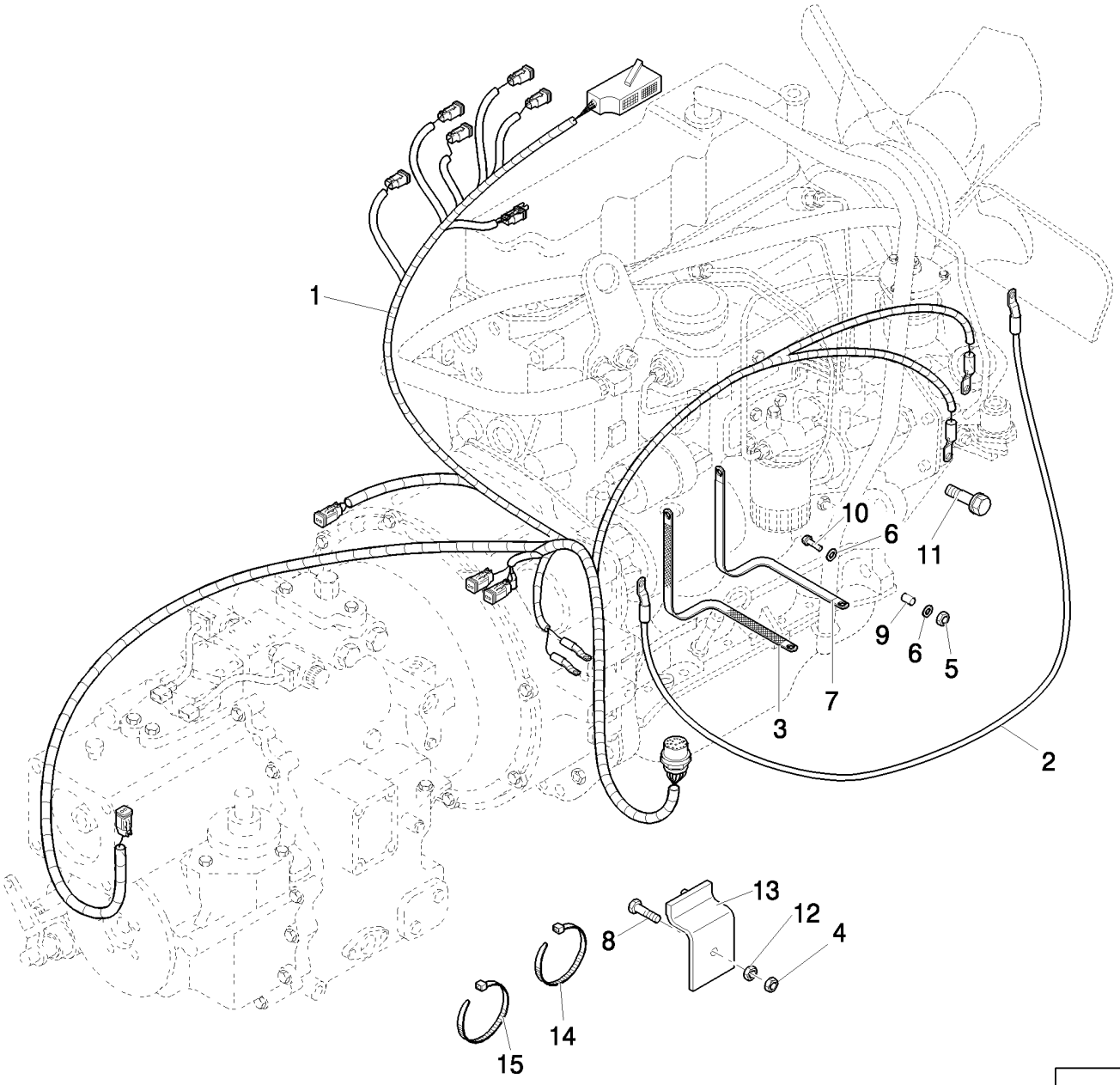

ENGINE HARNESS (POWER SHUTTLE) - NA

REF	FN	PART NUMBER	YR/SN	QTY	DESCRIPTION
1		87564241		1	HARNESS, Includes 87431470 3 amp diode
2		87636291		1	CABLE
3		87407206		1	Strap, Ground
4		87565124		1	NUT
5		14048211		1	NUT, LOCK, M8 x 1.25, Cl 8
6		12638511		2	WASHER, M8 x 15 x 1.5, 8x15
7		87410268		1	Strap, Ground
8		16043824		1	BOLT, Hex, M8 x 30, 8.8, Full Thd
9		87415208		1	SPACER
10		16044421		2	BOLT, Hex, M8 x 60, 8.8
11		47049186		1	BOLT, Hex, M10 x 30, 8.8
12		11701711		1	NUT, M10, Cl 8
13		87562089		1	COVER
14		87567356		4	CLAMP
15		87567355		4	CLAMP

NOTES

SECTION INDEX
Hydraulic Systems

1.82.0		HYDRAULIC OIL RESERVOIR
1.82.3/01		HYDRAULIC PUMP (35+35-154L/MM)
1.82.6	01	HYDRAULIC SYSTEM PIPES: PUMP OIL DELIVERY
1.82.6	02	HYDRAULIC SYSTEM PIPES: CONTROL VALVE DELIVERY
1.82.6	03	HYDRAULIC SYSTEM PIPES: PRESSURE INTAKE
1.82.6	04	HYDRAULIC SYSTEM PIPES: CONTROL VALVE DISCHARGE
1.82.6	05	HYDRAULIC SYSTEM PIPES: RETURN TO TANK
1.82.6	06	HYDRAULIC SYSTEM PIPES: OIL FILTER AND CHECK VALVE
1.82.6	07	HYDRAULIC SYSTEM PIPES: LOADER ATTACHMENT CYLINDERS
1.82.6	10	HYDRAULIC SYSTEM PIPING
1.82.6	11	HYDRAULIC SYSTEM PIPING
1.82.6	12	HYDRAULIC SYSTEM PIPES 4WS (CENTER PIVOT): NA
1.82.6	13	HYDRAULIC SYSTEM PIPES: SWING CYLINDER
1.82.6	14	HYDRAULIC SYSTEM PIPES: BACKHOE ATTACHMENT CYLINDER
1.82.6	15	HYDRAULIC SYSTEM PIPES: BACKHOE ATTACHMENT BOOM CYLINDER
1.82.6	16	ROTATION PLATE HOSE CLAMPS (CENTER PIVOT)
1.82.6/01	01	FRONT HYDRAULIC PUMP INTAKE & OUTLET HOSES (CENTER PIVOT) - NA
1.82.6/01	02	REAR HYDRAULIC PUMP STABILIZER, LOADER & BACKHOE VALVE HOSES (CP) - NA
1.82.6/01	03	HYDRAULIC SYSTEM PIPES (CENTER PIVOT): NA: PRESSURE INTAKE
1.82.6/01	04	RETURN MANIFOLD HOSES - NA
1.82.6/01	05	FILTER ASSEMBLY & HOSE TO RETURN MANIFOLD (CENTER PIVOT) - NA
1.82.6/01	06	HYDRAULIC SYSTEM PIPES (CENTER PIVOT): NA: RETURN TO TANK
1.82.6/01	07	LOADER LIFT CYLINDER HOSES (CENTER PIVOT) - NA
1.82.6/01	08	LOADER BUCKET CYLINDER HOSES (CENTER PIVOT) - NA
1.82.6/01	09	BACKHOE SWING CYLINDER HOSES (CENTER PIVOT) - NA
1.82.6/01	10	BACKHOE CONTROL VALVE HOSES (CENTER PIVOT) - NA
1.82.6/01	11	ROTATION PLATE HOSE CLAMPS (CENTER PIVOT) - NA
1.82.6/01	12	BACKHOE CONTROL VALVE (CENTER PIVOT) - NA
1.82.6/01	13	DIPPER VALVE SECTION (CENTER PIVOT) - NA
1.82.6/01	14	BUCKET, SWING, & BOOM VALVE SECTION (CENTER PIVOT) - NA

1.82.0		p1	05/08

HYDRAULIC OIL RESERVOIR

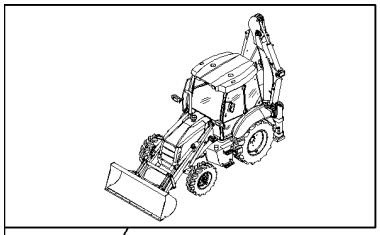

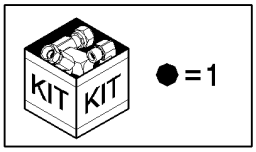

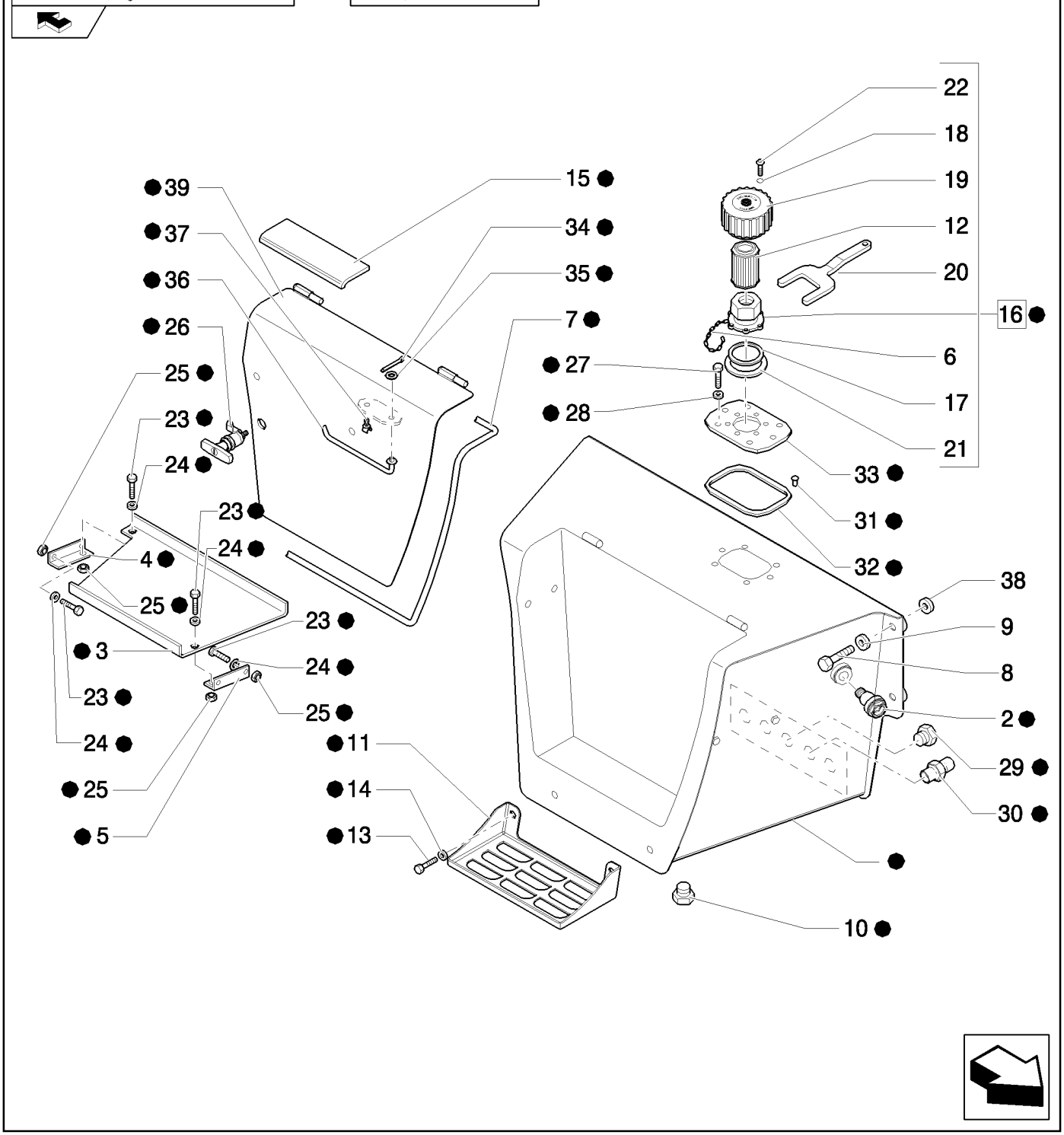

HYDRAULIC OIL RESERVOIR

REF	FN	PART NUMBER	YR/SN	QTY	DESCRIPTION
1		87577246		1	TANK, Assy
2		85801249		1	GAUGE, LEVEL
3		87407463		1	TRAY
4		87407464		1	BRACKET
5		87407465		1	BRACKET
6		85813352		1	FLANGE
7		87417207		1	SEAL, RUBBER
8		15540721		4	BOLT, Hex, M12 x 1.25 x 45, 8.8, Full Thd
9		47048976		4	WASHER
10		47050671		2	PLUG
11		85801218		2	PLATE, STEP
12		87407928		1	FILTER
13		11112421		4	BOLT, Hex, M12 x 30, 8.8
14		47048973		4	WASHER
15		87702352		1	STRIP, ANTI-SKID
16		87403241		1	CAP, FILLER, Assy
17		85813351		1	O-RING
18		85813354		6	O-RING
19		85813350		1	PLUG
20		85802580		1	WRENCH, SPECIAL
21		9969380		1	GASKET
22		85813353		6	SCREW
23		47049185		4	SCREW
24		47048972		4	WASHER
25		47049041		4	NUT
26		87574189		1	HANDLE
27		16043421		6	SCREW, Hex, M8 x 20, 8.8
28		47048962		6	WASHER
29		85825154		3	PLUG
30		85825155		1	CONNECTOR, HYD.
31		85826382		7	NUT
32		85826383		1	GASKET
33		85828107		1	PLATE
34		47042074		1	PIN
35		47044758		1	WASHER

HYDRAULIC OIL RESERVOIR

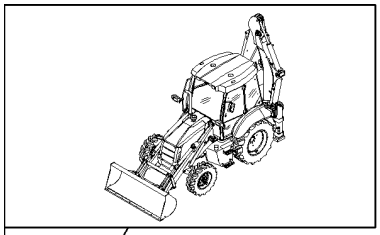

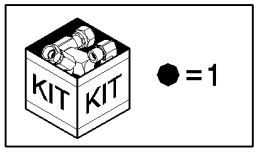

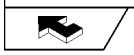

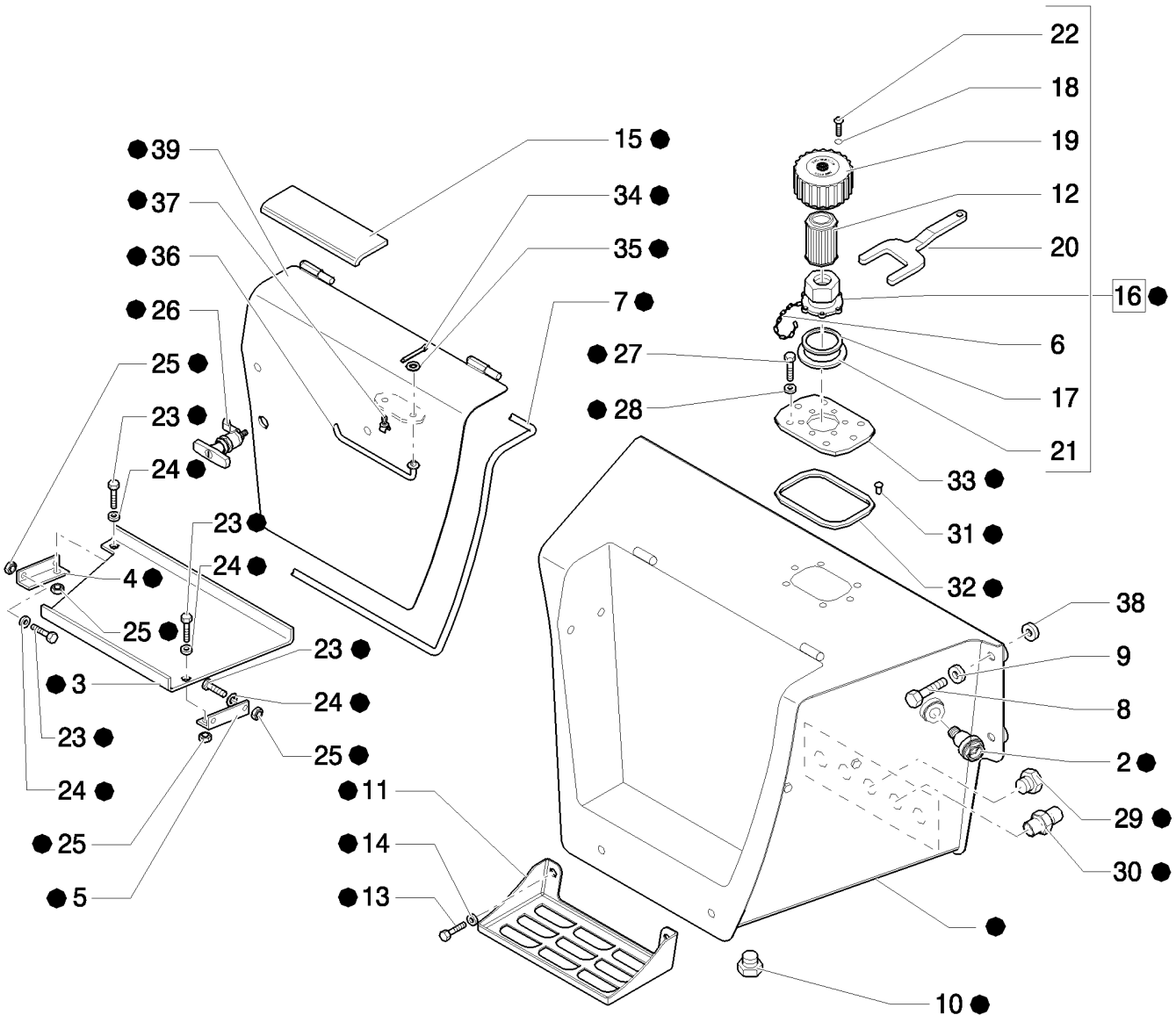



HYDRAULIC OIL RESERVOIR

REF	FN	PART NUMBER	YR/SN	QTY	DESCRIPTION
36		85828017		1	LEVER
37		72273491		1	CLAMP
38		87353741		4	SPACER
39		87406299		1	COVER

HYDRAULIC PUMP (35+35-154L/MM)

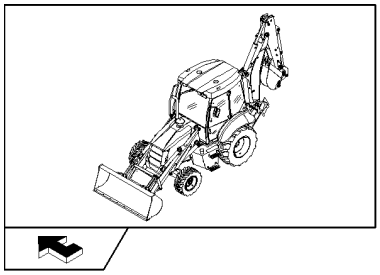

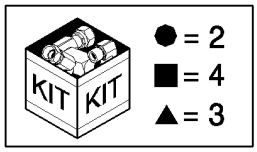

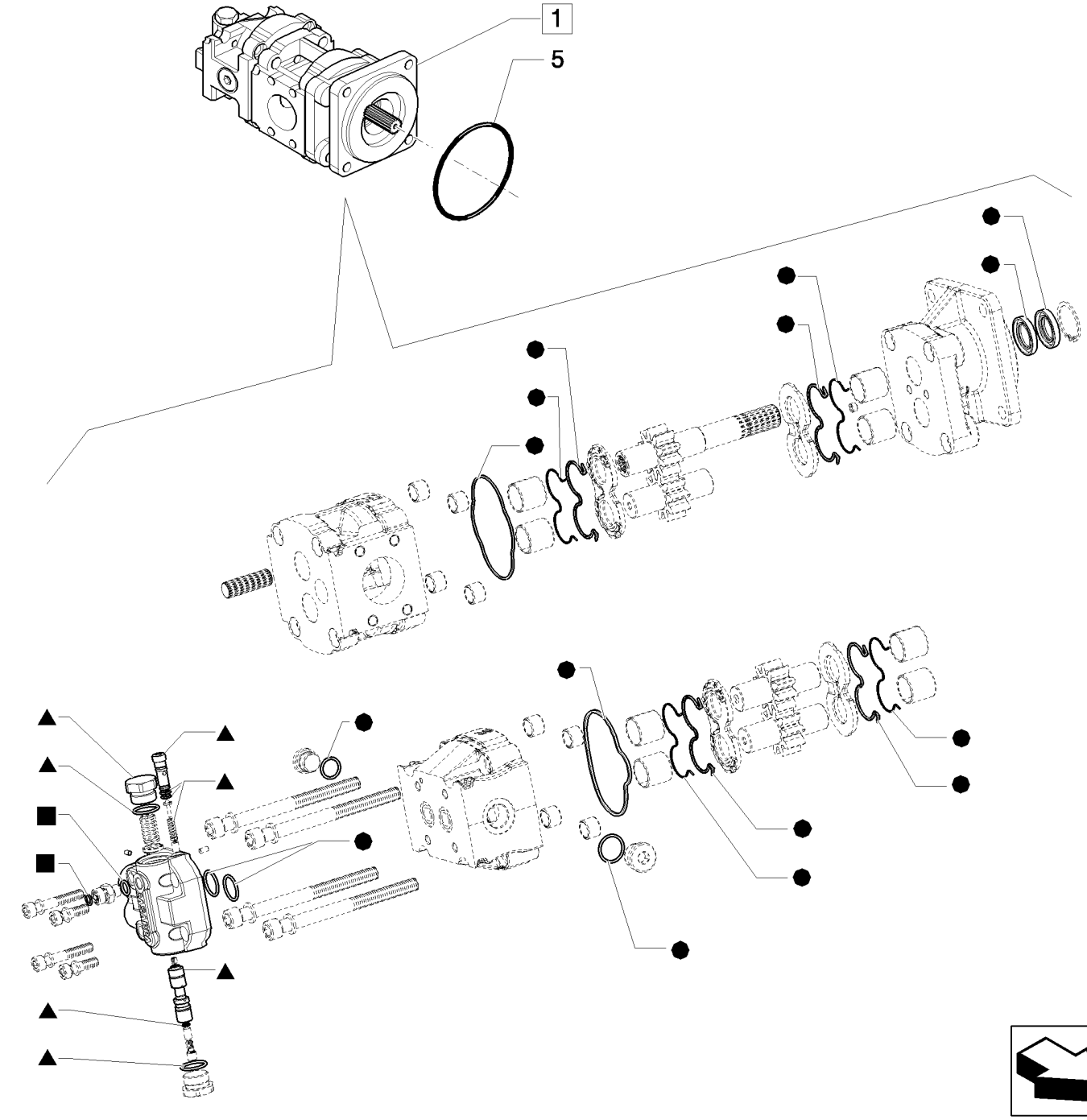

HYDRAULIC PUMP (35+35-154L/MM)

REF	FN	PART NUMBER	YR/SN	QTY	DESCRIPTION
1		87362336		1	PUMP, HYDRAULIC, Assy
2		85813244		1	KIT, SEALS, Seal
3		87530241		1	COVER
4		85824196		1	CONNECTOR, HYD.
5		14466880		1	O-RING, -250, 70 Duro, 4.984" ID x .139" Thk

1.82.6	01	p1	04/08

HYDRAULIC SYSTEM PIPES: PUMP OIL DELIVERY

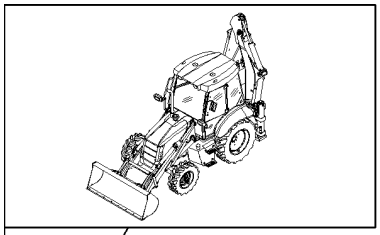

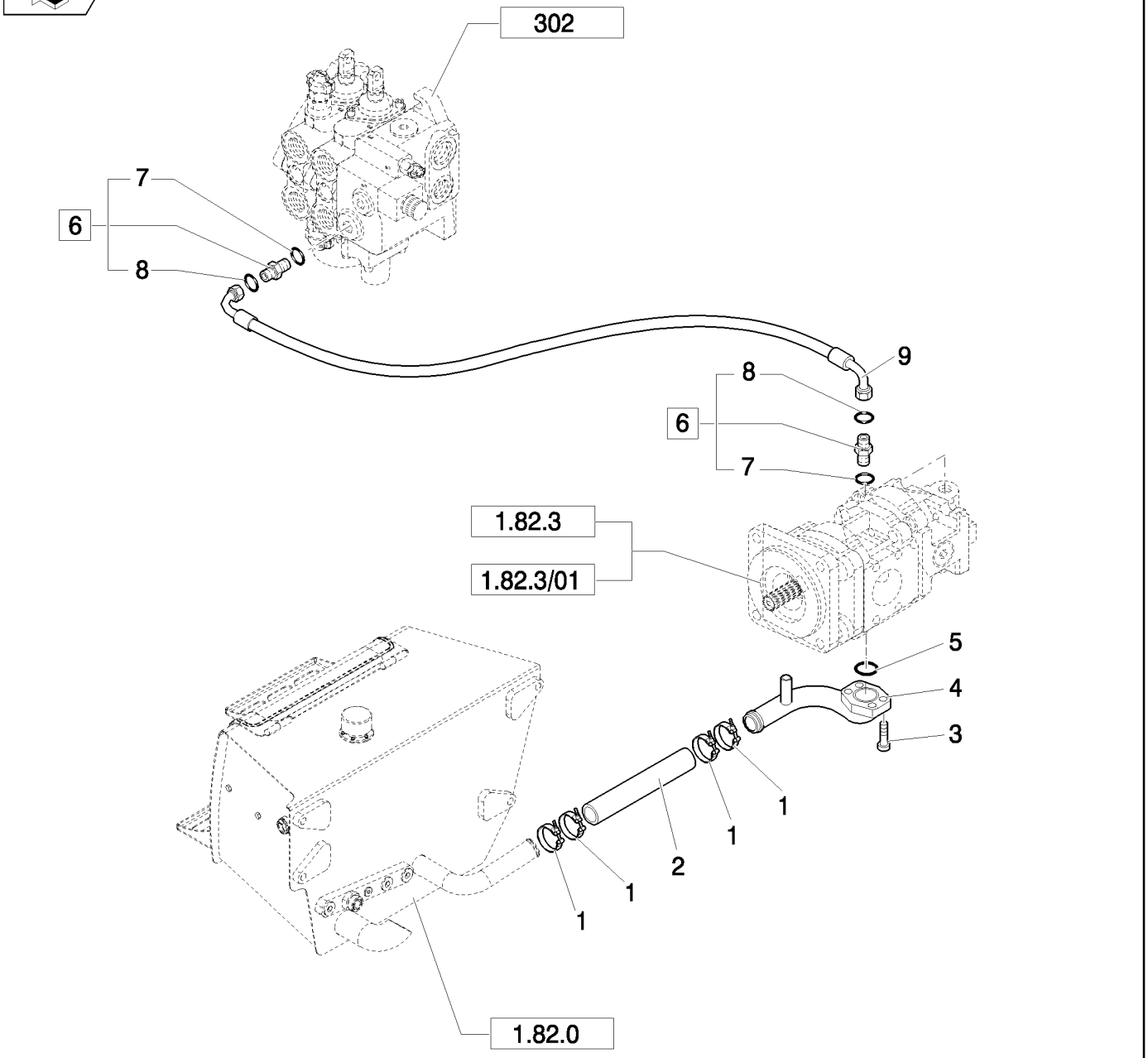

HYDRAULIC SYSTEM PIPES: PUMP OIL DELIVERY

REF	FN	PART NUMBER	YR/SN	QTY	DESCRIPTION
1		87676333		4	CLAMP
2		85811870		1	HOSE
3		14422021		3	SCREW, Hex Soc Hd, M12 x 30, 8.8
4		85827041		1	TUBE
5		14464680		1	O-RING, -228, 70 Duro, 2.234" ID x .139" Thk
6		83962538		2	CONNECTOR, HYD., Assy
7		80167266		2	O-RING
8		89991976		2	O-RING
9		87614753		1	HOSE, FLEXIBLE

Mechanical Version / Pilot Version

B95B

HYDRAULIC SYSTEM PIPES: CONTROL VALVE DELIVERY

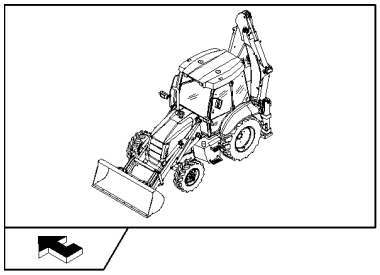

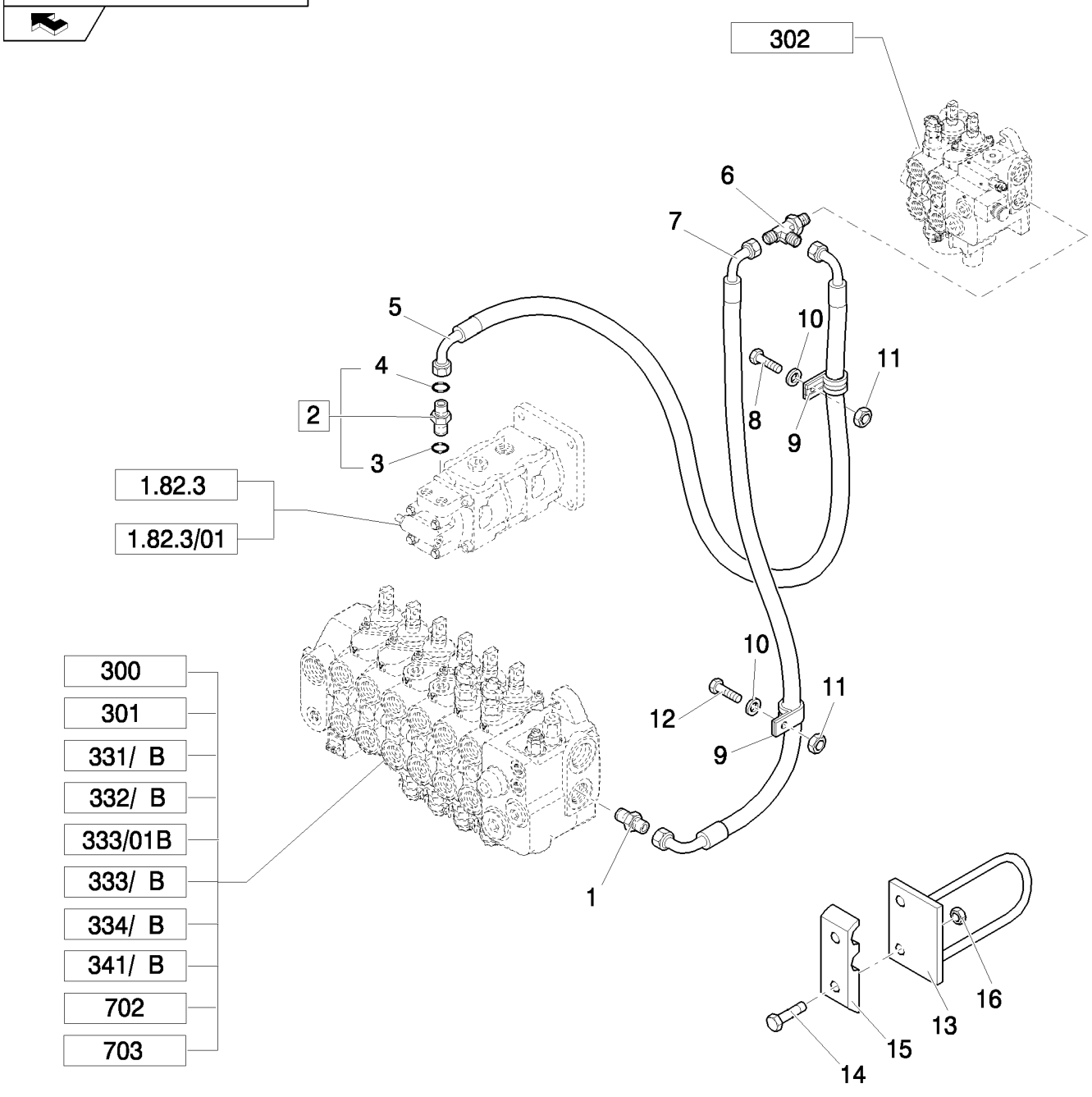

HYDRAULIC SYSTEM PIPES: CONTROL VALVE DELIVERY

REF	FN	PART NUMBER	YR/SN	QTY	DESCRIPTION
1		85803486		1	CONNECTOR, HYD.
2		83963000		1	CONNECTOR, HYD., Assy
3		80167269		1	O-RING
4		83901443		1	O-RING
5		87614751		1	HOSE, FLEXIBLE
6	1	85805838		1	CONNECTION, 3 WAY
6	2	85826093		1	TEE
7		87516888		1	HOSE, FLEXIBLE, L=MM.1080
8		16044021		2	BOLT, Hex, M8 x 40, 8.8
9		85802890		2	CLAMP
10		11193979		2	WASHER, SPRING, Belleville, M8.4
11		14048211		2	NUT, LOCK, M8 x 1.25, Cl 8
12		47049161		1	BOLT
13	3	85802214		2	SUPPORT
14	3	16044221		2	BOLT, Hex, M8 x 50, 8.8
15	3	87631462		2	BRACKET
16	3	16104111		2	NUT, LOCK, M8 x 1.25, Cl 8

(1) Only for Mechanical Version
(2) Only for Pilot Version
(3) Only for NA Version - B115B EU Pilot Center Version

HYDRAULIC SYSTEM PIPES: PRESSURE INTAKE

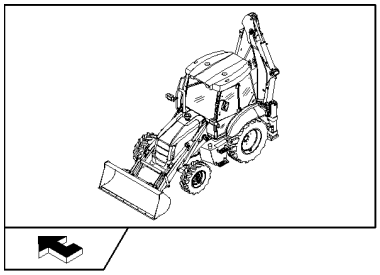

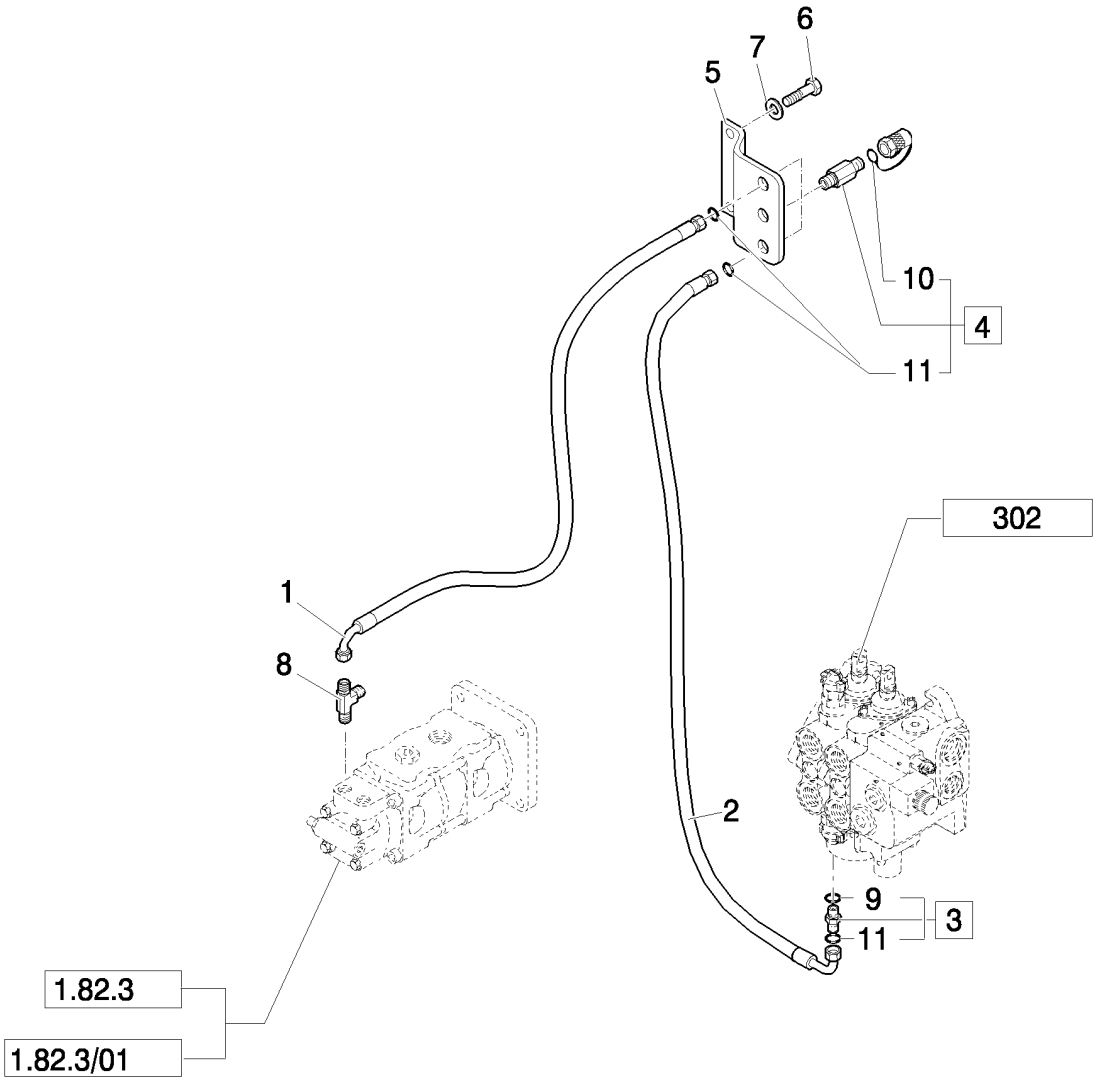

HYDRAULIC SYSTEM PIPES: PRESSURE INTAKE

REF	FN	PART NUMBER	YR/SN	QTY	DESCRIPTION
1		85812171		1	HOSE, FLEXIBLE, 1450mm lg
2		85812173		1	HOSE, FLEXIBLE
3		83963371		1	CONNECTOR, HYD., Assy
4		85817226		2	COUPLING, QUICK, MALE, Assy
5		87569583		1	PLATE
6		14441524		2	SCREW
7		11193879		2	WASHER, SPRING, Belleville, M8.4
8		85805502		1	TEE
9		89617873		1	O-RING
10		9968791		2	PLUG
11		81844851		4	O-RING, 90 Duro, .375" ID x .070" Thk

Mechanical Version / Pilot Version

B95B

HYDRAULIC SYSTEM PIPES: CONTROL VALVE DISCHARGE

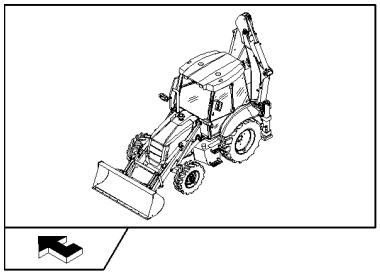

HYDRAULIC SYSTEM PIPES: CONTROL VALVE DISCHARGE

REF	FN	PART NUMBER	YR/SN	QTY	DESCRIPTION
1		83963375		3	CONNECTOR, HYD., Assy
2		80167268		3	O-RING
3		89824050		3	O-RING
4		85818909		1	HOSE, FLEXIBLE
5	1	85805167		1	HOSE, FLEXIBLE
5	2	85827823		1	HOSE, FLEXIBLE
6		85802955		1	PLUG
7		85805168		1	CONNECTOR, HYD.
8		85805166		1	BLOCK
9		11190779		2	WASHER, SPRING, Belleville, M13, 12x24x2.8
10		15541621		2	BOLT, Hex, M12 x 1.25 x 100, 8.8
11		83963371		2	CONNECTOR, HYD., Assy
12		85812174		1	HOSE, FLEXIBLE
13		14560187		2	STRAP, CABLE, 178mm lg
14		81844851		2	O-RING, 90 Duro, .375" ID x .070" Thk
15		89617873		2	O-RING, 90 Duro, .468" ID x .078" Thk
16	2	83962179		1	ELBOW, 90°

(1) Only for Mechanical Version
(2) Only for Pilot Version

Mechanical Version / Pilot Version

B95B

1.82.6	05	p1	04/08

HYDRAULIC SYSTEM PIPES: RETURN TO TANK

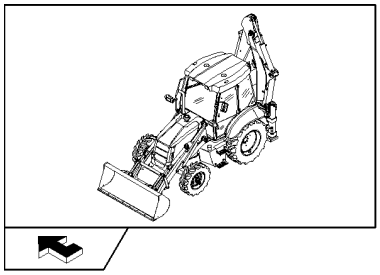

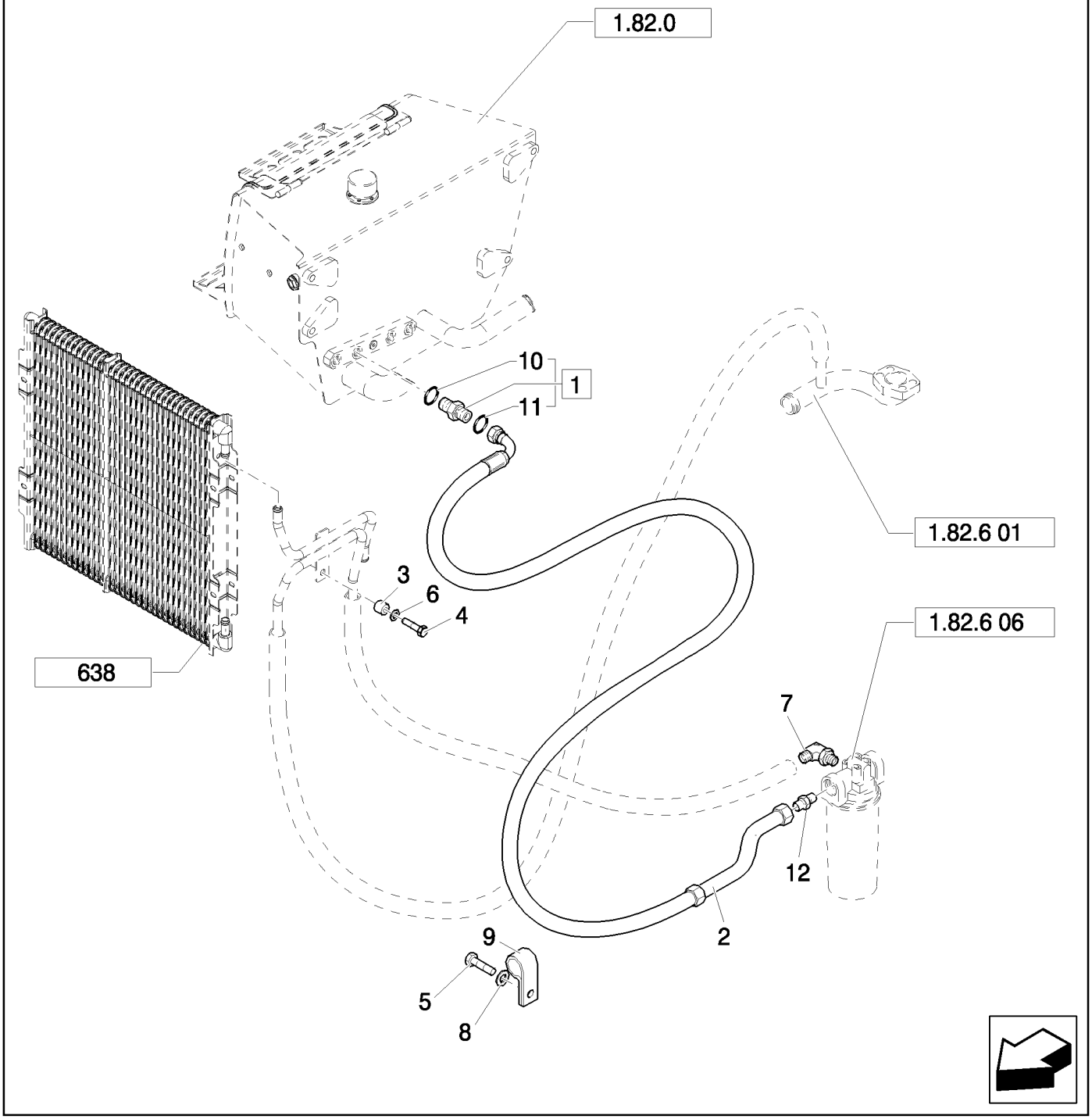

HYDRAULIC SYSTEM PIPES: RETURN TO TANK

REF	FN	PART NUMBER	YR/SN	QTY	DESCRIPTION
1		85802801		1	CONNECTOR, HYD., Assy, 1-11/16"-12 ORS x 1-5/16"-12 SAE O-ring
2		85827824		1	HOSE, FLEXIBLE
3		85825169		1	SPACER
4		47049184		4	SCREW
5		47042364		1	BOLT, M12x25
6		47048963		1	WASHER
7		85825355		1	CONNECTOR, HYD.
8		47048964		1	WASHER
9		47048664		1	CLAMP
10		80167268		1	O-RING
11		89824051		1	O-RING
12		85802960		1	CONNECTOR, HYD.

1.82.6	06	p1	04/08

HYDRAULIC SYSTEM PIPES: OIL FILTER AND CHECK VALVE

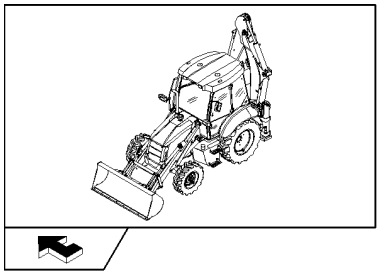

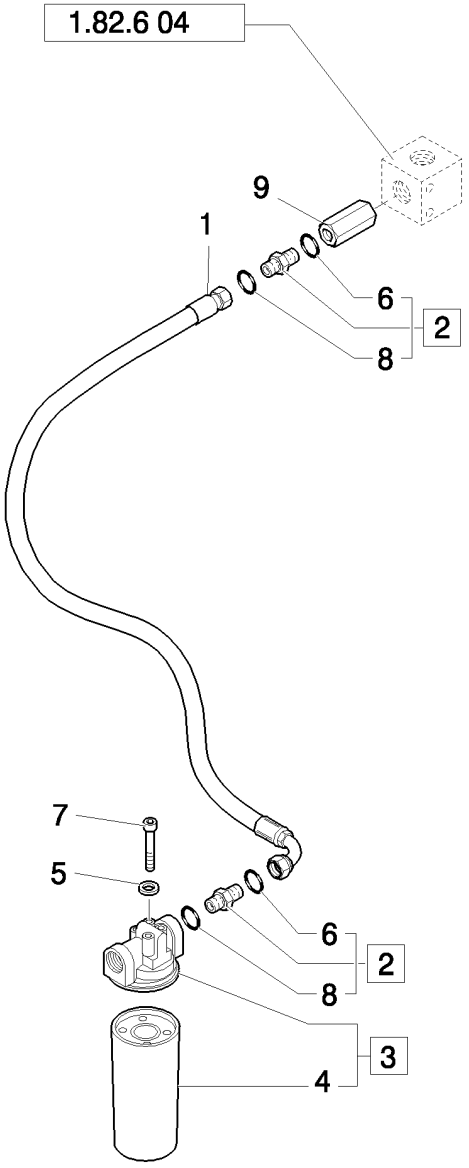

HYDRAULIC SYSTEM PIPES: OIL FILTER AND CHECK VALVE

REF	FN	PART NUMBER	YR/SN	QTY	DESCRIPTION
1	1	87414983		1	HOSE, FLEXIBLE
1	2	85805840		1	HOSE, FLEXIBLE
2		85802801		2	CONNECTOR, HYD., Assy, 1-11/16"-12 ORS x 1-5/16"-12 SAE O-ring
3		87315438		1	FILTER ASSY
4		86989733		1	FILTER, HYDRAULIC OIL
5		11190579		4	WASHER, SPRING, Belleville, M10.5
6		80167268		2	O-RING
7		11106221		4	BOLT, Hex, M10 x 25, 8.8, Full Thd
8		89824051		2	O-RING
9	1	85805824		1	VALVE, CHECK

(1) Only for Side Shift
(2) Only for Center Pivot

1.82.6	07	p1	03/08

HYDRAULIC SYSTEM PIPES: LOADER ATTACHMENT CYLINDERS

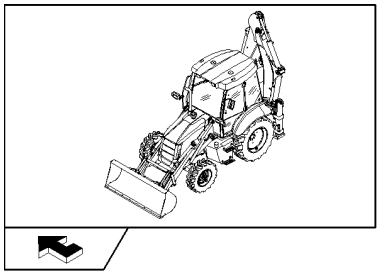

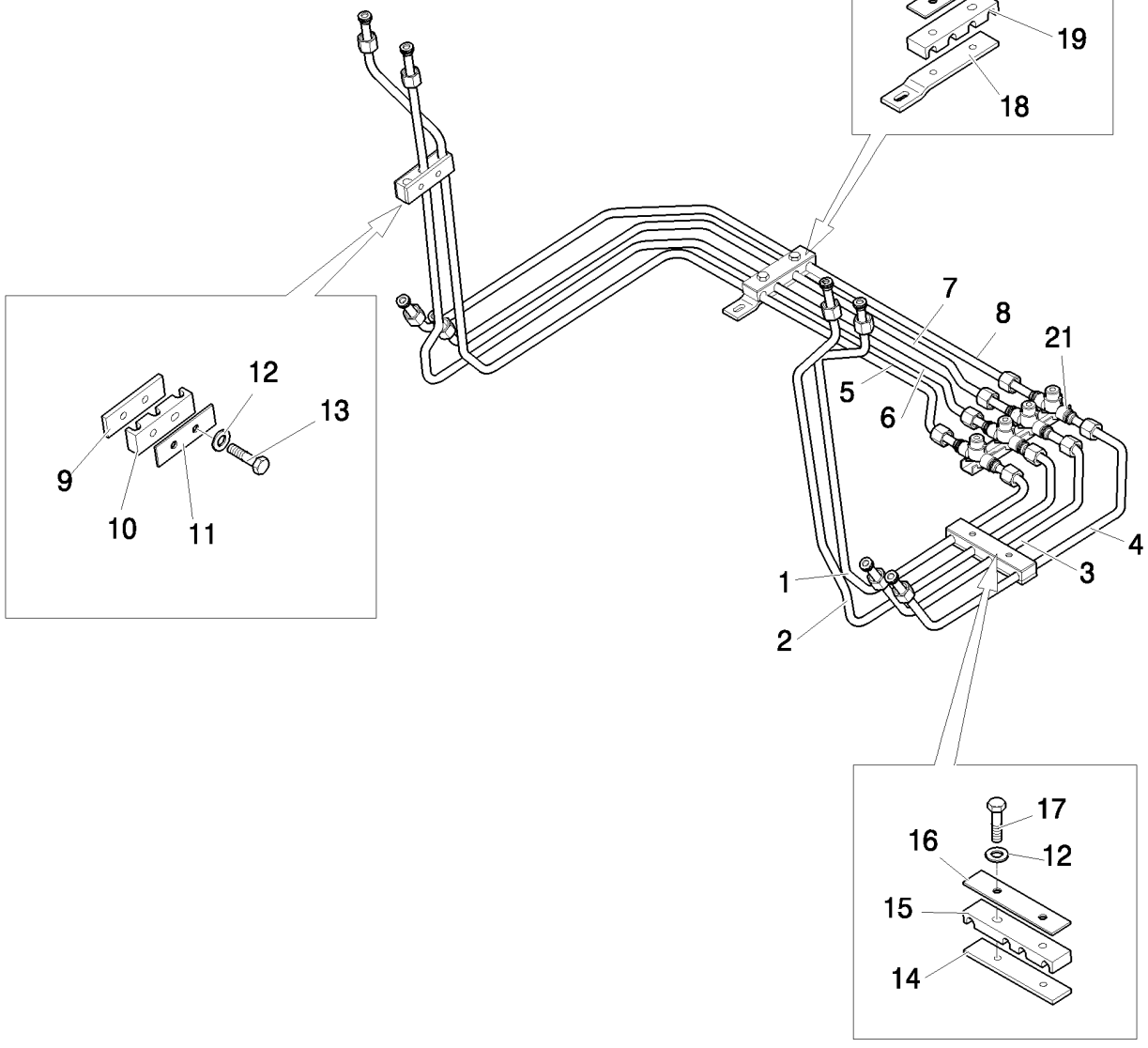

HYDRAULIC SYSTEM PIPES: LOADER ATTACHMENT CYLINDERS

REF	FN	PART NUMBER	YR/SN	QTY	DESCRIPTION
1		85805854		1	TUBE, HYD, LH
2		85805855		1	TUBE, HYD, LH
3		85805858		1	TUBE, HYD, LH
4		85805859		1	TUBE, HYD, LH
5		85805856		1	TUBE, HYD, RH
6		85805857		1	TUBE, HYD, RH
7		85805860		1	TUBE, HYD, RH
8		85805861		1	TUBE, HYD, RH
9		85805870		2	PLATE
10		85805872		2	CLAMP
11		85805869		2	PLATE
12		11193979		8	WASHER, SPRING, Belleville, M8.4
13		16043621		2	BOLT, Hex, M8 x 25, 8.8
14		85805210		2	PLATE
15		85805211		2	CLAMP
16		85805209		2	PLATE
17		16043821		6	BOLT, Hex, M8 x 30, 8.8
18		85805206		1	BRACKET
19		85805208		1	CLAMP
20		85805207		1	PLATE
21		85805203		1	MANIFOLD

Mechanical Version / Pilot Version

B95B

1.82.6	10	p1	03/08

HYDRAULIC SYSTEM PIPING

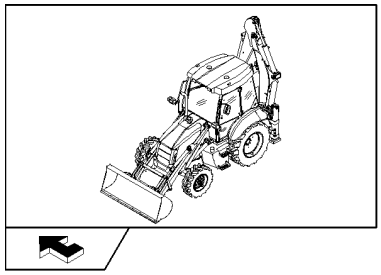

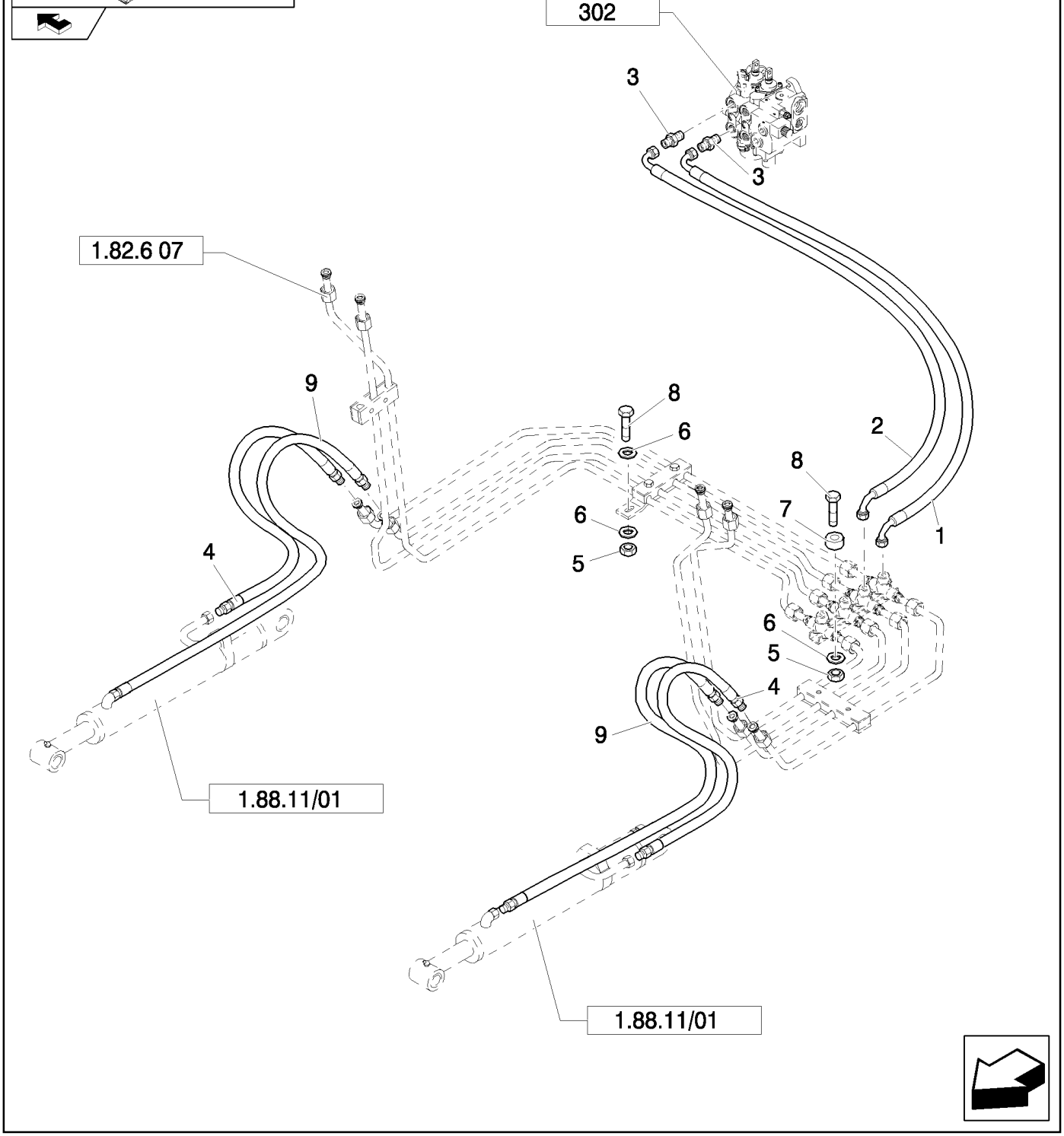

HYDRAULIC SYSTEM PIPING

REF	FN	PART NUMBER	YR/SN	QTY	DESCRIPTION
1		87619508		1	HOSE, FLEXIBLE
2		87619510		1	HOSE, FLEXIBLE
3		83962539		2	CONNECTOR, HYD., 1-1/16-12 ORB x 1-14 ORFS; Incl. 167266, 9992069 O-Rings
4		85813363		2	HOSE, FLEXIBLE, 550mm lg
5		14048211		2	NUT, LOCK, M8 x 1.25, Cl 8
6		12647121		3	WASHER, M8 x 20 x 3
7		85802891		2	SPACER
8		16044021		2	BOLT, Hex, M8 x 40, 8.8
9		85813380		2	HOSE, FLEXIBLE

Mechanical Version / Pilot Version

B95B

1.82.6	11	p1	03/08

HYDRAULIC SYSTEM PIPING

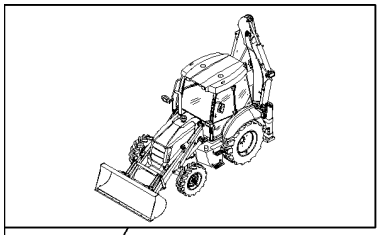

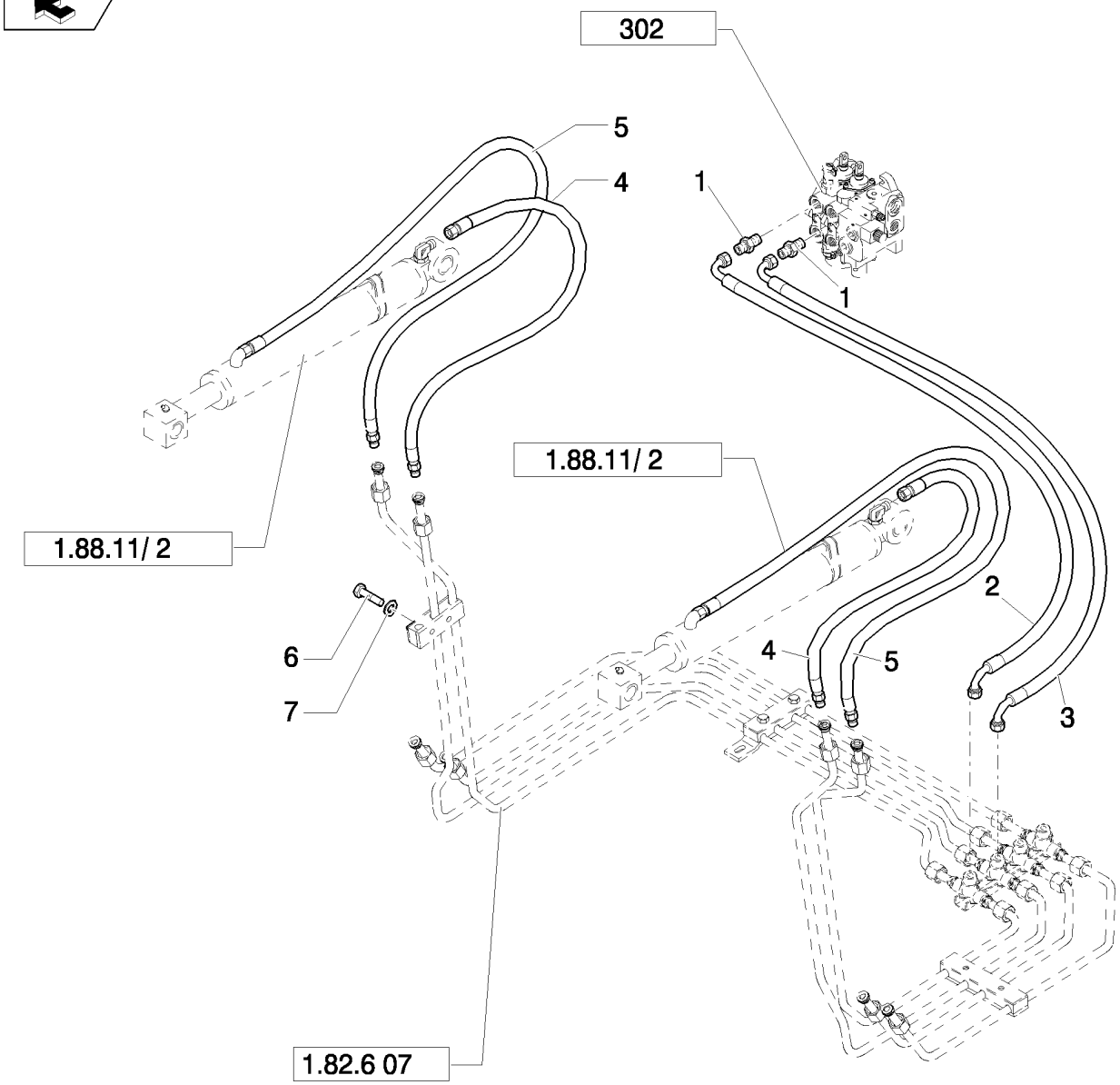

HYDRAULIC SYSTEM PIPING

REF	FN	PART NUMBER	YR/SN	QTY	DESCRIPTION
1		83962539		2	CONNECTOR, HYD., 1-1/16-12 ORB x 1-14 ORFS; Incl. 167266, 9992069 O-Rings
2		87619509		1	HOSE, FLEXIBLE
3		87619507		1	HOSE, FLEXIBLE
4		85813362		2	HOSE, FLEXIBLE, 1130mm lg
5		85813379		2	HOSE, FLEXIBLE
6		16044421		2	BOLT, Hex, M8 x 60, 8.8
7		11193979		2	WASHER, SPRING, Belleville, M8.4

1.82.6	12	p1	03/08

HYDRAULIC SYSTEM PIPES 4WS (CENTER PIVOT): NA

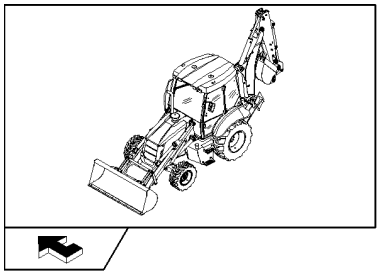

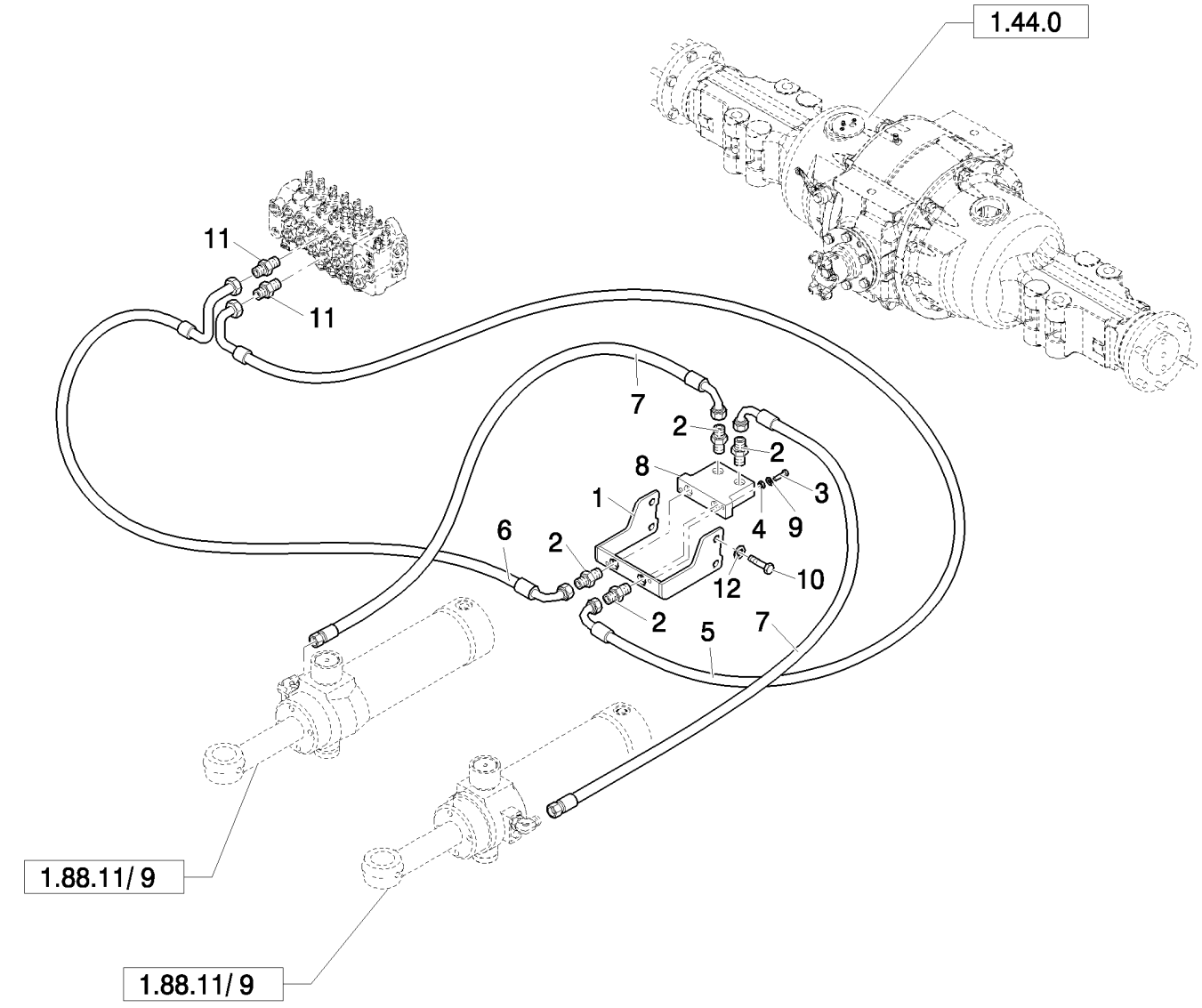

HYDRAULIC SYSTEM PIPES 4WS (CENTER PIVOT): NA

REF	FN	PART NUMBER	YR/SN	QTY	DESCRIPTION
1	1	87371811		1	SUPPORT
1	2	87350477		1	BRACKET
1	3	87351460		1	BRACKET
2		201-112		4	CONNECTOR, HYD., 13/16"-16 ORFS x 7/8"-14 ORB
3		614-10040		2	BOLT, Hex, M10 x 40, 8.8, Full Thd, M10x40
4		829-1410		2	NUT, M10, Cl 10
5		87356499		1	HOSE, FLEXIBLE
6		87356501		1	HOSE, FLEXIBLE
7		87361461		2	HOSE, FLEXIBLE
8		87449373		1	VALVE, HYDRAULIC
9		895-11010		4	WASHER, M10 x 20 x 2, 11 x 21 x 2
10		413-1036		4	BOLT, Hex, 5/8"-11 x 2 1/4", G5
10	4	87376137		4	BOLT, BANJO
11		85805258		2	CONNECTOR, HYD., 9/16"-16 ORS x 1 1/16"-12, O-Ring
12	3	14496931		1	WASHER, M16 x 30 x 3

(1) Except for B115B
(2) Only for Power Shuttle
(3) Only for Power Shift
(4) Only for B115B

Pilot Control Version

B95B

HYDRAULIC SYSTEM PIPES: SWING CYLINDER

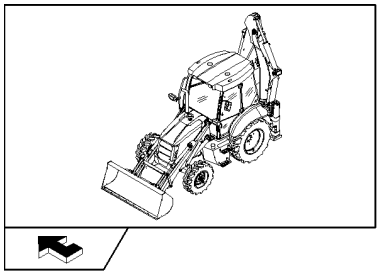

HYDRAULIC SYSTEM PIPES: SWING CYLINDER

REF	FN	PART NUMBER	YR/SN	QTY	DESCRIPTION
1		85802955		2	PLUG
2		83971549		5	ELBOW, Assy
3		80128825		5	O-RING
4		89992298		5	O-RING
5		83963374		1	CONNECTOR, HYD., Assy
6		81845030		1	NUT
7		81832258		1	O-RING
8	1	85819730		1	HOSE, HYDRAULIC
8	2	85819060		1	TUBE, HYD
9	1	85819728		1	HOSE, HYDRAULIC
9	2	85819061		1	HOSE, HYDRAULIC
10	1	85819727		1	HOSE, HYDRAULIC, 415mm lg
10	2	85820109		1	TUBE, HYD
11		85819729		1	HOSE, HYDRAULIC
12		85805258		2	CONNECTOR, HYD., 9/16"-16 ORS x 1 1/16"-12, O-Ring
13		16044221		2	BOLT, Hex, M8 x 50, 8.8
14		14560187		2	STRAP, CABLE, 178mm lg, L=203.2 mm
15		11190579		2	WASHER, SPRING, Belleville, M10.5

(1) Only for B110B - B115B Center Pivot, Pilot Version, Power Shift
(2) Only for Side Shift

HYDRAULIC SYSTEM PIPES: BACKHOE ATTACHMENT CYLINDER

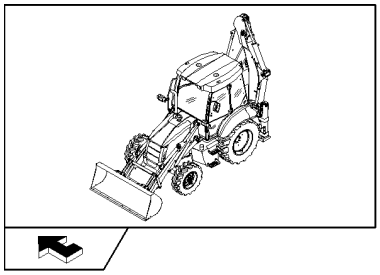

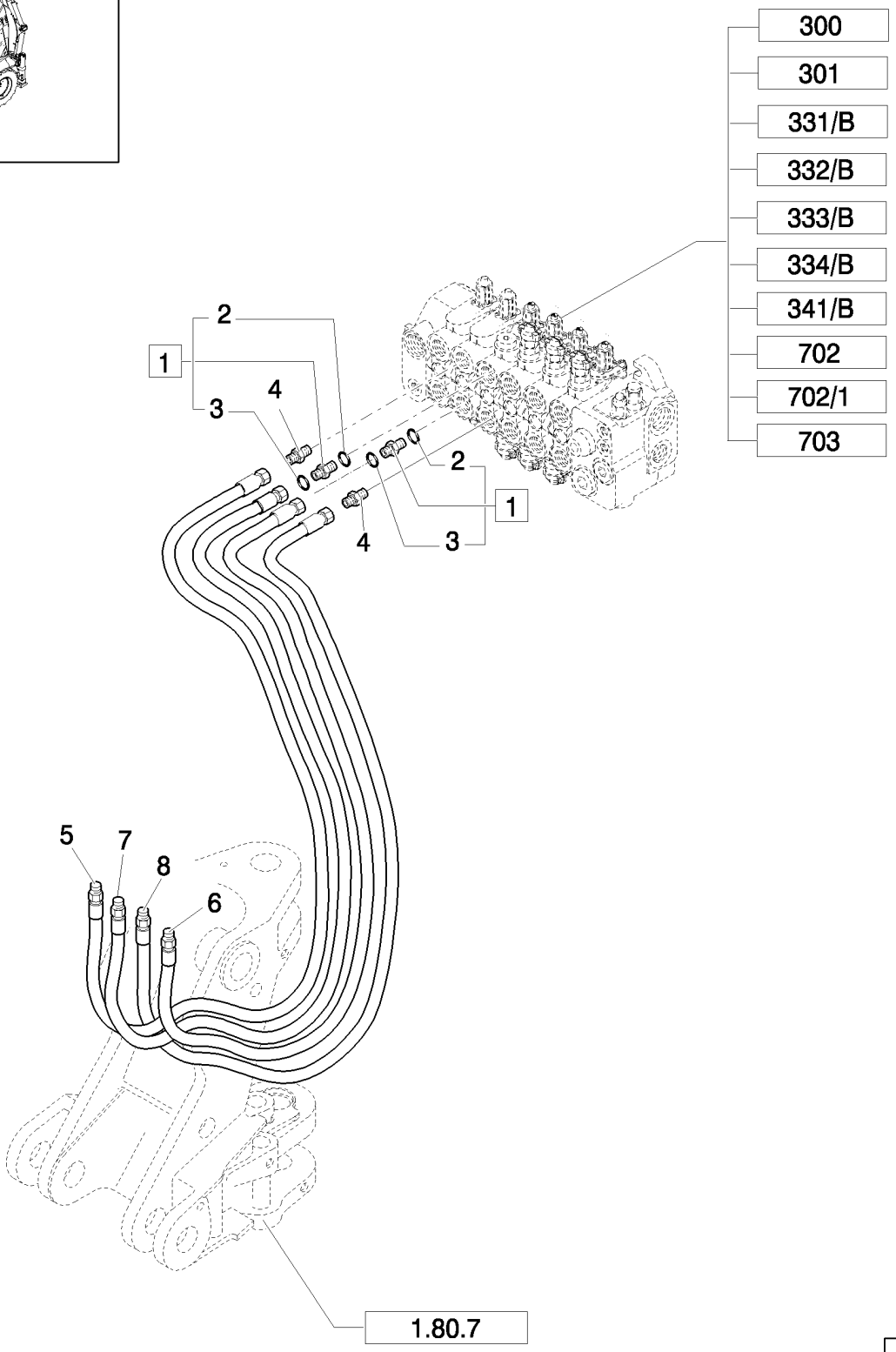

HYDRAULIC SYSTEM PIPES: BACKHOE ATTACHMENT CYLINDER

REF	FN	PART NUMBER	YR/SN	QTY	DESCRIPTION
1		83962538		2	CONNECTOR, HYD., Assy
2		80167266		2	O-RING
3		89991976		2	O-RING
4		83962539		2	CONNECTOR, HYD., 1-1/16-12 ORB x 1-14 ORFS; Incl. 167266, 9992069 O-Rings
5	1	87619495		1	HOSE, FLEXIBLE
5	2	85819064		1	HOSE, HYDRAULIC
6	1	87621908		1	HOSE, FLEXIBLE
6	2	85819062		1	HOSE, HYDRAULIC
7	1	87619496		1	HOSE, FLEXIBLE
7	2	85819063		1	HOSE, HYDRAULIC
8	1	87621920		1	HOSE, FLEXIBLE
8	2	85819065		1	HOSE, HYDRAULIC

(1) Only for Center Pivot
(2) Only for Side Shift

1.82.6	15	p1	04/08

HYDRAULIC SYSTEM PIPES: BACKHOE ATTACHMENT BOOM CYLINDER

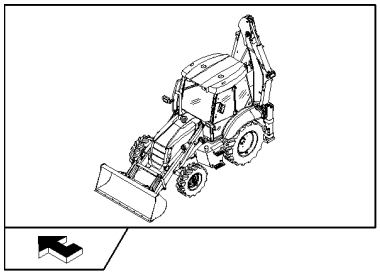

HYDRAULIC SYSTEM PIPES: BACKHOE ATTACHMENT BOOM CYLINDER

REF	FN	PART NUMBER	YR/SN	QTY	DESCRIPTION
1		83962538		1	CONNECTOR, HYD., Assy
2		80167266		1	O-RING
3		89991976		1	O-RING
4		83962539		1	CONNECTOR, HYD., 1-1/16-12 ORB x 1-14 ORFS; Incl. 167266, 9992069 O-Rings
5	1	85819058		1	TUBE, HYD
5	2	87621907		1	HOSE, FLEXIBLE
6	1	85819059		1	TUBE, HYD
6	3	87619484		1	HOSE, FLEXIBLE
7	1	85817230		2	CLAMP
8	1	85817231		2	CLAMP
9	1	85817474		2	STRAP, CABLE
10	1	15213621		4	SCREW, Hex, M8 x 55, 8.8, Full Thd
11	1	11193879		4	WASHER, SPRING, Belleville, M8.4
12	1	14048211		4	NUT, LOCK, M8 x 1.25, Cl 8

(1) Only for Side Shift
(2) Only for Center Pivot
(3) Only for Pilot Version

ROTATION PLATE HOSE CLAMPS (CENTER PIVOT)

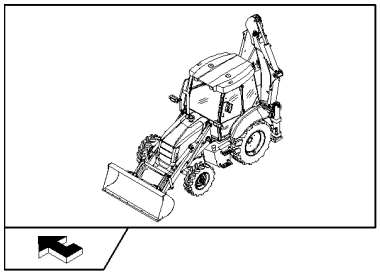

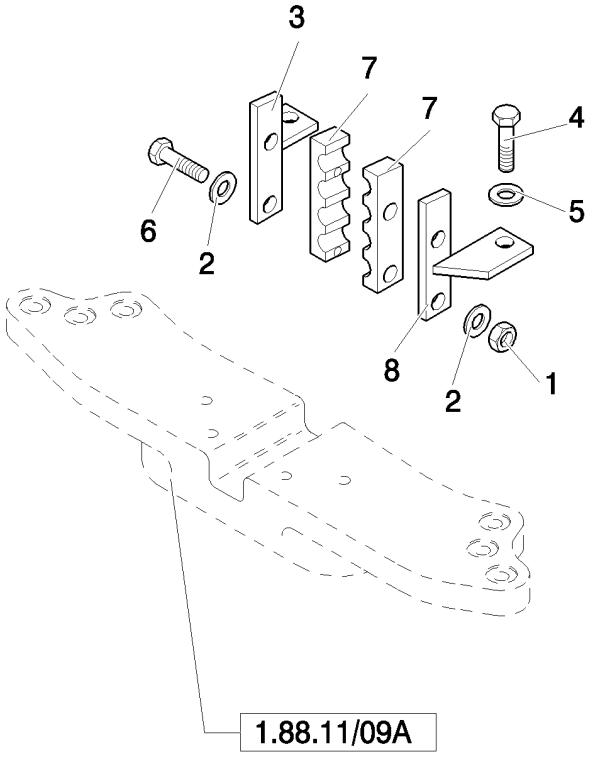

ROTATION PLATE HOSE CLAMPS (CENTER PIVOT)

REF	FN	PART NUMBER	YR/SN	QTY	DESCRIPTION
1		14048221		2	NUT, LOCK, M8 x 1.25, Cl 10
2		12647121		2	WASHER, M8 x 20 x 3
3		85804573		1	SUPPORT
4		11106221		2	BOLT, Hex, M10 x 25, 8.8, Full Thd
5		11190579		2	WASHER, SPRING, Belleville, M10.5
6		16044421		2	BOLT, Hex, M8 x 60, 8.8
7		87631460		2	CLAMP
8		85804574		1	SUPPORT

1.82.6/01	01	p1	04/08

FRONT HYDRAULIC PUMP INTAKE & OUTLET HOSES (CENTER PIVOT) - NA

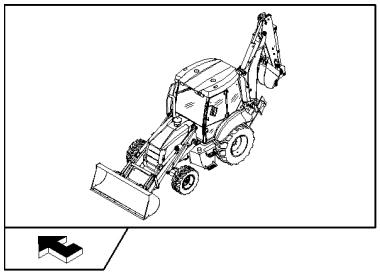

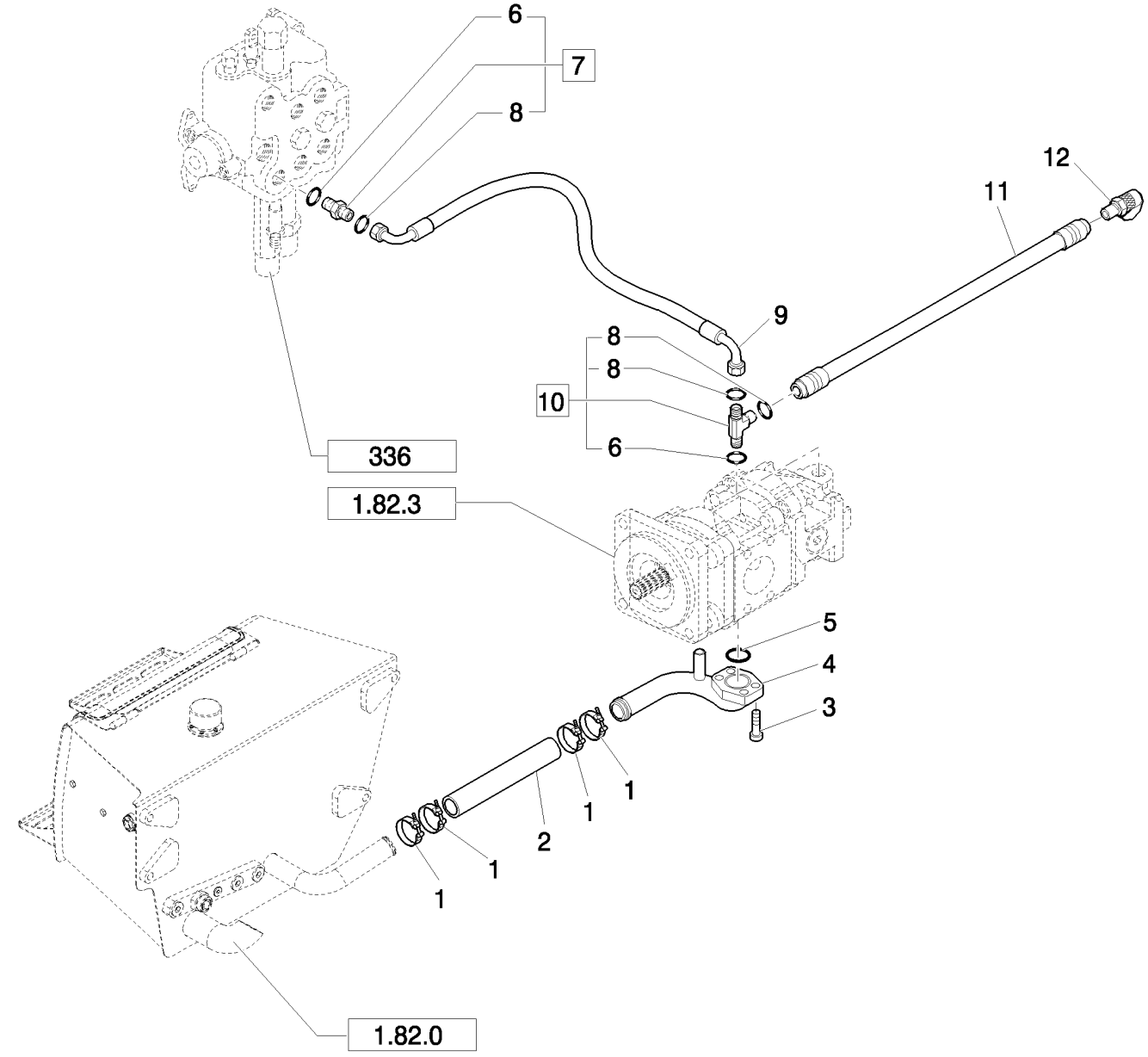

FRONT HYDRAULIC PUMP INTAKE & OUTLET HOSES (CENTER PIVOT) - NA

REF	FN	PART NUMBER	YR/SN	QTY	DESCRIPTION
1		87676333		4	CLAMP
2		85811870		1	HOSE
3		14422021		3	SCREW, Hex Soc Hd, M12 x 30, 8.8
4		85827041		1	TUBE
5		14464680		1	O-RING, -228, 70 Duro, 2.234" ID x .139" Thk
6		80167266		2	O-RING
7		83962538		1	CONNECTOR, HYD., Assy
8		89991976		3	O-RING
9		87621912		1	HOSE, FLEXIBLE
10		85815581		1	TEE, Assy
11		85815568		1	HOSE, HYDRAULIC
12		85817596		1	COUPLING, QUICK, MALE

1.82.6/01	02	p1	05/08

REAR HYDRAULIC PUMP STABILIZER, LOADER & BACKHOE VALVE HOSES (CP) - NA

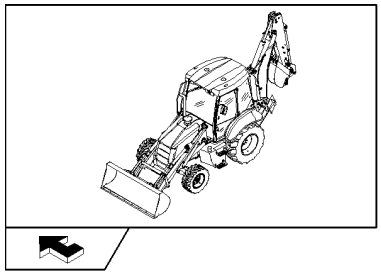

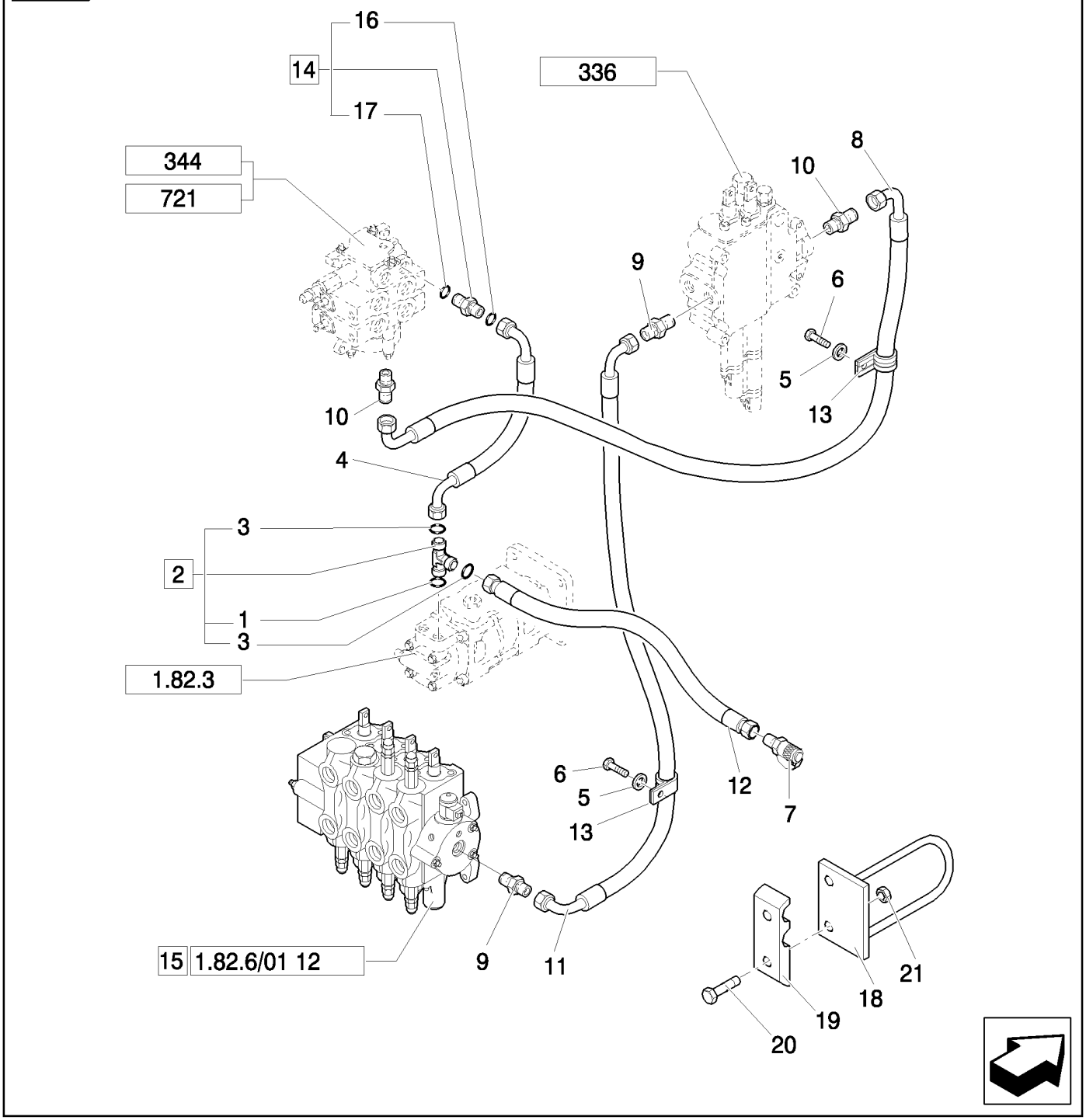

REAR HYDRAULIC PUMP STABILIZER, LOADER & BACKHOE VALVE HOSES (CP) - NA

REF	FN	PART NUMBER	YR/SN	QTY	DESCRIPTION
1		80167269		1	O-RING
2		85815580		1	CONNECTOR, HYD., Assy
3		83901443		2	O-RING
4		87614752		1	HOSE, FLEXIBLE
5		11193979		2	WASHER, SPRING, Belleville, M8.4
6		16044021		2	BOLT, Hex, M8 x 40, 8.8
7		85817596		1	COUPLING, QUICK, MALE
8		87621910		1	HOSE, FLEXIBLE
9		85802958		1	CONNECTOR, HYD.
10		85802642		2	CONNECTOR, HYD., 1-3/16"-12 ORS x 7/8"-14 SAE O-Ring
11		85802776		1	HOSE, HYDRAULIC, 1150mm lg
12		85815567		1	HOSE, HYDRAULIC
13		85802890		2	CLAMP
14		83963000		1	CONNECTOR, HYD., Assy
15		85827100		1	VALVE, CONTROL
16		80167269		1	O-RING
17		83901443		1	O-RING
18		85802214		2	SUPPORT
19		87631462		2	BRACKET
20		16044221		2	BOLT, Hex, M8 x 50, 8.8
21		16104111		2	NUT, LOCK, M8 x 1.25, Cl 8

Mechanical Version

B95B

HYDRAULIC SYSTEM PIPES (CENTER PIVOT): NA: PRESSURE INTAKE

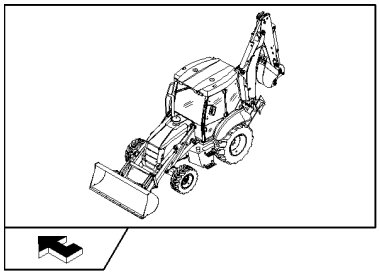

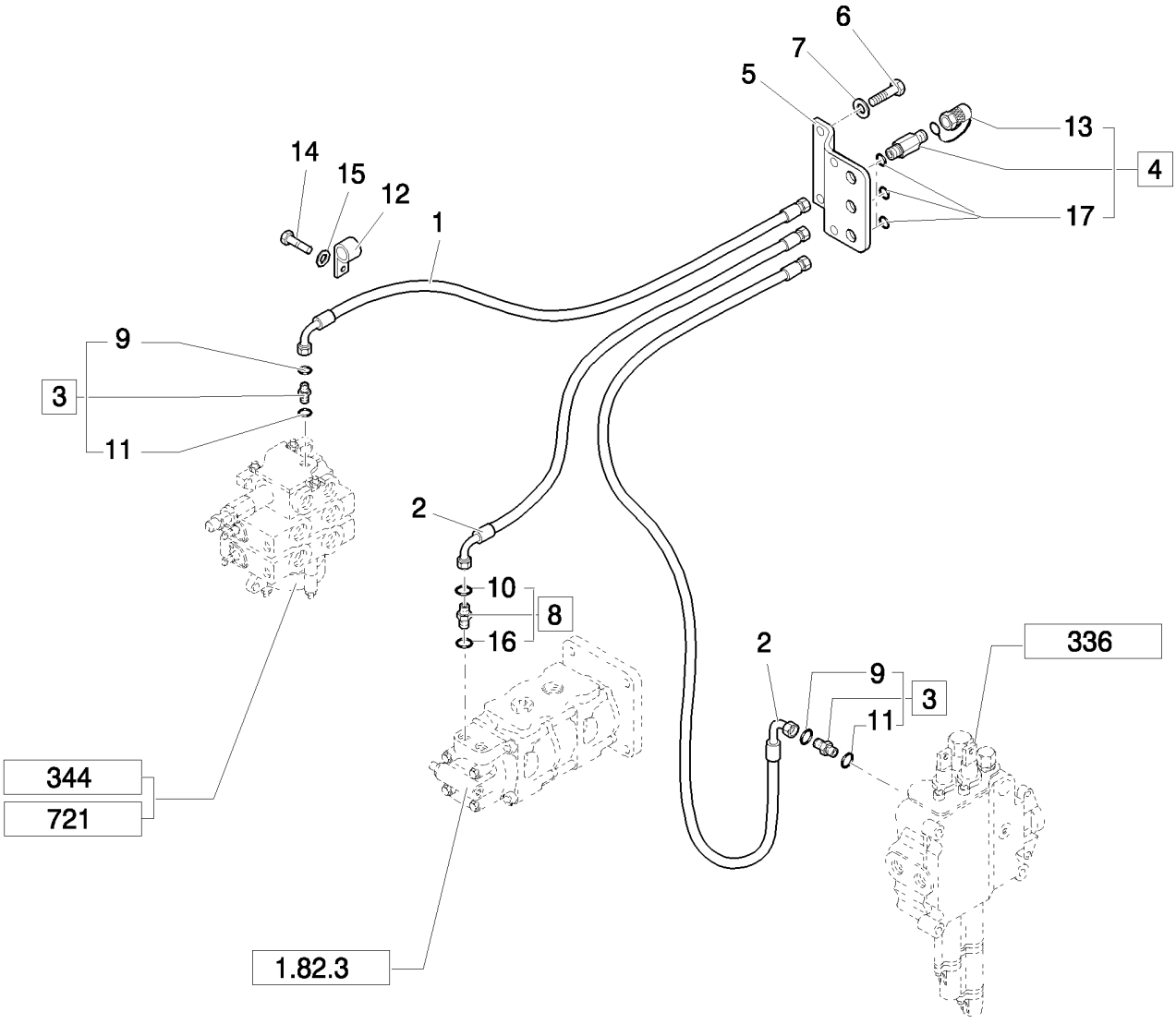

HYDRAULIC SYSTEM PIPES (CENTER PIVOT): NA: PRESSURE INTAKE

REF	FN	PART NUMBER	YR/SN	QTY	DESCRIPTION
1		85812170		1	HOSE, FLEXIBLE, 1250mm lg
2		85812171		2	HOSE, FLEXIBLE, 1450mm lg
3		83963371		2	CONNECTOR, HYD., Assy
4		85817226		3	COUPLING, QUICK, MALE, Assy
5		87569583		1	PLATE
6		14441524		2	SCREW
7		11193879		2	WASHER, SPRING, Belleville, M8.4
8		83971549		1	ELBOW, Assy
9		89617873		5	O-RING, 90 Duro, .468" ID x .078" Thk
10		89992298		1	O-RING
11		81844851		5	O-RING, 90 Duro, .375" ID x .070" Thk
12		85802890		2	CLAMP
13		9968791		3	PLUG
14		15540821		2	BOLT, Hex, M12 x 1.25 x 50, 8.8
15		11190779		2	WASHER, SPRING, Belleville, M13
16		80128825		1	O-RING
17		81844851		3	O-RING

Mechanical Version B95B

RETURN MANIFOLD HOSES - NA

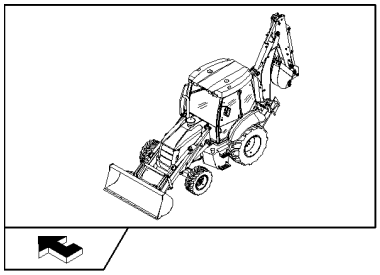

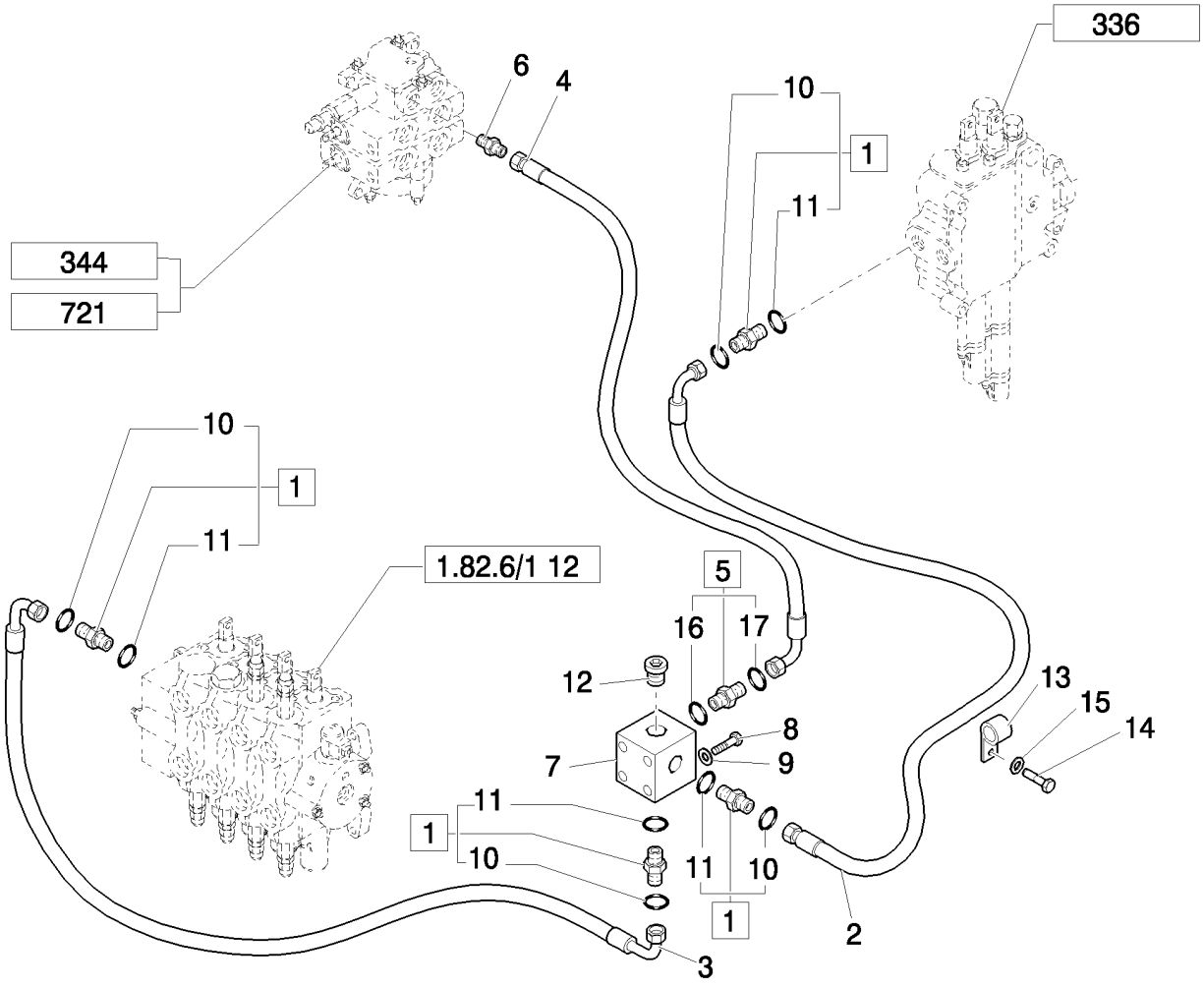

RETURN MANIFOLD HOSES - NA

REF	FN	PART NUMBER	YR/SN	QTY	DESCRIPTION
1		83963375		4	CONNECTOR, HYD., Assy
2		85802777		1	HOSE, FLEXIBLE, 1100mm lg
3		85802839		1	HOSE, FLEXIBLE, 500mm lg
3	1	87574479		1	HOSE
4		85802838		1	HOSE, HYDRAULIC, 700mm lg
5		83962538		1	CONNECTOR, HYD., Assy
6		85802642		1	CONNECTOR, HYD., 1-3/16"-12 ORS x 7/8"-14 SAE O-Ring
7		85802799		1	BLOCK, CONNECTING
8		15541621		2	BOLT, Hex, M12 x 1.25 x 100, 8.8
9		11190779		2	WASHER, SPRING, Belleville, M13
10		89824050		4	O-RING
11		80167268		4	O-RING
12		85802955		1	PLUG
13		85802890		1	CLAMP
14		15540821		1	BOLT, Hex, M12 x 1.25 x 50, 8.8
15		12646921		1	WASHER, M12 x 28 x 3
16		80167266		1	O-RING
17		89991976		1	O-RING

(1) Only for B95BTC

FILTER ASSEMBLY & HOSE TO RETURN MANIFOLD (CENTER PIVOT) - NA

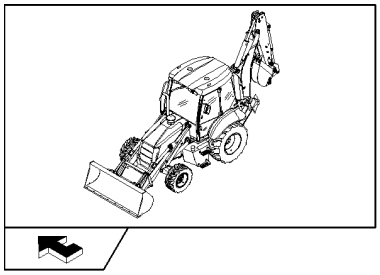

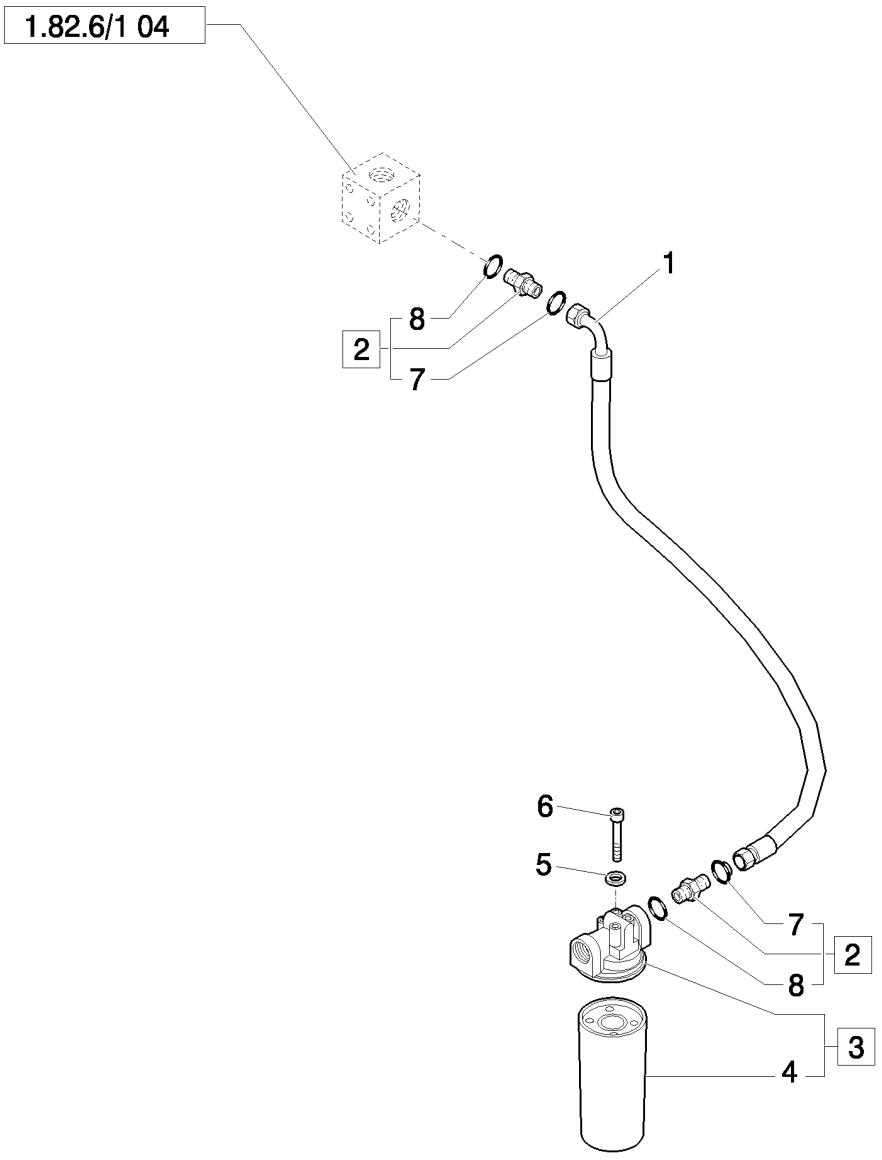

FILTER ASSEMBLY & HOSE TO RETURN MANIFOLD (CENTER PIVOT) - NA

REF	FN	PART NUMBER	YR/SN	QTY	DESCRIPTION
1		85826986		1	HOSE, FLEXIBLE
2		85802801		2	CONNECTOR, HYD., Assy
3		87315438		1	FILTER ASSY, Assy
4		86989733		1	FILTER, HYDRAULIC OIL
5		11190579		4	WASHER, SPRING, Belleville, M10.5
6		11106221		4	BOLT, Hex, M10 x 25, 8.8, Full Thd
7		89824051		2	O-RING
8		80167268		2	O-RING

Mechanical Version

B95B

1.82.6/01	06	p1	04/08

HYDRAULIC SYSTEM PIPES (CENTER PIVOT): NA: RETURN TO TANK

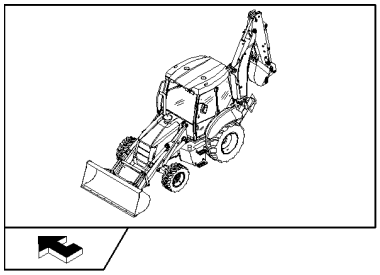

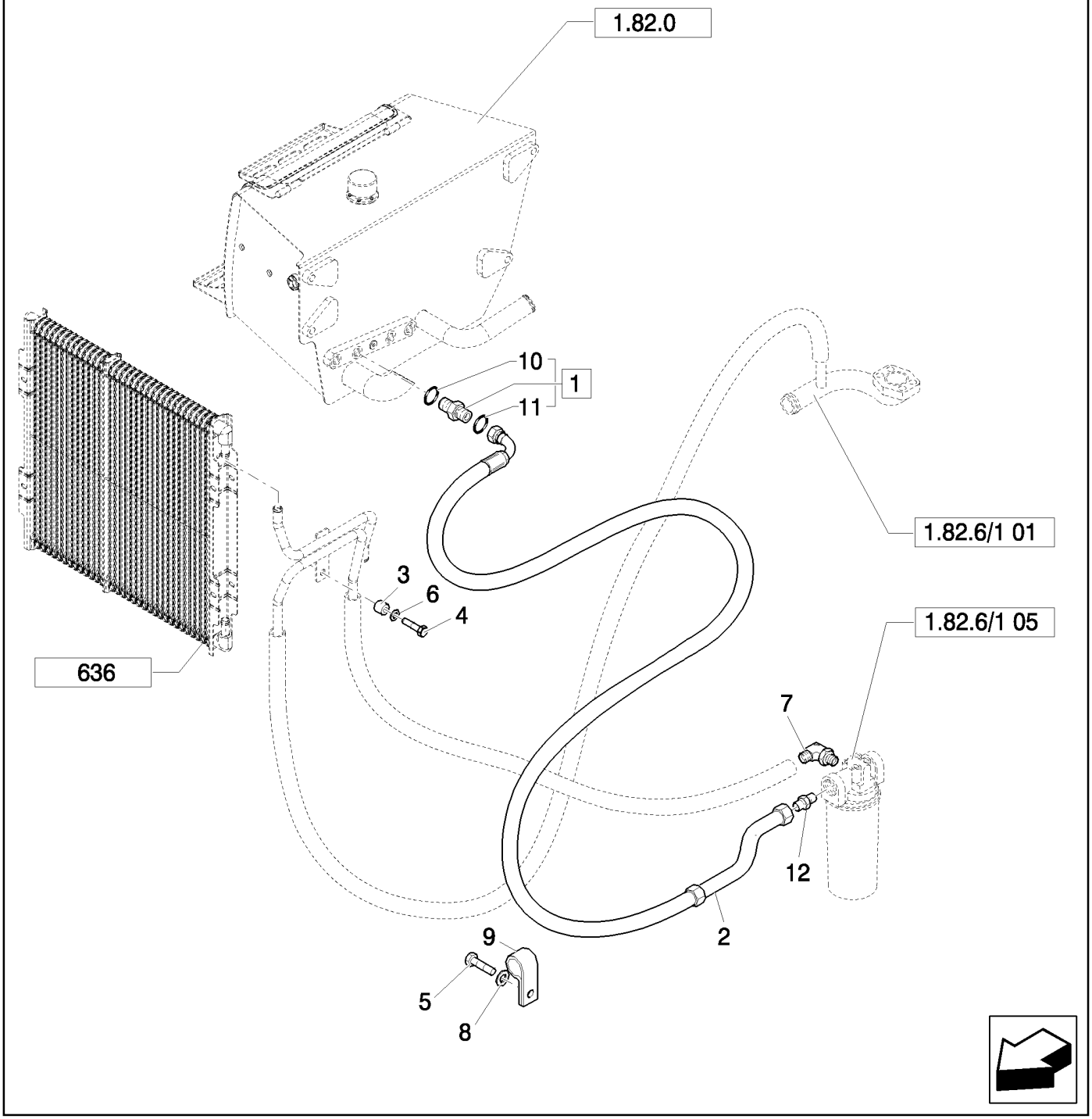

HYDRAULIC SYSTEM PIPES (CENTER PIVOT): NA: RETURN TO TANK

REF	FN	PART NUMBER	YR/SN	QTY	DESCRIPTION
1		85802801		1	CONNECTOR, HYD., Assy, 1-11/16"-12 ORS x 1-5/16"-12 SAE O-ring
2		85827824		1	HOSE, FLEXIBLE
3		85825169		1	SPACER
4		47049184		4	SCREW
5		15970921		1	BOLT, Hex, M10 x 1.25 x 35, 8.8, Full Thd, M12x25
6		47048963		1	WASHER
7		85825355		1	CONNECTOR, HYD.
8		47048964		1	WASHER
9		47048664		1	CLAMP
10		80167268		1	O-RING
11		89824051		1	O-RING
12		85802960		1	CONNECTOR, HYD.

1.82.6/01	07	p1	04/08

LOADER LIFT CYLINDER HOSES (CENTER PIVOT) - NA

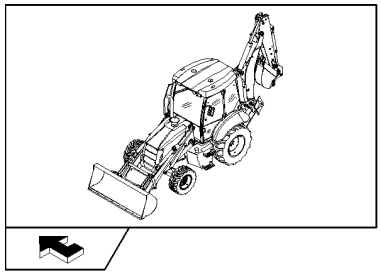

LOADER LIFT CYLINDER HOSES (CENTER PIVOT) - NA

REF	FN	PART NUMBER	YR/SN	QTY	DESCRIPTION
1		87619505		1	HOSE, FLEXIBLE
2		87619504		1	HOSE, FLEXIBLE
3		83901443		2	O-RING
4		83963000		2	CONNECTOR, HYD., Assy
5		80167269		2	O-RING
6		85813363		2	HOSE, FLEXIBLE, 550mm lg
7		14048211		2	NUT, LOCK, M8 x 1.25, Cl 8
8		16044021		2	BOLT, Hex, M8 x 40, 8.8
9		85802891		1	SPACER
10		12647121		2	WASHER, M8 x 20 x 3
11		85813380		2	HOSE, FLEXIBLE

1.82.6/01	08	p1	04/08

LOADER BUCKET CYLINDER HOSES (CENTER PIVOT) - NA

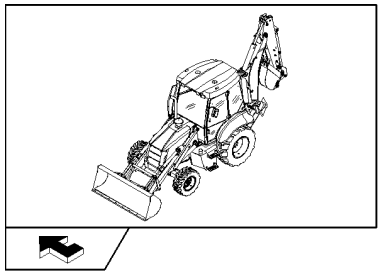

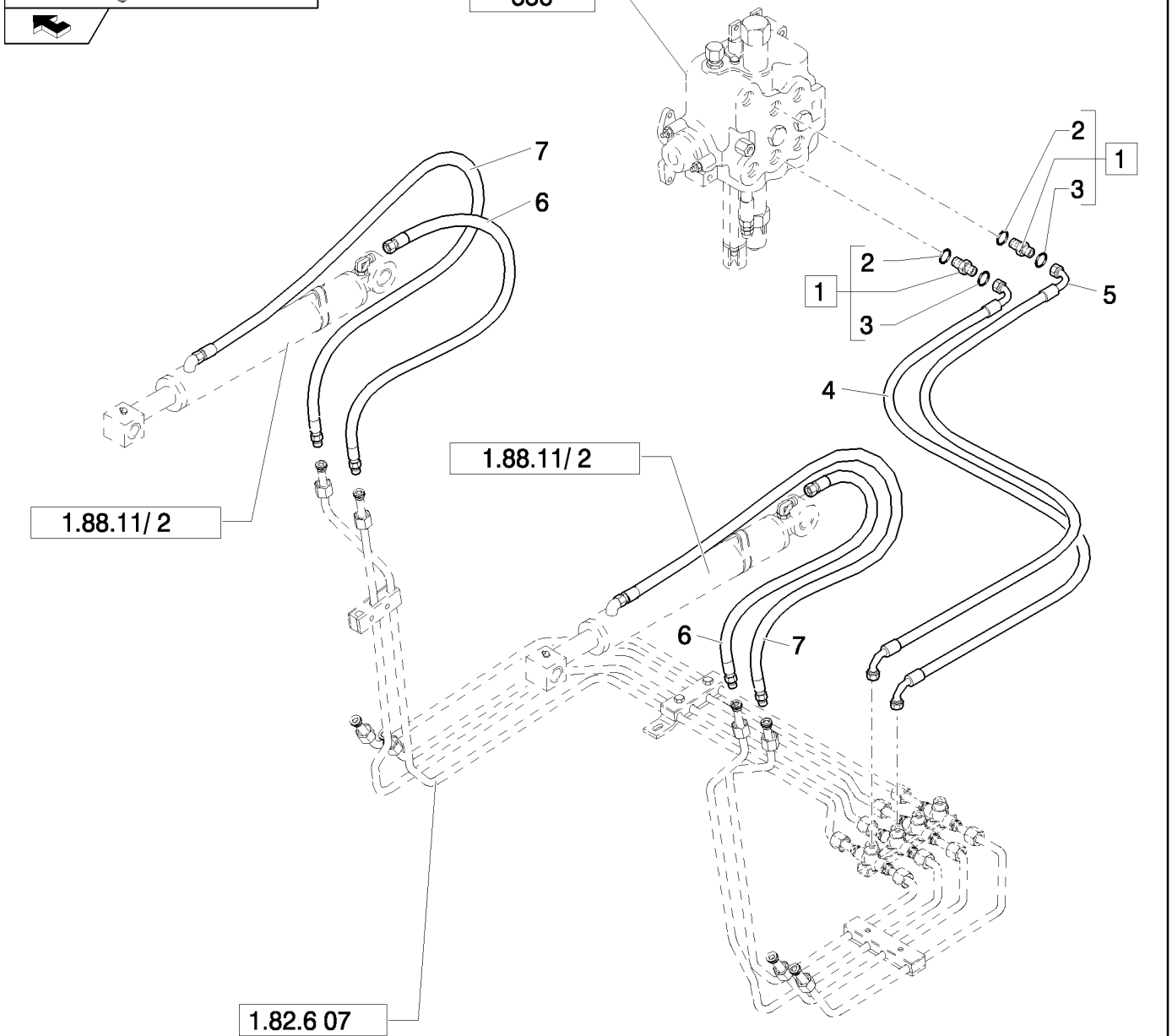

LOADER BUCKET CYLINDER HOSES (CENTER PIVOT) - NA

REF	FN	PART NUMBER	YR/SN	QTY	DESCRIPTION
1		83963000		2	CONNECTOR, HYD., Assy
2		80167269		2	O-RING
3		83901443		2	O-RING
4		87619504		1	HOSE, FLEXIBLE
5		87619505		1	HOSE, FLEXIBLE
6		85813362		2	HOSE, FLEXIBLE, 1130mm lg
7		85813379		2	HOSE, FLEXIBLE

1.82.6/01	09	p1	04/08

BACKHOE SWING CYLINDER HOSES (CENTER PIVOT) - NA

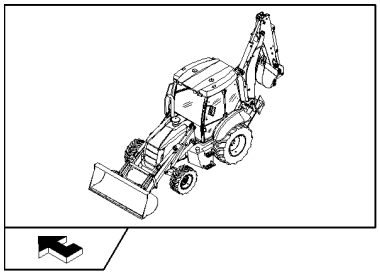

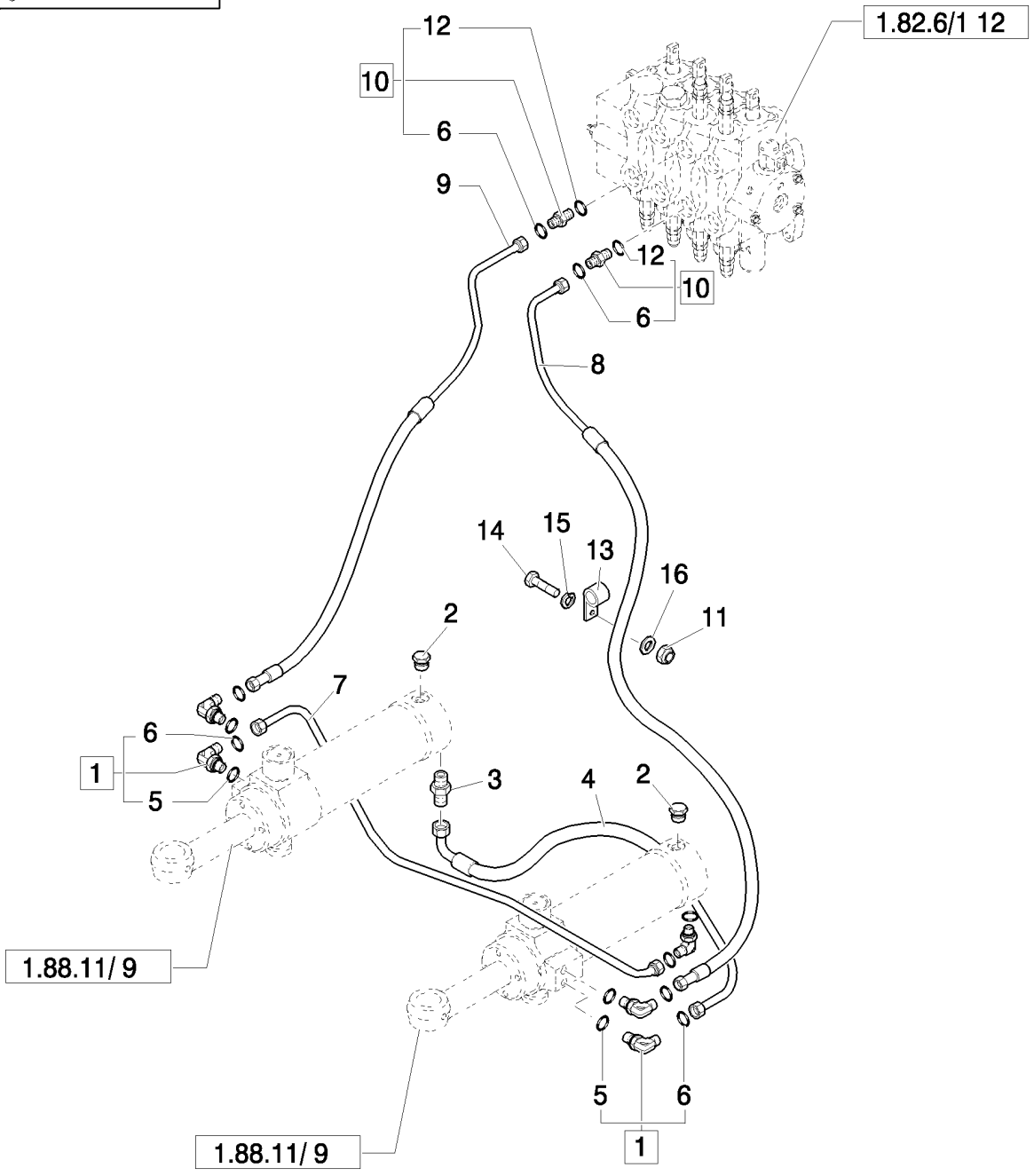

BACKHOE SWING CYLINDER HOSES (CENTER PIVOT) - NA

REF	FN	PART NUMBER	YR/SN	QTY	DESCRIPTION
1		83971549		4	ELBOW, Assy
2		85802955		2	PLUG
3		83963374		1	CONNECTOR, HYD.
4		85819727		1	HOSE, HYDRAULIC, 415mm lg
5		80128825		6	O-RING
6		89992298		6	O-RING
7		85819729		1	HOSE, HYDRAULIC
8		85819730		1	HOSE, HYDRAULIC
9		85819728		1	HOSE, HYDRAULIC
10		83963376		2	CONNECTOR, HYD., Assy
11		16101511		1	NUT, M12 x 1.25, Cl 8
12		80167269		2	O-RING
13		85802954		1	CLAMP
14		15970721		1	BOLT, Hex, M10 x 1.25 x 25, 8.8, Full Thd
15		11190579		1	WASHER, SPRING, Belleville, M10.5
16		12646921		1	WASHER, M12 x 28 x 3

BACKHOE CONTROL VALVE HOSES (CENTER PIVOT) - NA

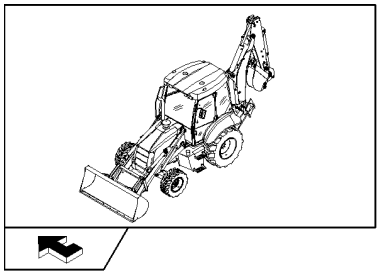

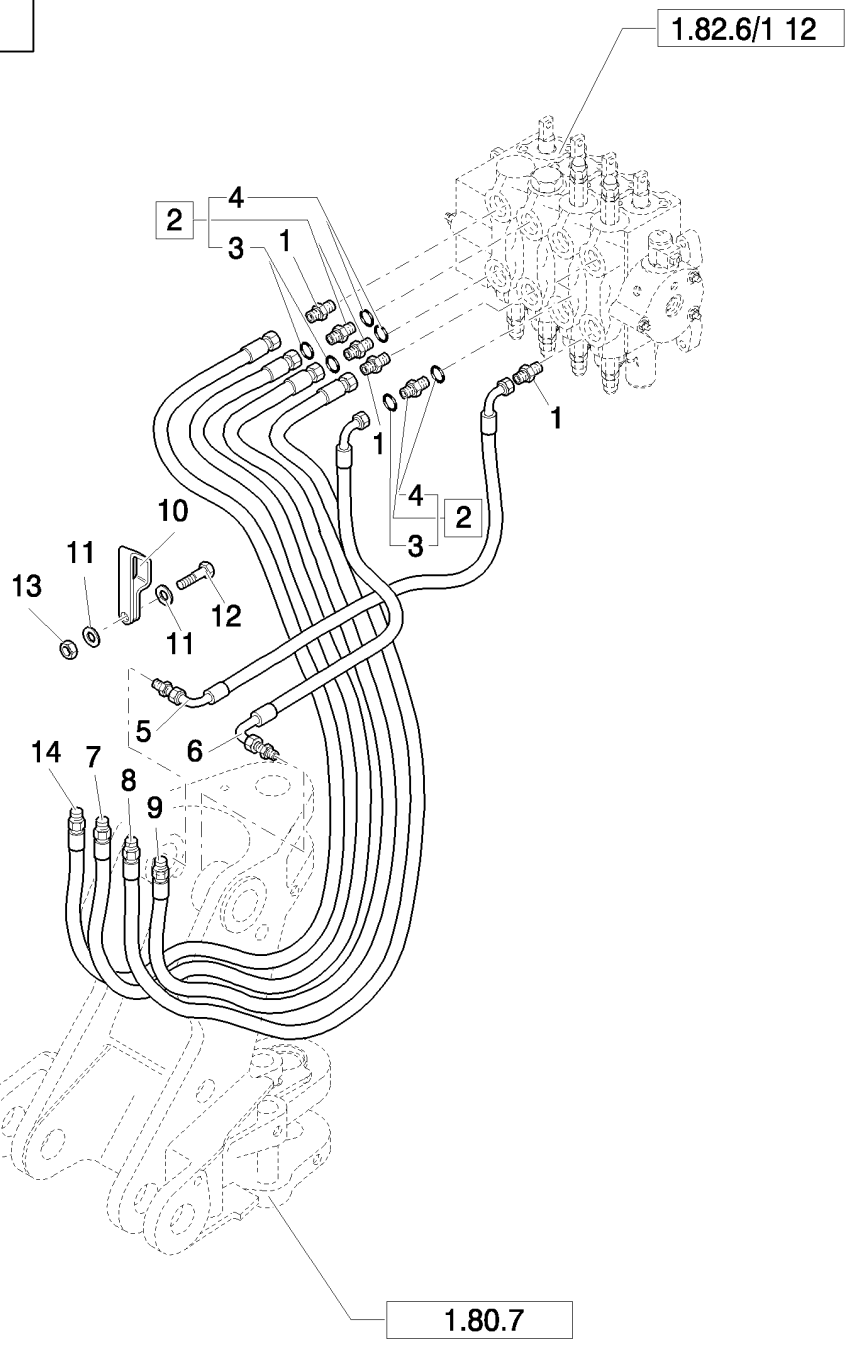

BACKHOE CONTROL VALVE HOSES (CENTER PIVOT) - NA

REF	FN	PART NUMBER	YR/SN	QTY	DESCRIPTION
1		85802642		3	CONNECTOR, HYD., 1-3/16"-12 ORS x 7/8"-14 SAE O-Ring
2		83963000		3	CONNECTOR, HYD., Assy
3		83901443		3	O-RING
4		80167269		3	O-RING
5		87621907		1	HOSE, FLEXIBLE
6		87619484		1	HOSE, FLEXIBLE
7		87619496		1	HOSE, FLEXIBLE
8		87631531		1	HOSE, FLEXIBLE
9		87621908		1	HOSE, FLEXIBLE
10		85804947		1	CLAMP
11		10519411		2	WASHER, M6 x 11.95 x 1.6
12		10902221		1	SCREW, Hex, M6 x 16, 8.8
13		12574211		1	NUT, LOCK, M6 x 1, Cl 8
14		87619495		1	HOSE, FLEXIBLE

1.82.6/01	11	p1	03/08

ROTATION PLATE HOSE CLAMPS (CENTER PIVOT) - NA

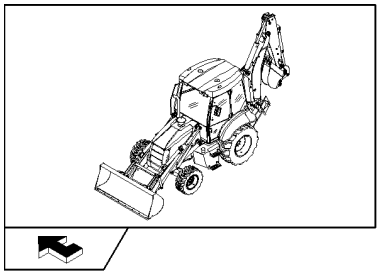

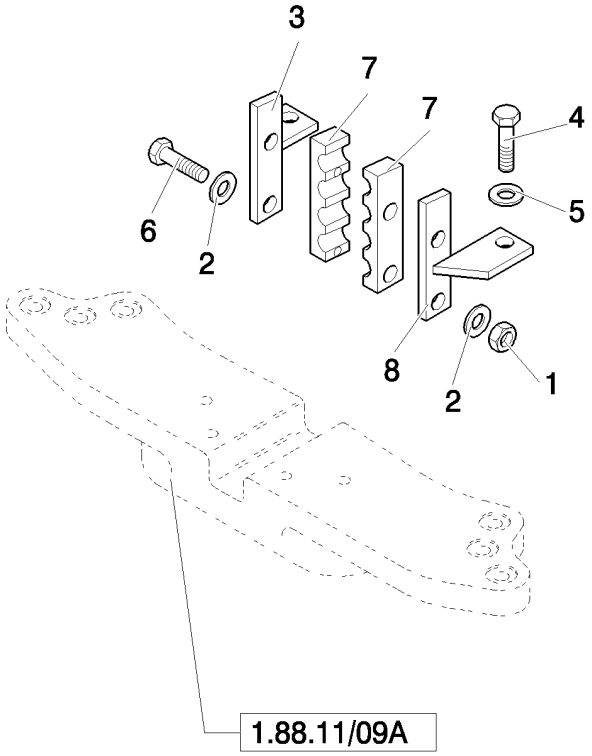

ROTATION PLATE HOSE CLAMPS (CENTER PIVOT) - NA

REF	FN	PART NUMBER	YR/SN	QTY	DESCRIPTION
1		14048221		2	NUT, LOCK, M8 x 1.25, Cl 10
2		12647121		2	WASHER, M8 x 20 x 3
3		85804573		1	SUPPORT
4		11106221		2	BOLT, Hex, M10 x 25, 8.8, Full Thd
5		11190579		2	WASHER, SPRING, Belleville, M10.5
6		16044421		2	BOLT, Hex, M8 x 60, 8.8
7		87631460		2	CLAMP
8		85804574		1	SUPPORT

BACKHOE CONTROL VALVE (CENTER PIVOT) - NA

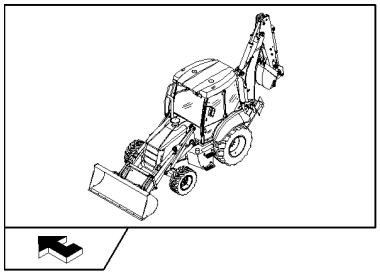

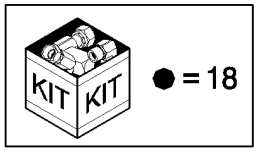

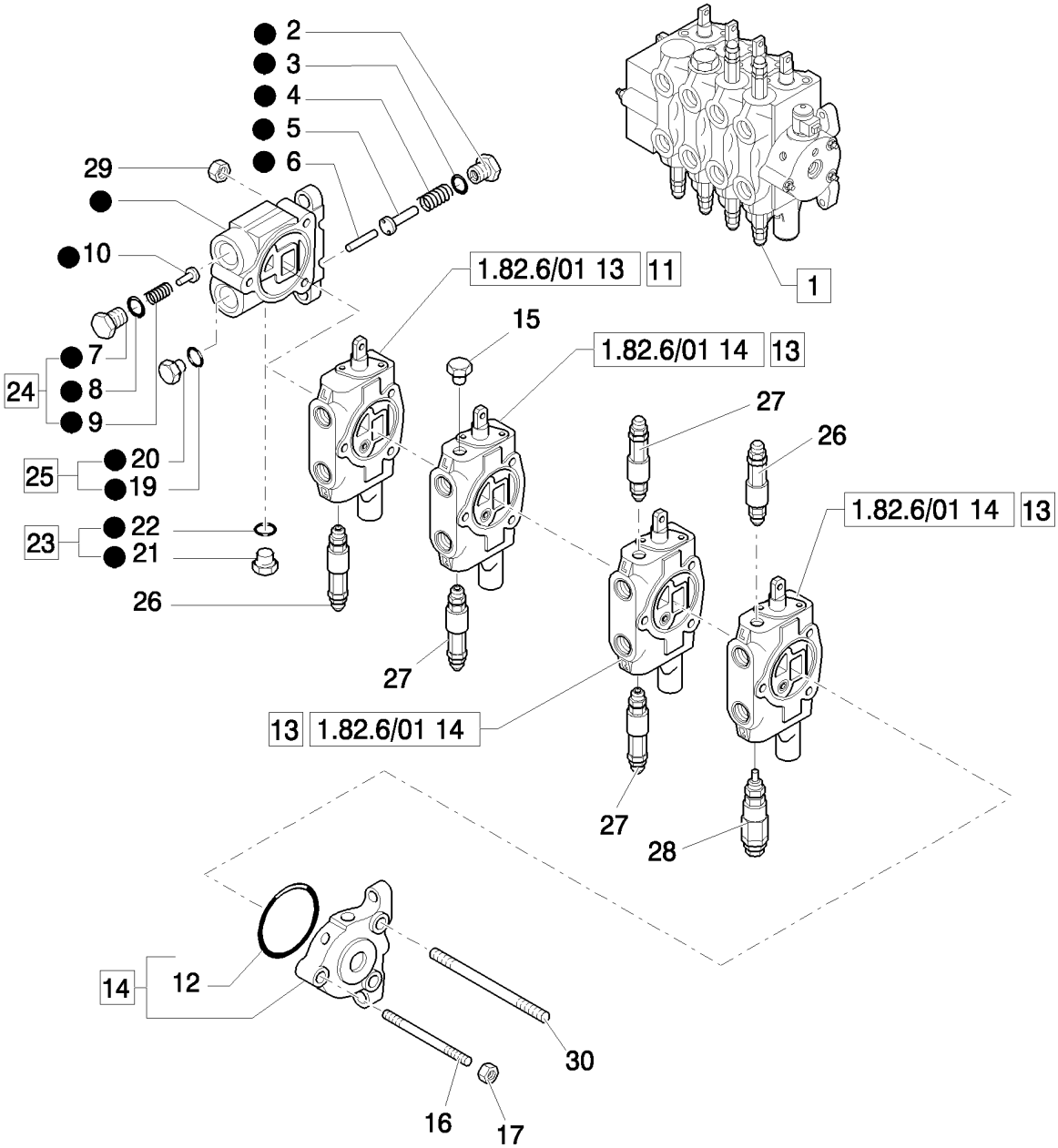

BACKHOE CONTROL VALVE (CENTER PIVOT) - NA

REF	FN	PART NUMBER	YR/SN	QTY	DESCRIPTION
1		85827100		1	VALVE, CONTROL, Assy
2		9968501		1	PLUG
3		9968502		1	O-RING
4		9968500		1	SPRING
5		9968503		1	PLUNGER
6		9968497		1	PIN
7		9968498		1	PLUG
8		9968468		1	O-RING
9		9968448		1	SPRING
10		9968447		1	PLUNGER
11		85827102		1	VALVE SECTION, HYD, Assy
12		9968495		1	O-RING
13		85827101		3	VALVE SECTION, HYD, Assy
14		9968494		1	VALVE SECTION, HYD, Assy
15		85807832		1	PLUG
16		9968506		1	ROD, THREADED
17		9968507		1	NUT
18		85807827		1	VALVE SECTION, HYD
19		85807830		1	O-RING
20		85807831		1	PLUG
21		85807828		1	PLUG
22		85807829		1	O-RING
23		9968523		1	PLUG, Assy
24		85807834		1	PLUG, Assy
25		85807833		1	PLUG, Assy
26		9968595		2	VALVE, PRESSURE RELIEF
27		9968596		3	VALVE, PRESSURE RELIEF
28		9968508		1	VALVE, PRESSURE RELIEF
29		9968504		1	NUT
29		9968505		1	ROD, THREADED

Mechanical Version

B95B

1.82.6/01	13	p1	04/08

DIPPER VALVE SECTION (CENTER PIVOT) - NA

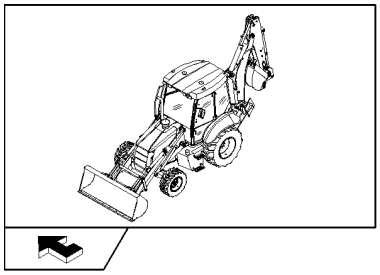

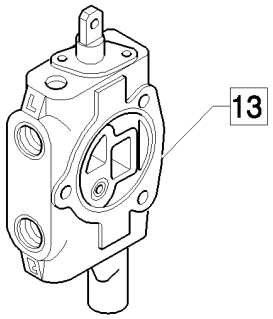

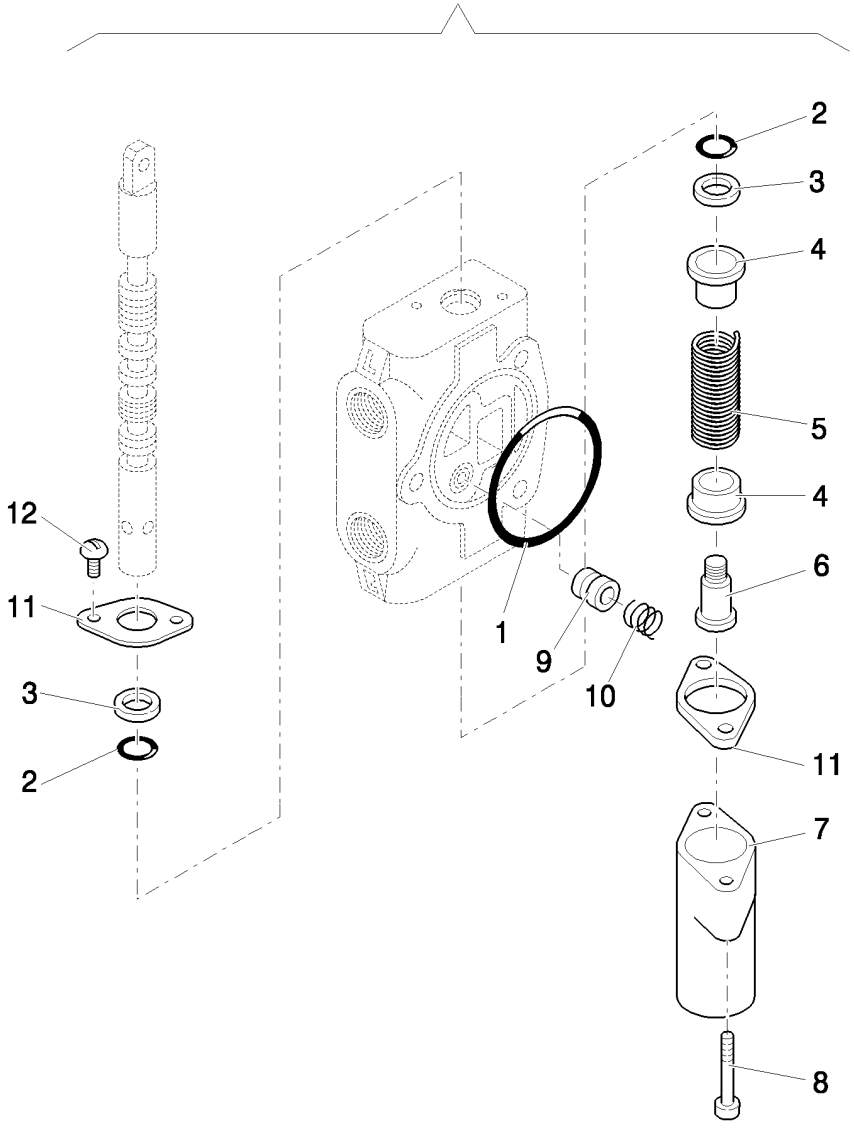

DIPPER VALVE SECTION (CENTER PIVOT) - NA

REF	FN	PART NUMBER	YR/SN	QTY	DESCRIPTION
1		9968495		1	O-RING
2		9968489		1	SEAL
3		9968490		1	WIPER
4		9968512		1	SEAT/SLOT
5		9968514		1	SPRING
6		9968515		1	SPOOL
7		9968513		1	COVER
8		9968516		1	SCREW
9		9968510		2	PLUNGER
10		9968511		1	SPRING
11		9968458		2	FLANGE
12		9968460		1	SCREW
13		85827102		1	VALVE SECTION, HYD, Assy

1.82.6/01	14	p1	04/08

BUCKET, SWING, & BOOM VALVE SECTION (CENTER PIVOT) - NA

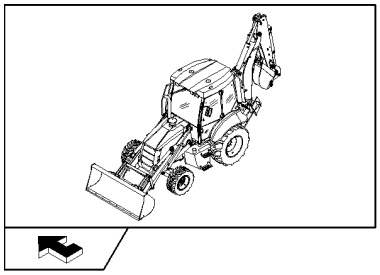

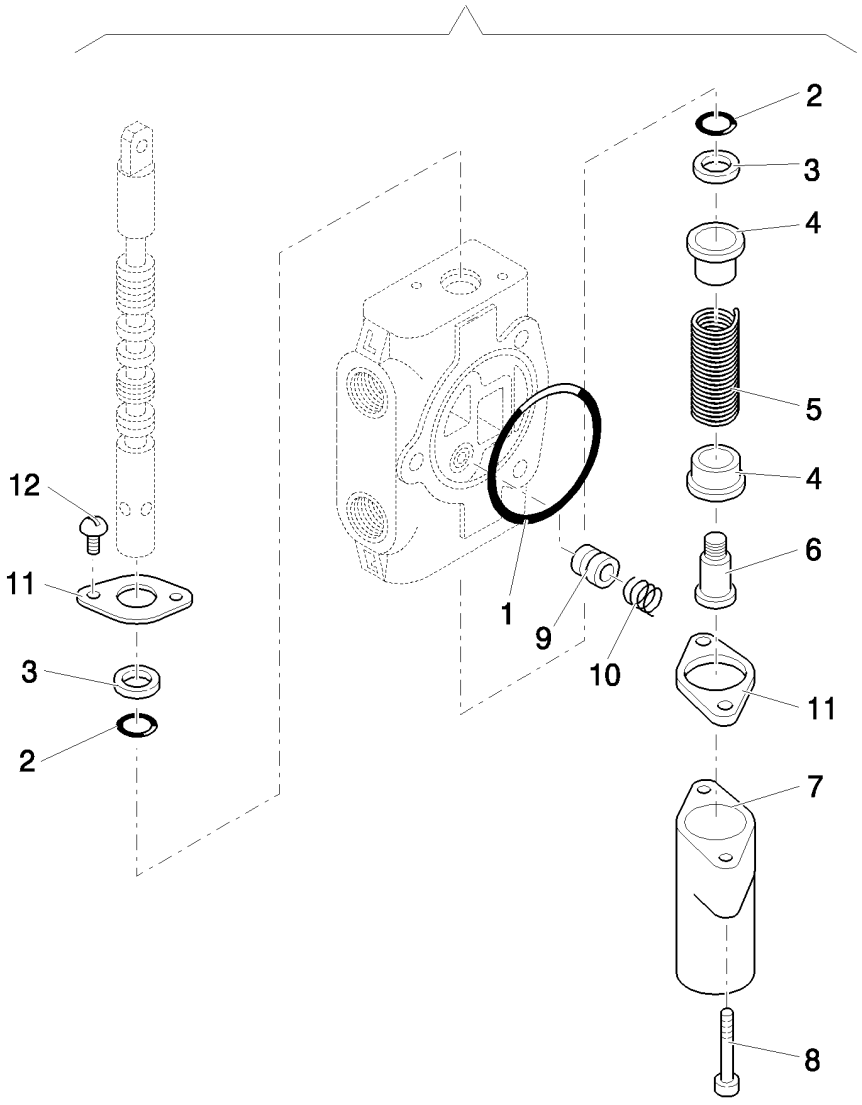

BUCKET, SWING, & BOOM VALVE SECTION (CENTER PIVOT) - NA

REF	FN	PART NUMBER	YR/SN	QTY	DESCRIPTION
1		9968495		1	O-RING
2		9968489		1	SEAL
3		9968490		1	WIPER
4		9968512		2	SEAT/SLOT
5		9968514		1	SPRING
6		9968515		1	SPOOL
7		9968513		1	COVER
8		9968516		1	SCREW
9		9968510		1	PLUNGER
10		9968511		1	SPRING
11		9968458		2	FLANGE
12		9968460		1	SCREW
13		85827101		1	VALVE SECTION, HYD, Assy

NOTES

SECTION INDEX
Sheet Metal/Decals

1.83.0	01	GRID AND ACCESSORIES
1.83.0	02	GUARD AND ACCESSORIES
1.83.0	03	DOOR LOCK KIT
1.83.0	04	LOCK PLATE ASSY
1.83.0	05	TIPPING GUARD HINGE KIT
1.83.0	06	TIPPING GUARD ASSY COMPONENTS
1.87.2		CAB SCREEN
1.87.8		CAB FASTENERS

1.83.0	01	p1	04/08

GRID AND ACCESSORIES

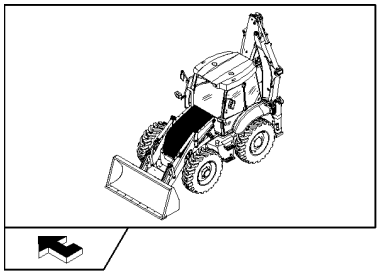

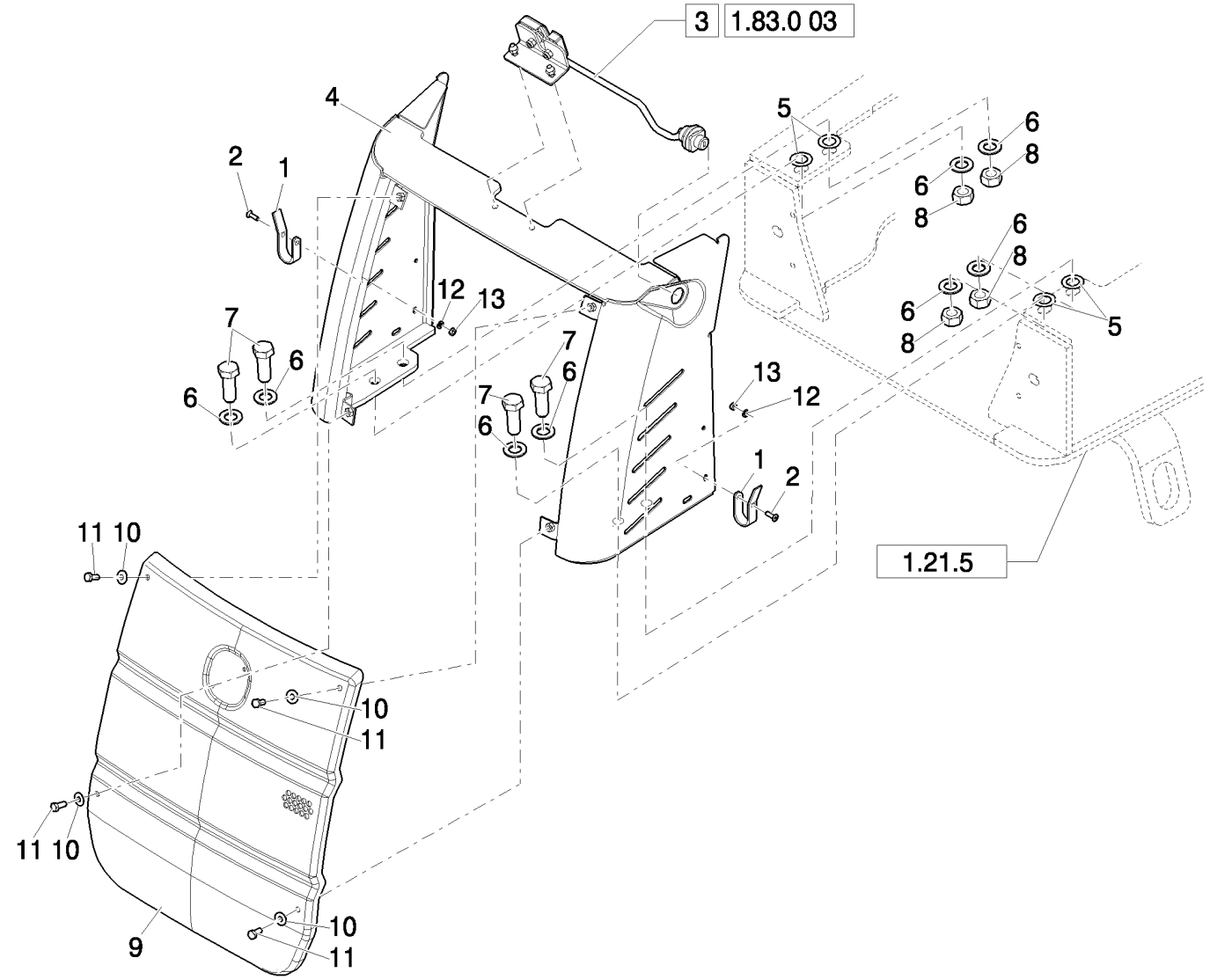

GRID AND ACCESSORIES

REF	FN	PART NUMBER	YR/SN	QTY	DESCRIPTION
1		87473167		2	BRACKET
2		14441421		2	SCREW, Hex Soc Flat Hd, M6 x 20, 8.8
3		87669786		1	LOCK, Assy
4		87632691		1	COVER
5		13580001		4	WASHER
6		11191579		8	WASHER, SPRING, Belleville, M17
7		15981221		4	BOLT, Hex, M16 x 65, 8.8
8		12164111		4	NUT
9		87614694		1	GRILLE
10		11193977		4	WASHER
11		87015745		4	BOLT, Hex, M8 x 20, 5.8, Full Thd
12		12643721		2	WASHER, M6 x 18 x 1.5
13		12574211		2	NUT, LOCK, M6 x 1, Cl 8

GUARD AND ACCESSORIES

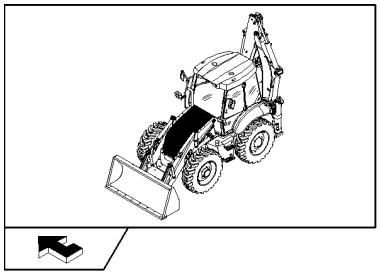

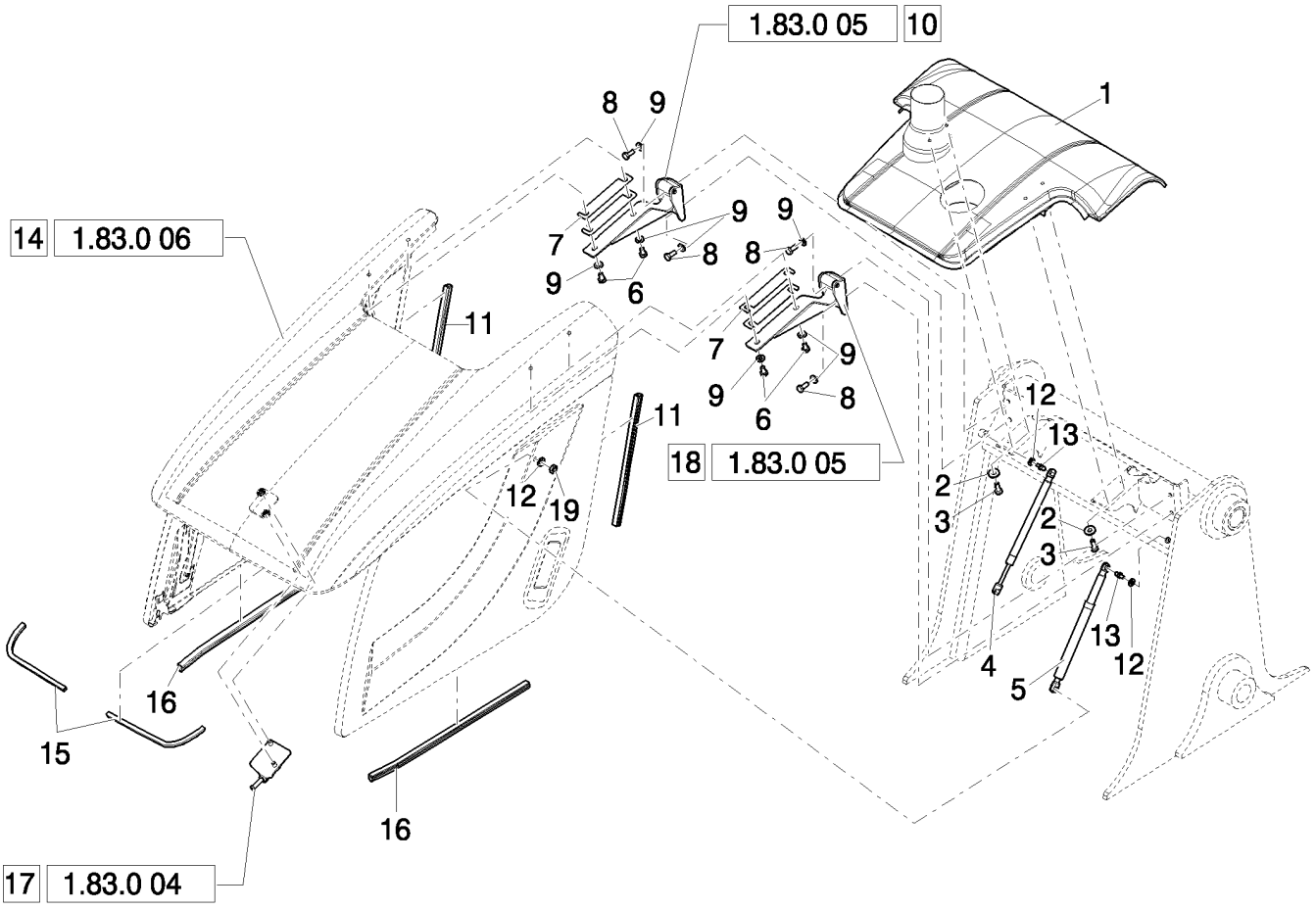

GUARD AND ACCESSORIES

REF	FN	PART NUMBER	YR/SN	QTY	DESCRIPTION
1		87741687		1	Hood, Engine
2		86592700		4	WASHER, M10 x 28 x 4, HT
3		11106321		4	BOLT, Hex, M10 x 28, 8.8, Full Thd
4		87636546		1	SPRING
5		87654073		1	SHOCK ABSORBER
6		11106021		4	BOLT, Hex, M10 x 20, 8.8, Full Thd
7		87673011		4	SHIM
8		11106221		4	BOLT, Hex, M10 x 25, 8.8, Full Thd
9		12642501		8	WASHER, M10 x 22 x 2
10		87696662		1	HINGE, Assy
11		87643908		2	SEAL, RUBBER
12		11193874		4	WASHER, SPRING, Belleville, M8.4
13		87603835		4	STUD
14	1	{87397053}		1	Assy
15		87652862		2	SEAL, RUBBER
14	2	{87653084}		1	Assy
16		87643906		2	SEAL, RUBBER
17		87613623		1	PLATE, FIXING, Assy
18		87748117		1	HINGE, Assy
19		16100810		2	NUT, M8, Cl 8

(1) Only for EU
(2) Only for NA

1.83.0	03	p1	04/08

DOOR LOCK KIT

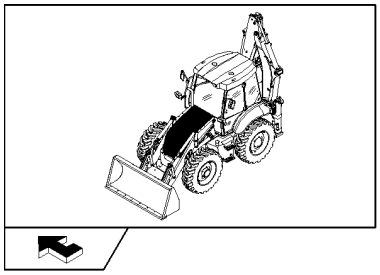

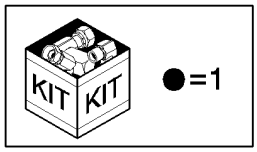

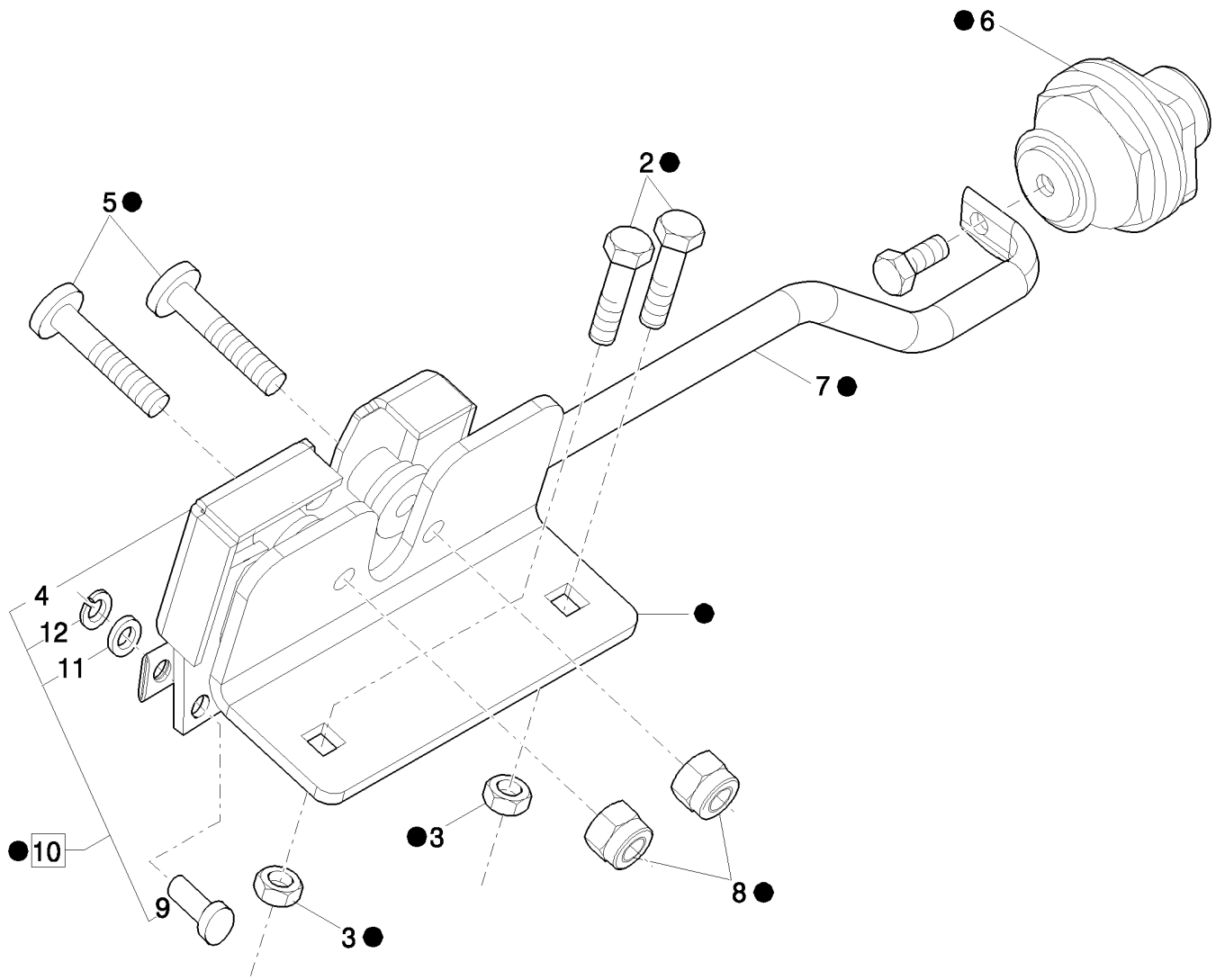

DOOR LOCK KIT

REF	FN	PART NUMBER	YR/SN	QTY	DESCRIPTION
1		87669786		1	LOCK, Assy
2		87694197		2	SCREW
3		16100811		2	NUT, M8, Cl 8
4		87742983		1	LOCK
5		14442321		2	SCREW, Hex Soc Flat Hd, M8 x 35, 8.8
6		87624743		1	PLUG
7		87624744		1	ROD
8		16104111		2	NUT, LOCK, M8 x 1.25, Cl 8
9		87687399		1	PIN
10		87624745		1	LOCK, Assy
11		14499301		1	WASHER, M6 x 12 x 1.6
12		11065374		1	RING, SNAP, M5, Ext

1.83.0	04	p1	03/08

LOCK PLATE ASSY

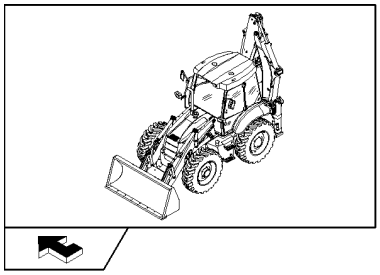

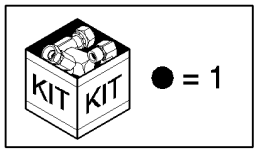

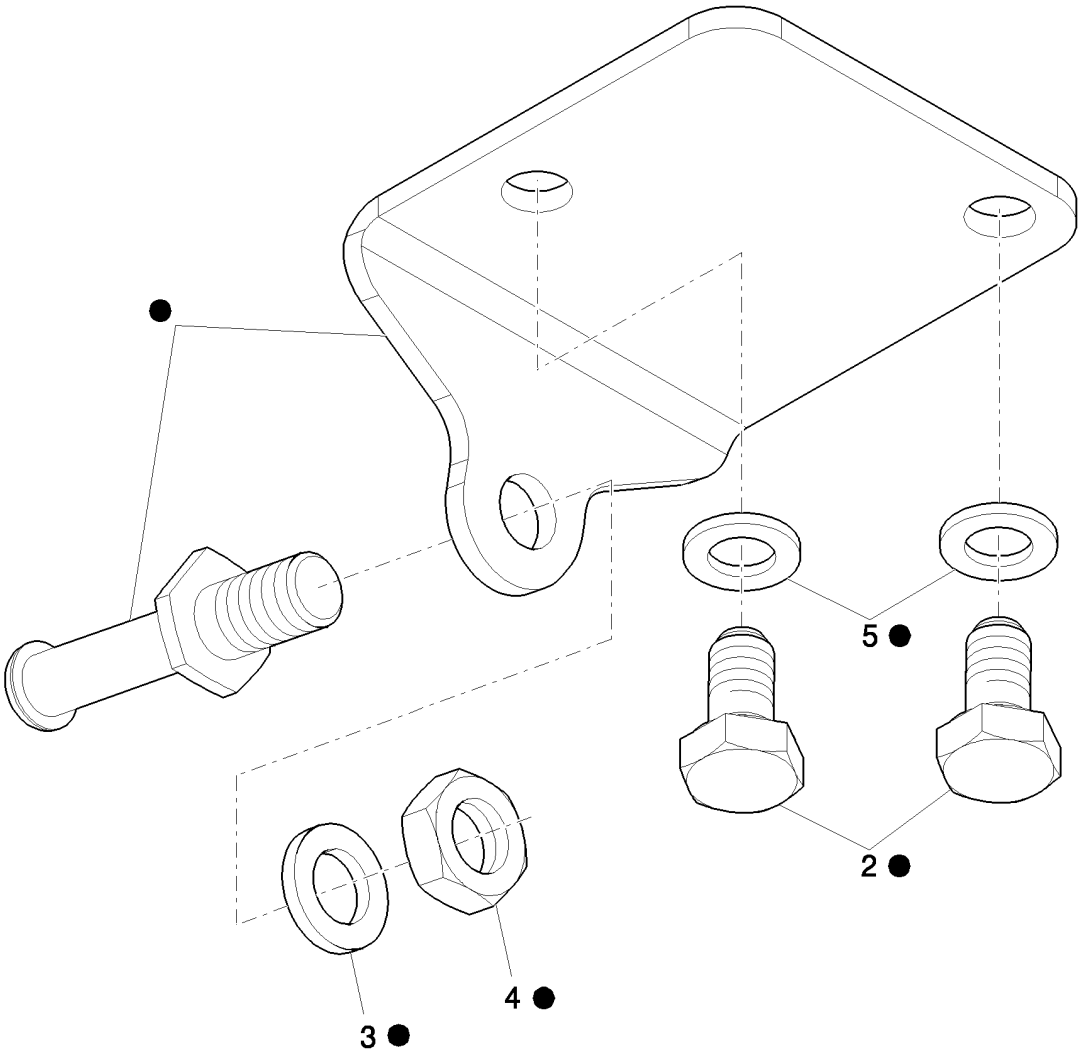

LOCK PLATE ASSY

REF	FN	PART NUMBER	YR/SN	QTY	DESCRIPTION
1		87613623		1	PLATE, FIXING, Assy
2		11106021		2	BOLT, Hex, M10 x 20, 8.8, Full Thd
3		13507401		1	WASHER, M12 x 20 x 2
4		10717311		1	NUT, Thin, M12 x 1.75, Cl 04
5		12638621		2	WASHER

1.83.0	05	p1	04/08

TIPPING GUARD HINGE KIT

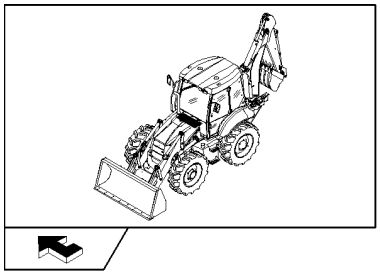

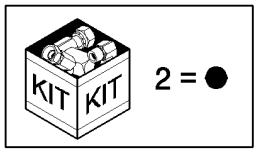

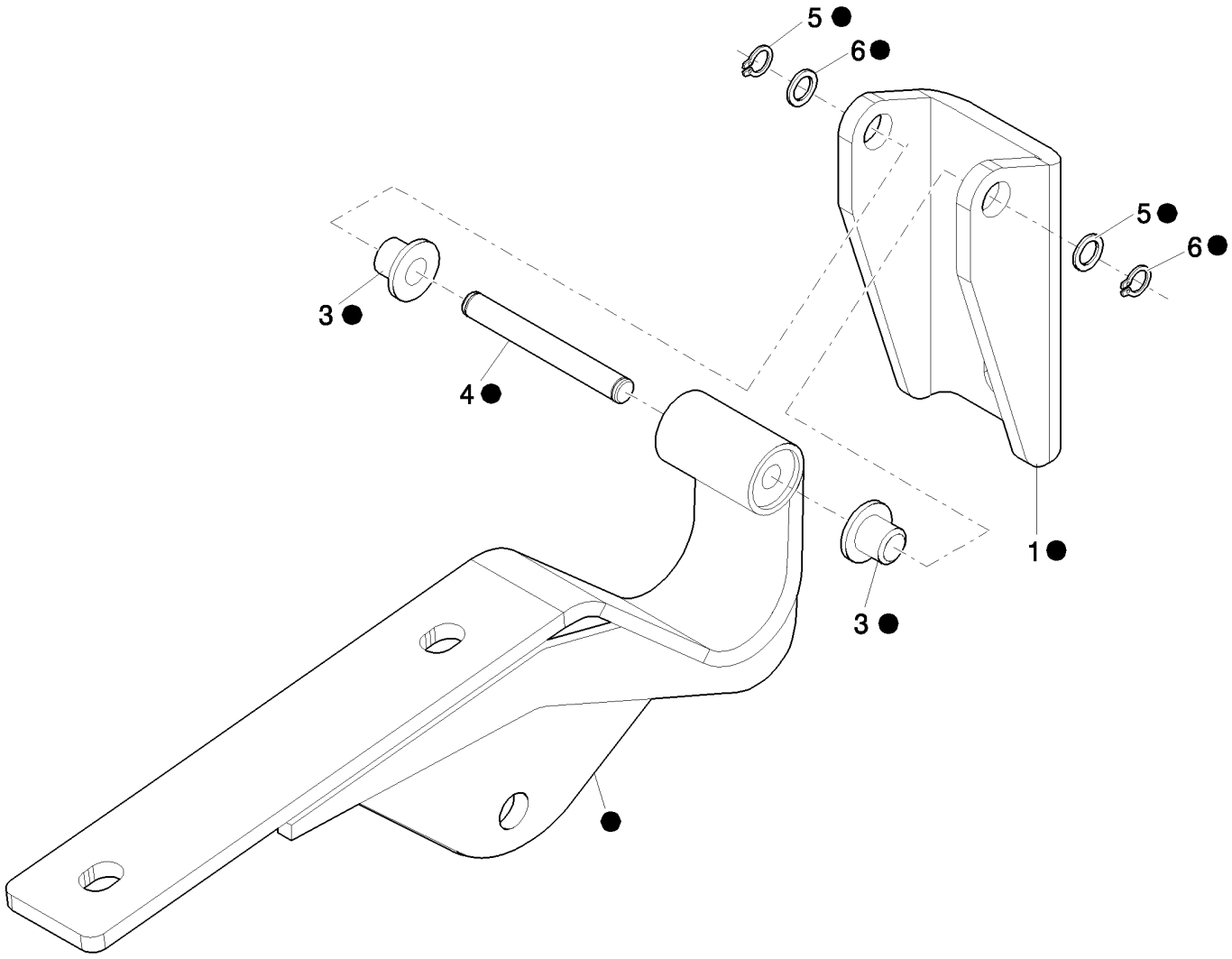

TIPPING GUARD HINGE KIT

REF	FN	PART NUMBER	YR/SN	QTY	DESCRIPTION
1		87385465		2	BRACKET
2	1	87696662		1	HINGE, Assy
2	2	87748117		1	HINGE, Assy
3		87669785		4	BUSHING
4		87686869		2	PIN
5		13507104		4	WASHER
6		87477173		4	RING

(1) Right Side
(2) Left Side

1.83.0	06	p1	03/08

TIPPING GUARD ASSY COMPONENTS

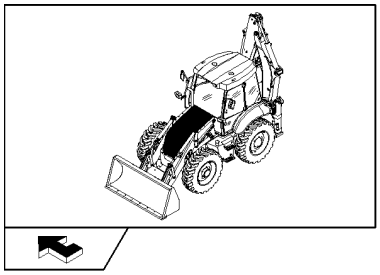

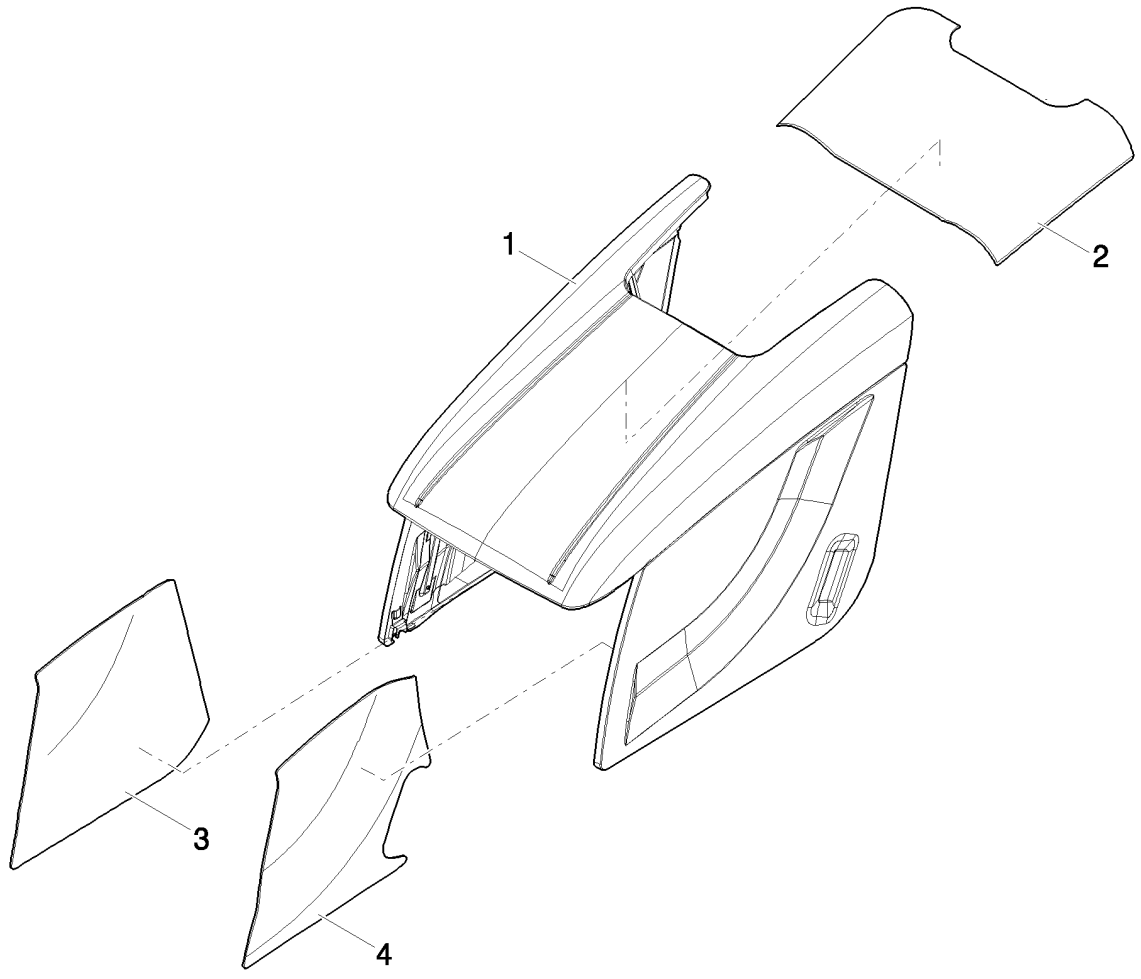

TIPPING GUARD ASSY COMPONENTS

REF	FN	PART NUMBER	YR/SN	QTY	DESCRIPTION
1		87376297		1	Hood, Engine
2	1	87643911		1	PANEL, ENGINE HOOD
2	2	87653086		1	PANEL, ENGINE HOOD
3	1	87643912		1	PANEL, ENGINE HOOD
3	2	87653220		1	PANEL, ENGINE HOOD
4	1	87643913		1	PANEL, ENGINE HOOD
4	2	87669736		1	PANEL, ENGINE HOOD

(1) Only for EU
(2) Only for NA

1.87.2		p1	03/08

CAB SCREEN

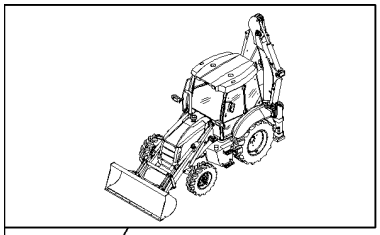

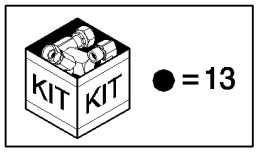

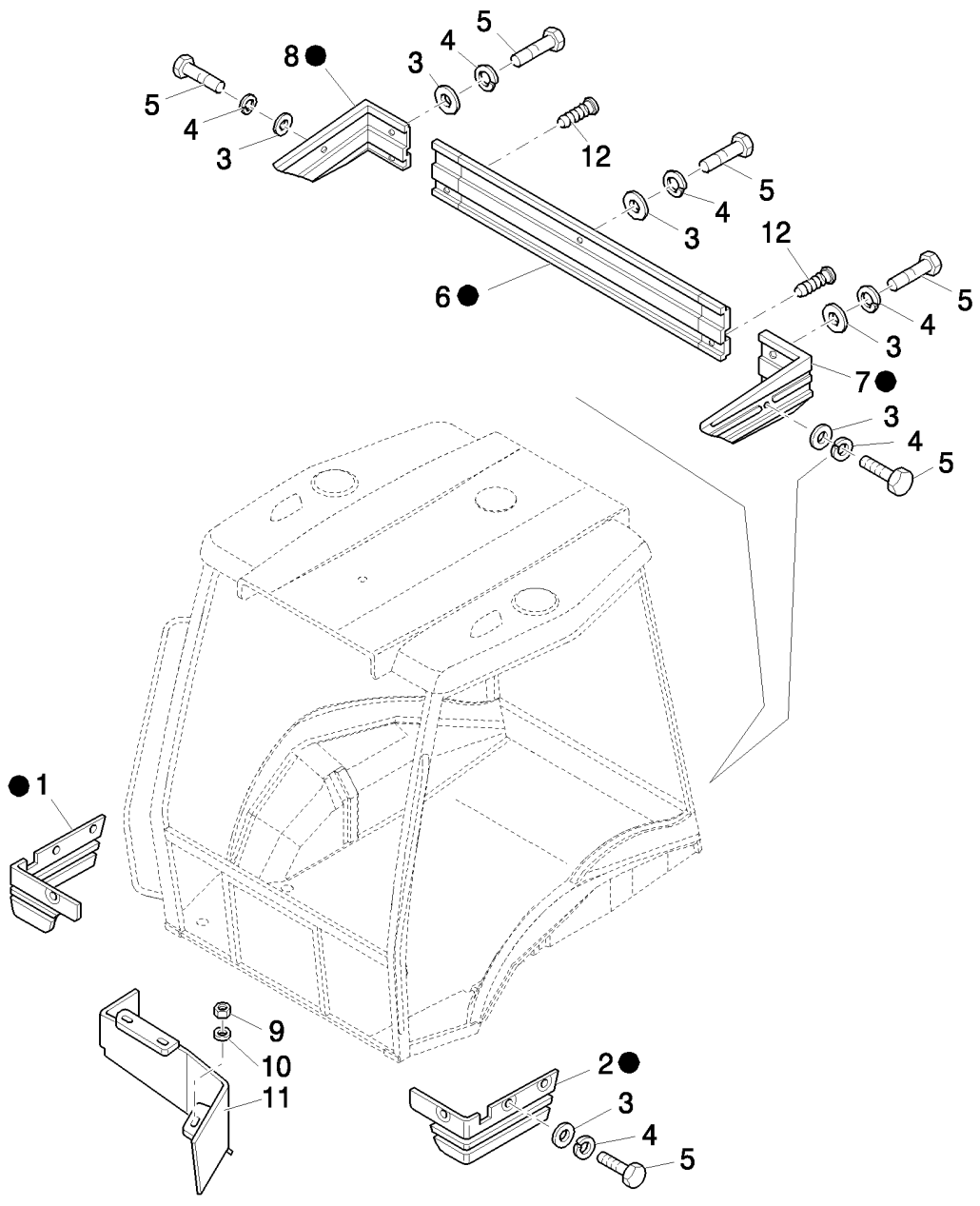

CAB SCREEN

REF	FN	PART NUMBER	YR/SN	QTY	DESCRIPTION
1		87315641		1	COVER, RH
2		87315643		1	COVER, LH
3		12643721		11	WASHER, M6 x 18 x 1.5
4		11194679		11	WASHER, SPRING, Belleville, M6.4
5		10902421		11	BOLT, Hex, M6 x 20, 8.8
6		85805303		1	COVER
7		85805304		1	COVER, LH
8		85805305		1	COVER, RH
9		16104111		3	NUT, LOCK, M8 x 1.25, Cl 8
10		11193979		3	WASHER, SPRING, Belleville, M8.4
11		85805142		1	PANEL
12		87641276		2	PLUG
13		87315628		1	KIT

CAB FASTENERS

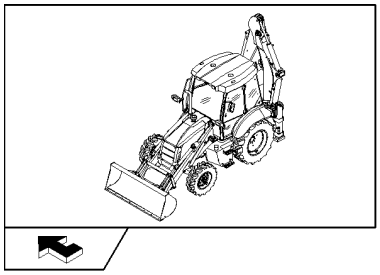

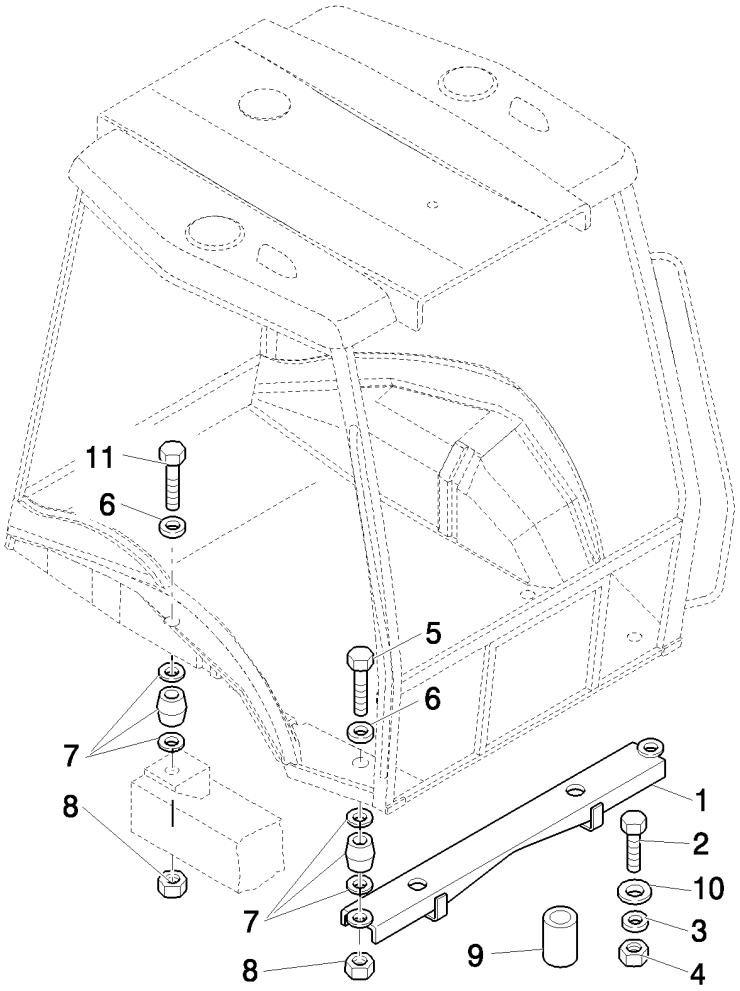

CAB FASTENERS

REF	FN	PART NUMBER	YR/SN	QTY	DESCRIPTION
1	1, 2	85801319		1	SUPPORT
1	3, 4	87303780		1	SUPPORT
2		15989334		2	BOLT, Hex, M20 x 1.5 x 110, 10.9
3		10520431		2	WASHER
4		12575121		2	NUT, LOCK, M20 x 1.5, Cl 10
5		15982134		2	BOLT, Hex, M16 x 140, 10.9
6		14496931		4	WASHER, M16 x 30 x 3
7		87569589		4	SILENTBLOC
8		12574921		4	NUT, LOCK, M16 x 1.5, Cl 10
9		85801324		2	SPACER
10		85804493		2	WASHER, 21 x 40 x 6
11		15981834		2	BOLT, Hex, M16 x 1.5 x 120, 10.9

(1) Only for B90B, B90BLR, B100BLR, B110B (EU)
(2) Only for B90B, B95B, B95BLR, B110B (NA)
(3) Only for B115B (EU)
(4) Only for B95BTC, B115B (NA)

NOTES

SECTION INDEX
Loader/Backhoe

1.88.01	01	REAR ATTACHMENT TRANSPORT LOCK TIE ROD (CENTER PIVOT): NA
1.88.01	02	REAR ATTACHMENT TRANSPORT LOCK CABLE (CENTER PIVOT): NA
1.88.08	01	SWING POST ASSEMBLY, BUSHINGS & PINS
1.88.08	02	SWING POST PINS & TRANSPORT LOCK HOOK
1.88.11		ARMS AND JOINTS
1.88.11/01		LOADER CYLINDER
1.88.11/02	01	LOADER BUCKET CONTROL CYLINDER
1.88.11/02	02	LOADER BUCKET CONTROL CYLINDER
1.88.11/03		LIFT CYLINDER AND BUCKET PIPES
1.88.11/05A	01	SELF-LEVELING LINKAGE, LOADER CONTROLS (CENTER PIVOT MECHANIC) - NA
1.88.11/05A	02	SELF-LEVELING LINKAGE, LOADER ARM (CENTER PIVOT) - NA
1.88.11/06A		STABILIZER CYLINDERS (CENTER PIVOT)
1.88.11/07A		PIPES FOR STABILIZER CYLINDERS (CENTER PIVOT PILOT)
1.88.11/07C		PIPES FOR STABILIZER CYLINDERS (CENTER PIVOT MECHANIC) - NA
1.88.11/08		RETURN TO DIG SENSOR
1.88.11/09	02	SWING CYLINDERS BACKHOE
1.88.11/09A		CYLINDERS AND ROTATION PLATE (CENTER PIVOT)
1.88.12/03		FRONT CONTROL VALVE SUPPORT AND TRANSMISSIONS (CENTER PIVOT - SIDE SHIFT)
1.88.12/03A		FRONT CONTROL VALVE SUPPORT AND TRANSMISSIONS (CENTER PIVOT) - NA
1.89.9/01		DISTRIBUTOR VALVE SUPPORT HUSCO (CENTER PIVOT) - NA

1.88.01	01	p1	04/08

REAR ATTACHMENT TRANSPORT LOCK TIE ROD (CENTER PIVOT): NA

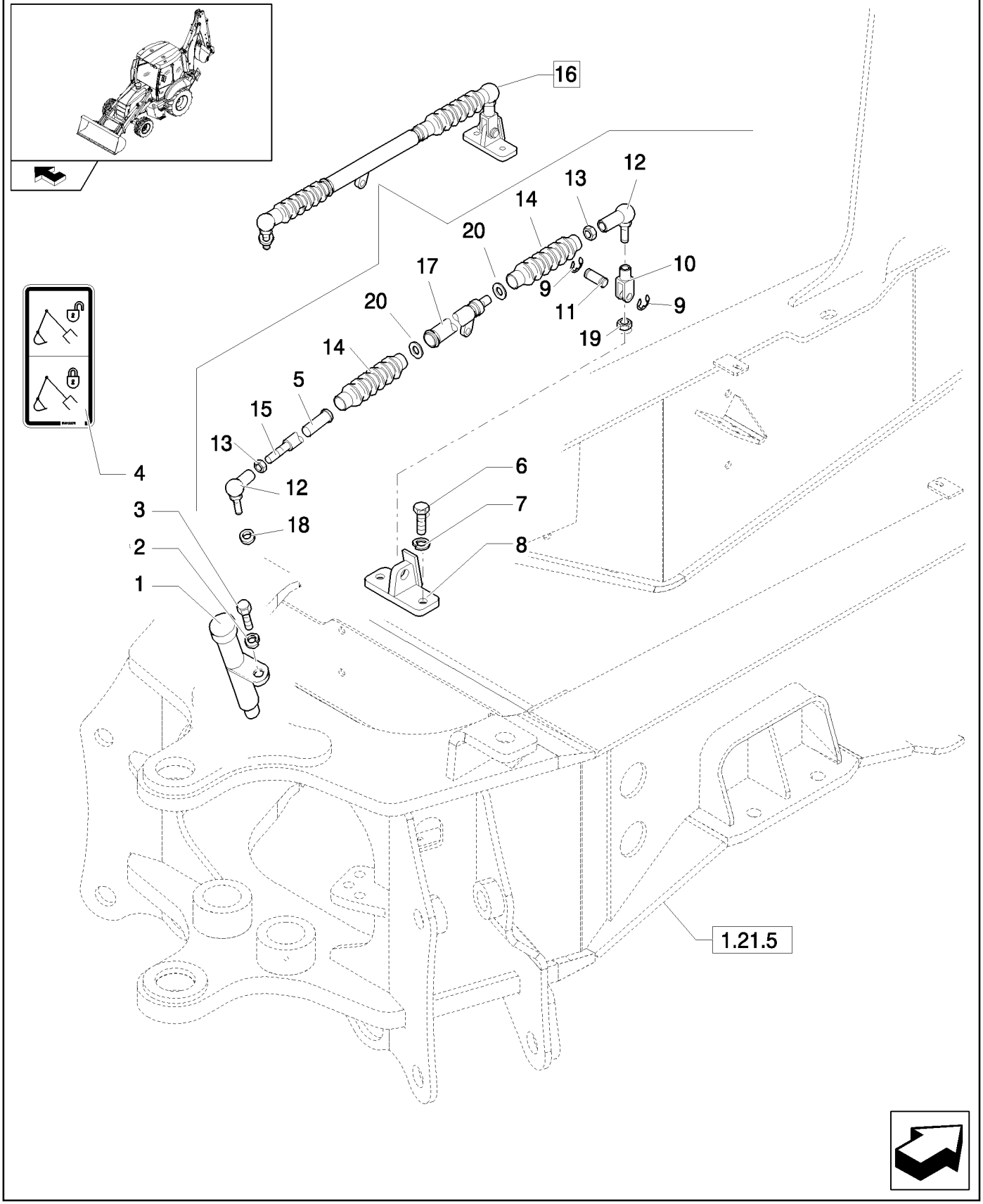

REAR ATTACHMENT TRANSPORT LOCK TIE ROD (CENTER PIVOT): NA

REF	FN	PART NUMBER	YR/SN	QTY	DESCRIPTION
1		85821268		1	SHOCK ABSORBER
2		11193879		2	WASHER, SPRING, Belleville, M8.4
3		16043621		1	BOLT, Hex, M8 x 25, 8.8
4		85812278		1	DECAL
5		85819482		1	BUSHING
6		11106221		4	BOLT, Hex, M10 x 25, 8.8, Full Thd
7		11190579		4	WASHER, SPRING, Belleville, M10.5
8		85819488		1	SUPPORT
9		85813407		2	RING
10		85819468		1	CLEVIS
11		87302958		1	PIN, CLEVIS
12		85819477		2	BALL JOINT
13		85819478		3	NUT, M10
14		85819479		2	BELLOWS
15		85819481		1	ROD
16		87302965		1	TIE-ROD, Assy
17		85819480		1	TUBE
18		85821270		1	WASHER
19		85821271		1	NUT, M16
20		85824227		2	CLAMP

1.88.01	02	p1	04/08

REAR ATTACHMENT TRANSPORT LOCK CABLE (CENTER PIVOT): NA

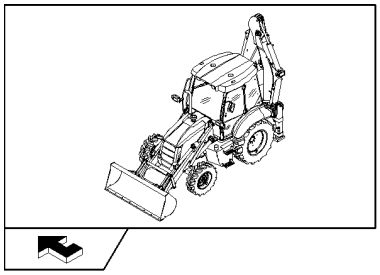

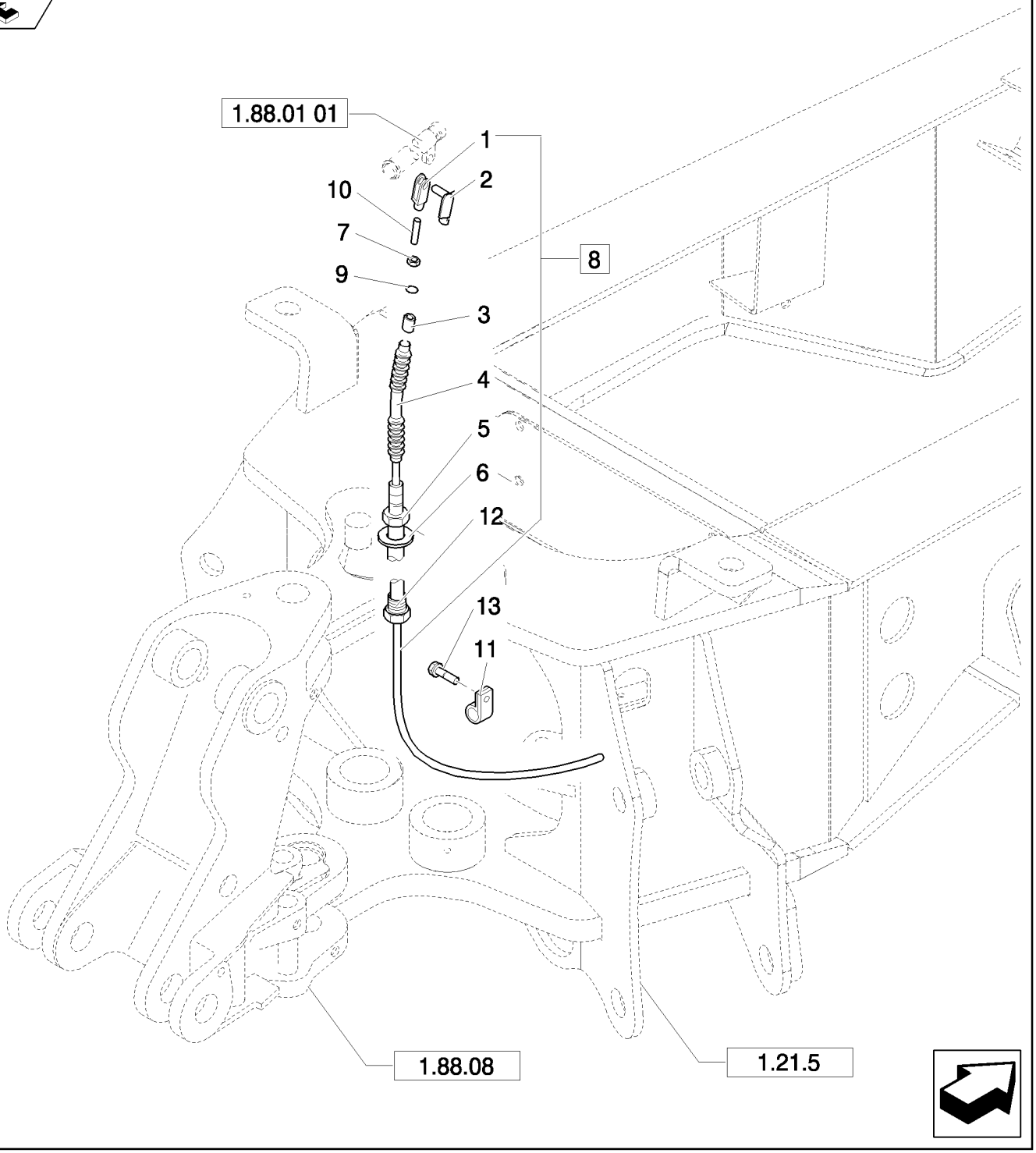

REAR ATTACHMENT TRANSPORT LOCK CABLE (CENTER PIVOT): NA

REF	FN	PART NUMBER	YR/SN	QTY	DESCRIPTION
1		85819467		1	CLEVIS
2		85819469		1	CLIP
3		85819471		1	GROMMET
4		85821278		1	BELLOWS
5		87302960		2	NUT
6		87302959		1	WASHER
7		85821273		1	NUT
8		87302967		1	CABLE, Assy
9		85821277		1	RING, RUBBER
10		85821279		1	ROD
11		10450190		1	CLAMP
12		87302961		1	REGULATOR, M8 x 1.25
13		16043021		1	BOLT, Hex, M8 x 12, 8.8, Full Thd

1.88.08	01	p1	04/08

SWING POST ASSEMBLY, BUSHINGS & PINS

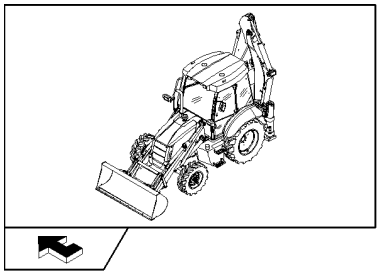

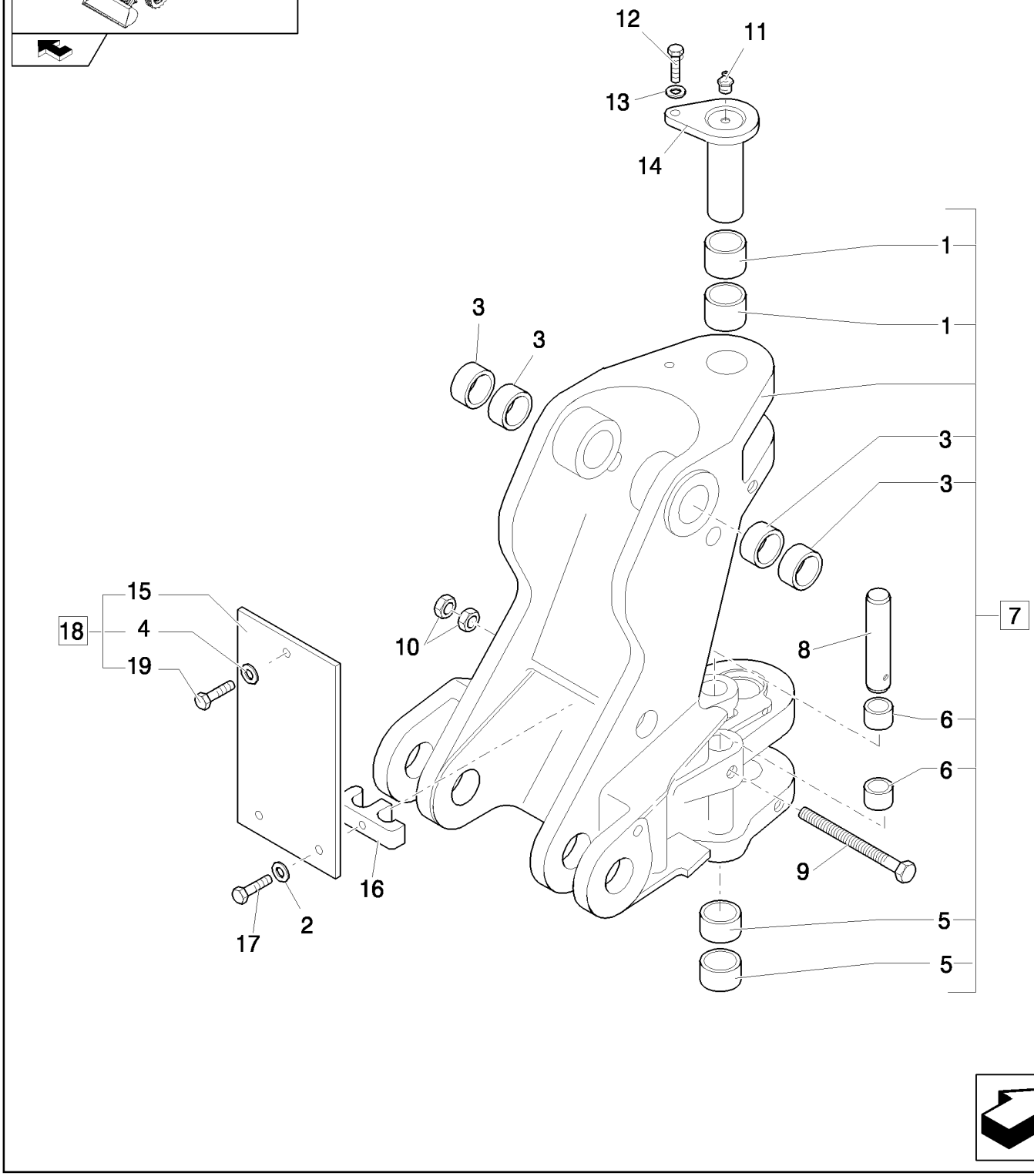

SWING POST ASSEMBLY, BUSHINGS & PINS

REF	FN	PART NUMBER	YR/SN	QTY	DESCRIPTION
1		85803196		2	BUSHING
2		11190579		2	WASHER, SPRING, Belleville, M10.5
3		85801029		4	BUSHING
4		11193979		1	WASHER, SPRING, Belleville, M8.4
5		85803197		2	BUSHING
6		85803193		4	BUSHING
7		87575394		1	TOWER, Assy, P/N 85801028 in Primer colour
8		85803192		2	PIN, Swing Cylinder
9		87363478		1	SCREW, M10x270
10		10717421		2	NUT, Thin, M14 x 2, Cl 05, M14
11		83416242		3	NIPPLE, LUBE, 1/8"-27
12		85802397		1	SCREW, M16X40
13		85802396		1	WASHER
14		85801076		1	PIN
15		85805137		1	PLATE
16		87310285		1	CLAMP
17		11107321		2	BOLT, Hex, M10 x 55, 8.8
18		85805648		1	KIT, Assy
19		16043621		1	BOLT, Hex, M8 x 25, 8.8

1.88.08	02	p1	05/08

SWING POST PINS & TRANSPORT LOCK HOOK

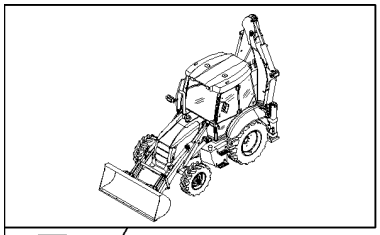

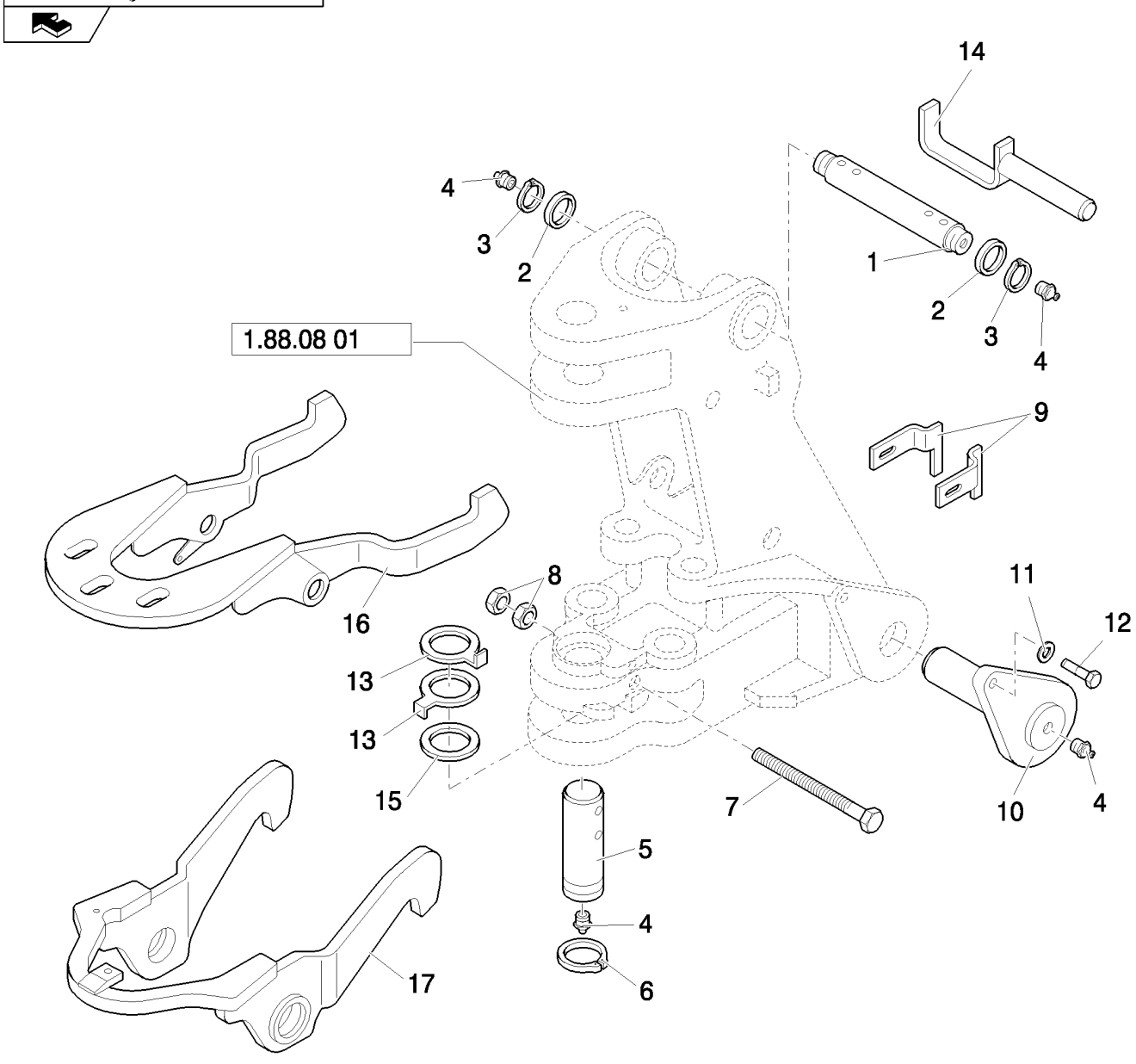

SWING POST PINS & TRANSPORT LOCK HOOK

REF	FN	PART NUMBER	YR/SN	QTY	DESCRIPTION
1		85801026		1	PIN
2		83910977		2	SPACER, M45X66X3
3		83911019		2	CIRCLIP
4		83416242		3	NIPPLE, LUBE, 1/8"-27
5		85801079		1	PIN
6		85803198		1	CIRCLIP
7		15201934		1	BOLT, Hex, M14 x 170, 10.9, M14x170
8		10717421		2	NUT, Thin, M14 x 2, Cl 05, M14
9		85816776		1	KIT
10		85802872		2	PIN
11		85802396		2	WASHER
12		85802397		2	SCREW, M16X40
13		85801191		2	SPACER
14	1	87610829		1	PIN
14	2	87610834		1	PIN
15		8274447		1	SHIM, 1mm Thk
16	1	87597003		1	HOOK, LATCH
17	2	87596072		1	HOOK, LATCH

(1) Only for Trans. Lock Hydraulic
(2) Only for Trans. Lock Mechanic

ARMS AND JOINTS

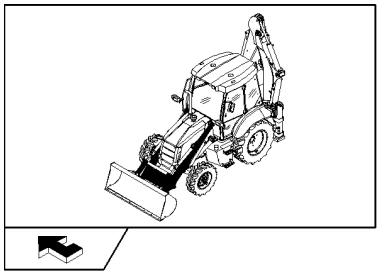

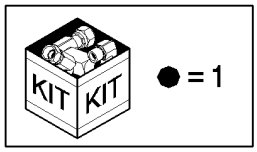

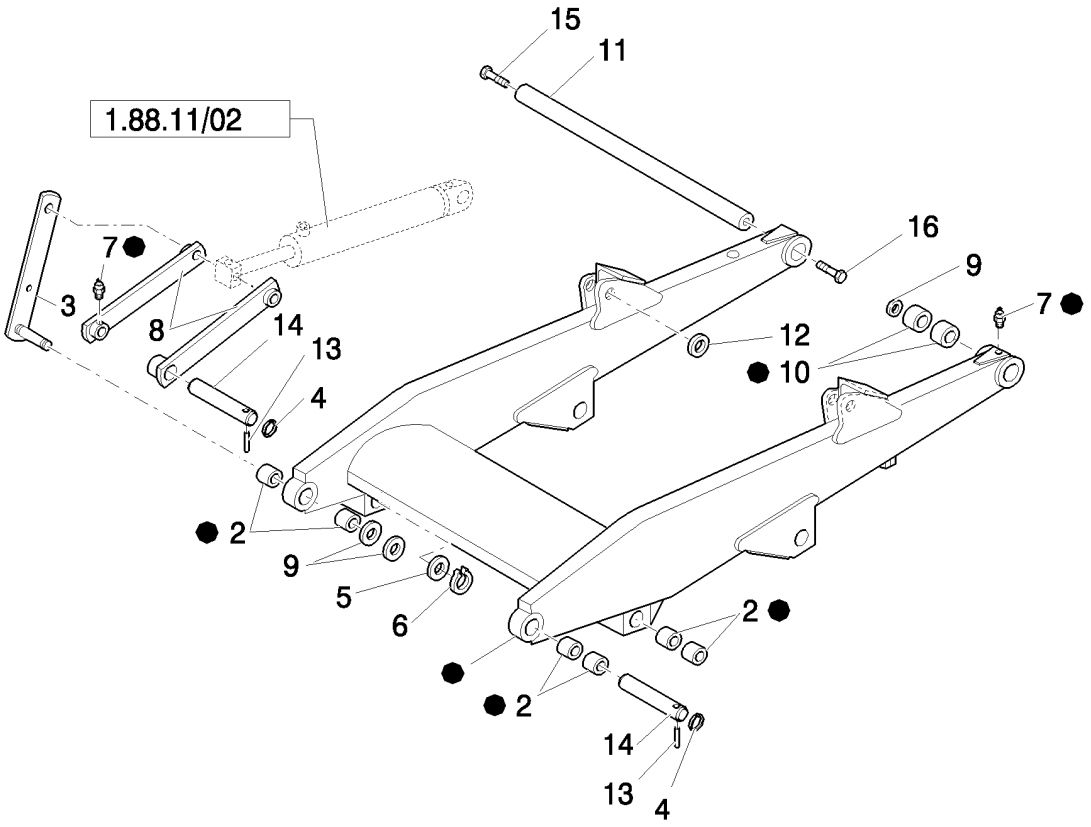

ARMS AND JOINTS

REF	FN	PART NUMBER	YR/SN	QTY	DESCRIPTION
1		87630900		1	LIFT RAM WITH PREDISPOSIT, Assy
2		81901809		8	BUSHING
3		85803643		2	LINK
4		85802992		4	RING
5		85700130		2	WASHER
6		81902463		2	RING
7		83416242		10	NIPPLE, LUBE
8		85803647		4	LINK CONROD
9		85828254		2	SHIM
10		81901896		4	BUSHING
11		85801087		1	PIN
12		81900328		2	WASHER
13		85802993		4	PIN
14		85801051		4	PIN
15		11383634		1	BOLT, Hex, M20 x 1.5 x 50, 10.9, Full Thd
16		15988734		1	BOLT, Hex, M20 x 1.5 x 80, 10.9

1.88.11/01		p1	04/08

LOADER CYLINDER

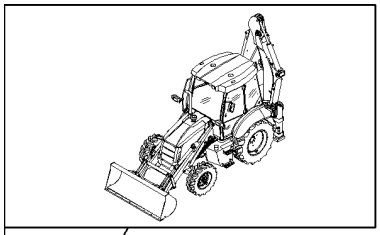

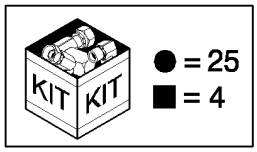

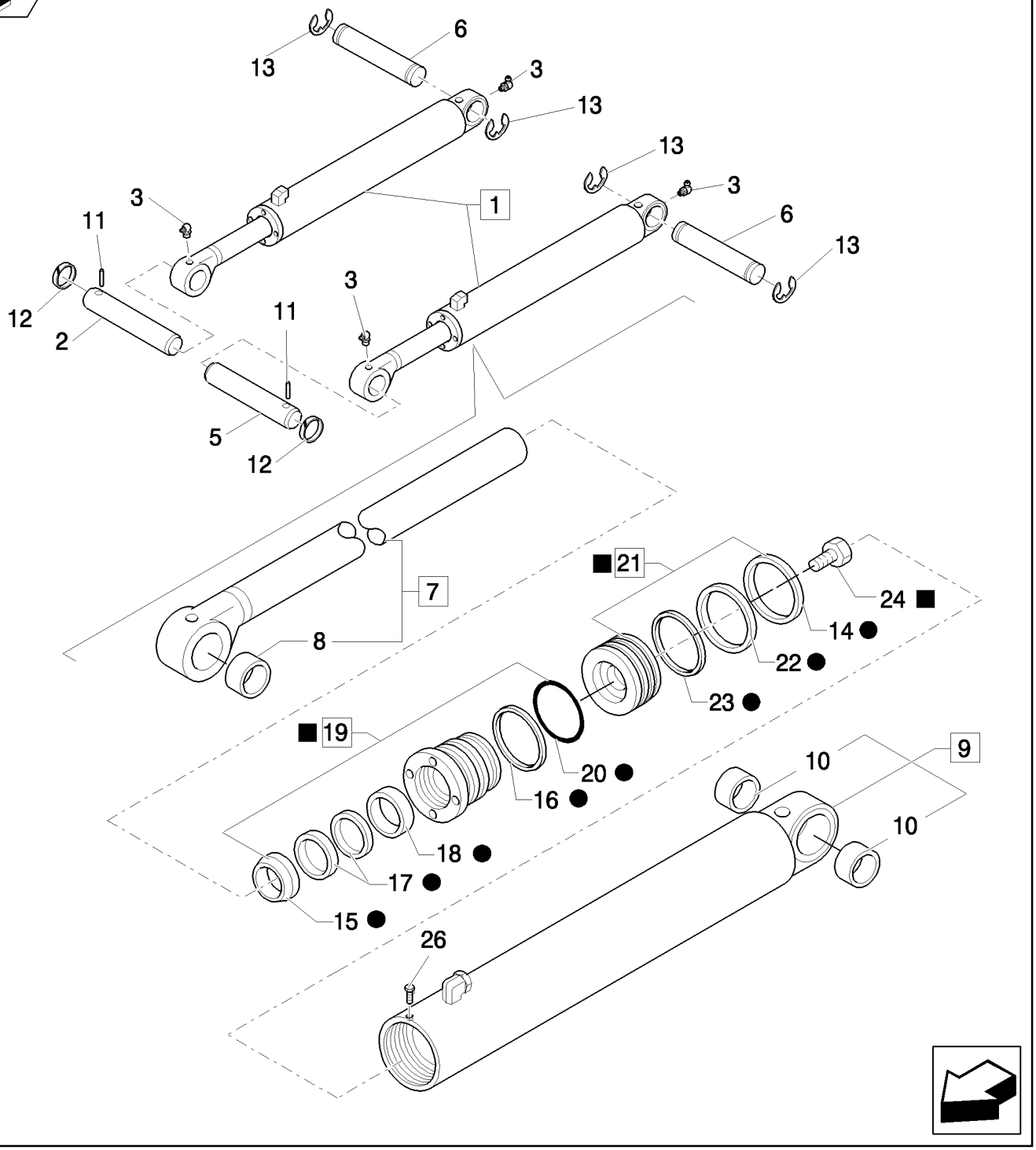

LOADER CYLINDER

REF	FN	PART NUMBER	YR/SN	QTY	DESCRIPTION
1		87315525		2	HYDRAULIC CYLINDER, Assy
2		85801049		1	PIN
3		81818824		4	NIPPLE, LUBE, 90º, 1/8"-27 NPT
4		87424196		2	KIT, REPAIR
5		85801050		1	PIN
6		87402742		2	PIN
7		85800103		2	ROD, Assy
8		81902174		2	BUSHING
9		85800105		2	TUBE, Assy
10		81901897		4	BUSHING
11		85802993		2	PIN
12		85802992		2	RING
13		47049094		4	CIRCLIP
14		87408634		2	Ring, Wear
15		87414969		2	SEAL
16		87440401		2	BACK-UP RING
17		87414970		2	KIT, SEALS
18		87414966		2	BEARING, NYLON
19		87415116		2	GLAND, Assy
20		87421144		2	O-RING
21		87405859		2	PISTON, Assy
22		87414333		2	SEAL
23		87414341		2	RING
24		87428020		2	SCREW
25		87428628		1	KIT, SEALS
26		276-2446		1	SCREW, SELF TAPPING, Hex Hd, #8 x 3/8"

1.88.11/02	01	p1	04/08

LOADER BUCKET CONTROL CYLINDER

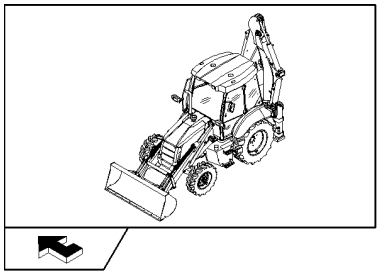

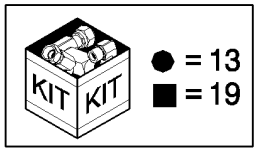

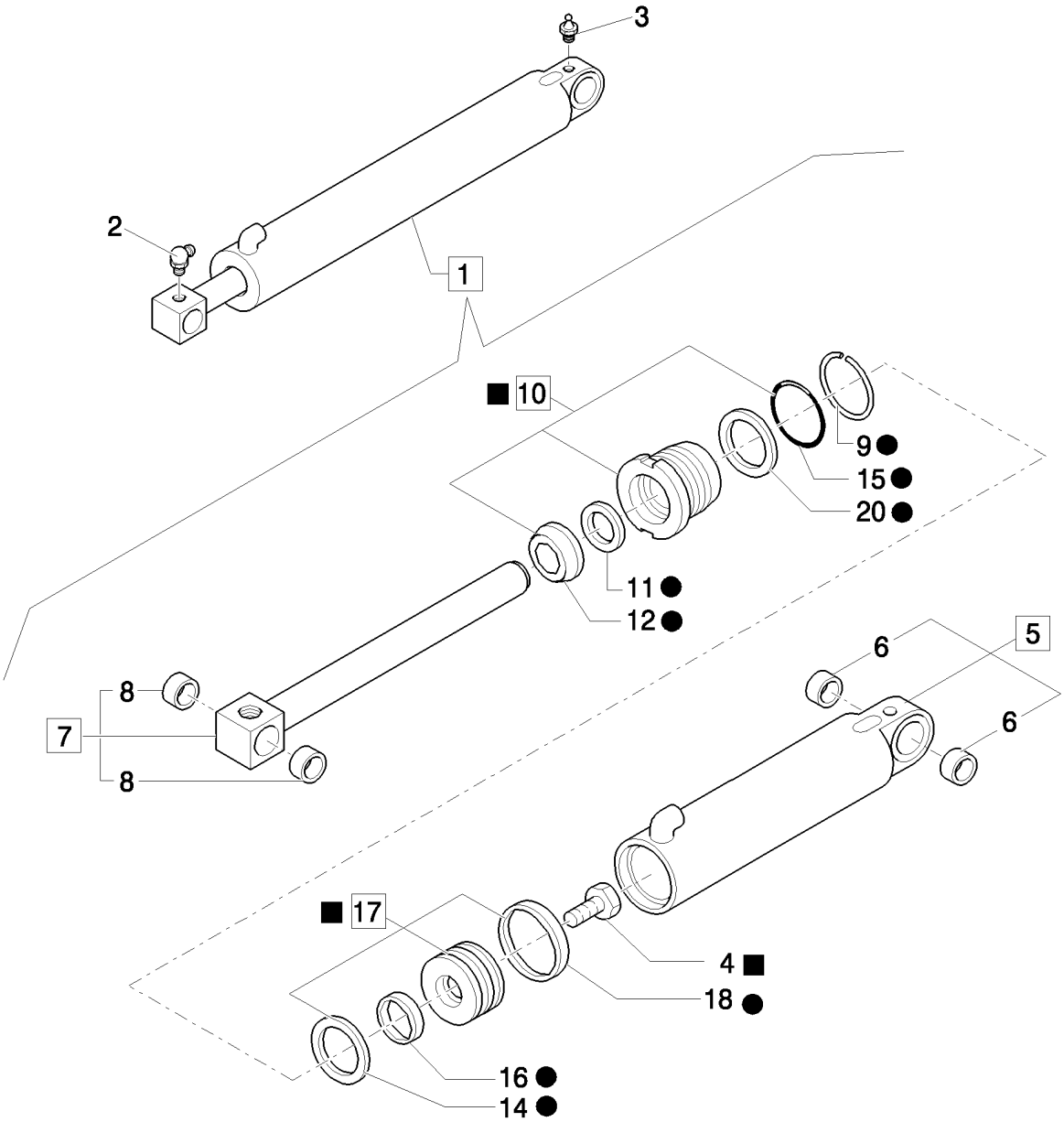

LOADER BUCKET CONTROL CYLINDER

REF	FN	PART NUMBER	YR/SN	QTY	DESCRIPTION
1		87315521		2	HYDRAULIC CYLINDER, Assy,Loader Bucket
2		81818824		2	NIPPLE, LUBE, 90º, 1/8"-27 NPT, 1/8-27-90GR
3		83416242		2	NIPPLE, LUBE, 1/8"-27
4		87428020		2	SCREW
5		85800504		2	TUBE, Assy
6		81902174		4	BUSHING
7		83962811		2	ROD, Assy
8		83902710		4	BUSHING
9		83937315		2	WIRE, RETAINING
10		87415115		2	GLAND, Assy
11		87414965		2	KIT, SEALS
12		87414964		2	WIPER
13		87428627		1	KIT, SEALS
14		87414340		2	RING
15		87421143		2	O-RING
16		87414332		2	SEAL
17		87406750		2	PISTON, Assy
18		87408633		2	Ring, Wear
19		87424195		1	KIT, REPAIR
20		87440396		1	BACK-UP RING

1.88.11/02	02	p1	03/08

LOADER BUCKET CONTROL CYLINDER

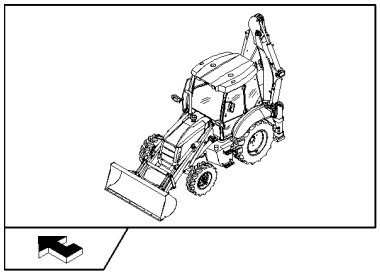

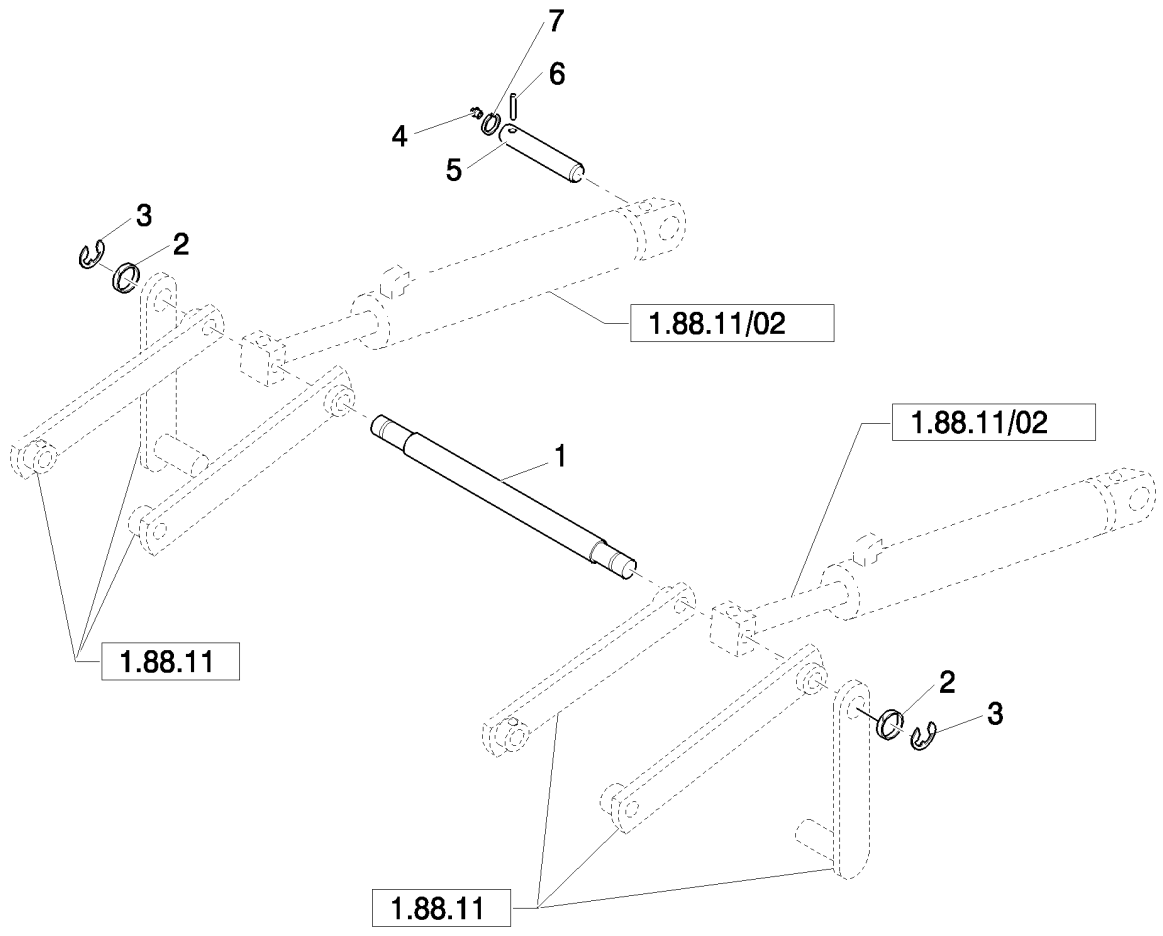

LOADER BUCKET CONTROL CYLINDER

REF	FN	PART NUMBER	YR/SN	QTY	DESCRIPTION
1		85803635		1	SPACER
2		81900328		2	WASHER
3		81902463		2	RING
4		83416242		2	NIPPLE, LUBE
5		85801049		2	PIN, 38mm x 159mm
6		85802993		2	PIN
7		85802992		2	RING

1.88.11/03		p1	04/08

LIFT CYLINDER AND BUCKET PIPES

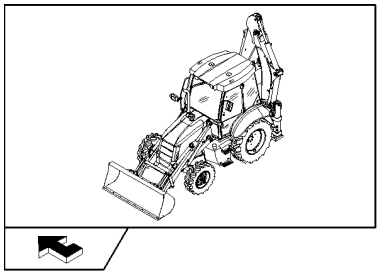

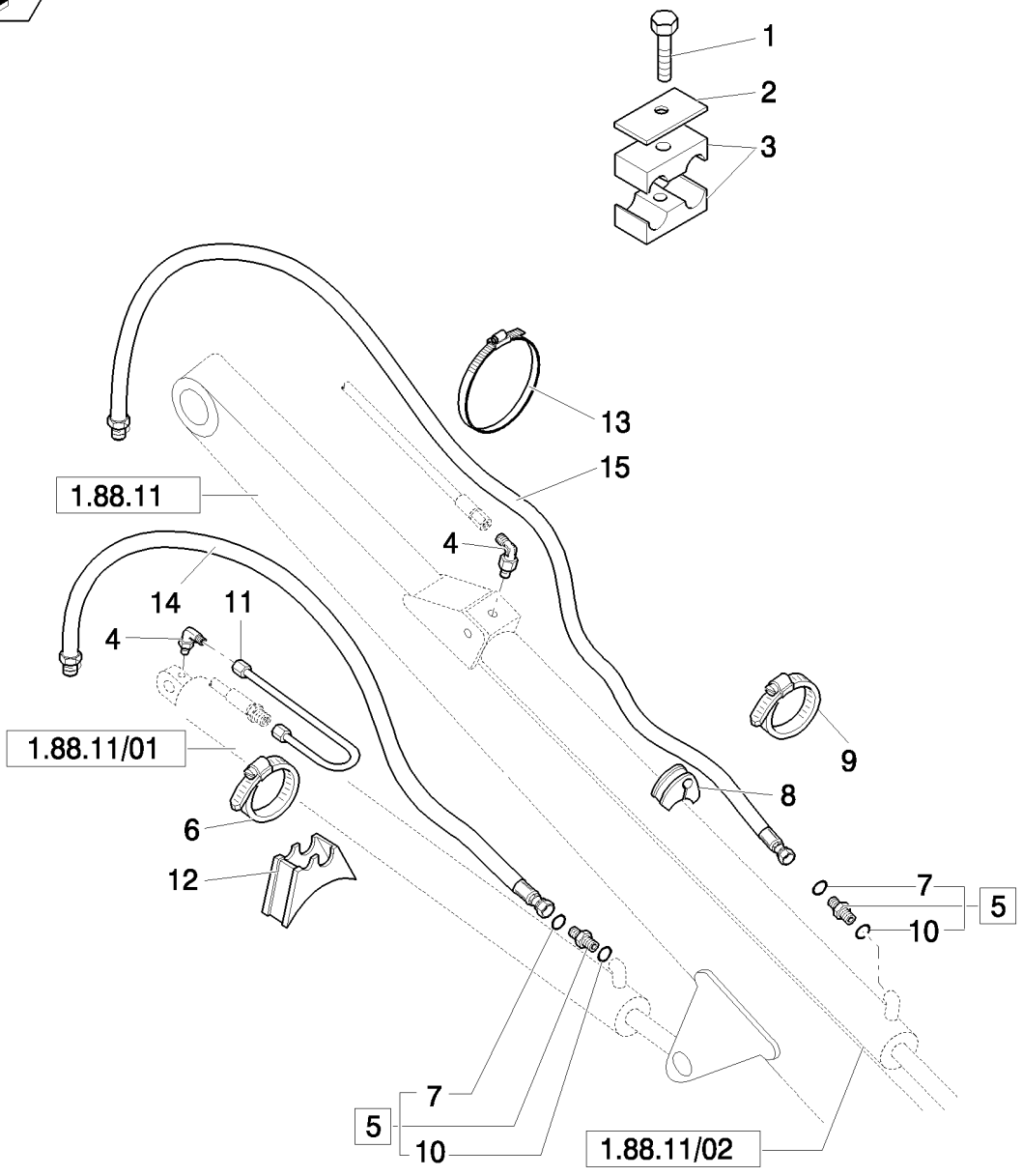

LIFT CYLINDER AND BUCKET PIPES

REF	FN	PART NUMBER	YR/SN	QTY	DESCRIPTION
1		16044321		2	BOLT, Hex, M8 x 55, 8.8
2		87390514		2	PLATE
3		87390511		4	CLAMP
4		85802961		4	ELBOW
5		83963376		4	CONNECTOR, HYD., Assy
6		85802743		2	CLAMP, HOSE
7		89992298		8	O-RING
8		85803008		2	CLAMP, HOSE
9		85805567		2	BLOCK
10		80167269		10	O-RING
11		85801596		2	TUBE
12		87303909		2	BLOCK
13		14560187		2	STRAP, CABLE, 178mm lg, L=203.2 mm
14		85813380		2	HOSE, FLEXIBLE
15		85813379		2	HOSE, FLEXIBLE

1.88.11/05A	01	p1	05/08

SELF-LEVELING LINKAGE, LOADER CONTROLS (CENTER PIVOT MECHANIC) - NA

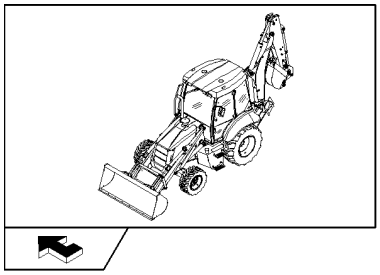

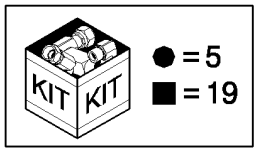

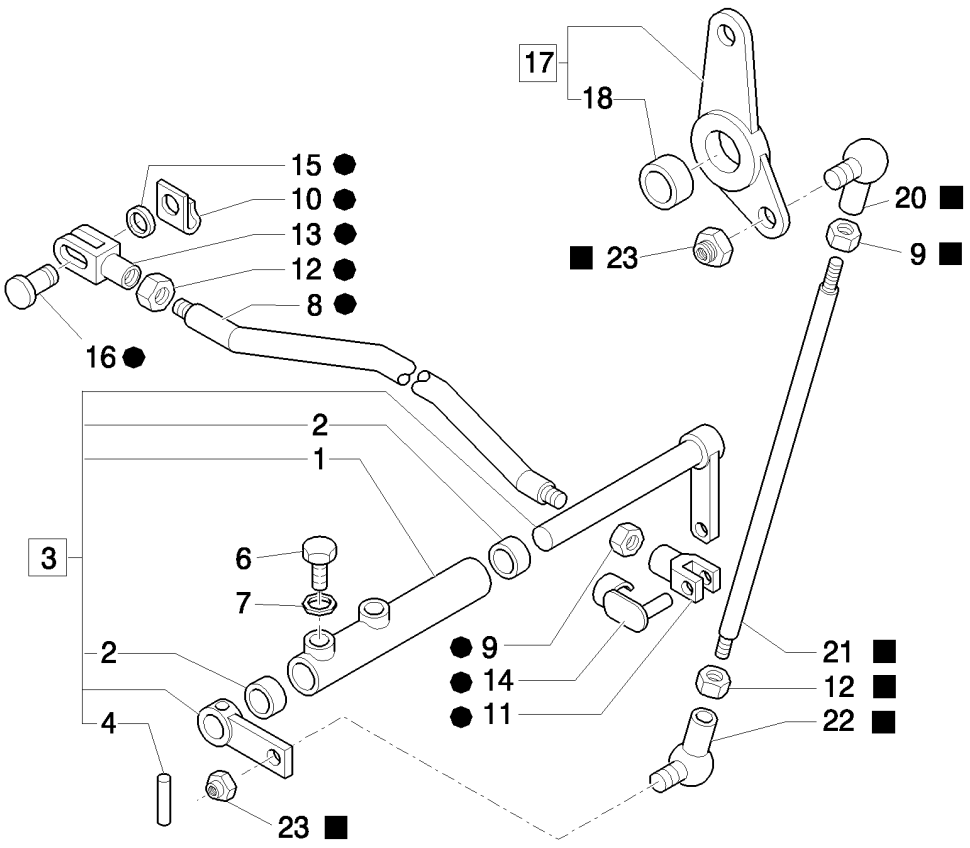

SELF-LEVELING LINKAGE, LOADER CONTROLS (CENTER PIVOT MECHANIC) - NA

REF	FN	PART NUMBER	YR/SN	QTY	DESCRIPTION
1		85802724		1	LEVER, Assy
2		85802494		2	BUSHING
3		85827787		1	LEVER, Assy
4		85805616		1	PIN
5		85802734		1	TIE-ROD, Assy
6		15970521		1	BOLT, Hex, M10 x 1.25 x 20, 8.8, Full Thd
7		11190679		2	WASHER, SPRING, Belleville, M10.5
8		85802736		1	TIE-ROD
9		16102311		2	NUT, Thin, M8 x 1.25, Cl 04
10		11064071		1	CLIP
11		11991971		1	CLEVIS
12		16102911		2	NUT, Thin, M8 x 1.25, Cl 04, LH
13		85802735		1	CLEVIS
14		85802738		1	RETAINER
15		14496521		1	WASHER, M8 x 17 x 1.6
16		85802737		2	PIN
17		85803215		1	LEVER, Assy
18		81855916		1	BUSHING
19		85802741		1	TIE-ROD, Assy
20		85804376		1	BALL JOINT
21		85802742		1	TIE-ROD
22		85804375		1	BALL JOINT
23		14048211		2	NUT, LOCK, M8 x 1.25, Cl 8

1.88.11/05A	02	p1	03/08

SELF-LEVELING LINKAGE, LOADER ARM (CENTER PIVOT) - NA

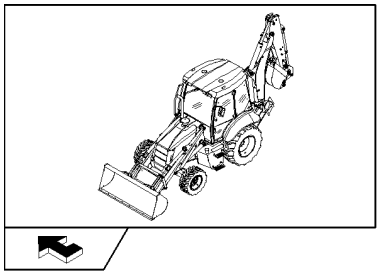

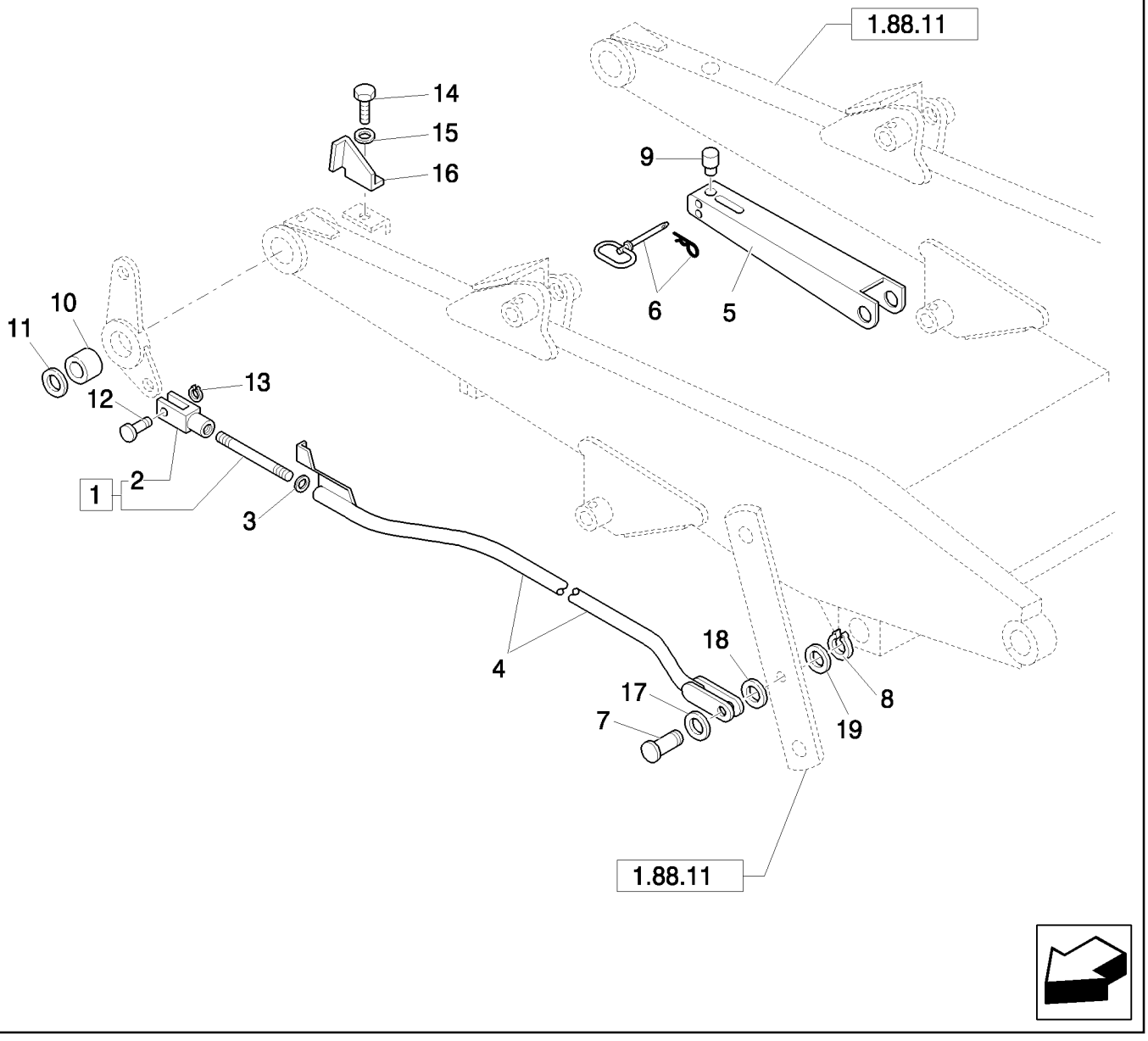

SELF-LEVELING LINKAGE, LOADER ARM (CENTER PIVOT) - NA

REF	FN	PART NUMBER	YR/SN	QTY	DESCRIPTION
1		83963433		1	ROD, Assy
2		83962659		1	CLEVIS
3		82879400		1	WASHER
4		85804026		1	LINK
5		85802405		1	LOCK, CYLINDER, Strut; Loader Lift Cylinder Lockout; Incl. Ref 9
6		86507337		1	PIN, HITCH
7		85803297		1	PIN
8		83911366		1	CIRCLIP
9		85802403		1	PLUG, Pad, Strut Prop
10		83963422		1	SPACER
11		85804366		1	WASHER
12		85819179		1	PIN
13		85700341		1	CIRCLIP
14		10979421		1	BOLT, Hex, M6 x 10, 8.8, Full Thd
15		11193279		1	WASHER, SPRING, Belleville, M6.4
16		85803277		1	PLATE
17		85817622		AR	WASHER
18		85817623		AR	WASHER
19		81900328		1	WASHER

1.88.11/06A		p1	05/08

STABILIZER CYLINDERS (CENTER PIVOT)

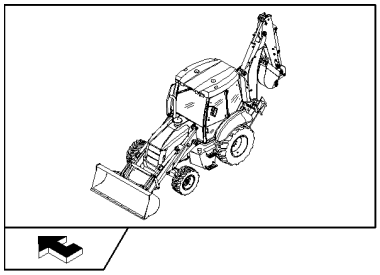

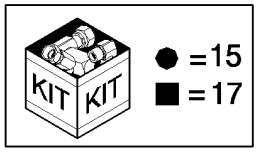

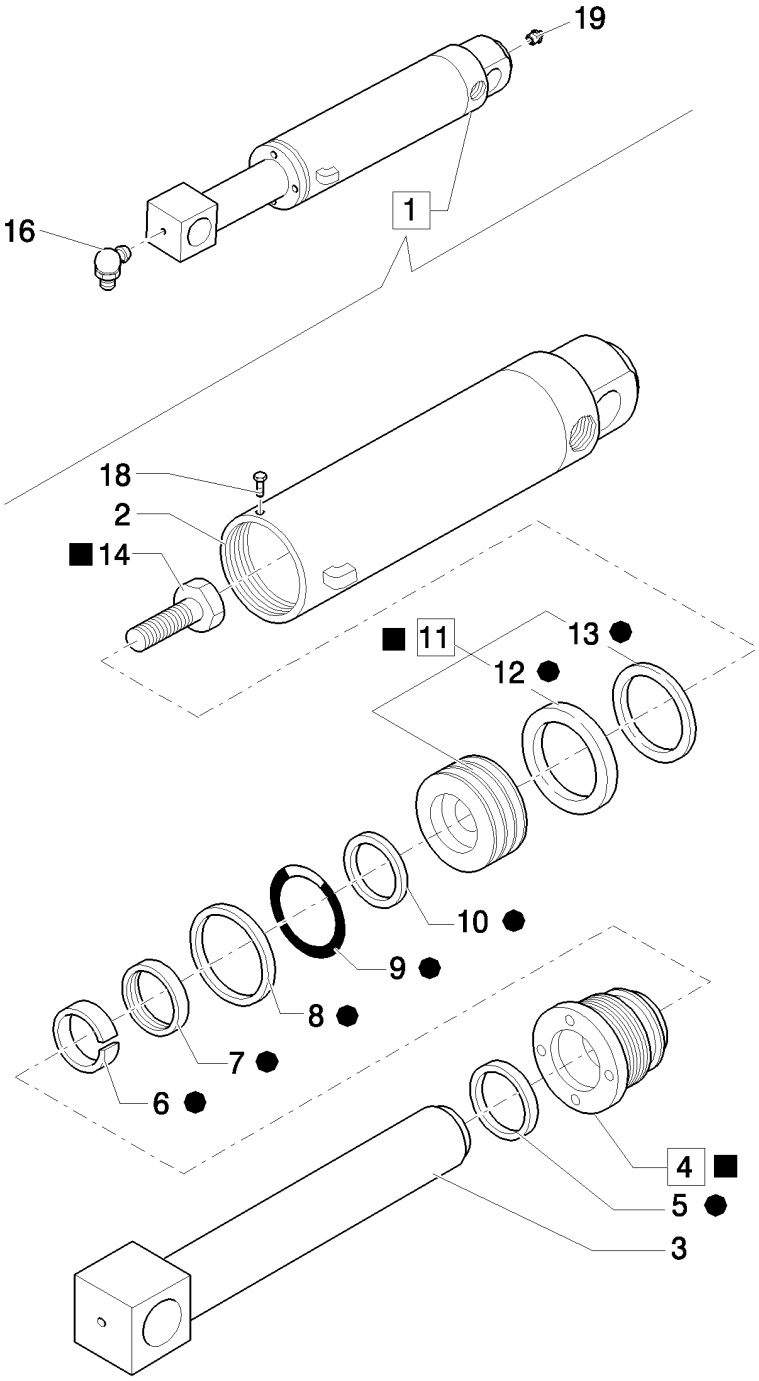

STABILIZER CYLINDERS (CENTER PIVOT)

REF	FN	PART NUMBER	YR/SN	QTY	DESCRIPTION
1		87315528		2	HYDRAULIC CYLINDER, Assy
2		85800604		2	BARREL
3		85800603		2	ROD
4	1	87412400		2	CYLINDER HEAD, Assy
5		87414974		2	WIPER
6		87414971		2	BUSHING
7		87414975		2	KIT, SEALS
8		87440410		2	BACK-UP RING
9		87421145		2	O-RING
10		87414342		2	RING
11		87406921		2	PISTON, Assy
12		87414334		2	SEAL
13		87408635		2	Ring, Wear
14		87428011		2	BOLT
15		87428630		1	KIT, SEALS
16		81818824		2	NIPPLE, LUBE, 90º, 1/8"-27 NPT
17		81818824		2	NIPPLE, LUBE, 90º, 1/8"-27 NPT, Assy, 1/8"-27
18		85827128		1	SCREW
19		83416242		2	NIPPLE, LUBE

(1) Includes 5 - 9

1.88.11/07A		p1	04/08

PIPES FOR STABILIZER CYLINDERS (CENTER PIVOT PILOT)

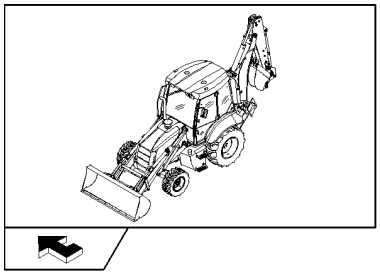

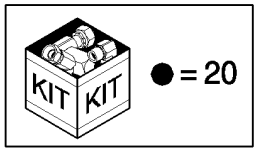

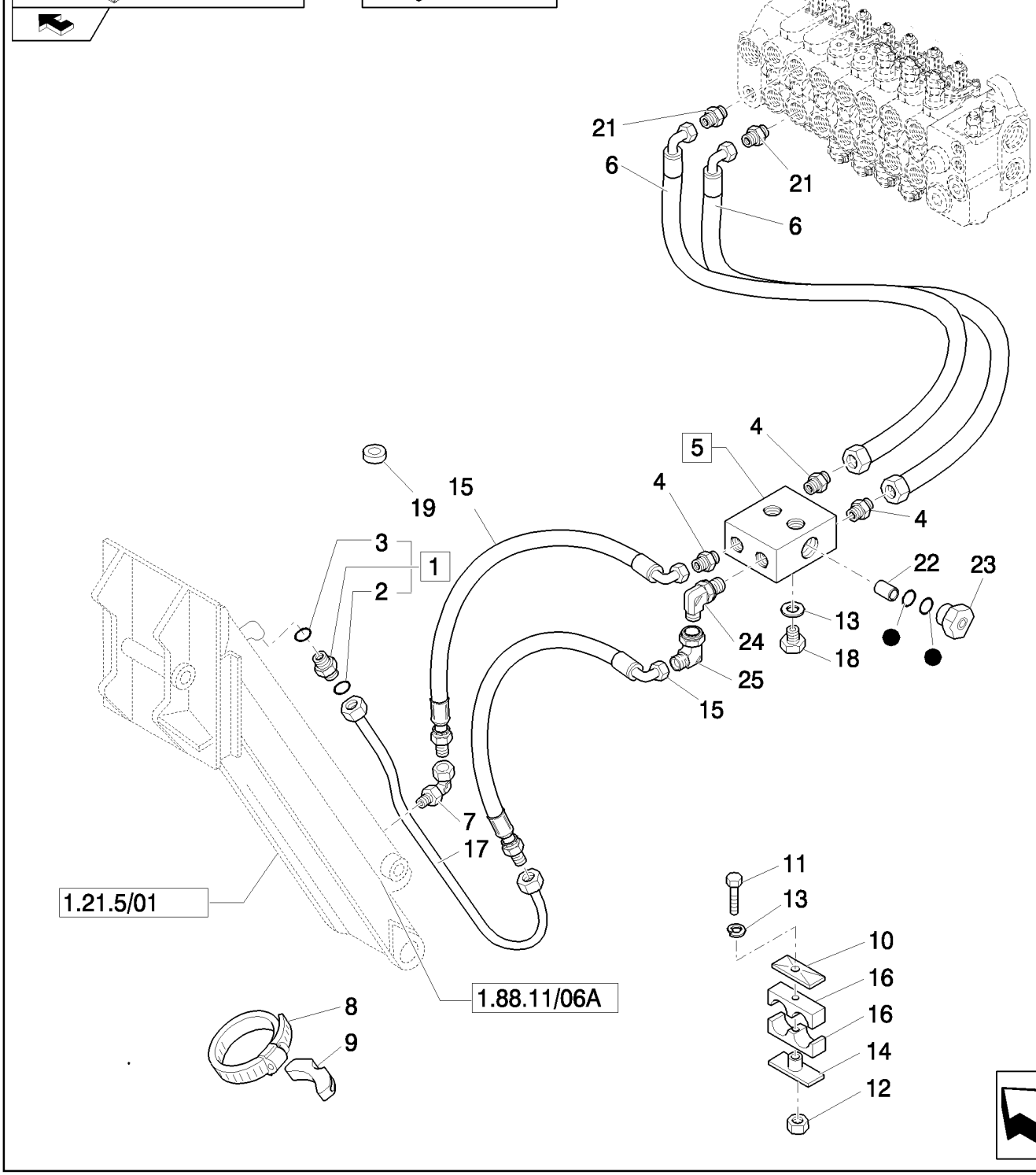

PIPES FOR STABILIZER CYLINDERS (CENTER PIVOT PILOT)

REF	FN	PART NUMBER	YR/SN	QTY	DESCRIPTION
1		83963374		2	CONNECTOR, HYD., Assy
2		89992298		6	O-RING
3		80128825		6	O-RING
4		83985067		6	CONNECTOR, HYD., Includes O-Rings 9617873 & 9992298
5	1	85802820		2	VALVE, CHECK, Assy
6		85807873		4	HOSE, FLEXIBLE, 946mm lg
7		85802965		2	CONNECTOR, HYD.
8		85803008		2	CLAMP, HOSE
9		87303912		2	BLOCK
10		87390514		2	PLATE
11		15213621		2	SCREW, Hex, M8 x 55, 8.8, Full Thd
12		14048211		2	NUT, LOCK, M8 x 1.25, Cl 8
13		11193879		6	WASHER, SPRING, Belleville, M8.4
14		87390534		2	PLATE
15		85807874		4	HOSE, FLEXIBLE, 1676mm lg
16		87390511		4	CLAMP
17		85802620		2	TUBE, HYD
18		16044421		4	BOLT, Hex, M8 x 60, 8.8
19		85803517		2	BUSHING, RUBBER
20		85821126		2	KIT
21		85805258		4	CONNECTOR, HYD., 9/16"-16 ORS x 1 1/16"-12, O-Ring
22		85820159		1	PLUNGER
23		85820160		2	VALVE, HYDRAULIC
24		83983763		2	CONNECTOR, HYD.
25		86511208		2	ELBOW

(1) Includes 20 - 23

PIPES FOR STABILIZER CYLINDERS (CENTER PIVOT MECHANIC) - NA

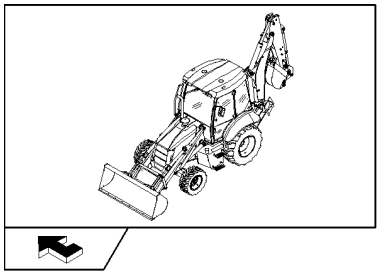

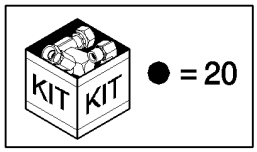

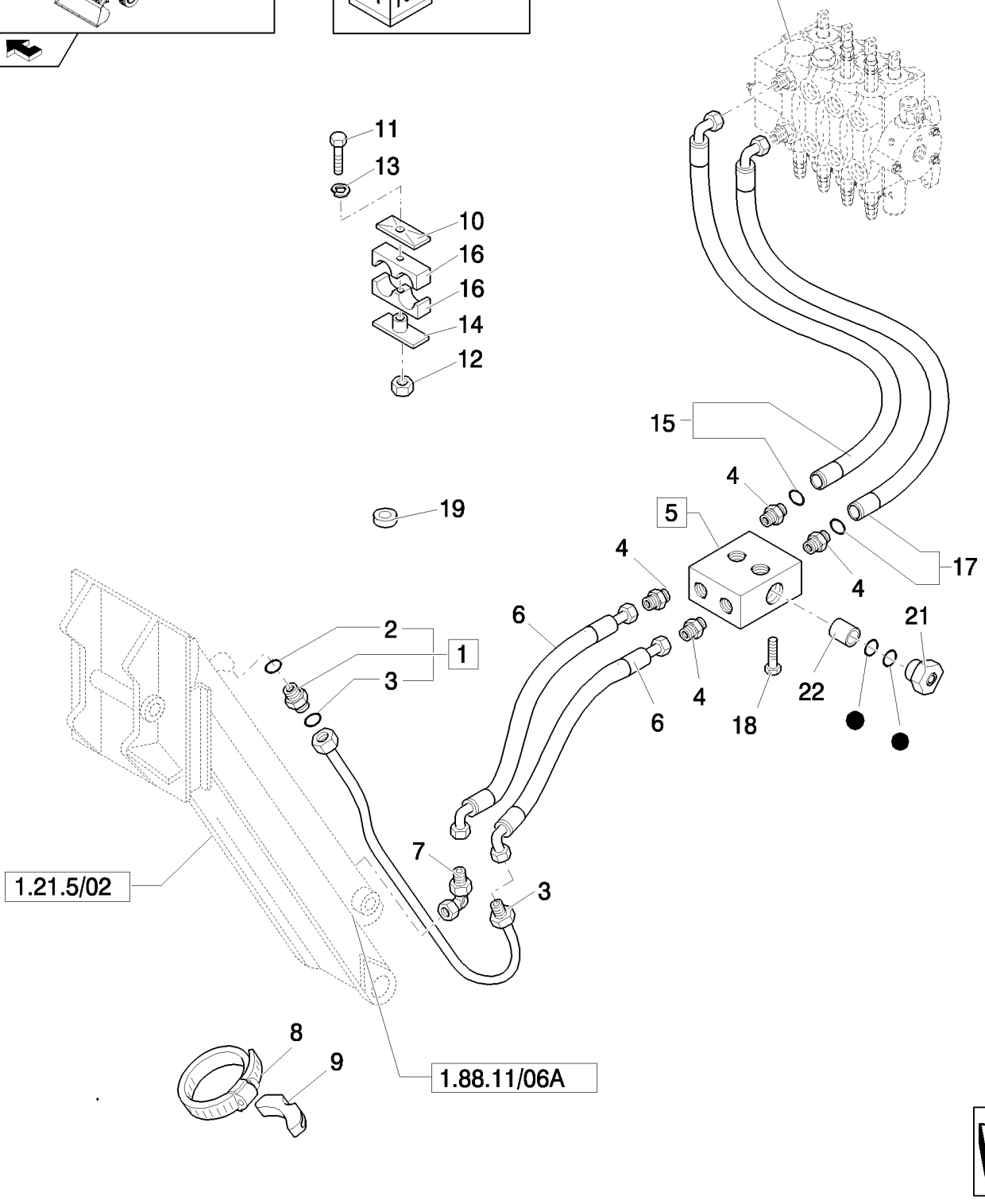

PIPES FOR STABILIZER CYLINDERS (CENTER PIVOT MECHANIC) - NA

REF	FN	PART NUMBER	YR/SN	QTY	DESCRIPTION
1		83963374		6	CONNECTOR, HYD., Assy
2		89992298		6	O-RING
3		80128825		6	O-RING
4		83985067		8	CONNECTOR, HYD., Includes O-Rings 9617873 & 9992298
5	1	85802820		2	VALVE, CHECK, Assy
6		85807873		4	HOSE, FLEXIBLE, 946mm lg
7		85802965		2	CONNECTOR, HYD.
8		85803008		2	CLAMP, HOSE
9		87303912		2	BLOCK
10		87390514		2	PLATE
11		15213621		2	SCREW, Hex, M8 x 55, 8.8, Full Thd
12		14048211		2	NUT, LOCK, M8 x 1.25, Cl 8
13		11193879		6	WASHER, SPRING, Belleville, M8.4
14		87390534		2	PLATE
15		85807874		4	HOSE, FLEXIBLE, 1676mm lg
16		87390511		4	CLAMP
17		85802620		2	TUBE, HYD
18		16044421		4	BOLT, Hex, M8 x 60, 8.8
19		85803517		2	BUSHING, RUBBER
20		85821126		2	KIT
21		85820160		2	VALVE, HYDRAULIC
22		85820159		1	PLUNGER

(1) Includes 20 - 22

RETURN TO DIG SENSOR

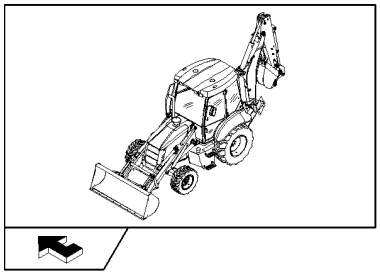

EU
B95B
B95BLR
B100B
B100BLR
B110B

NA
B95B
B95BLR
B100B
B110B

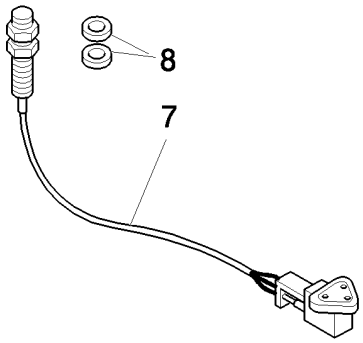

B115B EU

B115B NA

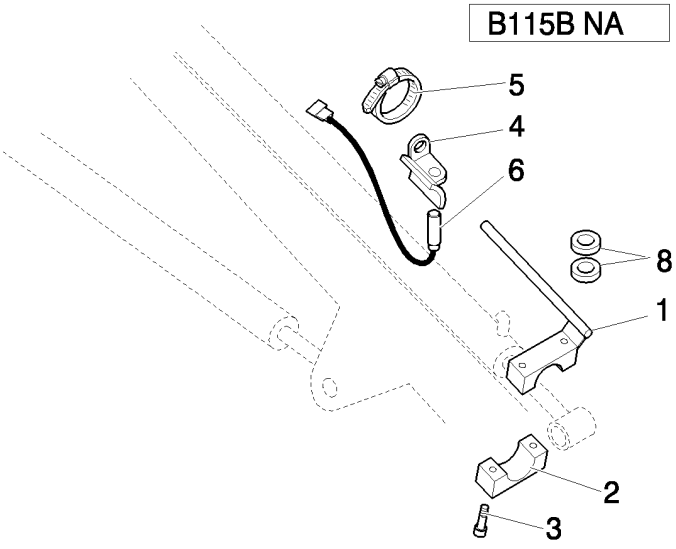

RETURN TO DIG SENSOR

REF	FN	PART NUMBER	YR/SN	QTY	DESCRIPTION
1		85805108		1	ROD
2		85805111		1	BLOCK
3		14305621		2	SCREW, Hex Soc Hd, M6 x 35, 8.8
4		85805113		1	SUPPORT
5		85803010		2	CLAMP, HOSE
6		85805619		1	SENSOR, Pigtail Length = 2600mm
7		85802950		1	SENSOR, Pigtail Length = 400mm
8		14497001		4	WASHER, LOCK, 19X34X3

1.88.11/09	02	p1	04/08

SWING CYLINDERS BACKHOE

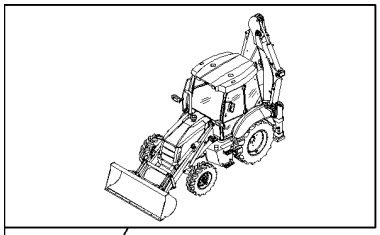

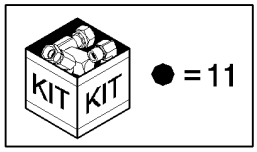

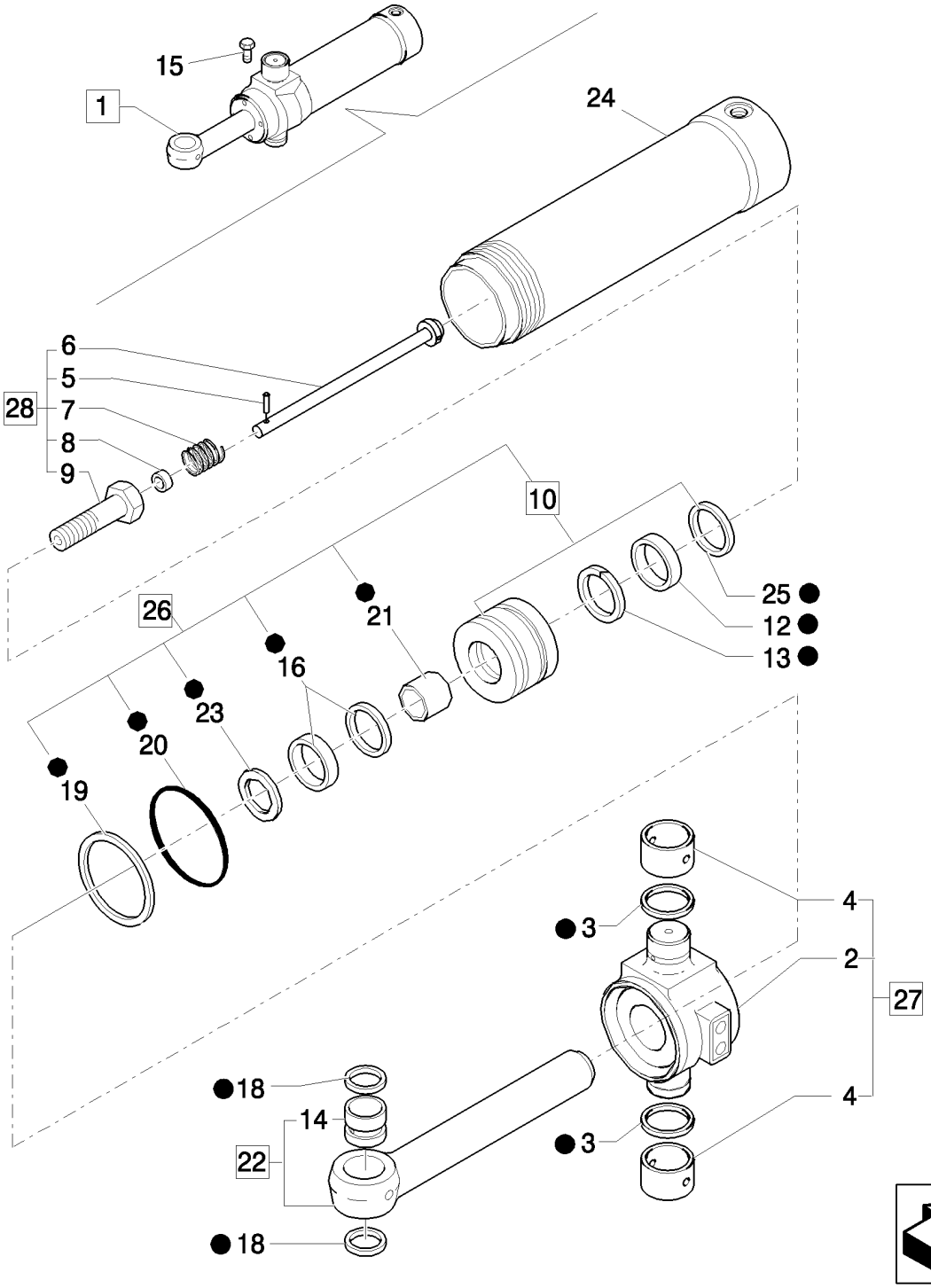

SWING CYLINDERS BACKHOE

REF	FN	PART NUMBER	YR/SN	QTY	DESCRIPTION
1		87315529		1	HYDRAULIC CYLINDER, Assy
2		87422783		1	TRUNNION
3		83910601		2	SEAL, Seal
4		83912378		2	BUSHING
5		83910599		1	PIN
6		85800990		1	ROD
7		83931313		1	SPRING
8		83998909		1	BUSHING
9		87428014		1	SCREW, M30x2x100
10		87424838		1	PISTON, Assy
11		87428631		1	KIT, SEALS
12		87408636		1	Ring, Wear
13		87414335		1	SEAL, HYD-CYLINDER
14		85800303		1	BUSHING
15		276-2456		1	SCREW, SELF TAPPING
16		87414970		1	KIT, SEALS, 50 mm Rod
18		83931289		2	SEAL, HYD-CYLINDER
19		85800007		1	BACK-UP RING, Back-up
20		87421149		1	O-RING, 4.734" ID x .139" Thk
21		87414966		1	BEARING, NYLON, 50 mm Rod
22		87433032		1	ROD, Assy
23		87414969		1	SEAL, 50 mm Rod
24		87455335		1	CYLINDER HEAD
25		87414343		1	RING
26		87445307		1	KIT, SEALS, Assy
27		87445758		1	TRUNNION, Assy
28		87424935		1	BOLT, Assy

CYLINDERS AND ROTATION PLATE (CENTER PIVOT)

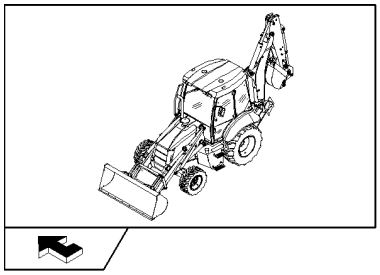

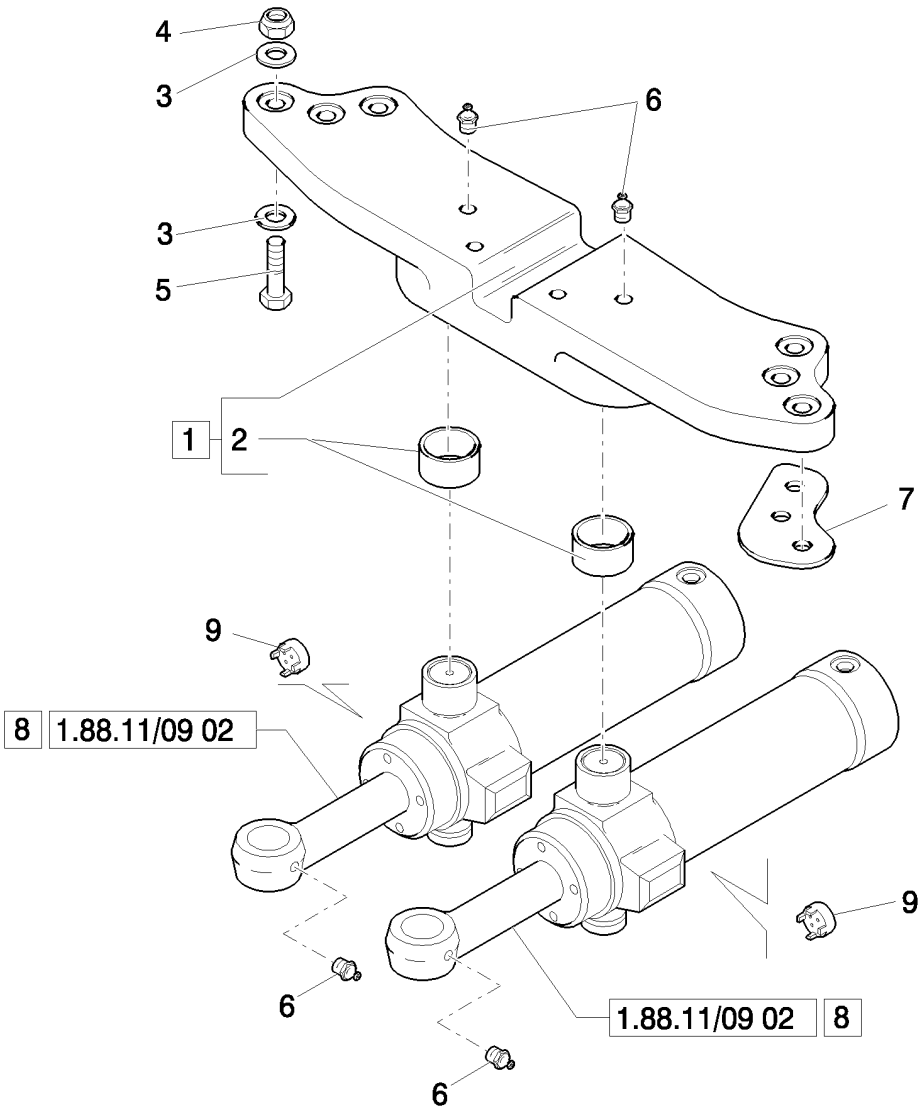

CYLINDERS AND ROTATION PLATE (CENTER PIVOT)

REF	FN	PART NUMBER	YR/SN	QTY	DESCRIPTION
1		85803617		1	PLATE, RETAINING, Assy
2		83910645		2	BUSHING
3		10520431		12	WASHER
4		12575121		6	NUT, LOCK, M20 x 1.5, Cl 10
5		15988934		6	BOLT, Hex, M20 x 90, 10.9
6		83416242		4	NIPPLE, LUBE, 1/8"-27
7		85801153		4	SHIM
7		85803039		2	SHIM
8		87315529		2	HYDRAULIC CYLINDER, Assy
9	1	85800965		2	REDUCER

(1) Only for B115B (EU)

1.88.12/03		p1	04/08

FRONT CONTROL VALVE SUPPORT AND TRANSMISSIONS (CENTER PIVOT - SIDE SHIFT)

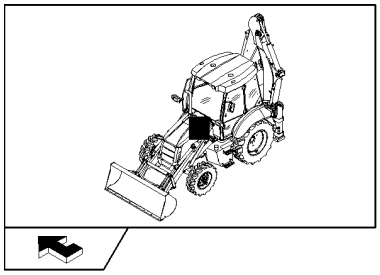

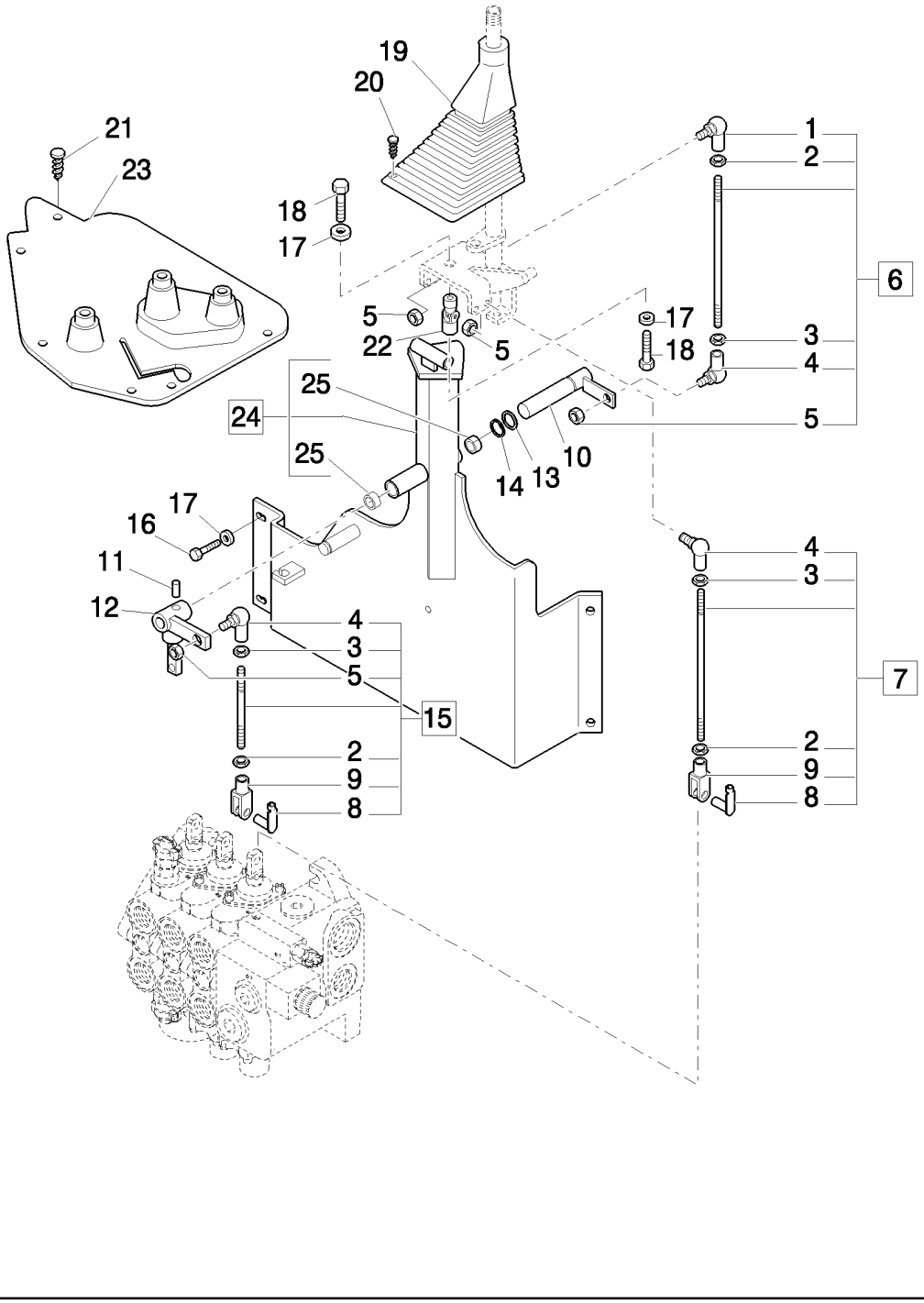

FRONT CONTROL VALVE SUPPORT AND TRANSMISSIONS (CENTER PIVOT - SIDE SHIFT)

REF	FN	PART NUMBER	YR/SN	QTY	DESCRIPTION
1		85804376		1	BALL JOINT
2		16102911		3	NUT, Thin, M8 x 1.25, Cl 04, LH
3		16102311		3	NUT, Thin, M8 x 1.25, Cl 04
4		85804375		3	BALL JOINT
5		14048211		5	NUT, LOCK, M8 x 1.25, Cl 8
6		85803477		1	TIE-ROD, Assy
7		85805498		1	TIE-ROD, Assy
8		85802738		2	RETAINER
9		11991971		2	CLEVIS
10		85824463		1	LEVER
11		85805616		1	PIN
12		85825465		1	IDLER
13		14496901		1	WASHER, M16 x 30 x 3
14		83911366		1	CIRCLIP
15		85805806		1	TIE-ROD, Assy
16		11112821		4	BOLT, Hex, M12 x 40, 8.8, Full Thd
17		11190779		5	WASHER, SPRING, Belleville, M13
18		15540321		1	BOLT, Hex, M12 x 1.25 x 25, 8.8, Full Thd
19		85802842		1	BOOT
20		14568887		4	FASTENER, 8x20
21		85808422		6	PLUG
22		85801518		1	JOINT, UNIVERSAL
23		85806245		1	BOOT
24		87304842		1	SUPPORT, Assy
25		85802494		2	BUSHING

Excluded Mechanical Version NA

B95B

1.88.12/03A		p1	04/08

FRONT CONTROL VALVE SUPPORT AND TRANSMISSIONS (CENTER PIVOT) - NA

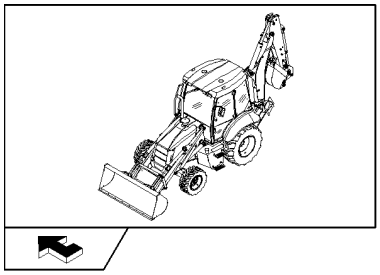

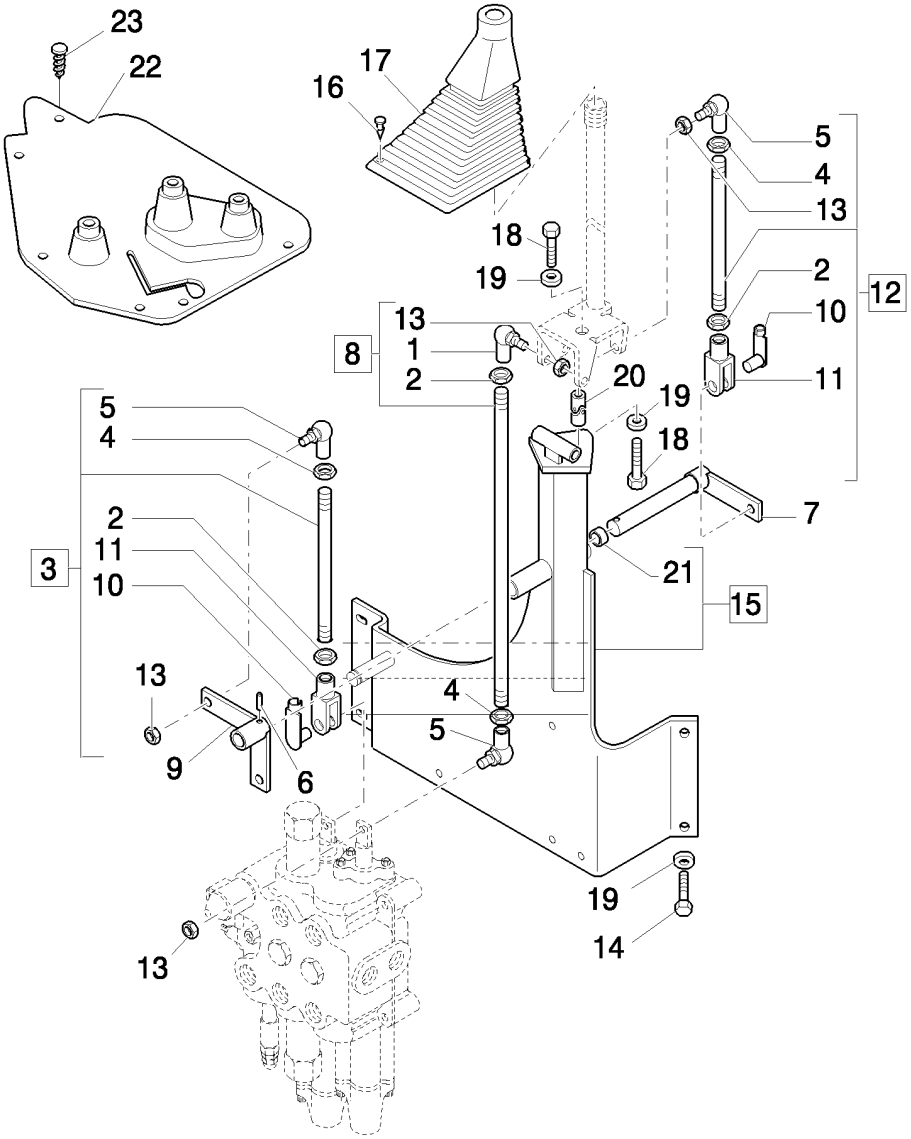

FRONT CONTROL VALVE SUPPORT AND TRANSMISSIONS (CENTER PIVOT) - NA

REF	FN	PART NUMBER	YR/SN	QTY	DESCRIPTION
1		85804376		1	BALL JOINT
2		16102311		3	NUT, Thin, M8 x 1.25, Cl 04
3		85801564		1	TIE-ROD, Assy
4		16102911		3	NUT, Thin, M8 x 1.25, Cl 04, LH
5		85804375		3	BALL JOINT
6		85805616		1	PIN
7		85805692		1	PIN
8		85801566		1	TIE-ROD, Assy
9		85805690		1	LEVER
10		85802738		2	RETAINER
11		11991971		2	CLEVIS
12		85801562		1	TIE-ROD, Assy
13		14048211		4	NUT, LOCK, M8 x 1.25, Cl 8
14		11112821		4	BOLT, Hex, M12 x 40, 8.8, Full Thd
15		87312027		1	SUPPORT, Assy
16		14568887		4	FASTENER
17		85802842		1	BOOT
18		15540321		2	BOLT, Hex, M12 x 1.25 x 25, 8.8, Full Thd
19		11190779		6	WASHER, SPRING, Belleville, M13
20		85801518		1	JOINT, UNIVERSAL
21		85802494		2	BUSHING
22	1	85804539		1	COVER
23	1	85808422		6	PLUG

(1) Only for CAB

Mechanical Version B95B

1.89.9/01		p1	03/08

DISTRIBUTOR VALVE SUPPORT HUSCO (CENTER PIVOT) - NA

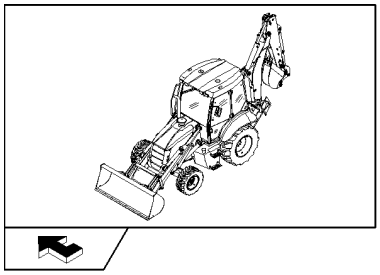

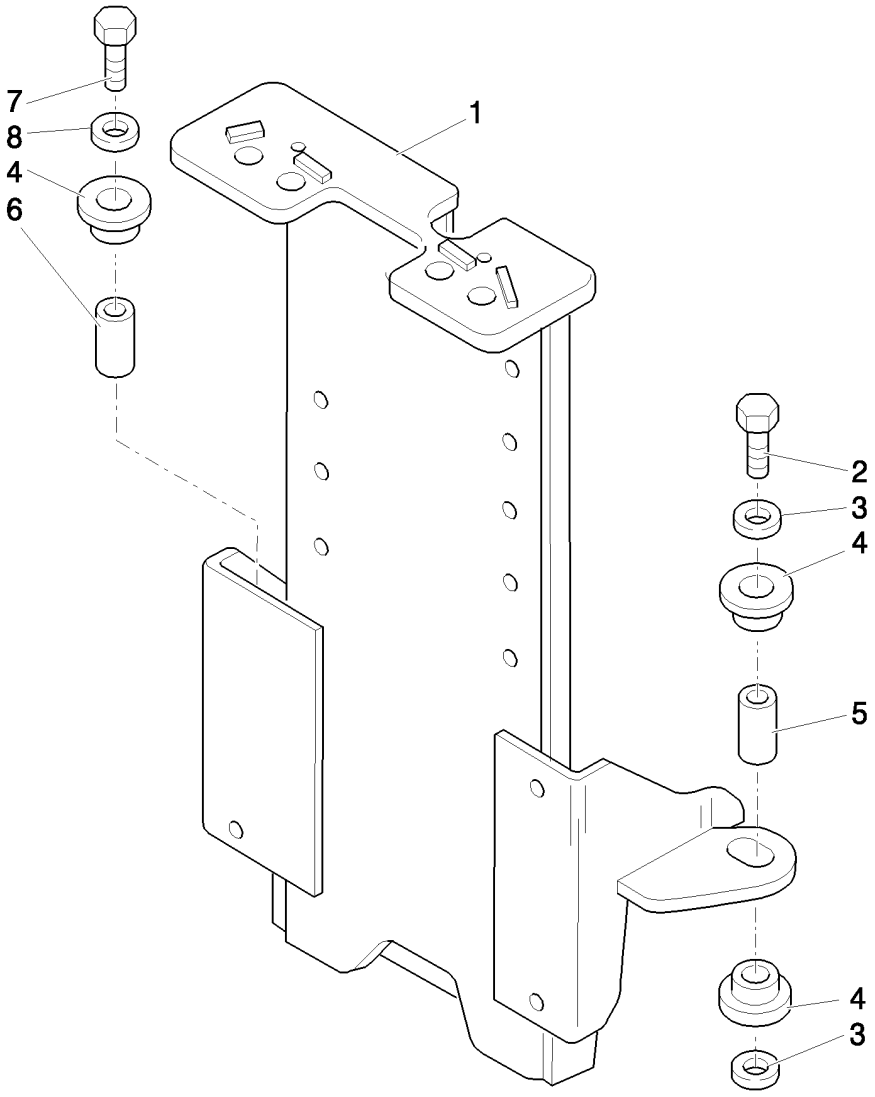

DISTRIBUTOR VALVE SUPPORT HUSCO (CENTER PIVOT) - NA

REF	FN	PART NUMBER	YR/SN	QTY	DESCRIPTION
1		85820167		1	SUPPORT
2		15215821		2	BOLT, Hex, M12 x 60, 8.8, Full Thd
3		85802618		5	WASHER, SEALING, 13x41x3
4		87348165		6	ISOLATOR
5		85817252		2	BUSHING, 12.5 x 16.5 x 24
6		85820172		1	BUSHING, 12.5 x 16.5 x 22
7		15216421		1	BOLT, Hex, M12 x 90, 8.8, Full Thd
8		85820170		1	SPACER

Mechanical Version B95B

NOTES

SECTION INDEX
Operator's Platform

1.91.1		CAB : CEILING LIGHT
1.91.1/01		SAFETY FRAME: INSTRUMENTS AND GAUGES (ROPS) - NA
1.91.3		BACK-UP ALARM
1.91.4	01	CAB ROOF HARNESS (CAB, POWER SHUTTLE)
1.91.4	02	FUSE BOX CONTROL UNIT (CAB, POWER SHUTTLE)
1.91.4	03	IGNITON SWITCH, POWER POINT, FUSE PANEL & SIDE CONSOLE HARNESS (CAB PT)
1.91.4	04	FRONT HARNESS AND CONTROL UNIT (CAB, POWER SHUTTLE)
1.91.4	05	FRONT DASH (CAB POWER SHUTTLE)
1.91.4	06	CAB ELECTRIC SYSTEM COMPONENTS (CAB, POWER SHUTTLE)
1.91.4/02	01	CAB ROOF HARNESS (ROPS POWER SHUTTLE)
1.91.4/02	02	FUSE BOX CONTROL UNIT (ROPS POWER SHUTTLE)
1.91.4/02	03	IGNITON SWITCH, POWER POINT, FUSE PANEL & SIDE CONSOLE HARNESS (ROPS PT)
1.91.4/02	04	FRONT HARNESS AND CONTROL UNIT (ROPS POWER SHUTTLE)
1.91.4/02	05	RH CONSOLE WITH INSTRUMENTS (ROPS POWER SHUTTLE) - NA
1.91.4/02	06	CAB ELECTRIC SYSTEM COMPONENTS (ROPS POWER SHUTTLE)
1.91.5	01	FRONT AND REAR WINDSCREEN WIPERS
1.91.5	02	WINDSCREEN WIPERS RESERVOIR & NOZZLES
1.91.6		RADIO ANTENNA & SPEAKER COVER
1.91.7/01		LAMPS & LIGHTS - ROPS - NA
1.91.7/02		LAMPS & LIGHTS - CAB - NA
1.92.2		CAB: FRAME-DOOR
1.92.3		FRONT GLASSES AND SEALS
1.92.4	01	DOOR LATERAL GLASS FASTENERS
1.92.4	02	CAB SIDE GLASS FASTENERS
1.92.4	03	SIDE GLASSES
1.92.5		FENDERS, REAR
1.92.6	01	DOOR COMPONENTS
1.92.6	02	DOOR COMPLETION COMPONENTS: LOWER SIDE
1.92.6	03	DOOR CLOSURE HINGE COMPONENTS
1.92.8		FLAME TRAP SEAL, ROPS (POWER SHUTTLE)
1.92.9	01	REAR GLASSES AND COMPONENTS
1.92.9	02	REAR GLASS CLOSURE HINGE
1.92.9	03	HINGES AND REAR GLASS CLOSURE
1.93.0	01	CAB : SOFT TRIM (POWER SHUTTLE, POWER SHIFT)
1.93.0	02	CAB : SOFT TRIM (POWER SHUTTLE, POWER SHIFT)
1.93.0	03	CAB / SIDE COVERING AND FRONT FLOOR (POWER SHUTTLE: POWER SHIFT)
1.93.0	04	CAB / REAR CONSOLE AND FLOOR COVERING (POWER SHUTTLE: POWER SHIFT)
1.93.0/01	01	CAB : SOFT TRIM (POWER SHUTTLE, POWER SHIFT)
1.93.0/01	02	CAB / FLOOR COVERING AND COMPONENTS (POWER SHUTTLE: POWER SHIFT)
1.93.0/02	01	RIGHT SIDE COVERING, REAR CONSOLE ROPS (CENTER PIVOT): NA
1.93.0/03		MACHINES SOFT TRIMS (ROPS) - NA
1.93.4		CAB: REAR MIRROR - SUN SCREEN
1.93.5	01	CAB / FRONT DASHBOARD
1.93.5	02	CAB / DASHBOARD FASTENERS AND GASKETS
1.93.5/01	01	FRONT CONSOLE - ROPS (POWER SHUTTLE) - NA
1.93.5/01	02	RH SIDE CONSOLE SEAL & CLIPS - ROPS (POWER SHUTTLE) - NA
1.93.7		INNER REAR VIEW MIRROR (POWER SHUTTLE) ROPS
1.94.0/01		CAB / ROPS: ROOF AND INNER COVERING: NA
1.94.2		HEATER WATER HOSES

SECTION INDEX
Operator's Platform

1.95.0	01	CAB / ROPS : BRAKE PEDAL
1.95.0	02	CAB / ROPS / BRAKE PUMP
1.95.0	03	CAB / ROPS / BRAKE SYSTEM PIPES
1.95.0/ A		CAB / ROPS / BRAKE PUMP CYLINDER
1.95.1		CAB / ROPS / PARKING BRAKE LEVER AND CONTROL CABLE
1.95.2		TRANSPORT LOCK CONTROL - NA
1.95.3		HAND/PEDAL ELECTRONIC ACCELERATOR CONTROL
1.95.5	01	STEERING COLUMN AND COVERING: NA
1.95.5	02	STEERING SYSTEM SLEEVES: NA
1.95.5/ A	01	POWER STEERING: NA
1.96.0		FOWARD/REVERSE & MULTI-PURPOSE LEVER
1.96.2	01	STABILIZER CONTROL (SIDE SHIFT - EU) - (CENTER PIVOT - NA)
1.96.2	02	STABILIZER CONTROL (CENTER PIVOT) - NA
1.96.2/01		PILOT CONTROL DIAGNOSTICS
1.96.7/04		CLOSING PINS AND PLUGS ROPS (CENTER PIVOT): NA
1.96.7/05		CAB / VARIOUS COMPONENTS (CENTER PIVOT): NA
1.96.7/06		CAB: VARIOUS COMPONENTS (CENTER PIVOT): NA
1.96.7/07		CLOSING PINS AND PLUGS ROPS (CENTER PIVOT): NA
1.98.0/01		INFORMATION SYMBOL DECALS (POWER SHUTTLE - POWER SHIFT) - NA
1.98.1	08	IDENTIFICATION MODEL: GUARD DECALS
1.98.1	09	MODEL IDENTIFICATION B90B / B90BLR - B959B / B95BLR - B100B / B100BLR

NOTES

CAB : CEILING LIGHT

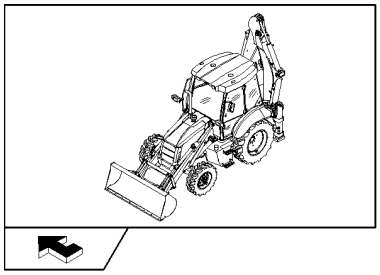

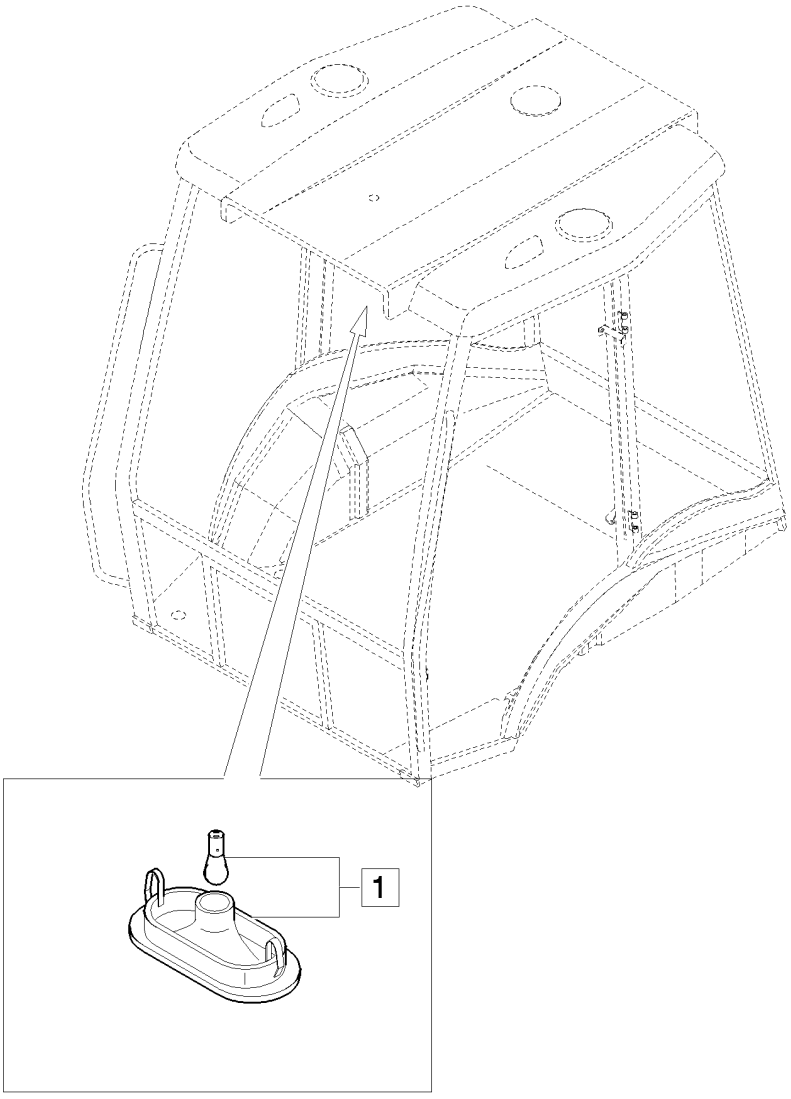

CAB : CEILING LIGHT

REF	FN	PART NUMBER	YR/SN	QTY	DESCRIPTION
1		82022833		1	LAMP, CEILING, Assy

SAFETY FRAME: INSTRUMENTS AND GAUGES (ROPS) - NA

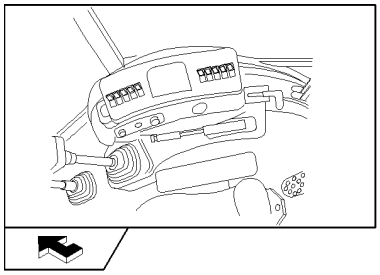

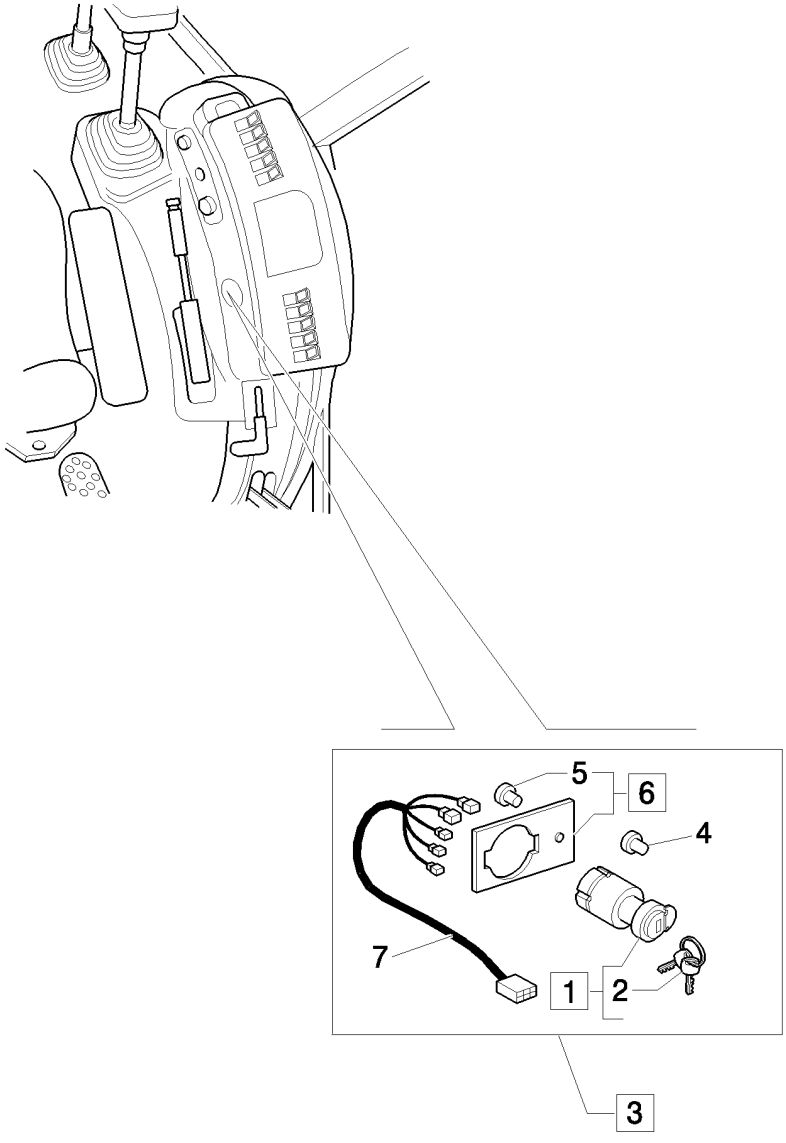

SAFETY FRAME: INSTRUMENTS AND GAUGES (ROPS) - NA

REF	FN	PART NUMBER	YR/SN	QTY	DESCRIPTION
1		85804674		1	SWITCH, IGNITION, Assy
2		85804675		2	KEY, IGNITION
3		85807866		1	KIT, CONVERSION, Assy
4		784122		1	PLUG
5		10427201		1	RIVET
6		85827548		1	PLATE, Assy
7		85807855		1	HARNESS, WIRE

BACK-UP ALARM

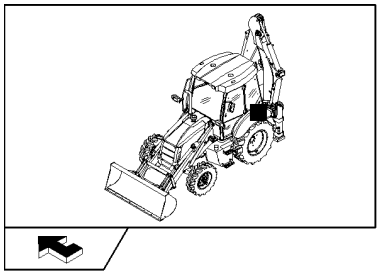

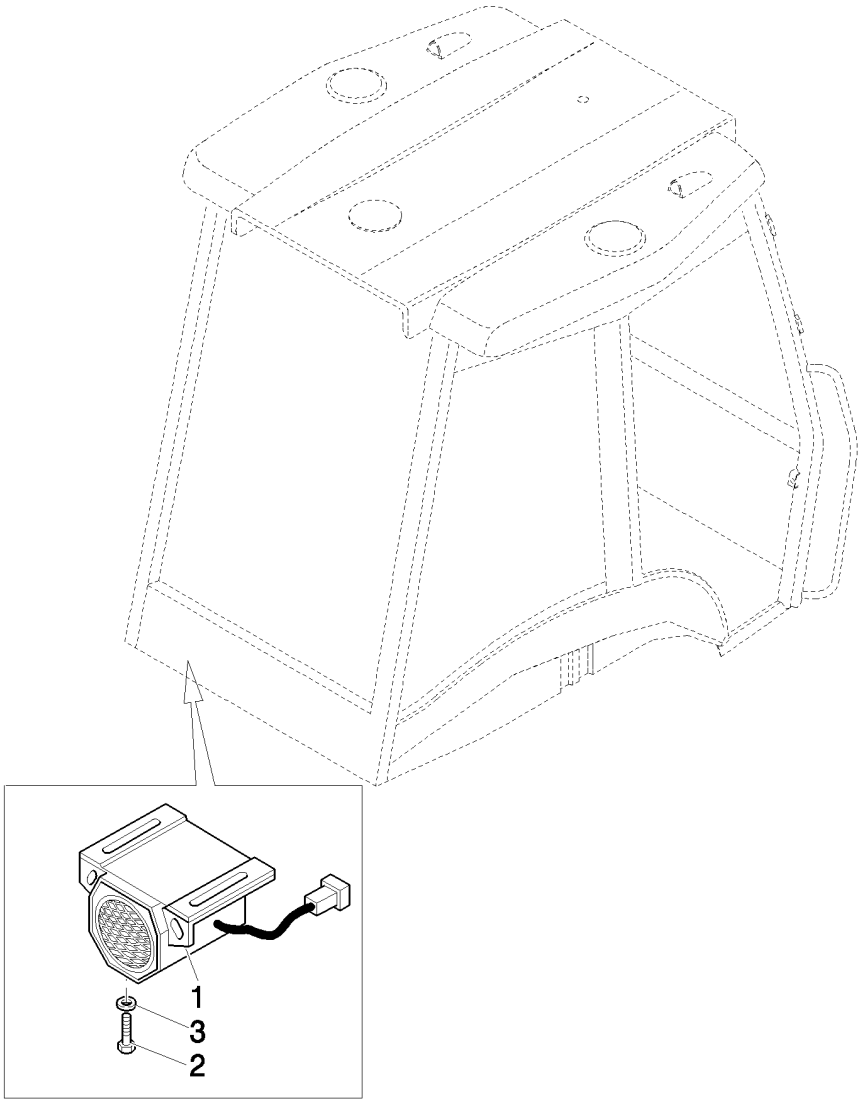

BACK-UP ALARM

REF	FN	PART NUMBER	YR/SN	QTY	DESCRIPTION
1		87303261		1	ALARM
2		10902321		2	BOLT, Hex, M6 x 18, 8.8, Full Thd
3		11197779		2	WASHER, SPRING, Belleville, M6.4

1.91.4	01	p1	03/08

CAB ROOF HARNESS (CAB, POWER SHUTTLE)

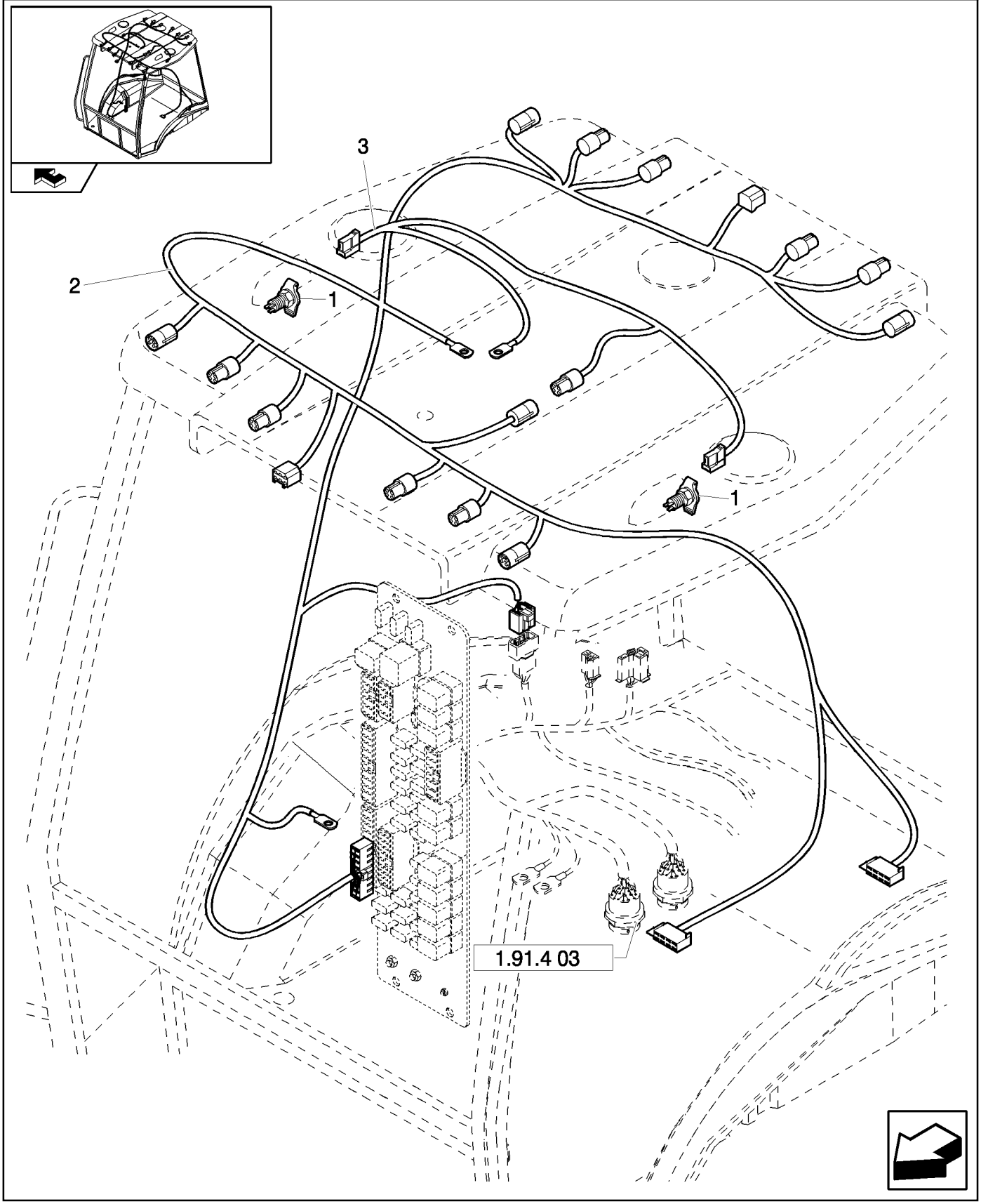

CAB ROOF HARNESS (CAB, POWER SHUTTLE)

REF	FN	PART NUMBER	YR/SN	QTY	DESCRIPTION
1		87546419		2	SOCKET, Mating Part is 86508819 Plug
2		85825330		1	HARNESS, WIRE
3		85819568		1	HARNESS, WIRE, Rotary Beacon

Mechanical Version / Pilot Control Version

B95B

1.91.4	02	p1	04/08

FUSE BOX CONTROL UNIT (CAB, POWER SHUTTLE)

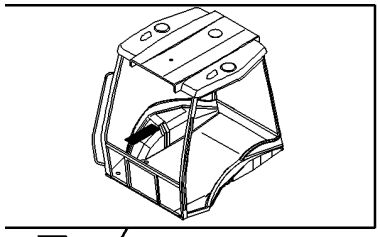

FUSE BOX CONTROL UNIT (CAB, POWER SHUTTLE)

REF	FN	PART NUMBER	YR/SN	QTY	DESCRIPTION
1		85802478		4	ISOLATOR
2	1	87552124		1	ELECTRONIC UNIT, CONTROL, Assy
2	2	87609145		1	ELECTRONIC UNIT, CONTROL, Assy
3		11054790		1	FUSE
4		10519204		1	WASHER, M4 x 9 x .8
5		11054590		2	FUSE
6		85806135		1	ISOLATOR
7		11054890		3	FUSE
8		11054990		7	FUSE, 10 Amp
9		11055090		10	FUSE
10		10615274		4	WASHER, LOCK, Ext Tooth, M4
11		12574011		1	NUT, LOCK, M4 x .7, Cl 8
12		85803986		1	RELAY, Flasher
13	1	87552125		1	BODY
13	2	87609146		1	BOARD, PRINTED CIRCUIT
14		85825198		9	RELAY
15		12574011		4	NUT, LOCK, M4 x .7, Cl 8
16		85802250		1	DECAL
17		85806134		1	FUSE
18	2	87600615		1	BUZZER

(1) Except for B90B, B90BLR
(2) Only for B90B, B90BLR

1.91.4	03	p1	05/08

IGNITON SWITCH, POWER POINT, FUSE PANEL & SIDE CONSOLE HARNESS (CAB PT)

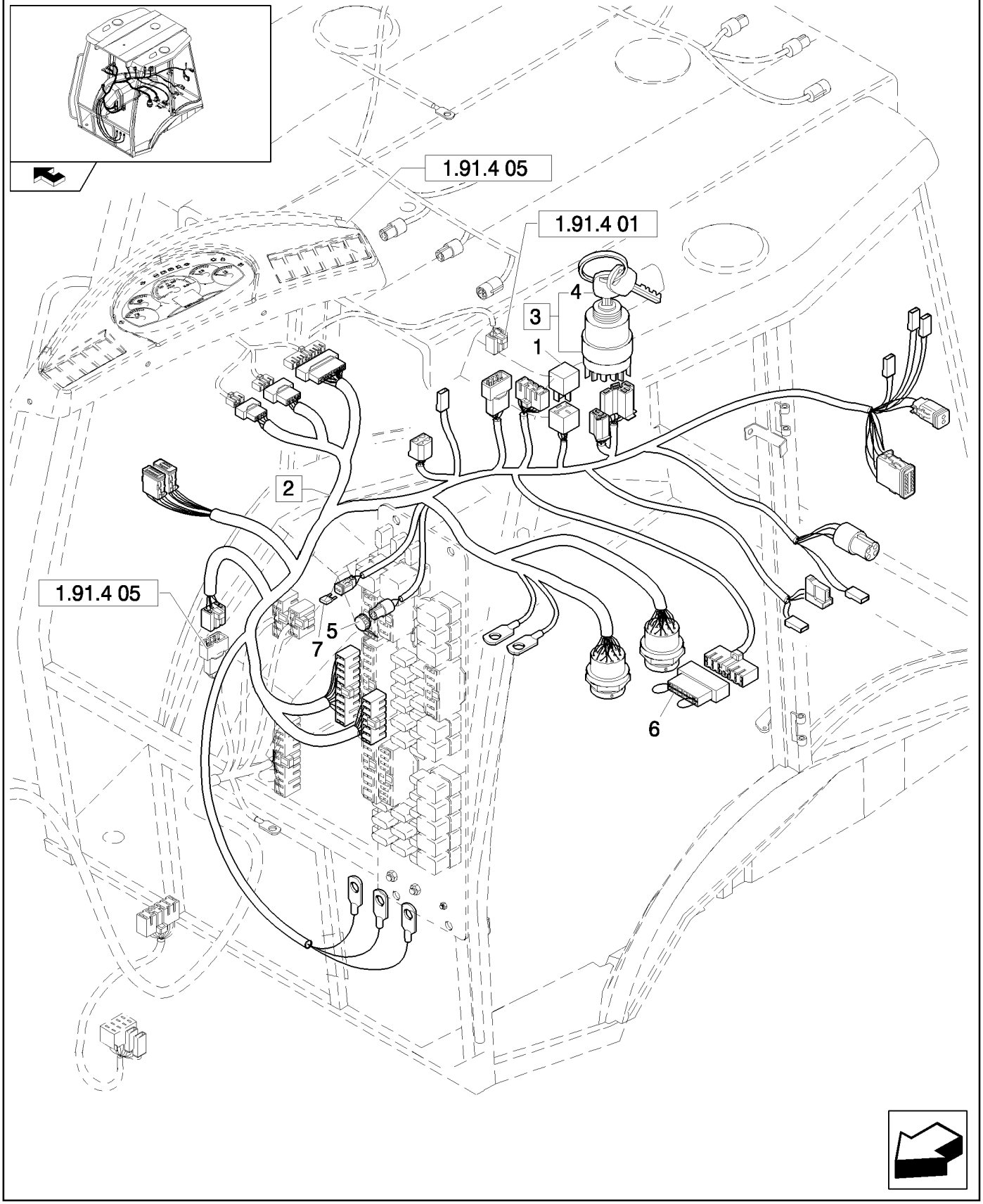

IGNITON SWITCH, POWER POINT, FUSE PANEL & SIDE CONSOLE HARNESS (CAB PT)

REF	FN	PART NUMBER	YR/SN	QTY	DESCRIPTION
1	1	87433890		1	ADAPTER
1	2	87433891		1	ADAPTER
2	3, 4	87552126		1	CABLE, ELECTRIC, Assy
2	5	87318749		1	HARNESS, WIRE, Assy
3		87431469		1	SWITCH, IGNITION, Assy, 3A
4		85804675		2	KEY, IGNITION
5		87640751		1	PLUG
6		85821410		1	BLOCK
7		11054790		1	FUSE

(1) Only for EU
(2) Only for NA
(3) Includes 5 - 7
(4) Except for B90B, B90BLR
(5) Only for B90B, B90BLR

Mechanical Version / Pilot Control Version

B95B

1.91.4	04	p1	04/08

FRONT HARNESS AND CONTROL UNIT (CAB, POWER SHUTTLE)

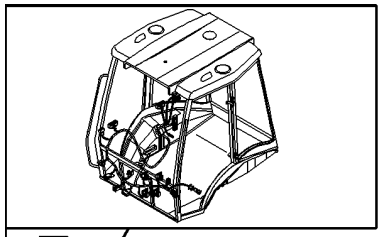

KIT KIT ■ = 6



FRONT HARNESS AND CONTROL UNIT (CAB, POWER SHUTTLE)

REF	FN	PART NUMBER	YR/SN	QTY	DESCRIPTION
1	1, 2	87601608		1	HARNESS, Assy
1	3, 2	85818820		1	HARNESS, WIRE, Assy
2		85806133		1	SWITCH, FLASHER
3	4	14560087		10	STRAP, CABLE
4	4	87371907		1	HARNESS
5	4	87371906		2	DIODE
6	4	87653101		1	KIT

(1) Except for B90B, B90BLR
(2) Includes 2
(3) Only for B90B, B90BLR
(4) Only for B95BTC

1.91.4	05	p1	03/08

FRONT DASH (CAB POWER SHUTTLE)

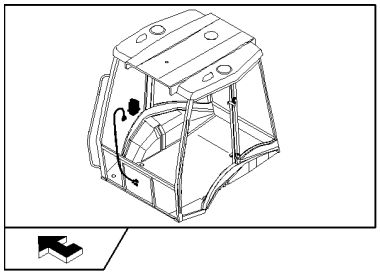

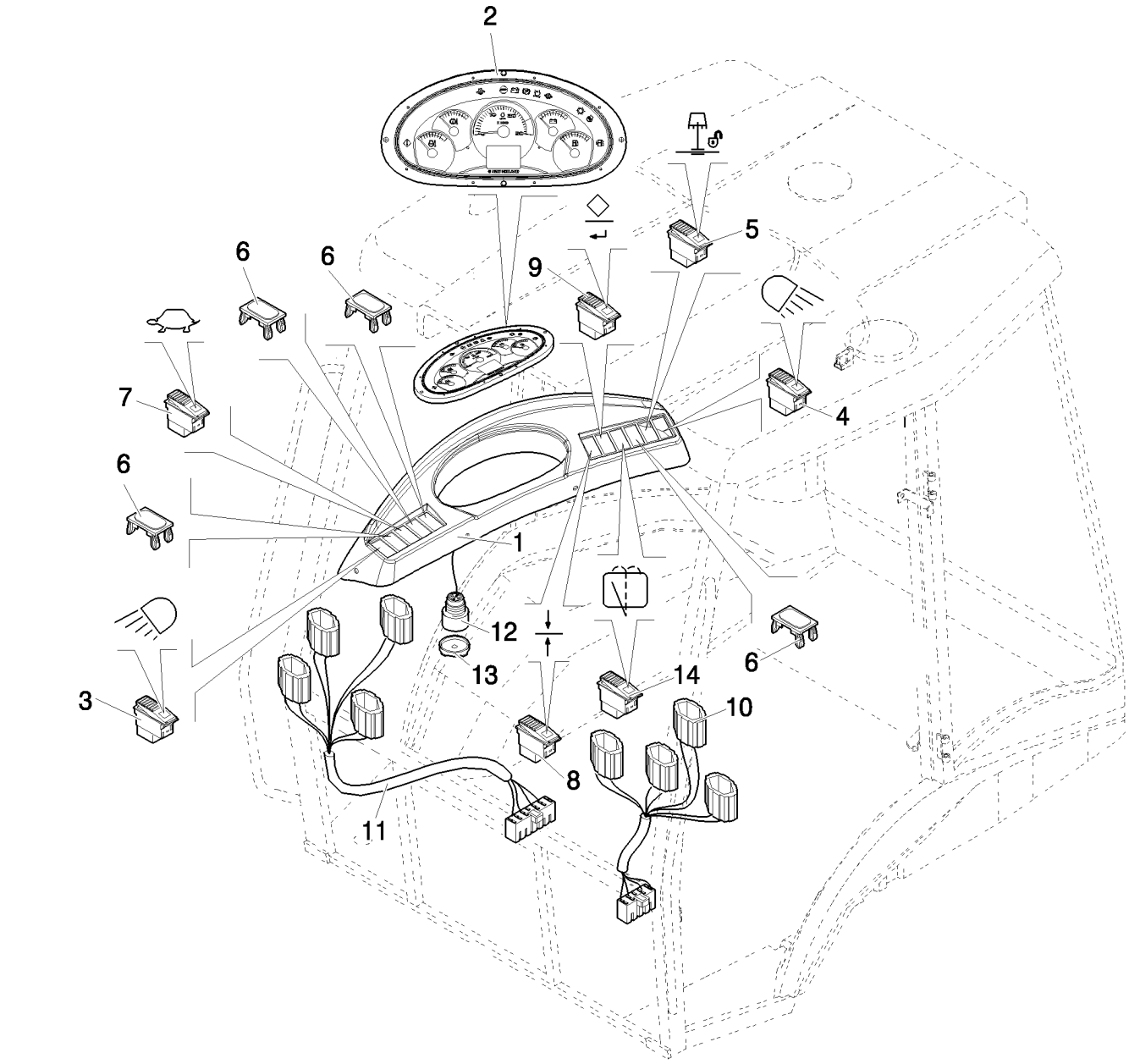

FRONT DASH (CAB POWER SHUTTLE)

REF	FN	PART NUMBER	YR/SN	QTY	DESCRIPTION
1		87540632		1	DASHBOARD
2		87521757		1	CLUSTER
3		85818818		1	SWITCH, LIGHTS
4		85818819		1	SWITCH
5	1	85818895		1	SWITCH
6		85825254		6	PLUG
7	1	85819142		1	SWITCH
8		87536826		1	SWITCH
9		87536827		1	SWITCH
10		87557803		1	DASHBOARD
11		87550456		1	DASHBOARD
12		87527167		1	HORN
13		87539792		1	COVER
14		85818823		1	SWITCH, WINDSHIELD WIPER

(1) Only for EU

CAB ELECTRIC SYSTEM COMPONENTS (CAB, POWER SHUTTLE)

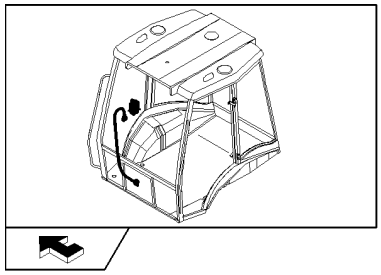

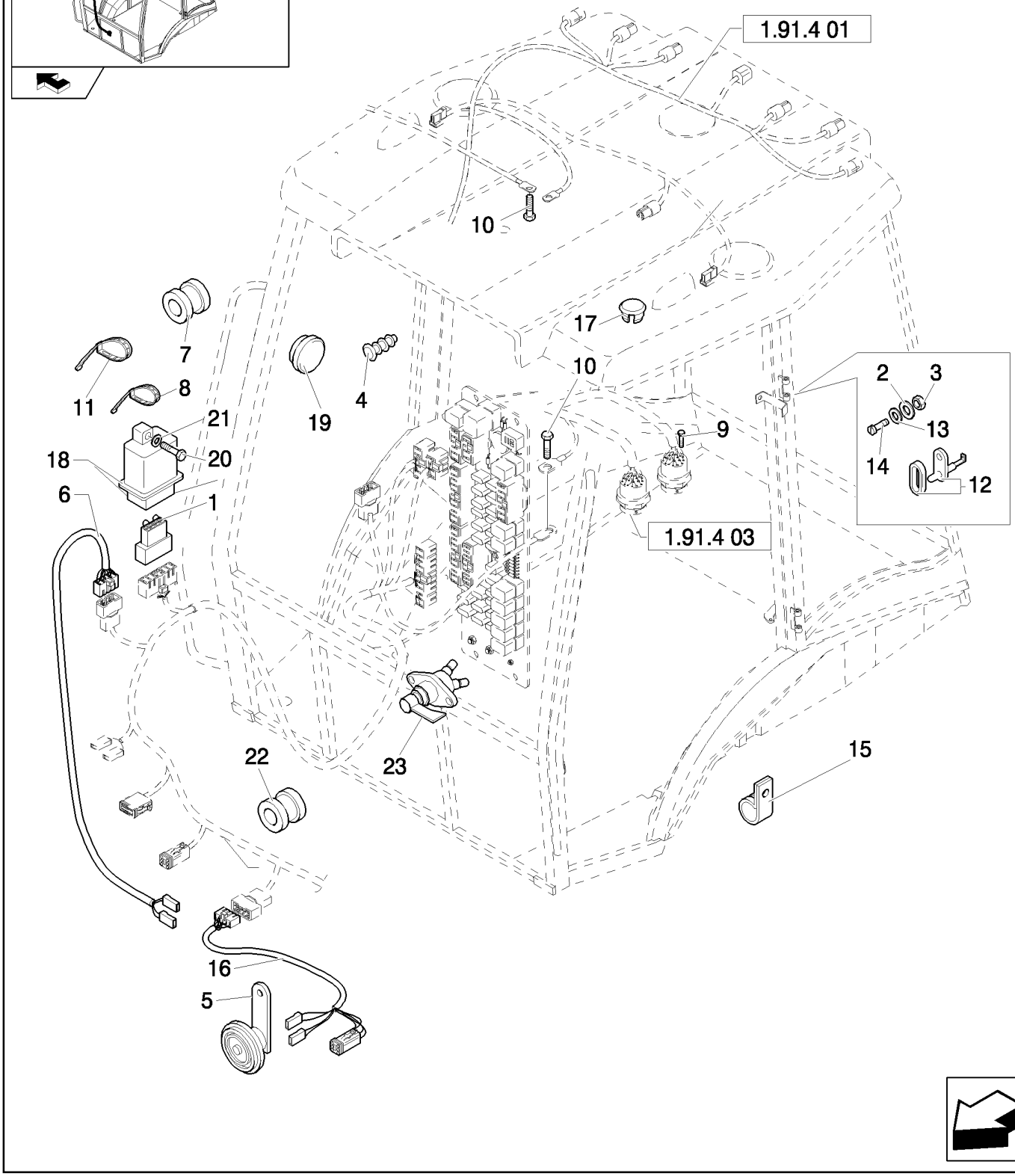

CAB ELECTRIC SYSTEM COMPONENTS (CAB, POWER SHUTTLE)

REF	FN	PART NUMBER	YR/SN	QTY	DESCRIPTION
1	1	85806136		1	CONNECTOR, ELEC
2		10615274		6	WASHER, LOCK, Ext Tooth, M4
3		12574011		6	NUT, LOCK, M4 x .7, Cl 8
4		85802310		1	PLUG
5		87689317		1	HORN
6	1	85819193		1	HARNESS, WIRE
6	2	87552128		1	CABLE, ELECTRIC
7		10398980		1	GROMMET
8		5112712		5	CLIP, HOSE, M4.8 x 283
9	3	13272214		2	SCREW, Cross Pan Hd, M4 x 16
10		16042924		2	BOLT, Hex, M8 x 10, 8.8, Full Thd
11		85805383		30	STRAP, CABLE
12		83961521		2	SWITCH
13		10519204		2	WASHER, M4 x 9 x .8
14		13309417		2	SCREW, Cross Oval Hd, M4 x 20
15		10450090		1	CLAMP
16	1	85819195		1	HARNESS, WIRE
17		79111978		1	PLUG
18	2	85806132		1	FLASHER UNIT, Circuit Board
19	2	85808460		1	PLUG
20	2	10902624		1	BOLT, Hex, M6 x 25, 8.8, Full Thd
21	2	11193274		1	WASHER, SPRING, Belleville, M6.4
22	1	10398680		2	GROMMET
23	3	87409316		1	SWITCH

(1) Only for EU
(2) Only for NA
(3) Only for B90B, B90BLR

CAB ROOF HARNESS (ROPS POWER SHUTTLE)

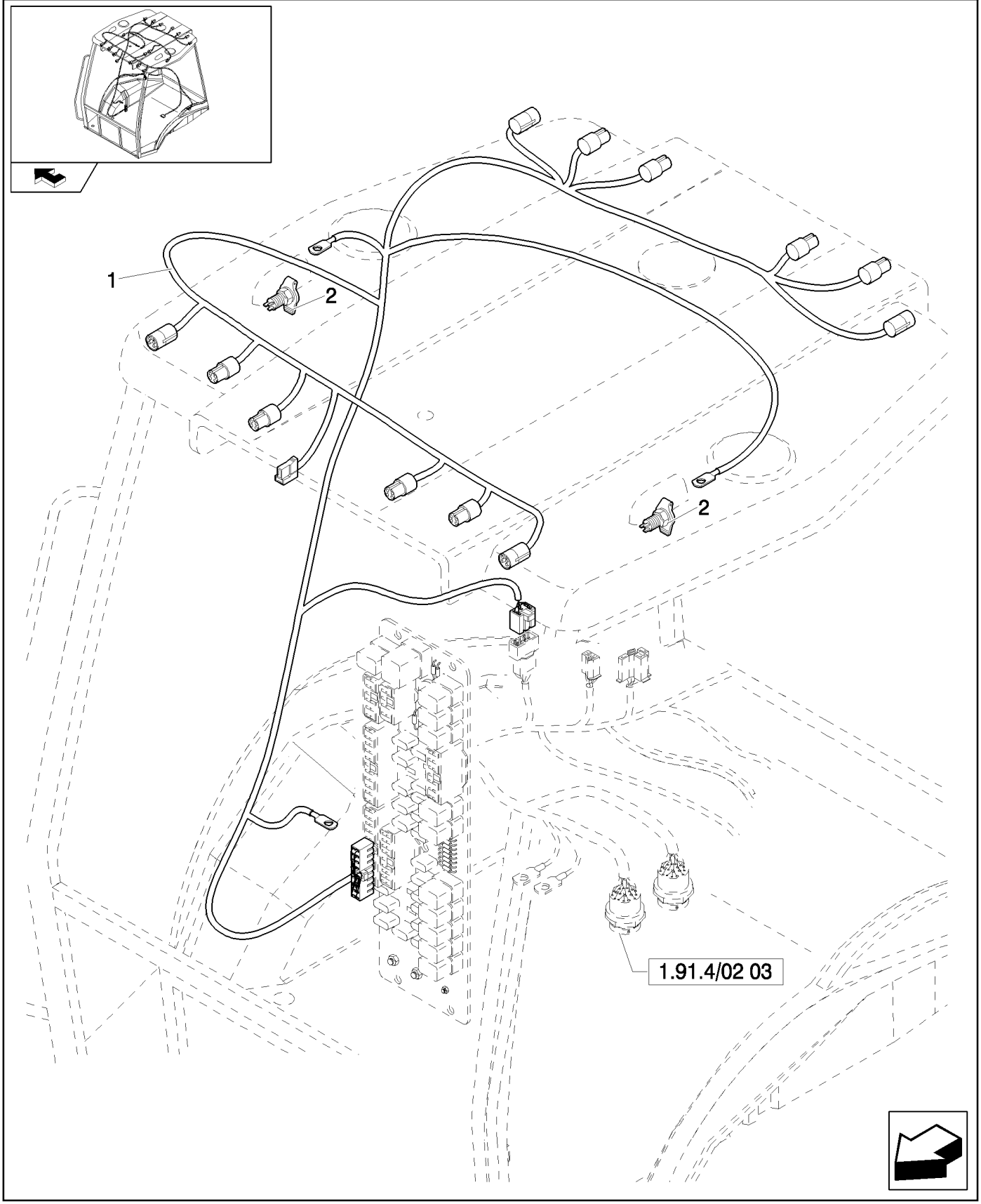

CAB ROOF HARNESS (ROPS POWER SHUTTLE)

REF	FN	PART NUMBER	YR/SN	QTY	DESCRIPTION
1	1	85819724		1	HARNESS, WIRE
1	2	85819725		1	HARNESS, WIRE
2		87546419		2	SOCKET, Mating Part is 86508819 Plug

(1) Only for NA
(2) Only for EU

1.91.4/02	02	p1	04/08

FUSE BOX CONTROL UNIT (ROPS POWER SHUTTLE)

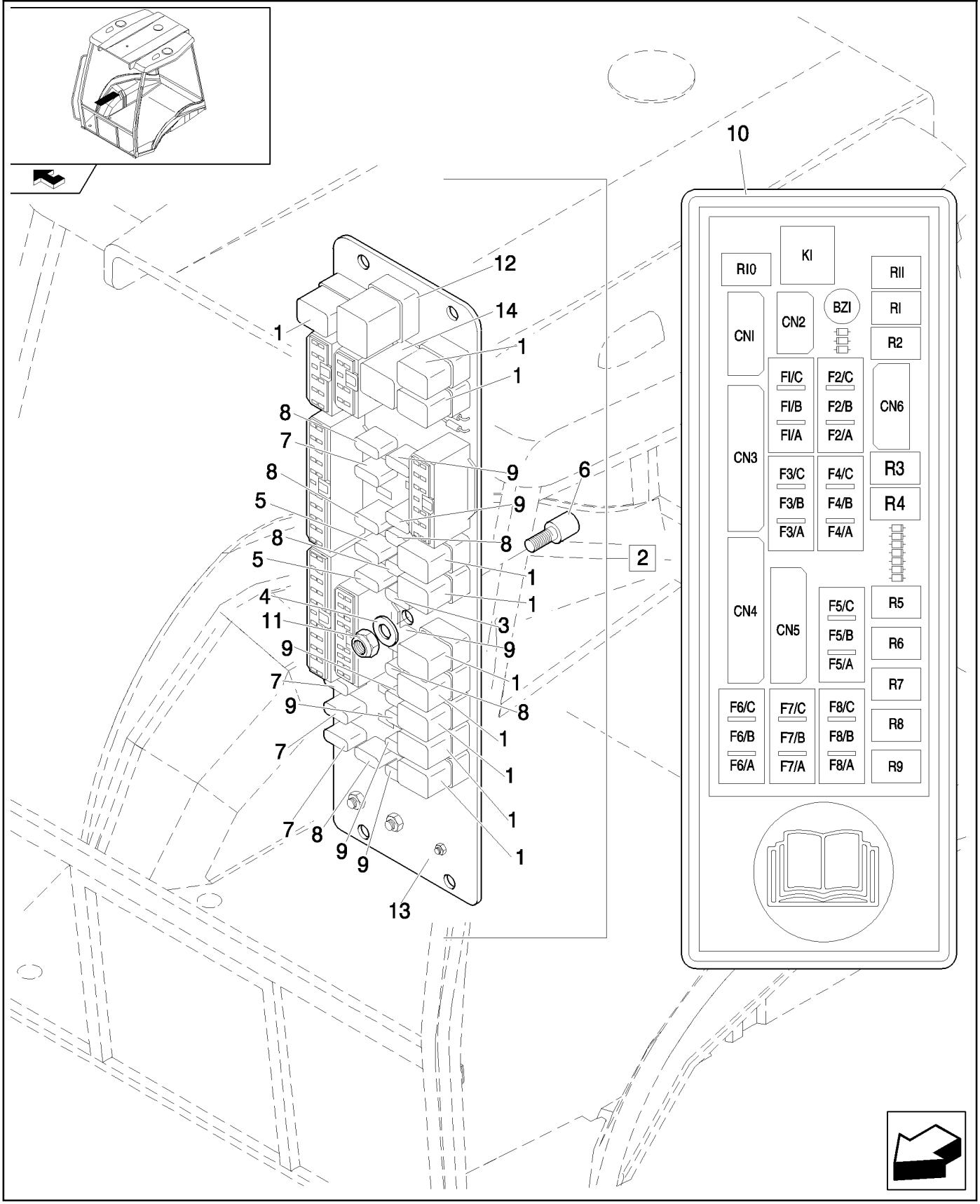

FUSE BOX CONTROL UNIT (ROPS POWER SHUTTLE)

REF	FN	PART NUMBER	YR/SN	QTY	DESCRIPTION
1		85825198		11	RELAY
2	1	87554901		1	ELECTRONIC UNIT, CONTROL, Assy
2	2	87609138		1	ELECTRONIC UNIT, CONTROL, Assy
3		11054790		1	FUSE, 5A
4		10519204		1	WASHER, M4 x 9 x .8
5		11054590		2	FUSE, 3A
6		85806135		1	ISOLATOR
7		11054890		3	FUSE, 7,5A
8		11054990		6	FUSE, 10 Amp
9		11055090		8	FUSE, 15A
10		85802250		1	DECAL
11		12574011		1	NUT, LOCK, M4 x .7, Cl 8
12		85803986		1	RELAY, Flasher
13	1	87552125		1	BODY
13	2	87609146		1	BOARD, PRINTED CIRCUIT
14	2	87600615		1	BUZZER

(1) Except for B90B, B90BLR
(2) Only for B90B, B90BLR

1.91.4/02	03	p1	05/08

IGNITON SWITCH, POWER POINT, FUSE PANEL & SIDE CONSOLE HARNESS (ROPS PT)

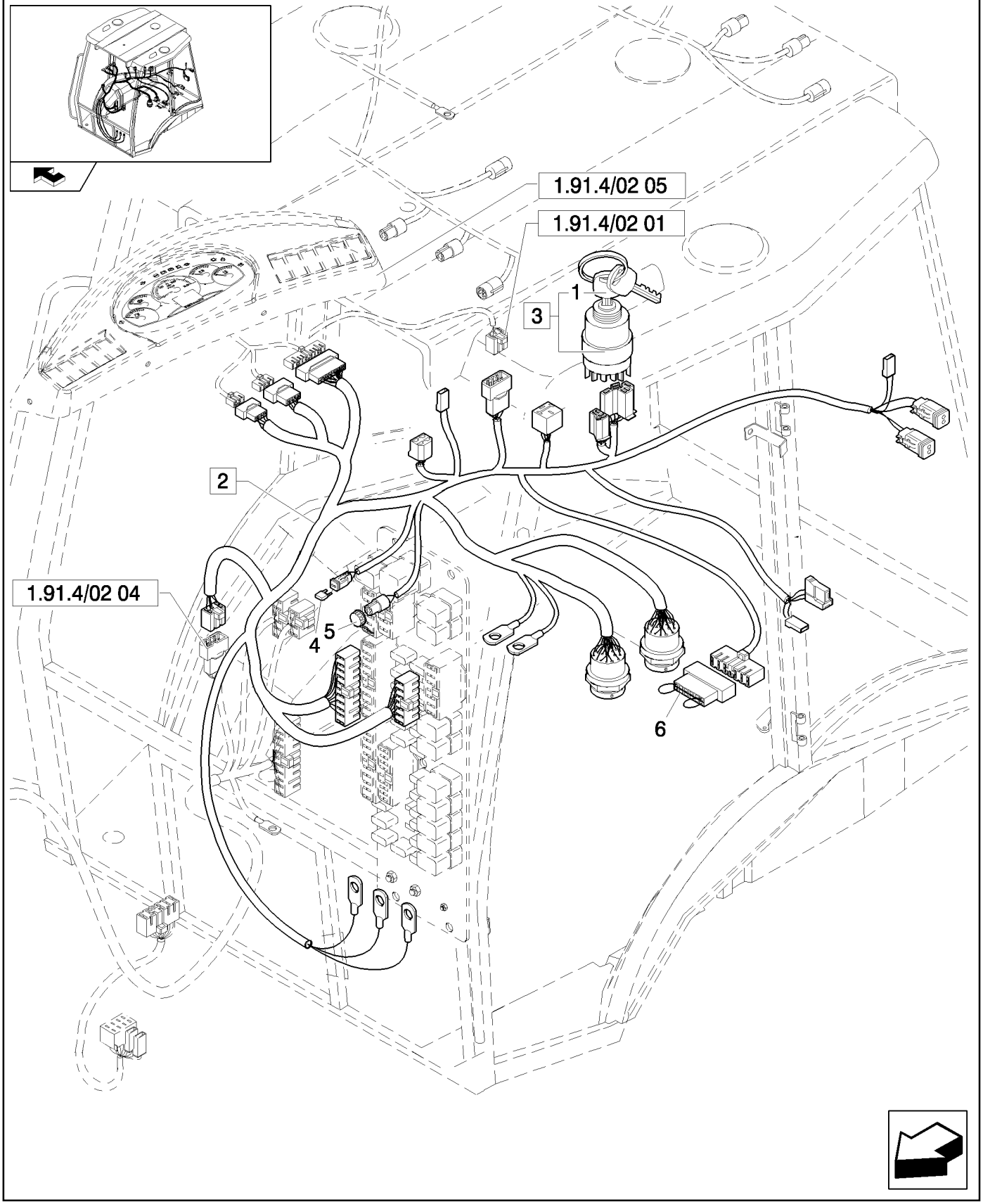

IGNITON SWITCH, POWER POINT, FUSE PANEL & SIDE CONSOLE HARNESS (ROPS PT)

REF	FN	PART NUMBER	YR/SN	QTY	DESCRIPTION
1		85804675		1	KEY, IGNITION
2	1	87554286		1	CABLE, ELECTRIC
2	2	87431461		1	HARNESS, WIRE
2	3	87318746		1	HARNESS, WIRE
3		87431469		1	SWITCH, IGNITION, Assy
4	1	11054790		1	FUSE
5	1	87640751		1	PLUG
6		85821410		1	BLOCK

(1) Except for B90B, B90BLR
(2) Only for B90B (NA)
(3) Only for B90B, B90BLR (EU)

FRONT HARNESS AND CONTROL UNIT (ROPS POWER SHUTTLE)

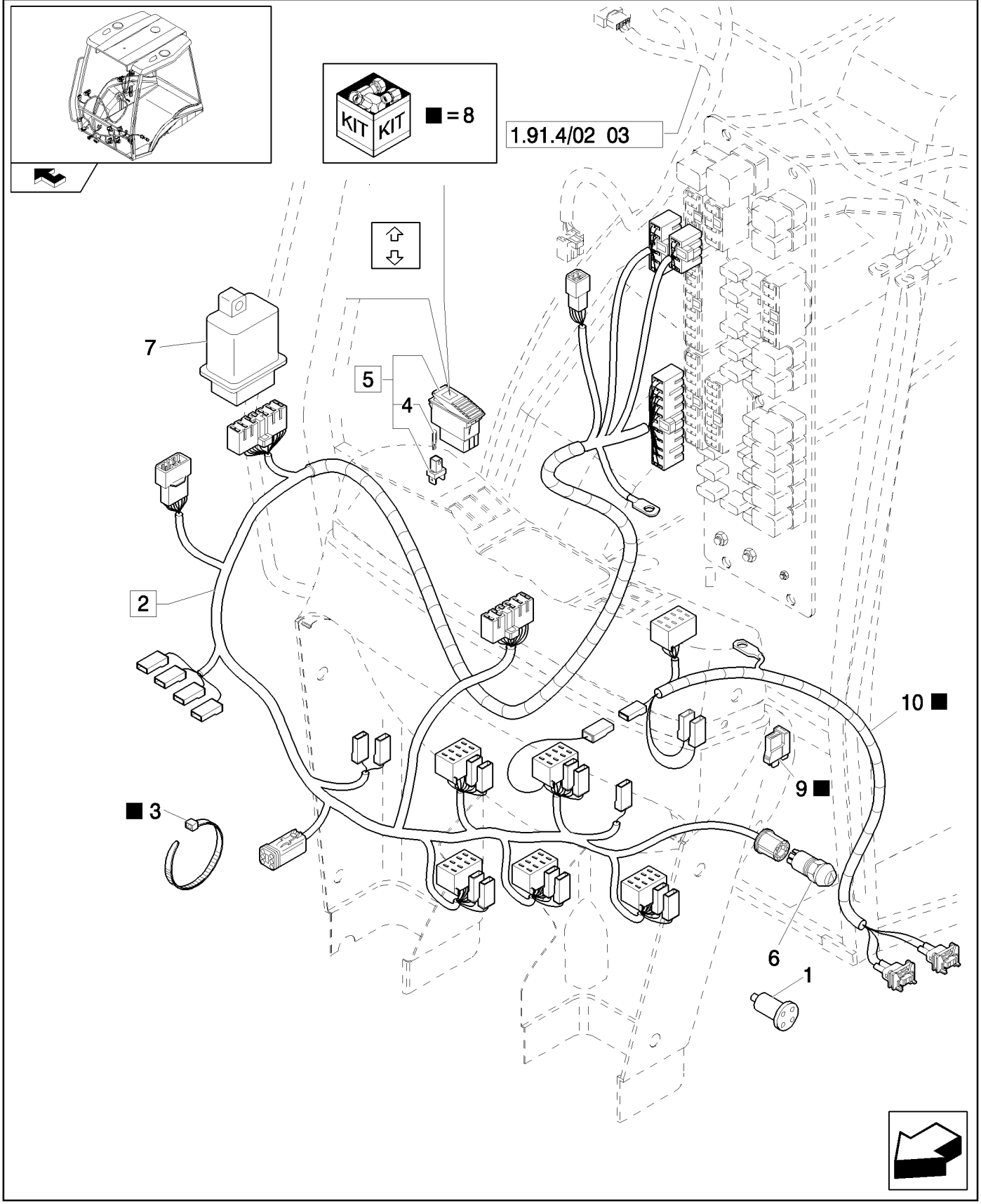

FRONT HARNESS AND CONTROL UNIT (ROPS POWER SHUTTLE)

REF	FN	PART NUMBER	YR/SN	QTY	DESCRIPTION
1	1	87433891		1	ADAPTER
1	2	87433890		1	ADAPTER
2	3, 4	87601605		1	HARNESS, Assy
2	3, 5	85819586		1	HARNESS, WIRE, Assy
2	2, 6	85819588		1	HARNESS, WIRE, Assy
3	7	14560087		10	STRAP, CABLE
4	1	14143790		1	BULB
5	1	85819144		1	SWITCH, Assy
6		85806133		1	SWITCH, FLASHER
7	1	85806132		1	FLASHER UNIT
8	7	87653101		1	KIT
9	7	87371906		2	DIODE
10	7	87371907		1	HARNESS

(1) Only for NA
(2) Only for B90B, B90BLR (EU)
(3) Includes 5 - 7
(4) Except for B90B, B90BLR
(5) Only for B90B (NA)
(6) Includes 6
(7) Only for B95BTC

Mechanical Version / Pilot Control Version B95B

1.91.4/02	05	p1	03/08

RH CONSOLE WITH INSTRUMENTS (ROPS POWER SHUTTLE) - NA

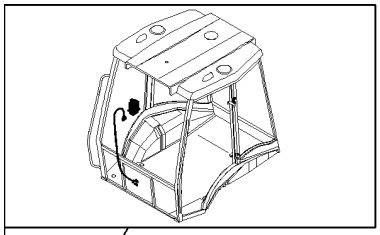

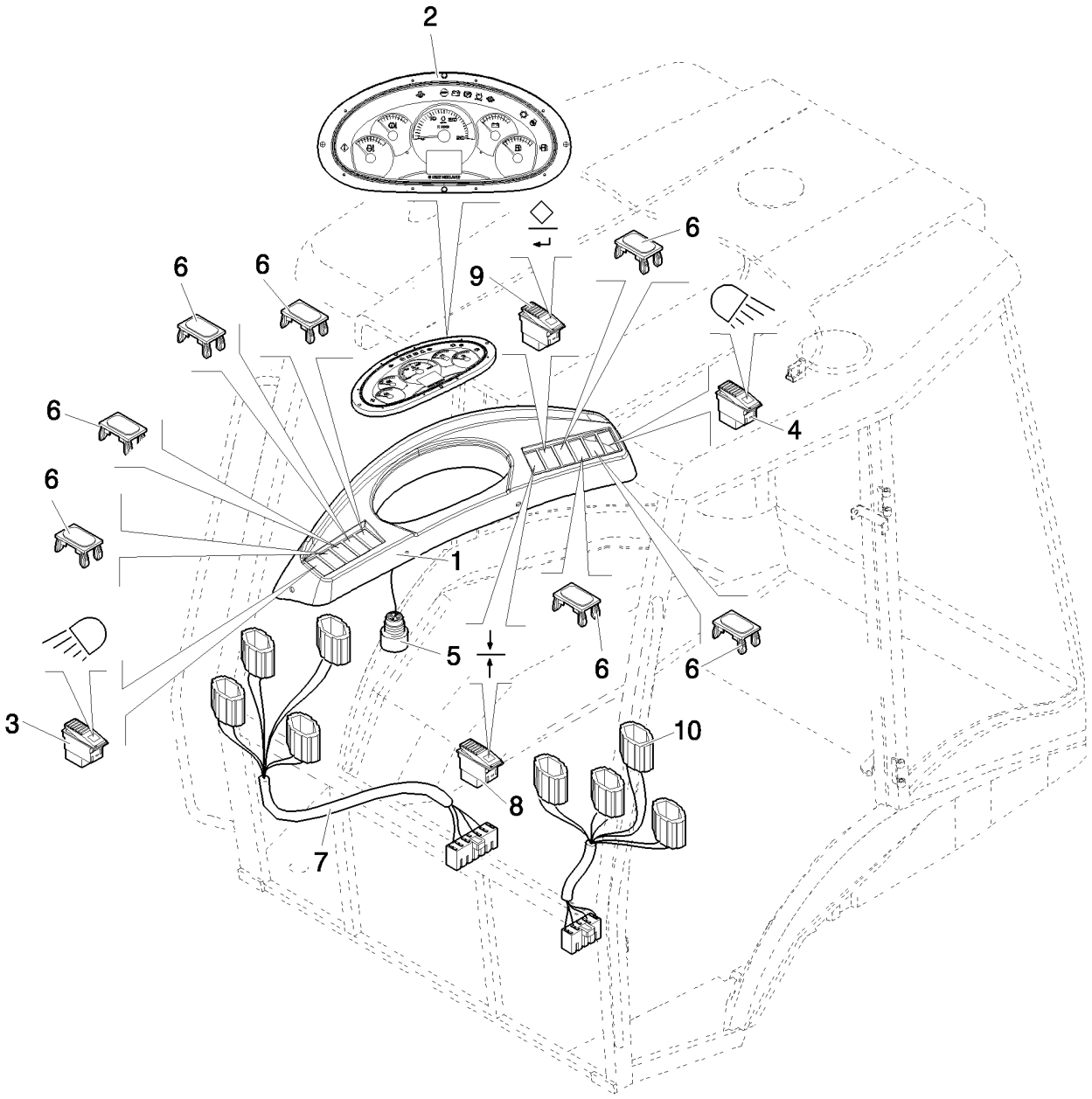

RH CONSOLE WITH INSTRUMENTS (ROPS POWER SHUTTLE) - NA

REF	FN	PART NUMBER	YR/SN	QTY	DESCRIPTION
1		87540632		1	DASHBOARD
2		87521757		1	CLUSTER
3		85818818		1	SWITCH, LIGHTS
4		85818819		1	SWITCH
5		87527167		1	HORN
6		85825254		7	PLUG
7		87558491		1	CABLE, ELECTRIC
8		87536826		1	SWITCH
9		87536827		1	SWITCH
10		87557803		1	DASHBOARD

CAB ELECTRIC SYSTEM COMPONENTS (ROPS POWER SHUTTLE)

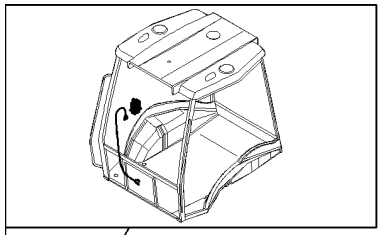

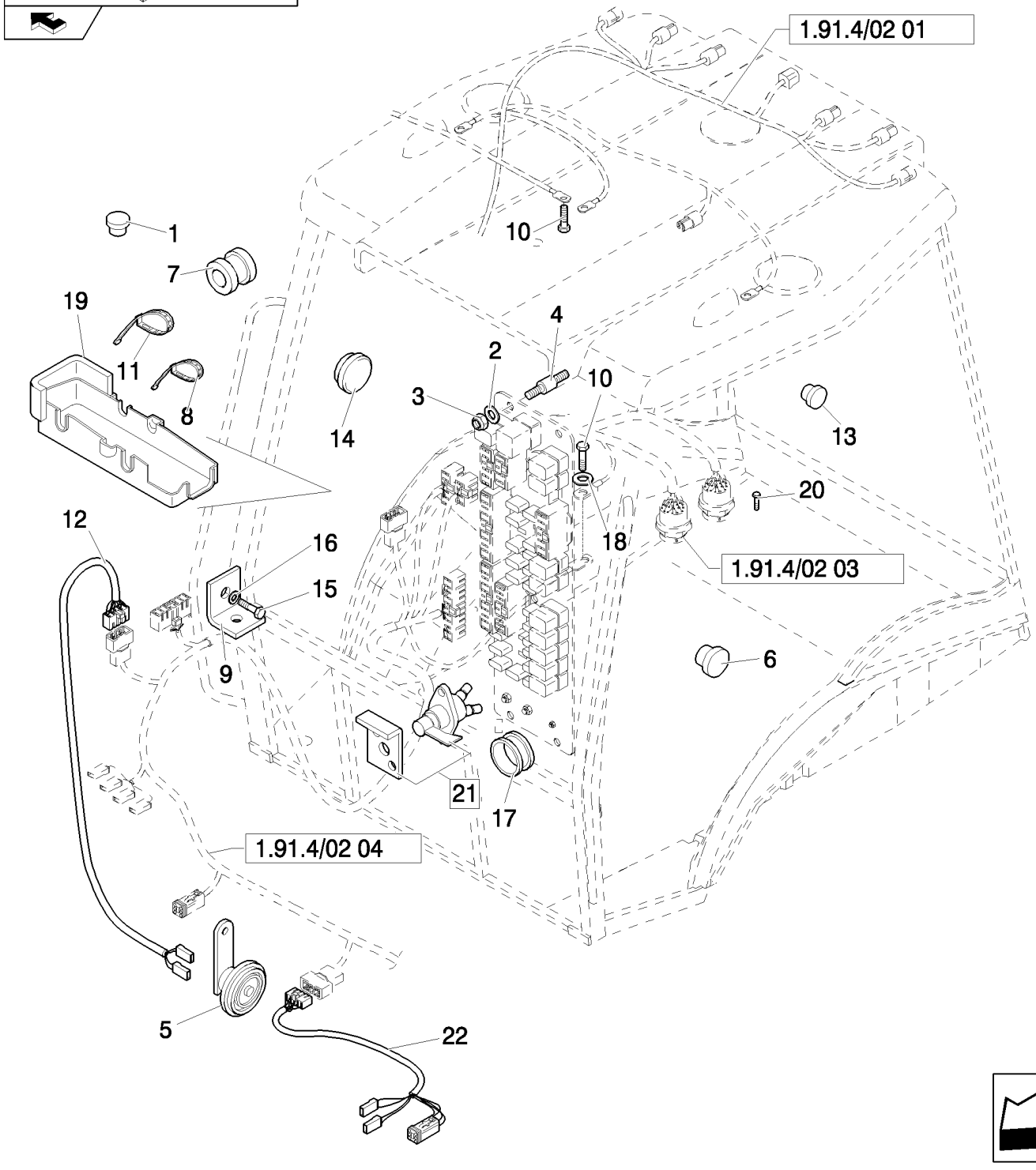

CAB ELECTRIC SYSTEM COMPONENTS (ROPS POWER SHUTTLE)

REF	FN	PART NUMBER	YR/SN	QTY	DESCRIPTION
1		85825254		1	PLUG
2		10615274		4	WASHER, LOCK, Ext Tooth, M4
3		12574011		4	NUT, LOCK, M4 x .7, Cl 8
4		85825129		4	ISOLATOR
5		87689317		1	HORN
6	1	79111978		1	PLUG
7		10398980		2	GROMMET
8		5112712		5	CLIP, HOSE, M4.8 x 283
9	1	85821326		1	SUPPORT
10		16043121		2	BOLT, Hex, M8 x 14, 8.8, Full Thd
11		85805383		26	STRAP, CABLE
12	1	87552128		1	CABLE, ELECTRIC
12	2	85819193		1	HARNESS, WIRE
13	1	85802310		1	PLUG
14	1	85808460		1	PLUG
15	1	10902624		1	BOLT, Hex, M6 x 25, 8.8, Full Thd
16	1	11193274		1	WASHER, SPRING, Belleville, M6.4
17		10398680		7	GROMMET
18		11193879		2	WASHER, SPRING, Belleville, M8.4
19		85825136		1	COVER
20	3	13272214		2	SCREW, Cross Pan Hd, M4 x 16
21	2	87409315		1	KIT, Assy
22	2	85819195		1	HARNESS, WIRE

(1) Only for NA
(2) Only for EU
(3) Only for B90B, B90BLR

FRONT AND REAR WINDSCREEN WIPERS

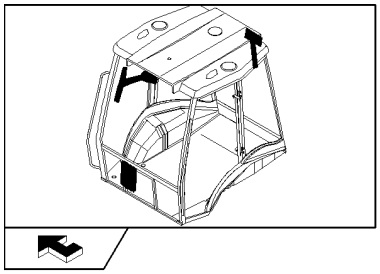

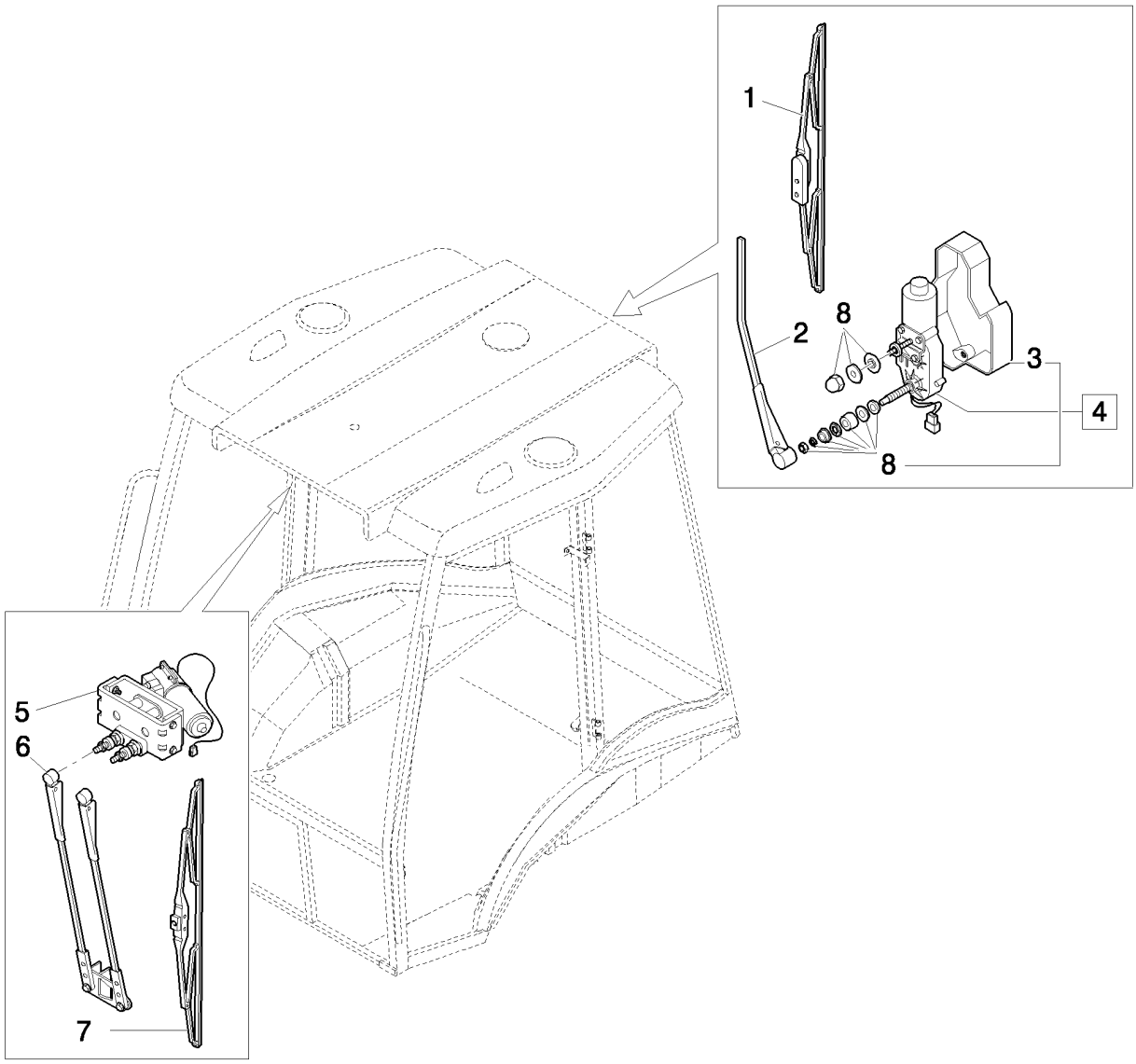

FRONT AND REAR WINDSCREEN WIPERS

REF	FN	PART NUMBER	YR/SN	QTY	DESCRIPTION
1		85819827		1	WIPER BLADE, Rear
2		85806098		1	WIPER ARM, Rear
3		85806095		1	COVER, Rear
4		87628768		1	WIPER MOTOR, Assy, Rear
5		85806184		1	WIPER MOTOR, Front
6		85806185		1	WIPER ARM, Front
7		85819826		1	WIPER BLADE, Front
8		87628806		1	KIT

1.91.5	02	p1	05/08

WINDSCREEN WIPERS RESERVOIR & NOZZLES

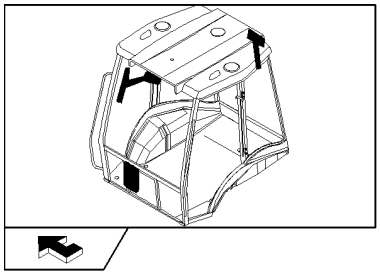

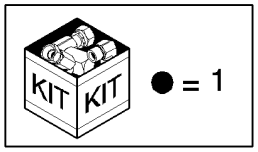

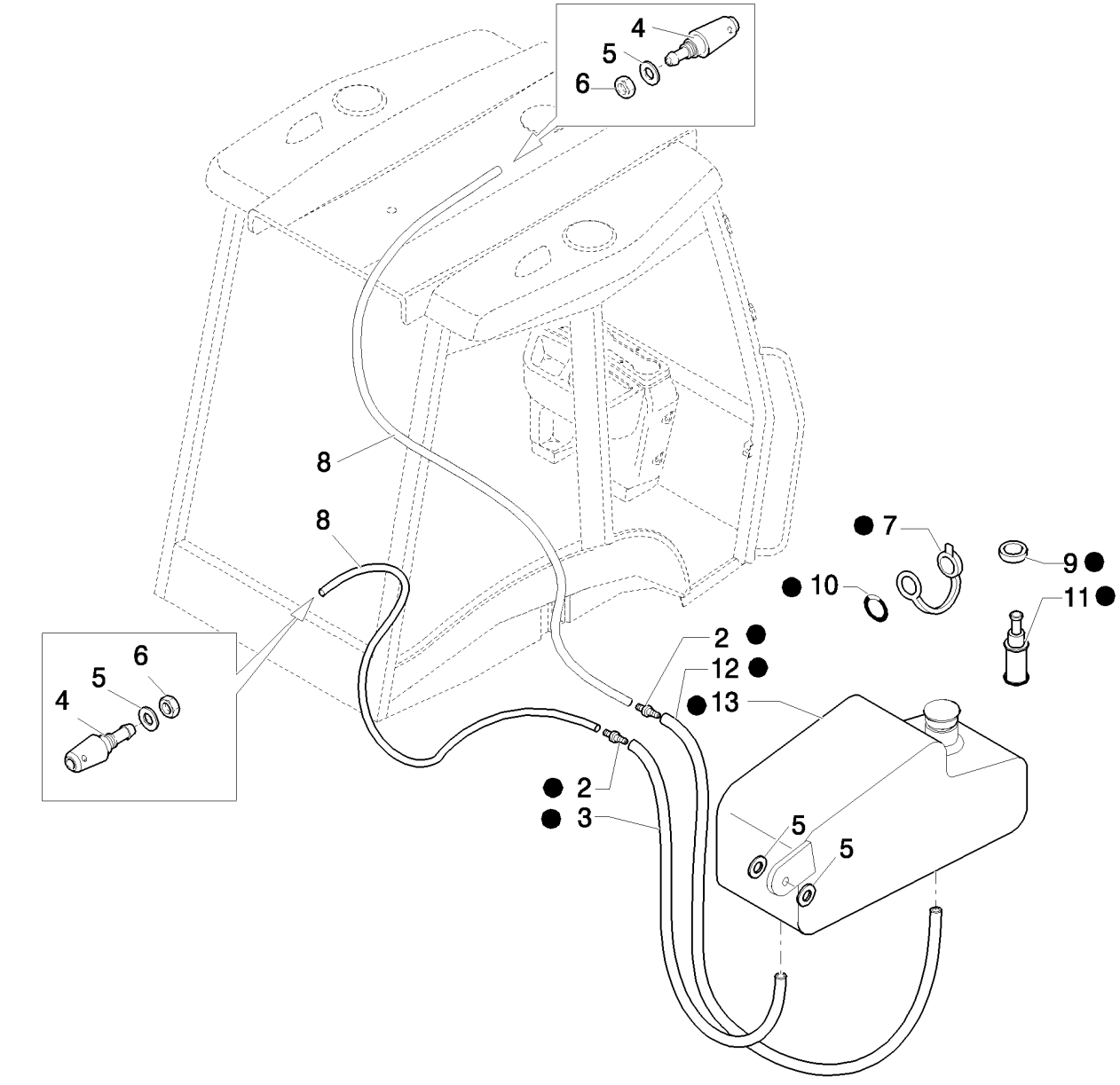

WINDSCREEN WIPERS RESERVOIR & NOZZLES

REF	FN	PART NUMBER	YR/SN	QTY	DESCRIPTION
1		85821153		1	PAN, Assy
2		85821337		2	VALVE, CHECK
3		85821335		1	HOSE, FLEXIBLE
4		85802398		2	NOZZLE
5		12646704		2	WASHER, M8 x 20 x 2
6		16102411		2	NUT, Thin, M8 x 1, Cl 04
7		5175736		1	CAP
8		85821338		2	HOSE, FLEXIBLE
9		85821336		2	SEALRING
10		85820237		1	O-RING
11		85821333		2	PUMP
12		85824450		1	HOSE, FLEXIBLE
13		85821334		1	RESERVOIR, WINDSH. WASH

RADIO ANTENNA & SPEAKER COVER

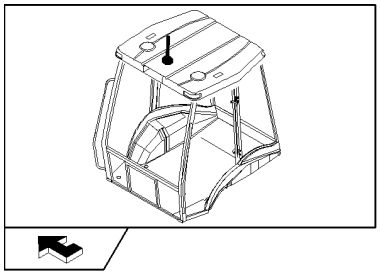

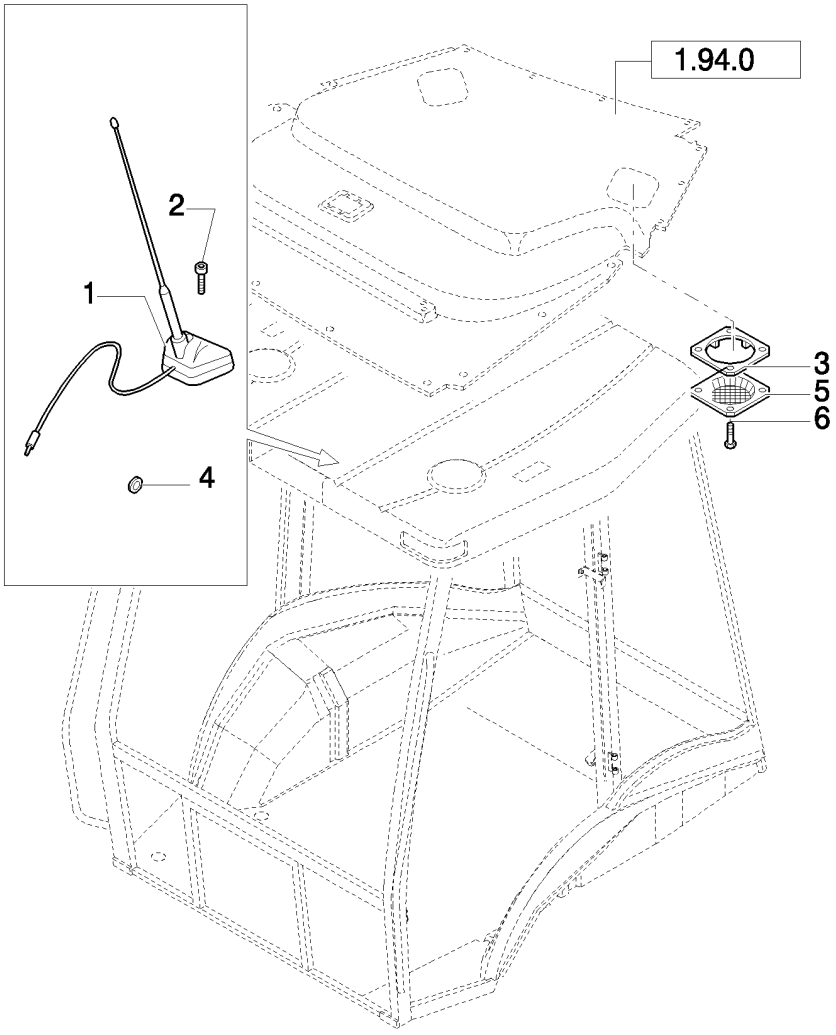

RADIO ANTENNA & SPEAKER COVER

REF	FN	PART NUMBER	YR/SN	QTY	DESCRIPTION
1		85819569		1	ANTENNA
2		13311817		1	SCREW, Cross Oval Hd, M5 x 40
3		85802107		2	PLATE, MOUNTING
4		10399580		1	GROMMET
5		85804362		2	GRILLE
6		13297817		8	SCREW

LAMPS & LIGHTS - ROPS - NA

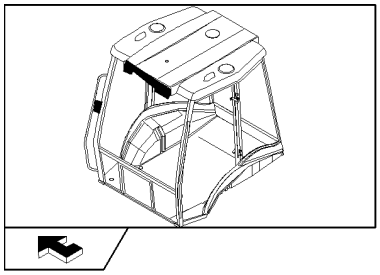

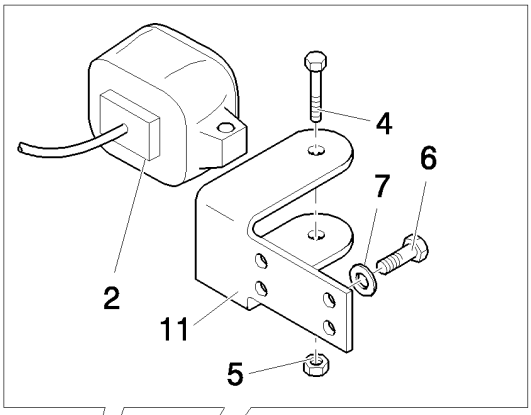

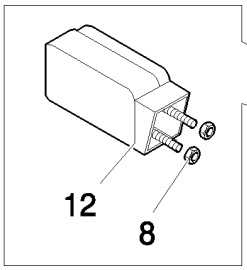

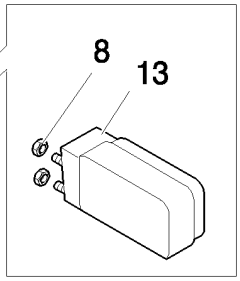

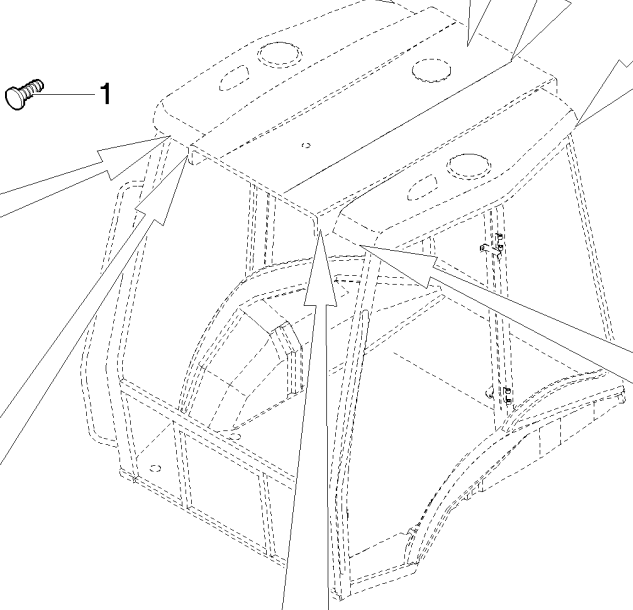

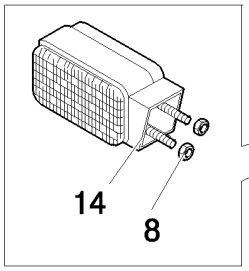

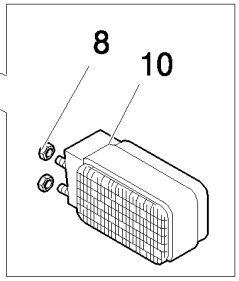

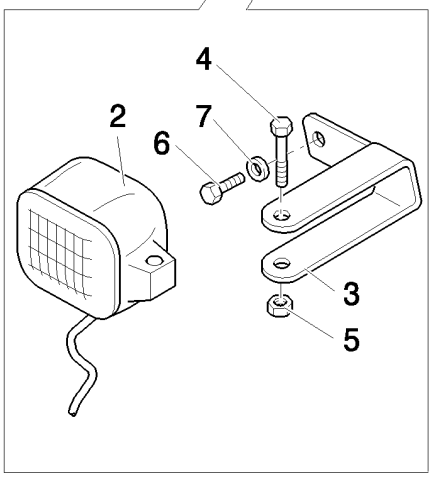

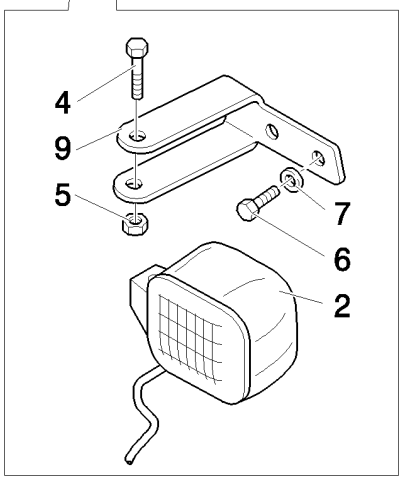

LAMPS & LIGHTS - ROPS - NA

REF	FN	PART NUMBER	YR/SN	QTY	DESCRIPTION
1		14591687		1	BUTTON
2		85819200		4	HEADLAMP, Includes H3 12V 55W Bulb, Order 9703399 For Bulb
3		85819190		1	BRACKET, RH
4		16044324		4	BOLT, Hex, M8 x 55, 8.8
5		16104111		4	NUT, LOCK, M8 x 1.25, Cl 8
6		10902124		8	BOLT, Hex, M6 x 14, 8.8, Full Thd
7		11197774		8	WASHER, SPRING, Belleville, M6.4
8		14084111		8	NUT, M5 x .8, Flg
9		85819191		1	BRACKET, LH
10		85819197		1	LAMP, FRONT, LH; Solid Amber Lens
11		85819194		2	BRACKET
12		85819198		1	LAMP, TAIL, RH; Red/Amber Lens
13		85819199		1	LAMP, TAIL, LH; Red/Amber Lens
14		85819196		1	LAMP, FRONT, RH; Solid Amber Lens

LAMPS & LIGHTS - CAB - NA

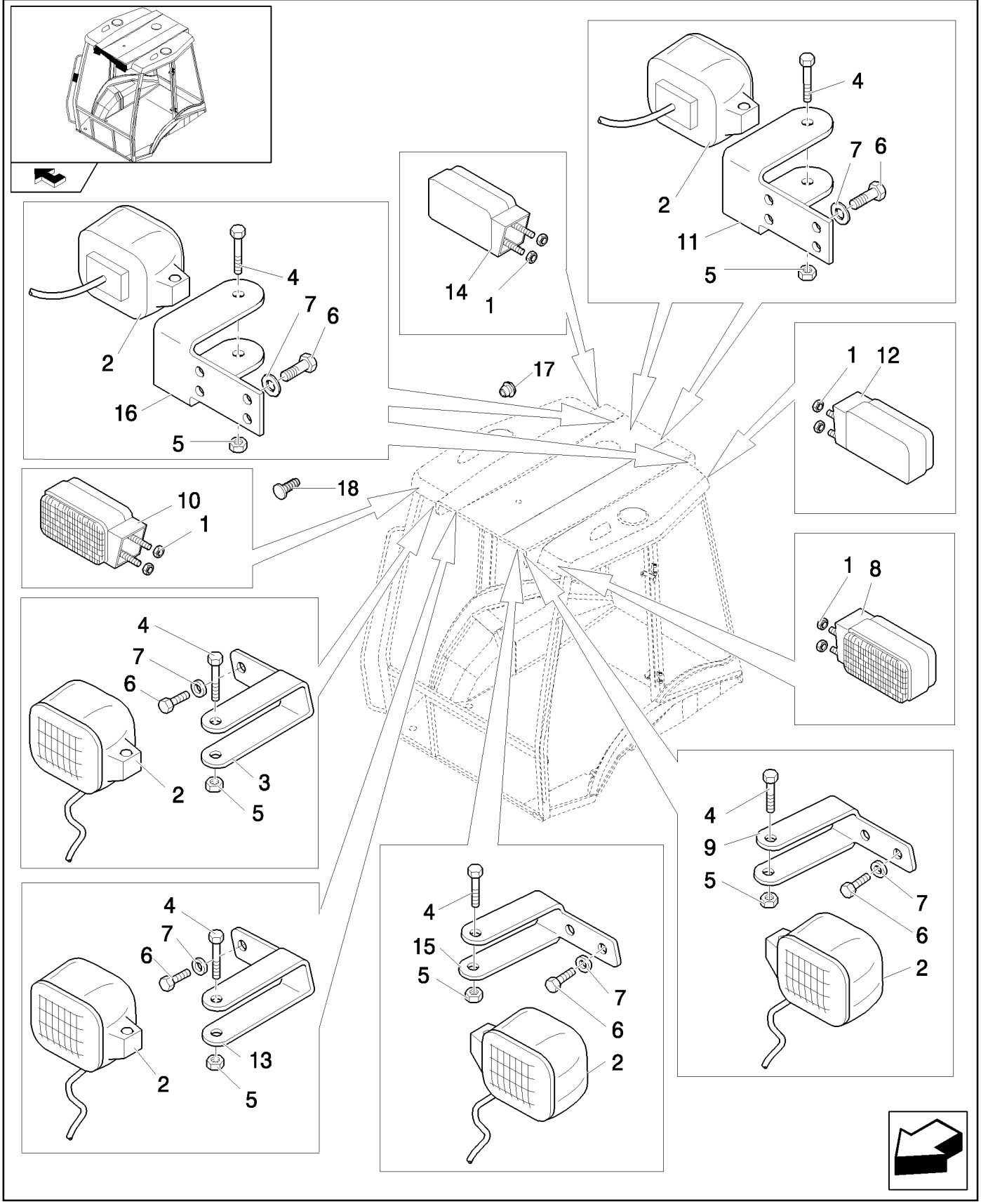

LAMPS & LIGHTS - CAB - NA

REF	FN	PART NUMBER	YR/SN	QTY	DESCRIPTION
1		14084111		8	NUT, M5 x .8, Flg
2		85819200		8	HEADLAMP
3		85819190		1	BRACKET
4		16044324		8	BOLT, Hex, M8 x 55, 8.8
5		16104111		8	NUT, LOCK, M8 x 1.25, Cl 8
6		10902124		24	BOLT, Hex, M6 x 14, 8.8, Full Thd
7		11197774		24	WASHER, SPRING, Belleville, M6.4
8		85819197		1	LAMP, FRONT
9		85819191		1	BRACKET
10		85819196		1	LAMP, FRONT
11		85819194		2	BRACKET
12		85819199		1	LAMP, TAIL
13	1	85819188		1	BRACKET
14		85819198		1	LAMP, TAIL
15	1	85819189		1	BRACKET
16	1	85819192		2	BRACKET
17	2	83994150		1	PLUG
18	2	5118658		1	PLUG

(1) Only for Power Shift
(2) Only for Power Shuttle

CAB: FRAME-DOOR

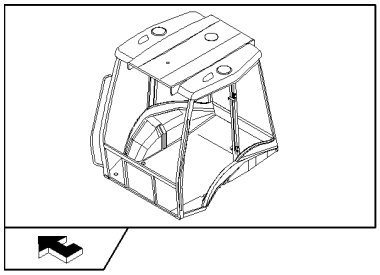

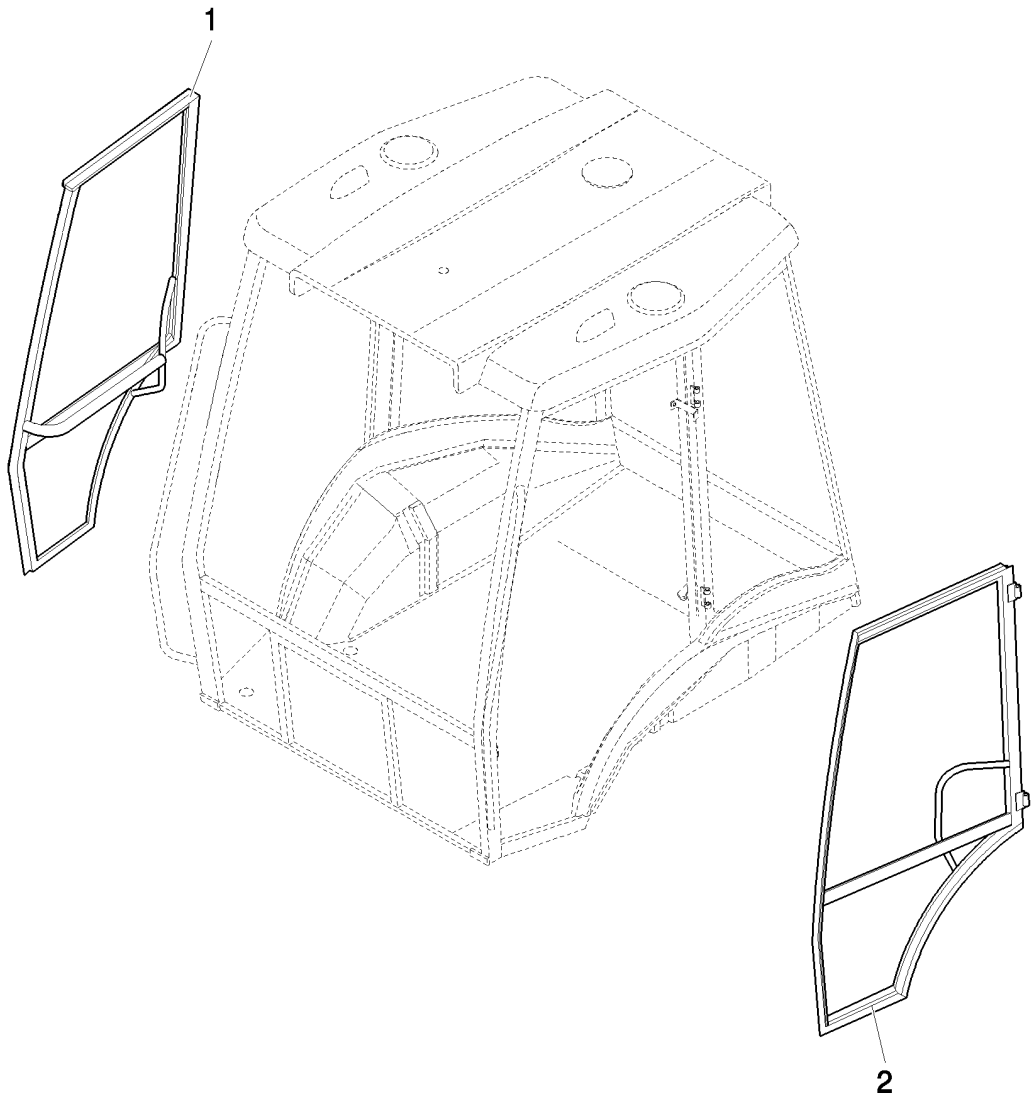

CAB: FRAME-DOOR

REF	FN	PART NUMBER	YR/SN	QTY	DESCRIPTION
1		87354650		1	FRAME, RH
2		87354652		1	FRAME, LH

FRONT GLASSES AND SEALS

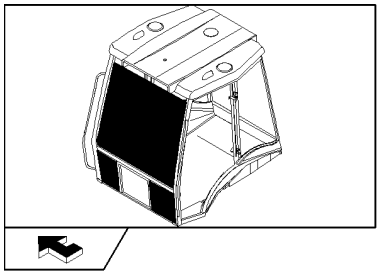

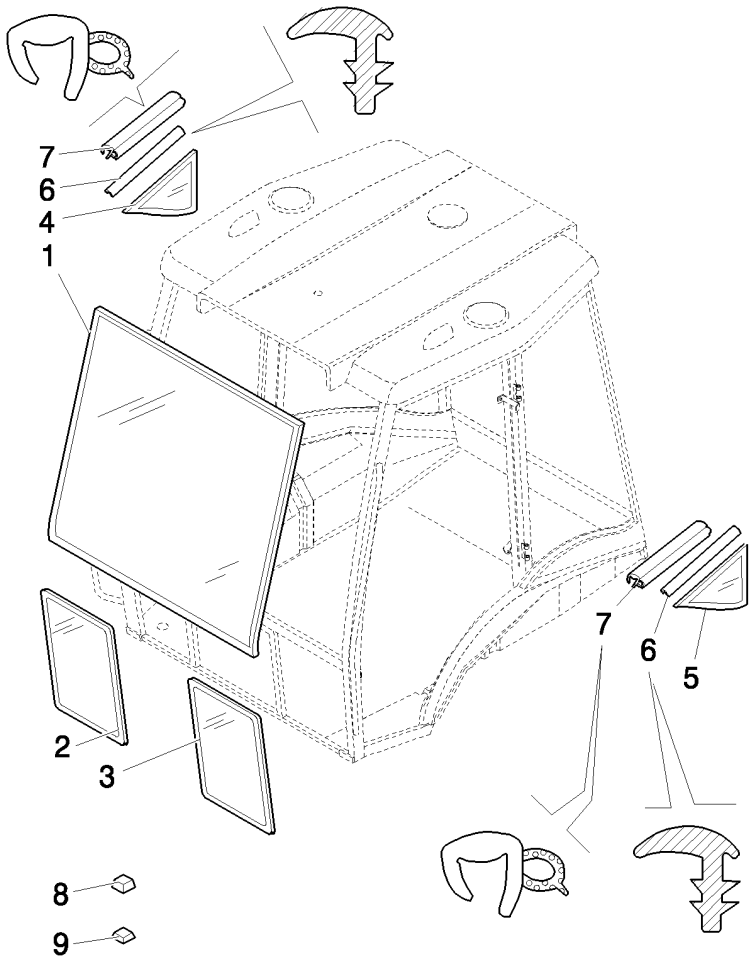

FRONT GLASSES AND SEALS

REF	FN	PART NUMBER	YR/SN	QTY	DESCRIPTION
1		85801621		1	GLASS
2		85801622		1	GLASS, CAB, RH
3		85801623		1	GLASS, CAB, LH
4		85801630		1	GLASS, CAB, RH
5		85801631		1	GLASS, CAB, LH
6		85802334		M	GASKET
7		85805065		2	GASKET
8		85802223		8	SPACER
9		85802224		10	SPACER

1.92.4	01	p1	05/08

DOOR LATERAL GLASS FASTENERS

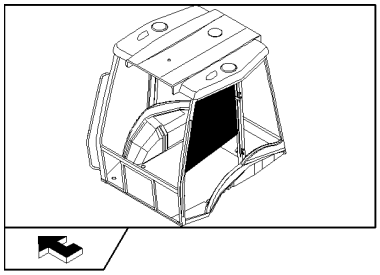

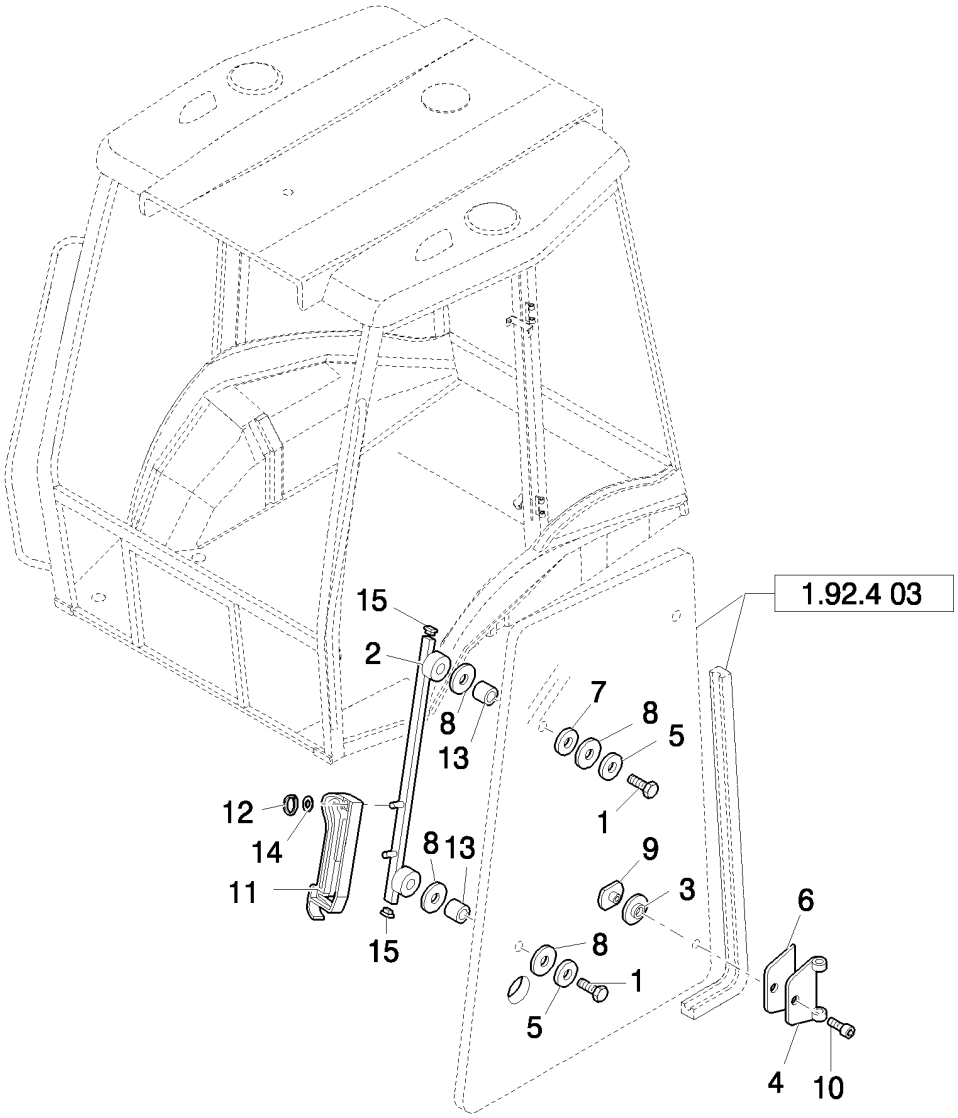

DOOR LATERAL GLASS FASTENERS

REF	FN	PART NUMBER	YR/SN	QTY	DESCRIPTION
1		82859922		4	BOLT
2		87396515		1	SUPPORT, RH
2		87396492		1	SUPPORT, LH
3		83961985		4	SPACER
4		85804869		4	HINGE
5		83963153		4	SPACER
6		81872036		4	SEAL, RUBBER
7		12638504		4	WASHER, M8 x 15 x 1.5
8		83995356		12	BUSHING
9		85805448		4	NUT, RING
10		81871864		4	SCREW, Socket Drive, M8x1.25x16
11		87353724		4	HANDLE
12		11087776		4	CIRCLIP, M6
13		83961987		4	SPACER
14		10519404		2	WASHER, M6 x 11.95 x 1.6
15		81871439		8	CAP

1.92.4	02	p1	04/08

CAB SIDE GLASS FASTENERS

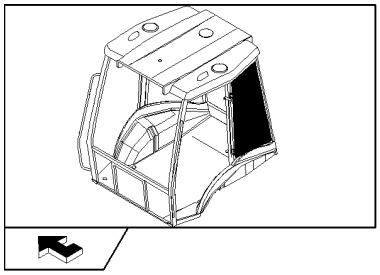

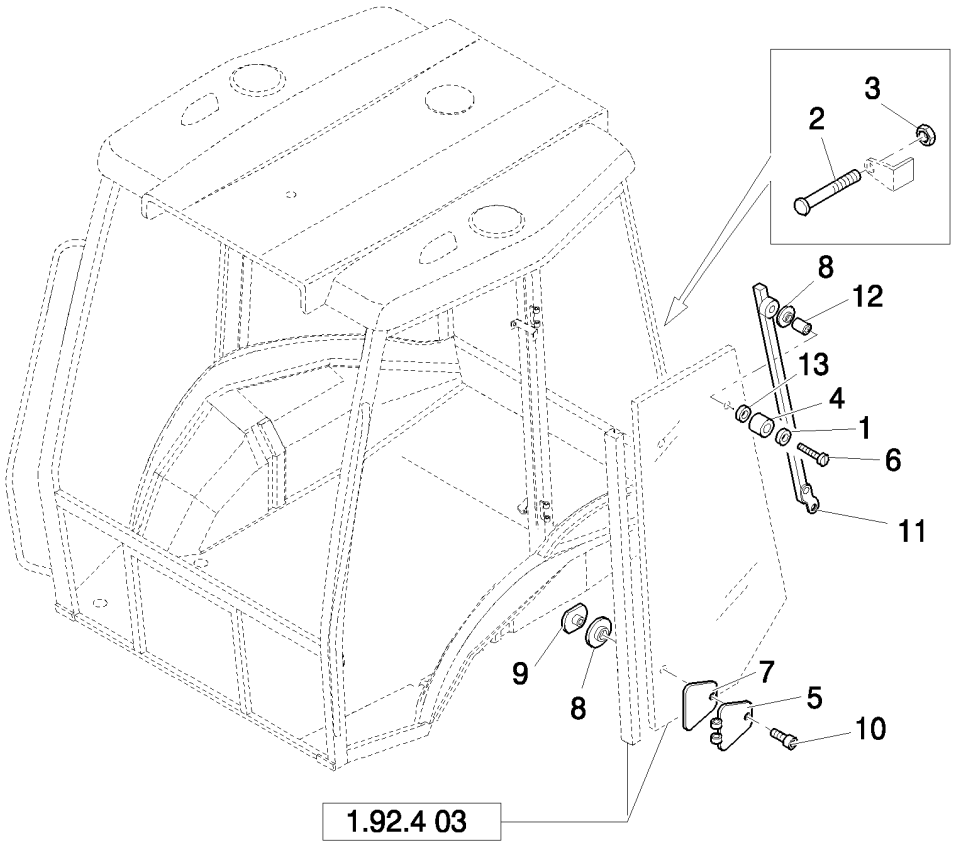

CAB SIDE GLASS FASTENERS

REF	FN	PART NUMBER	YR/SN	QTY	DESCRIPTION
1		10519404		2	WASHER, M6 x 11.95 x 1.6
2		87313813		4	PIN
3		10702711		8	NUT
4		83976357		2	BUMPER
5		85804870		4	HINGE
6		10903224		2	VALVE, HYDRAULIC, Hex, M6 x 40, 8.8
7		81872028		4	SPACER
8		83961985		4	SPACER
9		85805448		4	NUT, RING
10		81871864		4	SCREW, Socket Drive, M8 x 1.25 x 16
11		87396525		1	SUPPORT, RH
12		83961987		2	SPACER
11		87396528		1	SUPPORT, LH
13		11193979		2	WASHER, SPRING, Belleville, M8.4

SIDE GLASSES

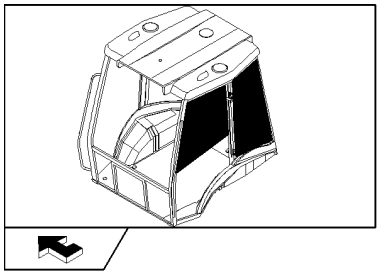

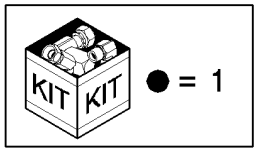

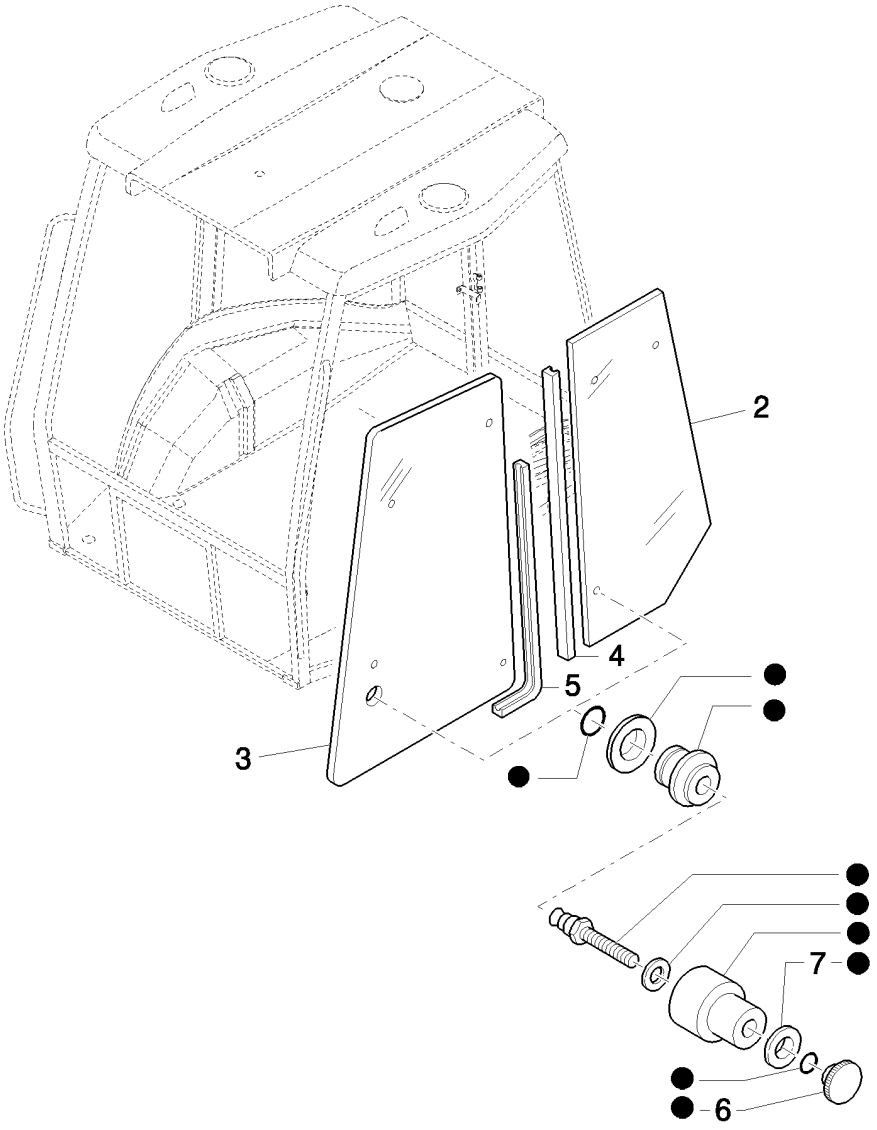

SIDE GLASSES

REF	FN	PART NUMBER	YR/SN	QTY	DESCRIPTION
1		85804617		2	KIT
2		85801628		2	GLASS, CAB
3		85801626		2	GLASS, CAB
4		85812254		2	STRIP, RUBBER, 3150 mm lg
5		85812255		2	STRIP, RUBBER, 3315 mm lg
6		85805448		2	NUT, RING
7		83961985		2	SPACER

FENDERS, REAR

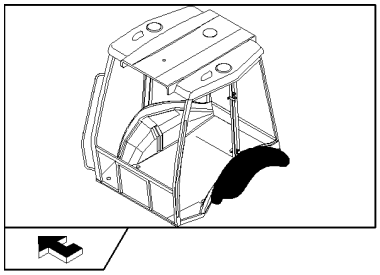

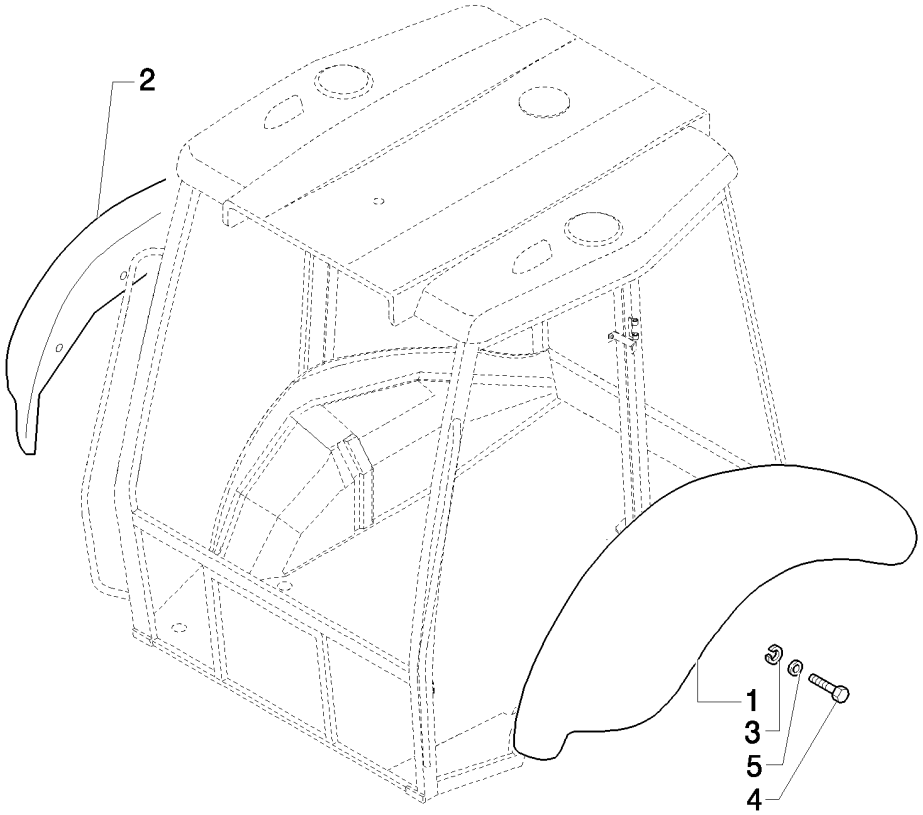

FENDERS, REAR

REF	FN	PART NUMBER	YR/SN	QTY	DESCRIPTION
1	1, 2	85817211		1	FENDER, REAR, LH
1	3	85817213		1	FENDER, REAR, LH
2	1, 2	85817210		1	FENDER, REAR, RH
2	3	85817212		1	FENDER, REAR, RH
3		11193874		10	WASHER, SPRING, Belleville, M8.4
4		16044124		10	BOLT, Hex, M8 x 45, 8.8
5		12646204		10	WASHER, M8 x 35 x 3

(1) Only for B90B, B100B, B100BLR, B110B (EU)
(2) Only for B90B, B95B, B95BLR, B95BTC, B110B (NA)
(3) Only for B115B

1.92.6	01	p1	05/08

DOOR COMPONENTS

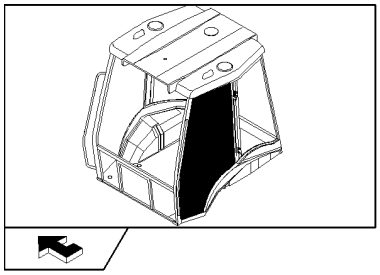

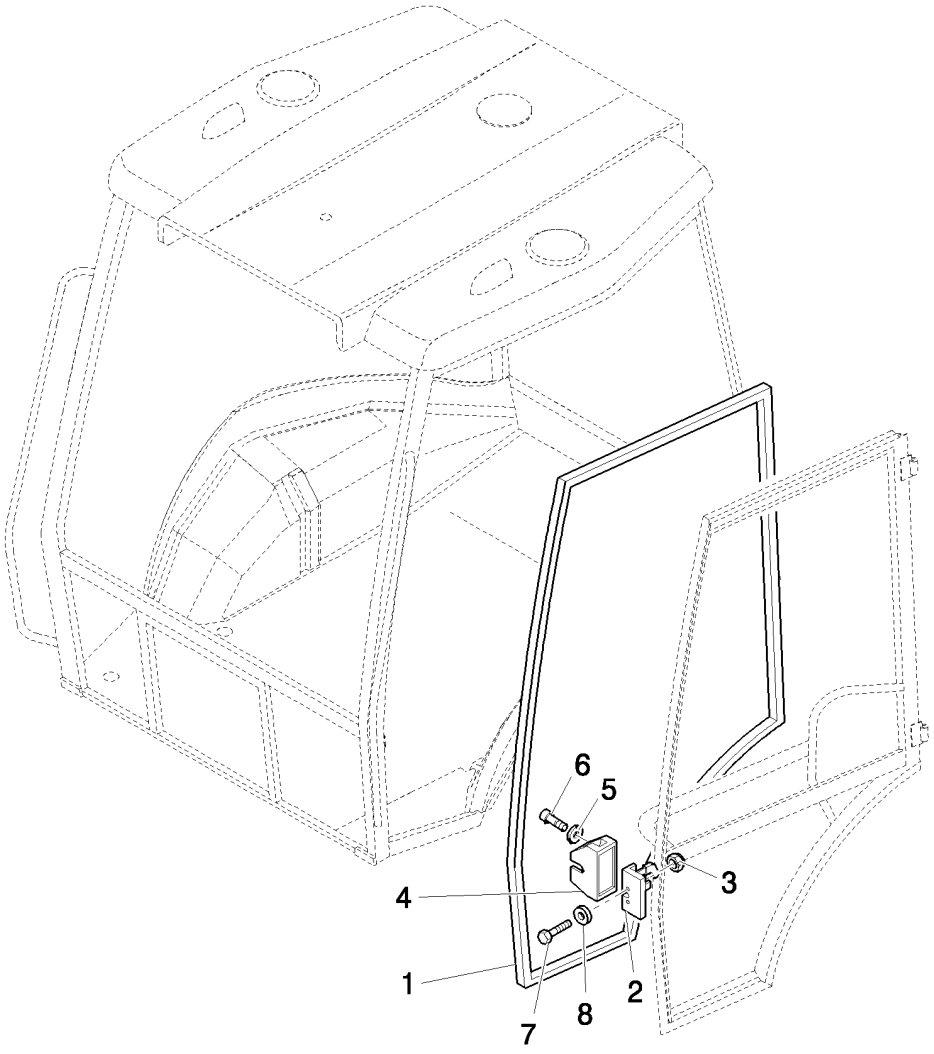

DOOR COMPONENTS

REF	FN	PART NUMBER	YR/SN	QTY	DESCRIPTION
1		85812252		1	SEAL, DOOR, RH
1		85812253		1	SEAL, DOOR, LH
2		44910052		1	LOCK, DOOR, LH, LH
2		44910053		1	LOCK, DOOR, RH, RH
3		14048214		4	NUT, LOCK, M8 x 1.25
4		85805771		1	COVER, LH
4		85805770		1	COVER, RH
5		12643701		4	WASHER, M6 x 18 x 1.5
6		13273911		4	SCREW, Cross Pan Hd, M5 x 10
7		14442421		4	SCREW, Hex Soc Flat Hd, M8 x 40, 8.8
8		10519604		4	WASHER, M8 x 17 x 2

1.92.6	02	p1	05/08

DOOR COMPLETION COMPONENTS: LOWER SIDE

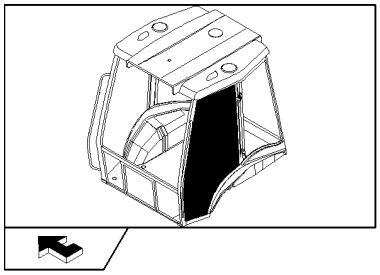

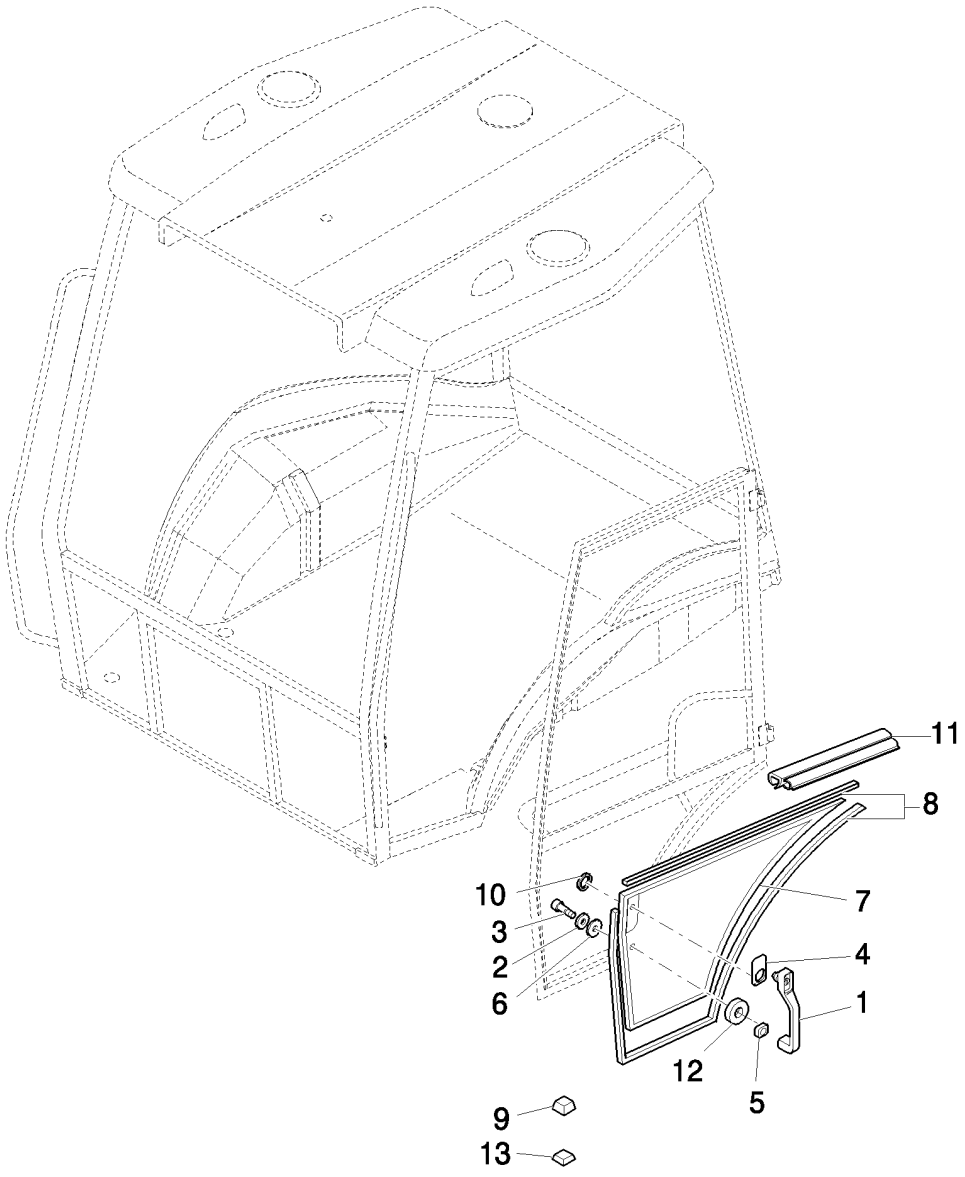

DOOR COMPLETION COMPONENTS: LOWER SIDE

REF	FN	PART NUMBER	YR/SN	QTY	DESCRIPTION
1		85805659		2	HANDLE
2		12640601		2	WASHER, M6 x 25 x 2
3		13276621		2	SCREW, Cross Pan Hd, M6 x 25, 8.8
4		85801799		2	GASKET
5		85801800		2	SEAL, RUBBER
6		83961987		4	SPACER
7		85801624		1	GLASS, CAB, RH
7		85801625		1	GLASS, CAB, LH
8		85802334		MT	GASKET
9		85802223		20	SPACER
10		85802307		2	SEALRING
11		85805065		2	GASKET
12		85801801		2	SEALRING, 24X6X2
13		85802224		10	SPACER

1.92.6	03	p1	03/08

DOOR CLOSURE HINGE COMPONENTS

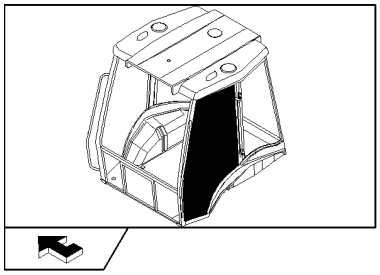

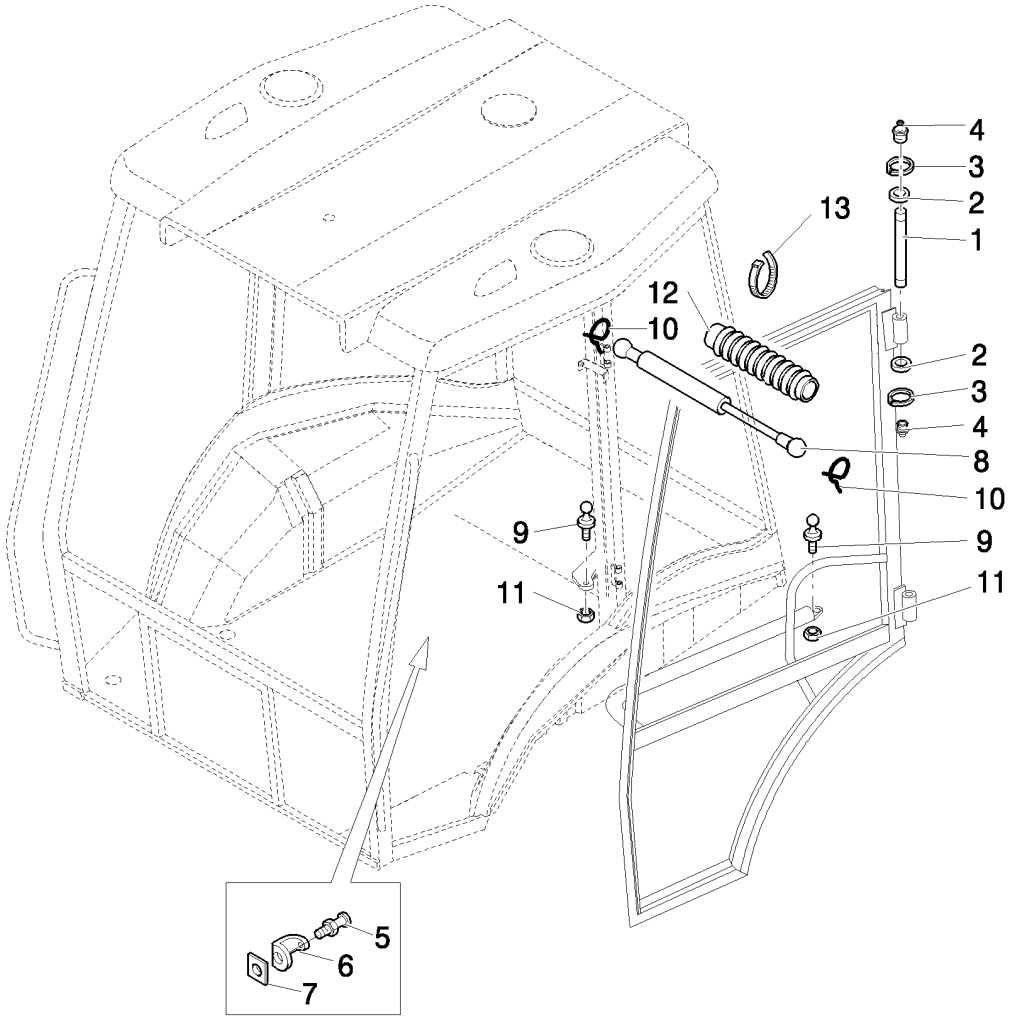

DOOR CLOSURE HINGE COMPONENTS

REF	FN	PART NUMBER	YR/SN	QTY	DESCRIPTION
1		87304810		4	PIN
2		83964146		24	WASHER
3		11088076		8	CIRCLIP, M10, D.9
4		13406911		4	NIPPLE, LUBE, 1/4"-28
5		83994395		2	PLATE, STEEL
6		83994372		2	GUARD
7		83994378		2	NUT, M12 x 1
8		5183854		2	GAS STRUT
9		82000409		4	PIN, BALL
10		81869714		4	CLIP
11		16104511		4	NUT, LOCK, M8 x 1.25, Cl 8.8
12		81867742		2	BOOT
13		5112712		4	CLIP, HOSE, M4.8 x 283

1.92.8		p1	03/08

FLAME TRAP SEAL, ROPS (POWER SHUTTLE)

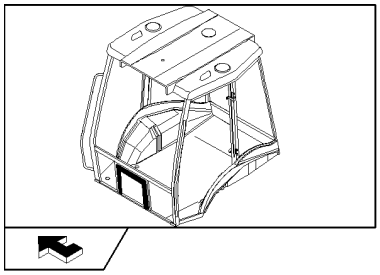

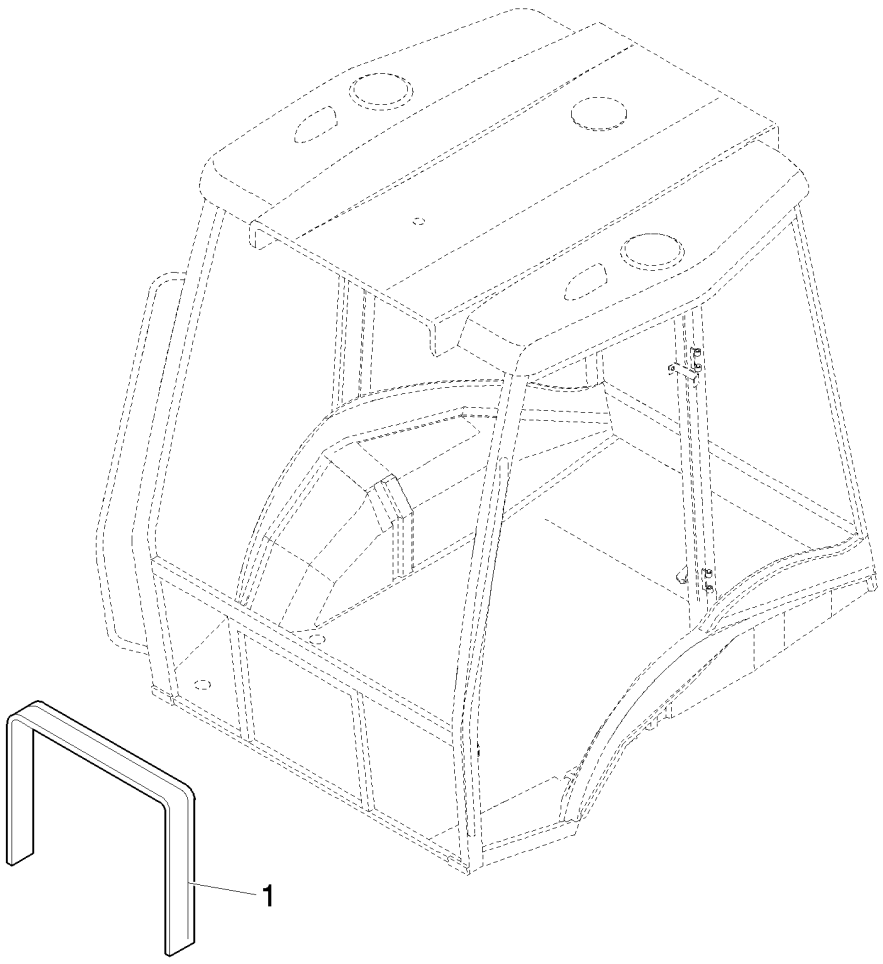

FLAME TRAP SEAL, ROPS (POWER SHUTTLE)

REF	FN	PART NUMBER	YR/SN	QTY	DESCRIPTION
1		85805571		1	STRIP, RUBBER

1.92.9	01	p1	03/08

REAR GLASSES AND COMPONENTS

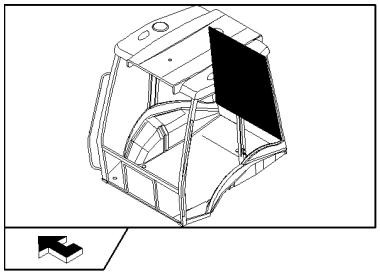

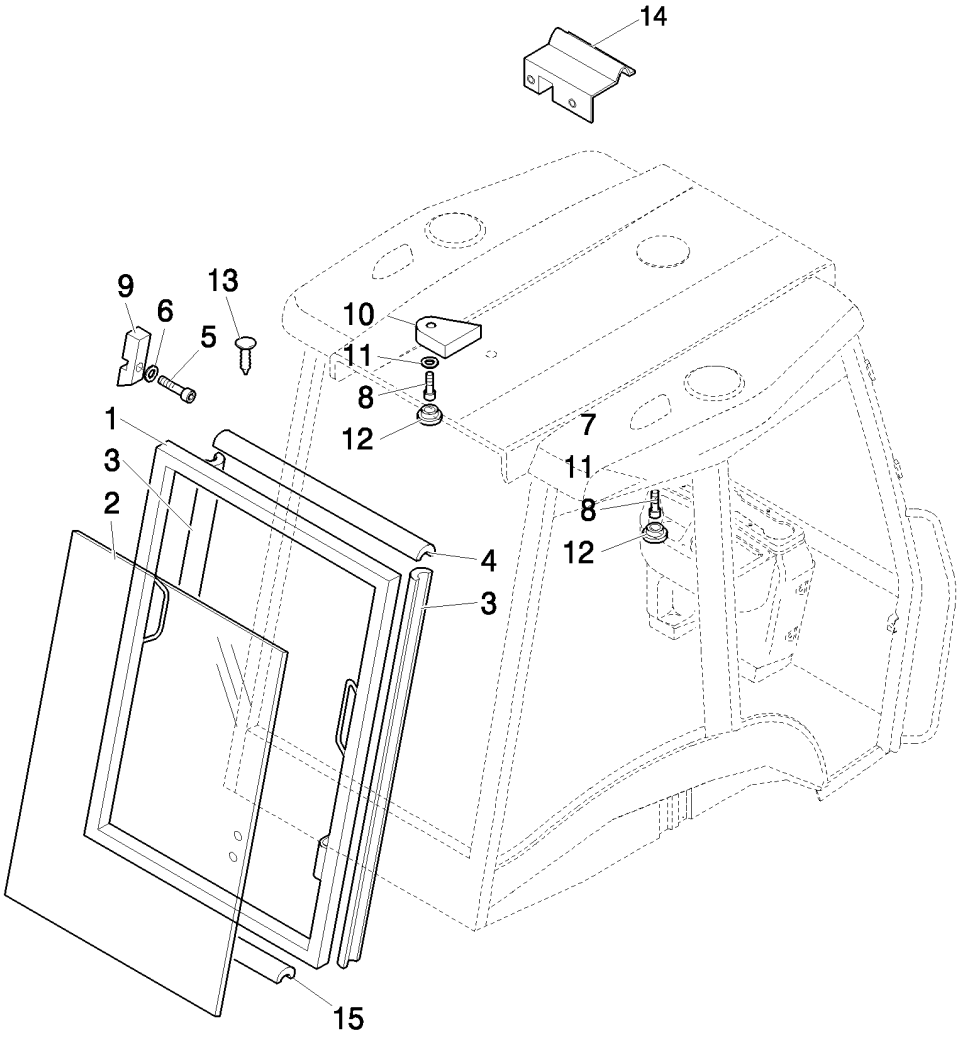

REAR GLASSES AND COMPONENTS

REF	FN	PART NUMBER	YR/SN	QTY	DESCRIPTION
1		85801739		1	DOOR
2		85801632		1	GLASS, CAB
3		85801811		2	EXTRUSION
4		85819018		1	STRIP, RUBBER, L=965
5		16043324		2	BOLT, Hex, M8 x 18, 8.8, Full Thd
6		12646704		2	WASHER, M8 x 20 x 2
7		85801828		1	PAD, RH
8		13313417		2	SCREW, Cross Oval Hd, M6 x 25
9		85801826		2	STOP
10		85801829		1	PAD, LH
11		85801991		2	WASHER
12		79111978		2	PLUG
13		83994150		2	PLUG
14		85812365		1	COLLAR, RETAINER
15		85819017		1	STRIP, RUBBER, L=1010

1.92.9	02	p1	04/08

REAR GLASS CLOSURE HINGE

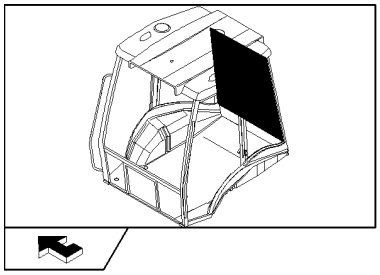

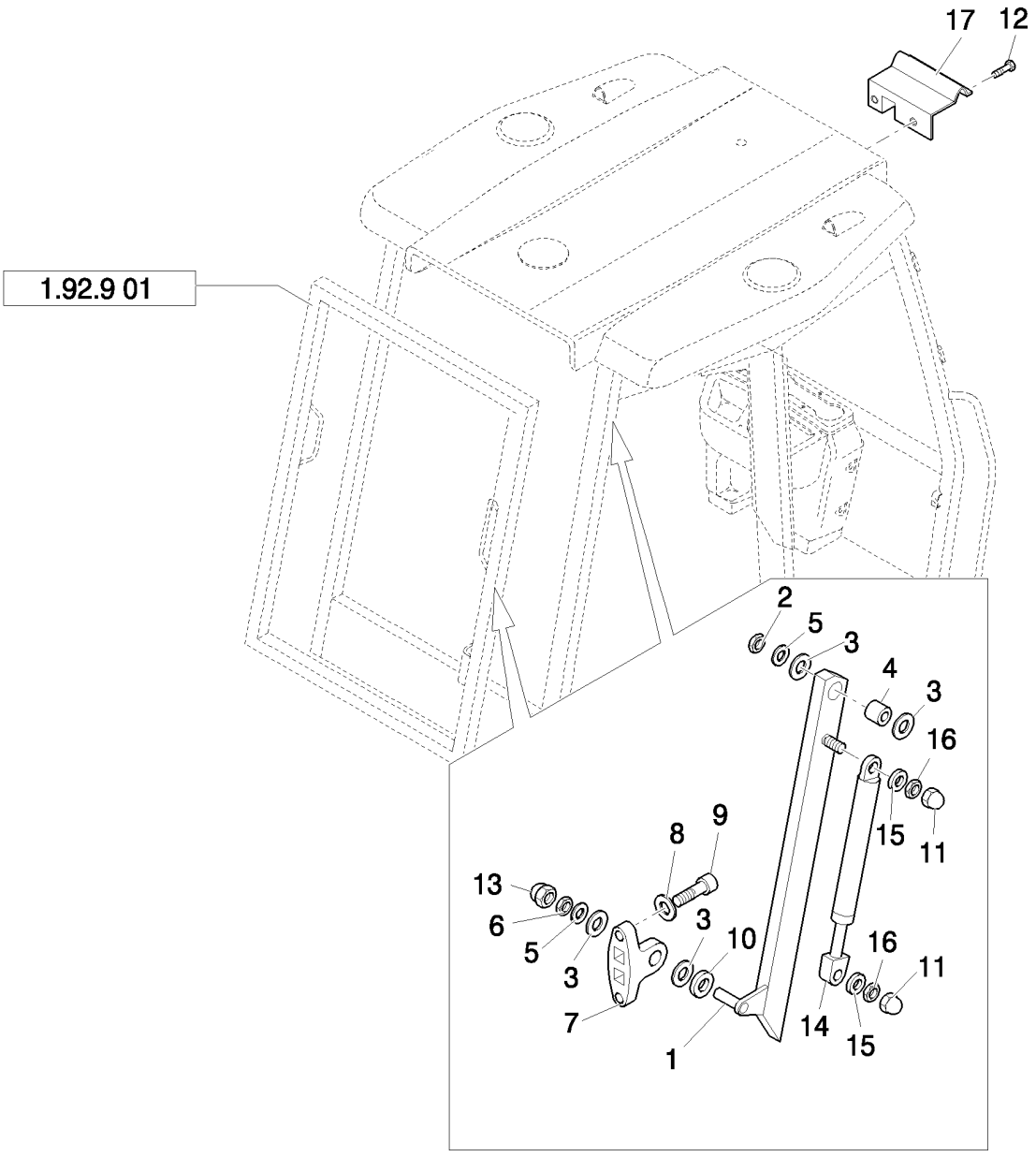

REAR GLASS CLOSURE HINGE

REF	FN	PART NUMBER	YR/SN	QTY	DESCRIPTION
1		85801812		1	SUPPORT, RH
1		85801813		1	SUPPORT, LH
3		85801814		12	SPACER
2		16105111		2	NUT, LOCK, M12 x 1.25, Cl 8
4		85801815		2	BUSHING
5		12646904		4	WASHER, M12 x 28 x 3
6		16104111		2	NUT, LOCK, M8 x 1.25, Cl 8
7		85801816		2	SUPPORT
8		12638504		4	WASHER, M8 x 15 x 1.5
9		14306424		4	SCREW, Hex Soc Hd, M8 x 25, 8.8
10		12647004		2	WASHER, M8 x 25 x 2.5
11		15811387		4	CAP
12		13276217		2	SCREW, Cross Pan Hd, M6 x 16
13		5132136		2	COVER, CAP
14		85801827		2	GAS STRUT
15		14496407		4	WASHER
16		12574215		4	NUT, LOCK, M6 x 1, Cl 8
17		85812364		1	RETAINER

1.92.9	03	p1	05/08

HINGES AND REAR GLASS CLOSURE

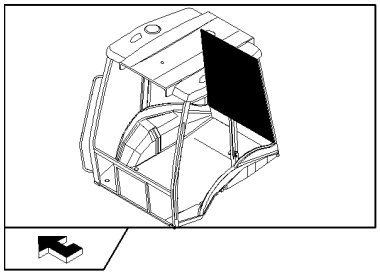

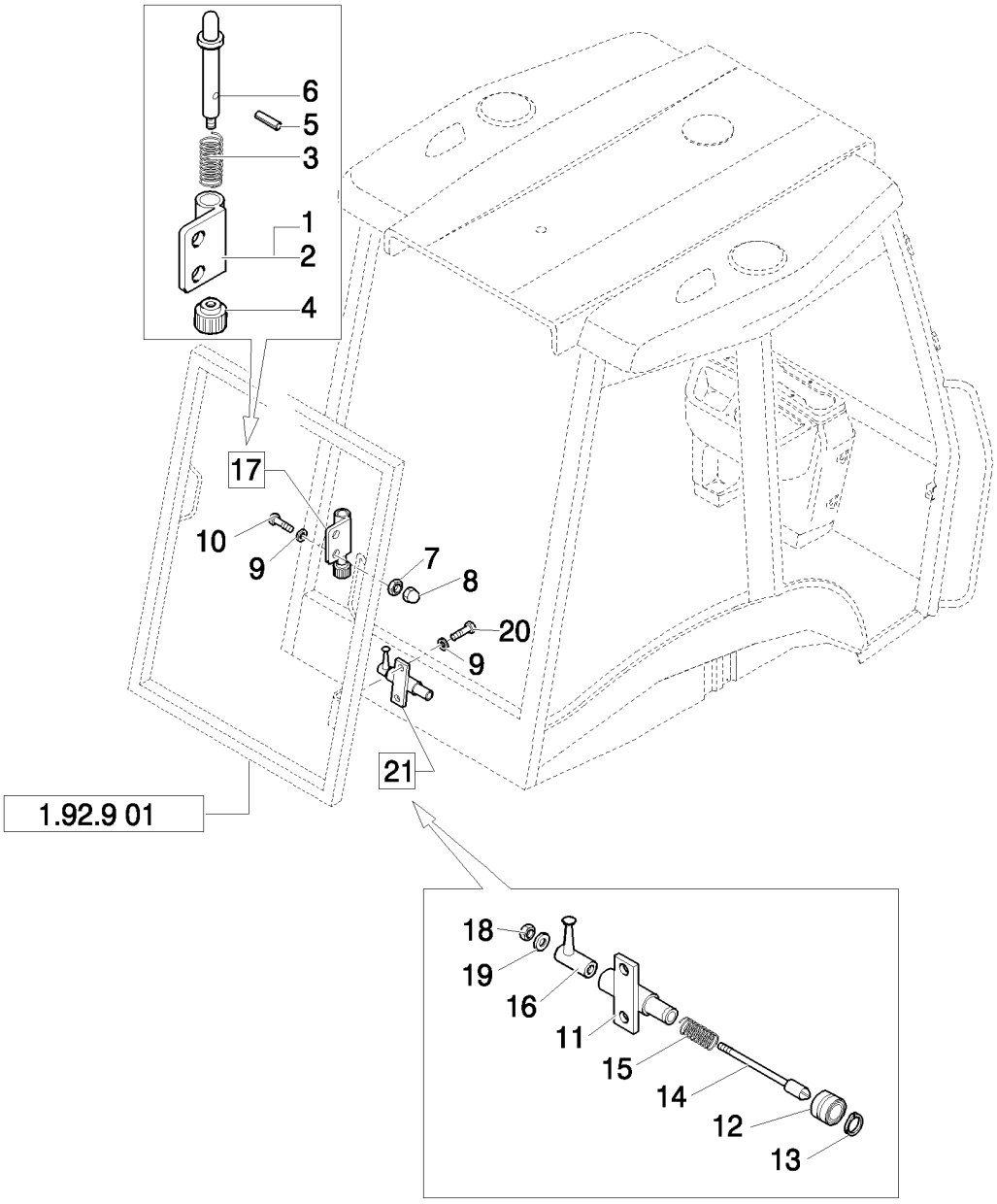

HINGES AND REAR GLASS CLOSURE

REF	FN	PART NUMBER	YR/SN	QTY	DESCRIPTION
1		85801831		1	BLOCK, LH
2		85801830		1	BLOCK, RH
3		85801832		2	SPRING
4		85801833		2	KNOB
5		14161771		2	PIN, LOCK, M3 x 16, Slotted
6		85801834		2	PIN
7		16104111		4	NUT, LOCK, M8 x 1.25, Cl 8
8		5132136		4	COVER, CAP
9		11198074		8	WASHER, SPRING, Belleville, M8.4
10		85827836		4	SCREW, Cap, HH, CL 8.8, M8 x 1.25 x 25
11		85801820		1	PIN, RH
11		85801821		1	PIN, LH
12		85802018		2	BEARING, ROLLER
13		85802351		2	CIRCLIP
14		85801823		2	PIN
15		85801824		2	SPRING
16		85801825		2	LATCH
17		85802345		2	HINGE, Assy, LH
17		85802344		4	HINGE, Assy, RH
18		12574111		2	NUT, LOCK, M5 x .8, Cl 8
19		12637824		2	WASHER
20		16043624		4	BOLT, Hex, M8 x 25, 8.8, Full Thd
21		85802346		1	BLOCK, Assy, RH
21		85802347		1	BLOCK, Assy, LH

1.93.0	01	p1	04/08

CAB : SOFT TRIM (POWER SHUTTLE, POWER SHIFT)

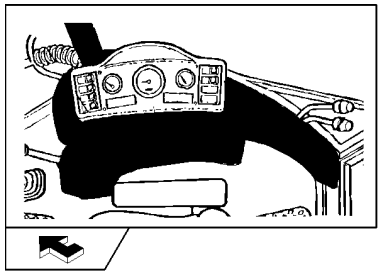

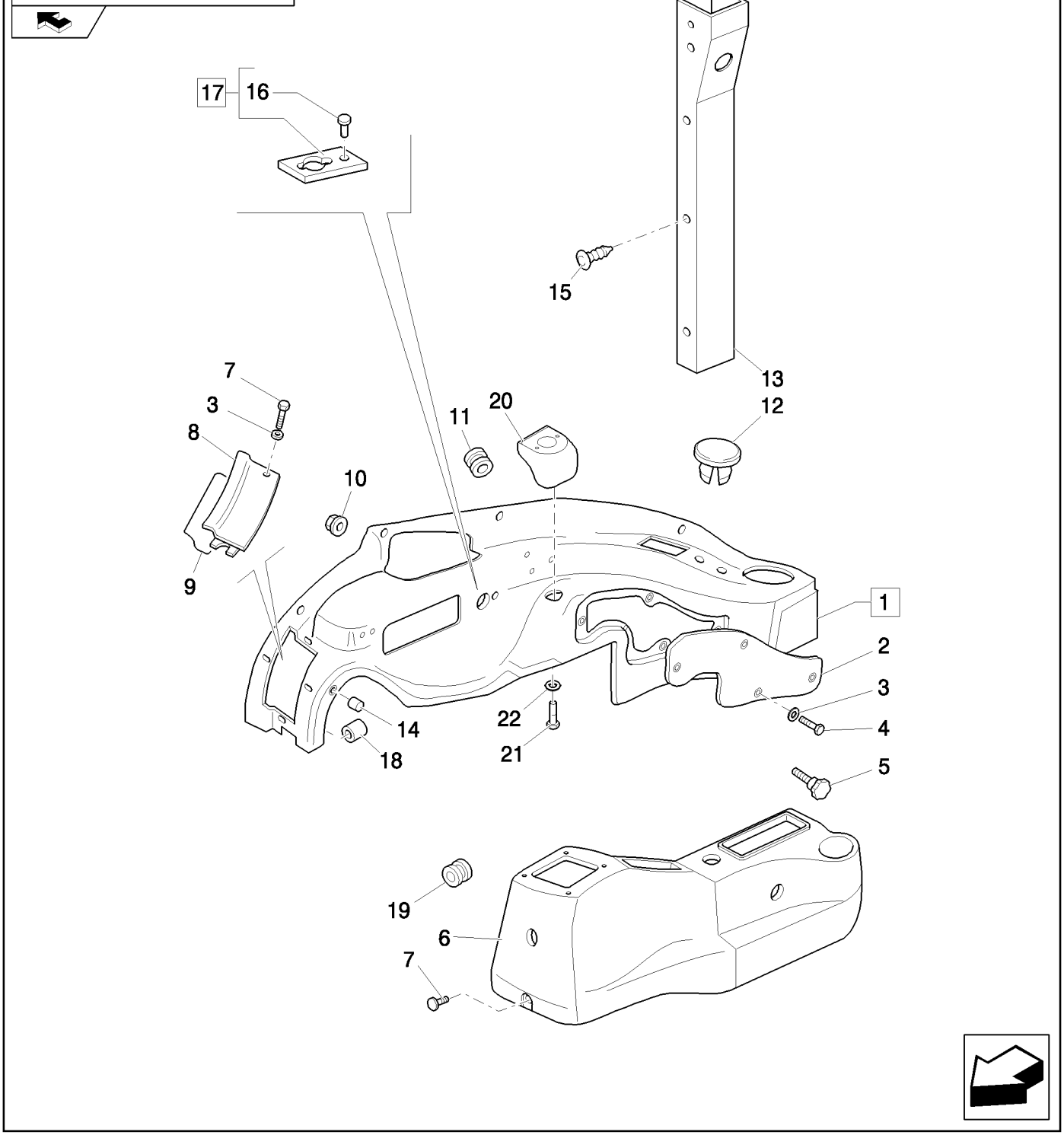

CAB : SOFT TRIM (POWER SHUTTLE, POWER SHIFT)

REF	FN	PART NUMBER	YR/SN	QTY	DESCRIPTION
1	1	87543600		1	SOFT TRIM, Assy
1	2	87743161		1	COVER, Assy
2		85801649		1	SOFT TRIM
3		12647701		2	WASHER
4		13311017		5	SCREW, Cross Oval Hd, M5 x 16
5		85805323		1	KNOB
6		87319785		1	SOFT TRIM
7		16043824		AR	BOLT, Hex, M8 x 30, 8.8, Full Thd
8		85825191		1	COVER
9		85806023		1	STRIP, SEALING
10	3	14084814		5	NUT, M8 x 1.25, Flg
10		14059314		5	NUT
11		10398980		1	GROMMET, 46X5
12		79111815		1	PLUG
13		85819285		1	SOFT TRIM, RH
14		85805819		4	BUSHING, THREADED
15		81870039		6	FASTENER
16		10427201		1	RIVET
17		85827548		1	PLATE, Assy
18		85804750		6	BUSHING, THREADED
19		87517471		1	RING, INSULATING
20	4	87540633		1	DASHBOARD
21	4	13274217		2	SCREW, Pan Hd, M5 x 16, 5.8
22	4	12647701		2	WASHER

(1) Includes 2, 8, 9, 18
(2) Only for B90B, B90BLR CAB (EU)
(3) Only for Power Shuttle
(4) Except for B90B, B90BLR

Mechanical Version	B95B

CAB : SOFT TRIM (POWER SHUTTLE, POWER SHIFT)

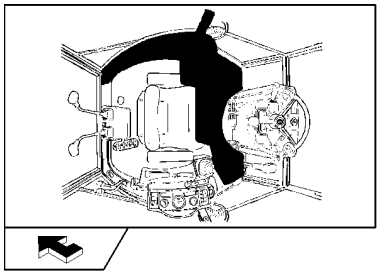

CAB : SOFT TRIM (POWER SHUTTLE, POWER SHIFT)

REF	FN	PART NUMBER	YR/SN	QTY	DESCRIPTION
1		85808460		1	PLUG
2		12647004		8	WASHER, M8 x 25 x 2.5, D=24
3		13313417		6	SCREW, Cross Oval Hd, M6 x 25
4		85819287		1	SOFT TRIM, Assy, LH
5		5178468		1	COAT HOOK
6		14084011		1	NUT, M4 x .7, Flg
7		14059314		4	NUT
7	1	14084814		4	NUT, M8 x 1.25, Flg
8		10519604		4	WASHER, M8 x 17 x 2
9		15627011		12	RIVET
10		83961823		1	STRAP
11		12638107		1	SPACER, 5X14
12		85806154		1	RIVET
13		79111978		1	PLUG
14		5148132		1	NUT, LOCK
15		5148131		1	HOUSING, 1,2W
16		81870039		6	FASTENER
17		12574211		1	NUT, LOCK, M6 x 1, Cl 8

(1) Only for Power Shuttle

Mechanical Version / Pilot Version	B95B

CAB / SIDE COVERING AND FRONT FLOOR (POWER SHUTTLE: POWER SHIFT)

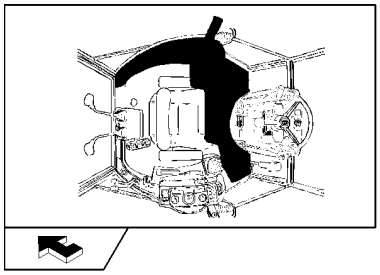

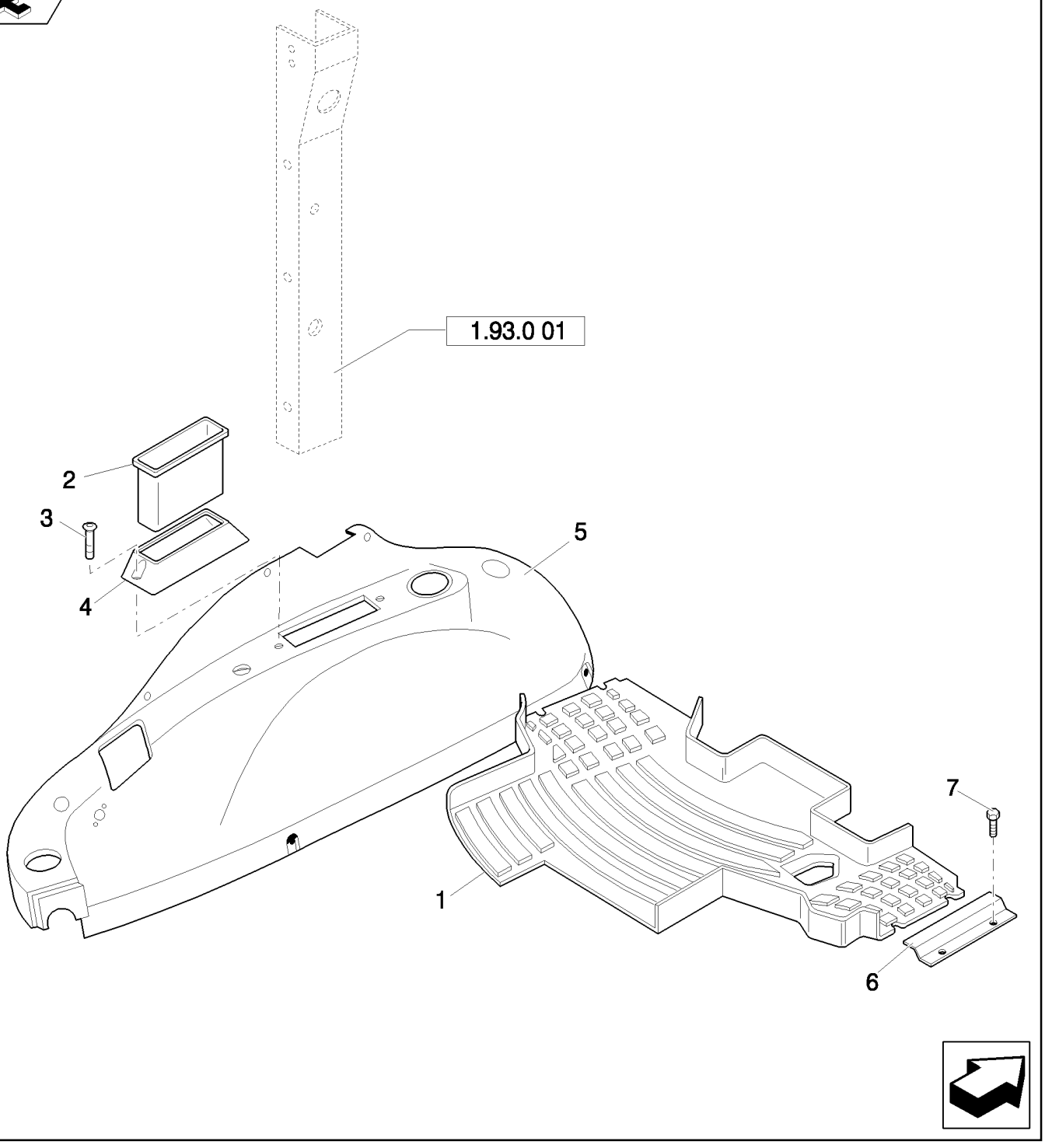

CAB / SIDE COVERING AND FRONT FLOOR (POWER SHUTTLE: POWER SHIFT)

REF	FN	PART NUMBER	YR/SN	QTY	DESCRIPTION
1	1	85804867		1	MAT, FLOOR
1	2	85804865		1	MAT, FLOOR
2		85801979		1	CONTAINER
3		13276617		2	SCREW, Cross Pan Hd, M6 x 25
4		85801651		1	HOUSING
5	3	87362094		1	SOFT TRIM
5	4	87362098		1	SOFT TRIM
6		85805591		2	MOULDING, DOOR SILL
7		14441521		4	BOLT, Hex Soc Flat Hd, M6 x 25, 8.8

(1) Only for Power Shift
(2) Only for Power Shuttle
(3) Only for EU includes B115B (NA)
(4) Except for B115B

Mechanical Version / Pilot Version	B95B

1.93.0	04	p1	03/08

CAB / REAR CONSOLE AND FLOOR COVERING (POWER SHUTTLE: POWER SHIFT)

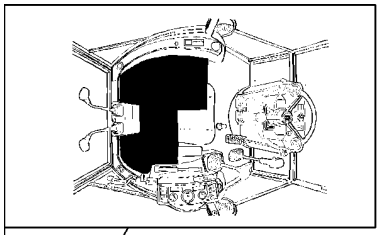

CAB / REAR CONSOLE AND FLOOR COVERING (POWER SHUTTLE: POWER SHIFT)

REF	FN	PART NUMBER	YR/SN	QTY	DESCRIPTION
1		87319801		1	CONSOLE
2		85804863		1	FOOT REST
3		10519604		4	WASHER, M8 x 17 x 2
4		16043824		4	BOLT, Hex, M8 x 30, 8.8, Full Thd
5		85804864		1	FOOT REST
6		85804866		1	MAT, FLOOR
7		79089592		1	WASHER
8		13311217		5	SCREW, Cross Oval Hd, M5 x 20
9		4999021		1	GASKET
10		10902624		4	BOLT, Hex, M6 x 25, 8.8, Full Thd
11		12640621		4	WASHER, M6 x 25 x 2
12		87319803		2	PLUG
13		82001909		1	GROMMET
14		85812080		4	NUT
15		87408893		1	PANEL
16		87323749		1	BRACKET

Mechanical Version B95B

1.93.0/01	01	p1	04/08

CAB : SOFT TRIM (POWER SHUTTLE, POWER SHIFT)

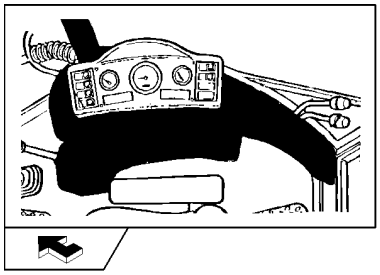

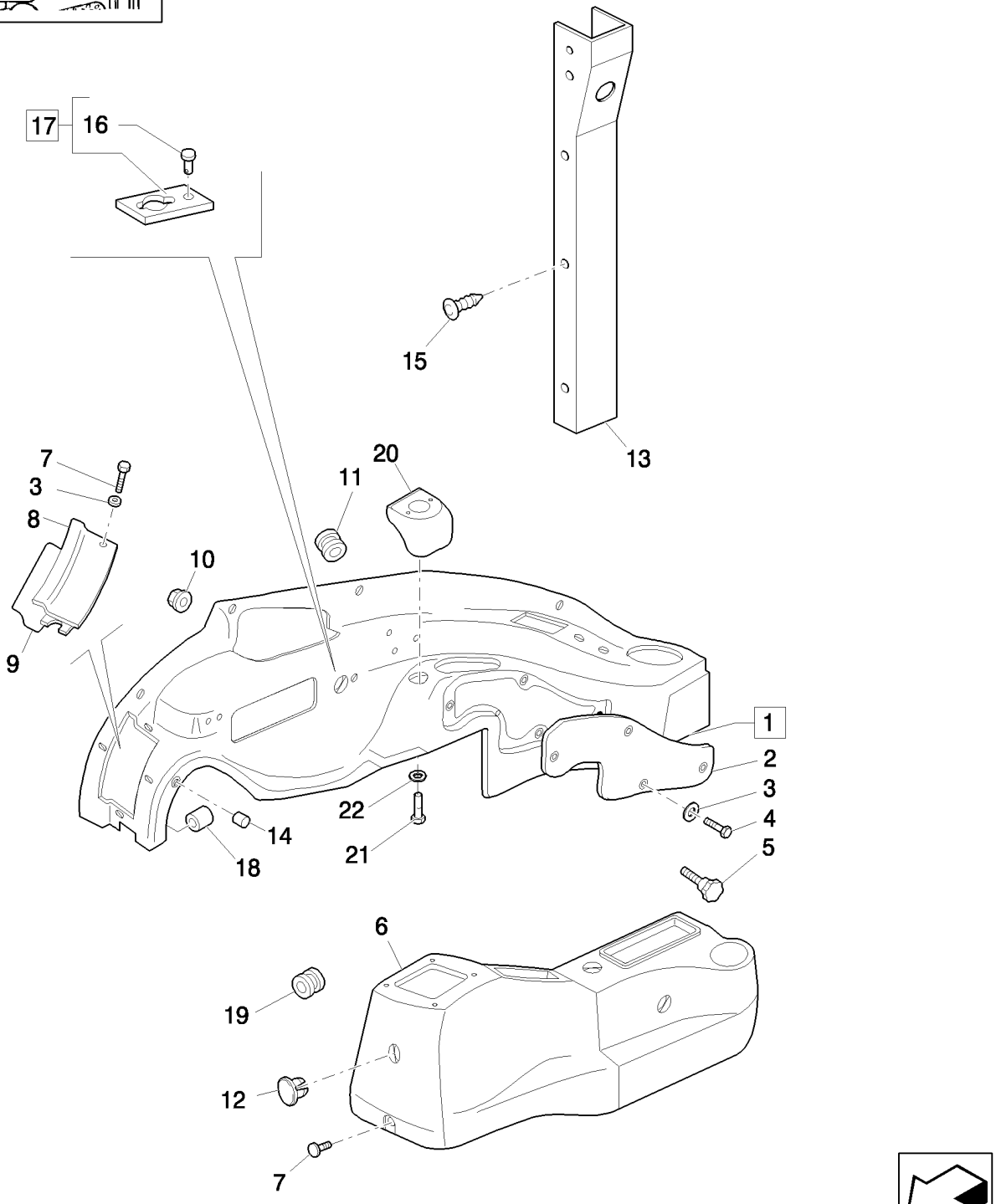

CAB : SOFT TRIM (POWER SHUTTLE, POWER SHIFT)

REF	FN	PART NUMBER	YR/SN	QTY	DESCRIPTION
1	1	87543654		1	SOFT TRIM, Assy
1	2	87743160		1	COVER, Assy
2		85801649		1	SOFT TRIM
3		12647701		2	WASHER
4		13311217		5	SCREW, Cross Oval Hd, M5 x 20
5		85805323		1	KNOB
6		87319785		1	SOFT TRIM
7		13311017		AR	SCREW, Cross Oval Hd, M5 x 16
8		85825191		1	COVER
9		85806023		1	STRIP, SEALING
10		14084814		5	NUT, M8 x 1.25, Flg
10	3	14059314		5	NUT, M8
11		10398980		1	GROMMET, 46X5
12		79111815		1	PLUG
13		85819285		1	SOFT TRIM, RH
14		85805819		4	BUSHING, THREADED
15		81870039		6	FASTENER
16		10427201		1	RIVET
17		85827548		1	PLATE, Assy
18		85804750		6	BUSHING, THREADED
19		87517471		1	RING, INSULATING
20	4	87540633		1	DASHBOARD
21	4	13274217		2	SCREW, Pan Hd, M5 x 16, 5.8
22	4	12647701		2	WASHER

(1) Includes 2, 8, 9, 14, 18
(2) Only for B90B, B90BLR (EU) - B90B (NA)
(3) Only for Power Shift
(4) Except for B90B, B90BLR (EU) - B90B (NA)

Pilot Control Version	B95B

1.93.0/01	02	p1	03/08

CAB / FLOOR COVERING AND COMPONENTS (POWER SHUTTLE: POWER SHIFT)

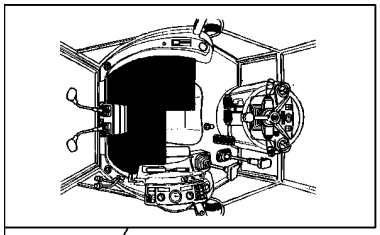

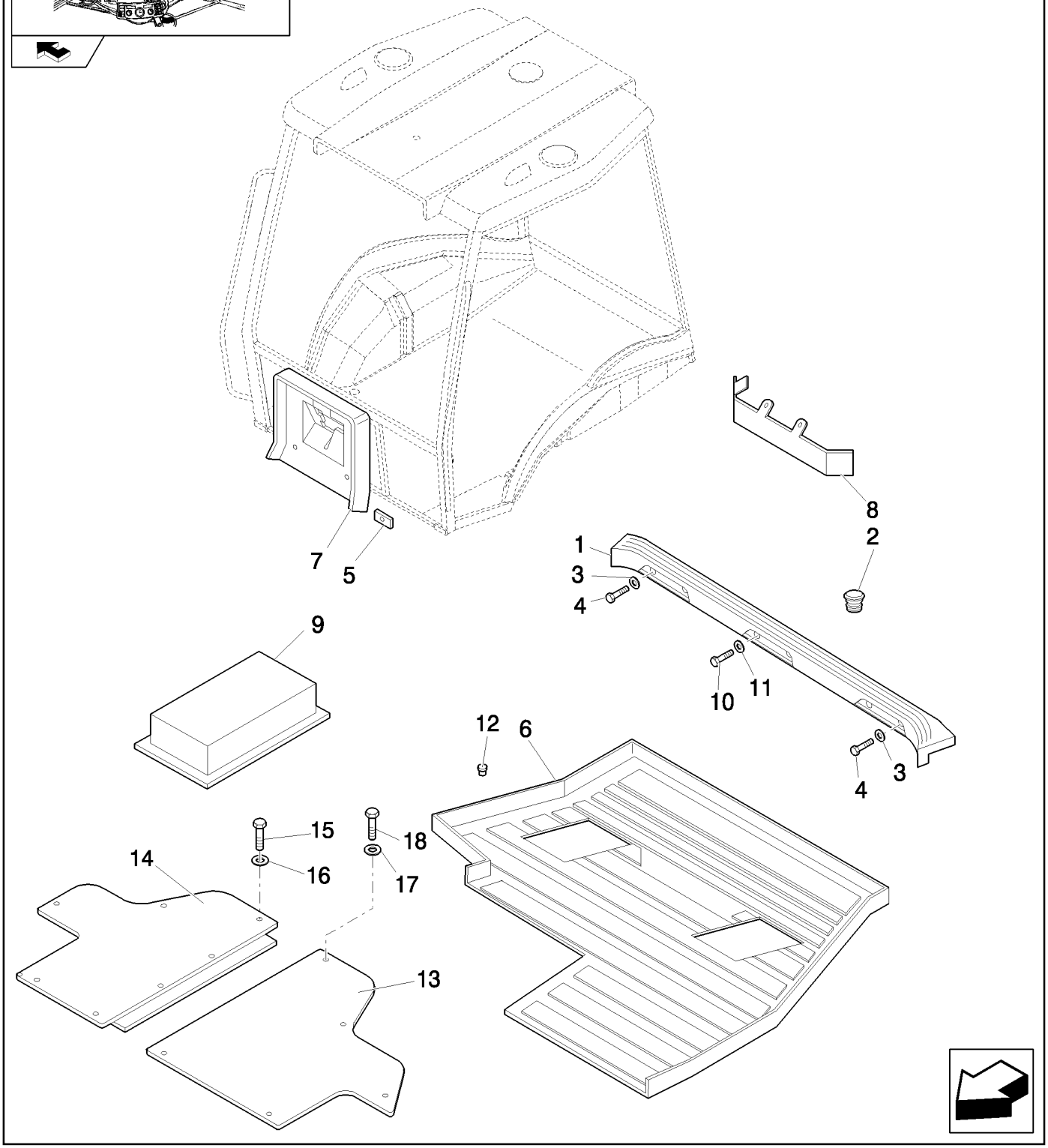

CAB / FLOOR COVERING AND COMPONENTS (POWER SHUTTLE: POWER SHIFT)

REF	FN	PART NUMBER	YR/SN	QTY	DESCRIPTION
1		87410385		1	PANEL
2		82001909		1	GROMMET
3		10519604		4	WASHER, M8 x 17 x 2
4		16043824		4	BOLT, Hex, M8 x 30, 8.8, Full Thd
5		85812080		1	NUT
6		87410108		1	MAT
7		87408893		1	PANEL
8		87323749		10	BRACKET
9		4999021		1	GASKET
10		10902624		4	BOLT, Hex, M6 x 25, 8.8, Full Thd
11		12640621		4	WASHER, M6 x 25 x 2
12		87319803		10	PLUG
13		87426546		1	COVER, TOP
14		87426550		1	COVER, TOP
15		10902524		10	BOLT, Hex, M6 x 22, 8.8, Full Thd
16		11193274		10	WASHER, SPRING, Belleville, M6.4
17		85801991		5	WASHER
18		13311217		5	SCREW, Cross Oval Hd, M5 x 20

1.93.0/02	01	p1	04/08

RIGHT SIDE COVERING, REAR CONSOLE ROPS (CENTER PIVOT): NA

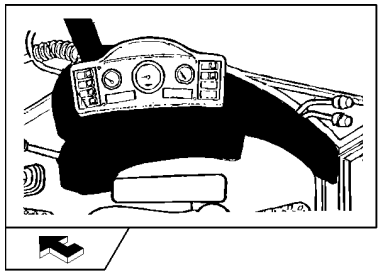

RIGHT SIDE COVERING, REAR CONSOLE ROPS (CENTER PIVOT): NA

REF	FN	PART NUMBER	YR/SN	QTY	DESCRIPTION
1	1, 2	87543716		1	SOFT TRIM, Assy
1	3, 1	87745631		1	COVER, Assy
1	4, 1	87743162		1	COVER, Assy
2		85801649		1	SOFT TRIM
3		85801991		AR	WASHER
4		13311217		5	SCREW, Cross Oval Hd, M5 x 20
5		85805323		1	KNOB
6		85805803		1	UTILITY HOLDER
7		16043424		4	SCREW, Hex, M8 x 20, 8.8, Full Thd
8		85825191		1	COVER, Fuse Panel
9		85806023		1	STRIP, SEALING
10		14084814		5	NUT, M8 x 1.25, Flg
11		85805308		1	SEAL
12		79111815		1	PLUG
13		79089592		2	WASHER, D=24
14		13311017		4	SCREW, Cross Oval Hd, M5 x 16
15		85812081		1	STRIP, RUBBER
16		10427201		1	RIVET
17		85827548		1	PLATE, Assy
18		85804750		6	BUSHING, THREADED
19	2	85827817		1	BLISTER
20		85808460		1	PLUG
21		14441521		2	BOLT, Hex Soc Flat Hd, M6 x 25, 8.8
22		11193974		4	WASHER, SPRING, Belleville, M8.4
23		79111978		1	PLUG
24		82001909		1	GROMMET
25		4999021		1	GASKET
26	2	87540633		1	DASHBOARD
27	2	12647701		2	WASHER
28	2	13274217		2	SCREW, Pan Hd, M5 x 16, 5.8
29		85805819		4	BUSHING, THREADED

(1) Includes 2, 8, 9, 18, 29
(2) Only for B95B, B95BLR, B95BTC, B110B
(3) Only for B90B Mechanical Version
(4) Only for B90B Pilot Version

1.93.0/02	01	p2	04/08

RIGHT SIDE COVERING, REAR CONSOLE ROPS (CENTER PIVOT): NA

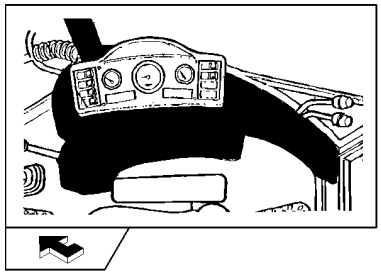

RIGHT SIDE COVERING, REAR CONSOLE ROPS (CENTER PIVOT): NA

REF	FN	PART NUMBER	YR/SN	QTY	DESCRIPTION
30		85819016		1	STRIP, RUBBER

MACHINES SOFT TRIMS (ROPS) - NA

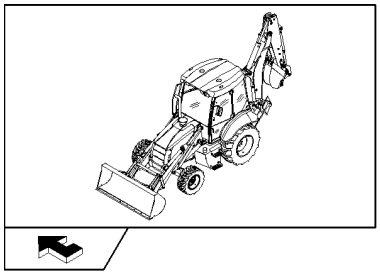

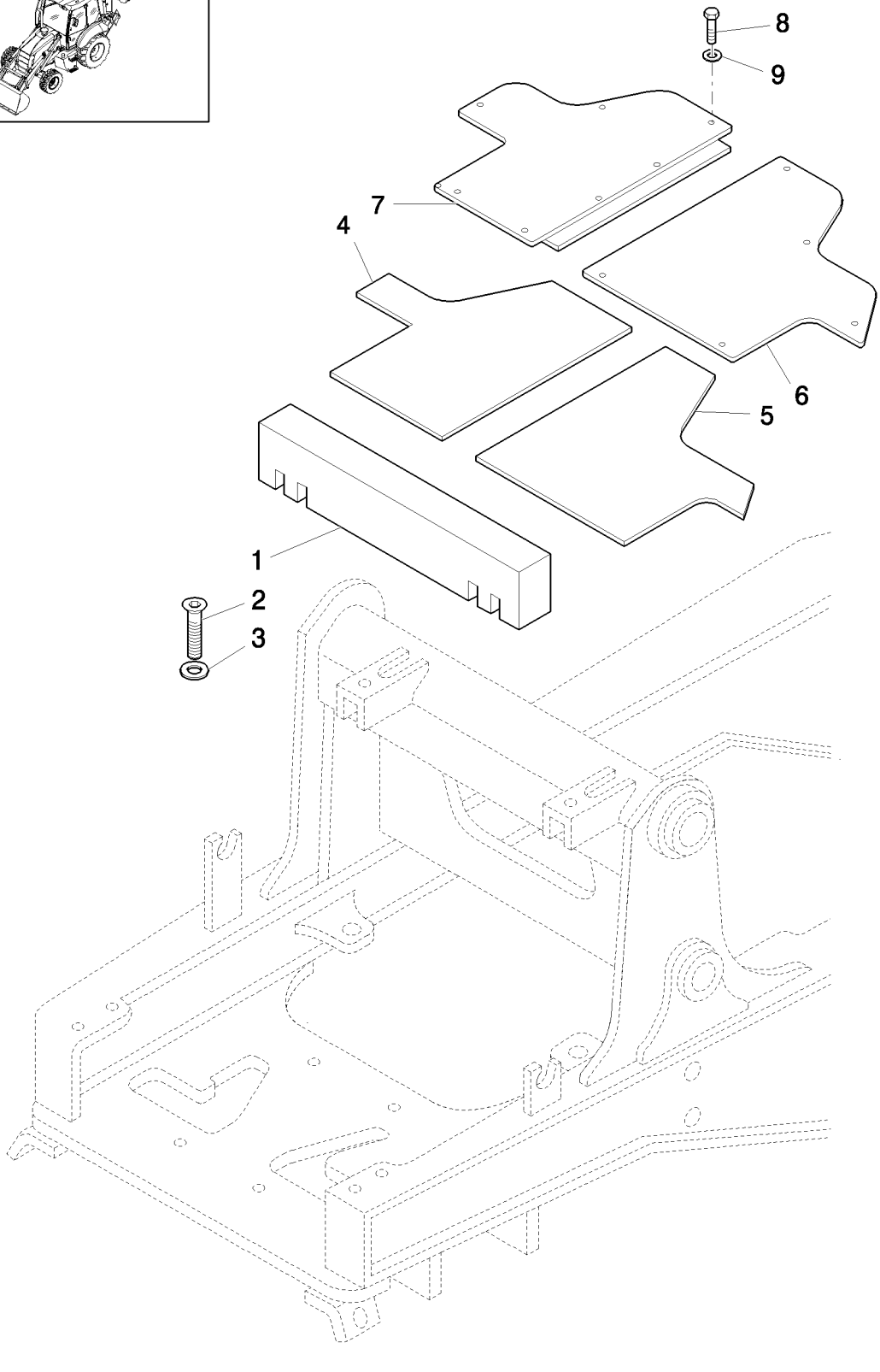

MACHINES SOFT TRIMS (ROPS) - NA

REF	FN	PART NUMBER	YR/SN	QTY	DESCRIPTION
1		85817287		1	SEAL
2		13311217		5	SCREW, Cross Oval Hd, M5 x 20
3		85801991		5	WASHER
4	1	87442379		1	MAT
5	1	87442378		1	MAT
6	1	87426546		1	COVER, TOP
7	1	87426550		1	COVER, TOP, RH
8	1	10902524		10	BOLT, Hex, M6 x 22, 8.8, Full Thd
9	1	11193274		10	WASHER, SPRING, Belleville, M6.4

(1) Only for Pilot Version

CAB: REAR MIRROR - SUN SCREEN

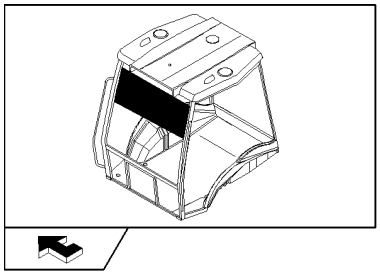

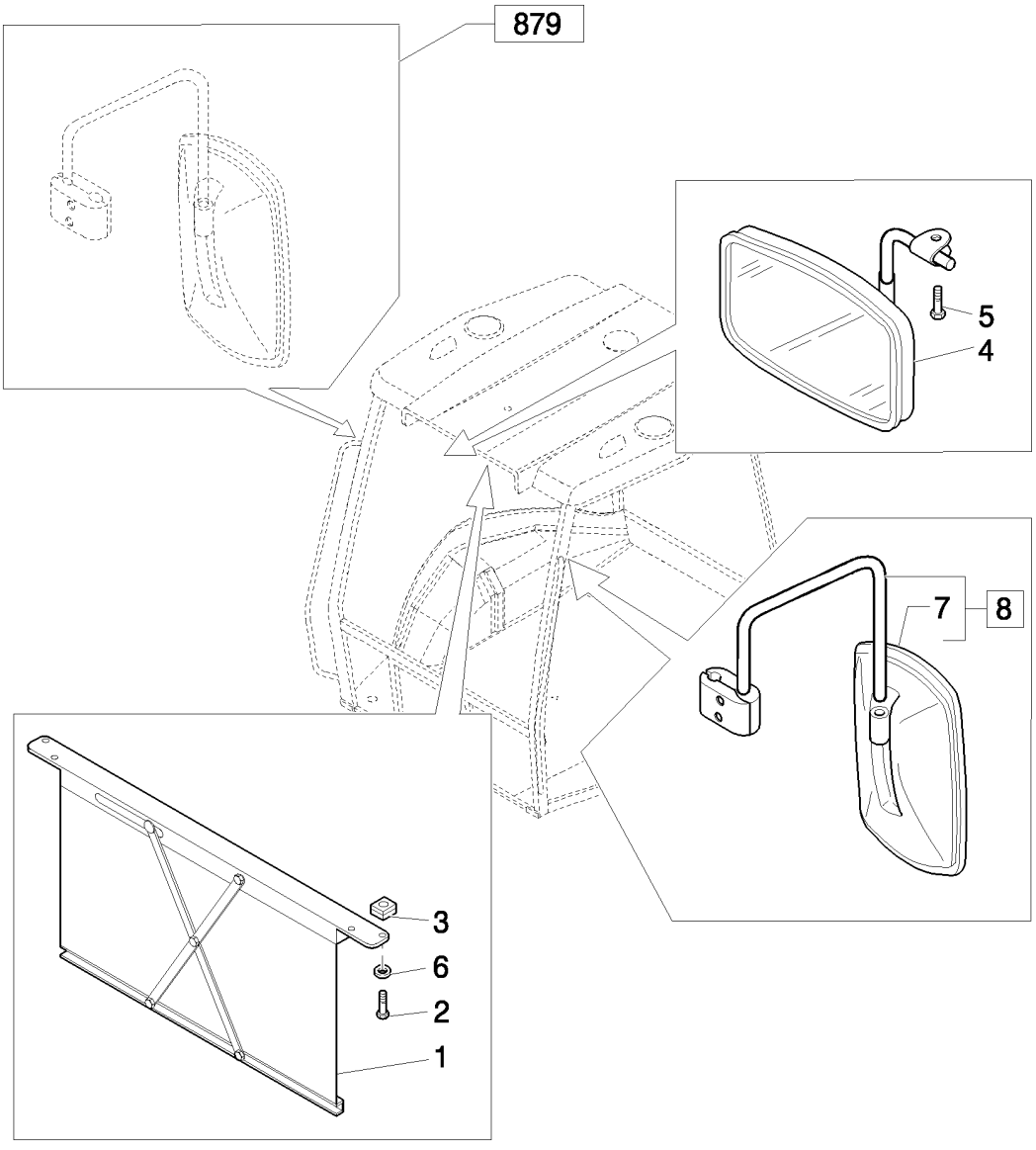

CAB: REAR MIRROR - SUN SCREEN

REF	FN	PART NUMBER	YR/SN	QTY	DESCRIPTION
1		5176441		1	SUNSHADE
2		14303324		4	SCREW, Hex Soc Hd, M4 x 20, 8.8, Full Thd
3		14197790		4	NUT, M4 x .7, Cage
4		87665407		1	MIRROR, REAR-VIEW
5		13313417		1	SCREW, Cross Oval Hd, M6 x 25
6		12642821		4	WASHER, M4 x 12 x 1
7	1	85820138		1	MIRROR, REAR-VIEW
8	1	85820139		1	MIRROR, LH, Assy

(1) Only for CAB

CAB / FRONT DASHBOARD

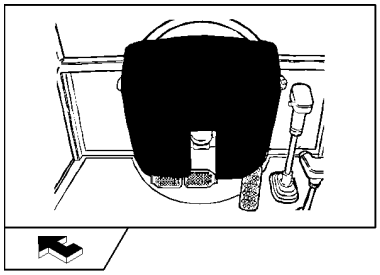

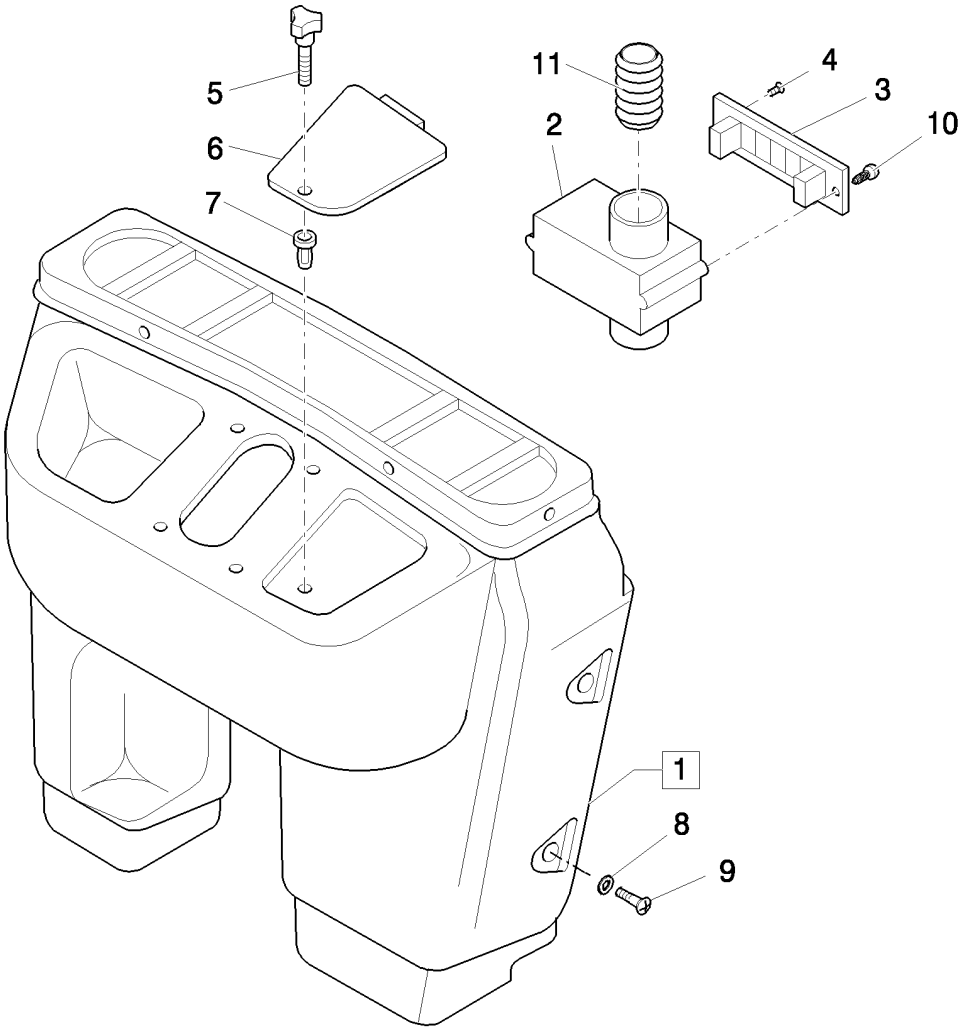

CAB / FRONT DASHBOARD

REF	FN	PART NUMBER	YR/SN	QTY	DESCRIPTION
1	1, 2, 3	85819289		1	PANEL, DASH, Assy
1	1, 4	85819291		1	PANEL, DASH, Assy
2		85819567		2	DUCT, AIR
3		85819454		2	DIFFUSER
4		14440327		4	SCREW, Hex Soc Flat Hd, M4 x 20, 8.8
5		85805323		1	KNOB, M5
6		85806089		1	COVER
7		85804750		5	BUSHING, THREADED, M5
8		79089592		AR	WASHER, D=24
9		79105220		AR	SCREW, LOCK, Cross Oval Csk Hd, M6 x 20
10		14568887		4	FASTENER, 8X20
11		85819592		2	SLEEVE

(1) Includes 2 - 7
(2) Only for B90B, B95B, B95BLR, B95BTC, B110B (NA)
(3) Only for B90B, B90BLR, B100B, B100BLR, B110B (EU)
(4) Only for B115B

CAB / DASHBOARD FASTENERS AND GASKETS

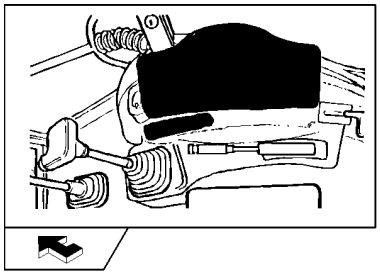

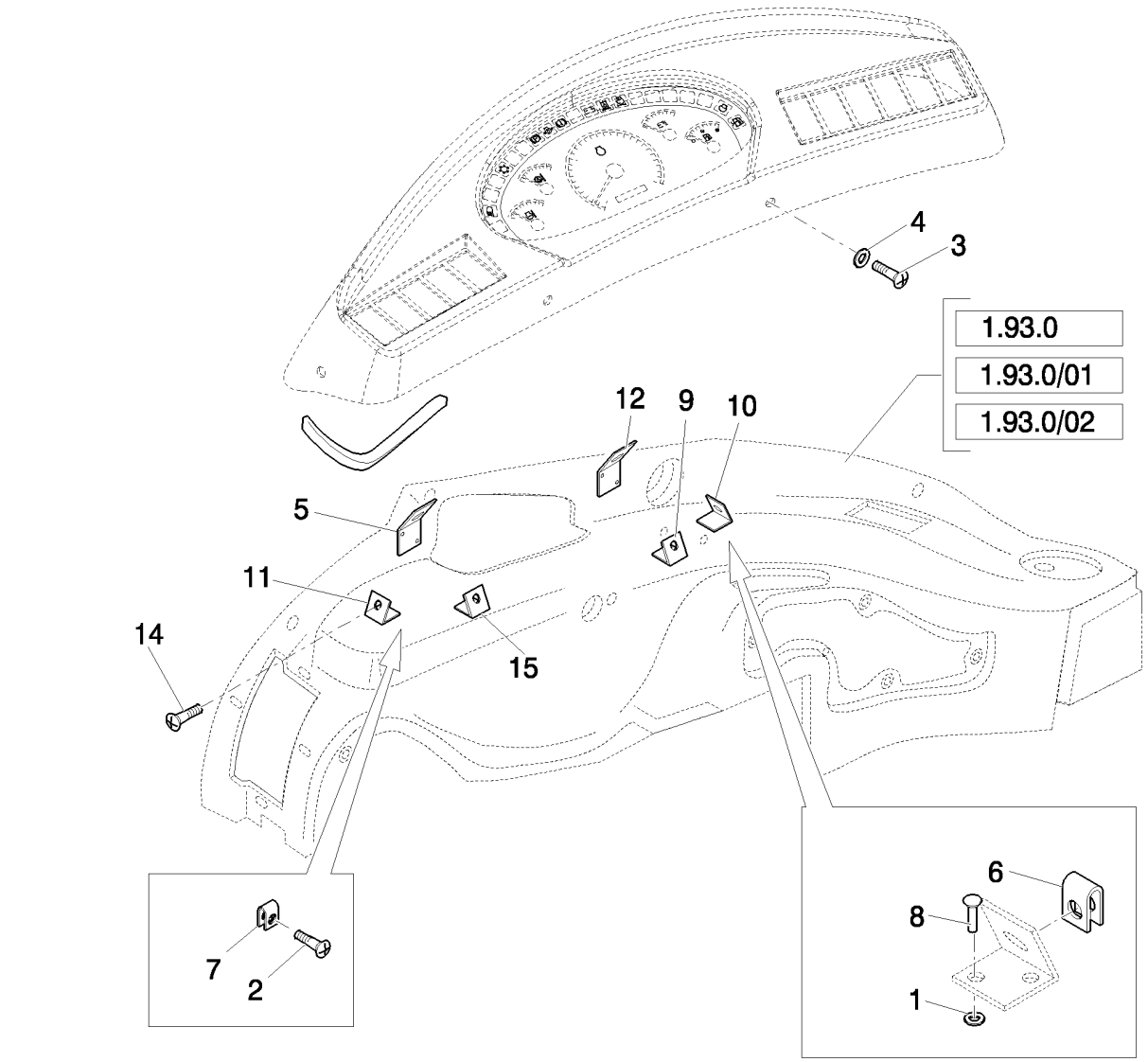

CAB / DASHBOARD FASTENERS AND GASKETS

REF	FN	PART NUMBER	YR/SN	QTY	DESCRIPTION
1		12642804		12	WASHER, M4 x 12 x 1
2		13311017		4	SCREW, Cross Oval Hd, M5 x 16, CAB
3		15693507		AR	SCREW, SELF TAPPING, Cross Oval Hd, M4.8 x 22
4		85801991		AR	WASHER
5	1	87552670		1	SEAL
5	2	85824393		1	SEAL, RUBBER
6		14189176		6	NUT, J, #10
7		14372671		2	NUT, M4.2, U, 12.4mm long, CAB
8		14642191		12	RIVET
9		85802142		2	BRACKET
10		85802143		1	BRACKET
11		85802144		1	BRACKET
12		85802145		1	BRACKET
13	1	87551537		1	BRACKET
13	2	85802146		1	BRACKET
14		15910607		2	SCREW
15	2	85802141		1	BRACKET

(1) Except for B90B, B90BLR
(2) Only for B90B, B90BLR

FRONT CONSOLE - ROPS (POWER SHUTTLE) - NA

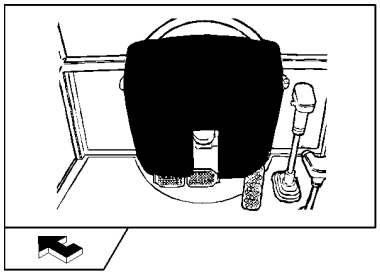

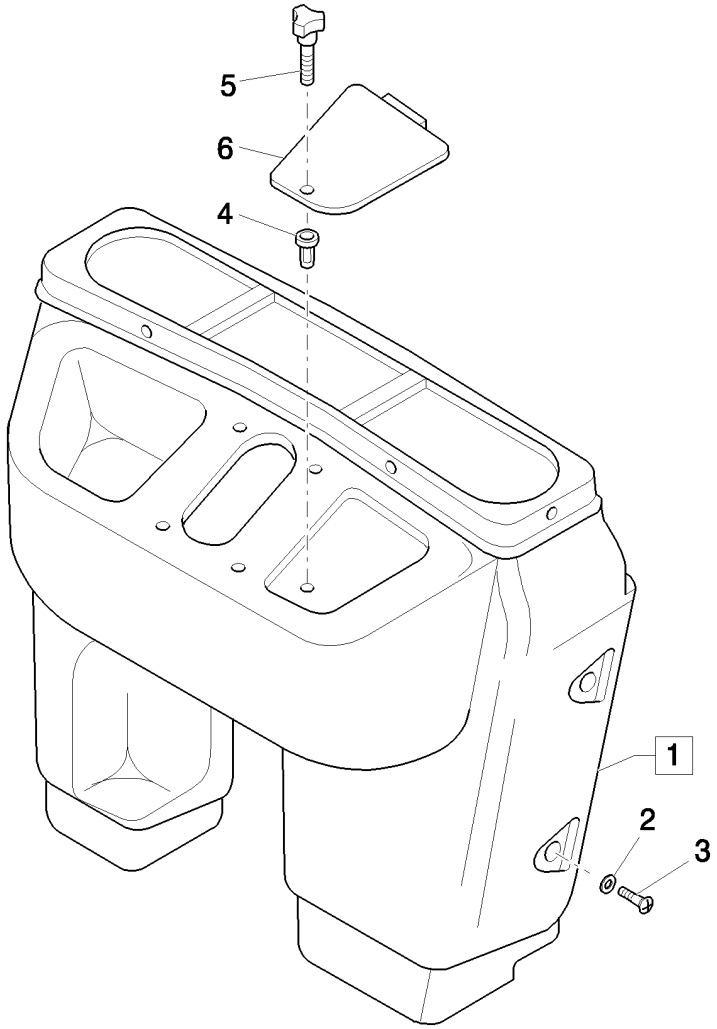

FRONT CONSOLE - ROPS (POWER SHUTTLE) - NA

REF	FN	PART NUMBER	YR/SN	QTY	DESCRIPTION
1	1	85819407		1	PANEL, DASH, Assy, ROPS
2		79089592		5	WASHER, D=24
3		13311214		4	SCREW, Cross Oval Hd, M5 x 20, M6X20
4		85804750		5	BUSHING, THREADED, M5
5		85805323		1	KNOB, M5
6		85806089		1	COVER

(1) Includes 4 - 6

RH SIDE CONSOLE SEAL & CLIPS - ROPS (POWER SHUTTLE) - NA

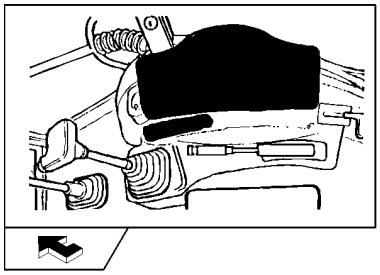

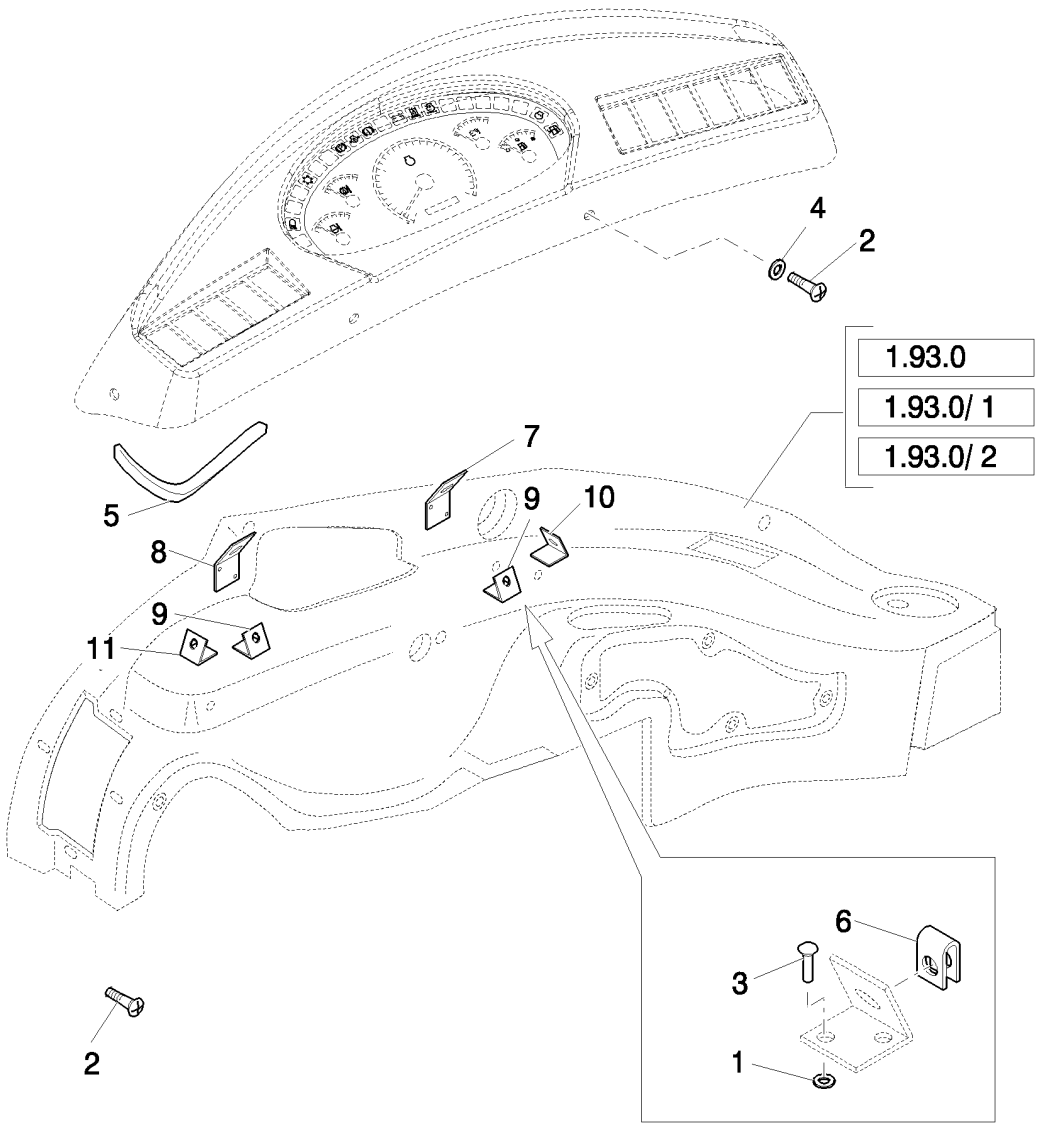

RH SIDE CONSOLE SEAL & CLIPS - ROPS (POWER SHUTTLE) - NA

REF	FN	PART NUMBER	YR/SN	QTY	DESCRIPTION
1		12642804		12	WASHER, M4 x 12 x 1
2		15693507		AR	SCREW, SELF TAPPING, Cross Oval Hd, M4.8 x 22
3		14642191		12	RIVET
4		85801991		AR	WASHER
5		87552670		1	SEAL
6		14189176		6	NUT, J, #10
7		85802145		1	BRACKET
8		87551537		1	BRACKET
9		85802142		2	BRACKET
10		85802143		1	BRACKET
11		85802144		1	BRACKET

INNER REAR VIEW MIRROR (POWER SHUTTLE) ROPS

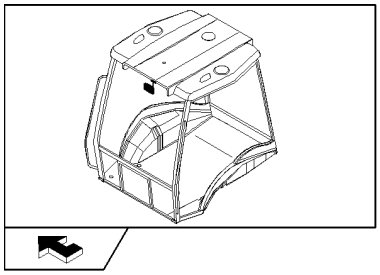

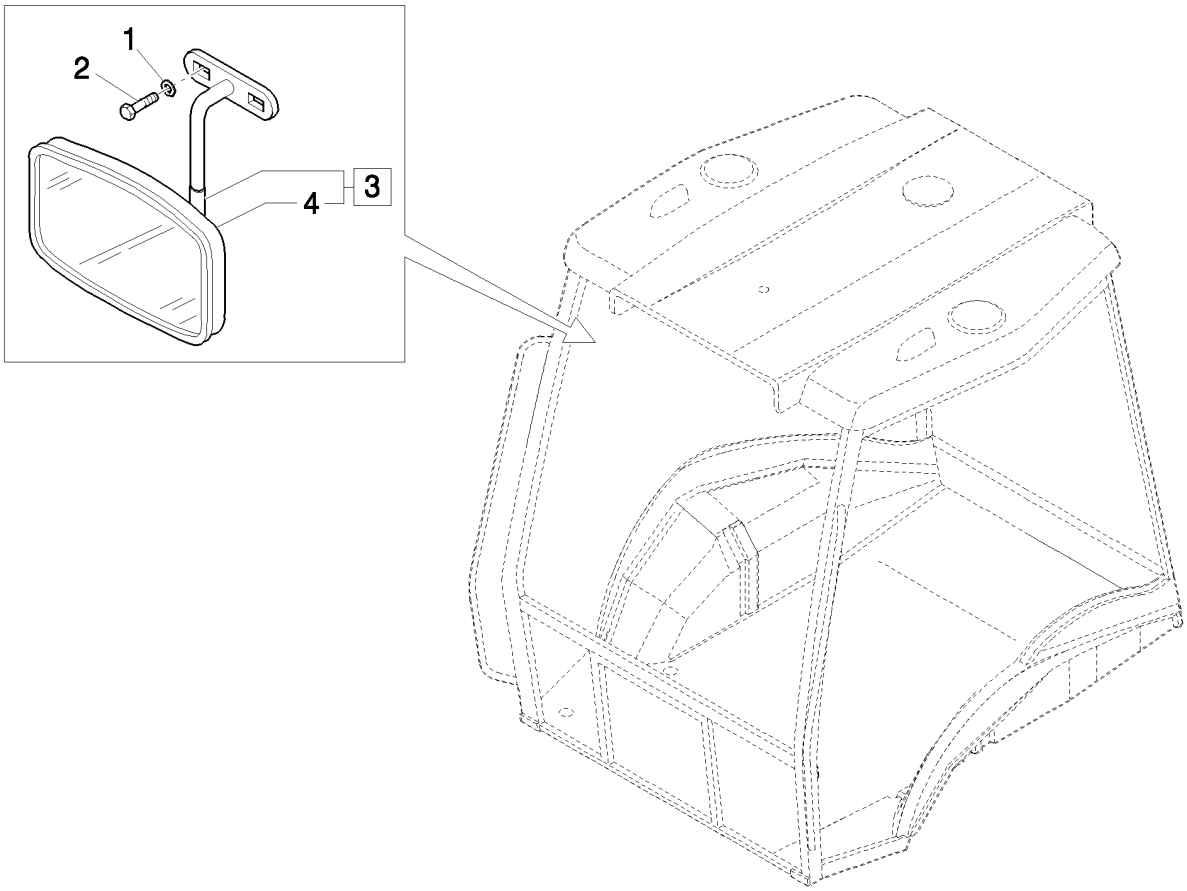

INNER REAR VIEW MIRROR (POWER SHUTTLE) ROPS

REF	FN	PART NUMBER	YR/SN	QTY	DESCRIPTION
1		11193274		2	WASHER, SPRING, Belleville, M6.4
2		10902424		2	BOLT, Hex, M6 x 20, 8.8, Full Thd
3		85817685		1	MIRROR, REAR-VIEW, Assy
4		85817686		1	MIRROR, REAR-VIEW

CAB / ROPS: ROOF AND INNER COVERING: NA

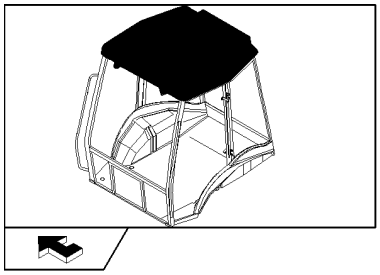

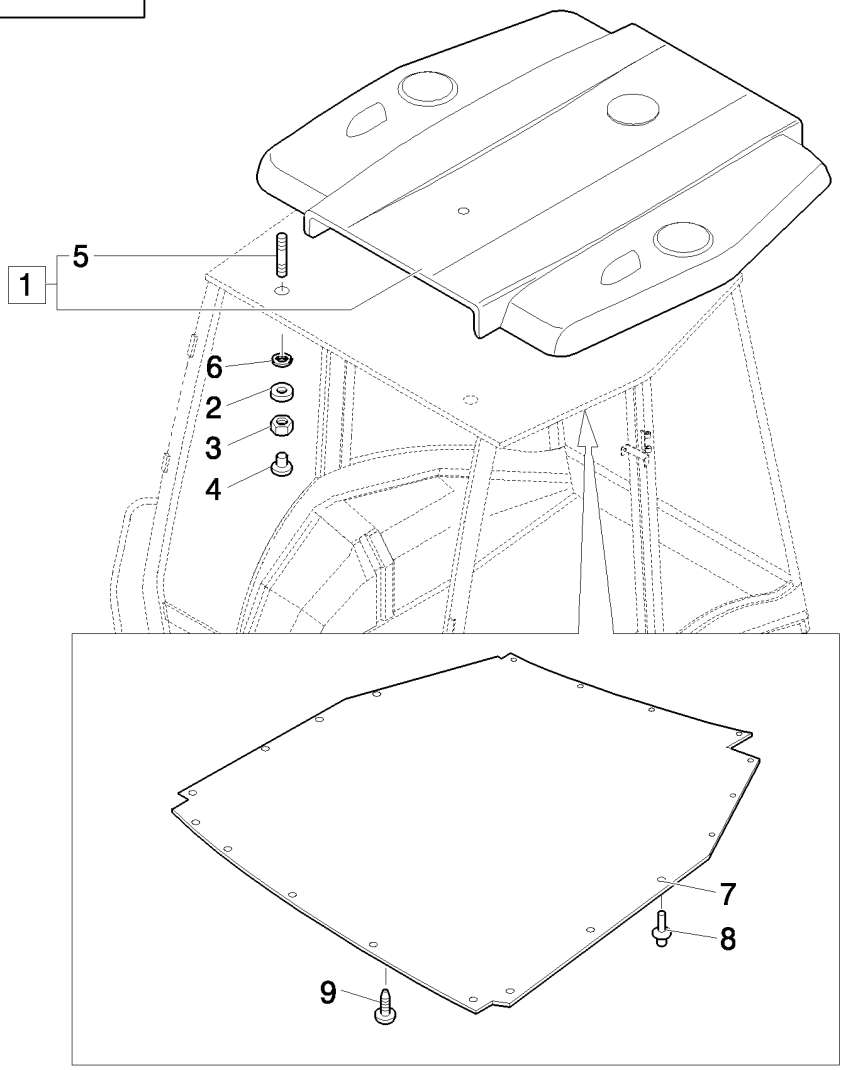

CAB / ROPS: ROOF AND INNER COVERING: NA

REF	FN	PART NUMBER	YR/SN	QTY	DESCRIPTION
1	1	87349058		1	ROOF, Assy
1	2	87349055		1	ROOF, Assy
2		12647004		8	WASHER, M8 x 25 x 2.5
3		16104111		8	NUT, LOCK, M8 x 1.25, Cl 8
4		87350247		8	PLUG
5		13517021		8	STUD
6		85801801		8	SEALRING
7	2	87319727		1	SOFT TRIM
8	2	5162852		21	FASTENER
9	2	85805777		1	PLUG

(1) Only for ROPS
(2) Only for CAB

1.94.2		p1	03/08

HEATER WATER HOSES

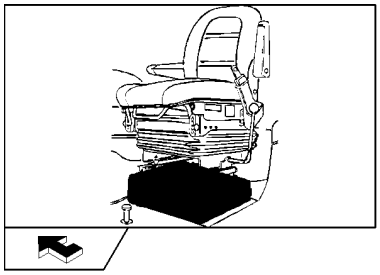

HEATER WATER HOSES

REF	FN	PART NUMBER	YR/SN	QTY	DESCRIPTION
1		87324991		1	HOSE, FLEXIBLE
2		87553661		1	HOSE
3		87550746		1	FITTING
4		47048896		1	VALVE, HYDRAULIC
5		85803079		4	CLAMP, HOSE
6		85802890		1	CLAMP
7		87567356		1	CLAMP
8		47044673		1	WASHER
9		47048451		4	STRAP, CABLE, M8 x 384
10		11112221		1	BOLT, Hex, M12 x 25, 8.8, Full Thd

1.95.0	01	p1	04/08

CAB / ROPS : BRAKE PEDAL

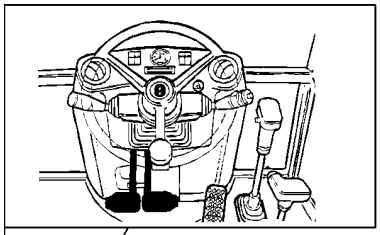

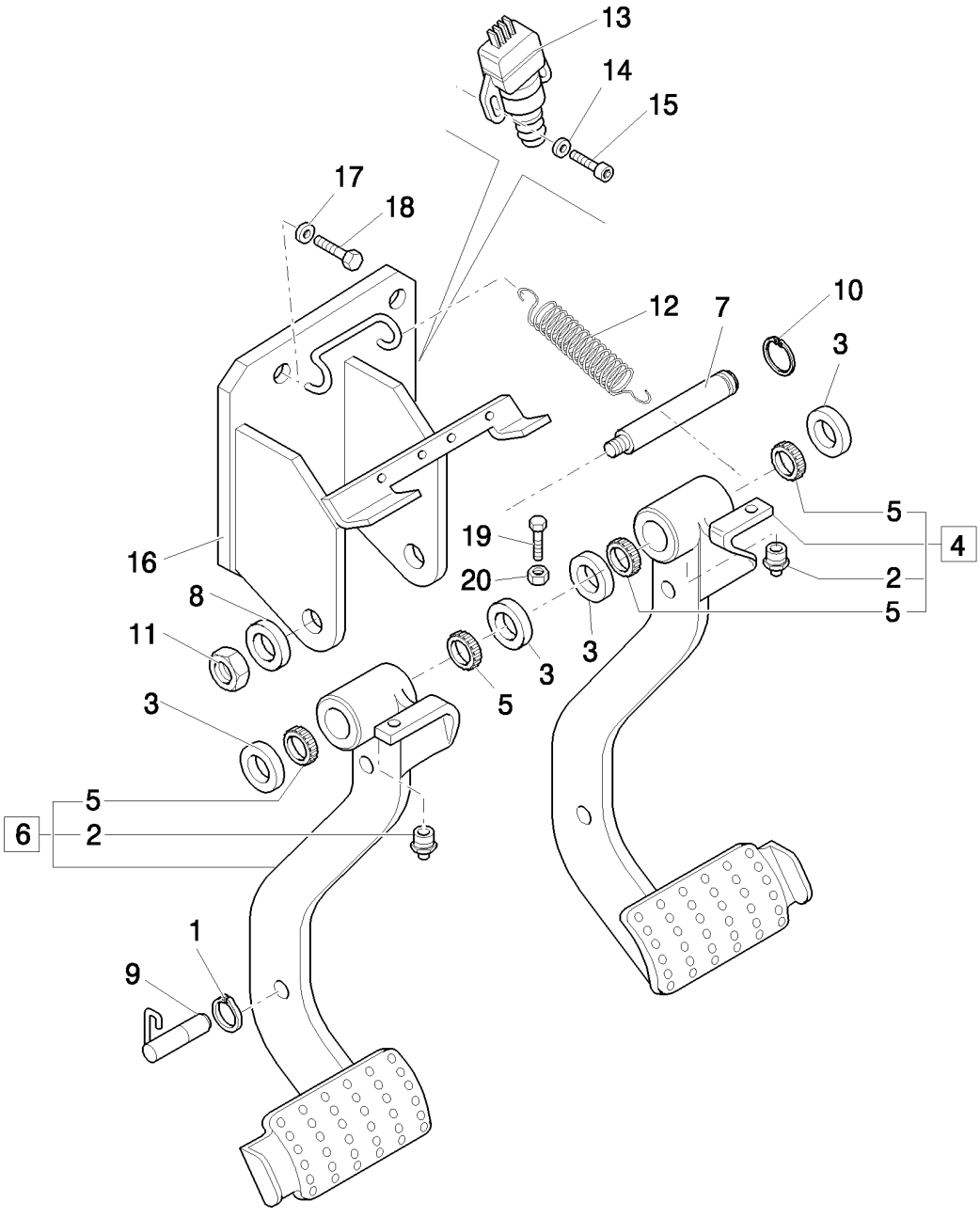

CAB / ROPS : BRAKE PEDAL

REF	FN	PART NUMBER	YR/SN	QTY	DESCRIPTION
1		11088176		1	CIRCLIP, M11
2		13407214		2	NIPPLE, LUBE
3		5148062		4	WASHER
4		85805285		1	PEDAL, Assy, RH
5		4983992		4	BEARING, NEEDLE
6		85805283		1	PEDAL, Assy, LH
7		85801860		1	PIN
8		10517274		1	WASHER, LOCK
9		87517988		1	BLOCK
10		11067376		1	RING, SNAP, M25, Ext
11		12164114		1	NUT, M16 x 1.5
12		5153180		1	SPRING
13		82026949		2	SWITCH, Brake
14		12642821		4	WASHER, M4 x 12 x 1, W/Cab
15		14303324		4	SCREW, Hex Soc Hd, M4 x 20, 8.8, Full Thd, W/Cab
16		85805277		1	SUPPORT
17		11190574		4	WASHER, SPRING, Belleville, M10.5
18		15970524		4	SCREW, Hex, M10 x 1.25 x 20, 8.8, Full Thd
19		16043921		2	SCREW, M8 x 1,25 x 35
20		11701621		2	NUT, M8, Cl 10

CAB / ROPS / BRAKE PUMP

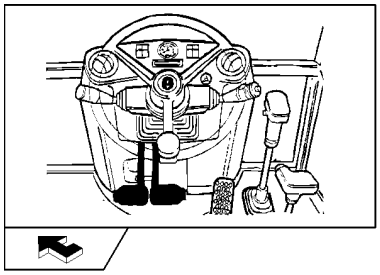

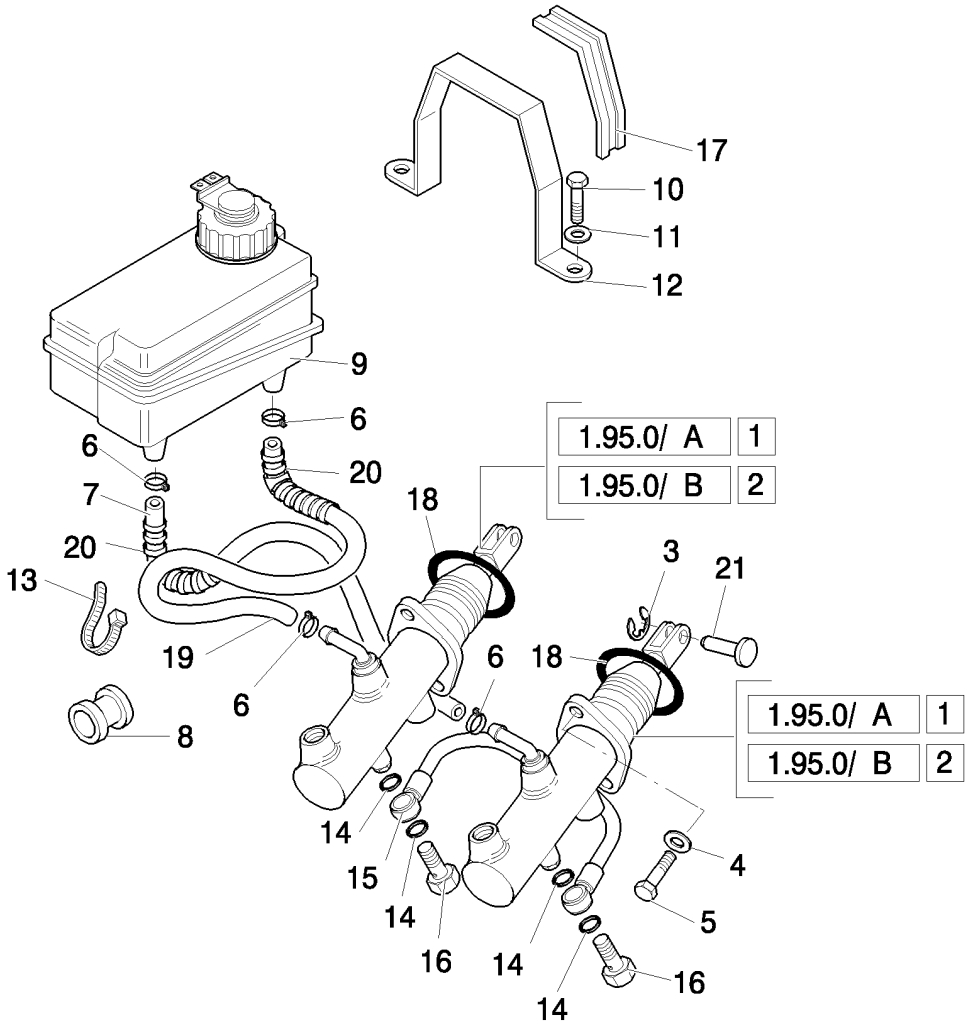

CAB / ROPS / BRAKE PUMP

REF	FN	PART NUMBER	YR/SN	QTY	DESCRIPTION
1	1	87398198		2	BRAKE CYLINDER, Assy
2	2	85824114		2	PUMP, HYDRAULIC, Assy
3		11064176		2	CLIP
4		11193874		4	WASHER, SPRING, Belleville, M8.4
5		14306324		4	SCREW, Hex Soc Hd, M8 x 20, 8.8
6		13423271		4	CLIP, HOSE
7		85819914		1	TUBE
8		85801941		2	SHOCK ABSORBER
9		82003369		1	RESERVOIR, BRAKE FLUID
10		10902624		2	BOLT, Hex, M6 x 25, 8.8, Full Thd
11		11193274		2	WASHER, SPRING, Belleville, M6.4
12		85801092		1	BRACKET
13		14560187		1	STRAP, CABLE, 178mm lg, L=203.2 mm
14		2854292		8	SEAL WASHER
15		5155701		1	TUBE
16		5155703		2	BOLT, BANJO, M12x1.25x22
17		85801093		1	STRIP-GASKET
18	3	13399076		2	CIRCLIP
19		85819915		1	TUBE
20		87302705		2	SHEATH, FLEXIBLE
21		5155381		2	PIN

(1) Only for B90B, B90BLR, B100B, B100BLR, B110B (EU) - B90B, B95B, B95BLR, B110B (NA)
(2) Only for B115B (EU) - B115B (NA)
(3) Only for CAB

CAB / ROPS / BRAKE SYSTEM PIPES

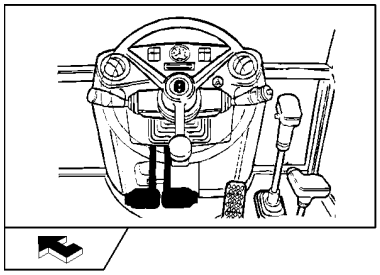

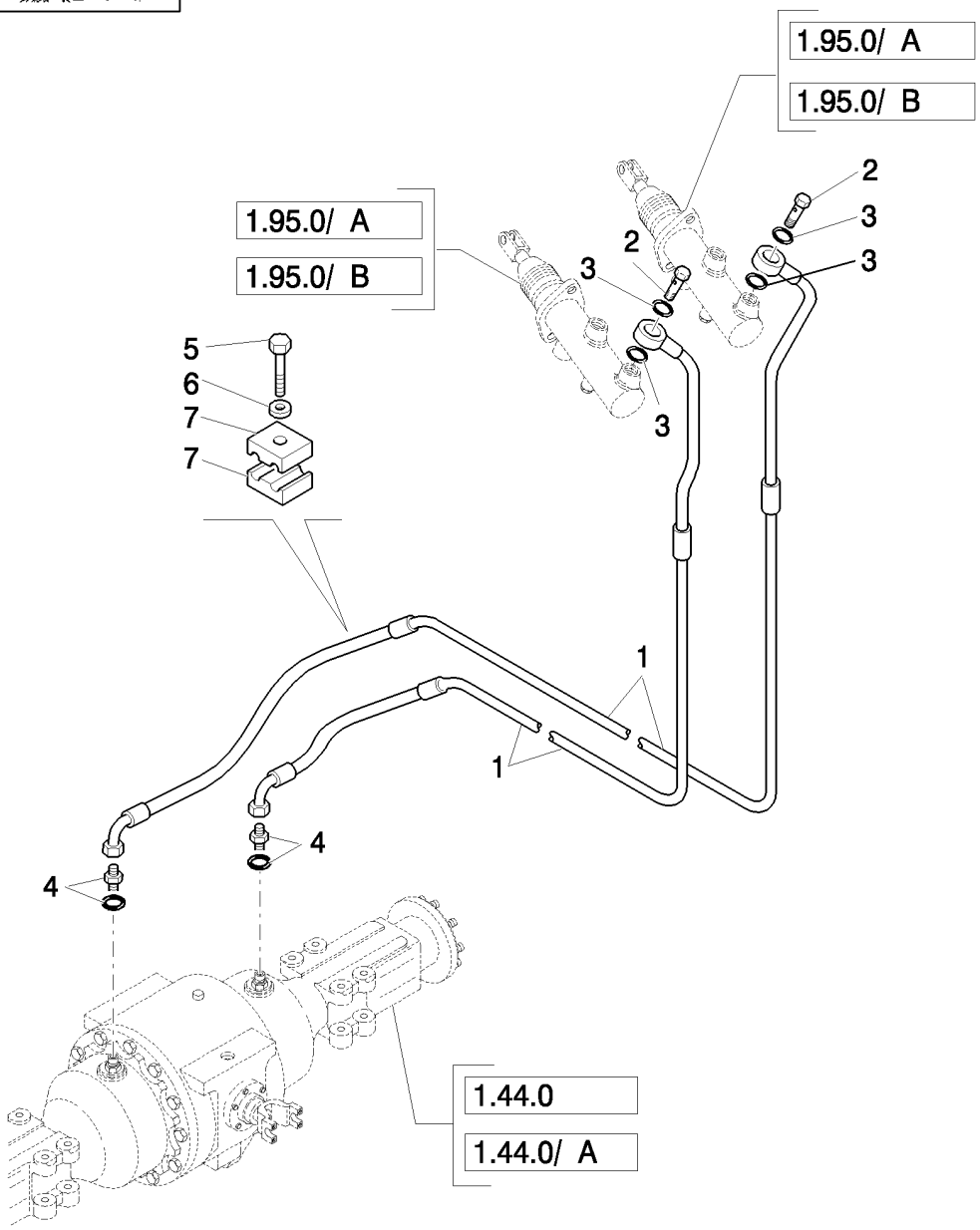

CAB / ROPS / BRAKE SYSTEM PIPES

REF	FN	PART NUMBER	YR/SN	QTY	DESCRIPTION
1		85819177		2	BRAKE LINE
2		5155703		2	BOLT, BANJO
3		2854292		4	SEAL WASHER
4	1	85803312		2	CONNECTOR, HYD.
4	2	85805655		2	ELBOW
5		15212721		2	BOLT, Hex, M6 x 40, 8.8, Full Thd
6		14447021		2	WASHER, M5 x 15 x 1
7		85805548		4	CLIP

(1) Only for B90B, B90BLR, B100B, B100BLR, BB110B (EU) - B90B, B95B, B95BLR, B110B (NA)
(2) Only for B115B (EU) - B115B (NA)

CAB / ROPS / BRAKE PUMP CYLINDER

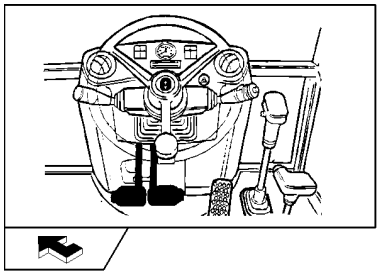

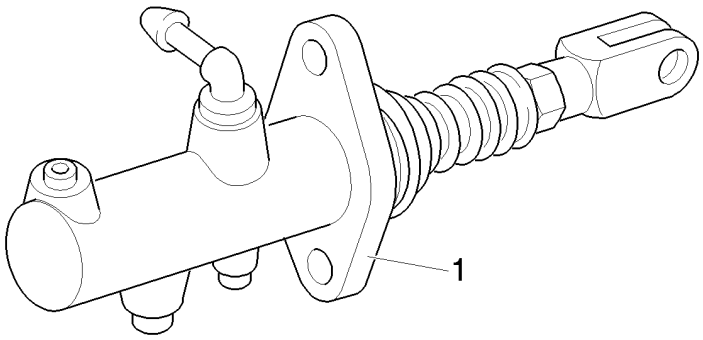

CAB / ROPS / BRAKE PUMP CYLINDER

REF	FN	PART NUMBER	YR/SN	QTY	DESCRIPTION
1		87398198		1	BRAKE CYLINDER

CAB / ROPS / PARKING BRAKE LEVER AND CONTROL CABLE

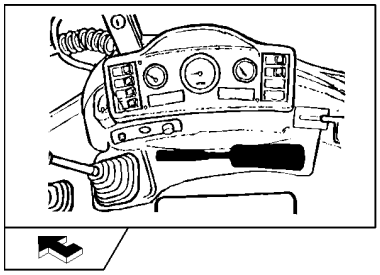

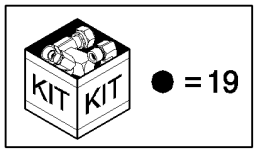

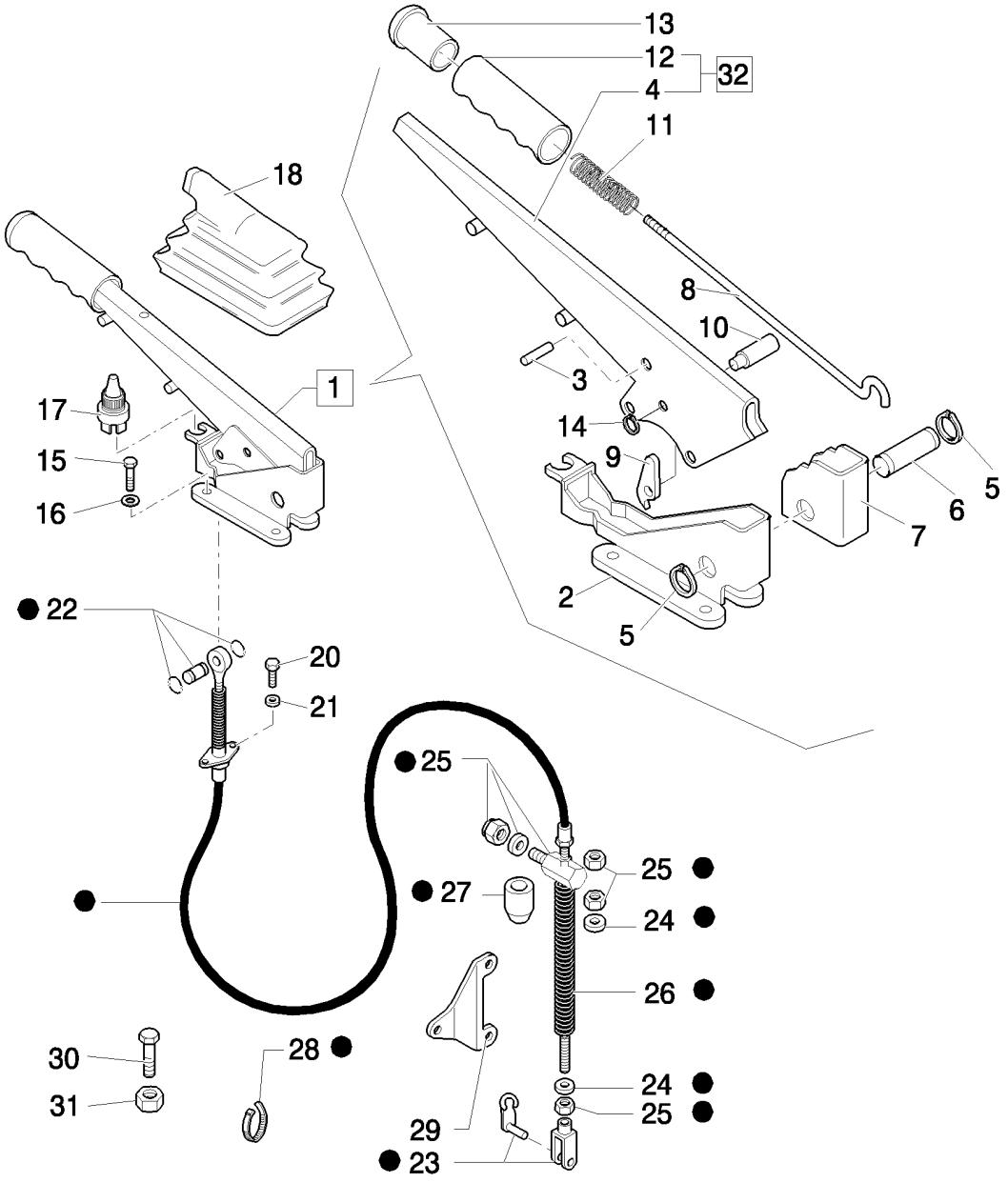

CAB / ROPS / PARKING BRAKE LEVER AND CONTROL CABLE

REF	FN	PART NUMBER	YR/SN	QTY	DESCRIPTION
1		85827832		1	LEVER, Assy
2		85805441		1	SUPPORT
3		4985127		1	RIVET
4		85805440		1	LEVER
5		13400776		2	RING, LOCKING
6		4988275		1	PIN
7		5110153		1	RATCHET
8		85827833		1	DIPSTICK
9		5110155		1	PAWL
10		5131437		1	PIN
11		5105729		1	SPRING
12		86021837		1	HANDLE GRIP
13		4985122		1	BUTTON
14		11065476		1	RING, SNAP, M6, Ext
15		14306424		4	SCREW, Hex Soc Hd, M8 x 25, 8.8
16		11193874		4	WASHER, SPRING, Belleville, M8.4
17		85816770		1	SWITCH ASSY
18		5106733		1	BOOT
19	1	85815536		1	CABLE, Assy
19	2	85815537		1	CABLE, Assy
20		10978024		2	BOLT, Hex, M5 x 20, 8.8, Full Thd
21		10615374		2	WASHER
22		85815550		1	BALL JOINT
23		85815556		1	CLEVIS
24		85815555		1	WASHER, 22 x 10.2 x 2
25		85815552		1	CONNECTION, SWIVEL
26	3	85815554		1	SPRING
26	2	85821173		1	SPRING
27		85821172		1	GASKET
28		85815549		1	STRAP, CABLE
29	4	85826099		1	SUPPORT

(1) Only for B90B, B90BLR, B100B, B100BLR, B110B (EU) - B90B, B95B, B95BLR, B95BTC, B110B (NA)
(2) Only for B115B (EU) - B115B (NA)
(3) Only for B90B, B90BLR, B100B, B100BLR, B110B (EU) - B90B, B95B, B95BLR, B110B (NA)
(4) Only for Power Shuttle

CAB / ROPS / PARKING BRAKE LEVER AND CONTROL CABLE

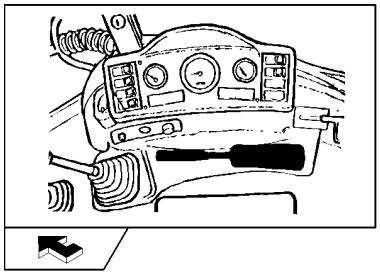

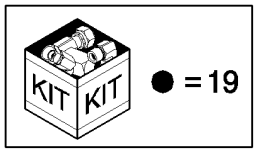

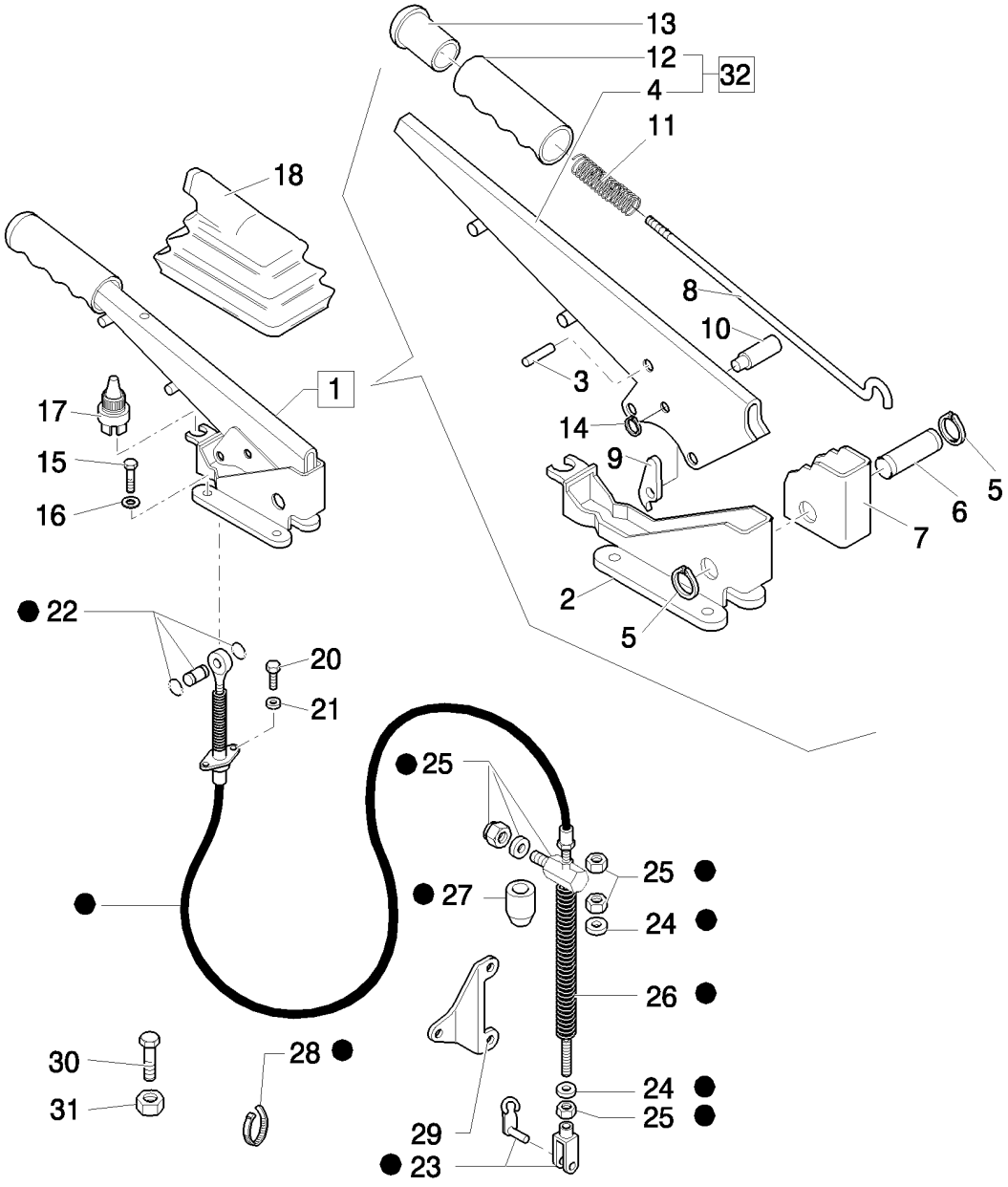

CAB / ROPS / PARKING BRAKE LEVER AND CONTROL CABLE

REF	FN	PART NUMBER	YR/SN	QTY	DESCRIPTION
29	1	85805251		1	SUPPORT
30		13272319		1	SCREW
31		10794011		1	NUT, M4, Cl 8
32		85827834		1	LEVER, Assy

(1) Only for Power Shift

TRANSPORT LOCK CONTROL - NA

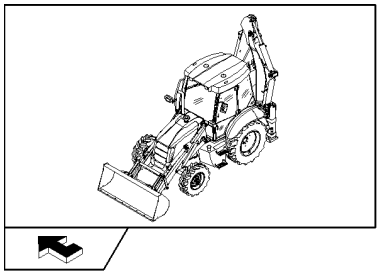

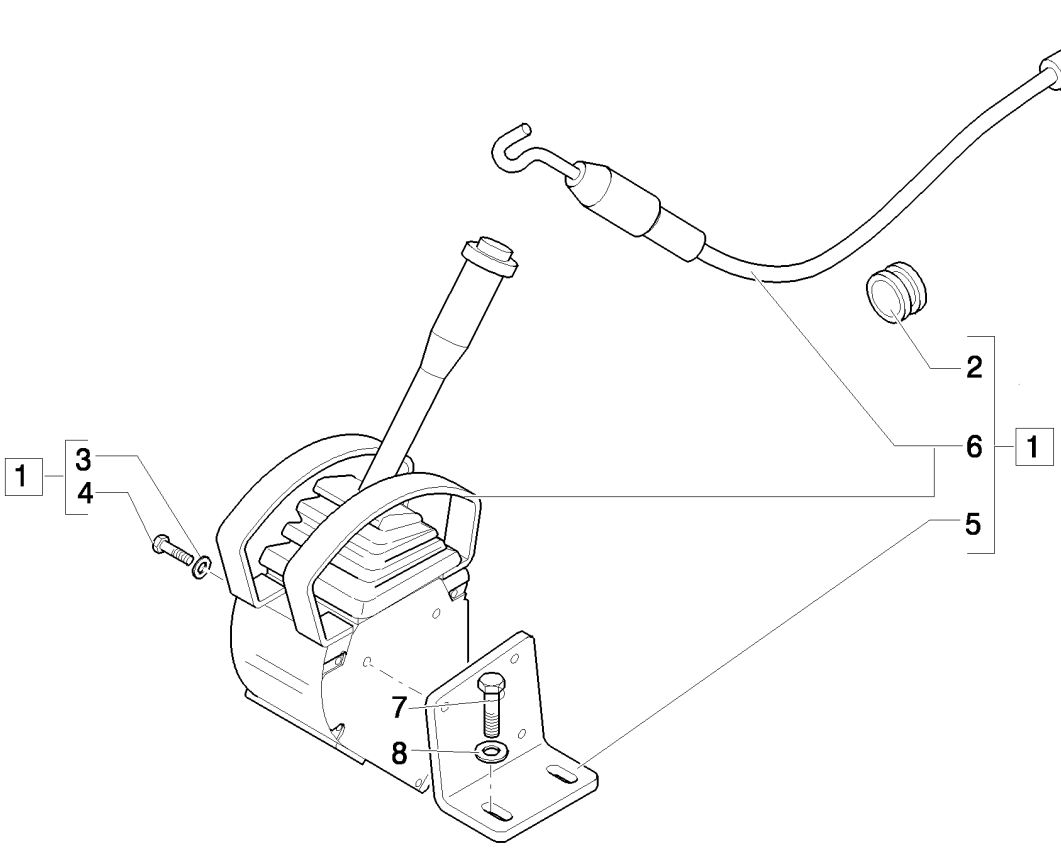

TRANSPORT LOCK CONTROL - NA

REF	FN	PART NUMBER	YR/SN	QTY	DESCRIPTION
1	1	87324535		1	LEVER, Assy, TRANSPORT LOCK; Not Serviced As An Assembly, Order Components
1	2	87324490		1	LEVER, Assy
2		10398680		1	GROMMET
3		11193274		3	WASHER, SPRING, Belleville, M6.4
4		15212921		3	BOLT, Hex, M6 x 50, 8.8, Full Thd
5		85808419		1	SUPPORT
6		87324496		1	LEVER
7		16043624		2	BOLT, Hex, M8 x 25, 8.8, Full Thd
8		11193874		2	WASHER, SPRING, Belleville, M8.4

(1) Only for ROPS
(2) Only for CAB

HAND/PEDAL ELECTRONIC ACCELERATOR CONTROL

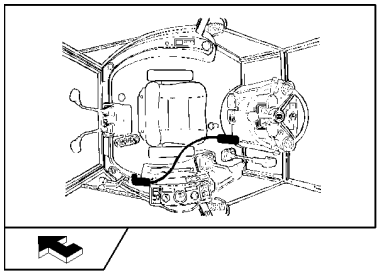

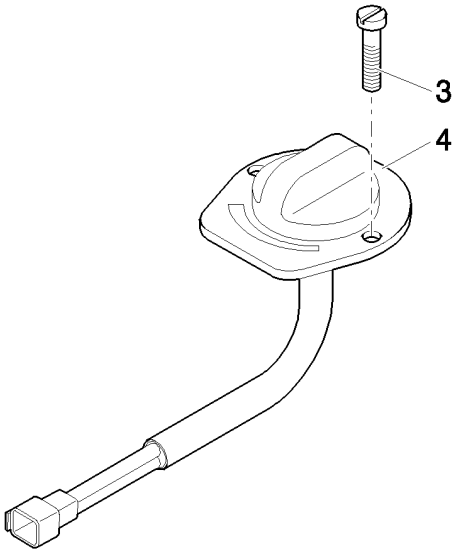

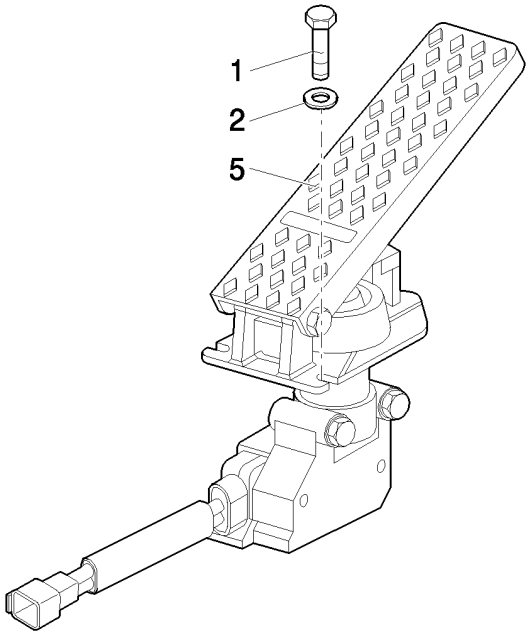

HAND/PEDAL ELECTRONIC ACCELERATOR CONTROL

REF	FN	PART NUMBER	YR/SN	QTY	DESCRIPTION
1		10902424		3	BOLT, Hex, M6 x 20, 8.8, Full Thd
2		11193274		3	WASHER, SPRING, Belleville, M6.4
3		13274117		2	SCREW
4		87528964		1	THROTTLE CONTROL
5		87518902		1	PEDAL

STEERING COLUMN AND COVERING: NA

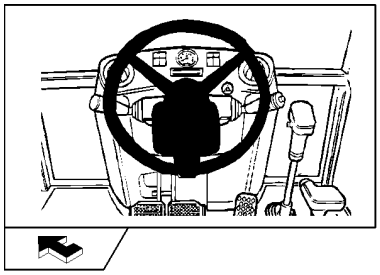

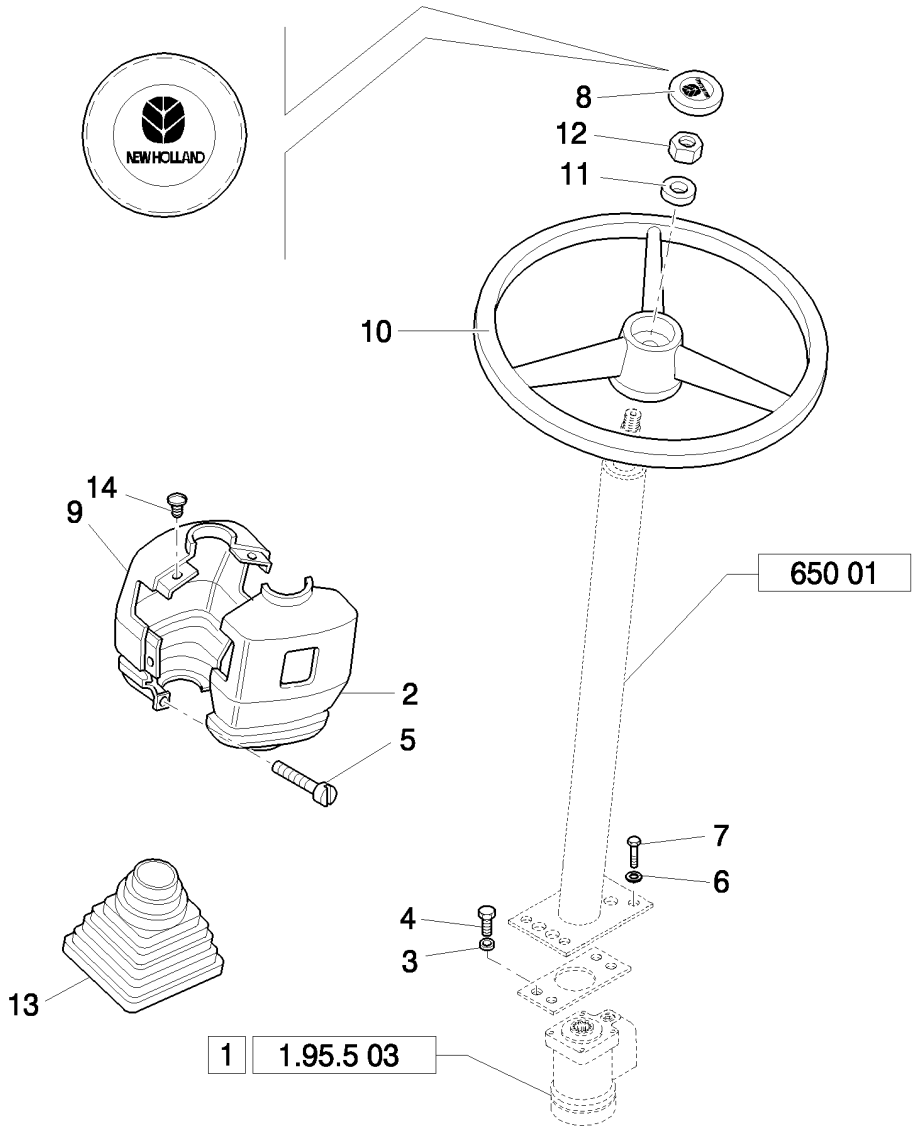

STEERING COLUMN AND COVERING: NA

REF	FN	PART NUMBER	YR/SN	QTY	DESCRIPTION
1		87360424		1	STEERING HYDRAULIC, Assy
2	1	85805775		1	COVER, Upper
2	2	85805774		1	COVER
3		10615774		4	WASHER, LOCK
4		14432334		4	SCREW, Hex Soc Hd, M10 x 22, 10.9
5		14303324		4	SCREW, Hex Soc Hd, M4 x 20, 8.8, Full Thd
6		11190574		4	WASHER, SPRING, Belleville, M10.5
7		15970724		4	SCREW, Hex, M10 x 1.25 x 25, 8.8, Full Thd
8		85820105		1	CAP
9	3	85805772		1	COVER, LOWER
9	4	85805773		1	COVER
10		5148946		1	STEERING WHEEL
11		4998760		1	WASHER
12		10791414		1	NUT, M16X1,5
13		85801976		1	BOOT
14		14568887		4	FASTENER

(1) Only for Power Shuttle Rops
(2) Only for CAB Power Shuttle / Power Shift
(3) Only for Power Shuttle
(4) Only for CAB Power Shift

STEERING SYSTEM SLEEVES: NA

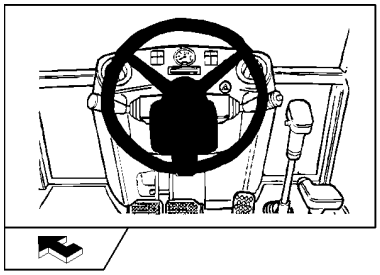

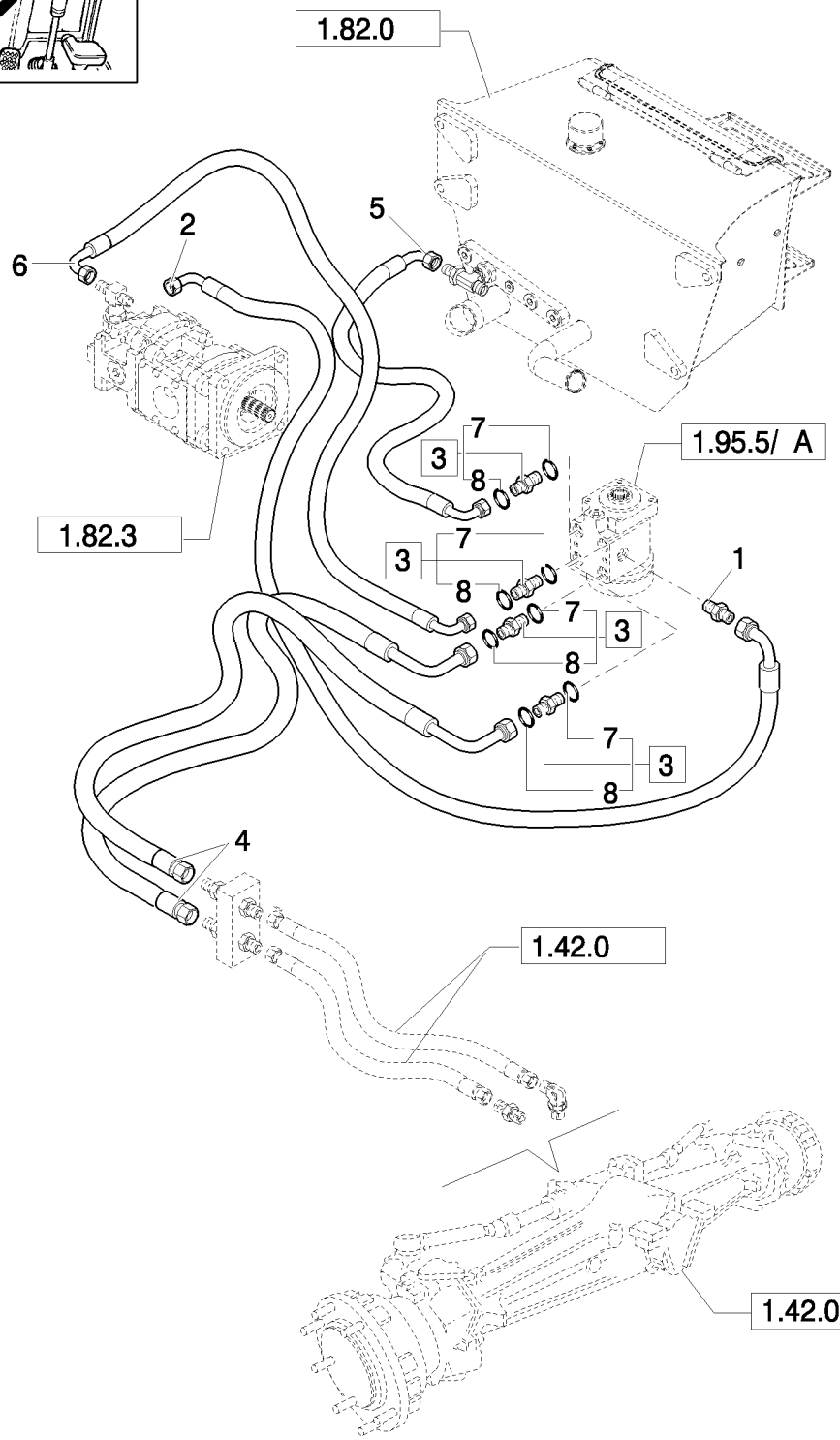

STEERING SYSTEM SLEEVES: NA

REF	FN	PART NUMBER	YR/SN	QTY	DESCRIPTION
1		85802640		1	CONNECTOR, HYD.
2		85819041		1	HOSE, FLEXIBLE
3		83963374		4	CONNECTOR, HYD., Assy
4		85826080		2	HOSE, FLEXIBLE, RH CYLINDER
5		85802761		1	HOSE, HYDRAULIC, 1100mm lg
6		85820282		1	HOSE, FLEXIBLE
7		80128825		4	O-RING
8		89992298		4	O-RING

POWER STEERING: NA

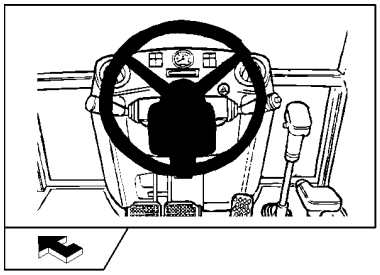

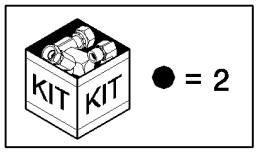

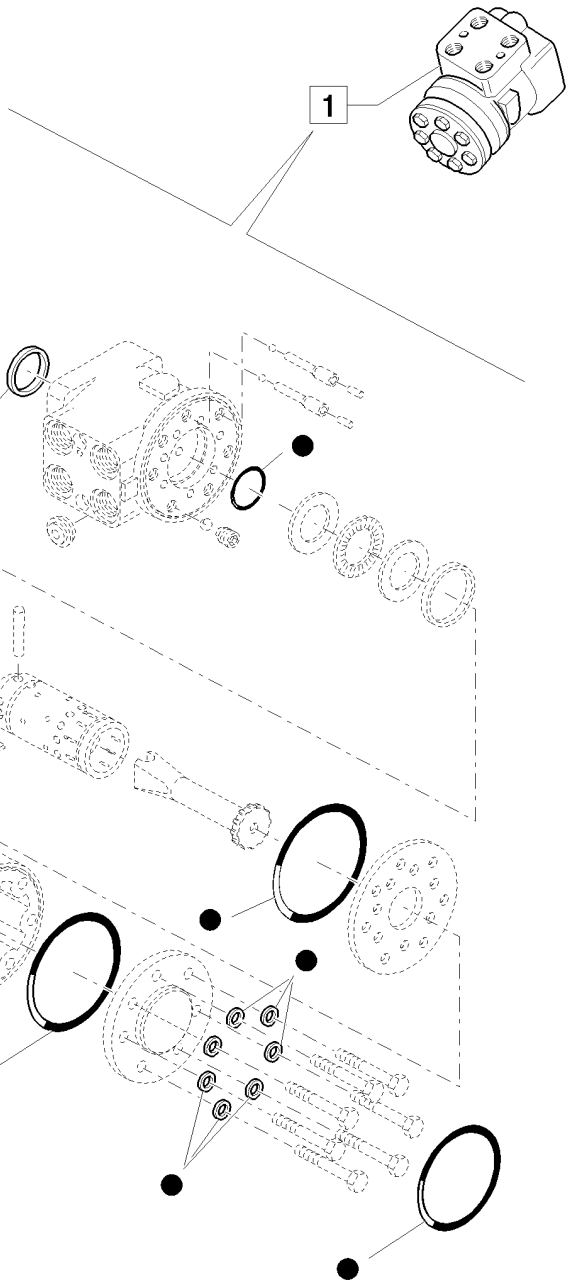

POWER STEERING: NA

REF	FN	PART NUMBER	YR/SN	QTY	DESCRIPTION
1		87360424		1	STEERING HYDRAULIC, Assy
2		85808390		1	KIT, SEALS

FOWARD/REVERSE & MULTI-PURPOSE LEVER

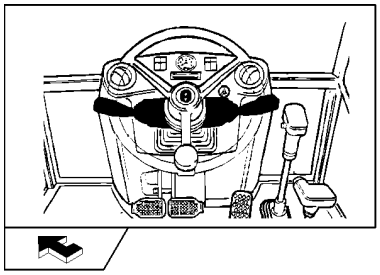

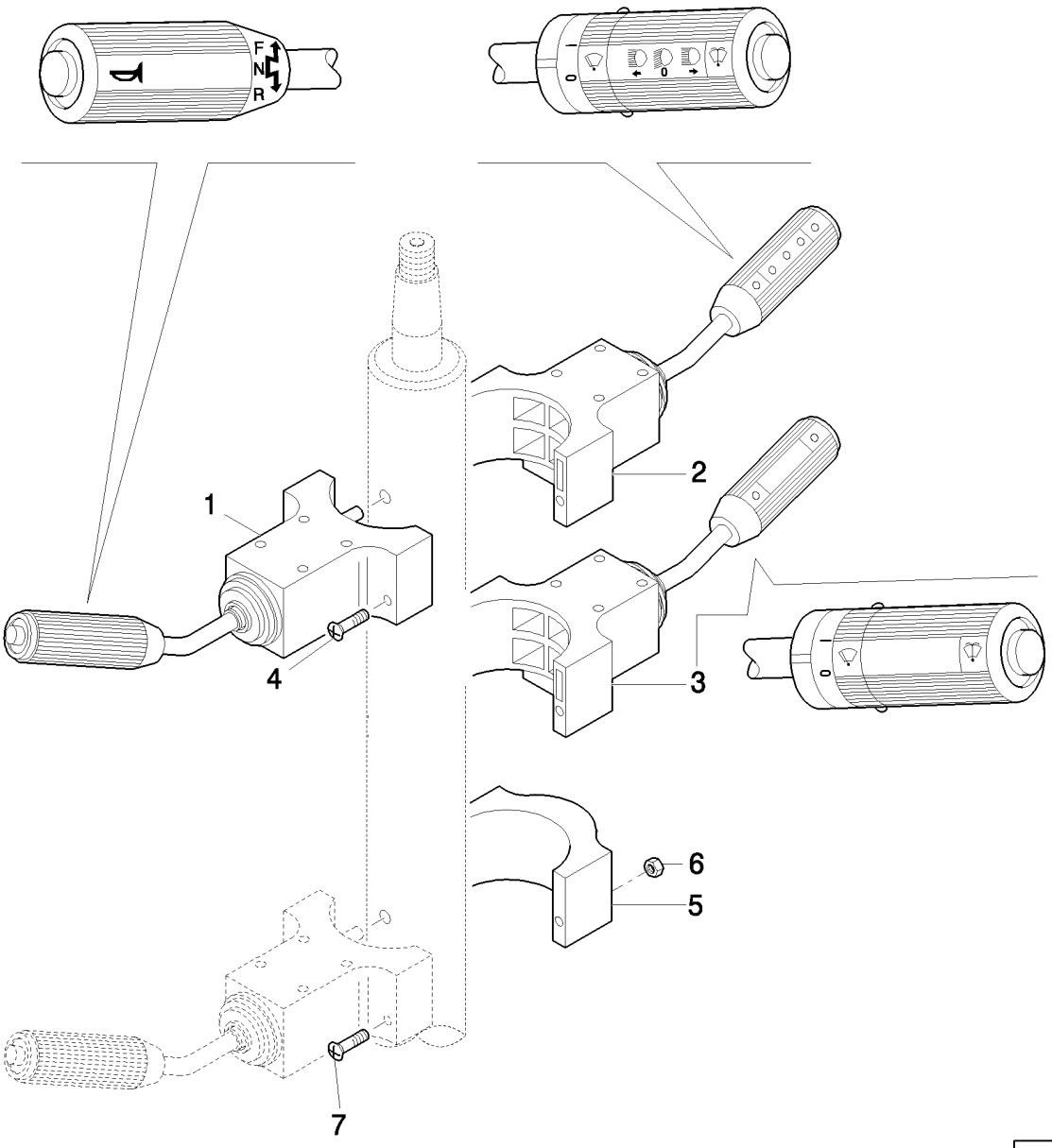

FOWARD/REVERSE & MULTI-PURPOSE LEVER

REF	FN	PART NUMBER	YR/SN	QTY	DESCRIPTION
1	1	85801938		1	LEVER, CONTROL
2	2	85828252		1	SWITCH ASSY
3	3	85801939		1	SWITCH
4	1	14304724		2	SCREW, Hex Soc Hd, M5 x 50, 8.8, Full Thd
4	4	14358724		2	SCREW
5	5	85804676		1	CLAMP
6	5	12574111		2	NUT, LOCK, M5 x .8, Cl 8
7	5	14301521		2	SCREW, Hex Soc Hd, M5 x 60, 8.8

(1) Only for Power Shuttle
(2) Only for Power Shift / Shuttle (EU)
(3) Only for Power Shuttle / Power Shift (NA) CAB
(4) Only for Power Shift
(5) Only for ROPS

1.96.2	01	p1	04/08

STABILIZER CONTROL (SIDE SHIFT - EU) - (CENTER PIVOT - NA)

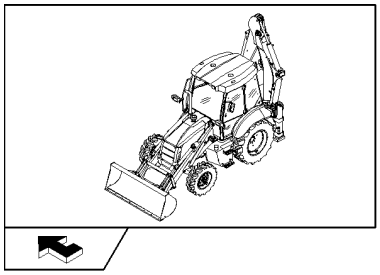

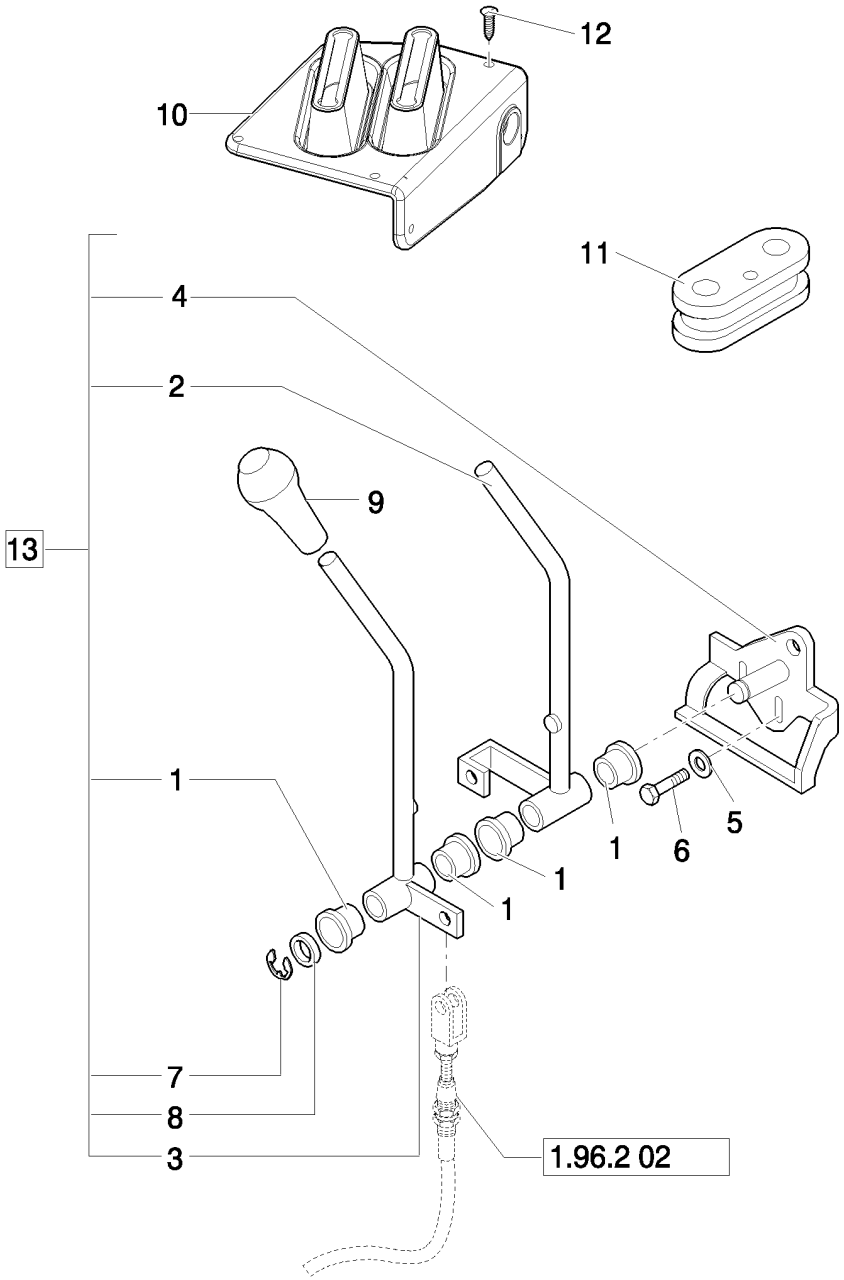

STABILIZER CONTROL (SIDE SHIFT - EU) - (CENTER PIVOT - NA)

REF	FN	PART NUMBER	YR/SN	QTY	DESCRIPTION
1		85813136		4	BUSHING
2		85813134		1	LEVER, RH
3		85813135		1	LEVER, LH
4		85813133		1	SUPPORT
5		11193874		2	WASHER, SPRING, Belleville, M8.4
6		16043624		2	BOLT, Hex, M8 x 25, 8.8, Full Thd
7		85813138		1	CIRCLIP
8		85813137		1	WASHER
9		85802763		2	KNOB
10		85821316		1	BOOT
11		87407927		1	INSULATOR BLOCK
12		85827850		6	PLUG
13		85813100		1	ARM, TRIP, Assy

Mechanical Version B95B

STABILIZER CONTROL (CENTER PIVOT) - NA

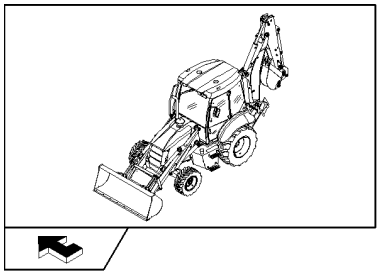

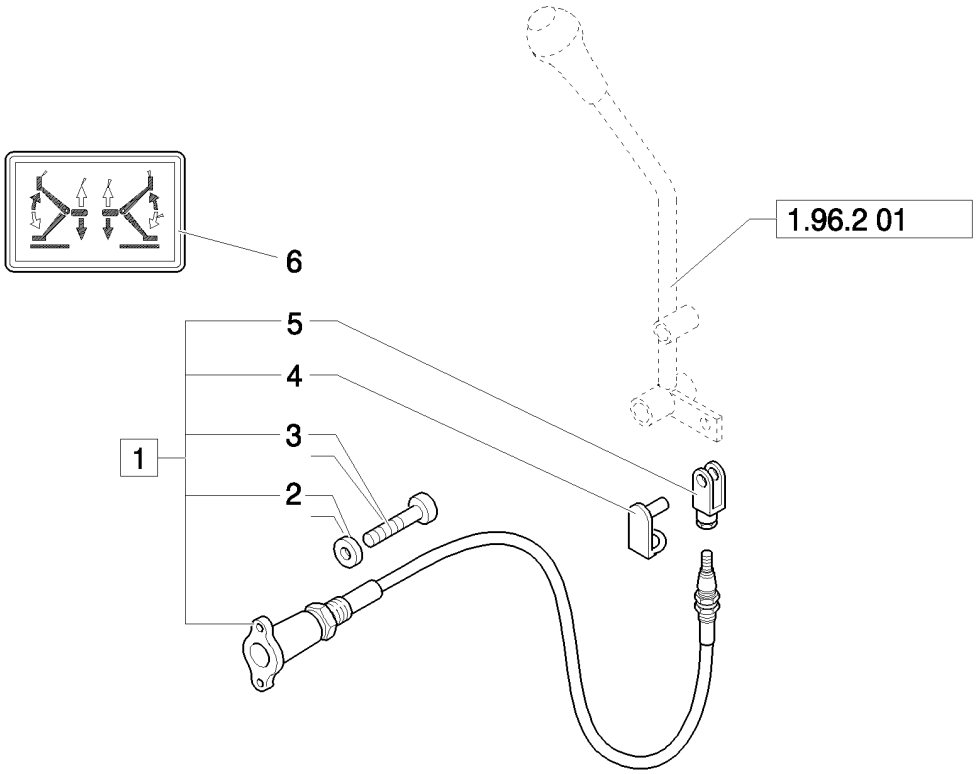

STABILIZER CONTROL (CENTER PIVOT) - NA

REF	FN	PART NUMBER	YR/SN	QTY	DESCRIPTION
1		85813104		2	CABLE, Assy
2		85813201		4	WASHER
3		85813200		4	SCREW, M6 x 15
4		85813186		2	CLIP
5		85813187		2	CLEVIS
6		85803788		1	IDEOGRAM

Mechanical Version B95B

PILOT CONTROL DIAGNOSTICS

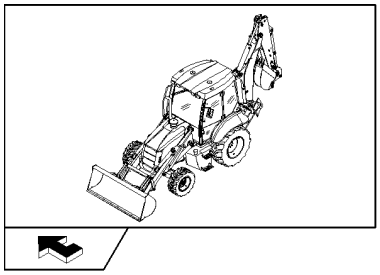

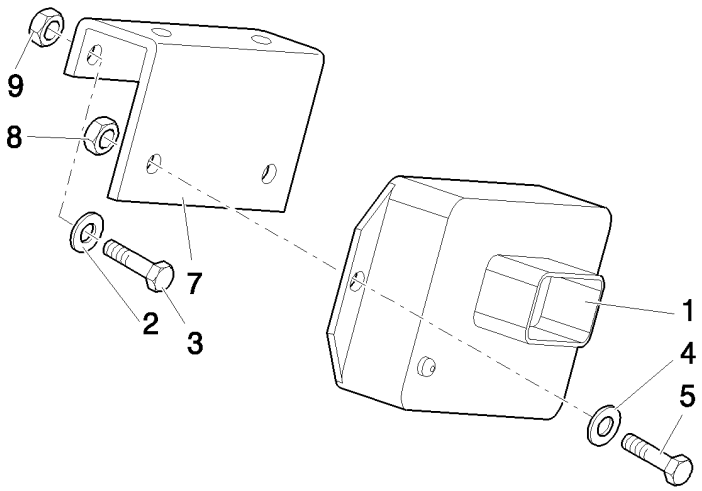

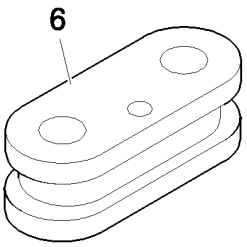

PILOT CONTROL DIAGNOSTICS

REF	FN	PART NUMBER	YR/SN	QTY	DESCRIPTION
1	1	87419454		1	MODULE
1	2	87419455		1	CONTROL UNIT
2		11197779		2	WASHER, SPRING, Belleville, M6.4
3		10902321		2	BOLT, Hex, M6 x 18, 8.8, Full Thd
4		47048959		2	WASHER
5		10444721		2	SCREW, Hex, M4 x 14, 8.8, Full Thd, M4x20
6		87407927		1	INSULATOR BLOCK
7		85828213		1	SUPPORT
8		12574011		2	NUT, LOCK, M4 x .7, Cl 8
9		12574211		2	NUT, LOCK, M6 x 1, Cl 8

(1) 6/7 function black color
(2) 8 function white color

Pilot Control Version 87419454 Black Box Controller for Machines W/O Bi-Directional Auxiliary Hydraulics; 87419455 White Box Controller for Machines W/Bi-Directional Auxiliary Hydraulics. 87419455 Can Service All Machines Equipped With or Without Bi-Directional Auxiliary Hydraulics.

B95B

CLOSING PINS AND PLUGS ROPS (CENTER PIVOT): NA

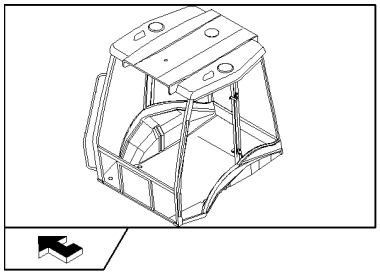

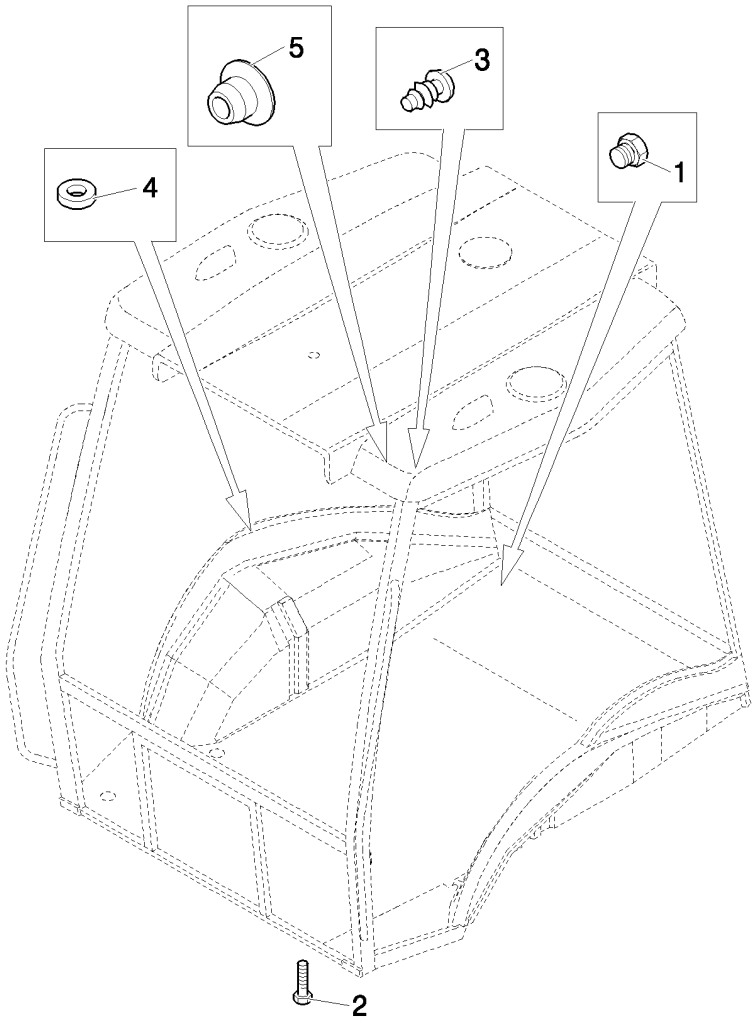

CLOSING PINS AND PLUGS ROPS (CENTER PIVOT): NA

REF	FN	PART NUMBER	YR/SN	QTY	DESCRIPTION
1		85802309		4	PLUG
2		13313417		4	SCREW, Cross Oval Hd, M6 x 25
3		85802310		4	PLUG
4		85804734		5	WASHER, RUBBER
5		82003283		4	PLUG

Mechanical Version B95B

CAB / VARIOUS COMPONENTS (CENTER PIVOT): NA

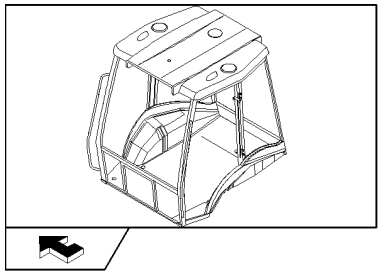

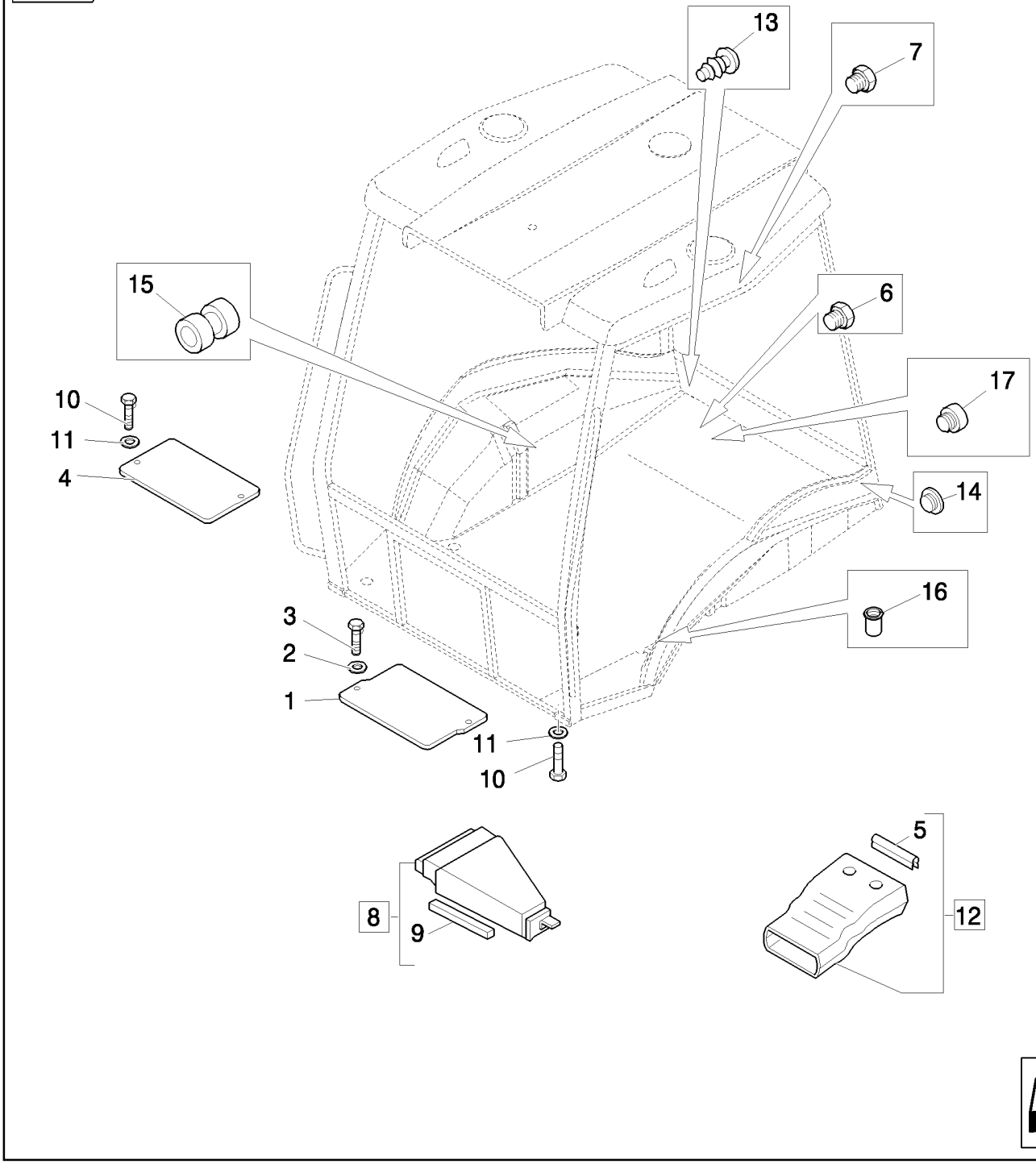

CAB / VARIOUS COMPONENTS (CENTER PIVOT): NA

REF	FN	PART NUMBER	YR/SN	QTY	DESCRIPTION
1		85801968		1	PLATE
2		11198074		2	WASHER, SPRING, Belleville, M8.4
3		16043424		2	SCREW, Hex, M8 x 20, 8.8, Full Thd
4	1	85802225		1	COVER
5		85812021		1	STRIP, SEALING
6		79111978		10	PLUG
7		83994150		2	PLUG
8		85805200		1	DUCT, AIR, Assy, Front
9		85806023		1	STRIP, SEALING
10		10902224		5	BOLT, Hex, M6 x 16, 8.8, Full Thd
11		11193274		5	WASHER, SPRING, Belleville, M6.4
12		85820141		1	DUCT, AIR, Assy
13		85802310		4	PLUG
14	1	85802227		1	PLUG
15		10398580		2	GROMMET
16		85801953		2	RIVET
17		85802309		2	PLUG

(1) Only for Power Shift

CAB: VARIOUS COMPONENTS (CENTER PIVOT): NA

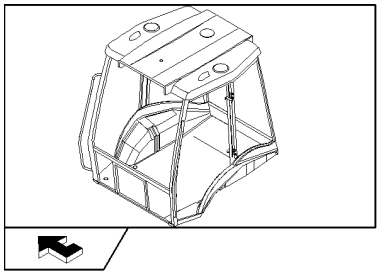

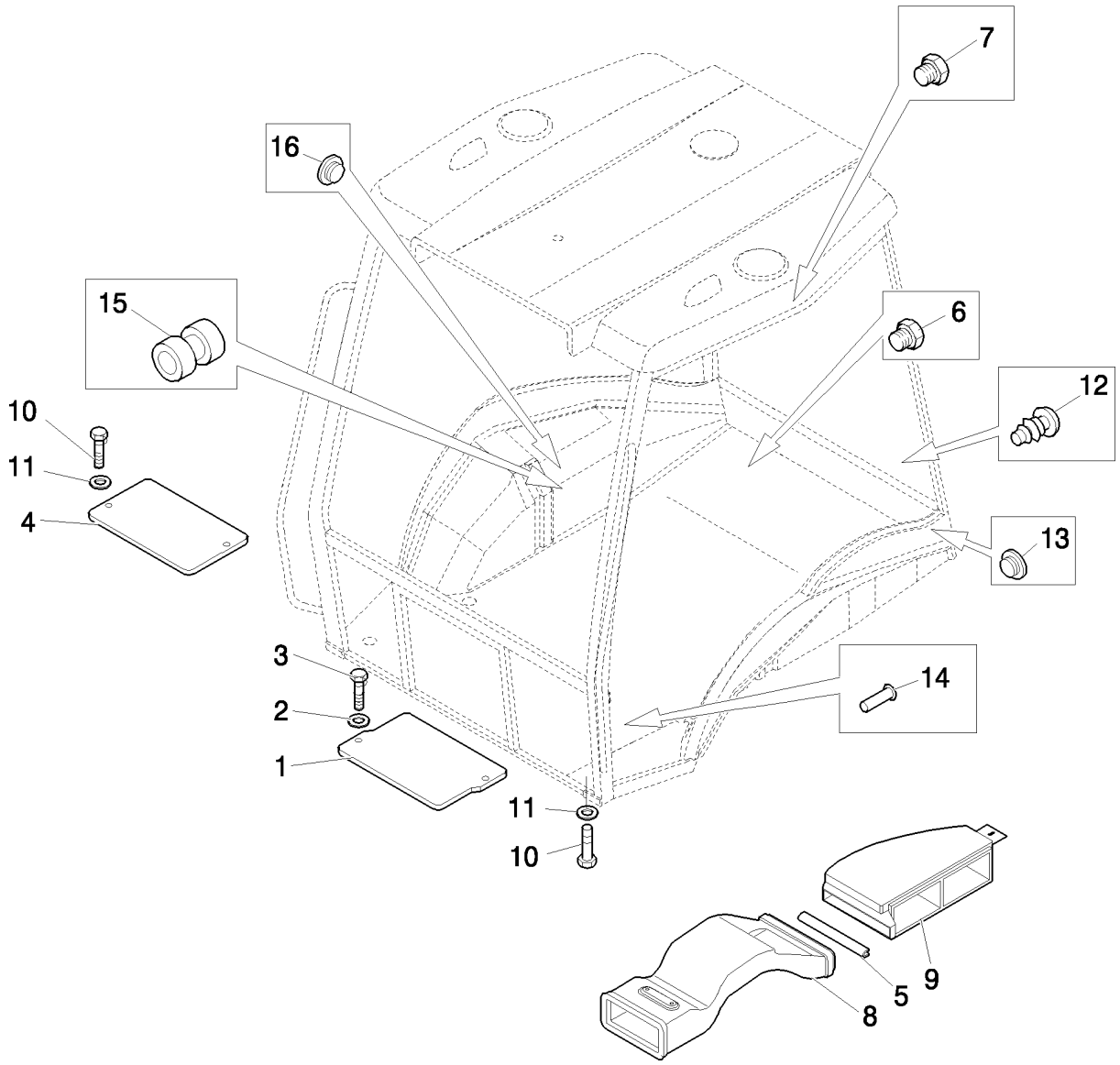



CAB: VARIOUS COMPONENTS (CENTER PIVOT): NA

REF	FN	PART NUMBER	YR/SN	QTY	DESCRIPTION
1		85801968		1	PLATE
2		11198074		2	WASHER, SPRING, Belleville, M8.4
3		16043424		2	SCREW, Hex, M8 x 20, 8.8, Full Thd
4	1	85802225		1	COVER
5		85812021		1	STRIP, SEALING
6		79111978		10	PLUG
7		83994150		2	PLUG
8		87408277		1	DUCT, AIR, FRONT
9		87319754		1	DUCT, AIR
10		10902224		11	BOLT, Hex, M6 x 16, 8.8, Full Thd
11		11193274		11	WASHER, SPRING, Belleville, M6.4
12		85802310		4	PLUG
13		85802309		2	PLUG
14		85801953		2	RIVET
15		10398580		2	GROMMET
16	1	85802227		1	PLUG

(1) Only for Power Shift

Pilot Control Version

B95B

CLOSING PINS AND PLUGS ROPS (CENTER PIVOT): NA

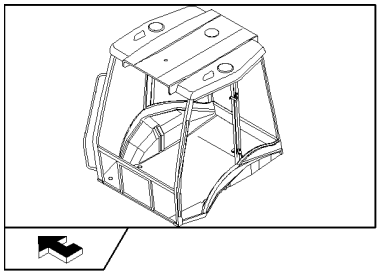

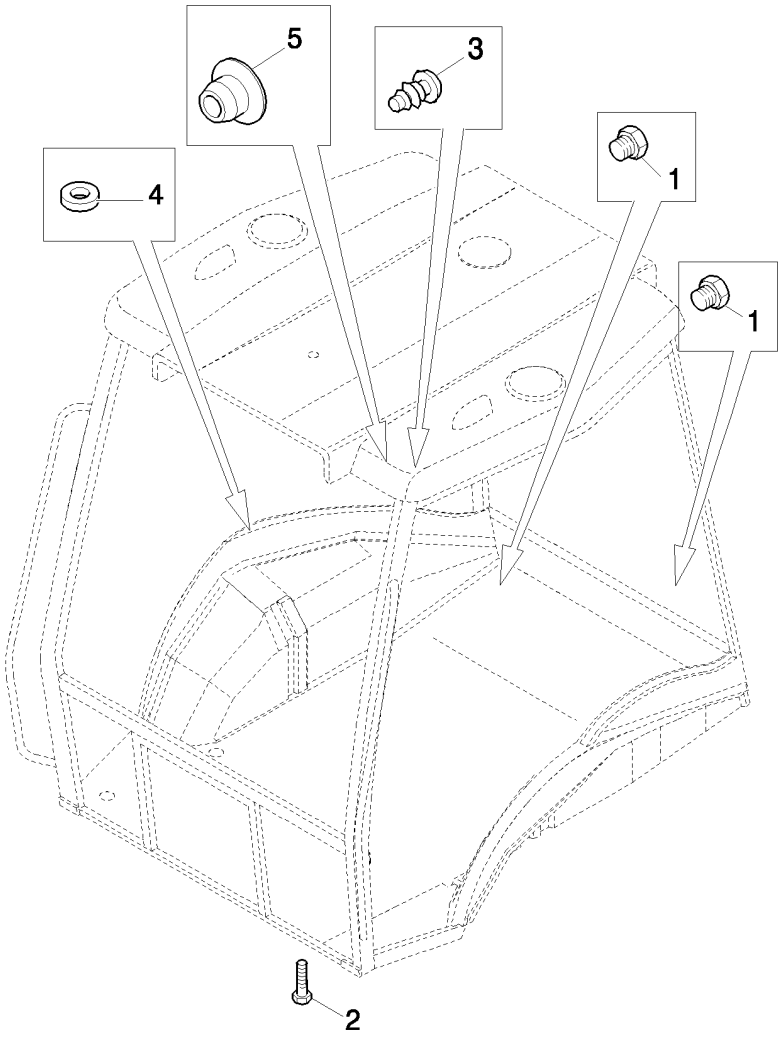

CLOSING PINS AND PLUGS ROPS (CENTER PIVOT): NA

REF	FN	PART NUMBER	YR/SN	QTY	DESCRIPTION
1		85802309		4	PLUG
2		13313417		4	SCREW, Cross Oval Hd, M6 x 25
3		85802310		4	PLUG
4		85804734		5	WASHER, RUBBER
5		82003283		4	PLUG

INFORMATION SYMBOL DECALS (POWER SHUTTLE - POWER SHIFT) - NA

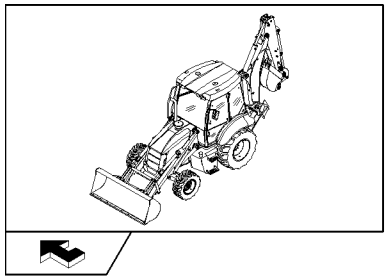

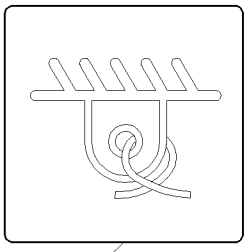

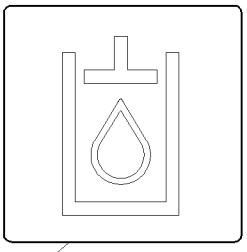

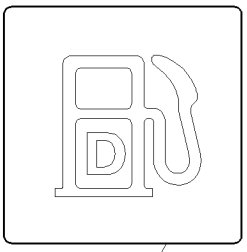

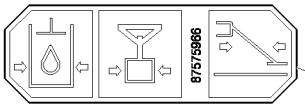

3
10

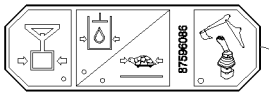

2
11

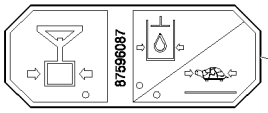

4
12

5

TORQUE CONVERTER TRANSMISSION WITH CLUTCH DISCONNECT

F
N
R

BEFORE STARTING - Place both shuttle (power reversing) and gear shift lever in neutral and assure parking brake is applied.

TO SHIFT - Select operating gear (1, 2, 3, or 4), then use shuttle lever to select direction of travel

1 3 N 2 4

SHUTTLE SHIFTING - Reduce engine speed when changing direction of travel from (F) to (R)

CLUTCH DISCONNECT - Press button on loader control or gear shift levers to disconnect hydraulic clutch during loader lift cycle or gear changes.

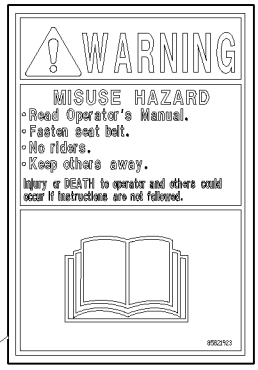

6

9

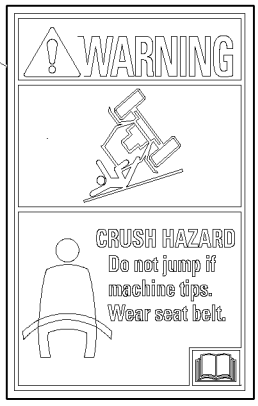

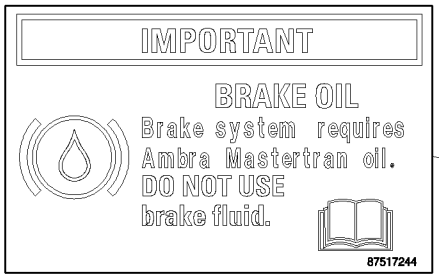

1

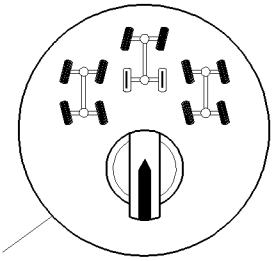

13



8

7

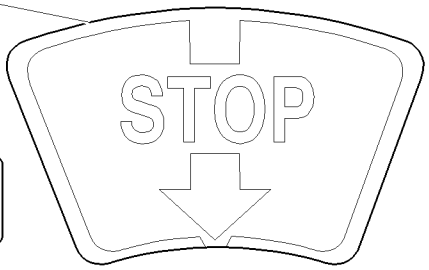

14

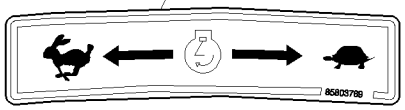

INFORMATION SYMBOL DECALS (POWER SHUTTLE - POWER SHIFT) - NA

REF	FN	PART NUMBER	YR/SN	QTY	DESCRIPTION
1		85821926		1	DECAL
2		85804341		1	DECAL
3		86500514		4	DECAL
4		85804338		1	DECAL
5	1	85804091		1	DECAL
6		85821923		1	DECAL
7		85802441		1	DECAL
8	2	87387139		1	DECAL
9		85821920		1	DECAL, WARNING
10	3	87575966		1	DECAL
11	4	87596086		1	DECAL
12	5	87596087		1	DECAL
13	6	85805909		1	DECAL
14	7	85803789		1	IDEOGRAM

(1) Only for Power Shuttle
(2) Except for B115B
(3) Only for Mechanical Version HUSCO
(4) Only for Pilot Version
(5) Only for Mechanical Version REXROTH
(6) Only for B115B
(7) Only for B90B

IDENTIFICATION MODEL: GUARD DECALS

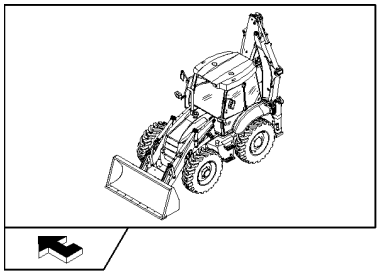

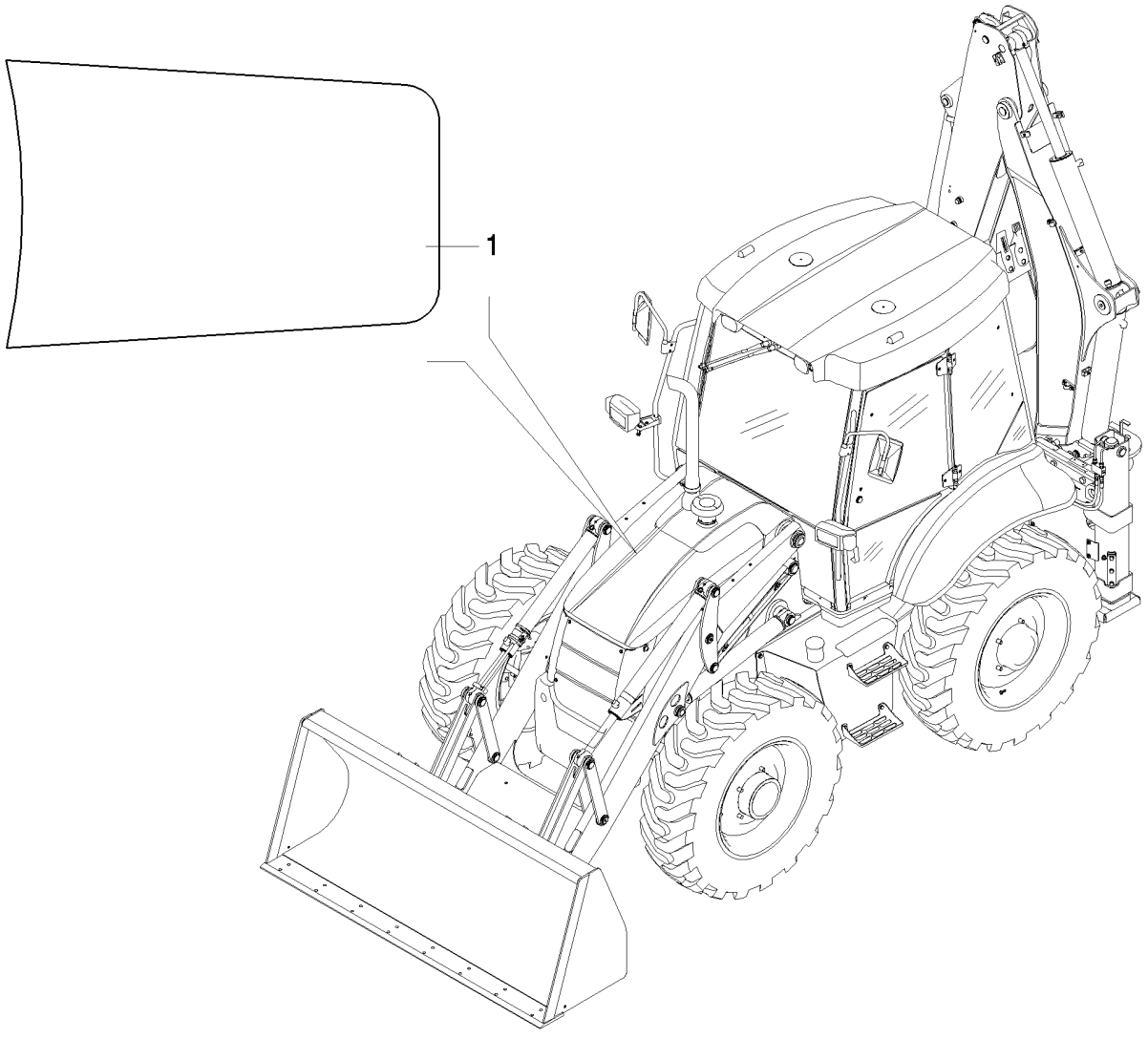

IDENTIFICATION MODEL: GUARD DECALS

REF	FN	PART NUMBER	YR/SN	QTY	DESCRIPTION
1		87653297		1	DECAL

MODEL IDENTIFICATION B90B / B90BLR - B959B / B95BLR - B100B / B100BLR

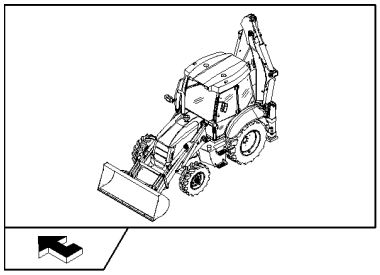

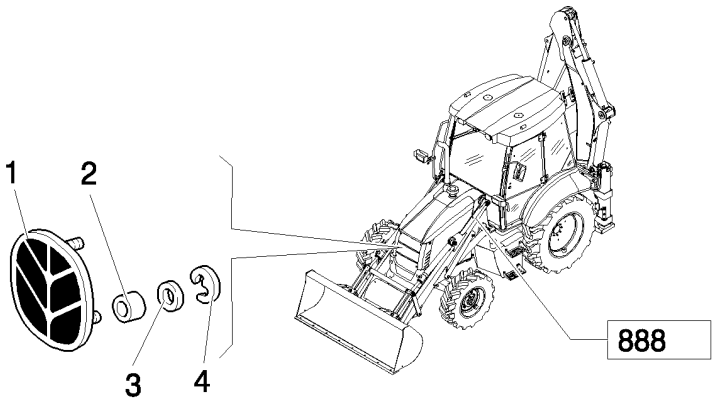



10



7

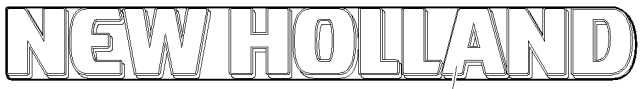

6

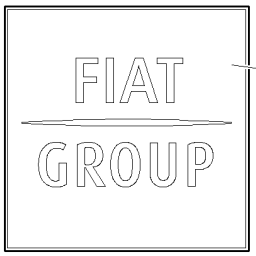

8

12

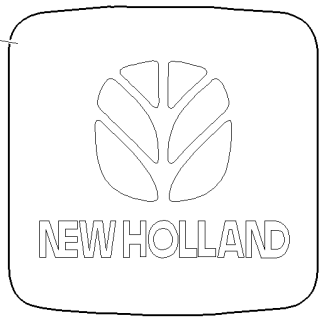

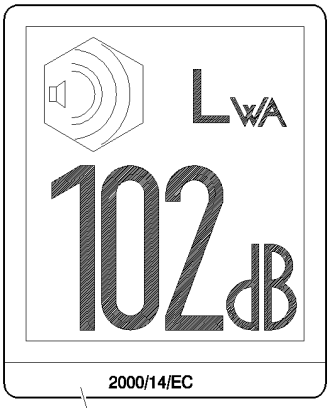

11

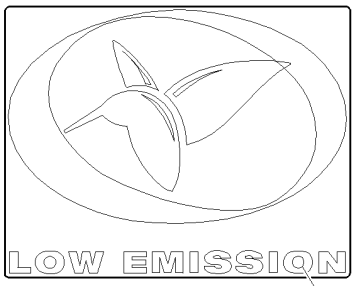

5

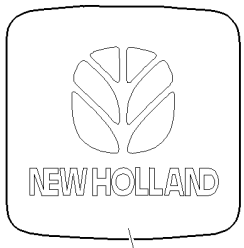

9



MODEL IDENTIFICATION B90B / B90BLR - B959B / B95BLR - B100B / B100BLR

REF	FN	PART NUMBER	YR/SN	QTY	DESCRIPTION
1		85820107		1	EMBLEM
2		12643711		2	WASHER
3		5138360		2	RING, RUBBER
4		5135069		2	CLIP
5		87701340		2	DECAL
6	1	87687644		2	DECAL, L=MM.1338
7	1	87609724		2	DECAL, L=MM.949
8	1	87691652		2	DECAL
9		87802964		1	EMBLEM
10		87674137		1	DECAL, L=MM.404
11	2, 3	87346382		1	DECAL
11	4, 3	87346213		1	DECAL
12		87415930		2	DECAL

(1) Except for NA Version
(2) Only for B90B, B90BLR (ROPS)
(3) Except for B95B, B95BLR (NA)
(4) Except for B90B, B90BLR (ROPS)

NOTES

SECTION INDEX
Wheels

81.00		FRONT WHEELS (2WD) - NA
82.00	01	DRIVING WHEELS(4WD) - NA
83.00	01	REAR WHEELS - NA

FRONT WHEELS (2WD) - NA

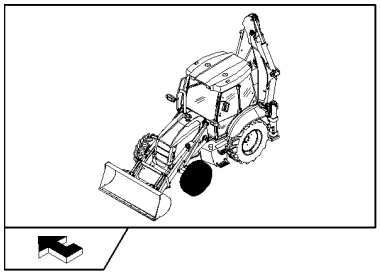

EQUIP	TIRE SIZE	RIM
81.38	11L - 16TLF3 - 10PR	W8LX 16

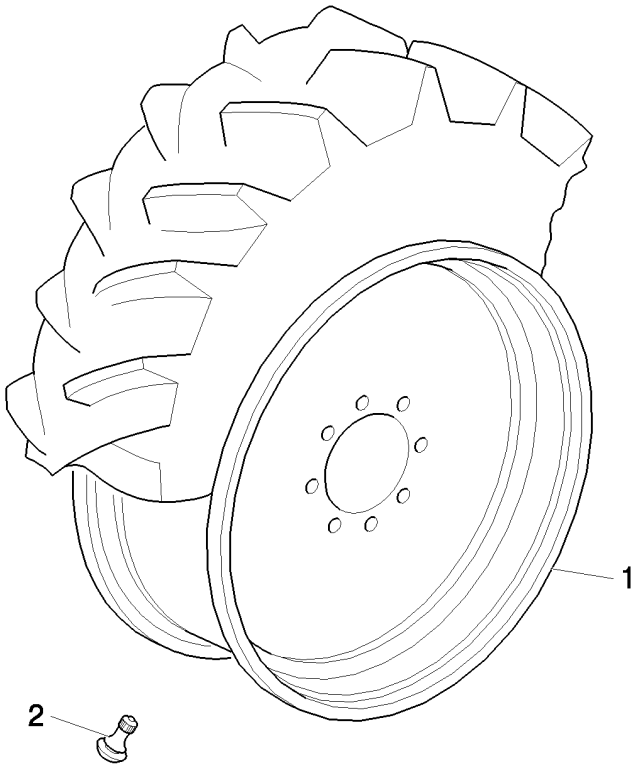

FRONT WHEELS (2WD) - NA

REF	FN	PART NUMBER	YR/SN	QTY	DESCRIPTION
1		85812260		2	WHEEL, W8L x 16
2		85700224		2	VALVE STEM

DRIVING WHEELS(4WD) - NA

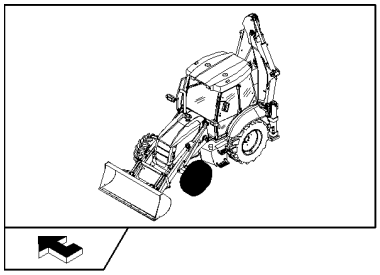

EQUIP	TIRE SIZE	RIM
82.78	14-17.5 R4 - 10PR	10.5 X 17.5
82.79	12-16.5 R4 - 10PR	9.75 X 16.5
82.79	12.16.5 HULK	9.75 X 16.5

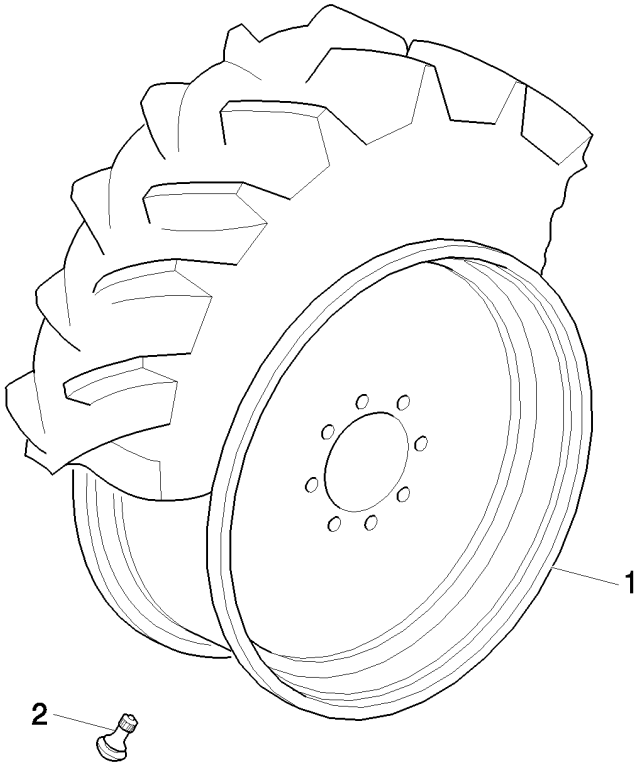

DRIVING WHEELS(4WD) - NA

REF	FN	PART NUMBER	YR/SN	QTY	DESCRIPTION
1		87664399		2	WHEEL, 10.5 x 17.5
1		87664534		2	WHEEL, 9.75 x 16.5
2		85700224		2	VALVE STEM

REAR WHEELS - NA

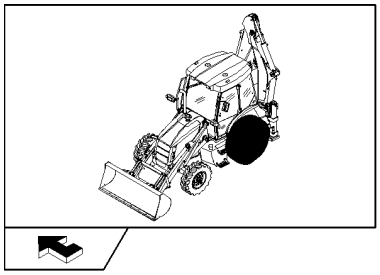

EQUIP	TIRE SIZE	RIM
83.66	16.9-28 R4 - 10PR	W14X28
83.93	16.9-24 R4 - 10PR	W15LX24
83.94	17.5L24 R4 - 10PR	W15LX24
83.93	16.9-24 R4 - 10PR	W16LX24
83.62	19.5-24 "JUMBO"	W16LX24
83.62	16.9-24 R4 - 10PR	W18LX24

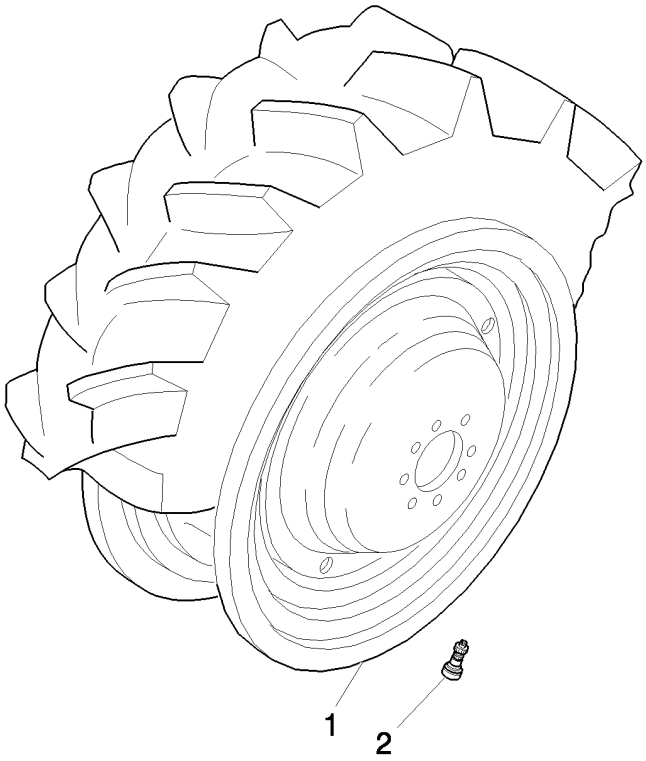

REAR WHEELS - NA

REF	FN	PART NUMBER	YR/SN	QTY	DESCRIPTION
1		87664294		2	WHEEL, W14 x 28
1		87664555		2	WHEEL, W16L x 24
1		87663635		2	WHEEL, W15L x 24
1		87664439		2	WHEEL, W18L x 24
2		85700224		2	VALVE STEM

NOTES

095		STABILIZER CONTROL WITHOUT AUTO-UP (CENTER PIVOT)
096		STABILIZER CONTROL WITH AUTO-UP (CENTER PIVOT)
131		SINGLE BATTERY
175		AIR INTAKE CAP & PRE-CLEANER
176		AIR INTAKE CAP & PRE-CLEANER
201		SHOVEL AND REAR LIFTING HOOKS
284		REAR MIRROR (CAB) - NA
290		FRONT COUNTERWEIGHT: 2WS
291		FRONT COUNTERWEIGHT: 2WS
302	01	TWO-SECTION CONTROL VALVE FOR LOADER
302	02	LOADER ATTACHMENT 2-SECTION CONTROL VALVE: INTAKE SECTION
302	03	LOADER ATTACHMENT 2-SECTION CONTROL VALVE: BOOM SECTION
302	04	TWO-SECTION CONTROL VALVE FOR LOADER
321		DOUBLE BATTERY
331	01	TOWER ASSY 6 SECTIONS (CENTER PIVOT)
331	02	PILOT CONTROL VALVE SUPPORT, COMPLETE
331	03	PILOT CONTROL VALVE SUPPORT, COMPLETE
331	04	PILOT CONTROL VALVE SUPPORT, COMPLETE
331	05	PILOT CONTROL VALVE SUPPORT, COMPLETE
331	06	6 SECTION PILOT CONTROL VALVE SUPPORT, COMPLETE
331	07	PILOT CONTROL VALVE SUPPORT, COMPLETE
331	08	PILOT CONTROL VALVE SUPPORT, COMPLETE
331	09	PILOT CONTROL VALVE SUPPORT, COMPLETE
331/ A		PROPORTIONAL CONTROL VALVE 6 SECTIONS
331/ B	01	BACKHOE CONTROL VALVE, 6 SECTIONS (CENTER PIVOT)
331/ B	02	BACKHOE CONTROL VALVE, INLET SECTION (CENTER PIVOT)
331/ B	03	BACKHOE CONTROL VALVE, BOOM SECTION (CENTER PIVOT)
331/ B	04	BACKHOE CONTROL VALVE, SWING SECTION (CENTER PIVOT)
331/ B	05	BACKHOE CONTROL VALVE, BUCKET SECTION (CENTER PIVOT)
331/ B	06	BACKHOE CONTROL VALVE, DIPPERSTICK SECTION (CENTER PIVOT)
331/ B	07	BACKHOE CONTROL VALVE, STABILIZER SECTION (CENTER PIVOT)
331/ B	08	BACKHOE CONTROL VALVE, BOOM SECTION (CENTER PIVOT)
331/ B	09	BACKHOE CONTROL VALVE, SWING SECTION (CENTER PIVOT)
331/ B	10	BACKHOE CONTROL VALVE, BUCKET SECTION (CENTER PIVOT)
331/ B	11	BACKHOE CONTROL VALVE, DIPPERSTICK SECTION (CENTER PIVOT)
331/ B	12	BACKHOE CONTROL VALVE, STABILIZER SECTION (CENTER PIVOT)
331/ C	01	PILOT VALVE OF HYDRAULIC CONTROL LEVER (RIGHT HAND)
331/ C	02	VALVE, JOYSTICK PILOT CONTROLS (LEFT HAND)
333	01	TOWER ASSY 7 SECTIONS (CENTER PIVOT)
333	02	TOWER ASSY FOR 7-SECTION PILOT CONTROL: CONTROL VALVE HYDRAULIC SYSTEM, PROPORTIONAL VALVE
333	03	TOWER ASSY FOR 7-SECTION PILOT CONTROL (CENTER PIVOT): CONTROL VALVE INSTALLATION
333	04	TOWER ASSY FOR 7-SECTION PILOT CONTROL (CENTER PIVOT): TELESCOPIC CYLINDER SYSTEM
333	05	TOWER ASSY FOR 7-SECTION PILOT CONTROL (CENTER PIVOT): BUCKET CYLINDER SYSTEM
333/ A		PROPORTIONAL CONTROL VALVE 7 SECTIONS
333/ C	01	PILOT VALVE OF HYDRAULIC CONTROL LEVER (RIGHT HANDS) 7 SPOOLS
333/ C	02	PILOT VALVE OF HYDRAULIC CONTROL LEVER (RIGHT HANDS) 7 SPOOLS
333/01B	01	7 SECTIONS EXCAVATOR CONTROL VALVE (CENTER PIVOT) - NA

SECTION INDEX
Variation

333/01B	02	BACKHOE ATTACHMENT 7-SECTION CONTROL VALVE (CENTER PIVOT): NA: TELESCOPIC CYLINDER
335		TOWER ASSY 7 SECTIONS (CENTER PIVOT)
336/01	01	TWO SECTION LOADER CONTROL VALVE (CENTER PIVOT) - NA
336/01	02	LOADER CONTROL VALVE, TWO SECTION, CAP & UNLOAD VALVE (CENTER PIVOT) - NA
336/01	03	LOADER CONTROL VALVE, TWO SECTION, RELIEF & CHECK VALVES (CENTER PIVOT) - NA
336/01	04	LOADER CONTROL VALVE, TWO SECTION, BY-PASS KIT (CENTER PIVOT) - NA
336/01	05	LOADER CONTROL VALVE, TWO SECTION, UNLOAD KIT OR DUMP VALVE (CENTER PIVOT) - NA
337	01	LOCKING VALVE ON LOADER ATTACHMENT TIPPING CYLINDERS
337	02	LOCK VALVE ON LOADER LIFT CYLINDERS
338		LOCK VALVE ON LOADER LIFT CYLINDERS
344	01	STABILIZER CONTROL VALVE, TWO SECTION (CENTER PIVOT) - NA
344	02	STABILIZER CONTROL VALVE, LH & RH SECTION (CENTER PIVOT) - NA
346	01	A/C HOUSING & FILTERS
346	02	A/C BLOWER & COILS
346	03	HEATER COIL HOSES
346	04	A/C & HEATER CONTROL PANEL
346	05	A/C & HEATER CONSOLE DUCTS
347	01	HOUSING & FILTERS
347	02	HEATER BLOWER & COILS
347	03	HEATER COIL HOSES
347	04	A/C & HEATER CONTROL PANEL
347	05	A/C & HEATER CONSOLE DUCTS
347	06	CAB HEATING COATING PLUG
386		12" (305MM) HD BACKHOE BUCKET WITH PIN TEETH - NA
387		18" (457MM) HD BACKHOE BUCKET WITH PIN TEETH - NA
388		24" (610MM) HD BACKHOE BUCKET WITH PIN TEETH - NA
389		30" (762MM) HD BACKHOE BUCKET WITH PIN TEETH - NA
390		LOADER CONTROL VALVE, TWO SECTION, LEVER - NA
390/01		36" (910MM) HD BACKHOE BUCKET WITH PIN TEETH - NA
391		LOCK VALVE FOR BUCKET 4X1 / 6X1
392	01	LOCKING VALVE ON BOOM CYLINDER AND BACKHOE ATTACHMENT
392	02	LOCKING VALVE ON CYLINDER AND BACKHOE ATTACHMENT
393		2 LEVER BACKHOE CONTROLS, LEVER, BOOT & DECALS - NA
394	01	4-LEVER BACKHOE ATTACHMENT CONTROLS, CONSOLE, LEVERS AND SQUARE LEVER (CENTER PIVOT: SIDE SHIFT): CONTROL LEVERS
394	02	4-LEVER BACKHOE ATTACHMENT CONTROLS, UPPER TIE ROD ASSY (CENTER PIVOT: SIDE SHIFT): UPPER TIE RODS
394	03	4-LEVER BACKHOE ATTACHMENT CONTROLS, LOWER TIE ROD ASSY (CENTER PIVOT: SIDE SHIFT): LOWER TIE RODS
394/01	01	2-LEVER ISO BACKHOE ATTACHMENT CONTROLS, LEVERS, DUSTPROOF, DECALS (CENTER PIVOT) - NA -CONTROL LEVERS
402	01	(4WD) FRONT AXLE, HOUSING, BUSHINGS & SUPPORTS - NA
402	02	(4WD) FRONT AXLE, SWIVEL HOUSING & STEERING CYLINDER - NA
402	03	(4WD) FRONT AXLE, HUBS - NA
402	04	(4WD) FRONT AXLE, RING GEAR & PINION ASSEMBLY - NA
402	05	(4WD) FRONT AXLE, DIFFERENTIAL - NA
402	06	FRONT AXLE 4WD, ARTICULATED AXLE SHAFT

SECTION INDEX
Variation

416		SYSTEM HAMMER COMPONENTS (CAB - ROPS)
437		GLIDE RIDE VALVE,HYDRAULIC SYSTEM FOR MACHINE FRAME LEVELLING
471	01	BUCKET 4X1 (1 M³) WITH BLADE "COMMON GREY"
471	02	4X1 BUCKET (1 M3) WITH “COMMON GREY” BLADE: BUCKET BREAKDOWN
471/01		HYDRAULIC CYLINDER (BUCKET 4X1-6X1)
472	01	BUCKET 4X1 (1 M³) WITH TINE "COMMON GREY"
472	02	4X1 BUCKET (1 M3) WITH “COMMON GREY” TEETH: BUCKET BREAKDOWN
473	01	BUCKET 6X1 (1 M³) WITH BLADE "COMMON GREY"
473	02	6X1 BUCKET (1 M3) WITH “COMMON GREY” BLADE: BUCKET BREAKDOWN
474	01	BUCKET 6X1 (1 M³) WITH TINE "COMMON GREY"
474	02	6X1 BUCKET (1 M3) WITH “COMMON GREY” TEETH: BUCKET BREAKDOWN
514	01	SHORT DIPPER
514	02	SHORT DIPPER
514	03	HYDRAULIC LIFTING CYLINDER
514	04	HYDRAULIC DITCHING CYLINDER
515/01		12" (305MM) BACKHOE BUCKET WITH PIN TEETH - NA
516/01		18" (457MM) BACKHOE BUCKET WITH PIN TEETH - NA
517/01		24" (610MM) BACKHOE BUCKET WITH PIN TEETH - NA
518/01		30" (762MM) BACKHOE BUCKET WITH PIN TEETH - NA
519/01		36" (910MM) BACKHOE BUCKET WITH PIN TEETH - NA
520		(0.88 M³) BUCKET WITHOUT TINES
520/01		18" (457MM) BACKHOE BUCKET WITH PIN TEETH (EXTRA HD) - NA
521		24" (610MM) BACKHOE BUCKET WITH PIN TEETH (EXTRA HD) - NA
522		(1 M³) BUCKET WITHOUT TINES
522/01		STANDARD (1 M³) BUCKET WITH FORKS
525		STANDARD (1 M³) BUCKET WITH FORKS AND REVERSIBLE BLADE
527		(0.88 M³) BUCKET AND EXTRA REVERSIBLE BLADE
535		STABILIZER FOOT GROUND (CENTER PIVOT)
536		STANDARD (1 M³) BUCKET WITH TINE
536/02		REVERSIBLE STABILIZER FOOT (CENTER PIVOT)
537		STANDARD (1 M³) BUCKET WITH EXTRA REVERSIBLE BLADE
548		DITCH CLEANING BUCKET
622		INTERNAL FAN - CAB
636	07	ENGINE VERSION: STARTER MOTOR
636	08	ACCESSORY ENGINE - ALTERNATOR
638	01	RADIATOR GUARDS
638	02	COOLANT RADIATOR, HYDRAULIC FLUID AND TRANSMISSION OIL
638	03	AFTER-COOLER COOLING PIPING
638	04	PARKEERREM (CABINE: ROPS)
638	05	ENGINE VERSION: SUPPORTS
638	06	ENGINE OUTFIT: FAN WITH VISCOUS JOINT: EU
638	07	ACCESSORY ENGINE - STARTER
638	08	ACCESSORY ENGINE: ALTERNATOR
639	01	RADIATOR GUARDS
639	02	COOLANT RADIATOR, HYDRAULIC FLUID AND TRANSMISSION OIL
639	03	AFTER-COOLER COOLING PIPING
639	04	PARKEERREM (CABINE: ROPS)
639	05	ENGINE VERSION: SUPPORTS
639	06	ENGINE OUTFIT: FAN WITH VISCOUS JOINT
639	07	ENGINE VERSION: STARTER MOTOR
639	08	ACCESSORY ENGINE

SECTION INDEX
Variation

646	01	MACHINE PART AIR CONDITIONING SET
646	02	A/C COMPRESSOR ATTACHING GROUP
646	03	A/C COMPRESSOR
646	04	A/C FILTER & CONDENSER ATTACHING GROUP
650		STEERING COLUMN, FIXED & ADJUSTABLE
698		GLIDE RIDE VALVE,HYDRAULIC SYSTEM FOR MACHINE FRAME LEVELLING & ON/OFF SWITCH
699		HAND HAMMER SWITCH
700	01	4X1 AND 6X1 BUCKET ARM HYDRAULIC DUCTS (POWER SHIFT, POWER SHUTTLE)
700	02	4X1 AND 6X1 BUCKET MACHINE HYDRAULIC DUCTS (POWER SHIFT, POWER SHUTTLE)
700	03	THREE-SECTION CONTROL VALVE FOR LOADER (POWER SHIFT , POWER SHUTTLE)
721	01	TELESCOPIC DIPPER AT PEDAL CONTROL (CENTER PIVOT): CONTROL VALVE: NA
721	02	
721	03	HED TELESCOPIC CONTORL VALVE, SECTION HOSES(CENTER PIVOT) - NA
721	04	TELESCOPIC DIPPER AT PEDAL CONTROL (CENTER PIVOT): TELESCOPIC DIPPER SYSTEM: TELESCOPIC CYLINDER: NA
721	05	TELESCOPIC DIPPER AT PEDAL CONTROL (CENTER PIVOT): TELESCOPIC DIPPER SYSTEM: BUCKET CYLINDER: NA
721	06	TELESCOPIC DIPPER AT PEDAL CONTROL (CENTER PIVOT): NA
724/ A		REAR HAMMER CONTROL VALVE
724/01	01	MACHINE HYDRAULIC SYSTEM FOR HAMMER (CENTER PIVOT)
724/01	02	HAMMER ARM HYDRAULIC SYSTEM (CENTER PIVOT)
724/02		HYDRAULIC SYSTEM FOR HAMMER (CENTER PIVOT)
725		HAMMER KIT FROM LIFTING ARM TO DEMOLITION ARM
725/01	01	4X1 AND 6X1 BUCKET ARM ASSY HYDRAULIC SYSTEM (POWER SHUTTLE): NA
725/01	02	4X1 AND 6X1 BUCKET MACHINE HYDRAULIC DUCT ASSY (POWER SHUTTLE): NA
725/01	03	LOADER CONTROL VALVE, THREE SECTION (CENTER PIVOT) - NA
725/01	04	LOADER CONTROL VALVE, THREE SECTION, CAP & UNLOAD VALVE (CENTER PIVOT) - NA
725/01	05	LOADER CONTROL VALVE, THREE SECTION, RELIEF & CHECK VALVES (CENTER PIVOT) - NA
725/01	06	THREE-SECTION CONTROL VALVE FOR LOADER - BUCKET SECTION 4X1 - 6X1(CENTER PIVOT) - NA
727/01		HED FOOT PEDAL, CABLE & DECALS (CENTER PIVOT) - NA
728	01	HAND HAMMER SYSTEM: DELIVERY
728	02	HAND HAMMER SYSTEM: RETURN
728	03	MANUAL HAMMER VALVE
733		REAR MECHANICAL QUICK-COUPLING
734		FRONT MECHANICAL QUICK-COUPLING
758		ROTATING BEACON
787		FRONT CONSOLE WITHOUT SPEEDOMETER (POWER SHUTTLE, ROPS)
787/01		FRONT CONSOLE WITHOUT SPEEDOMETER (POWER SHUTTLE, CAB)
788		FRONT CONSOLE WITH SPEEDOMETER (ROPS)
788/01		FRONT CONSOLE WITH SPEEDOMETER (CAB) (POWER SHUTTLE)
789		SPEED SENSOR(P.SHUTTLE)
793		FRONT WORKING LIGHT - CAB
793/01		FRONT WORKING LIGHT (ROPS)
794		LAMPS & LIGHTS - CAB
794/01		LAMPS & LIGHTS (ROPS)

SECTION INDEX
Variation

796		ANTITHEFT
803		FENDERS, FRONT
835		REAR MUDGUARD AND ROOF (ROPS: CAB): NA
851		CLOTH SEAT & ATTACHING HARDWARE - CABINE
851/01	01	CLOTH SEAT CUSHIONS, ARMRESTS & RELATED PARTS
851/01	02	CLOTH SEAT MOUNTING PLATE, ADJUSTING RAILS & SEAT BELT
851/01	03	CLOTH SEAT UPPER SUSPENSION PARTS
851/01	04	CLOTH SEAT LOWER SUSPENSION PARTS
855		AIR RIDE CLOTH SEAT & ATTACHING HARDWARE - CABINE
855/01	01	AIR RIDE CLOTH SEAT CUSHIONS, ARMRESTS & RELATED PARTS
855/01	02	AIR RIDE CLOTH SEAT MOUNTING PLATE, ADJUSTING RAILS & SEAT BELT
855/01	03	AIR RIDE CLOTH SEAT UPPER SUSPENSION PARTS
855/01	04	AIR RIDE CLOTH SEAT LOWER SUSPENSION PARTS
855/01	05	AIR RIDE CLOTH SEAT COMPRESSOR & TUBING
856		VINYL SEAT CUSHIONS, ARMRESTS & RELATED PARTS (ROPS)
856/01	01	VINYL SEAT WITH ARMRESTS & MOUNTING HARDWARE (ROPS)
856/01	02	VINYL SEAT MOUNTING PLATE, ADJUSTING RAILS & SEAT BELT (ROPS)
856/01	03	VINYL SEAT UPPER SUSPENSION PARTS (ROPS)
856/01	04	VINYL SEAT LOWER SUSPENSION PARTS (ROPS)
879		CAB RIGHT REAR MIRROR
888		GUARD AND DIPPER DECAL
900	01	LONG DIPPER: ASSY
900	02	BOOM - LONG DIPPER
900	03	LONG DIPPER
900	04	LONG/SHORT DIPPER - BUCKET MOTION
900	05	DIPPER: DIPPER SYSTEM, BOOM AND DIPPER CYLINDER
900	06	DIPPER: BUCKET CYLINDER HYDRAULIC SYSTEM
900	07	DIPPER: BOOM CYLINDER HYDRAULIC SYSTEM
900	08	DIPPER - HYDRAULIC SYSTEM
900	09	HYDRAULIC LIFTING CYLINDER - TELESCOPIC DIPPER LONG
900	10	HYDRAULIC DITCHING CYLINDER
900	11	HYDRAULIC BUCKET CYLINDER
901	01	LONG TELESCOPIC DIPPER: ASSY
901	02	TELESCOPIC DIPPER LONG
901	03	TELESCOPIC DIPPER - HYDRAULIC SYSTEM
901	04	LONG TELESCOPIC DIPPER: TELESCOPIC HYDRAULIC CYLINDER
902	01	SHORT TELESCOPIC DIPPER: ASSY
902	02	TELESCOPIC DIPPER SHORT
902	03	SHORT TELESCOPIC DIPPER: TELESCOPIC HYDRAULIC CYLINDER
990		TOOL KIT
993	01	PLATES - NA
993	02	PLATES - NA
995		COLD START

095		p1	03/08

STABILIZER CONTROL WITHOUT AUTO-UP (CENTER PIVOT)

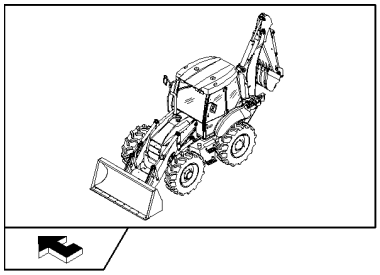

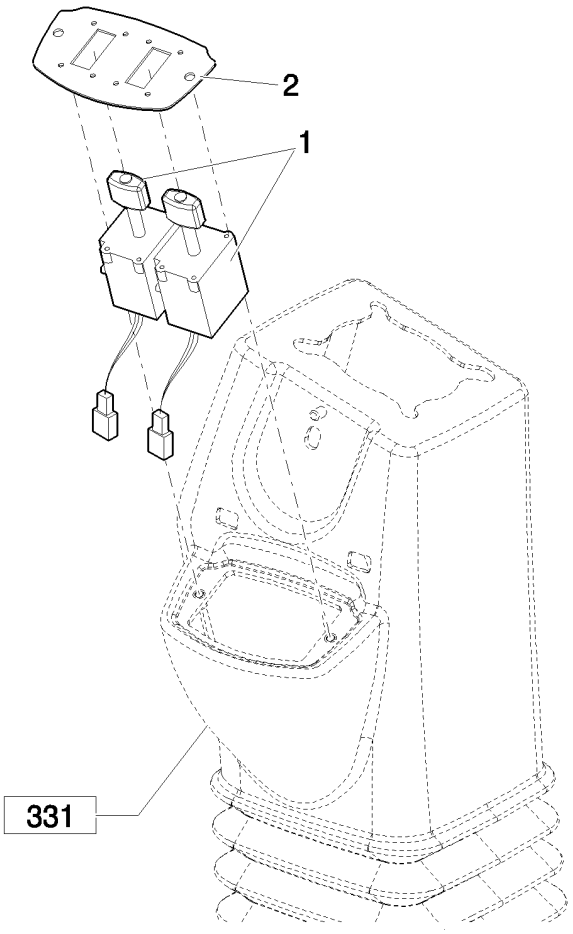

STABILIZER CONTROL WITHOUT AUTO-UP (CENTER PIVOT)

REF	FN	PART NUMBER	YR/SN	QTY	DESCRIPTION
1		86988086		2	JOYSTICK
2		87435381		1	PLATE, MOUNTING

Pilot Control Version

B95B

096		p1	03/08

STABILIZER CONTROL WITH AUTO-UP (CENTER PIVOT)

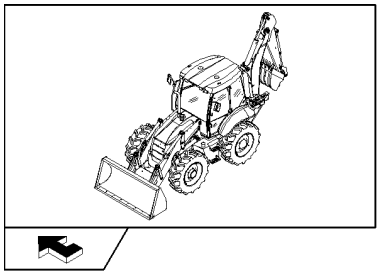

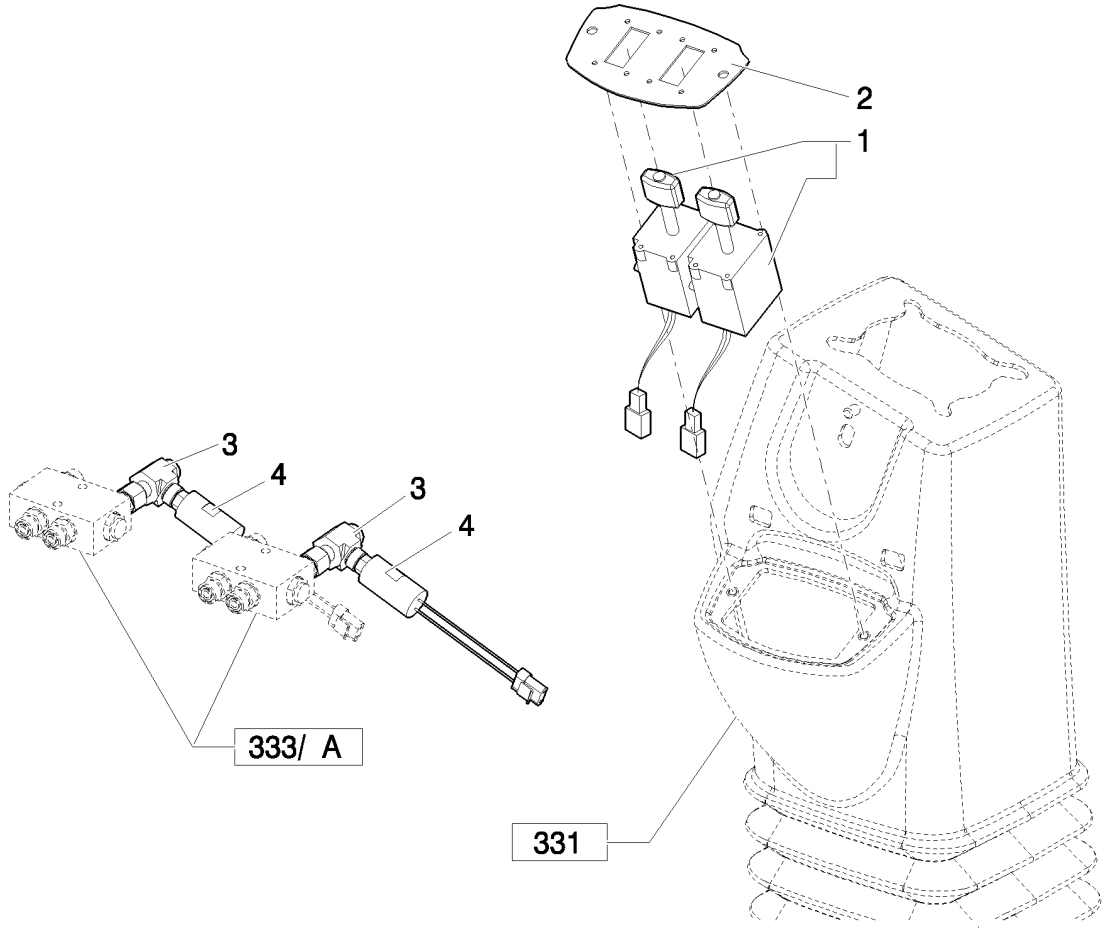

STABILIZER CONTROL WITH AUTO-UP (CENTER PIVOT)

REF	FN	PART NUMBER	YR/SN	QTY	DESCRIPTION
1		86988086		2	JOYSTICK
2		87435381		1	PLATE, MOUNTING
3		87401111		2	CONNECTOR, HYD.
4		87589234		2	SWITCH, PRESSURE

131		p1	03/08

SINGLE BATTERY

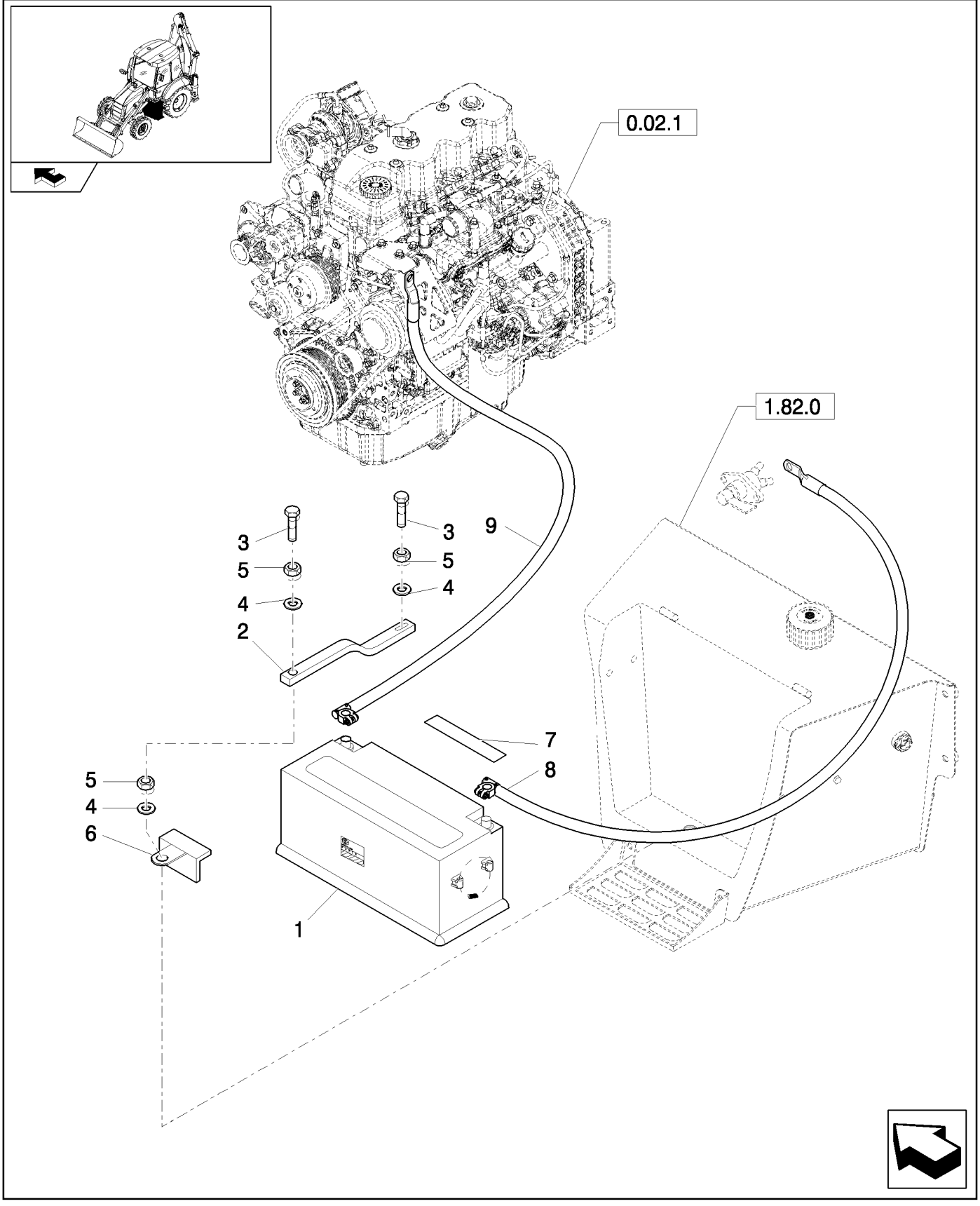

SINGLE BATTERY

REF	FN	PART NUMBER	YR/SN	QTY	DESCRIPTION
1		85825440		1	BATTERY, WET, CANADIAN.
2		87416929		1	BRACKET
3		412005		2	BOLT, Hex, M10 x 220, 8.8, M10x220
4		47048963		2	WASHER
5		47049041		2	NUT, M10
6		47048788		2	ANGLE
7		47049590		1	DECAL
8		87405018		1	Strap, Ground
9		87567413		1	CABLE

175		p1	03/08

AIR INTAKE CAP & PRE-CLEANER

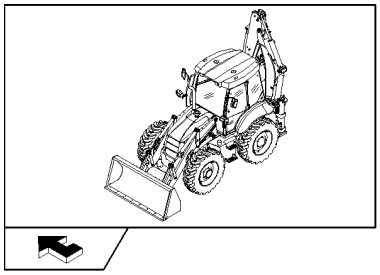

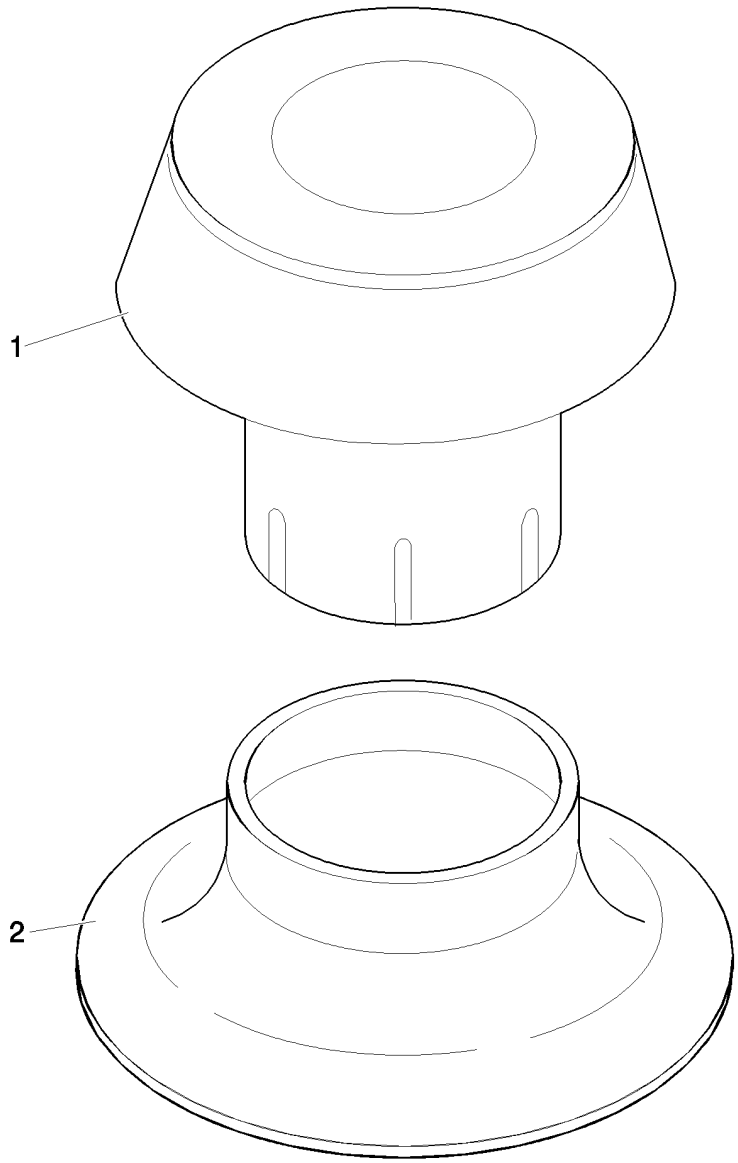

AIR INTAKE CAP & PRE-CLEANER

REF	FN	PART NUMBER	YR/SN	QTY	DESCRIPTION
1		85804602		1	CAP
2	1	87597631		1	COVER

(1) Only for B100B, B100BLR, B110B, B115B (EU) - B95BLR, B95BTC, B110B, B115B (NA)

AIR INTAKE CAP & PRE-CLEANER

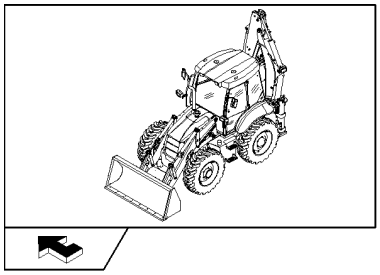

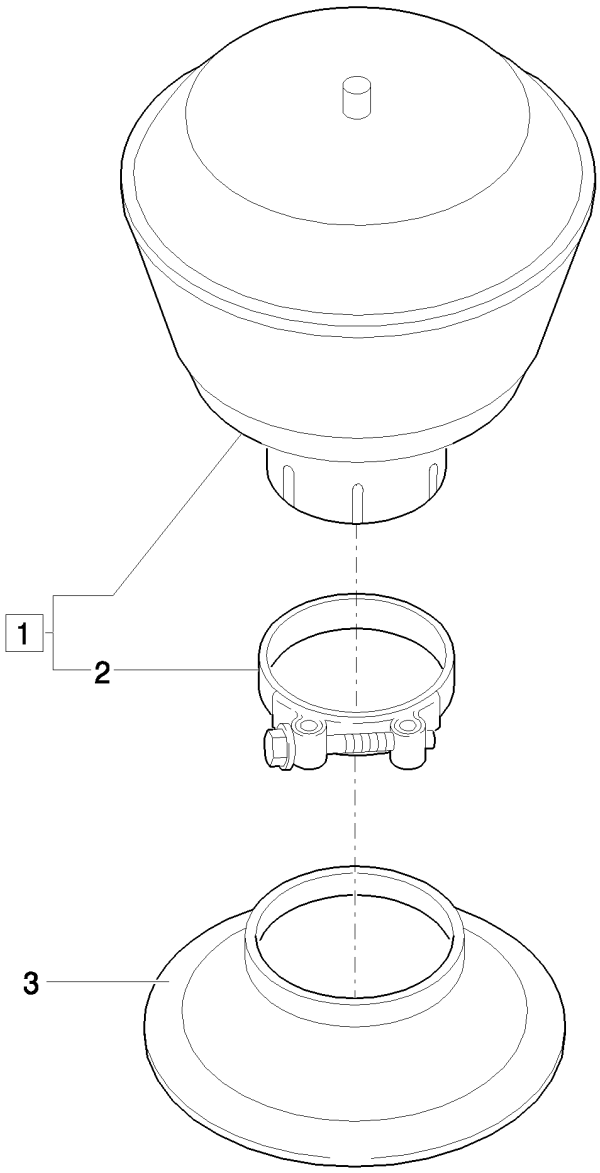

AIR INTAKE CAP & PRE-CLEANER

REF	FN	PART NUMBER	YR/SN	QTY	DESCRIPTION
1		85804347		1	PRESCREENER, Assy
2	1	85802743		1	CLAMP, HOSE
3	1	87597631		1	COVER

(1) Only for B100B, B100BLR, B110B, B115B (EU) - B95BLR, B95BTC, B110B, B115B (NA)

SHOVEL AND REAR LIFTING HOOKS

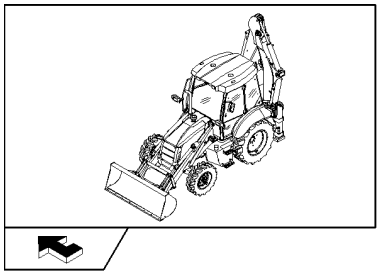

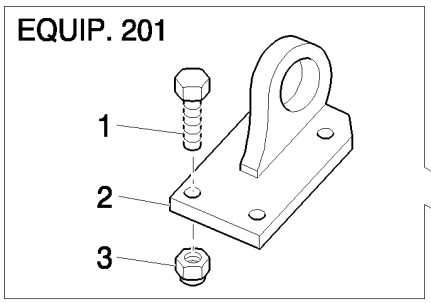

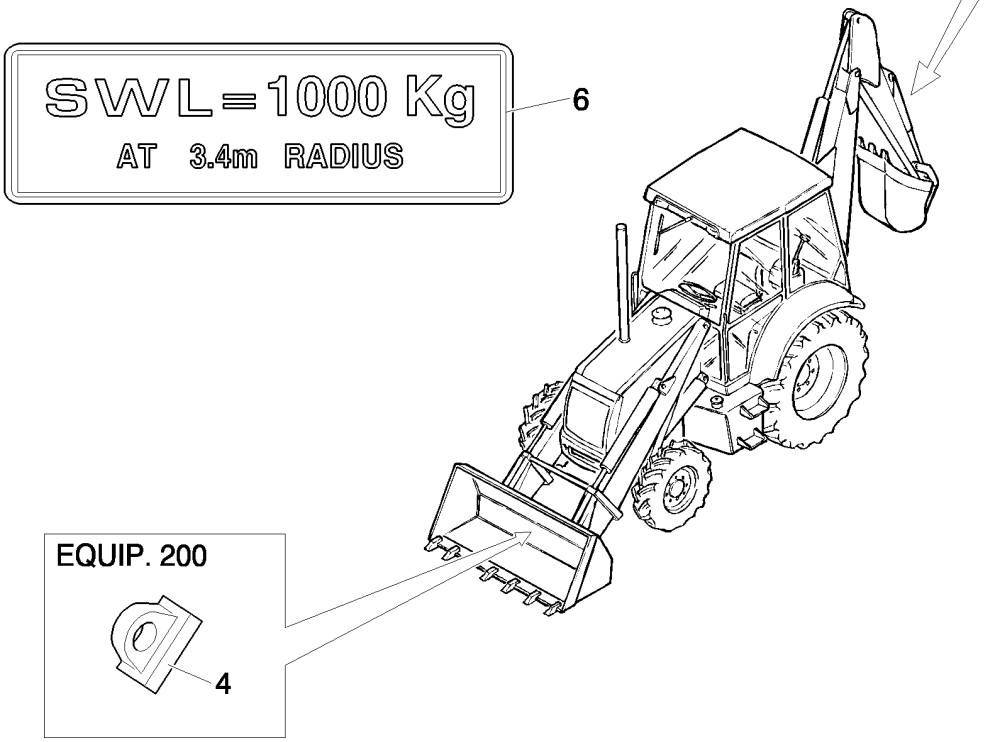

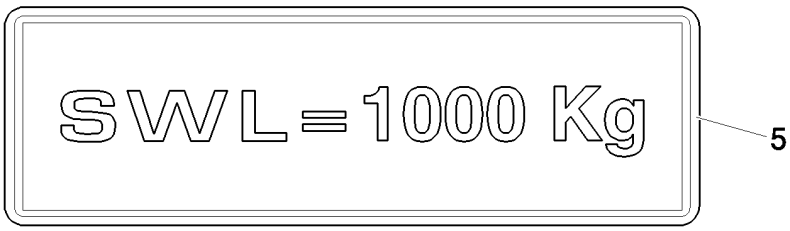

SHOVEL AND REAR LIFTING HOOKS

REF	FN	PART NUMBER	YR/SN	QTY	DESCRIPTION
1		11394334		4	BOLT, Hex, M14 x 1.5 x 45, 8.8, Full Thd, (Equip.201)
2		85802599		1	EYE, LIFTING, (EQUIP.201)
3		12574825		4	NUT, LOCK, M14 x 1.5, Cl 10, (EQUIP.201)
4		85805807		1	EYE, LIFTING, (Equip.200)
5		85805663		1	DECAL, (EQUIP.200)
6		85805664		1	DECAL, (EQUIP.201)

REAR MIRROR (CAB) - NA

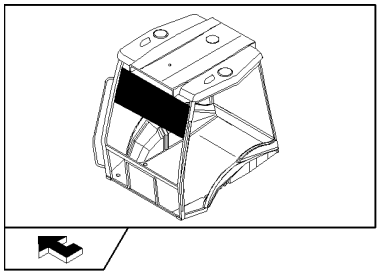

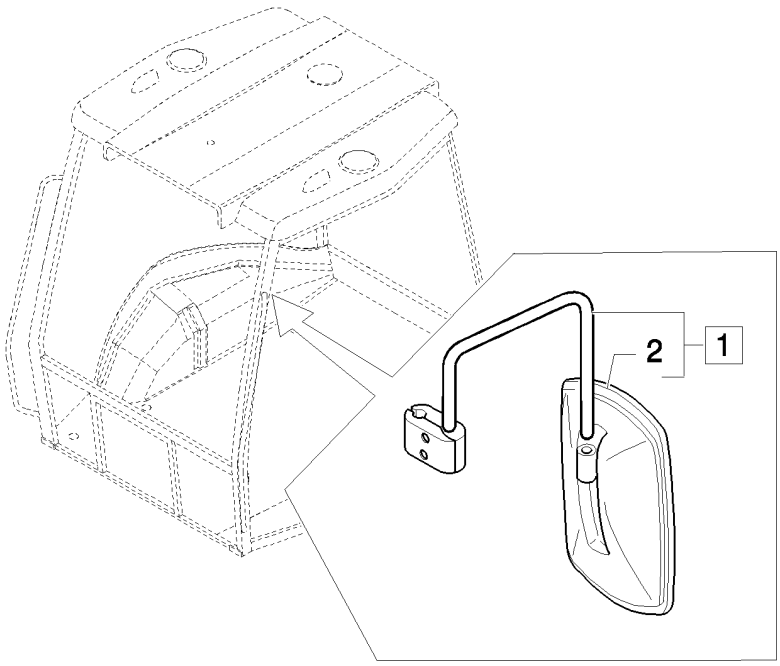

REAR MIRROR (CAB) - NA

REF	FN	PART NUMBER	YR/SN	QTY	DESCRIPTION
1		85820139		1	MIRROR, LH, Assy
2		85820138		2	MIRROR, REAR-VIEW

FRONT COUNTERWEIGHT: 2WS

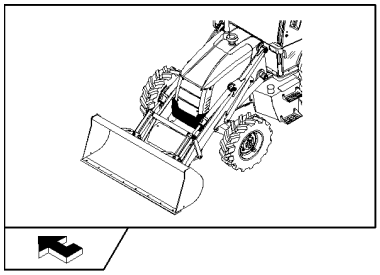

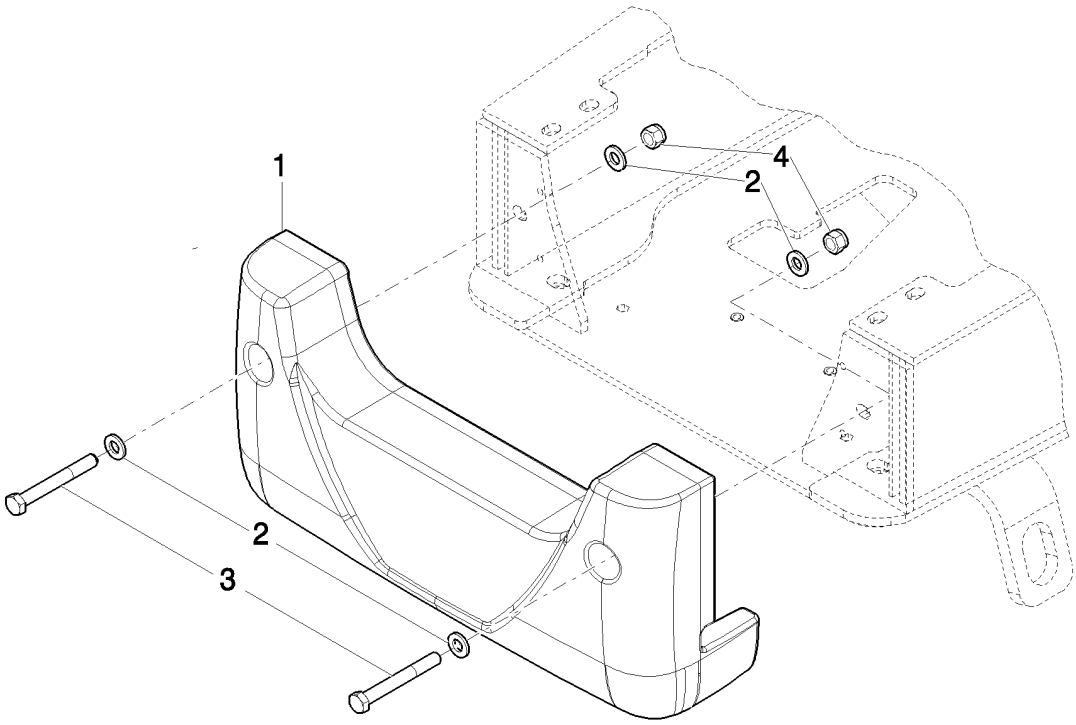

FRONT COUNTERWEIGHT: 2WS

REF	FN	PART NUMBER	YR/SN	QTY	DESCRIPTION
1		87631830		1	WEIGHT
2		13580121		4	WASHER
3		11120521		2	BOLT, Hex, M16 x 130, 8.8
4		12577411		2	NUT, LOCK, M16 x 2, Cl 8

291		p1	03/08

FRONT COUNTERWEIGHT: 2WS

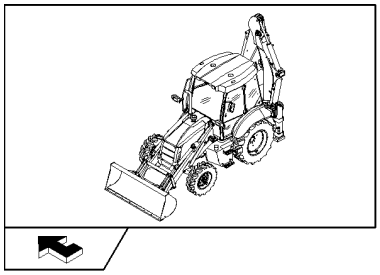

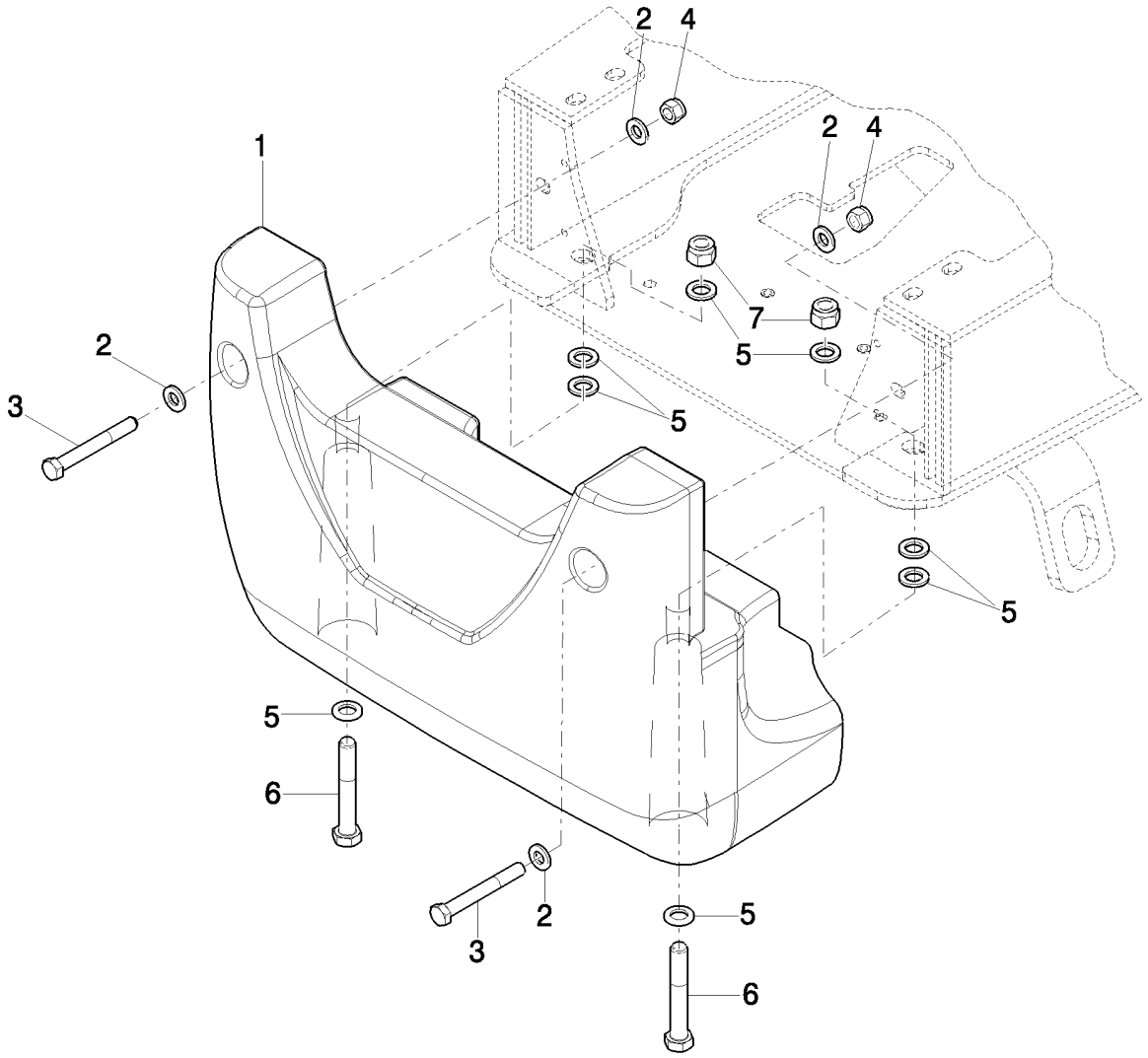

FRONT COUNTERWEIGHT: 2WS

REF	FN	PART NUMBER	YR/SN	QTY	DESCRIPTION
1		87631834		1	WEIGHT, Equip. 292
1		87631832		1	WEIGHT, Equip. 291
2		13580121		4	WASHER
3		11120521		2	BOLT, Hex, M16 x 130, 8.8
4		12577411		2	NUT, LOCK, M16 x 2, Cl 8
5		10520431		8	WASHER
6		16041821		2	BOLT, Hex, M20 x 130, 8.8
7		12577711		2	NUT, LOCK, M20 x 2.5, Cl 8

TWO-SECTION CONTROL VALVE FOR LOADER

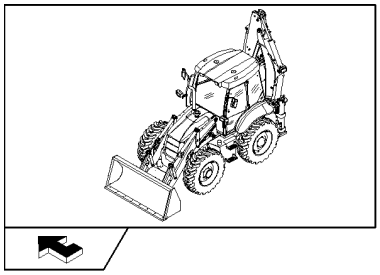

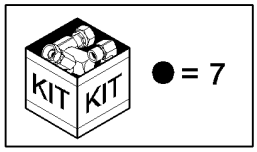

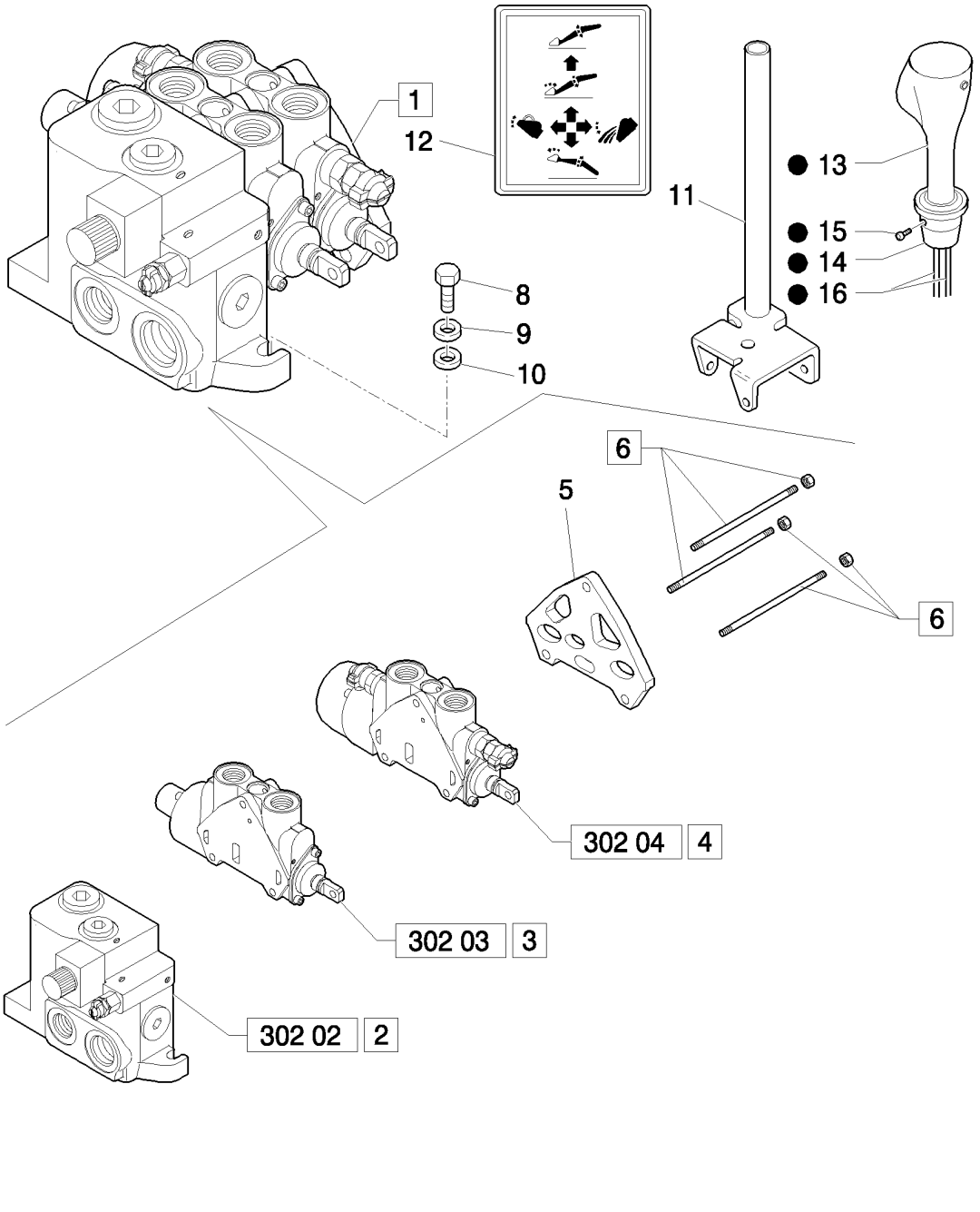

TWO-SECTION CONTROL VALVE FOR LOADER

REF	FN	PART NUMBER	YR/SN	QTY	DESCRIPTION
1		85825188		1	VALVE, CONTROL, Assy
2		85825468		1	VALVE SECTION, HYD, Assy
3	1	87558567		1	SECTOR, Assy
4	2	85825469		1	VALVE SECTION, HYD, Assy
5		85826924		1	SECTOR, TOOTHED, Assy
6		85825475		1	TIE-ROD, THREADED, TIE RODS
7	3	87311102		1	JOYSTICK
7	4	87311103		1	JOYSTICK
8		11234721		3	BOLT, Hex, M10 x 1.25 x 45, 8.8
9		13578621		3	WASHER, 10x30x2
10		11190679		3	WASHER, SPRING, Belleville, M10.5
11		87646646		1	LEVER
12		85804346		1	DECAL
13	3	87311302		1	HANDLE GRIP
13	4	87311306		1	HANDLE GRIP
14		87311303		1	HUB
15		13789621		2	SET SCREW, Hex Soc, M8 x 10, Flat Pt
16	3	87311836		1	HARNESS, WIRE
16	4	87311838		1	HARNESS, WIRE, Includes Switch

(1) LOADER
(2) Bucket
(3) Only for Power Shift
(4) Only for Power Shuttle

NA: Only for Pilot Version except B115B (Mechanical Version / Pilot Version)

302	02	p1	04/08

LOADER ATTACHMENT 2-SECTION CONTROL VALVE: INTAKE SECTION

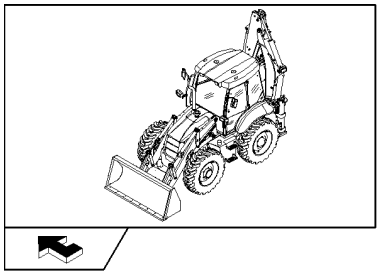

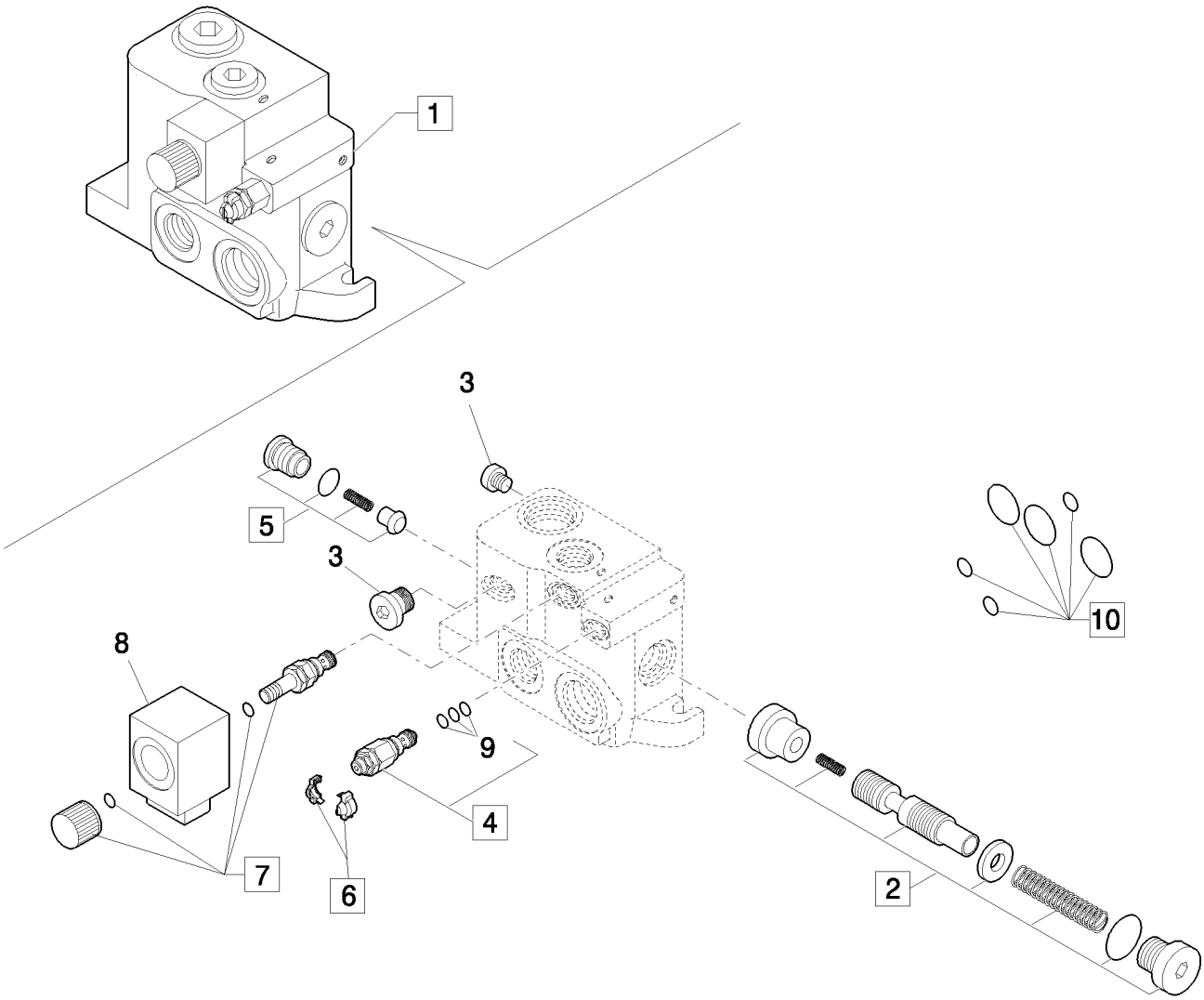

LOADER ATTACHMENT 2-SECTION CONTROL VALVE: INTAKE SECTION

REF	FN	PART NUMBER	YR/SN	QTY	DESCRIPTION
1		85825468		1	VALVE SECTION, HYD, Assy
2		85825472		1	KIT, Assy
3		85811923		2	PLUG
4		85811946		1	VALVE, PRESSURE RELIEF
5		85811938		1	VALVE, CHECK, Assy
6		85811934		1	KIT
7		85811954		1	KIT, Assy
8		87734721		1	SOLENOID
9		85821236		1	KIT, SEALS
10		85819148		1	KIT, SEALS

NA: Only for Pilot Version except B115B (Mechanical Version / Pilot Version)

302	03	p1	04/08

LOADER ATTACHMENT 2-SECTION CONTROL VALVE: BOOM SECTION

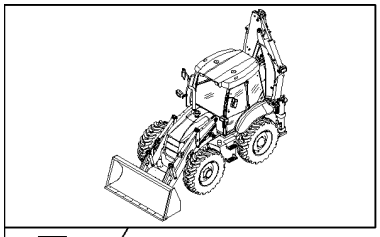

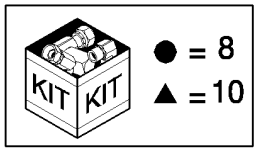

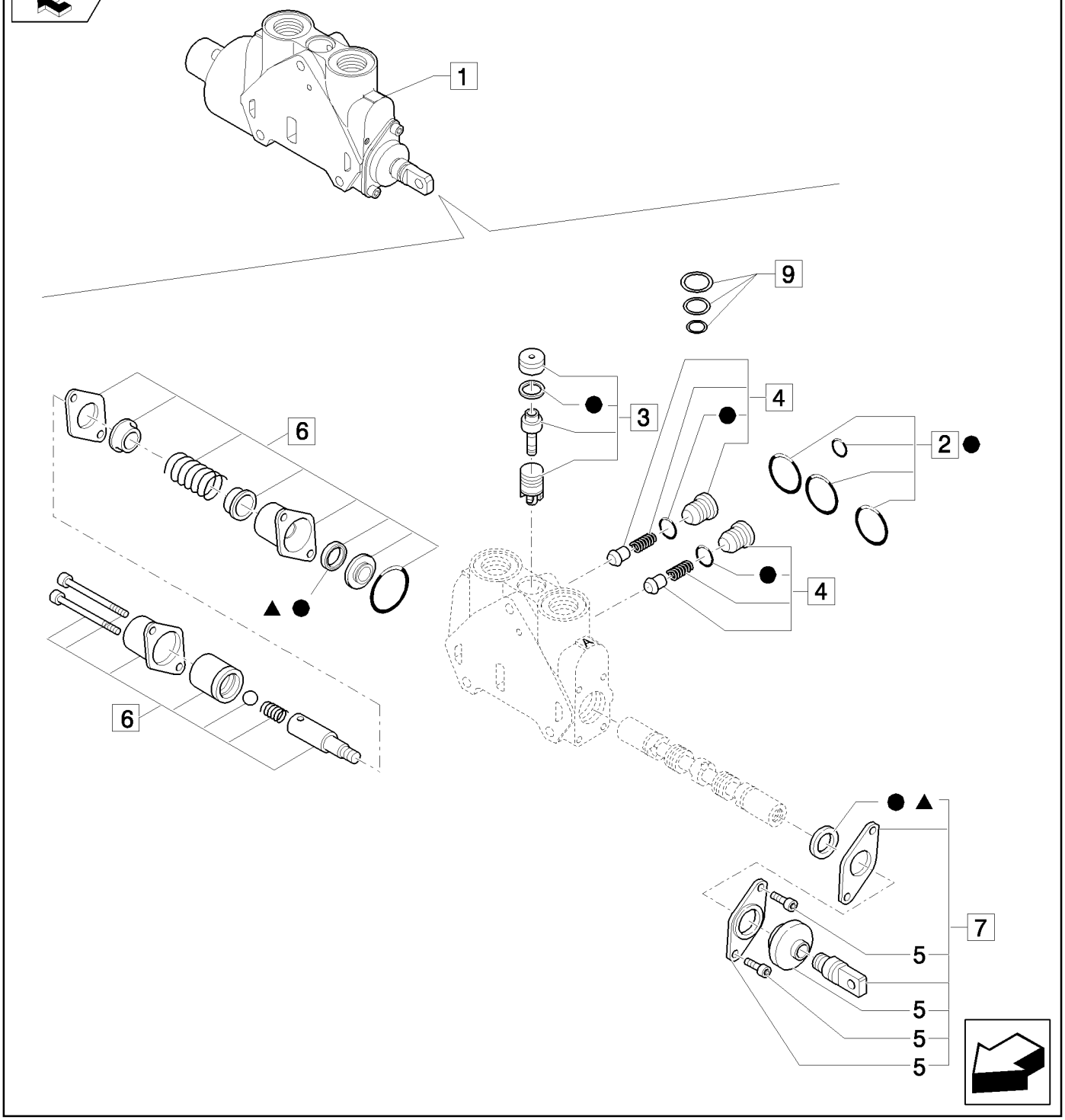

LOADER ATTACHMENT 2-SECTION CONTROL VALVE: BOOM SECTION

REF	FN	PART NUMBER	YR/SN	QTY	DESCRIPTION
1		87558567		1	SECTOR, Assy
2		85819148		1	KIT, SEALS, Seals
3		85819378		1	KIT, SEALS, Valve
4		85811938		2	VALVE, CHECK, Valve, Assy
5		85820130		1	BOOT
6		87558870		1	KIT, Cover Assy
7		87735363		1	KIT, REPAIR, Working Assy
8		85824282		1	KIT, Seals
9		85819040		1	KIT, SEALS, Compensator Seal
10		85824283		1	KIT, SEALS, Spool Seal

NA: Only for Pilot Version except B115B (Mechanical Version / Pilot Version)

TWO-SECTION CONTROL VALVE FOR LOADER

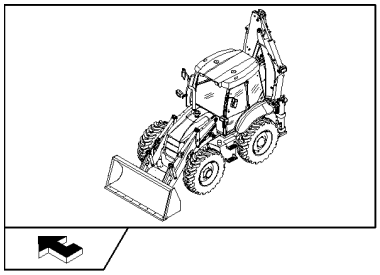

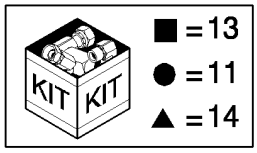

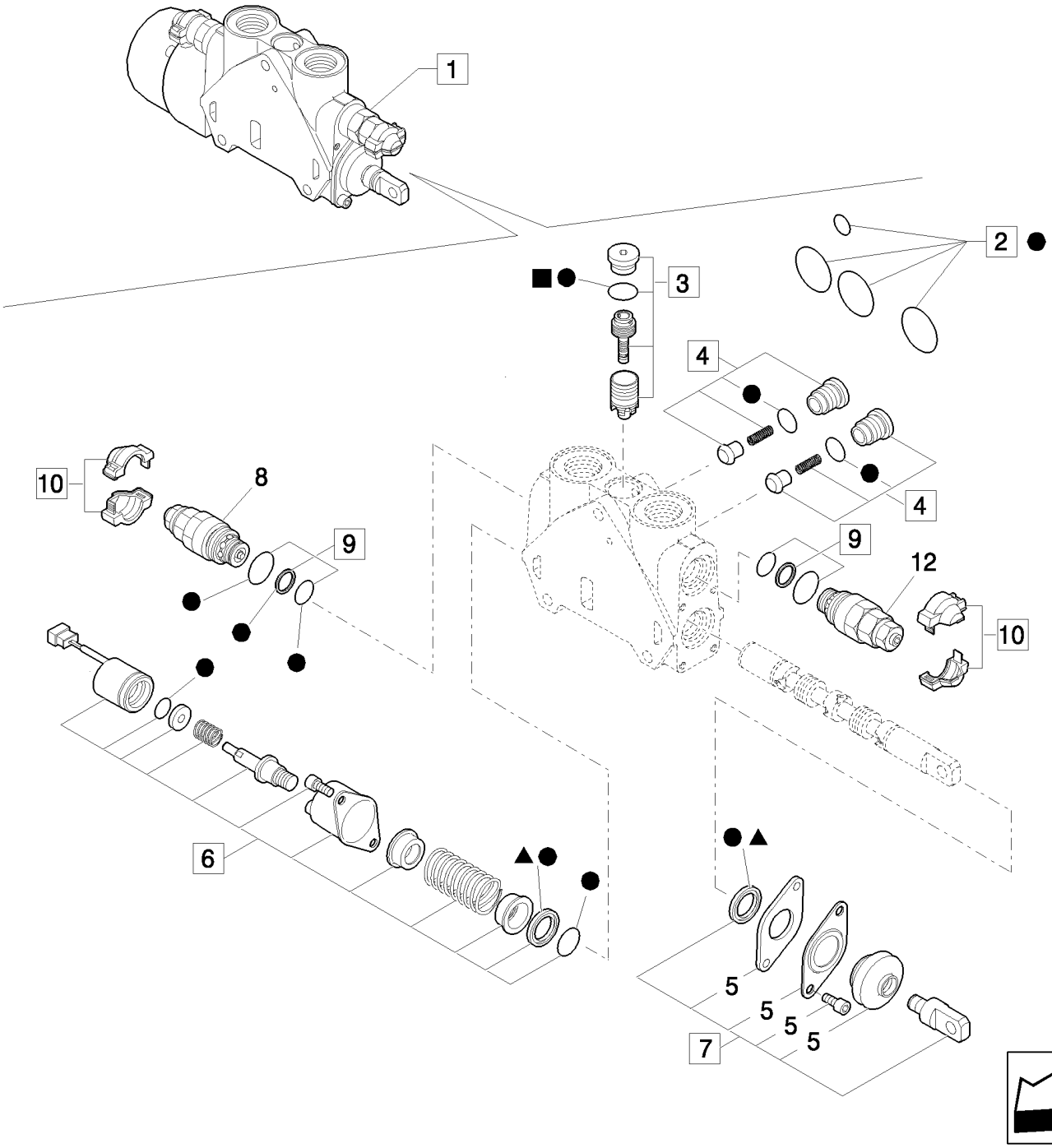

TWO-SECTION CONTROL VALVE FOR LOADER

REF	FN	PART NUMBER	YR/SN	QTY	DESCRIPTION
1		85825469		1	VALVE SECTION, HYD, Assy
2		85819148		1	KIT, SEALS, Seals
3		85819378		1	KIT, SEALS, Valve
4		85811938		2	VALVE, CHECK, Valve
5		85820130		1	BOOT
6		85825471		1	KIT, Cover Assy
7		87735363		1	KIT, REPAIR, Working Assy
8	1, 2	85812116		1	VALVE, PRESSURE RELIEF
9		85811933		2	KIT, SEALS, Valve Seals
10		85811935		2	KIT, Cover
11		85824281		1	KIT, SEALS, Seals
12	1, 3	85812113		1	VALVE, HYDRAULIC
13		85819040		1	KIT, SEALS, Compensator Seal
14		85824283		1	KIT, SEALS, Spool Seal

(1) Includes 9, 10
(2) 240 BAR
(3) 165 BAR

NA: Only for Pilot Version except B115B (Mechanical Version / Pilot Version)

321		p1	03/08

DOUBLE BATTERY

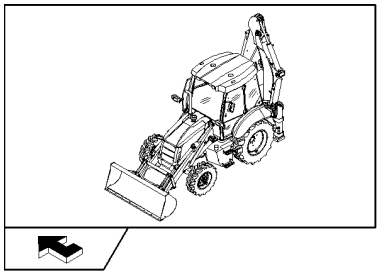

DOUBLE BATTERY

REF	FN	PART NUMBER	YR/SN	QTY	DESCRIPTION
1		85826208		2	BATTERY, WET, U.S.
2		412005		4	BOLT, Hex, M10 x 220, 8.8, M10x220
3		85827072		1	CABLE, ELECTRIC
4		87568472		1	CABLE
5		47049041		4	NUT, M10
6		47049590		AR	DECAL
7		85826906		2	GUARD
8		87415781		2	BRACKET
9		47048788		4	ANGLE
10		47048963		4	WASHER
11		87529531		4	PLATE, RETAINING
12		85827416		1	CABLE, GROUND
13		87405018		1	Strap, Ground

331	01	p1	04/08

TOWER ASSY 6 SECTIONS (CENTER PIVOT)

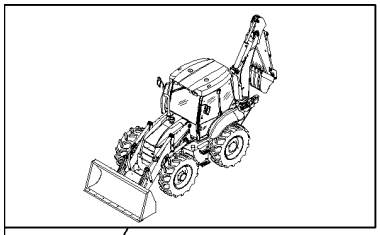

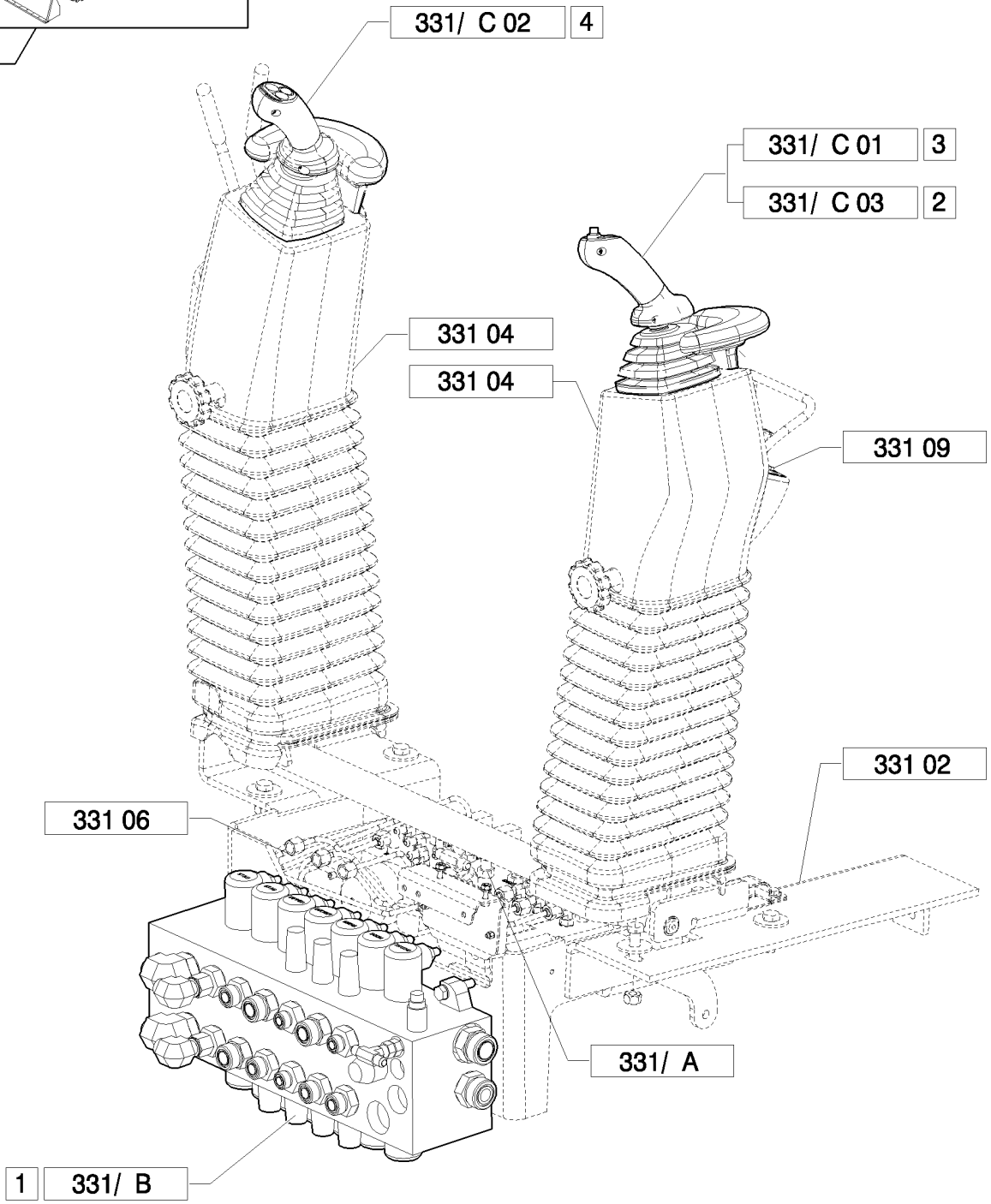

TOWER ASSY 6 SECTIONS (CENTER PIVOT)

REF	FN	PART NUMBER	YR/SN	QTY	DESCRIPTION
1	1	87734101		1	VALVE, CONTROL, Assy
1	2	87734093		1	VALVE, CONTROL, Assy
2	3	87685954		1	VALVE, CONTROL, Assy
3	4	87685956		1	VALVE, CONTROL, Assy
4		87685948		1	VALVE, CONTROL, Assy

(1) Only for B110B, B115B (EU)
(2) Only for NA
(3) Only for B90B
(4) Except for B90B

331	02	p1	03/08

PILOT CONTROL VALVE SUPPORT, COMPLETE

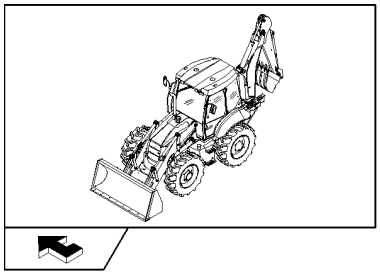

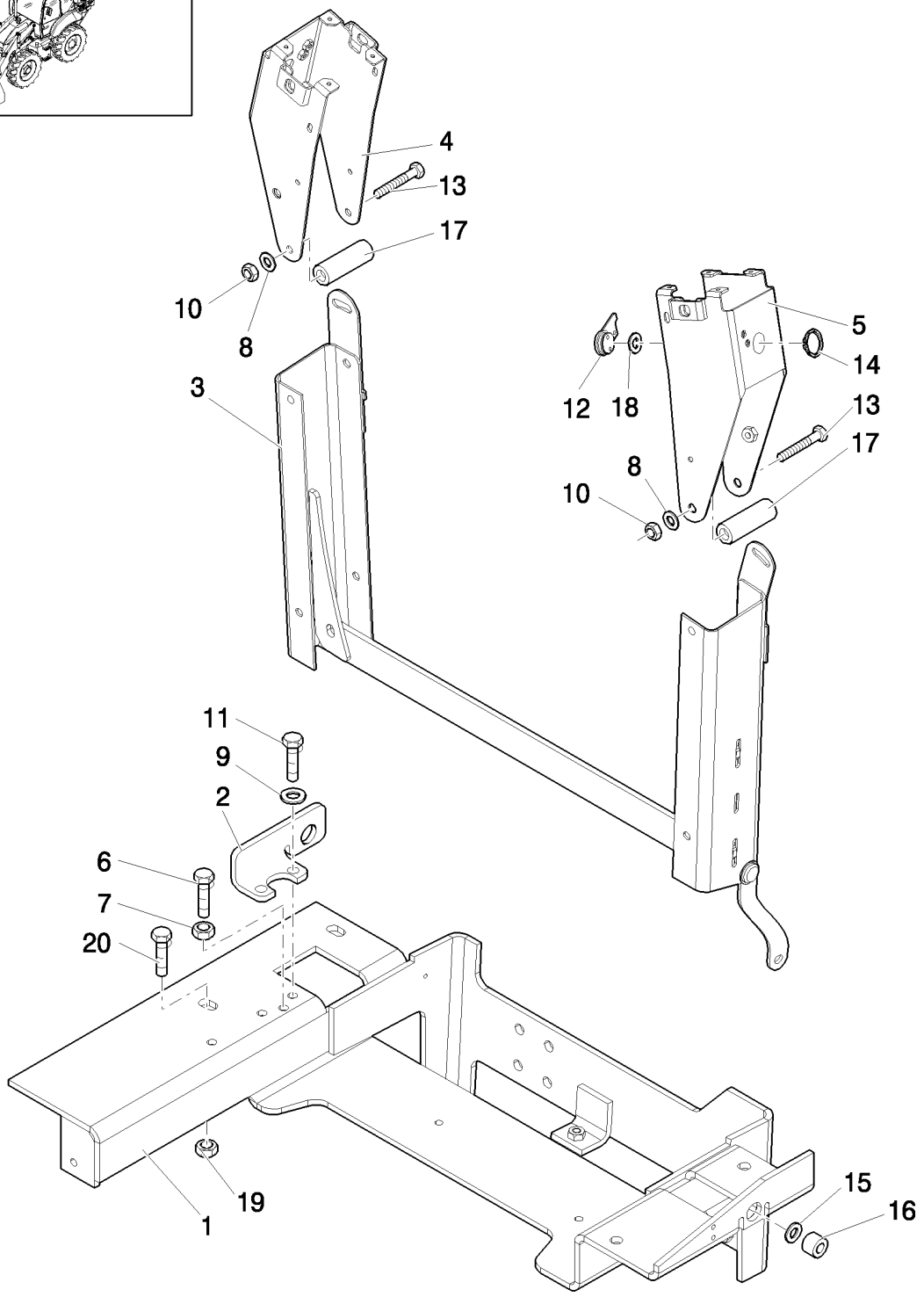

PILOT CONTROL VALVE SUPPORT, COMPLETE

REF	FN	PART NUMBER	YR/SN	QTY	DESCRIPTION
1		87434992		1	SUPPORT
2		87427004		1	SUPPORT
3		87426960		1	PIVOT ASSY.
4		87453116		1	SUPPORT
5		87453117		1	SUPPORT
6		15213721		1	BOLT, Hex, M8 x 60, 8.8, Full Thd
7		16100811		1	NUT, M8, Cl 8
8		47048969		4	WASHER
9		47048992		2	WASHER
10		47049041		2	NUT
11		47049082		2	BOLT
12		87453118		1	LEVER
13		84058418		2	BOLT, Hex, M10 x 125, 8.8
14		85824053		1	O-RING
15		85824054		4	WASHER
16		85824059		2	BUSHING
17		87453110		2	SPACER
18		87405706		1	WASHER
19		47049032		4	NUT
20		47049151		4	SCREW

Pilot Control Version	B95B

331	03	p1	03/08

PILOT CONTROL VALVE SUPPORT, COMPLETE

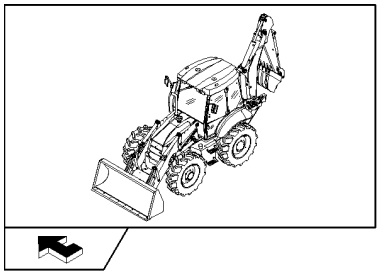

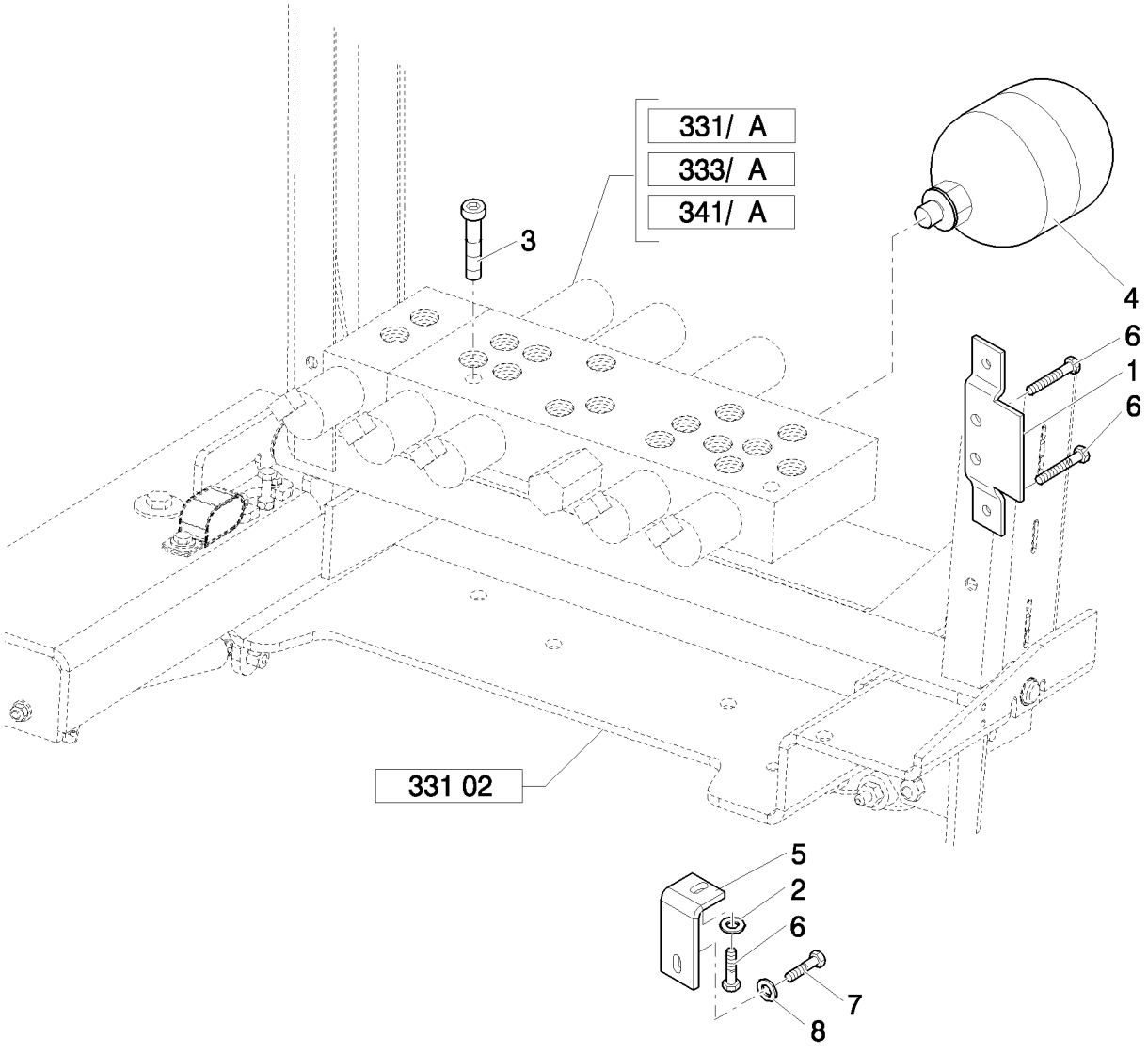

PILOT CONTROL VALVE SUPPORT, COMPLETE

REF	FN	PART NUMBER	YR/SN	QTY	DESCRIPTION
1		86990460		1	PLATE, MOUNTING
2		47048971		1	WASHER
3		14306821		2	SCREW, Hex Soc Hd, M8 x 45, 8.8
4		87425225		1	ACCUMULATOR
5		87402306		1	BRACKET
6		16040821		3	BOLT, Hex, M10 x 40, 8.8, Full Thd
7		47049065		1	SCREW
8		85802618		1	WASHER, SEALING

Pilot Control Version	B95B

331	04	p1	03/08

PILOT CONTROL VALVE SUPPORT, COMPLETE

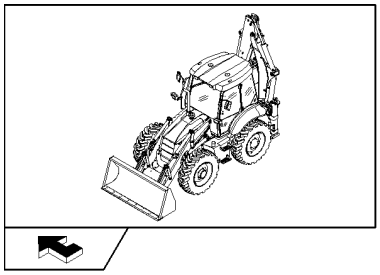

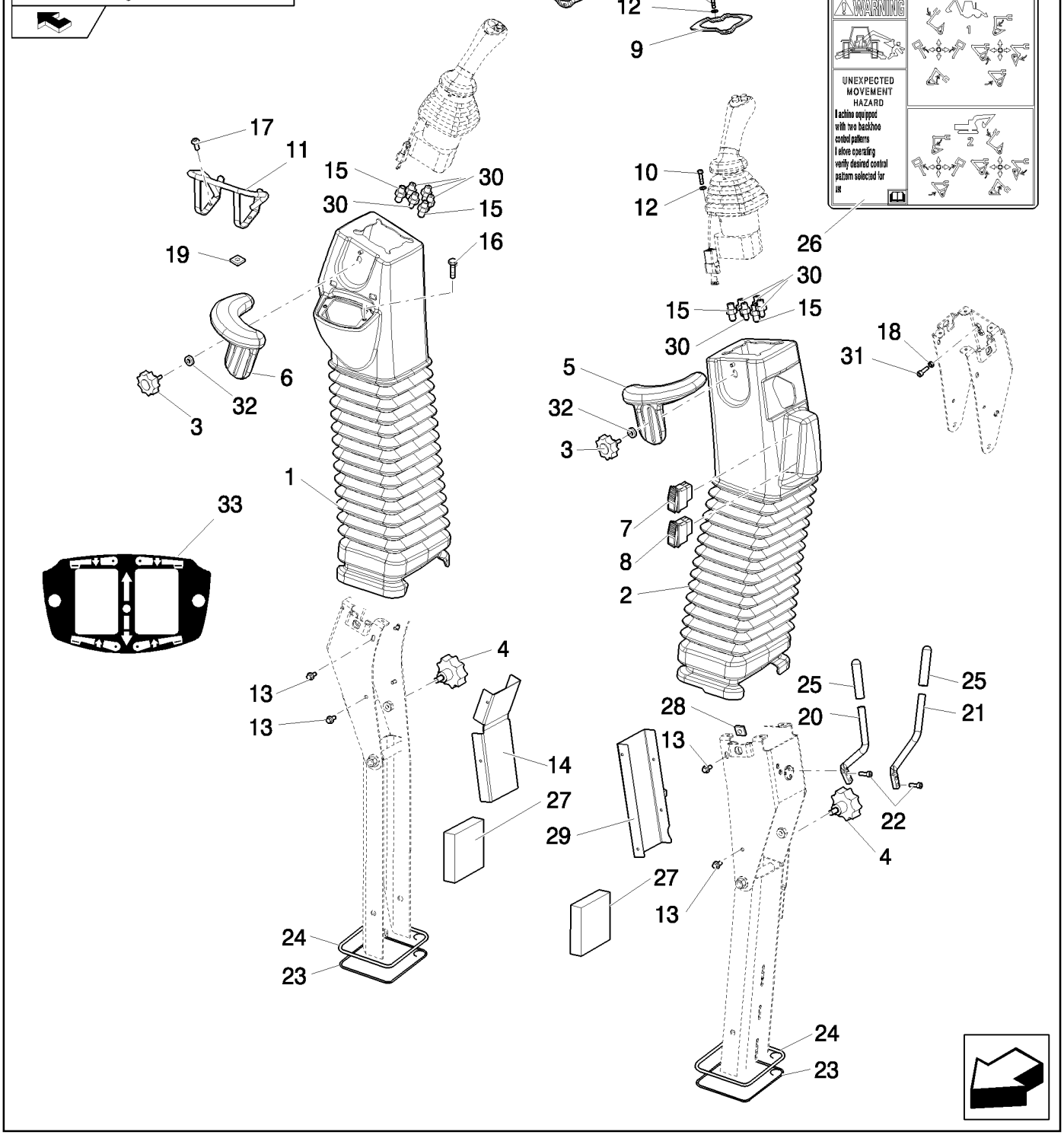

PILOT CONTROL VALVE SUPPORT, COMPLETE

REF	FN	PART NUMBER	YR/SN	QTY	DESCRIPTION
1		87309923		1	BOOT
2		87309924		1	BOOT
3		87437689		2	KNOB
4		87437688		2	KNOB
5		87437366		1	ARMREST
6		87437369		1	ARMREST
7		87423802		1	SWITCH
8		87410105		1	SWITCH
9		87435372		2	PLATE, RETAINING
10		10902834		8	SCREW
11		87307656		1	GUARD
12		11197779		8	WASHER, SPRING, Belleville, M6.4
13		86625199		8	SCREW, SELF TAPPING, Hex Flg Hd, M6 x 13
14		87431301		1	SHIELD
15		47050686		4	CONNECTOR, HYD.
16		87022296		8	SCREW, Cross Pan Hd, M3 x 8
17		87310085		2	SCREW, SELF TAPPING
18		12574111		1	NUT, LOCK, M5 x .8, Cl 8
19		87452511		2	NUT
20		87418368		1	ROD
21		87418369		1	ROD
22		87310098		4	BOLT, M6 x 20
23		87433514		2	GASKET
24		87433515		2	GASKET
25		87421909		2	GRIP
26	1	87305953		1	DECAL
26	2	87305413		1	DECAL
27		87349851		2	PANEL, INSULATING
28		86625073		2	NUT, M6, U
29		87431300		1	GUARD
30		85803312		8	CONNECTOR, HYD.
31		10977821		1	BOLT, Hex, M5 x 16, 8.8, Full Thd
32		85821536		2	WASHER, M6 x 25 x 1.6

(1) Only for EU
(2) Only for NA

Pilot Control Version	B95B

331	04	p2	03/08

PILOT CONTROL VALVE SUPPORT, COMPLETE

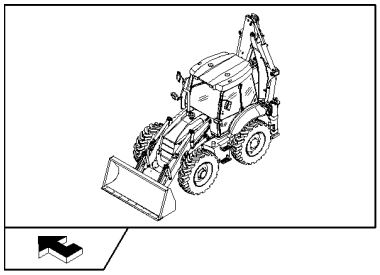

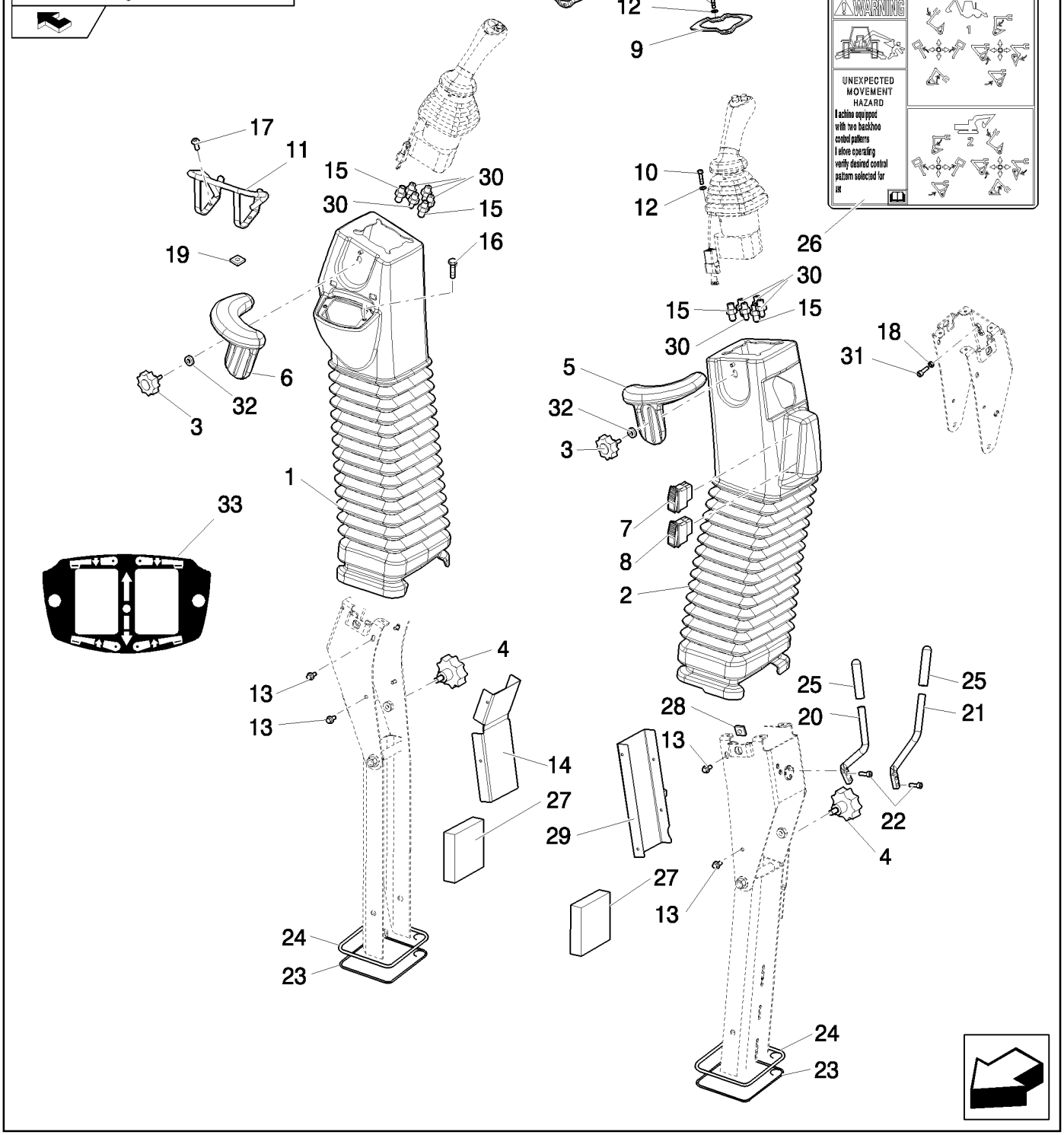

PILOT CONTROL VALVE SUPPORT, COMPLETE

REF	FN	PART NUMBER	YR/SN	QTY	DESCRIPTION
33		87423812		1	DECAL

Pilot Control Version	B95B

331	05	p1	03/08

PILOT CONTROL VALVE SUPPORT, COMPLETE

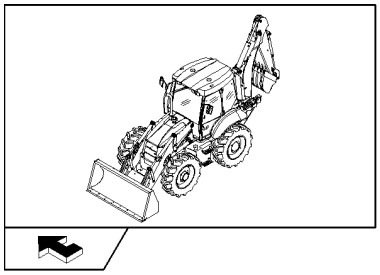

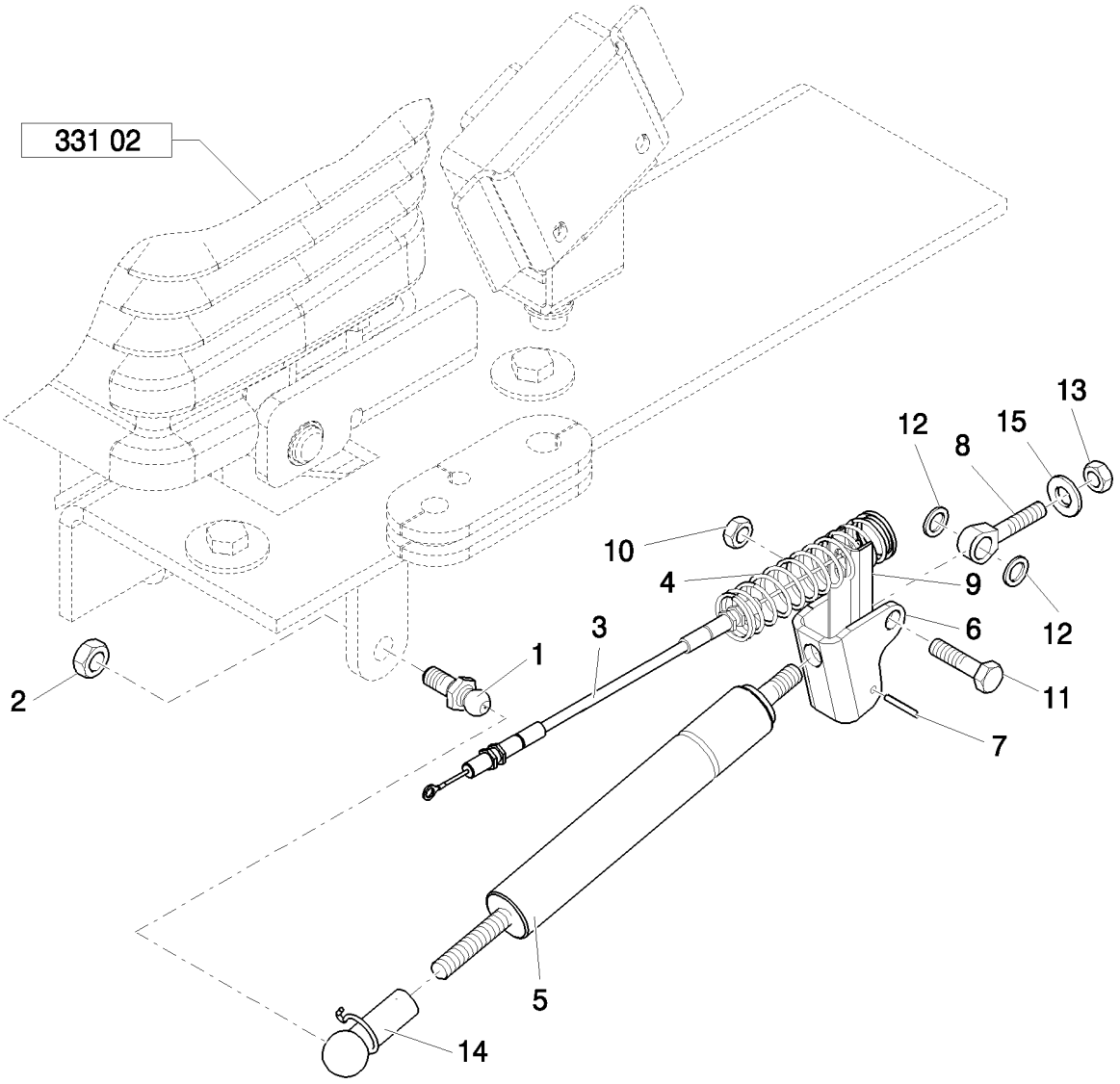

PILOT CONTROL VALVE SUPPORT, COMPLETE

REF	FN	PART NUMBER	YR/SN	QTY	DESCRIPTION
1		85824067		1	PIN, BALL
2		47049041		1	NUT, M10
3		87430028		1	CABLE
4		87443692		1	SPRING
5		86989616		1	GAS STRUT
6		85824080		1	BRACKET
7		85821514		2	PIN
8		85824081		1	BALL JOINT
9		86984549		1	CHANNEL
10		85821516		1	NUT
11		85821515		1	BOLT
12		85821520		2	SPACER
13		47049442		2	NUT
14		86999310		1	CLIP
15		47049404		1	WASHER

Pilot Control Version	B95B

331	06	p1	03/08

6 SECTION PILOT CONTROL VALVE SUPPORT, COMPLETE

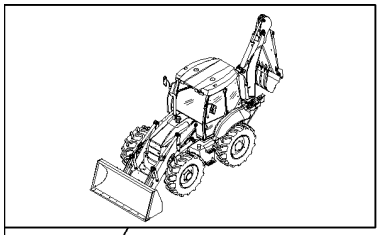

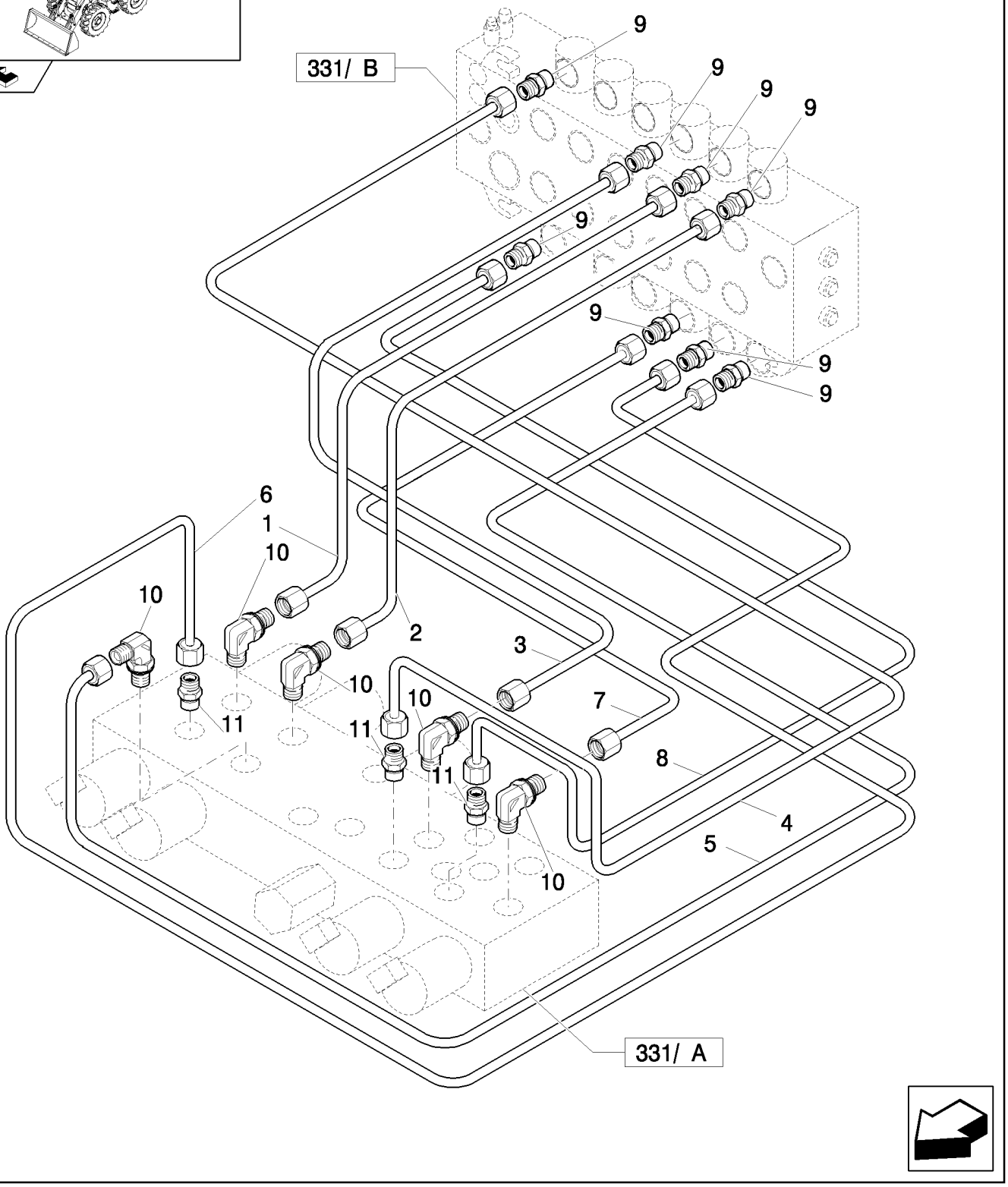

6 SECTION PILOT CONTROL VALVE SUPPORT, COMPLETE

REF	FN	PART NUMBER	YR/SN	QTY	DESCRIPTION
1		85827093		1	TUBE, HYD
2		85827094		1	TUBE, HYD
3		85827091		1	TUBE, HYD
4		85827089		1	TUBE, HYD
5		85827092		1	TUBE, HYD
6		85827095		1	TUBE, HYD
7		85827090		1	TUBE, HYD
8		85827088		1	TUBE, HYD
9		85803312		7	CONNECTOR, HYD.
10		47050653		5	ELBOW
11		47050685		3	CONNECTOR, HYD.

Pilot Control Version	B95B

331	07	p1	03/08

PILOT CONTROL VALVE SUPPORT, COMPLETE

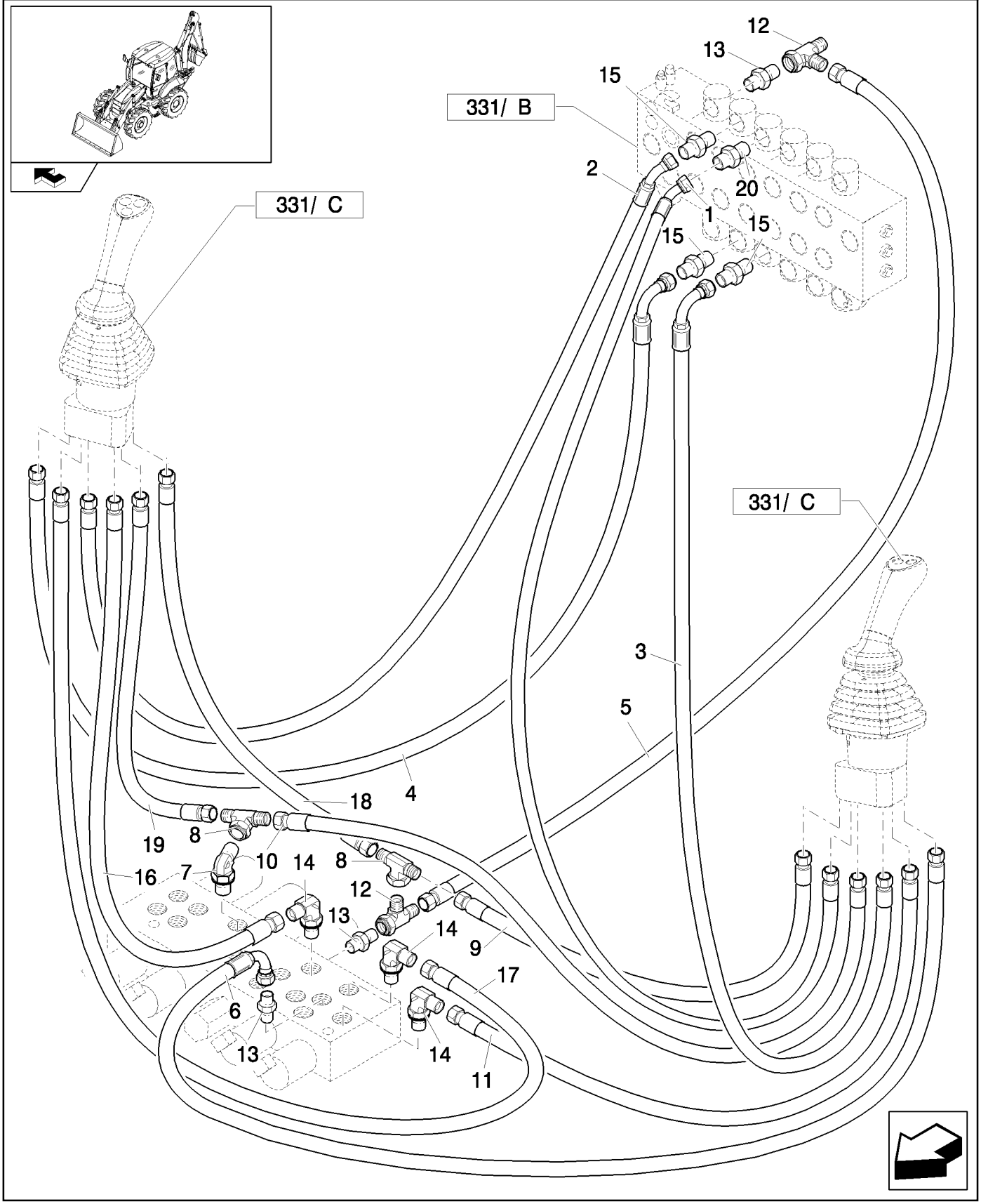

PILOT CONTROL VALVE SUPPORT, COMPLETE

REF	FN	PART NUMBER	YR/SN	QTY	DESCRIPTION
1		85827084		1	HOSE, FLEXIBLE
2		85827085		1	HOSE, FLEXIBLE
3		85827086		1	HOSE, FLEXIBLE
4		85827077		1	HOSE, FLEXIBLE
5		85827087		1	HOSE, FLEXIBLE
6		85827082		1	HOSE, FLEXIBLE
7		85827467		1	ELBOW
8		85827466		2	TEE
9		85827076		1	HOSE, FLEXIBLE
10		85827080		1	HOSE, FLEXIBLE
11		85827078		1	HOSE, FLEXIBLE
12		47120173		2	TEE
13		47050686		3	CONNECTOR, HYD.
14		47050653		3	ELBOW
15		85803312		4	CONNECTOR, HYD.
16		85827533		1	HOSE, FLEXIBLE
17		85827531		1	HOSE, FLEXIBLE
18		85827532		1	HOSE, FLEXIBLE
19		85827534		1	HOSE, FLEXIBLE

Pilot Control Version	B95B

331	08	p1	03/08

PILOT CONTROL VALVE SUPPORT, COMPLETE

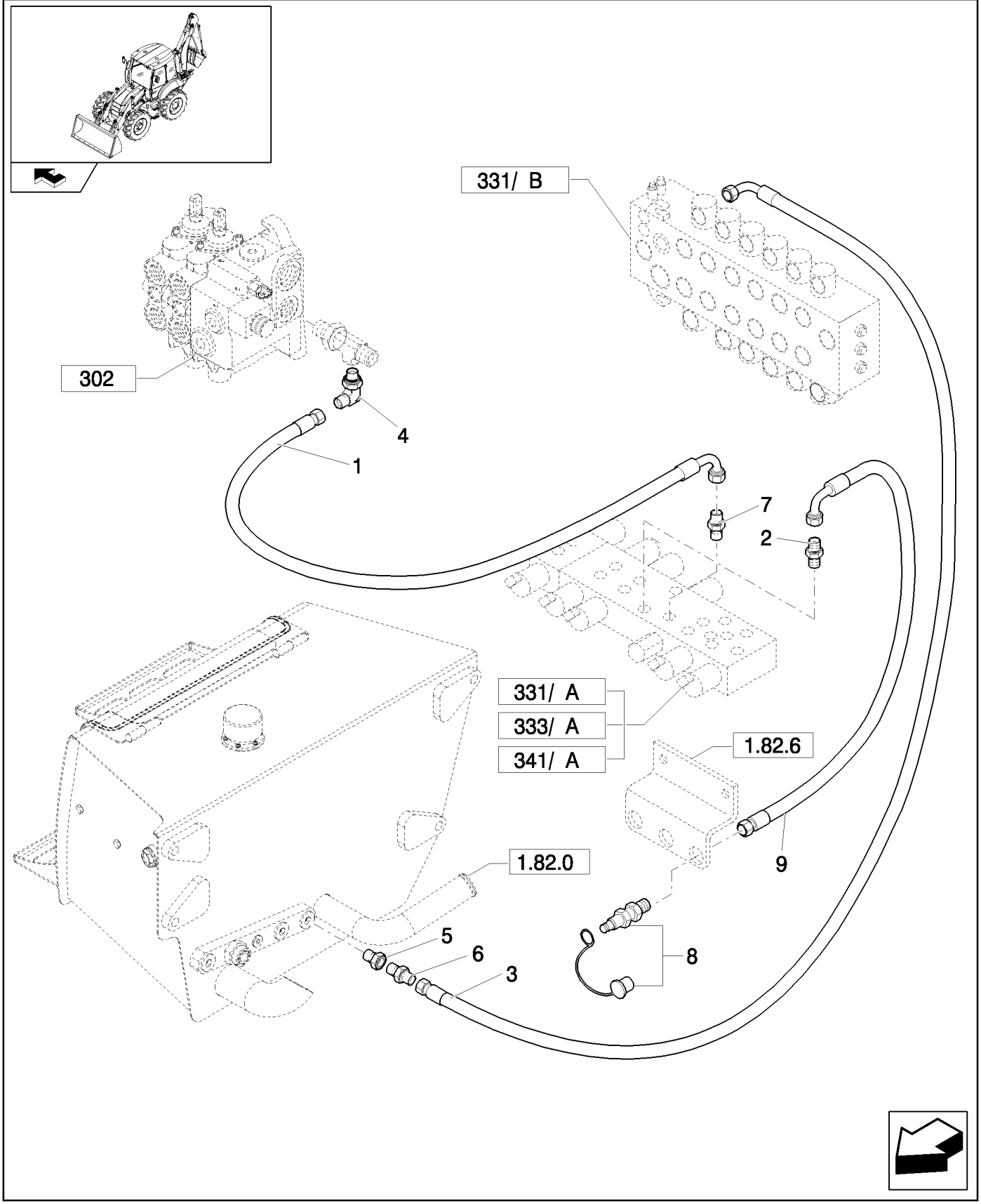

PILOT CONTROL VALVE SUPPORT, COMPLETE

REF	FN	PART NUMBER	YR/SN	QTY	DESCRIPTION
1		85827476		1	HOSE, FLEXIBLE
2		83963371		1	CONNECTOR, HYD.
3		85827475		1	HOSE, FLEXIBLE
4		85805318		1	ELBOW, 90º, 9/16"-18, 37º x 9/16"-18, O-Ring
5		85826100		1	REDUCER
6		47050686		1	CONNECTOR, HYD.
7		47050653		1	ELBOW
8		85817226		1	COUPLING, QUICK, MALE
9		85812173		1	HOSE, FLEXIBLE

Pilot Control Version	B95B

PILOT CONTROL VALVE SUPPORT, COMPLETE

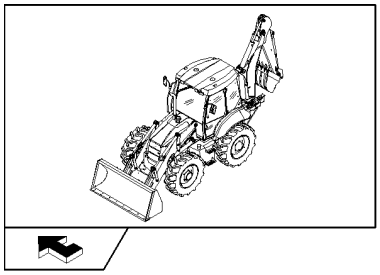

KIT KIT ● = 3

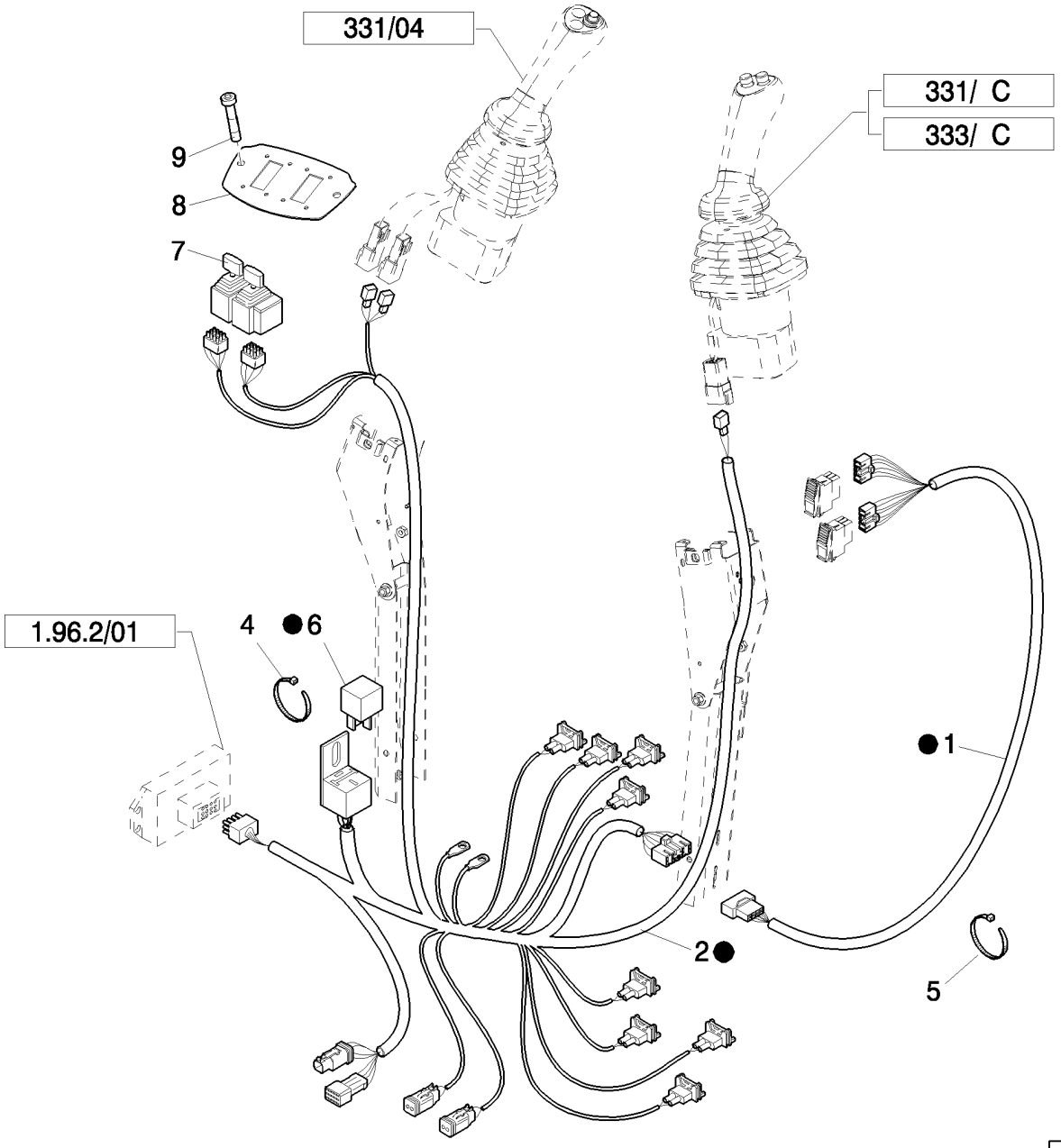

PILOT CONTROL VALVE SUPPORT, COMPLETE

REF	FN	PART NUMBER	YR/SN	QTY	DESCRIPTION
1		85828216		1	HARNESS, WIRE
2	1	87305611		1	HARNESS, WIRE
2	2	87573079		1	HARNESS
3	3, 1	87305604		1	HARNESS, WIRE
3	3, 2	87573078		1	HARNESS
4		14560187		7	STRAP, CABLE, 178mm lg, L=203.2 mm
5		47044780		2	CABLE
6		85821537		1	RELAY
7		86988086		2	JOYSTICK
8		87435381		1	PLATE, MOUNTING
9		85821534		2	SCREW

(1) Only for B90B, B90BLR (EU) - B90B(NA
(2) Only for B100B, B100BLR, B110B, B115B (EU) - B95B, B95BLR, B95BTC, B110B, B115B (NA)
(3) Includes 1, 2, 6

Pilot Control Version	B95B

PROPORTIONAL CONTROL VALVE 6 SECTIONS

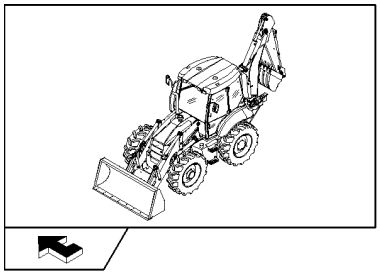

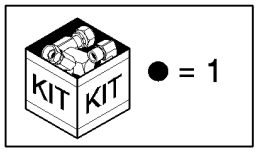

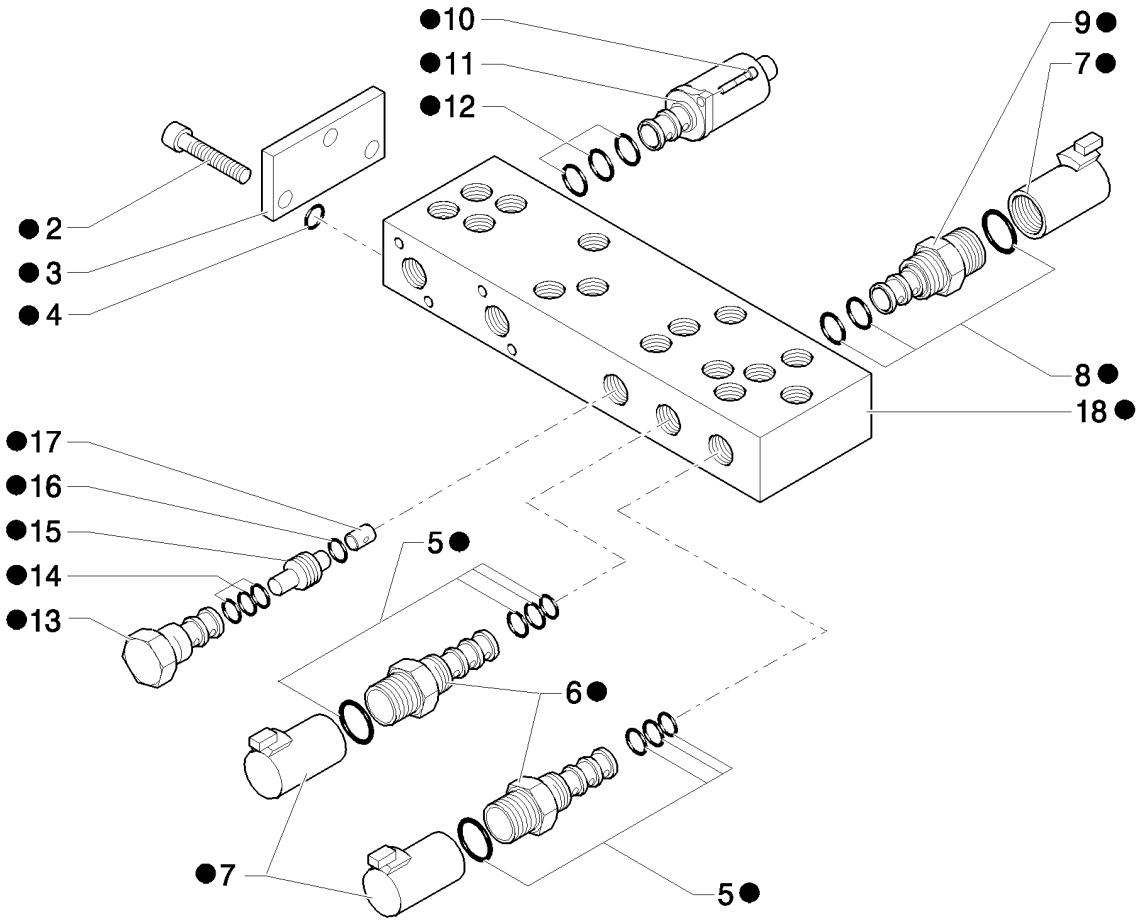

PROPORTIONAL CONTROL VALVE 6 SECTIONS

REF	FN	PART NUMBER	YR/SN	QTY	DESCRIPTION
1		85827472		1	VALVE, HYDRAULIC
2		14304021		3	SCREW, Hex Soc Hd, M5 x 10, 8.8
3		85827991		1	PLATE
4		85827999		1	KIT, SEALS
5		85828002		2	KIT, SEALS
6	1	85827996		2	VALVE, SOLENOID
7		85827995		3	COIL
8		85827998		1	KIT, SEALS
9	2	85827994		1	VALVE, SOLENOID
10		14302921		8	BOLT, Hex, M4 x 10, 8.8, Full Thd
11		85827993		4	VALVE, SOLENOID
12		85828000		4	KIT, SEALS
13		85827997		1	VALVE, CARTRIDGE, HYDRAULIC PRESSURE REDUCING VALVE
14		85828001		1	KIT, SEALS
15		85827992		1	VALVE, CHECK
16		85828003		1	O-RING
17		85828005		1	ORIFICE
18		85828013		1	BODY

(1) Includes 5, 7
(2) Includes 7, 8

Pilot Control Version

B95B

331/ B	01	p1	04/08

BACKHOE CONTROL VALVE, 6 SECTIONS (CENTER PIVOT)

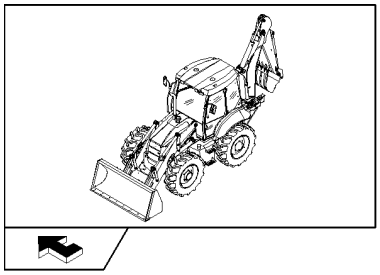

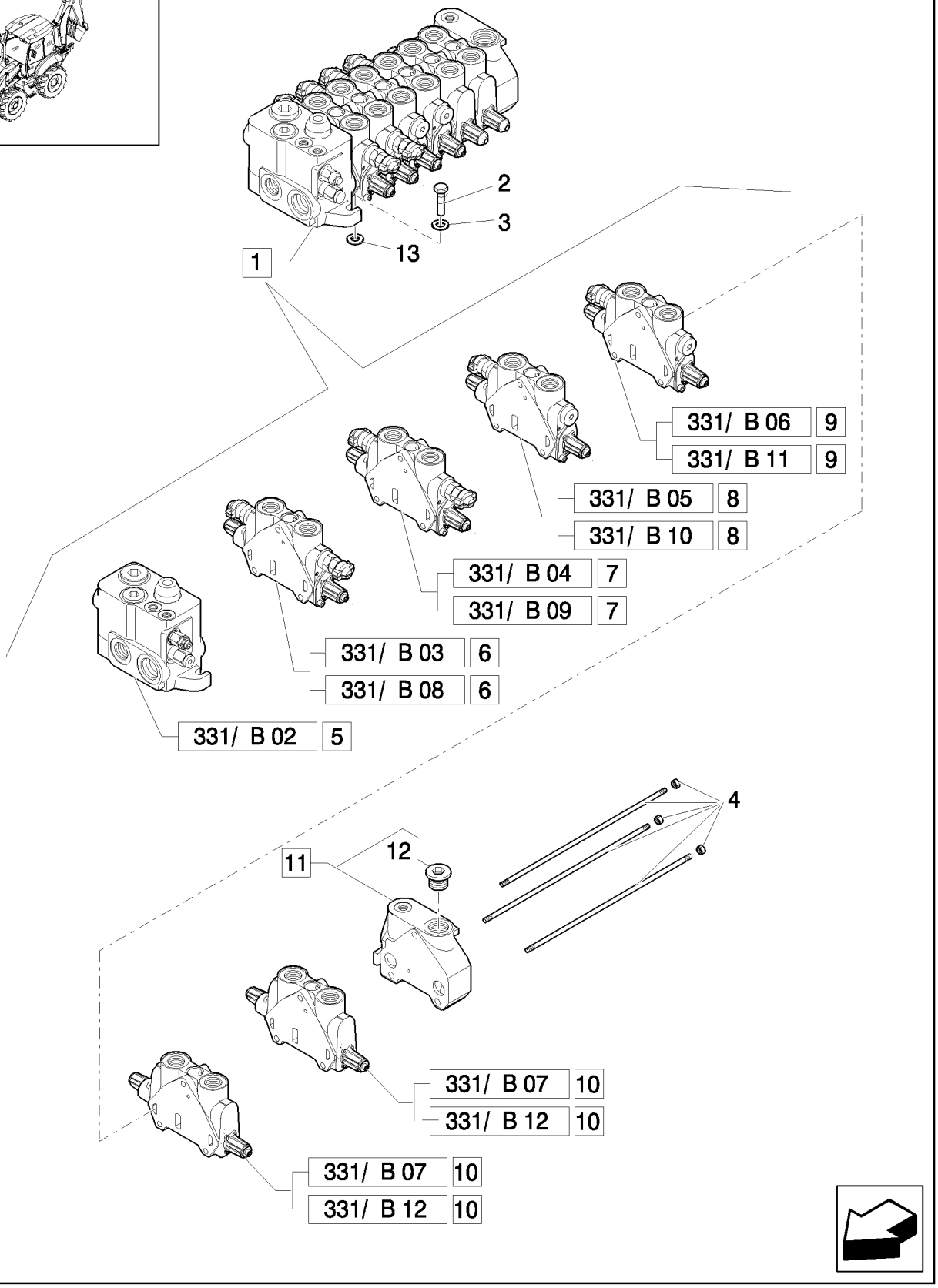

BACKHOE CONTROL VALVE, 6 SECTIONS (CENTER PIVOT)

REF	FN	PART NUMBER	YR/SN	QTY	DESCRIPTION
1	1	87734101		1	VALVE, CONTROL, Assy
1	2	87734093		1	VALVE, CONTROL, Assy
2		11234721		3	BOLT, Hex, M10 x 1.25 x 45, 8.8
3		11190679		3	WASHER, SPRING, Belleville, M10.5
4		85811958		1	KIT
5		87610858		1	VALVE SECTION, HYD, Assy
6	1, 3	85826930		1	SECTOR, TOOTHED, Assy
6	4, 3	85826901		1	VALVE SECTION, HYD, Assy
7	5, 1	85826931		1	SECTOR, TOOTHED, Assy
7	5, 4	85826339		1	VALVE SECTION, HYD, Assy
8	6, 1	85826932		1	SECTOR, TOOTHED, Assy
8	6, 4	85826903		1	SECTOR, TOOTHED, Assy
9	1, 7	87758454		1	SPOOL, Assy
9	4, 7	87758451		1	SPOOL, Assy
10	1, 8	85826360		2	SECTOR, TOOTHED, Assy
10	4, 8	85826340		2	VALVE SECTION, HYD, Assy
11		85826250		1	VALVE SECTION, HYD
12		85811921		1	PLUG, 1-1/16"-12 UNF 2A
13		13578621		3	WASHER

(1) Only for B110B, B115B (EU)
(2) Center Pivot
(3) Boom Cylinder
(4) Only for NA
(5) Swing Cylinder
(6) Bucket Cylinder
(7) Dipper Cylinder
(8) Stabilizer Cylinder

Pilot Control Version

B95B

BACKHOE CONTROL VALVE, INLET SECTION (CENTER PIVOT)

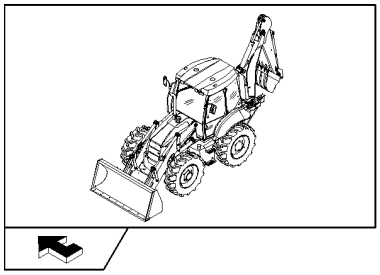

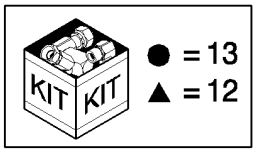

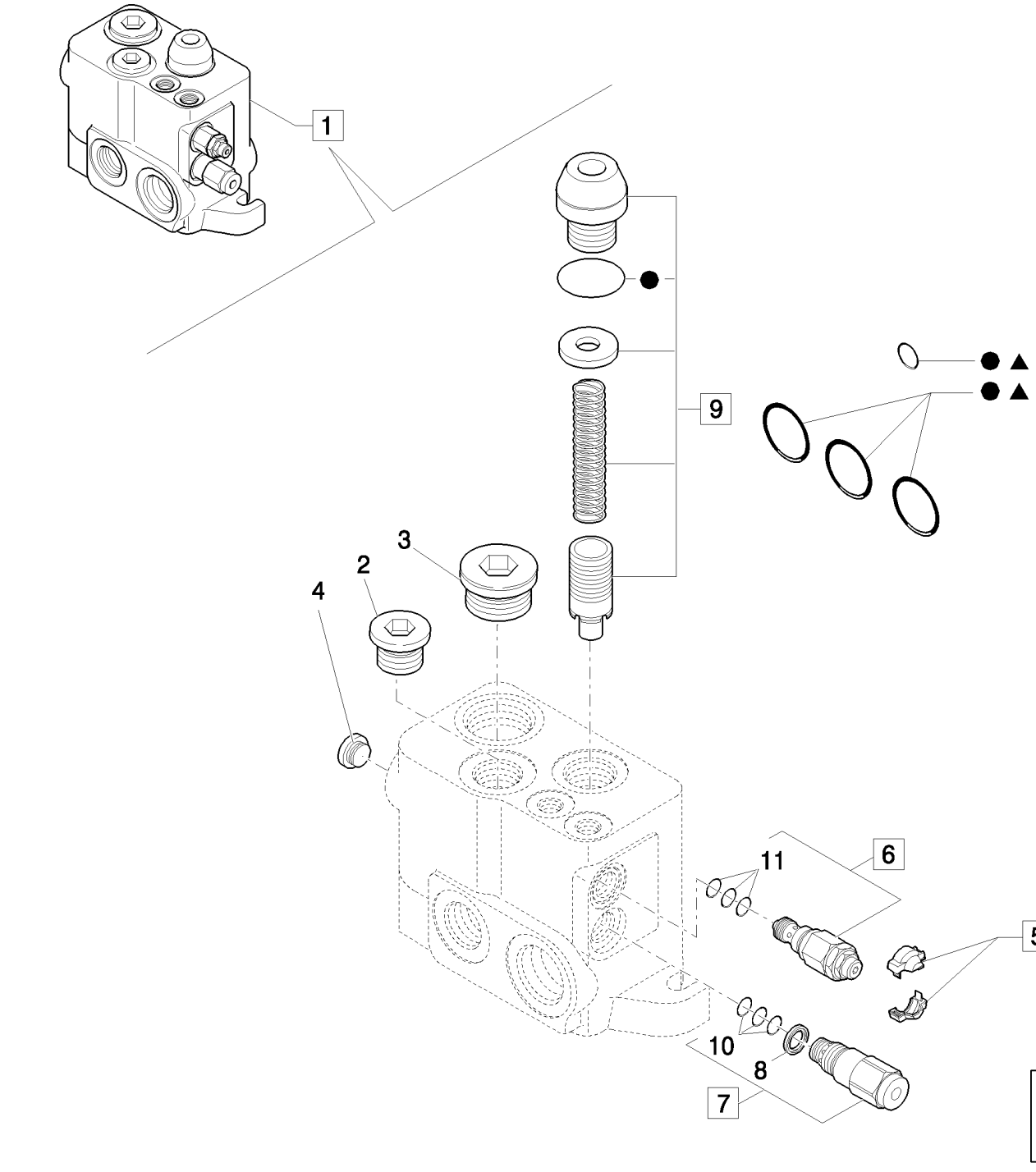

BACKHOE CONTROL VALVE, INLET SECTION (CENTER PIVOT)

REF	FN	PART NUMBER	YR/SN	QTY	DESCRIPTION
1		87610858		1	VALVE SECTION, HYD, Assy
2		85811921		1	PLUG, 1-1/16"-12 UNF 2A
3		85811922		1	PLUG, 1-5/16"-12 UNF 2A
4		85811923		1	PLUG
5		85811934		1	KIT, Cover
6		85811946		1	VALVE, PRESSURE RELIEF, Assy
7		85820128		1	REGULATOR, Assy
8		85817669		1	GASKET
9		85820129		1	KIT, Regulation Assy
10		85821235		1	KIT, SEALS, Seal, Flow Regulator
11		85821236		1	KIT, SEALS, Seal, LS Pressure Relief
12		87308749		1	KIT, SEALS, Seals
13		85825477		1	KIT, SEALS, Seal

Pilot Control Version

B95B

BACKHOE CONTROL VALVE, BOOM SECTION (CENTER PIVOT)

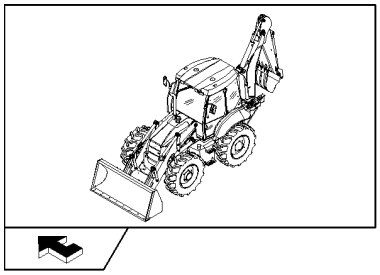

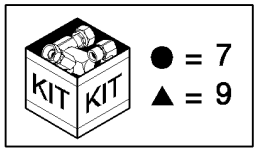

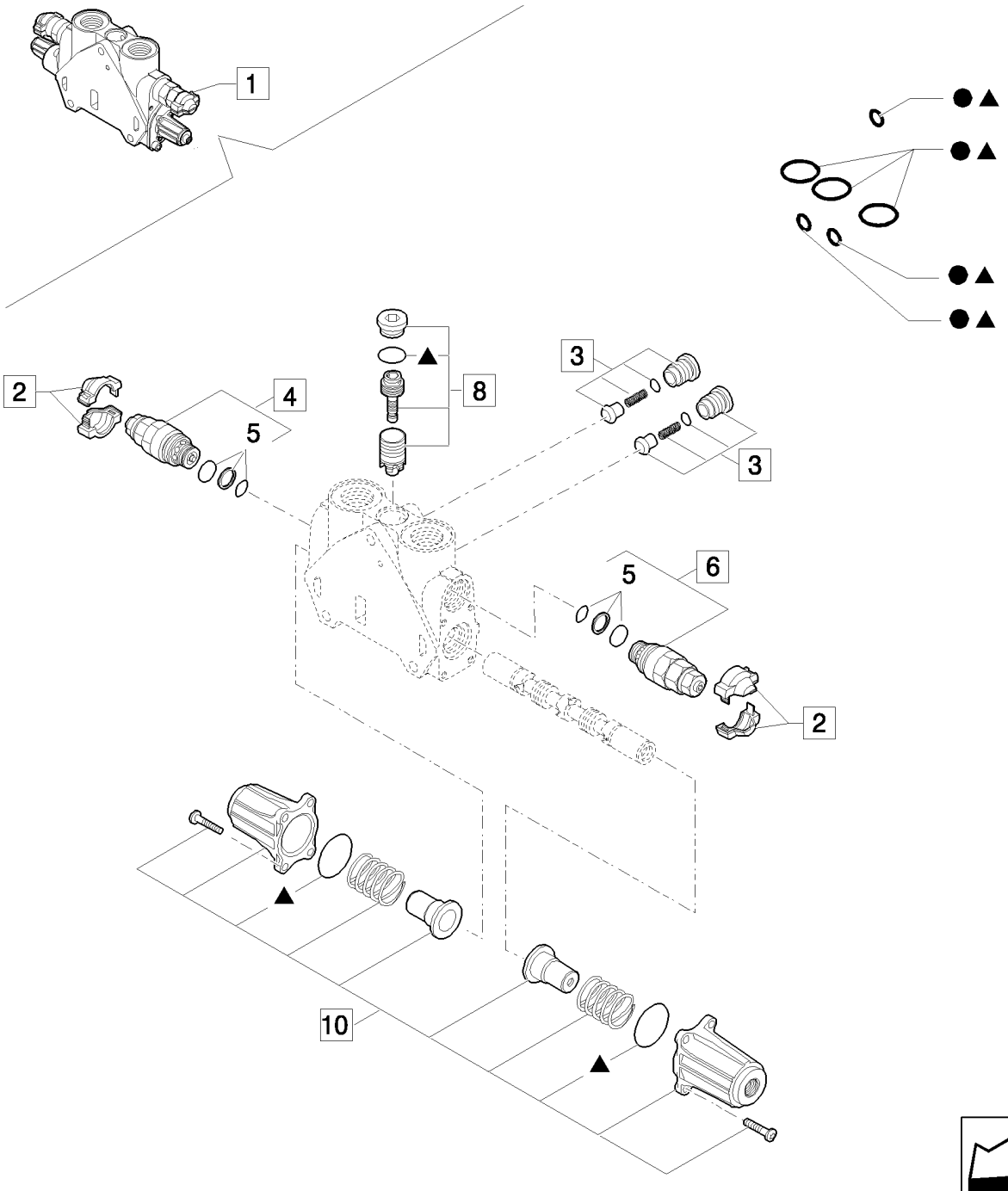

BACKHOE CONTROL VALVE, BOOM SECTION (CENTER PIVOT)

REF	FN	PART NUMBER	YR/SN	QTY	DESCRIPTION
1		85826930		1	SECTOR, TOOTHED, Assy
2		85811934		2	KIT, Cover
3		85811938		2	VALVE, CHECK, Valve, Assy
4	1	85812116		2	VALVE, PRESSURE RELIEF, Assy
5		85811933		2	KIT, SEALS, Valve Seals
6	2	85812117		2	VALVE, HYDRAULIC
7		85819148		1	KIT, SEALS, Seals
8		85819378		1	KIT, SEALS, Valve
9		85824281		1	KIT, SEALS, Cover Assy
10		85826344		1	KIT

(1) 240 BAR
(2) 315 BAR

Pilot Control Version

B95B

BACKHOE CONTROL VALVE, SWING SECTION (CENTER PIVOT)

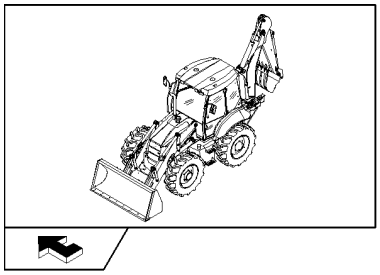

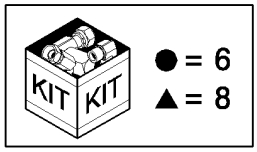

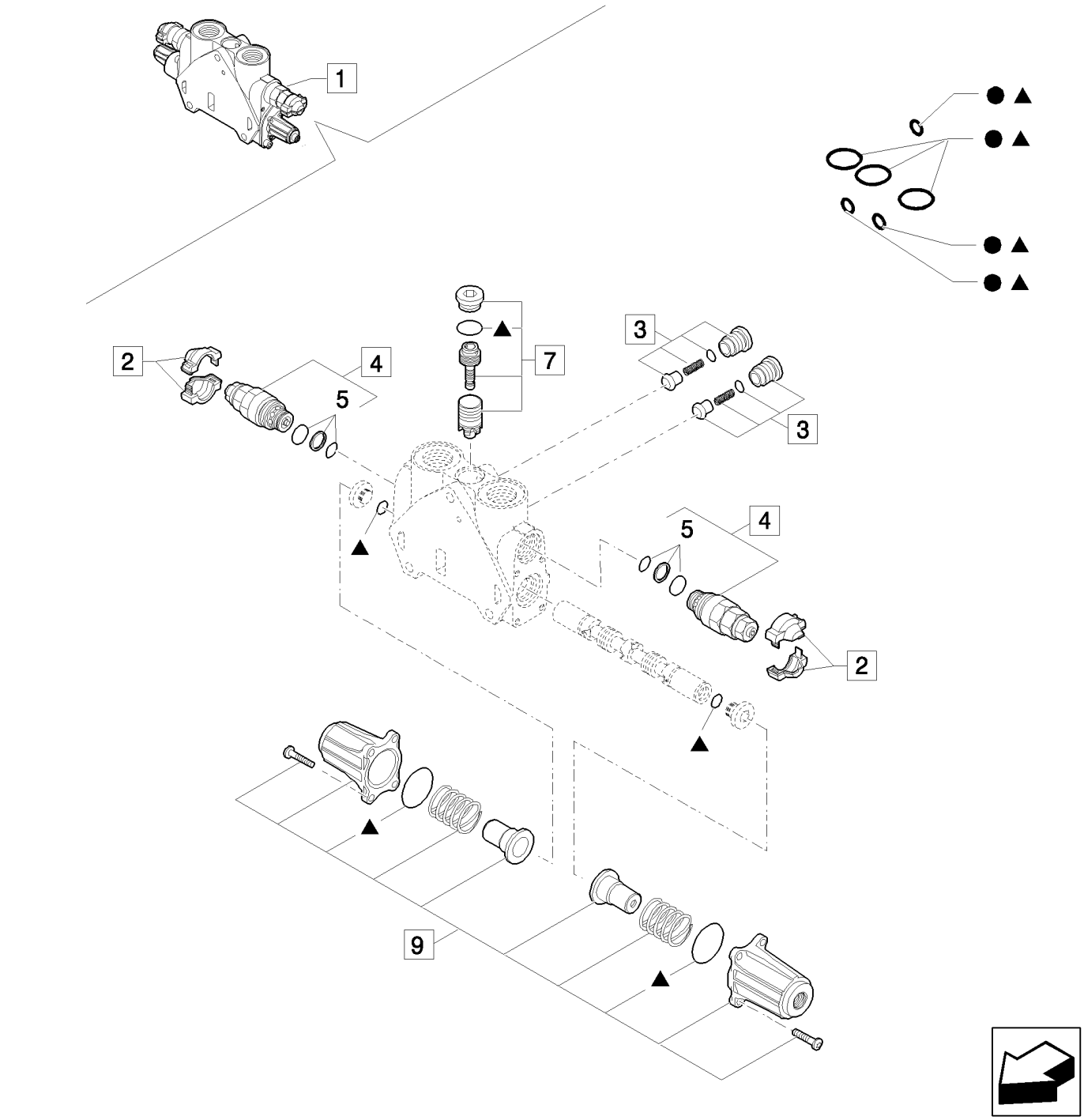

BACKHOE CONTROL VALVE, SWING SECTION (CENTER PIVOT)

REF	FN	PART NUMBER	YR/SN	QTY	DESCRIPTION
1		85826931		1	SECTOR, TOOTHED, Assy
2		85811934		2	KIT, Cover
3		85811938		2	VALVE, CHECK, Valve, Assy
4	1	85812114		2	VALVE, HYDRAULIC, Assy
5		85811933		2	KIT, SEALS, Secondary Valve
6		85819148		1	KIT, SEALS, Seals
7		85819378		1	KIT, SEALS, Seals
8		85824282		1	KIT
9		85826344		1	KIT

(1) 205 BAR

Pilot Control Version

B95B

BACKHOE CONTROL VALVE, BUCKET SECTION (CENTER PIVOT)

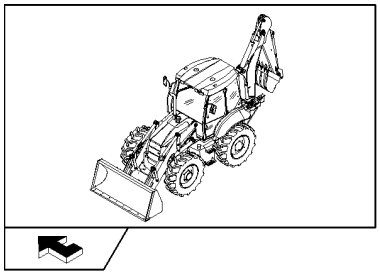

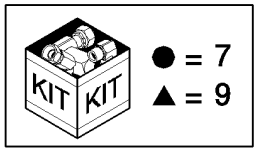

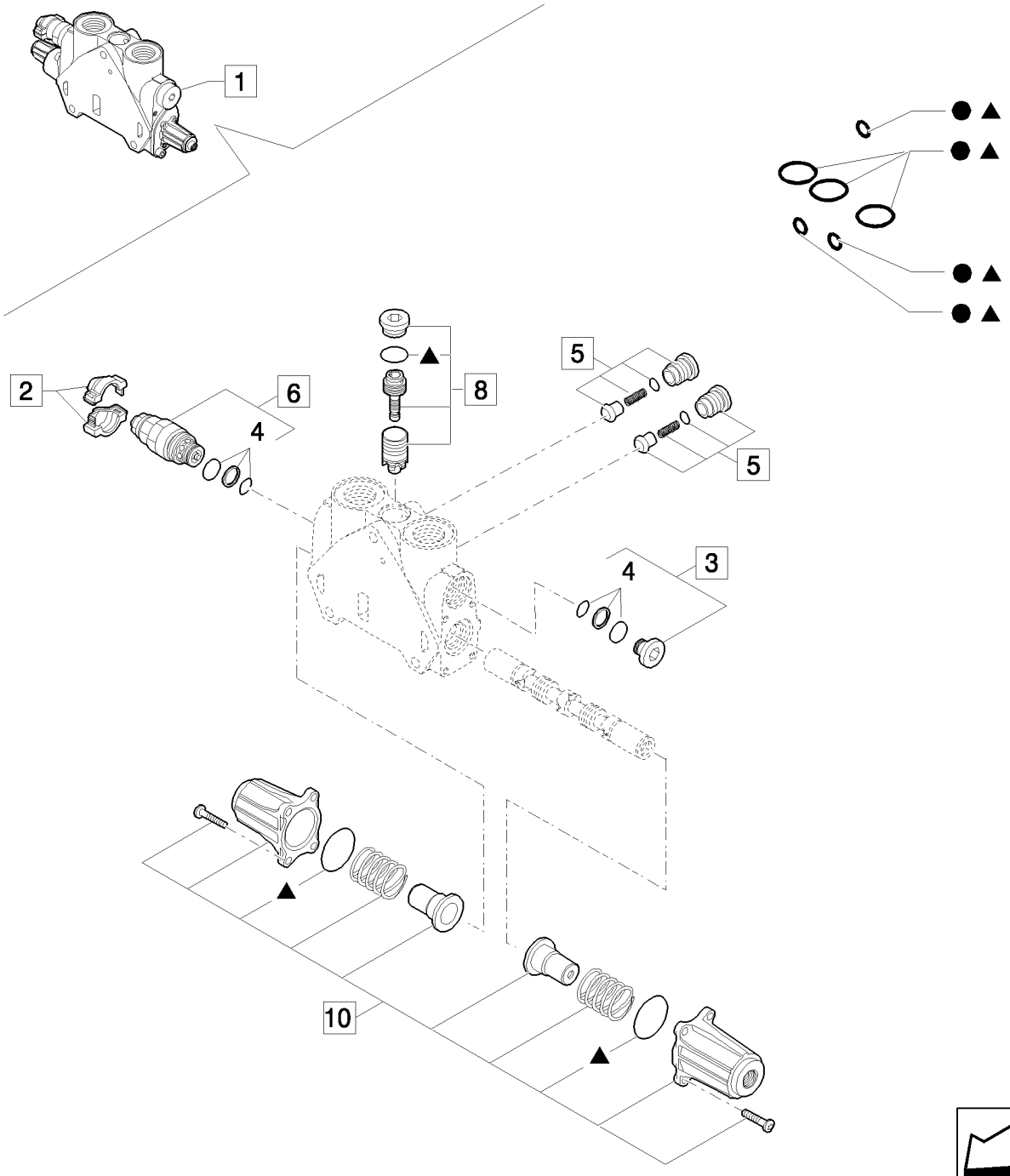

BACKHOE CONTROL VALVE, BUCKET SECTION (CENTER PIVOT)

REF	FN	PART NUMBER	YR/SN	QTY	DESCRIPTION
1		85826932		1	SECTOR, TOOTHED, Assy
2		85811934		1	KIT, Cover
3		85811937		1	PLUG, Assy
4		85811933		1	KIT, SEALS, Valve Seals
5		85811938		1	VALVE, CHECK, Valve, Assy
6	1	85812115		1	VALVE, HYDRAULIC, Assy
7		85819148		1	KIT, SEALS, Seals
8		85819378		1	KIT, SEALS, Valve
9		85824281		1	KIT, SEALS, Seals
10		85826344		2	KIT, Cover Assy

(1) 220 BAR

Pilot Control Version

B95B

BACKHOE CONTROL VALVE, DIPPERSTICK SECTION (CENTER PIVOT)

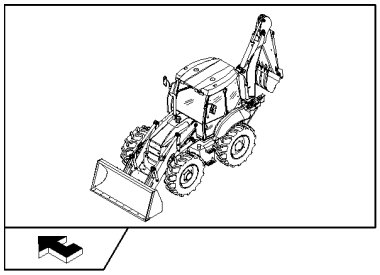

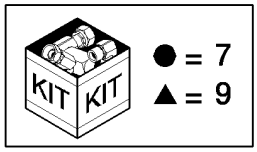

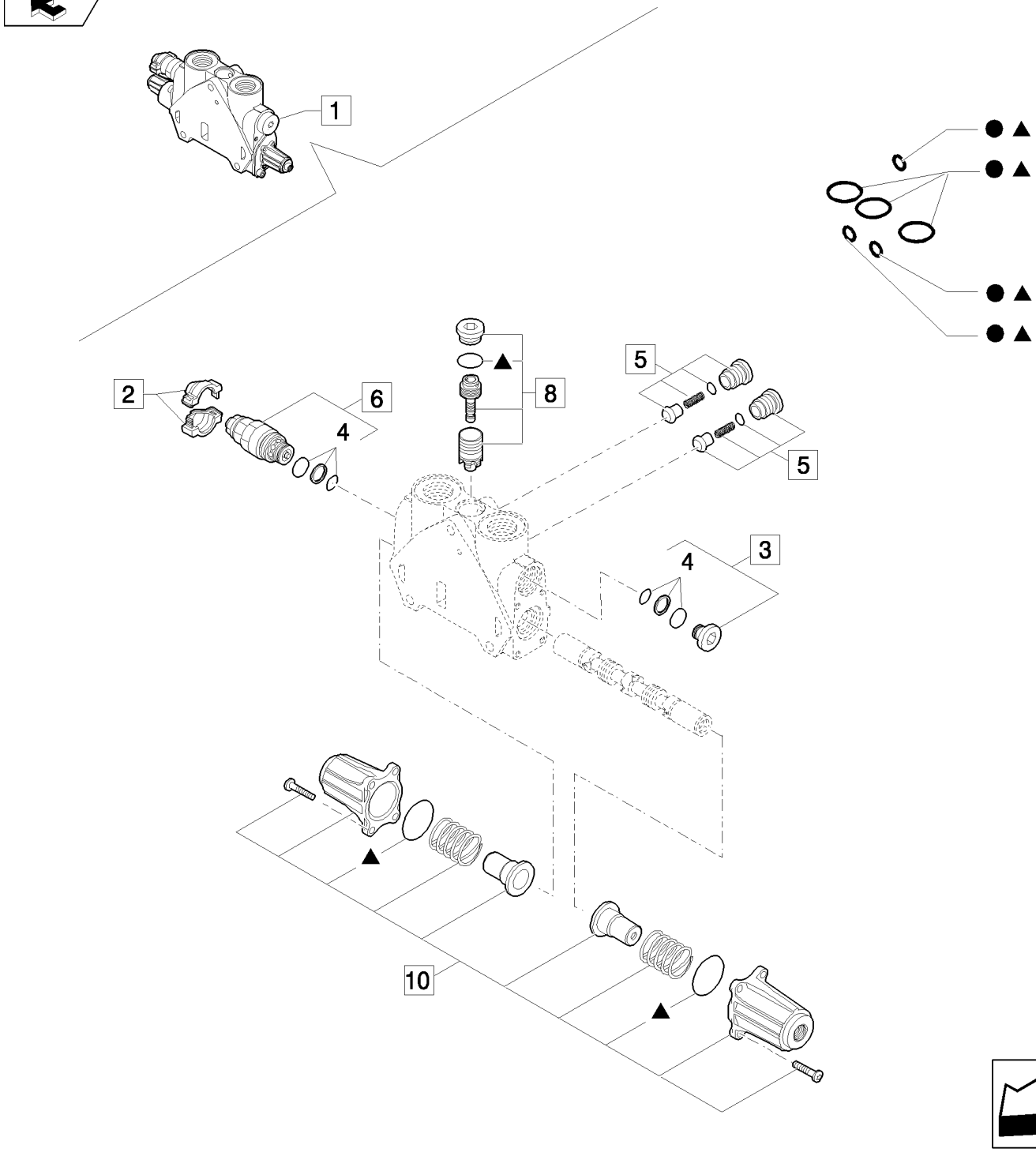

BACKHOE CONTROL VALVE, DIPPERSTICK SECTION (CENTER PIVOT)

REF	FN	PART NUMBER	YR/SN	QTY	DESCRIPTION
1		87758454		1	SPOOL, Assy
2		85811934		1	KIT, Cover
3		85811937		1	PLUG, Assy
4		85811933		1	KIT, SEALS, Valve Seals
5		85811938		2	VALVE, CHECK, Valve, Assy
6	1	85812116		1	VALVE, PRESSURE RELIEF, Assy
7		85819148		1	KIT, SEALS, Seals
8		85819378		1	KIT, SEALS, Valve
9		85824281		1	KIT, SEALS, Seals
10		85826344		1	KIT, Cover Assy

(1) 240 BAR

Pilot Control Version

B95B

331/ B	07	p1	04/08

BACKHOE CONTROL VALVE, STABILIZER SECTION (CENTER PIVOT)

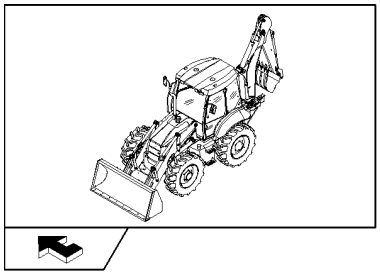

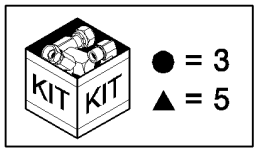

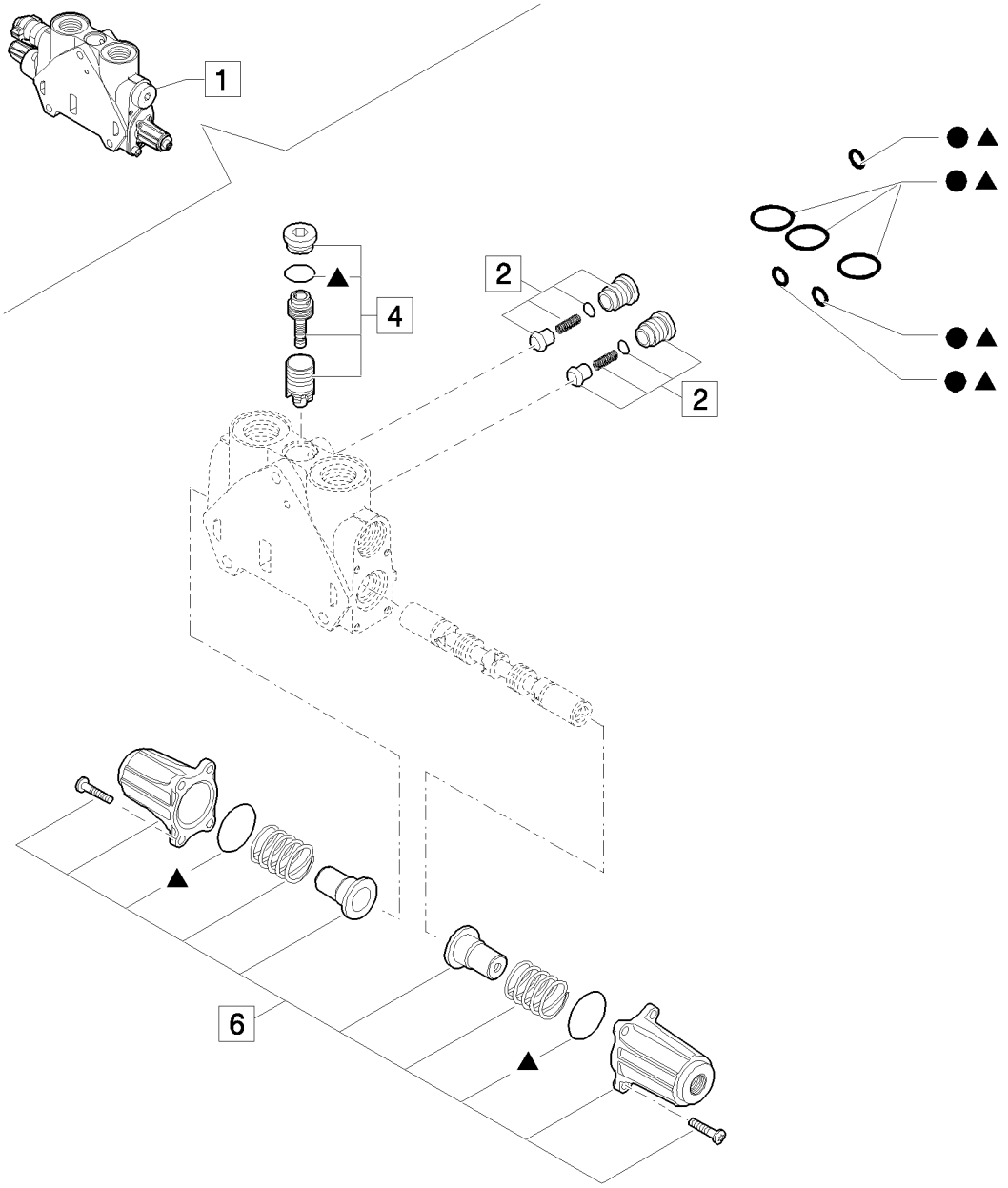

BACKHOE CONTROL VALVE, STABILIZER SECTION (CENTER PIVOT)

REF	FN	PART NUMBER	YR/SN	QTY	DESCRIPTION
1		85826360		2	SECTOR, TOOTHED, Assy
2		85811938		2	VALVE, CHECK, Valve, Assy
3		85819148		1	KIT, SEALS, Seals
4		85819378		1	KIT, SEALS, Valve
5		85824281		1	KIT, SEALS, Seals
6		85826344		1	KIT, Cover Assy

Pilot Control Version

B95B

BACKHOE CONTROL VALVE, BOOM SECTION (CENTER PIVOT)

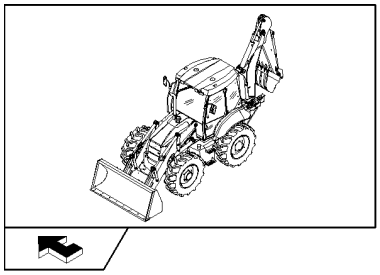

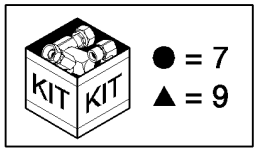

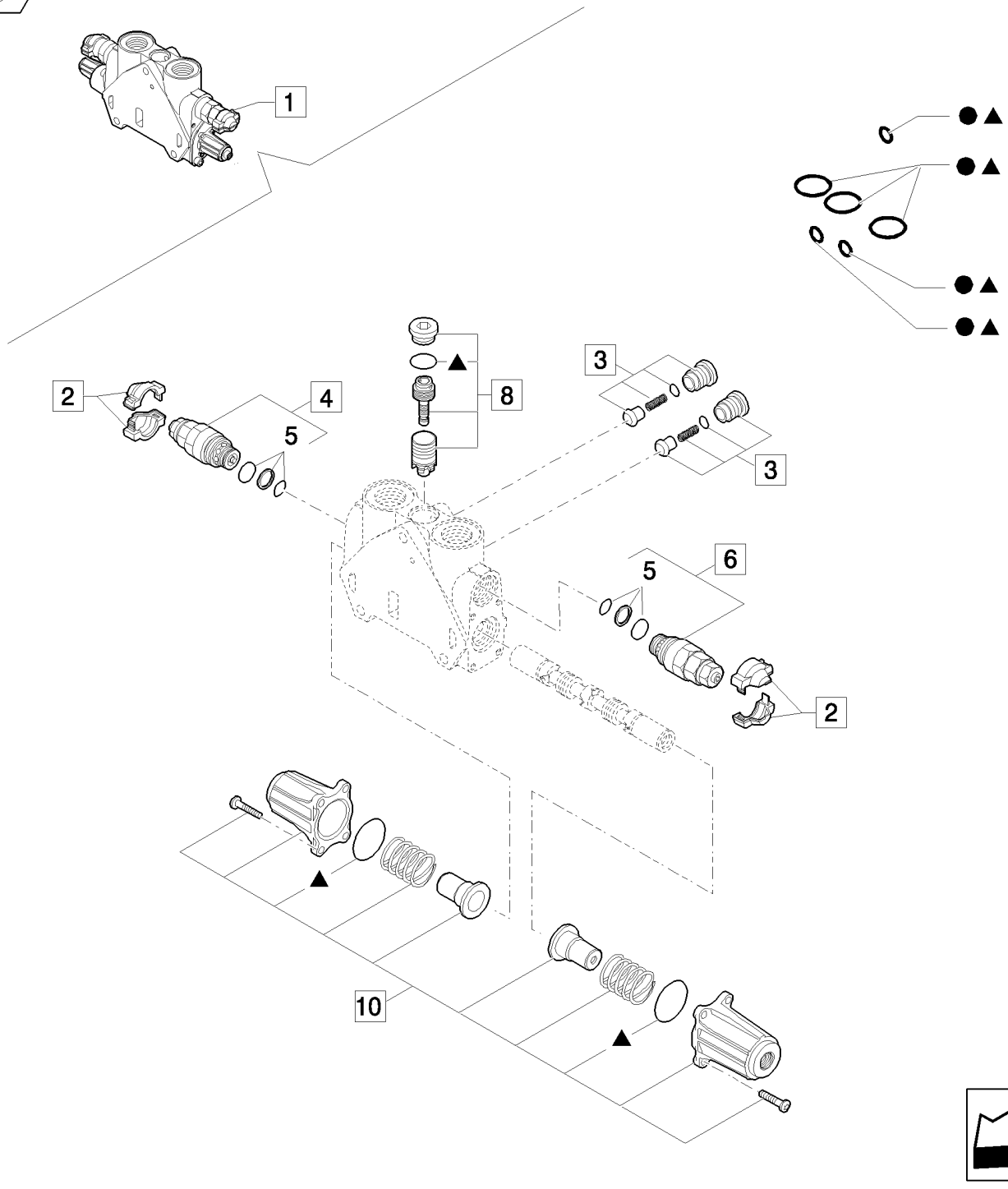

BACKHOE CONTROL VALVE, BOOM SECTION (CENTER PIVOT)

REF	FN	PART NUMBER	YR/SN	QTY	DESCRIPTION
1		85826901		1	VALVE SECTION, HYD, Assy
2		85811934		2	KIT, Cover
3		85811938		2	VALVE, CHECK, Valve, Assy
4	1	85812116		2	VALVE, PRESSURE RELIEF, Assy
5		85811933		2	KIT, SEALS, Valve Seals
6	2	85812117		2	VALVE, HYDRAULIC, Assy
7		85819148		1	KIT, SEALS, Seals
8		85819378		1	KIT, SEALS, Valve
9		85824281		1	KIT, SEALS, Cover Assy
10		85826344		1	KIT

(1) 240 BAR
(2) 315 BAR

Pilot Control Version

B95B

BACKHOE CONTROL VALVE, SWING SECTION (CENTER PIVOT)

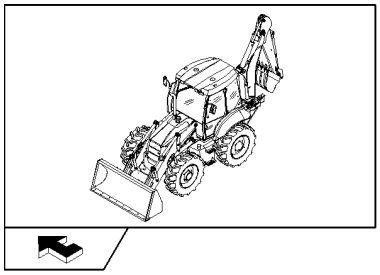

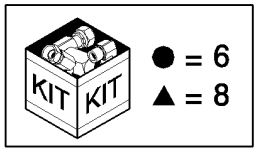

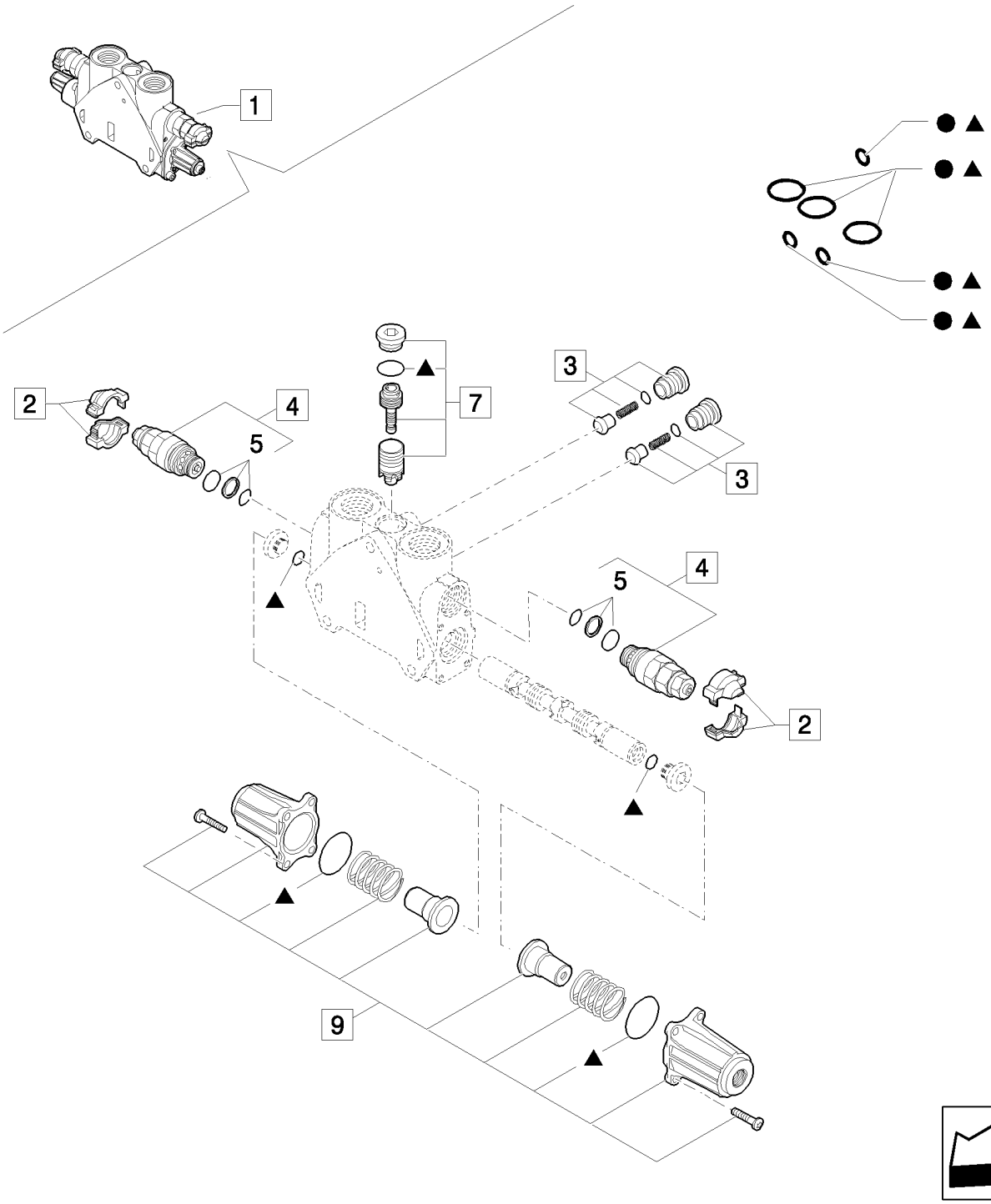

BACKHOE CONTROL VALVE, SWING SECTION (CENTER PIVOT)

REF	FN	PART NUMBER	YR/SN	QTY	DESCRIPTION
1		85826339		1	VALVE SECTION, HYD, Assy
2		85811934		2	KIT, Cover
3		85811938		2	VALVE, CHECK, Valve, Assy
4	1	85812114		2	VALVE, HYDRAULIC, Assy
5		85811933		2	KIT, SEALS, Secondary Valve
6		85819148		1	KIT, SEALS, Seals
7		85826345		1	KIT, Seals
8		85824282		1	KIT
9		85826344		1	KIT

(1) 205 BAR

Pilot Control Version

B95B

BACKHOE CONTROL VALVE, BUCKET SECTION (CENTER PIVOT)

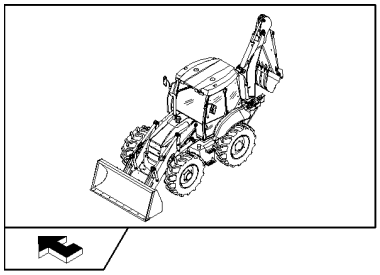

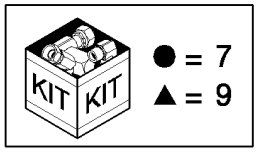

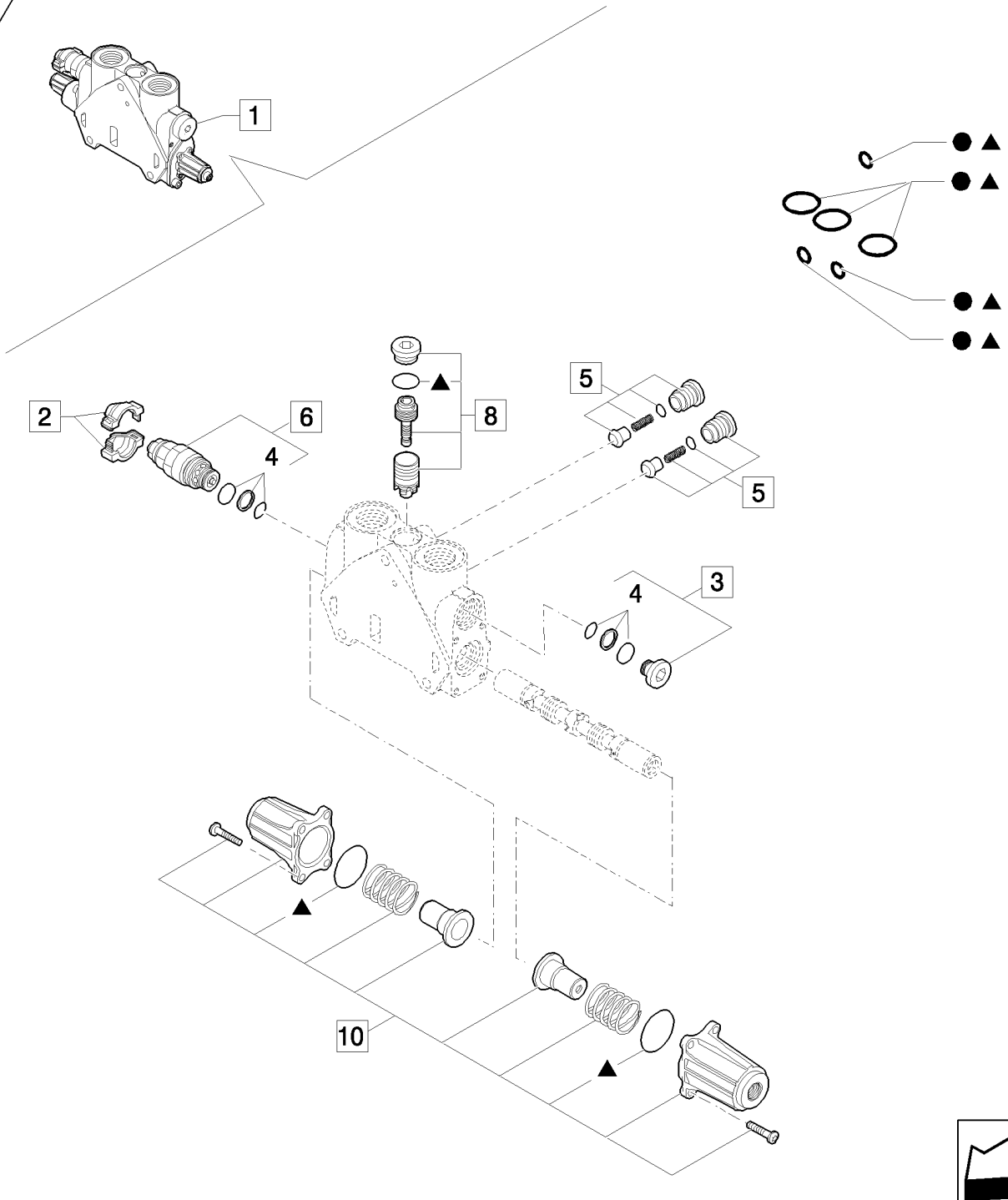

BACKHOE CONTROL VALVE, BUCKET SECTION (CENTER PIVOT)

REF	FN	PART NUMBER	YR/SN	QTY	DESCRIPTION
1		85826903		1	SECTOR, TOOTHED, Assy
2		85811934		1	KIT, Cover
3		85811935		1	KIT
4		85811933		1	KIT, SEALS, Valve Seals
5		85811938		1	VALVE, CHECK, Valve, Assy
6	1	85812115		1	VALVE, HYDRAULIC, Assy
7		85819148		1	KIT, SEALS, Seals
8		85819378		1	KIT, SEALS, Valve
9		85824281		1	KIT, SEALS, Seals
10		85826344		2	KIT, Cover Assy

(1) 220 BAR

Pilot Control Version

B95B

BACKHOE CONTROL VALVE, DIPPERSTICK SECTION (CENTER PIVOT)

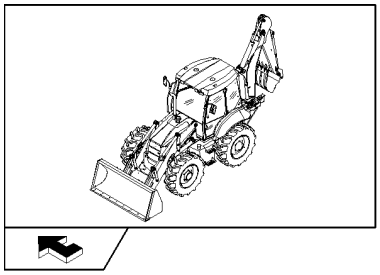

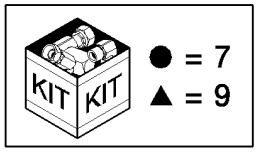

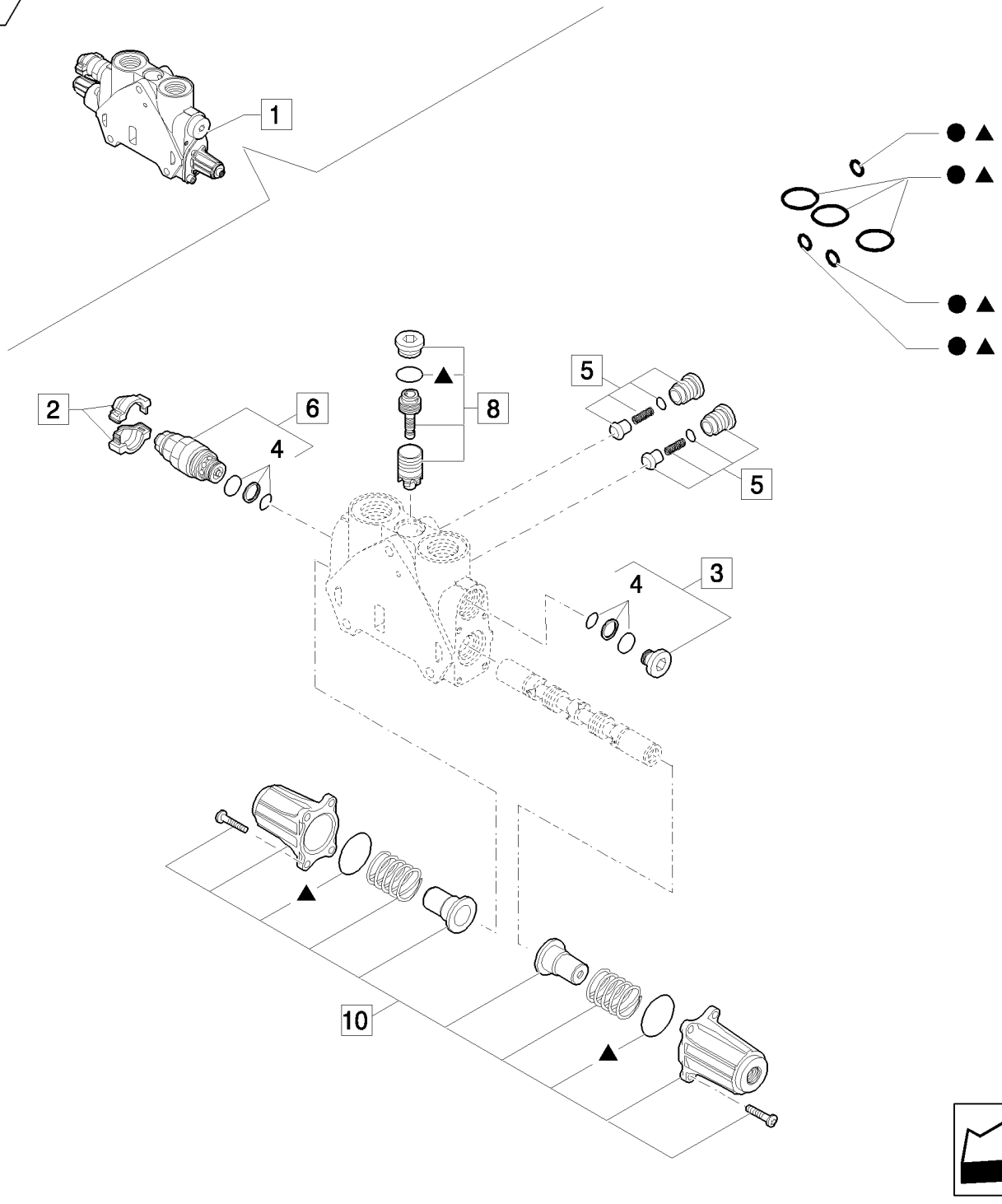

BACKHOE CONTROL VALVE, DIPPERSTICK SECTION (CENTER PIVOT)

REF	FN	PART NUMBER	YR/SN	QTY	DESCRIPTION
1		87758451		1	SPOOL, Assy
2		85811934		1	KIT, Cover
3		85811937		1	PLUG, Assy
4		85811933		1	KIT, SEALS, Valve Seals
5		85811938		2	VALVE, CHECK, Valve, Assy
6	1	85812116		1	VALVE, PRESSURE RELIEF, Assy
7		85819148		1	KIT, SEALS, Seals
8		85826345		1	KIT, Valve
9		85824281		1	KIT, SEALS, Seals
10		85826344		1	KIT, Cover Assy

(1) 240 BAR

Pilot Control Version

B95B

BACKHOE CONTROL VALVE, STABILIZER SECTION (CENTER PIVOT)

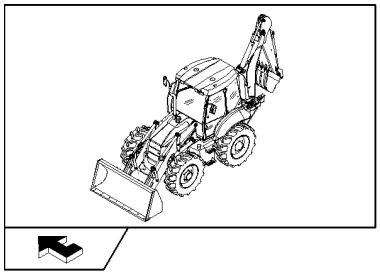

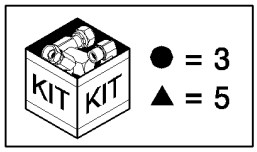

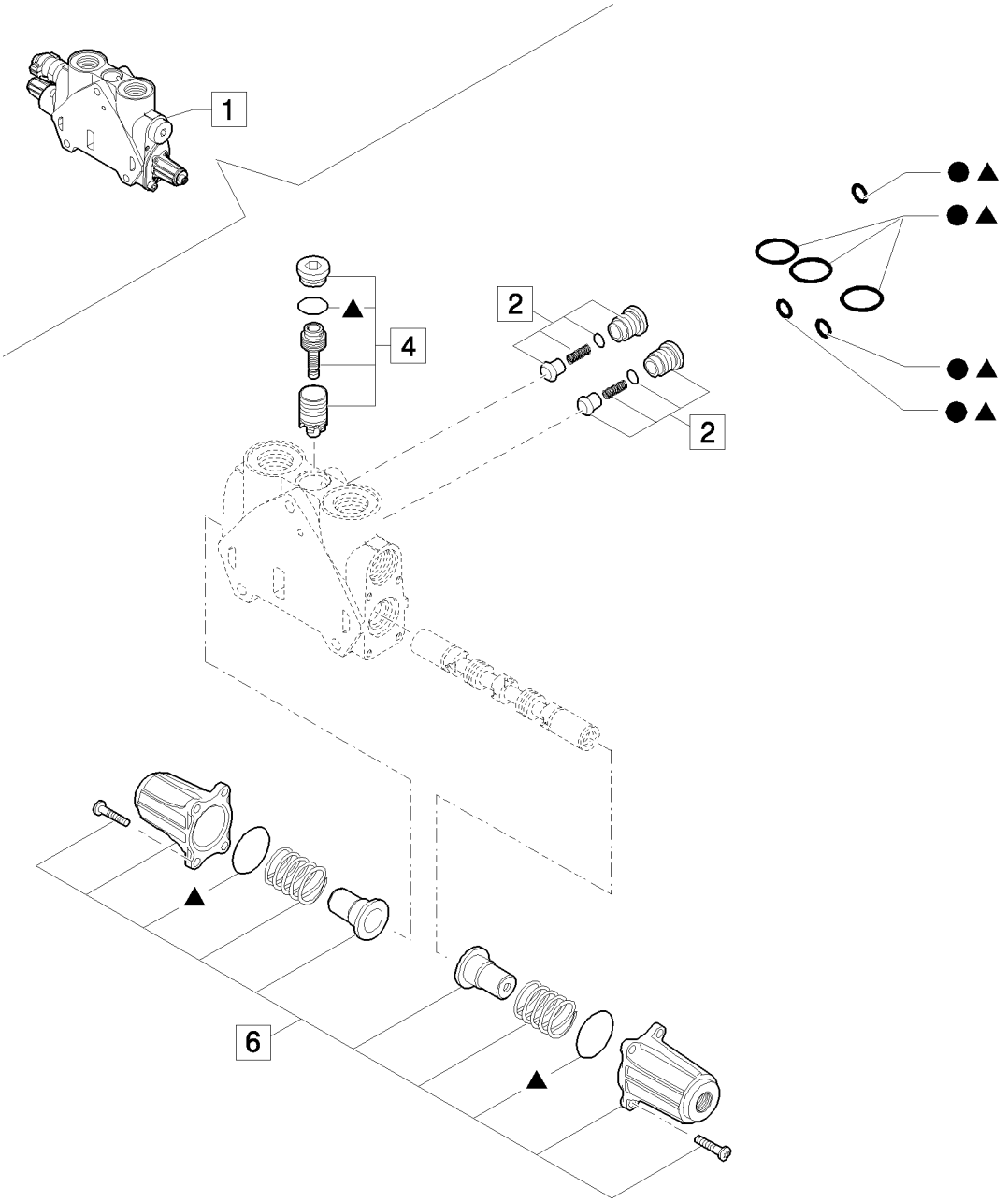

BACKHOE CONTROL VALVE, STABILIZER SECTION (CENTER PIVOT)

REF	FN	PART NUMBER	YR/SN	QTY	DESCRIPTION
1		85826340		2	VALVE SECTION, HYD, Assy
2		85811938		2	VALVE, CHECK, Valve, Assy
3		85819148		1	KIT, SEALS, Seals
4		85819378		1	KIT, SEALS, Valve
5		85824281		1	KIT, SEALS, Seals
6		85826344		1	KIT, Cover Assy

Pilot Control Version

B95B

331/ C	01	p1	04/08

PILOT VALVE OF HYDRAULIC CONTROL LEVER (RIGHT HAND)

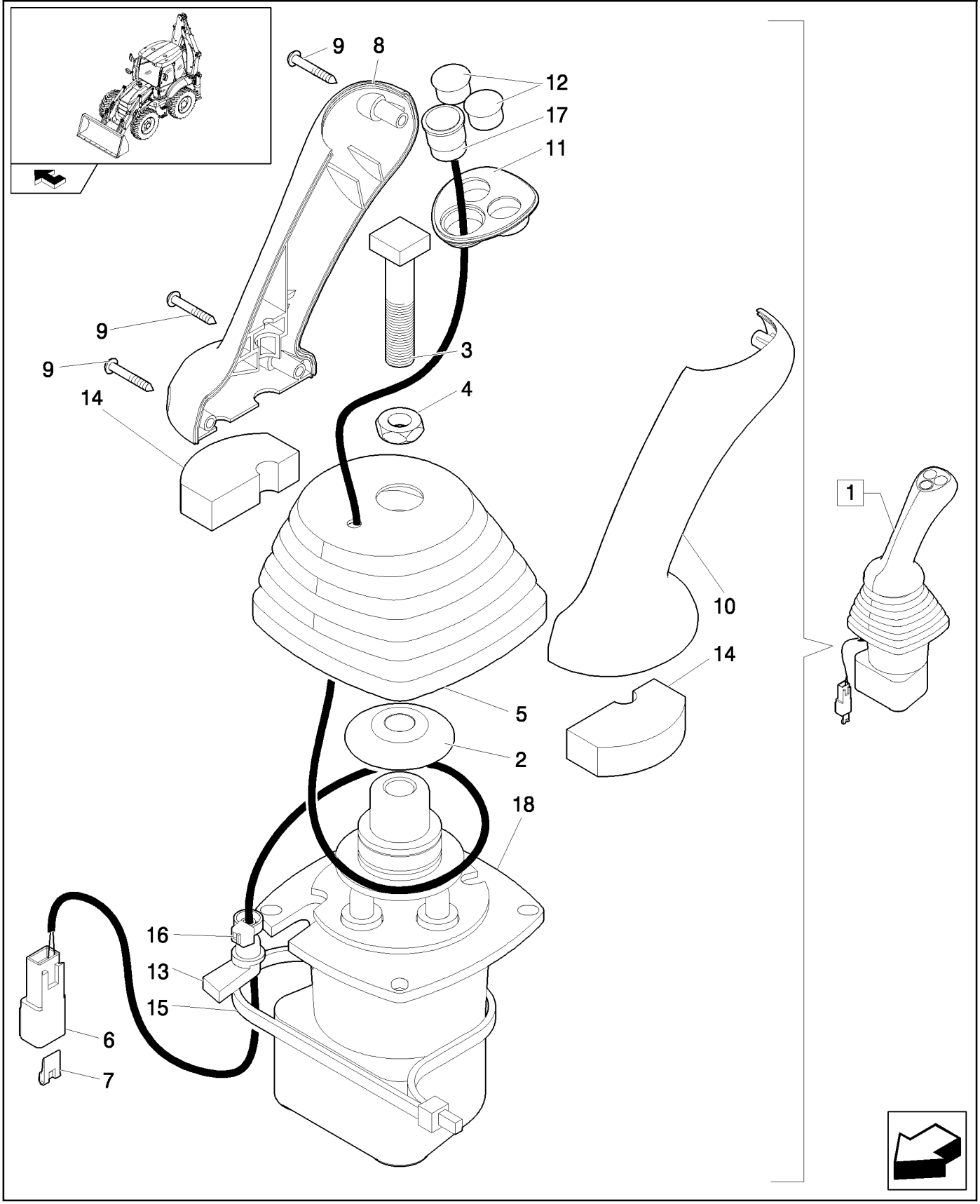

PILOT VALVE OF HYDRAULIC CONTROL LEVER (RIGHT HAND)

REF	FN	PART NUMBER	YR/SN	QTY	DESCRIPTION
1		87685956		1	VALVE, CONTROL, Assy, RH
2		87436225		1	RETAINER
3		87428023		1	BOLT
4		87037944		1	NUT, Thin, M12 x 1.75, Cl 05
5		87443721		1	BOOT
6		225315C1		1	CONNECTOR, ELEC
7		225318C1		1	WEDGE
8		87308838		1	HANDLE GRIP
9		15687475		3	SCREW, SELF TAPPING, Pan Hd, M3.5 x 25, Stainless
10		87308839		1	HANDLE GRIP
11		87547309		1	BEZEL
12		86625128		2	PLUG, Dome, .562" hole, Nylon
13		87424267		1	GROMMET
14		87435506		2	SEAL
15		87438046		1	STRAP, CABLE
16		87000312		1	STRAP, CABLE
17		87546922		1	SWITCH
18		87687141		1	VALVE, PILOT

331/ C	02	p1	04/08

VALVE, JOYSTICK PILOT CONTROLS (LEFT HAND)

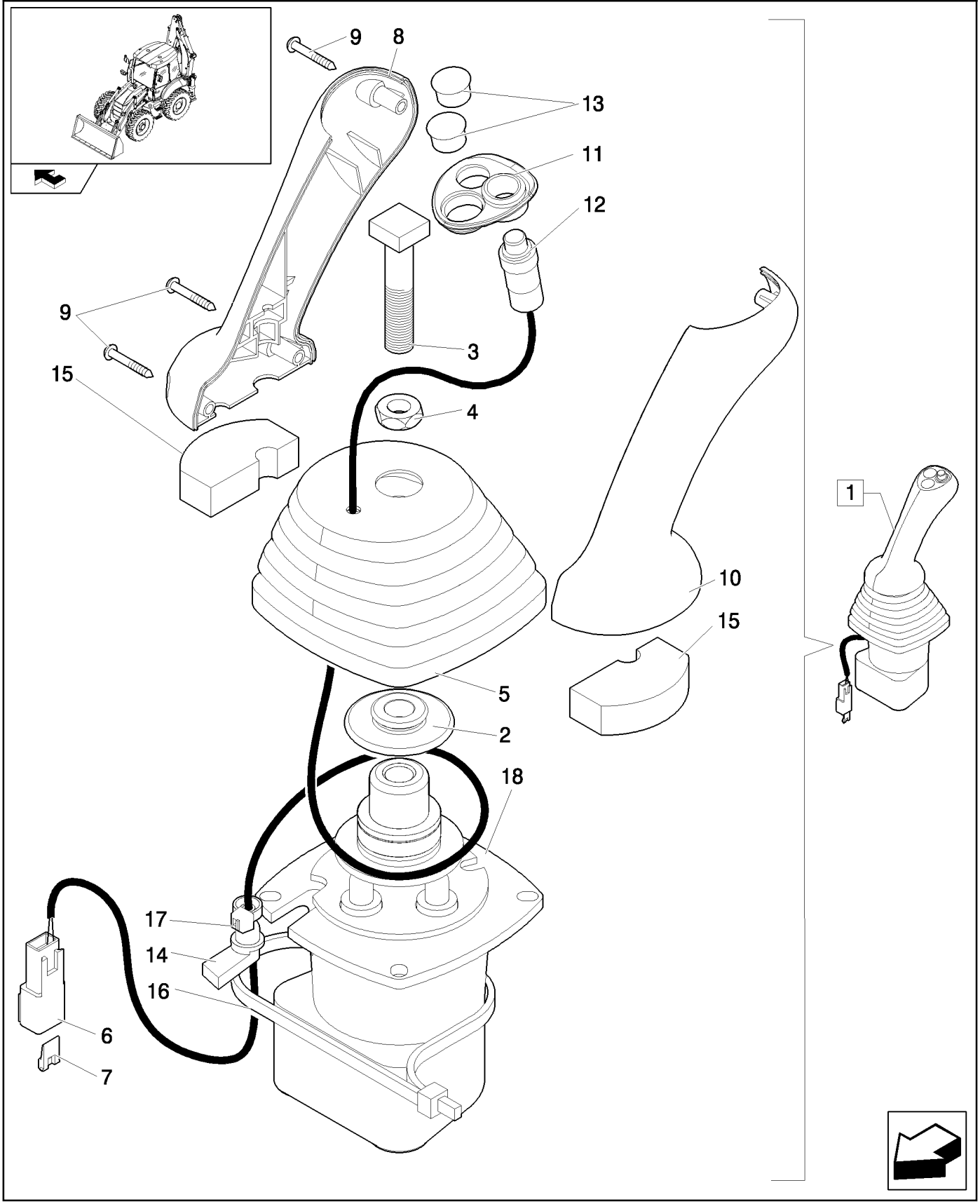

VALVE, JOYSTICK PILOT CONTROLS (LEFT HAND)

REF	FN	PART NUMBER	YR/SN	QTY	DESCRIPTION
1		87685948		1	VALVE, CONTROL, Assy
2		87436225		1	RETAINER
3		87428023		1	BOLT
4		87037944		1	NUT, Thin, M12 x 1.75, Cl 05
5		87443721		1	BOOT
6		225315C1		1	CONNECTOR, ELEC
7		225318C1		1	WEDGE
8		87308838		1	HANDLE GRIP
9		15687475		3	SCREW, SELF TAPPING, Pan Hd, M3.5 x 25, Stainless
10		87308839		1	HANDLE GRIP
11		87435243		1	BEZEL
12		87437372		1	SWITCH
13		86625128		2	PLUG, Dome, .562" hole, Nylon
14		87424267		1	GROMMET
15		87435506		2	SEAL
16		87438046		1	STRAP, CABLE
17		87000312		1	STRAP, CABLE
18		87687141		1	VALVE, PILOT

333	01	p1	04/08

TOWER ASSY 7 SECTIONS (CENTER PIVOT)

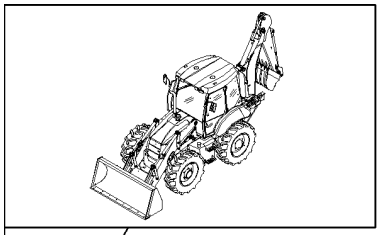

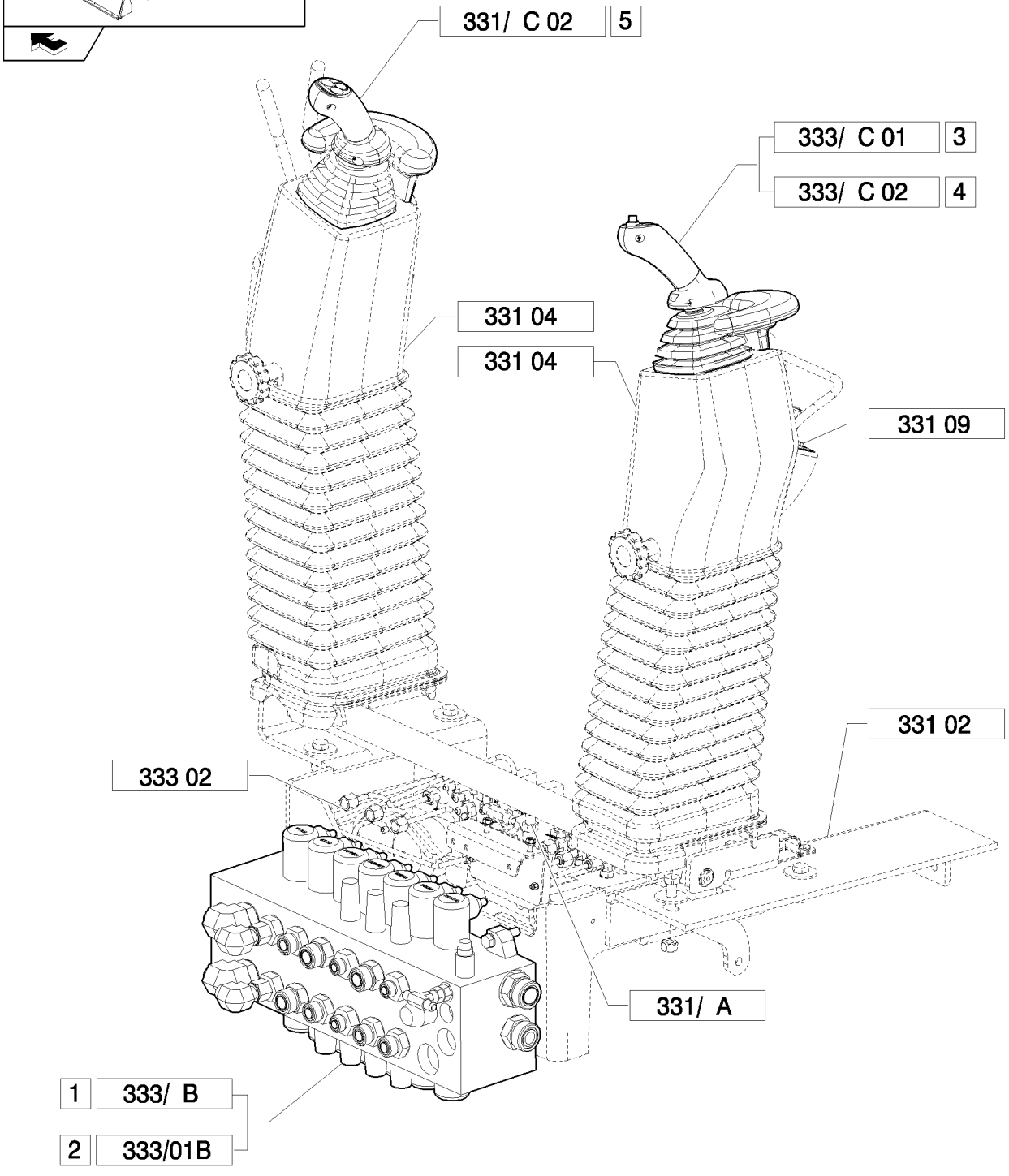

TOWER ASSY 7 SECTIONS (CENTER PIVOT)

REF	FN	PART NUMBER	YR/SN	QTY	DESCRIPTION
1	1	87734107		1	VALVE, CONTROL, Assy
2	2	87734106		1	VALVE, CONTROL, Assy
3	3	87685957		1	VALVE, CONTROL, Assy
4	4	87685955		1	VALVE, CONTROL, Assy
5		87685948		1	VALVE, CONTROL, Assy

(1) Only for B110B, B115B (EU)
(2) Only for NA
(3) Except for B90B
(4) Only for B90B

333	02	p1	03/08

TOWER ASSY FOR 7-SECTION PILOT CONTROL: CONTROL VALVE HYDRAULIC SYSTEM, PROPORTIONAL VALVE

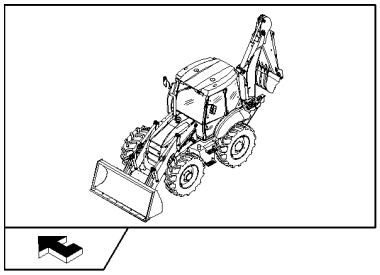

TOWER ASSY FOR 7-SECTION PILOT CONTROL: CONTROL VALVE HYDRAULIC SYSTEM, PROPORTIONAL VALVE

REF	FN	PART NUMBER	YR/SN	QTY	DESCRIPTION
1		85827093		1	TUBE, HYD
2		85827094		1	TUBE, HYD
3		85827091		1	TUBE, HYD
4		85827089		1	TUBE, HYD
5		85827092		1	TUBE, HYD
6		85827095		1	TUBE, HYD
7		85827090		1	TUBE, HYD
8		85827088		1	TUBE, HYD
9		85803312		9	CONNECTOR, HYD.
10		47050653		6	ELBOW
11		47050685		4	CONNECTOR, HYD.
12		85827097		1	TUBE, HYD
13		87306186		1	TUBE, HYD

Pilot Control Version	B95B

TOWER ASSY FOR 7-SECTION PILOT CONTROL (CENTER PIVOT): CONTROL VALVE INSTALLATION

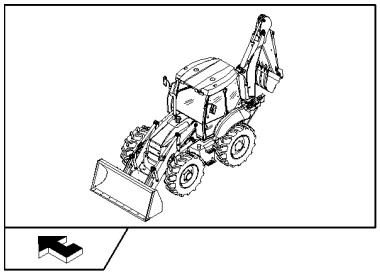

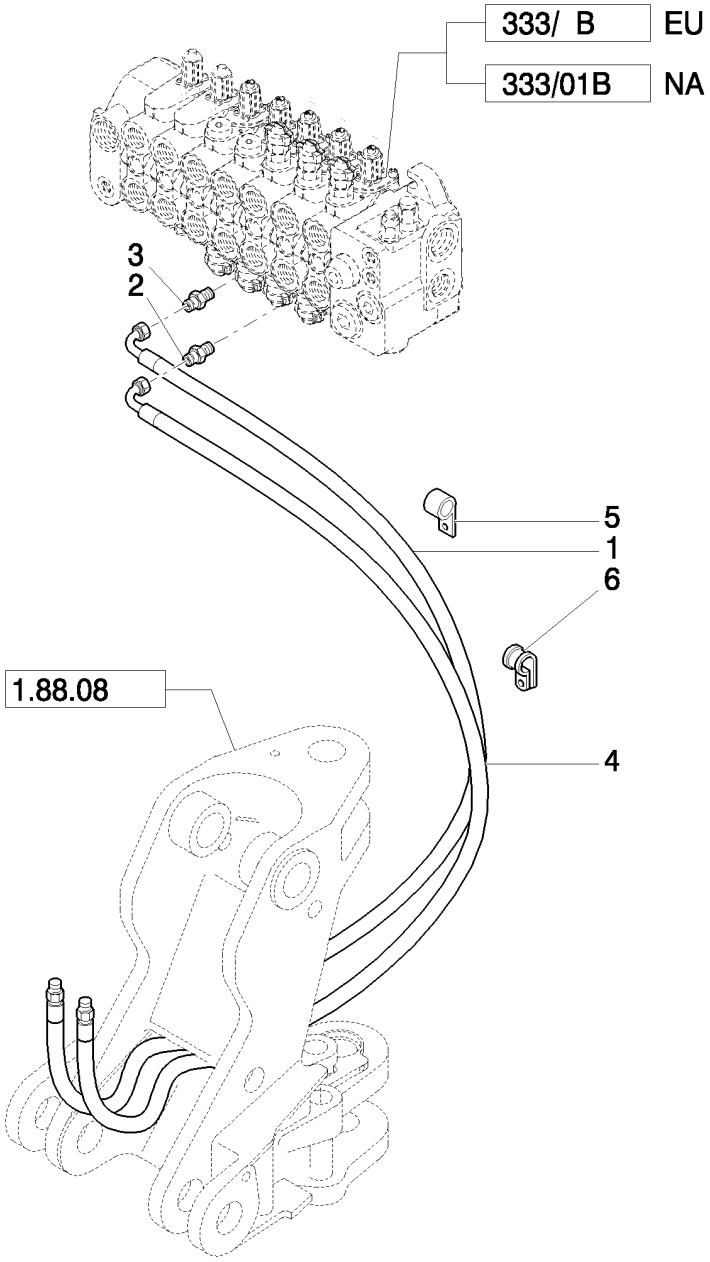

TOWER ASSY FOR 7-SECTION PILOT CONTROL (CENTER PIVOT): CONTROL VALVE INSTALLATION

REF	FN	PART NUMBER	YR/SN	QTY	DESCRIPTION
1		87638575		1	HOSE, FLEXIBLE
2		85805258		1	CONNECTOR, HYD., 9/16"-16 ORS x 1 1/16"-12, O-Ring
3		83962539		1	CONNECTOR, HYD.
4		85812211		1	HOSE, FLEXIBLE
5		85803393		2	CLAMP
6		85812029		4	CLAMP

333	04	p1	05/08

TOWER ASSY FOR 7-SECTION PILOT CONTROL (CENTER PIVOT): TELESCOPIC CYLINDER SYSTEM

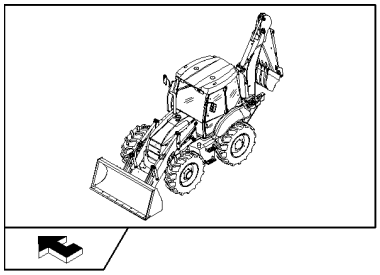

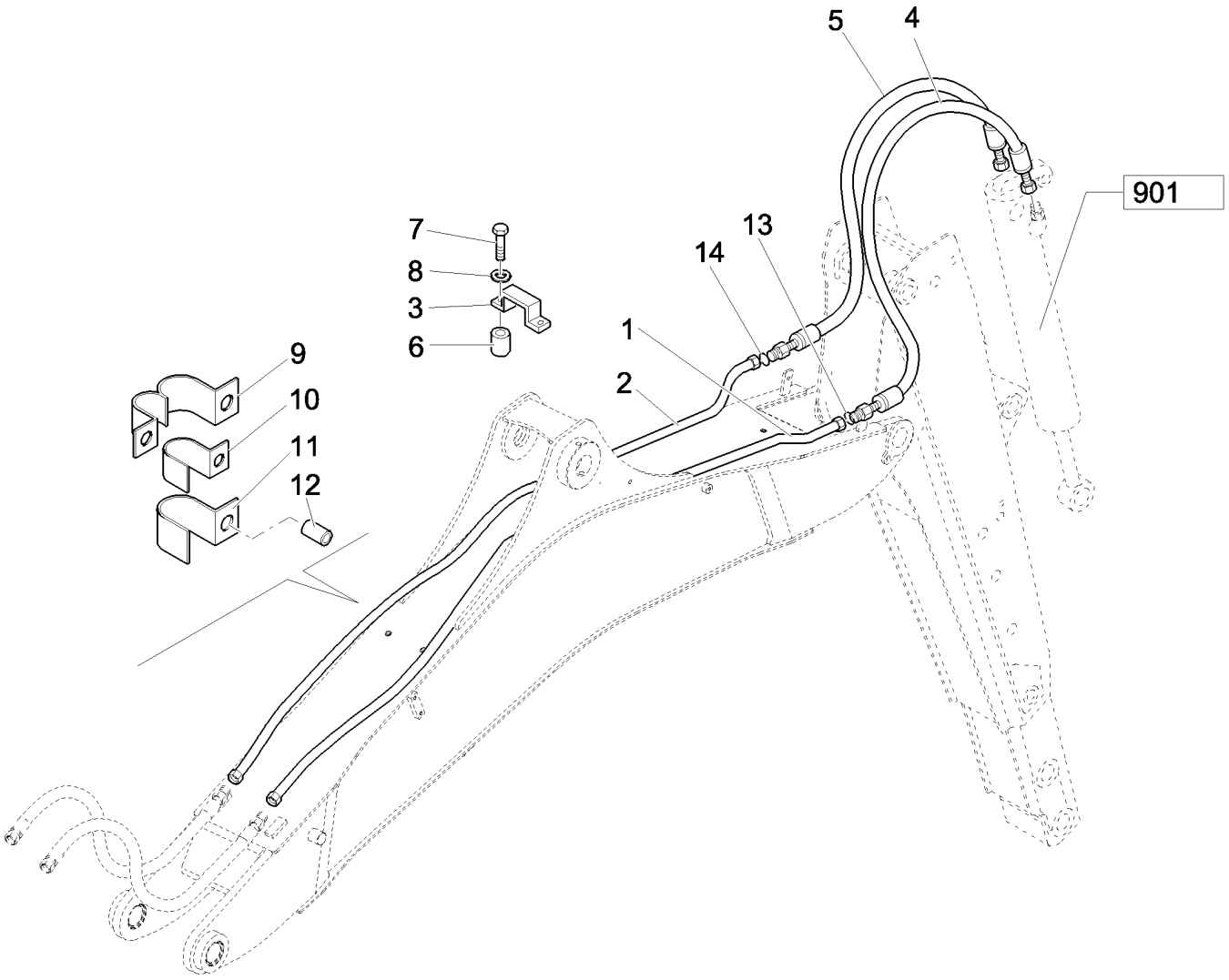

TOWER ASSY FOR 7-SECTION PILOT CONTROL (CENTER PIVOT): TELESCOPIC CYLINDER SYSTEM

REF	FN	PART NUMBER	YR/SN	QTY	DESCRIPTION
1		87617945		1	PIPE, PRESSURE, 16 mm OD Tube
2		87621518		1	PIPE, PRESSURE, 12 mm OD Tube
3		85802900		1	CLAMP
4		87619506		1	HOSE, FLEXIBLE
5		85817108		1	HOSE, HYDRAULIC
6		85818943		1	SPACER
7		16044021		2	BOLT, Hex, M8 x 40, 8.8
8		11193879		2	WASHER, SPRING, Belleville, M8.4
9		85802529		1	CLAMP
10		85802527		2	CLAMP
11		85802528		2	CLAMP
12		87615734		1	SPACER
13		9992069		1	O-RING, -016, 90 Duro, .614" ID x .070" Thk
14		9992298		1	O-RING, -014, 90 Duro, .489" ID x .070" Thk

Pilot Control Version	B95B

333	05	p1	03/08

TOWER ASSY FOR 7-SECTION PILOT CONTROL (CENTER PIVOT): BUCKET CYLINDER SYSTEM

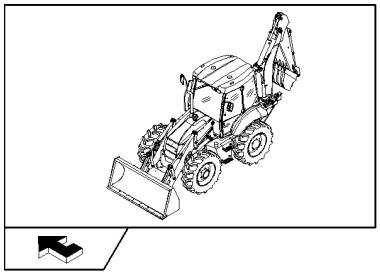

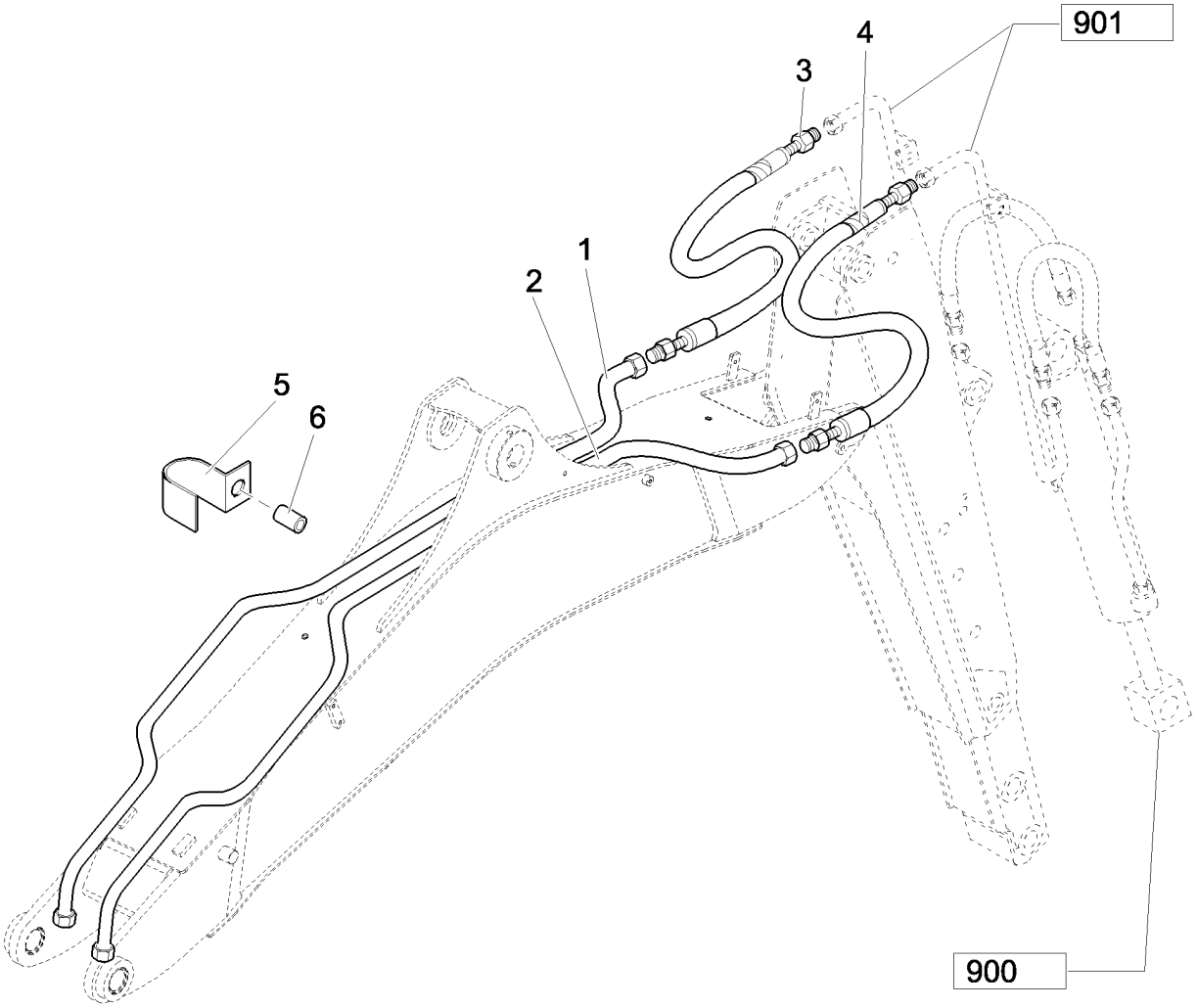

TOWER ASSY FOR 7-SECTION PILOT CONTROL (CENTER PIVOT): BUCKET CYLINDER SYSTEM

REF	FN	PART NUMBER	YR/SN	QTY	DESCRIPTION
1		87614629		1	PIPE, PRESSURE, 20 mm OD Tube
2		87614627		1	PIPE, PRESSURE, 16 mm OD Tube
3		85817106		1	HOSE, FLEXIBLE
4		85817107		1	HOSE, FLEXIBLE
5		87610539		1	PIPE CLAMP
6		87610565		1	SPACER

PROPORTIONAL CONTROL VALVE 7 SECTIONS

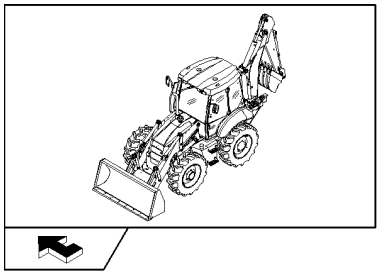

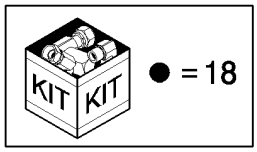

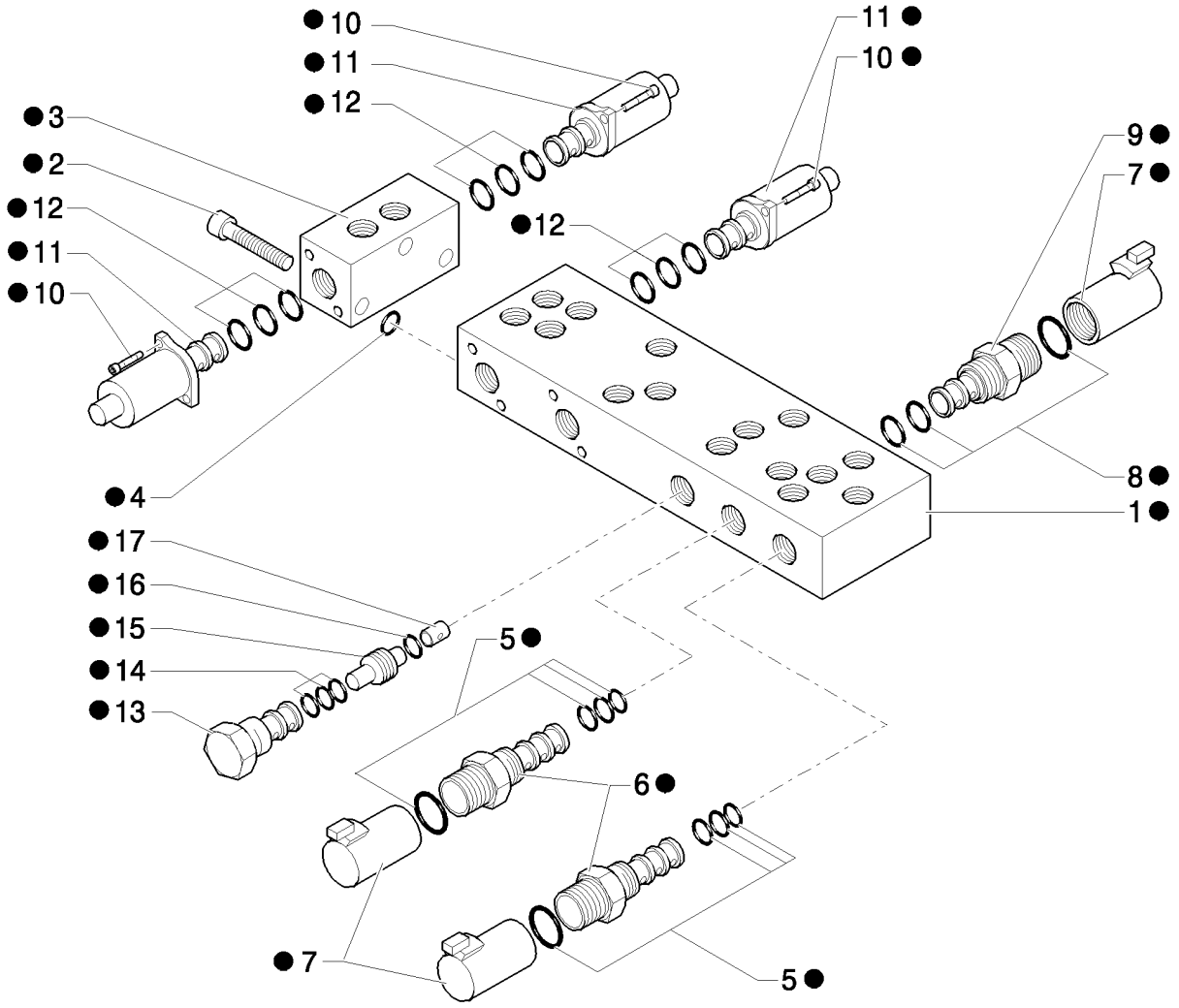

PROPORTIONAL CONTROL VALVE 7 SECTIONS

REF	FN	PART NUMBER	YR/SN	QTY	DESCRIPTION
1		85828015		1	BODY
2		14358921		3	SCREW, Hex Soc Hd, M5 x 45, 10.9
3		85828004		1	BODY, M6x60
4		85827999		1	KIT, SEALS
5		85828002		2	KIT, SEALS
6	1	85827996		2	VALVE, SOLENOID
7		85827995		3	COIL
8		85827998		1	KIT, SEALS
9	2	85827994		1	VALVE, SOLENOID
10		14302921		12	BOLT, Hex, M4 x 10, 8.8, Full Thd
11		85827993		6	VALVE, SOLENOID
12		85828000		4	KIT, SEALS
13		85827997		1	VALVE, CARTRIDGE, HYDRAULIC PRESSURE REDUCING VALVE
14		85828001		1	KIT, SEALS
15		85827992		1	VALVE, CHECK
16		85828003		1	O-RING
17		85828005		1	ORIFICE
18		85827471		1	VALVE, HYDRAULIC

(1) Includes 5, 7
(2) Includes 7, 8

Pilot Control Version

B95B

333/ C	01	p1	04/08

PILOT VALVE OF HYDRAULIC CONTROL LEVER (RIGHT HANDS) 7 SPOOLS

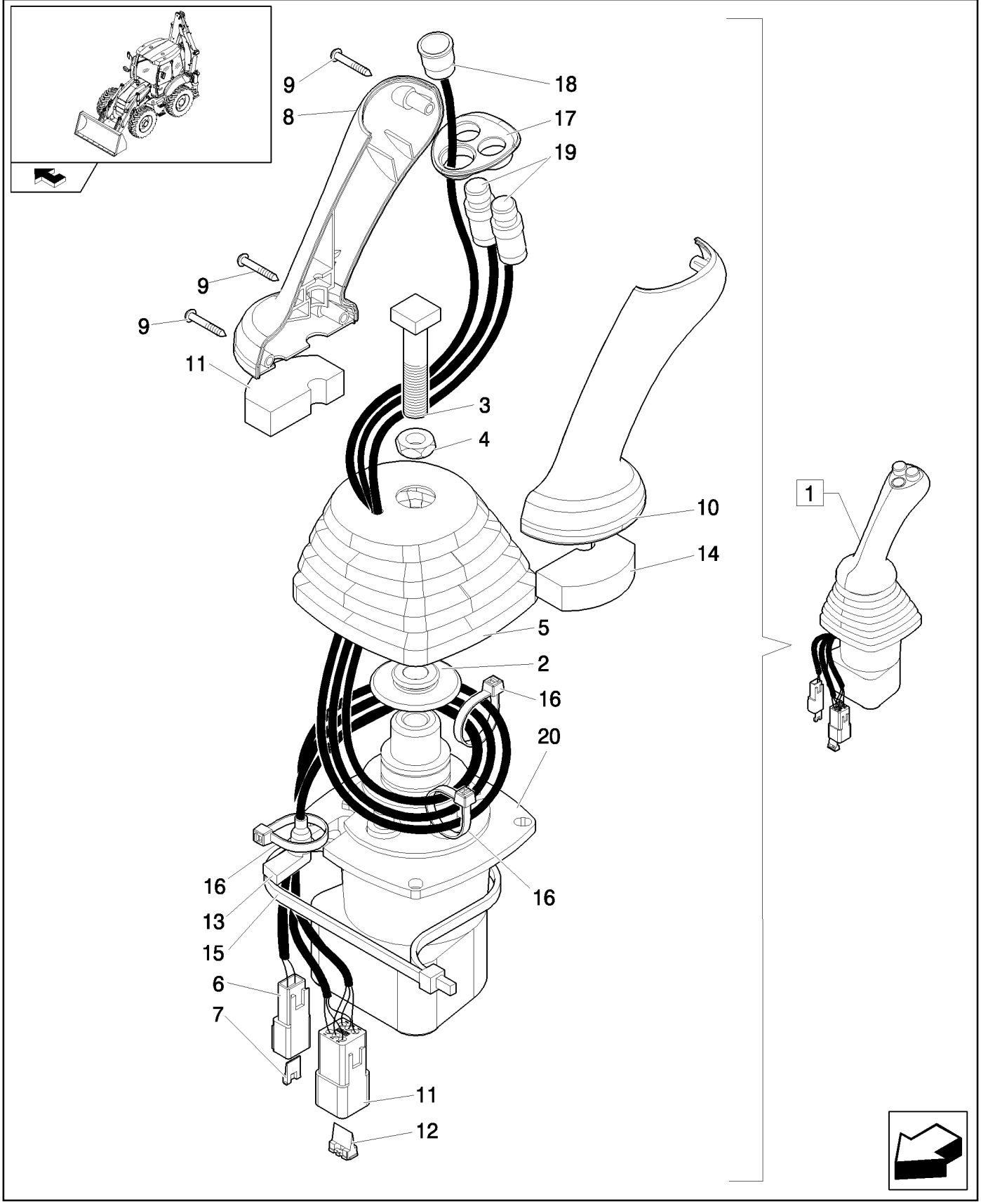

PILOT VALVE OF HYDRAULIC CONTROL LEVER (RIGHT HANDS) 7 SPOOLS

REF	FN	PART NUMBER	YR/SN	QTY	DESCRIPTION
1		87685957		1	VALVE, CONTROL, Assy
2		87436225		1	RETAINER
3		87428023		1	BOLT
4		87037944		1	NUT, Thin, M12 x 1.75, Cl 05
5		87443721		1	BOOT
6		225315C1		1	CONNECTOR, ELEC
7		225318C1		1	WEDGE
8		87308838		1	HANDLE GRIP
9		15687475		3	SCREW, SELF TAPPING, Pan Hd, M3.5 x 25, Stainless
10		87308839		1	HANDLE GRIP
11		225350C1		1	CONNECTOR, ELEC
12		225353C1		1	WEDGE
13		87424267		1	GROMMET
14		87435506		2	SEAL
15		87438046		1	STRAP, CABLE
16		87000312		3	STRAP, CABLE
17		87547309		1	BEZEL
18		87546922		1	SWITCH
19		87437371		2	SWITCH ASSY
20		87687141		1	VALVE, PILOT

333/ C	02	p1	04/08

PILOT VALVE OF HYDRAULIC CONTROL LEVER (RIGHT HANDS) 7 SPOOLS

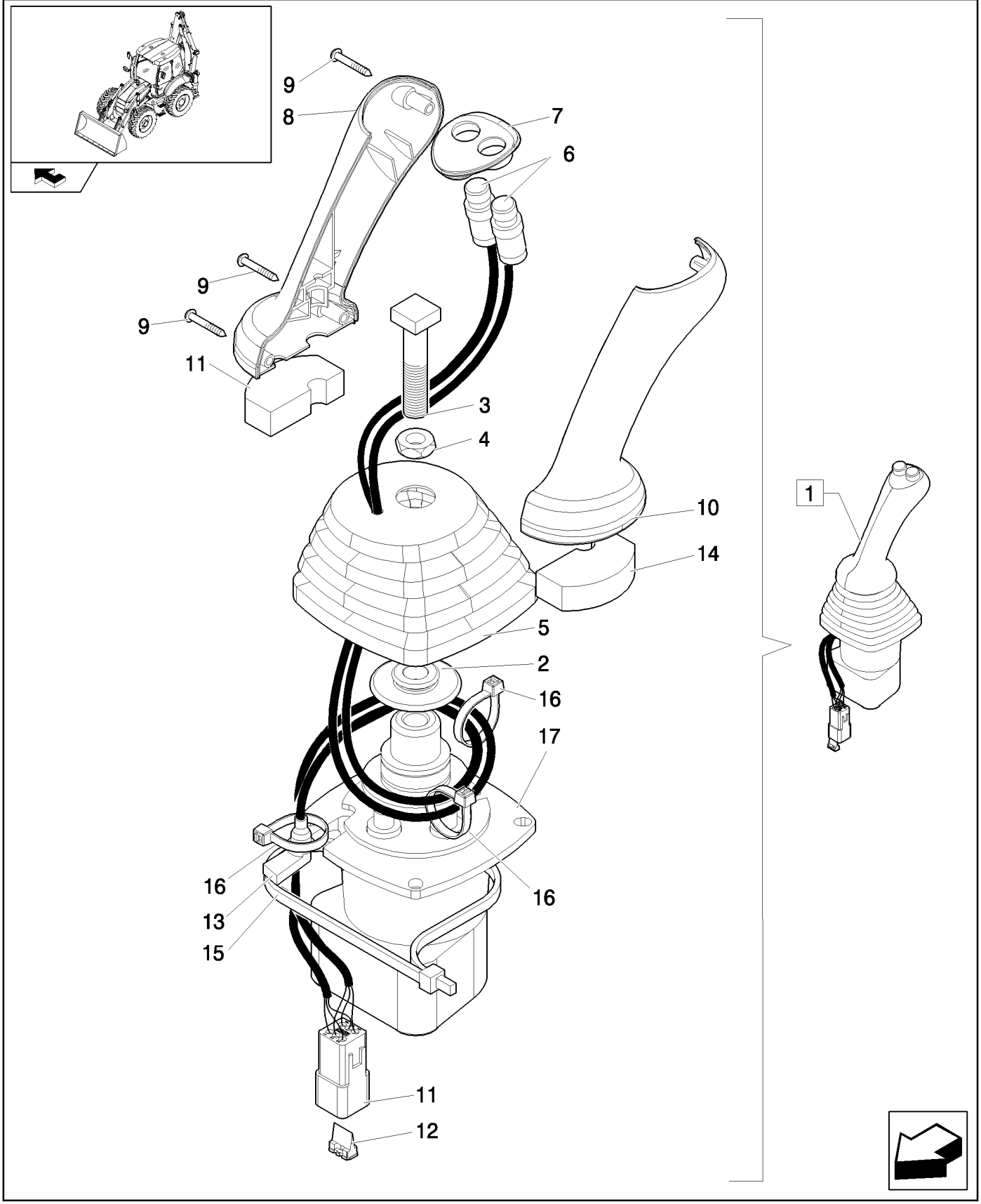

PILOT VALVE OF HYDRAULIC CONTROL LEVER (RIGHT HANDS) 7 SPOOLS

REF	FN	PART NUMBER	YR/SN	QTY	DESCRIPTION
1		87685955		1	VALVE, CONTROL, Assy
2		87436225		1	RETAINER
3		87428023		1	BOLT
4		87037944		1	NUT, Thin, M12 x 1.75, Cl 05
5		87443721		1	BOOT
6		87437371		2	SWITCH ASSY
7		87435242		1	BEZEL
8		87308838		1	HANDLE GRIP
9		15687475		3	SCREW, SELF TAPPING, Pan Hd, M3.5 x 25, Stainless
10		87308839		1	HANDLE GRIP
11		225350C1		1	CONNECTOR, ELEC
12		225353C1		1	WEDGE
13		87424267		1	GROMMET
14		87435506		2	SEAL
15		87438046		1	STRAP, CABLE
16		87000312		3	STRAP, CABLE
17		87687141		1	VALVE, PILOT

333/01B	01	p1	04/08

7 SECTIONS EXCAVATOR CONTROL VALVE (CENTER PIVOT) - NA

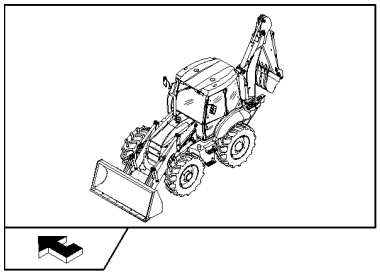

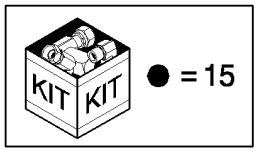

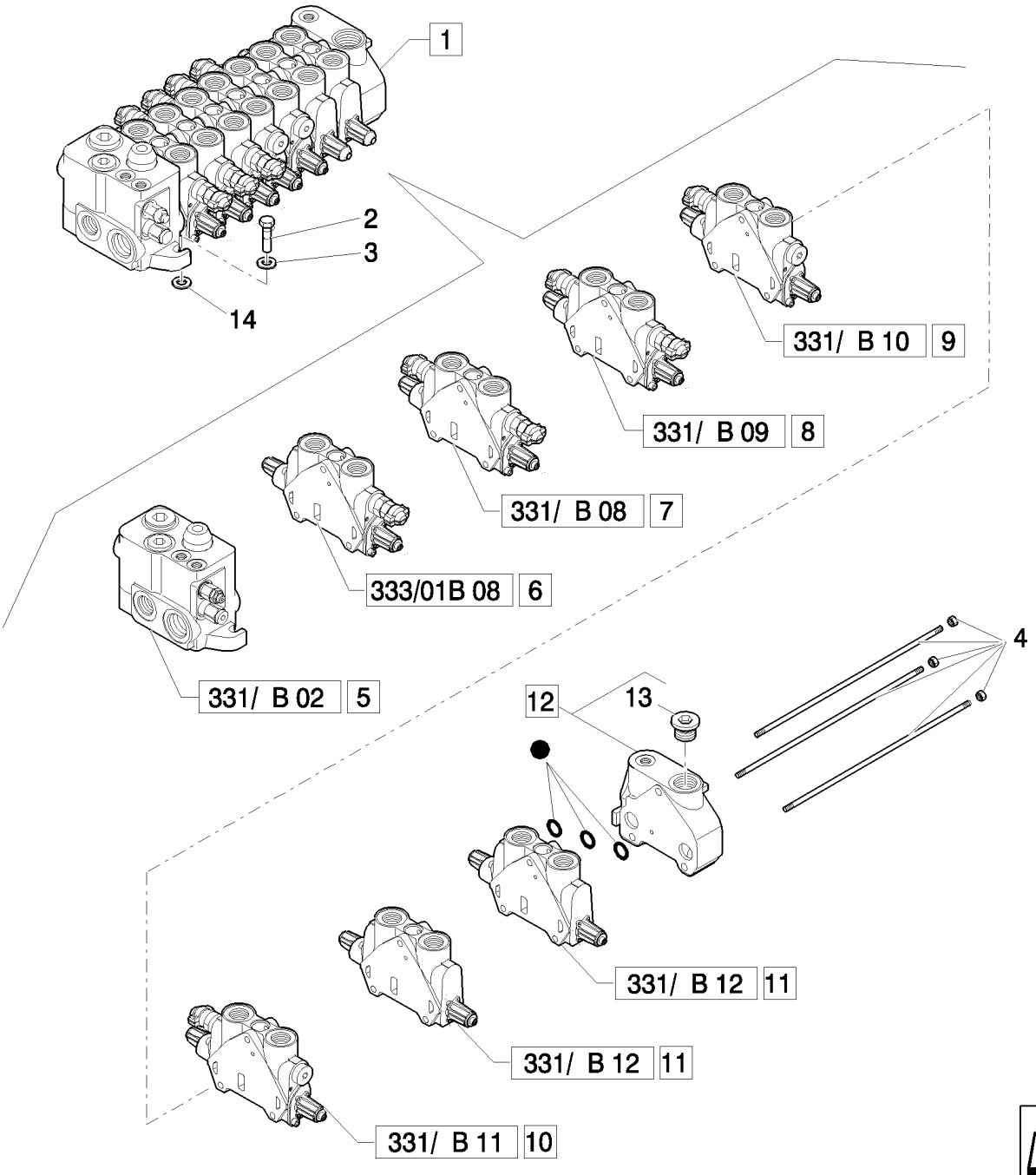

7 SECTIONS EXCAVATOR CONTROL VALVE (CENTER PIVOT) - NA

REF	FN	PART NUMBER	YR/SN	QTY	DESCRIPTION
1		87734106		1	VALVE, CONTROL, Assy
2		11234721		3	BOLT, Hex, M10 x 1.25 x 45, 8.8
3		11190679		3	WASHER, SPRING, Belleville, M10.5
4		85811959		1	KIT
5		87610858		1	VALVE SECTION, HYD, Assy
6	1	87558574		1	SECTOR, Assy
7	2	85826901		1	VALVE SECTION, HYD, Assy
8	3	85826339		1	VALVE SECTION, HYD, Assy
9	4	85826903		1	SECTOR, TOOTHED, Assy
10	5	87758451		1	SPOOL, Assy
11	6	85826340		2	VALVE SECTION, HYD, Assy
12		85826250		1	VALVE SECTION, HYD, Assy
13		85811921		1	PLUG, 1-1/16"-12 UNF 2A
14		13578621		3	WASHER
15		85825473		1	KIT, SEALS

(1) Telescopic Cylinder
(2) Boom Cylinder
(3) Swing Cylinder
(4) Dipper Cylinder
(5) Arm Cylinder
(6) Stabilizer Cylinder

Pilot Control Version

B95B

BACKHOE ATTACHMENT 7-SECTION CONTROL VALVE (CENTER PIVOT): NA: TELESCOPIC CYLINDER

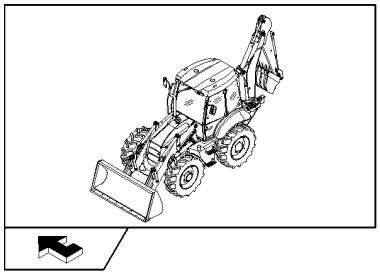

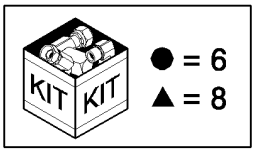

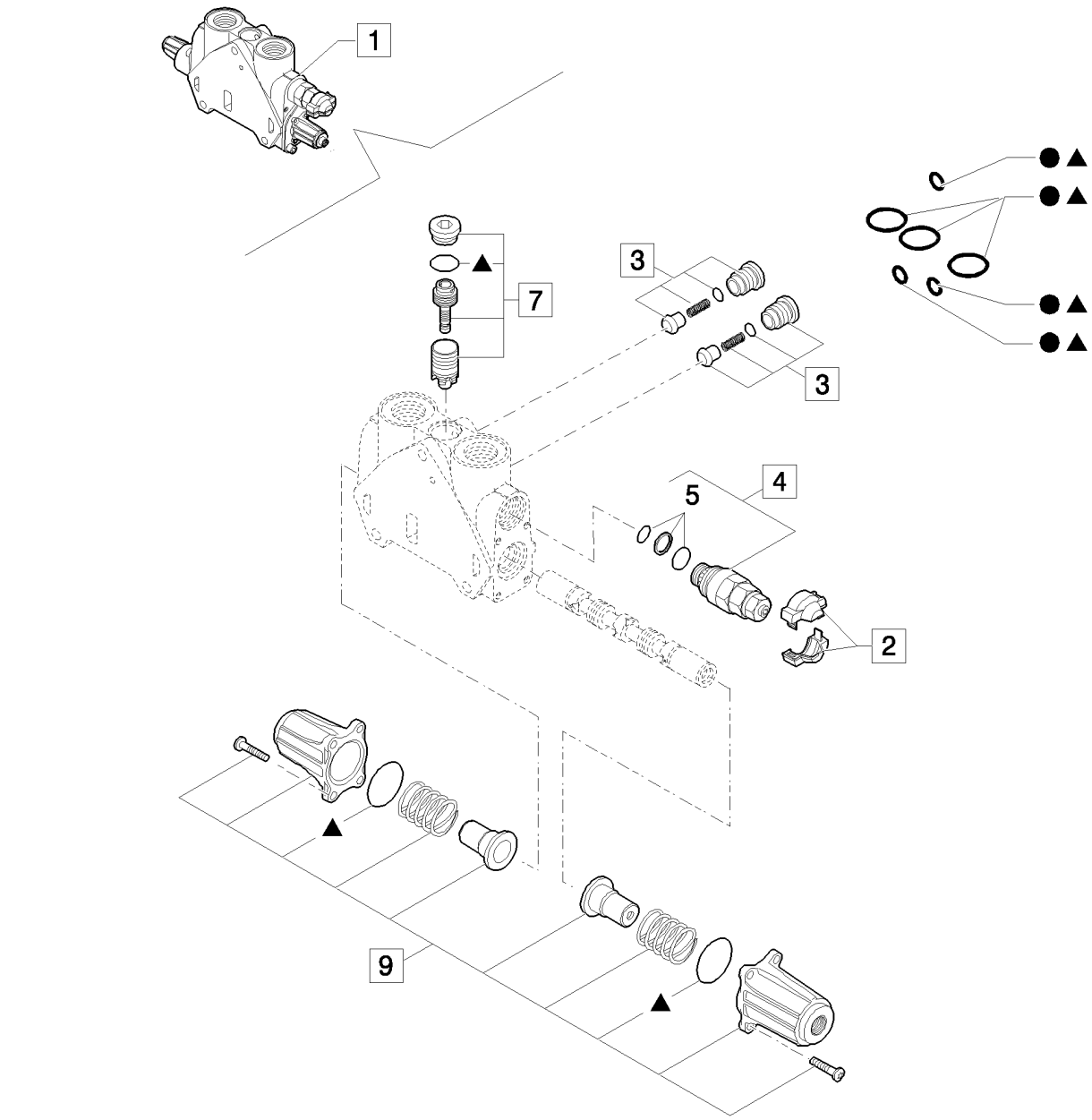

BACKHOE ATTACHMENT 7-SECTION CONTROL VALVE (CENTER PIVOT): NA: TELESCOPIC CYLINDER

REF	FN	PART NUMBER	YR/SN	QTY	DESCRIPTION
1		87558574		1	SECTOR, Assy
2		85811934		2	KIT, Cover
3		85811938		2	VALVE, CHECK, Valve, Assy
4	1	87341088		2	VALVE, HYDRAULIC, Assy
5		85811933		1	KIT, SEALS, Valve Seals
6		85819148		1	KIT, SEALS, Seals
7		85819378		1	KIT, SEALS, Valve
8		85824281		1	KIT, SEALS, Seals
9		85826344		1	KIT, Cover Assy

(1) 124 BAR

335		p1	04/08

TOWER ASSY 7 SECTIONS (CENTER PIVOT)

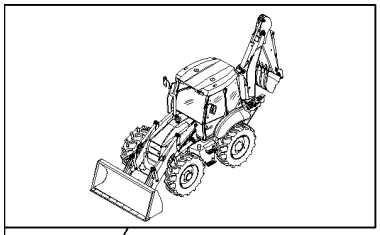

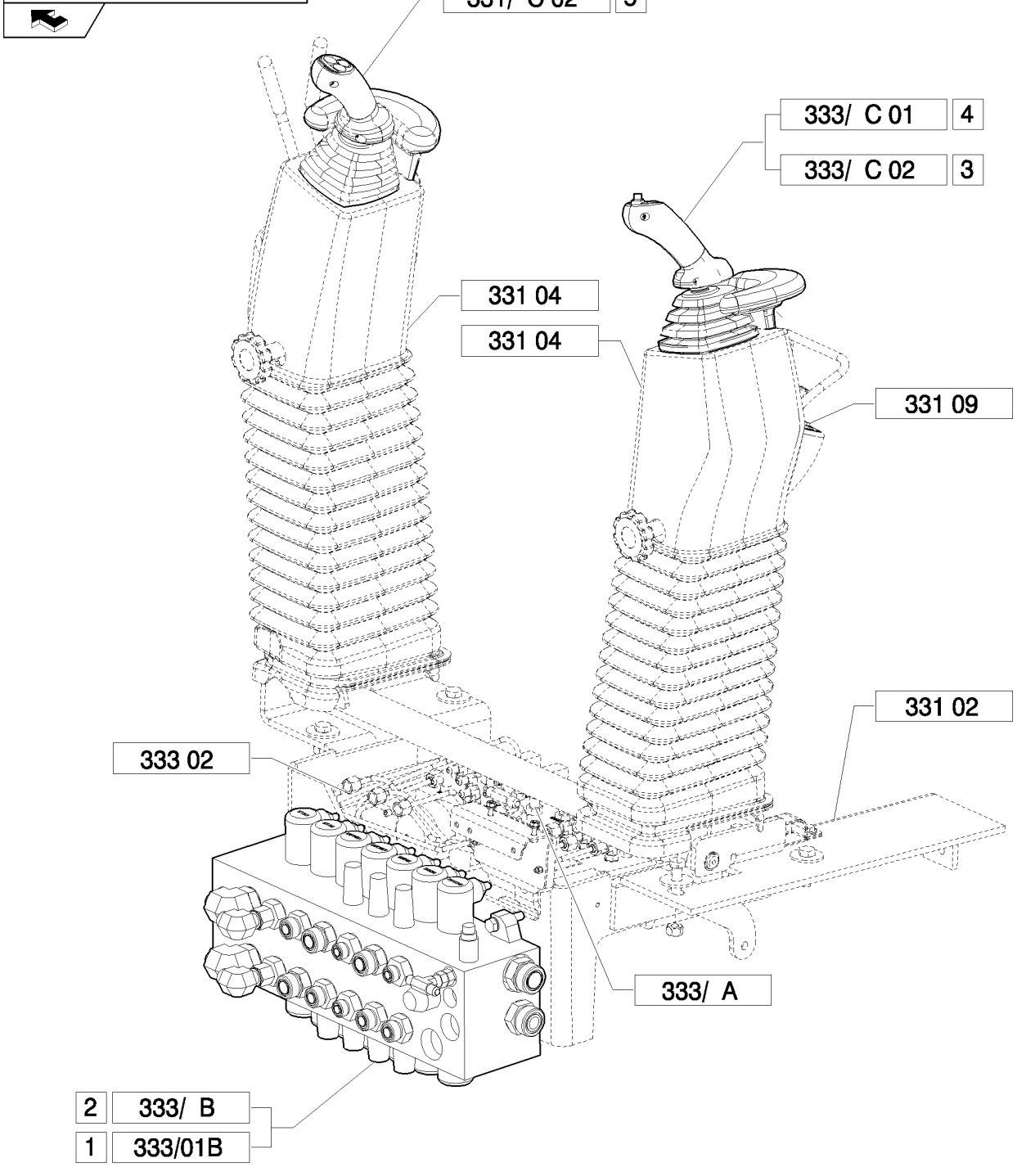

TOWER ASSY 7 SECTIONS (CENTER PIVOT)

REF	FN	PART NUMBER	YR/SN	QTY	DESCRIPTION
1	1	87734106		1	VALVE, CONTROL, Assy
2	2	87734107		1	VALVE, CONTROL, Assy
3	3	87685955		1	VALVE, CONTROL, Assy
4	4	87685957		1	VALVE, CONTROL, Assy
5		87685948		1	VALVE, CONTROL, Assy

(1) Only for NA
(2) Only for B110B, B115B Center Pivot EU
(3) Only for B90B, B90BLR(EU) - B90B, B90BLR (NA)
(4) Only for Center Pivot EU / NA

336/01	01	p1	04/08

TWO SECTION LOADER CONTROL VALVE (CENTER PIVOT) - NA

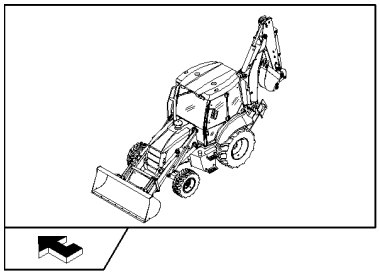

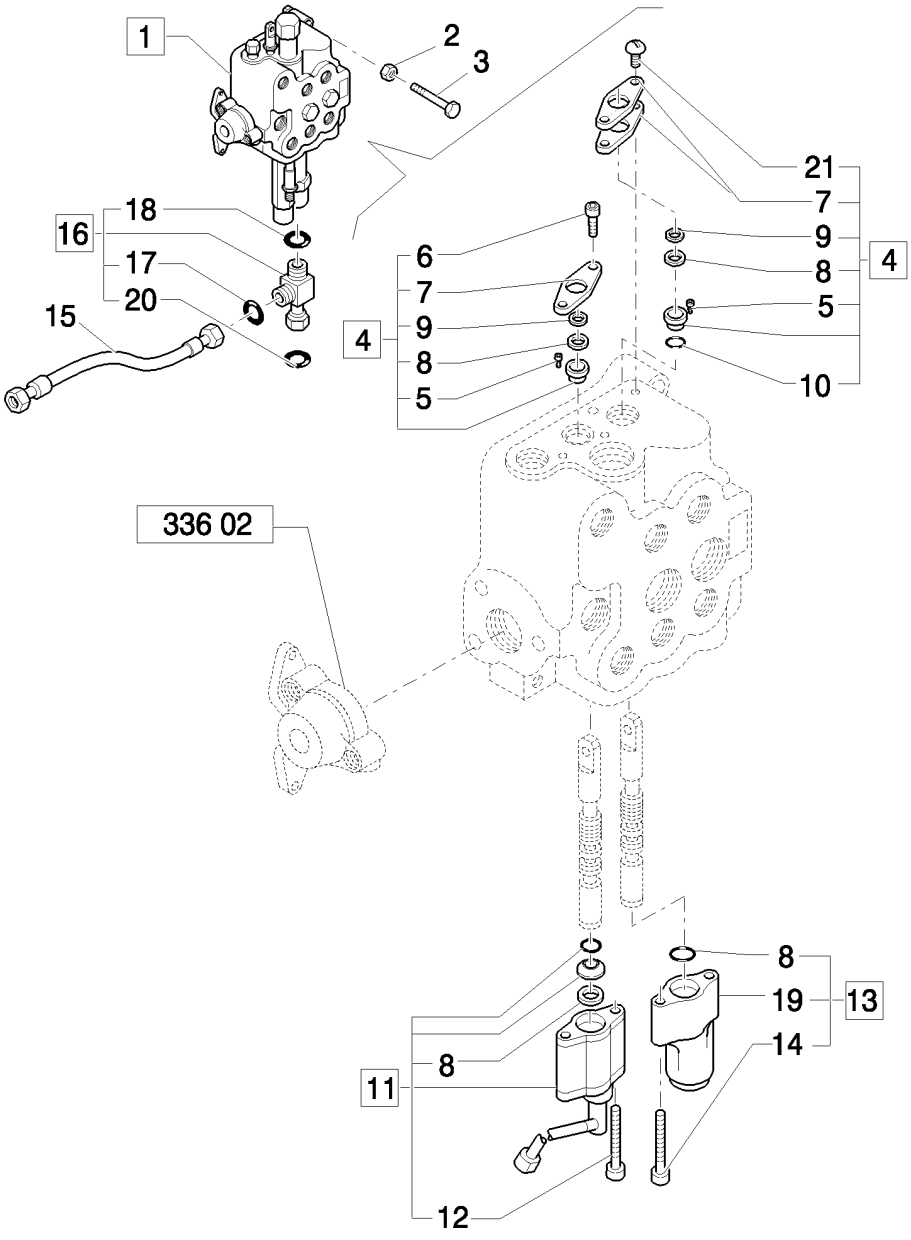

TWO SECTION LOADER CONTROL VALVE (CENTER PIVOT) - NA

REF	FN	PART NUMBER	YR/SN	QTY	DESCRIPTION
1		85819649		1	VALVE, CONTROL, Assy
2		11190579		3	WASHER, SPRING, Belleville, M10.5
3		14308221		3	SCREW, Hex Soc Hd, M10 x 1.25 x 65, 8.8
4		9968455		1	KIT
5		9968457		1	SPACER
6		9968456		2	SCREW
7		9968458		3	FLANGE
8		9968489		4	SEAL
9		9968490		1	WIPER
10		87327076		1	O-RING
11		85808403		1	STOP, Magnetic Detent, Assy
12		9968451		2	SCREW
13		85817025		1	SPOOL, Assy
14		9968454		2	SCREW
15		85816804		1	HOSE, HYDRAULIC, 550mm lg
16		85817531		1	TEE, Assy
17		89825770		1	O-RING
18		89824050		1	O-RING
19		9968513		1	COVER
20		89626929		1	O-RING, 90 Duro, 1.048" ID x .116" Thk
21		9968460		2	SCREW

Mechanical Version B95B

LOADER CONTROL VALVE, TWO SECTION, CAP & UNLOAD VALVE (CENTER PIVOT) - NA

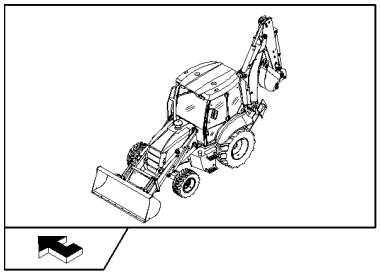

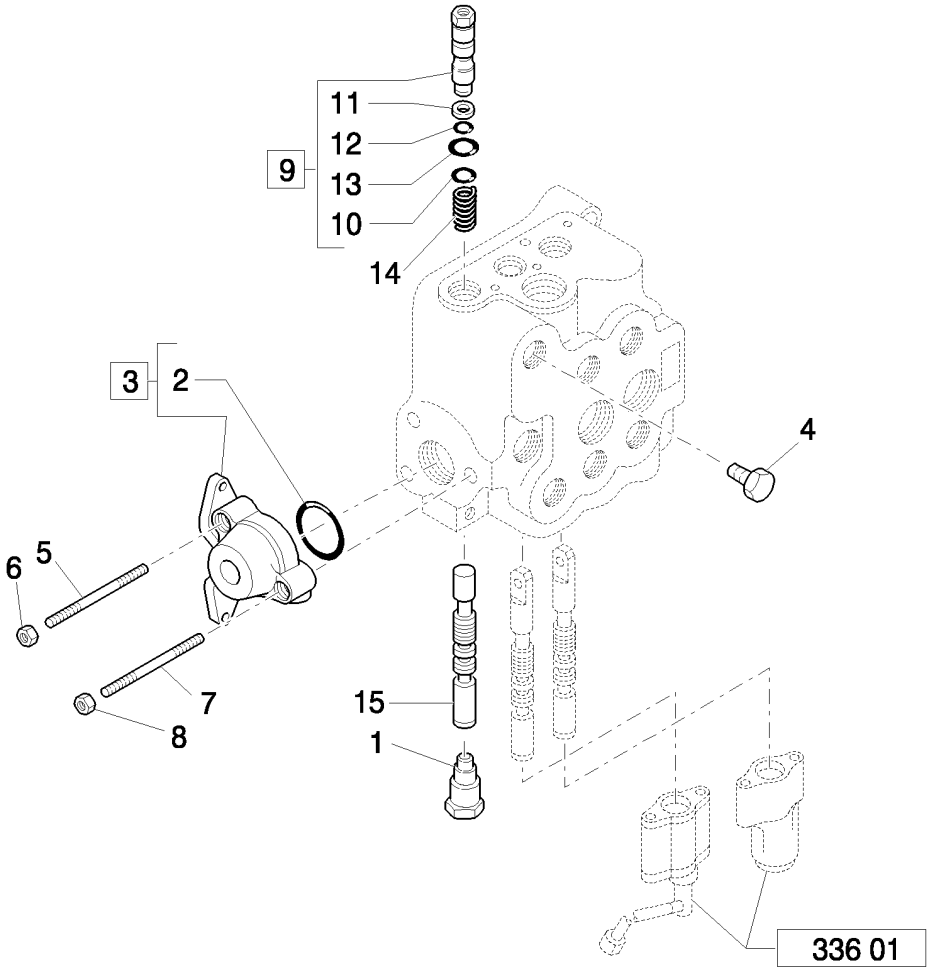

LOADER CONTROL VALVE, TWO SECTION, CAP & UNLOAD VALVE (CENTER PIVOT) - NA

REF	FN	PART NUMBER	YR/SN	QTY	DESCRIPTION
1		9968464		1	PLUG, Assy
2		9968476		1	O-RING
3		9968443		1	VALVE SECTION, HYD, Assy
4		85807857		1	PLUG
5		9968521		2	STUD
6		9968441		2	NUT
7		9968520		1	STUD
8		9968440		1	NUT
9		85815667		1	VALVE, BY-PASS, Assy
10		85815668		1	O-RING
11		9968467		1	RING, BACK-UP
12		9968466		1	O-RING
13		9968468		1	O-RING
14		9968488		1	SPRING
15		85807858		1	SPOOL

Mechanical Version	B95B

LOADER CONTROL VALVE, TWO SECTION, RELIEF & CHECK VALVES (CENTER PIVOT) - NA

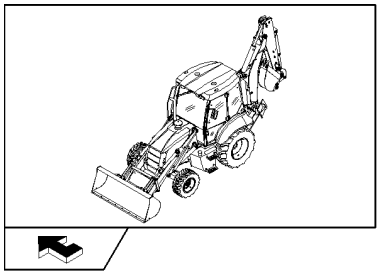

KIT KIT ● = 14

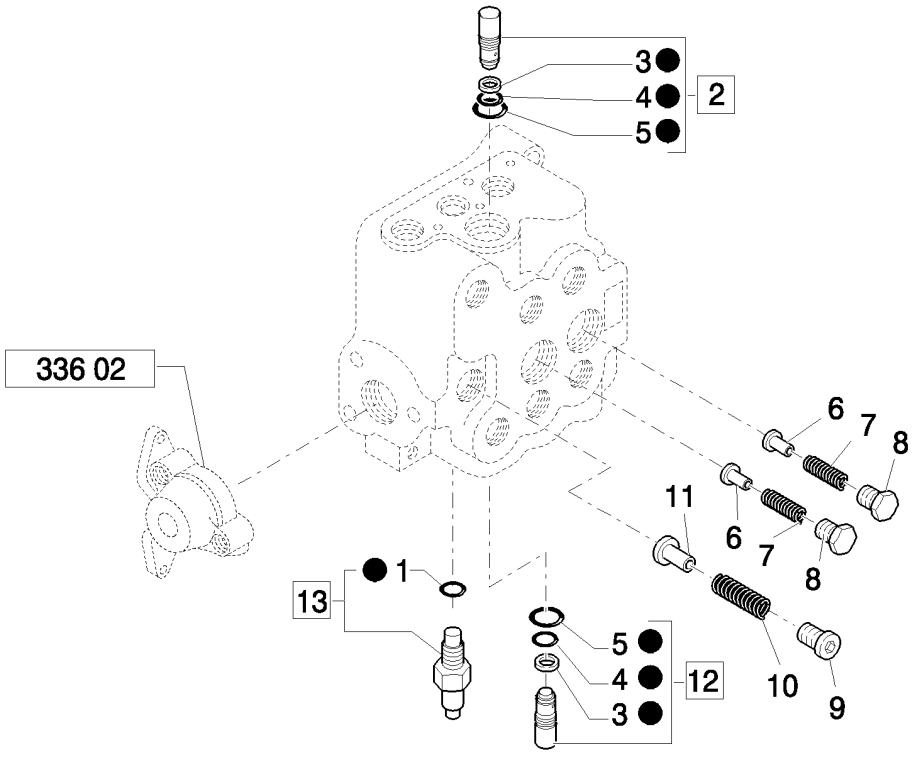

LOADER CONTROL VALVE, TWO SECTION, RELIEF & CHECK VALVES (CENTER PIVOT) - NA

REF	FN	PART NUMBER	YR/SN	QTY	DESCRIPTION
1		85819945		1	O-RING, Assy
2		87302609		1	VALVE, PRESSURE RELIEF, Assy
3		87302608		2	BACK-UP RING
4		9968471		2	O-RING
5		9968470		2	O-RING
6		9968444		2	PLUNGER
7		9968445		2	SPRING
8		9968446		2	PLUG
9		9968449		1	PLUG
10		9968448		1	SPRING
11		9968447		1	PLUNGER
12		87302611		1	VALVE, PRESSURE RELIEF, Assy
13		85819722		1	VALVE, HYDRAULIC, Assy
14		87302607		2	KIT, SEALS

Mechanical Version B95B

LOADER CONTROL VALVE, TWO SECTION, BY-PASS KIT (CENTER PIVOT) - NA

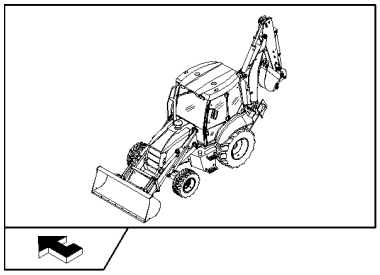

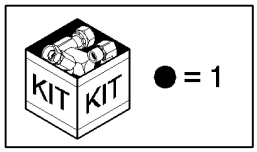

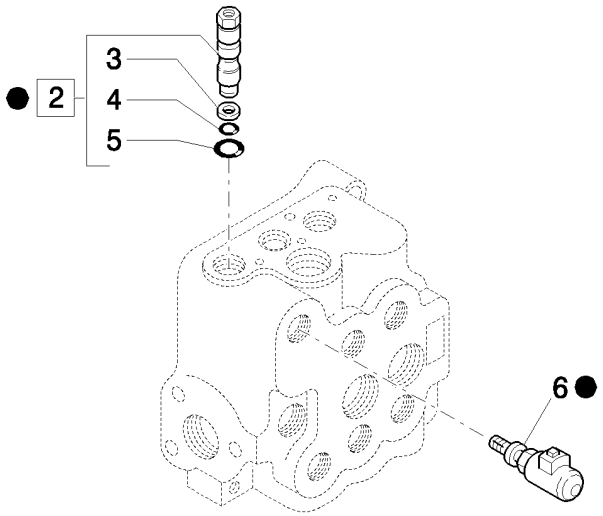

LOADER CONTROL VALVE, TWO SECTION, BY-PASS KIT (CENTER PIVOT) - NA

REF	FN	PART NUMBER	YR/SN	QTY	DESCRIPTION
1		85817201		1	KIT, CONVERSION
2		9968465		1	VALVE, PILOT, Assy
3		9968467		1	RING, BACK-UP
4		9968466		1	O-RING
5		9968468		1	O-RING
6		9968461		1	SOLENOID

Mechanical Version B95B

LOADER CONTROL VALVE, TWO SECTION, UNLOAD KIT OR DUMP VALVE (CENTER PIVOT) - NA

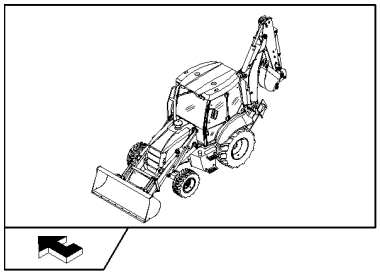

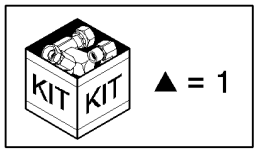

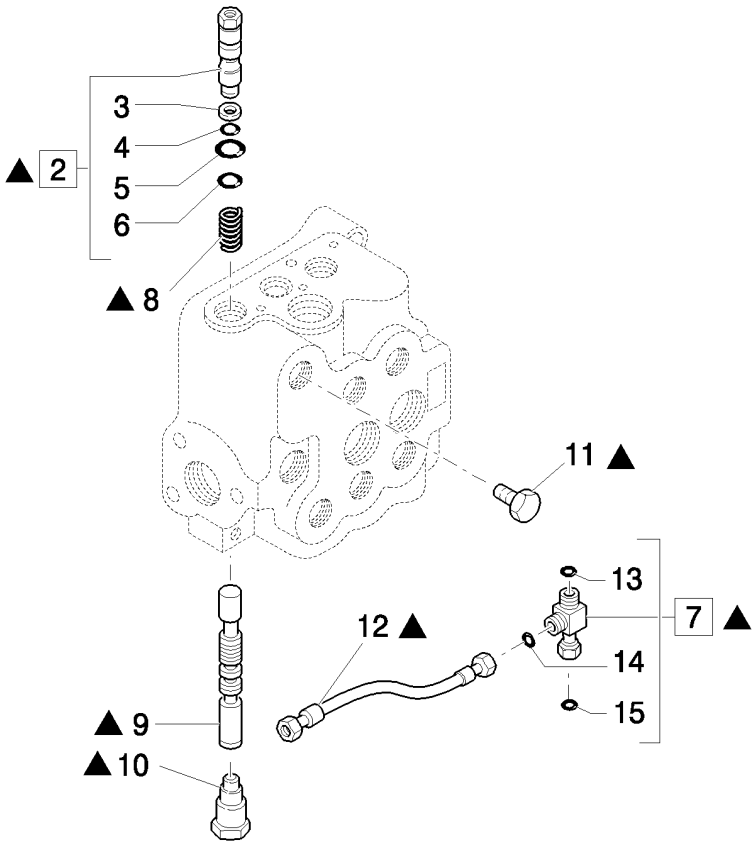

LOADER CONTROL VALVE, TWO SECTION, UNLOAD KIT OR DUMP VALVE (CENTER PIVOT) - NA

REF	FN	PART NUMBER	YR/SN	QTY	DESCRIPTION
1		85816793		1	KIT
2		85815667		1	VALVE, BY-PASS, Assy
3		9968467		1	RING, BACK-UP
4		9968466		1	O-RING
5		9968468		1	O-RING
6		85815668		1	O-RING
7		85817531		1	TEE, Assy
8		9968488		1	SPRING
9		85807858		1	SPOOL
10		9968464		1	PLUG
11		85807857		1	PLUG
12		85816804		1	HOSE, HYDRAULIC, 550mm lg
13		89824050		1	O-RING
14		89825770		1	O-RING
15		89626929		1	O-RING, 90 Duro, 1.048" ID x .116" Thk

Mechanical Version B95B

337	01	p1	04/08

LOCKING VALVE ON LOADER ATTACHMENT TIPPING CYLINDERS

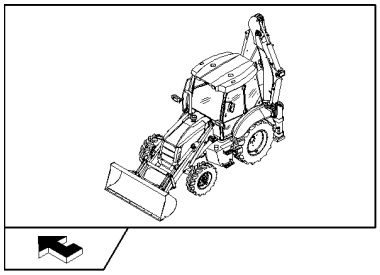

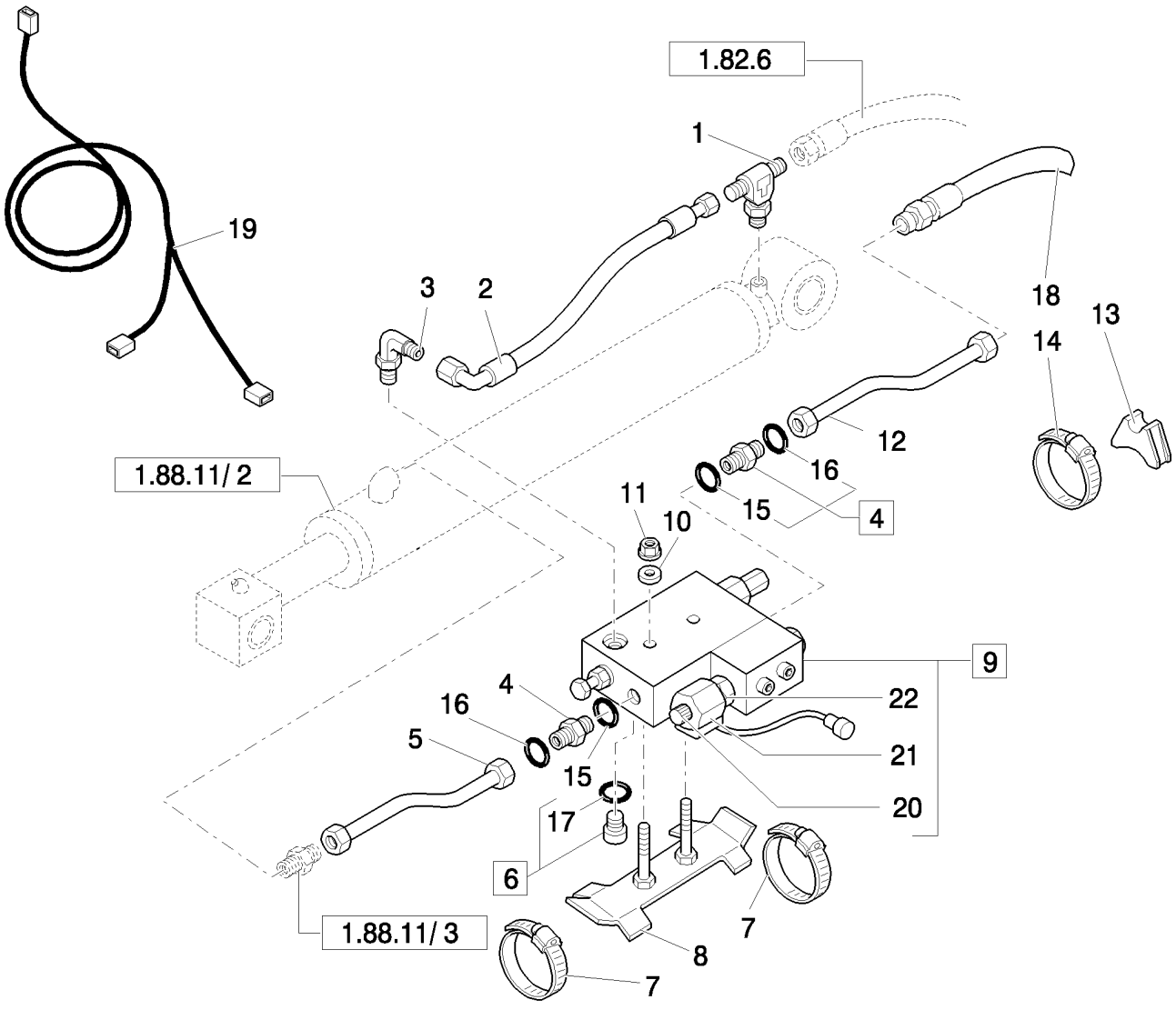

LOCKING VALVE ON LOADER ATTACHMENT TIPPING CYLINDERS

REF	FN	PART NUMBER	YR/SN	QTY	DESCRIPTION
1		85805218		2	TEE
2		85815506		2	HOSE, FLEXIBLE
3		85805220		2	ELBOW
4		83963374		4	CONNECTOR, HYD., Assy
5		85805262		2	TUBE, HYD
6		85802805		2	PLUG, Assy
7		85803010		4	CLAMP, HOSE
8		85805221		2	SUPPORT
9		85805224		2	VALVE, HYDRAULIC, Assy
10		11193879		4	WASHER, SPRING, Belleville, M8.4
11		14048221		4	NUT, LOCK, M8 x 1.25, Cl 10
12		85805264		2	TUBE, HYD
13		87303910		2	SPACER
14		85802743		2	CLAMP, HOSE
15		80128825		2	O-RING
16		89992298		2	O-RING
17		89825770		1	O-RING
18		85813361		2	HOSE, HYDRAULIC, 1130mm lg
19		85826276		1	HARNESS, WIRE
20		9970384		2	NUT
21		85820283		2	COIL
22		85820285		2	VALVE, HYDRAULIC

337	02	p1	04/08

LOCK VALVE ON LOADER LIFT CYLINDERS

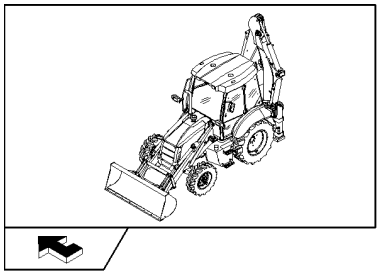

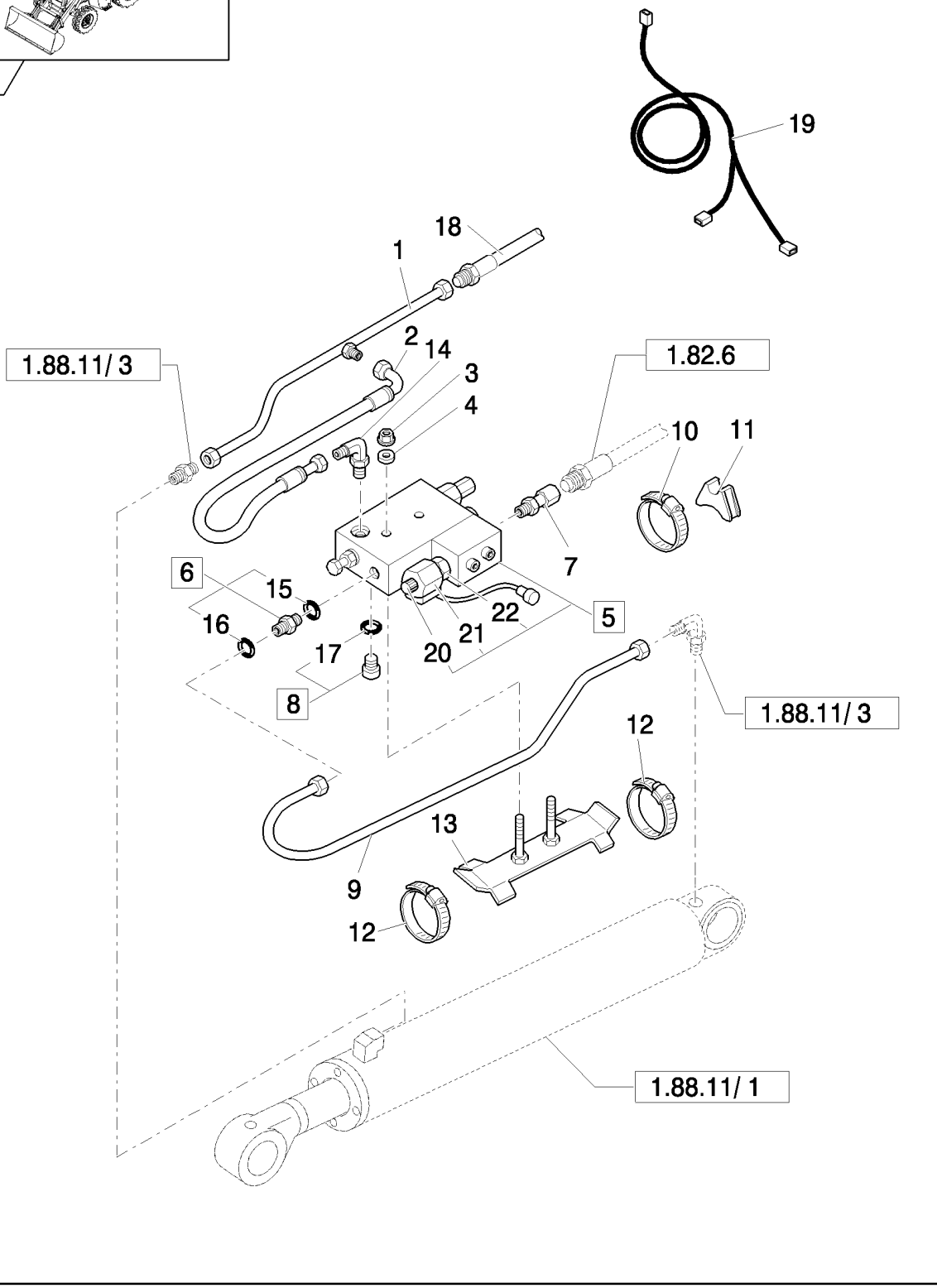

LOCK VALVE ON LOADER LIFT CYLINDERS

REF	FN	PART NUMBER	YR/SN	QTY	DESCRIPTION
1		85827853		2	TUBE, HYD
2		85815506		2	HOSE, FLEXIBLE
3		14048221		4	NUT, LOCK, M8 x 1.25, Cl 10
4		11193879		4	WASHER, SPRING, Belleville, M8.4
5		85805223		2	VALVE, HYDRAULIC, Assy
6		83963374		2	CONNECTOR, HYD., Assy
7		85805217		2	CONNECTOR, HYD.
8		85802805		2	PLUG, Assy
9		85805271		1	TUBE, HYD, LH
9		85805273		1	TUBE, HYD, RH
10		85803008		2	CLAMP, HOSE
11		87303912		2	BLOCK
12		85802743		4	CLAMP, HOSE
13		85805221		2	SUPPORT
14		85805220		2	ELBOW
15		80128825		2	O-RING
16		89992298		2	O-RING
17		89825770		2	O-RING
18		85813363		2	HOSE, FLEXIBLE, 550mm lg
19		85826275		1	HARNESS, WIRE
20		9970384		2	NUT
21		85820283		2	COIL
22		85820285		2	VALVE, HYDRAULIC

338		p1	03/08

LOCK VALVE ON LOADER LIFT CYLINDERS

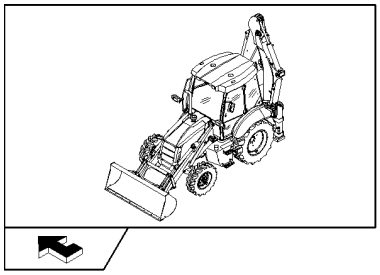

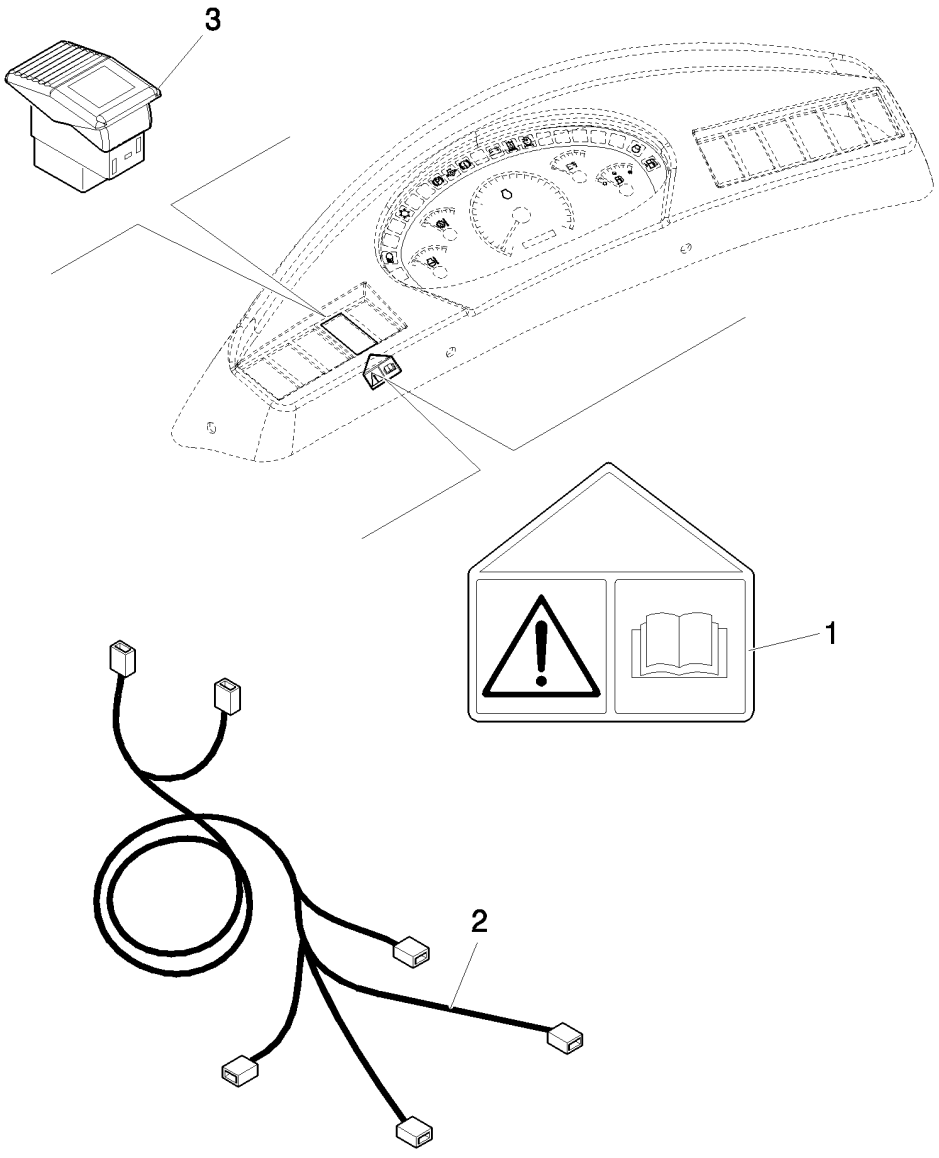

LOCK VALVE ON LOADER LIFT CYLINDERS

REF	FN	PART NUMBER	YR/SN	QTY	DESCRIPTION
1		85805228		1	DECAL
2		85826274		1	HARNESS
3		85819074		1	SWITCH

344	01	p1	04/08

STABILIZER CONTROL VALVE, TWO SECTION (CENTER PIVOT) - NA

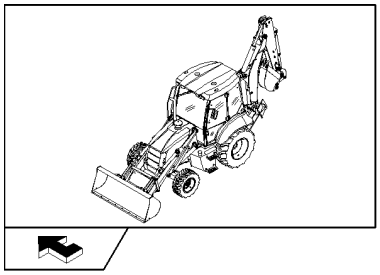

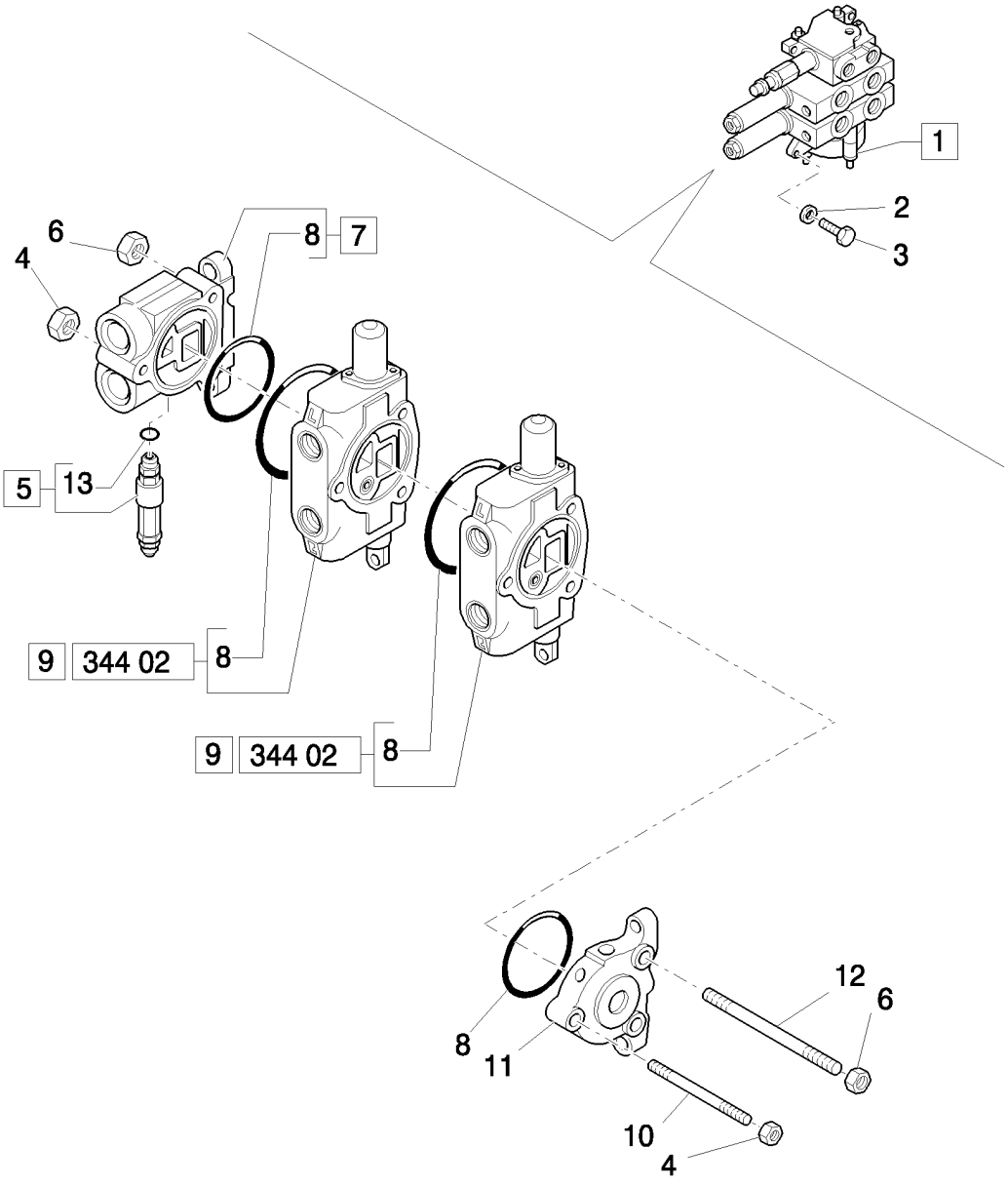

STABILIZER CONTROL VALVE, TWO SECTION (CENTER PIVOT) - NA

REF	FN	PART NUMBER	YR/SN	QTY	DESCRIPTION
1		85819684		1	VALVE, CONTROL, Assy
2		11193879		3	WASHER, SPRING, Belleville, M8.4
3		16043921		3	SCREW, M8x1.25x35
4		9968440		2	NUT
5		85819721		1	VALVE, HYDRAULIC
6		9968441		4	NUT
7		9968524		1	VALVE SECTION, HYD
8		9968476		4	O-RING
9		9970107		2	VALVE SECTION, HYD, Assy
10		9968533		1	STUD
11		9968527		1	VALVE SECTION, HYD
12		9968532		2	STUD
13		85819945		1	O-RING

Mechanical Version B95B

344	02	p1	04/08

STABILIZER CONTROL VALVE, LH & RH SECTION (CENTER PIVOT) - NA

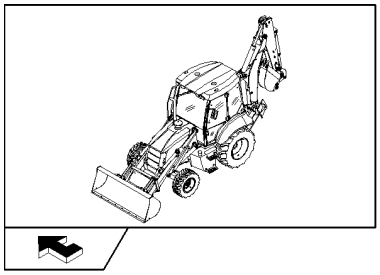

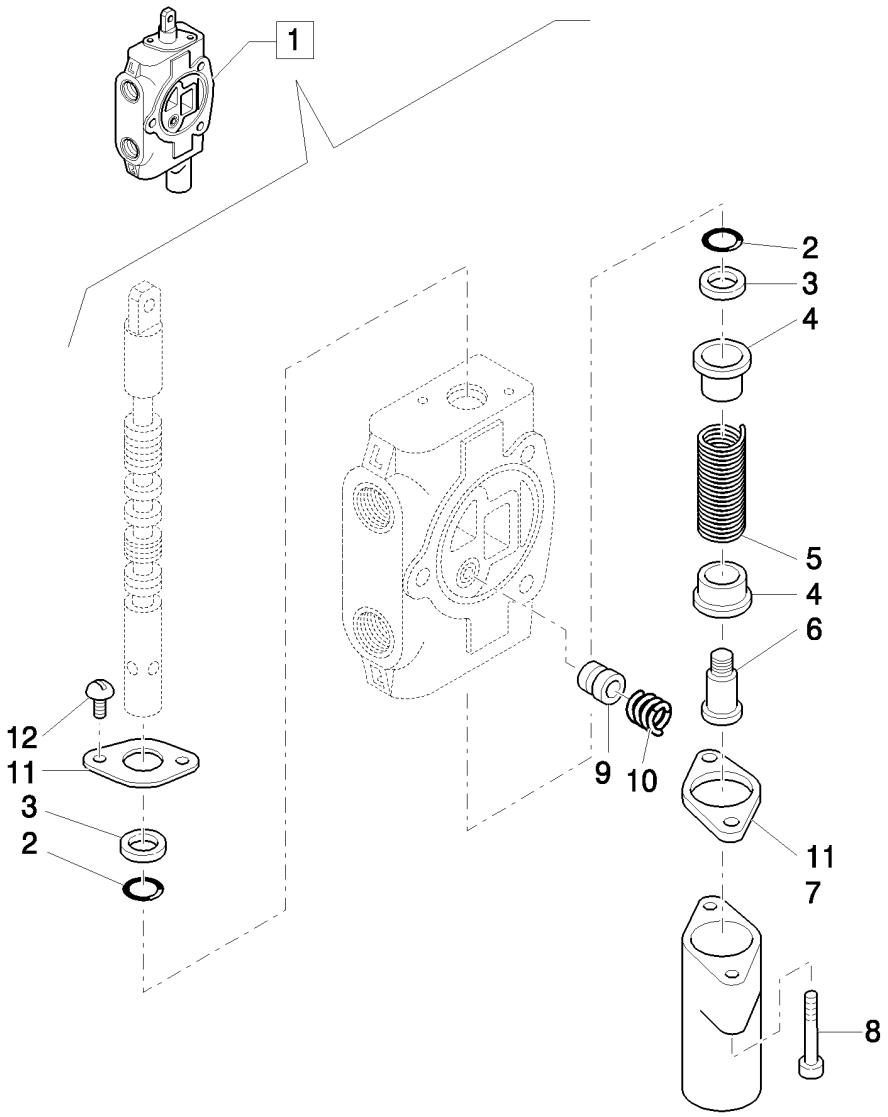

STABILIZER CONTROL VALVE, LH & RH SECTION (CENTER PIVOT) - NA

REF	FN	PART NUMBER	YR/SN	QTY	DESCRIPTION
1		9970107		1	VALVE SECTION, HYD, Assy
2		85813418		2	O-RING
3		85813419		2	WIPER
4		9968481		2	SEAT
5		9968531		1	SPRING
6		9968483		1	SCREW
7		9968484		1	COVER
8		9968486		2	SCREW
9		9968477		1	POPPET
10		9968478		1	SPRING
11		9968480		2	FLANGE
12		9968460		2	SCREW

Mechanical Version B95B

346	01	p1	03/08

A/C HOUSING & FILTERS

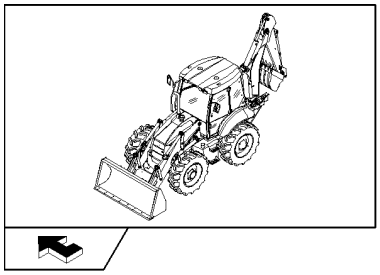

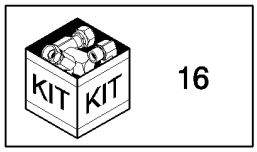

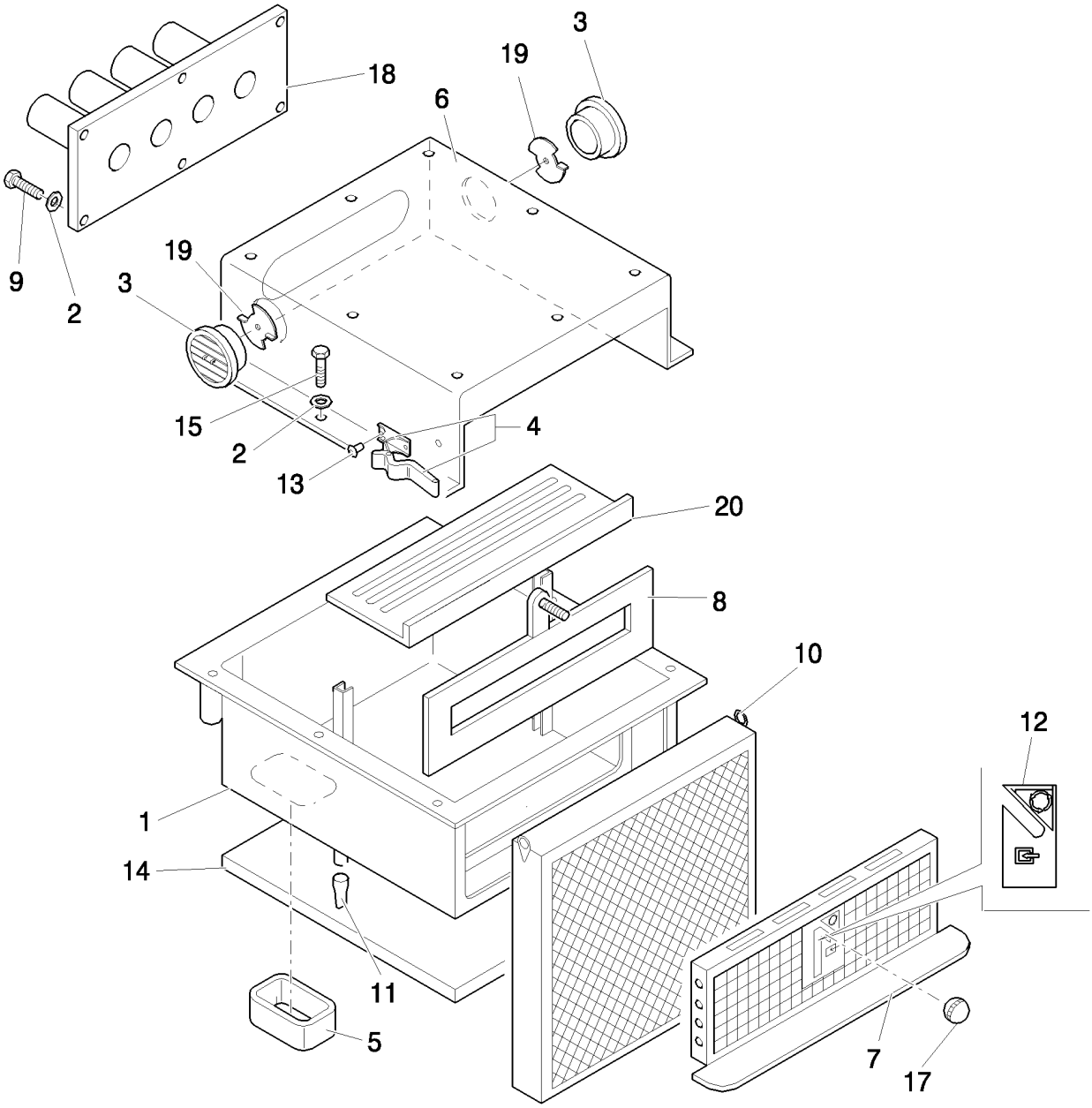

A/C HOUSING & FILTERS

REF	FN	PART NUMBER	YR/SN	QTY	DESCRIPTION
1		87314323		1	HOUSING
2		11193974		6	WASHER, SPRING, Belleville, M8.4
3		87362068		2	OUTLET
4		87358140		2	HANDLE GRIP
5		87314730		1	INSULATION, FOAM
6		87618272		1	COVER
7		87314330		1	GRILLE
8		87314350		1	LID
9		85819184		13	SCREW
10		87314367		1	FILTER, CAB
11		87315029		2	VALVE, DUST
12		87314351		1	DECAL
13		87358141		4	RIVET
14		87314520		1	INSULATION, FOAM
15		16043624		6	BOLT, Hex, M8 x 25, 8.8, Full Thd
16		87314518		1	INSULATION, FOAM, - KIT
17		87314353		1	KNOB
18		87314357		1	DUCT, AIR
19		87618261		2	BAFFLE
20		87314355		1	BOTTOM

A/C BLOWER & COILS

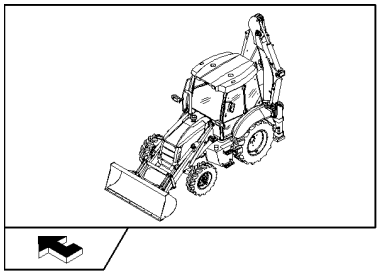

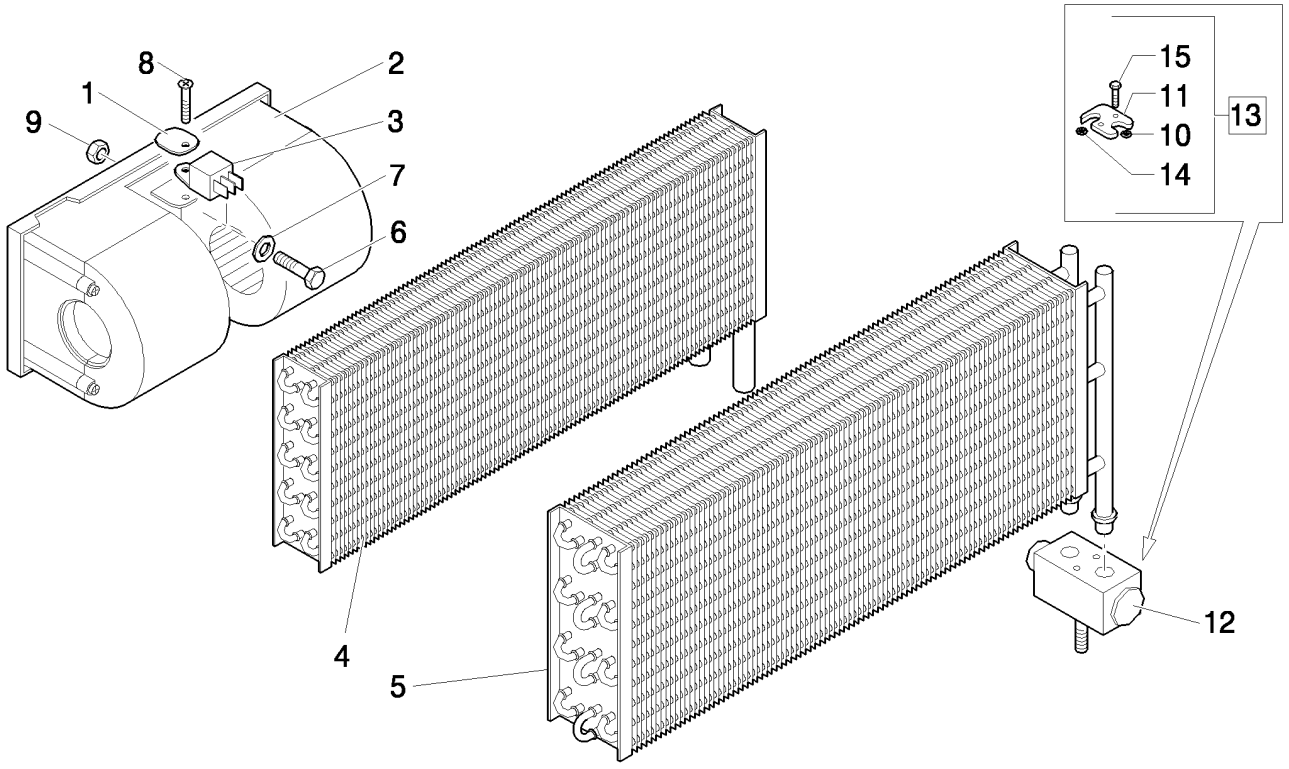

A/C BLOWER & COILS

REF	FN	PART NUMBER	YR/SN	QTY	DESCRIPTION
1		85817289		1	PLATE, RETAINING
2		85813079		1	BLOWER, ELECTRIC
3		85804041		1	RESISTOR
4		87314527		1	HEATER
5		87314369		1	EVAPORATOR
6		10902424		1	BOLT, Hex, M6 x 20, 8.8, Full Thd
7		11197774		1	WASHER, SPRING, Belleville, M6.4
8		85817189		1	SCREW
9		12574211		1	NUT, LOCK, M6 x 1, Cl 8
10		85805006		1	O-RING
11		85805005		1	FLANGE
12		87314524		1	VALVE, CONTROL
13		85804038		1	FLANGE, Assy
14		85805003		1	O-RING
15		85805004		2	SCREW

346	03	p1	04/08

HEATER COIL HOSES

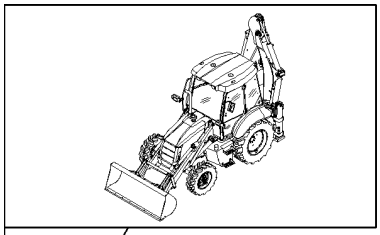

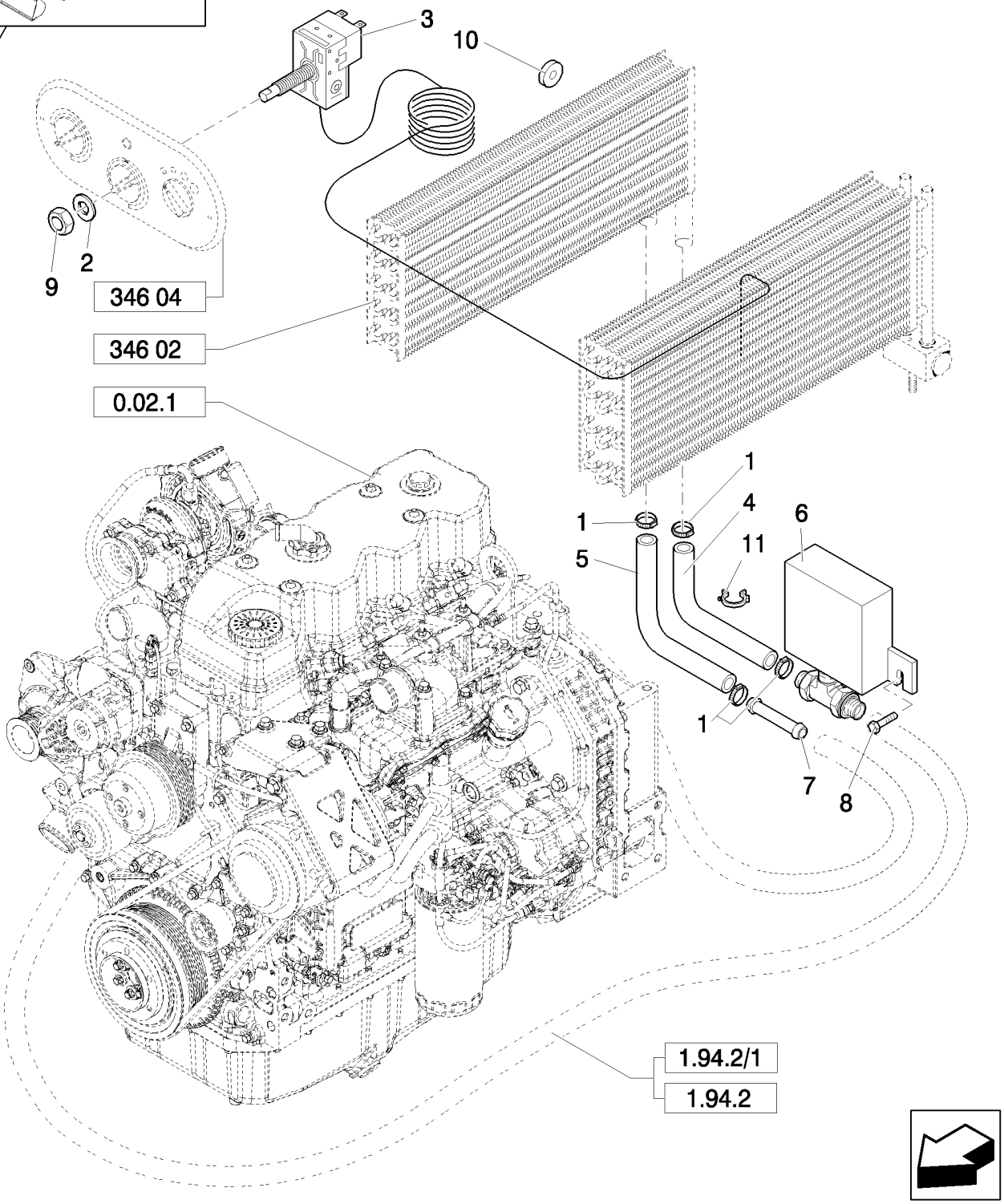

HEATER COIL HOSES

REF	FN	PART NUMBER	YR/SN	QTY	DESCRIPTION
1		87314726		4	CLAMP, HOSE
2		87358348		1	WASHER
3		87314526		1	THERMOSTAT
4		87318747		1	HOSE, FLEXIBLE
5		87318750		1	HOSE, FLEXIBLE
6		87314554		1	DRAINCOCK/TAP, SUPPLY
7		85804051		1	TUBE
8		87617261		2	SCREW
9		85817295		1	NUT
10		87314729		2	SEAL
11		87358142		2	COLLAR

346	04	p1	03/08

A/C & HEATER CONTROL PANEL

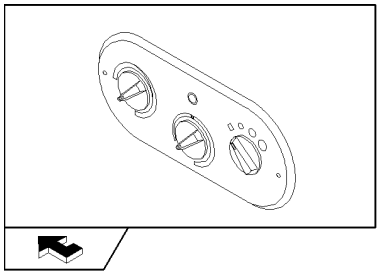

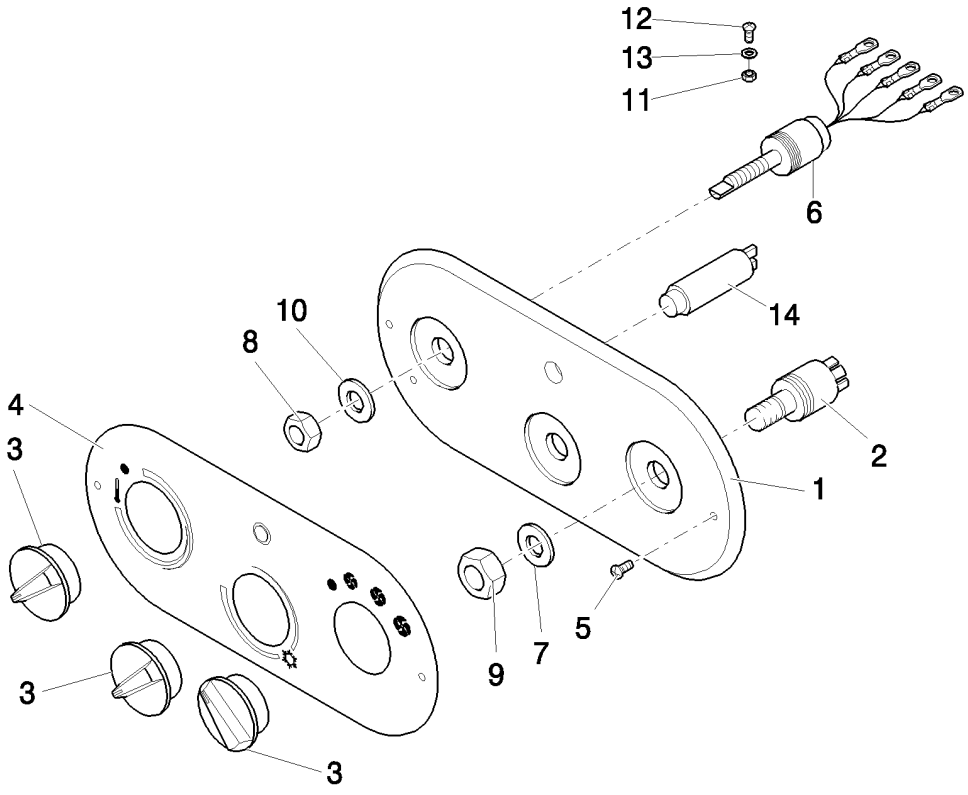

A/C & HEATER CONTROL PANEL

REF	FN	PART NUMBER	YR/SN	QTY	DESCRIPTION
1		87314743		1	DASHBOARD
2		87314747		1	SWITCH
3		87314749		3	KNOB
4	1	87567694		1	SCREEN
4	2	87314750		1	DECAL
5		12678401		2	SCREW
6		87314753		1	POTENTIOMETER
7		87358348		1	WASHER, 13X20
8		87334860		1	NUT
9		87334861		1	NUT, 12,5X18X1,5
10		87358349		1	WASHER, 10,5X16X1,5
11		14372671		2	NUT, M4.2, U, 12.4mm long
12		15693507		2	SCREW, SELF TAPPING, Cross Oval Hd, M4.8 x 22
13		12601174		2	WASHER, Wave, M4.3
14	2	87314751		1	BULB

(1) Only for B95B, B95BLR, B95BTC, B110B, B115B (NA) - B100B, B100BLR, B110B, B115B (EU)
(2) Only for B90B, B90BLR (EU) - B90B (NA)

346	05	p1	03/08

A/C & HEATER CONSOLE DUCTS

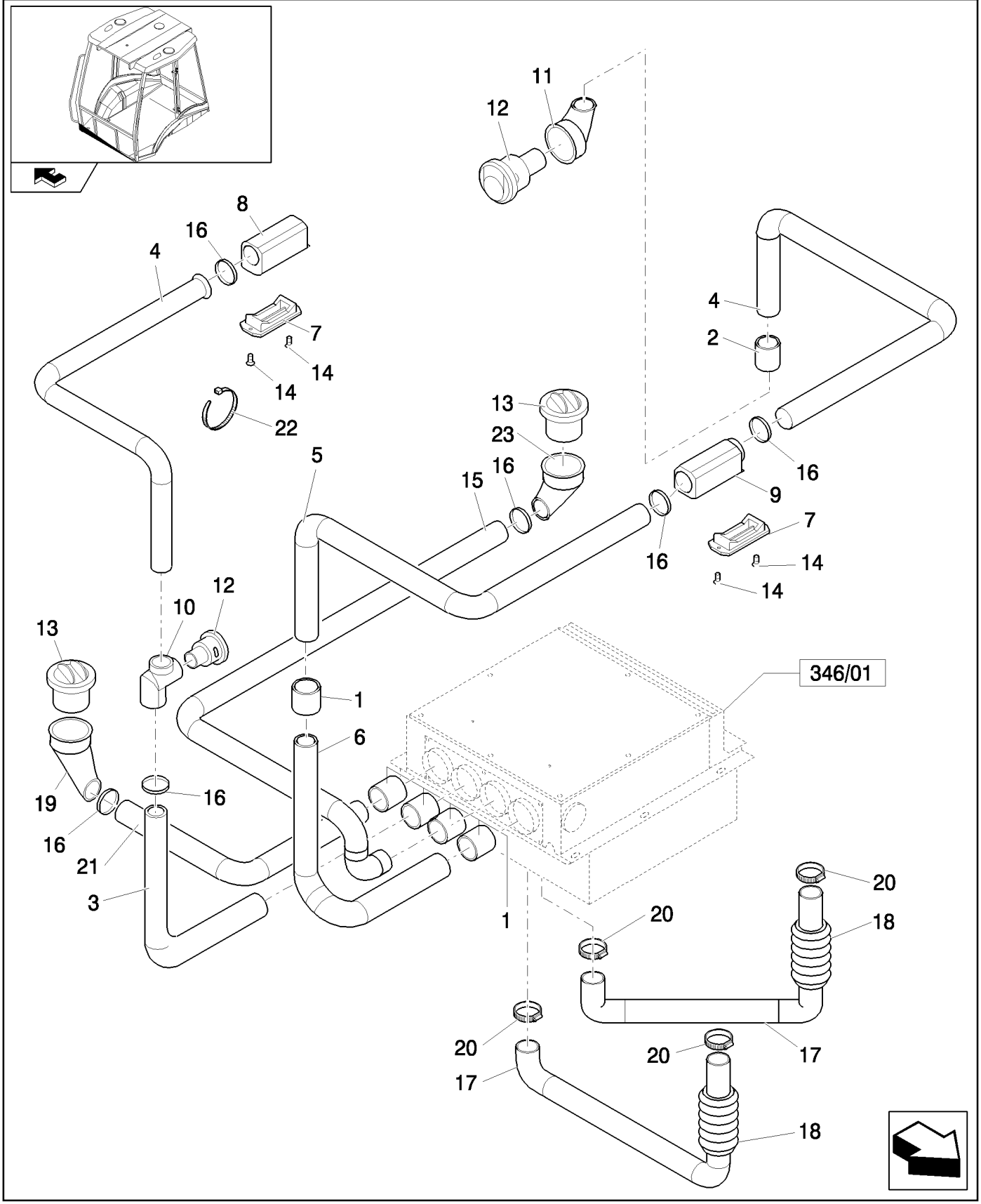

A/C & HEATER CONSOLE DUCTS

REF	FN	PART NUMBER	YR/SN	QTY	DESCRIPTION
1		85819452		5	HOSE
2		85819451		1	HOSE
3		87314771		1	DUCT, AIR
4		87314772		2	DUCT, AIR
5		87314773		1	DUCT, AIR
6		87319448		1	DUCT, AIR
7		85819454		2	DIFFUSER
8		87314946		1	DISTRIBUTOR
9		87314947		1	DISTRIBUTOR
10		87314948		1	ELBOW
11		85819453		1	ELBOW
12		87362068		2	OUTLET
13		87362065		2	DIFFUSER
14		14440327		4	SCREW, Hex Soc Flat Hd, M4 x 20, 8.8
15		87319437		1	DUCT, AIR
16		13000690		6	CLAMP, HOSE
17		87314767		2	DUCT, AIR
18		87314769		2	DUCT, AIR
19		87652770		1	ELBOW
20		13000990		4	CLAMP, HOSE
21		87319443		1	DUCT, AIR
22		5112712		12	CLIP, HOSE, M4.8 x 283
23		87652764		1	ELBOW

347	01	p1	03/08

HOUSING & FILTERS

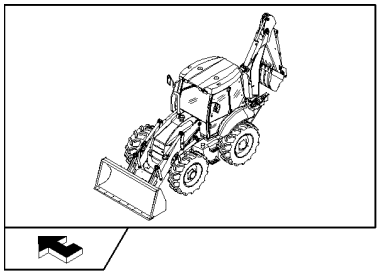

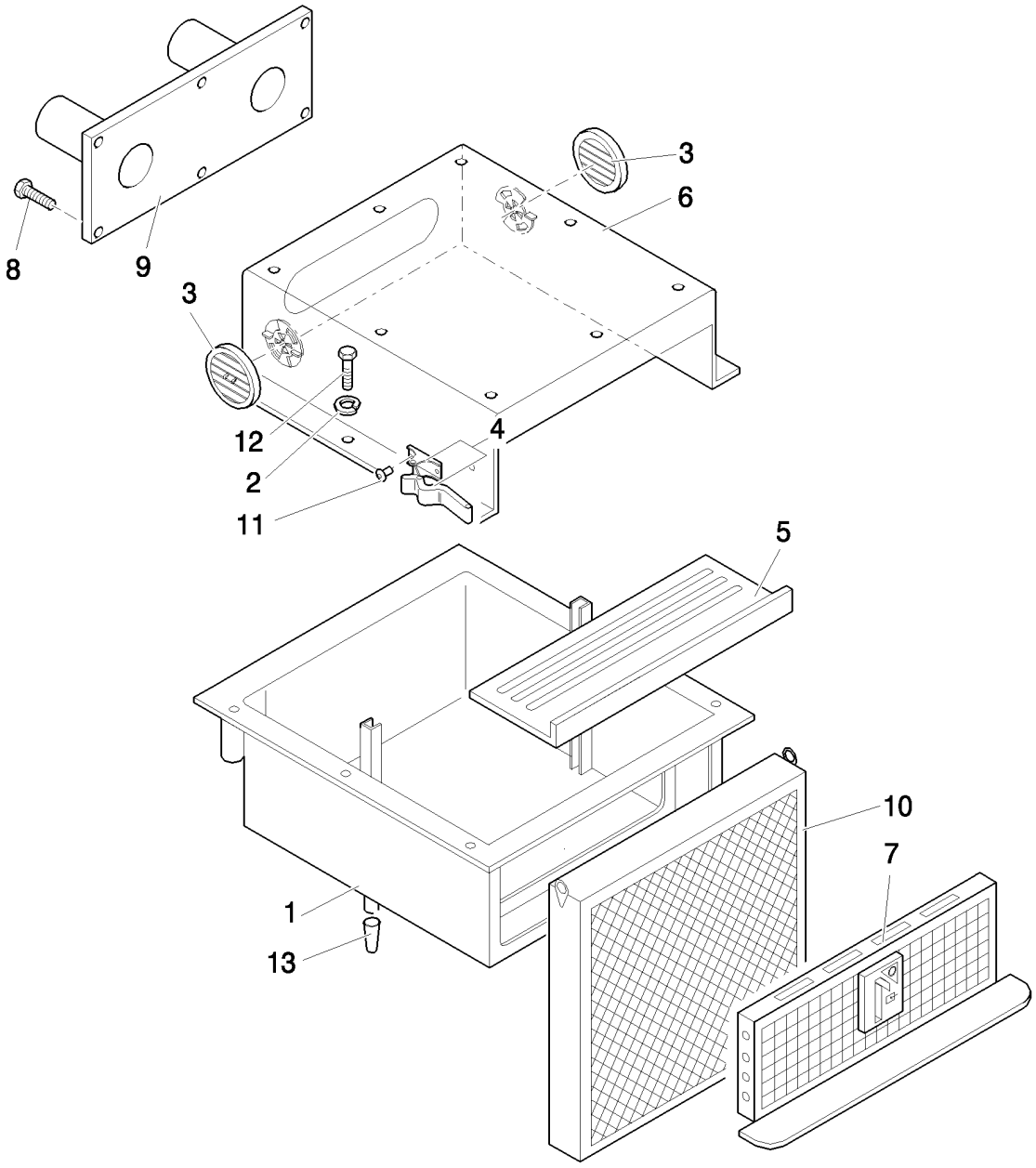

HOUSING & FILTERS

REF	FN	PART NUMBER	YR/SN	QTY	DESCRIPTION
1		87314323		1	HOUSING
2		11193974		6	WASHER, SPRING, Belleville, M8.4
3		87618259		2	BAFFLE
4		87358140		2	HANDLE GRIP
5		87314355		1	BOTTOM
6		87618272		1	COVER
7		87314330		1	GRILLE
8		85819184		13	SCREW
9		87316439		1	DUCT, AIR
10		87314367		1	FILTER, CAB
11		87358141		4	RIVET
12		16043624		6	BOLT, Hex, M8 x 25, 8.8, Full Thd
13		87315029		2	VALVE, DUST

347	02	p1	03/08

HEATER BLOWER & COILS

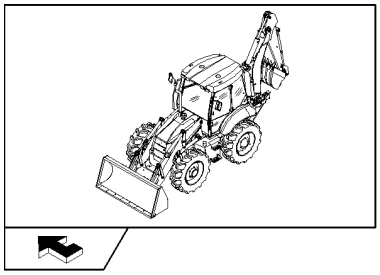

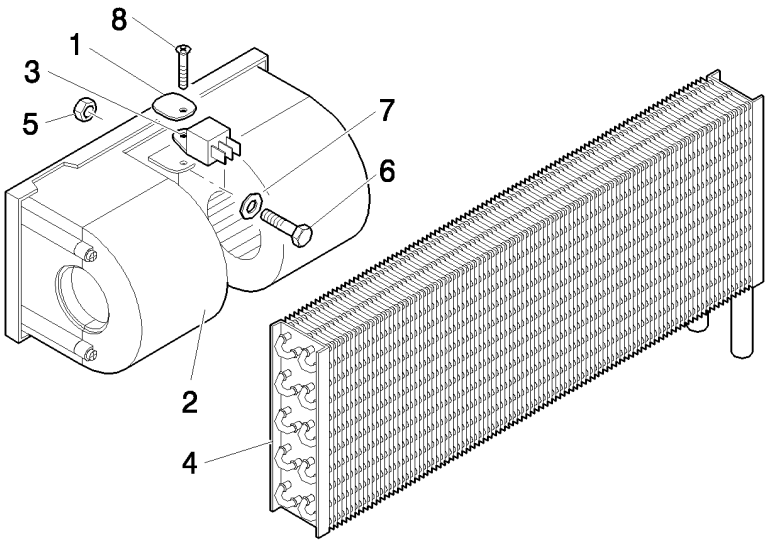

HEATER BLOWER & COILS

REF	FN	PART NUMBER	YR/SN	QTY	DESCRIPTION
1		85817289		1	PLATE, RETAINING
2		85813079		1	BLOWER, ELECTRIC
3		85804041		1	RESISTOR
4		87314527		1	HEATER
5		12574211		1	NUT, LOCK, M6 x 1, Cl 8
6		10902424		1	BOLT, Hex, M6 x 20, 8.8, Full Thd
7		11197774		1	WASHER, SPRING, Belleville, M6.4
8		85817189		1	SCREW

347	03	p1	03/08

HEATER COIL HOSES

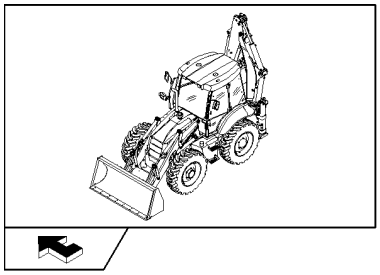

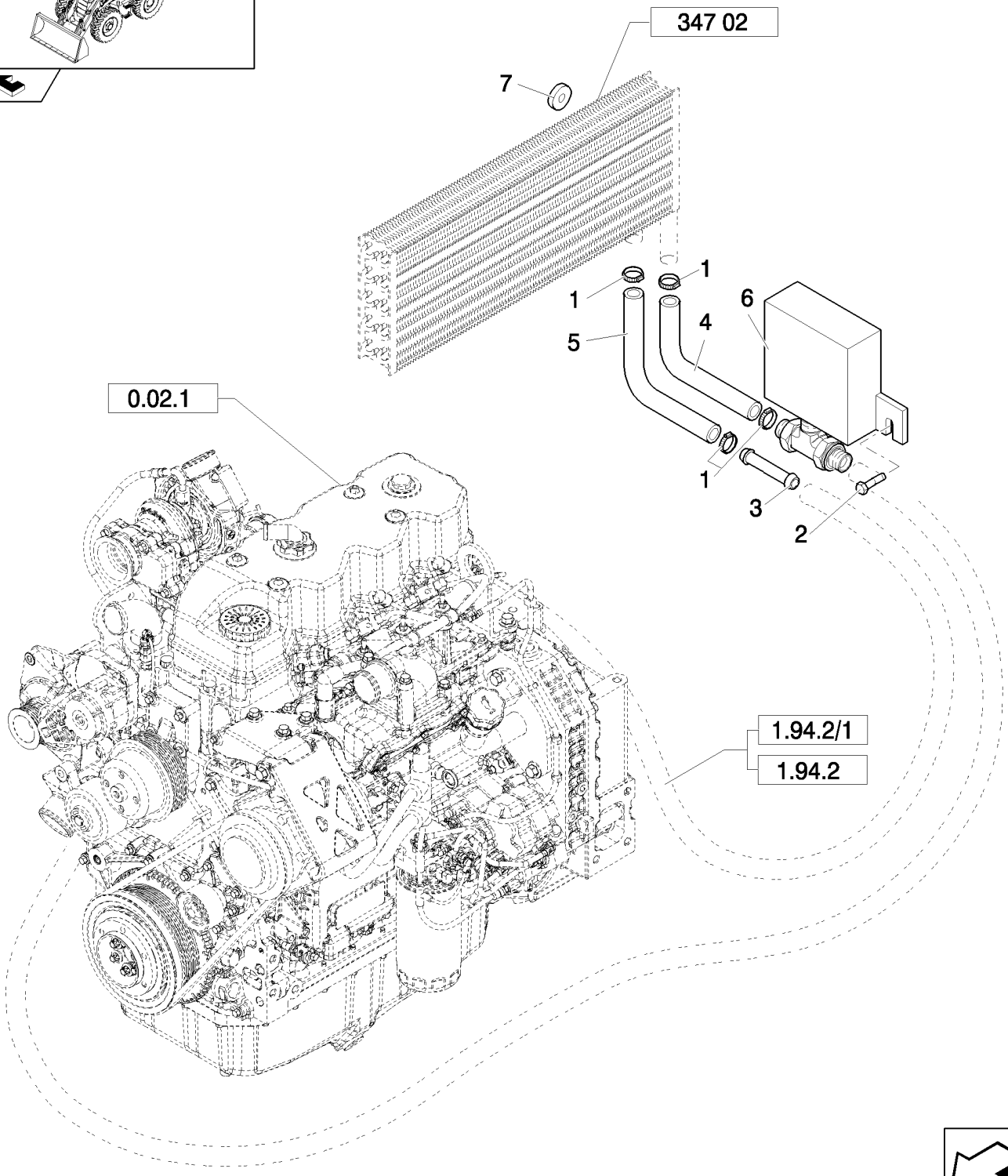

HEATER COIL HOSES

REF	FN	PART NUMBER	YR/SN	QTY	DESCRIPTION
1		87314726		4	CLAMP, HOSE
2		87617261		2	SCREW
3		85804051		1	TUBE
4		87318747		1	HOSE, FLEXIBLE
5		87318750		1	HOSE, FLEXIBLE
6		87314554		1	DRAINCOCK/TAP, SUPPLY
7		87314729		2	SEAL

347	04	p1	03/08

A/C & HEATER CONTROL PANEL

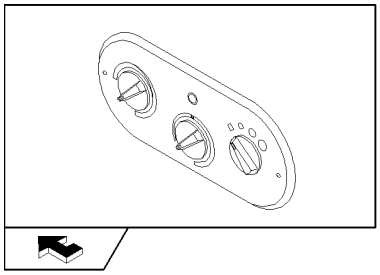

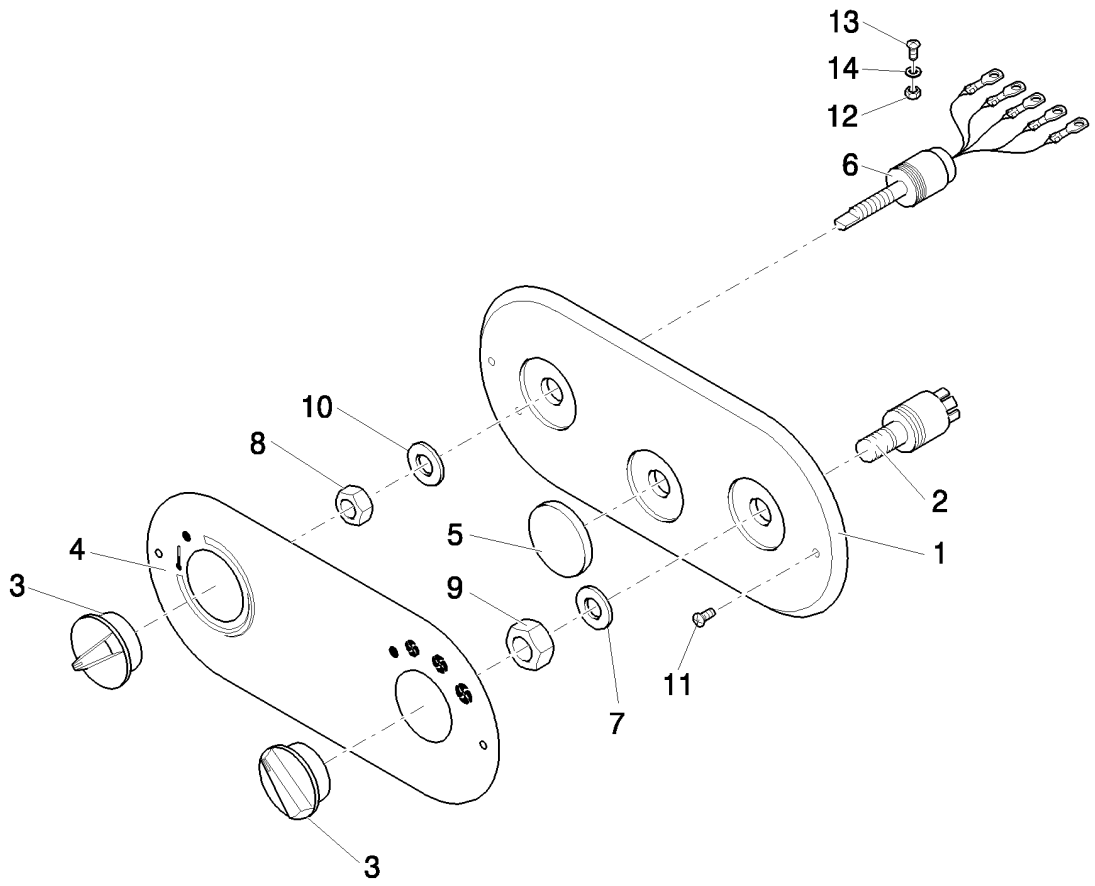

A/C & HEATER CONTROL PANEL

REF	FN	PART NUMBER	YR/SN	QTY	DESCRIPTION
1		87314743		1	DASHBOARD
2		87314747		1	SWITCH
3		87314749		2	KNOB
4		87316443		1	DECAL
5		87316442		1	PLUG
6		87314753		1	POTENTIOMETER
7		87358348		1	WASHER, 12,5X18X1,5
8		87334860		1	NUT
9		87334861		1	NUT
10		87358349		1	WASHER, 10,5X16X1,5
11		12678401		2	SCREW
12		12574111		2	NUT, LOCK, M5 x .8, Cl 8
13		15687801		2	SCREW, SELF TAPPING, Cross Pan Hd, M4.8 x 9.5
14		12601174		2	WASHER, Wave, M4.3

347	05	p1	03/08

A/C & HEATER CONSOLE DUCTS

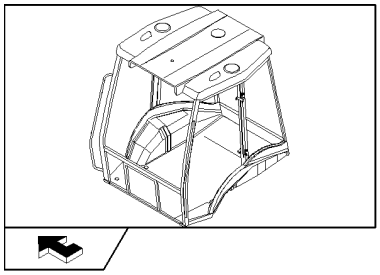

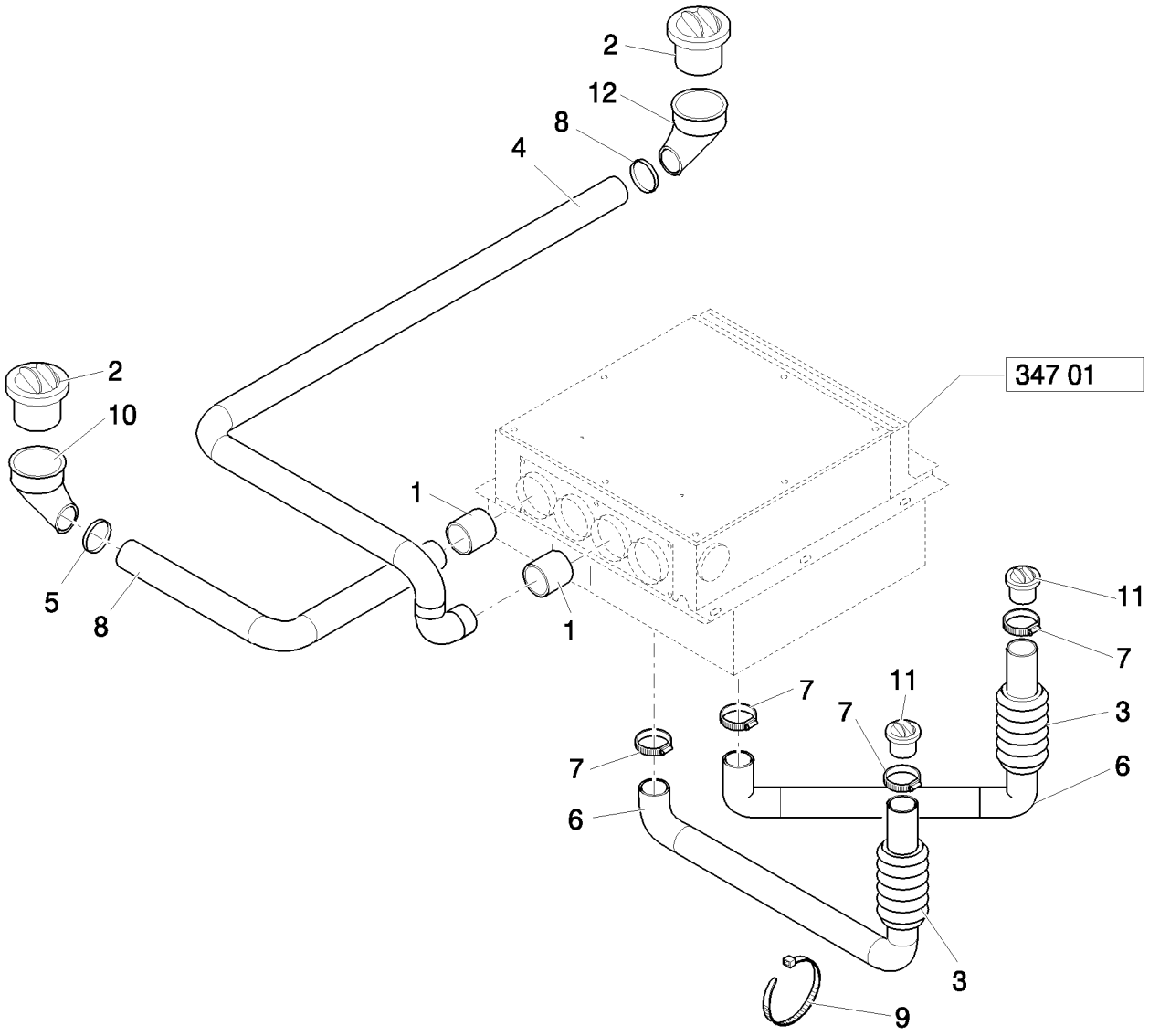

A/C & HEATER CONSOLE DUCTS

REF	FN	PART NUMBER	YR/SN	QTY	DESCRIPTION
1		85819452		2	HOSE
2		87362065		2	DIFFUSER
3		87314769		2	DUCT, AIR
4		87319437		1	DUCT, AIR
5		13000690		2	CLAMP, HOSE
6		87314769		2	DUCT, AIR
7		13000990		4	CLAMP, HOSE
8		87319443		1	DUCT, AIR
9		5112712		12	CLIP, HOSE, M4.8 x 283
10		87652770		1	ELBOW
11		87362068		2	OUTLET
12		87652764		1	ELBOW

347	06	p1	03/08

CAB HEATING COATING PLUG

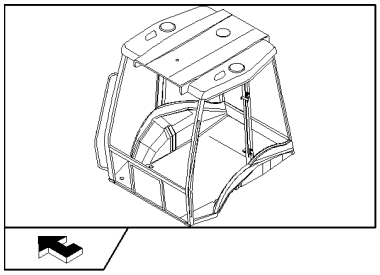

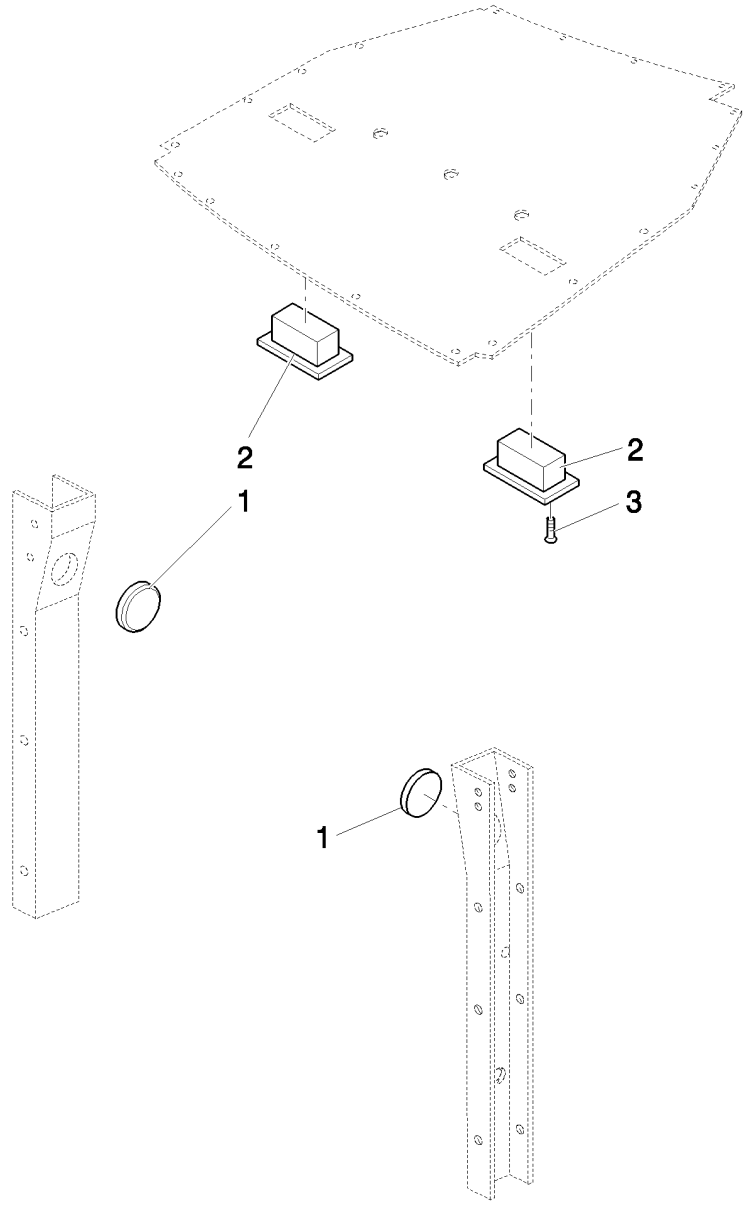



CAB HEATING COATING PLUG

REF	FN	PART NUMBER	YR/SN	QTY	DESCRIPTION
1		87319018		2	PLUG
2		87318763		2	PLUG
3		14440327		4	SCREW, Hex Soc Flat Hd, M4 x 20, 8.8

12" (305MM) HD BACKHOE BUCKET WITH PIN TEETH - NA

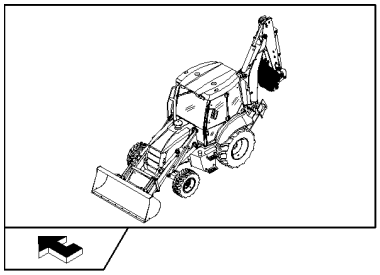

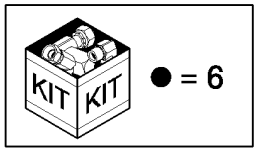

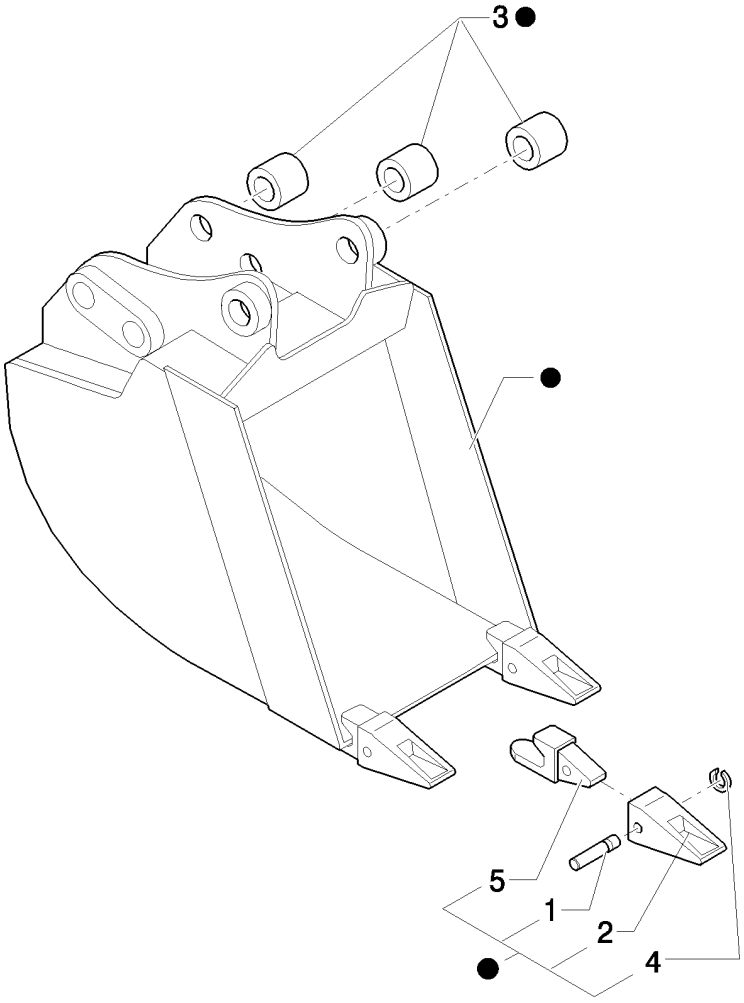

12" (305MM) HD BACKHOE BUCKET WITH PIN TEETH - NA

REF	FN	PART NUMBER	YR/SN	QTY	DESCRIPTION
1		85801097		3	PIN
2		85811432		3	TOOTH, BUCKET
3		83910634		6	BUSHING
4		85801098		3	RING
5		85821788		3	SHANK, BUCKET TOOTH
6		87607818		1	BUCKET

387		p1	03/08

18" (457MM) HD BACKHOE BUCKET WITH PIN TEETH - NA

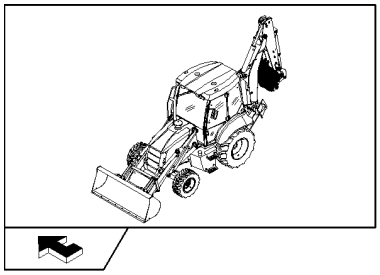

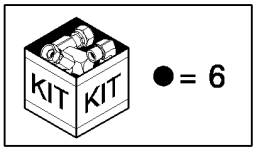

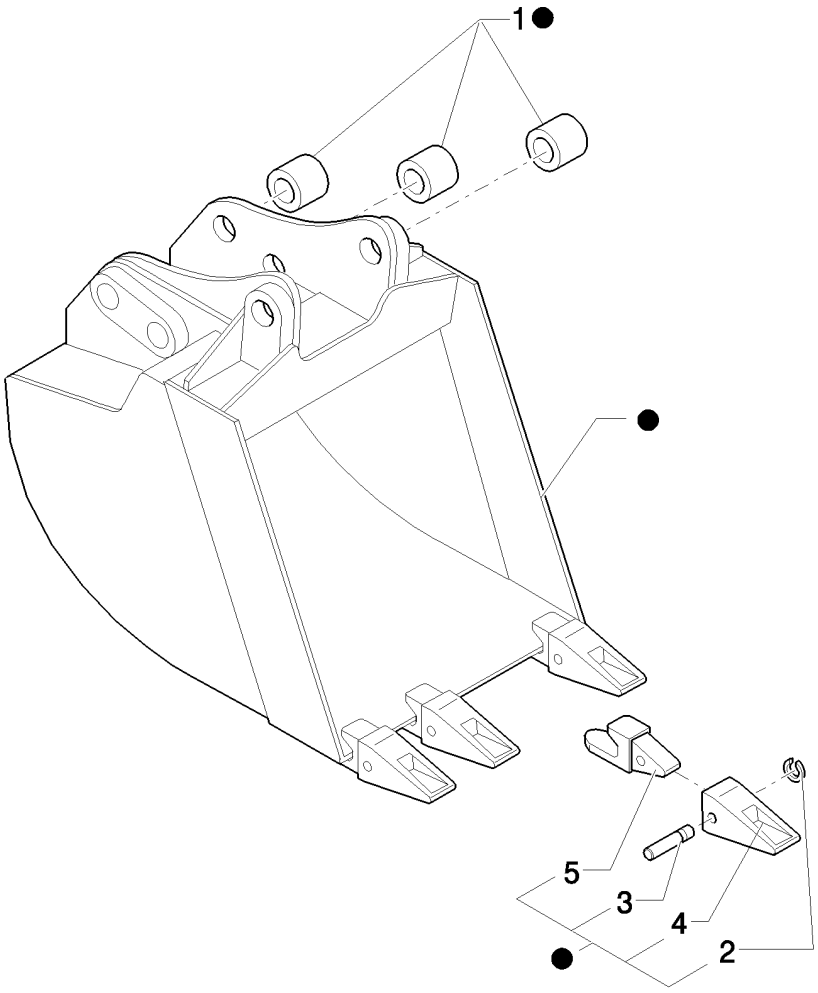

18" (457MM) HD BACKHOE BUCKET WITH PIN TEETH - NA

REF	FN	PART NUMBER	YR/SN	QTY	DESCRIPTION
1		83910634		6	BUSHING
2		85801098		4	RING
3		85801097		4	PIN
4		85811432		4	TOOTH, BUCKET
5		85821788		4	SHANK, BUCKET TOOTH
6		87607821		1	BUCKET

24" (610MM) HD BACKHOE BUCKET WITH PIN TEETH - NA

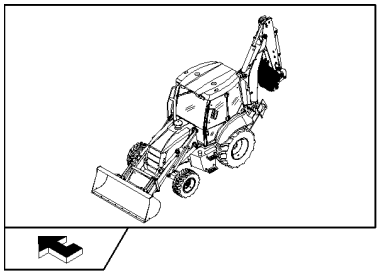

KIT KIT ●= 6

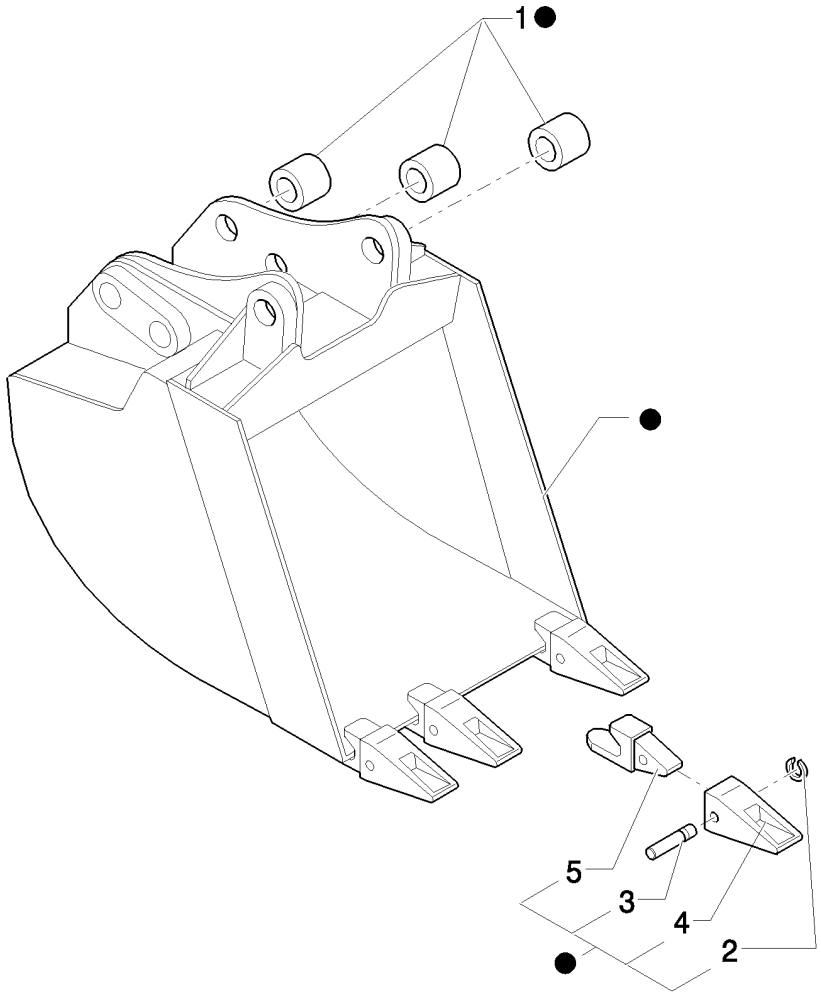

24" (610MM) HD BACKHOE BUCKET WITH PIN TEETH - NA

REF	FN	PART NUMBER	YR/SN	QTY	DESCRIPTION
1		83910634		6	BUSHING
2		85801098		4	RING
3		85801097		4	PIN
4		85811432		4	TOOTH, BUCKET
5		85821788		4	SHANK, BUCKET TOOTH
6		87607824		1	BUCKET

30" (762MM) HD BACKHOE BUCKET WITH PIN TEETH - NA

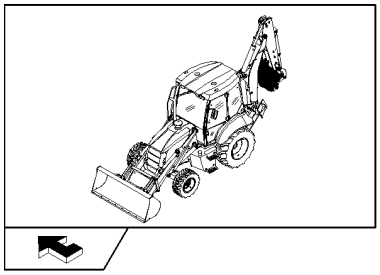

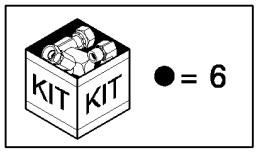

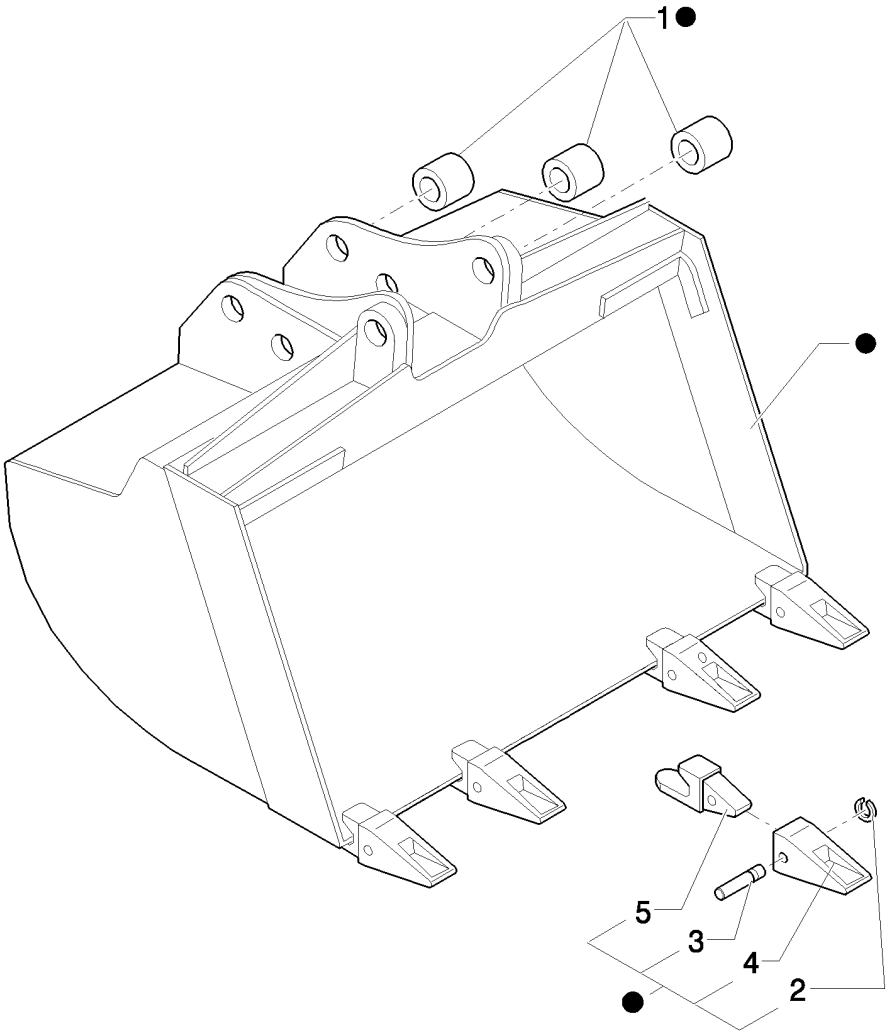

30" (762MM) HD BACKHOE BUCKET WITH PIN TEETH - NA

REF	FN	PART NUMBER	YR/SN	QTY	DESCRIPTION
1		83910634		6	BUSHING
2		85801098		5	RING
3		85801097		5	PIN
4		85811432		5	TOOTH, BUCKET
5		85821788		5	SHANK, BUCKET TOOTH
6		87607825		1	BUCKET

LOADER CONTROL VALVE, TWO SECTION, LEVER - NA

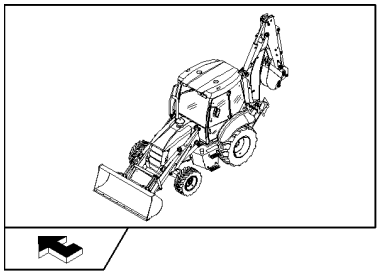

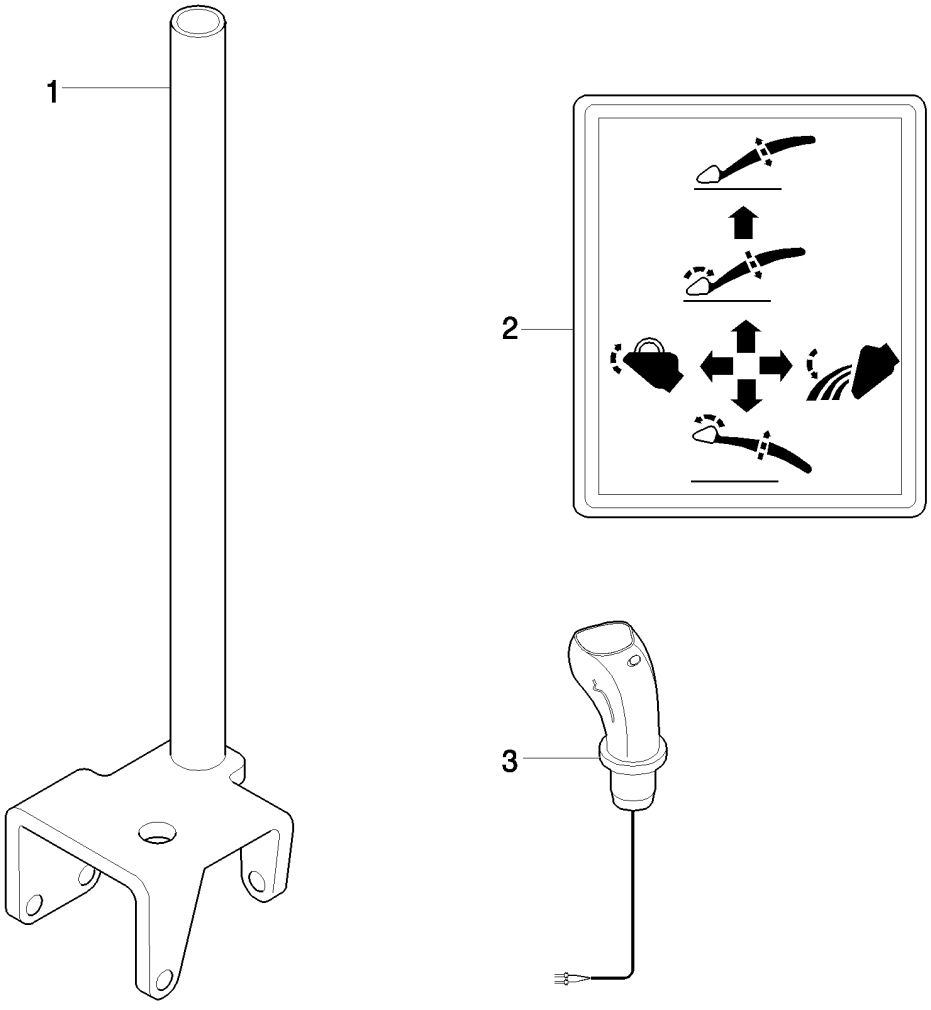

LOADER CONTROL VALVE, TWO SECTION, LEVER - NA

REF	FN	PART NUMBER	YR/SN	QTY	DESCRIPTION
1	1	87646604		1	LEVER
2		85804346		1	DECAL
3	1	87311102		1	JOYSTICK
3	2	87311103		1	JOYSTICK

(1) Only for Power Shift
(2) Only for Power Shuttle

36" (910MM) HD BACKHOE BUCKET WITH PIN TEETH - NA

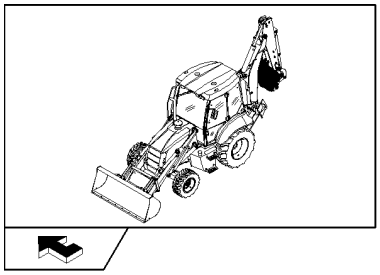

KIT KIT ●= 6

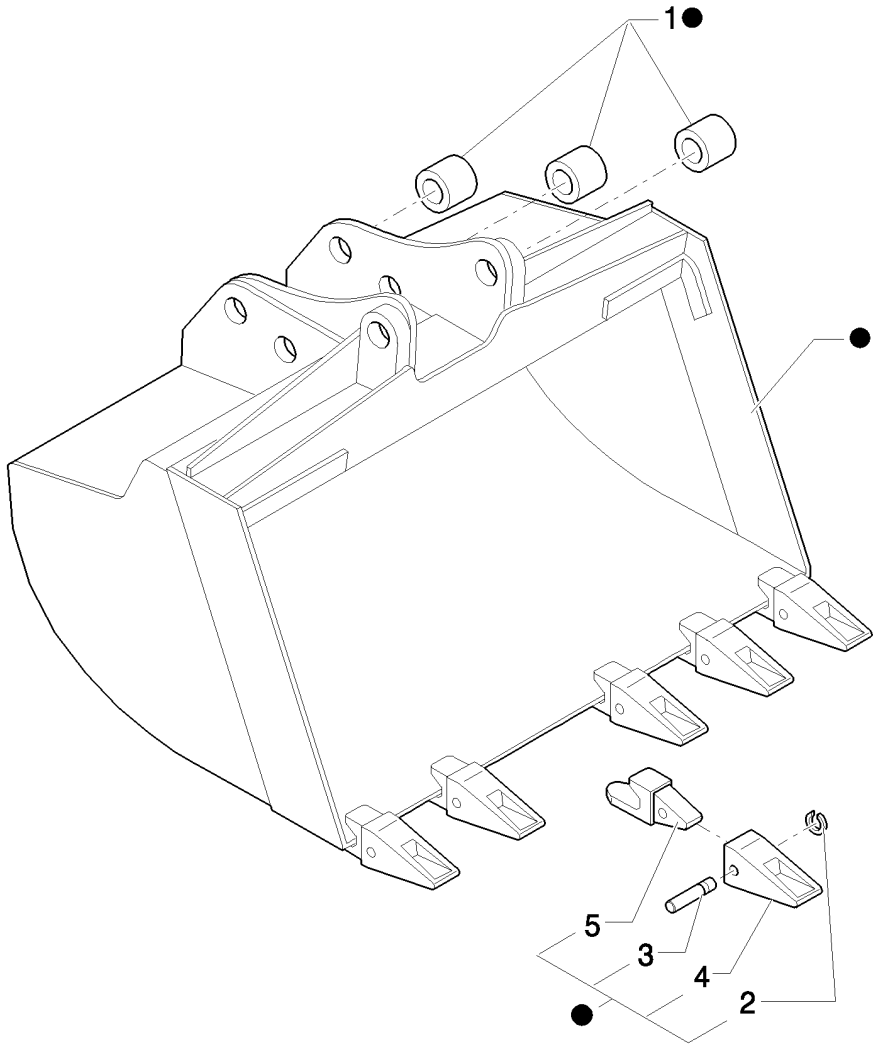

36" (910MM) HD BACKHOE BUCKET WITH PIN TEETH - NA

REF	FN	PART NUMBER	YR/SN	QTY	DESCRIPTION
1		83910634		6	BUSHING
2		85801098		6	RING
3		85801097		6	PIN
4		85811432		6	TOOTH, BUCKET
5		85821788		6	SHANK, BUCKET TOOTH
6		87607827		1	BUCKET

391		p1	03/08

LOCK VALVE FOR BUCKET 4X1 / 6X1

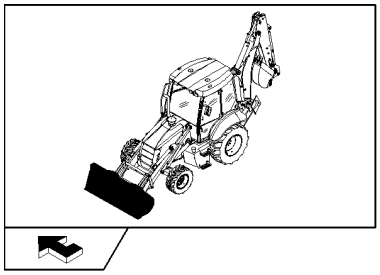

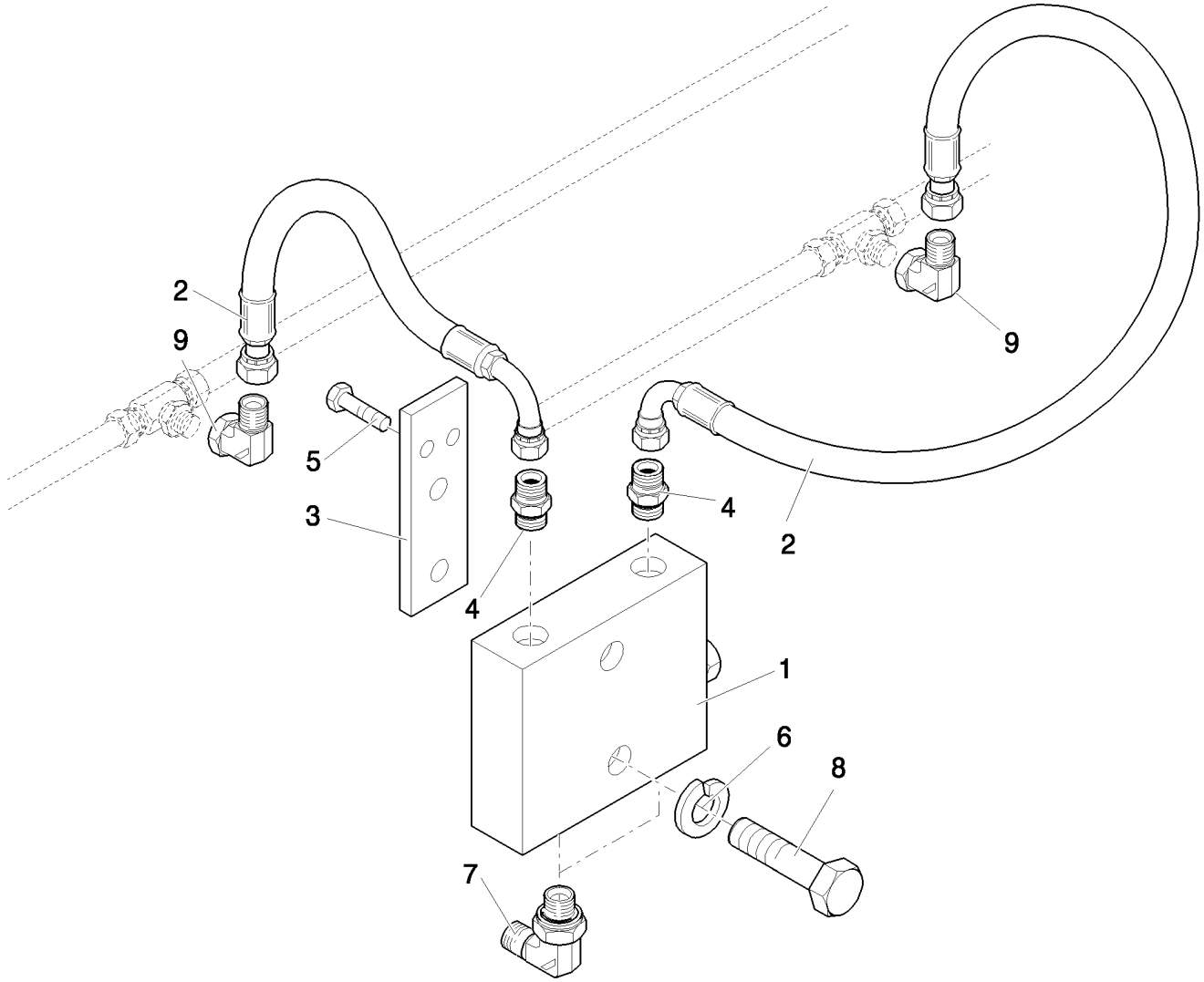

LOCK VALVE FOR BUCKET 4X1 / 6X1

REF	FN	PART NUMBER	YR/SN	QTY	DESCRIPTION
1		85820844		1	VALVE, HYDRAULIC
2		85821127		2	HOSE, FLEXIBLE
3		87316861		1	PLATE
4		83963374		2	CONNECTOR, HYD.
5		16044321		2	BOLT, Hex, M8 x 55, 8.8
6		11193874		4	WASHER, SPRING, Belleville, M8.4
7		83971549		2	ELBOW
8		16044121		2	BOLT, Hex, M8 x 45, 8.8
9		86511208		2	ELBOW

392	01	p1	04/08

LOCKING VALVE ON BOOM CYLINDER AND BACKHOE ATTACHMENT

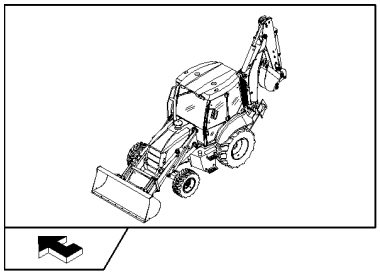

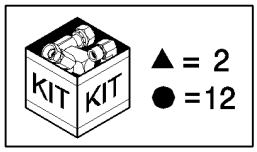

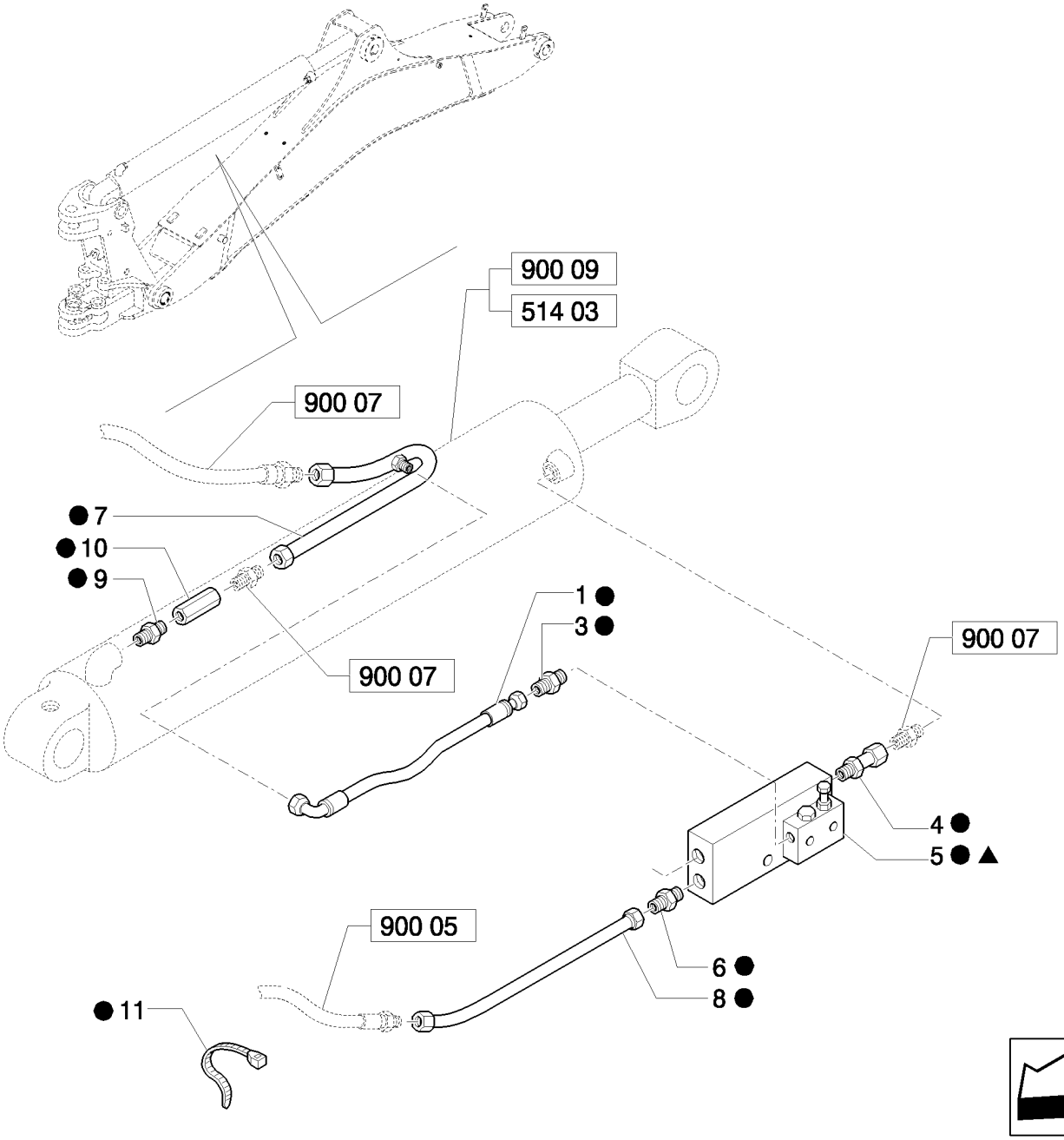

LOCKING VALVE ON BOOM CYLINDER AND BACKHOE ATTACHMENT

REF	FN	PART NUMBER	YR/SN	QTY	DESCRIPTION
1		85815505		1	HOSE, HYDRAULIC, 600mm lg
2		85820912		AR	KIT
3		85802803		1	CONNECTOR, HYD.
4		85805124		1	CONNECTOR, HYD.
5	1	87353316		1	VALVE, SAFETY, Assy
6		83963000		2	CONNECTOR, HYD.
7		85820836		1	TUBE, HYD
8		87647914		1	PIPE, PRESSURE
9		85804879		1	CONNECTOR, HYD.
10		85824308		1	VALVE, HYDRAULIC
11		79072960		2	STRAP, CABLE
12		87648638		1	KIT

(1) Includes 2

392	02	p1	03/08

LOCKING VALVE ON CYLINDER AND BACKHOE ATTACHMENT

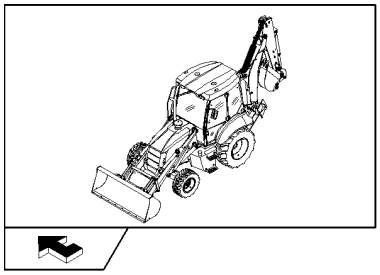

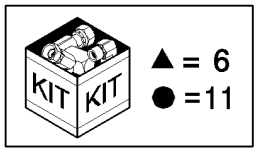

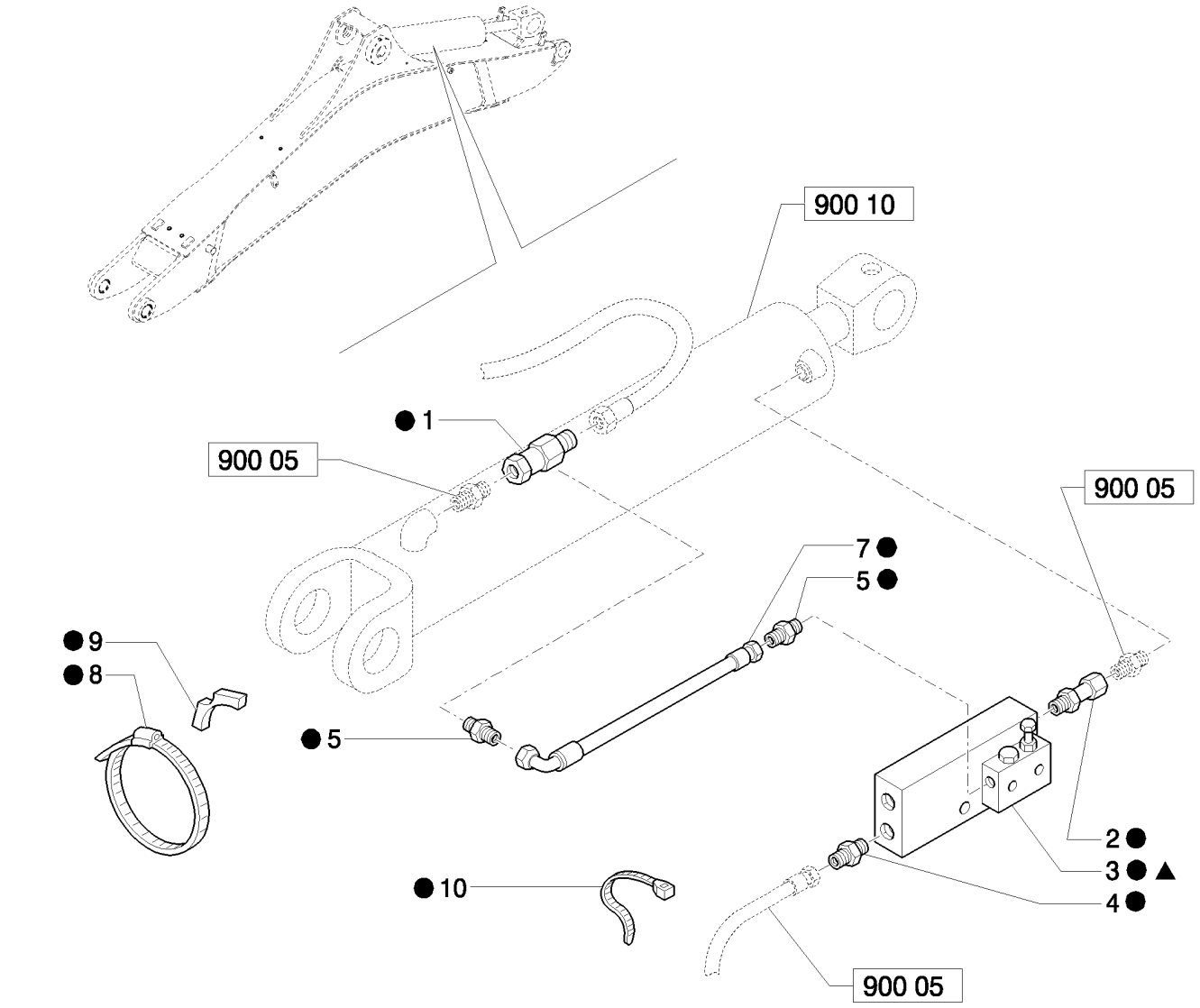

LOCKING VALVE ON CYLINDER AND BACKHOE ATTACHMENT

REF	FN	PART NUMBER	YR/SN	QTY	DESCRIPTION
1		85805115		1	CONNECTOR, HYD.
2		85805124		1	CONNECTOR, HYD.
3	1	87353314		1	VALVE, SAFETY, ASSY
4		83963000		2	CONNECTOR, HYD.
5		85802803		2	CONNECTOR, HYD.
6		85820913		1	KIT
7		85815505		1	HOSE, HYDRAULIC, 600mm lg
8		85805126		1	CLAMP, HOSE
9		85805123		1	SPACER
10		79072960		2	STRAP, CABLE
11		87648639		1	KIT

(1) Includes 6

393		p1	04/08

2 LEVER BACKHOE CONTROLS, LEVER, BOOT & DECALS - NA

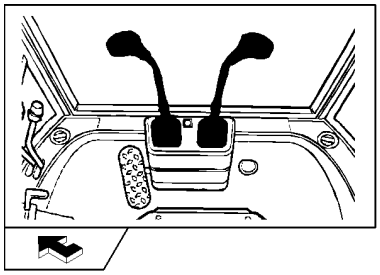

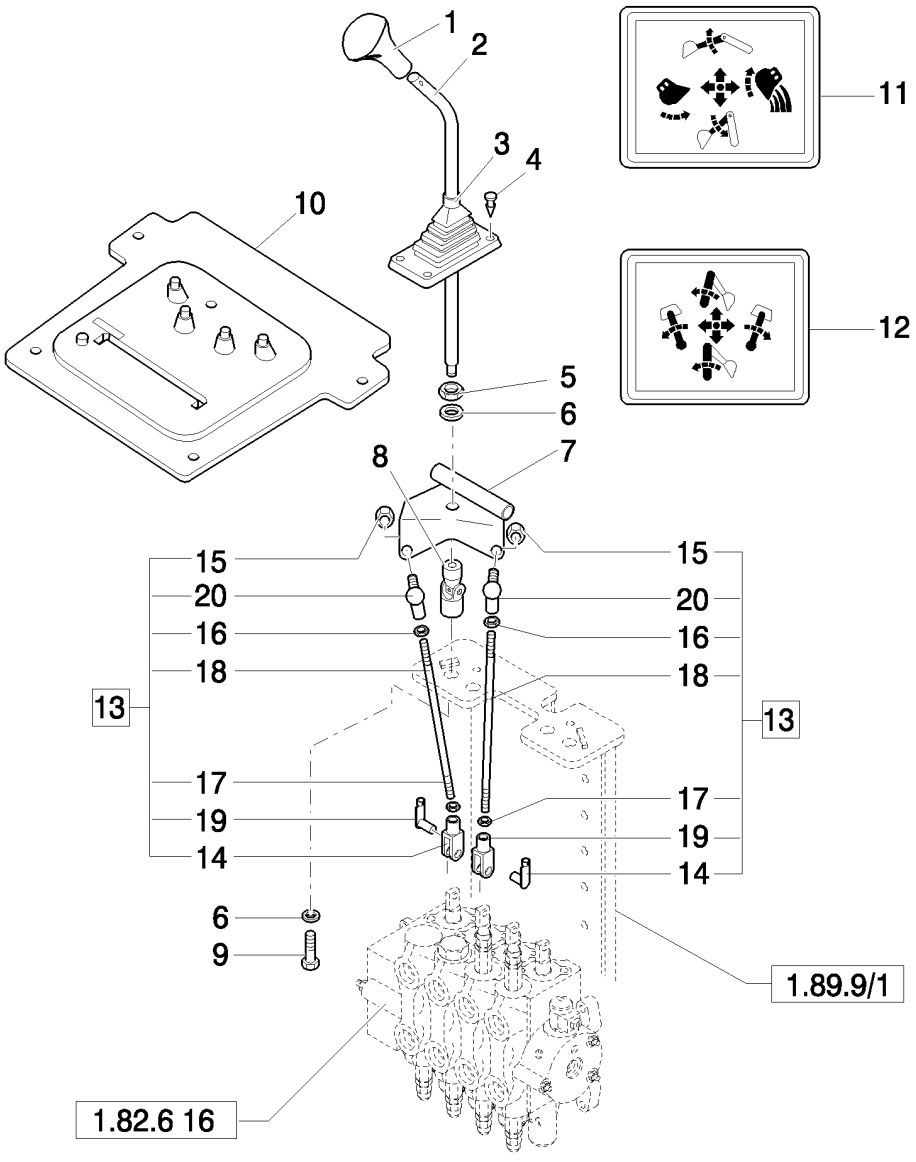

2 LEVER BACKHOE CONTROLS, LEVER, BOOT & DECALS - NA

REF	FN	PART NUMBER	YR/SN	QTY	DESCRIPTION
1		85801502		1	KNOB, Without Horn Switch
1		85802682		1	KNOB, Includes 13796621 M5 x 8mm long Setscrew; With 87448432 Horn Switch
		87448432		1	SWITCH ASSY, Horn
2		85801488		2	LEVER
3		85802843		2	BOOT
4		14568887		8	FASTENER
5		16101511		2	NUT, M12 x 1.25, Cl 8
6		11190779		4	WASHER, SPRING, Belleville, M13
7		85803124		1	BRACKET, LH
7		85803107		1	BRACKET, RH
8		85801518		2	JOINT, UNIVERSAL
9		15540321		2	BOLT, Hex, M12 x 1.25 x 25, 8.8, Full Thd
10	1	85804540		1	BOOT
11		85804344		1	IDEOGRAM
12		85804345		1	IDEOGRAM
13		85801514		4	TIE-ROD, Assy
14		11991971		1	CLEVIS
15		14048211		1	NUT, LOCK, M8 x 1.25, Cl 8
16		16102311		1	NUT, Thin, M8 x 1.25, Cl 04
17		16102911		1	NUT, Thin, M8 x 1.25, Cl 04, LH
18		85801515		1	TIE-ROD
19		85802738		1	RETAINER
20		85804375		1	BALL JOINT

(1) Only for CAB

Mechanical Version B95B

394	01	p1	04/08

4-LEVER BACKHOE ATTACHMENT CONTROLS, CONSOLE, LEVERS AND SQUARE LEVER (CENTER PIVOT: SIDE SHIFT): CONTROL LEVERS

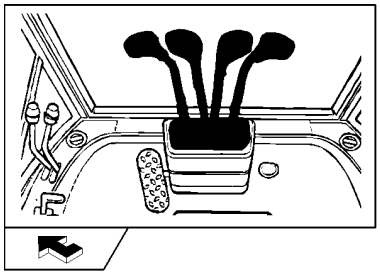

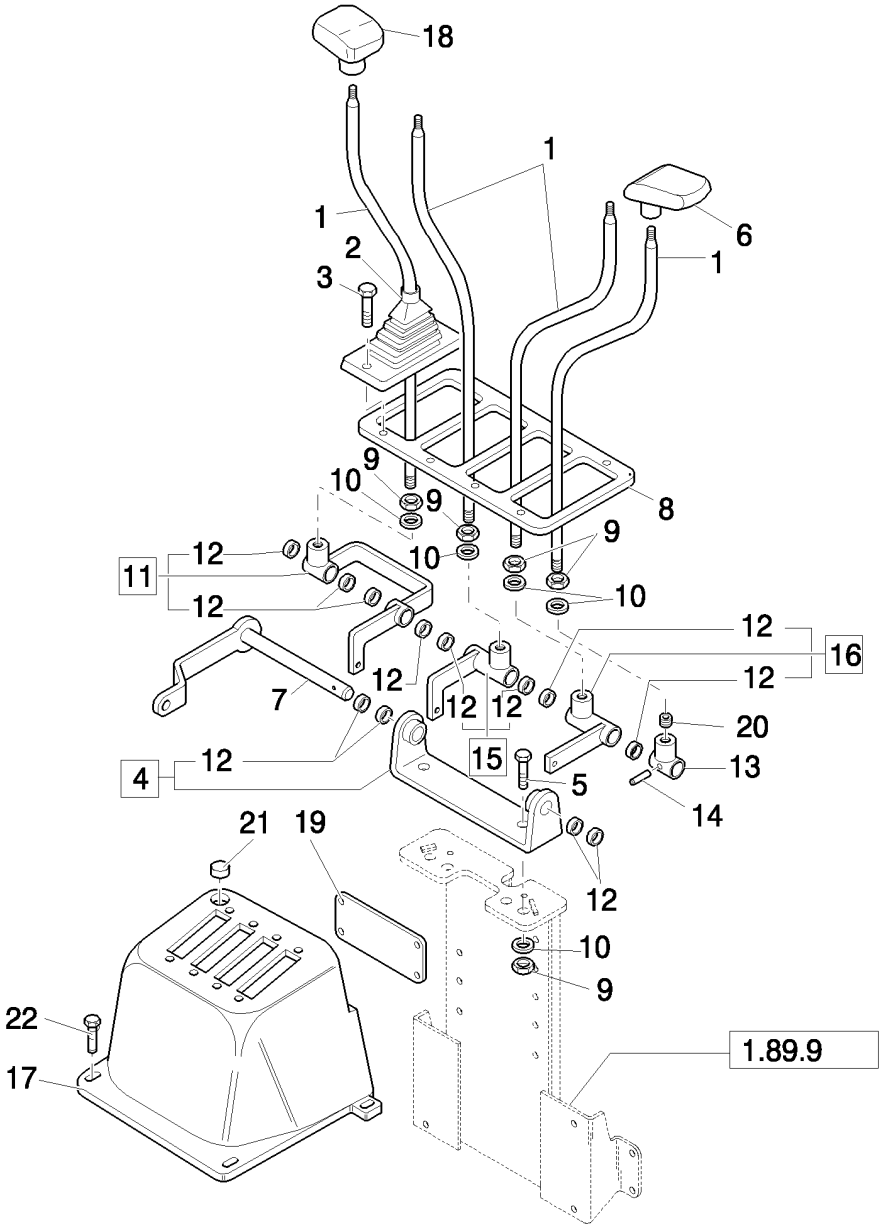

4-LEVER BACKHOE ATTACHMENT CONTROLS, CONSOLE, LEVERS AND SQUARE LEVER (CENTER PIVOT: SIDE SHIFT): CONTROL LEVER

REF	FN	PART NUMBER	YR/SN	QTY	DESCRIPTION
1		85804780		4	LEVER
2		85803382		4	BOOT
3		13272477		8	SCREW, Cross Pan Hd, M4 x 20, 12.9
4		85802647		1	SUPPORT, Assy
5		15540421		2	BOLT, Hex, M12 x 1.25 x 30, 8.8, Full Thd
6		83962918		2	HANDLE, LH
7		85804782		1	PIN
8		85803540		1	PLATE
9		16101511		6	NUT, M12 x 1.25, Cl 8
10		11190779		6	WASHER, SPRING, Belleville, M13
11		85804801		1	BELLCRANK, Assy
12		85802494		12	BUSHING
13		85804787		1	BELLCRANK
14		13940370		1	PIN, ROLL, M5 x 26, Coiled
15		85804794		1	BELLCRANK, Assy
16		85804791		1	BELLCRANK, Assy
17	1	87319744		1	DASHBOARD
17	2	85827820		1	BLISTER
18		83962919		2	HANDLE, RH
19	2	85804781		1	COVER
20		13812631		1	SET SCREW, Hex Soc, M12 x 12, Flat Pt
21		85802227		1	PLUG
22		13272477		8	SCREW, Cross Pan Hd, M4 x 20, 12.9

(1) Side Shift - Center Pivot - CAB
(2) ROPS

Mechanical Version B95B

4-LEVER BACKHOE ATTACHMENT CONTROLS, UPPER TIE ROD ASSY (CENTER PIVOT: SIDE SHIFT): UPPER TIE RODS

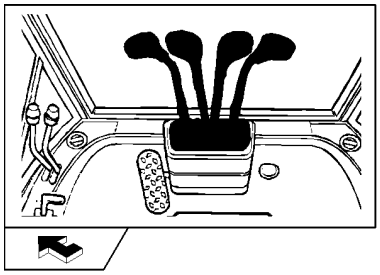

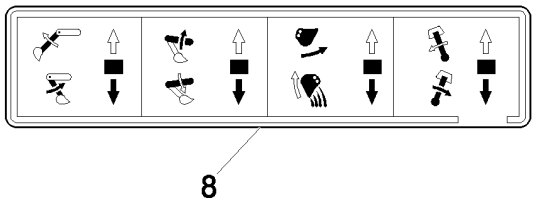

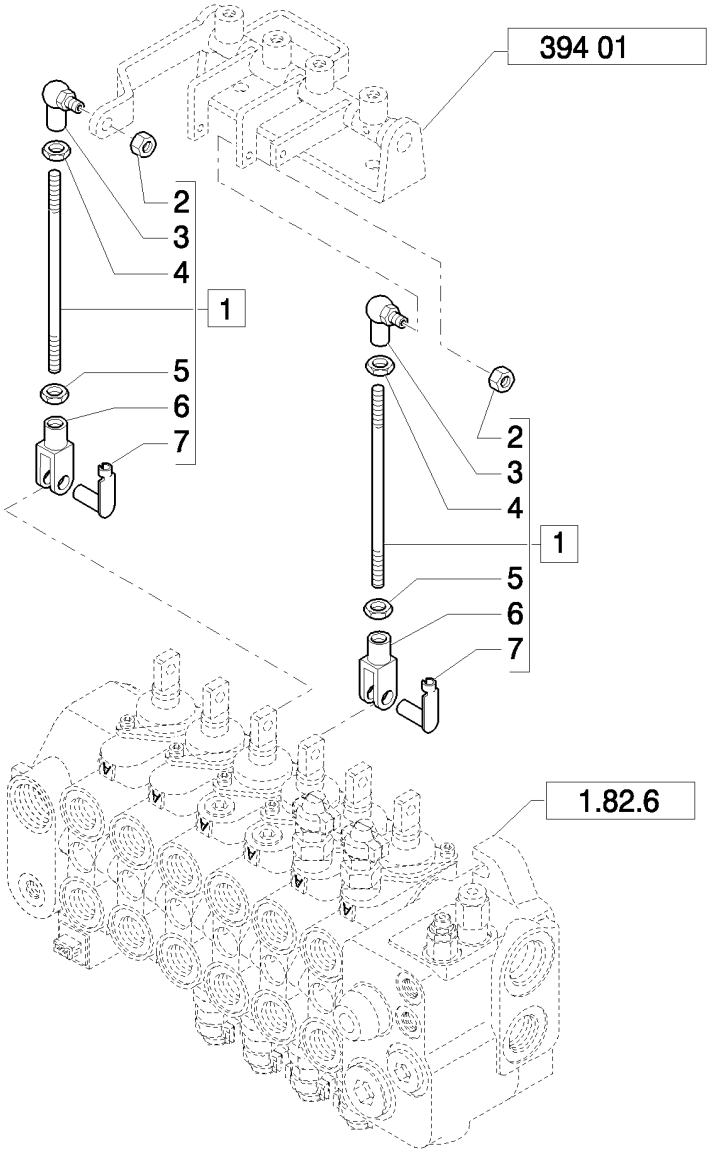

4-LEVER BACKHOE ATTACHMENT CONTROLS, UPPER TIE ROD ASSY (CENTER PIVOT: SIDE SHIFT): UPPER TIE RODS

REF	FN	PART NUMBER	YR/SN	QTY	DESCRIPTION
1	1	85804803		2	TIE-ROD, Assy
1	2	85805498		2	TIE-ROD, Assy
2		14048211		2	NUT, LOCK, M8 x 1.25, Cl 8
3		85804375		2	BALL JOINT
4		16102311		2	NUT, Thin, M8 x 1.25, Cl 04
5		16102911		2	NUT, Thin, M8 x 1.25, Cl 04, LH
6		11991971		2	CLEVIS
7		85802738		2	RETAINER
8		85803917		1	DECAL

(1) ROPS
(2) Side Shift - Center Pivot - CAB

394	03	p1	04/08

4-LEVER BACKHOE ATTACHMENT CONTROLS, LOWER TIE ROD ASSY (CENTER PIVOT: SIDE SHIFT): LOWER TIE RODS

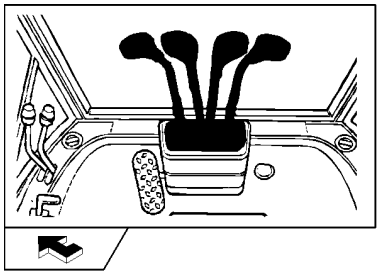

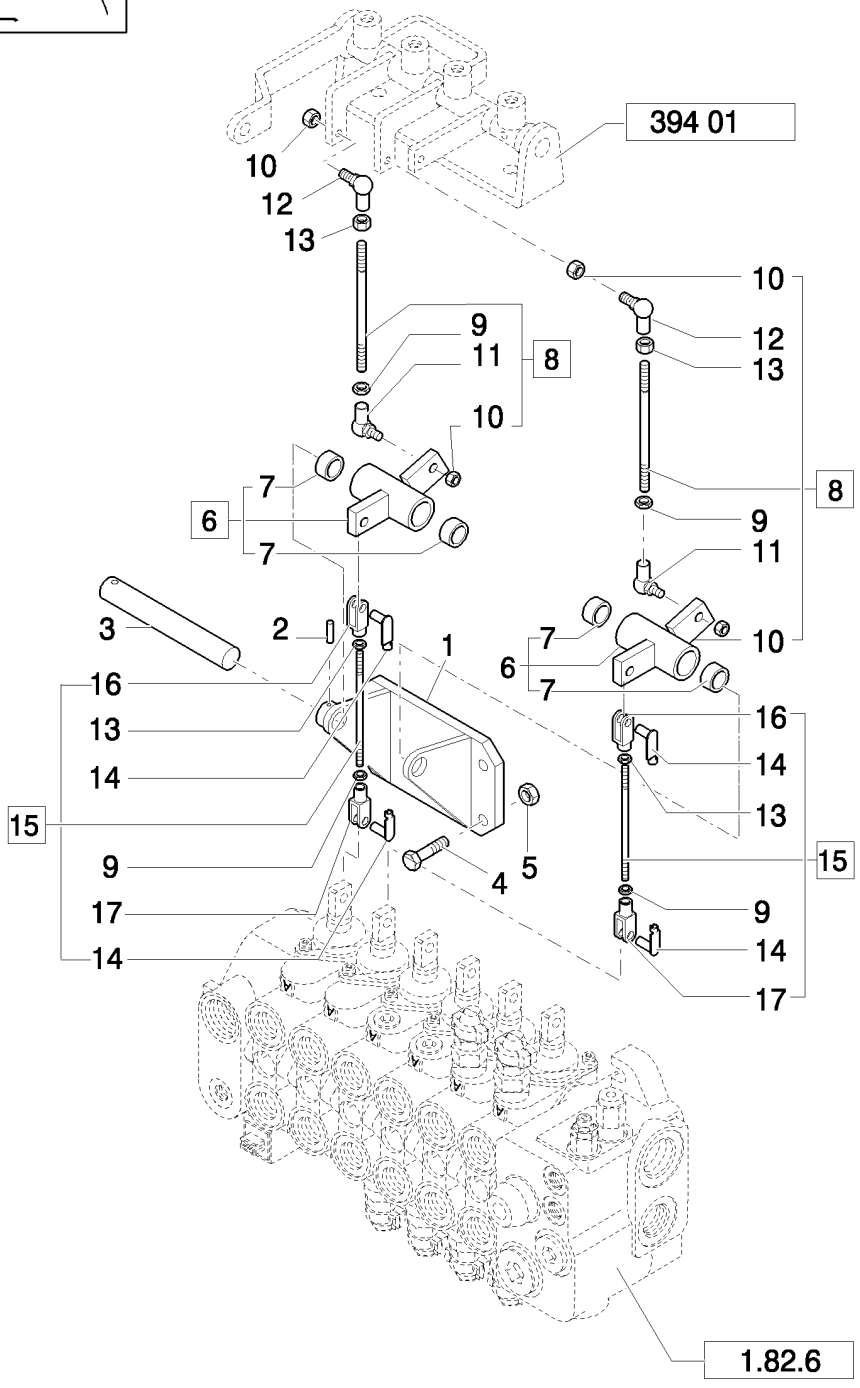

4-LEVER BACKHOE ATTACHMENT CONTROLS, LOWER TIE ROD ASSY (CENTER PIVOT: SIDE SHIFT): LOWER TIE RODS

REF	FN	PART NUMBER	YR/SN	QTY	DESCRIPTION
1		85803360		1	SUPPORT
2		13940370		1	PIN, ROLL, M5 x 26, Coiled
3		85803364		1	PIN
4		16043621		4	BOLT, Hex, M8 x 25, 8.8
5		16104111		4	NUT, LOCK, M8 x 1.25, Cl 8
6		85807926		2	BELLCRANK
7		85802494		4	BUSHING
8		85804736		2	TIE-ROD, Assy
9		16102911		4	NUT, Thin, M8 x 1.25, Cl 04, LH
10		14048211		4	NUT, LOCK, M8 x 1.25, Cl 8
11		85804376		2	BALL JOINT
12		85804375		2	BALL JOINT
13		16102311		6	NUT, Thin, M8 x 1.25, Cl 04
14		85802738		4	RETAINER
15	1	85803447		2	TIE-ROD, Assy
15	2	85807914		2	TIE-ROD, Assy
16		10007871		2	YOKE
17		11991971		2	CLEVIS

(1) ROPS
(2) Side Shift - Center Pivot - CAB

Mechanical Version

B95B

394/01	01	p1	03/08

2-LEVER ISO BACKHOE ATTACHMENT CONTROLS, LEVERS, DUSTPROOF, DECALS (CENTER PIVOT) - NA -CONTROL LEVERS

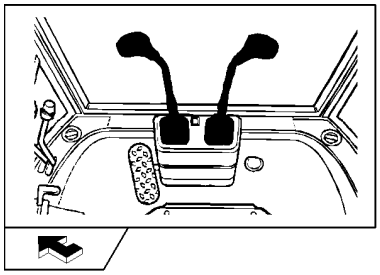

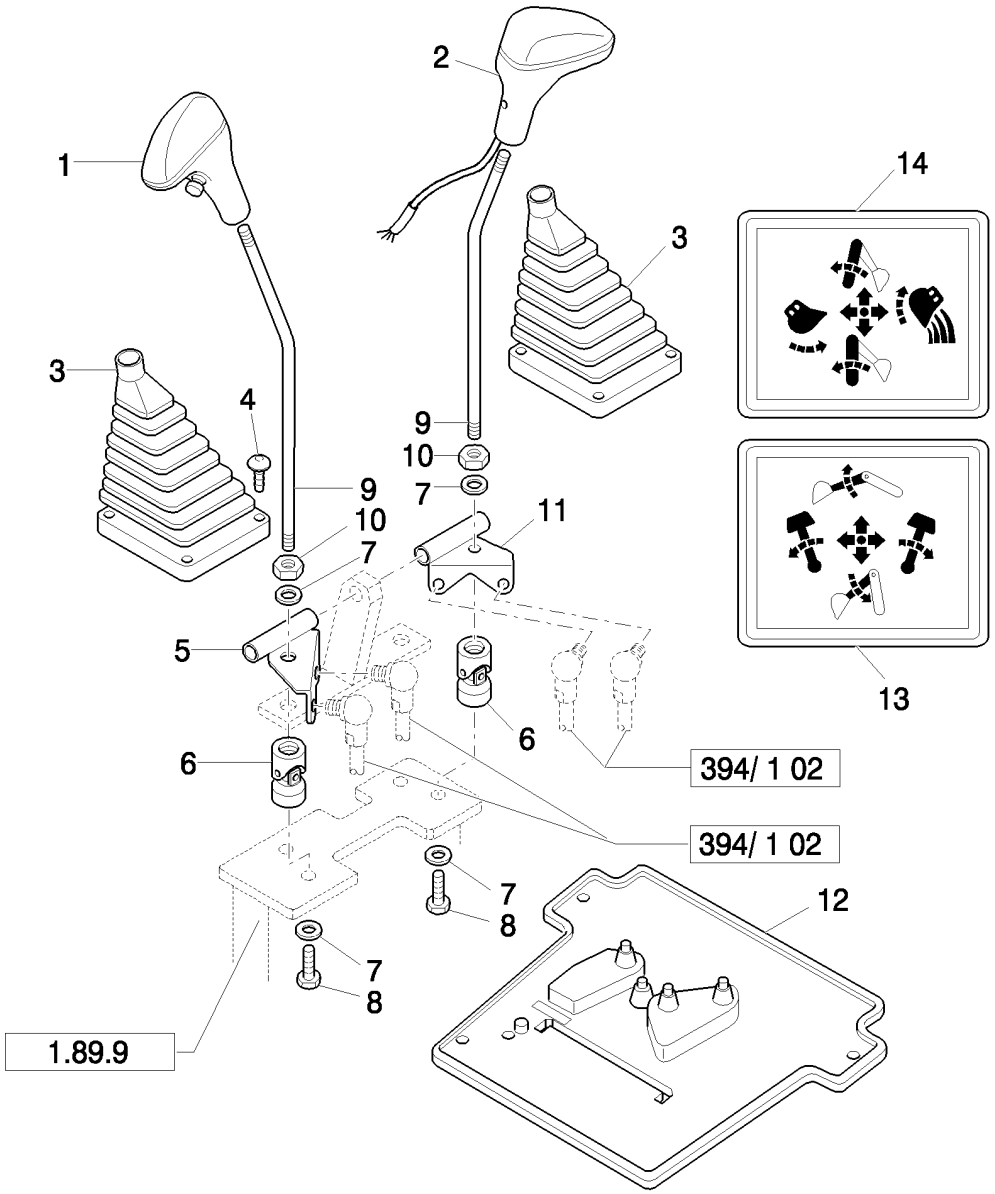

2-LEVER ISO BACKHOE ATTACHMENT CONTROLS, LEVERS, DUSTPROOF, DECALS (CENTER PIVOT) - NA -CONTROL LEVERS

REF	FN	PART NUMBER	YR/SN	QTY	DESCRIPTION
1		85801502		1	KNOB, Without Horn Switch
2		85802682		1	KNOB, Includes 13796621 M5 x 8mm long Setscrew; With 87448432 Horn Switch
		87448432		1	SWITCH ASSY, Horn
3		85802843		2	BOOT
4		14568887		8	FASTENER, 8X20
5		85803124		1	BRACKET, L.H.
6		85801518		2	JOINT, UNIVERSAL
7		11190779		4	WASHER, SPRING, Belleville, M13
8		15540321		2	BOLT, Hex, M12 x 1.25 x 25, 8.8, Full Thd
9		85801488		2	LEVER
10		16101511		2	NUT, M12 x 1.25, Cl 8
11		85803107		1	BRACKET, R.H.
12	1	85804541		1	BOOT, w/Cab
13		85803782		1	DECAL
14		85803783		1	DECAL

(1) Only for CAB

Mechanical Version	B95B

(4WD) FRONT AXLE, HOUSING, BUSHINGS & SUPPORTS - NA

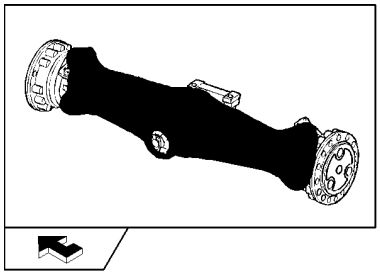

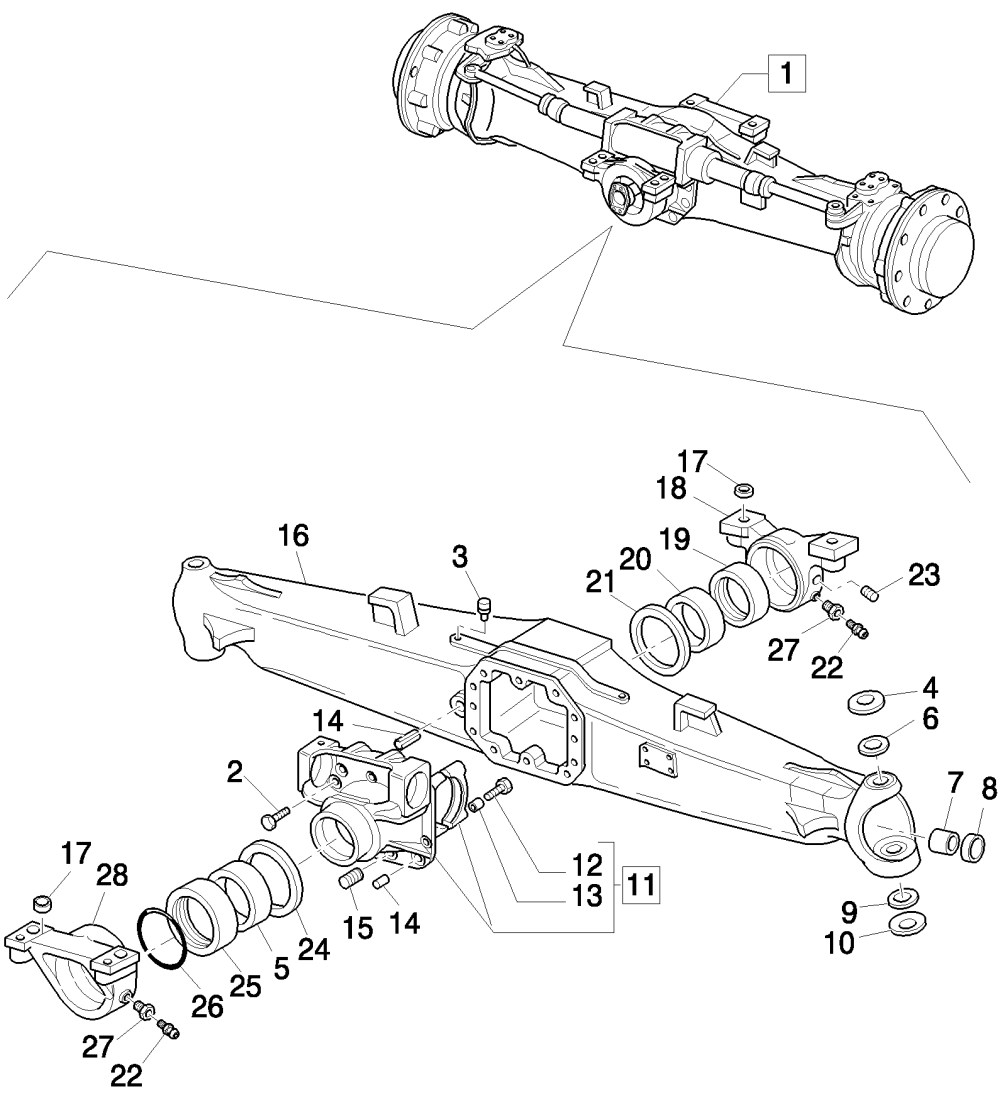

(4WD) FRONT AXLE, HOUSING, BUSHINGS & SUPPORTS - NA

REF	FN	PART NUMBER	YR/SN	QTY	DESCRIPTION
1	1	85827726		1	AXLE ASSY, 4WD
1	2	85827725		1	AXLE ASSY, 4WD
2		9967769		10	SCREW, Cap, HH, M12X1.75X33
3		9967672		1	PLUG, M10X1
4		9967997		2	WASHER
5		9968010		1	BUSHING
6		87306932		2	BUSHING
7		9968019		2	BUSHING
8		85824346		2	SEAL
9		9968002		2	BEARING, 2 piece
10		9968003		2	WASHER
11		9968004		1	SUPPORT, Assy
12		9967681		4	SCREW
13		9967682		4	BUSHING
14		9968005		2	PLUG, DRAIN
15		9967683		2	PIN, ROLL
16		85827738		1	HOUSING, AXLE
17		9967990		4	BUSHING
18		9967991		1	SUPPORT, Front
19		9967992		1	BUSHING
20		9967993		1	BUSHING
21		9967994		1	WASHER, THRUST
22		9967996		2	NIPPLE, LUBE
23		85805973		1	SCREW, M8X1
24		9968006		1	WASHER, THRUST
25		9968007		1	RING
26		9968008		1	O-RING
27		9967995		2	SCREW
28		9968009		1	SUPPORT, Rear

(1) Power Shuttle 13.714
(2) Power Shuttle 14.308

(4WD) FRONT AXLE, SWIVEL HOUSING & STEERING CYLINDER - NA

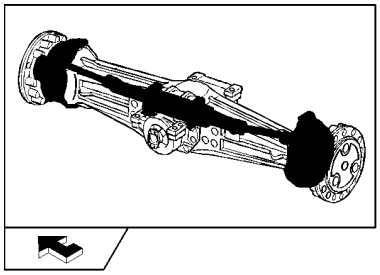

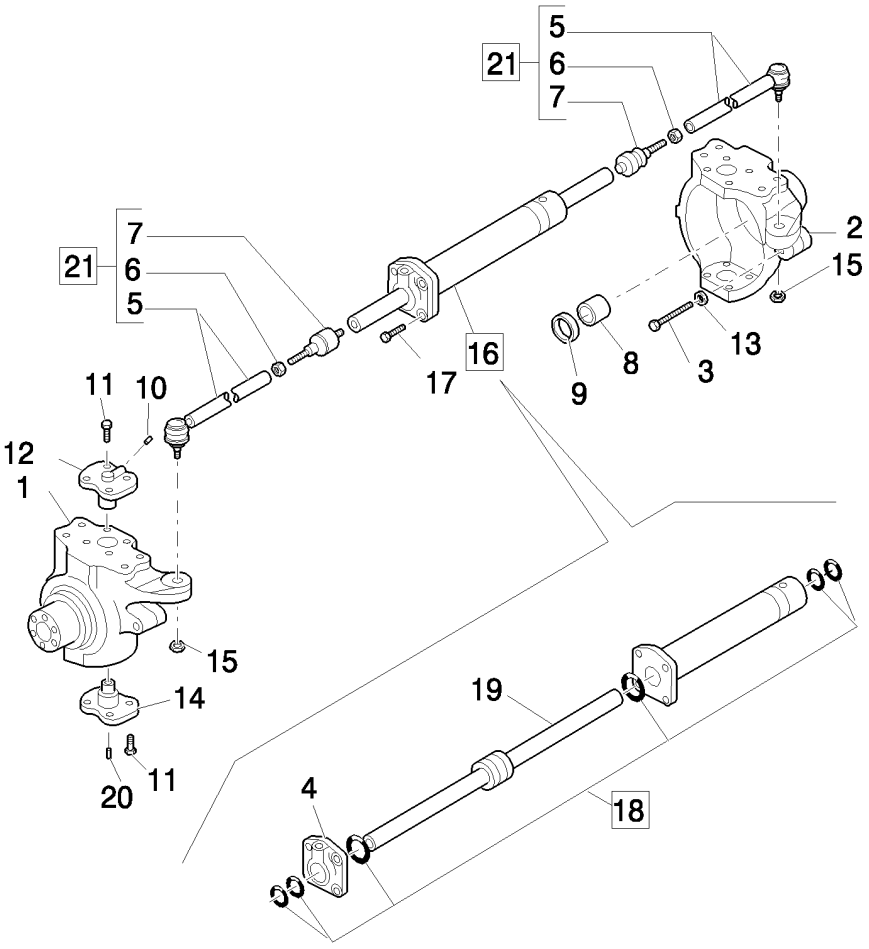

(4WD) FRONT AXLE, SWIVEL HOUSING & STEERING CYLINDER - NA

REF	FN	PART NUMBER	YR/SN	QTY	DESCRIPTION
1		85827740		1	KNOTTER, Assy, LH; 8 Bolt Holes
2		85827739		1	KNOTTER, Assy, RH; 8 Bolt Holes
3		85805987		2	SCREW, M16x100
4		85805989		1	CYLINDER HEAD
5		85805977		2	TIE-ROD
6		85805976		2	NUT, M18x1.5
7		85805975		2	BALL JOINT
8		85805988		2	BUSHING, BRONZE
9		85824345		2	SEAL
10		9968021		2	NIPPLE, LUBE, M6x2
11		9968022		14	SCREW, M14 x 2 x 35
12		9968023		2	PIVOT
13		85805986		2	NUT, M16
14		9968025		2	PIN
15		85805982		2	NUT, M18x1.5
16		85805978		1	CYLINDER STEERING, Assy
17		9968028		4	SCREW, M12x45
18		85805990		1	KIT, SEALS
19		85805992		1	ROD
20		85805984		2	NIPPLE, LUBE, M6x1
21		87306934		2	TIE-ROD, Assy

(4WD) FRONT AXLE, HUBS - NA

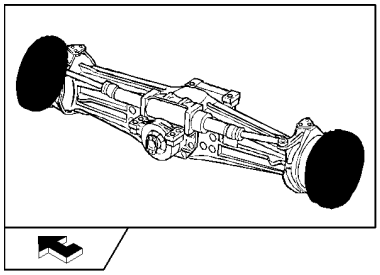

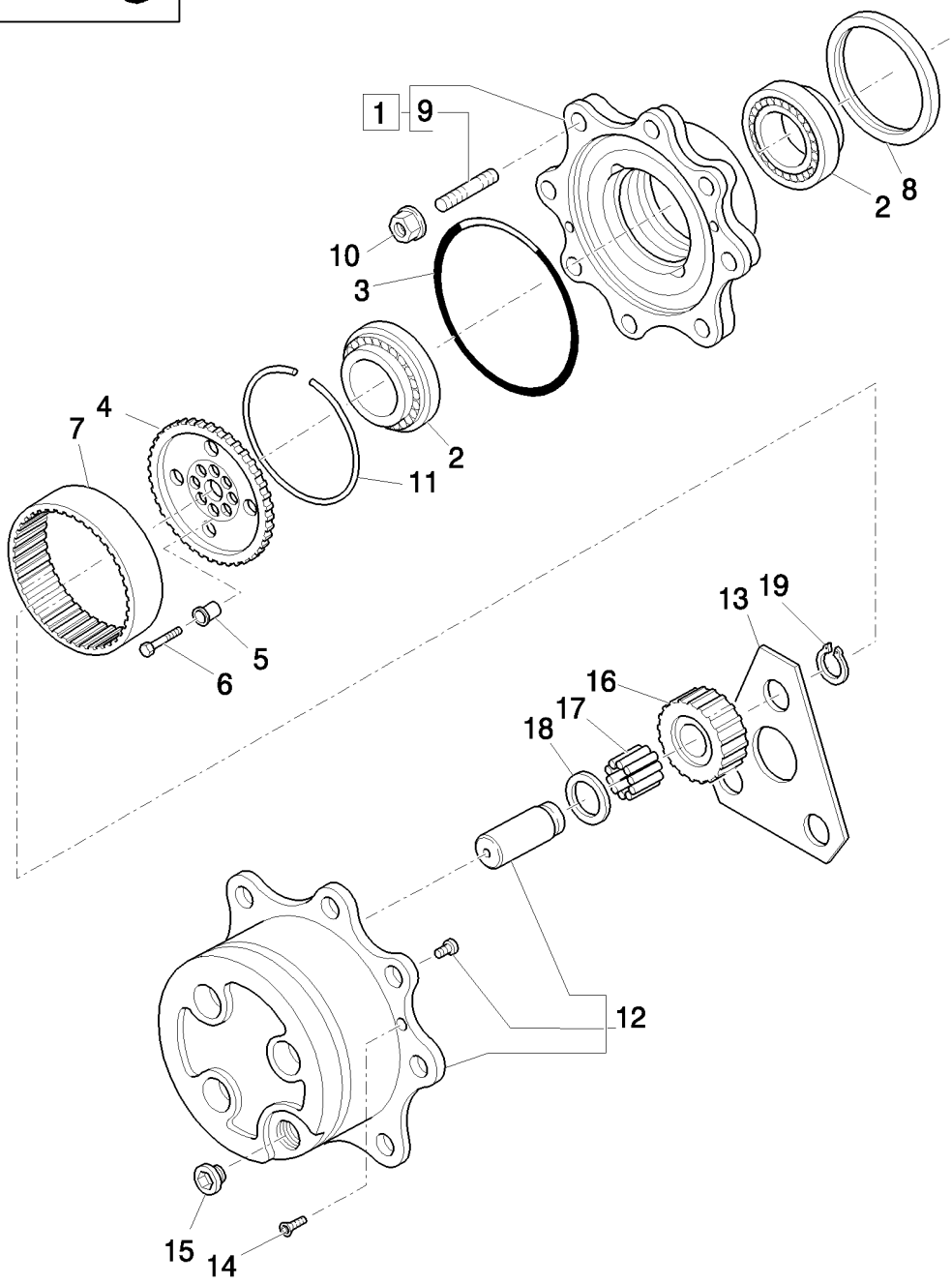

(4WD) FRONT AXLE, HUBS - NA

REF	FN	PART NUMBER	YR/SN	QTY	DESCRIPTION
1		85806003		2	KIT
2		9967687		4	BEARING ASSY
3		85805711		2	O-RING
4		85817698		2	HUB
5		85806009		16	BUSHING
6		85806010		16	SCREW, M10 x 45
7		85806008		2	GEAR, RING
8		85827067		2	SEAL, OIL, Seal, Oil
9		9968070		16	STUD
10		9968071		16	NUT, Wheel, M18 x 1.5
11		85806006		2	RING
12		85806011		2	KIT
13		85806016		2	WASHER, THRUST
14		85805709		4	SCREW, M8 x 20
15		85806012		2	PLUG, M30 x 2
16		85806014		6	GEAR, PLANETARY, T23
17		85806015		AR	KIT OF 10 NEEDLE BRG, (Qty 1=10 Pieces)
18		9968084		6	WASHER, THRUST, M55 x 34.6 x 1.5
19		9968083		6	CIRCLIP

(4WD) FRONT AXLE, RING GEAR & PINION ASSEMBLY - NA

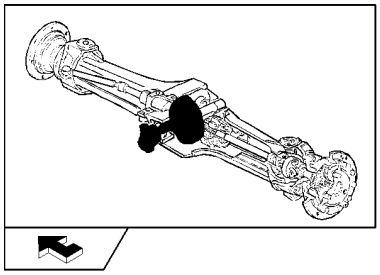

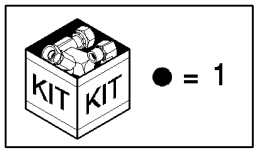

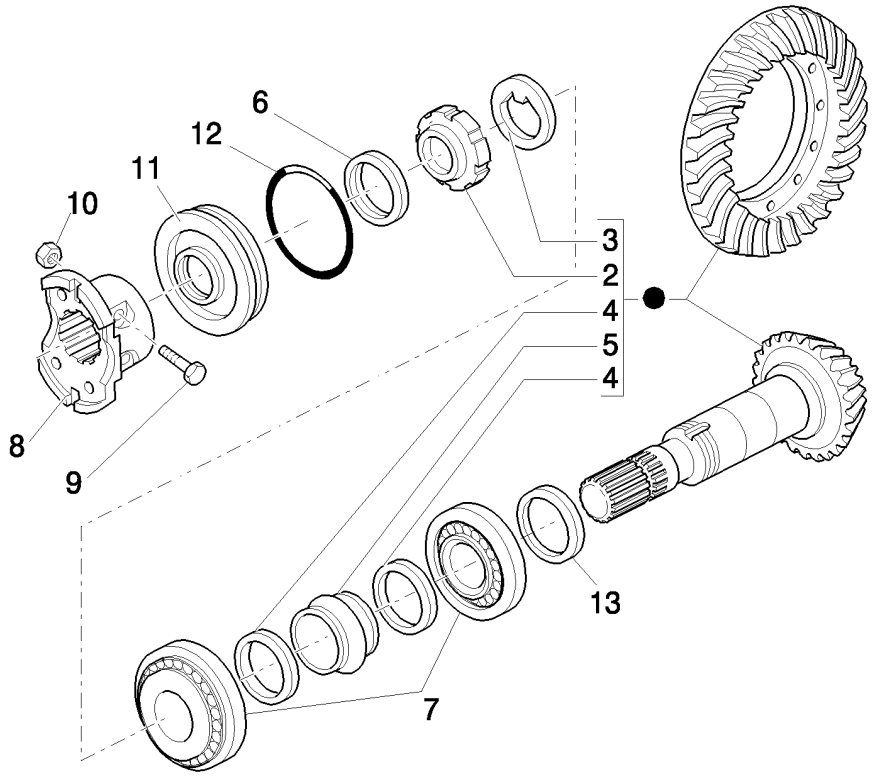

(4WD) FRONT AXLE, RING GEAR & PINION ASSEMBLY - NA

REF	FN	PART NUMBER	YR/SN	QTY	DESCRIPTION
1	1	85813060		1	GEAR SET, 13/31
1	2	85813059		1	GEAR SET, 14/32
2		9968032		1	NUT, RING, M40 x 1.5
3		9968031		1	WASHER, LOCK
4		9968033		2	WASHER, 50 x 40.5 x
5		9968034		1	SPACER
6		85824346		1	SEAL, Seal, Oil, M35 x 52 x 16
7		9968047		2	BEARING, ROLLER, TAPERED
8		9968049		1	FLANGE
9		9968048		2	SCREW, M10 x 60
10		9968050		2	NUT, M10 x 1.25
11		9968051		1	COVER
12		9968052		1	O-RING
13		9968037		AR	SHIM, 2.5 mm
13		9968038		AR	SHIM, 2.6 mm
13		9968039		AR	SHIM, 2.7 mm
13		9968040		AR	SHIM, 2.8 mm
13		9968041		AR	SHIM, 2.9 mm
13		9968042		AR	SHIM, 3.0 mm
13		9968043		AR	SHIM, 3.1 mm
13		9968044		AR	SHIM, 3.2 mm
13		9968045		AR	SHIM, 3.3 mm
13		9968046		AR	SHIM, 3.4 mm

(1) Consist Ref. Number : 2 - 5, Ratio=14.308 Axles 8582775

(2) Consist Ref. Number : 2 - 5, Ratio=13.174 Axles 8582776

(4WD) FRONT AXLE, DIFFERENTIAL - NA

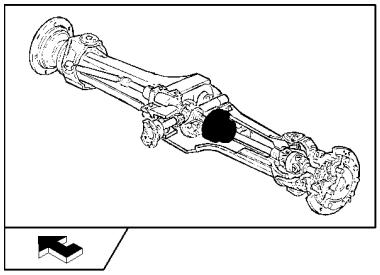

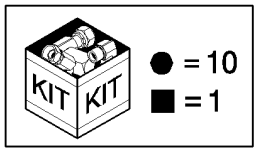

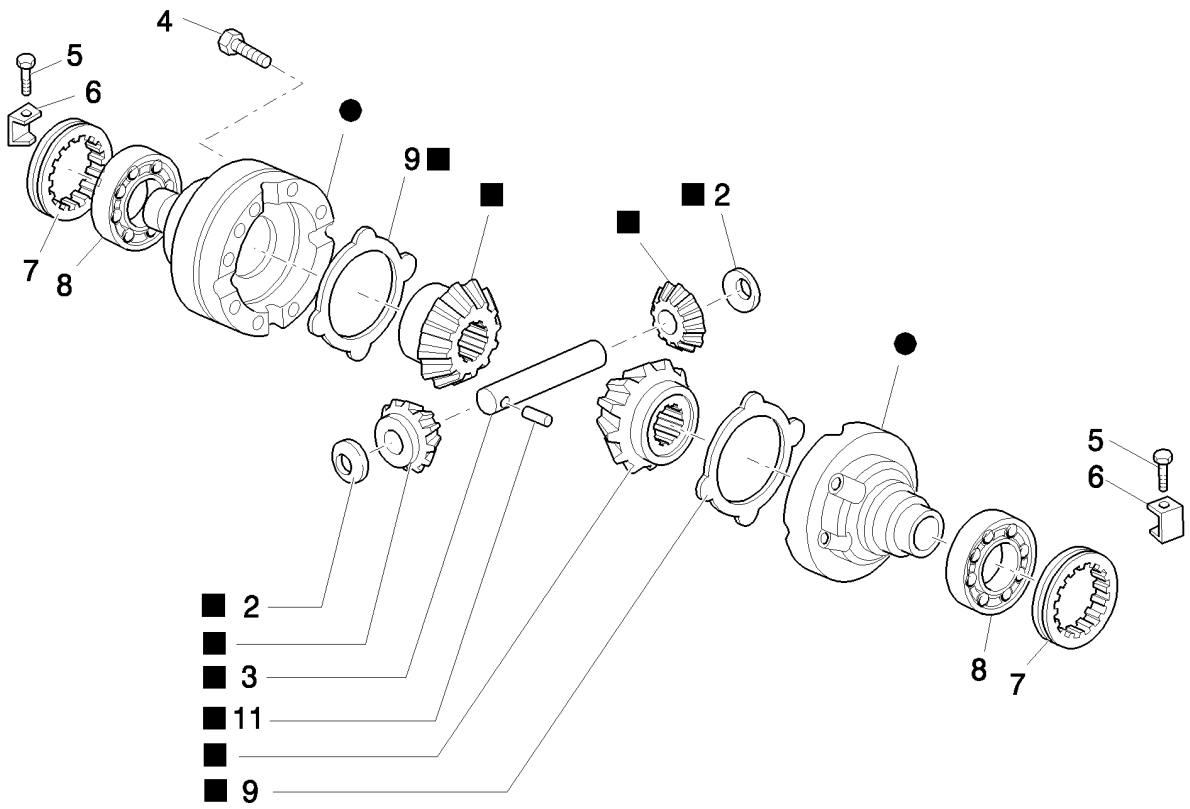

(4WD) FRONT AXLE, DIFFERENTIAL - NA

REF	FN	PART NUMBER	YR/SN	QTY	DESCRIPTION
1		85806004		1	KIT
2		9966352		2	WASHER, THRUST
3		9966354		1	PIN
4		9967736		12	SCREW, M10 x 1.5 x 75
5		9967739		2	SCREW, M6 x 10
6		9967740		2	CLIP
7		9967741		2	NUT, RING
8		9968054		2	BEARING, ROLLER, TAPERED
9		9967734		2	PLATE, DRIVE
10		85827068		1	HOUSING
11		9966356		1	PIN, ROLL, 7 x 40

FRONT AXLE 4WD, ARTICULATED AXLE SHAFT

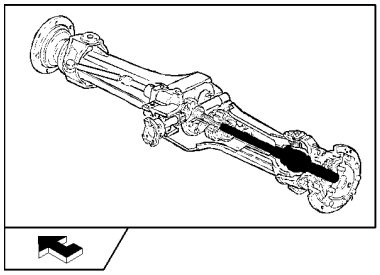

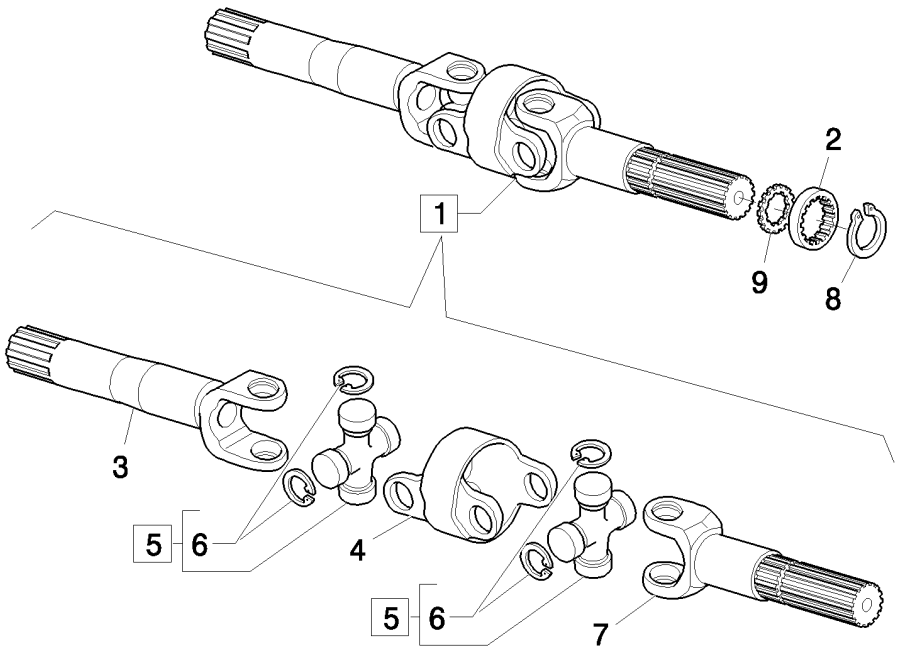

FRONT AXLE 4WD, ARTICULATED AXLE SHAFT

REF	FN	PART NUMBER	YR/SN	QTY	DESCRIPTION
1		85827741		2	SHAFT, ARTICULATED, Assy
2		85805999		2	WASHER, THRUST
3		87306929		1	SHAFT
4		85827070		2	BODY
5		85807283		2	SPIDER, Assy
6		85807284		1	RING, SNAP
7		87306930		2	SHAFT
8		87306933		2	RING, SNAP
9		85817697		2	WASHER, THRUST

SYSTEM HAMMER COMPONENTS (CAB - ROPS)

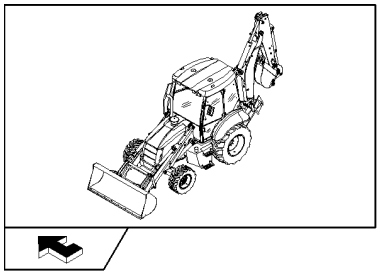

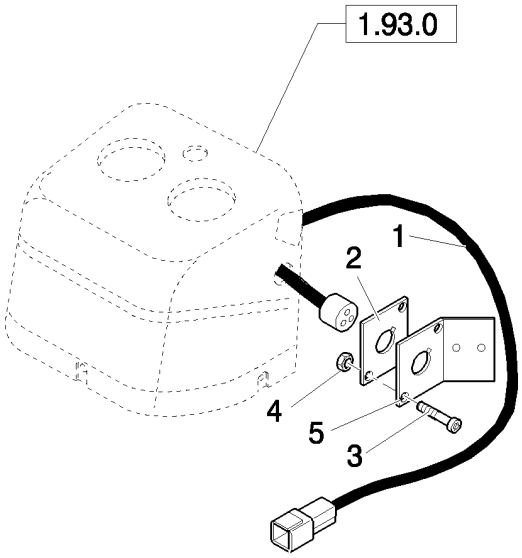

SYSTEM HAMMER COMPONENTS (CAB - ROPS)

REF	FN	PART NUMBER	YR/SN	QTY	DESCRIPTION
1		85819237		1	HARNESS, WIRE
2		85816760		1	PLATE
3		13272477		2	SCREW, Cross Pan Hd, M4 x 20, 12.9
4		12574011		2	NUT, LOCK, M4 x .7, Cl 8
5	1	85827822		1	PLATE, MOUNTING

(1) Only for ROPS

437		p1	04/08

GLIDE RIDE VALVE,HYDRAULIC SYSTEM FOR MACHINE FRAME LEVELLING

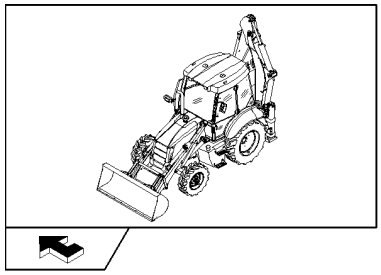

GLIDE RIDE VALVE,HYDRAULIC SYSTEM FOR MACHINE FRAME LEVELLING

REF	FN	PART NUMBER	YR/SN	QTY	DESCRIPTION
1		87358815		2	HOSE, FLEXIBLE
2		85815620		1	HOSE, FLEXIBLE
3		87638572		1	HOSE, FLEXIBLE
4		83971549		4	ELBOW, Assy
5		83963374		2	CONNECTOR, HYD., Assy
6		85824211		1	CABLE, ELECTRIC
7		87358808		1	BRACKET
8		87358817		1	VALVE, HYDRAULIC
9		87358818		1	ACCUMULATOR
10		87386551		1	PIPE
11		11106421		2	BOLT, Hex, M10 x 30, 8.8
12		87638573		1	HOSE, FLEXIBLE
13		11190579		3	WASHER, SPRING, Belleville, M10.5
14		85815583		2	TEE, Assy
15		83901443		2	O-RING
16		89992298		8	O-RING
17		15971321		1	BOLT, Hex, M10 x 75, 8.8
18		80128825		6	O-RING
19		11190679		2	WASHER, SPRING, Belleville, M10.5

471	01	p1	03/08

BUCKET 4X1 (1 M³) WITH BLADE "COMMON GREY"

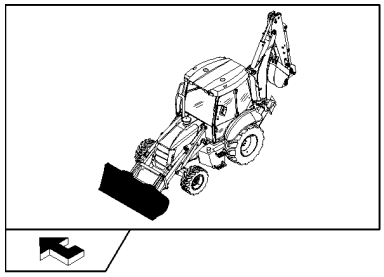

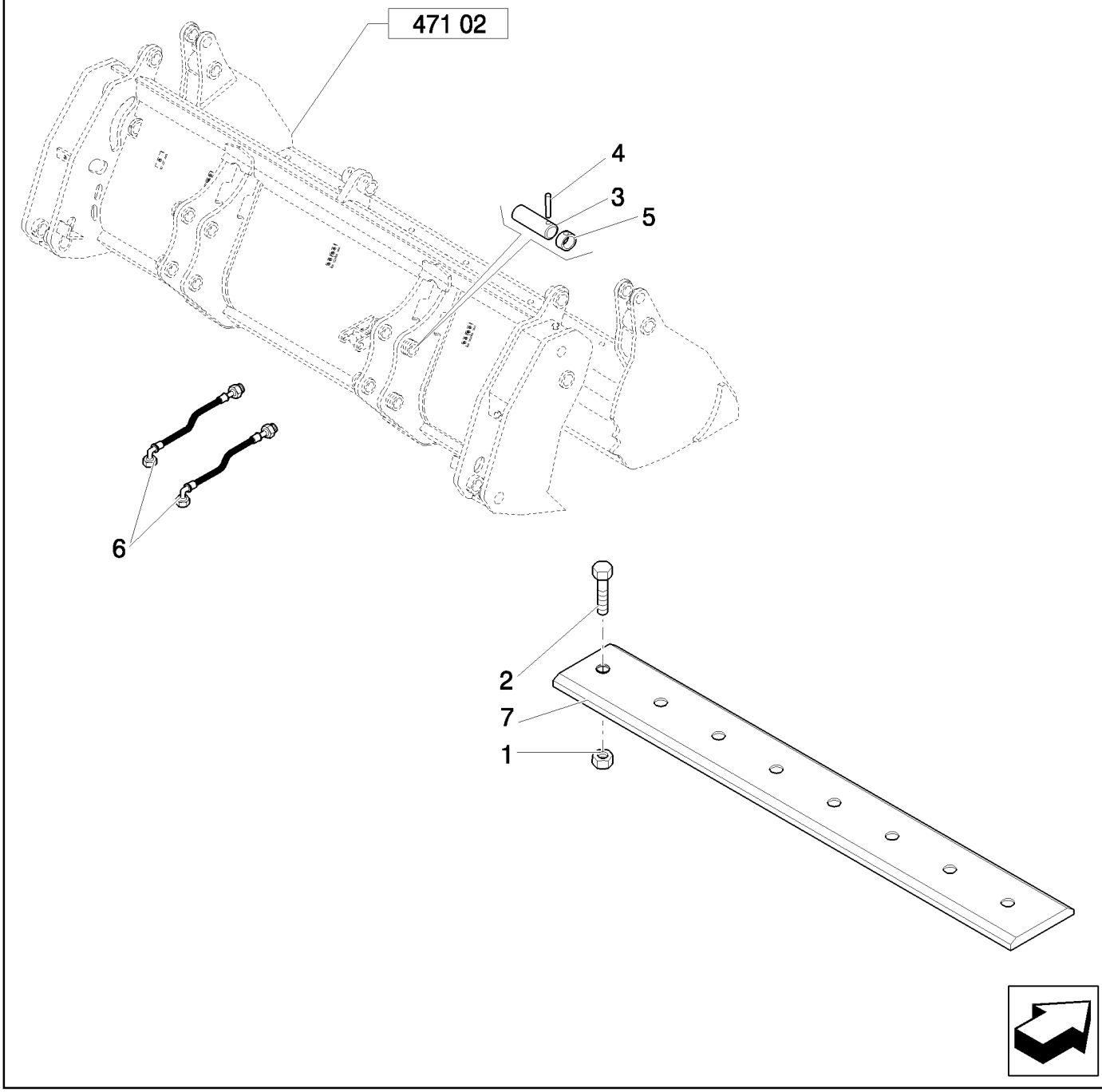

BUCKET 4X1 (1 M³) WITH BLADE "COMMON GREY"

REF	FN	PART NUMBER	YR/SN	QTY	DESCRIPTION
1		85801470		8	NUT, 5/8"-11, G8
2		85801371		8	BOLT, PLOW, 5/8"-11 x 2 1/4"
3		85801051		4	PIN
4		85802993		4	PIN
5		85802992		4	RING
6		85820819		2	HOSE, FLEXIBLE
7	1	85801161		1	EDGE, CUTTING

(1) Reversible bolt on

4X1 BUCKET (1 M3) WITH “COMMON GREY” BLADE: BUCKET BREAKDOWN

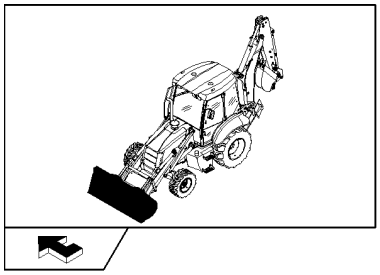

KIT KIT ● = 30

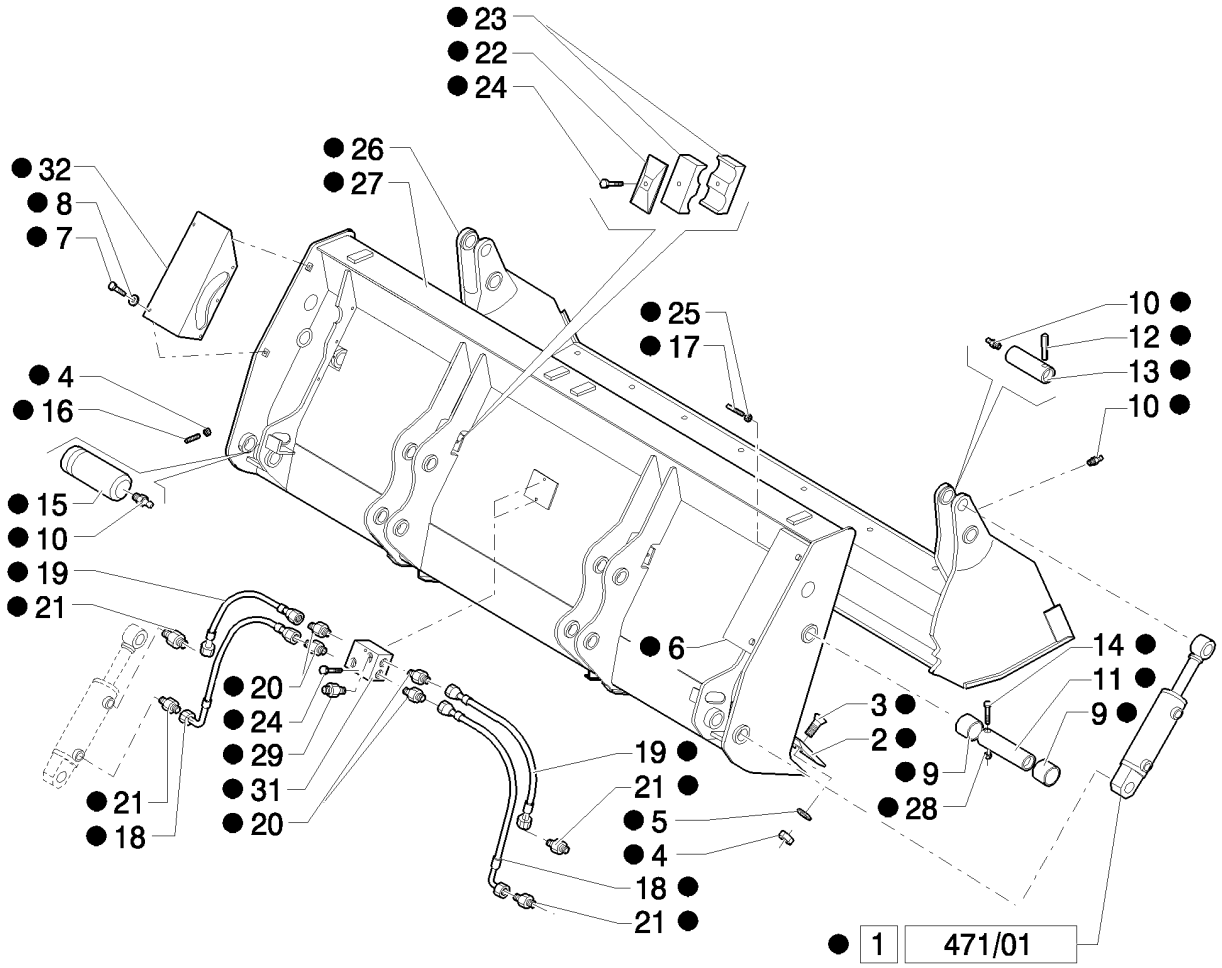

4X1 BUCKET (1 M3) WITH "COMMON GREY" BLADE: BUCKET BREAKDOWN

REF	FN	PART NUMBER	YR/SN	QTY	DESCRIPTION
1		87573861		2	CYLINDER, Assy
2		87308614		1	BLADE, KNIFE
3		87312328		8	SCREW, M14 x 40
4		85820008		10	NUT, M14 x 2
5		85820009		8	WASHER, SEALING
6		87312330		1	GUARD, RH
7		85820011		10	SCREW
8		85820012		10	WASHER, SEALING
9		85820013		4	BUSHING
10		85820014		6	NIPPLE, LUBE, M10 x 1
11		85820015		2	PIN
12		85820016		2	PIN, ROLL, 10 x 80
13		85820017		2	PIN
14		85820018		2	SCREW, M10 x 90
15		87310286		2	PIN
16		85820020		2	SCREW, M14 x 30
17		87312331		1	SCREW, M8 x 120
18		87312340		2	HOSE, FLEXIBLE
19		87312342		2	HOSE, FLEXIBLE
20		87312343		4	CONNECTOR, HYD.
21		87312333		4	CONNECTOR, HYD.
22		85820026		2	PLATE
23		85820027		4	CLAMP
24		85820030		4	SCREW, M8 x 45
25		85820031		1	NUT, M8
26		87310434		1	BUCKET
27		87310354		1	BUCKET
28		85820035		2	NUT, M10x1,5
29		87395482		2	CONNECTOR, HYD., Assy
30		87573550		1	BUCKET, 4 IN 1
31		87312335		1	FITTING
32		87395481		1	GUARD

HYDRAULIC CYLINDER (BUCKET 4X1-6X1)

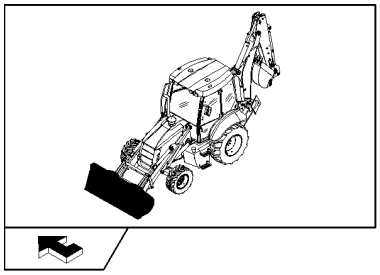

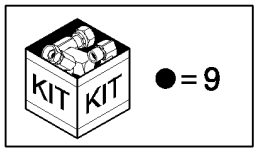

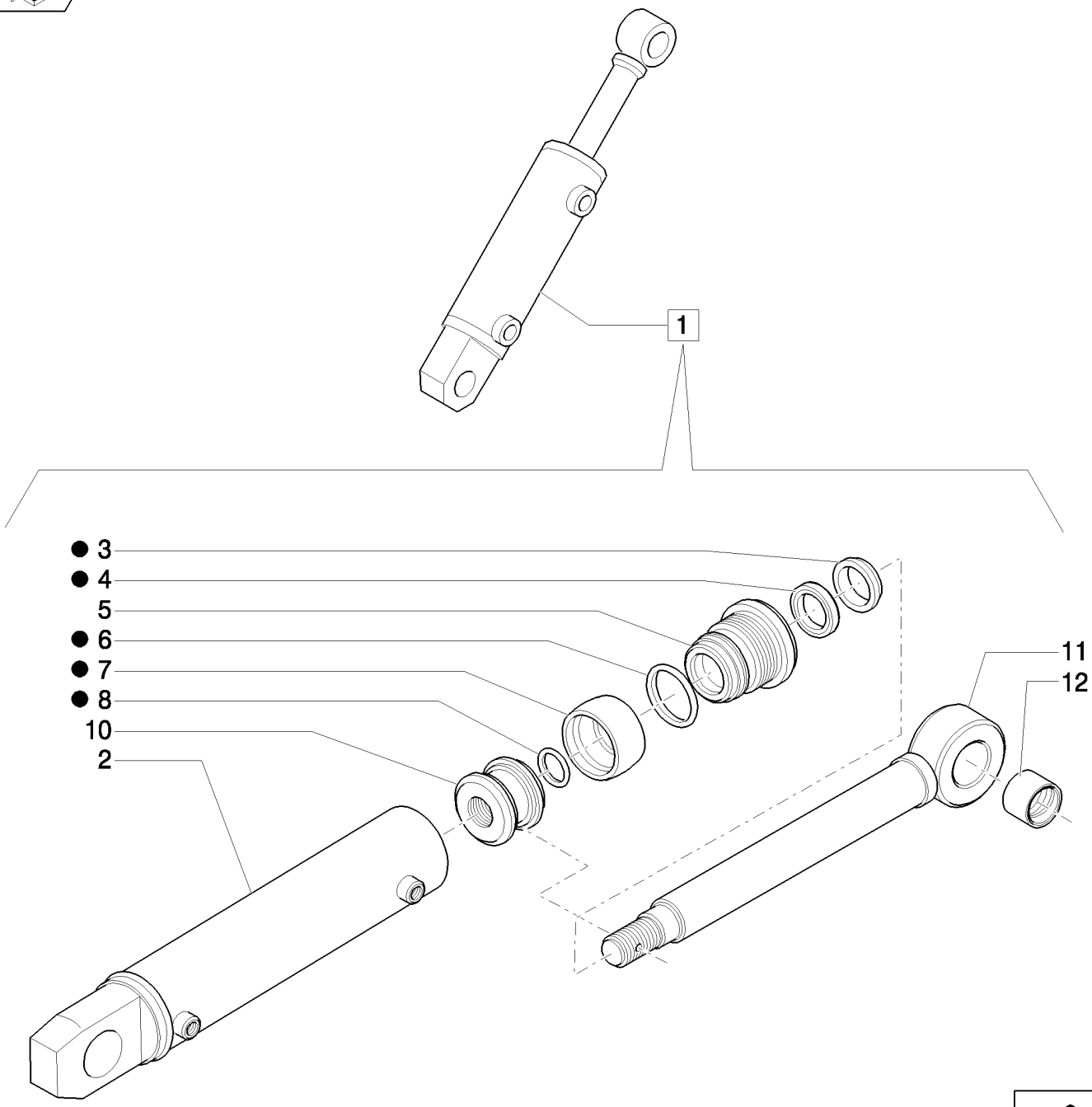

HYDRAULIC CYLINDER (BUCKET 4X1-6X1)

REF	FN	PART NUMBER	YR/SN	QTY	DESCRIPTION
1		87573861		1	CYLINDER, Assy
2		87574523		1	LINER
3		87574080		1	SCRAPER
4		87574092		1	SEAL
5		87574524		1	BOTTOM
6		87574099		1	SEAL
7		87574097		1	SEAL
8		87574098		1	O-RING
9	1	87573868		1	PACKAGE, SEALS
10		85820054		1	PISTON, Part May or May Not Have Hole For 85820055 Roll Pin; If Part Does Not Have Hole, The Piston Is Fixed To The Rod With Loctite 243
11		85820052		1	ROD, PISTON, Part May or May Not Have Hole For 85820055 Roll Pin; If Part Does Not Have Hole, The Piston Is Fixed To The Rod With Loctite 243
12		85820056		1	BUSHING

(1) Insludes 3, 4, 6 - 8

472	01	p1	03/08

BUCKET 4X1 (1 M³) WITH TINE "COMMON GREY"

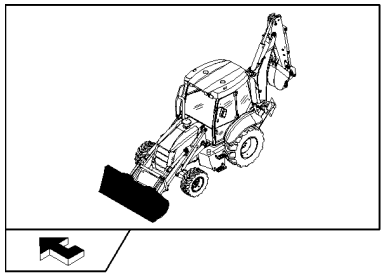

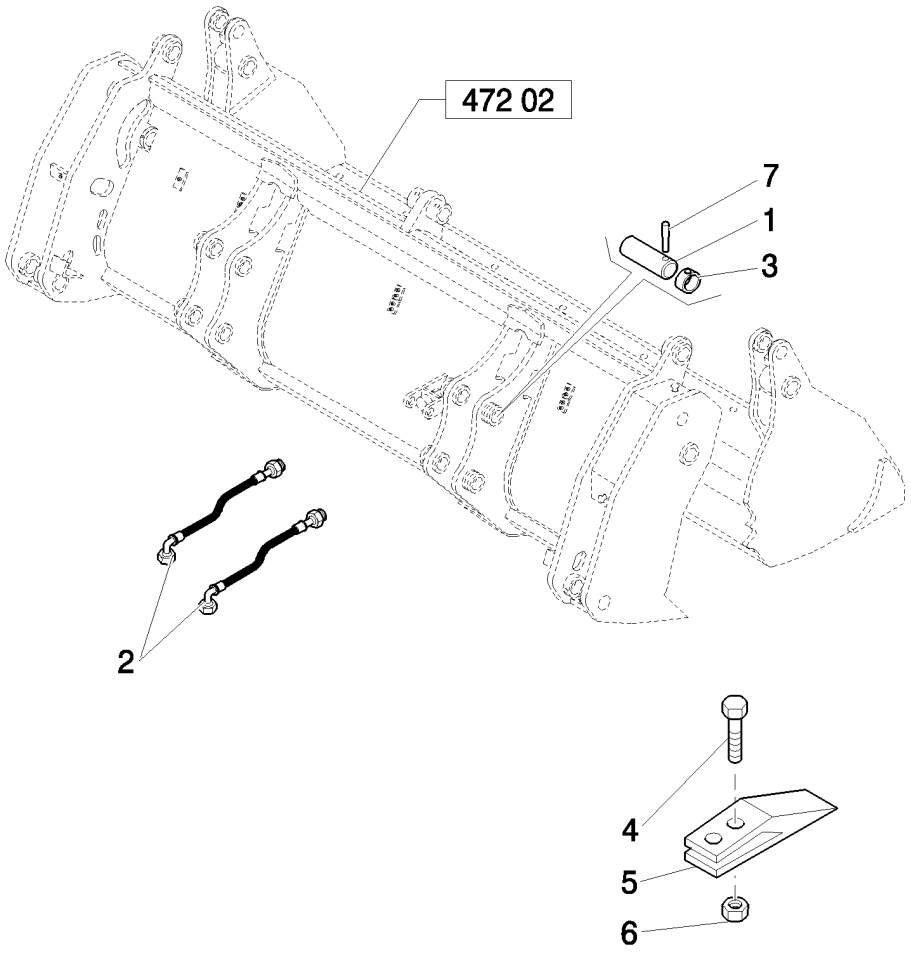

BUCKET 4X1 (1 M³) WITH TINE "COMMON GREY"

REF	FN	PART NUMBER	YR/SN	QTY	DESCRIPTION
1		85801051		4	PIN
2		85820819		2	HOSE, FLEXIBLE, L=800 mm
3		85802992		4	RING
4		85801371		16	BOLT, PLOW, 5/8"-11 x 2 1/4"
5		85811440		8	SHANK, BUCKET TOOTH
6		85801470		16	NUT, 5/8"-11, G8
7		85802993		4	PIN

4X1 BUCKET (1 M3) WITH “COMMON GREY” TEETH: BUCKET BREAKDOWN

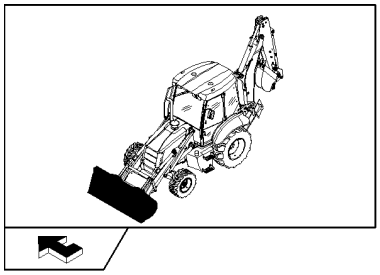

KIT KIT ● =30

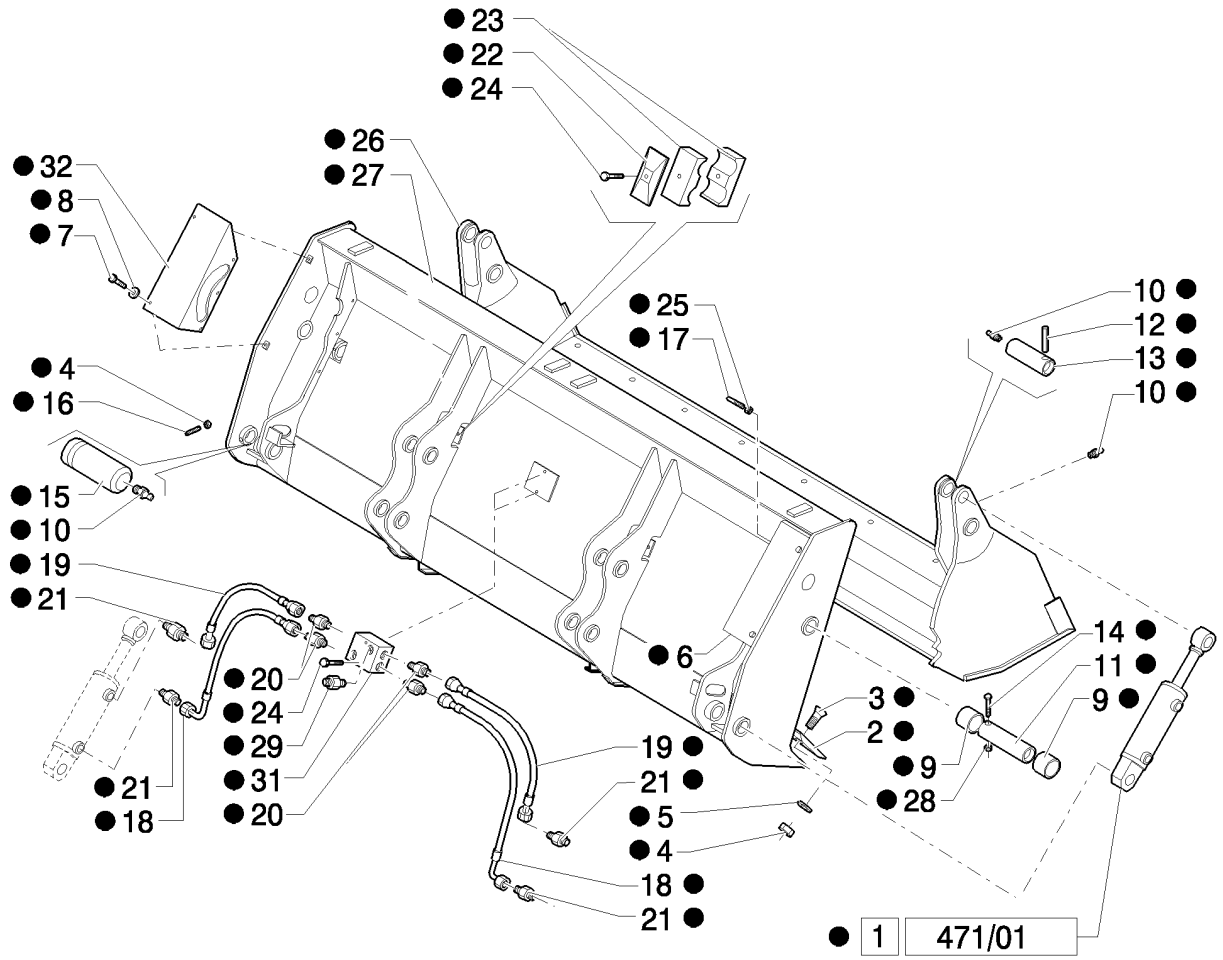

4X1 BUCKET (1 M3) WITH "COMMON GREY" TEETH: BUCKET BREAKDOWN

REF	FN	PART NUMBER	YR/SN	QTY	DESCRIPTION
1		87573861		2	CYLINDER, Assy
2		87308614		1	BLADE, KNIFE
3		87312328		8	SCREW, M14 x 40
4		85820008		10	NUT, M14 x 2
5		85820009		8	WASHER, SEALING
6		87312330		1	GUARD, RH
7		85820011		10	SCREW
8		85820012		10	WASHER, SEALING
9		85820013		4	BUSHING
10		85820014		6	NIPPLE, LUBE, M10 x 1
11		85820015		2	PIN
12		85820016		2	PIN, ROLL, 10 x 80
13		85820017		2	PIN
14		85820018		2	SCREW, M10 x 90
15		87310286		2	PIN
16		85820020		2	SCREW, M14 x 30
17		87312331		1	SCREW, M8 x 120
18		87312340		2	HOSE, FLEXIBLE
19		87312342		2	HOSE, FLEXIBLE
20		87312343		4	CONNECTOR, HYD.
21		87312333		4	CONNECTOR, HYD.
22		85820026		2	PLATE
23		85820027		4	CLAMP
24		85820030		4	SCREW, M8 x 45
25		85820031		1	NUT, M8
26		87310434		1	BUCKET
27		87310354		1	BUCKET
28		85820035		2	NUT, M10x1,5
29		87395482		2	CONNECTOR, HYD.
30		87573550		1	BUCKET, 4 IN 1, Assy
31		87312335		1	FITTING
32		87395481		1	GUARD

473	01	p1	03/08

BUCKET 6X1 (1 M³) WITH BLADE "COMMON GREY"

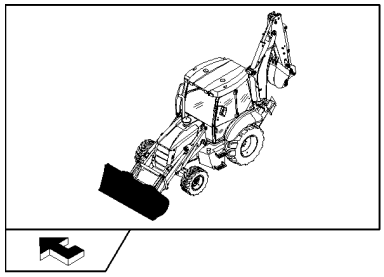

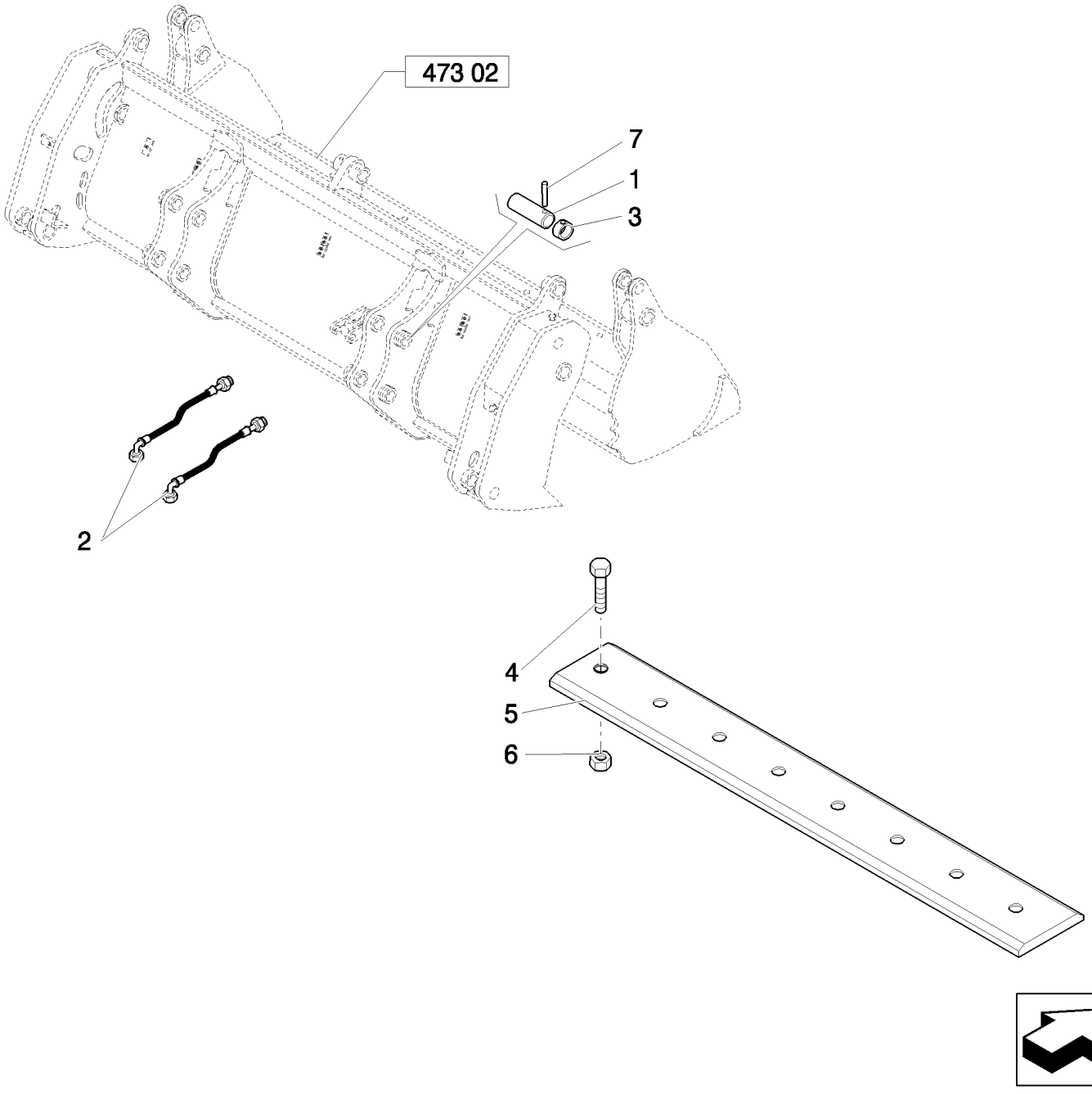

BUCKET 6X1 (1 M³) WITH BLADE "COMMON GREY"

REF	FN	PART NUMBER	YR/SN	QTY	DESCRIPTION
1		85801051		4	PIN
2		85820819		2	HOSE, FLEXIBLE, L=800 mm
3		85802992		4	RING
4		85801371		8	BOLT, PLOW, 5/8"-11 x 2 1/4"
5		85801161		1	EDGE, CUTTING
6		85801470		8	NUT, 5/8"-11, G8
7		85802993		4	PIN

473	02	p1	04/08

6X1 BUCKET (1 M3) WITH "COMMON GREY" BLADE: BUCKET BREAKDOWN

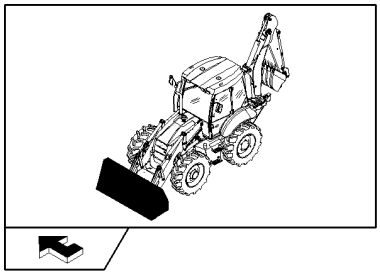

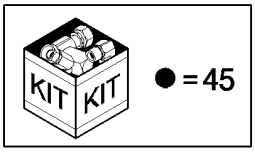

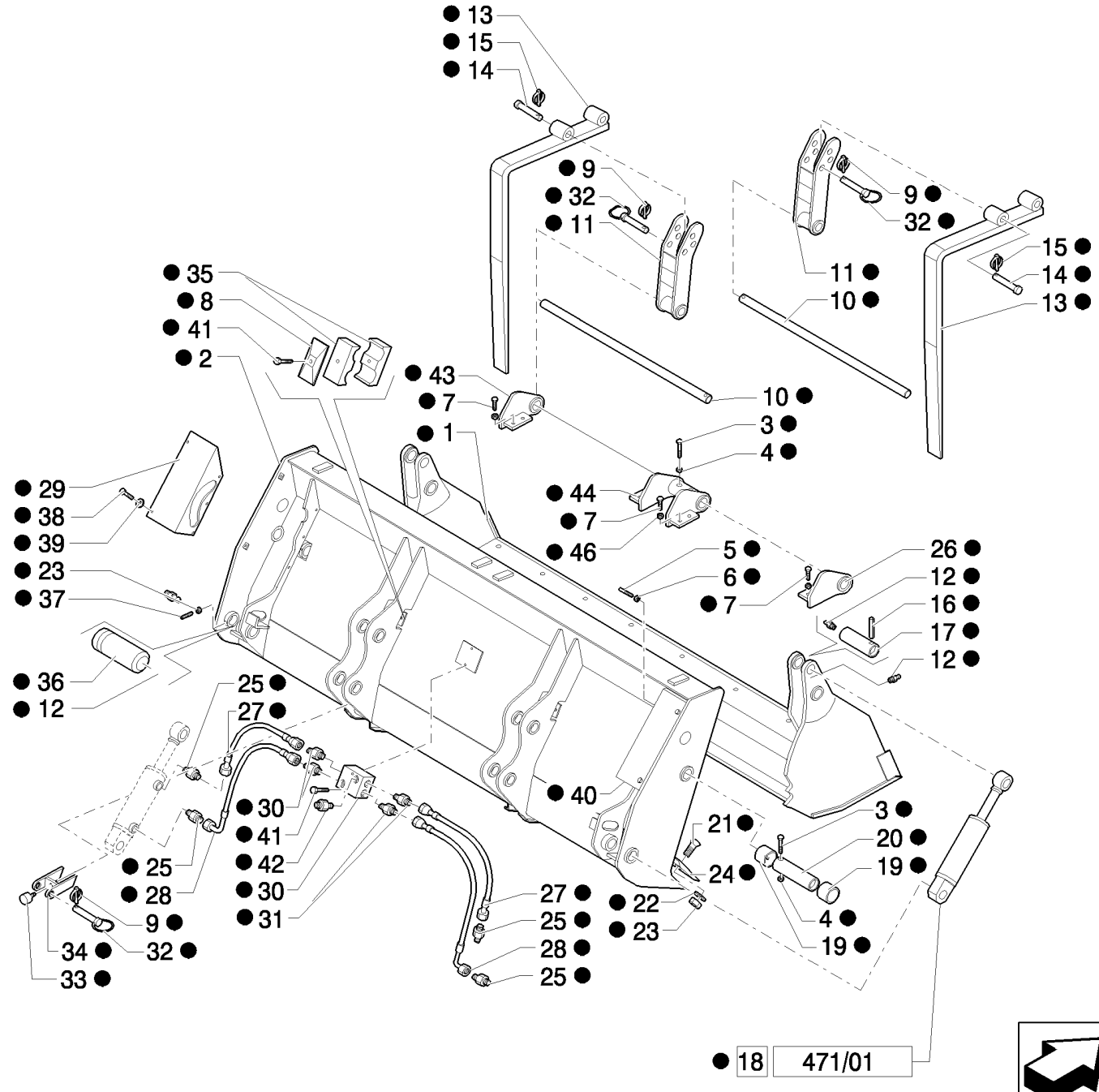

6X1 BUCKET (1 M3) WITH "COMMON GREY" BLADE: BUCKET BREAKDOWN

REF	FN	PART NUMBER	YR/SN	QTY	DESCRIPTION
1		87310434		1	BUCKET
2		87310354		1	BUCKET
3		85820018		4	SCREW, M10 x 90
4		85820035		4	NUT, M10x1,5
5		87312331		1	SCREW, M8 x 120
6		85820031		1	NUT, M8
7		87557215		8	SCREW, M16x35
8		85820026		2	PLATE
9		85820068		4	PIN, LOCK, D=11
10		87310372		2	SHAFT
11		87310368		2	SUPPORT
12		85820014		6	NIPPLE, LUBE, M10 x 1
13		87310367		2	FORK, BUCKET
14		87310369		2	PIN
15		85825177		2	PIN, LOCK, D=8
16		85820016		2	PIN, ROLL, 10 x 80
17		85820017		2	PIN
18		87573861		2	CYLINDER, Assy
19		85820013		4	BUSHING
20		85820015		2	PIN
21		87312328		8	SCREW, M14 x 40
22		85820009		8	WASHER, SEALING
23		85820008		10	NUT, M14 x 2
24		87308614		1	BLADE, KNIFE
25		87312333		4	CONNECTOR, HYD.
26		87310375		1	HINGE, RH
27		87312342		2	HOSE, FLEXIBLE
28		87312340		2	HOSE, FLEXIBLE
29		87395481		1	GUARD
30		87312335		1	FITTING
31		87312343		4	CONNECTOR, HYD.
32		85820064		2	PIN
33		85820069		2	PLUG
34		87310370		2	BRACKET
35		85820027		4	CLAMP

6X1 BUCKET (1 M3) WITH “COMMON GREY” BLADE: BUCKET BREAKDOWN

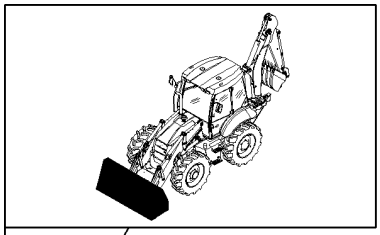

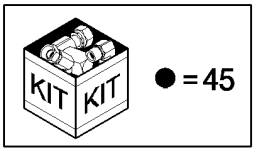

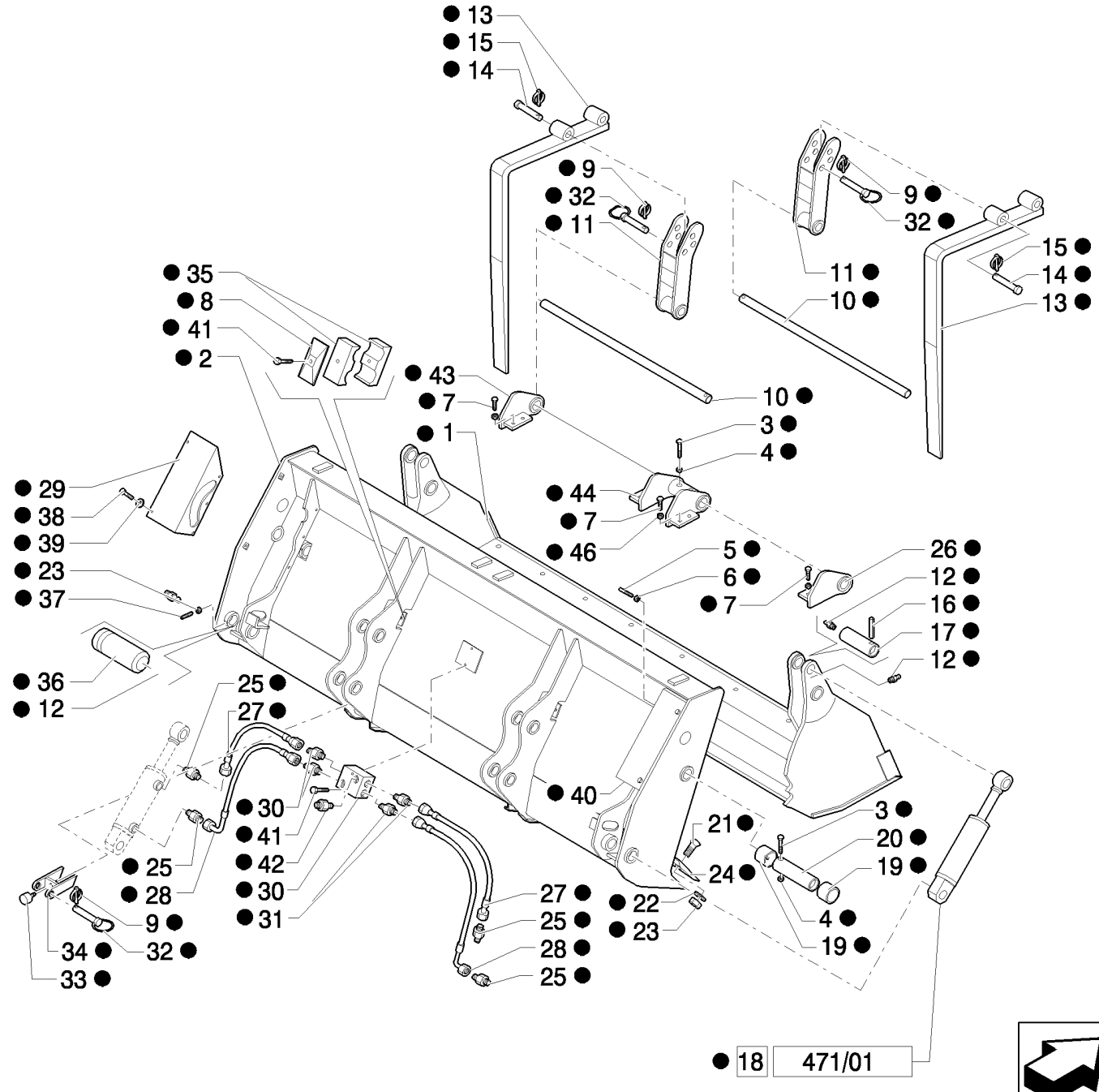

6X1 BUCKET (1 M3) WITH "COMMON GREY" BLADE: BUCKET BREAKDOWN

REF	FN	PART NUMBER	YR/SN	QTY	DESCRIPTION
36		87310286		2	PIN
37		85820020		2	SCREW, M14 x 30
38		85820011		10	SCREW, M8x16
39		85820012		10	WASHER, SEALING
40		87312330		1	GUARD, RH
41		85820030		4	SCREW, M8 x 45
42		87395482		2	CONNECTOR, HYD.
43		87310373		1	HINGE, LH
44		87310374		1	HINGE
45		87573552		1	BUCKET, Assy
46		87395486		8	WASHER

474	01	p1	03/08

BUCKET 6X1 (1 M³) WITH TINE "COMMON GREY"

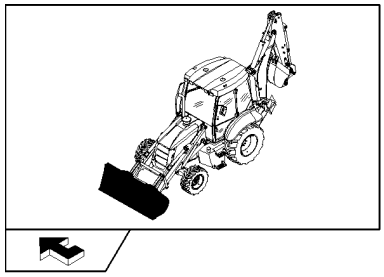

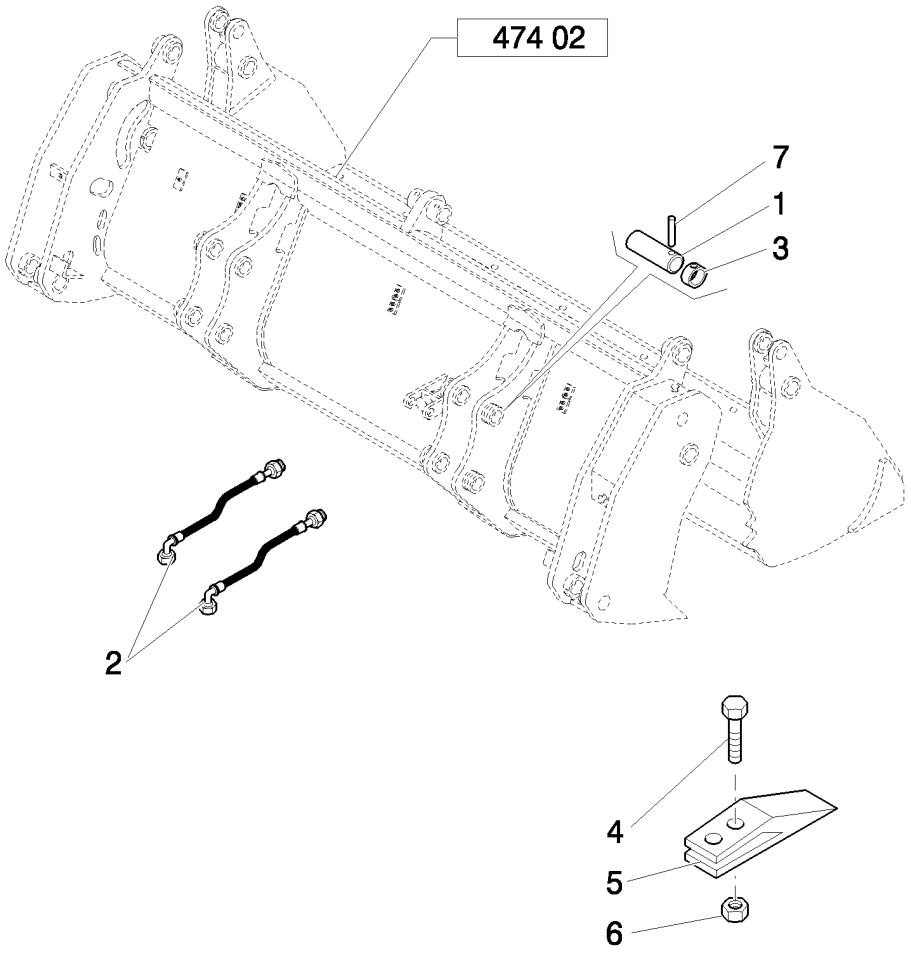

BUCKET 6X1 (1 M³) WITH TINE "COMMON GREY"

REF	FN	PART NUMBER	YR/SN	QTY	DESCRIPTION
1		85801051		4	PIN
2		85820819		2	HOSE, FLEXIBLE, L=800 mm
3		85802992		4	RING
4		85801371		16	BOLT, PLOW, 5/8"-11 x 2 1/4"
5		85811440		8	SHANK, BUCKET TOOTH
6		85801470		16	NUT, 5/8"-11, G8
7		85802993		4	PIN

474	02	p1	04/08

6X1 BUCKET (1 M3) WITH “COMMON GREY” TEETH: BUCKET BREAKDOWN

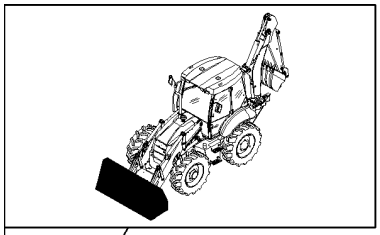

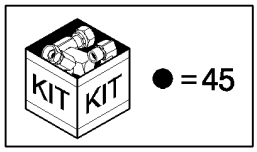

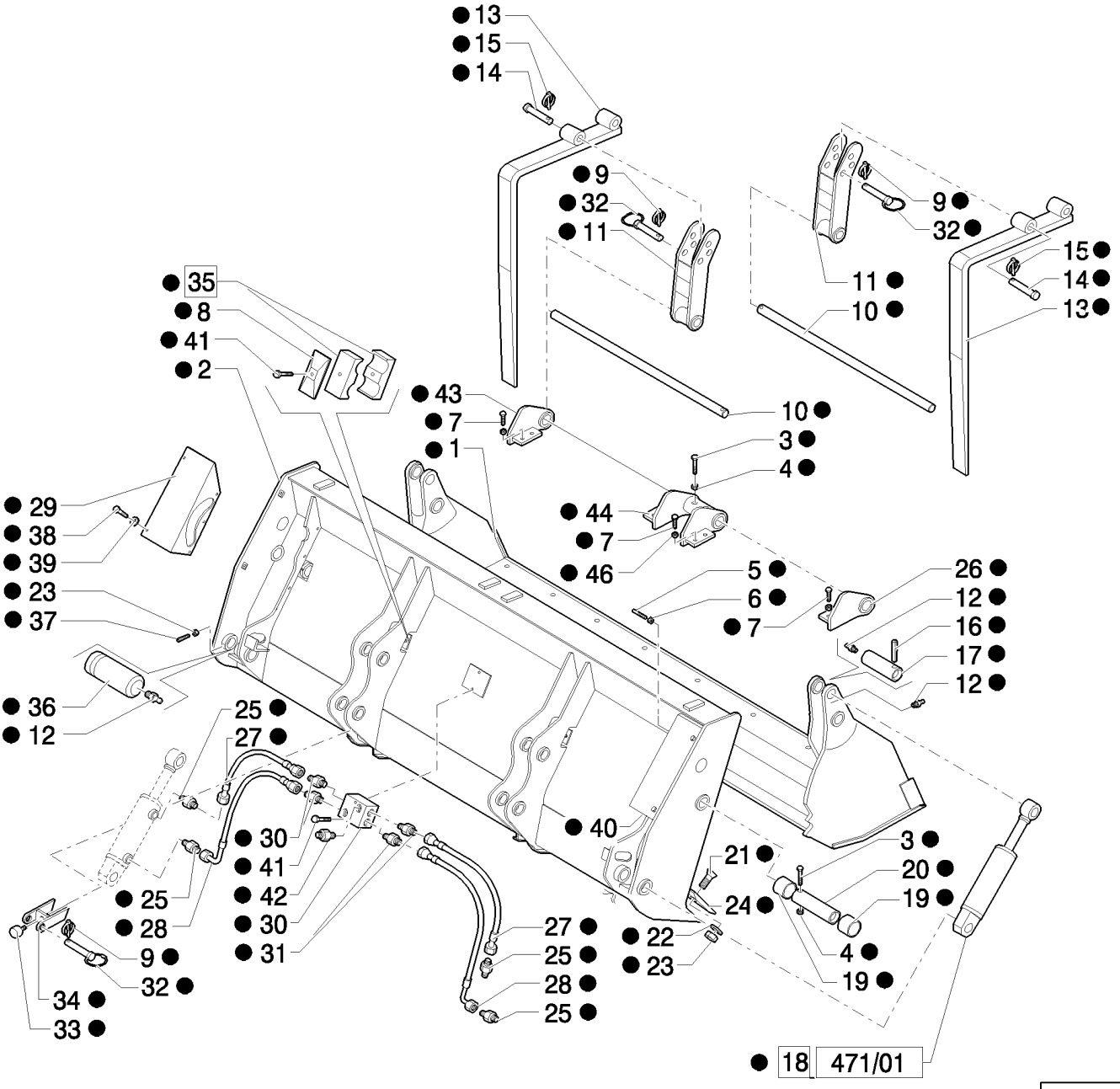

6X1 BUCKET (1 M3) WITH "COMMON GREY" TEETH: BUCKET BREAKDOWN

REF	FN	PART NUMBER	YR/SN	QTY	DESCRIPTION
1		87310434		1	BUCKET
2		87310354		1	BUCKET
3		85820018		4	SCREW, M10 x 90
4		85820035		4	NUT, M10x1,5
5		87312331		1	SCREW, M8 x 120
6		85820031		1	NUT, M8
7		87557215		8	SCREW, M16x35
8		85820026		2	PLATE
9		85820068		4	PIN, LOCK, D=11
10		87310372		2	SHAFT
11		87310368		2	SUPPORT
12		85820014		6	NIPPLE, LUBE, M10 x 1
13		87310367		2	FORK, BUCKET
14		87310369		2	PIN
15		85825177		2	PIN, LOCK, D=8
16		85820016		2	PIN, ROLL, 10 x 80
17		85820017		2	PIN
18		87573861		2	CYLINDER, Assy
19		85820013		4	BUSHING
20		85820015		2	PIN
21		87312328		8	SCREW, M14 x 40
22		85820009		8	WASHER, SEALING
23		85820008		10	NUT, M14 x 2
24		87308614		1	BLADE, KNIFE
25		87312333		4	CONNECTOR, HYD.
26		87310375		1	HINGE, RH
27		87312342		2	HOSE, FLEXIBLE
28		87312340		2	HOSE, FLEXIBLE
29		87395481		1	GUARD
30		87312335		1	FITTING
31		87312343		4	CONNECTOR, HYD.
32		85820064		2	PIN
33		85820069		2	PLUG
34		87310370		2	BRACKET
35		85820027		4	CLAMP

6X1 BUCKET (1 M3) WITH “COMMON GREY” TEETH: BUCKET BREAKDOWN

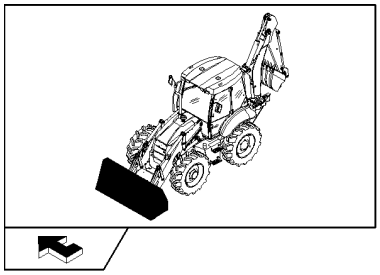

KIT KIT ● = 45

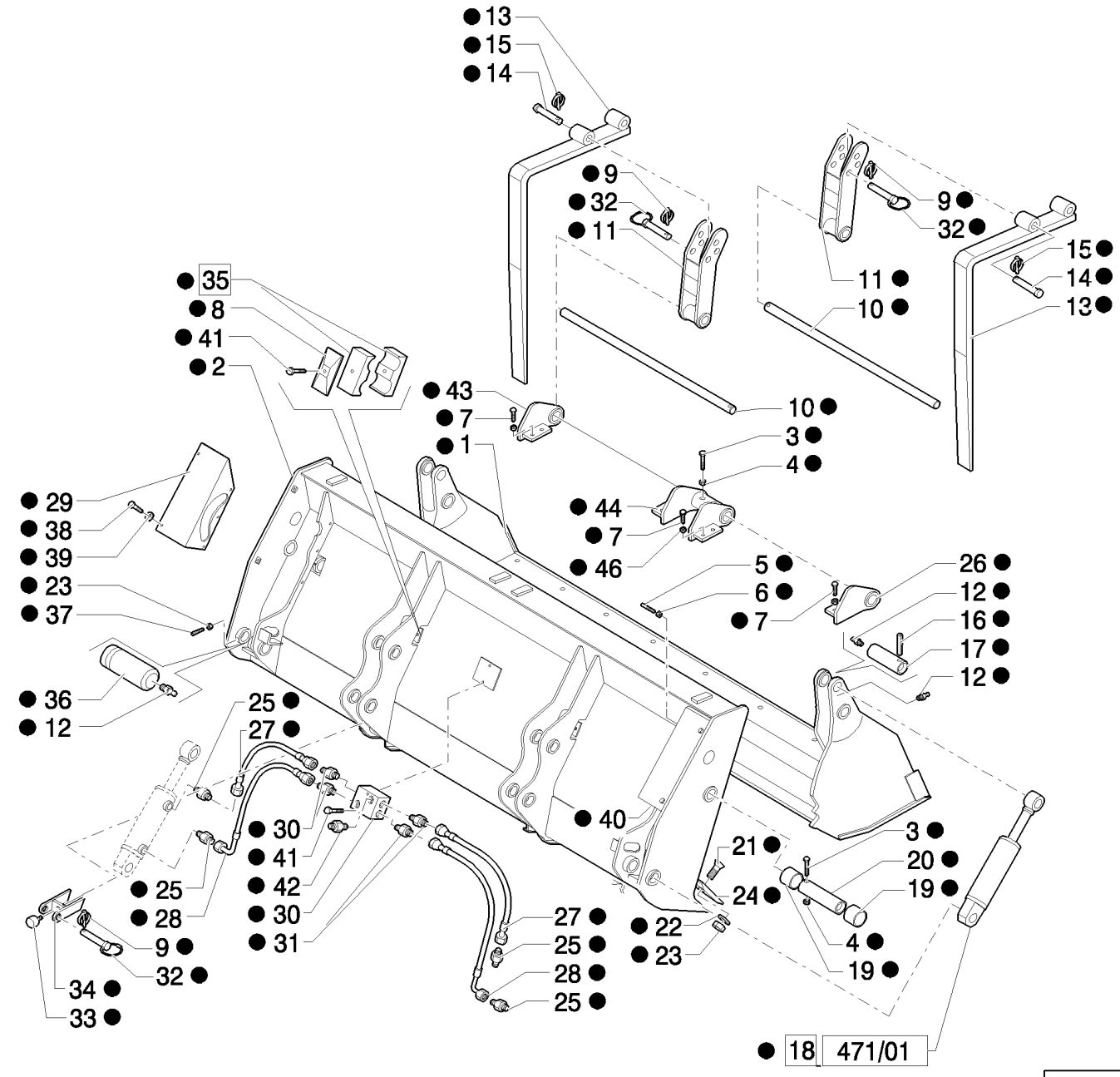

6X1 BUCKET (1 M3) WITH "COMMON GREY" TEETH: BUCKET BREAKDOWN

REF	FN	PART NUMBER	YR/SN	QTY	DESCRIPTION
36		87310286		2	PIN
37		85820020		2	SCREW, M14 x 30
38		85820011		10	SCREW, M8x16
39		85820012		10	WASHER, SEALING
40		87312330		1	GUARD
41		85820030		4	SCREW, M8 x 45
42		87395482		2	CONNECTOR, HYD.
43		87310373		1	HINGE, LH
44		87310374		1	HINGE
45		87573552		1	BUCKET, Assy
46		87395486		8	WASHER

514	01	p1	04/08

SHORT DIPPER

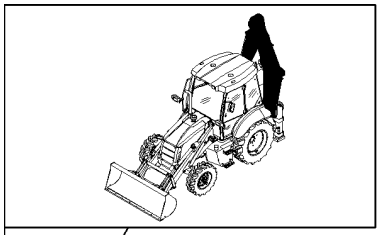

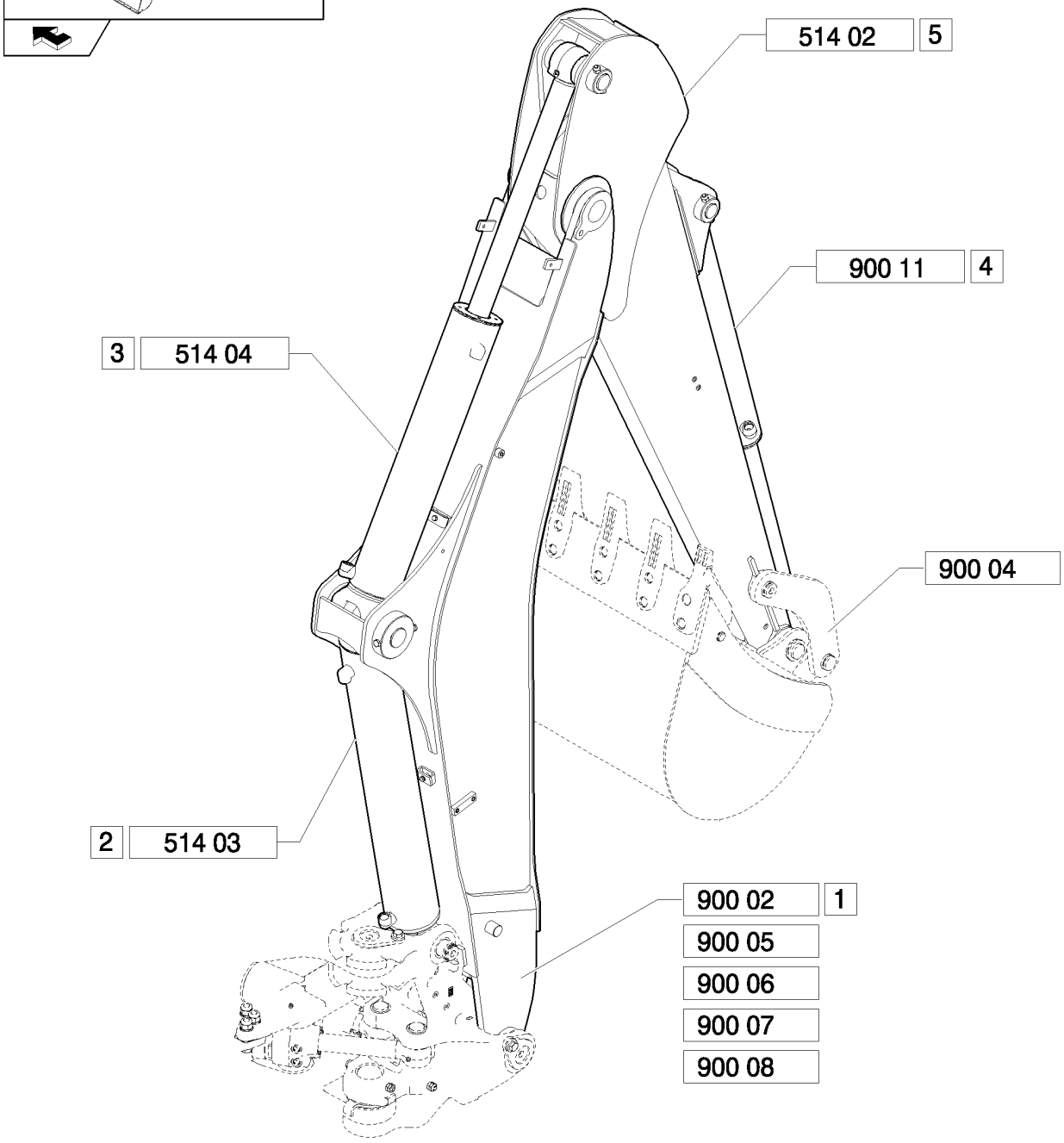

SHORT DIPPER

REF	FN	PART NUMBER	YR/SN	QTY	DESCRIPTION
1		87576064		1	BACKHOE ARM, Assy
2		87613157		1	CYLINDER, Assy
3		87382083		1	CYLINDER, Assy
4		87382007		1	CYLINDER, Assy
5		87593493		1	DIPPER, Assy, 1/8"-27

SHORT DIPPER

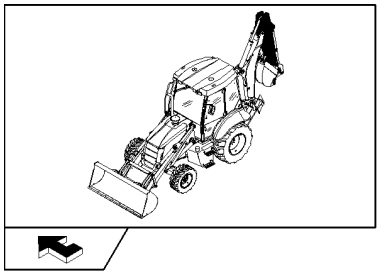

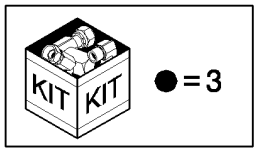

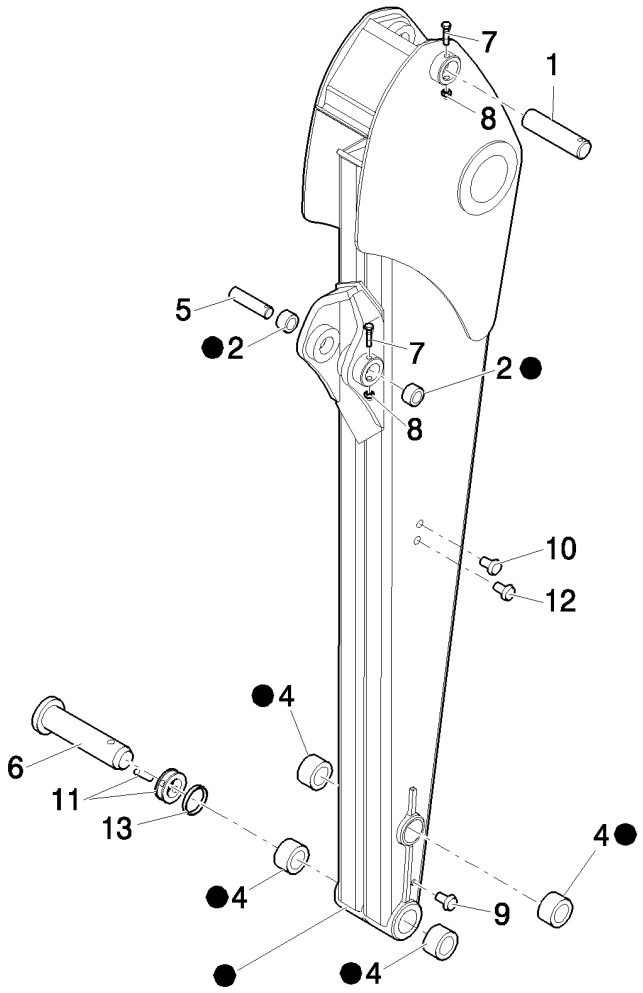

SHORT DIPPER

REF	FN	PART NUMBER	YR/SN	QTY	DESCRIPTION
1		87594196		1	PIN
2		83910546		2	BUSHING, 2.175" ID x 2.80" OD x 1.969"
3		87593493		1	DIPPER
4		83910548		4	BUSHING
5		87577359		1	PIN
6		85803005		1	PIN
7		15542921		2	BOLT, Hex, M12 x 1.25 x 95, 8.8
8		16105011		2	NUT, LOCK
9		85804447		4	PLUG
10		81870039		4	FASTENER
11		85802975		2	PIN, LOCK
12		85804447		4	PLUG
13		85802974		2	RING

514	03	p1	04/08

HYDRAULIC LIFTING CYLINDER

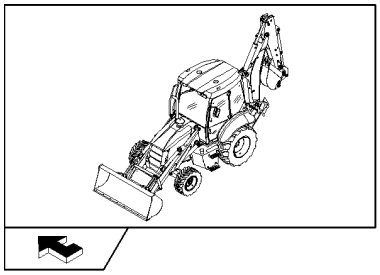

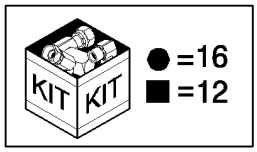

HYDRAULIC LIFTING CYLINDER

REF	FN	PART NUMBER	YR/SN	QTY	DESCRIPTION
1		G102090		1	RING
2		87598244		1	GLAND, Assy
3		D95146		1	SEAL, HYD-CYLINDER
4		G109395		2	SCREW, SELF TAPPING
5		87600654		1	ROD, Assy
6		87598245		1	GLAND
7		83416242		2	NIPPLE, LUBE, 1/8"-27
8		G109908		1	BUSHING
9		G107970		1	RING
10		238-5247		1	O-RING, -247, 70 Duro, 4.609" ID x .139" Thk
11		87598247		1	PISTON
12		87598248		1	PACKAGE
13		87598246		1	PISTON, Assy
14		G102092		1	RING
15		G102091		1	SEAL
16		87654842		1	KIT, SEALS
17		87598240		1	TUBE, Assy
18		117359A1		1	RING
19		D149079		2	BUSHING
20		87613157		1	CYLINDER, Assy

514	04	p1	04/08

HYDRAULIC DITCHING CYLINDER

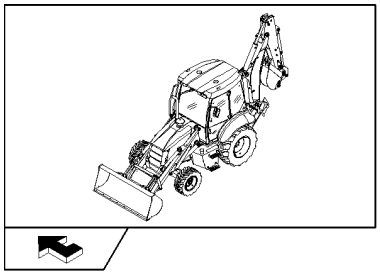

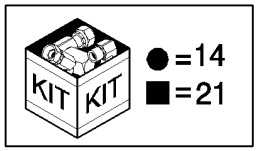

HYDRAULIC DITCHING CYLINDER

REF	FN	PART NUMBER	YR/SN	QTY	DESCRIPTION
1		87382083		1	CYLINDER, Assy
2		86982444		1	BOLT, SPECIAL
3		87382190		1	GLAND, Assy
4		87382188		1	PISTON, Assy
5		87403649		1	SEAL
6		446481A1		1	SEAL
7		446195A1		1	SEAL
8		G109908		1	BUSHING
9		238-5245		1	O-RING, -245, 70 Duro, 4.359" ID x .139" Thk
10		87382189		1	PISTON
11		87382191		1	GLAND
12		446178A1		1	SEAL
13		G109395		1	SCREW, SELF TAPPING
14		87654844		1	KIT, SEALS
15		87382089		1	ROD, Assy
16		D149079		2	BUSHING
17		83416242		1	NIPPLE, LUBE, 1/8"-27
18		D95146		1	SEAL, HYD-CYLINDER
19		87382086		1	TUBE, Assy
20		123407A1		2	RING
21		87382092		1	PACKAGE

12" (305MM) BACKHOE BUCKET WITH PIN TEETH - NA

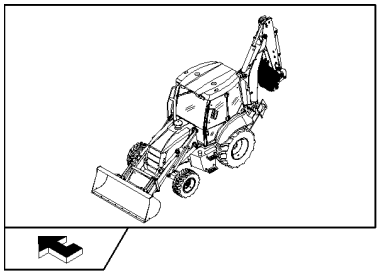

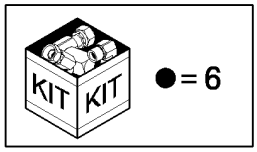

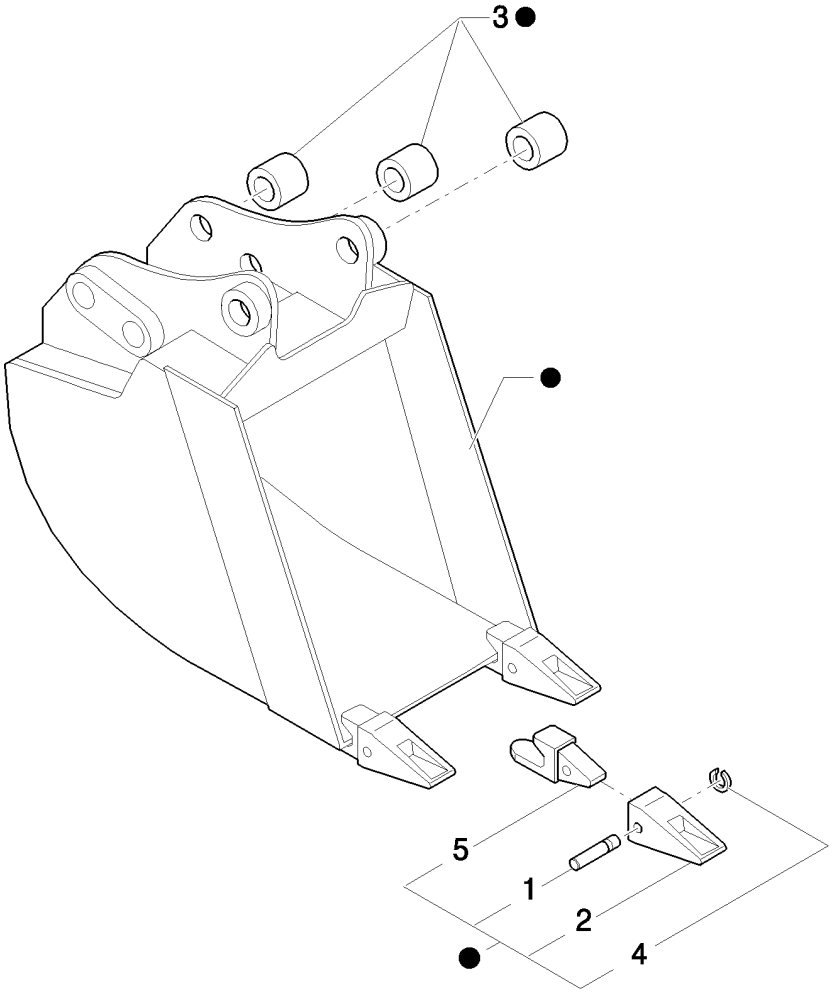

12" (305MM) BACKHOE BUCKET WITH PIN TEETH - NA

REF	FN	PART NUMBER	YR/SN	QTY	DESCRIPTION
1		85801097		3	PIN
2		85811432		3	TOOTH, BUCKET
3		83910634		6	BUSHING
4		85801098		3	RING
5		85821788		3	SHANK, BUCKET TOOTH
6		87609344		1	BUCKET, Assy

18" (457MM) BACKHOE BUCKET WITH PIN TEETH - NA

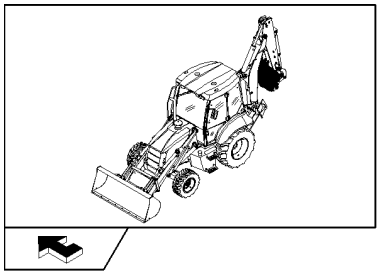

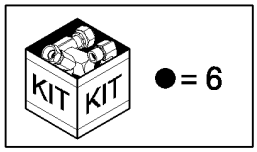

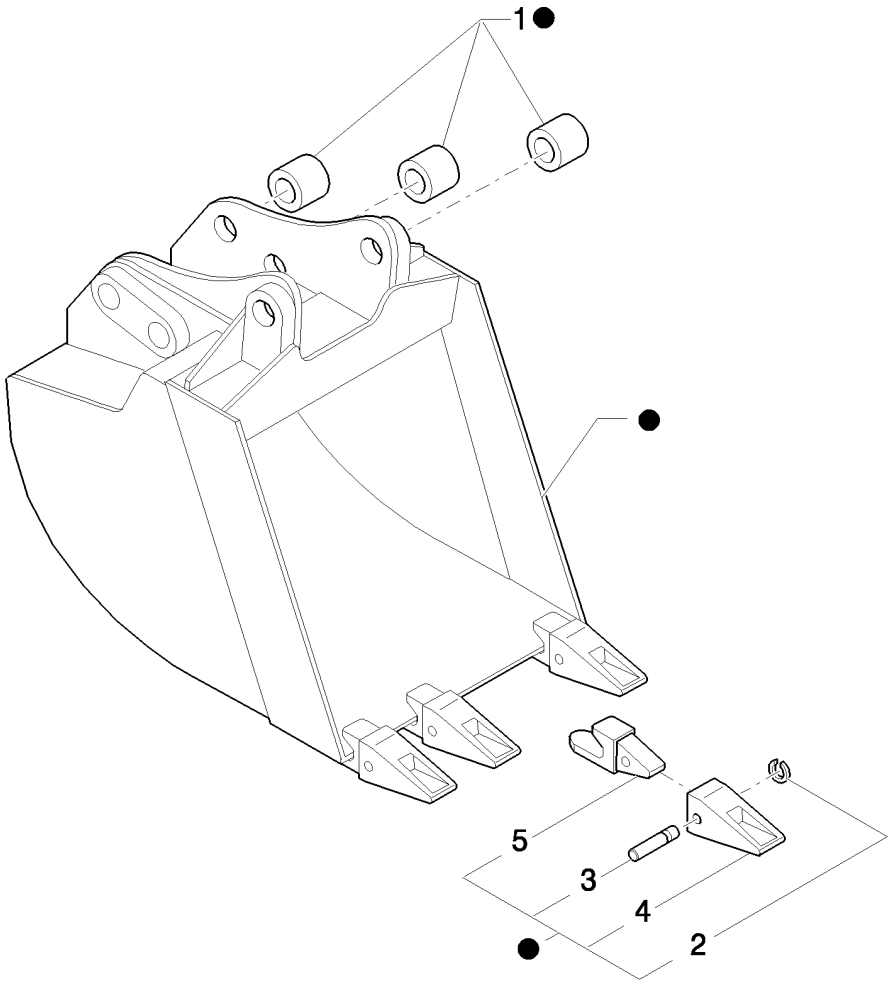

18" (457MM) BACKHOE BUCKET WITH PIN TEETH - NA

REF	FN	PART NUMBER	YR/SN	QTY	DESCRIPTION
1		83910634		6	BUSHING
2		85801098		4	RING
3		85801097		4	PIN
4		85811432		4	TOOTH, BUCKET
5		85821788		4	SHANK, BUCKET TOOTH
6		87609121		1	BUCKET, Assy

24" (610MM) BACKHOE BUCKET WITH PIN TEETH - NA

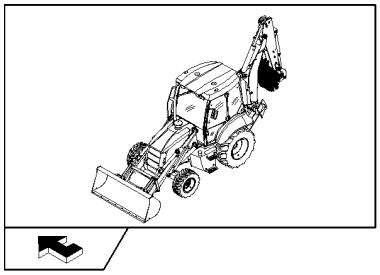

KIT KIT ●= 6

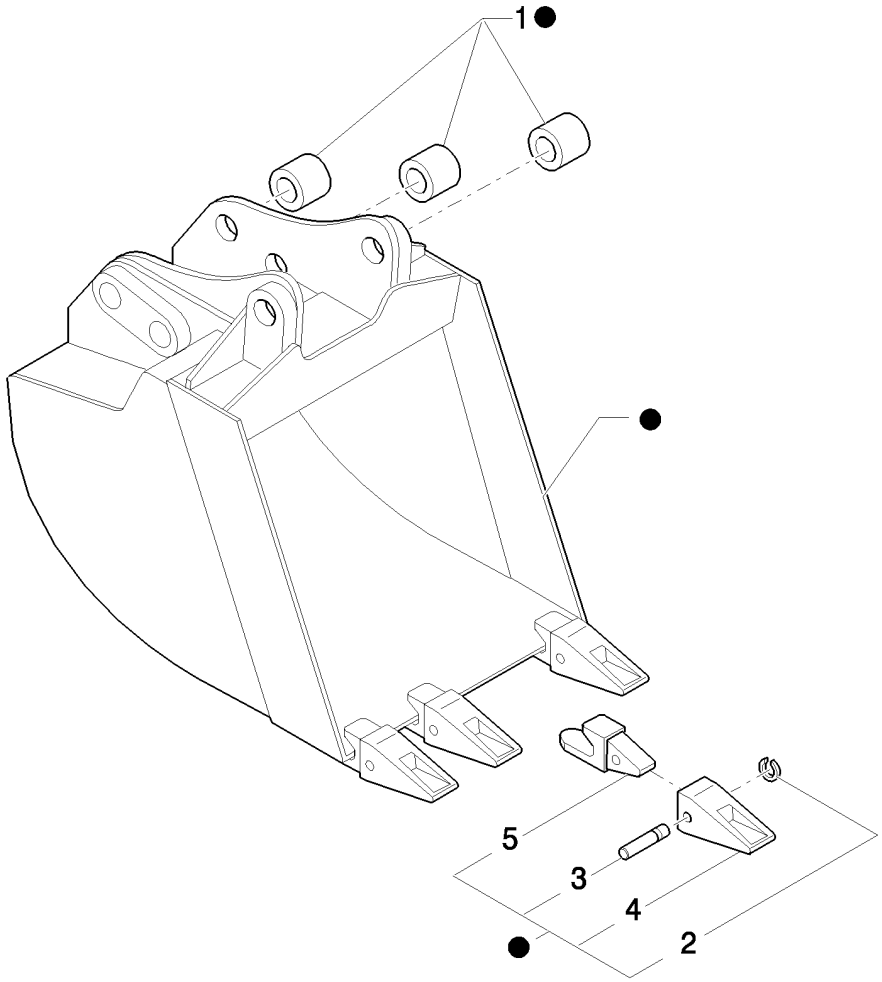

24" (610MM) BACKHOE BUCKET WITH PIN TEETH - NA

REF	FN	PART NUMBER	YR/SN	QTY	DESCRIPTION
1		83910634		6	BUSHING
2		85801098		4	RING
3		85801097		4	PIN
4		85811432		4	TOOTH, BUCKET
5		85821788		4	SHANK, BUCKET TOOTH
6		87607837		1	BUCKET, Assy

30" (762MM) BACKHOE BUCKET WITH PIN TEETH - NA

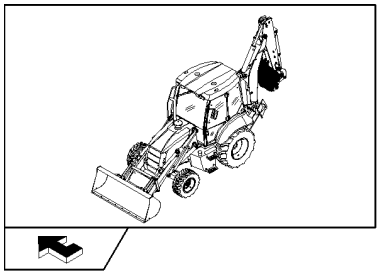

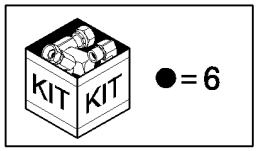

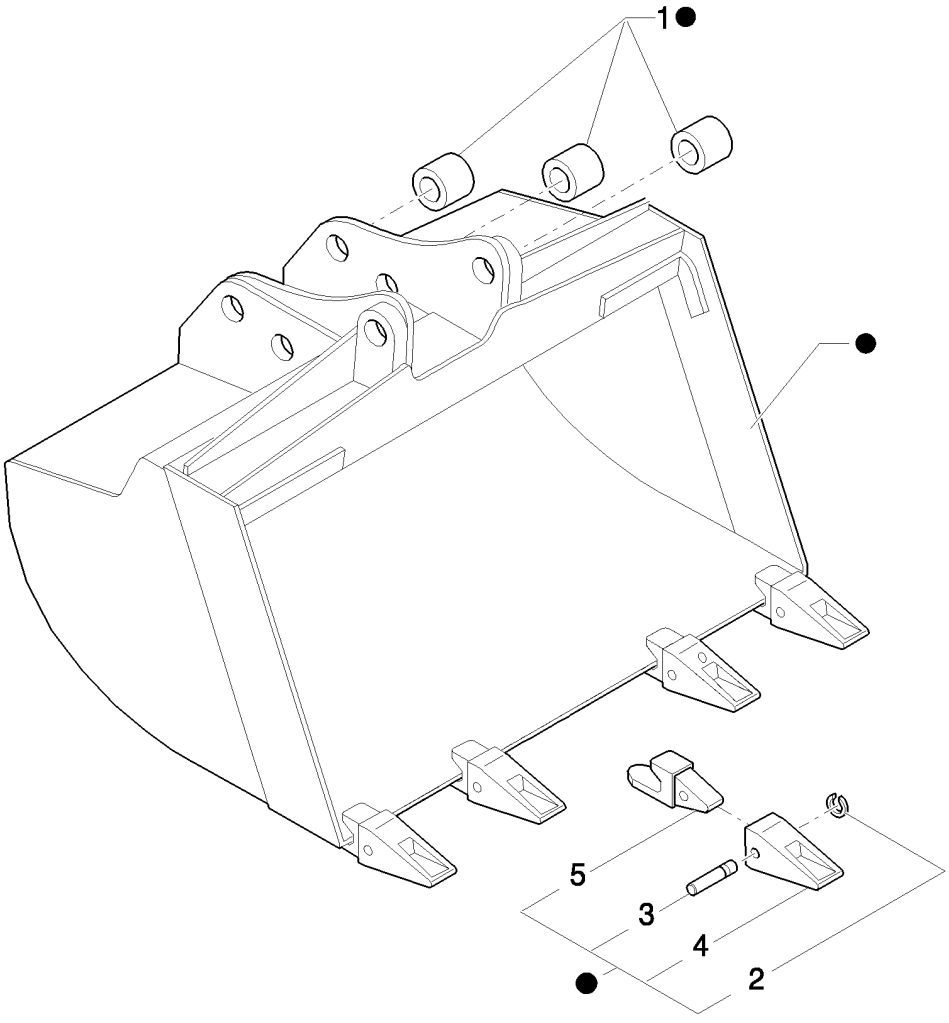

30" (762MM) BACKHOE BUCKET WITH PIN TEETH - NA

REF	FN	PART NUMBER	YR/SN	QTY	DESCRIPTION
1		83910634		6	BUSHING
2		85801098		5	RING
3		85801097		5	PIN
4		85811432		5	TOOTH, BUCKET
5		85821788		5	SHANK, BUCKET TOOTH
6		87609028		1	BUCKET, Assy

36" (910MM) BACKHOE BUCKET WITH PIN TEETH - NA

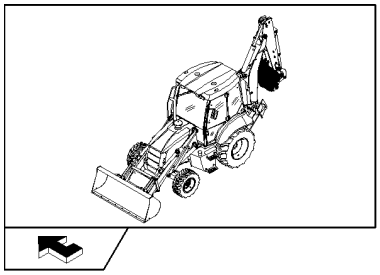

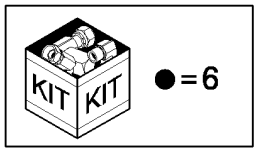

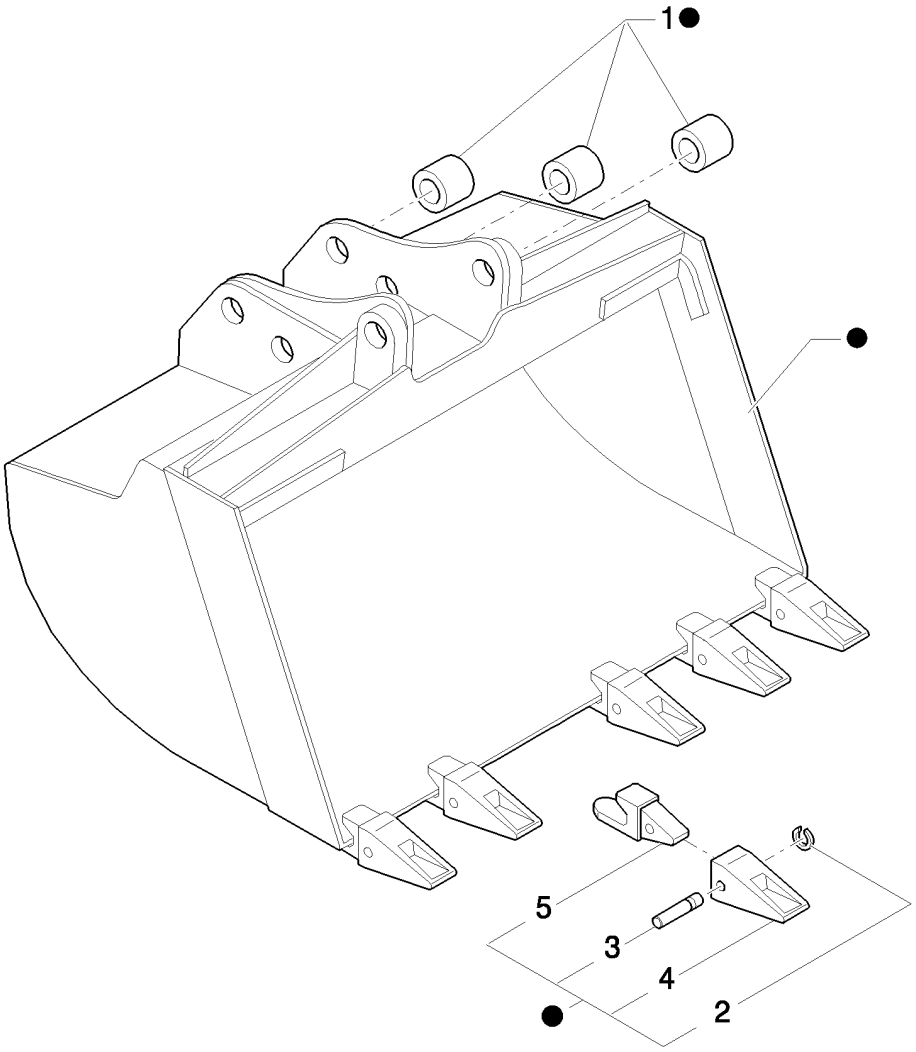

36" (910MM) BACKHOE BUCKET WITH PIN TEETH - NA

REF	FN	PART NUMBER	YR/SN	QTY	DESCRIPTION
1		83910634		6	BUSHING
2		85801098		6	RING
3		85801097		6	PIN
4		85811432		6	TOOTH, BUCKET
5		85821788		6	SHANK, BUCKET TOOTH
6		87607670		1	BUCKET, Assy

520		p1	04/08

(0.88 M³) BUCKET WITHOUT TINES

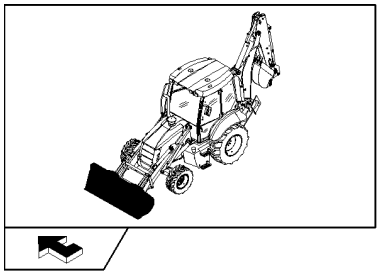

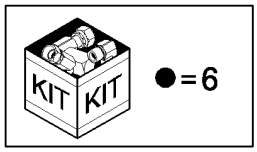

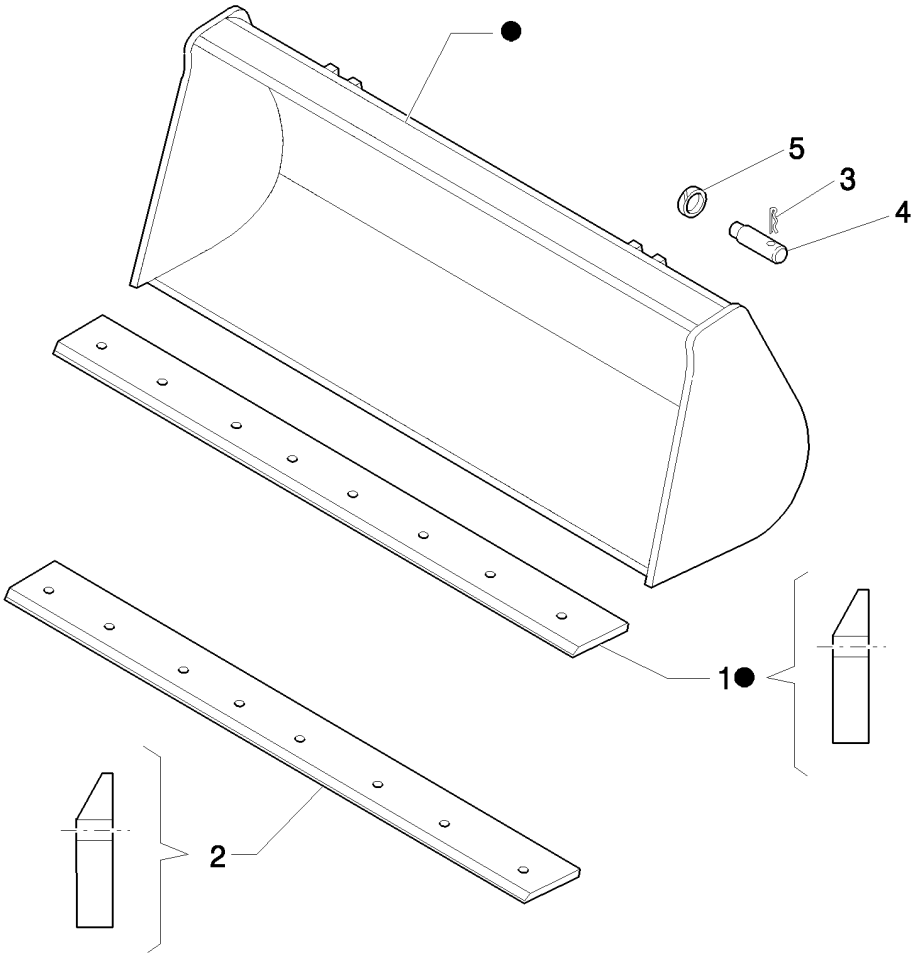

(0.88 M³) BUCKET WITHOUT TINES

REF	FN	PART NUMBER	YR/SN	QTY	DESCRIPTION
1	1	85801044		1	EDGE, CUTTING, 27 Deg. cutting edge
2	2	85807868		1	EDGE, CUTTING
3		85802993		4	PIN
4		85801051		4	PIN
5		85802992		4	RING
6		85801042		1	BUCKET, Assy

(1) Part welded to bucket
(2) Non-reversible weld on

18" (457MM) BACKHOE BUCKET WITH PIN TEETH (EXTRA HD) - NA

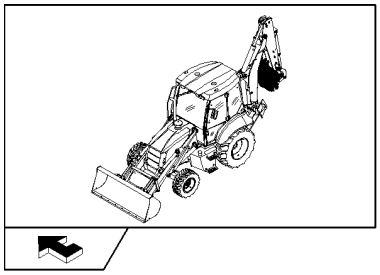

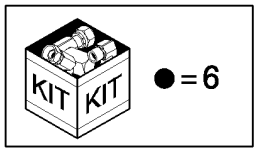

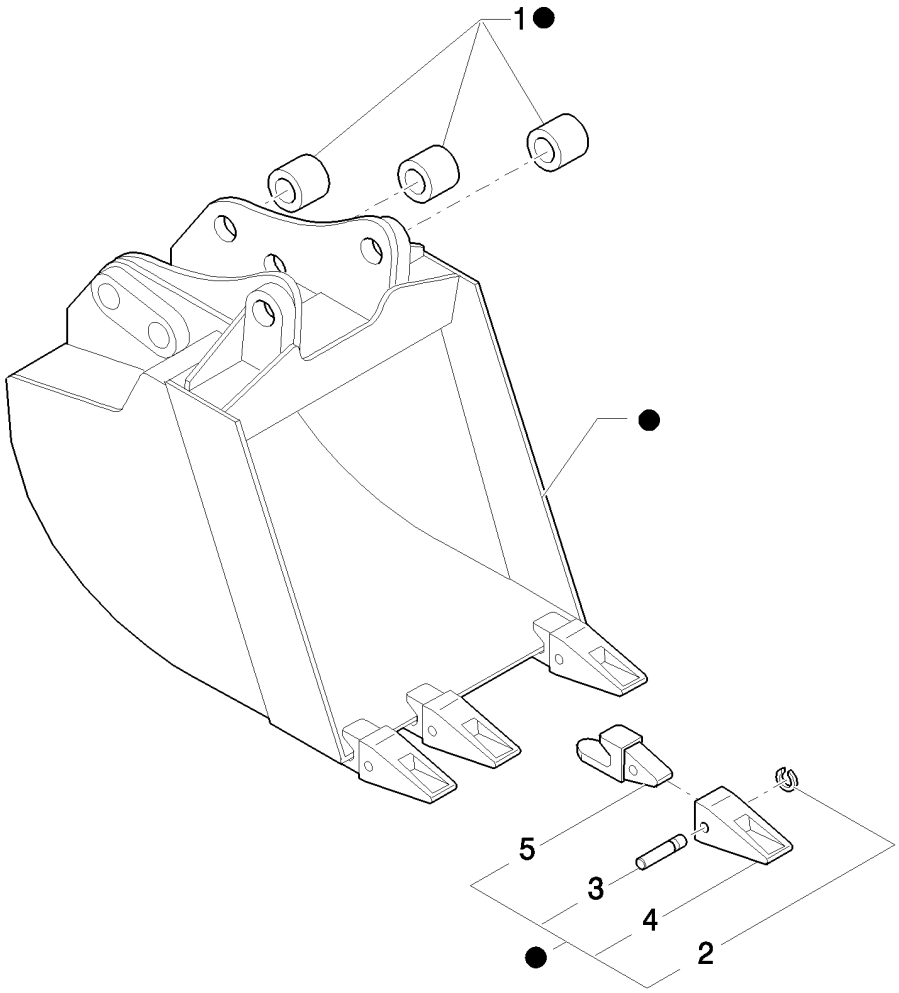

18" (457MM) BACKHOE BUCKET WITH PIN TEETH (EXTRA HD) - NA

REF	FN	PART NUMBER	YR/SN	QTY	DESCRIPTION
1		83910634		6	BUSHING
2		85801098		4	RING
3		85801097		4	PIN
4		85811432		4	TOOTH, BUCKET
5		85821788		4	SHANK, BUCKET TOOTH
6		87661002		1	BUCKET, Assy

24" (610MM) BACKHOE BUCKET WITH PIN TEETH (EXTRA HD) - NA

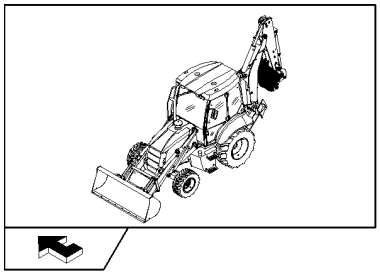

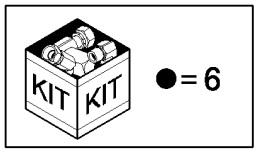

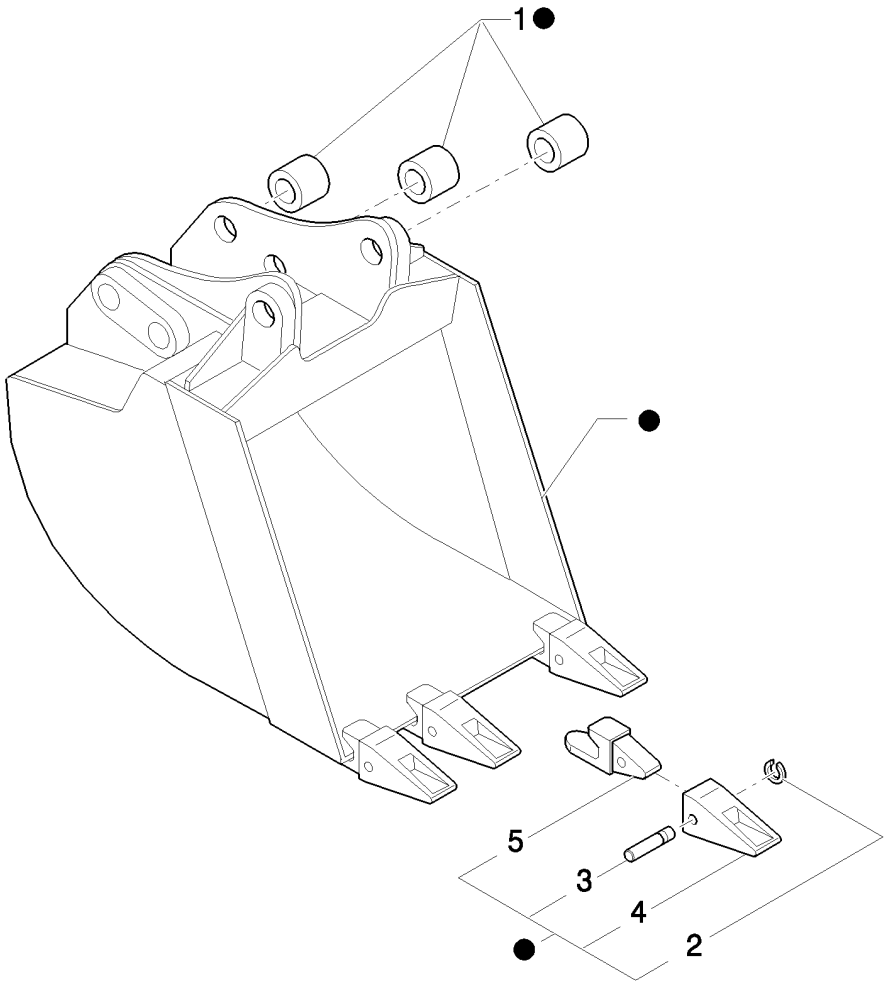

24" (610MM) BACKHOE BUCKET WITH PIN TEETH (EXTRA HD) - NA

REF	FN	PART NUMBER	YR/SN	QTY	DESCRIPTION
1		83910634		6	BUSHING
2		85801098		4	RING
3		85801097		4	PIN
4		85811432		4	TOOTH, BUCKET
5		85821788		4	SHANK, BUCKET TOOTH
6		87659514		1	BUCKET, Assy

522		p1	04/08

(1 M³) BUCKET WITHOUT TINES

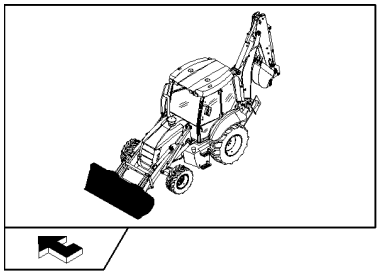

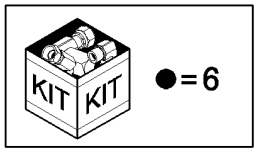

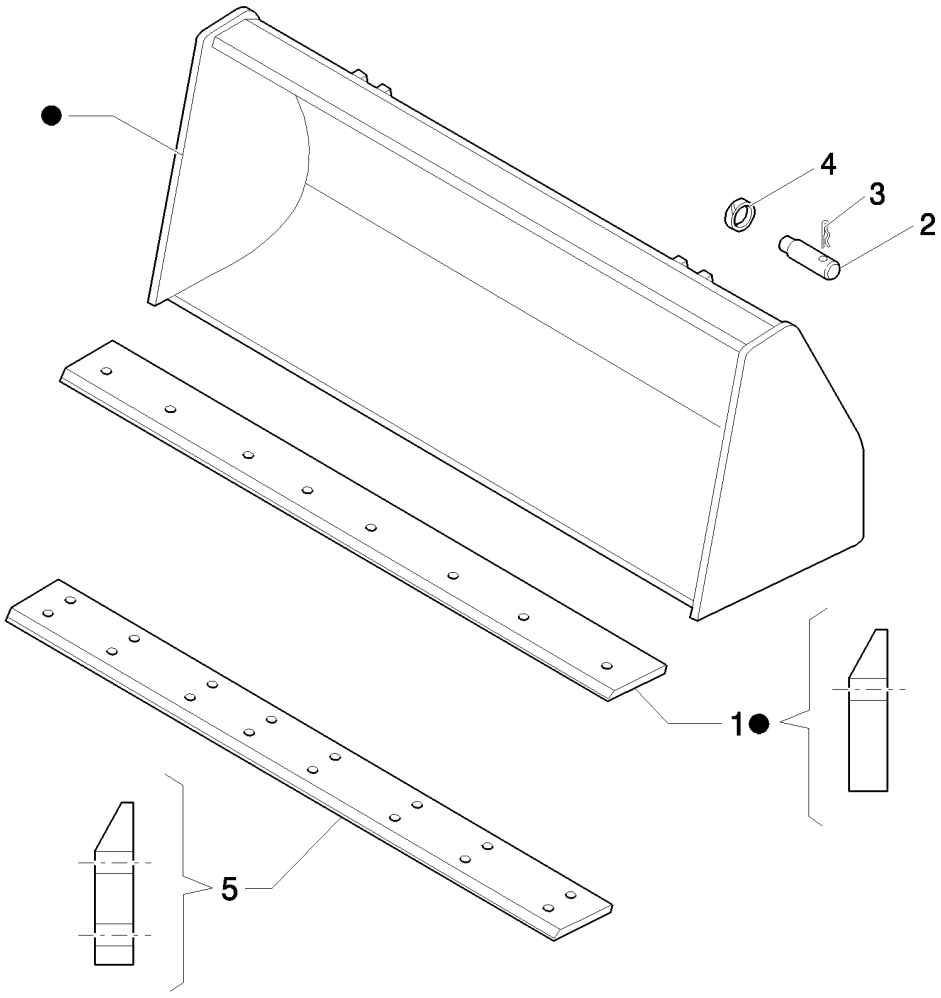

(1 M³) BUCKET WITHOUT TINES

REF	FN	PART NUMBER	YR/SN	QTY	DESCRIPTION
1	1	85801034		1	EDGE, CUTTING
2		85801051		4	PIN
3		85802993		4	PIN
4		85802992		4	RING
5	2	85807867		1	EDGE, CUTTING, 200mm W x 2250 L
6		85801040		1	BUCKET, Assy

(1) Part welded to bucket
(2) Non-reversible weld on

522/01		p1	04/08

STANDARD (1 M³) BUCKET WITH FORKS

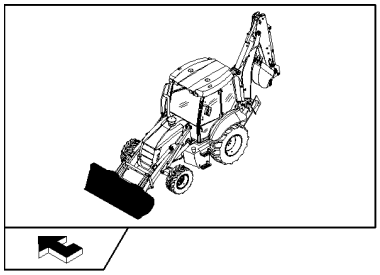

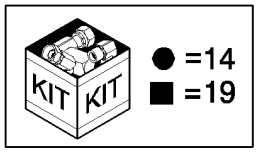

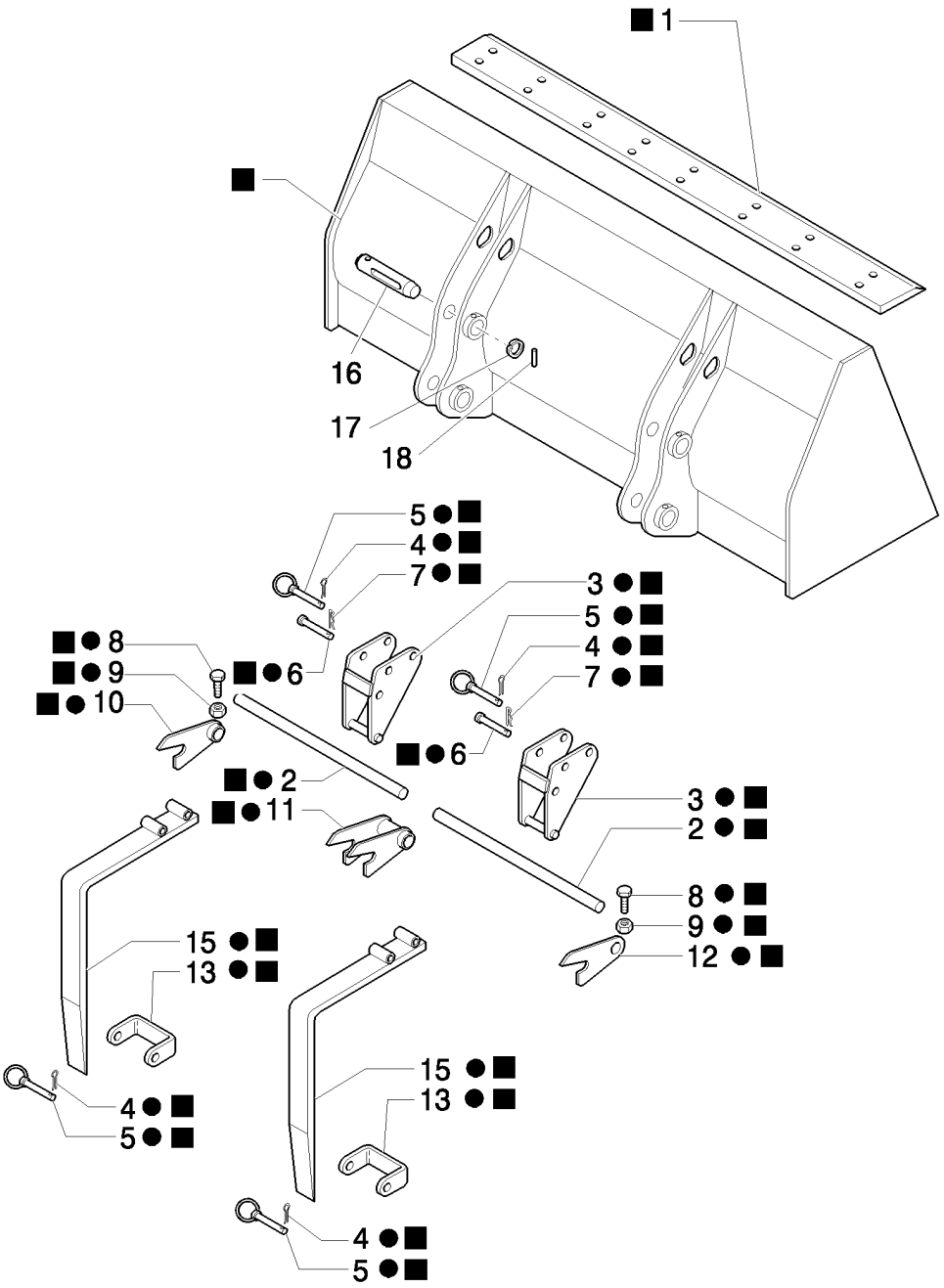

STANDARD (1 M³) BUCKET WITH FORKS

REF	FN	PART NUMBER	YR/SN	QTY	DESCRIPTION
1	1	85801034		1	EDGE, CUTTING
2		9969170		2	ROD
3		9968146		2	SUPPORT
4		9968147		4	PIN, ROLL
5		9968148		4	PIN, LOCK
6		9968149		2	PIN
7		9968150		2	PIN, SPLIT (COTTER)
8		9968151		2	SCREW
9		9968152		4	NUT, M10
10		9968153		1	HINGE
11		9968154		1	HINGE
12		9968155		1	HINGE
13		9968156		2	U-BRACKET
14		85801486		1	KIT, CONVERSION, FORKS
15		9968144		2	FORK
16		85801051		4	PIN
17		85802992		4	RING
18		85802993		4	PIN
19		85803224		1	BUCKET, Assy

(1) Part welded to bucket

525		p1	04/08

STANDARD (1 M³) BUCKET WITH FORKS AND REVERSIBLE BLADE

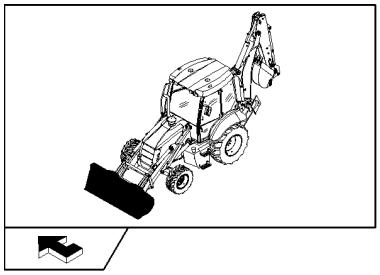

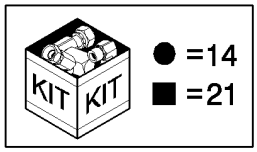

STANDARD (1 M³) BUCKET WITH FORKS AND REVERSIBLE BLADE

REF	FN	PART NUMBER	YR/SN	QTY	DESCRIPTION
1	1	85801034		1	EDGE, CUTTING
2		9969170		2	ROD
3		9968146		2	SUPPORT
4		9968147		4	PIN, ROLL
5		9968148		4	PIN, LOCK
6		9968149		2	PIN
7		9968150		2	PIN, SPLIT (COTTER)
8		9968151		2	SCREW
9		9968152		4	NUT, M10
10		9968153		1	HINGE
11		9968154		1	HINGE
12		9968155		1	HINGE
13		9968156		2	U-BRACKET
14		85801486		1	KIT, CONVERSION, FORKS
15		9968144		2	FORK
16		85801051		4	PIN
17		85802992		4	RING
18		85802993		4	PIN
19		85801470		8	NUT, 5/8"-11, G8
20		85801371		8	BOLT, PLOW, 5/8"-11 x 2 1/4"
21		85803224		1	BUCKET, Assy
22	2	85801161		1	EDGE, CUTTING

(1) Part welded to bucket
(2) Reversible bolt on

(0.88 M³) BUCKET AND EXTRA REVERSIBLE BLADE

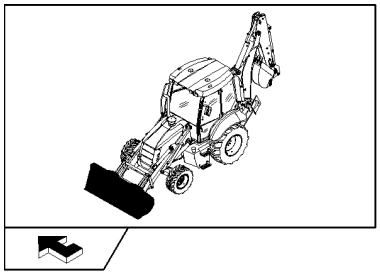

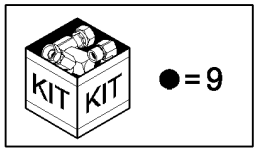

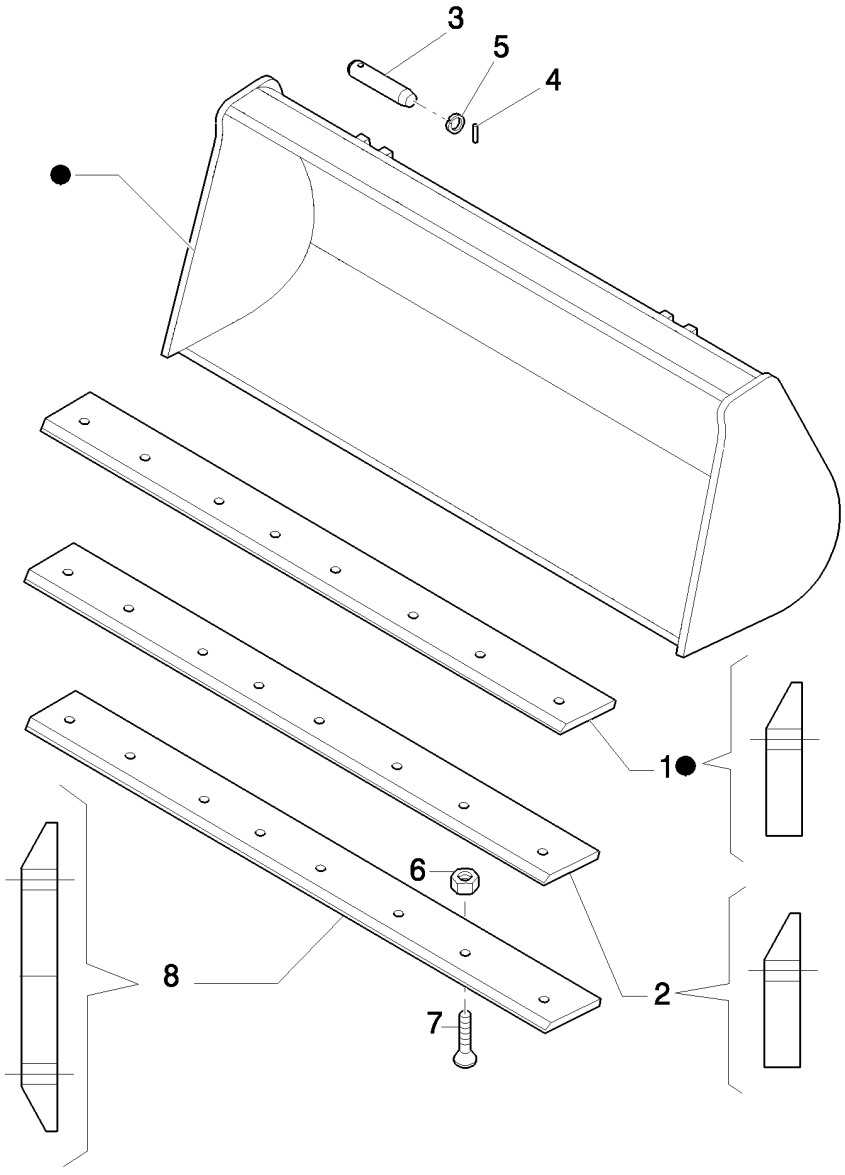

(0.88 M³) BUCKET AND EXTRA REVERSIBLE BLADE

REF	FN	PART NUMBER	YR/SN	QTY	DESCRIPTION
1	1	85801044		1	EDGE, CUTTING, 27 Deg. cutting edge
2		85807868		1	EDGE, CUTTING, N.A. ONLY
3		85801051		4	PIN
4		85802993		4	PIN
5		85802992		4	RING
6		85801470		8	NUT, 5/8"-11, G8
7		85801371		8	BOLT, PLOW, 5/8"-11 x 2 1/4"
8	2	85801161		1	EDGE, CUTTING, 35 Deg. cutting edge
9		85801042		1	BUCKET, Assy

(1) Part welded to bucket
(2) Reversible bolt on

STABILIZER FOOT GROUND (CENTER PIVOT)

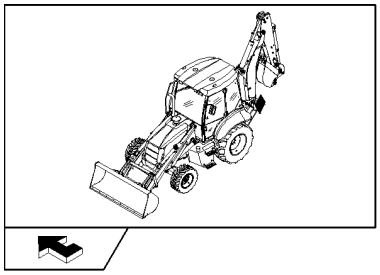

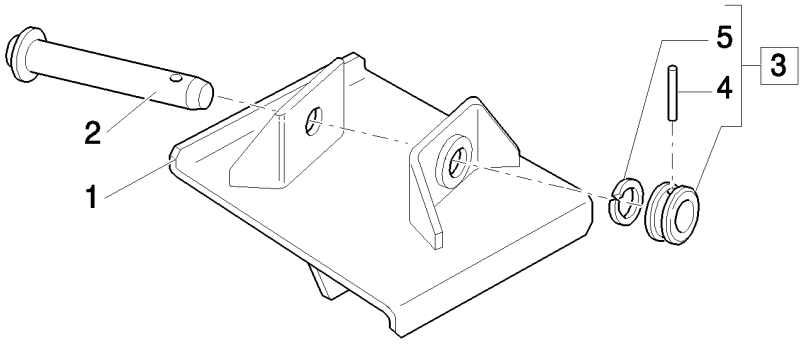

STABILIZER FOOT GROUND (CENTER PIVOT)

REF	FN	PART NUMBER	YR/SN	QTY	DESCRIPTION
1		85804847		1	PAD, RH
1		85804848		1	PAD, LH
2		85803141		2	PIN
3		85803139		2	PIN, LOCK, Assy
4		85802992		2	RING
5		85802993		2	PIN

STANDARD (1 M³) BUCKET WITH TINE

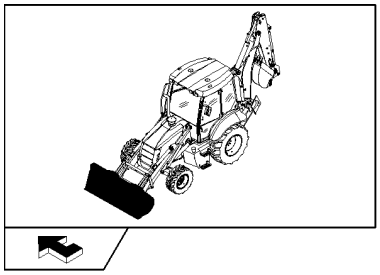

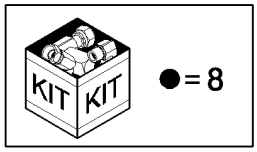

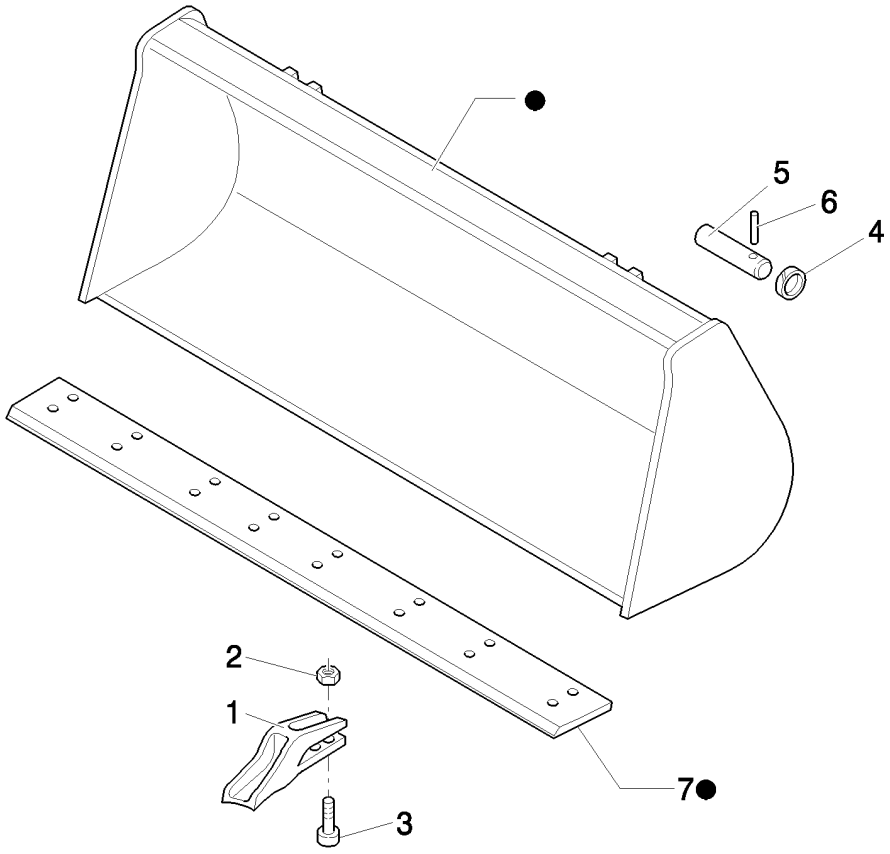

STANDARD (1 M³) BUCKET WITH TINE

REF	FN	PART NUMBER	YR/SN	QTY	DESCRIPTION
1		85811440		8	SHANK, BUCKET TOOTH
2		85801470		16	NUT, 5/8"-11, G8
3		85801371		16	BOLT, PLOW, 5/8"-11 x 2 1/4"
4		85802992		4	RING
5		85802993		4	PIN
6		85801051		4	PIN
7	1	85801034		1	EDGE, CUTTING
7		85807867		1	EDGE, CUTTING, 200mm W x 2250 L
8		85801040		1	BUCKET, Assy

(1) PART WELDED TO BUCKET

REVERSIBLE STABILIZER FOOT (CENTER PIVOT)

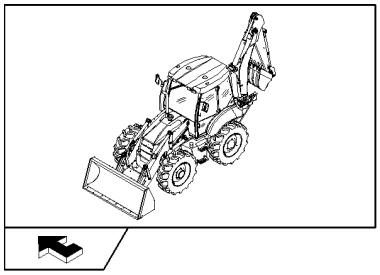

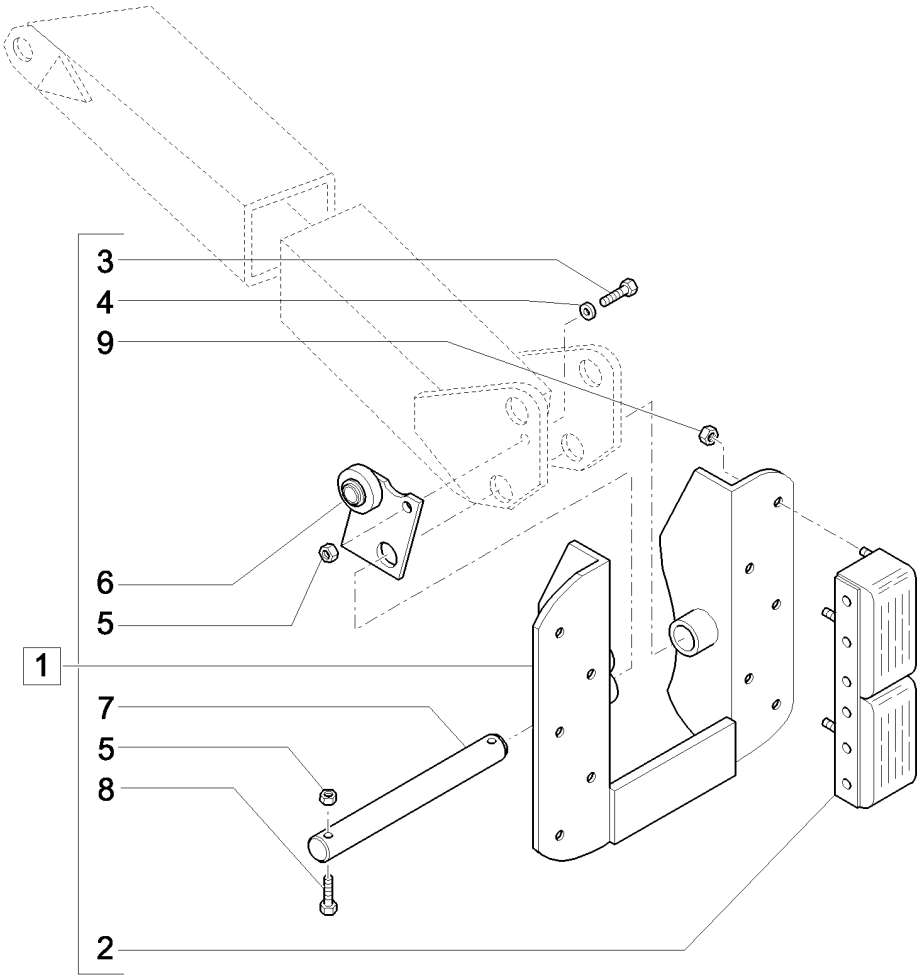

REVERSIBLE STABILIZER FOOT (CENTER PIVOT)

REF	FN	PART NUMBER	YR/SN	QTY	DESCRIPTION
1		85811985		1	FOOT, Assy, LH
1		85811986		1	FOOT, Assy, RH
2		85811992		4	PAD, RUBBER
3		81821263		2	BOLT, Hex, 3/8"-16 x 1 1/2", G5
4		12641004		2	WASHER, M10 x 20 x 3
5		81823746		6	NUT, 3/8"-16
6		85811990		1	BRACKET, LH
6		85811991		1	BRACKET, RH; Shown in Illustration
7		85811989		2	PIN
8		85804878		4	SCREW
9		81821237		20	NUT, 7/16"-14, G5, 7/16"-14

537		p1	04/08

STANDARD (1 M³) BUCKET WITH EXTRA REVERSIBLE BLADE

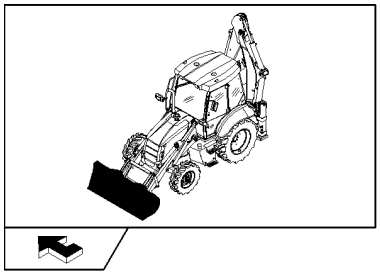

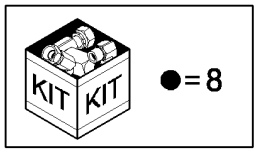

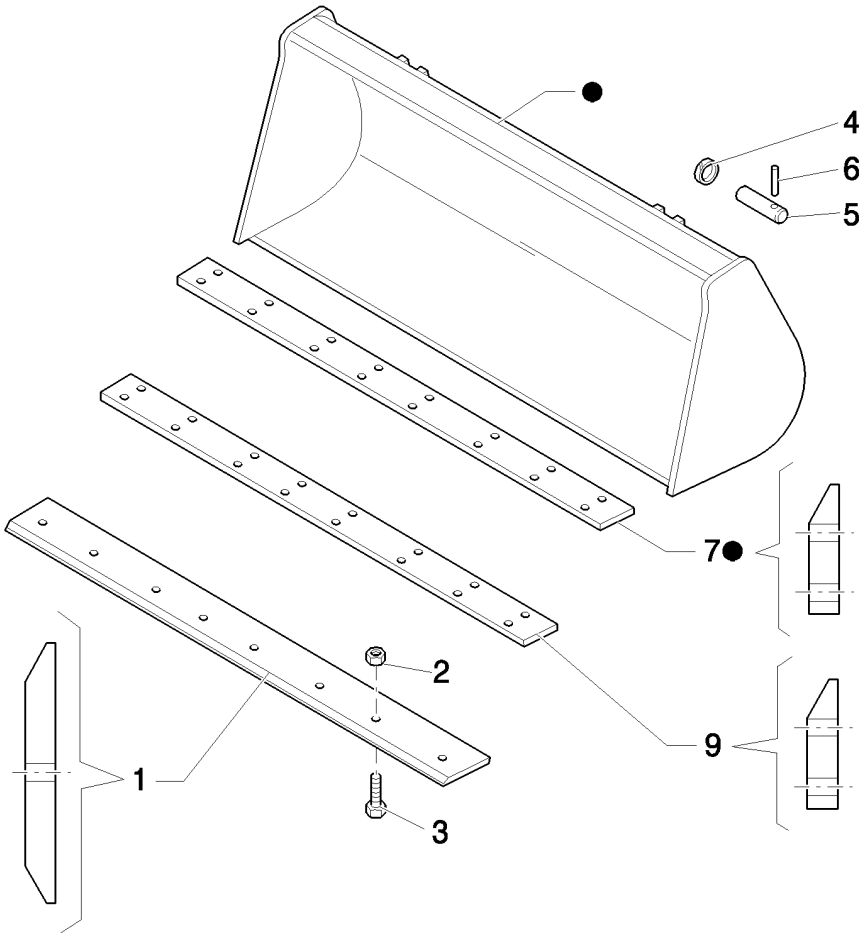

STANDARD (1 M³) BUCKET WITH EXTRA REVERSIBLE BLADE

REF	FN	PART NUMBER	YR/SN	QTY	DESCRIPTION
1	1	85801161		1	EDGE, CUTTING, 35 Deg. cutting edge
2		85801470		8	NUT, 5/8"-11, G8
3		85801371		8	BOLT, PLOW, 5/8"-11 x 2 1/4"
4		85802992		4	RING
5		85801051		4	PIN
6		85802993		4	PIN
7	2	85801034		1	EDGE, CUTTING
8		85801040		1	BUCKET, Assy
9		85807867		1	EDGE, CUTTING, 200mm W x 2250 L

(1) Reversible bolt on
(2) PART WELDED TO BUCKET

548		p1	03/08

DITCH CLEANING BUCKET

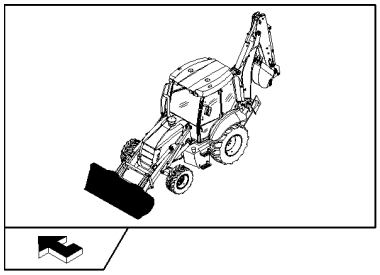

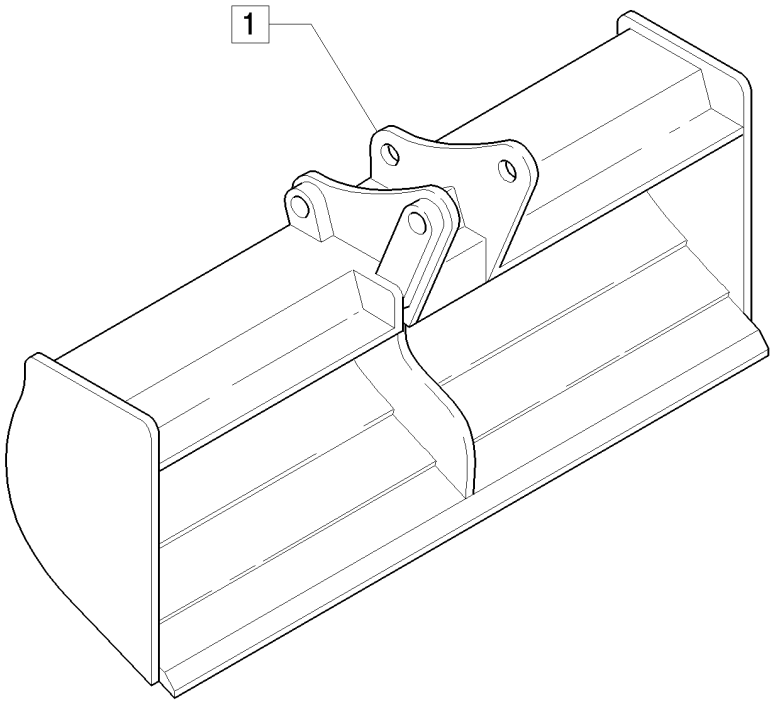

DITCH CLEANING BUCKET

REF	FN	PART NUMBER	YR/SN	QTY	DESCRIPTION
1		85824356		1	BUCKET

INTERNAL FAN - CAB

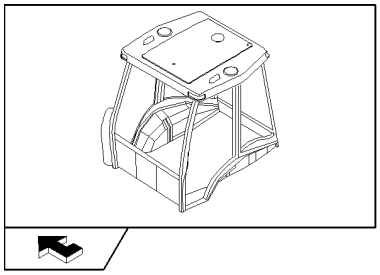

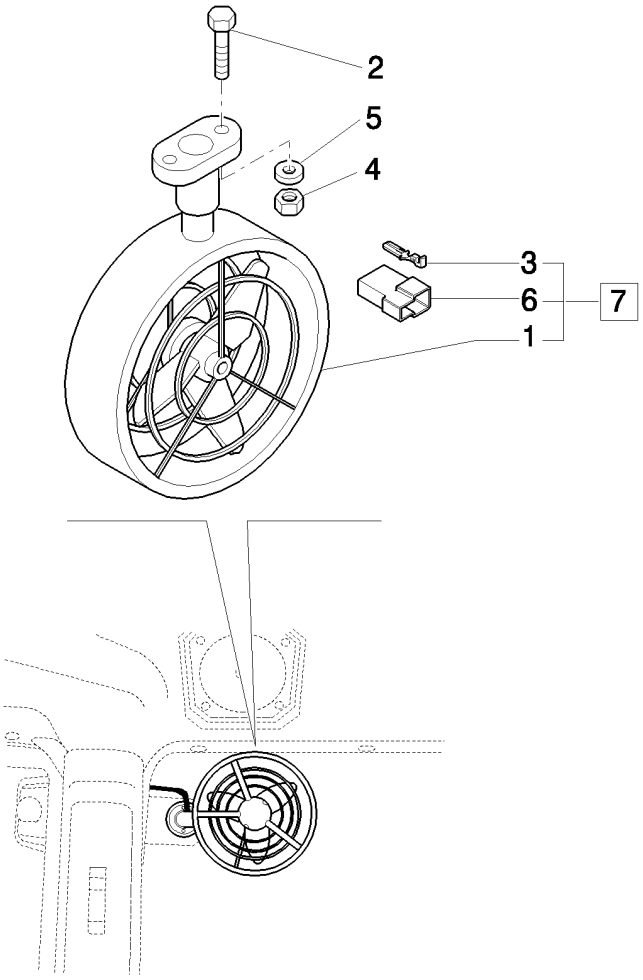

INTERNAL FAN - CAB

REF	FN	PART NUMBER	YR/SN	QTY	DESCRIPTION
1		85804323		1	FAN
2		14303324		2	SCREW, Hex Soc Hd, M4 x 20, 8.8, Full Thd
3		10250644		2	CABLE TERMINAL
4		12574011		2	NUT, LOCK, M4 x .7, Cl 8
5		12642804		2	WASHER, M4 x 12 x 1
6		12059980		1	CONNECTOR, ELEC
7		85802205		1	FAN, Assy

ENGINE VERSION: STARTER MOTOR

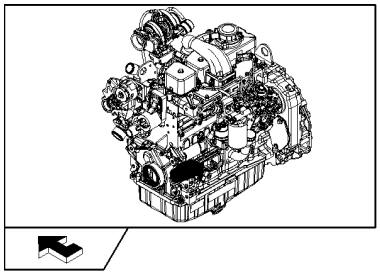

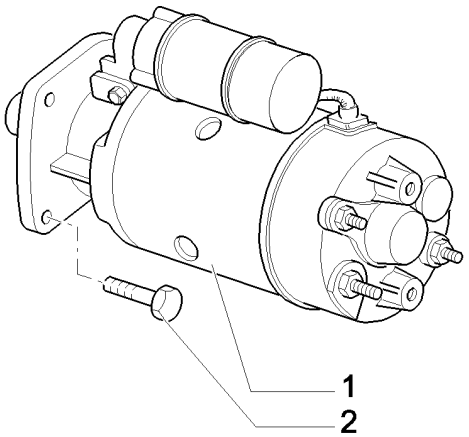

ENGINE VERSION: STARTER MOTOR

REF	FN	PART NUMBER	YR/SN	QTY	DESCRIPTION
1		86992395		1	MOTOR, STARTER
2		86511845		1	BOLT, Hex Flg, M10 x 35, 8.8

ACCESSORY ENGINE - ALTERNATOR

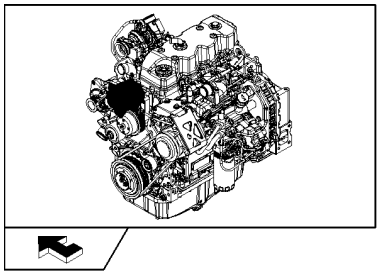

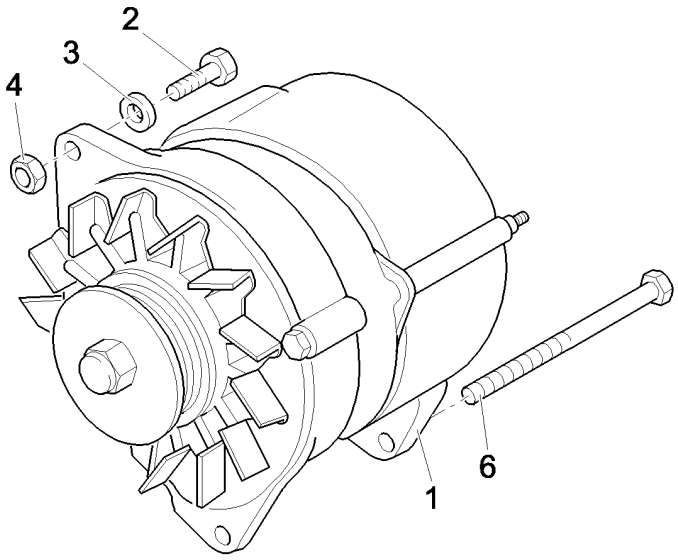

ACCESSORY ENGINE - ALTERNATOR

REF	FN	PART NUMBER	YR/SN	QTY	DESCRIPTION
1		87422777		1	ALTERNATOR
2		11107421		1	BOLT, Hex, M10 x 60, 8.8
3		896-11010		2	WASHER, M10 x 21.5 x 2.5, HT
4		12577211		1	NUT, LOCK, M10 x 1.5, Cl 8
5		827-10130		1	BOLT, Hex, M10 x 130, 10.9

638	01	p1	03/08

RADIATOR GUARDS

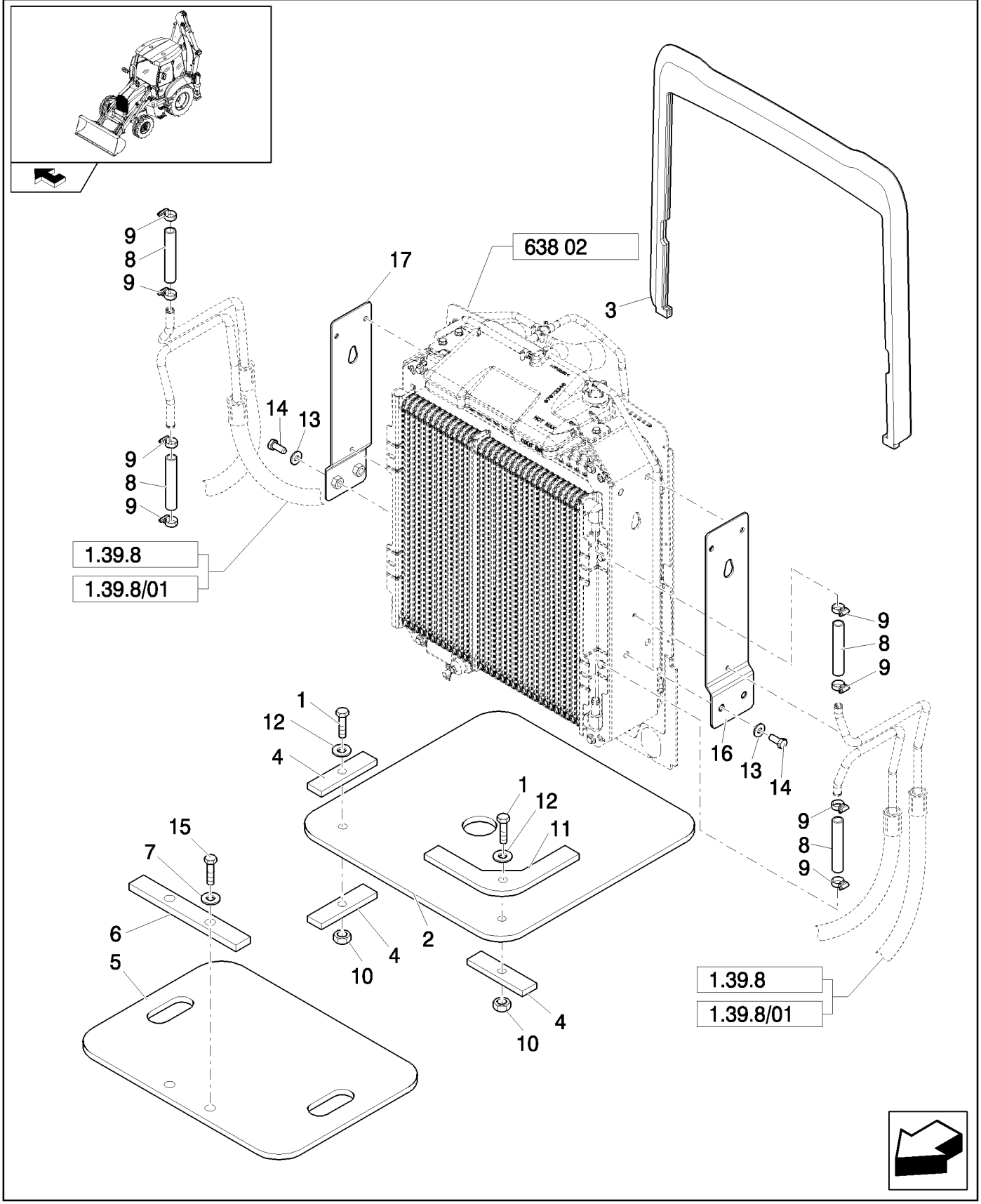

RADIATOR GUARDS

REF	FN	PART NUMBER	YR/SN	QTY	DESCRIPTION
1		47049163		4	SCREW
2		87440497		2	COVER
3		87624746		1	SEAL
4		87440498		6	PLATE, RETAINING
5		85827830		1	SEAL, RUBBER
6		85827831		1	PLATE
7		11193879		2	WASHER, SPRING, Belleville, M8.4
8		87302508		4	HOSE, FLEXIBLE
9		87314076		8	COLLAR
10		47042260		4	NUT
11		87440499		2	PLATE, RETAINING
12		47048962		8	WASHER
13		12646901		4	WASHER, 12x28x3
14		11112421		4	BOLT, Hex, M12 x 30, 8.8
15		16043821		2	BOLT, Hex, M8 x 30, 8.8
16		87673338		1	BRACKET
17		87673339		1	BRACKET

Without Air Conditioner

B95B

638	02	p1	03/08

COOLANT RADIATOR, HYDRAULIC FLUID AND TRANSMISSION OIL

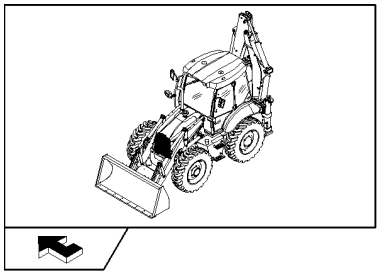

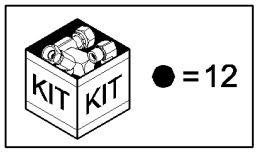

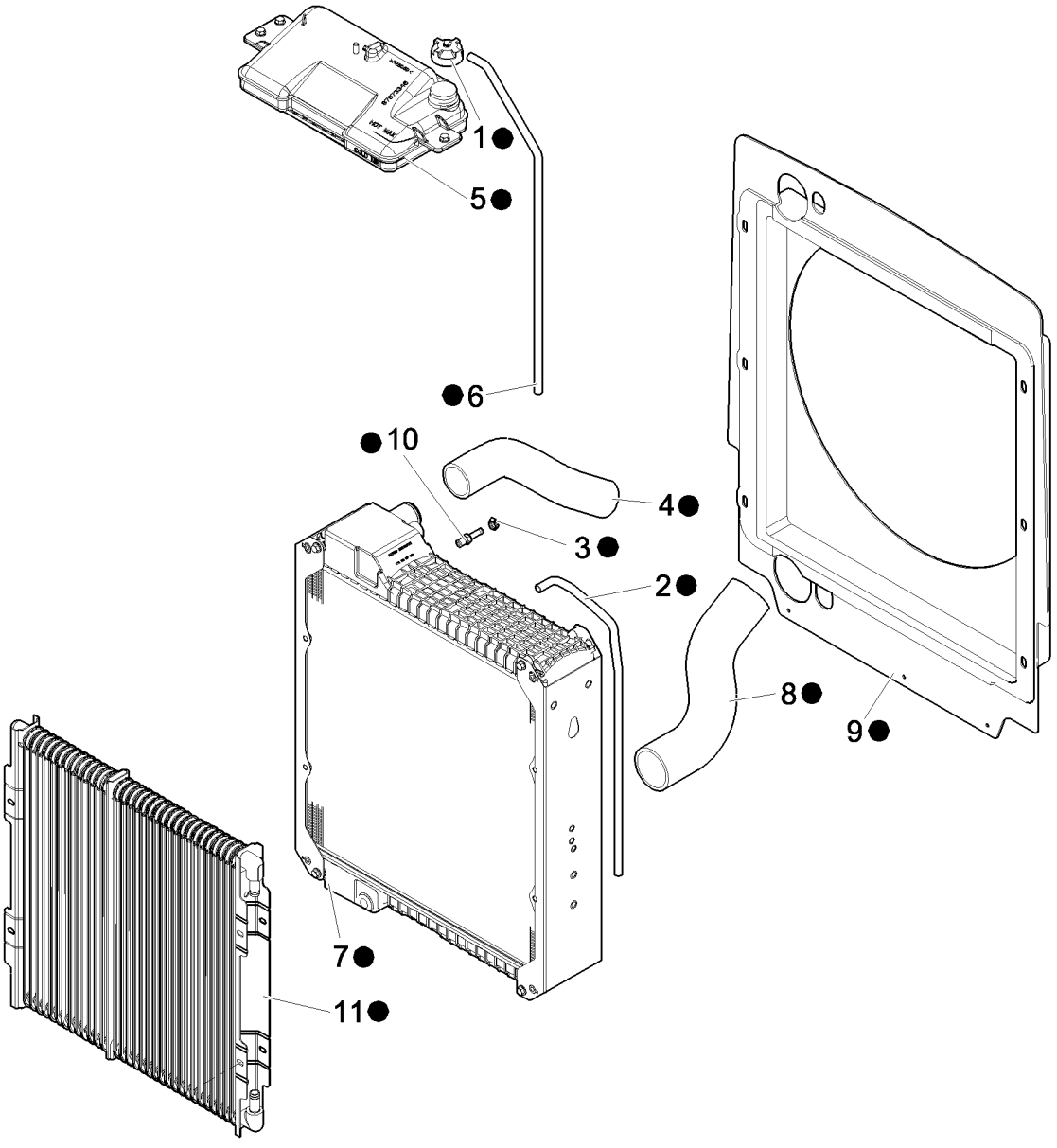

COOLANT RADIATOR, HYDRAULIC FLUID AND TRANSMISSION OIL

REF	FN	PART NUMBER	YR/SN	QTY	DESCRIPTION
1		87673335		1	CAP
2		87673347		1	HOSE
3		87673334		1	KIT
4		87528978		1	HOSE
5		87673346		1	BOWL
6		87675597		1	HOSE
7	1	87310155		1	RADIATOR
8		87407272		1	HOSE
9		87683149		1	SHROUD
10		87016893		1	FITTING, 1/4" Hose X 1/4" NPTF Beaded
11	2	87410099		1	COOLER, OIL
12		87670081		1	RADIATOR

(1) Water
(2) Oil Cooler

Without Air Conditioner

B95B

638	03	p1	03/08

AFTER-COOLER COOLING PIPING

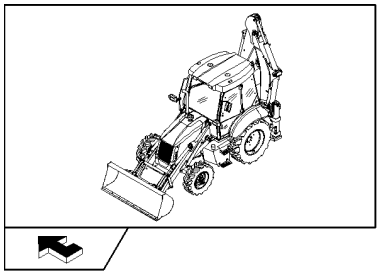

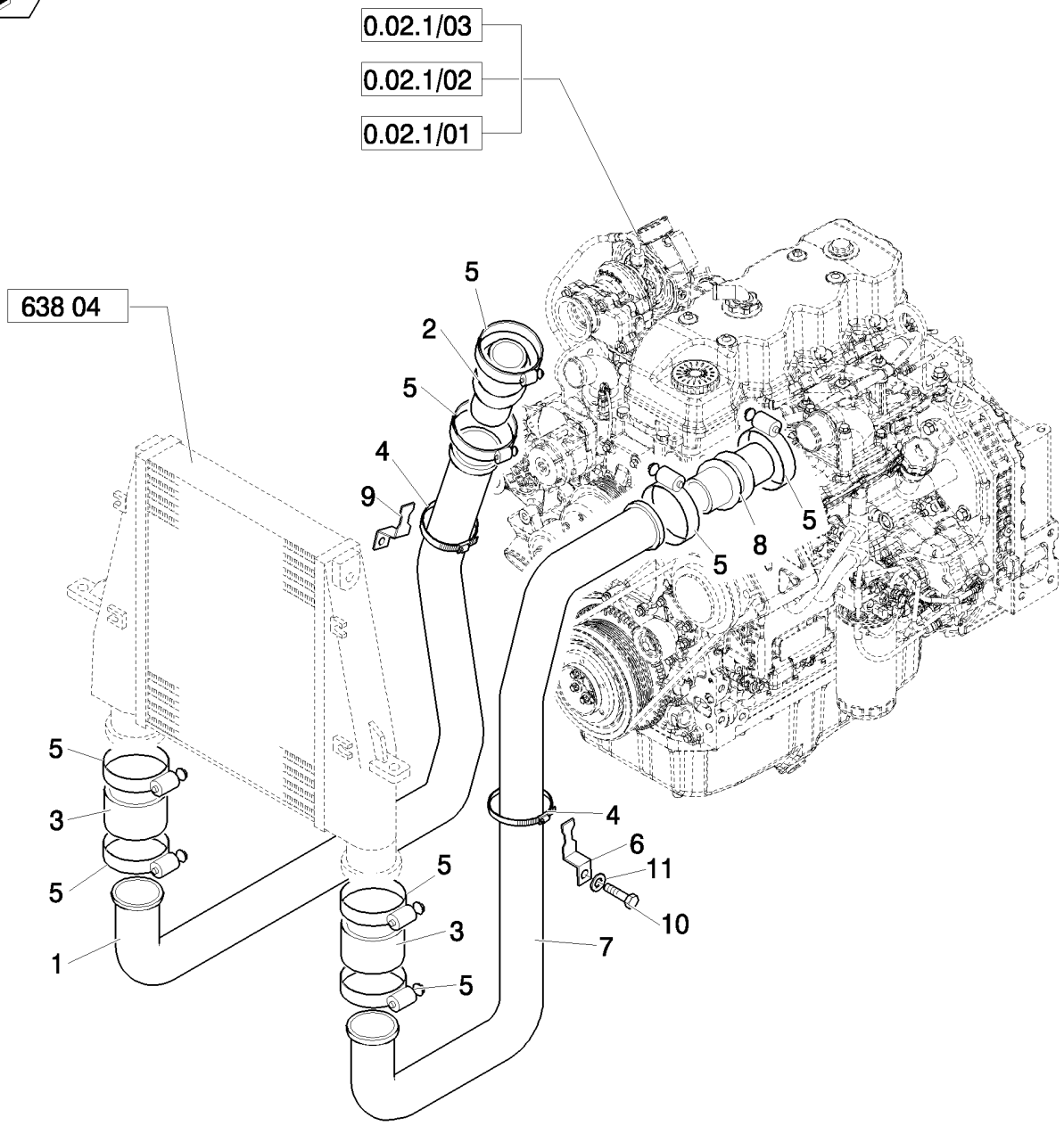

AFTER-COOLER COOLING PIPING

REF	FN	PART NUMBER	YR/SN	QTY	DESCRIPTION
1		87548192		1	TUBE
2		86994498		1	HOSE, M10X40
3		86982960		2	HOSE
4		86624194		4	CLAMP, HOSE, #36, 1.81/2.75 Type F Worm, M10X35
5		87410724		8	CLAMP
6		87561489		1	BRACKET
7		87554030		1	TUBE
8		86982962		1	HOSE
9		86983163		1	BRACKET
10		47042342		2	SCREW
11		47048992		2	WASHER

638	04	p1	03/08

PARKEERREM (CABINE: ROPS)

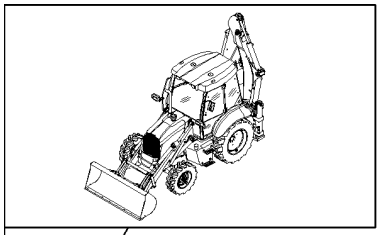

PARKEERREM (CABINE: ROPS)

REF	FN	PART NUMBER	YR/SN	QTY	DESCRIPTION
1		87573731		1	COOLER
2		47048972		2	WASHER
3		11106021		2	BOLT, Hex, M10 x 20, 8.8, Full Thd
4		87559628		1	BRACKET
5		87559274		1	BRACKET
6		47048440		6	WASHER
7		47049187		2	SCREW, M10x35
8		47048759		2	GROMMET
9		47049041		2	NUT
10		47049088		2	SCREW, M10x50
11		47048963		4	WASHER, 11x20x2.0mm
12		47048668		2	GASKET
13		87404427		2	BRACKET
14		85826361		2	SCREW
15		47048963		4	WASHER
16		87570398		1	BRACKET
17		87570395		1	BRACKET

ENGINE VERSION: SUPPORTS

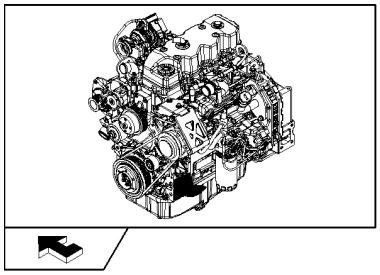

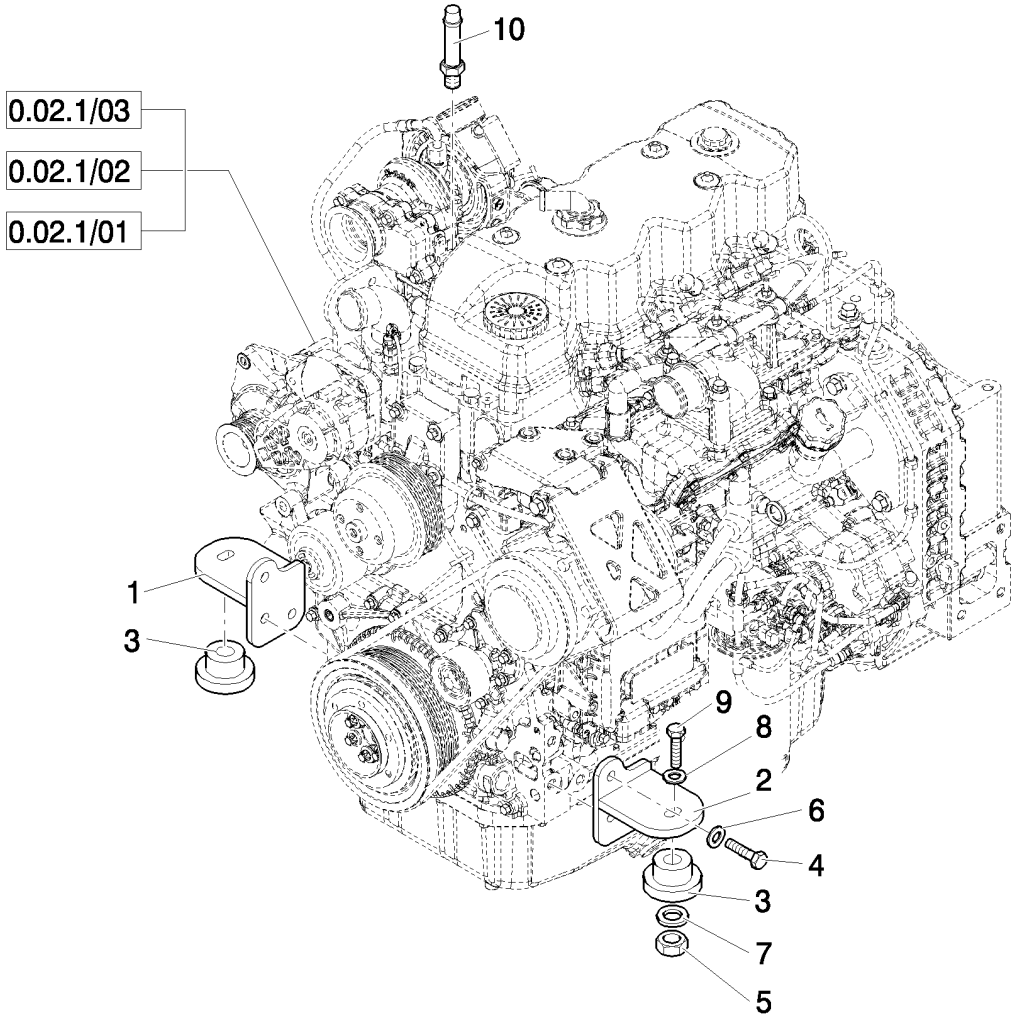

ENGINE VERSION: SUPPORTS

REF	FN	PART NUMBER	YR/SN	QTY	DESCRIPTION
1		87407275		1	MOUNT, ENGINE
2		87368320		1	MOUNT, ENGINE
3		87416966		2	ISOLATOR
4		11112421		6	BOLT, Hex, M12 x 30, 8.8
5		16105011		2	NUT, LOCK, M12x1.25
6		47048976		6	WASHER, M12
7		85801585		2	WASHER, SEALING, 65mm OD
8		85802618		2	WASHER, SEALING
9		87410647		2	SCREW, M12x1.25x90
10		87016893		1	FITTING, 1/4" Hose X 1/4" NPTF Beaded

ENGINE OUTFIT: FAN WITH VISCOUS JOINT: EU

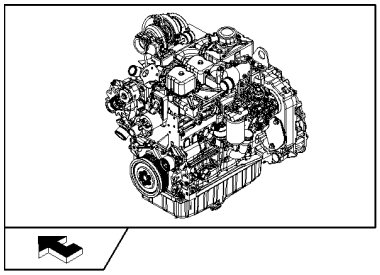

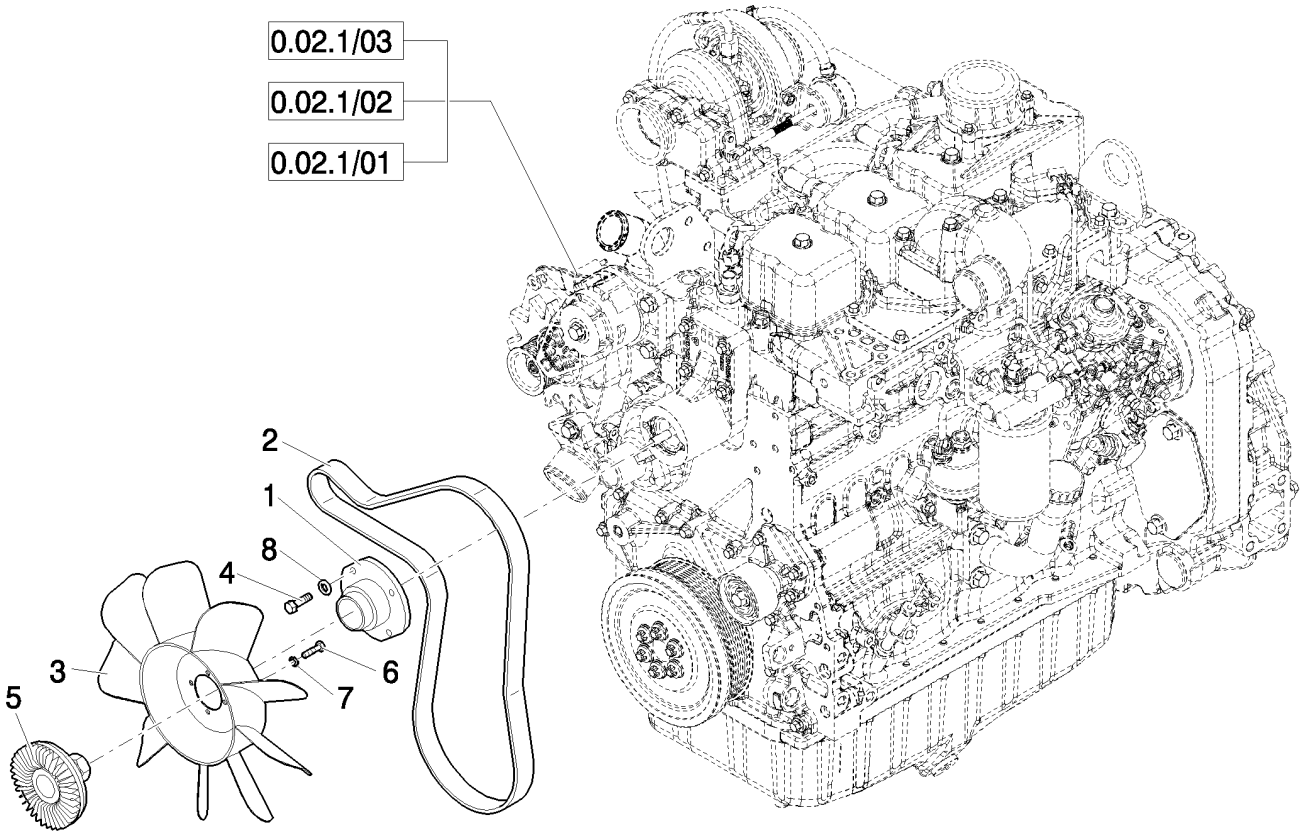

ENGINE OUTFIT: FAN WITH VISCOUS JOINT: EU

REF	FN	PART NUMBER	YR/SN	QTY	DESCRIPTION
1		47049809		1	ADAPTER
2		87415774		1	BELT
3		47049943		1	FAN
4		47049186		4	BOLT, Hex, M10 x 30, 8.8
5		87340008		1	DRIVE
6		16043221		4	SCREW, Hex, M8 x 16, 8.8
7		47048992		4	WASHER
8		47048972		4	WASHER

ACCESSORY ENGINE - STARTER

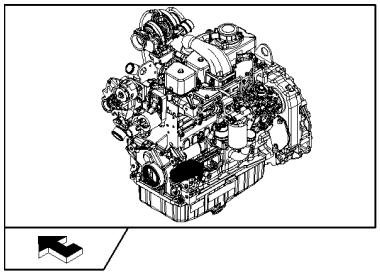

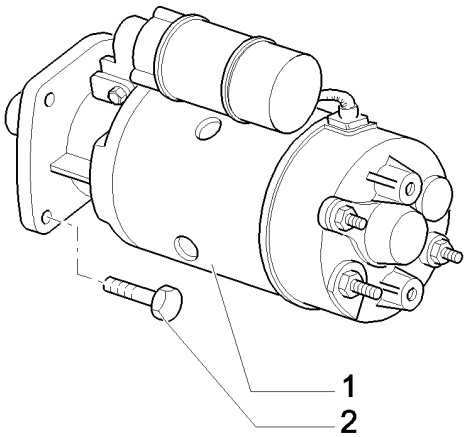

ACCESSORY ENGINE - STARTER

REF	FN	PART NUMBER	YR/SN	QTY	DESCRIPTION
1		86992395		1	MOTOR, STARTER
2		86511845		2	BOLT, Hex Flg, M10 x 35, 8.8, M10x35

ACCESSORY ENGINE: ALTERNATOR

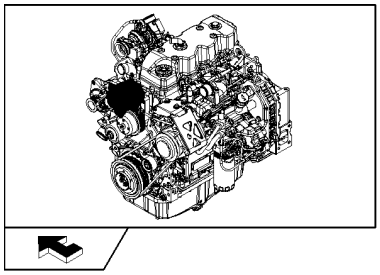

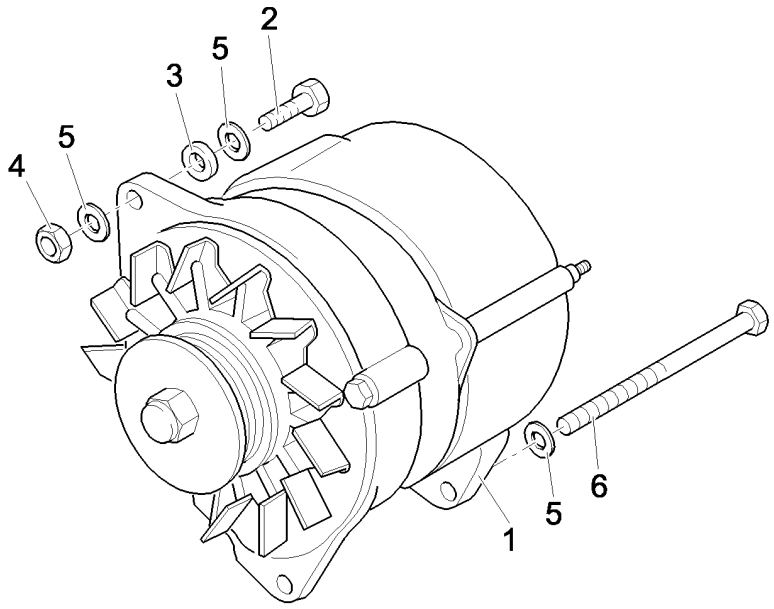

ACCESSORY ENGINE: ALTERNATOR

REF	FN	PART NUMBER	YR/SN	QTY	DESCRIPTION
1		87422777		1	ALTERNATOR
2		11107421		1	BOLT, Hex, M10 x 60, 8.8
3		896-11010		2	WASHER, M10 x 21.5 x 2.5, HT
4		12577211		1	NUT, LOCK, M10 x 1.5, Cl 8
5		11190679		3	WASHER, SPRING, Belleville, M10.5
6		827-10130		1	BOLT, Hex, M10 x 130, 10.9

639	01	p1	03/08

RADIATOR GUARDS

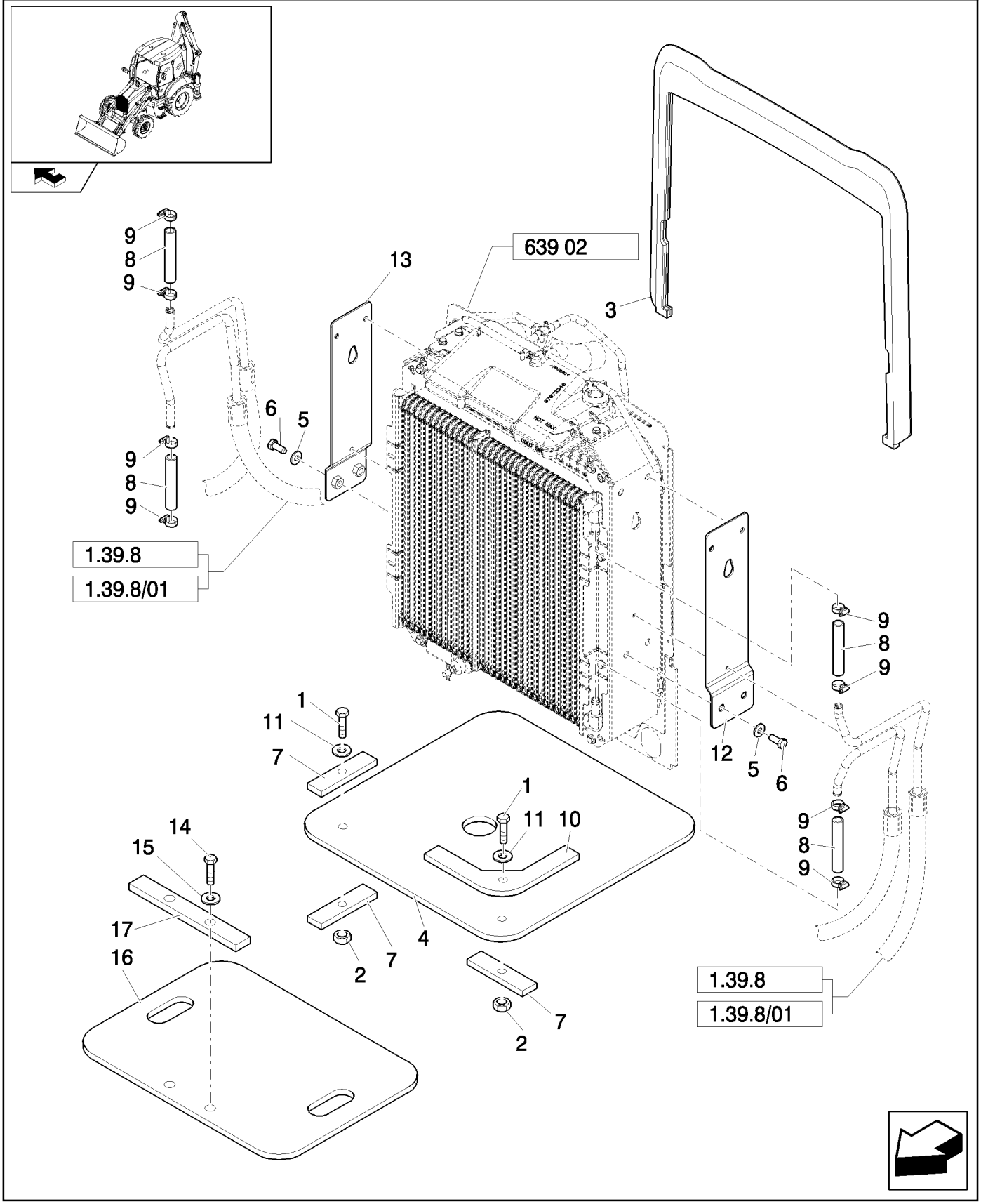

RADIATOR GUARDS

REF	FN	PART NUMBER	YR/SN	QTY	DESCRIPTION
1		47049163		4	SCREW
2		47042260		4	NUT
3		87624746		1	SEAL
4		87440497		2	COVER
5		12646901		4	WASHER, 12x28x3
6		11112421		4	BOLT, Hex, M12 x 30, 8.8
7		87440498		6	PLATE, RETAINING
8		87302508		4	HOSE, FLEXIBLE
9		87314076		8	COLLAR
10		87440499		2	PLATE, RETAINING
11		47048962		8	WASHER
12		87673338		1	BRACKET
13		87673339		1	BRACKET
14		16043821		2	BOLT, Hex, M8 x 30, 8.8
15		11193879		2	WASHER, SPRING, Belleville, M8.4
16		85827830		1	SEAL, RUBBER
17		85827831		1	PLATE

With Air Conditioner

B95B

639	02	p1	03/08

COOLANT RADIATOR, HYDRAULIC FLUID AND TRANSMISSION OIL

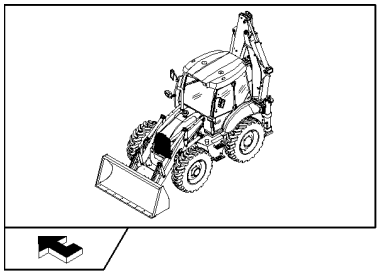

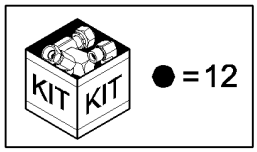

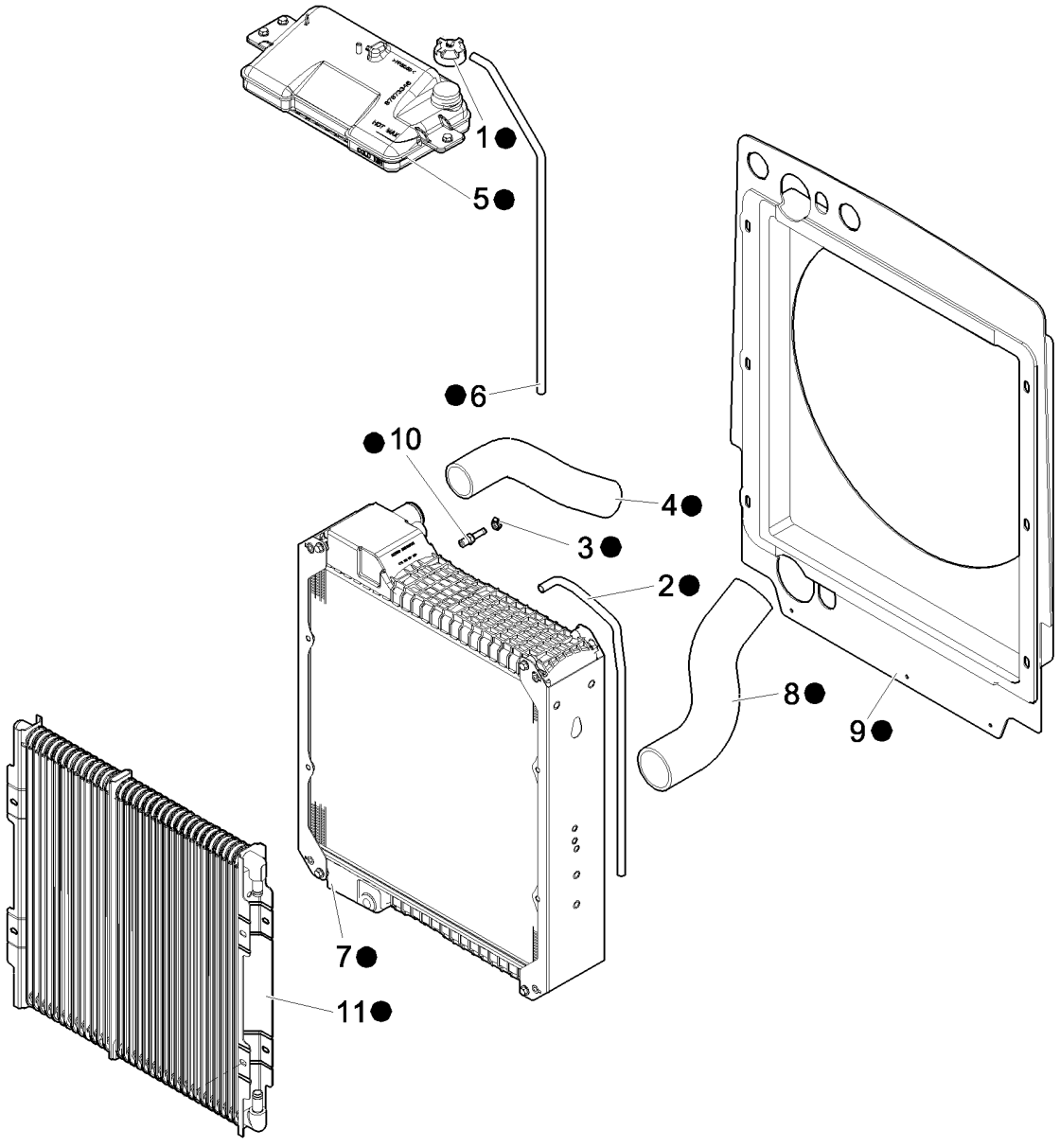

COOLANT RADIATOR, HYDRAULIC FLUID AND TRANSMISSION OIL

REF	FN	PART NUMBER	YR/SN	QTY	DESCRIPTION
1		87673335		1	CAP
2		87673347		1	HOSE
3		87673334		1	KIT
4		87528978		1	HOSE
5		87673346		1	BOWL
6		87675597		1	HOSE
7	1	87310155		1	RADIATOR
8		87407272		1	HOSE
9		87683149		1	SHROUD
10		87016893		1	FITTING, 1/4" Hose X 1/4" NPTF Beaded
11	2	87410099		1	COOLER, OIL
12		87670081		1	RADIATOR

(1) Water
(2) Oil Cooler

With Air Conditioner

B95B

639	03	p1	03/08

AFTER-COOLER COOLING PIPING

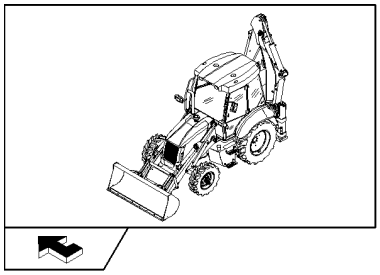

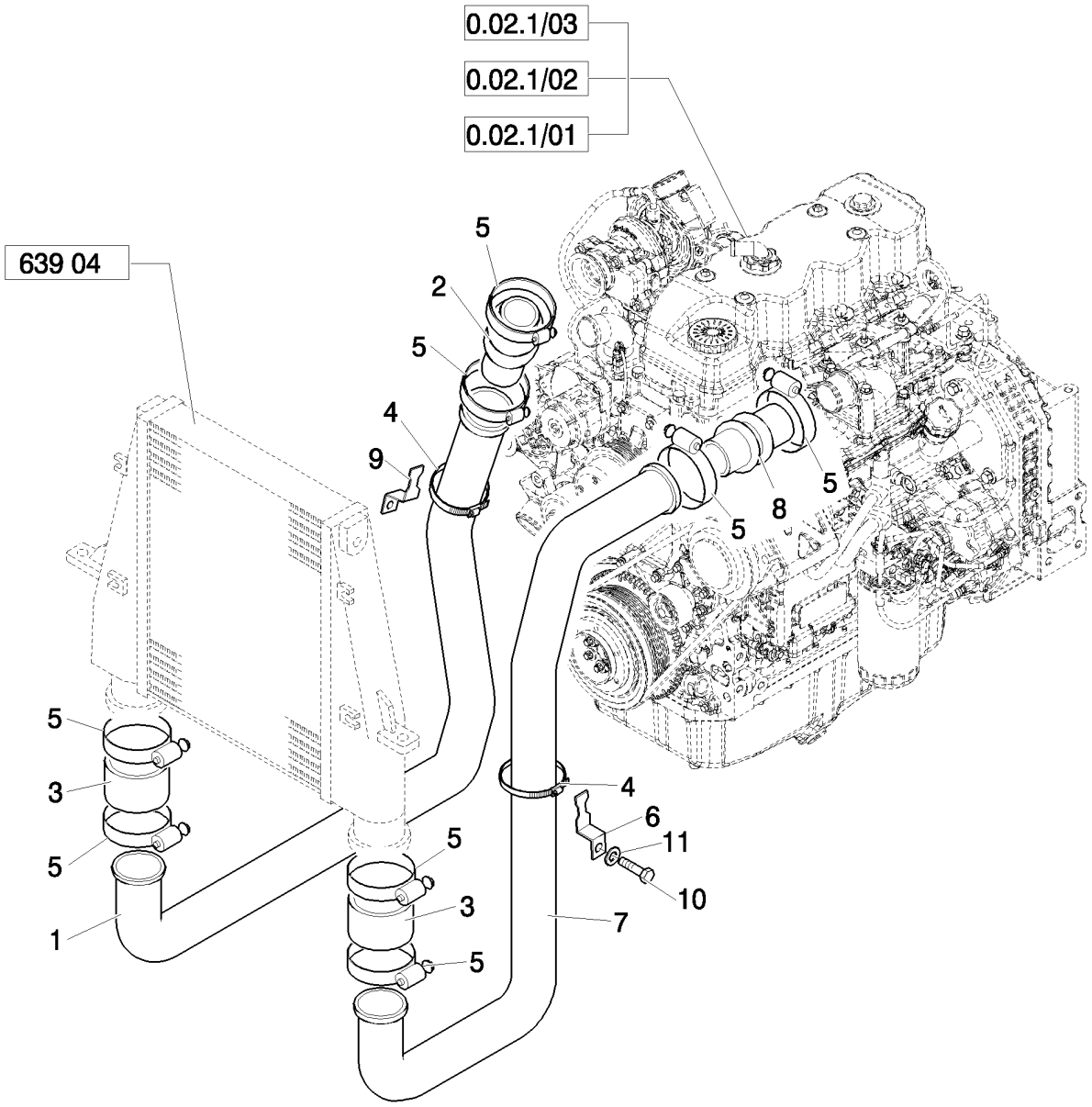

AFTER-COOLER COOLING PIPING

REF	FN	PART NUMBER	YR/SN	QTY	DESCRIPTION
1		87548192		1	TUBE
2		86994498		1	HOSE, M10X40
3		86982960		2	HOSE
4		86624194		4	CLAMP, HOSE, #36, 1.81/2.75 Type F Worm, M10X35
5		87410724		8	CLAMP
6		87561489		1	BRACKET
7		87554030		1	TUBE
8		86982962		1	HOSE
9		86983163		1	BRACKET
10		47042342		2	SCREW
11		47048992		2	WASHER

639	04	p1	03/08

PARKEERREM (CABINE: ROPS)

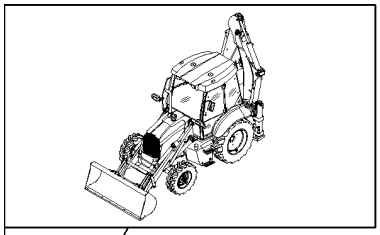

PARKEERREM (CABINE: ROPS)

REF	FN	PART NUMBER	YR/SN	QTY	DESCRIPTION
1		87573731		1	COOLER
2		47048972		2	WASHER
3		11106021		2	BOLT, Hex, M10 x 20, 8.8, Full Thd
4		87559628		1	BRACKET
5		87559274		1	BRACKET
6		47048440		6	WASHER
7		47049187		2	SCREW, M10x35
8		47048759		2	GROMMET
9		47048646		2	SPACER
10		47049088		2	SCREW, M10x50
11		47048963		4	WASHER, 11x20x2.0mm
12		47048668		2	GASKET
13		87404427		2	BRACKET
14		47049041		2	NUT
15		85826361		2	SCREW

ENGINE VERSION: SUPPORTS

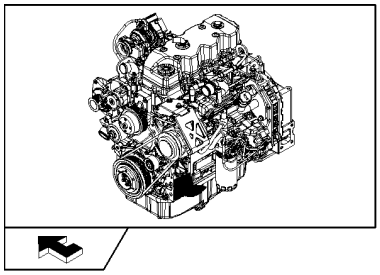

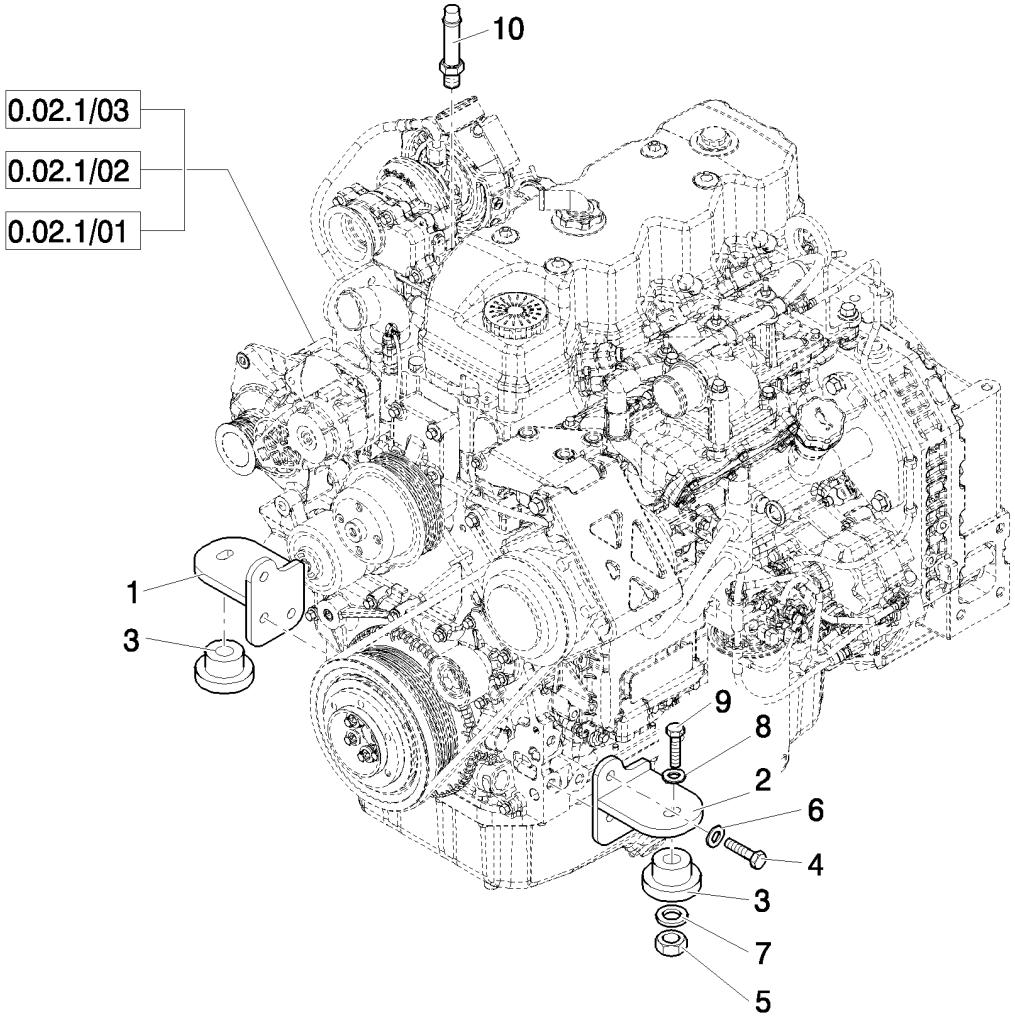

ENGINE VERSION: SUPPORTS

REF	FN	PART NUMBER	YR/SN	QTY	DESCRIPTION
1		87407275		1	MOUNT, ENGINE
2		87368320		1	MOUNT, ENGINE
3		87416966		2	ISOLATOR
4		11112421		6	BOLT, Hex, M12 x 30, 8.8
5		16105011		2	NUT, LOCK, M12x1.25
6		47048976		6	WASHER, M12
7		85801585		2	WASHER, SEALING, 65mm OD
8		85802618		2	WASHER, SEALING
9		87410647		2	SCREW, M12x1.25x90
10		87016893		1	FITTING, 1/4" Hose X 1/4" NPTF Beaded

ENGINE OUTFIT: FAN WITH VISCOUS JOINT

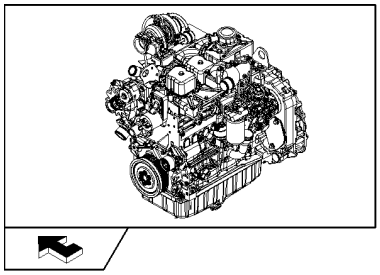

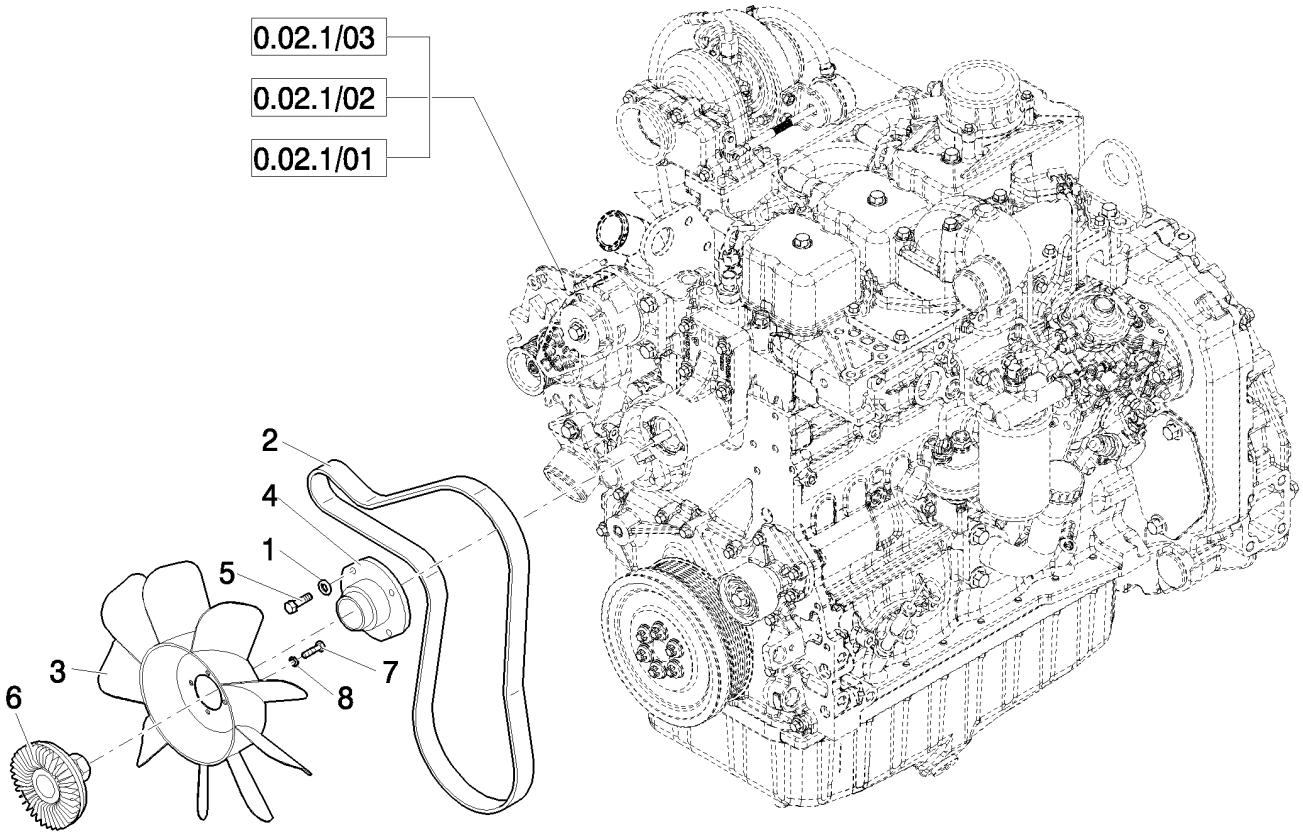

ENGINE OUTFIT: FAN WITH VISCOUS JOINT

REF	FN	PART NUMBER	YR/SN	QTY	DESCRIPTION
1		47048972		4	WASHER
2		87415774		1	BELT
3		47049943		1	FAN
4		47049809		1	ADAPTER
5		47049186		4	BOLT, Hex, M10 x 30, 8.8
6		87340008		1	DRIVE
7		16043221		4	SCREW, Hex, M8 x 16, 8.8
8		47048992		4	WASHER

ENGINE VERSION: STARTER MOTOR

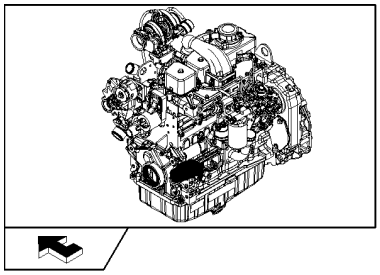

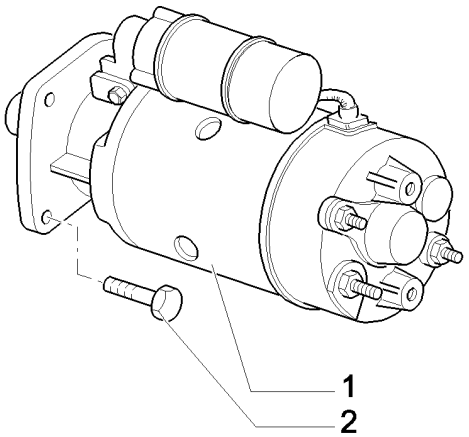

ENGINE VERSION: STARTER MOTOR

REF	FN	PART NUMBER	YR/SN	QTY	DESCRIPTION
1		86992395		1	MOTOR, STARTER
2		86511845		2	BOLT, Hex Flg, M10 x 35, 8.8, M10x35

ACCESSORY ENGINE

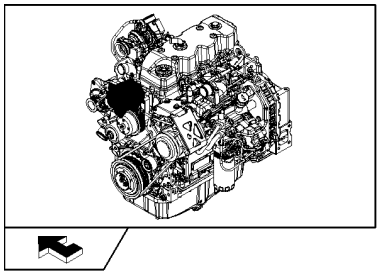

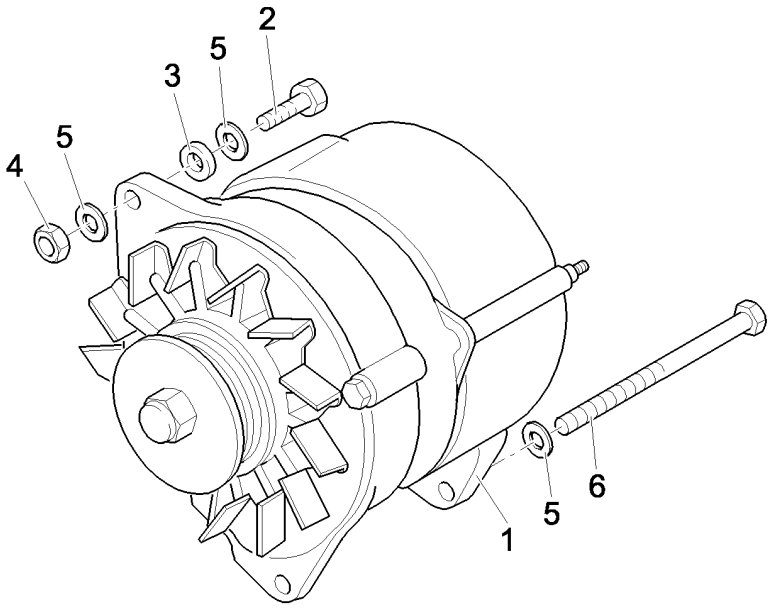

ACCESSORY ENGINE

REF	FN	PART NUMBER	YR/SN	QTY	DESCRIPTION
1		87422777		1	ALTERNATOR
2		11107421		1	BOLT, Hex, M10 x 60, 8.8
3		896-11010		2	WASHER, M10 x 21.5 x 2.5, HT
4		12577211		1	NUT, LOCK, M10 x 1.5, Cl 8
5		11190679		3	WASHER, SPRING, Belleville, M10.5
6		827-10130		1	BOLT, Hex, M10 x 130, 10.9

646	01	p1	04/08

MACHINE PART AIR CONDITIONING SET

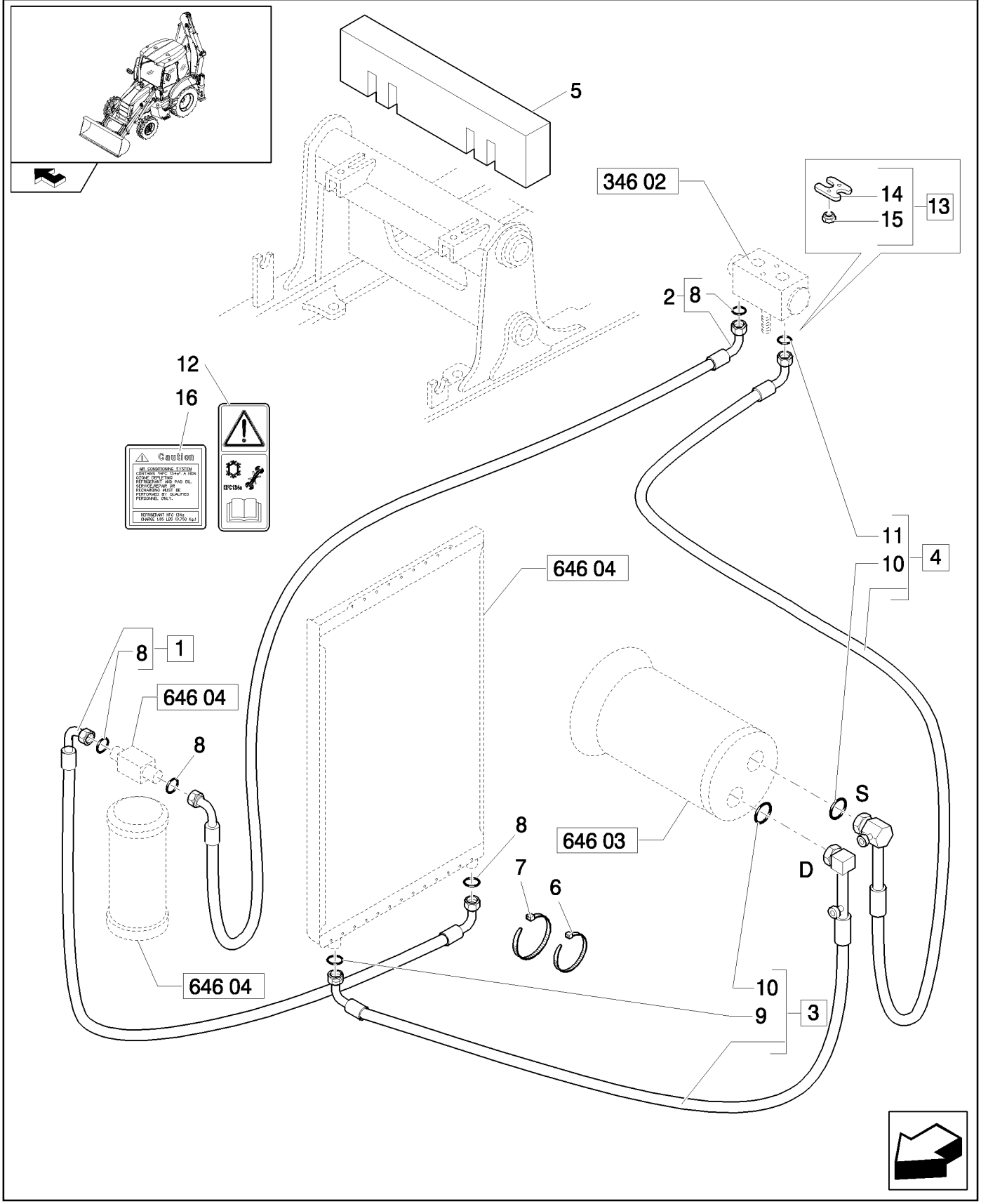

MACHINE PART AIR CONDITIONING SET

REF	FN	PART NUMBER	YR/SN	QTY	DESCRIPTION
1	1	87315364		1	HOSE, FLEXIBLE, Assy
2	1	87315368		1	HOSE, FLEXIBLE, Assy
3	2	87565311		1	HOSE, FLEXIBLE, Assy
3	2, 3	87315371		1	HOSE, FLEXIBLE, Assy
4	4	87565319		1	HOSE, FLEXIBLE, Assy
4	3, 4	87315381		1	HOSE, FLEXIBLE, Assy
5		85817287		1	SEAL
6		14560187		2	STRAP, CABLE, 178mm lg, L=203.2 mm
7		47048451		4	STRAP, CABLE, M8 x 384
8		85805013		4	O-RING
9		85805006		1	O-RING
10		85817186		2	O-RING
11		85805014		1	O-RING
12		85804441		1	DECAL
13		85821131		1	FLANGE
14		85805008		1	FLANGE
15		14040611		1	NUT
16		87324469		1	DECAL

(1) Includes 8 in q.ty 2
(2) Includes 9, 10 in q.ty 1
(3) Only for B90B, B90BLR (EU) - B90B (NA)
(4) Includes 10 in q.ty 1, 11

A/C COMPRESSOR ATTACHING GROUP

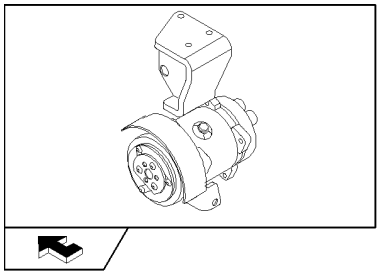

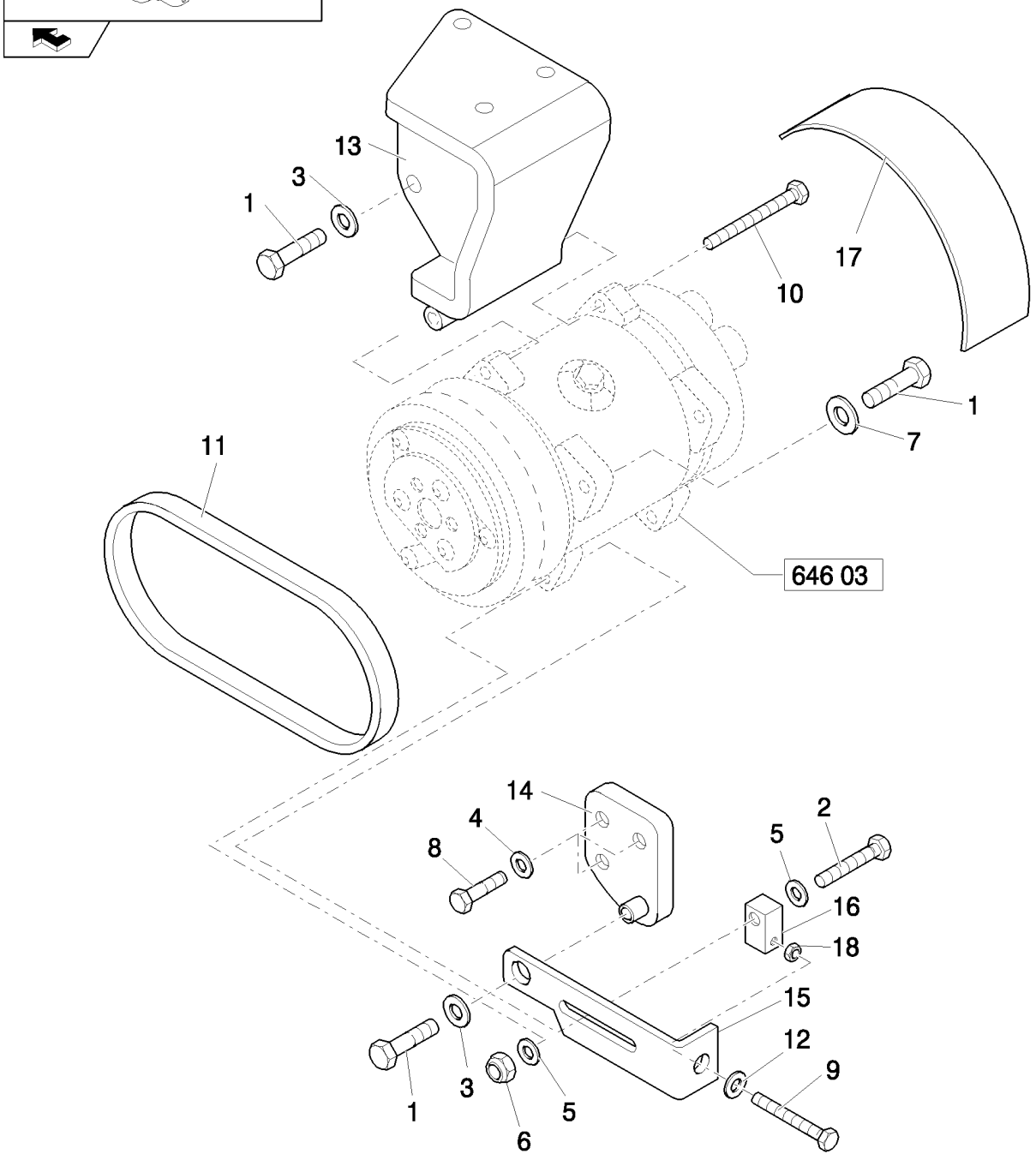

A/C COMPRESSOR ATTACHING GROUP

REF	FN	PART NUMBER	YR/SN	QTY	DESCRIPTION
1		11106421		3	BOLT, Hex, M10 x 30, 8.8
2		11107421		1	BOLT, Hex, M10 x 60, 8.8
3		11190574		2	WASHER, SPRING, Belleville, M10.5
4		11193874		3	WASHER, SPRING, Belleville, M8.4
5		14496601		2	WASHER, M10 x 20 x 2
6		12577211		1	NUT, LOCK, M10 x 1.5, Cl 8
7		12601474		1	WASHER, Wave, M10.5
8		16043621		3	BOLT, Hex, M8 x 25, 8.8
9		15213921		1	BOLT, Hex, M8 x 70, 8.8, Full Thd
10		14421621		1	SCREW
11		87565328		1	BELT
11	1	87304910		1	BELT
12		14496534		1	WASHER
13		87565321		1	SUPPORT
13	1	87315441		1	SUPPORT
14		87565322		1	SUPPORT
14	1	87315446		1	SUPPORT
15		87565326		1	TIGHTENER
15	1	87315457		1	TENSIONER, BELT
16		87315459		1	BLOCK
17		87565346		1	GUARD
17	1	87315460		1	GUARD
18		16102211		1	NUT, M8, Cl 10

(1) Only for B90B, B90BLR (EU) - B90B (NA)

A/C COMPRESSOR

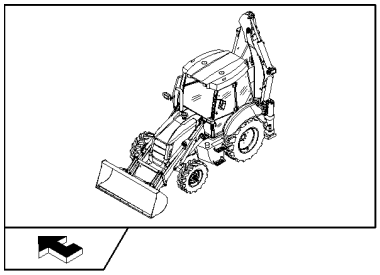

A/C COMPRESSOR

REF	FN	PART NUMBER	YR/SN	QTY	DESCRIPTION
1		85817170		1	COMPRESSOR, AIRCOND., (SD7H15) Assy
2		85817171		1	KIT
3		85817172		3	BEARING ASSY
4		85817173		1	KIT
5		85817174		1	KIT
6		85817175		1	KIT

646	04	p1	04/08

A/C FILTER & CONDENSER ATTACHING GROUP

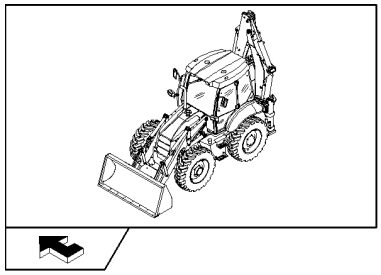

A/C FILTER & CONDENSER ATTACHING GROUP

REF	FN	PART NUMBER	YR/SN	QTY	DESCRIPTION
1		14496534		4	WASHER
2		16043421		2	SCREW, Hex, M8 x 20, 8.8
3		16104111		2	NUT, LOCK, M8 x 1.25, Cl 8
4		87315252		1	BRACKET
5		85819184		7	SCREW
6		85804065		1	SENDER UNIT, Assy
7		87630384		1	BRACKET
8		87646126		1	BRACKET
9		87630386		1	BRACKET, RH
10		87630383		1	BRACKET, LH
11		87315236		1	BRACKET
12		87315239		2	CLAMP, HOSE
13		87314566		1	CONDENSER
14		87315241		1	FILTER, CAB
15		16043621		4	BOLT, Hex, M8 x 25, 8.8
18		14040711		4	WASHER
16		85819185		1	GASKET
17		11054990		1	FUSE, 10 Amp
19		85821537		1	RELAY
20		87569316		1	EXTENSION

STEERING COLUMN, FIXED & ADJUSTABLE

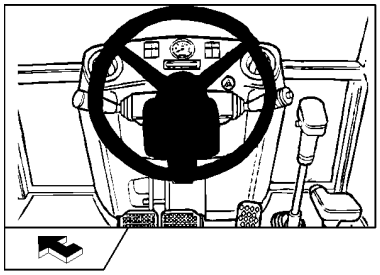

EQUIP.650

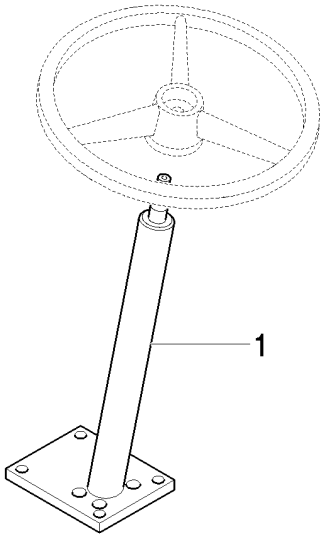

EQUIP.651

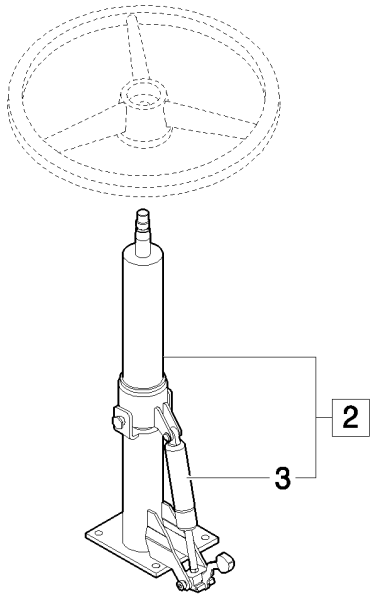

STEERING COLUMN, FIXED & ADJUSTABLE

REF	FN	PART NUMBER	YR/SN	QTY	DESCRIPTION
1	1	87324864		1	STEERING COLUMN
2		87560586		1	STEERING COLUMN, Assy
3	2	87560589		1	GAS STRUT

(1) Only for Power Shuttle
(2) Only for B115B

698		p1	04/08

GLIDE RIDE VALVE,HYDRAULIC SYSTEM FOR MACHINE FRAME LEVELLING & ON/OFF SWITCH

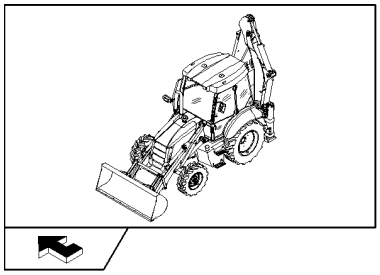

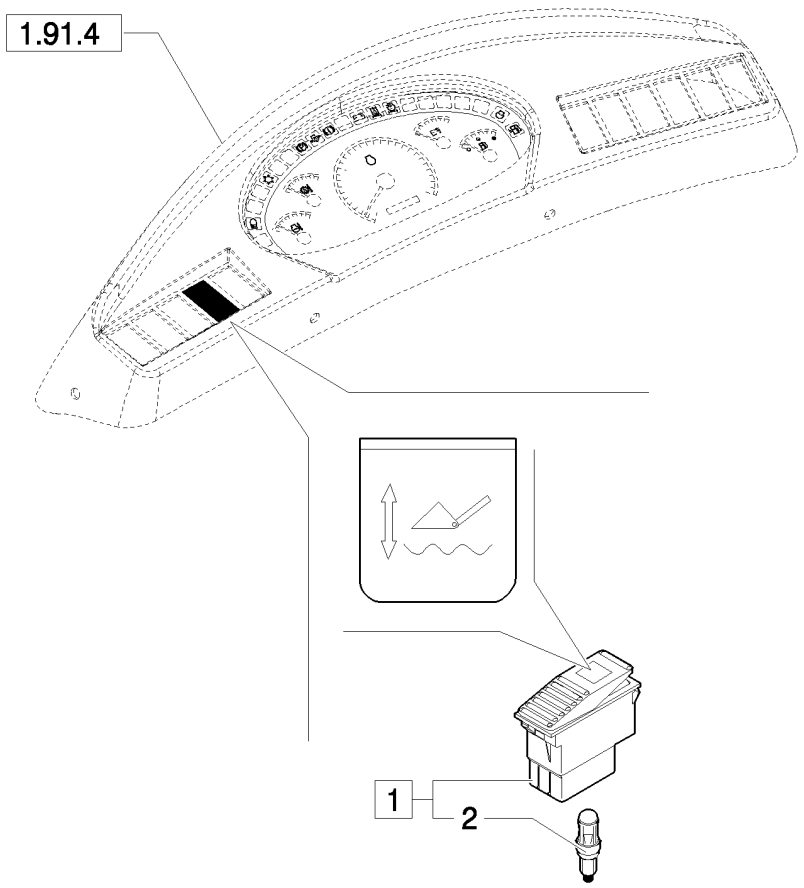

GLIDE RIDE VALVE,HYDRAULIC SYSTEM FOR MACHINE FRAME LEVELLING & ON/OFF SWITCH

REF	FN	PART NUMBER	YR/SN	QTY	DESCRIPTION
1		85817674		1	SWITCH, Assy
2		14143790		1	BULB

699		p1	04/08

HAND HAMMER SWITCH

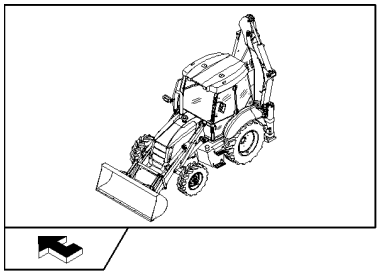

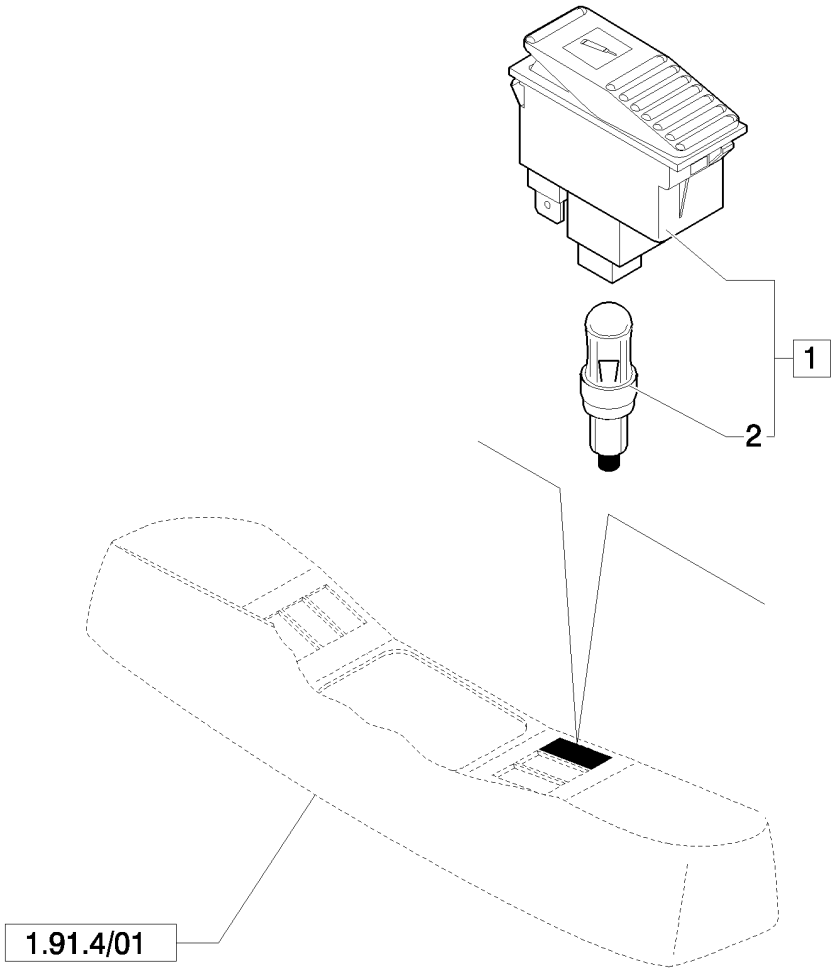

HAND HAMMER SWITCH

REF	FN	PART NUMBER	YR/SN	QTY	DESCRIPTION
1		85819072		1	SWITCH, Assy
2		14143790		1	BULB

700	01	p1	04/08

4X1 AND 6X1 BUCKET ARM HYDRAULIC DUCTS (POWER SHIFT, POWER SHUTTLE)

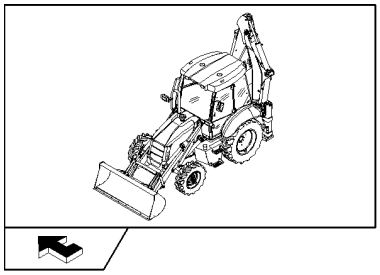

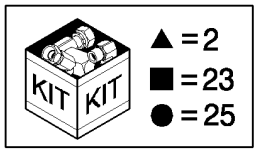

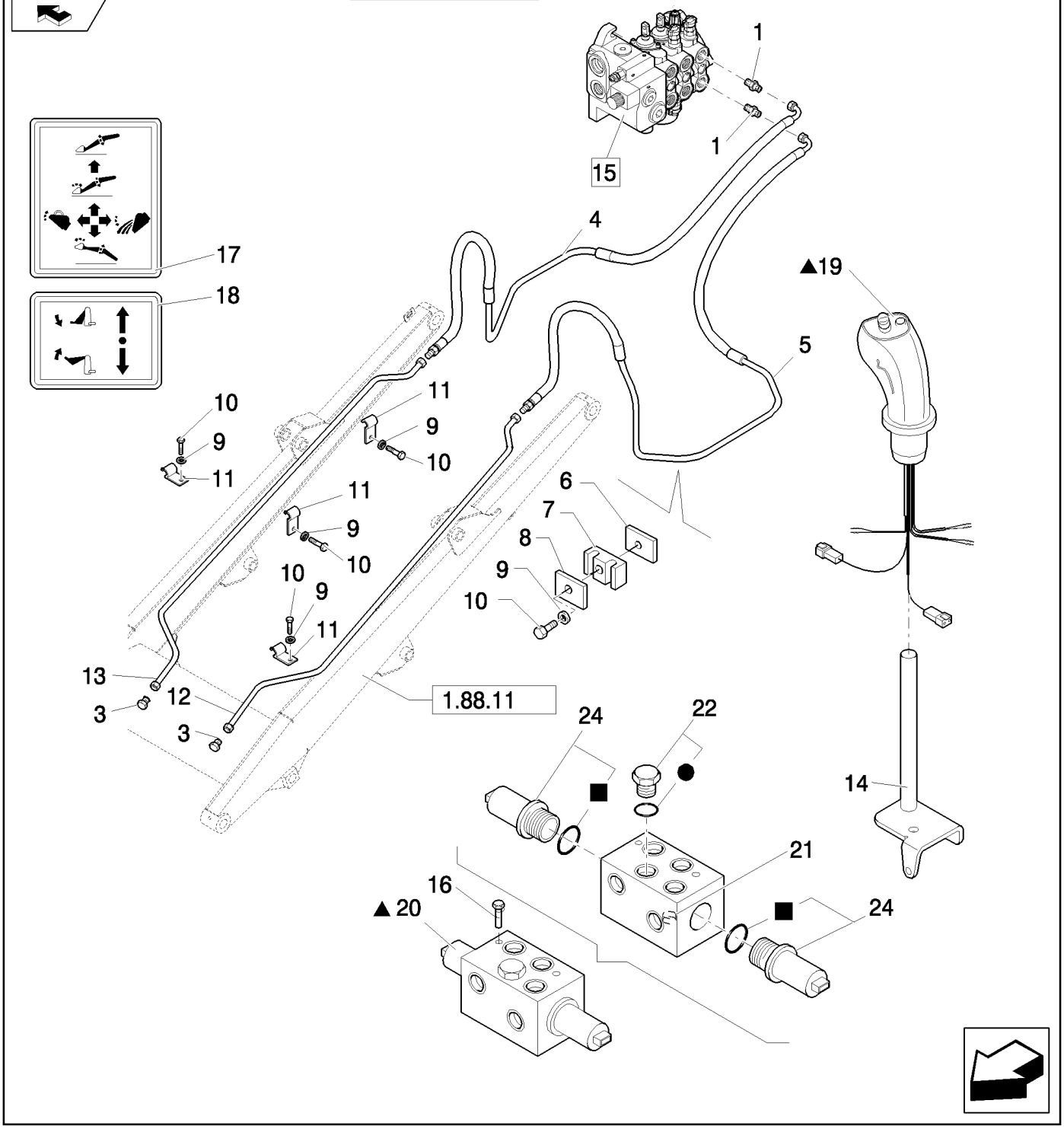

4X1 AND 6X1 BUCKET ARM HYDRAULIC DUCTS (POWER SHIFT, POWER SHUTTLE)

REF	FN	PART NUMBER	YR/SN	QTY	DESCRIPTION
1		85805258		2	CONNECTOR, HYD., 9/16"-16 ORS x 1 1/16"-12, O-Ring
2	1	87739987		1	KIT
2	2	87739988		1	KIT
3		85803408		2	PLUG
4		85819572		1	TUBE, HYD
5		85819571		1	TUBE, HYD, LH
6		85805340		2	PLATE
7		85805193		2	CLAMP
8		85805195		2	PLATE
9		11193979		8	WASHER, SPRING, Belleville, M8.4
10		16043821		8	BOLT, Hex, M8 x 30, 8.8
11		85805247		6	CLAMP
12		85805864		1	TUBE, HYD, LH
13		85805865		1	TUBE, HYD, RH
14		87646646		1	LEVER
15		87305111		1	VALVE, CONTROL, Assy
16		14300521		2	SCREW, Hex Soc Hd, M6 x 75, 8.8
17		85804346		1	DECAL
18		87305209		1	DECAL
19	1	87382109		1	HANDLE, Loader, Powershift, W/Detent, Declutch, Horn; Includes 87387702 Grip W/2 Buttons; 87387703 Prop Roller W/Detented Position; 87387719 Transmission & Horn Button Harness; 87387722 Bi-Directional PWM Driver Harness
19	2	87382112		1	HANDLE, Loader, Powershuttle, W/Detent, Declutch; Incl 87387751 Grip W/1 Button; 87387703 Prop Roller W/Detented Position; 87387754 Transmission Button Harness; 87387722 Bi-Directional PWM Driver Harness
20		87739689		1	VALVE, CONTROL, Assy
21		87311363		1	ORIFICE
22		87739122		1	VALVE

(1) Only for Power Shift
(2) Only for Power Shuttle

700	01	p2	04/08

4X1 AND 6X1 BUCKET ARM HYDRAULIC DUCTS (POWER SHIFT, POWER SHUTTLE)

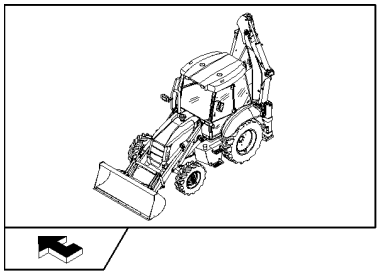

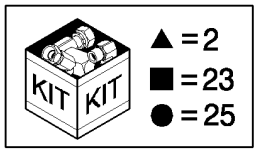

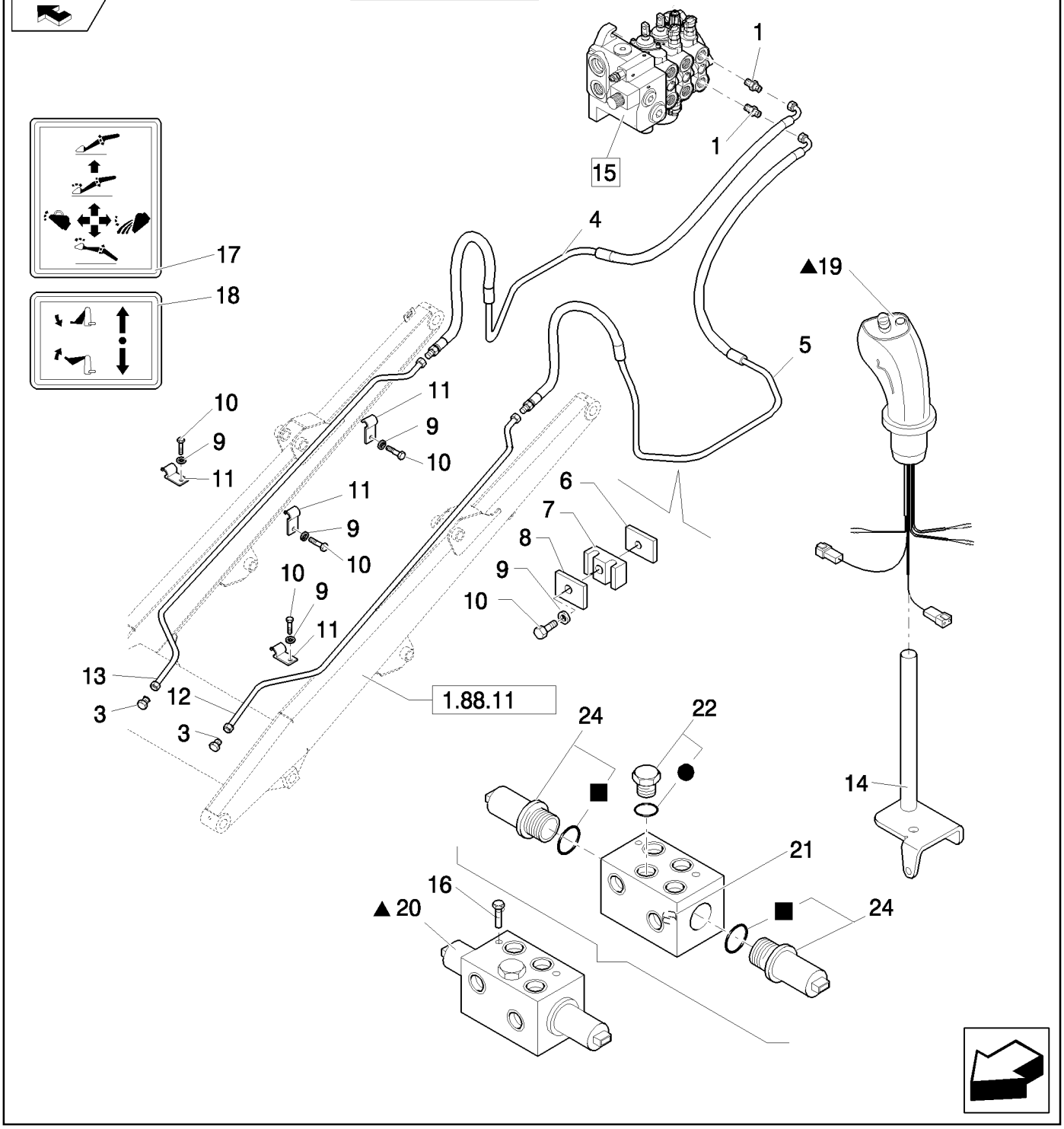

4X1 AND 6X1 BUCKET ARM HYDRAULIC DUCTS (POWER SHIFT, POWER SHUTTLE)

REF	FN	PART NUMBER	YR/SN	QTY	DESCRIPTION
23		85828000		1	KIT, SEALS
24		85827993		2	VALVE, SOLENOID
25		85828001		1	KIT, SEALS

700	02	p1	03/08

4X1 AND 6X1 BUCKET MACHINE HYDRAULIC DUCTS (POWER SHIFT, POWER SHUTTLE)

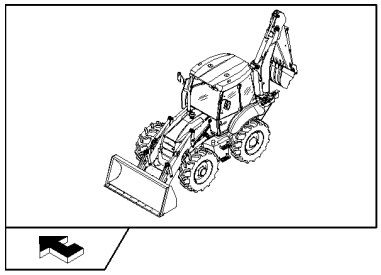

4X1 AND 6X1 BUCKET MACHINE HYDRAULIC DUCTS (POWER SHIFT, POWER SHUTTLE)

REF	FN	PART NUMBER	YR/SN	QTY	DESCRIPTION
1		85802234		1	ELBOW
2		85803312		1	CONNECTOR, HYD.
3		218-5053		2	CONNECTOR, HYD., 7/16"-20, 37° x 7/16"-20, O-Ring
4		218-5057		4	CONNECTOR, HYD., 9/16"-18, 37° x 9/16"-18, O-Ring
5		85826100		1	REDUCER
6		85828211		1	COUPLING, QUICK, MALE
7		87305211		1	HOSE, FLEXIBLE
8		87303401		1	HOSE, FLEXIBLE
9		87303400		2	HOSE, FLEXIBLE

700	03	p1	04/08

THREE-SECTION CONTROL VALVE FOR LOADER (POWER SHIFT , POWER SHUTTLE)

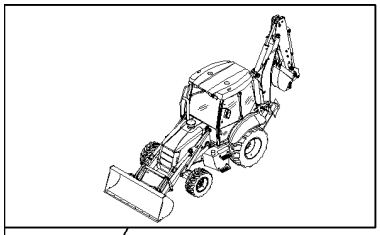

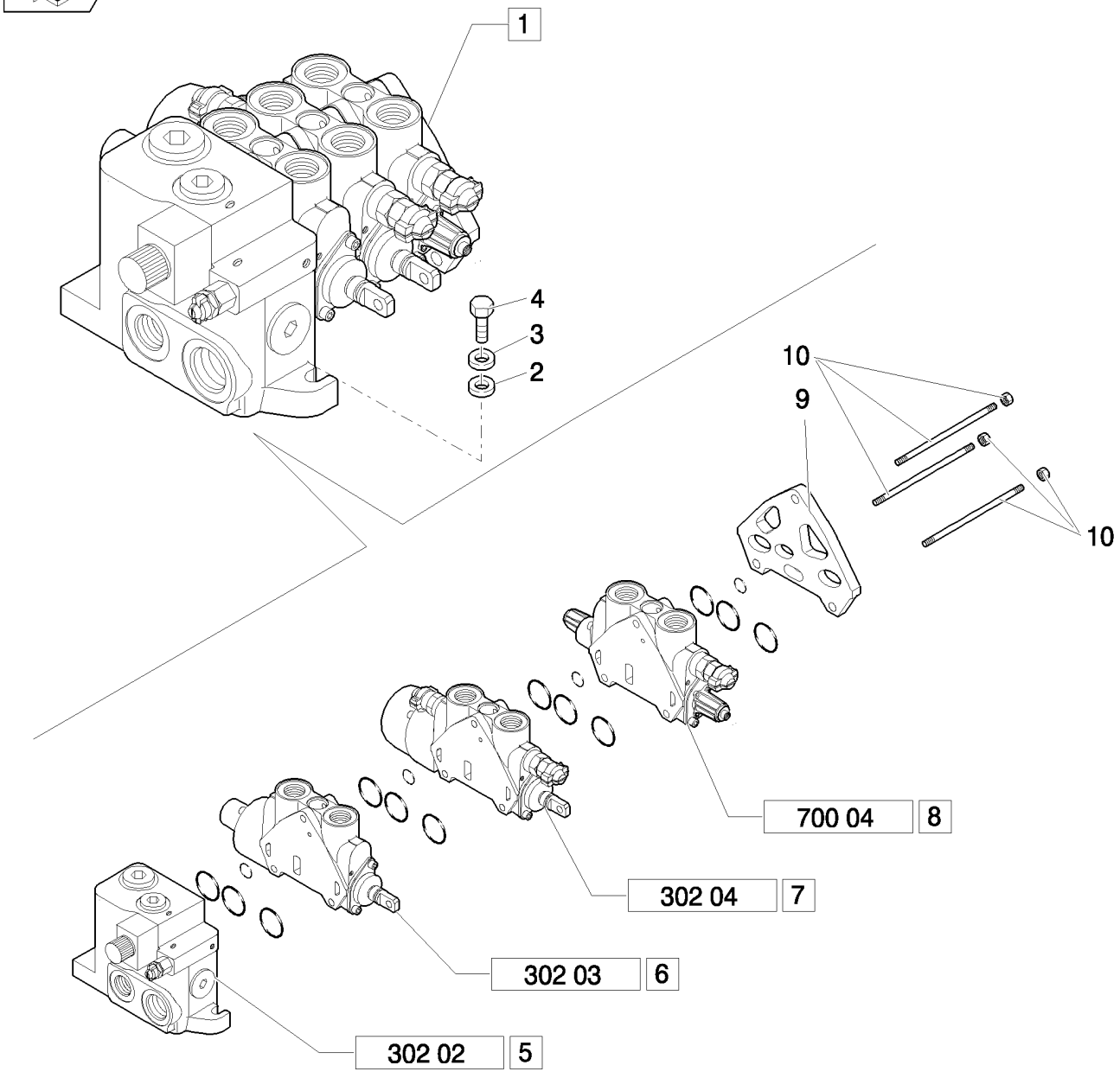

THREE-SECTION CONTROL VALVE FOR LOADER (POWER SHIFT , POWER SHUTTLE)

REF	FN	PART NUMBER	YR/SN	QTY	DESCRIPTION
1		87305111		1	VALVE, CONTROL, Assy
2		11190679		3	WASHER, SPRING, Belleville, M10.5
3		13578621		3	WASHER, 10x30x2
4		11234721		3	BOLT, Hex, M10 x 1.25 x 45, 8.8
5		85825468		1	VALVE SECTION, HYD, Assy
6	1	87558567		1	SECTOR, Assy
7	2	85825469		1	VALVE SECTION, HYD, Assy
8	3	87346911		1	ELEMENT, JOINING, Assy
9		85826924		1	SECTOR, TOOTHED
10		85825474		1	TIE-ROD, THREADED

(1) Boom Cylinder
(2) Bucket Cylinder
(3) Option

721	01	p1	04/08

TELESCOPIC DIPPER AT PEDAL CONTROL (CENTER PIVOT): CONTROL VALVE: NA

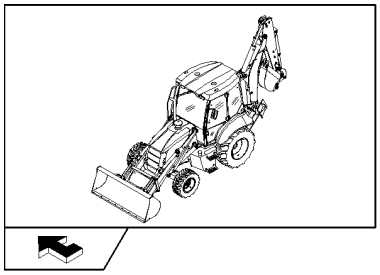

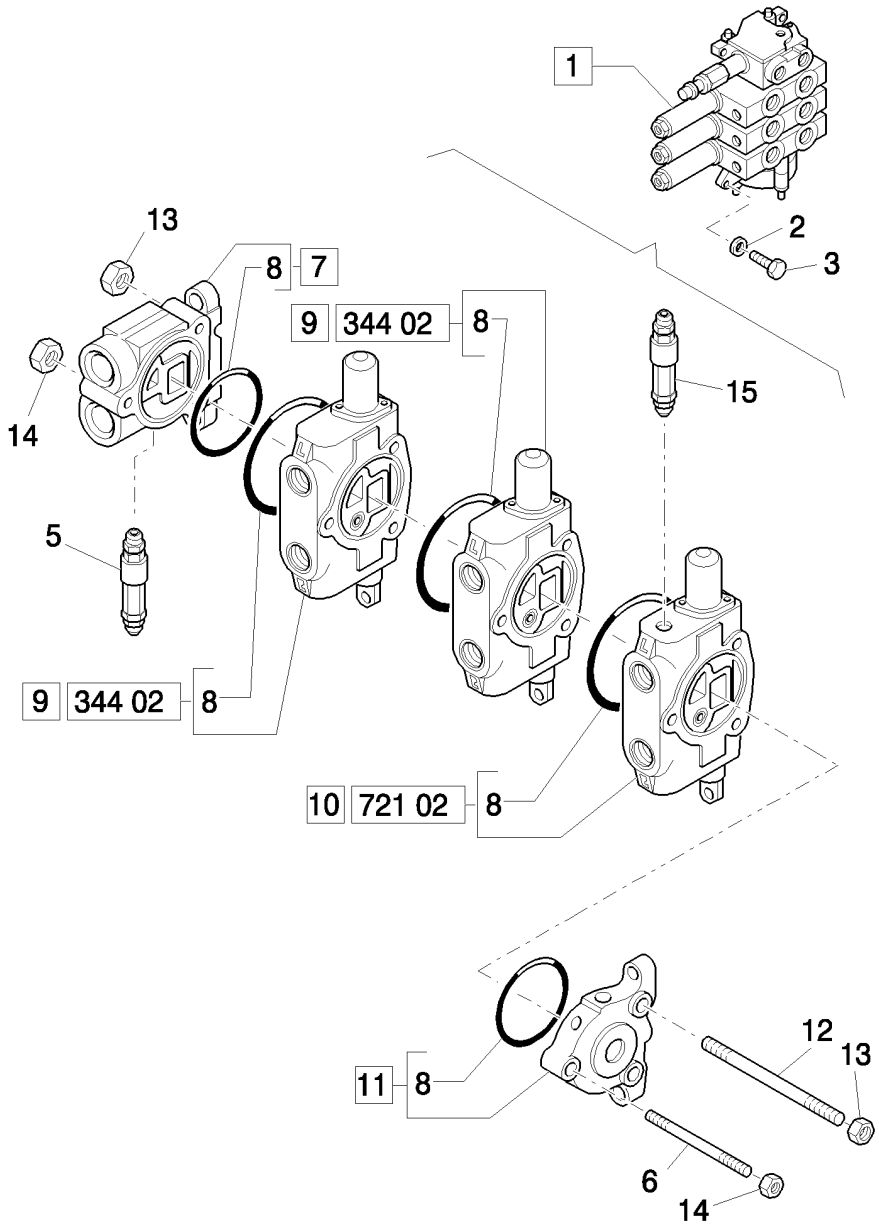

TELESCOPIC DIPPER AT PEDAL CONTROL (CENTER PIVOT): CONTROL VALVE: NA

REF	FN	PART NUMBER	YR/SN	QTY	DESCRIPTION
1		87331094		1	DISTRIBUTOR, Assy
2		11193879		3	WASHER, SPRING, Belleville, M8.4
3		16043921		3	SCREW, M8x1,25x35
5		85819721		1	VALVE, HYDRAULIC
6		9968528		1	STUD
7		9968524		1	VALVE SECTION, HYD, Assy
8		9968476		4	O-RING
9		9970107		2	VALVE SECTION, HYD, Assy
10		9968526		1	VALVE SECTION, HYD, Assy
11		9968527		1	VALVE SECTION, HYD, Assy
12		9968529		2	STUD
13		9968441		4	NUT
14		9968440		2	NUT
15		87331276		1	VALVE, HYDRAULIC

Mechanical Version B95B

721	02	p1	03/08

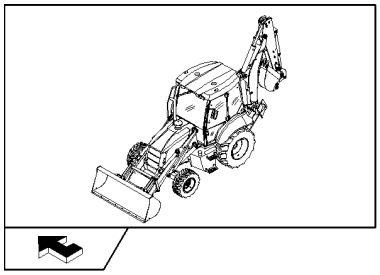

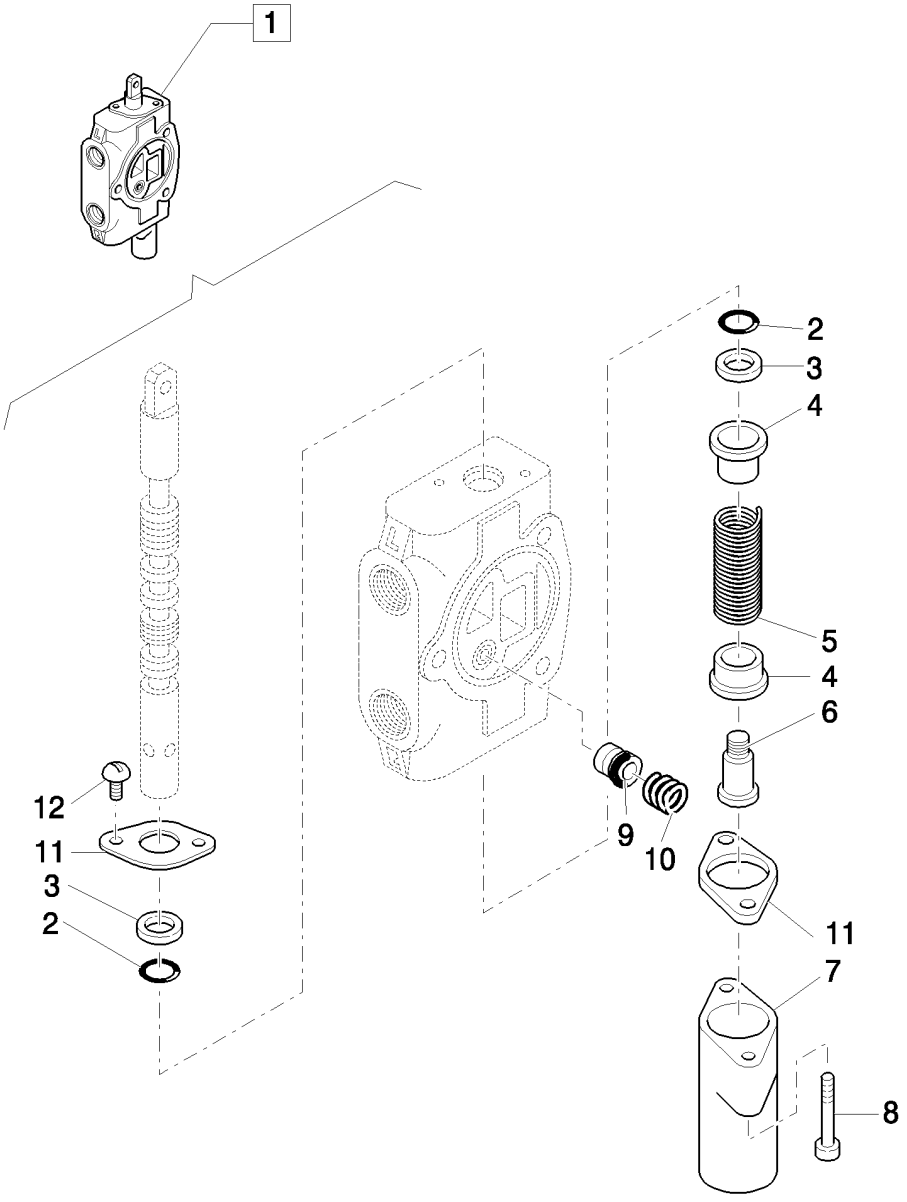

REF	FN	PART NUMBER	YR/SN	QTY	DESCRIPTION
1		9968526		1	VALVE SECTION, HYD, Assy
2		85813418		2	O-RING
3		85813419		2	WIPER
4		9968481		2	SEAT
5		9968531		1	SPRING
6		9968483		1	SCREW
7		9968484		1	COVER
8		9968486		2	SCREW
9		9968477		1	POPPET
10		9968478		1	SPRING
11		9968480		2	FLANGE
12		9968460		2	SCREW

HED TELESCOPIC CONTORL VALVE, SECTION HOSES(CENTER PIVOT) - NA

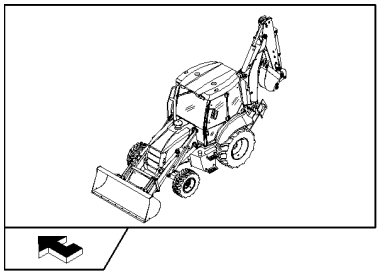

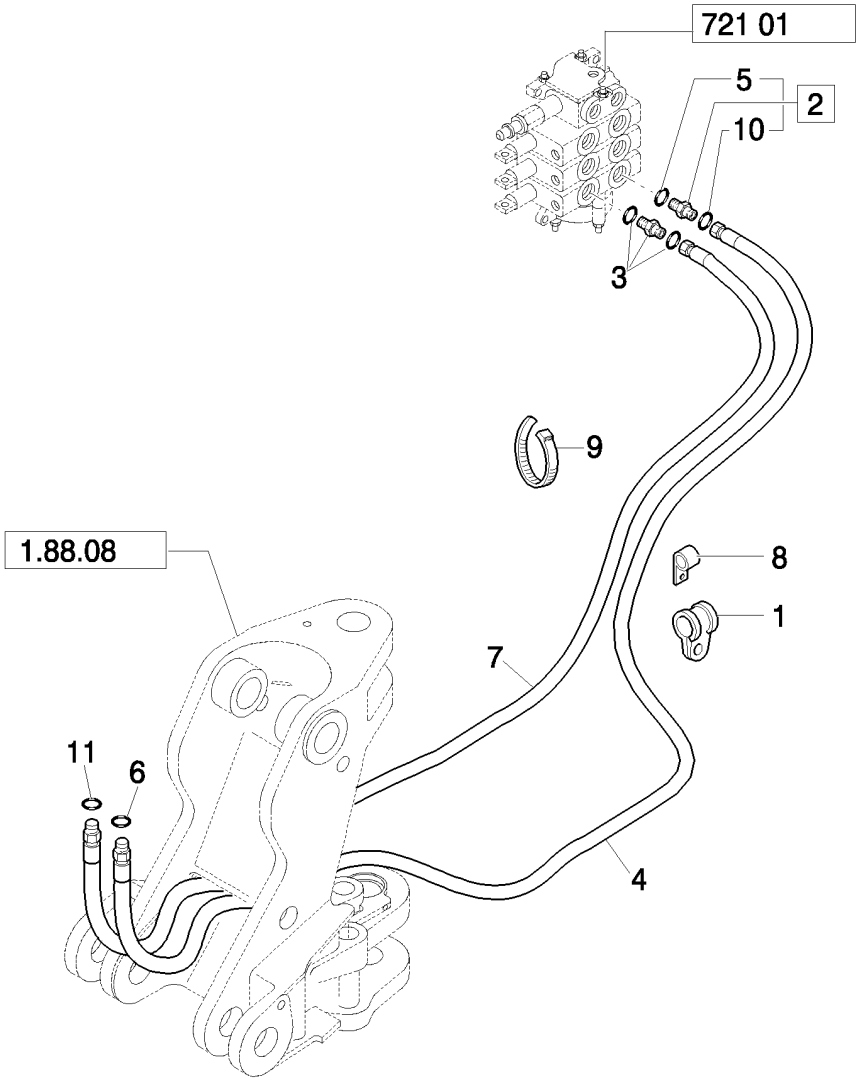

HED TELESCOPIC CONTORL VALVE, SECTION HOSES(CENTER PIVOT) - NA

REF	FN	PART NUMBER	YR/SN	QTY	DESCRIPTION
1		85812029		1	CLAMP
2		83963374		1	CONNECTOR, HYD.
3		85803234		1	CONNECTOR, HYD.
4		85812214		1	HOSE, HYDRAULIC, 2700mm lg
5		80128825		1	O-RING
6		9992298		1	O-RING, -014, 90 Duro, .489" ID x .070" Thk
7		87638574		1	HOSE, FLEXIBLE
8		85803393		2	CLAMP
9		85803332		4	STRAP, CABLE, M4.8 x 180
10		89992298		1	O-RING
11		9992069		1	O-RING, -016, 90 Duro, .614" ID x .070" Thk

Mechanical Version

B95B

721	04	p1	03/08

TELESCOPIC DIPPER AT PEDAL CONTROL (CENTER PIVOT): TELESCOPIC DIPPER SYSTEM: TELESCOPIC CYLINDER: NA

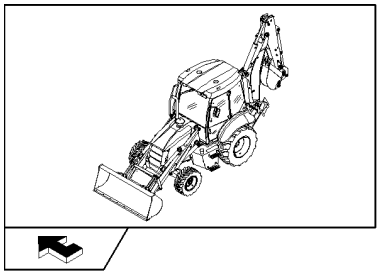

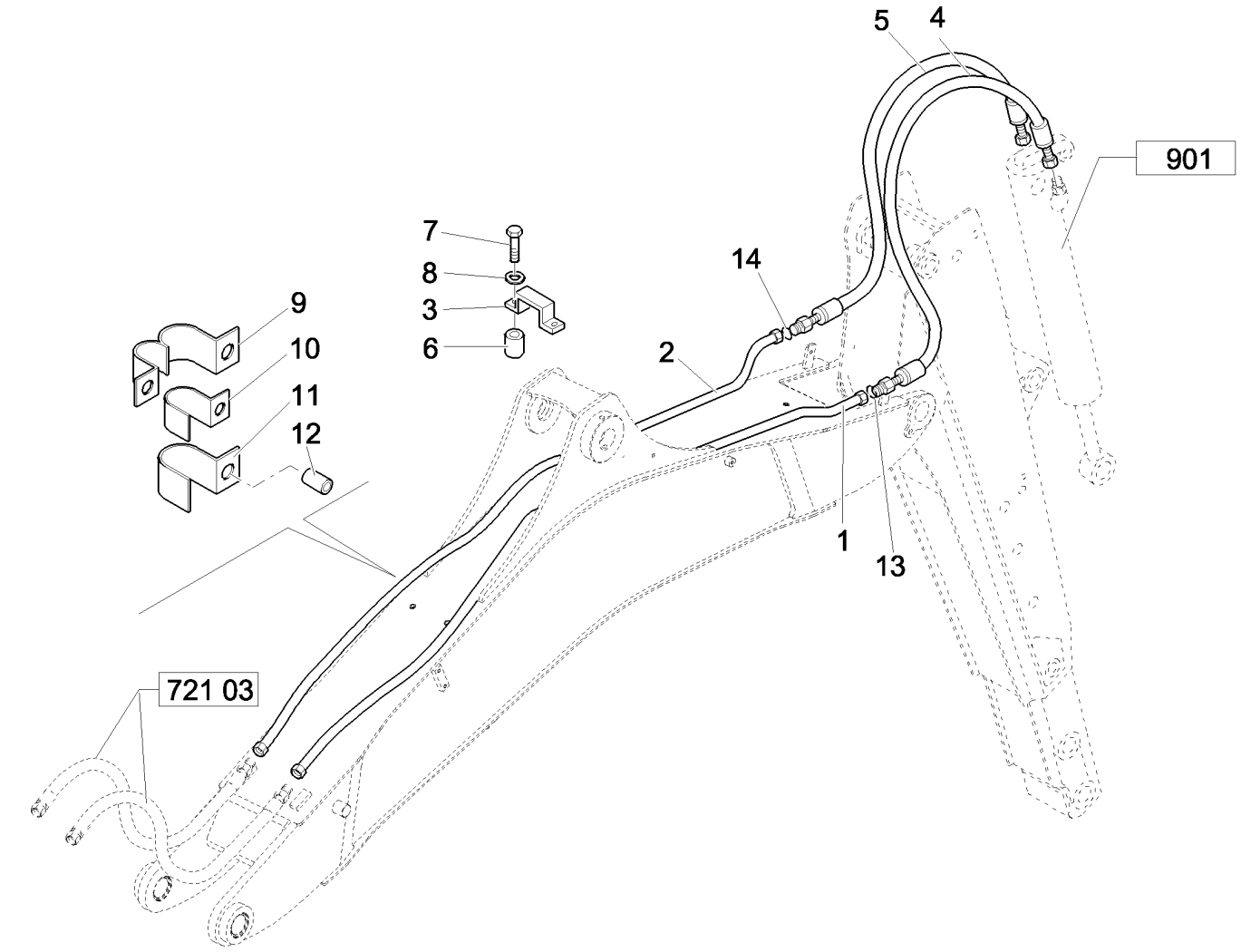

TELESCOPIC DIPPER AT PEDAL CONTROL (CENTER PIVOT): TELESCOPIC DIPPER SYSTEM: TELESCOPIC CYLINDER: NA

REF	FN	PART NUMBER	YR/SN	QTY	DESCRIPTION
1		87617945		1	PIPE, PRESSURE, 16 mm OD Tube
2		87621518		1	PIPE, PRESSURE, 12 mm OD Tube
3		85802900		1	CLAMP
4	1	87619506		1	HOSE, FLEXIBLE
5	2	85817108		1	HOSE, HYDRAULIC
6		87610565		1	SPACER
7		16044021		2	BOLT, Hex, M8 x 40, 8.8
8		11193879		2	WASHER, SPRING, Belleville, M8.4
9		85802529		2	CLAMP
10		85802527		2	CLAMP
11		85802528		2	CLAMP
12		87615734		1	SPACER
13		9992069		1	O-RING, -016, 90 Duro, .614" ID x .070" Thk
14		9992298		1	O-RING, -014, 90 Duro, .489" ID x .070" Thk

(1) Includes 13
(2) Includes 14

Mechanical Version B95B

721	05	p1	03/08

TELESCOPIC DIPPER AT PEDAL CONTROL (CENTER PIVOT): TELESCOPIC DIPPER SYSTEM: BUCKET CYLINDER: NA

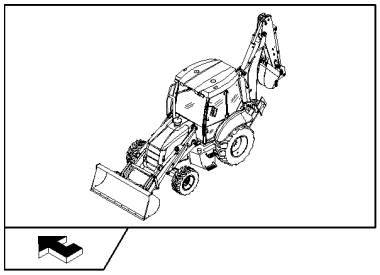

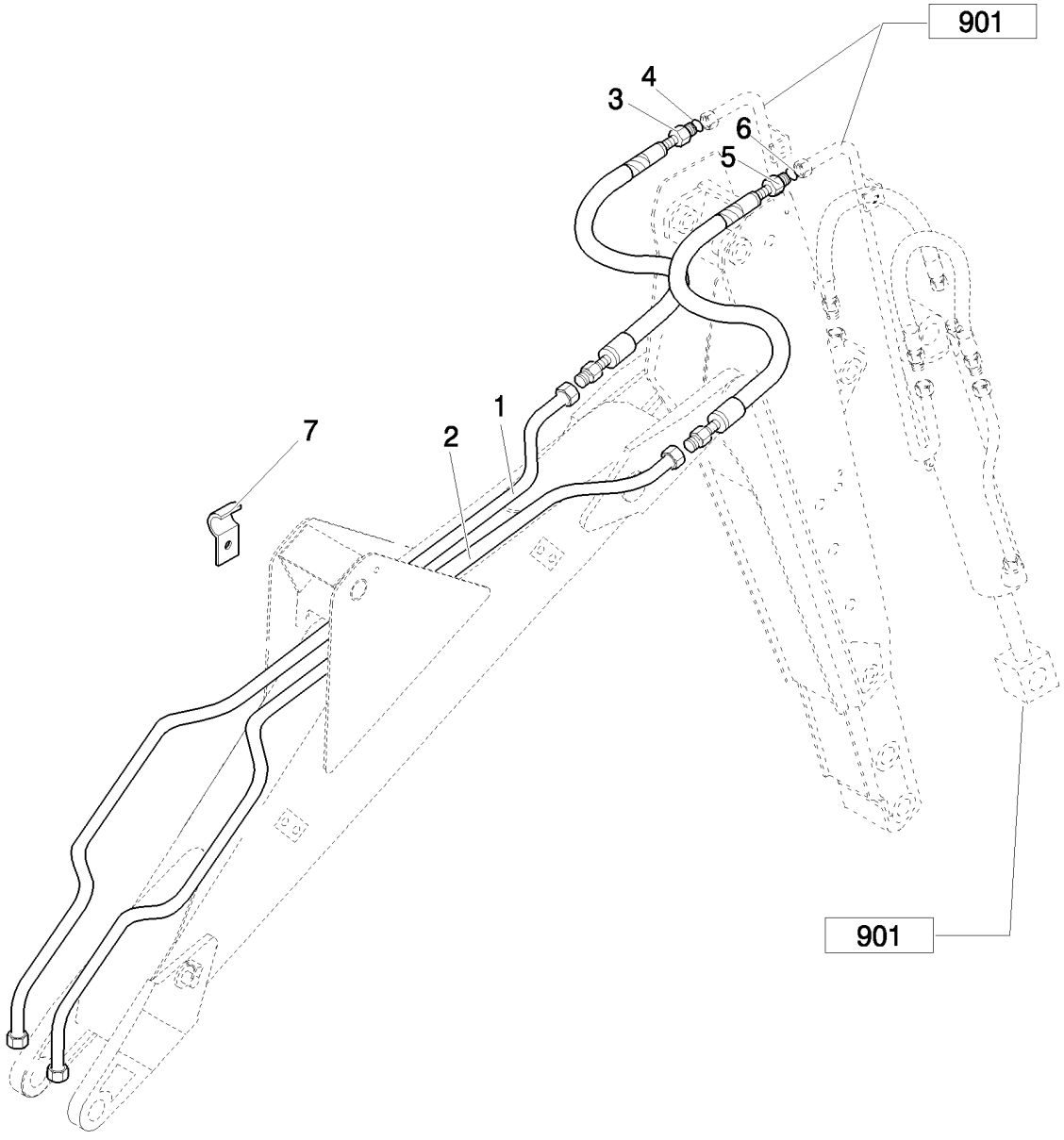

TELESCOPIC DIPPER AT PEDAL CONTROL (CENTER PIVOT): TELESCOPIC DIPPER SYSTEM: BUCKET CYLINDER: NA

REF	FN	PART NUMBER	YR/SN	QTY	DESCRIPTION
1		87614629		1	PIPE, PRESSURE, 20 mm OD Tube
2		87614627		1	PIPE, PRESSURE, 16 mm OD Tube
3	1	85817106		1	HOSE, FLEXIBLE
4		9991976		2	O-RING, -018, 90 Duro, .739" ID x .070" Thk
5	2	85817107		1	HOSE, FLEXIBLE
6		9992069		2	O-RING, -016, 90 Duro, .614" ID x .070" Thk
7		87610539		1	PIPE CLAMP

(1) Includes 4
(2) Includes 6

TELESCOPIC DIPPER AT PEDAL CONTROL (CENTER PIVOT): NA

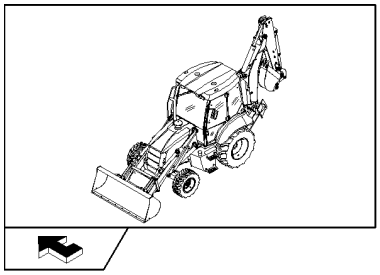

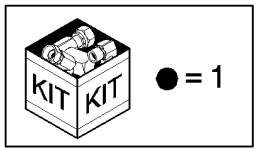

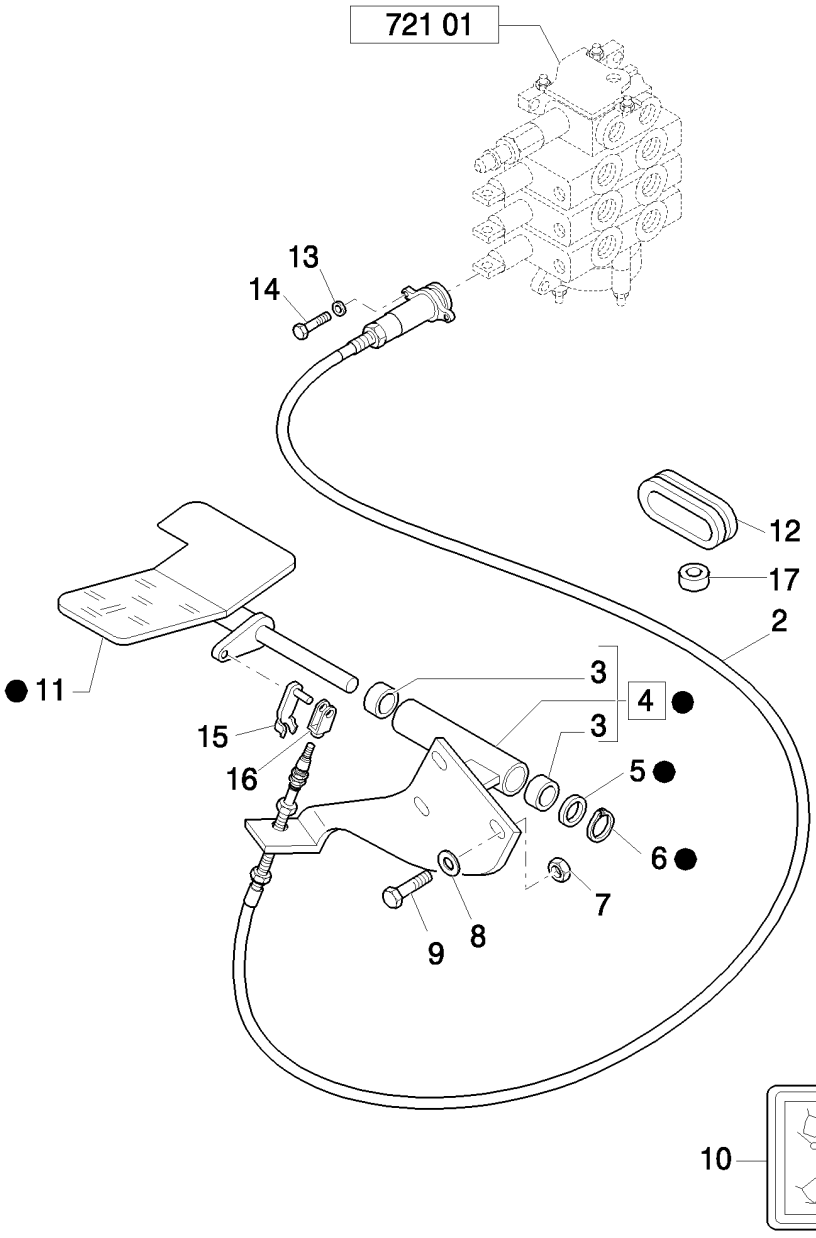

TELESCOPIC DIPPER AT PEDAL CONTROL (CENTER PIVOT): NA

REF	FN	PART NUMBER	YR/SN	QTY	DESCRIPTION
1		85802509		1	PEDAL, Assy
2	1	85813103		1	CABLE
3		85802494		2	BUSHING
4		85801599		1	PLATE, Assy
5		14496901		1	WASHER, M16 x 30 x 3
6		83911366		1	CIRCLIP
7		16104111		3	NUT, LOCK, M8 x 1.25, Cl 8
8		16043621		3	BOLT, Hex, M8 x 25, 8.8
9		11193879		3	WASHER, SPRING, Belleville, M8.4
10		85803786		1	DECAL
11		85802510		1	PEDAL
12		85803517		2	BUSHING, RUBBER
13		85813201		4	WASHER
14		85813200		4	SCREW
15		85813186		2	CLIP
16		85813187		2	CLEVIS
17		85802903		1	INSULATOR

(1) Includes 13 - 16

Mechanical Version B95B

REAR HAMMER CONTROL VALVE

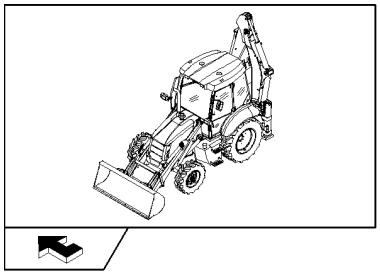

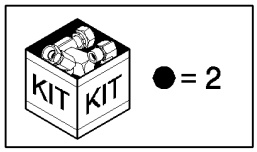

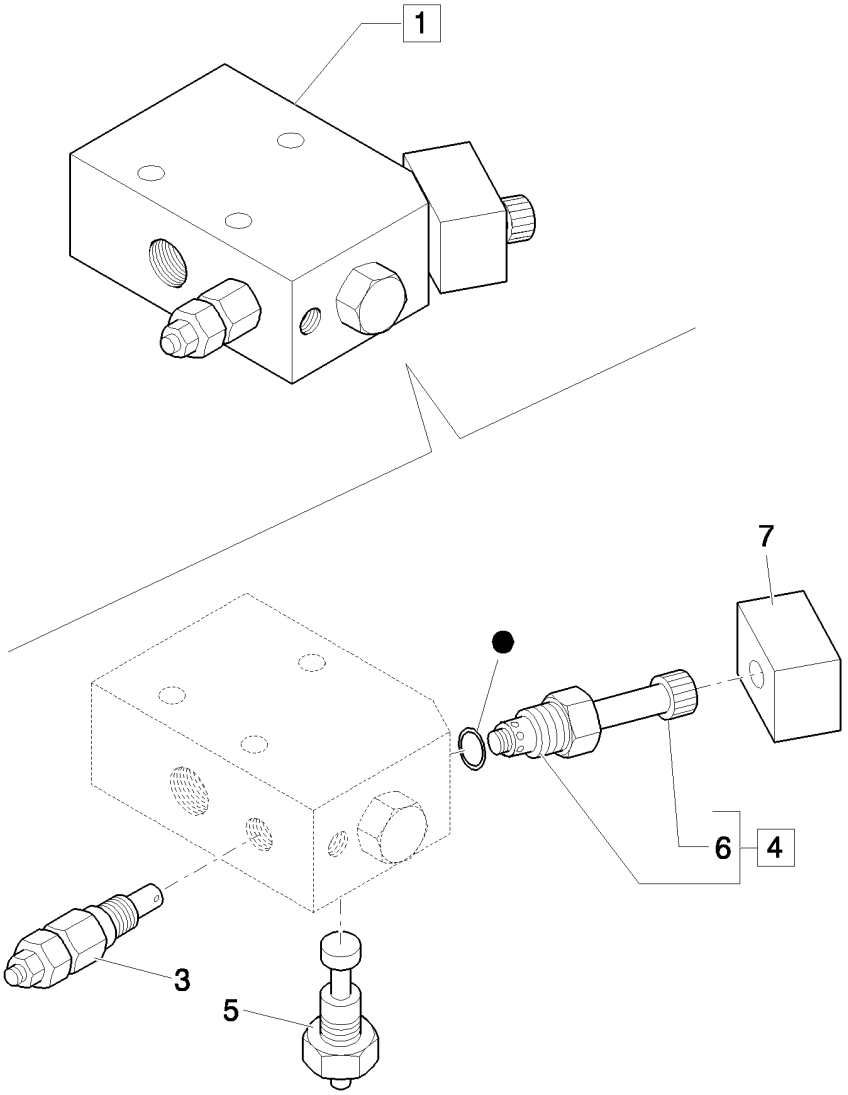

REAR HAMMER CONTROL VALVE

REF	FN	PART NUMBER	YR/SN	QTY	DESCRIPTION
1		87677466		1	VALVE, HYDRAULIC, ASSY
2		9970181		1	KIT, SEALS, Gaskets
3		87358201		1	VALVE, HYDRAULIC, ASSY
4		87358194		1	VALVE, HYDRAULIC, ASSY
5		9970179		1	REGULATOR, Assy
6		9970384		1	NUT
7		87357715		1	SENDER UNIT

724/01	01	p1	04/08

MACHINE HYDRAULIC SYSTEM FOR HAMMER (CENTER PIVOT)

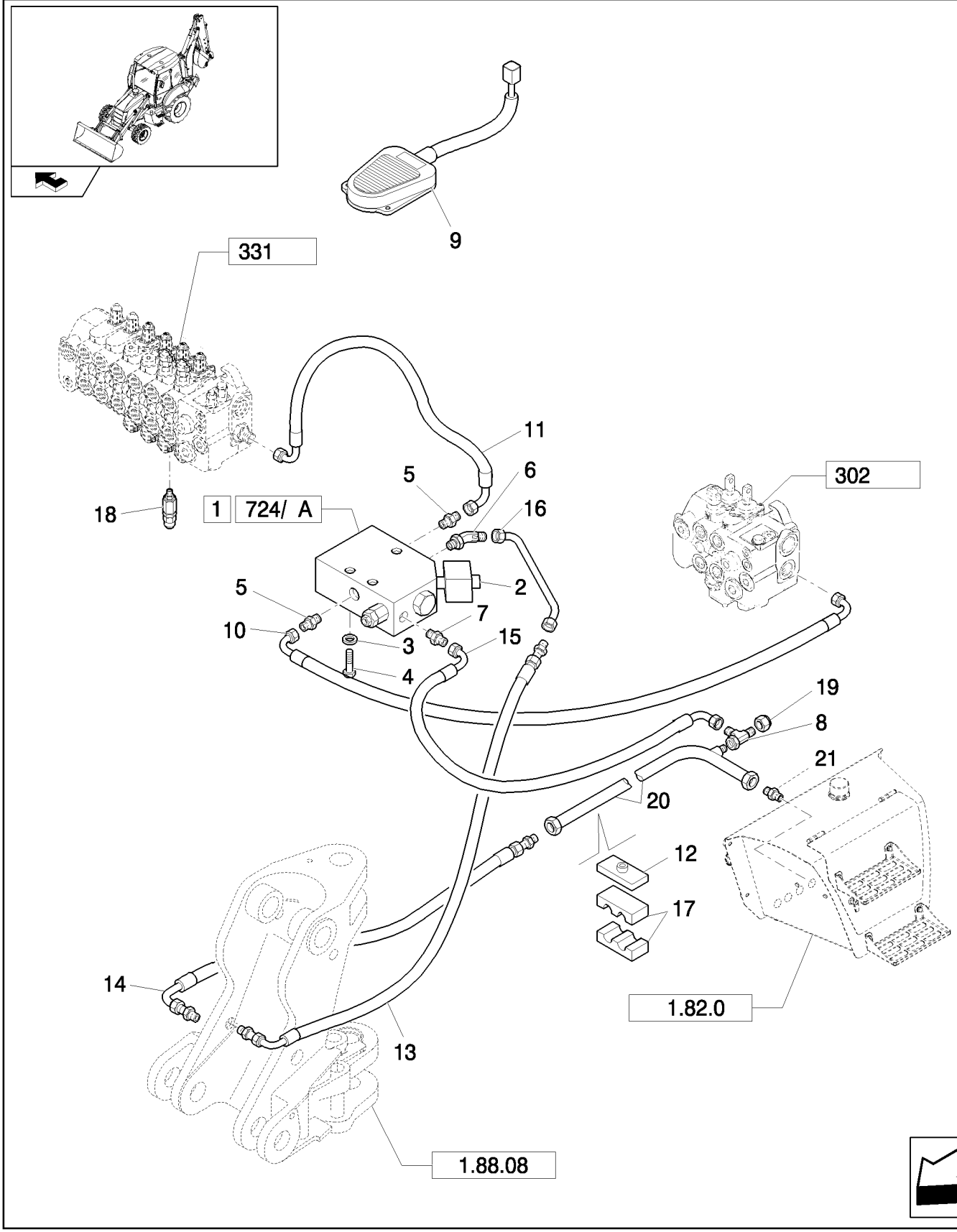

MACHINE HYDRAULIC SYSTEM FOR HAMMER (CENTER PIVOT)

REF	FN	PART NUMBER	YR/SN	QTY	DESCRIPTION
1		87677466		1	VALVE, HYDRAULIC, Assy
2		87357715		1	SENDER UNIT
3		11193879		3	WASHER, SPRING, Belleville, M8.4
4		16044821		3	BOLT, Hex, M8 x 80, 8.8
5		85803486		2	CONNECTOR, HYD.
6		85803487		1	ELBOW
7		83963371		1	CONNECTOR, HYD.
8		85807876		1	TEE
9		85826123		1	SWITCH ASSY
10		85802776		1	HOSE, HYDRAULIC, 1150mm lg
11		85803428		1	HOSE, HYDRAULIC, 850mm lg
12		87390531		1	PLATE
13		85817634		1	HOSE, HYDRAULIC
14		85817635		1	HOSE, HYDRAULIC
15		85817633		1	HOSE, HYDRAULIC
16		85817629		1	TUBE, HYD
17		87390530		1	CLAMP
18		85812116		1	VALVE, PRESSURE RELIEF
19		83987627		1	CAP
20		85826987		1	TUBE, HYD
21		85802801		1	CONNECTOR, HYD., 1-11/16"-12 ORSx1-5/16"-12 SAE O-ring

Pilot Control Version

B95B

724/01	02	p1	03/08

HAMMER ARM HYDRAULIC SYSTEM (CENTER PIVOT)

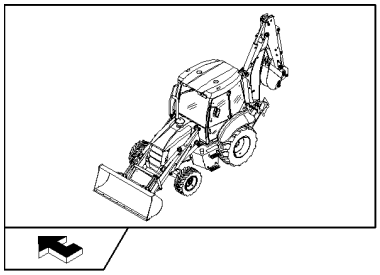

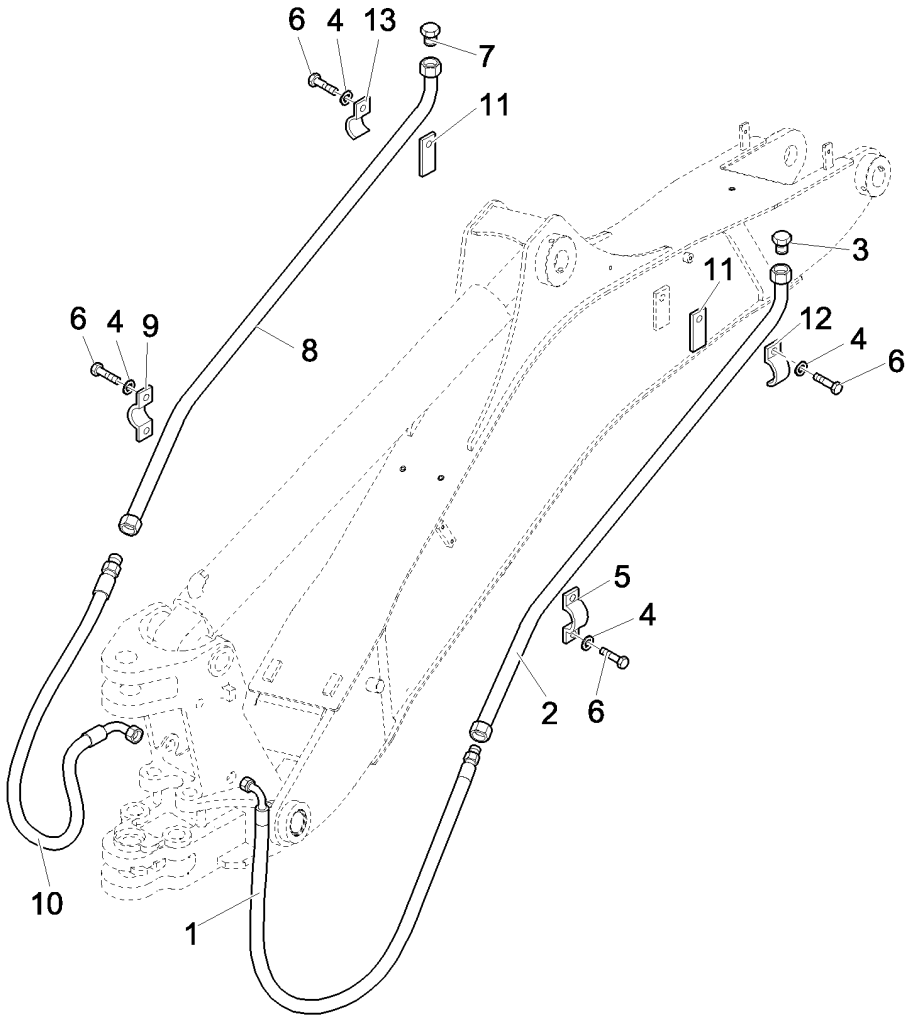

HAMMER ARM HYDRAULIC SYSTEM (CENTER PIVOT)

REF	FN	PART NUMBER	YR/SN	QTY	DESCRIPTION
1		85819619		1	HOSE, HYDRAULIC
2		87622842		1	PIPE, PRESSURE
3		85801397		1	PLUG
4		11190579		8	WASHER, SPRING, Belleville, M10.5
5		87310951		1	CLAMP
6		11106221		4	BOLT, Hex, M10 x 25, 8.8, Full Thd, M6x16
7		85801452		1	PLUG
8		87616236		1	PIPE, PRESSURE
9		87310952		1	CLAMP
10		85819618		1	HOSE, HYDRAULIC
11		87630711		2	PLATE
12		87624517		1	PIPE CLAMP
13		87629471		1	PIPE CLAMP

Pilot Control Version B95B

HYDRAULIC SYSTEM FOR HAMMER (CENTER PIVOT)

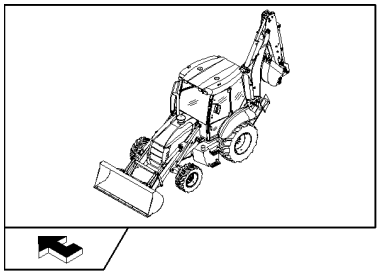

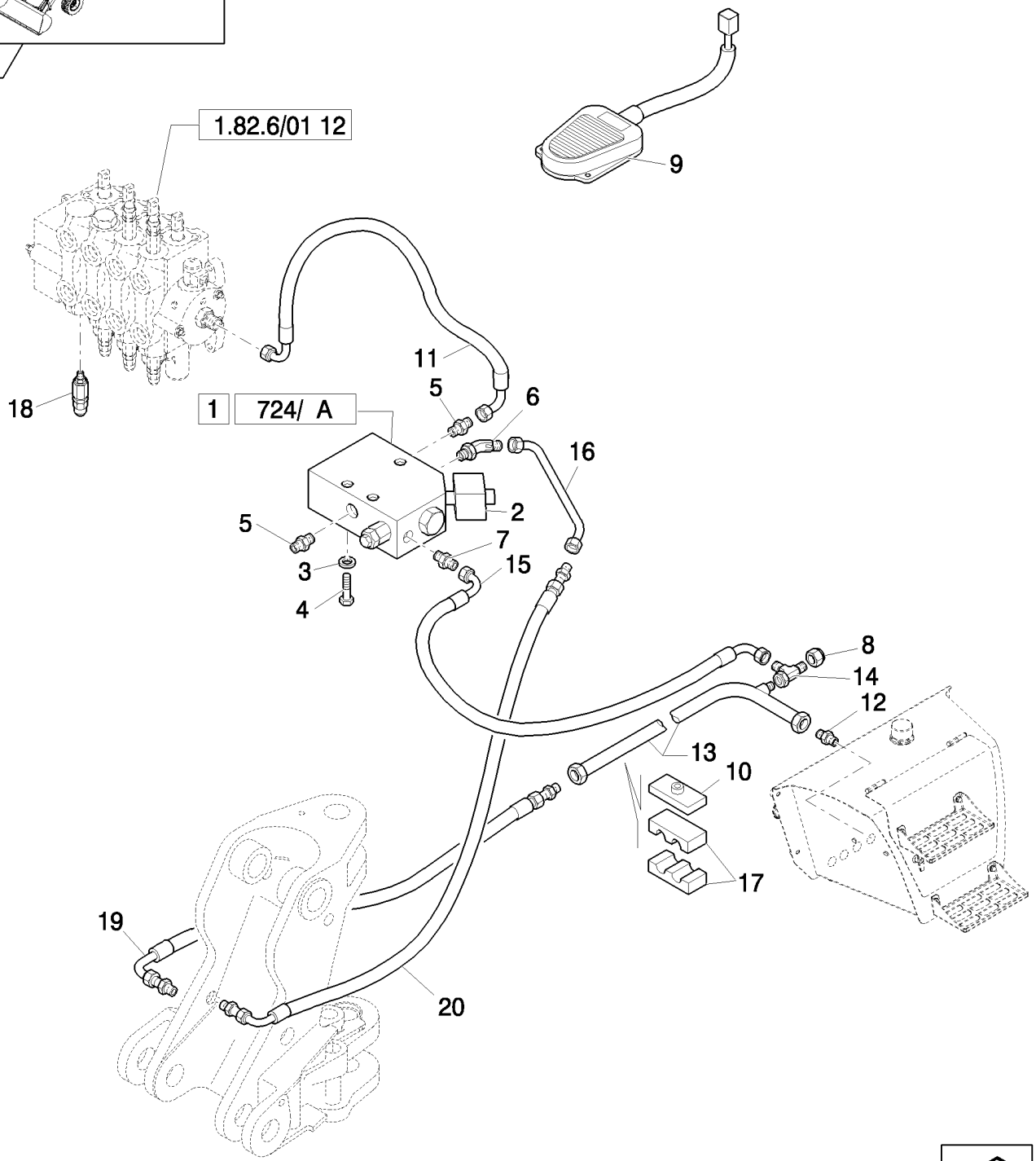

HYDRAULIC SYSTEM FOR HAMMER (CENTER PIVOT)

REF	FN	PART NUMBER	YR/SN	QTY	DESCRIPTION
1		87677466		1	VALVE, HYDRAULIC
2		87357715		1	SENDER UNIT
3		11193879		3	WASHER, SPRING, Belleville, M8.4
4		16044821		3	BOLT, Hex, M8 x 80, 8.8
5		85803486		2	CONNECTOR, HYD.
6		85803487		1	ELBOW, 45°
7		83963371		1	CONNECTOR, HYD.
8		85807876		1	TEE
9		85826123		1	SWITCH ASSY
10		87390531		1	PLATE
11		85803428		1	HOSE, HYDRAULIC, 850mm lg
12		85802801		1	CONNECTOR, HYD.
13		85826987		1	TUBE, HYD
14		83987627		1	CAP
15		85817633		1.	HOSE, HYDRAULIC
16		85817629		1	TUBE, HYD
17		87390530		1	CLAMP
18		9968595		1	VALVE, PRESSURE RELIEF
19		85817635		1	HOSE, HYDRAULIC
20		85817634		1	HOSE, HYDRAULIC

Mechanical Version B95B

725		p1	03/08

HAMMER KIT FROM LIFTING ARM TO DEMOLITION ARM

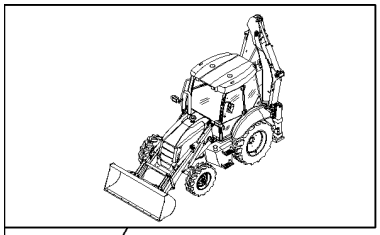

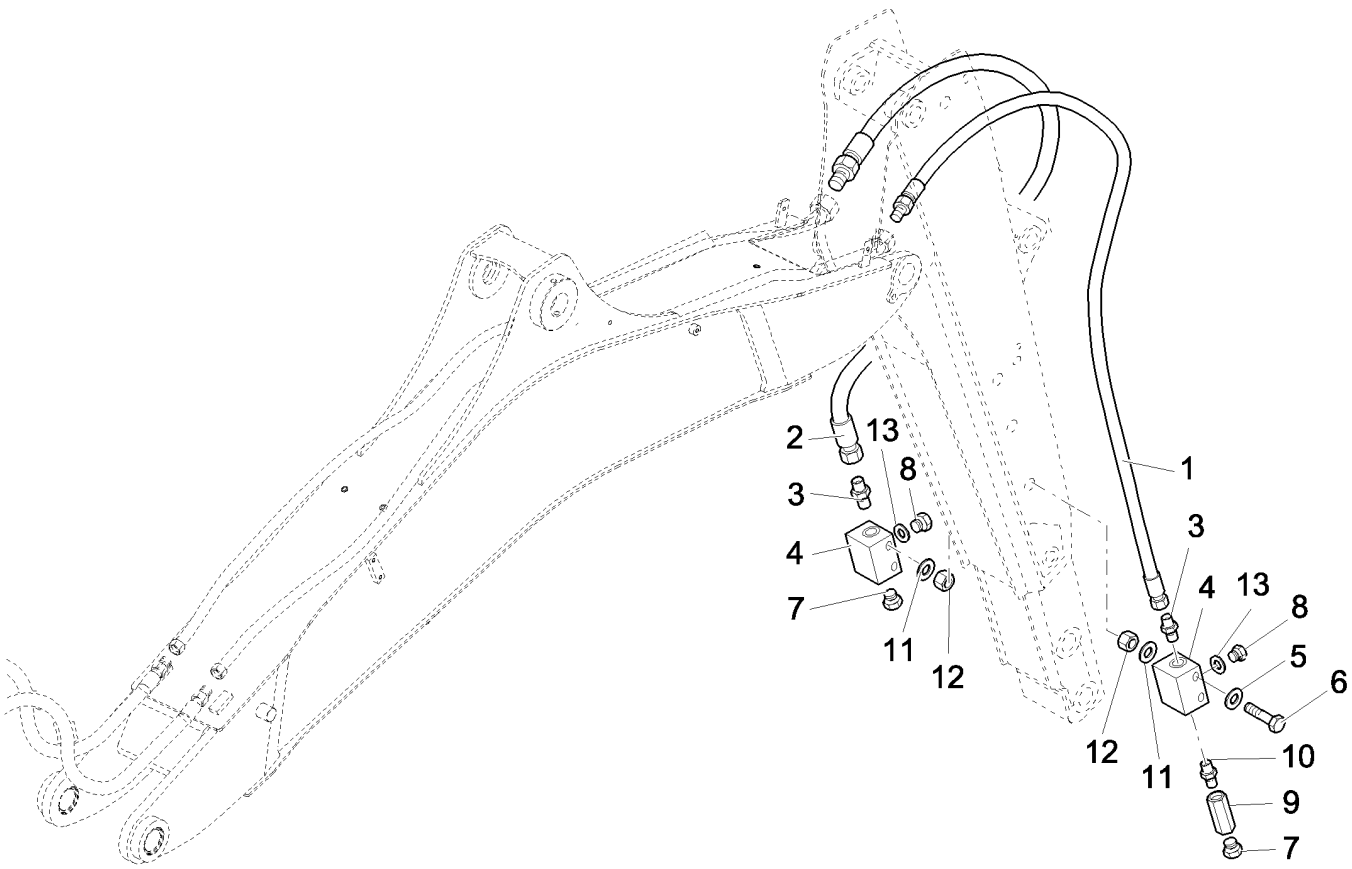

HAMMER KIT FROM LIFTING ARM TO DEMOLITION ARM

REF	FN	PART NUMBER	YR/SN	QTY	DESCRIPTION
1		85819621		1	HOSE, HYDRAULIC
2		85819620		1	HOSE, HYDRAULIC
3		85803486		2	CONNECTOR, HYD.
4		85802247		2	BLOCK
5		11193879		4	WASHER, SPRING, Belleville, M8.4
6		16045021		4	BOLT, Hex, M8 x 90, 8.8
7		85802457		2	PLUG
8		85803409		2	PLUG
9		85802372		1	VALVE, CHECK, 10 Bar
10		85804879		1	CONNECTOR, HYD.
11		12647121		6	WASHER, M8 x 20 x 3
12		14048211		2	NUT, LOCK, M8 x 1.25, Cl 8
13		80167269		2	O-RING

4X1 AND 6X1 BUCKET ARM ASSY HYDRAULIC SYSTEM (POWER SHUTTLE): NA

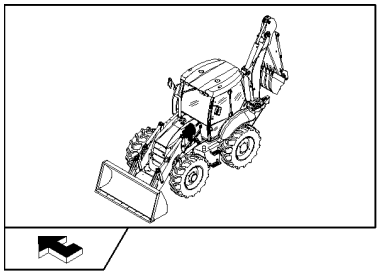

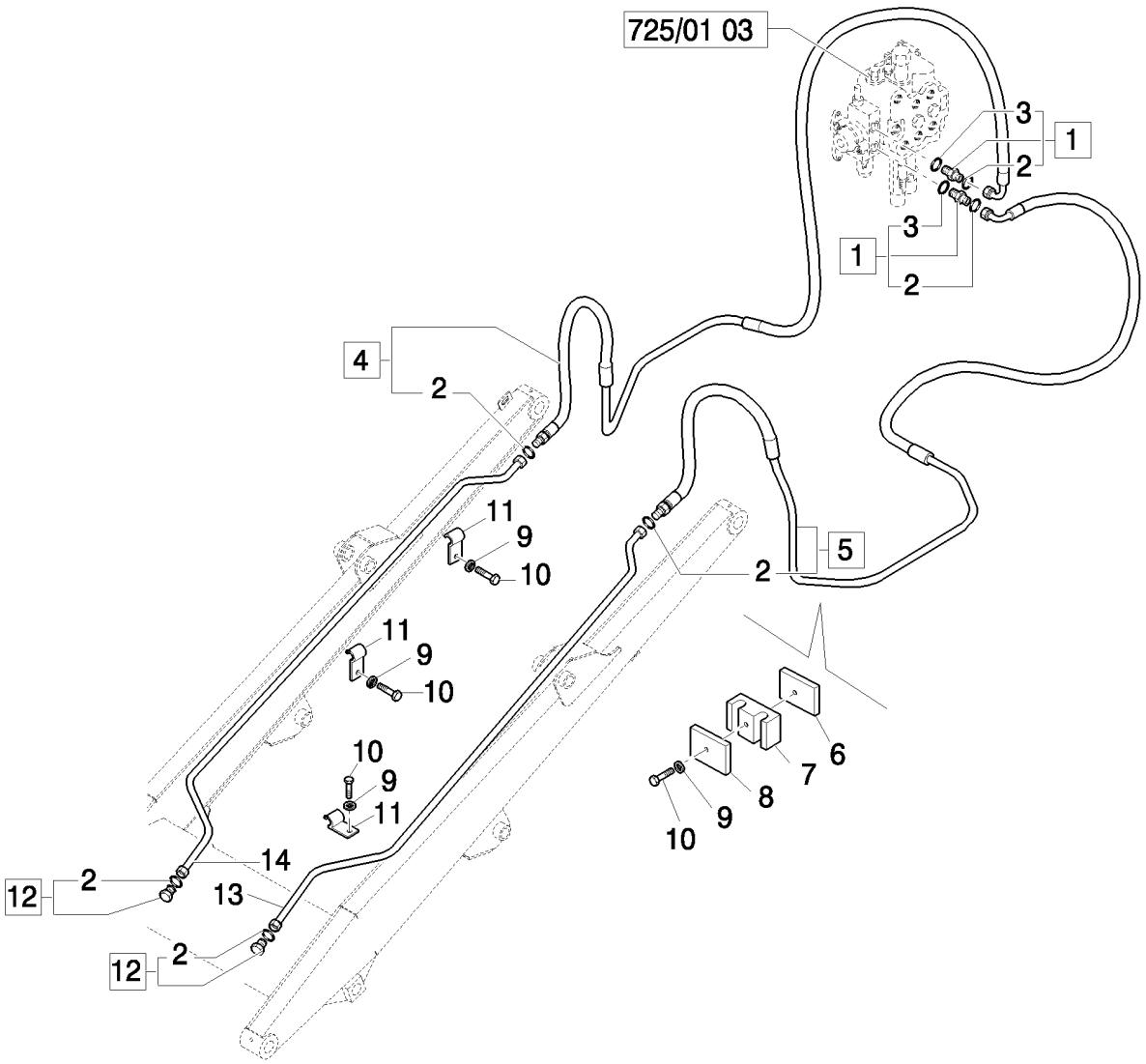

4X1 AND 6X1 BUCKET ARM ASSY HYDRAULIC SYSTEM (POWER SHUTTLE): NA

REF	FN	PART NUMBER	YR/SN	QTY	DESCRIPTION
1		83963376		2	CONNECTOR, HYD.
2		89992298		6	O-RING
3		80167269		2	O-RING
4		85805863		1	HOSE, HYDRAULIC, Assy, RH
5		85805862		1	HOSE, HYDRAULIC, Assy, LH
6		85805340		2	PLATE
7		85805193		2	CLAMP
8		85805195		2	PLATE
9		11193979		8	WASHER, SPRING, Belleville, M8.4
10		16043821		8	BOLT, Hex, M8 x 30, 8.8
11		85805247		6	CLAMP
12		85803408		2	PLUG, Assy
13		85805864		1	TUBE, HYD, LH
14		85805865		1	TUBE, HYD, RH

4X1 AND 6X1 BUCKET MACHINE HYDRAULIC DUCT ASSY (POWER SHUTTLE): NA

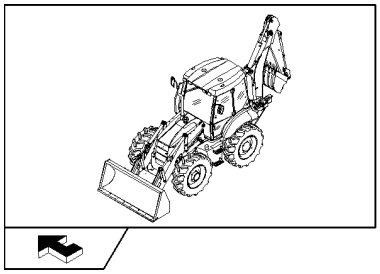

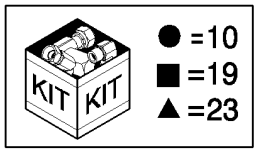

4X1 AND 6X1 BUCKET MACHINE HYDRAULIC DUCT ASSY (POWER SHUTTLE): NA

REF	FN	PART NUMBER	YR/SN	QTY	DESCRIPTION
1		85802234		2	ELBOW
2		85805318		2	ELBOW, 90º, 9/16"-18, 37º x 9/16"-18, O-Ring
3		47050685		2	CONNECTOR, HYD.
4		47050686		1	CONNECTOR, HYD.
5		85826100		1	REDUCER
6		85828211		1	COUPLING, QUICK, MALE
7		87316092		1	HOSE, FLEXIBLE
8		87316096		1	HOSE, FLEXIBLE
9		87316091		2	HOSE, FLEXIBLE
10		87739988		1	KIT
11		87382112		1	HANDLE, Loader, Powershuttle, W/Detent, Declutch; Includes 87387751 Grip W/1 Button; 87387703 Prop Roller W/Detented Position; 87387754 Transmission Button Harness; 87387722 Bi-Directional PWM Driver Harness
12		85804346		1	DECAL
13		87305209		4	DECAL
14		201-422		4	TEE, 11/16"-16 ORFS x 11/16"-16 Fem Sw Run
15		87739689		1	VALVE, CONTROL, Assy
16		14300521		1	SCREW, Hex Soc Hd, M6 x 75, 8.8, M6x75
17		87311363		1	ORIFICE
18		87739122		1	VALVE
19		85828000		1	KIT, SEALS
20		85827993		2	VALVE, SOLENOID
21		85817531		1	TEE
22		87646604		1	LEVER
23		85828001		1	KIT, SEALS

Mechanical Control Version

B95B

725/01	03	p1	04/08

LOADER CONTROL VALVE, THREE SECTION (CENTER PIVOT) - NA

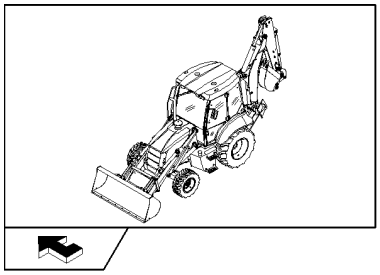

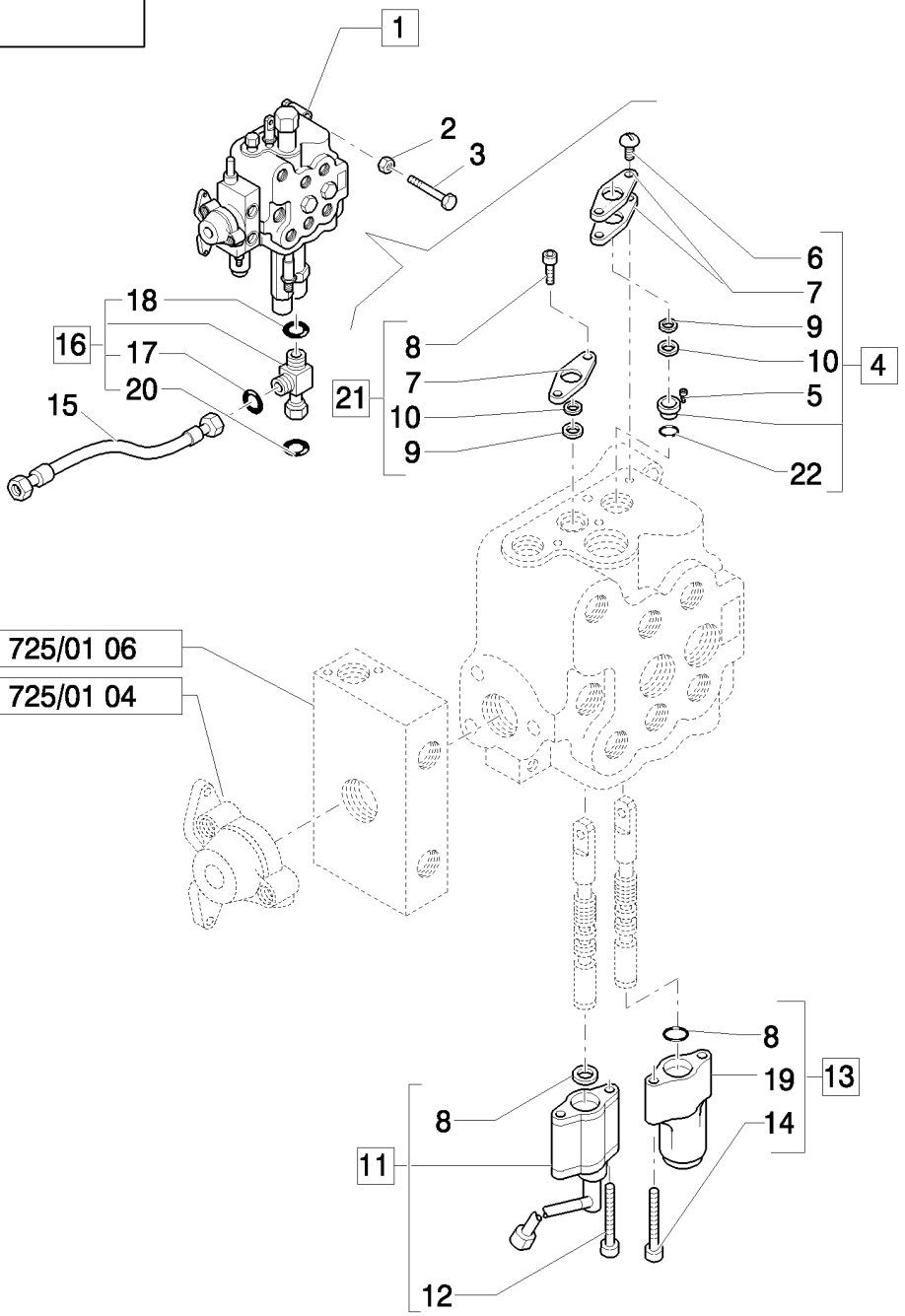

LOADER CONTROL VALVE, THREE SECTION (CENTER PIVOT) - NA

REF	FN	PART NUMBER	YR/SN	QTY	DESCRIPTION
1		87326256		1	VALVE SECTION, HYD, Assy
2		11190579		3	WASHER, SPRING, Belleville, M10.5
3		14308221		3	SCREW, Hex Soc Hd, M10 x 1.25 x 65, 8.8
4		9968455		1	KIT
5		9968457		1	SPACER
6		9968456		2	SCREW
7		9968458		3	FLANGE
8		9968460		2	SCREW
9		9968489		4	SEAL
10		9968490		2	WIPER
11		85808403		1	STOP, agnetic Detent, Assy
12		9968451		2	SCREW
13		85817025		1	SPOOL
14		9968454		2	SCREW
15		85816804		1	HOSE, HYDRAULIC, 550mm lg
16		85817531		1	TEE, Assy
17		9825770		1	O-RING, -011, 90 Duro, .301" ID x .070" Thk
18		9824050		1	O-RING, -021, 90 Duro, .926" ID x .070" Thk
19		9968513		1	COVER
20		89626929		1	O-RING, 90 Duro, 1.048" ID x .116" Thk
21		87319445		1	EYEBOLT, Assy
22		87327076		1	O-RING

Mechanical Version B95B

LOADER CONTROL VALVE, THREE SECTION, CAP & UNLOAD VALVE (CENTER PIVOT) - NA

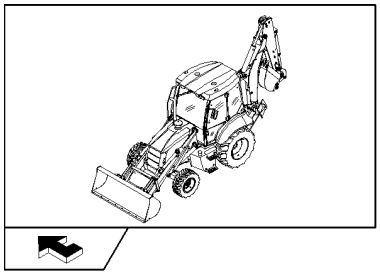

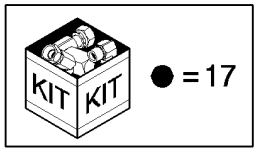

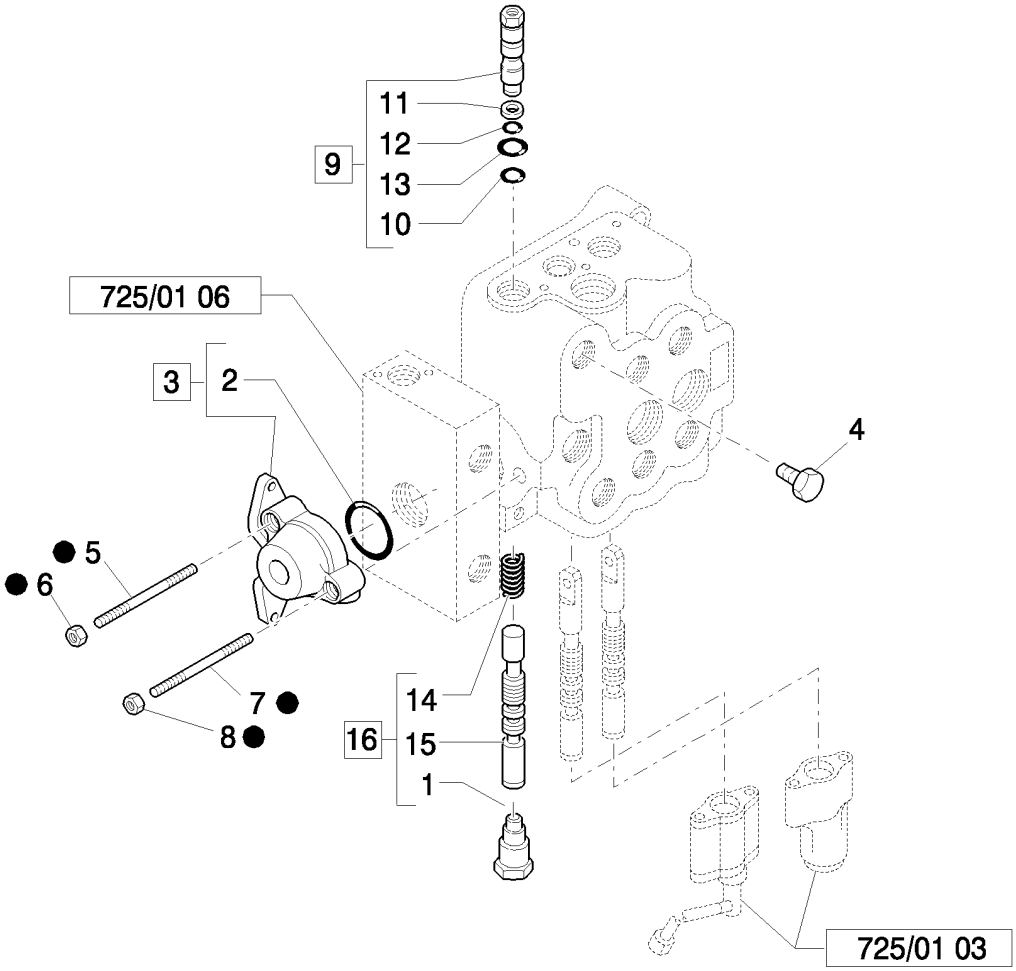

LOADER CONTROL VALVE, THREE SECTION, CAP & UNLOAD VALVE (CENTER PIVOT) - NA

REF	FN	PART NUMBER	YR/SN	QTY	DESCRIPTION
1		9968464		1	PLUG, Assy
2		9968476		1	O-RING
3		9968443		1	VALVE SECTION, HYD, Assy
4		85807857		1	PLUG
5		9968439		2	STUD
6		9968441		2	NUT
7		9968438		1	TIE-ROD, THREADED
8		9968440		1	NUT
9		85815667		1	VALVE, BY-PASS
10		85815668		1	O-RING
11		9968467		1	RING, BACK-UP
12		9968466		1	O-RING
13		9968468		1	O-RING
14		9968488		1	SPRING
15		85807858		1	SPOOL
16		87327632		1	SPOOL, Assy
17		87326258		1	KIT, CONVERSION

Mechanical Version B95B

725/01	05	p1	04/08

LOADER CONTROL VALVE, THREE SECTION, RELIEF & CHECK VALVES (CENTER PIVOT) - NA

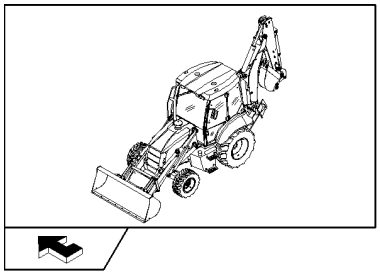

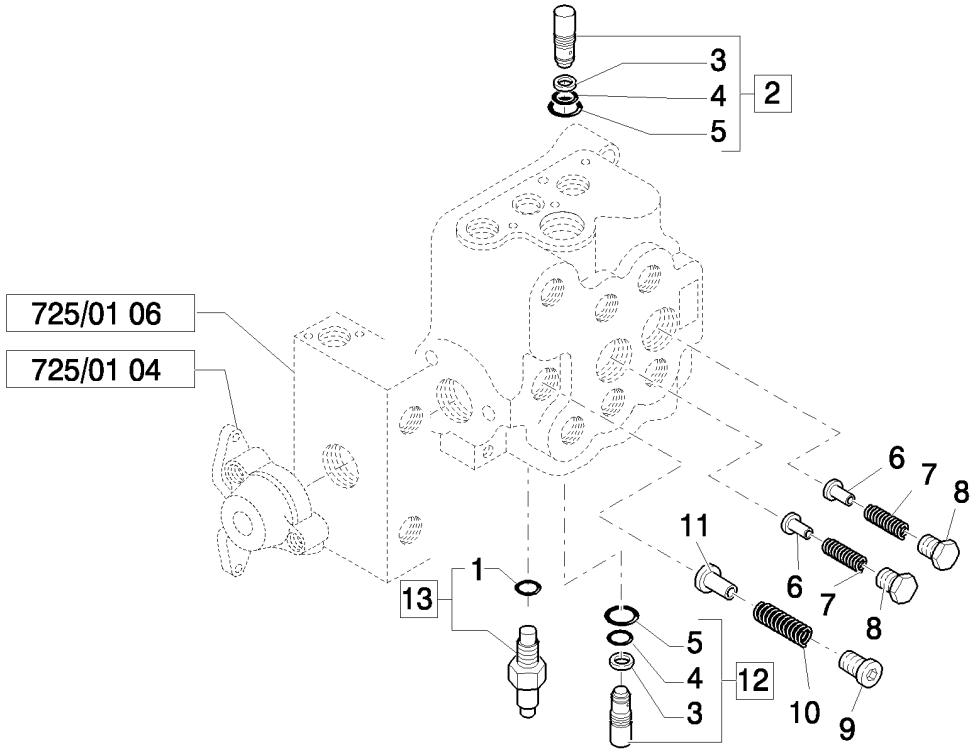

LOADER CONTROL VALVE, THREE SECTION, RELIEF & CHECK VALVES (CENTER PIVOT) - NA

REF	FN	PART NUMBER	YR/SN	QTY	DESCRIPTION
1		85819945		1	O-RING, Assy
2		87302609		1	VALVE, PRESSURE RELIEF, Assy
3		87302608		2	BACK-UP RING
4		9968471		2	O-RING
5		9968470		2	O-RING
6		9968444		2	PLUNGER
7		9968445		2	SPRING
8		9968446		2	PLUG
9		9968449		1	PLUG
10		9968448		1	SPRING
11		9968447		1	PLUNGER
12		87302611		1	VALVE, PRESSURE RELIEF, Assy
13		85819722		1	VALVE, HYDRAULIC, Assy

THREE-SECTION CONTROL VALVE FOR LOADER - BUCKET SECTION 4X1 - 6X1(CENTER PIVOT) - NA

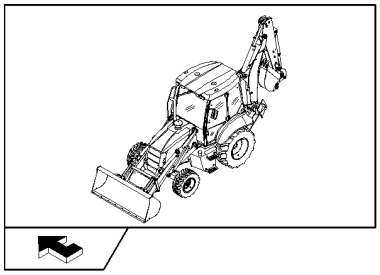

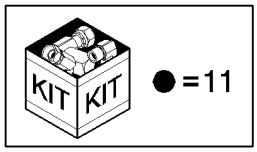

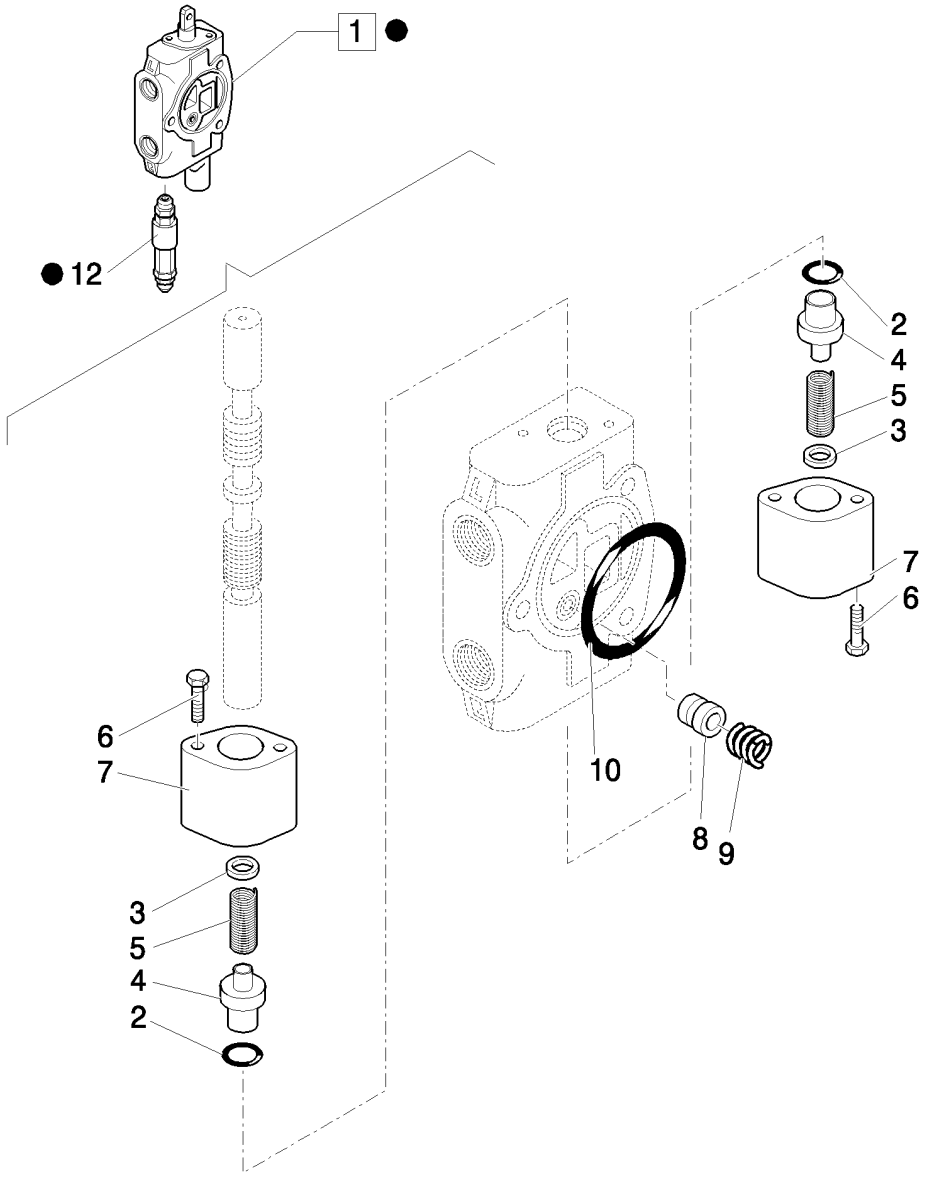

THREE-SECTION CONTROL VALVE FOR LOADER - BUCKET SECTION 4X1 - 6X1(CENTER PIVOT) - NA

REF	FN	PART NUMBER	YR/SN	QTY	DESCRIPTION
1		87326257		1	VALVE SECTION, HYD, Assy
2		87327044		2	O-RING
3		87327053		2	SPACER
4		87327049		2	SEAT
5		87327052		2	SPRING
6		87327057		2	SCREW
7		87327046		2	PLUG
8		9968477		1	POPPET
9		9968478		1	SPRING
10		9968476		1	O-RING
11		87326258		1	KIT, CONVERSION
12		9968595		1	VALVE, PRESSURE RELIEF

Mechanical Version

B95B

HED FOOT PEDAL, CABLE & DECALS (CENTER PIVOT) - NA

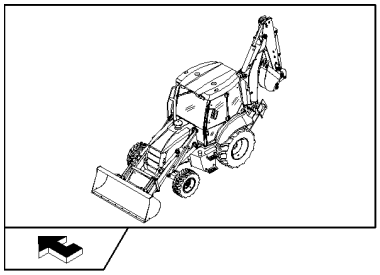

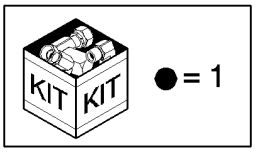

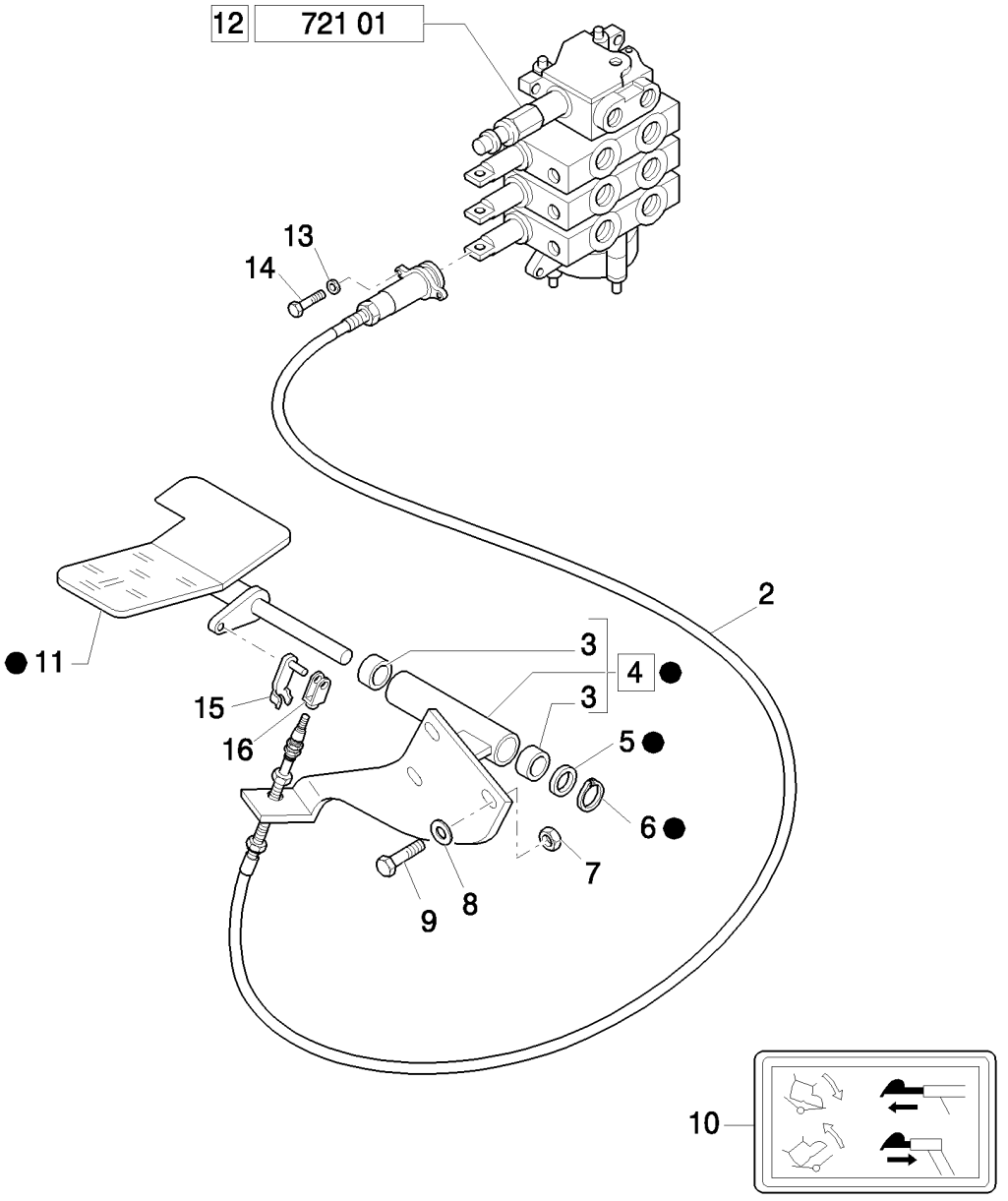

HED FOOT PEDAL, CABLE & DECALS (CENTER PIVOT) - NA

REF	FN	PART NUMBER	YR/SN	QTY	DESCRIPTION
1		85802509		1	PEDAL, Assy
2	1	85813103		1	CABLE
3		85802494		2	BUSHING
4		85801599		1	PLATE, Assy
5		14496901		1	WASHER, M16 x 30 x 3
6		83911366		1	CIRCLIP
7		16104111		3	NUT, LOCK, M8 x 1.25, Cl 8
8		16043621		3	BOLT, Hex, M8 x 25, 8.8
9		11193879		3	WASHER, SPRING, Belleville, M8.4
10		85803786		1	DECAL
11		85802510		1	PEDAL
12		87331094		1	DISTRIBUTOR, Assy
13		85813201		4	WASHER
14		85813200		4	SCREW
15		85813186		2	CLIP
16		85813187		2	CLEVIS

(1) Includes 13 - 16

Mechanical Version B95B

728	01	p1	04/08

HAND HAMMER SYSTEM: DELIVERY

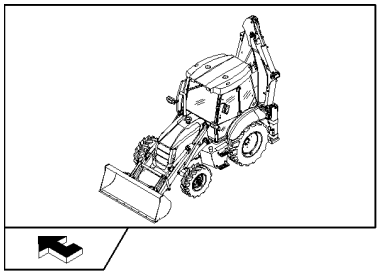

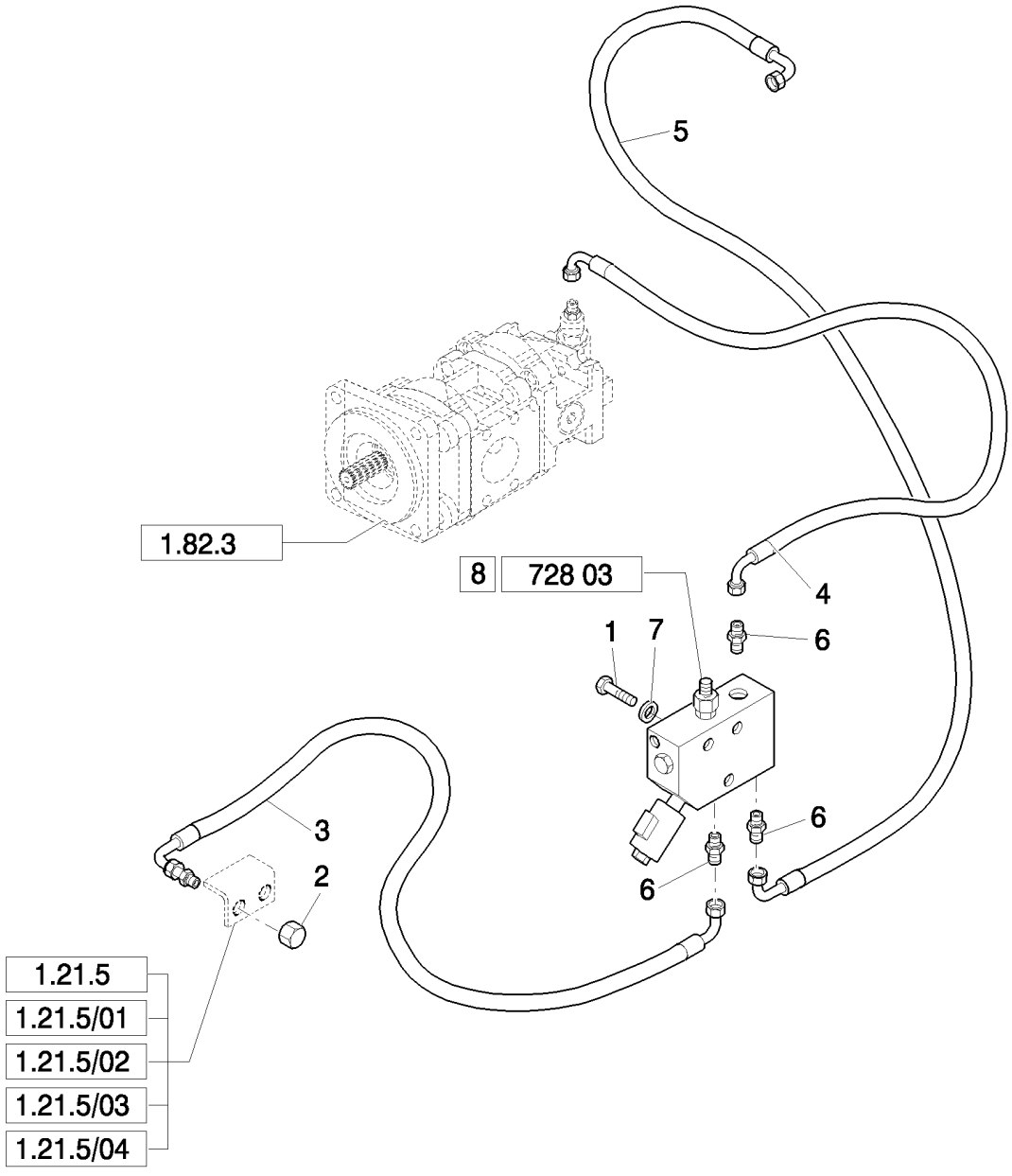

HAND HAMMER SYSTEM: DELIVERY

REF	FN	PART NUMBER	YR/SN	QTY	DESCRIPTION
1		16044521		3	BOLT, Hex, M8 x 65, 8.8
2		83987627		1	CAP
3		87619499		1	HOSE, FLEXIBLE
4	1	87614752		1	HOSE, FLEXIBLE
4	2	87621906		1	HOSE, FLEXIBLE
5	1	87621913		1	HOSE, FLEXIBLE
6		85803234		3	CONNECTOR, HYD.
7		11193879		3	WASHER, SPRING, Belleville, M8.4
8		87677506		1	VALVE, HYDRAULIC, Assy

(1) Excluded Mechanical Version (NA)
(2) Only for Mechanical Version (NA)

728	02	p1	04/08

HAND HAMMER SYSTEM: RETURN

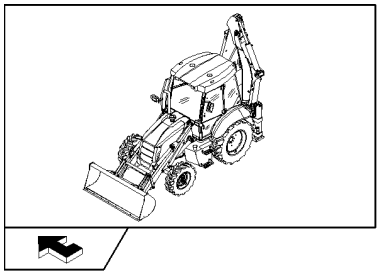

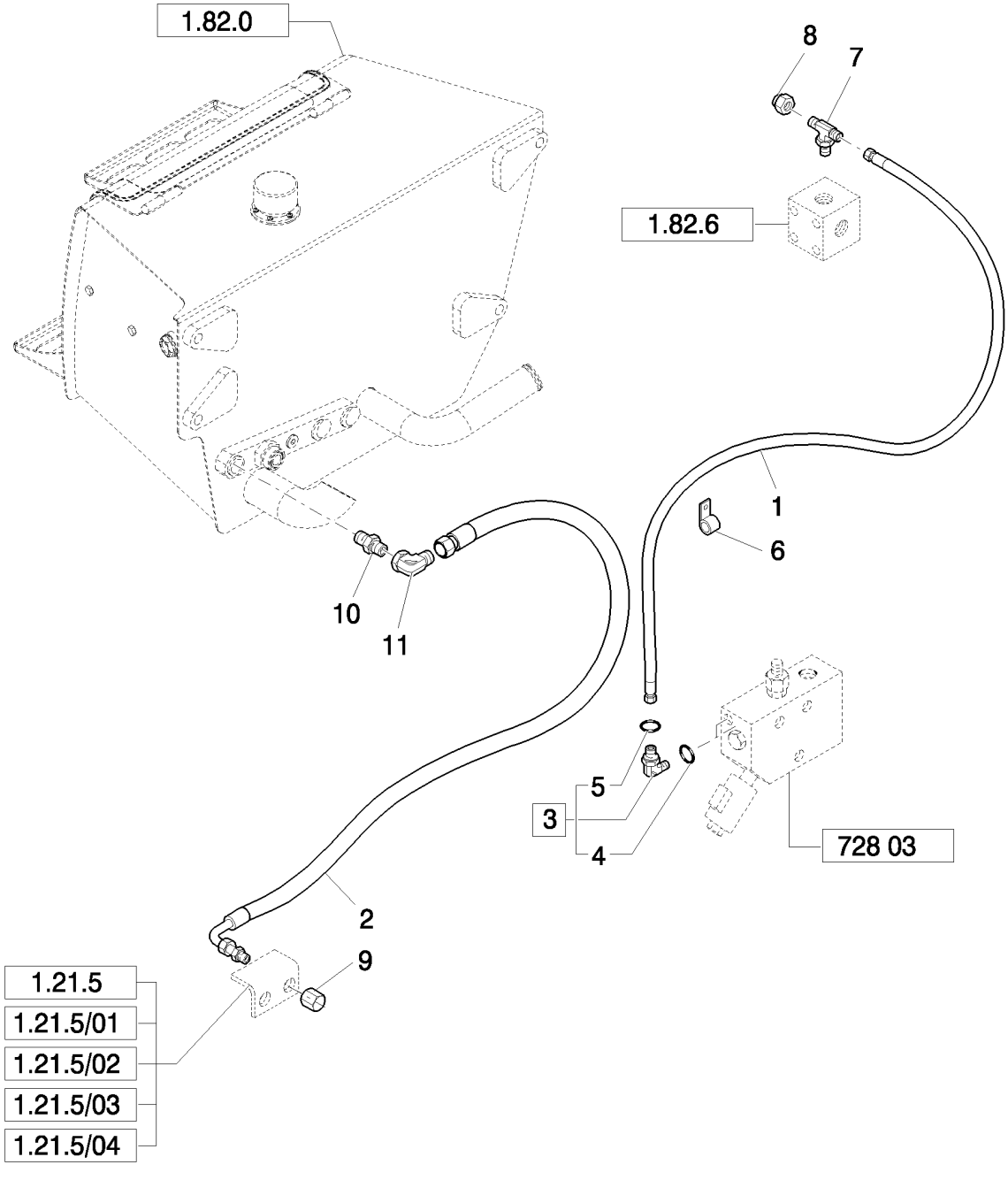

HAND HAMMER SYSTEM: RETURN

REF	FN	PART NUMBER	YR/SN	QTY	DESCRIPTION
1		85803230		1	HOSE, FLEXIBLE, 1050mm lg
2		85803231		1	HOSE, FLEXIBLE, 900mm lg
3		83961741		1	ELBOW, Assy
4		81844851		1	O-RING
5		81845037		1	O-RING
6		85803393		1	CLAMP
7		85802780		1	TEE
8		81871325		1	COVER
9		83987627		1	CAP
10		85803241		1	CONNECTOR, HYD.
11		85827861		1	CONNECTOR, HYD.

MANUAL HAMMER VALVE

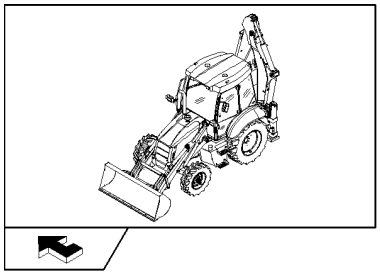

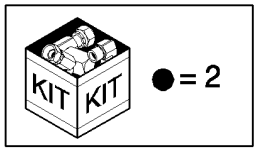

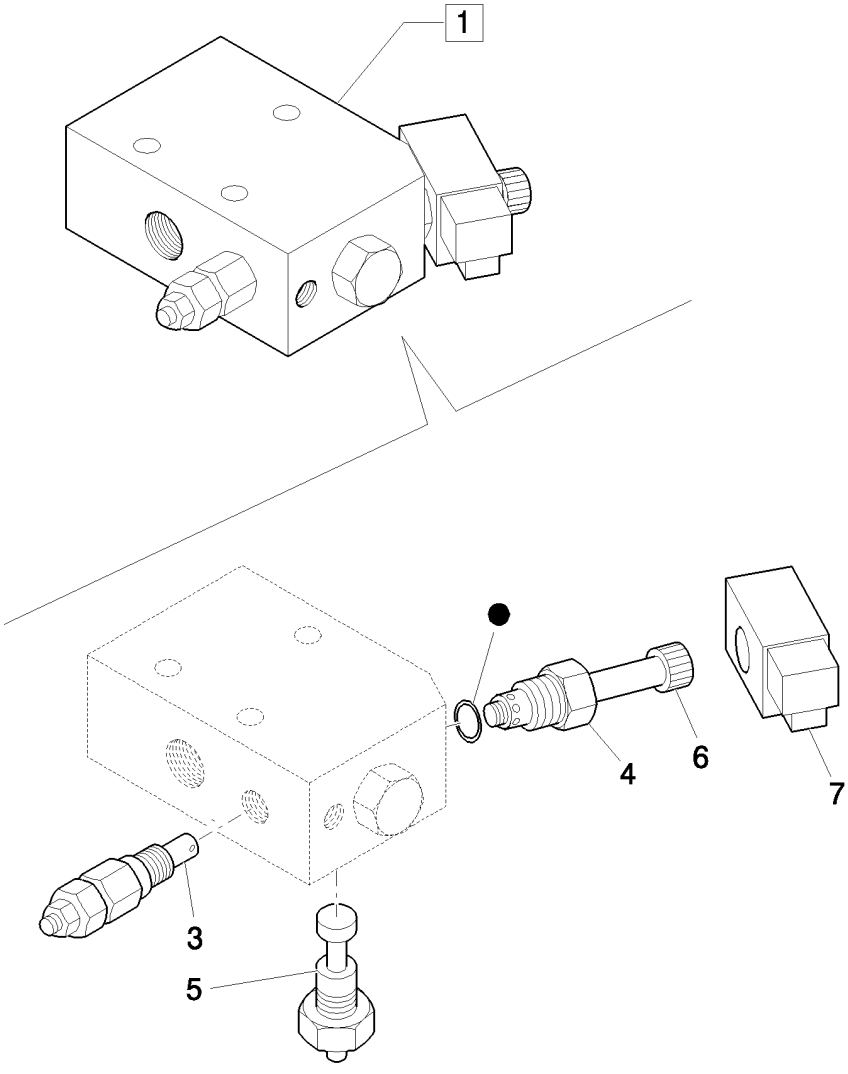

MANUAL HAMMER VALVE

REF	FN	PART NUMBER	YR/SN	QTY	DESCRIPTION
1		87677506		1	VALVE, HYDRAULIC, Assy
2		87358193		1	KIT, GASKETS
3		87358196		1	VALVE, HYDRAULIC
4		87358194		1	VALVE, HYDRAULIC
5		9970383		1	VALVE, SOLENOID
6		9970384		1	NUT
7		87357715		1	SENDER UNIT

REAR MECHANICAL QUICK-COUPLING

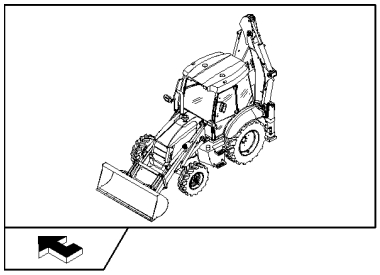

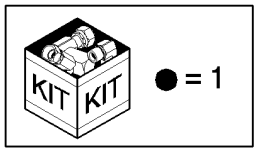

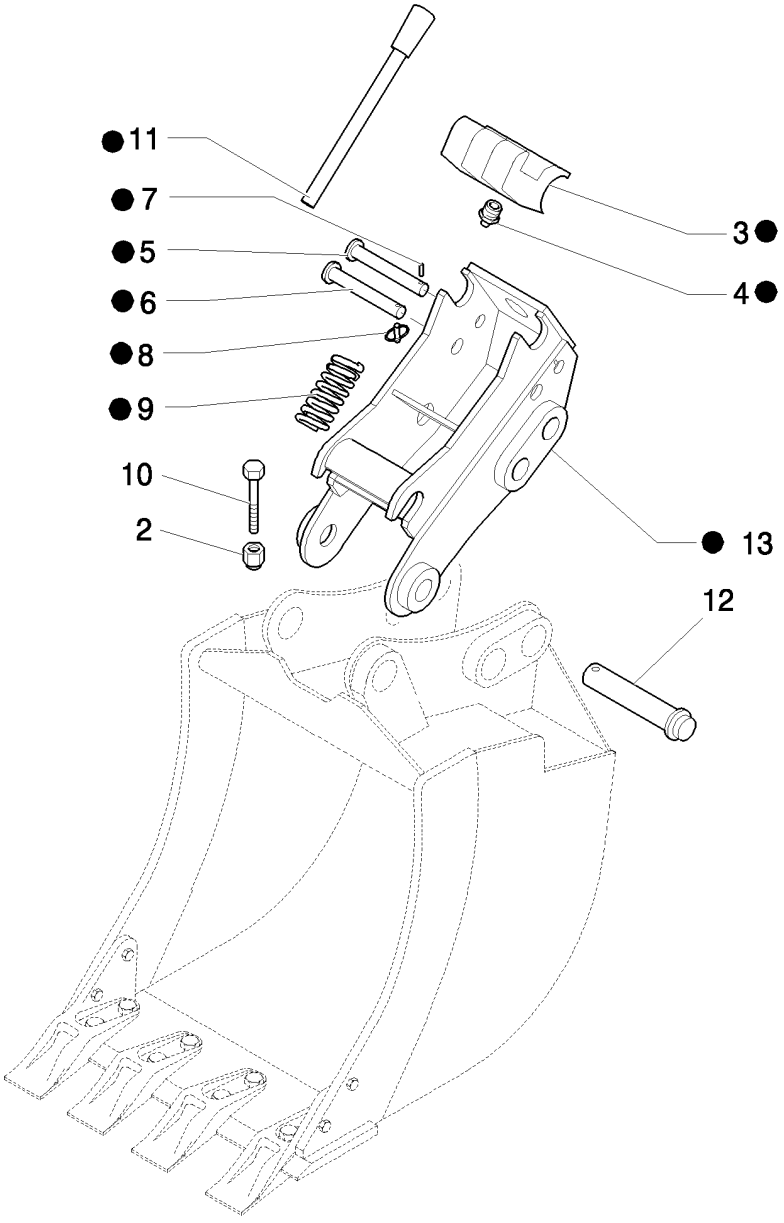

REAR MECHANICAL QUICK-COUPLING

REF	FN	PART NUMBER	YR/SN	QTY	DESCRIPTION
1		87677533		1	COUPLING, QUICK, FEMALE, Assy
2		12574511		2	NUT, LOCK, M10 x 1.25, Cl 8
3		85827552		1	HOOK
4		85824266		1	NIPPLE, LUBE
5		85827553		1	HOOK, 1.26" dia x 10.3" lg
6		87677542		1	SPLIT PIN/SAFETY PIN
7		85825285		1	PIN
8		87677544		1	PIN, LINCH
9		85824268		1	SPRING
10		15972034		2	BOLT, Hex, M10 x 110, 10.9
11		87677546		1	HANDLE
12		85803005		2	PIN
13		87677538		1	COUPLING, QUICK, FEMALE

FRONT MECHANICAL QUICK-COUPLING

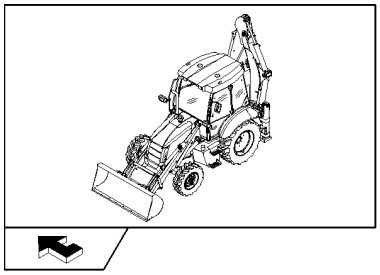

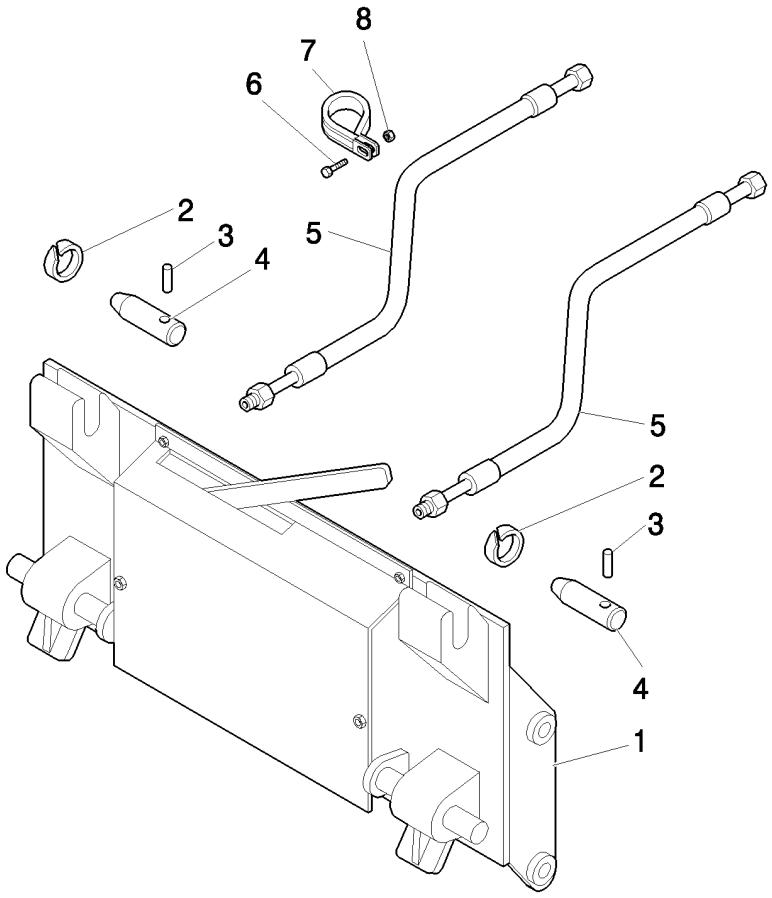

FRONT MECHANICAL QUICK-COUPLING

REF	FN	PART NUMBER	YR/SN	QTY	DESCRIPTION
1		85824397		1	PLATE, RETAINING
2		85802992		2	RING
3		85802993		2	PIN
4		85801051		2	PIN
5		85813378		2	HOSE, HYDRAULIC, 1000mm lg
6		16043921		2	SCREW, M8x1.25x35
7		85803393		2	CLAMP
8		16104111		2	NUT, LOCK, M8 x 1.25, Cl 8

758		p1	04/08

ROTATING BEACON

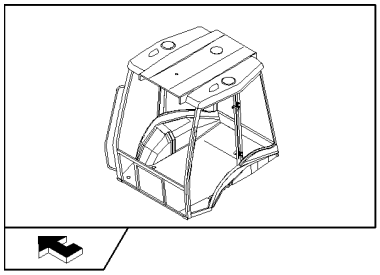

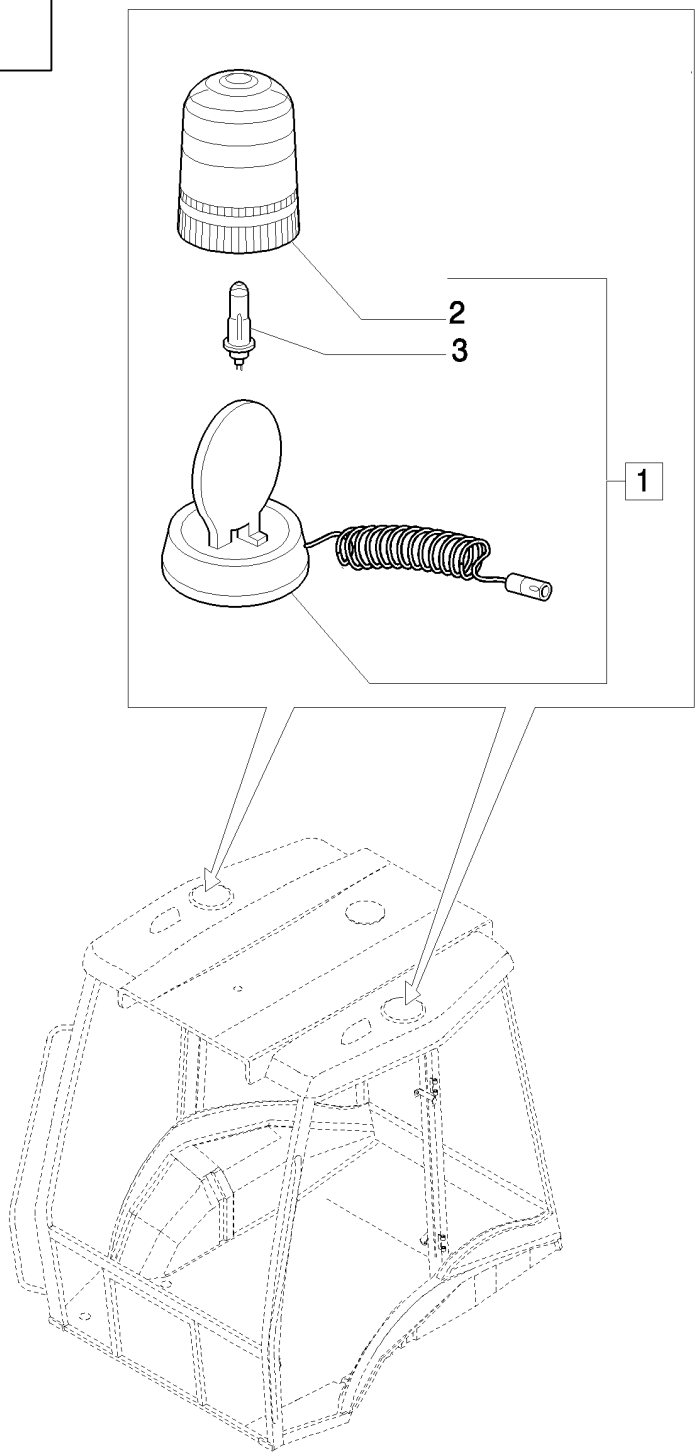

ROTATING BEACON

REF	FN	PART NUMBER	YR/SN	QTY	DESCRIPTION
1		85817129		1	BEACON, Assy
2		85817131		1	LENS
3		85817130		1	BULB

FRONT CONSOLE WITHOUT SPEEDOMETER (POWER SHUTTLE, ROPS)

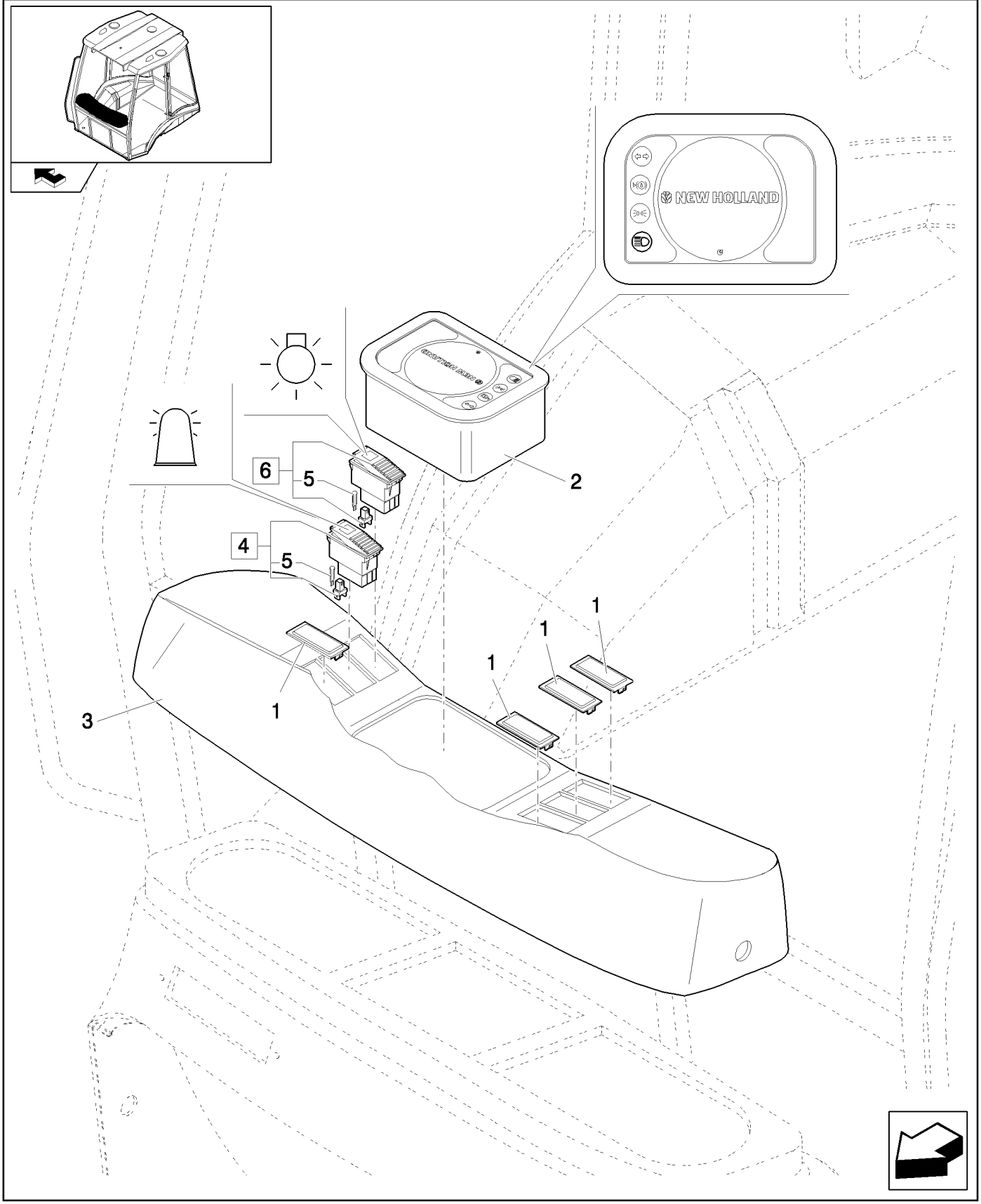

FRONT CONSOLE WITHOUT SPEEDOMETER (POWER SHUTTLE, ROPS)

REF	FN	PART NUMBER	YR/SN	QTY	DESCRIPTION
1		85825254		4	PLUG
2		87521741		1	SPEEDOMETER
3		85818940		1	DASHBOARD
4		85818827		1	SWITCH, Assy
5		14143790		4	BULB
6		85818828		1	SWITCH, LIGHTS, Assy

FRONT CONSOLE WITHOUT SPEEDOMETER (POWER SHUTTLE, CAB)

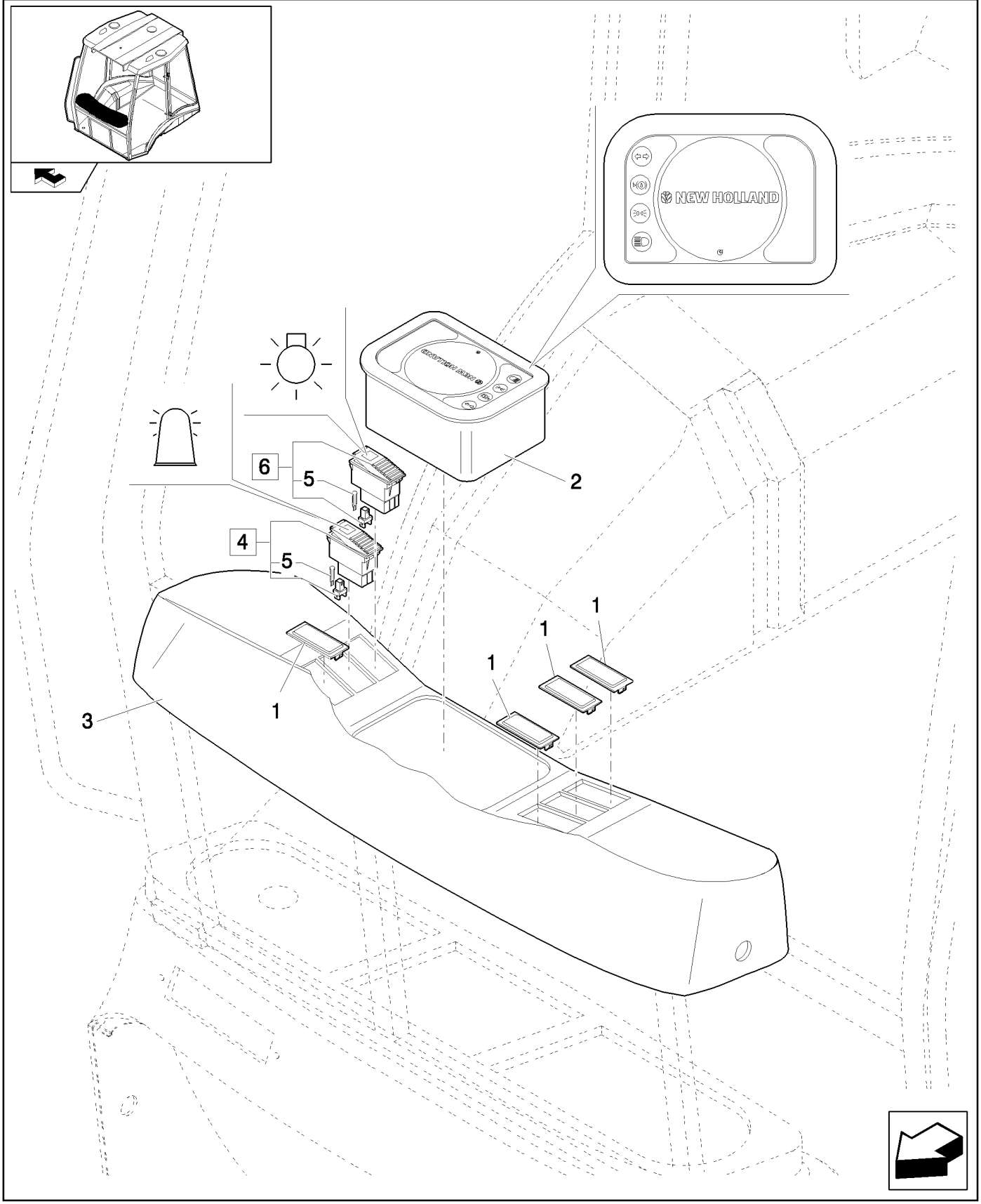

FRONT CONSOLE WITHOUT SPEEDOMETER (POWER SHUTTLE, CAB)

REF	FN	PART NUMBER	YR/SN	QTY	DESCRIPTION
1		85825254		4	PLUG
2		87521741		1	SPEEDOMETER
3		85818826		1	DASHBOARD
4		85818827		1	SWITCH, Assy
5		14143790		4	BULB
6		85818828		1	SWITCH, LIGHTS, Assy

788		p1	04/08

FRONT CONSOLE WITH SPEEDOMETER (ROPS)

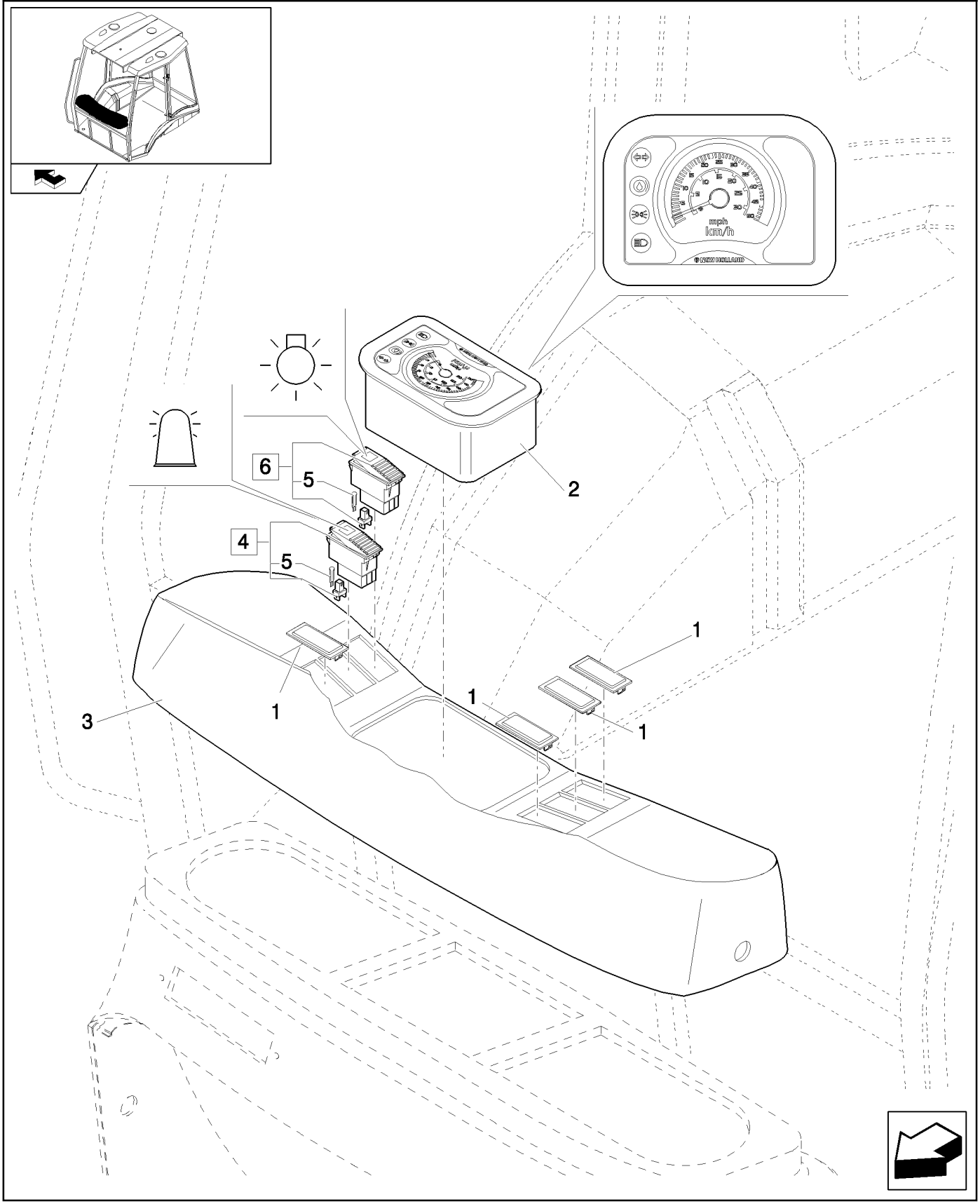

FRONT CONSOLE WITH SPEEDOMETER (ROPS)

REF	FN	PART NUMBER	YR/SN	QTY	DESCRIPTION
1		85825254		4	PLUG
2		87521822		1	SPEEDOMETER
3		85818940		1	DASHBOARD
4		85818827		1	SWITCH, Assy
5		14143790		2	BULB
6		85818828		1	SWITCH, LIGHTS, Assy

788/01		p1	04/08

FRONT CONSOLE WITH SPEEDOMETER (CAB) (POWER SHUTTLE)

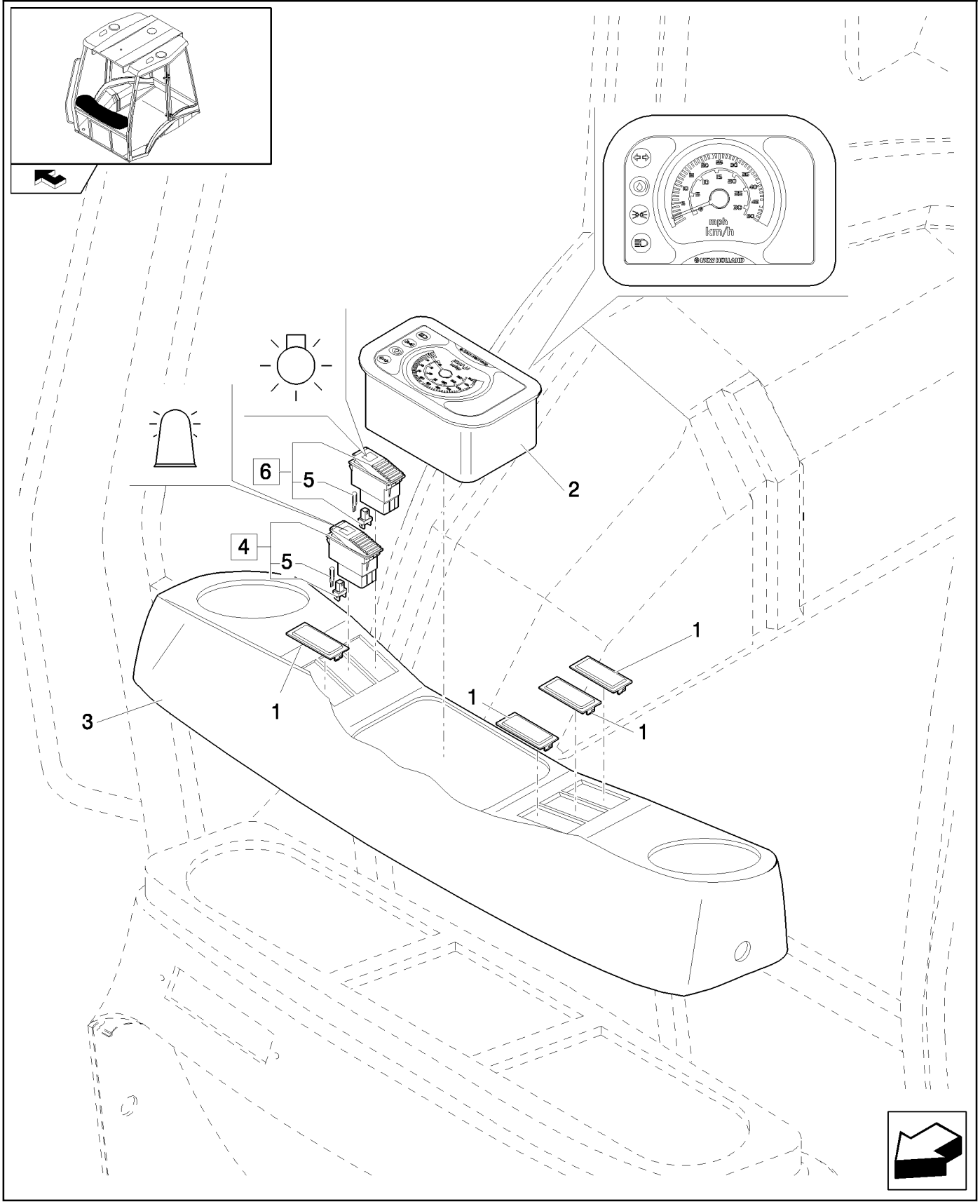

FRONT CONSOLE WITH SPEEDOMETER (CAB) (POWER SHUTTLE)

REF	FN	PART NUMBER	YR/SN	QTY	DESCRIPTION
1		85825254		4	PLUG
2		87521822		1	SPEEDOMETER
3		85818826		1	DASHBOARD
4		85818827		1	SWITCH, Assy
5		14143790		2	BULB
6		85818828		1	SWITCH, LIGHTS, Assy

SPEED SENSOR(P.SHUTTLE)

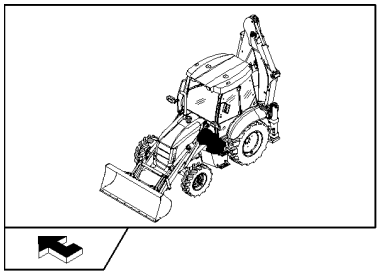

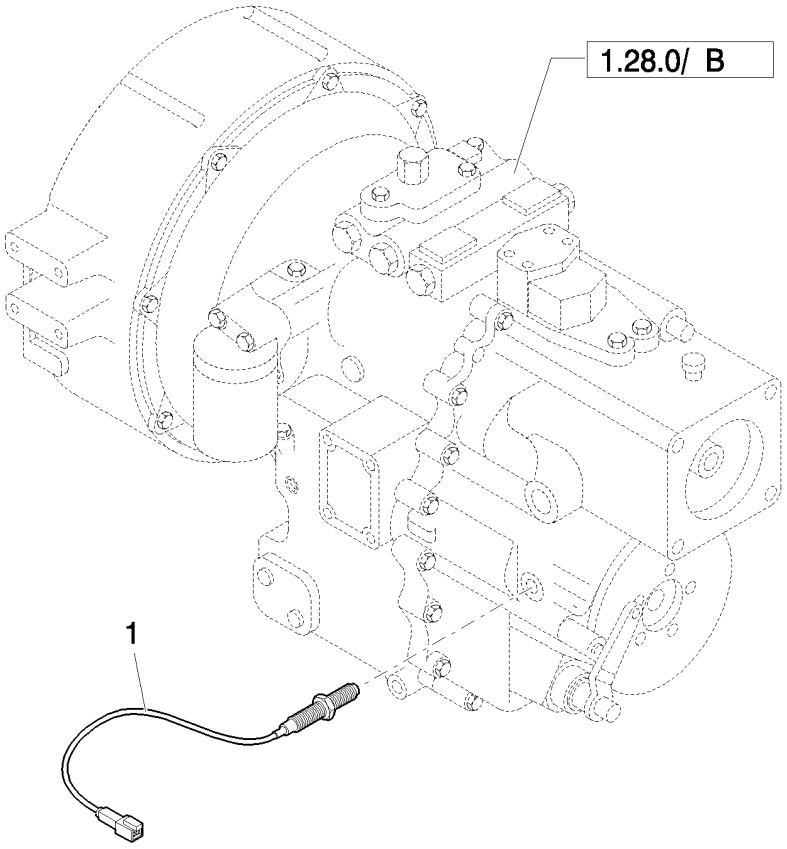

SPEED SENSOR(P.SHUTTLE)

REF	FN	PART NUMBER	YR/SN	QTY	DESCRIPTION
1		85804156		1	SENSOR

FRONT WORKING LIGHT - CAB

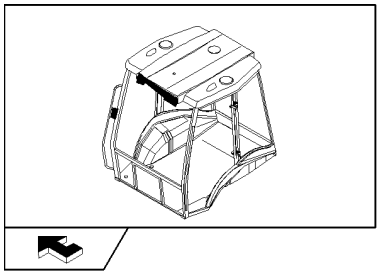

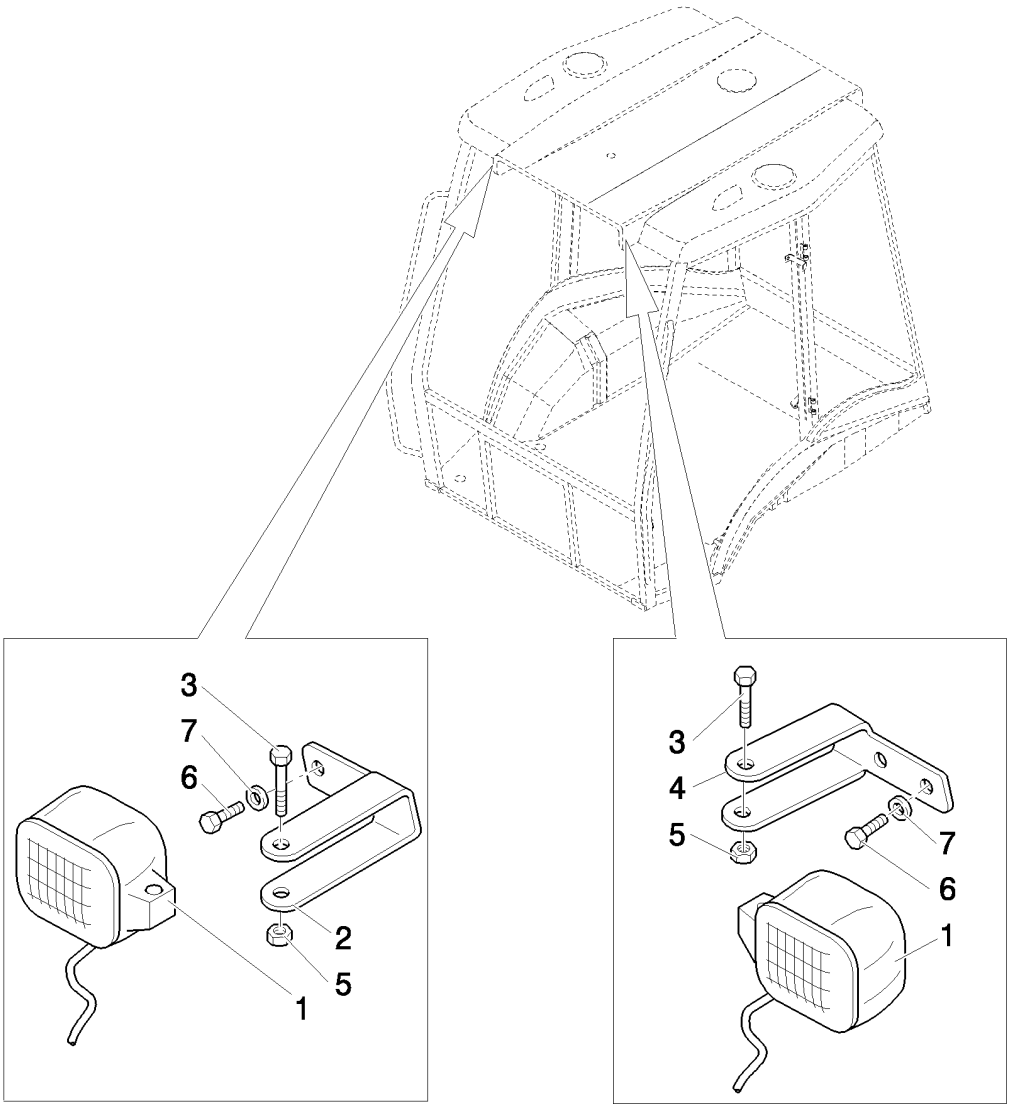

FRONT WORKING LIGHT - CAB

REF	FN	PART NUMBER	YR/SN	QTY	DESCRIPTION
1		85819200		2	HEADLAMP, Includes H3 12V 55W Bulb, Order 9703399 For Bulb
2		85819188		1	BRACKET, RH
3		16044324		2	BOLT, Hex, M8 x 55, 8.8
4		85819189		1	BRACKET
5		16104111		2	NUT, LOCK, M8 x 1.25, Cl 8
6		10902124		4	BOLT, Hex, M6 x 14, 8.8, Full Thd
7		11197774		4	WASHER, SPRING, Belleville, M6.4

FRONT WORKING LIGHT (ROPS)

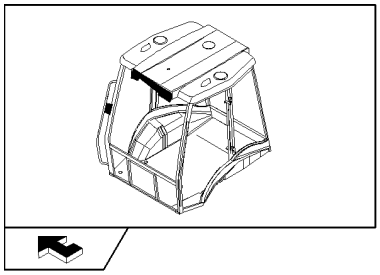

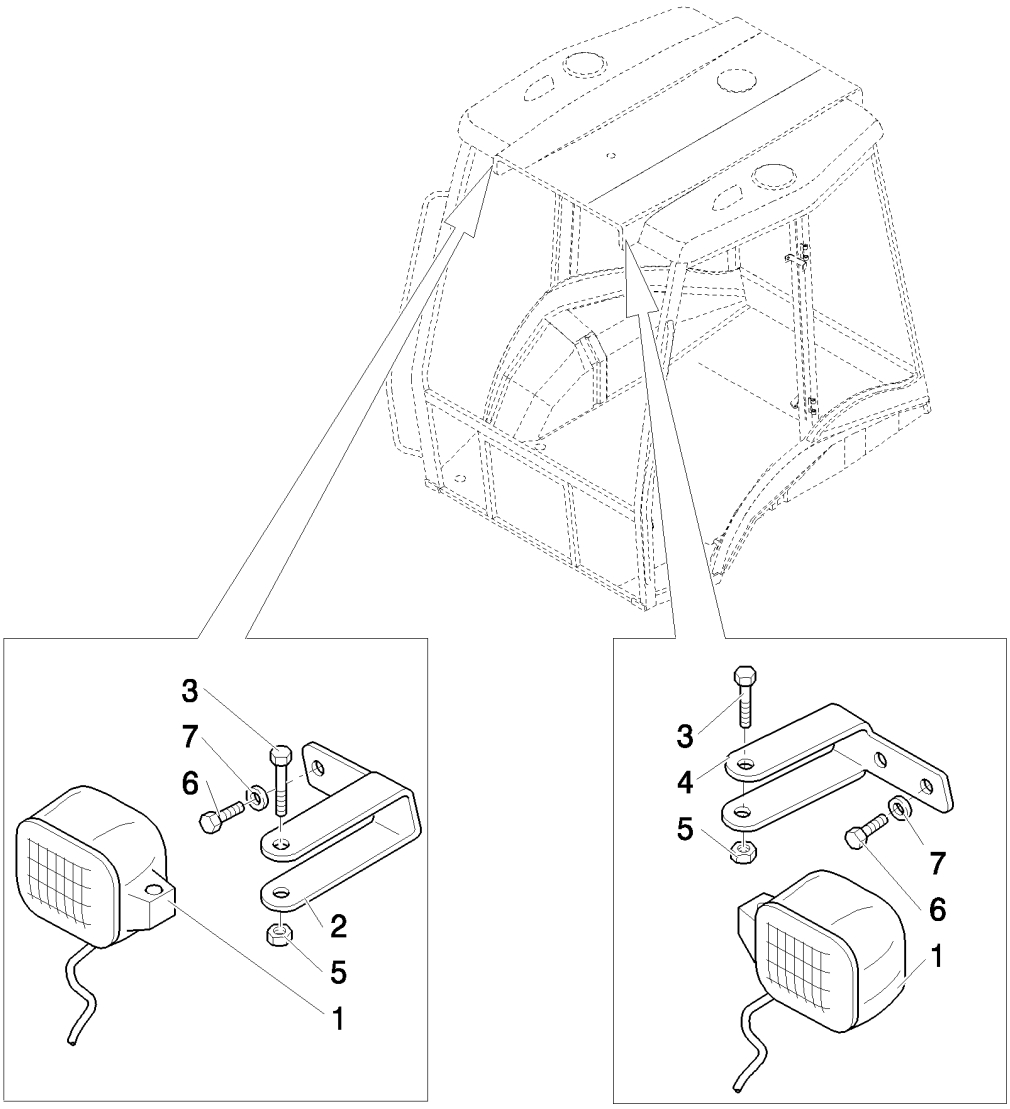

FRONT WORKING LIGHT (ROPS)

REF	FN	PART NUMBER	YR/SN	QTY	DESCRIPTION
1		85819200		2	HEADLAMP, Includes H3 12V 55W Bulb, Order 9703399 For Bulb
2		85819188		1	BRACKET, RH
3		16044324		2	BOLT, Hex, M8 x 55, 8.8
4		85819189		1	BRACKET
5		16104111		2	NUT, LOCK, M8 x 1.25, Cl 8
6		10902124		4	BOLT, Hex, M6 x 14, 8.8, Full Thd
7		11197774		4	WASHER, SPRING, Belleville, M6.4

LAMPS & LIGHTS - CAB

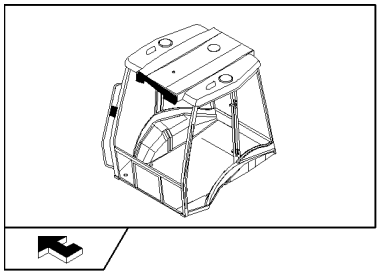

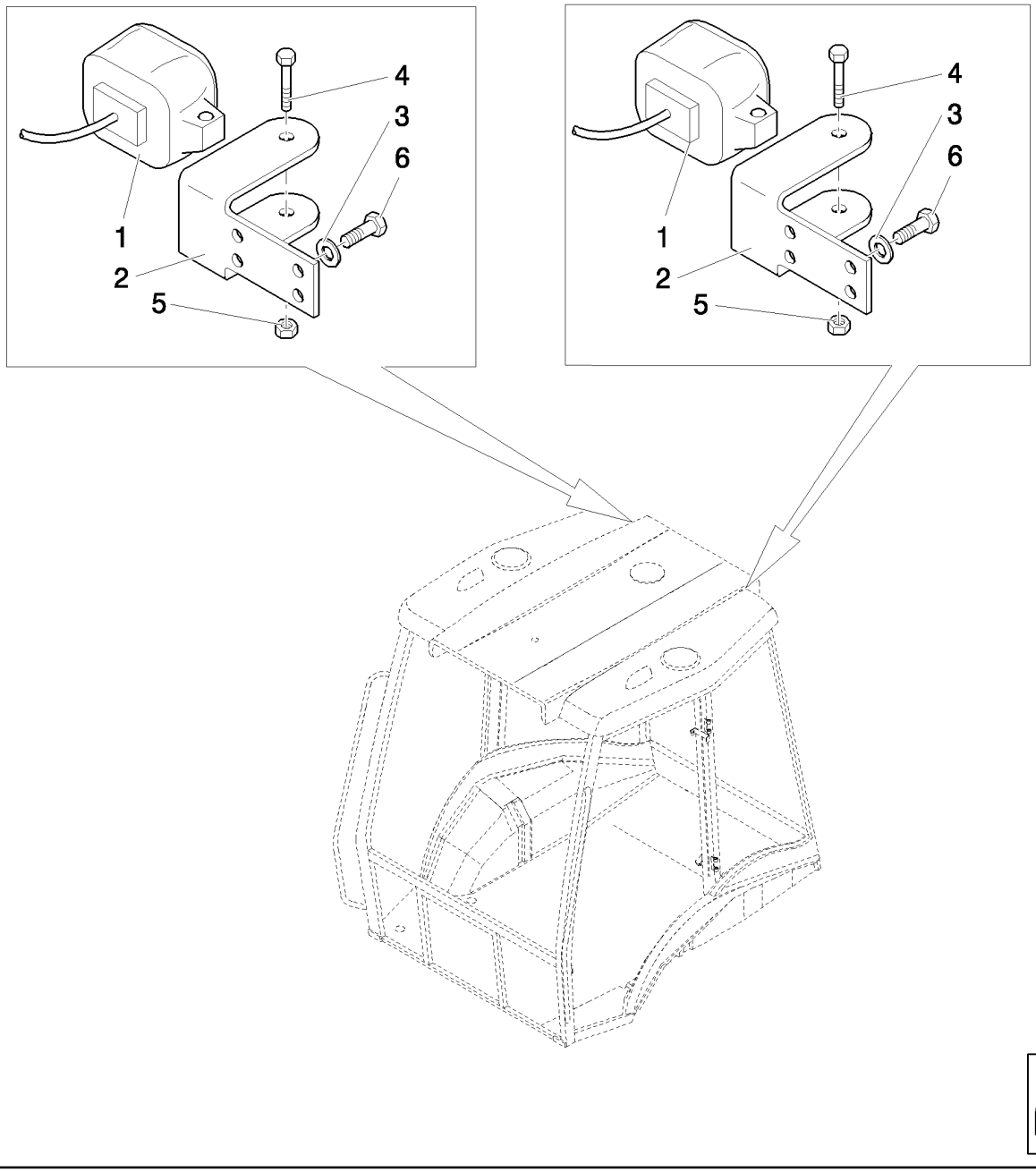

LAMPS & LIGHTS - CAB

REF	FN	PART NUMBER	YR/SN	QTY	DESCRIPTION
1		85819200		2	HEADLAMP, Includes H3 12V 55W Bulb, Order 9703399 For Bulb
2		85819192		2	BRACKET, LH
3		11197774		4	WASHER, SPRING, Belleville, M6.4
4		16044324		2	BOLT, Hex, M8 x 55, 8.8
5		16104111		2	NUT, LOCK, M8 x 1.25, Cl 8
6		10902124		4	BOLT, Hex, M6 x 14, 8.8, Full Thd

LAMPS & LIGHTS (ROPS)

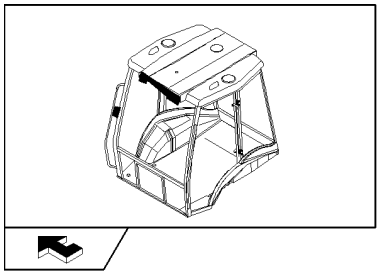

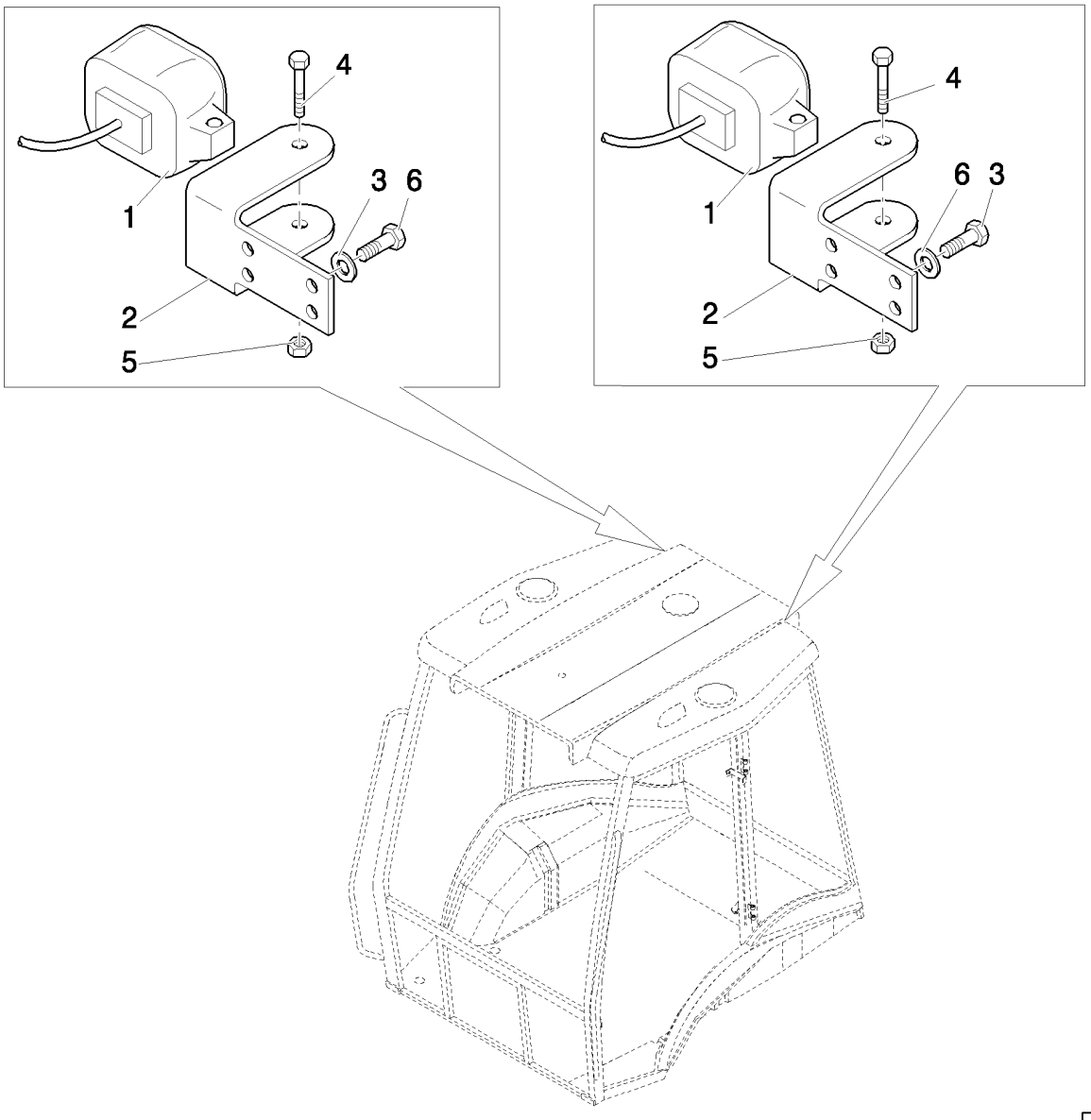

LAMPS & LIGHTS (ROPS)

REF	FN	PART NUMBER	YR/SN	QTY	DESCRIPTION
1		85819200		2	HEADLAMP, Includes H3 12V 55W Bulb, Order 9703399 For Bulb
2		85819192		2	BRACKET, LH
3		11197774		4	WASHER, SPRING, Belleville, M6.4
4		16044324		2	BOLT, Hex, M8 x 55, 8.8
5		16104111		2	NUT, LOCK, M8 x 1.25, Cl 8
6		10902124		4	BOLT, Hex, M6 x 14, 8.8, Full Thd

ANTITHEFT

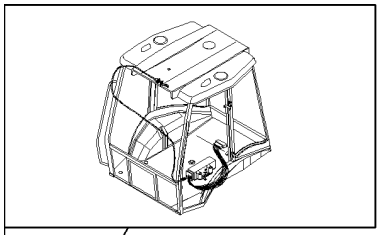

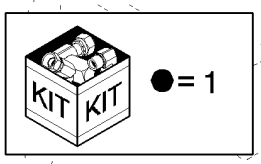

ANTITHEFT

REF	FN	PART NUMBER	YR/SN	QTY	DESCRIPTION
1		85819765		1	KIT
2		12574011		2	NUT, LOCK, M4 x .7, Cl 8
3		12642821		2	WASHER, M4 x 12 x 1
4		14303324		2	SCREW, Hex Soc Hd, M4 x 20, 8.8, Full Thd
5		85819766		1	COVER

FENDERS, FRONT

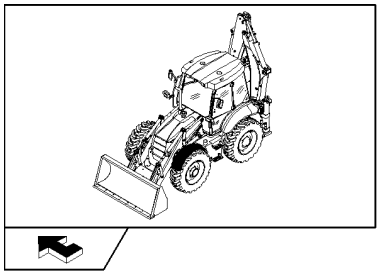

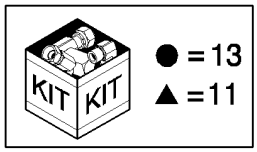

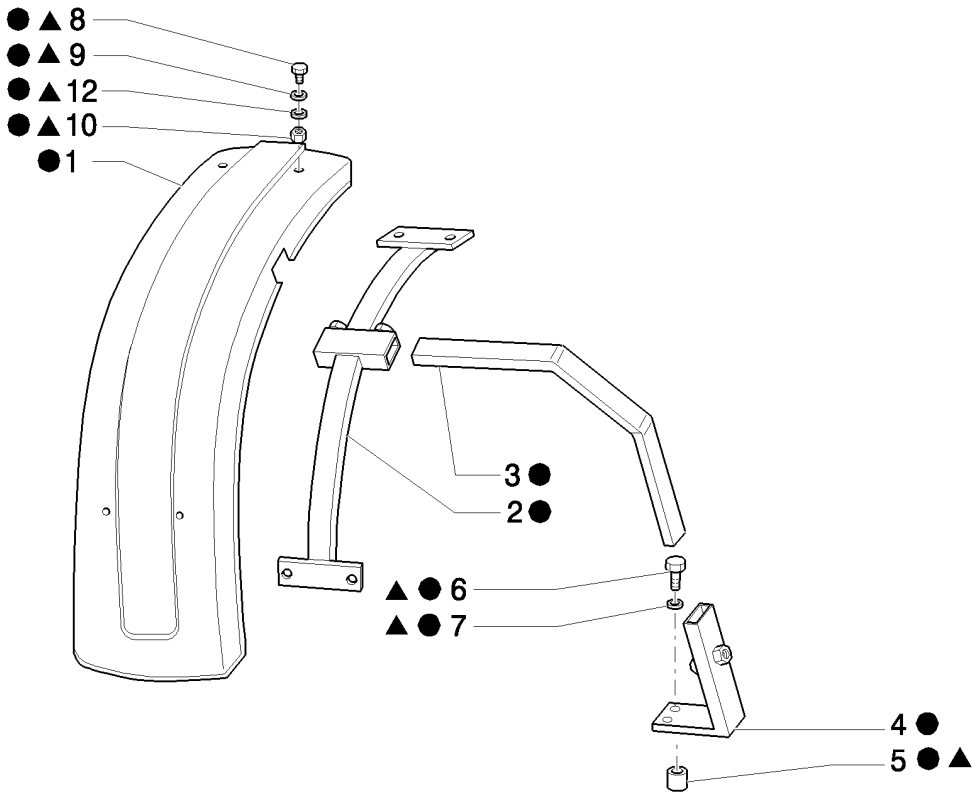

FENDERS, FRONT

REF	FN	PART NUMBER	YR/SN	QTY	DESCRIPTION
1		9968885		1	FENDER, FRONT, LH
1		9968886		1	FENDER, FRONT, RH
2		9968884		2	SUPPORT
3		85826132		2	SUPPORT
4		85826134		1	SUPPORT, RH
4		85826133		1	SUPPORT, LH
5		87348002		6	SPACER
6		11119121		6	BOLT, Hex, M16 x 60, 8.8
7		14496901		6	WASHER, M16 x 30 x 3
8		87302831		8	SCREW, M6 x 20
9		11194779		8	WASHER, SPRING, Belleville, M6.4, 6.5x18x1.5
10		12574211		8	NUT, LOCK, M6 x 1, Cl 8
11	1	87302715		1	KIT, M10x20
12		11193279		8	WASHER, SPRING, Belleville, M6.4
13		85826131		8	KIT

(1) Includes 5 - 12

835		p1	03/08

REAR MUDGUARD AND ROOF (ROPS: CAB): NA

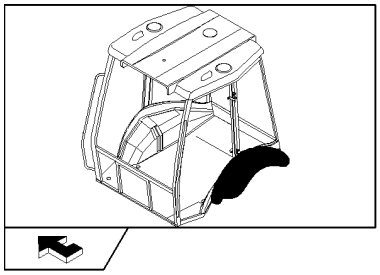

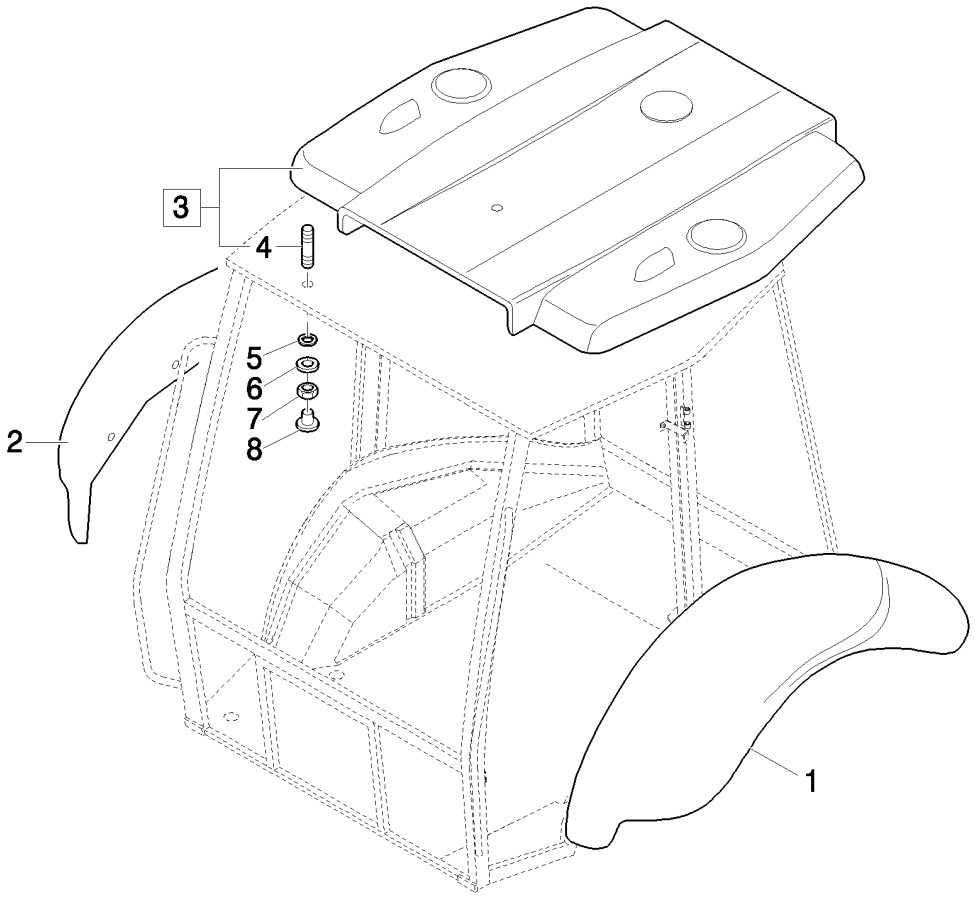

REAR MUDGUARD AND ROOF (ROPS: CAB): NA

REF	FN	PART NUMBER	YR/SN	QTY	DESCRIPTION
1		85817051		1	FENDER
2		85817050		1	FENDER
3	1	85819760		1	ROOF
3	2	85819763		1	ROOF
4		13517021		8	STUD
5		85801801		8	SEALRING
6		12647004		8	WASHER, M8 x 25 x 2.5
7		16104111		8	NUT, LOCK, M8 x 1.25, Cl 8
8		79111978		8	PLUG

(1) Only for CAB
(2) Only for ROPS

CLOTH SEAT & ATTACHING HARDWARE - CABINE

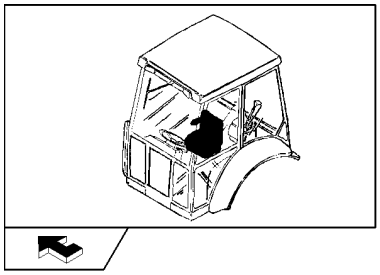

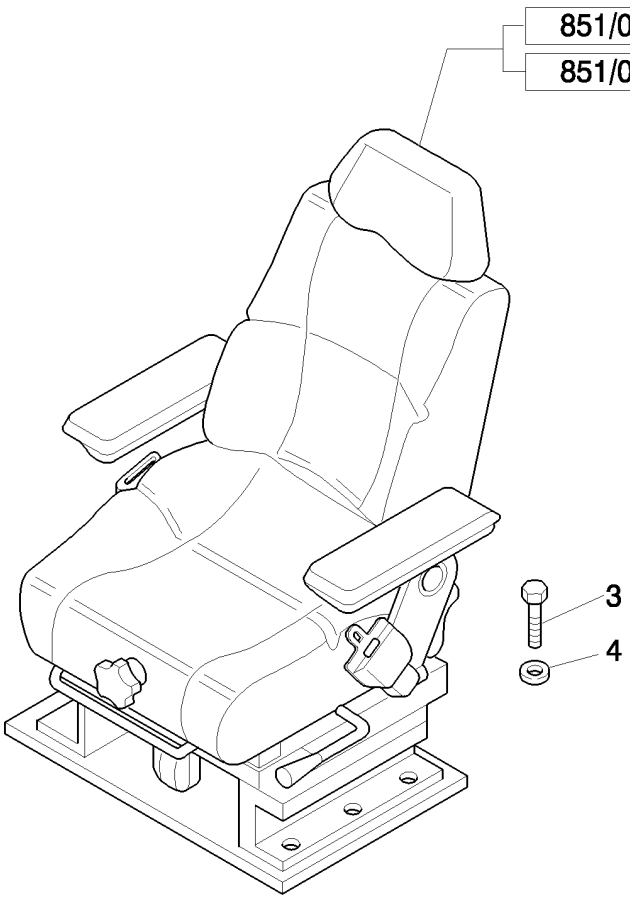

CLOTH SEAT & ATTACHING HARDWARE - CABINE

REF	FN	PART NUMBER	YR/SN	QTY	DESCRIPTION
1	1, 2, 3	87576858		1	SEAT, Assy
1	1, 4, 3	87576859		1	SEAT, Assy
2	2, 5, 3	87576866		1	SEAT, Assy
2	4, 5, 3	87576867		1	SEAT, Assy
3		16043424		8	SCREW, Hex, M8 x 20, 8.8, Full Thd
4		11198074		8	WASHER, SPRING, Belleville, M8.4

(1) Mechanical Control Version
(2) 3" Seat Belt
(3) Only for NA
(4) 2" Seat Belt
(5) Only for Pilot Control Version

851/01	01	p1	04/08

CLOTH SEAT CUSHIONS, ARMRESTS & RELATED PARTS

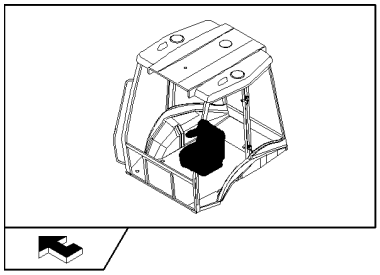

CLOTH SEAT CUSHIONS, ARMRESTS & RELATED PARTS

REF	FN	PART NUMBER	YR/SN	QTY	DESCRIPTION
1	1	87576858		1	SEAT, Assy
1	1	87576859		1	SEAT, Assy
1	2	87576866		1	SEAT, Assy
1	2	87576867		1	SEAT, Assy
2		87613060		1	BACKREST
3		87613073		1	BACKREST
4		87613074		1	SEAT
5	3	85817481		1	HOLDER
6		82034863		4	SCREW
7		47335213		2	BUSHING
8	4	85817485		1	SEAT, BACK
9	5, 6	85817453		1	ARMREST, LH
9	7, 6	85828196		1	ARMREST, LH
10	6	85827918		1	ARMREST, RH
11		82034881		AR	WASHER
12		85817459		2	NUT
13		85817478		1	LEVER
14		83984666		1	SCREW
15		85817466		1	COVER, RH
16		9972160		AR	SCREW, M8x25
17		87395582		2	BOLT, 7/16"-20UNF x 60.0
18		85817470		1	PLATE
19		9960795		1	PLATE, RH
20		9960793		1	SPRING
21		85817469		1	BUSHING
22		87613075		1	SCREW, M8 x 40
23		85821419		1	PLATE, RETAINING
24		85817476		1	PLATE

(1) Mechanical Control Version
(2) Only for Pilot Control Version
(3) Includes 6
(4) Includes 7, 21
(5) Only for Mechanical Control Version 87576859 - 87576858
(6) Includes 11, 12, 14
(7) Only for Pilot Control Version 87576867 - 87576866

851/01	01	p2	04/08

CLOTH SEAT CUSHIONS, ARMRESTS & RELATED PARTS

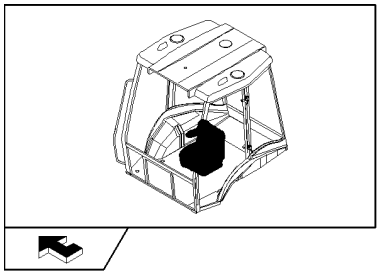

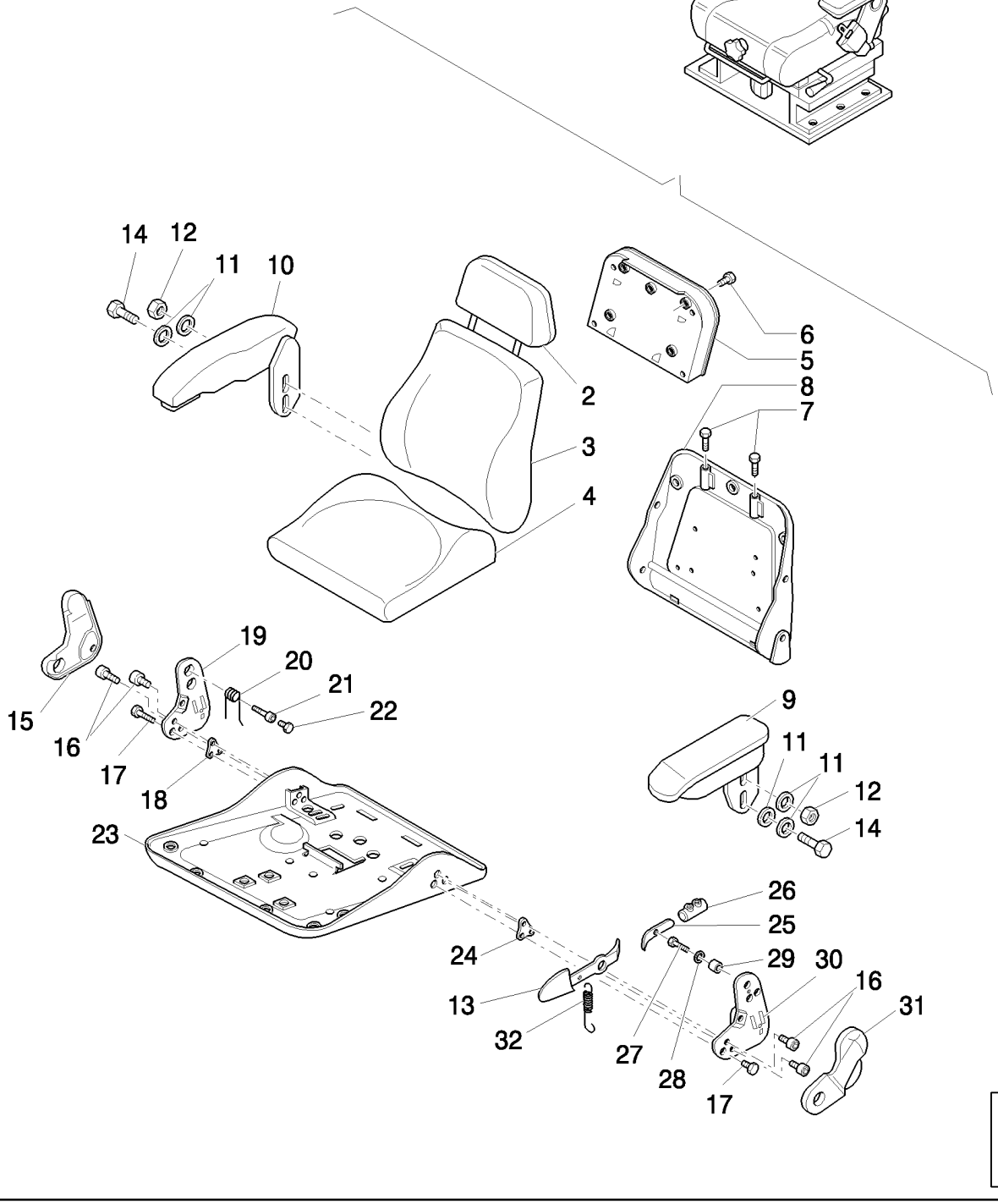

CLOTH SEAT CUSHIONS, ARMRESTS & RELATED PARTS

REF	FN	PART NUMBER	YR/SN	QTY	DESCRIPTION
25		85817460		1	LEVER
26		85821418		1	STOP DEVICE
27		82035038		1	SCREW
28		9960692		AR	SPACER
29		85817477		1	SPACER
30		9960803		1	PLATE, LH
31		85817479		1	COVER, RH
32		9960797		1	SPRING

851/01	02	p1	04/08

CLOTH SEAT MOUNTING PLATE, ADJUSTING RAILS & SEAT BELT

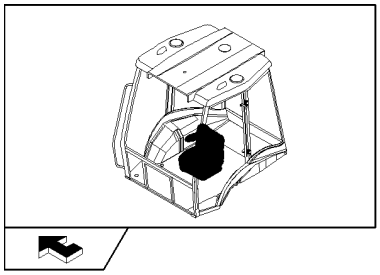

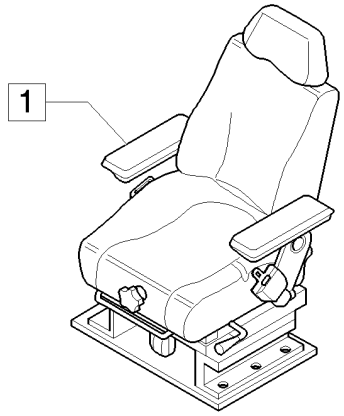

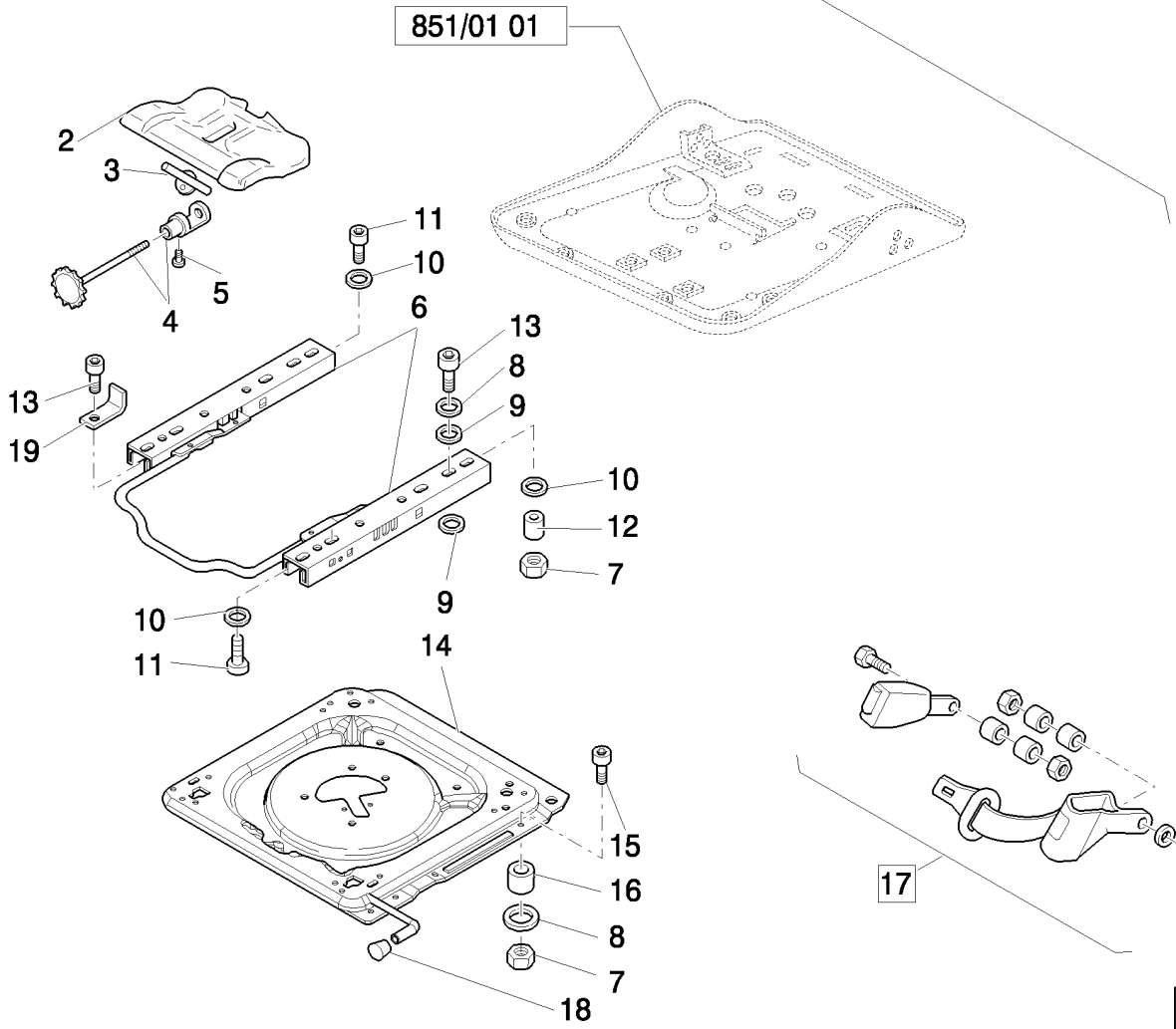

CLOTH SEAT MOUNTING PLATE, ADJUSTING RAILS & SEAT BELT

REF	FN	PART NUMBER	YR/SN	QTY	DESCRIPTION
1	1	87576858		1	SEAT, Assy
1	1	87576859		1	SEAT, Assy
1	2	87576866		1	SEAT, Assy
1	2	87576867		1	SEAT, Assy
2	3	71485488		1	CONTROL
3		85817463		1	PLATE
4	4	85817464		1	SCREW, ADJUSTMENT
5		9962962		1	SCREW, M5 x 10
6		85817484		1	KIT
7		85817458		9	NUT
8		9960692		AR	SPACER
9		9958776		9	SPACER
10		82034881		AR	WASHER
11		82034893		4	SCREW
12		85819813		1	BUSHING
13		9972160		AR	SCREW, M8x25
14	5	87395588		1	PLATE
15		85817465		4	SCREW, M8 x 40
16		85817456		4	SPACER
17	6	87364220		1	SEAT BELT, Assy
17	7	87364221		1	SEAT BELT, Assy
18		85817482		1	KNOB
19		85824204		2	BRACKET

(1) Mechanical Control Version
(2) Only for Pilot Control Version
(3) Includes 3 - 5
(4) Includes 3, 5
(5) Includes 18
(6) 2" Seat Belt
(7) 3" Seat Belt

851/01	03	p1	04/08

CLOTH SEAT UPPER SUSPENSION PARTS

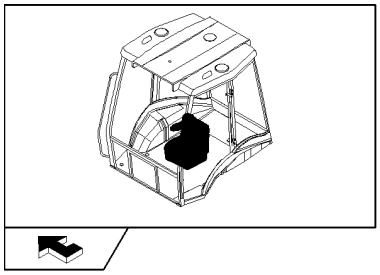

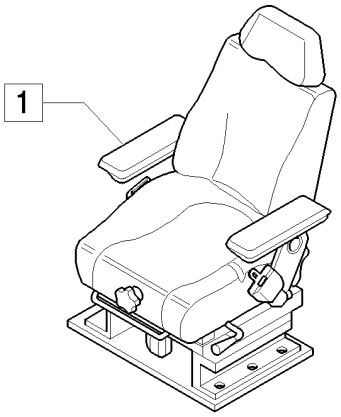

2 SEE ALSO TAV. 851/01 04

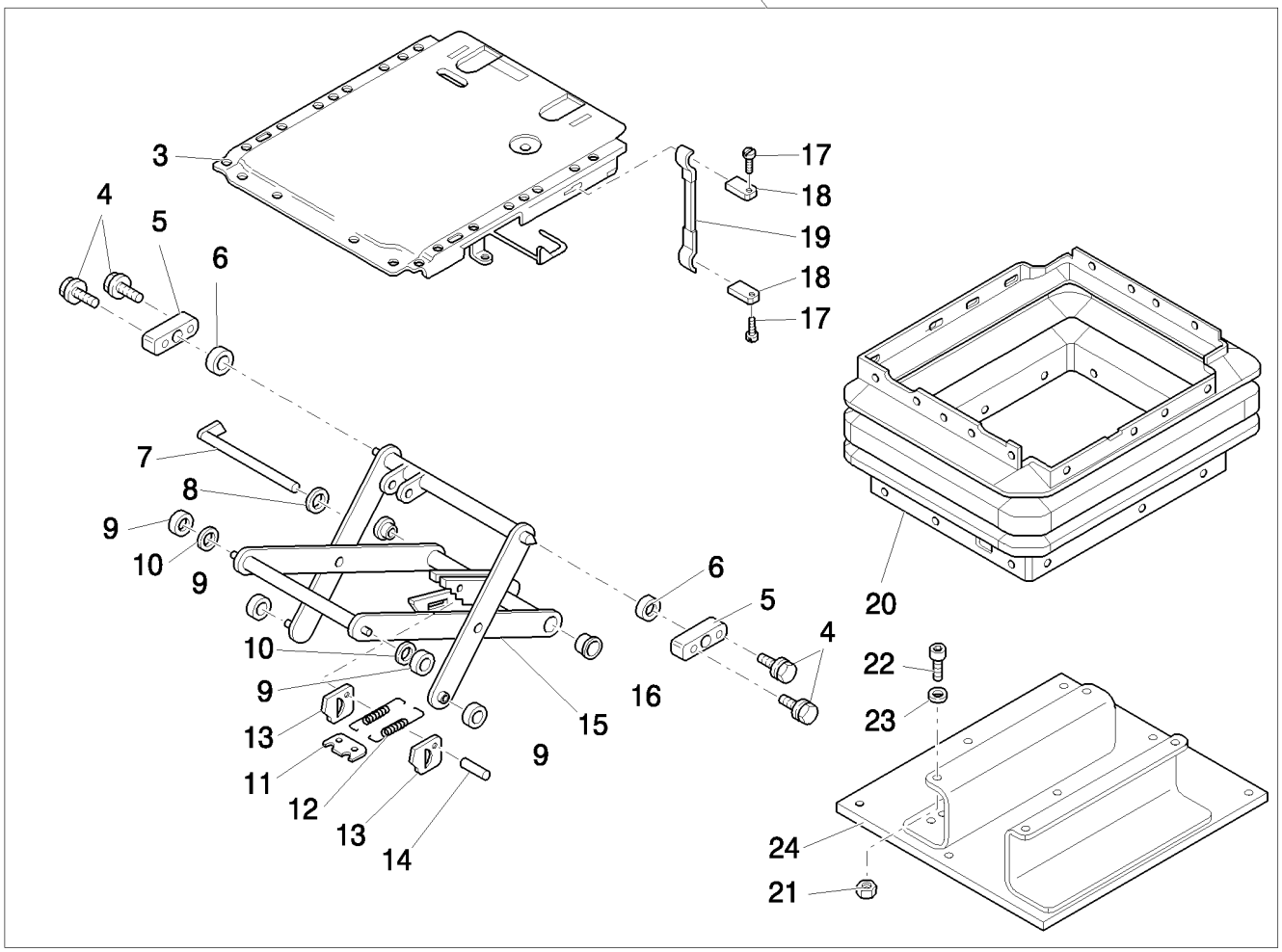

CLOTH SEAT UPPER SUSPENSION PARTS

REF	FN	PART NUMBER	YR/SN	QTY	DESCRIPTION
1	1	87576858		1	SEAT, Assy
1	1	87576859		1	SEAT, Assy
1	2	87576866		1	SEAT, Assy
1	2	87576867		1	SEAT, Assy
2		85817426		1	SUSPENSION, Assy
3		85817450		1	PLATE
4		85817444		4	SCREW, M6 x 16
5	3	82035094		2	BEARING
6		85817445		2	BUSHING
7		85817429		1	BOLT
8		82035127		1	WASHER
9		82035031		4	ROLLER
10		85817442		2	BUSHING
11		82035030		1	PLATE
12		85817430		2	SPRING
13		9958792		2	PLATE
14		82035036		1	BOLT
15	4	85817446		1	SUSPENSION
16		9960755		2	BUSHING
17		85817448		2	RIVET
18		85817449		2	PLATE
19	5	85817447		1	HANDLE
20		85817428		1	BELLOWS
21		85817458		4	NUT, M8
22		82034893		4	SCREW
23		82034881		4	WASHER
24		85817427		1	PLATE, RETAINING

(1) Mechanical Control Version
(2) Only for Pilot Control Version
(3) Includes 4, 6
(4) Includes 7, 9 - 14, 16
(5) Includes 17, 18

851/01	04	p1	04/08

CLOTH SEAT LOWER SUSPENSION PARTS

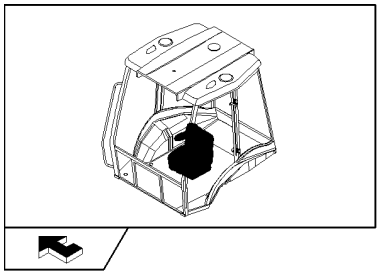

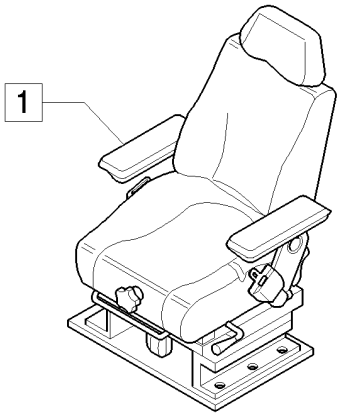

2 SEE ALSO TAV. 851/01 03

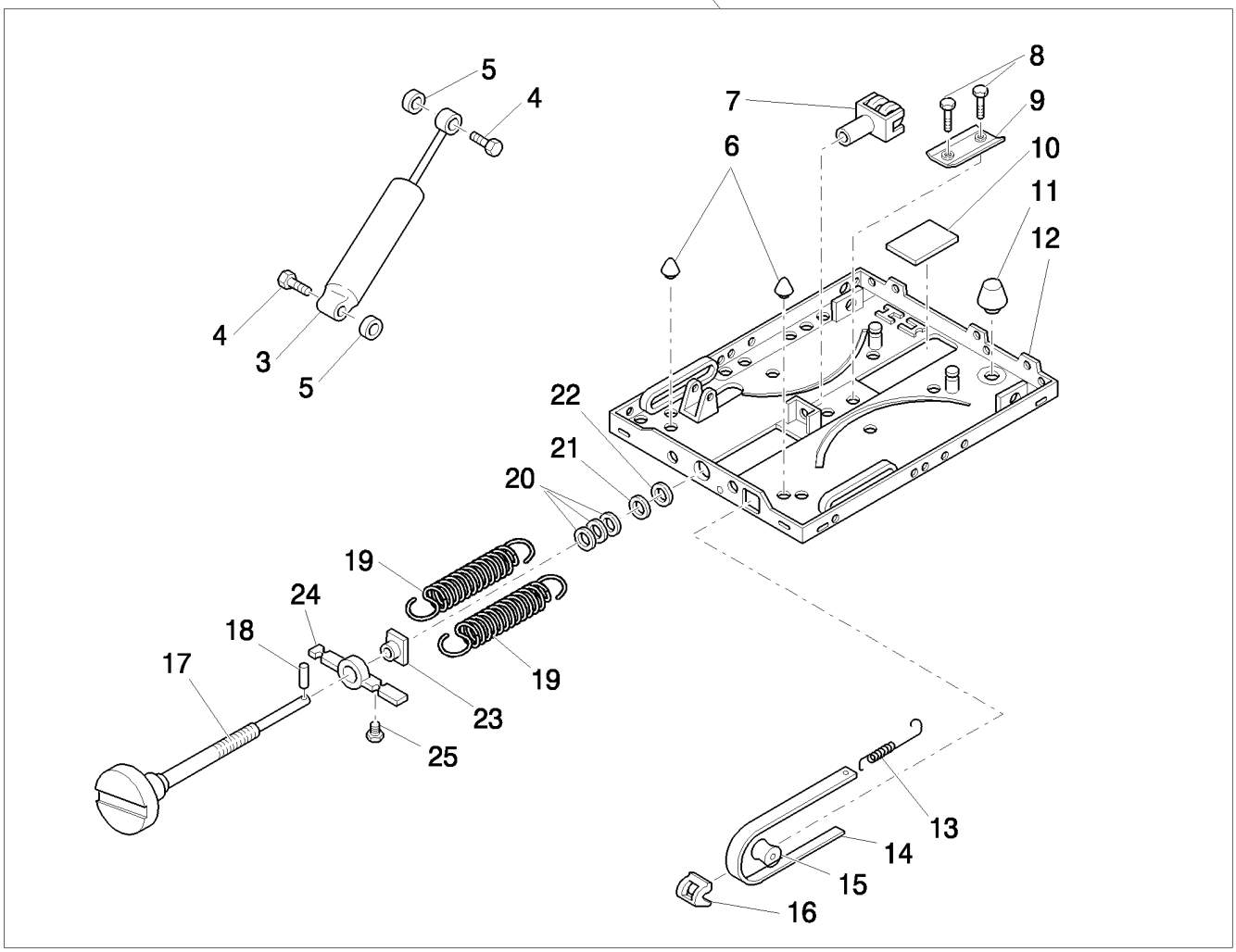

CLOTH SEAT LOWER SUSPENSION PARTS

REF	FN	PART NUMBER	YR/SN	QTY	DESCRIPTION
1	1	87576858		1	SEAT, Assy
1	1	87576859		1	SEAT, Assy
1	2	87576866		1	SEAT, Assy
1	2	87576867		1	SEAT, Assy
2		85817426		1	SUSPENSION, Assy
3	3	85817431		1	SHOCK ABSORBER
4		82035040		2	BOLT
5		82035128		2	WASHER
6		85817440		2	BUMPER, RUBBER
7		82035043		1	FORK
8		82035037		2	RIVET
9		82035054		1	PROFILE
10		82035032		1	PLATE
11		85817441		1	BUMPER, RUBBER
12	4	85817436		1	SUSPENSION
13		82035039		1	SPRING
14	5	85817443		1	INDICATOR
15		82035029		1	ROLLER
16		82035025		1	GUIDE
17	6	85817451		1	SCREW, ADJUSTMENT
18		85817433		1	DOWEL
19		85817434		2	SPRING
20		82035035		1	SET OF WASHERS
21		82035028		1	WASHER
22		85817435		1	BUSHING
23		82035034		1	NUT
24		82035027		1	BRACKET
25		82035033		1	RETAINER

(1) Mechanical Control Version
(2) Only for Pilot Control Version
(3) Includes 4, 5
(4) Includes 6, 8 - 11
(5) Includes 13, 15, 16
(6) Includes 18

855		p1	04/08

AIR RIDE CLOTH SEAT & ATTACHING HARDWARE - CABINE

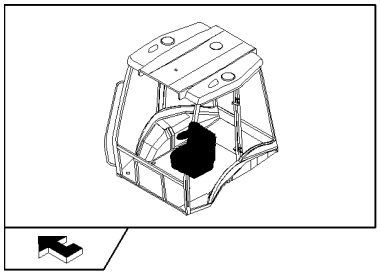

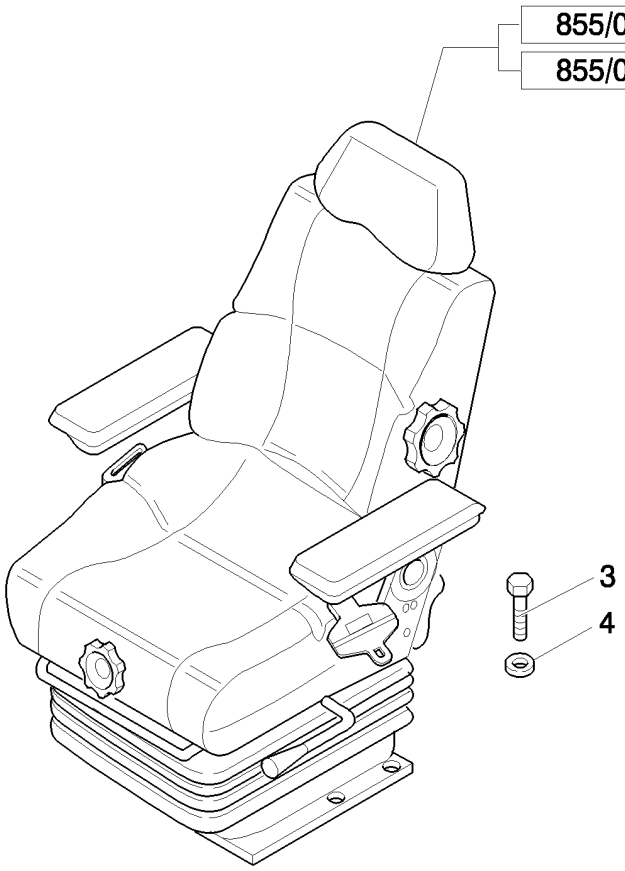

AIR RIDE CLOTH SEAT & ATTACHING HARDWARE - CABINE

REF	FN	PART NUMBER	YR/SN	QTY	DESCRIPTION
1	1, 2, 3	87576861		1	SEAT, Assy
1	1, 4, 3	87576862		1	SEAT, Assy
2	2, 5, 3	87576868		1	SEAT, Assy
2	4, 5, 3	87576869		1	SEAT, Assy
3		16043424		8	SCREW, Hex, M8 x 20, 8.8, Full Thd
4		11198074		8	WASHER, SPRING, Belleville, M8.4

(1) Mechanical Control Version
(2) 2" Seat Belt
(3) Only for NA
(4) 3" Seat Belt
(5) Only for Pilot Control Version

855/01	01	p1	04/08

AIR RIDE CLOTH SEAT CUSHIONS, ARMRESTS & RELATED PARTS

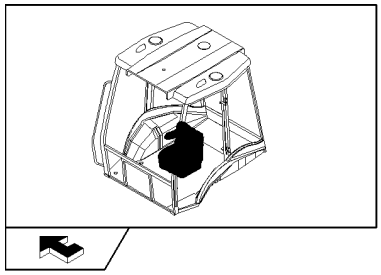

AIR RIDE CLOTH SEAT CUSHIONS, ARMRESTS & RELATED PARTS

REF	FN	PART NUMBER	YR/SN	QTY	DESCRIPTION
1	1	87576861		1	SEAT, Assy
1	1	87576862		1	SEAT, Assy
1	2	87576868		1	SEAT, Assy
1	2	87576869		1	SEAT, Assy
2		87613060		1	BACKREST
3		87613718		1	BACKREST
4		87613074		1	SEAT
5	3	85817481		1	HOLDER
6		82034863		4	SCREW
7		47335213		2	BUSHING
8	4	85817532		1	HEADREST, SEAT
9	5, 6	85817453		1	ARMREST, LH
9	7, 6	85828196		7	ARMREST
10	8	85827918		1	ARMREST, RH
11		82034881		AR	WASHER
12		85817459		2	NUT, M8
13		83984666		1	SCREW
14		13838071		2	BOLT, Hex Serr Flg, M8 x 20
15		85817466		1	COVER, RH
16		9972160		6	SCREW
17		87395582		2	BOLT, 7/16"-20UNF x 60.0
18		85817470		1	PLATE
19		9960795		1	PLATE, RH
20		9960793		1	SPRING
21		85817469		1	BUSHING
22		87613075		1	SCREW
23		85821419		1	PLATE, RETAINING

(1) Mechanical Control Version
(2) Only for Pilot Control Version
(3) Includes 6
(4) Includes 7, 34
(5) Only for Mechanical Control Version 87576861 - 87576862
(6) Includes 11 - 13
(7) Only for Pilot Control Version 87576868 - 87576869
(8) Includes 11, 12, 14

855/01	01	p2	04/08

AIR RIDE CLOTH SEAT CUSHIONS, ARMRESTS & RELATED PARTS

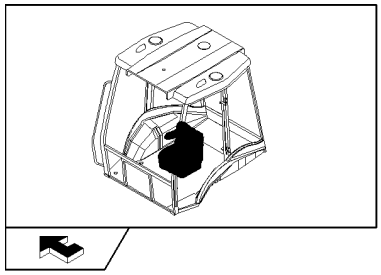

AIR RIDE CLOTH SEAT CUSHIONS, ARMRESTS & RELATED PARTS

REF	FN	PART NUMBER	YR/SN	QTY	DESCRIPTION
24		85817476		1	PLATE
25		85817460		1	LEVER
26		85821418		1	STOP DEVICE
27		82035038		1	SCREW
28		9960692		AR	SPACER
29		85817477		1	SPACER
30		9960803		1	PLATE, LH
31		85817479		1	COVER, LH
32		85817478		1	LEVER
33		9960797		1	SPRING
34		9967970		1	KIT
35		82034897		3	RIVET
36		85817534		1	SCREW, ADJUSTMENT

855/01	02	p1	04/08

AIR RIDE CLOTH SEAT MOUNTING PLATE, ADJUSTING RAILS & SEAT BELT

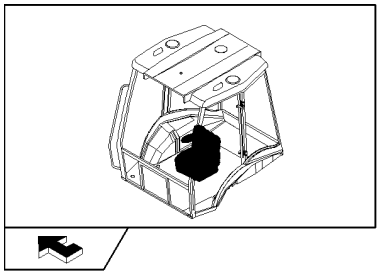

AIR RIDE CLOTH SEAT MOUNTING PLATE, ADJUSTING RAILS & SEAT BELT

REF	FN	PART NUMBER	YR/SN	QTY	DESCRIPTION
1	1	87576861		1	SEAT, Assy
1	1	87576862		1	SEAT, Assy
1	2	87576868		1	SEAT, Assy
1	2	87576869		1	SEAT, Assy
2	3	71485488		1	CONTROL
3		85817463		1	PLATE
4	4	85817464		1	SCREW, ADJUSTMENT
5		9962962		1	SCREW, M5 x 10
6		85817484		1	KIT
7		85817458		8	NUT
8		9960692		AR	SPACER
9		9958776		8	SPACER
10		82034881		AR	WASHER
11		9972160		AR	SCREW, M8x25
12		85824204		1	BRACKET
13		82034893		AR	SCREW
14	5	87395588		1	PLATE
15		85817536		4	SCREW
16		85817456		4	SPACER
17	6	87364220		1	SEAT BELT
17	7	87364221		1	SEAT BELT
18		85817482		1	KNOB
19		85819813		1	BUSHING

(1) Mechanical Control Version
(2) Only for Pilot Control Version
(3) Includes 4
(4) Includes 3, 5
(5) Includes 18
(6) 2" Seat Belt
(7) 3" Seat Belt

855/01	03	p1	04/08

AIR RIDE CLOTH SEAT UPPER SUSPENSION PARTS

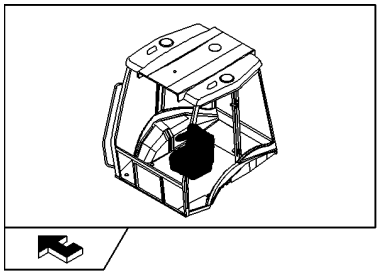

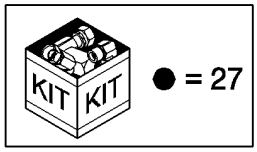

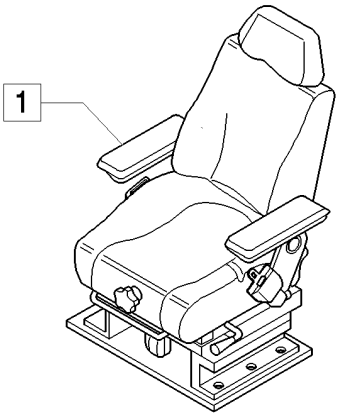

2 SEE ALSO TAV. 855/01 04
SEE ALSO TAV. 855/01 05

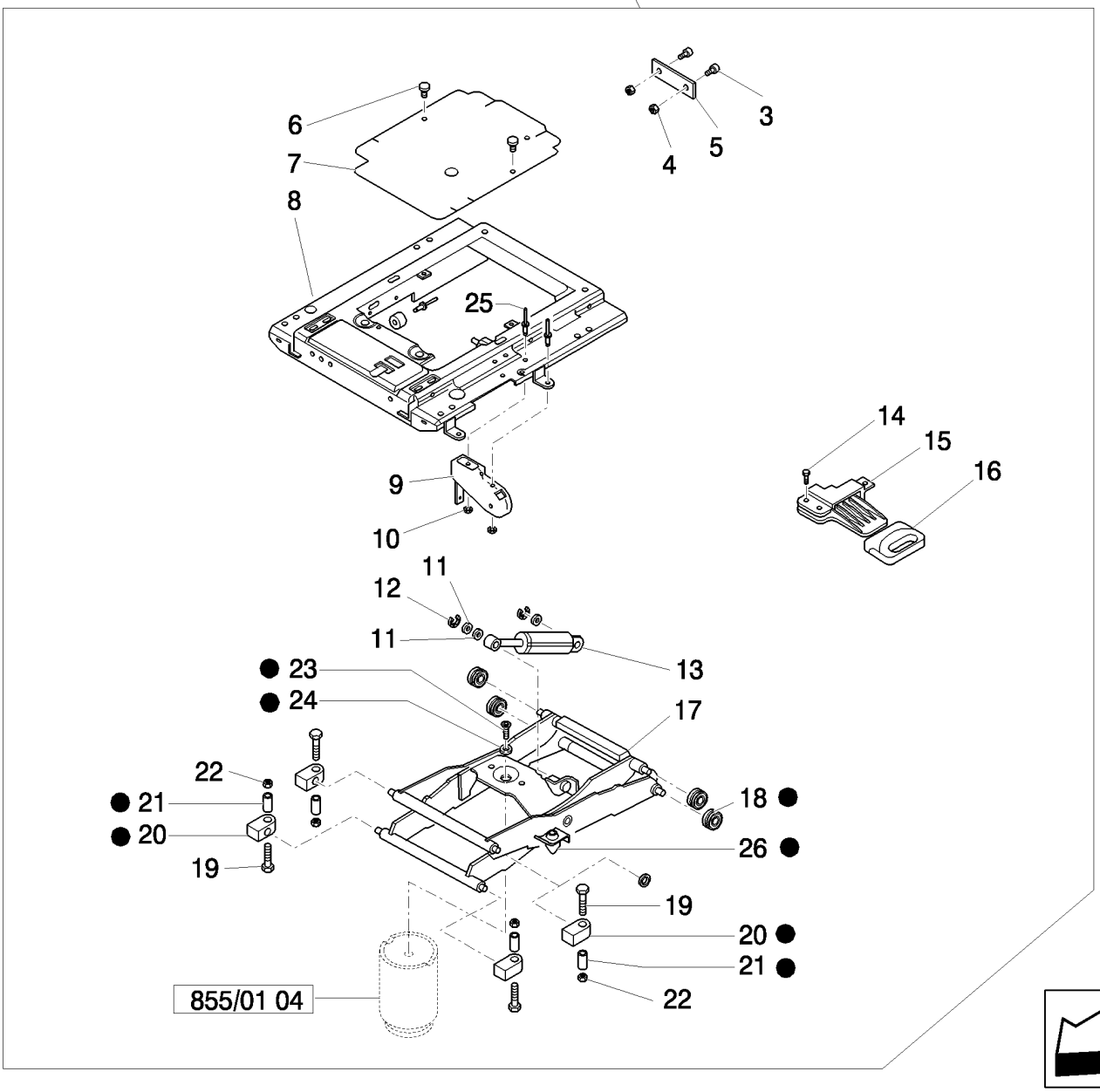

AIR RIDE CLOTH SEAT UPPER SUSPENSION PARTS

REF	FN	PART NUMBER	YR/SN	QTY	DESCRIPTION
1	1	87576861		1	SEAT, Assy
1	1	87576862		1	SEAT, Assy
1	2	87576868		1	SEAT, Assy
1	2	87576869		1	SEAT, Assy
18		85817482		1	KNOB
2		85817529		1	SUSPENSION
3		82034894		2	SCREW
4		85817494		1	PLATE
5		85817458		2	NUT
6		NS		AR	NOT SERVICED
7	3	85817486		1	COVER
8		85824436		1	SHOCK ABSORBER
9		85817489		2	WASHER
10		85817490		1	KIT
11		NS		3	NOT SERVICED
12		85817496		2	WASHER
13	4	85824434		1	SHOCK ABSORBER
14		85819815		3	SCREW
15		85817493		1	CONTROL
16		85817492		1	HANDLE
17	5	87615608		1	SUSPENSION
18		82035057		4	ROLLER
19		NS		4	NOT SERVICED
20		87613742		AR	BEARING, THRUST
21		82035053		AR	TUBE
22		NS		AR	NOT SERVICED
23		NS		AR	NOT SERVICED
24		NS		AR	NOT SERVICED
25		85817488		2	RIVET
26		82035126		2	BUMPER

(1) Mechanical Control Version
(2) Only for Pilot Control Version
(3) Includes 6
(4) Includes 12
(5) Includes 18, 20

AIR RIDE CLOTH SEAT UPPER SUSPENSION PARTS

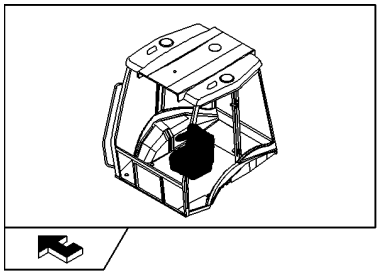

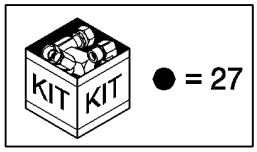

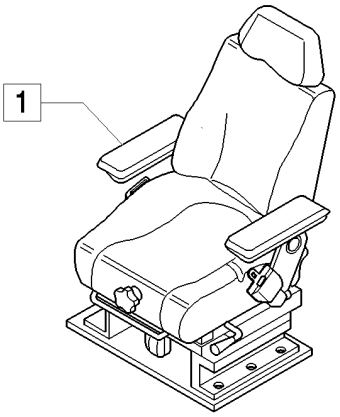

2 SEE ALSO TAV. 855/01 04
SEE ALSO TAV. 855/01 05

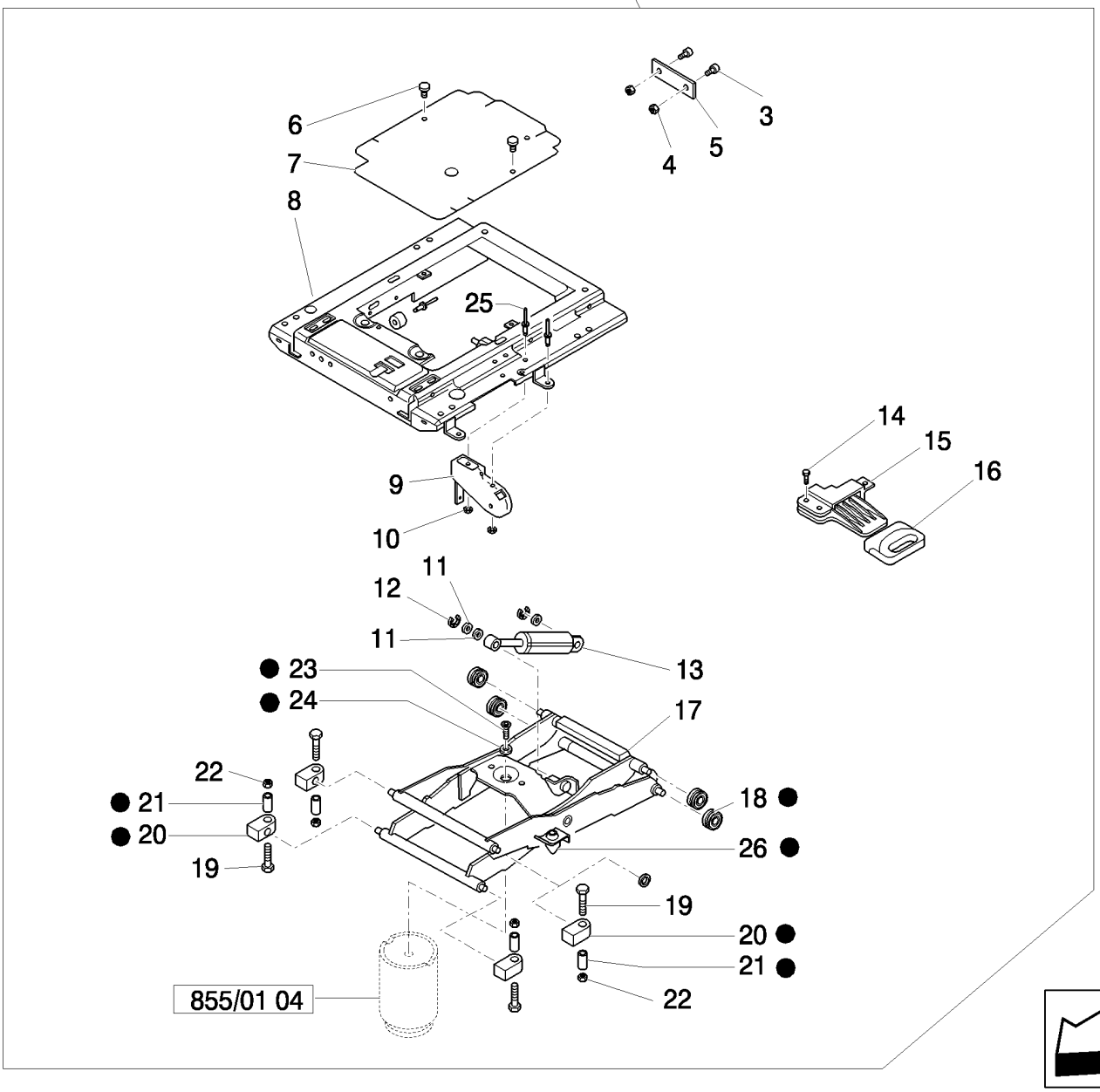

AIR RIDE CLOTH SEAT UPPER SUSPENSION PARTS

REF	FN	PART NUMBER	YR/SN	QTY		DESCRIPTION
27		82848105		1	KIT	

855/01	04	p1	04/08

AIR RIDE CLOTH SEAT LOWER SUSPENSION PARTS

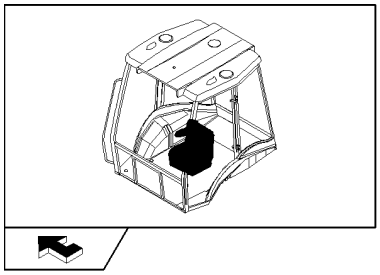

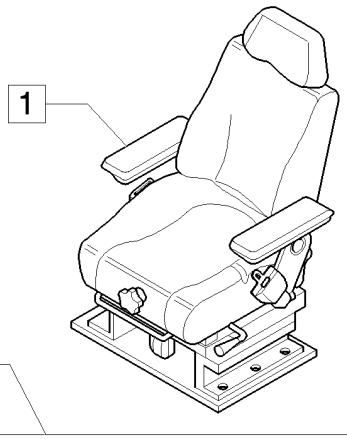

2 SEE ALSO TAV. 855/01 03
SEE ALSO TAV. 855/01 05

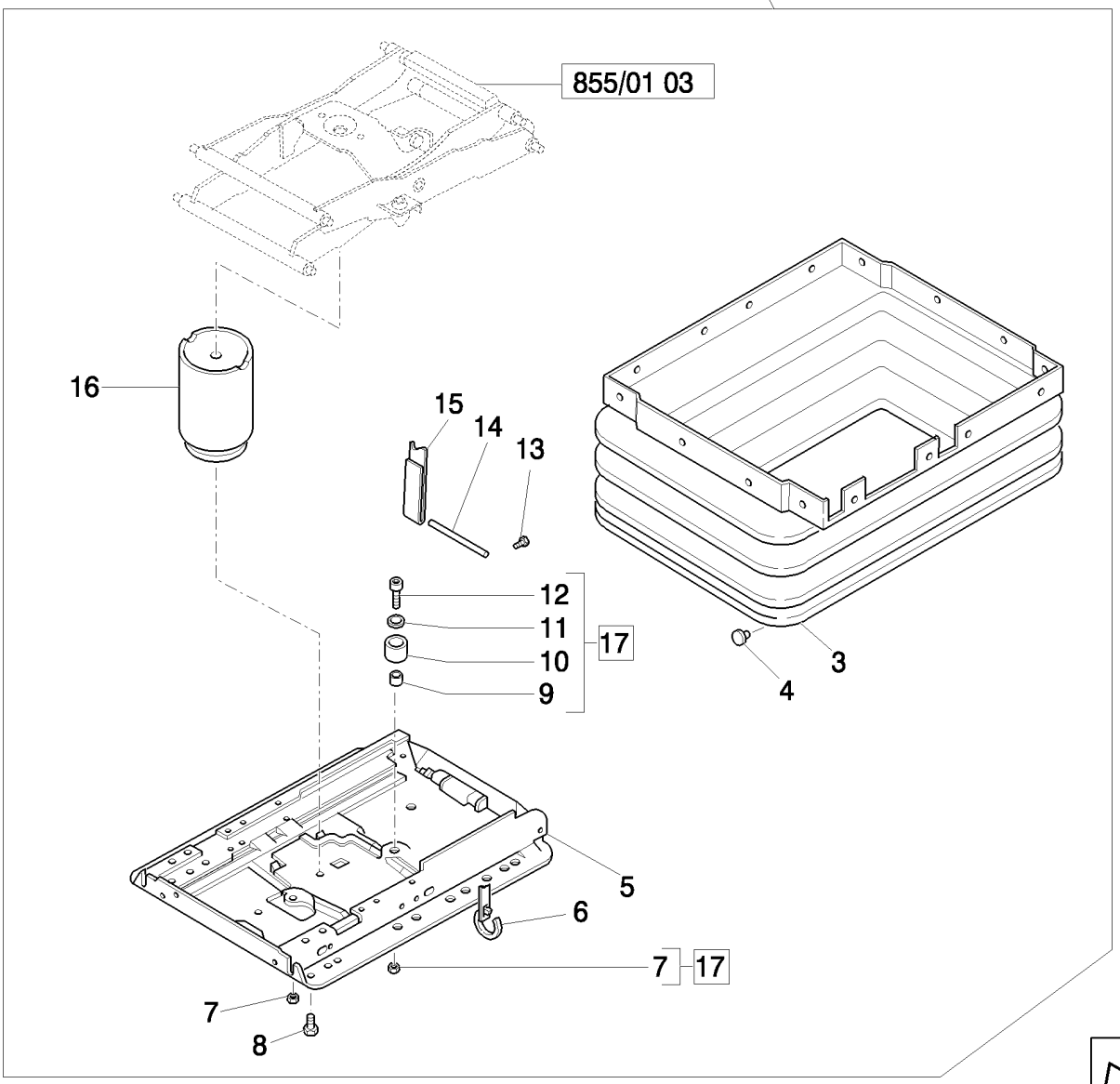

AIR RIDE CLOTH SEAT LOWER SUSPENSION PARTS

REF	FN	PART NUMBER	YR/SN	QTY	DESCRIPTION
1	1	87576861		1	SEAT, Assy
1	1	87576862		1	SEAT, Assy
1	2	87576868		1	SEAT, Assy
1	2	87576869		1	SEAT, Assy
2		85817529		1	SUSPENSION, Assy
3	3	85827920		1	BELLOWS
4		NS		AR	NOT SERVICED
5	4	87615611		1	SUSPENSION
6		NS		AR	NOT SERVICED
7		NS		AR	NOT SERVICED
8		NS		1	NOT SERVICED, M8x20
9		NS		1	NOT SERVICED
10	5	NS		1	NOT SERVICED
11		NS		1	NOT SERVICED
12		NS		1	NOT SERVICED, M8x20
13		9962962		1	SCREW
14		85817513		1	PIN
15		85817512		1	SOFT TRIM
16		87396450		1	SPRING
17		85817523		1	GUARD

(1) Mechanical Control Version
(2) Only for Pilot Control Version
(3) Includes 4
(4) Includes 4, 7, 10
(5) Includes 4, 7, 9, 11, 12

855/01	05	p1	04/08

AIR RIDE CLOTH SEAT COMPRESSOR & TUBING

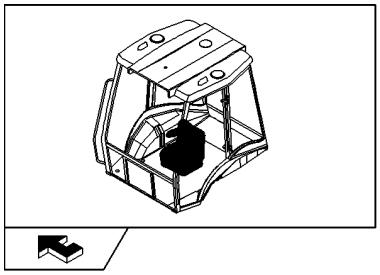

KIT KIT ● =14

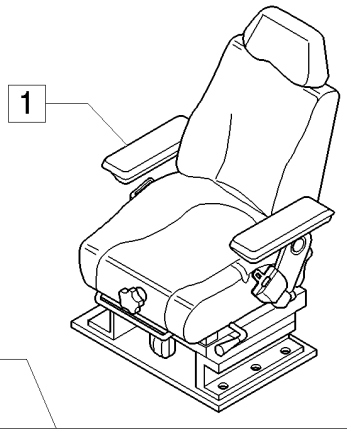

2 SEE ALSO TAV. 855/01 03
SEE ALSO TAV. 855/01 04

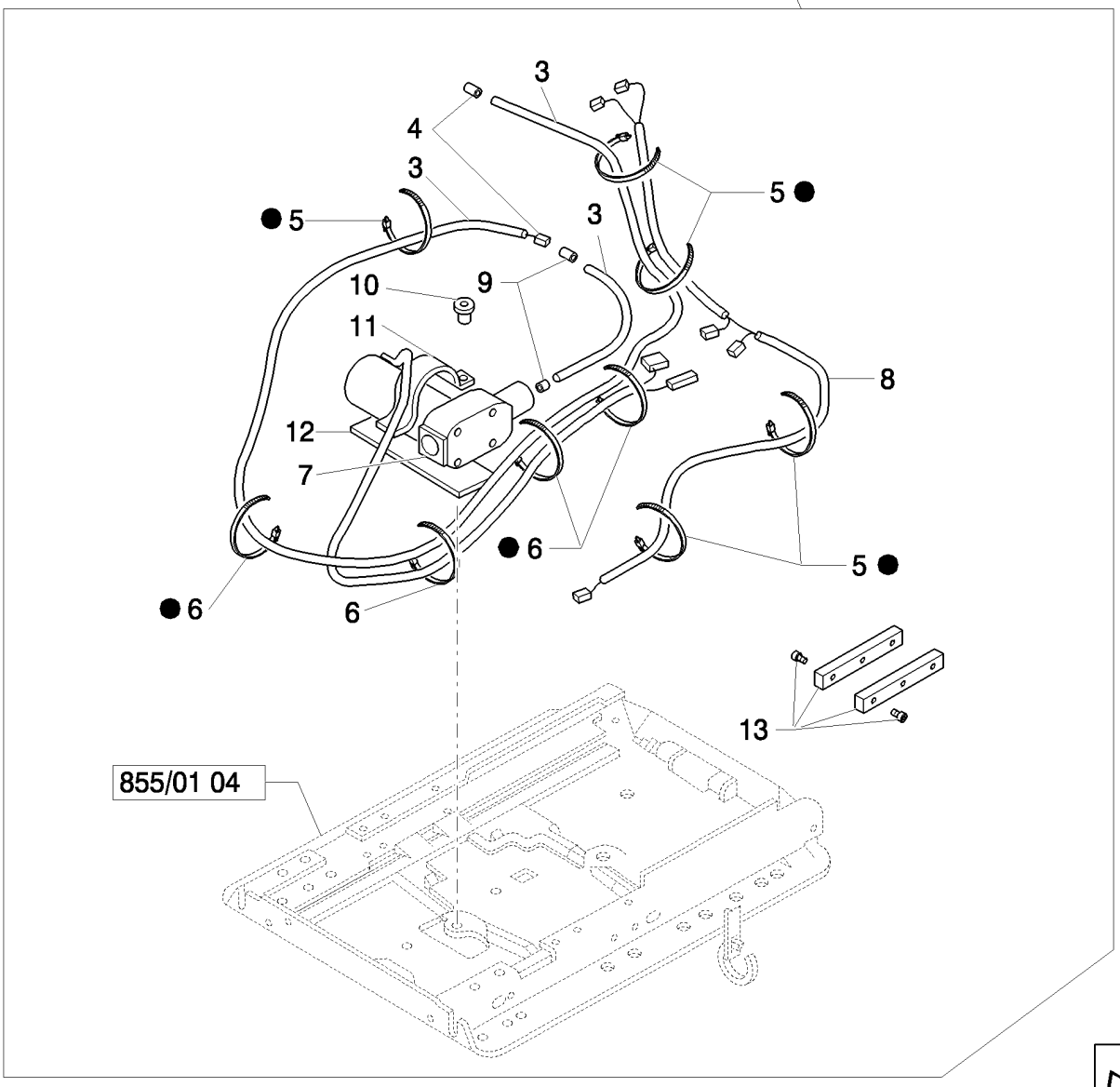

AIR RIDE CLOTH SEAT COMPRESSOR & TUBING

REF	FN	PART NUMBER	YR/SN	QTY	DESCRIPTION
1	1	87576861		1	SEAT, Assy
1	1	87576862		1	SEAT, Assy
1	2	87576868		1	SEAT, Assy
1	2	87576869		1	SEAT, Assy
2		85817529		1	SUSPENSION, Assy
3		87313729		1	KIT, REPAIR
4		NS		2	NOT SERVICED
5		NS		AR	NOT SERVICED
6		NS		4	NOT SERVICED
7		82035076		1	COMPRESSOR
8		85819814		1	HARNESS, WIRE
9		NS		2	NOT SERVICED
10		NS		1	NOT SERVICED
11		NS		1	NOT SERVICED
12		NS		1	NOT SERVICED
13		47335175		1	STOP
14		82848105		1	KIT

(1) Mechanical Control Version
(2) Only for Pilot Control Version

VINYL SEAT CUSHIONS, ARMRESTS & RELATED PARTS (ROPS)

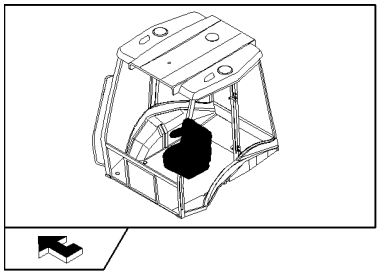

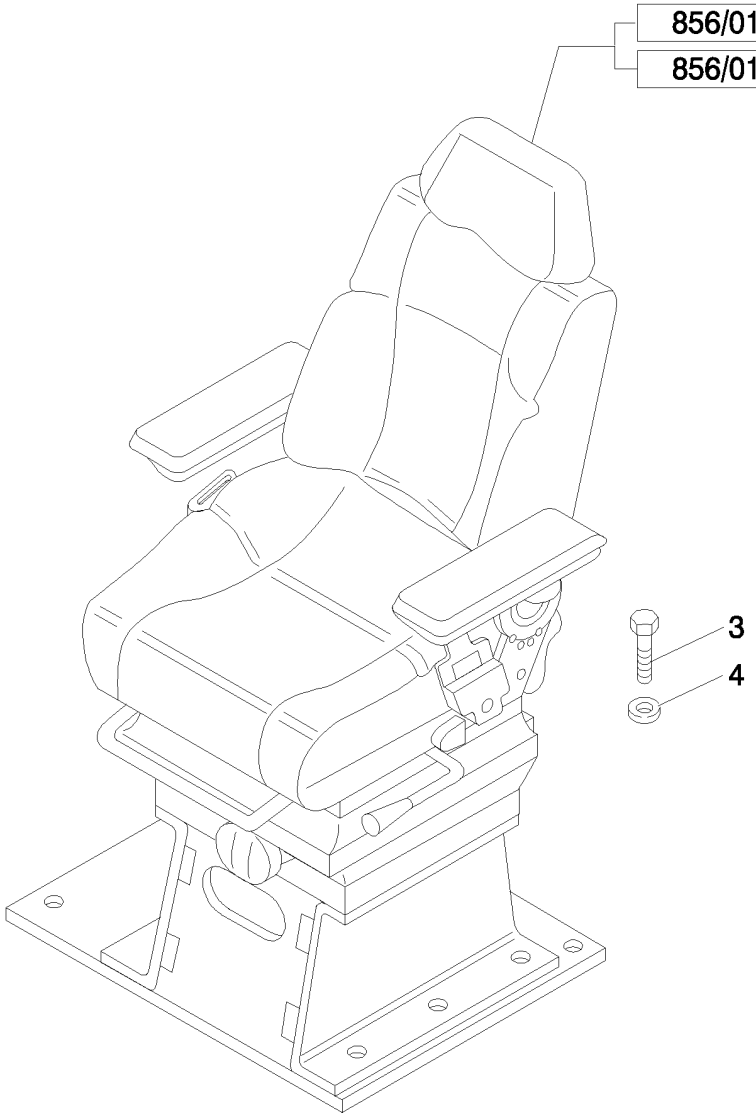

VINYL SEAT CUSHIONS, ARMRESTS & RELATED PARTS (ROPS)

REF	FN	PART NUMBER	YR/SN	QTY	DESCRIPTION
1	1, 2, 3	87576855		1	SEAT, Assy
1	1, 4, 3	87576856		1	SEAT, Assy
2	2, 3, 5	87576863		1	SEAT, Assy
2	4, 3, 5	87576865		1	SEAT, Assy
3		16043424		8	SCREW, Hex, M8 x 20, 8.8, Full Thd
4		11198074		8	WASHER, SPRING, Belleville, M8.4

(1) Mechanical Control Version
(2) 2" Seat Belt
(3) Consists Of Page 856/01 01 To 856/01 04
(4) 3" Seat Belt
(5) Only for Pilot Control Version

856/01	01	p1	04/08

VINYL SEAT WITH ARMRESTS & MOUNTING HARDWARE (ROPS)

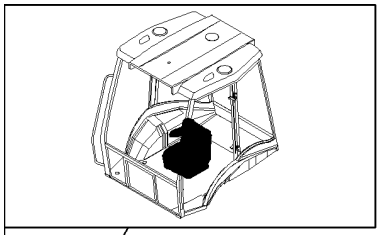

VINYL SEAT WITH ARMRESTS & MOUNTING HARDWARE (ROPS)

REF	FN	PART NUMBER	YR/SN	QTY	DESCRIPTION
1	1	87576855		1	SEAT, Assy
1	1	87576856		1	SEAT, Assy
1	2	87576863		1	SEAT, Assy
1	2	87576865		1	SEAT, Assy
2		85817562		1	HEADREST, SEAT
3		87613577		1	BACKREST, Cap, HH, CL 8.8, M8x1.25x20
4		85817564		1	CUSHION, SEAT
5	3	85817481		1	HOLDER
6		82034863		4	SCREW
7		47335213		2	BUSHING
8	4	85817485		1	SEAT, BACK
9	5, 6	85817453		1	ARMREST
9	5, 7	85828196		1	ARMREST
10	8	85827918		1	ARMREST
11		82034881		AR	WASHER
12		85817459		2	NUT
13		83984666		1	SCREW
14		13838071		1	BOLT, Hex Serr Flg, M8 x 20
15		85817466		1	COVER
16		9972160		AR	SCREW
17		87395582		2	BOLT, 7/16"-20UNFx60.0
18		85817470		1	PLATE
19		9960795		1	PLATE
20		9960793		1	SPRING
21		85817469		1	BUSHING
22		85817471		1	SCREW
23		85821419		1	PLATE, RETAINING

(1) Mechanical Control Version
(2) Only for Pilot Control Version
(3) Includes 6
(4) Includes 7, 21
(5) Includes 11 - 13
(6) Mechanical Control Version
(7) Only for Pilot Control Version
(8) Includes 11, 12, 14

856/01	01	p2	04/08

VINYL SEAT WITH ARMRESTS & MOUNTING HARDWARE (ROPS)

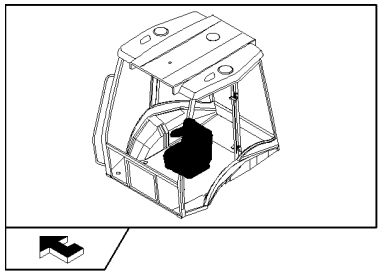

VINYL SEAT WITH ARMRESTS & MOUNTING HARDWARE (ROPS)

REF	FN	PART NUMBER	YR/SN	QTY	DESCRIPTION
24		85817476		1	PLATE
25		85817460		1	LEVER
26		85821418		1	STOP DEVICE
27		82035038		1	SCREW
28		9960692		AR	SPACER
29		85817477		1	SPACER
30		9960803		1	PLATE
31		85817479		1	COVER
32		85817478		1	LEVER
33		87613075		1	SCREW
34		9960797		1	SPRING

856/01	02	p1	04/08

VINYL SEAT MOUNTING PLATE, ADJUSTING RAILS & SEAT BELT (ROPS)

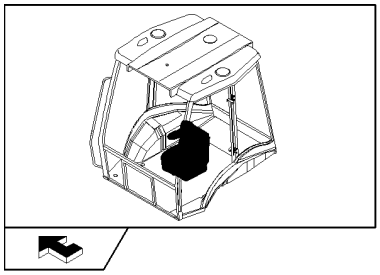

VINYL SEAT MOUNTING PLATE, ADJUSTING RAILS & SEAT BELT (ROPS)

REF	FN	PART NUMBER	YR/SN	QTY	DESCRIPTION
1	1	87576855		1	SEAT, Assy
1	1	87576856		1	SEAT, Assy
1	2	87576863		1	SEAT, Assy
1	2	87576865		1	SEAT, Assy
2		85817482		1	KNOB
3	3	87364220		1	SEAT BELT, Assy
3	4	87364221		1	SEAT BELT, Assy
4		85817456		4	SPACER
5		85817465		4	SCREW, M8 x 40
6		85817484		1	KIT
7		85817458		8	NUT
8		9960692		AR	SPACER
9		9958776		8	SPACER
10		82034881		AR	WASHER
11		9972160		8	SCREW, M8x25
12		85824204		1	BRACKET
13		82034893		4	SCREW, M8x20
14	5	87395588		1	PLATE
15		85819813		1	BUSHING

(1) Mechanical Control Version
(2) Only for Pilot Control Version
(3) 2" Seat Belt
(4) 3" Seat Belt
(5) Includes 10 - 12

856/01	03	p1	04/08

VINYL SEAT UPPER SUSPENSION PARTS (ROPS)

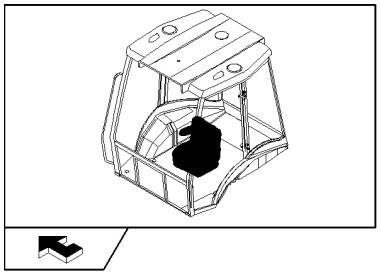

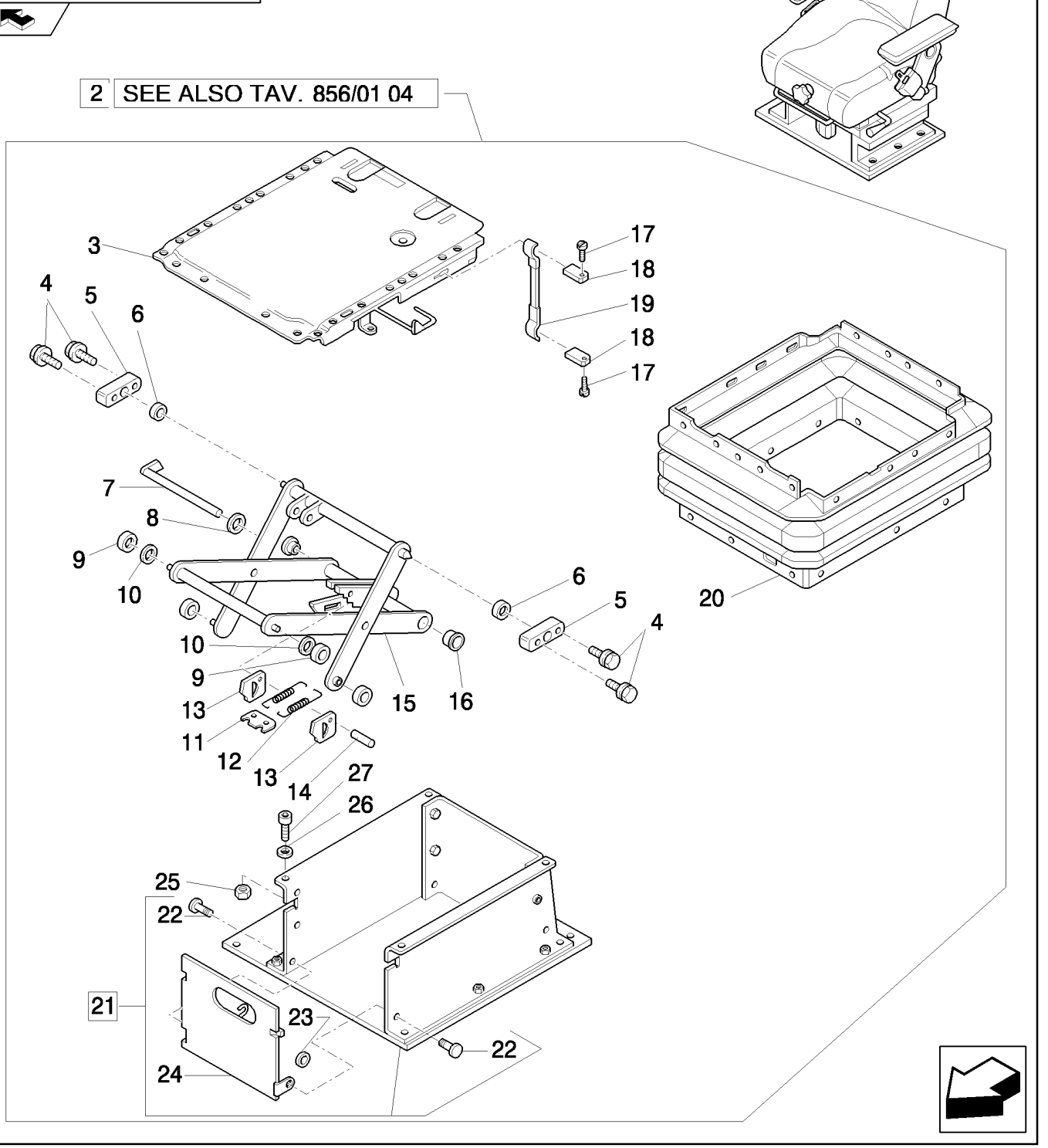

VINYL SEAT UPPER SUSPENSION PARTS (ROPS)

REF	FN	PART NUMBER	YR/SN	QTY	DESCRIPTION
1	1	87576855		1	SEAT, Assy
1	1	87576856		1	SEAT, Assy
1	2	87576863		1	SEAT, Assy
1	2	87576865		1	SEAT, Assy
2		85817556		1	SUSPENSION
3		85817450		1	PLATE
4		85817444		4	SCREW, M6 x 16
5	3	82035094		2	BEARING
6		85817445		2	BUSHING
7		85817429		1	BOLT
8		82035127		1	WASHER
9		82035031		4	ROLLER
10		85817442		2	BUSHING
11		82035030		1	PLATE
12		85817430		2	SPRING
13		9958792		2	PLATE
14		82035036		1	BOLT
15	4	85817446		1	SUSPENSION
16		9960755		2	BUSHING
17		85817448		2	RIVET
18		85817449		2	PLATE
19	5	85817447		1	HANDLE
20		85817428		1	BELLOWS
21	6	85817561		1	BASE
22		85817559		2	BOLT
23		85817560		2	WASHER
24		85817558		1	DOOR
25		85817458		4	NUT, M8
26		82034881		4	WASHER

(1) Mechanical Control Version
(2) Only for Pilot Control Version
(3) Includes 4, 6
(4) Includes 7, 9 - 14, 16
(5) Includes 17, 18
(6) Includes 22 - 24

856/01	03	p2	04/08

VINYL SEAT UPPER SUSPENSION PARTS (ROPS)

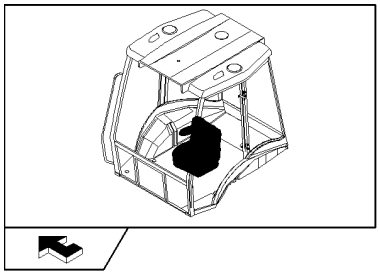

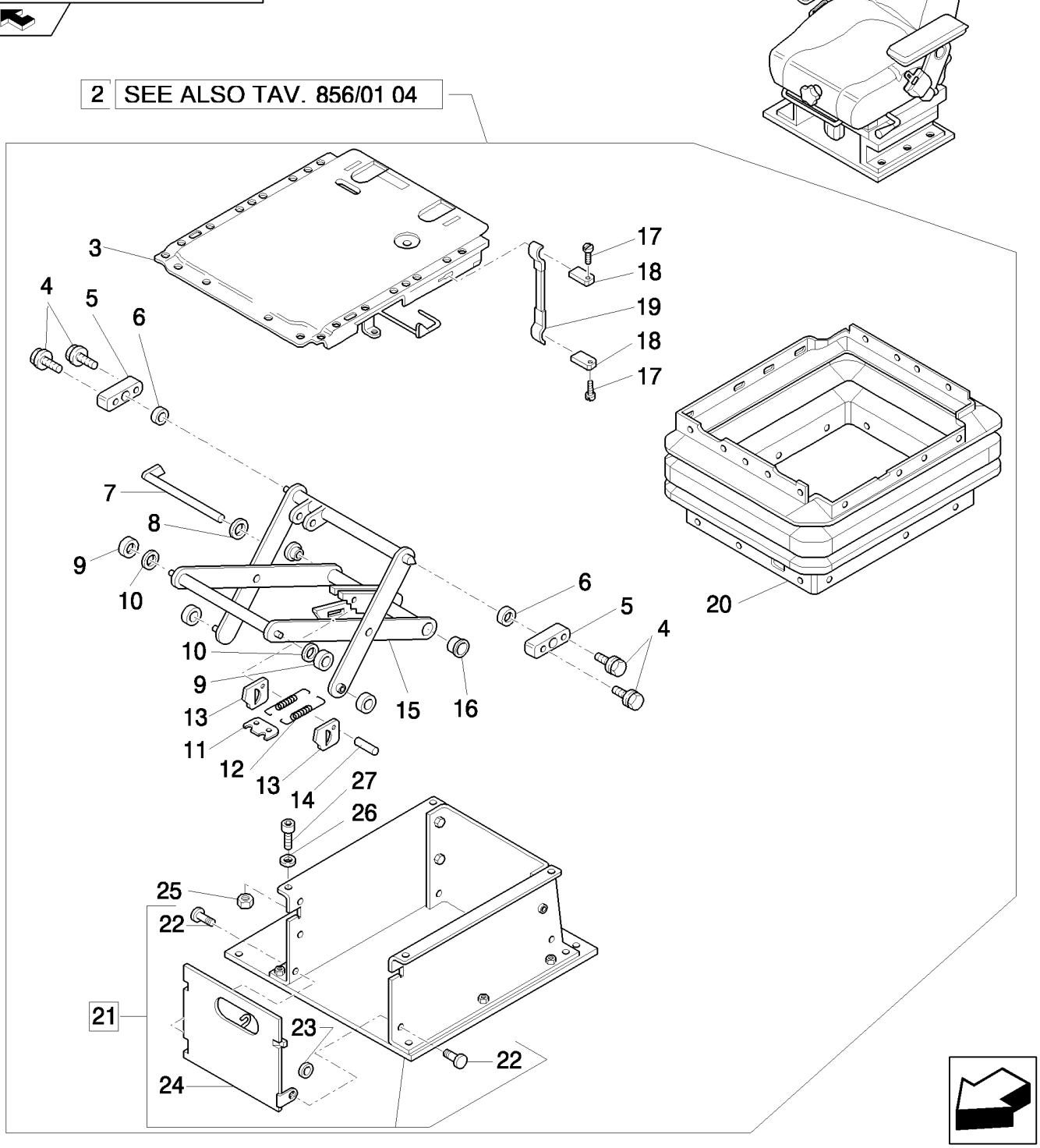

VINYL SEAT UPPER SUSPENSION PARTS (ROPS)

REF	FN	PART NUMBER	YR/SN	QTY	DESCRIPTION
27		82034893		4	SCREW

VINYL SEAT LOWER SUSPENSION PARTS (ROPS)

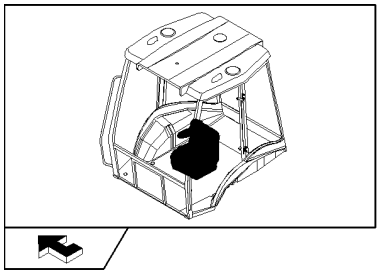

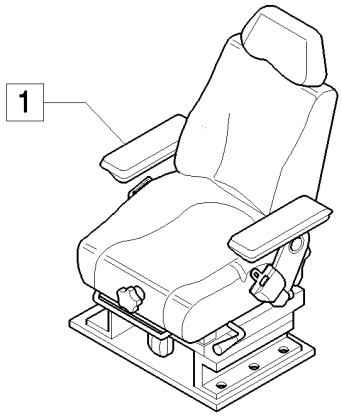

2 SEE ALSO TAV. 856/01 03

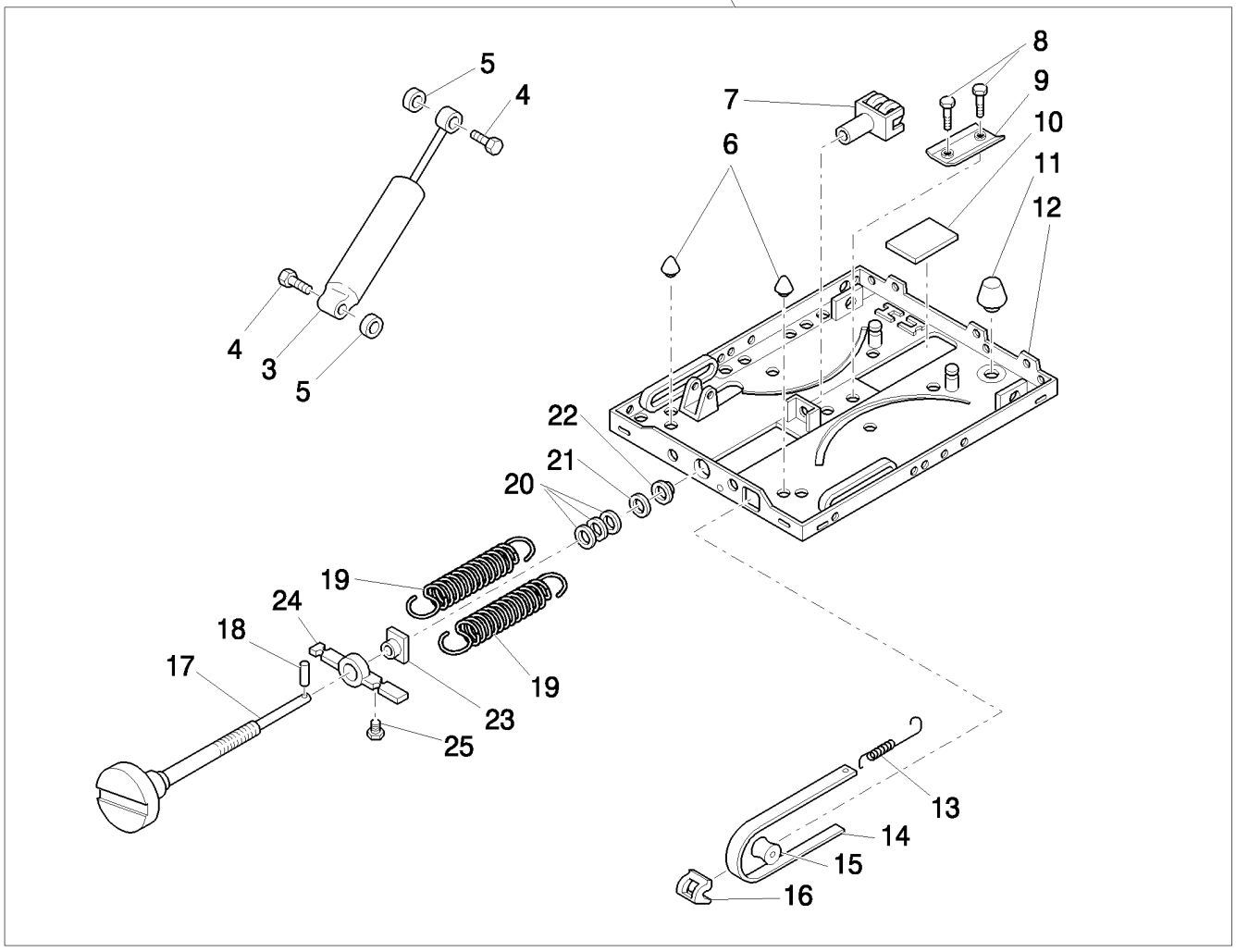

VINYL SEAT LOWER SUSPENSION PARTS (ROPS)

REF	FN	PART NUMBER	YR/SN	QTY	DESCRIPTION
1	1	87576855		1	SEAT, Assy
1	1	87576856		1	SEAT, Assy
1	2	87576863		1	SEAT, Assy
1	2	87576865		1	SEAT, Assy
2		85817556		1	SUSPENSION
3	3	85817431		1	SHOCK ABSORBER
4		82035040		2	BOLT
5		82035128		2	WASHER
6		85817440		2	BUMPER, RUBBER
7		82035043		1	FORK
8		82035037		2	RIVET
9		82035054		1	PROFILE
10		82035032		1	PLATE
11		85817441		1	BUMPER, RUBBER
12	4	85817436		1	SUSPENSION
13		82035039		1	SPRING
14	5	85817443		1	INDICATOR
15		82035029		1	ROLLER
16		82035025		1	GUIDE
17	6	85817451		1	SCREW, ADJUSTMENT
18		85817433		1	DOWEL
19		85817434		2	SPRING
20		82035035		1	SET OF WASHERS
21		82035028		1	WASHER
22		85817435		1	BUSHING
23		82035034		1	NUT
24		82035027		1	BRACKET
25		82035033		1	RETAINER

(1) Mechanical Control Version
(2) Only for Pilot Control Version
(3) Includes 4, 5
(4) Includes 6, 8 - 11
(5) Includes 13, 15, 16, 25
(6) Includes 18

879		p1	04/08

CAB RIGHT REAR MIRROR

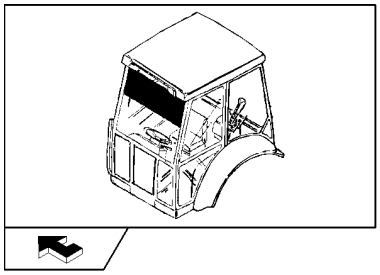

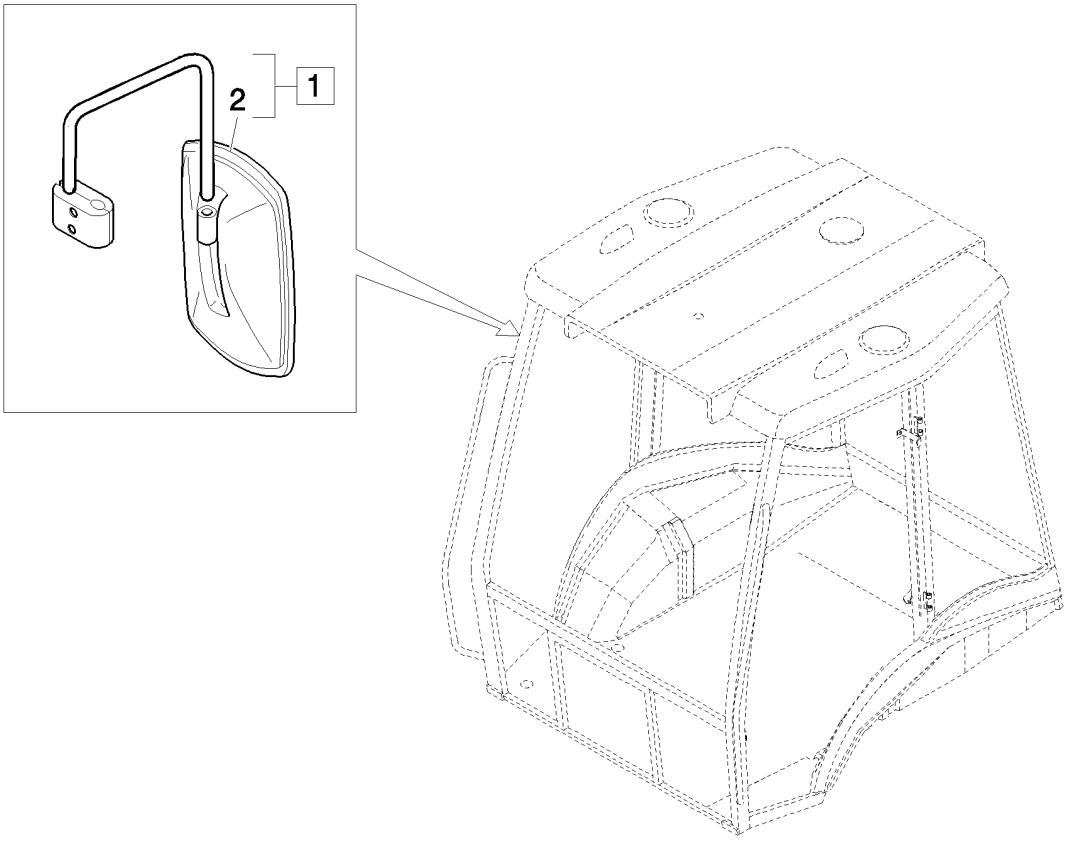

CAB RIGHT REAR MIRROR

REF	FN	PART NUMBER	YR/SN	QTY	DESCRIPTION
1		85820136		1	MIRROR, RH, Assy, DX
2		85820138		1	MIRROR, REAR-VIEW

GUARD AND DIPPER DECAL

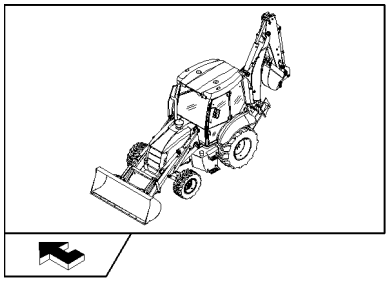

GUARD AND DIPPER DECAL

REF	FN	PART NUMBER	YR/SN	QTY	DESCRIPTION
1		87729598		2	DECAL
2		87729599		2	DECAL
3		87729596		2	DECAL
4		87729597		2	DECAL
5		87729602		2	DECAL
6		87729603		2	DECAL
7		87729600		2	DECAL
8		87729601		2	DECAL
9		87729608		2	DECAL
10		87729609		2	DECAL
11		87729606		2	DECAL
12		87729607		2	DECAL

900	01	p1	04/08

LONG DIPPER: ASSY

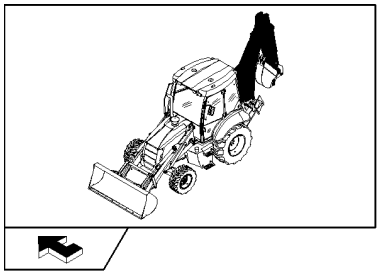

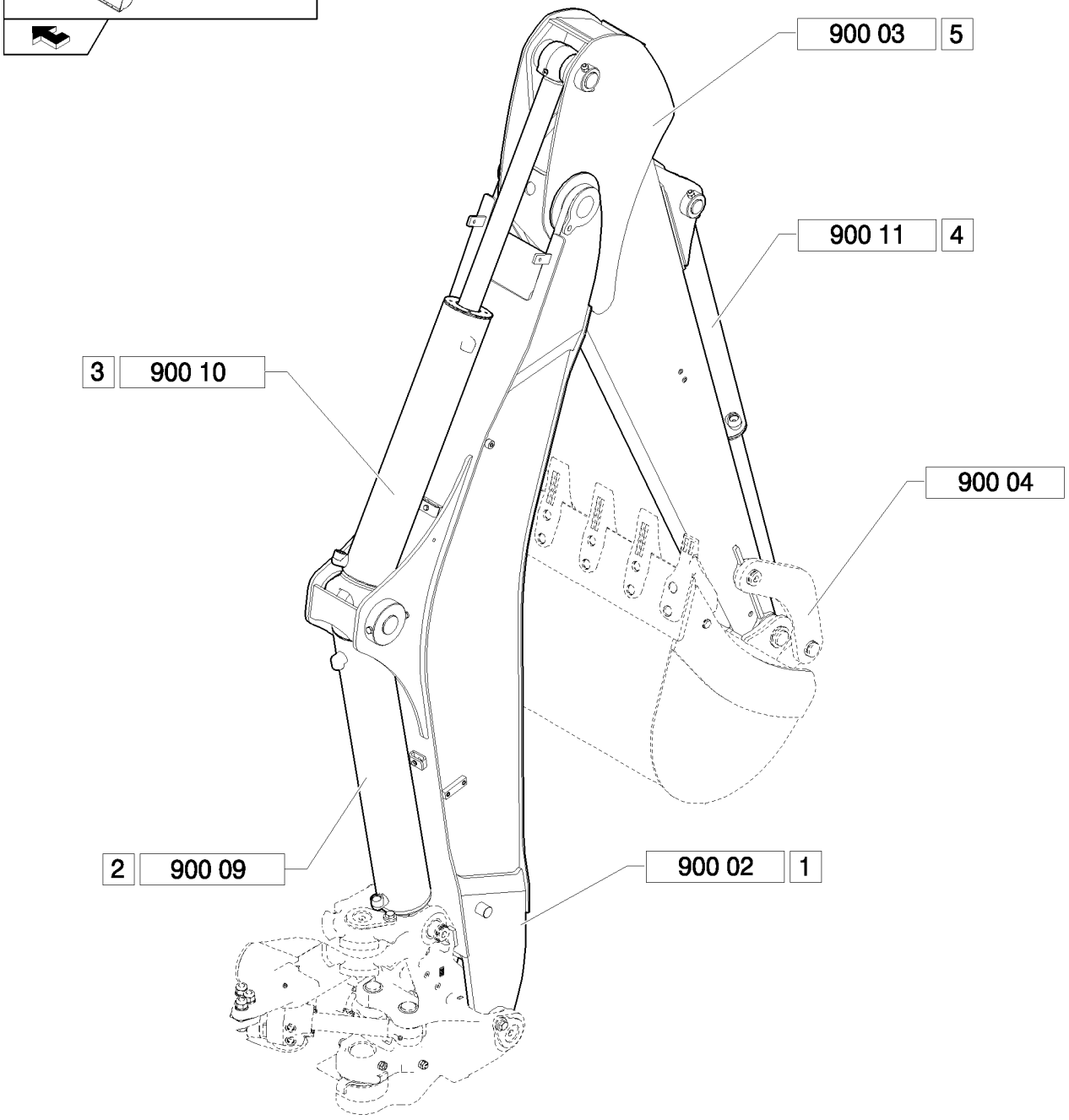

LONG DIPPER: ASSY

REF	FN	PART NUMBER	YR/SN	QTY	DESCRIPTION
1		87576064		1	BACKHOE ARM, Assy
2		87597583		1	CYLINDER, Assy
3		87594954		1	CYLINDER, Assy
4		87382007		1	CYLINDER, Assy
5		87592386		1	DIPPER, Assy

900	02	p1	04/08

BOOM - LONG DIPPER

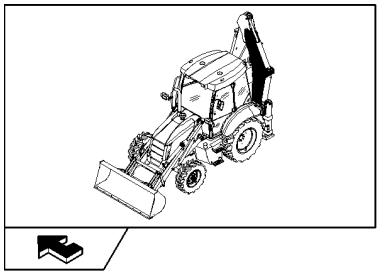

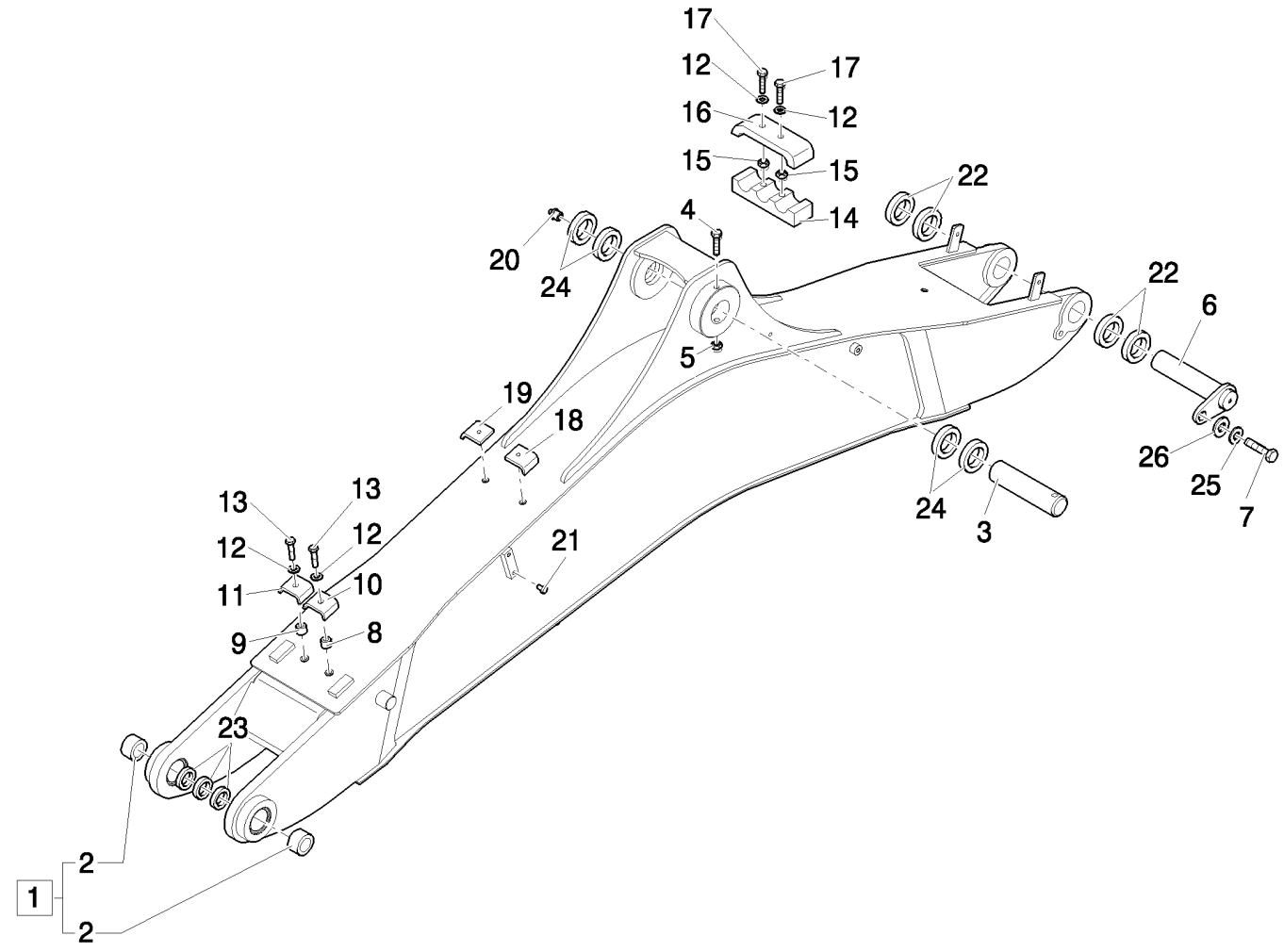

BOOM - LONG DIPPER

REF	FN	PART NUMBER	YR/SN	QTY	DESCRIPTION
1		87576064		1	BACKHOE ARM, Assy
2		83910557		2	RING
3		87590903		1	PIN
4		15542121		1	BOLT, Hex, M12 x 1.25 x 150, 8.8
5		16105011		1	NUT, LOCK
6		85815607		1	PIN
7		85802397		1	SCREW
8		85802902		1	SPACER
9		85802901		1	SPACER
10		85802900		1	CLAMP
11		85802899		1	CLAMP
12		11193879		6	WASHER, SPRING, Belleville, M8.4
13		16044221		2	BOLT, Hex, M8 x 50, 8.8
14		85802895		1	CLAMP
15		85802893		2	SPACER
16		85802894		1	U-BRACKET
17		16044421		4	BOLT, Hex, M8 x 60, 8.8
18		85815627		2	CLAMP
19		85815628		2	CLAMP
20		83416242		1	NIPPLE, LUBE
21		87310961		6	PLUG
22		85805295		4	SHIM
23		85805296		3	SHIM
24		85818916		4	SHIM
25		85815607		1	PIN
26		87747362		1	HOSE

LONG DIPPER

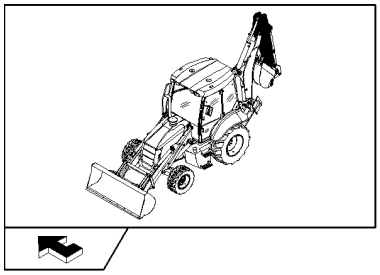

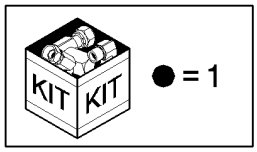

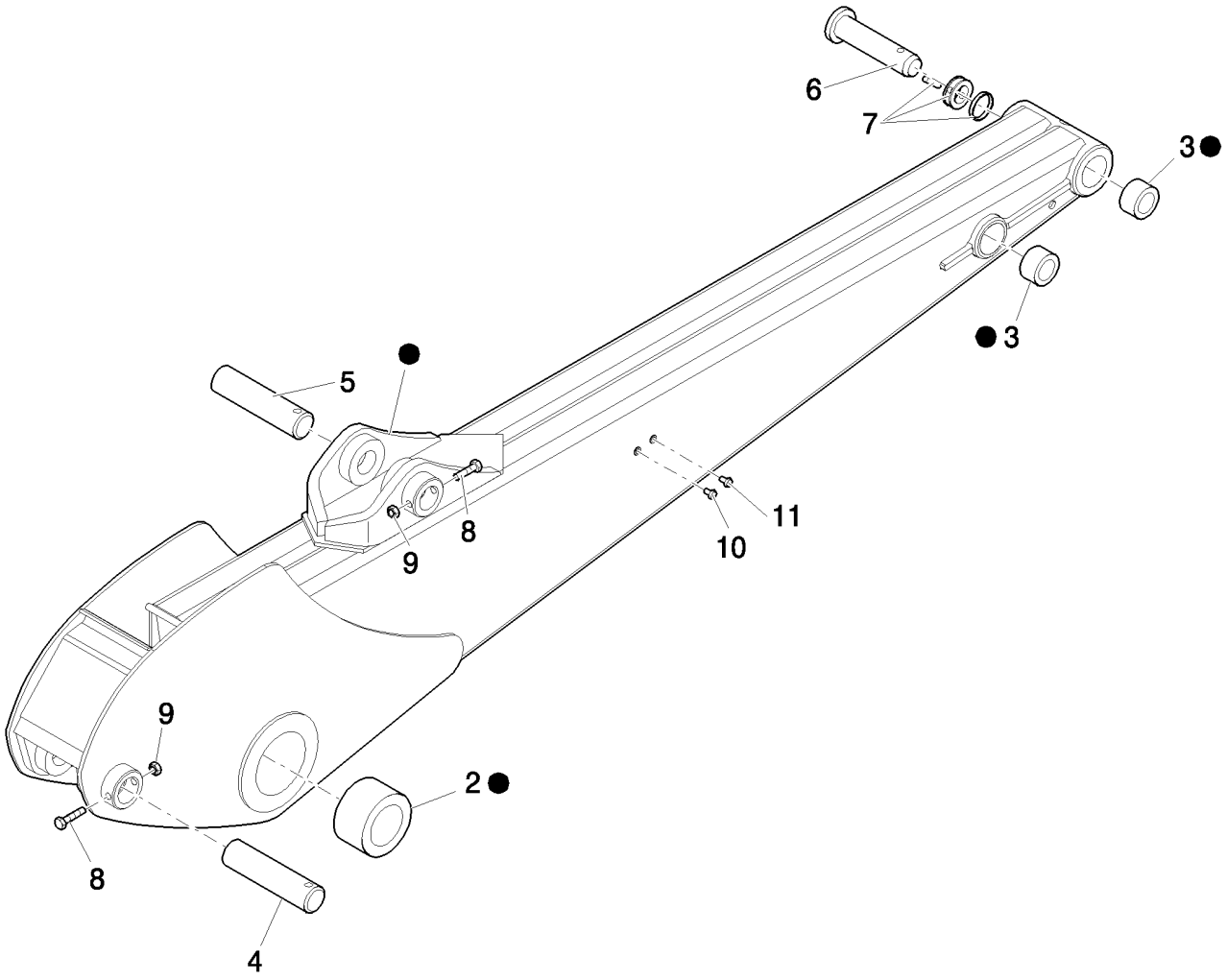

LONG DIPPER

REF	FN	PART NUMBER	YR/SN	QTY	DESCRIPTION
1		87592386		1	DIPPER, Assy
2		83910546		2	BUSHING
3		83910548		4	BUSHING
4		87594196		1	PIN
5		87577359		1	PIN
6		85803005		1	PIN
7		85802975		1	PIN, LOCK
8		15542921		2	BOLT, Hex, M12 x 1.25 x 95, 8.8
9		16105011		2	NUT, LOCK
10		85804447		4	PLUG

900	04	p1	04/08

LONG/SHORT DIPPER - BUCKET MOTION

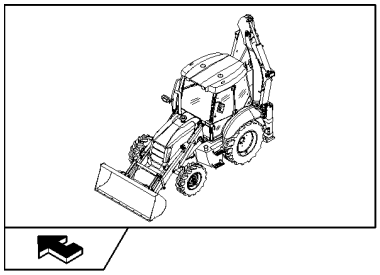

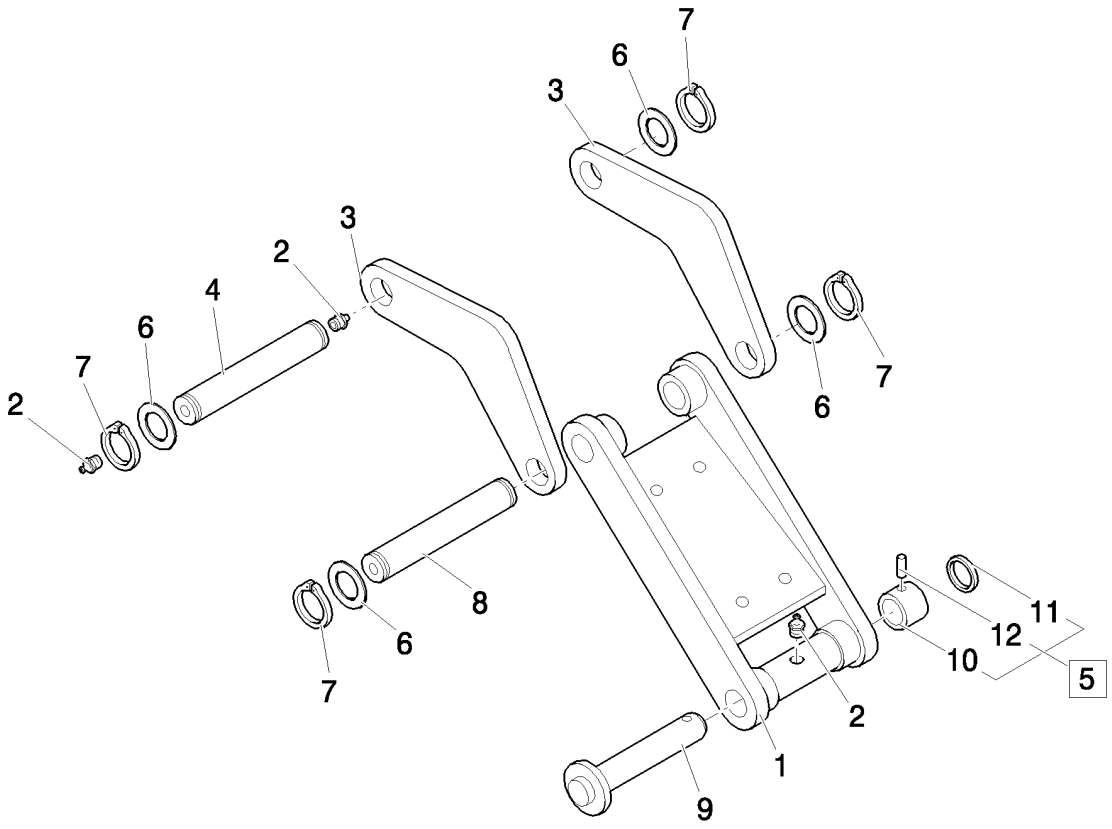

LONG/SHORT DIPPER - BUCKET MOTION

REF	FN	PART NUMBER	YR/SN	QTY	DESCRIPTION
1		85803613		1	LINK
2		83416242		3	NIPPLE, LUBE, 1/8"-27
3		87589579		2	LINK
4		85815517		1	PIN
5		85802975		1	PIN, LOCK, Assy
6		83910977		4	SPACER
7		11069071		4	RING, SNAP, M45, Ext
8		85813469		1	PIN
9		85803005		1	PIN
10		85802643		1	SPACER
11		85802974		1	RING
12		85802976		1	PIN

DIPPER: DIPPER SYSTEM, BOOM AND DIPPER CYLINDER

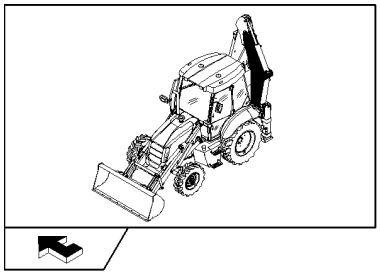

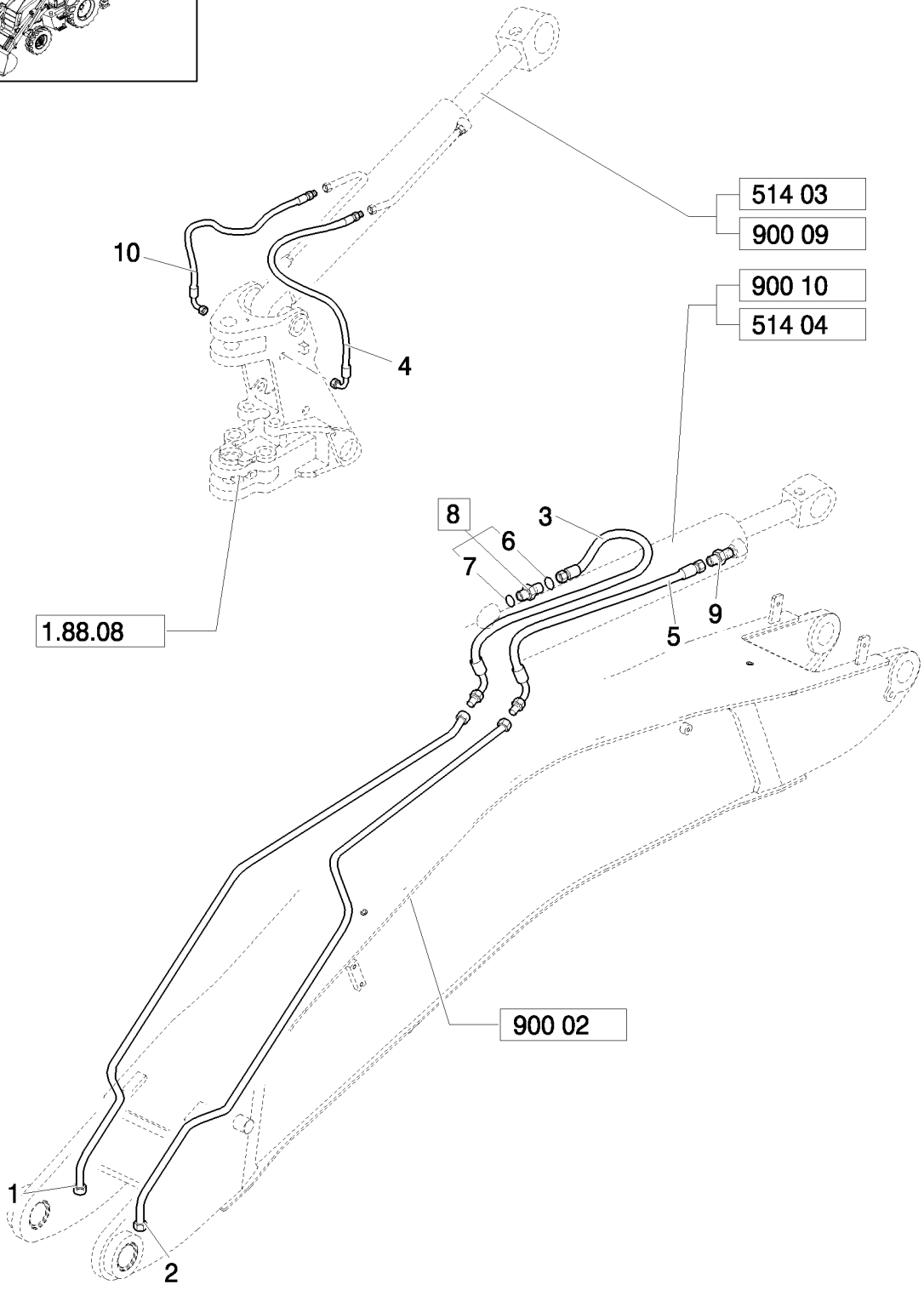

DIPPER: DIPPER SYSTEM, BOOM AND DIPPER CYLINDER

REF	FN	PART NUMBER	YR/SN	QTY	DESCRIPTION
1		87614628		1	PIPE
2		87614614		1	PIPE
3		87683904		1	HOSE, FLEXIBLE
4		87621914		1	HOSE, FLEXIBLE
5		87683905		1	HOSE, FLEXIBLE
6		89991976		1	O-RING
7		80167266		1	O-RING, 90 Duro, .924" ID x .116" Thk
8		83962538		1	CONNECTOR, HYD., Assy, 1-3/16"-12 ORS x 1-1/16"-12 SAE O-Ring
9		83962539		1	CONNECTOR, HYD.
10		87619512		1	HOSE, FLEXIBLE

900	06	p1	03/08

DIPPER: BUCKET CYLINDER HYDRAULIC SYSTEM

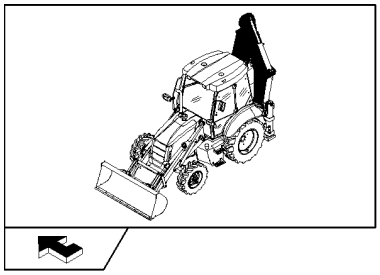

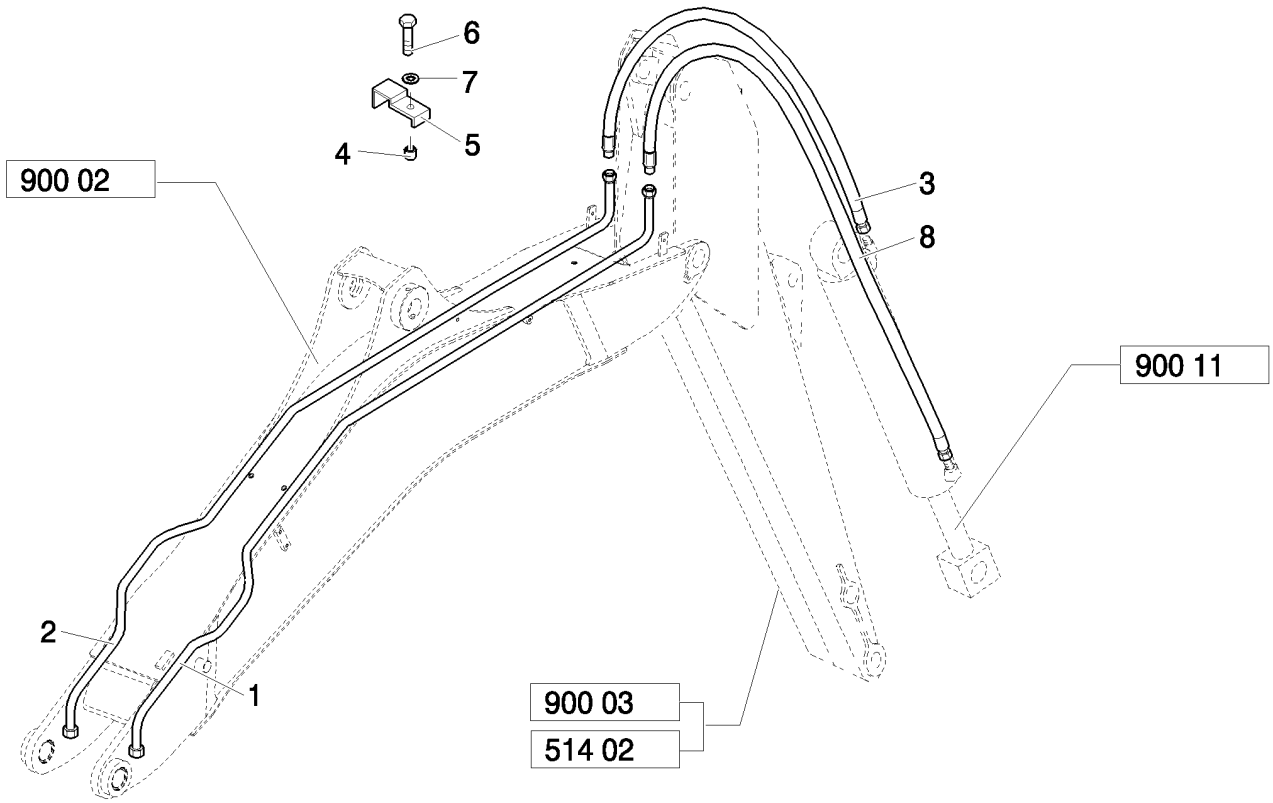

DIPPER: BUCKET CYLINDER HYDRAULIC SYSTEM

REF	FN	PART NUMBER	YR/SN	QTY	DESCRIPTION
1		87636636		1	PIPE
2		87636637		1	PIPE
3	1	87684509		1	HOSE, FLEXIBLE
3	2	87684511			HOSE, FLEXIBLE
4		85802901		1	SPACER
5		85802909		1	CLAMP
6		16044221		1	BOLT, Hex, M8 x 50, 8.8
7		11193979		1	WASHER, SPRING, Belleville, M8.4
8	1	87684507		1	HOSE, FLEXIBLE
8	2	87684508		1	HOSE, FLEXIBLE

(1) Only for Long Dipper
(2) Only for Short Dipper

DIPPER: BOOM CYLINDER HYDRAULIC SYSTEM

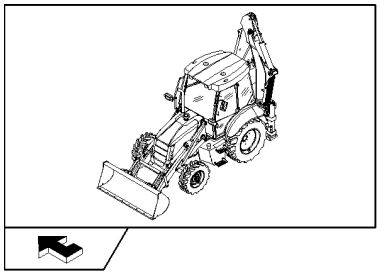

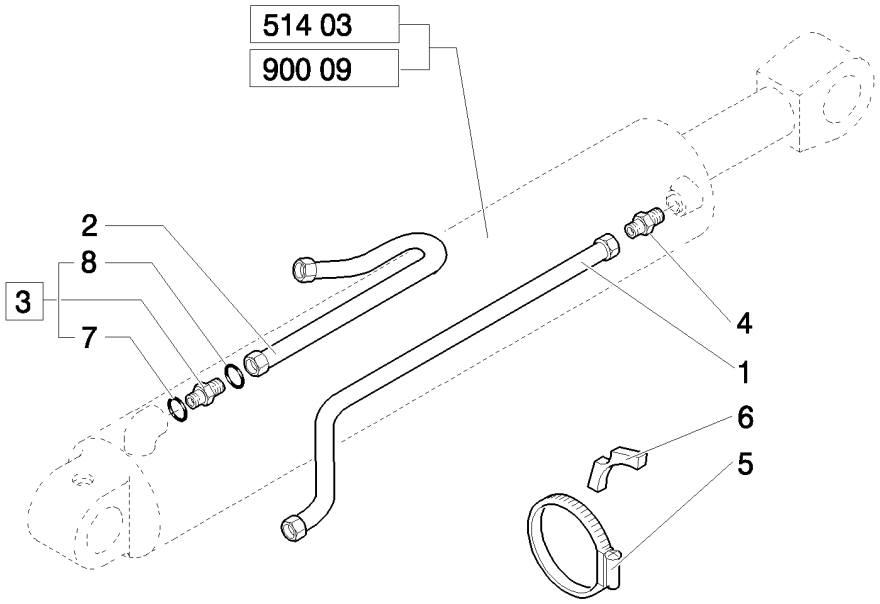

DIPPER: BOOM CYLINDER HYDRAULIC SYSTEM

REF	FN	PART NUMBER	YR/SN	QTY	DESCRIPTION
1		87624533		1	PIPE
2		85816813		1	TUBE, HYD
3		83962538		1	CONNECTOR, HYD., Assy, 1-3/16"-12 ORS x 1-1/16"-12 SAE O-Ring
4		83962539		1	CONNECTOR, HYD.
5		85802744		1	CLAMP, HOSE
6		87303912		2	BLOCK
7		80167266		1	O-RING, 90 Duro, .924" ID x .116" Thk
8		89991976		1	O-RING, 90 Duro, .739" ID x .070" Thk

DIPPER - HYDRAULIC SYSTEM

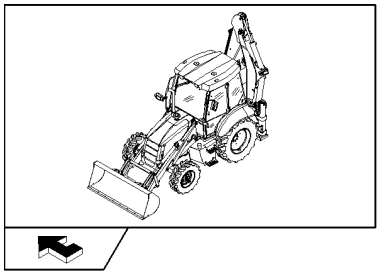

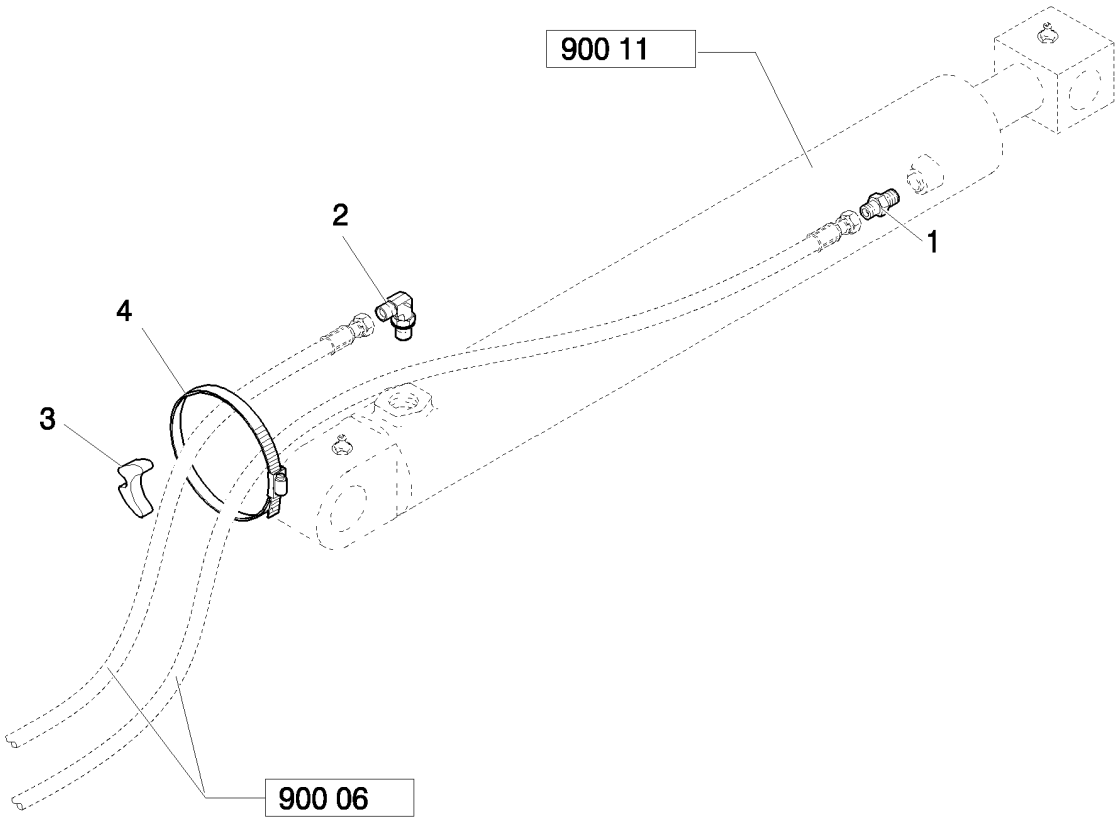

DIPPER - HYDRAULIC SYSTEM

REF	FN	PART NUMBER	YR/SN	QTY	DESCRIPTION
1		83962539		1	CONNECTOR, HYD.
2		85802957		1	ELBOW, 90º, 1 3/16"-12 ORS x 1 1/16"-12 SAE O-Ring
3		87565305		1	ANCHOR
4		85803008		1	CLAMP, HOSE

900	09	p1	04/08

HYDRAULIC LIFTING CYLINDER - TELESCOPIC DIPPER LONG

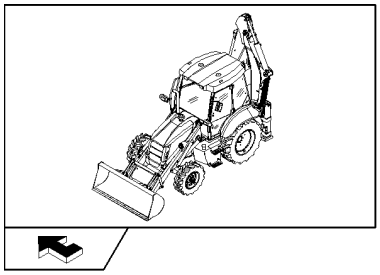

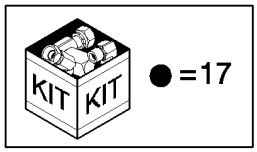

HYDRAULIC LIFTING CYLINDER - TELESCOPIC DIPPER LONG

REF	FN	PART NUMBER	YR/SN	QTY	DESCRIPTION
1		87597583		1	CYLINDER, Assy
2		87597479		1	GLAND, Assy
3		D95146		1	SEAL, HYD-CYLINDER
4		87597482		2	PISTON
5		87600654		1	ROD
6		87597480		2	GLAND
7		83416242		2	NIPPLE, LUBE, 1/8"-27
8		G109908		1	BUSHING
9		444640A1		1	SEAL
10		380621A1		1	RING, BACK-UP, 4.734" ID x .139" Thk
11		86982444		1	BOLT, SPECIAL, M33x2x90
12		238-5249		1	O-RING
13		87597481		1	PISTON, Assy
14		87530709		1	SEAL
15		87530710		1	SEAL
16		87402623		1	RING
17	1	87654843		1	KIT, SEALS
18		G109395		1	SCREW, SELF TAPPING
19		D149079		2	BUSHING
20		87597471		1	TUBE, Assy

(1) Includes 3, 8 - 10, 12, 14 - 16

900	10	p1	04/08

HYDRAULIC DITCHING CYLINDER

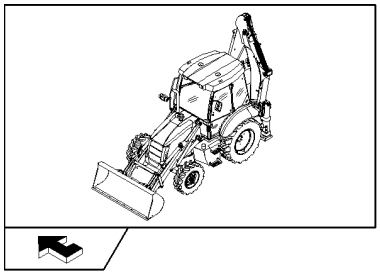

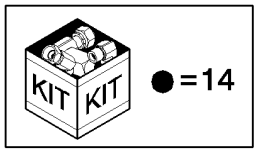

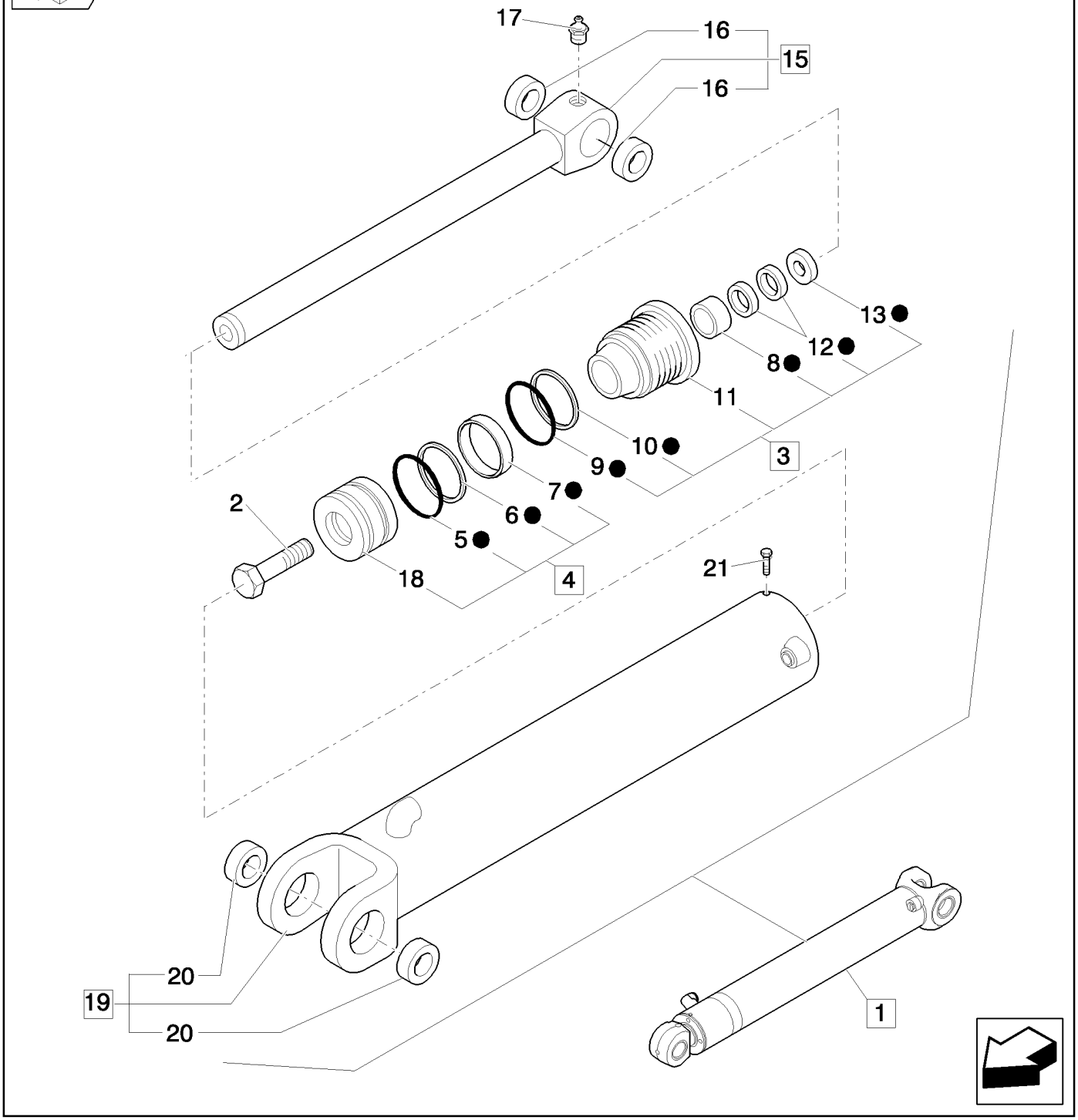

HYDRAULIC DITCHING CYLINDER

REF	FN	PART NUMBER	YR/SN	QTY	DESCRIPTION
1		87594954		1	CYLINDER, Assy
2		86982444		1	BOLT, SPECIAL
3		87598244		1	GLAND, Assy
4		87591992		1	PISTON, Assy
5		G102091		1	SEAL
6		G102092		1	RING
7		G102090		2	RING
8		G109908		1	BUSHING
9		238-5247		1	O-RING, -247, 70 Duro, 4.609" ID x .139" Thk
10		G107970		1	RING
11		87598245		1	GLAND
12		1542879C1		1	KIT, SEALS
13		D95146		1	SEAL, HYD-CYLINDER
14	1	87654845		1	KIT, SEALS
15		87382089		1	ROD, Assy
16		D149079		2	BUSHING
17		83416242		1	NIPPLE, LUBE, 1/8"-27
18		87591991		1	PISTON
19		87591981		1	TUBE, Assy
20		123407A1		2	RING
21		G109395		1	SCREW, SELF TAPPING

(1) Includes 5 - 10, 12, 13

900	11	p1	05/08

HYDRAULIC BUCKET CYLINDER

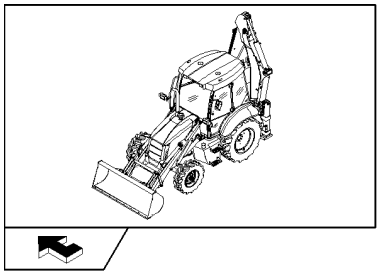

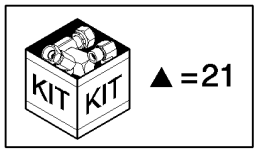

HYDRAULIC BUCKET CYLINDER

REF	FN	PART NUMBER	YR/SN	QTY	DESCRIPTION
1		G109908		1	BUSHING
2		87648324		1	GLAND
3		86982442		1	BOLT, SPECIAL
4		238-5235		1	O-RING, -235, 70 Duro, 3.109" ID x .139" Thk
5		1986905C1		1	PISTON, Assy
6		87381990		1	ROD, Assy
7		87581125		4	BUSHING
8		D38858		1	BACK-UP RING
9		G100711		1	Ring, Wear
10		87381987		1	TUBE, Assy
11		1542879C1		1	KIT, SEALS
12		83416242		2	NIPPLE, LUBE, 1/8"-27
13		D95146		1	SEAL, HYD-CYLINDER
14		1986906C1		1	PISTON
15		G100709		1	SEAL
16		G100710		1	RING
17		87646222		2	BUSHING
18		87382007		1	CYLINDER, Assy
19		87648323		1	GLAND, Assy
20		G109395		1	SCREW, SELF TAPPING
21	1	1542923C2		1	KIT, SEALS

(1) Includes 1, 4, 8, 9, 11, 13, 15, 16

901	01	p1	05/08

LONG TELESCOPIC DIPPER: ASSY

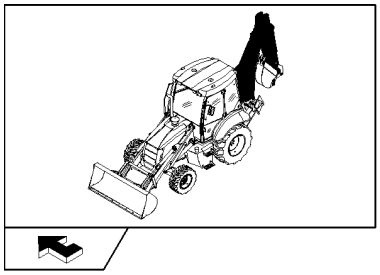

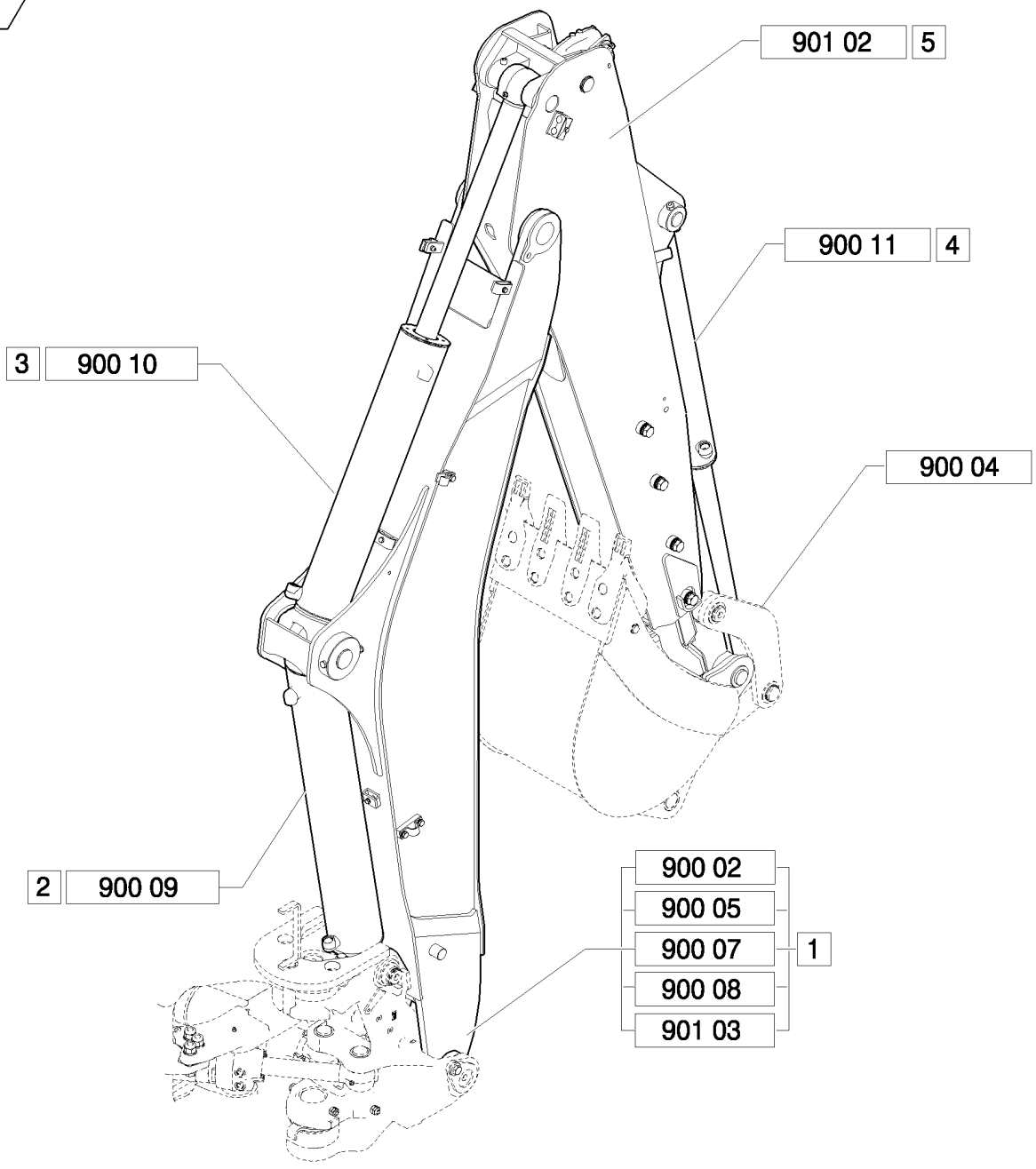

LONG TELESCOPIC DIPPER: ASSY

REF	FN	PART NUMBER	YR/SN	QTY	DESCRIPTION
1		87576064		1	BACKHOE ARM, Assy
2		87597583		1	CYLINDER, Assy
3		87594954		1	CYLINDER, Assy
4		87382007		1	CYLINDER, Assy
5		87639619		1	ARM, Assy

901	02	p1	05/08

TELESCOPIC DIPPER LONG

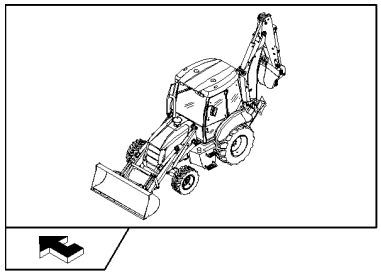

TELESCOPIC DIPPER LONG

REF	FN	PART NUMBER	YR/SN	QTY	DESCRIPTION
1		87639619		1	ARM, Assy
2		83910546		2	BUSHING
3	1	85802975		1	PIN, LOCK
4		87583508		1	PIN
5		85801309		1	PIN
6		83911019		4	CIRCLIP
7		11121321		8	SCREW
8		14497121		8	WASHER, M20 x 37 x 3
9		85801307		32	WASHER
10		85808473		4	PAD, SLIDING
11		85808472		4	PAD, SLIDING
12		16105011		1	NUT, LOCK
13		11190579		8	WASHER, SPRING, Belleville, M10.5
14		11106721		8	BOLT, Hex, M10 x 38, 8.8, Full Thd
15		14332521		1	SCREW, Hex Soc Hd, M12 x 1.25 x 100, 8.8
16		87392513		2	CLAMP
17		87392509		2	PLATE
18		16044121		2	BOLT, Hex, M8 x 45, 8.8
19		85803005		1	PIN
20		85801314		1	PIN
21		83902702		2	PIN, SPLIT (COTTER)
22		85801308		1	PIN
23		83910548		4	BUSHING
24		14497401		2	WASHER, LOCK
25	2	87583485		1	ARM
26	3	87583496		1	ARM
27		87392516		2	CLAMP
28		87577359		1	PIN
29		16105011		1	NUT, LOCK
30		85802976		1	PIN
31		81870039		4	FASTENER
32		15542921		1	BOLT, Hex, M12 x 1.25 x 95, 8.8

(1) Includes 30, 34, 35
(2) Includes 10 - 12
(3) Includes 23

901	02	p2	05/08

TELESCOPIC DIPPER LONG

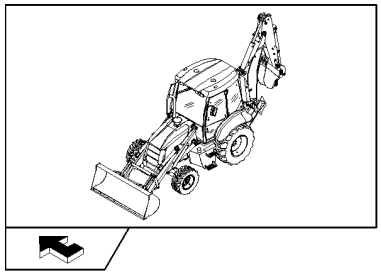

TELESCOPIC DIPPER LONG

REF	FN	PART NUMBER	YR/SN	QTY	DESCRIPTION
33		83416242		2	NIPPLE, LUBE
34		85802643		1	SPACER
35		85802974		1	RING

TELESCOPIC DIPPER - HYDRAULIC SYSTEM

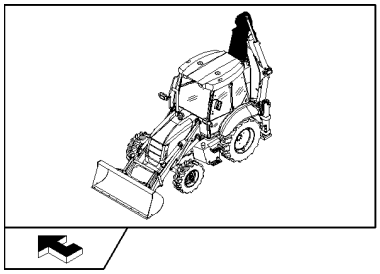

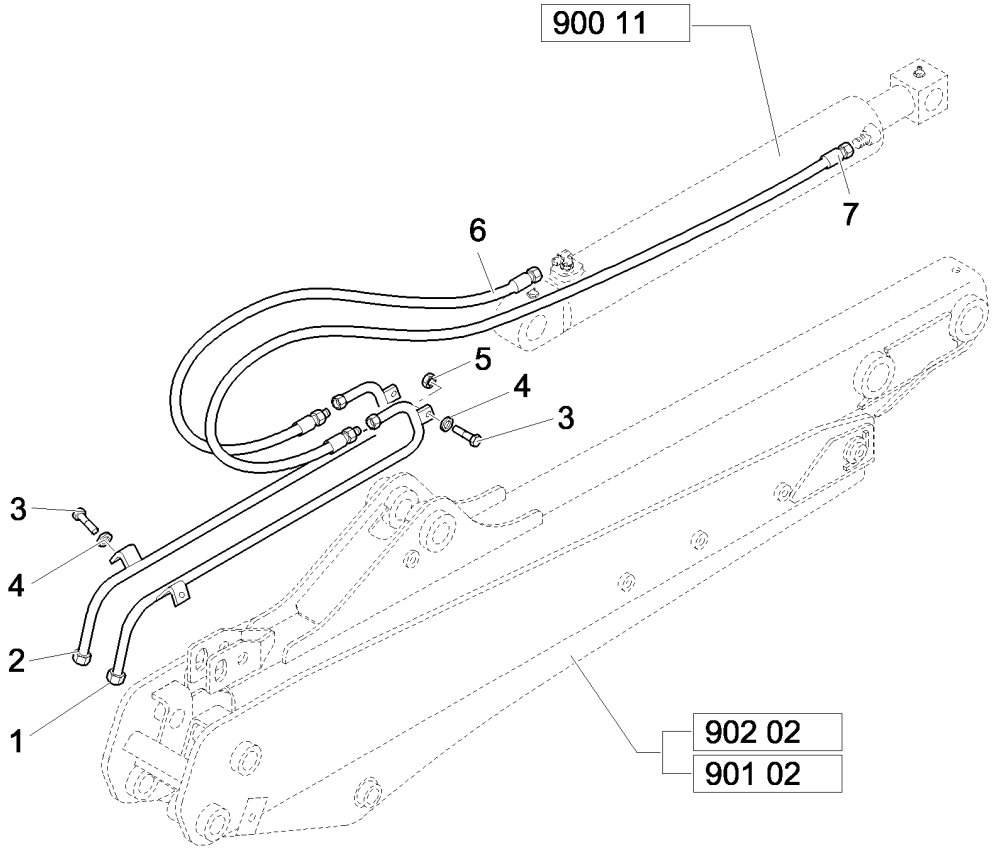

TELESCOPIC DIPPER - HYDRAULIC SYSTEM

REF	FN	PART NUMBER	YR/SN	QTY	DESCRIPTION
1	1	85816815		1	TUBE, HYD
1	2	85815679		1	TUBE, HYD
2	1	85816817		1	TUBE, HYD
2	2	85815677		1	TUBE, HYD
3		16043621		4	BOLT, Hex, M8 x 25, 8.8
4		11193979		4	WASHER, SPRING, Belleville, M8.4
5		14048211		2	NUT, LOCK, M8 x 1.25, Cl 8
6	1	87621911		1	HOSE, FLEXIBLE
6	2	87636395		1	HOSE, FLEXIBLE
7	1	87619511		1	HOSE, FLEXIBLE
7	2	87636396		1	HOSE, FLEXIBLE

(1) Only for Telescopic Dipper Short
(2) Only for Telescopic Dipper Long

LONG TELESCOPIC DIPPER: TELESCOPIC HYDRAULIC CYLINDER

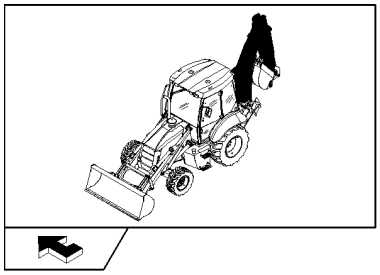

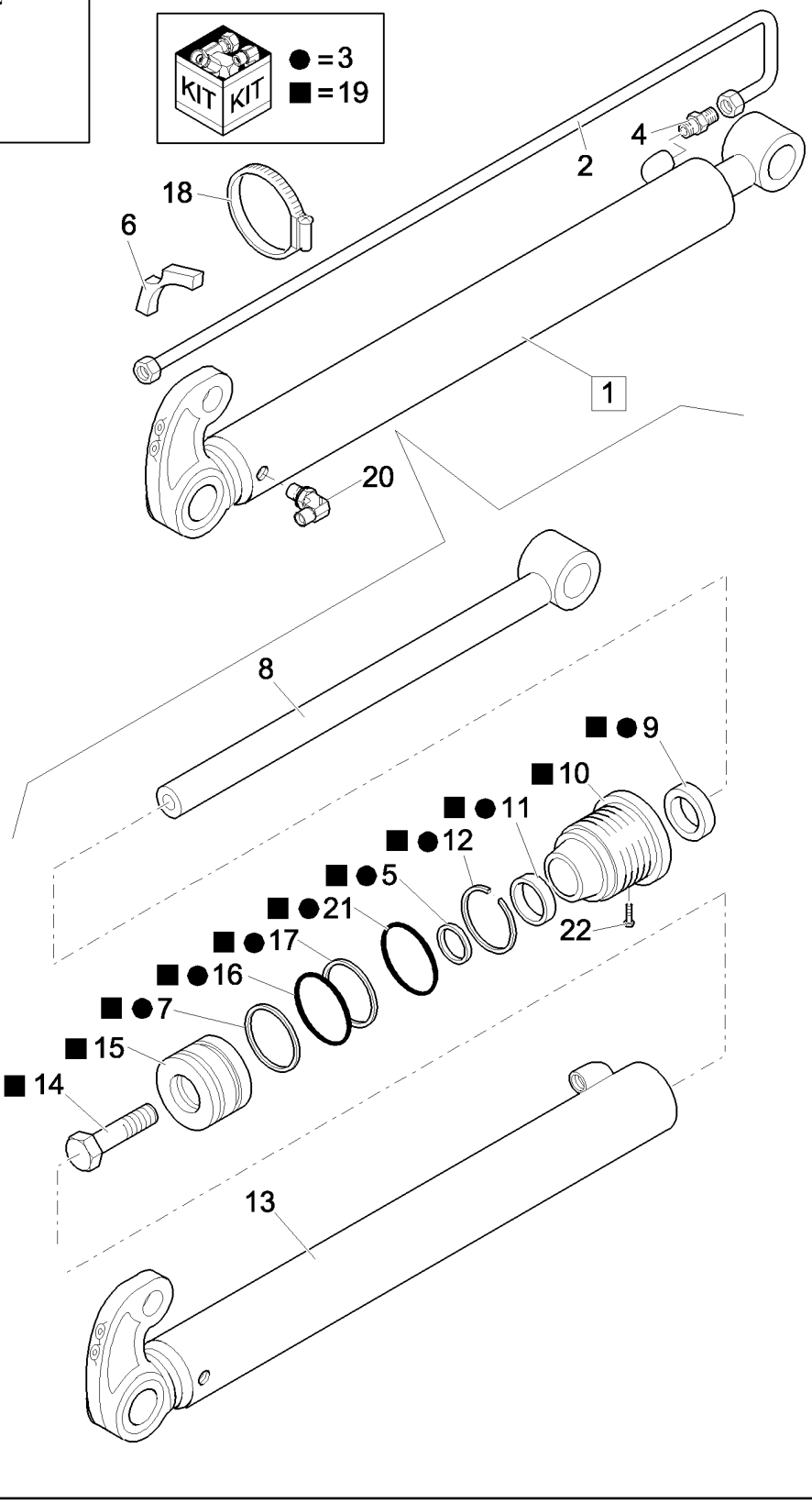

LONG TELESCOPIC DIPPER: TELESCOPIC HYDRAULIC CYLINDER

REF	FN	PART NUMBER	YR/SN	QTY	DESCRIPTION
1		87327259		1	HYDRAULIC CYLINDER, Assy
2		87327251		1	TUBE, RIGID
3		87342131		1	KIT
4		83963374		1	CONNECTOR, HYD.
5		1542875C1		1	KIT, SEALS
6		87303910		1	SPACER
7		G100444		1	SEAL
8		87313722		1	ROD
9		D95143		1	SEAL
10		297281A1		1	CAP CYLINDER END
11		G102425		1	BUSHING
12		G109298		1	RING
13		87313720		1	LINER, ENGINE CYLINDER
14		86982435		1	BOLT, SPECIAL
15		G107277		1	PISTON
16		G102288		1	SEAL ASSY.
17		G100449		1	Ring, Wear
18		85803010		1	CLAMP, HOSE
19		110692A4		1	PISTON
20		83971549		1	ELBOW
21		238-5231		1	O-RING, -231, 70 Duro, 2.609" ID x .139" Thk
22		G109395		1	SCREW, SELF TAPPING

902	01	p1	05/08

SHORT TELESCOPIC DIPPER: ASSY

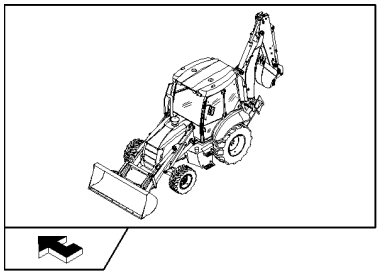

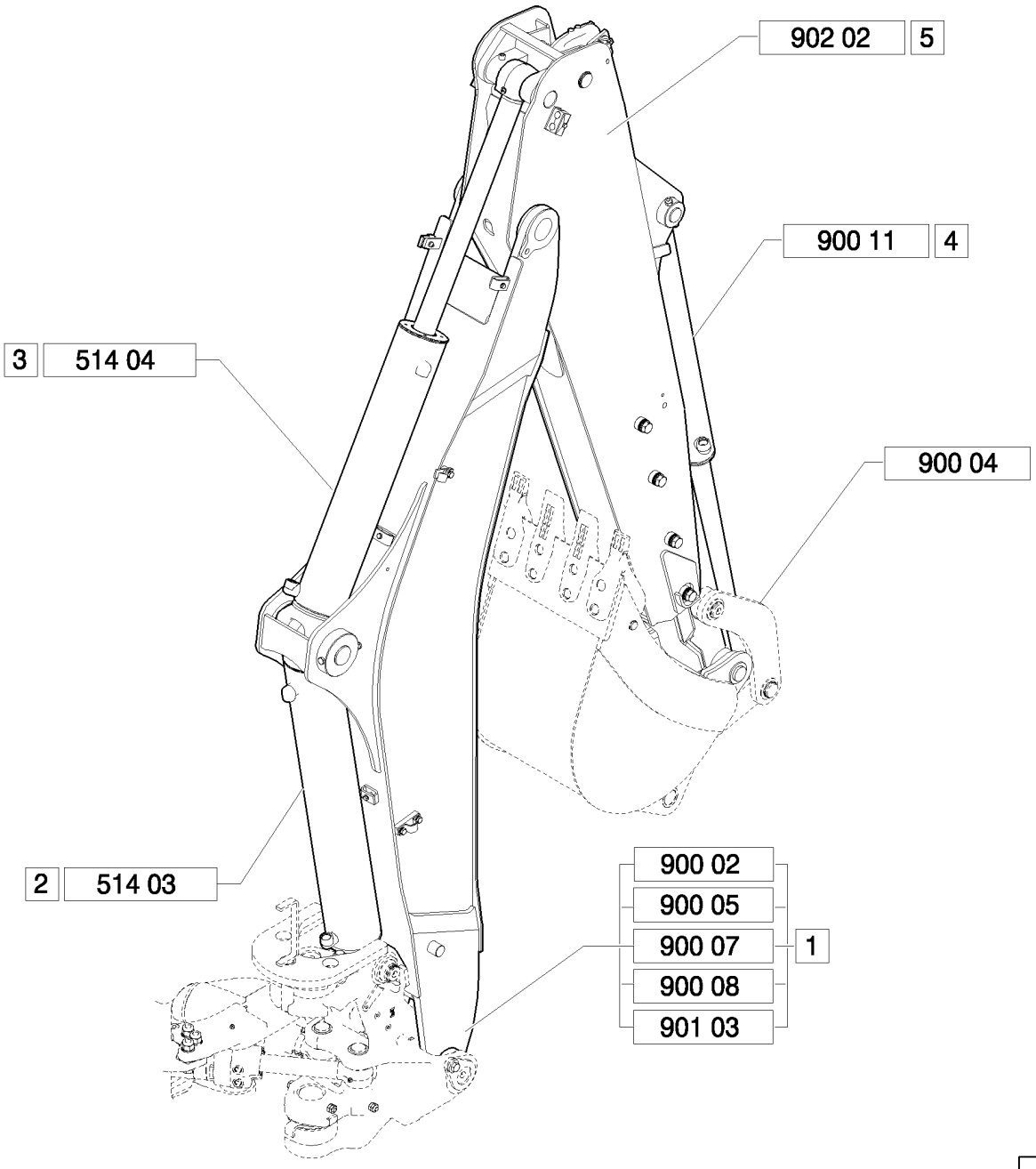



SHORT TELESCOPIC DIPPER: ASSY

REF	FN	PART NUMBER	YR/SN	QTY	DESCRIPTION
1		87576064		1	BACKHOE ARM, Assy
2		87613157		1	CYLINDER, Assy
3		87382083		1	CYLINDER, Assy
4		87382007		1	CYLINDER, Assy
5		87598703		1	ARM, Assy

902	02	p1	05/08

TELESCOPIC DIPPER SHORT

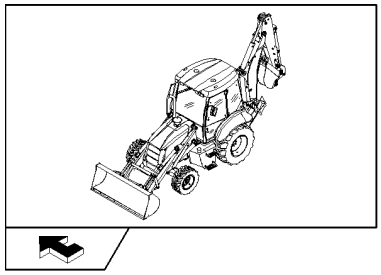

TELESCOPIC DIPPER SHORT

REF	FN	PART NUMBER	YR/SN	QTY	DESCRIPTION
1		87598703		1	ARM, Assy
2		83910546		2	BUSHING
3		81870039		4	FASTENER
4		87583508		1	PIN
5		85801309		1	PIN
6		83911019		4	CIRCLIP
7		11121321		8	SCREW
8		14497121		8	WASHER, M20 x 37 x 3
9		85801307		32	WASHER
10		85808473		4	PAD, SLIDING
11		85808472		4	PAD, SLIDING
12		16105011		1	NUT, LOCK
13		11190579		8	WASHER, SPRING, Belleville, M10.5
14		11106721		8	BOLT, Hex, M10 x 38, 8.8, Full Thd
15		14332521		1	SCREW, Hex Soc Hd, M12 x 1.25 x 100, 8.8
16		87392516		2	CLAMP
17		87392509		2	PLATE
18		16044121		2	BOLT, Hex, M8 x 45, 8.8
19		15542921		1	BOLT, Hex, M12 x 1.25 x 95, 8.8
20		85801314		1	PIN
21		83902702		2	PIN, SPLIT (COTTER)
22		85801308		1	PIN
23		83910548		4	BUSHING
24		14497401		2	WASHER, LOCK
25	1	87583510		1	ARM
26	2	87583516		1	ARM
27		87392513		2	CLAMP
28		16105011		1	NUT, LOCK
29		87577359		1	PIN

(1) Includes 2
(2) Includes 23

902	03	p1	05/08

SHORT TELESCOPIC DIPPER: TELESCOPIC HYDRAULIC CYLINDER

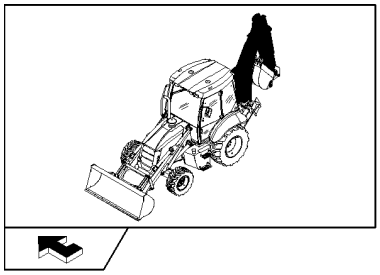

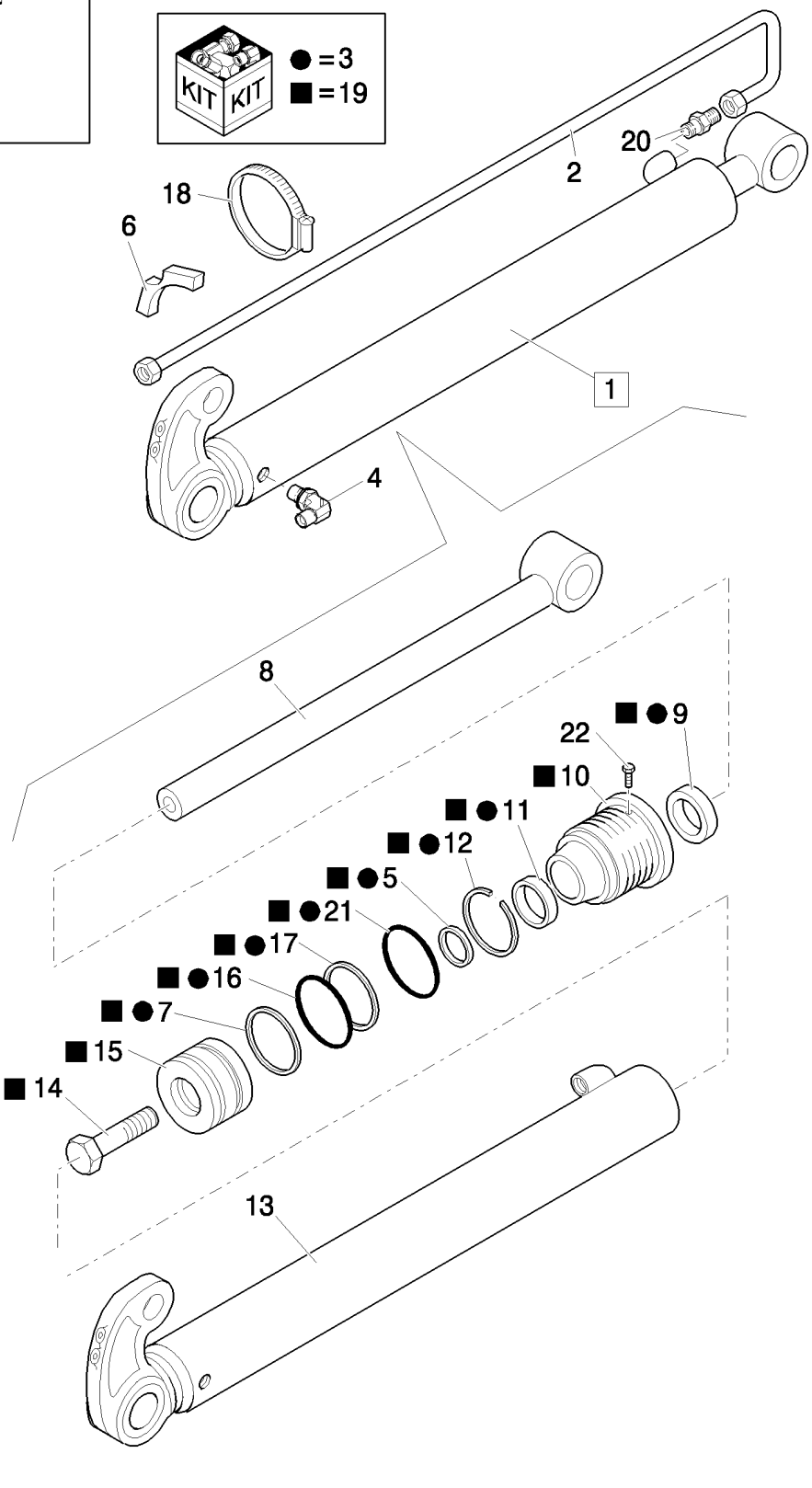

SHORT TELESCOPIC DIPPER: TELESCOPIC HYDRAULIC CYLINDER

REF	FN	PART NUMBER	YR/SN	QTY	DESCRIPTION
1		87327264		1	HYDRAULIC CYLINDER, Assy
2		87327252		1	TUBE, RIGID
3		87342131		1	KIT
4		83971549		1	ELBOW
5		1542875C1		1	KIT, SEALS
6		87303910		1	SPACER
7		G100444		1	SEAL
8		87314278		1	ROD
9		D95143		1	SEAL
10		297281A1		1	CAP CYLINDER END
11		G102425		1	BUSHING
12		G109298		1	RING
13		87314277		1	LINER, ENGINE CYLINDER
14		86982435		1	BOLT, SPECIAL
15		G107277		1	PISTON
16		G100443		1	GASKET
17		G100449		1	Ring, Wear
18		85803010		1	CLAMP, HOSE
19		110692A4		1	PISTON
20		83963374		1	CONNECTOR, HYD.
21		238-5231		1	O-RING, -231, 70 Duro, 2.609" ID x .139" Thk
22		86642312		1	SCREW, SELF TAPPING, Hex Hd, #8 x 3/8"

TOOL KIT

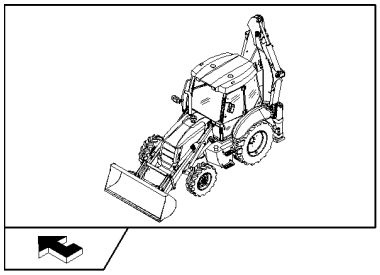

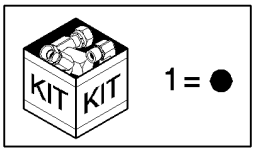

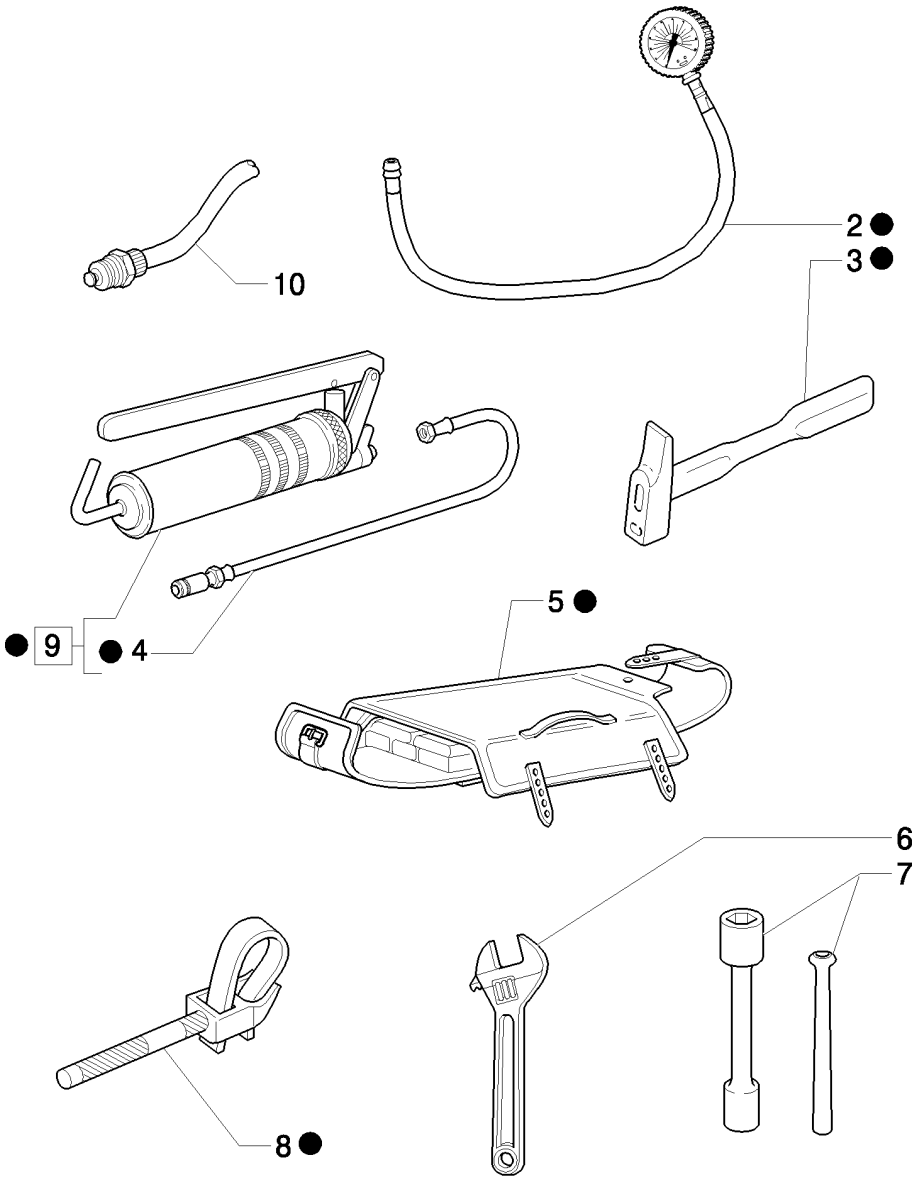

TOOL KIT

REF	FN	PART NUMBER	YR/SN	QTY	DESCRIPTION
1		85803394		1	TOOL KIT
1	1	85813113		1	TOOL KIT
2		85803396		1	GAUGE
3		14582790		1	HAMMER
4		79028981		1	HOSE, FLEXIBLE
5		79062734		1	TOOL BAG
6		71431438		1	WRENCH, ADJUSTING
7		85803395		1	SOCKET WRENCH
7	1	85813110		1	SPANNER, BOX
8		71304923		1	WRENCH, SPECIAL
9		79028977		1	GUN, GREASE, Assy
10		85826260		1	VALVE, DRAIN

(1) Only for B115B

993	01	p1	03/08

PLATES - NA

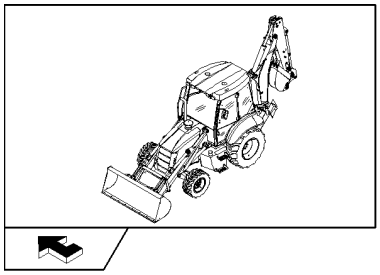

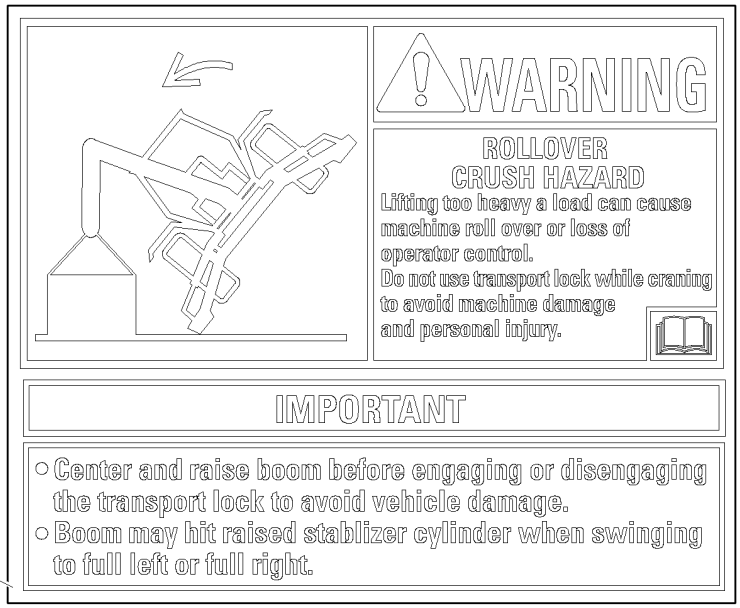

1

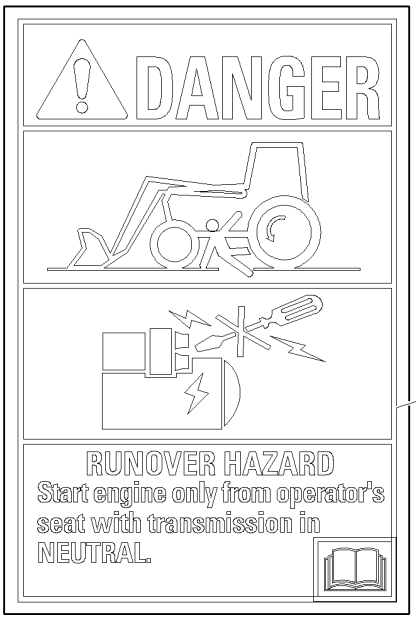

4

7

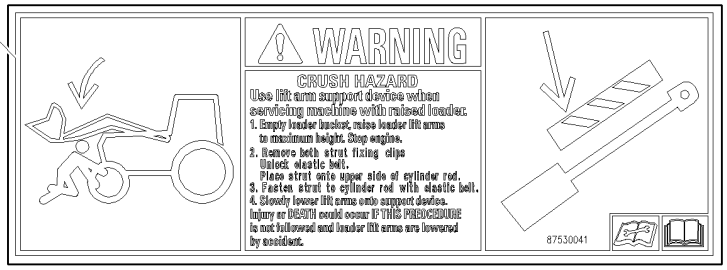



6

5

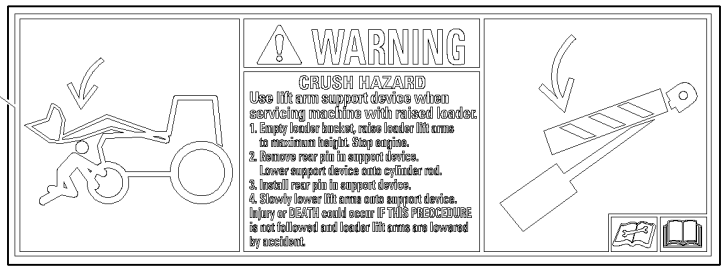

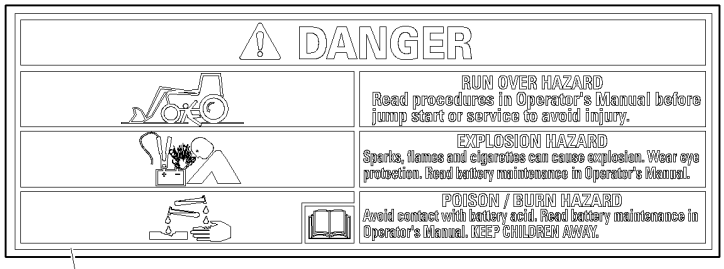

2

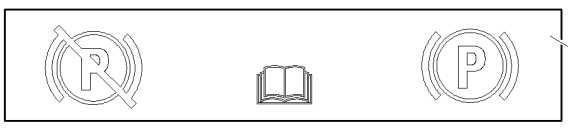

3



8

PLATES - NA

REF	FN	PART NUMBER	YR/SN	QTY	DESCRIPTION
1		85821924		1	DECAL, ENGLISH
1		85828069		1	DECAL, WARNING, FRENCH
1		85828070		1	DECAL, WARNING, SPANISH
2		85821917		1	DECAL, ENGLISH
2		85828088		1	DECAL, DANGER, FRENCH
2		85828089		1	DECAL, DANGER, SPANISH
3		85821925		1	DECAL
4		85821918		1	DECAL, FRENCH
4		85828086		1	SIGN, WARNING, SPANISH
4		85828087		1	DECAL, DANGER, ENGLISH
5		85821919		2	DECAL, ENGLISH
5		85828090		2	DECAL, DANGER, FRENCH
5		85828091		2	DECAL, DANGER, SPANISH
6	1	85821921		1	DECAL, ENGLISH
6		85828084		1	DECAL, WARNING, FRENCH
6		85828085		1	DECAL, DANGER, SPANISH
7	2	87530041		1	DECAL, ENGLISH
7	3	87608143		1	DECAL, FRENCH
7	2	87608145		1	DECAL, SPANISH
8		87596091		1	DECAL, SPANISH
8		87581010		1	DECAL, ENGLISH
8		87596089		1	DECAL, FRENCH

(1) Except for B115B
(2) Only for B95BTC, B115B
(3) Only for B115B

PLATES - NA

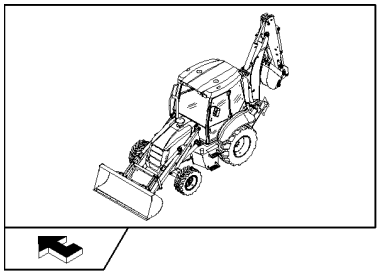

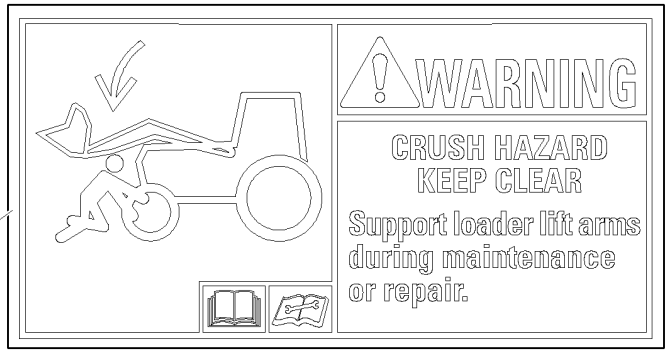

2

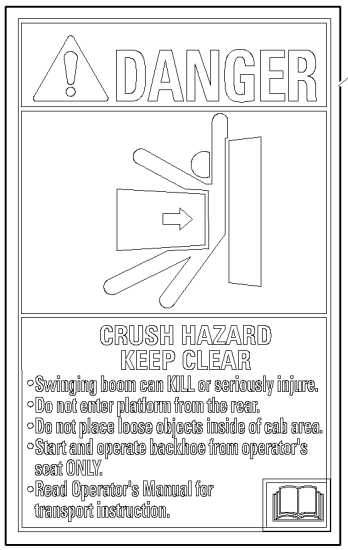

1

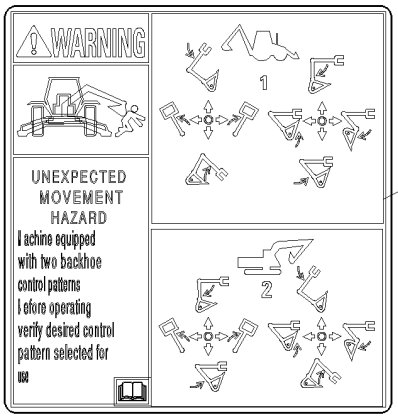

5

6



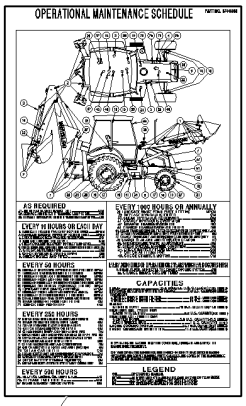

8

7

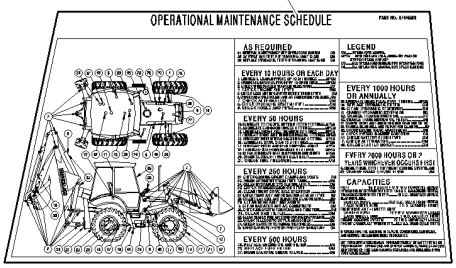

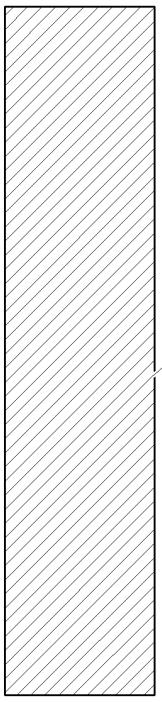

3

4

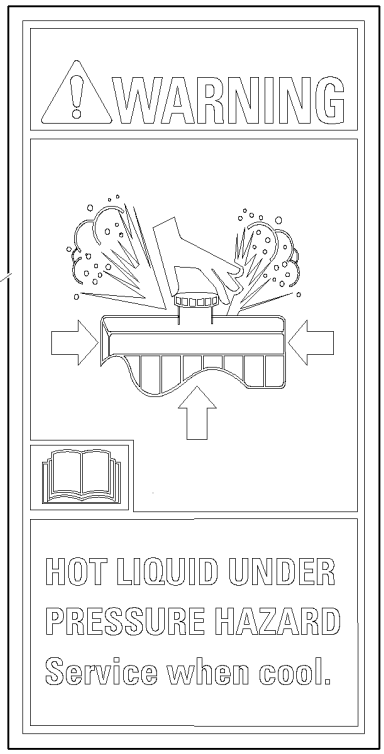

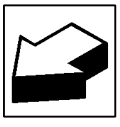

PLATES - NA

REF	FN	PART NUMBER	YR/SN	QTY	DESCRIPTION
1		85821922		2	DECAL, ENGLISH
1		85828080		2	DECAL, DANGER, FRENCH
1		85828081		2	DECAL, DANGER, SPANISH
2		85821946		2	DECAL, ENGLISH
2		85828082		2	DECAL, WARNING, FRENCH
2		85828083		2	DECAL, WARNING, SPANISH
3		86547781		2	DECAL
4		85821916		1	DECAL, ENGLISH
4		85828094		1	DECAL, WARNING, FRENCH
4		85828095		1	DECAL, WARNING, SPANISH
5	1	87305413		1	DECAL, ENGLISH
6		85821927		2	DECAL
6		85828097		2	DECAL
6		85828098		2	DECAL
7	2	87615426		1	DECAL, FRENCH
7	2	87615425		1	DECAL, SPANISH
7	2	87615424		1	DECAL, ENGLISH
7	3	87615421		1	DECAL
7	3	87615422		1	DECAL
8		87615417		1	DECAL, SPANISH
8		87577194		1	DECAL, ENGLISH

(1) Only for NA Pilot Control Version
(2) Only for B115B
(3) Only for B95BTC

COLD START

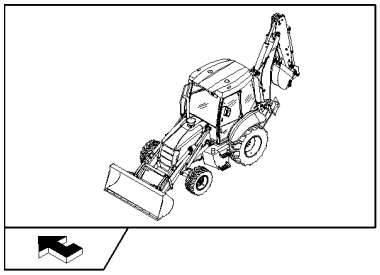

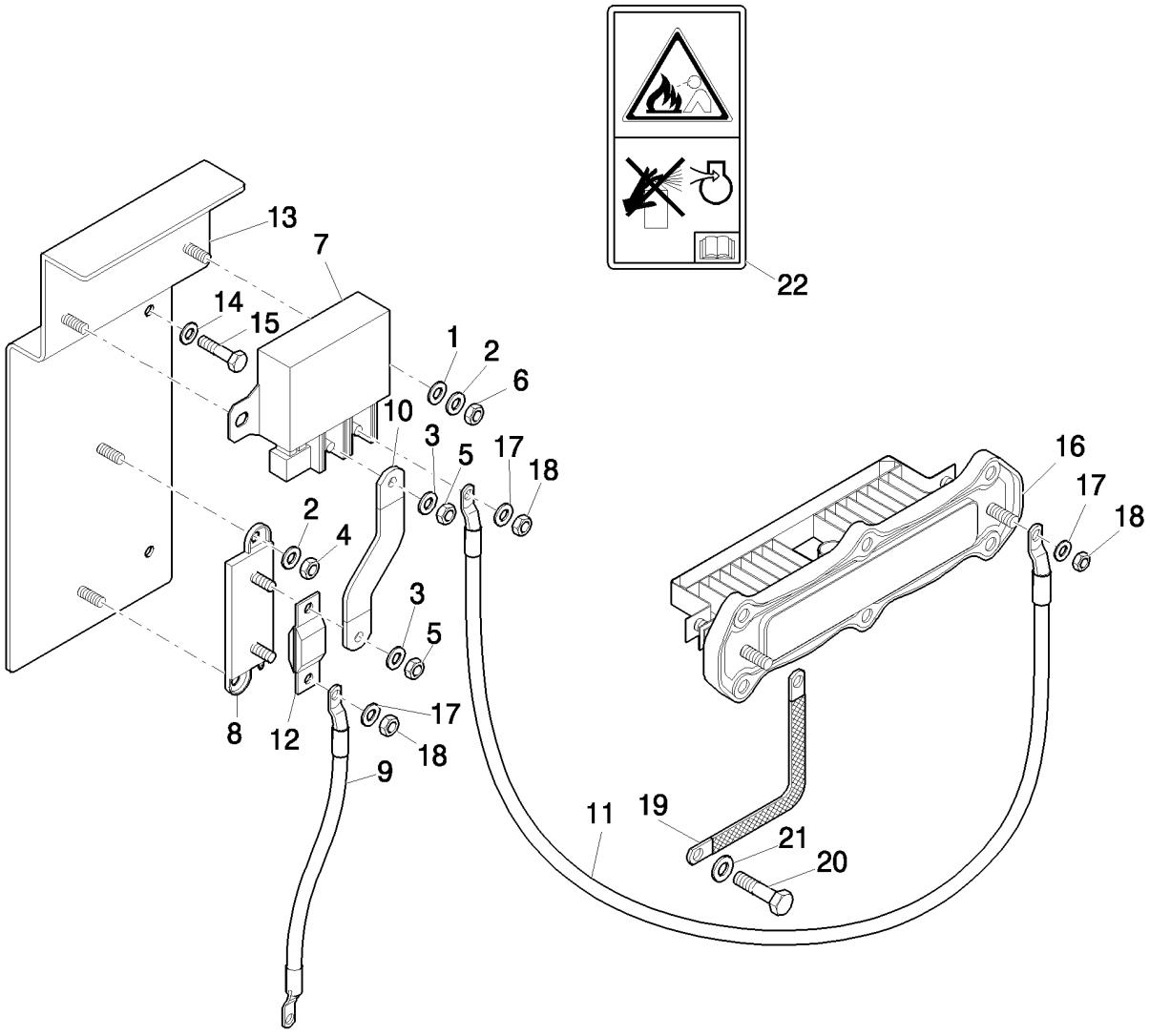

COLD START

REF	FN	PART NUMBER	YR/SN	QTY	DESCRIPTION
1		322357		2	WASHER, SPRING, Belleville, M6
2		13577701		4	WASHER
3		11193979		2	WASHER, SPRING, Belleville, M8.4
4		15896211		2	NUT, M6, Cl 8
5		16104111		2	NUT, LOCK, M8 x 1.25, Cl 8
6		12574111		4	NUT, LOCK, M5 x .8, Cl 8
7		86619908		1	RELAY
8		87302554		1	CONNECTOR, ELEC
9		87571508		1	CABLE
10		87571509		1	CABLE
11		87571511		1	CABLE
12		87410602		1	FUSE
13		87571513		1	SUPPORT
14		16043621		2	BOLT, Hex, M8 x 25, 8.8
15		11193979		2	WASHER, SPRING, Belleville, M8.4
16		2854837		1	HEATER
17		14499304		4	WASHER, M6 x 11 x 1.6
18		12574211		2	NUT, LOCK, M6 x 1, Cl 8
19		87571512		1	CABLE, GROUND
20		16042924		1	BOLT, Hex, M8 x 10, 8.8, Full Thd
21		12642704		1	WASHER, LOCK
22		8603095		1	DECAL, WARNING
22	1	8603092		1	DECAL, WARNING

(1) Only for NA

Number	Figure	Sequence	Ref.
{87397053}	1.83.0	02	14
{87653084}	1.83.0	02	14
10007871	394	03	16
10250644	622		3
10398580	1.96.7/05		15
	1.96.7/06		15
10398680	1.91.4	06	22
	1.91.4/02	06	17
	1.95.2		2
10398980	1.91.4	06	7
	1.91.4/02	06	7
	1.93.0	01	11
	1.93.0/01	01	11
10399580	1.91.6		4
10427201	1.91.1/01		5
	1.93.0	01	16
	1.93.0/01	01	16
	1.93.0/02	01	16
10444721	1.96.2/01		5
10450090	1.91.4	06	15
10450190	1.88.01	02	11
10517274	1.95.0	01	8
10519204	1.91.4	02	4
	1.91.4	06	13
	1.91.4/02	02	4
10519404	1.92.4	01	14
	1.92.4	02	1
10519411	1.82.6/01	10	11
10519604	1.92.6	01	8
	1.93.0	02	8
	1.93.0	04	3
	1.93.0/01	02	3
10520431	1.21.5		9
	1.87.8		3
	1.88.11/09A		3
	291		5
10615274	1.91.4	02	10
	1.91.4	06	2
	1.91.4/02	06	2
10615374	1.95.1		21
10615774	1.95.5	01	3
10702711	1.92.4	02	3
10717311	1.83.0	04	4
10717421	1.88.08	01	10
	1.88.08	02	8
10766901	1.44.1		9
	1.44.1/01		9
10791414	1.95.5	01	12
10794011	1.95.1		31
10802801	1.44.1		6
	1.44.1/01		6
10902124	1.91.7/01		6
	1.91.7/02		6
	793		6
	793/01		6
	794		6
	794/01		6
10902221	1.82.6/01	10	12
10902224	1.96.7/05		10
	1.96.7/06		10
10902321	1.91.3		2
	1.96.2/01		3
10902421	1.87.2		5
10902424	1.93.7		2
	1.95.3		1
	346	02	6
	347	02	6
10902524	1.93.0/01	02	15
	1.93.0/03		8
10902624	1.91.4	06	20
	1.91.4/02	06	15
	1.93.0	04	10
	1.93.0/01	02	10
	1.95.0	02	10
10902834	331	04	10
10903021	1.29.1		5
10903224	1.92.4	02	6
10977821	331	04	31
10978024	1.95.1		20
10979421	1.88.11/05A	02	14
11054590	1.91.4	02	5
	1.91.4/02	02	5
11054790	1.91.4	02	3
	1.91.4	03	7
	1.91.4/02	02	3
	1.91.4/02	03	4
11054890	1.91.4	02	7
	1.91.4/02	02	7
11054990	1.91.4	02	8
	1.91.4/02	02	8
	646	04	17
11055090	1.91.4	02	9
	1.91.4/02	02	9
11064071	1.88.11/05A	01	10
11064176	1.95.0	02	3
11065374	1.83.0	03	12
11065476	1.95.1		14
11067376	1.95.0	01	10
11069071	900	04	7
110692A4	901	04	19
	902	03	19
11087776	1.92.4	01	12
11088076	1.92.6	03	3
11088176	1.95.0	01	1
11106021	1.28.0/ A	01	25
	1.28.0/ B	01	13
	1.83.0	02	6
	1.83.0	04	2
	638	04	3
	639	04	3
11106221	1.82.6	06	7
	1.82.6	16	4
	1.82.6/01	05	6
	1.82.6/01	11	4
	1.83.0	02	8
	1.88.01	01	6
	724/01	02	6
11106321	1.83.0	02	3
11106421	1.19.1		7
	437		11
	646	02	1
11106434	1.28.0		20
11106634	1.15.0	01	12
11106721	901	02	14
	902	02	14
11107321	1.88.08	01	17
11107421	636	08	2
	638	08	2
	639	08	2
	646	02	2
11107634	1.15.0	02	2
11112221	1.94.2		10
11112421	1.14.0		11
	1.82.0		13
	638	01	14
	638	05	4
	639	01	6
	639	05	4
11112434	1.28.0		17
11112634	1.28.0		15
11112821	1.88.12/03		16
	1.88.12/03A		14
11119121	803		6
11120521	290		3
	291		3
11121321	901	02	7
	902	02	7
11190574	1.95.0	01	17
	1.95.5	01	6
	646	02	3
11190579	1.82.6	06	5
	1.82.6	13	15
	1.82.6	16	5
	1.82.6/01	05	5
	1.82.6/01	09	15
	1.82.6/01	11	5

Number	Figure	Sequence	Ref.	Number	Figure	Sequence	Ref.
11190579	1.88.01	01	7	11193979	1.82.6	07	12
	1.88.08	01	2		1.82.6	11	7
	336/01	01	2		1.82.6/01	02	5
	437		13		1.87.2		10
	724/01	02	4		1.88.08	01	4
	725/01	03	2		1.92.4	02	13
	901	02	13		700	01	9
	902	02	13		725/01	01	9
11190679	1.88.11/05A	01	7		900	06	7
	302	01	10		901	03	4
	331/ B	01	3		995		15
	333/01B	01	3		995		3
	437		19	11194679	1.87.2		4
	638	08	5	11194779	803		9
	639	08	5	11197774	1.91.7/01		7
	700	03	2		1.91.7/02		7
11190779	1.28.0		7		346	02	7
	1.28.0/ A	02	4		347	02	7
	1.28.0/ B	02	4		793		7
	1.82.6	04	9		793/01		7
	1.82.6/01	03	15		794		3
	1.82.6/01	04	9		794/01		3
	1.88.12/03		17	11197779	1.29.1		6
	1.88.12/03A		19		1.91.3		3
	393		6		1.96.2/01		2
	394	01	10		331	04	12
	394/01	01	7	11197879	1.75.2	02	6
11191579	1.83.0	01	6	11198074	1.92.9	03	9
11193274	1.91.4	06	21		1.96.7/05		2
	1.91.4/02	06	16		1.96.7/06		2
	1.93.0/01	02	16		851		4
	1.93.0/03		9		855		4
	1.93.7		1		856		4
	1.95.0	02	11	11198379	1.15.0	01	5
	1.95.2		3	11198479	1.15.0	01	10
	1.95.3		2	11198679	1.21.5		25
	1.96.7/05		11		1.28.0		14
	1.96.7/06		11	11200679	1.44.0/ B	01	13
11193279	1.88.11/05A	02	15	11234721	302	01	8
	803		12		331/ B	01	2
11193874	1.21.5		27		333/01B	01	2
	1.83.0	02	12		700	03	4
	1.92.5		3	11383634	1.88.11		15
	1.95.0	02	4	11394334	201		1
	1.95.1		16	11701621	1.95.0	01	20
	1.95.2		8	11701711	1.75.2	04	12
	1.96.2	01	5	11701721	1.15.0	02	4
	391		6	117359A1	514	03	18
	646	02	4	11991971	1.88.11/05A	01	11
11193879	1.42.0		2		1.88.12/03		9
	1.75.2	01	7		1.88.12/03A		11
	1.82.6	03	7		393		14
	1.82.6	15	11		394	02	6
	1.82.6/01	03	7		394	03	17
	1.88.01	01	2	12059980	622		6
	1.88.11/07A		13	12164111	1.83.0	01	8
	1.88.11/07C		13	12164114	1.95.0	01	11
	1.91.4/02	06	18	123407A1	514	04	20
	333	04	8		900	10	20
	337	01	10	12574011	1.91.4	02	11
	337	02	4		1.91.4	02	15
	344	01	2		1.91.4	06	3
	638	01	7		1.91.4/02	02	11
	639	01	15		1.91.4/02	06	3
	721	01	2		1.96.2/01		8
	721	04	8		416		4
	721	06	9		622		4
	724/01	01	3		796		2
	724/02		3	12574111	1.92.9	03	18
	725		5		1.96.0		6
	727/01		9		331	04	18
	728	01	7		347	04	12
	900	02	12		995		6
11193974	1.93.0/02	01	22	12574211	1.82.6/01	10	13
	346	01	2		1.83.0	01	13
	347	01	2		1.93.0	02	17
11193977	1.83.0	01	10		1.96.2/01		9
11193979	1.82.6	02	10		346	02	9

Number	Figure	Sequence	Ref.	Number	Figure	Sequence	Ref.
12574211	347	02	5	13000690	347	05	5
	803		10	13000990	346	05	20
	995		18		347	05	7
12574215	1.92.9	02	16	13272214	1.91.4	06	9
12574511	733		2		1.91.4/02	06	20
12574825	201		3	13272319	1.95.1		30
12574921	1.87.8		8	13272477	394	01	22
12575121	1.87.8		4		394	01	3
	1.88.11/09A		4		416		3
12575321	1.44.0/ B	01	10	13273911	1.92.6	01	6
12577211	636	08	4	13274117	1.95.3		3
	638	08	4	13274217	1.93.0	01	21
	639	08	4		1.93.0/01	01	21
	646	02	6		1.93.0/02	01	28
12577221	1.15.0	01	13	13276217	1.92.9	02	12
12577411	290		4	13276617	1.93.0	03	3
	291		4	13276621	1.92.6	02	3
12577711	291		7	13297817	1.91.6		6
12601174	346	04	13	13309417	1.91.4	06	14
	347	04	14	13311017	1.93.0	01	4
12601474	646	02	7		1.93.0/01	01	7
12637824	1.92.9	03	19		1.93.0/02	01	14
12638107	1.93.0	02	11		1.93.5	02	2
12638504	1.92.4	01	7	13311214	1.93.5/01	01	3
	1.92.9	02	8	13311217	1.93.0	04	8
12638511	1.19.1		8		1.93.0/01	01	4
	1.75.2	04	6		1.93.0/01	02	18
12638601	1.19.1		6		1.93.0/02	01	4
12638621	1.15.0	01	11		1.93.0/03		2
	1.15.0	02	5	13311817	1.91.6		2
	1.83.0	04	5	13313417	1.92.9	01	8
12640601	1.92.6	02	2		1.93.0	02	3
12640621	1.93.0	04	11		1.93.4		5
	1.93.0/01	02	11		1.96.7/04		2
12641004	536/02		4		1.96.7/07		2
12642501	1.83.0	02	9	13399076	1.95.0	02	18
12642704	995		21	13400776	1.95.1		5
12642804	1.93.5	02	1	13406911	1.44.1		8
	1.93.5/01	02	1		1.44.1/01		8
	622		5		1.92.6	03	4
12642821	1.93.4		6	13407214	1.95.0	01	2
	1.95.0	01	14	13423271	1.95.0	02	6
	796		3	13507104	1.83.0	05	5
12643701	1.92.6	01	5	13507401	1.83.0	04	3
12643711	1.98.1	09	2	13517021	1.94.0/01		5
12643721	1.83.0	01	12		835		4
	1.87.2		3	13577701	995		2
12644921	1.44.1		10	13578621	302	01	9
	1.44.1/01		10		331/ B	01	13
12646204	1.92.5		5		333/01B	01	14
12646701	1.14.6		7		700	03	3
12646704	1.91.5	02	5	13580001	1.83.0	01	5
	1.92.9	01	6	13580121	290		2
12646721	1.15.0	01	16		291		2
12646901	638	01	13	13789621	302	01	15
	639	01	5	13812631	394	01	20
12646904	1.92.9	02	5	13838071	855/01	01	14
12646921	1.82.6/01	04	15		856/01	01	14
	1.82.6/01	09	16	13940370	394	01	14
12647004	1.92.9	02	10		394	03	2
	1.93.0	02	2	14040611	646	01	15
	1.94.0/01		2	14040711	646	04	18
	835		6	14048211	1.75.2	01	8
12647121	1.75.2	01	9		1.75.2	04	5
	1.75.2	02	3		1.82.6	02	11
	1.82.6	10	6		1.82.6	10	5
	1.82.6	16	2		1.82.6	15	12
	1.82.6/01	07	10		1.82.6/01	07	7
	1.82.6/01	11	2		1.88.11/05A	01	23
	725		11		1.88.11/07A		12
12647701	1.93.0	01	22		1.88.11/07C		12
	1.93.0	01	3		1.88.12/03		5
	1.93.0/01	01	22		1.88.12/03A		13
	1.93.0/01	01	3		393		15
	1.93.0/02	01	27		394	02	2
12678401	346	04	5		394	03	10
	347	04	11		725		12
13000690	346	05	16		901	03	5

Number	Figure	Sequence	Ref.	Number	Figure	Sequence	Ref.
14048214	1.92.6	01	3	14496901	721	06	5
14048221	1.82.6	16	1		727/01		5
	1.82.6/01	11	1		803		7
	337	01	11	14496931	1.82.6	12	12
	337	02	3		1.87.8		6
14059314	1.93.0	01	10	14497001	1.88.11/08		8
	1.93.0	02	7	14497121	1.44.1		13
	1.93.0/01	01	10		1.44.1/01		13
14084011	1.93.0	02	6		901	02	8
14084111	1.91.7/01		8		902	02	8
	1.91.7/02		1	14497331	1.44.0/ B	01	9
14084814	1.93.0	01	10	14497401	901	02	24
	1.93.0	02	7		902	02	24
	1.93.0/01	01	10	14499301	1.83.0	03	11
	1.93.0/02	01	10	14499304	995		17
14143790	1.91.4/02	04	4	14499421	1.15.0	01	18
	698		2	14560087	1.91.4	04	3
	699		2		1.91.4/02	04	3
	787		5	14560187	1.14.6		1
	787/01		5		1.75.2	01	4
	788		5		1.82.6	04	13
	788/01		5		1.82.6	13	14
14161771	1.92.9	03	5		1.88.11/03		13
14189176	1.93.5	02	6		1.95.0	02	13
	1.93.5/01	02	6		331	09	4
14197790	1.93.4		3		646	01	6
14300521	700	01	16	14568887	1.88.12/03		20
	725/01	02	16		1.88.12/03A		16
14301521	1.96.0		7		1.93.5	01	10
14302921	331/ A		10		1.95.5	01	14
	333/ A		10		393		4
14303324	1.93.4		2		394/01	01	4
	1.95.0	01	15	14582790	990		3
	1.95.5	01	5	14591687	1.91.7/01		1
	622		2	14642191	1.93.5	02	8
	796		4		1.93.5/01	02	3
14304021	331/ A		2	15201934	1.88.08	02	7
14304724	1.96.0		4	15212721	1.95.0	03	5
14305321	1.39.8		14	15212921	1.95.2		4
14305621	1.88.11/08		3	15213334	1.15.0	01	15
14306324	1.95.0	02	5	15213621	1.82.6	15	10
14306424	1.92.9	02	9		1.88.11/07A		11
	1.95.1		15		1.88.11/07C		11
14306821	331	03	3	15213721	331	02	6
14308221	336/01	01	3	15213921	646	02	9
	725/01	03	3	15215821	1.89.9/01		2
14332521	901	02	15	15216421	1.89.9/01		7
	902	02	15	1542875C1	901	04	5
14358724	1.96.0		4		902	03	5
14358921	333/ A		2	1542879C1	900	10	12
14372671	1.93.5	02	7		900	11	11
	346	04	11	1542923C2	900	11	21
14421621	646	02	10	15540321	1.88.12/03		18
14422021	1.82.6	01	3		1.88.12/03A		18
	1.82.6/01	01	3		393		9
14432334	1.95.5	01	4		394/01	01	8
14440327	1.93.5	01	4	15540421	394	01	5
	346	05	14	15540534	1.21.5		24
	347	06	3	15540721	1.14.0		3
14441421	1.83.0	01	2		1.82.0		8
14441521	1.93.0	03	7	15540821	1.29.1		4
	1.93.0/02	01	21		1.82.6/01	03	14
14441524	1.82.6	03	6		1.82.6/01	04	14
	1.82.6/01	03	6	15541621	1.82.6	04	10
14442321	1.83.0	03	5		1.82.6/01	04	8
14442421	1.92.6	01	7	15542121	900	02	4
14447021	1.95.0	03	6	15542921	514	02	7
14464680	1.82.6	01	5		900	03	8
	1.82.6/01	01	5		901	02	32
14466880	1.82.3/01		5		902	02	19
14496407	1.92.9	02	15	15627011	1.93.0	02	9
14496521	1.88.11/05A	01	15	15687475	331/ C	01	9
14496534	646	02	12		331/ C	02	9
	646	04	1		333/ C	01	9
14496601	646	02	5		333/ C	02	9
14496621	1.15.0	01	4	15687801	347	04	13
14496721	1.29.1		10	15693507	1.93.5	02	3
14496901	1.88.12/03		13		1.93.5/01	02	2

Number	Figure	Sequence	Ref.	Number	Figure	Sequence	Ref.
15693507	346	04	12	16044121	391		8
15811387	1.92.9	02	11		901	02	18
15896211	995		4		902	02	18
15910607	1.93.5	02	14	16044124	1.92.5		4
15970521	1.88.11/05A	01	6	16044221	1.82.6	02	14
15970524	1.95.0	01	18		1.82.6	13	13
15970721	1.82.6/01	09	14		1.82.6/01	02	20
15970724	1.95.5	01	7		900	02	13
15970921	1.82.6/01	06	5		900	06	6
15971321	437		17	16044321	1.88.11/03		1
15972034	733		10		391		5
15981221	1.83.0	01	7	16044324	1.91.7/01		4
15981834	1.87.8		11		1.91.7/02		4
15982134	1.87.8		5		793		3
15988734	1.88.11		16		793/01		3
15988934	1.88.11/09A		5		794		4
15989134	1.21.5		10		794/01		4
15989334	1.87.8		2	16044421	1.75.2	04	10
15999434	1.44.0/ B	01	11		1.82.6	11	6
16040821	331	03	6		1.82.6	16	6
16040834	1.15.0	01	6		1.82.6/01	11	6
16041821	291		6		1.88.11/07A		18
16042924	1.91.4	06	10		1.88.11/07C		18
	995		20		900	02	17
16043021	1.75.2	01	6	16044521	728	01	1
	1.88.01	02	13	16044821	724/01	01	4
16043121	1.91.4/02	06	10		724/02		4
16043221	1.14.6		9	16045021	725		6
	638	06	6	16100810	1.83.0	02	19
	639	06	7	16100811	1.83.0	03	3
16043324	1.92.9	01	5		331	02	7
16043421	1.19.1		9	16100821	1.15.0	01	14
	1.21.5		28	16101511	1.82.6/01	09	11
	1.42.0		3		393		5
	1.75.2	02	13		394	01	9
	1.82.0		27		394/01	01	10
	646	04	2	16102211	646	02	18
16043424	1.93.0/02	01	7	16102311	1.88.11/05A	01	9
	1.96.7/05		3		1.88.12/03		3
	1.96.7/06		3		1.88.12/03A		2
	851		3		393		16
	855		3		394	02	4
	856		3		394	03	13
16043621	1.82.6	07	13	16102411	1.91.5	02	6
	1.88.01	01	3	16102911	1.88.11/05A	01	12
	1.88.08	01	19		1.88.12/03		2
	394	03	4		1.88.12/03A		4
	646	02	8		393		17
	646	04	15		394	02	5
	721	06	8		394	03	9
	727/01		8	16104111	1.75.2	02	2
	901	03	3		1.82.6	02	16
	995		14		1.82.6/01	02	21
16043624	1.92.9	03	20		1.83.0	03	8
	1.95.2		7		1.87.2		9
	1.96.2	01	6		1.91.7/01		5
	346	01	15		1.91.7/02		5
	347	01	12		1.92.9	02	6
16043821	1.14.6		13		1.92.9	03	7
	1.82.6	07	17		1.94.0/01		3
	638	01	15		394	03	5
	639	01	14		646	04	3
	700	01	10		721	06	7
	725/01	01	10		727/01		7
16043824	1.75.2	04	8		734		8
	1.93.0	01	7		793		5
	1.93.0	04	4		793/01		5
	1.93.0/01	02	4		794		5
16043921	1.95.0	01	19		794/01		5
	344	01	3		835		7
	721	01	3		995		5
	734		6	16104511	1.92.6	03	11
16044021	1.82.6	02	8	16105011	1.28.0		12
	1.82.6	10	8		1.29.1		3
	1.82.6/01	02	6		514	02	8
	1.82.6/01	07	8		638	05	5
	333	04	7		639	05	5
	721	04	7		900	02	5

Number	Figure	Sequence	Ref.	Number	Figure	Sequence	Ref.
16105011	900	03	9	2852484	0.17.3		3
	901	02	12	2852485	0.27.0/01		12
	901	02	29	2852488	0.14.0/01	01	3
	902	02	12	2852500	0.17.3		2
	902	02	28	2852511	0.32.3/01		5
16105111	1.92.9	02	2	2852602	0.06.6/01		20
1986905C1	900	11	5	2852744	0.07.7/01		3
1986906C1	900	11	14	2852774	0.06.3/01	01	3
201-112	1.82.6	12	2	2852776	0.06.6/01		10
201-422	725/01	02	14	2852804	0.14.0/01	01	10
218-5053	700	02	3	2852805	0.14.0/01	01	11
218-5057	700	02	4	2852817	0.17.0		3
225315C1	331/ C	01	6	2852818	0.17.0		6
	331/ C	02	6	2852820	0.17.0		10
	333/ C	01	6	2852821	0.17.0		15
225318C1	331/ C	01	7	2852825	0.17.0		4
	331/ C	02	7	2852865	0.04.3/01	03	2
	333/ C	01	7	2853410	0.27.0/01		10
225350C1	333/ C	01	11	2853412	0.27.0/01		11
	333/ C	02	11	2853414	0.30.0		1
225353C1	333/ C	01	12	2853535	0.06.6/01		19
	333/ C	02	12	2853537	0.14.9/01		2
238-5231	901	04	21	2853722	0.31.5/01		9
	902	03	21	2853728	0.04.2		10
238-5235	900	11	4	2853780	0.31.5/01		2
238-5245	514	04	9	2853781	0.31.5/01		3
238-5247	514	03	10	2853822	0.08.0		1
	900	10	9	2853826	0.06.3/01	02	1
238-5249	900	09	12	2853858	0.06.3/01	01	1
276-2446	1.88.11/01		26	2854030	0.08.2/01		3
276-2456	1.88.11/09	02	15	2854072	0.32.3/01		2
2830082	0.04.0/01		1	2854079	0.17.0		20
2830222	0.06.6/01		7	2854282	0.17.0		5
2830433	0.10.5	01	7	2854292	0.17.0		22
2830444	0.07.7/01		2		1.95.0	02	14
2830559	0.31.5/01		10		1.95.0	03	3
2830706	0.06.0/01		17	2854491	0.32.3/01		15
2830707	0.06.0/01		17	2854530	0.06.6/01		18
2830948	0.10.5	02	3	2854542	0.14.9/01		5
2831031	0.10.5	01	8	2854543	0.14.9/01		4
2831266	0.06.0/01		3	2854544	0.14.9/01		8
2831287	0.06.0/01		7	2854563	0.20.0/01		2
2831297	0.08.1/01		3	2854564	0.20.0/01		3
2831298	0.08.1/01		1	2854566	0.20.0/01		7
2831302	0.10.5	02	6	2854593	0.17.0		26
2831303	0.10.5	02	5	2854594	0.17.0		18
2831305	0.10.5	02	1	2854596	0.17.0		19
2831354	0.10.5	01	9	2854606	0.14.0/01	02	2
2852011	0.04.2		4	2854609	0.14.0/01	02	6
2852012	0.04.2		7	2854700	0.07.1/01		8
2852013	0.04.2		9	2854701	0.07.1/01		9
2852016	0.04.2		5	2854702	0.07.1/01		6
2852047	0.32.0		2	2854812	0.06.3/01	01	4
2852049	0.08.3		1	2854837	995		16
2852051	0.08.3		2	2855150	0.17.0		23
2852054	0.08.4		3	2855336	0.20.4/01		1
2852071	0.24.0/01		5	2855427	0.20.3/01		1
2852072	0.24.0/01		4	2855428	0.20.3/01		3
2852100	0.30.5/01		13	2855430	0.20.3/01		4
2852101	0.30.5/01		14	2855491	0.14.0/01	02	5
2852114	0.32.0		1	2855503	0.14.9/01		1
2852161	0.34.0/01		2	2855743	0.10.5	01	12
2852162	0.34.0/01		3	2855744	0.10.5	01	10
2852170	0.34.5		1	2855746	0.10.5	02	4
2852171	0.34.5		5	2855753	0.10.5	01	2
2852172	0.34.5		6	2855773	0.45.0/01		1
2852180	0.40.0/01		1	2855774	0.45.0/01		2
2852181	0.32.3/01		4	2855776	0.32.3/01		3
2852195	0.30.5/01		8	2855780	0.30.5/01		10
2852196	0.30.5/01		15	2855787	0.27.0/01		7
2852197	0.30.5/01		12	2855792	0.20.0/01		1
2852202	0.04.0/01		17	2855795	0.20.3/01		5
2852234	0.04.2		1	2855801	0.04.3/01	01	4
	0.14.0/01	01	13	2855803	0.04.3/01	03	8
2852267	0.07.1/01		7	2855805	0.07.1/01		1
2852428	0.06.6/01		12	2855807	0.07.7/01		1
2852434	0.14.9/01		9	2855809	0.07.1/01		4
2852473	0.32.6/01		4	2855813	0.27.0/01		1

Number	Figure	Sequence	Ref.	Number	Figure	Sequence	Ref.
2855815	0.27.0/01		2	47048963	638	04	11
2855818	0.14.9/01		7		638	04	15
2855819	0.14.9/01		6		639	04	11
2855823	0.32.6/01		2	47048964	1.39.8		5
2855886	0.17.3		1		1.82.6	05	8
2855949	0.34.0/01		1		1.82.6/01	06	8
2855950	0.34.0/01		4	47048969	331	02	8
2856035	0.27.0/01		9	47048971	331	03	2
2856086	0.04.2		6	47048972	1.82.0		24
2856458	0.06.6/01		2		638	04	2
2856460	0.06.6/01		15		638	06	8
2856543	0.32.6/01		3		639	04	2
2856701	0.24.0/01		3		639	06	1
2856707	0.06.3/01	01	2	47048973	1.14.0		4
297281A1	901	04	10		1.82.0		14
	902	03	10	47048976	1.14.0		8
2992147	0.08.0		4		1.82.0		9
2992148	0.08.0		4		638	05	6
2992149	0.08.0		4		639	05	6
2992153	0.08.0		3	47048992	331	02	9
2992154	0.08.0		3		638	03	11
2992155	0.08.0		3		638	06	7
322357	995		1		639	03	11
328955A1	1.44.0/ B	02	34		639	06	8
380621A1	900	09	10	47048993	1.75.2	02	9
412005	131		3	47049010	1.75.2	02	10
	321		2	47049031	1.75.2	02	11
413-1036	1.82.6	12	10	47049032	331	02	19
42541849	0.14.0/01A		3	47049041	1.82.0		25
42541850	0.14.0/01A		2		131		5
42541851	0.14.0/01A		10		321		5
42547619	0.14.0/01A		4		331	02	10
42548060	0.14.0/01A		6		331	05	2
42550486	0.14.0/01A		9		638	04	9
42550487	0.14.0/01A		7		639	04	14
42550488	0.14.0/01A		5	47049065	331	03	7
42550932	0.14.0/01A		8	47049082	331	02	11
444640A1	900	09	9	47049088	638	04	10
446178A1	514	04	12		639	04	10
446195A1	514	04	7	47049094	1.88.11/01		13
446481A1	514	04	6	47049151	331	02	20
44910052	1.92.6	01	2	47049161	1.82.6	02	12
44910053	1.92.6	01	2	47049163	638	01	1
47042074	1.82.0		34		639	01	1
47042260	638	01	10	47049176	1.28.6		4
	639	01	2	47049184	1.82.6	05	4
47042342	638	03	10		1.82.6/01	06	4
	639	03	10	47049185	1.82.0		23
47042364	1.39.8		9	47049186	1.75.2	04	11
	1.82.6	05	5		638	06	4
47044673	1.94.2		8		639	06	5
47044758	1.82.0		35	47049187	638	04	7
47044780	331	09	5		639	04	7
47048440	638	04	6	47049372	1.28.0		19
	639	04	6		1.28.0/ A	01	26
47048451	1.94.2		9		1.28.0/ B	01	25
	646	01	7	47049404	331	05	15
47048646	639	04	9	47049442	331	05	13
47048664	1.39.8		4	47049590	131		7
	1.82.6	05	9		321		6
	1.82.6/01	06	9	47049809	638	06	1
47048668	638	04	12		639	06	4
	639	04	12	47049943	638	06	3
47048759	638	04	8		639	06	3
	639	04	8	47050653	331	06	10
47048788	131		6		331	07	14
	321		9		331	08	7
47048895	1.75.2	02	1		333	02	10
47048896	1.94.2		4	47050658	1.28.6		3
47048898	1.15.0	01	7	47050671	1.14.0		5
47048959	1.96.2/01		4		1.82.0		10
47048962	1.82.0		28	47050685	331	06	11
	638	01	12		333	02	11
	639	01	11		725/01	02	3
47048963	1.82.6	05	6	47050686	331	04	15
	1.82.6/01	06	6		331	07	13
	131		4		331	08	6
	321		10		725/01	02	4

Number	Figure	Sequence	Ref.	Number	Figure	Sequence	Ref.
47120173	331	07	12	4895378	0.04.3/01	03	4
47335175	855/01	05	13	4895379	0.04.3/01	03	5
47335213	851/01	01	7	4895392	0.04.0/01		13
	855/01	01	7		0.32.3/01		9
	856/01	01	7	4895393	0.04.0/01		14
4890088	0.14.0/01	01	6		0.32.3/01		10
4890189	0.17.0		8	4895406	0.06.0/01		13
4890190	0.17.0		9		0.27.0/01		3
4890193	0.17.0		11	4895407	0.06.0/01		14
4890343	0.34.5		3	4895408	0.06.0/01		15
4890634	0.14.0/01	01	7	4895432	0.06.6/01		1
4890635	0.14.0/01	01	14		0.07.1/01		2
4890700	0.14.0/01	01	4	4895462	0.20.3/01		6
4890732	0.34.5		9	4895477	0.17.0		12
4890832	0.04.3/01	02	4	4895483	0.14.0/01	02	1
4890833	0.04.3/01	03	6	4895489	0.04.2		2
4890926	0.14.0/01	02	8	4895538	0.04.2		8
4890929	0.14.0/01	02	3	4895586	0.10.5	01	6
4890964	0.17.0		24	4895605	0.04.0/01		9
4891024	0.06.0/01		1	4895610	0.27.0/01		5
4891025	0.06.0/01		2	4895623	0.32.3/01		6
4891209	0.04.3/01	02	5	4895625	0.32.3/01		7
	0.10.5	02	7	4895817	0.17.0		1
4891353	0.04.0/01		6	4896052	0.06.6/01		21
4891385	0.14.0/01	01	8	4896329	0.20.4/01		3
4892255	0.17.0		14	4896381	0.12.0/01		2
4892426	0.34.5		8	4896404	0.31.5/01		4
4892708	0.08.1/01		2	4896406	0.31.5/01		9
4892712	0.08.2/01		2	4896409	0.31.5/01		6
4892732	0.34.5		7	4896410	0.31.5/01		7
4892867	0.08.4		2	4896419	0.12.0/01		5
4892915	0.04.3/01	03	2	4896542	0.17.0		21
4893036	0.06.0/01		10	4896773	0.08.4		1
	0.32.3/01		13	4896884	0.14.9/01		10
	0.32.3/01		8	4896897	0.27.0/01		8
4893244	0.06.0/01		16	4896939	0.04.3/01	01	3
4893386	0.08.0		2	4896947	0.10.5	01	5
4893389	0.14.0/01	01	12	4896952	0.14.0/01	01	2
4893391	0.31.5/01		8	4896996	0.20.3/01		8
4893487	0.06.6/01		16		0.20.4/01		4
4893739	0.14.0/01	02	4	4897024	0.04.3/01	02	1
4893936	0.06.3/01	01	5	4897048	0.10.5	01	4
4893962	0.14.0/01	01	9	4897071	0.10.5	01	3
4894095	0.20.3/01		2	4897125	0.10.5	01	1
	0.20.4/01		2	4897224	0.17.0		13
4894218	0.04.0/01		8		0.20.0/01		5
4894641	0.08.3		3	4897245	0.06.6/01		4
4895031	0.06.6/01		17	4897248	0.06.6/01		3
4895037	0.27.0/01		6	4897330	0.27.0/01		4
4895038	0.04.0/01		4	4897457	0.12.0/01		4
4895039	0.04.0/01		3	4897480	0.30.0		1
4895040	0.04.0/01		7	4897499	0.04.3/01	03	2
4895045	0.31.5/01		5	4897934	0.10.5	01	11
4895049	0.04.0/01		15	4898301	0.04.2		3
4895051	0.06.0/01		5	4898482	0.24.0/01		6
4895052	0.06.0/01		6	4898877	0.20.0/01		4
4895065	0.06.6/01		8	4898921	0.14.0/01	01	5
4895067	0.06.6/01		11		0.14.0/01A		1
4895068	0.06.6/01		5	4899003	0.14.0/01	01	1
4895073	0.06.0/01		8	4899009	0.04.0/01		11
4895074	0.06.0/01		9	4899019	0.31.5/01		1
4895078	0.32.3/01		14	4899020	0.14.9/01		3
4895080	0.32.3/01		11	4899026	0.04.0/01		2
4895082	0.32.3/01		12		0.04.3/01	01	1
4895085	0.06.0/01		11		0.04.3/01	03	1
4895089	0.06.0/01		12	4899027	0.10.5	02	2
4895107	0.30.5/01		2	4899037	0.45.0/01		4
4895133	0.24.0/01		2	4899039	0.07.1/01		3
4895155	0.04.3/01	03	3	4899046	0.08.0		5
4895157	0.17.0		17	4899053	0.34.5		2
4895164	0.30.5/01		1	4899057	0.17.0		2
4895198	0.06.6/01		6	4899058	0.30.5/01		9
4895228	0.04.0/01		5	4899063	0.04.3/01	02	3
4895291	0.34.5		4	4899068	0.04.3/01	03	2
	0.40.0/01		2		0.12.0/01		3
4895292	0.34.0/01		6	4899072	0.04.0/01		12
4895323	0.10.5	02	8	4899073	0.04.3/01	01	3
4895336	0.07.7/01		4	4899076	0.04.3/01	03	2

Number	Figure	Sequence	Ref.	Number	Figure	Sequence	Ref.
4899078	0.04.3/01	01	2	71304923	990		8
	0.04.3/01	02	2	71431438	990		6
	0.17.0		25	71485488	851/01	02	2
4899079	0.12.0/01		1		855/01	02	2
	0.32.0		3	72273491	1.82.0		37
	0.34.0/01		5	784122	1.91.1/01		4
	0.45.0/01		3	79028977	990		9
4899080	0.12.0/01		6	79028981	990		4
4899081	0.06.0/01		4	79062734	990		5
4899089	0.06.6/01		9	79072960	392	01	11
4899090	0.30.0		2		392	02	10
4899091	0.04.2		2	79089592	1.93.0	04	7
4899093	0.04.3/01	01	3		1.93.0/02	01	13
4899103	0.20.3/01		7		1.93.5	01	8
4899106	0.30.5/01		7		1.93.5/01	01	2
4899107	0.30.5/01		3	79105220	1.93.5	01	9
4899108	0.30.5/01		4	79111815	1.93.0	01	12
4899109	0.04.3/01	03	2		1.93.0/01	01	12
	0.10.5	01	11		1.93.0/02	01	12
	0.32.3/01		1	79111978	1.91.4	06	17
4899110	0.17.0		7		1.91.4/02	06	6
	0.32.6/01		1		1.92.9	01	12
4899115	0.04.0/01		10		1.93.0	02	13
4899118	0.24.0/01		1		1.93.0/02	01	23
4899119	0.07.7/01		5		1.96.7/05		6
4899121	0.30.5/01		11		1.96.7/06		6
4899124	0.17.0		16		835		8
4899143	0.04.3/01	03	7	80087308	1.44.0/ B	02	25
4899228	0.06.3/01	01	6	80128825	1.82.6	13	3
4899239	0.06.3/01	01	7		1.82.6/01	03	16
4899245	0.06.6/01		13		1.82.6/01	09	5
4899256	0.06.6/01		14		1.88.11/07A		3
4899467	0.30.5/01		5		1.88.11/07C		3
4899519	0.30.5/01		6		1.95.5	02	7
4899689	0.14.0/01	02	7		337	01	15
4899803	0.04.0/01		16		337	02	15
4899815	0.17.3		2		437		18
4899921	0.07.1/01		5		721	03	5
4983992	1.95.0	01	5	80167266	1.82.6	01	7
4985122	1.95.1		13		1.82.6	14	2
4985127	1.95.1		3		1.82.6	15	2
4988275	1.95.1		6		1.82.6/01	01	6
4998760	1.95.5	01	11		1.82.6/01	04	16
4999021	1.93.0	04	9		900	05	7
	1.93.0/01	02	9		900	07	7
	1.93.0/02	01	25	80167268	1.82.6	04	2
504153150	0.06.3/01	02	2		1.82.6	05	10
504153151	0.06.3/01	02	4		1.82.6	06	6
5105729	1.95.1		11		1.82.6/01	04	11
5106733	1.95.1		18		1.82.6/01	05	8
5110153	1.95.1		7		1.82.6/01	06	10
5110155	1.95.1		9	80167269	1.82.6	02	3
5112712	1.91.4	06	8		1.82.6/01	02	1
	1.91.4/02	06	8		1.82.6/01	02	16
	1.92.6	03	13		1.82.6/01	07	5
	346	05	22		1.82.6/01	08	2
	347	05	9		1.82.6/01	09	12
5118658	1.91.7/02		18		1.82.6/01	10	4
5131437	1.95.1		10		1.88.11/03		10
5132136	1.92.9	02	13		725		13
	1.92.9	03	8		725/01	01	3
5135069	1.98.1	09	4	80263136	1.44.0/ B	01	12
5138360	1.98.1	09	3	80280248	1.44.0/ B	03	37
5148062	1.95.0	01	3	80510884	1.44.0/ B	03	17
5148131	1.93.0	02	15	80510892	1.44.0/ B	03	6
5148132	1.93.0	02	14	8093882	0.08.1/01		4
5148946	1.95.5	01	10	8094853	0.08.2/01		1
5153180	1.95.0	01	12	8094854	0.08.2/01		1
5155381	1.95.0	02	21	8094960	0.08.1/01		4
5155701	1.95.0	02	15	8094961	0.08.1/01		4
5155703	1.95.0	02	16	81728114	1.44.0/ B	03	8
	1.95.0	03	2	81800471	1.44.0/ B	03	12
5162852	1.94.0/01		8	81800472	1.44.0/ B	03	7
5175736	1.91.5	02	7	81800474	1.44.0/ B	03	2
5176441	1.93.4		1	81800475	1.44.0/ B	03	4
5178468	1.93.0	02	5	81800486	1.44.1		2
5183854	1.92.6	03	8		1.44.1/01		2
614-10040	1.82.6	12	3	81800488	1.44.1		7

Number	Figure	Sequence	Ref.
81800488	1.44.1/01		7
81802548	1.44.0/ B	02	3
81802560	1.44.0/ B	02	22
81803273	1.44.0/ B	02	15
81803275	1.44.0/ B	02	16
81803334	1.44.0/ B	02	10
81803336	1.44.0/ B	02	26
81803345	1.44.0/ B	02	28
81803413	1.44.0/ B	03	5
81803424	1.44.0/ B	03	11
81803445	1.44.0/ B	03	13
81803451	1.44.0/ B	03	15
81803474	1.44.0/ B	03	1
81803491	1.44.0/ B	02	23
81803502	1.44.0/ B	02	23
81803503	1.44.0/ B	02	23
81803504	1.44.0/ B	02	23
81803505	1.44.0/ B	02	23
81803506	1.44.0/ B	02	23
81803507	1.44.0/ B	02	23
81803508	1.44.0/ B	02	23
81803509	1.44.0/ B	02	23
81803510	1.44.0/ B	02	23
81803511	1.44.0/ B	02	23
81803515	1.44.0/ B	03	30
81803516	1.44.0/ B	03	30
81803517	1.44.0/ B	03	30
81803519	1.44.0/ B	03	30
81803520	1.44.0/ B	03	30
81803521	1.44.0/ B	03	30
81803522	1.44.0/ B	03	30
81803542	1.44.0/ B	03	21
81804978	1.44.0/ B	02	24
81805231	1.44.1		11
	1.44.1/01		11
81809406	1.44.0/ B	01	8
81812261	1.44.0/ B	03	3
81812912	1.44.0/ B	01	24
81816246	1.44.0/ B	03	10
81818397	1.44.0/ B	01	18
81818824	1.21.5		16
	1.88.11/01		3
	1.88.11/02	01	2
	1.88.11/06A		16
	1.88.11/06A		17
81820047	1.44.0/ B	01	20
81820846	1.44.0/ B	02	18
81820849	1.44.0/ B	02	13
81821237	536/02		9
81821263	536/02		3
81821267	1.44.0/ B	03	36
81821691	1.44.1		3
	1.44.1/01		3
81822462	1.44.1		17
	1.44.1/01		17
81823610	1.44.0/ B	02	14
81823746	536/02		5
81824478	1.44.0/ B	03	20
81827354	1.44.0/ B	03	24
81832258	1.82.6	13	7
81834042	1.44.0/ B	03	26
81834073	1.44.0/ B	03	33
81844851	1.82.6	03	11
	1.82.6	04	14
	1.82.6/01	03	11
	1.82.6/01	03	17
	728	02	4
81845030	1.82.6	13	6
81845037	728	02	5
81845041	1.44.0/ B	01	26
81845711	1.44.0/ B	03	23
81845713	1.44.0/ B	03	35
81845714	1.44.0/ B	03	27
81846884	1.44.0/ B	02	21
81847146	1.44.0/ B	03	25
81847148	1.44.0/ B	03	31
81847149	1.44.0/ B	03	31
81847150	1.44.0/ B	03	31
81847151	1.44.0/ B	03	31
81847152	1.44.0/ B	03	31
81847153	1.44.0/ B	03	31
81847154	1.44.0/ B	03	31
81847155	1.44.0/ B	03	31
81847156	1.44.0/ B	03	31
81847157	1.44.0/ B	03	31
81847158	1.44.0/ B	03	31
81847159	1.44.0/ B	03	31
81847160	1.44.0/ B	03	31
81847161	1.44.0/ B	03	31
81847162	1.44.0/ B	03	31
81854753	1.44.0/ B	02	12
81855916	1.88.11/05A	01	18
81866390	1.44.0/ B	01	17
81867742	1.92.6	03	12
81869714	1.92.6	03	10
81870039	1.93.0	01	15
	1.93.0	02	16
	1.93.0/01	01	15
	514	02	10
	901	02	31
	902	02	3
81871325	728	02	8
81871439	1.92.4	01	15
81871864	1.92.4	01	10
	1.92.4	02	10
81872028	1.92.4	02	7
81872036	1.92.4	01	6
81875248	1.21.5		4
81876885	1.44.0/ B	03	14
81878514	1.44.0/ B	01	25
81900328	1.88.11		12
	1.88.11/02	02	2
	1.88.11/05A	02	19
81901809	1.88.11		2
81901837	1.21.5		7
81901896	1.88.11		10
81901897	1.88.11/01		10
81902174	1.88.11/01		8
	1.88.11/02	01	6
81902463	1.88.11		6
	1.88.11/02	02	3
82000409	1.92.6	03	9
82001909	1.93.0	04	13
	1.93.0/01	02	2
	1.93.0/02	01	24
82003283	1.96.7/04		5
	1.96.7/07		5
82003369	1.95.0	02	9
82022833	1.91.1		1
82026949	1.95.0	01	13
82034863	851/01	01	6
	855/01	01	6
	856/01	01	6
82034881	851/01	01	11
	851/01	02	10
	851/01	03	23
	855/01	01	11
	855/01	02	10
	856/01	01	11
	856/01	02	10
	856/01	03	26
82034893	851/01	02	11
	851/01	03	22
	855/01	02	13
	856/01	02	13
	856/01	03	27
82034894	855/01	03	3
82034897	855/01	01	35
82035025	851/01	04	16
	856/01	04	16
82035027	851/01	04	24
	856/01	04	24
82035028	851/01	04	21
	856/01	04	21
82035029	851/01	04	15
	856/01	04	15

Number	Figure	Sequence	Ref.
82035030	851/01	03	11
	856/01	03	11
82035031	851/01	03	9
	856/01	03	9
82035032	851/01	04	10
	856/01	04	10
82035033	851/01	04	25
	856/01	04	25
82035034	851/01	04	23
	856/01	04	23
82035035	851/01	04	20
	856/01	04	20
82035036	851/01	03	14
	856/01	03	14
82035037	851/01	04	8
	856/01	04	8
82035038	851/01	01	27
	855/01	01	27
	856/01	01	27
82035039	851/01	04	13
	856/01	04	13
82035040	851/01	04	4
	856/01	04	4
82035043	851/01	04	7
	856/01	04	7
82035053	855/01	03	21
82035054	851/01	04	9
	856/01	04	9
82035057	855/01	03	18
82035076	855/01	05	7
82035094	851/01	03	5
	856/01	03	5
82035126	855/01	03	26
82035127	851/01	03	8
	856/01	03	8
82035128	851/01	04	5
	856/01	04	5
827-10130	636	08	5
	638	08	6
	639	08	6
8274447	1.88.08	02	15
82848105	855/01	03	27
	855/01	05	14
82859922	1.92.4	01	1
82879400	1.88.11/05A	02	3
82895716	1.44.0/ B	01	21
829-1410	1.82.6	12	4
82958118	1.44.0/ B	02	29
82958961	1.44.0/ B	03	22
82959373	1.44.0/ B	01	23
82959375	1.44.0/ B	03	16
82979988	1.44.0/ B	02	27
83416242	1.21.5		12
	1.88.08	01	11
	1.88.08	02	4
	1.88.11		7
	1.88.11/02	01	3
	1.88.11/02	02	4
	1.88.11/06A		19
	1.88.11/09A		6
	514	03	7
	514	04	17
	900	02	20
	900	04	2
	900	09	7
	900	10	17
	900	11	12
	901	02	33
83417133	1.44.0/ B	01	6
83417169	1.44.0/ B	03	29
83901443	1.82.6	02	4
	1.82.6/01	02	17
	1.82.6/01	02	3
	1.82.6/01	07	3
	1.82.6/01	08	3
	1.82.6/01	10	3
	437		15
83902702	901	02	21

Number	Figure	Sequence	Ref.
83902702	902	02	21
83902710	1.88.11/02	01	8
83904750	1.44.1		16
	1.44.1/01		16
83909107	1.44.0/ B	01	3
83910546	514	02	2
	900	03	2
	901	02	2
	902	02	2
83910548	514	02	4
	900	03	3
	901	02	23
	902	02	23
83910557	900	02	2
83910599	1.88.11/09	02	5
83910601	1.88.11/09	02	3
83910629	1.21.5		18
83910630	1.21.5		17
83910634	386		3
	387		1
	388		1
	389		1
	390/01		1
	515/01		3
	516/01		1
	517/01		1
	518/01		1
	519/01		1
	520/01		1
	521		1
83910645	1.21.5		5
	1.88.11/09A		2
83910977	1.21.5		21
	1.88.08	02	2
	900	04	6
83911000	1.21.5		11
83911019	1.21.5		20
	1.88.08	02	3
	901	02	6
	902	02	6
83911020	1.21.5		6
83911366	1.88.11/05A	02	8
	1.88.12/03		14
	721	06	6
	727/01		6
83911686	1.44.1		14
	1.44.1/01		14
83912246	1.44.0/ B	03	34
83912378	1.88.11/09	02	4
83925620	1.44.0/ B	01	22
83931289	1.88.11/09	02	18
83931313	1.88.11/09	02	7
83937179	1.44.0/ B	03	19
83937315	1.88.11/02	01	9
83947107	1.44.0/ B	03	38
83948308	1.44.1		5
	1.44.1/01		5
83949810	1.44.0/ B	03	32
83949811	1.44.0/ B	02	20
83949812	1.44.0/ B	03	39
83949838	1.44.1		1
	1.44.1/01		1
83952932	1.44.1		4
	1.44.1/01		4
83955462	1.44.0/ B	01	2
83955490	1.44.0/ B	01	15
83957533	1.44.0/ B	03	28
83961521	1.91.4	06	12
83961741	728	02	3
83961823	1.93.0	02	10
83961985	1.92.4	01	3
	1.92.4	02	8
	1.92.4	03	7
83961987	1.92.4	01	13
	1.92.4	02	12
	1.92.6	02	6
83962179	1.82.6	04	16
83962538	1.82.6	01	6

Number	Figure	Sequence	Ref.
83962538	1.82.6	14	1
	1.82.6	15	1
	1.82.6/01	01	7
	1.82.6/01	04	5
	900	05	8
	900	07	3
83962539	1.82.6	10	3
	1.82.6	11	1
	1.82.6	14	4
	1.82.6	15	4
	333	03	3
	900	05	9
	900	07	4
	900	08	1
83962659	1.88.11/05A	02	2
83962811	1.88.11/02	01	7
83962918	394	01	6
83962919	394	01	18
83963000	1.82.6	02	2
	1.82.6/01	02	14
	1.82.6/01	07	4
	1.82.6/01	08	1
	1.82.6/01	10	2
	392	01	6
	392	02	4
83963153	1.92.4	01	5
83963371	1.42.0		4
	1.82.6	03	3
	1.82.6	04	11
	1.82.6/01	03	3
	331	08	2
	724/01	01	7
	724/02		7
83963374	1.82.6	13	5
	1.82.6/01	09	3
	1.88.11/07A		1
	1.88.11/07C		1
	1.95.5	02	3
	337	01	4
	337	02	6
	391		4
	437		5
	721	03	2
	901	04	4
	902	03	20
83963375	1.82.6	04	1
	1.82.6/01	04	1
83963376	1.82.6/01	09	10
	1.88.11/03		5
	725/01	01	1
83963422	1.88.11/05A	02	10
83963433	1.88.11/05A	02	1
83964146	1.92.6	03	2
83971549	1.82.6	13	2
	1.82.6/01	03	8
	1.82.6/01	09	1
	391		7
	437		4
	901	04	20
	902	03	4
83971567	1.44.1		15
	1.44.1/01		15
83976357	1.92.4	02	4
83983763	1.42.0		13
	1.88.11/07A		24
83984666	851/01	01	14
	855/01	01	13
	856/01	01	13
83985067	1.42.0		12
	1.88.11/07A		4
	1.88.11/07C		4
83987627	724/01	01	19
	724/02		14
	728	01	2
	728	02	9
83989915	1.44.0/ B	03	9
83994150	1.91.7/02		17
	1.92.9	01	13
83994150	1.96.7/05		7
	1.96.7/06		7
83994372	1.92.6	03	6
83994378	1.92.6	03	7
83994395	1.92.6	03	5
83994579	1.44.0/ B	03	18
83995356	1.92.4	01	8
83998909	1.88.11/09	02	8
83999466	1.21.5		19
84058418	331	02	13
85700130	1.88.11		5
85700224	81.00		2
	82.00	01	2
	83.00	01	2
85700341	1.88.11/05A	02	13
85700728	1.21.5		2
85800007	1.88.11/09	02	19
85800103	1.88.11/01		7
85800105	1.88.11/01		9
85800303	1.88.11/09	02	14
85800504	1.88.11/02	01	5
85800603	1.88.11/06A		3
85800604	1.88.11/06A		2
85800965	1.88.11/09A		9
85800990	1.88.11/09	02	6
85801026	1.88.08	02	1
85801029	1.88.08	01	3
85801034	522		1
	522/01		1
	525		1
	536		7
	537		7
85801040	522		6
	536		8
	537		8
85801042	520		6
	527		9
85801044	520		1
	527		1
85801049	1.88.11/01		2
	1.88.11/02	02	5
85801050	1.88.11/01		5
85801051	1.88.11		14
	471	01	3
	472	01	1
	473	01	1
	474	01	1
	520		4
	522		2
	522/01		16
	525		16
	527		3
	536		6
	537		5
	734		4
85801076	1.88.08	01	14
85801079	1.88.08	02	5
85801087	1.88.11		11
85801092	1.95.0	02	12
85801093	1.95.0	02	17
85801097	386		1
	387		3
	388		3
	389		3
	390/01		3
	515/01		1
	516/01		3
	517/01		3
	518/01		3
	519/01		3
	520/01		3
	521		3
85801098	386		4
	387		2
	388		2
	389		2
	390/01		2
	515/01		4

Number	Figure	Sequence	Ref.
85801098	516/01		2
	517/01		2
	518/01		2
	519/01		2
	520/01		2
	521		2
85801110	1.21.5		3
85801153	1.88.11/09A		7
85801161	471	01	7
	473	01	5
	525		22
	527		8
	537		1
85801191	1.88.08	02	13
85801218	1.14.0		6
	1.82.0		11
85801249	1.82.0		2
85801262	1.21.5		22
85801307	901	02	9
	902	02	9
85801308	901	02	22
	902	02	22
85801309	901	02	5
	902	02	5
85801314	901	02	20
	902	02	20
85801319	1.87.8		1
85801324	1.87.8		9
85801371	471	01	2
	472	01	4
	473	01	4
	474	01	4
	525		20
	527		7
	536		3
	537		3
85801397	724/01	02	3
85801452	724/01	02	7
85801470	471	01	1
	472	01	6
	473	01	6
	474	01	6
	525		19
	527		6
	536		2
	537		2
85801486	522/01		14
	525		14
85801488	393		2
	394/01	01	9
85801502	393		1
	394/01	01	1
85801514	393		13
85801515	393		18
85801518	1.88.12/03		22
	1.88.12/03A		20
	393		8
	394/01	01	6
85801562	1.88.12/03A		12
85801564	1.88.12/03A		3
85801566	1.88.12/03A		8
85801585	1.28.0		9
	638	05	7
	639	05	7
85801596	1.88.11/03		11
85801599	721	06	4
	727/01		4
85801621	1.92.3		1
85801622	1.92.3		2
85801623	1.92.3		3
85801624	1.92.6	02	7
85801625	1.92.6	02	7
85801626	1.92.4	03	3
85801628	1.92.4	03	2
85801630	1.92.3		4
85801631	1.92.3		5
85801632	1.92.9	01	2
85801649	1.93.0	01	2
85801649	1.93.0/01	01	2
	1.93.0/02	01	2
85801651	1.93.0	03	4
85801739	1.92.9	01	1
85801799	1.92.6	02	4
85801800	1.92.6	02	5
85801801	1.92.6	02	12
	1.94.0/01		6
	835		5
85801811	1.92.9	01	3
85801812	1.92.9	02	1
85801813	1.92.9	02	1
85801814	1.92.9	02	3
85801815	1.92.9	02	4
85801816	1.92.9	02	7
85801820	1.92.9	03	11
85801821	1.92.9	03	11
85801823	1.92.9	03	14
85801824	1.92.9	03	15
85801825	1.92.9	03	16
85801826	1.92.9	01	9
85801827	1.92.9	02	14
85801828	1.92.9	01	7
85801829	1.92.9	01	10
85801830	1.92.9	03	2
85801831	1.92.9	03	1
85801832	1.92.9	03	3
85801833	1.92.9	03	4
85801834	1.92.9	03	6
85801860	1.95.0	01	7
85801938	1.96.0		1
85801939	1.96.0		3
85801941	1.95.0	02	8
85801953	1.96.7/05		16
	1.96.7/06		14
85801968	1.96.7/05		1
	1.96.7/06		1
85801976	1.95.5	01	13
85801979	1.93.0	03	2
85801991	1.92.9	01	11
	1.93.0/01	02	17
	1.93.0/02	01	3
	1.93.0/03		3
	1.93.5	02	4
	1.93.5/01	02	4
85802018	1.92.9	03	12
85802107	1.91.6		3
85802141	1.93.5	02	15
85802142	1.93.5	02	9
	1.93.5/01	02	9
85802143	1.93.5	02	10
	1.93.5/01	02	10
85802144	1.93.5	02	11
	1.93.5/01	02	11
85802145	1.93.5	02	12
	1.93.5/01	02	7
85802146	1.93.5	02	13
85802205	622		7
85802214	1.82.6	02	13
	1.82.6/01	02	18
85802223	1.92.3		8
	1.92.6	02	9
85802224	1.92.3		9
	1.92.6	02	13
85802225	1.96.7/05		4
	1.96.7/06		4
85802227	1.96.7/05		14
	1.96.7/06		16
	394	01	21
85802234	700	02	1
	725/01	02	1
85802247	725		4
85802250	1.91.4	02	16
	1.91.4/02	02	10
85802307	1.92.6	02	10
85802309	1.96.7/04		1
	1.96.7/05		17
	1.96.7/06		13

Number	Figure	Sequence	Ref.
85802309	1.96.7/07		1
85802310	1.91.4	06	4
	1.91.4/02	06	13
	1.96.7/04		3
	1.96.7/05		13
	1.96.7/06		12
	1.96.7/07		3
85802334	1.92.3		6
	1.92.6	02	8
85802338	1.21.5		13
85802344	1.92.9	03	17
85802345	1.92.9	03	17
85802346	1.92.9	03	21
85802347	1.92.9	03	21
85802351	1.92.9	03	13
85802372	725		9
85802396	1.88.08	01	13
	1.88.08	02	11
85802397	1.88.08	01	12
	1.88.08	02	12
	900	02	7
85802398	1.91.5	02	4
85802403	1.88.11/05A	02	9
85802405	1.88.11/05A	02	5
85802441	1.98.0/01		7
85802457	725		7
85802478	1.91.4	02	1
85802494	1.88.11/05A	01	2
	1.88.12/03		25
	1.88.12/03A		21
	394	01	12
	394	03	7
	721	06	3
	727/01		3
85802509	721	06	1
	727/01		1
85802510	721	06	11
	727/01		11
85802513	1.44.1		12
	1.44.1/01		12
85802515	1.44.1/01		18
85802527	333	04	10
	721	04	10
85802528	333	04	11
	721	04	11
85802529	333	04	9
	721	04	9
85802580	1.82.0		20
85802599	201		2
85802618	1.28.0		11
	1.89.9/01		3
	331	03	8
	638	05	8
	639	05	8
85802620	1.88.11/07A		17
	1.88.11/07C		17
85802640	1.95.5	02	1
85802642	1.82.6/01	02	10
	1.82.6/01	04	6
	1.82.6/01	10	1
85802643	900	04	10
	901	02	34
85802647	394	01	4
85802682	393		1
	394/01	01	2
85802683	1.28.0/ A	02	8
	1.28.0/ B	02	13
85802684	1.28.0/ A	02	7
	1.28.0/ B	02	7
85802724	1.88.11/05A	01	1
85802734	1.88.11/05A	01	5
85802735	1.88.11/05A	01	13
85802736	1.88.11/05A	01	8
85802737	1.88.11/05A	01	16
85802738	1.88.11/05A	01	14
	1.88.12/03		8
	1.88.12/03A		10
	393		19
85802738	394	02	7
	394	03	14
85802741	1.88.11/05A	01	19
85802742	1.88.11/05A	01	21
85802743	1.19.1		5
	1.88.11/03		6
	176		2
	337	01	14
	337	02	12
85802744	900	07	5
85802761	1.95.5	02	5
85802763	1.96.2	01	9
85802776	1.82.6/01	02	11
	724/01	01	10
85802777	1.82.6/01	04	2
85802780	728	02	7
85802799	1.82.6/01	04	7
85802801	1.82.6	05	1
	1.82.6	06	2
	1.82.6/01	05	2
	1.82.6/01	06	1
	724/01	01	21
	724/02		12
85802803	392	01	3
	392	02	5
85802805	337	01	6
	337	02	8
85802820	1.88.11/07A		5
	1.88.11/07C		5
85802838	1.82.6/01	04	4
85802839	1.82.6/01	04	3
85802842	1.88.12/03		19
	1.88.12/03A		17
85802843	393		3
	394/01	01	3
85802847	1.29.1		8
85802872	1.88.08	02	10
85802890	1.82.6	02	9
	1.82.6/01	02	13
	1.82.6/01	03	12
	1.82.6/01	04	13
	1.94.2		6
85802891	1.82.6	10	7
	1.82.6/01	07	9
85802893	900	02	15
85802894	900	02	16
85802895	900	02	14
85802899	900	02	11
85802900	333	04	3
	721	04	3
	900	02	10
85802901	900	02	9
	900	06	4
85802902	900	02	8
85802903	1.21.5		8
	721	06	17
85802909	900	06	5
85802947	1.29.1		1
85802950	1.88.11/08		7
85802954	1.82.6/01	09	13
85802955	1.82.6	04	6
	1.82.6	13	1
	1.82.6/01	04	12
	1.82.6/01	09	2
85802957	900	08	2
85802958	1.82.6/01	02	9
85802960	1.82.6	05	12
	1.82.6/01	06	12
85802961	1.88.11/03		4
85802965	1.88.11/07A		7
	1.88.11/07C		7
85802974	514	02	13
	900	04	11
	901	02	35
85802975	514	02	11
	900	03	7
	900	04	5
	901	02	3

Number	Figure	Sequence	Ref.
85802976	900	04	12
	901	02	30
85802992	1.88.11		4
	1.88.11/01		12
	1.88.11/02	02	7
	471	01	5
	472	01	3
	473	01	3
	474	01	3
	520		5
	522		4
	522/01		17
	525		17
	527		5
	535		4
	536		4
	537		4
	734		2
85802993	1.88.11		13
	1.88.11/01		11
	1.88.11/02	02	6
	471	01	4
	472	01	7
	473	01	7
	474	01	7
	520		3
	522		3
	522/01		18
	525		18
	527		4
	535		5
	536		5
	537		6
	734		3
85803005	514	02	6
	733		12
	900	03	6
	900	04	9
	901	02	19
85803008	1.88.11/03		8
	1.88.11/07A		8
	1.88.11/07C		8
	337	02	10
	900	08	4
85803010	1.88.11/08		5
	337	01	7
	901	04	18
	902	03	18
85803013	1.19.1		12
85803039	1.88.11/09A		7
85803079	1.94.2		5
85803107	393		7
	394/01	01	11
85803124	393		7
	394/01	01	5
85803139	535		3
85803141	535		2
85803192	1.88.08	01	8
85803193	1.88.08	01	6
85803196	1.88.08	01	1
85803197	1.88.08	01	5
85803198	1.88.08	02	6
85803215	1.88.11/05A	01	17
85803224	522/01		19
	525		21
85803230	728	02	1
85803231	728	02	2
85803234	721	03	3
	728	01	6
85803241	728	02	10
85803277	1.88.11/05A	02	16
85803297	1.88.11/05A	02	7
85803312	1.95.0	03	4
	331	04	30
	331	06	9
	331	07	15
	333	02	9
	700	02	2
85803332	1.42.0		10
	721	03	9
85803360	394	03	1
85803364	394	03	3
85803382	394	01	2
85803393	333	03	5
	721	03	8
	728	02	6
	734		7
85803394	990		1
85803395	990		7
85803396	990		2
85803408	700	01	3
	725/01	01	12
85803409	725		8
85803428	724/01	01	11
	724/02		11
85803447	394	03	15
85803477	1.88.12/03		6
85803486	1.82.6	02	1
	724/01	01	5
	724/02		5
	725		3
85803487	724/01	01	6
	724/02		6
85803517	1.88.11/07A		19
	1.88.11/07C		19
	721	06	12
85803540	394	01	8
85803613	900	04	1
85803617	1.88.11/09A		1
85803635	1.88.11/02	02	1
85803643	1.88.11		3
85803647	1.88.11		8
85803782	394/01	01	13
85803783	394/01	01	14
85803786	721	06	10
	727/01		10
85803788	1.96.2	02	6
85803789	1.98.0/01		14
85803884	1.75.2	01	5
85803917	394	02	8
85803959	1.21.5		14
85803960	1.21.5		14
85803986	1.91.4	02	12
	1.91.4/02	02	12
85804026	1.88.11/05A	02	4
85804038	346	02	13
85804041	346	02	3
	347	02	3
85804051	346	03	7
	347	03	3
85804065	646	04	6
85804091	1.98.0/01		5
85804156	789		1
85804171	1.21.5		23
85804275	1.28.0		18
85804276	1.28.0		2
85804323	622		1
85804338	1.98.0/01		4
85804341	1.98.0/01		2
85804344	393		11
85804345	393		12
85804346	302	01	12
	390		2
	700	01	17
	725/01	02	12
85804347	176		1
85804362	1.91.6		5
85804366	1.88.11/05A	02	11
85804375	1.88.11/05A	01	22
	1.88.12/03		4
	1.88.12/03A		5
	393		20
	394	02	3
	394	03	12
85804376	1.88.11/05A	01	20
	1.88.12/03		1

Number	Figure	Sequence	Ref.	Number	Figure	Sequence	Ref.
85804376	1.88.12/03A		1	85805203	1.82.6	07	21
	394	03	11	85805206	1.82.6	07	18
85804441	646	01	12	85805207	1.82.6	07	20
85804447	514	02	12	85805208	1.82.6	07	19
	514	02	9	85805209	1.82.6	07	16
	900	03	10	85805210	1.82.6	07	14
85804493	1.87.8		10	85805211	1.82.6	07	15
85804539	1.88.12/03A		22	85805217	337	02	7
85804540	393		10	85805218	337	01	1
85804541	394/01	01	12	85805220	337	01	3
85804573	1.82.6	16	3		337	02	14
	1.82.6/01	11	3	85805221	337	01	8
85804574	1.82.6	16	8		337	02	13
	1.82.6/01	11	8	85805223	337	02	5
85804602	175		1	85805224	337	01	9
85804617	1.92.4	03	1	85805228	338		1
85804674	1.91.1/01		1	85805232	1.42.0		1
85804675	1.91.1/01		2	85805247	700	01	11
	1.91.4	03	4		725/01	01	11
	1.91.4/02	03	1	85805251	1.95.1		29
85804676	1.96.0		5	85805258	1.82.6	12	11
85804734	1.96.7/04		4		1.82.6	13	12
	1.96.7/07		4		1.88.11/07A		21
85804736	394	03	8		333	03	2
85804750	1.93.0	01	18		700	01	1
	1.93.0/01	01	18	85805262	337	01	5
	1.93.0/02	01	18	85805264	337	01	12
	1.93.5	01	7	85805271	337	02	9
	1.93.5/01	01	4	85805273	337	02	9
85804780	394	01	1	85805277	1.95.0	01	16
85804781	394	01	19	85805283	1.95.0	01	6
85804782	394	01	7	85805285	1.95.0	01	4
85804787	394	01	13	85805295	900	02	22
85804791	394	01	16	85805296	900	02	23
85804794	394	01	15	85805303	1.87.2		6
85804801	394	01	11	85805304	1.87.2		7
85804803	394	02	1	85805305	1.87.2		8
85804847	535		1	85805308	1.93.0/02	01	11
85804848	535		1	85805318	1.42.0		5
85804863	1.93.0	04	2		331	08	4
85804864	1.93.0	04	5		725/01	02	2
85804865	1.93.0	03	1	85805323	1.93.0	01	5
85804866	1.93.0	04	6		1.93.0/01	01	5
85804867	1.93.0	03	1		1.93.0/02	01	5
85804869	1.92.4	01	4		1.93.5	01	5
85804870	1.92.4	02	5		1.93.5/01	01	5
85804878	536/02		8	85805340	700	01	6
85804879	392	01	9		725/01	01	6
	725		10	85805383	1.91.4	06	11
85804947	1.82.6/01	10	10		1.91.4/02	06	11
85805003	346	02	14	85805440	1.95.1		4
85805004	346	02	15	85805441	1.95.1		2
85805005	346	02	11	85805448	1.92.4	01	9
85805006	346	02	10		1.92.4	02	9
	646	01	9		1.92.4	03	6
85805008	646	01	14	85805498	1.88.12/03		7
85805013	646	01	8		394	02	1
85805014	646	01	11	85805502	1.82.6	03	8
85805065	1.92.3		7	85805548	1.95.0	03	7
	1.92.6	02	11	85805567	1.88.11/03		9
85805108	1.88.11/08		1	85805571	1.92.8		1
85805111	1.88.11/08		2	85805591	1.93.0	03	6
85805113	1.88.11/08		4	85805616	1.88.11/05A	01	4
85805115	392	02	1		1.88.12/03		11
85805123	392	02	9		1.88.12/03A		6
85805124	392	01	4	85805619	1.88.11/08		6
	392	02	2	85805648	1.88.08	01	18
85805126	392	02	8	85805655	1.95.0	03	4
85805137	1.88.08	01	15	85805659	1.92.6	02	1
85805142	1.87.2		11	85805663	201		5
85805166	1.82.6	04	8	85805664	201		6
85805167	1.82.6	04	5	85805685	1.75.2	01	3
85805168	1.82.6	04	7	85805686	1.75.2	01	2
85805193	700	01	7	85805690	1.88.12/03A		9
	725/01	01	7	85805692	1.88.12/03A		7
85805195	700	01	8	85805703	1.40.0	01	18
	725/01	01	8	85805704	1.40.0	01	22
85805200	1.96.7/05		8	85805705	1.40.0	01	25

Number	Figure	Sequence	Ref.
85805706	1.40.0	01	14
85805707	1.40.0	01	21
	1.40.0	02	29
85805709	1.40.0	02	28
	402	03	14
85805710	1.40.0	02	30
85805711	1.40.0	02	22
	402	03	3
85805770	1.92.6	01	4
85805771	1.92.6	01	4
85805772	1.95.5	01	9
85805773	1.95.5	01	9
85805774	1.95.5	01	2
85805775	1.95.5	01	2
85805777	1.94.0/01		9
85805803	1.93.0/02	01	6
85805806	1.88.12/03		15
85805807	201		4
85805819	1.93.0	01	14
	1.93.0/01	01	14
	1.93.0/02	01	29
85805824	1.82.6	06	9
85805838	1.82.6	02	6
85805840	1.82.6	06	1
85805854	1.82.6	07	1
85805855	1.82.6	07	2
85805856	1.82.6	07	5
85805857	1.82.6	07	6
85805858	1.82.6	07	3
85805859	1.82.6	07	4
85805860	1.82.6	07	7
85805861	1.82.6	07	8
85805862	725/01	01	5
85805863	725/01	01	4
85805864	700	01	12
	725/01	01	13
85805865	700	01	13
	725/01	01	14
85805869	1.82.6	07	11
85805870	1.82.6	07	9
85805872	1.82.6	07	10
85805909	1.98.0/01		13
85805973	1.40.0	01	7
	402	01	23
85805974	1.40.0	02	31
85805975	1.40.0	02	7
	402	02	7
85805976	1.40.0	02	6
	402	02	6
85805977	1.40.0	02	5
	402	02	5
85805978	1.40.0	02	16
	402	02	16
85805979	1.40.0	02	11
85805980	1.40.0	02	12
85805982	1.40.0	02	15
	402	02	15
85805983	1.40.0	02	14
85805984	1.40.0	02	8
	402	02	20
85805986	1.40.0	02	13
	402	02	13
85805987	1.40.0	02	3
	402	02	3
85805988	402	02	8
85805989	1.40.0	02	4
	402	02	4
85805990	1.40.0	02	18
	402	02	18
85805992	1.40.0	02	19
	402	02	19
85805999	402	06	2
85806003	1.40.0	02	20
	402	03	1
85806004	402	05	1
85806006	402	03	11
85806008	402	03	7
85806009	402	03	5
85806010	1.40.0	02	27
	402	03	6
85806011	402	03	12
85806012	402	03	15
85806014	402	03	16
85806015	402	03	17
85806016	402	03	13
85806019	1.28.0/ A	04	16
	1.28.0/ B	04	16
85806023	1.93.0	01	9
	1.93.0/01	01	9
	1.93.0/02	01	9
	1.96.7/05		9
85806089	1.93.5	01	6
	1.93.5/01	01	6
85806095	1.91.5	01	3
85806098	1.91.5	01	2
85806132	1.91.4	06	18
	1.91.4/02	04	7
85806133	1.91.4	04	2
	1.91.4/02	04	6
85806134	1.91.4	02	17
85806135	1.91.4	02	6
	1.91.4/02	02	6
85806136	1.91.4	06	1
85806154	1.93.0	02	12
85806184	1.91.5	01	5
85806185	1.91.5	01	6
85806245	1.88.12/03		23
85807283	402	06	5
85807284	402	06	6
85807827	1.82.6/01	12	18
85807828	1.82.6/01	12	21
85807829	1.82.6/01	12	22
85807830	1.82.6/01	12	19
85807831	1.82.6/01	12	20
85807832	1.82.6/01	12	15
85807833	1.82.6/01	12	25
85807834	1.82.6/01	12	24
85807855	1.91.1/01		7
85807857	336/01	02	4
	336/01	05	11
	725/01	04	4
85807858	336/01	02	15
	336/01	05	9
	725/01	04	15
85807866	1.91.1/01		3
85807867	522		5
	536		7
	537		9
85807868	520		2
	527		2
85807873	1.88.11/07A		6
	1.88.11/07C		6
85807874	1.88.11/07A		15
	1.88.11/07C		15
85807876	724/01	01	8
	724/02		8
85807914	394	03	15
85807926	394	03	6
85808390	1.95.5/ A	01	2
85808403	336/01	01	11
	725/01	03	11
85808419	1.95.2		5
85808422	1.21.5		15
	1.88.12/03		21
	1.88.12/03A		23
85808460	1.91.4	06	19
	1.91.4/02	06	14
	1.93.0	02	1
	1.93.0/02	01	20
85808472	901	02	11
	902	02	11
85808473	901	02	10
	902	02	10
85811432	386		2
	387		4
	388		4

Number	Figure	Sequence	Ref.	Number	Figure	Sequence	Ref.
85811432	389		4	85812085	1.28.0/ A	03	5
	390/01		4		1.28.0/ B	03	9
	515/01		2	85812086	1.28.0/ A	03	2
	516/01		4		1.28.0/ B	03	1
	517/01		4	85812087	1.28.0/ A	03	1
	518/01		4		1.28.0/ B	03	2
	519/01		4	85812091	1.28.0/ A	03	15
	520/01		4		1.28.0/ B	03	16
	521		4	85812092	1.28.0/ A	04	3
85811440	472	01	5		1.28.0/ B	04	3
	474	01	5	85812094	1.28.0/ A	02	3
	536		1		1.28.0/ B	02	3
85811870	1.82.6	01	2	85812096	1.28.0/ A	01	3
	1.82.6/01	01	2		1.28.0/ B	01	24
85811921	331/ B	01	12	85812113	302	04	12
	331/ B	02	2	85812114	331/ B	04	4
	333/01B	01	13		331/ B	09	4
85811922	331/ B	02	3	85812115	331/ B	05	6
85811923	302	02	3		331/ B	10	6
	331/ B	02	4	85812116	302	04	8
85811933	302	04	9		331/ B	03	4
	331/ B	03	5		331/ B	06	6
	331/ B	04	5		331/ B	08	4
	331/ B	05	4		331/ B	11	6
	331/ B	06	4		724/01	01	18
	331/ B	08	5	85812117	331/ B	03	6
	331/ B	09	5		331/ B	08	6
	331/ B	10	4	85812170	1.82.6/01	03	1
	331/ B	11	4	85812171	1.82.6	03	1
	333/01B	02	5		1.82.6/01	03	2
85811934	302	02	6	85812173	1.82.6	03	2
	331/ B	02	5		331	08	9
	331/ B	03	2	85812174	1.82.6	04	12
	331/ B	04	2	85812202	1.42.0		8
	331/ B	05	2	85812211	333	03	4
	331/ B	06	2	85812212	1.42.0		11
	331/ B	08	2	85812214	721	03	4
	331/ B	09	2	85812252	1.92.6	01	1
	331/ B	10	2	85812253	1.92.6	01	1
	331/ B	11	2	85812254	1.92.4	03	4
	333/01B	02	2	85812255	1.92.4	03	5
85811935	302	04	10	85812260	81.00		1
	331/ B	10	3	85812278	1.88.01	01	4
85811937	331/ B	05	3	85812364	1.92.9	02	17
	331/ B	06	3	85812365	1.92.9	01	14
	331/ B	11	3	85813054	1.40.0	02	26
85811938	302	02	5	85813059	402	04	1
	302	03	4	85813060	402	04	1
	302	04	4	85813079	346	02	2
	331/ B	03	3		347	02	2
	331/ B	04	3	85813100	1.96.2	01	13
	331/ B	05	5	85813103	721	06	2
	331/ B	06	5		727/01		2
	331/ B	07	2	85813104	1.96.2	02	1
	331/ B	08	3	85813110	990		7
	331/ B	09	3	85813113	990		1
	331/ B	10	5	85813133	1.96.2	01	4
	331/ B	11	5	85813134	1.96.2	01	2
	331/ B	12	2	85813135	1.96.2	01	3
	333/01B	02	3	85813136	1.96.2	01	1
85811946	302	02	4	85813137	1.96.2	01	8
	331/ B	02	6	85813138	1.96.2	01	7
85811954	302	02	7	85813186	1.96.2	02	4
85811958	331/ B	01	4		721	06	15
85811959	333/01B	01	4		727/01		15
85811985	536/02		1	85813187	1.96.2	02	5
85811986	536/02		1		721	06	16
85811989	536/02		7		727/01		16
85811990	536/02		6	85813200	1.96.2	02	3
85811991	536/02		6		721	06	14
85811992	536/02		2		727/01		14
85812021	1.96.7/05		5	85813201	1.96.2	02	2
	1.96.7/06		5		721	06	13
85812029	333	03	6		727/01		13
	721	03	1	85813244	1.82.3/01		2
85812080	1.93.0	04	14	85813300	1.28.0/ A	04	7
	1.93.0/01	02	5		1.28.0/ B	04	7
85812081	1.93.0/02	01	15	85813318	1.28.0/ A	04	15

Number	Figure	Sequence	Ref.
85813318	1.28.0/ B	04	15
85813350	1.82.0		19
85813351	1.82.0		17
85813352	1.82.0		6
85813353	1.82.0		22
85813354	1.82.0		18
85813361	337	01	18
85813362	1.82.6	11	4
	1.82.6/01	08	6
85813363	1.82.6	10	4
	1.82.6/01	07	6
	337	02	18
85813377	1.42.0		7
85813378	734		5
85813379	1.82.6	11	5
	1.82.6/01	08	7
	1.88.11/03		15
85813380	1.82.6	10	9
	1.82.6/01	07	11
	1.88.11/03		14
85813407	1.88.01	01	9
85813418	344	02	2
	721	02	2
85813419	344	02	3
	721	02	3
85813469	900	04	8
85815505	392	01	1
	392	02	7
85815506	337	01	2
	337	02	2
85815517	900	04	4
85815536	1.95.1		19
85815537	1.95.1		19
85815549	1.95.1		28
85815550	1.95.1		22
85815552	1.95.1		25
85815554	1.95.1		26
85815555	1.95.1		24
85815556	1.95.1		23
85815567	1.82.6/01	02	12
85815568	1.82.6/01	01	11
85815580	1.82.6/01	02	2
85815581	1.82.6/01	01	10
85815583	437		14
85815607	900	02	25
	900	02	6
85815614	1.42.0		9
85815615	1.42.0		6
85815620	437		2
85815627	900	02	18
85815628	900	02	19
85815667	336/01	02	9
	336/01	05	2
	725/01	04	9
85815668	336/01	02	10
	336/01	05	6
	725/01	04	10
85815677	901	03	2
85815679	901	03	1
85816760	416		2
85816770	1.95.1		17
85816776	1.88.08	02	9
85816793	336/01	05	1
85816804	336/01	01	15
	336/01	05	12
	725/01	03	15
85816813	900	07	2
85816815	901	03	1
85816817	901	03	2
85817001	1.28.0/ A	01	13
	1.28.0/ B	01	16
85817002	1.28.0/ A	03	9
	1.28.0/ B	03	5
85817004	MPARTS	00	8
	1.28.0/ A	03	11
	1.28.0/ B	03	14
85817006	1.28.0/ A	04	21
	1.28.0/ B	04	21
85817007	1.28.0/ A	04	22
	1.28.0/ B	04	22
85817025	336/01	01	13
	725/01	03	13
85817050	835		2
85817051	835		1
85817106	333	05	3
	721	05	3
85817107	333	05	4
	721	05	5
85817108	333	04	5
	721	04	5
85817129	758		1
85817130	758		3
85817131	758		2
85817163	1.28.0/ A	01	12
	1.28.0/ A	04	5
	1.28.0/ B	01	15
	1.28.0/ B	04	5
85817164	1.28.0/ A	01	6
	1.28.0/ B	01	4
85817165	1.28.0/ A	03	10
	1.28.0/ B	03	13
85817169	1.28.0/ A	01	18
	1.28.0/ B	01	20
85817170	646	03	1
85817171	646	03	2
85817172	646	03	3
85817173	646	03	4
85817174	646	03	5
85817175	646	03	6
85817186	646	01	10
85817189	346	02	8
	347	02	8
85817190	1.28.0/ B	01	7
85817201	336/01	04	1
85817210	1.92.5		2
85817211	1.92.5		1
85817212	1.92.5		2
85817213	1.92.5		1
85817226	1.82.6	03	4
	1.82.6/01	03	4
	331	08	8
85817230	1.82.6	15	7
85817231	1.82.6	15	8
85817252	1.89.9/01		5
85817287	1.93.0/03		1
	646	01	5
85817289	346	02	1
	347	02	1
85817295	346	03	9
85817426	851/01	03	2
	851/01	04	2
85817427	851/01	03	24
85817428	851/01	03	20
	856/01	03	20
85817429	851/01	03	7
	856/01	03	7
85817430	851/01	03	12
	856/01	03	12
85817431	851/01	04	3
	856/01	04	3
85817433	851/01	04	18
	856/01	04	18
85817434	851/01	04	19
	856/01	04	19
85817435	851/01	04	22
	856/01	04	22
85817436	851/01	04	12
	856/01	04	12
85817440	851/01	04	6
	856/01	04	6
85817441	851/01	04	11
	856/01	04	11
85817442	851/01	03	10
	856/01	03	10
85817443	851/01	04	14
	856/01	04	14

Number	Figure	Sequence	Ref.	Number	Figure	Sequence	Ref.
85817444	851/01	03	4	85817490	855/01	03	10
	856/01	03	4	85817492	855/01	03	16
85817445	851/01	03	6	85817493	855/01	03	15
	856/01	03	6	85817494	855/01	03	4
85817446	851/01	03	15	85817496	855/01	03	12
	856/01	03	15	85817512	855/01	04	15
85817447	851/01	03	19	85817513	855/01	04	14
	856/01	03	19	85817523	855/01	04	17
85817448	851/01	03	17	85817529	855/01	03	2
	856/01	03	17		855/01	04	2
85817449	851/01	03	18		855/01	05	2
	856/01	03	18	85817531	336/01	01	16
85817450	851/01	03	3		336/01	05	7
	856/01	03	3		725/01	02	21
85817451	851/01	04	17		725/01	03	16
	856/01	04	17	85817532	855/01	01	8
85817453	851/01	01	9	85817534	855/01	01	36
	855/01	01	9	85817536	855/01	02	15
	856/01	01	9	85817556	856/01	03	2
85817456	851/01	02	16		856/01	04	2
	855/01	02	16	85817558	856/01	03	24
	856/01	02	4	85817559	856/01	03	22
85817458	851/01	02	7	85817560	856/01	03	23
	851/01	03	21	85817561	856/01	03	21
	855/01	02	7	85817562	856/01	01	2
	855/01	03	5	85817564	856/01	01	4
	856/01	02	7	85817596	1.82.6/01	01	12
	856/01	03	25		1.82.6/01	02	7
85817459	851/01	01	12	85817622	1.88.11/05A	02	17
	855/01	01	12	85817623	1.88.11/05A	02	18
	856/01	01	12	85817629	724/01	01	16
85817460	851/01	01	25		724/02		16
	855/01	01	25	85817633	724/01	01	15
	856/01	01	25		724/02		15
85817463	851/01	02	3	85817634	724/01	01	13
	855/01	02	3		724/02		20
85817464	851/01	02	4	85817635	724/01	01	14
	855/01	02	4		724/02		19
85817465	851/01	02	15	85817669	331/ B	02	8
	856/01	02	5	85817672	1.75.2	02	5
85817466	851/01	01	15	85817674	698		1
	855/01	01	15	85817685	1.93.7		3
	856/01	01	15	85817686	1.93.7		4
85817469	851/01	01	21	85817697	402	06	9
	855/01	01	21	85817698	402	03	4
	856/01	01	21	85818818	1.91.4	05	3
85817470	851/01	01	18		1.91.4/02	05	3
	855/01	01	18	85818819	1.91.4	05	4
	856/01	01	18		1.91.4/02	05	4
85817471	856/01	01	22	85818820	1.91.4	04	1
85817474	1.82.6	15	9	85818823	1.91.4	05	14
85817476	851/01	01	24	85818826	787/01		3
	855/01	01	24		788/01		3
	856/01	01	24	85818827	787		4
85817477	851/01	01	29		787/01		4
	855/01	01	29		788		4
	856/01	01	29		788/01		4
85817478	851/01	01	13	85818828	787		6
	855/01	01	32		787/01		6
	856/01	01	32		788		6
85817479	851/01	01	31		788/01		6
	855/01	01	31	85818895	1.91.4	05	5
	856/01	01	31	85818909	1.82.6	04	4
85817481	851/01	01	5	85818916	900	02	24
	855/01	01	5	85818940	787		3
	856/01	01	5		788		3
85817482	851/01	02	18	85818943	333	04	6
	855/01	02	18	85819013	1.44.1		18
	855/01	03	18	85819016	1.93.0/02	01	30
	856/01	02	2	85819017	1.92.9	01	15
85817484	851/01	02	6	85819018	1.92.9	01	4
	855/01	02	6	85819040	302	03	9
	856/01	02	6		302	04	13
85817485	851/01	01	8	85819041	1.95.5	02	2
	856/01	01	8	85819058	1.82.6	15	5
85817486	855/01	03	7	85819059	1.82.6	15	6
85817488	855/01	03	25	85819060	1.82.6	13	8
85817489	855/01	03	9	85819061	1.82.6	13	9

Number	Figure	Sequence	Ref.	Number	Figure	Sequence	Ref.
85819062	1.82.6	14	6	85819378	333/01B	02	7
85819063	1.82.6	14	7	85819407	1.93.5/01	01	1
85819064	1.82.6	14	5	85819451	346	05	2
85819065	1.82.6	14	8	85819452	346	05	1
85819072	699		1		347	05	1
85819074	338		3	85819453	346	05	11
85819142	1.91.4	05	7	85819454	1.93.5	01	3
85819144	1.91.4/02	04	5		346	05	7
85819148	302	02	10	85819467	1.88.01	02	1
	302	03	2	85819468	1.88.01	01	10
	302	04	2	85819469	1.88.01	02	2
	331/ B	03	7	85819471	1.88.01	02	3
	331/ B	04	6	85819477	1.88.01	01	12
	331/ B	05	7	85819478	1.88.01	01	13
	331/ B	06	7	85819479	1.88.01	01	14
	331/ B	07	3	85819480	1.88.01	01	17
	331/ B	08	7	85819481	1.88.01	01	15
	331/ B	09	6	85819482	1.88.01	01	5
	331/ B	10	7	85819488	1.88.01	01	8
	331/ B	11	7	85819567	1.93.5	01	2
	331/ B	12	3	85819568	1.91.4	01	3
	333/01B	02	6	85819569	1.91.6		1
85819177	1.95.0	03	1	85819571	700	01	5
85819179	1.88.11/05A	02	12	85819572	700	01	4
85819184	346	01	9	85819586	1.91.4/02	04	2
	347	01	8	85819588	1.91.4/02	04	2
	646	04	5	85819592	1.93.5	01	11
85819185	646	04	16	85819618	724/01	02	10
85819186	1.38.1		8	85819619	724/01	02	1
85819188	1.91.7/02		13	85819620	725		2
	793		2	85819621	725		1
	793/01		2	85819649	336/01	01	1
85819189	1.91.7/02		15	85819684	344	01	1
	793		4	85819721	344	01	5
	793/01		4		721	01	5
85819190	1.91.7/01		3	85819722	336/01	03	13
	1.91.7/02		3		725/01	05	13
85819191	1.91.7/01		9	85819724	1.91.4/02	01	1
	1.91.7/02		9	85819725	1.91.4/02	01	1
85819192	1.91.7/02		16	85819727	1.82.6	13	10
	794		2		1.82.6/01	09	4
	794/01		2	85819728	1.82.6	13	9
85819193	1.91.4	06	6		1.82.6/01	09	9
	1.91.4/02	06	12	85819729	1.82.6	13	11
85819194	1.91.7/01		11		1.82.6/01	09	7
	1.91.7/02		11	85819730	1.82.6	13	8
85819195	1.91.4	06	16		1.82.6/01	09	8
	1.91.4/02	06	22	85819760	835		3
85819196	1.91.7/01		14	85819763	835		3
	1.91.7/02		10	85819765	796		1
85819197	1.91.7/01		10	85819766	796		5
	1.91.7/02		8	85819813	851/01	02	12
85819198	1.91.7/01		12		855/01	02	19
	1.91.7/02		14		856/01	02	15
85819199	1.91.7/01		13	85819814	855/01	05	8
	1.91.7/02		12	85819815	855/01	03	14
85819200	1.91.7/01		2	85819826	1.91.5	01	7
	1.91.7/02		2	85819827	1.91.5	01	1
	793		1	85819914	1.95.0	02	7
	793/01		1	85819915	1.95.0	02	19
	794		1	85819945	336/01	03	1
	794/01		1		344	01	13
85819237	416		1		725/01	05	1
85819285	1.93.0	01	13	85820008	471	02	4
	1.93.0/01	01	13		472	02	4
85819287	1.93.0	02	4		473	02	23
85819289	1.93.5	01	1		474	02	23
85819291	1.93.5	01	1	85820009	471	02	5
85819378	302	03	3		472	02	5
	302	04	3		473	02	22
	331/ B	03	8		474	02	22
	331/ B	04	7	85820011	471	02	7
	331/ B	05	8		472	02	7
	331/ B	06	8		473	02	38
	331/ B	07	4		474	02	38
	331/ B	08	8	85820012	471	02	8
	331/ B	10	8		472	02	8
	331/ B	12	4		473	02	39

Number	Figure	Sequence	Ref.	Number	Figure	Sequence	Ref.
85820012	474	02	39	85820160	1.88.11/07C		21
85820013	471	02	9	85820167	1.89.9/01		1
	472	02	9	85820170	1.89.9/01		8
	473	02	19	85820172	1.89.9/01		6
	474	02	19	85820237	1.91.5	02	10
85820014	471	02	10	85820282	1.95.5	02	6
	472	02	10	85820283	337	01	21
	473	02	12		337	02	21
	474	02	12	85820285	337	01	22
85820015	471	02	11		337	02	22
	472	02	11	85820819	471	01	6
	473	02	20		472	01	2
	474	02	20		473	01	2
85820016	471	02	12		474	01	2
	472	02	12	85820836	392	01	7
	473	02	16	85820844	391		1
	474	02	16	85820908	1.38.1		6
85820017	471	02	13	85820909	1.28.0/ A	06	4
	472	02	13		1.28.0/ B	06	4
	473	02	17		1.38.1		10
	474	02	17	85820912	392	01	2
85820018	471	02	14	85820913	392	02	6
	472	02	14	85820914	1.38.1		9
	473	02	3	85821126	1.88.11/07A		20
	474	02	3		1.88.11/07C		20
85820020	471	02	16	85821127	391		2
	472	02	16	85821131	646	01	13
	473	02	37	85821153	1.91.5	02	1
	474	02	37	85821172	1.95.1		27
85820026	471	02	22	85821173	1.95.1		26
	472	02	22	85821235	331/ B	02	10
	473	02	8	85821236	302	02	9
	474	02	8		331/ B	02	11
85820027	471	02	23	85821268	1.88.01	01	1
	472	02	23	85821270	1.88.01	01	18
	473	02	35	85821271	1.88.01	01	19
	474	02	35	85821273	1.88.01	02	7
85820030	471	02	24	85821277	1.88.01	02	9
	472	02	24	85821278	1.88.01	02	4
	473	02	41	85821279	1.88.01	02	10
	474	02	41	85821316	1.96.2	01	10
85820031	471	02	25	85821326	1.91.4/02	06	9
	472	02	25	85821333	1.91.5	02	11
	473	02	6	85821334	1.91.5	02	13
	474	02	6	85821335	1.91.5	02	3
85820035	471	02	28	85821336	1.91.5	02	9
	472	02	28	85821337	1.91.5	02	2
	473	02	4	85821338	1.91.5	02	8
	474	02	4	85821410	1.91.4	03	6
85820052	471/01		11		1.91.4/02	03	6
85820054	471/01		10	85821418	851/01	01	26
85820056	471/01		12		855/01	01	26
85820064	473	02	32		856/01	01	26
	474	02	32	85821419	851/01	01	23
85820068	473	02	9		855/01	01	23
	474	02	9		856/01	01	23
85820069	473	02	33	85821452	1.28.0/ A	05	15
	474	02	33		1.28.0/ B	05	15
85820105	1.95.5	01	8	85821454	1.28.0/ A	05	16
85820107	1.98.1	09	1		1.28.0/ B	05	16
85820109	1.82.6	13	10	85821514	331	05	7
85820128	331/ B	02	7	85821515	331	05	11
85820129	331/ B	02	9	85821516	331	05	10
85820130	302	03	5	85821520	331	05	12
	302	04	5	85821534	331	09	9
85820136	879		1	85821536	331	04	32
85820138	1.93.4		7	85821537	331	09	6
	284		2		646	04	19
	879		2	85821788	386		5
85820139	1.93.4		8		387		5
	284		1		388		5
85820141	1.96.7/05		12		389		5
85820154	1.38.1		5		390/01		5
85820156	1.75.2	02	4		515/01		5
85820157	1.38.1		2		516/01		5
85820159	1.88.11/07A		22		517/01		5
	1.88.11/07C		22		518/01		5
85820160	1.88.11/07A		23		519/01		5

Number	Figure	Sequence	Ref.	Number	Figure	Sequence	Ref.
85821788	520/01		5	85825254	1.91.4/02	05	6
	521		5		1.91.4/02	06	1
85821916	993	02	4		787		1
85821917	993	01	2		787/01		1
85821918	993	01	4		788		1
85821919	993	01	5		788/01		1
85821920	1.98.0/01		9	85825285	733		7
85821921	993	01	6	85825330	1.91.4	01	2
85821922	993	02	1	85825355	1.82.6	05	7
85821923	1.98.0/01		6		1.82.6/01	06	7
85821924	993	01	1	85825392	1.14.0		2
85821925	993	01	3	85825440	131		1
85821926	1.98.0/01		1	85825465	1.88.12/03		12
85821927	993	02	6	85825468	302	01	2
85821946	993	02	2		302	02	1
85824053	331	02	14		700	03	5
85824054	331	02	15	85825469	302	01	4
85824059	331	02	16		302	04	1
85824067	331	05	1		700	03	7
85824080	331	05	6	85825471	302	04	6
85824081	331	05	8	85825472	302	02	2
85824114	1.95.0	02	2	85825473	333/01B	01	15
85824187	1.29.1		7	85825474	700	03	10
85824196	1.82.3/01		4	85825475	302	01	6
85824204	851/01	02	19	85825477	331/ B	02	13
	855/01	02	12	85825506	1.28.0/ A	06	5
	856/01	02	12		1.28.0/ B	01	23
85824211	437		6		1.28.0/ B	06	5
85824227	1.88.01	01	20		1.28.0/ B	08	20
85824266	733		4	85826020	MPARTS	00	8
85824268	733		9	85826080	1.95.5	02	4
85824281	302	04	11	85826093	1.82.6	02	6
	331/ B	03	9	85826099	1.95.1		29
	331/ B	05	9	85826100	331	08	5
	331/ B	06	9		700	02	5
	331/ B	07	5		725/01	02	5
	331/ B	08	9	85826123	724/01	01	9
	331/ B	10	9		724/02		9
	331/ B	11	9	85826131	803		13
	331/ B	12	5	85826132	803		3
	333/01B	02	8	85826133	803		4
85824282	302	03	8	85826134	803		4
	331/ B	04	8	85826208	321		1
	331/ B	09	8	85826250	331/ B	01	11
85824283	302	03	10		333/01B	01	12
	302	04	14	85826260	990		10
85824308	392	01	10	85826274	338		2
85824339	1.40.0	01	1	85826275	337	02	19
85824345	402	02	9	85826276	337	01	19
85824346	402	01	8	85826339	331/ B	01	7
	402	04	6		331/ B	09	1
85824347	1.40.0	01	16		333/01B	01	8
85824352	1.40.0	02	9	85826340	331/ B	01	10
85824356	548		1		331/ B	12	1
85824381	1.14.6		11		333/01B	01	11
85824393	1.93.5	02	5	85826344	331/ B	03	10
85824397	734		1		331/ B	04	9
85824434	855/01	03	13		331/ B	05	10
85824436	855/01	03	8		331/ B	06	10
85824450	1.91.5	02	12		331/ B	07	6
85824463	1.88.12/03		10		331/ B	08	10
85824469	1.40.0	01	20		331/ B	09	9
85825129	1.91.4/02	06	4		331/ B	10	10
85825136	1.91.4/02	06	19		331/ B	11	10
85825154	1.82.0		29		331/ B	12	6
85825155	1.82.0		30		333/01B	02	9
85825158	1.14.0		7	85826345	331/ B	09	7
85825169	1.82.6	05	3		331/ B	11	8
	1.82.6/01	06	3	85826360	331/ B	01	10
85825177	473	02	15		331/ B	07	1
	474	02	15	85826361	638	04	14
85825188	302	01	1		639	04	15
85825191	1.93.0	01	8	85826382	1.82.0		31
	1.93.0/01	01	8	85826383	1.82.0		32
	1.93.0/02	01	8	85826901	331/ B	01	6
85825198	1.91.4	02	14		331/ B	08	1
	1.91.4/02	02	1		333/01B	01	7
85825254	1.91.4	05	6	85826903	331/ B	01	8

Number	Figure	Sequence	Ref.
85826903	331/ B	10	1
	333/01B	01	9
85826906	321		7
85826924	302	01	5
	700	03	9
85826930	331/ B	01	6
	331/ B	03	1
85826931	331/ B	01	7
	331/ B	04	1
85826932	331/ B	01	8
	331/ B	05	1
85826943	1.29.1		2
85826964	1.75.2	02	14
85826986	1.82.6/01	05	1
85826987	724/01	01	20
	724/02		13
85827041	1.82.6	01	4
	1.82.6/01	01	4
85827067	1.40.0	02	23
	402	03	8
85827068	402	05	10
85827070	402	06	4
85827072	321		3
85827076	331	07	9
85827077	331	07	4
85827078	331	07	11
85827080	331	07	10
85827082	331	07	6
85827084	331	07	1
85827085	331	07	2
85827086	331	07	3
85827087	331	07	5
85827088	331	06	8
	333	02	8
85827089	331	06	4
	333	02	4
85827090	331	06	7
	333	02	7
85827091	331	06	3
	333	02	3
85827092	331	06	5
	333	02	5
85827093	331	06	1
	333	02	1
85827094	331	06	2
	333	02	2
85827095	331	06	6
	333	02	6
85827097	333	02	12
85827100	1.82.6/01	02	15
	1.82.6/01	12	1
85827101	1.82.6/01	12	13
	1.82.6/01	14	13
85827102	1.82.6/01	12	11
	1.82.6/01	13	13
85827128	1.88.11/06A		18
85827416	321		12
85827466	331	07	8
85827467	331	07	7
85827471	333/ A		18
85827472	331/ A		1
85827475	331	08	3
85827476	331	08	1
85827531	331	07	17
85827532	331	07	18
85827533	331	07	16
85827534	331	07	19
85827548	1.91.1/01		6
	1.93.0	01	17
	1.93.0/01	01	17
	1.93.0/02	01	17
85827552	733		3
85827553	733		5
85827725	402	01	1
85827726	402	01	1
85827738	402	01	16
85827739	402	02	2
85827740	402	02	1
85827741	402	06	1
85827764	1.28.0/ A	04	1
	1.28.0/ B	04	1
85827769	1.28.0/ A	01	1
85827770	1.28.0/ A	01	2
85827771	1.28.0/ A	05	7
	1.28.0/ B	05	7
85827772	1.28.0/ A	05	8
	1.28.0/ B	05	8
85827773	1.28.0/ A	05	13
	1.28.0/ B	05	13
85827774	1.28.0/ A	05	14
	1.28.0/ B	05	14
85827776	1.28.0/ A	04	23
	1.28.0/ B	04	23
85827777	1.28.0/ A	04	20
	1.28.0/ B	04	20
85827779	1.28.0/ A	04	8
	1.28.0/ B	04	8
85827782	1.28.0/ B	08	5
85827783	1.28.0/ B	01	2
85827784	1.28.0/ B	01	3
85827787	1.88.11/05A	01	3
85827797	1.28.0/ A	04	6
	1.28.0/ B	04	6
85827798	1.28.0/ A	04	2
	1.28.0/ B	04	2
85827799	1.28.0/ A	04	24
	1.28.0/ B	04	24
85827803	1.28.0/ A	06	9
	1.28.0/ B	06	22
85827817	1.93.0/02	01	19
85827820	394	01	17
85827822	416		5
85827823	1.82.6	04	5
85827824	1.82.6	05	2
	1.82.6/01	06	2
85827830	638	01	5
	639	01	16
85827831	638	01	6
	639	01	17
85827832	1.95.1		1
85827833	1.95.1		8
85827834	1.95.1		32
85827836	1.92.9	03	10
85827850	1.96.2	01	12
85827853	337	02	1
85827861	728	02	11
85827918	851/01	01	10
	855/01	01	10
	856/01	01	10
85827920	855/01	04	3
85827991	331/ A		3
85827992	331/ A		15
	333/ A		15
85827993	331/ A		11
	333/ A		11
	700	01	24
	725/01	02	20
85827994	331/ A		9
	333/ A		9
85827995	331/ A		7
	333/ A		7
85827996	331/ A		6
	333/ A		6
85827997	331/ A		13
	333/ A		13
85827998	331/ A		8
	333/ A		8
85827999	331/ A		4
	333/ A		4
85828000	331/ A		12
	333/ A		12
	700	01	23
	725/01	02	19
85828001	331/ A		14
	333/ A		14
	700	01	25

Number	Figure	Sequence	Ref.
85828001	725/01	02	23
85828002	331/ A		5
	333/ A		5
85828003	331/ A		16
	333/ A		16
85828004	333/ A		3
85828005	331/ A		17
	333/ A		17
85828013	331/ A		18
85828015	333/ A		1
85828017	1.82.0		36
85828069	993	01	1
85828070	993	01	1
85828080	993	02	1
85828081	993	02	1
85828082	993	02	2
85828083	993	02	2
85828084	993	01	6
85828085	993	01	6
85828086	993	01	4
85828087	993	01	4
85828088	993	01	2
85828089	993	01	2
85828090	993	01	5
85828091	993	01	5
85828094	993	02	4
85828095	993	02	4
85828097	993	02	6
85828098	993	02	6
85828107	1.82.0		33
85828196	851/01	01	9
	855/01	01	9
	856/01	01	9
85828211	700	02	6
	725/01	02	6
85828213	1.96.2/01		7
85828216	331	09	1
85828252	1.96.0		2
85828254	1.88.11		9
86021837	1.95.1		12
8603092	995		22
8603095	995		22
8605735	1.14.6		2
86500514	1.98.0/01		3
86505999	1.44.0/ B	01	8
86507337	1.88.11/05A	02	6
86511208	1.88.11/07A		25
	391		9
86511646	1.44.0/ B	01	14
86511845	0.36.0		2
	636	07	2
	638	07	2
	639	07	2
86536749	1.44.0/ B	01	5
86547781	993	02	3
86552793	1.44.0/ B	01	7
86552794	1.44.0/ B	01	7
86576091	1.44.0/ B	02	33
86584272	1.44.0/ B	02	17
86584273	1.44.0/ B	02	11
86592700	1.83.0	02	2
86597537	1.44.0/ B	01	27
86619908	995		7
86624194	638	03	4
	639	03	4
86625073	331	04	28
86625128	331/ C	01	12
	331/ C	02	13
86625199	331	04	13
86632588	1.44.0/ B	01	30
	1.44.0/ B	02	31
86642312	902	03	22
86982435	901	04	14
	902	03	14
86982442	900	11	3
86982444	514	04	2
	900	09	11
	900	10	2
86982960	638	03	3
	639	03	3
86982962	638	03	8
	639	03	8
86983163	638	03	9
	639	03	9
86984549	331	05	9
86985587	1.14.0		9
86988086	095		1
	096		1
	331	09	7
86989616	331	05	5
86989733	MPARTS	00	4
	1.82.6	06	4
	1.82.6/01	05	4
86990460	331	03	1
86990712	1.28.0		3
86990713	1.28.0		4
86992395	0.36.0		1
	636	07	1
	638	07	1
	639	07	1
86993546	1.28.0/ A	01	22
	1.28.0/ B	01	1
86994498	638	03	2
	639	03	2
86999310	331	05	14
87000312	331/ C	01	16
	331/ C	02	17
	333/ C	01	16
	333/ C	02	16
87015745	1.83.0	01	11
87016893	638	02	10
	638	05	10
	639	02	10
	639	05	10
87017743	1.39.8		8
87017744	1.39.8		7
87019767	1.28.0		16
	1.28.0/ A	01	8
	1.28.0/ B	01	26
87021704	1.28.0		6
87022296	331	04	16
87030508	1.15.0	01	17
87037944	331/ C	01	4
	331/ C	02	4
	333/ C	01	4
	333/ C	02	4
87302151	1.21.5		26
87302508	638	01	8
	639	01	8
87302554	995		8
87302607	336/01	03	14
87302608	336/01	03	3
	725/01	05	3
87302609	336/01	03	2
	725/01	05	2
87302611	336/01	03	12
	725/01	05	12
87302705	1.95.0	02	20
87302715	803		11
87302760	1.44.0/ B	02	7
87302761	1.44.0/ B	02	8
87302831	803		8
87302958	1.88.01	01	11
87302959	1.88.01	02	6
87302960	1.88.01	02	5
87302961	1.88.01	02	12
87302965	1.88.01	01	16
87302967	1.88.01	02	8
87303261	1.91.3		1
87303400	700	02	9
87303401	700	02	8
87303780	1.87.8		1
87303909	1.88.11/03		12
87303910	337	01	13
	901	04	6
	902	03	6

Number	Figure	Sequence	Ref.
87303912	1.88.11/07A		9
	1.88.11/07C		9
	337	02	11
	900	07	6
87304344	1.44.0/ B	02	1
87304345	1.44.0/ B	02	1
87304810	1.92.6	03	1
87304842	1.88.12/03		24
87304910	646	02	11
87305111	700	01	15
	700	03	1
87305209	700	01	18
	725/01	02	13
87305211	700	02	7
87305413	331	04	26
	993	02	5
87305604	331	09	3
87305611	331	09	2
87305713	1.44.0/ B	02	5
87305953	331	04	26
87306186	333	02	13
87306929	402	06	3
87306930	402	06	7
87306932	402	01	6
87306933	402	06	8
87306934	402	02	21
87307656	331	04	11
87307807	0.06.3/01	02	3
87308018	1.44.0/ B	02	4
87308614	471	02	2
	472	02	2
	473	02	24
	474	02	24
87308749	331/ B	02	12
87308838	331/ C	01	8
	331/ C	02	8
	333/ C	01	8
	333/ C	02	8
87308839	331/ C	01	10
	331/ C	02	10
	333/ C	01	10
	333/ C	02	10
87309923	331	04	1
87309924	331	04	2
87310085	331	04	17
87310098	331	04	22
87310155	638	02	7
	639	02	7
87310285	1.88.08	01	16
87310286	471	02	15
	472	02	15
	473	02	36
	474	02	36
87310354	471	02	27
	472	02	27
	473	02	2
	474	02	2
87310367	473	02	13
	474	02	13
87310368	473	02	11
	474	02	11
87310369	473	02	14
	474	02	14
87310370	473	02	34
	474	02	34
87310372	473	02	10
	474	02	10
87310373	473	02	43
	474	02	43
87310374	473	02	44
	474	02	44
87310375	473	02	26
	474	02	26
87310434	471	02	26
	472	02	26
	473	02	1
	474	02	1
87310951	724/01	02	5
87310952	724/01	02	9
87310961	900	02	21
87311102	302	01	7
	390		3
87311103	302	01	7
	390		3
87311154	1.38.1		7
87311302	302	01	13
87311303	302	01	14
87311306	302	01	13
87311363	700	01	21
	725/01	02	17
87311836	302	01	16
87311838	302	01	16
87312027	1.88.12/03A		15
87312328	471	02	3
	472	02	3
	473	02	21
	474	02	21
87312330	471	02	6
	472	02	6
	473	02	40
	474	02	40
87312331	471	02	17
	472	02	17
	473	02	5
	474	02	5
87312333	471	02	21
	472	02	21
	473	02	25
	474	02	25
87312335	471	02	31
	472	02	31
	473	02	30
	474	02	30
87312340	471	02	18
	472	02	18
	473	02	28
	474	02	28
87312342	471	02	19
	472	02	19
	473	02	27
	474	02	27
87312343	471	02	20
	472	02	20
	473	02	31
	474	02	31
87313720	901	04	13
87313722	901	04	8
87313729	855/01	05	3
87313813	1.92.4	02	2
87313966	1.44.0/ B	01	19
	1.44.0/ B	02	2
87314076	1.39.8		3
	638	01	9
	639	01	9
87314211	1.44.0/ B	01	4
	1.44.0/ B	02	32
87314277	902	03	13
87314278	902	03	8
87314323	346	01	1
	347	01	1
87314330	346	01	7
	347	01	7
87314350	346	01	8
87314351	346	01	12
87314353	346	01	17
87314355	346	01	20
	347	01	5
87314357	346	01	18
87314367	MPARTS	00	7
	346	01	10
	347	01	10
87314369	346	02	5
87314518	346	01	16
87314520	346	01	14
87314524	346	02	12
87314526	346	03	3

Number	Figure	Sequence	Ref.
87314527	346	02	4
	347	02	4
87314554	346	03	6
	347	03	6
87314566	646	04	13
87314726	346	03	1
	347	03	1
87314729	346	03	10
	347	03	7
87314730	346	01	5
87314743	346	04	1
	347	04	1
87314747	346	04	2
	347	04	2
87314749	346	04	3
	347	04	3
87314750	346	04	4
87314751	346	04	14
87314753	346	04	6
	347	04	6
87314767	346	05	17
87314769	346	05	18
	347	05	3
	347	05	6
87314771	346	05	3
87314772	346	05	4
87314773	346	05	5
87314946	346	05	8
87314947	346	05	9
87314948	346	05	10
87315029	346	01	11
	347	01	13
87315236	646	04	11
87315239	646	04	12
87315241	646	04	14
87315252	646	04	4
87315364	646	01	1
87315368	646	01	2
87315371	646	01	3
87315381	646	01	4
87315438	1.82.6	06	3
	1.82.6/01	05	3
87315441	646	02	13
87315446	646	02	14
87315457	646	02	15
87315459	646	02	16
87315460	646	02	17
87315521	1.88.11/02	01	1
87315525	1.88.11/01		1
87315528	1.88.11/06A		1
87315529	1.88.11/09	02	1
	1.88.11/09A		8
87315628	1.87.2		13
87315641	1.87.2		1
87315643	1.87.2		2
87316091	725/01	02	9
87316092	725/01	02	7
87316096	725/01	02	8
87316439	347	01	9
87316442	347	04	5
87316443	347	04	4
87316861	391		3
87318746	1.91.4/02	03	2
87318747	346	03	4
	347	03	4
87318749	1.91.4	03	2
87318750	346	03	5
	347	03	5
87318763	347	06	2
87319018	347	06	1
87319437	346	05	15
	347	05	4
87319443	346	05	21
	347	05	8
87319445	725/01	03	21
87319448	346	05	6
87319727	1.94.0/01		7
87319744	394	01	17
87319754	1.96.7/06		9
87319785	1.93.0	01	6
	1.93.0/01	01	6
87319801	1.93.0	04	1
87319803	1.93.0	04	12
	1.93.0/01	02	12
87323749	1.93.0	04	16
	1.93.0/01	02	8
87324469	646	01	16
87324490	1.95.2		1
87324496	1.95.2		6
87324535	1.95.2		1
87324864	650		1
87324991	1.94.2		1
87326170	1.44.0/ B	02	19
87326256	725/01	03	1
87326257	725/01	06	1
87326258	725/01	04	17
	725/01	06	11
87327044	725/01	06	2
87327046	725/01	06	7
87327049	725/01	06	4
87327052	725/01	06	5
87327053	725/01	06	3
87327057	725/01	06	6
87327076	336/01	01	10
	725/01	03	22
87327251	901	04	2
87327252	902	03	2
87327259	901	04	1
87327264	902	03	1
87327632	725/01	04	16
87331094	721	01	1
	727/01		12
87331276	721	01	15
87334836	1.44.0/ B	01	29
	1.44.0/ B	02	30
87334860	346	04	8
	347	04	8
87334861	346	04	9
	347	04	9
87340008	638	06	5
	639	06	6
87341088	333/01B	02	4
87342131	901	04	3
	902	03	3
87345955	1.39.8		6
87346213	1.98.1	09	11
87346382	1.98.1	09	11
87346911	700	03	8
87348000	1.44.0/ B	01	16
87348002	803		5
87348165	1.89.9/01		4
87349055	1.94.0/01		1
87349058	1.94.0/01		1
87349851	331	04	27
87350247	1.94.0/01		4
87350477	1.82.6	12	1
87351460	1.82.6	12	1
87353314	392	02	3
87353316	392	01	5
87353724	1.92.4	01	11
87353741	1.14.0		12
	1.82.0		38
87354650	1.92.2		1
87354652	1.92.2		2
87355226	1.14.0		1
87356499	1.82.6	12	5
87356501	1.82.6	12	6
87357715	724/ A		7
	724/01	01	2
	724/02		2
	728	03	7
87358140	346	01	4
	347	01	4
87358141	346	01	13
	347	01	11
87358142	346	03	11

Number	Figure	Sequence	Ref.
87358193	728	03	2
87358194	724/ A		4
	728	03	4
87358196	728	03	3
87358201	724/ A		3
87358348	346	03	2
	346	04	7
	347	04	7
87358349	346	04	10
	347	04	10
87358808	437		7
87358815	437		1
87358817	437		8
87358818	437		9
87360424	1.95.5	01	1
	1.95.5/ A	01	1
87361461	1.82.6	12	7
87362065	346	05	13
	347	05	2
87362068	346	01	3
	346	05	12
	347	05	11
87362094	1.93.0	03	5
87362098	1.93.0	03	5
87362336	1.82.3/01		1
87363478	1.88.08	01	9
87364220	851/01	02	17
	855/01	02	17
	856/01	02	3
87364221	851/01	02	17
	855/01	02	17
	856/01	02	3
87368320	638	05	2
	639	05	2
87371811	1.82.6	12	1
87371906	1.91.4	04	5
	1.91.4/02	04	9
87371907	1.91.4	04	4
	1.91.4/02	04	10
87376137	1.82.6	12	10
87376297	1.83.0	06	1
87381987	900	11	10
87381990	900	11	6
87382007	514	01	4
	900	01	4
	900	11	18
	901	01	4
	902	01	4
87382083	514	01	3
	514	04	1
	902	01	3
87382086	514	04	19
87382089	514	04	15
	900	10	15
87382092	514	04	21
87382109	700	01	19
87382112	700	01	19
	725/01	02	11
87382188	514	04	4
87382189	514	04	10
87382190	514	04	3
87382191	514	04	11
87385465	1.83.0	05	1
87386551	437		10
87387139	1.98.0/01		8
87390511	1.88.11/03		3
	1.88.11/07A		16
	1.88.11/07C		16
87390514	1.88.11/03		2
	1.88.11/07A		10
	1.88.11/07C		10
87390530	724/01	01	17
	724/02		17
87390531	724/01	01	12
	724/02		10
87390534	1.88.11/07A		14
	1.88.11/07C		14
87392509	901	02	17
87392509	902	02	17
87392513	901	02	16
	902	02	27
87392516	901	02	27
	902	02	16
87395481	471	02	32
	472	02	32
	473	02	29
	474	02	29
87395482	471	02	29
	472	02	29
	473	02	42
	474	02	42
87395486	473	02	46
	474	02	46
87395582	851/01	01	17
	855/01	01	17
	856/01	01	17
87395588	851/01	02	14
	855/01	02	14
	856/01	02	14
87396450	855/01	04	16
87396492	1.92.4	01	2
87396515	1.92.4	01	2
87396525	1.92.4	02	11
87396528	1.92.4	02	11
87398198	1.95.0	02	1
	1.95.0/ A		1
87400114	1.28.0/ A	01	11
	1.28.0/ B	01	14
87401111	096		3
87402306	331	03	5
87402623	900	09	16
87402742	1.88.11/01		6
87403241	1.82.0		16
87403649	514	04	5
87403672	1.14.6		12
87404427	638	04	13
	639	04	13
87405018	131		8
	321		13
87405628	1.28.0		21
87405629	1.28.0		13
87405706	331	02	18
87405859	1.88.11/01		21
87406299	1.82.0		39
87406750	1.88.11/02	01	17
87406921	1.88.11/06A		11
87406934	1.28.0/ A	01	23
	1.28.0/ B	01	6
87407206	1.75.2	04	3
87407272	638	02	8
	639	02	8
87407275	638	05	1
	639	05	1
87407463	1.82.0		3
87407464	1.82.0		4
87407465	1.82.0		5
87407758	1.28.0		1
87407927	1.96.2	01	11
	1.96.2/01		6
87407928	1.82.0		12
87408277	1.96.7/06		8
87408479	1.28.6		1
87408557	1.28.6		2
87408633	1.88.11/02	01	18
87408634	1.88.11/01		14
87408635	1.88.11/06A		13
87408636	1.88.11/09	02	12
87408893	1.93.0	04	15
	1.93.0/01	02	7
87409201	1.28.0/ A	01	24
	1.28.0/ B	01	12
87409315	1.91.4/02	06	21
87409316	1.75.2	02	7
	1.91.4	06	23
87410099	638	02	11
	639	02	11

Number	Figure	Sequence	Ref.	Number	Figure	Sequence	Ref.
87410105	331	04	8	87428020	1.88.11/02	01	4
87410108	1.93.0/01	02	6	87428023	331/ C	01	3
87410268	1.75.2	04	7		331/ C	02	3
87410385	1.93.0/01	02	1		333/ C	01	3
87410602	995		12		333/ C	02	3
87410647	1.28.0		8	87428627	1.88.11/02	01	13
	638	05	9	87428628	1.88.11/01		25
	639	05	9	87428630	1.88.11/06A		15
87410724	638	03	5	87428631	1.88.11/09	02	11
	639	03	5	87430028	331	05	3
87412400	1.88.11/06A		4	87431300	331	04	29
87414332	1.88.11/02	01	16	87431301	331	04	14
87414333	1.88.11/01		22	87431461	1.91.4/02	03	2
87414334	1.88.11/06A		12	87431469	1.91.4	03	3
87414335	1.88.11/09	02	13		1.91.4/02	03	3
87414340	1.88.11/02	01	14	87433032	1.88.11/09	02	22
87414341	1.88.11/01		23	87433514	331	04	23
87414342	1.88.11/06A		10	87433515	331	04	24
87414343	1.88.11/09	02	25	87433890	1.91.4	03	1
87414560	1.14.6		6		1.91.4/02	04	1
87414964	1.88.11/02	01	12	87433891	1.91.4	03	1
87414965	1.88.11/02	01	11		1.91.4/02	04	1
87414966	1.88.11/01		18	87434992	331	02	1
	1.88.11/09	02	21	87435242	333/ C	02	7
87414969	1.88.11/01		15	87435243	331/ C	02	11
	1.88.11/09	02	23	87435372	331	04	9
87414970	1.88.11/01		17	87435381	095		2
	1.88.11/09	02	16		096		2
87414971	1.88.11/06A		6		331	09	8
87414974	1.88.11/06A		5	87435506	331/ C	01	14
87414975	1.88.11/06A		7		331/ C	02	15
87414983	1.82.6	06	1		333/ C	01	14
87415115	1.88.11/02	01	10		333/ C	02	14
87415116	1.88.11/01		19	87436225	331/ C	01	2
87415208	1.75.2	04	9		331/ C	02	2
87415774	638	06	2		333/ C	01	2
	639	06	2		333/ C	02	2
87415781	321		8	87437366	331	04	5
87415930	1.98.1	09	12	87437369	331	04	6
87416929	131		2	87437371	333/ C	01	19
87416966	638	05	3		333/ C	02	6
	639	05	3	87437372	331/ C	02	12
87416967	1.28.0		10	87437688	331	04	4
87417207	1.82.0		7	87437689	331	04	3
87418368	331	04	20	87437804	1.15.0	02	3
87418369	331	04	21	87438046	331/ C	01	15
87419454	1.96.2/01		1		331/ C	02	16
87419455	1.96.2/01		1		333/ C	01	15
87421143	1.88.11/02	01	15		333/ C	02	15
87421144	1.88.11/01		20	87440396	1.88.11/02	01	20
87421145	1.88.11/06A		9	87440401	1.88.11/01		16
87421149	1.88.11/09	02	20	87440410	1.88.11/06A		8
87421909	331	04	25	87440497	638	01	2
87422777	636	08	1		639	01	4
	638	08	1	87440498	638	01	4
	639	08	1		639	01	7
87422783	1.88.11/09	02	2	87440499	638	01	11
87423802	331	04	7		639	01	10
87423812	331	04	33	87442378	1.93.0/03		5
87424195	1.88.11/02	01	19	87442379	1.93.0/03		4
87424196	1.88.11/01		4	87443692	331	05	4
87424267	331/ C	01	13	87443721	331/ C	01	5
	331/ C	02	14		331/ C	02	5
	333/ C	01	13		333/ C	01	5
	333/ C	02	13		333/ C	02	5
87424838	1.88.11/09	02	10	87445307	1.88.11/09	02	26
87424935	1.88.11/09	02	28	87445758	1.88.11/09	02	27
87425225	331	03	4	87447132	1.29.1		9
87426546	1.93.0/01	02	13	87448432	393		
	1.93.0/03		6		394/01	01	
87426550	1.93.0/01	02	14	87449373	1.82.6	12	8
	1.93.0/03		7	87452511	331	04	19
87426960	331	02	3	87453110	331	02	17
87427004	331	02	2	87453116	331	02	4
87427925	1.75.2	02	12	87453117	331	02	5
87428011	1.88.11/06A		14	87453118	331	02	12
87428014	1.88.11/09	02	9	87455335	1.88.11/09	02	24
87428020	1.88.11/01		24	87473026	1.15.0	01	8

Number	Figure	Sequence	Ref.
87473167	1.83.0	01	1
87473250	1.15.0	01	9
87474192	1.15.0	01	1
87477173	1.83.0	05	6
87516888	1.82.6	02	7
87517471	1.93.0	01	19
	1.93.0/01	01	19
87517988	1.95.0	01	9
87518902	1.95.3		5
87521741	787		2
	787/01		2
87521757	1.91.4	05	2
	1.91.4/02	05	2
87521822	788		2
	788/01		2
87527167	1.91.4	05	12
	1.91.4/02	05	5
87528964	1.95.3		4
87528978	638	02	4
	639	02	4
87529531	321		11
87530041	993	01	7
87530241	1.82.3/01		3
87530709	900	09	14
87530710	900	09	15
87536826	1.91.4	05	8
	1.91.4/02	05	8
87536827	1.91.4	05	9
	1.91.4/02	05	9
87539792	1.91.4	05	13
87540632	1.91.4	05	1
	1.91.4/02	05	1
87540633	1.93.0	01	20
	1.93.0/01	01	20
	1.93.0/02	01	26
87542345	1.44.0/ B	02	6
87542348	1.44.0/ B	02	9
87542350	1.44.0/ B	02	9
87542398	1.44.0/ B	01	1
87543600	1.93.0	01	1
87543654	1.93.0/01	01	1
87543716	1.93.0/02	01	1
87544169	1.75.2	01	1
87546419	1.91.4	01	1
	1.91.4/02	01	2
87546922	331/ C	01	17
	333/ C	01	18
87547309	331/ C	01	11
	333/ C	01	17
87548192	638	03	1
	639	03	1
87550456	1.91.4	05	11
87550746	1.94.2		3
87551537	1.93.5	02	13
	1.93.5/01	02	8
87552124	1.91.4	02	2
87552125	1.91.4	02	13
	1.91.4/02	02	13
87552126	1.91.4	03	2
87552128	1.91.4	06	6
	1.91.4/02	06	12
87552416	1.38.1		4
87552418	1.38.1		1
87552670	1.93.5	02	5
	1.93.5/01	02	5
87553661	1.94.2		2
87554030	638	03	7
	639	03	7
87554286	1.91.4/02	03	2
87554901	1.91.4/02	02	2
87557215	473	02	7
	474	02	7
87557803	1.91.4	05	10
	1.91.4/02	05	10
87558491	1.91.4/02	05	7
87558567	302	01	3
	302	03	1
	700	03	6
87558574	333/01B	01	6
	333/01B	02	1
87558870	302	03	6
87559274	638	04	5
	639	04	5
87559628	638	04	4
	639	04	4
87560586	650		2
87560589	650		3
87561489	638	03	6
	639	03	6
87562089	1.75.2	04	13
87563601	1.14.6		8
	1.14.6/ A		1
87564241	1.75.2	04	1
87564242	1.75.2	01	1
87565124	1.75.2	04	4
87565305	900	08	3
87565311	646	01	3
87565319	646	01	4
87565321	646	02	13
87565322	646	02	14
87565326	646	02	15
87565328	646	02	11
87565346	646	02	17
87567355	1.75.2	04	15
87567356	1.75.2	04	14
	1.94.2		7
87567413	131		9
87567694	346	04	4
87568472	321		4
87569316	646	04	20
87569583	1.82.6	03	5
	1.82.6/01	03	5
87569589	1.87.8		7
87570395	638	04	17
87570398	638	04	16
87571508	995		9
87571509	995		10
87571511	995		11
87571512	995		19
87571513	995		13
87571706	1.14.6		4
87573078	331	09	3
87573079	331	09	2
87573550	471	02	30
	472	02	30
87573552	473	02	45
	474	02	45
87573731	638	04	1
	639	04	1
87573861	471	02	1
	471/01		1
	472	02	1
	473	02	18
	474	02	18
87573868	471/01		9
87574080	471/01		3
87574092	471/01		4
87574097	471/01		7
87574098	471/01		8
87574099	471/01		6
87574189	1.82.0		26
87574479	1.82.6/01	04	3
87574523	471/01		2
87574524	471/01		5
87575394	1.88.08	01	7
87575966	1.98.0/01		10
87576064	514	01	1
	900	01	1
	900	02	1
	901	01	1
	902	01	1
87576855	856		1
	856/01	01	1
	856/01	02	1
	856/01	03	1
	856/01	04	1

Number	Figure	Sequence	Ref.
87576856	856		1
	856/01	01	1
	856/01	02	1
	856/01	03	1
	856/01	04	1
87576858	851		1
	851/01	01	1
	851/01	02	1
	851/01	03	1
	851/01	04	1
87576859	851		1
	851/01	01	1
	851/01	02	1
	851/01	03	1
	851/01	04	1
87576861	855		1
	855/01	01	1
	855/01	02	1
	855/01	03	1
	855/01	04	1
	855/01	05	1
87576862	855		1
	855/01	01	1
	855/01	02	1
	855/01	03	1
	855/01	04	1
	855/01	05	1
87576863	856		2
	856/01	01	1
	856/01	02	1
	856/01	03	1
	856/01	04	1
87576865	856		2
	856/01	01	1
	856/01	02	1
	856/01	03	1
	856/01	04	1
87576866	851		2
	851/01	01	1
	851/01	02	1
	851/01	03	1
	851/01	04	1
87576867	851		2
	851/01	01	1
	851/01	02	1
	851/01	03	1
	851/01	04	1
87576868	855		2
	855/01	01	1
	855/01	02	1
	855/01	03	1
	855/01	04	1
	855/01	05	1
87576869	855		2
	855/01	01	1
	855/01	02	1
	855/01	03	1
	855/01	04	1
	855/01	05	1
87577194	993	02	8
87577246	1.82.0		1
87577359	514	02	5
	900	03	5
	901	02	28
	902	02	29
87581010	993	01	8
87581125	900	11	7
87582179	0.08.2/01		4
87582180	0.08.2/01		4
87583485	901	02	25
87583496	901	02	26
87583508	901	02	4
	902	02	4
87583510	902	02	25
87583516	902	02	26
87587692	0.02.1/01		1
87589234	096		4
87589579	900	04	3
87589951	1.39.8		13
87590894	1.39.8		1
87590903	900	02	3
87591241	1.39.8		2
87591981	900	10	19
87591991	900	10	18
87591992	900	10	4
87592386	900	01	5
	900	03	1
87592724	1.39.8		10
87592822	1.39.8		11
87593493	514	01	5
	514	02	3
87594196	514	02	1
	900	03	4
87594954	900	01	3
	900	10	1
	901	01	3
87596072	1.88.08	02	17
87596086	1.98.0/01		11
87596087	1.98.0/01		12
87596089	993	01	8
87596091	993	01	8
87597003	1.88.08	02	16
87597471	900	09	20
87597479	900	09	2
87597480	900	09	6
87597481	900	09	13
87597482	900	09	4
87597583	900	01	2
	900	09	1
	901	01	2
87597631	175		2
	176		3
87598240	514	03	17
87598244	514	03	2
	900	10	3
87598245	514	03	6
	900	10	11
87598246	514	03	13
87598247	514	03	11
87598248	514	03	12
87598703	902	01	5
	902	02	1
87600615	1.91.4	02	18
	1.91.4/02	02	14
87600654	514	03	5
	900	09	5
87601605	1.91.4/02	04	2
87601608	1.91.4	04	1
87603835	1.83.0	02	13
87607670	519/01		6
87607818	386		6
87607821	387		6
87607824	388		6
87607825	389		6
87607827	390/01		6
87607837	517/01		6
87608143	993	01	7
87608145	993	01	7
87609028	518/01		6
87609039	1.14.6		5
87609121	516/01		6
87609138	1.91.4/02	02	2
87609145	1.91.4	02	2
87609146	1.91.4	02	13
	1.91.4/02	02	13
87609344	515/01		6
87609724	1.98.1	09	7
87610539	333	05	5
	721	05	7
87610565	333	05	6
	721	04	6
87610829	1.88.08	02	14
87610834	1.88.08	02	14
87610858	331/ B	01	5
	331/ B	02	1
	333/01B	01	5

Number	Figure	Sequence	Ref.
87612469	1.14.6/ A		6
87612472	1.14.6/ A		2
87612475	1.14.6/ A		7
87612722	1.39.8		12
87613060	851/01	01	2
	855/01	01	2
87613073	851/01	01	3
87613074	851/01	01	4
	855/01	01	4
87613075	851/01	01	22
	855/01	01	22
	856/01	01	33
87613157	514	01	2
	514	03	20
	902	01	2
87613577	856/01	01	3
87613623	1.83.0	02	17
	1.83.0	04	1
87613641	1.75.2	02	8
87613718	855/01	01	3
87613742	855/01	03	20
87614614	900	05	2
87614627	333	05	2
	721	05	2
87614628	900	05	1
87614629	333	05	1
	721	05	1
87614694	1.83.0	01	9
87614751	1.82.6	02	5
87614752	1.82.6/01	02	4
	728	01	4
87614753	1.82.6	01	9
87615417	993	02	8
87615421	993	02	7
87615422	993	02	7
87615424	993	02	7
87615425	993	02	7
87615426	993	02	7
87615608	855/01	03	17
87615611	855/01	04	5
87615734	333	04	12
	721	04	12
87616236	724/01	02	8
87617261	346	03	8
	347	03	2
87617945	333	04	1
	721	04	1
87618259	347	01	3
87618261	346	01	19
87618272	346	01	6
	347	01	6
87618524	1.15.0	01	1
87619484	1.82.6	15	6
	1.82.6/01	10	6
87619495	1.82.6	14	5
	1.82.6/01	10	14
87619496	1.82.6	14	7
	1.82.6/01	10	7
87619499	728	01	3
87619504	1.82.6/01	07	2
	1.82.6/01	08	4
87619505	1.82.6/01	07	1
	1.82.6/01	08	5
87619506	333	04	4
	721	04	4
87619507	1.82.6	11	3
87619508	1.82.6	10	1
87619509	1.82.6	11	2
87619510	1.82.6	10	2
87619511	901	03	7
87619512	900	05	10
87621518	333	04	2
	721	04	2
87621906	728	01	4
87621907	1.82.6	15	5
	1.82.6/01	10	5
87621908	1.82.6	14	6
	1.82.6/01	10	9
87621910	1.82.6/01	02	8
87621911	901	03	6
87621912	1.82.6/01	01	9
87621913	728	01	5
87621914	900	05	4
87621920	1.82.6	14	8
87622842	724/01	02	2
87624517	724/01	02	12
87624533	900	07	1
87624743	1.83.0	03	6
87624744	1.83.0	03	7
87624745	1.83.0	03	10
87624746	638	01	3
	639	01	3
87626855	1.21.5		1
87628768	1.91.5	01	4
87628806	1.91.5	01	8
87629471	724/01	02	13
87630383	646	04	10
87630384	646	04	7
87630386	646	04	9
87630711	724/01	02	11
87630900	1.88.11		1
87631460	1.82.6	16	7
	1.82.6/01	11	7
87631462	1.82.6	02	15
	1.82.6/01	02	19
87631531	1.82.6/01	10	8
87631623	MPARTS	00	5
	1.19.1		13
87631625	MPARTS	00	6
	1.19.1		14
87631670	1.19.1		15
87631830	290		1
87631832	291		1
87631834	291		1
87632691	1.83.0	01	4
87636291	1.75.2	04	2
87636395	901	03	6
87636396	901	03	7
87636546	1.83.0	02	4
87636636	900	06	1
87636637	900	06	2
87637579	1.19.1		1
87638572	437		3
87638573	437		12
87638574	721	03	7
87638575	333	03	1
87638778	1.14.6		3
87639182	1.15.0	01	2
87639183	1.19.1		3
87639619	901	01	5
	901	02	1
87640751	1.91.4	03	5
	1.91.4/02	03	5
87641276	1.87.2		12
87643906	1.83.0	02	16
87643908	1.83.0	02	11
87643911	1.83.0	06	2
87643912	1.83.0	06	3
87643913	1.83.0	06	4
87646126	646	04	8
87646222	900	11	17
87646604	390		1
	725/01	02	22
87646646	302	01	11
	700	01	14
87647474	1.19.1		10
87647609	1.19.1		11
87647914	392	01	8
87648323	900	11	19
87648324	900	11	2
87648638	392	01	12
87648639	392	02	11
87651689	1.14.6		10
87652764	346	05	23
	347	05	12
87652770	346	05	19

Number	Figure	Sequence	Ref.	Number	Figure	Sequence	Ref.
87652770	347	05	10	87685957	333/ C	01	1
87652862	1.83.0	02	15		335		4
87653086	1.83.0	06	2	87686869	1.83.0	05	4
87653101	1.91.4	04	6	87687141	331/ C	01	18
	1.91.4/02	04	8		331/ C	02	18
87653220	1.83.0	06	3		333/ C	01	20
87653297	1.98.1	08	1		333/ C	02	17
87654073	1.83.0	02	5	87687399	1.83.0	03	9
87654842	514	03	16	87687644	1.98.1	09	6
87654843	900	09	17	87689317	1.91.4	06	5
87654844	514	04	14		1.91.4/02	06	5
87654845	900	10	14	87691652	1.98.1	09	8
87658926	1.15.0	01	3	87694197	1.83.0	03	2
87659514	521		6	87696662	1.83.0	02	10
87661002	520/01		6		1.83.0	05	2
87663635	83.00	01	1	87701340	1.98.1	09	5
87664294	83.00	01	1	87701725	1.19.1		2
87664399	82.00	01	1	87702352	1.14.0		10
87664439	83.00	01	1		1.82.0		15
87664534	82.00	01	1	87729596	888		3
87664555	83.00	01	1	87729597	888		4
87665407	1.93.4		4	87729598	888		1
87669736	1.83.0	06	4	87729599	888		2
87669785	1.83.0	05	3	87729600	888		7
87669786	1.83.0	01	3	87729601	888		8
	1.83.0	03	1	87729602	888		5
87670081	638	02	12	87729603	888		6
	639	02	12	87729606	888		11
87673011	1.83.0	02	7	87729607	888		12
87673334	638	02	3	87729608	888		9
	639	02	3	87729609	888		10
87673335	638	02	1	87734093	331	01	1
	639	02	1		331/ B	01	1
87673338	638	01	16	87734101	331	01	1
	639	01	12		331/ B	01	1
87673339	638	01	17	87734106	333	01	2
	639	01	13		333/01B	01	1
87673346	638	02	5		335		1
	639	02	5	87734107	333	01	1
87673347	638	02	2		335		2
	639	02	2	87734721	302	02	8
87673905	1.15.0	02	1	87735363	302	03	7
87673972	1.40.0	02	2		302	04	7
87673991	1.40.0	02	1	87739122	700	01	22
87674137	1.98.1	09	10		725/01	02	18
87675597	638	02	6	87739689	700	01	20
	639	02	6		725/01	02	15
87676333	1.82.6	01	1	87739987	700	01	2
	1.82.6/01	01	1	87739988	700	01	2
87677466	724/ A		1		725/01	02	10
	724/01	01	1	87741687	1.83.0	02	1
	724/02		1	87742983	1.83.0	03	4
87677506	728	01	8	87743160	1.93.0/01	01	1
	728	03	1	87743161	1.93.0	01	1
87677533	733		1	87743162	1.93.0/02	01	1
87677538	733		13	87745631	1.93.0/02	01	1
87677542	733		6	87747362	900	02	26
87677544	733		8	87748117	1.83.0	02	18
87677546	733		11		1.83.0	05	2
87683149	638	02	9	87749354	1.28.0		5
	639	02	9	87749355	1.28.0		5
87683904	900	05	3	87750941	1.19.1		4
87683905	900	05	5	87758451	331/ B	01	9
87684507	900	06	8		331/ B	11	1
87684508	900	06	8		333/01B	01	10
87684509	900	06	3	87758454	331/ B	01	9
87684511	900	06	3		331/ B	06	1
87685948	331	01	4	87802964	1.98.1	09	9
	331/ C	02	1	87803192	MPARTS	00	1
	333	01	5	87803197	MPARTS	00	1
	335		5		0.20.0/01		6
87685954	331	01	2	87803260	MPARTS	00	3
87685955	333	01	4		0.30.2		1
	333/ C	02	1	87803444	MPARTS	00	2
	335		3		1.14.6/ A		4
87685956	331	01	3	87840170	1.14.6/ A		5
	331/ C	01	1	87840171	1.14.6/ A		3
87685957	333	01	3	87840173	1.14.6/ A		10

Number	Figure	Sequence	Ref.	Number	Figure	Sequence	Ref.
87840177	1.14.6/ A		8	9967673	1.40.0	01	19
87840178	1.14.6/ A		9	9967678	1.40.0	01	23
895-11010	1.82.6	12	9	9967679	1.40.0	01	24
896-11010	636	08	3	9967681	402	01	12
	638	08	3	9967682	402	01	13
	639	08	3	9967683	1.40.0	01	26
89617873	1.82.6	03	9		402	01	15
	1.82.6	04	15	9967687	1.40.0	02	21
	1.82.6/01	03	9		402	03	2
89626929	336/01	01	20	9967734	402	05	9
	336/01	05	15	9967736	402	05	4
	725/01	03	20	9967739	402	05	5
89706729	1.44.0/ B	01	28	9967740	402	05	6
89824050	1.82.6	04	3	9967741	402	05	7
	1.82.6/01	04	10	9967769	1.40.0	01	17
	336/01	01	18		402	01	2
	336/01	05	13	9967970	855/01	01	34
89824051	1.82.6	05	11	9967990	1.40.0	01	15
	1.82.6	06	8		402	01	17
	1.82.6/01	05	7	9967991	1.40.0	01	2
	1.82.6/01	06	11		402	01	18
89825770	336/01	01	17	9967992	1.40.0	01	3
	336/01	05	14		402	01	19
	337	01	17	9967993	1.40.0	01	4
	337	02	17		402	01	20
89991976	1.82.6	01	8	9967994	1.40.0	01	5
	1.82.6	14	3		402	01	21
	1.82.6	15	3	9967995	1.40.0	01	11
	1.82.6/01	01	8		402	01	27
	1.82.6/01	04	17	9967996	1.40.0	01	6
	900	05	6		402	01	22
	900	07	8	9967997	402	01	4
89992298	1.82.6	13	4	9968002	402	01	9
	1.82.6/01	03	10	9968003	402	01	10
	1.82.6/01	09	6	9968004	402	01	11
	1.88.11/03		7	9968005	402	01	14
	1.88.11/07A		2	9968006	1.40.0	01	8
	1.88.11/07C		2		402	01	24
	1.95.5	02	8	9968007	1.40.0	01	9
	337	01	16		402	01	25
	337	02	16	9968008	1.40.0	01	10
	437		16		402	01	26
	721	03	10	9968009	1.40.0	01	12
	725/01	01	2		402	01	28
9824050	725/01	03	18	9968010	1.40.0	01	13
9825770	725/01	03	17		402	01	5
9958776	851/01	02	9	9968019	402	01	7
	855/01	02	9	9968021	1.40.0	02	10
	856/01	02	9		402	02	10
9958792	851/01	03	13	9968022	402	02	11
	856/01	03	13	9968023	402	02	12
9960692	851/01	01	28	9968025	402	02	14
	851/01	02	8	9968028	1.40.0	02	17
	855/01	01	28		402	02	17
	855/01	02	8	9968031	402	04	3
	856/01	01	28	9968032	402	04	2
	856/01	02	8	9968033	402	04	4
9960755	851/01	03	16	9968034	402	04	5
	856/01	03	16	9968037	402	04	13
9960793	851/01	01	20	9968038	402	04	13
	855/01	01	20	9968039	402	04	13
	856/01	01	20	9968040	402	04	13
9960795	851/01	01	19	9968041	402	04	13
	855/01	01	19	9968042	402	04	13
	856/01	01	19	9968043	402	04	13
9960797	851/01	01	32	9968044	402	04	13
	855/01	01	33	9968045	402	04	13
	856/01	01	34	9968046	402	04	13
9960803	851/01	01	30	9968047	402	04	7
	855/01	01	30	9968048	402	04	9
	856/01	01	30	9968049	402	04	8
9962962	851/01	02	5	9968050	402	04	10
	855/01	02	5	9968051	402	04	11
	855/01	04	13	9968052	402	04	12
9966352	402	05	2	9968054	402	05	8
9966354	402	05	3	9968070	1.40.0	02	24
9966356	402	05	11		402	03	9
9967672	402	01	3	9968071	1.40.0	02	25

Number	Figure	Sequence	Ref.	Number	Figure	Sequence	Ref.
9968071	402	03	10	9968259	1.28.0/ B	08	2
9968083	402	03	19	9968260	1.28.0/ A	06	23
9968084	402	03	18		1.28.0/ B	06	23
9968144	522/01		15	9968261	1.28.0/ A	05	27
	525		15		1.28.0/ B	05	27
9968146	522/01		3	9968262	1.28.0/ A	05	26
	525		3		1.28.0/ B	05	26
9968147	522/01		4	9968263	1.28.0/ A	05	26
	525		4		1.28.0/ B	05	26
9968148	522/01		5	9968264	1.28.0/ A	05	26
	525		5		1.28.0/ B	05	26
9968149	522/01		6	9968265	1.28.0/ A	05	26
	525		6		1.28.0/ B	05	26
9968150	522/01		7	9968266	1.28.0/ A	05	26
	525		7		1.28.0/ B	05	26
9968151	522/01		8	9968267	1.28.0/ A	05	26
	525		8		1.28.0/ B	05	26
9968152	522/01		9	9968268	1.28.0/ A	05	24
	525		9		1.28.0/ B	05	24
9968153	522/01		10	9968269	1.28.0/ A	06	17
	525		10		1.28.0/ B	06	17
9968154	522/01		11	9968270	1.28.0/ A	06	8
	525		11		1.28.0/ A	07	3
9968155	522/01		12		1.28.0/ B	06	8
	525		12		1.28.0/ B	07	3
9968156	522/01		13	9968271	1.28.0/ A	06	6
	525		13		1.28.0/ A	07	5
9968218	1.28.0/ A	01	4		1.28.0/ B	06	6
	1.28.0/ A	02	11		1.28.0/ B	07	5
	1.28.0/ A	03	7	9968272	1.28.0/ A	06	7
	1.28.0/ A	07	14		1.28.0/ A	07	4
	1.28.0/ B	02	11		1.28.0/ B	06	7
	1.28.0/ B	03	15		1.28.0/ B	07	4
	1.28.0/ B	07	14	9968273	1.28.0/ A	06	7
9968219	1.28.0/ A	01	5		1.28.0/ A	07	4
	1.28.0/ A	02	9		1.28.0/ B	06	7
	1.28.0/ A	03	6		1.28.0/ B	07	4
	1.28.0/ A	07	10	9968274	1.28.0/ A	06	7
	1.28.0/ B	02	9		1.28.0/ A	07	4
	1.28.0/ B	03	8		1.28.0/ B	06	7
	1.28.0/ B	07	10		1.28.0/ B	07	4
9968223	1.28.0/ A	06	15	9968275	1.28.0/ A	06	7
	1.28.0/ B	06	15		1.28.0/ A	07	4
9968226	1.28.0/ A	05	18		1.28.0/ B	06	7
	1.28.0/ B	05	18		1.28.0/ B	07	4
9968228	1.28.0/ A	05	2	9968276	1.28.0/ A	05	17
	1.28.0/ B	05	2		1.28.0/ B	05	17
9968229	1.28.0/ B	08	11		1.28.0/ B	08	3
9968230	1.28.0/ A	05	30	9968277	1.28.0/ A	07	1
	1.28.0/ B	05	30		1.28.0/ B	07	1
9968232	1.28.0/ B	08	10	9968278	1.28.0/ A	06	22
9968233	1.28.0/ B	08	17		1.28.0/ B	06	19
9968234	1.28.0/ B	08	12	9968279	1.28.0/ A	05	1
9968235	1.28.0/ B	08	15		1.28.0/ B	05	1
9968236	1.28.0/ B	08	16	9968280	1.28.0/ A	07	2
9968239	1.28.0/ B	08	9		1.28.0/ B	07	2
9968240	1.28.0/ B	08	7	9968281	1.28.0/ A	05	25
9968244	1.28.0/ B	08	4		1.28.0/ B	05	25
9968246	1.28.0/ A	06	18	9968282	1.28.0/ A	05	28
	1.28.0/ B	06	18		1.28.0/ B	05	28
9968247	1.28.0/ A	06	16	9968285	1.28.0/ A	05	21
	1.28.0/ B	06	16		1.28.0/ B	05	21
9968248	1.28.0/ A	06	13	9968286	1.28.0/ A	05	5
	1.28.0/ B	06	13		1.28.0/ B	05	5
9968249	1.28.0/ B	06	9	9968287	1.28.0/ A	05	9
9968250	1.28.0/ A	06	11		1.28.0/ B	05	9
	1.28.0/ B	06	11	9968288	1.28.0/ A	05	10
9968251	1.28.0/ A	06	12		1.28.0/ B	05	10
	1.28.0/ B	06	12	9968289	1.28.0/ A	05	12
9968252	1.28.0/ A	06	10		1.28.0/ B	05	12
	1.28.0/ B	06	10	9968290	1.28.0/ A	05	11
9968253	1.28.0/ A	06	21		1.28.0/ B	05	11
	1.28.0/ B	06	21	9968291	1.28.0/ A	05	6
9968254	1.28.0/ B	08	8		1.28.0/ B	05	6
9968255	1.28.0/ B	08	1	9968297	1.28.0/ B	08	14
9968256	1.28.0/ B	08	2	9968298	1.28.0/ B	08	13
9968257	1.28.0/ B	08	2	9968299	1.28.0/ A	04	14
9968258	1.28.0/ B	08	2		1.28.0/ B	04	14

Number	Figure	Sequence	Ref.	Number	Figure	Sequence	Ref.
9968300	1.28.0/ B	08	21	9968356	1.28.0/ A	01	7
9968301	1.28.0/ B	08	19		1.28.0/ B	01	5
9968302	1.28.0/ A	05	4	9968358	1.28.0/ A	06	20
	1.28.0/ B	05	4		1.28.0/ B	06	20
9968304	1.28.0/ A	05	3	9968359	1.28.0/ A	01	15
	1.28.0/ B	05	3		1.28.0/ B	01	17
9968305	1.28.0/ A	05	22	9968360	1.28.0/ A	01	17
	1.28.0/ B	05	22		1.28.0/ B	01	19
9968306	1.28.0/ A	06	2	9968361	1.28.0/ A	01	16
	1.28.0/ B	06	2		1.28.0/ B	01	18
	1.28.0/ B	08	23	9968362	1.28.0/ A	01	19
	1.38.1		12		1.28.0/ B	01	21
9968307	1.28.0/ A	06	14	9968364	1.28.0/ A	02	12
	1.28.0/ B	06	14		1.28.0/ B	02	12
9968308	1.28.0/ A	06	1	9968365	1.28.0/ A	01	21
	1.28.0/ B	06	1		1.28.0/ B	01	10
	1.28.0/ B	08	18	9968368	1.28.0/ A	02	10
	1.38.1		3		1.28.0/ B	02	10
9968309	1.28.0/ A	06	3	9968370	1.28.0/ A	04	19
	1.28.0/ B	06	3		1.28.0/ B	04	19
	1.28.0/ B	08	22	9968371	1.28.0/ A	02	5
	1.38.1		11		1.28.0/ B	02	5
9968311	1.28.0/ A	01	9	9968374	1.28.0/ A	03	13
	1.28.0/ B	01	11		1.28.0/ B	03	11
9968312	1.28.0/ A	01	10	9968375	1.28.0/ A	03	14
9968313	1.28.0/ A	01	14		1.28.0/ B	03	10
	1.28.0/ B	01	22	9968382	1.28.0/ B	02	8
9968314	1.28.0/ A	05	29	9968383	1.28.0/ B	02	14
	1.28.0/ B	05	29	9968393	1.28.0/ B	08	6
9968315	1.28.0/ A	07	9	9968396	1.28.0/ A	06	19
	1.28.0/ B	07	9	9968438	725/01	04	7
9968316	1.28.0/ A	07	8	9968439	725/01	04	5
	1.28.0/ B	07	8	9968440	336/01	02	8
9968317	1.28.0/ A	07	11		344	01	4
	1.28.0/ B	07	11		721	01	14
9968318	1.28.0/ A	07	12		725/01	04	8
	1.28.0/ B	07	12	9968441	336/01	02	6
9968319	1.28.0/ A	07	6		344	01	6
	1.28.0/ B	07	6		721	01	13
9968322	1.28.0/ A	07	7		725/01	04	6
	1.28.0/ B	07	7	9968443	336/01	02	3
9968323	1.28.0/ A	07	13		725/01	04	3
	1.28.0/ B	07	13	9968444	336/01	03	6
9968324	1.28.0/ A	04	9		725/01	05	6
	1.28.0/ B	04	9	9968445	336/01	03	7
9968326	1.28.0/ A	04	11		725/01	05	7
	1.28.0/ B	04	11	9968446	336/01	03	8
9968327	1.28.0/ A	04	10		725/01	05	8
	1.28.0/ B	04	10	9968447	1.82.6/01	12	10
9968328	1.28.0/ A	04	12		336/01	03	11
	1.28.0/ B	04	12		725/01	05	11
9968333	1.28.0/ A	02	6	9968448	1.82.6/01	12	9
	1.28.0/ B	02	6		336/01	03	10
9968334	1.28.0/ A	02	2		725/01	05	10
	1.28.0/ B	02	2	9968449	336/01	03	9
9968336	1.28.0/ A	03	3		725/01	05	9
	1.28.0/ B	03	7	9968451	336/01	01	12
9968337	1.28.0/ B	03	3		725/01	03	12
9968339	1.28.0/ A	01	20	9968454	336/01	01	14
	1.28.0/ B	01	9		725/01	03	14
9968340	1.28.0/ B	03	6	9968455	336/01	01	4
9968341	1.28.0/ A	05	19		725/01	03	4
	1.28.0/ B	05	19	9968456	336/01	01	6
9968342	1.28.0/ A	05	20		725/01	03	6
	1.28.0/ B	05	20	9968457	336/01	01	5
9968343	1.28.0/ A	05	20		725/01	03	5
	1.28.0/ B	05	20	9968458	1.82.6/01	13	11
9968344	1.28.0/ A	05	20		1.82.6/01	14	11
	1.28.0/ B	05	20		336/01	01	7
9968345	1.28.0/ A	05	20		725/01	03	7
	1.28.0/ B	05	20	9968460	1.82.6/01	13	12
9968347	1.28.0/ A	05	23		1.82.6/01	14	12
	1.28.0/ B	05	23		336/01	01	21
9968350	1.28.0/ A	02	1		344	02	12
	1.28.0/ B	02	1		721	02	12
9968351	1.28.0/ B	01	8		725/01	03	8
9968354	1.28.0/ A	03	12	9968461	336/01	04	6
	1.28.0/ B	03	12	9968464	336/01	02	1

Number	Figure	Sequence	Ref.
9968464	336/01	05	10
	725/01	04	1
9968465	336/01	04	2
9968466	336/01	02	12
	336/01	04	4
	336/01	05	4
	725/01	04	12
9968467	336/01	02	11
	336/01	04	3
	336/01	05	3
	725/01	04	11
9968468	1.82.6/01	12	8
	336/01	02	13
	336/01	04	5
	336/01	05	5
	725/01	04	13
9968470	336/01	03	5
	725/01	05	5
9968471	336/01	03	4
	725/01	05	4
9968476	336/01	02	2
	344	01	8
	721	01	8
	725/01	04	2
	725/01	06	10
9968477	344	02	9
	721	02	9
	725/01	06	8
9968478	344	02	10
	721	02	10
	725/01	06	9
9968480	344	02	11
	721	02	11
9968481	344	02	4
	721	02	4
9968483	344	02	6
	721	02	6
9968484	344	02	7
	721	02	7
9968486	344	02	8
	721	02	8
9968488	336/01	02	14
	336/01	05	8
	725/01	04	14
9968489	1.82.6/01	13	2
	1.82.6/01	14	2
	336/01	01	8
	725/01	03	9
9968490	1.82.6/01	13	3
	1.82.6/01	14	3
	336/01	01	9
	725/01	03	10
9968494	1.82.6/01	12	14
9968495	1.82.6/01	12	12
	1.82.6/01	13	1
	1.82.6/01	14	1
9968497	1.82.6/01	12	6
9968498	1.82.6/01	12	7
9968500	1.82.6/01	12	4
9968501	1.82.6/01	12	2
9968502	1.82.6/01	12	3
9968503	1.82.6/01	12	5
9968504	1.82.6/01	12	29
9968505	1.82.6/01	12	29
9968506	1.82.6/01	12	16
9968507	1.82.6/01	12	17
9968508	1.82.6/01	12	28
9968510	1.82.6/01	13	9
	1.82.6/01	14	9
9968511	1.82.6/01	13	10
	1.82.6/01	14	10
9968512	1.82.6/01	13	4
	1.82.6/01	14	4
9968513	1.82.6/01	13	7
	1.82.6/01	14	7
	336/01	01	19
	725/01	03	19
9968514	1.82.6/01	13	5
9968514	1.82.6/01	14	5
9968515	1.82.6/01	13	6
	1.82.6/01	14	6
9968516	1.82.6/01	13	8
	1.82.6/01	14	8
9968520	336/01	02	7
9968521	336/01	02	5
9968523	1.82.6/01	12	23
9968524	344	01	7
	721	01	7
9968526	721	01	10
	721	02	1
9968527	344	01	11
	721	01	11
9968528	721	01	6
9968529	721	01	12
9968531	344	02	5
	721	02	5
9968532	344	01	12
9968533	344	01	10
9968595	1.82.6/01	12	26
	724/02		18
	725/01	06	12
9968596	1.82.6/01	12	27
9968676	1.28.0/ A	03	8
	1.28.0/ B	03	4
9968791	1.82.6	03	10
	1.82.6/01	03	13
9968884	803		2
9968885	803		1
9968886	803		1
9968926	1.28.0/ A	04	17
	1.28.0/ B	04	17
9968927	1.28.0/ A	04	18
	1.28.0/ B	04	18
9969170	522/01		2
	525		2
9969281	1.28.0/ A	04	13
	1.28.0/ B	04	13
9969380	1.82.0		21
9969445	1.28.0/ A	04	4
	1.28.0/ B	04	4
9969449	1.28.0/ A	03	4
9970107	344	01	9
	344	02	1
	721	01	9
9970179	724/ A		5
9970181	724/ A		2
9970383	728	03	5
9970384	337	01	20
	337	02	20
	724/ A		6
	728	03	6
9972160	851/01	01	16
	851/01	02	13
	855/01	01	16
	855/01	02	11
	856/01	01	16
	856/01	02	11
9991976	721	05	4
9992069	333	04	13
	721	03	11
	721	04	13
	721	05	6
9992298	333	04	14
	721	03	6
	721	04	14
D139225	MPARTS	00	2
D149079	514	03	19
	514	04	16
	900	09	19
	900	10	16
D38858	900	11	8
D95143	901	04	9
	902	03	9
D95146	514	03	3
	514	04	18
	900	09	3

Number	Figure	Sequence	Ref.	Number	Figure	Sequence	Ref.
D95146	900	10	13				
	900	11	13				
G100443	902	03	16				
G100444	901	04	7				
	902	03	7				
G100449	901	04	17				
	902	03	17				
G100709	900	11	15				
G100710	900	11	16				
G100711	900	11	9				
G102090	514	03	1				
	900	10	7				
G102091	514	03	15				
	900	10	5				
G102092	514	03	14				
	900	10	6				
G102288	901	04	16				
G102425	901	04	11				
	902	03	11				
G107277	901	04	15				
	902	03	15				
G107970	514	03	9				
	900	10	10				
G109298	901	04	12				
	902	03	12				
G109395	514	03	4				
	514	04	13				
	900	09	18				
	900	10	21				
	900	11	20				
	901	04	22				
G109908	514	03	8				
	514	04	8				
	900	09	8				
	900	10	8				
	900	11	1				
NS	855/01	03	11				
	855/01	03	19				
	855/01	03	22				
	855/01	03	23				
	855/01	03	24				
	855/01	03	6				
	855/01	04	10				
	855/01	04	11				
	855/01	04	12				
	855/01	04	4				
	855/01	04	6				
	855/01	04	7				
	855/01	04	8				
	855/01	04	9				
	855/01	05	10				
	855/01	05	11				
	855/01	05	12				
	855/01	05	4				
	855/01	05	5				
	855/01	05	6				
	855/01	05	9				

NOTES

NEW HOLLAND

CATALOGUE DES PIÉCES

CHARGEUSE PELLETEUSE

B95B
PHASE 3

Bur • Publication 01Feb 08
Imprimé aux États-Unis • Réf. Catalogue/formulaire 87659788 FC
Copyright © 2006. CNH America, LLC. Tous droits réservés.

La société CNH America LLC se réserve le droit de modifier sans préavis la conception ou les caractéristiques de ses machines, et ce sans encourir d'obligation quelconque de mettre en place les nouvelles caractéristiques sur des machines déjà en service.

Toutes les informations fournies dans ce manuel sont susceptibles de varier selon les besoins de la production. Les dimensions et les masses indiquées sont approximatives. Les illustrations ne montrent pas nécessairement les produits en état standard. Pour obtenir des données précises au sujet d'un modèle de machine particulier, consulter un concessionnaire.

LISTE DE RÉVISIONS			
Publication	Date de publication	Machines concernées	Remarques
Première édition	01Feb 08	B95B Phase 3 Chargeuse Pelleteuse	87659788 FC

L'utilisation du texte ou des images de ce manuel est strictement interdite sans l'autorisation écrite de
CNH America LLC. Carol Stream, IL 60188 États-Unis

TABLE OF CONTENTS

MAIN		SECTIONS PRINCIPALES
MPARTS	00	PIÈCES POUR L'ENTRETIEN
SEC. 01	03	MOTEUR
SEC. 01	04	MOTEUR
SEC. 02		RESERVOIR A COMBUSTIBLE-SILENCIEUX-RADIATEUR-FILTRE A AIR
SEC. 03	01	BOÎTE DE VITESSES
SEC. 04		ESSIEU AVANT
SEC. 05		ESSIEU ARRIERE
SEC. 06		ELECTRIQUE
SEC. 07		DISTRIBUTEURS
SEC. 08		AUVENT
SEC. 09	01	CHARGEUR
SEC. 09	03	RETRO
SEC. 11		ROUES
SEC. 18		VARIANTES
0.0040/01	01	EQUIPEMENT OPTIONNEL - NA
0.0040/01	02	EQUIPEMENT OPTIONNEL - NA
0.0040/01	03	EQUIPEMENT OPTIONNEL - NA
0.02.1/01		MOTEUR
0.04.0/01		BLOC CYLINDRE
0.04.2		CARTER D'HUILE
0.04.3/01	01	COUVERCLES DE BATI
0.04.3/01	02	COUVERCLES DE BATI
0.04.3/01	03	COUVERCLES DE BATI
0.06.0/01		CULASSE DE CYLINDRE
0.06.3/01	01	COUVERCLES CULASSE
0.06.3/01	02	COUVERCLES CULASSE
0.06.6/01		AXE DE CULBUTEUR
0.07.1/01		CONDUIT D'ADMISSION
0.07.7/01		CONDUIT D'ECHAPPEMENT
0.08.0		VILEBREQUIN
0.08.1/01		BIELLE
0.08.2/01		PISTON - MOTEUR
0.08.3		VOLANT - MOTEUR
0.08.4		POULIE - VILEBREQUIN
0.10.5	01	MASSELOTTE, ENGRENAGES ET ARBRES
0.10.5	02	MASSELOTTE, ENGRENAGES ET ARBRES
0.12.0/01		ARBRE A CAMES - COMMANDE DE DISTRIBUTION
0.14.0/01	01	POMPE D'INJECTION
0.14.0/01	02	GROUPE D'INJECTION - INJECTEUR
0.14.0/01A		POMPE D'INJECTION - COMPOSANTS
0.14.9/01		GROUPE D'INJECTION - TUYAUTERIE
0.17.0		INJECTION ELECTRONIQUE
0.17.3		INSTALLATION ELECTRIQUE MOTEUR
0.20.0/01		FILTRE COMBUSTIBLE
0.20.3/01		TUYAUTERIES - COMBUSTIBLE
0.20.4/01		GROUPE D'INJECTION - TUYAUTERIE
0.24.0/01		TURBOCOMPRESSEUR
0.27.0/01		JAUGE DE NIVEAU - HUILE MOTEUR
0.30.0		POMPE A HUILE - MOTEUR
0.30.2		FILTRE A HUILE - MOTEUR

TABLE OF CONTENTS

0.30.5/01		TUYAUTERIES - HUILE DU MOTEUR
0.31.5/01		EXCHANGEUR DE TEMPERATURE - MOTEUR
0.32.0		POMPE A EAU
0.32.3/01		CIRCUIT DE REFROIDISSEMENT - MOTEUR
0.32.6/01		THERMOSTAT - REFROIDISSEMENT MOTEUR
0.34.0/01		POMPE A EAU - COMMANDE
0.34.5		COMMANDE DE VENTILATEUR
0.36.0		ACCESOIRE MOTEUR
0.40.0/01		ALTERNATEUR
0.45.0/01		CROCHETS DE MANOEUVRE - MOTEUR
1.14.0		RÉSERVOIR DE CARBURANT ET ACCESSOIRES
1.14.6		TUYAU COMBUSTIBLE
1.14.6/ A		FILTRE A COMBUSTIBLE
1.15.0	01	SILENCIEUX ET EXTENSIONS
1.15.0	02	TUYAU D'ÉCHAPPEMENT
1.19.1		FILTRE À AIR ET TUYAUX FLEXIBLES
1.21.5		CHASSIS (CENTER PIVOT)
1.28.0		TRANSMISSION
1.28.0/ A	01	COMPOSANTS DU CONVERTISSEUR DE COUPLE (2WD POWER-SHUTTLE)
1.28.0/ A	02	COMPOSANTS EXTERNES TRANSMISSION (2WD POWER-SHUTTLE)
1.28.0/ A	03	COMPOSANTS TRANSMISSION HYDRAULIQUE (2WD POWER-SHUTTLE)
1.28.0/ A	04	FREIN DE PARCAGE (2WD POWER-SHUTTLE)
1.28.0/ A	05	ROUAGES CHANGEMENT DE VITESSE (2WD POWER-SHUTTLE)
1.28.0/ A	06	ARBRE DE TRANSMISSION AVANT (2WD POWER-SHUTTLE)
1.28.0/ A	07	ENGRENAGES DE COMMANDE DE LA TRANSMISSION (2WD POWER-SHUTTLE)
1.28.0/ B	01	COMPIÈCES DU CONVERTISSEUR COUPLE ET ENGRENAGES DE COMMANDE DE LA TRANSMISSION (4WD POWER-SHUTTLE)
1.28.0/ B	02	COMPOSANTS EXTERNES DE LA TRANSMISSION (4WD POWER-SHUTTLE)
1.28.0/ B	03	COMPOSANTS HYDRAULIQUES DE LA TRANSMISSION (4WD POWER-SHUTTLE)
1.28.0/ B	04	FREIN DE PARCAGE (4WD POWER-SHUTTLE)
1.28.0/ B	05	ROUAGES CHANGEMENT DE VITESSE (4WD POWER-SHUTTLE)
1.28.0/ B	06	ARBRE DE TRANSMISSION AVANT (4WD POWER-SHUTTLE)
1.28.0/ B	07	ENGRENAGES DE COMMANDE DE LA TRANSMISSION (4WD POWER-SHUTTLE)
1.28.0/ B	08	ENGRENAGES ARBRE D'ENTRAÎNEMENT ARRIÈRE (4WD POWER-SHUTTLE)
1.28.6		JAUGE DE NIVEAU / FAIRE L'APPOINT (POWER-SHUTTLE)
1.29.1		COMMANDES EXTERIEURES (POWER-SHUTTLE)
1.38.1		ARBRE DE TRANSMISSION AVANT ET ARRIÈRE (POWER-SHUTTLE)
1.39.8		TUBULURES DE REFROIDISSEMENT HUILE TRANSMISSION (POWER-SHUTTLE)
1.40.0	01	ESSIEU AV (2WD)
1.40.0	02	ENSEMBLE DIRECTION ET MOYEUX AVANT (2WD)
1.42.0		INSTALLATION HYDRAULIQUE DIRECTION HYDROSTATIQUE
1.44.0/ B	01	ESSIEU ARRIERE (POWER-SHUTTLE) (CENTER PIVOT) - NA
1.44.0/ B	02	ENSEMBLE BLOCAGE DIFFÉRENTIEL ET ENGAGEMENT (POWER SHUTTLE) (CENTER PIVOT) - NA
1.44.0/ B	03	ENSEMBLE JEU ENGRENAGES CONIQUES PONT ARRIÈRE (POWER SHUTTLE) (CENTER PIVOT) - NA
1.44.1		COMMANDE DU DIFFERENTIEL (POWER-SHUTTLE)
1.44.1/01		COMMANDE DU DIFFERENTIEL (POWER-SHUTTLE) (CENTER PIVOT) - NA
1.75.2	01	CÂBLAGE ARRIÈRE CHÂSSIS ET CÂBLE DE TERRE (POWER SHUTTLE) - NA
1.75.2	02	INTERRUPTEUR VERROUILLAGE BATTERIE ET CABLE TERRE (POWER SHUTTLE) - NA

TABLE OF CONTENTS

1.75.2	04	CABLAGE MOTEUR (POWER SHUTTLE) - NA
1.82.0		RESERVOIR HUILE HYDRAULIQUE
1.82.3/01		POMPE HYDRAULIQUE (35+35-154L/MM)
1.82.6	01	TUYAUX CIRCUIT HYDRAULIQUE: DÉBIT HUILE POMPE
1.82.6	02	TUYAUX CIRCUIT HYDRAULIQUE: DÉBIT DISTRIBUTEUR
1.82.6	03	TUYAUX CIRCUIT HYDRAULIQUE: PRISE PRESSION
1.82.6	04	TUYAUX CIRCUIT HYDRAULIQUE: VIDANGE DISTRIBUTEUR
1.82.6	05	TUYAUX CIRCUIT HYDRAULIQUE: RETOUR AU RÉSERVOIR
1.82.6	06	TUYAUX CIRCUIT HYDRAULIQUE: FILTRE À HUILE ET CLAPET DE NON-RETOUR
1.82.6	07	TUYAUX CIRCUIT HYDRAULIQUE: VÉRINS ÉQUIPEMENT CHARGEUR
1.82.6	10	TUBULURES CIRCUIT HYDRAULIQU
1.82.6	11	TUBULURES CIRCUIT HYDRAULIQUE
1.82.6	12	TUYAUX CIRCUIT HYDRAULIQUE 4WS (CENTER PIVOT) - NA
1.82.6	13	TUYAUX CIRCUIT HYDRAULIQUE: VÉRIN DE ROTATION
1.82.6	14	TUYAUX CIRCUIT HYDRAULIQUE: VÉRIN DE L'ÉQUIPEMENT RÉTRO
1.82.6	15	TUYAUX CIRCUIT HYDRAULIQUE: VÉRIN FLÈCHE DE L'ÉQUIPEMENT RÉTRO
1.82.6	16	CRAMPONS MANCHONS PLAQUE ROTATION (CENTER PIVOT)
1.82.6/01	01	ASPIRATION POMPE HYDRAULIQUE AVANT ET FLEXIBLES SORTIE (CENTER PIVOT) - NA
1.82.6/01	02	STABILISATEUR POMPE HYDRAULIQUE ARRIERE, MANCHONS SOUPAPES CHARGEUSE ET EXCAVATRICE (CP) - NA
1.82.6/01	03	TUYAUX CIRCUIT HYDRAULIQUE (CENTER PIVOT) - NA: PRISE PRESSION
1.82.6/01	04	TUYAUX COLLECTEUR RETOUR - NA
1.82.6/01	05	GROUPE FILTRE & TUYAUX COLLECTEUR RETOUR (CENTER PIVOT) - NA
1.82.6/01	06	TUYAUX CIRCUIT HYDRAULIQUE (CENTER PIVOT) - NA: RETOUR AU RÉSERVOIR
1.82.6/01	07	TUYAUX CYLINDRE RELEVAGE CHARGEUSE (CENTER PIVOT) - NA
1.82.6/01	08	TUYAUX CYLINDRE GODET CHARGEUSE (CENTER PIVOT) - NA
1.82.6/01	09	TUYAUX CYLINDRES OSCILLATION EXCAVATRICE (CENTER PIVOT) - NA
1.82.6/01	10	TUYAUX DISTRIBUTEURX EXCAVATRICE (CENTER PIVOT) - NA
1.82.6/01	11	CRAMPONS MANCHONS PLAQUE ROTATION (CENTER PIVOT) - NA
1.82.6/01	12	DISTRIBUTEUR EXCAVATRICE (CENTER PIVOT) - NA
1.82.6/01	13	SECTION VANNE PELLE (CENTER PIVOT) - NA
1.82.6/01	14	SECTION VANNE GODET, FLECHE ET BARRE OSCIL. (CENTER PIVOT) - NA
1.83.0	01	GRILLE ET ACCESSOIRES
1.83.0	02	PROTECTION ET ACCESSOIRES
1.83.0	03	JEU BLOCAGE PORTE
1.83.0	04	ENSEMBLE PLAQUE DE BLOCAGE
1.83.0	05	JEU DE FIXATION PROTECTION ANTIRENVERSEMENT
1.83.0	06	COMPOSANTS DE L'ENSEMBLE PROTECTION ANTIRENVERSEMENT
1.87.2		ECRANS CABINE
1.87.8		PIECES DE FIXAGE A LA CABINE
1.88.01	01	TIRANT BLOCAGE TRANSPORT ÉQUIPEMENT ARRIÈRE (CENTER PIVOT) - NA
1.88.01	02	CÂBLE BLOCAGE TRANSPORT ÉQUIPEMENT ARRIÈRE (CENTER PIVOT) - NA
1.88.08	01	GROUPE BARRE OSCIL., DOUILLES ET AXES
1.88.08	02	AXES BARRE OSCIL. ET CROCHET BLOCAGE TRANSPORT
1.88.11		BRAS ET JOINTS
1.88.11/01		VERIN DE RELEVAGE
1.88.11/02	01	VERIN COMMANDE BENNE
1.88.11/02	02	VERIN COMMANDE BENNE
1.88.11/03		TUYAUX DU CYLINDRE RELEVAGE ET BENNE

TABLE OF CONTENTS

1.88.11/05A	01	JONCTIONS AUTONIVELEUSES, COMMANDES CHARGEUSE (CENTER PIVOT MECANIQUE) - NA
1.88.11/05A	02	JONCTIONS AUTONIVELEUSES, BRAS CHARGEUSE (CENTER PIVOT) - NA
1.88.11/06A		VERINS STABILISATEURS (CENTER PIVOT)
1.88.11/07A		CONDUITS POUR VERINS STABILISATEURS (CENTER PIVOT PILOT)
1.88.11/07C		CONDUITS POUR VERINS STABILISATEURS (CENTER PIVOT MECANIQUE) - NA
1.88.11/08		DETECTEUR RETOUR FOUILLE
1.88.11/09	02	CYLINDRES ARRIÈRES D'OSCILLATION
1.88.11/09A		VERINS ET PLAQUE DE ROTATION (CENTER PIVOT)
1.88.12/03		SUPPORT DISTRIBUTEURS AVANT ET RENVOIS (CENTER PIVOT - SIDE SHIFT)
1.88.12/03A		SUPPORT DISTRIBUTEURS AVANT ET RENVOIS (CENTER PIVOT) - NA
1.89.9/01		SUPPORT DISTRIBUTEUR ARRIERE HUSCO (CENTER PIVOT) - NA
1.91.1		CABINE : LAMPE PLAFONNIER
1.91.1/01		CHASSIS DE SURETE: APPAREILS DE CONTROL (ROPS) - NA
1.91.3		ALARME AUXILIAIRE
1.91.4	01	CÂBLAGE TOIT CABINE (CABINE, POWER SHUTTLE)
1.91.4	02	CENTRALE BOÎTE À FUSIBLES (CABINE, POWER SHUTTLE)
1.91.4	03	BOUTON ALLUMAGE, POINT ALLUM., FUSIBLES & CABL. CONSOLE LAT. (CAB PT)
1.91.4	04	CÂBLAGE AVANT ET CENTRALE (CABINE, POWER SHUTTLE)
1.91.4	05	TABLEAU DE BORD AVANT (CAB POWER SHUTTLE)
1.91.4	06	COMPOSANTS CIRCUIT ÉLECTRIQUE CABINE (CABINE, POWER SHUTTLE)
1.91.4/02	01	CÂBLAGE TOIT CABINE (ROPS POWER SHUTTLE)
1.91.4/02	02	CENTRALE BOÎTE À FUSIBLES (ROPS POWER SHUTTLE)
1.91.4/02	03	BOUTON ALLUMAGE, POINT ALLUM., FUSIBLES & CABL. CONSOLE LAT. (ROPS PT)
1.91.4/02	04	CÂBLAGE AVANT ET CENTRALE (ROPS POWER SHUTTLE)
1.91.4/02	05	CONSOLE DROITE AVEC INSTRUMENTS (ROPS POWER SHUTTLE) - NA
1.91.4/02	06	COMPOSANTS CIRCUIT ÉLECTRIQUE CABINE (ROPS POWER SHUTTLE)
1.91.5	01	LAVE-VITRE/ESSUIE-VITRE AVANT ET ARRIERE
1.91.5	02	RESERVOIR ET BUSES ESSUIE-GLACE
1.91.6		ANTENNE RADIO & CALOTTE HAUT-PARLEURS
1.91.7/01		LAMPES ET PHARES - ROPS - NA
1.91.7/02		LAMPES ET PHARES - CABINE - NA
1.92.2		CABINE: CHASSIS- PORTES
1.92.3		VITRES AVANT ET JOINTS
1.92.4	01	DISPOSITIFS DE SERRAGE VITRES LATÉRALES PORTE
1.92.4	02	DISPOSITIFS DE SERRAGE VITRES LATÉRALES CABINE
1.92.4	03	VITRES LATÉRALES
1.92.5		GARDE-BOUE ARRIERE
1.92.6	01	COMPOSANTS DEFINITIONDES PORTES
1.92.6	02	COMPOSANTS COMPLÈTEMENT PORTE: CÔTÉ INFÉRIEUR
1.92.6	03	COMPOSANTS CHARNIÈRES FERMETURE PORTE
1.92.8		JOINT ATTRAPE-FLAMME, ROPS (POWER SHUTTLE)
1.92.9	01	VITRES ARRIÈRE ET COMPOSANTS
1.92.9	02	CHARNIÈRE FERMETURE VITRE ARRIÈRE
1.92.9	03	CHARNIÈRES ET FERMETURE VITRE ARRIÈRE
1.93.0	01	CABINE : REVETEMENT (POWER SHUTTLE, POWER SHIFT)
1.93.0	02	CABINE : REVETEMENT (POWER SHUTTLE, POWER SHIFT)
1.93.0	03	CABINE / COUVERTURES LATÉRALES ET PLANCHER AVANT (POWER SHUTTLE: POWER SHIFT)
1.93.0	04	CABINE / CONSOLE ARRIÈRE ET PLANCHER (POWER SHUTTLE: POWER SHIFT)
1.93.0/01	01	CABINE : REVETEMENT (POWER SHUTTLE, POWER SHIFT)

TABLE OF CONTENTS

1.93.0/01	02	CABINE / PLANCHER ET COMPOSANTS (POWER SHUTTLE: POWER SHIFT)
1.93.0/02	01	COUVERTURE DROITE, CONSOLE ARRIÈRE ROPS (CENTER PIVOT) - NA
1.93.0/03		REVÊTEMENTS MACHINES (ROPS) - NA
1.93.4		RETROVISEUR - RIDEAU PARE-SOLEIL
1.93.5	01	CABINE / TABLEAU DE BORD AVANT
1.93.5	02	CABINE / DISPOSITIFS DE SERRAGE TABLEAU DE BORD ET GARNITURES
1.93.5/01	01	CABINE-CHASSIS DE SECURITE / TABLEAU - ROPS (POWER SHUTTLE) - NA
1.93.5/01	02	JOINT ET ARRETS CONSOLE LATERALE DROITE - ROPS (POWER SHUTTLE) - NA
1.93.7		RETROVISEUR INTERIEUR (POWER SHUTTLE) ROPS
1.94.0/01		CABINE / ROPS / TOIT ET COUVERTURE INTERNE - NA
1.94.2		TUYAUTERIES FLEXIBLES EAU DE CHAUFFAGE
1.95.0	01	CABINE / ROPS : PEDAL DE FREIN
1.95.0	02	CABINE / ROPS / POMPE FREIN
1.95.0	03	CABINE / ROPS / TUYAUX CIRCUIT DE FREINAGE
1.95.0/ A		CABINE / ROPS / VÉRIN POMPE FREIN
1.95.1		CABINE / ROPS / LEVIER FREIN DE PARCAGE ET CÂBLE DE COMMANDE
1.95.2		COMMANDE DU TRANSPORT LOCK - NA
1.95.3		COMMANDE ACCÉLÉRATEUR ÉLECTRONIQUE À MAIN/À PÉDALE
1.95.5	01	COLONNE DE DIRECTION ET COUVERTURE - NA
1.95.5	02	MANCHONS SYSTÈME DE DIRECTION - NA
1.95.5/ A	01	DIRECTION ASSISTÉE - NA
1.96.0		LEVIER AVANT/ARRIERE ET MULTIFONCTION
1.96.2	01	COMMANDE STABILISATEURS (SIDE SHIFT - EU) - (CENTER PIVOT - NA)
1.96.2	02	COMMANDE STABILISATEURS (CENTER PIVOT) - NA
1.96.2/01		DIAGNOSTIC PILOT CONTROL
1.96.7/04		AXES ET BOUCHONS ROPS (CENTER PIVOT) - NA
1.96.7/05		CABINE / COMPOSANTS DIVERS (CENTER PIVOT) - NA
1.96.7/06		CABINE: COMPOSANTS DIVERS (CENTER PIVOT) - NA
1.96.7/07		AXES ET BOUCHONS ROPS (CENTER PIVOT) - NA
1.98.0/01		DECALCOMANIES SYMBOLES INFO. (POWER SHUTTLE - POWER SHIFT) - NA
1.98.1	08	MODÈLE D'IDENTIFICATION: DÉCALCOMANIES DE PROTECTION
1.98.1	09	IDENTIFICATION MODELE B90B / B90BLR - B959B / B95BLR - B100B / B100BLR
81.00		ROUES AVANT (2WD) - NA
82.00	01	ROUES DIRECTRICES MOTRICES(4WD) - NA
83.00	01	ROUES ARRIÈRE - NA
095		COMMANDE DES STABILISATEURS SANS MONTEE AUTOTOMATIQUE (CENTER PIVOT)
096		COMMANDE DES STABILISATEURS AVEC MONTEE AUTOTOMATIQUE (CENTER PIVOT)
131		ACCUMULATEUR UNIQUE
175		CALOTTE D'ASPIRATION D'AIR ET PRÉFILTRE
176		CALOTTE D'ASPIRATION D'AIR ET PRÉFILTRE
201		CROCHETS DE LEVAGE PELLE ET ARRIERE
284		RETROVISEUR (CAB) - NA
290		CONTREPOIDS AVANT: 2WS
291		CONTREPOIDS AVANT: 2WS
302	01	DISTRIBUTEUR PALE A DEUX SECTEURS
302	02	DISTRIBUTEUR ÉQUIPEMENT CHARGEUR À 2 SECTIONS: SECTION ASPIRATION
302	03	DISTRIBUTEUR ÉQUIPEMENT CHARGEUR À 2 SECTIONS: SECTION FLÈCHE
302	04	DISTRIBUTEUR PALE A DEUX SECTEURS
321		ACCUMULATEUR DOUBLE

TABLE OF CONTENTS

331	01	COLONNE COMPLETE 6 SECTIONS (CENTER PIVOT)
331	02	SUPPORT COMPLET DE DISTRIBUTEUR DE COMMANDE PILOTE
331	03	SUPPORT COMPLET DE DISTRIBUTEUR DE COMMANDE PILOTE
331	04	SUPPORT COMPLET DE DISTRIBUTEUR DE COMMANDE PILOTE
331	05	SUPPORT COMPLET DE DISTRIBUTEUR DE COMMANDE PILOTE
331	06	SUPPORT COMPLET DE DISTRIBUTEUR DE COMMANDE PILOTE A 6 SECTIONS
331	07	SUPPORT COMPLET DE DISTRIBUTEUR DE COMMANDE PILOTE
331	08	SUPPORT COMPLET DE DISTRIBUTEUR DE COMMANDE PILOTE
331	09	SUPPORT COMPLET DE DISTRIBUTEUR DE COMMANDE PILOTE
331/ A		VALVE DE COMMANDE PROPORTIONNELLE 6 SECTIONS
331/ B	01	DISTRIBUTEUR EXCAVATRICE, 6 SECTIONS (CENTER PIVOT)
331/ B	02	DISTRIBUTEUR EXCAVATRICE, SECTION ENTREE (CENTER PIVOT)
331/ B	03	DISTRIBUTEUR EXCAVATRICE, SECTION FLECHE (CENTER PIVOT)
331/ B	04	DISTRIBUTEUR EXCAVATRICE, SECTION OSCIL. (CENTER PIVOT)
331/ B	05	DISTRIBUTEUR EXCAVATRICE, SECTION GODET (CENTER PIVOT)
331/ B	06	DISTRIBUTEUR EXCAVATRICE, SECTION BALANCIER (CENTER PIVOT)
331/ B	07	DISTRIBUTEUR EXCAVATRICE, SECTION STABILISATEUR (CENTER PIVOT)
331/ B	08	DISTRIBUTEUR EXCAVATRICE, SECTION FLECHE (CENTER PIVOT)
331/ B	09	DISTRIBUTEUR EXCAVATRICE, SECTION OSCIL. (CENTER PIVOT)
331/ B	10	DISTRIBUTEUR EXCAVATRICE, SECTION GODET (CENTER PIVOT)
331/ B	11	DISTRIBUTEUR EXCAVATRICE, SECTION BALANCIER (CENTER PIVOT)
331/ B	12	DISTRIBUTEUR EXCAVATRICE, SECTION STABILISATEUR (CENTER PIVOT)
331/ C	01	VALVE PILOTE DU MANIPULATEUR (DROIT)
331/ C	02	DISTRIBUTEUR LEVIER COMMANDE GAUCHE
333	01	COLONNE COMPLETE 7 SECTIONS (CENTER PIVOT)
333	02	ENSEMBLE TOURELLE POUR COMMANDE PILOTE À 7 SECTIONS: CIRCUIT HYDRAULIQUE DISTRIBUTEUR, SOUPAPE PROPORTIONNELLE
333	03	ENSEMBLE TOURELLE POUR COMMANDE PILOTE À 7 SECTIONS (CENTER PIVOT): INSTALLATION DISTRIBUTEUR
333	04	ENSEMBLE TOURELLE POUR COMMANDE PILOTE À 7 SECTIONS (CENTER PIVOT): SYSTÈME DU VÉRIN TÉLÉSCOPIQUE
333	05	ENSEMBLE TOURELLE POUR COMMANDE PILOTE À 7 SECTIONS (CENTER PIVOT): SYSTÈME DU VÉRIN DU GODET
333/ A		VALVE DE COMMANDE PROPORTIONNELLE 7 SECTIONS
333/ C	01	VALVE PILOTE DU MANIPULATEUR (DROIT) 7 TIROIRS
333/ C	02	VALVE PILOTE DU MANIPULATEUR (DROIT) 7 TIROIRS
333/01B	01	DISTRIBUTEUR DE COMMANDE D'EXCAVATRICE A 7 SECTIONS (CENTER PIVOT) - NA
333/01B	02	DISTRIBUTEUR ÉQUIPEMENT RÉTRO À 7 SECTIONS (CENTER PIVOT) - NA: VÉRIN DU BALANCIER TÉLÉSCOPIQUE
335		COLONNE COMPLETE 7 SECTIONS (CENTER PIVOT)
336/01	01	DISTRIBUTEUR CHARGEUSE TWO SECTIONS (CENTER PIVOT) - NA
336/01	02	DISTRIBUTEUR CHARGEUSE, 2 SECTIONS, CALOTTE & SOUPAPE DECHARGE (CENTER PIVOT) - NA
336/01	03	DISTRIBUTEUR CHARGEUSE, 2 SECTIONS, SOUPAPES D'EVACUATION ET DE RETENUE (CENTER PIVOT) - NA
336/01	04	DISTRIBUTEUR CHARGEUSE, 2 SECTIONS, LOT BY-PASS (CENTER PIVOT) - NA
336/01	05	DISTRIBUTEUR CHARGEUSE, 2 SECTIONS, LOT DECHARGE OU SOUPAPE BASCULEMENT (CENTER PIVOT) - NA
337	01	CLAPET DE BLOCAGE SUR VÉRINS ANTIRENVERSEMENT ÉQUIPEMENT CHARGEUR

TABLE OF CONTENTS

337	02	SOUPAPE DE BLOCAGE SUR CYLINDERS DE RELEVAGE PELLE
338		SOUPAPE DE BLOCAGE SUR CYLINDERS DE RELEVAGE PELLE
344	01	DISTRIBUTEUR STABILISATEUR, 2 SECTIONS (CENTER PIVOT) - NA
344	02	DISTRIBUTEUR STABILISATEUR, SECTION DROITE ET GAUCHE (CENTER PIVOT) - NA
346	01	LOGEMENT & FILTRES A/C
346	02	VENTILATEUR & SERPENTINS A/C
346	03	MANCHONS SPIRALES CHAUFFAGE
346	04	TABLEAU DE COMMANDE CHAUFFAGE & A/C
346	05	TUYAUTERIE CONSOLE CHAUFFAGE & A/C
347	01	LOGEMENT & FILTRES
347	02	VENTILATEUR & SERPENTINS RECHAUFFEUR
347	03	MANCHONS SPIRALES CHAUFFAGE
347	04	TABLEAU DE COMMANDE CHAUFFAGE & A/C
347	05	TUYAUTERIE CONSOLE CHAUFFAGE & A/C
347	06	BOUCHON REVÊTEMENT CHAUFFAGE CABINE
386		GODET RÉTROCAVEUSE 12" (305 MM) HD A DENTS GOUPILLEES - NA
387		GODET RÉTROCAVEUSE 18" (457MM) HD A DENTS GOUPILLEES - NA
388		GODET RÉTROCAVEUSE 24" (610MM) HD A DENTS GOUPILLEES - NA
389		GODET RÉTROCAVEUSE 30" (762MM) HD A DENTS GOUPILLEES - NA
390		DISTRIBUTEUR CHARGEUSE, 2 SECTIONS, LEVIER - NA
390/01		GODET RÉTROCAVEUSE 36" (910MM) HD A DENTS GOUPILLEES - NA
391		VALVE DE BLOCAGE POUR BENNE 4X1 / 6X1
392	01	CLAPET DE BLOCAGE SUR VÉRIN DE FLÈCHE ET ÉQUIPEMENT RÉTRO
392	02	CLAPET DE BLOCAGE SUR VÉRIN ET ÉQUIPEMENT RÉTRO
393		COMMANDES EXCAVATRICE A LEVIER, LEVIER, PARE-POUSSIERE & DECALCOMANIES - NA
394	01	COMMANDES ÉQUIPEMENT RÉTRO À 4 LEVIERS, CONSOLE, LEVIERS ET LEVIER CARRÉ (CENTER PIVOT: SIDE SHIFT): LEVIERS DE COMMANDE
394	02	COMMANDES ÉQUIPEMENT RÉTRO À 4 LEVIERS, ENSEMBLE TIRANT SUPÉRIEUR (CENTER PIVOT: SIDE SHIFT): TIRANTS SUPÉRIEURS
394	03	COMMANDES ÉQUIPEMENT RÉTRO À 4 LEVIERS, ENSEMBLE TIRANT INFÉRIEUR (CENTER PIVOT: SIDE SHIFT): TIRANTS INFÉRIEURS
394/01	01	COMMANDES ÉQUIPEMENT RÉTRO À 2 LEVIERS ISO, LEVIERS, ANTIPOUSSIÈRE, DÉCALCOMANIES (CENTER PIVOT) - NA -LEVIERS DE COMMANDE
402	01	ESSIEU AVANT (4RM), LOGEMENT, DOUILLES & SUPPORTS - NA
402	02	ESSIEU AVANT (4RM), LOGEMENT OSCILLANT & CYLINDRE DIRECTION - NA
402	03	ESSIEU AVANT (4RM), MOYEUX - NA
402	04	ESSIEU AVANT (4RM), GROUPE PIGNON & COURONNE - NA
402	05	ESSIEU AVANT (4RM), DIFFERENTIEL - NA
402	06	PONT AVANT 4WD, ARBRE PONT ARTICULÉ
416		COMPOSANTS DE MARTEAU DE SYSTÈMES (CAB - ROPS)
437		CHEMISE COULISSANTE,INSTALLATION HYDRAULIQUE MISE DE NIVEAU STRUCTURE MACHINE
471	01	BENNE 4X1 (1 M³) AVEC LAME "COMMON GREY"
471	02	GODET 4X1 (1 M3) AVEC LAME “COMMON GREY”: DÉFAILLANCE GODET
471/01		VERIN HYDRAULIQUE (BENNE 4X1-6X1)
472	01	BENNE 4X1 (1 M³) AVEC DENT "COMMON GREY"
472	02	GODET 4X1 (1 M3) AVEC DENTS “COMMON GREY”: DÉFAILLANCE GODET
473	01	BENNE 6X1 (1 M³) AVEC LAME "COMMON GREY"
473	02	GODET 6X1 (1 M3) AVEC LAME “COMMON GREY”: DÉFAILLANCE GODET

TABLE OF CONTENTS

474	01	BENNE 6X1 (1 M³) AVEC DENT "COMMON GREY"
474	02	GODET 6X1 (1 M3) AVEC DENTS “COMMON GREY”: DÉFAILLANCE GODET
514	01	BALANCIER COURT
514	02	BALANCIER COURT
514	03	CYLINDRE HYDRAULIQUE LEVAGE
514	04	CYLINDRE HYDRAULIQUE EXCAVATION
515/01		GODET RÉTROCAVEUSE 12" (305 MM) A DENTS GOUPILLEES - NA
516/01		GODET RÉTROCAVEUSE 18" (457MM) A DENTS GOUPILLEES - NA
517/01		GODET RÉTROCAVEUSE 24" (610 MM) A DENTS GOUPILLEES - NA
518/01		GODET RÉTROCAVEUSE 30" (762 MM) A DENTS GOUPILLEES - NA
519/01		GODET RÉTROCAVEUSE 36" (910MM) A DENTS GOUPILLEES - NA
520		BENNE DE (0.88 M³) SANS DENTS
520/01		GODET RÉTROCAVEUSE 18" (457 MM) A DENTS GOUPILLEES (EXTRA HD) - NA
521		GODET RÉTROCAVEUSE 24" (610MM) A DENTS GOUPILLEES (EXTRA HD) - NA
522		BENNE DE (1 M³) SANS DENTS
522/01		BENNE STANDARD DE (1 M³) AVEC FURCHES
525		BENNE STANDARD DE (1 M³) AVEC FURCHES ET LAME REVERSIBLE
527		BENNE DE (0.88 M³) ET LAME REVERSIBLE SUPPLEMENTAIRE
535		PIED STABILISATEUR TERRE (CENTER PIVOT)
536		BENNE STANDARD DE (1 M³) AVEC DENT
536/02		PIED STABILISATEUR REVERSIBLE (CENTER PIVOT)
537		BENNE STANDARD DE (1 M³) AVEC LAME REVERSIBLE SUPPLEMENTAIRE
548		BENNE CUREUSE DE FOSSÅS
622		VENTILATEUR INTERIEUR - CAB
636	07	VERSION MOTEUR: DÉMARREUR
636	08	ACCESOIRE MOTEUR - ALTERNATEUR
638	01	PROTECTIONS RADIATEUR
638	02	RADIATEUR À EAU, HUILE HYDRAULIQUE ET TRANSMISSION
638	03	TUBULURES DE REFROIDISSEMENT AFTER-COOLER
638	04	RADIATEUR: AFTER-COOLER
638	05	VERSION MOTEUR: SUPPORTS
638	06	ÉQUIPEMENT MOTEUR: VENTILATEUR AVEC JOINT GLUANT - EU
638	07	ACCESOIRE MOTEUR - DEMARREUR
638	08	ACCESOIRE MOTEUR: ALTERNATEUR
639	01	PROTECTIONS RADIATEUR
639	02	RADIATEUR À EAU, HUILE HYDRAULIQUE ET TRANSMISSION
639	03	TUBULURES DE REFROIDISSEMENT AFTER-COOLER
639	04	RADIATEUR: AFTER-COOLER
639	05	VERSION MOTEUR: SUPPORTS
639	06	ÉQUIPEMENT MOTEUR: VENTILATEUR AVEC JOINT GLUANT
639	07	VERSION MOTEUR: DÉMARREUR
639	08	ACCESOIRE MOTEUR
646	01	JEU DE PIÈCES MACHINE POUR LA CLIMATISATION
646	02	GROUPE BRANCHEM. COMPRESSEUR A/C
646	03	COMPRESSEUR A/C
646	04	GROUPE BRANCHEM. FILTRE A/C & CONDENSEUR
650		COLONNE DIRECTION, FIXE & REGLABLE
698		CHEMISE COULISSANTE,INSTALLATION HYDRAULIQUE MISE DE NIVEAU STRUCTURE MACHINE & COMMUTATEUR ON/OFF
699		BOUTON MARTEAU MANUEL

TABLE OF CONTENTS

700	01	CONDUITS HYDRAULIQUES BRAS GODETS 4X1 ET 6X1 (POWER SHIFT, POWER SHUTTLE)
700	02	CONDUITS HYDRAULIQUES MACHINE GODETS 4X1 ET 6X1 (POWER SHIFT, POWER SHUTTLE)
700	03	DISTRIBUTEUR PALE A TROIS SECTEURS (POWER SHIFT , POWER SHUTTLE)
721	01	BALANCIER TÉLÉSCOPIQUE AVEC COMMANDE À PÉDALE (CENTER PIVOT): DISTRIBUTEUR - NA
721	02	DISTRIBUTEUR STABILISATEUR, 3 ESECTION (CENTER PIVOT) - NA
721	03	MANCHONS DISTRIBUTEUR BRAS TELESCOPIQUE, SECTION HED(CENTER PIVOT) - NA
721	04	BALANCIER TÉLÉSCOPIQUE AVEC COMMANDE À PÉDALE (CENTER PIVOT): SYSTÈME BALANCIER TÉLÉSCOPIQUE: VÉRIN TÉLÉSCOPIQUE - NA
721	05	BALANCIER TÉLÉSCOPIQUE AVEC COMMANDE À PÉDALE (CENTER PIVOT): SYSTÈME BALANCIER TÉLÉSCOPIQUE: VÉRIN DU GODET - NA
721	06	BALANCIER TÉLÉSCOPIQUE AVEC COMMANDE À PÉDALE (CENTER PIVOT) - NA
724/ A		DISTRIBUTEUR MARTEAU ARRIERE
724/01	01	CIRCUIT HYDRAULIQUE MACHINE POUR MARTEAU (CENTER PIVOT)
724/01	02	CIRCUIT HYDRAULIQUE BRAS MARTEAU (CENTER PIVOT)
724/02		INSTALLATION HYDRAULIQUE MARTEAU (CENTER PIVOT)
725		MARTEAU PIQUEUR - BALANCIER TELESCOPIQUE
725/01	01	CIRCUIT HYDRAULIQUE ENSEMBLE BRAS GODETS 4X1 ET 6X1 (POWER SHUTTLE) - NA
725/01	02	ENSEMBLE CONDUITS HYDRAULIQUES MACHINE GODETS 4X1 ET 6X1 (POWER SHUTTLE) - NA
725/01	03	DISTRIBUTEUR CHARGEUSE, 3 SECTIONS (CENTER PIVOT) - NA
725/01	04	DISTRIBUTEUR CHARGEUSE, 3 SECTIONS, CALOTTE & SOUPAPE DECHARGE (CENTER PIVOT) - NA
725/01	05	DISTRIBUTEUR CHARGEUSE, 3 SECTIONS, SOUPAPES D'EVACUATION ET DE RETENUE (CENTER PIVOT) - NA
725/01	06	DISTRIBUTEUR PALE A TROIS SECTEURS - BENNE SECTEUR 4X1 - 6X1(CENTER PIVOT) - NA
727/01		INSTALLATION HYDR. BRAS TELESCOPIQUE COMMANDE A PEDALE (CENTER PIVOT) - NA
728	01	SYSTÈME MARTEAU À MAIN: SORTIE
728	02	SYSTÈME MARTEAU À MAIN: RETOUR
728	03	VALVE MARTEAU MANUEL
733		RACCORD RAPIDE MECANIQUE ARRIERE
734		RACCORD RAPIDE MECANIQUE AVANT
758		GYROPHARE
787		CONSOLE AVANT SANS TACHYMETRE (POWER SHUTTLE, ROPS)
787/01		CONSOLE AVANT SANS TACHYMETRE (POWER SHUTTLE, CAB)
788		CONSOLE AVANT AVEC TACHYMETRE (ROPS)
788/01		CONSOLE AVANT AVEC TACHYMETRE (CAB) (POWER SHUTTLE)
789		DETECTEUR DE VITESSE (P.SHUTTLE)
793		FEUX DE TRAVAIL AVANT - CABINE
793/01		FEUX DE TRAVAIL AVANT (ROPS)
794		LAMPES ET PHARES - CABINE
794/01		LAMPES ET PHARES (ROPS)
796		ANTIVOL
803		PARE-BOUE AVANT
835		PROTECTION CONTRE LA BOUE ARRIÈRE ET TOIT (ROPS / CAB) - NA

TABLE OF CONTENTS

851		SIEGE EN TISSU - CABINE
851/01	01	COUSSINS SIEGE EN TISSU, ACCOUDOIRS & ACCESSOIRES
851/01	02	PLAQUE INSTALLATION SIEGE TISSU, GLISSIERES REGLAGE & CEINTURE
851/01	03	PARTIES SUSPENSIONS SUPERIEURES SIEGE TISSU
851/01	04	PARTIES SUSPENSIONS INFERIEURES SIEGE TISSU
855		SIEGE PNEUMATIQUE EN TISSU - CABINE
855/01	01	COUSSINS SIEGE PNEUMATIQUE, ACCOUDOIRS & ACCESSOIRES
855/01	02	PLAQUE INSTALLATION SIEGE PNEUMATIQUE, GLISSIERES REGL & CEINTURE
855/01	03	PARTIES SUSPENSIONS SUPERIEURES SIEGE PNEUMATIQUE
855/01	04	PARTIES SUSPENSIONS INFERIEURES SIEGE TISSU PNEUMATIQUE
855/01	05	COMPRESSEUR & TUBES SIEGE PNEUMATIQUE EN TISSU
856		COUSSINS SIEGE EN VINYLE, ACCOUDOIRS & ACCESSOIRES (ROPS)
856/01	01	SIEGE EN VINYLE AVEC ACCOUDOIRS (ROPS)
856/01	02	PLAQUE INSTALLATION SIEGE VINYLE, GLISSIERES REGLAGE & CEINTURE (ROPS)
856/01	03	PARTIES SUSPENSIONS SUPERIEURES SIEGE VINYLE (ROPS)
856/01	04	PARTIES SUSPENSIONS INFERIEURES SIEGE VINYLE (ROPS)
879		MIROIR RÉTROVISEUR DROIT CABINE
888		PROTECTION ET DÉCALCOMANIE BALANCIER
900	01	BALANCIER LONG: ENSEMBLE
900	02	FLECHE - BALANCIER LONG
900	03	BALANCIER LONG
900	04	BALANCIER LONG/COURT - CINEMATIQUE GODET
900	05	BALANCIER: SYSTÈME BALANCIER, FLÈCHE ET VÉRIN DU BALANCIER
900	06	BALANCIER: CIRCUIT HYDRAULIQUE VÉRIN DU GODET
900	07	BALANCIER: CIRCUIT HYDRAULIQUE VÉRIN DE FLÈCHE
900	08	BALANCIER - CIRCUIT HYDRAULIQUE
900	09	CYLINDRE HYDRAULIQUE LEVAGE - BALANCIER TELESCOPIQUE LONG
900	10	CYLINDRE HYDRAULIQUE EXCAVATION
900	11	CYLINDRE HYDRAULIQUE BENNE
901	01	BALANCIER TÉLÉSCOPIQUE LONG: ENSEMBLE
901	02	BALANCIER TELESCOPIQUE LONG
901	03	BALANCIER TELESCOPIQUE - CIRCUIT HYDRAULIQUE
901	04	BALANCIER TÉLÉSCOPIQUE LONG: VÉRIN HYDRAULIQUE TÉLÉSCOPIQUE
902	01	BALANCIER TÉLÉSCOPIQUE COURT: ENSEMBLE
902	02	BALANCIER TELESCOPIQUE COURT
902	03	BALANCIER TÉLÉSCOPIQUE COURT: VÉRIN HYDRAULIQUE TÉLÉSCOPIQUE
990		OUTILS
993	01	PLAQUETTES - NA
993	02	PLAQUETTES - NA
995		DÉMARRAGE À FROID

GÉNÉRALITÉS

AVIS DE PROPRIÉTÉ

Les données contenues dans ce manuel constituent la propriété de cette société. Toute reproduction ou utilisation de toute partie de ce manuel à d'autres fins que l'utilisation et l'entretien de notre matériel ne sont permises que si elles sont expressément autorisées par écrit.

Des copies supplémentaires peuvent être obtenues auprès du concessionnaire. Pour obtenir des exemplaires supplémentaires, s'adresser au concessionnaire et donner en référence le numéro de publication imprimé au bas de la couverture arrière de ce manuel ou sur la page de titre.

POLITIQUE DE LA SOCIÉTÉ

L'entreprise, dont la politique est fondée sur le progrès constant, se réserve le droit de changer ses prix et d'apporter des modifications à la conception et aux caractéristiques du matériel à tout moment, sans préavis et sans obligation de modifier les machines précédemment fabriquées.

Toutes les données qui apparaissent dans le présent manuel peuvent faire l'objet de variations dues aux contraintes de production. Les dimensions et les mesures de poids ne sont qu'approximatives et les machines illustrées ne sont pas nécessairement en état standard. Pour des données précises au sujet d'un modèle de machine en particulier, consulter un concessionnaire agréé.

PIÈCES ET ACCESSOIRES

Des pièces et des accessoires d'origine ont été conçus spécifiquement pour ces machines.

New Holland souhaite préciser que les pièces et accessoires « non originaux » n'ont PAS été examinés et mis en vente par la société. La pose et l'utilisation de ces produits pourraient s'avérer néfaste pour la conception de la machine et donc altérer ses caractéristiques de sécurité. La compagnie ne peut être tenue responsable des dégâts résultant de l'utilisation de pièces et d'accessoires « non originaux ».

AMÉLIORATIONS

Nous nous efforçons de sans cesse continuer à améliorer nos produits. Nous nous réservons le droit d'apporter des améliorations ou modifications dès qu'elles s'avèrent pratiques et possibles, sans engagement ni obligation d'apporter des modifications ou des ajouts sur les équipements vendus auparavant.

CODES DE MODÈLES

Les machines énumérées ne sont peut-être pas toutes disponibles dans tous les pays ou sur tous les marchés ; en conséquence, pour obtenir les informations les plus récentes, consulter le concessionnaire.

ASSISTANCE AU PROPRIÉTAIRE

Nous souhaitons que vous soyez entièrement satisfait de votre investissement. Tous les problèmes rencontrés lors de l'utilisation de l'équipement sont normalement gérés par le service Entretien des concessionnaires, mais il est possible que des malentendus aient lieu. Si le problème n'a pas été géré de façon satisfaisante, procéder comme suit.

1. Contacter le propriétaire ou le directeur de la concession, expliquer le problème et demander de l'aide. En cas de besoin d'assistance supplémentaire, le concessionnaire peut contacter directement nos bureaux.
2. Fournir au concessionnaire les renseignements suivants :
   - Nom, adresse et numéro de téléphone
   - Modèle de la machine et numéro de série
   - Nom et adresse du concessionnaire
   - Date d'achat et nombre d'heures d'utilisation
   - Nature du problème

Garder à l'esprit le fait que le problème sera très certainement réglé au sein de la concession, à l'aide des infrastructures, des équipements et du personnel du concessionnaire. C'est pourquoi il est important que le premier contact se situe au niveau du concessionnaire.

PIÈCES DÉTACHÉES

Pour maintenir un fonctionnement efficace, utiliser des pièces détachées d'origine.

Lors de la commande de pièces, fournir les informations suivantes.

- Modèle de la machine
- Numéros de série de la machine et du moteur
- Référence de la pièce du catalogue de pièces détachées

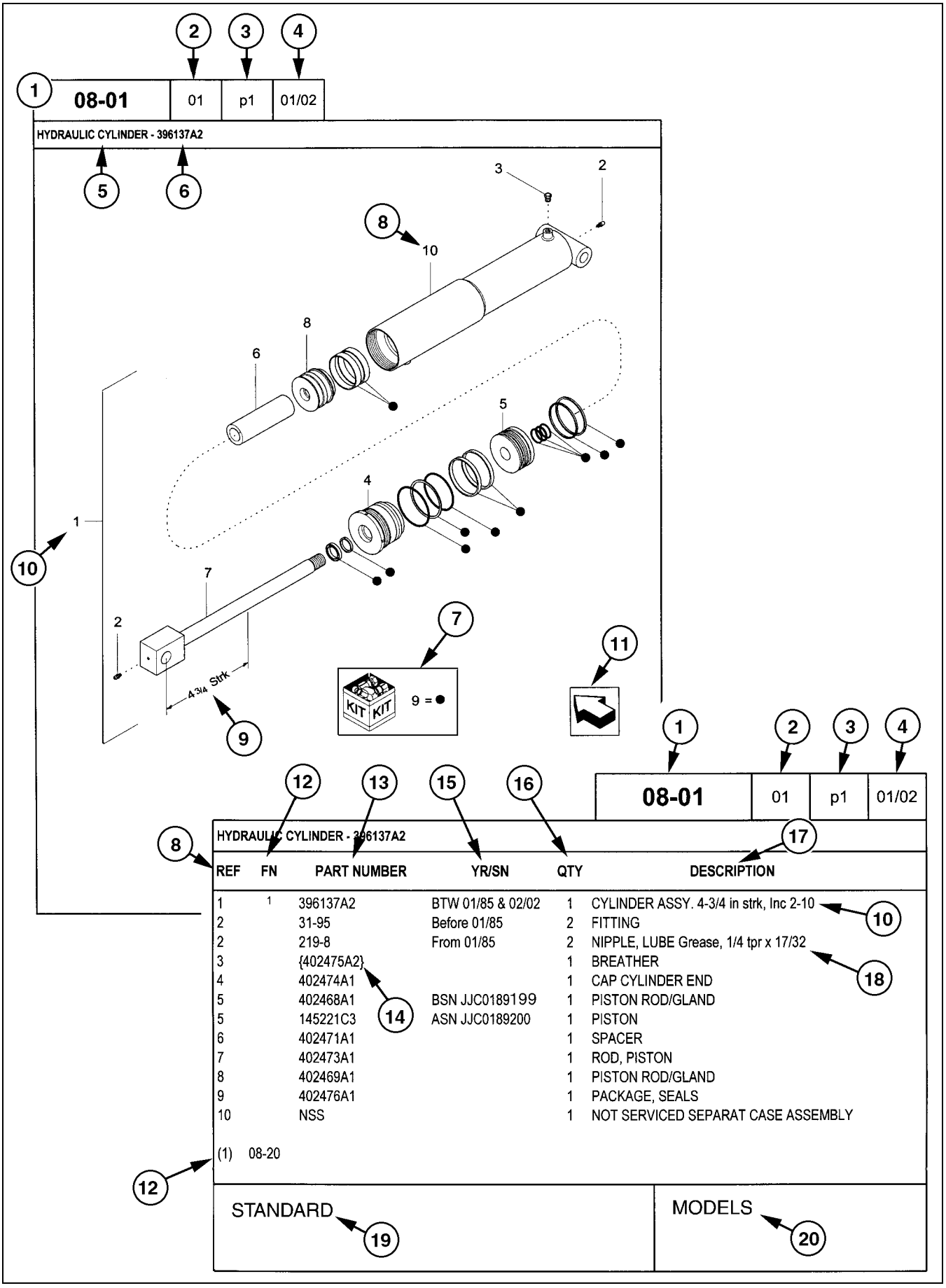

REF	FN	PART NUMBER	YR/SN	QTY	DESCRIPTION
1	1	396137A2	BTW 01/85 & 02/02	1	CYLINDER ASSY. 4-3/4 in strk, Inc 2-10
2		31-95	Before 01/85	2	FITTING
2		219-8	From 01/85	2	NIPPLE, LUBE Grease, 1/4 tpr x 17/32
3		{402475A2}		1	BREATHER
4		402474A1		1	CAP CYLINDER END
5		402468A1	BSN JJC0189199	1	PISTON ROD/GLAND
5		145221C3	ASN JJC0189200	1	PISTON
6		402471A1		1	SPACER
7		402473A1		1	ROD, PISTON
8		402469A1		1	PISTON ROD/GLAND
9		402476A1		1	PACKAGE, SEALS
10		NSS		1	NOT SERVICED SEPARAT CASE ASSEMBLY

(1) 08-20

STANDARD

MODELS

UTILISATION DU CATALOGUE DE PIÈCES

1. Numéro de la figure
2. Code de séquence dans le numéro de la figure
3. Numéro de la page dans le code de séquence
4. Date d'impression (mois/année)
5. Description de la figure
6. Informations générales relatives à la figure
7. Pièces fournies dans les kits de réparation selon référence de symbole
8. Chiffre-référence de la référence
9. Caractéristiques techniques relatives à la pièce indiquée
10. Le chiffre-référence de la figure inclut des articles entre crochets, les articles inclus peuvent aussi être énumérés dans la zone de description additionnelle
11. Orientation – La flèche indique l'avant de la machine
12. Note de pied de page – Informations supplémentaires relatives à la référence. Dans cet exemple, 08-20 correspond à une autre figure où cette pièce est illustrée
13. Référence
    NSS = pièces sans entretien
    Numéros entre parenthèses = localement non disponibles comme pièces détachées
14. Localement non disponible comme pièce détachée
15. Année/N° de série

    Année
    Avant 01/85 = pièce valable pour la production de janvier 1985 et antérieure
    À partir de 01/85 = pièce valable pour la production de janvier 1985 et postérieure
    Entre 01/85 et 02/02 = pièce valable pour les machines produites entre janvier 1985 et février 2002

    Numéro de série (P.I.N.)
    BSN JJC0268800 = pièce valable pour les numéros de série JJC0268800 et inférieurs
    ASN JJC0268800 = pièce valable pour les numéros de série JJC0268800 et supérieurs
    Entre JJC0178000 et JJC0179000 = pièce valable pour les numéros de série compris entre JJC0178000 et JJC0179000
16. La quantité totale de pièces auxquelles il est fait référence dans cette page. La quantité peut être remplacée par les indications suivantes :
    AR = Selon besoin
    X = Selon le besoin
17. Description
18. Description complémentaire de la pièce pour faciliter la confirmation de l'identification
19. Notes de la figure
20. Numéro(s) de modèle

GAUCHE ET DROIT

La référence aux côtés gauche et droit dans ce catalogue est identifiée par l'opérateur debout à l'arrière de l'unité de base (sans outil arrière), regardant vers l'avant de la machine (en marche avant normale).

Pour les pages concernant les outils de la machine, les côtés droit et gauche sont définis par l'opérateur assis en position correcte de commande de l'outil.

DIMENSIONS

Les dimensions impériales et métriques ne montrent pas les désignations numériques du filetage standard. Un chiffre suivant un point virgule (;) est la classe ou le grade de la visserie. Une virgule (,) représente le point séparateur décimal (.) du système impérial.

SIGNIFICATION DES ABRÉVIATIONS

AC	courant alternatif
adj	réglable
amp	ampère
AR	selon le besoin
ASN	numéro de série et supérieur P.I.N. et supérieur

blkhd	cloison
br	branche
BSN	avant numéro de série avant P.I.N.
BTW	entre

cc	centimètre cube
cl	classe
cmprsn	compression
cn pt	bout pointu
cp pt	bout cuvette
CRS	acier en alliage de chrome
CST	acier au carbone
cu yd	verge cube

DC	courant continu
deg	degré
dg pt	bout cylindrique long
dia	diamètre
dr type	type de transmission

fc	face
fc sl	joint à face
fem	femelle
fem PT	filetage de tube femelle
fl	évasement
flat pt	bout plat
ft	pied(s)

ga	jauge
gal	gallon(s)
gpm	gallons par minute
gr	grade

hd	tête
hdg pt	bout cylindrique court
hp	chevaux
ID	diamètre intérieur
in	pouce(s)
Incl.	comprend
inv fl	évasement inversé

K	kilo
kg	kilogramme
km/h	kilomètres/heure

L	litre
lb	livre
lb-ft	livre/pied
lg	long
LH	côté gauche
LH thd	filetage à gauche

M	(préfixe) taille métrique du filetage
m	mètre
ml	millilitre
mm	millimètre

NF	National Fine
No.	n°
NPT	pas de tuyauterie
NS	National Super Fine

OD	diamètre extérieur
ohm	ohm
Or	joint torique
ORB	bossage de joint torique
ORFS	joint torique à face
ov cntr	hypercentrique
ov pt	bout ovale
oz	once

P	pas
psi	livre par pouce carré
pt	pinte
PT	filetage de tuyau

rd	rond
rd holes	trous ronds
RH	droit
RH thd	filetage à droite
rpm	tr/mn

sl	autobloquant
sq	carré
SST	acier inoxydable
st	à auto-taraudage
strk	course
sw	pivot

T	dent
thk	épais
tpr	conique
tube OD	diamètre extérieur de tube

V	volt(s)
W	watt(s)
X	selon le besoin
yd	yard

SECTION INDEX
Généralités

MAIN		SECTIONS PRINCIPALES
MPARTS	00	PIÈCES POUR L'ENTRETIEN
SEC. 01	03	MOTEUR
SEC. 01	04	MOTEUR
SEC. 02		RESERVOIR A COMBUSTIBLE-SILENCIEUX-RADIATEUR-FILTRE A AIR
SEC. 03	01	BOÎTE DE VITESSES
SEC. 04		ESSIEU AVANT
SEC. 05		ESSIEU ARRIERE
SEC. 06		ELECTRIQUE
SEC. 07		DISTRIBUTEURS
SEC. 08		AUVENT
SEC. 09	01	CHARGEUR
SEC. 09	03	RETRO
SEC. 11		ROUES
SEC. 18		VARIANTES
0.0040/01	01	EQUIPEMENT OPTIONNEL - NA
0.0040/01	02	EQUIPEMENT OPTIONNEL - NA
0.0040/01	03	EQUIPEMENT OPTIONNEL - NA

SECTIONS PRINCIPALES

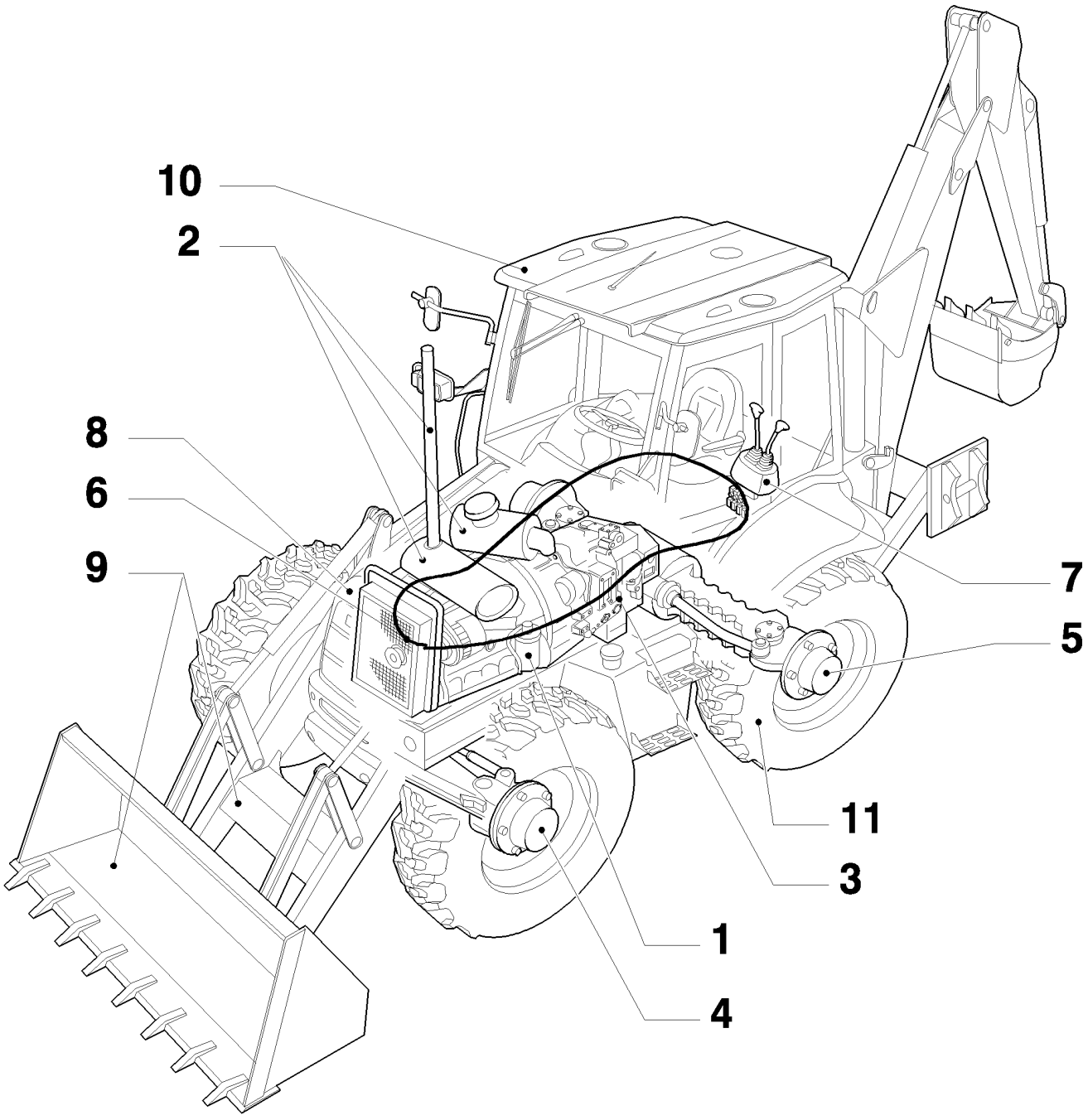

SECTIONS PRINCIPALES

REF	FN	PART NUMBER	YR/SN	QTY	DESCRIPTION

PIÈCES POUR L'ENTRETIEN

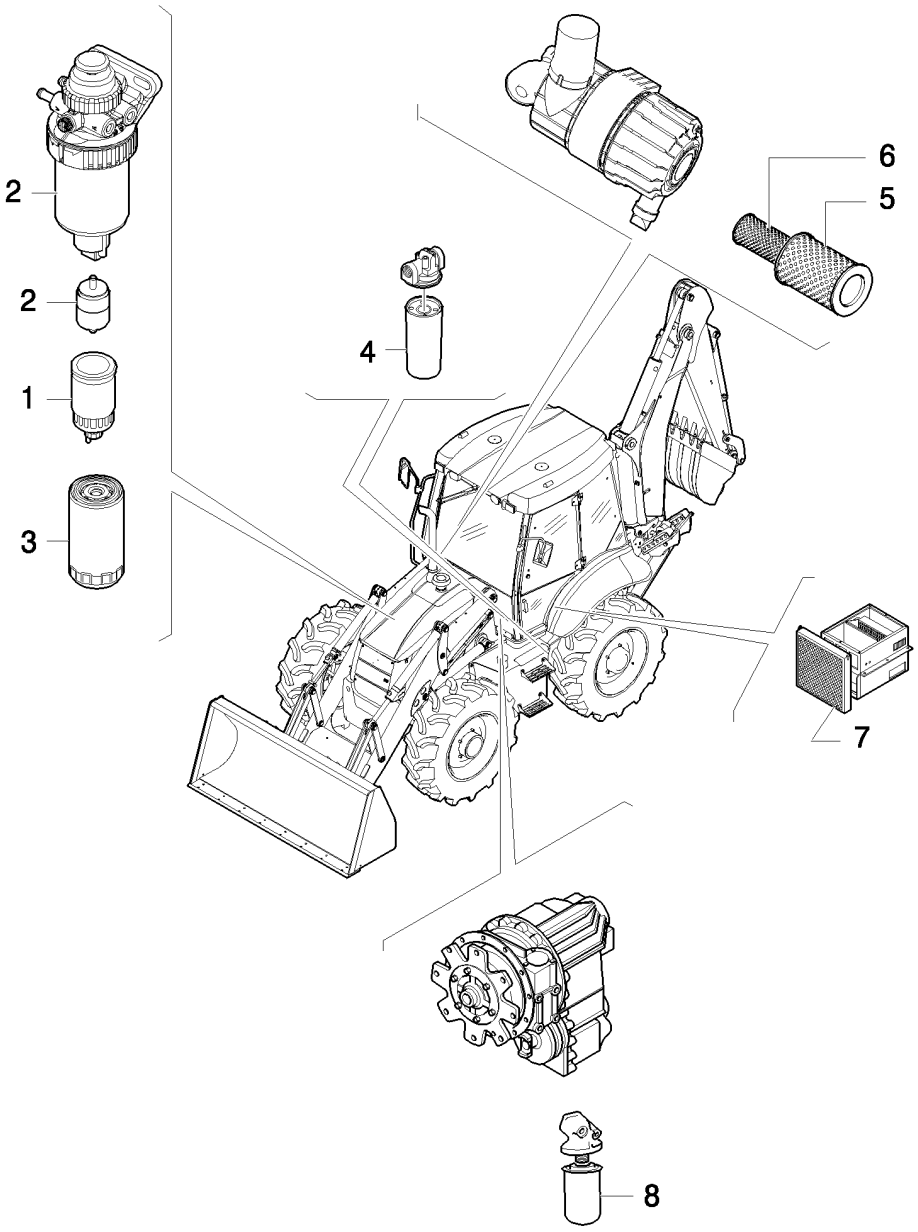

PIÈCES POUR L'ENTRETIEN

REF	FN	PART NUMBER	YR/SN	QTY	DESCRIPTION
1		87803197		1	FILTRE A COMBUSTIBLE
1		87803192		1	FILTRE A COMBUSTIBLE
2		87803444		1	FILTRE A COMBUSTIBLE
2		D139225		1	FILTRE A COMBUSTIBLE
3		87803260		1	FILTRE A HUILE MOTEUR
4		86989733		1	FILTRE, HUILE HYDRAULIQUE
5		87631623		1	FILTRE A AIR
6		87631625		1	FILTRE A AIR
7		87314367		1	FILTRE A AIR CABINE
8		85817004		1	FILTRE
8		85826020		1	FILTRE, HUILE HYDRAULIQUE

MOTEUR

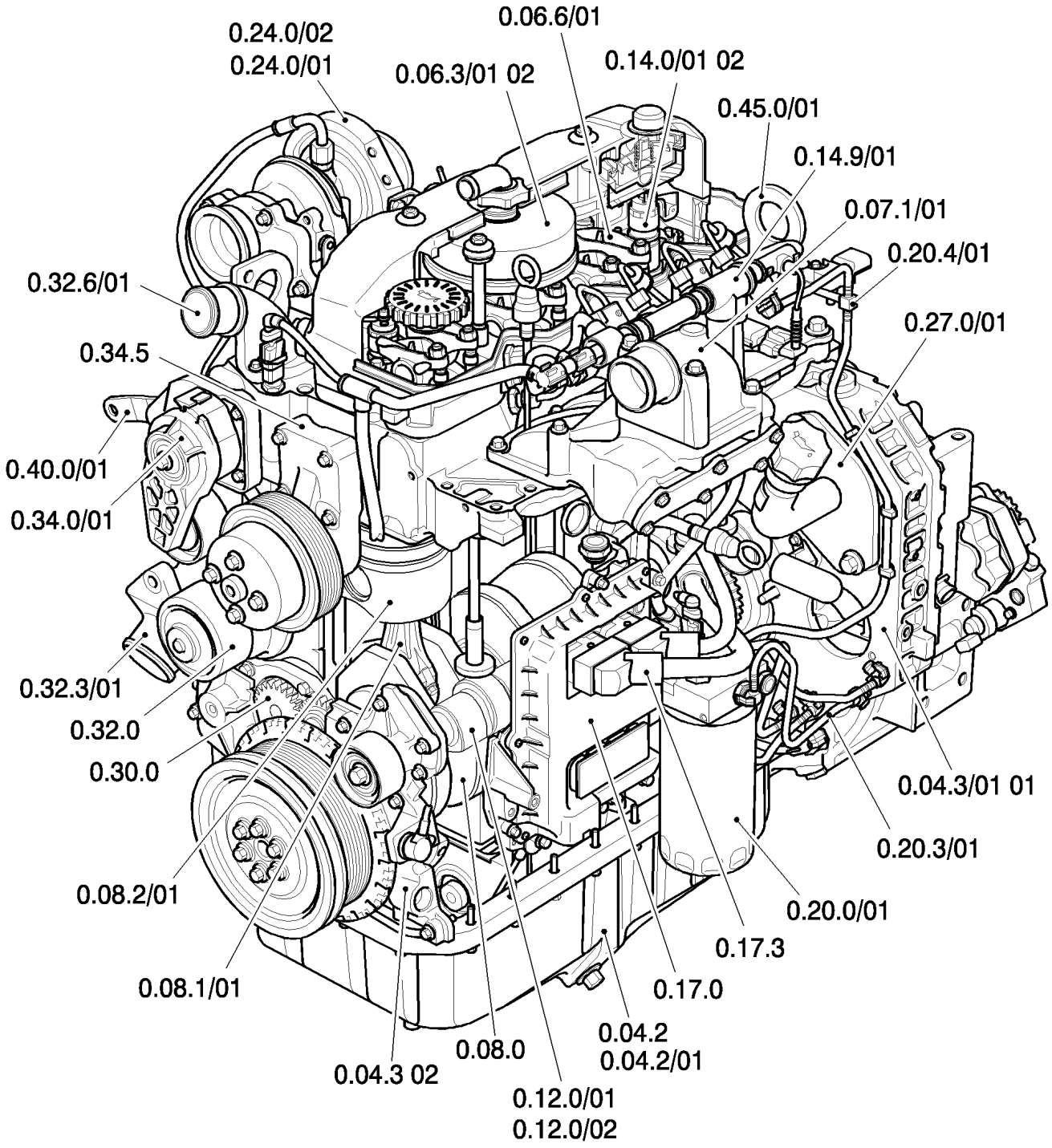
0.24.0/02
0.24.0/01
0.06.6/01
0.06.3/01 02
0.14.0/01 02
0.45.0/01
0.14.9/01
0.07.1/01
0.20.4/01
0.27.0/01
0.32.6/01
0.34.5
0.40.0/01
0.34.0/01
0.32.3/01
0.32.0
0.30.0
0.08.2/01
0.08.1/01
0.04.3 02
0.08.0
0.12.0/01
0.12.0/02
0.04.2
0.04.2/01
0.17.0
0.17.3
0.20.0/01
0.20.3/01
0.04.3/01 01

MOTEUR

REF	FN	PART NUMBER	YR/SN	QTY	DESCRIPTION

MOTEUR

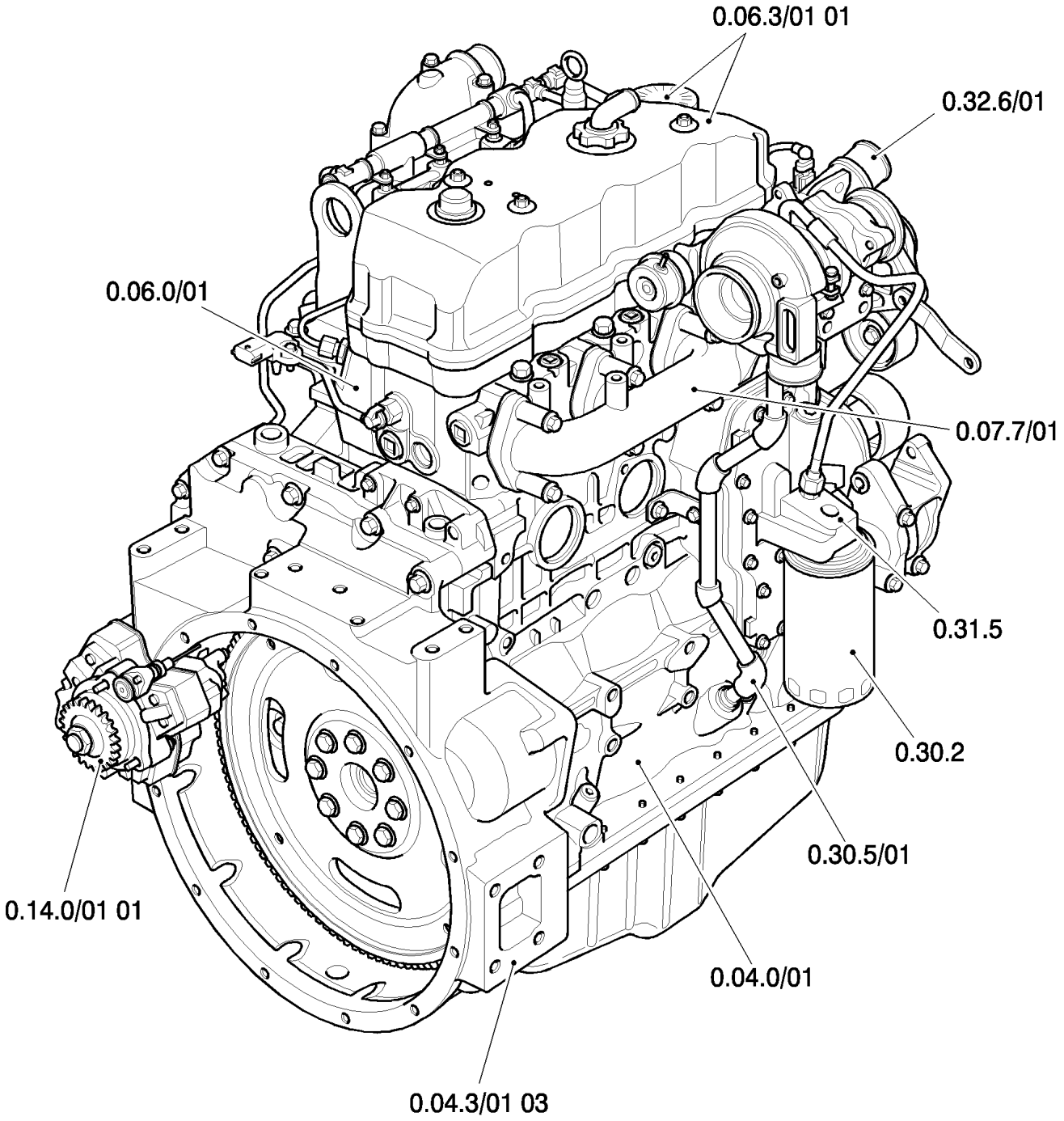
0.06.3/01 01
0.32.6/01
0.06.0/01
0.07.7/01
0.31.5
0.30.2
0.30.5/01
0.14.0/01 01
0.04.0/01
0.04.3/01 03

MOTEUR

REF	FN	PART NUMBER	YR/SN	QTY	DESCRIPTION

RESERVOIR A COMBUSTIBLE-SILENCIEUX-RADIATEUR-FILTRE A AIR

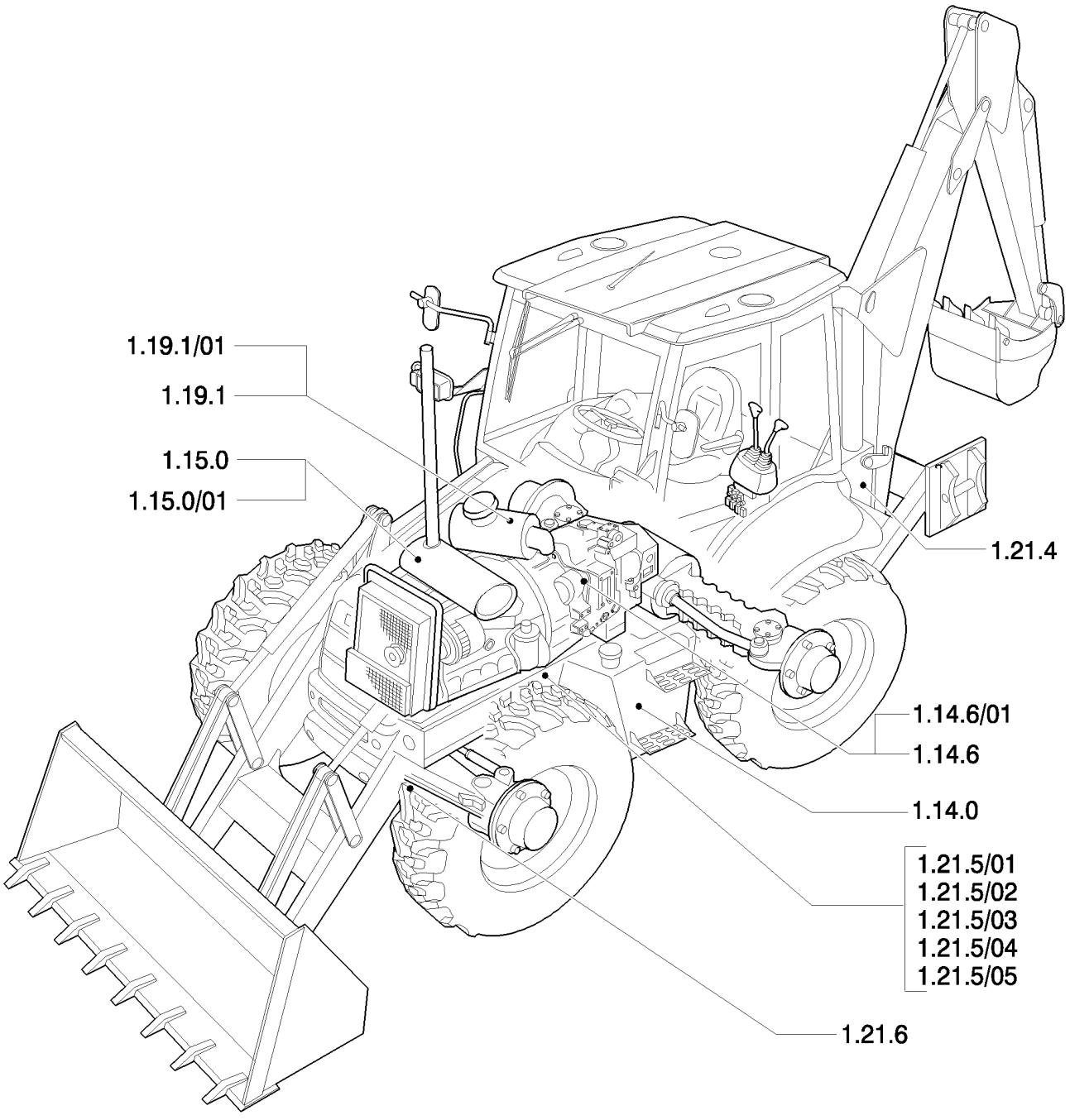

RESERVOIR A COMBUSTIBLE-SILENCIEUX-RADIATEUR-FILTRE A AIR

REF	FN	PART NUMBER	YR/SN	QTY	DESCRIPTION

BOÎTE DE VITESSES

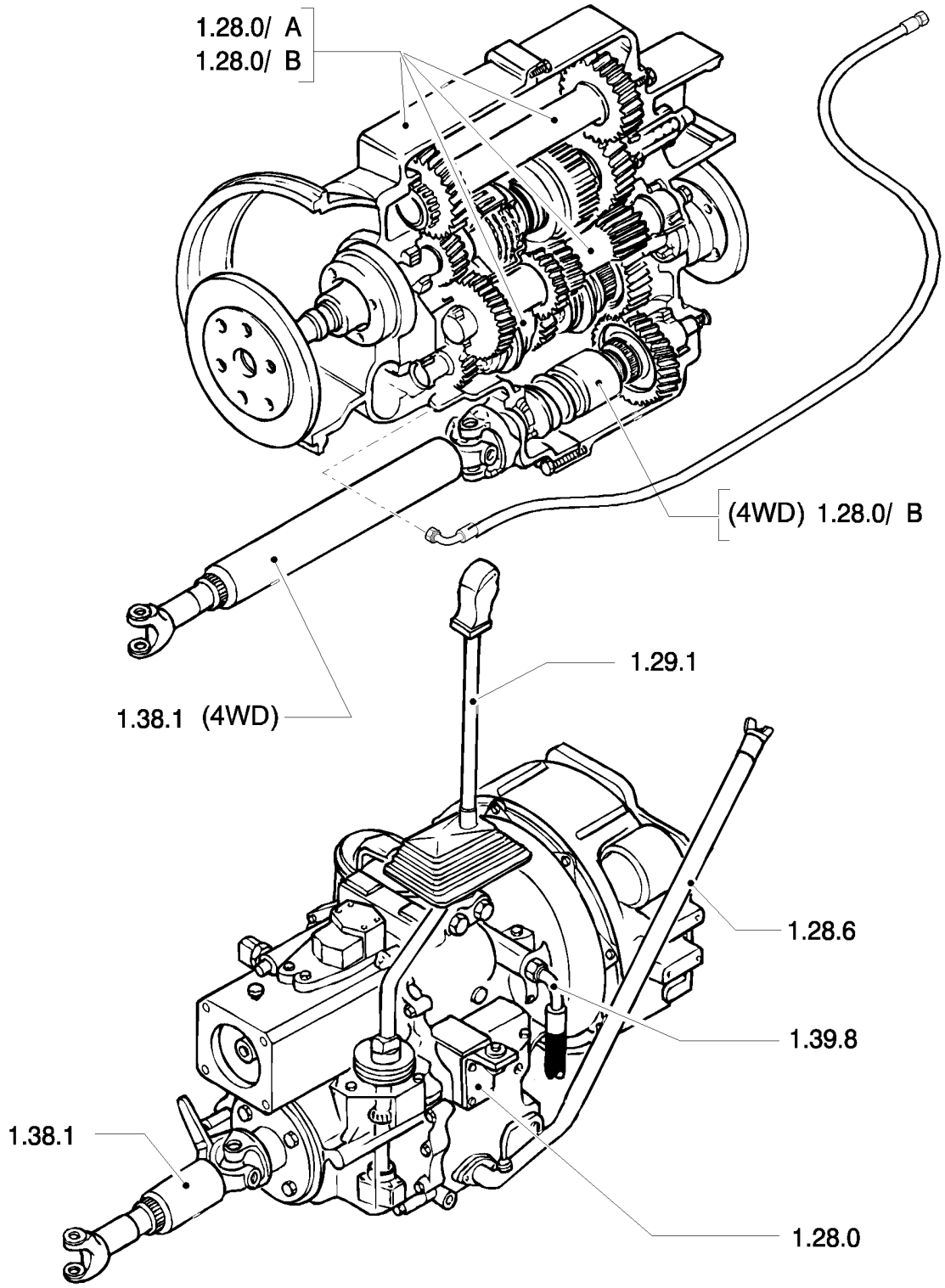

BOÎTE DE VITESSES

REF	FN	PART NUMBER	YR/SN	QTY	DESCRIPTION

ESSIEU AVANT

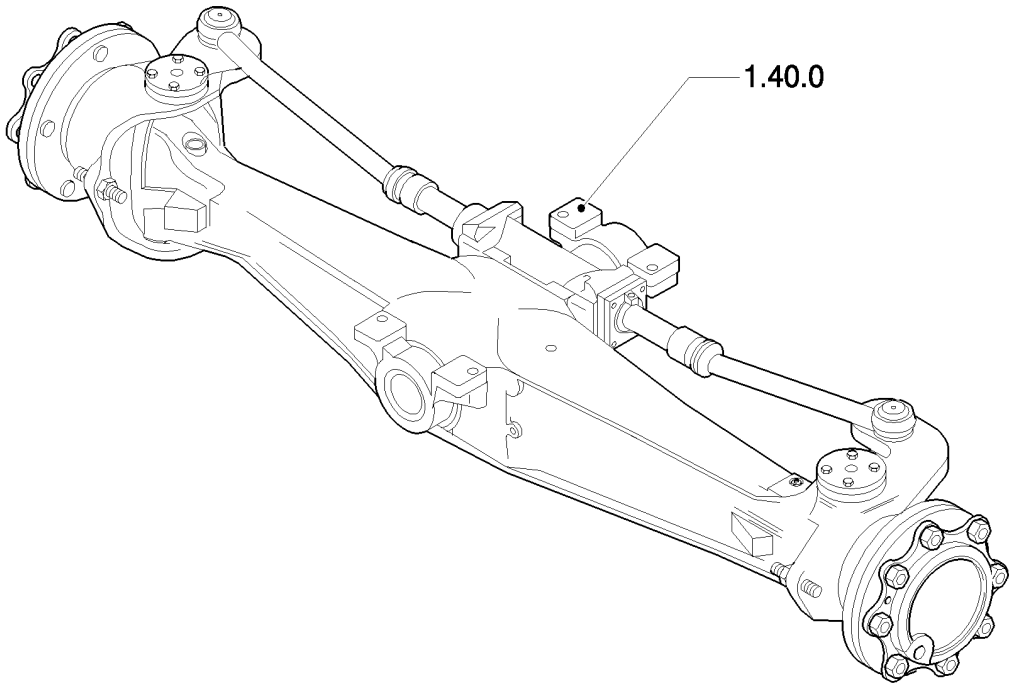

ESSIEU AVANT

REF	FN	PART NUMBER	YR/SN	QTY	DESCRIPTION

ESSIEU ARRIERE

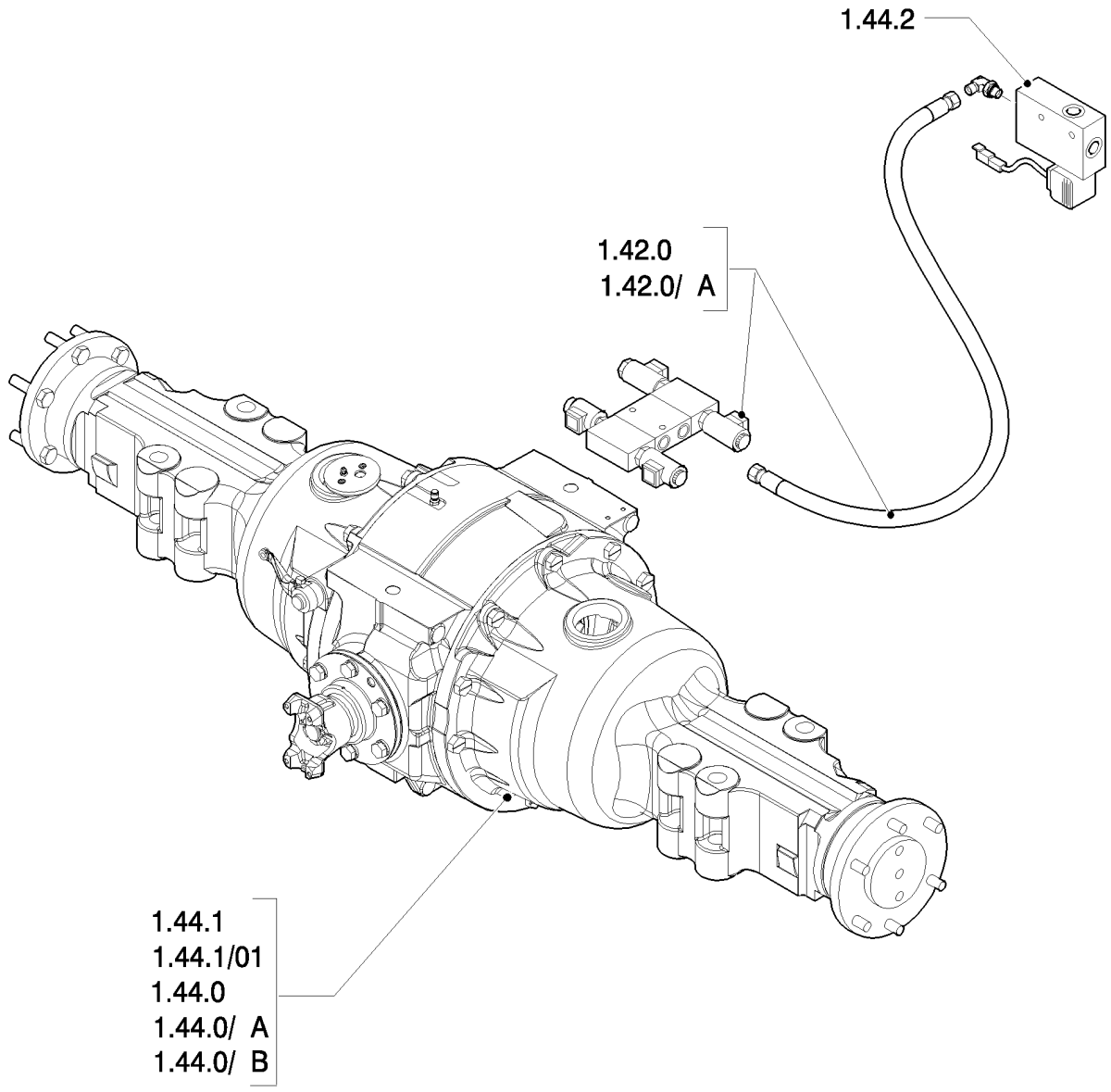

ESSIEU ARRIERE

REF	FN	PART NUMBER	YR/SN	QTY	DESCRIPTION

ELECTRIQUE

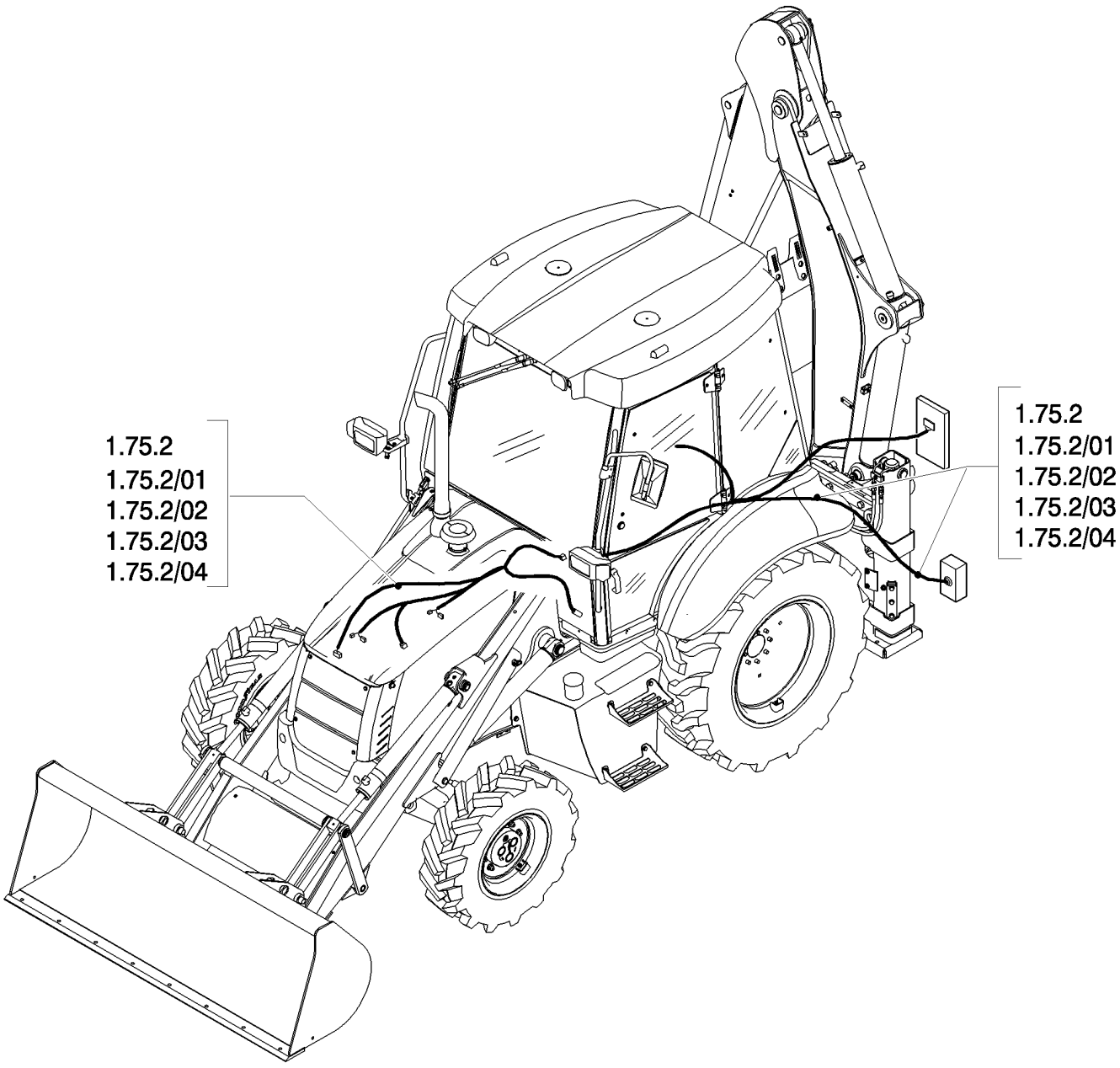
1.75.2
1.75.2/01
1.75.2/02
1.75.2/03
1.75.2/04
1.75.2
1.75.2/01
1.75.2/02
1.75.2/03
1.75.2/04

ELECTRIQUE

REF	FN	PART NUMBER	YR/SN	QTY	DESCRIPTION

DISTRIBUTEURS

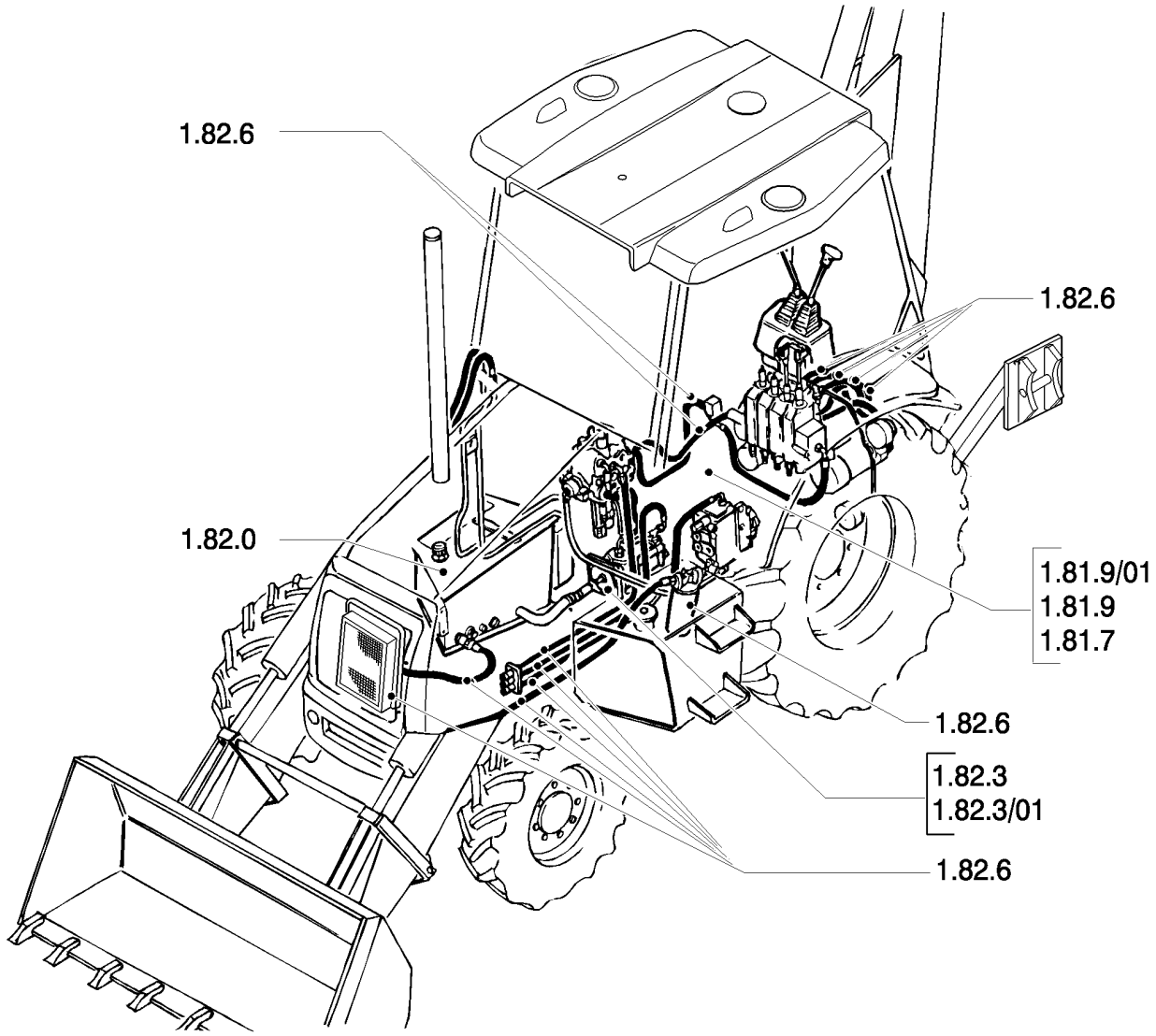

DISTRIBUTEURS

REF	FN	PART NUMBER	YR/SN	QTY	DESCRIPTION

AUVENT

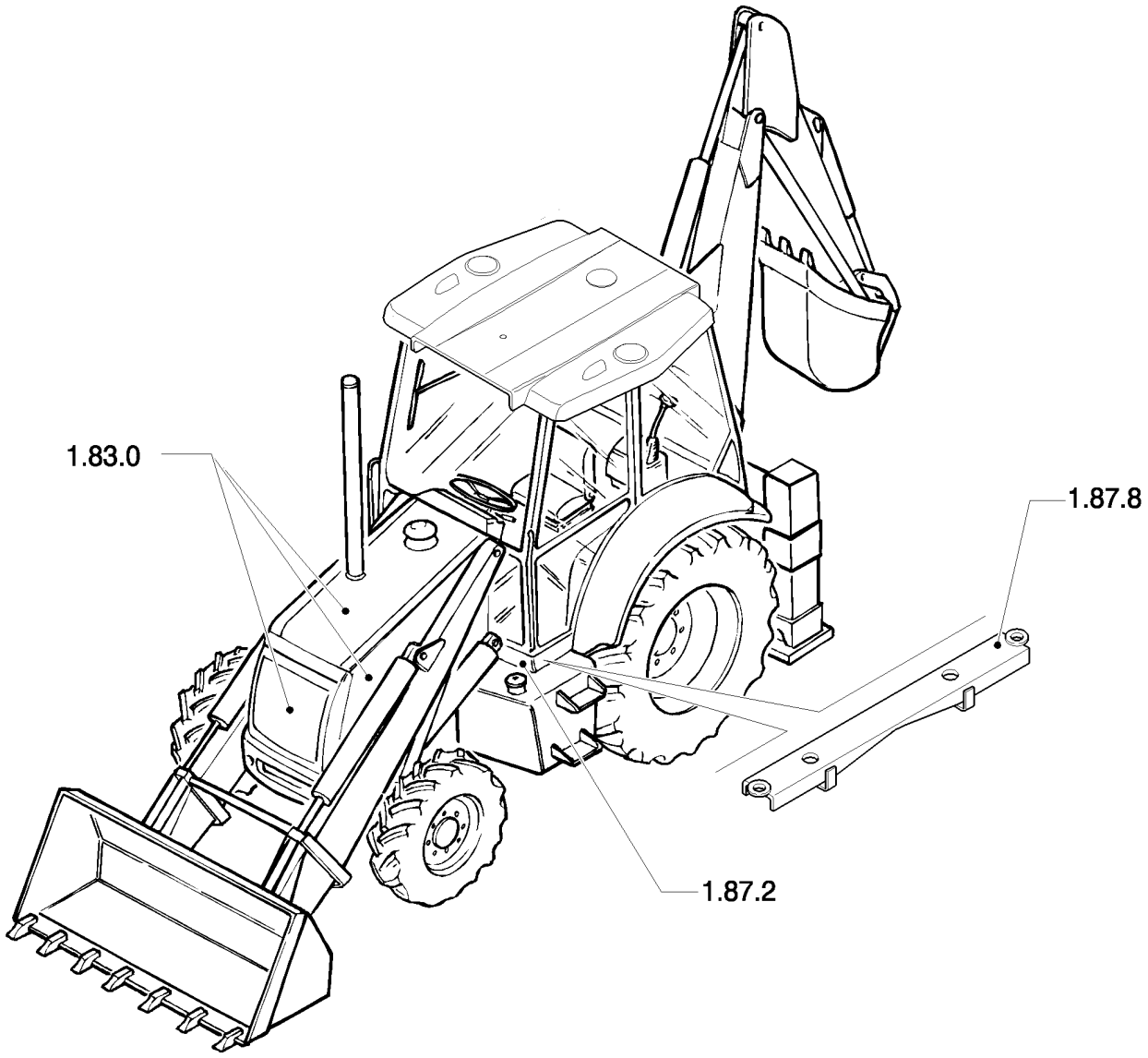

AUVENT

REF	FN	PART NUMBER	YR/SN	QTY	DESCRIPTION

CHARGEUR

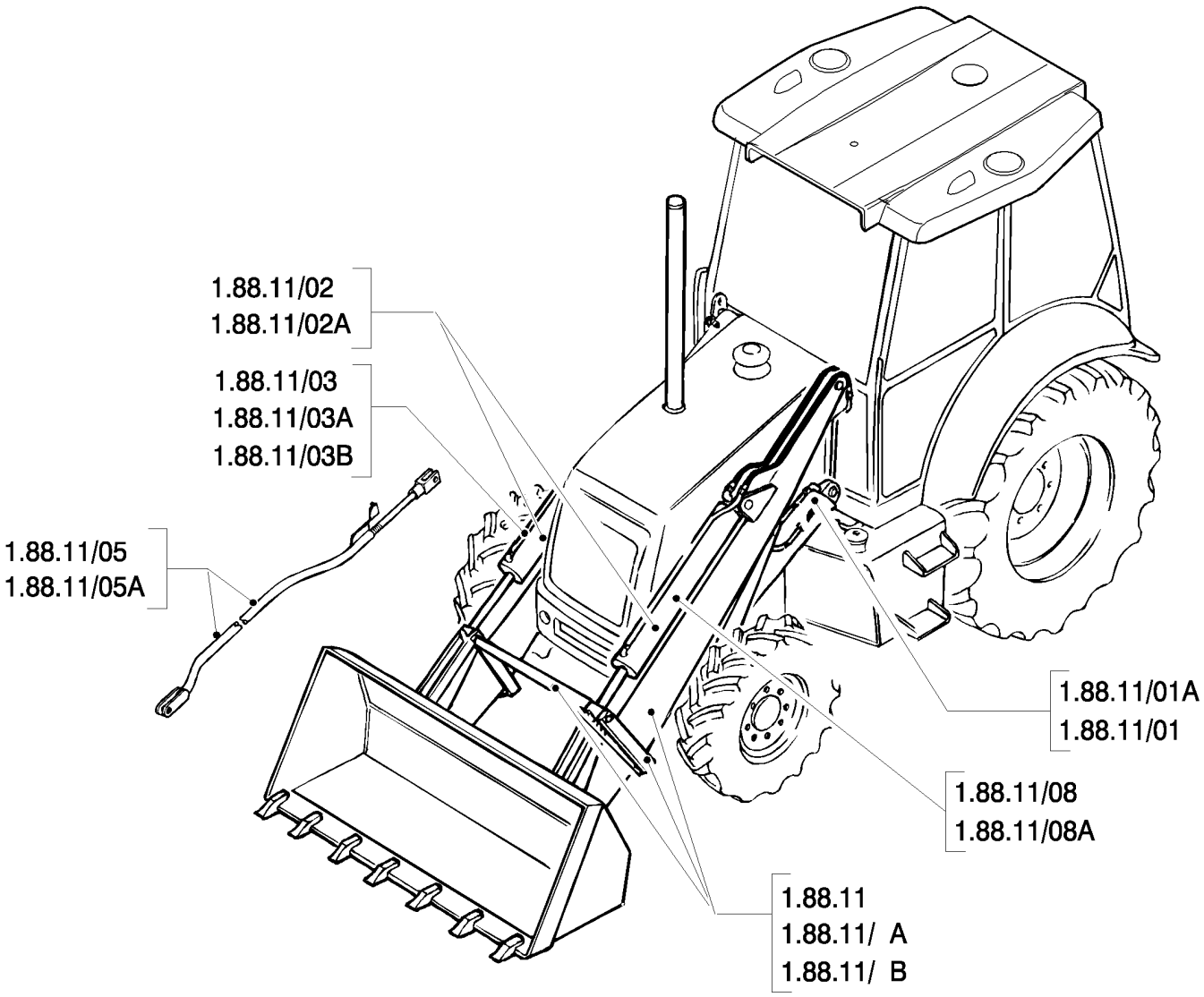
1.88.11/02
1.88.11/02A
1.88.11/03
1.88.11/03A
1.88.11/03B
1.88.11/05
1.88.11/05A
1.88.11/01A
1.88.11/01
1.88.11/08
1.88.11/08A
1.88.11
1.88.11/ A
1.88.11/ B

CHARGEUR

REF	FN	PART NUMBER	YR/SN	QTY	DESCRIPTION

RETRO

CENTER PIVOT

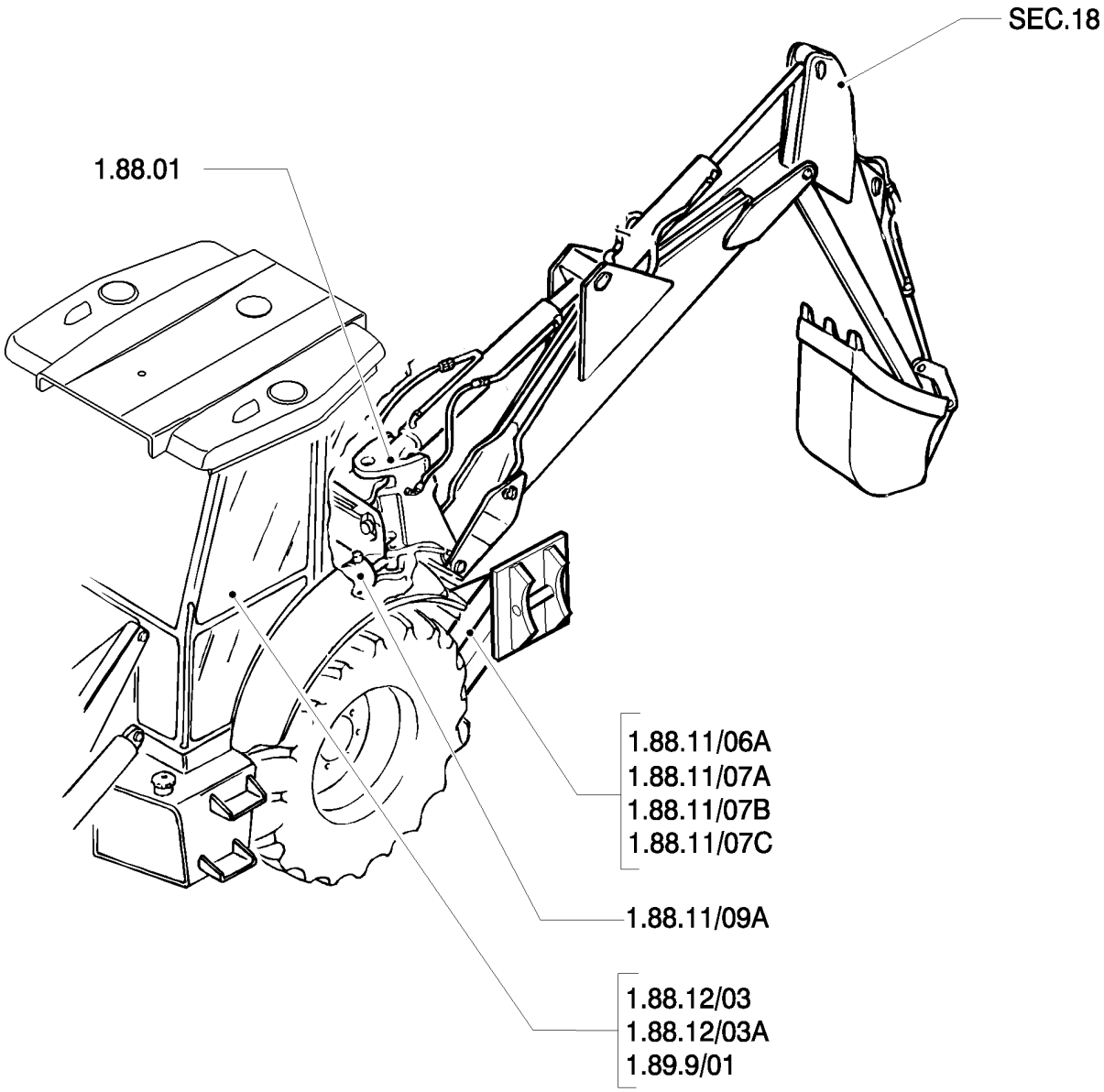

RETRO

REF	FN	PART NUMBER	YR/SN	QTY	DESCRIPTION

ROUES

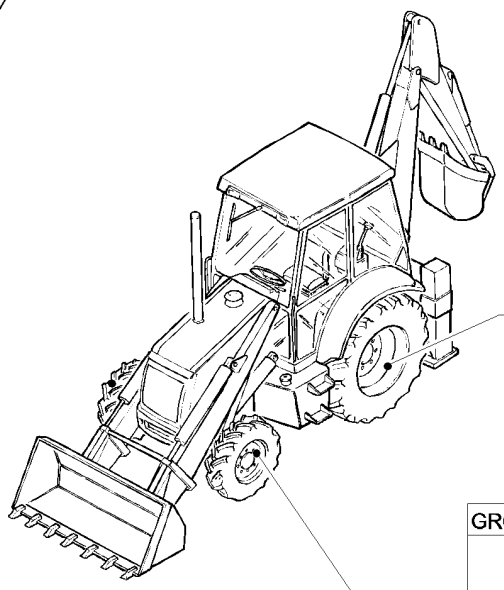

GROUP	EQUIP	TIRE SIZE	RIM
83.00	83.52	16.9 - 28 R4-10PLY TITAN	W15LX 28
	83.62	16.9 - 28 R4 - 12PR	W14LX 28
	83.64	16.9 - 24 R4 - 10PR	W15LX 24
	83.65	17.5 - L24 R4 - 10PR	W15LX 24
	83.91	19.5 - 24 R4 - 10PR	W16LX 24
	83.92	18.4 - 26 R4 - 12PR	DW16L X26
	83.92	21L24 R4 - 10PR	W18L X24
	83.93	18.4 - 26 R1 - 12PR	DW16L X26
	83.93	19.5 x 24 "JUMBO HULK"	W16L X24
	83.96	480/80 R26 IT520	DW16LX26
	83.97	16.9 - 28	W14L X28Z
	83.98	18.4 - 26	DW16L X26

GROUP	EQUIP	TIRE SIZE	RIM
82.00	82.75	14 -17.5NHS - 8PR	10.5 X 17.5
	82.76	12 -16.5NHS -8PR	9,75 X 16,5
	82.76	12 - 16.3 HULK	9,75 X 16,5
	82.76	12 - 16.5 HULK	9,75 X 16,5
	82.78	10.5/80 -18I3 - 10PR	9 X 18
	82.79	12.5/80 -18I3 - 10PR	9 X 18
	82.80	12.5/80 -18I3 - 10PR	9 X 18
	82.87	320/80-R18-IT520	9 X 18
	82.89	12.5 - 18	9 X 18

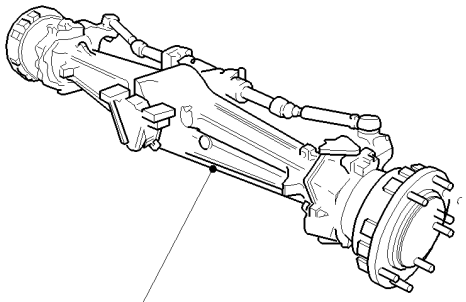

GROUP	EQUIP	TIRE SIZE	RIM
81.00	81.38	11L - 16SLF3 - 10PR	W8LX 16

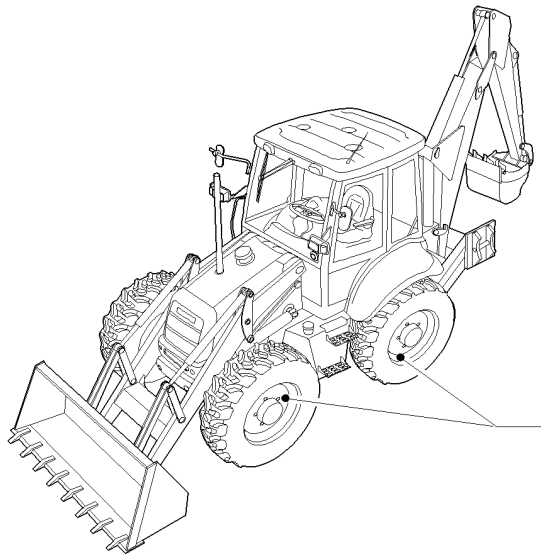

GROUP	EQUIP	TIRE SIZE	RIM
85.00	85.64	16.9 - 24 R4 - 12PR	W14LX 24
	85.64	16.9 - 24 R4 - 12PR (I.S.G.)	W15LX 24
	85.65	16.9 - 28 R4 - 12PR	W15LX 28
	85.65	16.9 - 28 R4 12PLY GY (I.S.G.T.)	W14LX 28
	85.66	440/80 R28 156A8 IT530	W14LX 28
	85.67	440/80 R28 156A8 IT520	W14LX 28

ROUES

REF	FN	PART NUMBER	YR/SN	QTY	DESCRIPTION

VARIANTES

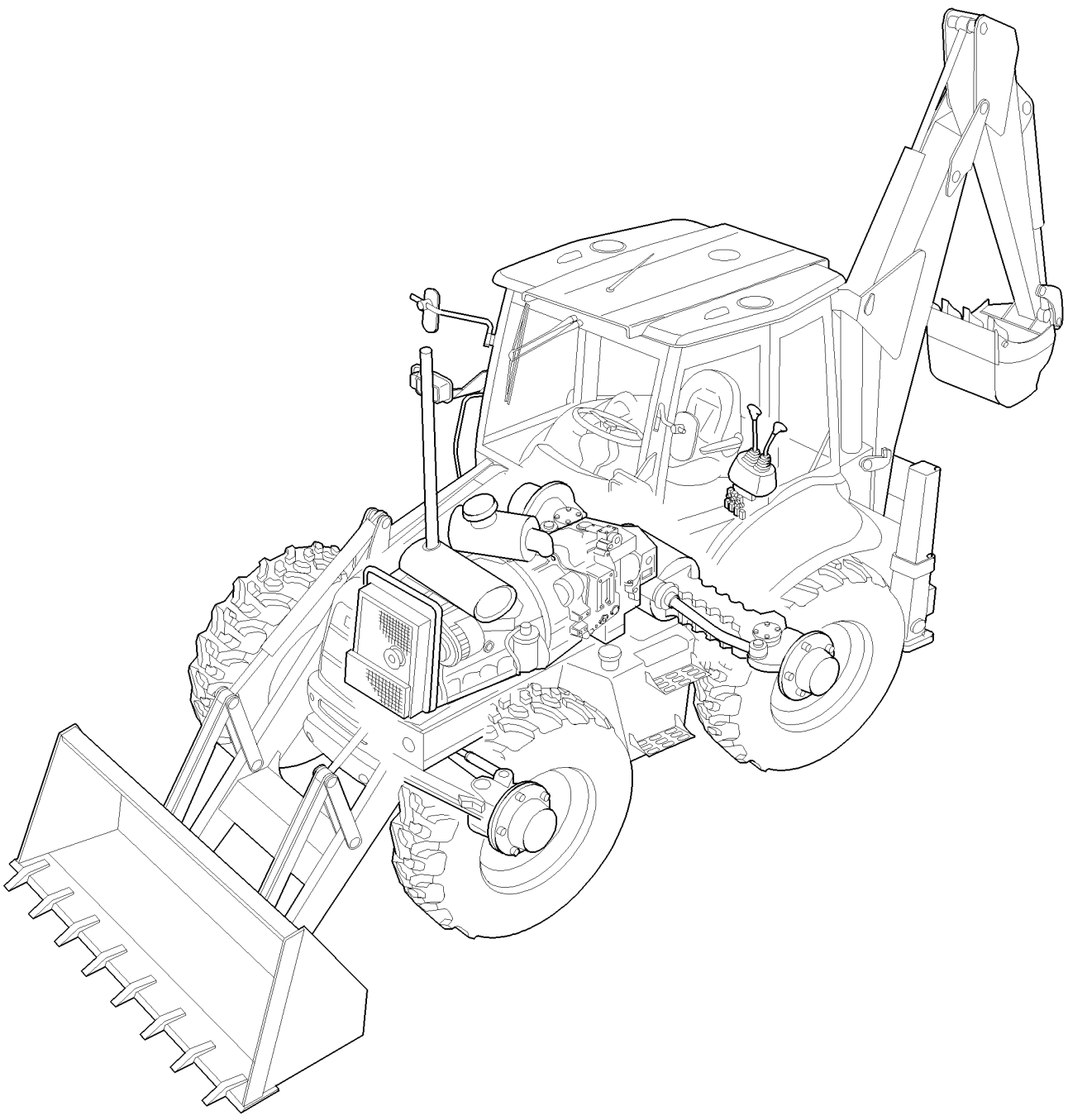

VARIANTES

REF	FN	PART NUMBER	YR/SN	QTY	DESCRIPTION

EQUIPEMENT OPTIONNEL - NA

VARIANT CODE	DESCRIPTION	APPLICATION					
		B90B	B95B	B95BLR	B95BTC	B110B	B115B
095	Stabilizer control without auto-up (CENTER PIVOT)	●	●	●	●	●	●
096	Stabilizer control with auto-up (CENTER PIVOT)	●	●	●	●	●	●
130	Approval for Europe	●	●	●	●	●	●
131 - 131/01	Single Battery	●	●	●	●	●	●
141	Approval for France	●	●	●	●	●	●
142	Approval for Russia	●	●	●	●	●	●
175	Air intake cap & pre-cleaner	●	●	●	●	●	●
176	Air intake cap & pre-cleaner	●	●	●	●	●	●
201	Shovel and rear lifting hooks	●	●	●	●	●	●
207	Rear counterweight	●					
284	Rear mirror (CAB)	●	●	●	●	●	
290 - 291 293	Front counterweight	●	●	●	●	●	●
300	Backhoe control valve, 6 sections (CENTER PIVOT)						●
302	Two-section control valve for loader	●	●	●	●	●	●
321 - 321/01	Double battery	●	●	●	●	●	●
331	Tower assy 6 sections (CENTER PIVOT)	●	●	●	●	●	●
331/ A	Proportional control valve 6 sections	●	●	●	●	●	●
331/ B	Backhoe control valve, 6 sections (CENTER PIVOT)	●	●	●	●	●	●
331/ C	Pilot valve of hydraulic control lever (RIGHT HAND - LEFT HAND)	●	●	●	●	●	●
333	Tower assy 7 sections (CENTER PIVOT)	●	●	●	●	●	●
333/01B	7-sections excavator control valve (CENTER PIVOT)	●	●	●	●	●	●
333/ A	Proportional control valve 7 sections	●	●	●	●	●	●
333/ C	Pilot valve of hydraulic control lever (RIGHT HANDS) 7 spools	●	●	●	●	●	●
335	Tower assy 7 sections (CENTER PIVOT)	●	●	●	●	●	●
337	Lock valve on loader cylinders	●	●	●	●	●	
338	Lock valve on loader lift cylinders	●	●	●	●	●	●
339	Lock valve on bucket cylinder						●
341/ A	Proportional valve 4 operations	●	●	●	●	●	●
342	Valve with viscous joint	●					
344	Stabilizer control valve, two sections (CENTER PIVOT)	●	●	●	●	●	
346	A/C housing & filters	●	●	●	●	●	●
347	Housing & filters	●	●	●	●	●	●
350	2 lever backhoe controls						●
351	JCB 2 lever backhoe controls						●
358	ISO 2 lever backhoe controls						●
386	Backhoe bucket 12" (305MM) HD with thorned tines	●	●	●	●	●	●
387	Backhoe bucket 18" (457MM) HD with thorned tines	●	●	●	●	●	●
388	Backhoe bucket 24" (610MM) HD with thorned tines	●	●	●	●	●	●
389	Backhoe bucket 30" (762MM) HD with thorned tines	●	●	●	●	●	●
390	Loader control valve, two section, lever & decal	●	●	●	●	●	
390/01	Backhoe bucket 36" (910MM) HD with thorned tines	●	●	●	●	●	●
391	Lock valve for bucket 4X1 / 6X1	●	●	●	●	●	●
392	Locking valve on backhoe lift and dipp. Cylinder	●	●	●	●	●	●
393	2 lever backhoe controls, lever, boot & decals	●	●	●	●	●	●
394	4 lever backhoe controls, console, levers & bellcrannk (CENTER PIVOT - SIDE SHIFT)	●	●	●	●	●	
394/01	ISO 2 lever backhoe controls, lever, boot & decals (CENTER PIVOT)	●	●	●	●	●	
397	Suspended load handling on machine side	●	●	●	●	●	●
398	Lock valve on loader boom cylinder and backhoe dipper cylinder	●	●	●	●	●	●
400	Front axle (4WS) - box						●
401	Rear axle, RH & center housing (4WS)						●
402	4WD front axle. Housing, bushing & supportt	●	●	●	●	●	
415	Front axle - (4WD) w/gear, bevel					●	
416	System hammer components (CAB - ROPS)	●	●	●	●	●	●
431 - 432	1 M3 standard bucket				●		
433	Bucket 4X1 with blade				●		
434	Bucket 4X1 with tines				●		
437	Glide ride valve, hydraulic system for machine frame levelling	●	●	●	●	●	●
469	Bucket 6X1 (1,15 M3) with blade "COMMON GRAY"						●
470	Bucket 6X1 (1,15 M3) with blade "COMMON GRAY"						●
471	Bucket 4X1 (1 M3) with blade "COMMON GRAY"	●	●	●		●	
471/01	Hydraulic cylinder (BUCKET 4X1 - 6X1)	●	●	●	●	●	●
471/02	Bucket 4X1 (1 M3) with blade "COMMON GRAY"				●		
472 - 472/01	Bucket 4X1 (1 M3) with tines "COMMON GRAY"	●	●	●	●	●	
473	Bucket 6X1 (1 M3) with blade "COMMON GRAY"	●	●	●		●	

EQUIPEMENT OPTIONNEL - NA

REF	FN	PART NUMBER	YR/SN	QTY	DESCRIPTION

EQUIPEMENT OPTIONNEL - NA

VARIANT CODE	DESCRIPTION	APPLICATION					
		B90B	B95B	B95BLR	B95BTC	B110B	B115B
474	Bucket 6X1 (1 M3) with tines "COMMON GRAY"	●	●	●		●	
475	Bucket 4X1 (1,15 M3) with blade "COMMON GRAY"						●
476	Bucket 4X1 (1,15 M3) with tines "COMMON GRAY"						●
487	24" (610MM) backhoe bucket with pin teeth						●
500	1,13 M3 bucket						●
501	1,13 M3 bucket w/tines						●
502	1,13 M3 bucket with extra reversible blade						●
515/01	12" (350MM) backhoe bucket with pin teeth	●	●	●	●	●	●
516/01	18" (457MM) backhoe bucket with pin teeth	●	●	●	●	●	●
517/01	24" (610MM) backhoe bucket with pin teeth	●	●	●	●	●	●
518/01	30" (762MM) backhoe bucket with pin teeth	●	●	●	●	●	●
519/01	36" (914MM) backhoe bucket with pin teeth	●	●	●	●	●	●
520	0.88 M3 bucket without tines	●	●	●	●		
520/01	18" (457MM) backhoe bucket with pin teeth (EXTRA HD)	●	●	●	●	●	●
521	Pin tooth kit, 24" (610MM) backhoe buckets (EXTRA HD)	●	●	●	●	●	●
522	1,13 M3 bucket	●	●	●		●	
522/01	Standard 1MC bucket with forks	●	●	●		●	
522/02	1 M3 bucket with cutter				●		
525	Standard 1MC bucket with forks and reversible blade	●	●	●		●	
527	0.88 M3 bucket and extra reversible blade	●	●	●			
533	1,15 M3 bucket with forks and cutter blade						●
534	1,15 M3 bucket with forks and extra reversible blade						●
535	Stabilizer foot ground (CENTER PIVOT)	●	●	●	●	●	●
536	Standard 1MC bucket with tines	●	●	●		●	
536/01	1 M3 bucket with tines and cutter				●		
536/02	Reversible stabilizer leg (CENTER PIVOT)	●	●	●	●	●	●
537	Standard 1MC bucket with extra reversible blade	●	●	●		●	
537/01	1 M3 bucket with additional reversible blade				●		
548	Ditch cleaning bucket	●	●	●	●	●	●
622	Internal fan	●	●	●	●	●	●
636 - 637 638 - 639	Radiator	●	●	●	●	●	●
642	Egs control, 20 & 40km/h (POWER SHIFT)					●	●
646	Machine part air conditioning set	●	●	●	●	●	●
650	Steering column, fixed & adjustable	●	●	●	●	●	●
698	Glide ride valve, hydraulic system for machine frame levelling & ON/OFF switch	●	●	●	●	●	●
699	Hand hammer switch	●	●	●	●	●	
700	4X1 & 6X1 bucket hydraulic lines (POWER SHIFT, POWER SHUTTLE)	●	●	●	●	●	●
700/01	4X1 & 6X1 bucket hydraulic lines (4WS)						●
700/02	4X1 & 6X1 bucket hydraulic lines				●		
703	Pedal-operated telescopic dipper hydraulic system (7 SECTION)						●
721	Telescopic control valve, 3 sections (CENTER PIVOT)	●	●	●	●	●	
724/01	Hydraulic system for hammer (CENTER PIVOT)	●	●	●	●	●	●
724/02	Hydraulic system for hammer (CENTER PIVOT)	●	●	●	●	●	
724/ A	Rear hammer control valve	●	●	●	●	●	●
725	Hammer kit from lifting arm to demolition arm	●	●	●	●	●	●
725/01	4X1 & 6X1 bucket hydraulic lines (POWER SHUTTLE)	●	●	●	●	●	
725/02	4X1 & 6X1 bucket hydraulic lines (POWER SHIFT)	●	●	●	●		●
725/03	4X1 & 6X1 bucket hyraulic lines (POWER SHUTTLE)				●		
727	Hydraulic system presetting for telescopic links pedal operated						●
727/01	Hydraulic system prearrangement (CENTER PIVOT)	●	●	●	●	●	
728	Manual hammer system	●	●	●	●	●	●
733	Rear mechanical quick-coupling	●	●	●	●	●	●
734	Front mechanical quick-coupling	●	●	●		●	
758	Rotating beacon	●	●	●	●	●	●
787	Front console without speedometer (POWER SHUTTLE, ROPS)	●	●	●	●	●	
787/01	Front console without speedometer (POWER SHUTTLE, CAB)	●	●	●	●	●	
788	Front console with speedometer (ROPS)	●	●	●	●	●	
788/01	Front console with speedometer (CAB)	●	●	●	●	●	
789	Speed sensor (POWER SHUTTLE)	●	●	●	●	●	
793	Front working light (CAB)	●	●	●	●	●	●
793/01	Front working light (ROPS)	●	●	●	●	●	
794	Lamps & lights (CAB)	●	●	●	●	●	●
794/01	Lamps & lights (ROPS)	●	●	●	●	●	
796	Antitheft	●	●	●	●	●	●

EQUIPEMENT OPTIONNEL - NA

REF	FN	PART NUMBER	YR/SN	QTY	DESCRIPTION

EQUIPEMENT OPTIONNEL - NA

VARIANT CODE	DESCRIPTION	APPLICATION					
		B90B	B95B	B95BLR	B95BTC	B110B	B115B
803	Fenders, front	●	●	●	●	●	
851	Cloth seat & attaching hardware - cabine	●	●	●	●	●	●
851/01	Cloth seat cushinos, armrests & related parts	●	●	●	●	●	●
853	Rear mudguards and roof (ROPS - CAB)	●	●	●	●	●	●
855	Air ride cloth seat & attaching hardware - cabine	●	●	●	●	●	●
855/01	Air ride cloth seat cushinos, armrests & related parts	●	●	●	●	●	●
856	Vinyl seat cushinos, armrests & related parts (ROPS)	●	●	●	●	●	
856/01	Vinyl seat with armrests & mounting hardware (ROPS)	●	●	●	●	●	
860	Fenders, front						●
879	Right back view mirror	●	●	●	●	●	●
888	Arm and guard decal	●	●	●	●		
900	Boom - long dipper	●	●	●	●	●	●
901	Telescopic dipper long	●	●	●	●	●	●
902	Short telescopic dipper	●	●	●	●		
987	Foward/Reverse & steering decals - POWER SHIFT						●
990	Tool kit	●	●	●	●	●	●
992	Cab warning & information decals (POWER SHUTTLE - POWER SHIFT)	●	●	●	●	●	●
993	Plates	●	●	●	●	●	●
995 - 995/01	Cold start	●	●	●	●	●	●
998	Foward/Reverse & steering decals - POWER SHIFT					●	●

EQUIPEMENT OPTIONNEL - NA

REF	FN	PART NUMBER	YR/SN	QTY	DESCRIPTION

NOTES

SECTION INDEX
Moteur

0.02.1/01		MOTEUR
0.04.0/01		BLOC CYLINDRE
0.04.2		CARTER D'HUILE
0.04.3/01	01	COUVERCLES DE BATI
0.04.3/01	02	COUVERCLES DE BATI
0.04.3/01	03	COUVERCLES DE BATI
0.06.0/01		CULASSE DE CYLINDRE
0.06.3/01	01	COUVERCLES CULASSE
0.06.3/01	02	COUVERCLES CULASSE
0.06.6/01		AXE DE CULBUTEUR
0.07.1/01		CONDUIT D'ADMISSION
0.07.7/01		CONDUIT D'ECHAPPEMENT
0.08.0		VILEBREQUIN
0.08.1/01		BIELLE
0.08.2/01		PISTON - MOTEUR
0.08.3		VOLANT - MOTEUR
0.08.4		POULIE - VILEBREQUIN
0.10.5	01	MASSELOTTE, ENGRENAGES ET ARBRES
0.10.5	02	MASSELOTTE, ENGRENAGES ET ARBRES
0.12.0/01		ARBRE A CAMES - COMMANDE DE DISTRIBUTION
0.14.0/01	01	POMPE D'INJECTION
0.14.0/01	02	GROUPE D'INJECTION - INJECTEUR
0.14.0/01A		POMPE D'INJECTION - COMPOSANTS
0.14.9/01		GROUPE D'INJECTION - TUYAUTERIE
0.17.0		INJECTION ELECTRONIQUE
0.17.3		INSTALLATION ELECTRIQUE MOTEUR
0.20.0/01		FILTRE COMBUSTIBLE
0.20.3/01		TUYAUTERIES - COMBUSTIBLE
0.20.4/01		GROUPE D'INJECTION - TUYAUTERIE
0.24.0/01		TURBOCOMPRESSEUR
0.27.0/01		JAUGE DE NIVEAU - HUILE MOTEUR
0.30.0		POMPE A HUILE - MOTEUR
0.30.2		FILTRE A HUILE - MOTEUR
0.30.5/01		TUYAUTERIES - HUILE DU MOTEUR
0.31.5/01		EXCHANGEUR DE TEMPERATURE - MOTEUR
0.32.0		POMPE A EAU
0.32.3/01		CIRCUIT DE REFROIDISSEMENT - MOTEUR
0.32.6/01		THERMOSTAT - REFROIDISSEMENT MOTEUR
0.34.0/01		POMPE A EAU - COMMANDE
0.34.5		COMMANDE DE VENTILATEUR
0.36.0		ACCESOIRE MOTEUR
0.40.0/01		ALTERNATEUR
0.45.0/01		CROCHETS DE MANOEUVRE - MOTEUR

MOTEUR

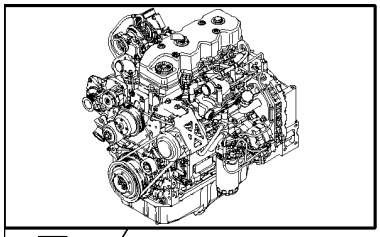

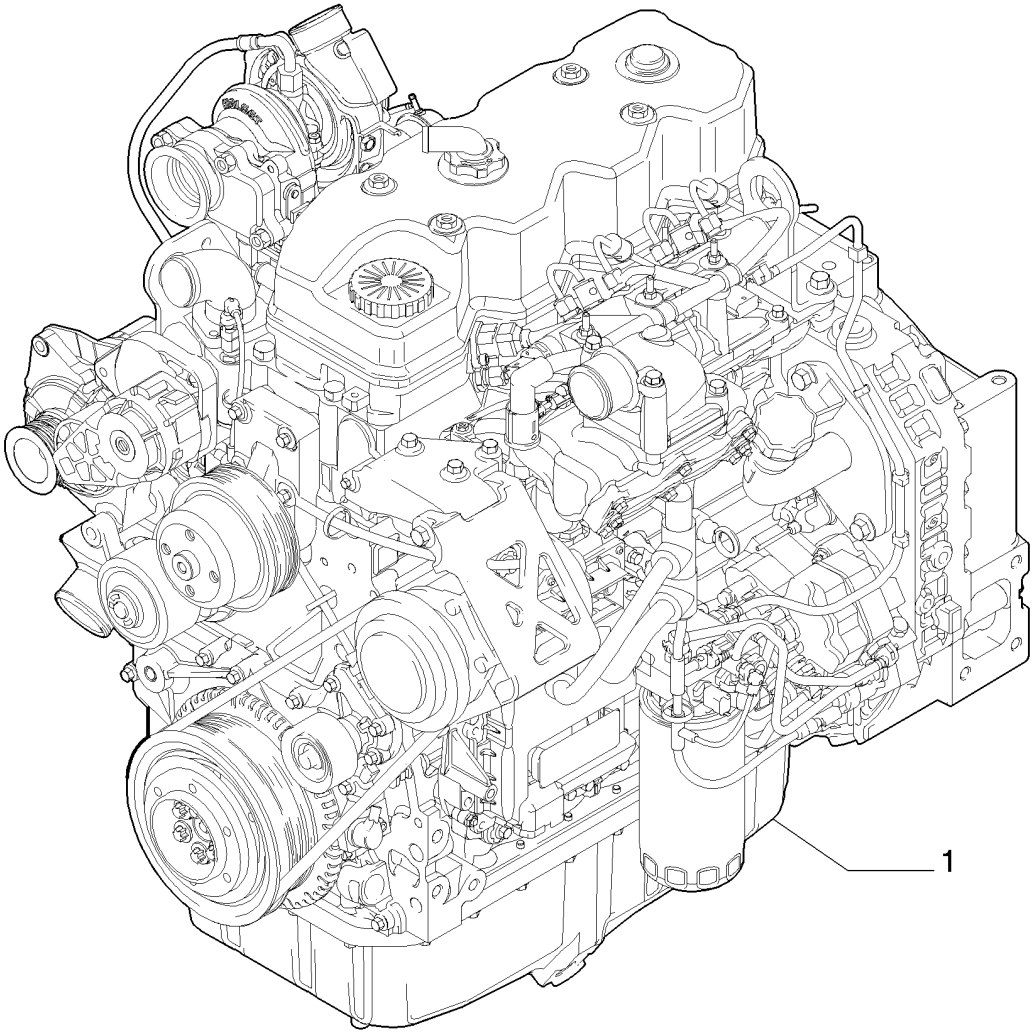

MOTEUR

REF	FN	PART NUMBER	YR/SN	QTY	DESCRIPTION
1		87587692		1	MOTEUR, - ASSY

BLOC CYLINDRE

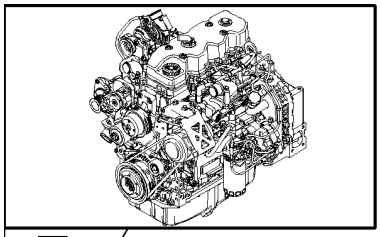

KIT KIT ● = 1

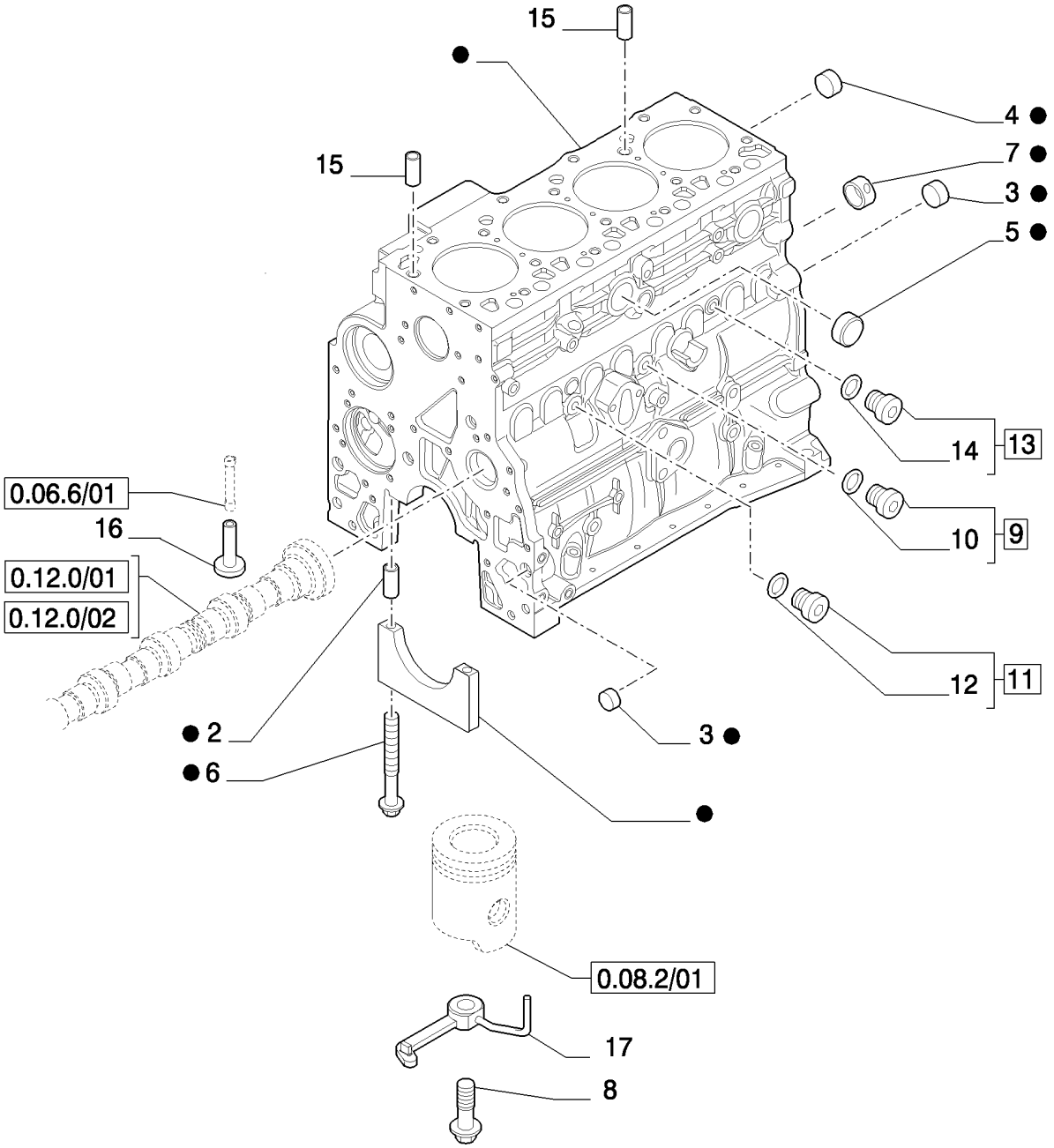

BLOC CYLINDRE

REF	FN	PART NUMBER	YR/SN	QTY	DESCRIPTION
1		2830082		1	BLOC MOTEUR, - ASSY
2		4899026		10	PION
3		4895039		3	BOUCHON
4		4895038		4	BOUCHON
5		4895228		2	BOUCHON
6		4891353		10	VIS, Flg Hd, M12 x 1.5 x 120
7		4895040		1	BAGUE
8		4894218		4	VIS
9		4895605		1	BOUCHON, 14x1.5 - ASSY
10		4899115		1	JOINT THORIQUE
11		4899009		1	BOUCHON, 10x1.5 - ASSY
12		4899072		1	JOINT THORIQUE
13		4895392		1	BOUCHON, 18x1.5 - ASSY
14		4895393		1	JOINT THORIQUE
15		4895049		2	PION
16		4899803		8	POUSSOIR
17		2852202		4	GICLEUR

CARTER D'HUILE

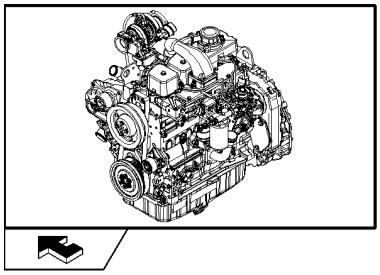

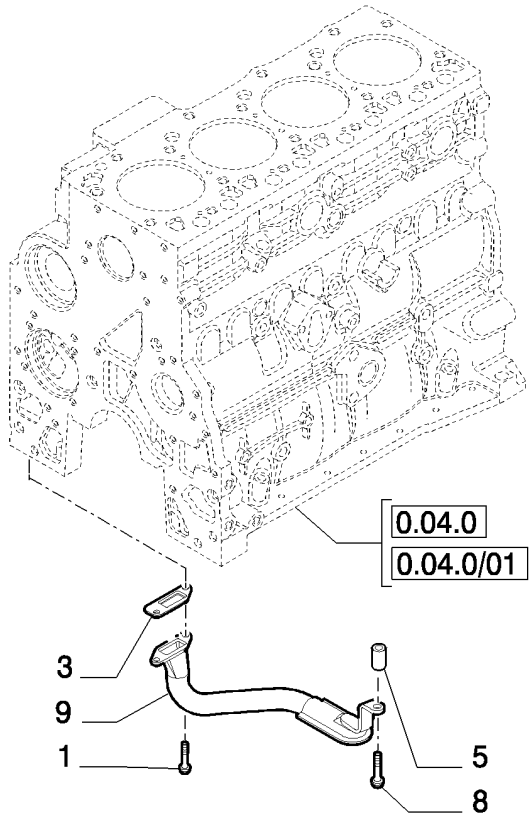

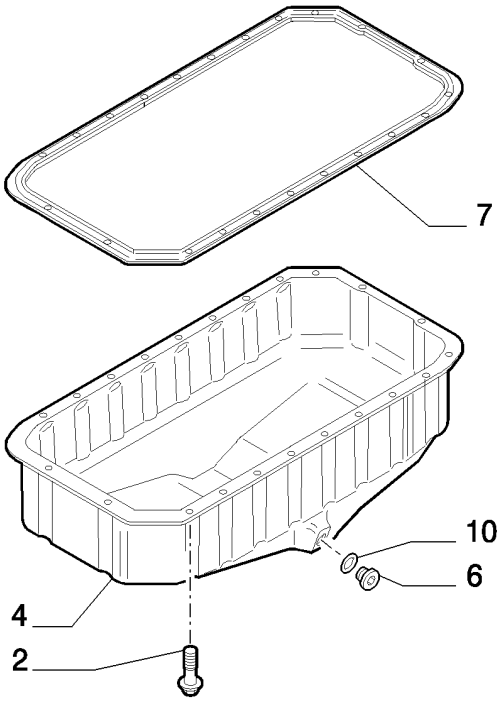

CARTER D'HUILE

REF	FN	PART NUMBER	YR/SN	QTY	DESCRIPTION
1		2852234		2	VIS, Hex Flg, M8 x 1.25 x 20
2		4899091		22	VIS, Hex Flg, M8 x 1.25 x 40
2		4895489		2	VIS
3		4898301		1	JOINT, - ASSY
4		2852011		1	CARTER D'HUILE
5		2852016		1	ENTRETOISE
6		2856086		1	BOUCHON
7		2852012		1	JOINT
8		4895538		1	VIS
9		2852013		1	TAMIS DE CRÉPINE
10		2853728		1	JOINT THORIQUE

COUVERCLES DE BATI

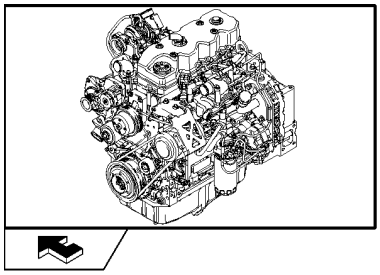

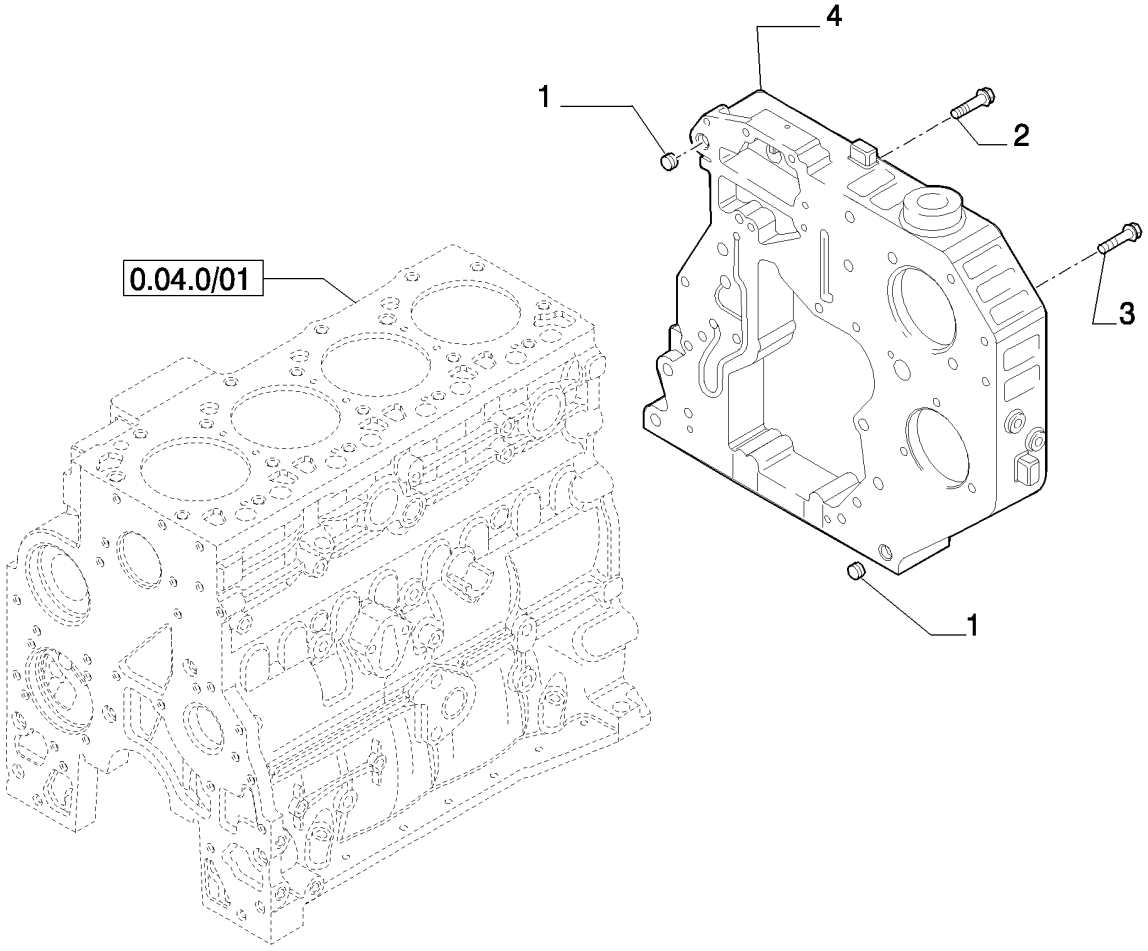

COUVERCLES DE BATI

REF	FN	PART NUMBER	YR/SN	QTY	DESCRIPTION
1		4899026		2	PION
2		4899078		4	VIS, Hex Flg, M8 x 1.25 x 45
3		4899093		2	VIS, Hex Flg, M10 x 1.5 x 30
3		4899073		1	VIS, Hex Flg, M12 x 1.75 x 30
3		4896939		3	VIS, M10x1.5x50
4		2855801		1	CARTER

COUVERCLES DE BATI

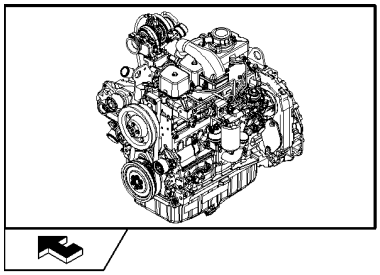

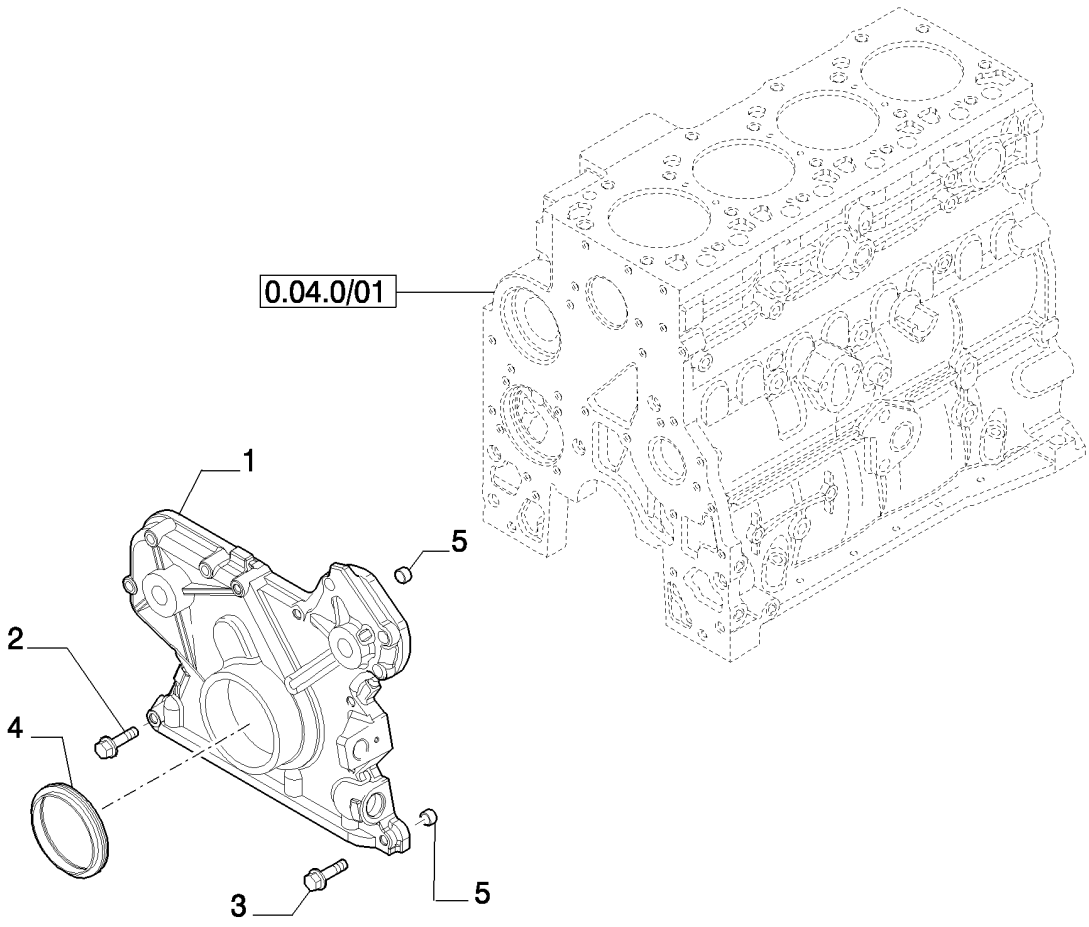

COUVERCLES DE BATI

REF	FN	PART NUMBER	YR/SN	QTY	DESCRIPTION
1		4897024		1	COUVERCLE, - FRONT
2		4899078		5	VIS, Hex Flg, M8 x 1.25 x 45
3		4899063		8	VIS, Hex Flg, M8 x 1.25 x 30
4		4890832		1	JOINT
5		4891209		2	PION

COUVERCLES DE BATI

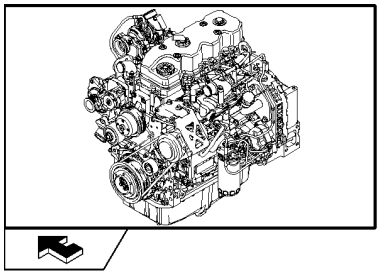

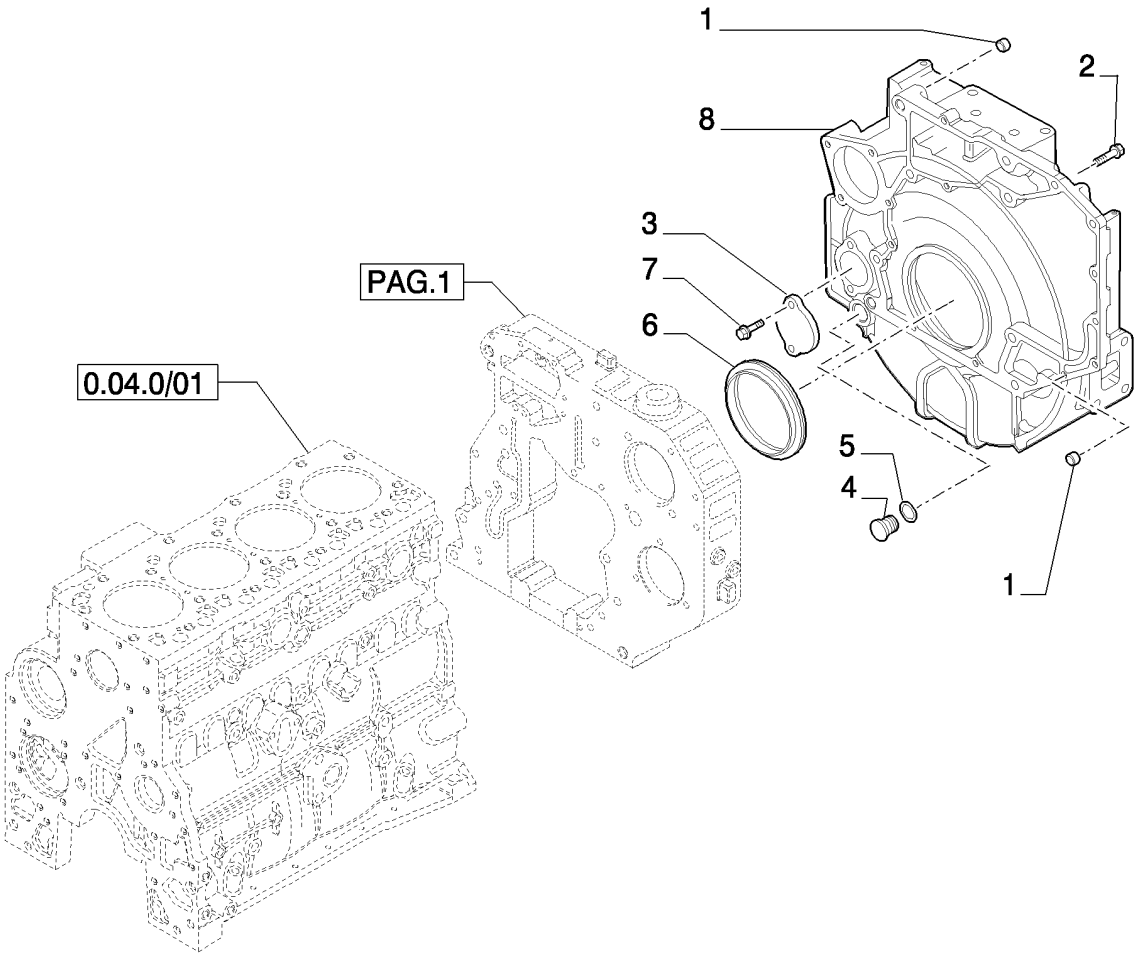

COUVERCLES DE BATI

REF	FN	PART NUMBER	YR/SN	QTY	DESCRIPTION
1		4899026		2	PION
2		4899109		2	VIS, Hex, M10 x 1.5 x 80
2		4892915		7	VIS, M10x1.5x40
2		4899076		6	VIS, Hex Flg, M12 x 1.75 x 80
2		4897499		2	VIS, M12x1.75x120
2		4899068		2	VIS, Hex Flg , M8 x 1.25 x 16
2		2852865		2	VIS, M10x35
3		4895155		1	COUVERCLE
4		4895378		1	BOUCHON
5		4895379		1	JOINT THORIQUE, M21.82 ID x 3.53 Thk
6		4890833		1	JOINT
7		4899143		2	VIS, Hex Flg, M10 x 1.5 x 140
8		2855803		1	CARTER

CULASSE DE CYLINDRE

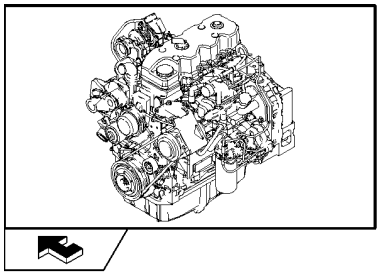

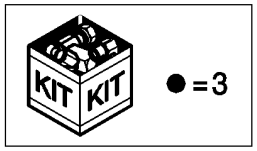

CULASSE DE CYLINDRE

REF	FN	PART NUMBER	YR/SN	QTY	DESCRIPTION
1		4891024		8	VIS
2		4891025		10	VIS
3		2831266		1	CULASSE, -ASSY
4		4899081		32	DEMI-CONE DE POUSSOIR
5		4895051		8	SOUPAPE D'ECHAPPEMENT
6		4895052		8	SOUPAPE D'ADMISSION
7		2831287		16	SIEGE DE RESSORT
8		4895073		16	RESSORT, SOUPAPE
9		4895074		16	CUVE
10		4893036		1	BOUCHON
11		4895085		9	BOUCHON, 25.74mm OD
12		4895089		7	BOUCHON, .886" OD
13		4895406		5	BOUCHON, 9.8mm OD
14		4895407		1	BOUCHON, 38.28mm OD
15		4895408		2	BOUCHON, .511" OD
16		4893244		16	SIEGE DE SOUPAPE
17		2830706		1	JOINT DE CULASSE, SP=1.25
17		2830707		1	JOINT DE CULASSE, SP=1.15

COUVERCLES CULASSE

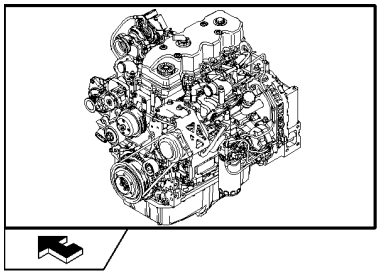

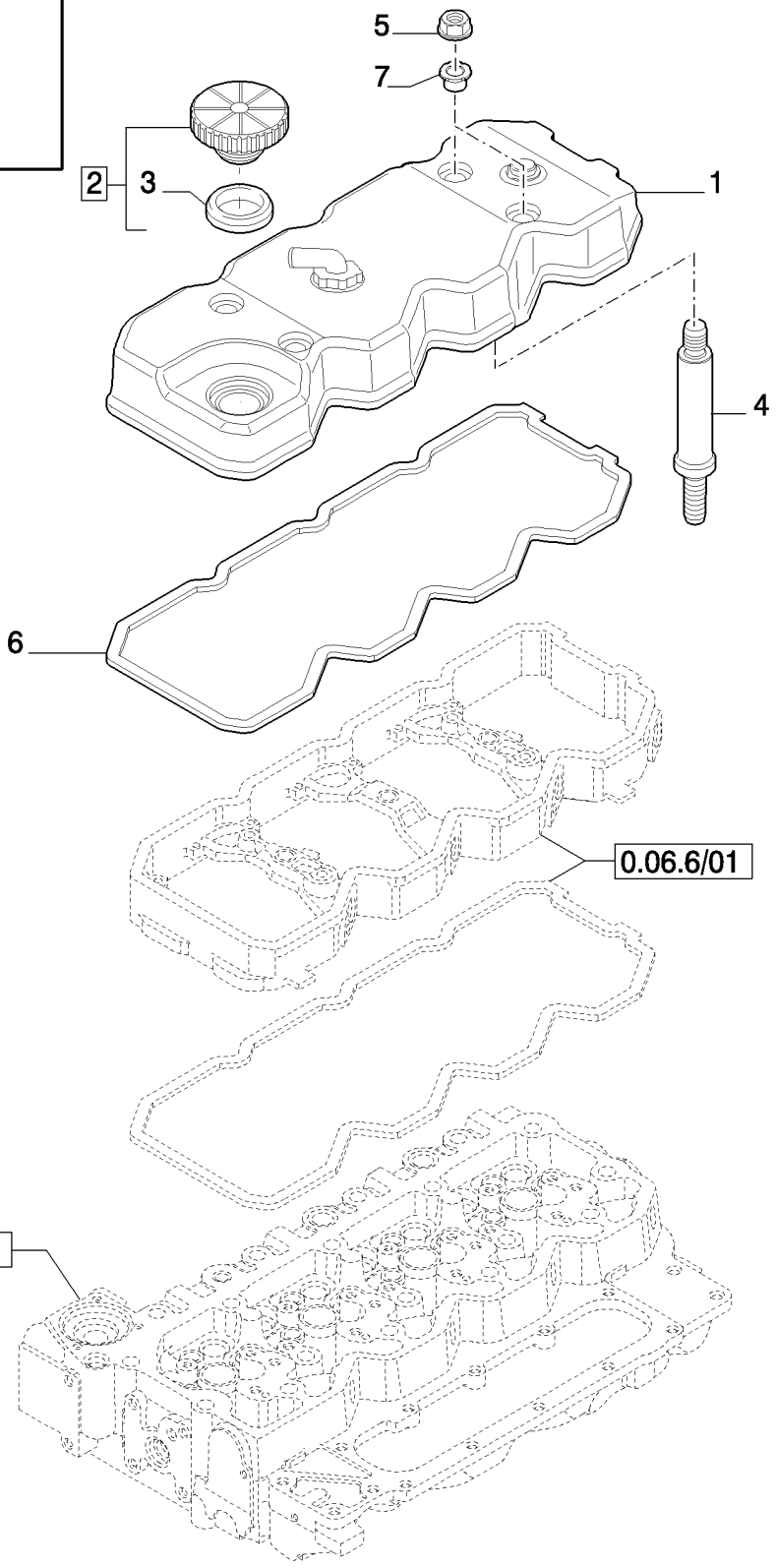

COUVERCLES CULASSE

REF	FN	PART NUMBER	YR/SN	QTY	DESCRIPTION
1	1	2853858		1	CACHE-CULBUTEURS, - ASSY
2		2856707		1	BOUCHON DE REMPL., - ASSY
3		2852774		1	JOINT
4		2854812		4	GOUJON
5		4893936		4	ECROU
6		4899228		1	JOINT
7		4899239		4	SILENT-BLOC

(1) See Page 2 (Incl. p/n 2853826)

COUVERCLES CULASSE

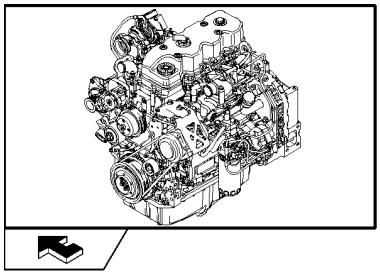

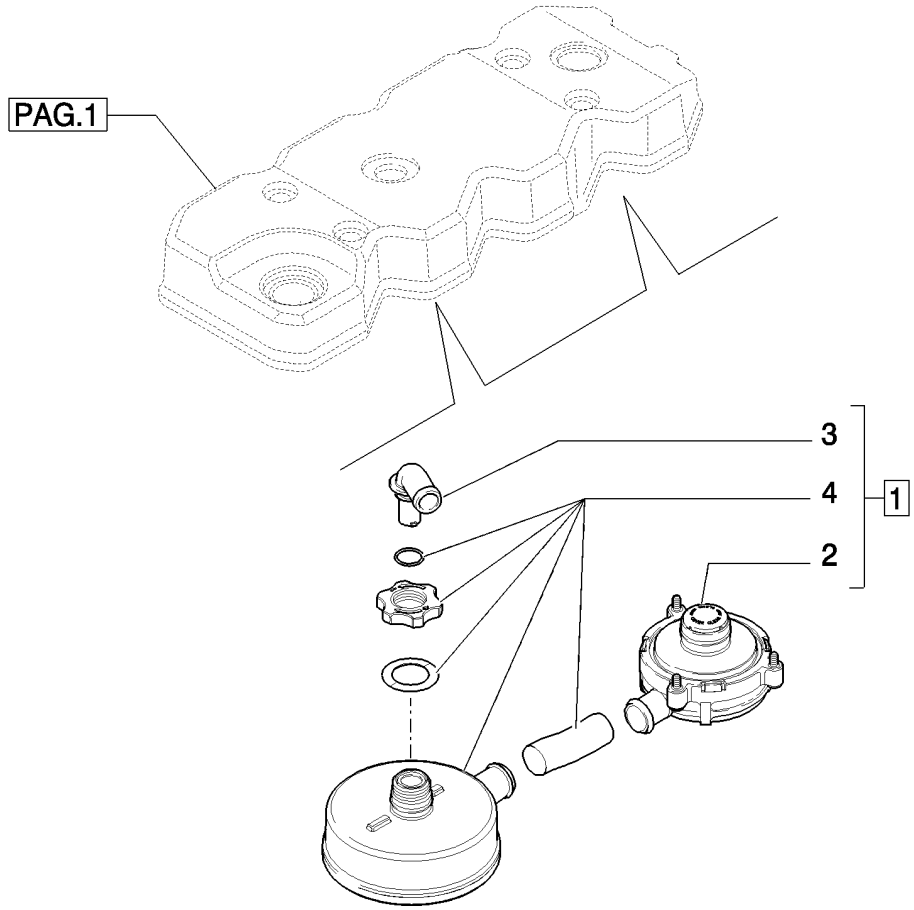

COUVERCLES CULASSE

REF	FN	PART NUMBER	YR/SN	QTY	DESCRIPTION
1		2853826		1	RENIFLARD, - ASSY
2		504153150		1	SOUPAPE
3		87307807		1	COUDE
4		504153151		1	ELÉMENT

AXE DE CULBUTEUR

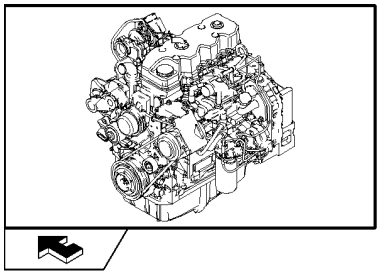

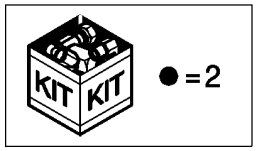

AXE DE CULBUTEUR

REF	FN	PART NUMBER	YR/SN	QTY	DESCRIPTION
1		4895432		3	VIS, M8x1.25x70
2		2856458		4	CULBUTEUR, - ASSY
3		4897248		2	RETENEUR
4		4897245		2	PRISE
5		4895068		1	CULBUTEUR, - ASSY
6		4895198		2	ECROU
7		2830222		2	VIS DE REGLAGE
8		4895065		2	ENTRETOISE
9		4899089		2	VIS, Hex Flg, M8 x 1.25 x 50
10		2852776		2	RONDELLE, 6x11
11		4895067		1	CULBUTEUR, - ASSY
12		2852428		4	CLIP
13		4899245		3	MANCHON
14		4899256		1	CARTER, - ASSY
15		2856460		2	VIS
16		4893487		4	SUPPORT
17		4895031		8	TIGE DE CULBUTEUR
18		2854530		8	TRAVERSE
19		2853535		1	JOINT
20		2852602		2	VIS, 6x16
21		4896052		2	FAISCEAU COMPLET

CONDUIT D'ADMISSION

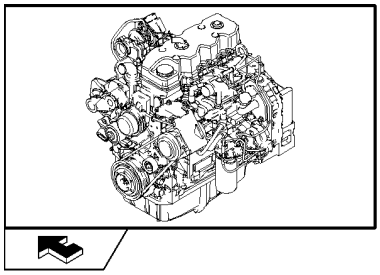

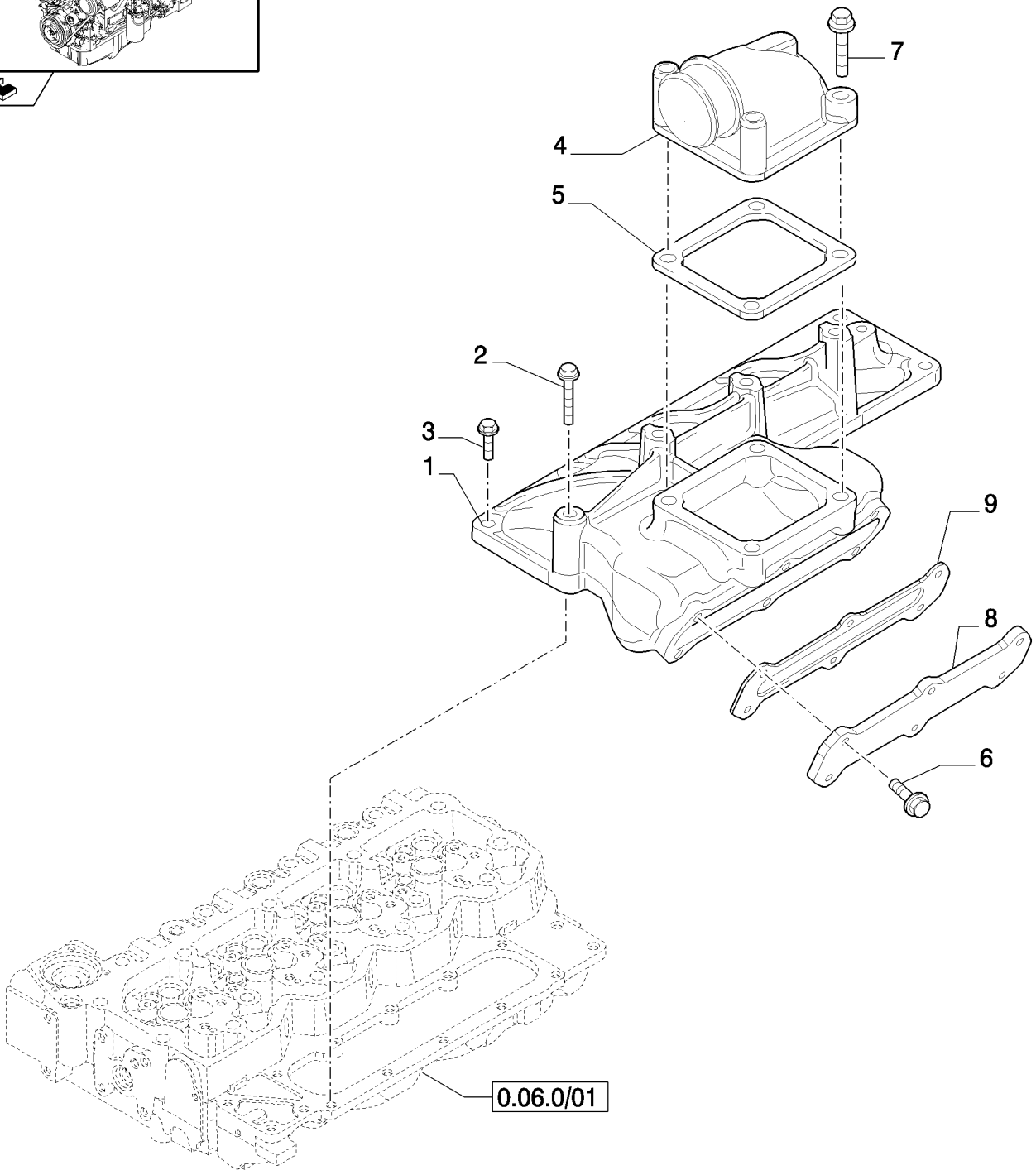

CONDUIT D'ADMISSION

REF	FN	PART NUMBER	YR/SN	QTY	DESCRIPTION
1		2855805		1	CONDUIT D'ADMISSION
2		4895432		1	VIS
3		4899039		6	VIS, Hex Flg, M8 x 1.25 x 25
4		2855809		1	COLLECTEUR
5		4899921		1	JOINT
6		2854702		6	VIS, M6x20
7		2852267		2	VIS
8		2854700		1	COUVERCLE
9		2854701		1	JOINT

CONDUIT D'ECHAPPEMENT

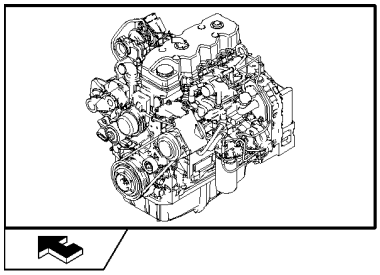

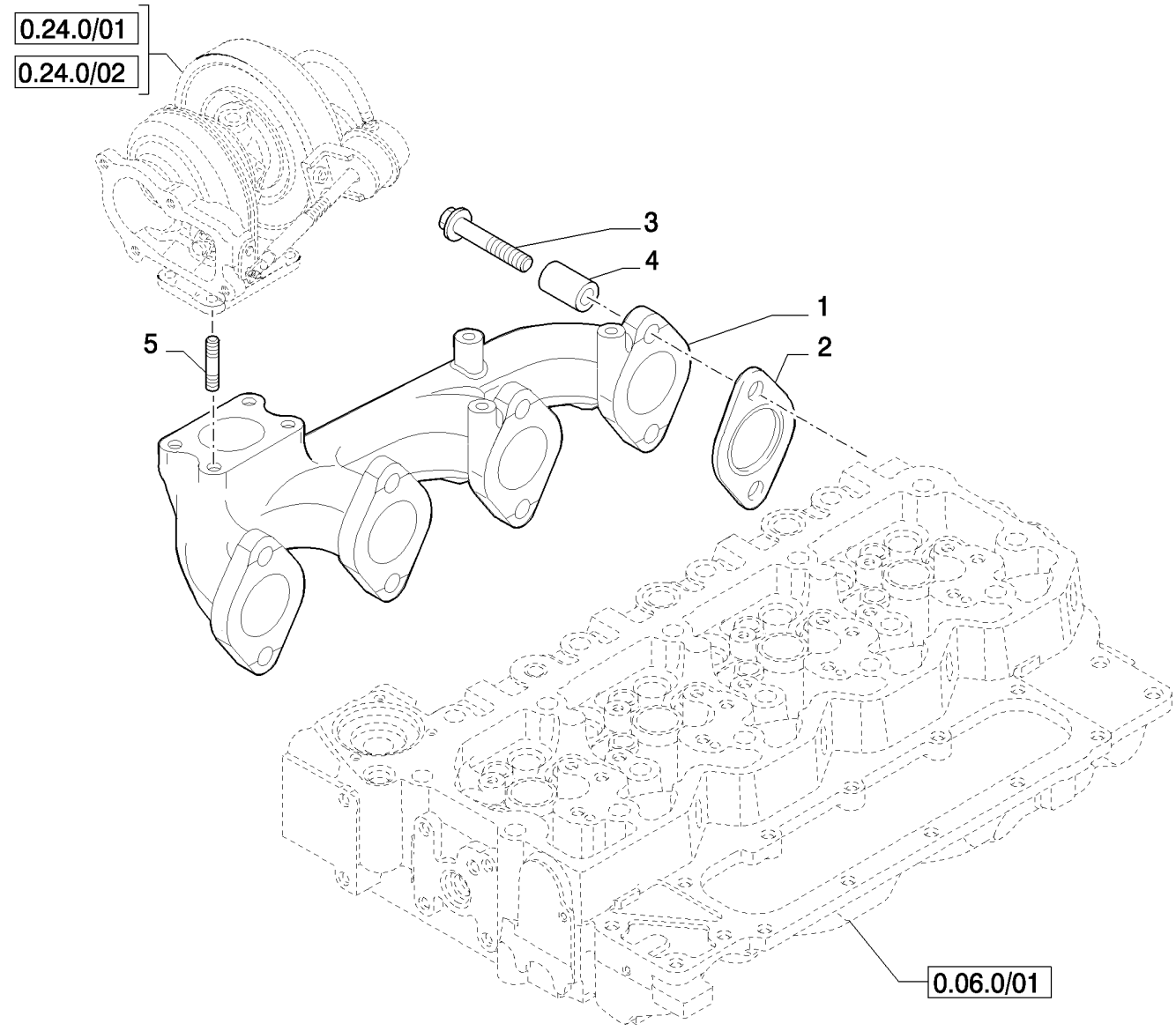

CONDUIT D'ECHAPPEMENT

REF	FN	PART NUMBER	YR/SN	QTY	DESCRIPTION
1		2855807		1	CONDUIT D'ECHAPPEMENT
2		2830444		4	JOINT
3		2852744		8	VIS
4		4895336		8	ENTRETOISE
5		4899119		4	GOUJON

VILEBREQUIN

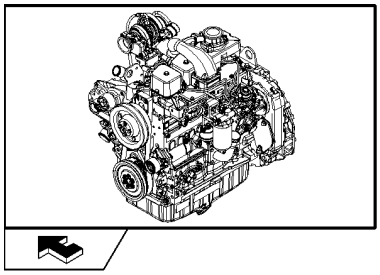

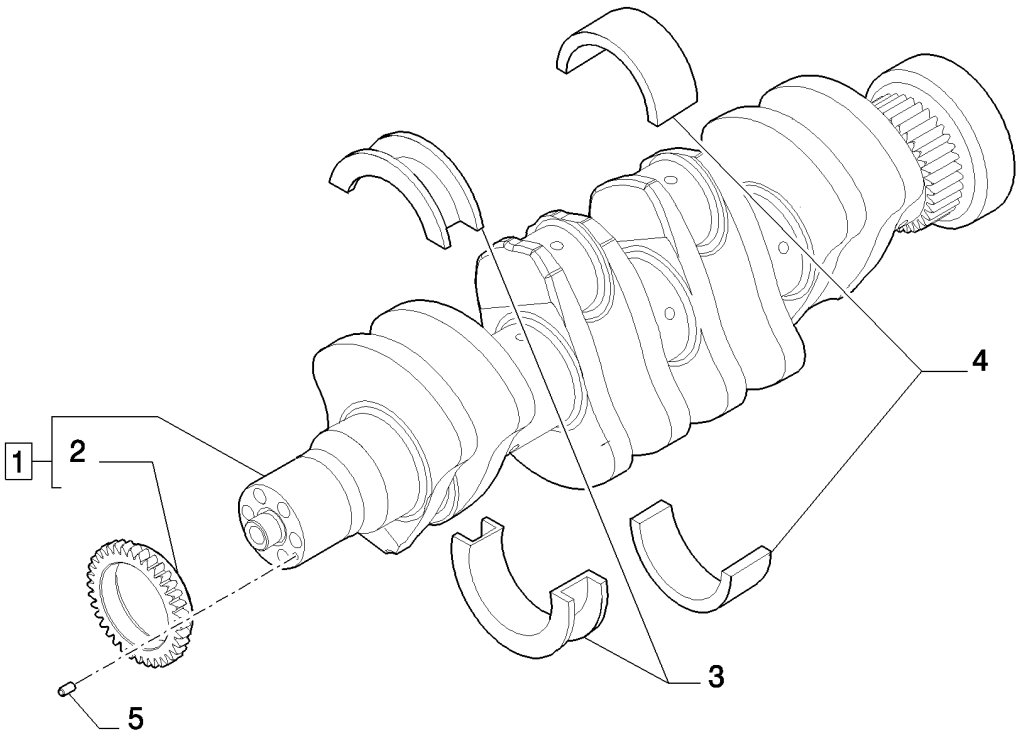

VILEBREQUIN

REF	FN	PART NUMBER	YR/SN	QTY	DESCRIPTION
1		2853822		1	VILEBREQUIN, - ASSY
2		4893386		1	PIGNON
3		2992153		1	KIT DEMI-RONDELLES (STD), STD (THRUST)
3		2992154		1	KIT DEMI-RONDELLES +0.50, + 0.250 (THRUST)
3		2992155		1	KIT DEMI-RONDELLES +0.25, + 0.500 (THRUST)
4		2992147		4	POCHET.DEMI-COUSSINETS
4		2992148		4	POCHET.DEMI-COUSS.-0.254
4		2992149		4	POCHET. DEMI-COUSS.-0.508
5		4899046		1	PION

BIELLE

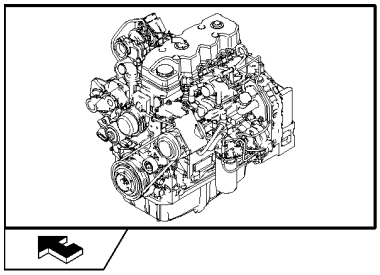

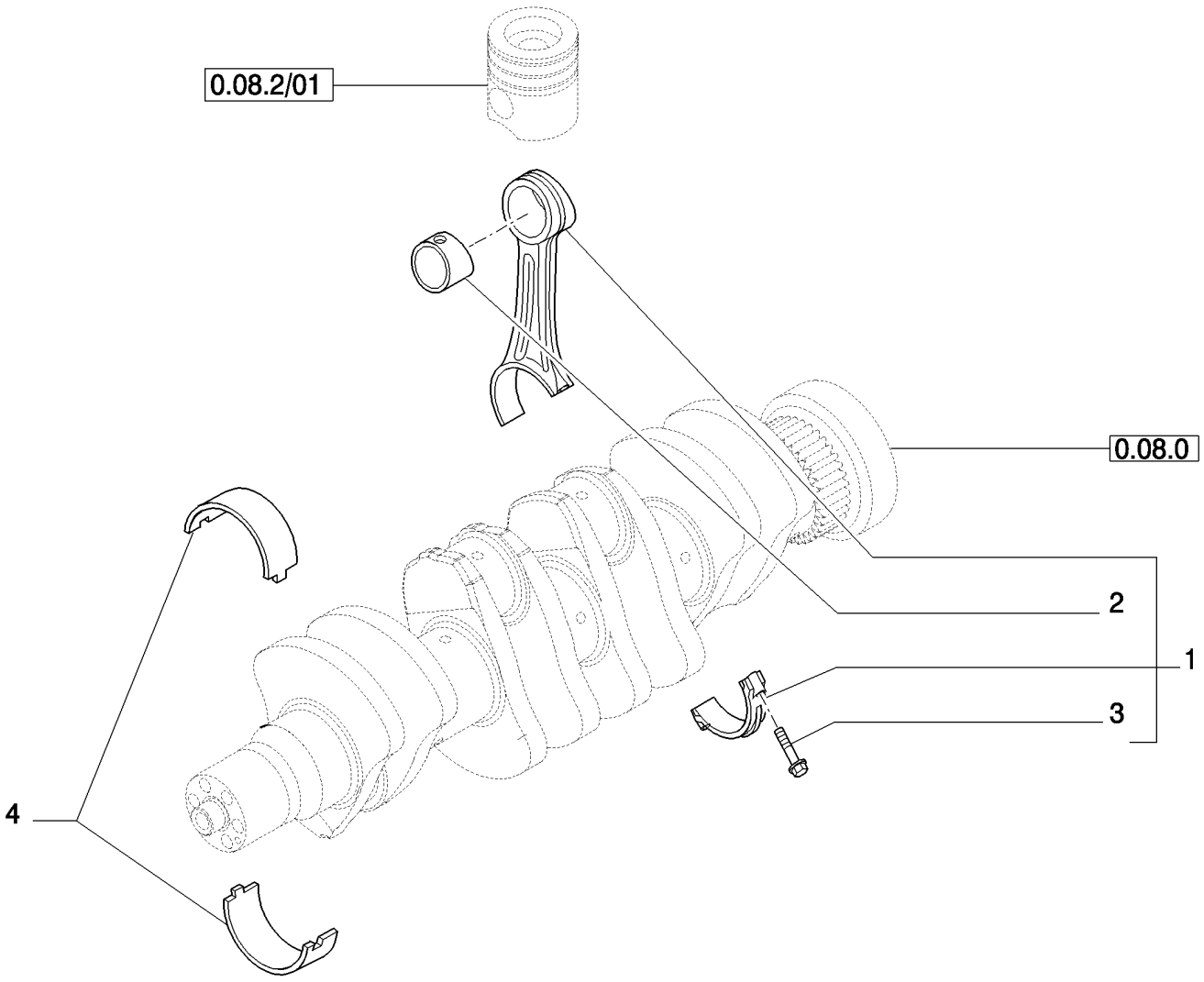

BIELLE

REF	FN	PART NUMBER	YR/SN	QTY	DESCRIPTION
1		2831298		4	BIELLE, - ASSY
2		4892708		1	BAGUE
3		2831297		2	VIS
4		8093882		4	POCHET.DEMI-COUSS.DE BAN
4		8094960		4	POCHET.DEMI-COUSS.DE BAN, (-0.250)
4		8094961		4	POCHET.DEMI-COUSS.DE BAN, (-0.500)

PISTON - MOTEUR

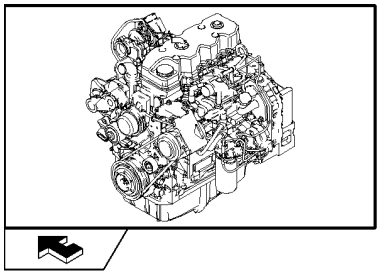

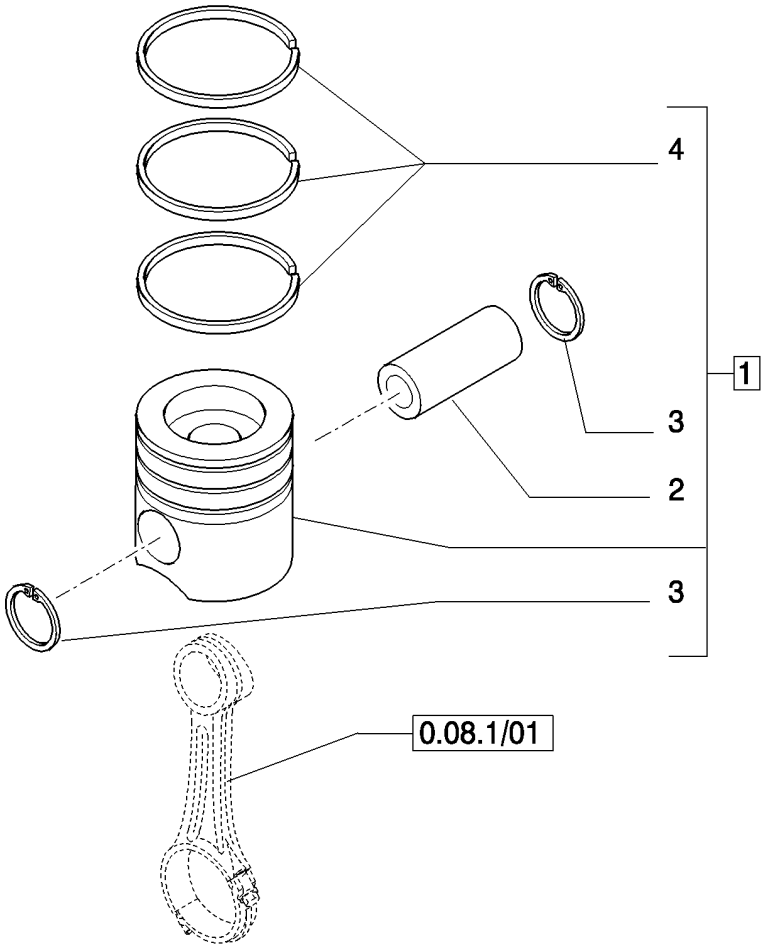

PISTON - MOTEUR

REF	FN	PART NUMBER	YR/SN	QTY	DESCRIPTION
1		8094853		4	KIT DE PISTONS & SEGMENT, - ASSY (STD)
1		8094854		4	KIT DE PISTONS & SEGMENT, - ASSY (+0.4)
2		4892712		1	AXE DE PISTON
3		2854030		2	ANNEAU D'ARRÊT
4		87582179		1	KIT SEGMENTS DE PISTON, (STD)
4		87582180		1	KIT SEGMENTS DE PISTON, (+0.4)

VOLANT - MOTEUR

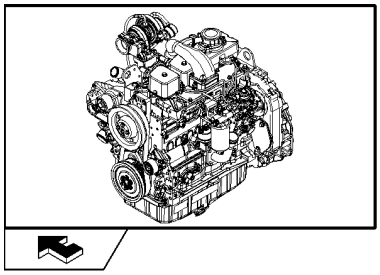

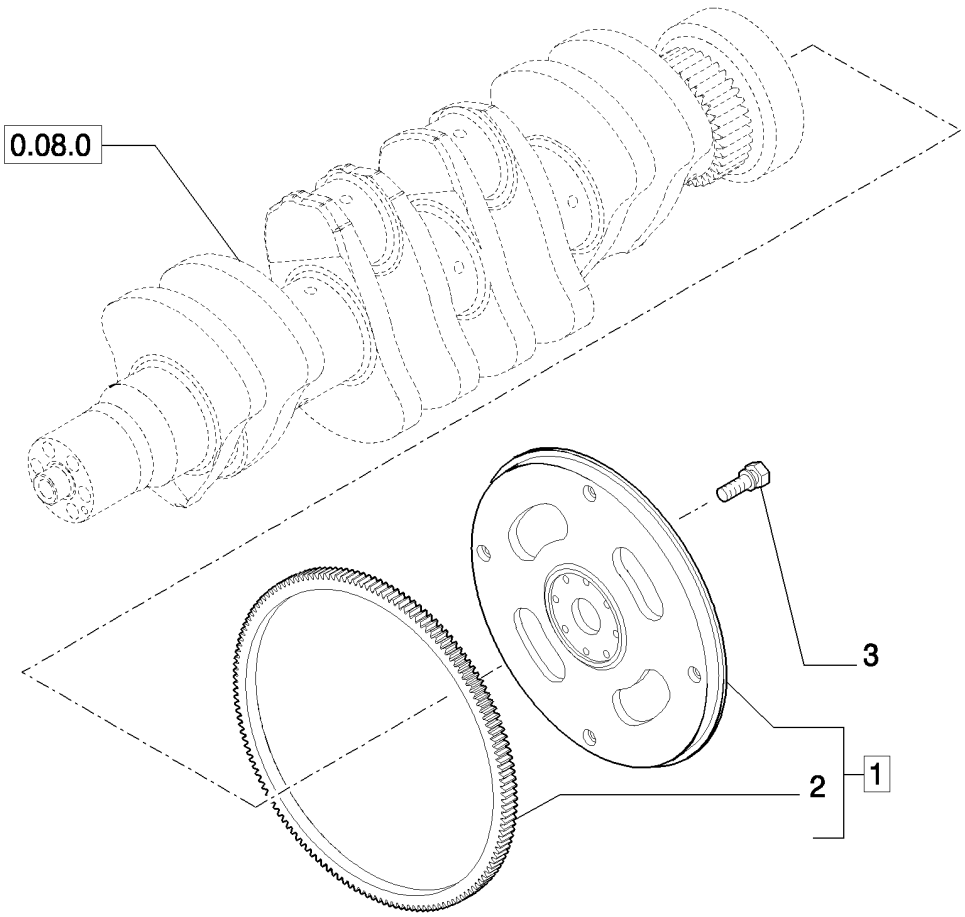

VOLANT - MOTEUR

REF	FN	PART NUMBER	YR/SN	QTY	DESCRIPTION
1		2852049		1	VOLANT DU MOTEUR, - ASSY
2		2852051		1	COURONNE DENTÉE
3		4894641		8	VIS, Wash Hd, M12 x 1.25 x 31

POULIE - VILEBREQUIN

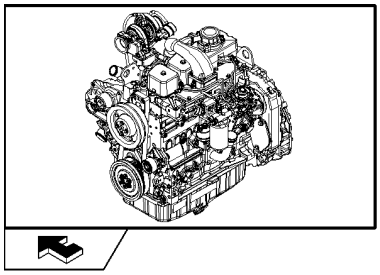

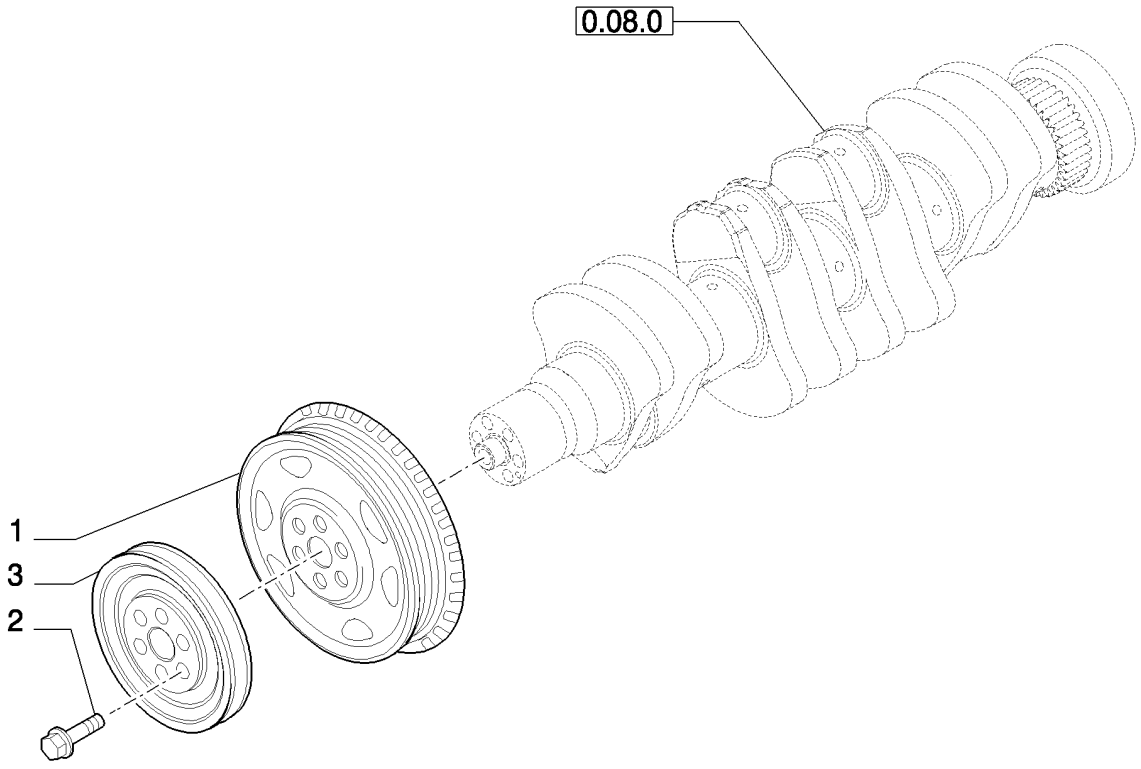

POULIE - VILEBREQUIN

REF	FN	PART NUMBER	YR/SN	QTY	DESCRIPTION
1		4896773		1	POULIE
2		4892867		6	VIS, Torx Wash Hd, M12 x 1.25 x 78.5
3		2852054		1	POULIE

MASSELOTTE, ENGRENAGES ET ARBRES

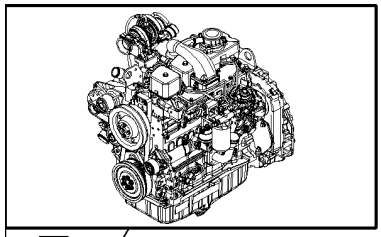

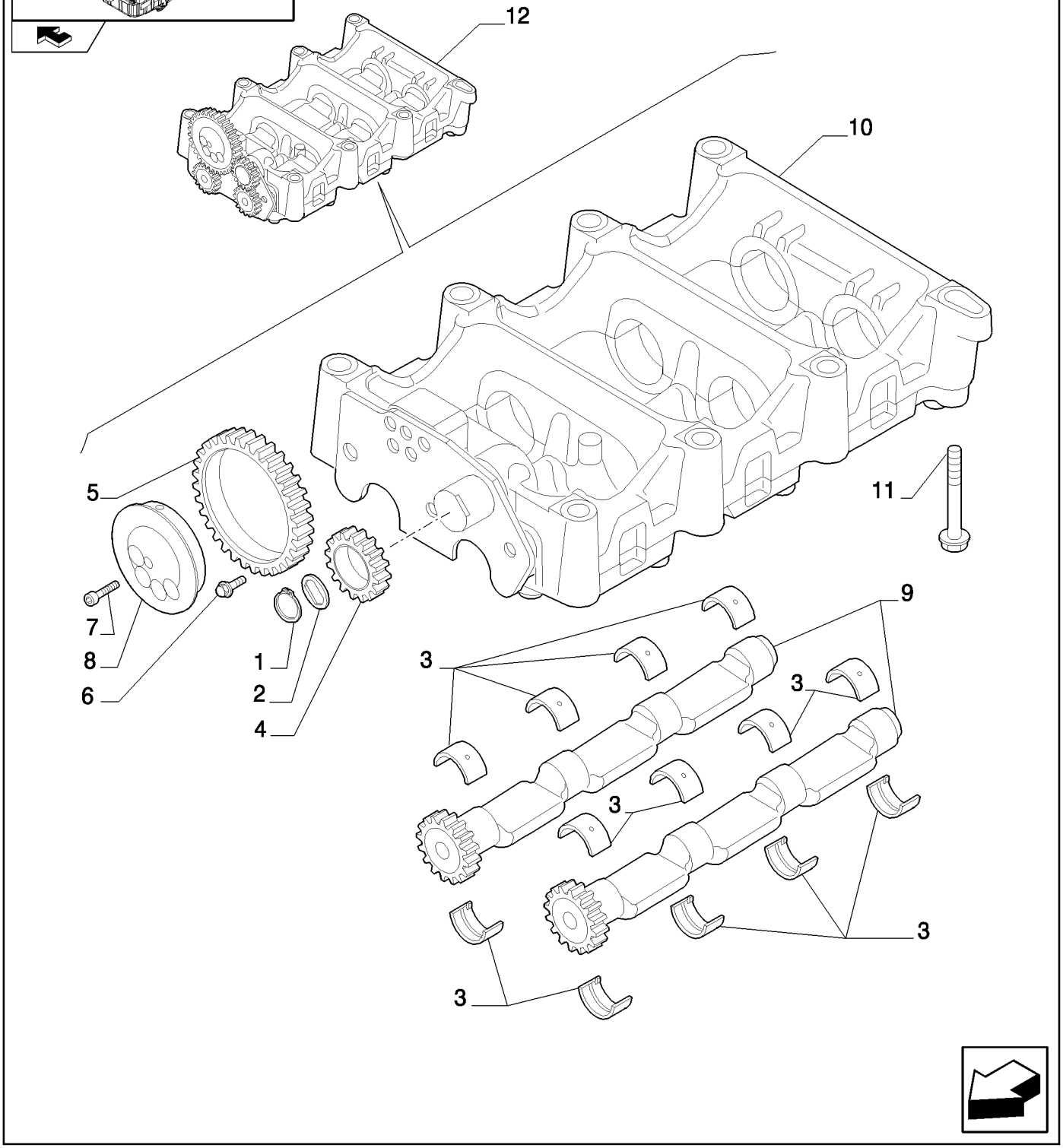

MASSELOTTE, ENGRENAGES ET ARBRES

REF	FN	PART NUMBER	YR/SN	QTY	DESCRIPTION
1		4897125		1	ANNEAU D'ARRÊT
2		2855753		1	PLATEAU DE PRESSION
3		4897071		16	BAGUE
4		4897048		1	PIGNON FOU
5		4896947		1	PIGNON FOU
6		4895586		3	VIS
7		2830433		5	VIS
8		2831031		1	ARBRE DE RENVOI
9		2831354		2	ARBRE
10	1	2855744		1	CARTER, - ASSY
11		4899109		7	VIS, Hex, M10 x 1.5 x 80
11		4897934		1	VIS
12		2855743		1	MASSELOTTE, - ASSY

(1) See Page 2

MASSELOTTE, ENGRENAGES ET ARBRES

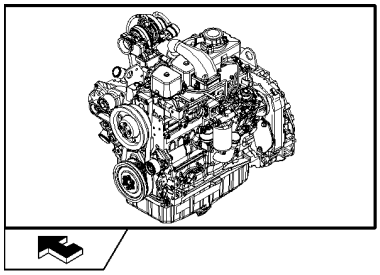

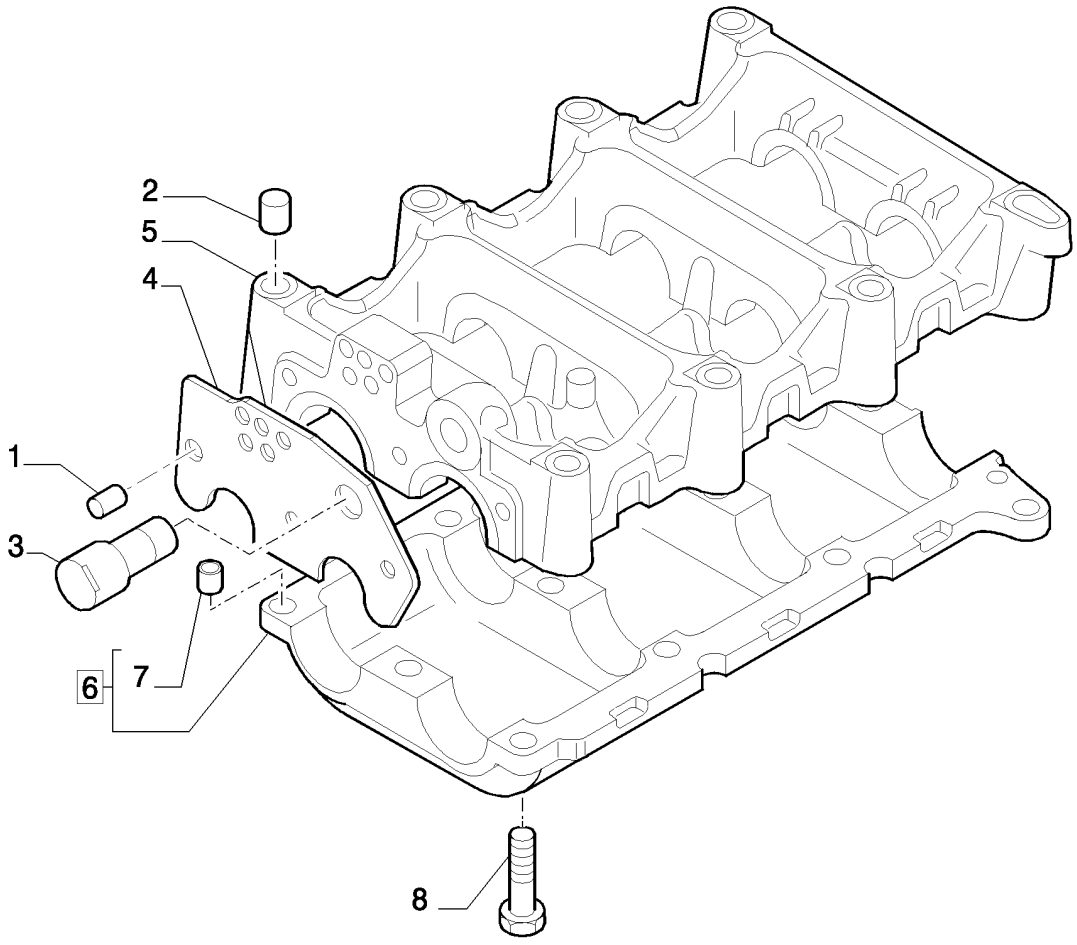

MASSELOTTE, ENGRENAGES ET ARBRES

REF	FN	PART NUMBER	YR/SN	QTY	DESCRIPTION
1		2831305		1	PION
2		4899027		2	PION
3		2830948		1	ARBRE DE RENVOI
4		2855746		1	PLATEAU DE PRESSION
5		2831303		1	CHASSIS
6		2831302		1	CHASSIS, - ASSY
7		4891209		6	PION
8		4895323		12	VIS

ARBRE A CAMES - COMMANDE DE DISTRIBUTION

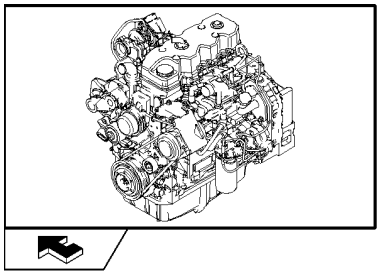

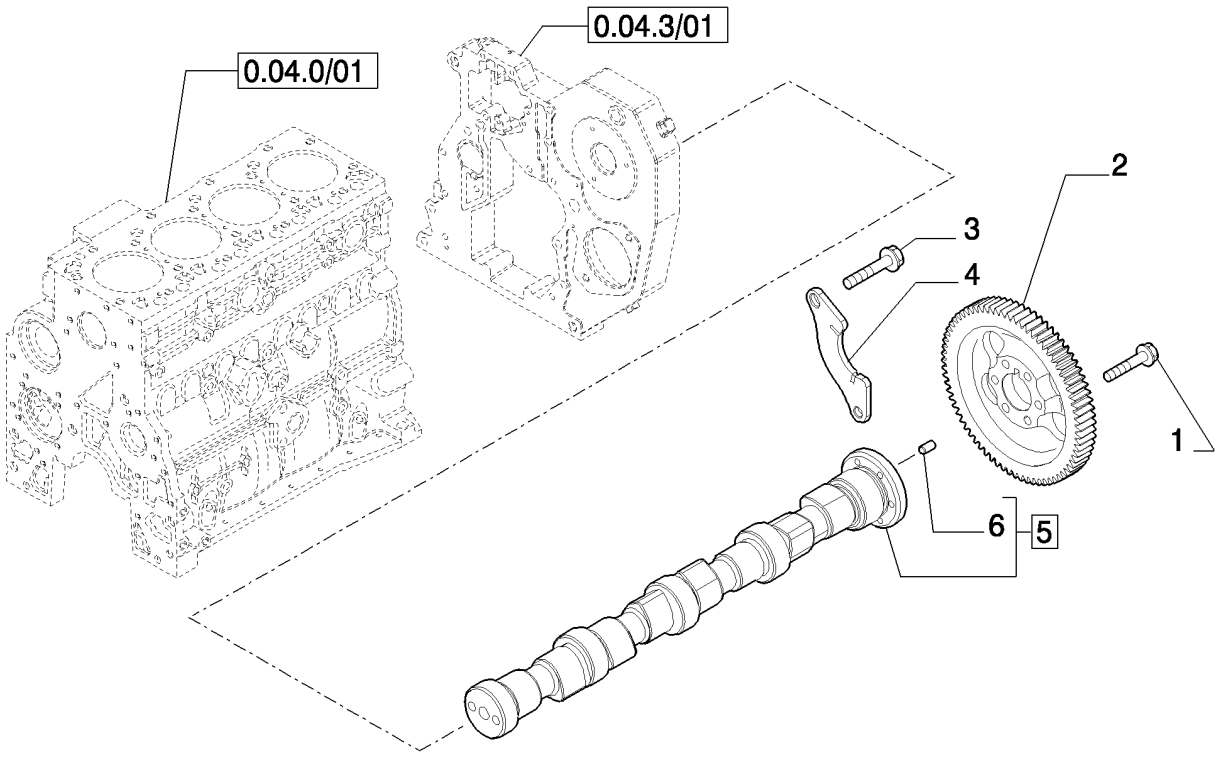

ARBRE A CAMES - COMMANDE DE DISTRIBUTION

REF	FN	PART NUMBER	YR/SN	QTY	DESCRIPTION
1		4899079		6	VIS, Hex Flg, M8 x 1.25 x 25
2		4896381		1	PIGNON
3		4899068		2	VIS, Hex Flg , M8 x 1.25 x 16
4		4897457		1	SUPPORT
5		4896419		1	ARBRE A CAMES, - ASSY
6		4899080		1	PION

POMPE D'INJECTION

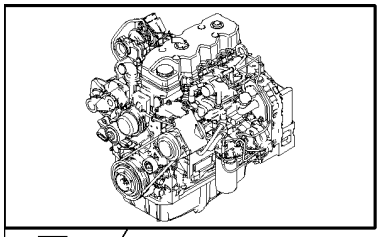

KIT KIT ● = 5

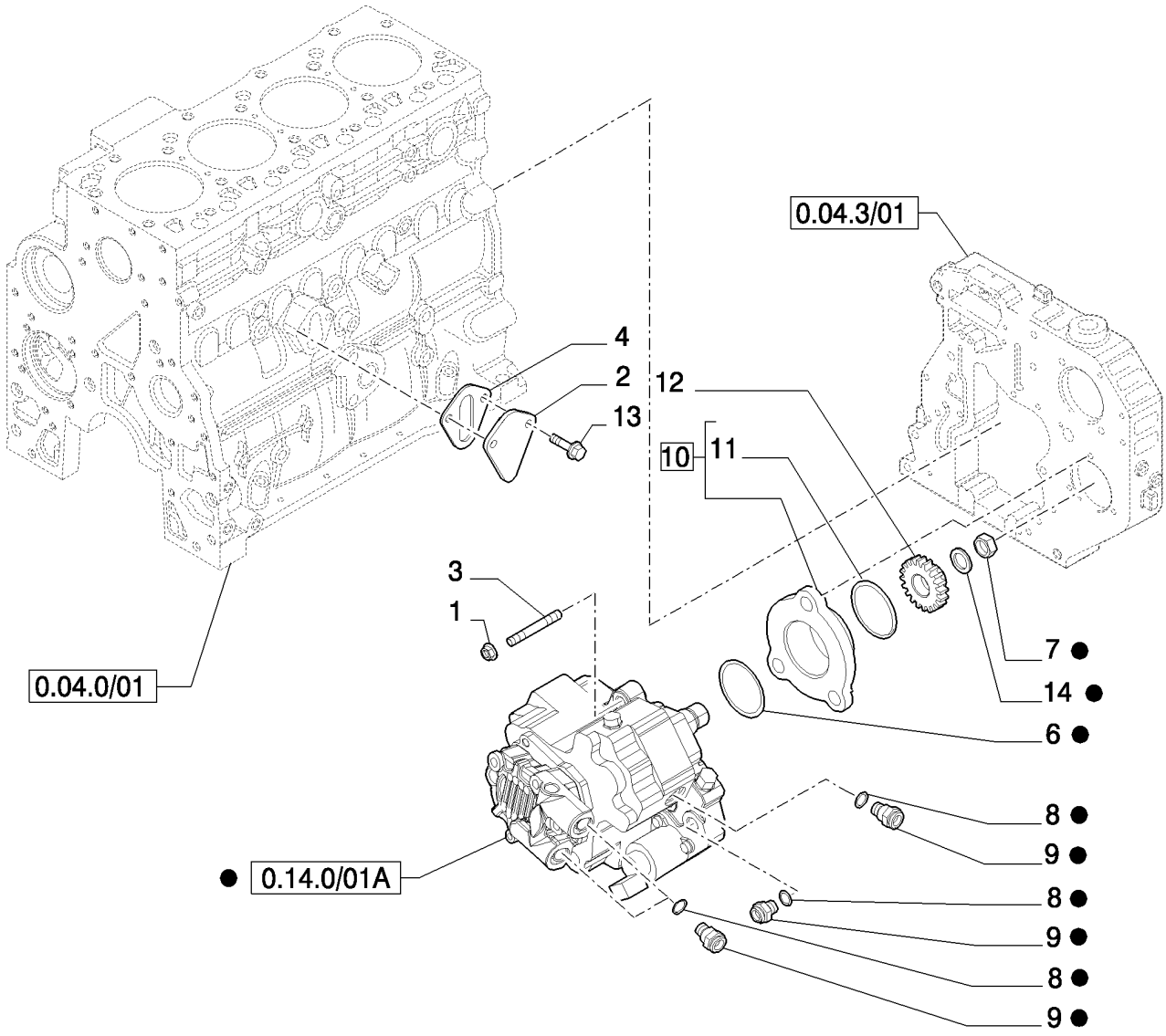

POMPE D'INJECTION

REF	FN	PART NUMBER	YR/SN	QTY	DESCRIPTION
1		4899003		3	ECROU
2		4896952		1	COUVERCLE
3		2852488		1	GOUJON, M8x1.25x50
4		4890700		1	JOINT
5	1	4898921		1	POMPE INJECTION, - ASSY
6		4890088		1	JOINT THORIQUE
7		4890634		1	ECROU
8		4891385		4	JOINT
9		4893962		4	ACCOUPLEMANT RAP MALE
10		2852804		1	MOYEU
11		2852805		1	JOINT THORIQUE
12		4893389		1	PIGNON CONDUIT
13		2852234		2	VIS, Hex Flg, M8 x 1.25 x 20
14		4890635		1	RONDELLE

(1) See Page 0.14.0/01A

GROUPE D'INJECTION - INJECTEUR

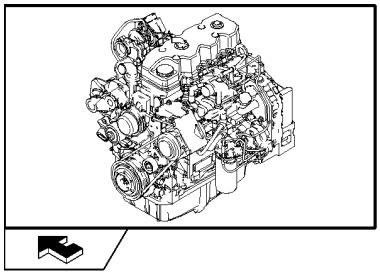

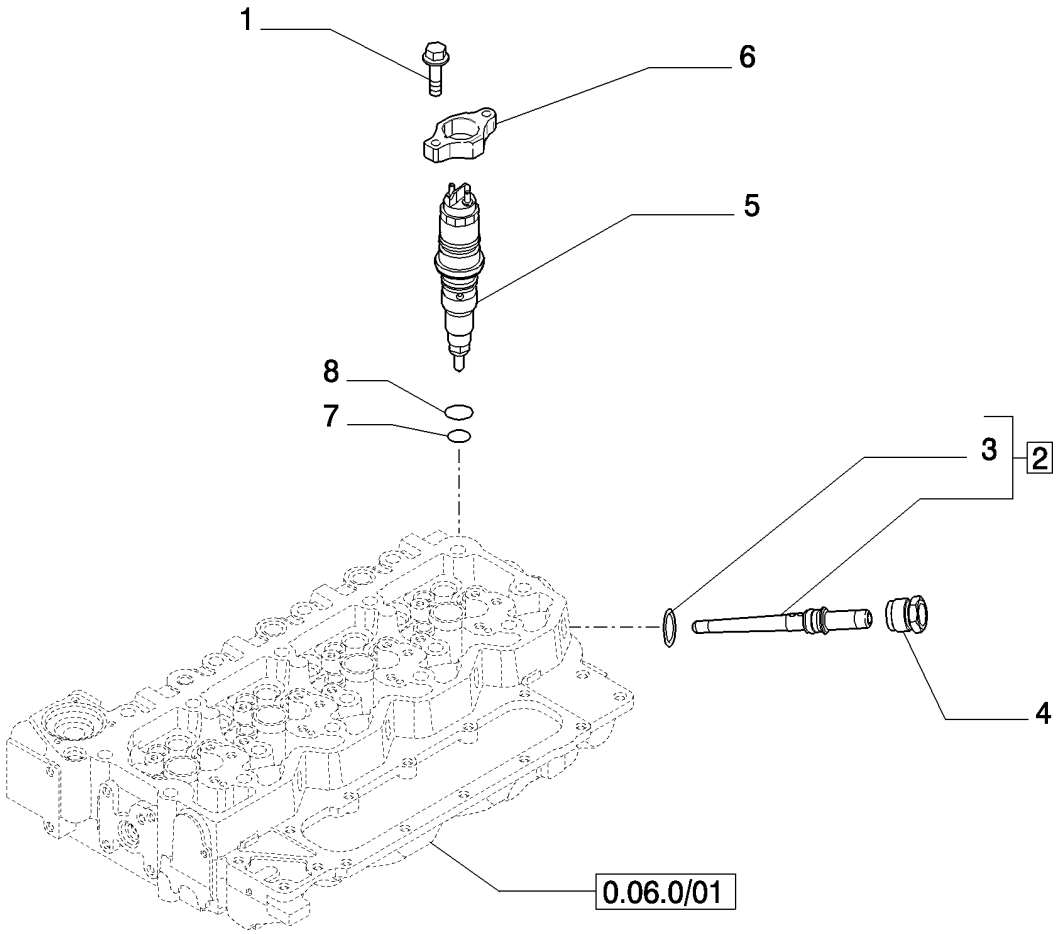

GROUPE D'INJECTION - INJECTEUR

REF	FN	PART NUMBER	YR/SN	QTY	DESCRIPTION
1		4895483		8	VIS, M6x1.0x25
2		2854606		4	RACCORD, - ASSY
3		4890929		1	JOINT THORIQUE
4		4893739		4	ECROU DE TUYAUTERIE
5		2855491		4	INJECTEUR
6		2854609		4	PATTE FIXATION
7		4899689		4	RONDELLE D'ETANCHEITE
8		4890926		4	JOINT THORIQUE

POMPE D'INJECTION - COMPOSANTS

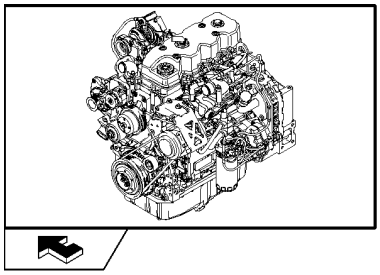

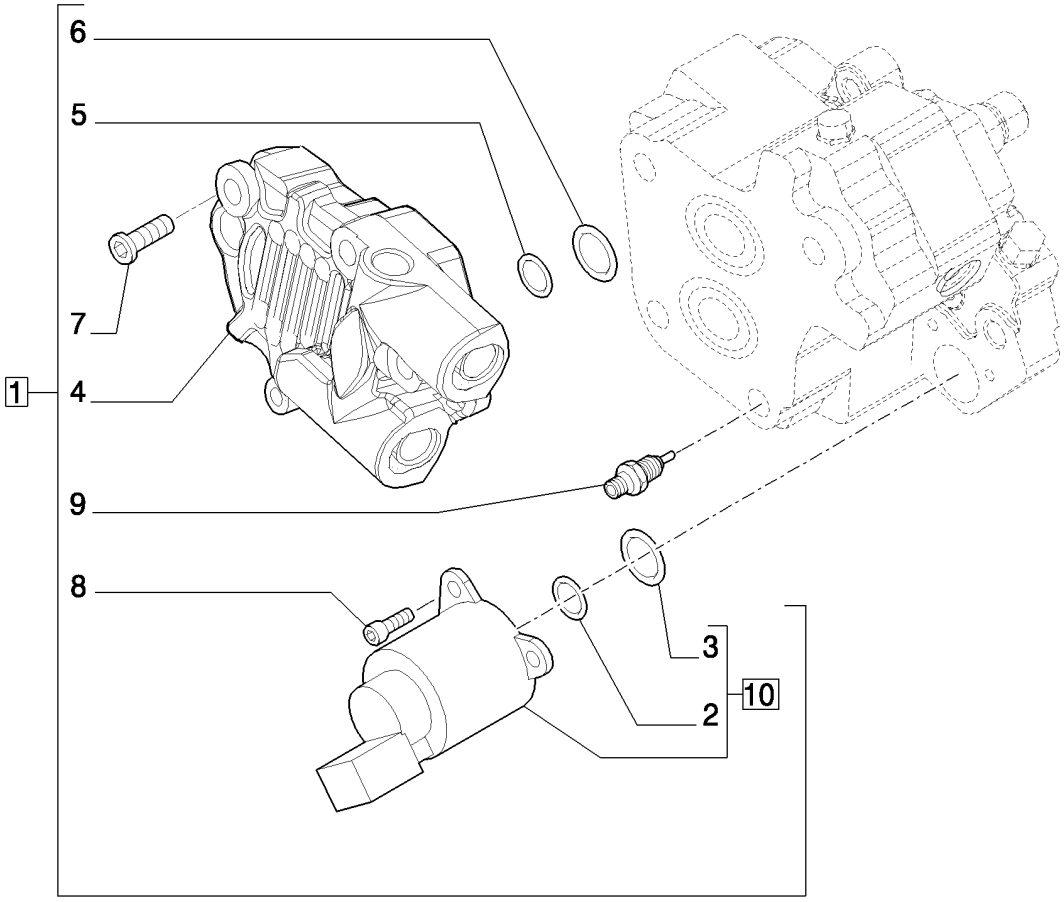

POMPE D'INJECTION - COMPOSANTS

REF	FN	PART NUMBER	YR/SN	QTY	DESCRIPTION
1		4898921		1	POMPE INJECTION, - ASSY
2		42541850		1	JOINT THORIQUE
3		42541849		1	JOINT THORIQUE
4		42547619		1	POMPE D'ALIMENTATION
5		42550488		1	JOINT THORIQUE
6		42548060		1	JOINT THORIQUE
7		42550487		4	VIS
8		42550932		3	VIS
9		42550486		1	SOUPAPE
10		42541851		1	SOLENOIDE, - ASSY

GROUPE D'INJECTION - TUYAUTERIE

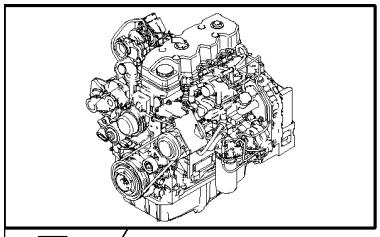

KIT KIT ● = 1

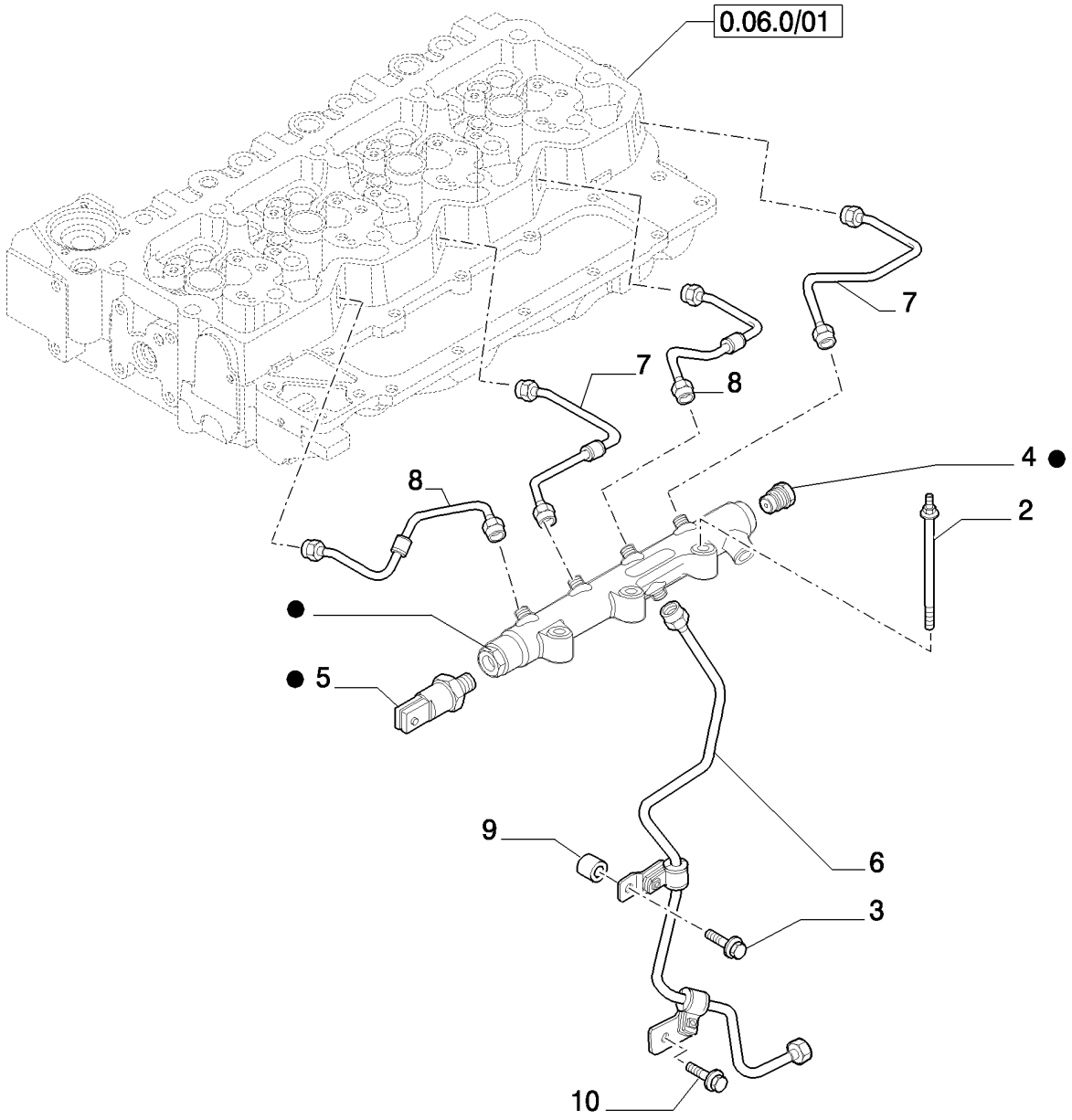

GROUPE D'INJECTION - TUYAUTERIE

REF	FN	PART NUMBER	YR/SN	QTY	DESCRIPTION
1		2855503		1	COLLECTEUR, - ASSY
2		2853537		3	BOULON
3		4899020		1	VIS, M8x1.25x16
4		2854543		1	SOUPAPE, DÉCHARGE
5		2854542		1	CAPTEUR
6		2855819		1	TUBE D'INJECTION
7		2855818		2	TUBE D'INJECTION
8		2854544		2	TUBE D'INJECTION
9		2852434		1	ENTRETOISE
10		4896884		1	VIS

INJECTION ELECTRONIQUE

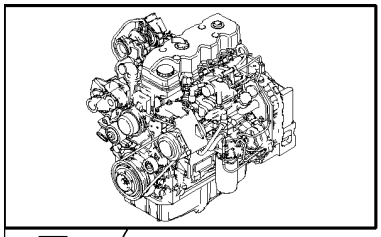

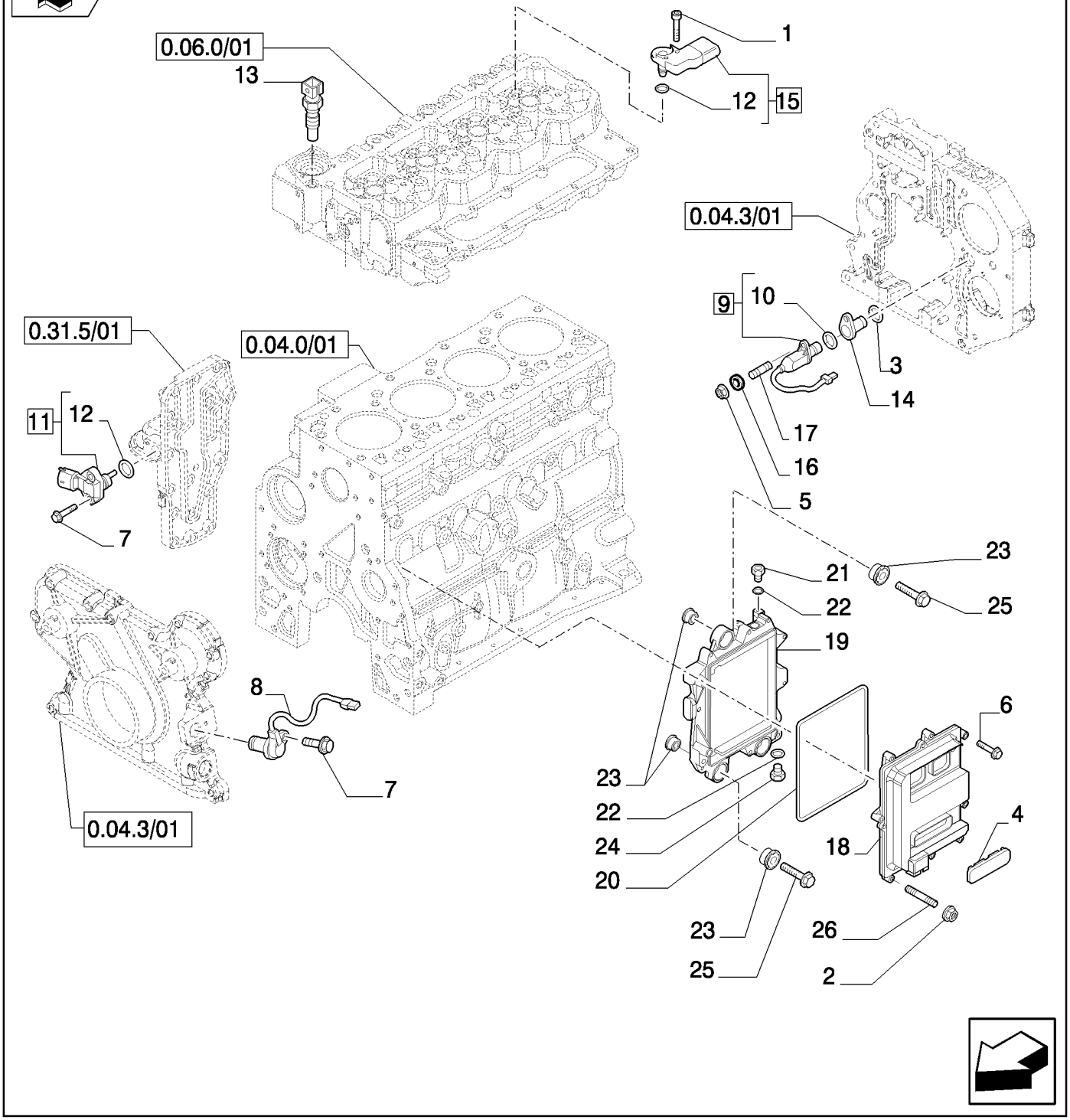

INJECTION ELECTRONIQUE

REF	FN	PART NUMBER	YR/SN	QTY	DESCRIPTION
1		4895817		1	VIS
2		4899057		1	ECROU
3		2852817		1	JOINT THORIQUE, 23.5x1.7
4		2852825		1	BOUCHON
5		2854282		1	ECROU
6		2852818		7	VIS, M6x30
7		4899110		3	VIS, Hex Flg, M6 x 1 x 20
8		4890189		1	CAPTEUR
9		4890190		1	CAPTEUR, - ASSY
10		2852820		1	JOINT THORIQUE, 17.17x1.78
11		4890193		1	CAPTEUR, - ASSY
12		4895477		1	JOINT THORIQUE
13		4897224		1	CAPTEUR, Temperature
14		4892255		1	CARTER
15		2852821		1	CAPTEUR, - ASSY
16		4899124		1	RONDELLE
17		4895157		1	GOUJON
18		2854594		1	MODULE
19		2854596		1	PATTE FIXATION
20		2854079		1	JOINT
21		4896542		1	RACCORD, M12x1.5
22		2854292		2	JOINT-CIRCULAIRE
23		2855150		6	PLOT SUSPENSION
24		4890964		1	RACCORD
25		4899078		3	VIS, Hex Flg, M8 x 1.25 x 45
26		2854593		1	GOUJON

INSTALLATION ELECTRIQUE MOTEUR

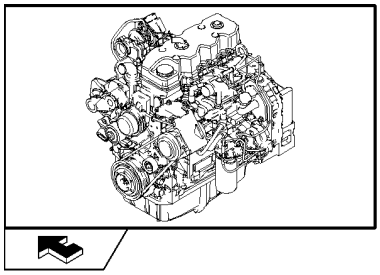

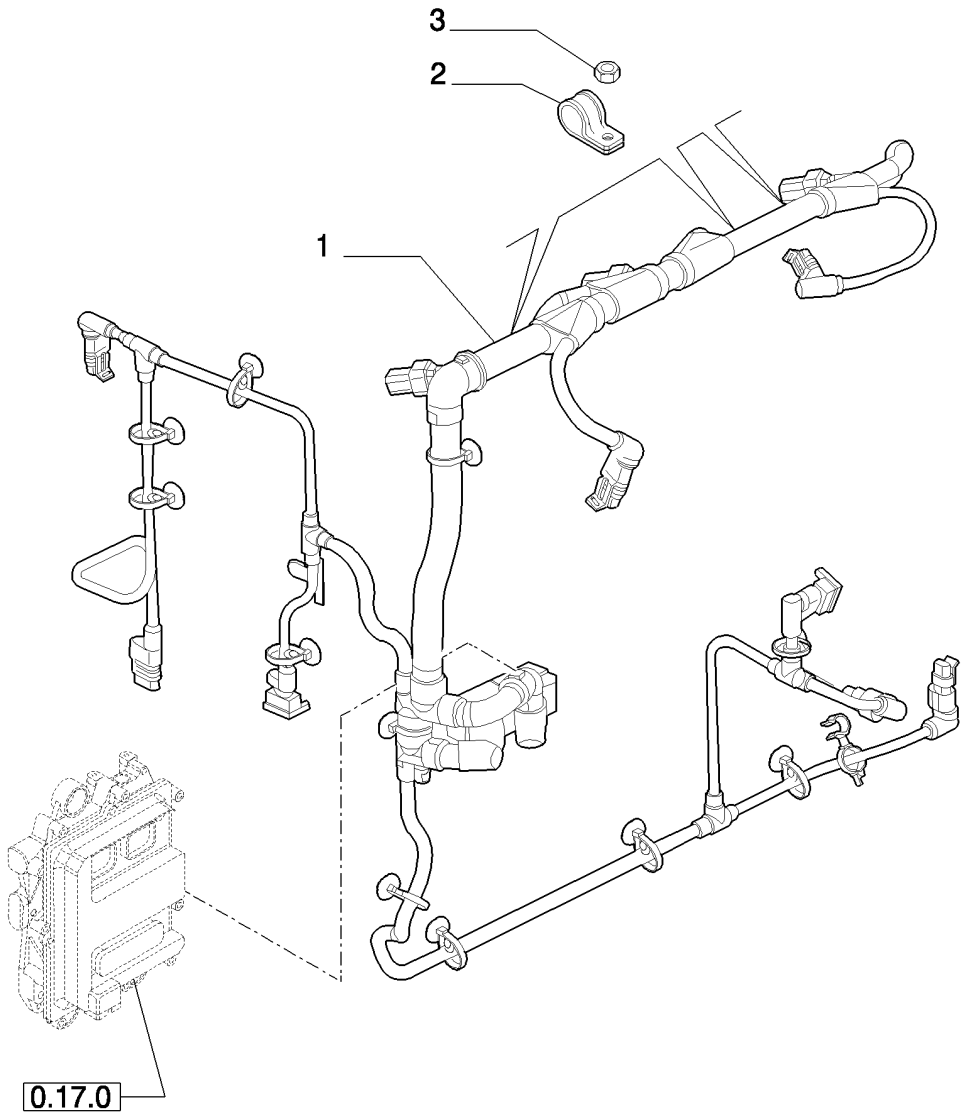

INSTALLATION ELECTRIQUE MOTEUR

REF	FN	PART NUMBER	YR/SN	QTY	DESCRIPTION
1		2855886		1	FAISCEAU COMPLET
2		4899815		2	BRIDE-FIXATION/ COLLIER
2		2852500		1	BRIDE
3		2852484		3	ECROU

FILTRE COMBUSTIBLE

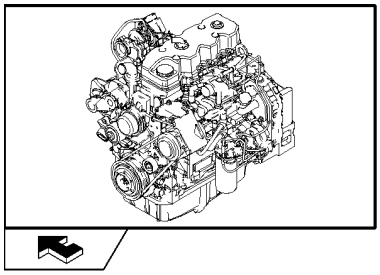

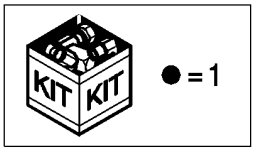

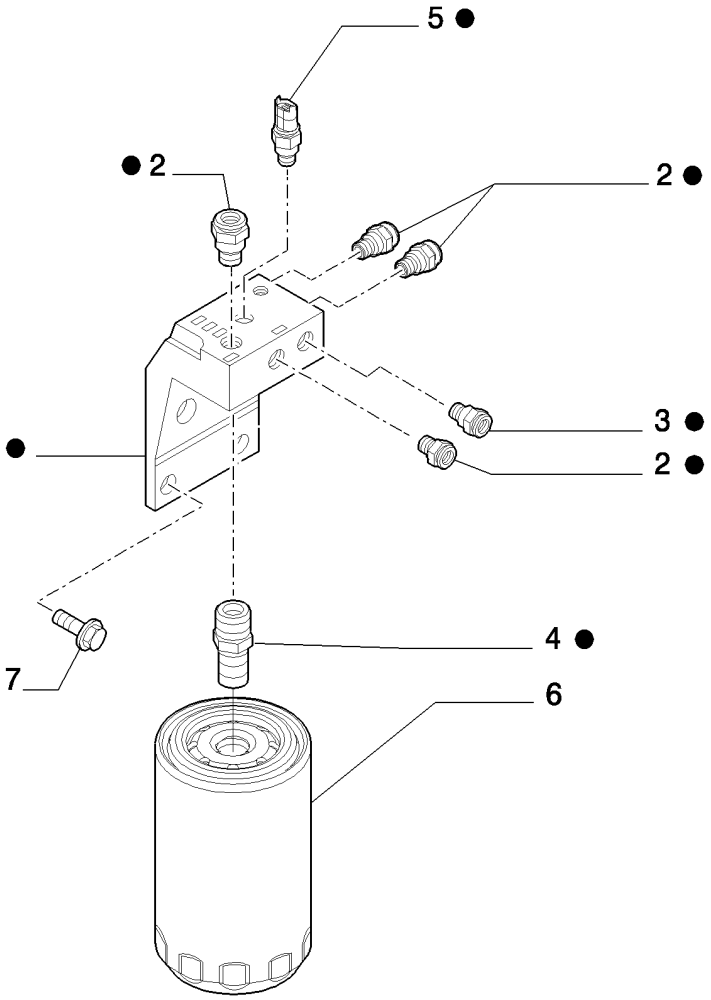

FILTRE COMBUSTIBLE

REF	FN	PART NUMBER	YR/SN	QTY	DESCRIPTION
1		2855792		1	CARTER, - ASSY
2		2854563		4	RACCORD
3		2854564		1	RACCORD
4		4898877		1	RACCORD
5		4897224		1	CAPTEUR, Temperature
6		87803197		1	FILTRE A COMBUSTIBLE
7		2854566		2	VIS, M12x30

TUYAUTERIES - COMBUSTIBLE

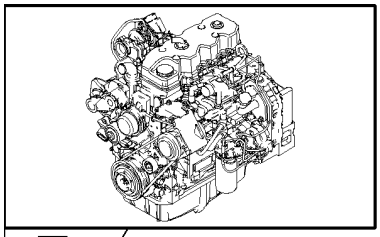

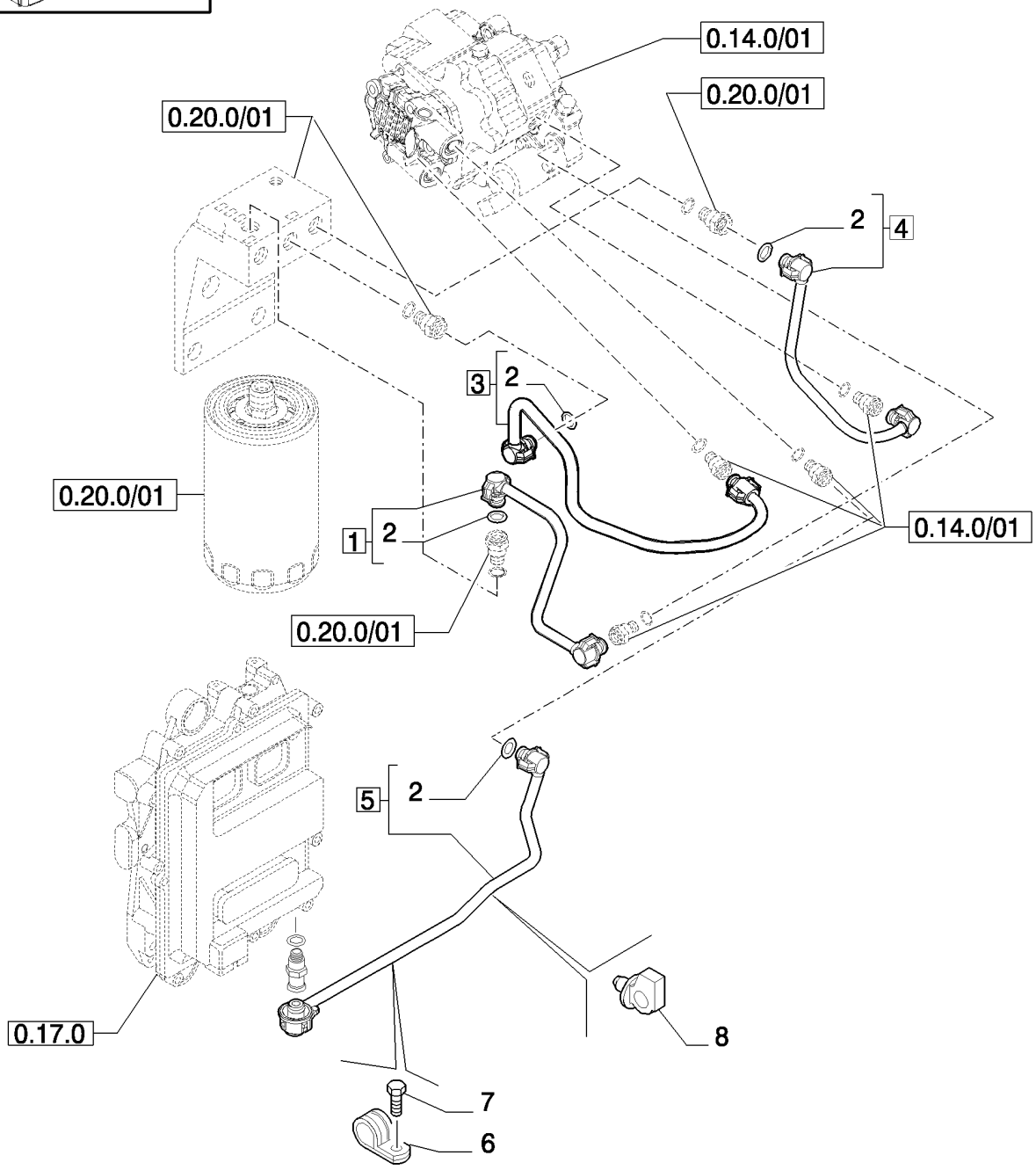

TUYAUTERIES - COMBUSTIBLE

REF	FN	PART NUMBER	YR/SN	QTY	DESCRIPTION
1		2855427		1	TUYAU, - ASSY
2		4894095		6	JOINT THORIQUE
3		2855428		1	TUYAU, - ASSY
4		2855430		1	TUYAU, - ASSY
5		2855795		1	TUBE D'INJECTION, - ASSY
6		4895462		1	BRIDE
7		4899103		1	VIS, Hex Flg, M8 x 1.25 x 12
8		4896996		1	BRIDE

GROUPE D'INJECTION - TUYAUTERIE

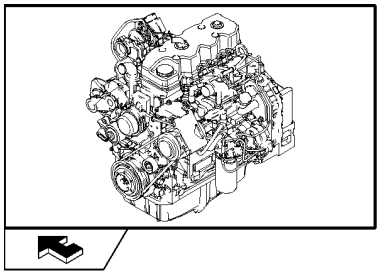

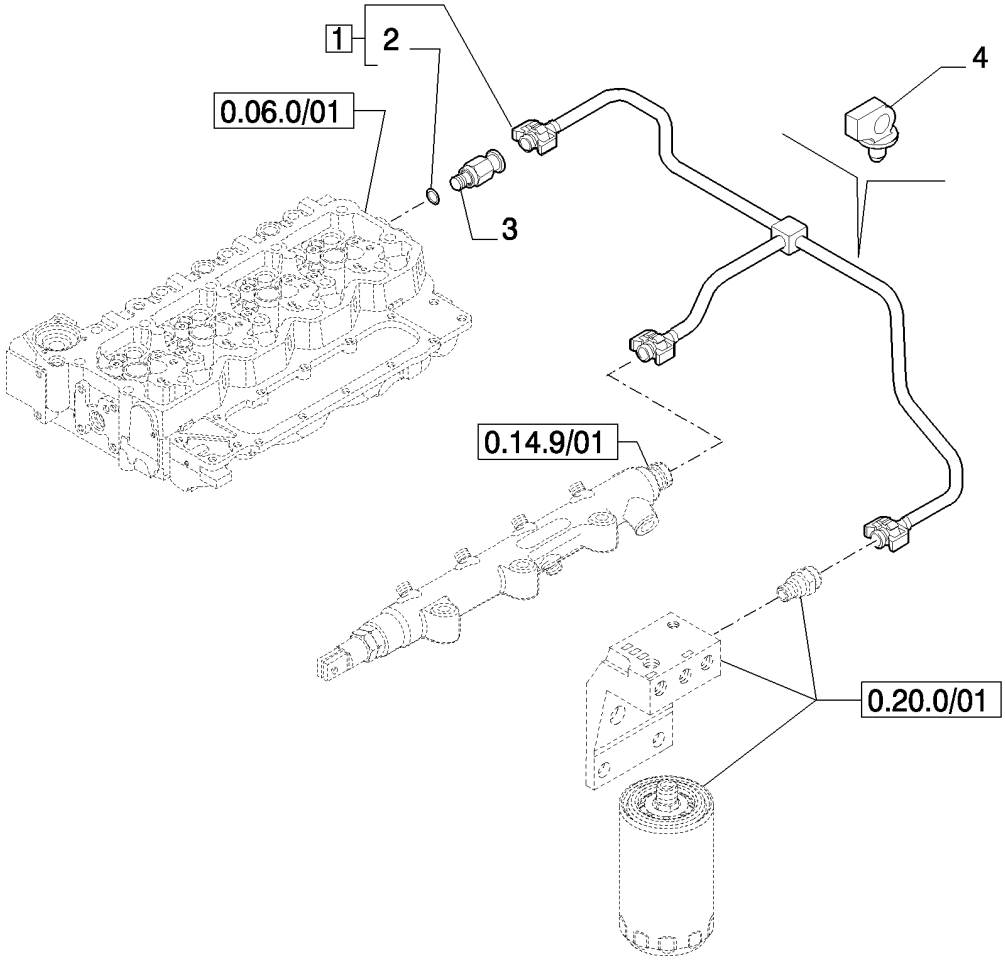

GROUPE D'INJECTION - TUYAUTERIE

REF	FN	PART NUMBER	YR/SN	QTY	DESCRIPTION
1		2855336		1	TUYAUTERIE DE RETOUR, - ASSY
2		4894095		3	JOINT THORIQUE
3		4896329		1	SOUPAPE, DÉCHARGE
4		4896996		1	BRIDE

TURBOCOMPRESSEUR

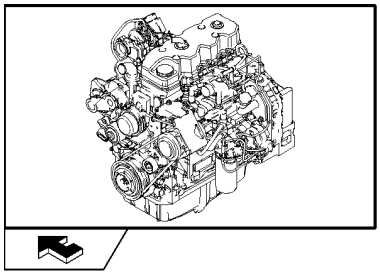

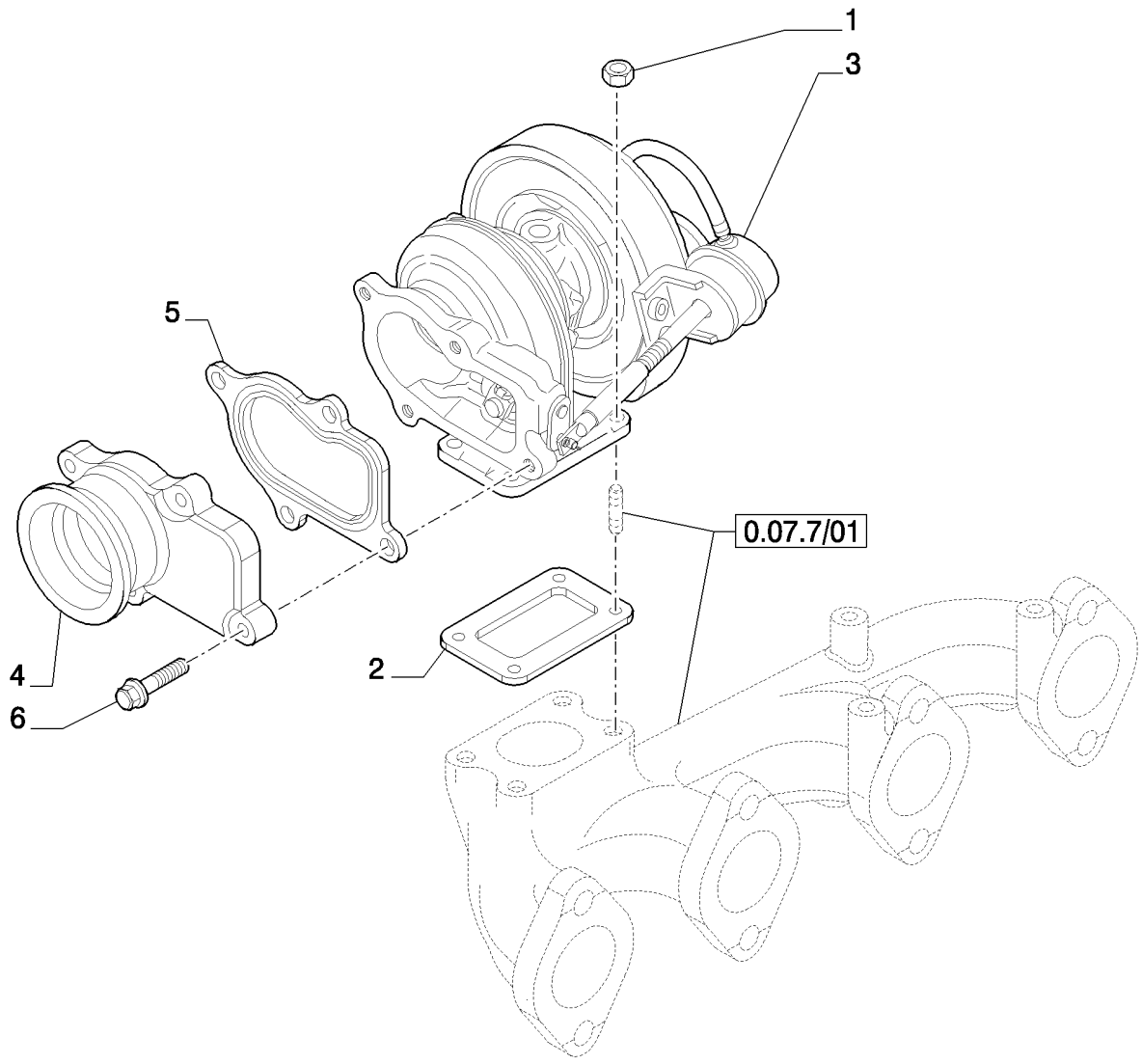

TURBOCOMPRESSEUR

REF	FN	PART NUMBER	YR/SN	QTY	DESCRIPTION
1		4899118		4	ECROU
2		4895133		1	JOINT
3		2856701		1	TURBOCOMPRESSEUR
4		2852072		1	CONDUIT D'ECHAPPEMENT
5		2852071		1	JOINT
6		4898482		4	VIS, Flg Hd, M8 x 1.25 x 30

JAUGE DE NIVEAU - HUILE MOTEUR

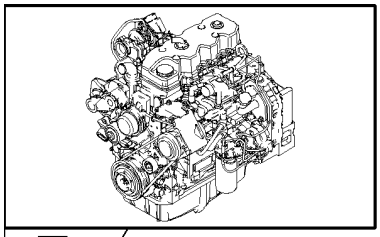

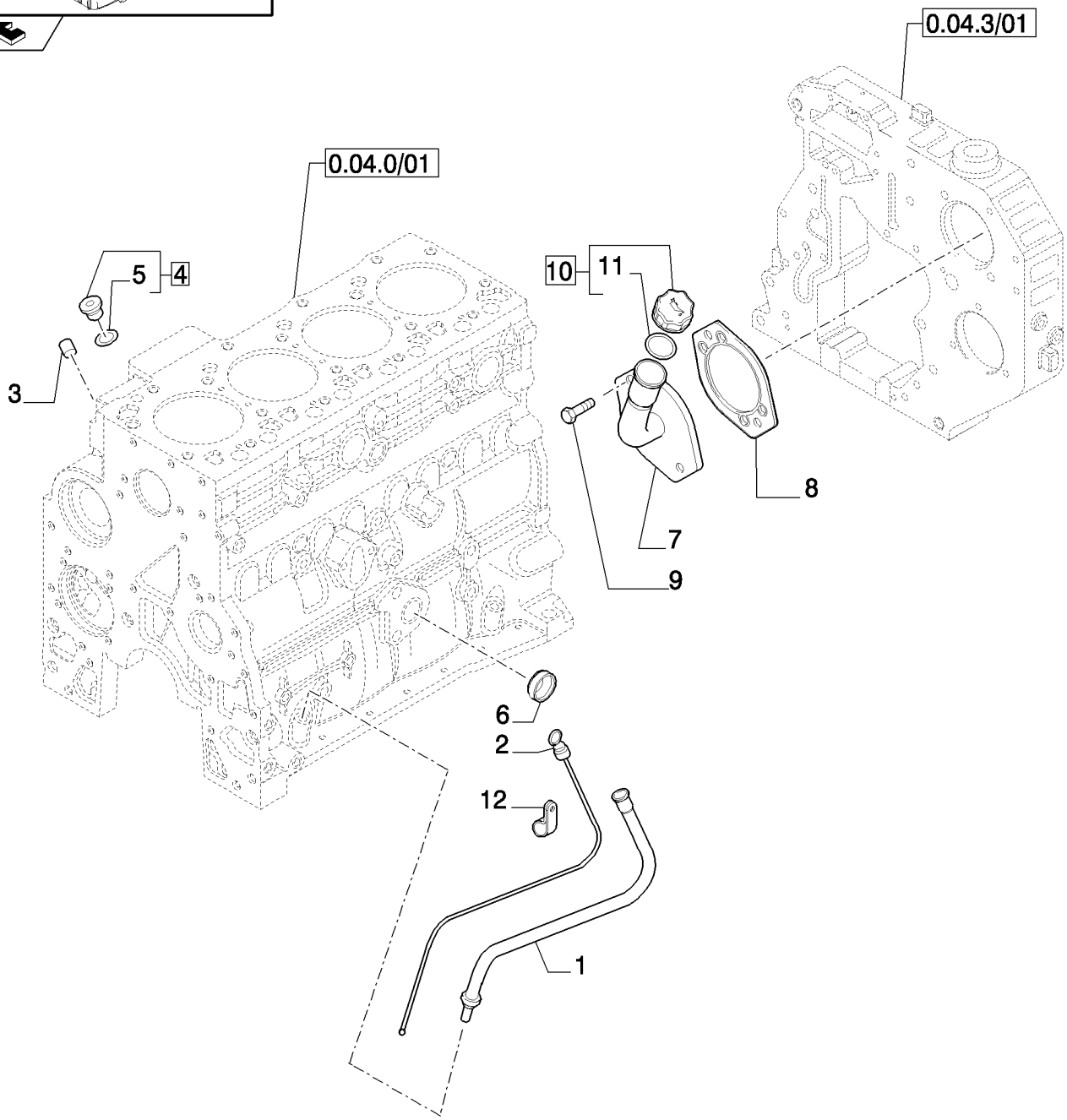

JAUGE DE NIVEAU - HUILE MOTEUR

REF	FN	PART NUMBER	YR/SN	QTY	DESCRIPTION
1		2855813		1	TUBE, - OIL LEVEL
2		2855815		1	JAUGE DE NIVEAU
3		4895406		2	BOUCHON
4		4897330		2	BOUCHON, - ASSY
5		4895610		1	JOINT THORIQUE
6		4895037		1	BOUCHON
7		2855787		1	TUBE
8		4896897		1	JOINT
9		2856035		2	VIS
10		2853410		1	BOUCHON DE REMPLISSAGE, - ASSY
11		2853412		1	JOINT THORIQUE
12		2852485		1	PATTE FIXATION

POMPE A HUILE - MOTEUR

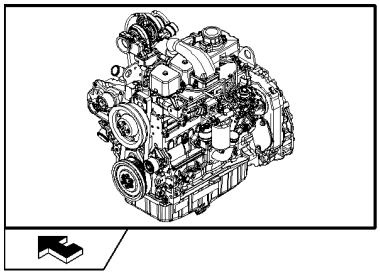

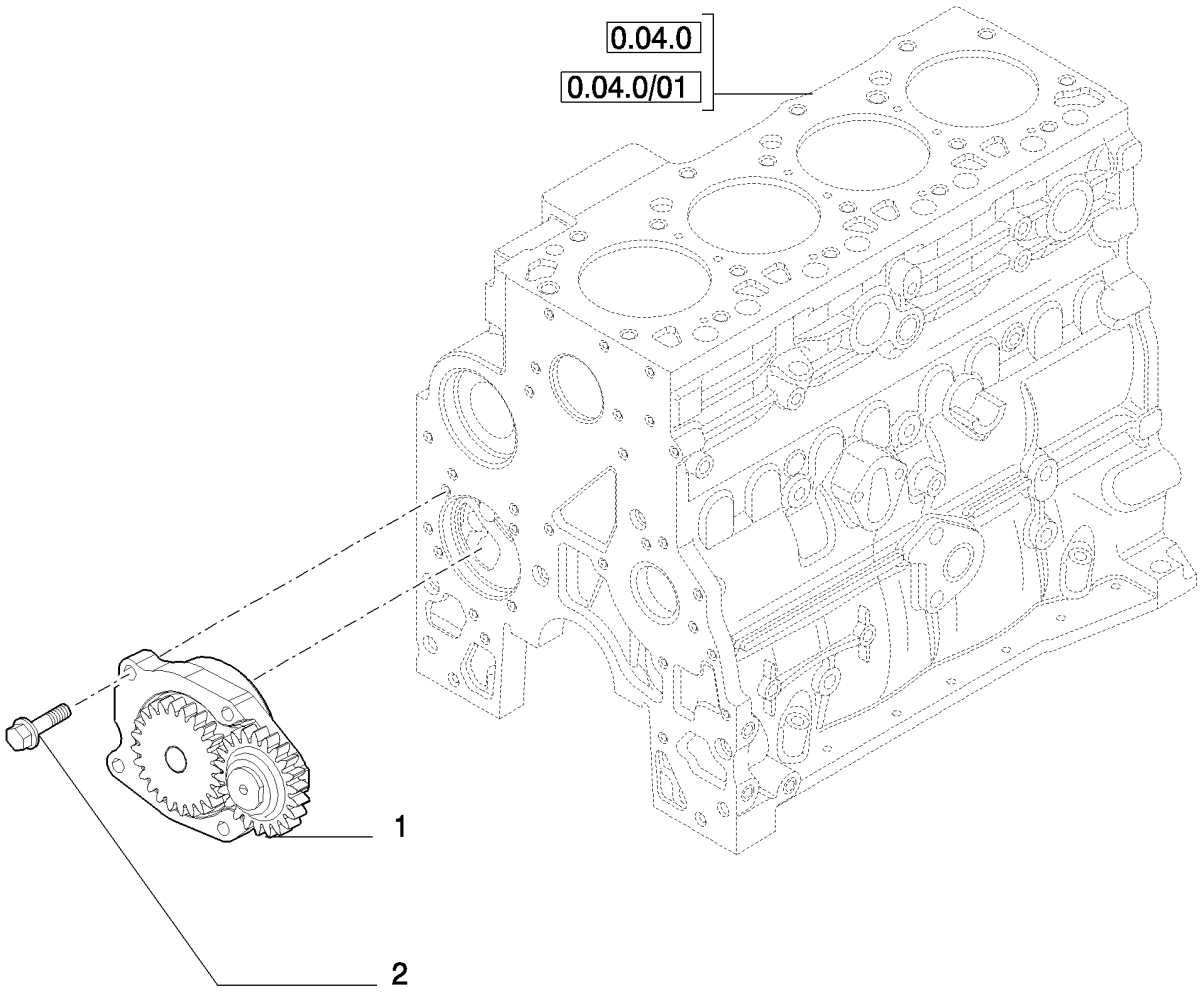

POMPE A HUILE - MOTEUR

REF	FN	PART NUMBER	YR/SN	QTY	DESCRIPTION
1		4897480		1	POMPE A HUILE, In alternative
1		2853414		1	POMPE A HUILE, In alternative
2		4899090		4	VIS, Hex Flg, M8 x 1.25 x 30

FILTRE A HUILE - MOTEUR

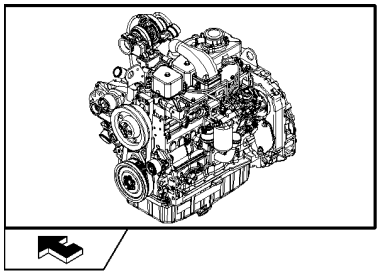

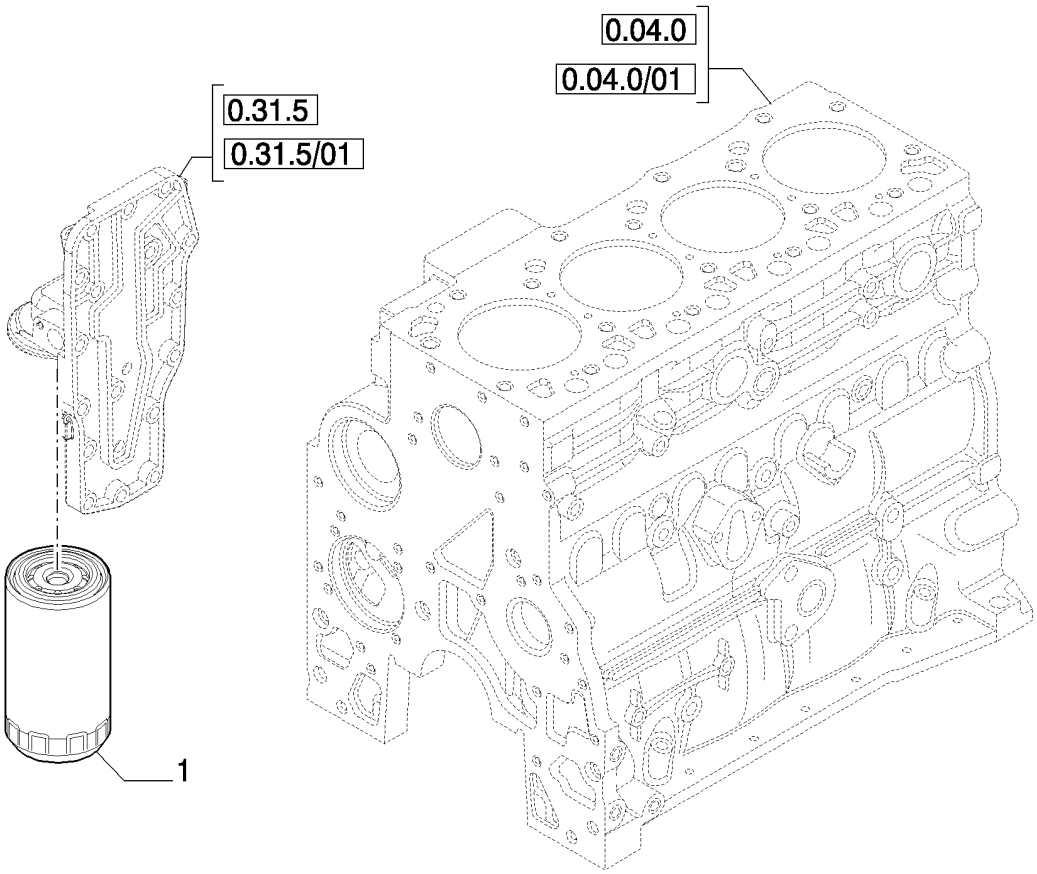

FILTRE A HUILE - MOTEUR

REF	FN	PART NUMBER	YR/SN	QTY	DESCRIPTION
1		87803260		1	FILTRE A HUILE MOTEUR, 2/4 Valve

TUYAUTERIES - HUILE DU MOTEUR

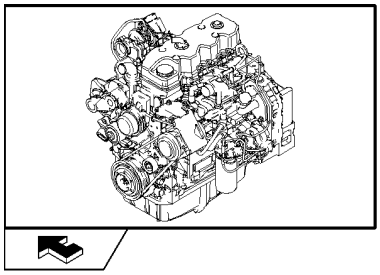

TUYAUTERIES - HUILE DU MOTEUR

REF	FN	PART NUMBER	YR/SN	QTY	DESCRIPTION
1		4895164		2	VIS
2		4895107		1	RACCORD, - ASSY
3		4899107		1	JOINT THORIQUE
4		4899108		2	JOINT THORIQUE
5		4899467		1	JOINT
6		4899519		1	BRIDE
7		4899106		1	RACCORD, - ASSY
8		2852195		1	FLEXIBLE HYDRAULIQUE
9		4899058		2	JOINT THORIQUE, M17.12 ID x 2.62 Thk
10		2855780		1	TUYAU, - ASSY
11		4899121		1	RONDELLE D'ETANCHEITE
12		2852197		1	ECROU, M6
13		2852100		1	VIS, M8x1.25x16
14		2852101		1	VIS, M6x16
15		2852196		1	PATTE FIXATION

EXCHANGEUR DE TEMPERATURE - MOTEUR

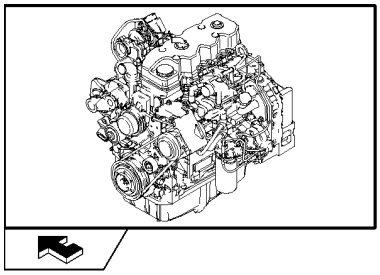

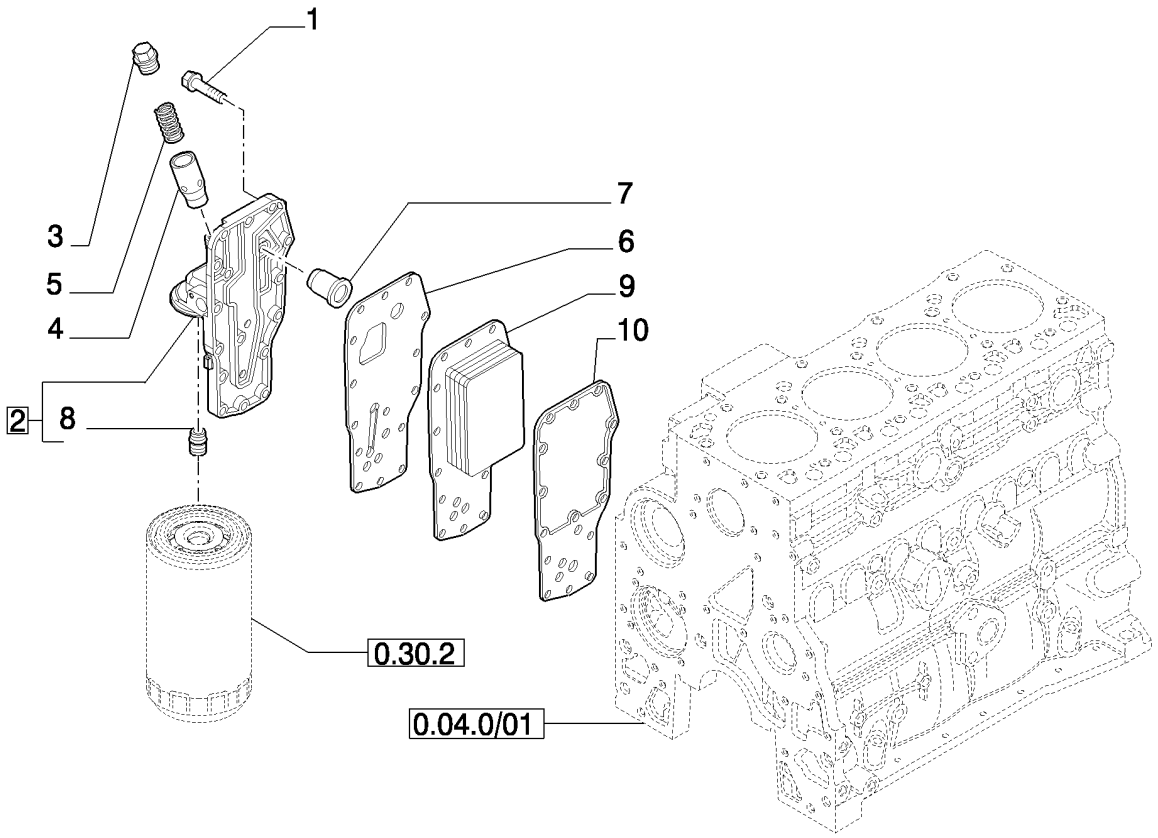

EXCHANGEUR DE TEMPERATURE - MOTEUR

REF	FN	PART NUMBER	YR/SN	QTY	DESCRIPTION
1		4899019		15	VIS, Hex Flg, M8 x 1.25 x 35
2		2853780		1	Tête De Filtre, - ASSY
3		2853781		1	BOUCHON, - ASSY
4		4896404		1	PLONGEUR
5		4895045		1	RESSORT
6		4896409		1	JOINT
7		4896410		1	SOUPAPE, DÉCHARGE
8		4893391		1	ADAPTEUR
9		2853722		1	ECHANGEUR DE CHALEUR
9		4896406		1	REFROIDISSEUR D'HUILE
10		2830559		1	JOINT

POMPE A EAU

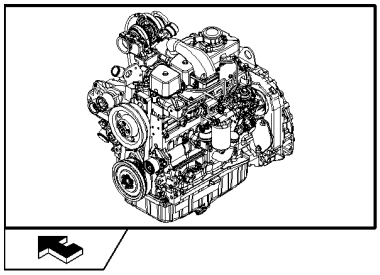

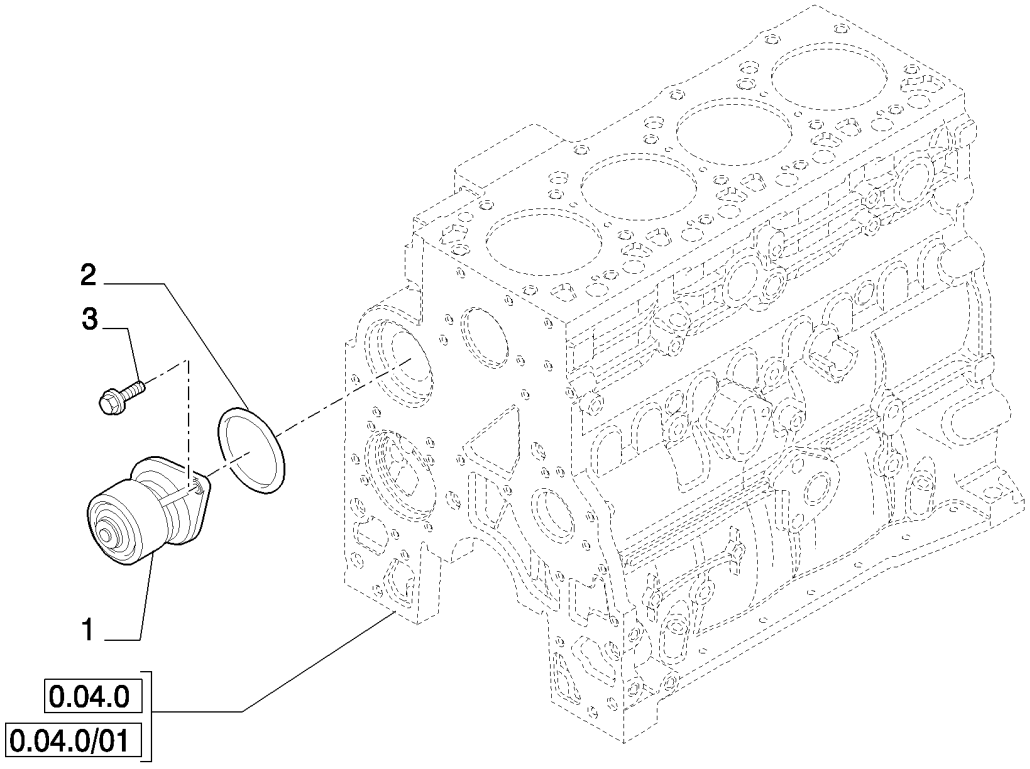

POMPE A EAU

REF	FN	PART NUMBER	YR/SN	QTY	DESCRIPTION
1		2852114		1	POMPE A EAU
2		2852047		1	JOINT ANNULAIRE
3		4899079		2	VIS, Hex Flg, M8 x 1.25 x 25

CIRCUIT DE REFROIDISSEMENT - MOTEUR

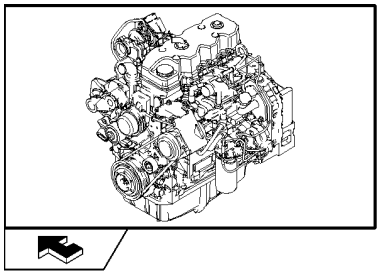

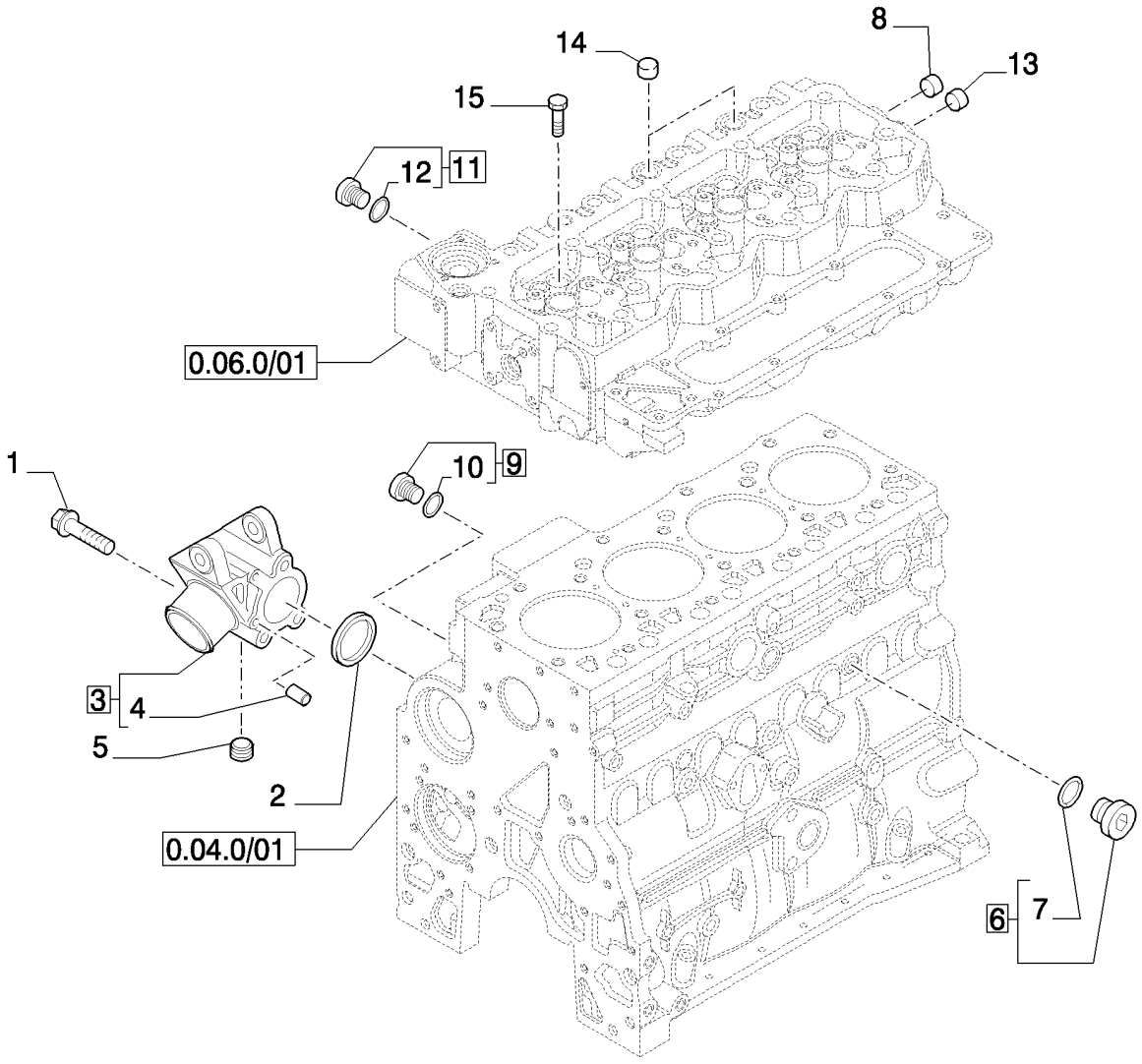

CIRCUIT DE REFROIDISSEMENT - MOTEUR

REF	FN	PART NUMBER	YR/SN	QTY	DESCRIPTION
1		4899109		3	VIS, Hex, M10 x 1.5 x 80
2		2854072		1	JOINT THORIQUE
3		2855776		1	SUPPORT, - ASSY
4		2852181		2	ENTRETOISE
5		2852511		1	BOUCHON
6		4895623		1	BOUCHON
7		4895625		1	JOINT THORIQUE
8		4893036		1	BOUCHON
9		4895392		1	BOUCHON, - ASSY
10		4895393		1	JOINT THORIQUE
11		4895080		1	BOUCHON, - ASSY
12		4895082		1	JOINT THORIQUE
13		4893036		1	BOUCHON
14		4895078		2	BOUCHON
15		2854491		1	BOUCHON

THERMOSTAT - REFROIDISSEMENT MOTEUR

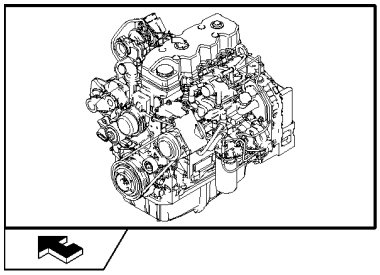

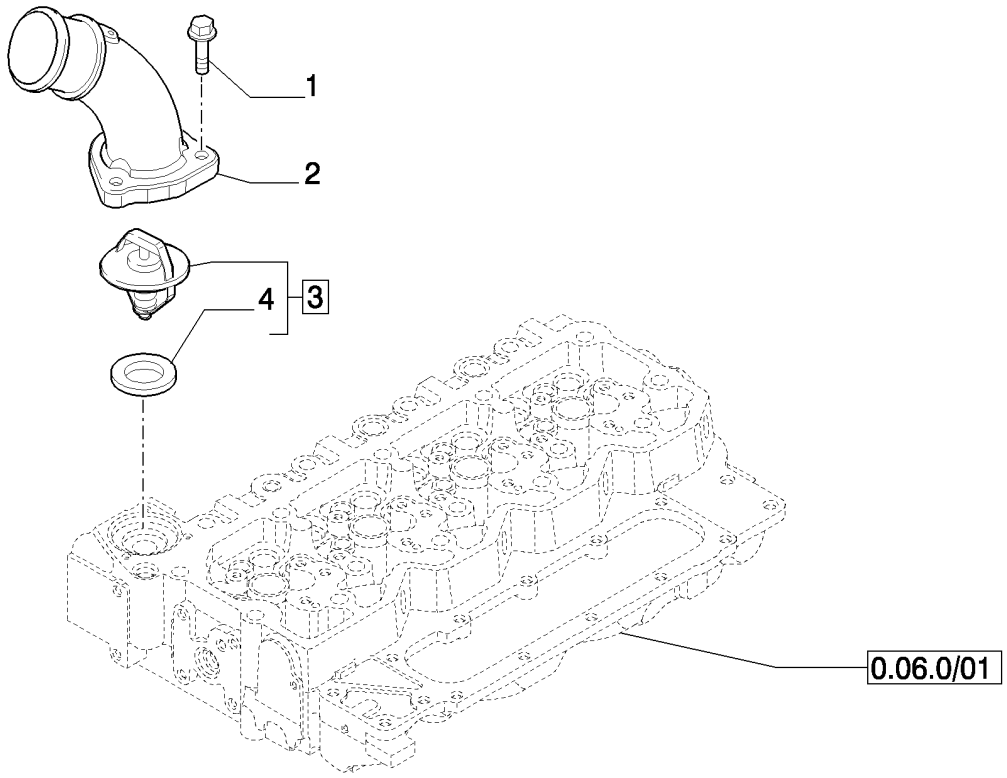

THERMOSTAT - REFROIDISSEMENT MOTEUR

REF	FN	PART NUMBER	YR/SN	QTY	DESCRIPTION
1		4899110		3	VIS, Hex Flg, M6 x 1 x 20
2		2855823		1	COUVERCLE
3		2856543		1	THERMOSTAT, - ASSY
4		2852473		1	JOINT

POMPE A EAU - COMMANDE

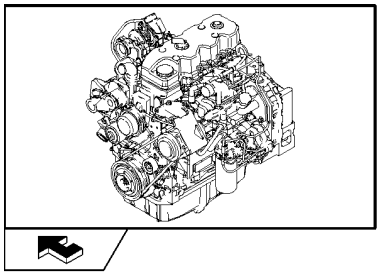

POMPE A EAU - COMMANDE

REF	FN	PART NUMBER	YR/SN	QTY	DESCRIPTION
1		2855949		1	SUPPORT
2		2852161		1	TENDEUR DE COURROIE
3		2852162		1	POULIE
4		2855950		1	COURROIE
5		4899079		2	VIS, Hex Flg, M8 x 1.25 x 25
6		4895292		1	VIS

COMMANDE DE VENTILATEUR

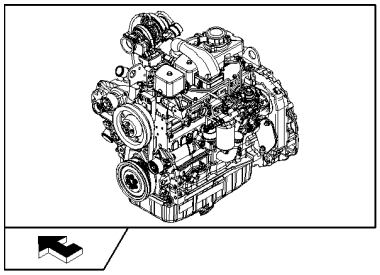

KIT KIT ● = 1

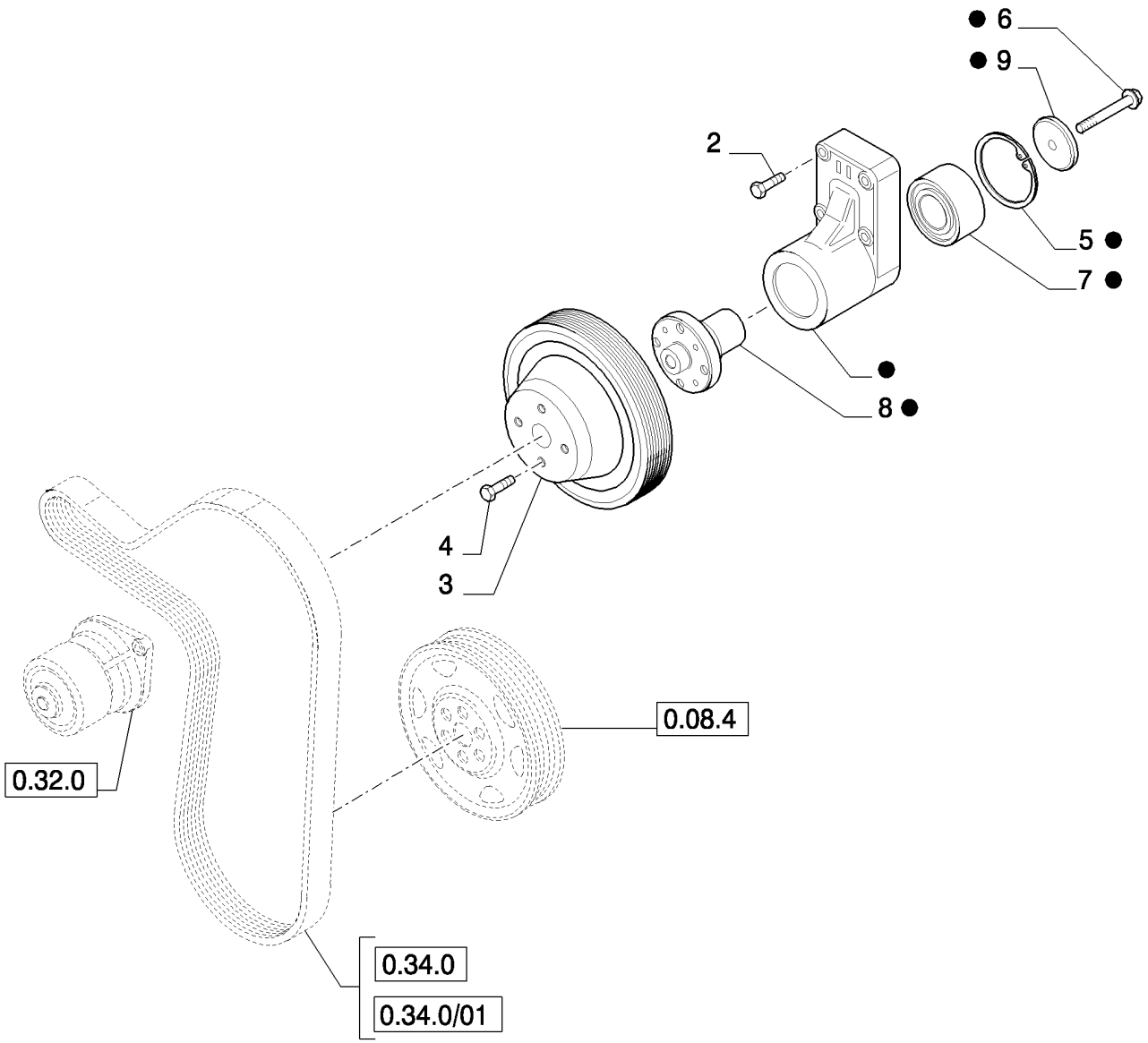

COMMANDE DE VENTILATEUR

REF	FN	PART NUMBER	YR/SN	QTY	DESCRIPTION
1		2852170		1	SUPPORT, - ASSY
2		4899053		4	VIS, Hex Flg, M8 x 45
3		4890343		1	POULIE
4		4895291		4	VIS, Hex Flg, M10 x 1.5 x 20, M10x1.5x20
5		2852171		1	ANNEAU D'ARRÊT
6		2852172		1	VIS
7		4892732		1	ROULEMENT A BILLES
8		4892426		1	MOYEU
9		4890732		1	RETENEUR

ACCESOIRE MOTEUR

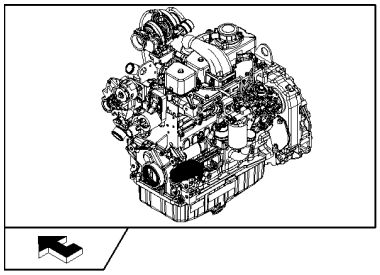

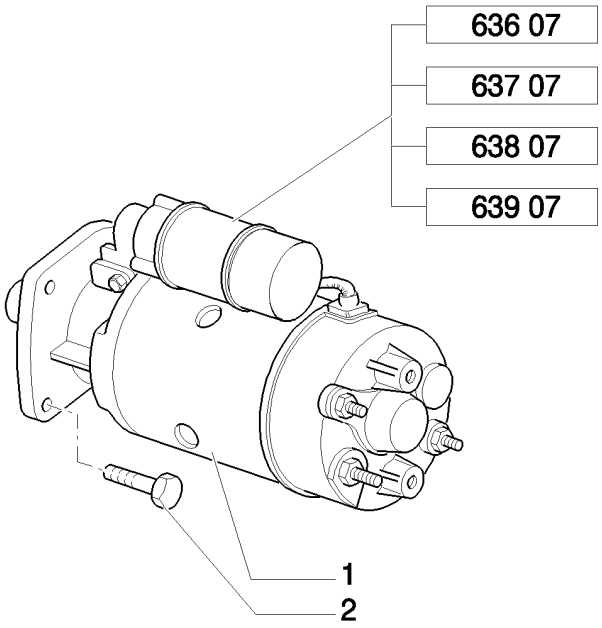

ACCESOIRE MOTEUR

REF	FN	PART NUMBER	YR/SN	QTY	DESCRIPTION
1		86992395		1	DEMARREUR
2		86511845		1	BOULON, Hex Flg, M10 x 35, 8.8

ALTERNATEUR

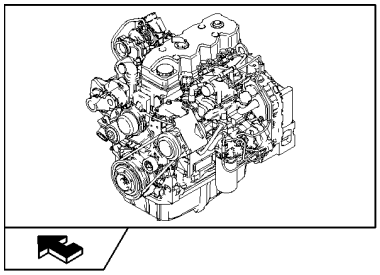

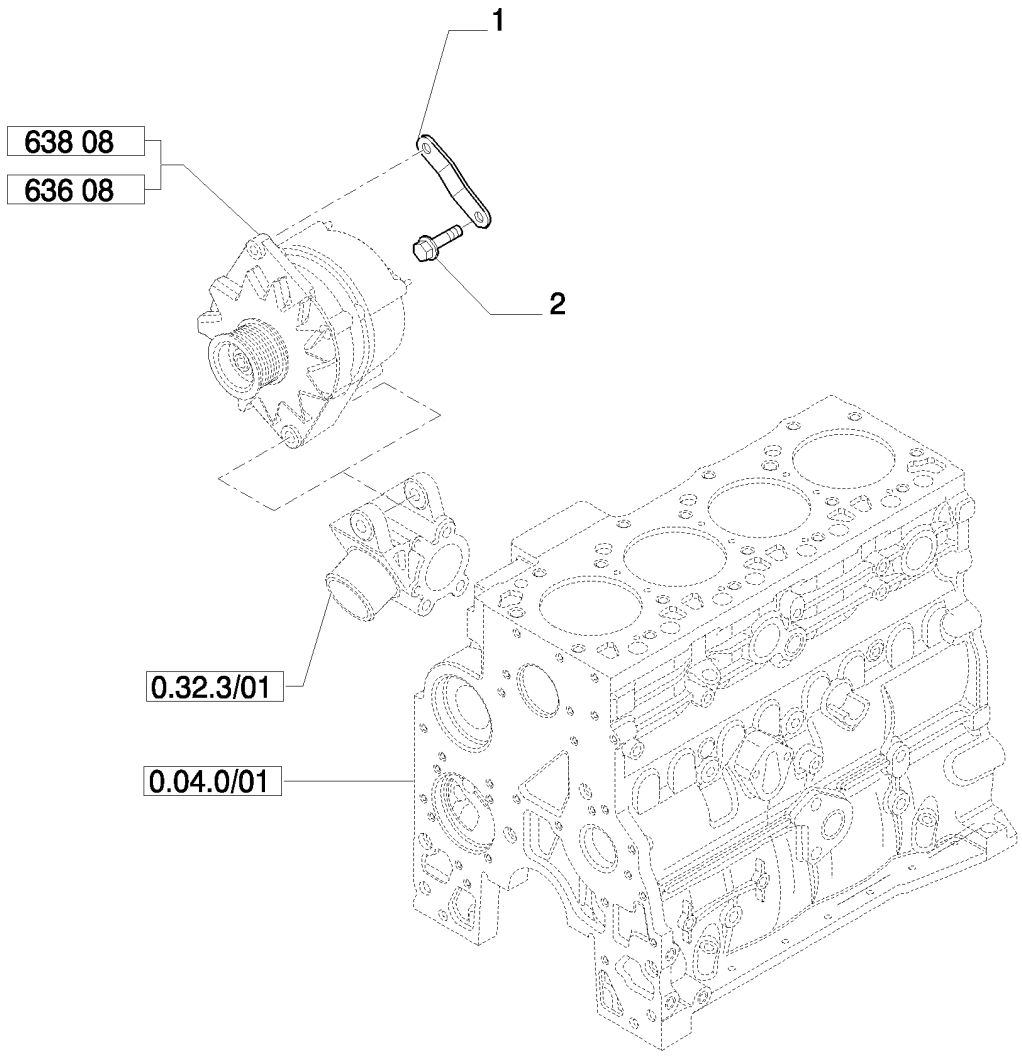

ALTERNATEUR

REF	FN	PART NUMBER	YR/SN	QTY	DESCRIPTION
1		2852180		1	PATTE FIXATION
2		4895291		1	VIS, Hex Flg, M10 x 1.5 x 20, M10x1.5x20

CROCHETS DE MANOEUVRE - MOTEUR

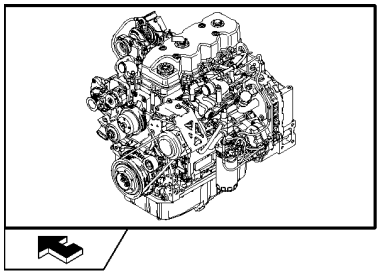

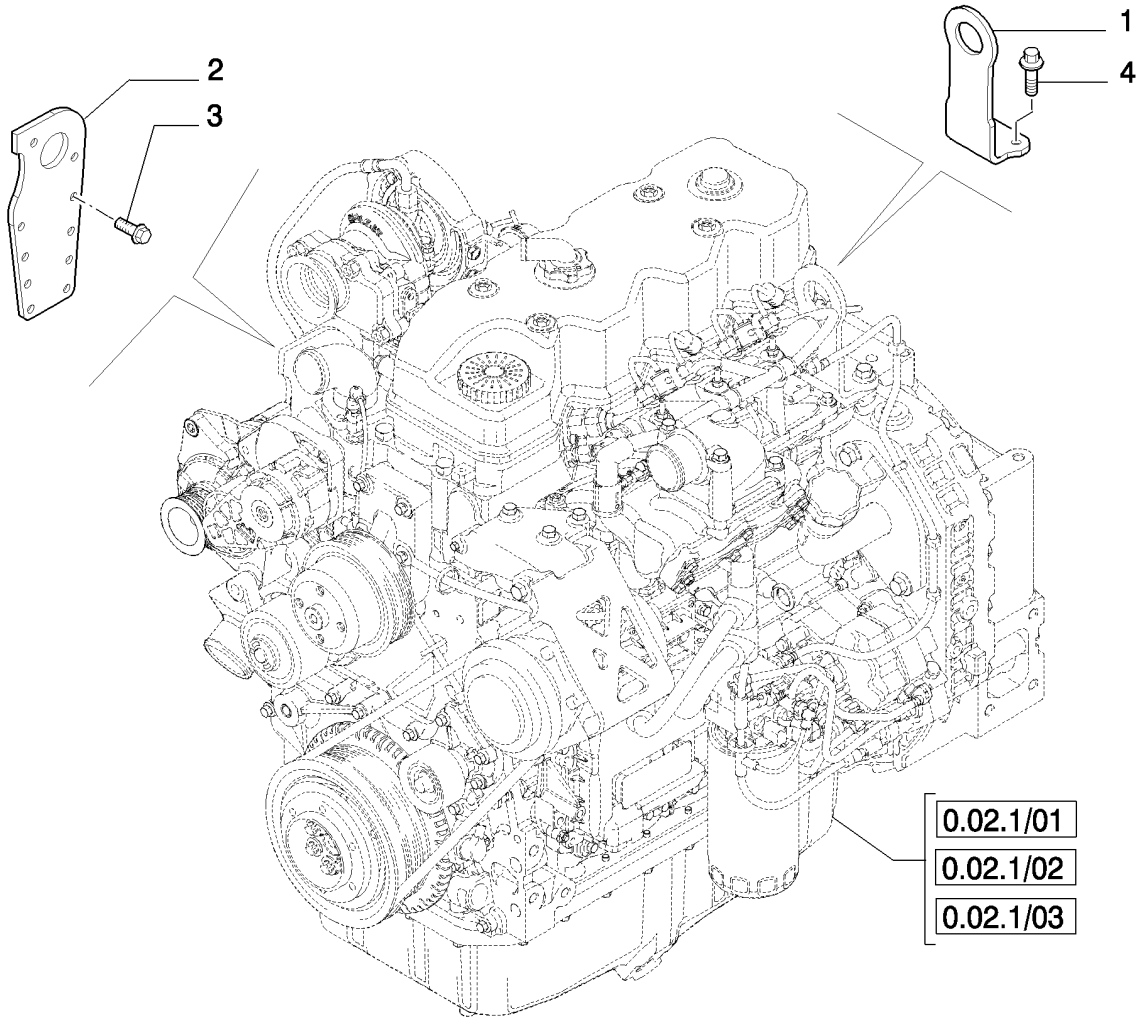

CROCHETS DE MANOEUVRE - MOTEUR

REF	FN	PART NUMBER	YR/SN	QTY	DESCRIPTION
1		2855773		1	PATTE FIXATION
2		2855774		1	PATTE FIXATION
3		4899079		4	VIS, Hex Flg, M8 x 1.25 x 25
4		4899037		2	VIS

NOTES

SECTION INDEX
Equipement Moteur

1.14.0		RÉSERVOIR DE CARBURANT ET ACCESSOIRES
1.14.6		TUYAU COMBUSTIBLE
1.14.6/ A		FILTRE A COMBUSTIBLE
1.15.0	01	SILENCIEUX ET EXTENSIONS
1.15.0	02	TUYAU D'ÉCHAPPEMENT
1.19.1		FILTRE À AIR ET TUYAUX FLEXIBLES
1.21.5		CHASSIS (CENTER PIVOT)

RÉSERVOIR DE CARBURANT ET ACCESSOIRES

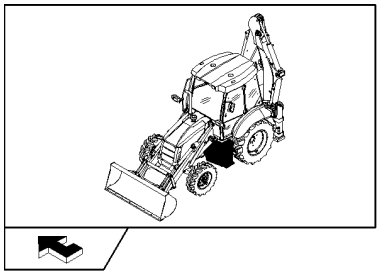

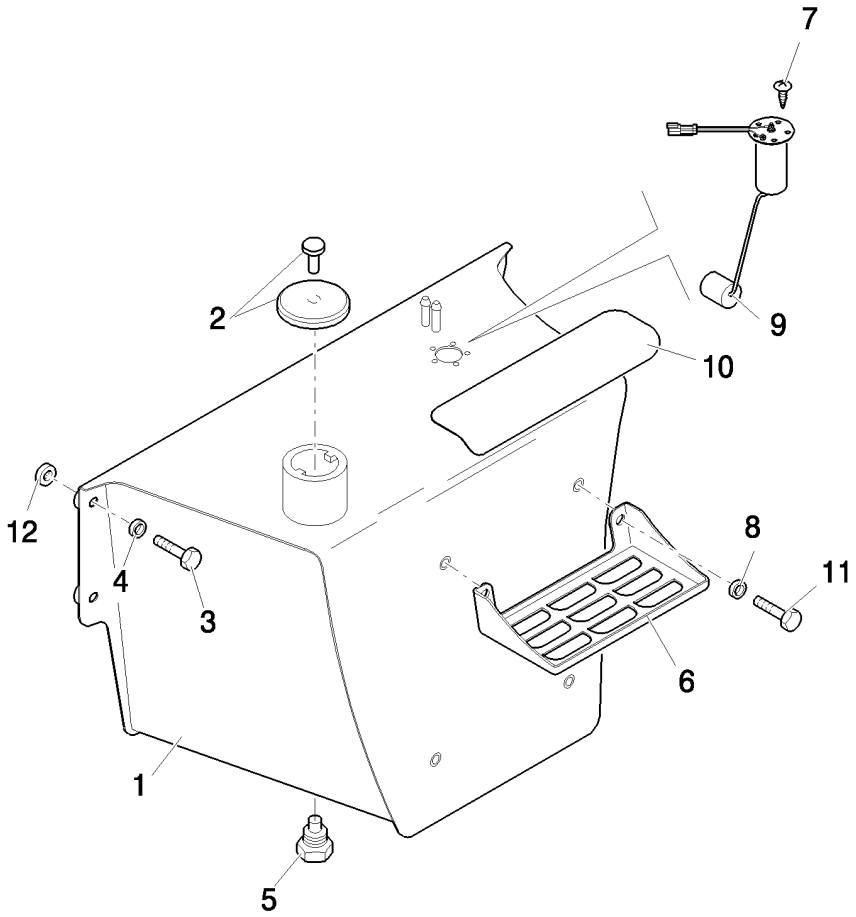

RÉSERVOIR DE CARBURANT ET ACCESSOIRES

REF	FN	PART NUMBER	YR/SN	QTY	DESCRIPTION
1		87355226		1	RESERVOIR DE COMBUSTIBLE
2		85825392		1	BOUCHON DE RESERVOIR+ CLE
3		15540721		4	BOULON, Hex, M12 x 1.25 x 45, 8.8, Full Thd
4		47048973		4	RONDELLE
5		47050671		1	BOUCHON
6		85801218		2	SOCLE
7		85825158		5	VIS, M5x12
8		47048976		4	RONDELLE, M12
9		86985587		1	TRANSMETTEUR ASSY
10		87702352		1	BANDE ANTI-DERAPANTE
11		11112421		4	BOULON, Hex, M12 x 30, 8.8
12		87353741		4	ENTRETOISE

1.14.6		p1	03/08

TUYAU COMBUSTIBLE

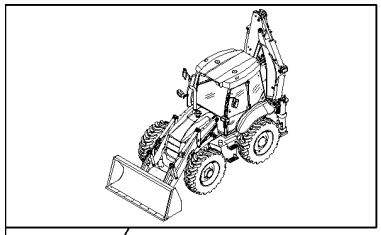

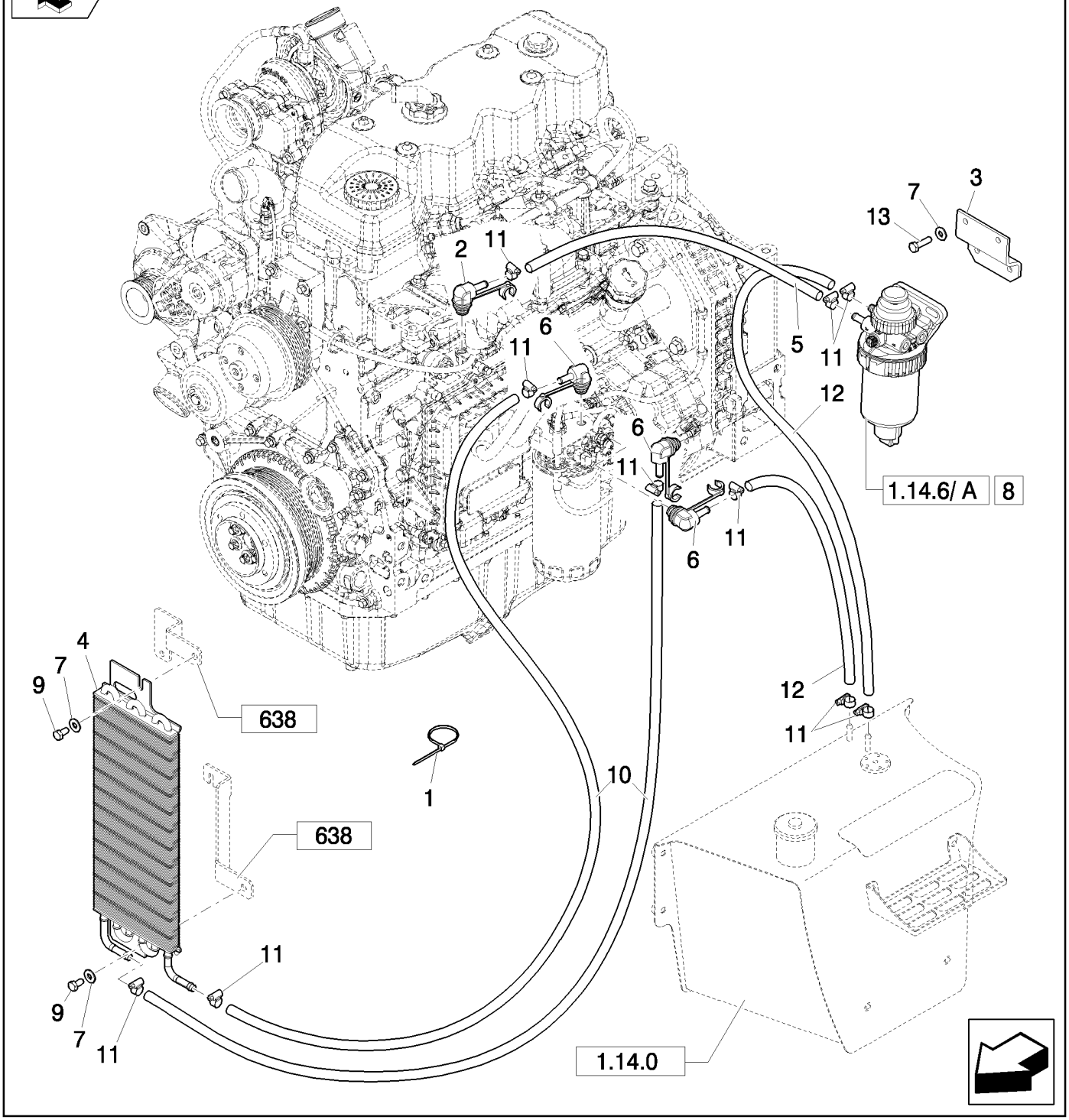

TUYAU COMBUSTIBLE

REF	FN	PART NUMBER	YR/SN	QTY	DESCRIPTION
1		14560187		7	SERRE-CABLE, 178mm lg, L=203.2 mm
2		8605735		1	RACCORD
3		87638778		1	PATTE FIXATION
4		87571706		1	REFROIDISSEUR
5		87609039		1	TUYAU FLEXIBLE
6		87414560		3	RACCORD
7		12646701		6	RONDELLE, M8 x 20 x 2
8		87563601		1	FILTRE A COMBUSTIBLE, Assy
9		16043221		2	VIS, Hex, M8 x 16, 8.8
10		87651689		2	TUYAU FLEXIBLE
11		85824381		10	BRIDE, FLEXIBLE
12		87403672		2	TUYAU FLEXIBLE
13		16043821		6	BOULON, Hex, M8 x 30, 8.8

FILTRE A COMBUSTIBLE

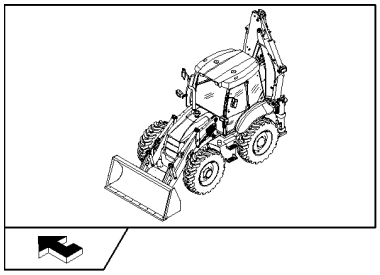

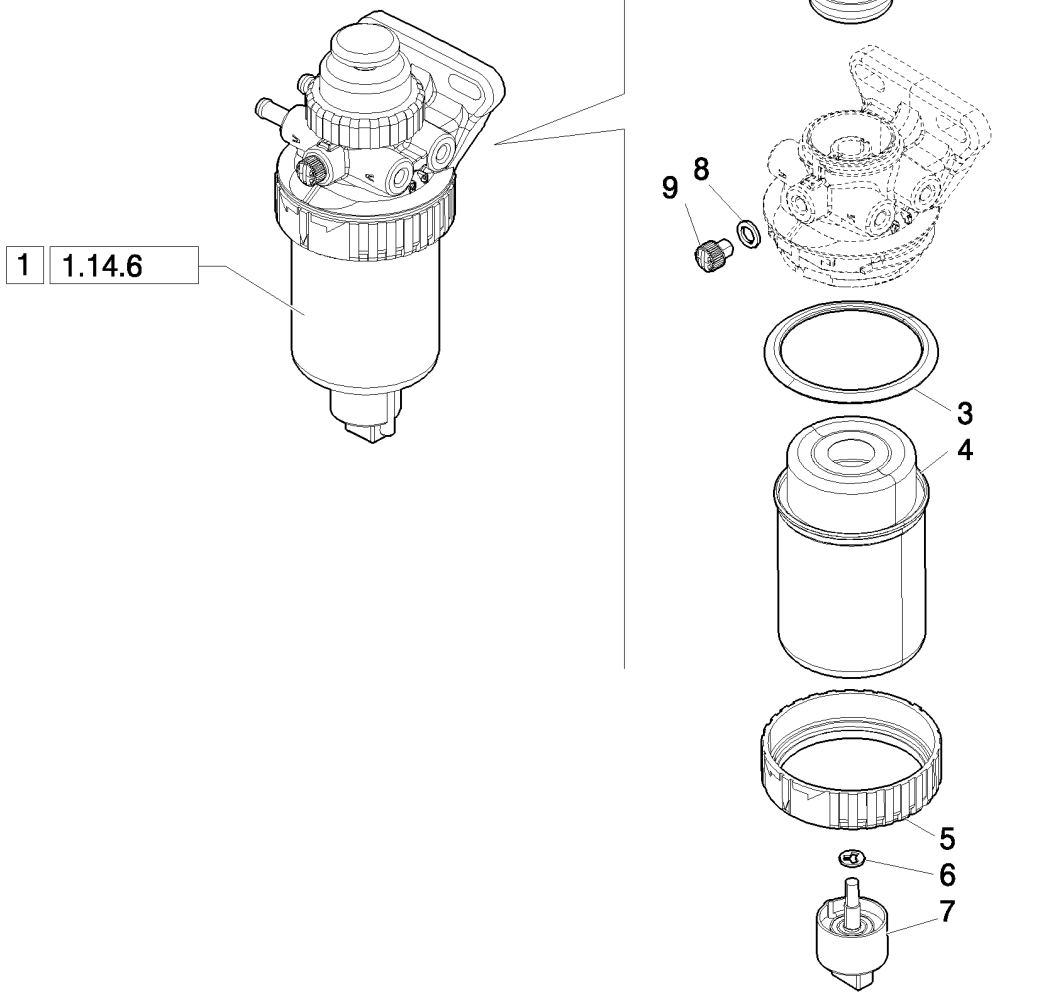

FILTRE A COMBUSTIBLE

REF	FN	PART NUMBER	YR/SN	QTY	DESCRIPTION
1		87563601		1	FILTRE A COMBUSTIBLE, Assy
2		87612472		1	KIT
3		87840171		1	JOINT
4		87803444		1	FILTRE A COMBUSTIBLE
5		87840170		1	CIRCLIP
6		87612469		1	JOINT
7		87612475		1	KIT
8		87840177		1	JOINT THORIQUE
9		87840178		1	BOUCHON
10		87840173		1	RETENEUR

1.15.0	01	p1	03/08

SILENCIEUX ET EXTENSIONS

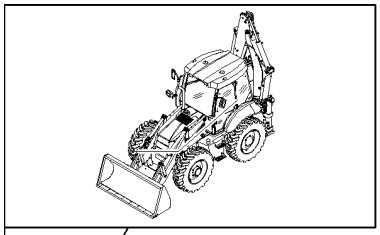

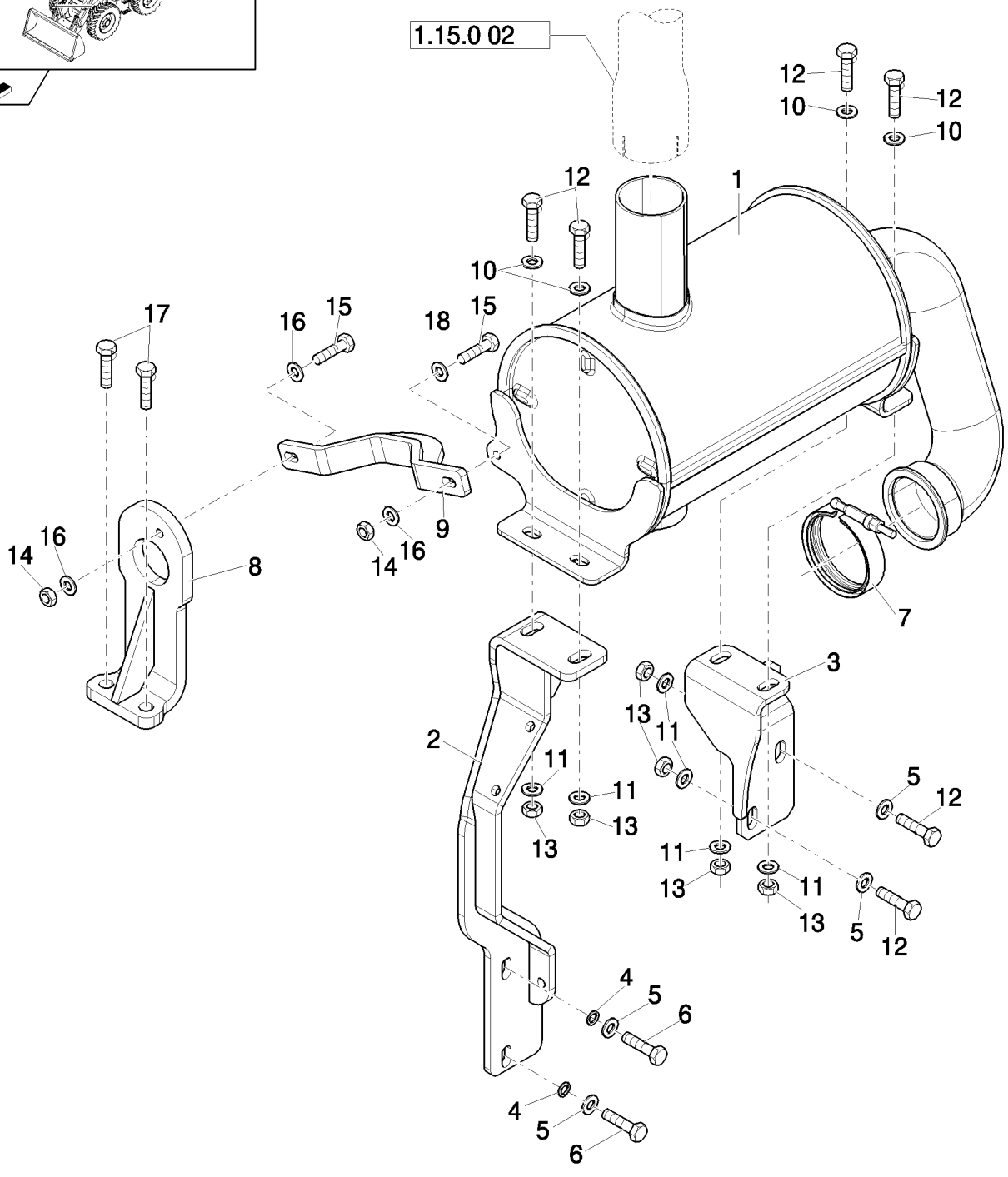

SILENCIEUX ET EXTENSIONS

REF	FN	PART NUMBER	YR/SN	QTY	DESCRIPTION
1	1	87618524		1	SILENCIEUX
1	2	87474192		1	SILENCIEUX
2		87639182		1	PATTE FIXATION
3		87658926		1	SUPPORT
4		14496621		2	RONDELLE, M10 x 21 x 2
5		11198379		4	RONDELLE BELLEVILLE, Belleville, M10.5
6		16040834		2	VIS
7		47048898		1	COLLIER
8		87473026		1	CROCHET
9		87473250		1	SUPPORT
10		11198479		4	RONDELLE
11		12638621		6	RONDELLE
12		11106634		6	BOULON, Hex, M10 x 35, 10.9, Full Thd
13		12577221		6	CONTRE-ECROU, M10 x 1.5, Cl 10
14		16100821		2	ECROU, M8, Cl 10
15		15213334		2	VIS
16		12646721		3	RONDELLE, M8 x 20 x 2
17		87030508		2	BOULON, Hex Flg, M12 x 30, 10.9, Full Thd
18		14499421		2	RONDELLE

(1) Only for B95B, B95BLR, B95BTC, B110B, B115B
(2) Only for B100B, B100BLR

TUYAU D'ÉCHAPPEMENT

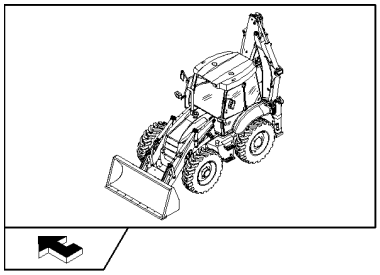

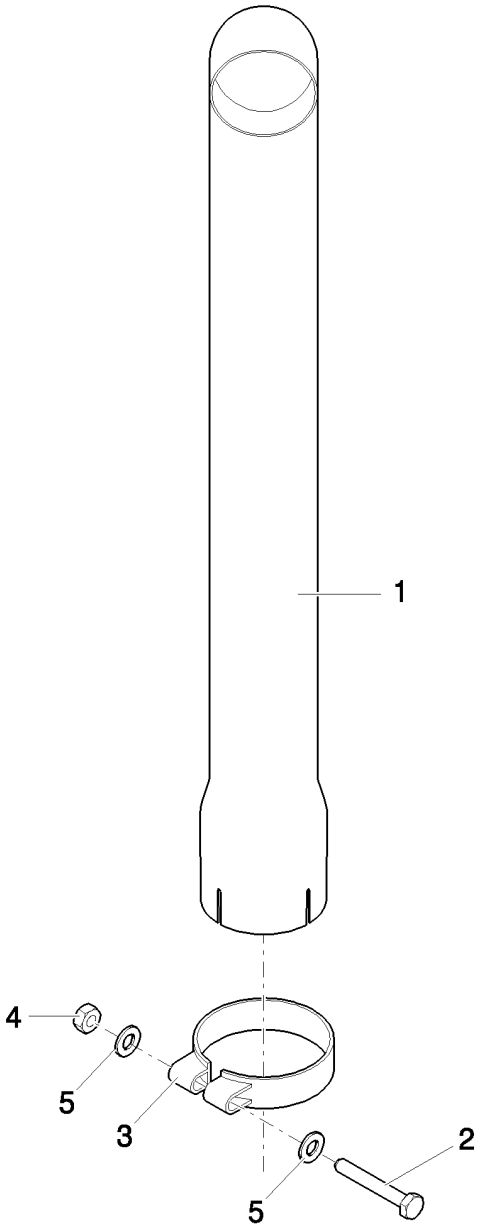

TUYAU D'ÉCHAPPEMENT

REF	FN	PART NUMBER	YR/SN	QTY	DESCRIPTION
1		87673905		1	TUBE ECHAPPEMENT
2		11107634		1	VIS
3		87437804		1	CAVALIER-SERRE-TUBE
4		11701721		1	ECROU, M10, Cl 10
5		12638621		2	RONDELLE

FILTRE À AIR ET TUYAUX FLEXIBLES

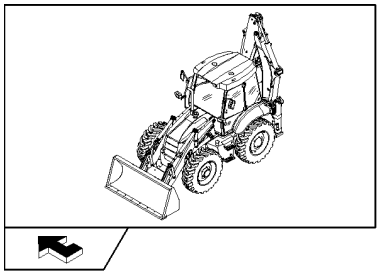

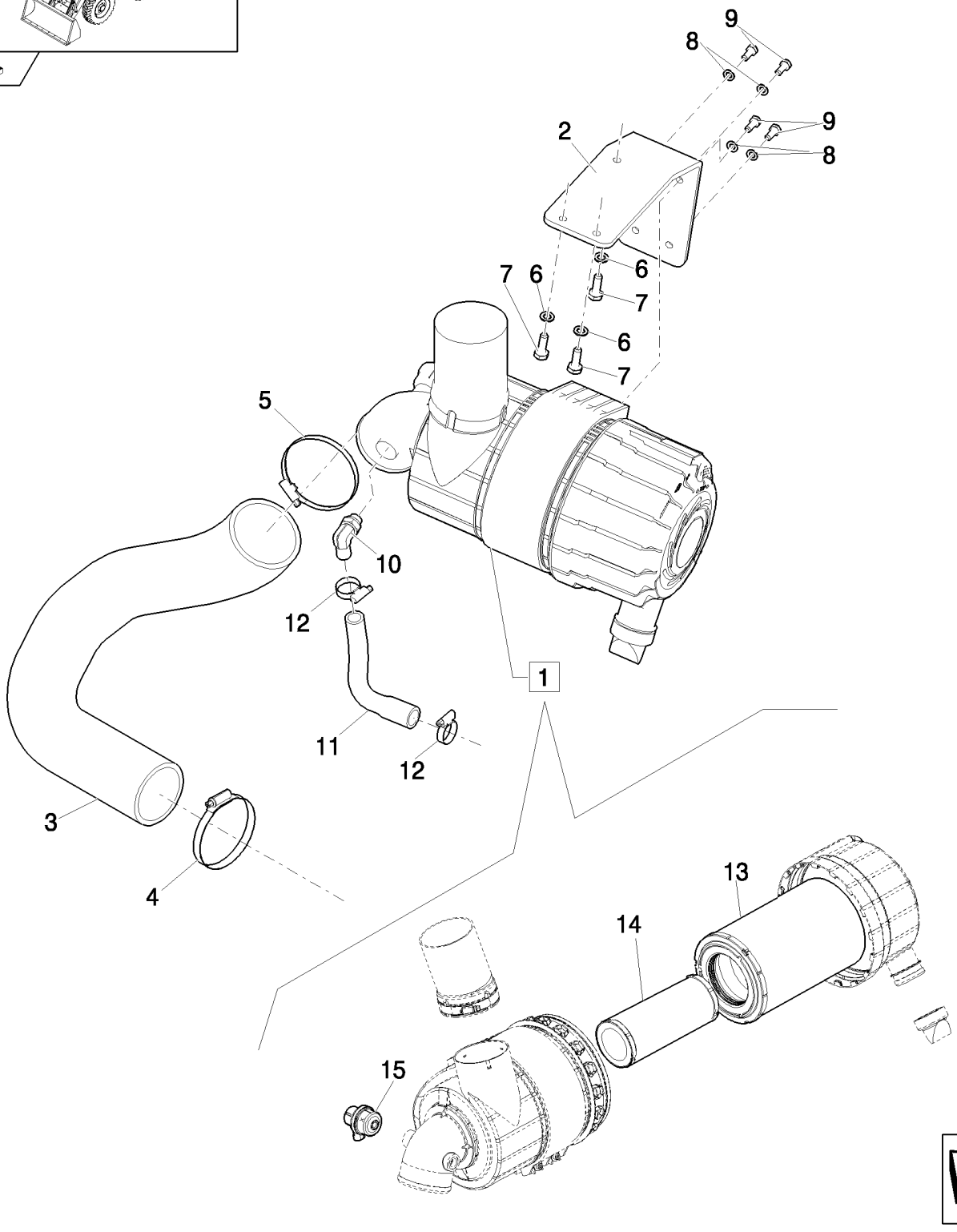

FILTRE À AIR ET TUYAUX FLEXIBLES

REF	FN	PART NUMBER	YR/SN	QTY	DESCRIPTION
1		87637579		1	FILTRE ASSY
2		87701725		1	SUPPORT
3		87639183		1	TUYAU FLEXIBLE
4		87750941		1	BRIDE
5		85802743		1	BRIDE, FLEXIBLE
6		12638601		3	RONDELLE, M10 x 18 x 2
7		11106421		3	BOULON, Hex, M10 x 30, 8.8
8		12638511		4	RONDELLE, M8 x 15 x 1.5
9		16043421		4	VIS, Hex, M8 x 20, 8.8
10		87647474		1	RACCORD
11		87647609		1	TUYAU FLEXIBLE
12		85803013		2	BRIDE, FLEXIBLE
13		87631623		1	FILTRE A AIR
14		87631625		1	FILTRE A AIR
15		87631670		1	PALPEUR

CHASSIS (CENTER PIVOT)

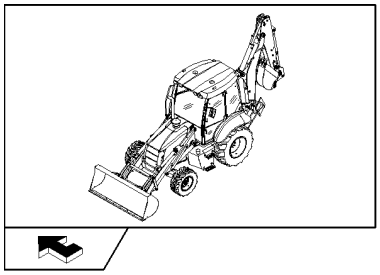

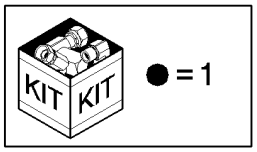

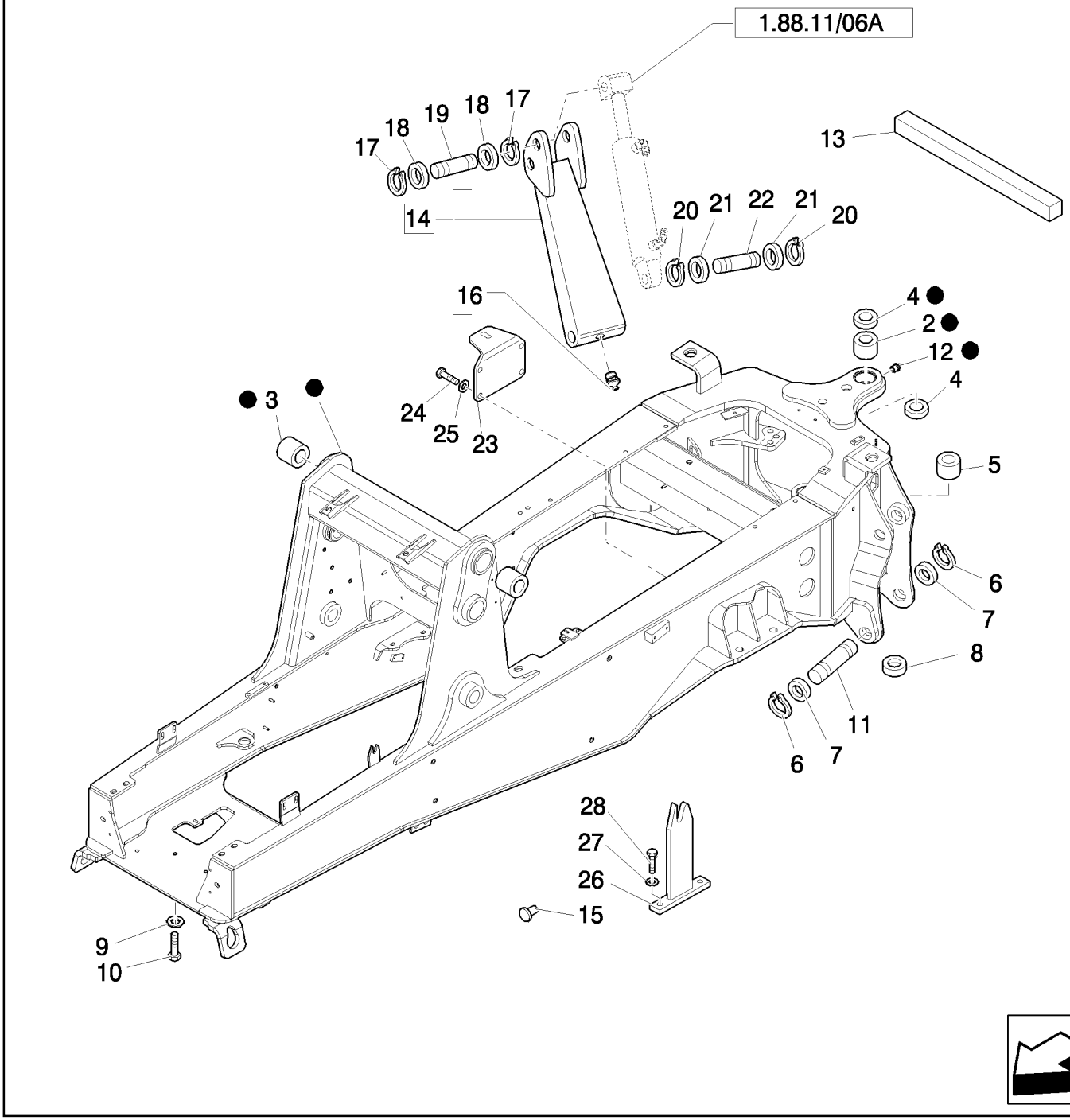

CHASSIS (CENTER PIVOT)

REF	FN	PART NUMBER	YR/SN	QTY	DESCRIPTION
1	1	87626855		1	CHASSIS
2		85700728		2	BAGUE
3		85801110		2	BAGUE
4		81875248		4	JOINT
5		83910645		2	BAGUE
6		83911020		4	ANNEAU D'ARRÊT
7		81901837		4	RONDELLE
8	2	85802903		1	ISOLANT
9		10520431		6	RONDELLE, 20x35
10		15989134		6	BOULON, Hex, M20 x 100, 10.9
11		83911000		2	AXE
12		83416242		2	GRAISSEUR
13		85802338		1	JOINT ADHESIF
14		85803959		1	STABILISATEUR, Assy, LH
14		85803960		1	STABILISATEUR, Assy, RH
15		85808422		2	BOUCHON
16		81818824		2	GRAISSEUR, 90º, 1/8"-27 NPT
17		83910630		4	ANNEAU
18		83910629		4	RONDELLE
19		83999466		2	AXE
20		83911019		4	CIRCLIP
21		83910977		4	ENTRETOISE
22		85801262		2	AXE
23		85804171		1	SUPPORT
24		15540534		4	BOULON, Hex, M12 x 1.25 x 35, 10.9, Full Thd
25		11198679		4	RONDELLE BELLEVILLE, Belleville, M13
26		87302151		1	SUPPORT, RH
27		11193874		2	RONDELLE BELLEVILLE, Belleville, M8.4
28		16043421		2	VIS, Hex, M8 x 20, 8.8

(1) Includes 2, 3, 5
(2) Only for NA

NOTES

SECTION INDEX

Engrenages et Prise de Force

1.28.0		TRANSMISSION
1.28.0/ A	01	COMPOSANTS DU CONVERTISSEUR DE COUPLE (2WD POWER-SHUTTLE)
1.28.0/ A	02	COMPOSANTS EXTERNES TRANSMISSION (2WD POWER-SHUTTLE)
1.28.0/ A	03	COMPOSANTS TRANSMISSION HYDRAULIQUE (2WD POWER-SHUTTLE)
1.28.0/ A	04	FREIN DE PARCAGE (2WD POWER-SHUTTLE)
1.28.0/ A	05	ROUAGES CHANGEMENT DE VITESSE (2WD POWER-SHUTTLE)
1.28.0/ A	06	ARBRE DE TRANSMISSION AVANT (2WD POWER-SHUTTLE)
1.28.0/ A	07	ENGRENAGES DE COMMANDE DE LA TRANSMISSION (2WD POWER-SHUTTLE)
1.28.0/ B	01	COMPIÈCES DU CONVERTISSEUR COUPLE ET ENGRENAGES DE COMMANDE DE LA TRANSMISSION (4WD POWER-SHUTTLE)
1.28.0/ B	02	COMPOSANTS EXTERNES DE LA TRANSMISSION (4WD POWER-SHUTTLE)
1.28.0/ B	03	COMPOSANTS HYDRAULIQUES DE LA TRANSMISSION (4WD POWER-SHUTTLE)
1.28.0/ B	04	FREIN DE PARCAGE (4WD POWER-SHUTTLE)
1.28.0/ B	05	ROUAGES CHANGEMENT DE VITESSE (4WD POWER-SHUTTLE)
1.28.0/ B	06	ARBRE DE TRANSMISSION AVANT (4WD POWER-SHUTTLE)
1.28.0/ B	07	ENGRENAGES DE COMMANDE DE LA TRANSMISSION (4WD POWER-SHUTTLE)
1.28.0/ B	08	ENGRENAGES ARBRE D'ENTRAÎNEMENT ARRIÈRE (4WD POWER-SHUTTLE)
1.28.6		JAUGE DE NIVEAU / FAIRE L'APPOINT (POWER-SHUTTLE)
1.29.1		COMMANDES EXTERIEURES (POWER-SHUTTLE)
1.38.1		ARBRE DE TRANSMISSION AVANT ET ARRIÈRE (POWER-SHUTTLE)
1.39.8		TUBULURES DE REFROIDISSEMENT HUILE TRANSMISSION (POWER-SHUTTLE)

TRANSMISSION

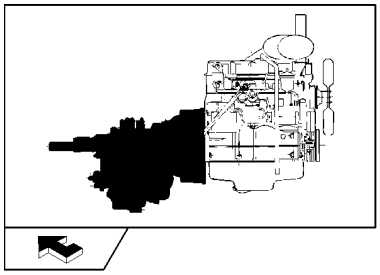

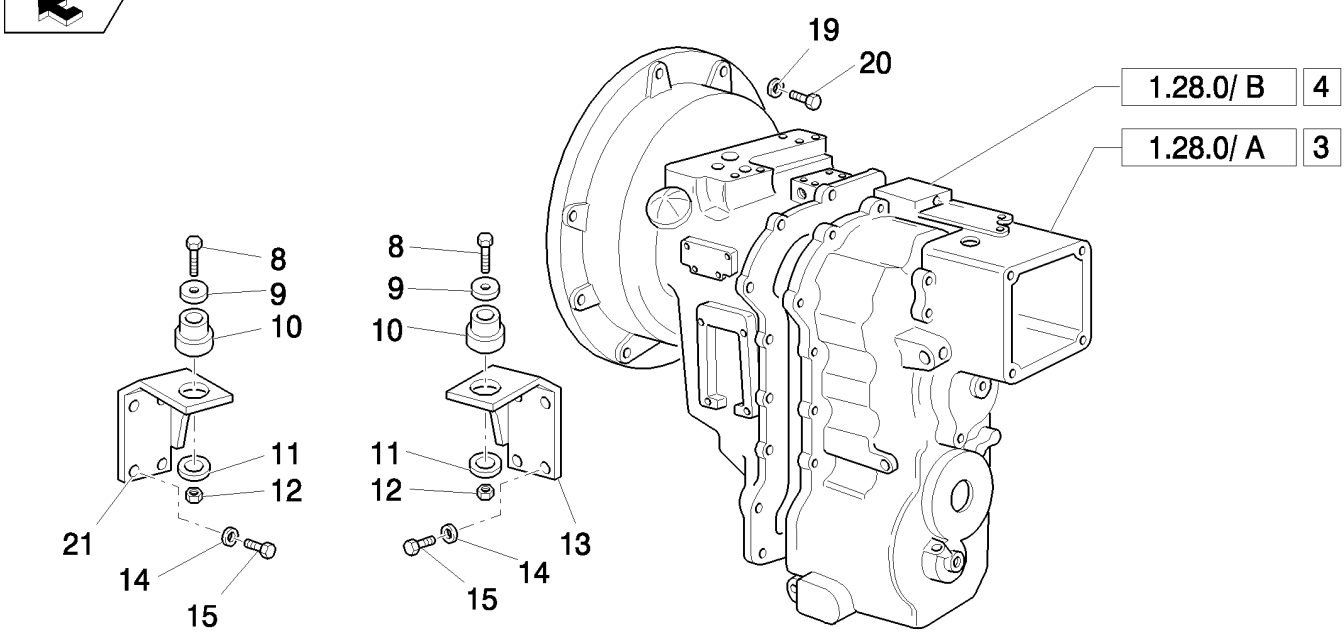

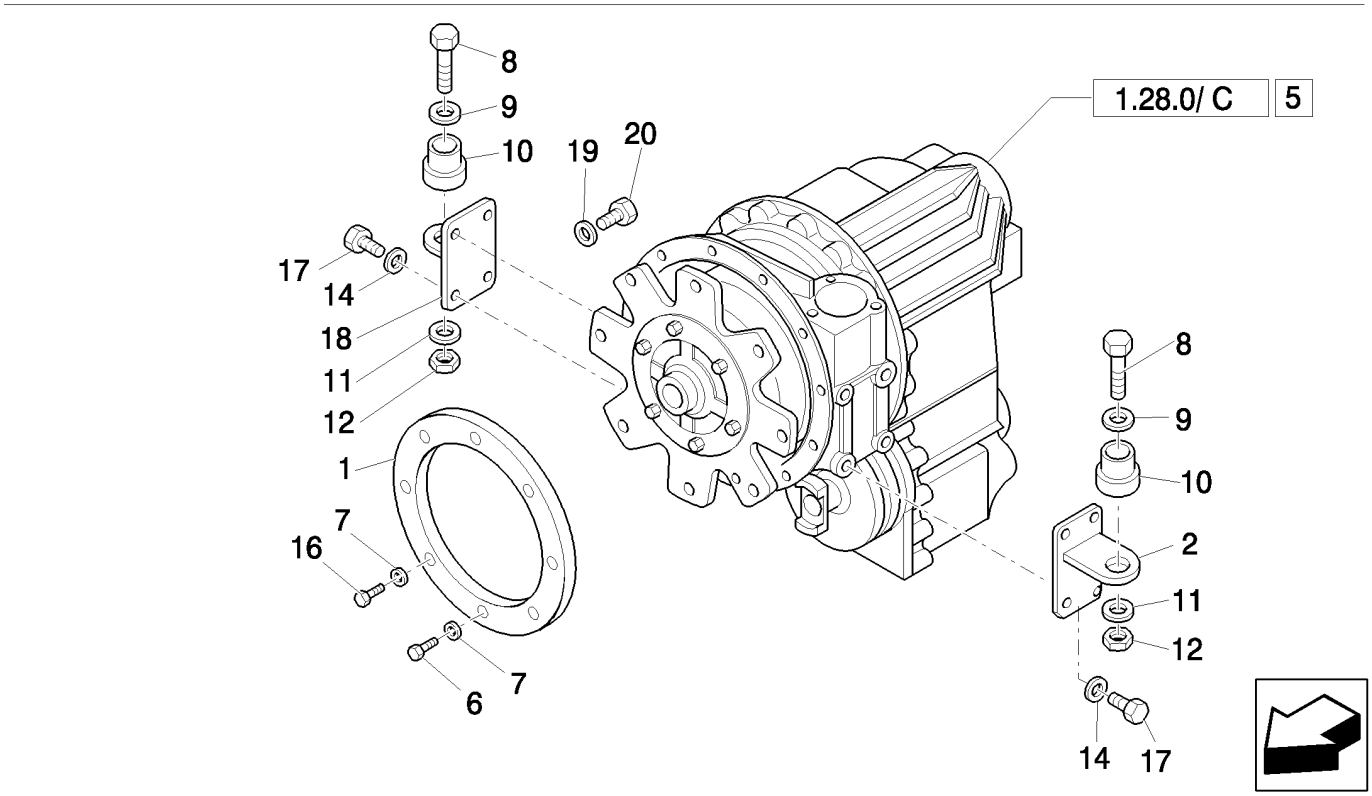

TRANSMISSION

REF	FN	PART NUMBER	YR/SN	QTY	DESCRIPTION
1		87407758		1	ANNEAU
2		85804276		1	SUPPORT, LH
3	1	86990712		1	TRANSMISSION, Assy
4	2, 3	86990713		1	TRANSMISSION, Assy
5	4	87749355		1	TRANSMISSION, 2WS, Assy
5	5	87749354		1	TRANSMISSION, 4WS, Assy
6		87021704		4	VIS, 12 Pt Hd, M10 x 1.25 x 50, 12.9
7		11190779		4	RONDELLE BELLEVILLE, Belleville, M13
8		87410647		2	VIS, M12x1.25x90
9		85801585		2	RONDELLE D'ETANCHEITE, 65mm OD
10		87416967		2	SUPPORT
11		85802618		2	RONDELLE D'ETANCHEITE
12		16105011		2	CONTRE-ECROU, M12x1.75x1.25
13		87405629		1	SUPPORT, LH
14		11198679		8	RONDELLE BELLEVILLE, Belleville, M13
15		11112634		8	VIS, M12x35
16		87019767		4	VIS, 12 Pt Hd, M10 x 1.25 x 30, 12.9
17		11112434		8	BOULON, Hex, M12 x 30, 10.9, Full Thd
18		85804275		1	SUPPORT, RH
19		47049372		12	RONDELLE
20		11106434		12	BOULON, Hex, M10 x 30, 10.9, Full Thd
21		87405628		1	SUPPORT, RH

(1) Only for 2WD, Power Shuttle
(2) Only for 4WD, Power Shuttle
(3) Repair and exchange component available - call Avatar Components, 1-800-453-3544, ext. 122
(4) Only for B110B 4WD, Power Shift
(5) Only for B115B 4WD, Power Shift

COMPOSANTS DU CONVERTISSEUR DE COUPLE (2WD POWER-SHUTTLE)

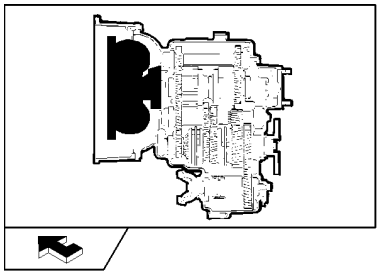

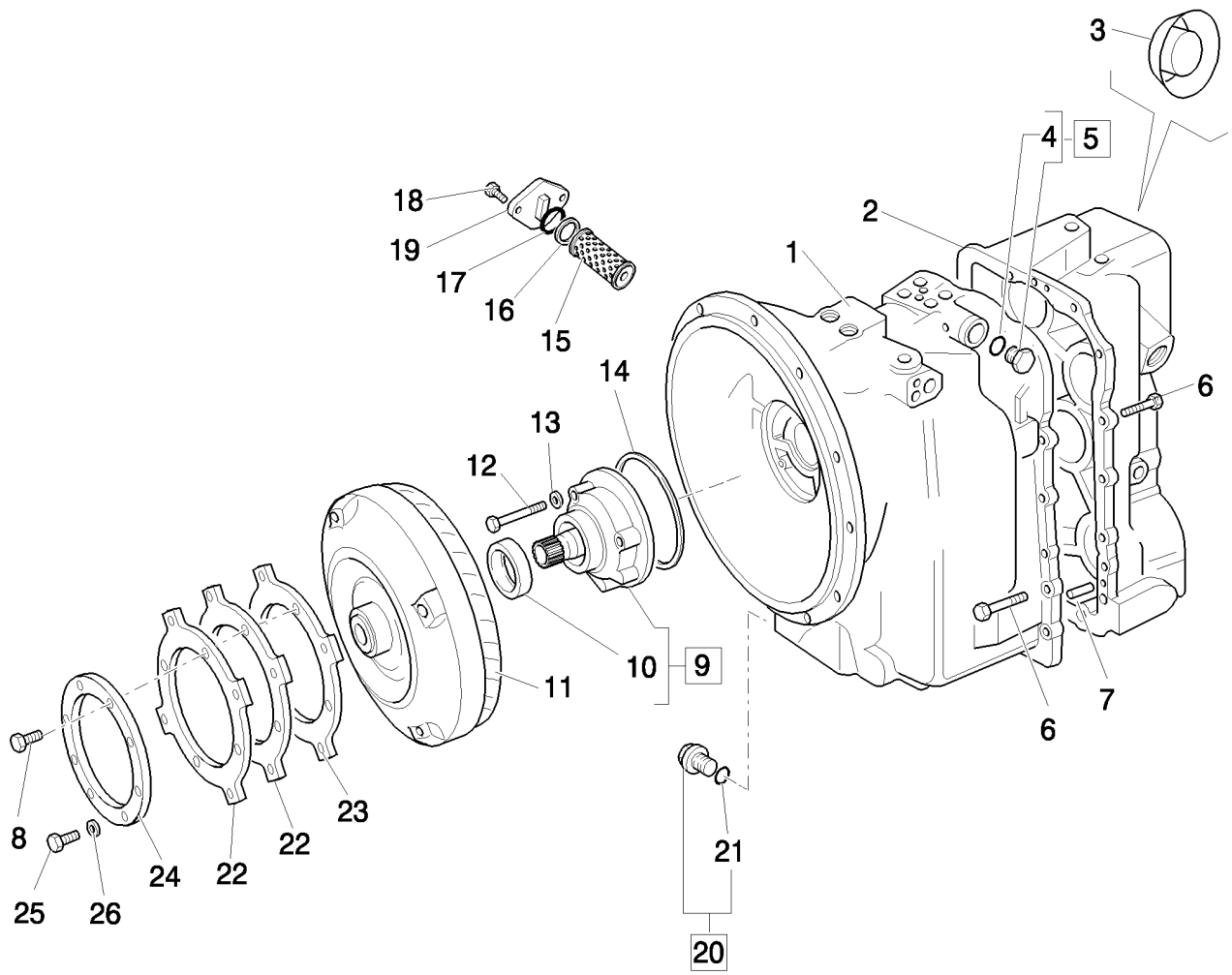

COMPOSANTS DU CONVERTISSEUR DE COUPLE (2WD POWER-SHUTTLE)

REF	FN	PART NUMBER	YR/SN	QTY	DESCRIPTION
1		85827769		1	CARTER, ENGRANGE
2		85827770		1	CARTER, ENGRANGE
3		85812096		1	BOUCHON
4		9968218		1	JOINT THORIQUE, 9/16"
5		9968219		1	BOUCHON, Assy, 9/16" UNF, 2
6		85817164		17	VIS
7		9968356		2	PION
8		87019767		4	VIS, 12 Pt Hd, M10 x 1.25 x 30, 12.9, M10x1.25x90
9		9968311		1	POMPE, Assy, M10x30
10		9968312		1	JOINT
11		87400114		1	CONVERTISSEUR DE COUPLE
12		85817163		7	VIS
13		85817001		4	RONDELLE
14		9968313		1	JOINT ANNULAIRE
15		9968359		1	FILTRE
16		9968361		1	RONDELLE
17		9968360		1	JOINT THORIQUE
18		85817169		2	VIS
19		9968362		1	CLOCHE
20		9968339		1	BOUCHON, Assy
21		9968365		1	JOINT THORIQUE
22		86993546		1	PLAQUE
23		87406934		1	PLAQUE
24		87409201		1	Plaque D"Appui
25		11106021		4	BOULON, Hex, M10 x 20, 8.8, Full Thd
26		47049372		4	RONDELLE

COMPOSANTS EXTERNES TRANSMISSION (2WD POWER-SHUTTLE)

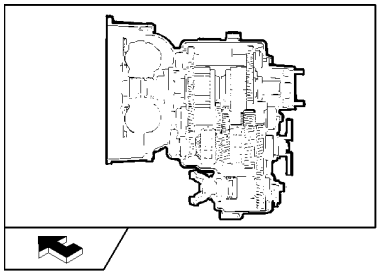

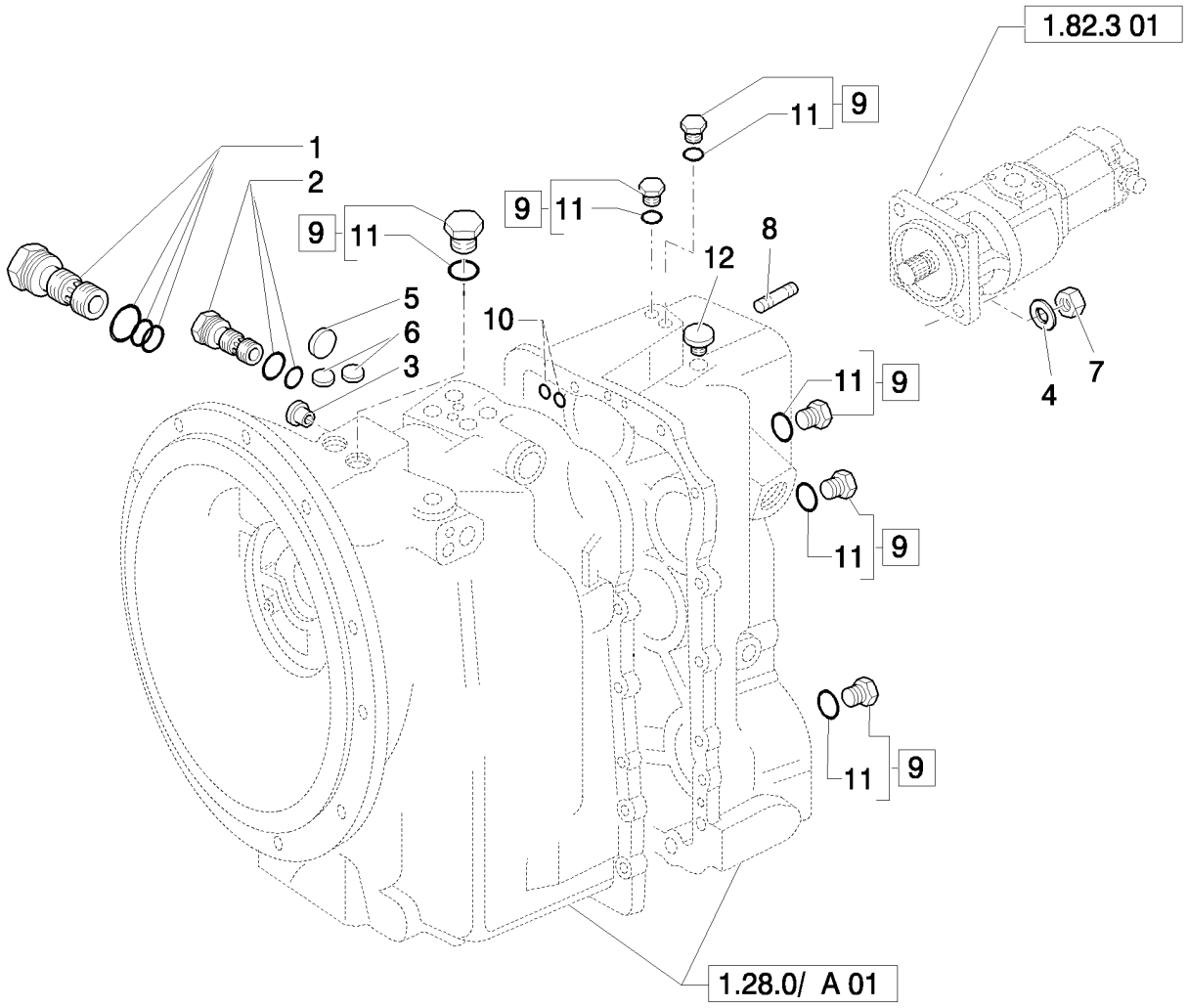

COMPOSANTS EXTERNES TRANSMISSION (2WD POWER-SHUTTLE)

REF	FN	PART NUMBER	YR/SN	QTY	DESCRIPTION
1		9968350		1	DISTRIBUTEUR, ydraulic Pressure Regulator
2		9968334		1	SOUPAPE, DÉCHARGE, Hydraulic Converter Relief
3		85812094		2	BOUCHON
4		11190779		4	RONDELLE BELLEVILLE, Belleville, M13
5		9968371		1	BOUCHON, Expansion, 1"
6		9968333		2	BOUCHON, Tyers, .5"
7		85802684		4	ECROU
8		85802683		4	GOUJON, 1/2"
9		9968219		AR	BOUCHON, Assy, 9/16" UNF
10		9968368		3	JOINT THORIQUE, .512" ID x .094" Thk
11		9968218		AR	JOINT THORIQUE, 9/16"
12		9968364		1	RENIFLARD

COMPOSANTS TRANSMISSION HYDRAULIQUE (2WD POWER-SHUTTLE)

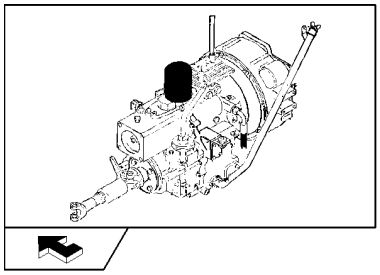

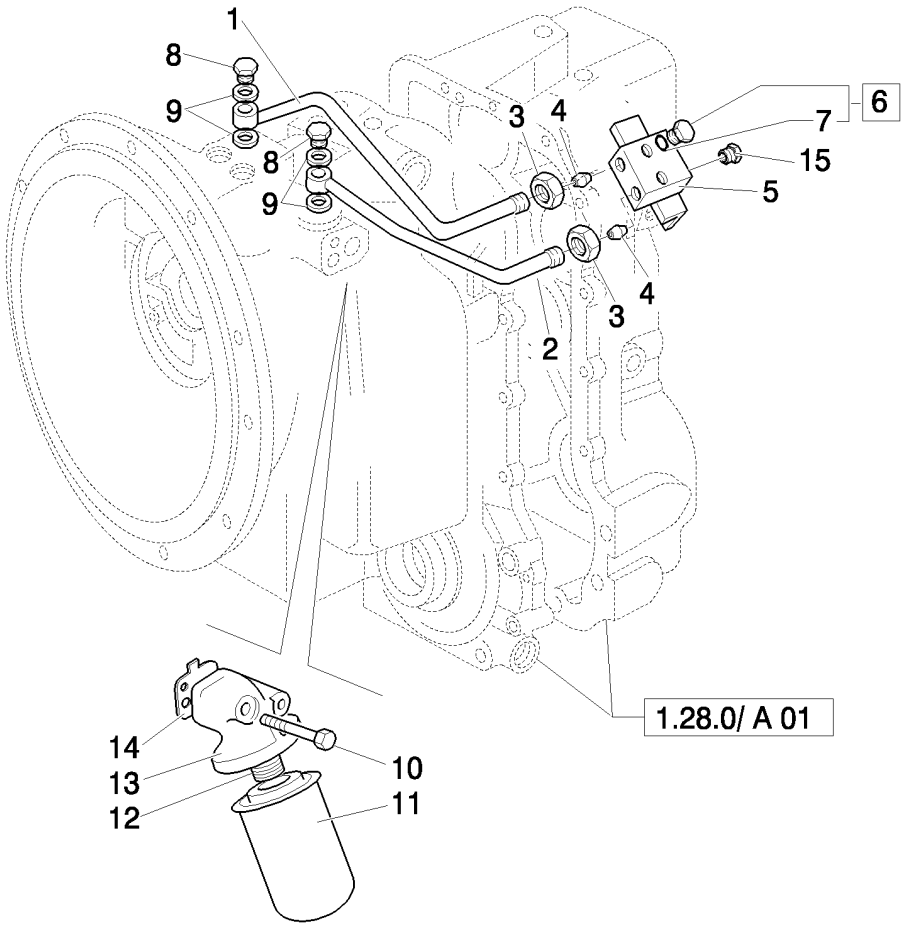

COMPOSANTS TRANSMISSION HYDRAULIQUE (2WD POWER-SHUTTLE)

REF	FN	PART NUMBER	YR/SN	QTY	DESCRIPTION
1		85812087		1	TUBE
2		85812086		1	TUBE
3		9968336		2	ECROU
4		9969449		4	RACCORD
5		85812085		1	BLOC DE JONCTION
6		9968219		2	BOUCHON, Assy, 9/16" UNF
7		9968218		2	JOINT THORIQUE, 9/16"
8		9968676		2	VIS-RACCORD
9		85817002		4	RONDELLE
10		85817165		2	VIS
11		85817004		1	FILTRE
12		9968354		1	ADAPTEUR
13		9968374		1	Tête De Filtre
14		9968375		1	JOINT
15		85812091		1	BOUCHON

1.28.0/ A	04	p1	04/08

FREIN DE PARCAGE (2WD POWER-SHUTTLE)

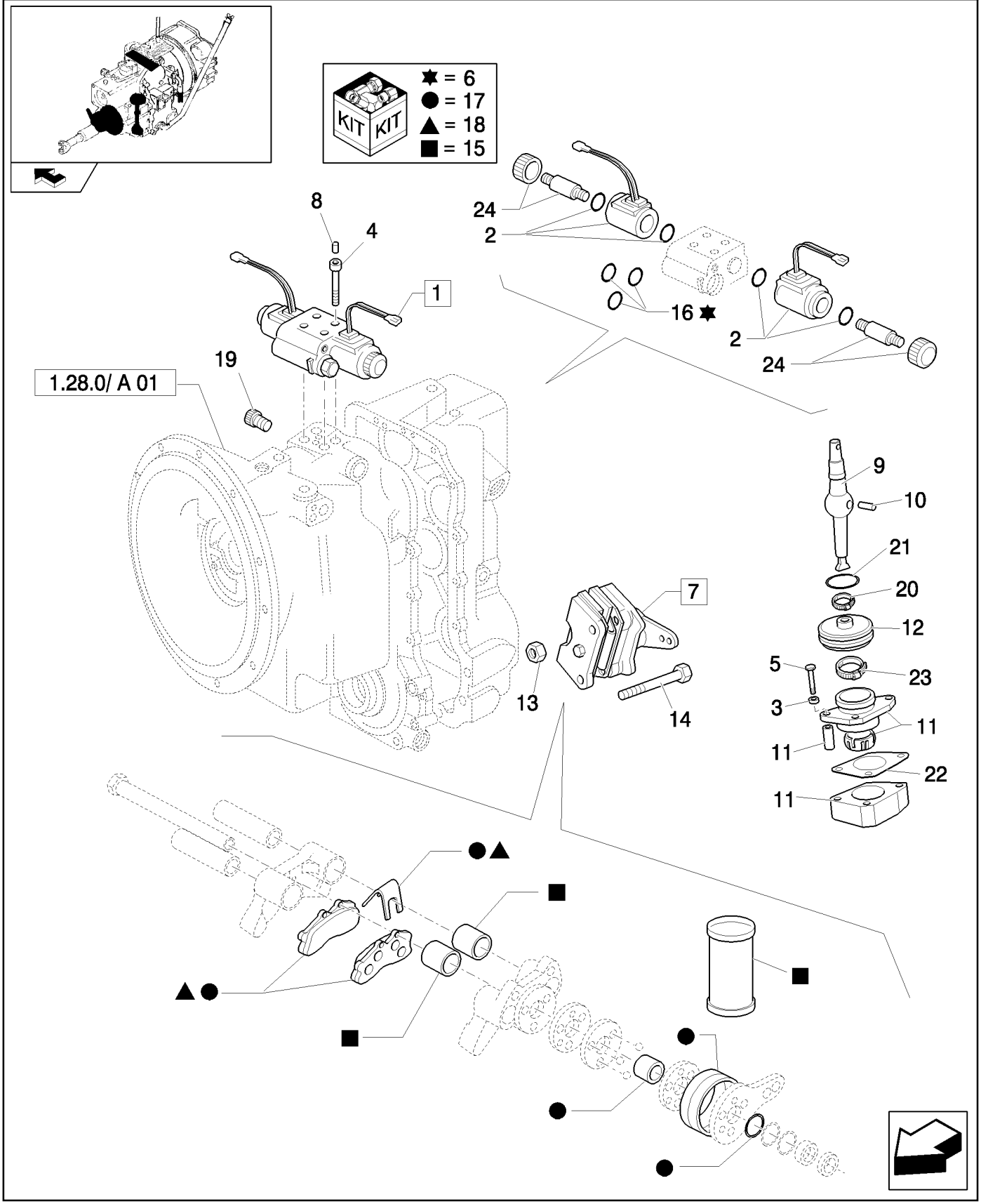

FREIN DE PARCAGE (2WD POWER-SHUTTLE)

REF	FN	PART NUMBER	YR/SN	QTY	DESCRIPTION
1		85827764		1	SOUPAPE HYDRAULIQUE, Assy
2		85827798		2	BOBINE
3		85812092		3	RONDELLE
4		9969445		4	VIS
5		85817163		3	VIS
6		85827797		1	COLIS DE RÉPARATION
7		85813300		1	FREIN DE PARCAGE, Assy
8		85827779		4	BOUCHON
9		9968324		1	LEVIER
10		9968327		1	AXE
11		9968326		1	SUPPORT
12		9968328		1	COIFFE
13		9969281		2	ECROU
14		9968299		2	BOULON
15		85813318		2	COLIS DE RÉPARATION
16		85806019		1	POCHETTE DE JOINT THORIQUE
17		9968926		1	KIT
18		9968927		1	KIT
19		9968370		2	BOUCHON
20		85827777		1	SERRE-CABLE
21		85817006		1	JOINT THORIQUE
22		85817007		1	JOINT
23		85827776		1	SERRE-CABLE
24		85827799		1	KIT

ROUAGES CHANGEMENT DE VITESSE (2WD POWER-SHUTTLE)

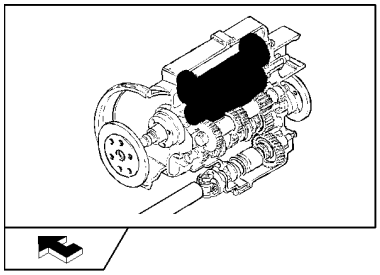

ROUAGES CHANGEMENT DE VITESSE (2WD POWER-SHUTTLE)

REF	FN	PART NUMBER	YR/SN	QTY	DESCRIPTION
1		9968279		3	RONDELLE
2		9968228		2	BUTÉE A BILLES
3		9968304		4	ROULEMENT A AIGUILLES, 50x5x17
4		9968302		2	ENTRETOISE
5		9968286		1	PIGNON, 30T
6		9968291		3	ANNEAU D'ARRÊT
7		85827771		2	RESSORT DE MAINTIEN
8		85827772		2	RESSORT
9		9968287		2	CIRCLIP
10		9968288		2	PLAQUE DORSALE
11		9968290		12	FRICTION EMBRAYAGE
12		9968289		12	DISQUE EMBRAYAGE
13		85827773		2	PISTON
14		85827774		2	RESSORT
15		85821452		1	ARBRE
16		85821454		1	DOUILLE, 2.234" IDx.139" Thk
17		9968276		1	POUSSOIR A GALET
18		9968226		4	JOINT
19		9968341		1	JOINT THORIQUE, M80 x 70 x 2
20		9968342		AR	CALE D'EPAISSEUR, 24T-25T
20		9968343		AR	CALE D'EPAISSEUR, M80 x 70 x .076
20		9968344		AR	CALE D'EPAISSEUR, M80 x 70 x .178
20		9968345		AR	CALE D'EPAISSEUR, M80 x 70 x .599
21		9968285		1	PIGNON, 24T
22		9968305		1	POUSSOIR A GALET
23		9968347		1	ARBRE
24		9968268		2	POUSSOIR A GALET
25		9968281		1	PIGNON, 24T-25T
26		9968262		AR	CALE D'EPAISSEUR, 0.002mm Thk
26		9968263		AR	CALE D'EPAISSEUR, 0.003mm Thk
26		9968264		AR	CALE D'EPAISSEUR, 0.003mm Thk
26		9968265		AR	CALE D'EPAISSEUR, 0.007mm Thk
26		9968266		AR	CALE D'EPAISSEUR, 0.015mm Thk
26		9968267		AR	CALE D'EPAISSEUR, 0.020mm Thk
27		9968261		1	ENTRETOISE

1.28.0/ A	05	p2	04/08

ROUAGES CHANGEMENT DE VITESSE (2WD POWER-SHUTTLE)

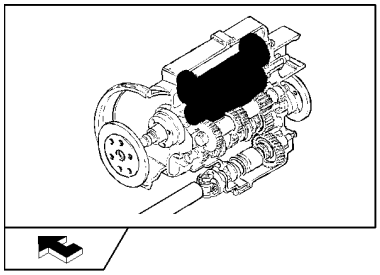

ROUAGES CHANGEMENT DE VITESSE (2WD POWER-SHUTTLE)

REF	FN	PART NUMBER	YR/SN	QTY	DESCRIPTION
28		9968282		1	ARBRE, Assy
29		9968314		1	JOINT ANNULAIRE, 40 mm
30		9968230		1	RONDELLE, M40 x 70 x 4

ARBRE DE TRANSMISSION AVANT (2WD POWER-SHUTTLE)

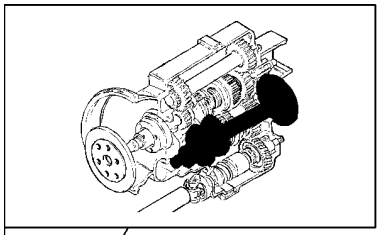

ARBRE DE TRANSMISSION AVANT (2WD POWER-SHUTTLE)

REF	FN	PART NUMBER	YR/SN	QTY	DESCRIPTION
1		9968308		1	VIS
2		9968306		1	RONDELLE
3		9968309		1	JOINT THORIQUE, 1.29" IDx.139" Thk
4		85820909		1	FLASQUE
5		85825506		1	JOINT, M48x62x8
6		9968271		1	ENTRETOISE
7		9968272		AR	CALE D'EPAISSEUR, 0.051mm Thk
7		9968273		AR	CALE D'EPAISSEUR, 0.076mm Thk
7		9968274		AR	CALE D'EPAISSEUR, 0.178mm Thk
7		9968275		AR	CALE D'EPAISSEUR, 0.559mm Thk
8		9968270		1	ROULEMENT A BILLES
9		85827803		1	PIGNON, 4th Output Shaft 19T
10		9968252		1	ENTRETOISE
11		9968250		2	ROULEMENT A AIGUILLES
12		9968251		1	ENTRETOISE
13		9968248		1	PIGNON, 43T, 1ST
14		9968307		2	SYNCHRONISEUR
15		9968223		2	MANCHON
16		9968247		1	PIGNON, 37T, 2ND
17		9968269		1	ARBRE
18		9968246		1	PIGNON, 28T, 3RD
19		9968396		1	ENTRETOISE
20		9968358		1	CHAPEAU, Sealing Cap, 2.25"
21		9968253		1	ANNEAU D'ARRÊT
22		9968278		1	POUSSOIR A GALET
23		9968260		1	RONDELLE, 55x4

ENGRENAGES DE COMMANDE DE LA TRANSMISSION (2WD POWER-SHUTTLE)

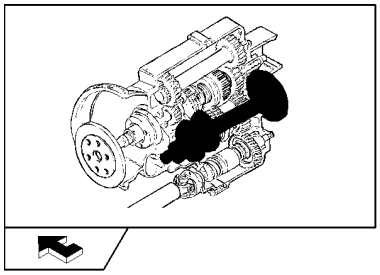

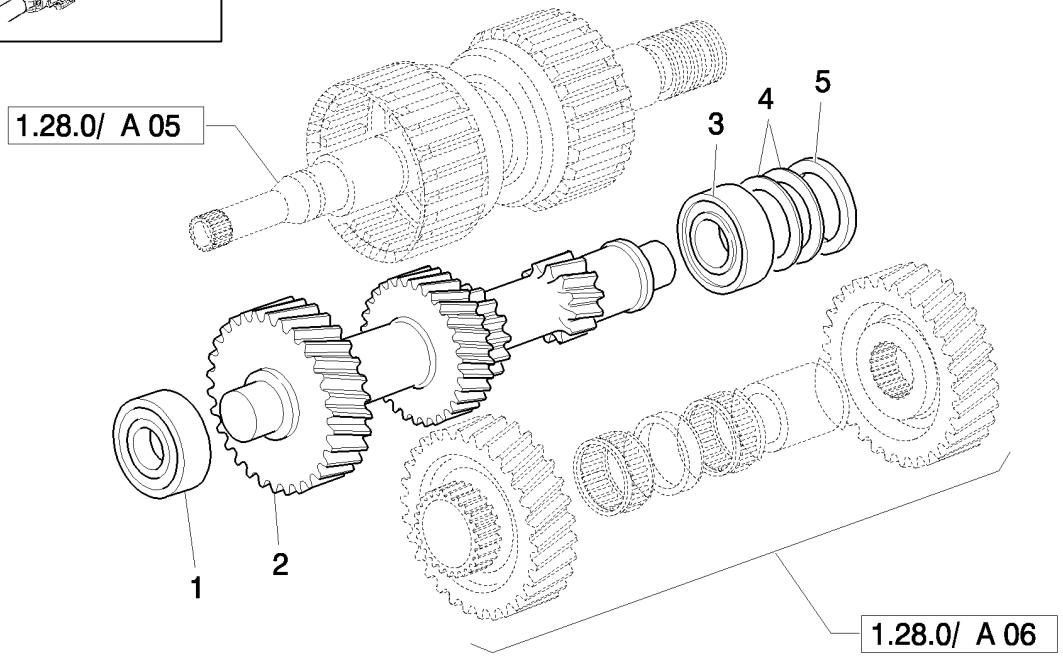

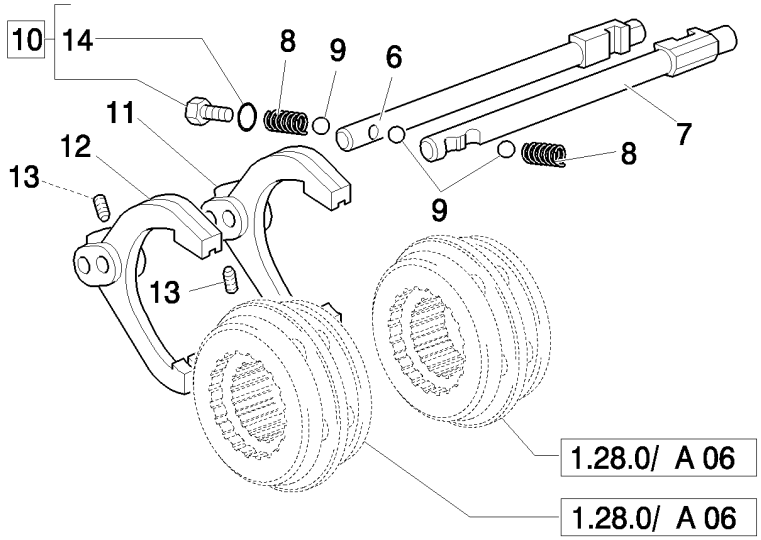

ENGRENAGES DE COMMANDE DE LA TRANSMISSION (2WD POWER-SHUTTLE)

REF	FN	PART NUMBER	YR/SN	QTY	DESCRIPTION
1		9968277		1	POUSSOIR A GALET
2		9968280		1	ARBRE, 35T-29T-20T-13T
3		9968270		1	ROULEMENT A BILLES
4		9968272		AR	CALE D'EPAISSEUR, 0.051mm Thk
4		9968273		AR	CALE D'EPAISSEUR, 0.076mm Thk
4		9968274		AR	CALE D'EPAISSEUR, 0.178mm Thk
4		9968275		AR	CALE D'EPAISSEUR, 0.559mm Thk
5		9968271		1	ENTRETOISE
6		9968319		1	AXE DE BALADEUR, 1st-2nd
7		9968322		1	AXE DE BALADEUR, 3rd-4th
8		9968316		2	RESSORT
9		9968315		3	BILLE
10		9968219		1	BOUCHON, Assy, 9/16" UNF
11		9968317		1	FOURCHETTE, 1st-2nd
12		9968318		1	FOURCHETTE, 3rd-4th
13		9968323		2	VIS
14		9968218		AR	JOINT THORIQUE, 9/16"

COMPIÈCES DU CONVERTISSEUR COUPLE ET ENGRENAGES DE COMMANDE DE LA TRANSMISSION (4WD POWER-SHUTTLE)

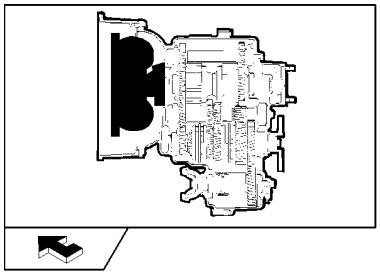

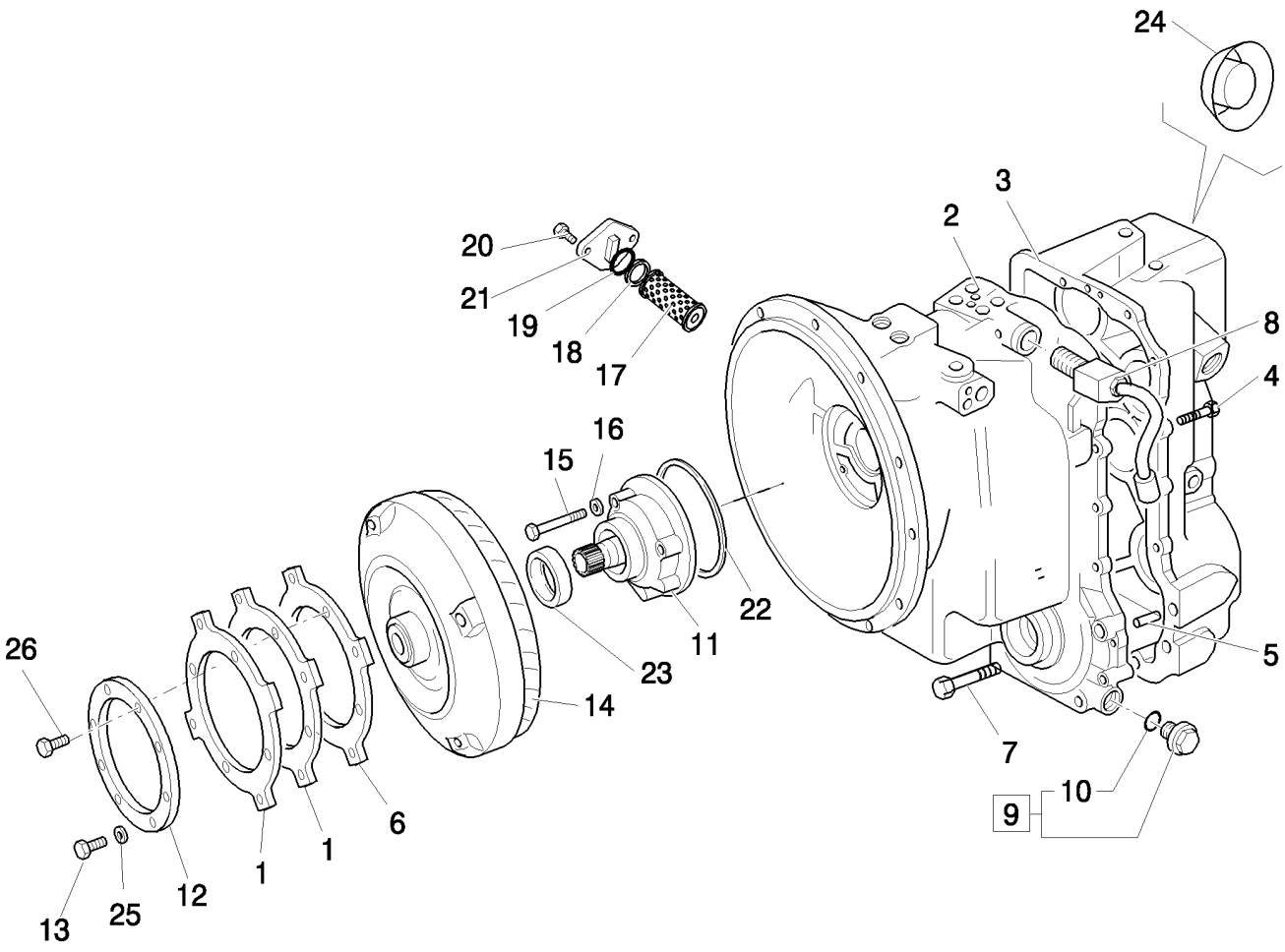

COMPIÈCES DU CONVERTISSEUR COUPLE ET ENGRENAGES DE COMMANDE DE LA TRANSMISSION (4WD POWER-SHUTTLE)

REF	FN	PART NUMBER	YR/SN	QTY	DESCRIPTION
1		86993546		2	PLAQUE
2		85827783		1	CARTER, ENGRANGE
3		85827784		1	CARTER, ENGRANGE
4		85817164		14	VIS
5		9968356		2	PION
6		87406934		1	PLAQUE
7		85817190		4	VIS
8		9968351		1	ELECTRO-VALVE, 4WD Solenoid
9		9968339		1	BOUCHON, Assy
10		9968365		1	JOINT THORIQUE
11		9968311		1	POMPE
12		87409201		1	Plaque D"Appui
13		11106021		4	BOULON, Hex, M10 x 20, 8.8, Full Thd
14		87400114		1	CONVERTISSEUR DE COUPLE
15		85817163		7	VIS
16		85817001		4	RONDELLE
17		9968359		1	FILTRE
18		9968361		1	RONDELLE
19		9968360		1	JOINT THORIQUE
20		85817169		2	VIS
21		9968362		1	CLOCHE
22		9968313		1	JOINT ANNULAIRE
23		85825506		1	JOINT
24		85812096		1	BOUCHON
25		47049372		4	RONDELLE
26		87019767		4	VIS, 12 Pt Hd, M10 x 1.25 x 30, 12.9, M10x1.25x90

COMPOSANTS EXTERNES DE LA TRANSMISSION (4WD POWER-SHUTTLE)

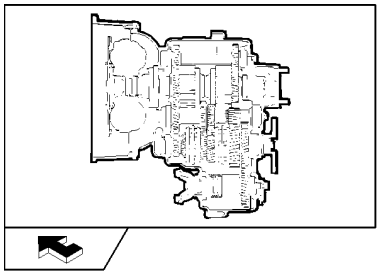

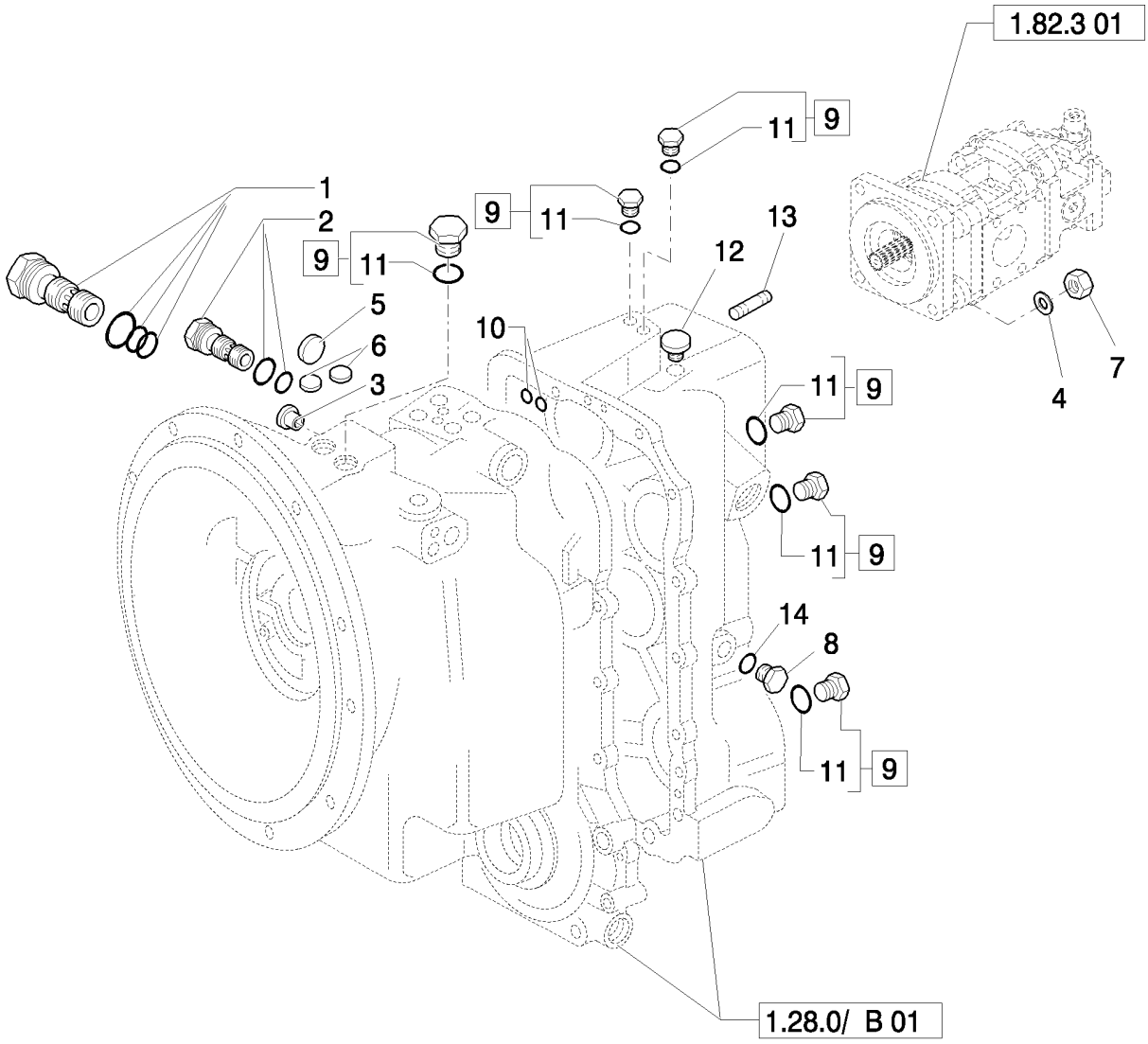

COMPOSANTS EXTERNES DE LA TRANSMISSION (4WD POWER-SHUTTLE)

REF	FN	PART NUMBER	YR/SN	QTY	DESCRIPTION
1		9968350		1	DISTRIBUTEUR, Hydraulic Pressure Regulator
2		9968334		1	SOUPAPE, DÉCHARGE, Hydraulic Converter Relief
3		85812094		2	BOUCHON
4		11190779		4	RONDELLE BELLEVILLE, Belleville, M13
5		9968371		1	BOUCHON, Expansion, 1"
6		9968333		2	BOUCHON, Tyers, .5"
7		85802684		4	ECROU
8		9968382		1	BOUCHON
9		9968219		AR	BOUCHON, Assy, 9/16" UNF
10		9968368		4	JOINT THORIQUE, .512" IDx.094"Thk
11		9968218		AR	JOINT THORIQUE, 9/16"
12		9968364		1	RENIFLARD
13		85802683		4	GOUJON, 1/2"
14		9968383		1	RONDELLE

COMPOSANTS HYDRAULIQUES DE LA TRANSMISSION (4WD POWER-SHUTTLE)

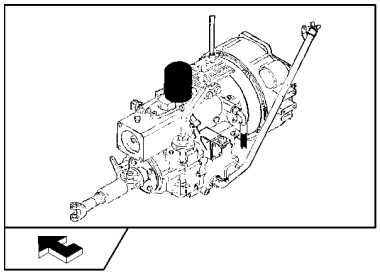

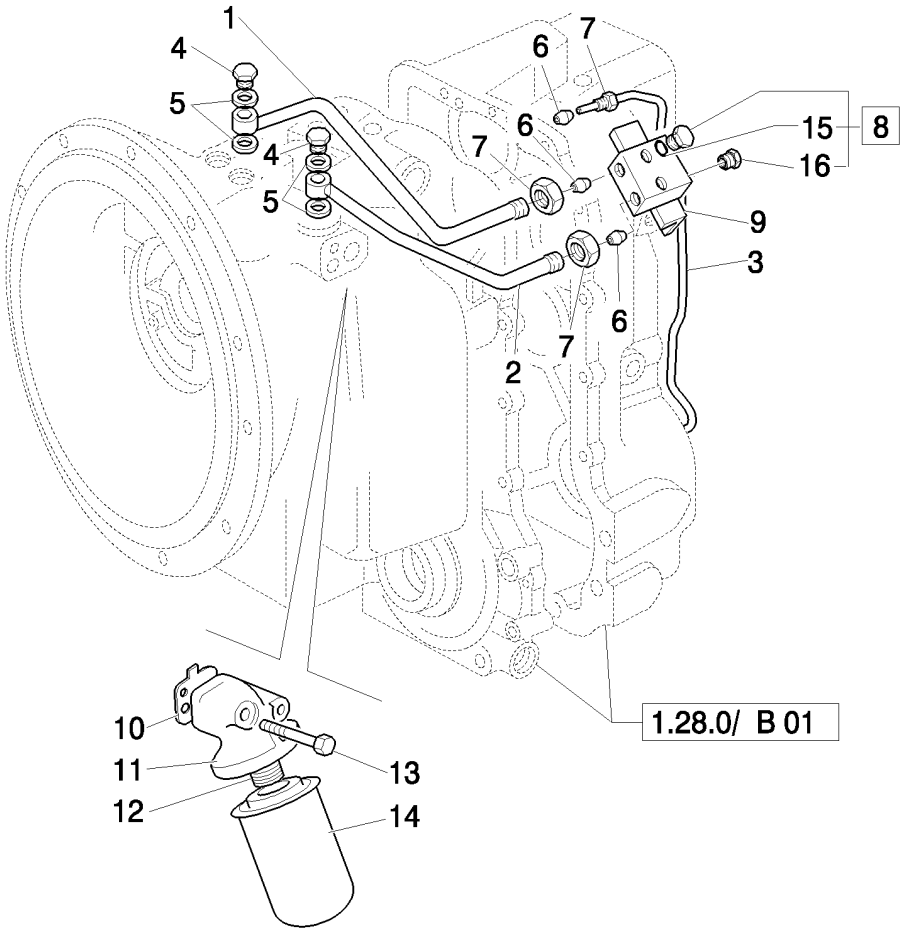

COMPOSANTS HYDRAULIQUES DE LA TRANSMISSION (4WD POWER-SHUTTLE)

REF	FN	PART NUMBER	YR/SN	QTY	DESCRIPTION
1		85812086		1	TUBE
2		85812087		1	TUBE
3		9968337		1	TUBE, 4WD
4		9968676		2	VIS-RACCORD
5		85817002		4	RONDELLE
6		9968340		AR	RACCORD
7		9968336		AR	ECROU
8		9968219		2	BOUCHON, Assy, 9/16" UNF
9		85812085		1	BLOC DE JONCTION
10		9968375		1	JOINT
11		9968374		1	Tête De Filtre
12		9968354		1	ADAPTEUR
13		85817165		2	VIS
14		85817004		1	FILTRE
15		9968218		AR	JOINT THORIQUE, 9/16"
16		85812091		1	BOUCHON

1.28.0/ B	04	p1	04/08

FREIN DE PARCAGE (4WD POWER-SHUTTLE)

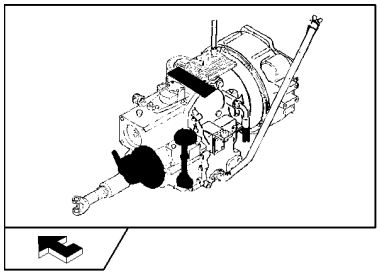

FREIN DE PARCAGE (4WD POWER-SHUTTLE)

REF	FN	PART NUMBER	YR/SN	QTY	DESCRIPTION
1		85827764		1	SOUPAPE HYDRAULIQUE, Assy
2		85827798		2	BOBINE
3		85812092		3	RONDELLE
4		9969445		4	VIS
5		85817163		3	VIS
6		85827797		1	COLIS DE RÉPARATION
7		85813300		1	FREIN DE PARCAGE, Assy
8		85827779		4	BOUCHON, 2WD
9		9968324		1	LEVIER
10		9968327		1	AXE
11		9968326		1	SUPPORT
12		9968328		1	COIFFE
13		9969281		2	ECROU
14		9968299		2	BOULON
15		85813318		1	COLIS DE RÉPARATION
16		85806019		1	POCHETTE DE JOINT THORIQUE
17		9968926		1	KIT
18		9968927		1	KIT
19		9968370		2	BOUCHON, Plastic, .25"
20		85827777		1	SERRE-CABLE
21		85817006		1	JOINT THORIQUE
22		85817007		1	JOINT
23		85827776		1	SERRE-CABLE
24		85827799		1	KIT

1.28.0/ B	05	p1	04/08

ROUAGES CHANGEMENT DE VITESSE (4WD POWER-SHUTTLE)

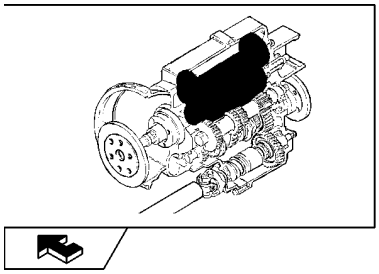

ROUAGES CHANGEMENT DE VITESSE (4WD POWER-SHUTTLE)

REF	FN	PART NUMBER	YR/SN	QTY	DESCRIPTION
1		9968279		3	RONDELLE, 50x70x4
2		9968228		2	BUTÉE A BILLES
3		9968304		4	ROULEMENT A AIGUILLES, 50x5x17
4		9968302		2	ENTRETOISE
5		9968286		1	PIGNON, 30T
6		9968291		3	ANNEAU D'ARRÊT
7		85827771		2	RESSORT DE MAINTIEN
8		85827772		2	RESSORT
9		9968287		2	CIRCLIP
10		9968288		2	PLAQUE DORSALE
11		9968290		12	FRICTION EMBRAYAGE
12		9968289		12	DISQUE EMBRAYAGE
13		85827773		2	PISTON
14		85827774		2	RESSORT
15		85821452		1	ARBRE
16		85821454		1	DOUILLE
17		9968276		1	POUSSOIR A GALET
18		9968226		4	JOINT
19		9968341		1	JOINT THORIQUE, M80 x 70 x 2
20		9968342		AR	CALE D'EPAISSEUR, 24T-25T
20		9968343		AR	CALE D'EPAISSEUR, M80 x 70 x .076
20		9968344		AR	CALE D'EPAISSEUR, M80 x 70 x .178
20		9968345		AR	CALE D'EPAISSEUR, M80 x 70 x .599
21		9968285		1	PIGNON, 24T
22		9968305		1	POUSSOIR A GALET
23		9968347		1	ARBRE
24		9968268		2	POUSSOIR A GALET
25		9968281		1	PIGNON, 24T-25T
26		9968262		AR	CALE D'EPAISSEUR, 0.002mm Thk
26		9968263		AR	CALE D'EPAISSEUR, 0.003mm Thk
26		9968264		AR	CALE D'EPAISSEUR, 0.003mm Thk
26		9968265		AR	CALE D'EPAISSEUR, 0.007mm Thk
26		9968266		AR	CALE D'EPAISSEUR, 0.015mm Thk
26		9968267		AR	CALE D'EPAISSEUR, 0.020mm Thk
27		9968261		1	ENTRETOISE

1.28.0/ B	05	p2	04/08

ROUAGES CHANGEMENT DE VITESSE (4WD POWER-SHUTTLE)

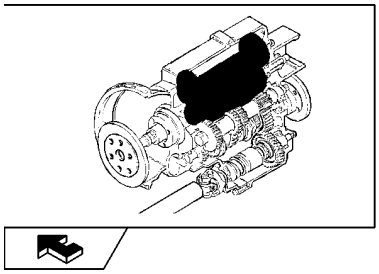

ROUAGES CHANGEMENT DE VITESSE (4WD POWER-SHUTTLE)

REF	FN	PART NUMBER	YR/SN	QTY	DESCRIPTION
28		9968282		1	ARBRE, Assy
29		9968314		1	JOINT ANNULAIRE, 40 mm
30		9968230		1	RONDELLE, M40 x 70 x 4

ARBRE DE TRANSMISSION AVANT (4WD POWER-SHUTTLE)

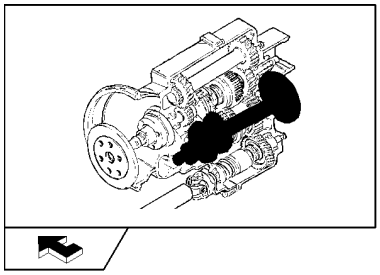

ARBRE DE TRANSMISSION AVANT (4WD POWER-SHUTTLE)

REF	FN	PART NUMBER	YR/SN	QTY	DESCRIPTION
1		9968308		1	VIS
2		9968306		1	RONDELLE
3		9968309		1	JOINT THORIQUE, 1.29"IDx.139"Thk
4		85820909		1	FLASQUE
5		85825506		1	JOINT, M48x62x8
6		9968271		1	ENTRETOISE
7		9968272		AR	CALE D'EPAISSEUR, 0.051mm Thk
7		9968273		AR	CALE D'EPAISSEUR, 0.076mm Thk
7		9968274		AR	CALE D'EPAISSEUR, 0.178mm Thk
7		9968275		AR	CALE D'EPAISSEUR, 0.559mm Thk
8		9968270		1	ROULEMENT A BILLES
9		9968249		1	PIGNON, 4WD
10		9968252		1	ENTRETOISE
11		9968250		2	ROULEMENT A AIGUILLES
12		9968251		1	ENTRETOISE
13		9968248		1	PIGNON, 43T, 1ST
14		9968307		2	SYNCHRONISEUR
15		9968223		2	MANCHON
16		9968247		1	PIGNON, 37T, 2ND
17		9968269		1	ARBRE
18		9968246		1	PIGNON, 28T 3RD
19		9968278		1	POUSSOIR A GALET
20		9968358		1	CHAPEAU, Sealing Cap, 2.25"
21		9968253		1	ANNEAU D'ARRÊT
22		85827803		1	PIGNON, 4th Output Shaft 19T
23		9968260		1	RONDELLE, 55x35x4

ENGRENAGES DE COMMANDE DE LA TRANSMISSION (4WD POWER-SHUTTLE)

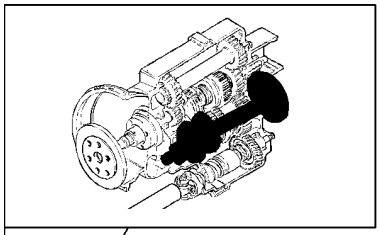

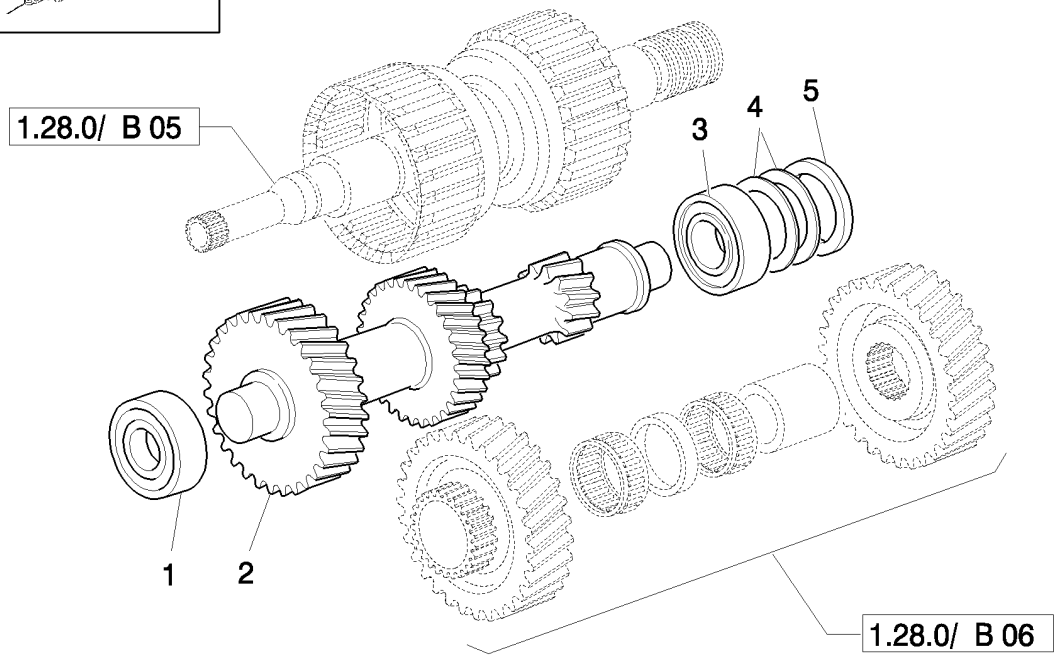

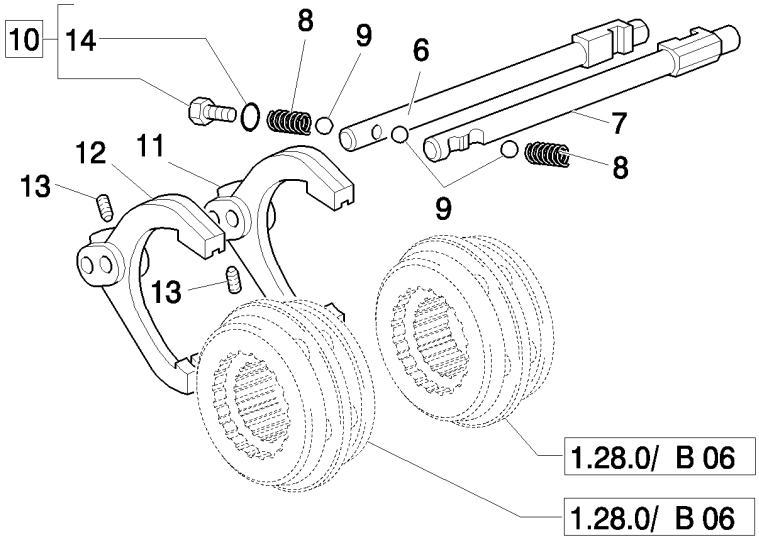

ENGRENAGES DE COMMANDE DE LA TRANSMISSION (4WD POWER-SHUTTLE)

REF	FN	PART NUMBER	YR/SN	QTY	DESCRIPTION
1		9968277		1	POUSSOIR A GALET
2		9968280		1	ARBRE, 35T-29T-20T-13T
3		9968270		1	ROULEMENT A BILLES
4		9968272		AR	CALE D'EPAISSEUR, 0.051mm Thk
4		9968273		AR	CALE D'EPAISSEUR, 0.076mm Thk
4		9968274		AR	CALE D'EPAISSEUR, 0.178mm Thk
4		9968275		AR	CALE D'EPAISSEUR, 0.559mm Thk
5		9968271		1	ENTRETOISE
6		9968319		1	AXE DE BALADEUR, 1st-2nd
7		9968322		1	AXE DE BALADEUR, 3rd-4th
8		9968316		2	RESSORT
9		9968315		3	BILLE
10		9968219		AR	BOUCHON, Assy, 9/16" UNF
11		9968317		1	FOURCHETTE, 1st-2nd
12		9968318		1	FOURCHETTE, 3rd-4th
13		9968323		2	VIS
14		9968218		AR	JOINT THORIQUE, 9/16"

ENGRENAGES ARBRE D'ENTRAÎNEMENT ARRIÈRE (4WD POWER-SHUTTLE)

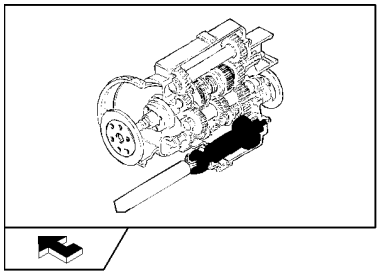

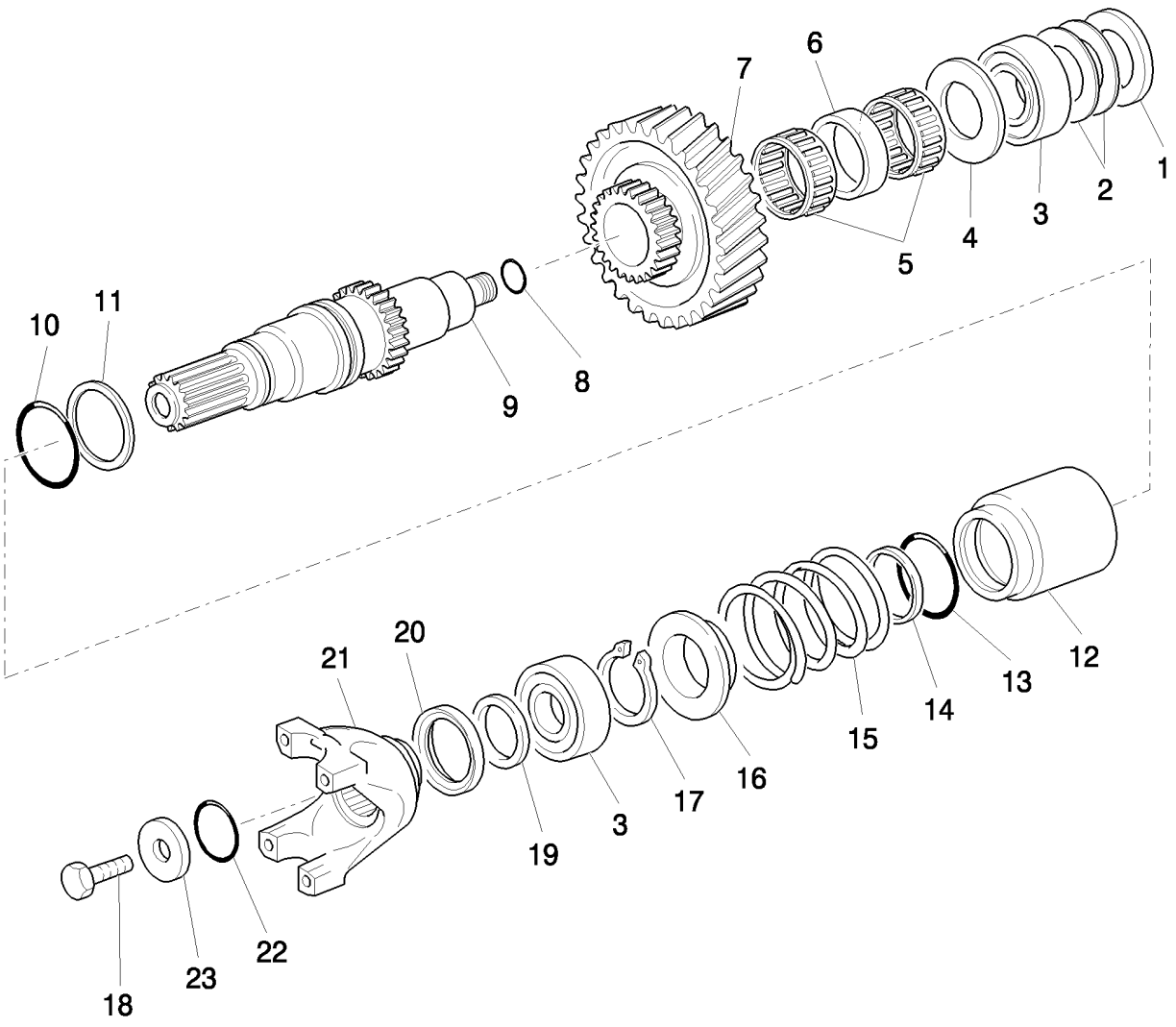

ENGRENAGES ARBRE D'ENTRAÎNEMENT ARRIÈRE (4WD POWER-SHUTTLE)

REF	FN	PART NUMBER	YR/SN	QTY	DESCRIPTION
1		9968255		1	ENTRETOISE
2		9968256		AR	CALE D'EPAISSEUR, 67.5 x 58 x 0.051 mm
2		9968257		AR	CALE D'EPAISSEUR, 67.5 x 58 x 0.076 mm
2		9968258		AR	CALE D'EPAISSEUR, 67.5x58x0.178
2		9968259		AR	CALE D'EPAISSEUR, 67.5 x 58 x 0.599 mm
3		9968276		2	POUSSOIR A GALET
4		9968244		1	RONDELLE DE BUTÉE, 65 x 40.5 x 4
5		85827782		2	ROULEMENT A AIGUILLES
6		9968393		1	ENTRETOISE
7		9968240		1	PIGNON, 35T
8		9968254		1	JOINT THORIQUE
9		9968239		1	ARBRE
10		9968232		1	JOINT THORIQUE, 1.859"IDx.139"Thk
11		9968229		1	JOINT
12		9968234		1	EMBRAYAGE
13		9968298		1	JOINT THORIQUE, 2.234"IDx.139"Thk
14		9968297		1	JOINT THORIQUE
15		9968235		1	RESSORT
16		9968236		1	SUPPORT
17		9968233		1	ANNEAU D'ARRÊT
18		9968308		1	VIS
19		9968301		1	ENTRETOISE
20		85825506		1	JOINT, M48x62x8
21		9968300		1	MACHOIRE, Mudfinger Dust Cap Not Serviced Separately, Order 9968300 Yoke
22		9968309		1	JOINT THORIQUE, 1.29"IDx.139"Thk
23		9968306		1	RONDELLE

JAUGE DE NIVEAU / FAIRE L'APPOINT (POWER-SHUTTLE)

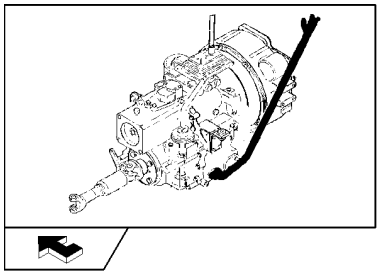

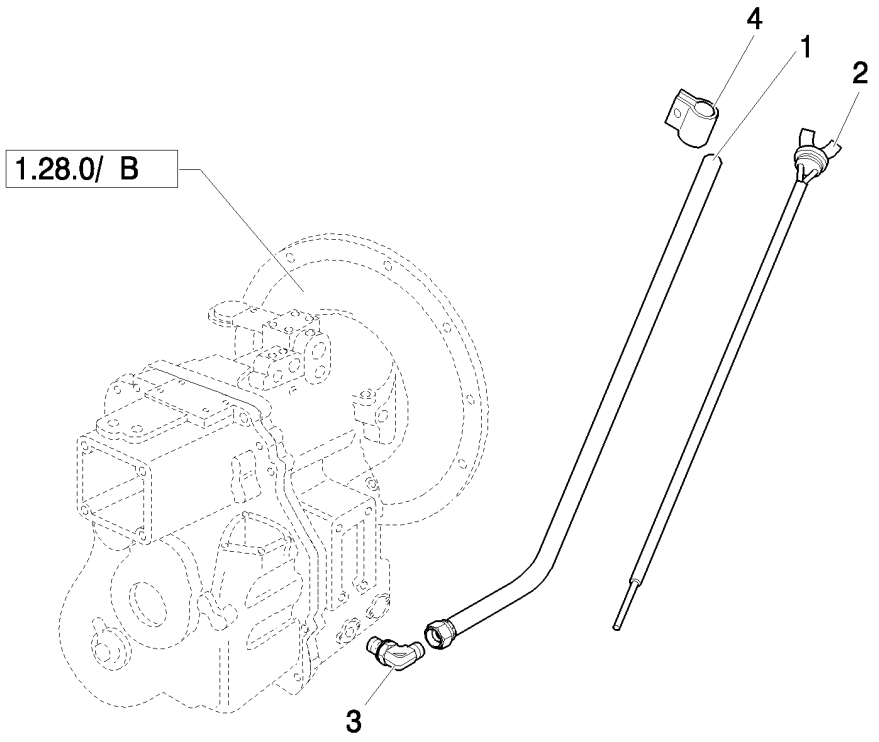

JAUGE DE NIVEAU / FAIRE L'APPOINT (POWER-SHUTTLE)

REF	FN	PART NUMBER	YR/SN	QTY	DESCRIPTION
1		87408479		1	TUBE
2		87408557		1	JAUGE DE NIVEAU
3		47050658		1	COUDE
4		47049176		1	BRIDE

COMMANDES EXTERIEURES (POWER-SHUTTLE)

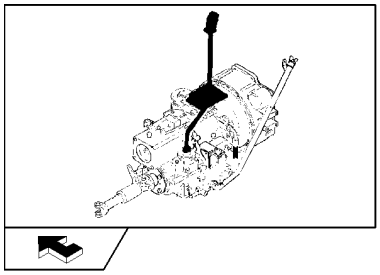

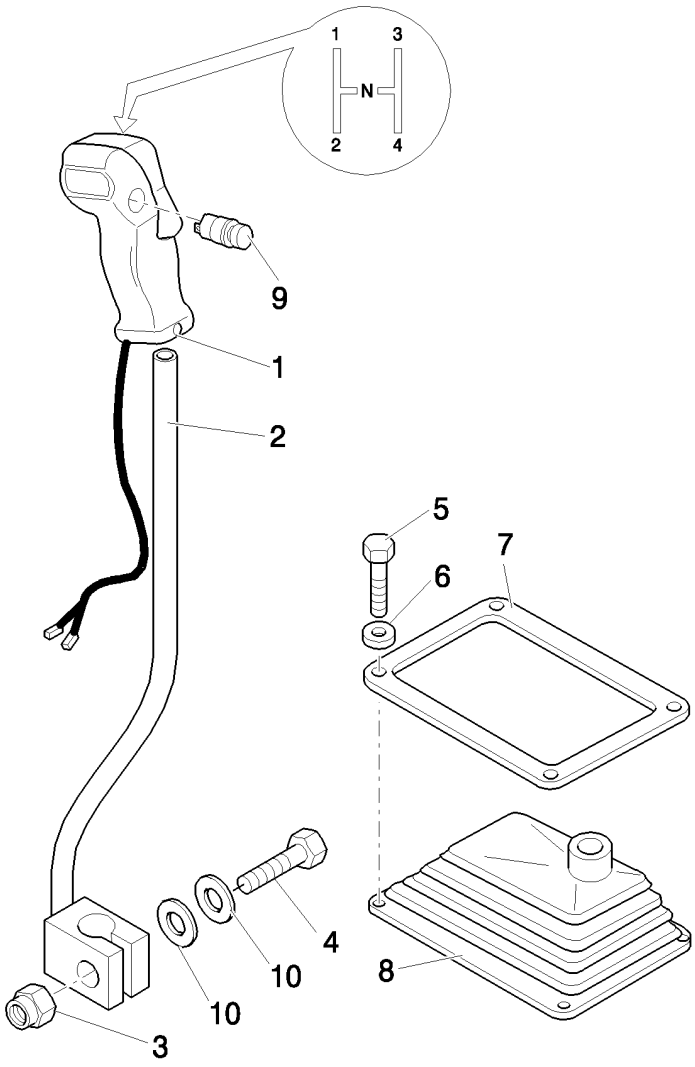

COMMANDES EXTERIEURES (POWER-SHUTTLE)

REF	FN	PART NUMBER	YR/SN	QTY	DESCRIPTION
1		85802947		1	POMMEAU, Assy
2		85826943		1	LEVIER
3		16105011		1	CONTRE-ECROU, M12x1.25
4		15540821		1	BOULON, Hex, M12 x 1.25 x 50, 8.8
5		10903021		4	BOULON, Hex, M6 x 35, 8.8
6		11197779		4	RONDELLE BELLEVILLE, Belleville, M6.4
7		85824187		1	RETENEUR
8		85802847		1	COIFFE
9		87447132		1	COMMUTATEUR COMPLET
10		14496721		2	RONDELLE, M12 x 24 x 2.5

ARBRE DE TRANSMISSION AVANT ET ARRIÈRE (POWER-SHUTTLE)

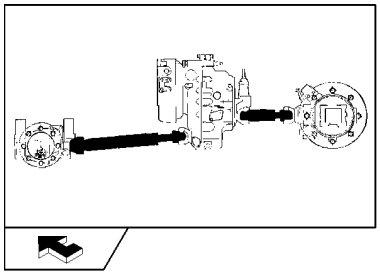

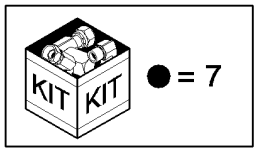

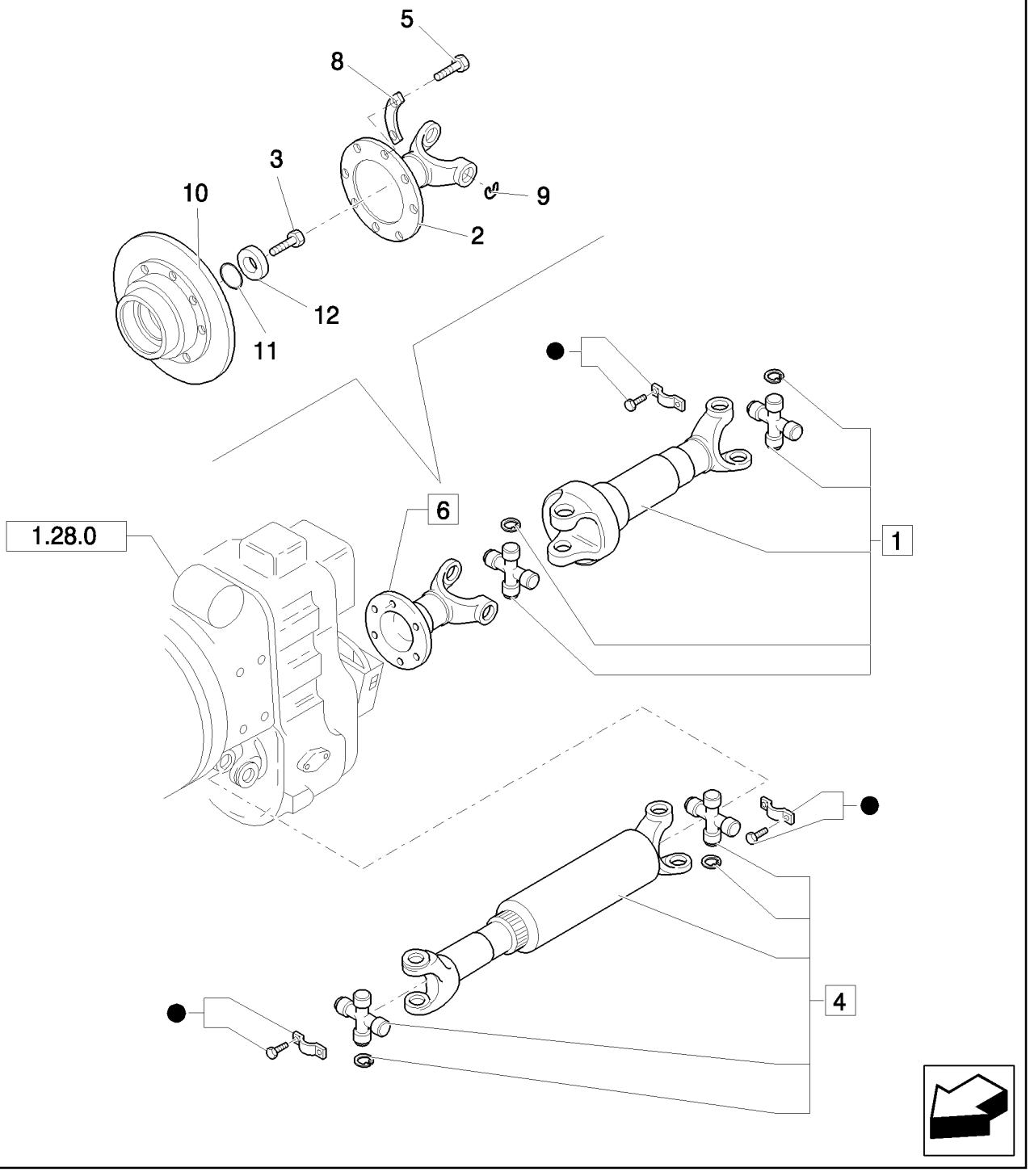

ARBRE DE TRANSMISSION AVANT ET ARRIÈRE (POWER-SHUTTLE)

REF	FN	PART NUMBER	YR/SN	QTY	DESCRIPTION
1		87552418		1	TRANS-CARDAN, Assy
2		85820157		1	FLASQUE
3		9968308		1	VIS
4		87552416		1	TRANS-CARDAN, Assy
5		85820154		8	VIS, M10 x 1.5
6	1	85820908		1	KIT ASSISTANCE
7		87311154		4	PATTE FIXATION, Front
8		85819186		4	COUVERCLE
9		85820914		2	CIRCLIP
10		85820909		1	FLASQUE
11		9968309		1	JOINT THORIQUE, 1.29"IDx.139"Thk
12		9968306		1	RONDELLE

(1) Trasformation Kit from DIN100 to DIN120

TUBULURES DE REFROIDISSEMENT HUILE TRANSMISSION (POWER-SHUTTLE)

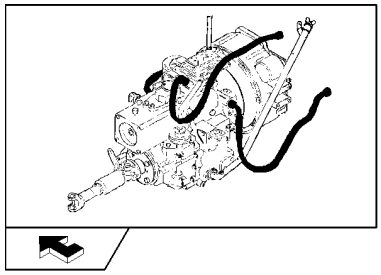

TUBULURES DE REFROIDISSEMENT HUILE TRANSMISSION (POWER-SHUTTLE)

REF	FN	PART NUMBER	YR/SN	QTY	DESCRIPTION
1		87590894		1	TUYAU
2		87591241		1	TUYAU
3		87314076		4	COLLIER
4		47048664		1	BRIDE
5		47048964		1	RONDELLE
6		87345955		2	PROTECTION
7		87017744		1	RACCORD, 90º, 5/8" Hose x 1 5/16"-12 ORB Beaded
8		87017743		1	RACCORD, 45º, 5/8" Hose x 1 5/16"-12 ORB Beaded
9		47042364		1	BOULON
10		87592724		1	TUYAU
11		87592822		1	TUYAU
12		87612722		2	PATTE FIXATION
13		87589951		2	BRIDE
14		14305321		2	VIS, Hex Soc Hd, M6 x 20, 8.8

NOTES

SECTION INDEX
Essieu Avant

1.40.0	01	ESSIEU AV (2WD)
1.40.0	02	ENSEMBLE DIRECTION ET MOYEUX AVANT (2WD)

ESSIEU AV (2WD)

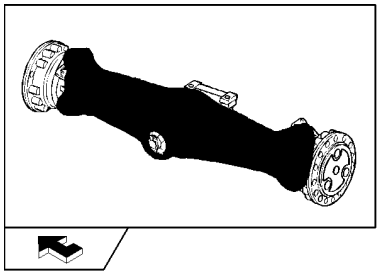

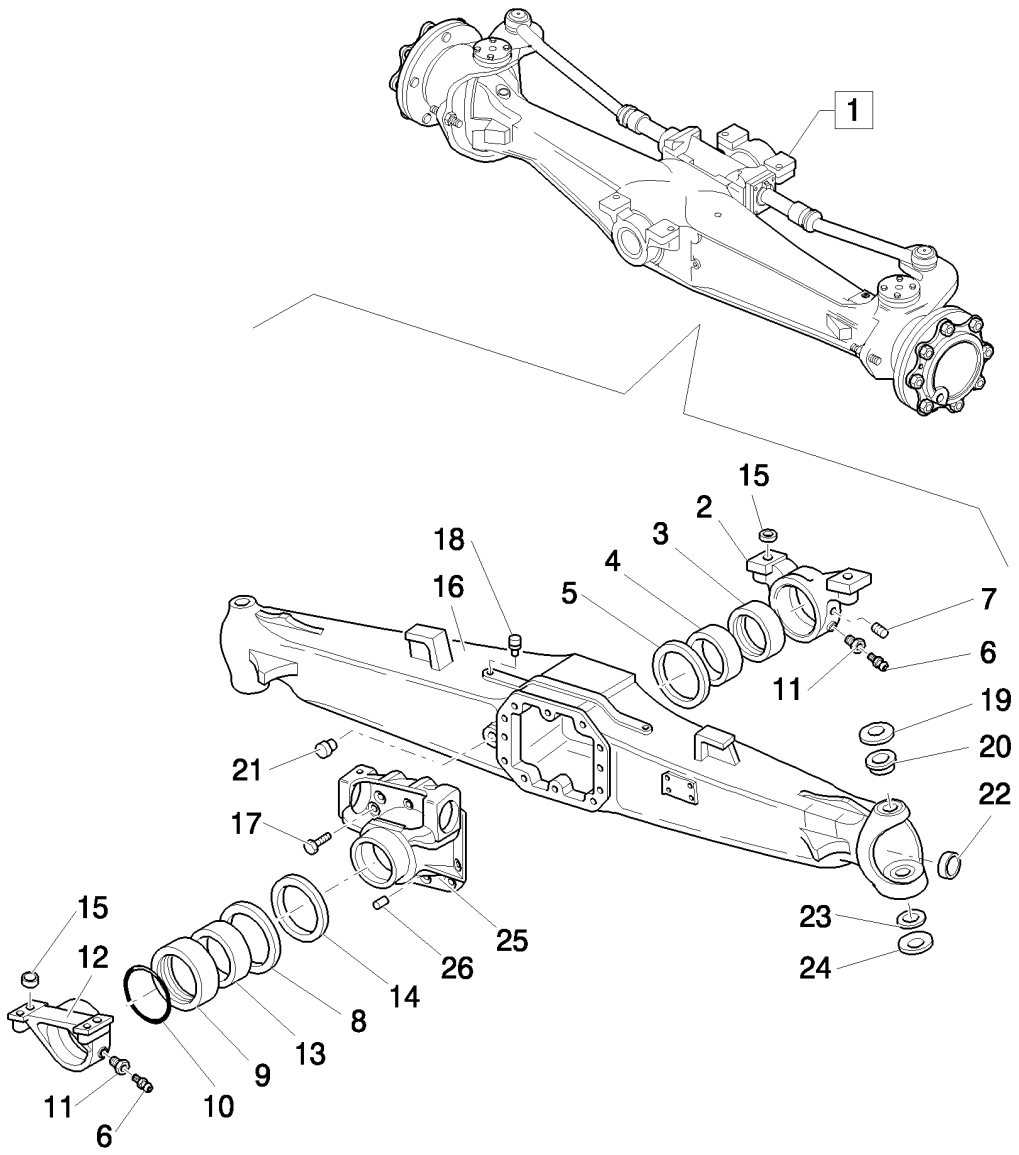

ESSIEU AV (2WD)

REF	FN	PART NUMBER	YR/SN	QTY	DESCRIPTION
1		85824339		1	PONT AVANT, Assy
2		9967991		1	SUPPORT
3		9967992		1	BAGUE, 125x115x5
4		9967993		1	BAGUE, 115x105x44
5		9967994		1	RONDELLE DE BUTÉE
6		9967996		2	GRAISSEUR
7		85805973		1	VIS, M8x1
8		9968006		1	RONDELLE DE BUTÉE
9		9968007		1	ANNEAU, 135x125x5
10		9968008		1	JOINT THORIQUE
11		9967995		2	VIS
12		9968009		1	SUPPORT
13		9968010		1	BAGUE
14		85805706		1	BOUCHON, DIA=92x12
15		9967990		4	BAGUE, 30x21x16.5
16		85824347		1	CARTER DE PONT
17		9967769		10	VIS, M12x1.75x33
18		85805703		1	BOUCHON, M10 x 1
19		9967673		2	RONDELLE
20		85824469		2	BAGUE
21		85805707		1	BOUCHON, M22 x 1.5
22		85805704		2	BOUCHON
23		9967678		2	CHEMIN DE ROULEMENT
24		9967679		2	RONDELLE
25		85805705		1	SUPPORT
26		9967683		2	GOUPILLE ELASTIQUE, 15x35

1.40.0	02	p1	04/08

ENSEMBLE DIRECTION ET MOYEUX AVANT (2WD)

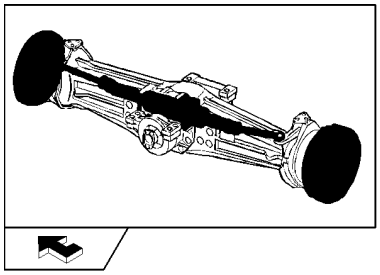

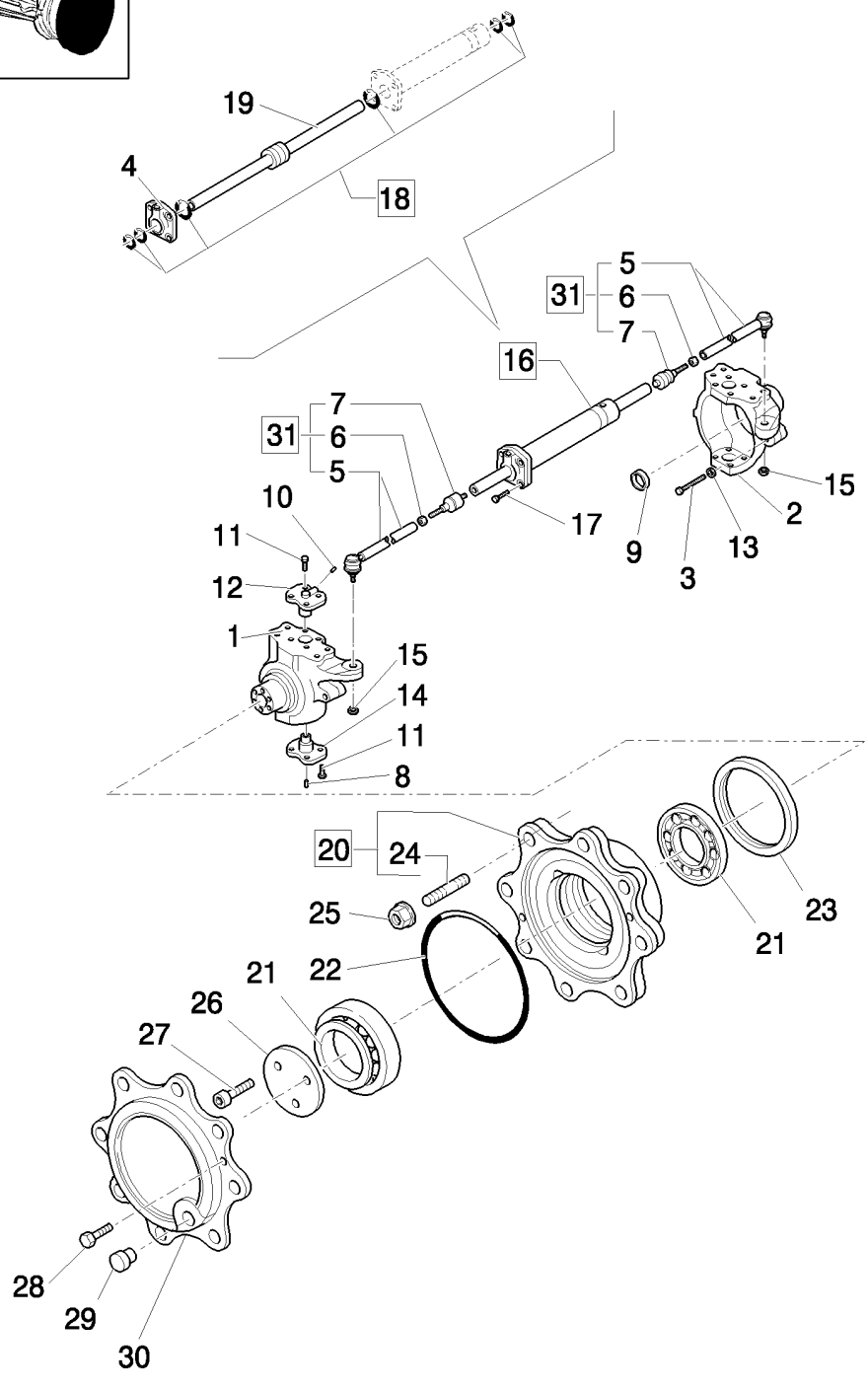

ENSEMBLE DIRECTION ET MOYEUX AVANT (2WD)

REF	FN	PART NUMBER	YR/SN	QTY	DESCRIPTION
1		87673991		1	CARTER
2		87673972		1	JOINT TOURNANT
3		85805987		2	VIS, M16x100
4		85805989		1	CULASSE
5		85805977		2	TIRANT
6		85805976		2	ECROU, M18x1.5
7		85805975		2	ROTULE
8		85805984		2	GRAISSEUR, M6x1
9		85824352		2	BOUCHON
10		9968021		2	GRAISSEUR, M6x2
11		85805979		16	VIS, M12x1.75x30
12		85805980		2	AXE
13		85805986		2	ECROU, M16
14		85805983		2	AXE
15		85805982		2	ECROU, M18x1,5
16		85805978		1	VÉRIN DE DIRECTION, Assy
17		9968028		4	VIS, M12x45
18		85805990		1	POCHETTE DE JOINTS
19		85805992		1	TRINGLE
20		85806003		2	KIT, Assy
21		9967687		4	ROULEMENT
22		85805711		2	JOINT THORIQUE
23		85827067		2	JOINT D'HUILE
24		9968070		16	GOUJON
25		9968071		16	ECROU, Wheel, M18 x 1.5
26		85813054		2	RONDELLE DE BUTÉE
27		85806010		6	VIS, M10x4.5
28		85805709		4	VIS, M8x20
29		85805707		2	BOUCHON, M22 x 1.5
30		85805710		2	COUVERCLE
31		85805974		2	TIRANT, Assy

NOTES

SECTION INDEX
Essieu Postérieur

1.42.0		INSTALLATION HYDRAULIQUE DIRECTION HYDROSTATIQUE
1.44.0/ B	01	ESSIEU ARRIERE (POWER-SHUTTLE) (CENTER PIVOT) - NA
1.44.0/ B	02	ENSEMBLE BLOCAGE DIFFÉRENTIEL ET ENGAGEMENT (POWER SHUTTLE) (CENTER PIVOT) - NA
1.44.0/ B	03	ENSEMBLE JEU ENGRENAGES CONIQUES PONT ARRIÈRE (POWER SHUTTLE) (CENTER PIVOT) - NA
1.44.1		COMMANDE DU DIFFERENTIEL (POWER-SHUTTLE)
1.44.1/01		COMMANDE DU DIFFERENTIEL (POWER-SHUTTLE) (CENTER PIVOT) - NA

INSTALLATION HYDRAULIQUE DIRECTION HYDROSTATIQUE

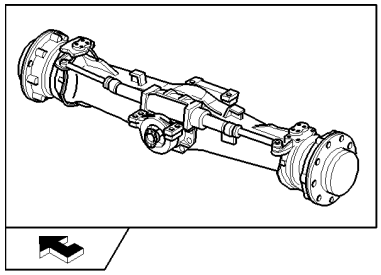

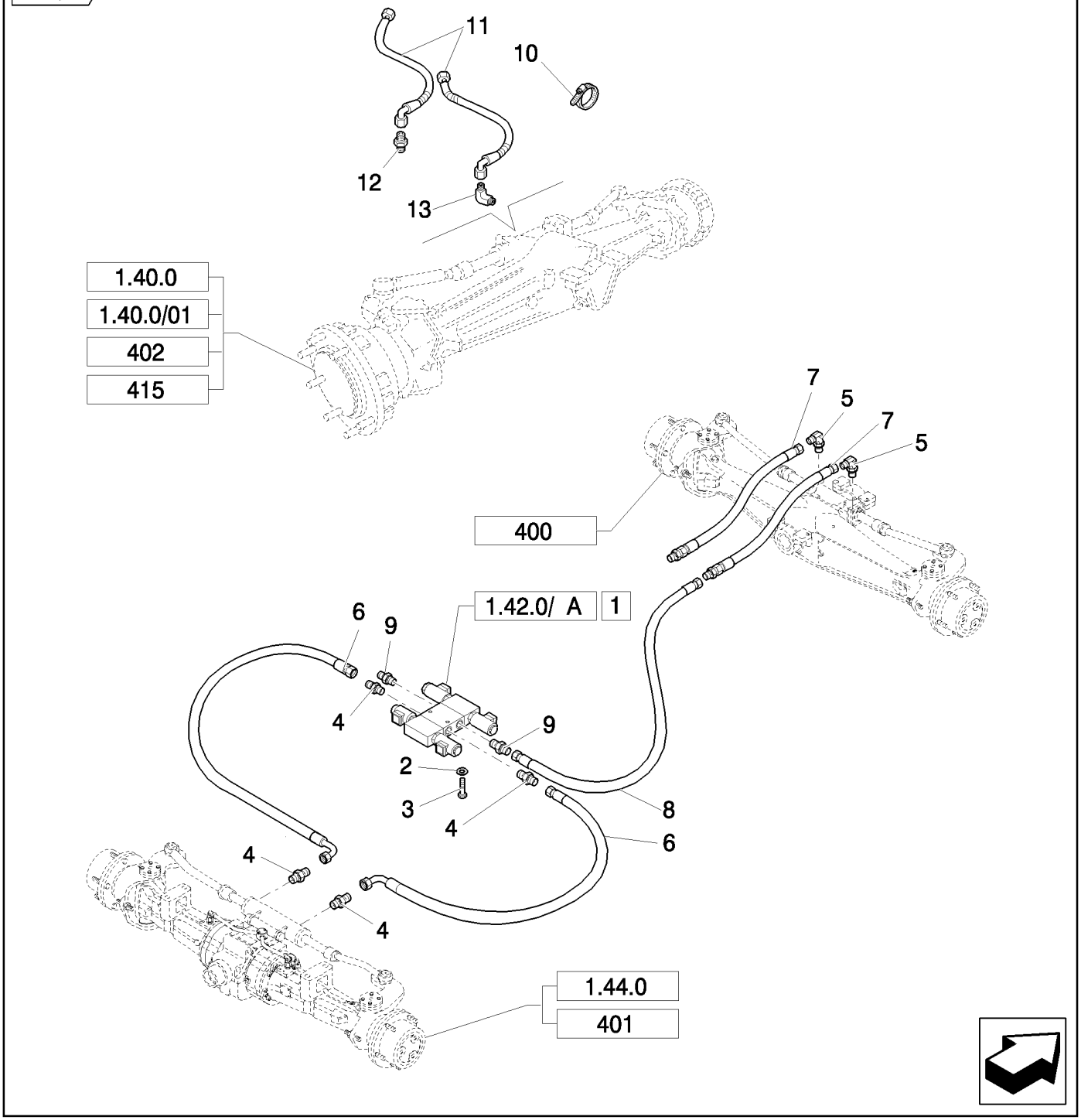

INSTALLATION HYDRAULIQUE DIRECTION HYDROSTATIQUE

REF	FN	PART NUMBER	YR/SN	QTY	DESCRIPTION
1	1	85805232		1	SOUPAPE HYDRAULIQUE, Assy
2	1	11193879		2	RONDELLE BELLEVILLE, Belleville, M8.4
3	1	16043421		2	VIS, Hex, M8 x 20, 8.8
4		83963371		4	RACCORD
5	1	85805318		2	COUDE, 90º, 9/16"-18, 37º x 9/16"-18, O-Ring
6	1	85815615		2	FLEXIBLE HYDRAULIQUE
7	1	85813377		2	TUYAU FLEXIBLE
8	1	85812202		1	FLEXIBLE HYDRAULIQUE
9	1	85815614		2	RACCORD, 11/16"-16 ORS x 9/16"-18, O-Ring
10	2	85803332		1	SERRE-CABLE, M4.8 x 180
11	2	85812212		2	FLEXIBLE HYDRAULIQUE, 1050mm lg
12	2	83985067		1	RACCORD, Includes O-Rings 9617873 & 9992298
13	2	83983763		1	RACCORD

(1) Only for B115B (EU) - B115B (NA)

(2) Only for B95B, B95BTC, B100B, B100BTC, B110B (NA) - B95B, B95BLR, B100B, B100BLR, B110B (EU)

ESSIEU ARRIERE (POWER-SHUTTLE) (CENTER PIVOT) - NA

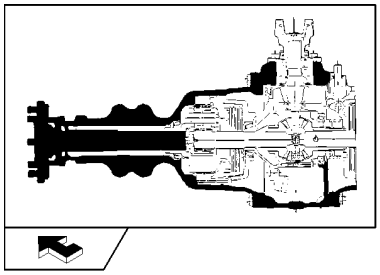

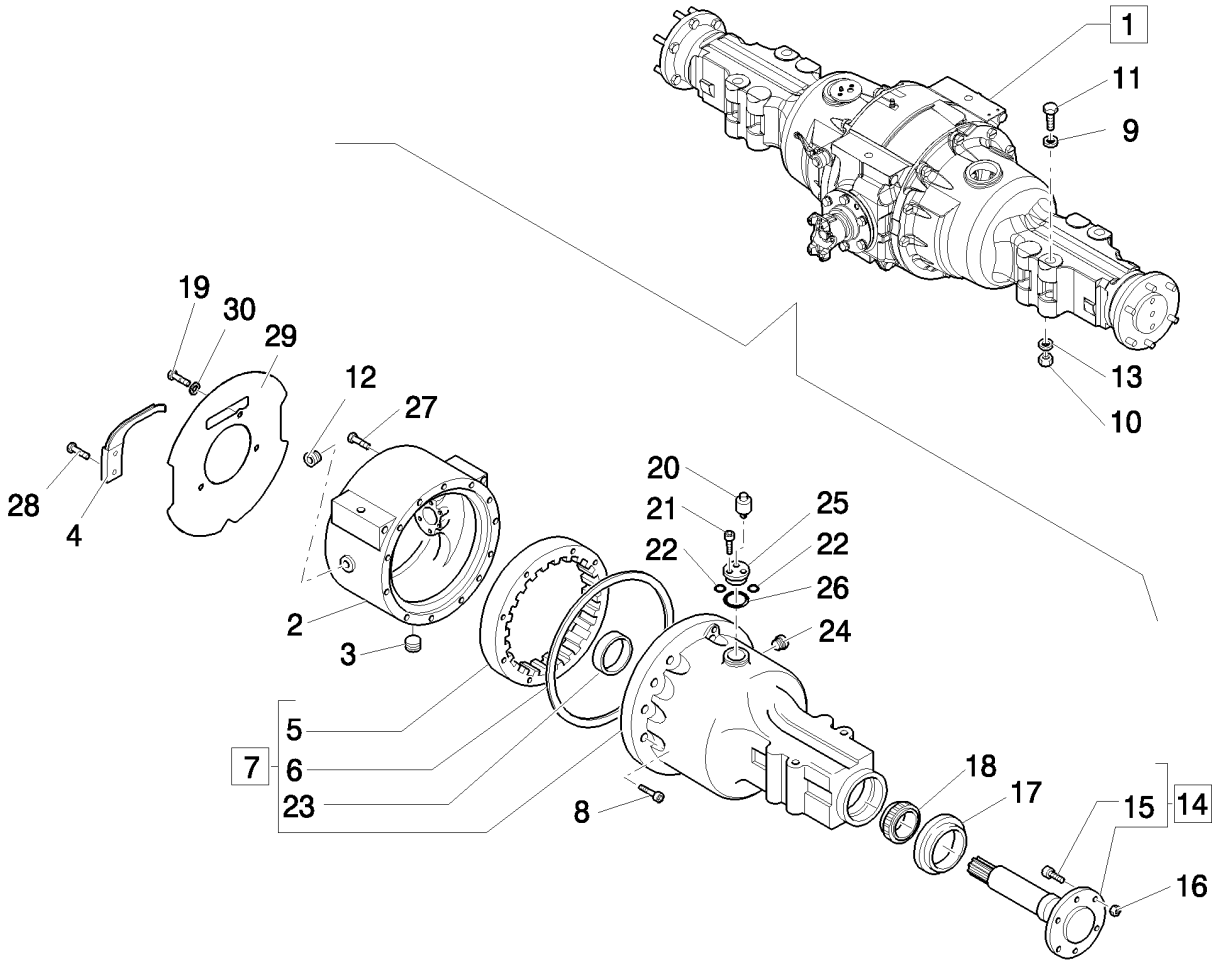

ESSIEU ARRIERE (POWER-SHUTTLE) (CENTER PIVOT) - NA

REF	FN	PART NUMBER	YR/SN	QTY	DESCRIPTION
1		87542398		1	ESSIEU, Assy, 4,62
2		83955462		1	CARTER
3		83909107		1	BOUCHON
4		87314211		4	BLOC, 9/16"-12-18 x 7.88"
5		86536749		2	PLANETAIRE
6		83417133		2	JOINT THORIQUE
7		86552793		1	CARTER DE PONT, Assy, LH
7		86552794		1	CARTER DE PONT, Assy, RH
8		86505999		25	BOULON, Hex, 5/8"-11 x 2", G5
8		81809406		1	BOULON
9		14497331		4	RONDELLE
10		12575321		4	CONTRE-ECROU, M24 x 2, Cl 10
11		15999434		4	VIS, M24 x 2 x 220
12		80263136		1	BOUCHON MAGNETIQUE
13		11200679		4	RONDELLE FREIN
14		86511646		2	ESSIEU, Assy
15		83955490		16	BOULON, 3/4"-16 x 2.32"
16		87348000		16	ECROU
17		81866390		2	JOINT A LÈVRES
18		81818397		2	CONE DE ROULEMENT
19		87313966		2	BOULON
20		81820047		2	VIS DE PURGE
21		82895716		4	VIS, 1/4-20X1,75
22		83925620		4	JOINT THORIQUE, 90 Duro, .375" ID x .103" Thk
23		82959373		2	CUVE
24		81812912		1	BOUCHON, 1/2"-11 x 1/2"
25		81878514		2	COLLECTEUR
26		81845041		2	JOINT THORIQUE
27		86597537		2	BOULON
28		89706729		2	VIS
29		87334836		1	PLAQUE DE SERRAGE
30		86632588		3	RONDELLE, 13/32" x 13/16" x .065", HDN

1.44.0/ B	02	p1	04/08

ENSEMBLE BLOCAGE DIFFÉRENTIEL ET ENGAGEMENT (POWER SHUTTLE) (CENTER PIVOT) - NA

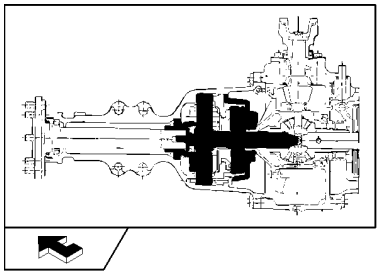

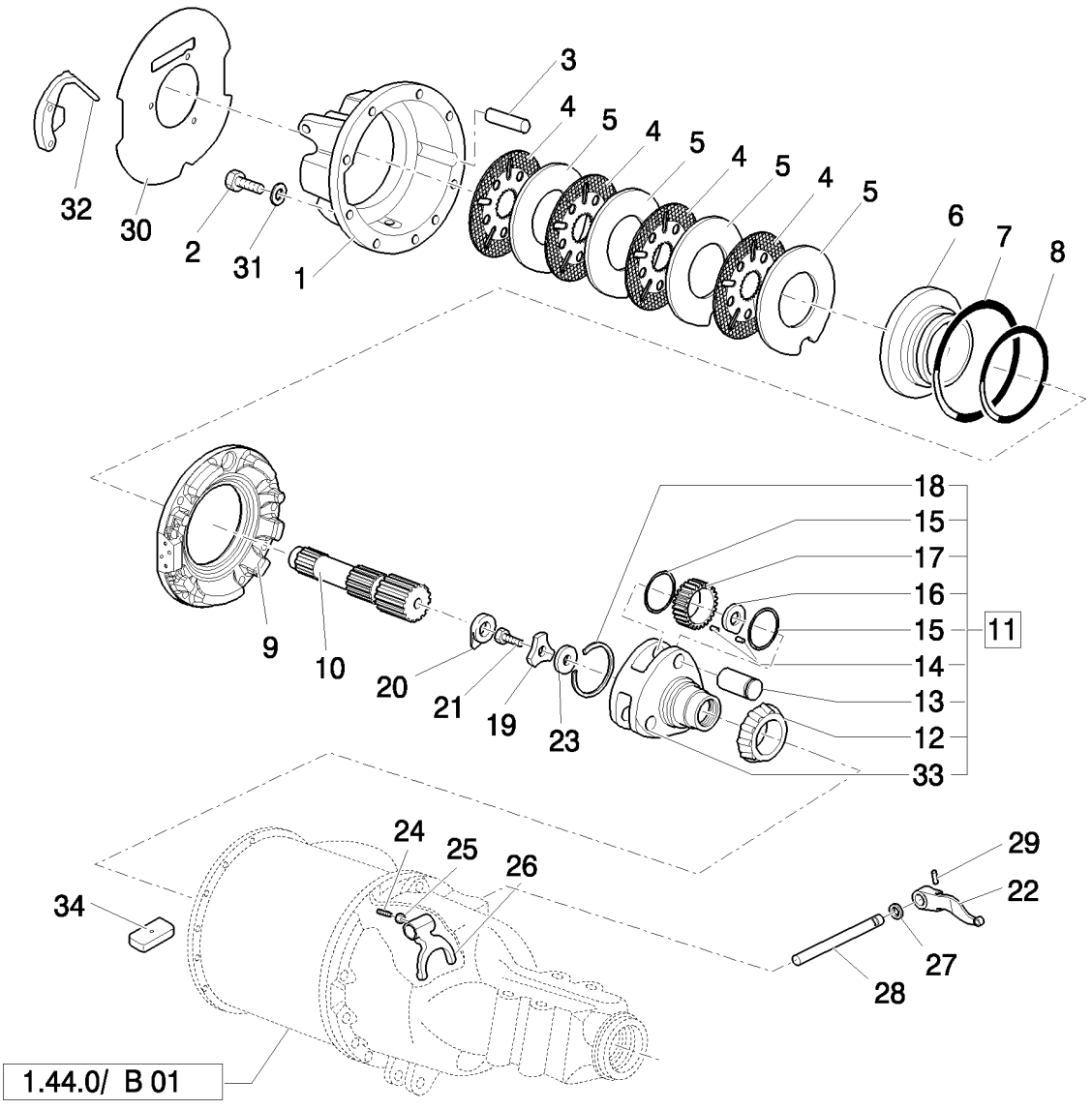

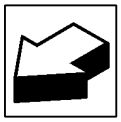

ENSEMBLE BLOCAGE DIFFÉRENTIEL ET ENGAGEMENT (POWER SHUTTLE) (CENTER PIVOT) - NA

REF	FN	PART NUMBER	YR/SN	QTY	DESCRIPTION
1		87304345		1	CARTER, RH
1		87304344		1	CARTER, LH
2		87313966		3	BOULON, Cap, HH, G8, 9/16"-12 x 5"
3		81802548		4	AXE, G8, 9/16"-18
4		87308018		8	DISQUE DE FREIN
5		87305713		8	DISQUE DE FREIN
6		87542345		2	PISTON
7		87302760		2	JOINT THORIQUE, -253, 5.359" ID x .139" Thk
8		87302761		2	JOINT THORIQUE, -253, 7.484" ID x .139" Thk
9		87542348		1	CARTER, RH
9		87542350		1	CARTER, LH
10		81803334		2	PIGNON SOLAIRE
11		86584273		2	PILIER, SOUTIEN, Assy
12		81854753		2	CONE DE ROULEMENT
13		81820849		6	ARBRE
14		81823610		AR	ROULEMENT
15		81803273		12	RONDELLE DE BUTÉE
16		81803275		6	ENTRETOISE
17		86584272		6	PLANETAIRE
18		81820846		2	RETENEUR
19		87326170		2	RONDELLE
20		83949811		2	PLAQUE D'ARRÊT
21		81846884		2	BOULON, HH, 7/8"-14 x 1-5/8"
22		81802560		1	LEVIER
23		81803491		1	ENTRETOISE, .050/.049" Thk
23		81803502		AR	ENTRETOISE, .054/.053" Thk, (1.372/1.346 mm)
23		81803503		AR	ENTRETOISE, .058/.057" Thk, (1.473/1.448 mm)
23		81803504		AR	ENTRETOISE, .062/.061" Thk, (1.575/1.549 mm)
23		81803505		AR	ENTRETOISE, .066/.065" Thk, (1.676/1.651 mm)
23		81803506		AR	ENTRETOISE, .070/.069" Thk, (1.778/1.753 mm)
23		81803507		AR	ENTRETOISE, .074/.073" Thk, (1.880/1.854 mm)
23		81803508		AR	ENTRETOISE, .078/.077" Thk, (1.981/1.956 mm)
23		81803509		AR	ENTRETOISE, .082/.081" Thk, (2.083/2.057 mm)
23		81803510		AR	ENTRETOISE, .086/.085" Thk, (2.184/2.159 mm)
23		81803511		AR	ENTRETOISE, .090/.089" Thk, (2.286/2.261 mm)

ENSEMBLE BLOCAGE DIFFÉRENTIEL ET ENGAGEMENT (POWER SHUTTLE) (CENTER PIVOT) - NA

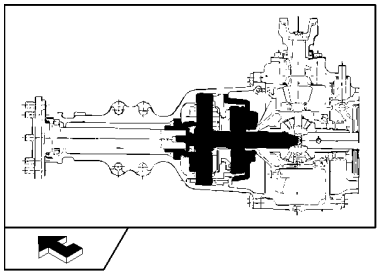

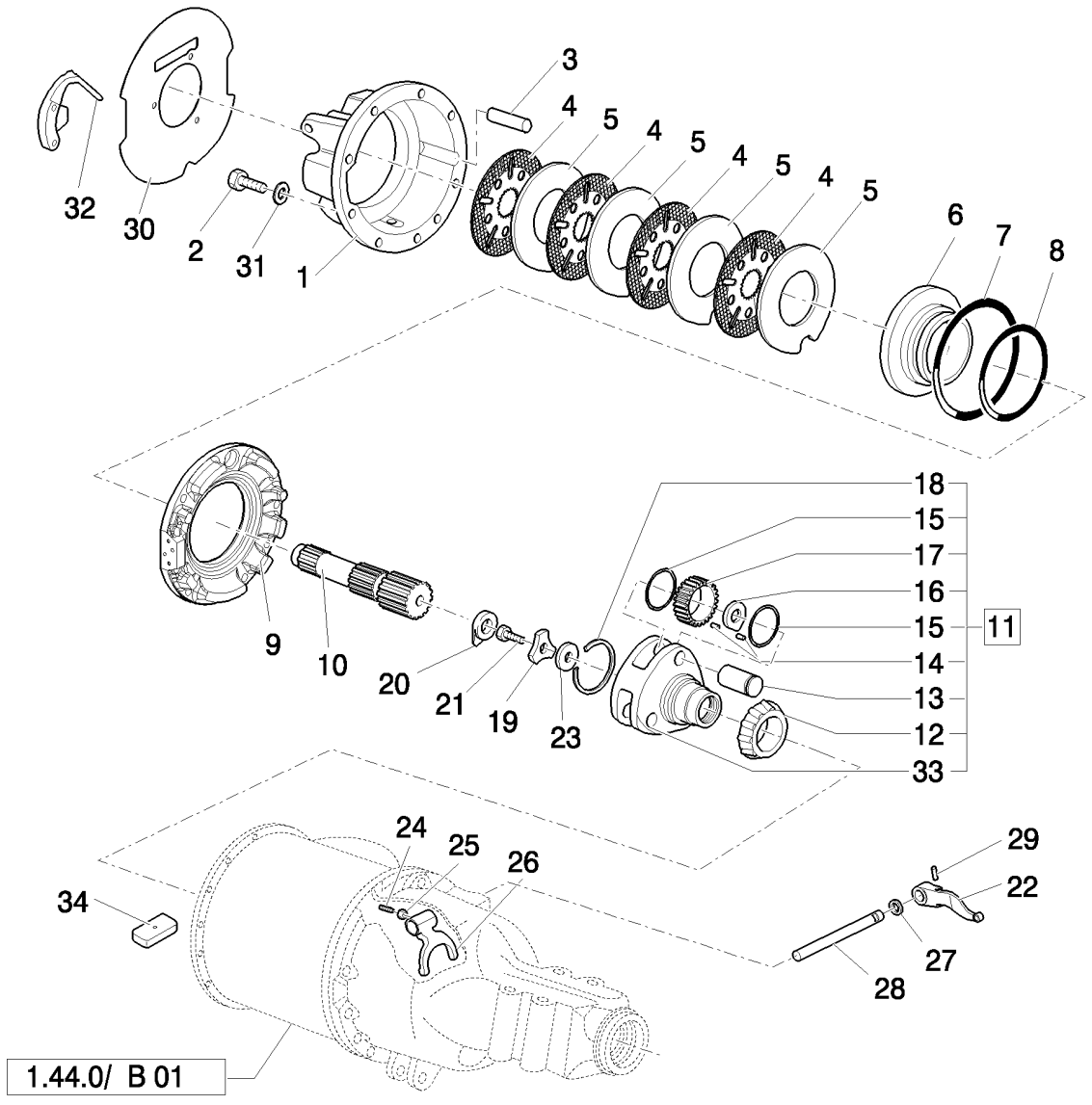

ENSEMBLE BLOCAGE DIFFÉRENTIEL ET ENGAGEMENT (POWER SHUTTLE) (CENTER PIVOT) - NA

REF	FN	PART NUMBER	YR/SN	QTY	DESCRIPTION
24		81804978		1	VIS, Set, 3/8"-24 x 7/16"
25		80087308		1	ECROU
26		81803336		1	FOURCHE
27		82979988		1	JOINT
28		81803345		1	ARBRE
29		82958118		1	GOUPILLE ELASTIQUE
30		87334836		1	PLAQUE DE SERRAGE
31		86632588		1	RONDELLE, 13/32" x 13/16" x .065", HDN
32		87314211		1	BLOC
33		86576091		1	PILIER, SOUTIEN
34		328955A1		2	

1.44.0/ B	03	p1	03/08

ENSEMBLE JEU ENGRENAGES CONIQUES PONT ARRIÈRE (POWER SHUTTLE) (CENTER PIVOT) - NA

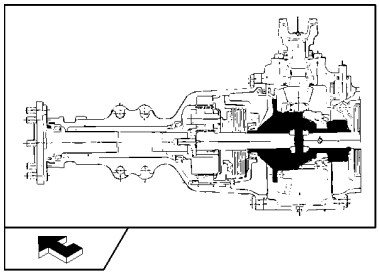

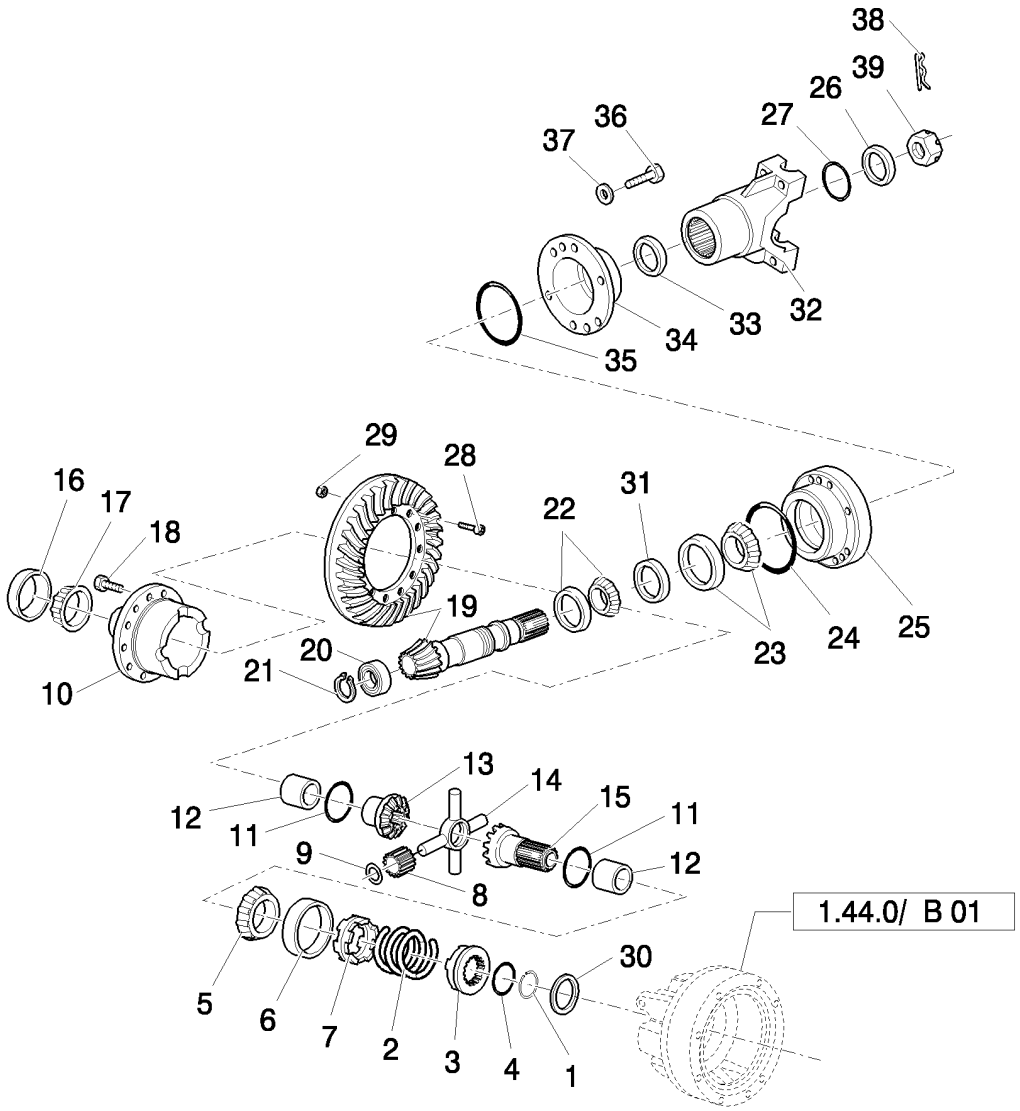

ENSEMBLE JEU ENGRENAGES CONIQUES PONT ARRIÈRE (POWER SHUTTLE) (CENTER PIVOT) - NA

REF	FN	PART NUMBER	YR/SN	QTY	DESCRIPTION
1		81803474		1	JONC D'ARRET
2		81800474		1	RESSORT, Differential Lock Coupler
3		81812261		1	ADAPTEUR
4		81800475		1	RONDELLE, Differential Lock, Coupler Stop
5		81803413		1	CONE DE ROULEMENT
6		80510892		1	CUVETTE ROULEMENT, RH
7		81800472		1	ADAPTEUR, Differential Lock Gear Case
8		81728114		4	PIGNON
9		83989915		4	RONDELLE FREIN
10		81816246		1	CARTER
11		81803424		2	RONDELLE DE BUTÉE, RH
12		81800471		2	BAGUE, RH
13		81803445		1	PIGNON
14		81876885		1	CROISILLON
15		81803451		1	PIGNON, RH
16		82959375		1	CUVETTE ROULEMENT
17		80510884		1	CONE DE ROULEMENT
18		83994579		8	VIS, Cap, HH, G8, Self-Locking, 1/2"-13 x 2-7/8"
19		83937179		1	JEU DE PIGNONS, 4,62
20		81824478		1	ROULEMENT A ROULEAU
21		81803542		1	JONC D'ARRET
22		82958961		1	POUSSOIR A GALET
23		81845711		1	CONE DE ROULEMENT
24		81827354		1	JOINT THORIQUE, 4.625" ID x .139" Thk
25		81847146		1	RETENEUR
26		81834042		1	RONDELLE
27		81845714		1	JOINT
28		83957533		12	BOULON, HH, G8, 1/2"-20 x 1-5/8"
29		83417169		12	CONTRE-ECROU, 1/2"-20, GA, Lock, G2, 1/2"-20
30		81803515		AR	CALE D'EPAISSEUR, 0,965/1,016
30		81803516		AR	CALE D'EPAISSEUR, .046/.044" Thk, (1.118-1.168 mm)
30		81803517		AR	CALE D'EPAISSEUR, .052/.050" Thk, (1.321/1.270 mm)

ENSEMBLE JEU ENGRENAGES CONIQUES PONT ARRIÈRE (POWER SHUTTLE) (CENTER PIVOT) - NA

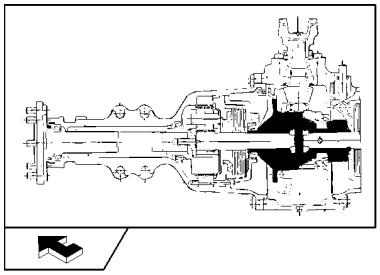

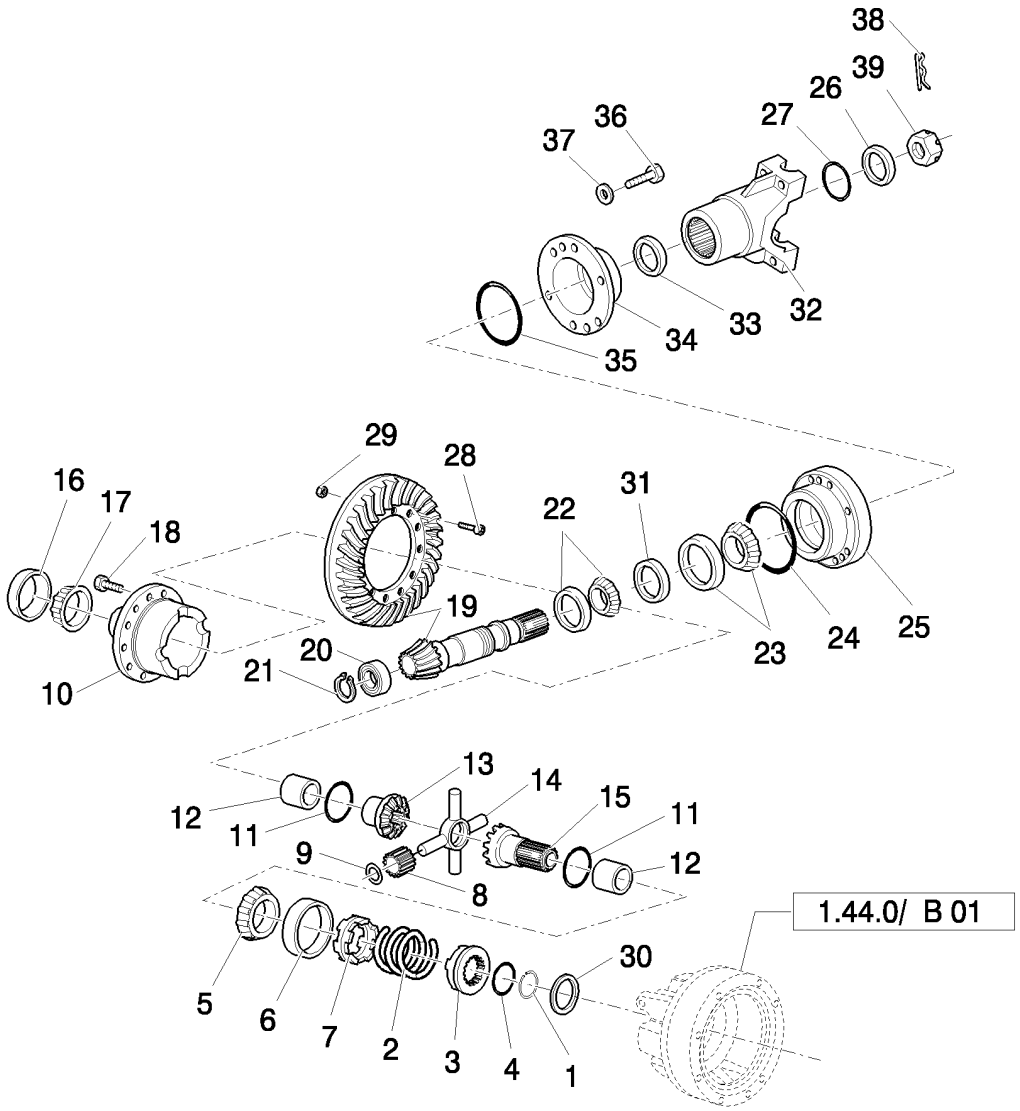

ENSEMBLE JEU ENGRENAGES CONIQUES PONT ARRIÈRE (POWER SHUTTLE) (CENTER PIVOT) - NA

REF	FN	PART NUMBER	YR/SN	QTY	DESCRIPTION
30		81803519		AR	CALE D'EPAISSEUR, .064/.062" Thk, (1.626/1.575 mm)
30		81803520		AR	CALE D'EPAISSEUR, .070/.068" Thk, (1.778/1.727 mm)
30		81803521		AR	CALE D'EPAISSEUR, .076/.074" Thk, (1.930/1.880 mm)
30		81803522		AR	CALE D'EPAISSEUR, .082/.080" Thk, (2.083/2.032 mm)
31		81847148		AR	ENTRETOISE, 31,852/31,864
31		81847149		AR	ENTRETOISE, 31,902/31,915
31		81847150		AR	ENTRETOISE, 31,953/31,966
31		81847151		AR	ENTRETOISE, 32,004/32,017
31		81847152		AR	ENTRETOISE, 32,055/32,068
31		81847153		AR	ENTRETOISE, 32,106/32,118
31		81847154		AR	ENTRETOISE, 32,156/32,169
31		81847155		AR	ENTRETOISE, 32,207/32,220
31		81847156		AR	ENTRETOISE, 32,258/32,271
31		81847157		AR	ENTRETOISE, 32,309/32,322
31		81847158		AR	ENTRETOISE, 32,360/32,372
31		81847159		AR	ENTRETOISE, 32,410/32,423
31		81847160		AR	ENTRETOISE, 32,461/32,474
31		81847161		AR	ENTRETOISE, 32,512/32,525
31		81847162		AR	ENTRETOISE, 32,563/32,576
32		83949810		1	FLASQUE
33		81834073		1	JOINT D'HUILE
34		83912246		1	RETENEUR
35		81845713		1	JOINT
36		81821267		6	BOULON, 9/16-12X1,50
37		80280248		6	RONDELLE FREIN
38		83947107		1	AXE, Cotter, 3/16" x 2.125"
39		83949812		1	ECROU, Slotted, 1-1/4"-18

COMMANDE DU DIFFERENTIEL (POWER-SHUTTLE)

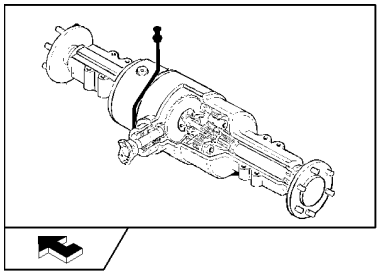

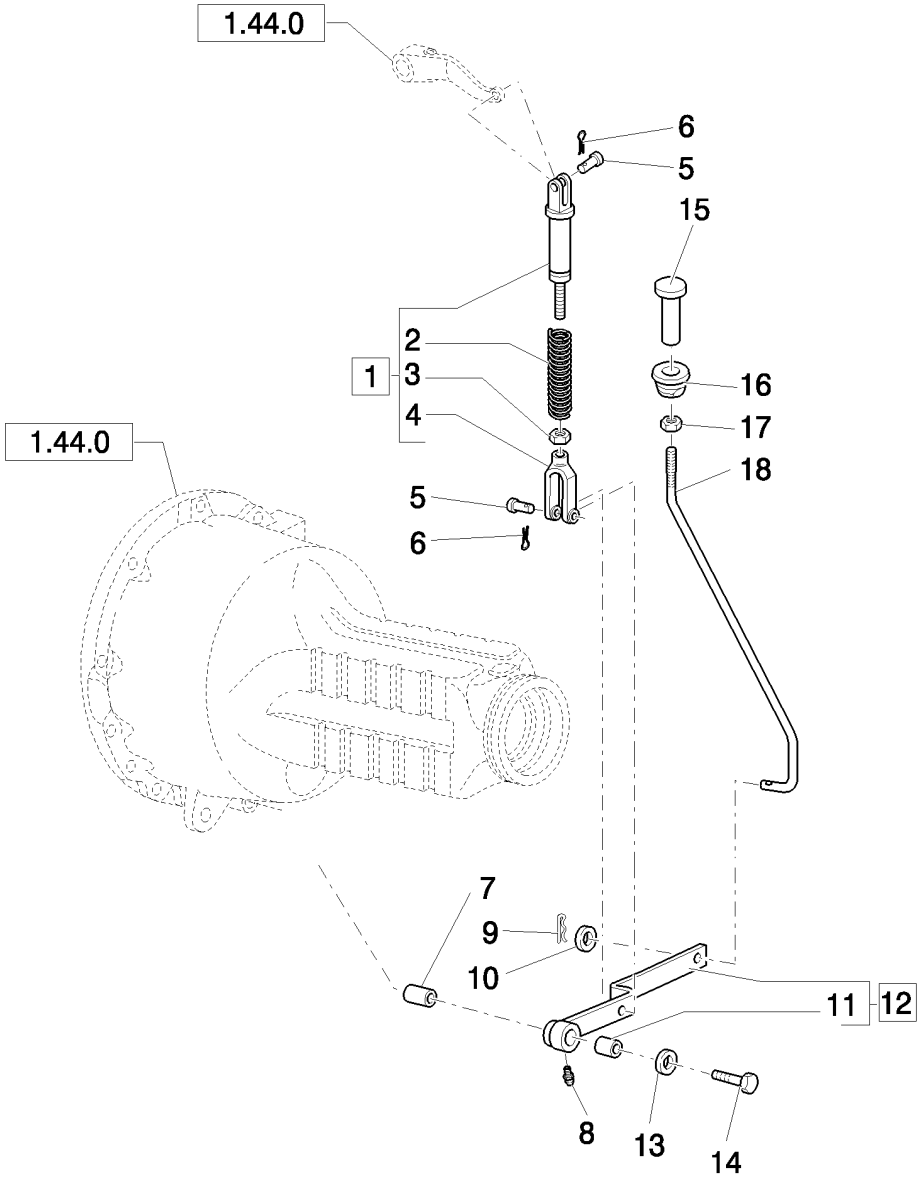

COMMANDE DU DIFFERENTIEL (POWER-SHUTTLE)

REF	FN	PART NUMBER	YR/SN	QTY	DESCRIPTION
1		83949838		1	TRINGLE, Assy
2		81800486		1	RESSORT
3		81821691		1	ECROU
4		83952932		1	FOURCHETTE
5		83948308		2	AXE
6		10802801		2	GOUPILLE, M2.5 x 25
7		81800488		1	ENTRETOISE
8		13406911		1	GRAISSEUR, 1/4"-28
9		10766901		1	GOUPILLE, M3.2 x 25
10		12644921		1	RONDELLE, M14 x 32 x 4
11		81805231		1	BAGUE
12		85802513		1	LEVIER
13		14497121		1	RONDELLE, M20 x 37 x 3
14		83911686		1	VIS
15		83971567		1	PEDALE
16		83904750		1	BAGUE
17		81822462		1	ECROU, Jam, 1/2"-20, G2
18		85819013		1	TIRANT

COMMANDE DU DIFFERENTIEL (POWER-SHUTTLE) (CENTER PIVOT) - NA

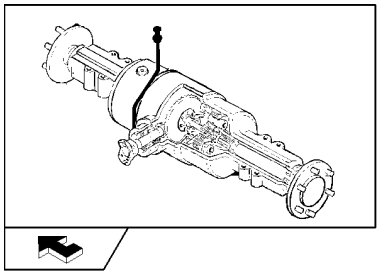

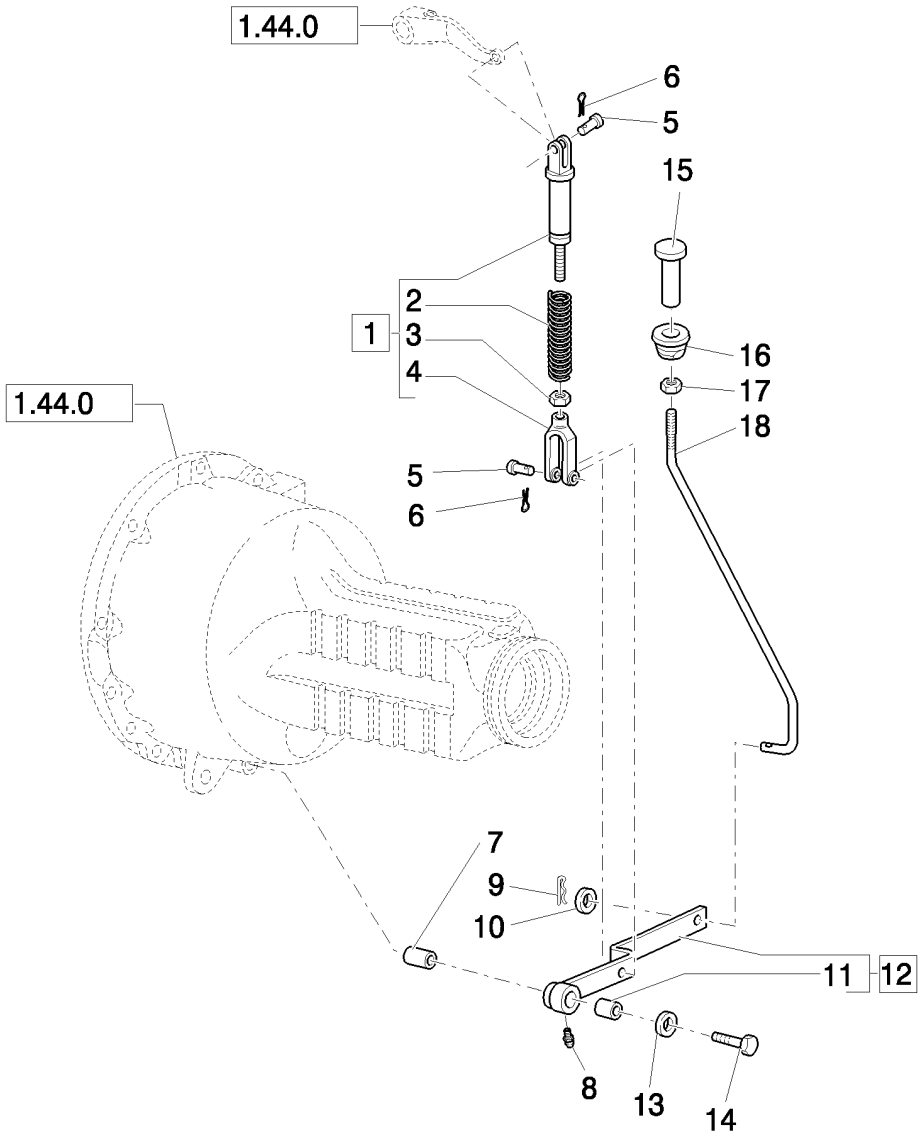

COMMANDE DU DIFFERENTIEL (POWER-SHUTTLE) (CENTER PIVOT) - NA

REF	FN	PART NUMBER	YR/SN	QTY	DESCRIPTION
1		83949838		1	TRINGLE, Assy
2		81800486		1	RESSORT, Inside Rod Tube
3		81821691		1	ECROU
4		83952932		1	FOURCHETTE
5		83948308		2	AXE
6		10802801		2	GOUPILLE, M2.5 x 25
7		81800488		1	ENTRETOISE
8		13406911		1	GRAISSEUR, 1/4"-28
9		10766901		1	GOUPILLE, M3.2 x 25
10		12644921		1	RONDELLE, M14 x 32 x 4
11		81805231		1	BAGUE
12		85802513		1	LEVIER, Assy
13		14497121		1	RONDELLE, M20 x 37 x 3
14		83911686		1	VIS
15		83971567		1	PEDALE
16		83904750		1	BAGUE
17		81822462		1	ECROU, Jam, 1/2"-20, G2
18		85802515		1	TRINGLE

NOTES

SECTION INDEX
Système Electrique

1.75.2	01	CÂBLAGE ARRIÈRE CHÂSSIS ET CÂBLE DE TERRE (POWER SHUTTLE) - NA
1.75.2	02	INTERRUPTEUR VERROUILLAGE BATTERIE ET CABLE TERRE (POWER SHUTTLE) - NA
1.75.2	04	CABLAGE MOTEUR (POWER SHUTTLE) - NA

1.75.2	01	p1	03/08

CÂBLAGE ARRIÈRE CHÂSSIS ET CÂBLE DE TERRE (POWER SHUTTLE) - NA

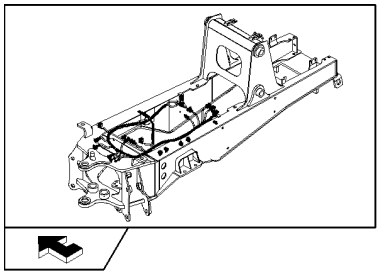

CÂBLAGE ARRIÈRE CHÂSSIS ET CÂBLE DE TERRE (POWER SHUTTLE) - NA

REF	FN	PART NUMBER	YR/SN	QTY	DESCRIPTION
1	1	87544169		1	FAISCEAU
1	2	87564242		1	FAISCEAU
2		85805686		4	COLLIER
3		85805685		2	COLLIER
4		14560187		55	SERRE-CABLE, 178mm lg, L=203.2 mm
5		85803884		1	Tresse De Masse
6		16043021		1	BOULON, Hex, M8 x 12, 8.8, Full Thd
7		11193879		1	RONDELLE BELLEVILLE, Belleville, M8.4
8		14048211		1	CONTRE-ECROU, M8 x 1.25, Cl 8
9		12647121		1	RONDELLE, M8 x 20 x 3

(1) Only for B90B
(2) Only for B95B, B95BLR, B95BTC, B110B

INTERRUPTEUR VERROUILLAGE BATTERIE ET CABLE TERRE (POWER SHUTTLE) - NA

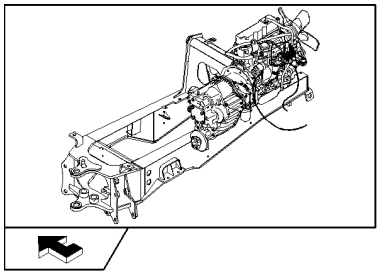

INTERRUPTEUR VERROUILLAGE BATTERIE ET CABLE TERRE (POWER SHUTTLE) - NA

REF	FN	PART NUMBER	YR/SN	QTY	DESCRIPTION
1		47048895		2	CAPTEUR
2		16104111		1	CONTRE-ECROU, M8 x 1.25, Cl 8
3		12647121		1	RONDELLE, M8 x 20 x 3
4		85820156		1	ADAPTEUR
5		85817672		1	PRESSOSTAT, Trans. Oil Pressure
6	1	11197879		2	RONDELLE BELLEVILLE, Belleville, M8.4
7	1	87409316		1	CONTACTEUR
8	1	87613641		1	SUPPORT
9		47048993		1	RONDELLE
10		47049010		1	VIS, M10x20
11		47049031		1	ECROU, M10
12	1	87427925		1	CABLE
13	1	16043421		2	VIS, Hex, M8 x 20, 8.8
14		85826964		1	RACCORD

(1) Only for B95B, B95BLR, B95BTC, B110B

1.75.2	04	p1	03/08

CABLAGE MOTEUR (POWER SHUTTLE) - NA

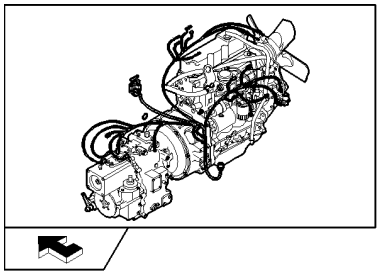

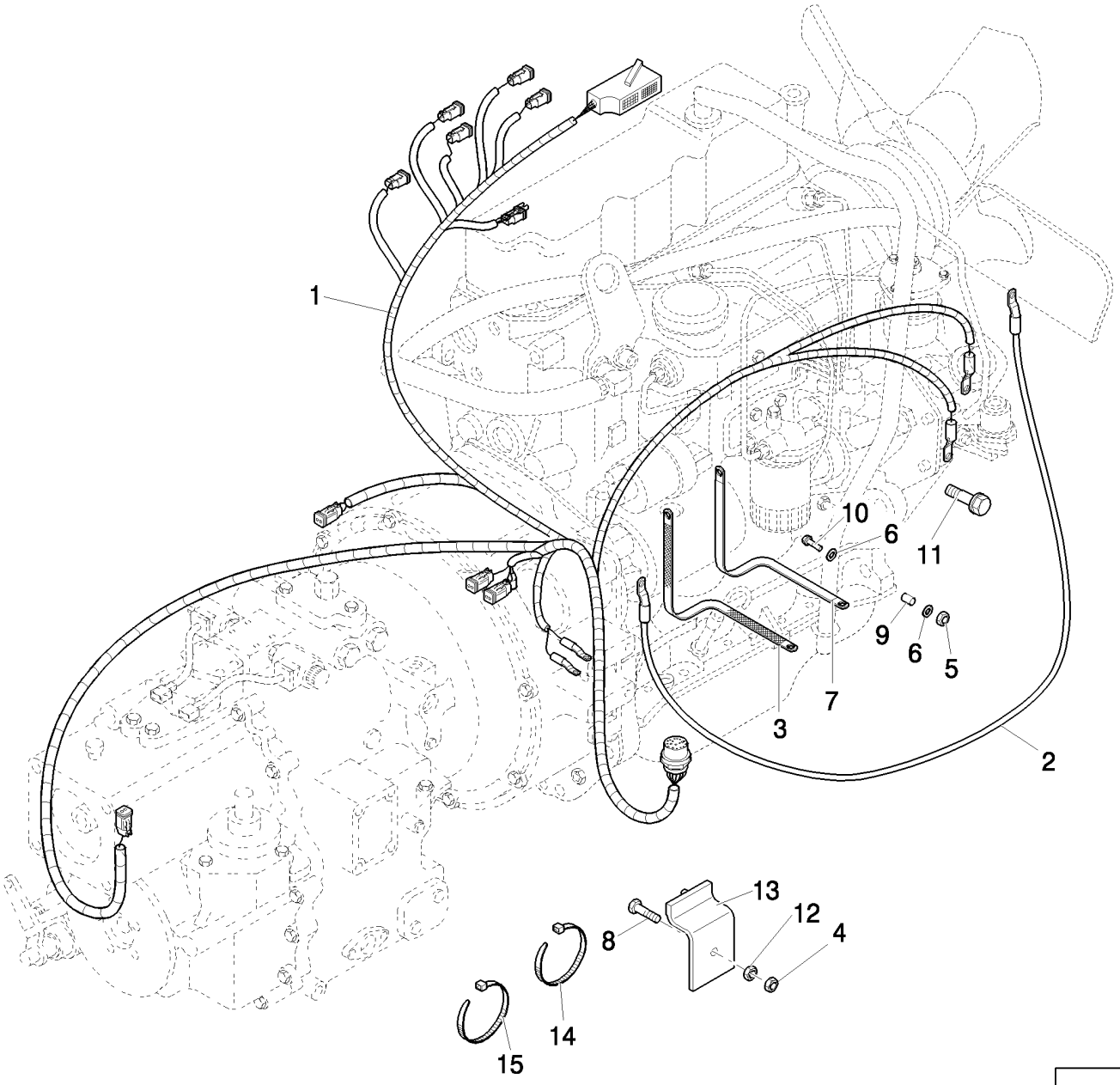

CABLAGE MOTEUR (POWER SHUTTLE) - NA

REF	FN	PART NUMBER	YR/SN	QTY	DESCRIPTION
1		87564241		1	FAISCEAU, Includes 87431470 3 amp diode
2		87636291		1	CABLE
3		87407206		1	Tresse De Masse
4		87565124		1	ECROU
5		14048211		1	CONTRE-ECROU, M8 x 1.25, Cl 8
6		12638511		2	RONDELLE, M8 x 15 x 1.5, 8x15
7		87410268		1	Tresse De Masse
8		16043824		1	BOULON, Hex, M8 x 30, 8.8, Full Thd
9		87415208		1	ENTRETOISE
10		16044421		2	BOULON, Hex, M8 x 60, 8.8
11		47049186		1	BOULON, Hex, M10 x 30, 8.8
12		11701711		1	ECROU, M10, Cl 8
13		87562089		1	COUVERCLE
14		87567356		4	BRIDE
15		87567355		4	BRIDE

NOTES

SECTION INDEX
Installation Hydraulique

1.82.0		RESERVOIR HUILE HYDRAULIQUE
1.82.3/01		POMPE HYDRAULIQUE (35+35-154L/MM)
1.82.6	01	TUYAUX CIRCUIT HYDRAULIQUE: DÉBIT HUILE POMPE
1.82.6	02	TUYAUX CIRCUIT HYDRAULIQUE: DÉBIT DISTRIBUTEUR
1.82.6	03	TUYAUX CIRCUIT HYDRAULIQUE: PRISE PRESSION
1.82.6	04	TUYAUX CIRCUIT HYDRAULIQUE: VIDANGE DISTRIBUTEUR
1.82.6	05	TUYAUX CIRCUIT HYDRAULIQUE: RETOUR AU RÉSERVOIR
1.82.6	06	TUYAUX CIRCUIT HYDRAULIQUE: FILTRE À HUILE ET CLAPET DE NON-RETOUR
1.82.6	07	TUYAUX CIRCUIT HYDRAULIQUE: VÉRINS ÉQUIPEMENT CHARGEUR
1.82.6	10	TUBULURES CIRCUIT HYDRAULIQU
1.82.6	11	TUBULURES CIRCUIT HYDRAULIQUE
1.82.6	12	TUYAUX CIRCUIT HYDRAULIQUE 4WS (CENTER PIVOT) - NA
1.82.6	13	TUYAUX CIRCUIT HYDRAULIQUE: VÉRIN DE ROTATION
1.82.6	14	TUYAUX CIRCUIT HYDRAULIQUE: VÉRIN DE L'ÉQUIPEMENT RÉTRO
1.82.6	15	TUYAUX CIRCUIT HYDRAULIQUE: VÉRIN FLÈCHE DE L'ÉQUIPEMENT RÉTRO
1.82.6	16	CRAMPONS MANCHONS PLAQUE ROTATION (CENTER PIVOT)
1.82.6/01	01	ASPIRATION POMPE HYDRAULIQUE AVANT ET FLEXIBLES SORTIE (CENTER PIVOT) - NA
1.82.6/01	02	STABILISATEUR POMPE HYDRAULIQUE ARRIERE, MANCHONS SOUPAPES CHARGEUSE ET EXCAVATRICE (CP) - NA
1.82.6/01	03	TUYAUX CIRCUIT HYDRAULIQUE (CENTER PIVOT) - NA: PRISE PRESSION
1.82.6/01	04	TUYAUX COLLECTEUR RETOUR - NA
1.82.6/01	05	GROUPE FILTRE & TUYAUX COLLECTEUR RETOUR (CENTER PIVOT) - NA
1.82.6/01	06	TUYAUX CIRCUIT HYDRAULIQUE (CENTER PIVOT) - NA: RETOUR AU RÉSERVOIR
1.82.6/01	07	TUYAUX CYLINDRE RELEVAGE CHARGEUSE (CENTER PIVOT) - NA
1.82.6/01	08	TUYAUX CYLINDRE GODET CHARGEUSE (CENTER PIVOT) - NA
1.82.6/01	09	TUYAUX CYLINDRES OSCILLATION EXCAVATRICE (CENTER PIVOT) - NA
1.82.6/01	10	TUYAUX DISTRIBUTEURX EXCAVATRICE (CENTER PIVOT) - NA
1.82.6/01	11	CRAMPONS MANCHONS PLAQUE ROTATION (CENTER PIVOT) - NA
1.82.6/01	12	DISTRIBUTEUR EXCAVATRICE (CENTER PIVOT) - NA
1.82.6/01	13	SECTION VANNE PELLE (CENTER PIVOT) - NA
1.82.6/01	14	SECTION VANNE GODET, FLECHE ET BARRE OSCIL. (CENTER PIVOT) - NA

1.82.0		p1	05/08

RESERVOIR HUILE HYDRAULIQUE

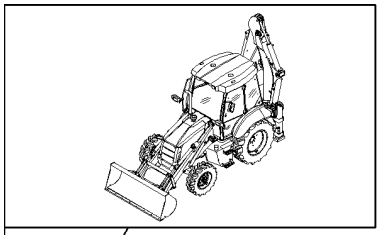

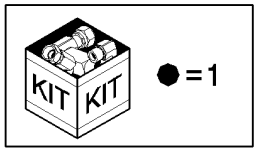

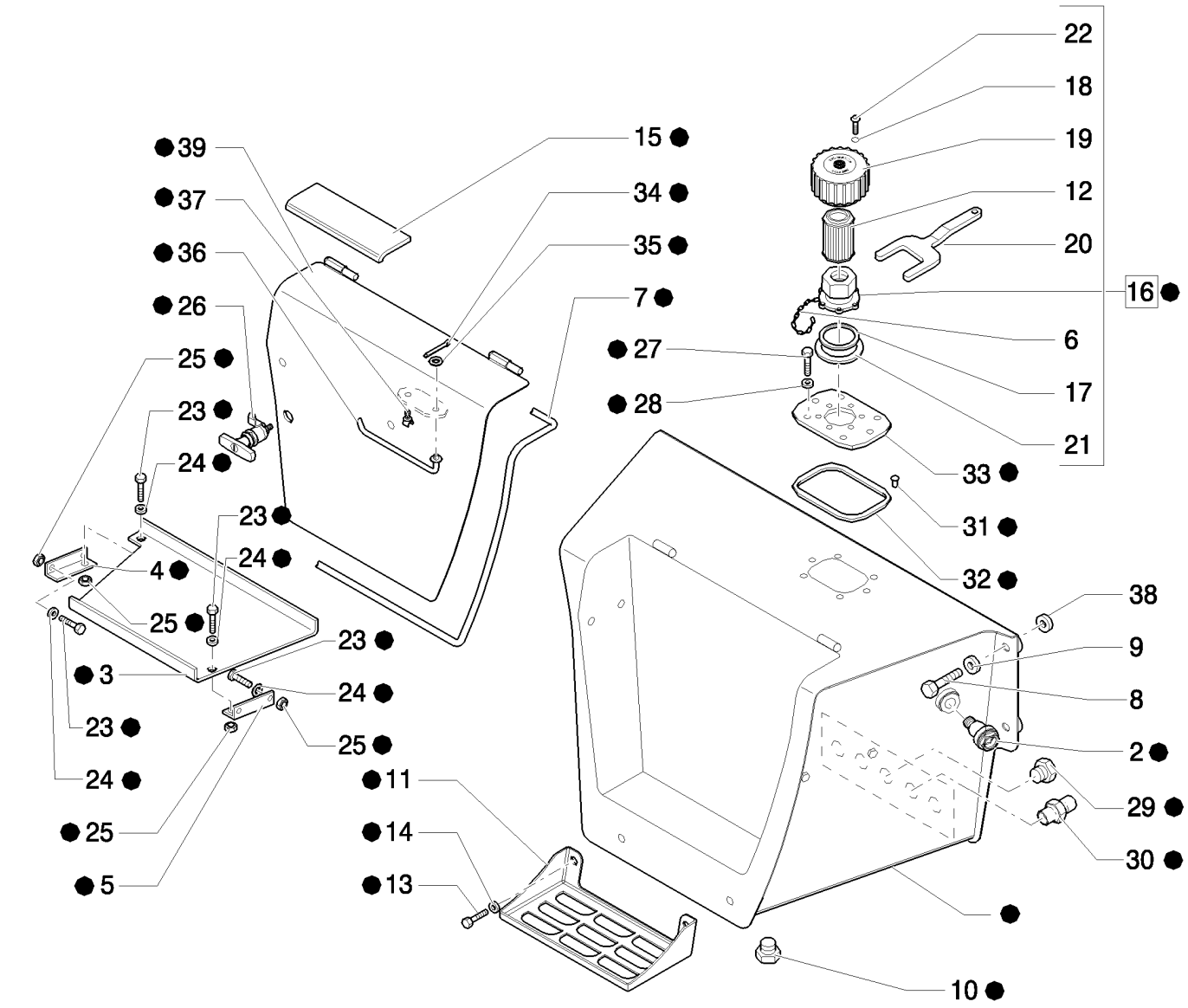

RESERVOIR HUILE HYDRAULIQUE

REF	FN	PART NUMBER	YR/SN	QTY	DESCRIPTION
1		87577246		1	RESERVOIR, Assy
2		85801249		1	INDICATEUR DE NIVEAU
3		87407463		1	PLATEAU
4		87407464		1	PATTE FIXATION
5		87407465		1	PATTE FIXATION
6		85813352		1	FLASQUE
7		87417207		1	JOINT, CAOUTCHOUC
8		15540721		4	BOULON, Hex, M12 x 1.25 x 45, 8.8, Full Thd
9		47048976		4	RONDELLE
10		47050671		2	BOUCHON
11		85801218		2	SOCLE
12		87407928		1	FILTRE
13		11112421		4	BOULON, Hex, M12 x 30, 8.8
14		47048973		4	RONDELLE
15		87702352		1	BANDE ANTI-DERAPANTE
16		87403241		1	BOUCHON DE REMPL., Assy
17		85813351		1	JOINT THORIQUE
18		85813354		6	JOINT THORIQUE
19		85813350		1	BOUCHON
20		85802580		1	CLE SPECIALE
21		9969380		1	JOINT
22		85813353		6	VIS
23		47049185		4	VIS
24		47048972		4	RONDELLE
25		47049041		4	ECROU
26		87574189		1	POIGNÉE
27		16043421		6	VIS, Hex, M8 x 20, 8.8
28		47048962		6	RONDELLE
29		85825154		3	BOUCHON
30		85825155		1	RACCORD
31		85826382		7	ECROU
32		85826383		1	JOINT
33		85828107		1	PLAQUE
34		47042074		1	AXE
35		47044758		1	RONDELLE

1.82.0		p2	05/08

RESERVOIR HUILE HYDRAULIQUE

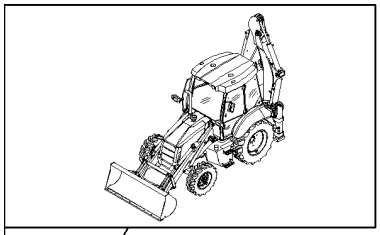

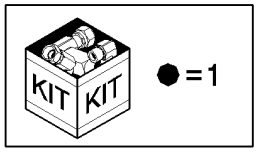

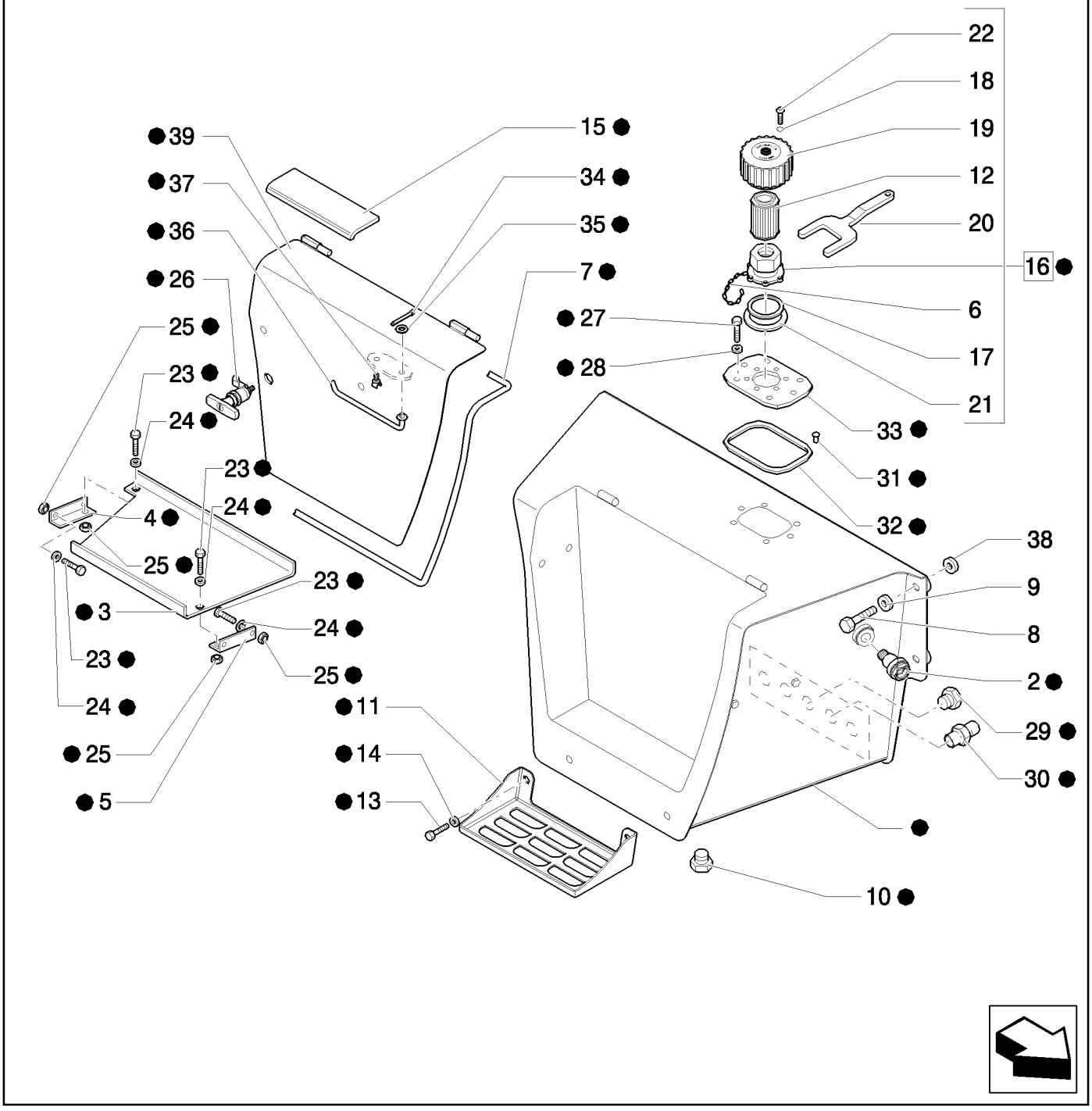

RESERVOIR HUILE HYDRAULIQUE

REF	FN	PART NUMBER	YR/SN	QTY	DESCRIPTION
36		85828017		1	LEVIER
37		72273491		1	BRIDE
38		87353741		4	ENTRETOISE
39		87406299		1	COUVERCLE

POMPE HYDRAULIQUE (35+35-154L/MM)

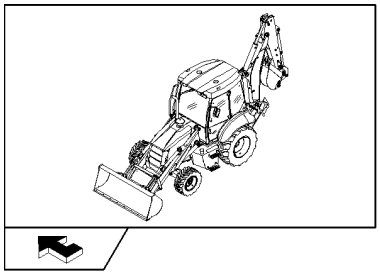

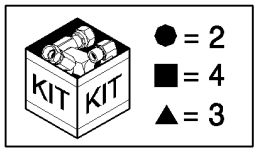

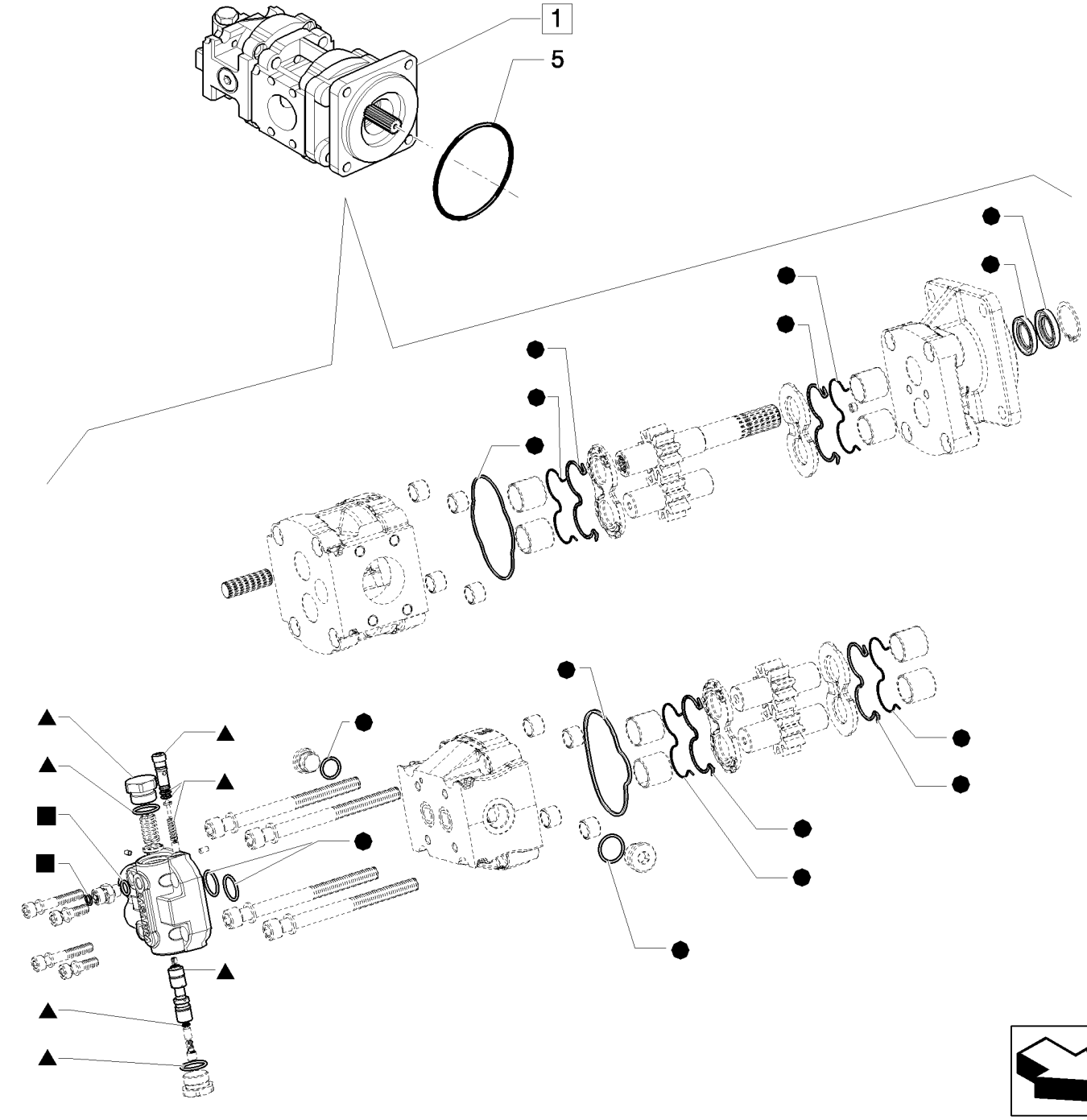

POMPE HYDRAULIQUE (35+35-154L/MM)

REF	FN	PART NUMBER	YR/SN	QTY	DESCRIPTION
1		87362336		1	POMPE HYDRAULIQUE, Assy
2		85813244		1	POCHETTE DE JOINTS, Seal
3		87530241		1	COUVERCLE
4		85824196		1	RACCORD
5		14466880		1	JOINT THORIQUE, -250, 70 Duro, 4.984" ID x .139" Thk

1.82.6	01	p1	04/08

TUYAUX CIRCUIT HYDRAULIQUE: DÉBIT HUILE POMPE

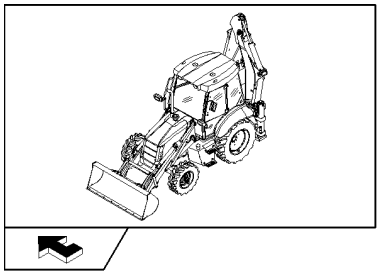

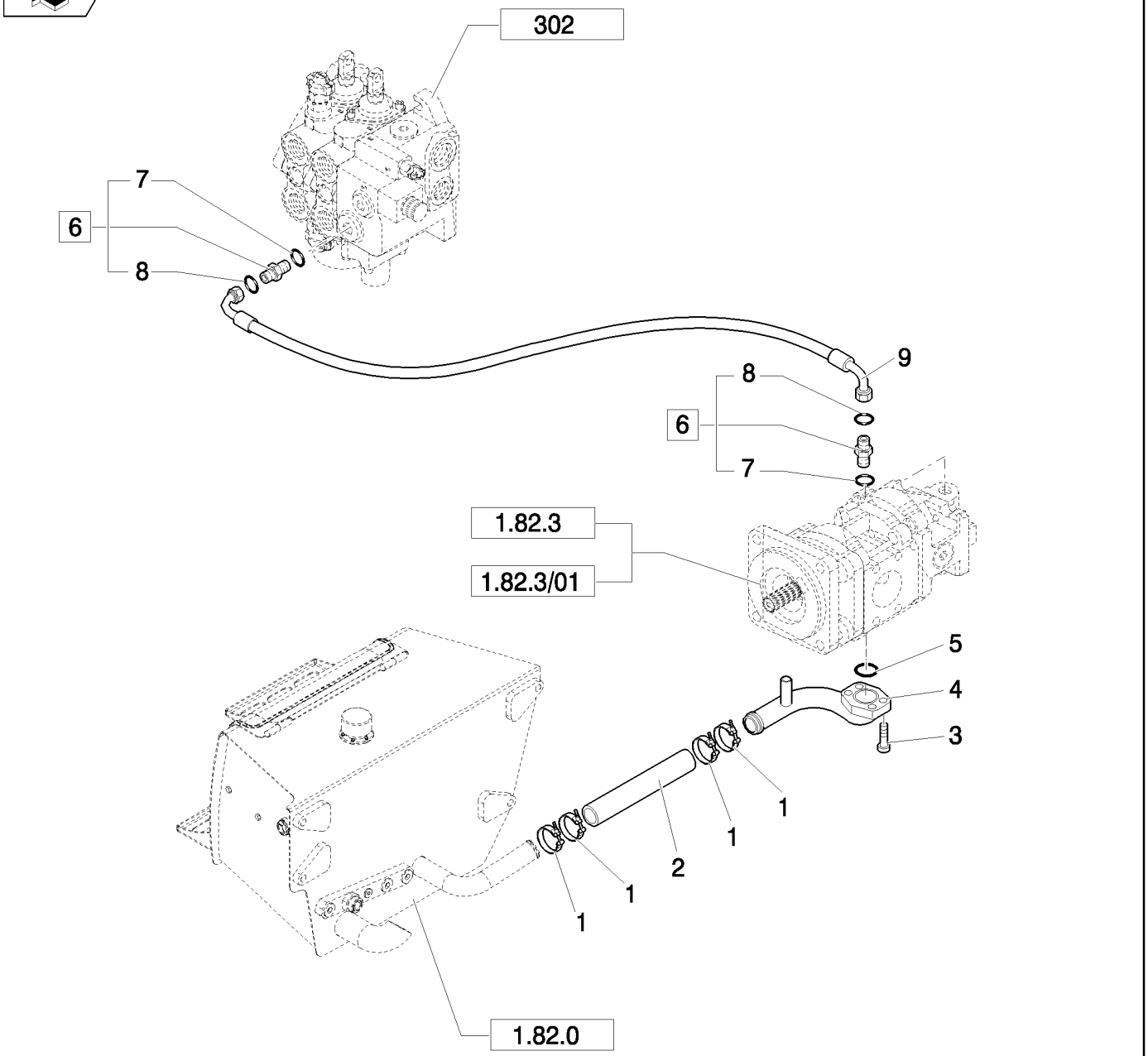

TUYAUX CIRCUIT HYDRAULIQUE: DÉBIT HUILE POMPE

REF	FN	PART NUMBER	YR/SN	QTY	DESCRIPTION
1		87676333		4	BRIDE
2		85811870		1	FLEXIBLE
3		14422021		3	VIS, Hex Soc Hd, M12 x 30, 8.8
4		85827041		1	TUBE
5		14464680		1	JOINT THORIQUE, -228, 70 Duro, 2.234" ID x .139" Thk
6		83962538		2	RACCORD, Assy
7		80167266		2	JOINT THORIQUE
8		89991976		2	JOINT THORIQUE
9		87614753		1	TUYAU FLEXIBLE

TUYAUX CIRCUIT HYDRAULIQUE: DÉBIT DISTRIBUTEUR

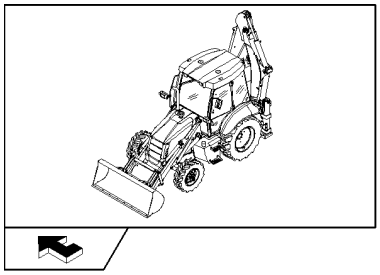

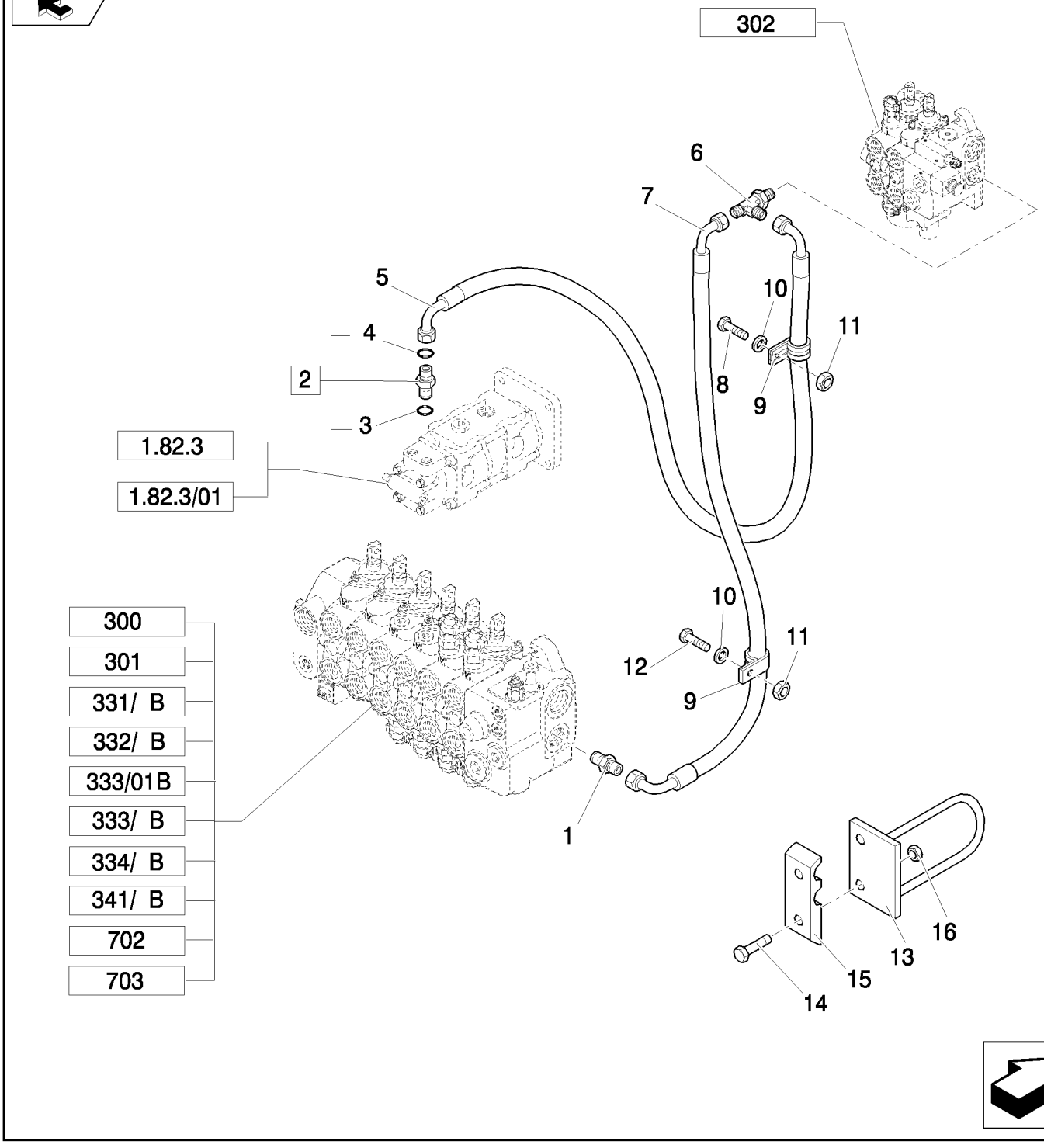

TUYAUX CIRCUIT HYDRAULIQUE: DÉBIT DISTRIBUTEUR

REF	FN	PART NUMBER	YR/SN	QTY	DESCRIPTION
1		85803486		1	RACCORD
2		83963000		1	RACCORD, Assy
3		80167269		1	JOINT THORIQUE
4		83901443		1	JOINT THORIQUE
5		87614751		1	TUYAU FLEXIBLE
6	1	85805838		1	RACCORD A 3 VOIES
6	2	85826093		1	TE
7		87516888		1	TUYAU FLEXIBLE, L=MM.1080
8		16044021		2	BOULON, Hex, M8 x 40, 8.8
9		85802890		2	BRIDE
10		11193979		2	RONDELLE BELLEVILLE, Belleville, M8.4
11		14048211		2	CONTRE-ECROU, M8 x 1.25, Cl 8
12		47049161		1	BOULON
13	3	85802214		2	SUPPORT
14	3	16044221		2	BOULON, Hex, M8 x 50, 8.8
15	3	87631462		2	PATTE FIXATION
16	3	16104111		2	CONTRE-ECROU, M8 x 1.25, Cl 8

(1) Only for Mechanical Version
(2) Only for Pilot Version
(3) Only for NA Version - B115B EU Pilot Center Version

1.82.6	03	p1	04/08

TUYAUX CIRCUIT HYDRAULIQUE: PRISE PRESSION

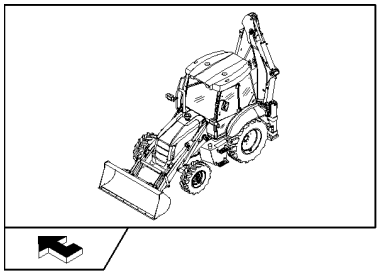

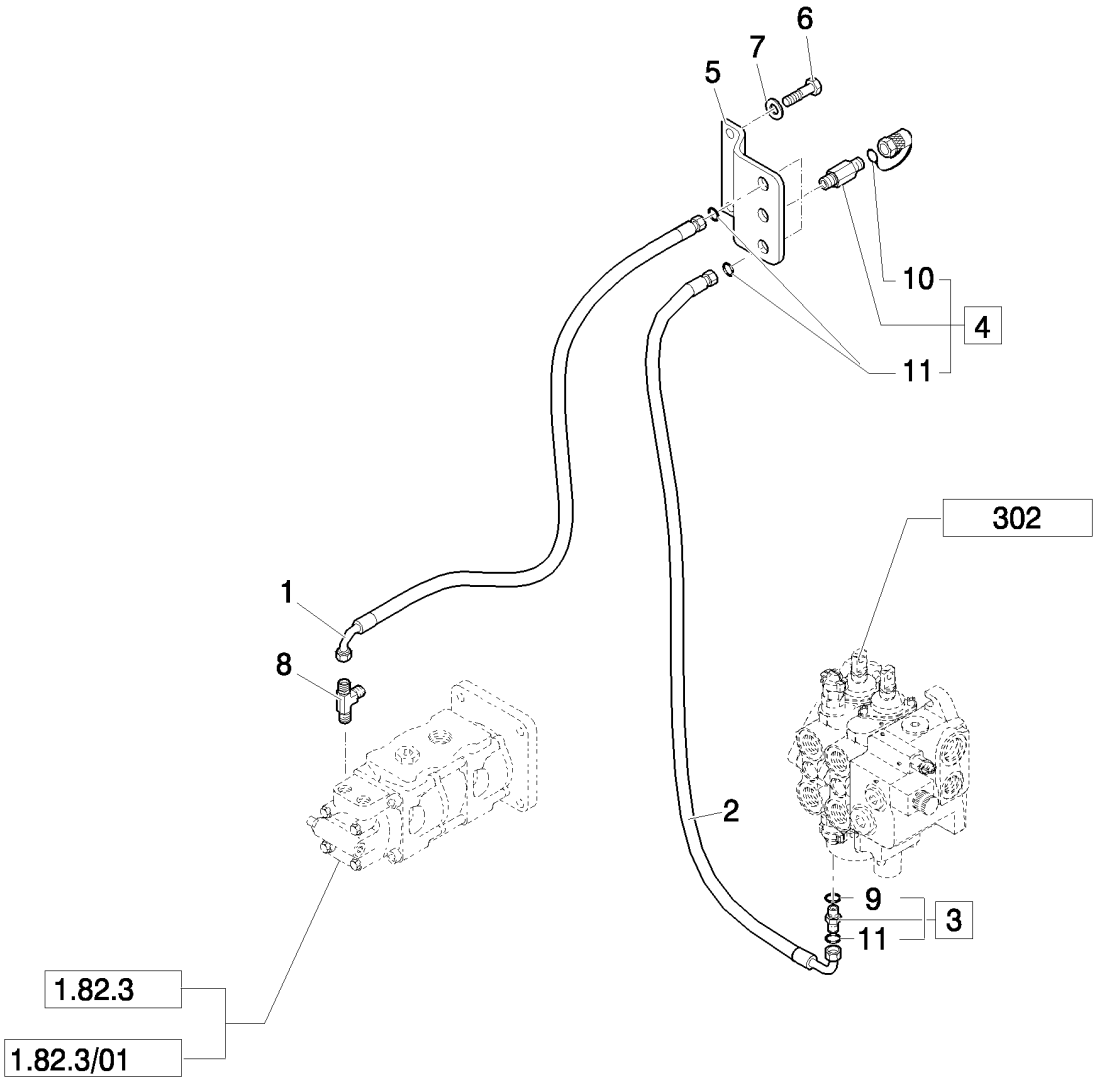

TUYAUX CIRCUIT HYDRAULIQUE: PRISE PRESSION

REF	FN	PART NUMBER	YR/SN	QTY	DESCRIPTION
1		85812171		1	TUYAU FLEXIBLE, 1450mm lg
2		85812173		1	TUYAU FLEXIBLE
3		83963371		1	RACCORD, Assy
4		85817226		2	ACCOUPLEMANT RAP MALE, Assy
5		87569583		1	PLAQUE
6		14441524		2	VIS
7		11193879		2	RONDELLE BELLEVILLE, Belleville, M8.4
8		85805502		1	TE
9		89617873		1	JOINT THORIQUE
10		9968791		2	BOUCHON
11		81844851		4	JOINT THORIQUE, 90 Duro, .375" ID x .070" Thk

Mechanical Version / Pilot Version

B95B

TUYAUX CIRCUIT HYDRAULIQUE: VIDANGE DISTRIBUTEUR

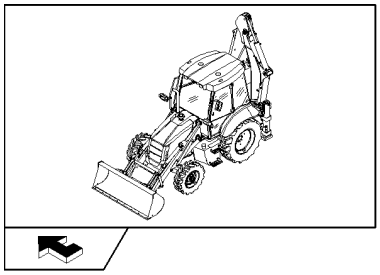

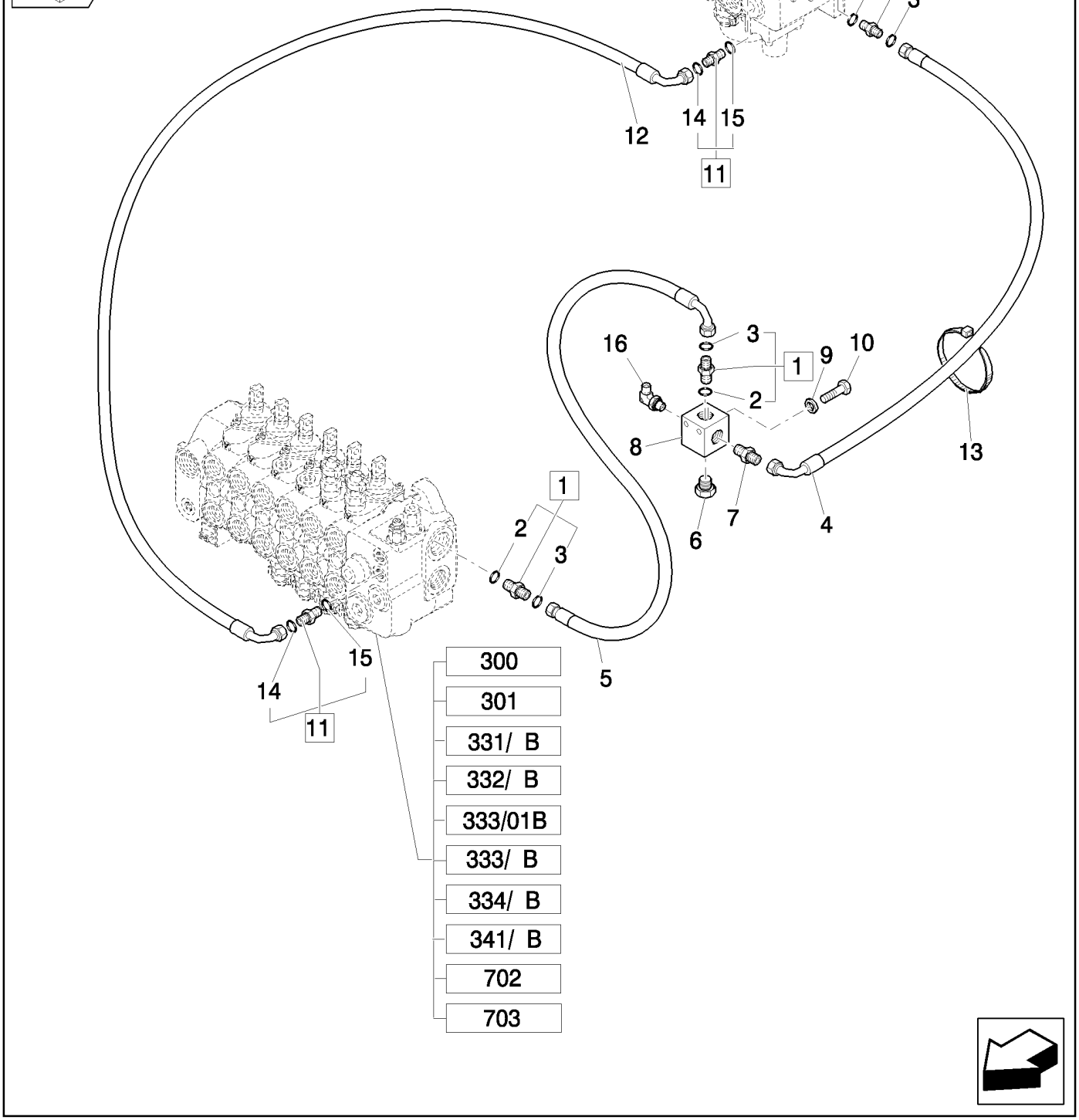

TUYAUX CIRCUIT HYDRAULIQUE: VIDANGE DISTRIBUTEUR

REF	FN	PART NUMBER	YR/SN	QTY	DESCRIPTION
1		83963375		3	RACCORD, Assy
2		80167268		3	JOINT THORIQUE
3		89824050		3	JOINT THORIQUE
4		85818909		1	TUYAU FLEXIBLE
5	1	85805167		1	TUYAU FLEXIBLE
5	2	85827823		1	TUYAU FLEXIBLE
6		85802955		1	BOUCHON
7		85805168		1	RACCORD
8		85805166		1	BLOC
9		11190779		2	RONDELLE BELLEVILLE, Belleville, M13, 12x24x2.8
10		15541621		2	BOULON, Hex, M12 x 1.25 x 100, 8.8
11		83963371		2	RACCORD, Assy
12		85812174		1	TUYAU FLEXIBLE
13		14560187		2	SERRE-CABLE, 178mm lg
14		81844851		2	JOINT THORIQUE, 90 Duro, .375" ID x .070" Thk
15		89617873		2	JOINT THORIQUE, 90 Duro, .468" ID x .078" Thk
16	2	83962179		1	COUDE, 90°

(1) Only for Mechanical Version
(2) Only for Pilot Version

1.82.6	05	p1	04/08

TUYAUX CIRCUIT HYDRAULIQUE: RETOUR AU RÉSERVOIR

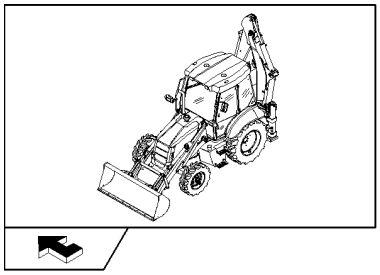

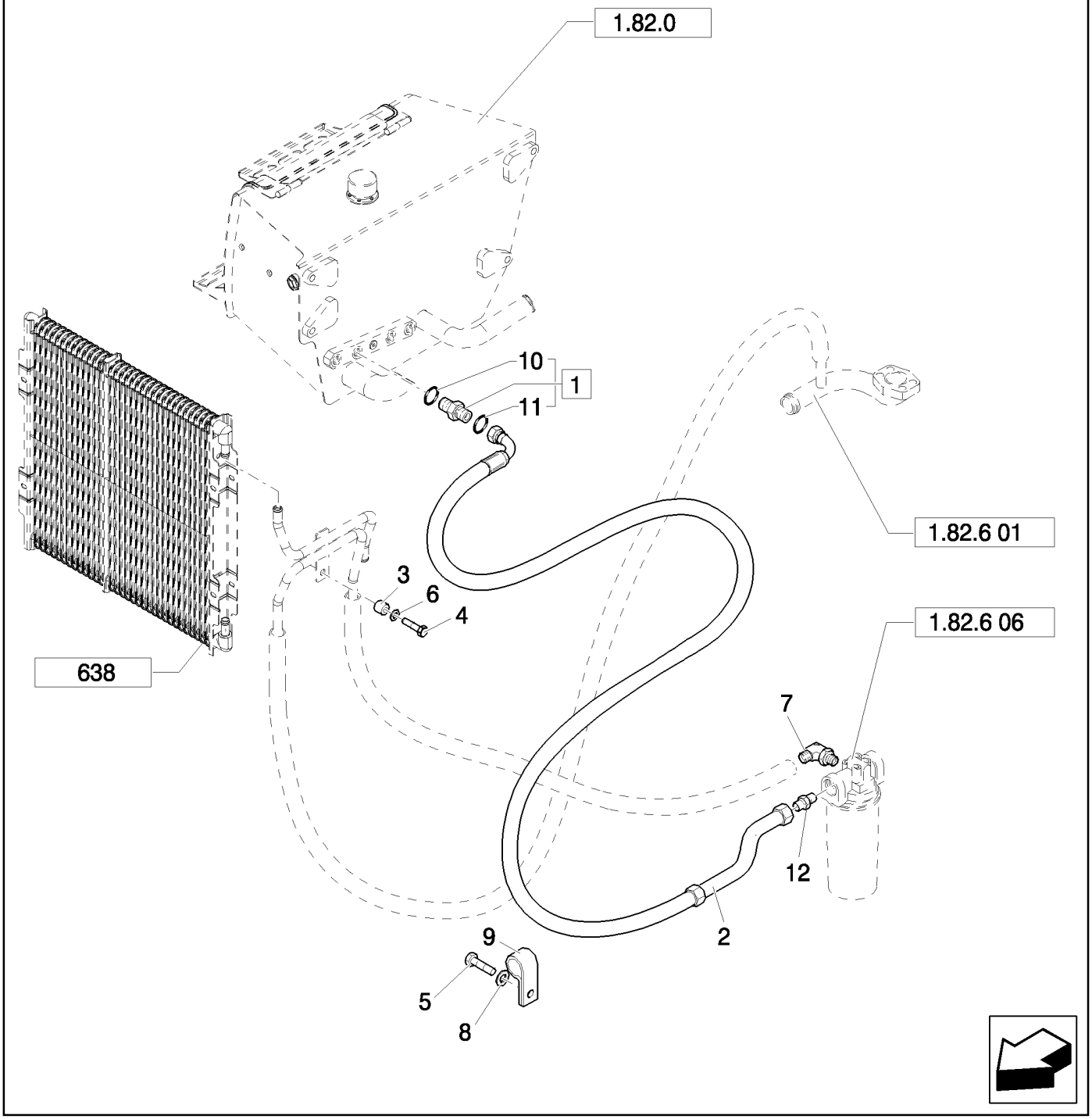

TUYAUX CIRCUIT HYDRAULIQUE: RETOUR AU RÉSERVOIR

REF	FN	PART NUMBER	YR/SN	QTY	DESCRIPTION
1		85802801		1	RACCORD, Assy, 1-11/16"-12 ORS x 1-5/16"-12 SAE O-ring
2		85827824		1	TUYAU FLEXIBLE
3		85825169		1	ENTRETOISE
4		47049184		4	VIS
5		47042364		1	BOULON, M12x25
6		47048963		1	RONDELLE
7		85825355		1	RACCORD
8		47048964		1	RONDELLE
9		47048664		1	BRIDE
10		80167268		1	JOINT THORIQUE
11		89824051		1	JOINT THORIQUE
12		85802960		1	RACCORD

Mechanical Version / Pilot Version

B95B

TUYAUX CIRCUIT HYDRAULIQUE: FILTRE À HUILE ET CLAPET DE NON-RETOUR

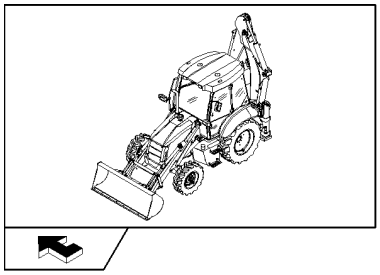

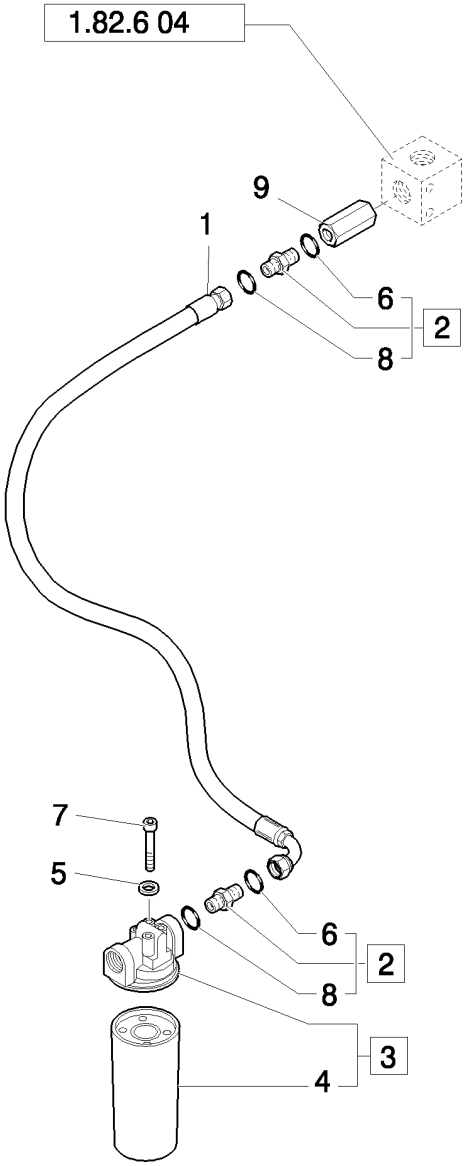

TUYAUX CIRCUIT HYDRAULIQUE: FILTRE À HUILE ET CLAPET DE NON-RETOUR

REF	FN	PART NUMBER	YR/SN	QTY	DESCRIPTION
1	1	87414983		1	TUYAU FLEXIBLE
1	2	85805840		1	TUYAU FLEXIBLE
2		85802801		2	RACCORD, Assy, 1-11/16"-12 ORS x 1-5/16"-12 SAE O-ring
3		87315438		1	FILTRE ASSY
4		86989733		1	FILTRE, HUILE HYDRAULIQUE
5		11190579		4	RONDELLE BELLEVILLE, Belleville, M10.5
6		80167268		2	JOINT THORIQUE
7		11106221		4	BOULON, Hex, M10 x 25, 8.8, Full Thd
8		89824051		2	JOINT THORIQUE
9	1	85805824		1	CLAPET ANTI-RETOUR

(1) Only for Side Shift
(2) Only for Center Pivot

1.82.6	07	p1	03/08

TUYAUX CIRCUIT HYDRAULIQUE: VÉRINS ÉQUIPEMENT CHARGEUR

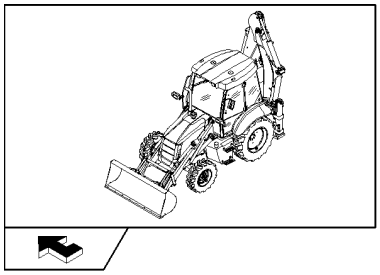

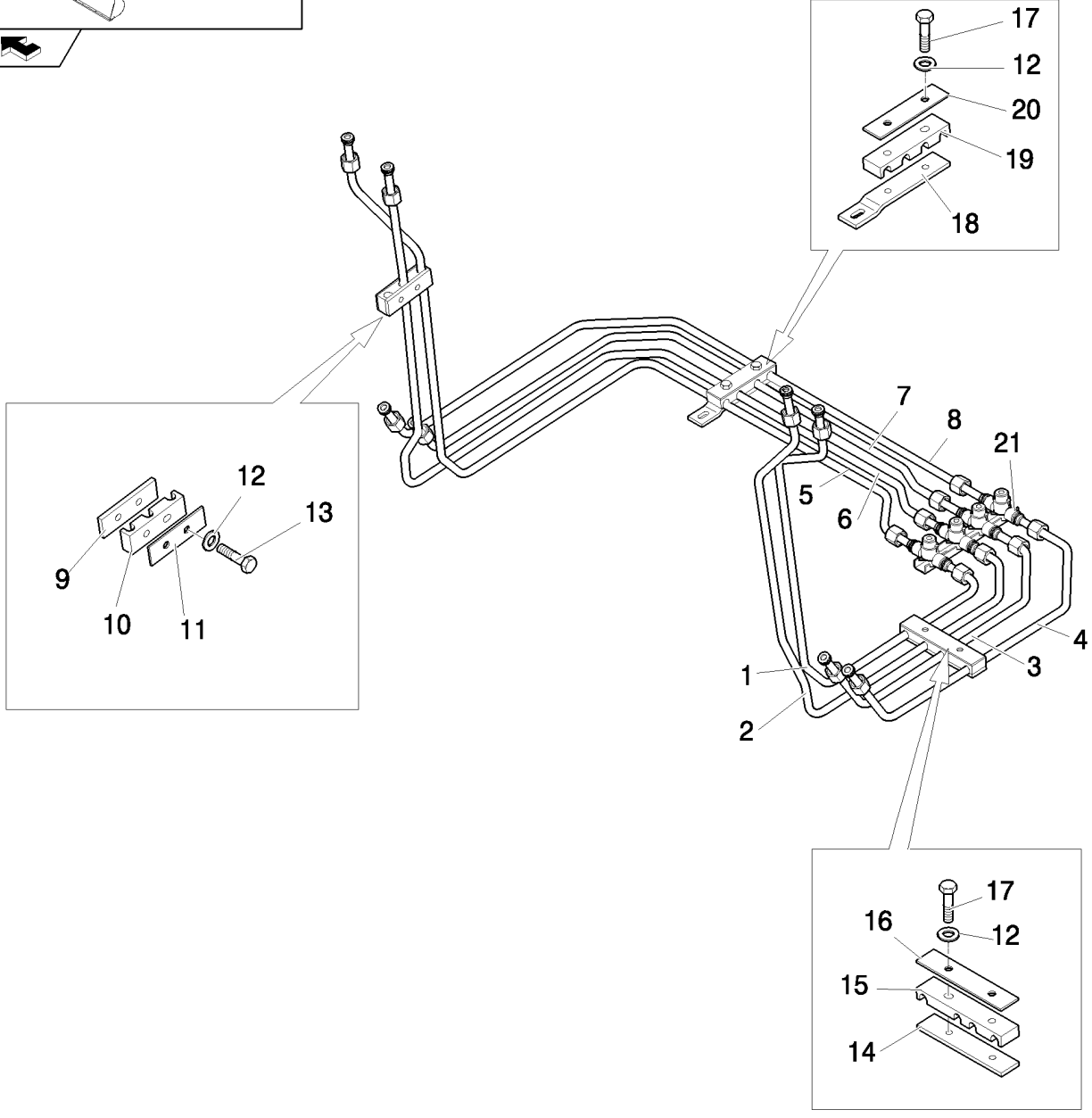

TUYAUX CIRCUIT HYDRAULIQUE: VÉRINS ÉQUIPEMENT CHARGEUR

REF	FN	PART NUMBER	YR/SN	QTY	DESCRIPTION
1		85805854		1	TUYAU HYDRAULIQUE, LH
2		85805855		1	TUYAU HYDRAULIQUE, LH
3		85805858		1	TUYAU HYDRAULIQUE, LH
4		85805859		1	TUYAU HYDRAULIQUE, LH
5		85805856		1	TUYAU HYDRAULIQUE, RH
6		85805857		1	TUYAU HYDRAULIQUE, RH
7		85805860		1	TUYAU HYDRAULIQUE, RH
8		85805861		1	TUYAU HYDRAULIQUE, RH
9		85805870		2	PLAQUE
10		85805872		2	BRIDE
11		85805869		2	PLAQUE
12		11193979		8	RONDELLE BELLEVILLE, Belleville, M8.4
13		16043621		2	BOULON, Hex, M8 x 25, 8.8
14		85805210		2	PLAQUE
15		85805211		2	BRIDE
16		85805209		2	PLAQUE
17		16043821		6	BOULON, Hex, M8 x 30, 8.8
18		85805206		1	PATTE FIXATION
19		85805208		1	BRIDE
20		85805207		1	PLAQUE
21		85805203		1	COLLECTEUR

Mechanical Version / Pilot Version

B95B

1.82.6	10	p1	03/08

TUBULURES CIRCUIT HYDRAULIQU

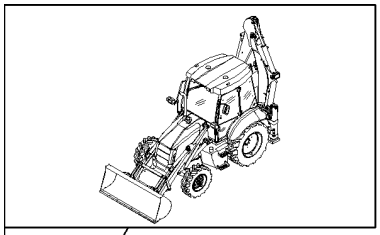

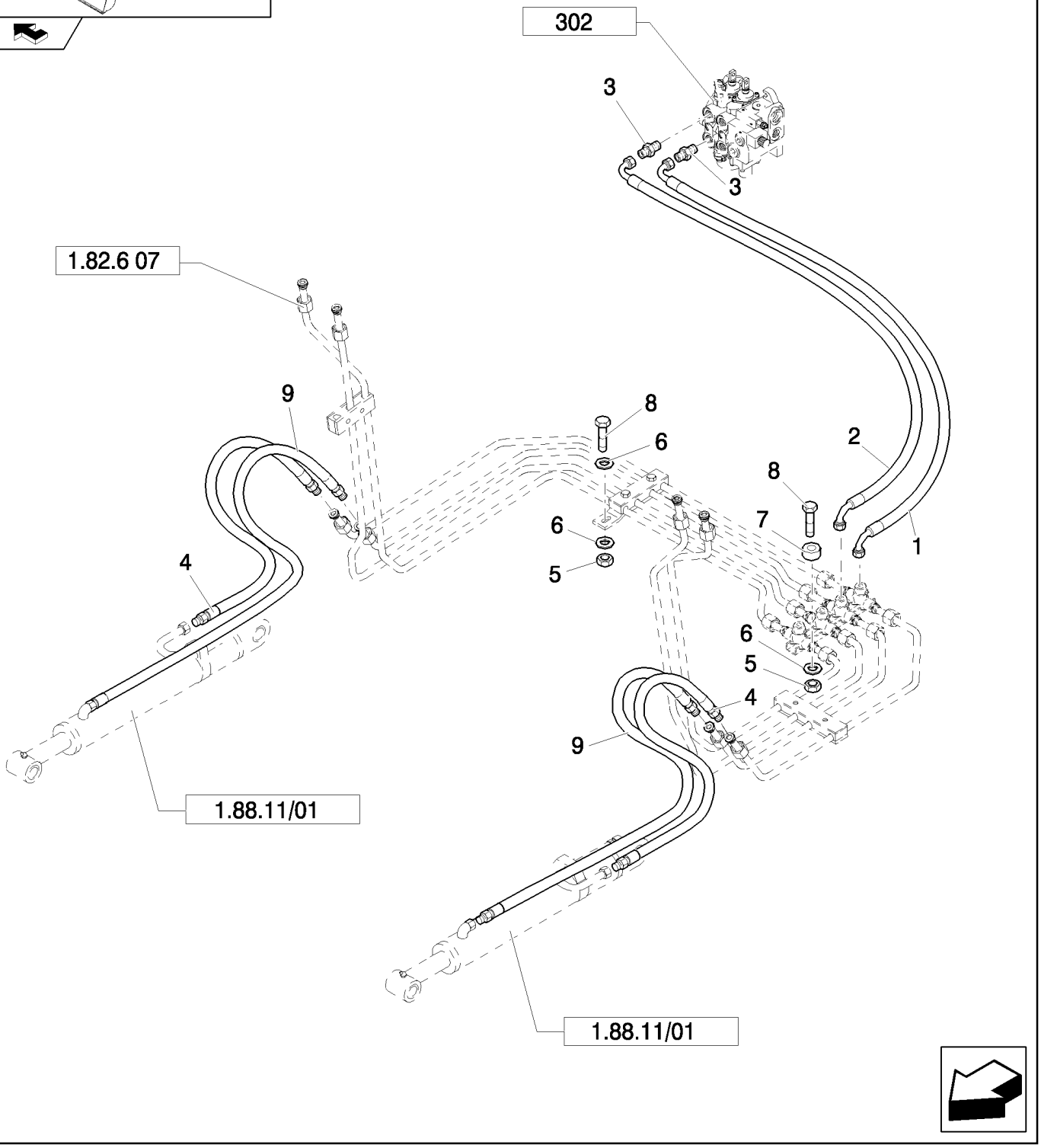

TUBULURES CIRCUIT HYDRAULIQU

REF	FN	PART NUMBER	YR/SN	QTY	DESCRIPTION
1		87619508		1	TUYAU FLEXIBLE
2		87619510		1	TUYAU FLEXIBLE
3		83962539		2	RACCORD, 1-1/16-12 ORB x 1-14 ORFS; Incl. 167266, 9992069 O-Rings
4		85813363		2	TUYAU FLEXIBLE, 550mm lg
5		14048211		2	CONTRE-ECROU, M8 x 1.25, Cl 8
6		12647121		3	RONDELLE, M8 x 20 x 3
7		85802891		2	ENTRETOISE
8		16044021		2	BOULON, Hex, M8 x 40, 8.8
9		85813380		2	TUYAU FLEXIBLE

Mechanical Version / Pilot Version

B95B

1.82.6	11	p1	03/08

TUBULURES CIRCUIT HYDRAULIQUE

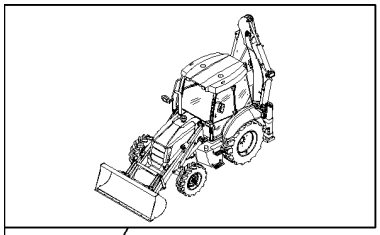

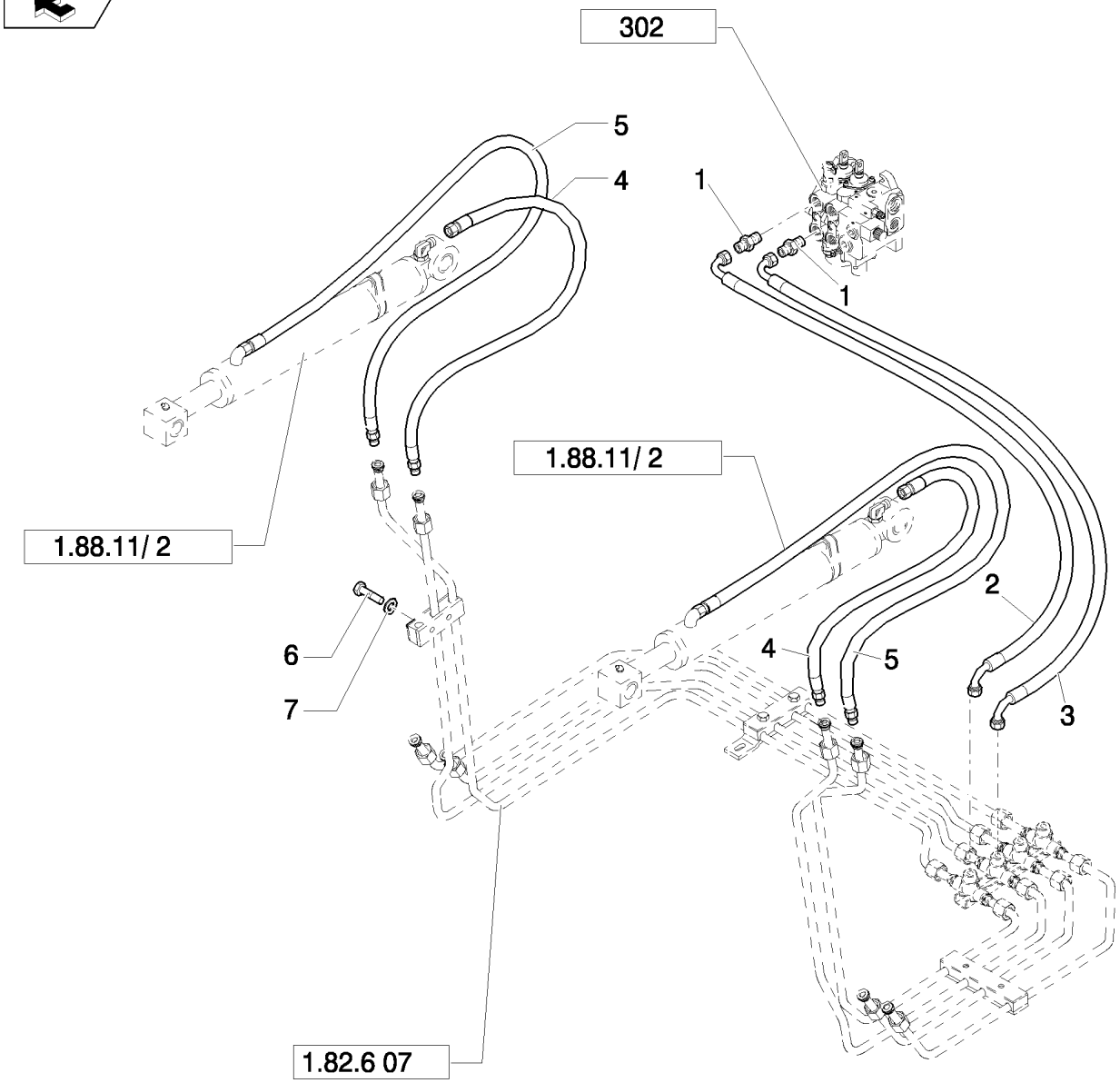

TUBULURES CIRCUIT HYDRAULIQUE

REF	FN	PART NUMBER	YR/SN	QTY	DESCRIPTION
1		83962539		2	RACCORD, 1-1/16-12 ORB x 1-14 ORFS; Incl. 167266, 9992069 O-Rings
2		87619509		1	TUYAU FLEXIBLE
3		87619507		1	TUYAU FLEXIBLE
4		85813362		2	TUYAU FLEXIBLE, 1130mm lg
5		85813379		2	TUYAU FLEXIBLE
6		16044421		2	BOULON, Hex, M8 x 60, 8.8
7		11193979		2	RONDELLE BELLEVILLE, Belleville, M8.4

Mechanical Version / Pilot Version

B95B

1.82.6	12	p1	03/08

TUYAUX CIRCUIT HYDRAULIQUE 4WS (CENTER PIVOT) - NA

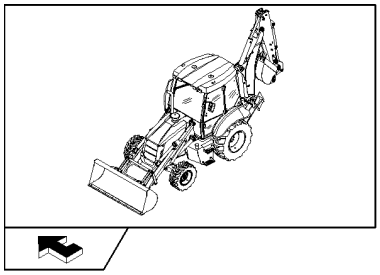

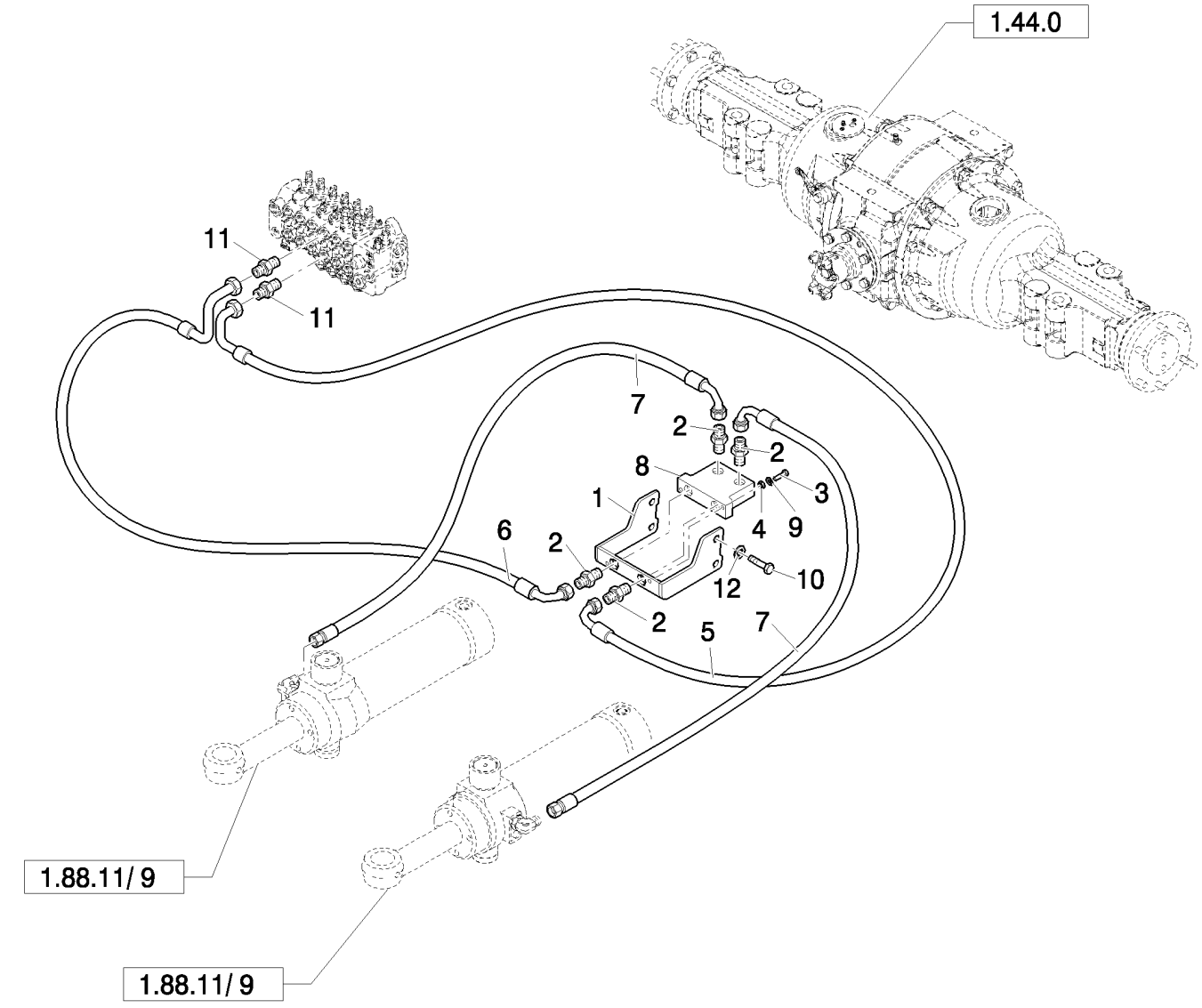

TUYAUX CIRCUIT HYDRAULIQUE 4WS (CENTER PIVOT) - NA

REF	FN	PART NUMBER	YR/SN	QTY	DESCRIPTION
1	1	87371811		1	SUPPORT
1	2	87350477		1	PATTE FIXATION
1	3	87351460		1	PATTE FIXATION
2		201-112		4	RACCORD, 13/16"-16 ORFS x 7/8"-14 ORB
3		614-10040		2	BOULON, Hex, M10 x 40, 8.8, Full Thd, M10x40
4		829-1410		2	ECROU, M10, Cl 10
5		87356499		1	TUYAU FLEXIBLE
6		87356501		1	TUYAU FLEXIBLE
7		87361461		2	TUYAU FLEXIBLE
8		87449373		1	SOUPAPE HYDRAULIQUE
9		895-11010		4	RONDELLE, M10 x 20 x 2, 11 x 21 x 2
10		413-1036		4	BOULON, Hex, 5/8"-11 x 2 1/4", G5
10	4	87376137		4	VIS-RACCORD
11		85805258		2	RACCORD, 9/16"-16 ORS x 1 1/16"-12, O-Ring
12	3	14496931		1	RONDELLE, M16 x 30 x 3

(1) Except for B115B
(2) Only for Power Shuttle
(3) Only for Power Shift
(4) Only for B115B

Pilot Control Version

B95B

TUYAUX CIRCUIT HYDRAULIQUE: VÉRIN DE ROTATION

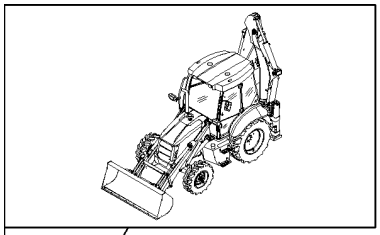

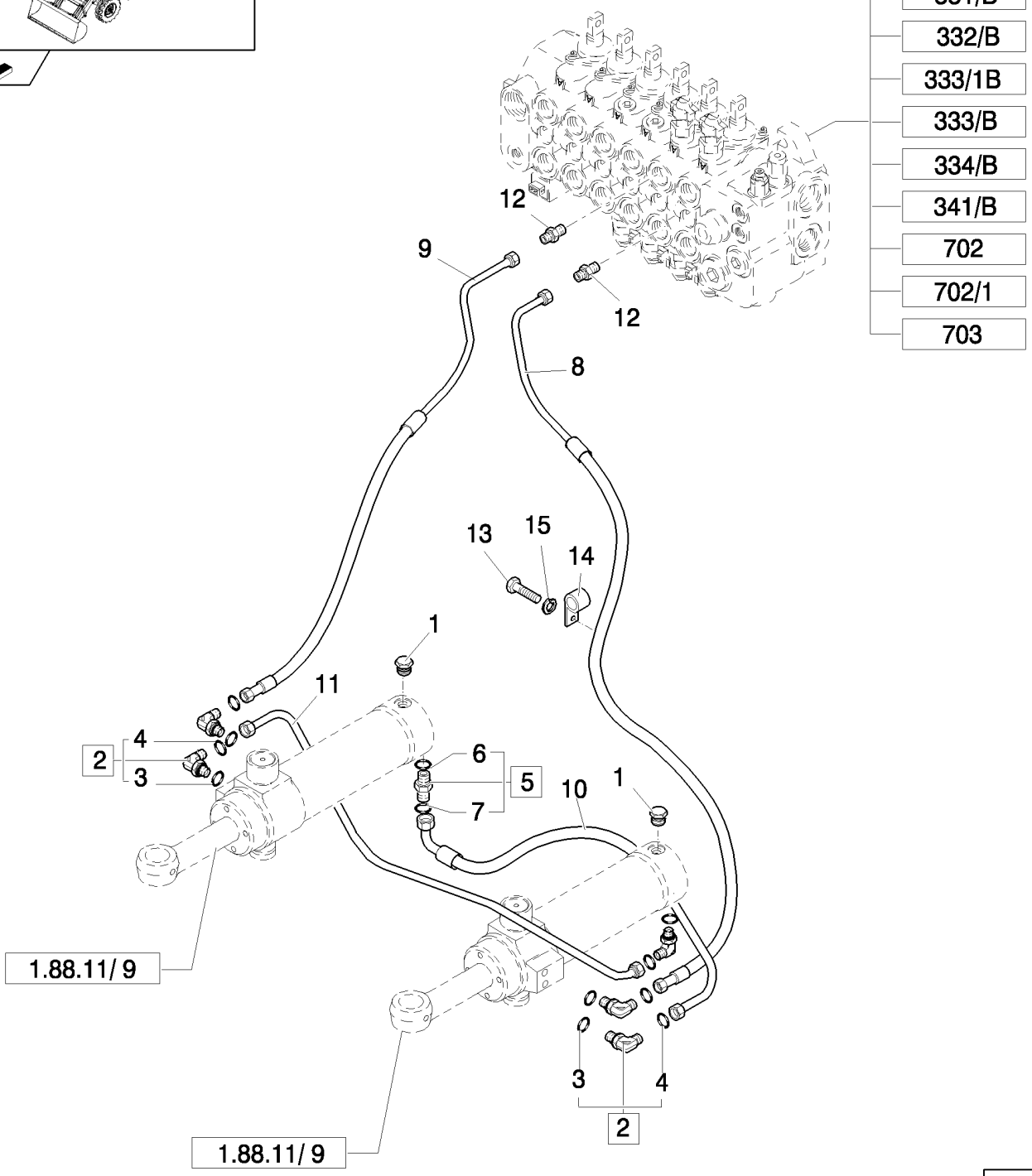

TUYAUX CIRCUIT HYDRAULIQUE: VÉRIN DE ROTATION

REF	FN	PART NUMBER	YR/SN	QTY	DESCRIPTION
1		85802955		2	BOUCHON
2		83971549		5	COUDE, Assy
3		80128825		5	JOINT THORIQUE
4		89992298		5	JOINT THORIQUE
5		83963374		1	RACCORD, Assy
6		81845030		1	ECROU
7		81832258		1	JOINT THORIQUE
8	1	85819730		1	FLEXIBLE HYDRAULIQUE
8	2	85819060		1	TUYAU HYDRAULIQUE
9	1	85819728		1	FLEXIBLE HYDRAULIQUE
9	2	85819061		1	FLEXIBLE HYDRAULIQUE
10	1	85819727		1	FLEXIBLE HYDRAULIQUE, 415mm lg
10	2	85820109		1	TUYAU HYDRAULIQUE
11		85819729		1	FLEXIBLE HYDRAULIQUE
12		85805258		2	RACCORD, 9/16"-16 ORS x 1 1/16"-12, O-Ring
13		16044221		2	BOULON, Hex, M8 x 50, 8.8
14		14560187		2	SERRE-CABLE, 178mm lg, L=203.2 mm
15		11190579		2	RONDELLE BELLEVILLE, Belleville, M10.5

(1) Only for B110B - B115B Center Pivot, Pilot Version, Power Shift
(2) Only for Side Shift

TUYAUX CIRCUIT HYDRAULIQUE: VÉRIN DE L'ÉQUIPEMENT RÉTRO

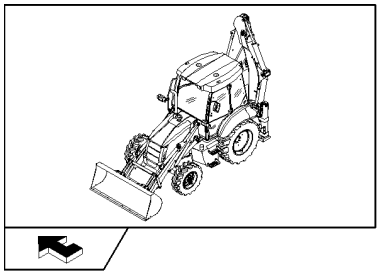

TUYAUX CIRCUIT HYDRAULIQUE: VÉRIN DE L'ÉQUIPEMENT RÉTRO

REF	FN	PART NUMBER	YR/SN	QTY	DESCRIPTION
1		83962538		2	RACCORD, Assy
2		80167266		2	JOINT THORIQUE
3		89991976		2	JOINT THORIQUE
4		83962539		2	RACCORD, 1-1/16-12 ORB x 1-14 ORFS; Incl. 167266, 9992069 O-Rings
5	1	87619495		1	TUYAU FLEXIBLE
5	2	85819064		1	FLEXIBLE HYDRAULIQUE
6	1	87621908		1	TUYAU FLEXIBLE
6	2	85819062		1	FLEXIBLE HYDRAULIQUE
7	1	87619496		1	TUYAU FLEXIBLE
7	2	85819063		1	FLEXIBLE HYDRAULIQUE
8	1	87621920		1	TUYAU FLEXIBLE
8	2	85819065		1	FLEXIBLE HYDRAULIQUE

(1) Only for Center Pivot
(2) Only for Side Shift

1.82.6	15	p1	04/08

TUYAUX CIRCUIT HYDRAULIQUE: VÉRIN FLÈCHE DE L'ÉQUIPEMENT RÉTRO

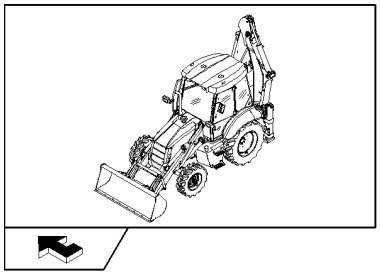

TUYAUX CIRCUIT HYDRAULIQUE: VÉRIN FLÈCHE DE L'ÉQUIPEMENT RÉTRO

REF	FN	PART NUMBER	YR/SN	QTY	DESCRIPTION
1		83962538		1	RACCORD, Assy
2		80167266		1	JOINT THORIQUE
3		89991976		1	JOINT THORIQUE
4		83962539		1	RACCORD, 1-1/16-12 ORB x 1-14 ORFS; Incl. 167266, 9992069 O-Rings
5	1	85819058		1	TUYAU HYDRAULIQUE
5	2	87621907		1	TUYAU FLEXIBLE
6	1	85819059		1	TUYAU HYDRAULIQUE
6	3	87619484		1	TUYAU FLEXIBLE
7	1	85817230		2	BRIDE
8	1	85817231		2	BRIDE
9	1	85817474		2	SERRE-CABLE
10	1	15213621		4	VIS, Hex, M8 x 55, 8.8, Full Thd
11	1	11193879		4	RONDELLE BELLEVILLE, Belleville, M8.4
12	1	14048211		4	CONTRE-ECROU, M8 x 1.25, Cl 8

(1) Only for Side Shift
(2) Only for Center Pivot
(3) Only for Pilot Version

CRAMPONS MANCHONS PLAQUE ROTATION (CENTER PIVOT)

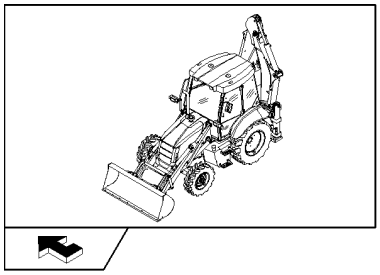

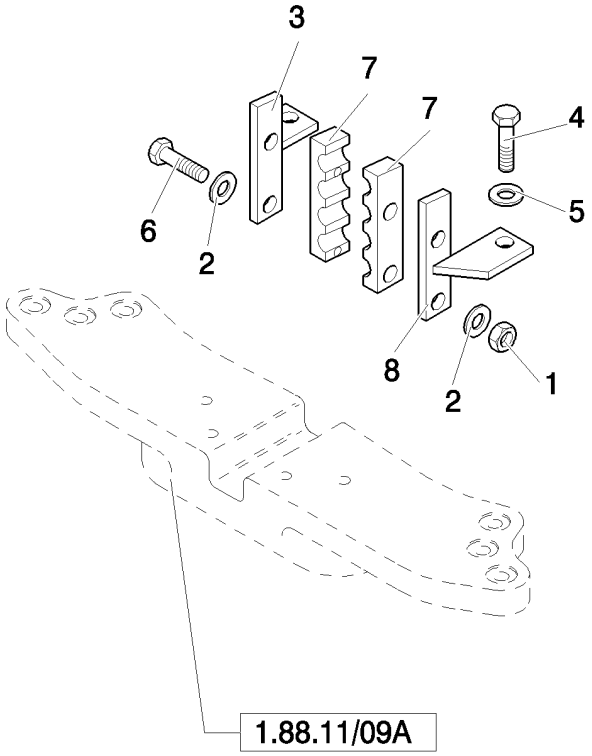

CRAMPONS MANCHONS PLAQUE ROTATION (CENTER PIVOT)

REF	FN	PART NUMBER	YR/SN	QTY	DESCRIPTION
1		14048221		2	CONTRE-ECROU, M8 x 1.25, Cl 10
2		12647121		2	RONDELLE, M8 x 20 x 3
3		85804573		1	SUPPORT
4		11106221		2	BOULON, Hex, M10 x 25, 8.8, Full Thd
5		11190579		2	RONDELLE BELLEVILLE, Belleville, M10.5
6		16044421		2	BOULON, Hex, M8 x 60, 8.8
7		87631460		2	BRIDE
8		85804574		1	SUPPORT

Mechanical Version / Pilot Version	B95B

1.82.6/01	01	p1	04/08

ASPIRATION POMPE HYDRAULIQUE AVANT ET FLEXIBLES SORTIE (CENTER PIVOT) - NA

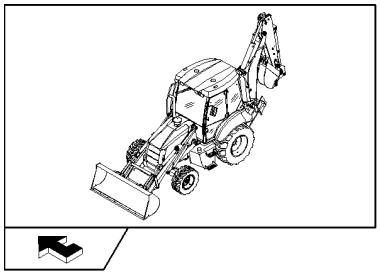

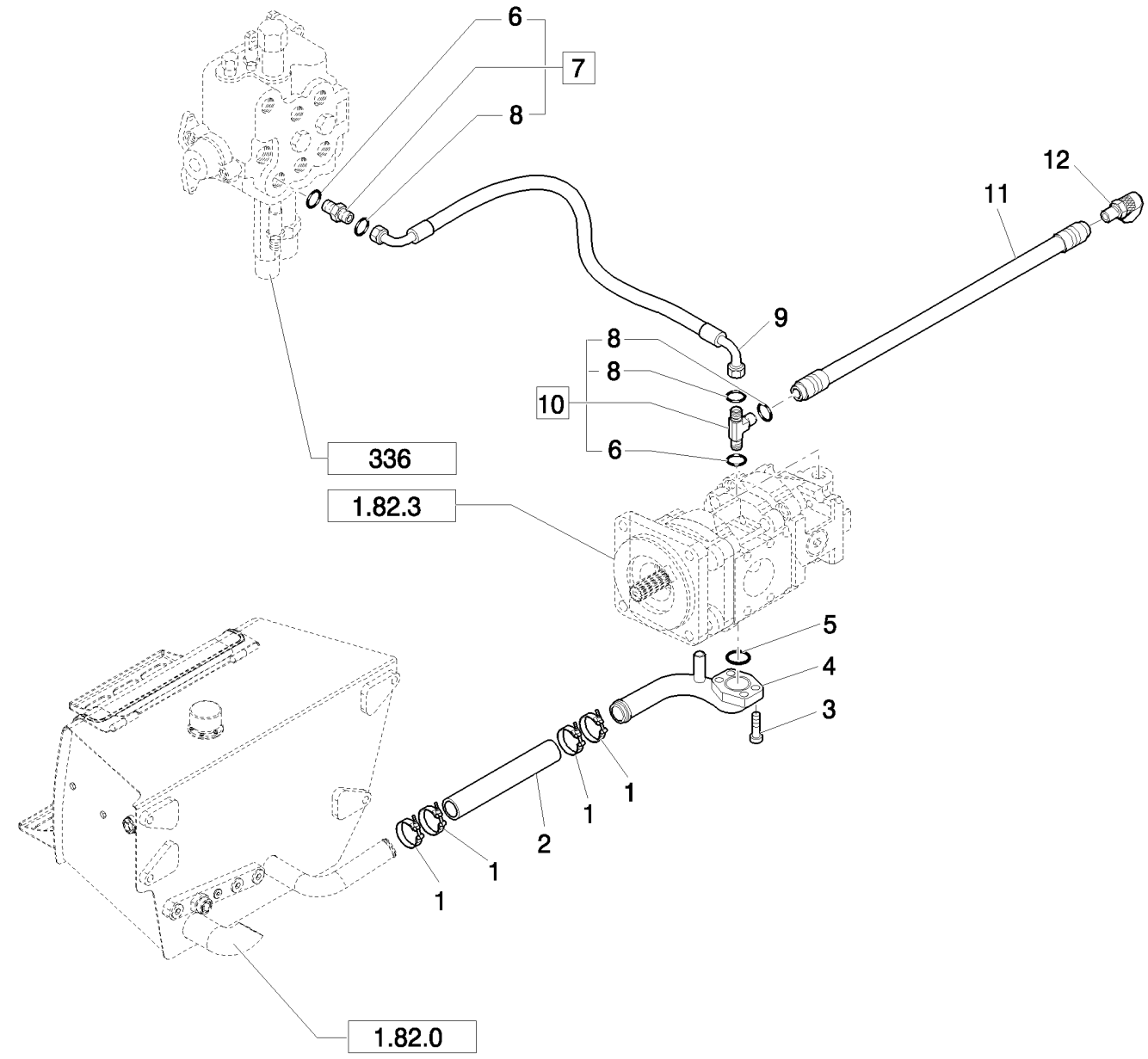

ASPIRATION POMPE HYDRAULIQUE AVANT ET FLEXIBLES SORTIE (CENTER PIVOT) - NA

REF	FN	PART NUMBER	YR/SN	QTY	DESCRIPTION
1		87676333		4	BRIDE
2		85811870		1	FLEXIBLE
3		14422021		3	VIS, Hex Soc Hd, M12 x 30, 8.8
4		85827041		1	TUBE
5		14464680		1	JOINT THORIQUE, -228, 70 Duro, 2.234" ID x .139" Thk
6		80167266		2	JOINT THORIQUE
7		83962538		1	RACCORD, Assy
8		89991976		3	JOINT THORIQUE
9		87621912		1	TUYAU FLEXIBLE
10		85815581		1	TE, Assy
11		85815568		1	FLEXIBLE HYDRAULIQUE
12		85817596		1	ACCOUPLEMANT RAP MALE

Mechanical Version B95B

1.82.6/01	02	p1	05/08

STABILISATEUR POMPE HYDRAULIQUE ARRIERE, MANCHONS SOUPAPES CHARGEUSE ET EXCAVATRICE (CP) - NA

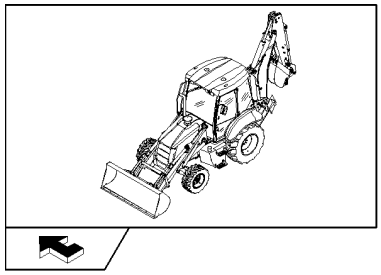

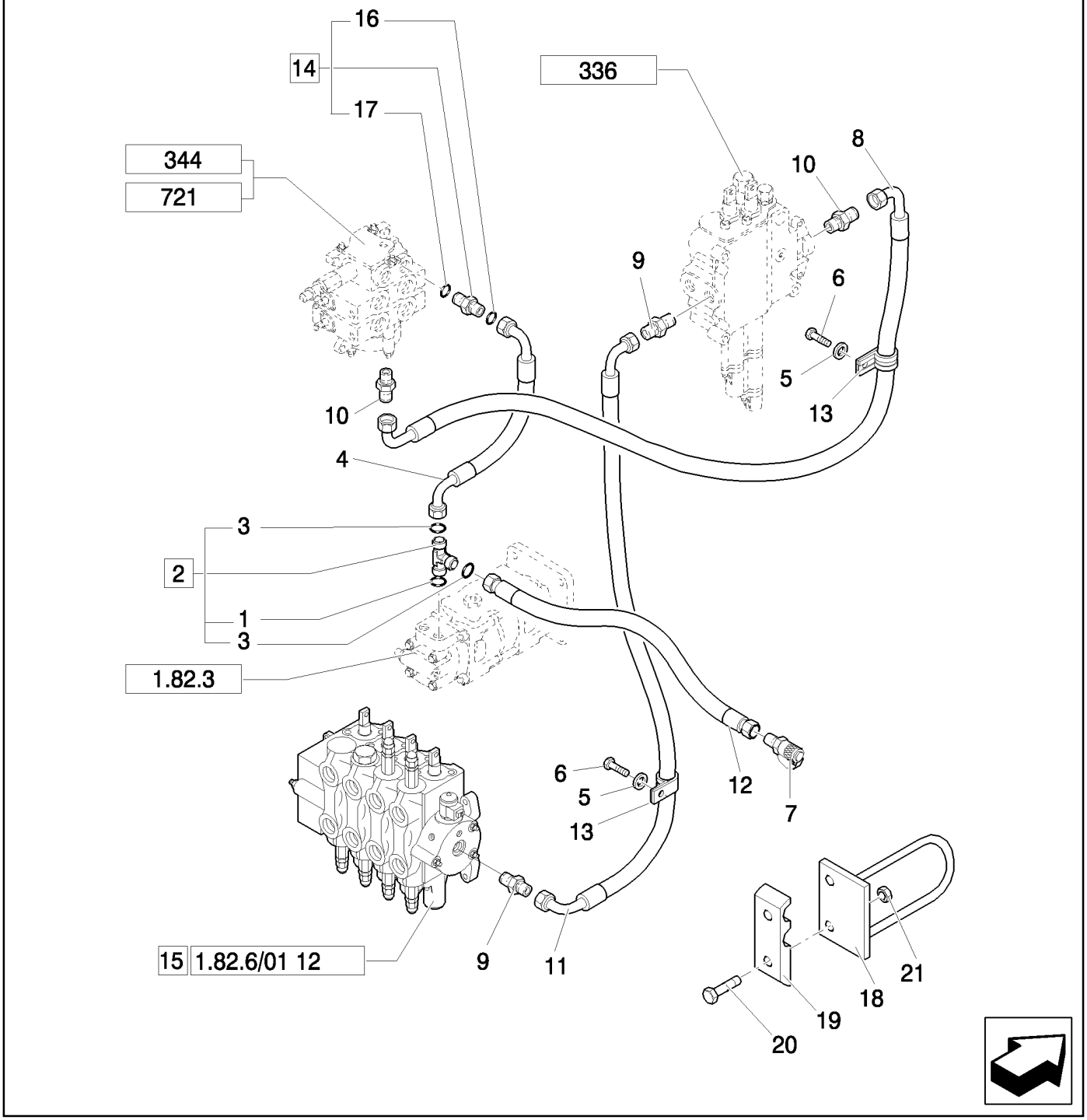

STABILISATEUR POMPE HYDRAULIQUE ARRIERE, MANCHONS SOUPAPES CHARGEUSE ET EXCAVATRICE (CP) - NA

REF	FN	PART NUMBER	YR/SN	QTY	DESCRIPTION
1		80167269		1	JOINT THORIQUE
2		85815580		1	RACCORD, Assy
3		83901443		2	JOINT THORIQUE
4		87614752		1	TUYAU FLEXIBLE
5		11193979		2	RONDELLE BELLEVILLE, Belleville, M8.4
6		16044021		2	BOULON, Hex, M8 x 40, 8.8
7		85817596		1	ACCOUPLEMANT RAP MALE
8		87621910		1	TUYAU FLEXIBLE
9		85802958		1	RACCORD
10		85802642		2	RACCORD, 1-3/16"-12 ORS x 7/8"-14 SAE O-Ring
11		85802776		1	FLEXIBLE HYDRAULIQUE, 1150mm lg
12		85815567		1	FLEXIBLE HYDRAULIQUE
13		85802890		2	BRIDE
14		83963000		1	RACCORD, Assy
15		85827100		1	DISTRIBUTEUR
16		80167269		1	JOINT THORIQUE
17		83901443		1	JOINT THORIQUE
18		85802214		2	SUPPORT
19		87631462		2	PATTE FIXATION
20		16044221		2	BOULON, Hex, M8 x 50, 8.8
21		16104111		2	CONTRE-ECROU, M8 x 1.25, Cl 8

Mechanical Version B95B

TUYAUX CIRCUIT HYDRAULIQUE (CENTER PIVOT) - NA: PRISE PRESSION

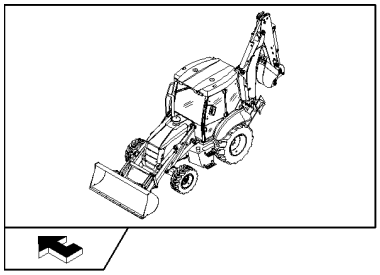

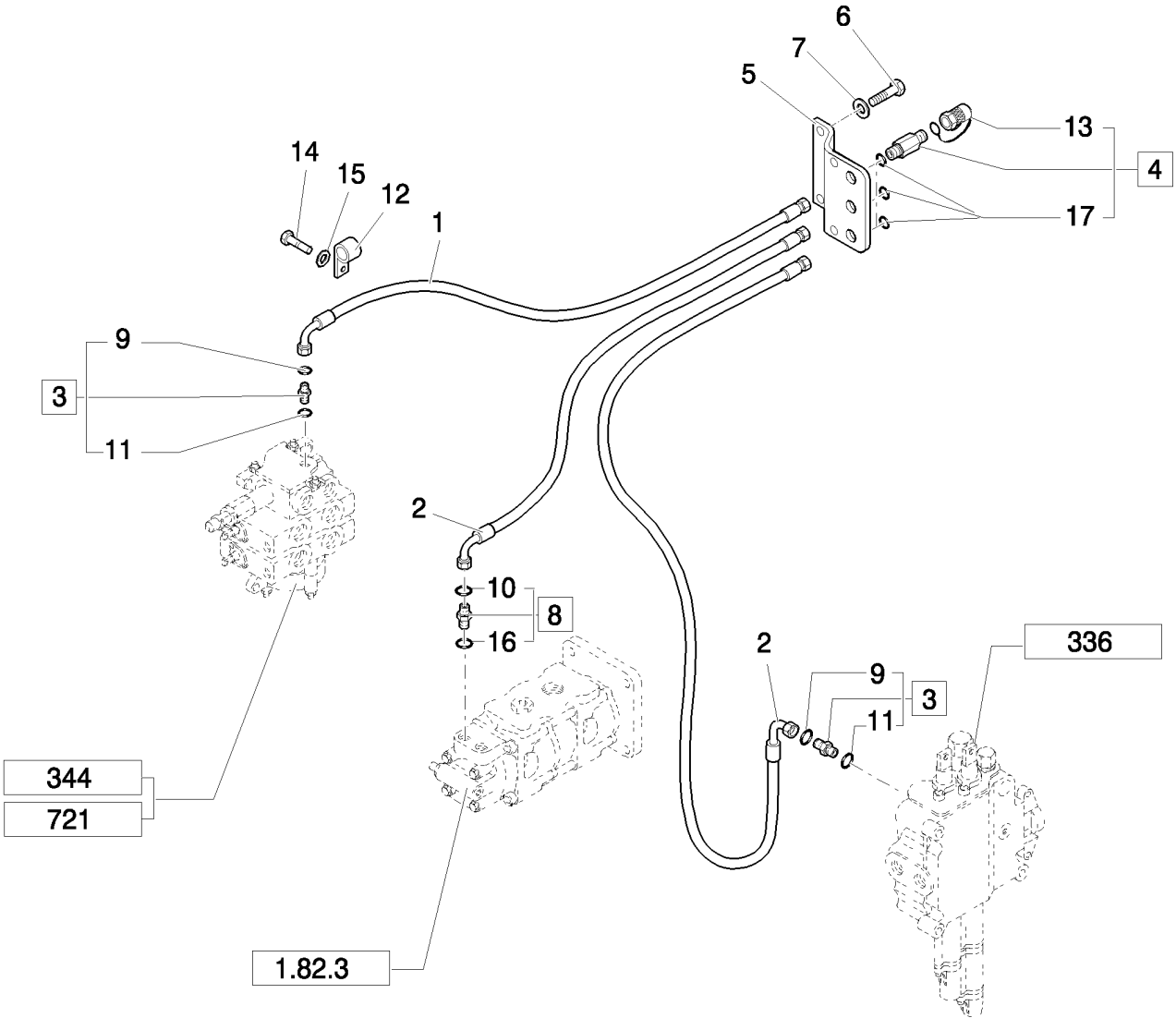

TUYAUX CIRCUIT HYDRAULIQUE (CENTER PIVOT) - NA: PRISE PRESSION

REF	FN	PART NUMBER	YR/SN	QTY	DESCRIPTION
1		85812170		1	TUYAU FLEXIBLE, 1250mm lg
2		85812171		2	TUYAU FLEXIBLE, 1450mm lg
3		83963371		2	RACCORD, Assy
4		85817226		3	ACCOUPLEMANT RAP MALE, Assy
5		87569583		1	PLAQUE
6		14441524		2	VIS
7		11193879		2	RONDELLE BELLEVILLE, Belleville, M8.4
8		83971549		1	COUDE, Assy
9		89617873		5	JOINT THORIQUE, 90 Duro, .468" ID x .078" Thk
10		89992298		1	JOINT THORIQUE
11		81844851		5	JOINT THORIQUE, 90 Duro, .375" ID x .070" Thk
12		85802890		2	BRIDE
13		9968791		3	BOUCHON
14		15540821		2	BOULON, Hex, M12 x 1.25 x 50, 8.8
15		11190779		2	RONDELLE BELLEVILLE, Belleville, M13
16		80128825		1	JOINT THORIQUE
17		81844851		3	JOINT THORIQUE

Mechanical Version	B95B

TUYAUX COLLECTEUR RETOUR - NA

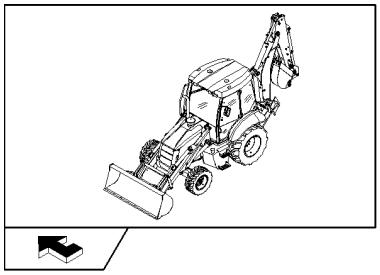

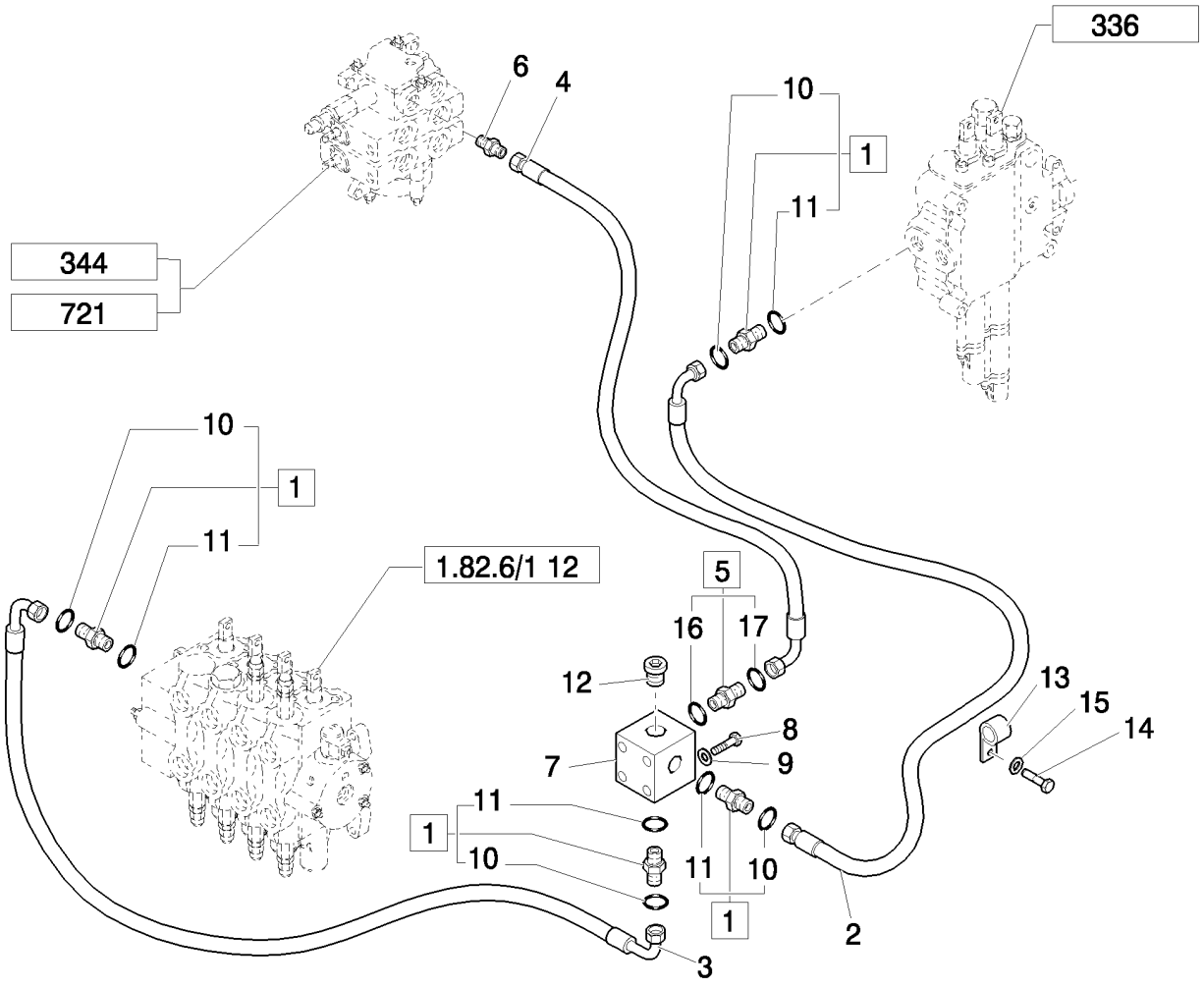

TUYAUX COLLECTEUR RETOUR - NA

REF	FN	PART NUMBER	YR/SN	QTY	DESCRIPTION
1		83963375		4	RACCORD, Assy
2		85802777		1	TUYAU FLEXIBLE, 1100mm lg
3		85802839		1	TUYAU FLEXIBLE, 500mm lg
3	1	87574479		1	FLEXIBLE
4		85802838		1	FLEXIBLE HYDRAULIQUE, 700mm lg
5		83962538		1	RACCORD, Assy
6		85802642		1	RACCORD, 1-3/16"-12 ORS x 7/8"-14 SAE O-Ring
7		85802799		1	BLOC DE JONCTION
8		15541621		2	BOULON, Hex, M12 x 1.25 x 100, 8.8
9		11190779		2	RONDELLE BELLEVILLE, Belleville, M13
10		89824050		4	JOINT THORIQUE
11		80167268		4	JOINT THORIQUE
12		85802955		1	BOUCHON
13		85802890		1	BRIDE
14		15540821		1	BOULON, Hex, M12 x 1.25 x 50, 8.8
15		12646921		1	RONDELLE, M12 x 28 x 3
16		80167266		1	JOINT THORIQUE
17		89991976		1	JOINT THORIQUE

(1) Only for B95BTC

1.82.6/01	05	p1	04/08

GROUPE FILTRE & TUYAUX COLLECTEUR RETOUR (CENTER PIVOT) - NA

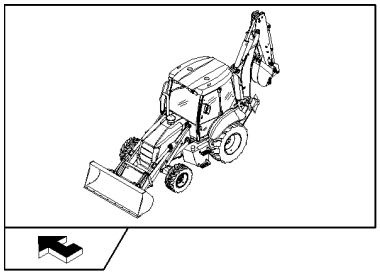

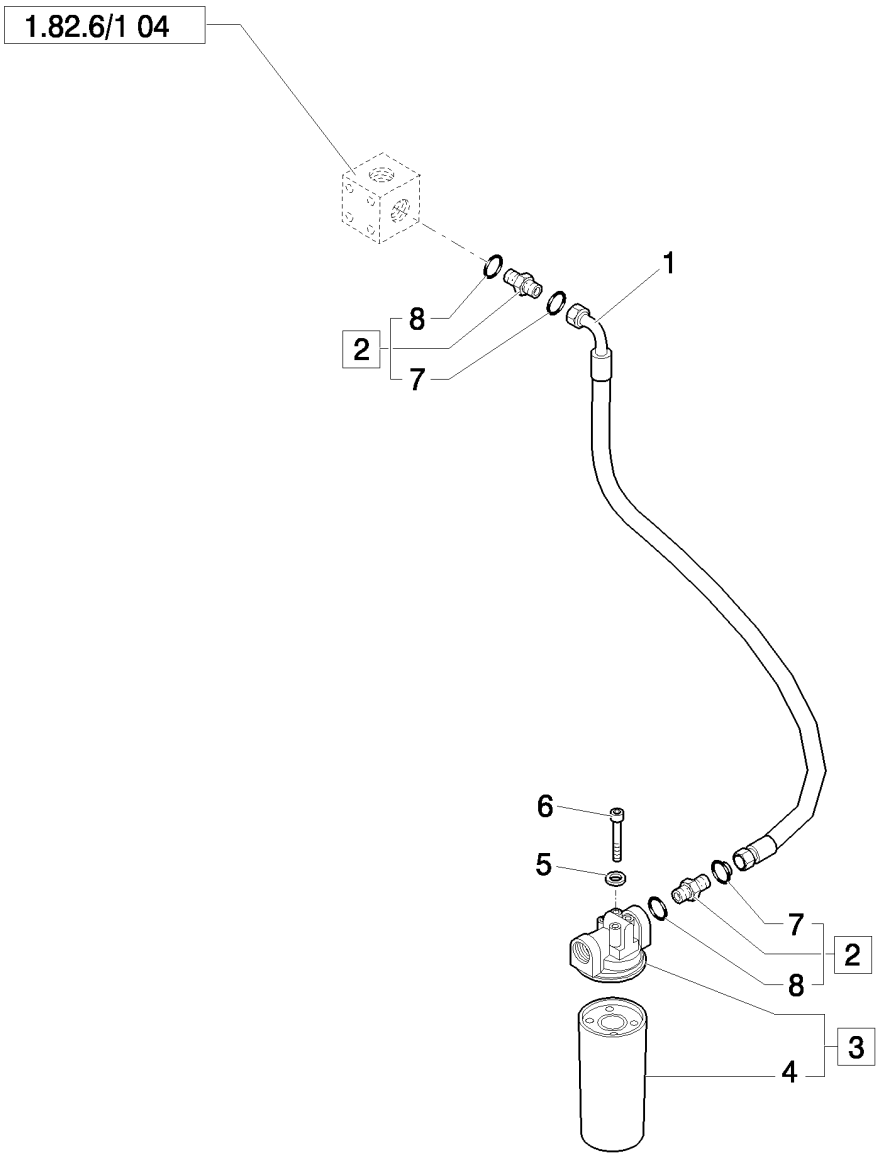

GROUPE FILTRE & TUYAUX COLLECTEUR RETOUR (CENTER PIVOT) - NA

REF	FN	PART NUMBER	YR/SN	QTY	DESCRIPTION
1		85826986		1	TUYAU FLEXIBLE
2		85802801		2	RACCORD, Assy
3		87315438		1	FILTRE ASSY, Assy
4		86989733		1	FILTRE, HUILE HYDRAULIQUE
5		11190579		4	RONDELLE BELLEVILLE, Belleville, M10.5
6		11106221		4	BOULON, Hex, M10 x 25, 8.8, Full Thd
7		89824051		2	JOINT THORIQUE
8		80167268		2	JOINT THORIQUE

Mechanical Version B95B

1.82.6/01	06	p1	04/08

TUYAUX CIRCUIT HYDRAULIQUE (CENTER PIVOT) - NA: RETOUR AU RÉSERVOIR

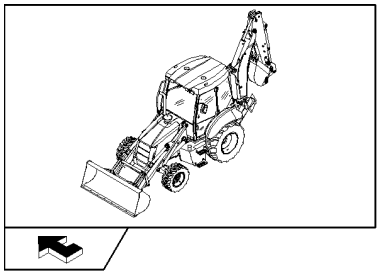

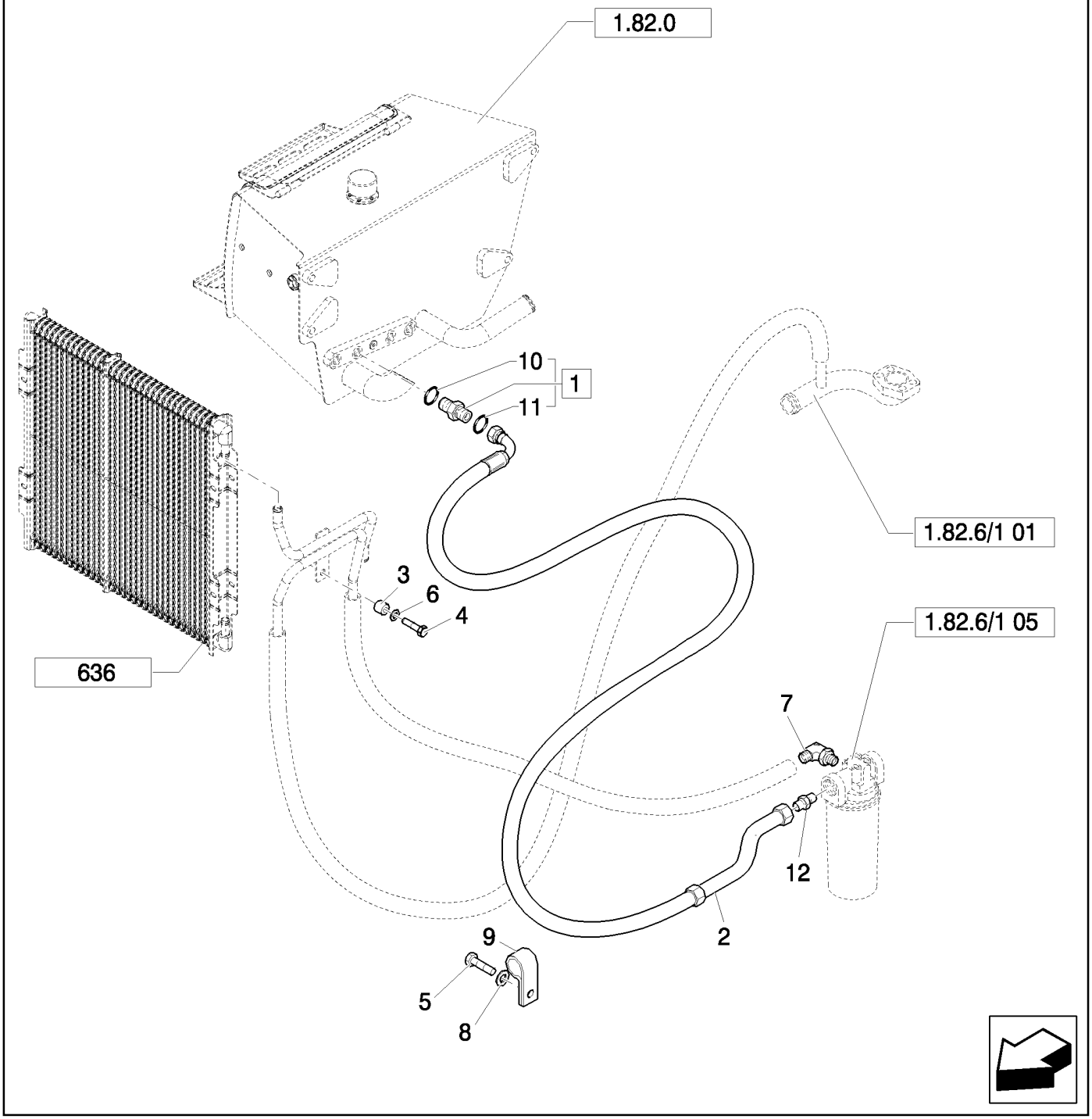

TUYAUX CIRCUIT HYDRAULIQUE (CENTER PIVOT) - NA: RETOUR AU RÉSERVOIR

REF	FN	PART NUMBER	YR/SN	QTY	DESCRIPTION
1		85802801		1	RACCORD, Assy, 1-11/16"-12 ORS x 1-5/16"-12 SAE O-ring
2		85827824		1	TUYAU FLEXIBLE
3		85825169		1	ENTRETOISE
4		47049184		4	VIS
5		15970921		1	BOULON, Hex, M10 x 1.25 x 35, 8.8, Full Thd, M12x25
6		47048963		1	RONDELLE
7		85825355		1	RACCORD
8		47048964		1	RONDELLE
9		47048664		1	BRIDE
10		80167268		1	JOINT THORIQUE
11		89824051		1	JOINT THORIQUE
12		85802960		1	RACCORD

Mechanical Version B95B

1.82.6/01	07	p1	04/08

TUYAUX CYLINDRE RELEVAGE CHARGEUSE (CENTER PIVOT) - NA

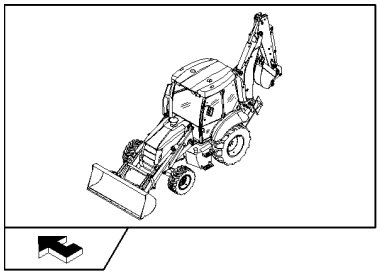

TUYAUX CYLINDRE RELEVAGE CHARGEUSE (CENTER PIVOT) - NA

REF	FN	PART NUMBER	YR/SN	QTY	DESCRIPTION
1		87619505		1	TUYAU FLEXIBLE
2		87619504		1	TUYAU FLEXIBLE
3		83901443		2	JOINT THORIQUE
4		83963000		2	RACCORD, Assy
5		80167269		2	JOINT THORIQUE
6		85813363		2	TUYAU FLEXIBLE, 550mm lg
7		14048211		2	CONTRE-ECROU, M8 x 1.25, Cl 8
8		16044021		2	BOULON, Hex, M8 x 40, 8.8
9		85802891		1	ENTRETOISE
10		12647121		2	RONDELLE, M8 x 20 x 3
11		85813380		2	TUYAU FLEXIBLE

Mechanical Version B95B

1.82.6/01	08	p1	04/08

TUYAUX CYLINDRE GODET CHARGEUSE (CENTER PIVOT) - NA

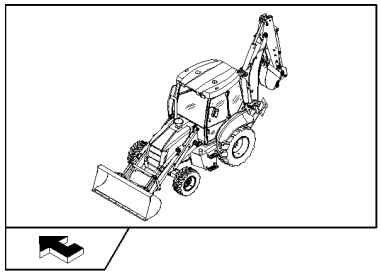

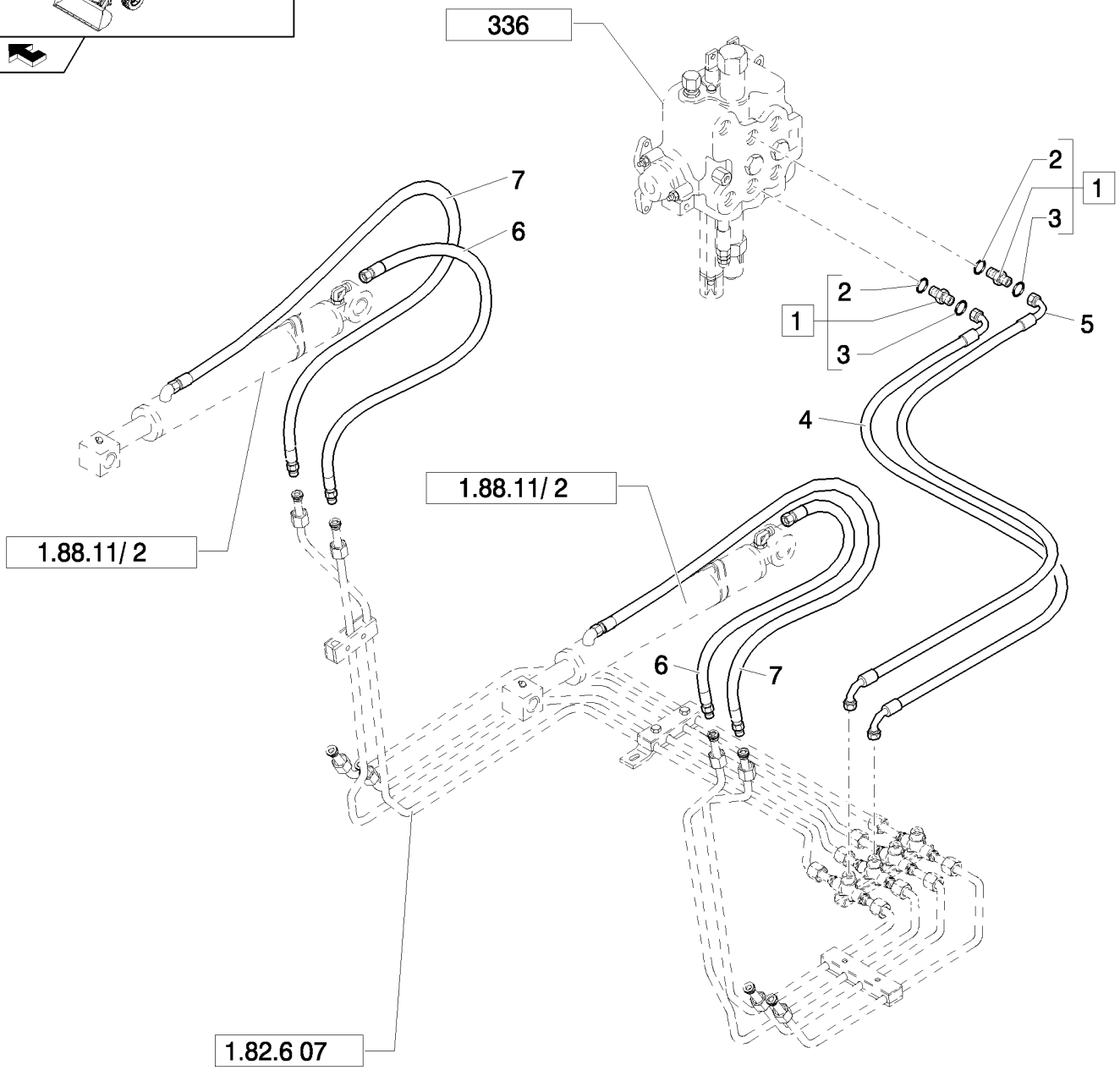

TUYAUX CYLINDRE GODET CHARGEUSE (CENTER PIVOT) - NA

REF	FN	PART NUMBER	YR/SN	QTY	DESCRIPTION
1		83963000		2	RACCORD, Assy
2		80167269		2	JOINT THORIQUE
3		83901443		2	JOINT THORIQUE
4		87619504		1	TUYAU FLEXIBLE
5		87619505		1	TUYAU FLEXIBLE
6		85813362		2	TUYAU FLEXIBLE, 1130mm lg
7		85813379		2	TUYAU FLEXIBLE

Mechanical Version B95B

1.82.6/01	09	p1	04/08

TUYAUX CYLINDRES OSCILLATION EXCAVATRICE (CENTER PIVOT) - NA

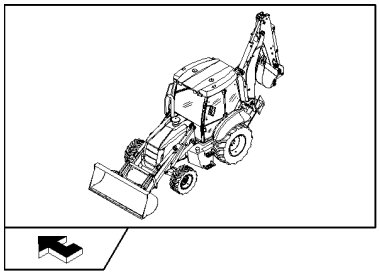

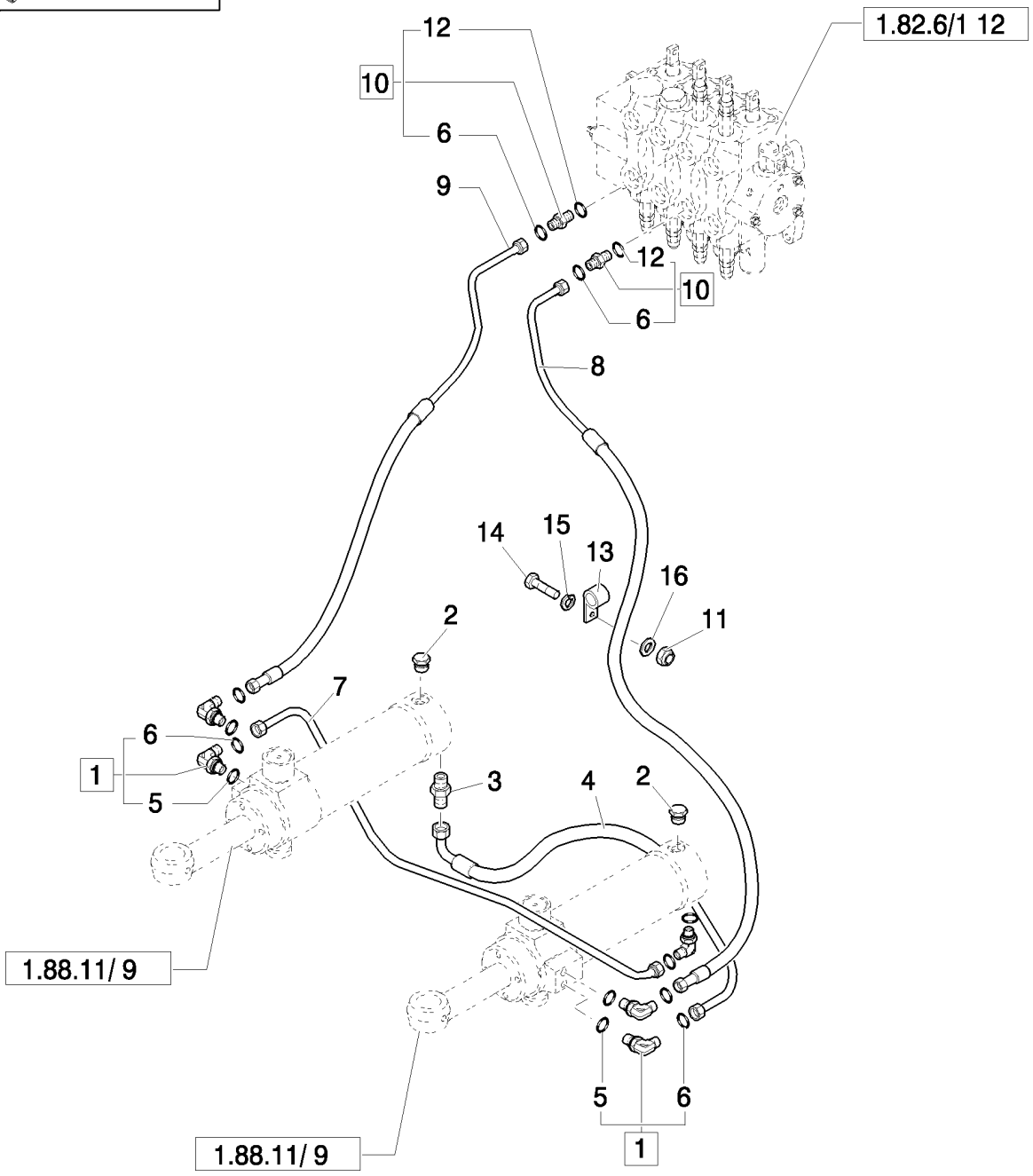

TUYAUX CYLINDRES OSCILLATION EXCAVATRICE (CENTER PIVOT) - NA

REF	FN	PART NUMBER	YR/SN	QTY	DESCRIPTION
1		83971549		4	COUDE, Assy
2		85802955		2	BOUCHON
3		83963374		1	RACCORD
4		85819727		1	FLEXIBLE HYDRAULIQUE, 415mm lg
5		80128825		6	JOINT THORIQUE
6		89992298		6	JOINT THORIQUE
7		85819729		1	FLEXIBLE HYDRAULIQUE
8		85819730		1	FLEXIBLE HYDRAULIQUE
9		85819728		1	FLEXIBLE HYDRAULIQUE
10		83963376		2	RACCORD, Assy
11		16101511		1	ECROU, M12 x 1.25, Cl 8
12		80167269		2	JOINT THORIQUE
13		85802954		1	BRIDE
14		15970721		1	BOULON, Hex, M10 x 1.25 x 25, 8.8, Full Thd
15		11190579		1	RONDELLE BELLEVILLE, Belleville, M10.5
16		12646921		1	RONDELLE, M12 x 28 x 3

Mechanical Version B95B

1.82.6/01	10	p1	04/08

TUYAUX DISTRIBUTEURX EXCAVATRICE (CENTER PIVOT) - NA

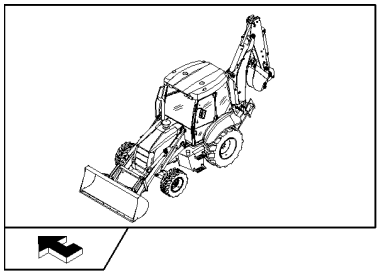

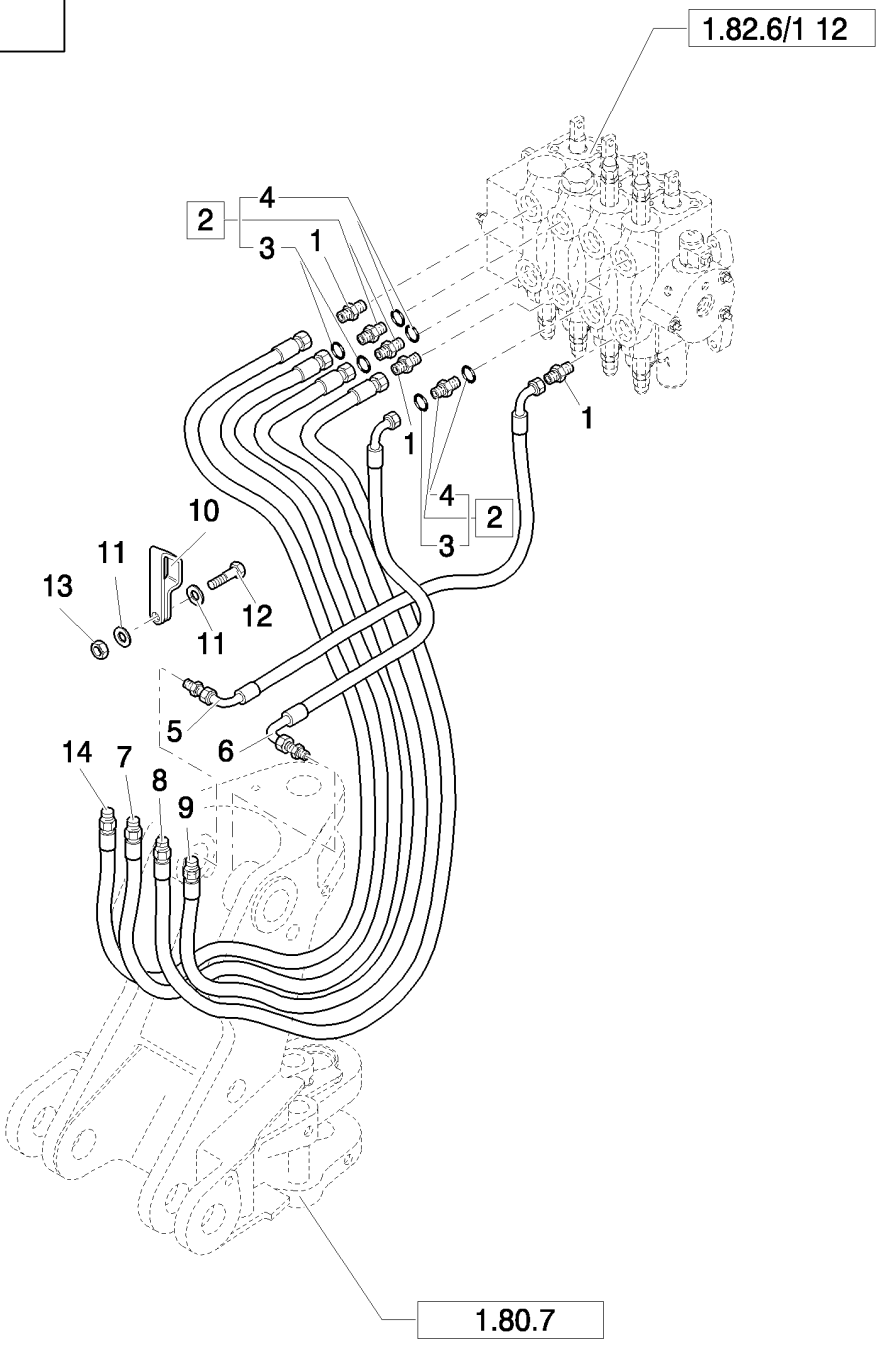

TUYAUX DISTRIBUTEURX EXCAVATRICE (CENTER PIVOT) - NA

REF	FN	PART NUMBER	YR/SN	QTY	DESCRIPTION
1		85802642		3	RACCORD, 1-3/16"-12 ORS x 7/8"-14 SAE O-Ring
2		83963000		3	RACCORD, Assy
3		83901443		3	JOINT THORIQUE
4		80167269		3	JOINT THORIQUE
5		87621907		1	TUYAU FLEXIBLE
6		87619484		1	TUYAU FLEXIBLE
7		87619496		1	TUYAU FLEXIBLE
8		87631531		1	TUYAU FLEXIBLE
9		87621908		1	TUYAU FLEXIBLE
10		85804947		1	BRIDE
11		10519411		2	RONDELLE, M6 x 11.95 x 1.6
12		10902221		1	VIS, Hex, M6 x 16, 8.8
13		12574211		1	CONTRE-ECROU, M6 x 1, Cl 8
14		87619495		1	TUYAU FLEXIBLE

Mechanical Version B95B

1.82.6/01	11	p1	03/08

CRAMPONS MANCHONS PLAQUE ROTATION (CENTER PIVOT) - NA

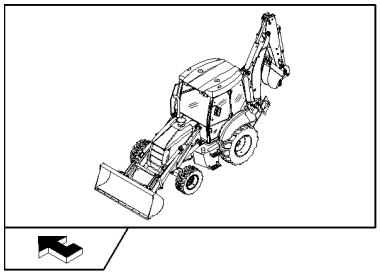

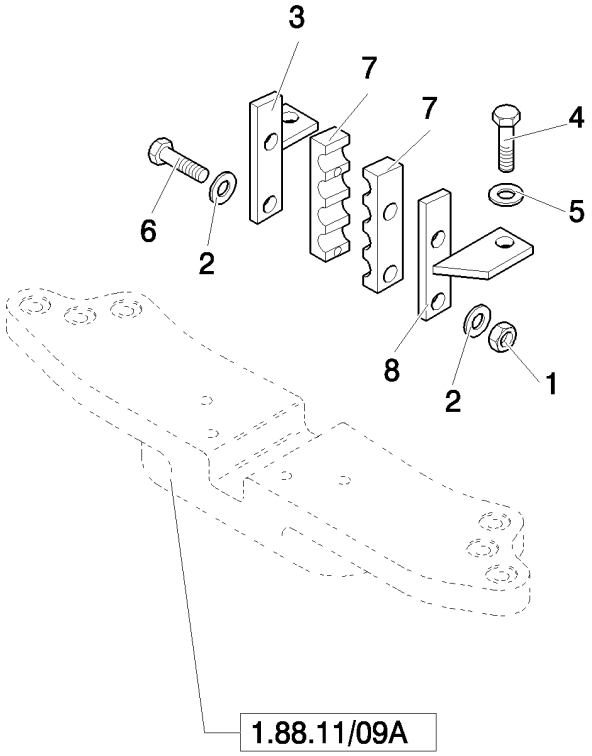

CRAMPONS MANCHONS PLAQUE ROTATION (CENTER PIVOT) - NA

REF	FN	PART NUMBER	YR/SN	QTY	DESCRIPTION
1		14048221		2	CONTRE-ECROU, M8 x 1.25, Cl 10
2		12647121		2	RONDELLE, M8 x 20 x 3
3		85804573		1	SUPPORT
4		11106221		2	BOULON, Hex, M10 x 25, 8.8, Full Thd
5		11190579		2	RONDELLE BELLEVILLE, Belleville, M10.5
6		16044421		2	BOULON, Hex, M8 x 60, 8.8
7		87631460		2	BRIDE
8		85804574		1	SUPPORT

Mechanical Version B95B

DISTRIBUTEUR EXCAVATRICE (CENTER PIVOT) - NA

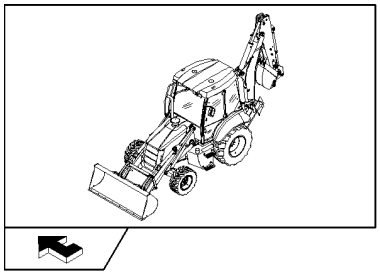

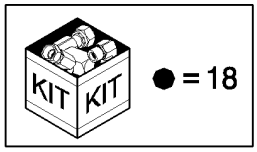

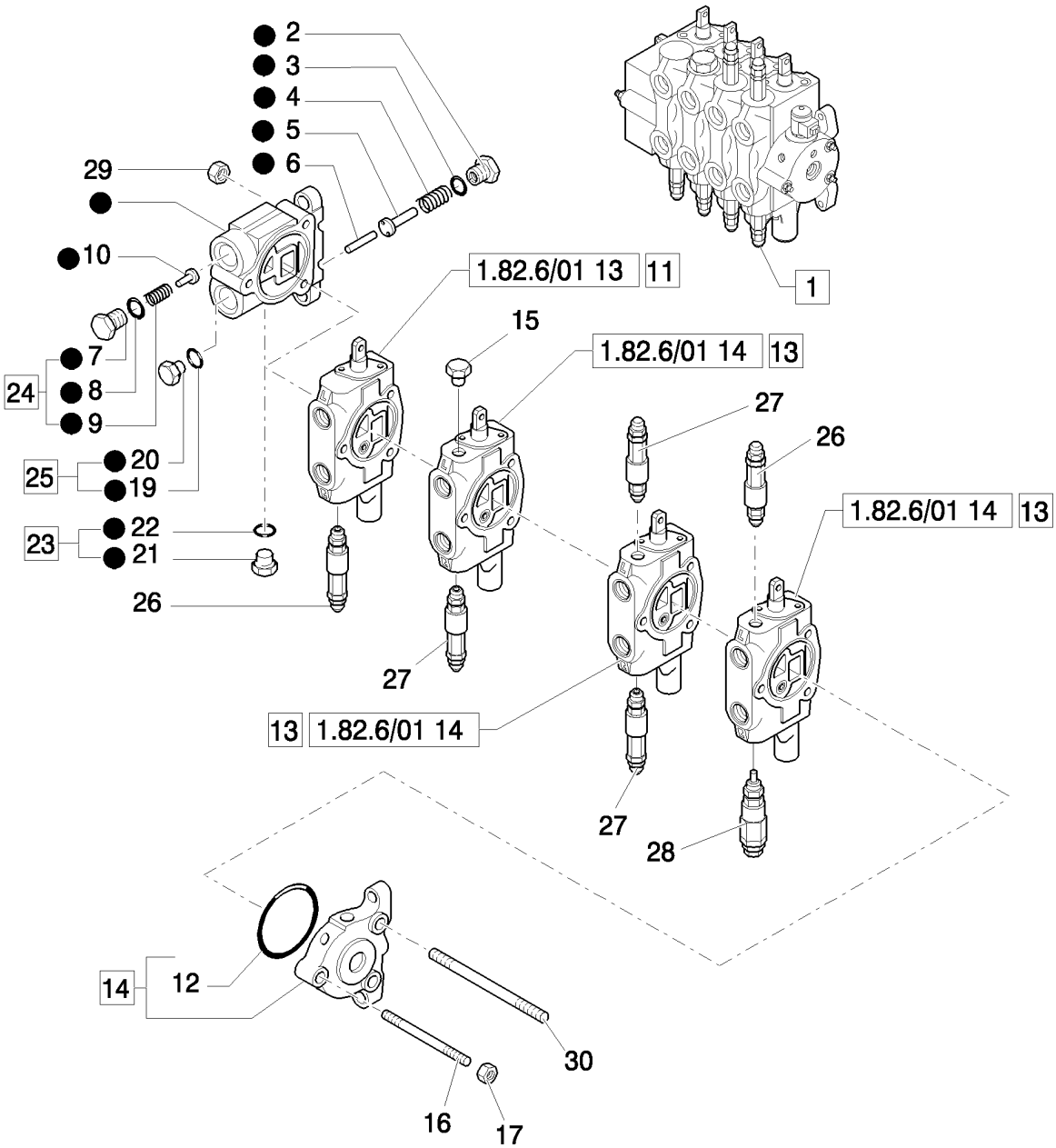

DISTRIBUTEUR EXCAVATRICE (CENTER PIVOT) - NA

REF	FN	PART NUMBER	YR/SN	QTY	DESCRIPTION
1		85827100		1	DISTRIBUTEUR, Assy
2		9968501		1	BOUCHON
3		9968502		1	JOINT THORIQUE
4		9968500		1	RESSORT
5		9968503		1	PLONGEUR
6		9968497		1	AXE
7		9968498		1	BOUCHON
8		9968468		1	JOINT THORIQUE
9		9968448		1	RESSORT
10		9968447		1	PLONGEUR
11		85827102		1	ELEMENT DISTR HYDR, Assy
12		9968495		1	JOINT THORIQUE
13		85827101		3	ELEMENT DISTR HYDR, Assy
14		9968494		1	ELEMENT DISTR HYDR, Assy
15		85807832		1	BOUCHON
16		9968506		1	TIGE FILETÉE
17		9968507		1	ECROU
18		85807827		1	ELEMENT DISTR HYDR
19		85807830		1	JOINT THORIQUE
20		85807831		1	BOUCHON
21		85807828		1	BOUCHON
22		85807829		1	JOINT THORIQUE
23		9968523		1	BOUCHON, Assy
24		85807834		1	BOUCHON, Assy
25		85807833		1	BOUCHON, Assy
26		9968595		2	SOUPAPE, DÉCHARGE
27		9968596		3	SOUPAPE, DÉCHARGE
28		9968508		1	SOUPAPE, DÉCHARGE
29		9968504		1	ECROU
29		9968505		1	TIGE FILETÉE

Mechanical Version B95B

1.82.6/01	13	p1	04/08

SECTION VANNE PELLE (CENTER PIVOT) - NA

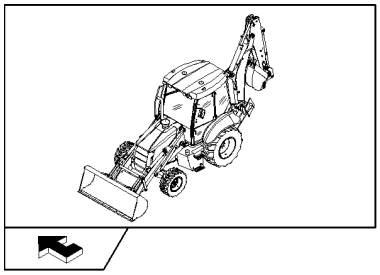

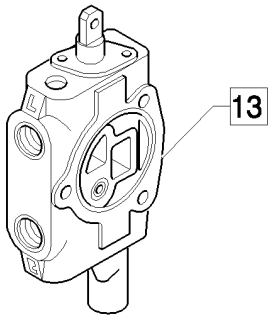

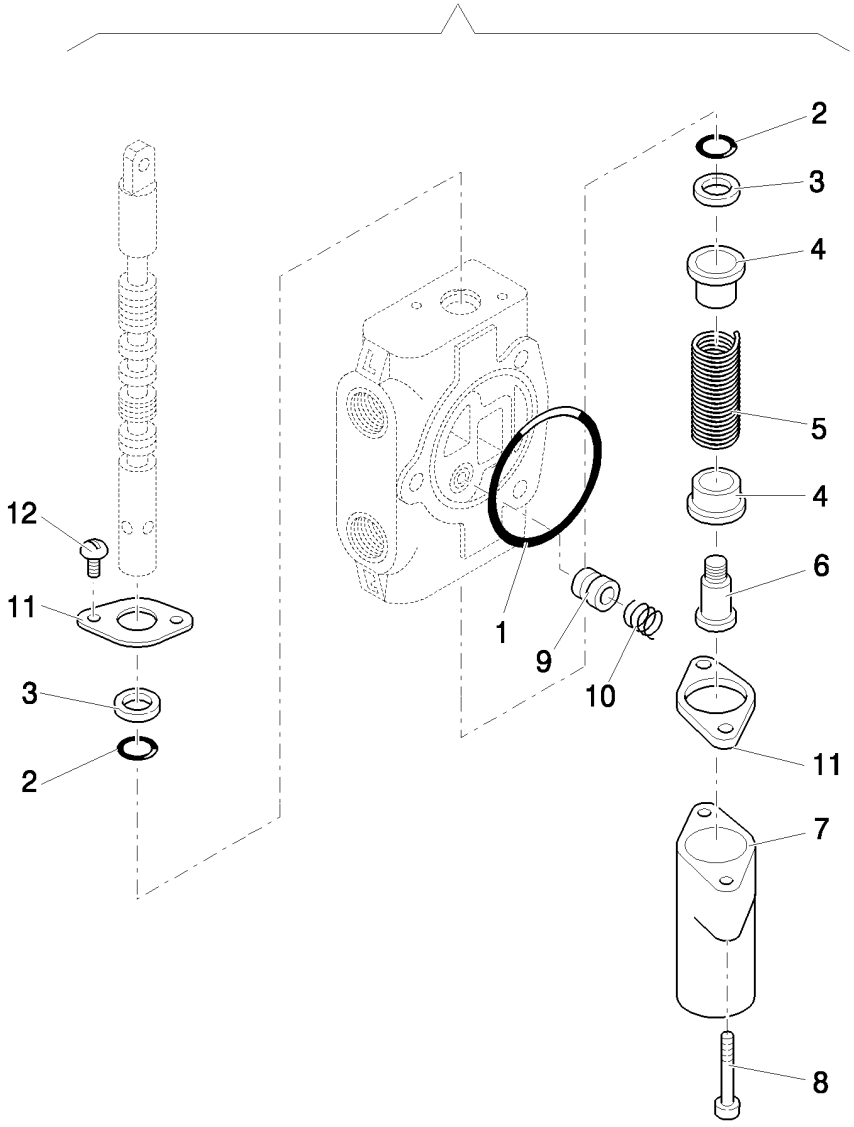

SECTION VANNE PELLE (CENTER PIVOT) - NA

REF	FN	PART NUMBER	YR/SN	QTY	DESCRIPTION
1		9968495		1	JOINT THORIQUE
2		9968489		1	JOINT
3		9968490		1	RACLEUR BALAIS
4		9968512		1	LOGEMENT
5		9968514		1	RESSORT
6		9968515		1	TIROIR
7		9968513		1	COUVERCLE
8		9968516		1	VIS
9		9968510		2	PLONGEUR
10		9968511		1	RESSORT
11		9968458		2	FLASQUE
12		9968460		1	VIS
13		85827102		1	ELEMENT DISTR HYDR, Assy

Mechanical Version B95B

1.82.6/01	14	p1	04/08

SECTION VANNE GODET, FLECHE ET BARRE OSCIL. (CENTER PIVOT) - NA

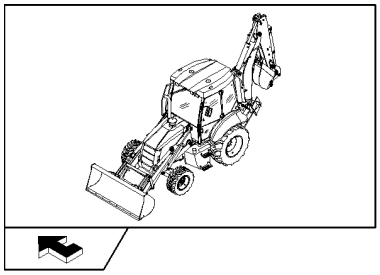

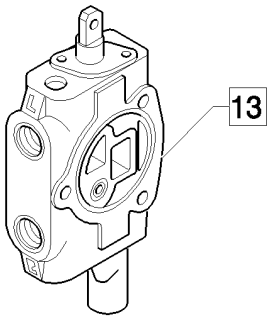

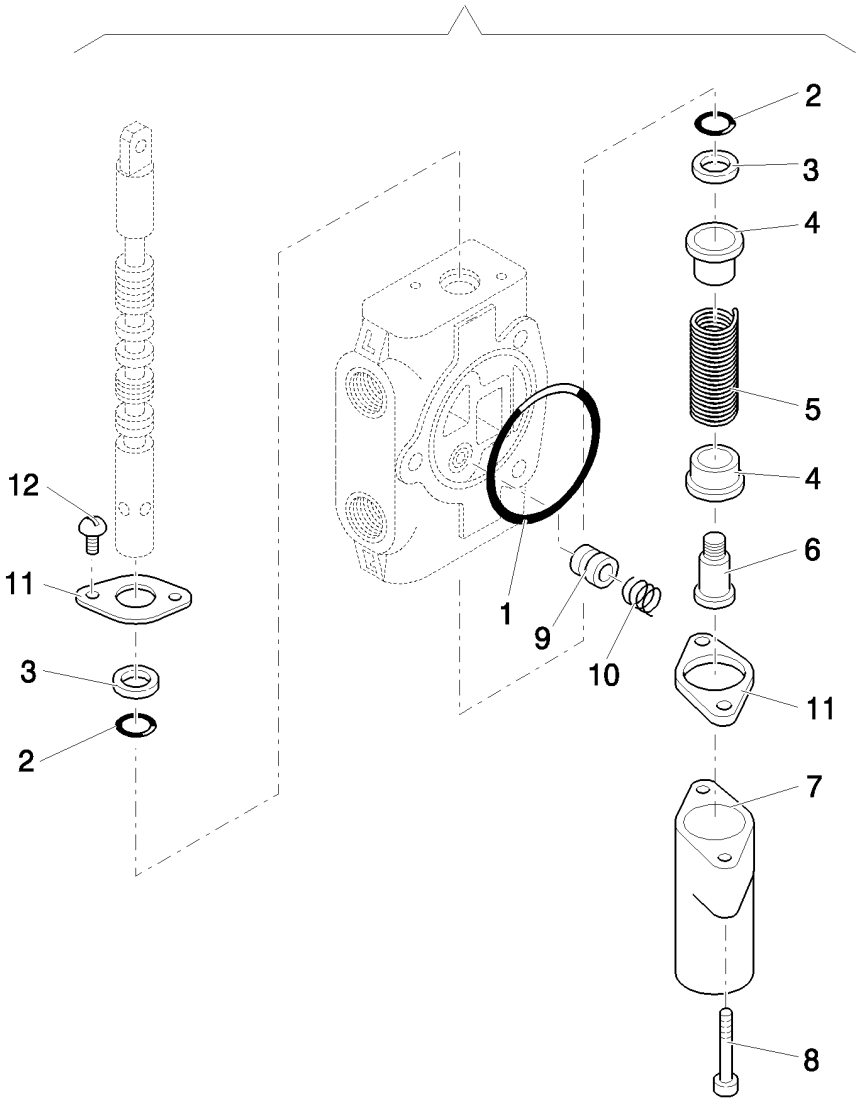

SECTION VANNE GODET, FLECHE ET BARRE OSCIL. (CENTER PIVOT) - NA

REF	FN	PART NUMBER	YR/SN	QTY	DESCRIPTION
1		9968495		1	JOINT THORIQUE
2		9968489		1	JOINT
3		9968490		1	RACLEUR BALAIS
4		9968512		2	LOGEMENT
5		9968514		1	RESSORT
6		9968515		1	TIROIR
7		9968513		1	COUVERCLE
8		9968516		1	VIS
9		9968510		1	PLONGEUR
10		9968511		1	RESSORT
11		9968458		2	FLASQUE
12		9968460		1	VIS
13		85827101		1	ELEMENT DISTR HYDR, Assy

Mechanical Version B95B

NOTES

SECTION INDEX

Revêtements en Tôle/Décalcomanie

1.83.0	01	GRILLE ET ACCESSOIRES
1.83.0	02	PROTECTION ET ACCESSOIRES
1.83.0	03	JEU BLOCAGE PORTE
1.83.0	04	ENSEMBLE PLAQUE DE BLOCAGE
1.83.0	05	JEU DE FIXATION PROTECTION ANTIRENVERSEMENT
1.83.0	06	COMPOSANTS DE L'ENSEMBLE PROTECTION ANTIRENVERSEMENT
1.87.2		ECRANS CABINE
1.87.8		PIECES DE FIXAGE A LA CABINE

1.83.0	01	p1	04/08

GRILLE ET ACCESSOIRES

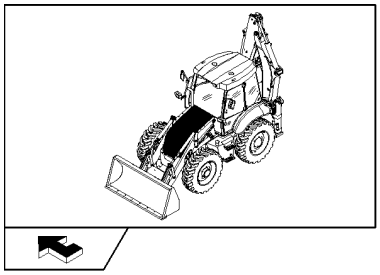

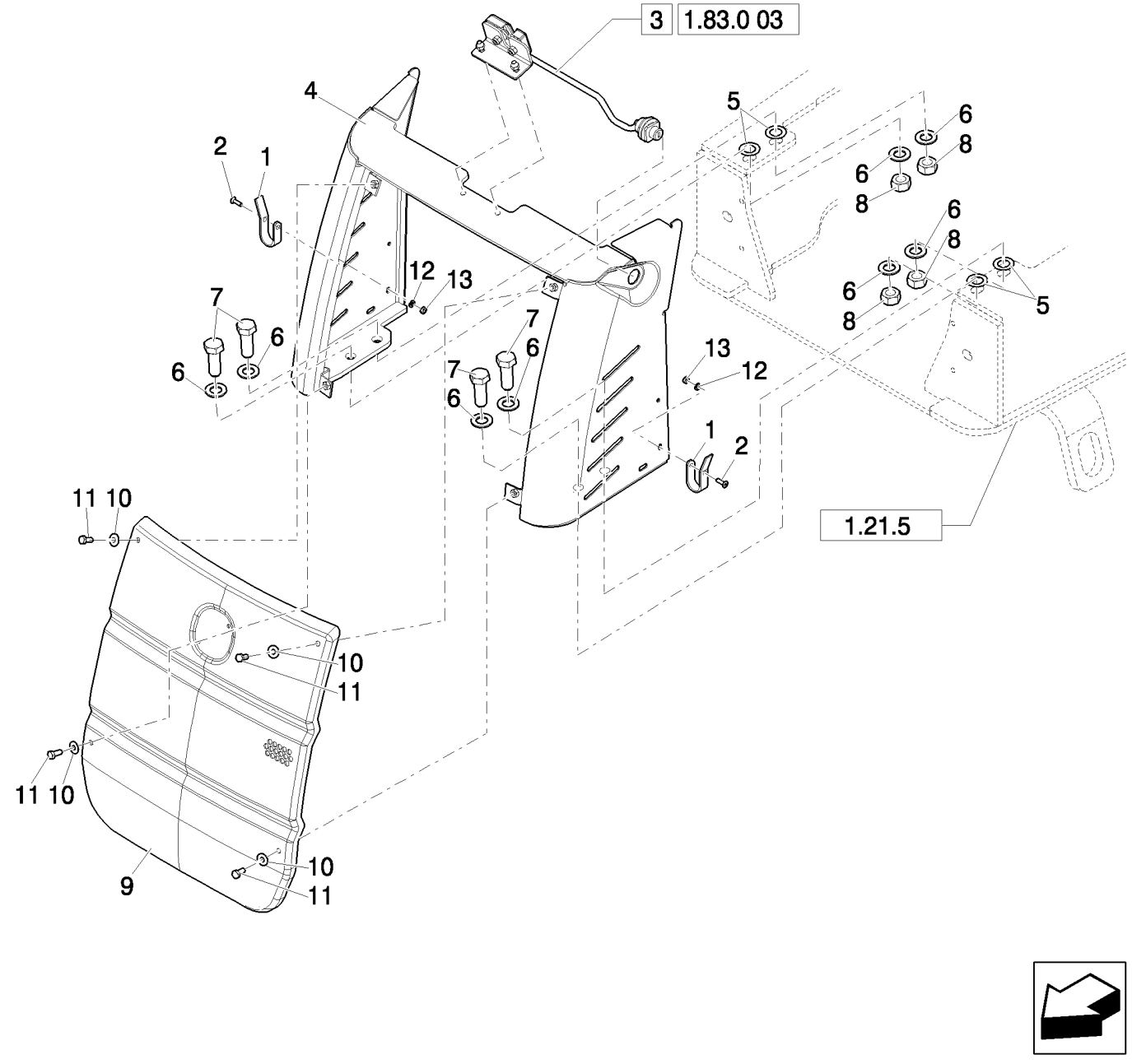

GRILLE ET ACCESSOIRES

REF	FN	PART NUMBER	YR/SN	QTY	DESCRIPTION
1		87473167		2	PATTE FIXATION
2		14441421		2	VIS, Hex Soc Flat Hd, M6 x 20, 8.8
3		87669786		1	SERRURE, Assy
4		87632691		1	COUVERCLE
5		13580001		4	RONDELLE
6		11191579		8	RONDELLE BELLEVILLE, Belleville, M17
7		15981221		4	BOULON, Hex, M16 x 65, 8.8
8		12164111		4	ECROU
9		87614694		1	CALANDRE
10		11193977		4	RONDELLE
11		87015745		4	BOULON, Hex, M8 x 20, 5.8, Full Thd
12		12643721		2	RONDELLE, M6 x 18 x 1.5
13		12574211		2	CONTRE-ECROU, M6 x 1, Cl 8

1.83.0	02	p1	04/08

PROTECTION ET ACCESSOIRES

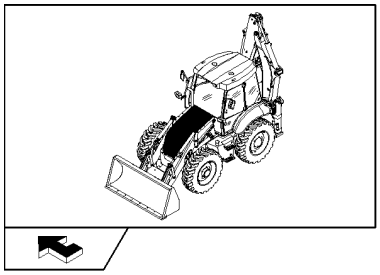

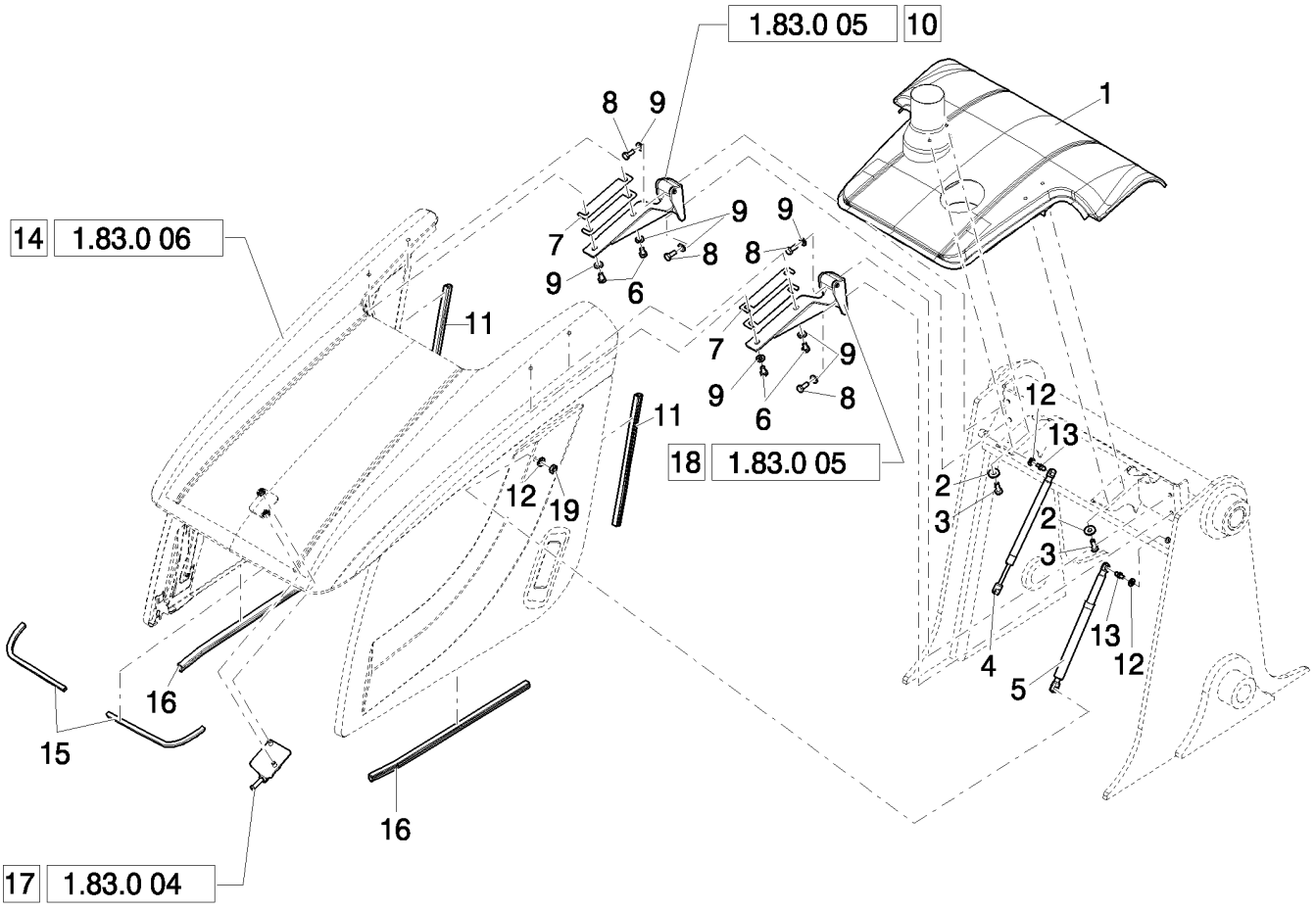

PROTECTION ET ACCESSOIRES

REF	FN	PART NUMBER	YR/SN	QTY	DESCRIPTION
1		87741687		1	Capot Moteur
2		86592700		4	RONDELLE, M10 x 28 x 4, HT
3		11106321		4	BOULON, Hex, M10 x 28, 8.8, Full Thd
4		87636546		1	RESSORT
5		87654073		1	AMORTISSEUR
6		11106021		4	BOULON, Hex, M10 x 20, 8.8, Full Thd
7		87673011		4	CALE D'EPAISSEUR
8		11106221		4	BOULON, Hex, M10 x 25, 8.8, Full Thd
9		12642501		8	RONDELLE, M10 x 22 x 2
10		87696662		1	PAUMELLE, Assy
11		87643908		2	JOINT, CAOUTCHOUC
12		11193874		4	RONDELLE BELLEVILLE, Belleville, M8.4
13		87603835		4	GOUJON
14	1	{87397053}		1	Assy
15		87652862		2	JOINT, CAOUTCHOUC
14	2	{87653084}		1	Assy
16		87643906		2	JOINT, CAOUTCHOUC
17		87613623		1	TAQUET DE FIXATION, Assy
18		87748117		1	CHARNIERE, Assy
19		16100810		2	ECROU, M8, Cl 8

(1) Only for EU
(2) Only for NA

1.83.0	03	p1	04/08

JEU BLOCAGE PORTE

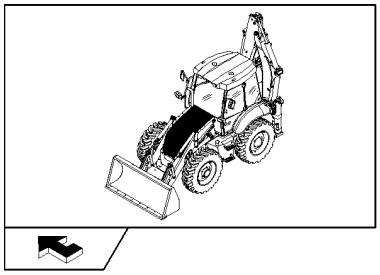

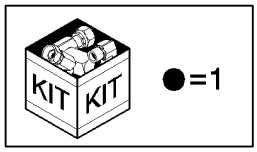

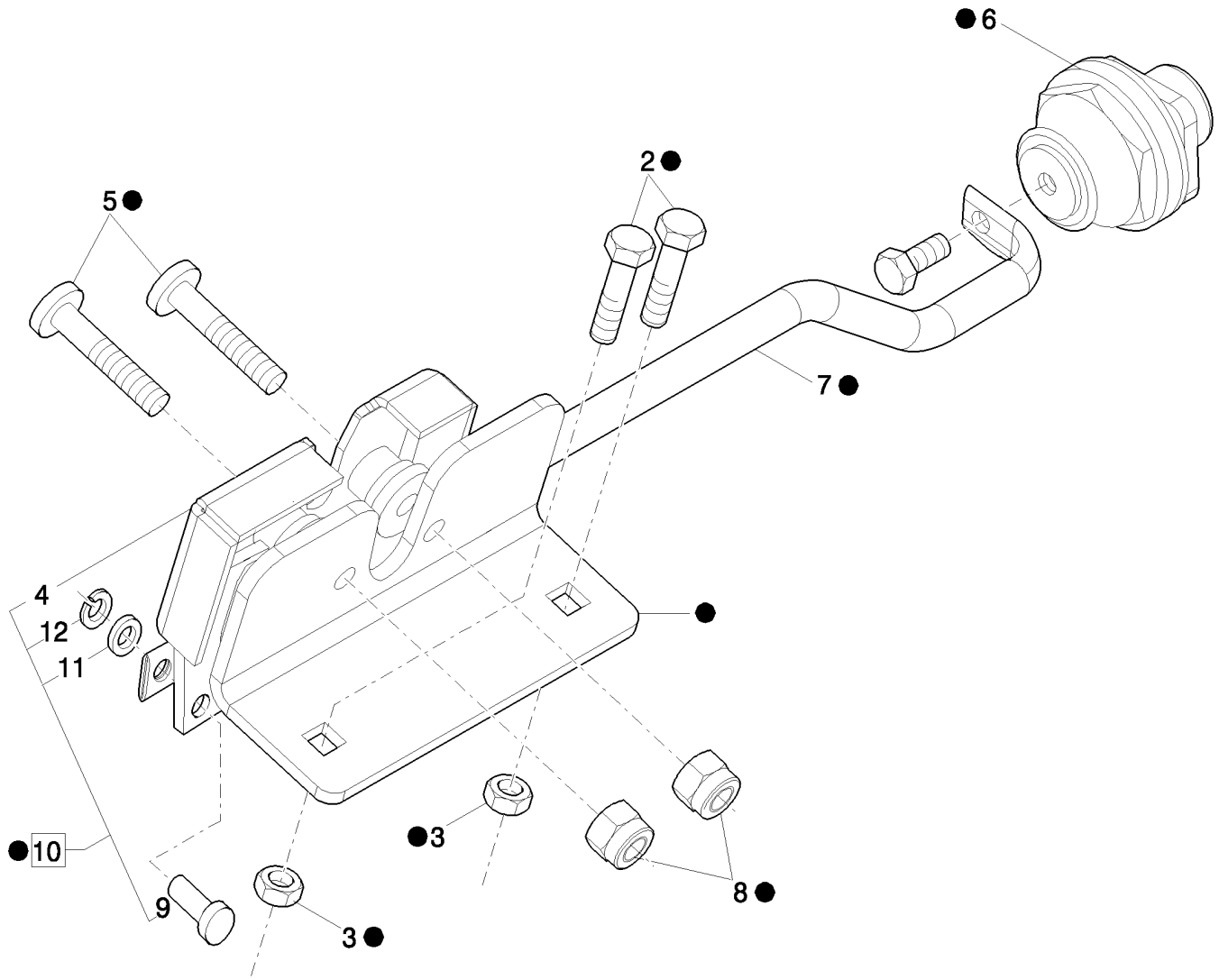

JEU BLOCAGE PORTE

REF	FN	PART NUMBER	YR/SN	QTY	DESCRIPTION
1		87669786		1	SERRURE, Assy
2		87694197		2	VIS
3		16100811		2	ECROU, M8, Cl 8
4		87742983		1	SERRURE
5		14442321		2	VIS, Hex Soc Flat Hd, M8 x 35, 8.8
6		87624743		1	BOUCHON
7		87624744		1	TRINGLE
8		16104111		2	CONTRE-ECROU, M8 x 1.25, Cl 8
9		87687399		1	AXE
10		87624745		1	SERRURE, Assy
11		14499301		1	RONDELLE, M6 x 12 x 1.6
12		11065374		1	ANNEAU D'ARRÊT, M5, Ext

1.83.0	04	p1	03/08

ENSEMBLE PLAQUE DE BLOCAGE

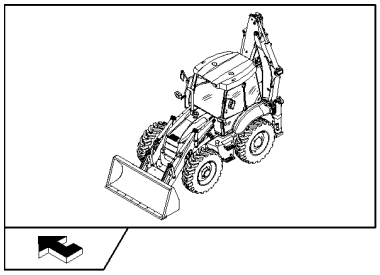

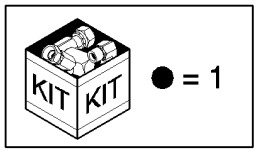

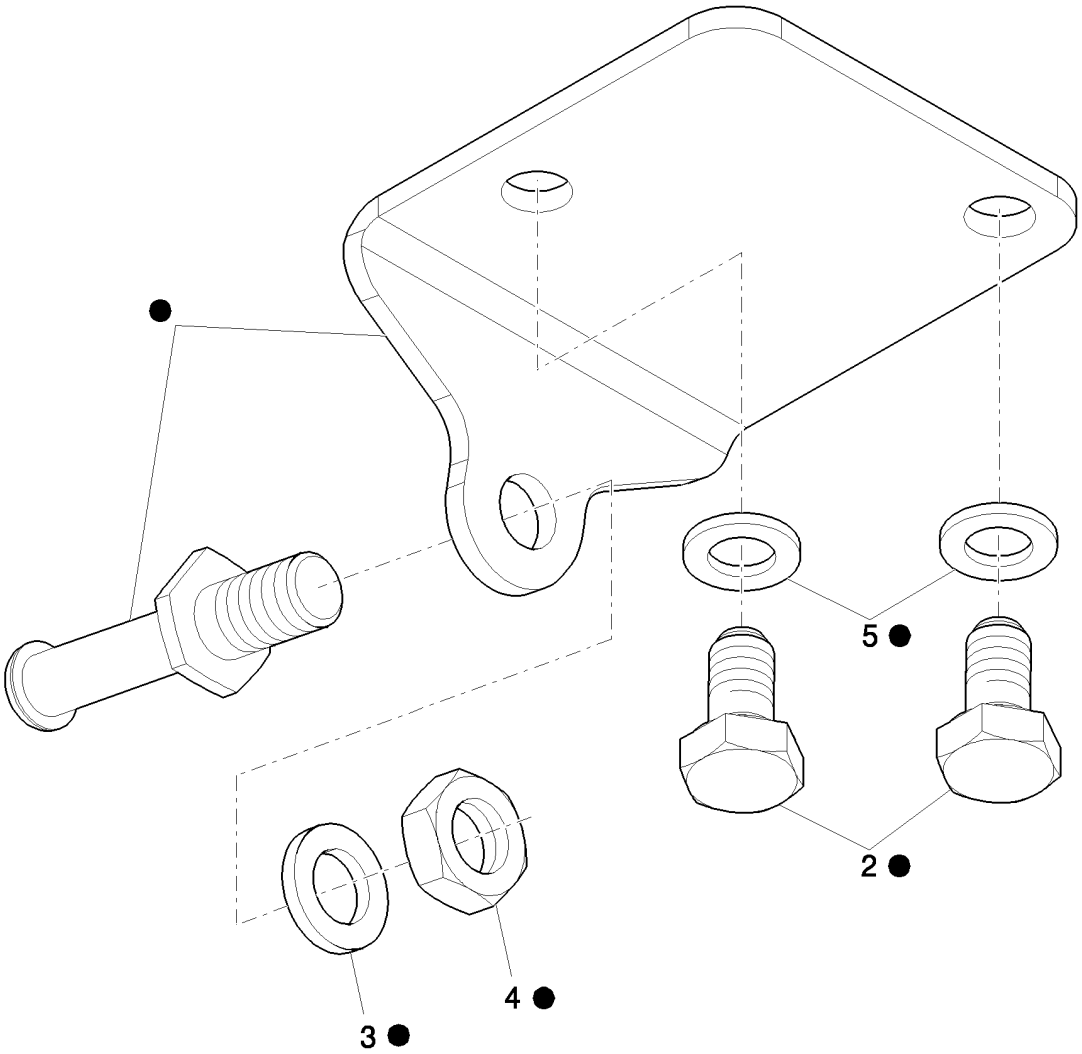

ENSEMBLE PLAQUE DE BLOCAGE

REF	FN	PART NUMBER	YR/SN	QTY	DESCRIPTION
1		87613623		1	TAQUET DE FIXATION, Assy
2		11106021		2	BOULON, Hex, M10 x 20, 8.8, Full Thd
3		13507401		1	RONDELLE, M12 x 20 x 2
4		10717311		1	ECROU, Thin, M12 x 1.75, Cl 04
5		12638621		2	RONDELLE

1.83.0	05	p1	04/08

JEU DE FIXATION PROTECTION ANTIRENVERSEMENT

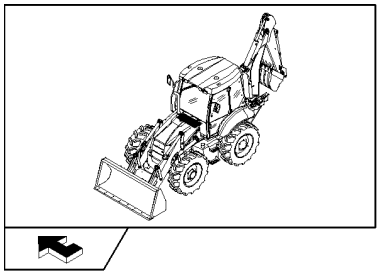

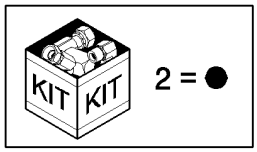

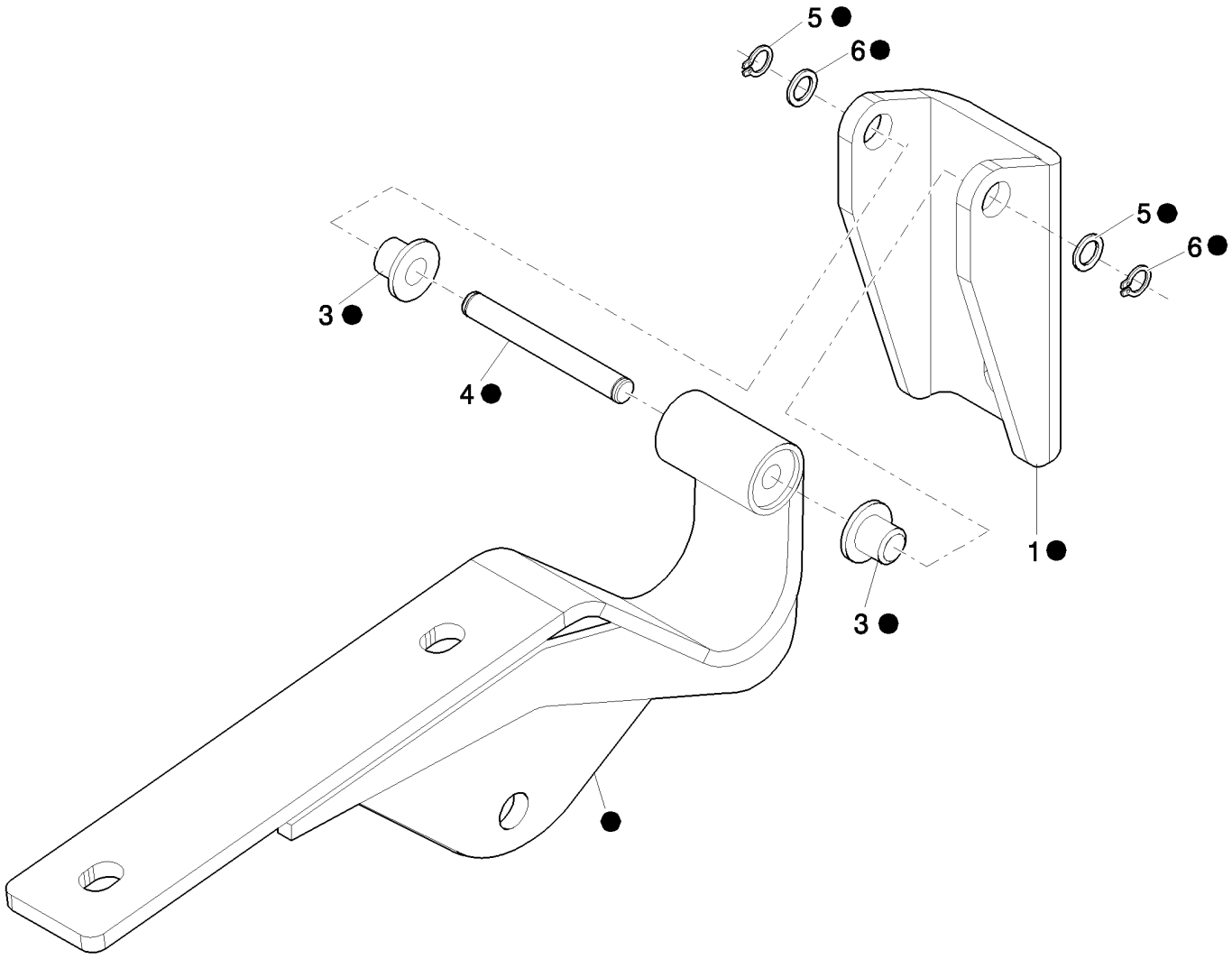

JEU DE FIXATION PROTECTION ANTIRENVERSEMENT

REF	FN	PART NUMBER	YR/SN	QTY	DESCRIPTION
1		87385465		2	PATTE FIXATION
2	1	87696662		1	PAUMELLE, Assy
2	2	87748117		1	CHARNIERE, Assy
3		87669785		4	BAGUE
4		87686869		2	AXE
5		13507104		4	RONDELLE
6		87477173		4	ANNEAU

(1) Right Side
(2) Left Side

1.83.0	06	p1	03/08

COMPOSANTS DE L'ENSEMBLE PROTECTION ANTIRENVERSEMENT

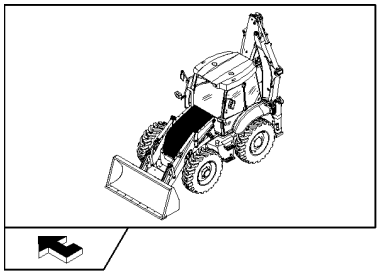

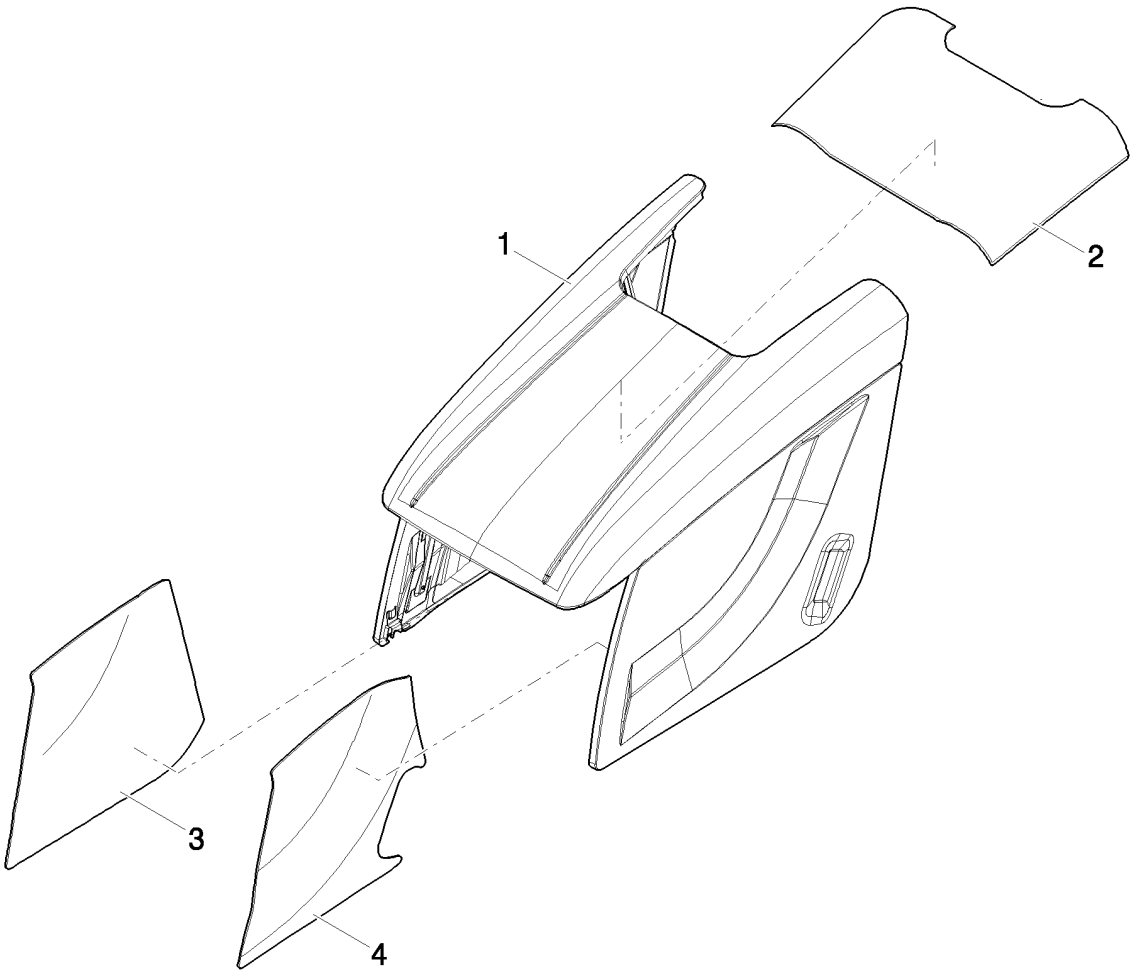

COMPOSANTS DE L'ENSEMBLE PROTECTION ANTIRENVERSEMENT

REF	FN	PART NUMBER	YR/SN	QTY	DESCRIPTION
1		87376297		1	Capot Moteur
2	1	87643911		1	CAPOT-MOTEUR
2	2	87653086		1	CAPOT-MOTEUR
3	1	87643912		1	CAPOT-MOTEUR
3	2	87653220		1	CAPOT-MOTEUR
4	1	87643913		1	CAPOT-MOTEUR
4	2	87669736		1	CAPOT-MOTEUR

(1) Only for EU
(2) Only for NA

1.87.2		p1	03/08

ECRANS CABINE

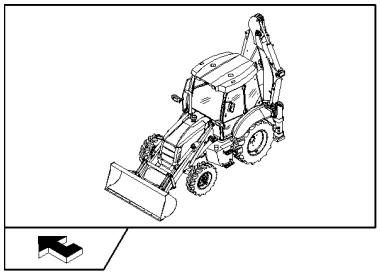

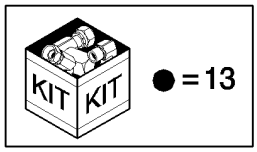

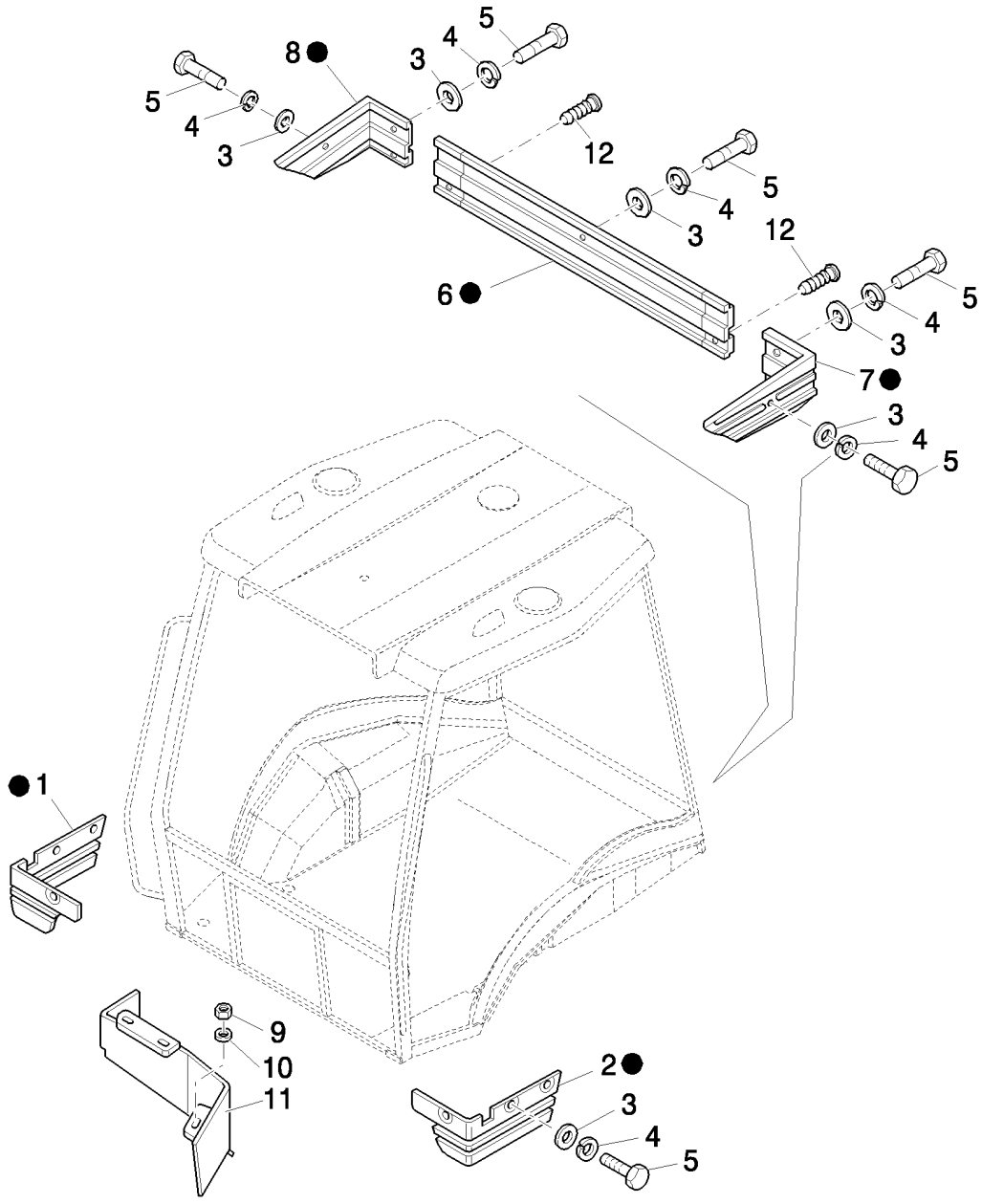

ECRANS CABINE

REF	FN	PART NUMBER	YR/SN	QTY	DESCRIPTION
1		87315641		1	COUVERCLE, RH
2		87315643		1	COUVERCLE, LH
3		12643721		11	RONDELLE, M6 x 18 x 1.5
4		11194679		11	RONDELLE BELLEVILLE, Belleville, M6.4
5		10902421		11	BOULON, Hex, M6 x 20, 8.8
6		85805303		1	COUVERCLE
7		85805304		1	COUVERCLE, LH
8		85805305		1	COUVERCLE, RH
9		16104111		3	CONTRE-ECROU, M8 x 1.25, Cl 8
10		11193979		3	RONDELLE BELLEVILLE, Belleville, M8.4
11		85805142		1	PANNEAU
12		87641276		2	BOUCHON
13		87315628		1	KIT

PIECES DE FIXAGE A LA CABINE

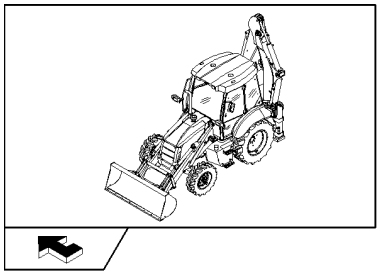

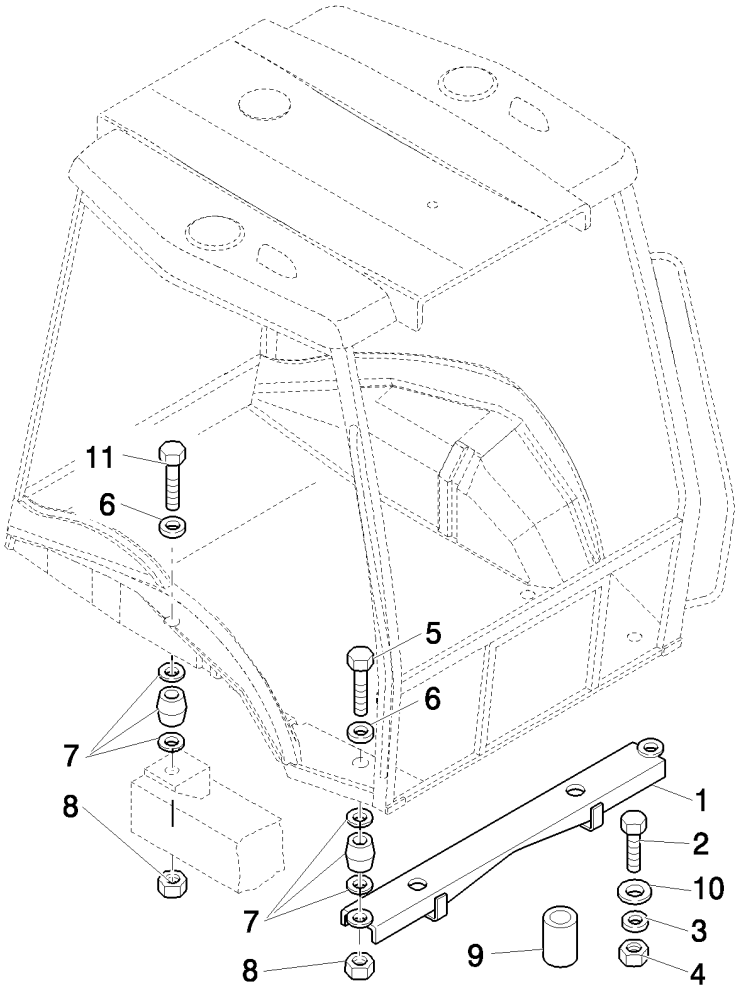

PIECES DE FIXAGE A LA CABINE

REF	FN	PART NUMBER	YR/SN	QTY	DESCRIPTION
1	1, 2	85801319		1	SUPPORT
1	3, 4	87303780		1	SUPPORT
2		15989334		2	BOULON, Hex, M20 x 1.5 x 110, 10.9
3		10520431		2	RONDELLE
4		12575121		2	CONTRE-ECROU, M20 x 1.5, Cl 10
5		15982134		2	BOULON, Hex, M16 x 140, 10.9
6		14496931		4	RONDELLE, M16 x 30 x 3
7		87569589		4	SILENT-BLOC
8		12574921		4	CONTRE-ECROU, M16 x 1.5, Cl 10
9		85801324		2	ENTRETOISE
10		85804493		2	RONDELLE, 21 x 40 x 6
11		15981834		2	BOULON, Hex, M16 x 1.5 x 120, 10.9

(1) Only for B90B, B90BLR, B100BLR, B110B (EU)
(2) Only for B90B, B95B, B95BLR, B110B (NA)
(3) Only for B115B (EU)
(4) Only for B95BTC, B115B (NA)

NOTES

SECTION INDEX

Chargeuse/Tracto-pelle

1.88.01	01	TIRANT BLOCAGE TRANSPORT ÉQUIPEMENT ARRIÈRE (CENTER PIVOT) - NA
1.88.01	02	CÂBLE BLOCAGE TRANSPORT ÉQUIPEMENT ARRIÈRE (CENTER PIVOT) - NA
1.88.08	01	GROUPE BARRE OSCIL., DOUILLES ET AXES
1.88.08	02	AXES BARRE OSCIL. ET CROCHET BLOCAGE TRANSPORT
1.88.11		BRAS ET JOINTS
1.88.11/01		VERIN DE RELEVAGE
1.88.11/02	01	VERIN COMMANDE BENNE
1.88.11/02	02	VERIN COMMANDE BENNE
1.88.11/03		TUYAUX DU CYLINDRE RELEVAGE ET BENNE
1.88.11/05A	01	JONCTIONS AUTONIVELEUSES, COMMANDES CHARGEUSE (CENTER PIVOT MECANIQUE) - NA
1.88.11/05A	02	JONCTIONS AUTONIVELEUSES, BRAS CHARGEUSE (CENTER PIVOT) - NA
1.88.11/06A		VERINS STABILISATEURS (CENTER PIVOT)
1.88.11/07A		CONDUITS POUR VERINS STABILISATEURS (CENTER PIVOT PILOT)
1.88.11/07C		CONDUITS POUR VERINS STABILISATEURS (CENTER PIVOT MECANIQUE) - NA
1.88.11/08		DETECTEUR RETOUR FOUILLE
1.88.11/09	02	CYLINDRES ARRIÈRES D'OSCILLATION
1.88.11/09A		VERINS ET PLAQUE DE ROTATION (CENTER PIVOT)
1.88.12/03		SUPPORT DISTRIBUTEURS AVANT ET RENVOIS (CENTER PIVOT - SIDE SHIFT)
1.88.12/03A		SUPPORT DISTRIBUTEURS AVANT ET RENVOIS (CENTER PIVOT) - NA
1.89.9/01		SUPPORT DISTRIBUTEUR ARRIERE HUSCO (CENTER PIVOT) - NA

1.88.01	01	p1	04/08

TIRANT BLOCAGE TRANSPORT ÉQUIPEMENT ARRIÈRE (CENTER PIVOT) - NA

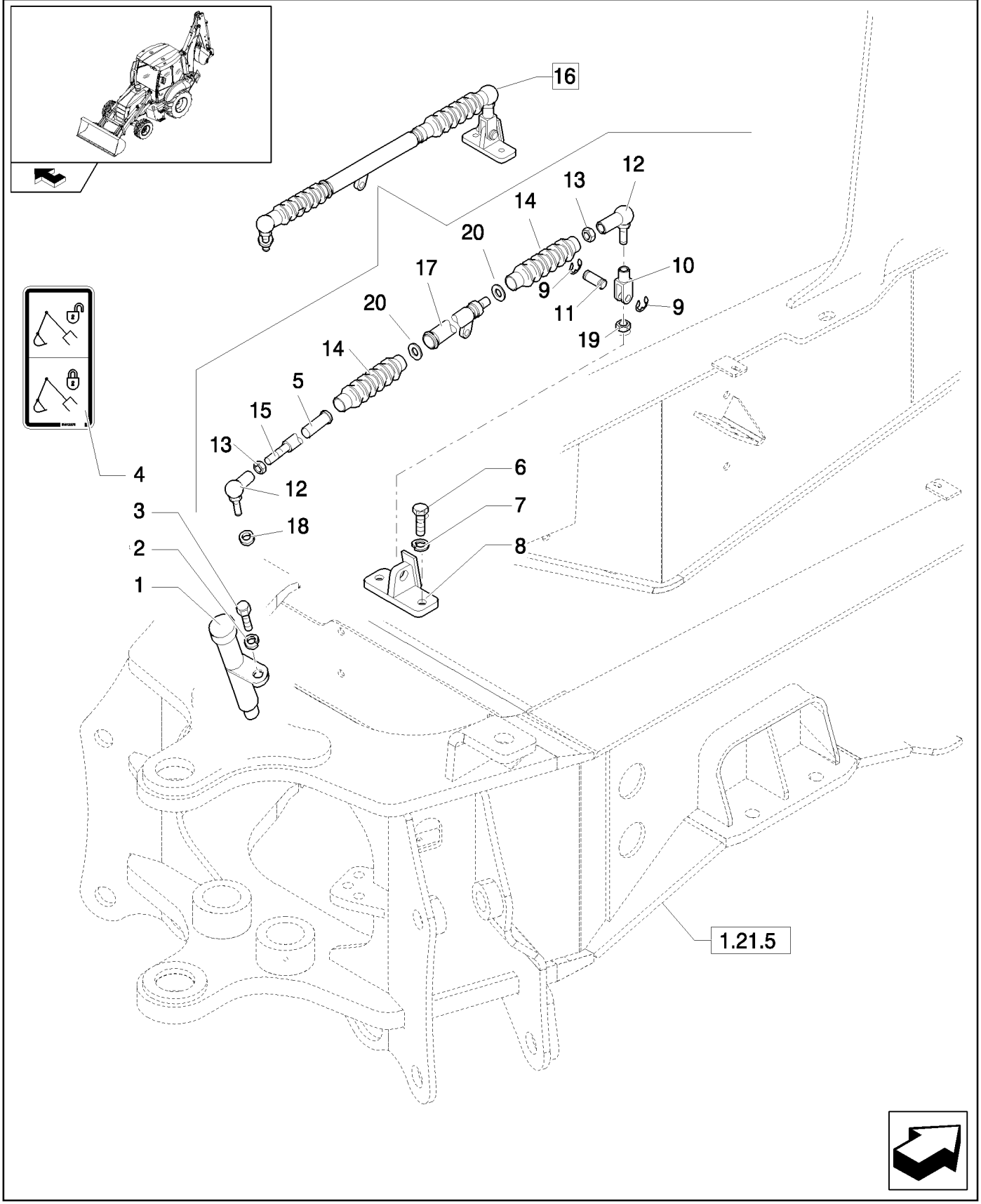

TIRANT BLOCAGE TRANSPORT ÉQUIPEMENT ARRIÈRE (CENTER PIVOT) - NA

REF	FN	PART NUMBER	YR/SN	QTY	DESCRIPTION
1		85821268		1	AMORTISSEUR
2		11193879		2	RONDELLE BELLEVILLE, Belleville, M8.4
3		16043621		1	BOULON, Hex, M8 x 25, 8.8
4		85812278		1	DECALCOMANIE
5		85819482		1	BAGUE
6		11106221		4	BOULON, Hex, M10 x 25, 8.8, Full Thd
7		11190579		4	RONDELLE BELLEVILLE, Belleville, M10.5
8		85819488		1	SUPPORT
9		85813407		2	ANNEAU
10		85819468		1	FOURCHETTE
11		87302958		1	AXE DE CHAPE
12		85819477		2	ROTULE
13		85819478		3	ECROU, M10
14		85819479		2	SOUFFLET
15		85819481		1	TRINGLE
16		87302965		1	TIRANT, Assy
17		85819480		1	TUBE
18		85821270		1	RONDELLE
19		85821271		1	ECROU, M16
20		85824227		2	BRIDE

1.88.01	02	p1	04/08

CÂBLE BLOCAGE TRANSPORT ÉQUIPEMENT ARRIÈRE (CENTER PIVOT) - NA

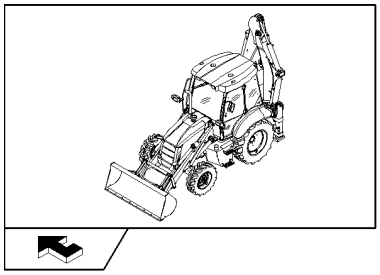

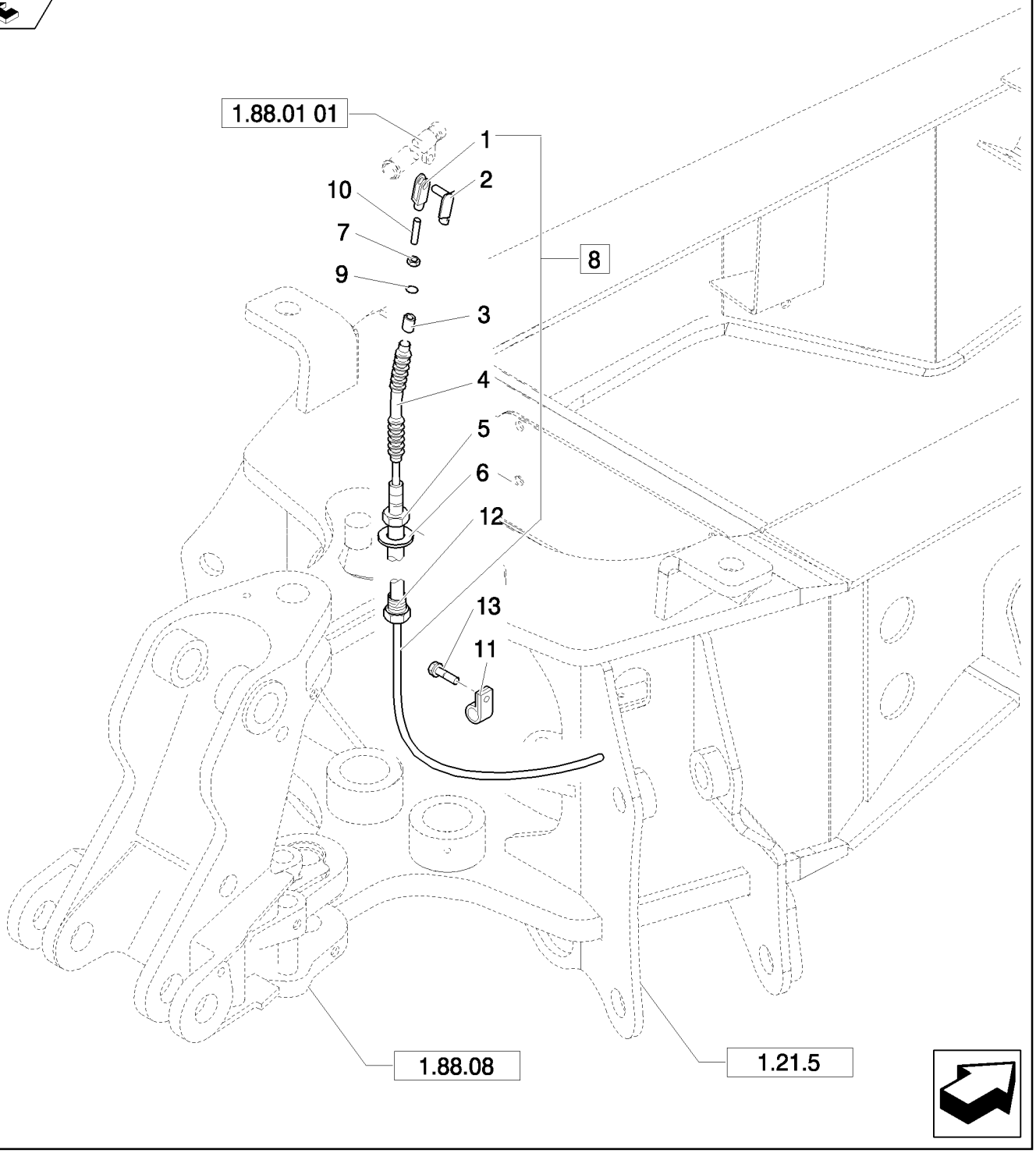

CÂBLE BLOCAGE TRANSPORT ÉQUIPEMENT ARRIÈRE (CENTER PIVOT) - NA

REF	FN	PART NUMBER	YR/SN	QTY	DESCRIPTION
1		85819467		1	FOURCHETTE
2		85819469		1	CLIP
3		85819471		1	PASSE-FIL
4		85821278		1	SOUFFLET
5		87302960		2	ECROU
6		87302959		1	RONDELLE
7		85821273		1	ECROU
8		87302967		1	CABLE, Assy
9		85821277		1	ANNEAU CAOUTCHOUC
10		85821279		1	TRINGLE
11		10450190		1	BRIDE
12		87302961		1	REGULATEUR, M8 x 1.25
13		16043021		1	BOULON, Hex, M8 x 12, 8.8, Full Thd

1.88.08	01	p1	04/08

GROUPE BARRE OSCIL., DOUILLES ET AXES

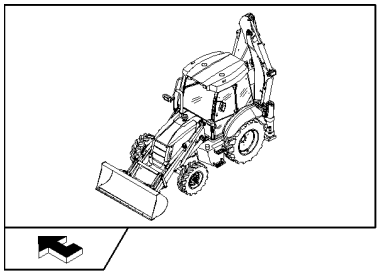

GROUPE BARRE OSCIL., DOUILLES ET AXES

REF	FN	PART NUMBER	YR/SN	QTY	DESCRIPTION
1		85803196		2	BAGUE
2		11190579		2	RONDELLE BELLEVILLE, Belleville, M10.5
3		85801029		4	BAGUE
4		11193979		1	RONDELLE BELLEVILLE, Belleville, M8.4
5		85803197		2	BAGUE
6		85803193		4	BAGUE
7		87575394		1	TOURELLE, Assy, P/N 85801028 in Primer colour
8		85803192		2	AXE, Swing Cylinder
9		87363478		1	VIS, M10x270
10		10717421		2	ECROU, Thin, M14 x 2, Cl 05, M14
11		83416242		3	GRAISSEUR, 1/8"-27
12		85802397		1	VIS, M16X40
13		85802396		1	RONDELLE
14		85801076		1	AXE
15		85805137		1	PLAQUE
16		87310285		1	BRIDE
17		11107321		2	BOULON, Hex, M10 x 55, 8.8
18		85805648		1	KIT, Assy
19		16043621		1	BOULON, Hex, M8 x 25, 8.8

1.88.08	02	p1	05/08

AXES BARRE OSCIL. ET CROCHET BLOCAGE TRANSPORT

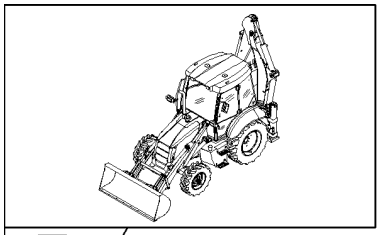

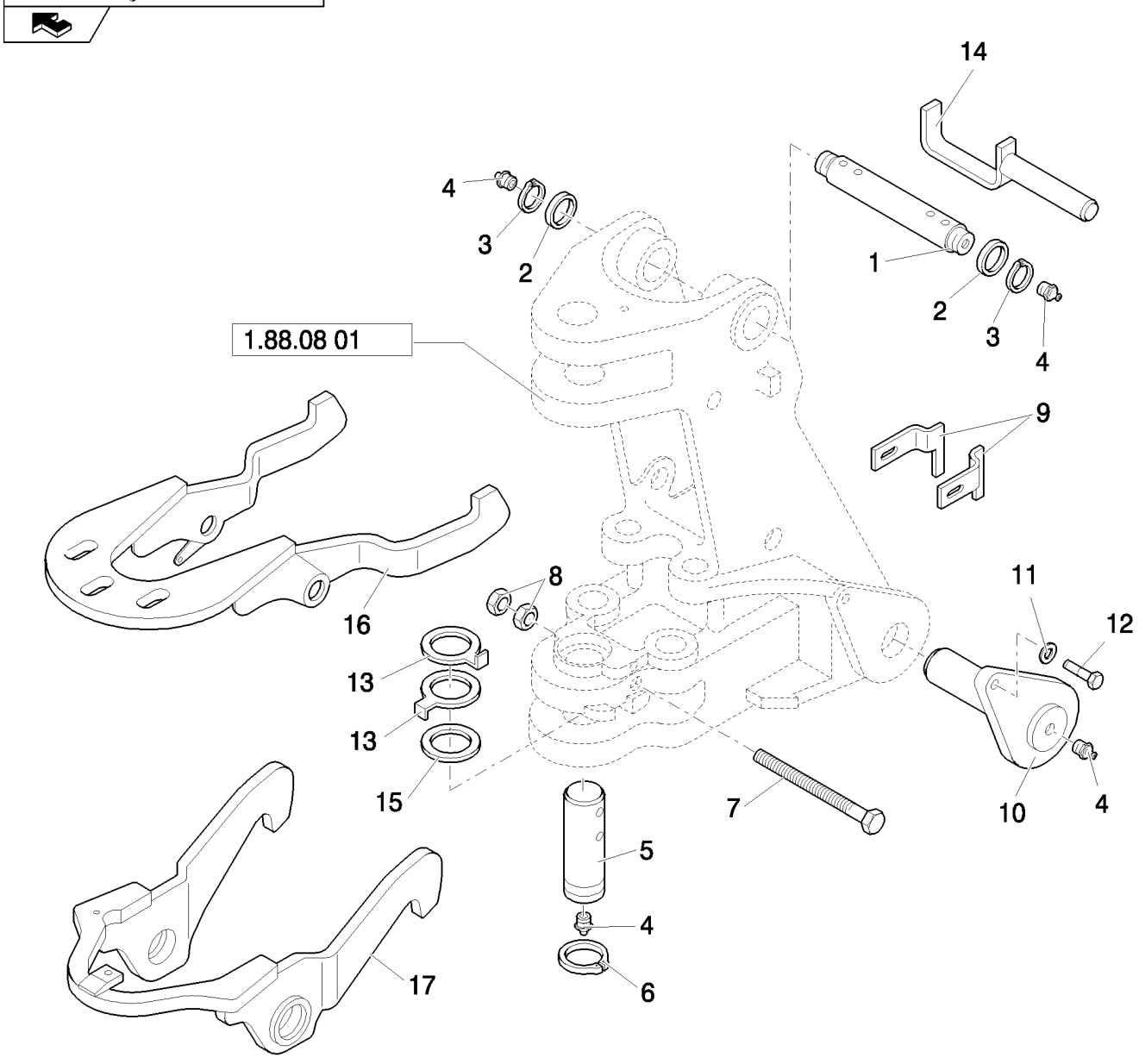

AXES BARRE OSCIL. ET CROCHET BLOCAGE TRANSPORT

REF	FN	PART NUMBER	YR/SN	QTY	DESCRIPTION
1		85801026		1	AXE
2		83910977		2	ENTRETOISE, M45X66X3
3		83911019		2	CIRCLIP
4		83416242		3	GRAISSEUR, 1/8"-27
5		85801079		1	AXE
6		85803198		1	CIRCLIP
7		15201934		1	BOULON, Hex, M14 x 170, 10.9, M14x170
8		10717421		2	ECROU, Thin, M14 x 2, Cl 05, M14
9		85816776		1	KIT
10		85802872		2	AXE
11		85802396		2	RONDELLE
12		85802397		2	VIS, M16X40
13		85801191		2	ENTRETOISE
14	1	87610829		1	AXE
14	2	87610834		1	AXE
15		8274447		1	CALE D'EPAISSEUR, 1mm Thk
16	1	87597003		1	CROCHET D'ARRET
17	2	87596072		1	CROCHET D'ARRET

(1) Only for Trans. Lock Hydraulic
(2) Only for Trans. Lock Mechanic

BRAS ET JOINTS

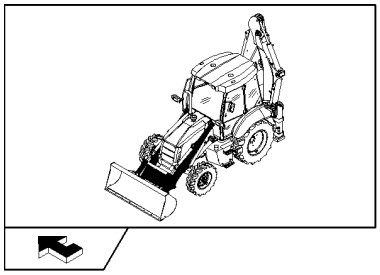

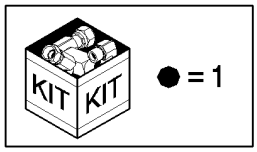

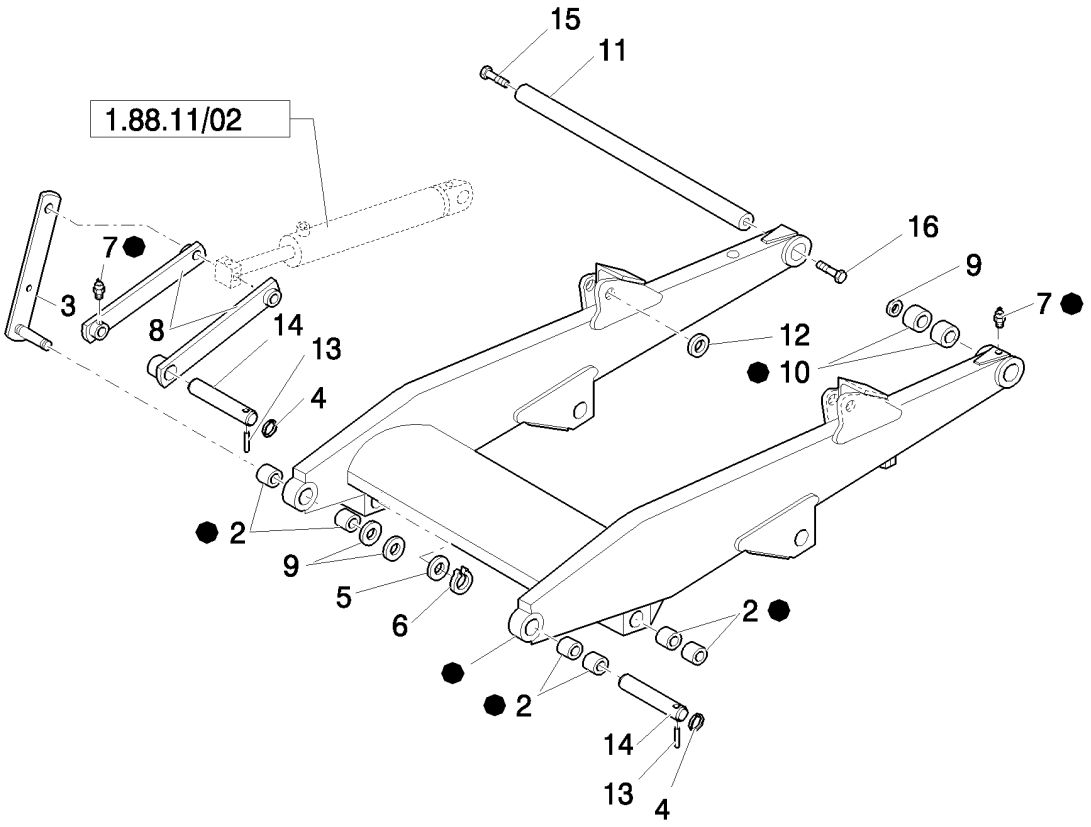

BRAS ET JOINTS

REF	FN	PART NUMBER	YR/SN	QTY	DESCRIPTION
1		87630900		1	BRAS DE LEVAGE, Assy
2		81901809		8	BAGUE
3		85803643		2	MAILLON
4		85802992		4	ANNEAU
5		85700130		2	RONDELLE
6		81902463		2	ANNEAU
7		83416242		10	GRAISSEUR
8		85803647		4	BIELLE
9		85828254		2	CALE D'EPAISSEUR
10		81901896		4	BAGUE
11		85801087		1	AXE
12		81900328		2	RONDELLE
13		85802993		4	AXE
14		85801051		4	AXE
15		11383634		1	BOULON, Hex, M20 x 1.5 x 50, 10.9, Full Thd
16		15988734		1	BOULON, Hex, M20 x 1.5 x 80, 10.9

1.88.11/01		p1	04/08

VERIN DE RELEVAGE

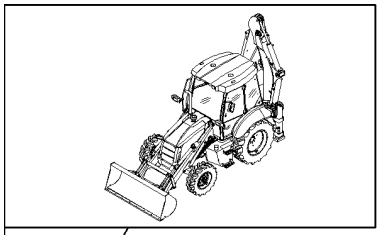

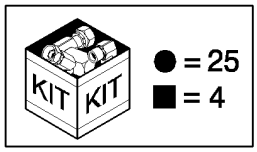

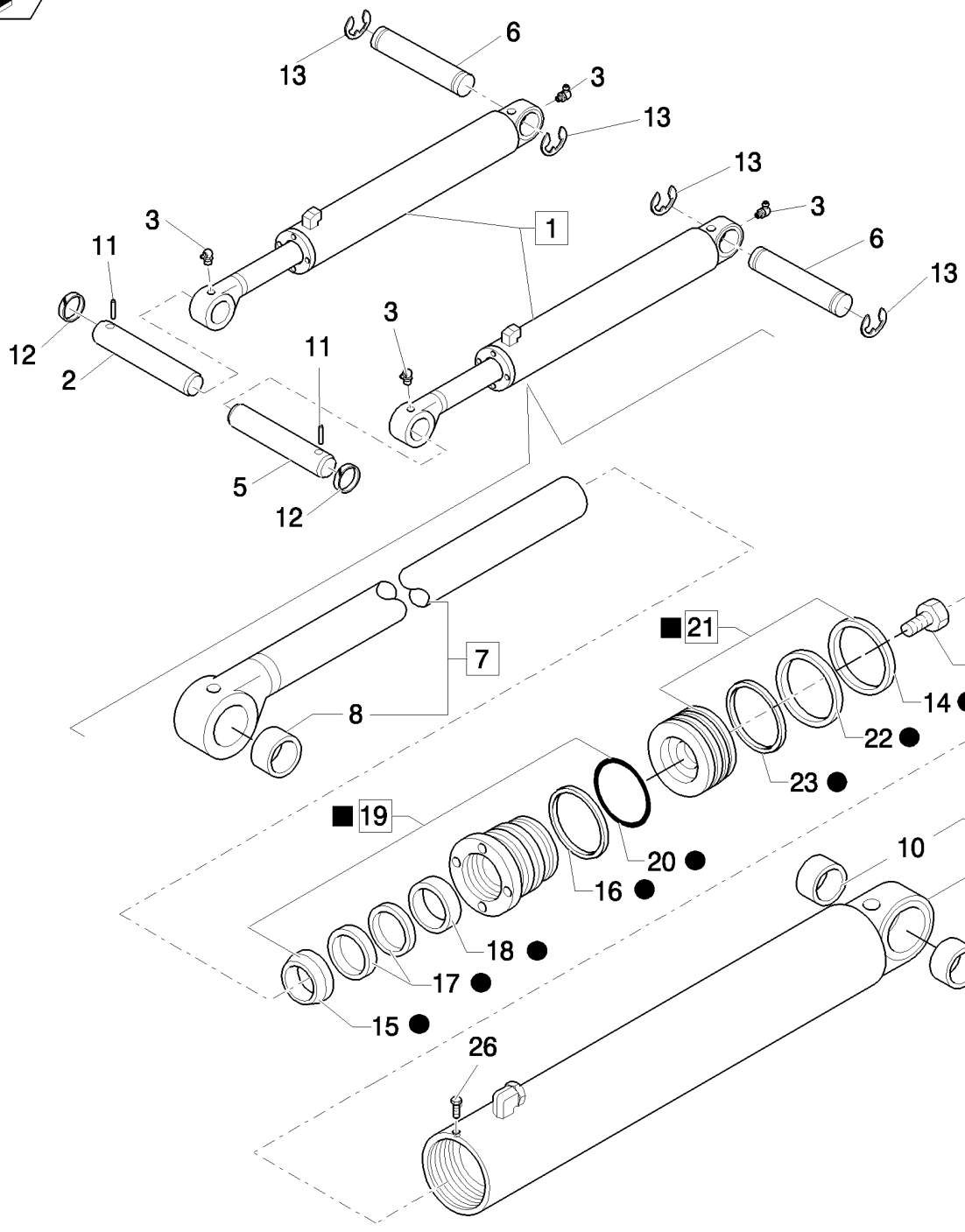

VERIN DE RELEVAGE

REF	FN	PART NUMBER	YR/SN	QTY	DESCRIPTION
1		87315525		2	VERIN HYDRAULIQUE, Assy
2		85801049		1	AXE
3		81818824		4	GRAISSEUR, 90º, 1/8"-27 NPT
4		87424196		2	COLIS DE RÉPARATION
5		85801050		1	AXE
6		87402742		2	AXE
7		85800103		2	TRINGLE, Assy
8		81902174		2	BAGUE
9		85800105		2	TUBE, Assy
10		81901897		4	BAGUE
11		85802993		2	AXE
12		85802992		2	ANNEAU
13		47049094		4	CIRCLIP
14		87408634		2	Bague D"Usure
15		87414969		2	JOINT
16		87440401		2	CONTRE-JOINT
17		87414970		2	POCHETTE DE JOINTS
18		87414966		2	COUSSINET EN NYLON
19		87415116		2	PRESSE-ETOUPE, Assy
20		87421144		2	JOINT THORIQUE
21		87405859		2	PISTON, Assy
22		87414333		2	JOINT
23		87414341		2	ANNEAU
24		87428020		2	VIS
25		87428628		1	POCHETTE DE JOINTS
26		276-2446		1	VIS AUTO-TARAUDEUSE, Hex Hd, #8 x 3/8"

1.88.11/02	01	p1	04/08

VERIN COMMANDE BENNE

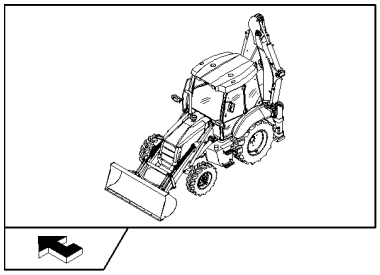

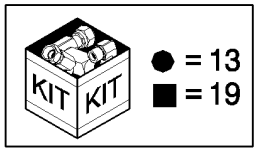

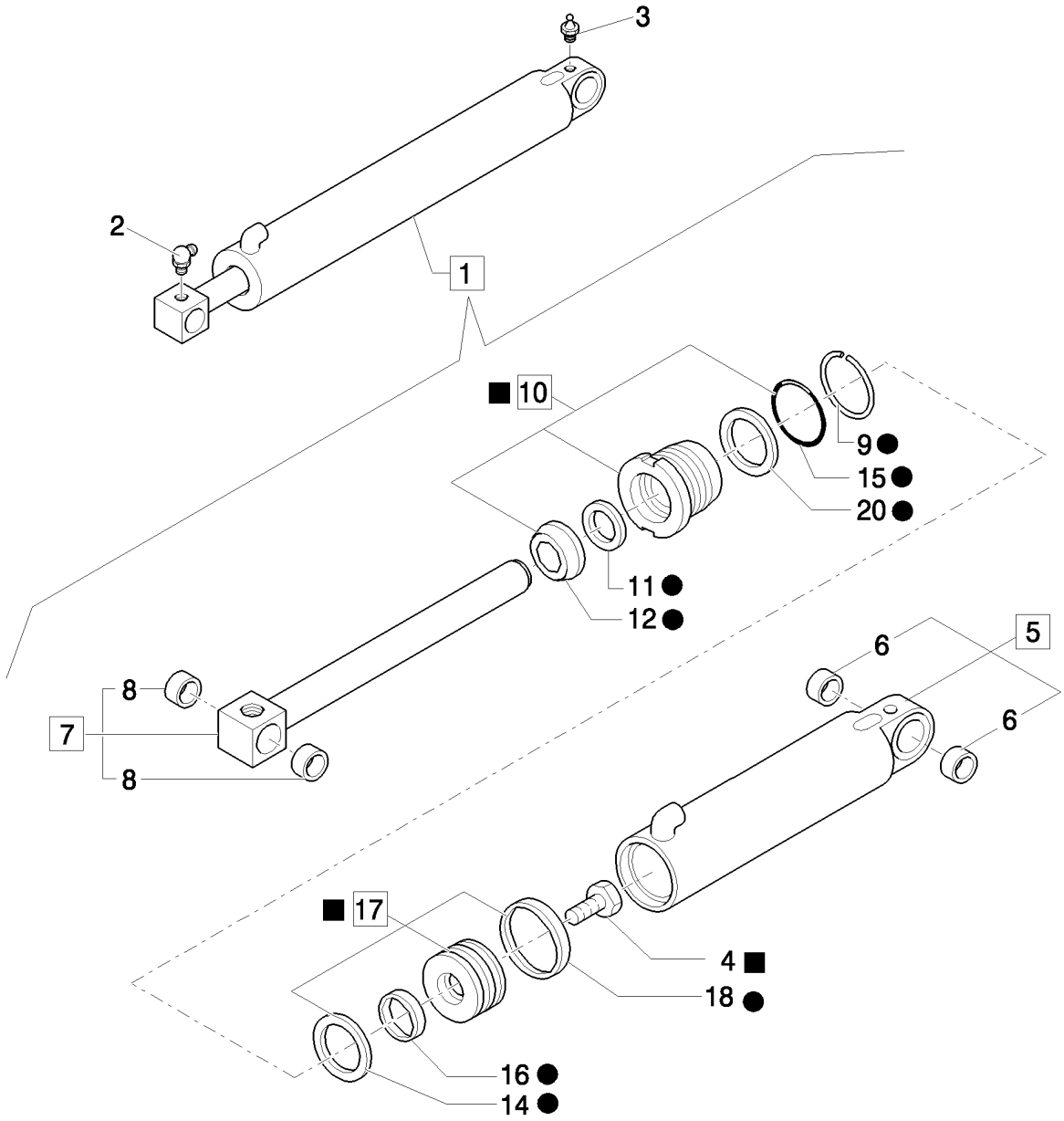

VERIN COMMANDE BENNE

REF	FN	PART NUMBER	YR/SN	QTY	DESCRIPTION
1		87315521		2	VERIN HYDRAULIQUE, Assy,Loader Bucket
2		81818824		2	GRAISSEUR, 90º, 1/8"-27 NPT, 1/8-27-90GR
3		83416242		2	GRAISSEUR, 1/8"-27
4		87428020		2	VIS
5		85800504		2	TUBE, Assy
6		81902174		4	BAGUE
7		83962811		2	TRINGLE, Assy
8		83902710		4	BAGUE
9		83937315		2	FIL
10		87415115		2	PRESSE-ETOUPE, Assy
11		87414965		2	POCHETTE DE JOINTS
12		87414964		2	RACLEUR BALAIS
13		87428627		1	POCHETTE DE JOINTS
14		87414340		2	ANNEAU
15		87421143		2	JOINT THORIQUE
16		87414332		2	JOINT
17		87406750		2	PISTON, Assy
18		87408633		2	Bague D"Usure
19		87424195		1	COLIS DE RÉPARATION
20		87440396		1	CONTRE-JOINT

1.88.11/02	02	p1	03/08

VERIN COMMANDE BENNE

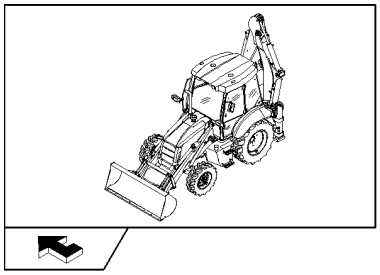

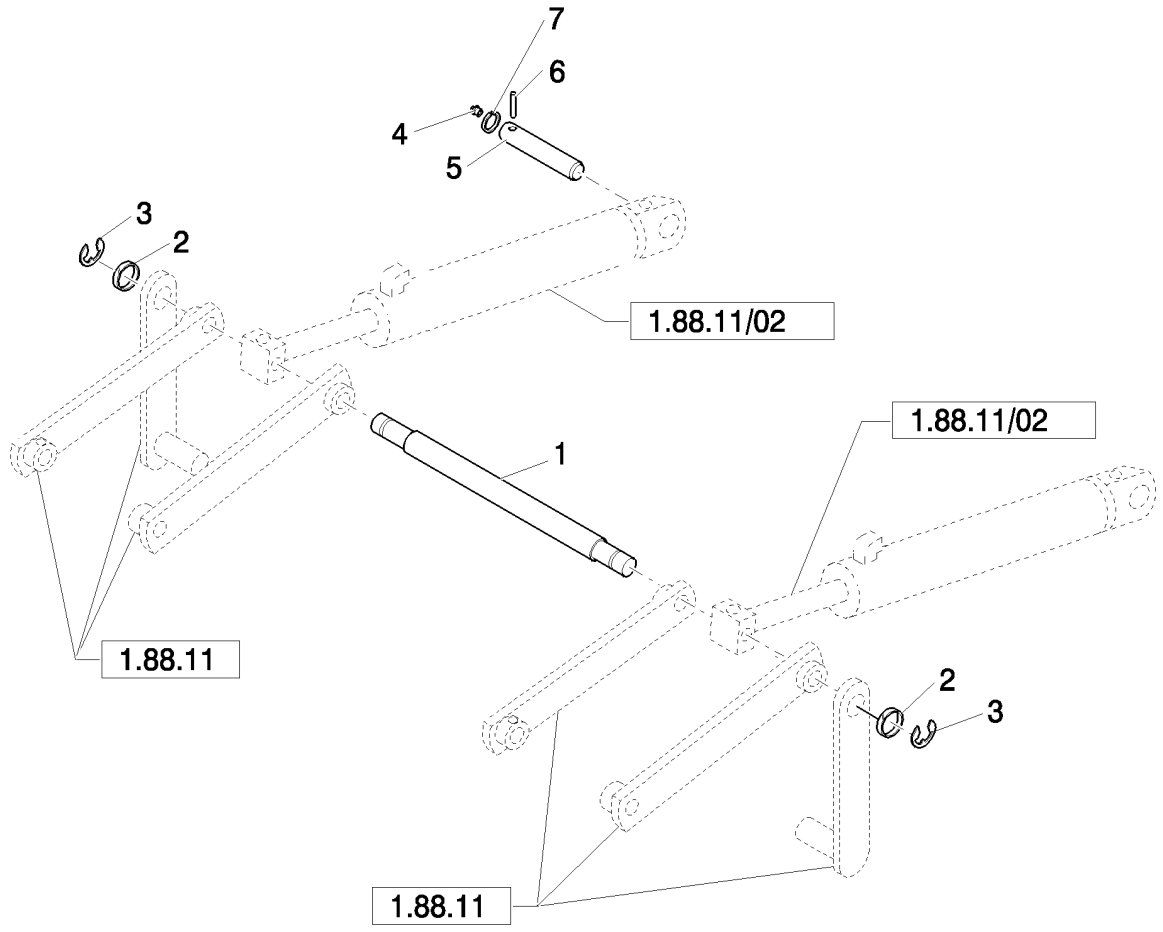

VERIN COMMANDE BENNE

REF	FN	PART NUMBER	YR/SN	QTY	DESCRIPTION
1		85803635		1	ENTRETOISE
2		81900328		2	RONDELLE
3		81902463		2	ANNEAU
4		83416242		2	GRAISSEUR
5		85801049		2	AXE, 38mm x 159mm
6		85802993		2	AXE
7		85802992		2	ANNEAU

1.88.11/03		p1	04/08

TUYAUX DU CYLINDRE RELEVAGE ET BENNE

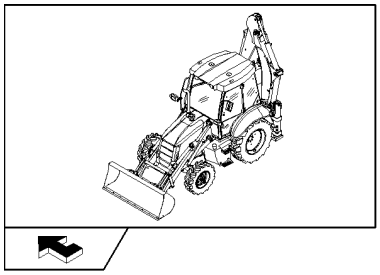

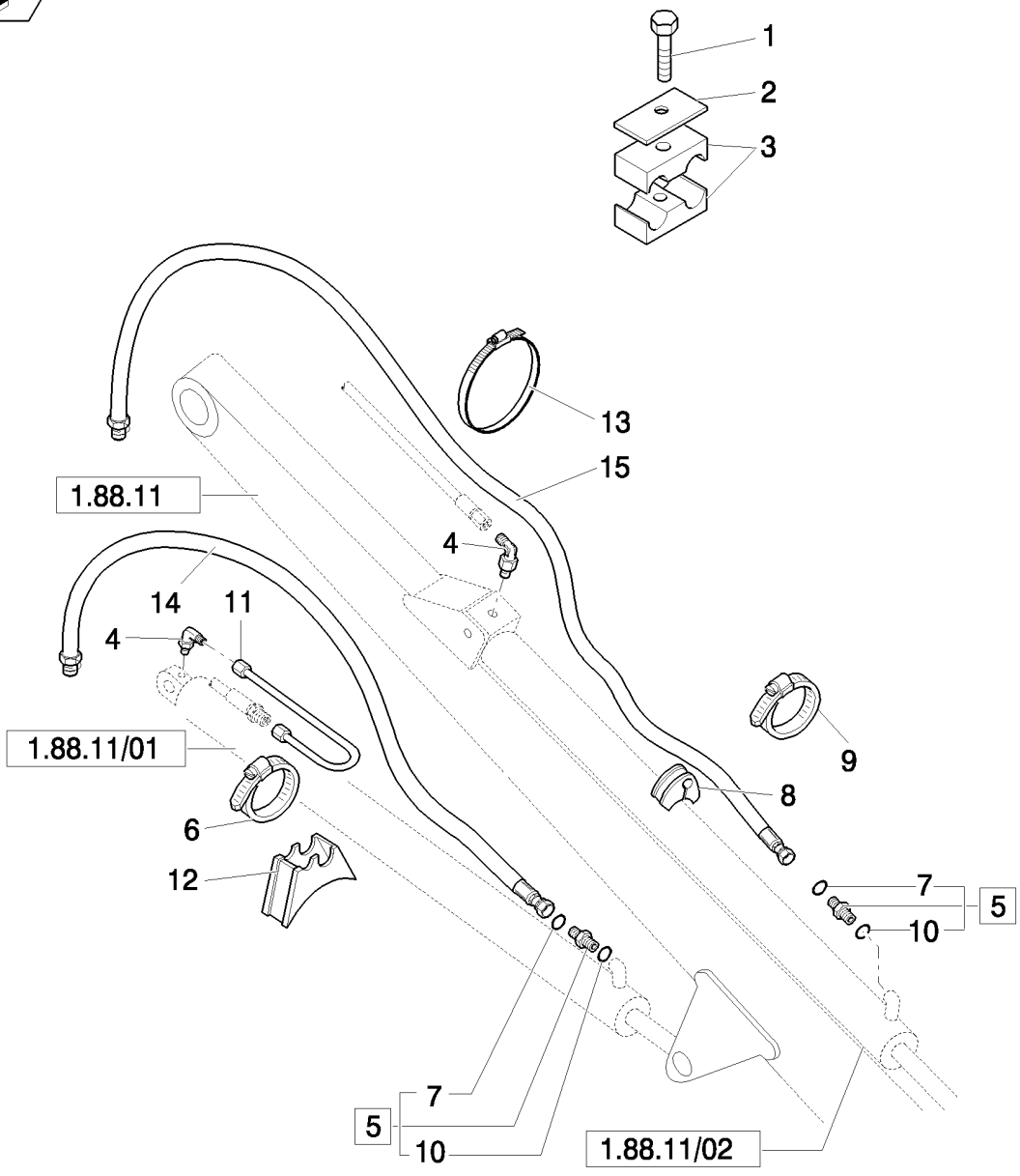

TUYAUX DU CYLINDRE RELEVAGE ET BENNE

REF	FN	PART NUMBER	YR/SN	QTY	DESCRIPTION
1		16044321		2	BOULON, Hex, M8 x 55, 8.8
2		87390514		2	PLAQUE
3		87390511		4	COLLIER
4		85802961		4	COUDE
5		83963376		4	RACCORD, Assy
6		85802743		2	BRIDE, FLEXIBLE
7		89992298		8	JOINT THORIQUE
8		85803008		2	BRIDE, FLEXIBLE
9		85805567		2	BLOC
10		80167269		10	JOINT THORIQUE
11		85801596		2	TUBE
12		87303909		2	BLOC
13		14560187		2	SERRE-CABLE, 178mm lg, L=203.2 mm
14		85813380		2	TUYAU FLEXIBLE
15		85813379		2	TUYAU FLEXIBLE

1.88.11/05A	01	p1	05/08

JONCTIONS AUTONIVELEUSES, COMMANDES CHARGEUSE (CENTER PIVOT MECANIQUE) - NA

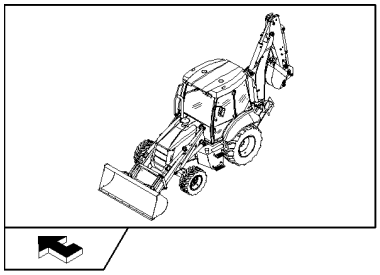

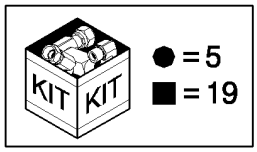

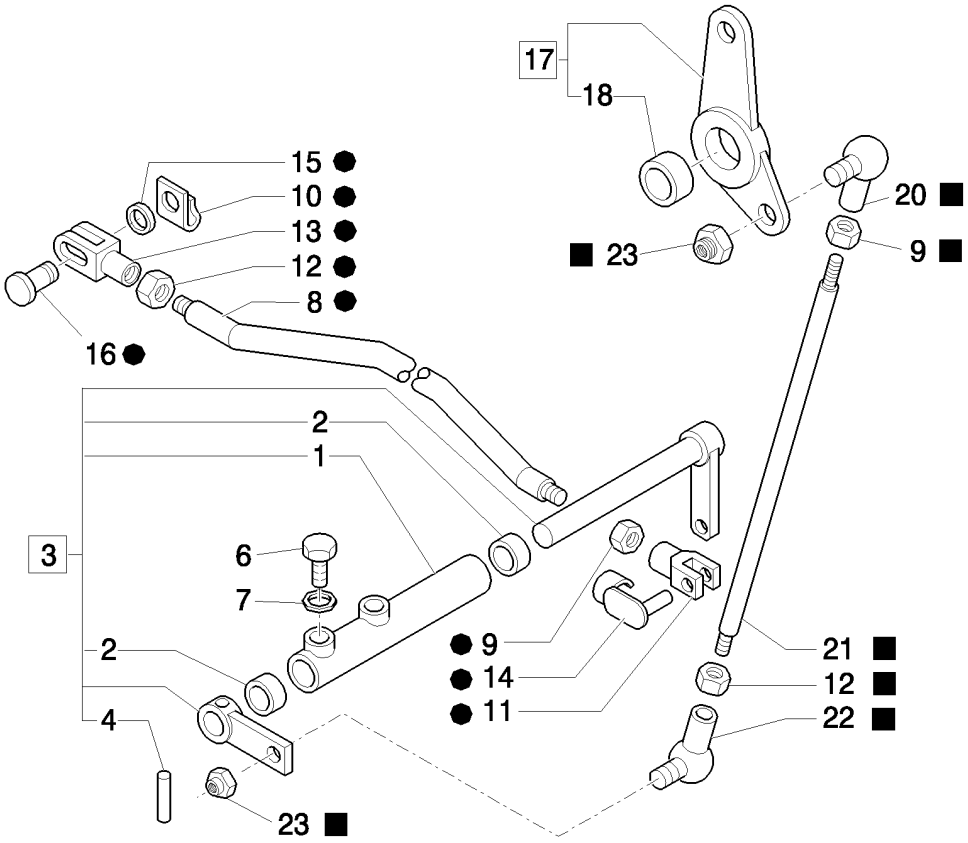

JONCTIONS AUTONIVELEUSES, COMMANDES CHARGEUSE (CENTER PIVOT MECANIQUE) - NA

REF	FN	PART NUMBER	YR/SN	QTY	DESCRIPTION
1		85802724		1	LEVIER, Assy
2		85802494		2	BAGUE
3		85827787		1	LEVIER, Assy
4		85805616		1	AXE
5		85802734		1	TIRANT, Assy
6		15970521		1	BOULON, Hex, M10 x 1.25 x 20, 8.8, Full Thd
7		11190679		2	RONDELLE BELLEVILLE, Belleville, M10.5
8		85802736		1	TIRANT
9		16102311		2	ECROU, Thin, M8 x 1.25, Cl 04
10		11064071		1	CLIP
11		11991971		1	FOURCHETTE
12		16102911		2	ECROU, Thin, M8 x 1.25, Cl 04, LH
13		85802735		1	FOURCHETTE
14		85802738		1	RETENEUR
15		14496521		1	RONDELLE, M8 x 17 x 1.6
16		85802737		2	AXE
17		85803215		1	LEVIER, Assy
18		81855916		1	BAGUE
19		85802741		1	TIRANT, Assy
20		85804376		1	ROTULE
21		85802742		1	TIRANT
22		85804375		1	ROTULE
23		14048211		2	CONTRE-ECROU, M8 x 1.25, Cl 8

1.88.11/05A	02	p1	03/08

JONCTIONS AUTONIVELEUSES, BRAS CHARGEUSE (CENTER PIVOT) - NA

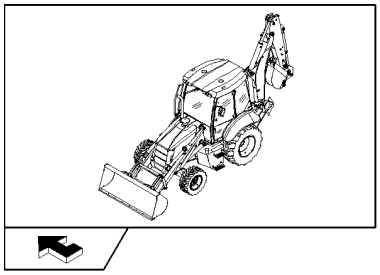

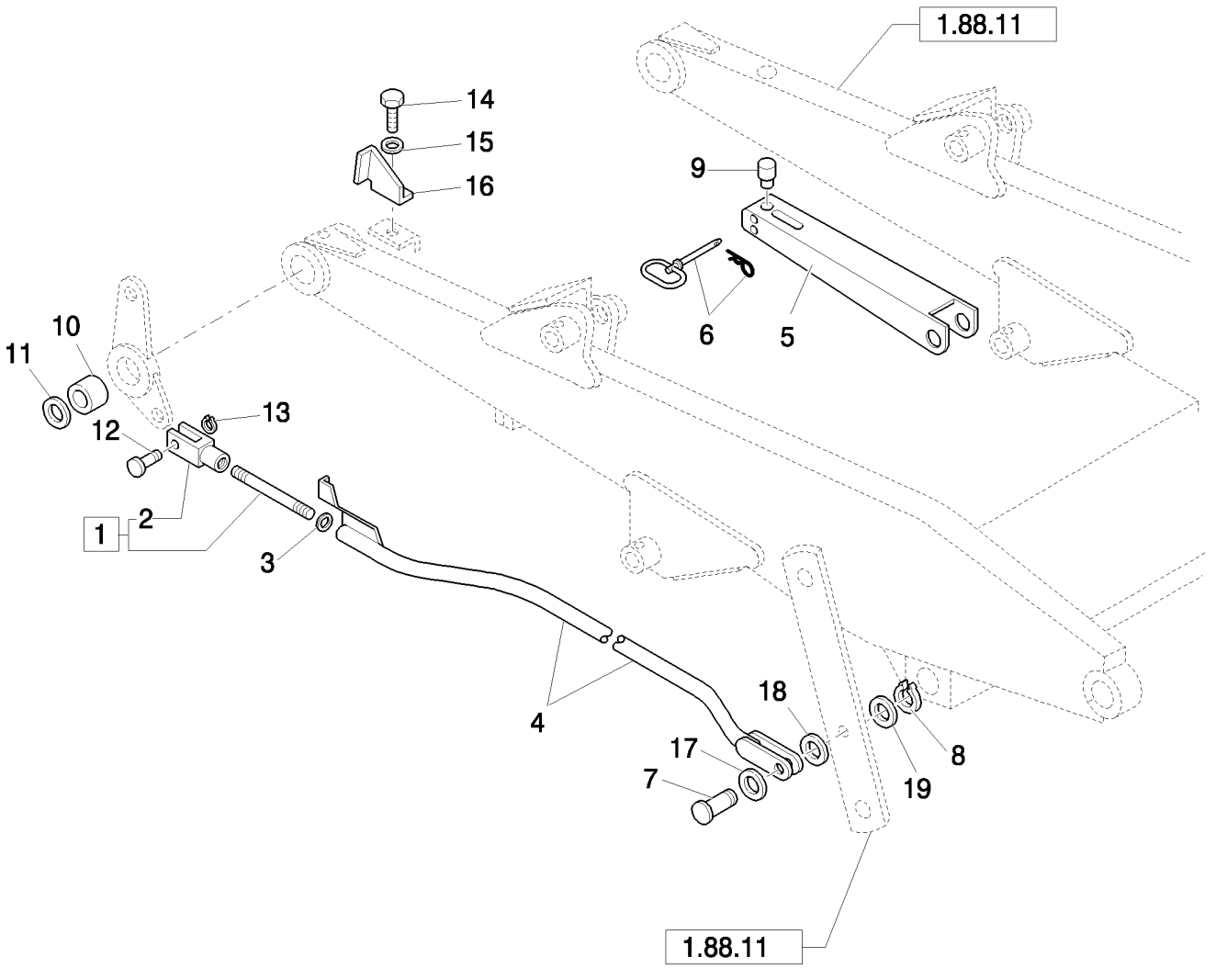

JONCTIONS AUTONIVELEUSES, BRAS CHARGEUSE (CENTER PIVOT) - NA

REF	FN	PART NUMBER	YR/SN	QTY	DESCRIPTION
1		83963433		1	TRINGLE, Assy
2		83962659		1	FOURCHETTE
3		82879400		1	RONDELLE
4		85804026		1	MAILLON
5		85802405		1	BARILLET DE SERRURE, Strut; Loader Lift Cylinder Lockout; Incl. Ref 9
6		86507337		1	AXE D'ATTELAGE
7		85803297		1	AXE
8		83911366		1	CIRCLIP
9		85802403		1	BOUCHON, Pad, Strut Prop
10		83963422		1	ENTRETOISE
11		85804366		1	RONDELLE
12		85819179		1	AXE
13		85700341		1	CIRCLIP
14		10979421		1	BOULON, Hex, M6 x 10, 8.8, Full Thd
15		11193279		1	RONDELLE BELLEVILLE, Belleville, M6.4
16		85803277		1	PLAQUE
17		85817622		AR	RONDELLE
18		85817623		AR	RONDELLE
19		81900328		1	RONDELLE

1.88.11/06A		p1	05/08

VERINS STABILISATEURS (CENTER PIVOT)

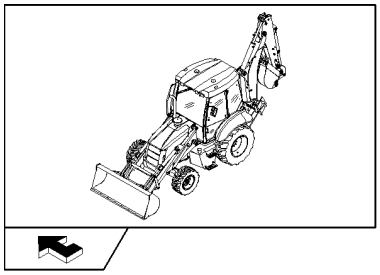

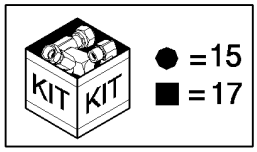

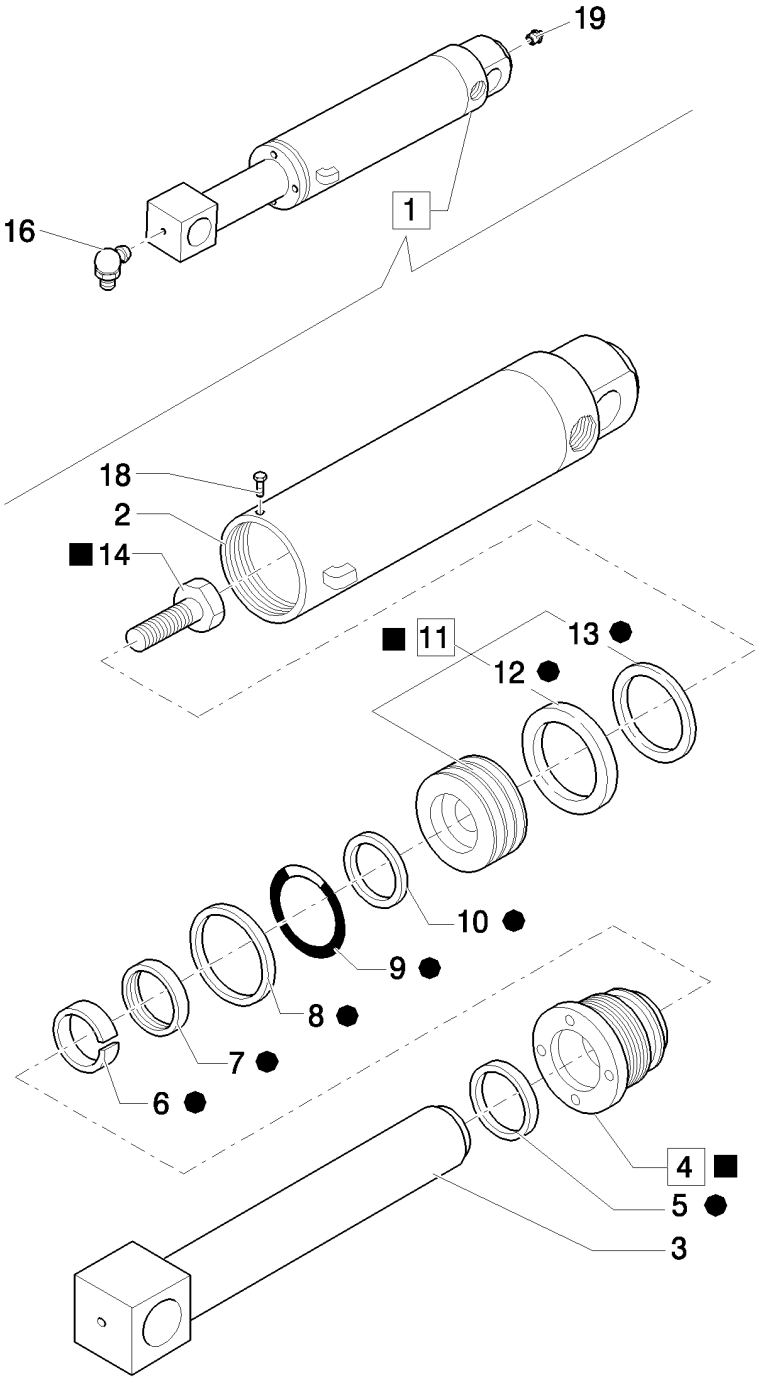

VERINS STABILISATEURS (CENTER PIVOT)

REF	FN	PART NUMBER	YR/SN	QTY	DESCRIPTION
1		87315528		2	VERIN HYDRAULIQUE, Assy
2		85800604		2	CYLINDRE
3		85800603		2	TRINGLE
4	1	87412400		2	CULASSE, Assy
5		87414974		2	RACLEUR BALAIS
6		87414971		2	BAGUE
7		87414975		2	POCHETTE DE JOINTS
8		87440410		2	CONTRE-JOINT
9		87421145		2	JOINT THORIQUE
10		87414342		2	ANNEAU
11		87406921		2	PISTON, Assy
12		87414334		2	JOINT
13		87408635		2	Bague D"Usure
14		87428011		2	BOULON
15		87428630		1	POCHETTE DE JOINTS
16		81818824		2	GRAISSEUR, 90º, 1/8"-27 NPT
17		81818824		2	GRAISSEUR, 90º, 1/8"-27 NPT, Assy, 1/8"-27
18		85827128		1	VIS
19		83416242		2	GRAISSEUR

(1) Includes 5 - 9

1.88.11/07A		p1	04/08

CONDUITS POUR VERINS STABILISATEURS (CENTER PIVOT PILOT)

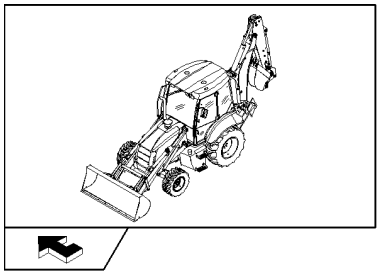

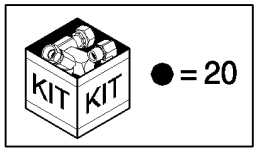

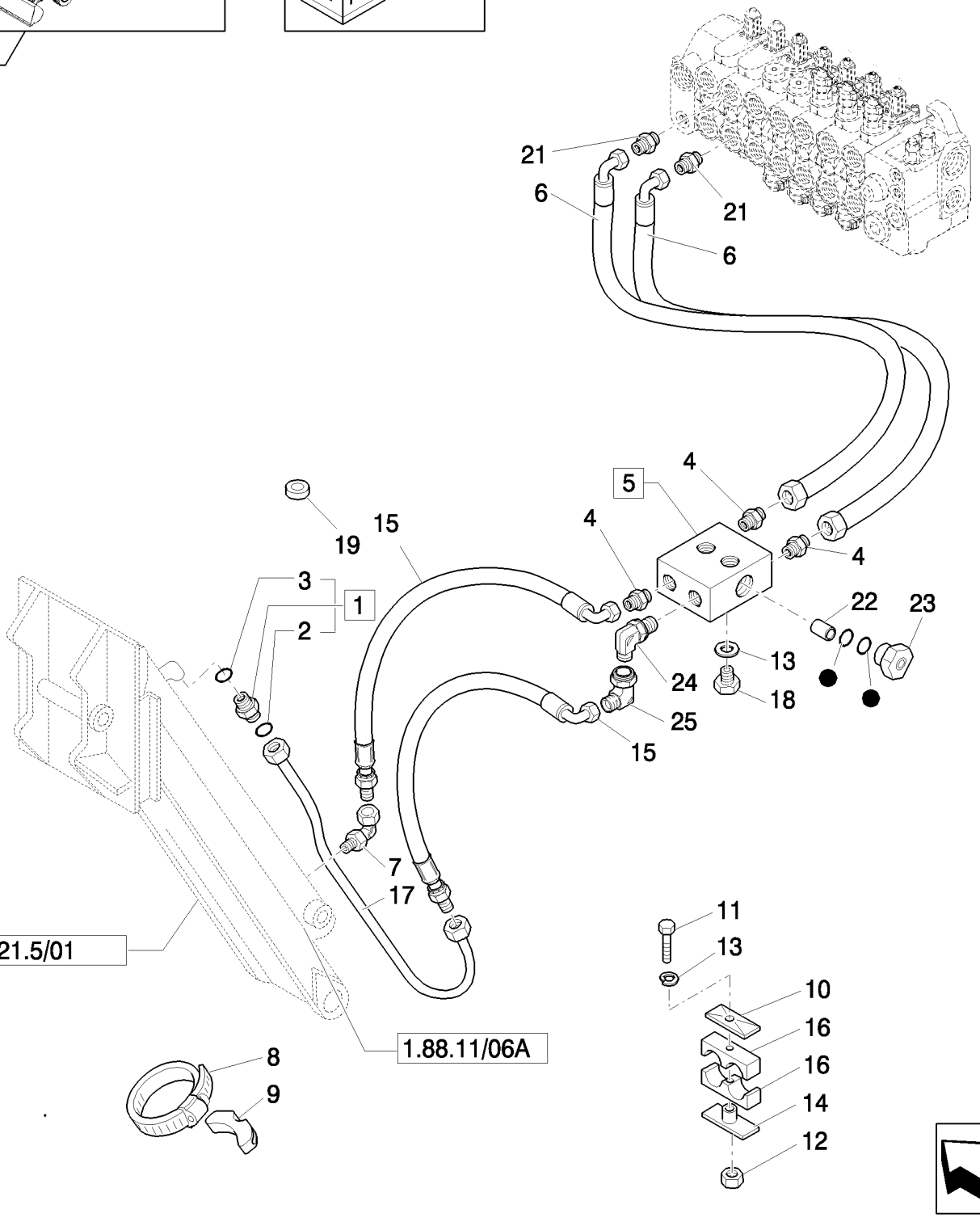

CONDUITS POUR VERINS STABILISATEURS (CENTER PIVOT PILOT)

REF	FN	PART NUMBER	YR/SN	QTY	DESCRIPTION
1		83963374		2	RACCORD, Assy
2		89992298		6	JOINT THORIQUE
3		80128825		6	JOINT THORIQUE
4		83985067		6	RACCORD, Includes O-Rings 9617873 & 9992298
5	1	85802820		2	CLAPET ANTI-RETOUR, Assy
6		85807873		4	TUYAU FLEXIBLE, 946mm lg
7		85802965		2	RACCORD
8		85803008		2	BRIDE, FLEXIBLE
9		87303912		2	BLOC
10		87390514		2	PLAQUE
11		15213621		2	VIS, Hex, M8 x 55, 8.8, Full Thd
12		14048211		2	CONTRE-ECROU, M8 x 1.25, Cl 8
13		11193879		6	RONDELLE BELLEVILLE, Belleville, M8.4
14		87390534		2	PLAQUE
15		85807874		4	TUYAU FLEXIBLE, 1676mm lg
16		87390511		4	COLLIER
17		85802620		2	TUYAU HYDRAULIQUE
18		16044421		4	BOULON, Hex, M8 x 60, 8.8
19		85803517		2	BAGUE CAOUTCHOUC
20		85821126		2	KIT
21		85805258		4	RACCORD, 9/16"-16 ORS x 1 1/16"-12, O-Ring
22		85820159		1	PLONGEUR
23		85820160		2	SOUPAPE HYDRAULIQUE
24		83983763		2	RACCORD
25		86511208		2	COUDE

(1) Includes 20 - 23

CONDUITS POUR VERINS STABILISATEURS (CENTER PIVOT MECANIQUE) - NA

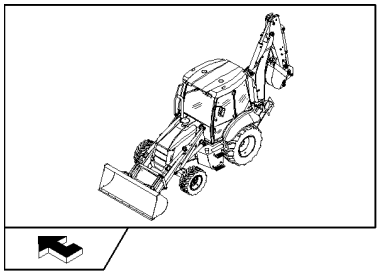

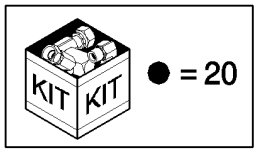

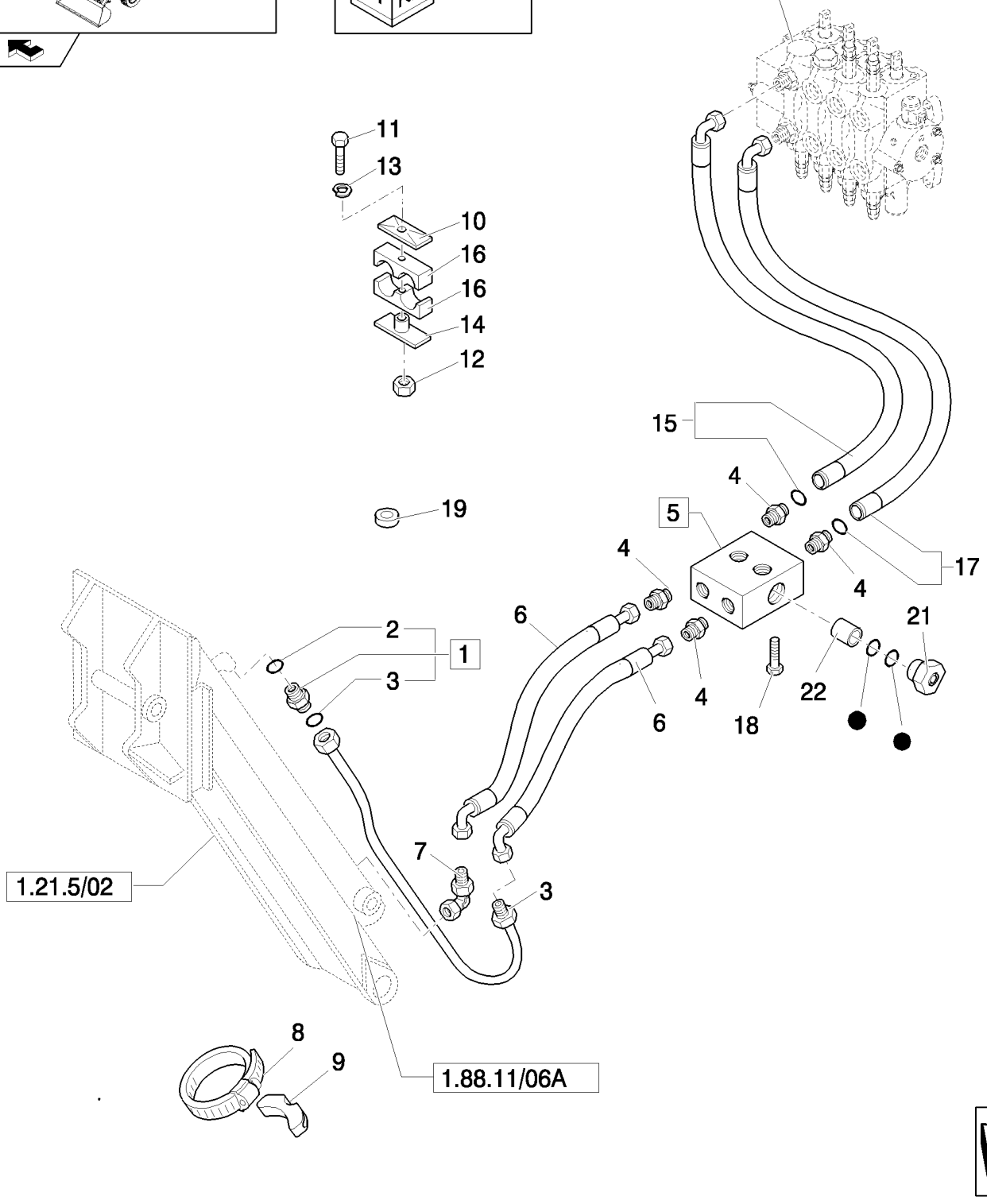

CONDUITS POUR VERINS STABILISATEURS (CENTER PIVOT MECANIQUE) - NA

REF	FN	PART NUMBER	YR/SN	QTY	DESCRIPTION
1		83963374		6	RACCORD, Assy
2		89992298		6	JOINT THORIQUE
3		80128825		6	JOINT THORIQUE
4		83985067		8	RACCORD, Includes O-Rings 9617873 & 9992298
5	1	85802820		2	CLAPET ANTI-RETOUR, Assy
6		85807873		4	TUYAU FLEXIBLE, 946mm lg
7		85802965		2	RACCORD
8		85803008		2	BRIDE, FLEXIBLE
9		87303912		2	BLOC
10		87390514		2	PLAQUE
11		15213621		2	VIS, Hex, M8 x 55, 8.8, Full Thd
12		14048211		2	CONTRE-ECROU, M8 x 1.25, Cl 8
13		11193879		6	RONDELLE BELLEVILLE, Belleville, M8.4
14		87390534		2	PLAQUE
15		85807874		4	TUYAU FLEXIBLE, 1676mm lg
16		87390511		4	COLLIER
17		85802620		2	TUYAU HYDRAULIQUE
18		16044421		4	BOULON, Hex, M8 x 60, 8.8
19		85803517		2	BAGUE CAOUTCHOUC
20		85821126		2	KIT
21		85820160		2	SOUPAPE HYDRAULIQUE
22		85820159		1	PLONGEUR

(1) Includes 20 - 22

DETECTEUR RETOUR FOUILLE

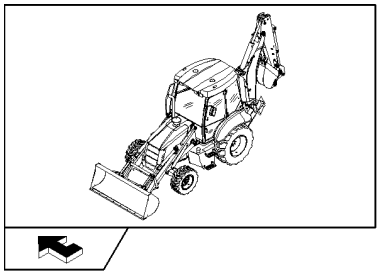

EU
B95B
B95BLR
B100B
B100BLR
B110B

NA
B95B
B95BLR
B100B
B110B

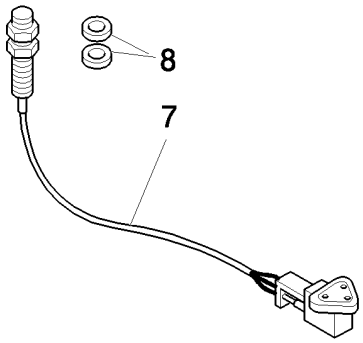

B115B EU

B115B NA

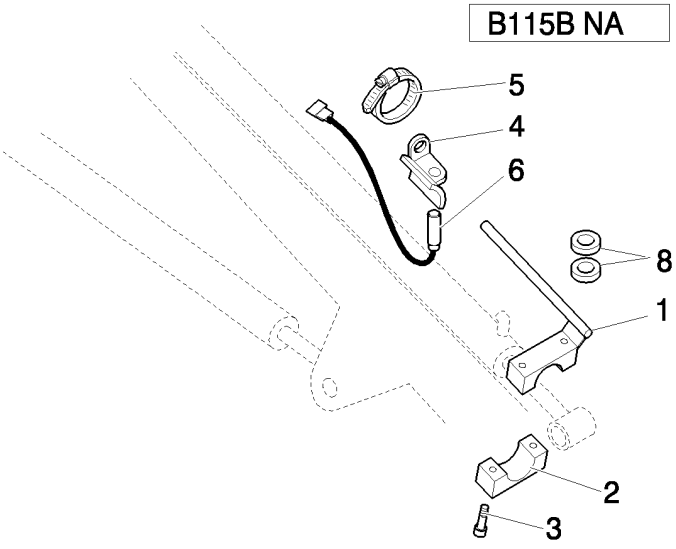

DETECTEUR RETOUR FOUILLE

REF	FN	PART NUMBER	YR/SN	QTY	DESCRIPTION
1		85805108		1	TRINGLE
2		85805111		1	BLOC
3		14305621		2	VIS, Hex Soc Hd, M6 x 35, 8.8
4		85805113		1	SUPPORT
5		85803010		2	BRIDE, FLEXIBLE
6		85805619		1	CAPTEUR, Pigtail Length = 2600mm
7		85802950		1	CAPTEUR, Pigtail Length = 400mm
8		14497001		4	RONDELLE FREIN, 19X34X3

1.88.11/09	02	p1	04/08

CYLINDRES ARRIÈRES D'OSCILLATION

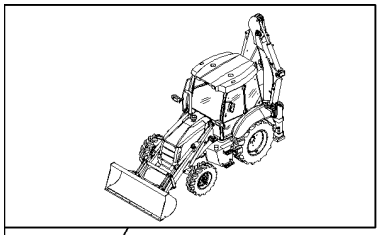

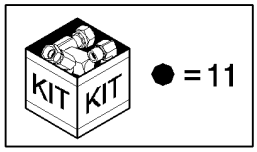

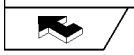

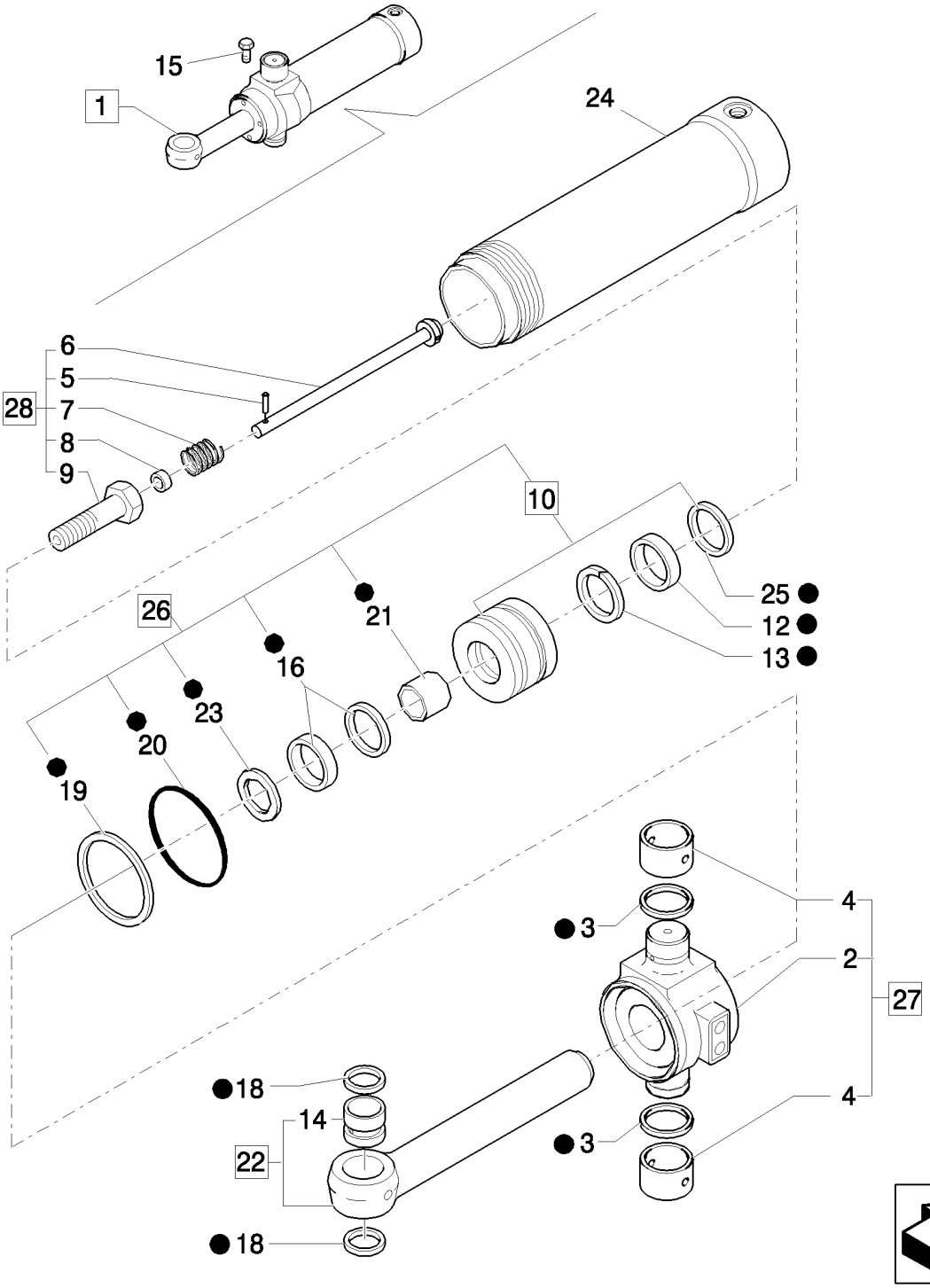

CYLINDRES ARRIÈRES D'OSCILLATION

REF	FN	PART NUMBER	YR/SN	QTY	DESCRIPTION
1		87315529		1	VERIN HYDRAULIQUE, Assy
2		87422783		1	TOURILLON
3		83910601		2	JOINT, Seal
4		83912378		2	BAGUE
5		83910599		1	AXE
6		85800990		1	TRINGLE
7		83931313		1	RESSORT
8		83998909		1	BAGUE
9		87428014		1	VIS, M30x2x100
10		87424838		1	PISTON, Assy
11		87428631		1	POCHETTE DE JOINTS
12		87408636		1	Bague D"Usure
13		87414335		1	JOINT-RACLEUR
14		85800303		1	BAGUE
15		276-2456		1	VIS AUTO-TARAUDEUSE
16		87414970		1	POCHETTE DE JOINTS, 50 mm Rod
18		83931289		2	JOINT-RACLEUR
19		85800007		1	CONTRE-JOINT, Back-up
20		87421149		1	JOINT THORIQUE, 4.734" ID x .139" Thk
21		87414966		1	COUSSINET EN NYLON, 50 mm Rod
22		87433032		1	TRINGLE, Assy
23		87414969		1	JOINT, 50 mm Rod
24		87455335		1	CULASSE
25		87414343		1	ANNEAU
26		87445307		1	POCHETTE DE JOINTS, Assy
27		87445758		1	TOURILLON, Assy
28		87424935		1	BOULON, Assy

1.88.11/09A		p1	04/08

VERINS ET PLAQUE DE ROTATION (CENTER PIVOT)

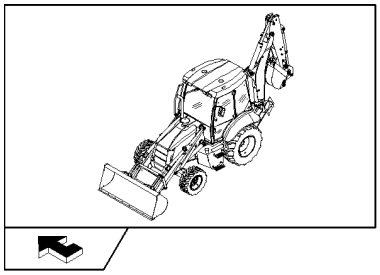

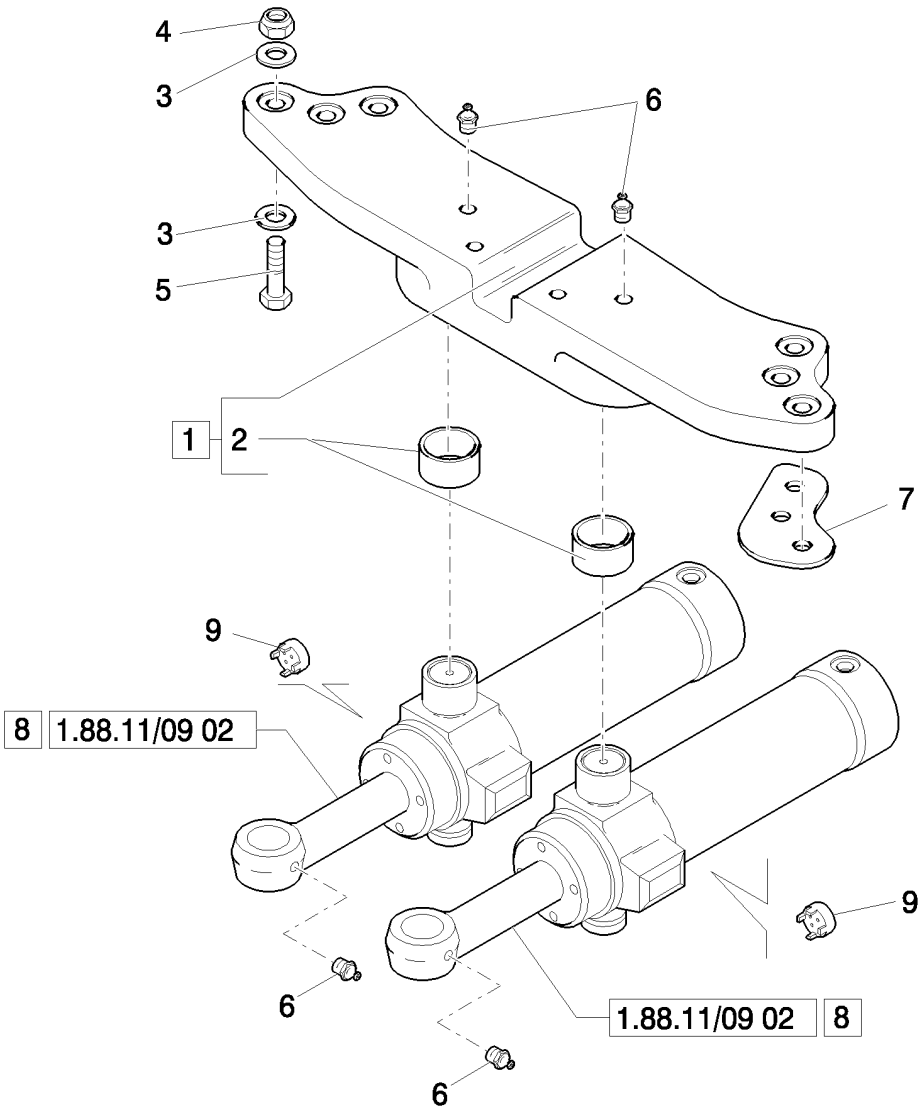

VERINS ET PLAQUE DE ROTATION (CENTER PIVOT)

REF	FN	PART NUMBER	YR/SN	QTY	DESCRIPTION
1		85803617		1	PLAQUE DE SERRAGE, Assy
2		83910645		2	BAGUE
3		10520431		12	RONDELLE
4		12575121		6	CONTRE-ECROU, M20 x 1.5, Cl 10
5		15988934		6	BOULON, Hex, M20 x 90, 10.9
6		83416242		4	GRAISSEUR, 1/8"-27
7		85801153		4	CALE D'EPAISSEUR
7		85803039		2	CALE D'EPAISSEUR
8		87315529		2	VERIN HYDRAULIQUE, Assy
9	1	85800965		2	REDUCTEUR

(1) Only for B115B (EU)

1.88.12/03		p1	04/08

SUPPORT DISTRIBUTEURS AVANT ET RENVOIS (CENTER PIVOT - SIDE SHIFT)

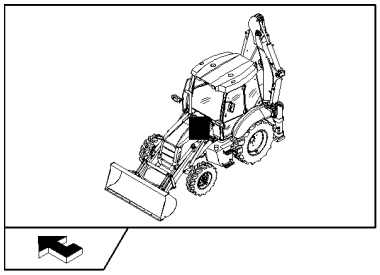

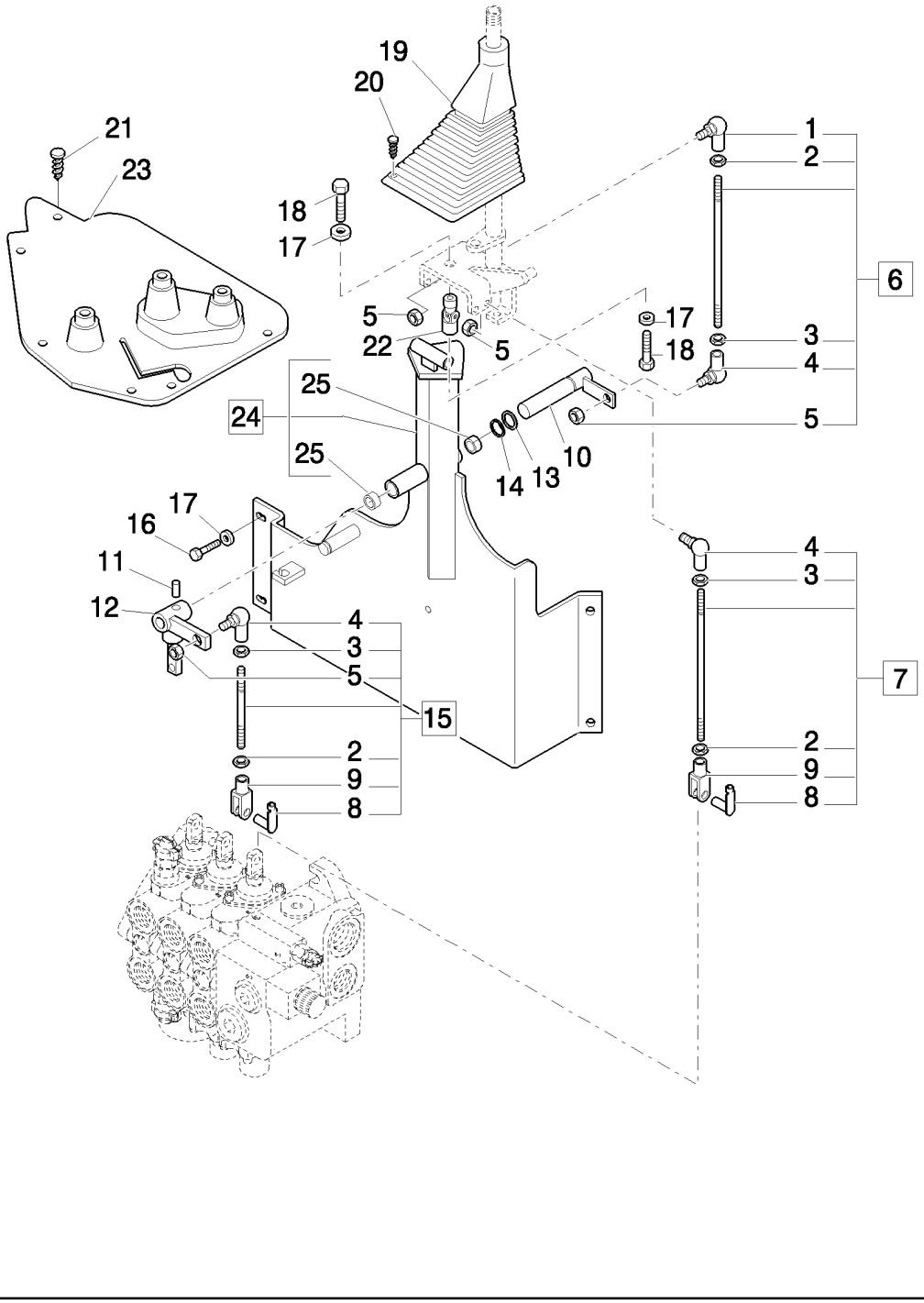

SUPPORT DISTRIBUTEURS AVANT ET RENVOIS (CENTER PIVOT - SIDE SHIFT)

REF	FN	PART NUMBER	YR/SN	QTY	DESCRIPTION
1		85804376		1	ROTULE
2		16102911		3	ECROU, Thin, M8 x 1.25, Cl 04, LH
3		16102311		3	ECROU, Thin, M8 x 1.25, Cl 04
4		85804375		3	ROTULE
5		14048211		5	CONTRE-ECROU, M8 x 1.25, Cl 8
6		85803477		1	TIRANT, Assy
7		85805498		1	TIRANT, Assy
8		85802738		2	RETENEUR
9		11991971		2	FOURCHETTE
10		85824463		1	LEVIER
11		85805616		1	AXE
12		85825465		1	GALET TENDEUR
13		14496901		1	RONDELLE, M16 x 30 x 3
14		83911366		1	CIRCLIP
15		85805806		1	TIRANT, Assy
16		11112821		4	BOULON, Hex, M12 x 40, 8.8, Full Thd
17		11190779		5	RONDELLE BELLEVILLE, Belleville, M13
18		15540321		1	BOULON, Hex, M12 x 1.25 x 25, 8.8, Full Thd
19		85802842		1	COIFFE
20		14568887		4	ATTACHE, 8x20
21		85808422		6	BOUCHON
22		85801518		1	CARDAN
23		85806245		1	COIFFE
24		87304842		1	SUPPORT, Assy
25		85802494		2	BAGUE

Excluded Mechanical Version NA

B95B

1.88.12/03A		p1	04/08

SUPPORT DISTRIBUTEURS AVANT ET RENVOIS (CENTER PIVOT) - NA

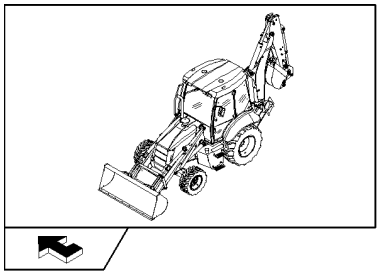

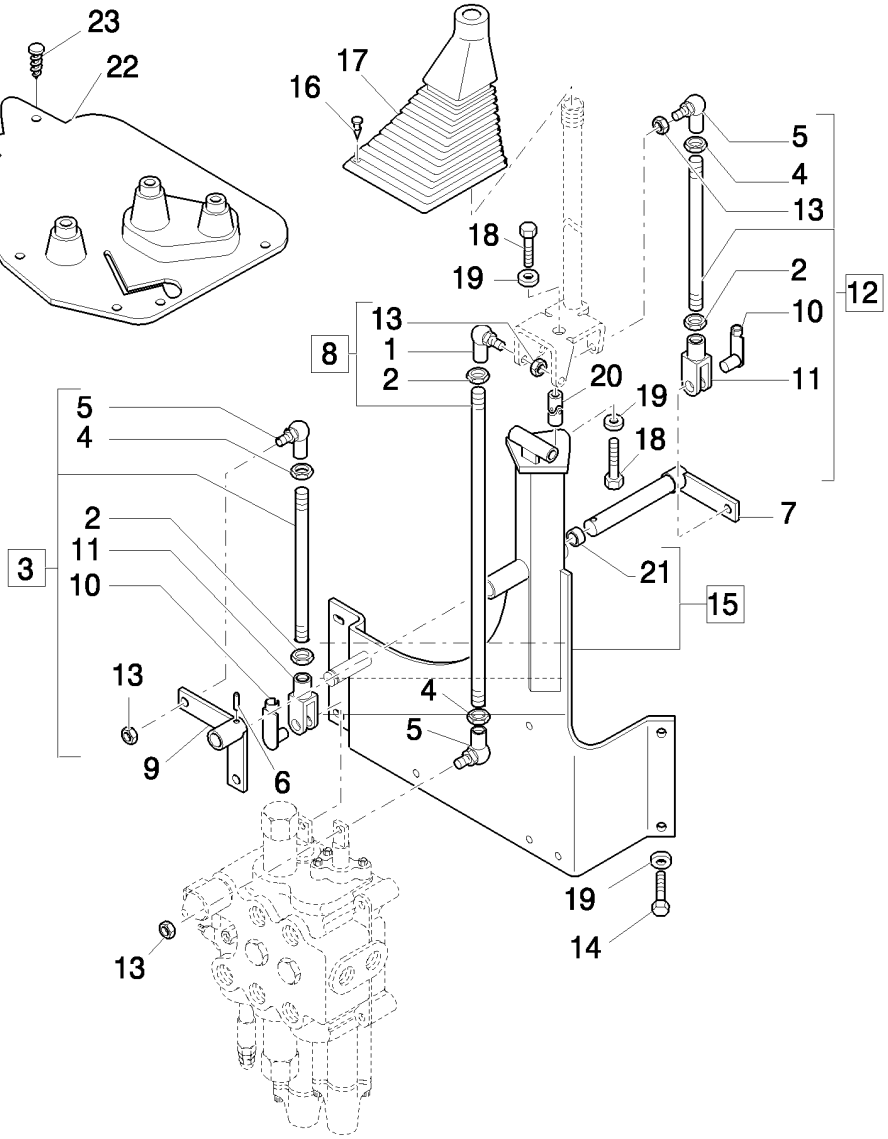

SUPPORT DISTRIBUTEURS AVANT ET RENVOIS (CENTER PIVOT) - NA

REF	FN	PART NUMBER	YR/SN	QTY	DESCRIPTION
1		85804376		1	ROTULE
2		16102311		3	ECROU, Thin, M8 x 1.25, Cl 04
3		85801564		1	TIRANT, Assy
4		16102911		3	ECROU, Thin, M8 x 1.25, Cl 04, LH
5		85804375		3	ROTULE
6		85805616		1	AXE
7		85805692		1	AXE
8		85801566		1	TIRANT, Assy
9		85805690		1	LEVIER
10		85802738		2	RETENEUR
11		11991971		2	FOURCHETTE
12		85801562		1	TIRANT, Assy
13		14048211		4	CONTRE-ECROU, M8 x 1.25, Cl 8
14		11112821		4	BOULON, Hex, M12 x 40, 8.8, Full Thd
15		87312027		1	SUPPORT, Assy
16		14568887		4	ATTACHE
17		85802842		1	COIFFE
18		15540321		2	BOULON, Hex, M12 x 1.25 x 25, 8.8, Full Thd
19		11190779		6	RONDELLE BELLEVILLE, Belleville, M13
20		85801518		1	CARDAN
21		85802494		2	BAGUE
22	1	85804539		1	COUVERCLE
23	1	85808422		6	BOUCHON

(1) Only for CAB

Mechanical Version	B95B

1.89.9/01		p1	03/08

SUPPORT DISTRIBUTEUR ARRIERE HUSCO (CENTER PIVOT) - NA

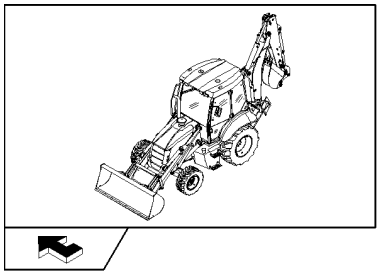

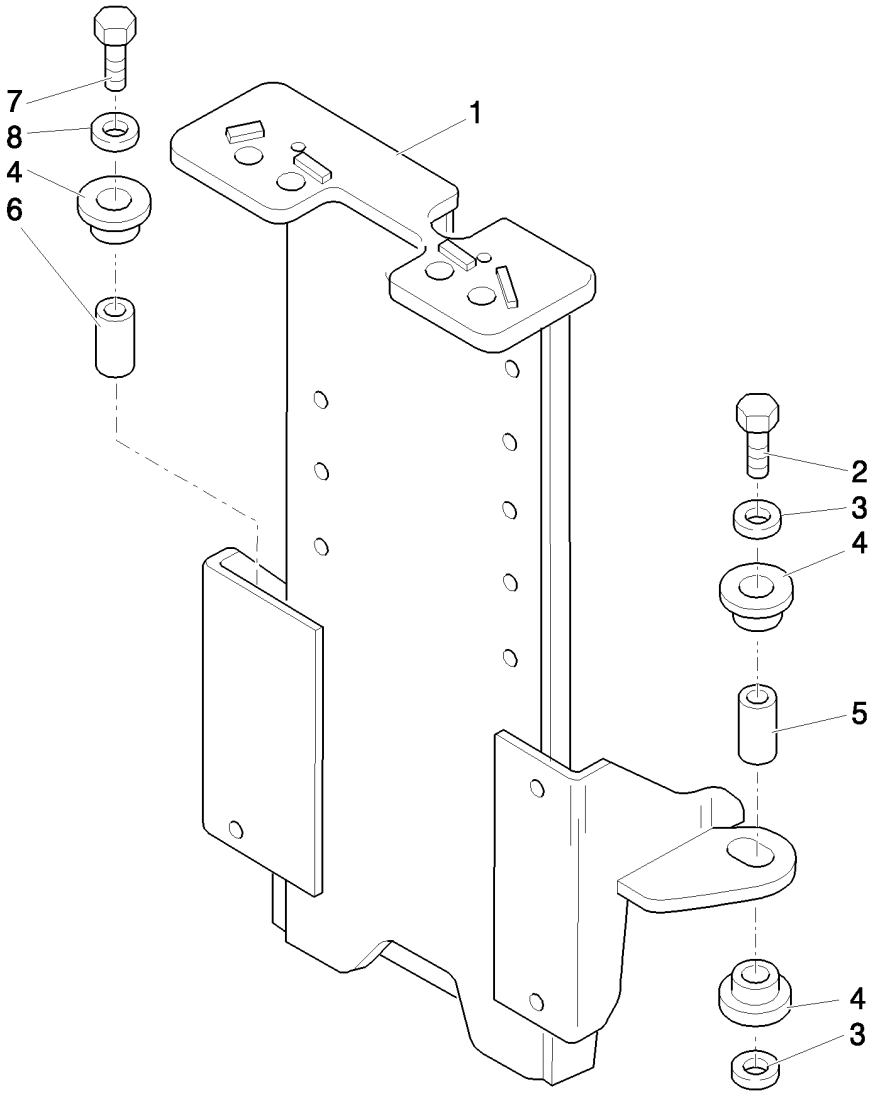

SUPPORT DISTRIBUTEUR ARRIERE HUSCO (CENTER PIVOT) - NA

REF	FN	PART NUMBER	YR/SN	QTY	DESCRIPTION
1		85820167		1	SUPPORT
2		15215821		2	BOULON, Hex, M12 x 60, 8.8, Full Thd
3		85802618		5	RONDELLE D'ETANCHEITE, 13x41x3
4		87348165		6	ISOLATEUR
5		85817252		2	BAGUE, 12.5 x 16.5 x 24
6		85820172		1	BAGUE, 12.5 x 16.5 x 22
7		15216421		1	BOULON, Hex, M12 x 90, 8.8, Full Thd
8		85820170		1	ENTRETOISE

Mechanical Version B95B

NOTES

SECTION INDEX
Plate-forme de Conduite

1.91.1		CABINE : LAMPE PLAFONNIER
1.91.1/01		CHASSIS DE SURETE: APPAREILS DE CONTROL (ROPS) - NA
1.91.3		ALARME AUXILIAIRE
1.91.4	01	CÂBLAGE TOIT CABINE (CABINE, POWER SHUTTLE)
1.91.4	02	CENTRALE BOÎTE À FUSIBLES (CABINE, POWER SHUTTLE)
1.91.4	03	BOUTON ALLUMAGE, POINT ALLUM., FUSIBLES & CABL. CONSOLE LAT. (CAB PT)
1.91.4	04	CÂBLAGE AVANT ET CENTRALE (CABINE, POWER SHUTTLE)
1.91.4	05	TABLEAU DE BORD AVANT (CAB POWER SHUTTLE)
1.91.4	06	COMPOSANTS CIRCUIT ÉLECTRIQUE CABINE (CABINE, POWER SHUTTLE)
1.91.4/02	01	CÂBLAGE TOIT CABINE (ROPS POWER SHUTTLE)
1.91.4/02	02	CENTRALE BOÎTE À FUSIBLES (ROPS POWER SHUTTLE)
1.91.4/02	03	BOUTON ALLUMAGE, POINT ALLUM., FUSIBLES & CABL. CONSOLE LAT. (ROPS PT)
1.91.4/02	04	CÂBLAGE AVANT ET CENTRALE (ROPS POWER SHUTTLE)
1.91.4/02	05	CONSOLE DROITE AVEC INSTRUMENTS (ROPS POWER SHUTTLE) - NA
1.91.4/02	06	COMPOSANTS CIRCUIT ÉLECTRIQUE CABINE (ROPS POWER SHUTTLE)
1.91.5	01	LAVE-VITRE/ESSUIE-VITRE AVANT ET ARRIERE
1.91.5	02	RESERVOIR ET BUSES ESSUIE-GLACE
1.91.6		ANTENNE RADIO & CALOTTE HAUT-PARLEURS
1.91.7/01		LAMPES ET PHARES - ROPS - NA
1.91.7/02		LAMPES ET PHARES - CABINE - NA
1.92.2		CABINE: CHASSIS- PORTES
1.92.3		VITRES AVANT ET JOINTS
1.92.4	01	DISPOSITIFS DE SERRAGE VITRES LATÉRALES PORTE
1.92.4	02	DISPOSITIFS DE SERRAGE VITRES LATÉRALES CABINE
1.92.4	03	VITRES LATÉRALES
1.92.5		GARDE-BOUE ARRIERE
1.92.6	01	COMPOSANTS DEFINITIONDES PORTES
1.92.6	02	COMPOSANTS COMPLÈTEMENT PORTE: CÔTÉ INFÉRIEUR
1.92.6	03	COMPOSANTS CHARNIÈRES FERMETURE PORTE
1.92.8		JOINT ATTRAPE-FLAMME, ROPS (POWER SHUTTLE)
1.92.9	01	VITRES ARRIÈRE ET COMPOSANTS
1.92.9	02	CHARNIÈRE FERMETURE VITRE ARRIÈRE
1.92.9	03	CHARNIÈRES ET FERMETURE VITRE ARRIÈRE
1.93.0	01	CABINE : REVETEMENT (POWER SHUTTLE, POWER SHIFT)
1.93.0	02	CABINE : REVETEMENT (POWER SHUTTLE, POWER SHIFT)
1.93.0	03	CABINE / COUVERTURES LATÉRALES ET PLANCHER AVANT (POWER SHUTTLE: POWER SHIFT)
1.93.0	04	CABINE / CONSOLE ARRIÈRE ET PLANCHER (POWER SHUTTLE: POWER SHIFT)
1.93.0/01	01	CABINE : REVETEMENT (POWER SHUTTLE, POWER SHIFT)
1.93.0/01	02	CABINE / PLANCHER ET COMPOSANTS (POWER SHUTTLE: POWER SHIFT)
1.93.0/02	01	COUVERTURE DROITE, CONSOLE ARRIÈRE ROPS (CENTER PIVOT) - NA
1.93.0/03		REVÊTEMENTS MACHINES (ROPS) - NA
1.93.4		RETROVISEUR - RIDEAU PARE-SOLEIL
1.93.5	01	CABINE / TABLEAU DE BORD AVANT
1.93.5	02	CABINE / DISPOSITIFS DE SERRAGE TABLEAU DE BORD ET GARNITURES
1.93.5/01	01	CABINE-CHASSIS DE SECURITE / TABLEAU - ROPS (POWER SHUTTLE) - NA
1.93.5/01	02	JOINT ET ARRETS CONSOLE LATERALE DROITE - ROPS (POWER SHUTTLE) - NA
1.93.7		RETROVISEUR INTERIEUR (POWER SHUTTLE) ROPS
1.94.0/01		CABINE / ROPS / TOIT ET COUVERTURE INTERNE - NA
1.94.2		TUYAUTERIES FLEXIBLES EAU DE CHAUFFAGE
1.95.0	01	CABINE / ROPS : PEDAL DE FREIN

SECTION INDEX
Plate-forme de Conduite

1.95.0	02	CABINE / ROPS / POMPE FREIN
1.95.0	03	CABINE / ROPS / TUYAUX CIRCUIT DE FREINAGE
1.95.0/ A		CABINE / ROPS / VÉRIN POMPE FREIN
1.95.1		CABINE / ROPS / LEVIER FREIN DE PARCAGE ET CÂBLE DE COMMANDE
1.95.2		COMMANDE DU TRANSPORT LOCK - NA
1.95.3		COMMANDE ACCÉLÉRATEUR ÉLECTRONIQUE À MAIN/À PÉDALE
1.95.5	01	COLONNE DE DIRECTION ET COUVERTURE - NA
1.95.5	02	MANCHONS SYSTÈME DE DIRECTION - NA
1.95.5/ A	01	DIRECTION ASSISTÉE - NA
1.96.0		LEVIER AVANT/ARRIERE ET MULTIFONCTION
1.96.2	01	COMMANDE STABILISATEURS (SIDE SHIFT - EU) - (CENTER PIVOT - NA)
1.96.2	02	COMMANDE STABILISATEURS (CENTER PIVOT) - NA
1.96.2/01		DIAGNOSTIC PILOT CONTROL
1.96.7/04		AXES ET BOUCHONS ROPS (CENTER PIVOT) - NA
1.96.7/05		CABINE / COMPOSANTS DIVERS (CENTER PIVOT) - NA
1.96.7/06		CABINE: COMPOSANTS DIVERS (CENTER PIVOT) - NA
1.96.7/07		AXES ET BOUCHONS ROPS (CENTER PIVOT) - NA
1.98.0/01		DECALCOMANIES SYMBOLES INFO. (POWER SHUTTLE - POWER SHIFT) - NA
1.98.1	08	MODÈLE D'IDENTIFICATION: DÉCALCOMANIES DE PROTECTION
1.98.1	09	IDENTIFICATION MODELE B90B / B90BLR - B959B / B95BLR - B100B / B100BLR

NOTES

CABINE : LAMPE PLAFONNIER

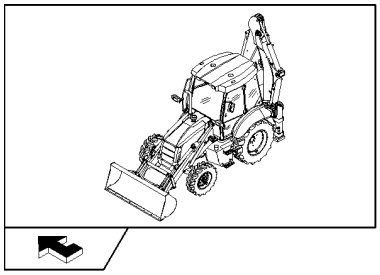

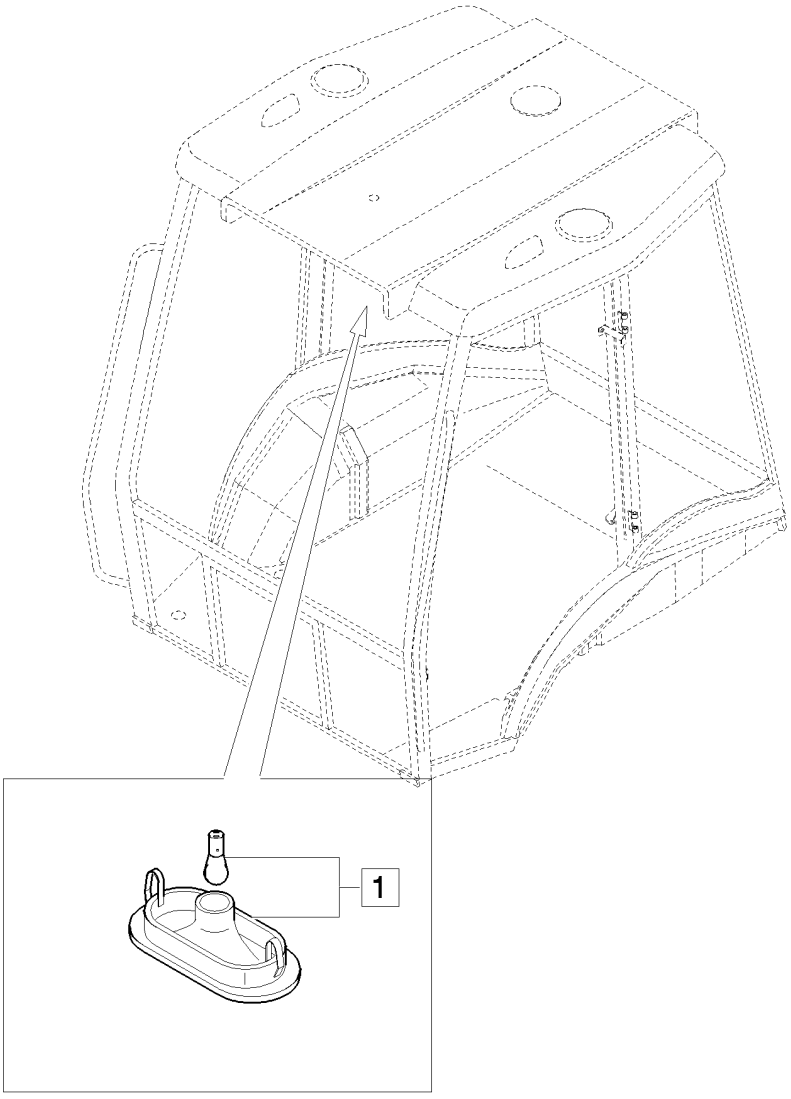

CABINE : LAMPE PLAFONNIER

REF	FN	PART NUMBER	YR/SN	QTY	DESCRIPTION
1		82022833		1	LAMPE PLAFONNIER, Assy

CHASSIS DE SURETE: APPAREILS DE CONTROL (ROPS) - NA

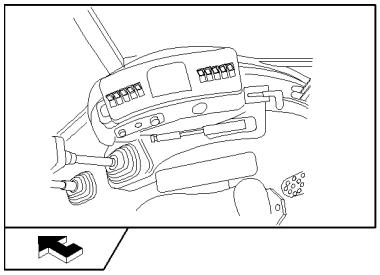

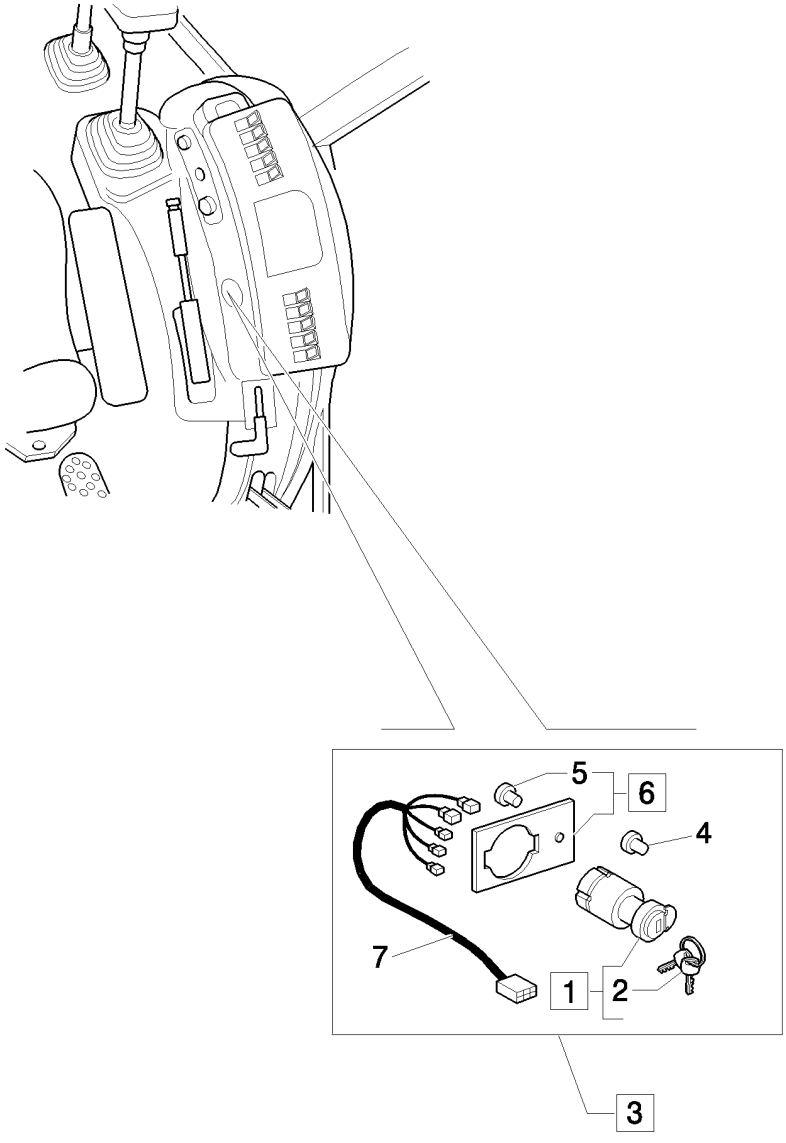

CHASSIS DE SURETE: APPAREILS DE CONTROL (ROPS) - NA

REF	FN	PART NUMBER	YR/SN	QTY	DESCRIPTION
1		85804674		1	COMMUTATEUR, DEM., Assy
2		85804675		2	CLÉ DE CONTACT
3		85807866		1	KIT DE TRANSFORMATION, Assy
4		784122		1	BOUCHON
5		10427201		1	RIVET
6		85827548		1	PLAQUE, Assy
7		85807855		1	FAISCEAU COMPLET

ALARME AUXILIAIRE

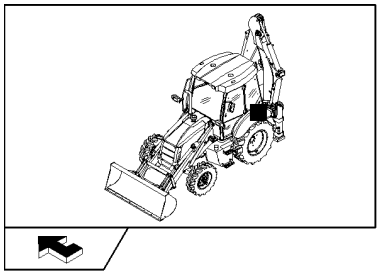

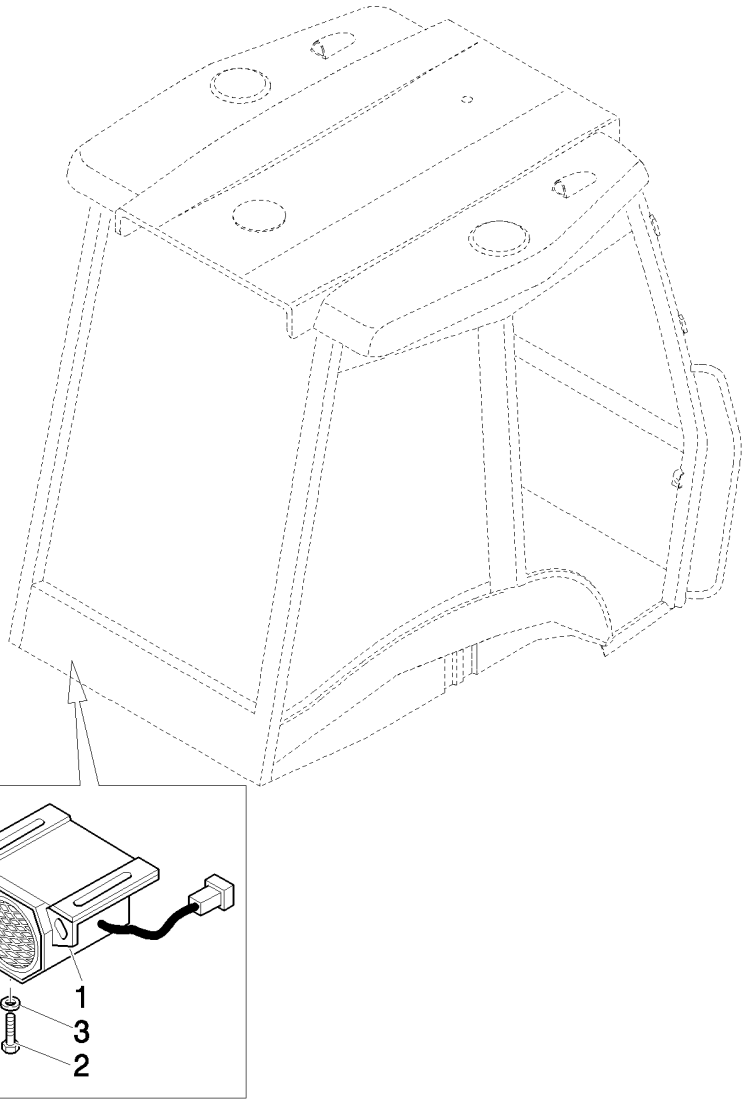

ALARME AUXILIAIRE

REF	FN	PART NUMBER	YR/SN	QTY	DESCRIPTION
1		87303261		1	ALARME
2		10902321		2	BOULON, Hex, M6 x 18, 8.8, Full Thd
3		11197779		2	RONDELLE BELLEVILLE, Belleville, M6.4

1.91.4	01	p1	03/08

CÂBLAGE TOIT CABINE (CABINE, POWER SHUTTLE)

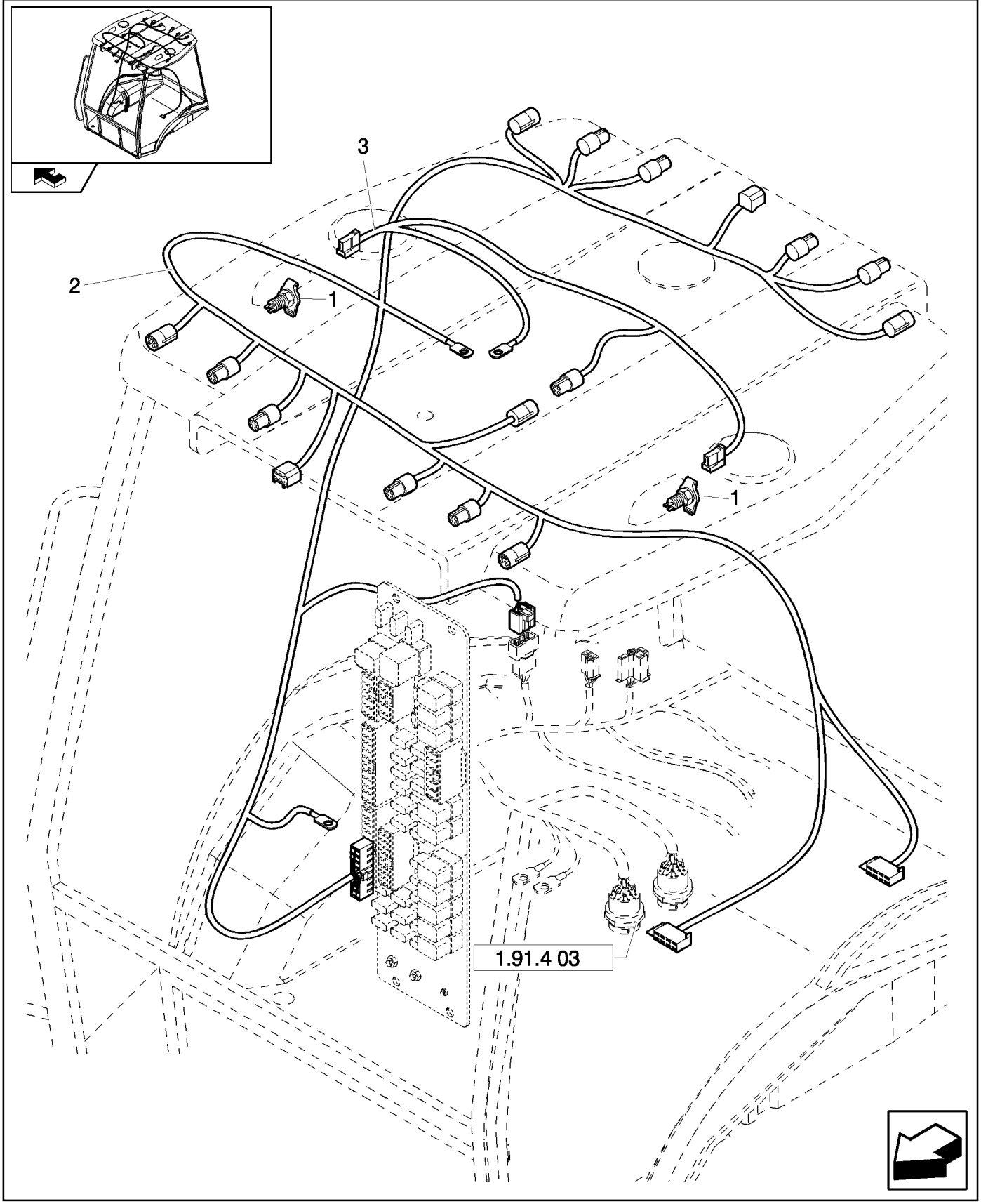

CÂBLAGE TOIT CABINE (CABINE, POWER SHUTTLE)

REF	FN	PART NUMBER	YR/SN	QTY	DESCRIPTION
1		87546419		2	PRISE, Mating Part is 86508819 Plug
2		85825330		1	FAISCEAU COMPLET
3		85819568		1	FAISCEAU COMPLET, Rotary Beacon

CENTRALE BOÎTE À FUSIBLES (CABINE, POWER SHUTTLE)

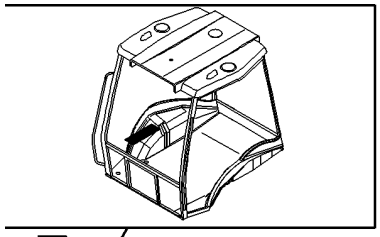

CENTRALE BOÎTE À FUSIBLES (CABINE, POWER SHUTTLE)

REF	FN	PART NUMBER	YR/SN	QTY	DESCRIPTION
1		85802478		4	ISOLATEUR
2	1	87552124		1	BOITIER ELECTRONIQUE, Assy
2	2	87609145		1	BOITIER ELECTRONIQUE, Assy
3		11054790		1	FUSIBLE
4		10519204		1	RONDELLE, M4 x 9 x .8
5		11054590		2	FUSIBLE
6		85806135		1	ISOLATEUR
7		11054890		3	FUSIBLE
8		11054990		7	FUSIBLE, 10 Amp
9		11055090		10	FUSIBLE
10		10615274		4	RONDELLE FREIN, Ext Tooth, M4
11		12574011		1	CONTRE-ECROU, M4 x .7, Cl 8
12		85803986		1	RELAIS, Flasher
13	1	87552125		1	CORPS
13	2	87609146		1	CIRCUIT IMPRIME
14		85825198		9	RELAIS
15		12574011		4	CONTRE-ECROU, M4 x .7, Cl 8
16		85802250		1	DECALCOMANIE
17		85806134		1	FUSIBLE
18	2	87600615		1	AVERTISSEUR

(1) Except for B90B, B90BLR
(2) Only for B90B, B90BLR

BOUTON ALLUMAGE, POINT ALLUM., FUSIBLES & CABL. CONSOLE LAT. (CAB PT)

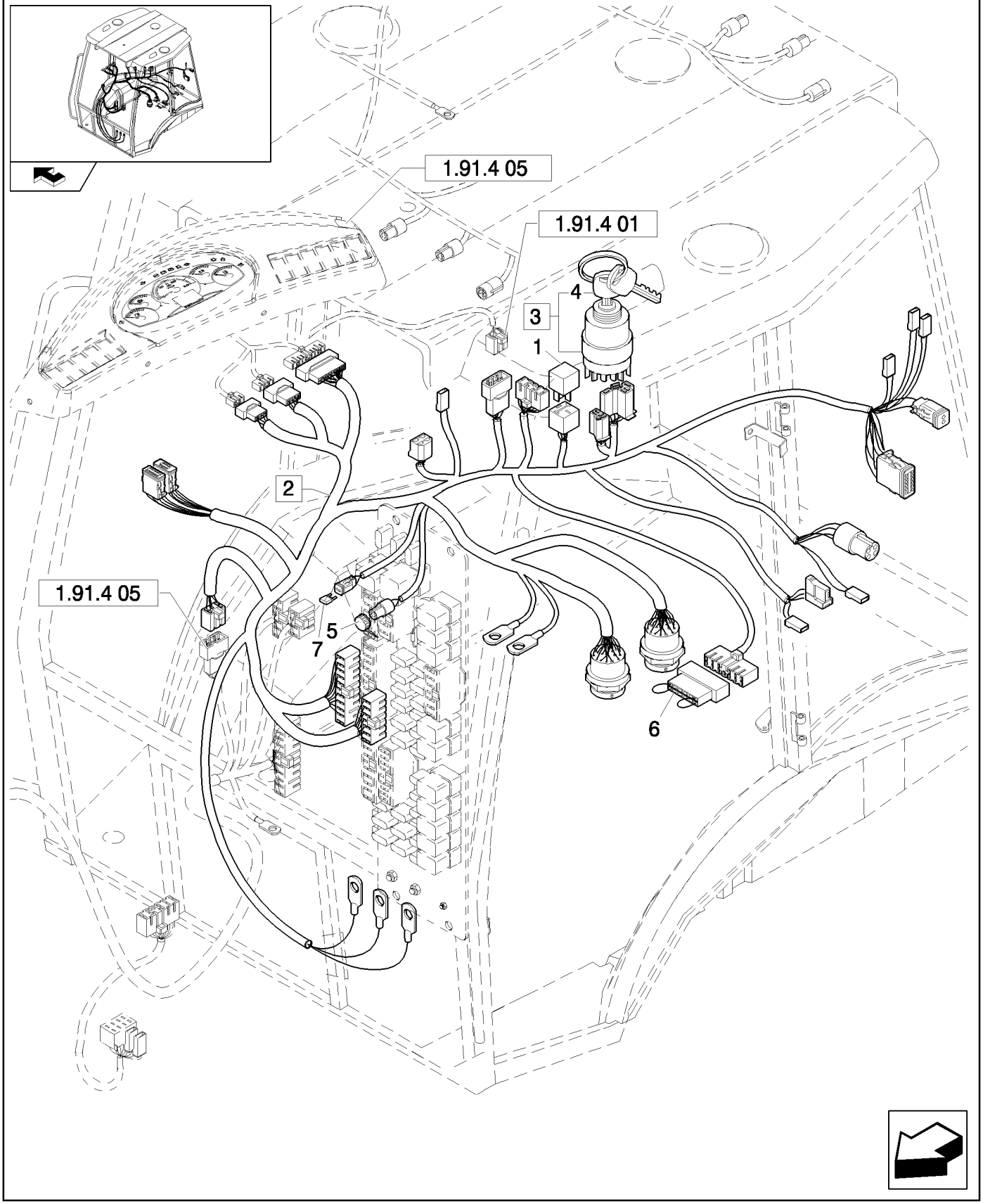

BOUTON ALLUMAGE, POINT ALLUM., FUSIBLES & CABL. CONSOLE LAT. (CAB PT)

REF	FN	PART NUMBER	YR/SN	QTY	DESCRIPTION
1	1	87433890		1	ADAPTEUR
1	2	87433891		1	ADAPTEUR
2	3, 4	87552126		1	CABLE ELECTRIQUE, Assy
2	5	87318749		1	FAISCEAU COMPLET, Assy
3		87431469		1	COMMUTATEUR, DEM., Assy, 3A
4		85804675		2	CLÉ DE CONTACT
5		87640751		1	BOUCHON
6		85821410		1	BLOC
7		11054790		1	FUSIBLE

(1) Only for EU
(2) Only for NA
(3) Includes 5 - 7
(4) Except for B90B, B90BLR
(5) Only for B90B, B90BLR

CÂBLAGE AVANT ET CENTRALE (CABINE, POWER SHUTTLE)

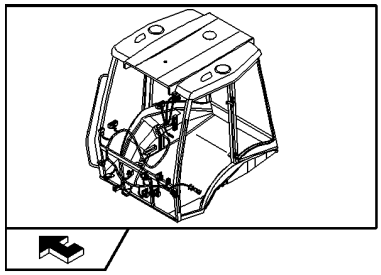

KIT KIT ■ = 6

CÂBLAGE AVANT ET CENTRALE (CABINE, POWER SHUTTLE)

REF	FN	PART NUMBER	YR/SN	QTY	DESCRIPTION
1	1, 2	87601608		1	FAISCEAU, Assy
1	3, 2	85818820		1	FAISCEAU COMPLET, Assy
2		85806133		1	COMM. CLIGNOTANT
3	4	14560087		10	SERRE-CABLE
4	4	87371907		1	FAISCEAU
5	4	87371906		2	DIODE
6	4	87653101		1	KIT

(1) Except for B90B, B90BLR
(2) Includes 2
(3) Only for B90B, B90BLR
(4) Only for B95BTC

1.91.4	05	p1	03/08

TABLEAU DE BORD AVANT (CAB POWER SHUTTLE)

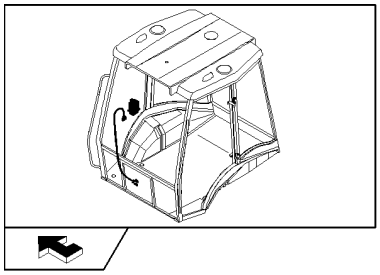

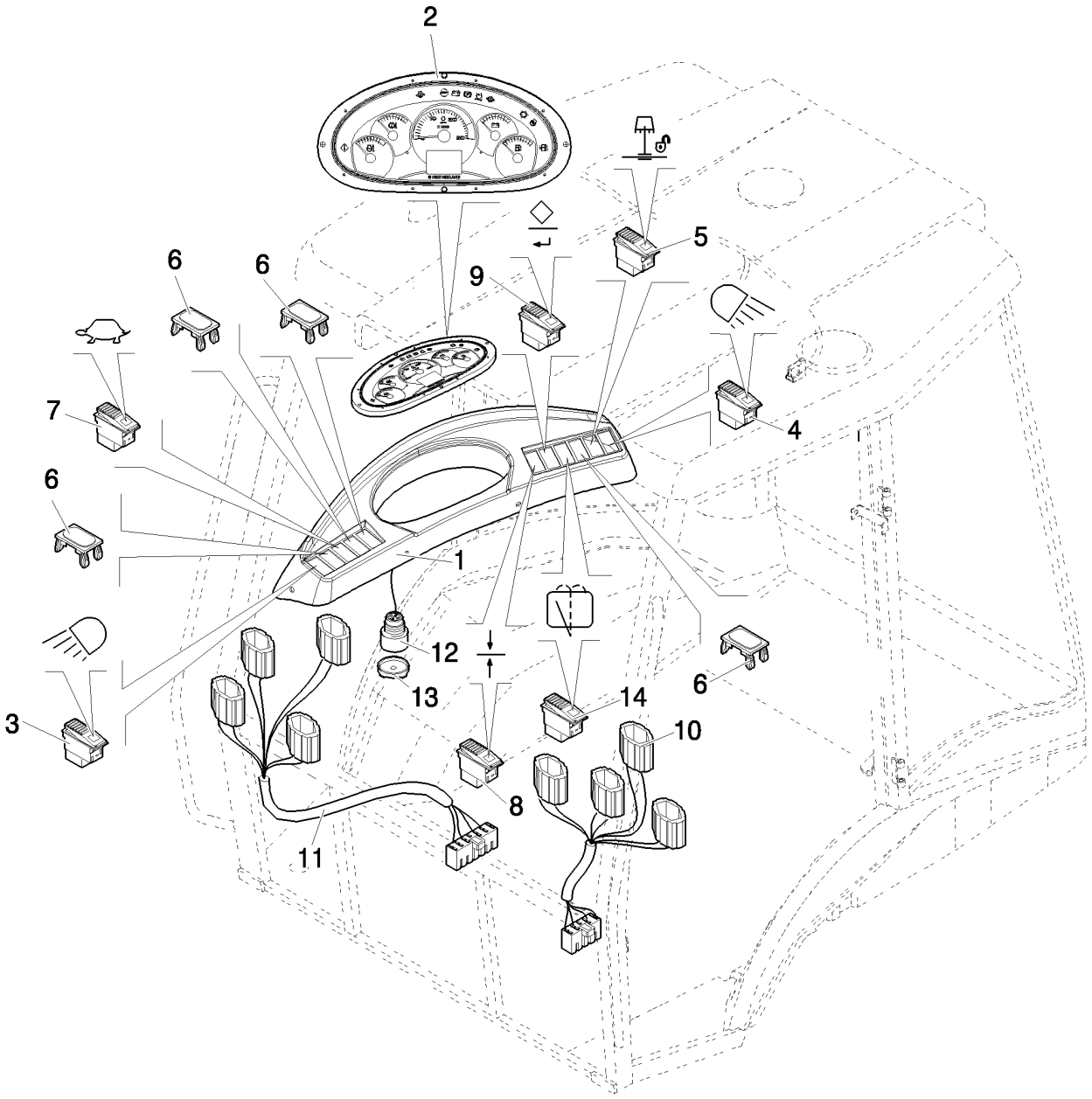

TABLEAU DE BORD AVANT (CAB POWER SHUTTLE)

REF	FN	PART NUMBER	YR/SN	QTY	DESCRIPTION
1		87540632		1	INSTRUMENTS DE BORD
2		87521757		1	INDICATEUR COMBINE
3		85818818		1	COMM. LUMIERES
4		85818819		1	CONTACTEUR
5	1	85818895		1	CONTACTEUR
6		85825254		6	BOUCHON
7	1	85819142		1	CONTACTEUR
8		87536826		1	CONTACTEUR
9		87536827		1	CONTACTEUR
10		87557803		1	INSTRUMENTS DE BORD
11		87550456		1	INSTRUMENTS DE BORD
12		87527167		1	AVERTISSEUR
13		87539792		1	COUVERCLE
14		85818823		1	COMM. ESSUIE-GLACE

(1) Only for EU

1.91.4	06	p1	03/08

COMPOSANTS CIRCUIT ÉLECTRIQUE CABINE (CABINE, POWER SHUTTLE)

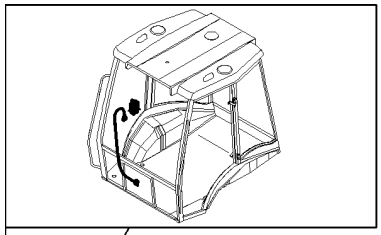

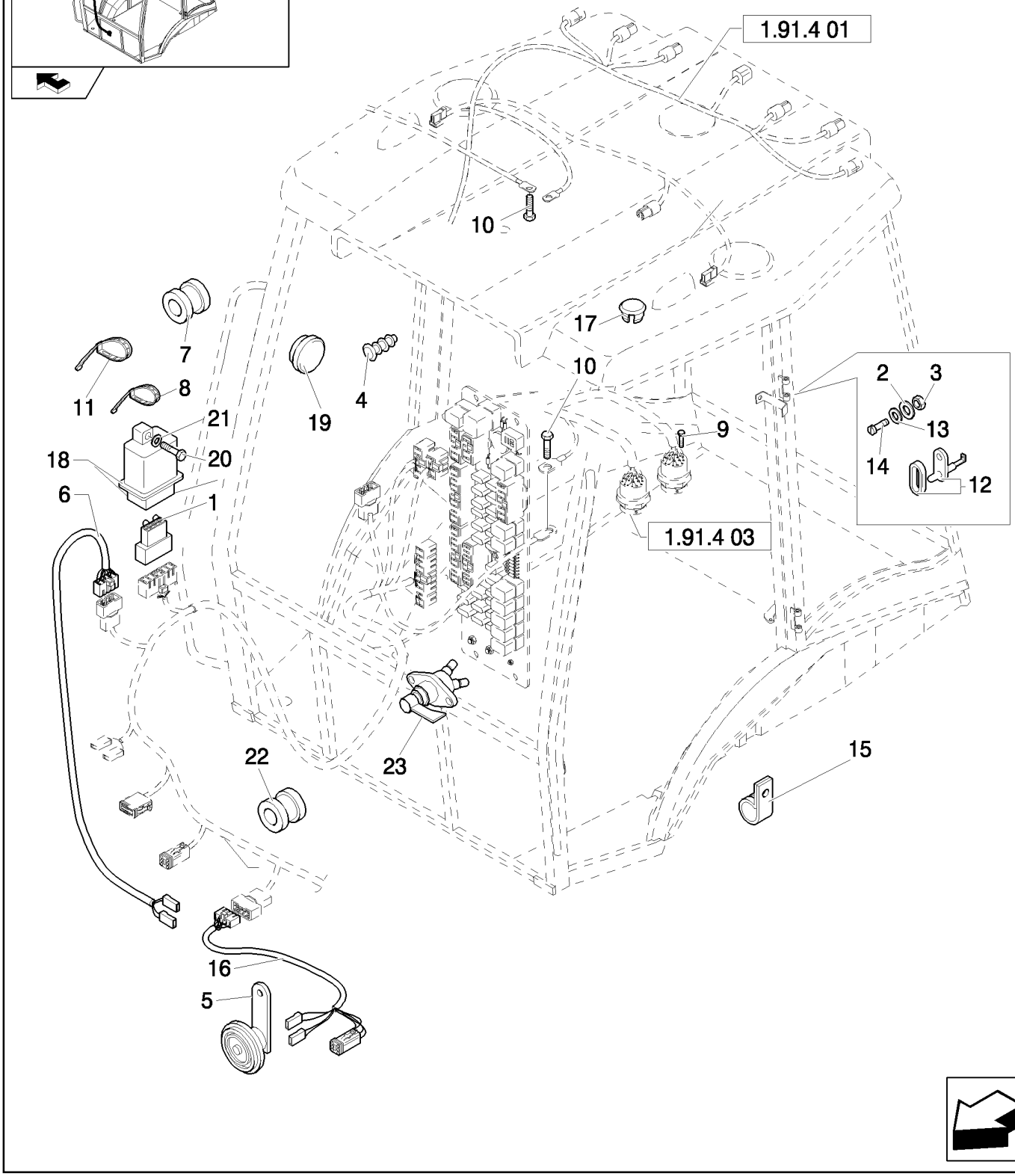

COMPOSANTS CIRCUIT ÉLECTRIQUE CABINE (CABINE, POWER SHUTTLE)

REF	FN	PART NUMBER	YR/SN	QTY	DESCRIPTION
1	1	85806136		1	CONNECTEUR
2		10615274		6	RONDELLE FREIN, Ext Tooth, M4
3		12574011		6	CONTRE-ECROU, M4 x .7, Cl 8
4		85802310		1	BOUCHON
5		87689317		1	AVERTISSEUR
6	1	85819193		1	FAISCEAU COMPLET
6	2	87552128		1	CABLE ELECTRIQUE
7		10398980		1	PASSE-FIL
8		5112712		5	COLLIER, M4.8 x 283
9	3	13272214		2	VIS, Cross Pan Hd, M4 x 16
10		16042924		2	BOULON, Hex, M8 x 10, 8.8, Full Thd
11		85805383		30	SERRE-CABLE
12		83961521		2	CONTACTEUR
13		10519204		2	RONDELLE, M4 x 9 x .8
14		13309417		2	VIS, Cross Oval Hd, M4 x 20
15		10450090		1	BRIDE
16	1	85819195		1	FAISCEAU COMPLET
17		79111978		1	BOUCHON
18	2	85806132		1	CLIGNOTANT, Circuit Board
19	2	85808460		1	BOUCHON
20	2	10902624		1	BOULON, Hex, M6 x 25, 8.8, Full Thd
21	2	11193274		1	RONDELLE BELLEVILLE, Belleville, M6.4
22	1	10398680		2	PASSE-FIL
23	3	87409316		1	CONTACTEUR

(1) Only for EU
(2) Only for NA
(3) Only for B90B, B90BLR

Mechanical Version / Pilot Control Version

B95B

CÂBLAGE TOIT CABINE (ROPS POWER SHUTTLE)

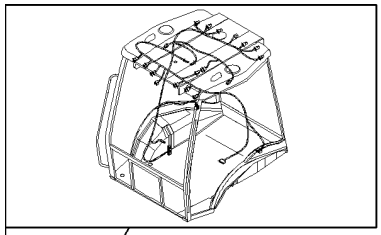

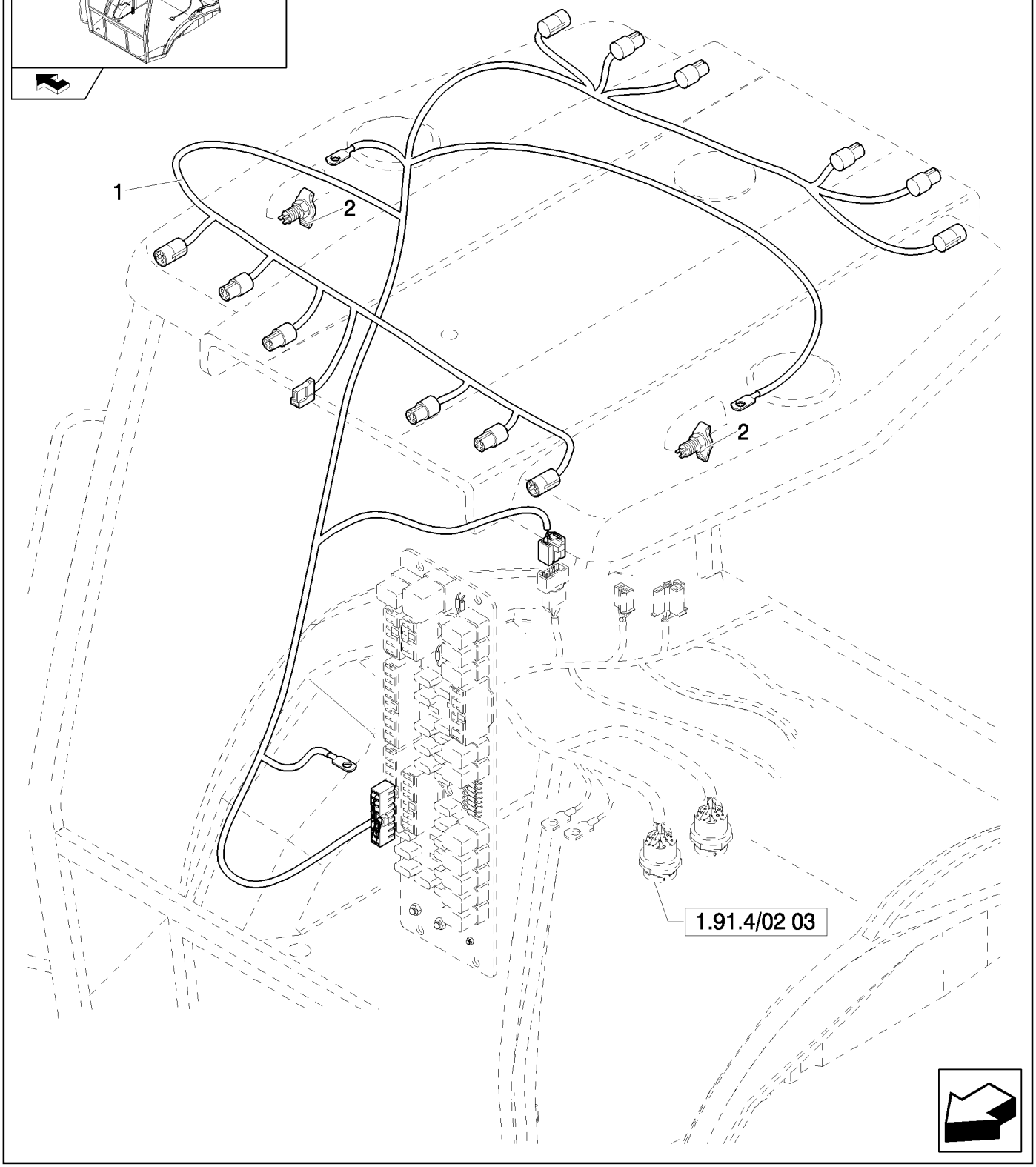

CÂBLAGE TOIT CABINE (ROPS POWER SHUTTLE)

REF	FN	PART NUMBER	YR/SN	QTY	DESCRIPTION
1	1	85819724		1	FAISCEAU COMPLET
1	2	85819725		1	FAISCEAU COMPLET
2		87546419		2	PRISE, Mating Part is 86508819 Plug

(1) Only for NA
(2) Only for EU

Mechanical Version / Pilot Control Version	B95B

1.91.4/02	02	p1	04/08

CENTRALE BOÎTE À FUSIBLES (ROPS POWER SHUTTLE)

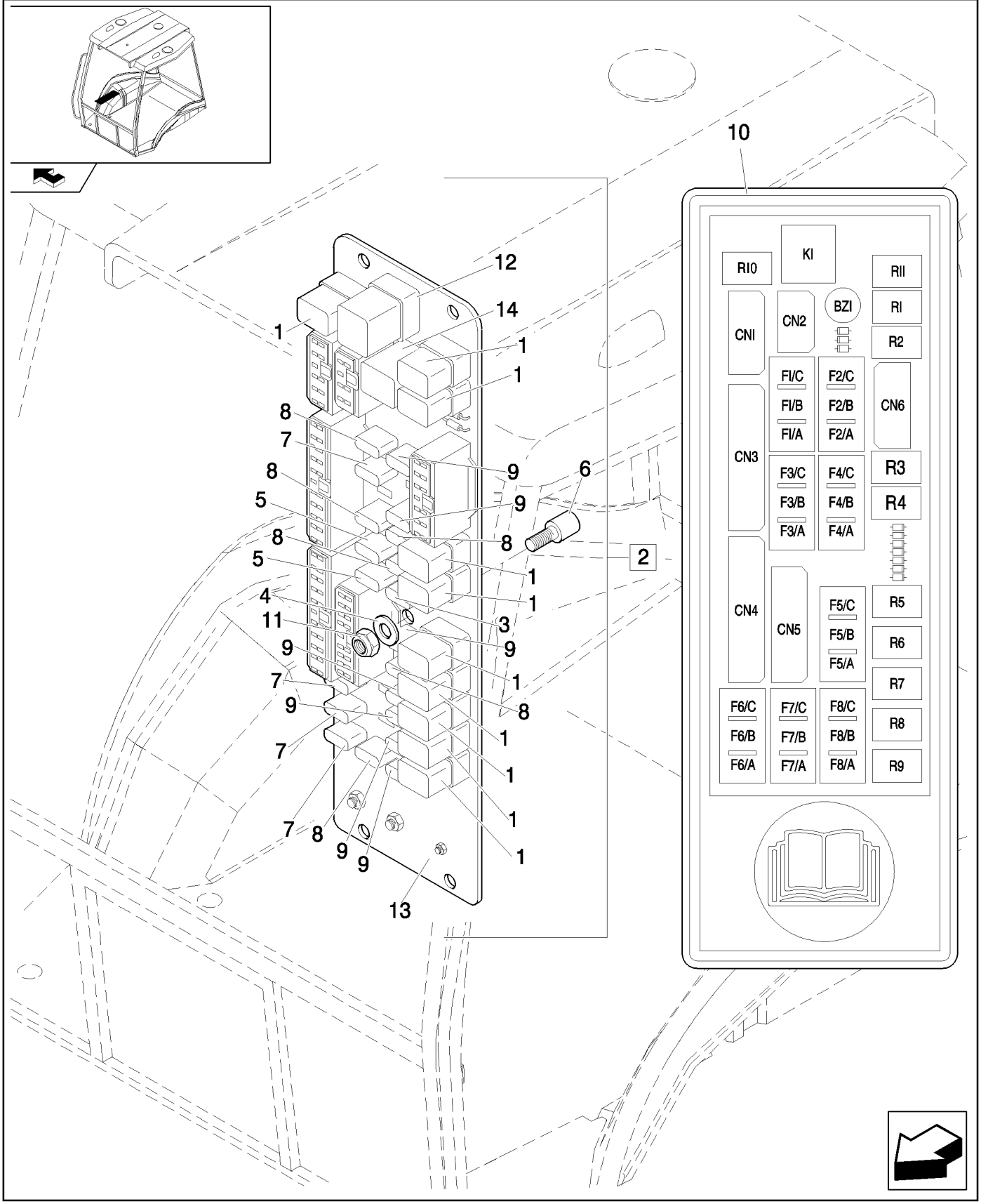

CENTRALE BOÎTE À FUSIBLES (ROPS POWER SHUTTLE)

REF	FN	PART NUMBER	YR/SN	QTY	DESCRIPTION
1		85825198		11	RELAIS
2	1	87554901		1	BOITIER ELECTRONIQUE, Assy
2	2	87609138		1	BOITIER ELECTRONIQUE, Assy
3		11054790		1	FUSIBLE, 5A
4		10519204		1	RONDELLE, M4 x 9 x .8
5		11054590		2	FUSIBLE, 3A
6		85806135		1	ISOLATEUR
7		11054890		3	FUSIBLE, 7,5A
8		11054990		6	FUSIBLE, 10 Amp
9		11055090		8	FUSIBLE, 15A
10		85802250		1	DECALCOMANIE
11		12574011		1	CONTRE-ECROU, M4 x .7, Cl 8
12		85803986		1	RELAIS, Flasher
13	1	87552125		1	CORPS
13	2	87609146		1	CIRCUIT IMPRIME
14	2	87600615		1	AVERTISSEUR

(1) Except for B90B, B90BLR
(2) Only for B90B, B90BLR

Mechanical Version / Pilot Control Version B95B

1.91.4/02	03	p1	05/08

BOUTON ALLUMAGE, POINT ALLUM., FUSIBLES & CABL. CONSOLE LAT. (ROPS PT)

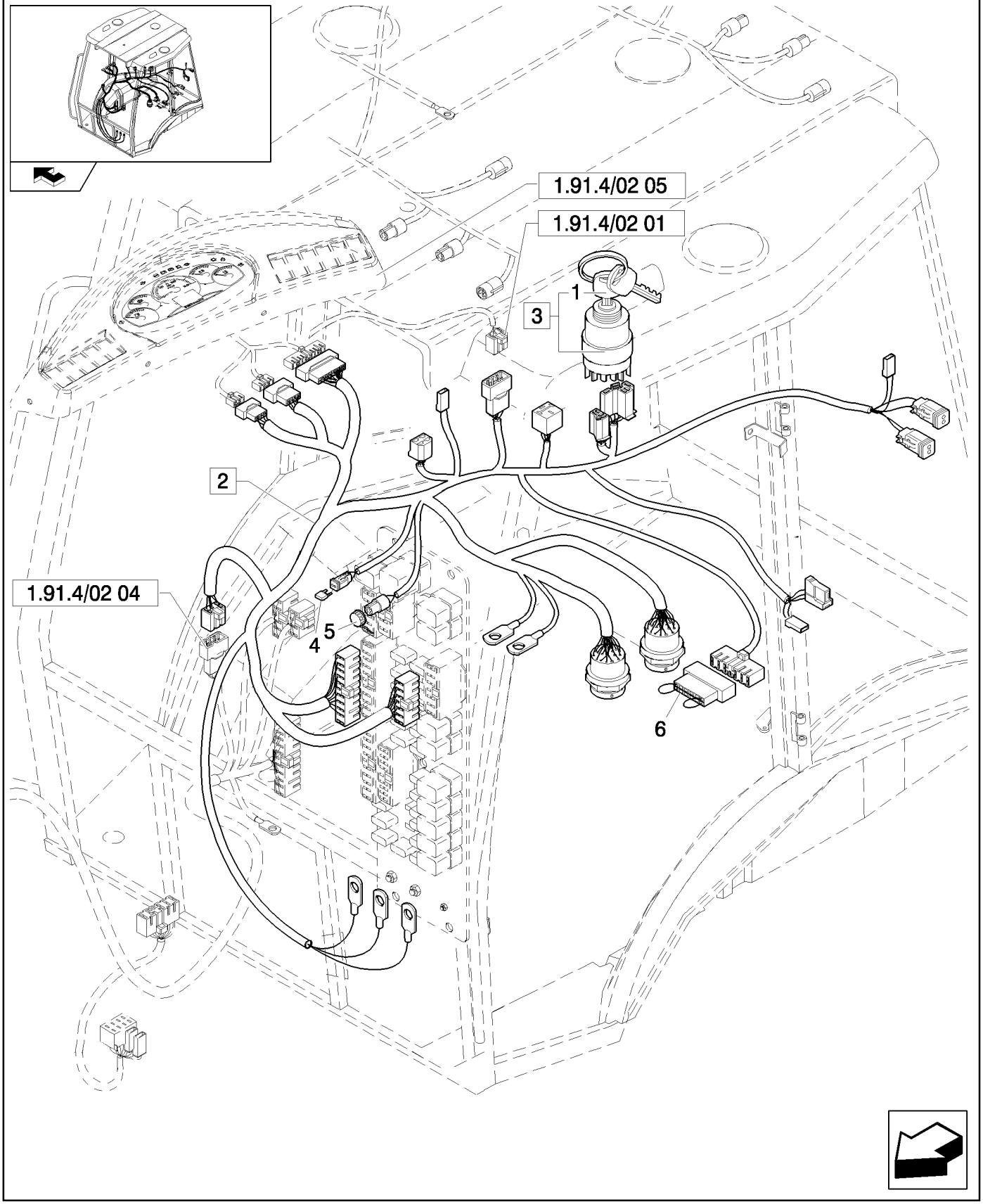

BOUTON ALLUMAGE, POINT ALLUM., FUSIBLES & CABL. CONSOLE LAT. (ROPS PT)

REF	FN	PART NUMBER	YR/SN	QTY	DESCRIPTION
1		85804675		1	CLÉ DE CONTACT
2	1	87554286		1	CABLE ELECTRIQUE
2	2	87431461		1	FAISCEAU COMPLET
2	3	87318746		1	FAISCEAU COMPLET
3		87431469		1	COMMUTATEUR, DEM., Assy
4	1	11054790		1	FUSIBLE
5	1	87640751		1	BOUCHON
6		85821410		1	BLOC

(1) Except for B90B, B90BLR
(2) Only for B90B (NA)
(3) Only for B90B, B90BLR (EU)

CÂBLAGE AVANT ET CENTRALE (ROPS POWER SHUTTLE)

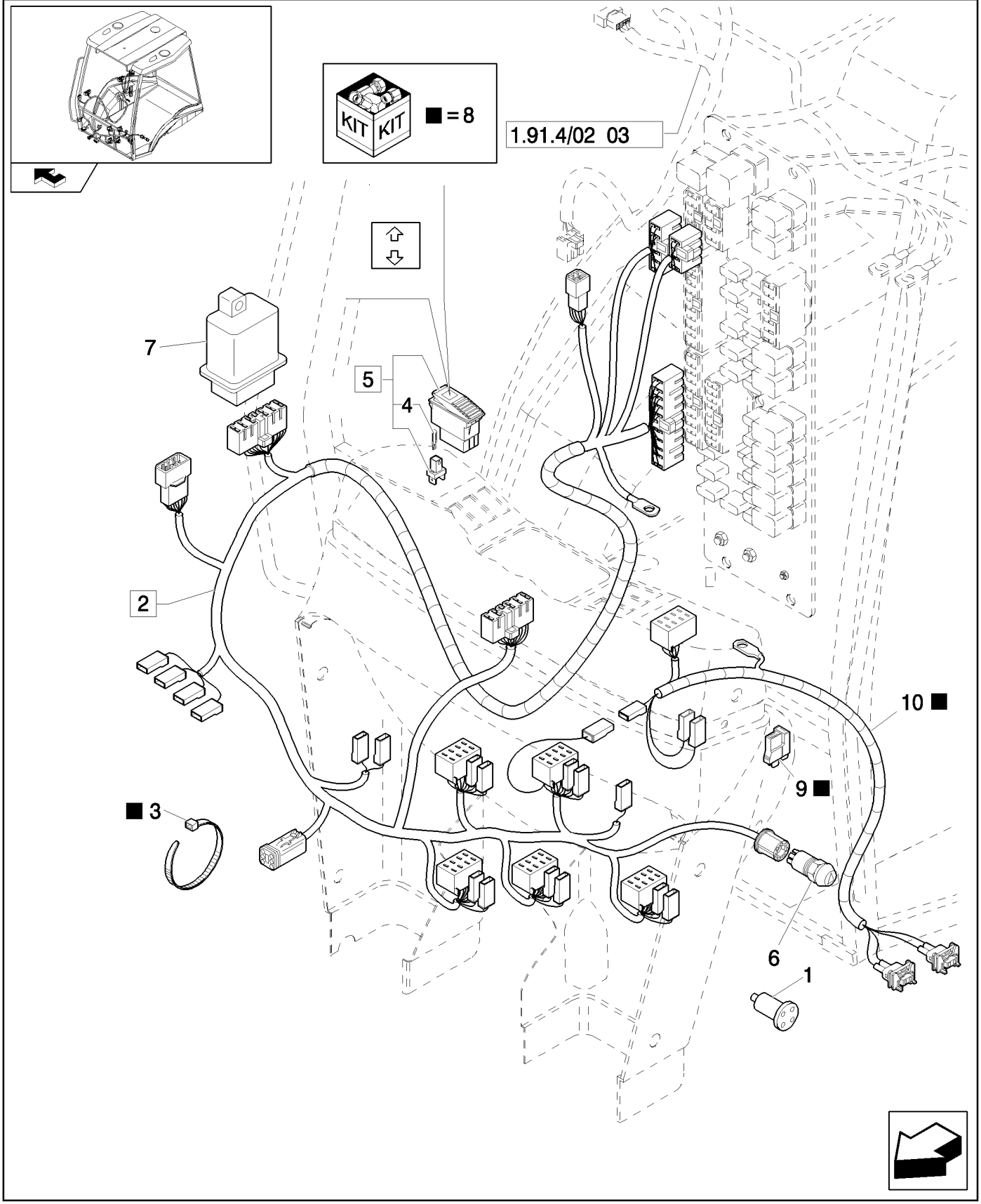

CÂBLAGE AVANT ET CENTRALE (ROPS POWER SHUTTLE)

REF	FN	PART NUMBER	YR/SN	QTY	DESCRIPTION
1	1	87433891		1	ADAPTEUR
1	2	87433890		1	ADAPTEUR
2	3, 4	87601605		1	FAISCEAU, Assy
2	3, 5	85819586		1	FAISCEAU COMPLET, Assy
2	2, 6	85819588		1	FAISCEAU COMPLET, Assy
3	7	14560087		10	SERRE-CABLE
4	1	14143790		1	AMPOULE
5	1	85819144		1	CONTACTEUR, Assy
6		85806133		1	COMM. CLIGNOTANT
7	1	85806132		1	CLIGNOTANT
8	7	87653101		1	KIT
9	7	87371906		2	DIODE
10	7	87371907		1	FAISCEAU

(1) Only for NA
(2) Only for B90B, B90BLR (EU)
(3) Includes 5 - 7
(4) Except for B90B, B90BLR
(5) Only for B90B (NA)
(6) Includes 6
(7) Only for B95BTC

Mechanical Version / Pilot Control Version B95B

CONSOLE DROITE AVEC INSTRUMENTS (ROPS POWER SHUTTLE) - NA

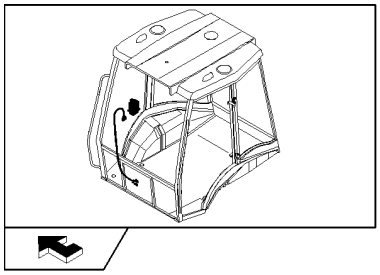

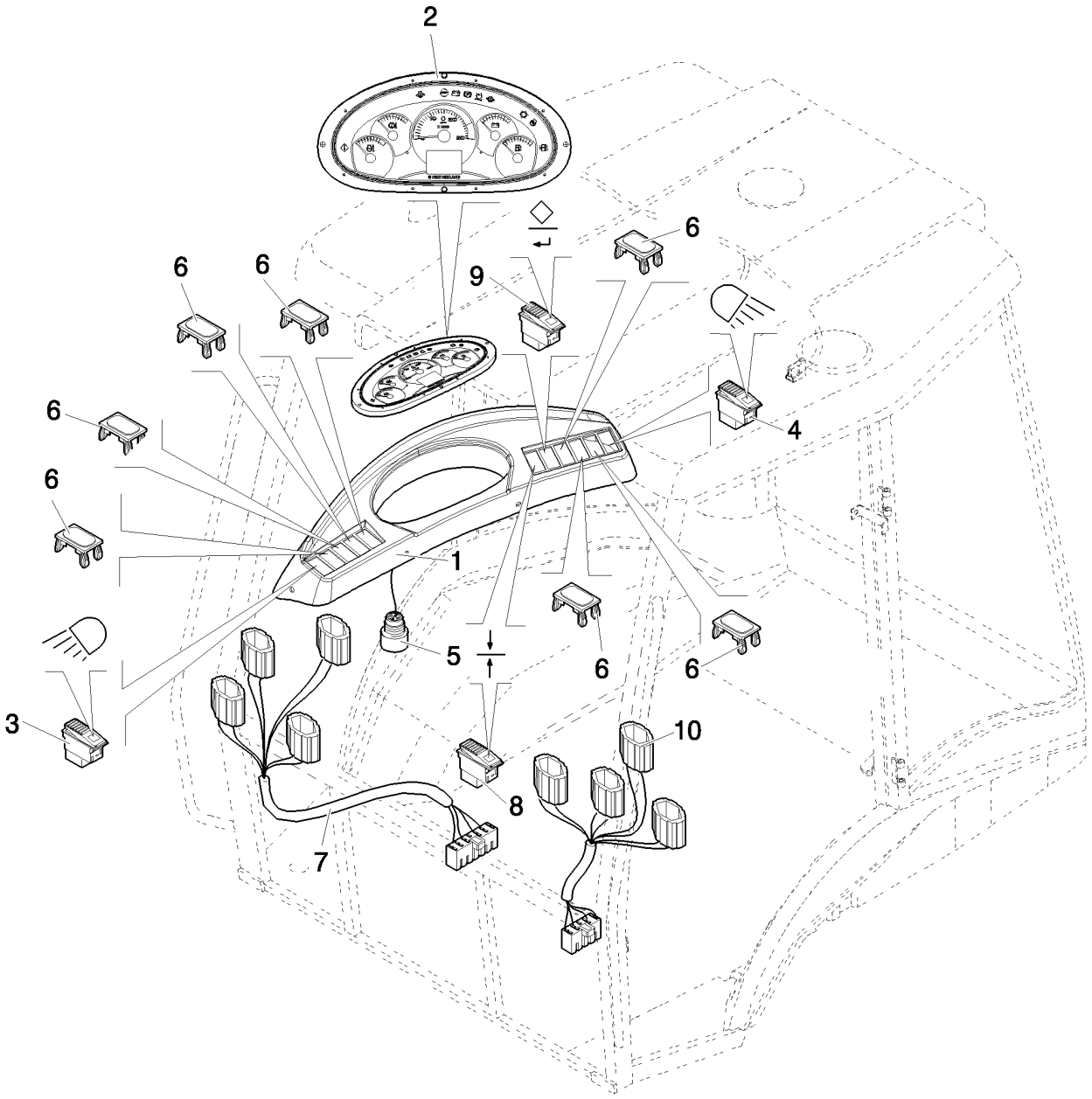

CONSOLE DROITE AVEC INSTRUMENTS (ROPS POWER SHUTTLE) - NA

REF	FN	PART NUMBER	YR/SN	QTY	DESCRIPTION
1		87540632		1	INSTRUMENTS DE BORD
2		87521757		1	INDICATEUR COMBINE
3		85818818		1	COMM. LUMIERES
4		85818819		1	CONTACTEUR
5		87527167		1	AVERTISSEUR
6		85825254		7	BOUCHON
7		87558491		1	CABLE ELECTRIQUE
8		87536826		1	CONTACTEUR
9		87536827		1	CONTACTEUR
10		87557803		1	INSTRUMENTS DE BORD

COMPOSANTS CIRCUIT ÉLECTRIQUE CABINE (ROPS POWER SHUTTLE)

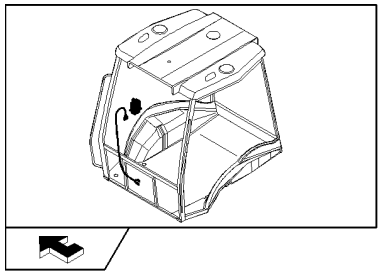

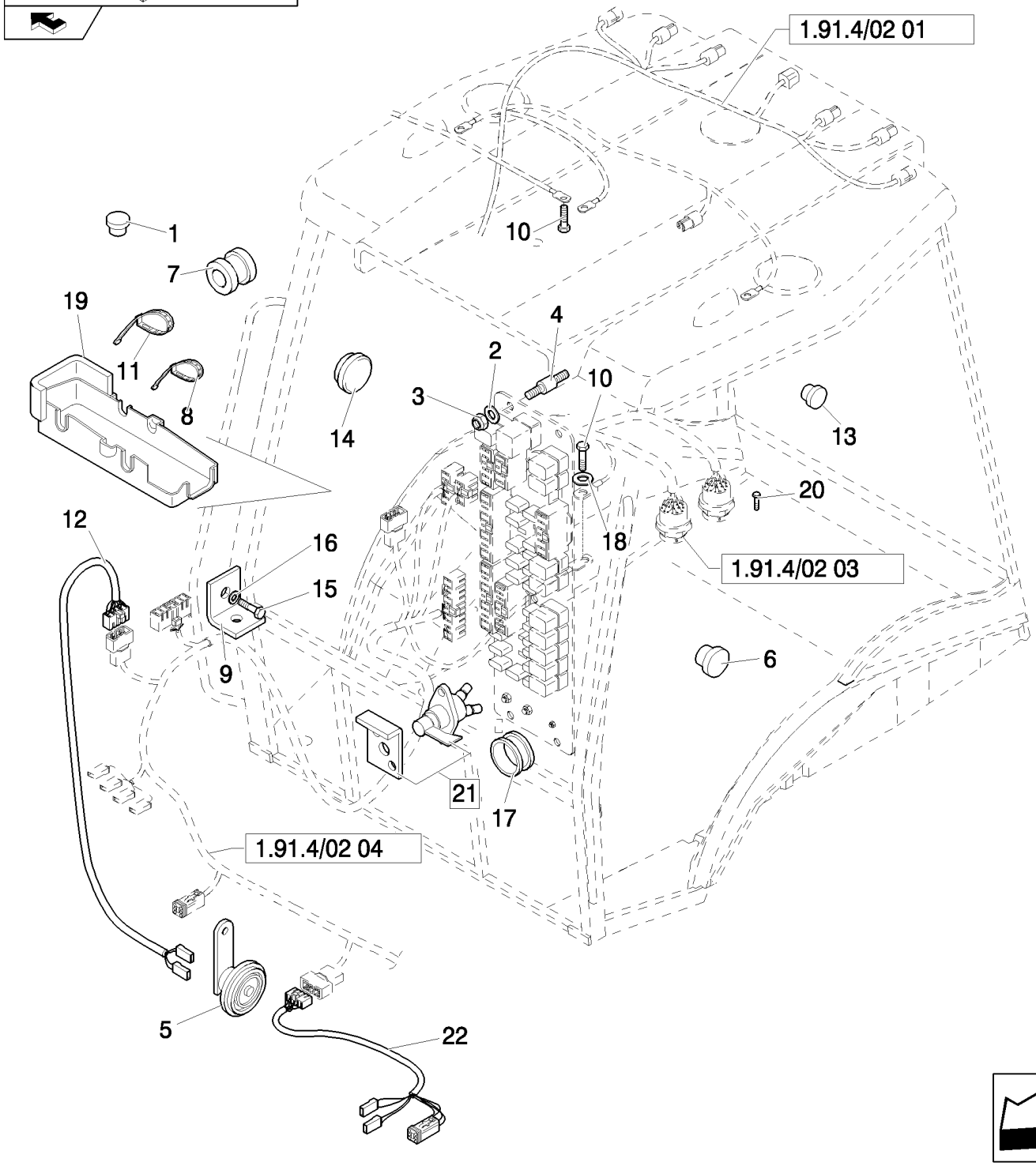

COMPOSANTS CIRCUIT ÉLECTRIQUE CABINE (ROPS POWER SHUTTLE)

REF	FN	PART NUMBER	YR/SN	QTY	DESCRIPTION
1		85825254		1	BOUCHON
2		10615274		4	RONDELLE FREIN, Ext Tooth, M4
3		12574011		4	CONTRE-ECROU, M4 x .7, Cl 8
4		85825129		4	ISOLATEUR
5		87689317		1	AVERTISSEUR
6	1	79111978		1	BOUCHON
7		10398980		2	PASSE-FIL
8		5112712		5	COLLIER, M4.8 x 283
9	1	85821326		1	SUPPORT
10		16043121		2	BOULON, Hex, M8 x 14, 8.8, Full Thd
11		85805383		26	SERRE-CABLE
12	1	87552128		1	CABLE ELECTRIQUE
12	2	85819193		1	FAISCEAU COMPLET
13	1	85802310		1	BOUCHON
14	1	85808460		1	BOUCHON
15	1	10902624		1	BOULON, Hex, M6 x 25, 8.8, Full Thd
16	1	11193274		1	RONDELLE BELLEVILLE, Belleville, M6.4
17		10398680		7	PASSE-FIL
18		11193879		2	RONDELLE BELLEVILLE, Belleville, M8.4
19		85825136		1	COUVERTURE
20	3	13272214		2	VIS, Cross Pan Hd, M4 x 16
21	2	87409315		1	KIT, Assy
22	2	85819195		1	FAISCEAU COMPLET

(1) Only for NA
(2) Only for EU
(3) Only for B90B, B90BLR

LAVE-VITRE/ESSUIE-VITRE AVANT ET ARRIERE

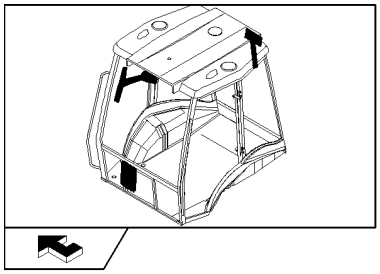

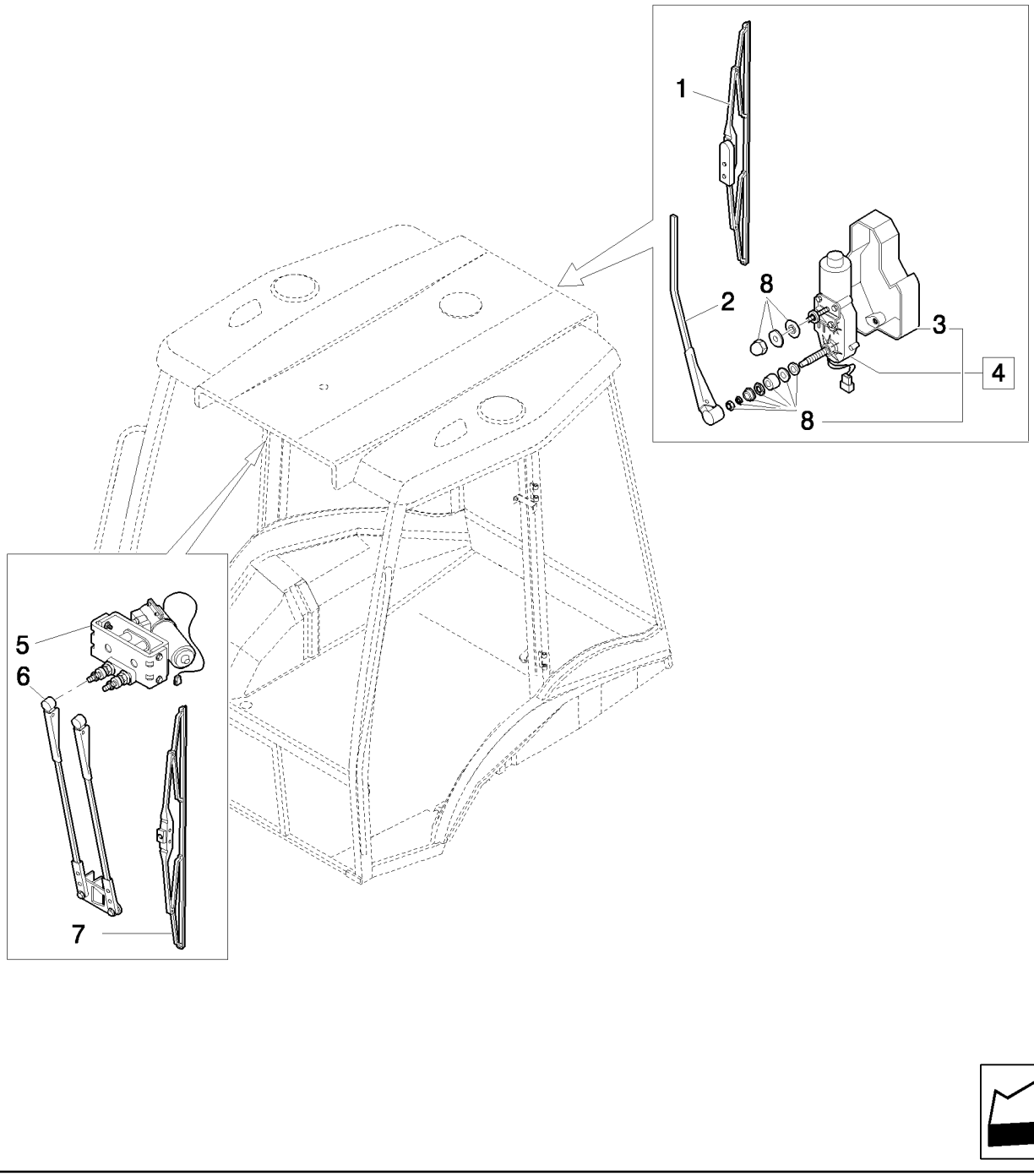

LAVE-VITRE/ESSUIE-VITRE AVANT ET ARRIERE

REF	FN	PART NUMBER	YR/SN	QTY	DESCRIPTION
1		85819827		1	BALAI D'ESSUIE-GLACE, Rear
2		85806098		1	BRAS D'ESSUIE-GLACE, Rear
3		85806095		1	COUVERCLE, Rear
4		87628768		1	MOTEUR D'ESSUIE-GLACE, Assy, Rear
5		85806184		1	MOTEUR D'ESSUIE-GLACE, Front
6		85806185		1	BRAS D'ESSUIE-GLACE, Front
7		85819826		1	BALAI D'ESSUIE-GLACE, Front
8		87628806		1	KIT

1.91.5	02	p1	05/08

RESERVOIR ET BUSES ESSUIE-GLACE

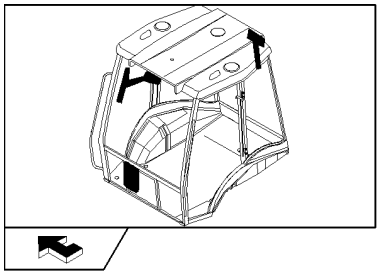

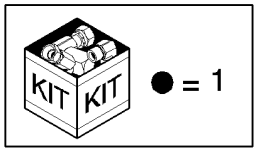

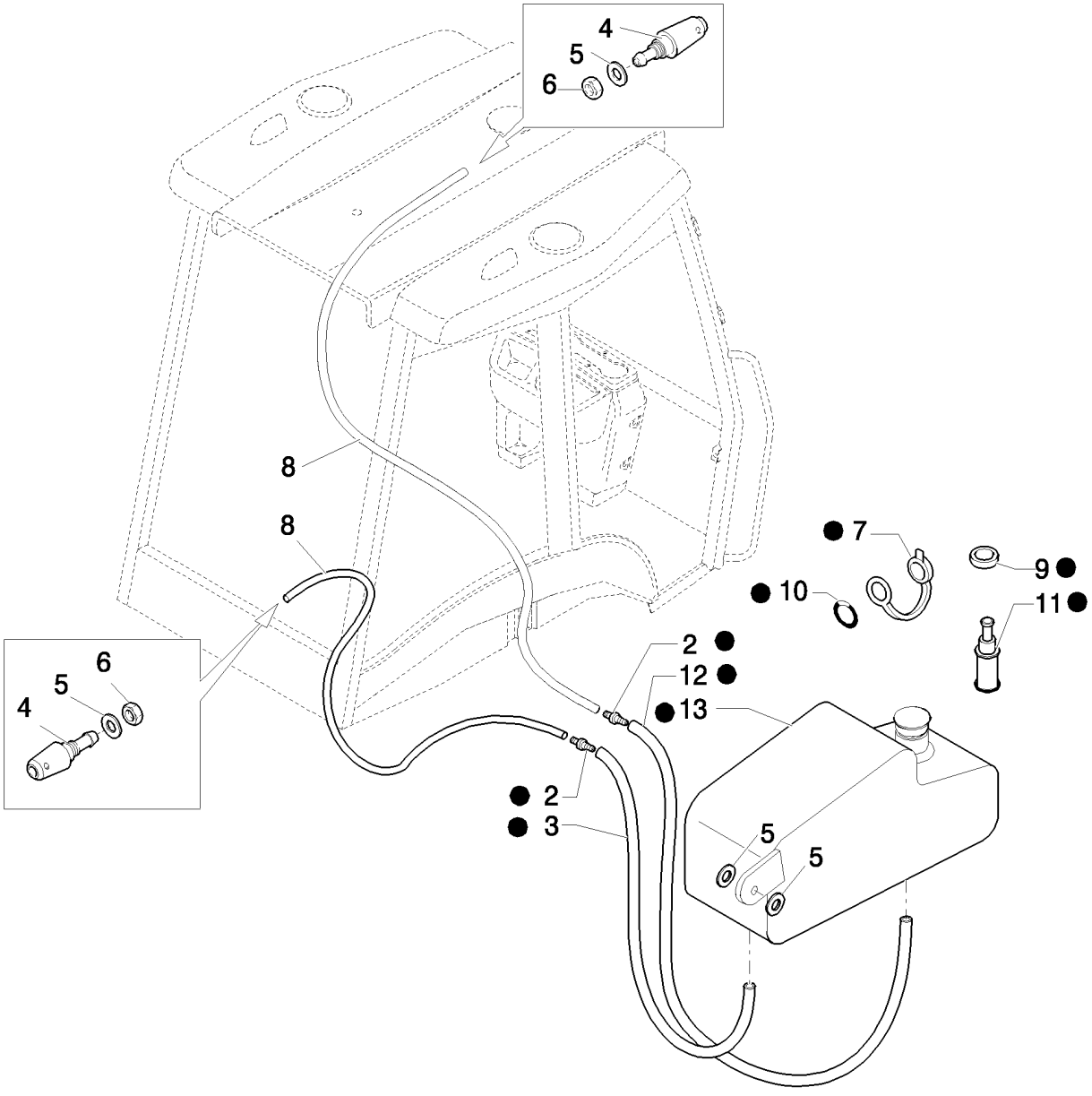

RESERVOIR ET BUSES ESSUIE-GLACE

REF	FN	PART NUMBER	YR/SN	QTY	DESCRIPTION
1		85821153		1	CUVETTE, Assy
2		85821337		2	CLAPET ANTI-RETOUR
3		85821335		1	TUYAU FLEXIBLE
4		85802398		2	GICLEUR
5		12646704		2	RONDELLE, M8 x 20 x 2
6		16102411		2	ECROU, Thin, M8 x 1, Cl 04
7		5175736		1	CHAPEAU
8		85821338		2	TUYAU FLEXIBLE
9		85821336		2	JOINT ANNULAIRE
10		85820237		1	JOINT THORIQUE
11		85821333		2	POMPE
12		85824450		1	TUYAU FLEXIBLE
13		85821334		1	RESERVOIR DE LAVE-GLACE

ANTENNE RADIO & CALOTTE HAUT-PARLEURS

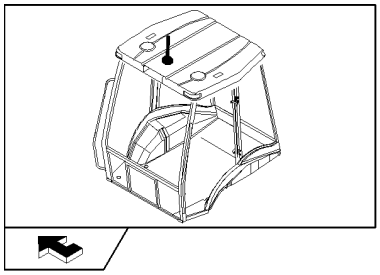

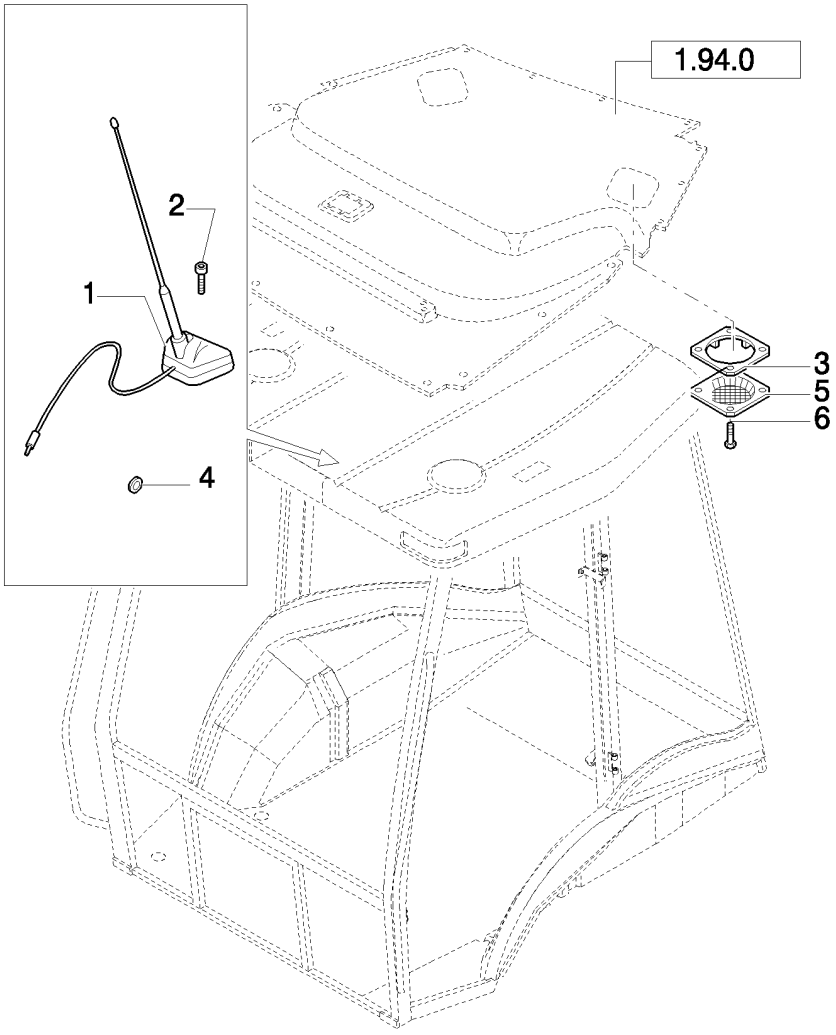

ANTENNE RADIO & CALOTTE HAUT-PARLEURS

REF	FN	PART NUMBER	YR/SN	QTY	DESCRIPTION
1		85819569		1	ANTENNE
2		13311817		1	VIS, Cross Oval Hd, M5 x 40
3		85802107		2	PANOPLIE
4		10399580		1	PASSE-FIL
5		85804362		2	CALANDRE
6		13297817		8	VIS

LAMPES ET PHARES - ROPS - NA

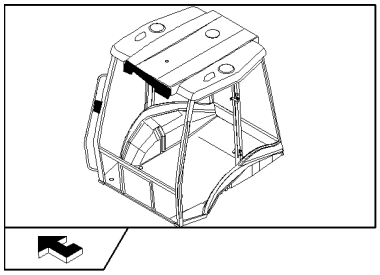

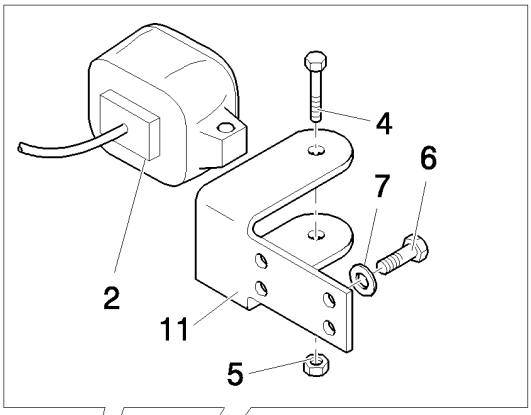

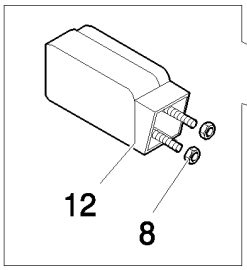

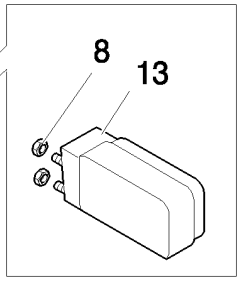

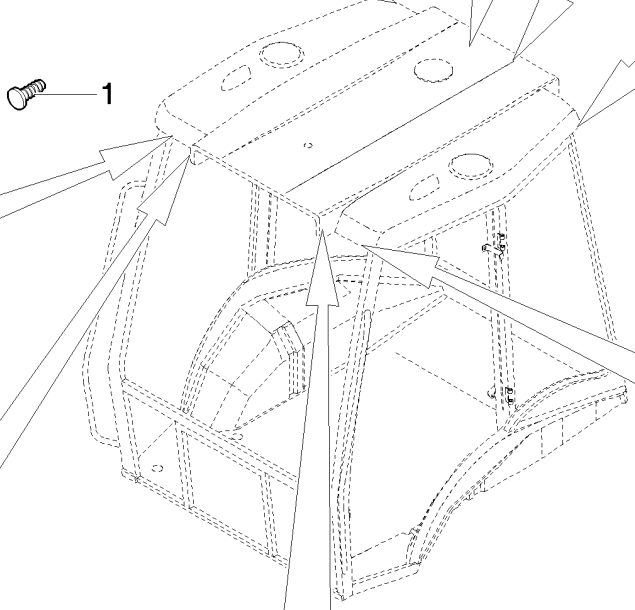

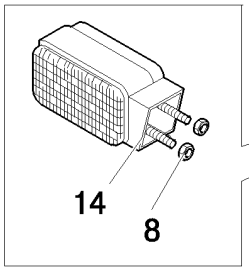

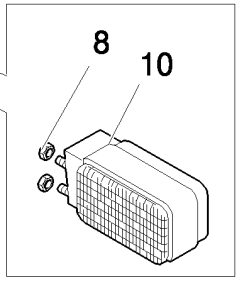

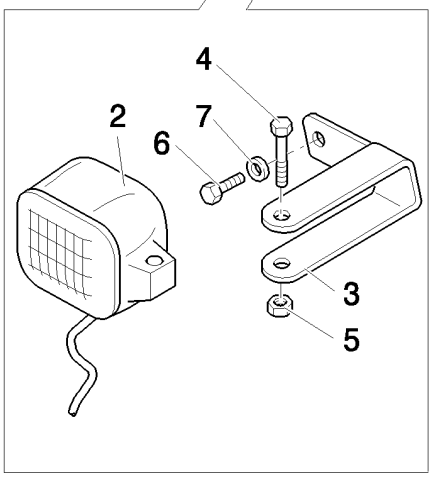

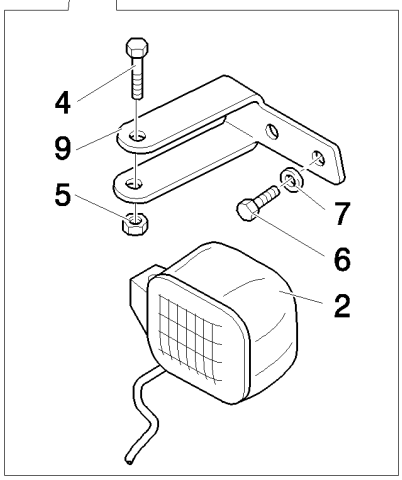



LAMPES ET PHARES - ROPS - NA

REF	FN	PART NUMBER	YR/SN	QTY	DESCRIPTION
1		14591687		1	BOUTON
2		85819200		4	PHARE, Includes H3 12V 55W Bulb, Order 9703399 For Bulb
3		85819190		1	PATTE FIXATION, RH
4		16044324		4	BOULON, Hex, M8 x 55, 8.8
5		16104111		4	CONTRE-ECROU, M8 x 1.25, Cl 8
6		10902124		8	BOULON, Hex, M6 x 14, 8.8, Full Thd
7		11197774		8	RONDELLE BELLEVILLE, Belleville, M6.4
8		14084111		8	ECROU, M5 x .8, Flg
9		85819191		1	PATTE FIXATION, LH
10		85819197		1	PHARE AV, LH; Solid Amber Lens
11		85819194		2	PATTE FIXATION
12		85819198		1	FEU ARRIERE, RH; Red/Amber Lens
13		85819199		1	FEU ARRIERE, LH; Red/Amber Lens
14		85819196		1	PHARE AV, RH; Solid Amber Lens

1.91.7/02		p1	03/08

LAMPES ET PHARES - CABINE - NA

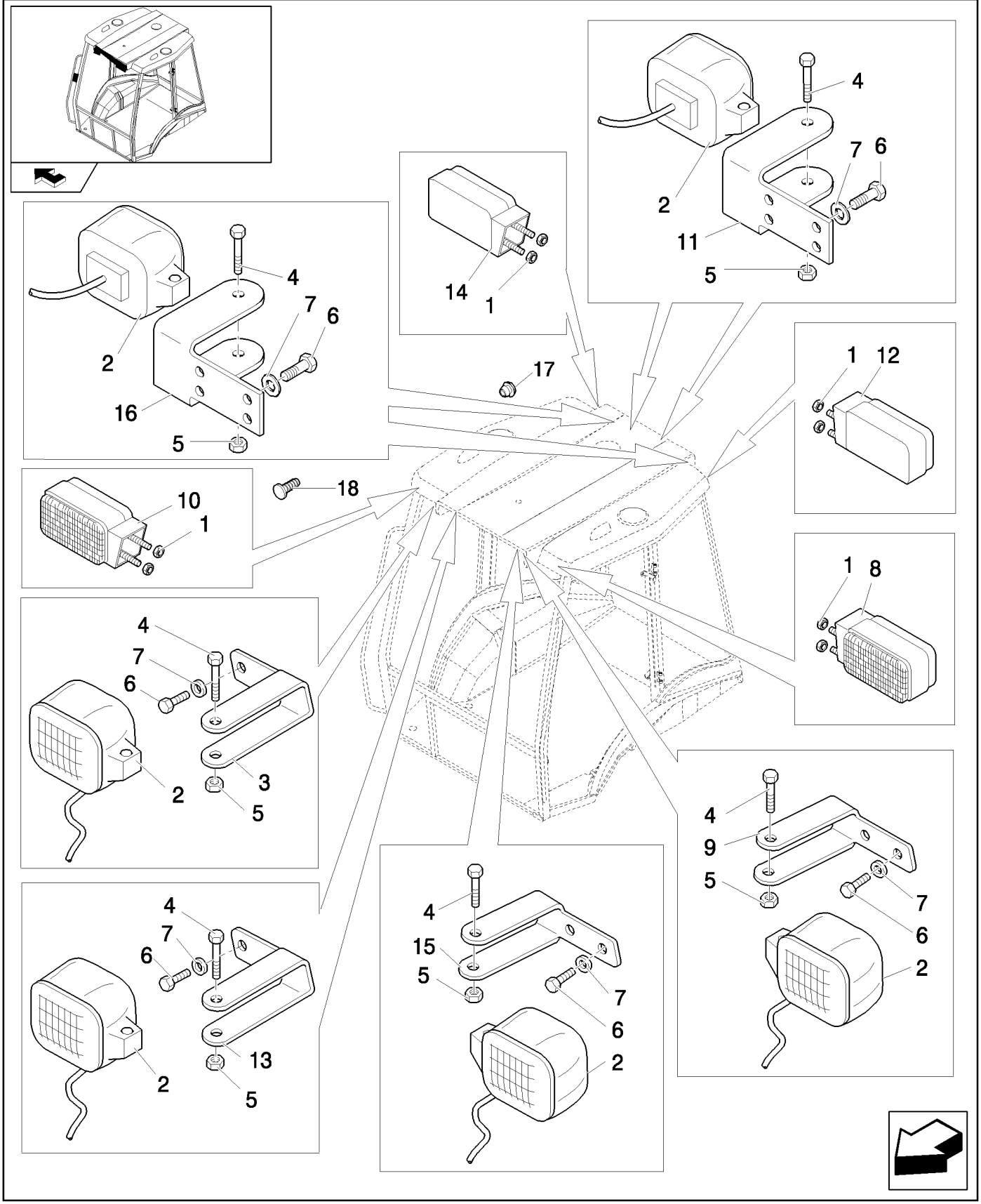

LAMPES ET PHARES - CABINE - NA

REF	FN	PART NUMBER	YR/SN	QTY	DESCRIPTION
1		14084111		8	ECROU, M5 x .8, Flg
2		85819200		8	PHARE
3		85819190		1	PATTE FIXATION
4		16044324		8	BOULON, Hex, M8 x 55, 8.8
5		16104111		8	CONTRE-ECROU, M8 x 1.25, Cl 8
6		10902124		24	BOULON, Hex, M6 x 14, 8.8, Full Thd
7		11197774		24	RONDELLE BELLEVILLE, Belleville, M6.4
8		85819197		1	PHARE AV
9		85819191		1	PATTE FIXATION
10		85819196		1	PHARE AV
11		85819194		2	PATTE FIXATION
12		85819199		1	FEU ARRIERE
13	1	85819188		1	PATTE FIXATION
14		85819198		1	FEU ARRIERE
15	1	85819189		1	PATTE FIXATION
16	1	85819192		2	PATTE FIXATION
17	2	83994150		1	BOUCHON
18	2	5118658		1	BOUCHON

(1) Only for Power Shift
(2) Only for Power Shuttle

CABINE: CHASSIS- PORTES

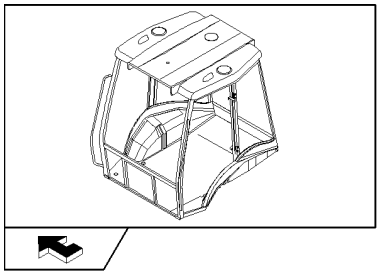

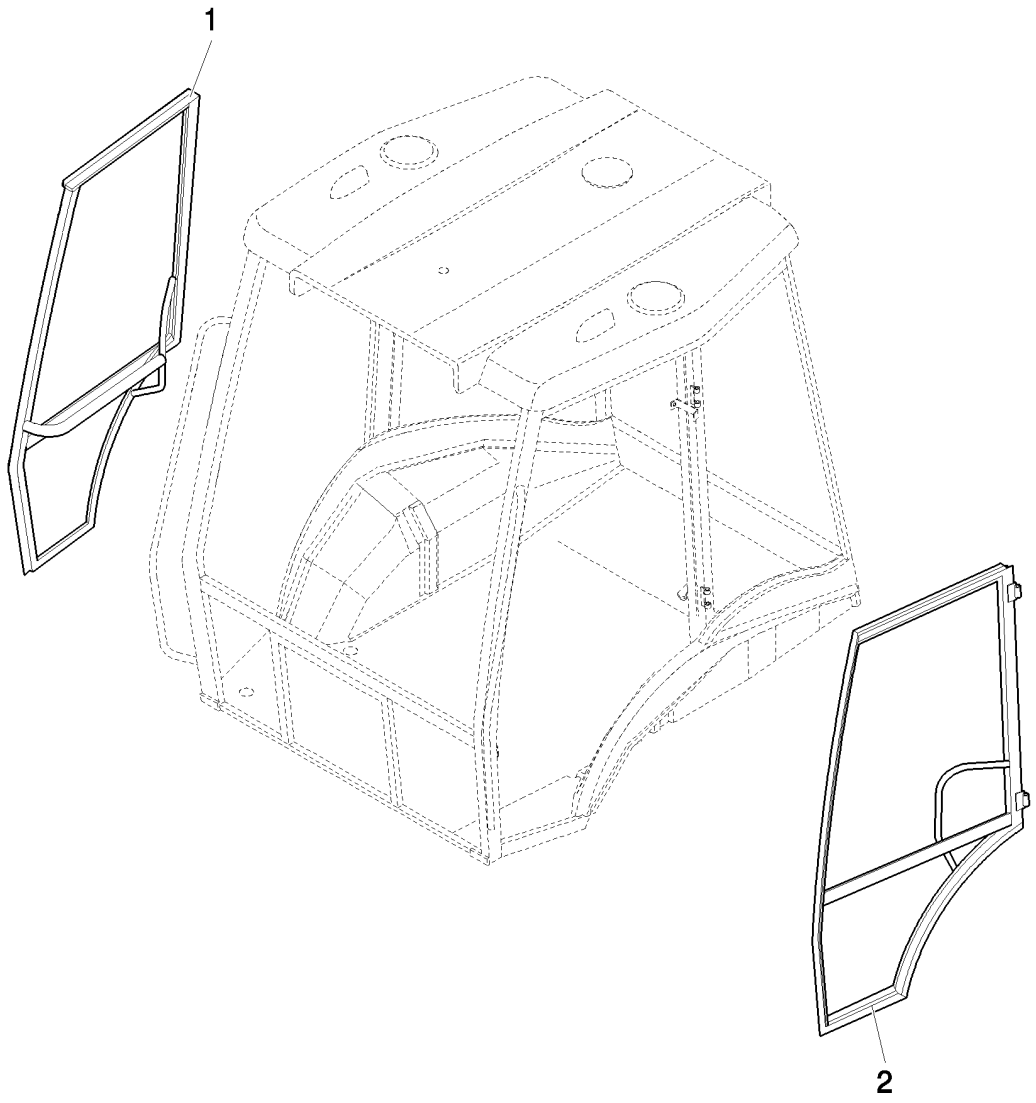

CABINE: CHASSIS- PORTES

REF	FN	PART NUMBER	YR/SN	QTY	DESCRIPTION
1		87354650		1	CHASSIS, RH
2		87354652		1	CHASSIS, LH

VITRES AVANT ET JOINTS

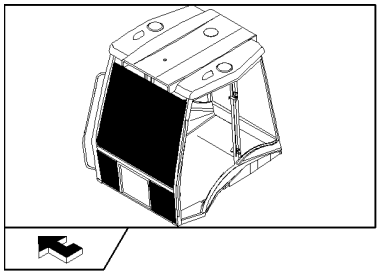

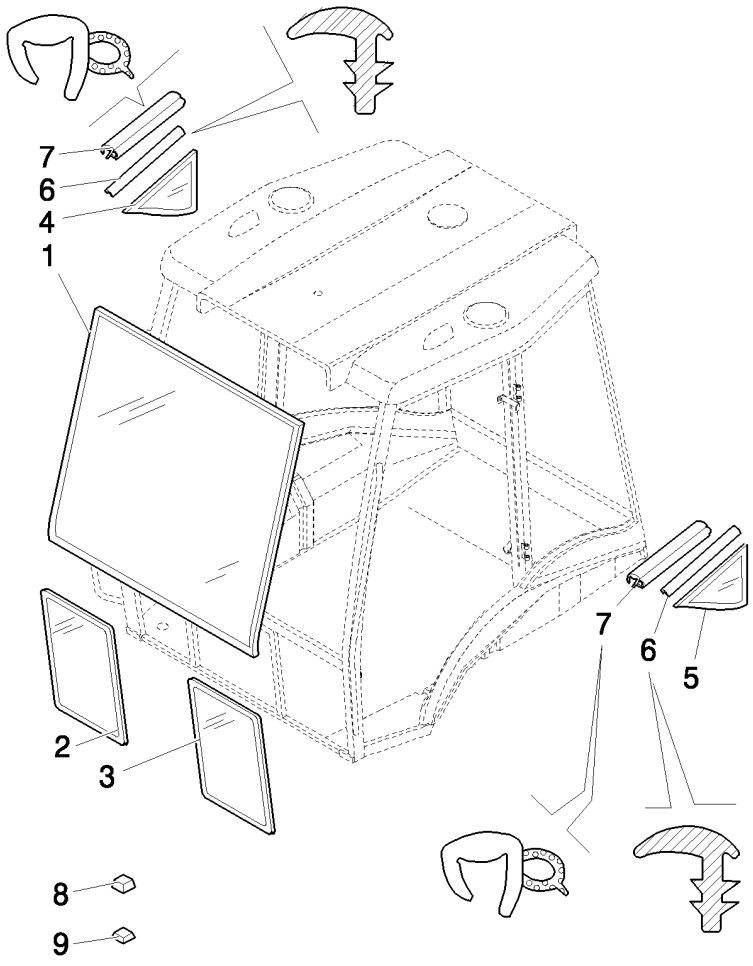

VITRES AVANT ET JOINTS

REF	FN	PART NUMBER	YR/SN	QTY	DESCRIPTION
1		85801621		1	VITRE
2		85801622		1	VITRE DE CABINE, RH
3		85801623		1	VITRE DE CABINE, LH
4		85801630		1	VITRE DE CABINE, RH
5		85801631		1	VITRE DE CABINE, LH
6		85802334		M	JOINT
7		85805065		2	JOINT
8		85802223		8	ENTRETOISE
9		85802224		10	ENTRETOISE

1.92.4	01	p1	05/08

DISPOSITIFS DE SERRAGE VITRES LATÉRALES PORTE

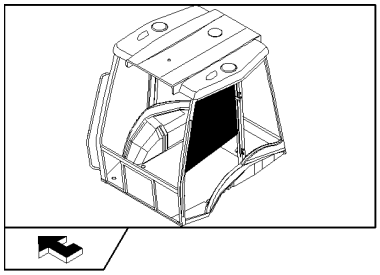

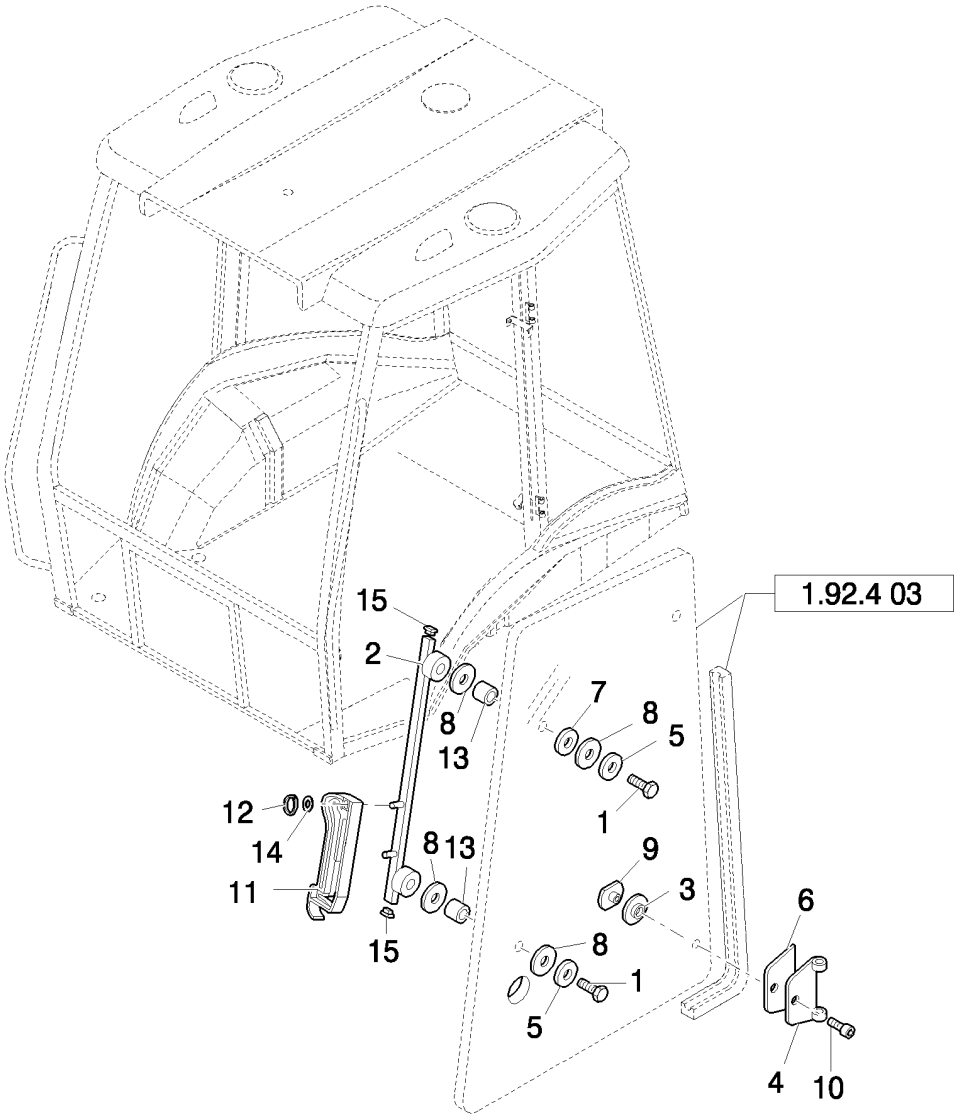

DISPOSITIFS DE SERRAGE VITRES LATÉRALES PORTE

REF	FN	PART NUMBER	YR/SN	QTY	DESCRIPTION
1		82859922		4	BOULON
2		87396515		1	SUPPORT, RH
2		87396492		1	SUPPORT, LH
3		83961985		4	ENTRETOISE
4		85804869		4	CHARNIERE
5		83963153		4	ENTRETOISE
6		81872036		4	JOINT, CAOUTCHOUC
7		12638504		4	RONDELLE, M8 x 15 x 1.5
8		83995356		12	BAGUE
9		85805448		4	VIROLE
10		81871864		4	VIS, Socket Drive, M8x1.25x16
11		87353724		4	POIGNÉE
12		11087776		4	CIRCLIP, M6
13		83961987		4	ENTRETOISE
14		10519404		2	RONDELLE, M6 x 11.95 x 1.6
15		81871439		8	CHAPEAU

1.92.4	02	p1	04/08

DISPOSITIFS DE SERRAGE VITRES LATÉRALES CABINE

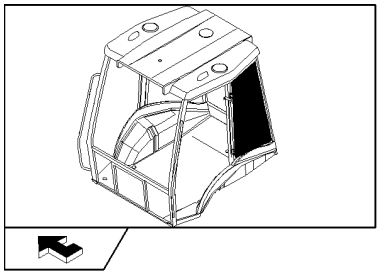

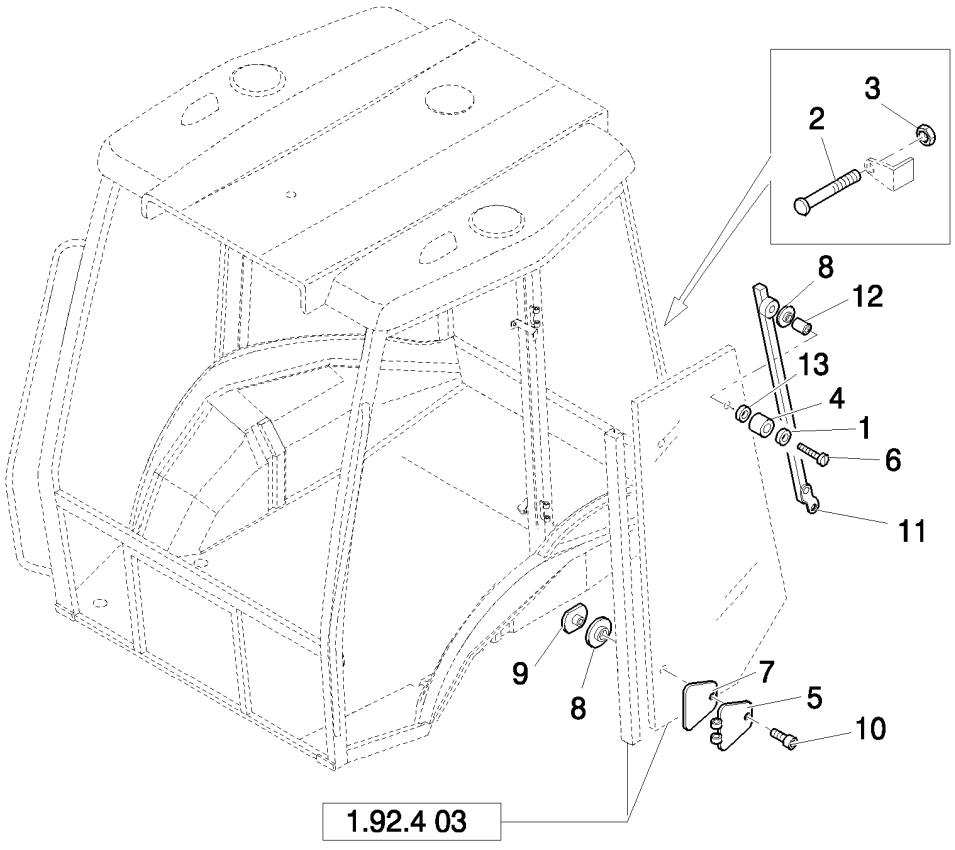

DISPOSITIFS DE SERRAGE VITRES LATÉRALES CABINE

REF	FN	PART NUMBER	YR/SN	QTY	DESCRIPTION
1		10519404		2	RONDELLE, M6 x 11.95 x 1.6
2		87313813		4	AXE
3		10702711		8	ECROU
4		83976357		2	PARE-CHOCS
5		85804870		4	CHARNIERE
6		10903224		2	SOUPAPE HYDRAULIQUE, Hex, M6 x 40, 8.8
7		81872028		4	ENTRETOISE
8		83961985		4	ENTRETOISE
9		85805448		4	VIROLE
10		81871864		4	VIS, Socket Drive, M8 x 1.25 x 16
11		87396525		1	SUPPORT, RH
12		83961987		2	ENTRETOISE
11		87396528		1	SUPPORT, LH
13		11193979		2	RONDELLE BELLEVILLE, Belleville, M8.4

1.92.4	03	p1	04/08

VITRES LATÉRALES

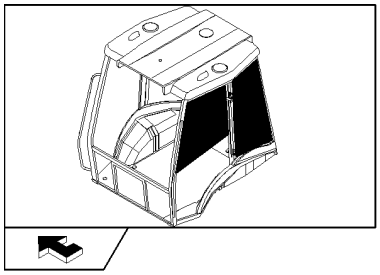

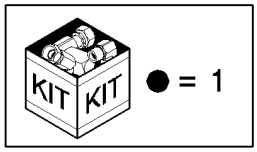

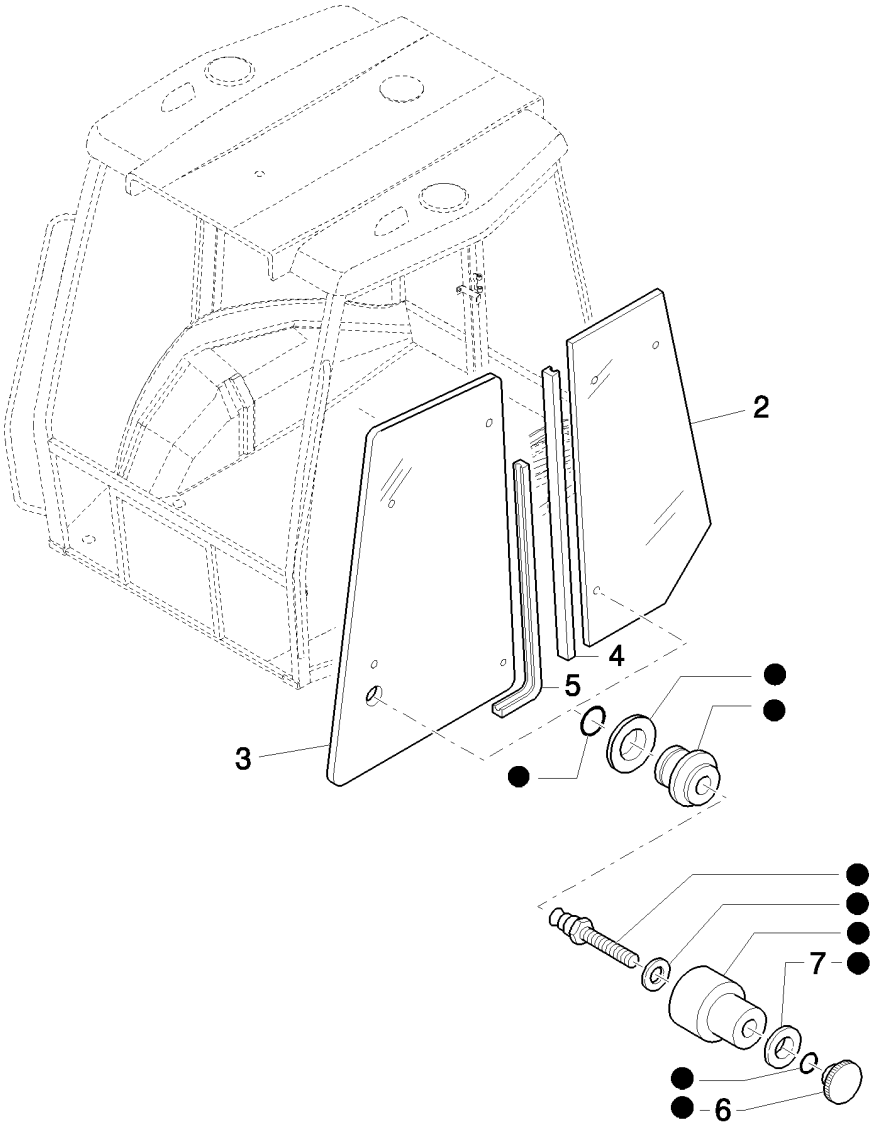

VITRES LATÉRALES

REF	FN	PART NUMBER	YR/SN	QTY	DESCRIPTION
1		85804617		2	KIT
2		85801628		2	VITRE DE CABINE
3		85801626		2	VITRE DE CABINE
4		85812254		2	PROFILE CAOUTCHOUC, 3150 mm lg
5		85812255		2	PROFILE CAOUTCHOUC, 3315 mm lg
6		85805448		2	VIROLE
7		83961985		2	ENTRETOISE

1.92.5		p1	03/08

GARDE-BOUE ARRIERE

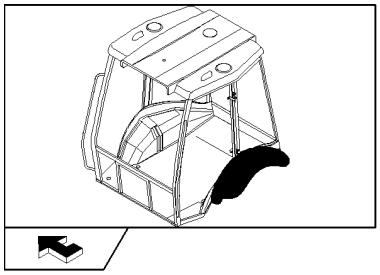

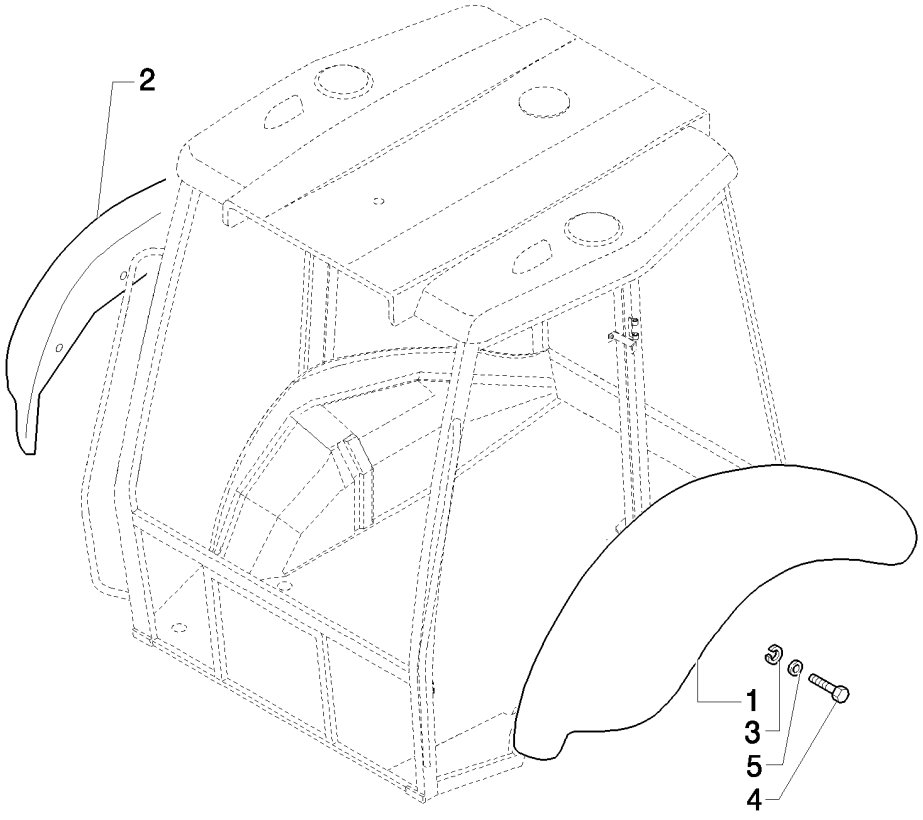

GARDE-BOUE ARRIERE

REF	FN	PART NUMBER	YR/SN	QTY	DESCRIPTION
1	1, 2	85817211		1	GARDE BOUE ARRIERE, LH
1	3	85817213		1	GARDE BOUE ARRIERE, LH
2	1, 2	85817210		1	GARDE BOUE ARRIERE, RH
2	3	85817212		1	GARDE BOUE ARRIERE, RH
3		11193874		10	RONDELLE BELLEVILLE, Belleville, M8.4
4		16044124		10	BOULON, Hex, M8 x 45, 8.8
5		12646204		10	RONDELLE, M8 x 35 x 3

(1) Only for B90B, B100B, B100BLR, B110B (EU)
(2) Only for B90B, B95B, B95BLR, B95BTC, B110B (NA)
(3) Only for B115B

1.92.6	01	p1	05/08

COMPOSANTS DEFINITIONDES PORTES

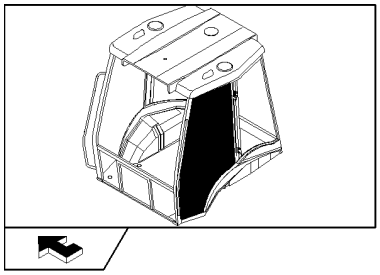

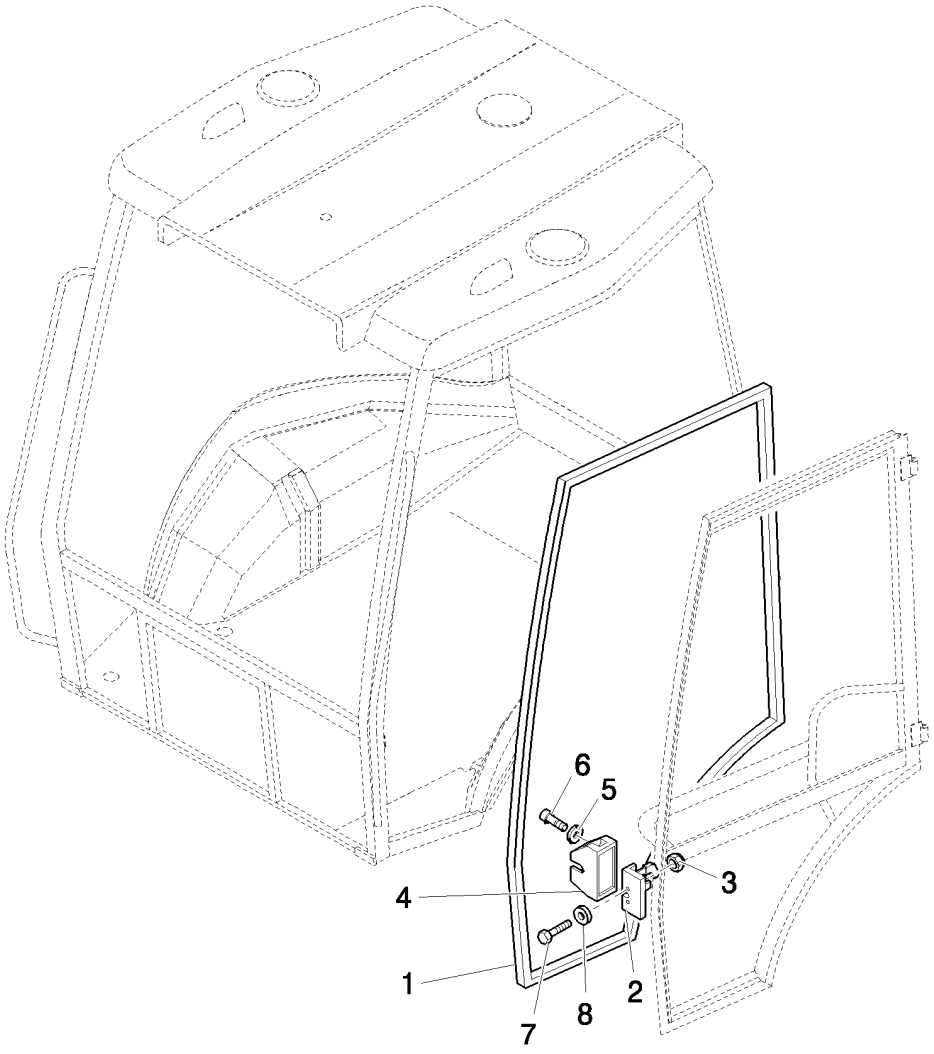

COMPOSANTS DEFINITIONDES PORTES

REF	FN	PART NUMBER	YR/SN	QTY	DESCRIPTION
1		85812252		1	JOINT DE PORTE, RH
1		85812253		1	JOINT DE PORTE, LH
2		44910052		1	SERRURE PORTE, GCHE, LH
2		44910053		1	SERRURE PORTE, DRT, RH
3		14048214		4	CONTRE-ECROU, M8 x 1.25
4		85805771		1	COUVERCLE, LH
4		85805770		1	COUVERCLE, RH
5		12643701		4	RONDELLE, M6 x 18 x 1.5
6		13273911		4	VIS, Cross Pan Hd, M5 x 10
7		14442421		4	VIS, Hex Soc Flat Hd, M8 x 40, 8.8
8		10519604		4	RONDELLE, M8 x 17 x 2

1.92.6	02	p1	05/08

COMPOSANTS COMPLÈTEMENT PORTE: CÔTÉ INFÉRIEUR

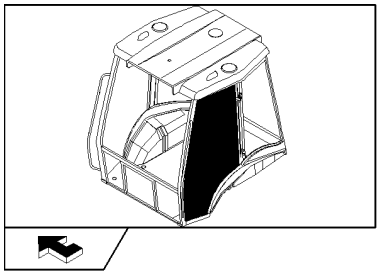

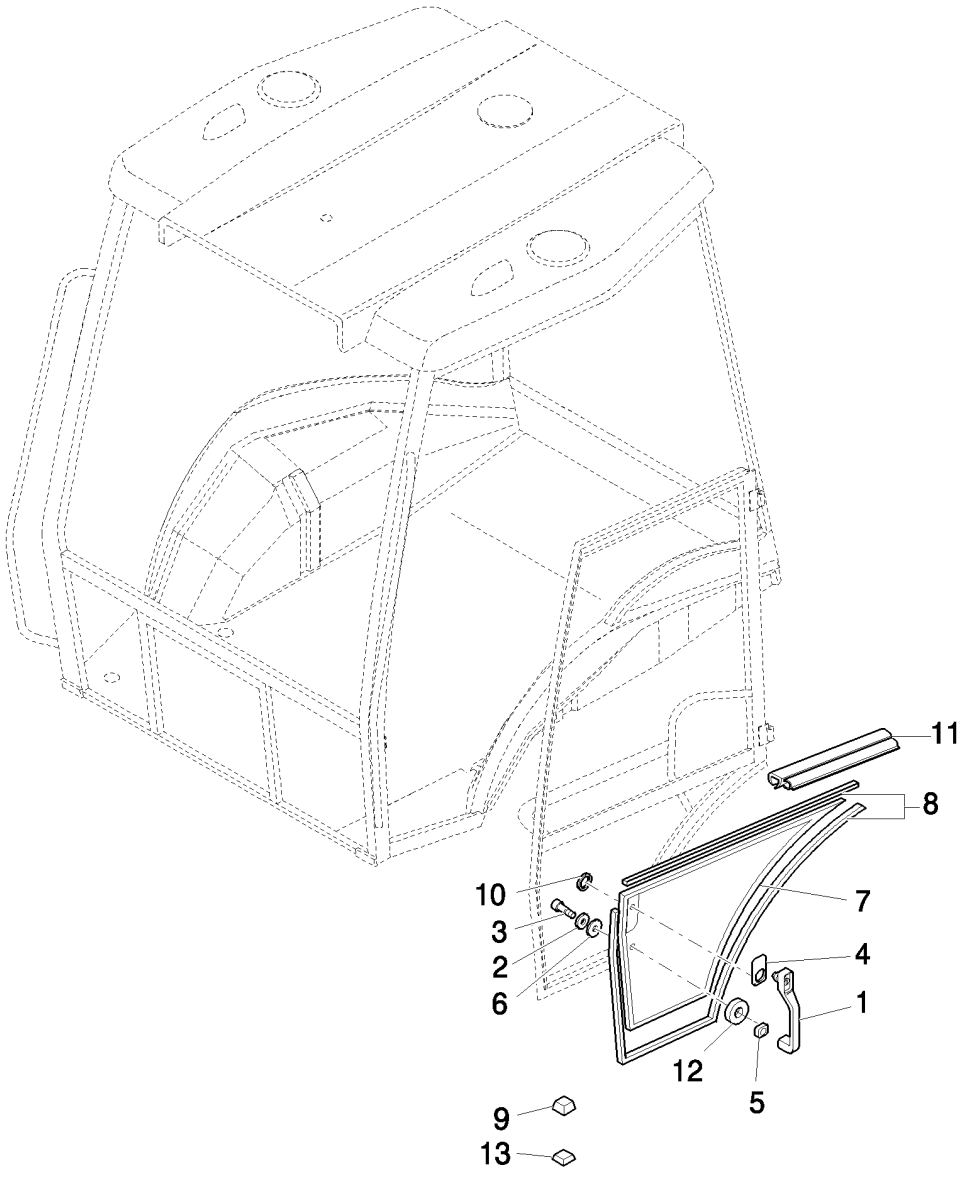

COMPOSANTS COMPLÈTEMENT PORTE: CÔTÉ INFÉRIEUR

REF	FN	PART NUMBER	YR/SN	QTY	DESCRIPTION
1		85805659		2	POIGNÉE
2		12640601		2	RONDELLE, M6 x 25 x 2
3		13276621		2	VIS, Cross Pan Hd, M6 x 25, 8.8
4		85801799		2	JOINT
5		85801800		2	JOINT, CAOUTCHOUC
6		83961987		4	ENTRETOISE
7		85801624		1	VITRE DE CABINE, RH
7		85801625		1	VITRE DE CABINE, LH
8		85802334		MT	JOINT
9		85802223		20	ENTRETOISE
10		85802307		2	JOINT ANNULAIRE
11		85805065		2	JOINT
12		85801801		2	JOINT ANNULAIRE, 24X6X2
13		85802224		10	ENTRETOISE

1.92.6	03	p1	03/08

COMPOSANTS CHARNIÈRES FERMETURE PORTE

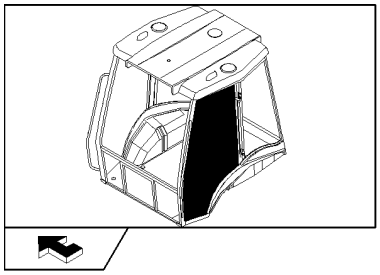

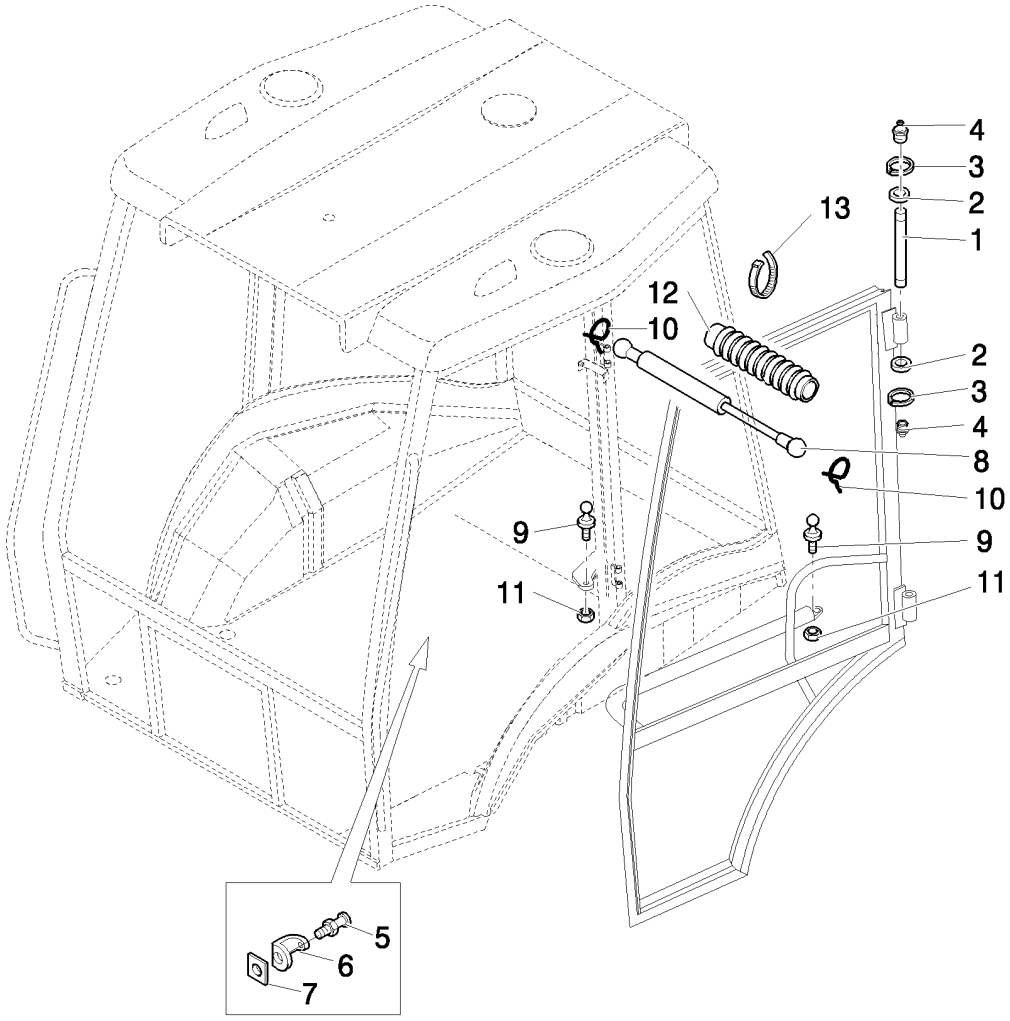

COMPOSANTS CHARNIÈRES FERMETURE PORTE

REF	FN	PART NUMBER	YR/SN	QTY	DESCRIPTION
1		87304810		4	AXE
2		83964146		24	RONDELLE
3		11088076		8	CIRCLIP, M10, D.9
4		13406911		4	GRAISSEUR, 1/4"-28
5		83994395		2	TOLE
6		83994372		2	GARANT
7		83994378		2	ECROU, M12 x 1
8		5183854		2	COMPAS
9		82000409		4	AXE ROTULE
10		81869714		4	CLIP
11		16104511		4	CONTRE-ECROU, M8 x 1.25, Cl 8.8
12		81867742		2	COIFFE
13		5112712		4	COLLIER, M4.8 x 283

JOINT ATTRAPE-FLAMME, ROPS (POWER SHUTTLE)

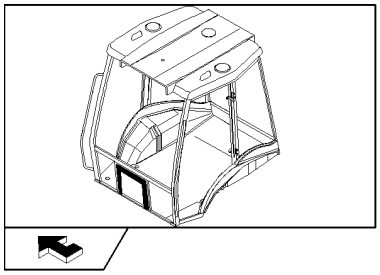

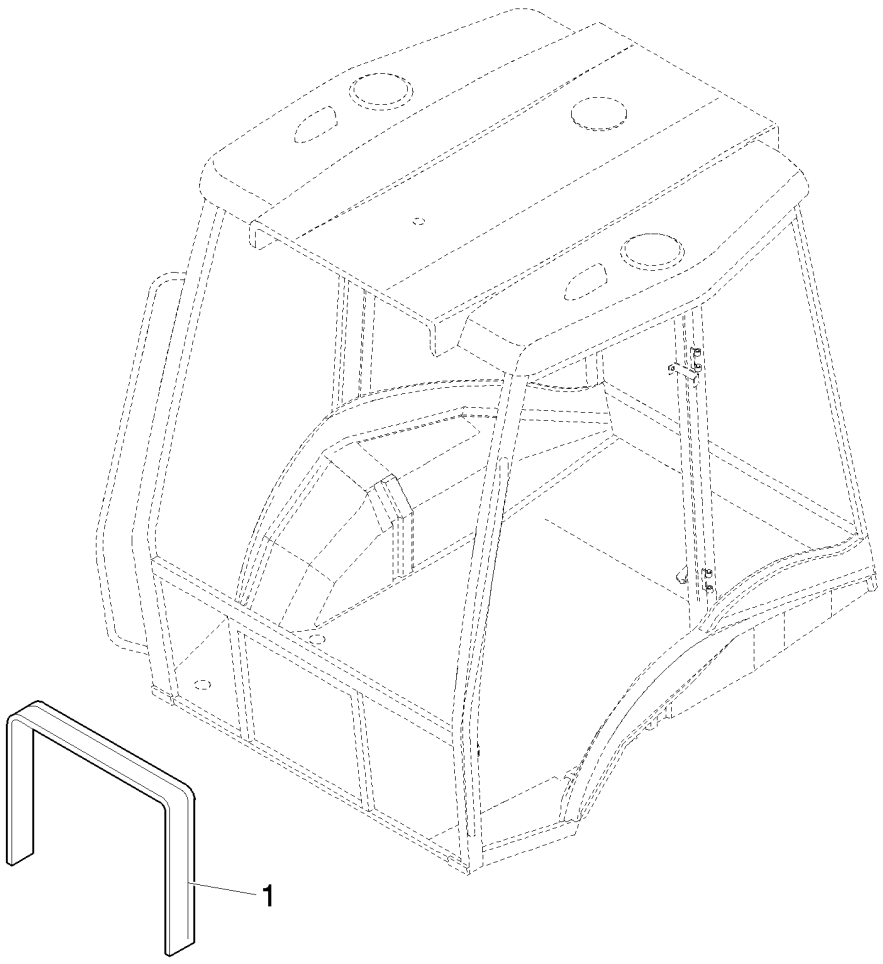

JOINT ATTRAPE-FLAMME, ROPS (POWER SHUTTLE)

REF	FN	PART NUMBER	YR/SN	QTY	DESCRIPTION
1		85805571		1	PROFILE CAOUTCHOUC

1.92.9	01	p1	03/08

VITRES ARRIÈRE ET COMPOSANTS

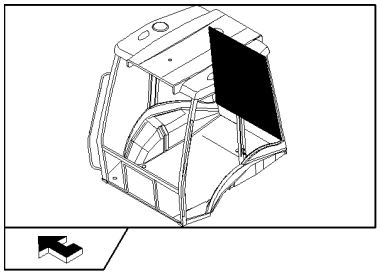

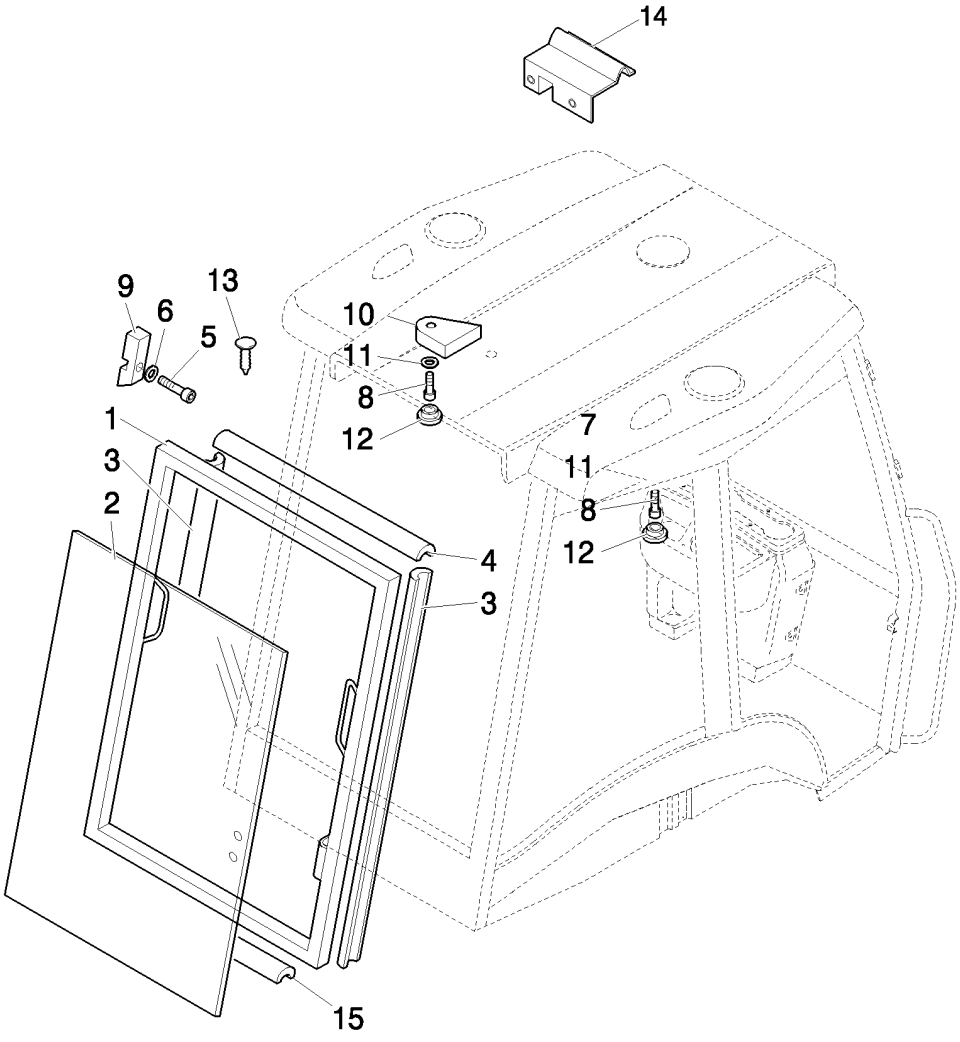

VITRES ARRIÈRE ET COMPOSANTS

REF	FN	PART NUMBER	YR/SN	QTY	DESCRIPTION
1		85801739		1	PORTE
2		85801632		1	VITRE DE CABINE
3		85801811		2	PROFILE
4		85819018		1	PROFILE CAOUTCHOUC, L=965
5		16043324		2	BOULON, Hex, M8 x 18, 8.8, Full Thd
6		12646704		2	RONDELLE, M8 x 20 x 2
7		85801828		1	TAMPON, RH
8		13313417		2	VIS, Cross Oval Hd, M6 x 25
9		85801826		2	BUTÉE
10		85801829		1	TAMPON, LH
11		85801991		2	RONDELLE
12		79111978		2	BOUCHON
13		83994150		2	BOUCHON
14		85812365		1	BRIDE-FIXATION/ COLLIER
15		85819017		1	PROFILE CAOUTCHOUC, L=1010

1.92.9	02	p1	04/08

CHARNIÈRE FERMETURE VITRE ARRIÈRE

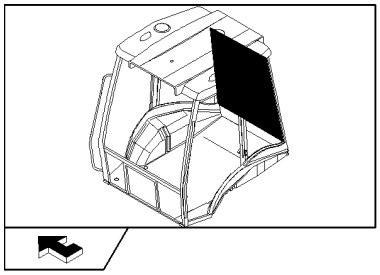

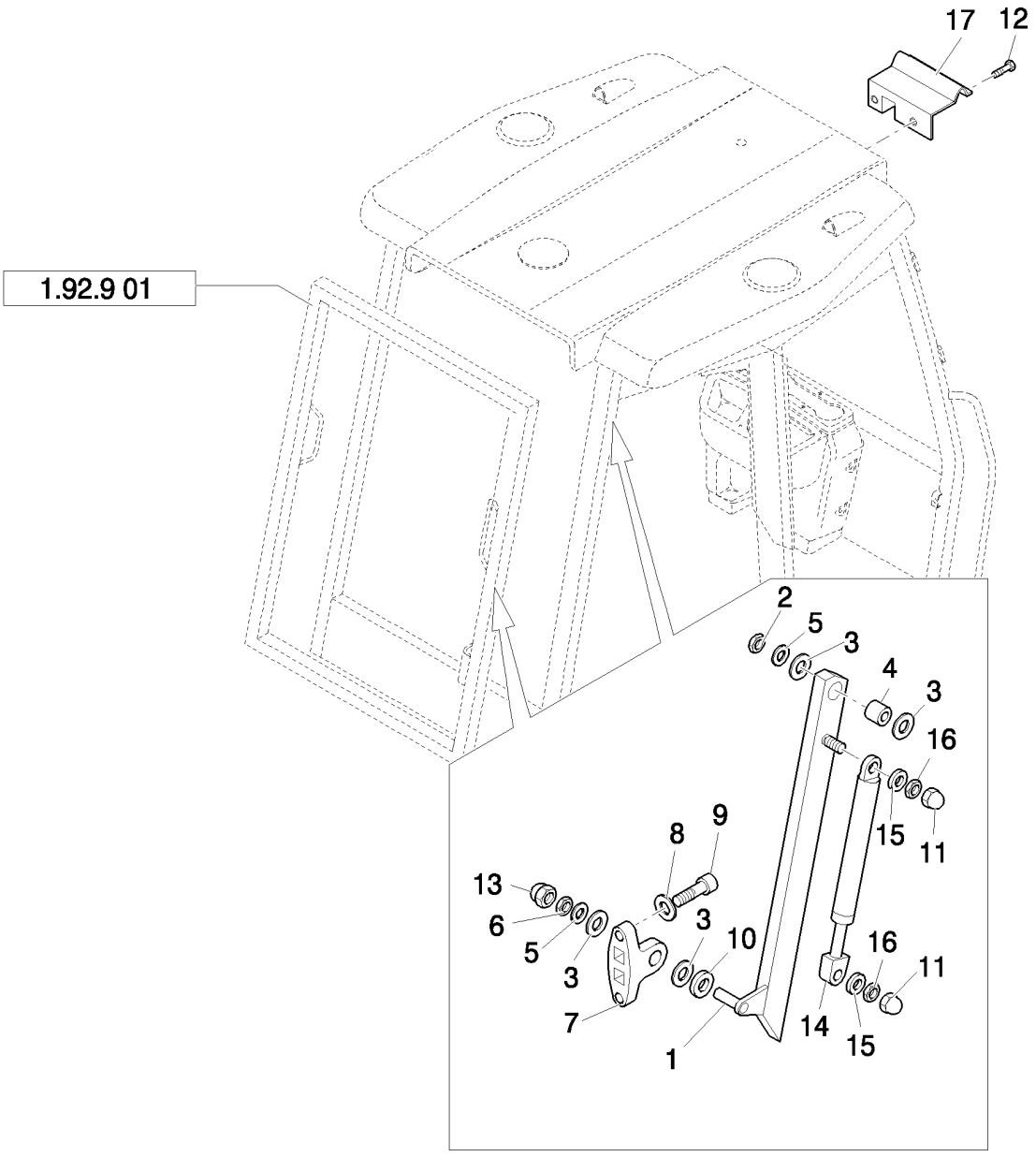

CHARNIÈRE FERMETURE VITRE ARRIÈRE

REF	FN	PART NUMBER	YR/SN	QTY	DESCRIPTION
1		85801812		1	SUPPORT, RH
1		85801813		1	SUPPORT, LH
3		85801814		12	ENTRETOISE
2		16105111		2	CONTRE-ECROU, M12 x 1.25, Cl 8
4		85801815		2	BAGUE
5		12646904		4	RONDELLE, M12 x 28 x 3
6		16104111		2	CONTRE-ECROU, M8 x 1.25, Cl 8
7		85801816		2	SUPPORT
8		12638504		4	RONDELLE, M8 x 15 x 1.5
9		14306424		4	VIS, Hex Soc Hd, M8 x 25, 8.8
10		12647004		2	RONDELLE, M8 x 25 x 2.5
11		15811387		4	CHAPEAU
12		13276217		2	VIS, Cross Pan Hd, M6 x 16
13		5132136		2	CACHE-BOUCHON
14		85801827		2	COMPAS
15		14496407		4	RONDELLE
16		12574215		4	CONTRE-ECROU, M6 x 1, Cl 8
17		85812364		1	RETENEUR

1.92.9	03	p1	05/08

CHARNIÈRES ET FERMETURE VITRE ARRIÈRE

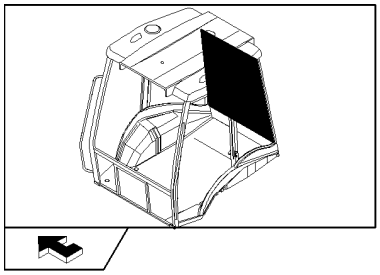

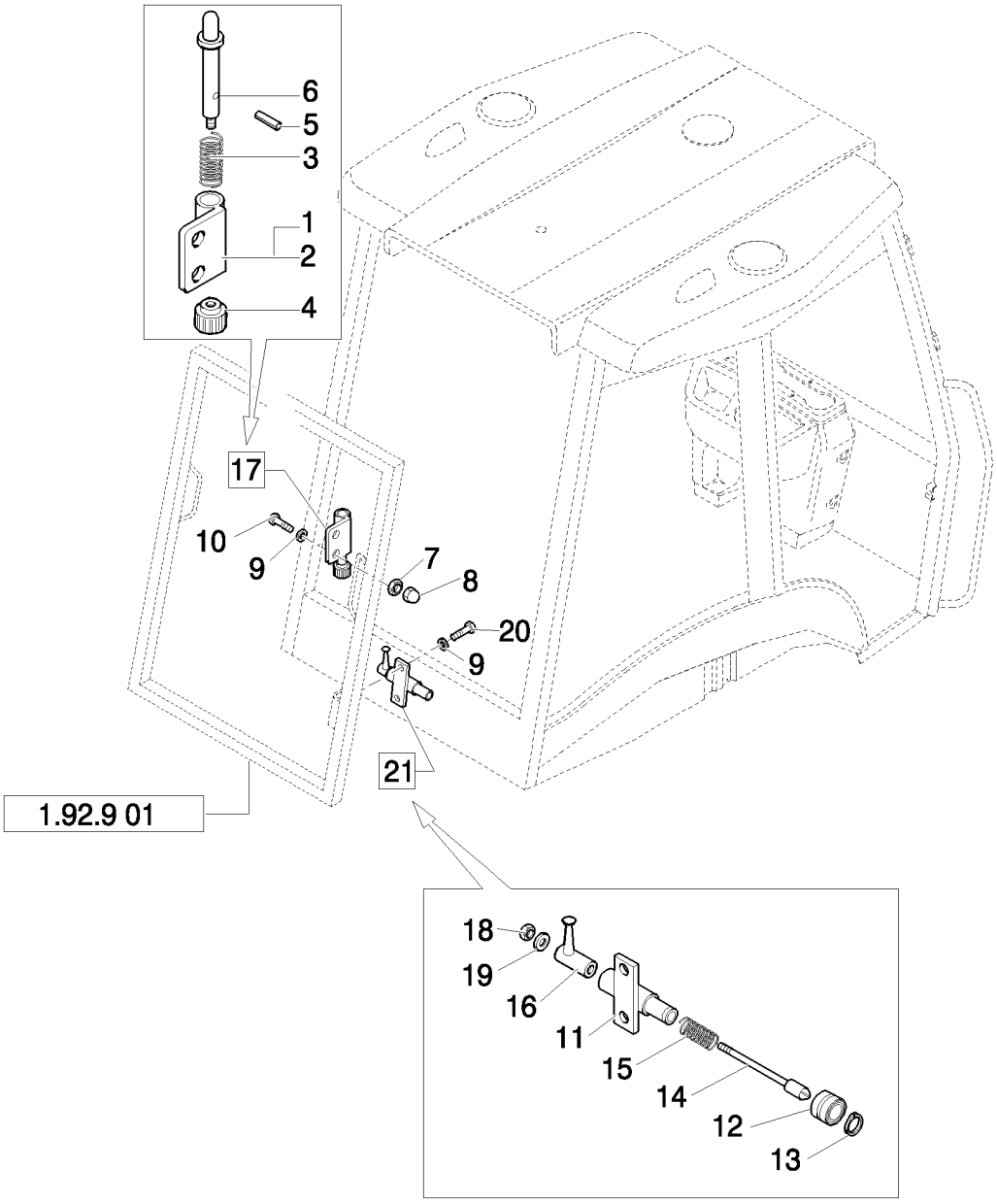

CHARNIÈRES ET FERMETURE VITRE ARRIÈRE

REF	FN	PART NUMBER	YR/SN	QTY	DESCRIPTION
1		85801831		1	BLOC, LH
2		85801830		1	BLOC, RH
3		85801832		2	RESSORT
4		85801833		2	POMMEAU
5		14161771		2	CHEVILLE, M3 x 16, Slotted
6		85801834		2	AXE
7		16104111		4	CONTRE-ECROU, M8 x 1.25, Cl 8
8		5132136		4	CACHE-BOUCHON
9		11198074		8	RONDELLE BELLEVILLE, Belleville, M8.4
10		85827836		4	VIS, Cap, HH, CL 8.8, M8 x 1.25 x 25
11		85801820		1	AXE, RH
11		85801821		1	AXE, LH
12		85802018		2	ROULEMENT A ROULEAU
13		85802351		2	CIRCLIP
14		85801823		2	AXE
15		85801824		2	RESSORT
16		85801825		2	LOQUET
17		85802345		2	CHARNIERE, Assy, LH
17		85802344		4	CHARNIERE, Assy, RH
18		12574111		2	CONTRE-ECROU, M5 x .8, Cl 8
19		12637824		2	RONDELLE
20		16043624		4	BOULON, Hex, M8 x 25, 8.8, Full Thd
21		85802346		1	BLOC, Assy, RH
21		85802347		1	BLOC, Assy, LH

1.93.0	01	p1	04/08

CABINE : REVETEMENT (POWER SHUTTLE, POWER SHIFT)

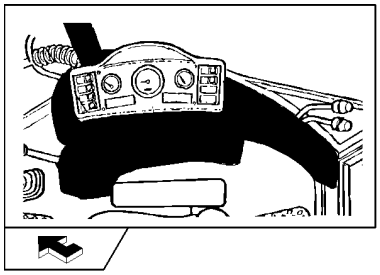

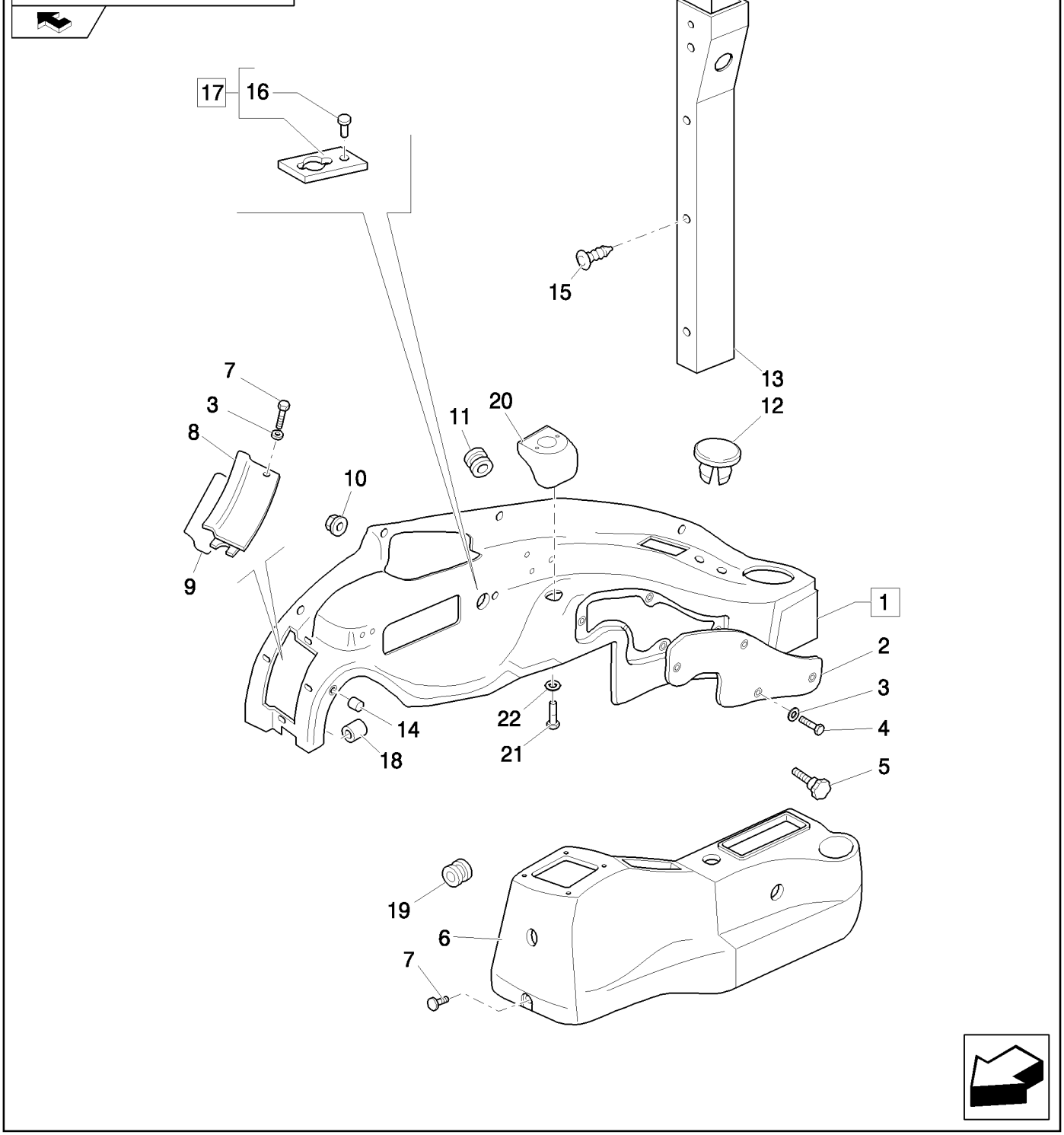

CABINE : REVETEMENT (POWER SHUTTLE, POWER SHIFT)

REF	FN	PART NUMBER	YR/SN	QTY	DESCRIPTION
1	1	87543600		1	REVETEMENT, Assy
1	2	87743161		1	COUVERCLE, Assy
2		85801649		1	REVETEMENT
3		12647701		2	RONDELLE
4		13311017		5	VIS, Cross Oval Hd, M5 x 16
5		85805323		1	POMMEAU
6		87319785		1	REVETEMENT
7		16043824		AR	BOULON, Hex, M8 x 30, 8.8, Full Thd
8		85825191		1	COUVERCLE
9		85806023		1	BANDE D'ETANCHEITE
10	3	14084814		5	ECROU, M8 x 1.25, Flg
10		14059314		5	ECROU
11		10398980		1	PASSE-FIL, 46X5
12		79111815		1	BOUCHON
13		85819285		1	REVETEMENT, RH
14		85805819		4	BAGUE FILETEE
15		81870039		6	ATTACHE
16		10427201		1	RIVET
17		85827548		1	PLAQUE, Assy
18		85804750		6	BAGUE FILETEE
19		87517471		1	BAGUE ISOLANTE
20	4	87540633		1	INSTRUMENTS DE BORD
21	4	13274217		2	VIS, Pan Hd, M5 x 16, 5.8
22	4	12647701		2	RONDELLE

(1) Includes 2, 8, 9, 18
(2) Only for B90B, B90BLR CAB (EU)
(3) Only for Power Shuttle
(4) Except for B90B, B90BLR

Mechanical Version	B95B

1.93.0	02	p1	04/08

CABINE : REVETEMENT (POWER SHUTTLE, POWER SHIFT)

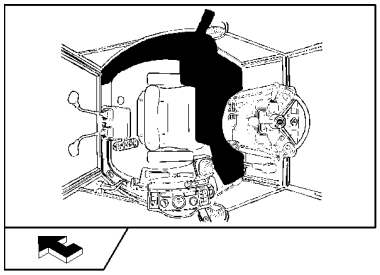

CABINE : REVETEMENT (POWER SHUTTLE, POWER SHIFT)

REF	FN	PART NUMBER	YR/SN	QTY	DESCRIPTION
1		85808460		1	BOUCHON
2		12647004		8	RONDELLE, M8 x 25 x 2.5, D=24
3		13313417		6	VIS, Cross Oval Hd, M6 x 25
4		85819287		1	REVETEMENT, Assy, LH
5		5178468		1	PORTE-MANTEAU
6		14084011		1	ECROU, M4 x .7, Flg
7		14059314		4	ECROU
7	1	14084814		4	ECROU, M8 x 1.25, Flg
8		10519604		4	RONDELLE, M8 x 17 x 2
9		15627011		12	RIVET
10		83961823		1	SANGLE
11		12638107		1	ENTRETOISE, 5X14
12		85806154		1	RIVET
13		79111978		1	BOUCHON
14		5148132		1	CONTRE-ECROU
15		5148131		1	CARTER, 1,2W
16		81870039		6	ATTACHE
17		12574211		1	CONTRE-ECROU, M6 x 1, Cl 8

(1) Only for Power Shuttle

Mechanical Version / Pilot Version	B95B

CABINE / COUVERTURES LATÉRALES ET PLANCHER AVANT (POWER SHUTTLE: POWER SHIFT)

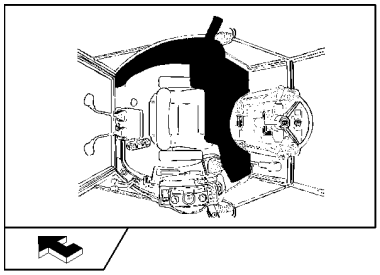

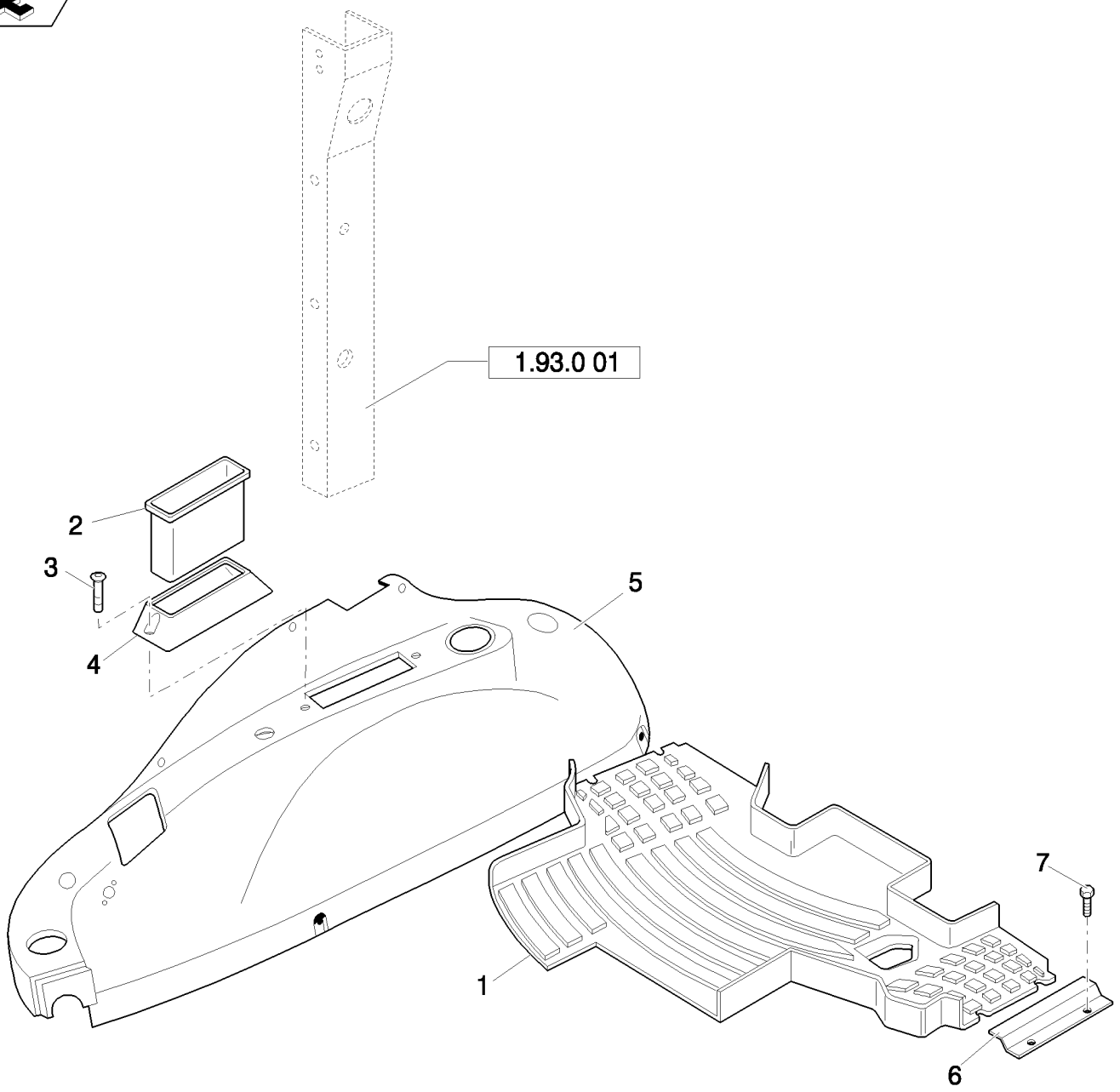

CABINE / COUVERTURES LATÉRALES ET PLANCHER AVANT (POWER SHUTTLE: POWER SHIFT)

REF	FN	PART NUMBER	YR/SN	QTY	DESCRIPTION
1	1	85804867		1	TAPIS DE PLANCHER
1	2	85804865		1	TAPIS DE PLANCHER
2		85801979		1	CONTENEUR
3		13276617		2	VIS, Cross Pan Hd, M6 x 25
4		85801651		1	CARTER
5	3	87362094		1	REVETEMENT
5	4	87362098		1	REVETEMENT
6		85805591		2	BAVOLET DE PORTE
7		14441521		4	BOULON, Hex Soc Flat Hd, M6 x 25, 8.8

(1) Only for Power Shift
(2) Only for Power Shuttle
(3) Only for EU includes B115B (NA)
(4) Except for B115B

Mechanical Version / Pilot Version	B95B

1.93.0	04	p1	03/08

CABINE / CONSOLE ARRIÈRE ET PLANCHER (POWER SHUTTLE: POWER SHIFT)

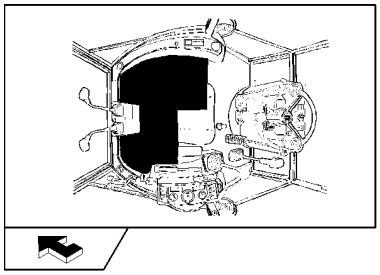

CABINE / CONSOLE ARRIÈRE ET PLANCHER (POWER SHUTTLE: POWER SHIFT)

REF	FN	PART NUMBER	YR/SN	QTY	DESCRIPTION
1		87319801		1	CONSOLE
2		85804863		1	REPOSE-PIEDS
3		10519604		4	RONDELLE, M8 x 17 x 2
4		16043824		4	BOULON, Hex, M8 x 30, 8.8, Full Thd
5		85804864		1	REPOSE-PIEDS
6		85804866		1	TAPIS DE PLANCHER
7		79089592		1	RONDELLE
8		13311217		5	VIS, Cross Oval Hd, M5 x 20
9		4999021		1	JOINT
10		10902624		4	BOULON, Hex, M6 x 25, 8.8, Full Thd
11		12640621		4	RONDELLE, M6 x 25 x 2
12		87319803		2	BOUCHON
13		82001909		1	PASSE-FIL
14		85812080		4	ECROU
15		87408893		1	PANNEAU
16		87323749		1	PATTE FIXATION

Mechanical Version B95B

1.93.0/01	01	p1	04/08

CABINE : REVETEMENT (POWER SHUTTLE, POWER SHIFT)

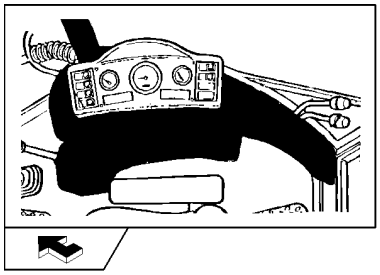

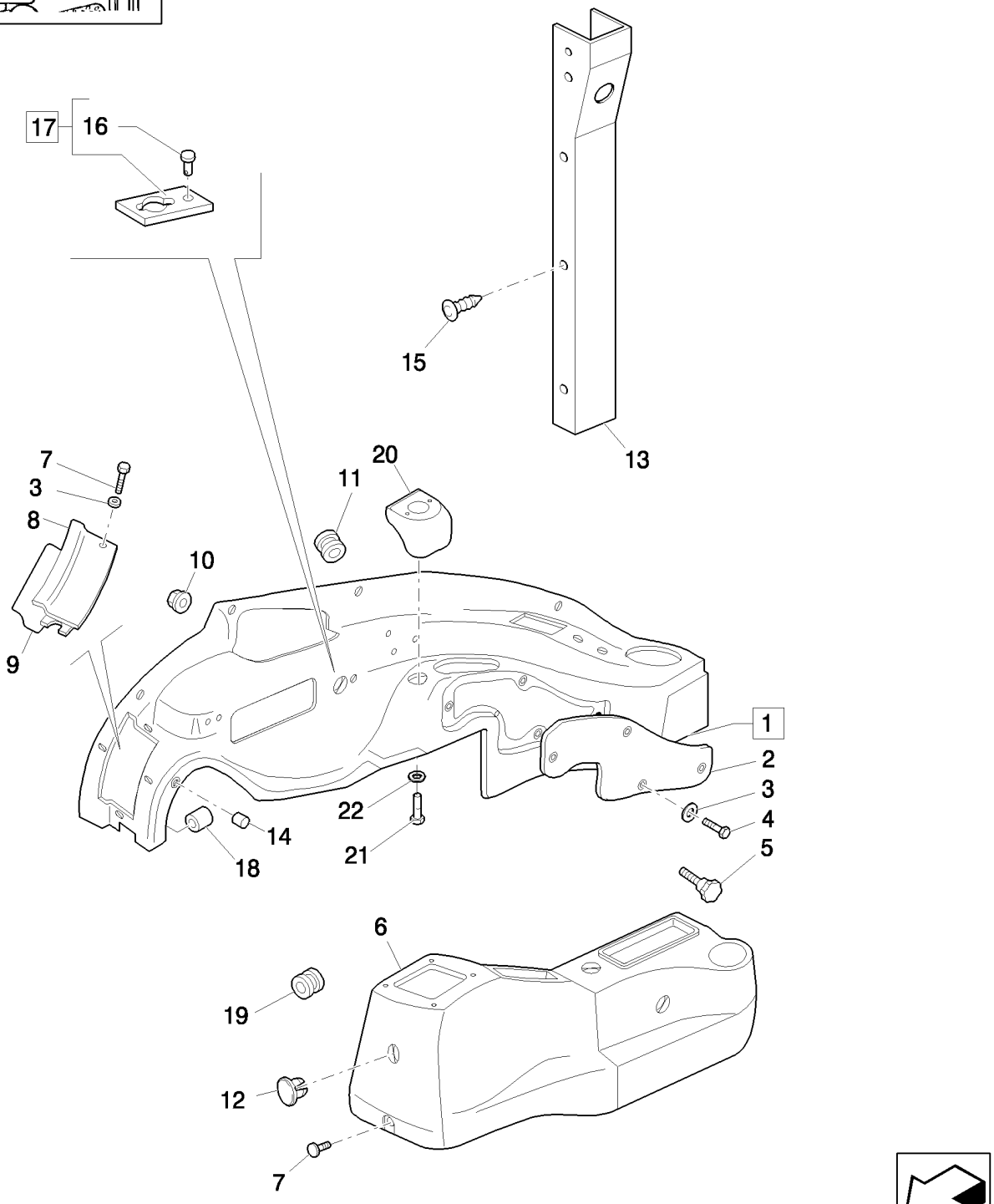

CABINE : REVETEMENT (POWER SHUTTLE, POWER SHIFT)

REF	FN	PART NUMBER	YR/SN	QTY	DESCRIPTION
1	1	87543654		1	REVETEMENT, Assy
1	2	87743160		1	COUVERCLE, Assy
2		85801649		1	REVETEMENT
3		12647701		2	RONDELLE
4		13311217		5	VIS, Cross Oval Hd, M5 x 20
5		85805323		1	POMMEAU
6		87319785		1	REVETEMENT
7		13311017		AR	VIS, Cross Oval Hd, M5 x 16
8		85825191		1	COUVERCLE
9		85806023		1	BANDE D'ETANCHEITE
10		14084814		5	ECROU, M8 x 1.25, Flg
10	3	14059314		5	ECROU, M8
11		10398980		1	PASSE-FIL, 46X5
12		79111815		1	BOUCHON
13		85819285		1	REVETEMENT, RH
14		85805819		4	BAGUE FILETEE
15		81870039		6	ATTACHE
16		10427201		1	RIVET
17		85827548		1	PLAQUE, Assy
18		85804750		6	BAGUE FILETEE
19		87517471		1	BAGUE ISOLANTE
20	4	87540633		1	INSTRUMENTS DE BORD
21	4	13274217		2	VIS, Pan Hd, M5 x 16, 5.8
22	4	12647701		2	RONDELLE

(1) Includes 2, 8, 9, 14, 18
(2) Only for B90B, B90BLR (EU) - B90B (NA)
(3) Only for Power Shift
(4) Except for B90B, B90BLR (EU) - B90B (NA)

Pilot Control Version	B95B

1.93.0/01	02	p1	03/08

CABINE / PLANCHER ET COMPOSANTS (POWER SHUTTLE: POWER SHIFT)

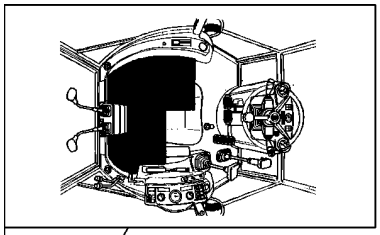

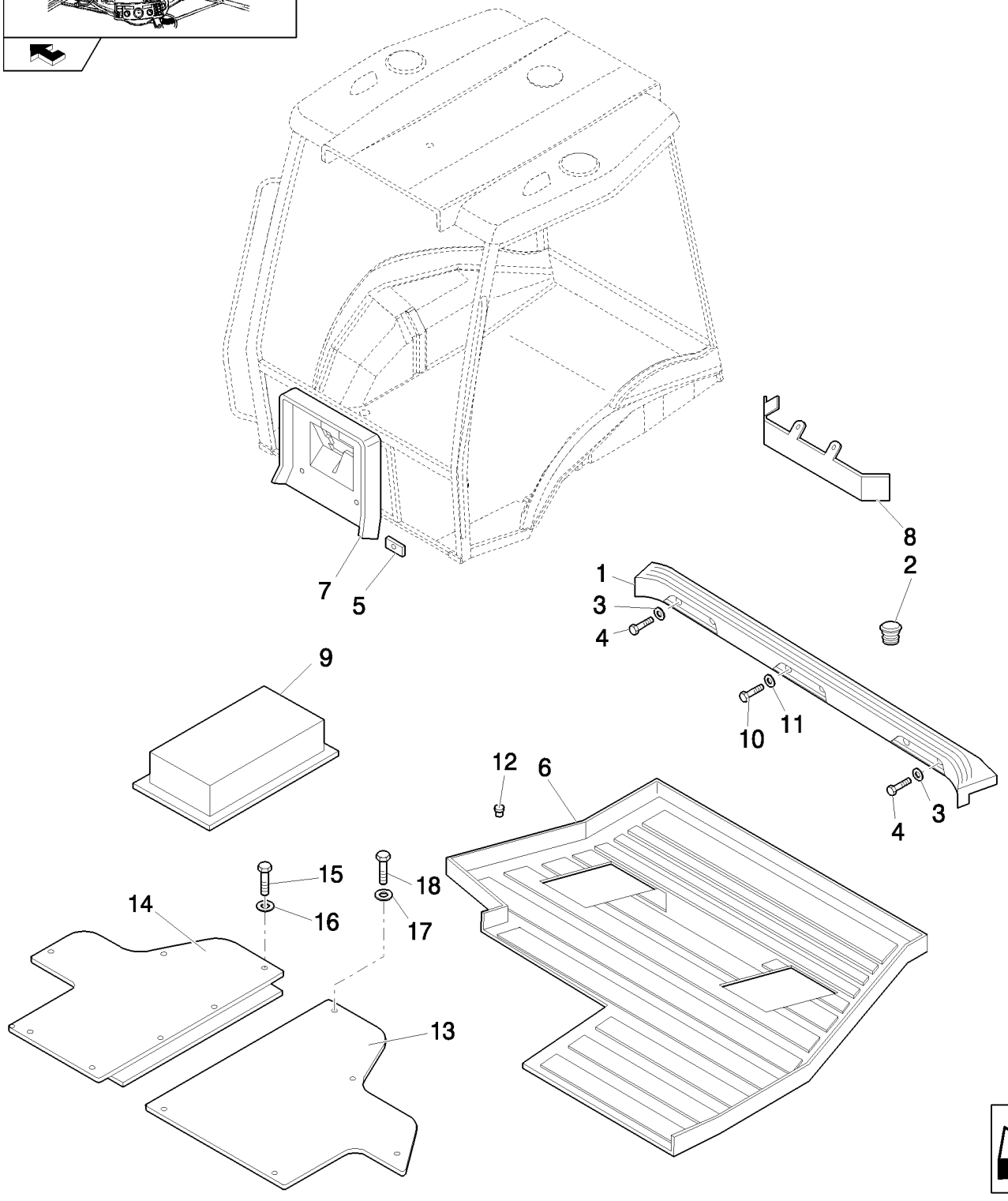

CABINE / PLANCHER ET COMPOSANTS (POWER SHUTTLE: POWER SHIFT)

REF	FN	PART NUMBER	YR/SN	QTY	DESCRIPTION
1		87410385		1	PANNEAU
2		82001909		1	PASSE-FIL
3		10519604		4	RONDELLE, M8 x 17 x 2
4		16043824		4	BOULON, Hex, M8 x 30, 8.8, Full Thd
5		85812080		1	ECROU
6		87410108		1	TAPIS
7		87408893		1	PANNEAU
8		87323749		10	PATTE FIXATION
9		4999021		1	JOINT
10		10902624		4	BOULON, Hex, M6 x 25, 8.8, Full Thd
11		12640621		4	RONDELLE, M6 x 25 x 2
12		87319803		10	BOUCHON
13		87426546		1	COUVERCLE SUPERIEUR CPT.
14		87426550		1	COUVERCLE SUPERIEUR CPT.
15		10902524		10	BOULON, Hex, M6 x 22, 8.8, Full Thd
16		11193274		10	RONDELLE BELLEVILLE, Belleville, M6.4
17		85801991		5	RONDELLE
18		13311217		5	VIS, Cross Oval Hd, M5 x 20

1.93.0/02	01	p1	04/08

COUVERTURE DROITE, CONSOLE ARRIÈRE ROPS (CENTER PIVOT) - NA

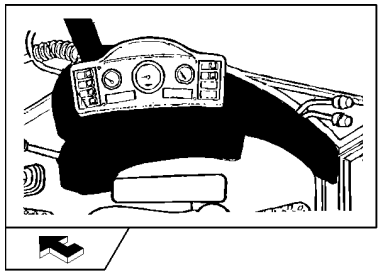

COUVERTURE DROITE, CONSOLE ARRIÈRE ROPS (CENTER PIVOT) - NA

REF	FN	PART NUMBER	YR/SN	QTY	DESCRIPTION
1	1, 2	87543716		1	REVETEMENT, Assy
1	3, 1	87745631		1	COUVERCLE, Assy
1	4, 1	87743162		1	COUVERCLE, Assy
2		85801649		1	REVETEMENT
3		85801991		AR	RONDELLE
4		13311217		5	VIS, Cross Oval Hd, M5 x 20
5		85805323		1	POMMEAU
6		85805803		1	PORTE-OBJETS
7		16043424		4	VIS, Hex, M8 x 20, 8.8, Full Thd
8		85825191		1	COUVERCLE, Fuse Panel
9		85806023		1	BANDE D'ETANCHEITE
10		14084814		5	ECROU, M8 x 1.25, Flg
11		85805308		1	JOINT
12		79111815		1	BOUCHON
13		79089592		2	RONDELLE, D=24
14		13311017		4	VIS, Cross Oval Hd, M5 x 16
15		85812081		1	PROFILE CAOUTCHOUC
16		10427201		1	RIVET
17		85827548		1	PLAQUE, Assy
18		85804750		6	BAGUE FILETEE
19	2	85827817		1	BLISTER
20		85808460		1	BOUCHON
21		14441521		2	BOULON, Hex Soc Flat Hd, M6 x 25, 8.8
22		11193974		4	RONDELLE BELLEVILLE, Belleville, M8.4
23		79111978		1	BOUCHON
24		82001909		1	PASSE-FIL
25		4999021		1	JOINT
26	2	87540633		1	INSTRUMENTS DE BORD
27	2	12647701		2	RONDELLE
28	2	13274217		2	VIS, Pan Hd, M5 x 16, 5.8
29		85805819		4	BAGUE FILETEE

(1) Includes 2, 8, 9, 18, 29
(2) Only for B95B, B95BLR, B95BTC, B110B
(3) Only for B90B Mechanical Version
(4) Only for B90B Pilot Version

1.93.0/02	01	p2	04/08

COUVERTURE DROITE, CONSOLE ARRIÈRE ROPS (CENTER PIVOT) - NA

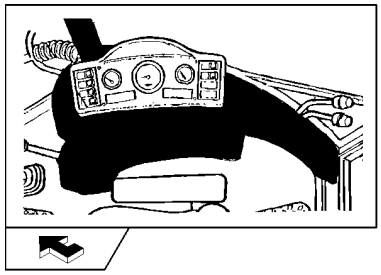

COUVERTURE DROITE, CONSOLE ARRIÈRE ROPS (CENTER PIVOT) - NA

REF	FN	PART NUMBER	YR/SN	QTY	DESCRIPTION
30		85819016		1	PROFILE CAOUTCHOUC

1.93.0/03		p1	03/08

REVÊTEMENTS MACHINES (ROPS) - NA

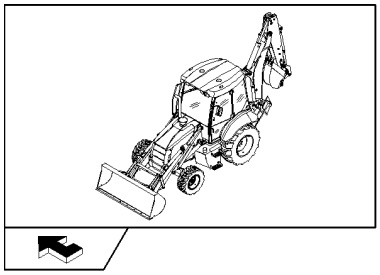

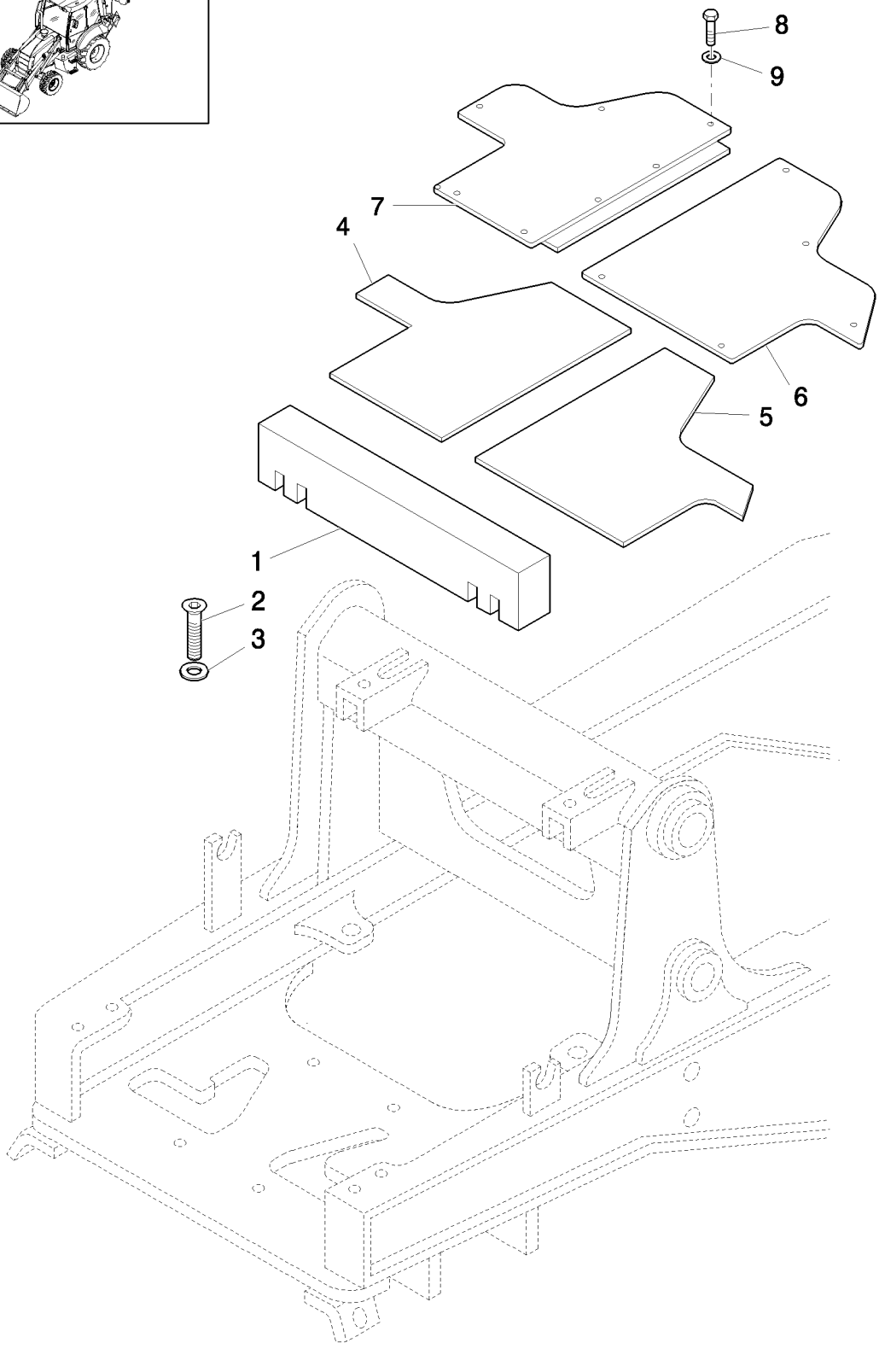

REVÊTEMENTS MACHINES (ROPS) - NA

REF	FN	PART NUMBER	YR/SN	QTY	DESCRIPTION
1		85817287		1	JOINT
2		13311217		5	VIS, Cross Oval Hd, M5 x 20
3		85801991		5	RONDELLE
4	1	87442379		1	TAPIS
5	1	87442378		1	TAPIS
6	1	87426546		1	COUVERCLE SUPERIEUR CPT.
7	1	87426550		1	COUVERCLE SUPERIEUR CPT., RH
8	1	10902524		10	BOULON, Hex, M6 x 22, 8.8, Full Thd
9	1	11193274		10	RONDELLE BELLEVILLE, Belleville, M6.4

(1) Only for Pilot Version

RETROVISEUR - RIDEAU PARE-SOLEIL

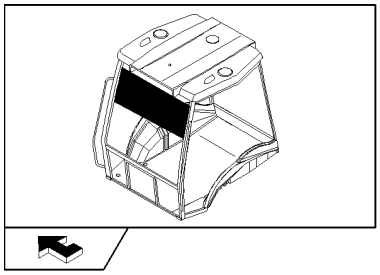

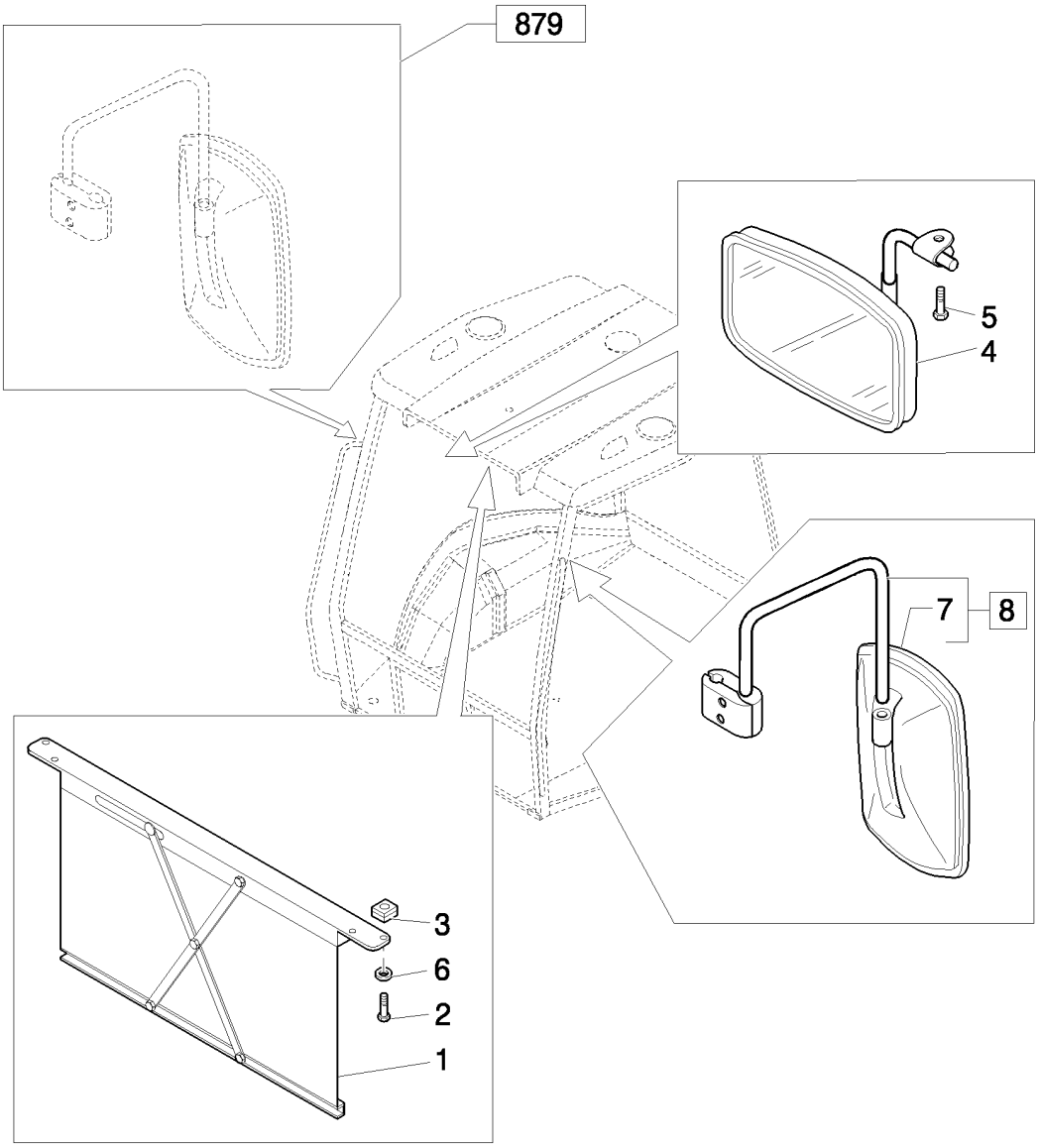

RETROVISEUR - RIDEAU PARE-SOLEIL

REF	FN	PART NUMBER	YR/SN	QTY	DESCRIPTION
1		5176441		1	TOILE PARE-SOLEIL
2		14303324		4	VIS, Hex Soc Hd, M4 x 20, 8.8, Full Thd
3		14197790		4	ECROU, M4 x .7, Cage
4		87665407		1	RÉTROVISEUR
5		13313417		1	VIS, Cross Oval Hd, M6 x 25
6		12642821		4	RONDELLE, M4 x 12 x 1
7	1	85820138		1	RÉTROVISEUR
8	1	85820139		1	RETROVISEUR, GCH, Assy

(1) Only for CAB

1.93.5	01	p1	04/08

CABINE / TABLEAU DE BORD AVANT

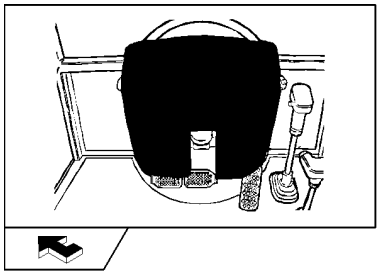

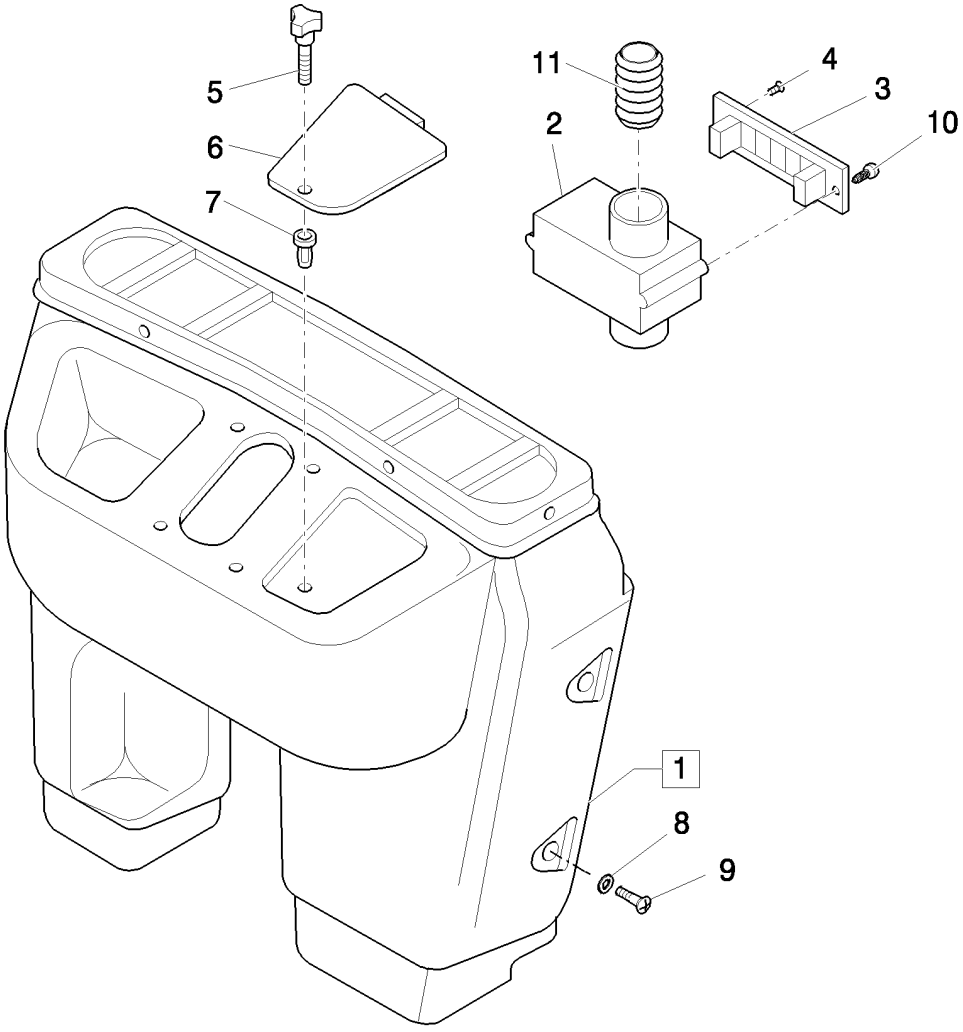

CABINE / TABLEAU DE BORD AVANT

REF	FN	PART NUMBER	YR/SN	QTY	DESCRIPTION
1	1, 2, 3	85819289		1	TABLEAU, Assy
1	1, 4	85819291		1	TABLEAU, Assy
2		85819567		2	CONDUIT D'AIR
3		85819454		2	DIFFUSEUR
4		14440327		4	VIS, Hex Soc Flat Hd, M4 x 20, 8.8
5		85805323		1	POMMEAU, M5
6		85806089		1	COUVERCLE
7		85804750		5	BAGUE FILETEE, M5
8		79089592		AR	RONDELLE, D=24
9		79105220		AR	FREIN-D'ECROU, Cross Oval Csk Hd, M6 x 20
10		14568887		4	ATTACHE, 8X20
11		85819592		2	MANCHON

(1) Includes 2 - 7
(2) Only for B90B, B95B, B95BLR, B95BTC, B110B (NA)
(3) Only for B90B, B90BLR, B100B, B100BLR, B110B (EU)
(4) Only for B115B

CABINE / DISPOSITIFS DE SERRAGE TABLEAU DE BORD ET GARNITURES

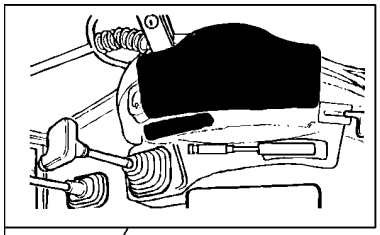

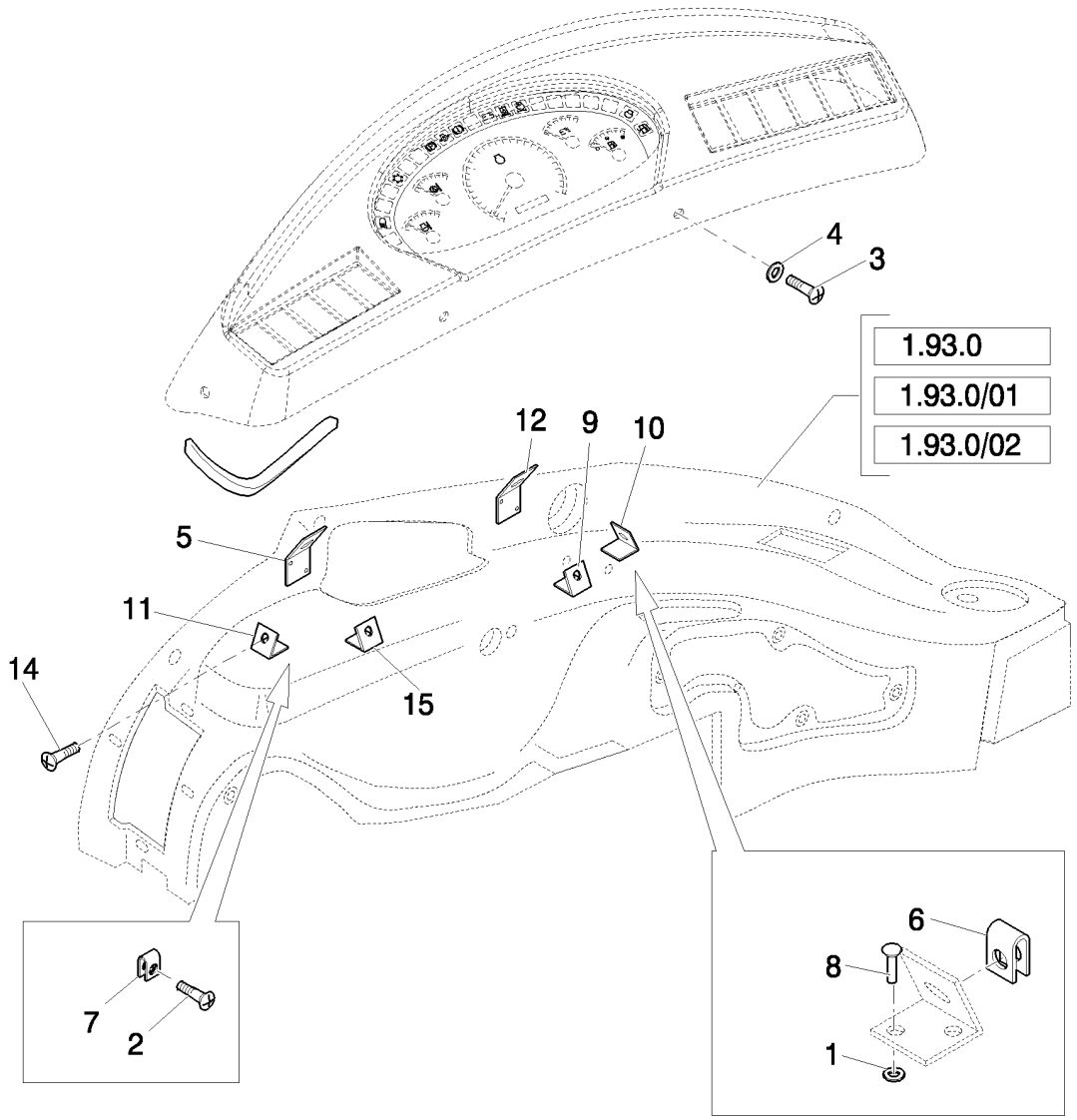

CABINE / DISPOSITIFS DE SERRAGE TABLEAU DE BORD ET GARNITURES

REF	FN	PART NUMBER	YR/SN	QTY	DESCRIPTION
1		12642804		12	RONDELLE, M4 x 12 x 1
2		13311017		4	VIS, Cross Oval Hd, M5 x 16, CAB
3		15693507		AR	VIS AUTO-TARAUDEUSE, Cross Oval Hd, M4.8 x 22
4		85801991		AR	RONDELLE
5	1	87552670		1	JOINT
5	2	85824393		1	JOINT, CAOUTCHOUC
6		14189176		6	ECROU, J, #10
7		14372671		2	ECROU, M4.2, U, 12.4mm long, CAB
8		14642191		12	RIVET
9		85802142		2	PATTE FIXATION
10		85802143		1	PATTE FIXATION
11		85802144		1	PATTE FIXATION
12		85802145		1	PATTE FIXATION
13	1	87551537		1	PATTE FIXATION
13	2	85802146		1	PATTE FIXATION
14		15910607		2	VIS
15	2	85802141		1	PATTE FIXATION

(1) Except for B90B, B90BLR
(2) Only for B90B, B90BLR

CABINE-CHASSIS DE SECURITE / TABLEAU - ROPS (POWER SHUTTLE) - NA

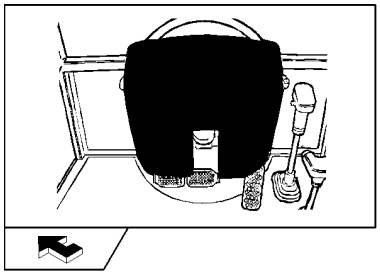

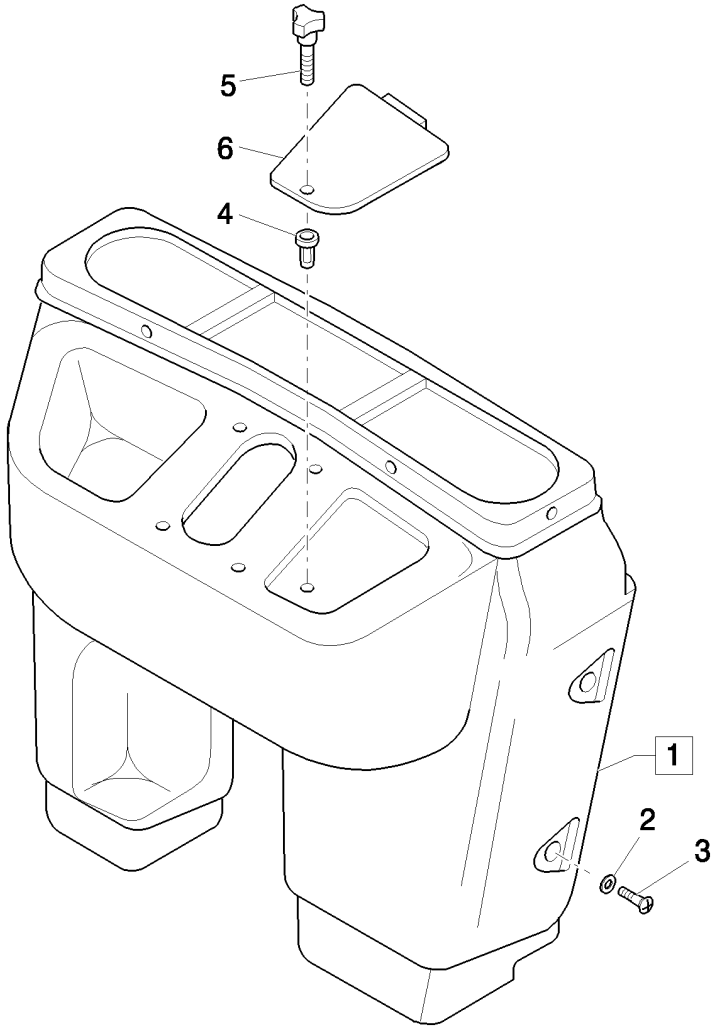

CABINE-CHASSIS DE SECURITE / TABLEAU - ROPS (POWER SHUTTLE) - NA

REF	FN	PART NUMBER	YR/SN	QTY	DESCRIPTION
1	1	85819407		1	TABLEAU, Assy, ROPS
2		79089592		5	RONDELLE, D=24
3		13311214		4	VIS, Cross Oval Hd, M5 x 20, M6X20
4		85804750		5	BAGUE FILETEE, M5
5		85805323		1	POMMEAU, M5
6		85806089		1	COUVERCLE

(1) Includes 4 - 6

JOINT ET ARRETS CONSOLE LATERALE DROITE - ROPS (POWER SHUTTLE) - NA

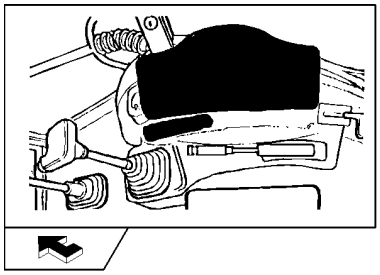

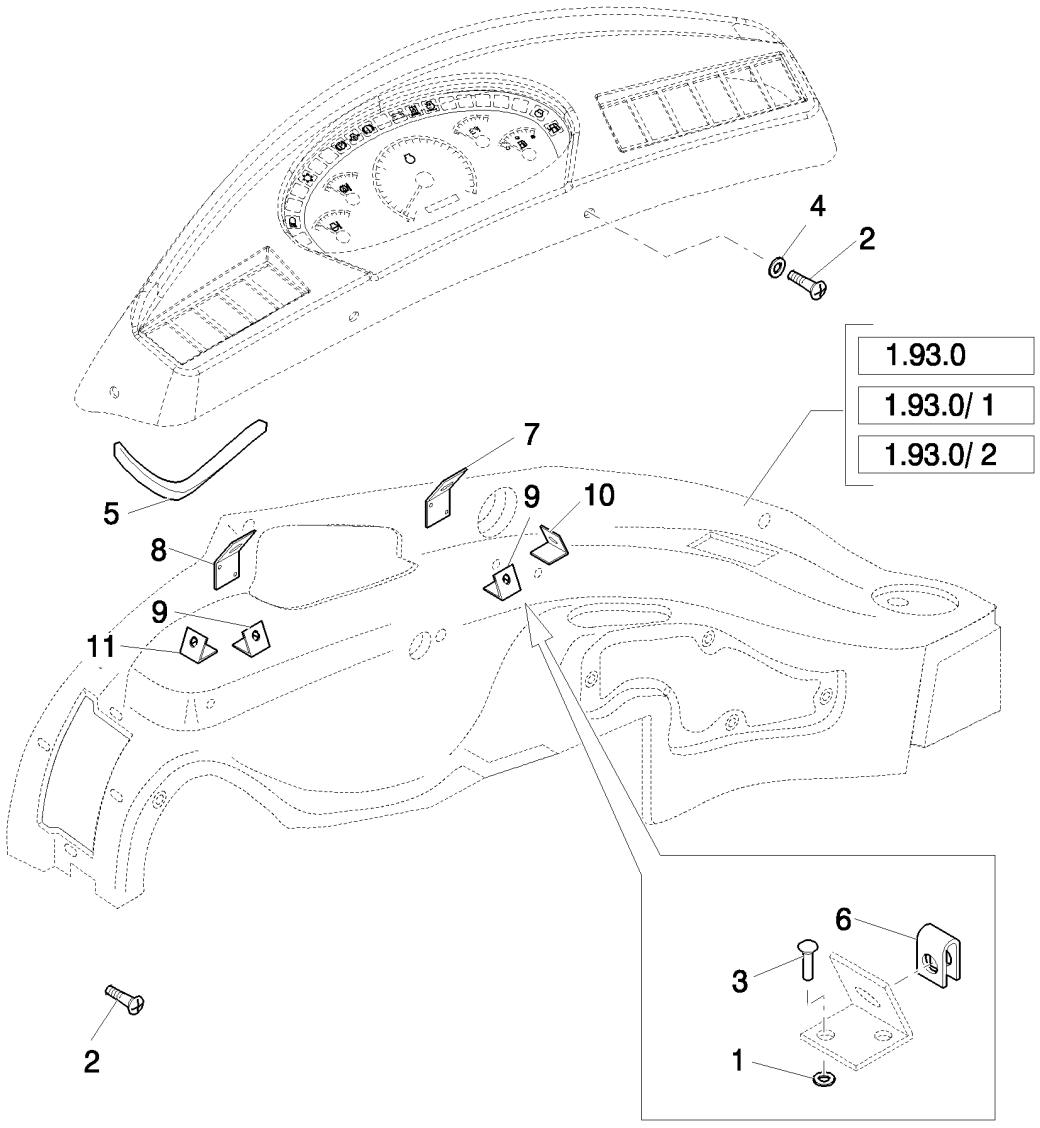

JOINT ET ARRETS CONSOLE LATERALE DROITE - ROPS (POWER SHUTTLE) - NA

REF	FN	PART NUMBER	YR/SN	QTY	DESCRIPTION
1		12642804		12	RONDELLE, M4 x 12 x 1
2		15693507		AR	VIS AUTO-TARAUDEUSE, Cross Oval Hd, M4.8 x 22
3		14642191		12	RIVET
4		85801991		AR	RONDELLE
5		87552670		1	JOINT
6		14189176		6	ECROU, J, #10
7		85802145		1	PATTE FIXATION
8		87551537		1	PATTE FIXATION
9		85802142		2	PATTE FIXATION
10		85802143		1	PATTE FIXATION
11		85802144		1	PATTE FIXATION

RETROVISEUR INTERIEUR (POWER SHUTTLE) ROPS

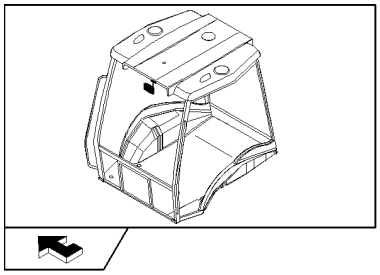

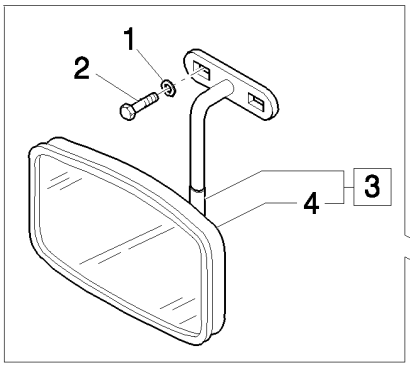

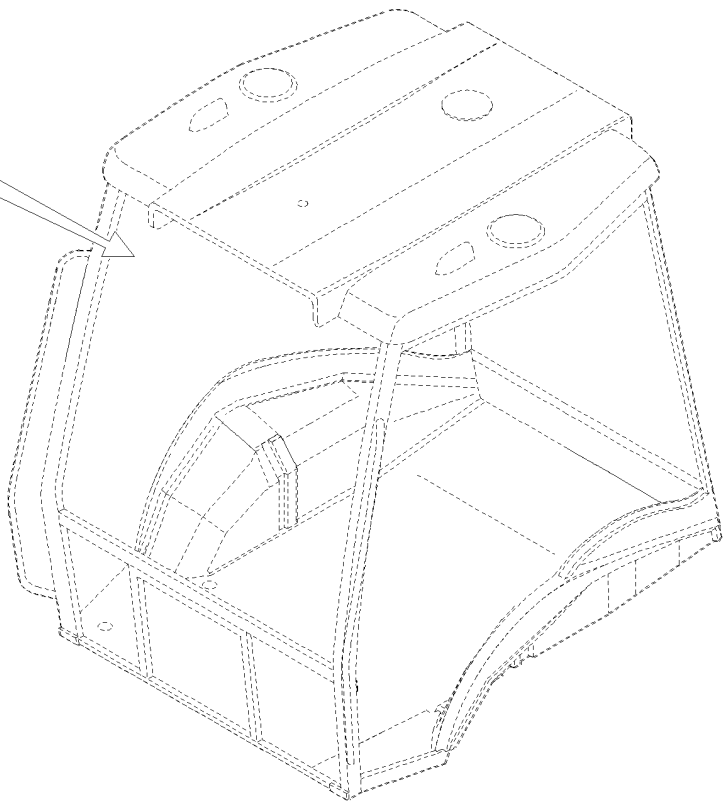

RETROVISEUR INTERIEUR (POWER SHUTTLE) ROPS

REF	FN	PART NUMBER	YR/SN	QTY	DESCRIPTION
1		11193274		2	RONDELLE BELLEVILLE, Belleville, M6.4
2		10902424		2	BOULON, Hex, M6 x 20, 8.8, Full Thd
3		85817685		1	RÉTROVISEUR, Assy
4		85817686		1	RÉTROVISEUR

CABINE / ROPS / TOIT ET COUVERTURE INTERNE - NA

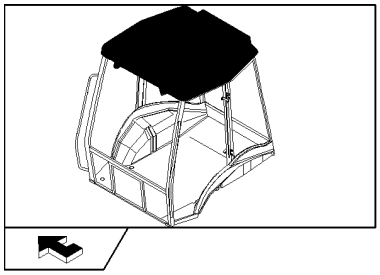

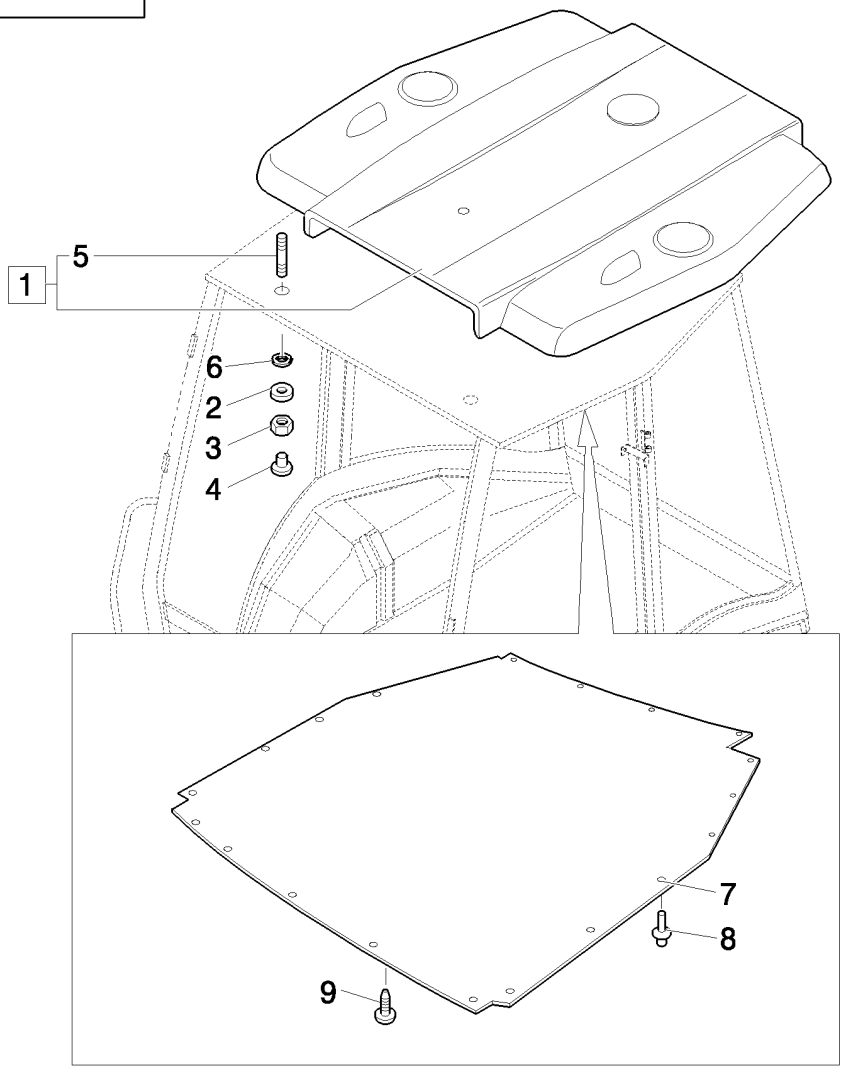

CABINE / ROPS / TOIT ET COUVERTURE INTERNE - NA

REF	FN	PART NUMBER	YR/SN	QTY	DESCRIPTION
1	1	87349058		1	TOIT, Assy
1	2	87349055		1	TOIT, Assy
2		12647004		8	RONDELLE, M8 x 25 x 2.5
3		16104111		8	CONTRE-ECROU, M8 x 1.25, Cl 8
4		87350247		8	BOUCHON
5		13517021		8	GOUJON
6		85801801		8	JOINT ANNULAIRE
7	2	87319727		1	REVETEMENT
8	2	5162852		21	ATTACHE
9	2	85805777		1	BOUCHON

(1) Only for ROPS
(2) Only for CAB

TUYAUTERIES FLEXIBLES EAU DE CHAUFFAGE

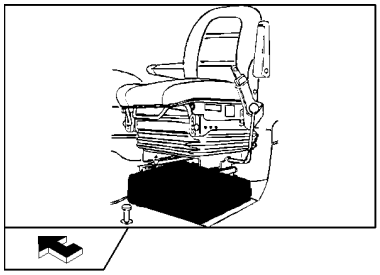

TUYAUTERIES FLEXIBLES EAU DE CHAUFFAGE

REF	FN	PART NUMBER	YR/SN	QTY	DESCRIPTION
1		87324991		1	TUYAU FLEXIBLE
2		87553661		1	FLEXIBLE
3		87550746		1	RACCORD
4		47048896		1	SOUPAPE HYDRAULIQUE
5		85803079		4	BRIDE, FLEXIBLE
6		85802890		1	BRIDE
7		87567356		1	BRIDE
8		47044673		1	RONDELLE
9		47048451		4	SERRE-CABLE, M8 x 384
10		11112221		1	BOULON, Hex, M12 x 25, 8.8, Full Thd

1.95.0	01	p1	04/08

CABINE / ROPS : PEDAL DE FREIN

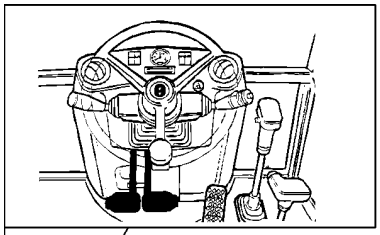

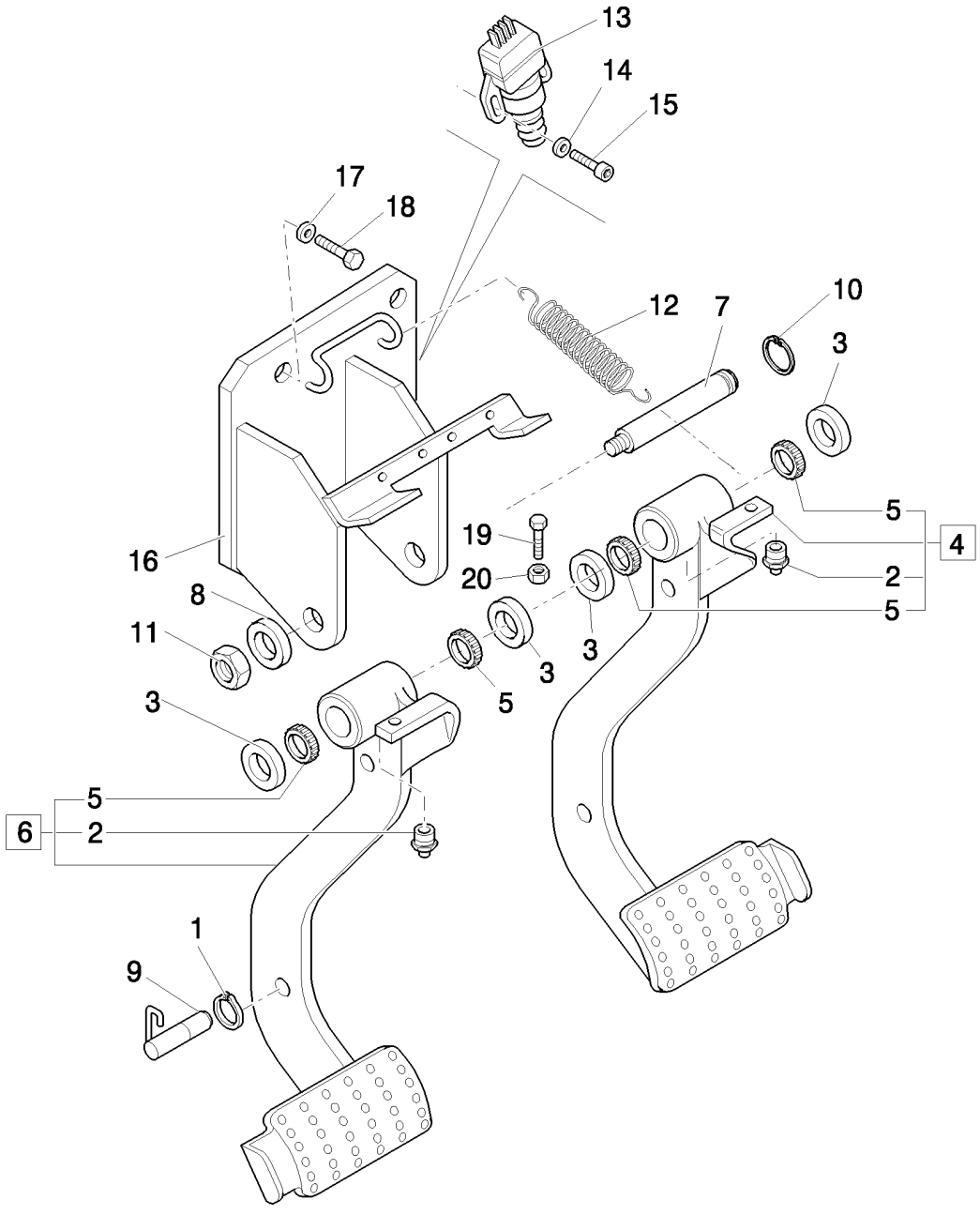

CABINE / ROPS : PEDAL DE FREIN

REF	FN	PART NUMBER	YR/SN	QTY	DESCRIPTION
1		11088176		1	CIRCLIP, M11
2		13407214		2	GRAISSEUR
3		5148062		4	RONDELLE
4		85805285		1	PEDALE, Assy, RH
5		4983992		4	ROULEMENT A AIGUILLES
6		85805283		1	PEDALE, Assy, LH
7		85801860		1	AXE
8		10517274		1	RONDELLE FREIN
9		87517988		1	BLOC
10		11067376		1	ANNEAU D'ARRÊT, M25, Ext
11		12164114		1	ECROU, M16 x 1.5
12		5153180		1	RESSORT
13		82026949		2	CONTACTEUR, Brake
14		12642821		4	RONDELLE, M4 x 12 x 1, W/Cab
15		14303324		4	VIS, Hex Soc Hd, M4 x 20, 8.8, Full Thd, W/Cab
16		85805277		1	SUPPORT
17		11190574		4	RONDELLE BELLEVILLE, Belleville, M10.5
18		15970524		4	VIS, Hex, M10 x 1.25 x 20, 8.8, Full Thd
19		16043921		2	VIS, M8 x 1,25 x 35
20		11701621		2	ECROU, M8, Cl 10

CABINE / ROPS / POMPE FREIN

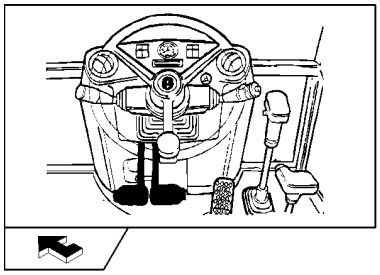

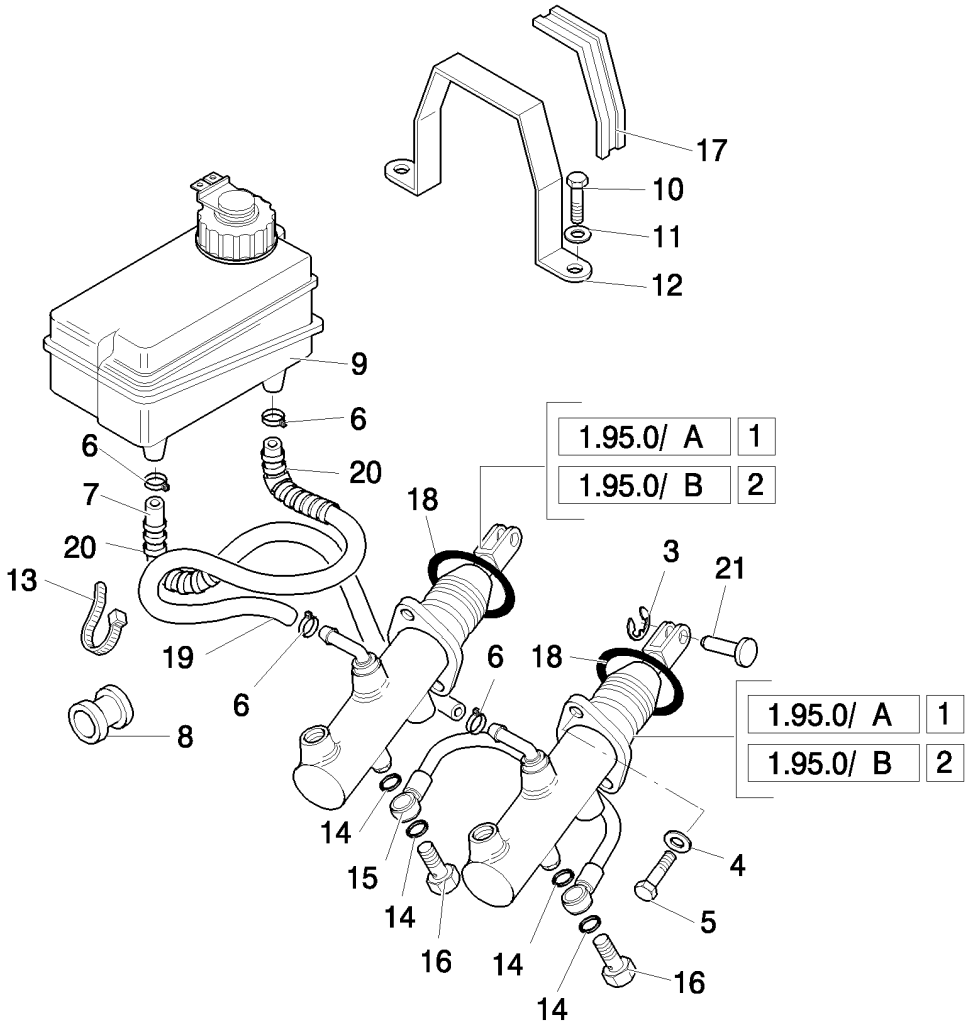

CABINE / ROPS / POMPE FREIN

REF	FN	PART NUMBER	YR/SN	QTY	DESCRIPTION
1	1	87398198		2	MAITRE CYLINDRE DE ROUE, Assy
2	2	85824114		2	POMPE HYDRAULIQUE, Assy
3		11064176		2	CLIP
4		11193874		4	RONDELLE BELLEVILLE, Belleville, M8.4
5		14306324		4	VIS, Hex Soc Hd, M8 x 20, 8.8
6		13423271		4	COLLIER
7		85819914		1	TUBE
8		85801941		2	AMORTISSEUR
9		82003369		1	RESERVOIR, LIQUIDE FREIN
10		10902624		2	BOULON, Hex, M6 x 25, 8.8, Full Thd
11		11193274		2	RONDELLE BELLEVILLE, Belleville, M6.4
12		85801092		1	PATTE FIXATION
13		14560187		1	SERRE-CABLE, 178mm lg, L=203.2 mm
14		2854292		8	JOINT-CIRCULAIRE
15		5155701		1	TUBE
16		5155703		2	VIS-RACCORD, M12x1.25x22
17		85801093		1	JOINT ADHESIF
18	3	13399076		2	CIRCLIP
19		85819915		1	TUBE
20		87302705		2	GAINE SOUPLE
21		5155381		2	AXE

(1) Only for B90B, B90BLR, B100B, B100BLR, B110B (EU) - B90B, B95B, B95BLR, B110B (NA)
(2) Only for B115B (EU) - B115B (NA)
(3) Only for CAB

CABINE / ROPS / TUYAUX CIRCUIT DE FREINAGE

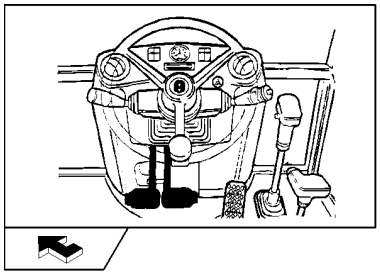

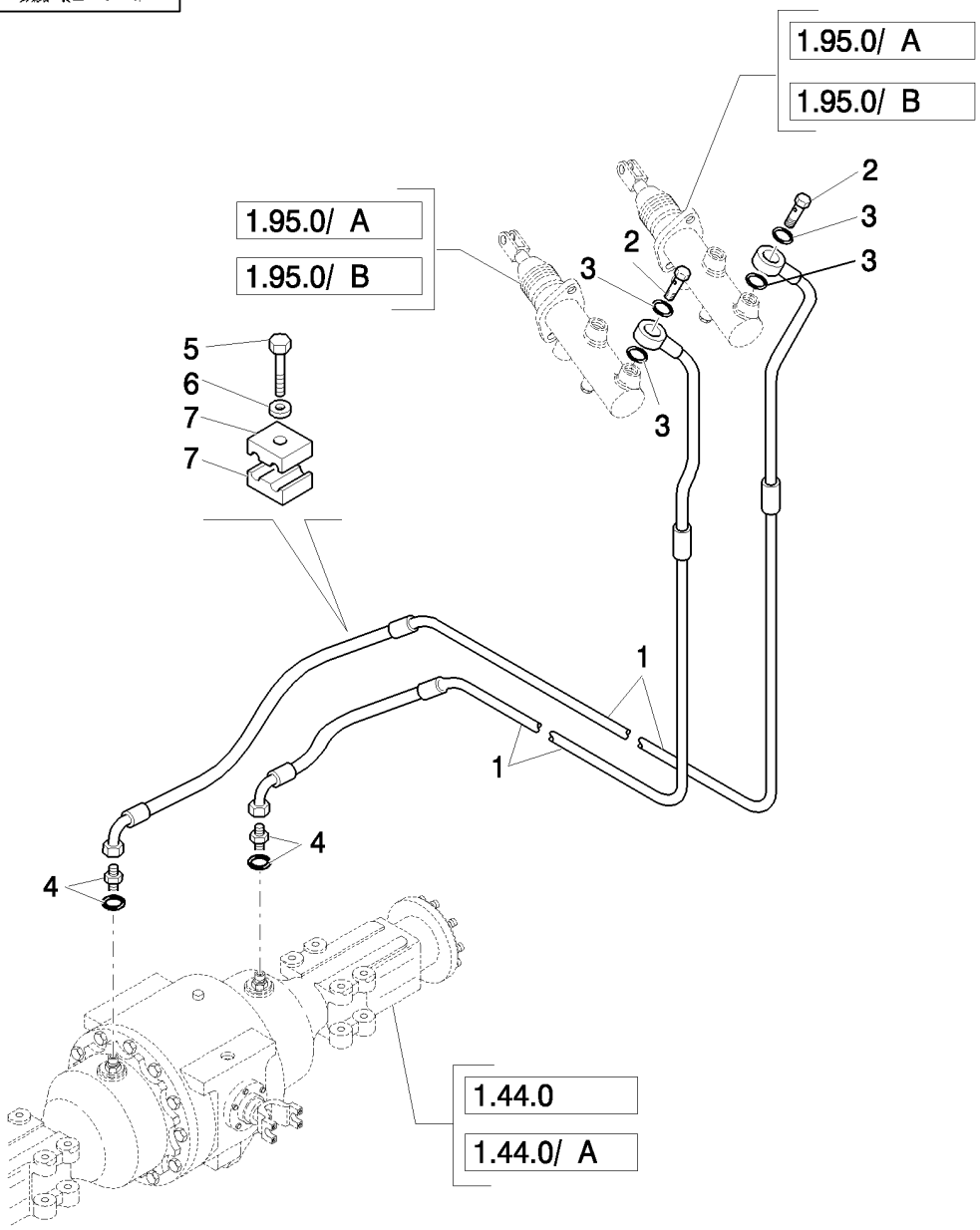

CABINE / ROPS / TUYAUX CIRCUIT DE FREINAGE

REF	FN	PART NUMBER	YR/SN	QTY	DESCRIPTION
1		85819177		2	TUYAUTERIE DE FREIN
2		5155703		2	VIS-RACCORD
3		2854292		4	JOINT-CIRCULAIRE
4	1	85803312		2	RACCORD
4	2	85805655		2	COUDE
5		15212721		2	BOULON, Hex, M6 x 40, 8.8, Full Thd
6		14447021		2	RONDELLE, M5 x 15 x 1
7		85805548		4	CLIP

(1) Only for B90B, B90BLR, B100B, B100BLR, BB110B (EU) - B90B, B95B, B95BLR, B110B (NA)
(2) Only for B115B (EU) - B115B (NA)

CABINE / ROPS / VÉRIN POMPE FREIN

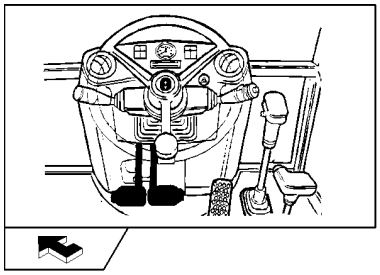

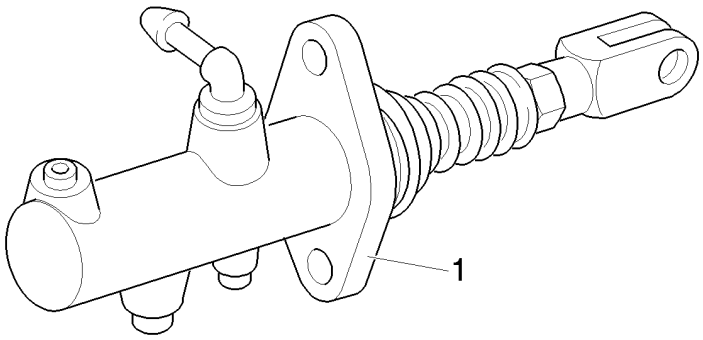

CABINE / ROPS / VÉRIN POMPE FREIN

REF	FN	PART NUMBER	YR/SN	QTY	DESCRIPTION
1		87398198		1	MAITRE CYLINDRE DE ROUE

CABINE / ROPS / LEVIER FREIN DE PARCAGE ET CÂBLE DE COMMANDE

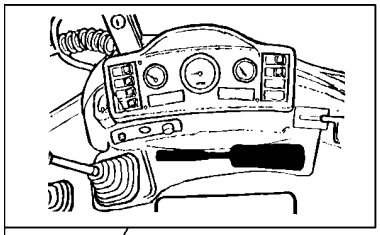

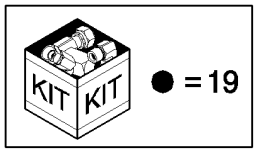

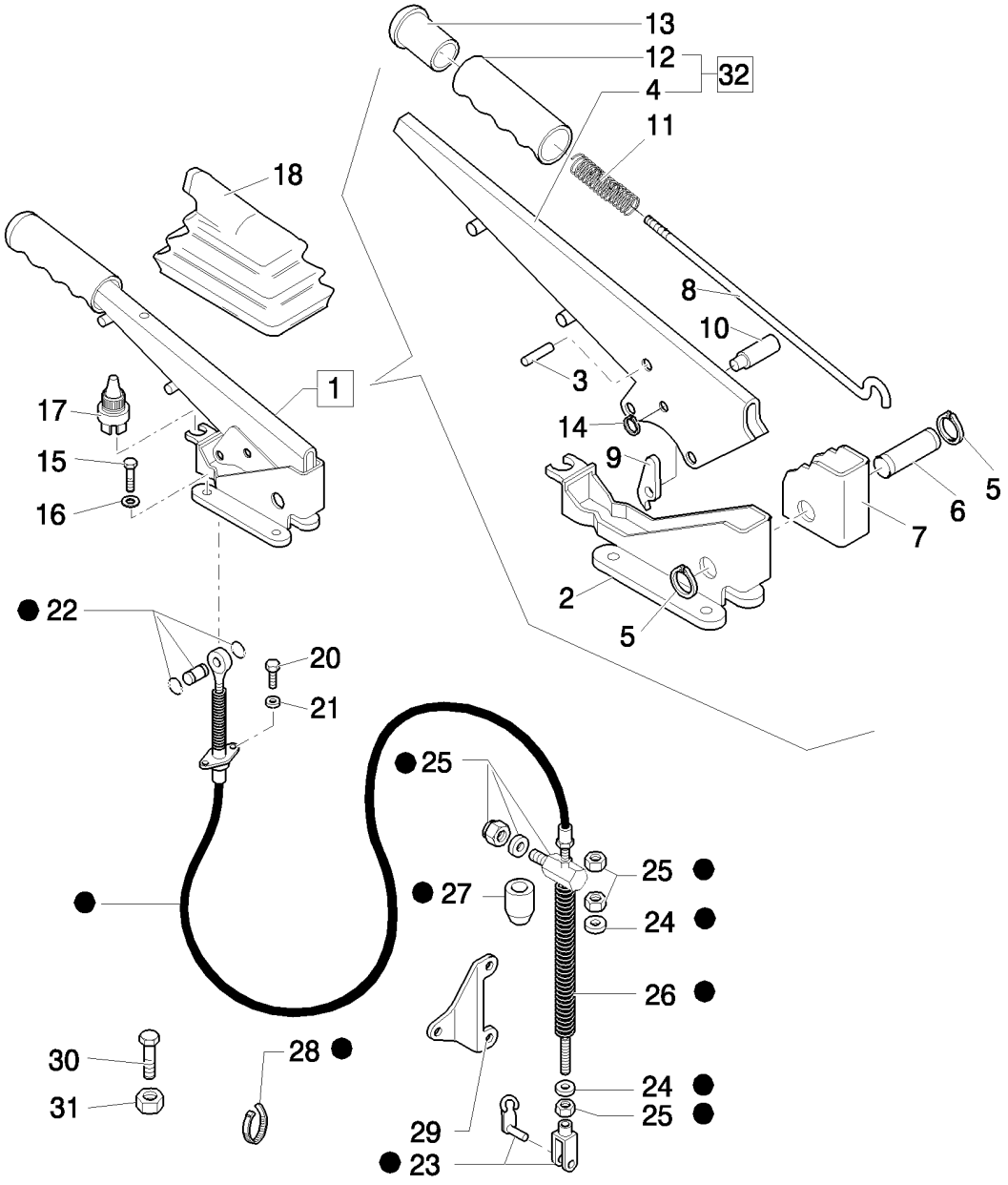

CABINE / ROPS / LEVIER FREIN DE PARCAGE ET CÂBLE DE COMMANDE

REF	FN	PART NUMBER	YR/SN	QTY	DESCRIPTION
1		85827832		1	LEVIER, Assy
2		85805441		1	SUPPORT
3		4985127		1	RIVET
4		85805440		1	LEVIER
5		13400776		2	JONC D'ARRET
6		4988275		1	AXE
7		5110153		1	ROCHET
8		85827833		1	JAUGE DE NIVEAU
9		5110155		1	CLIQUET
10		5131437		1	AXE
11		5105729		1	RESSORT
12		86021837		1	POMMEAU
13		4985122		1	BOUTON
14		11065476		1	ANNEAU D'ARRÊT, M6, Ext
15		14306424		4	VIS, Hex Soc Hd, M8 x 25, 8.8
16		11193874		4	RONDELLE BELLEVILLE, Belleville, M8.4
17		85816770		1	COMMUTATEUR COMPLET
18		5106733		1	COIFFE
19	1	85815536		1	CABLE, Assy
19	2	85815537		1	CABLE, Assy
20		10978024		2	BOULON, Hex, M5 x 20, 8.8, Full Thd
21		10615374		2	RONDELLE
22		85815550		1	ROTULE
23		85815556		1	FOURCHETTE
24		85815555		1	RONDELLE, 22 x 10.2 x 2
25		85815552		1	RACCORD REGLABLE
26	3	85815554		1	RESSORT
26	2	85821173		1	RESSORT
27		85821172		1	JOINT
28		85815549		1	SERRE-CABLE
29	4	85826099		1	SUPPORT

(1) Only for B90B, B90BLR, B100B, B100BLR, B110B (EU) - B90B, B95B, B95BLR, B95BTC, B110B (NA)
(2) Only for B115B (EU) - B115B (NA)
(3) Only for B90B, B90BLR, B100B, B100BLR, B110B (EU) - B90B, B95B, B95BLR, B110B (NA)
(4) Only for Power Shuttle

CABINE / ROPS / LEVIER FREIN DE PARCAGE ET CÂBLE DE COMMANDE

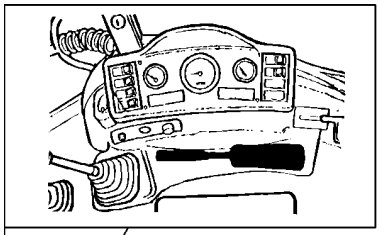

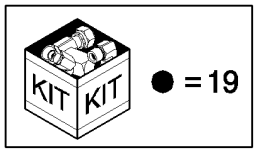

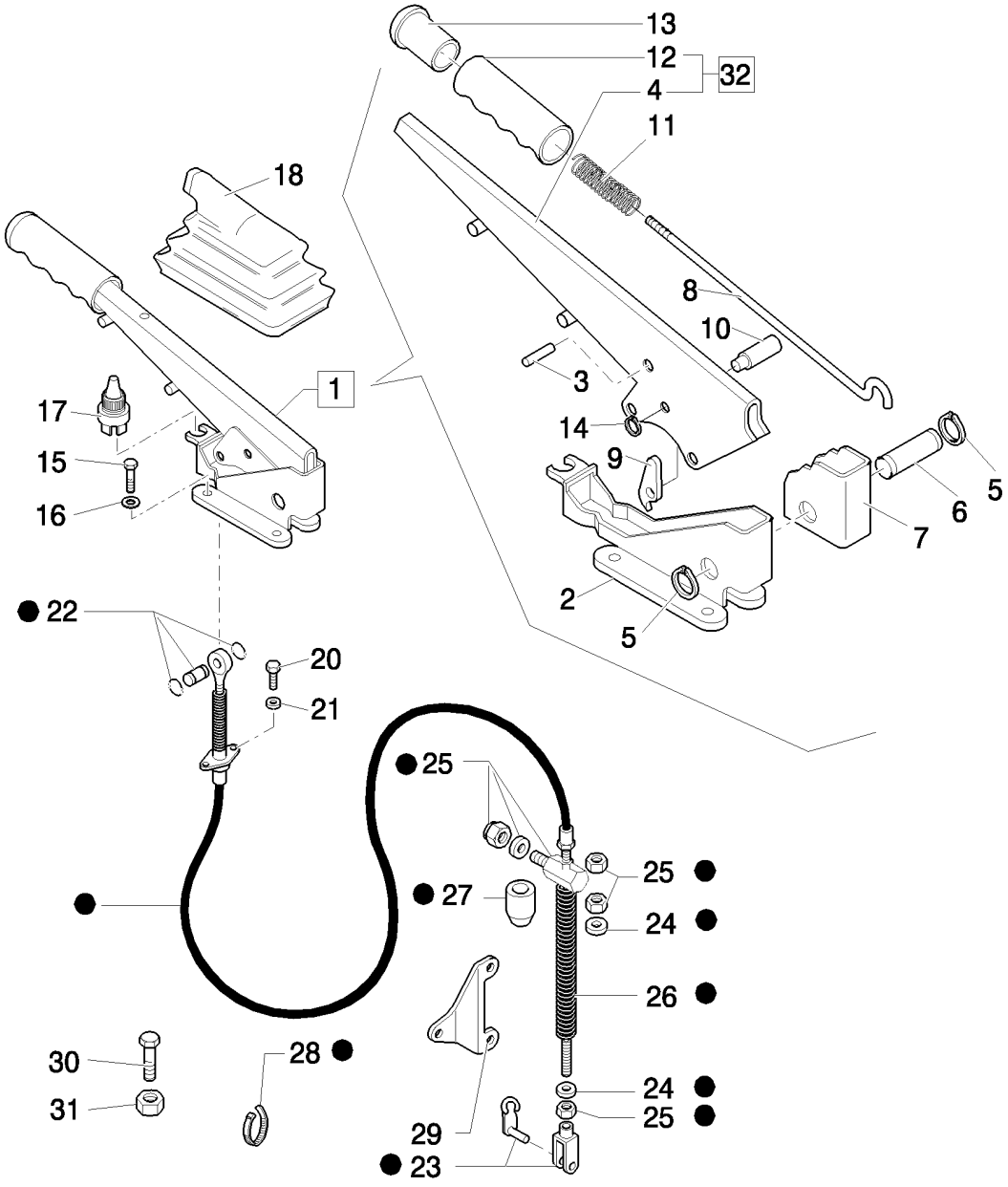

CABINE / ROPS / LEVIER FREIN DE PARCAGE ET CÂBLE DE COMMANDE

REF	FN	PART NUMBER	YR/SN	QTY	DESCRIPTION
29	1	85805251		1	SUPPORT
30		13272319		1	VIS
31		10794011		1	ECROU, M4, Cl 8
32		85827834		1	LEVIER, Assy

(1) Only for Power Shift

COMMANDE DU TRANSPORT LOCK - NA

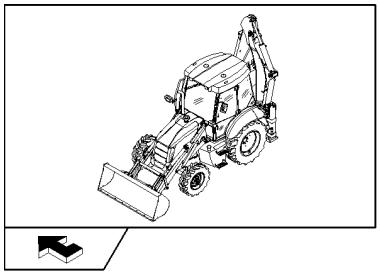

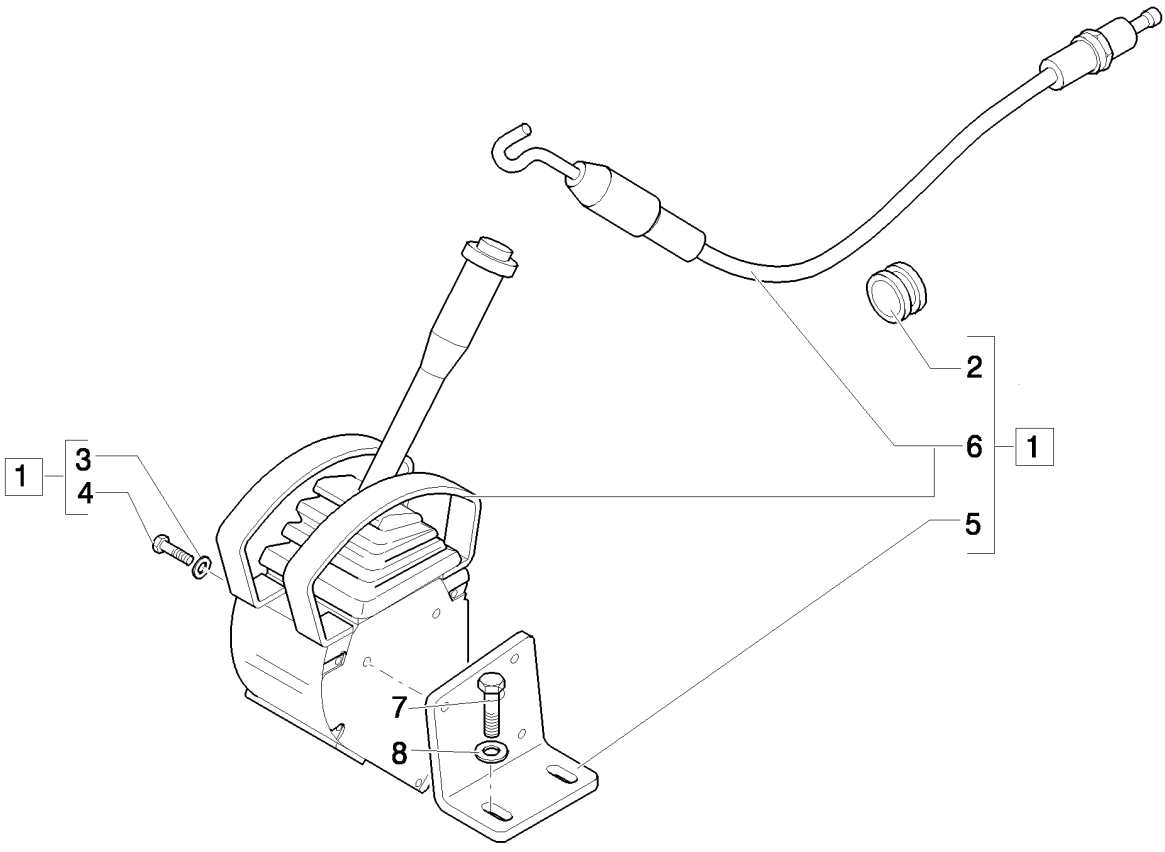

COMMANDE DU TRANSPORT LOCK - NA

REF	FN	PART NUMBER	YR/SN	QTY	DESCRIPTION
1	1	87324535		1	LEVIER, Assy, TRANSPORT LOCK; Not Serviced As An Assembly, Order Components
1	2	87324490		1	LEVIER, Assy
2		10398680		1	PASSE-FIL
3		11193274		3	RONDELLE BELLEVILLE, Belleville, M6.4
4		15212921		3	BOULON, Hex, M6 x 50, 8.8, Full Thd
5		85808419		1	SUPPORT
6		87324496		1	LEVIER
7		16043624		2	BOULON, Hex, M8 x 25, 8.8, Full Thd
8		11193874		2	RONDELLE BELLEVILLE, Belleville, M8.4

(1) Only for ROPS
(2) Only for CAB

COMMANDE ACCÉLÉRATEUR ÉLECTRONIQUE À MAIN/À PÉDALE

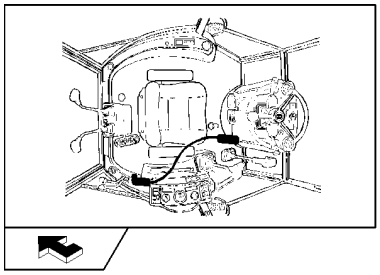

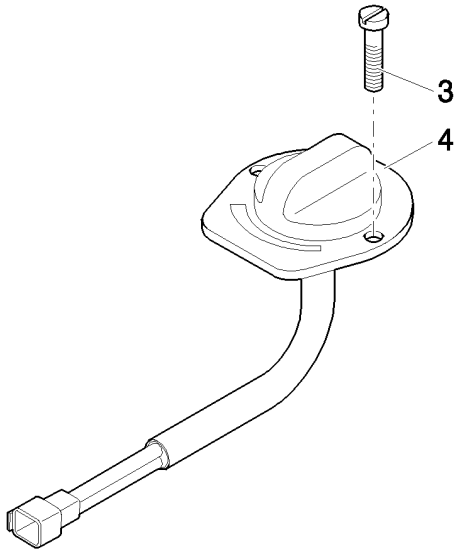

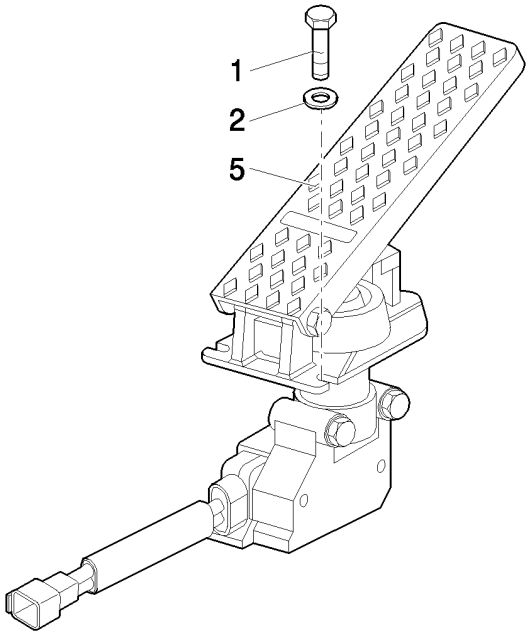

COMMANDE ACCÉLÉRATEUR ÉLECTRONIQUE À MAIN/À PÉDALE

REF	FN	PART NUMBER	YR/SN	QTY	DESCRIPTION
1		10902424		3	BOULON, Hex, M6 x 20, 8.8, Full Thd
2		11193274		3	RONDELLE BELLEVILLE, Belleville, M6.4
3		13274117		2	VIS
4		87528964		1	COMMANDE D'ACCELERATEUR
5		87518902		1	PEDALE

COLONNE DE DIRECTION ET COUVERTURE - NA

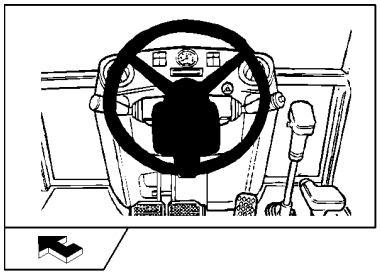

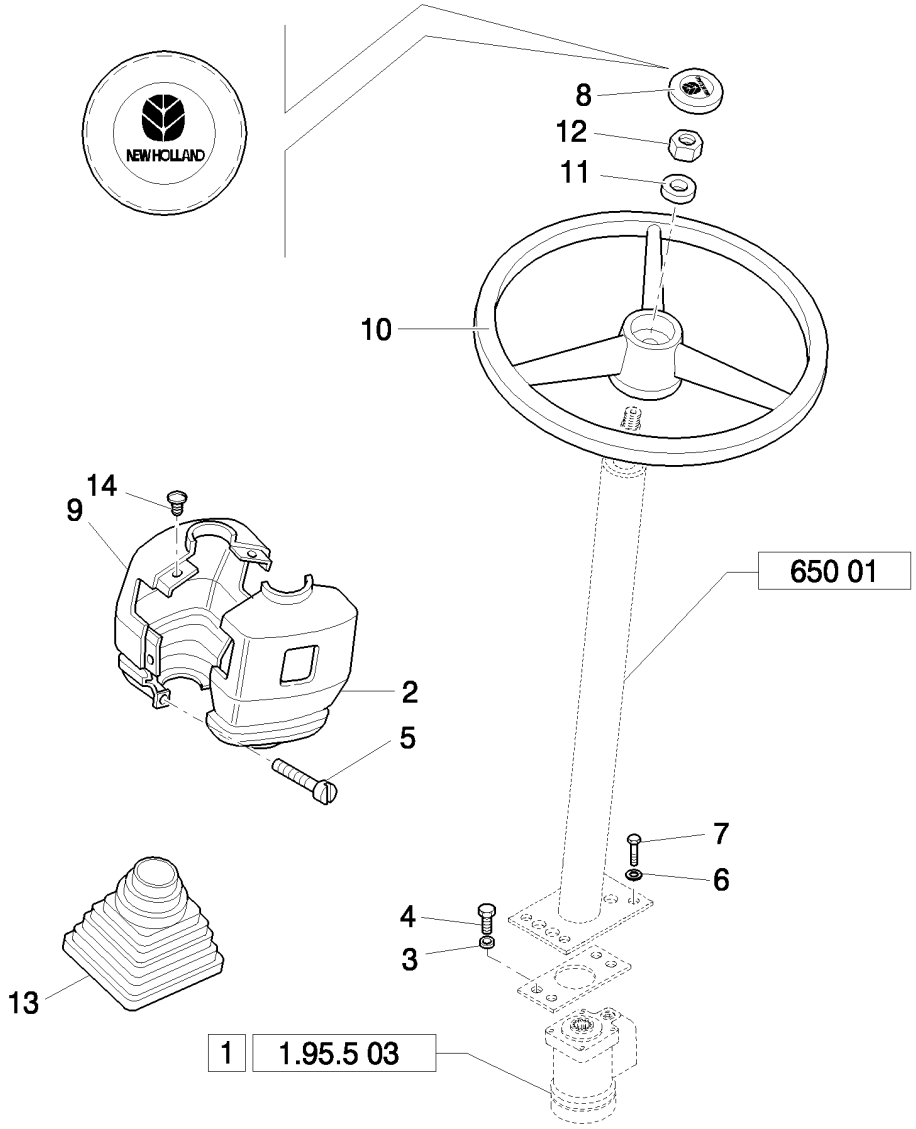

COLONNE DE DIRECTION ET COUVERTURE - NA

REF	FN	PART NUMBER	YR/SN	QTY	DESCRIPTION
1		87360424		1	DIRECTION HYDRAULIQUE, Assy
2	1	85805775		1	COUVERCLE, Upper
2	2	85805774		1	COUVERCLE
3		10615774		4	RONDELLE FREIN
4		14432334		4	VIS, Hex Soc Hd, M10 x 22, 10.9
5		14303324		4	VIS, Hex Soc Hd, M4 x 20, 8.8, Full Thd
6		11190574		4	RONDELLE BELLEVILLE, Belleville, M10.5
7		15970724		4	VIS, Hex, M10 x 1.25 x 25, 8.8, Full Thd
8		85820105		1	CHAPEAU
9	3	85805772		1	COUVERCLE, LOWER
9	4	85805773		1	COUVERCLE
10		5148946		1	VOLANT DE DIRECTION
11		4998760		1	RONDELLE
12		10791414		1	ECROU, M16X1,5
13		85801976		1	COIFFE
14		14568887		4	ATTACHE

(1) Only for Power Shuttle Rops
(2) Only for CAB Power Shuttle / Power Shift
(3) Only for Power Shuttle
(4) Only for CAB Power Shift

MANCHONS SYSTÈME DE DIRECTION - NA

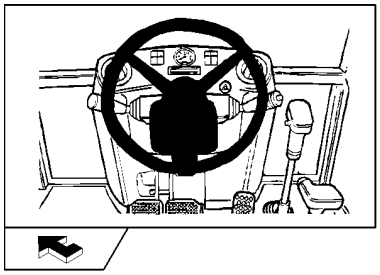

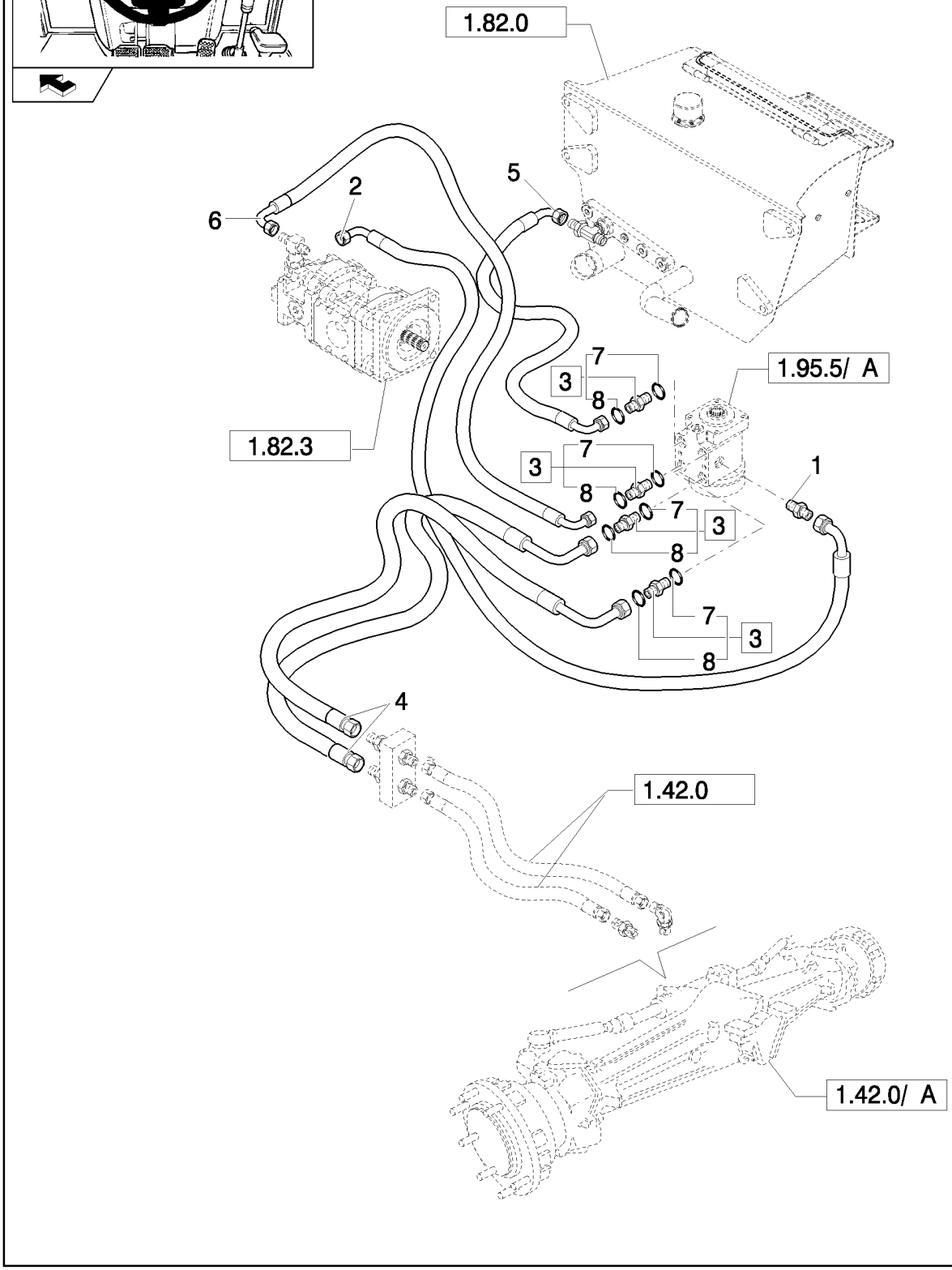

MANCHONS SYSTÈME DE DIRECTION - NA

REF	FN	PART NUMBER	YR/SN	QTY	DESCRIPTION
1		85802640		1	RACCORD
2		85819041		1	TUYAU FLEXIBLE
3		83963374		4	RACCORD, Assy
4		85826080		2	TUYAU FLEXIBLE, RH CYLINDER
5		85802761		1	FLEXIBLE HYDRAULIQUE, 1100mm lg
6		85820282		1	TUYAU FLEXIBLE
7		80128825		4	JOINT THORIQUE
8		89992298		4	JOINT THORIQUE

DIRECTION ASSISTÉE - NA

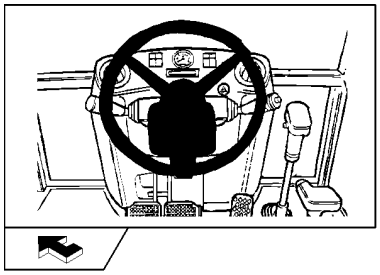

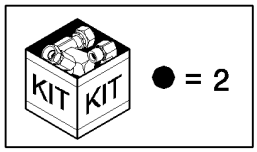

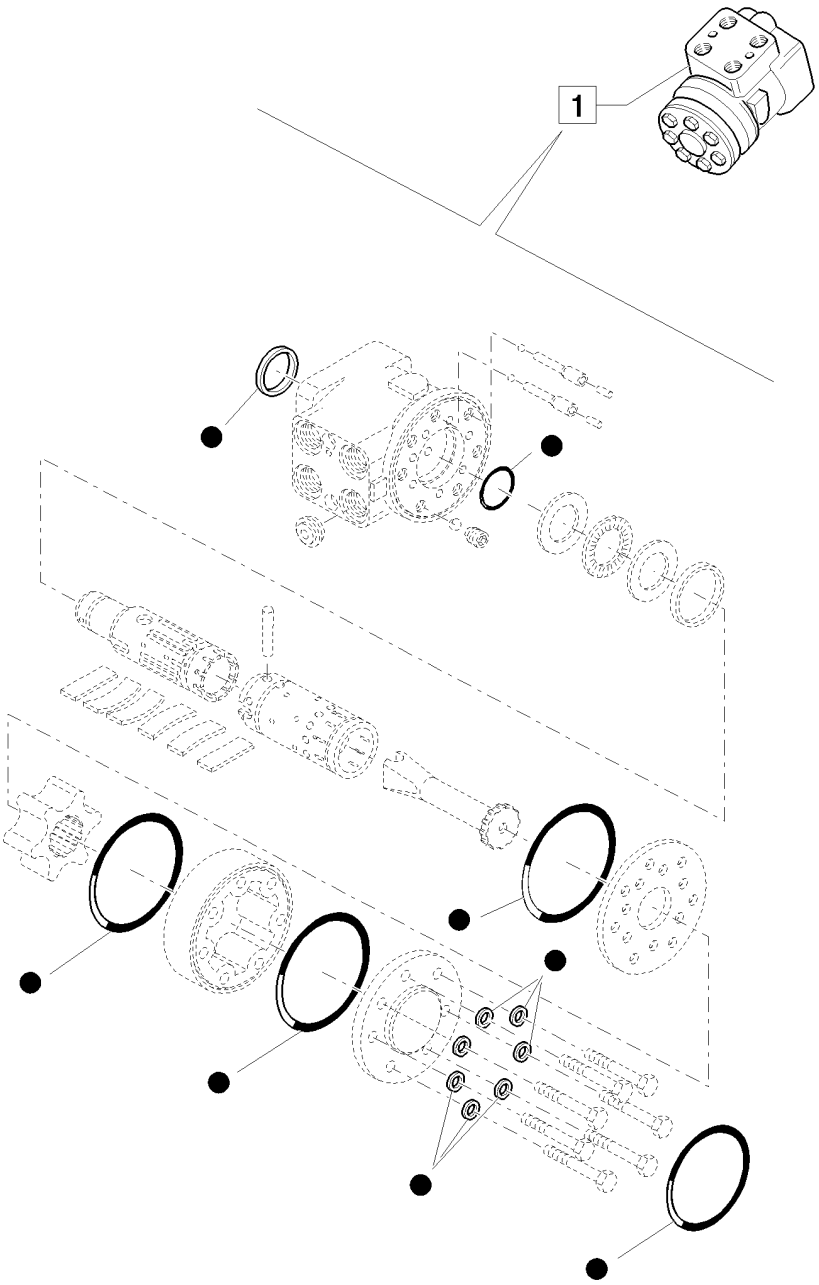

DIRECTION ASSISTÉE - NA

REF	FN	PART NUMBER	YR/SN	QTY	DESCRIPTION
1		87360424		1	DIRECTION HYDRAULIQUE, Assy
2		85808390		1	POCHETTE DE JOINTS

LEVIER AVANT/ARRIERE ET MULTIFONCTION

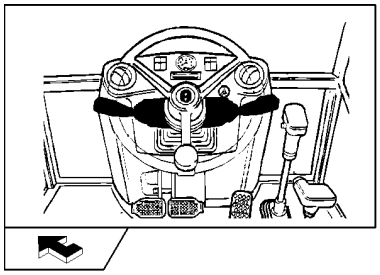

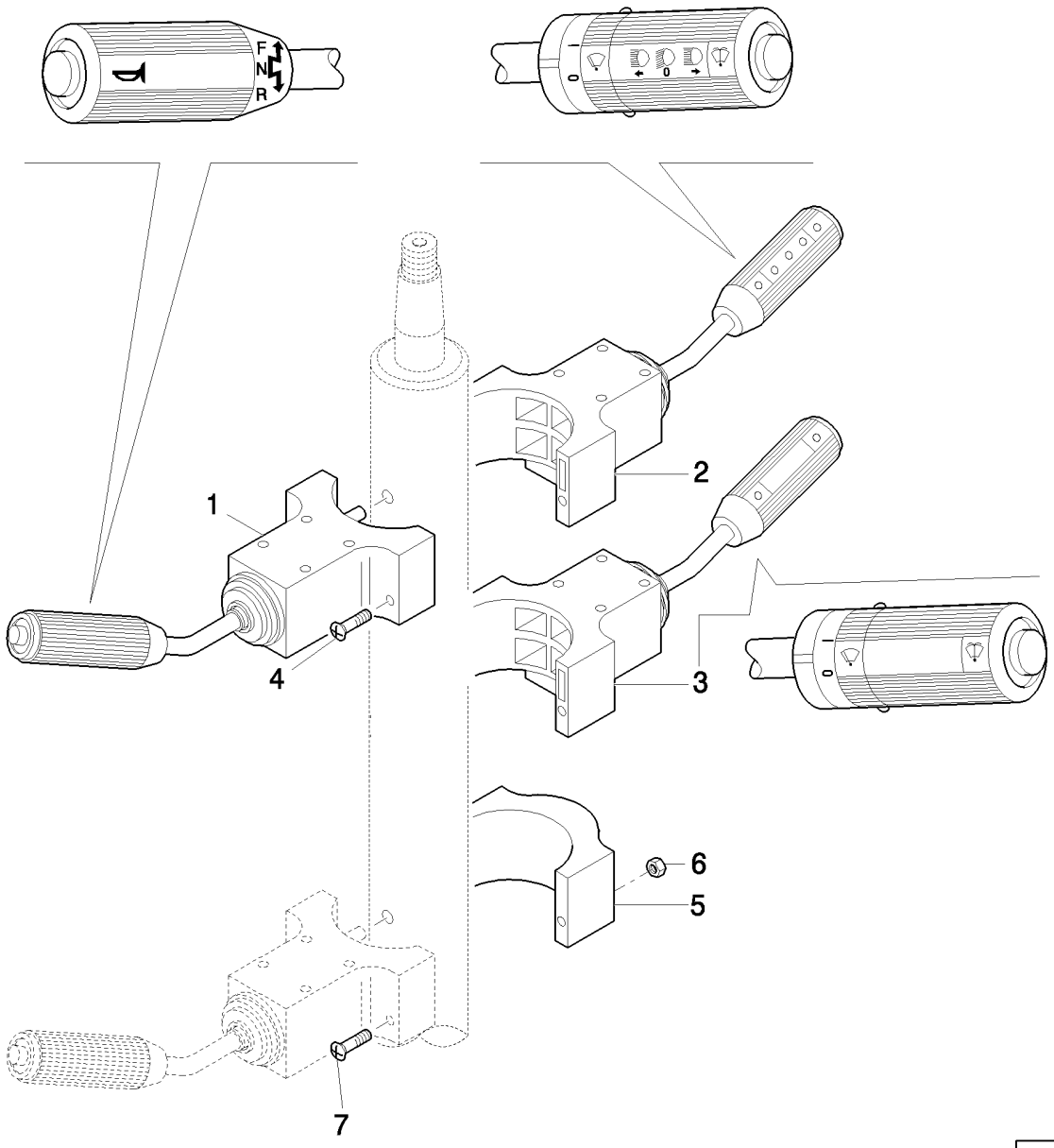

LEVIER AVANT/ARRIERE ET MULTIFONCTION

REF	FN	PART NUMBER	YR/SN	QTY	DESCRIPTION
1	1	85801938		1	LEVIER DE COMMANDE
2	2	85828252		1	COMMUTATEUR COMPLET
3	3	85801939		1	CONTACTEUR
4	1	14304724		2	VIS, Hex Soc Hd, M5 x 50, 8.8, Full Thd
4	4	14358724		2	VIS
5	5	85804676		1	BRIDE
6	5	12574111		2	CONTRE-ECROU, M5 x .8, Cl 8
7	5	14301521		2	VIS, Hex Soc Hd, M5 x 60, 8.8

(1) Only for Power Shuttle
(2) Only for Power Shift / Shuttle (EU)
(3) Only for Power Shuttle / Power Shift (NA) CAB
(4) Only for Power Shift
(5) Only for ROPS

COMMANDE STABILISATEURS (SIDE SHIFT - EU) - (CENTER PIVOT - NA)

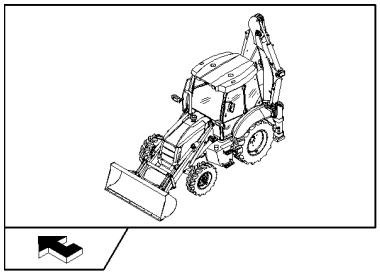

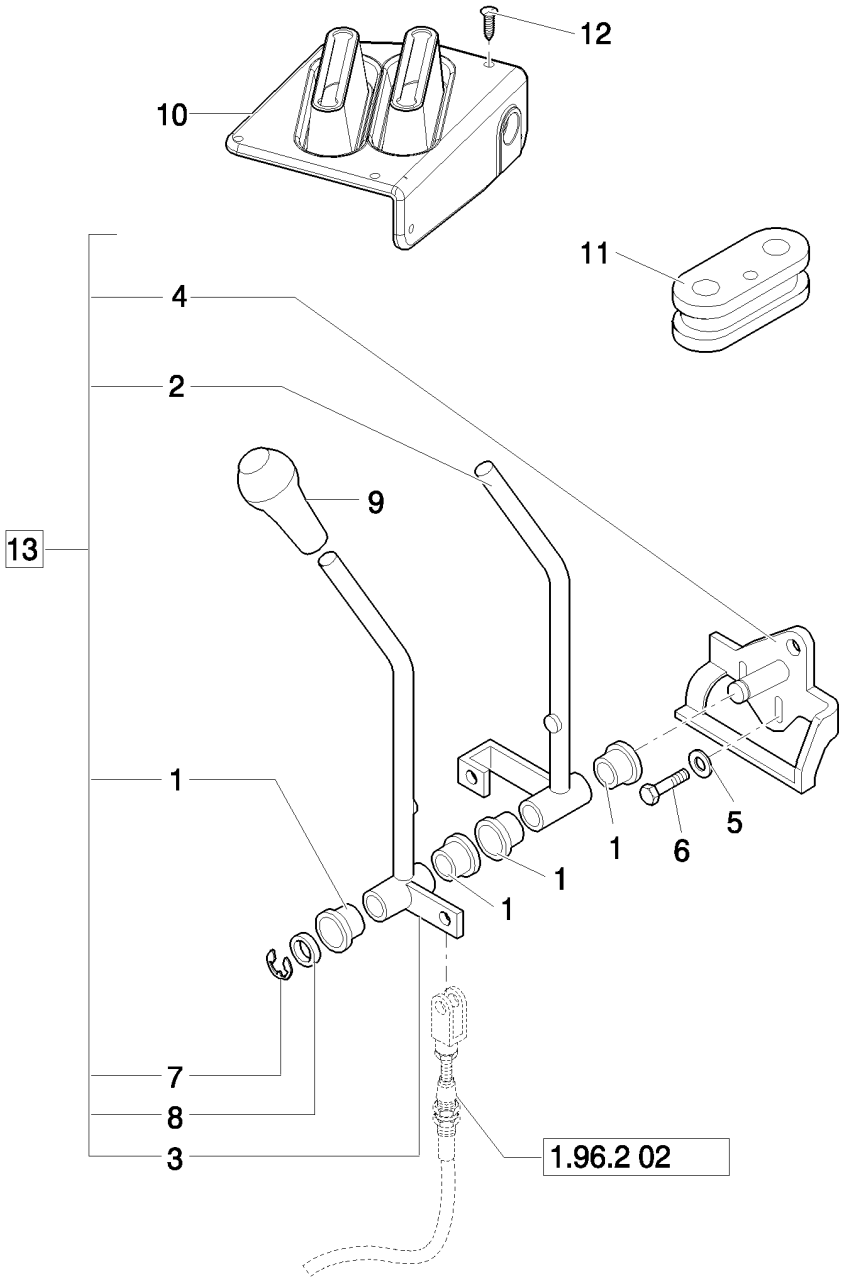

COMMANDE STABILISATEURS (SIDE SHIFT - EU) - (CENTER PIVOT - NA)

REF	FN	PART NUMBER	YR/SN	QTY	DESCRIPTION
1		85813136		4	BAGUE
2		85813134		1	LEVIER, RH
3		85813135		1	LEVIER, LH
4		85813133		1	SUPPORT
5		11193874		2	RONDELLE BELLEVILLE, Belleville, M8.4
6		16043624		2	BOULON, Hex, M8 x 25, 8.8, Full Thd
7		85813138		1	CIRCLIP
8		85813137		1	RONDELLE
9		85802763		2	POMMEAU
10		85821316		1	COIFFE
11		87407927		1	PLOT SUSPENSION
12		85827850		6	BOUCHON
13		85813100		1	BRAS DE DECLENCH., Assy

Mechanical Version B95B

COMMANDE STABILISATEURS (CENTER PIVOT) - NA

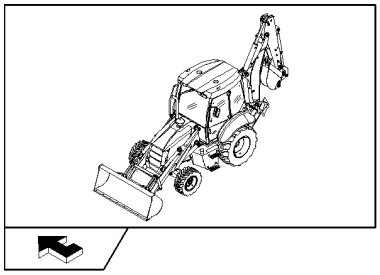

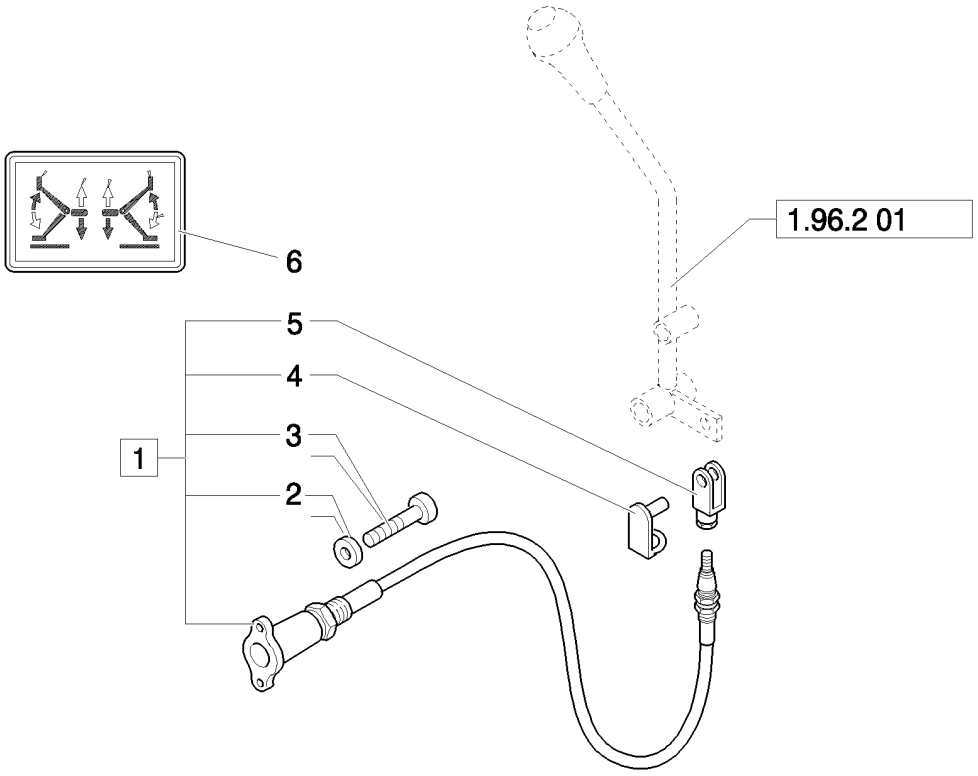

COMMANDE STABILISATEURS (CENTER PIVOT) - NA

REF	FN	PART NUMBER	YR/SN	QTY	DESCRIPTION
1		85813104		2	CABLE, Assy
2		85813201		4	RONDELLE
3		85813200		4	VIS, M6 x 15
4		85813186		2	CLIP
5		85813187		2	FOURCHETTE
6		85803788		1	IDEOGRAMME

Mechanical Version B95B

DIAGNOSTIC PILOT CONTROL

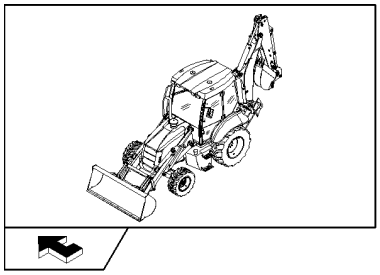

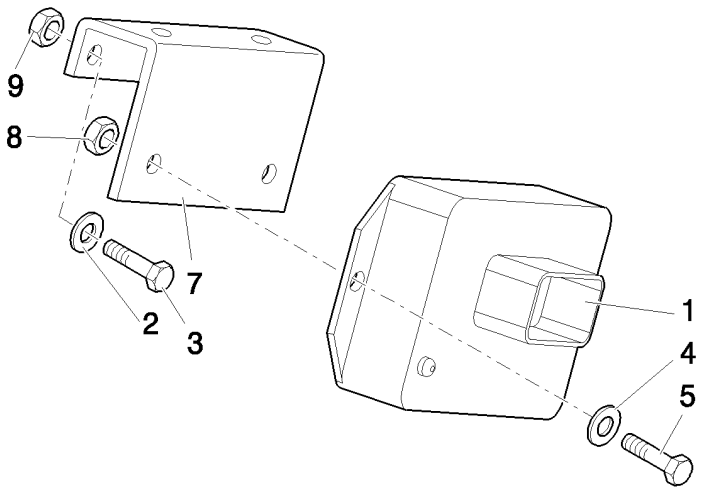

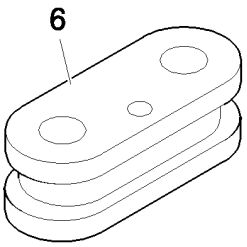

DIAGNOSTIC PILOT CONTROL

REF	FN	PART NUMBER	YR/SN	QTY	DESCRIPTION
1	1	87419454		1	MODULE
1	2	87419455		1	GROUPE REGULATEUR
2		11197779		2	RONDELLE BELLEVILLE, Belleville, M6.4
3		10902321		2	BOULON, Hex, M6 x 18, 8.8, Full Thd
4		47048959		2	RONDELLE
5		10444721		2	VIS, Hex, M4 x 14, 8.8, Full Thd, M4x20
6		87407927		1	PLOT SUSPENSION
7		85828213		1	SUPPORT
8		12574011		2	CONTRE-ECROU, M4 x .7, Cl 8
9		12574211		2	CONTRE-ECROU, M6 x 1, Cl 8

(1) 6/7 function black color
(2) 8 function white color

Pilot Control Version 87419454 Black Box Controller for Machines W/O Bi-Directional Auxiliary Hydraulics; 87419455 White Box Controller for Machines W/Bi-Directional Auxiliary Hydraulics. 87419455 Can Service All Machines Equipped With or Without Bi-Directional Auxiliary Hydraulics.

B95B

AXES ET BOUCHONS ROPS (CENTER PIVOT) - NA

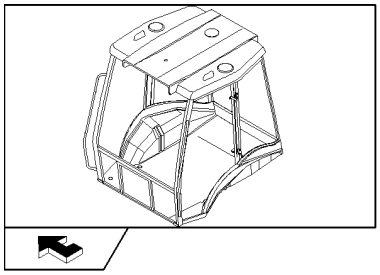

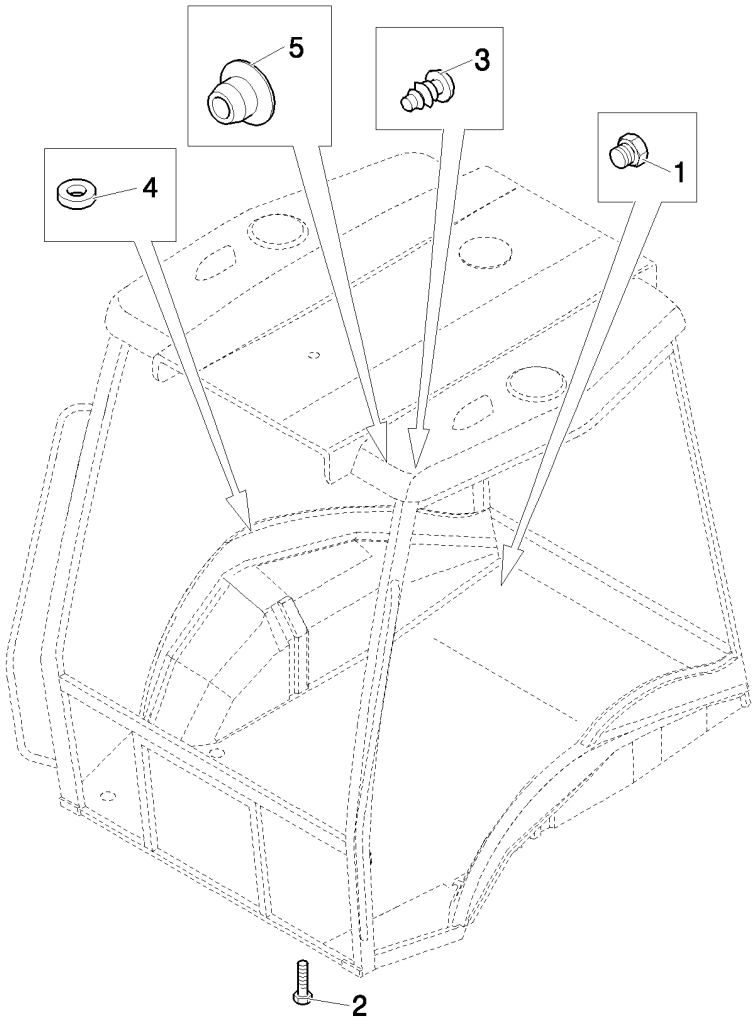

AXES ET BOUCHONS ROPS (CENTER PIVOT) - NA

REF	FN	PART NUMBER	YR/SN	QTY	DESCRIPTION
1		85802309		4	BOUCHON
2		13313417		4	VIS, Cross Oval Hd, M6 x 25
3		85802310		4	BOUCHON
4		85804734		5	RONDELLE ELASTIQUE
5		82003283		4	BOUCHON

Mechanical Version B95B

CABINE / COMPOSANTS DIVERS (CENTER PIVOT) - NA

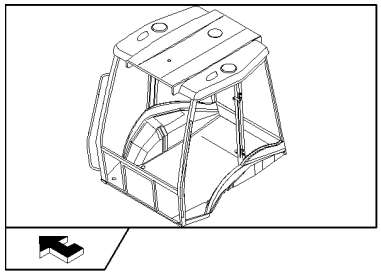

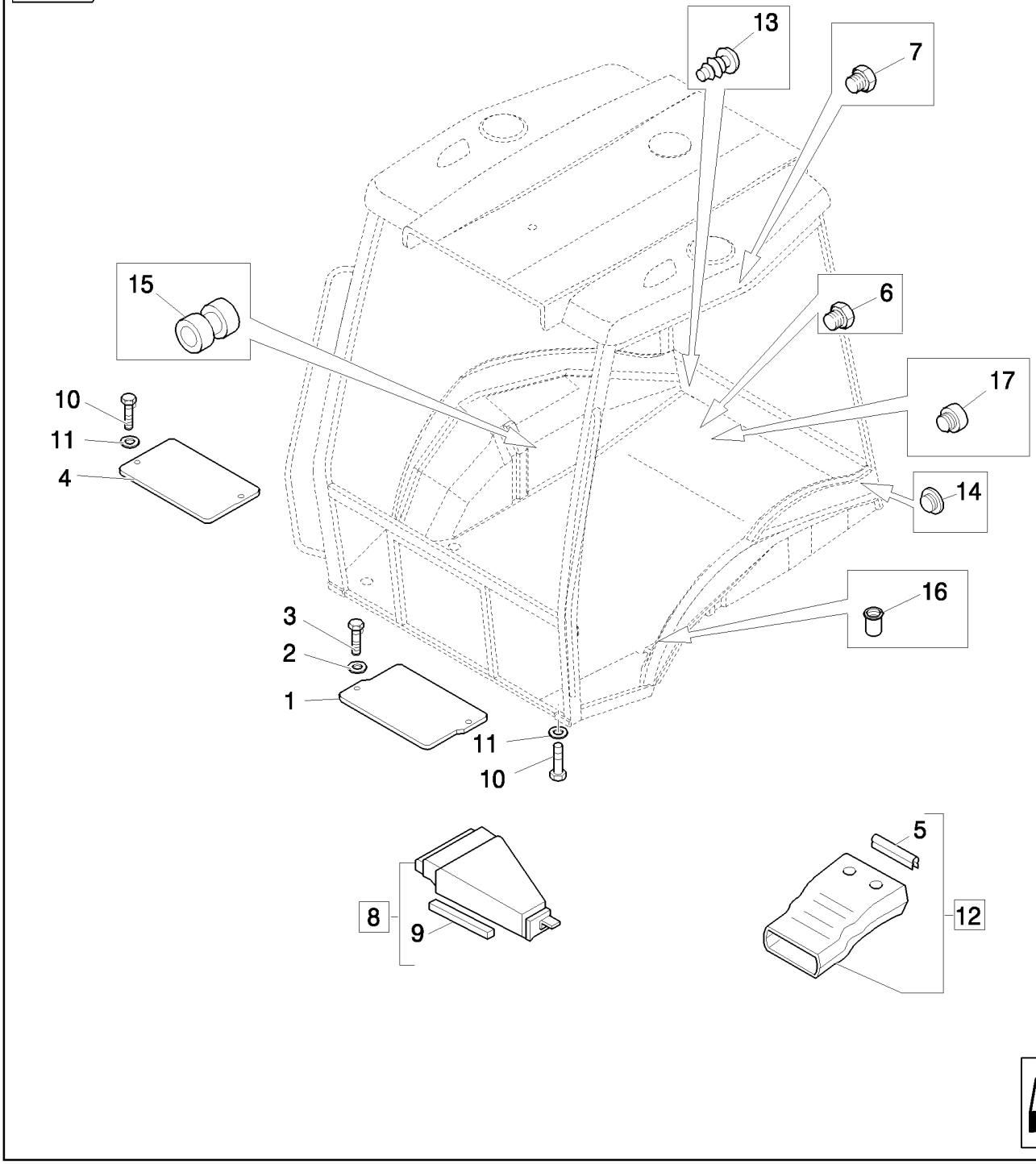

CABINE / COMPOSANTS DIVERS (CENTER PIVOT) - NA

REF	FN	PART NUMBER	YR/SN	QTY	DESCRIPTION
1		85801968		1	PLAQUE
2		11198074		2	RONDELLE BELLEVILLE, Belleville, M8.4
3		16043424		2	VIS, Hex, M8 x 20, 8.8, Full Thd
4	1	85802225		1	COUVERCLE
5		85812021		1	BANDE D'ETANCHEITE
6		79111978		10	BOUCHON
7		83994150		2	BOUCHON
8		85805200		1	CONDUIT D'AIR, Assy, Front
9		85806023		1	BANDE D'ETANCHEITE
10		10902224		5	BOULON, Hex, M6 x 16, 8.8, Full Thd
11		11193274		5	RONDELLE BELLEVILLE, Belleville, M6.4
12		85820141		1	CONDUIT D'AIR, Assy
13		85802310		4	BOUCHON
14	1	85802227		1	BOUCHON
15		10398580		2	PASSE-FIL
16		85801953		2	RIVET
17		85802309		2	BOUCHON

(1) Only for Power Shift

CABINE: COMPOSANTS DIVERS (CENTER PIVOT) - NA

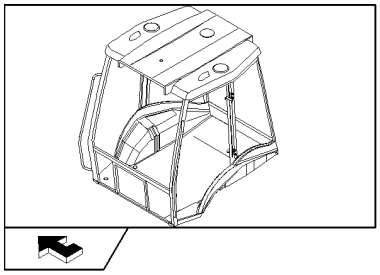

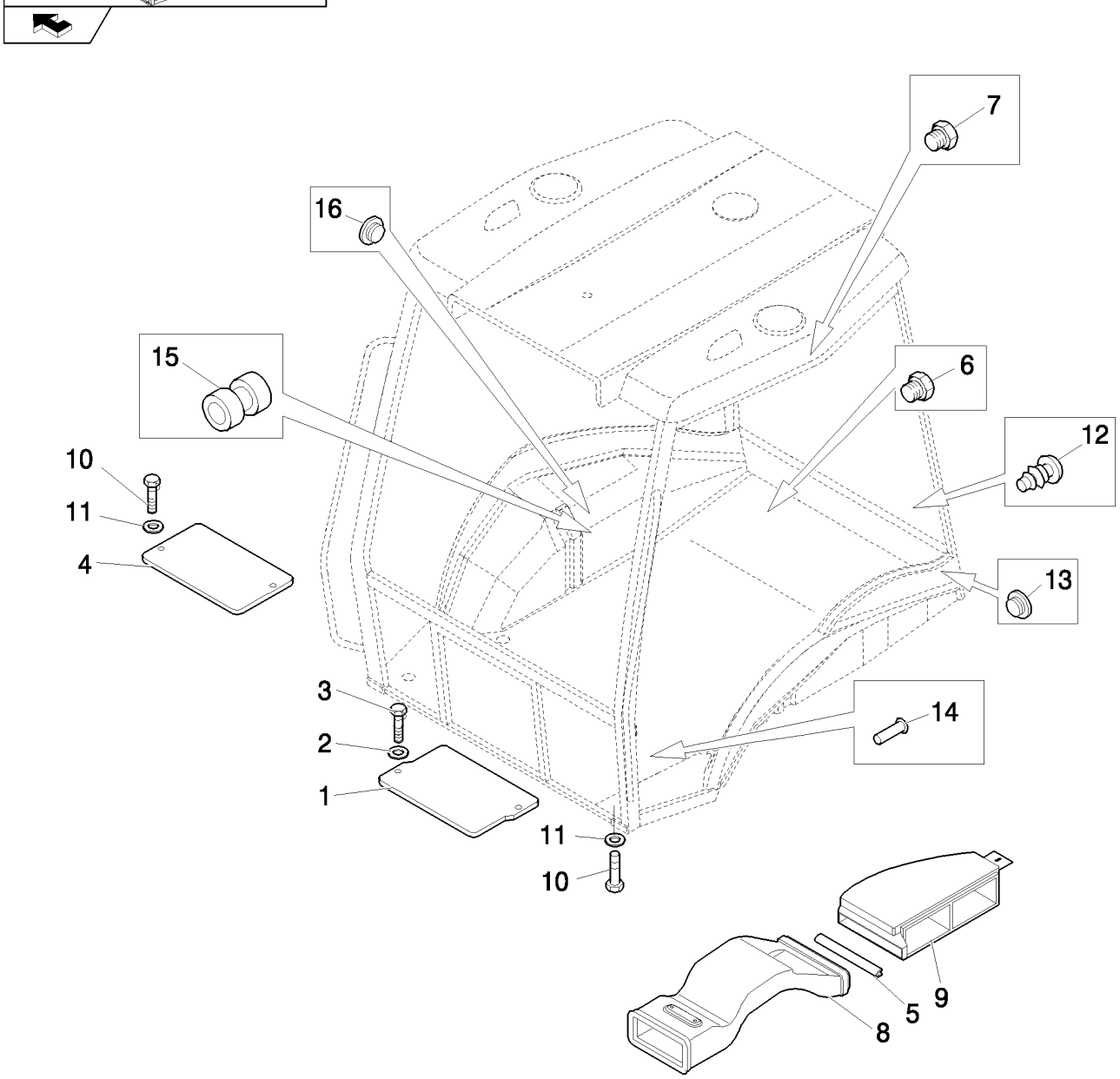

CABINE: COMPOSANTS DIVERS (CENTER PIVOT) - NA

REF	FN	PART NUMBER	YR/SN	QTY	DESCRIPTION
1		85801968		1	PLAQUE
2		11198074		2	RONDELLE BELLEVILLE, Belleville, M8.4
3		16043424		2	VIS, Hex, M8 x 20, 8.8, Full Thd
4	1	85802225		1	COUVERCLE
5		85812021		1	BANDE D'ETANCHEITE
6		79111978		10	BOUCHON
7		83994150		2	BOUCHON
8		87408277		1	CONDUIT D'AIR, FRONT
9		87319754		1	CONDUIT D'AIR
10		10902224		11	BOULON, Hex, M6 x 16, 8.8, Full Thd
11		11193274		11	RONDELLE BELLEVILLE, Belleville, M6.4
12		85802310		4	BOUCHON
13		85802309		2	BOUCHON
14		85801953		2	RIVET
15		10398580		2	PASSE-FIL
16	1	85802227		1	BOUCHON

(1) Only for Power Shift

AXES ET BOUCHONS ROPS (CENTER PIVOT) - NA

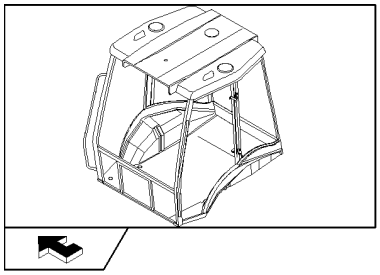

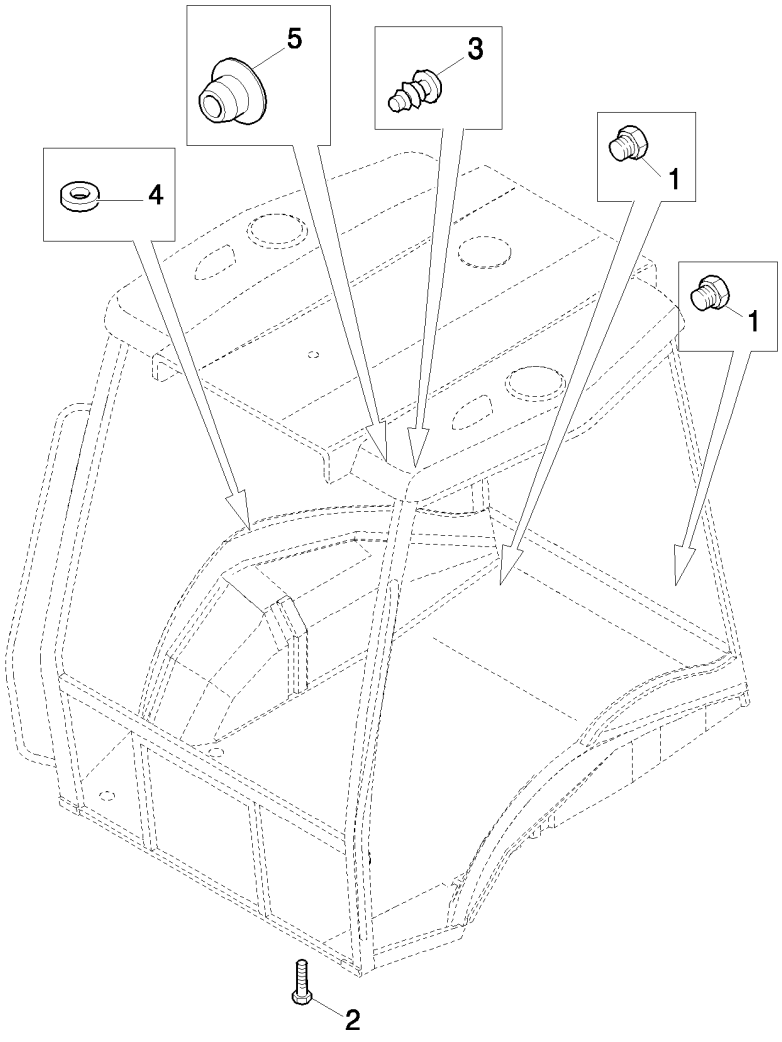

AXES ET BOUCHONS ROPS (CENTER PIVOT) - NA

REF	FN	PART NUMBER	YR/SN	QTY	DESCRIPTION
1		85802309		4	BOUCHON
2		13313417		4	VIS, Cross Oval Hd, M6 x 25
3		85802310		4	BOUCHON
4		85804734		5	RONDELLE ELASTIQUE
5		82003283		4	BOUCHON

Pilot Control Version

B95B

DECALCOMANIES SYMBOLES INFO. (POWER SHUTTLE - POWER SHIFT) - NA

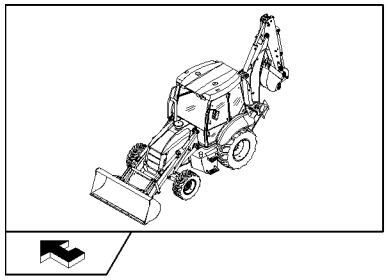

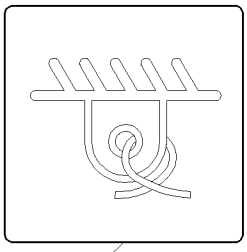

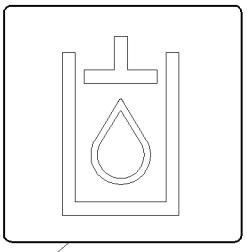

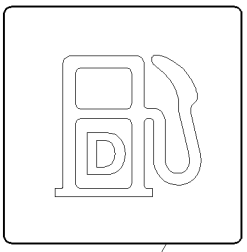

3

2

4

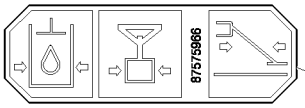

10

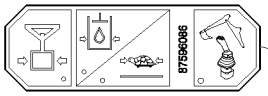

11

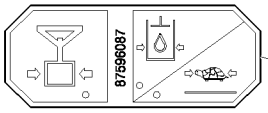

12

5

TORQUE CONVERTER TRANSMISSION WITH CLUTCH DISCONNECT

F
N
R

BEFORE STARTING - Place both shuttle (power reversing) and gear shift lever in neutral and assure parking brake is applied.

TO SHIFT - Select operating gear (1, 2, 3, or 4), then use shuttle lever to select direction of travel

1 3 N 2 4

SHUTTLE SHIFTING - Reduce engine speed when changing direction of travel from (F) to (R)

CLUTCH DISCONNECT - Press button on loader control or gear shift levers to disconnect hydraulic clutch during loader lift cycle or gear changes.

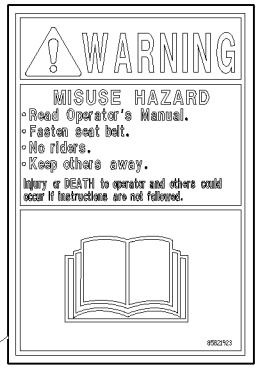

6

9

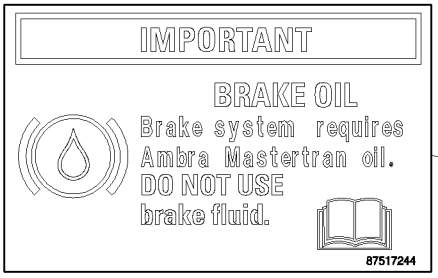

1

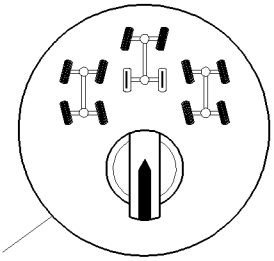

13

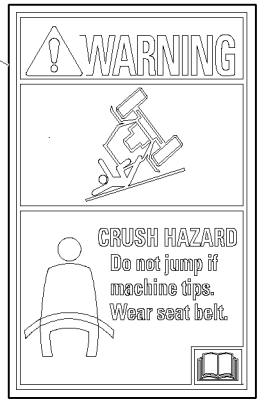



8

14

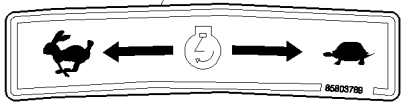

7

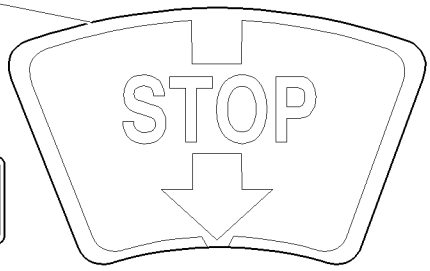

DECALCOMANIES SYMBOLES INFO. (POWER SHUTTLE - POWER SHIFT) - NA

REF	FN	PART NUMBER	YR/SN	QTY	DESCRIPTION
1		85821926		1	DECALCOMANIE
2		85804341		1	DECALCOMANIE
3		86500514		4	DECALCOMANIE
4		85804338		1	DECALCOMANIE
5	1	85804091		1	DECALCOMANIE
6		85821923		1	DECALCOMANIE
7		85802441		1	DECALCOMANIE
8	2	87387139		1	DECALCOMANIE
9		85821920		1	ETIQUETTE ALARME
10	3	87575966		1	DECALCOMANIE
11	4	87596086		1	DECALCOMANIE
12	5	87596087		1	DECALCOMANIE
13	6	85805909		1	DECALCOMANIE
14	7	85803789		1	IDEOGRAMME

(1) Only for Power Shuttle
(2) Except for B115B
(3) Only for Mechanical Version HUSCO
(4) Only for Pilot Version
(5) Only for Mechanical Version REXROTH
(6) Only for B115B
(7) Only for B90B

MODÈLE D'IDENTIFICATION: DÉCALCOMANIES DE PROTECTION

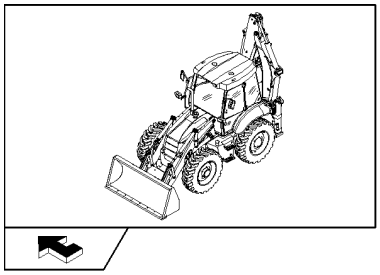

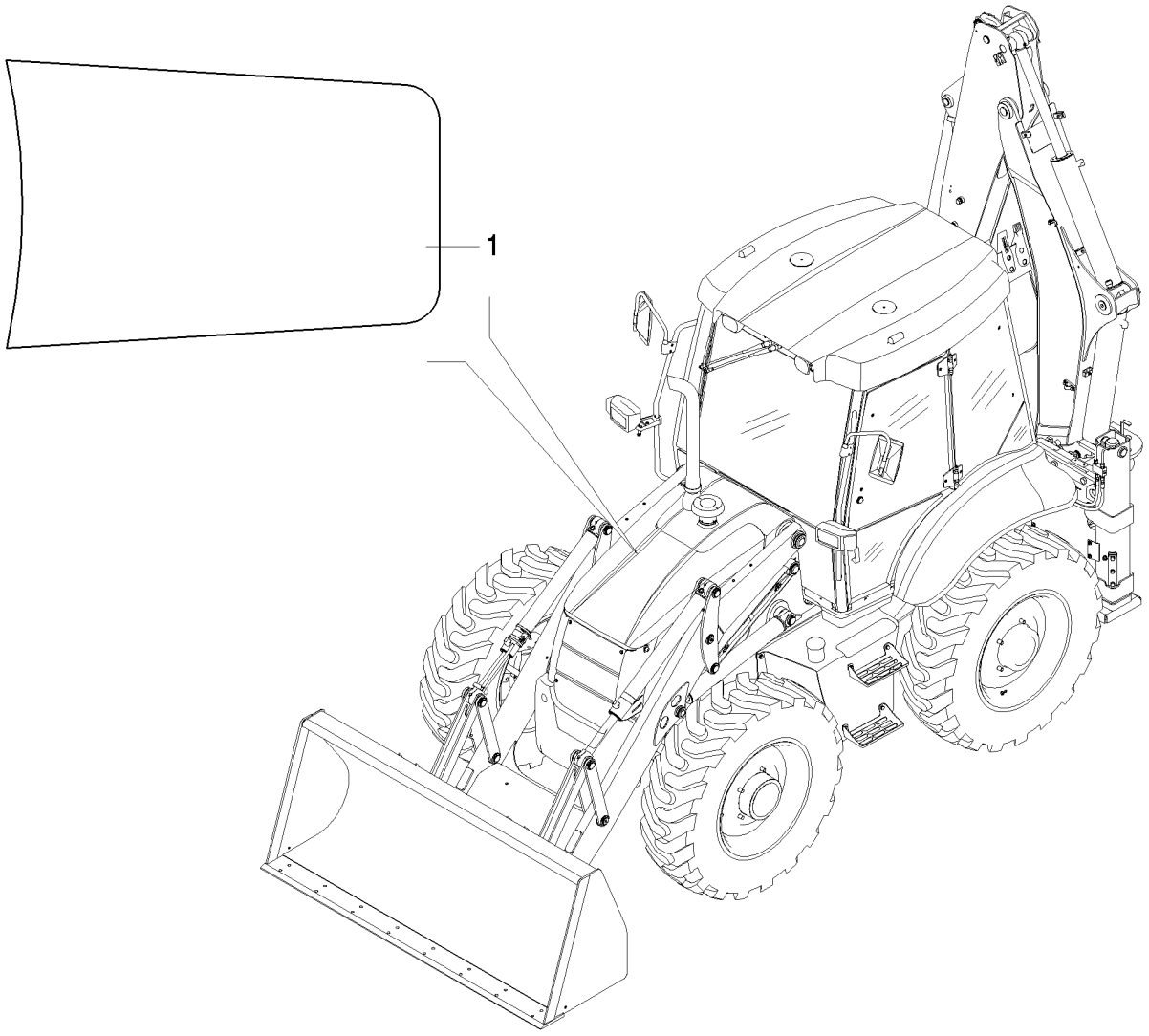

MODÈLE D'IDENTIFICATION: DÉCALCOMANIES DE PROTECTION

REF	FN	PART NUMBER	YR/SN	QTY	DESCRIPTION
1		87653297		1	DECALCOMANIE

IDENTIFICATION MODELE B90B / B90BLR - B959B / B95BLR - B100B / B100BLR

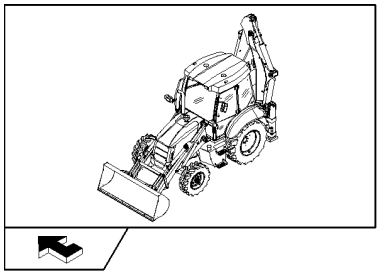

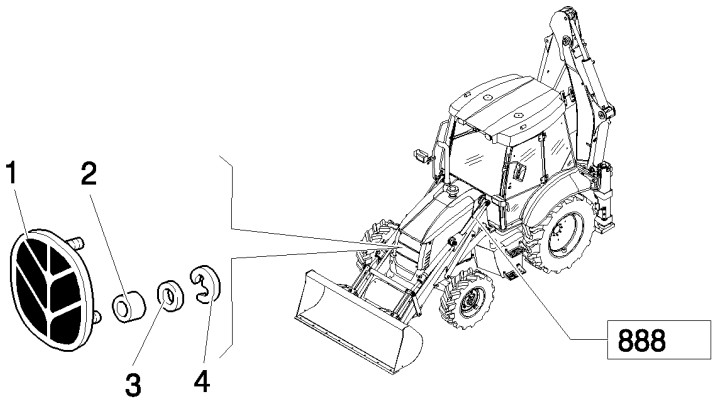



10



7

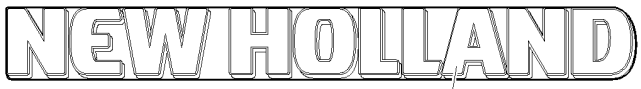

6

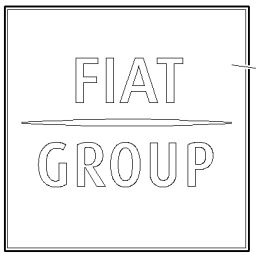

8

12

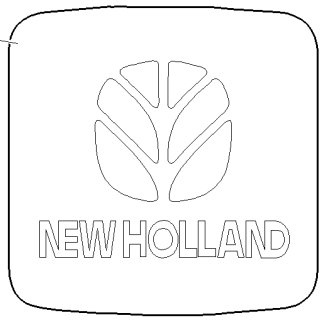

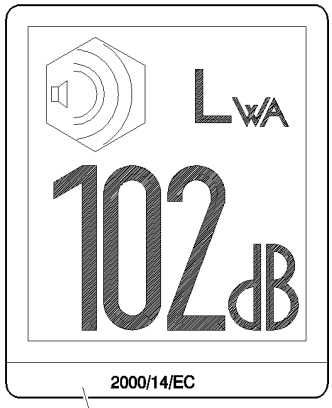

11

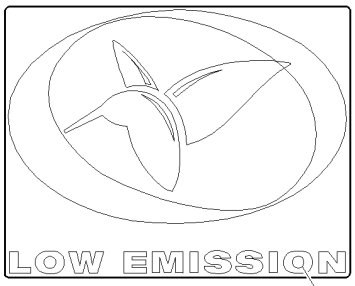

5

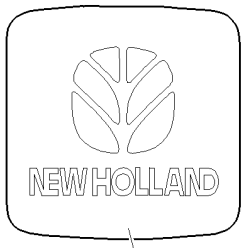

9



IDENTIFICATION MODELE B90B / B90BLR - B959B / B95BLR - B100B / B100BLR

REF	FN	PART NUMBER	YR/SN	QTY	DESCRIPTION
1		85820107		1	EMBLÈME
2		12643711		2	RONDELLE
3		5138360		2	ANNEAU CAOUTCHOUC
4		5135069		2	CLIP
5		87701340		2	DECALCOMANIE
6	1	87687644		2	DECALCOMANIE, L=MM.1338
7	1	87609724		2	DECALCOMANIE, L=MM.949
8	1	87691652		2	DECALCOMANIE
9		87802964		1	EMBLÈME
10		87674137		1	DECALCOMANIE, L=MM.404
11	2, 3	87346382		1	DECALCOMANIE
11	4, 3	87346213		1	DECALCOMANIE
12		87415930		2	DECALCOMANIE

(1) Except for NA Version
(2) Only for B90B, B90BLR (ROPS)
(3) Except for B95B, B95BLR (NA)
(4) Except for B90B, B90BLR (ROPS)

NOTES

SECTION INDEX

Roues

81.00		ROUES AVANT (2WD) - NA
82.00	01	ROUES DIRECTRICES MOTRICES(4WD) - NA
83.00	01	ROUES ARRIÈRE - NA

ROUES AVANT (2WD) - NA

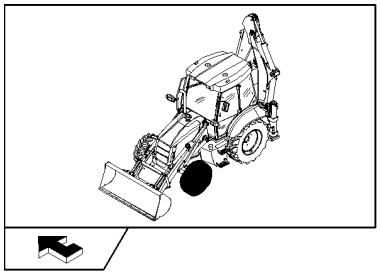

EQUIP	TIRE SIZE	RIM
81.38	11L - 16TLF3 - 10PR	W8LX 16

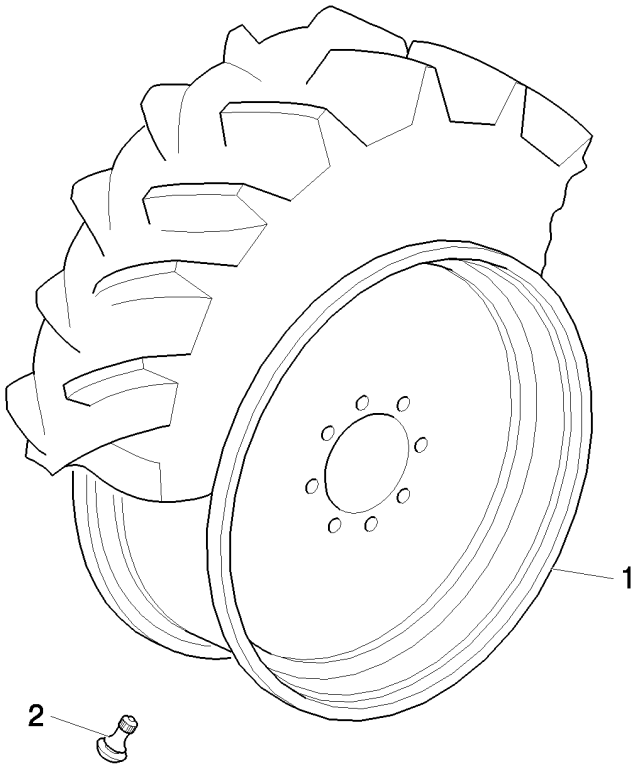

ROUES AVANT (2WD) - NA

REF	FN	PART NUMBER	YR/SN	QTY	DESCRIPTION
1		85812260		2	ROUE, W8L x 16
2		85700224		2	TIGE DE SOUPAPE

ROUES DIRECTRICES MOTRICES(4WD) - NA

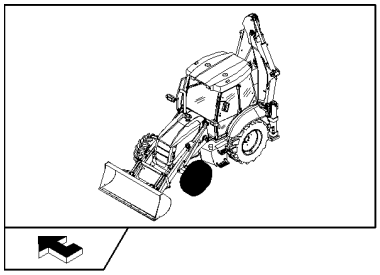

EQUIP	TIRE SIZE	RIM
82.78	14-17.5 R4 - 10PR	10.5 X 17.5
82.79	12-16.5 R4 - 10PR	9.75 X 16.5
82.79	12.16.5 HULK	9.75 X 16.5

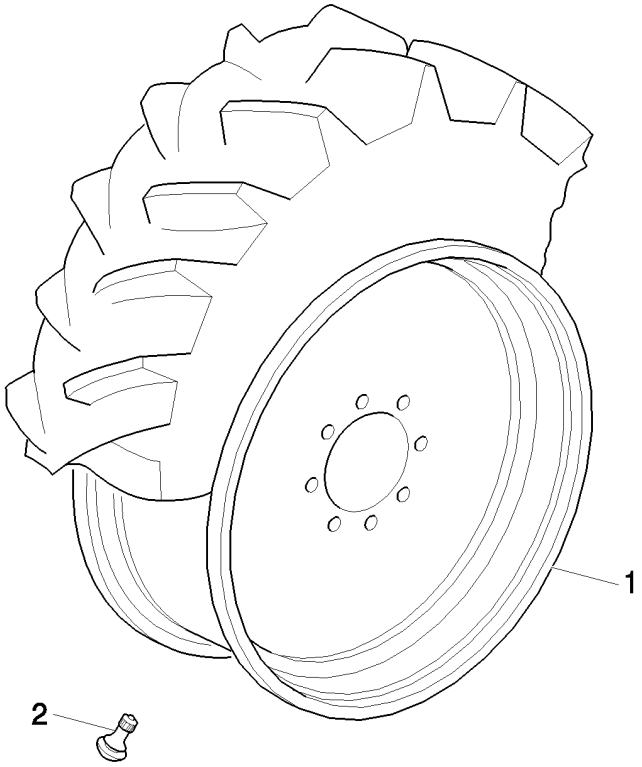

ROUES DIRECTRICES MOTRICES(4WD) - NA

REF	FN	PART NUMBER	YR/SN	QTY	DESCRIPTION
1		87664399		2	ROUE, 10.5 x 17.5
1		87664534		2	ROUE, 9.75 x 16.5
2		85700224		2	TIGE DE SOUPAPE

ROUES ARRIÈRE - NA

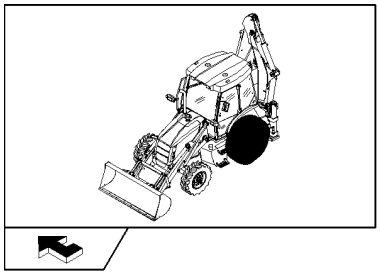

EQUIP	TIRE SIZE	RIM
83.66	16.9-28 R4 - 10PR	W14X28
83.93	16.9-24 R4 - 10PR	W15LX24
83.94	17.5L24 R4 - 10PR	W15LX24
83.93	16.9-24 R4 - 10PR	W16LX24
83.62	19.5-24 "JUMBO"	W16LX24
83.62	16.9-24 R4 - 10PR	W18LX24

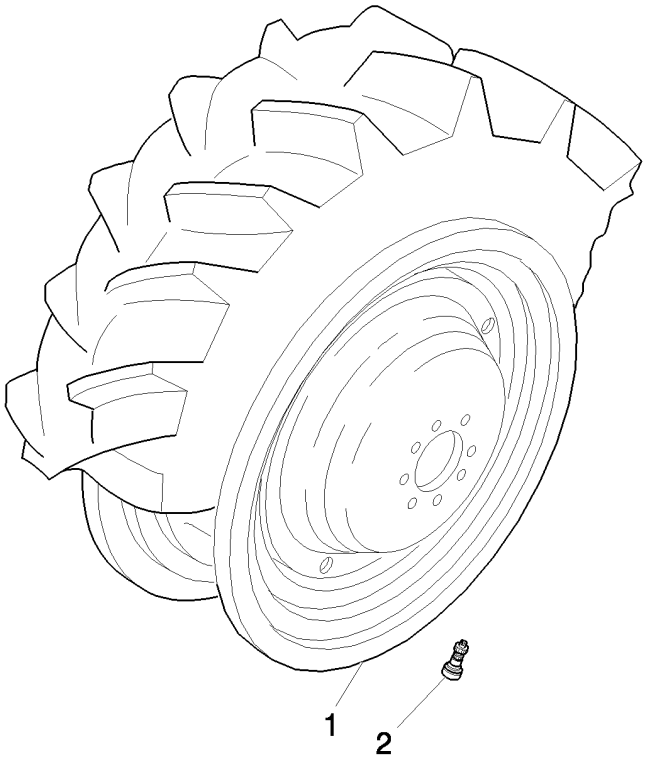

ROUES ARRIÈRE - NA

REF	FN	PART NUMBER	YR/SN	QTY	DESCRIPTION
1		87664294		2	ROUE, W14 x 28
1		87664555		2	ROUE, W16L x 24
1		87663635		2	ROUE, W15L x 24
1		87664439		2	ROUE, W18L x 24
2		85700224		2	TIGE DE SOUPAPE

NOTES

SECTION INDEX
Variantes

095		COMMANDE DES STABILISATEURS SANS MONTEE AUTOTOMATIQUE (CENTER PIVOT)
096		COMMANDE DES STABILISATEURS AVEC MONTEE AUTOTOMATIQUE (CENTER PIVOT)
131		ACCUMULATEUR UNIQUE
175		CALOTTE D'ASPIRATION D'AIR ET PRÉFILTRE
176		CALOTTE D'ASPIRATION D'AIR ET PRÉFILTRE
201		CROCHETS DE LEVAGE PELLE ET ARRIERE
284		RETROVISEUR (CAB) - NA
290		CONTREPOIDS AVANT: 2WS
291		CONTREPOIDS AVANT: 2WS
302	01	DISTRIBUTEUR PALE A DEUX SECTEURS
302	02	DISTRIBUTEUR ÉQUIPEMENT CHARGEUR À 2 SECTIONS: SECTION ASPIRATION
302	03	DISTRIBUTEUR ÉQUIPEMENT CHARGEUR À 2 SECTIONS: SECTION FLÈCHE
302	04	DISTRIBUTEUR PALE A DEUX SECTEURS
321		ACCUMULATEUR DOUBLE
331	01	COLONNE COMPLETE 6 SECTIONS (CENTER PIVOT)
331	02	SUPPORT COMPLET DE DISTRIBUTEUR DE COMMANDE PILOTE
331	03	SUPPORT COMPLET DE DISTRIBUTEUR DE COMMANDE PILOTE
331	04	SUPPORT COMPLET DE DISTRIBUTEUR DE COMMANDE PILOTE
331	05	SUPPORT COMPLET DE DISTRIBUTEUR DE COMMANDE PILOTE
331	06	SUPPORT COMPLET DE DISTRIBUTEUR DE COMMANDE PILOTE A 6 SECTIONS
331	07	SUPPORT COMPLET DE DISTRIBUTEUR DE COMMANDE PILOTE
331	08	SUPPORT COMPLET DE DISTRIBUTEUR DE COMMANDE PILOTE
331	09	SUPPORT COMPLET DE DISTRIBUTEUR DE COMMANDE PILOTE
331/ A		VALVE DE COMMANDE PROPORTIONNELLE 6 SECTIONS
331/ B	01	DISTRIBUTEUR EXCAVATRICE, 6 SECTIONS (CENTER PIVOT)
331/ B	02	DISTRIBUTEUR EXCAVATRICE, SECTION ENTREE (CENTER PIVOT)
331/ B	03	DISTRIBUTEUR EXCAVATRICE, SECTION FLECHE (CENTER PIVOT)
331/ B	04	DISTRIBUTEUR EXCAVATRICE, SECTION OSCIL. (CENTER PIVOT)
331/ B	05	DISTRIBUTEUR EXCAVATRICE, SECTION GODET (CENTER PIVOT)
331/ B	06	DISTRIBUTEUR EXCAVATRICE, SECTION BALANCIER (CENTER PIVOT)
331/ B	07	DISTRIBUTEUR EXCAVATRICE, SECTION STABILISATEUR (CENTER PIVOT)
331/ B	08	DISTRIBUTEUR EXCAVATRICE, SECTION FLECHE (CENTER PIVOT)
331/ B	09	DISTRIBUTEUR EXCAVATRICE, SECTION OSCIL. (CENTER PIVOT)
331/ B	10	DISTRIBUTEUR EXCAVATRICE, SECTION GODET (CENTER PIVOT)
331/ B	11	DISTRIBUTEUR EXCAVATRICE, SECTION BALANCIER (CENTER PIVOT)
331/ B	12	DISTRIBUTEUR EXCAVATRICE, SECTION STABILISATEUR (CENTER PIVOT)
331/ C	01	VALVE PILOTE DU MANIPULATEUR (DROIT)
331/ C	02	DISTRIBUTEUR LEVIER COMMANDE GAUCHE
333	01	COLONNE COMPLETE 7 SECTIONS (CENTER PIVOT)
333	02	ENSEMBLE TOURELLE POUR COMMANDE PILOTE À 7 SECTIONS: CIRCUIT HYDRAULIQUE DISTRIBUTEUR, SOUPAPE PROPORTIONNELLE
333	03	ENSEMBLE TOURELLE POUR COMMANDE PILOTE À 7 SECTIONS (CENTER PIVOT): INSTALLATION DISTRIBUTEUR
333	04	ENSEMBLE TOURELLE POUR COMMANDE PILOTE À 7 SECTIONS (CENTER PIVOT): SYSTÈME DU VÉRIN TÉLÉSCOPIQUE
333	05	ENSEMBLE TOURELLE POUR COMMANDE PILOTE À 7 SECTIONS (CENTER PIVOT): SYSTÈME DU VÉRIN DU GODET
333/ A		VALVE DE COMMANDE PROPORTIONNELLE 7 SECTIONS
333/ C	01	VALVE PILOTE DU MANIPULATEUR (DROIT) 7 TIROIRS

SECTION INDEX
Variantes

333/ C	02	VALVE PILOTE DU MANIPULATEUR (DROIT) 7 TIROIRS
333/01B	01	DISTRIBUTEUR DE COMMANDE D'EXCAVATRICE A 7 SECTIONS (CENTER PIVOT) - NA
333/01B	02	DISTRIBUTEUR ÉQUIPEMENT RÉTRO À 7 SECTIONS (CENTER PIVOT) - NA: VÉRIN DU BALANCIER TÉLÉSCOPIQUE
335		COLONNE COMPLETE 7 SECTIONS (CENTER PIVOT)
336/01	01	DISTRIBUTEUR CHARGEUSE TWO SECTIONS (CENTER PIVOT) - NA
336/01	02	DISTRIBUTEUR CHARGEUSE, 2 SECTIONS, CALOTTE & SOUPAPE DECHARGE (CENTER PIVOT) - NA
336/01	03	DISTRIBUTEUR CHARGEUSE, 2 SECTIONS, SOUPAPES D'EVACUATION ET DE RETENUE (CENTER PIVOT) - NA
336/01	04	DISTRIBUTEUR CHARGEUSE, 2 SECTIONS, LOT BY-PASS (CENTER PIVOT) - NA
336/01	05	DISTRIBUTEUR CHARGEUSE, 2 SECTIONS, LOT DECHARGE OU SOUPAPE BASCULEMENT (CENTER PIVOT) - NA
337	01	CLAPET DE BLOCAGE SUR VÉRINS ANTIRENVERSEMENT ÉQUIPEMENT CHARGEUR
337	02	SOUPAPE DE BLOCAGE SUR CYLINDERS DE RELEVAGE PELLE
338		SOUPAPE DE BLOCAGE SUR CYLINDERS DE RELEVAGE PELLE
344	01	DISTRIBUTEUR STABILISATEUR, 2 SECTIONS (CENTER PIVOT) - NA
344	02	DISTRIBUTEUR STABILISATEUR, SECTION DROITE ET GAUCHE (CENTER PIVOT) - NA
346	01	LOGEMENT & FILTRES A/C
346	02	VENTILATEUR & SERPENTINS A/C
346	03	MANCHONS SPIRALES CHAUFFAGE
346	04	TABLEAU DE COMMANDE CHAUFFAGE & A/C
346	05	TUYAUTERIE CONSOLE CHAUFFAGE & A/C
347	01	LOGEMENT & FILTRES
347	02	VENTILATEUR & SERPENTINS RECHAUFFEUR
347	03	MANCHONS SPIRALES CHAUFFAGE
347	04	TABLEAU DE COMMANDE CHAUFFAGE & A/C
347	05	TUYAUTERIE CONSOLE CHAUFFAGE & A/C
347	06	BOUCHON REVÊTEMENT CHAUFFAGE CABINE
386		GODET RÉTROCAVEUSE 12" (305 MM) HD A DENTS GOUPILLEES - NA
387		GODET RÉTROCAVEUSE 18" (457MM) HD A DENTS GOUPILLEES - NA
388		GODET RÉTROCAVEUSE 24" (610MM) HD A DENTS GOUPILLEES - NA
389		GODET RÉTROCAVEUSE 30" (762MM) HD A DENTS GOUPILLEES - NA
390		DISTRIBUTEUR CHARGEUSE, 2 SECTIONS, LEVIER - NA
390/01		GODET RÉTROCAVEUSE 36" (910MM) HD A DENTS GOUPILLEES - NA
391		VALVE DE BLOCAGE POUR BENNE 4X1 / 6X1
392	01	CLAPET DE BLOCAGE SUR VÉRIN DE FLÈCHE ET ÉQUIPEMENT RÉTRO
392	02	CLAPET DE BLOCAGE SUR VÉRIN ET ÉQUIPEMENT RÉTRO
393		COMMANDES EXCAVATRICE A LEVIER, LEVIER, PARE-POUSSIERE & DECALCOMANIES - NA
394	01	COMMANDES ÉQUIPEMENT RÉTRO À 4 LEVIERS, CONSOLE, LEVIERS ET LEVIER CARRÉ (CENTER PIVOT: SIDE SHIFT): LEVIERS DE COMMANDE
394	02	COMMANDES ÉQUIPEMENT RÉTRO À 4 LEVIERS, ENSEMBLE TIRANT SUPÉRIEUR (CENTER PIVOT: SIDE SHIFT): TIRANTS SUPÉRIEURS
394	03	COMMANDES ÉQUIPEMENT RÉTRO À 4 LEVIERS, ENSEMBLE TIRANT INFÉRIEUR (CENTER PIVOT: SIDE SHIFT): TIRANTS INFÉRIEURS
394/01	01	COMMANDES ÉQUIPEMENT RÉTRO À 2 LEVIERS ISO, LEVIERS, ANTIPOUSSIÈRE, DÉCALCOMANIES (CENTER PIVOT) - NA -LEVIERS DE COMMANDE

SECTION INDEX

Variantes

402	01	ESSIEU AVANT (4RM), LOGEMENT, DOUILLES & SUPPORTS - NA
402	02	ESSIEU AVANT (4RM), LOGEMENT OSCILLANT & CYLINDRE DIRECTION - NA
402	03	ESSIEU AVANT (4RM), MOYEUX - NA
402	04	ESSIEU AVANT (4RM), GROUPE PIGNON & COURONNE - NA
402	05	ESSIEU AVANT (4RM), DIFFERENTIEL - NA
402	06	PONT AVANT 4WD, ARBRE PONT ARTICULÉ
416		COMPOSANTS DE MARTEAU DE SYSTÈMES (CAB - ROPS)
437		CHEMISE COULISSANTE,INSTALLATION HYDRAULIQUE MISE DE NIVEAU STRUCTURE MACHINE
471	01	BENNE 4X1 (1 M³) AVEC LAME "COMMON GREY"
471	02	GODET 4X1 (1 M3) AVEC LAME “COMMON GREY”: DÉFAILLANCE GODET
471/01		VERIN HYDRAULIQUE (BENNE 4X1-6X1)
472	01	BENNE 4X1 (1 M³) AVEC DENT "COMMON GREY"
472	02	GODET 4X1 (1 M3) AVEC DENTS “COMMON GREY”: DÉFAILLANCE GODET
473	01	BENNE 6X1 (1 M³) AVEC LAME "COMMON GREY"
473	02	GODET 6X1 (1 M3) AVEC LAME “COMMON GREY”: DÉFAILLANCE GODET
474	01	BENNE 6X1 (1 M³) AVEC DENT "COMMON GREY"
474	02	GODET 6X1 (1 M3) AVEC DENTS “COMMON GREY”: DÉFAILLANCE GODET
514	01	BALANCIER COURT
514	02	BALANCIER COURT
514	03	CYLINDRE HYDRAULIQUE LEVAGE
514	04	CYLINDRE HYDRAULIQUE EXCAVATION
515/01		GODET RÉTROCAVEUSE 12" (305 MM) A DENTS GOUPILLEES - NA
516/01		GODET RÉTROCAVEUSE 18" (457MM) A DENTS GOUPILLEES - NA
517/01		GODET RÉTROCAVEUSE 24" (610 MM) A DENTS GOUPILLEES - NA
518/01		GODET RÉTROCAVEUSE 30" (762 MM) A DENTS GOUPILLEES - NA
519/01		GODET RÉTROCAVEUSE 36" (910MM) A DENTS GOUPILLEES - NA
520		BENNE DE (0.88 M³) SANS DENTS
520/01		GODET RÉTROCAVEUSE 18" (457 MM) A DENTS GOUPILLEES (EXTRA HD) - NA
521		GODET RÉTROCAVEUSE 24" (610MM) A DENTS GOUPILLEES (EXTRA HD) - NA
522		BENNE DE (1 M³) SANS DENTS
522/01		BENNE STANDARD DE (1 M³) AVEC FURCHES
525		BENNE STANDARD DE (1 M³) AVEC FURCHES ET LAME REVERSIBLE
527		BENNE DE (0.88 M³) ET LAME REVERSIBLE SUPPLEMENTAIRE
535		PIED STABILISATEUR TERRE (CENTER PIVOT)
536		BENNE STANDARD DE (1 M³) AVEC DENT
536/02		PIED STABILISATEUR REVERSIBLE (CENTER PIVOT)
537		BENNE STANDARD DE (1 M³) AVEC LAME REVERSIBLE SUPPLEMENTAIRE
548		BENNE CUREUSE DE FOSSÅS
622		VENTILATEUR INTERIEUR - CAB
636	07	VERSION MOTEUR: DÉMARREUR
636	08	ACCESOIRE MOTEUR - ALTERNATEUR
638	01	PROTECTIONS RADIATEUR
638	02	RADIATEUR À EAU, HUILE HYDRAULIQUE ET TRANSMISSION
638	03	TUBULURES DE REFROIDISSEMENT AFTER-COOLER
638	04	RADIATEUR: AFTER-COOLER
638	05	VERSION MOTEUR: SUPPORTS
638	06	ÉQUIPEMENT MOTEUR: VENTILATEUR AVEC JOINT GLUANT - EU
638	07	ACCESOIRE MOTEUR - DEMARREUR
638	08	ACCESOIRE MOTEUR: ALTERNATEUR
639	01	PROTECTIONS RADIATEUR

SECTION INDEX
Variantes

639	02	RADIATEUR À EAU, HUILE HYDRAULIQUE ET TRANSMISSION
639	03	TUBULURES DE REFROIDISSEMENT AFTER-COOLER
639	04	RADIATEUR: AFTER-COOLER
639	05	VERSION MOTEUR: SUPPORTS
639	06	ÉQUIPEMENT MOTEUR: VENTILATEUR AVEC JOINT GLUANT
639	07	VERSION MOTEUR: DÉMARREUR
639	08	ACCESOIRE MOTEUR
646	01	JEU DE PIÈCES MACHINE POUR LA CLIMATISATION
646	02	GROUPE BRANCHEM. COMPRESSEUR A/C
646	03	COMPRESSEUR A/C
646	04	GROUPE BRANCHEM. FILTRE A/C & CONDENSEUR
650		COLONNE DIRECTION, FIXE & REGLABLE
698		CHEMISE COULISSANTE,INSTALLATION HYDRAULIQUE MISE DE NIVEAU STRUCTURE MACHINE & COMMUTATEUR ON/OFF
699		BOUTON MARTEAU MANUEL
700	01	CONDUITS HYDRAULIQUES BRAS GODETS 4X1 ET 6X1 (POWER SHIFT, POWER SHUTTLE)
700	02	CONDUITS HYDRAULIQUES MACHINE GODETS 4X1 ET 6X1 (POWER SHIFT, POWER SHUTTLE)
700	03	DISTRIBUTEUR PALE A TROIS SECTEURS (POWER SHIFT , POWER SHUTTLE)
721	01	BALANCIER TÉLÉSCOPIQUE AVEC COMMANDE À PÉDALE (CENTER PIVOT): DISTRIBUTEUR - NA
721	02	DISTRIBUTEUR STABILISATEUR, 3 ESECTION (CENTER PIVOT) - NA
721	03	MANCHONS DISTRIBUTEUR BRAS TELESCOPIQUE, SECTION HED(CENTER PIVOT) - NA
721	04	BALANCIER TÉLÉSCOPIQUE AVEC COMMANDE À PÉDALE (CENTER PIVOT): SYSTÈME BALANCIER TÉLÉSCOPIQUE: VÉRIN TÉLÉSCOPIQUE - NA
721	05	BALANCIER TÉLÉSCOPIQUE AVEC COMMANDE À PÉDALE (CENTER PIVOT): SYSTÈME BALANCIER TÉLÉSCOPIQUE: VÉRIN DU GODET - NA
721	06	BALANCIER TÉLÉSCOPIQUE AVEC COMMANDE À PÉDALE (CENTER PIVOT) - NA
724/ A		DISTRIBUTEUR MARTEAU ARRIERE
724/01	01	CIRCUIT HYDRAULIQUE MACHINE POUR MARTEAU (CENTER PIVOT)
724/01	02	CIRCUIT HYDRAULIQUE BRAS MARTEAU (CENTER PIVOT)
724/02		INSTALLATION HYDRAULIQUE MARTEAU (CENTER PIVOT)
725		MARTEAU PIQUEUR - BALANCIER TELESCOPIQUE
725/01	01	CIRCUIT HYDRAULIQUE ENSEMBLE BRAS GODETS 4X1 ET 6X1 (POWER SHUTTLE) - NA
725/01	02	ENSEMBLE CONDUITS HYDRAULIQUES MACHINE GODETS 4X1 ET 6X1 (POWER SHUTTLE) - NA
725/01	03	DISTRIBUTEUR CHARGEUSE, 3 SECTIONS (CENTER PIVOT) - NA
725/01	04	DISTRIBUTEUR CHARGEUSE, 3 SECTIONS, CALOTTE & SOUPAPE DECHARGE (CENTER PIVOT) - NA
725/01	05	DISTRIBUTEUR CHARGEUSE, 3 SECTIONS, SOUPAPES D'EVACUATION ET DE RETENUE (CENTER PIVOT) - NA
725/01	06	DISTRIBUTEUR PALE A TROIS SECTEURS - BENNE SECTEUR 4X1 - 6X1(CENTER PIVOT) - NA
727/01		INSTALLATION HYDR. BRAS TELESCOPIQUE COMMANDE A PEDALE (CENTER PIVOT) - NA
728	01	SYSTÈME MARTEAU À MAIN: SORTIE
728	02	SYSTÈME MARTEAU À MAIN: RETOUR
728	03	VALVE MARTEAU MANUEL

733		RACCORD RAPIDE MECANIQUE ARRIERE
734		RACCORD RAPIDE MECANIQUE AVANT
758		GYROPHARE
787		CONSOLE AVANT SANS TACHYMETRE (POWER SHUTTLE, ROPS)
787/01		CONSOLE AVANT SANS TACHYMETRE (POWER SHUTTLE, CAB)
788		CONSOLE AVANT AVEC TACHYMETRE (ROPS)
788/01		CONSOLE AVANT AVEC TACHYMETRE (CAB) (POWER SHUTTLE)
789		DETECTEUR DE VITESSE (P.SHUTTLE)
793		FEUX DE TRAVAIL AVANT - CABINE
793/01		FEUX DE TRAVAIL AVANT (ROPS)
794		LAMPES ET PHARES - CABINE
794/01		LAMPES ET PHARES (ROPS)
796		ANTIVOL
803		PARE-BOUE AVANT
835		PROTECTION CONTRE LA BOUE ARRIÈRE ET TOIT (ROPS / CAB) - NA
851		SIEGE EN TISSU - CABINE
851/01	01	COUSSINS SIEGE EN TISSU, ACCOUDOIRS & ACCESSOIRES
851/01	02	PLAQUE INSTALLATION SIEGE TISSU, GLISSIERES REGLAGE & CEINTURE
851/01	03	PARTIES SUSPENSIONS SUPERIEURES SIEGE TISSU
851/01	04	PARTIES SUSPENSIONS INFERIEURES SIEGE TISSU
855		SIEGE PNEUMATIQUE EN TISSU - CABINE
855/01	01	COUSSINS SIEGE PNEUMATIQUE, ACCOUDOIRS & ACCESSOIRES
855/01	02	PLAQUE INSTALLATION SIEGE PNEUMATIQUE, GLISSIERES REGL & CEINTURE
855/01	03	PARTIES SUSPENSIONS SUPERIEURES SIEGE PNEUMATIQUE
855/01	04	PARTIES SUSPENSIONS INFERIEURES SIEGE TISSU PNEUMATIQUE
855/01	05	COMPRESSEUR & TUBES SIEGE PNEUMATIQUE EN TISSU
856		COUSSINS SIEGE EN VINYLE, ACCOUDOIRS & ACCESSOIRES (ROPS)
856/01	01	SIEGE EN VINYLE AVEC ACCOUDOIRS (ROPS)
856/01	02	PLAQUE INSTALLATION SIEGE VINYLE, GLISSIERES REGLAGE & CEINTURE (ROPS)
856/01	03	PARTIES SUSPENSIONS SUPERIEURES SIEGE VINYLE (ROPS)
856/01	04	PARTIES SUSPENSIONS INFERIEURES SIEGE VINYLE (ROPS)
879		MIROIR RÉTROVISEUR DROIT CABINE
888		PROTECTION ET DÉCALCOMANIE BALANCIER
900	01	BALANCIER LONG: ENSEMBLE
900	02	FLECHE - BALANCIER LONG
900	03	BALANCIER LONG
900	04	BALANCIER LONG/COURT - CINEMATIQUE GODET
900	05	BALANCIER: SYSTÈME BALANCIER, FLÈCHE ET VÉRIN DU BALANCIER
900	06	BALANCIER: CIRCUIT HYDRAULIQUE VÉRIN DU GODET
900	07	BALANCIER: CIRCUIT HYDRAULIQUE VÉRIN DE FLÈCHE
900	08	BALANCIER - CIRCUIT HYDRAULIQUE
900	09	CYLINDRE HYDRAULIQUE LEVAGE - BALANCIER TELESCOPIQUE LONG
900	10	CYLINDRE HYDRAULIQUE EXCAVATION
900	11	CYLINDRE HYDRAULIQUE BENNE
901	01	BALANCIER TÉLÉSCOPIQUE LONG: ENSEMBLE
901	02	BALANCIER TELESCOPIQUE LONG
901	03	BALANCIER TELESCOPIQUE - CIRCUIT HYDRAULIQUE
901	04	BALANCIER TÉLÉSCOPIQUE LONG: VÉRIN HYDRAULIQUE TÉLÉSCOPIQUE
902	01	BALANCIER TÉLÉSCOPIQUE COURT: ENSEMBLE
902	02	BALANCIER TELESCOPIQUE COURT

SECTION INDEX
Variantes

902	03	BALANCIER TÉLÉSCOPIQUE COURT: VÉRIN HYDRAULIQUE TÉLÉSCOPIQUE
990		OUTILS
993	01	PLAQUETTES - NA
993	02	PLAQUETTES - NA
995		DÉMARRAGE À FROID

NOTES

095		p1	03/08

COMMANDE DES STABILISATEURS SANS MONTEE AUTOTOMATIQUE (CENTER PIVOT)

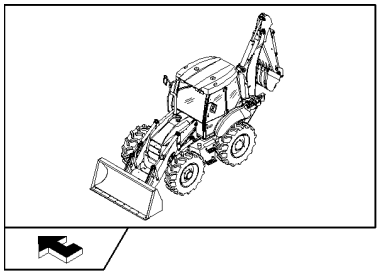

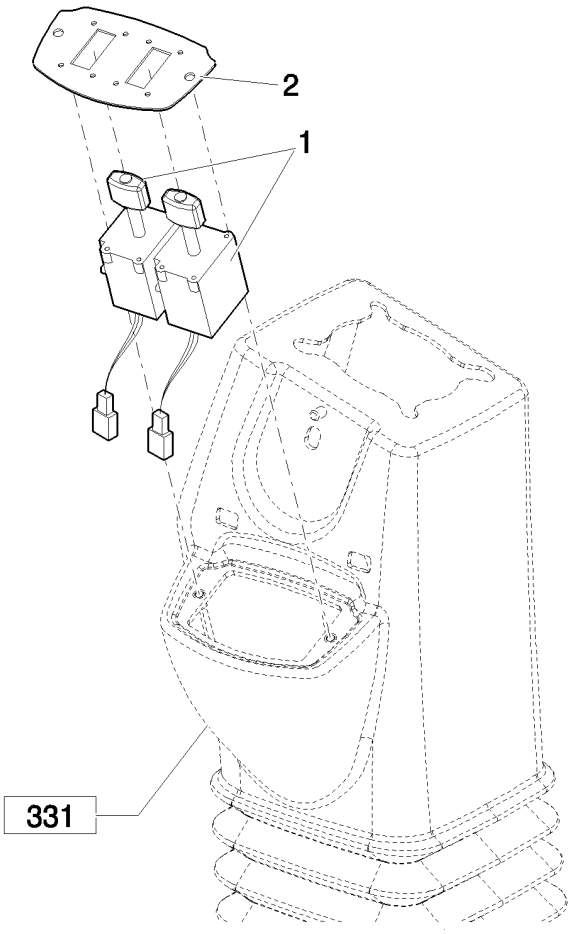

COMMANDE DES STABILISATEURS SANS MONTEE AUTOTOMATIQUE (CENTER PIVOT)

REF	FN	PART NUMBER	YR/SN	QTY	DESCRIPTION
1		86988086		2	JOYSTICK
2		87435381		1	PANOPLIE

Pilot Control Version

B95B

096		p1	03/08

COMMANDE DES STABILISATEURS AVEC MONTEE AUTOTOMATIQUE (CENTER PIVOT)

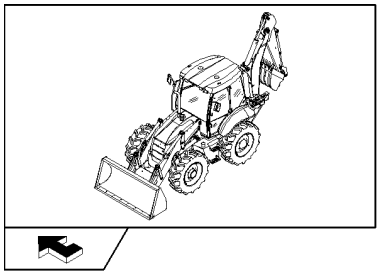

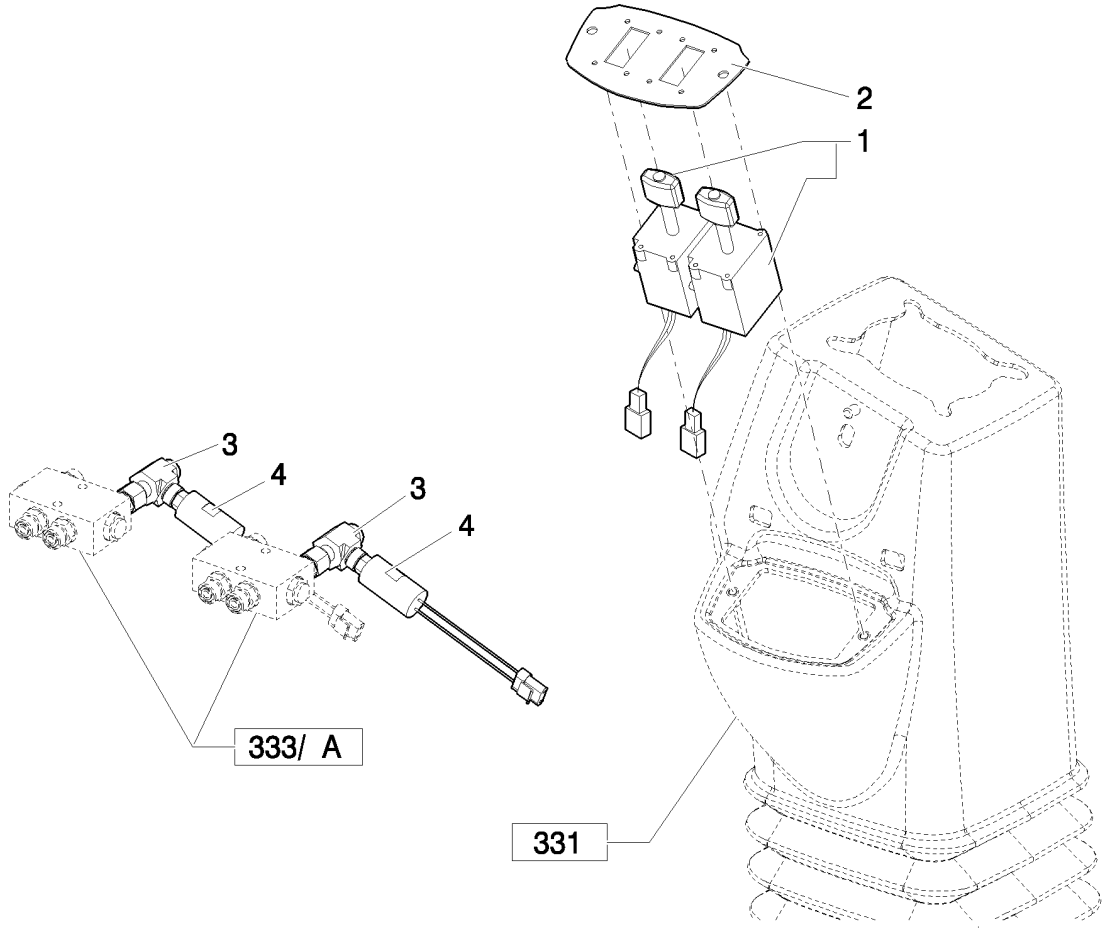

COMMANDE DES STABILISATEURS AVEC MONTEE AUTOTOMATIQUE (CENTER PIVOT)

REF	FN	PART NUMBER	YR/SN	QTY	DESCRIPTION
1		86988086		2	JOYSTICK
2		87435381		1	PANOPLIE
3		87401111		2	RACCORD
4		87589234		2	PRESSOSTAT

Pilot Control Version

B95B

131		p1	03/08

ACCUMULATEUR UNIQUE

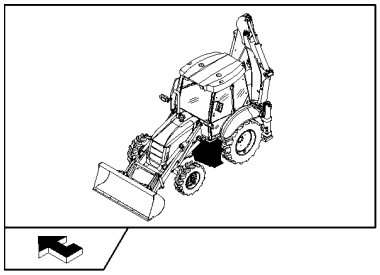

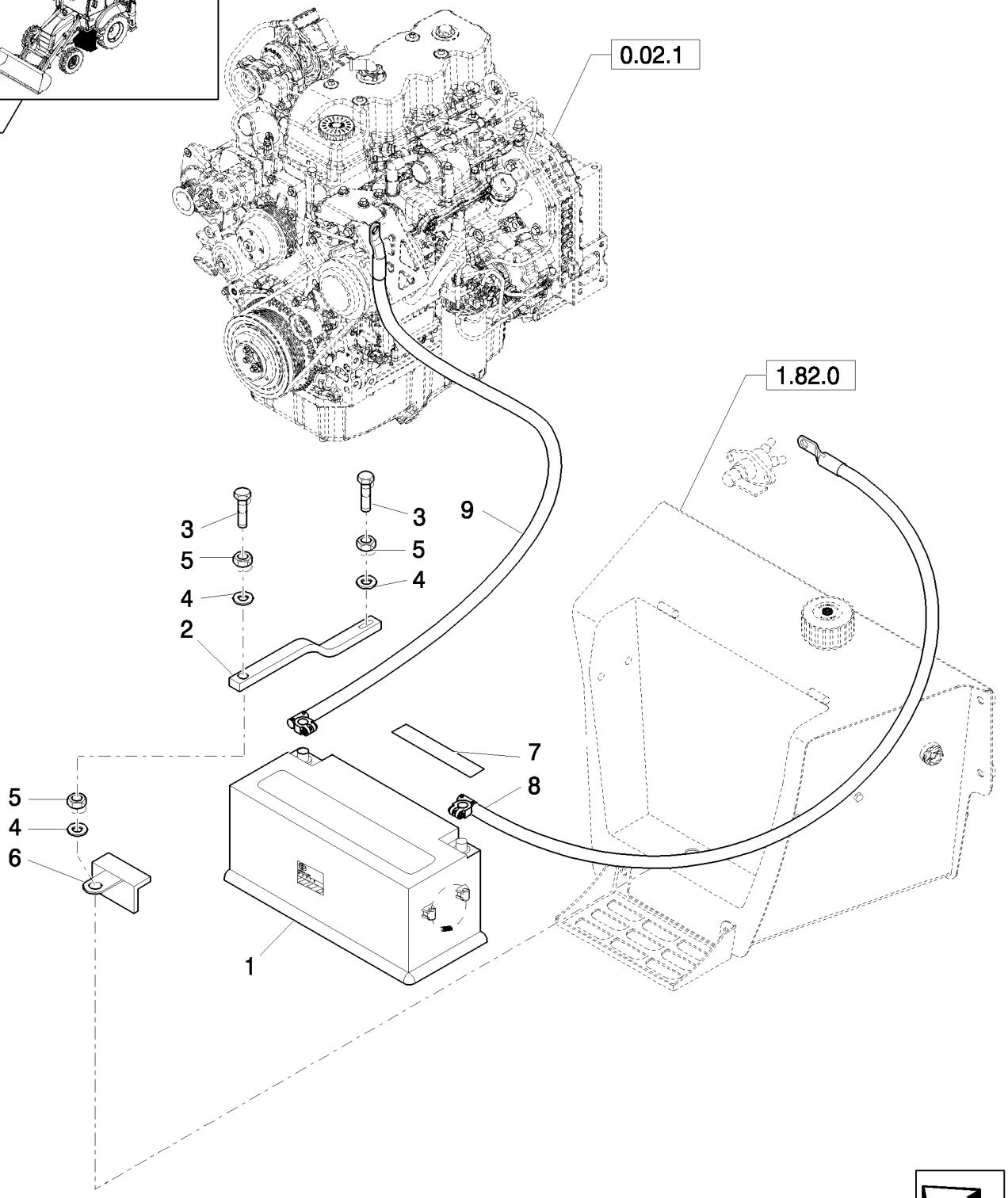

ACCUMULATEUR UNIQUE

REF	FN	PART NUMBER	YR/SN	QTY	DESCRIPTION
1		85825440		1	BATTERIE HUMIDE, CANADIAN.
2		87416929		1	PATTE FIXATION
3		412005		2	BOULON, Hex, M10 x 220, 8.8, M10x220
4		47048963		2	RONDELLE
5		47049041		2	ECROU, M10
6		47048788		2	CORNIERE
7		47049590		1	DECALCOMANIE
8		87405018		1	Tresse De Masse
9		87567413		1	CABLE

175		p1	03/08

CALOTTE D'ASPIRATION D'AIR ET PRÉFILTRE

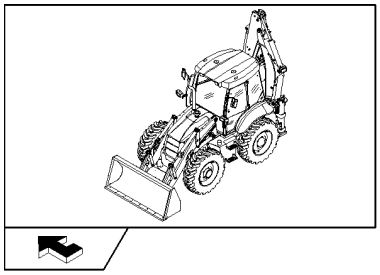

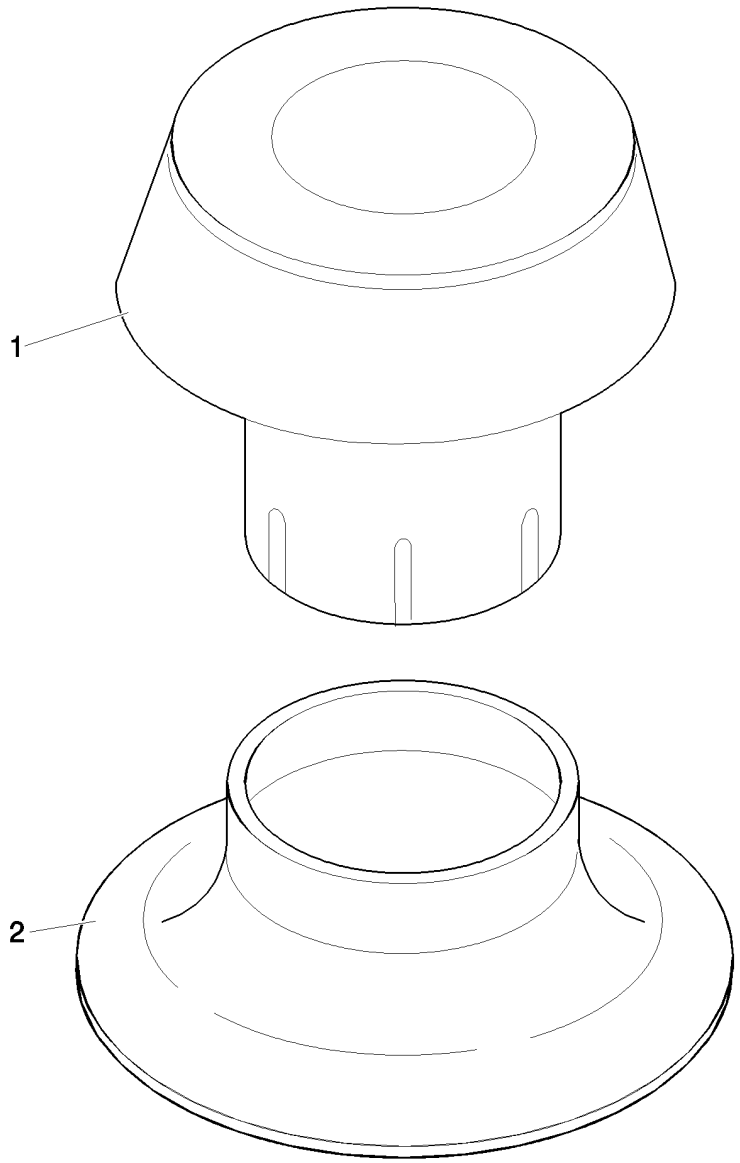

CALOTTE D'ASPIRATION D'AIR ET PRÉFILTRE

REF	FN	PART NUMBER	YR/SN	QTY	DESCRIPTION
1		85804602		1	CHAPEAU
2	1	87597631		1	COUVERCLE

(1) Only for B100B, B100BLR, B110B, B115B (EU) - B95BLR, B95BTC, B110B, B115B (NA)

176		p1	04/08

CALOTTE D'ASPIRATION D'AIR ET PRÉFILTRE

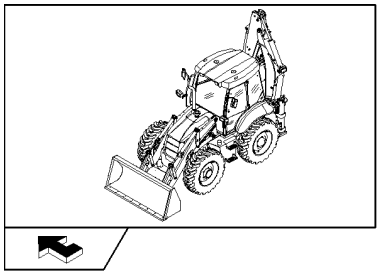

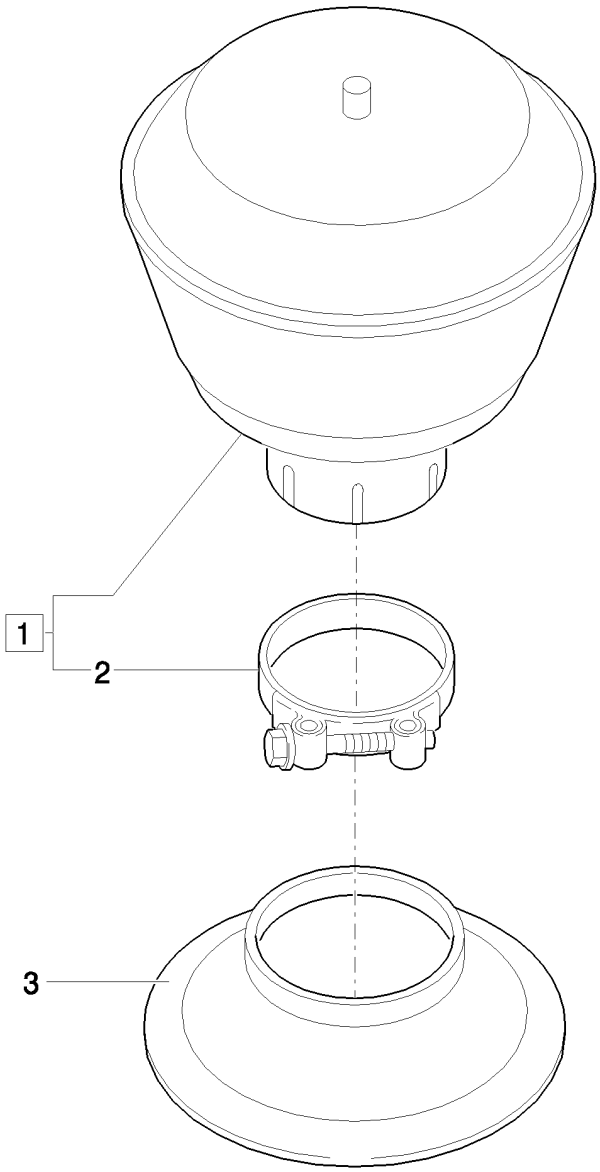

CALOTTE D'ASPIRATION D'AIR ET PRÉFILTRE

REF	FN	PART NUMBER	YR/SN	QTY	DESCRIPTION
1		85804347		1	PRÉFILTRE CYCLONE, Assy
2	1	85802743		1	BRIDE, FLEXIBLE
3	1	87597631		1	COUVERCLE

(1) Only for B100B, B100BLR, B110B, B115B (EU) - B95BLR, B95BTC, B110B, B115B (NA)

CROCHETS DE LEVAGE PELLE ET ARRIERE

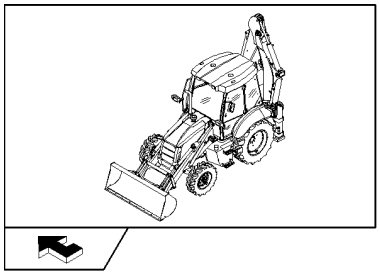

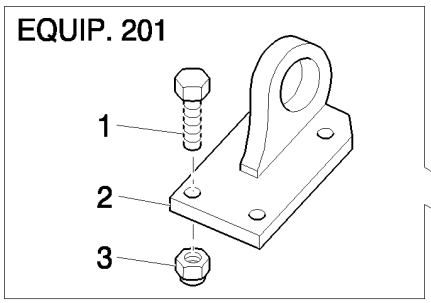

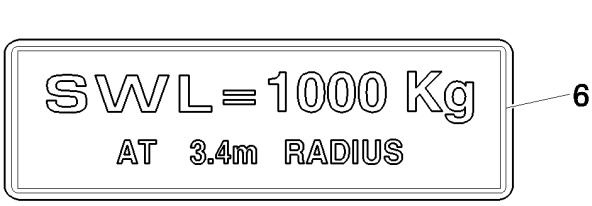

6

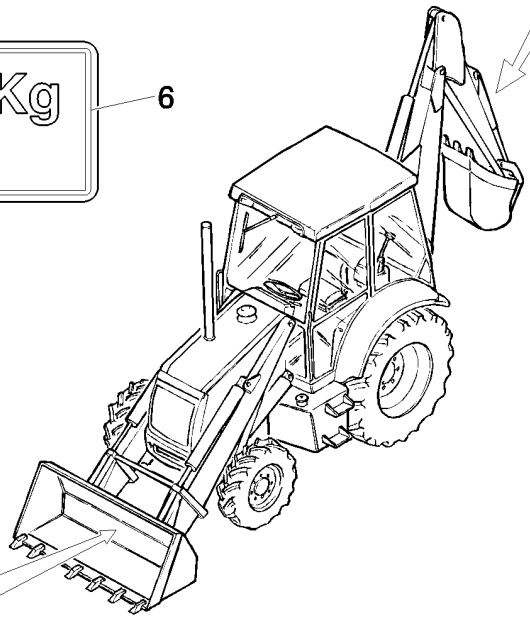

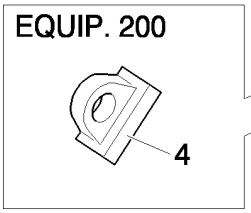

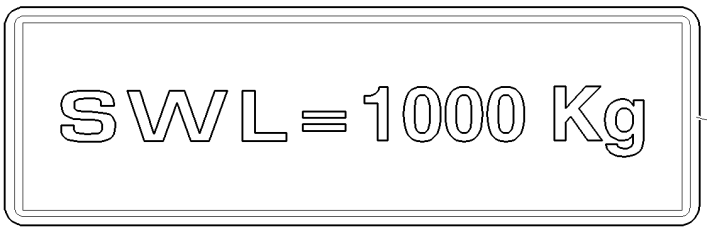

5

CROCHETS DE LEVAGE PELLE ET ARRIERE

REF	FN	PART NUMBER	YR/SN	QTY	DESCRIPTION
1		11394334		4	BOULON, Hex, M14 x 1.5 x 45, 8.8, Full Thd, (Equip.201)
2		85802599		1	OEILLET, (EQUIP.201)
3		12574825		4	CONTRE-ECROU, M14 x 1.5, Cl 10, (EQUIP.201)
4		85805807		1	OEILLET, (Equip.200)
5		85805663		1	DECALCOMANIE, (EQUIP.200)
6		85805664		1	DECALCOMANIE, (EQUIP.201)

284		p1	04/08

RETROVISEUR (CAB) - NA

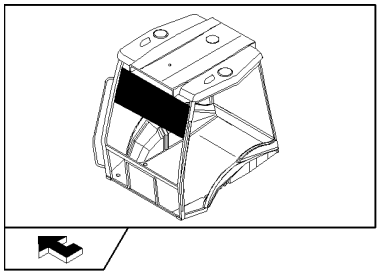

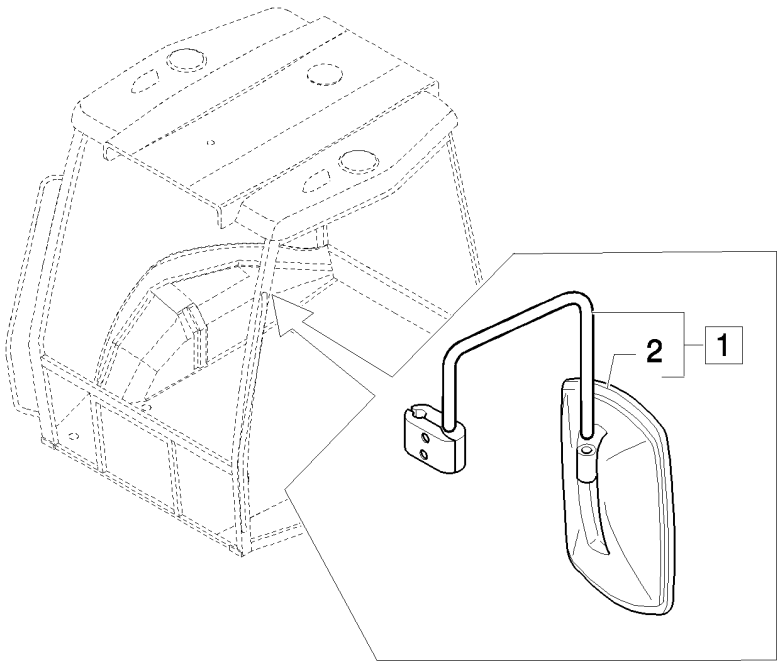

RETROVISEUR (CAB) - NA

REF	FN	PART NUMBER	YR/SN	QTY	DESCRIPTION
1		85820139		1	RETROVISEUR, GCH, Assy
2		85820138		2	RÉTROVISEUR

CONTREPOIDS AVANT: 2WS

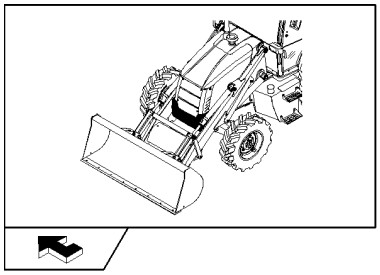

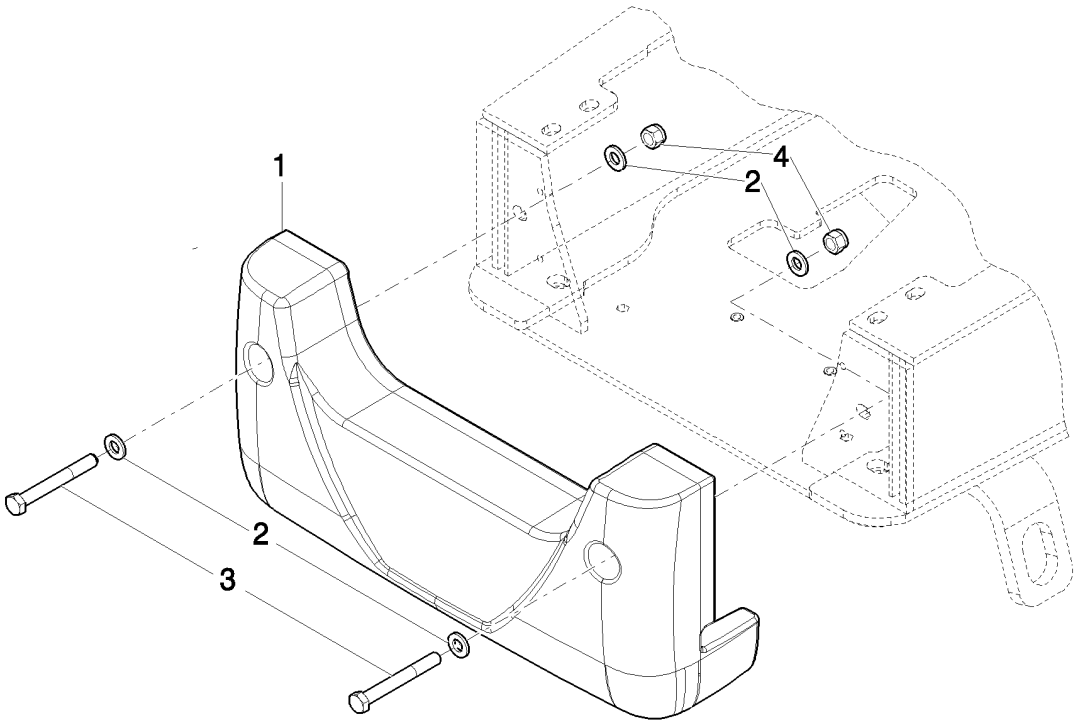

CONTREPOIDS AVANT: 2WS

REF	FN	PART NUMBER	YR/SN	QTY	DESCRIPTION
1		87631830		1	POIDS
2		13580121		4	RONDELLE
3		11120521		2	BOULON, Hex, M16 x 130, 8.8
4		12577411		2	CONTRE-ECROU, M16 x 2, Cl 8

291		p1	03/08

CONTREPOIDS AVANT: 2WS

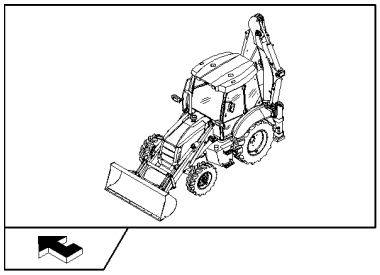

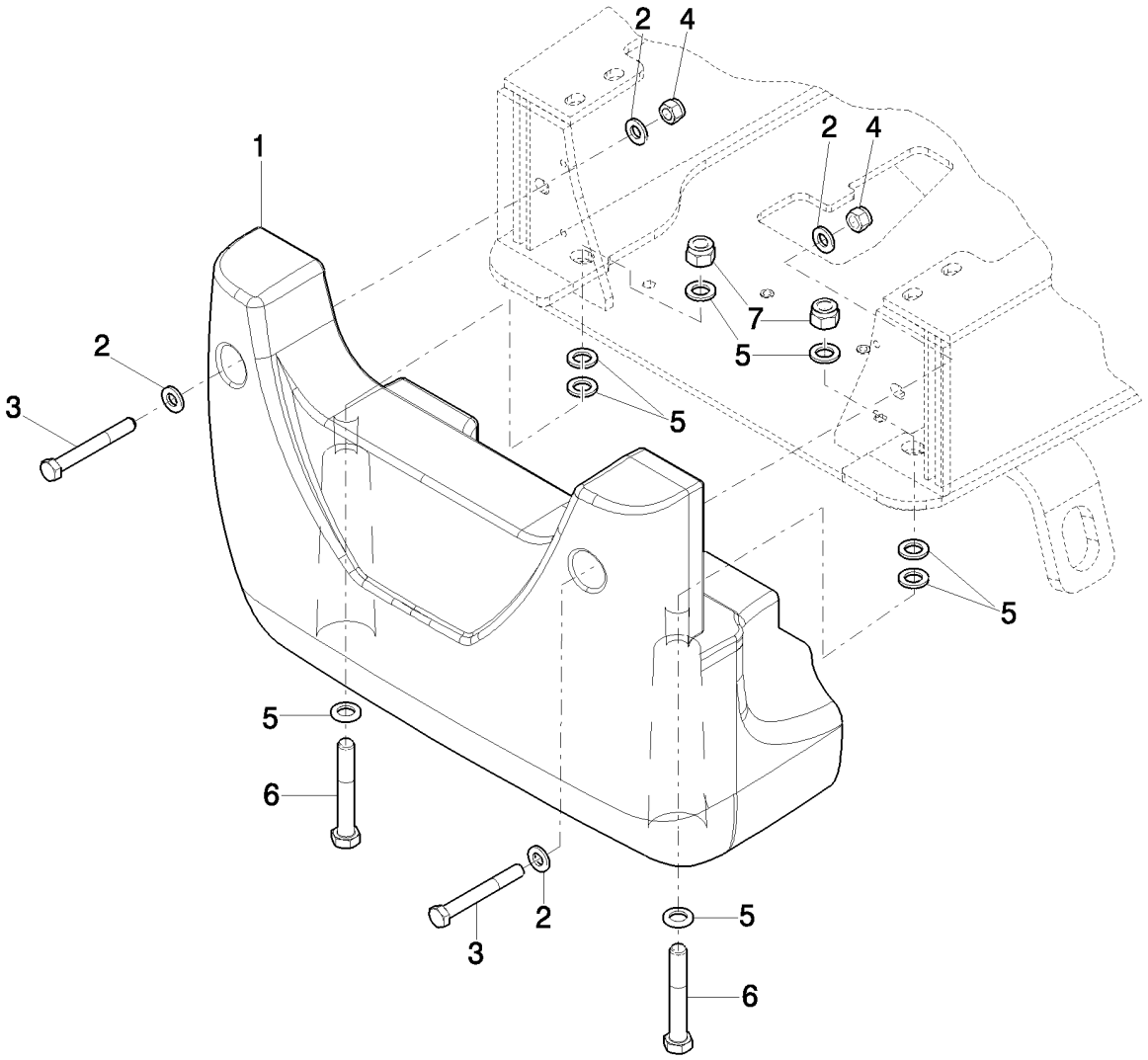

CONTREPOIDS AVANT: 2WS

REF	FN	PART NUMBER	YR/SN	QTY	DESCRIPTION
1		87631834		1	POIDS, Equip. 292
1		87631832		1	POIDS, Equip. 291
2		13580121		4	RONDELLE
3		11120521		2	BOULON, Hex, M16 x 130, 8.8
4		12577411		2	CONTRE-ECROU, M16 x 2, Cl 8
5		10520431		8	RONDELLE
6		16041821		2	BOULON, Hex, M20 x 130, 8.8
7		12577711		2	CONTRE-ECROU, M20 x 2.5, Cl 8

DISTRIBUTEUR PALE A DEUX SECTEURS

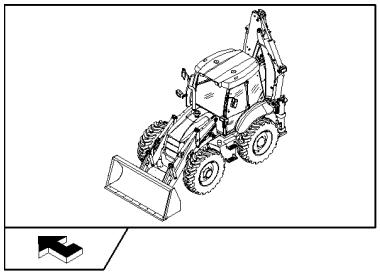

KIT KIT ● = 7

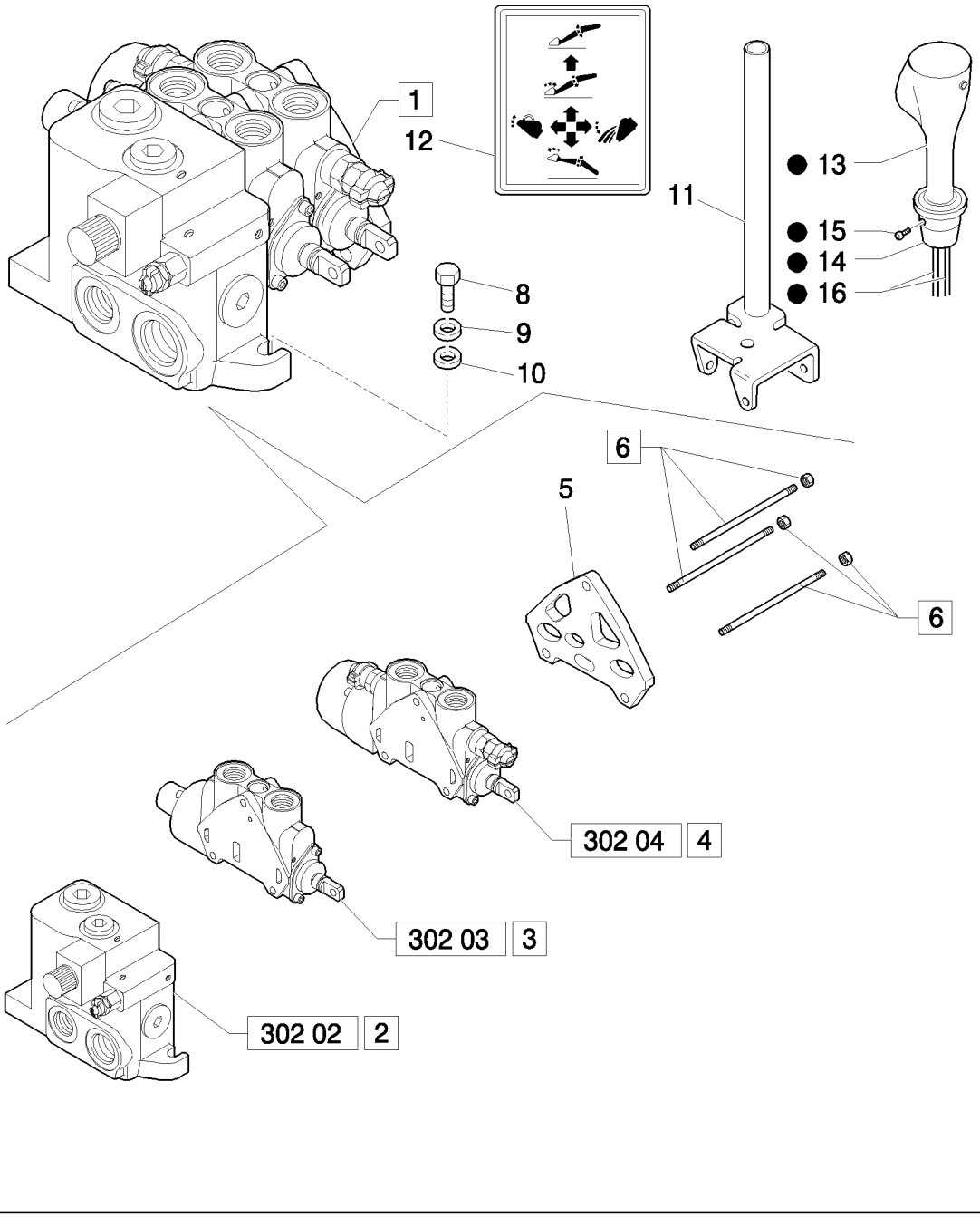

DISTRIBUTEUR PALE A DEUX SECTEURS

REF	FN	PART NUMBER	YR/SN	QTY	DESCRIPTION
1		85825188		1	DISTRIBUTEUR, Assy
2		85825468		1	ELEMENT DISTR HYDR, Assy
3	1	87558567		1	SECTEUR, Assy
4	2	85825469		1	ELEMENT DISTR HYDR, Assy
5		85826924		1	SECTEUR, Assy
6		85825475		1	TIRANT FILETE, TIE RODS
7	3	87311102		1	JOYSTICK
7	4	87311103		1	JOYSTICK
8		11234721		3	BOULON, Hex, M10 x 1.25 x 45, 8.8
9		13578621		3	RONDELLE, 10x30x2
10		11190679		3	RONDELLE BELLEVILLE, Belleville, M10.5
11		87646646		1	LEVIER
12		85804346		1	DECALCOMANIE
13	3	87311302		1	POMMEAU
13	4	87311306		1	POMMEAU
14		87311303		1	MOYEU
15		13789621		2	VIS DE RÉGLAGE, Hex Soc, M8 x 10, Flat Pt
16	3	87311836		1	FAISCEAU COMPLET
16	4	87311838		1	FAISCEAU COMPLET, Includes Switch

(1) LOADER
(2) Bucket
(3) Only for Power Shift
(4) Only for Power Shuttle

NA: Only for Pilot Version except B115B (Mechanical Version / Pilot Version)

302	02	p1	04/08

DISTRIBUTEUR ÉQUIPEMENT CHARGEUR À 2 SECTIONS: SECTION ASPIRATION

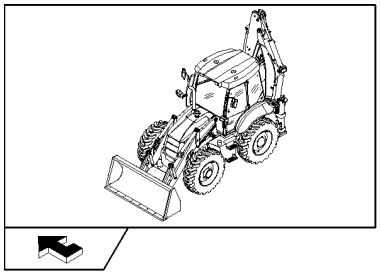

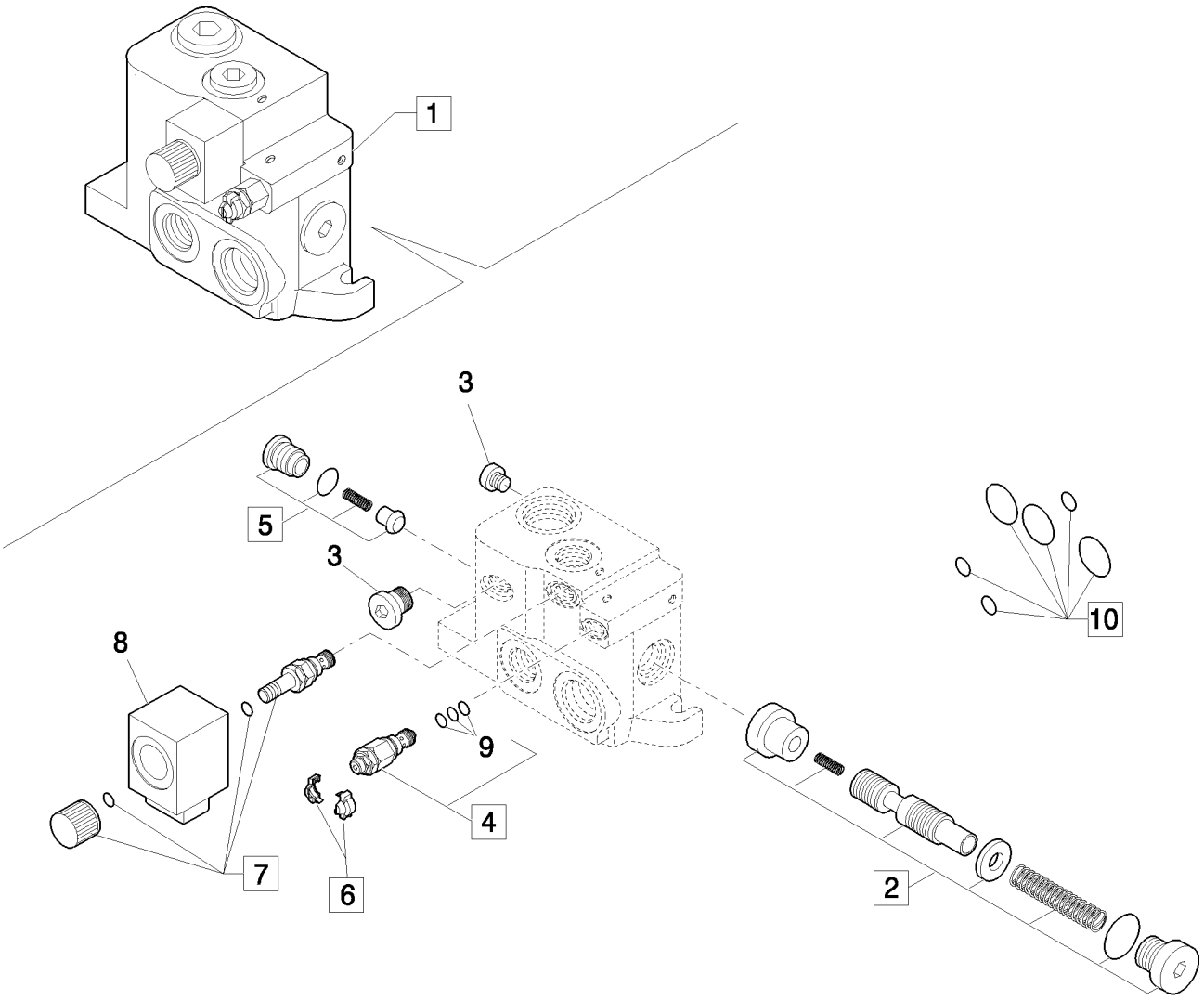

DISTRIBUTEUR ÉQUIPEMENT CHARGEUR À 2 SECTIONS: SECTION ASPIRATION

REF	FN	PART NUMBER	YR/SN	QTY	DESCRIPTION
1		85825468		1	ELEMENT DISTR HYDR, Assy
2		85825472		1	KIT, Assy
3		85811923		2	BOUCHON
4		85811946		1	SOUPAPE, DÉCHARGE
5		85811938		1	CLAPET ANTI-RETOUR, Assy
6		85811934		1	KIT
7		85811954		1	KIT, Assy
8		87734721		1	SOLENOIDE
9		85821236		1	POCHETTE DE JOINTS
10		85819148		1	POCHETTE DE JOINTS

NA: Only for Pilot Version except B115B (Mechanical Version / Pilot Version)

302	03	p1	04/08

DISTRIBUTEUR ÉQUIPEMENT CHARGEUR À 2 SECTIONS: SECTION FLÈCHE

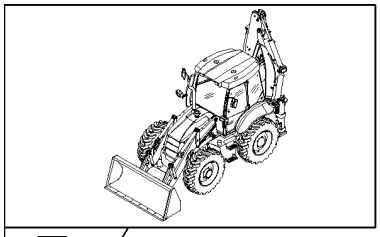

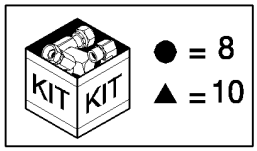

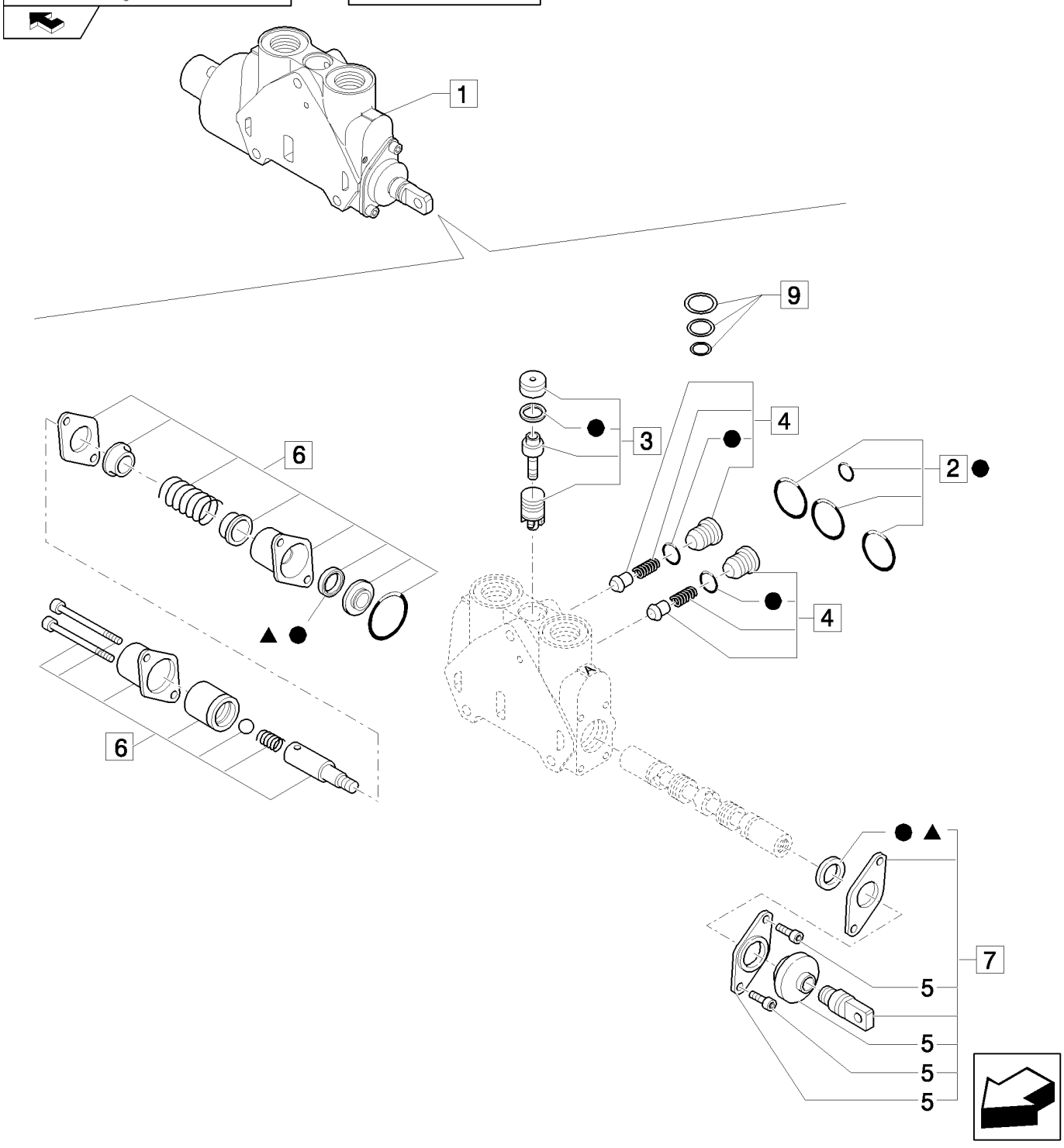

DISTRIBUTEUR ÉQUIPEMENT CHARGEUR À 2 SECTIONS: SECTION FLÈCHE

REF	FN	PART NUMBER	YR/SN	QTY	DESCRIPTION
1		87558567		1	SECTEUR, Assy
2		85819148		1	POCHETTE DE JOINTS, Seals
3		85819378		1	POCHETTE DE JOINTS, Valve
4		85811938		2	CLAPET ANTI-RETOUR, Valve, Assy
5		85820130		1	COIFFE
6		87558870		1	KIT, Cover Assy
7		87735363		1	COLIS DE RÉPARATION, Working Assy
8		85824282		1	KIT, Seals
9		85819040		1	POCHETTE DE JOINTS, Compensator Seal
10		85824283		1	POCHETTE DE JOINTS, Spool Seal

NA: Only for Pilot Version except B115B (Mechanical Version / Pilot Version)

302	04	p1	04/08

DISTRIBUTEUR PALE A DEUX SECTEURS

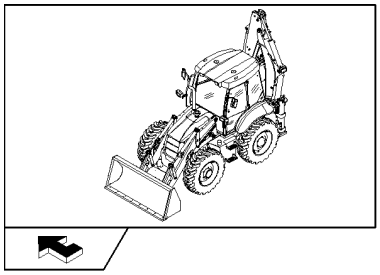

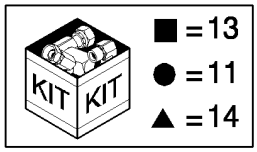

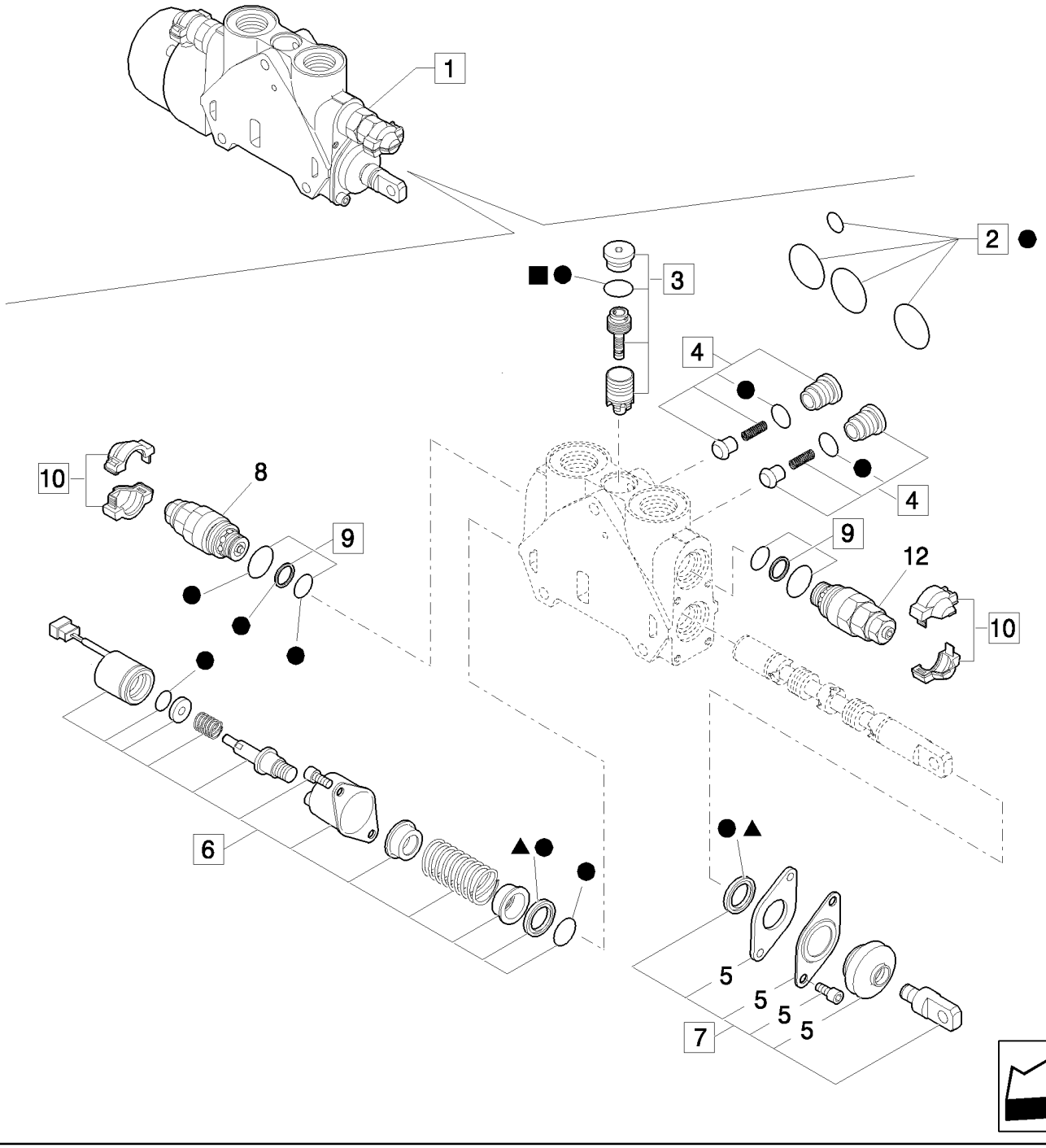

DISTRIBUTEUR PALE A DEUX SECTEURS

REF	FN	PART NUMBER	YR/SN	QTY	DESCRIPTION
1		85825469		1	ELEMENT DISTR HYDR, Assy
2		85819148		1	POCHETTE DE JOINTS, Seals
3		85819378		1	POCHETTE DE JOINTS, Valve
4		85811938		2	CLAPET ANTI-RETOUR, Valve
5		85820130		1	COIFFE
6		85825471		1	KIT, Cover Assy
7		87735363		1	COLIS DE RÉPARATION, Working Assy
8	1, 2	85812116		1	SOUPAPE, DÉCHARGE
9		85811933		2	POCHETTE DE JOINTS, Valve Seals
10		85811935		2	KIT, Cover
11		85824281		1	POCHETTE DE JOINTS, Seals
12	1, 3	85812113		1	SOUPAPE HYDRAULIQUE
13		85819040		1	POCHETTE DE JOINTS, Compensator Seal
14		85824283		1	POCHETTE DE JOINTS, Spool Seal

(1) Includes 9, 10
(2) 240 BAR
(3) 165 BAR

NA: Only for Pilot Version except B115B (Mechanical Version / Pilot Version)

321		p1	03/08

ACCUMULATEUR DOUBLE

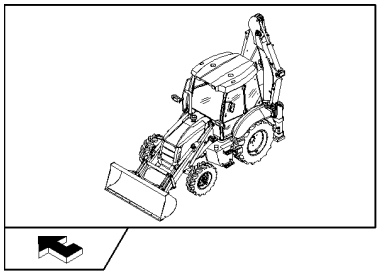

ACCUMULATEUR DOUBLE

REF	FN	PART NUMBER	YR/SN	QTY	DESCRIPTION
1		85826208		2	BATTERIE HUMIDE, U.S.
2		412005		4	BOULON, Hex, M10 x 220, 8.8, M10x220
3		85827072		1	CABLE ELECTRIQUE
4		87568472		1	CABLE
5		47049041		4	ECROU, M10
6		47049590		AR	DECALCOMANIE
7		85826906		2	GARANT
8		87415781		2	PATTE FIXATION
9		47048788		4	CORNIERE
10		47048963		4	RONDELLE
11		87529531		4	PLAQUE DE SERRAGE
12		85827416		1	CABLE, MASSE
13		87405018		1	Tresse De Masse

331	01	p1	04/08

COLONNE COMPLETE 6 SECTIONS (CENTER PIVOT)

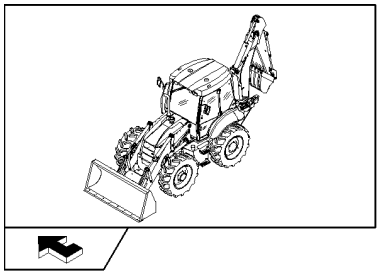

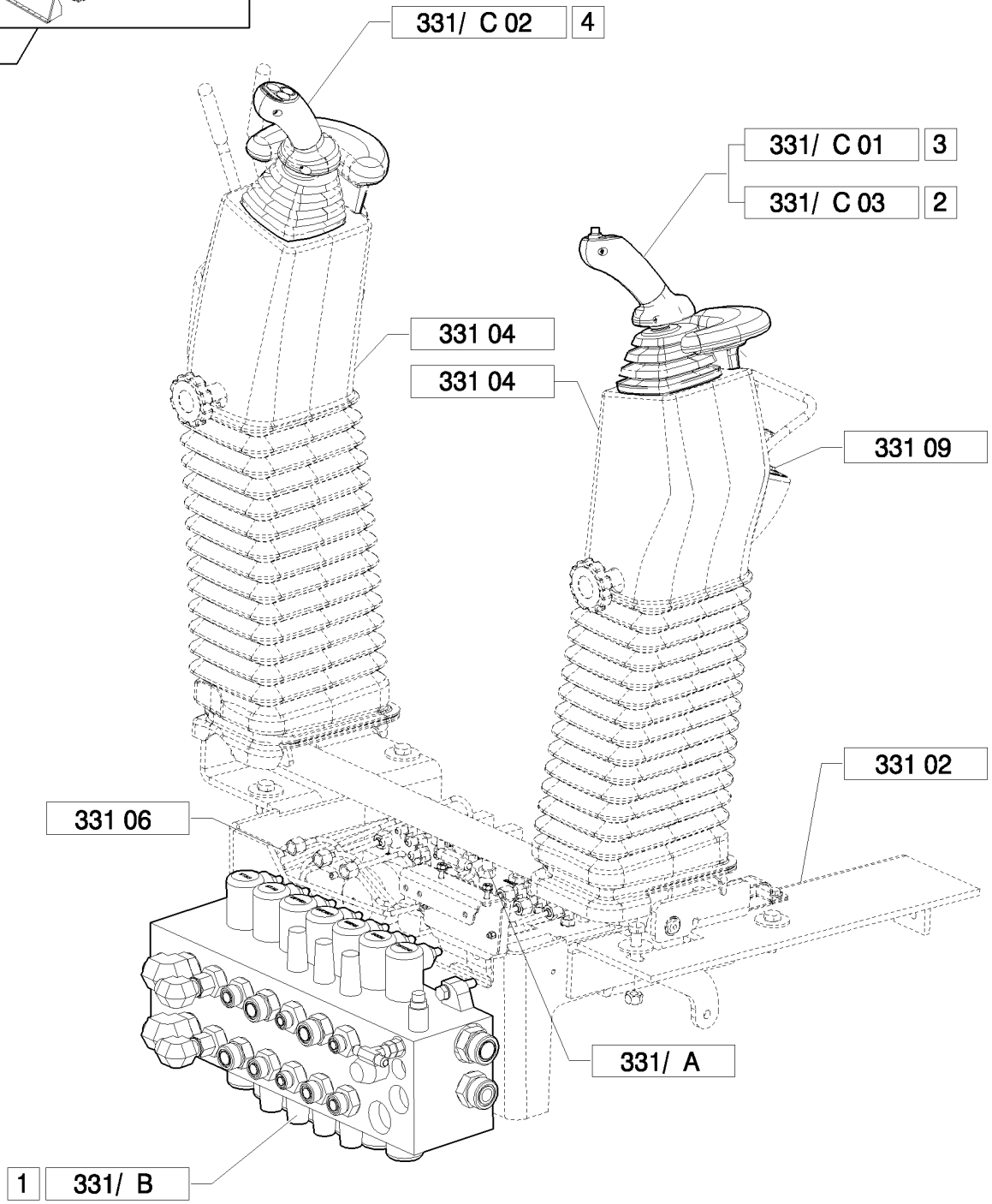

COLONNE COMPLETE 6 SECTIONS (CENTER PIVOT)

REF	FN	PART NUMBER	YR/SN	QTY	DESCRIPTION
1	1	87734101		1	DISTRIBUTEUR, Assy
1	2	87734093		1	DISTRIBUTEUR, Assy
2	3	87685954		1	DISTRIBUTEUR, Assy
3	4	87685956		1	DISTRIBUTEUR, Assy
4		87685948		1	DISTRIBUTEUR, Assy

(1) Only for B110B, B115B (EU)
(2) Only for NA
(3) Only for B90B
(4) Except for B90B

Pilot Control Version B95B

331	02	p1	03/08

SUPPORT COMPLET DE DISTRIBUTEUR DE COMMANDE PILOTE

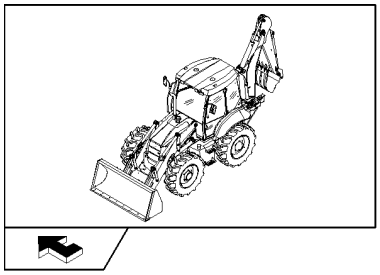

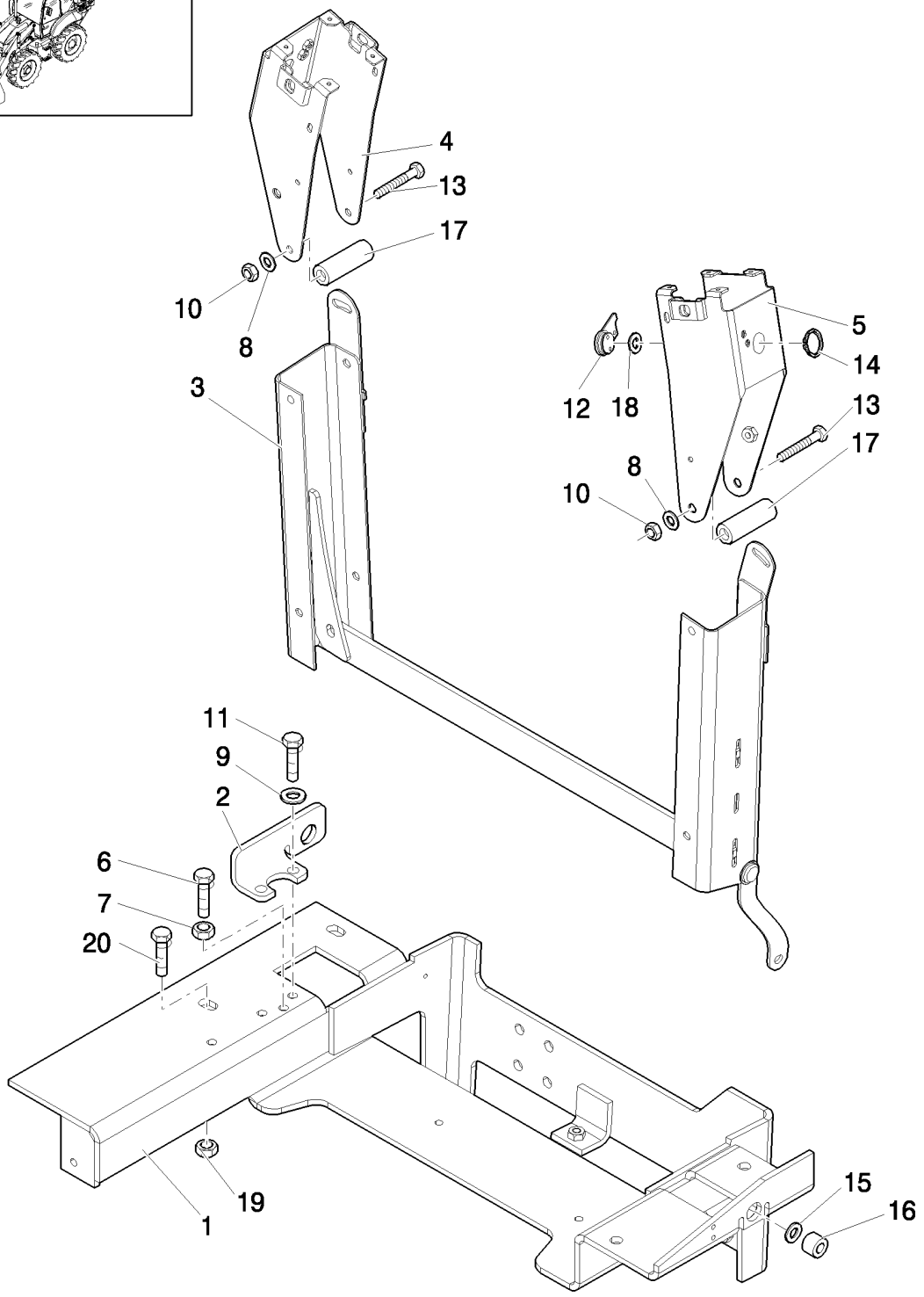

SUPPORT COMPLET DE DISTRIBUTEUR DE COMMANDE PILOTE

REF	FN	PART NUMBER	YR/SN	QTY	DESCRIPTION
1		87434992		1	SUPPORT
2		87427004		1	SUPPORT
3		87426960		1	PIVOT (ASSEMBLE)
4		87453116		1	SUPPORT
5		87453117		1	SUPPORT
6		15213721		1	BOULON, Hex, M8 x 60, 8.8, Full Thd
7		16100811		1	ECROU, M8, Cl 8
8		47048969		4	RONDELLE
9		47048992		2	RONDELLE
10		47049041		2	ECROU
11		47049082		2	BOULON
12		87453118		1	LEVIER
13		84058418		2	BOULON, Hex, M10 x 125, 8.8
14		85824053		1	JOINT THORIQUE
15		85824054		4	RONDELLE
16		85824059		2	BAGUE
17		87453110		2	ENTRETOISE
18		87405706		1	RONDELLE
19		47049032		4	ECROU
20		47049151		4	VIS

Pilot Control Version	B95B

331	03	p1	03/08

SUPPORT COMPLET DE DISTRIBUTEUR DE COMMANDE PILOTE

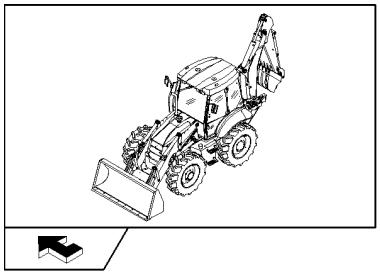

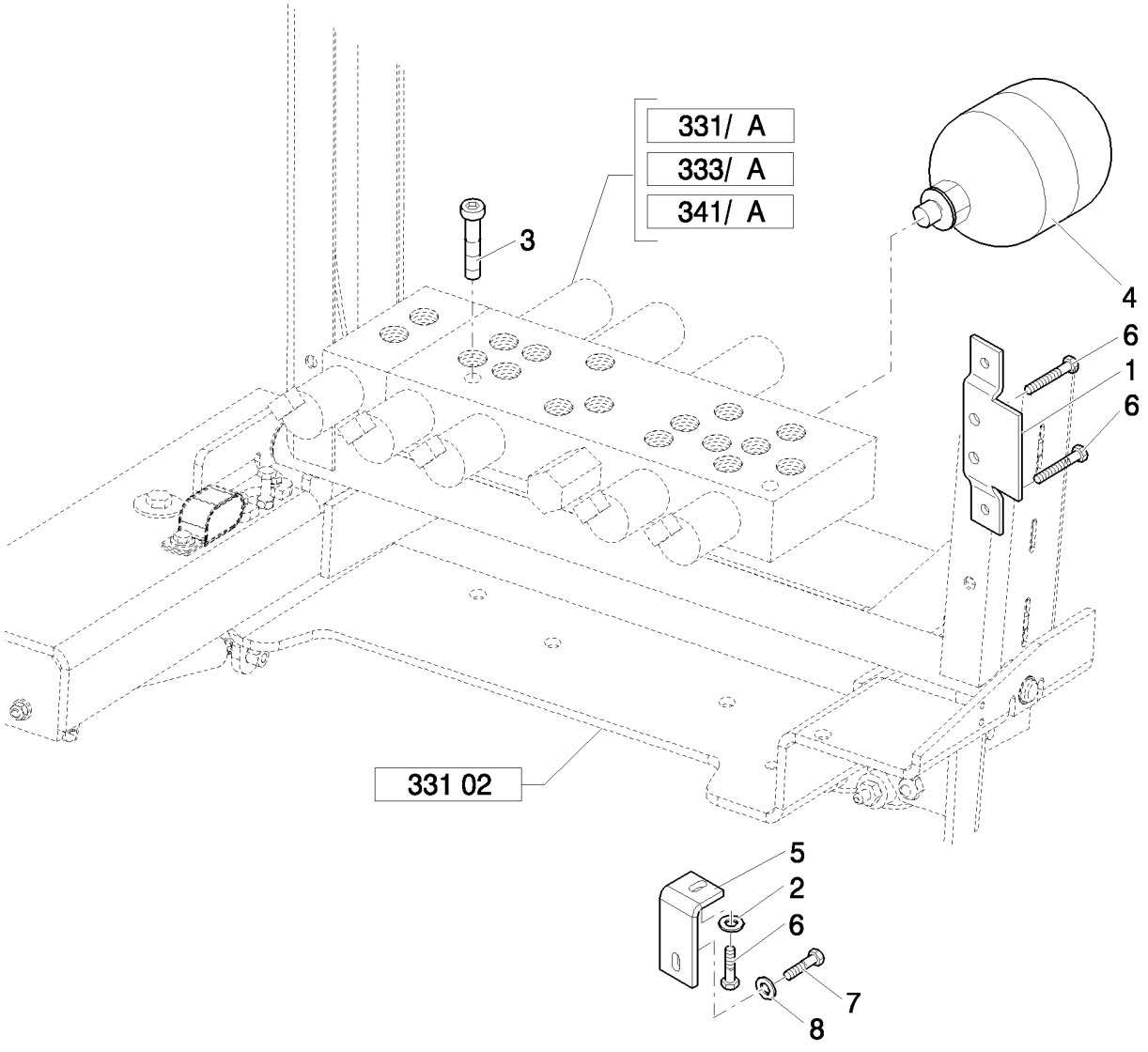

SUPPORT COMPLET DE DISTRIBUTEUR DE COMMANDE PILOTE

REF	FN	PART NUMBER	YR/SN	QTY	DESCRIPTION
1		86990460		1	PANOPLIE
2		47048971		1	RONDELLE
3		14306821		2	VIS, Hex Soc Hd, M8 x 45, 8.8
4		87425225		1	ACCUMULATEUR
5		87402306		1	PATTE FIXATION
6		16040821		3	BOULON, Hex, M10 x 40, 8.8, Full Thd
7		47049065		1	VIS
8		85802618		1	RONDELLE D'ETANCHEITE

Pilot Control Version	B95B

331	04	p1	03/08

SUPPORT COMPLET DE DISTRIBUTEUR DE COMMANDE PILOTE

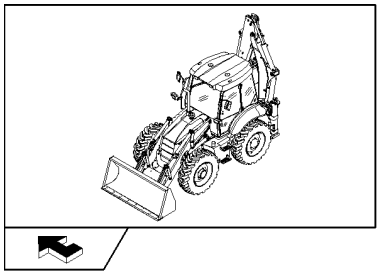

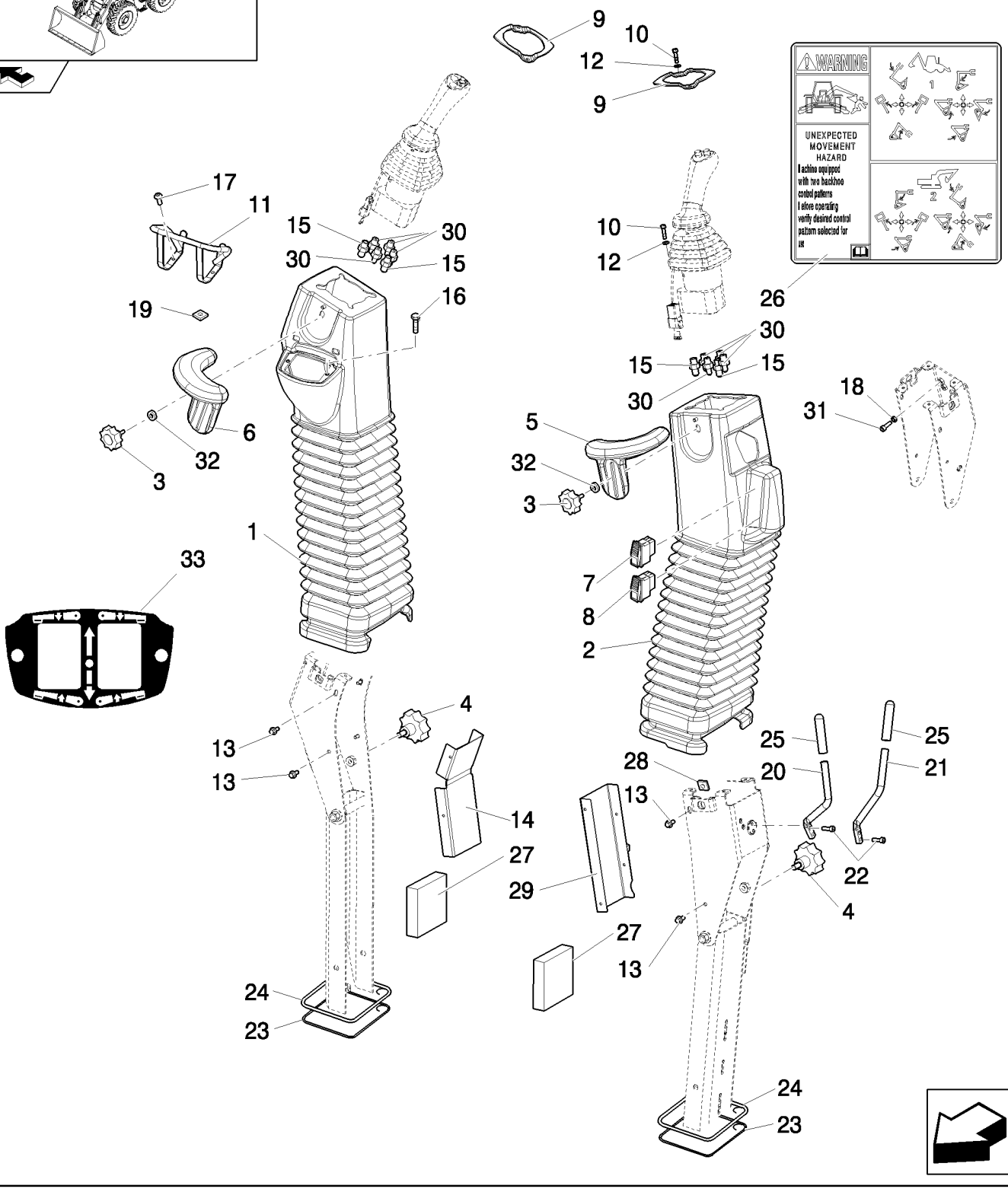

SUPPORT COMPLET DE DISTRIBUTEUR DE COMMANDE PILOTE

REF	FN	PART NUMBER	YR/SN	QTY	DESCRIPTION
1		87309923		1	COIFFE
2		87309924		1	COIFFE
3		87437689		2	POMMEAU
4		87437688		2	POMMEAU
5		87437366		1	ACCOUDOIR
6		87437369		1	ACCOUDOIR
7		87423802		1	CONTACTEUR
8		87410105		1	CONTACTEUR
9		87435372		2	PLAQUE DE SERRAGE
10		10902834		8	VIS
11		87307656		1	GARANT
12		11197779		8	RONDELLE BELLEVILLE, Belleville, M6.4
13		86625199		8	VIS AUTO-TARAUDEUSE, Hex Flg Hd, M6 x 13
14		87431301		1	PROTECTION
15		47050686		4	RACCORD
16		87022296		8	VIS, Cross Pan Hd, M3 x 8
17		87310085		2	VIS AUTO-TARAUDEUSE
18		12574111		1	CONTRE-ECROU, M5 x .8, Cl 8
19		87452511		2	ECROU
20		87418368		1	TRINGLE
21		87418369		1	TRINGLE
22		87310098		4	BOULON, M6 x 20
23		87433514		2	JOINT
24		87433515		2	JOINT
25		87421909		2	POIGNEE DE MANETTE
26	1	87305953		1	DECALCOMANIE
26	2	87305413		1	DECALCOMANIE
27		87349851		2	REVETEMENT ISOLANT
28		86625073		2	ECROU, M6, U
29		87431300		1	GARANT
30		85803312		8	RACCORD
31		10977821		1	BOULON, Hex, M5 x 16, 8.8, Full Thd
32		85821536		2	RONDELLE, M6 x 25 x 1.6

(1) Only for EU
(2) Only for NA

Pilot Control Version	B95B

331	04	p2	03/08

SUPPORT COMPLET DE DISTRIBUTEUR DE COMMANDE PILOTE

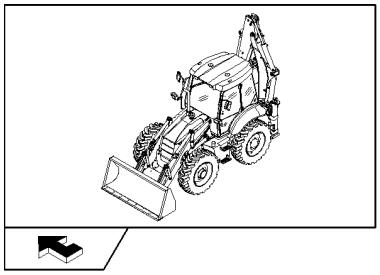

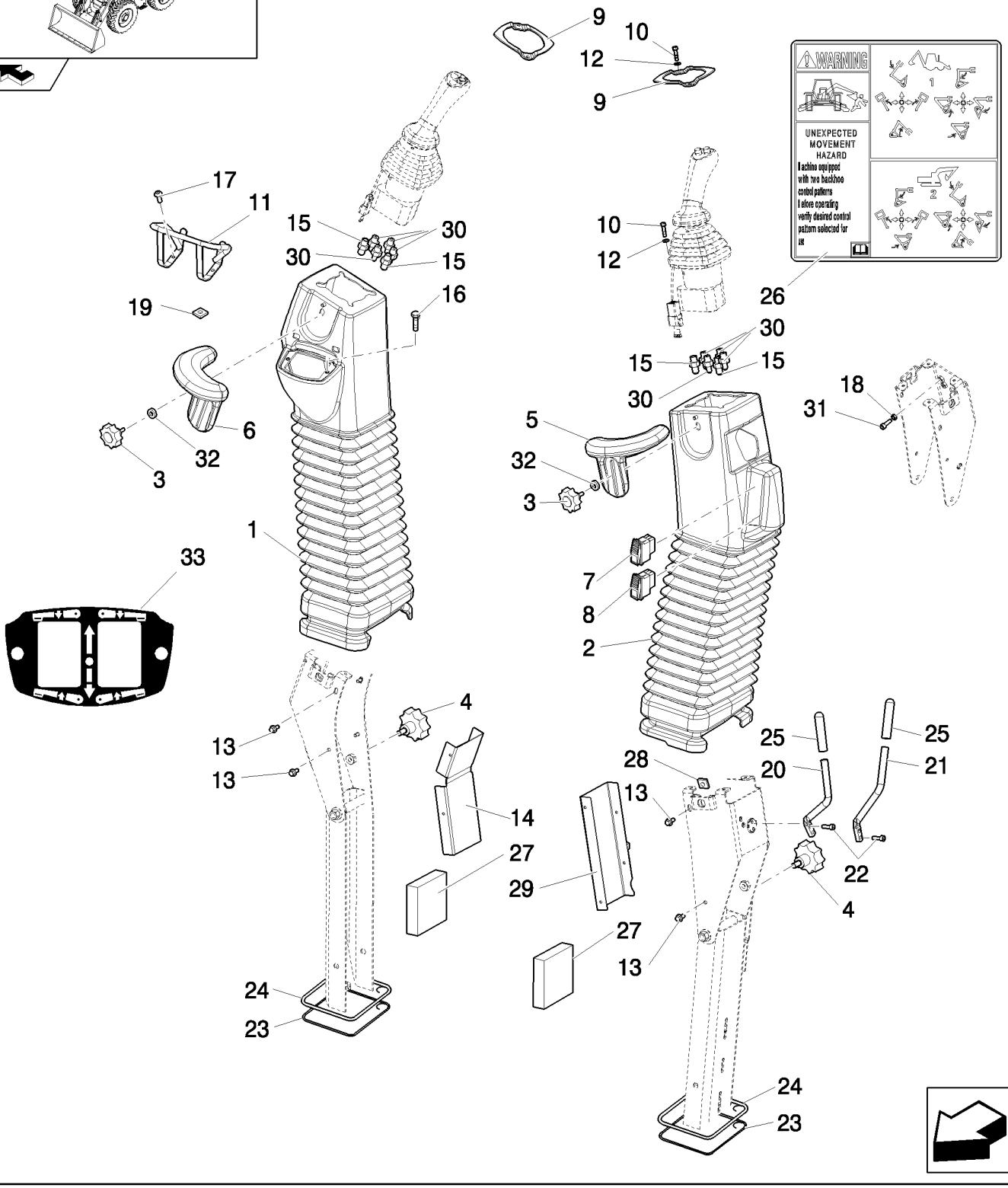

SUPPORT COMPLET DE DISTRIBUTEUR DE COMMANDE PILOTE

REF	FN	PART NUMBER	YR/SN	QTY	DESCRIPTION
33		87423812		1	DECALCOMANIE

Pilot Control Version	B95B

331	05	p1	03/08

SUPPORT COMPLET DE DISTRIBUTEUR DE COMMANDE PILOTE

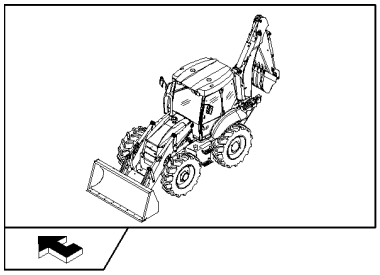

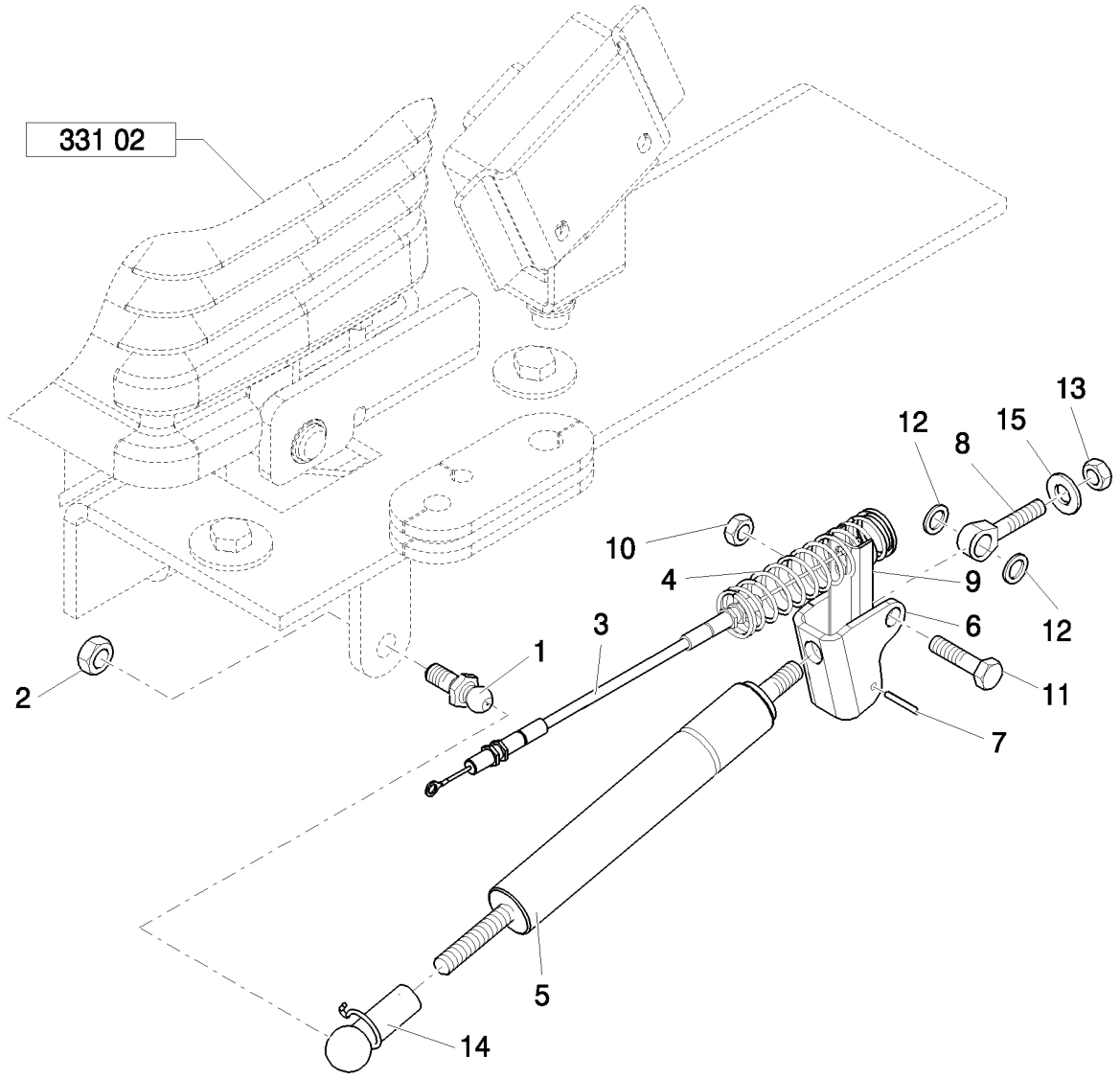

SUPPORT COMPLET DE DISTRIBUTEUR DE COMMANDE PILOTE

REF	FN	PART NUMBER	YR/SN	QTY	DESCRIPTION
1		85824067		1	AXE ROTULE
2		47049041		1	ECROU, M10
3		87430028		1	CABLE
4		87443692		1	RESSORT
5		86989616		1	COMPAS
6		85824080		1	PATTE FIXATION
7		85821514		2	AXE
8		85824081		1	ROTULE
9		86984549		1	CANAL
10		85821516		1	ECROU
11		85821515		1	BOULON
12		85821520		2	ENTRETOISE
13		47049442		2	ECROU
14		86999310		1	CLIP
15		47049404		1	RONDELLE

Pilot Control Version	B95B

331	06	p1	03/08

SUPPORT COMPLET DE DISTRIBUTEUR DE COMMANDE PILOTE A 6 SECTIONS

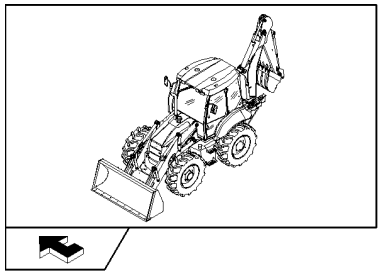

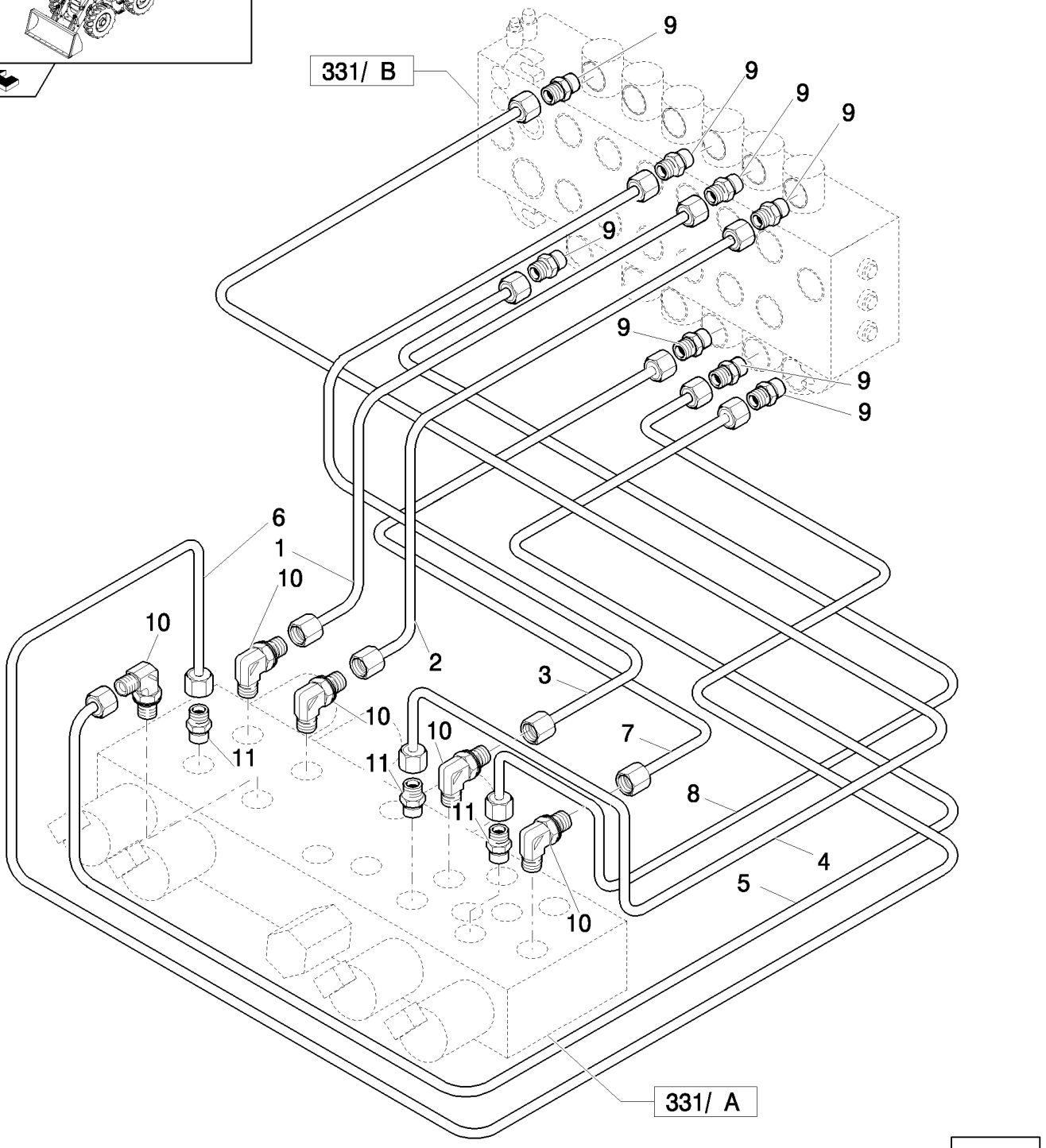

SUPPORT COMPLET DE DISTRIBUTEUR DE COMMANDE PILOTE A 6 SECTIONS

REF	FN	PART NUMBER	YR/SN	QTY	DESCRIPTION
1		85827093		1	TUYAU HYDRAULIQUE
2		85827094		1	TUYAU HYDRAULIQUE
3		85827091		1	TUYAU HYDRAULIQUE
4		85827089		1	TUYAU HYDRAULIQUE
5		85827092		1	TUYAU HYDRAULIQUE
6		85827095		1	TUYAU HYDRAULIQUE
7		85827090		1	TUYAU HYDRAULIQUE
8		85827088		1	TUYAU HYDRAULIQUE
9		85803312		7	RACCORD
10		47050653		5	COUDE
11		47050685		3	RACCORD

Pilot Control Version	B95B

331	07	p1	03/08

SUPPORT COMPLET DE DISTRIBUTEUR DE COMMANDE PILOTE

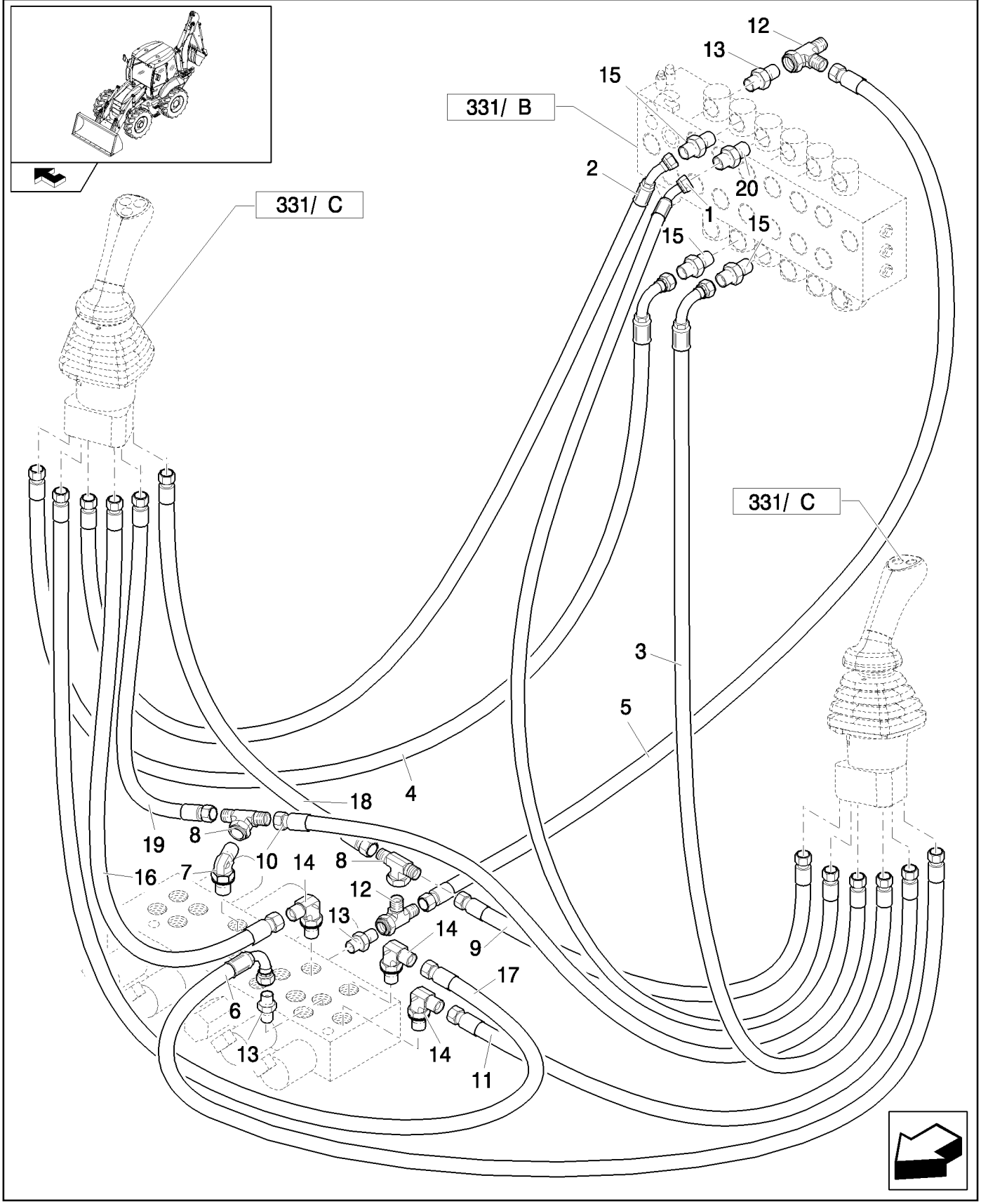

SUPPORT COMPLET DE DISTRIBUTEUR DE COMMANDE PILOTE

REF	FN	PART NUMBER	YR/SN	QTY	DESCRIPTION
1		85827084		1	TUYAU FLEXIBLE
2		85827085		1	TUYAU FLEXIBLE
3		85827086		1	TUYAU FLEXIBLE
4		85827077		1	TUYAU FLEXIBLE
5		85827087		1	TUYAU FLEXIBLE
6		85827082		1	TUYAU FLEXIBLE
7		85827467		1	COUDE
8		85827466		2	TE
9		85827076		1	TUYAU FLEXIBLE
10		85827080		1	TUYAU FLEXIBLE
11		85827078		1	TUYAU FLEXIBLE
12		47120173		2	TE
13		47050686		3	RACCORD
14		47050653		3	COUDE
15		85803312		4	RACCORD
16		85827533		1	TUYAU FLEXIBLE
17		85827531		1	TUYAU FLEXIBLE
18		85827532		1	TUYAU FLEXIBLE
19		85827534		1	TUYAU FLEXIBLE

Pilot Control Version	B95B

331	08	p1	03/08

SUPPORT COMPLET DE DISTRIBUTEUR DE COMMANDE PILOTE

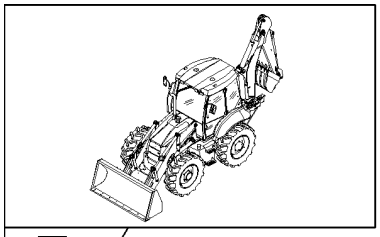

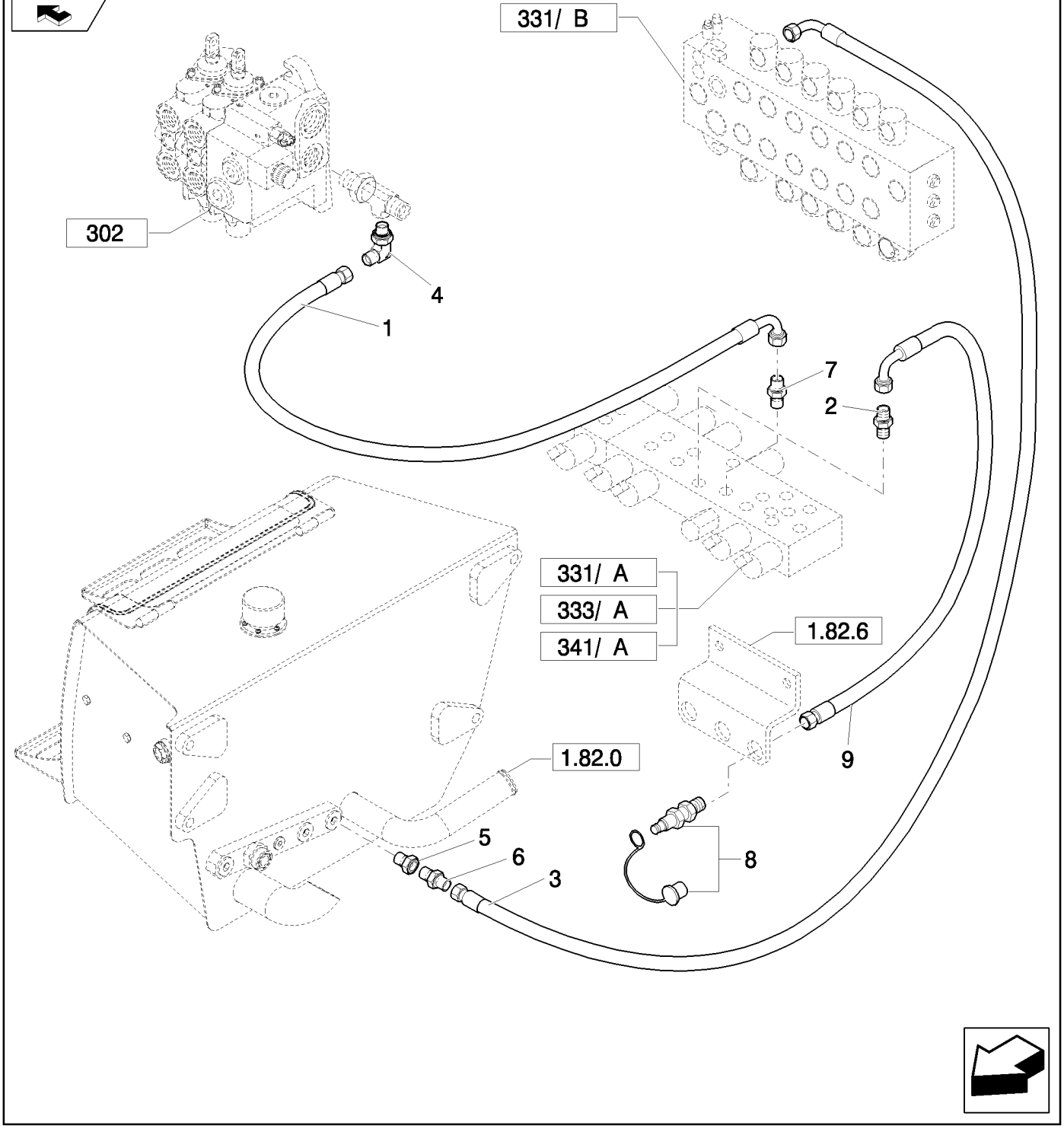

SUPPORT COMPLET DE DISTRIBUTEUR DE COMMANDE PILOTE

REF	FN	PART NUMBER	YR/SN	QTY	DESCRIPTION
1		85827476		1	TUYAU FLEXIBLE
2		83963371		1	RACCORD
3		85827475		1	TUYAU FLEXIBLE
4		85805318		1	COUDE, 90º, 9/16"-18, 37º x 9/16"-18, O-Ring
5		85826100		1	REDUCTEUR
6		47050686		1	RACCORD
7		47050653		1	COUDE
8		85817226		1	ACCOUPLEMANT RAP MALE
9		85812173		1	TUYAU FLEXIBLE

Pilot Control Version	B95B

SUPPORT COMPLET DE DISTRIBUTEUR DE COMMANDE PILOTE

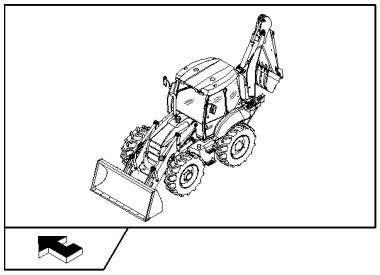

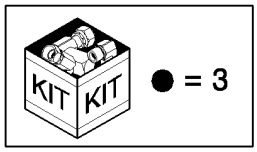

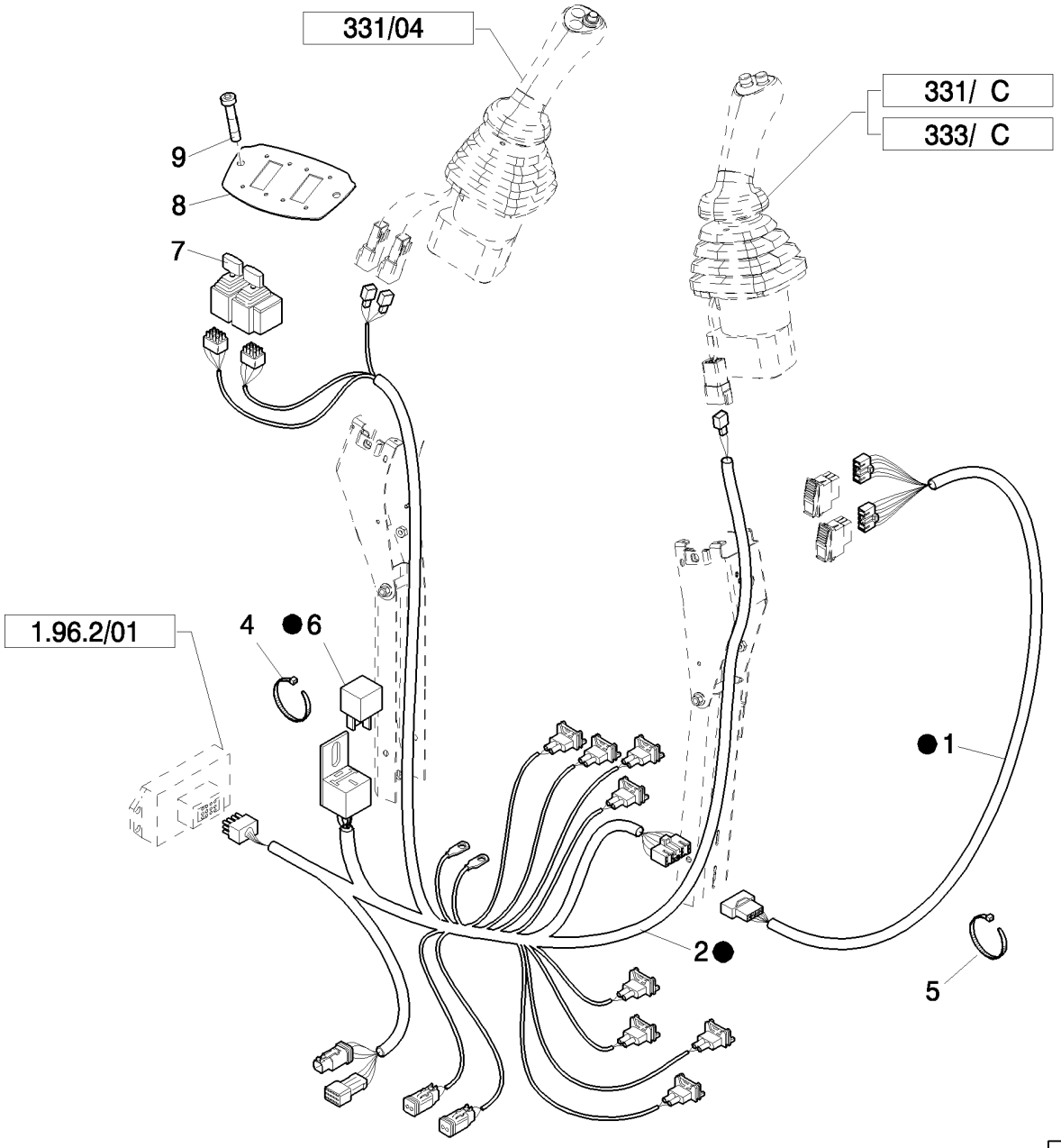

SUPPORT COMPLET DE DISTRIBUTEUR DE COMMANDE PILOTE

REF	FN	PART NUMBER	YR/SN	QTY	DESCRIPTION
1		85828216		1	FAISCEAU COMPLET
2	1	87305611		1	FAISCEAU COMPLET
2	2	87573079		1	FAISCEAU
3	3, 1	87305604		1	FAISCEAU COMPLET
3	3, 2	87573078		1	FAISCEAU
4		14560187		7	SERRE-CABLE, 178mm lg, L=203.2 mm
5		47044780		2	CABLE
6		85821537		1	RELAIS
7		86988086		2	JOYSTICK
8		87435381		1	PANOPLIE
9		85821534		2	VIS

(1) Only for B90B, B90BLR (EU) - B90B(NA

(2) Only for B100B, B100BLR, B110B, B115B (EU) - B95B, B95BLR, B95BTC, B110B, B115B (NA)

(3) Includes 1, 2, 6

Pilot Control Version	B95B

331/ A		p1	03/08

VALVE DE COMMANDE PROPORTIONNELLE 6 SECTIONS

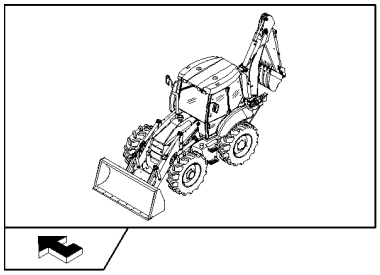

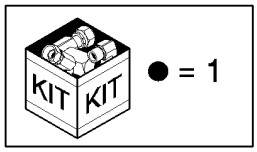

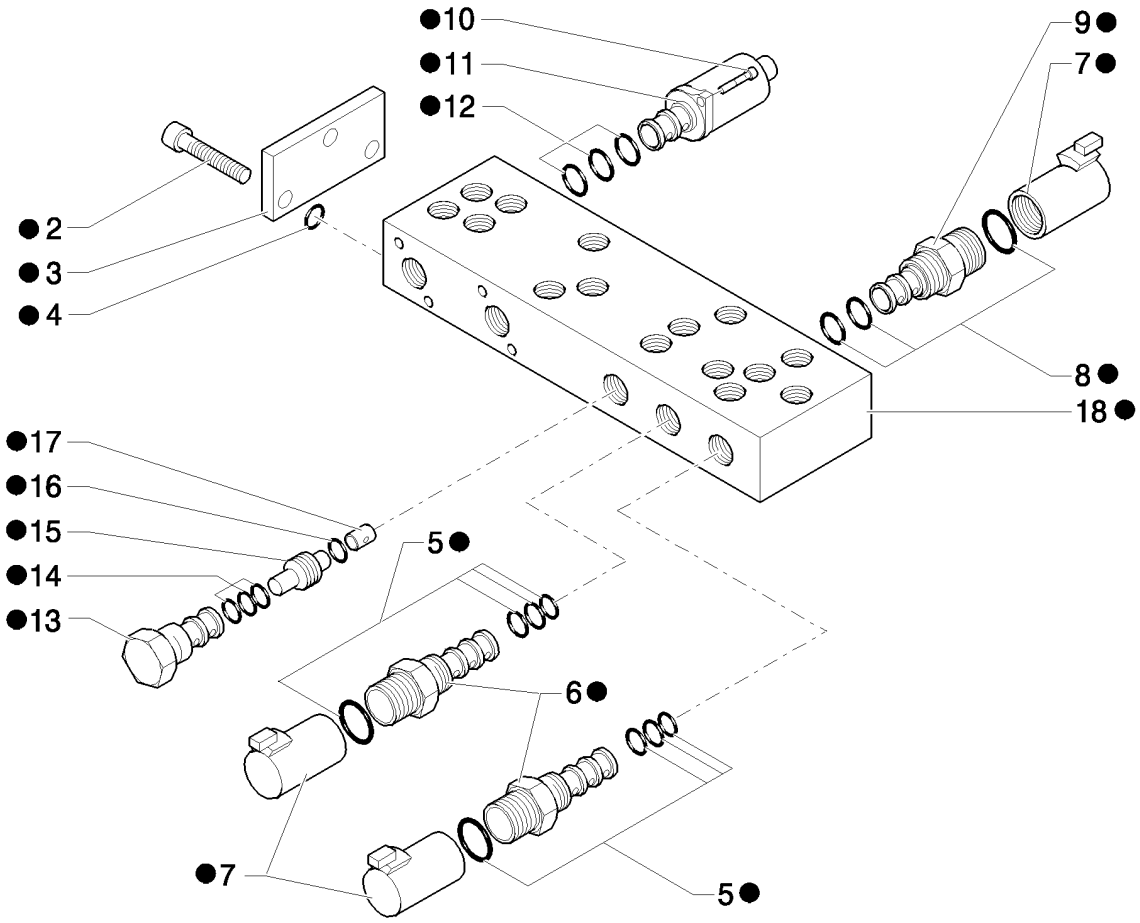

VALVE DE COMMANDE PROPORTIONNELLE 6 SECTIONS

REF	FN	PART NUMBER	YR/SN	QTY	DESCRIPTION
1		85827472		1	SOUPAPE HYDRAULIQUE
2		14304021		3	VIS, Hex Soc Hd, M5 x 10, 8.8
3		85827991		1	PLAQUE
4		85827999		1	POCHETTE DE JOINTS
5		85828002		2	POCHETTE DE JOINTS
6	1	85827996		2	ELECTRO-VALVE
7		85827995		3	BOBINE
8		85827998		1	POCHETTE DE JOINTS
9	2	85827994		1	ELECTRO-VALVE
10		14302921		8	BOULON, Hex, M4 x 10, 8.8, Full Thd
11		85827993		4	ELECTRO-VALVE
12		85828000		4	POCHETTE DE JOINTS
13		85827997		1	SOUPAPE, CARTRIDGE, HYDRAULIC PRESSURE REDUCING VALVE
14		85828001		1	POCHETTE DE JOINTS
15		85827992		1	CLAPET ANTI-RETOUR
16		85828003		1	JOINT THORIQUE
17		85828005		1	ORIFICE
18		85828013		1	CORPS

(1) Includes 5, 7
(2) Includes 7, 8

Pilot Control Version

B95B

331/ B	01	p1	04/08

DISTRIBUTEUR EXCAVATRICE, 6 SECTIONS (CENTER PIVOT)

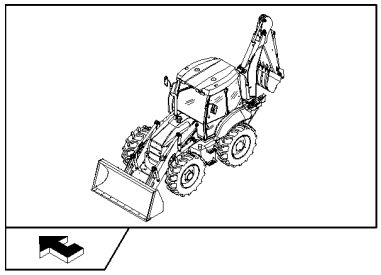

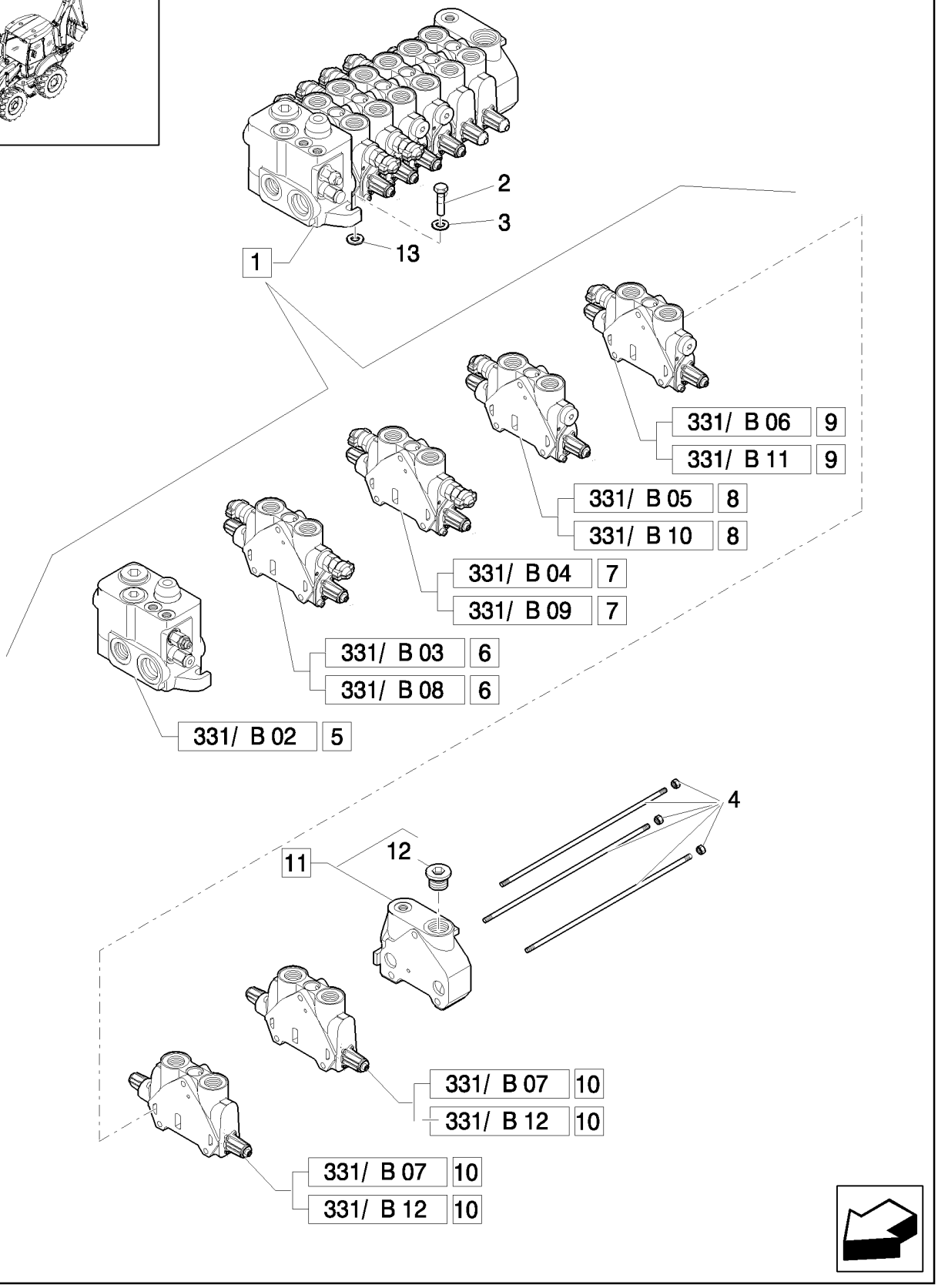

DISTRIBUTEUR EXCAVATRICE, 6 SECTIONS (CENTER PIVOT)

REF	FN	PART NUMBER	YR/SN	QTY	DESCRIPTION
1	1	87734101		1	DISTRIBUTEUR, Assy
1	2	87734093		1	DISTRIBUTEUR, Assy
2		11234721		3	BOULON, Hex, M10 x 1.25 x 45, 8.8
3		11190679		3	RONDELLE BELLEVILLE, Belleville, M10.5
4		85811958		1	KIT
5		87610858		1	ELEMENT DISTR HYDR, Assy
6	1, 3	85826930		1	SECTEUR, Assy
6	4, 3	85826901		1	ELEMENT DISTR HYDR, Assy
7	5, 1	85826931		1	SECTEUR, Assy
7	5, 4	85826339		1	ELEMENT DISTR HYDR, Assy
8	6, 1	85826932		1	SECTEUR, Assy
8	6, 4	85826903		1	SECTEUR, Assy
9	1, 7	87758454		1	TIROIR, Assy
9	4, 7	87758451		1	TIROIR, Assy
10	1, 8	85826360		2	SECTEUR, Assy
10	4, 8	85826340		2	ELEMENT DISTR HYDR, Assy
11		85826250		1	ELEMENT DISTR HYDR
12		85811921		1	BOUCHON, 1-1/16"-12 UNF 2A
13		13578621		3	RONDELLE

(1) Only for B110B, B115B (EU)
(2) Center Pivot
(3) Boom Cylinder
(4) Only for NA
(5) Swing Cylinder
(6) Bucket Cylinder
(7) Dipper Cylinder
(8) Stabilizer Cylinder

Pilot Control Version

B95B

331/ B	02	p1	04/08

DISTRIBUTEUR EXCAVATRICE, SECTION ENTREE (CENTER PIVOT)

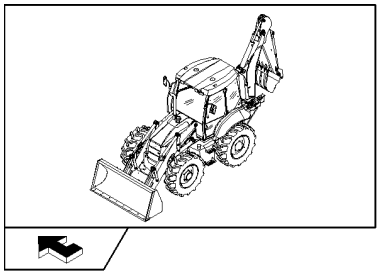

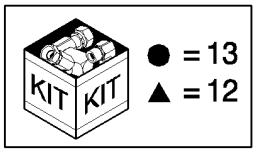

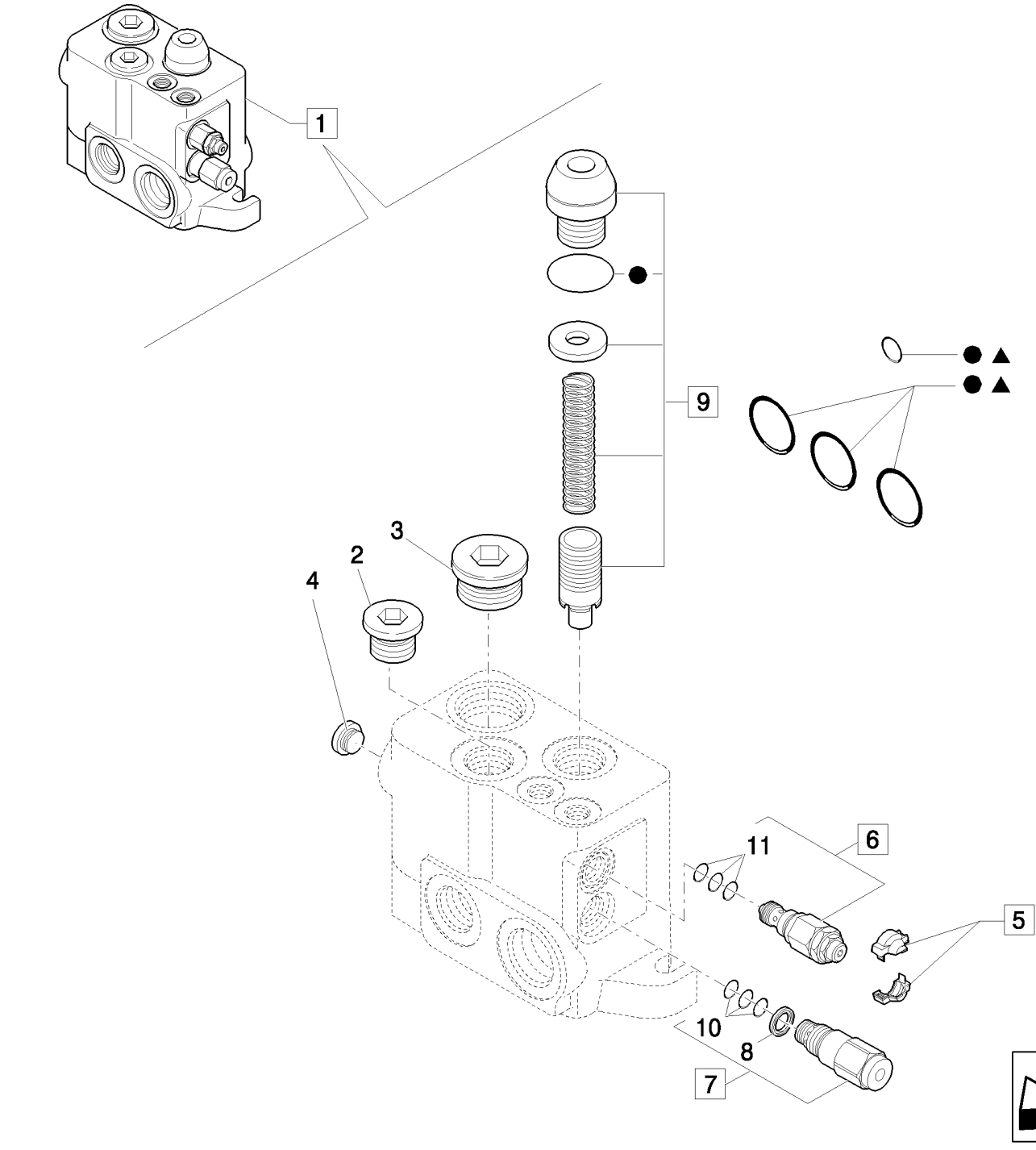

DISTRIBUTEUR EXCAVATRICE, SECTION ENTREE (CENTER PIVOT)

REF	FN	PART NUMBER	YR/SN	QTY	DESCRIPTION
1		87610858		1	ELEMENT DISTR HYDR, Assy
2		85811921		1	BOUCHON, 1-1/16"-12 UNF 2A
3		85811922		1	BOUCHON, 1-5/16"-12 UNF 2A
4		85811923		1	BOUCHON
5		85811934		1	KIT, Cover
6		85811946		1	SOUPAPE, DÉCHARGE, Assy
7		85820128		1	REGULATEUR, Assy
8		85817669		1	JOINT
9		85820129		1	KIT, Regulation Assy
10		85821235		1	POCHETTE DE JOINTS, Seal, Flow Regulator
11		85821236		1	POCHETTE DE JOINTS, Seal, LS Pressure Relief
12		87308749		1	POCHETTE DE JOINTS, Seals
13		85825477		1	POCHETTE DE JOINTS, Seal

331/ B	03	p1	04/08

DISTRIBUTEUR EXCAVATRICE, SECTION FLECHE (CENTER PIVOT)

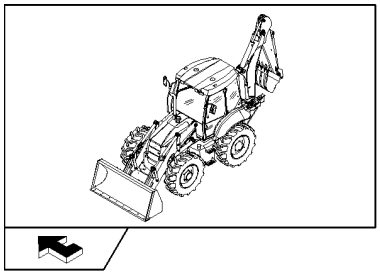

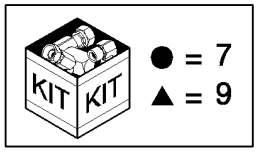

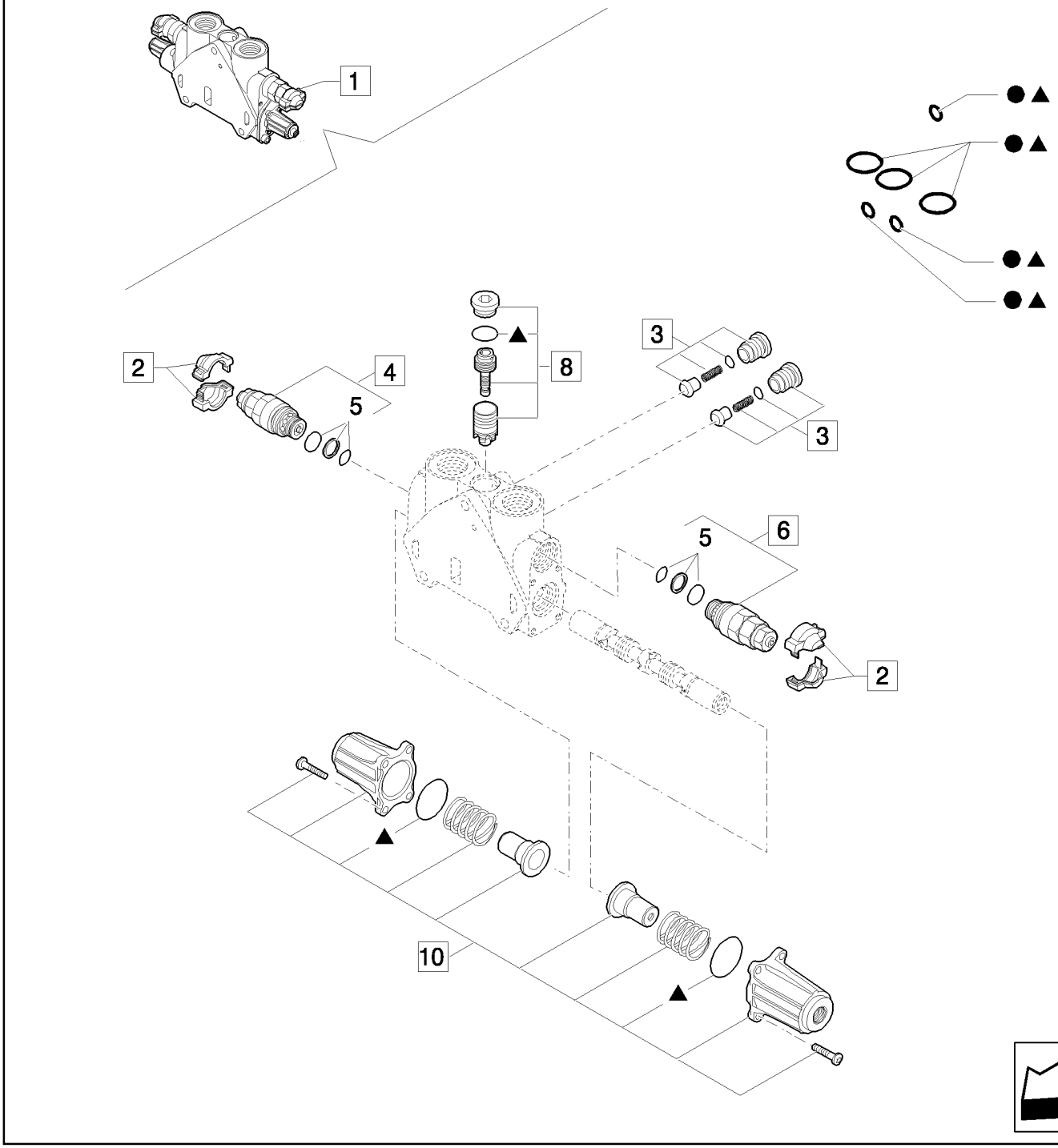

DISTRIBUTEUR EXCAVATRICE, SECTION FLECHE (CENTER PIVOT)

REF	FN	PART NUMBER	YR/SN	QTY	DESCRIPTION
1		85826930		1	SECTEUR, Assy
2		85811934		2	KIT, Cover
3		85811938		2	CLAPET ANTI-RETOUR, Valve, Assy
4	1	85812116		2	SOUPAPE, DÉCHARGE, Assy
5		85811933		2	POCHETTE DE JOINTS, Valve Seals
6	2	85812117		2	SOUPAPE HYDRAULIQUE
7		85819148		1	POCHETTE DE JOINTS, Seals
8		85819378		1	POCHETTE DE JOINTS, Valve
9		85824281		1	POCHETTE DE JOINTS, Cover Assy
10		85826344		1	KIT

(1) 240 BAR
(2) 315 BAR

Pilot Control Version

B95B

331/ B	04	p1	04/08

DISTRIBUTEUR EXCAVATRICE, SECTION OSCIL. (CENTER PIVOT)

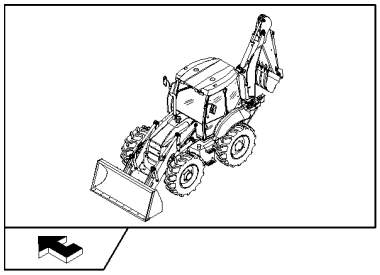

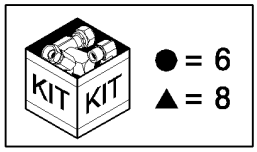

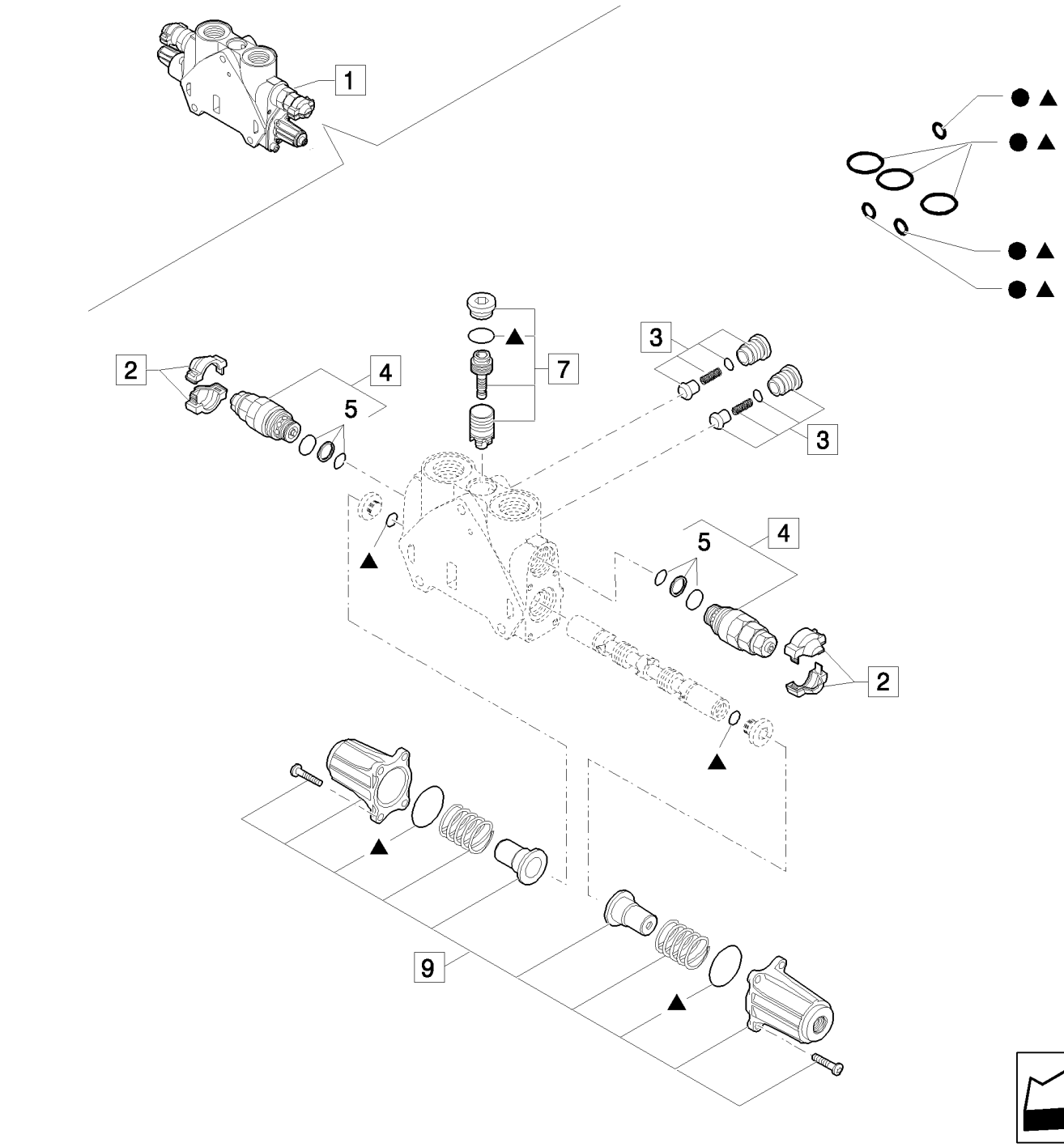

DISTRIBUTEUR EXCAVATRICE, SECTION OSCIL. (CENTER PIVOT)

REF	FN	PART NUMBER	YR/SN	QTY	DESCRIPTION
1		85826931		1	SECTEUR, Assy
2		85811934		2	KIT, Cover
3		85811938		2	CLAPET ANTI-RETOUR, Valve, Assy
4	1	85812114		2	SOUPAPE HYDRAULIQUE, Assy
5		85811933		2	POCHETTE DE JOINTS, Secondary Valve
6		85819148		1	POCHETTE DE JOINTS, Seals
7		85819378		1	POCHETTE DE JOINTS, Seals
8		85824282		1	KIT
9		85826344		1	KIT

(1) 205 BAR

Pilot Control Version

B95B

331/ B	05	p1	04/08

DISTRIBUTEUR EXCAVATRICE, SECTION GODET (CENTER PIVOT)

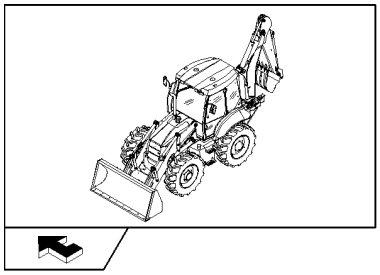

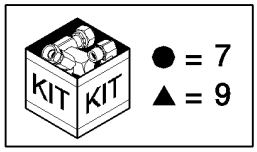

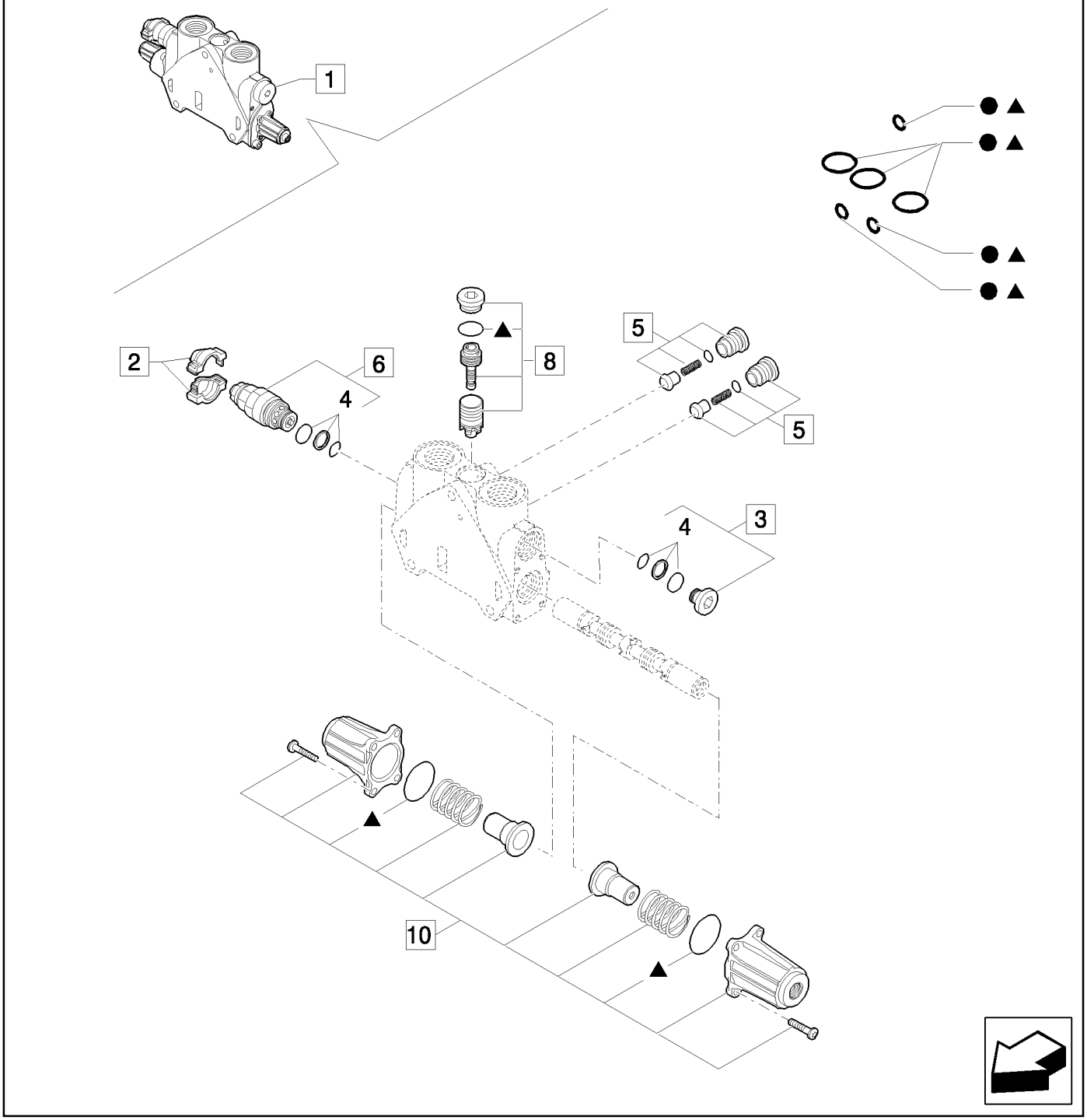

DISTRIBUTEUR EXCAVATRICE, SECTION GODET (CENTER PIVOT)

REF	FN	PART NUMBER	YR/SN	QTY	DESCRIPTION
1		85826932		1	SECTEUR, Assy
2		85811934		1	KIT, Cover
3		85811937		1	BOUCHON, Assy
4		85811933		1	POCHETTE DE JOINTS, Valve Seals
5		85811938		1	CLAPET ANTI-RETOUR, Valve, Assy
6	1	85812115		1	SOUPAPE HYDRAULIQUE, Assy
7		85819148		1	POCHETTE DE JOINTS, Seals
8		85819378		1	POCHETTE DE JOINTS, Valve
9		85824281		1	POCHETTE DE JOINTS, Seals
10		85826344		2	KIT, Cover Assy

(1) 220 BAR

DISTRIBUTEUR EXCAVATRICE, SECTION BALANCIER (CENTER PIVOT)

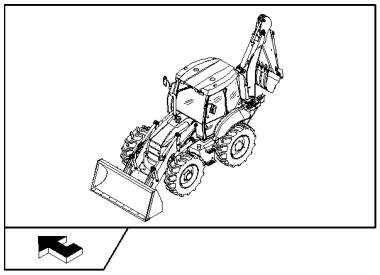

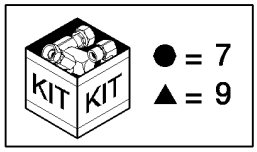

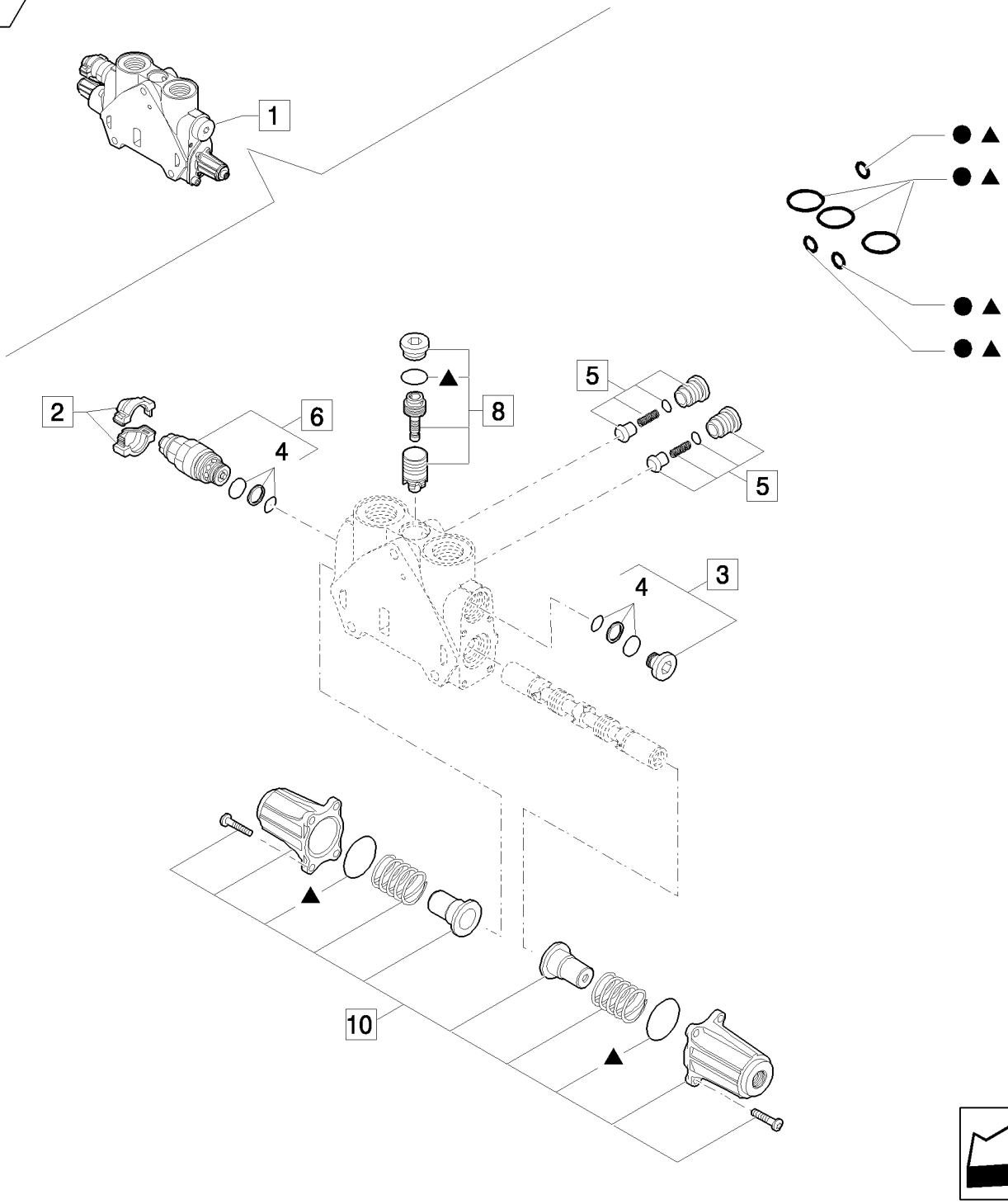

DISTRIBUTEUR EXCAVATRICE, SECTION BALANCIER (CENTER PIVOT)

REF	FN	PART NUMBER	YR/SN	QTY	DESCRIPTION
1		87758454		1	TIROIR, Assy
2		85811934		1	KIT, Cover
3		85811937		1	BOUCHON, Assy
4		85811933		1	POCHETTE DE JOINTS, Valve Seals
5		85811938		2	CLAPET ANTI-RETOUR, Valve, Assy
6	1	85812116		1	SOUPAPE, DÉCHARGE, Assy
7		85819148		1	POCHETTE DE JOINTS, Seals
8		85819378		1	POCHETTE DE JOINTS, Valve
9		85824281		1	POCHETTE DE JOINTS, Seals
10		85826344		1	KIT, Cover Assy

(1) 240 BAR

Pilot Control Version

B95B

331/ B	07	p1	04/08

DISTRIBUTEUR EXCAVATRICE, SECTION STABILISATEUR (CENTER PIVOT)

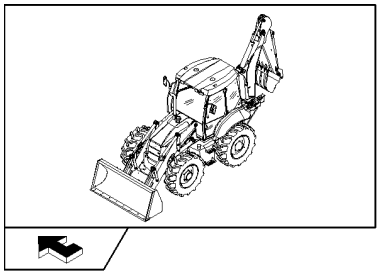

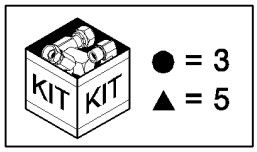

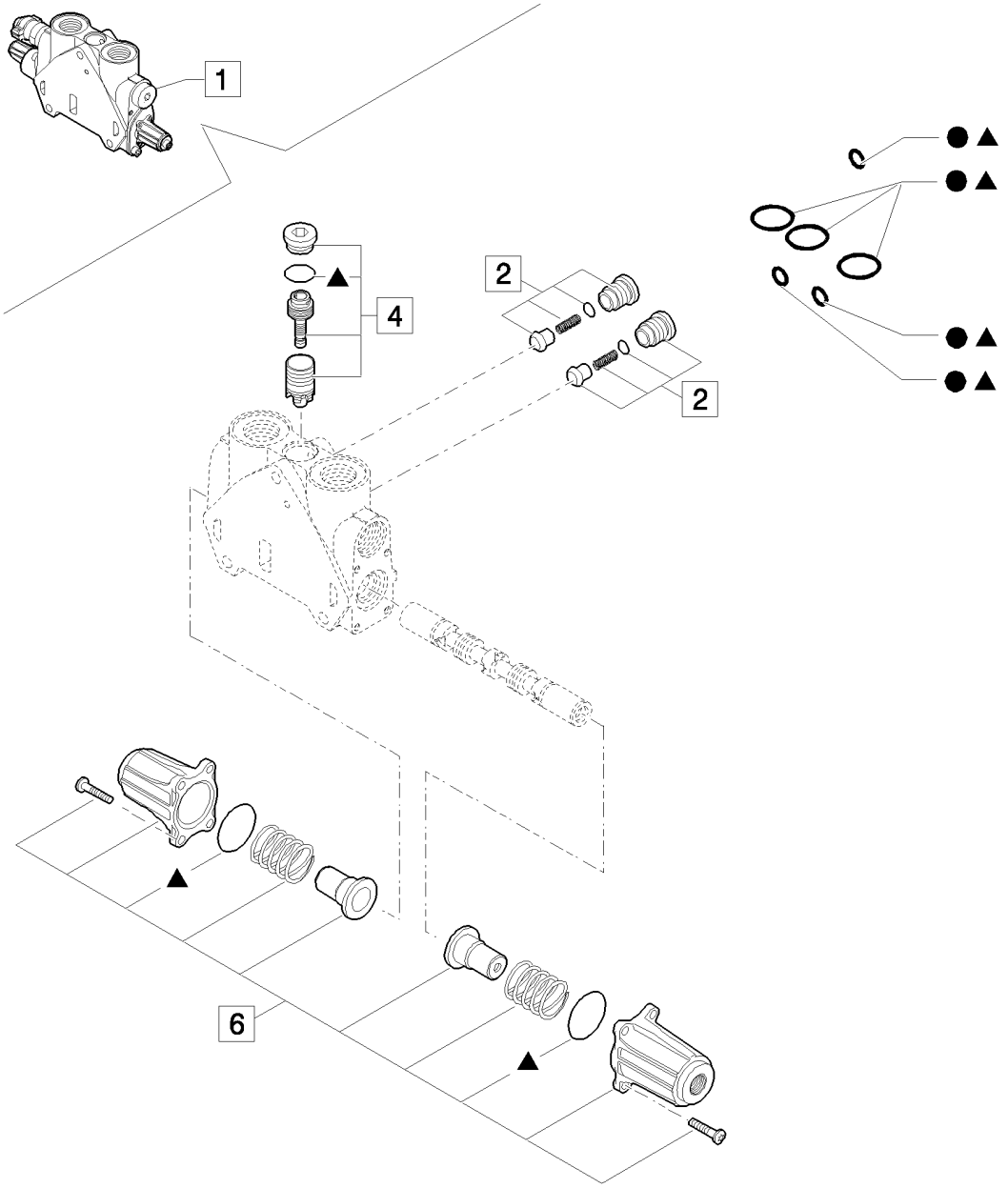

DISTRIBUTEUR EXCAVATRICE, SECTION STABILISATEUR (CENTER PIVOT)

REF	FN	PART NUMBER	YR/SN	QTY	DESCRIPTION
1		85826360		2	SECTEUR, Assy
2		85811938		2	CLAPET ANTI-RETOUR, Valve, Assy
3		85819148		1	POCHETTE DE JOINTS, Seals
4		85819378		1	POCHETTE DE JOINTS, Valve
5		85824281		1	POCHETTE DE JOINTS, Seals
6		85826344		1	KIT, Cover Assy

Pilot Control Version

B95B

331/ B	08	p1	04/08

DISTRIBUTEUR EXCAVATRICE, SECTION FLECHE (CENTER PIVOT)

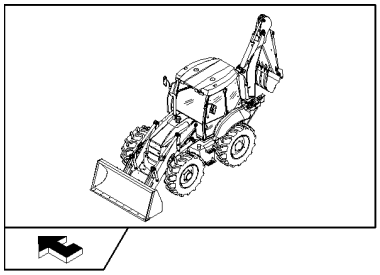

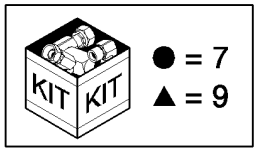

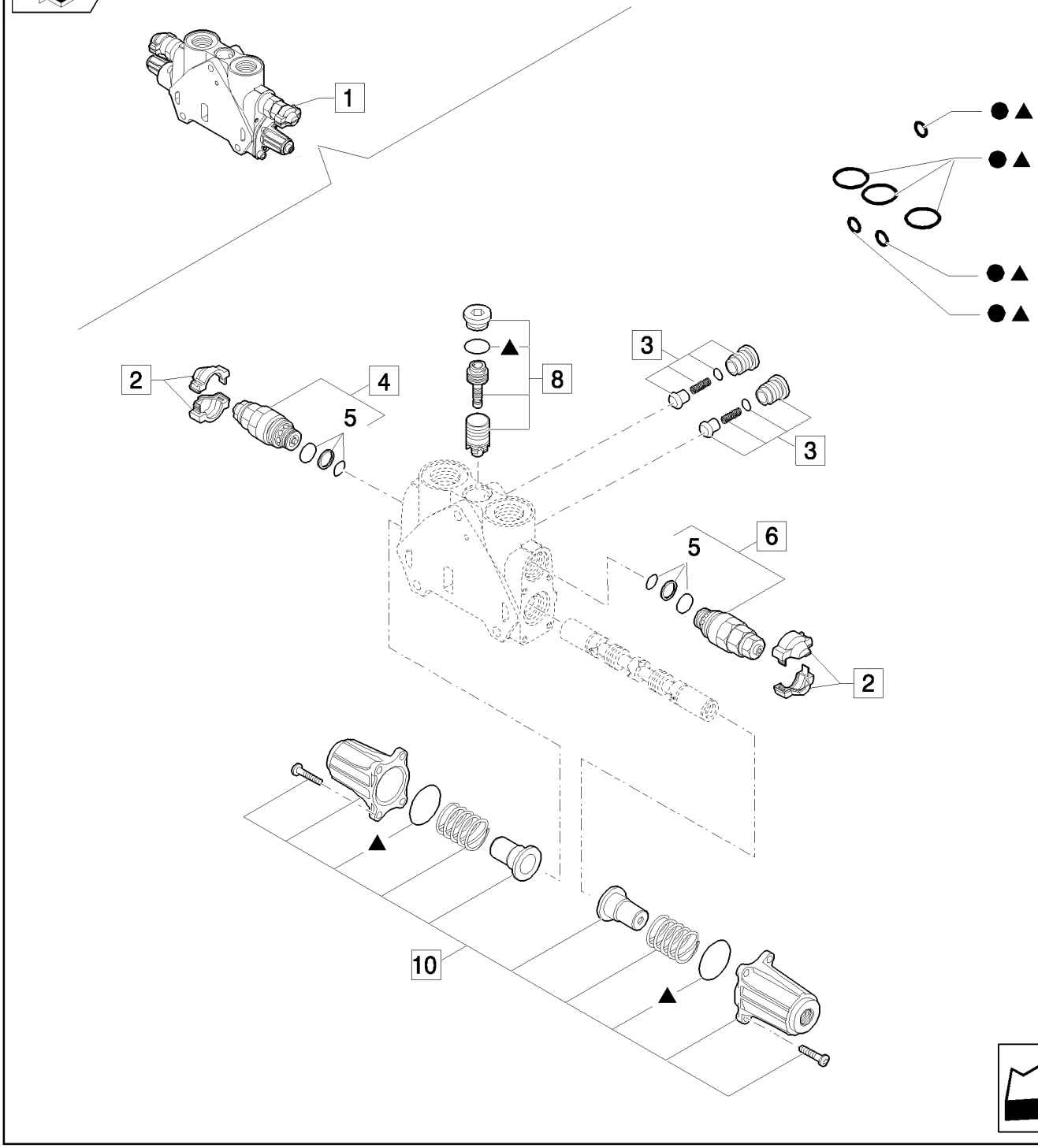

DISTRIBUTEUR EXCAVATRICE, SECTION FLECHE (CENTER PIVOT)

REF	FN	PART NUMBER	YR/SN	QTY	DESCRIPTION
1		85826901		1	ELEMENT DISTR HYDR, Assy
2		85811934		2	KIT, Cover
3		85811938		2	CLAPET ANTI-RETOUR, Valve, Assy
4	1	85812116		2	SOUPAPE, DÉCHARGE, Assy
5		85811933		2	POCHETTE DE JOINTS, Valve Seals
6	2	85812117		2	SOUPAPE HYDRAULIQUE, Assy
7		85819148		1	POCHETTE DE JOINTS, Seals
8		85819378		1	POCHETTE DE JOINTS, Valve
9		85824281		1	POCHETTE DE JOINTS, Cover Assy
10		85826344		1	KIT

(1) 240 BAR
(2) 315 BAR

Pilot Control Version

B95B

331/ B	09	p1	04/08

DISTRIBUTEUR EXCAVATRICE, SECTION OSCIL. (CENTER PIVOT)

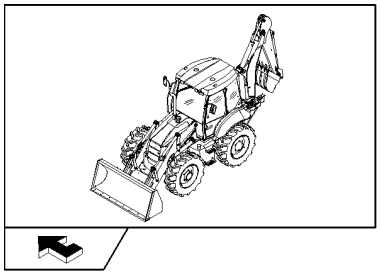

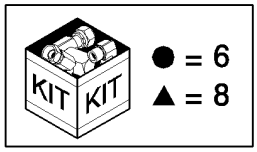

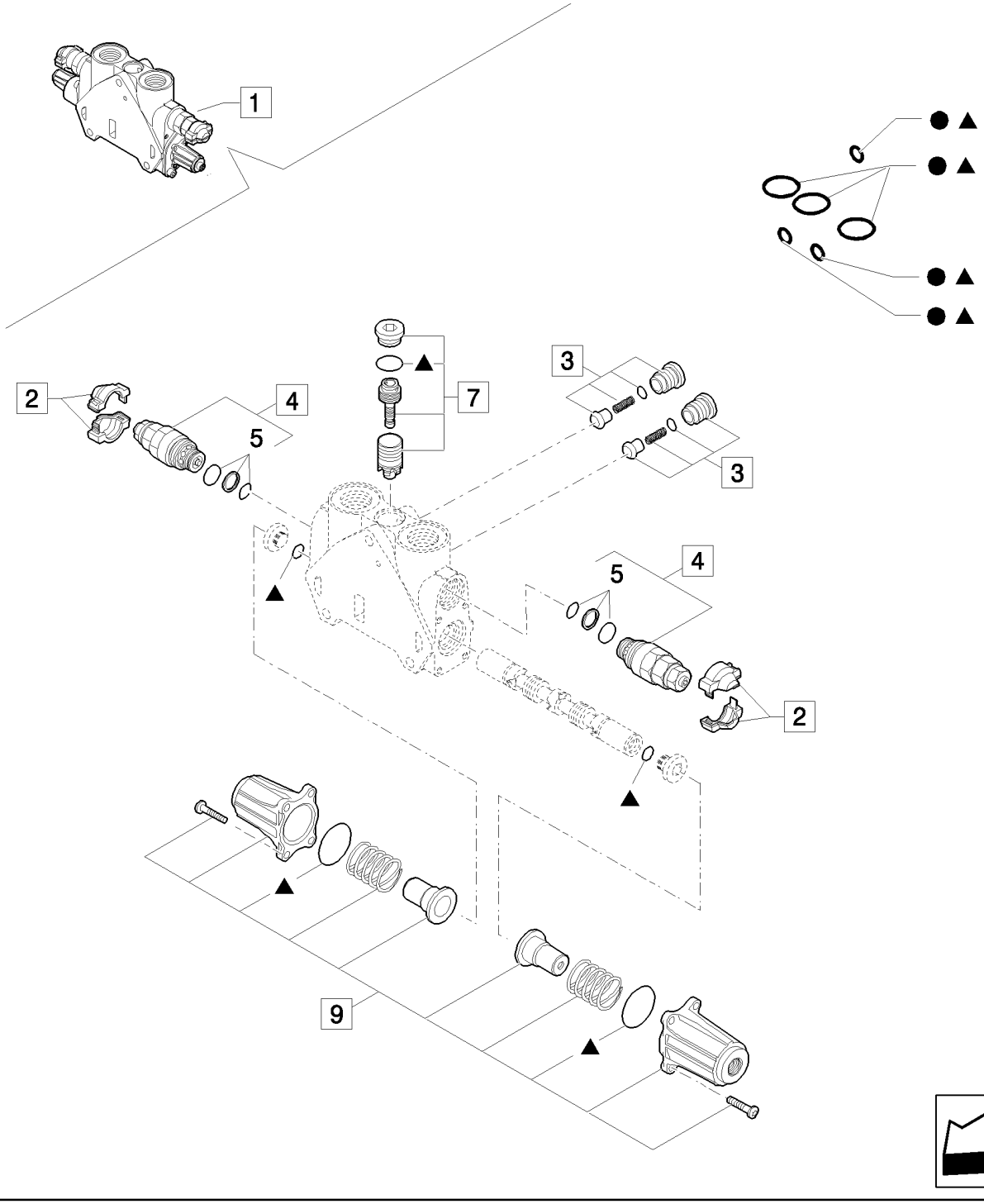

DISTRIBUTEUR EXCAVATRICE, SECTION OSCIL. (CENTER PIVOT)

REF	FN	PART NUMBER	YR/SN	QTY	DESCRIPTION
1		85826339		1	ELEMENT DISTR HYDR, Assy
2		85811934		2	KIT, Cover
3		85811938		2	CLAPET ANTI-RETOUR, Valve, Assy
4	1	85812114		2	SOUPAPE HYDRAULIQUE, Assy
5		85811933		2	POCHETTE DE JOINTS, Secondary Valve
6		85819148		1	POCHETTE DE JOINTS, Seals
7		85826345		1	KIT, Seals
8		85824282		1	KIT
9		85826344		1	KIT

(1) 205 BAR

Pilot Control Version

B95B

331/ B	10	p1	04/08

DISTRIBUTEUR EXCAVATRICE, SECTION GODET (CENTER PIVOT)

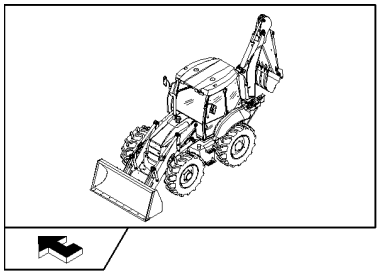

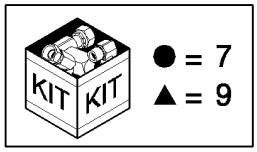

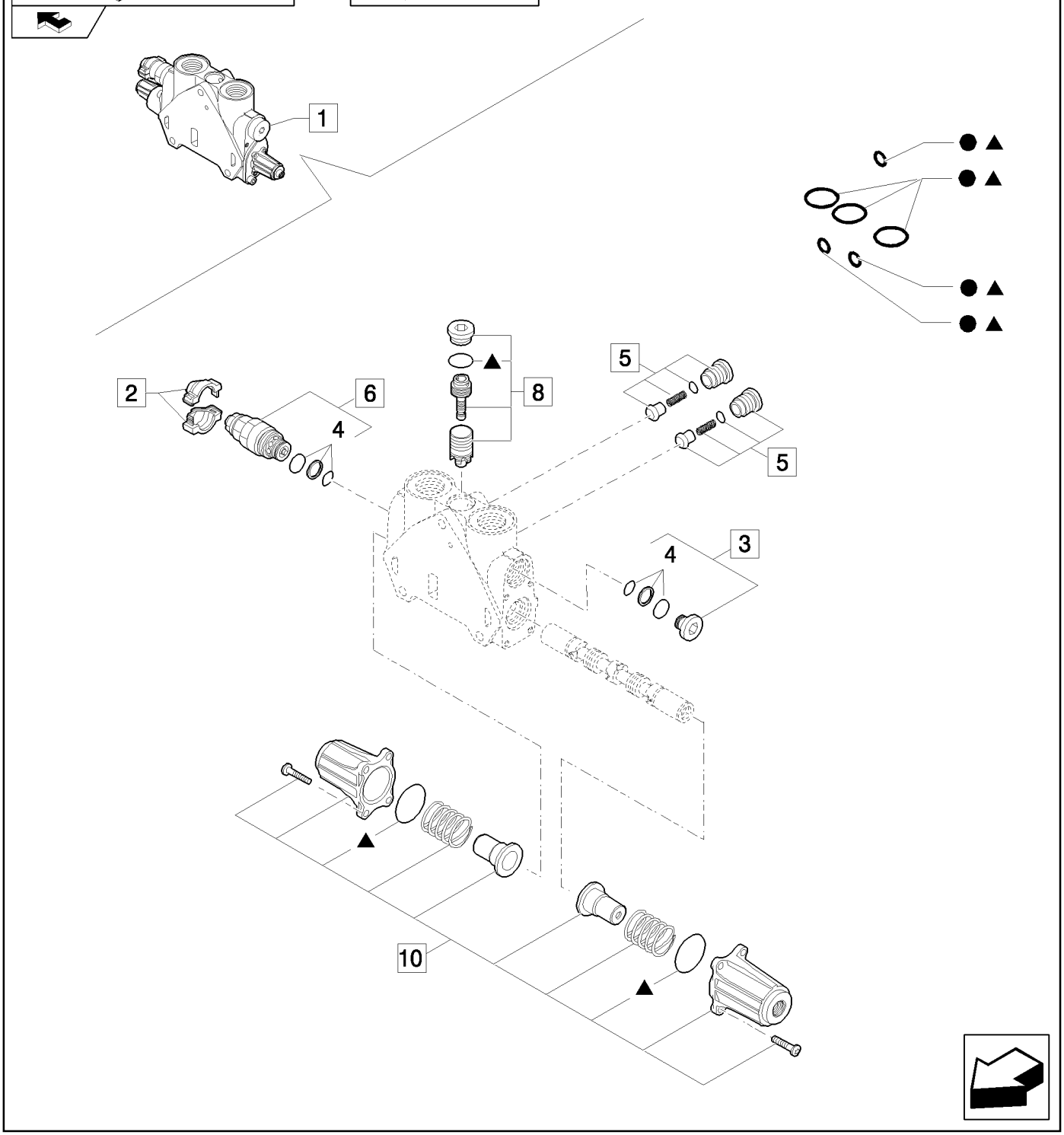

DISTRIBUTEUR EXCAVATRICE, SECTION GODET (CENTER PIVOT)

REF	FN	PART NUMBER	YR/SN	QTY	DESCRIPTION
1		85826903		1	SECTEUR, Assy
2		85811934		1	KIT, Cover
3		85811935		1	KIT
4		85811933		1	POCHETTE DE JOINTS, Valve Seals
5		85811938		1	CLAPET ANTI-RETOUR, Valve, Assy
6	1	85812115		1	SOUPAPE HYDRAULIQUE, Assy
7		85819148		1	POCHETTE DE JOINTS, Seals
8		85819378		1	POCHETTE DE JOINTS, Valve
9		85824281		1	POCHETTE DE JOINTS, Seals
10		85826344		2	KIT, Cover Assy

(1) 220 BAR

Pilot Control Version

B95B

DISTRIBUTEUR EXCAVATRICE, SECTION BALANCIER (CENTER PIVOT)

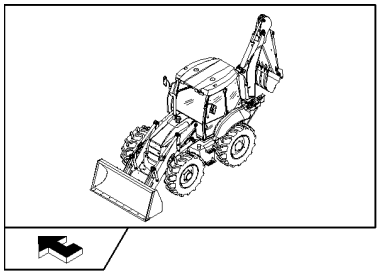

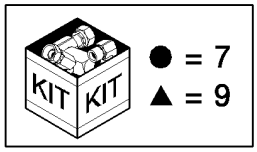

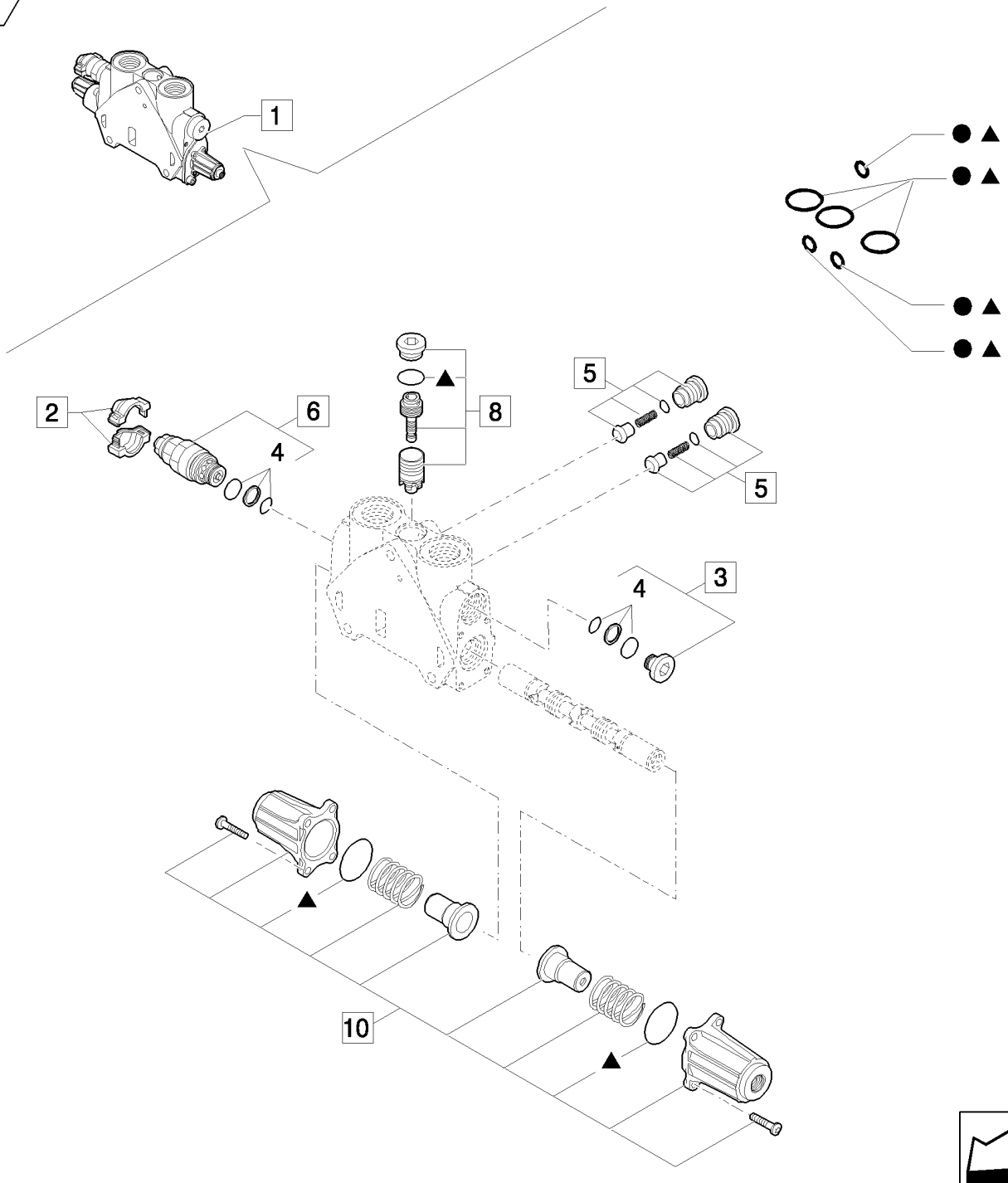

DISTRIBUTEUR EXCAVATRICE, SECTION BALANCIER (CENTER PIVOT)

REF	FN	PART NUMBER	YR/SN	QTY	DESCRIPTION
1		87758451		1	TIROIR, Assy
2		85811934		1	KIT, Cover
3		85811937		1	BOUCHON, Assy
4		85811933		1	POCHETTE DE JOINTS, Valve Seals
5		85811938		2	CLAPET ANTI-RETOUR, Valve, Assy
6	1	85812116		1	SOUPAPE, DÉCHARGE, Assy
7		85819148		1	POCHETTE DE JOINTS, Seals
8		85826345		1	KIT, Valve
9		85824281		1	POCHETTE DE JOINTS, Seals
10		85826344		1	KIT, Cover Assy

(1) 240 BAR

Pilot Control Version

B95B

331/ B	12	p1	04/08

DISTRIBUTEUR EXCAVATRICE, SECTION STABILISATEUR (CENTER PIVOT)

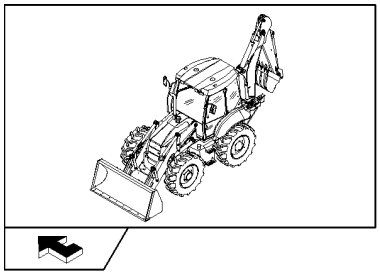

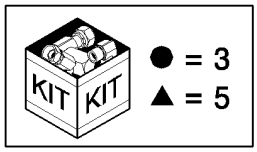

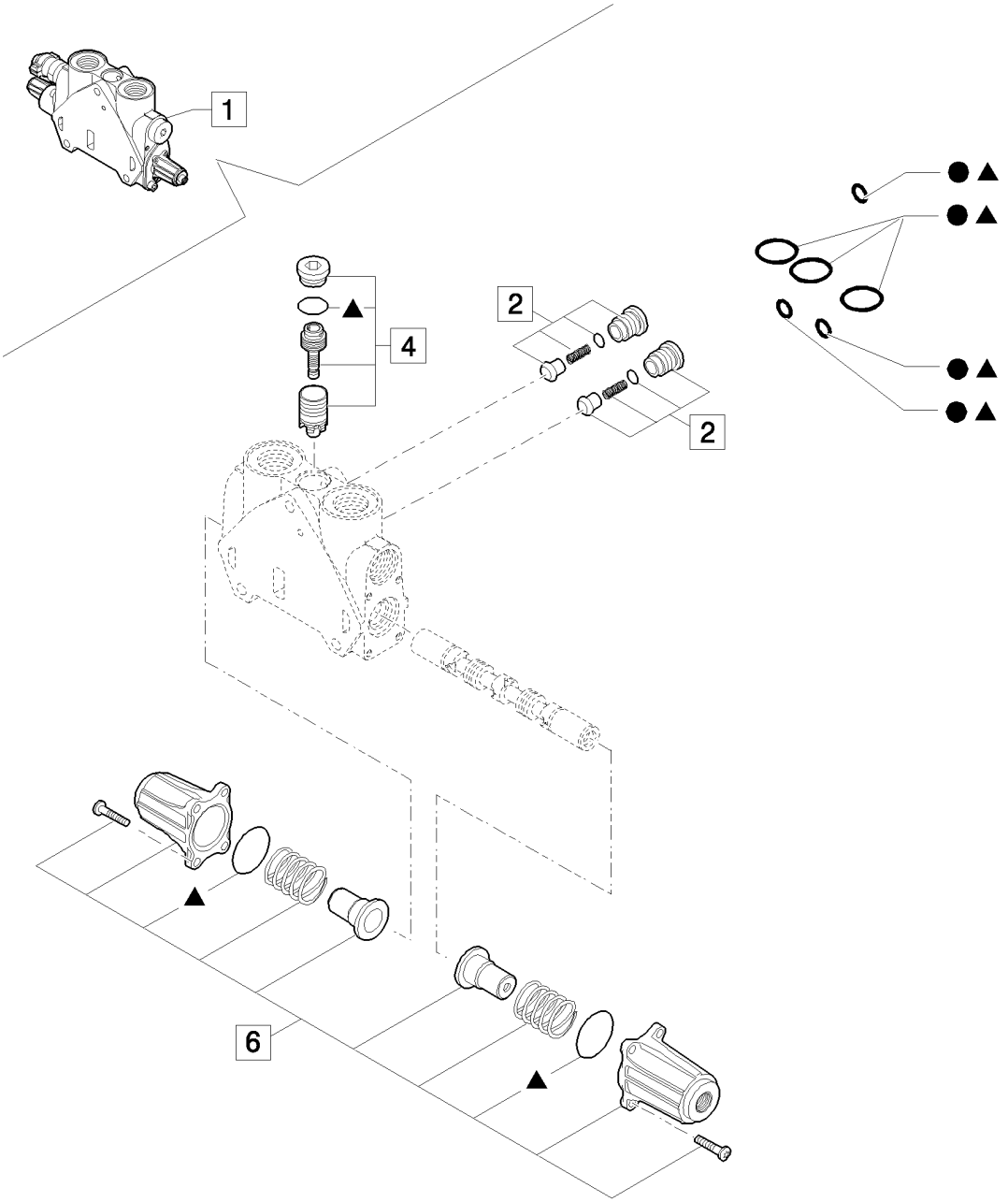

DISTRIBUTEUR EXCAVATRICE, SECTION STABILISATEUR (CENTER PIVOT)

REF	FN	PART NUMBER	YR/SN	QTY	DESCRIPTION
1		85826340		2	ELEMENT DISTR HYDR, Assy
2		85811938		2	CLAPET ANTI-RETOUR, Valve, Assy
3		85819148		1	POCHETTE DE JOINTS, Seals
4		85819378		1	POCHETTE DE JOINTS, Valve
5		85824281		1	POCHETTE DE JOINTS, Seals
6		85826344		1	KIT, Cover Assy

Pilot Control Version

B95B

331/ C	01	p1	04/08

VALVE PILOTE DU MANIPULATEUR (DROIT)

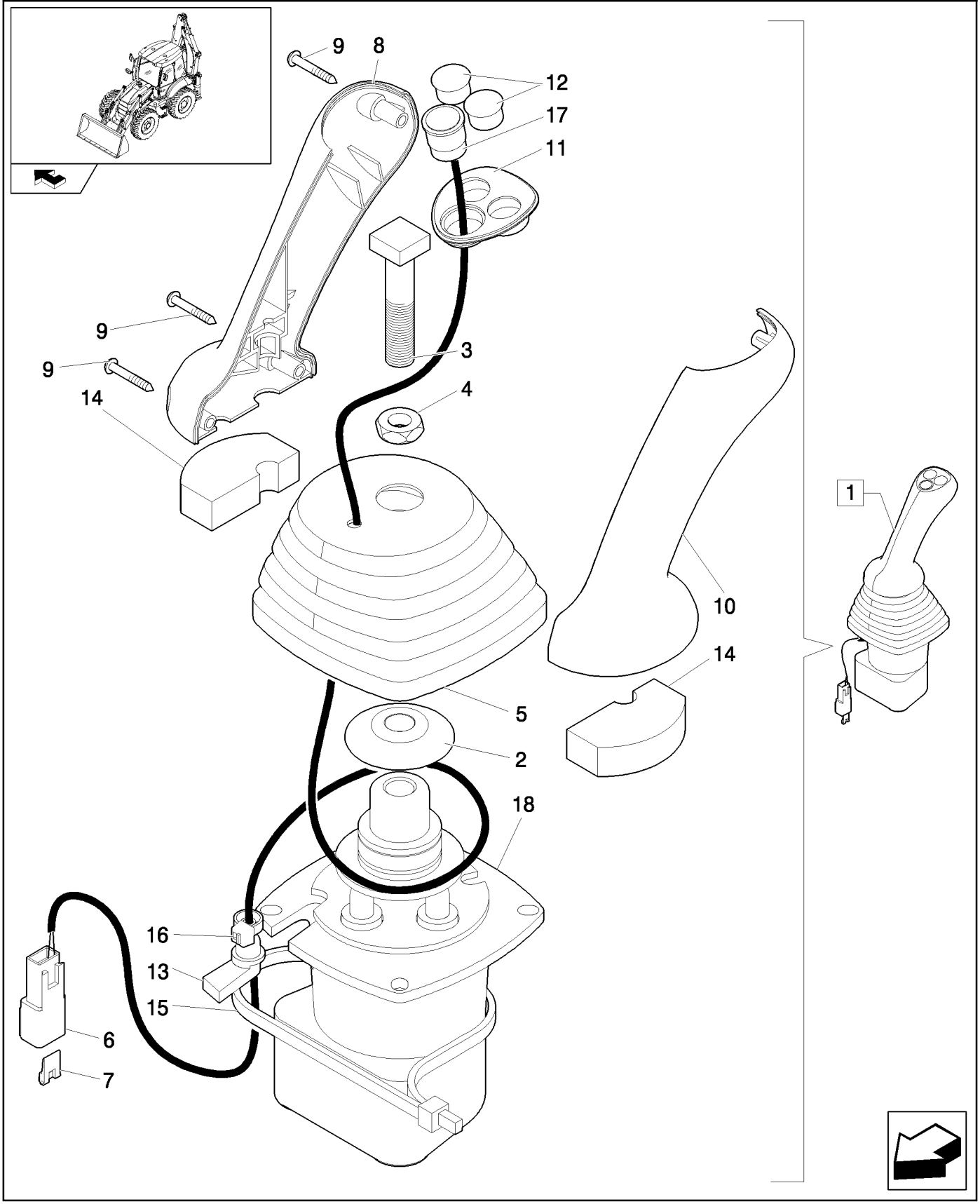

VALVE PILOTE DU MANIPULATEUR (DROIT)

REF	FN	PART NUMBER	YR/SN	QTY	DESCRIPTION
1		87685956		1	DISTRIBUTEUR, Assy, RH
2		87436225		1	RETENEUR
3		87428023		1	BOULON
4		87037944		1	ECROU, Thin, M12 x 1.75, Cl 05
5		87443721		1	COIFFE
6		225315C1		1	CONNECTEUR
7		225318C1		1	CALE DE BLOCAGE
8		87308838		1	POMMEAU
9		15687475		3	VIS AUTO-TARAUDEUSE, Pan Hd, M3.5 x 25, Stainless
10		87308839		1	POMMEAU
11		87547309		1	ENCADREMENT
12		86625128		2	BOUCHON, Dome, .562" hole, Nylon
13		87424267		1	PASSE-FIL
14		87435506		2	JOINT
15		87438046		1	SERRE-CABLE
16		87000312		1	SERRE-CABLE
17		87546922		1	CONTACTEUR
18		87687141		1	VALVE DE PILOTAGE

331/ C	02	p1	04/08

DISTRIBUTEUR LEVIER COMMANDE GAUCHE

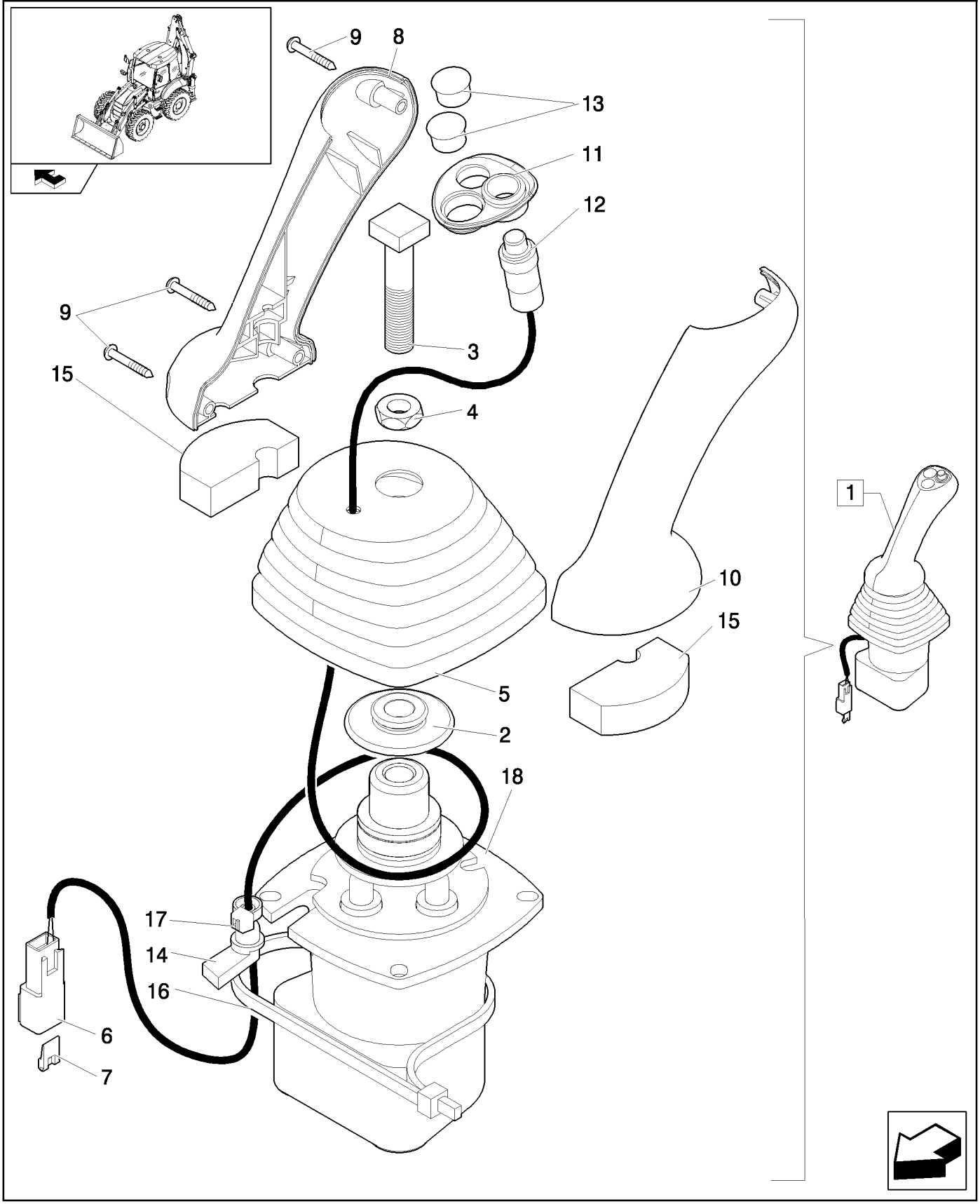

DISTRIBUTEUR LEVIER COMMANDE GAUCHE

REF	FN	PART NUMBER	YR/SN	QTY	DESCRIPTION
1		87685948		1	DISTRIBUTEUR, Assy
2		87436225		1	RETENEUR
3		87428023		1	BOULON
4		87037944		1	ECROU, Thin, M12 x 1.75, Cl 05
5		87443721		1	COIFFE
6		225315C1		1	CONNECTEUR
7		225318C1		1	CALE DE BLOCAGE
8		87308838		1	POMMEAU
9		15687475		3	VIS AUTO-TARAUDEUSE, Pan Hd, M3.5 x 25, Stainless
10		87308839		1	POMMEAU
11		87435243		1	ENCADREMENT
12		87437372		1	CONTACTEUR
13		86625128		2	BOUCHON, Dome, .562" hole, Nylon
14		87424267		1	PASSE-FIL
15		87435506		2	JOINT
16		87438046		1	SERRE-CABLE
17		87000312		1	SERRE-CABLE
18		87687141		1	VALVE DE PILOTAGE

333	01	p1	04/08

COLONNE COMPLETE 7 SECTIONS (CENTER PIVOT)

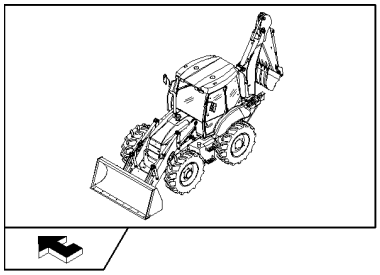

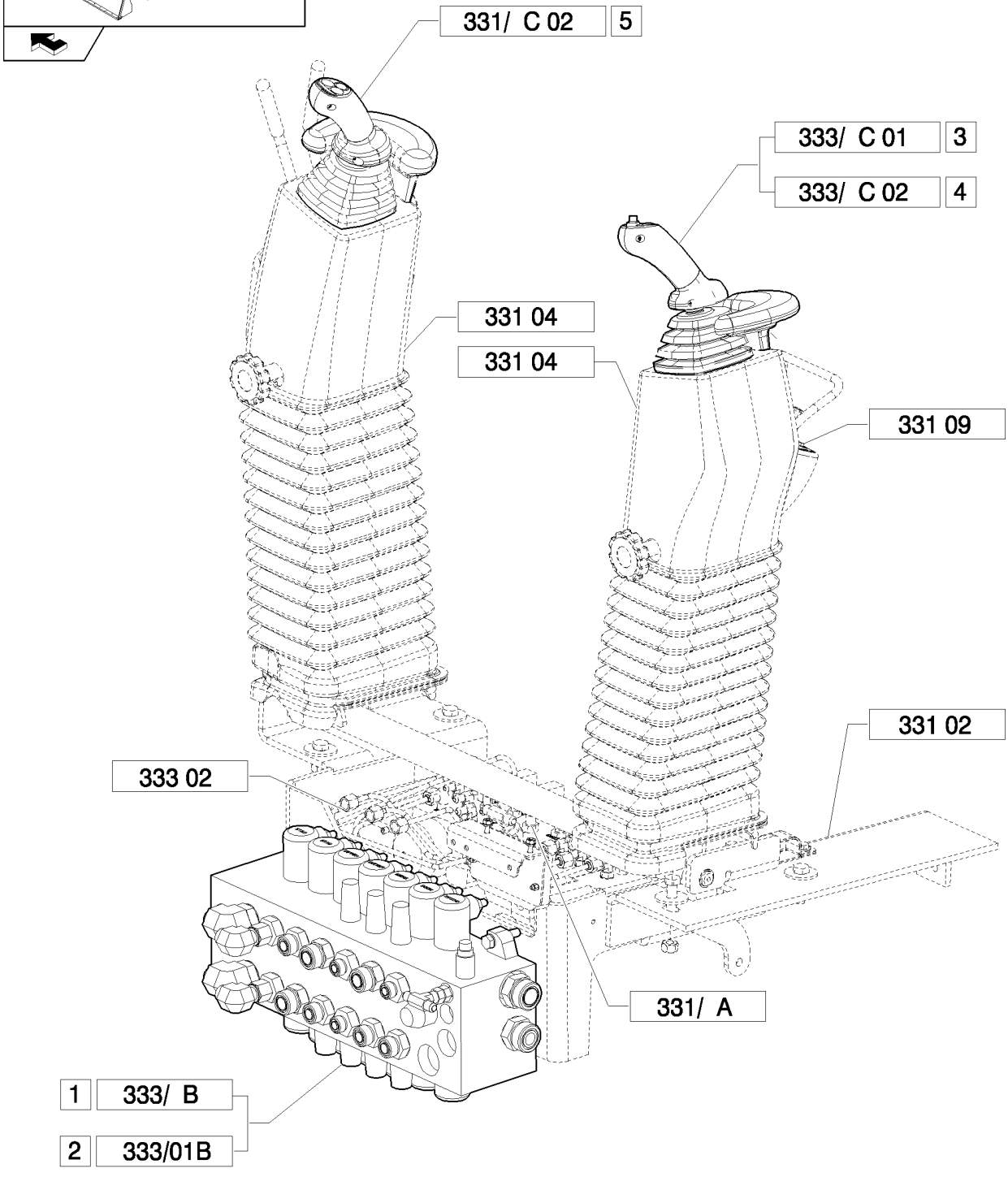

COLONNE COMPLETE 7 SECTIONS (CENTER PIVOT)

REF	FN	PART NUMBER	YR/SN	QTY	DESCRIPTION
1	1	87734107		1	DISTRIBUTEUR, Assy
2	2	87734106		1	DISTRIBUTEUR, Assy
3	3	87685957		1	DISTRIBUTEUR, Assy
4	4	87685955		1	DISTRIBUTEUR, Assy
5		87685948		1	DISTRIBUTEUR, Assy

(1) Only for B110B, B115B (EU)
(2) Only for NA
(3) Except for B90B
(4) Only for B90B

333	02	p1	03/08

ENSEMBLE TOURELLE POUR COMMANDE PILOTE À 7 SECTIONS: CIRCUIT HYDRAULIQUE DISTRIBUTEUR, SOUPAPE PROPORTIONNELLE

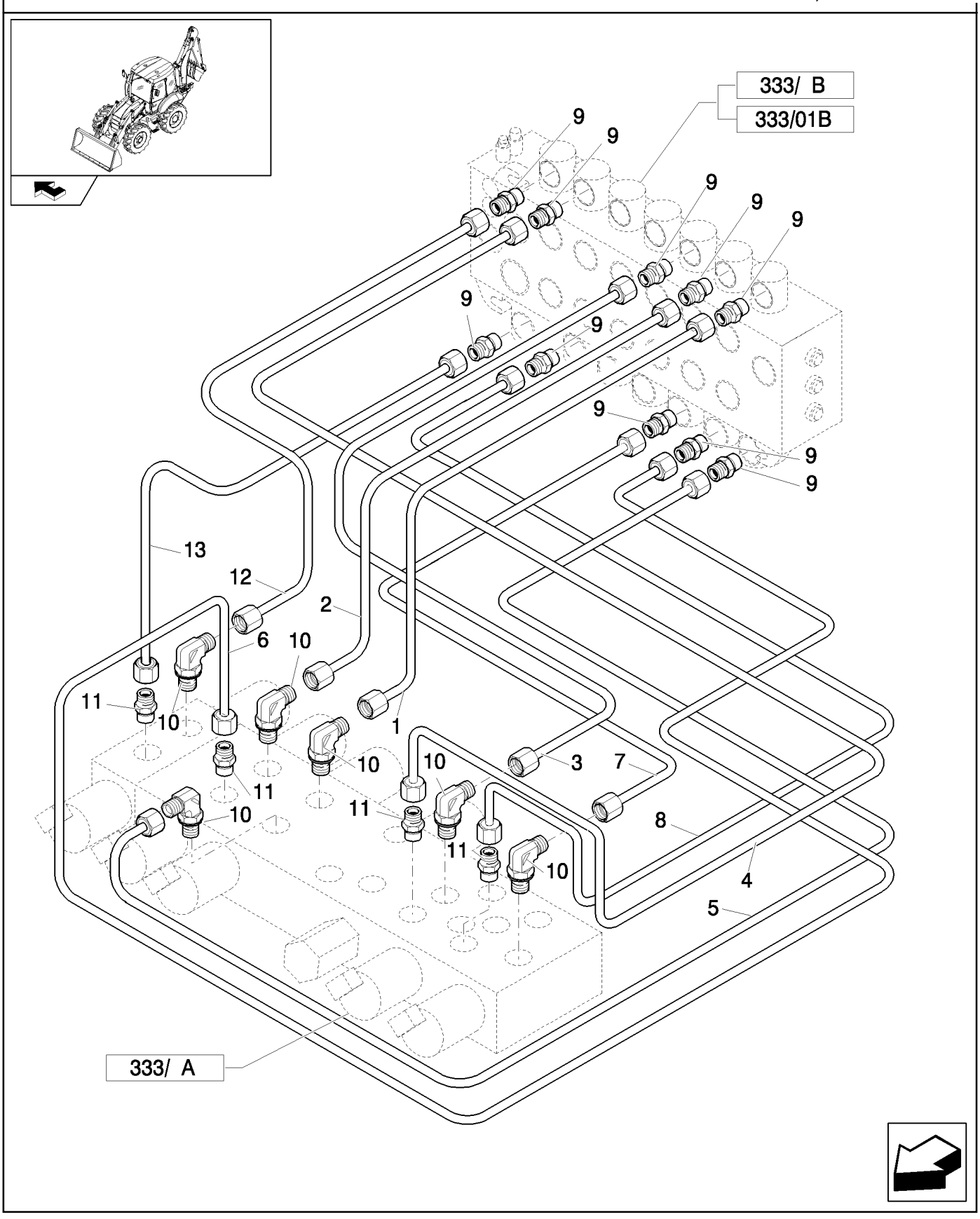

ENSEMBLE TOURELLE POUR COMMANDE PILOTE À 7 SECTIONS: CIRCUIT HYDRAULIQUE DISTRIBUTEUR, SOUPAPE PROPORTIONNEL

REF	FN	PART NUMBER	YR/SN	QTY	DESCRIPTION
1		85827093		1	TUYAU HYDRAULIQUE
2		85827094		1	TUYAU HYDRAULIQUE
3		85827091		1	TUYAU HYDRAULIQUE
4		85827089		1	TUYAU HYDRAULIQUE
5		85827092		1	TUYAU HYDRAULIQUE
6		85827095		1	TUYAU HYDRAULIQUE
7		85827090		1	TUYAU HYDRAULIQUE
8		85827088		1	TUYAU HYDRAULIQUE
9		85803312		9	RACCORD
10		47050653		6	COUDE
11		47050685		4	RACCORD
12		85827097		1	TUYAU HYDRAULIQUE
13		87306186		1	TUYAU HYDRAULIQUE

Pilot Control Version	B95B

333	03	p1	03/08

ENSEMBLE TOURELLE POUR COMMANDE PILOTE À 7 SECTIONS (CENTER PIVOT): INSTALLATION DISTRIBUTEUR

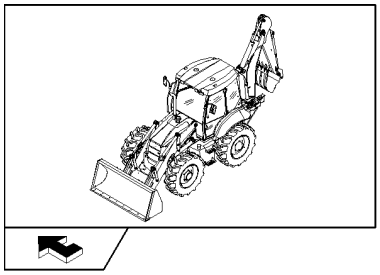

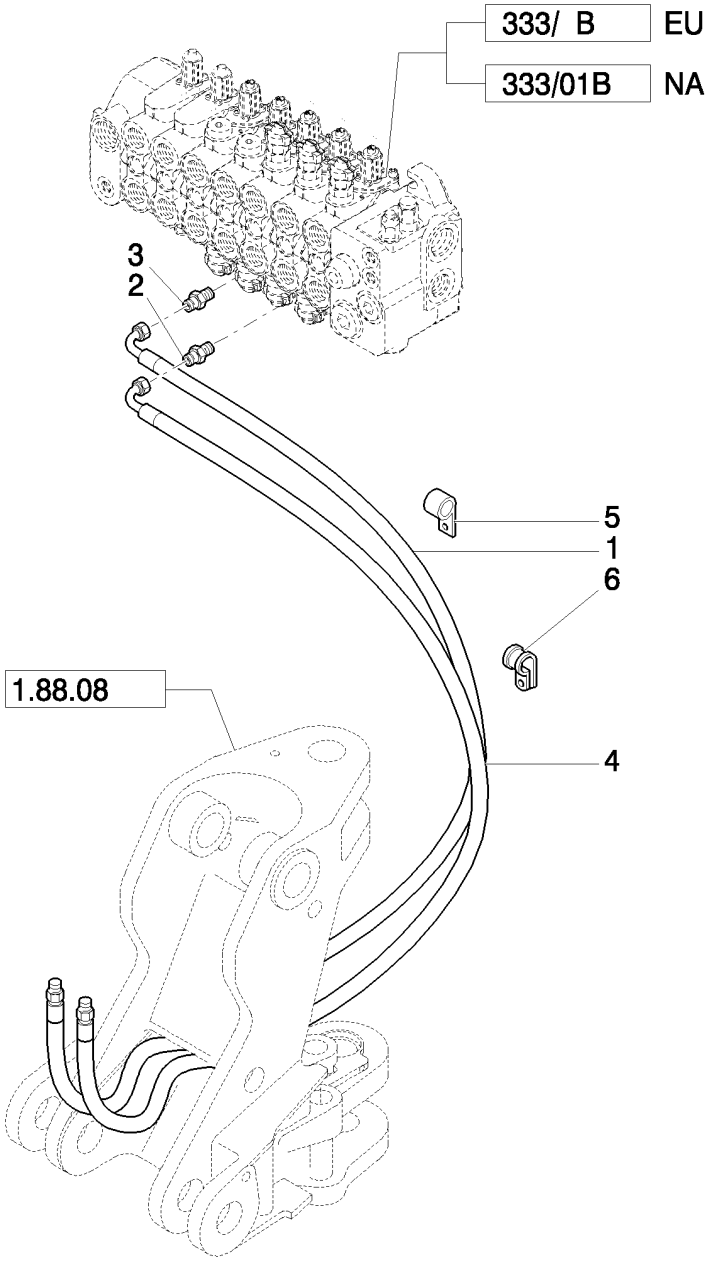

ENSEMBLE TOURELLE POUR COMMANDE PILOTE À 7 SECTIONS (CENTER PIVOT): INSTALLATION DISTRIBUTEUR

REF	FN	PART NUMBER	YR/SN	QTY	DESCRIPTION
1		87638575		1	TUYAU FLEXIBLE
2		85805258		1	RACCORD, 9/16"-16 ORS x 1 1/16"-12, O-Ring
3		83962539		1	RACCORD
4		85812211		1	TUYAU FLEXIBLE
5		85803393		2	BRIDE
6		85812029		4	BRIDE

333	04	p1	05/08

ENSEMBLE TOURELLE POUR COMMANDE PILOTE À 7 SECTIONS (CENTER PIVOT): SYSTÈME DU VÉRIN TÉLÉSCOPIQUE

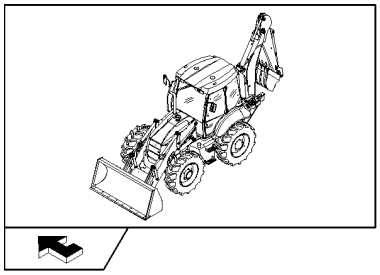

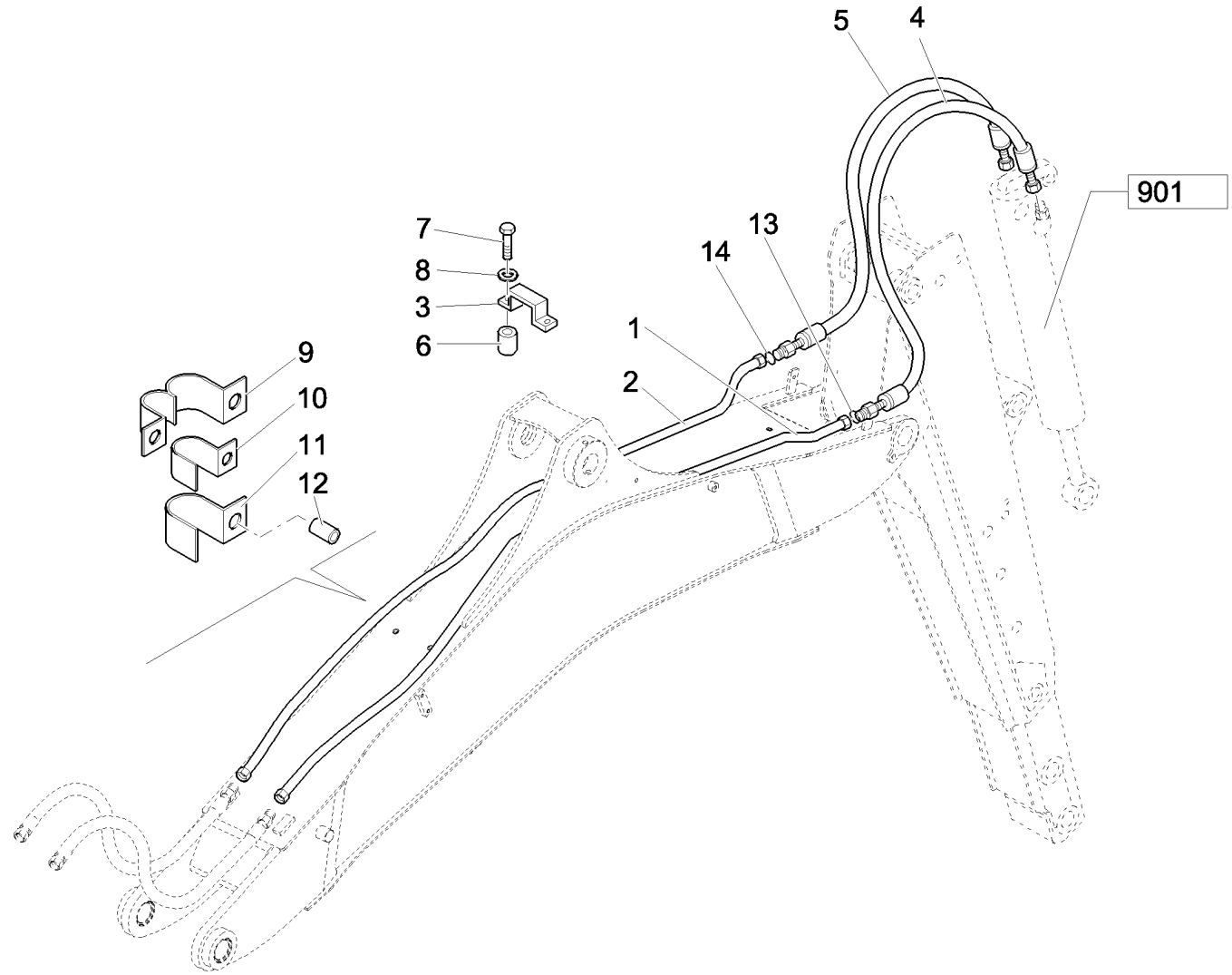

ENSEMBLE TOURELLE POUR COMMANDE PILOTE À 7 SECTIONS (CENTER PIVOT): SYSTÈME DU VÉRIN TÉLÉSCOPIQUE

REF	FN	PART NUMBER	YR/SN	QTY	DESCRIPTION
1		87617945		1	TUYAUTERIE PRESSION, 16 mm OD Tube
2		87621518		1	TUYAUTERIE PRESSION, 12 mm OD Tube
3		85802900		1	BRIDE
4		87619506		1	TUYAU FLEXIBLE
5		85817108		1	FLEXIBLE HYDRAULIQUE
6		85818943		1	ENTRETOISE
7		16044021		2	BOULON, Hex, M8 x 40, 8.8
8		11193879		2	RONDELLE BELLEVILLE, Belleville, M8.4
9		85802529		1	BRIDE
10		85802527		2	BRIDE
11		85802528		2	BRIDE
12		87615734		1	ENTRETOISE
13		9992069		1	JOINT THORIQUE, -016, 90 Duro, .614" ID x .070" Thk
14		9992298		1	JOINT THORIQUE, -014, 90 Duro, .489" ID x .070" Thk

Pilot Control Version	B95B

333	05	p1	03/08

ENSEMBLE TOURELLE POUR COMMANDE PILOTE À 7 SECTIONS (CENTER PIVOT): SYSTÈME DU VÉRIN DU GODET

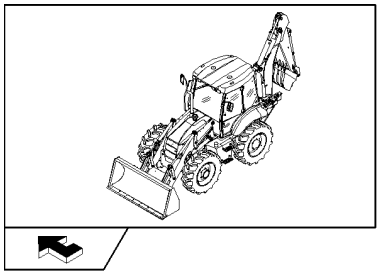

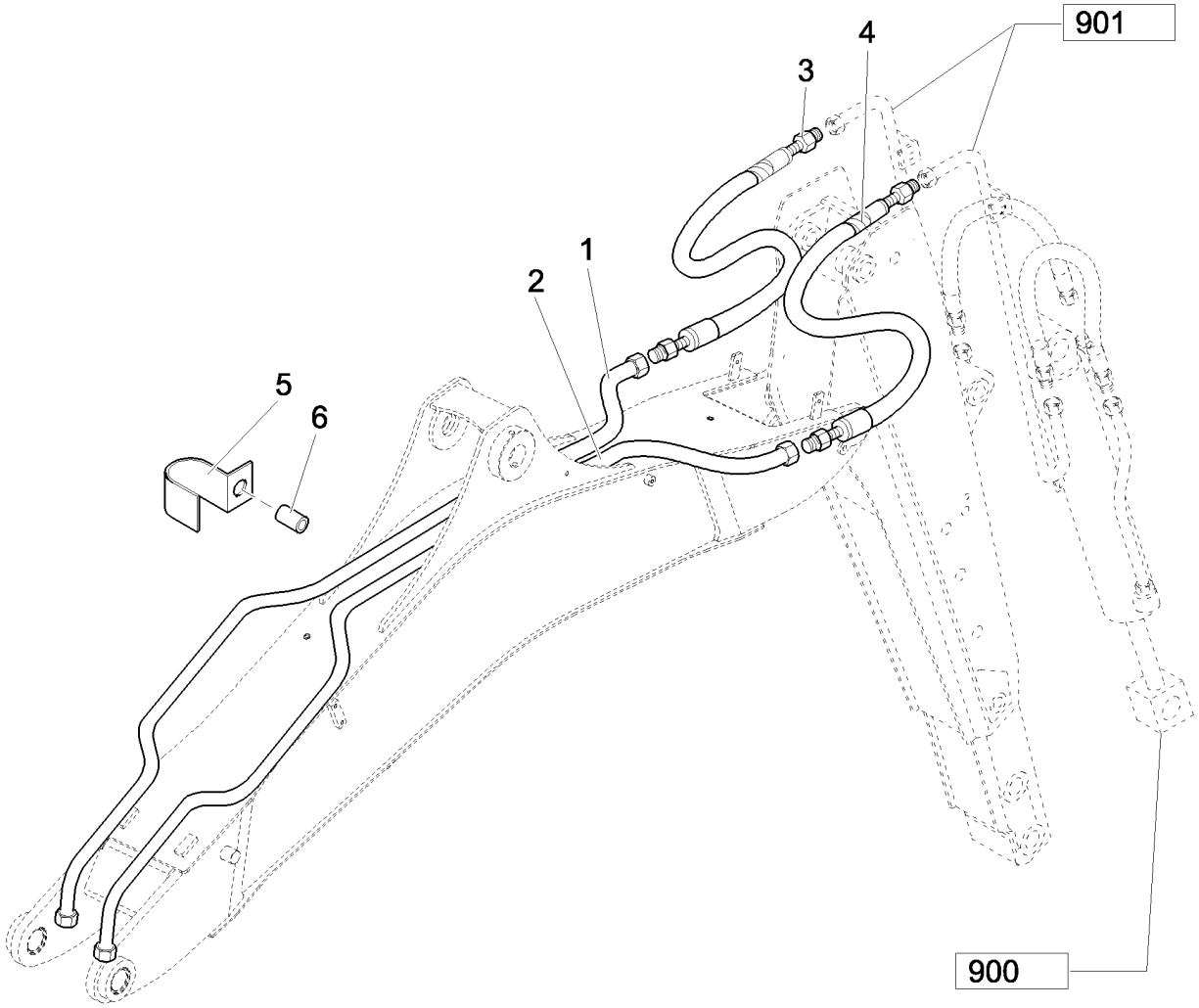

ENSEMBLE TOURELLE POUR COMMANDE PILOTE À 7 SECTIONS (CENTER PIVOT): SYSTÈME DU VÉRIN DU GODET

REF	FN	PART NUMBER	YR/SN	QTY	DESCRIPTION
1		87614629		1	TUYAUTERIE PRESSION, 20 mm OD Tube
2		87614627		1	TUYAUTERIE PRESSION, 16 mm OD Tube
3		85817106		1	TUYAU FLEXIBLE
4		85817107		1	TUYAU FLEXIBLE
5		87610539		1	CAVALIER-SERRE-TUBE
6		87610565		1	ENTRETOISE

333/ A		p1	03/08

VALVE DE COMMANDE PROPORTIONNELLE 7 SECTIONS

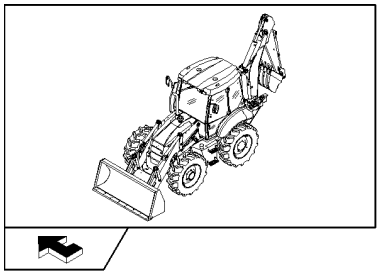

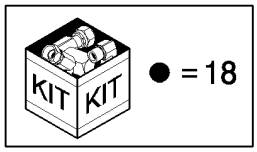

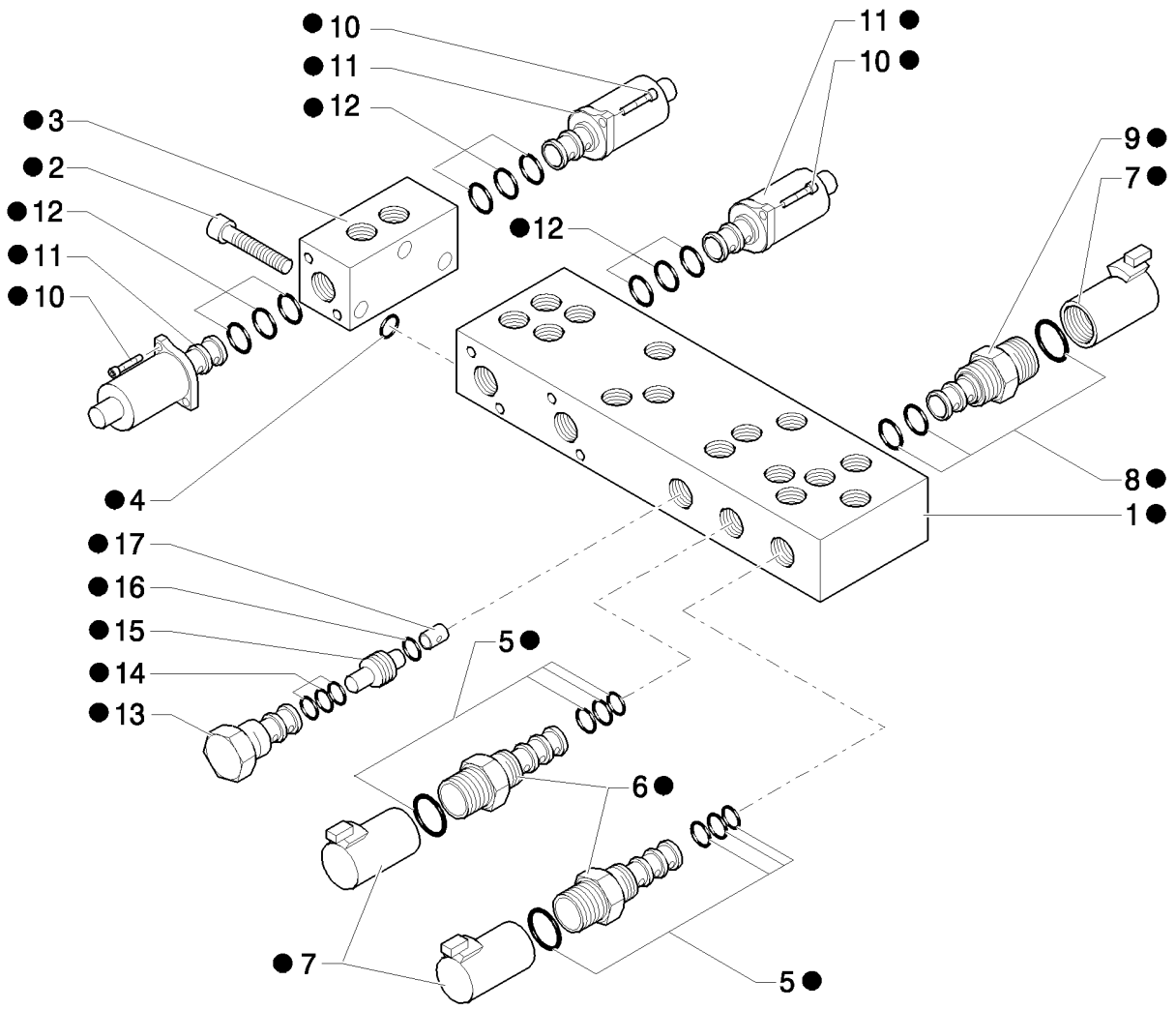

VALVE DE COMMANDE PROPORTIONNELLE 7 SECTIONS

REF	FN	PART NUMBER	YR/SN	QTY	DESCRIPTION
1		85828015		1	CORPS
2		14358921		3	VIS, Hex Soc Hd, M5 x 45, 10.9
3		85828004		1	CORPS, M6x60
4		85827999		1	POCHETTE DE JOINTS
5		85828002		2	POCHETTE DE JOINTS
6	1	85827996		2	ELECTRO-VALVE
7		85827995		3	BOBINE
8		85827998		1	POCHETTE DE JOINTS
9	2	85827994		1	ELECTRO-VALVE
10		14302921		12	BOULON, Hex, M4 x 10, 8.8, Full Thd
11		85827993		6	ELECTRO-VALVE
12		85828000		4	POCHETTE DE JOINTS
13		85827997		1	SOUPAPE, CARTRIDGE, HYDRAULIC PRESSURE REDUCING VALVE
14		85828001		1	POCHETTE DE JOINTS
15		85827992		1	CLAPET ANTI-RETOUR
16		85828003		1	JOINT THORIQUE
17		85828005		1	ORIFICE
18		85827471		1	SOUPAPE HYDRAULIQUE

(1) Includes 5, 7
(2) Includes 7, 8

Pilot Control Version

B95B

333/ C	01	p1	04/08

VALVE PILOTE DU MANIPULATEUR (DROIT) 7 TIROIRS

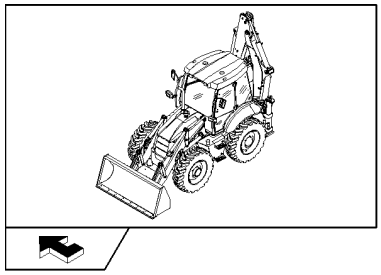

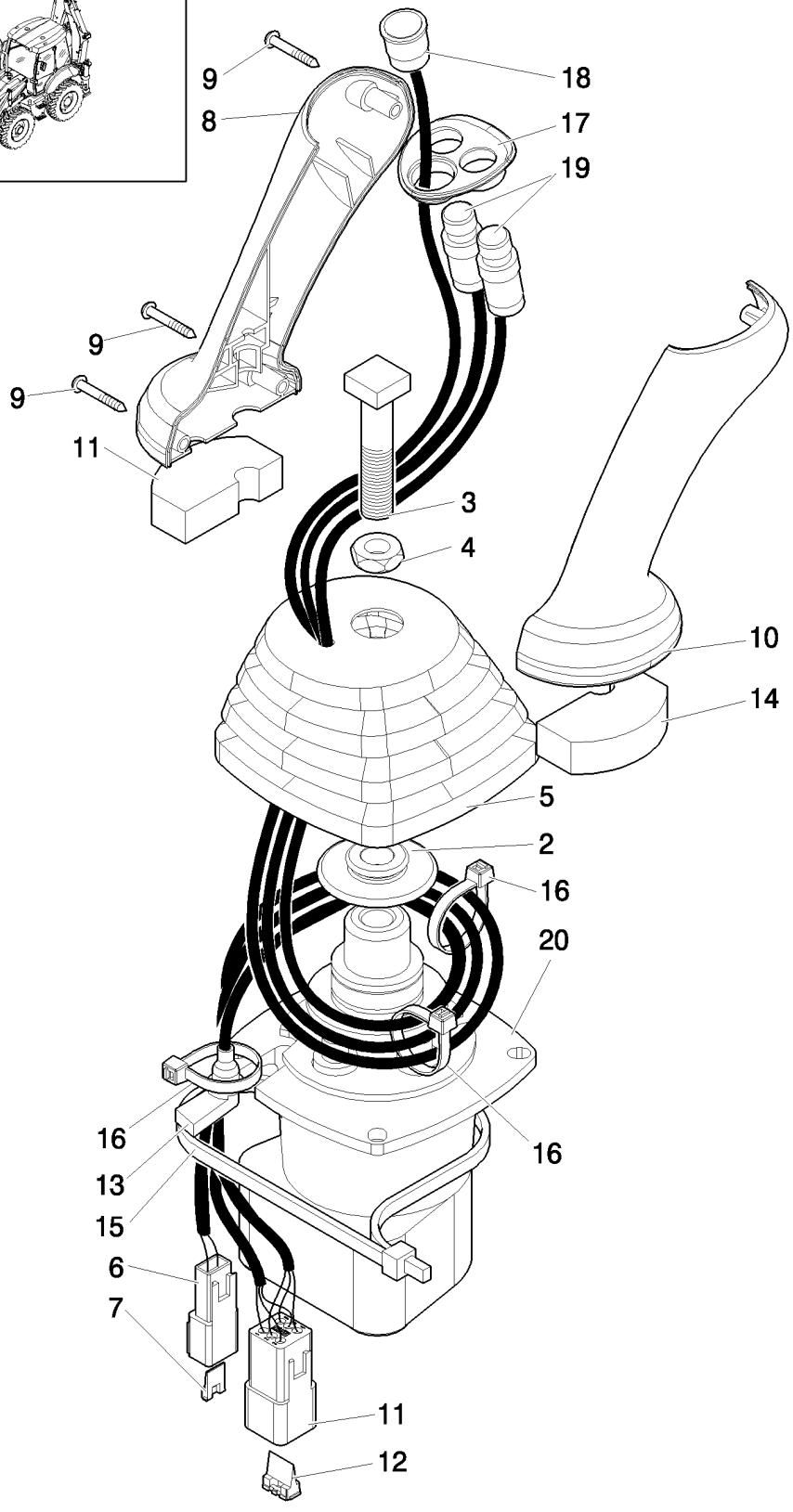

VALVE PILOTE DU MANIPULATEUR (DROIT) 7 TIROIRS

REF	FN	PART NUMBER	YR/SN	QTY	DESCRIPTION
1		87685957		1	DISTRIBUTEUR, Assy
2		87436225		1	RETENEUR
3		87428023		1	BOULON
4		87037944		1	ECROU, Thin, M12 x 1.75, Cl 05
5		87443721		1	COIFFE
6		225315C1		1	CONNECTEUR
7		225318C1		1	CALE DE BLOCAGE
8		87308838		1	POMMEAU
9		15687475		3	VIS AUTO-TARAUDEUSE, Pan Hd, M3.5 x 25, Stainless
10		87308839		1	POMMEAU
11		225350C1		1	CONNECTEUR
12		225353C1		1	CALE DE BLOCAGE
13		87424267		1	PASSE-FIL
14		87435506		2	JOINT
15		87438046		1	SERRE-CABLE
16		87000312		3	SERRE-CABLE
17		87547309		1	ENCADREMENT
18		87546922		1	CONTACTEUR
19		87437371		2	COMMUTATEUR COMPLET
20		87687141		1	VALVE DE PILOTAGE

333/ C	02	p1	04/08

VALVE PILOTE DU MANIPULATEUR (DROIT) 7 TIROIRS

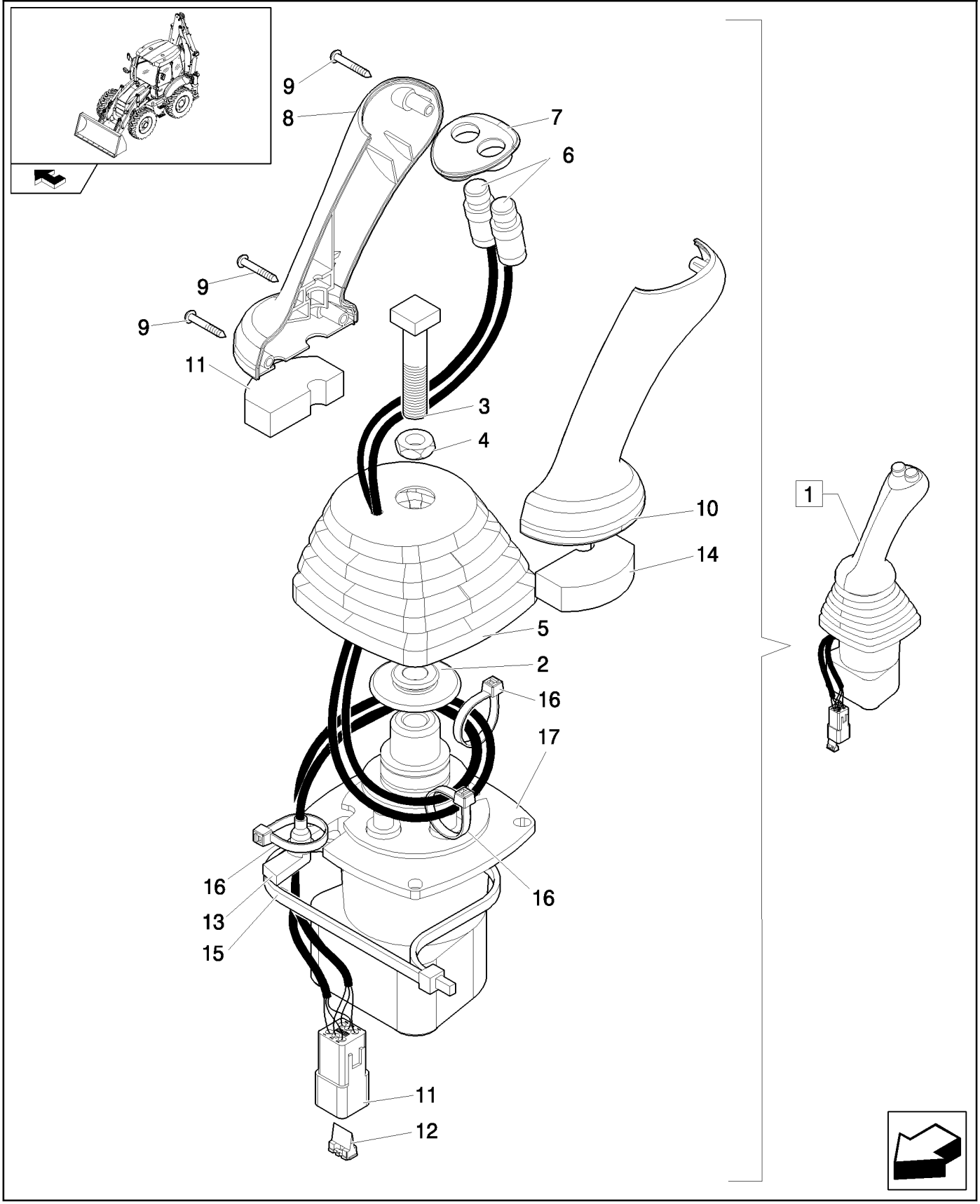

VALVE PILOTE DU MANIPULATEUR (DROIT) 7 TIROIRS

REF	FN	PART NUMBER	YR/SN	QTY	DESCRIPTION
1		87685955		1	DISTRIBUTEUR, Assy
2		87436225		1	RETENEUR
3		87428023		1	BOULON
4		87037944		1	ECROU, Thin, M12 x 1.75, Cl 05
5		87443721		1	COIFFE
6		87437371		2	COMMUTATEUR COMPLET
7		87435242		1	ENCADREMENT
8		87308838		1	POMMEAU
9		15687475		3	VIS AUTO-TARAUDEUSE, Pan Hd, M3.5 x 25, Stainless
10		87308839		1	POMMEAU
11		225350C1		1	CONNECTEUR
12		225353C1		1	CALE DE BLOCAGE
13		87424267		1	PASSE-FIL
14		87435506		2	JOINT
15		87438046		1	SERRE-CABLE
16		87000312		3	SERRE-CABLE
17		87687141		1	VALVE DE PILOTAGE

333/01B	01	p1	04/08

DISTRIBUTEUR DE COMMANDE D'EXCAVATRICE A 7 SECTIONS (CENTER PIVOT) - NA

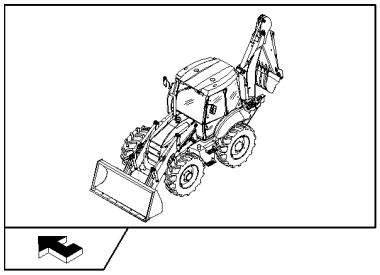

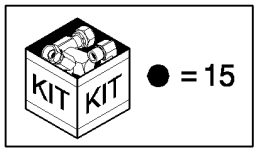

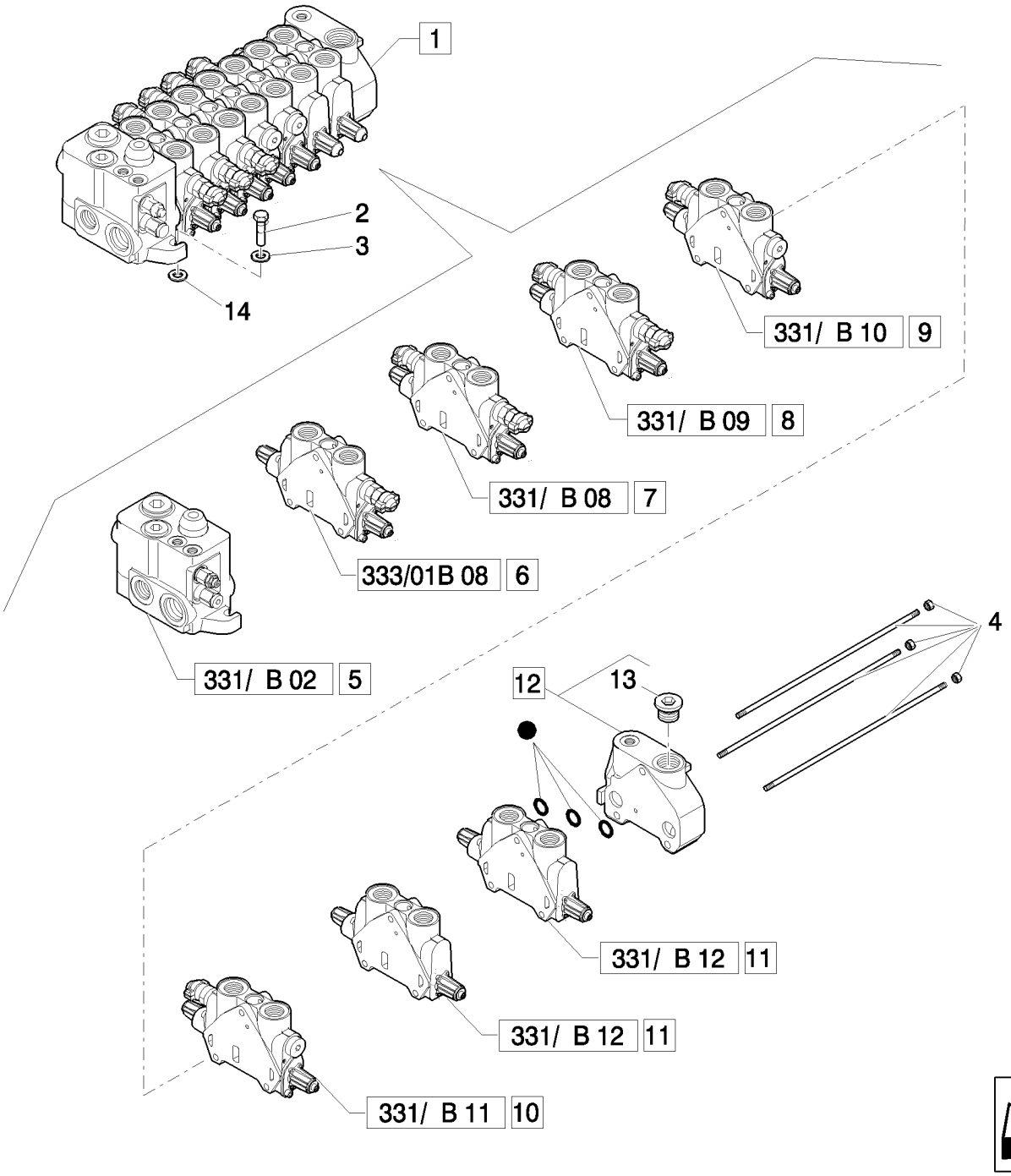

DISTRIBUTEUR DE COMMANDE D'EXCAVATRICE A 7 SECTIONS (CENTER PIVOT) - NA

REF	FN	PART NUMBER	YR/SN	QTY	DESCRIPTION
1		87734106		1	DISTRIBUTEUR, Assy
2		11234721		3	BOULON, Hex, M10 x 1.25 x 45, 8.8
3		11190679		3	RONDELLE BELLEVILLE, Belleville, M10.5
4		85811959		1	KIT
5		87610858		1	ELEMENT DISTR HYDR, Assy
6	1	87558574		1	SECTEUR, Assy
7	2	85826901		1	ELEMENT DISTR HYDR, Assy
8	3	85826339		1	ELEMENT DISTR HYDR, Assy
9	4	85826903		1	SECTEUR, Assy
10	5	87758451		1	TIROIR, Assy
11	6	85826340		2	ELEMENT DISTR HYDR, Assy
12		85826250		1	ELEMENT DISTR HYDR, Assy
13		85811921		1	BOUCHON, 1-1/16"-12 UNF 2A
14		13578621		3	RONDELLE
15		85825473		1	POCHETTE DE JOINTS

(1) Telescopic Cylinder
(2) Boom Cylinder
(3) Swing Cylinder
(4) Dipper Cylinder
(5) Arm Cylinder
(6) Stabilizer Cylinder

Pilot Control Version

B95B

333/01B	02	p1	04/08

DISTRIBUTEUR ÉQUIPEMENT RÉTRO À 7 SECTIONS (CENTER PIVOT) - NA: VÉRIN DU BALANCIER TÉLÉSCOPIQUE

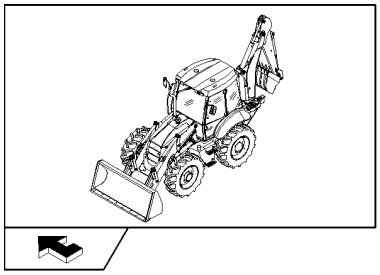

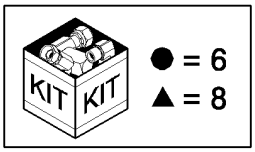

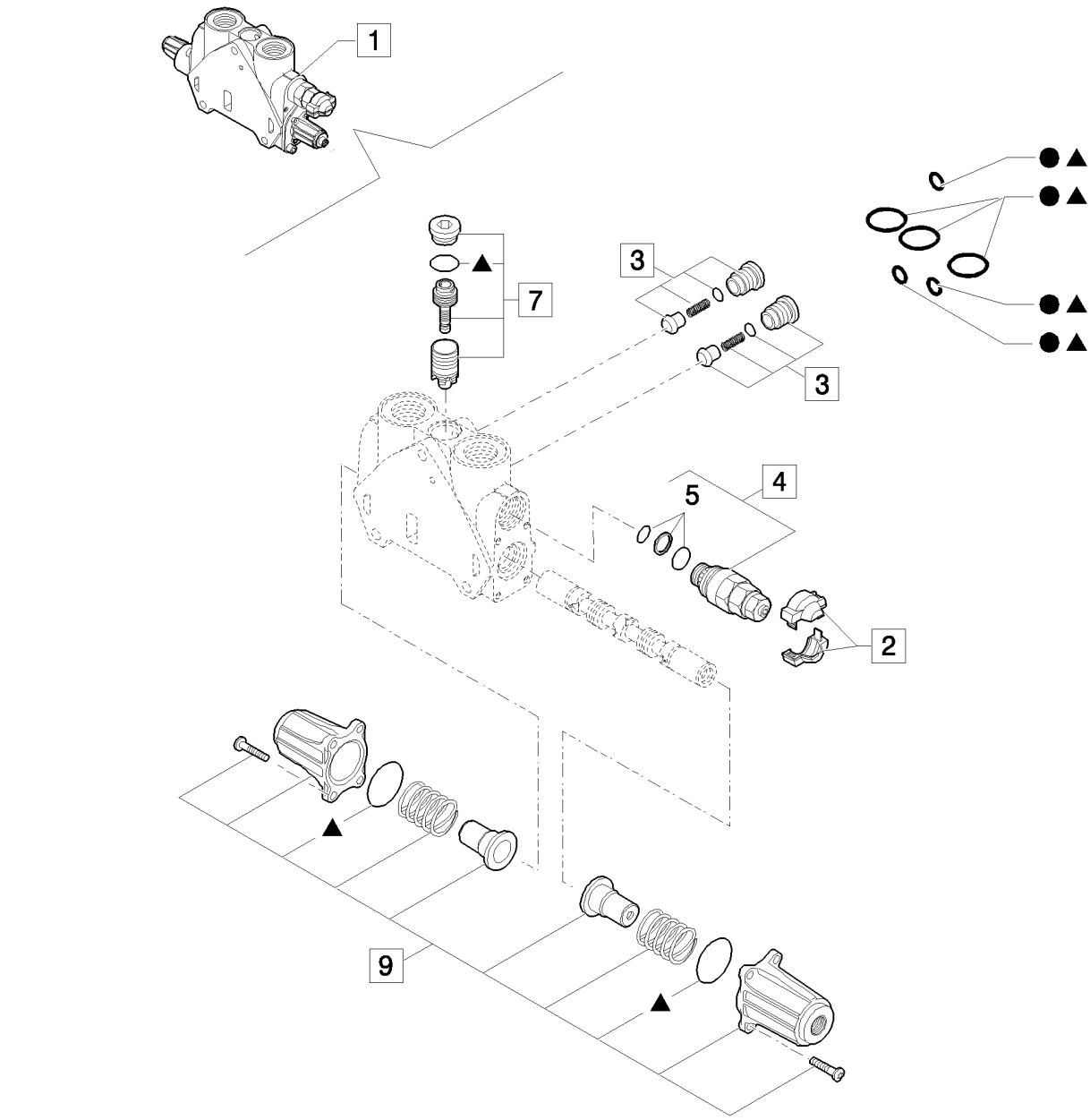

DISTRIBUTEUR ÉQUIPEMENT RÉTRO À 7 SECTIONS (CENTER PIVOT) - NA: VÉRIN DU BALANCIER TÉLÉSCOPIQUE

REF	FN	PART NUMBER	YR/SN	QTY	DESCRIPTION
1		87558574		1	SECTEUR, Assy
2		85811934		2	KIT, Cover
3		85811938		2	CLAPET ANTI-RETOUR, Valve, Assy
4	1	87341088		2	SOUPAPE HYDRAULIQUE, Assy
5		85811933		1	POCHETTE DE JOINTS, Valve Seals
6		85819148		1	POCHETTE DE JOINTS, Seals
7		85819378		1	POCHETTE DE JOINTS, Valve
8		85824281		1	POCHETTE DE JOINTS, Seals
9		85826344		1	KIT, Cover Assy

(1) 124 BAR

Pilot Control Version

B95B

335		p1	04/08

COLONNE COMPLETE 7 SECTIONS (CENTER PIVOT)

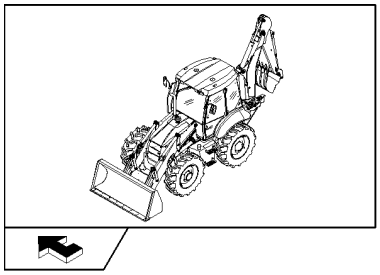

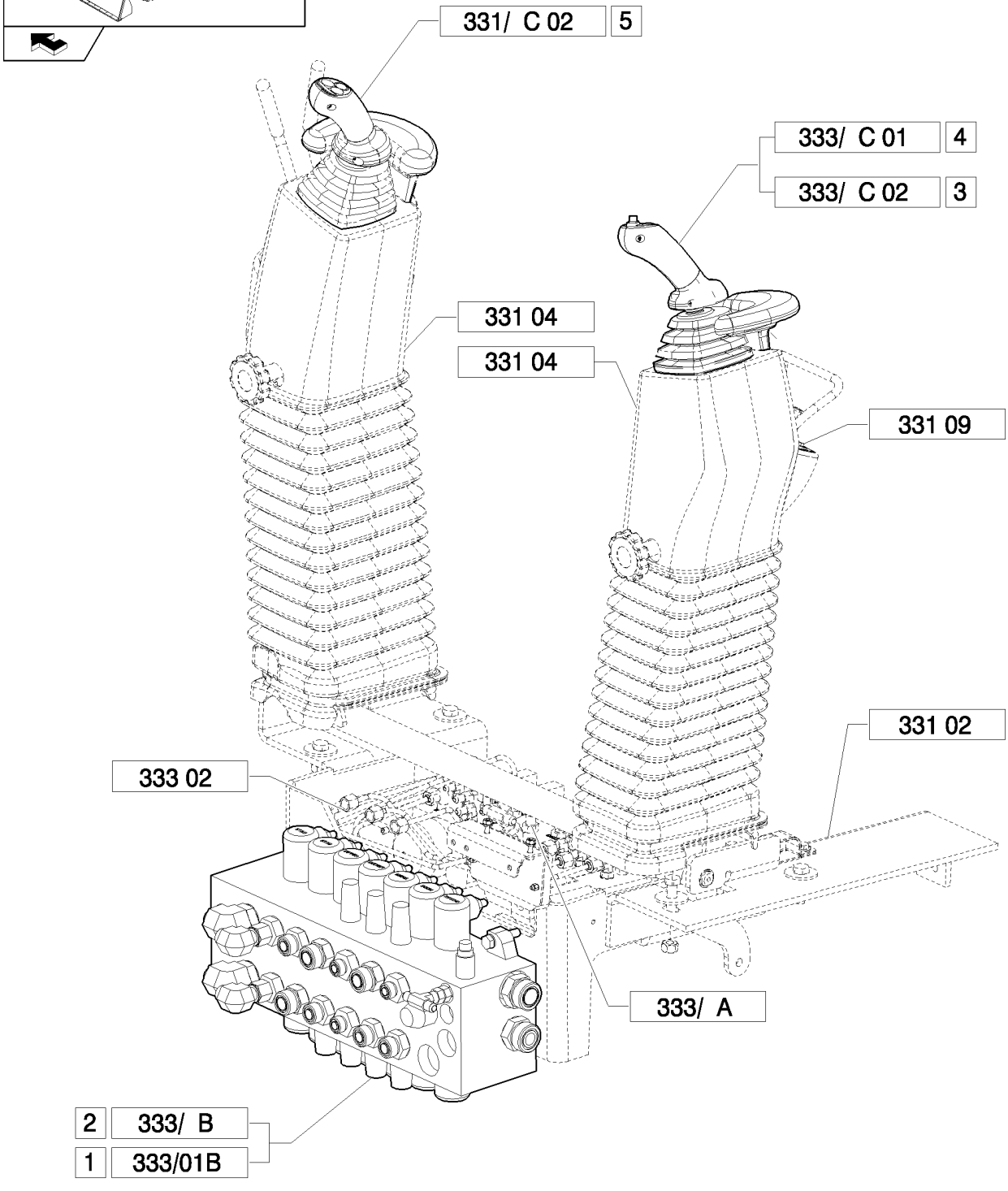

COLONNE COMPLETE 7 SECTIONS (CENTER PIVOT)

REF	FN	PART NUMBER	YR/SN	QTY	DESCRIPTION
1	1	87734106		1	DISTRIBUTEUR, Assy
2	2	87734107		1	DISTRIBUTEUR, Assy
3	3	87685955		1	DISTRIBUTEUR, Assy
4	4	87685957		1	DISTRIBUTEUR, Assy
5		87685948		1	DISTRIBUTEUR, Assy

(1) Only for NA
(2) Only for B110B, B115B Center Pivot EU
(3) Only for B90B, B90BLR(EU) - B90B, B90BLR (NA)
(4) Only for Center Pivot EU / NA

336/01	01	p1	04/08

DISTRIBUTEUR CHARGEUSE TWO SECTIONS (CENTER PIVOT) - NA

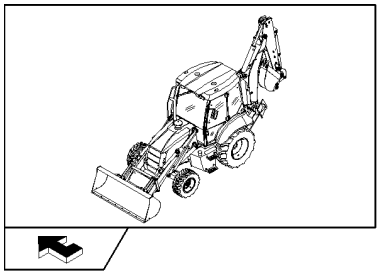

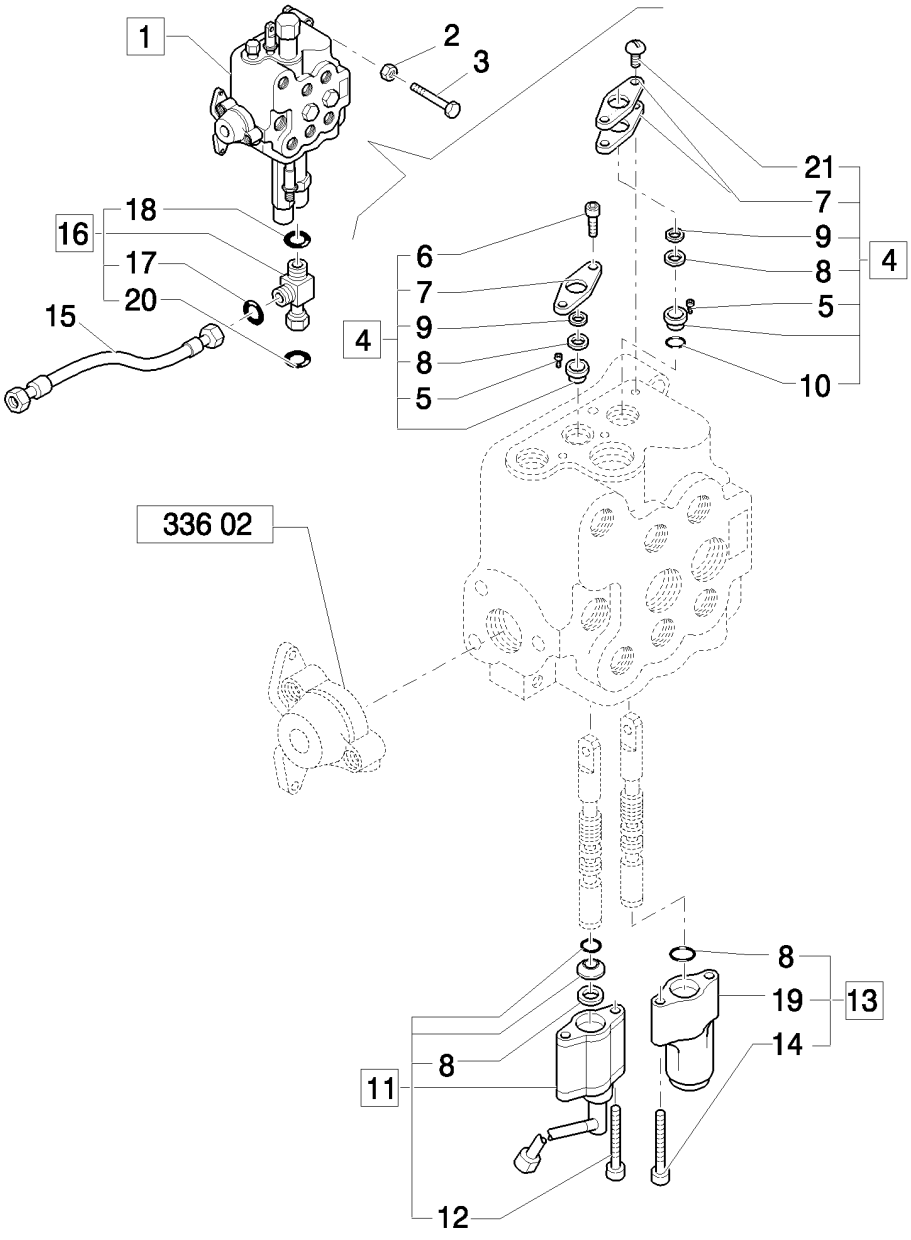

DISTRIBUTEUR CHARGEUSE TWO SECTIONS (CENTER PIVOT) - NA

REF	FN	PART NUMBER	YR/SN	QTY	DESCRIPTION
1		85819649		1	DISTRIBUTEUR, Assy
2		11190579		3	RONDELLE BELLEVILLE, Belleville, M10.5
3		14308221		3	VIS, Hex Soc Hd, M10 x 1.25 x 65, 8.8
4		9968455		1	KIT
5		9968457		1	ENTRETOISE
6		9968456		2	VIS
7		9968458		3	FLASQUE
8		9968489		4	JOINT
9		9968490		1	RACLEUR BALAIS
10		87327076		1	JOINT THORIQUE
11		85808403		1	BUTÉE, Magnetic Detent, Assy
12		9968451		2	VIS
13		85817025		1	TIROIR, Assy
14		9968454		2	VIS
15		85816804		1	FLEXIBLE HYDRAULIQUE, 550mm lg
16		85817531		1	TE, Assy
17		89825770		1	JOINT THORIQUE
18		89824050		1	JOINT THORIQUE
19		9968513		1	COUVERCLE
20		89626929		1	JOINT THORIQUE, 90 Duro, 1.048" ID x .116" Thk
21		9968460		2	VIS

Mechanical Version B95B

336/01	02	p1	04/08

DISTRIBUTEUR CHARGEUSE, 2 SECTIONS, CALOTTE & SOUPAPE DECHARGE (CENTER PIVOT) - NA

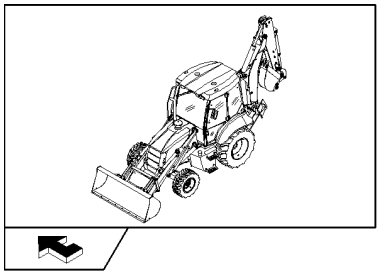

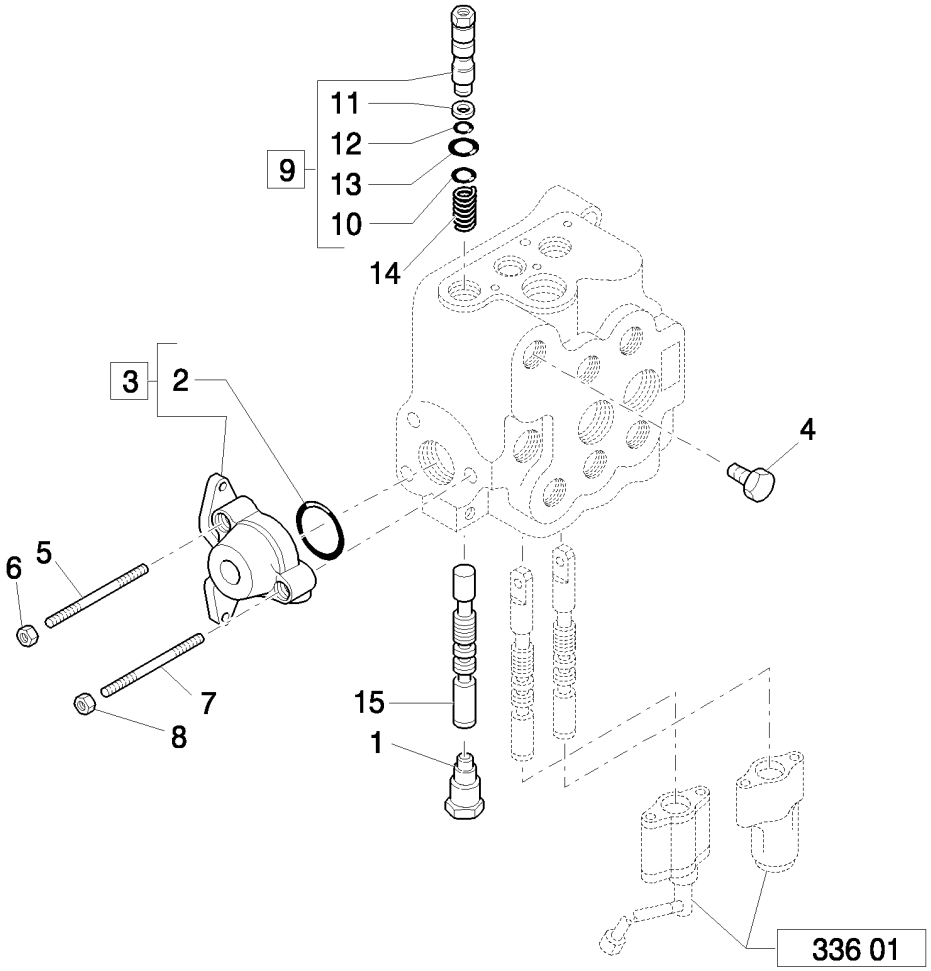

DISTRIBUTEUR CHARGEUSE, 2 SECTIONS, CALOTTE & SOUPAPE DECHARGE (CENTER PIVOT) - NA

REF	FN	PART NUMBER	YR/SN	QTY	DESCRIPTION
1		9968464		1	BOUCHON, Assy
2		9968476		1	JOINT THORIQUE
3		9968443		1	ELEMENT DISTR HYDR, Assy
4		85807857		1	BOUCHON
5		9968521		2	GOUJON
6		9968441		2	ECROU
7		9968520		1	GOUJON
8		9968440		1	ECROU
9		85815667		1	VALVE BY-PASS, Assy
10		85815668		1	JOINT THORIQUE
11		9968467		1	CONTRE-JOINT
12		9968466		1	JOINT THORIQUE
13		9968468		1	JOINT THORIQUE
14		9968488		1	RESSORT
15		85807858		1	TIROIR

Mechanical Version	B95B

336/01	03	p1	04/08

DISTRIBUTEUR CHARGEUSE, 2 SECTIONS, SOUPAPES D'EVACUATION ET DE RETENUE (CENTER PIVOT) - NA

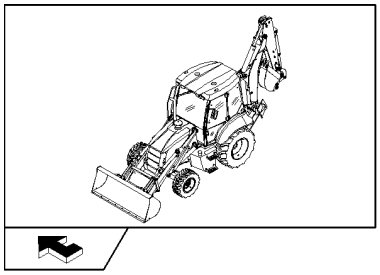

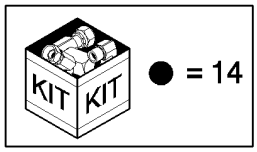

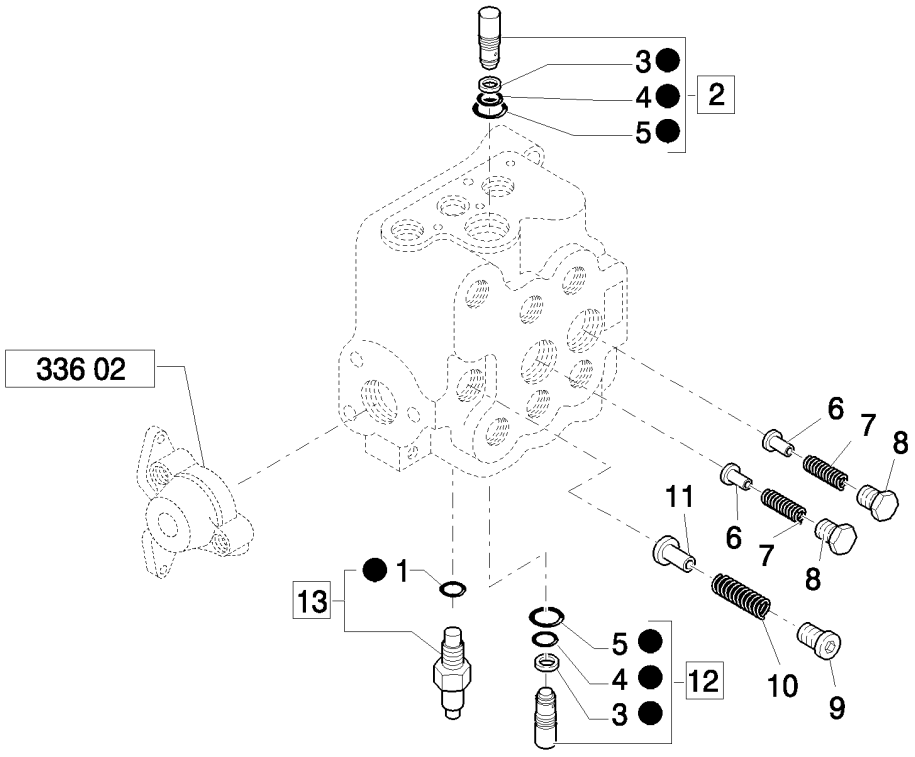

DISTRIBUTEUR CHARGEUSE, 2 SECTIONS, SOUPAPES D'EVACUATION ET DE RETENUE (CENTER PIVOT) - NA

REF	FN	PART NUMBER	YR/SN	QTY	DESCRIPTION
1		85819945		1	JOINT THORIQUE, Assy
2		87302609		1	SOUPAPE, DÉCHARGE, Assy
3		87302608		2	CONTRE-JOINT
4		9968471		2	JOINT THORIQUE
5		9968470		2	JOINT THORIQUE
6		9968444		2	PLONGEUR
7		9968445		2	RESSORT
8		9968446		2	BOUCHON
9		9968449		1	BOUCHON
10		9968448		1	RESSORT
11		9968447		1	PLONGEUR
12		87302611		1	SOUPAPE, DÉCHARGE, Assy
13		85819722		1	SOUPAPE HYDRAULIQUE, Assy
14		87302607		2	POCHETTE DE JOINTS

Mechanical Version	B95B

DISTRIBUTEUR CHARGEUSE, 2 SECTIONS, LOT BY-PASS (CENTER PIVOT) - NA

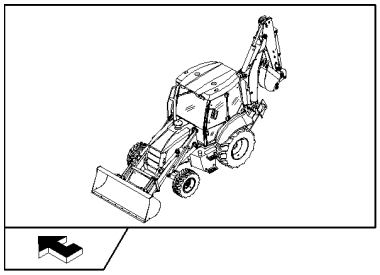

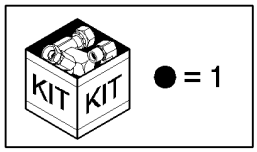

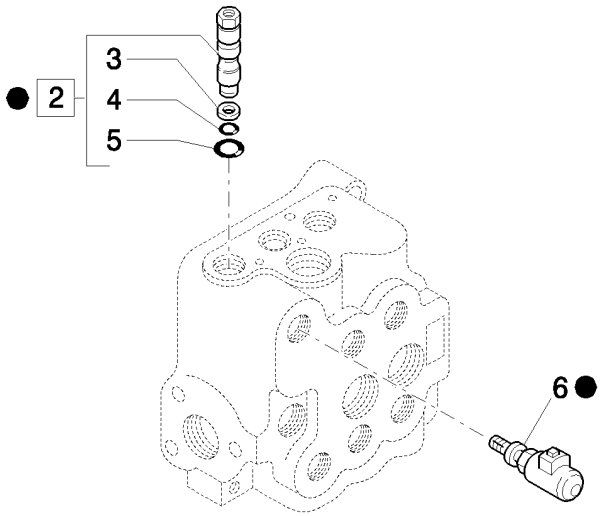

DISTRIBUTEUR CHARGEUSE, 2 SECTIONS, LOT BY-PASS (CENTER PIVOT) - NA

REF	FN	PART NUMBER	YR/SN	QTY	DESCRIPTION
1		85817201		1	KIT DE TRANSFORMATION
2		9968465		1	VALVE DE PILOTAGE, Assy
3		9968467		1	CONTRE-JOINT
4		9968466		1	JOINT THORIQUE
5		9968468		1	JOINT THORIQUE
6		9968461		1	SOLENOIDE

Mechanical Version	B95B

DISTRIBUTEUR CHARGEUSE, 2 SECTIONS, LOT DECHARGE OU SOUPAPE BASCULEMENT (CENTER PIVOT) - NA

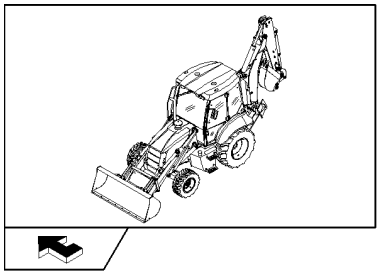

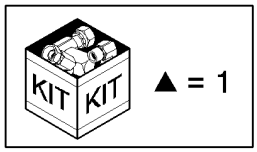

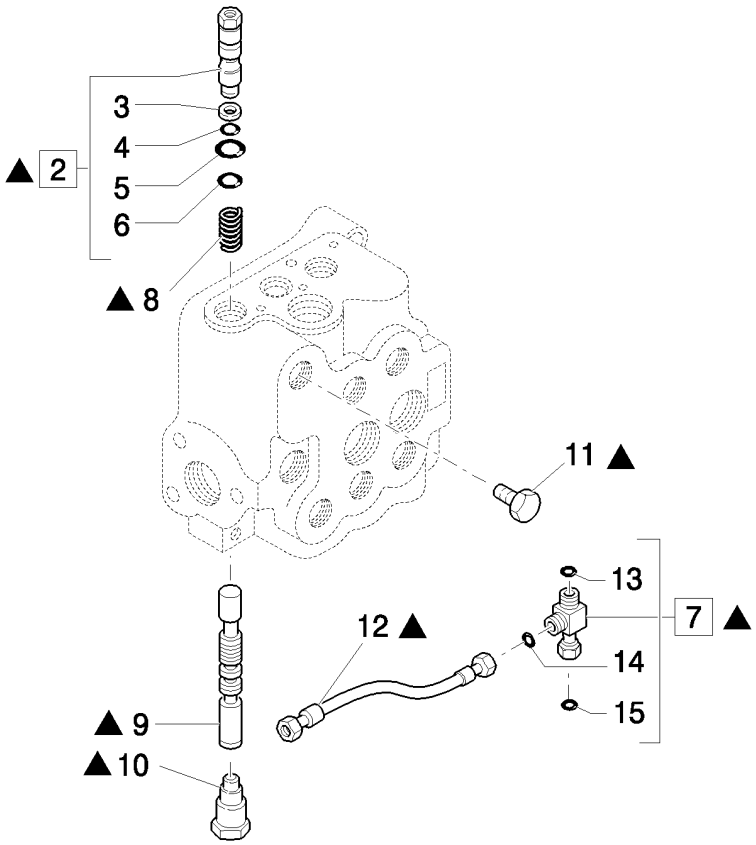

DISTRIBUTEUR CHARGEUSE, 2 SECTIONS, LOT DECHARGE OU SOUPAPE BASCULEMENT (CENTER PIVOT) - NA

REF	FN	PART NUMBER	YR/SN	QTY	DESCRIPTION
1		85816793		1	KIT
2		85815667		1	VALVE BY-PASS, Assy
3		9968467		1	CONTRE-JOINT
4		9968466		1	JOINT THORIQUE
5		9968468		1	JOINT THORIQUE
6		85815668		1	JOINT THORIQUE
7		85817531		1	TE, Assy
8		9968488		1	RESSORT
9		85807858		1	TIROIR
10		9968464		1	BOUCHON
11		85807857		1	BOUCHON
12		85816804		1	FLEXIBLE HYDRAULIQUE, 550mm lg
13		89824050		1	JOINT THORIQUE
14		89825770		1	JOINT THORIQUE
15		89626929		1	JOINT THORIQUE, 90 Duro, 1.048" ID x .116" Thk

Mechanical Version	B95B

337	01	p1	04/08

CLAPET DE BLOCAGE SUR VÉRINS ANTIRENVERSEMENT ÉQUIPEMENT CHARGEUR

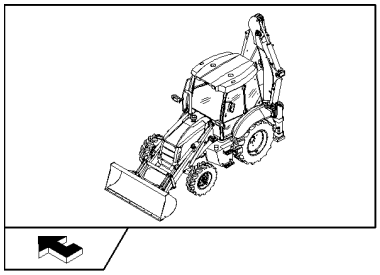

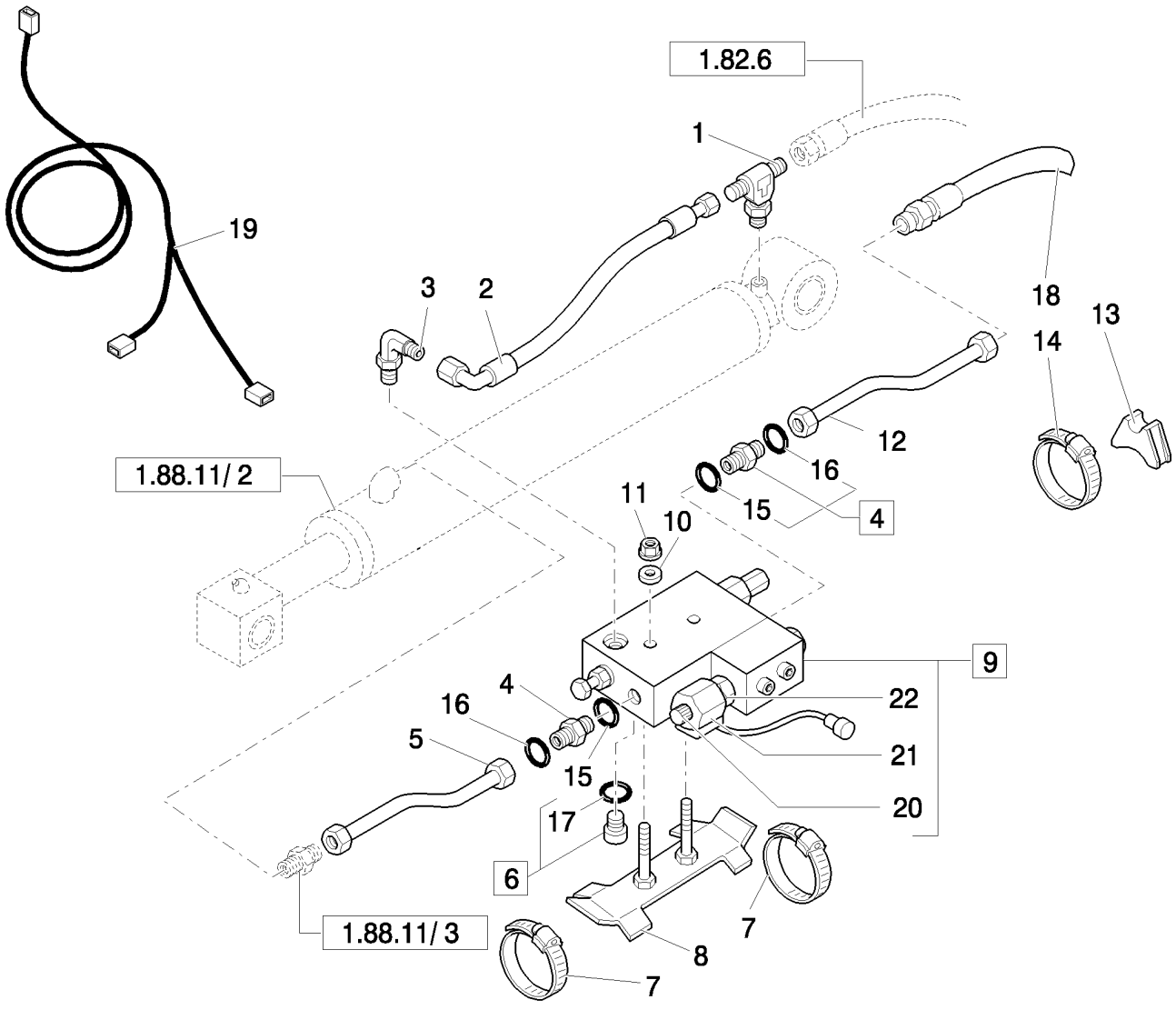

CLAPET DE BLOCAGE SUR VÉRINS ANTIRENVERSEMENT ÉQUIPEMENT CHARGEUR

REF	FN	PART NUMBER	YR/SN	QTY	DESCRIPTION
1		85805218		2	TE
2		85815506		2	TUYAU FLEXIBLE
3		85805220		2	COUDE
4		83963374		4	RACCORD, Assy
5		85805262		2	TUYAU HYDRAULIQUE
6		85802805		2	BOUCHON, Assy
7		85803010		4	BRIDE, FLEXIBLE
8		85805221		2	SUPPORT
9		85805224		2	SOUPAPE HYDRAULIQUE, Assy
10		11193879		4	RONDELLE BELLEVILLE, Belleville, M8.4
11		14048221		4	CONTRE-ECROU, M8 x 1.25, Cl 10
12		85805264		2	TUYAU HYDRAULIQUE
13		87303910		2	ENTRETOISE
14		85802743		2	BRIDE, FLEXIBLE
15		80128825		2	JOINT THORIQUE
16		89992298		2	JOINT THORIQUE
17		89825770		1	JOINT THORIQUE
18		85813361		2	FLEXIBLE HYDRAULIQUE, 1130mm lg
19		85826276		1	FAISCEAU COMPLET
20		9970384		2	ECROU
21		85820283		2	BOBINE
22		85820285		2	SOUPAPE HYDRAULIQUE

337	02	p1	04/08

SOUPAPE DE BLOCAGE SUR CYLINDERS DE RELEVAGE PELLE

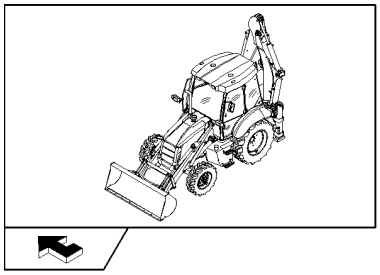

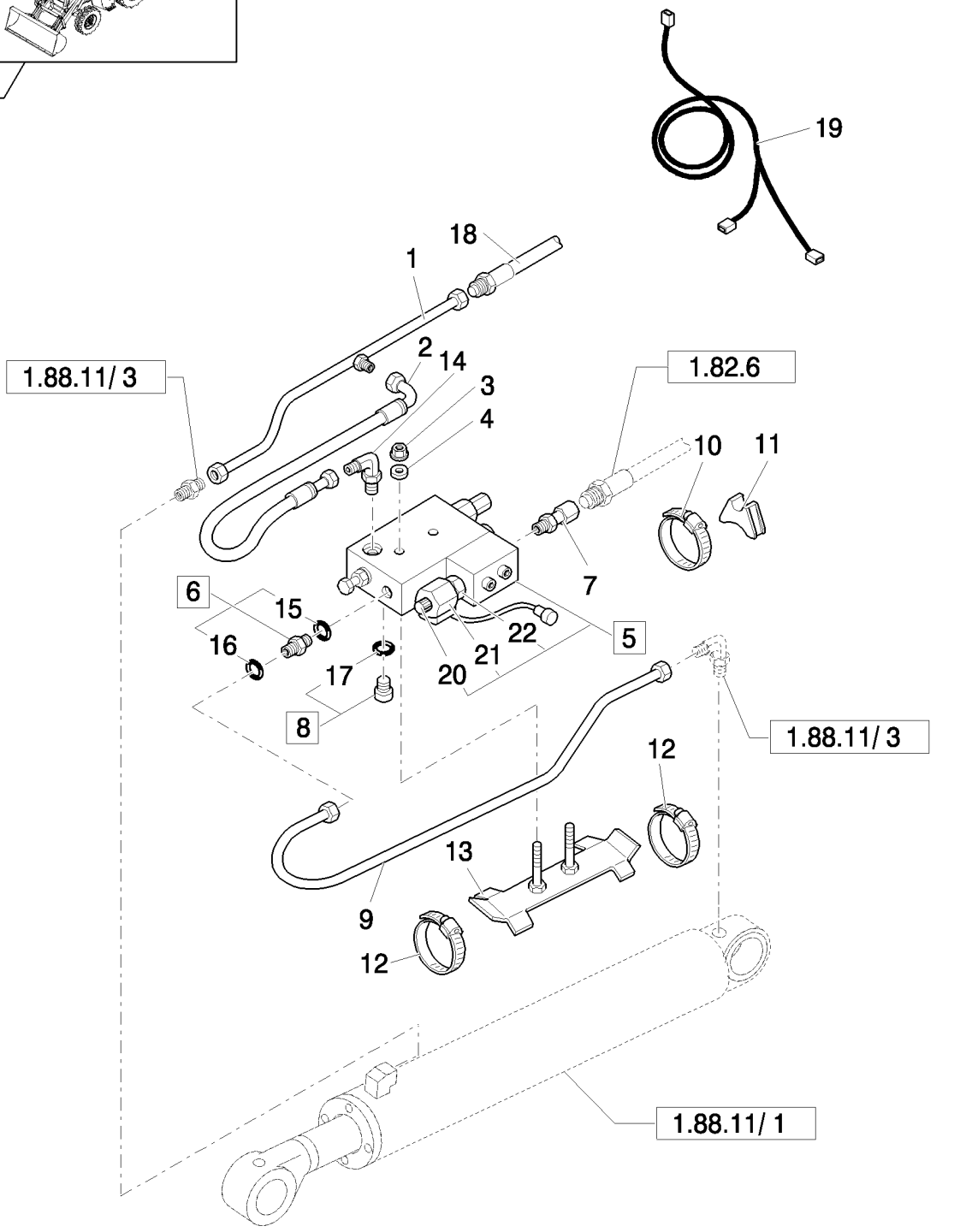

SOUPAPE DE BLOCAGE SUR CYLINDERS DE RELEVAGE PELLE

REF	FN	PART NUMBER	YR/SN	QTY	DESCRIPTION
1		85827853		2	TUYAU HYDRAULIQUE
2		85815506		2	TUYAU FLEXIBLE
3		14048221		4	CONTRE-ECROU, M8 x 1.25, Cl 10
4		11193879		4	RONDELLE BELLEVILLE, Belleville, M8.4
5		85805223		2	SOUPAPE HYDRAULIQUE, Assy
6		83963374		2	RACCORD, Assy
7		85805217		2	RACCORD
8		85802805		2	BOUCHON, Assy
9		85805271		1	TUYAU HYDRAULIQUE, LH
9		85805273		1	TUYAU HYDRAULIQUE, RH
10		85803008		2	BRIDE, FLEXIBLE
11		87303912		2	BLOC
12		85802743		4	BRIDE, FLEXIBLE
13		85805221		2	SUPPORT
14		85805220		2	COUDE
15		80128825		2	JOINT THORIQUE
16		89992298		2	JOINT THORIQUE
17		89825770		2	JOINT THORIQUE
18		85813363		2	TUYAU FLEXIBLE, 550mm lg
19		85826275		1	FAISCEAU COMPLET
20		9970384		2	ECROU
21		85820283		2	BOBINE
22		85820285		2	SOUPAPE HYDRAULIQUE

338		p1	03/08

SOUPAPE DE BLOCAGE SUR CYLINDERS DE RELEVAGE PELLE

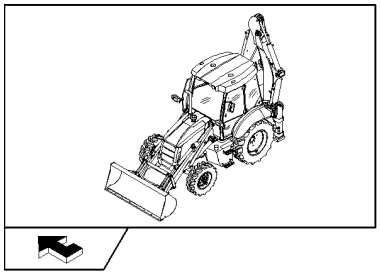

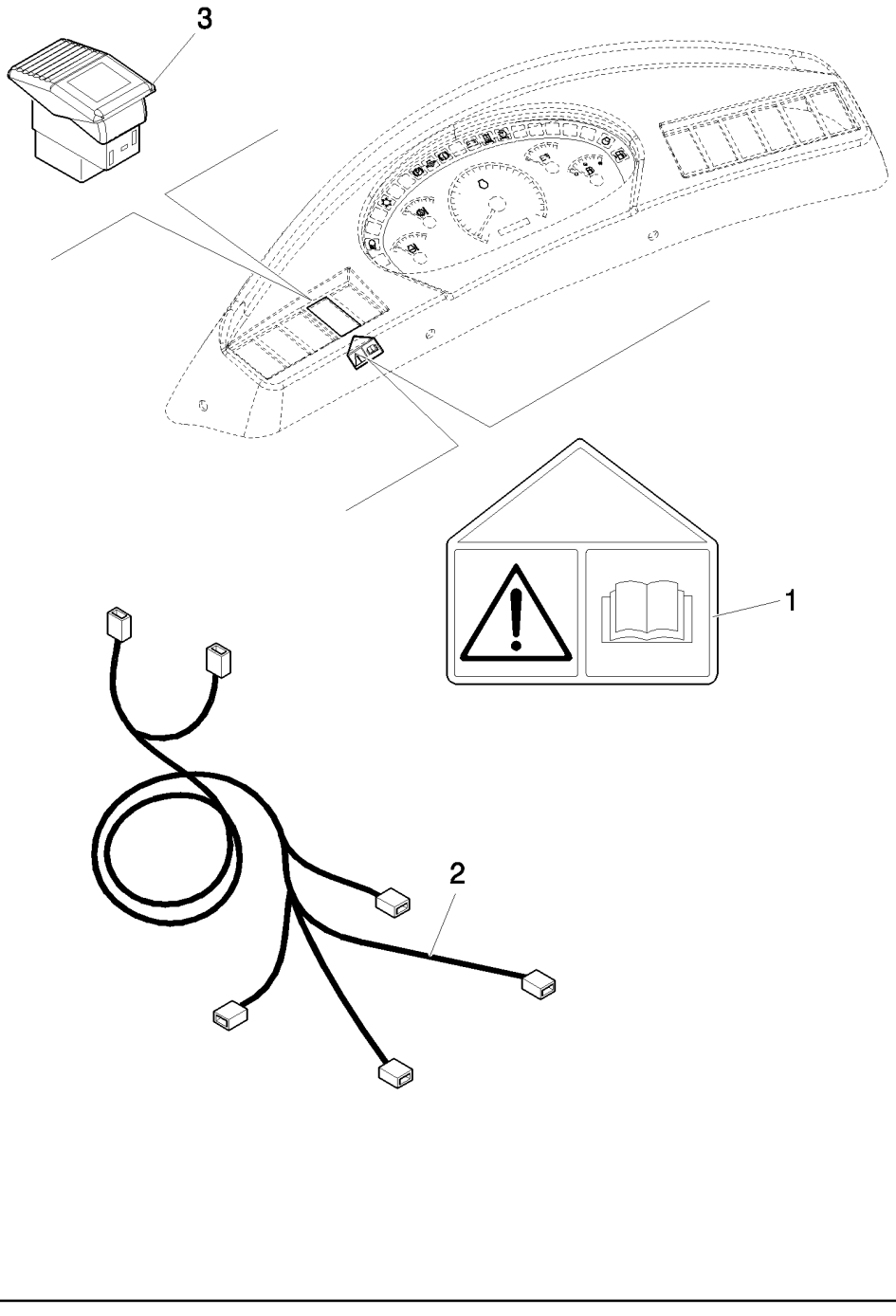

SOUPAPE DE BLOCAGE SUR CYLINDERS DE RELEVAGE PELLE

REF	FN	PART NUMBER	YR/SN	QTY	DESCRIPTION
1		85805228		1	DECALCOMANIE
2		85826274		1	FAISCEAU
3		85819074		1	CONTACTEUR

DISTRIBUTEUR STABILISATEUR, 2 SECTIONS (CENTER PIVOT) - NA

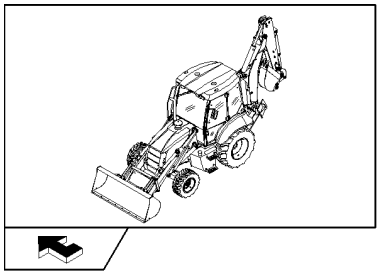

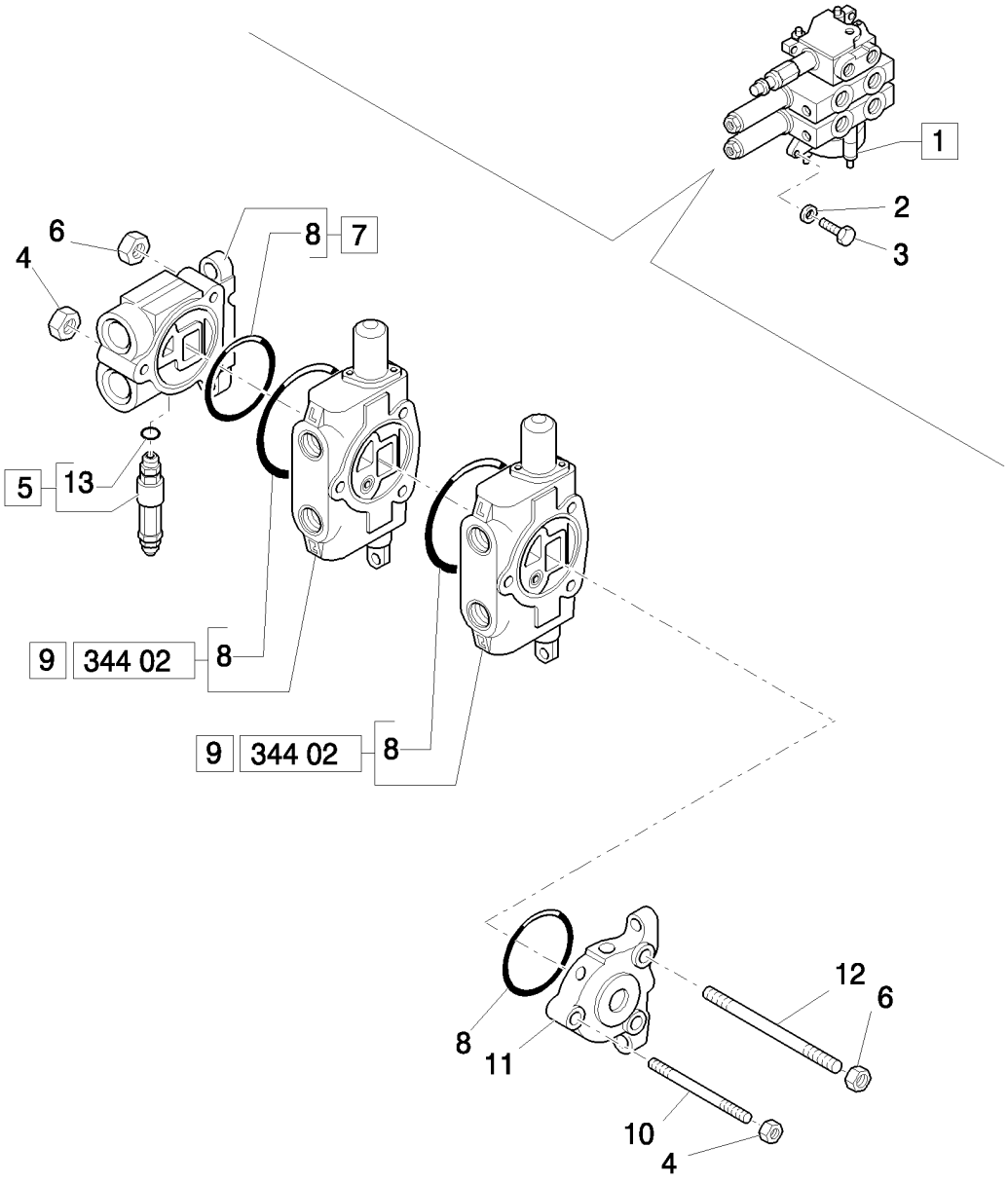

DISTRIBUTEUR STABILISATEUR, 2 SECTIONS (CENTER PIVOT) - NA

REF	FN	PART NUMBER	YR/SN	QTY	DESCRIPTION
1		85819684		1	DISTRIBUTEUR, Assy
2		11193879		3	RONDELLE BELLEVILLE, Belleville, M8.4
3		16043921		3	VIS, M8x1.25x35
4		9968440		2	ECROU
5		85819721		1	SOUPAPE HYDRAULIQUE
6		9968441		4	ECROU
7		9968524		1	ELEMENT DISTR HYDR
8		9968476		4	JOINT THORIQUE
9		9970107		2	ELEMENT DISTR HYDR, Assy
10		9968533		1	GOUJON
11		9968527		1	ELEMENT DISTR HYDR
12		9968532		2	GOUJON
13		85819945		1	JOINT THORIQUE

Mechanical Version	B95B

344	02	p1	04/08

DISTRIBUTEUR STABILISATEUR, SECTION DROITE ET GAUCHE (CENTER PIVOT) - NA

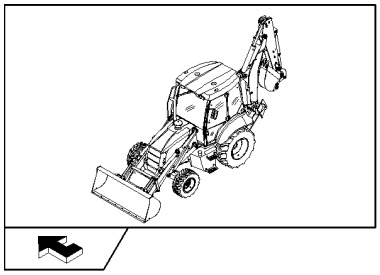

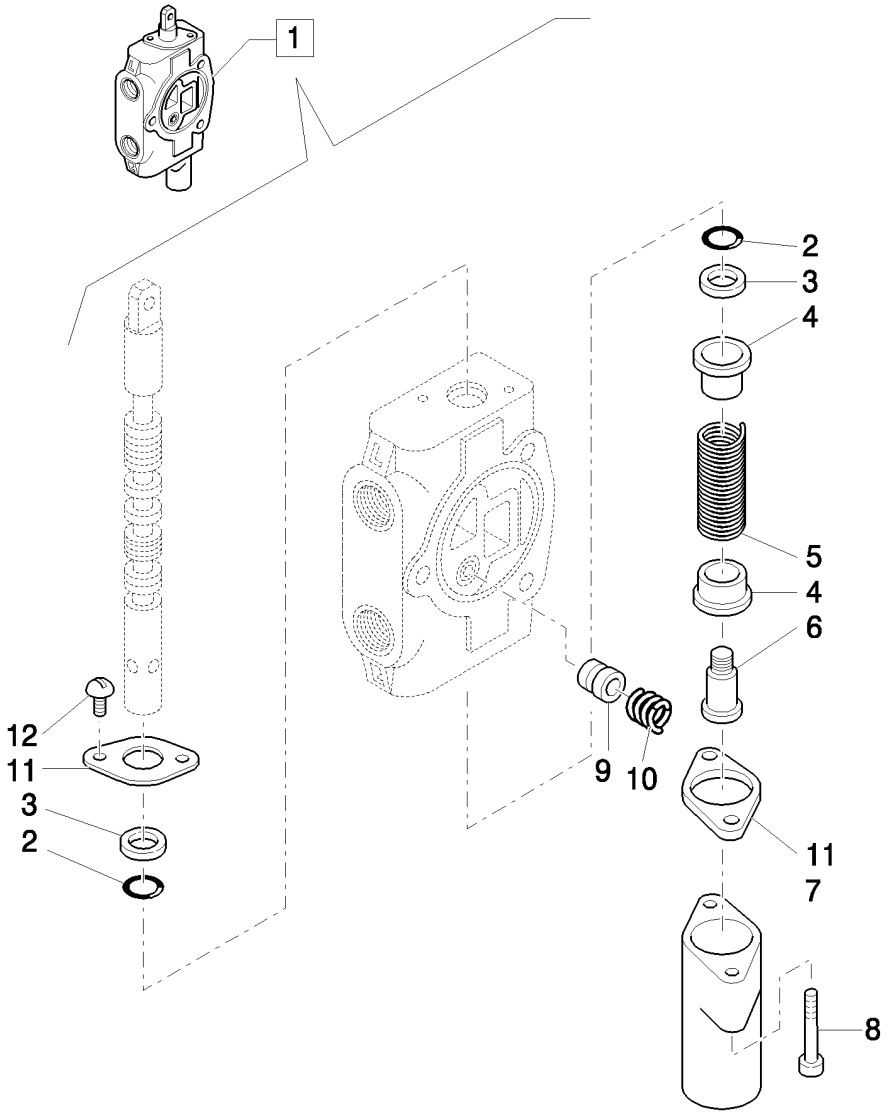

DISTRIBUTEUR STABILISATEUR, SECTION DROITE ET GAUCHE (CENTER PIVOT) - NA

REF	FN	PART NUMBER	YR/SN	QTY	DESCRIPTION
1		9970107		1	ELEMENT DISTR HYDR, Assy
2		85813418		2	JOINT THORIQUE
3		85813419		2	RACLEUR BALAIS
4		9968481		2	SIÈGE
5		9968531		1	RESSORT
6		9968483		1	VIS
7		9968484		1	COUVERCLE
8		9968486		2	VIS
9		9968477		1	VALVE A CLAPET
10		9968478		1	RESSORT
11		9968480		2	FLASQUE
12		9968460		2	VIS

Mechanical Version B95B

346	01	p1	03/08

LOGEMENT & FILTRES A/C

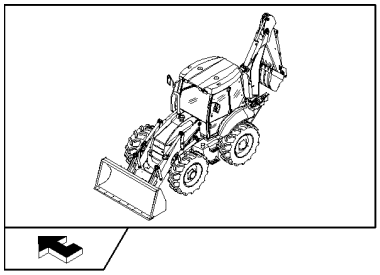

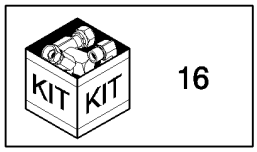

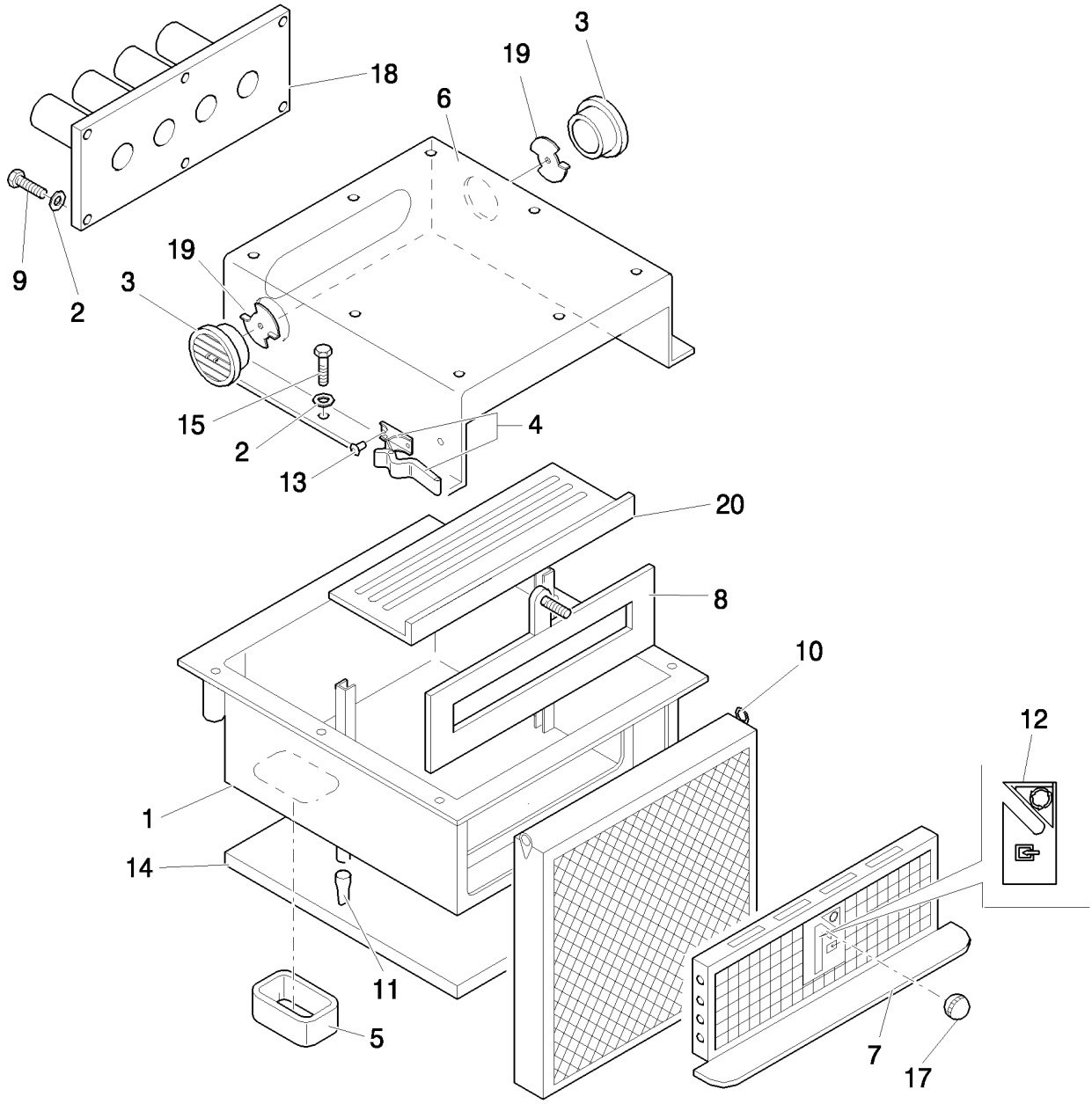

LOGEMENT & FILTRES A/C

REF	FN	PART NUMBER	YR/SN	QTY	DESCRIPTION
1		87314323		1	CARTER
2		11193974		6	RONDELLE BELLEVILLE, Belleville, M8.4
3		87362068		2	SORTIE
4		87358140		2	POMMEAU
5		87314730		1	MOUSSE ISOLANTE
6		87618272		1	COUVERCLE
7		87314330		1	CALANDRE
8		87314350		1	VOLET
9		85819184		13	VIS
10		87314367		1	FILTRE A AIR CABINE
11		87315029		2	VALVE A POUSSIÈRE
12		87314351		1	DECALCOMANIE
13		87358141		4	RIVET
14		87314520		1	MOUSSE ISOLANTE
15		16043624		6	BOULON, Hex, M8 x 25, 8.8, Full Thd
16		87314518		1	MOUSSE ISOLANTE, - KIT
17		87314353		1	POMMEAU
18		87314357		1	CONDUIT D'AIR
19		87618261		2	CHICANE
20		87314355		1	FOND

VENTILATEUR & SERPENTINS A/C

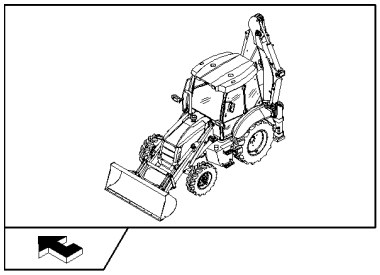

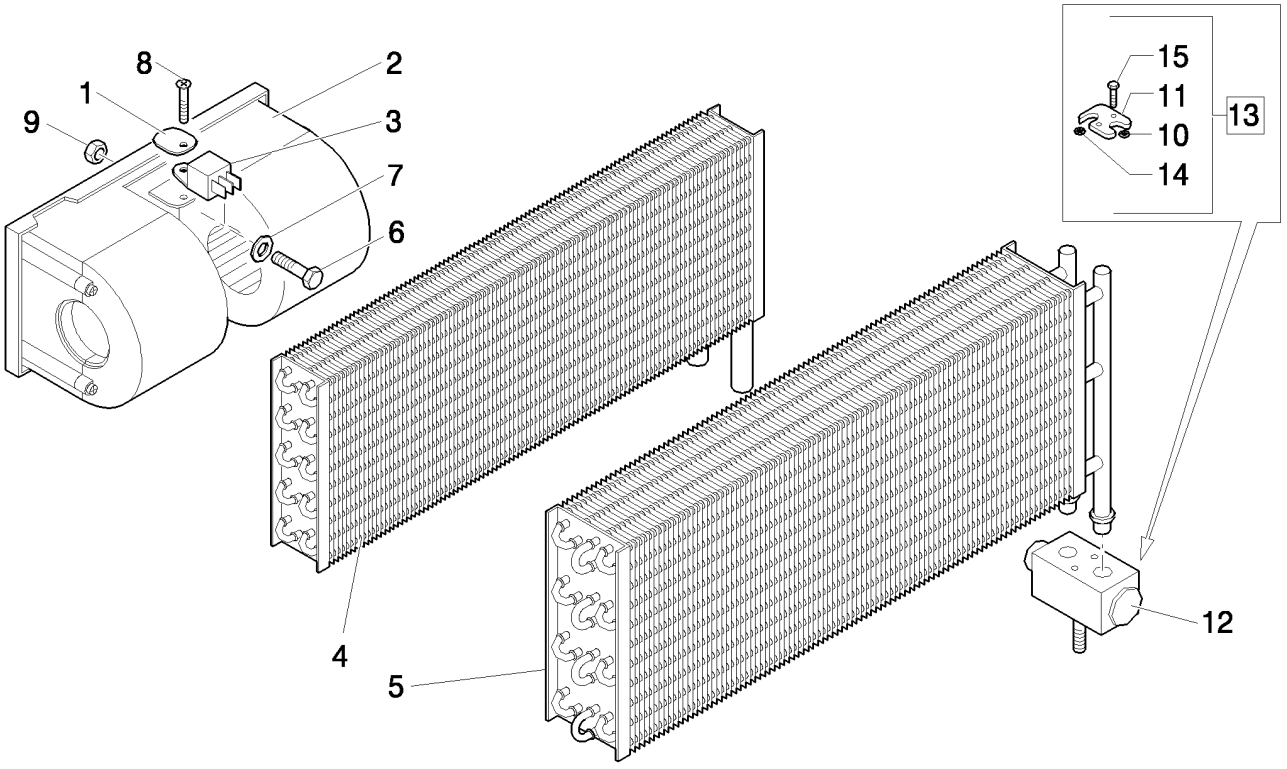

VENTILATEUR & SERPENTINS A/C

REF	FN	PART NUMBER	YR/SN	QTY	DESCRIPTION
1		85817289		1	PLAQUE DE SERRAGE
2		85813079		1	VENTILATEUR ELECTRIQUE
3		85804041		1	RESISTANCE
4		87314527		1	RECHAUFFEUR
5		87314369		1	EVAPORATEUR
6		10902424		1	BOULON, Hex, M6 x 20, 8.8, Full Thd
7		11197774		1	RONDELLE BELLEVILLE, Belleville, M6.4
8		85817189		1	VIS
9		12574211		1	CONTRE-ECROU, M6 x 1, Cl 8
10		85805006		1	JOINT THORIQUE
11		85805005		1	FLASQUE
12		87314524		1	DISTRIBUTEUR
13		85804038		1	FLASQUE, Assy
14		85805003		1	JOINT THORIQUE
15		85805004		2	VIS

346	03	p1	04/08

MANCHONS SPIRALES CHAUFFAGE

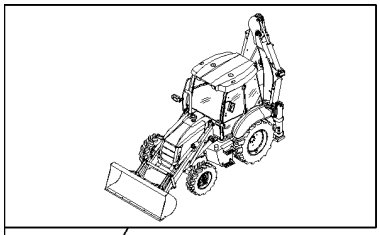

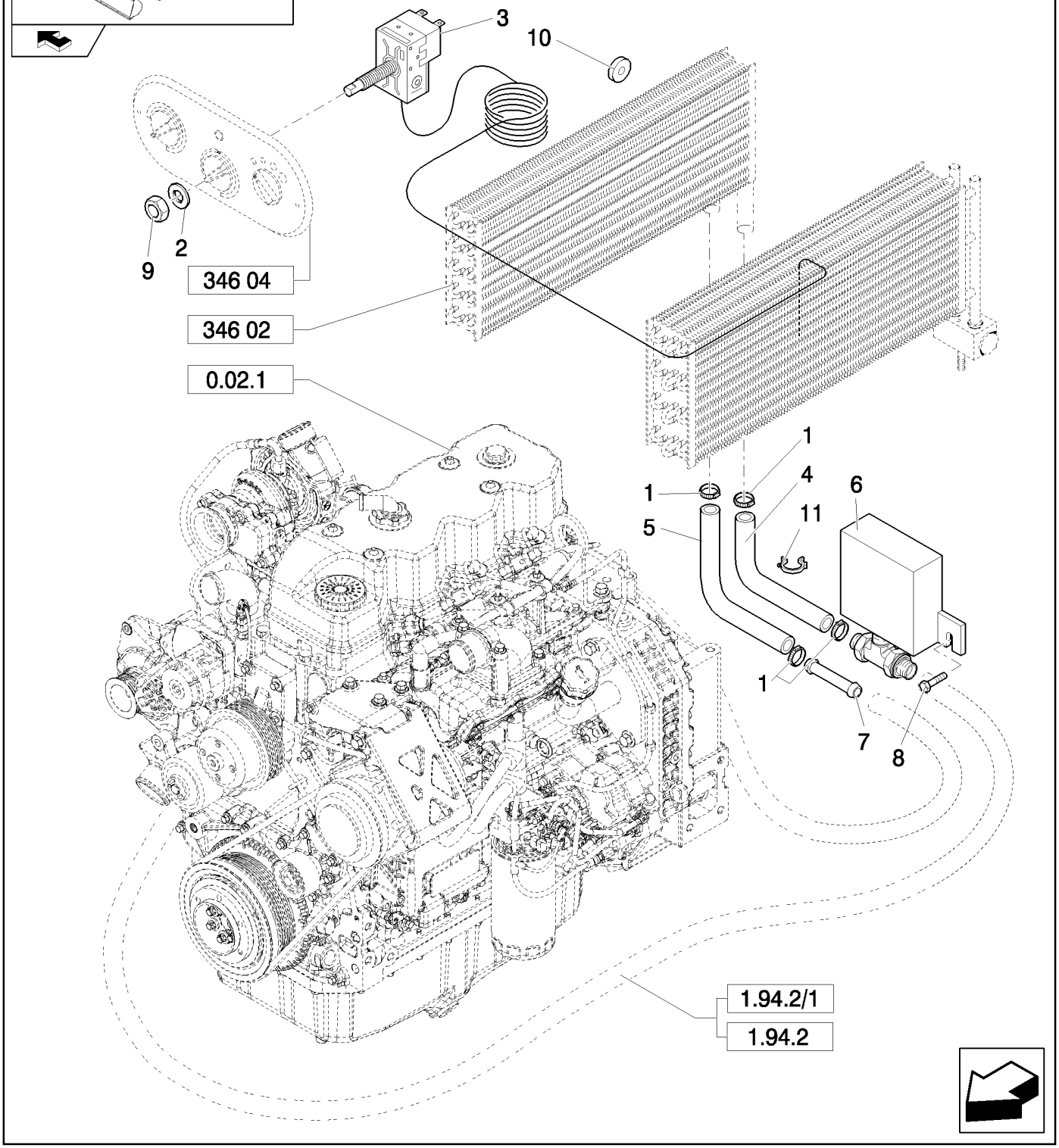

MANCHONS SPIRALES CHAUFFAGE

REF	FN	PART NUMBER	YR/SN	QTY	DESCRIPTION
1		87314726		4	BRIDE, FLEXIBLE
2		87358348		1	RONDELLE
3		87314526		1	THERMOSTAT
4		87318747		1	TUYAU FLEXIBLE
5		87318750		1	TUYAU FLEXIBLE
6		87314554		1	ROBINET
7		85804051		1	TUBE
8		87617261		2	VIS
9		85817295		1	ECROU
10		87314729		2	JOINT
11		87358142		2	COLLIER

346	04	p1	03/08

TABLEAU DE COMMANDE CHAUFFAGE & A/C

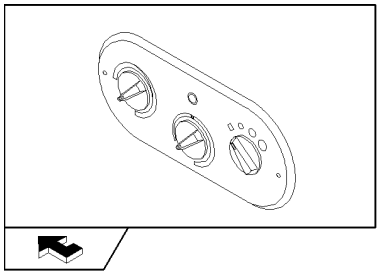

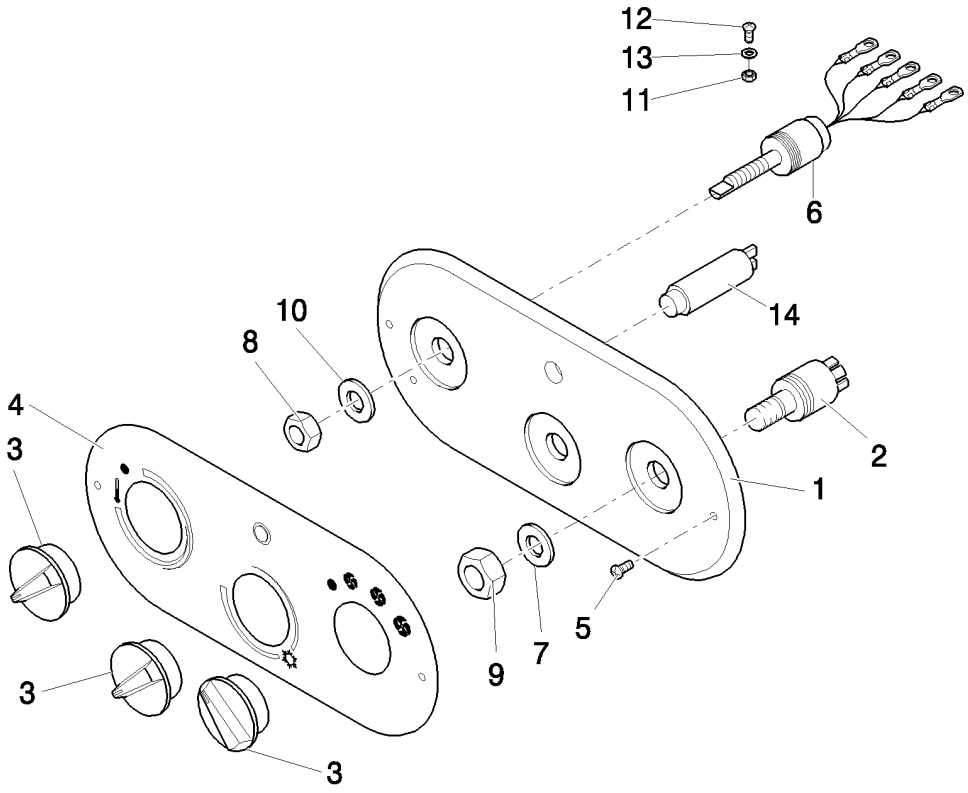

TABLEAU DE COMMANDE CHAUFFAGE & A/C

REF	FN	PART NUMBER	YR/SN	QTY	DESCRIPTION
1		87314743		1	INSTRUMENTS DE BORD
2		87314747		1	CONTACTEUR
3		87314749		3	POMMEAU
4	1	87567694		1	ECRAN
4	2	87314750		1	DECALCOMANIE
5		12678401		2	VIS
6		87314753		1	POTENTIOMETRE
7		87358348		1	RONDELLE, 13X20
8		87334860		1	ECROU
9		87334861		1	ECROU, 12,5X18X1,5
10		87358349		1	RONDELLE, 10,5X16X1,5
11		14372671		2	ECROU, M4.2, U, 12.4mm long
12		15693507		2	VIS AUTO-TARAUDEUSE, Cross Oval Hd, M4.8 x 22
13		12601174		2	RONDELLE, Wave, M4.3
14	2	87314751		1	AMPOULE

(1) Only for B95B, B95BLR, B95BTC, B110B, B115B (NA) - B100B, B100BLR, B110B, B115B (EU)
(2) Only for B90B, B90BLR (EU) - B90B (NA)

346	05	p1	03/08

TUYAUTERIE CONSOLE CHAUFFAGE & A/C

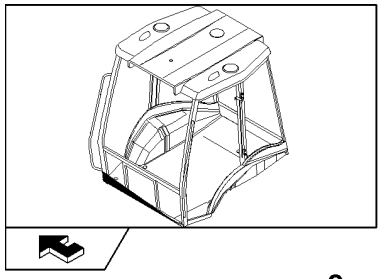

TUYAUTERIE CONSOLE CHAUFFAGE & A/C

REF	FN	PART NUMBER	YR/SN	QTY	DESCRIPTION
1		85819452		5	FLEXIBLE
2		85819451		1	FLEXIBLE
3		87314771		1	CONDUIT D'AIR
4		87314772		2	CONDUIT D'AIR
5		87314773		1	CONDUIT D'AIR
6		87319448		1	CONDUIT D'AIR
7		85819454		2	DIFFUSEUR
8		87314946		1	DISTRIBUTEUR
9		87314947		1	DISTRIBUTEUR
10		87314948		1	COUDE
11		85819453		1	COUDE
12		87362068		2	SORTIE
13		87362065		2	DIFFUSEUR
14		14440327		4	VIS, Hex Soc Flat Hd, M4 x 20, 8.8
15		87319437		1	CONDUIT D'AIR
16		13000690		6	BRIDE, FLEXIBLE
17		87314767		2	CONDUIT D'AIR
18		87314769		2	CONDUIT D'AIR
19		87652770		1	COUDE
20		13000990		4	BRIDE, FLEXIBLE
21		87319443		1	CONDUIT D'AIR
22		5112712		12	COLLIER, M4.8 x 283
23		87652764		1	COUDE

347	01	p1	03/08

LOGEMENT & FILTRES

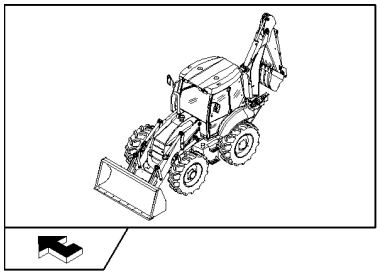

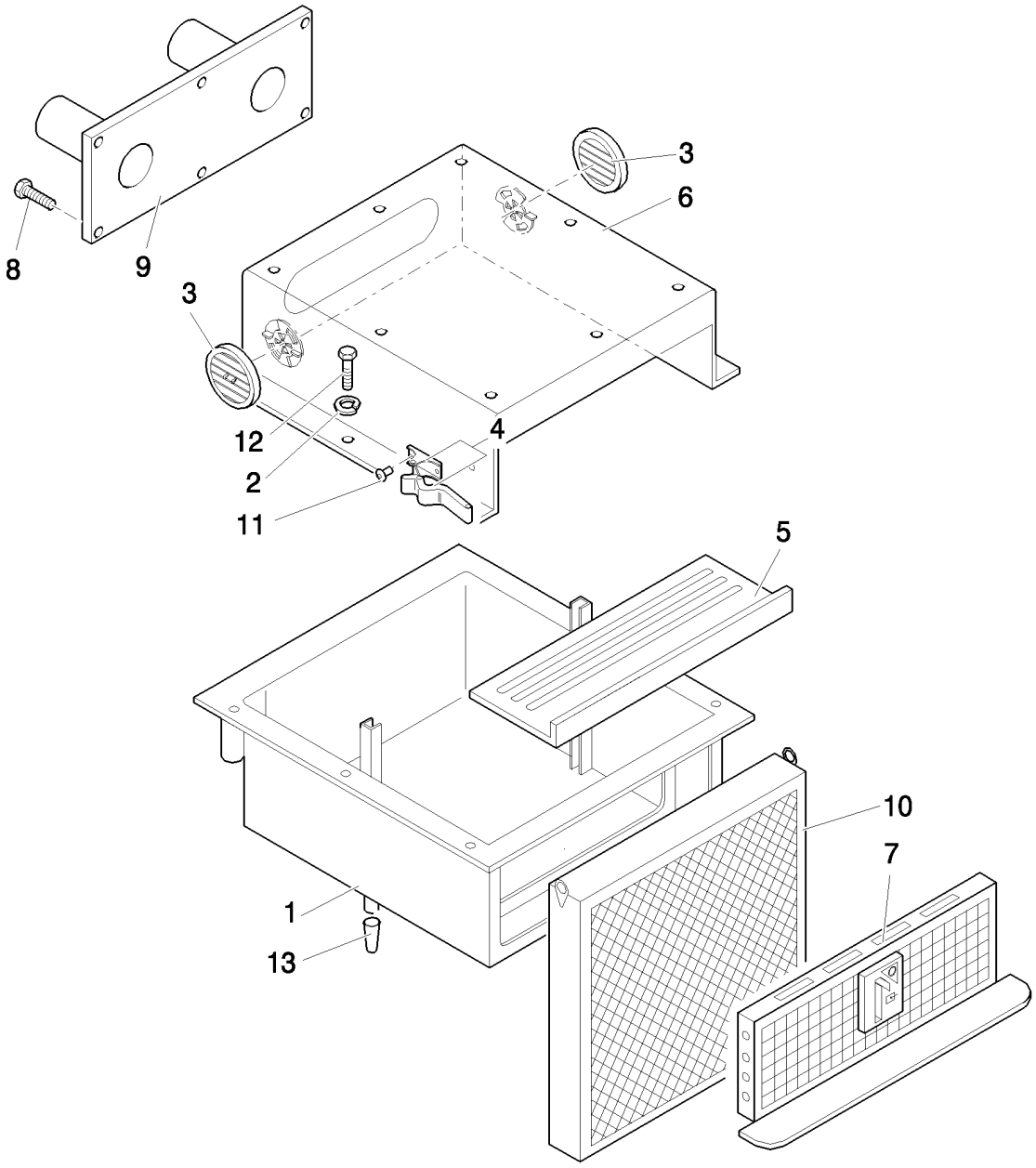

LOGEMENT & FILTRES

REF	FN	PART NUMBER	YR/SN	QTY	DESCRIPTION
1		87314323		1	CARTER
2		11193974		6	RONDELLE BELLEVILLE, Belleville, M8.4
3		87618259		2	CHICANE
4		87358140		2	POMMEAU
5		87314355		1	FOND
6		87618272		1	COUVERCLE
7		87314330		1	CALANDRE
8		85819184		13	VIS
9		87316439		1	CONDUIT D'AIR
10		87314367		1	FILTRE A AIR CABINE
11		87358141		4	RIVET
12		16043624		6	BOULON, Hex, M8 x 25, 8.8, Full Thd
13		87315029		2	VALVE A POUSSIÈRE

347	02	p1	03/08

VENTILATEUR & SERPENTINS RECHAUFFEUR

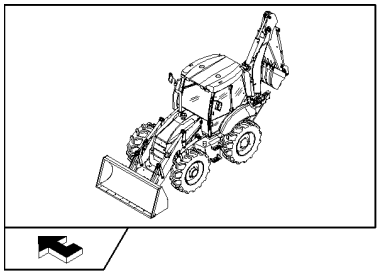

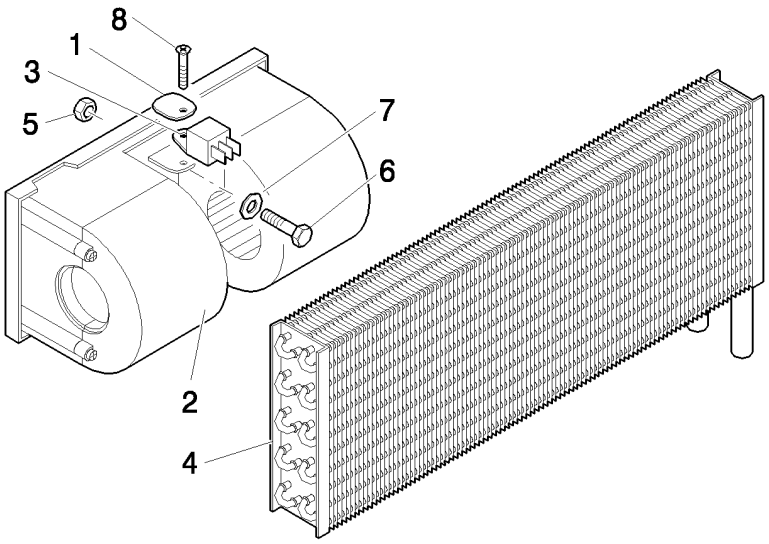

VENTILATEUR & SERPENTINS RECHAUFFEUR

REF	FN	PART NUMBER	YR/SN	QTY	DESCRIPTION
1		85817289		1	PLAQUE DE SERRAGE
2		85813079		1	VENTILATEUR ELECTRIQUE
3		85804041		1	RESISTANCE
4		87314527		1	RECHAUFFEUR
5		12574211		1	CONTRE-ECROU, M6 x 1, Cl 8
6		10902424		1	BOULON, Hex, M6 x 20, 8.8, Full Thd
7		11197774		1	RONDELLE BELLEVILLE, Belleville, M6.4
8		85817189		1	VIS

347	03	p1	03/08

MANCHONS SPIRALES CHAUFFAGE

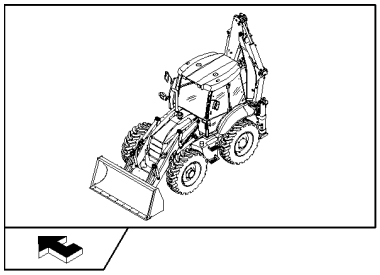

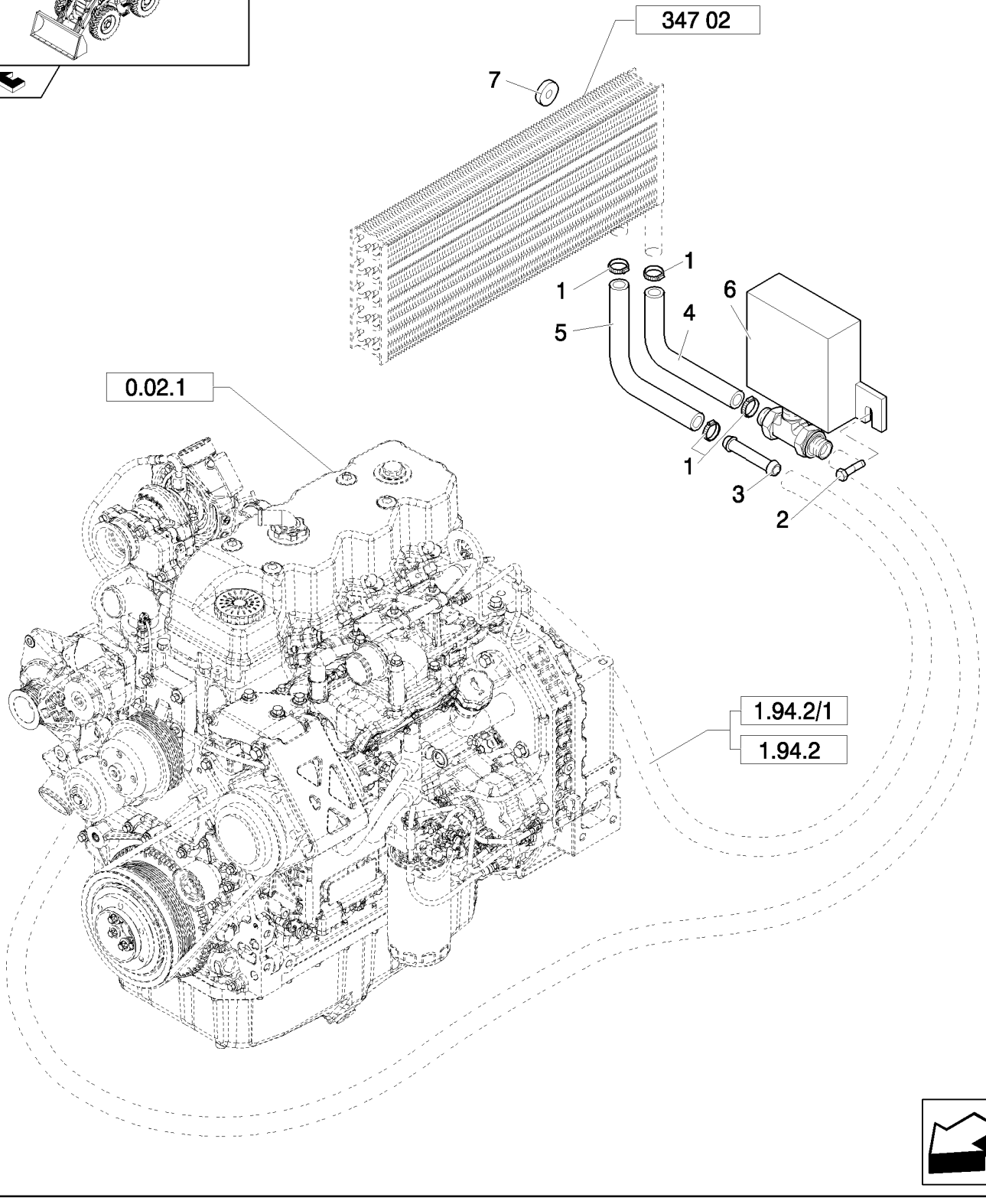

MANCHONS SPIRALES CHAUFFAGE

REF	FN	PART NUMBER	YR/SN	QTY	DESCRIPTION
1		87314726		4	BRIDE, FLEXIBLE
2		87617261		2	VIS
3		85804051		1	TUBE
4		87318747		1	TUYAU FLEXIBLE
5		87318750		1	TUYAU FLEXIBLE
6		87314554		1	ROBINET
7		87314729		2	JOINT

347	04	p1	03/08

TABLEAU DE COMMANDE CHAUFFAGE & A/C

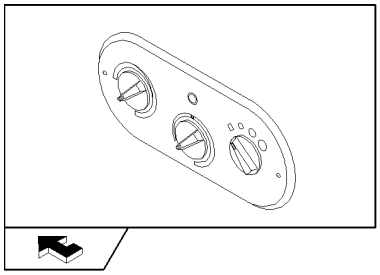

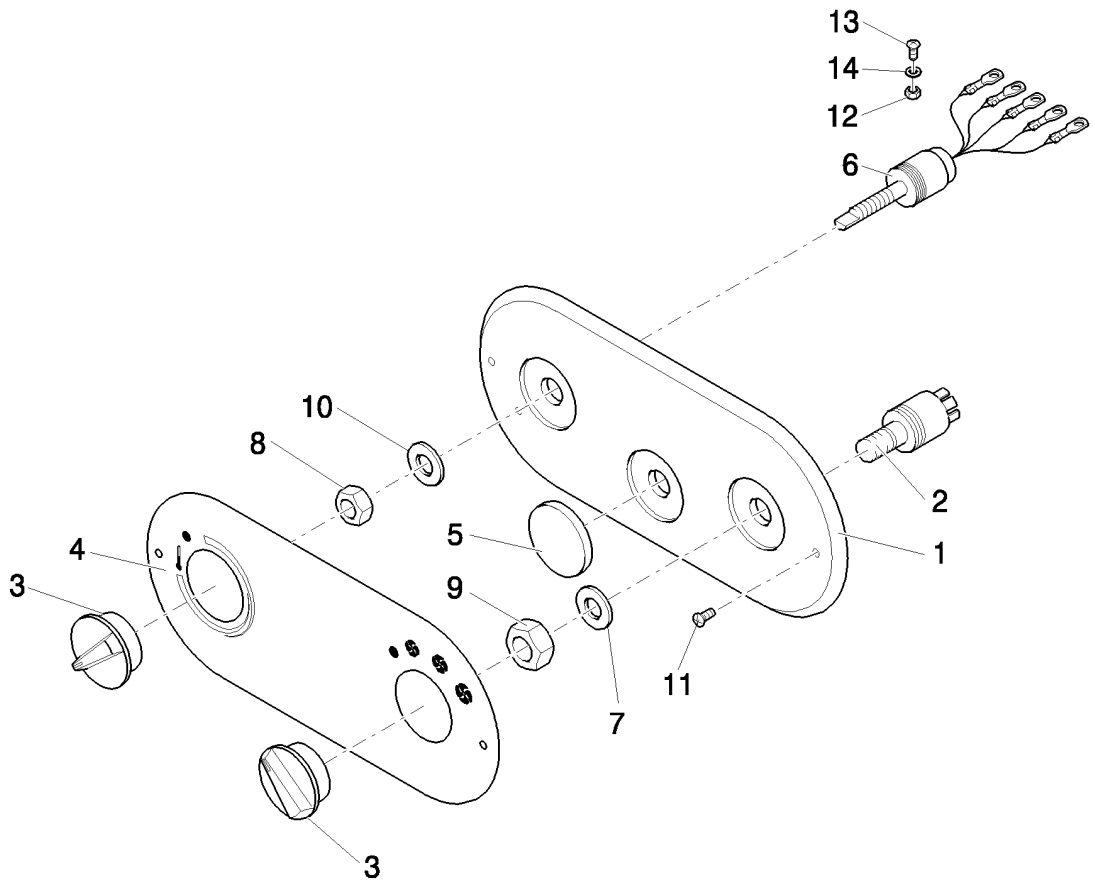

TABLEAU DE COMMANDE CHAUFFAGE & A/C

REF	FN	PART NUMBER	YR/SN	QTY	DESCRIPTION
1		87314743		1	INSTRUMENTS DE BORD
2		87314747		1	CONTACTEUR
3		87314749		2	POMMEAU
4		87316443		1	DECALCOMANIE
5		87316442		1	BOUCHON
6		87314753		1	POTENTIOMETRE
7		87358348		1	RONDELLE, 12,5X18X1,5
8		87334860		1	ECROU
9		87334861		1	ECROU
10		87358349		1	RONDELLE, 10,5X16X1,5
11		12678401		2	VIS
12		12574111		2	CONTRE-ECROU, M5 x .8, Cl 8
13		15687801		2	VIS AUTO-TARAUDEUSE, Cross Pan Hd, M4.8 x 9.5
14		12601174		2	RONDELLE, Wave, M4.3

347	05	p1	03/08

TUYAUTERIE CONSOLE CHAUFFAGE & A/C

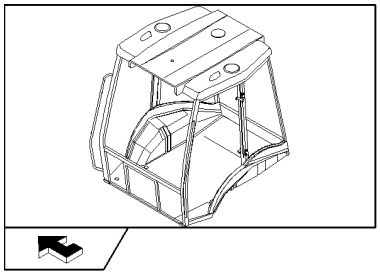

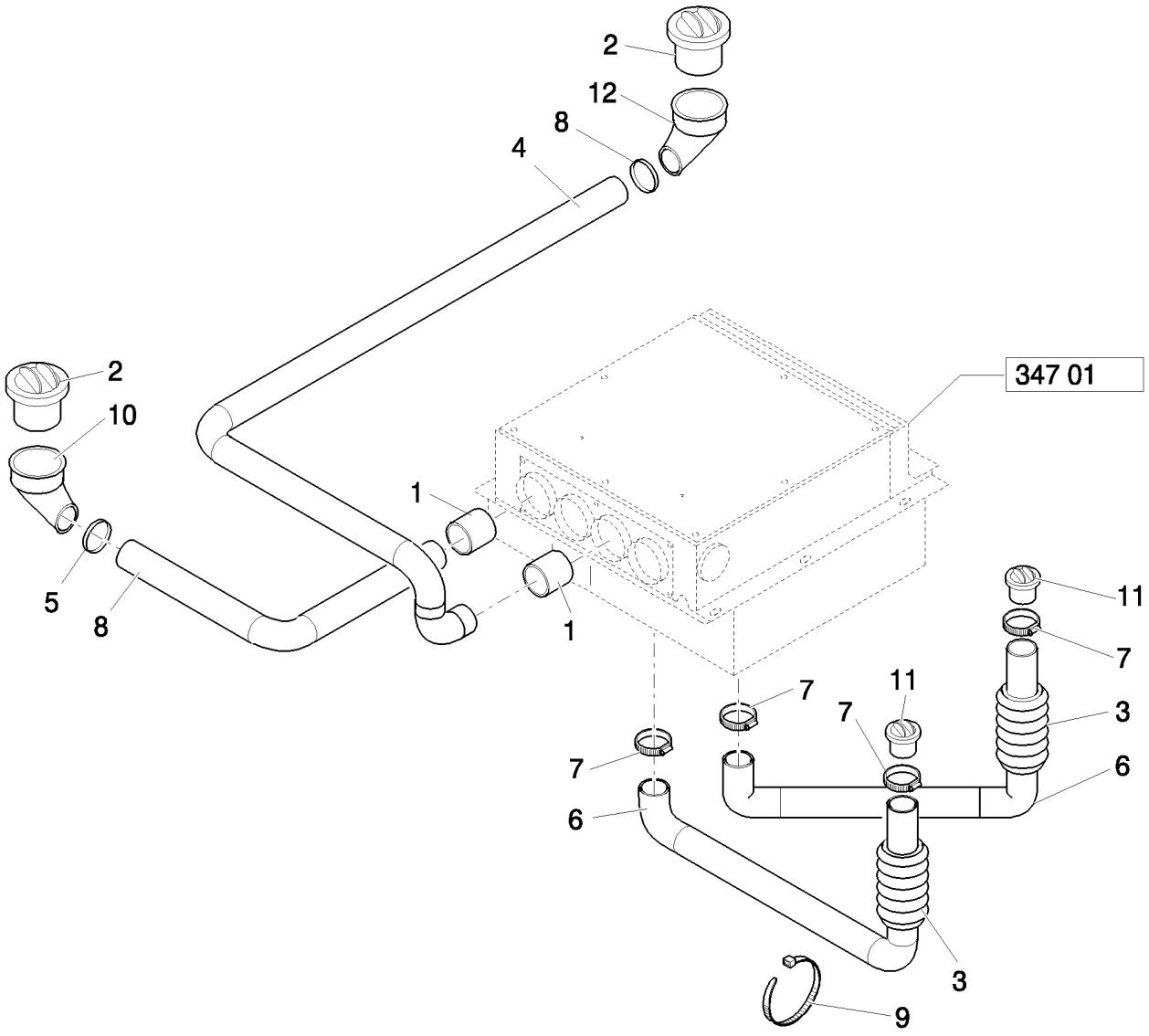

TUYAUTERIE CONSOLE CHAUFFAGE & A/C

REF	FN	PART NUMBER	YR/SN	QTY	DESCRIPTION
1		85819452		2	FLEXIBLE
2		87362065		2	DIFFUSEUR
3		87314769		2	CONDUIT D'AIR
4		87319437		1	CONDUIT D'AIR
5		13000690		2	BRIDE, FLEXIBLE
6		87314769		2	CONDUIT D'AIR
7		13000990		4	BRIDE, FLEXIBLE
8		87319443		1	CONDUIT D'AIR
9		5112712		12	COLLIER, M4.8 x 283
10		87652770		1	COUDE
11		87362068		2	SORTIE
12		87652764		1	COUDE

347	06	p1	03/08

BOUCHON REVÊTEMENT CHAUFFAGE CABINE

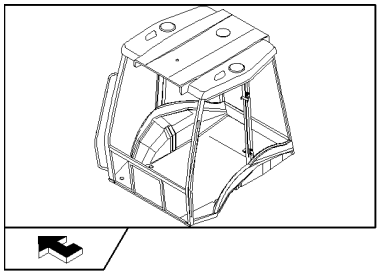

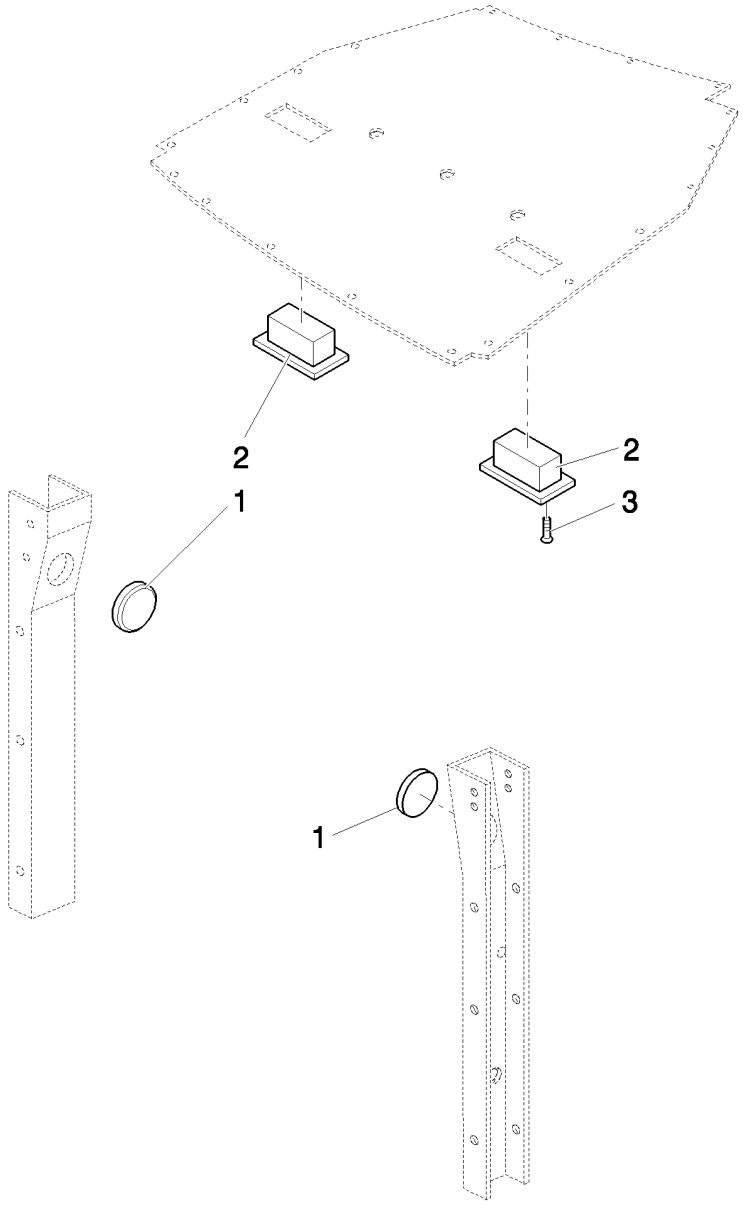

BOUCHON REVÊTEMENT CHAUFFAGE CABINE

REF	FN	PART NUMBER	YR/SN	QTY	DESCRIPTION
1		87319018		2	BOUCHON
2		87318763		2	BOUCHON
3		14440327		4	VIS, Hex Soc Flat Hd, M4 x 20, 8.8

GODET RÉTROCAVEUSE 12" (305 MM) HD A DENTS GOUPILLEES - NA

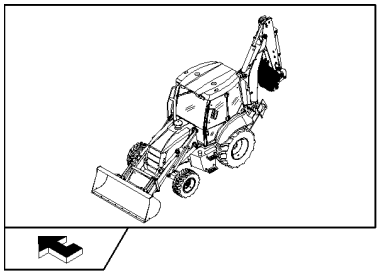

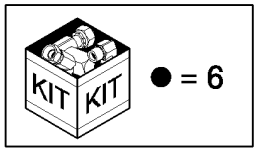

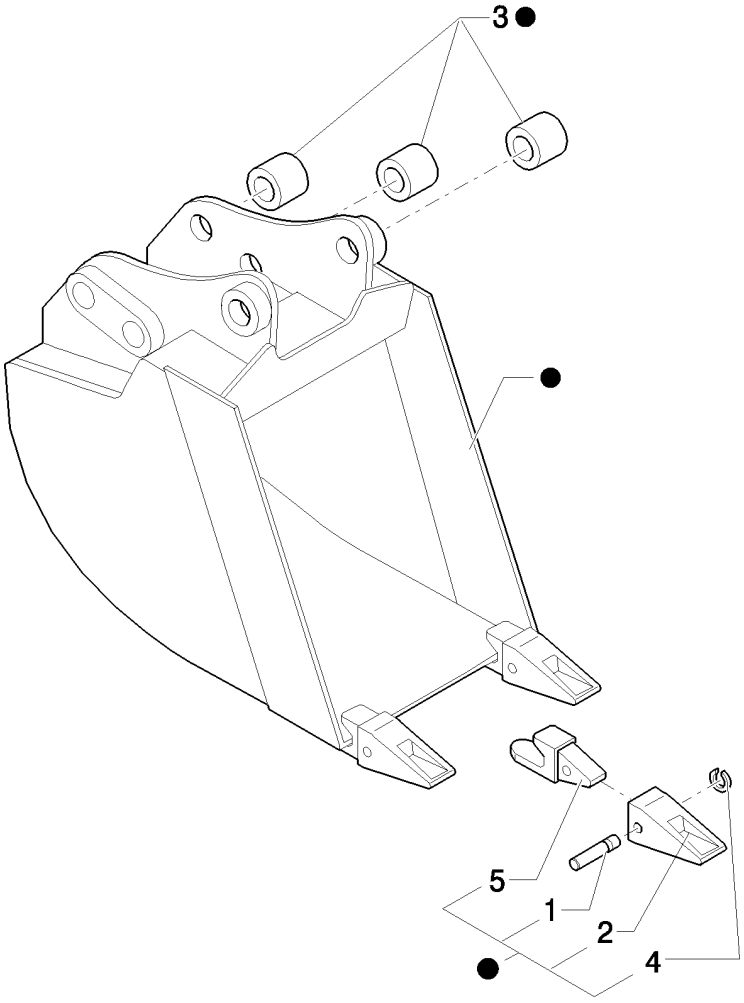

GODET RÉTROCAVEUSE 12" (305 MM) HD A DENTS GOUPILLEES - NA

REF	FN	PART NUMBER	YR/SN	QTY	DESCRIPTION
1		85801097		3	AXE
2		85811432		3	DENT DE GODET
3		83910634		6	BAGUE
4		85801098		3	ANNEAU
5		85821788		3	PORTE-DENT
6		87607818		1	GODET

GODET RÉTROCAVEUSE 18" (457MM) HD A DENTS GOUPILLEES - NA

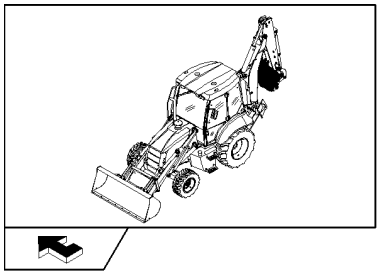

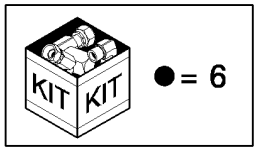

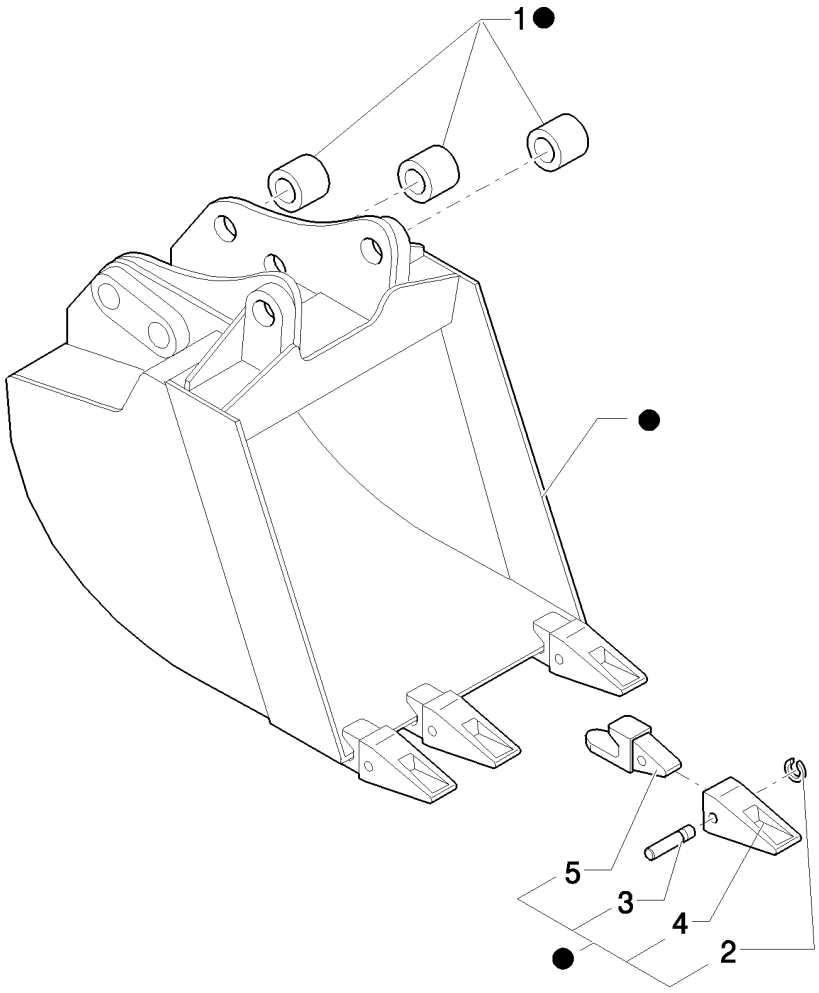

GODET RÉTROCAVEUSE 18" (457MM) HD A DENTS GOUPILLEES - NA

REF	FN	PART NUMBER	YR/SN	QTY	DESCRIPTION
1		83910634		6	BAGUE
2		85801098		4	ANNEAU
3		85801097		4	AXE
4		85811432		4	DENT DE GODET
5		85821788		4	PORTE-DENT
6		87607821		1	GODET

GODET RÉTROCAVEUSE 24" (610MM) HD A DENTS GOUPILLEES - NA

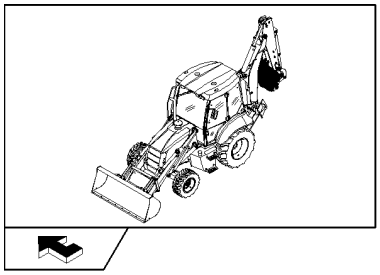

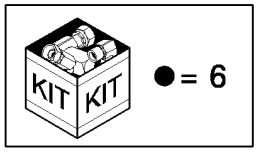

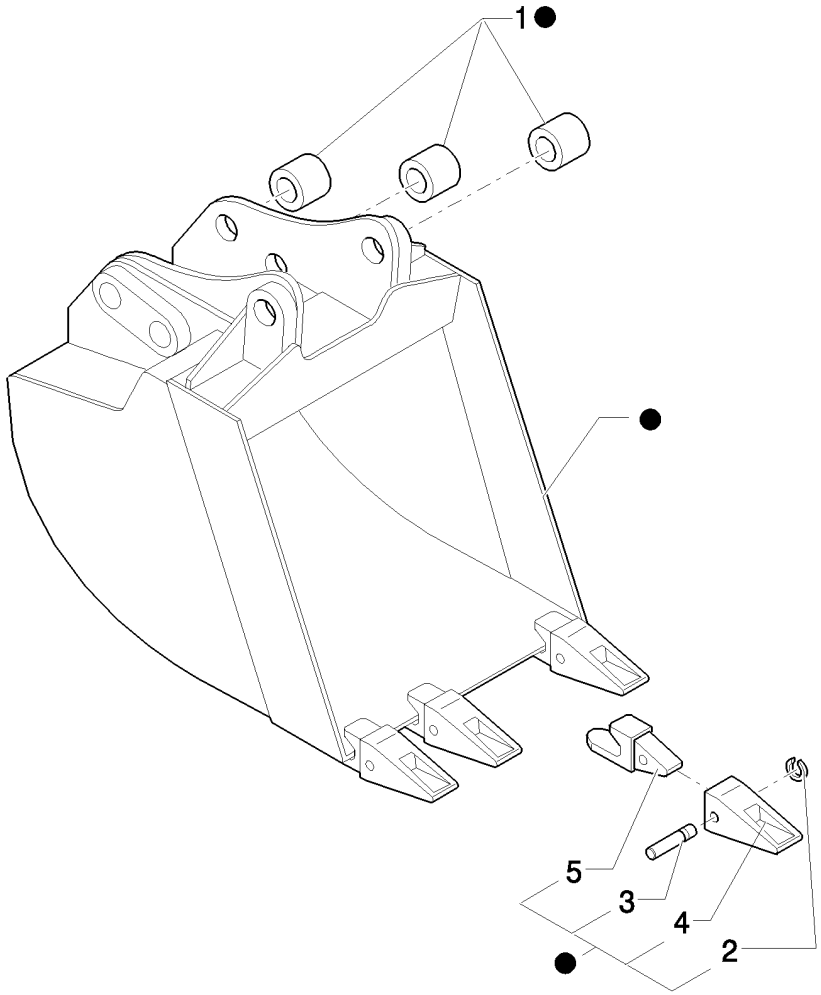

GODET RÉTROCAVEUSE 24" (610MM) HD A DENTS GOUPILLEES - NA

REF	FN	PART NUMBER	YR/SN	QTY	DESCRIPTION
1		83910634		6	BAGUE
2		85801098		4	ANNEAU
3		85801097		4	AXE
4		85811432		4	DENT DE GODET
5		85821788		4	PORTE-DENT
6		87607824		1	GODET

389		p1	03/08

GODET RÉTROCAVEUSE 30" (762MM) HD A DENTS GOUPILLEES - NA

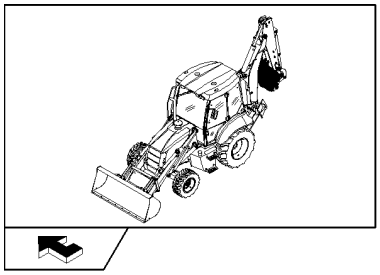

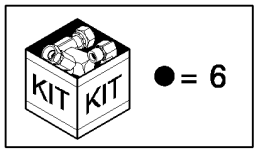

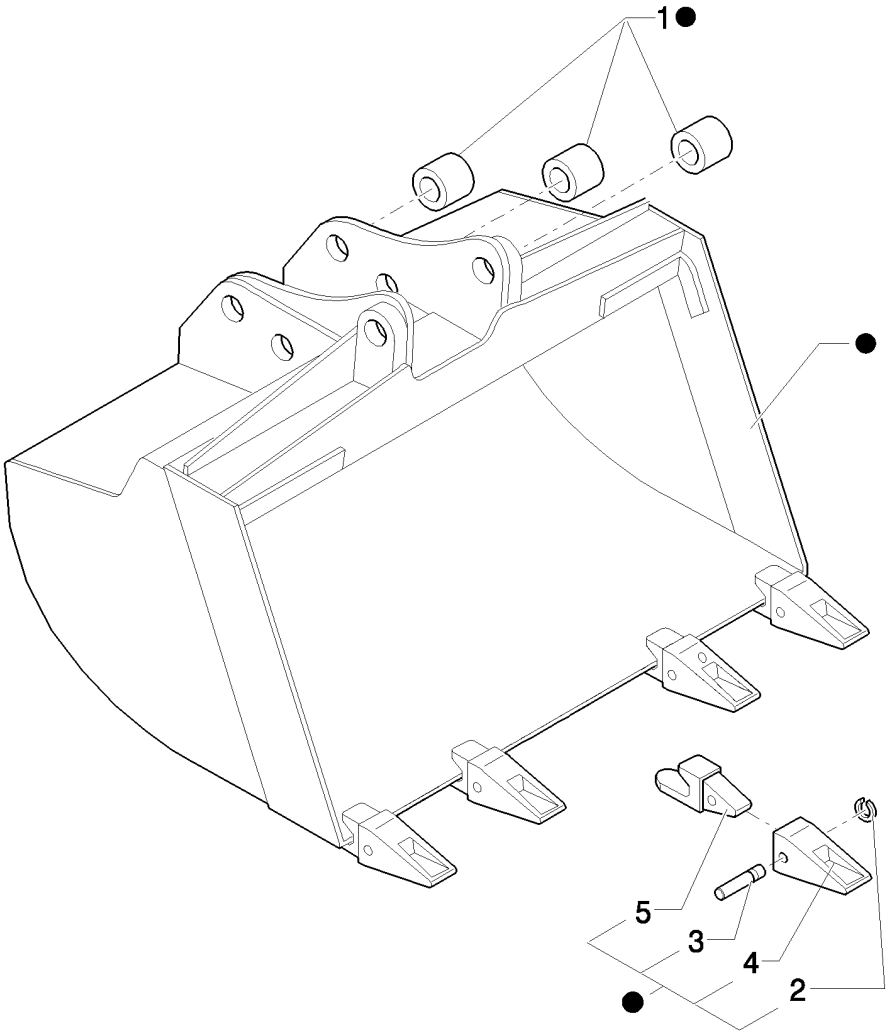

GODET RÉTROCAVEUSE 30" (762MM) HD A DENTS GOUPILLEES - NA

REF	FN	PART NUMBER	YR/SN	QTY	DESCRIPTION
1		83910634		6	BAGUE
2		85801098		5	ANNEAU
3		85801097		5	AXE
4		85811432		5	DENT DE GODET
5		85821788		5	PORTE-DENT
6		87607825		1	GODET

DISTRIBUTEUR CHARGEUSE, 2 SECTIONS, LEVIER - NA

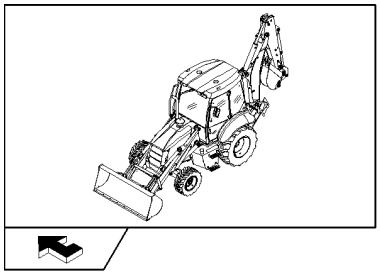

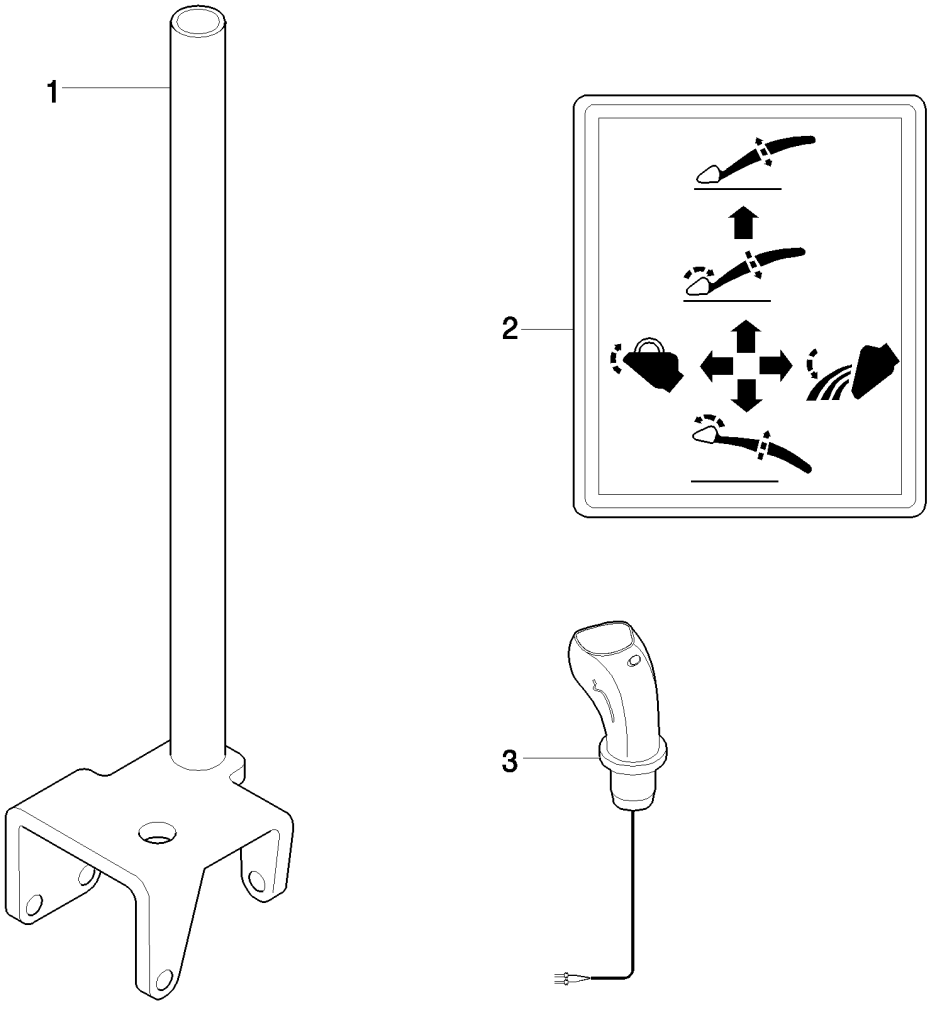

DISTRIBUTEUR CHARGEUSE, 2 SECTIONS, LEVIER - NA

REF	FN	PART NUMBER	YR/SN	QTY	DESCRIPTION
1	1	87646604		1	LEVIER
2		85804346		1	DECALCOMANIE
3	1	87311102		1	JOYSTICK
3	2	87311103		1	JOYSTICK

(1) Only for Power Shift
(2) Only for Power Shuttle

Mechanical Version B95B

GODET RÉTROCAVEUSE 36" (910MM) HD A DENTS GOUPILLEES - NA

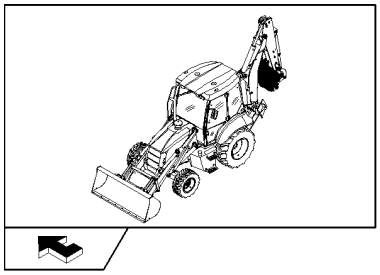

KIT KIT ●= 6

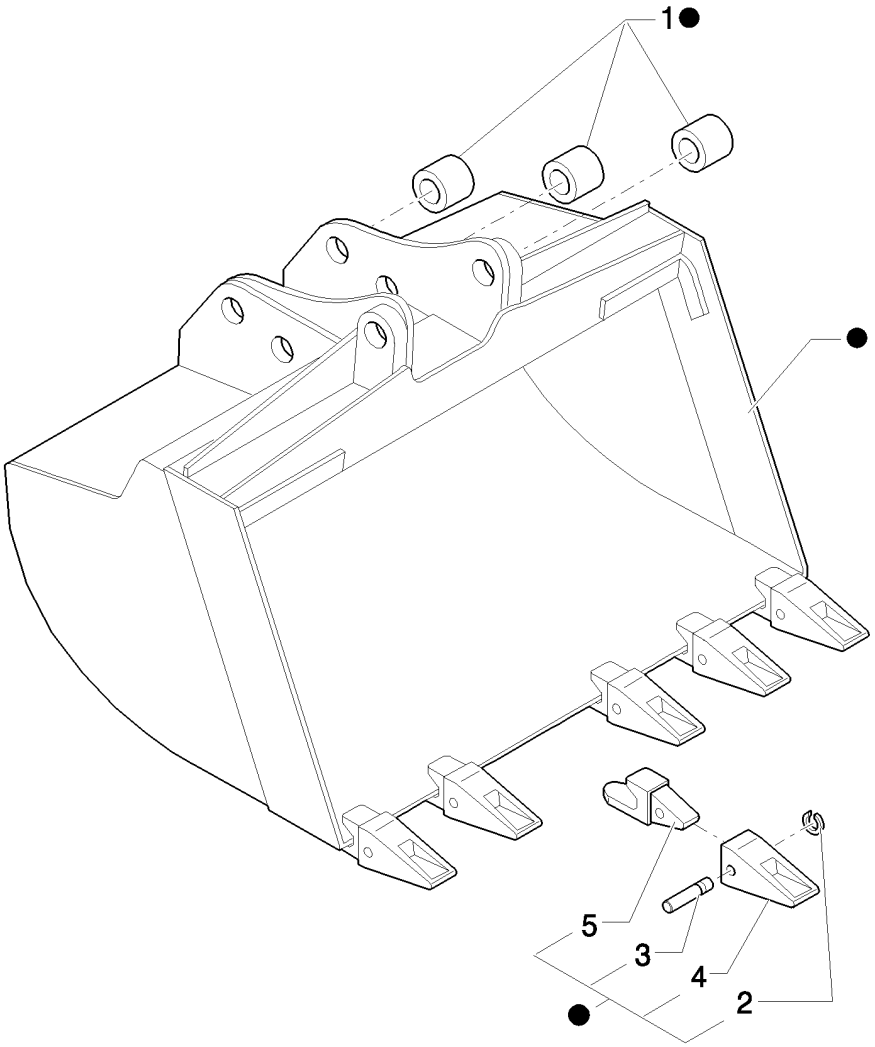

GODET RÉTROCAVEUSE 36" (910MM) HD A DENTS GOUPILLEES - NA

REF	FN	PART NUMBER	YR/SN	QTY	DESCRIPTION
1		83910634		6	BAGUE
2		85801098		6	ANNEAU
3		85801097		6	AXE
4		85811432		6	DENT DE GODET
5		85821788		6	PORTE-DENT
6		87607827		1	GODET

391		p1	03/08

VALVE DE BLOCAGE POUR BENNE 4X1 / 6X1

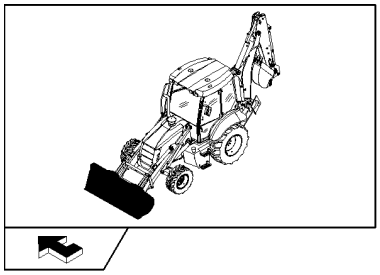

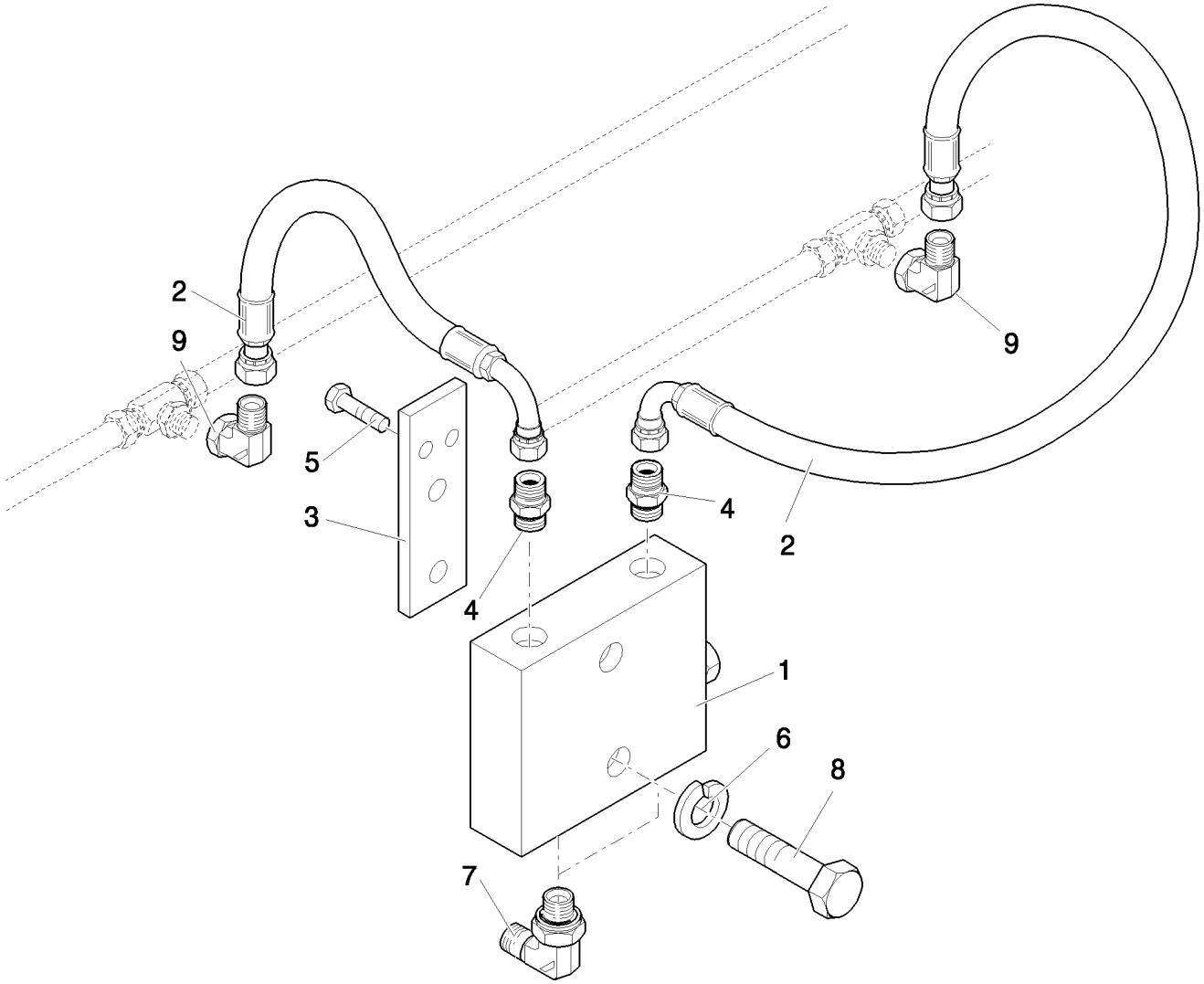

VALVE DE BLOCAGE POUR BENNE 4X1 / 6X1

REF	FN	PART NUMBER	YR/SN	QTY	DESCRIPTION
1		85820844		1	SOUPAPE HYDRAULIQUE
2		85821127		2	TUYAU FLEXIBLE
3		87316861		1	PLAQUE
4		83963374		2	RACCORD
5		16044321		2	BOULON, Hex, M8 x 55, 8.8
6		11193874		4	RONDELLE BELLEVILLE, Belleville, M8.4
7		83971549		2	COUDE
8		16044121		2	BOULON, Hex, M8 x 45, 8.8
9		86511208		2	COUDE

392	01	p1	04/08

CLAPET DE BLOCAGE SUR VÉRIN DE FLÈCHE ET ÉQUIPEMENT RÉTRO

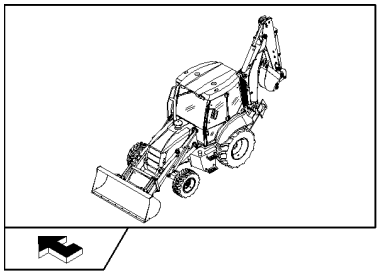

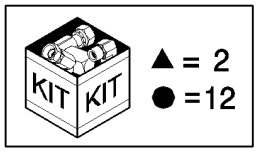

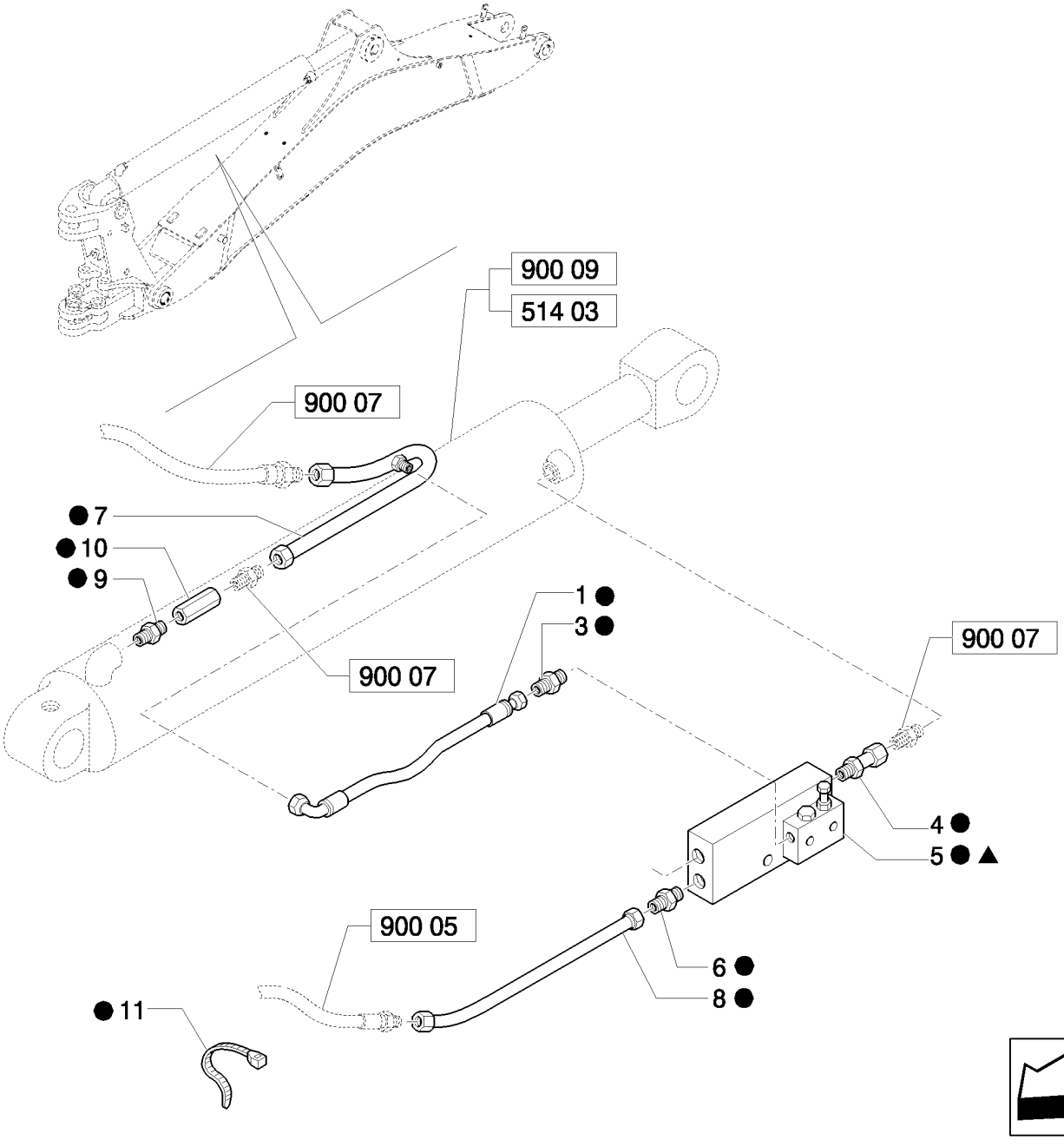

CLAPET DE BLOCAGE SUR VÉRIN DE FLÈCHE ET ÉQUIPEMENT RÉTRO

REF	FN	PART NUMBER	YR/SN	QTY	DESCRIPTION
1		85815505		1	FLEXIBLE HYDRAULIQUE, 600mm lg
2		85820912		AR	KIT
3		85802803		1	RACCORD
4		85805124		1	RACCORD
5	1	87353316		1	SOUPAPE DE SECURITE, Assy
6		83963000		2	RACCORD
7		85820836		1	TUYAU HYDRAULIQUE
8		87647914		1	TUYAUTERIE PRESSION
9		85804879		1	RACCORD
10		85824308		1	SOUPAPE HYDRAULIQUE
11		79072960		2	SERRE-CABLE
12		87648638		1	KIT

(1) Includes 2

392	02	p1	03/08

CLAPET DE BLOCAGE SUR VÉRIN ET ÉQUIPEMENT RÉTRO

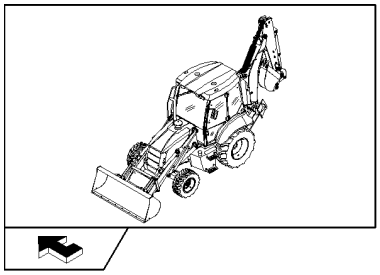

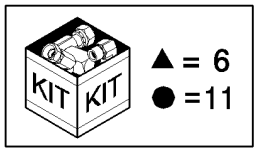

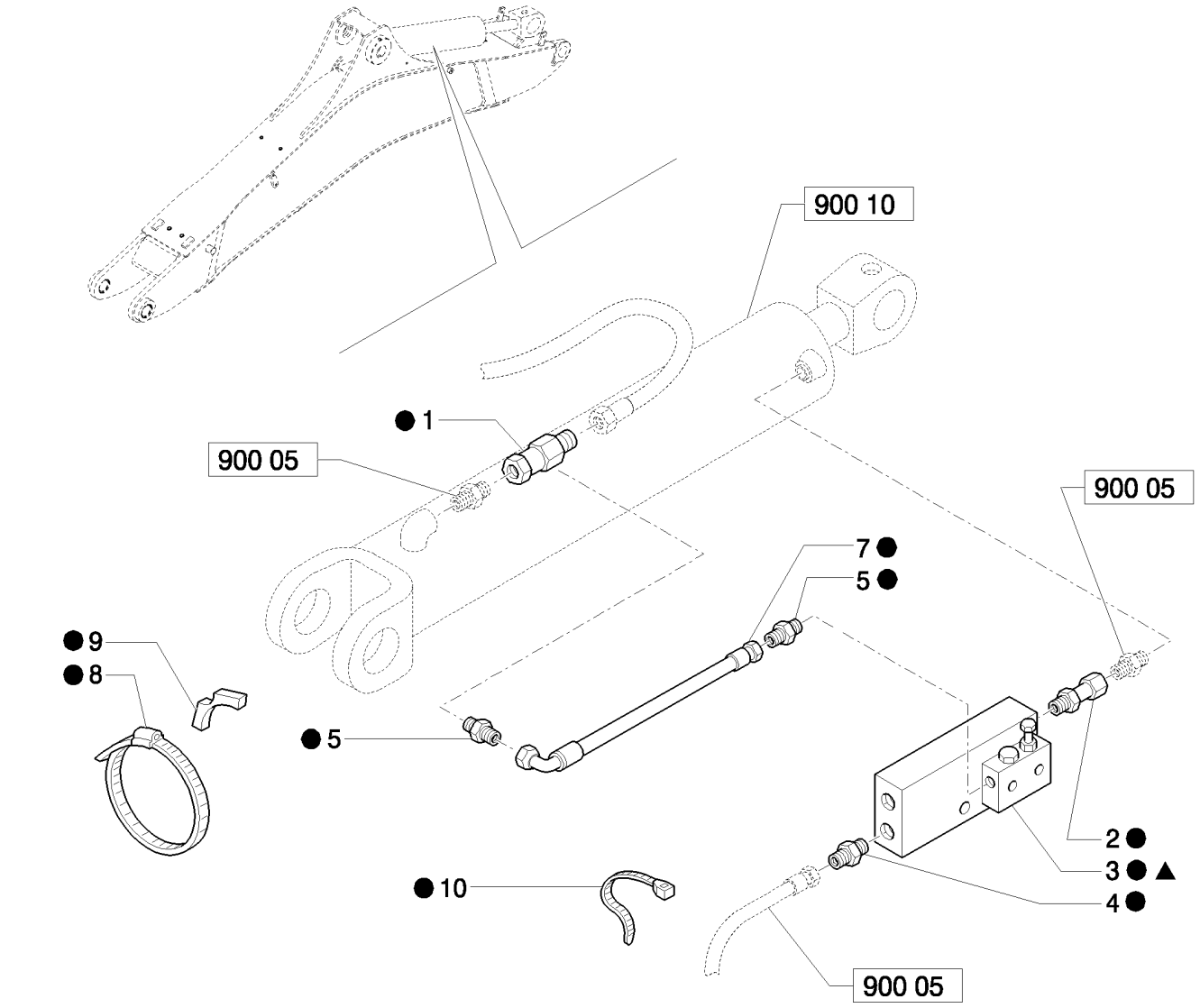

CLAPET DE BLOCAGE SUR VÉRIN ET ÉQUIPEMENT RÉTRO

REF	FN	PART NUMBER	YR/SN	QTY	DESCRIPTION
1		85805115		1	RACCORD
2		85805124		1	RACCORD
3	1	87353314		1	SOUPAPE DE SECURITE, ASSY
4		83963000		2	RACCORD
5		85802803		2	RACCORD
6		85820913		1	KIT
7		85815505		1	FLEXIBLE HYDRAULIQUE, 600mm lg
8		85805126		1	BRIDE, FLEXIBLE
9		85805123		1	ENTRETOISE
10		79072960		2	SERRE-CABLE
11		87648639		1	KIT

(1) Includes 6

393		p1	04/08

COMMANDES EXCAVATRICE A LEVIER, LEVIER, PARE-POUSSIERE & DECALCOMANIES - NA

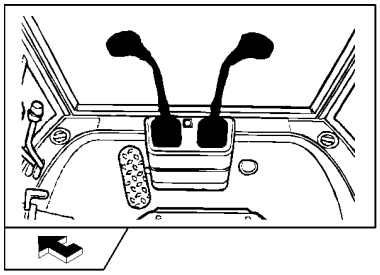

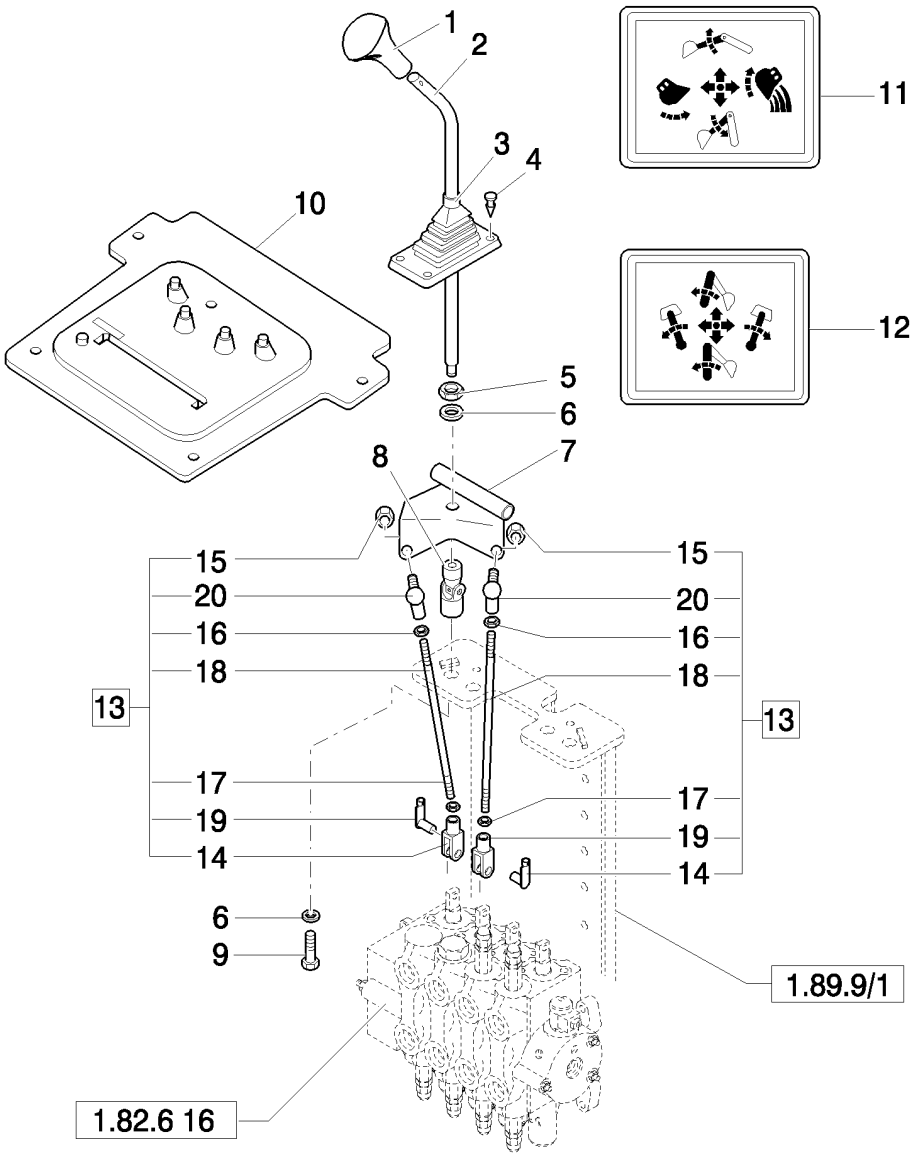

COMMANDES EXCAVATRICE A LEVIER, LEVIER, PARE-POUSSIERE & DECALCOMANIES - NA

REF	FN	PART NUMBER	YR/SN	QTY	DESCRIPTION
1		85801502		1	POMMEAU, Without Horn Switch
1		85802682		1	POMMEAU, Includes 13796621 M5 x 8mm long Setscrew; With 87448432 Horn Switch
		87448432		1	COMMUTATEUR COMPLET, Horn
2		85801488		2	LEVIER
3		85802843		2	COIFFE
4		14568887		8	ATTACHE
5		16101511		2	ECROU, M12 x 1.25, Cl 8
6		11190779		4	RONDELLE BELLEVILLE, Belleville, M13
7		85803124		1	PATTE FIXATION, LH
7		85803107		1	PATTE FIXATION, RH
8		85801518		2	CARDAN
9		15540321		2	BOULON, Hex, M12 x 1.25 x 25, 8.8, Full Thd
10	1	85804540		1	COIFFE
11		85804344		1	IDEOGRAMME
12		85804345		1	IDEOGRAMME
13		85801514		4	TIRANT, Assy
14		11991971		1	FOURCHETTE
15		14048211		1	CONTRE-ECROU, M8 x 1.25, Cl 8
16		16102311		1	ECROU, Thin, M8 x 1.25, Cl 04
17		16102911		1	ECROU, Thin, M8 x 1.25, Cl 04, LH
18		85801515		1	TIRANT
19		85802738		1	RETENEUR
20		85804375		1	ROTULE

(1) Only for CAB

Mechanical Version B95B

394	01	p1	04/08

COMMANDES ÉQUIPEMENT RÉTRO À 4 LEVIERS, CONSOLE, LEVIERS ET LEVIER CARRÉ (CENTER PIVOT: SIDE SHIFT): LEVIERS DE COMMAN

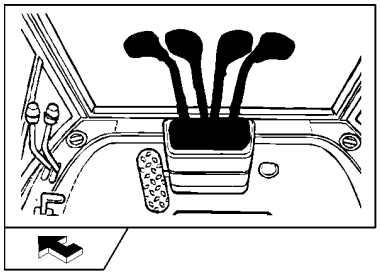

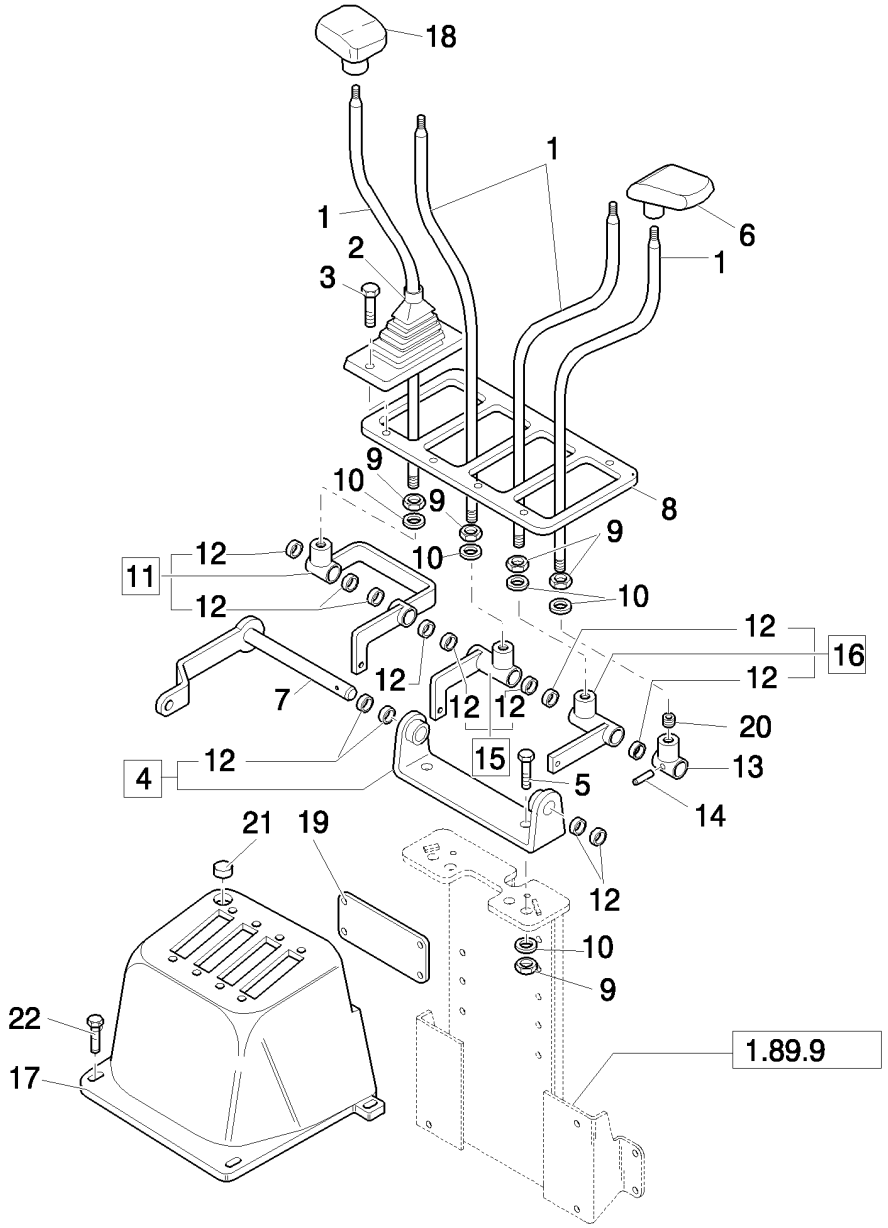

COMMANDES ÉQUIPEMENT RÉTRO À 4 LEVIERS, CONSOLE, LEVIERS ET LEVIER CARRÉ (CENTER PIVOT: SIDE SHIFT): LEVIERS DE CO

REF	FN	PART NUMBER	YR/SN	QTY	DESCRIPTION
1		85804780		4	LEVIER
2		85803382		4	COIFFE
3		13272477		8	VIS, Cross Pan Hd, M4 x 20, 12.9
4		85802647		1	SUPPORT, Assy
5		15540421		2	BOULON, Hex, M12 x 1.25 x 30, 8.8, Full Thd
6		83962918		2	POIGNÉE, LH
7		85804782		1	AXE
8		85803540		1	PLAQUE
9		16101511		6	ECROU, M12 x 1.25, Cl 8
10		11190779		6	RONDELLE BELLEVILLE, Belleville, M13
11		85804801		1	LEVIER DE RENVOI, Assy
12		85802494		12	BAGUE
13		85804787		1	LEVIER DE RENVOI
14		13940370		1	GOUPILLE ELASTIQUE, M5 x 26, Coiled
15		85804794		1	LEVIER DE RENVOI, Assy
16		85804791		1	LEVIER DE RENVOI, Assy
17	1	87319744		1	INSTRUMENTS DE BORD
17	2	85827820		1	BLISTER
18		83962919		2	POIGNÉE, RH
19	2	85804781		1	COUVERCLE
20		13812631		1	VIS DE RÉGLAGE, Hex Soc, M12 x 12, Flat Pt
21		85802227		1	BOUCHON
22		13272477		8	VIS, Cross Pan Hd, M4 x 20, 12.9

(1) Side Shift - Center Pivot - CAB
(2) ROPS

Mechanical Version B95B

COMMANDES ÉQUIPEMENT RÉTRO À 4 LEVIERS, ENSEMBLE TIRANT SUPÉRIEUR (CENTER PIVOT: SIDE SHIFT): TIRANTS SUPÉRIEURS

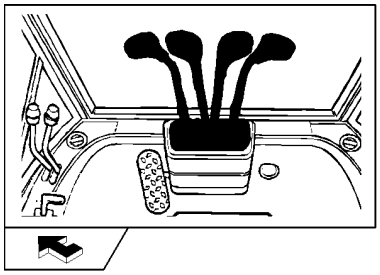

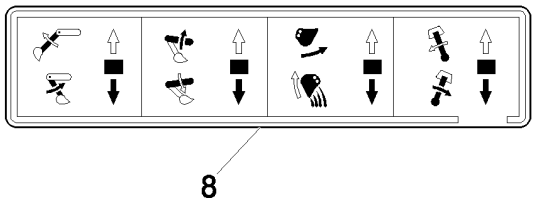

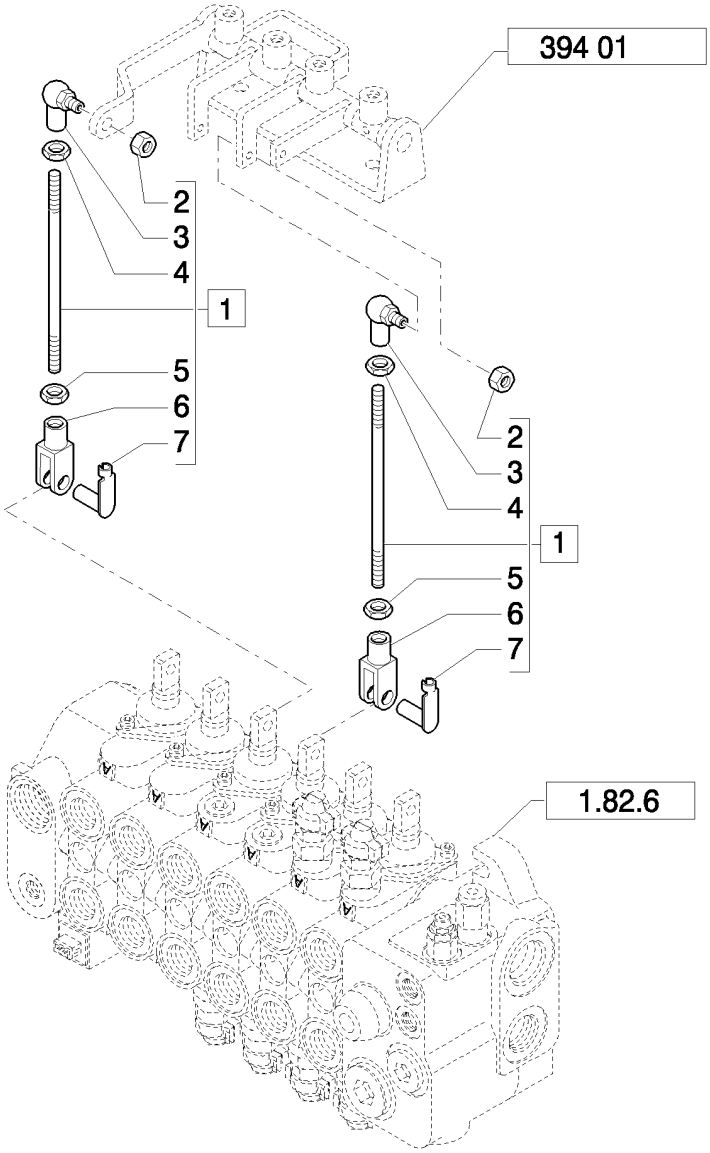

COMMANDES ÉQUIPEMENT RÉTRO À 4 LEVIERS, ENSEMBLE TIRANT SUPÉRIEUR (CENTER PIVOT: SIDE SHIFT): TIRANTS SUPÉRIEURS

REF	FN	PART NUMBER	YR/SN	QTY	DESCRIPTION
1	1	85804803		2	TIRANT, Assy
1	2	85805498		2	TIRANT, Assy
2		14048211		2	CONTRE-ECROU, M8 x 1.25, Cl 8
3		85804375		2	ROTULE
4		16102311		2	ECROU, Thin, M8 x 1.25, Cl 04
5		16102911		2	ECROU, Thin, M8 x 1.25, Cl 04, LH
6		11991971		2	FOURCHETTE
7		85802738		2	RETENEUR
8		85803917		1	DECALCOMANIE

(1) ROPS
(2) Side Shift - Center Pivot - CAB

Mechanical Version	B95B

COMMANDES ÉQUIPEMENT RÉTRO À 4 LEVIERS, ENSEMBLE TIRANT INFÉRIEUR (CENTER PIVOT: SIDE SHIFT): TIRANTS INFÉRIEURS

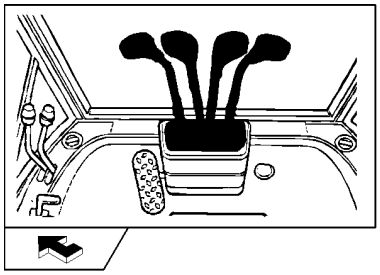

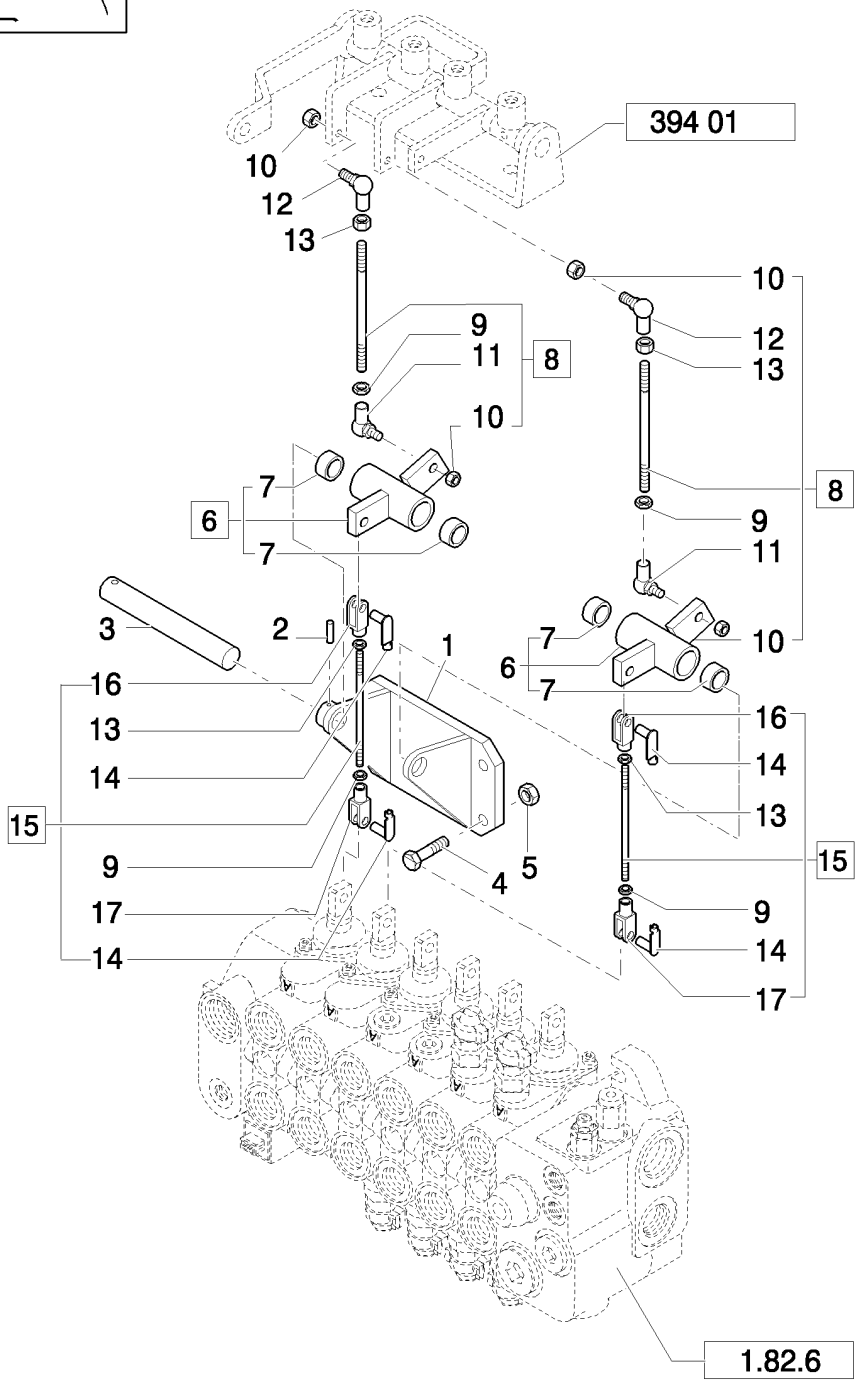

COMMANDES ÉQUIPEMENT RÉTRO À 4 LEVIERS, ENSEMBLE TIRANT INFÉRIEUR (CENTER PIVOT: SIDE SHIFT): TIRANTS INFÉRIEURS

REF	FN	PART NUMBER	YR/SN	QTY	DESCRIPTION
1		85803360		1	SUPPORT
2		13940370		1	GOUPILLE ELASTIQUE, M5 x 26, Coiled
3		85803364		1	AXE
4		16043621		4	BOULON, Hex, M8 x 25, 8.8
5		16104111		4	CONTRE-ECROU, M8 x 1.25, Cl 8
6		85807926		2	LEVIER DE RENVOI
7		85802494		4	BAGUE
8		85804736		2	TIRANT, Assy
9		16102911		4	ECROU, Thin, M8 x 1.25, Cl 04, LH
10		14048211		4	CONTRE-ECROU, M8 x 1.25, Cl 8
11		85804376		2	ROTULE
12		85804375		2	ROTULE
13		16102311		6	ECROU, Thin, M8 x 1.25, Cl 04
14		85802738		4	RETENEUR
15	1	85803447		2	TIRANT, Assy
15	2	85807914		2	TIRANT, Assy
16		10007871		2	MACHOIRE
17		11991971		2	FOURCHETTE

(1) ROPS
(2) Side Shift - Center Pivot - CAB

394/01	01	p1	03/08

COMMANDES ÉQUIPEMENT RÉTRO À 2 LEVIERS ISO, LEVIERS, ANTIPOUSSIÈRE, DÉCALCOMANIES (CENTER PIVOT) - NA -LEVIERS DE COMM

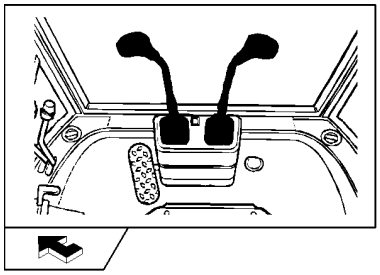

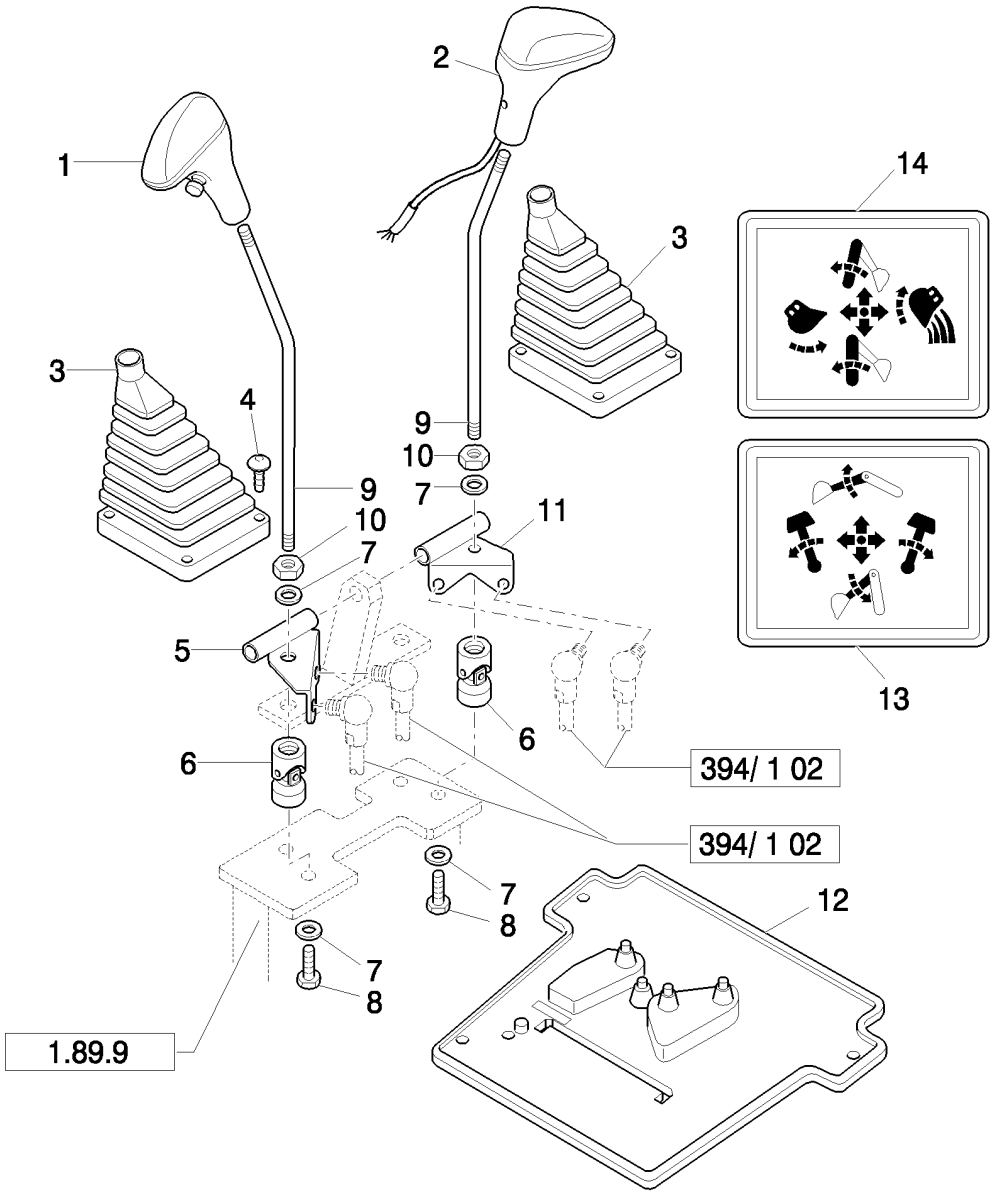

COMMANDES ÉQUIPEMENT RÉTRO À 2 LEVIERS ISO, LEVIERS, ANTIPOUSSIÈRE, DÉCALCOMANIES (CENTER PIVOT) - NA -LEVIERS DE

REF	FN	PART NUMBER	YR/SN	QTY	DESCRIPTION
1		85801502		1	POMMEAU, Without Horn Switch
2		85802682		1	POMMEAU, Includes 13796621 M5 x 8mm long Setscrew; With 87448432 Horn Switch
		87448432		1	COMMUTATEUR COMPLET, Horn
3		85802843		2	COIFFE
4		14568887		8	ATTACHE, 8X20
5		85803124		1	PATTE FIXATION, L.H.
6		85801518		2	CARDAN
7		11190779		4	RONDELLE BELLEVILLE, Belleville, M13
8		15540321		2	BOULON, Hex, M12 x 1.25 x 25, 8.8, Full Thd
9		85801488		2	LEVIER
10		16101511		2	ECROU, M12 x 1.25, Cl 8
11		85803107		1	PATTE FIXATION, R.H.
12	1	85804541		1	COIFFE, w/Cab
13		85803782		1	DECALCOMANIE
14		85803783		1	DECALCOMANIE

(1) Only for CAB

Mechanical Version	B95B

402	01	p1	04/08

ESSIEU AVANT (4RM), LOGEMENT, DOUILLES & SUPPORTS - NA

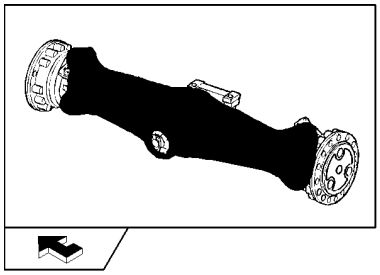

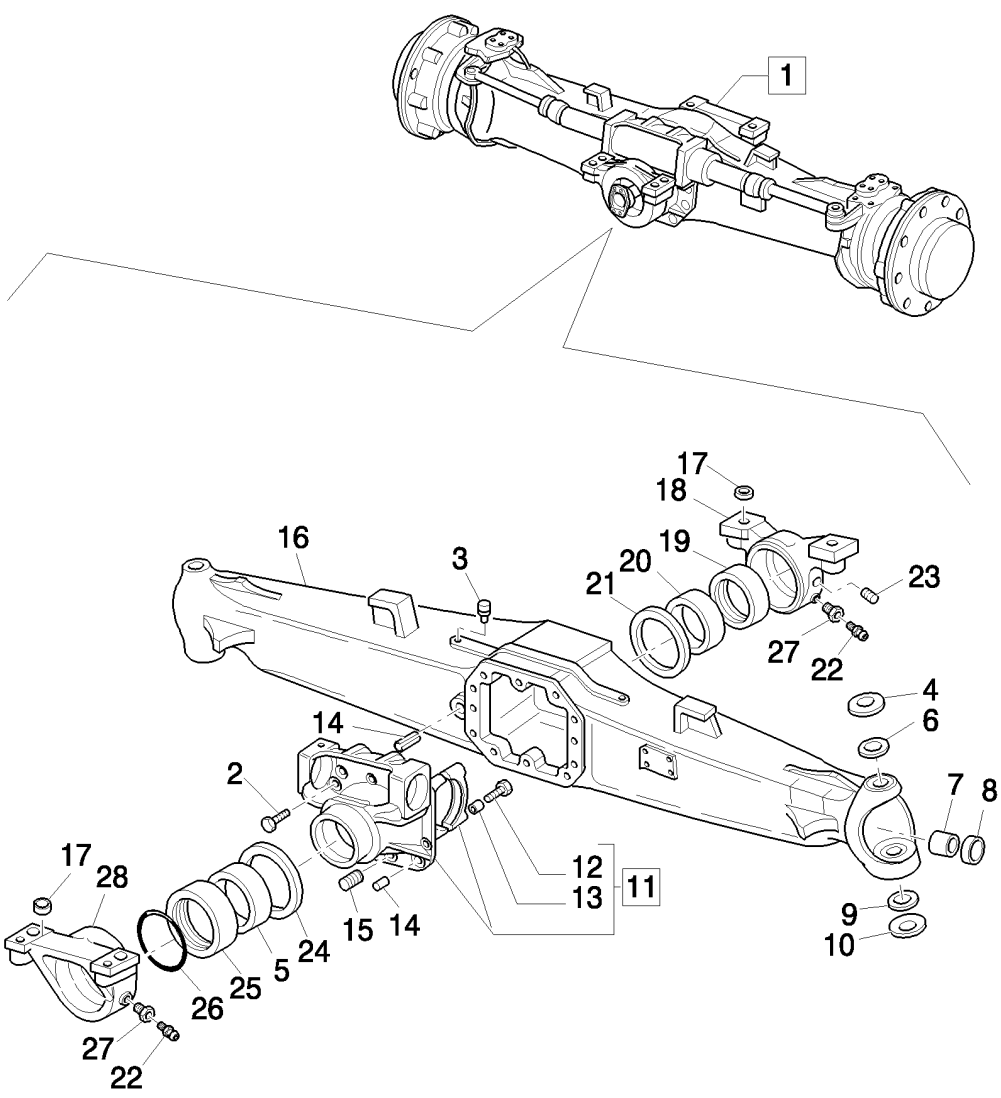

ESSIEU AVANT (4RM), LOGEMENT, DOUILLES & SUPPORTS - NA

REF	FN	PART NUMBER	YR/SN	QTY	DESCRIPTION
1	1	85827726		1	PONT AVANT
1	2	85827725		1	PONT AVANT
2		9967769		10	VIS, Cap, HH, M12X1.75X33
3		9967672		1	BOUCHON, M10X1
4		9967997		2	RONDELLE
5		9968010		1	BAGUE
6		87306932		2	BAGUE
7		9968019		2	BAGUE
8		85824346		2	JOINT
9		9968002		2	ROULEMENT, 2 piece
10		9968003		2	RONDELLE
11		9968004		1	SUPPORT, Assy
12		9967681		4	VIS
13		9967682		4	BAGUE
14		9968005		2	BOUCHON DE VIDANGE
15		9967683		2	GOUPILLE ELASTIQUE
16		85827738		1	CARTER DE PONT
17		9967990		4	BAGUE
18		9967991		1	SUPPORT, Front
19		9967992		1	BAGUE
20		9967993		1	BAGUE
21		9967994		1	RONDELLE DE BUTÉE
22		9967996		2	GRAISSEUR
23		85805973		1	VIS, M8X1
24		9968006		1	RONDELLE DE BUTÉE
25		9968007		1	ANNEAU
26		9968008		1	JOINT THORIQUE
27		9967995		2	VIS
28		9968009		1	SUPPORT, Rear

(1) Power Shuttle 13.714
(2) Power Shuttle 14.308

ESSIEU AVANT (4RM), LOGEMENT OSCILLANT & CYLINDRE DIRECTION - NA

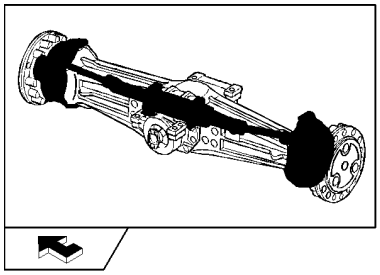

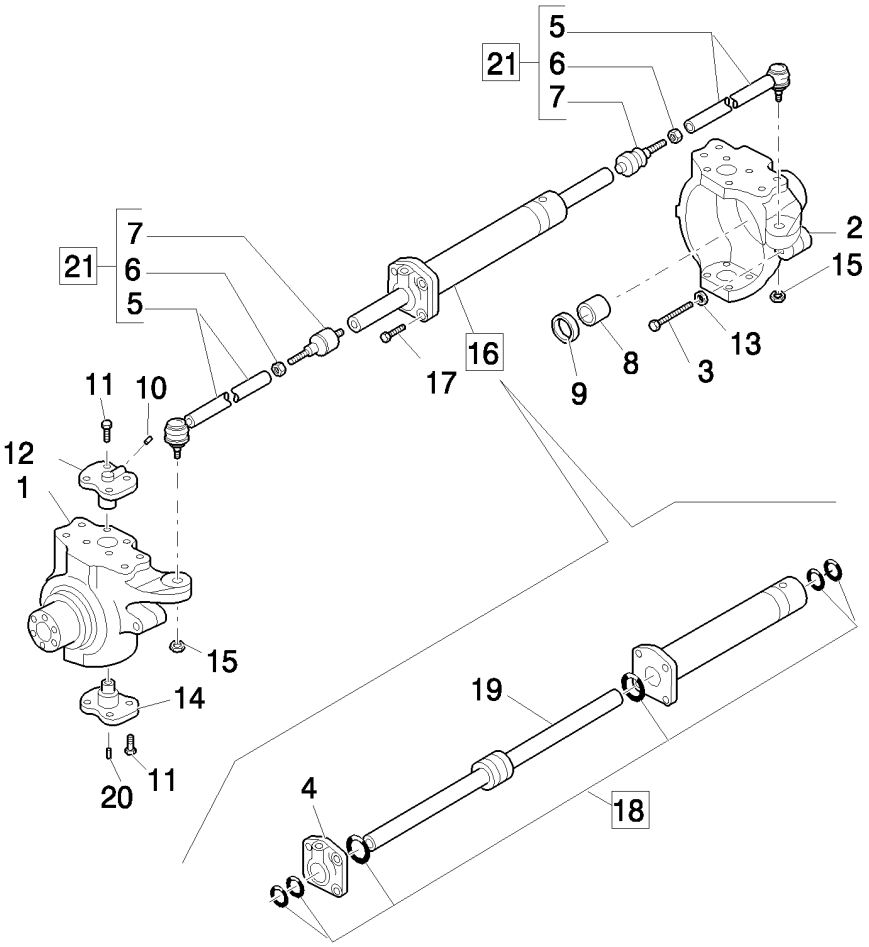

ESSIEU AVANT (4RM), LOGEMENT OSCILLANT & CYLINDRE DIRECTION - NA

REF	FN	PART NUMBER	YR/SN	QTY	DESCRIPTION
1		85827740		1	NOUEUR, Assy, LH; 8 Bolt Holes
2		85827739		1	NOUEUR, Assy, RH; 8 Bolt Holes
3		85805987		2	VIS, M16x100
4		85805989		1	CULASSE
5		85805977		2	TIRANT
6		85805976		2	ECROU, M18x1.5
7		85805975		2	ROTULE
8		85805988		2	BAGUE BRONZE
9		85824345		2	JOINT
10		9968021		2	GRAISSEUR, M6x2
11		9968022		14	VIS, M14 x 2 x 35
12		9968023		2	PIVOT
13		85805986		2	ECROU, M16
14		9968025		2	AXE
15		85805982		2	ECROU, M18x1.5
16		85805978		1	VÉRIN DE DIRECTION, Assy
17		9968028		4	VIS, M12x45
18		85805990		1	POCHETTE DE JOINTS
19		85805992		1	TRINGLE
20		85805984		2	GRAISSEUR, M6x1
21		87306934		2	TIRANT, Assy

ESSIEU AVANT (4RM), MOYEUX - NA

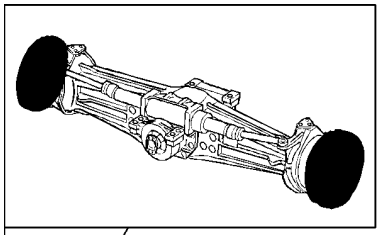

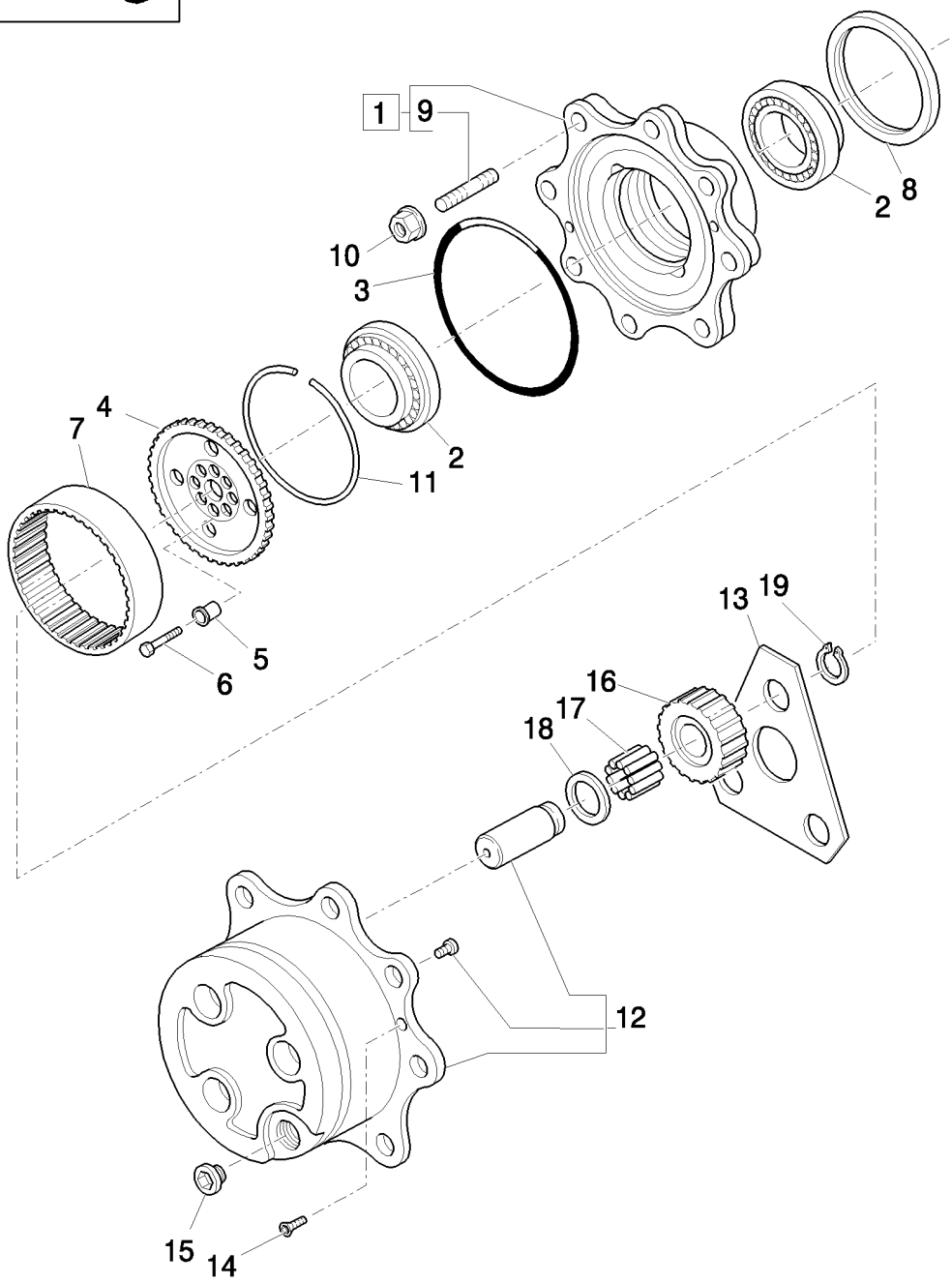

ESSIEU AVANT (4RM), MOYEUX - NA

REF	FN	PART NUMBER	YR/SN	QTY	DESCRIPTION
1		85806003		2	KIT
2		9967687		4	ROULEMENT
3		85805711		2	JOINT THORIQUE
4		85817698		2	MOYEU
5		85806009		16	BAGUE
6		85806010		16	VIS, M10 x 45
7		85806008		2	COURONNE DENTÉE
8		85827067		2	JOINT D'HUILE, Seal, Oil
9		9968070		16	GOUJON
10		9968071		16	ECROU, Wheel, M18 x 1.5
11		85806006		2	ANNEAU
12		85806011		2	KIT
13		85806016		2	RONDELLE DE BUTÉE
14		85805709		4	VIS, M8 x 20
15		85806012		2	BOUCHON, M30 x 2
16		85806014		6	PLANETAIRE, T23
17		85806015		AR	JEU DE 10 AIGUILLES, (Qty 1=10 Pieces)
18		9968084		6	RONDELLE DE BUTÉE, M55 x 34.6 x 1.5
19		9968083		6	CIRCLIP

ESSIEU AVANT (4RM), GROUPE PIGNON & COURONNE - NA

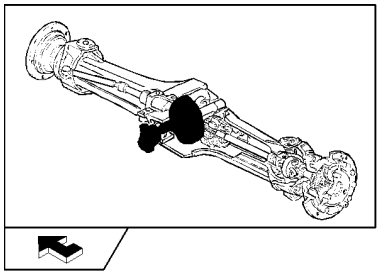

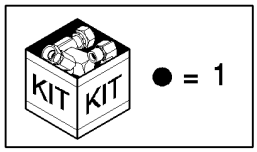

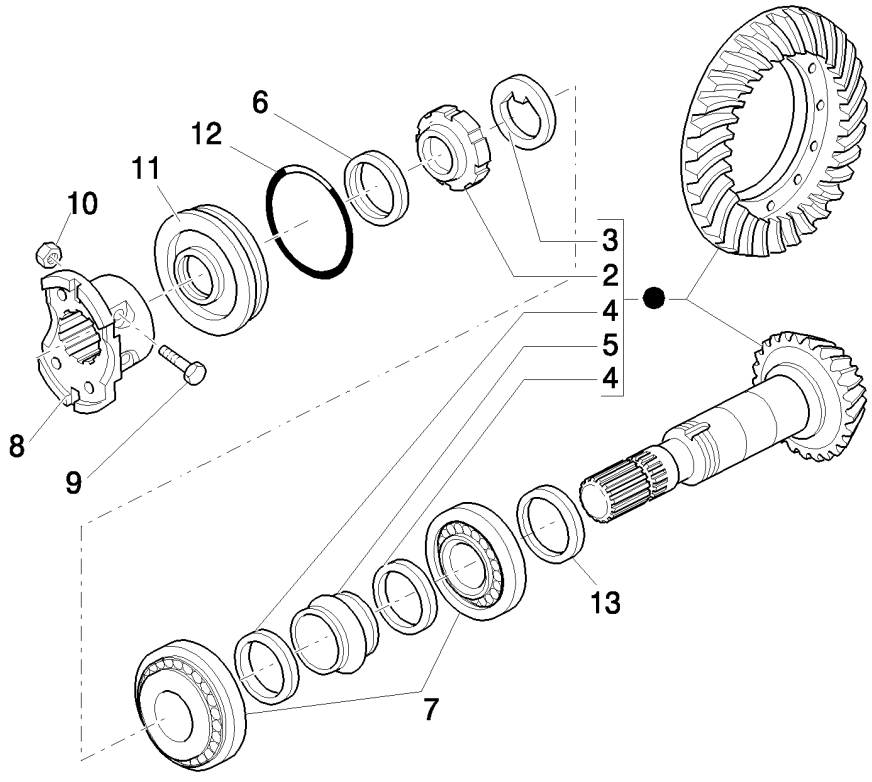

ESSIEU AVANT (4RM), GROUPE PIGNON & COURONNE - NA

REF	FN	PART NUMBER	YR/SN	QTY	DESCRIPTION
1	1	85813060		1	JEU DE PIGNONS, 13/31
1	2	85813059		1	JEU DE PIGNONS, 14/32
2		9968032		1	VIROLE, M40 x 1.5
3		9968031		1	RONDELLE FREIN
4		9968033		2	RONDELLE, 50 x 40.5 x
5		9968034		1	ENTRETOISE
6		85824346		1	JOINT, Seal, Oil, M35 x 52 x 16
7		9968047		2	POUSSOIR A GALET
8		9968049		1	FLASQUE
9		9968048		2	VIS, M10 x 60
10		9968050		2	ECROU, M10 x 1.25
11		9968051		1	COUVERCLE
12		9968052		1	JOINT THORIQUE
13		9968037		AR	CALE D'EPAISSEUR, 2.5 mm
13		9968038		AR	CALE D'EPAISSEUR, 2.6 mm
13		9968039		AR	CALE D'EPAISSEUR, 2.7 mm
13		9968040		AR	CALE D'EPAISSEUR, 2.8 mm
13		9968041		AR	CALE D'EPAISSEUR, 2.9 mm
13		9968042		AR	CALE D'EPAISSEUR, 3.0 mm
13		9968043		AR	CALE D'EPAISSEUR, 3.1 mm
13		9968044		AR	CALE D'EPAISSEUR, 3.2 mm
13		9968045		AR	CALE D'EPAISSEUR, 3.3 mm
13		9968046		AR	CALE D'EPAISSEUR, 3.4 mm

(1) Consist Ref. Number : 2 - 5, Ratio=14.308 Axles 8582775

(2) Consist Ref. Number : 2 - 5, Ratio=13.174 Axles 8582776

ESSIEU AVANT (4RM), DIFFERENTIEL - NA

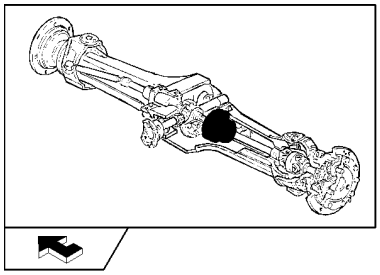

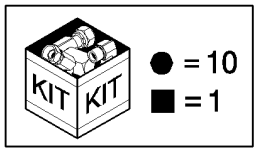

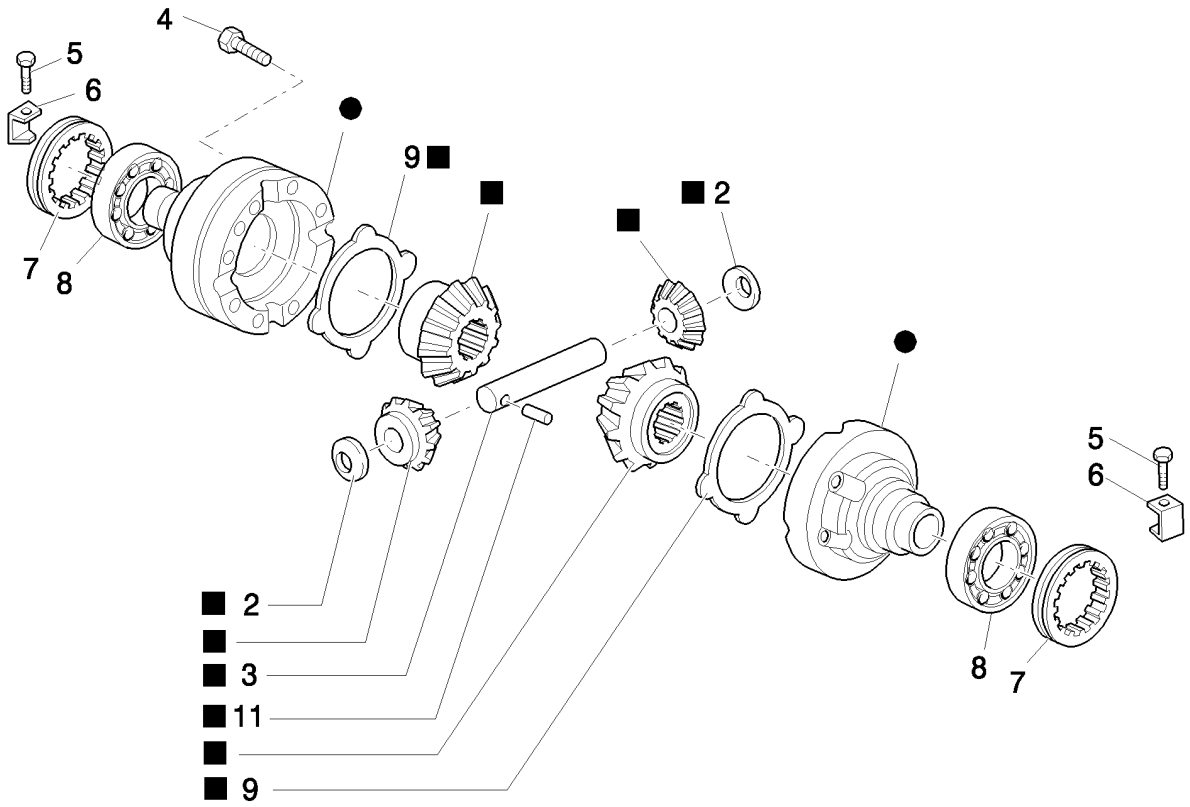

ESSIEU AVANT (4RM), DIFFERENTIEL - NA

REF	FN	PART NUMBER	YR/SN	QTY	DESCRIPTION
1		85806004		1	KIT
2		9966352		2	RONDELLE DE BUTÉE
3		9966354		1	AXE
4		9967736		12	VIS, M10 x 1.5 x 75
5		9967739		2	VIS, M6 x 10
6		9967740		2	CLIP
7		9967741		2	VIROLE
8		9968054		2	POUSSOIR A GALET
9		9967734		2	DISQUE D'ENTRAÎNEMENT
10		85827068		1	CARTER
11		9966356		1	GOUPILLE ELASTIQUE, 7 x 40

PONT AVANT 4WD, ARBRE PONT ARTICULÉ

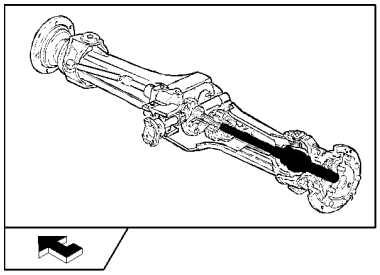

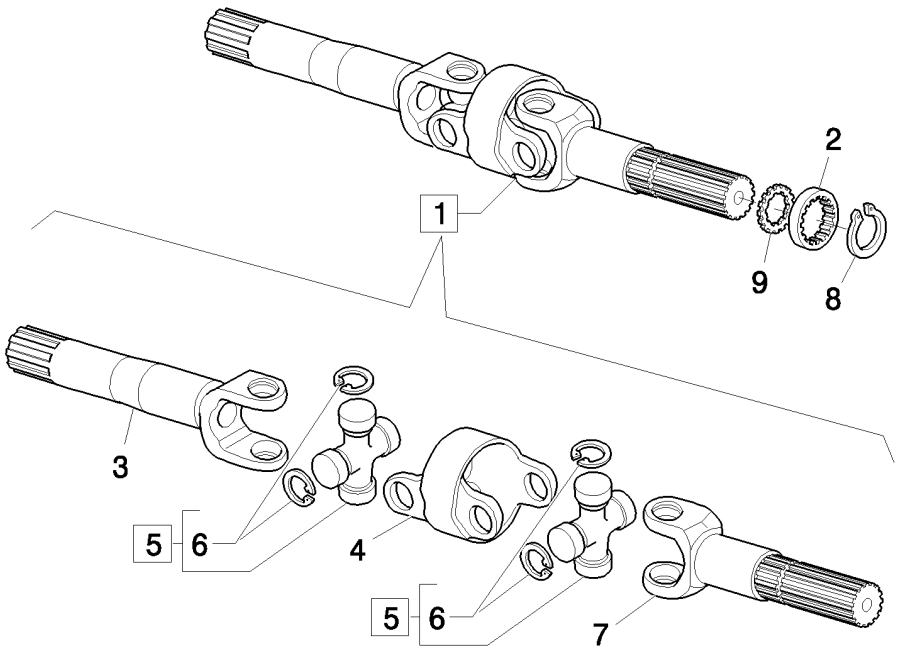

PONT AVANT 4WD, ARBRE PONT ARTICULÉ

REF	FN	PART NUMBER	YR/SN	QTY	DESCRIPTION
1		85827741		2	ARBRE ARTICULE, Assy
2		85805999		2	RONDELLE DE BUTÉE
3		87306929		1	ARBRE
4		85827070		2	CORPS
5		85807283		2	CROISILLON, Assy
6		85807284		1	ANNEAU D'ARRÊT
7		87306930		2	ARBRE
8		87306933		2	ANNEAU D'ARRÊT
9		85817697		2	RONDELLE DE BUTÉE

COMPOSANTS DE MARTEAU DE SYSTÈMES (CAB - ROPS)

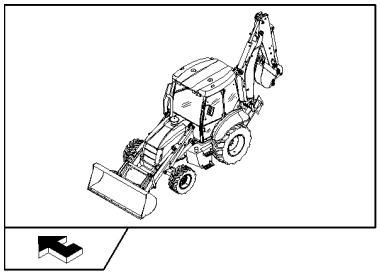

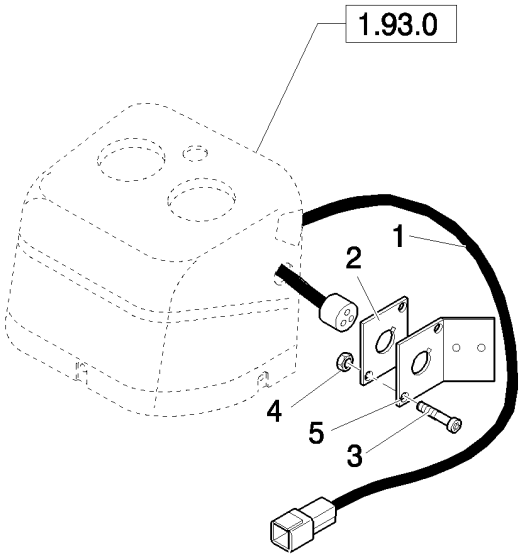

COMPOSANTS DE MARTEAU DE SYSTÈMES (CAB - ROPS)

REF	FN	PART NUMBER	YR/SN	QTY	DESCRIPTION
1		85819237		1	FAISCEAU COMPLET
2		85816760		1	PLAQUE
3		13272477		2	VIS, Cross Pan Hd, M4 x 20, 12.9
4		12574011		2	CONTRE-ECROU, M4 x .7, Cl 8
5	1	85827822		1	PANOPLIE

(1) Only for ROPS

437		p1	04/08

CHEMISE COULISSANTE,INSTALLATION HYDRAULIQUE MISE DE NIVEAU STRUCTURE MACHINE

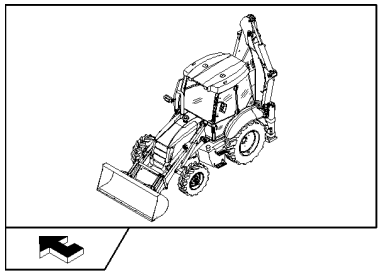

CHEMISE COULISSANTE,INSTALLATION HYDRAULIQUE MISE DE NIVEAU STRUCTURE MACHINE

REF	FN	PART NUMBER	YR/SN	QTY	DESCRIPTION
1		87358815		2	TUYAU FLEXIBLE
2		85815620		1	TUYAU FLEXIBLE
3		87638572		1	TUYAU FLEXIBLE
4		83971549		4	COUDE, Assy
5		83963374		2	RACCORD, Assy
6		85824211		1	CABLE ELECTRIQUE
7		87358808		1	PATTE FIXATION
8		87358817		1	SOUPAPE HYDRAULIQUE
9		87358818		1	ACCUMULATEUR
10		87386551		1	TUYAU
11		11106421		2	BOULON, Hex, M10 x 30, 8.8
12		87638573		1	TUYAU FLEXIBLE
13		11190579		3	RONDELLE BELLEVILLE, Belleville, M10.5
14		85815583		2	TE, Assy
15		83901443		2	JOINT THORIQUE
16		89992298		8	JOINT THORIQUE
17		15971321		1	BOULON, Hex, M10 x 75, 8.8
18		80128825		6	JOINT THORIQUE
19		11190679		2	RONDELLE BELLEVILLE, Belleville, M10.5

471	01	p1	03/08

BENNE 4X1 (1 M³) AVEC LAME "COMMON GREY"

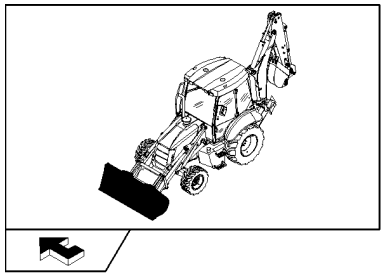

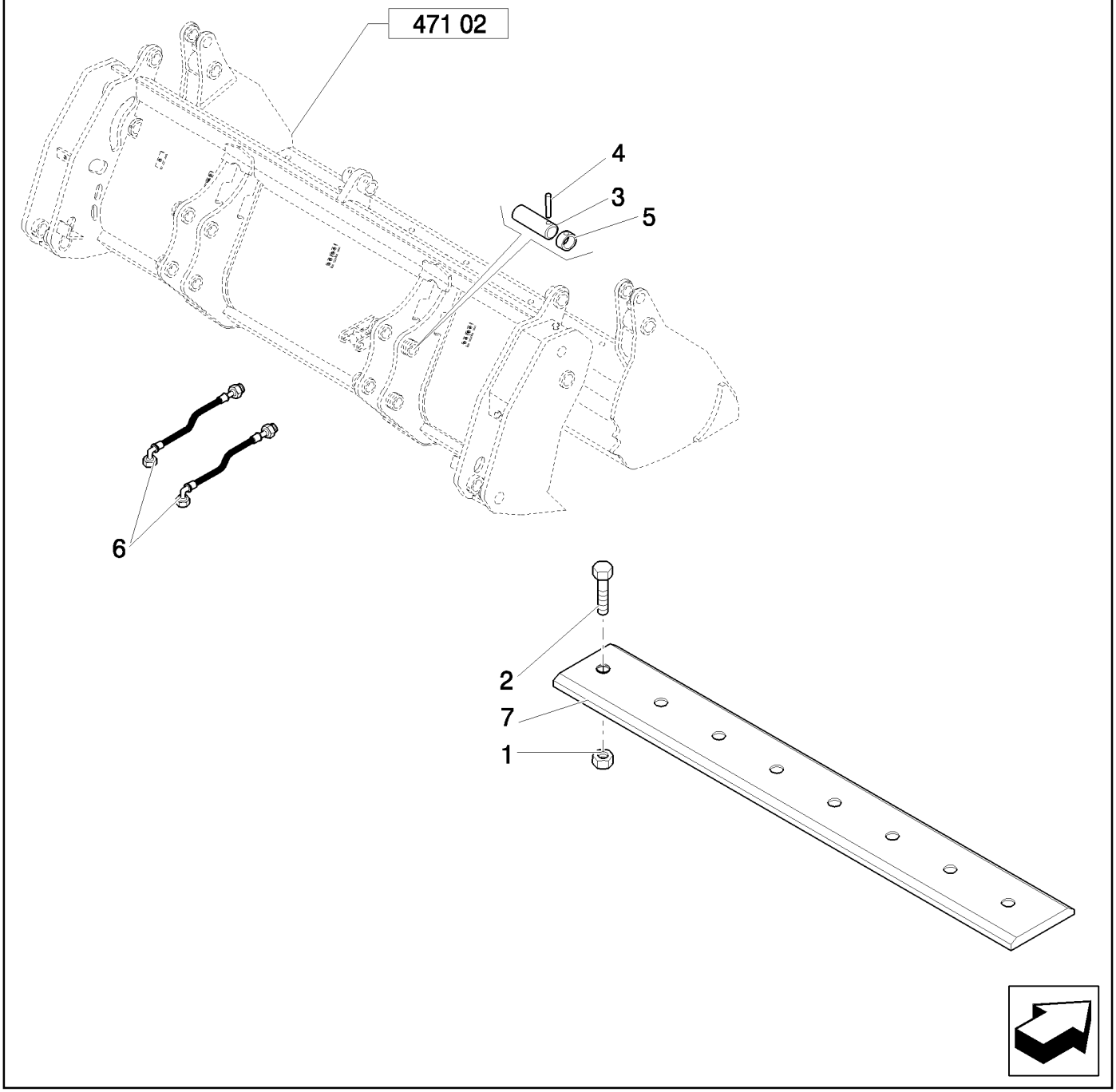

BENNE 4X1 (1 M³) AVEC LAME "COMMON GREY"

REF	FN	PART NUMBER	YR/SN	QTY	DESCRIPTION
1		85801470		8	ECROU, 5/8"-11, G8
2		85801371		8	BOULON CHARRUE, 5/8"-11 x 2 1/4"
3		85801051		4	AXE
4		85802993		4	AXE
5		85802992		4	ANNEAU
6		85820819		2	TUYAU FLEXIBLE
7	1	85801161		1	LAME D'ATTAQUE

(1) Reversible bolt on

GODET 4X1 (1 M3) AVEC LAME “COMMON GREY”: DÉFAILLANCE GODET

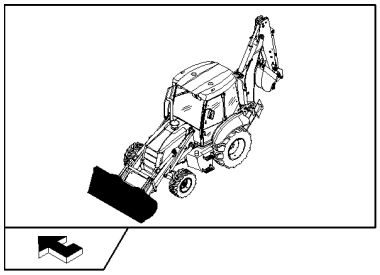

KIT KIT ● = 30

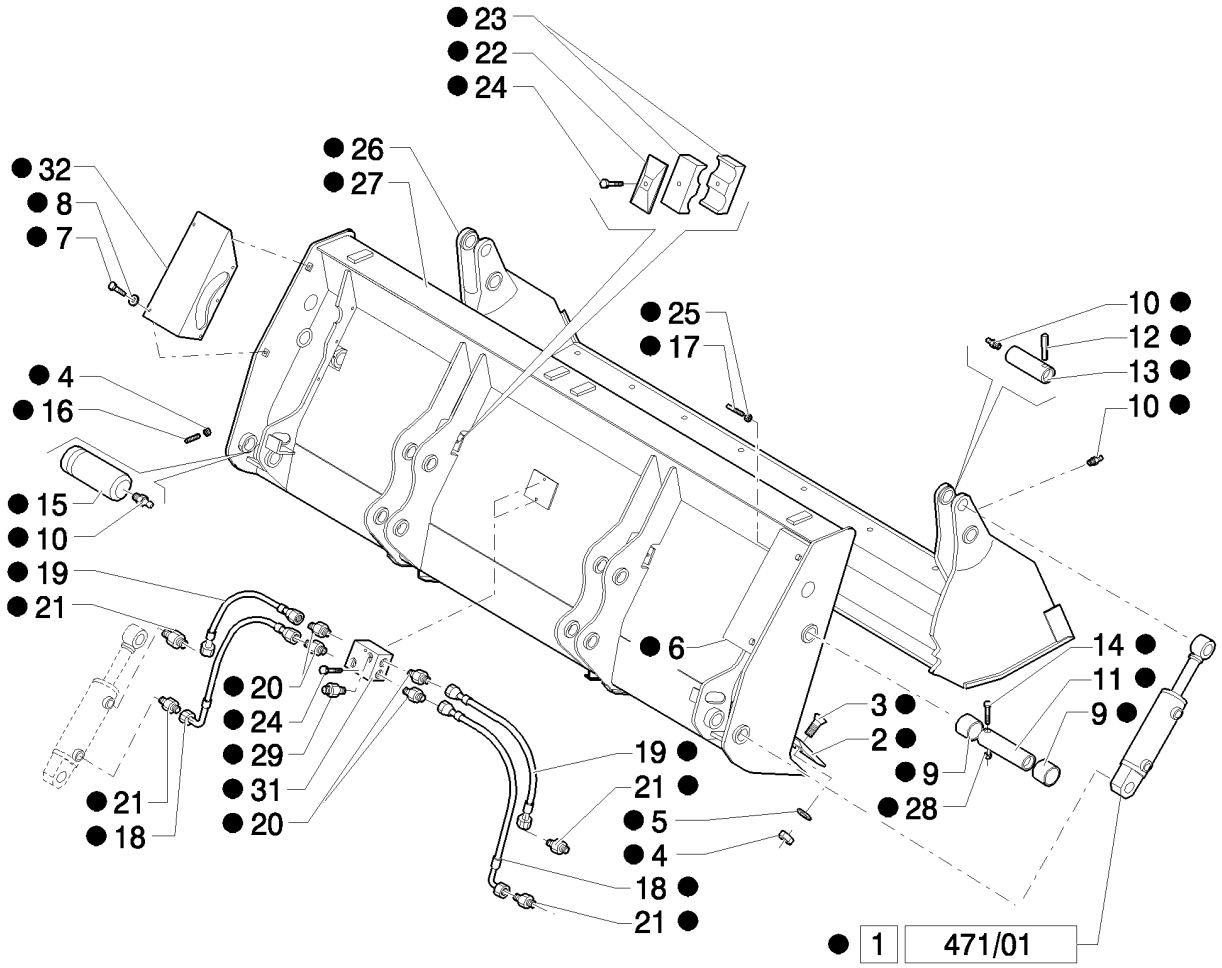

GODET 4X1 (1 M3) AVEC LAME "COMMON GREY": DÉFAILLANCE GODET

REF	FN	PART NUMBER	YR/SN	QTY	DESCRIPTION
1		87573861		2	VERIN, Assy
2		87308614		1	LAME
3		87312328		8	VIS, M14 x 40
4		85820008		10	ECROU, M14 x 2
5		85820009		8	RONDELLE D'ETANCHEITE
6		87312330		1	GARANT, RH
7		85820011		10	VIS
8		85820012		10	RONDELLE D'ETANCHEITE
9		85820013		4	BAGUE
10		85820014		6	GRAISSEUR, M10 x 1
11		85820015		2	AXE
12		85820016		2	GOUPILLE ELASTIQUE, 10 x 80
13		85820017		2	AXE
14		85820018		2	VIS, M10 x 90
15		87310286		2	AXE
16		85820020		2	VIS, M14 x 30
17		87312331		1	VIS, M8 x 120
18		87312340		2	TUYAU FLEXIBLE
19		87312342		2	TUYAU FLEXIBLE
20		87312343		4	RACCORD
21		87312333		4	RACCORD
22		85820026		2	PLAQUE
23		85820027		4	BRIDE
24		85820030		4	VIS, M8 x 45
25		85820031		1	ECROU, M8
26		87310434		1	GODET
27		87310354		1	GODET
28		85820035		2	ECROU, M10x1,5
29		87395482		2	RACCORD, Assy
30		87573550		1	GODET 4 EN 1
31		87312335		1	RACCORD
32		87395481		1	GARANT

471/01		p1	04/08

VERIN HYDRAULIQUE (BENNE 4X1-6X1)

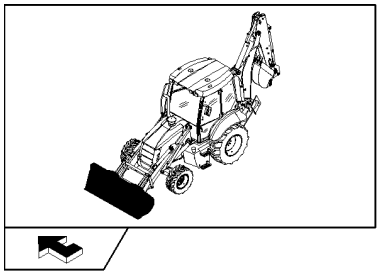

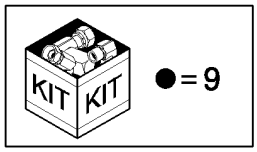

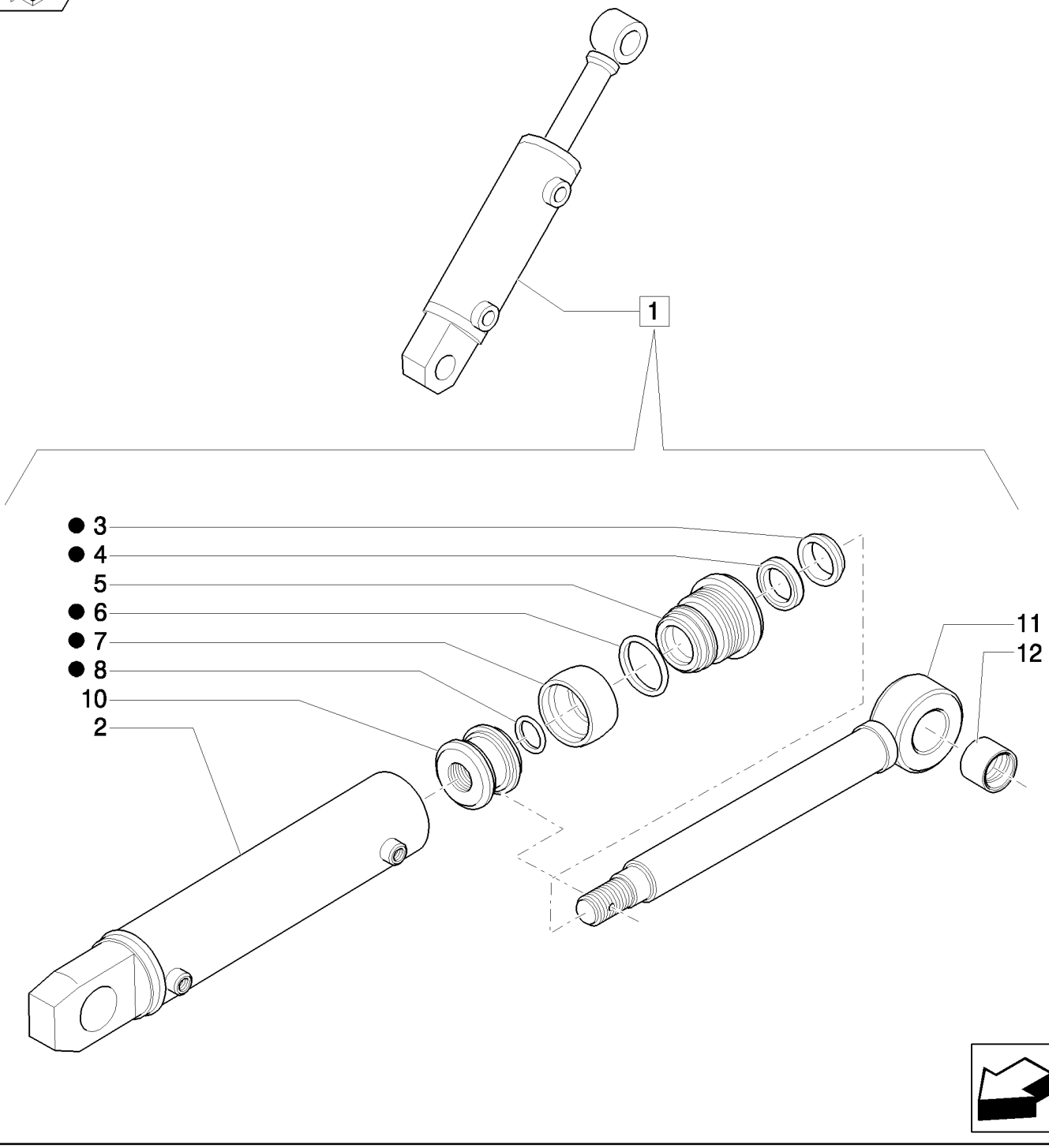

VERIN HYDRAULIQUE (BENNE 4X1-6X1)

REF	FN	PART NUMBER	YR/SN	QTY	DESCRIPTION
1		87573861		1	VERIN, Assy
2		87574523		1	TUBE ISOLANT
3		87574080		1	RACLEUR
4		87574092		1	JOINT
5		87574524		1	FOND
6		87574099		1	JOINT
7		87574097		1	JOINT
8		87574098		1	JOINT THORIQUE
9	1	87573868		1	POCHETTE-JOINTS
10		85820054		1	PISTON, Part May or May Not Have Hole For 85820055 Roll Pin; If Part Does Not Have Hole, The Piston Is Fixed To The Rod With Loctite 243
11		85820052		1	TIGE DE VERIN, Part May or May Not Have Hole For 85820055 Roll Pin; If Part Does Not Have Hole, The Piston Is Fixed To The Rod With Loctite 243
12		85820056		1	BAGUE

(1) Insludes 3, 4, 6 - 8

472	01	p1	03/08

BENNE 4X1 (1 M³) AVEC DENT "COMMON GREY"

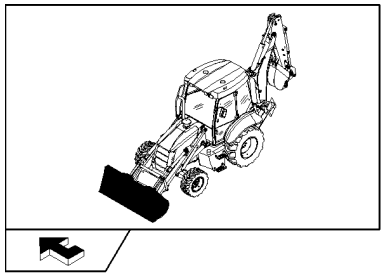

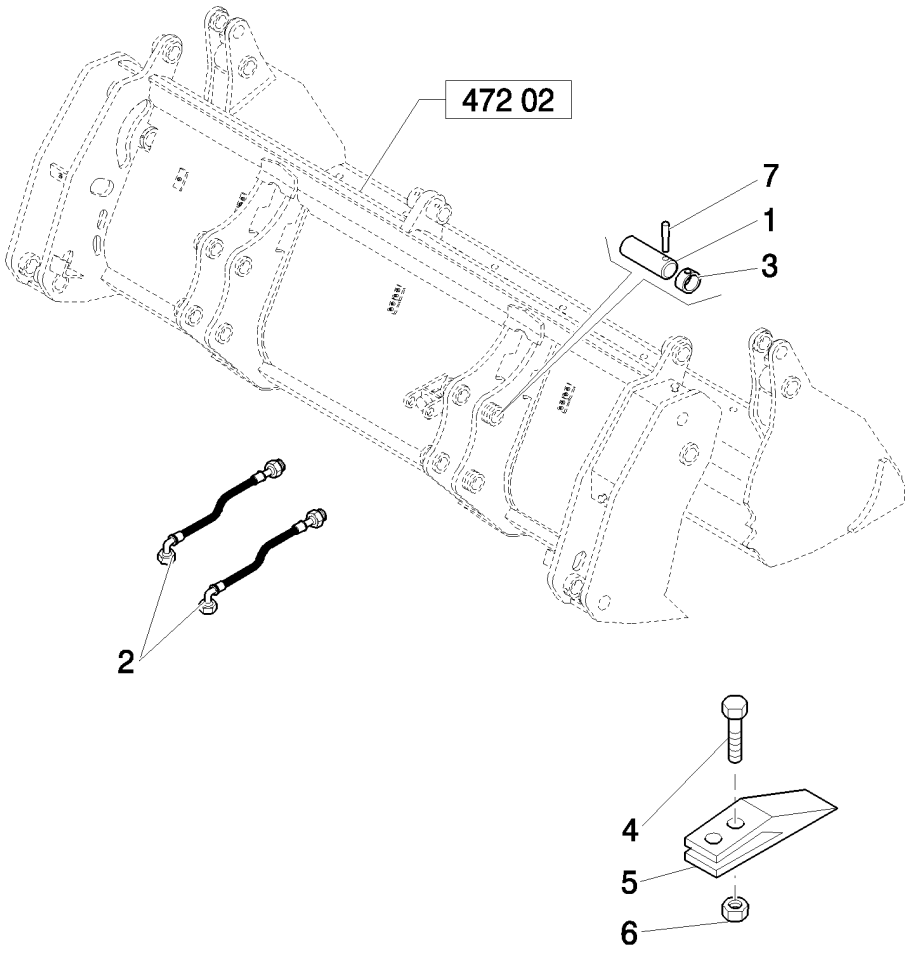

BENNE 4X1 (1 M³) AVEC DENT "COMMON GREY"

REF	FN	PART NUMBER	YR/SN	QTY	DESCRIPTION
1		85801051		4	AXE
2		85820819		2	TUYAU FLEXIBLE, L=800 mm
3		85802992		4	ANNEAU
4		85801371		16	BOULON CHARRUE, 5/8"-11 x 2 1/4"
5		85811440		8	PORTE-DENT
6		85801470		16	ECROU, 5/8"-11, G8
7		85802993		4	AXE

GODET 4X1 (1 M3) AVEC DENTS “COMMON GREY”: DÉFAILLANCE GODET

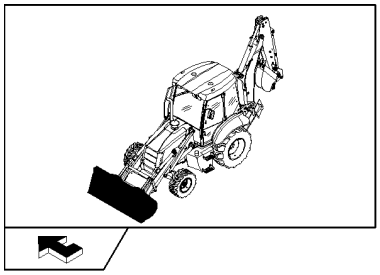

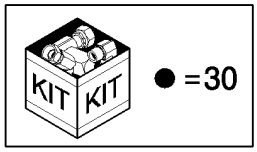

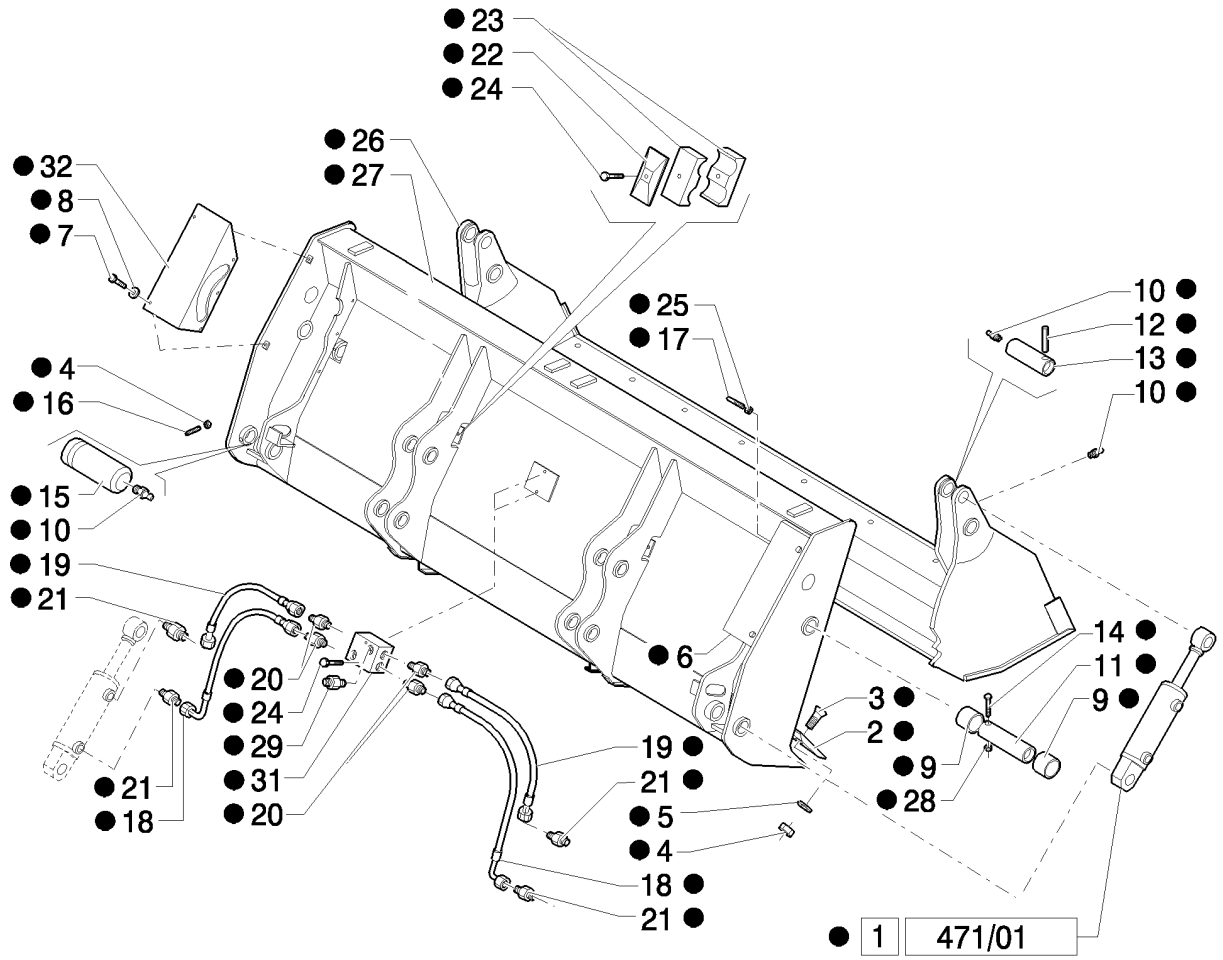

GODET 4X1 (1 M3) AVEC DENTS "COMMON GREY": DÉFAILLANCE GODET

REF	FN	PART NUMBER	YR/SN	QTY	DESCRIPTION
1		87573861		2	VERIN, Assy
2		87308614		1	LAME
3		87312328		8	VIS, M14 x 40
4		85820008		10	ECROU, M14 x 2
5		85820009		8	RONDELLE D'ETANCHEITE
6		87312330		1	GARANT, RH
7		85820011		10	VIS
8		85820012		10	RONDELLE D'ETANCHEITE
9		85820013		4	BAGUE
10		85820014		6	GRAISSEUR, M10 x 1
11		85820015		2	AXE
12		85820016		2	GOUPILLE ELASTIQUE, 10 x 80
13		85820017		2	AXE
14		85820018		2	VIS, M10 x 90
15		87310286		2	AXE
16		85820020		2	VIS, M14 x 30
17		87312331		1	VIS, M8 x 120
18		87312340		2	TUYAU FLEXIBLE
19		87312342		2	TUYAU FLEXIBLE
20		87312343		4	RACCORD
21		87312333		4	RACCORD
22		85820026		2	PLAQUE
23		85820027		4	BRIDE
24		85820030		4	VIS, M8 x 45
25		85820031		1	ECROU, M8
26		87310434		1	GODET
27		87310354		1	GODET
28		85820035		2	ECROU, M10x1,5
29		87395482		2	RACCORD
30		87573550		1	GODET 4 EN 1, Assy
31		87312335		1	RACCORD
32		87395481		1	GARANT

473	01	p1	03/08

BENNE 6X1 (1 M³) AVEC LAME "COMMON GREY"

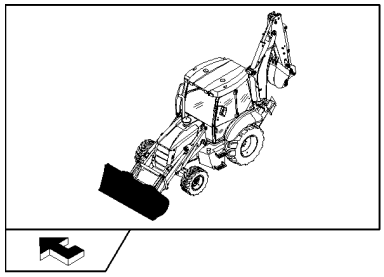

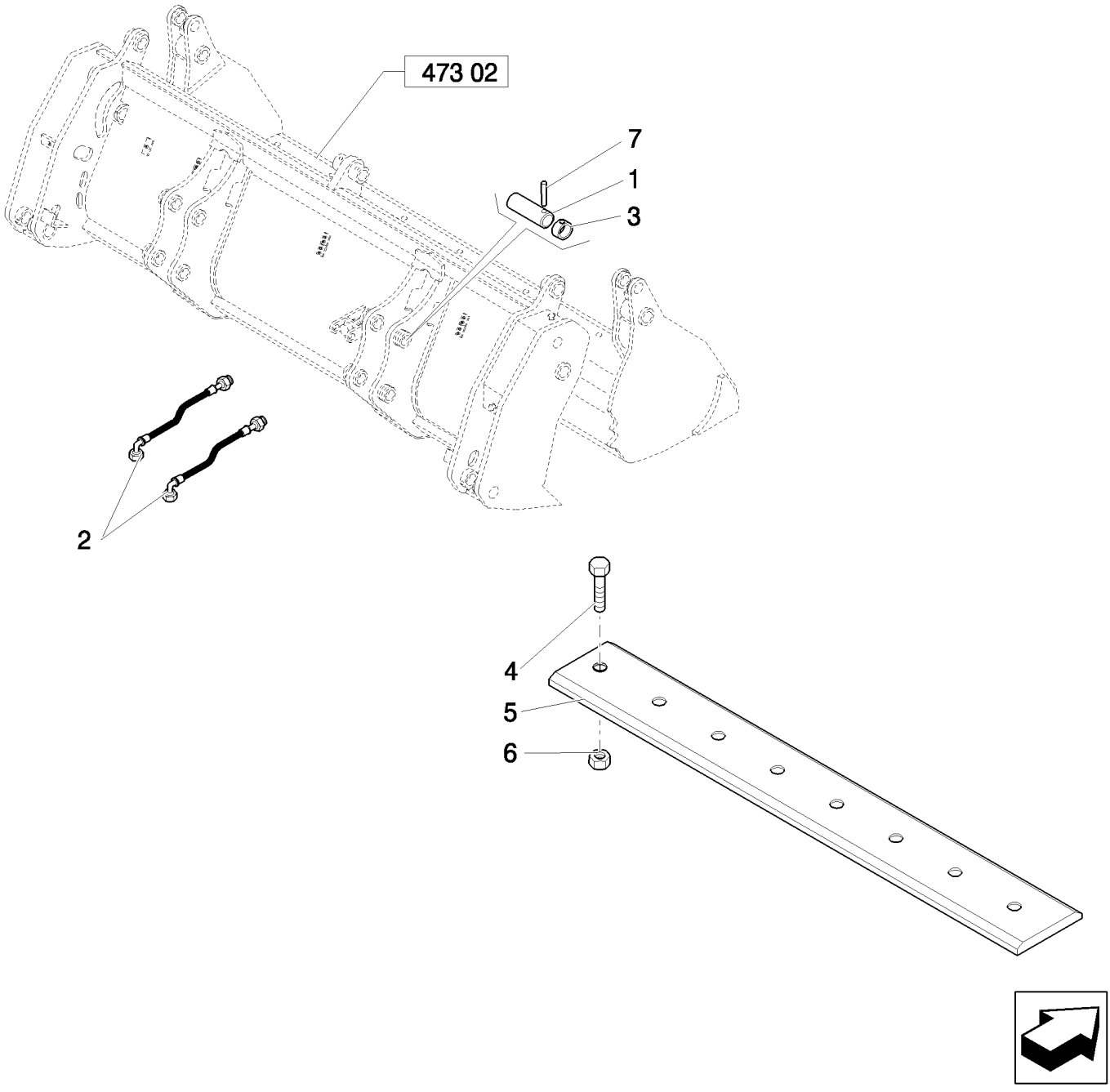

BENNE 6X1 (1 M³) AVEC LAME "COMMON GREY"

REF	FN	PART NUMBER	YR/SN	QTY	DESCRIPTION
1		85801051		4	AXE
2		85820819		2	TUYAU FLEXIBLE, L=800 mm
3		85802992		4	ANNEAU
4		85801371		8	BOULON CHARRUE, 5/8"-11 x 2 1/4"
5		85801161		1	LAME D'ATTAQUE
6		85801470		8	ECROU, 5/8"-11, G8
7		85802993		4	AXE

473	02	p1	04/08

GODET 6X1 (1 M3) AVEC LAME “COMMON GREY”: DÉFAILLANCE GODET

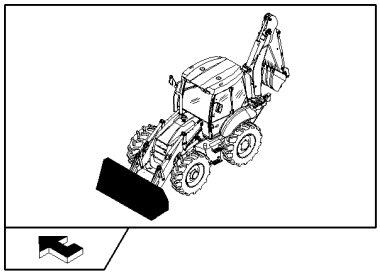

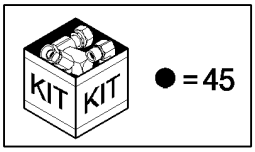

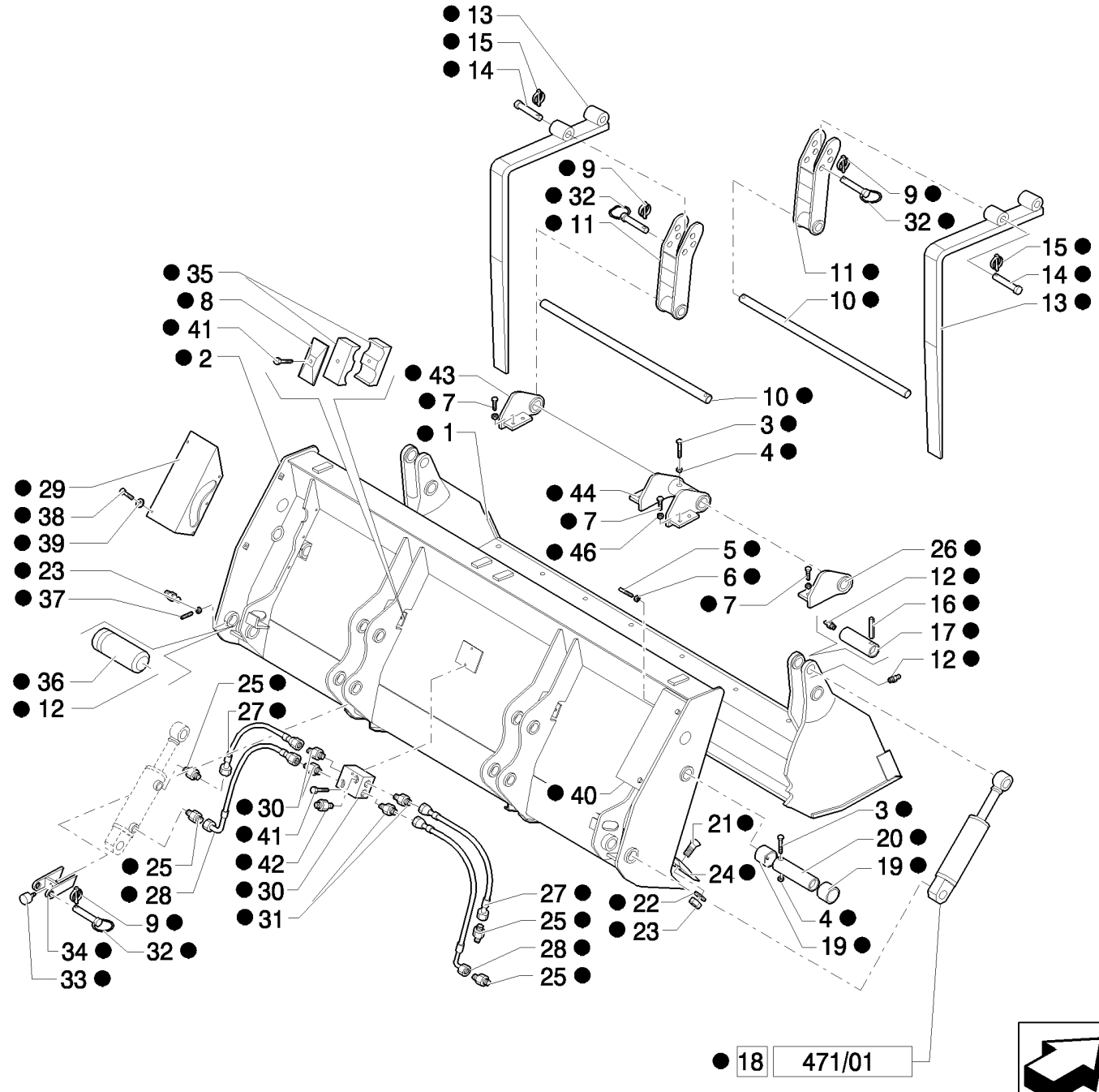

GODET 6X1 (1 M3) AVEC LAME "COMMON GREY": DÉFAILLANCE GODET

REF	FN	PART NUMBER	YR/SN	QTY	DESCRIPTION
1		87310434		1	GODET
2		87310354		1	GODET
3		85820018		4	VIS, M10 x 90
4		85820035		4	ECROU, M10x1,5
5		87312331		1	VIS, M8 x 120
6		85820031		1	ECROU, M8
7		87557215		8	VIS, M16x35
8		85820026		2	PLAQUE
9		85820068		4	CHEVILLE, D=11
10		87310372		2	ARBRE
11		87310368		2	SUPPORT
12		85820014		6	GRAISSEUR, M10 x 1
13		87310367		2	FOURCHE DE GODET
14		87310369		2	AXE
15		85825177		2	CHEVILLE, D=8
16		85820016		2	GOUPILLE ELASTIQUE, 10 x 80
17		85820017		2	AXE
18		87573861		2	VERIN, Assy
19		85820013		4	BAGUE
20		85820015		2	AXE
21		87312328		8	VIS, M14 x 40
22		85820009		8	RONDELLE D'ETANCHEITE
23		85820008		10	ECROU, M14 x 2
24		87308614		1	LAME
25		87312333		4	RACCORD
26		87310375		1	CHARNIERE, RH
27		87312342		2	TUYAU FLEXIBLE
28		87312340		2	TUYAU FLEXIBLE
29		87395481		1	GARANT
30		87312335		1	RACCORD
31		87312343		4	RACCORD
32		85820064		2	AXE
33		85820069		2	BOUCHON
34		87310370		2	PATTE FIXATION
35		85820027		4	BRIDE

GODET 6X1 (1 M3) AVEC LAME “COMMON GREY”: DÉFAILLANCE GODET

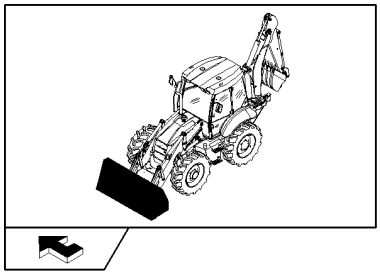

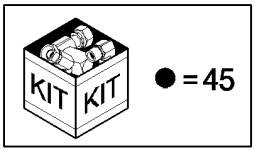

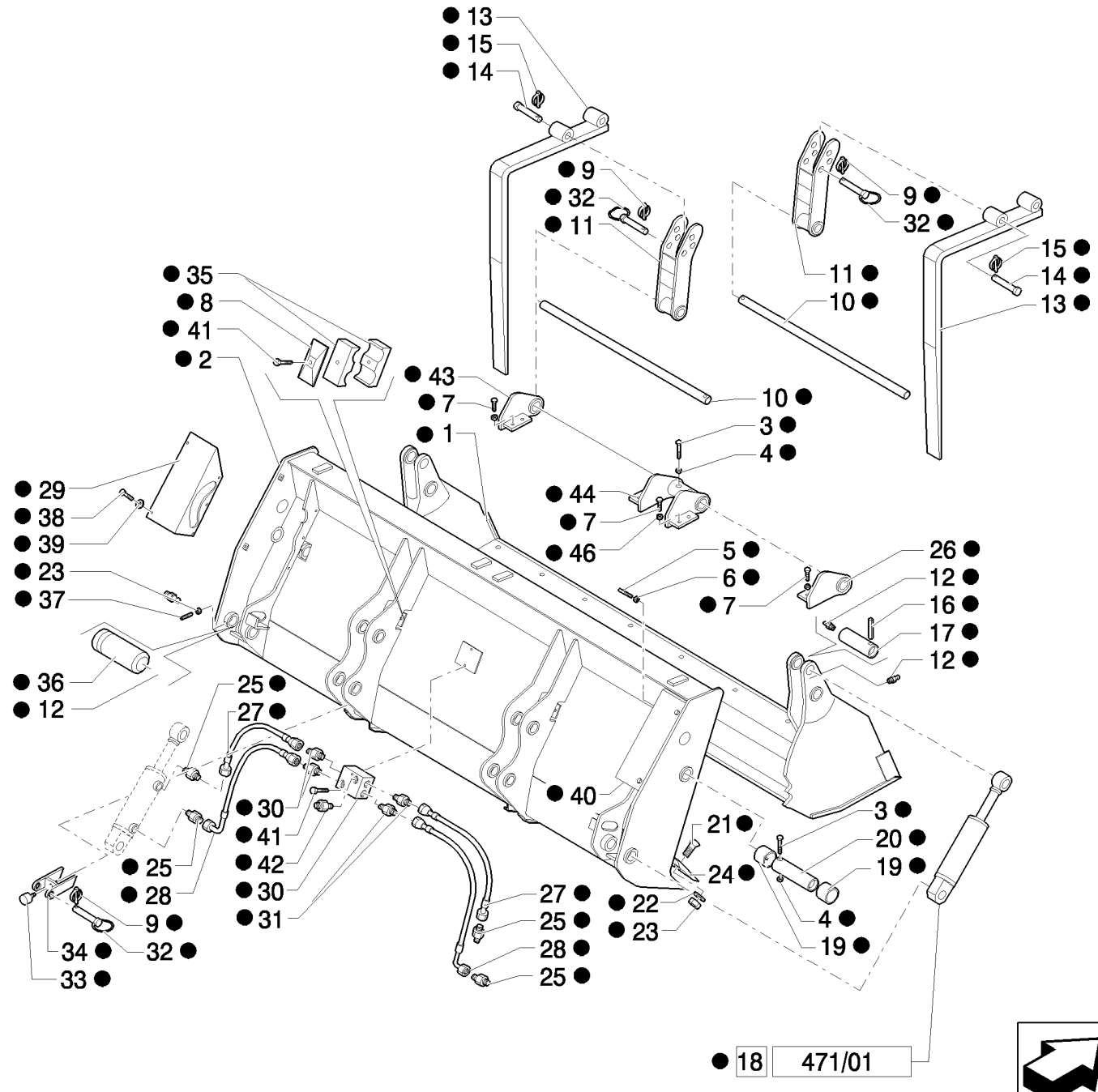

GODET 6X1 (1 M3) AVEC LAME “COMMON GREY”: DÉFAILLANCE GODET

REF	FN	PART NUMBER	YR/SN	QTY	DESCRIPTION
36		87310286		2	AXE
37		85820020		2	VIS, M14 x 30
38		85820011		10	VIS, M8x16
39		85820012		10	RONDELLE D'ETANCHEITE
40		87312330		1	GARANT, RH
41		85820030		4	VIS, M8 x 45
42		87395482		2	RACCORD
43		87310373		1	CHARNIERE, LH
44		87310374		1	CHARNIERE
45		87573552		1	GODET, Assy
46		87395486		8	RONDELLE

474	01	p1	03/08

BENNE 6X1 (1 M³) AVEC DENT "COMMON GREY"

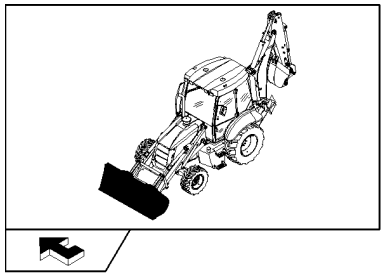

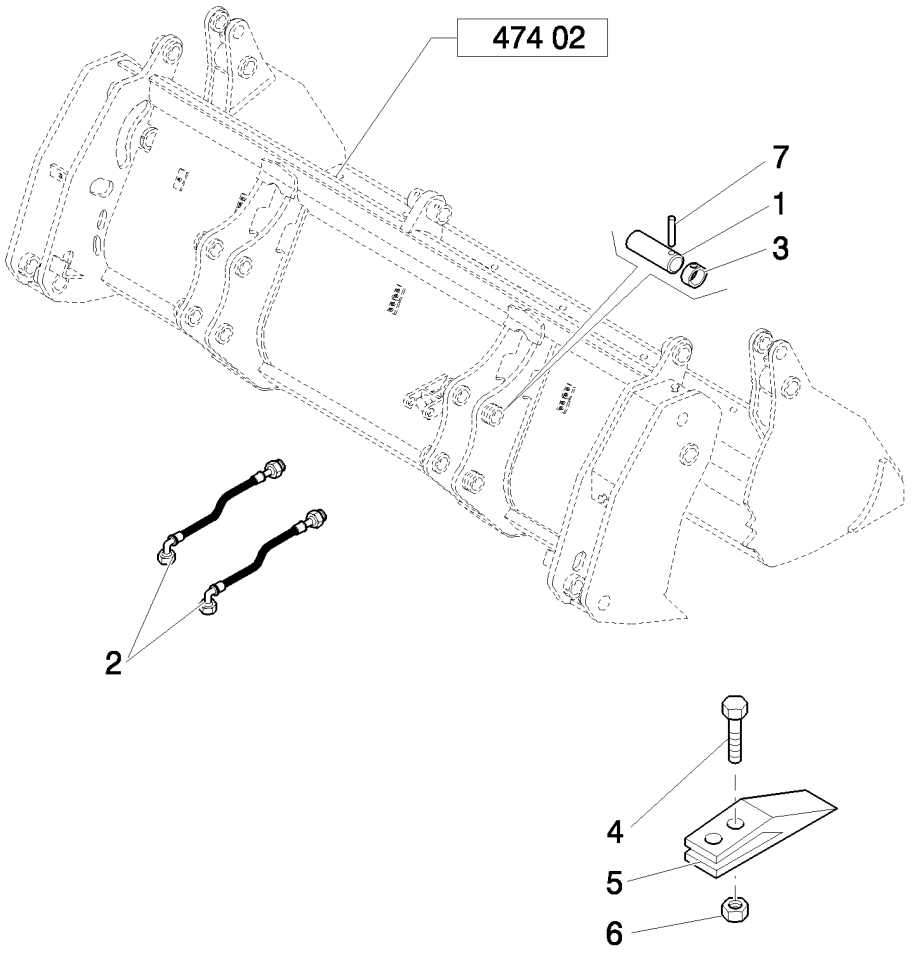

BENNE 6X1 (1 M³) AVEC DENT "COMMON GREY"

REF	FN	PART NUMBER	YR/SN	QTY	DESCRIPTION
1		85801051		4	AXE
2		85820819		2	TUYAU FLEXIBLE, L=800 mm
3		85802992		4	ANNEAU
4		85801371		16	BOULON CHARRUE, 5/8"-11 x 2 1/4"
5		85811440		8	PORTE-DENT
6		85801470		16	ECROU, 5/8"-11, G8
7		85802993		4	AXE

474	02	p1	04/08

GODET 6X1 (1 M3) AVEC DENTS “COMMON GREY”: DÉFAILLANCE GODET

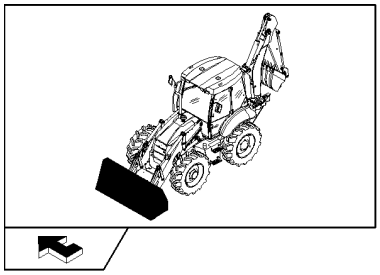

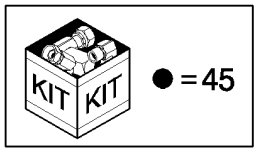

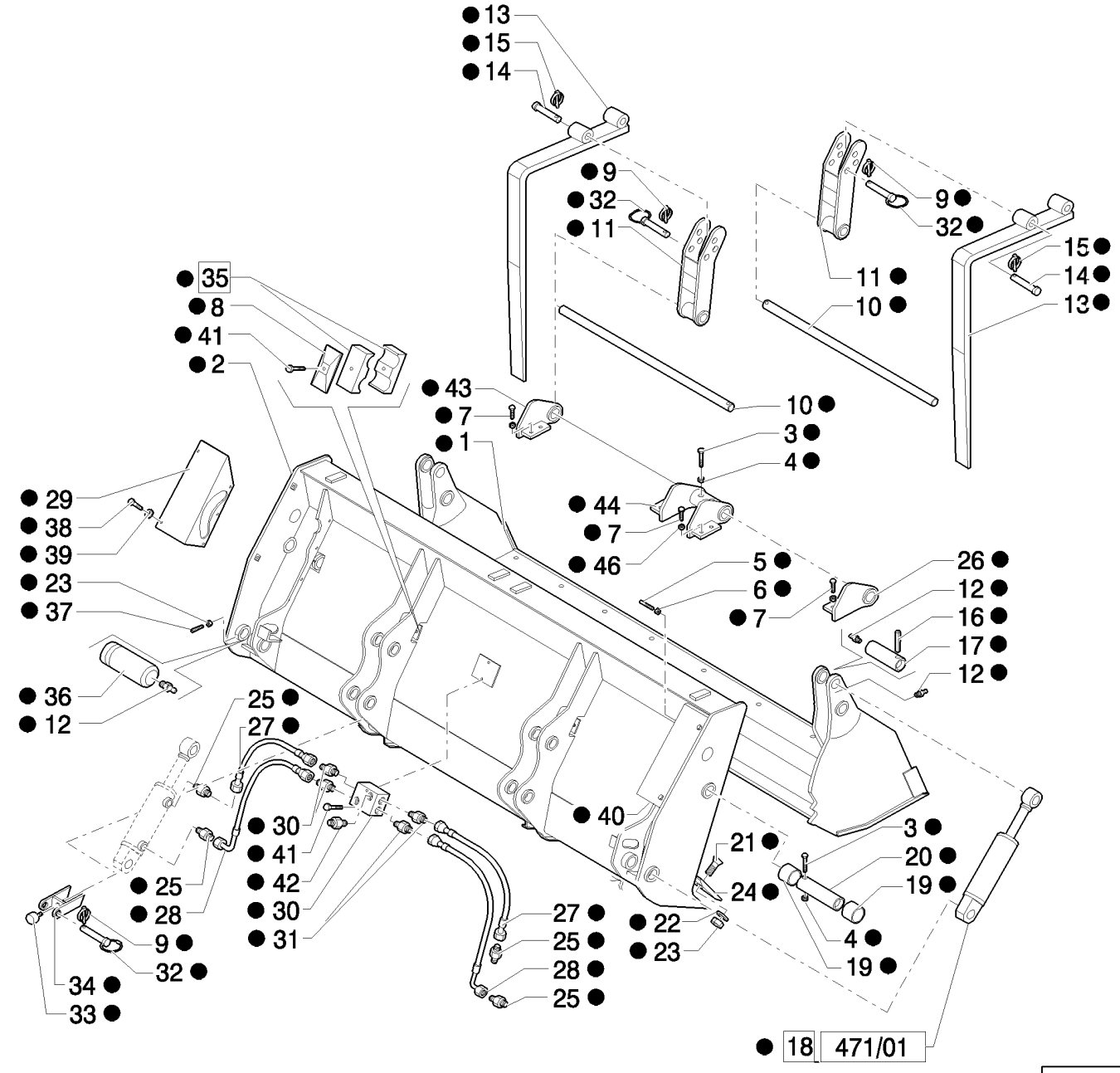

GODET 6X1 (1 M3) AVEC DENTS "COMMON GREY": DÉFAILLANCE GODET

REF	FN	PART NUMBER	YR/SN	QTY	DESCRIPTION
1		87310434		1	GODET
2		87310354		1	GODET
3		85820018		4	VIS, M10 x 90
4		85820035		4	ECROU, M10x1,5
5		87312331		1	VIS, M8 x 120
6		85820031		1	ECROU, M8
7		87557215		8	VIS, M16x35
8		85820026		2	PLAQUE
9		85820068		4	CHEVILLE, D=11
10		87310372		2	ARBRE
11		87310368		2	SUPPORT
12		85820014		6	GRAISSEUR, M10 x 1
13		87310367		2	FOURCHE DE GODET
14		87310369		2	AXE
15		85825177		2	CHEVILLE, D=8
16		85820016		2	GOUPILLE ELASTIQUE, 10 x 80
17		85820017		2	AXE
18		87573861		2	VERIN, Assy
19		85820013		4	BAGUE
20		85820015		2	AXE
21		87312328		8	VIS, M14 x 40
22		85820009		8	RONDELLE D'ETANCHEITE
23		85820008		10	ECROU, M14 x 2
24		87308614		1	LAME
25		87312333		4	RACCORD
26		87310375		1	CHARNIERE, RH
27		87312342		2	TUYAU FLEXIBLE
28		87312340		2	TUYAU FLEXIBLE
29		87395481		1	GARANT
30		87312335		1	RACCORD
31		87312343		4	RACCORD
32		85820064		2	AXE
33		85820069		2	BOUCHON
34		87310370		2	PATTE FIXATION
35		85820027		4	BRIDE

GODET 6X1 (1 M3) AVEC DENTS “COMMON GREY”: DÉFAILLANCE GODET

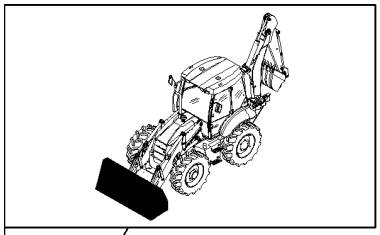

KIT KIT ● = 45

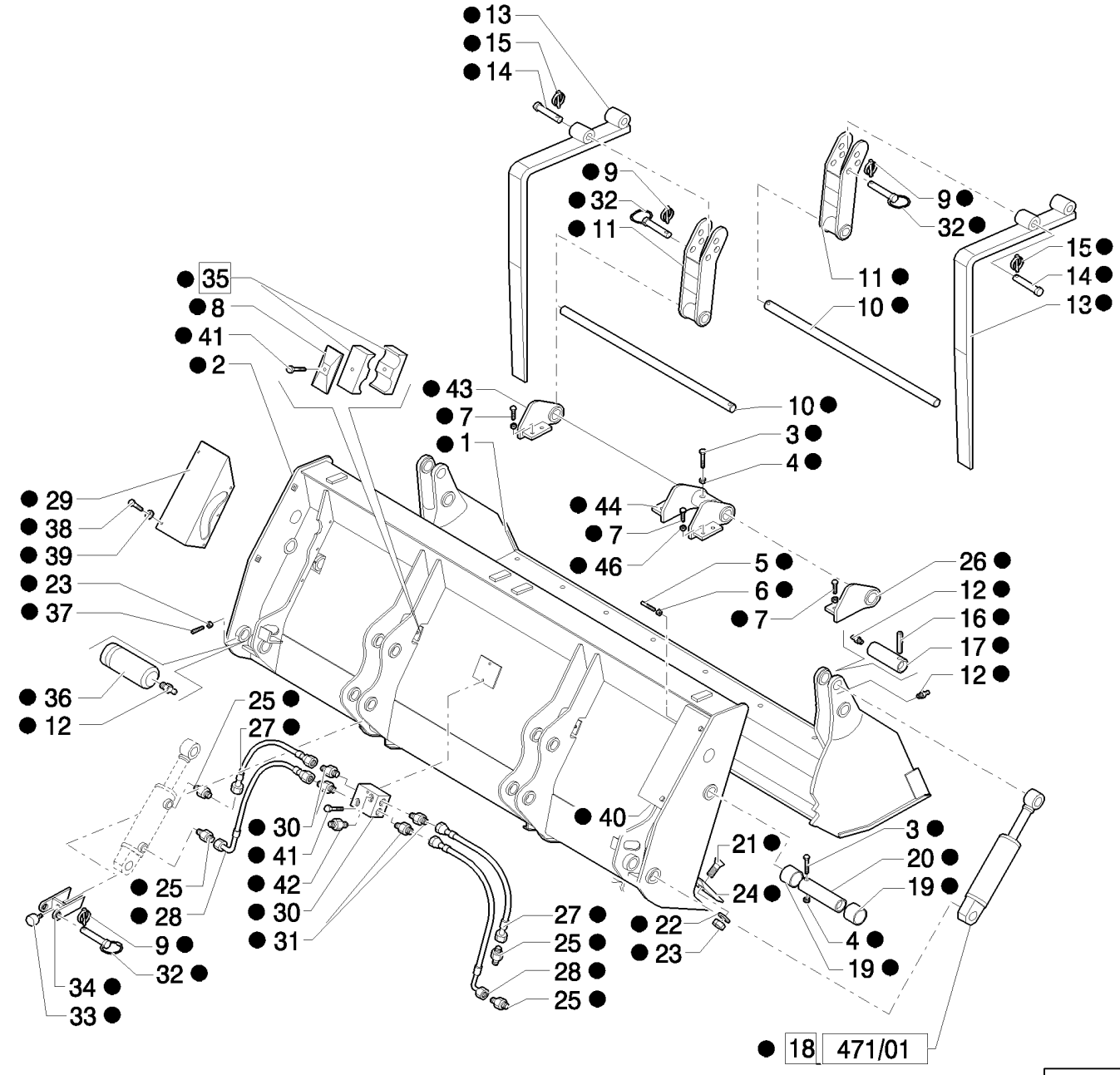

GODET 6X1 (1 M3) AVEC DENTS “COMMON GREY”: DÉFAILLANCE GODET

REF	FN	PART NUMBER	YR/SN	QTY	DESCRIPTION
36		87310286		2	AXE
37		85820020		2	VIS, M14 x 30
38		85820011		10	VIS, M8x16
39		85820012		10	RONDELLE D'ETANCHEITE
40		87312330		1	GARANT
41		85820030		4	VIS, M8 x 45
42		87395482		2	RACCORD
43		87310373		1	CHARNIERE, LH
44		87310374		1	CHARNIERE
45		87573552		1	GODET, Assy
46		87395486		8	RONDELLE

514	01	p1	04/08

BALANCIER COURT

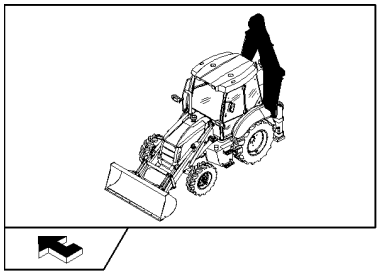

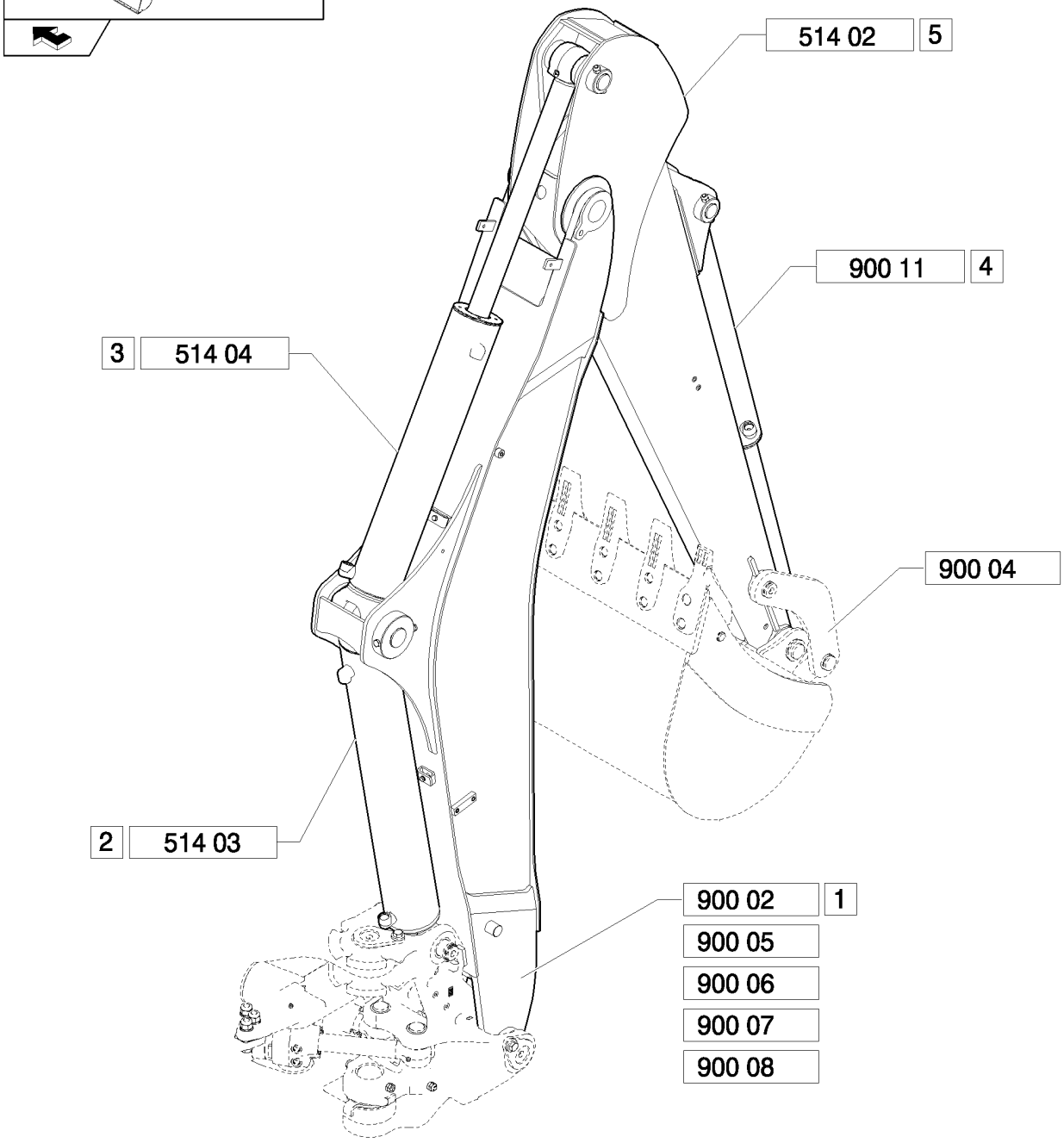

BALANCIER COURT

REF	FN	PART NUMBER	YR/SN	QTY	DESCRIPTION
1		87576064		1	GODET ESCAVATEUR, Assy
2		87613157		1	VERIN, Assy
3		87382083		1	VERIN, Assy
4		87382007		1	VERIN, Assy
5		87593493		1	BALANCIER, Assy, 1/8"-27

BALANCIER COURT

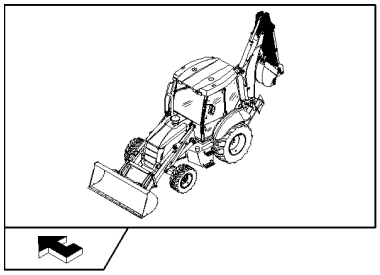

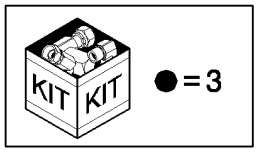

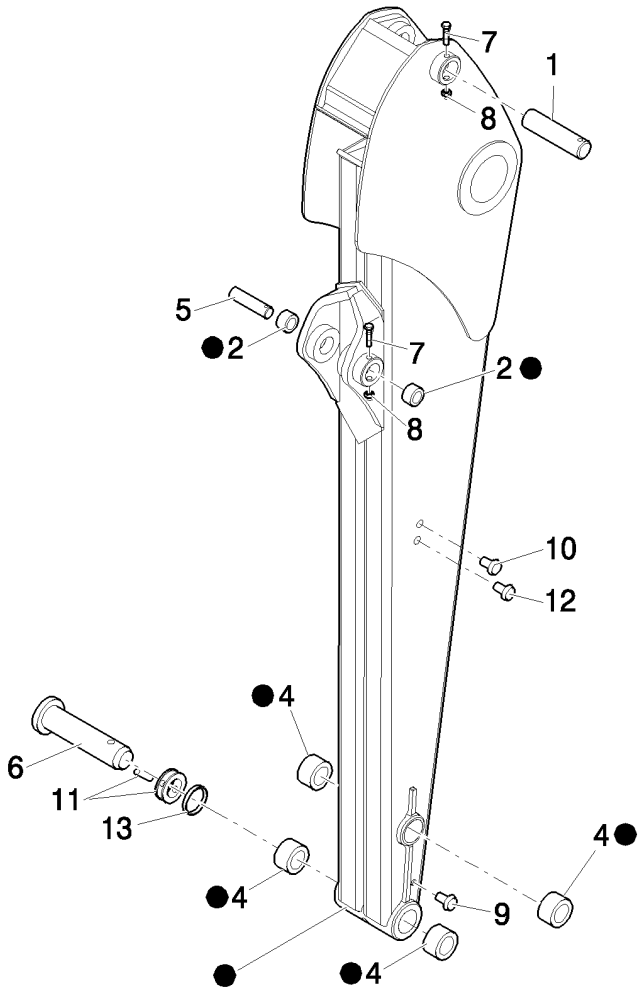

BALANCIER COURT

REF	FN	PART NUMBER	YR/SN	QTY	DESCRIPTION
1		87594196		1	AXE
2		83910546		2	BAGUE, 2.175" ID x 2.80" OD x 1.969"
3		87593493		1	BALANCIER
4		83910548		4	BAGUE
5		87577359		1	AXE
6		85803005		1	AXE
7		15542921		2	BOULON, Hex, M12 x 1.25 x 95, 8.8
8		16105011		2	CONTRE-ECROU
9		85804447		4	BOUCHON
10		81870039		4	ATTACHE
11		85802975		2	CHEVILLE
12		85804447		4	BOUCHON
13		85802974		2	ANNEAU

514	03	p1	04/08

CYLINDRE HYDRAULIQUE LEVAGE

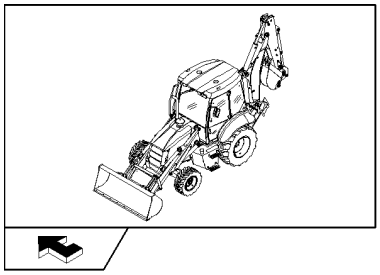

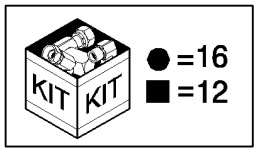

CYLINDRE HYDRAULIQUE LEVAGE

REF	FN	PART NUMBER	YR/SN	QTY	DESCRIPTION
1		G102090		1	ANNEAU
2		87598244		1	PRESSE-ETOUPE, Assy
3		D95146		1	JOINT-RACLEUR
4		G109395		2	VIS AUTO-TARAUDEUSE
5		87600654		1	TRINGLE, Assy
6		87598245		1	PRESSE-ETOUPE
7		83416242		2	GRAISSEUR, 1/8"-27
8		G109908		1	BAGUE
9		G107970		1	ANNEAU
10		238-5247		1	JOINT THORIQUE, -247, 70 Duro, 4.609" ID x .139" Thk
11		87598247		1	PISTON
12		87598248		1	COLIS
13		87598246		1	PISTON, Assy
14		G102092		1	ANNEAU
15		G102091		1	JOINT
16		87654842		1	POCHETTE DE JOINTS
17		87598240		1	TUBE, Assy
18		117359A1		1	ANNEAU
19		D149079		2	BAGUE
20		87613157		1	VERIN, Assy

514	04	p1	04/08

CYLINDRE HYDRAULIQUE EXCAVATION

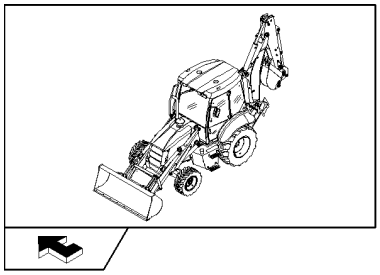

CYLINDRE HYDRAULIQUE EXCAVATION

REF	FN	PART NUMBER	YR/SN	QTY	DESCRIPTION
1		87382083		1	VERIN, Assy
2		86982444		1	BOULON SPECIAL
3		87382190		1	PRESSE-ETOUPE, Assy
4		87382188		1	PISTON, Assy
5		87403649		1	JOINT
6		446481A1		1	JOINT
7		446195A1		1	JOINT
8		G109908		1	BAGUE
9		238-5245		1	JOINT THORIQUE, -245, 70 Duro, 4.359" ID x .139" Thk
10		87382189		1	PISTON
11		87382191		1	PRESSE-ETOUPE
12		446178A1		1	JOINT
13		G109395		1	VIS AUTO-TARAUDEUSE
14		87654844		1	POCHETTE DE JOINTS
15		87382089		1	TRINGLE, Assy
16		D149079		2	BAGUE
17		83416242		1	GRAISSEUR, 1/8"-27
18		D95146		1	JOINT-RACLEUR
19		87382086		1	TUBE, Assy
20		123407A1		2	ANNEAU
21		87382092		1	COLIS

GODET RÉTROCAVEUSE 12" (305 MM) A DENTS GOUPILLEES - NA

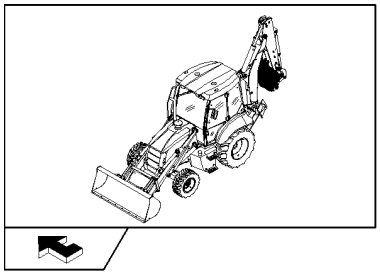

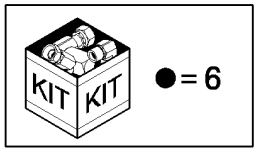

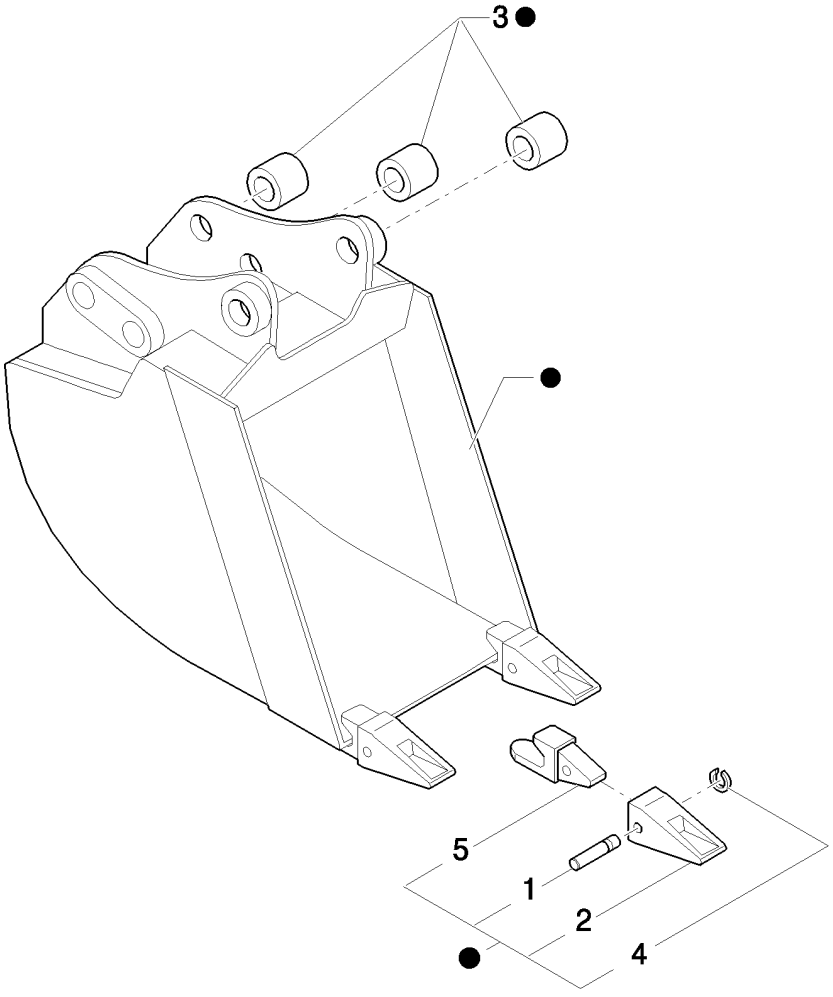

GODET RÉTROCAVEUSE 12" (305 MM) A DENTS GOUPILLEES - NA

REF	FN	PART NUMBER	YR/SN	QTY	DESCRIPTION
1		85801097		3	AXE
2		85811432		3	DENT DE GODET
3		83910634		6	BAGUE
4		85801098		3	ANNEAU
5		85821788		3	PORTE-DENT
6		87609344		1	GODET, Assy

GODET RÉTROCAVEUSE 18" (457MM) A DENTS GOUPILLEES - NA

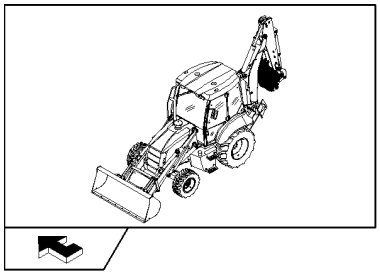

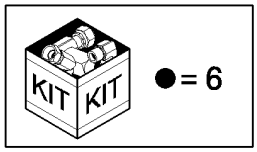

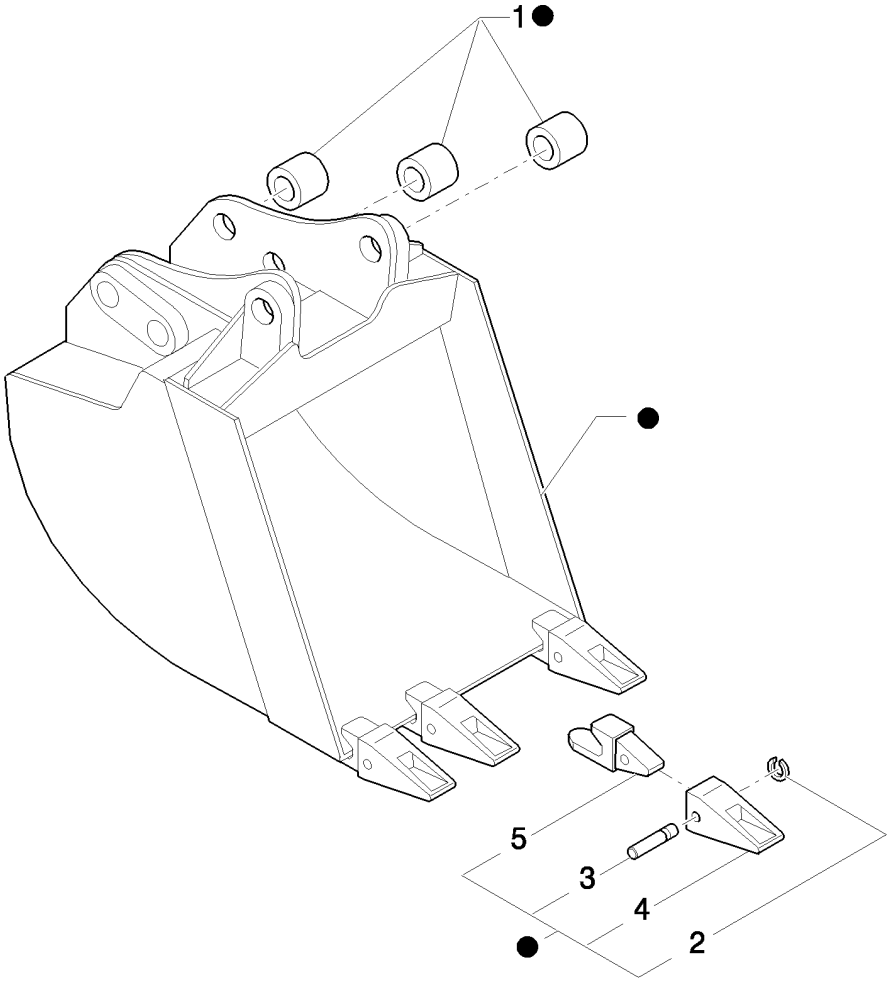

GODET RÉTROCAVEUSE 18" (457MM) A DENTS GOUPILLEES - NA

REF	FN	PART NUMBER	YR/SN	QTY	DESCRIPTION
1		83910634		6	BAGUE
2		85801098		4	ANNEAU
3		85801097		4	AXE
4		85811432		4	DENT DE GODET
5		85821788		4	PORTE-DENT
6		87609121		1	GODET, Assy

GODET RÉTROCAVEUSE 24" (610 MM) A DENTS GOUPILLEES - NA

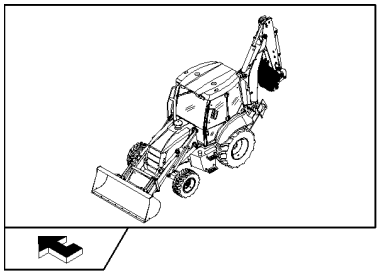

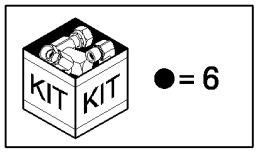

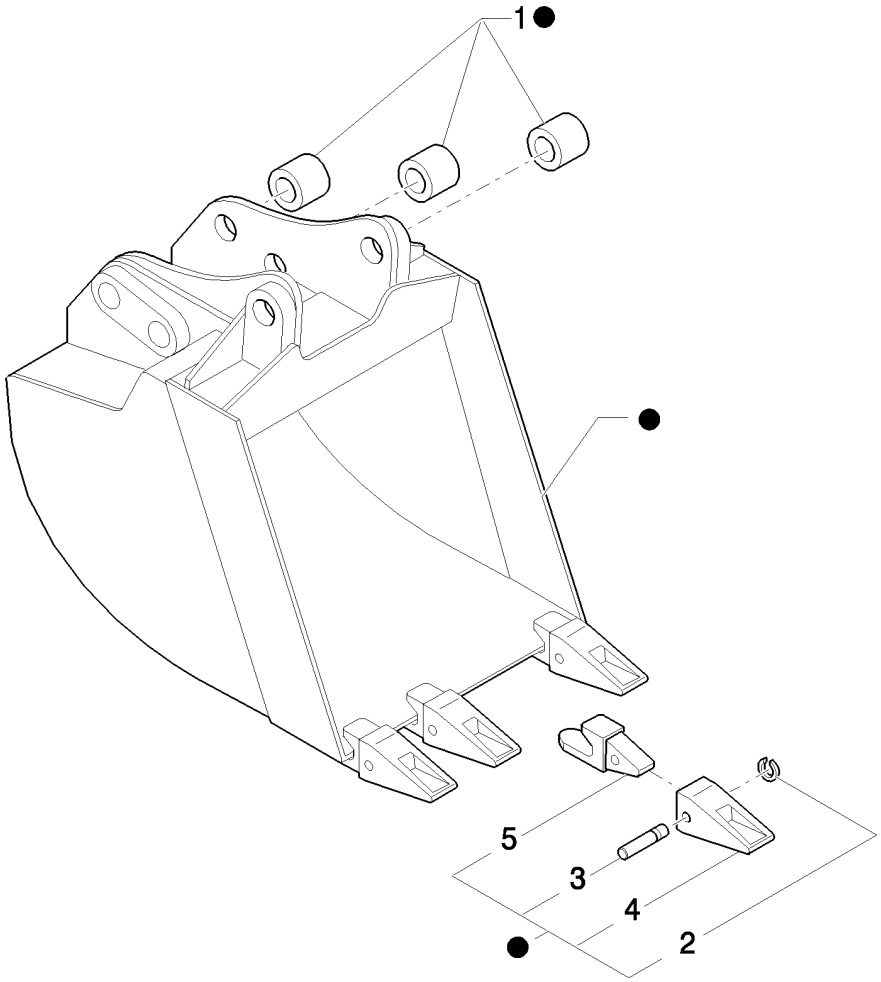

GODET RÉTROCAVEUSE 24" (610 MM) A DENTS GOUPILLEES - NA

REF	FN	PART NUMBER	YR/SN	QTY	DESCRIPTION
1		83910634		6	BAGUE
2		85801098		4	ANNEAU
3		85801097		4	AXE
4		85811432		4	DENT DE GODET
5		85821788		4	PORTE-DENT
6		87607837		1	GODET, Assy

518/01		p1	04/08

GODET RÉTROCAVEUSE 30" (762 MM) A DENTS GOUPILLEES - NA

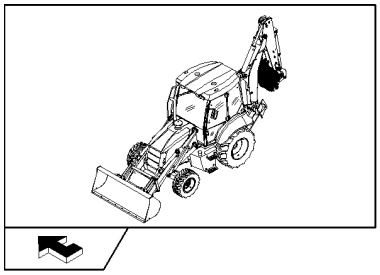

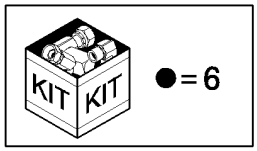

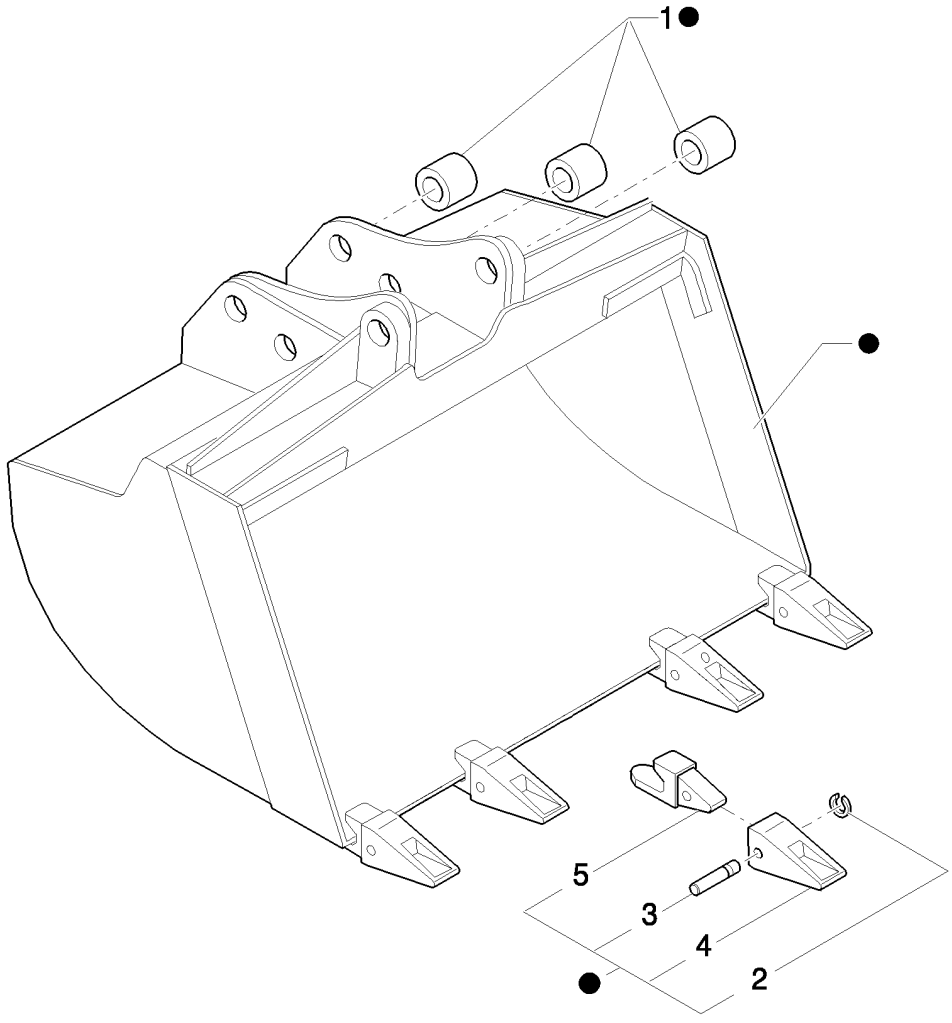

GODET RÉTROCAVEUSE 30" (762 MM) A DENTS GOUPILLEES - NA

REF	FN	PART NUMBER	YR/SN	QTY	DESCRIPTION
1		83910634		6	BAGUE
2		85801098		5	ANNEAU
3		85801097		5	AXE
4		85811432		5	DENT DE GODET
5		85821788		5	PORTE-DENT
6		87609028		1	GODET, Assy

GODET RÉTROCAVEUSE 36" (910MM) A DENTS GOUPILLEES - NA

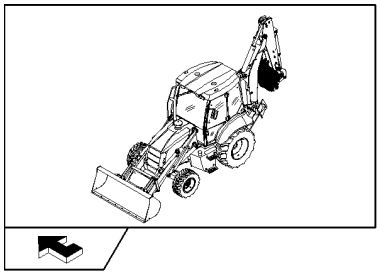

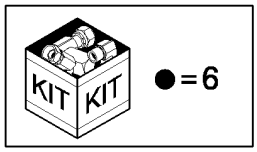

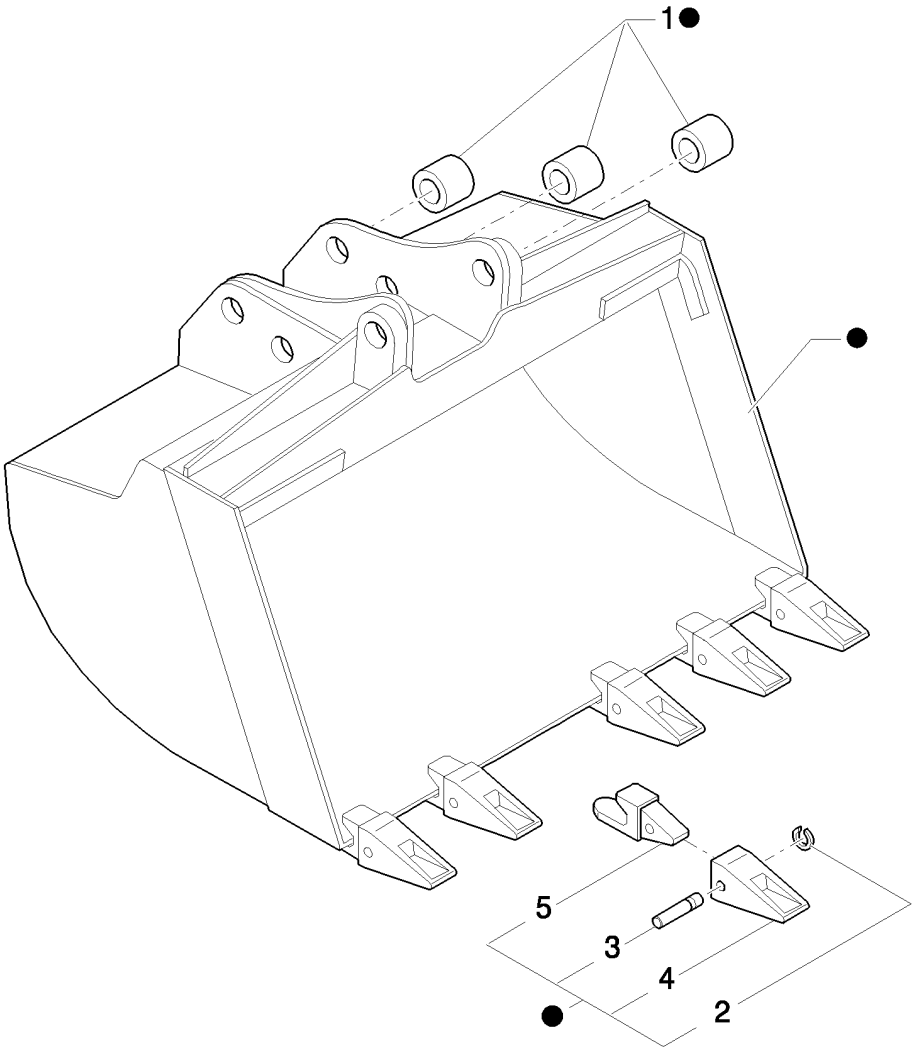

GODET RÉTROCAVEUSE 36" (910MM) A DENTS GOUPILLEES - NA

REF	FN	PART NUMBER	YR/SN	QTY	DESCRIPTION
1		83910634		6	BAGUE
2		85801098		6	ANNEAU
3		85801097		6	AXE
4		85811432		6	DENT DE GODET
5		85821788		6	PORTE-DENT
6		87607670		1	GODET, Assy

520		p1	04/08

BENNE DE (0.88 M³) SANS DENTS

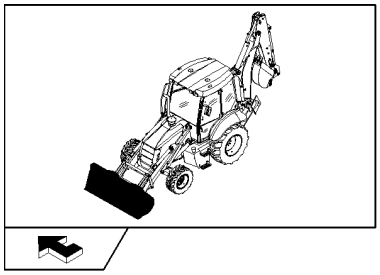

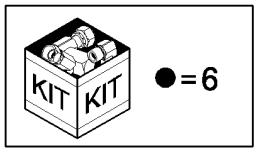

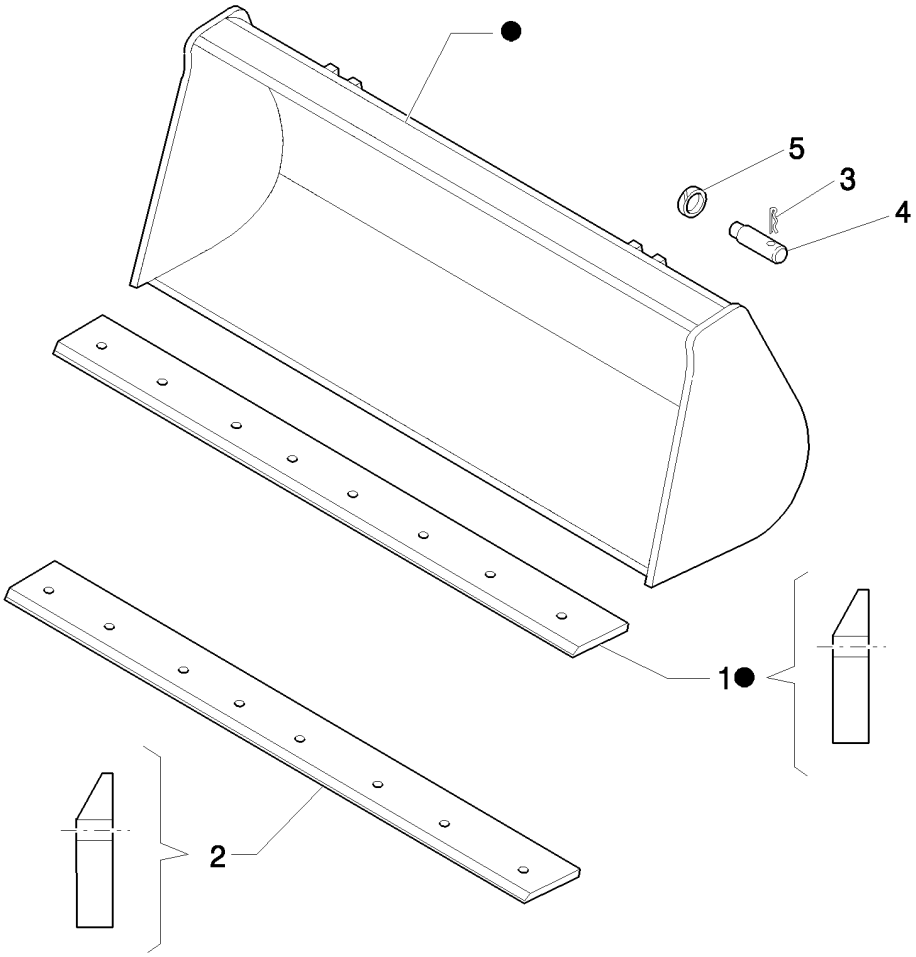

BENNE DE (0.88 M³) SANS DENTS

REF	FN	PART NUMBER	YR/SN	QTY	DESCRIPTION
1	1	85801044		1	LAME D'ATTAQUE, 27 Deg. cutting edge
2	2	85807868		1	LAME D'ATTAQUE
3		85802993		4	AXE
4		85801051		4	AXE
5		85802992		4	ANNEAU
6		85801042		1	GODET, Assy

(1) Part welded to bucket
(2) Non-reversible weld on

GODET RÉTROCAVEUSE 18" (457 MM) A DENTS GOUPILLEES (EXTRA HD) - NA

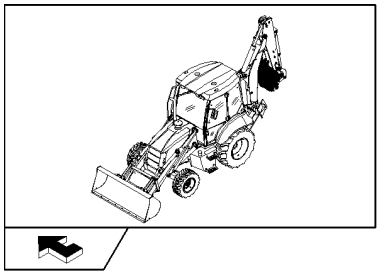

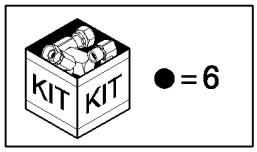

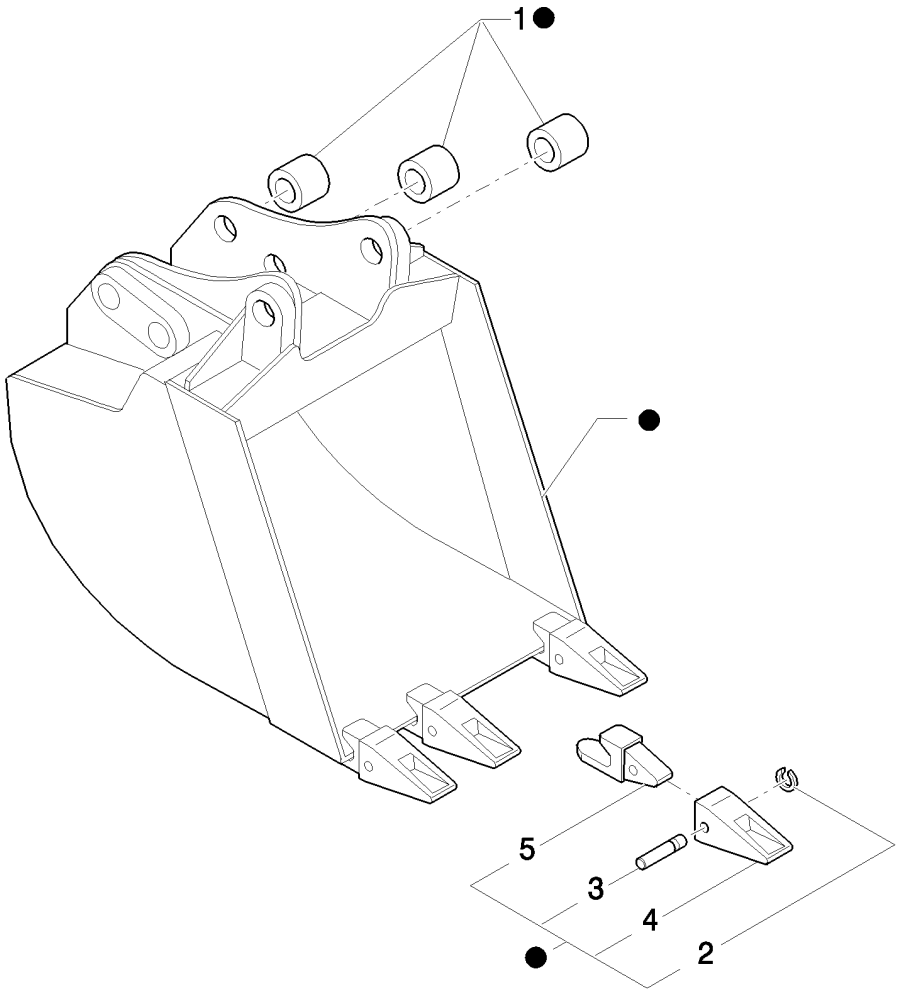

GODET RÉTROCAVEUSE 18" (457 MM) A DENTS GOUPILLEES (EXTRA HD) - NA

REF	FN	PART NUMBER	YR/SN	QTY	DESCRIPTION
1		83910634		6	BAGUE
2		85801098		4	ANNEAU
3		85801097		4	AXE
4		85811432		4	DENT DE GODET
5		85821788		4	PORTE-DENT
6		87661002		1	GODET, Assy

GODET RÉTROCAVEUSE 24" (610MM) A DENTS GOUPILLEES (EXTRA HD) - NA

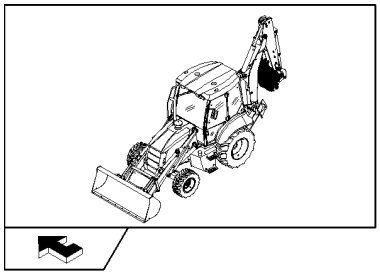

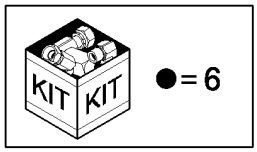

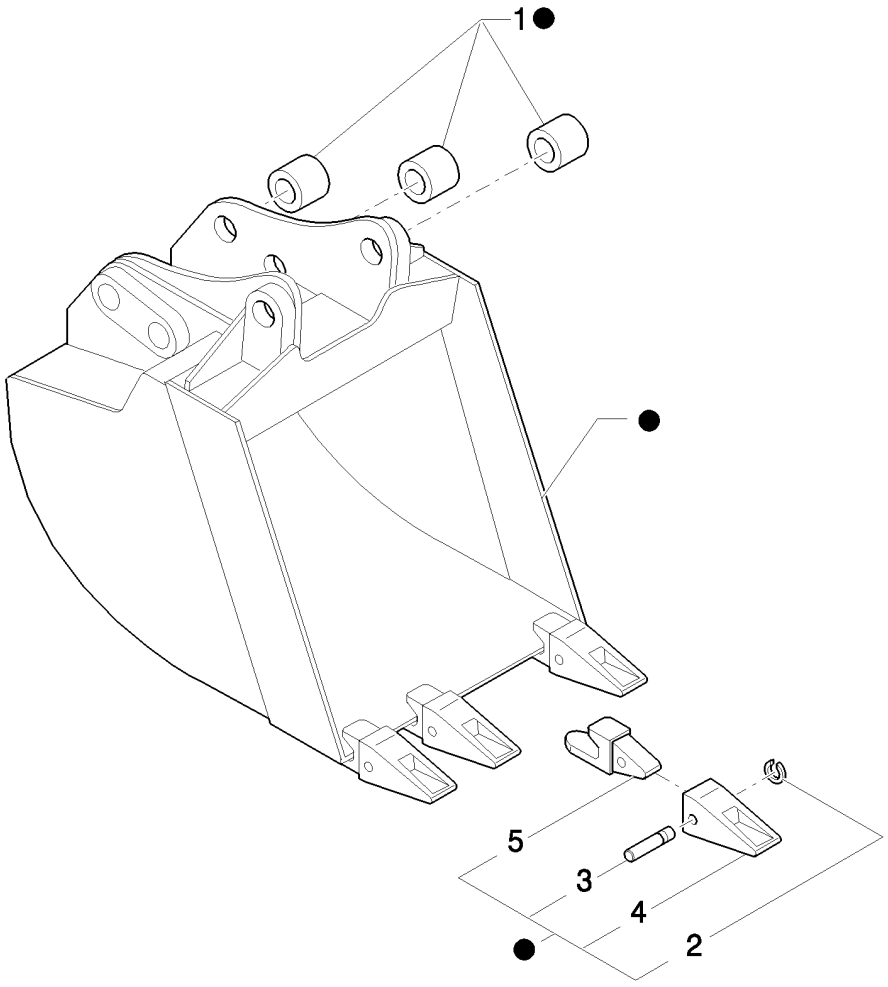

GODET RÉTROCAVEUSE 24" (610MM) A DENTS GOUPILLEES (EXTRA HD) - NA

REF	FN	PART NUMBER	YR/SN	QTY	DESCRIPTION
1		83910634		6	BAGUE
2		85801098		4	ANNEAU
3		85801097		4	AXE
4		85811432		4	DENT DE GODET
5		85821788		4	PORTE-DENT
6		87659514		1	GODET, Assy

522		p1	04/08

BENNE DE (1 M³) SANS DENTS

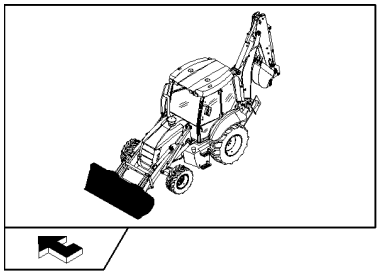

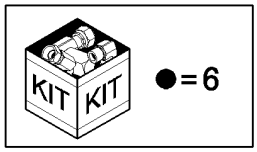

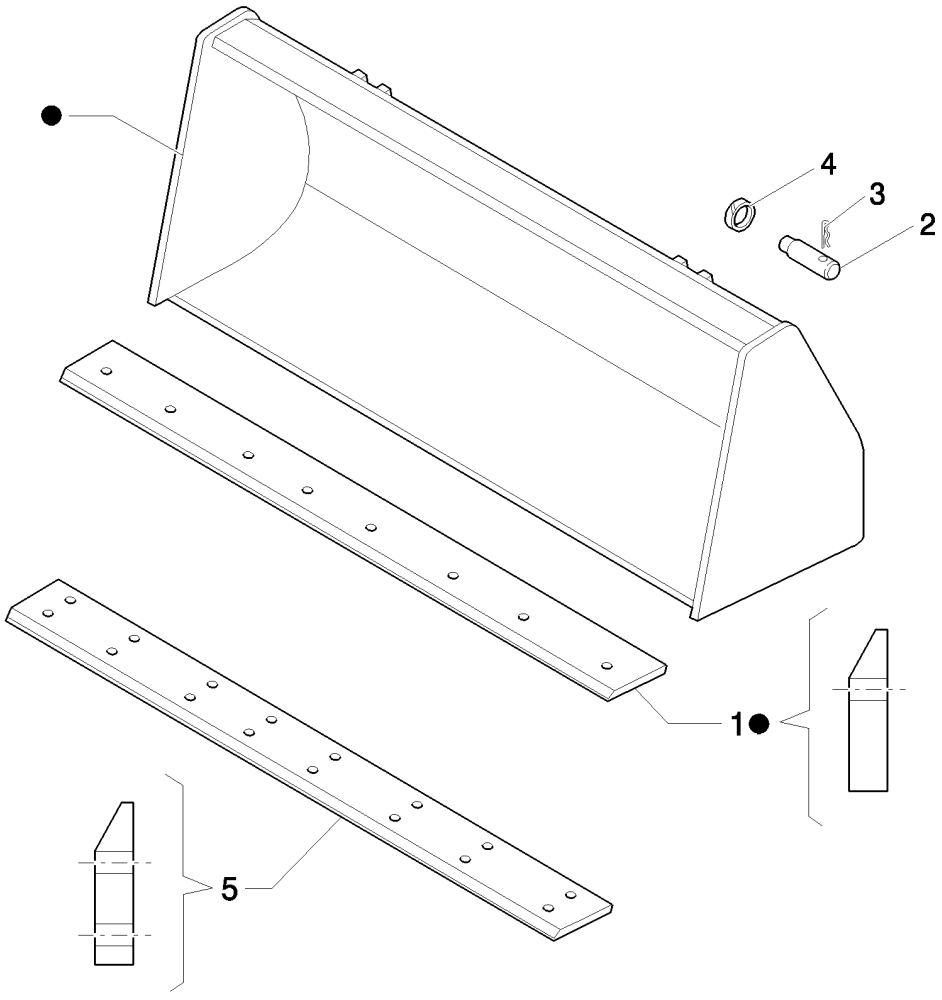

BENNE DE (1 M³) SANS DENTS

REF	FN	PART NUMBER	YR/SN	QTY	DESCRIPTION
1	1	85801034		1	LAME D'ATTAQUE
2		85801051		4	AXE
3		85802993		4	AXE
4		85802992		4	ANNEAU
5	2	85807867		1	LAME D'ATTAQUE, 200mm W x 2250 L
6		85801040		1	GODET, Assy

(1) Part welded to bucket
(2) Non-reversible weld on

522/01		p1	04/08

BENNE STANDARD DE (1 M³) AVEC FURCHES

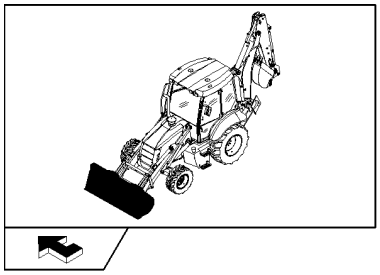

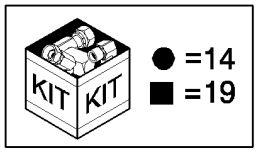

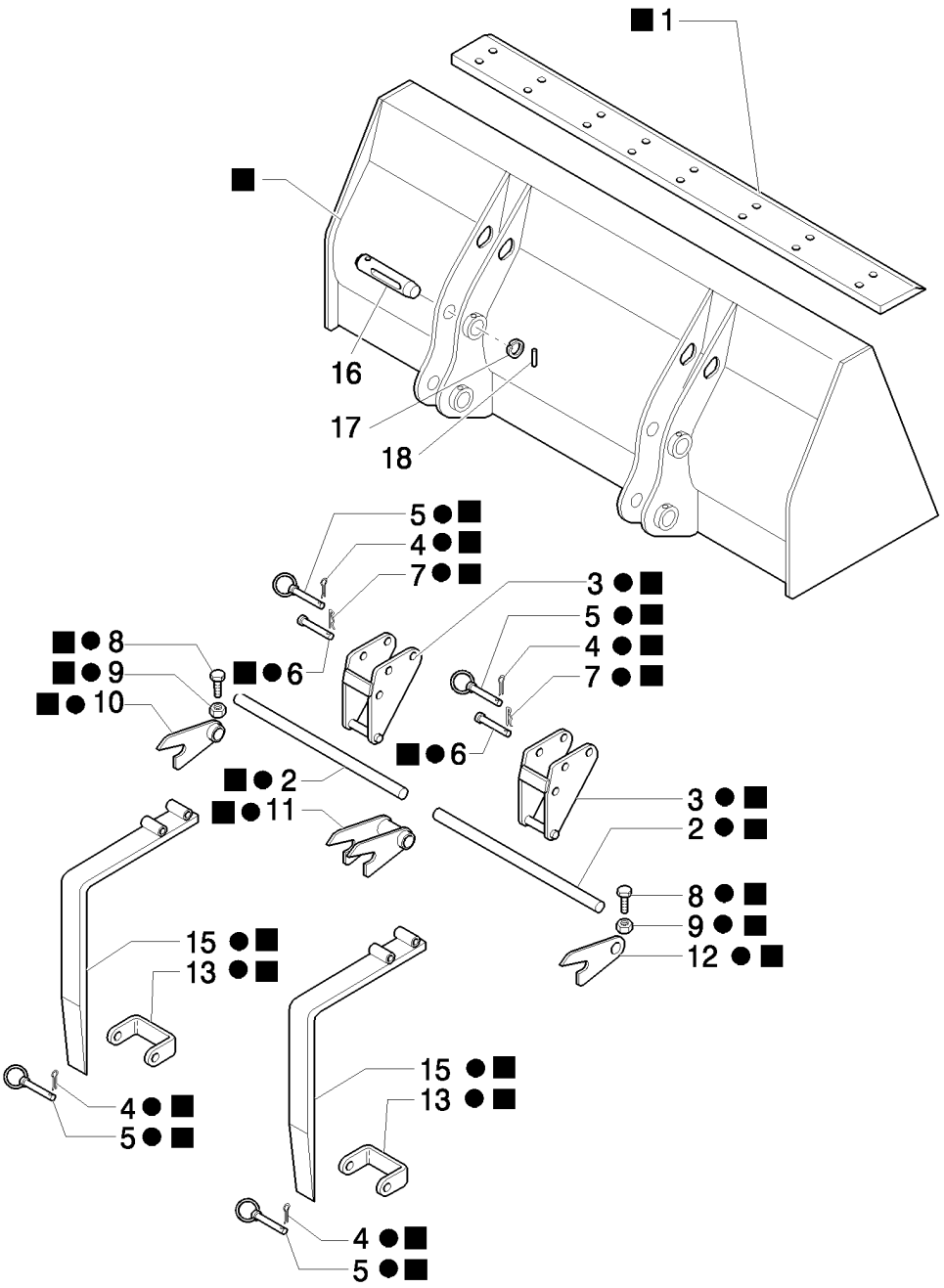

BENNE STANDARD DE (1 M³) AVEC FURCHES

REF	FN	PART NUMBER	YR/SN	QTY	DESCRIPTION
1	1	85801034		1	LAME D'ATTAQUE
2		9969170		2	TRINGLE
3		9968146		2	SUPPORT
4		9968147		4	GOUPILLE ELASTIQUE
5		9968148		4	CHEVILLE
6		9968149		2	AXE
7		9968150		2	GOUPILLE
8		9968151		2	VIS
9		9968152		4	ECROU, M10
10		9968153		1	CHARNIERE
11		9968154		1	CHARNIERE
12		9968155		1	CHARNIERE
13		9968156		2	ETRIER PROFILE EN U
14		85801486		1	KIT DE TRANSFORMATION, FORKS
15		9968144		2	FOURCHE
16		85801051		4	AXE
17		85802992		4	ANNEAU
18		85802993		4	AXE
19		85803224		1	GODET, Assy

(1) Part welded to bucket

525		p1	04/08

BENNE STANDARD DE (1 M³) AVEC FURCHES ET LAME REVERSIBLE

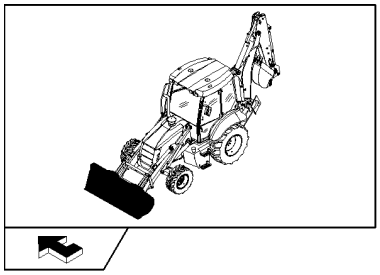

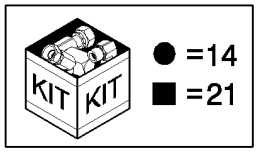

BENNE STANDARD DE (1 M³) AVEC FURCHES ET LAME REVERSIBLE

REF	FN	PART NUMBER	YR/SN	QTY	DESCRIPTION
1	1	85801034		1	LAME D'ATTAQUE
2		9969170		2	TRINGLE
3		9968146		2	SUPPORT
4		9968147		4	GOUPILLE ELASTIQUE
5		9968148		4	CHEVILLE
6		9968149		2	AXE
7		9968150		2	GOUPILLE
8		9968151		2	VIS
9		9968152		4	ECROU, M10
10		9968153		1	CHARNIERE
11		9968154		1	CHARNIERE
12		9968155		1	CHARNIERE
13		9968156		2	ETRIER PROFILE EN U
14		85801486		1	KIT DE TRANSFORMATION, FORKS
15		9968144		2	FOURCHE
16		85801051		4	AXE
17		85802992		4	ANNEAU
18		85802993		4	AXE
19		85801470		8	ECROU, 5/8"-11, G8
20		85801371		8	BOULON CHARRUE, 5/8"-11 x 2 1/4"
21		85803224		1	GODET, Assy
22	2	85801161		1	LAME D'ATTAQUE

(1) Part welded to bucket
(2) Reversible bolt on

527		p1	04/08

BENNE DE (0.88 M³) ET LAME REVERSIBLE SUPPLEMENTAIRE

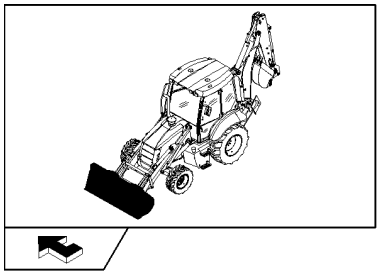

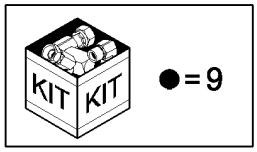

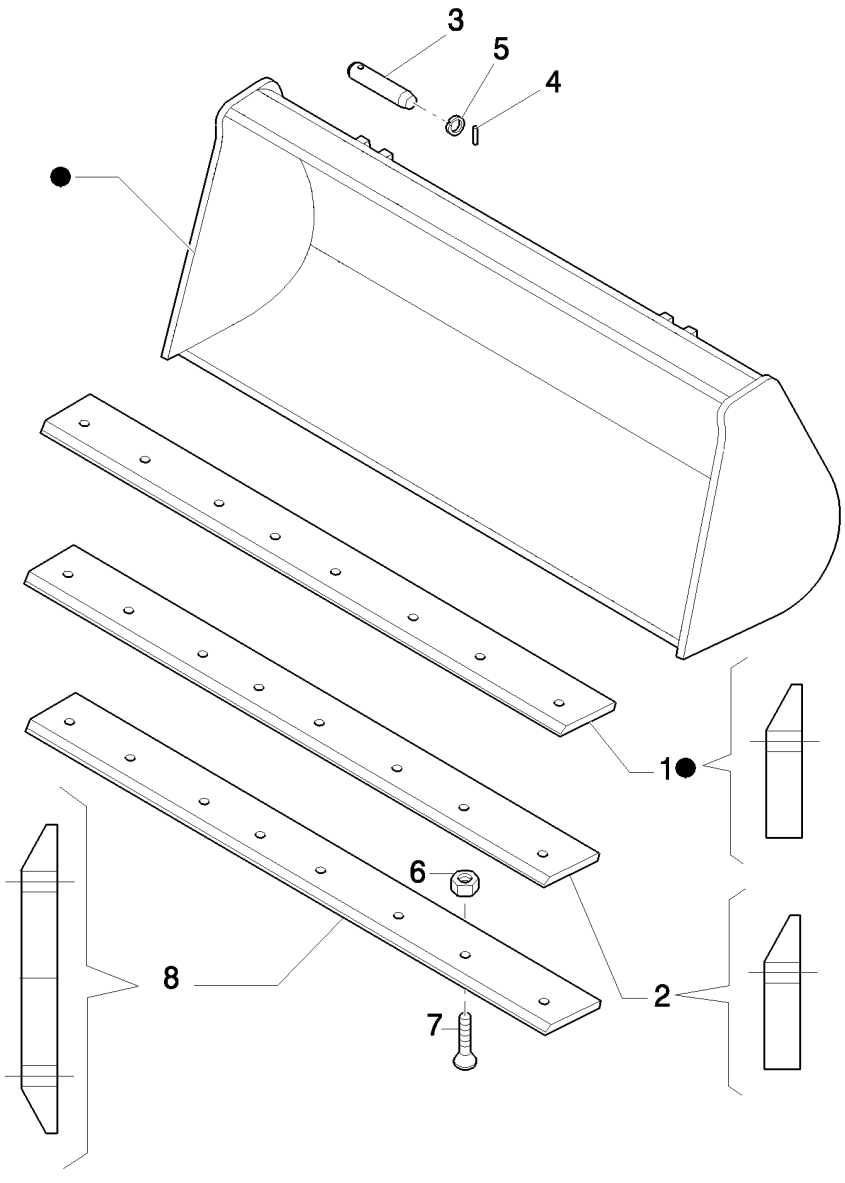

BENNE DE (0.88 M³) ET LAME REVERSIBLE SUPPLEMENTAIRE

REF	FN	PART NUMBER	YR/SN	QTY	DESCRIPTION
1	1	85801044		1	LAME D'ATTAQUE, 27 Deg. cutting edge
2		85807868		1	LAME D'ATTAQUE, N.A. ONLY
3		85801051		4	AXE
4		85802993		4	AXE
5		85802992		4	ANNEAU
6		85801470		8	ECROU, 5/8"-11, G8
7		85801371		8	BOULON CHARRUE, 5/8"-11 x 2 1/4"
8	2	85801161		1	LAME D'ATTAQUE, 35 Deg. cutting edge
9		85801042		1	GODET, Assy

(1) Part welded to bucket
(2) Reversible bolt on

535		p1	03/08

PIED STABILISATEUR TERRE (CENTER PIVOT)

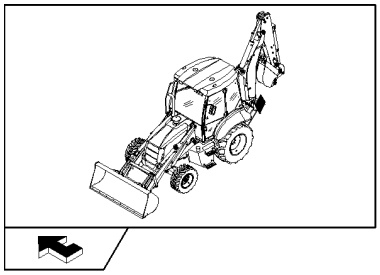

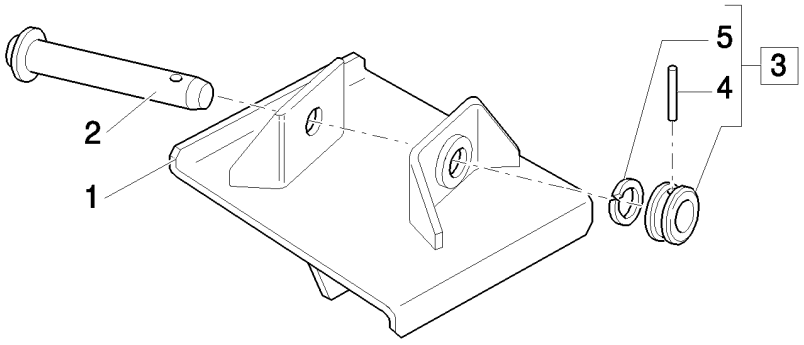

PIED STABILISATEUR TERRE (CENTER PIVOT)

REF	FN	PART NUMBER	YR/SN	QTY	DESCRIPTION
1		85804847		1	TAMPON, RH
1		85804848		1	TAMPON, LH
2		85803141		2	AXE
3		85803139		2	CHEVILLE, Assy
4		85802992		2	ANNEAU
5		85802993		2	AXE

536		p1	04/08

BENNE STANDARD DE (1 M³) AVEC DENT

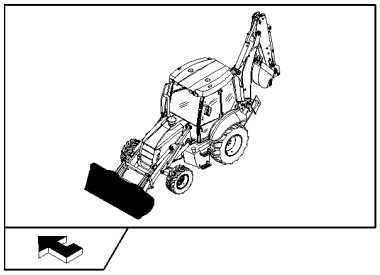

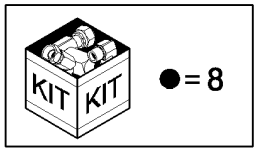

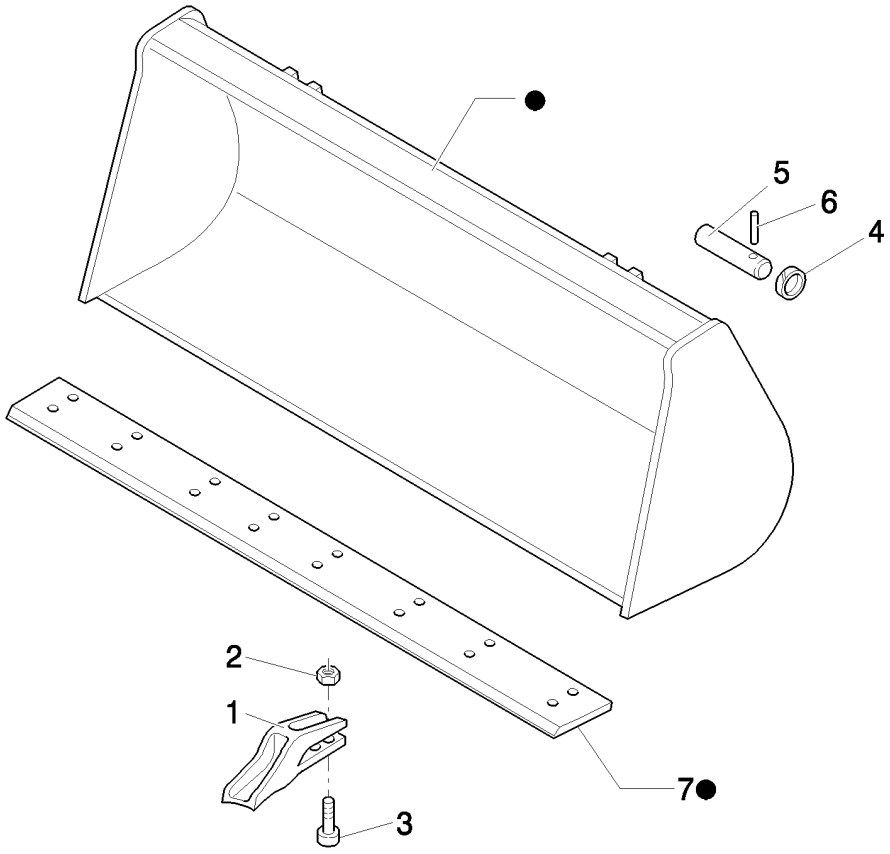

BENNE STANDARD DE (1 M³) AVEC DENT

REF	FN	PART NUMBER	YR/SN	QTY	DESCRIPTION
1		85811440		8	PORTE-DENT
2		85801470		16	ECROU, 5/8"-11, G8
3		85801371		16	BOULON CHARRUE, 5/8"-11 x 2 1/4"
4		85802992		4	ANNEAU
5		85802993		4	AXE
6		85801051		4	AXE
7	1	85801034		1	LAME D'ATTAQUE
7		85807867		1	LAME D'ATTAQUE, 200mm W x 2250 L
8		85801040		1	GODET, Assy

(1) PART WELDED TO BUCKET

536/02		p1	04/08

PIED STABILISATEUR REVERSIBLE (CENTER PIVOT)

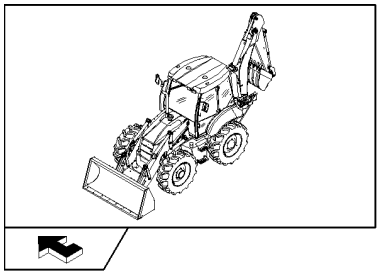

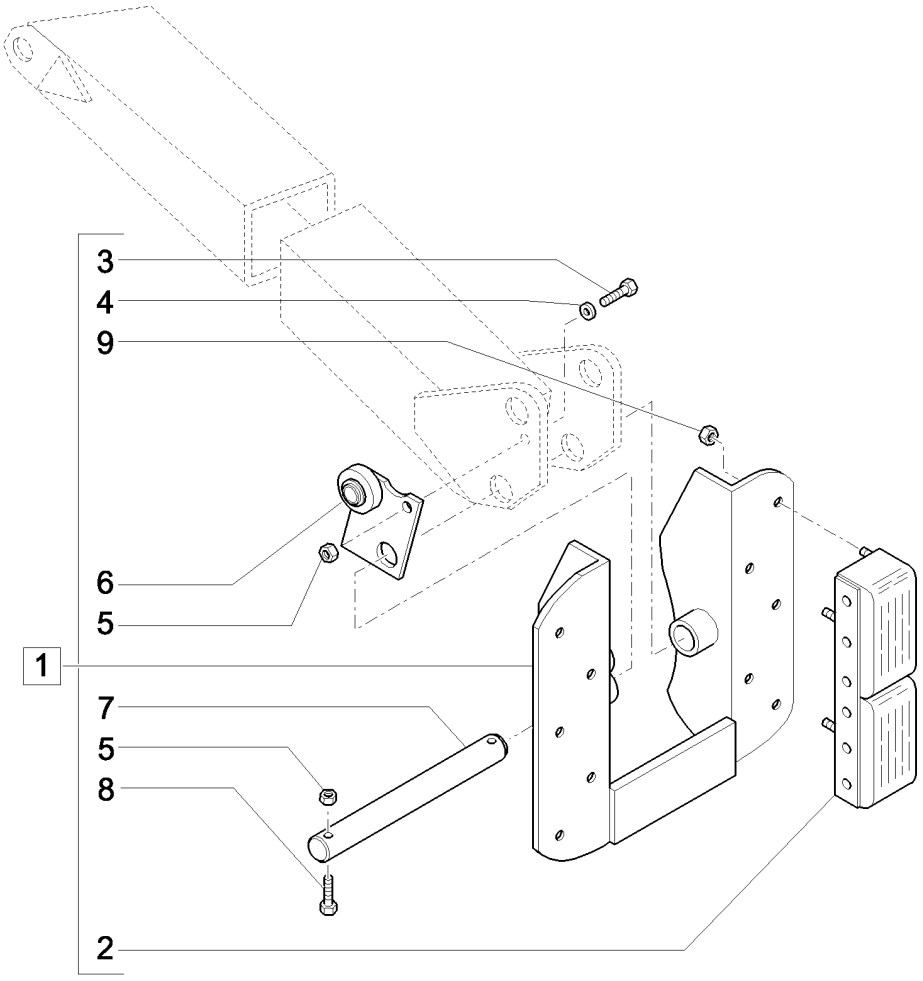

PIED STABILISATEUR REVERSIBLE (CENTER PIVOT)

REF	FN	PART NUMBER	YR/SN	QTY	DESCRIPTION
1		85811985		1	PIED, Assy, LH
1		85811986		1	PIED, Assy, RH
2		85811992		4	PLAQUE CAOUTCHOUC
3		81821263		2	BOULON, Hex, 3/8"-16 x 1 1/2", G5
4		12641004		2	RONDELLE, M10 x 20 x 3
5		81823746		6	ECROU, 3/8"-16
6		85811990		1	PATTE FIXATION, LH
6		85811991		1	PATTE FIXATION, RH; Shown in Illustration
7		85811989		2	AXE
8		85804878		4	VIS
9		81821237		20	ECROU, 7/16"-14, G5, 7/16"-14

537		p1	04/08

BENNE STANDARD DE (1 M³) AVEC LAME REVERSIBLE SUPPLEMENTAIRE

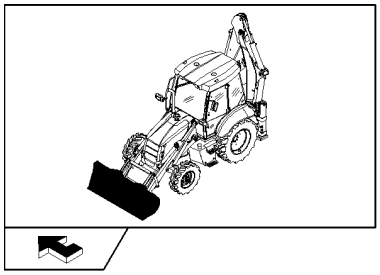

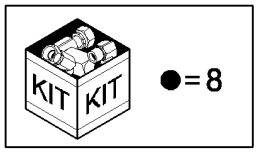

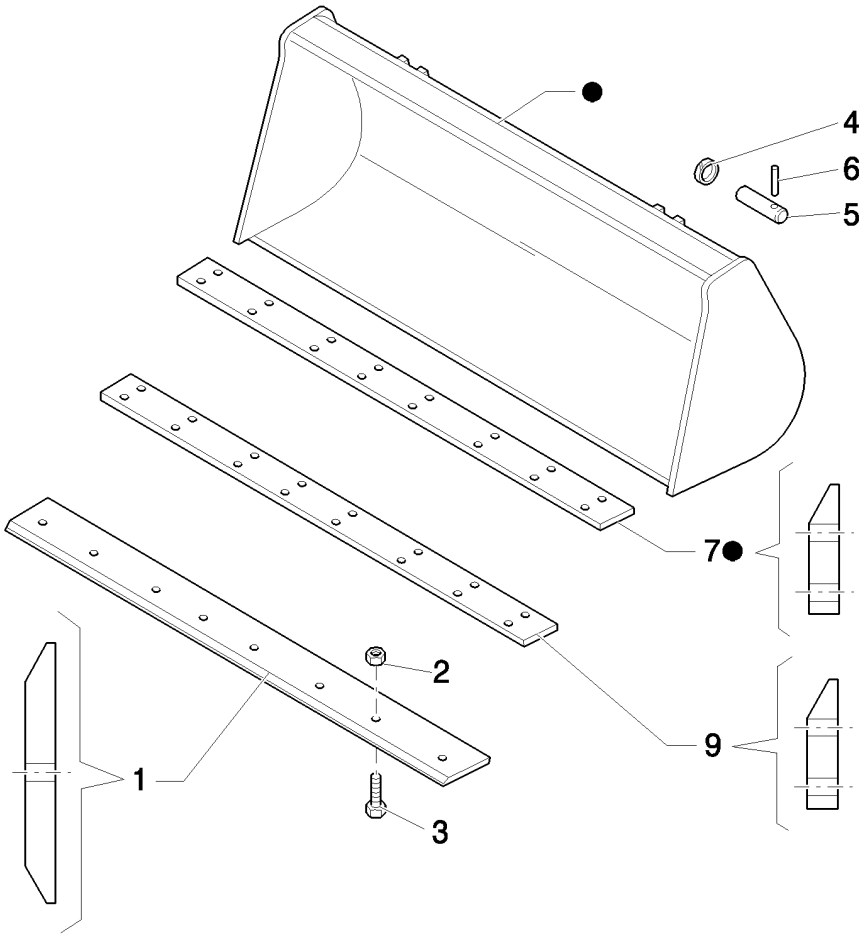

BENNE STANDARD DE (1 M³) AVEC LAME REVERSIBLE SUPPLEMENTAIRE

REF	FN	PART NUMBER	YR/SN	QTY	DESCRIPTION
1	1	85801161		1	LAME D'ATTAQUE, 35 Deg. cutting edge
2		85801470		8	ECROU, 5/8"-11, G8
3		85801371		8	BOULON CHARRUE, 5/8"-11 x 2 1/4"
4		85802992		4	ANNEAU
5		85801051		4	AXE
6		85802993		4	AXE
7	2	85801034		1	LAME D'ATTAQUE
8		85801040		1	GODET, Assy
9		85807867		1	LAME D'ATTAQUE, 200mm W x 2250 L

(1) Reversible bolt on
(2) PART WELDED TO BUCKET

548		p1	03/08

BENNE CUREUSE DE FOSSÅS

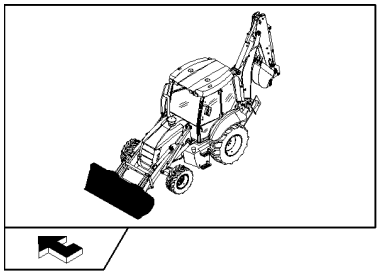

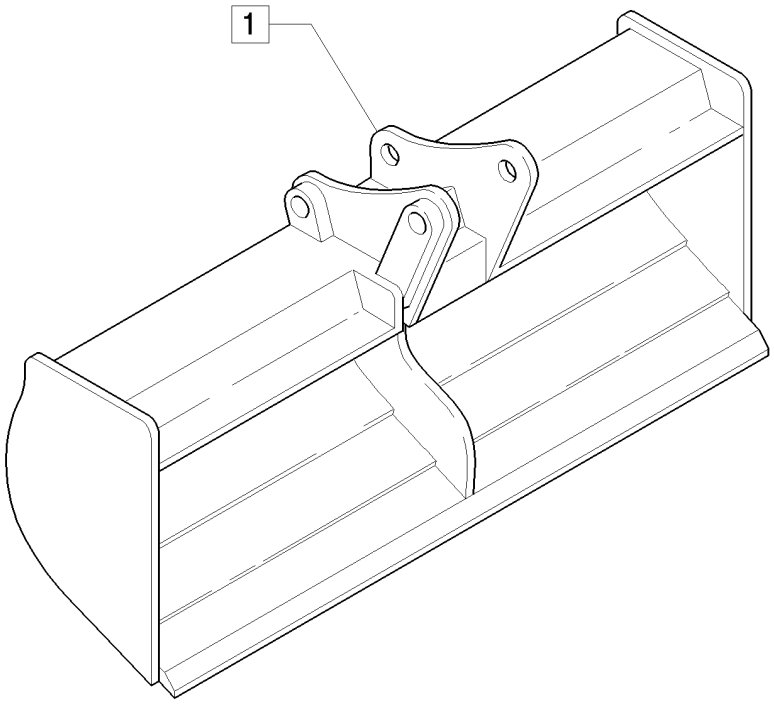

BENNE CUREUSE DE FOSSÅS

REF	FN	PART NUMBER	YR/SN	QTY	DESCRIPTION
1		85824356		1	GODET

622		p1	04/08

VENTILATEUR INTERIEUR - CAB

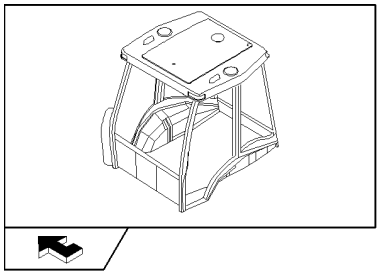

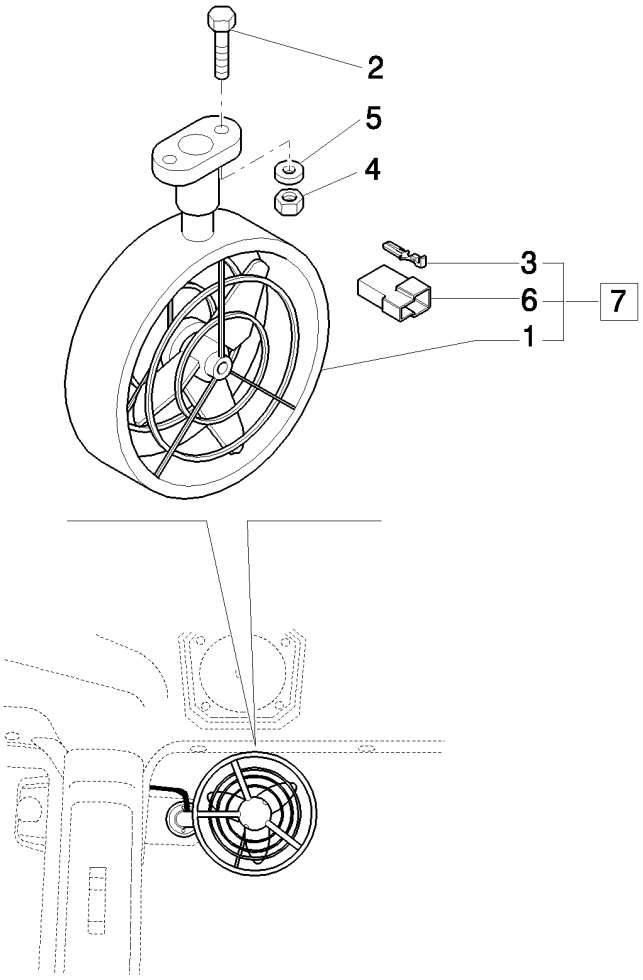

VENTILATEUR INTERIEUR - CAB

REF	FN	PART NUMBER	YR/SN	QTY	DESCRIPTION
1		85804323		1	VENTILATEUR
2		14303324		2	VIS, Hex Soc Hd, M4 x 20, 8.8, Full Thd
3		10250644		2	COSSE
4		12574011		2	CONTRE-ECROU, M4 x .7, Cl 8
5		12642804		2	RONDELLE, M4 x 12 x 1
6		12059980		1	CONNECTEUR
7		85802205		1	VENTILATEUR, Assy

VERSION MOTEUR: DÉMARREUR

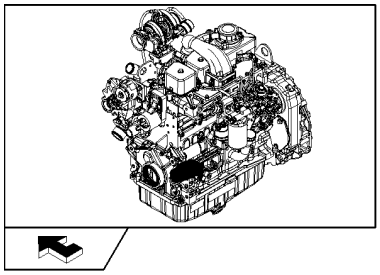

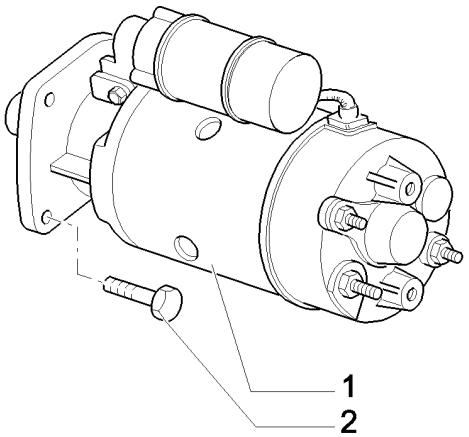

VERSION MOTEUR: DÉMARREUR

REF	FN	PART NUMBER	YR/SN	QTY	DESCRIPTION
1		86992395		1	DEMARREUR
2		86511845		1	BOULON, Hex Flg, M10 x 35, 8.8

ACCESOIRE MOTEUR - ALTERNATEUR

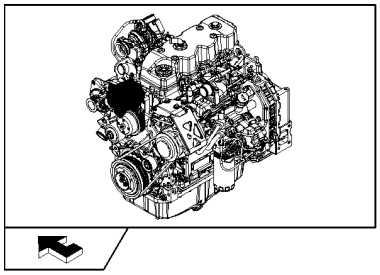

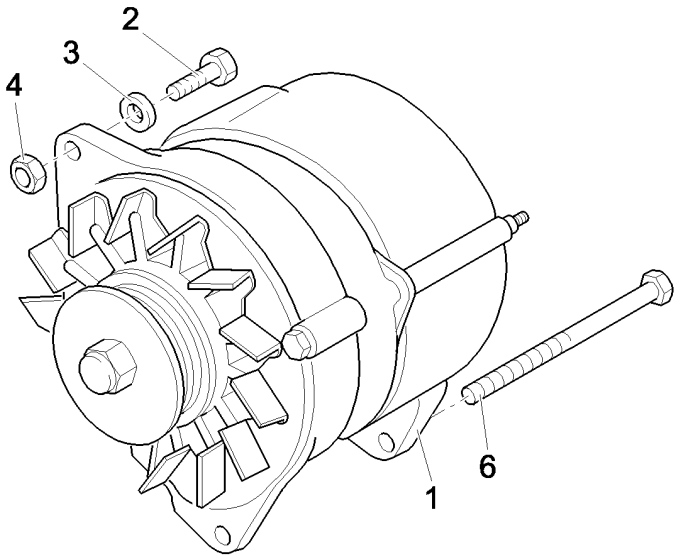

ACCESOIRE MOTEUR - ALTERNATEUR

REF	FN	PART NUMBER	YR/SN	QTY	DESCRIPTION
1		87422777		1	ALTERNATEUR
2		11107421		1	BOULON, Hex, M10 x 60, 8.8
3		896-11010		2	RONDELLE, M10 x 21.5 x 2.5, HT
4		12577211		1	CONTRE-ECROU, M10 x 1.5, Cl 8
5		827-10130		1	BOULON, Hex, M10 x 130, 10.9

638	01	p1	03/08

PROTECTIONS RADIATEUR

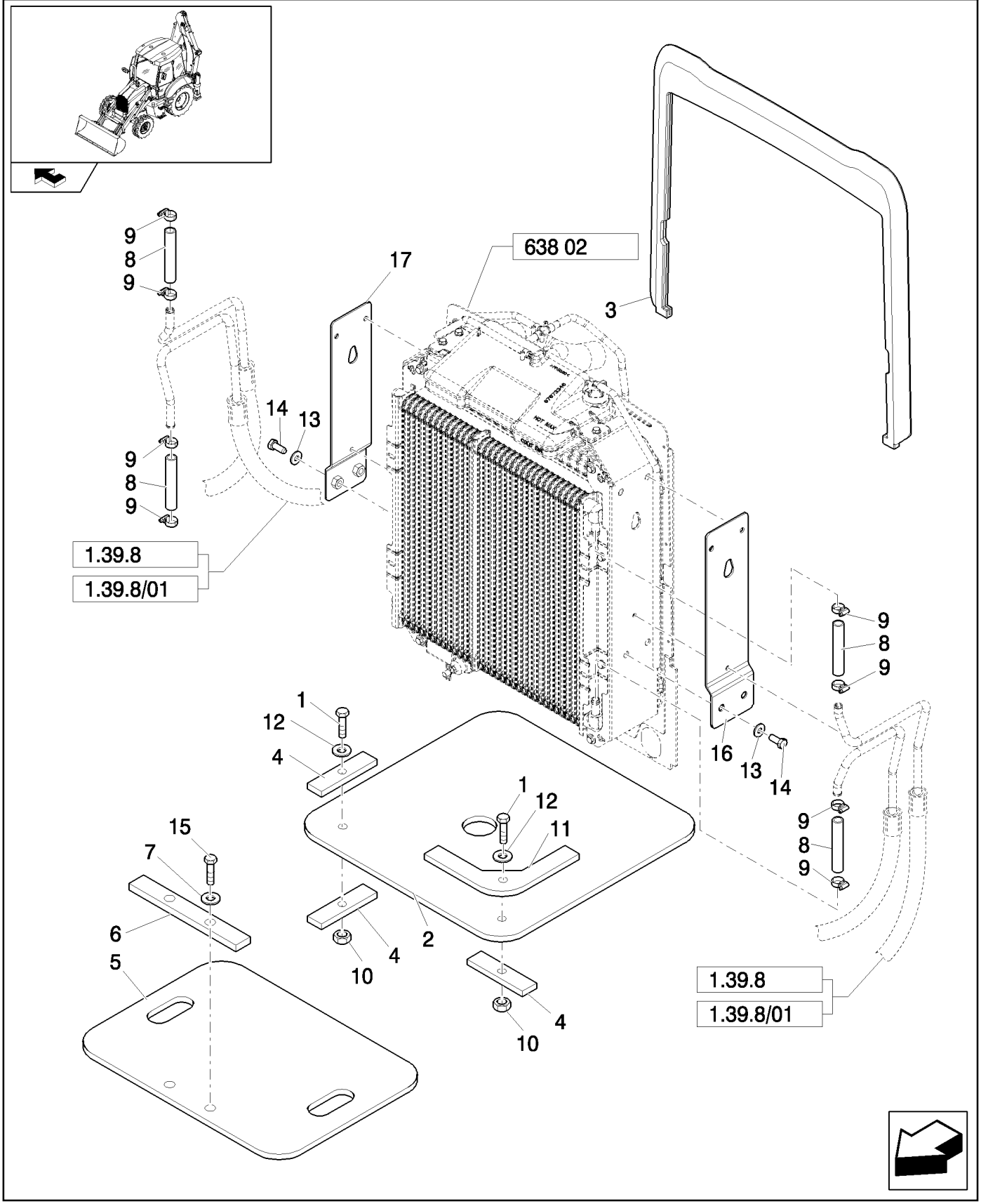

PROTECTIONS RADIATEUR

REF	FN	PART NUMBER	YR/SN	QTY	DESCRIPTION
1		47049163		4	VIS
2		87440497		2	COUVERCLE
3		87624746		1	JOINT
4		87440498		6	PLAQUE DE SERRAGE
5		85827830		1	JOINT, CAOUTCHOUC
6		85827831		1	PLAQUE
7		11193879		2	RONDELLE BELLEVILLE, Belleville, M8.4
8		87302508		4	TUYAU FLEXIBLE
9		87314076		8	COLLIER
10		47042260		4	ECROU
11		87440499		2	PLAQUE DE SERRAGE
12		47048962		8	RONDELLE
13		12646901		4	RONDELLE, 12x28x3
14		11112421		4	BOULON, Hex, M12 x 30, 8.8
15		16043821		2	BOULON, Hex, M8 x 30, 8.8
16		87673338		1	PATTE FIXATION
17		87673339		1	PATTE FIXATION

Without Air Conditioner

B95B

638	02	p1	03/08

RADIATEUR À EAU, HUILE HYDRAULIQUE ET TRANSMISSION

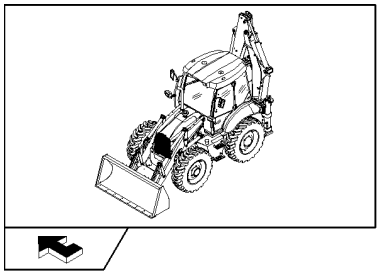

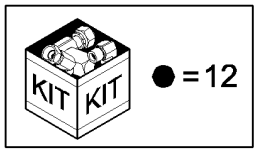

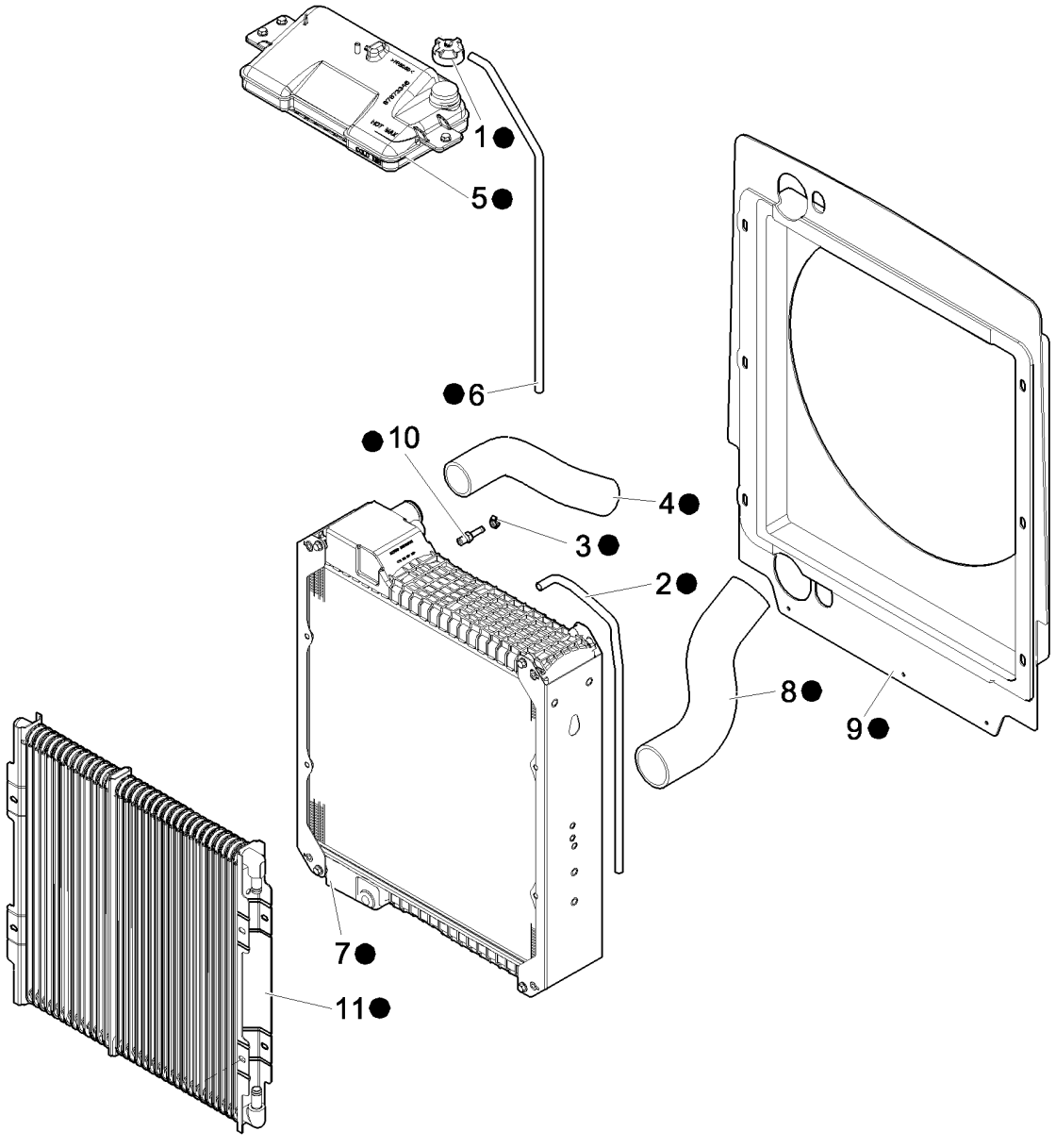

RADIATEUR À EAU, HUILE HYDRAULIQUE ET TRANSMISSION

REF	FN	PART NUMBER	YR/SN	QTY	DESCRIPTION
1		87673335		1	CHAPEAU
2		87673347		1	FLEXIBLE
3		87673334		1	KIT
4		87528978		1	FLEXIBLE
5		87673346		1	CUVE
6		87675597		1	FLEXIBLE
7	1	87310155		1	RADIATEUR
8		87407272		1	FLEXIBLE
9		87683149		1	BUSE
10		87016893		1	RACCORD, 1/4" Hose X 1/4" NPTF Beaded
11	2	87410099		1	REFROIDISSEUR D'HUILE
12		87670081		1	RADIATEUR

(1) Water
(2) Oil Cooler

Without Air Conditioner

B95B

638	03	p1	03/08

TUBULURES DE REFROIDISSEMENT AFTER-COOLER

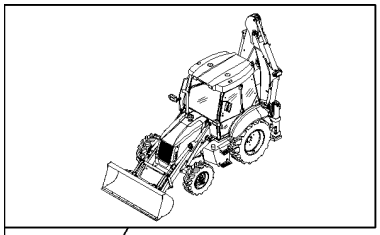

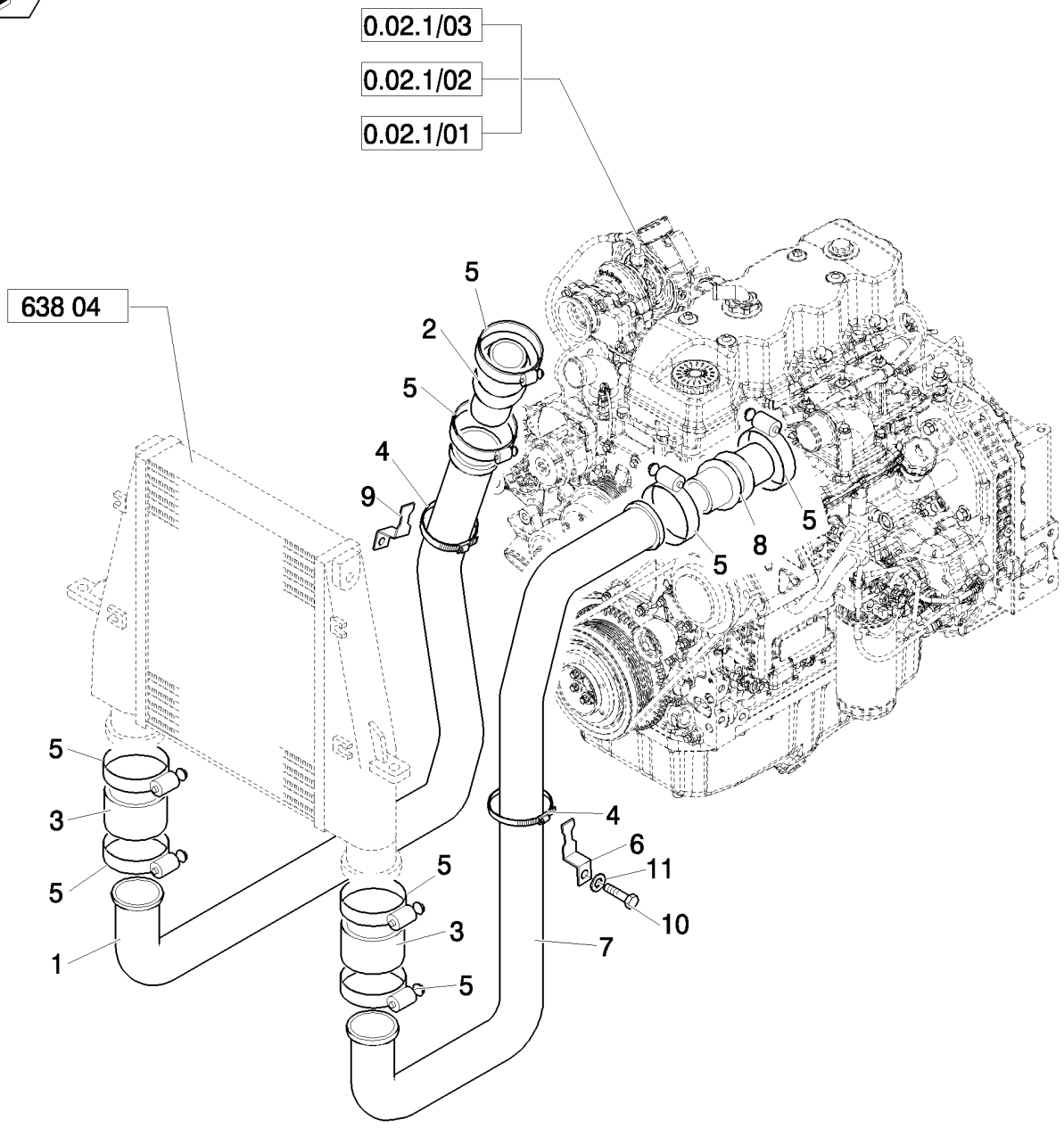

TUBULURES DE REFROIDISSEMENT AFTER-COOLER

REF	FN	PART NUMBER	YR/SN	QTY	DESCRIPTION
1		87548192		1	TUBE
2		86994498		1	FLEXIBLE, M10X40
3		86982960		2	FLEXIBLE
4		86624194		4	BRIDE, FLEXIBLE, #36, 1.81/2.75 Type F Worm, M10X35
5		87410724		8	BRIDE
6		87561489		1	PATTE FIXATION
7		87554030		1	TUBE
8		86982962		1	FLEXIBLE
9		86983163		1	PATTE FIXATION
10		47042342		2	VIS
11		47048992		2	RONDELLE

638	04	p1	03/08

RADIATEUR: AFTER-COOLER

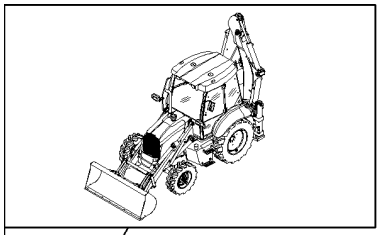

RADIATEUR: AFTER-COOLER

REF	FN	PART NUMBER	YR/SN	QTY	DESCRIPTION
1		87573731		1	REFROIDISSEUR
2		47048972		2	RONDELLE
3		11106021		2	BOULON, Hex, M10 x 20, 8.8, Full Thd
4		87559628		1	PATTE FIXATION
5		87559274		1	PATTE FIXATION
6		47048440		6	RONDELLE
7		47049187		2	VIS, M10x35
8		47048759		2	PASSE-FIL
9		47049041		2	ECROU
10		47049088		2	VIS, M10x50
11		47048963		4	RONDELLE, 11x20x2.0mm
12		47048668		2	JOINT
13		87404427		2	PATTE FIXATION
14		85826361		2	VIS
15		47048963		4	RONDELLE
16		87570398		1	PATTE FIXATION
17		87570395		1	PATTE FIXATION

638	05	p1	03/08

VERSION MOTEUR: SUPPORTS

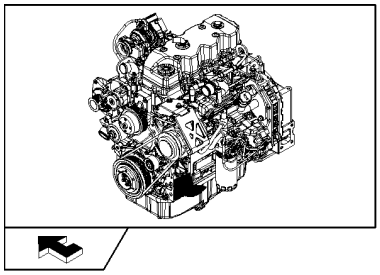

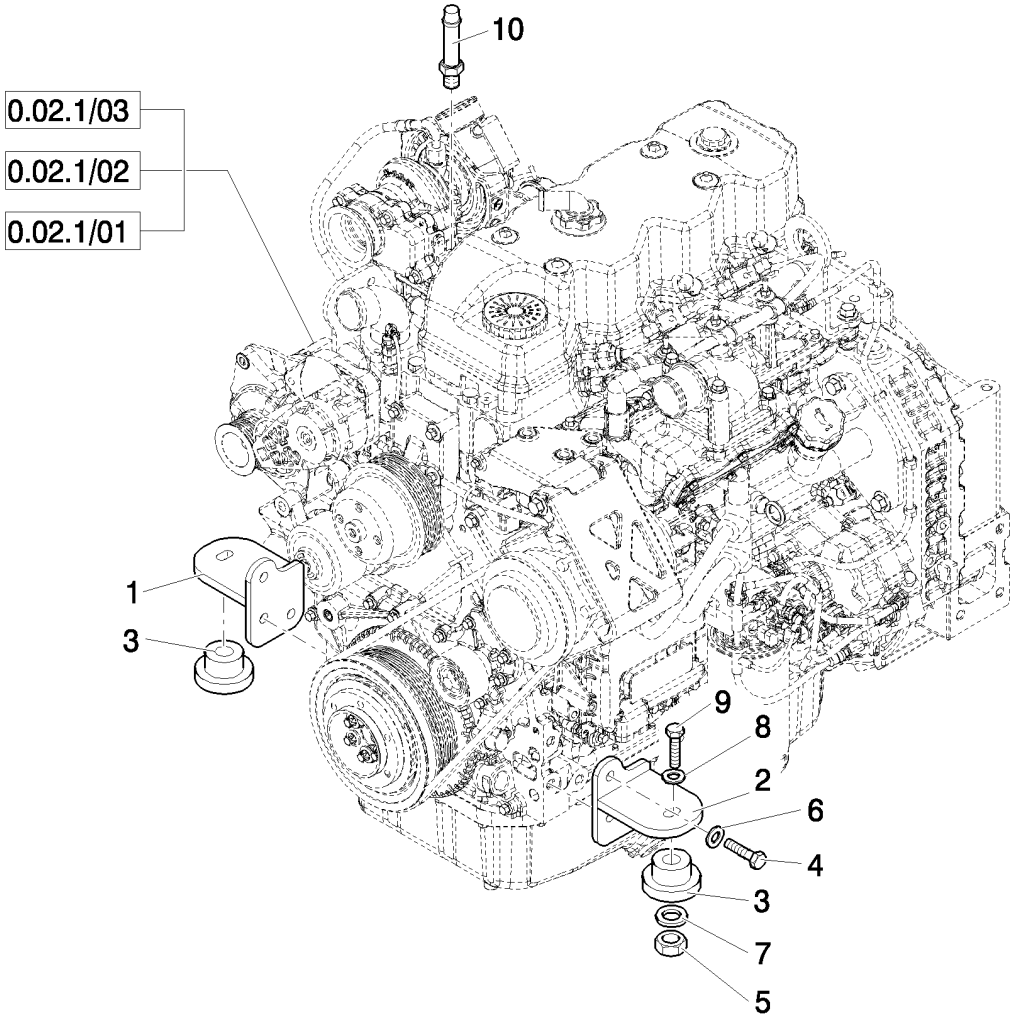

VERSION MOTEUR: SUPPORTS

REF	FN	PART NUMBER	YR/SN	QTY	DESCRIPTION
1		87407275		1	SUPPORT MOTEUR
2		87368320		1	SUPPORT MOTEUR
3		87416966		2	ISOLATEUR
4		11112421		6	BOULON, Hex, M12 x 30, 8.8
5		16105011		2	CONTRE-ECROU, M12x1.25
6		47048976		6	RONDELLE, M12
7		85801585		2	RONDELLE D'ETANCHEITE, 65mm OD
8		85802618		2	RONDELLE D'ETANCHEITE
9		87410647		2	VIS, M12x1.25x90
10		87016893		1	RACCORD, 1/4" Hose X 1/4" NPTF Beaded

ÉQUIPEMENT MOTEUR: VENTILATEUR AVEC JOINT GLUANT - EU

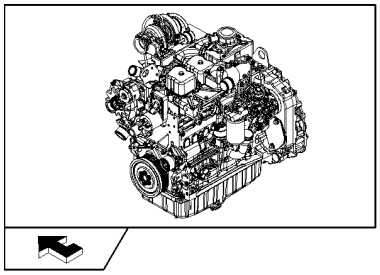

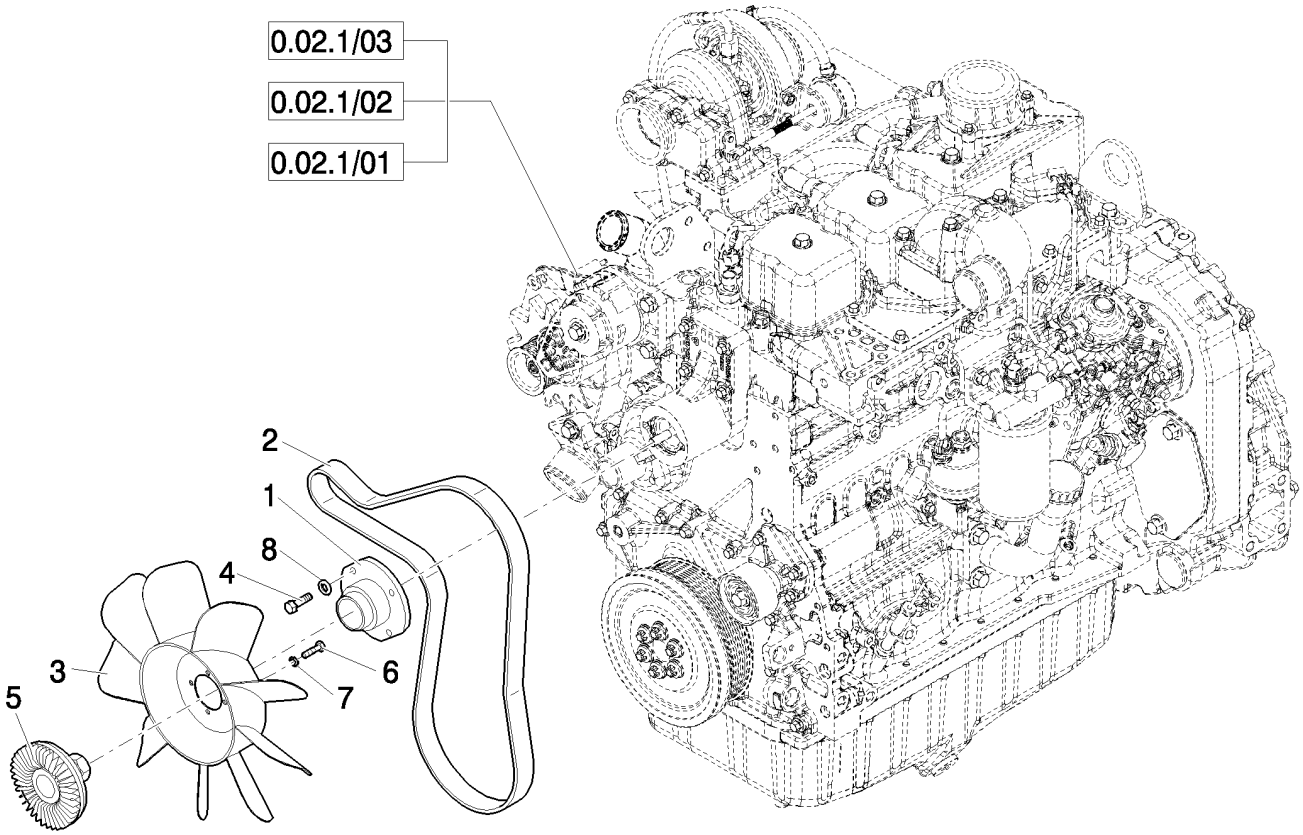

ÉQUIPEMENT MOTEUR: VENTILATEUR AVEC JOINT GLUANT - EU

REF	FN	PART NUMBER	YR/SN	QTY	DESCRIPTION
1		47049809		1	ADAPTEUR
2		87415774		1	COURROIE
3		47049943		1	VENTILATEUR
4		47049186		4	BOULON, Hex, M10 x 30, 8.8
5		87340008		1	COMMANDE-ENTRAINEM.
6		16043221		4	VIS, Hex, M8 x 16, 8.8
7		47048992		4	RONDELLE
8		47048972		4	RONDELLE

ACCESOIRE MOTEUR - DEMARREUR

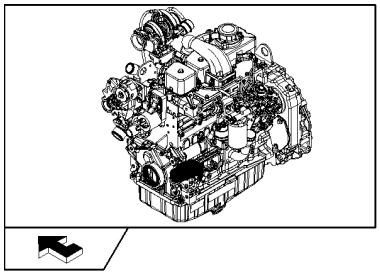

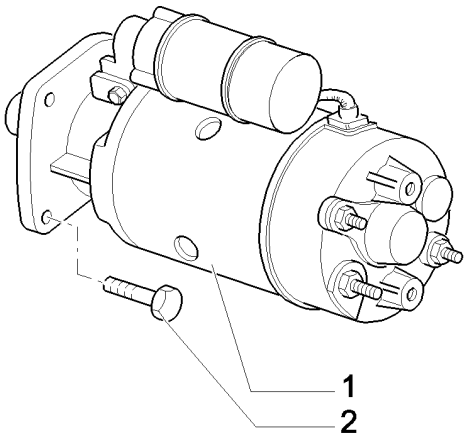

ACCESOIRE MOTEUR - DEMARREUR

REF	FN	PART NUMBER	YR/SN	QTY	DESCRIPTION
1		86992395		1	DEMARREUR
2		86511845		2	BOULON, Hex Flg, M10 x 35, 8.8, M10x35

ACCESOIRE MOTEUR: ALTERNATEUR

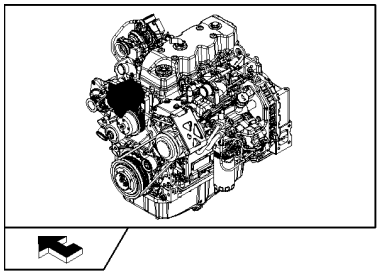

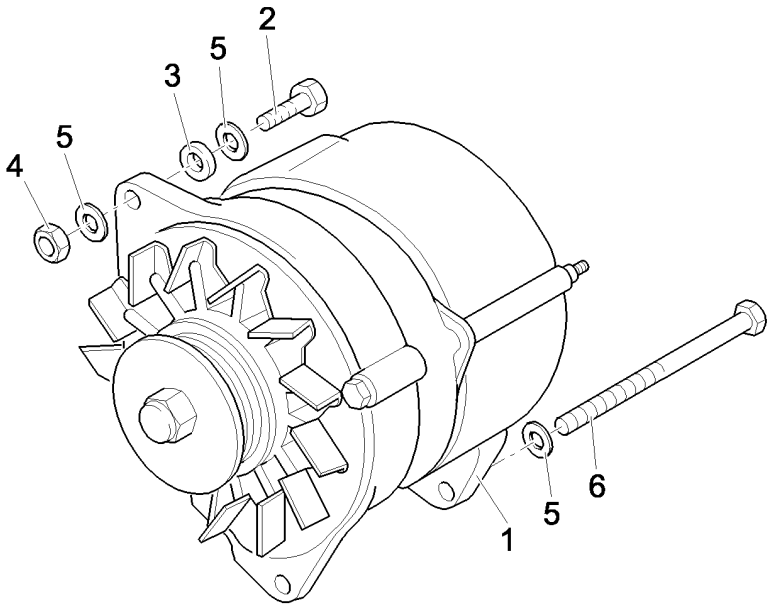

ACCESOIRE MOTEUR: ALTERNATEUR

REF	FN	PART NUMBER	YR/SN	QTY	DESCRIPTION
1		87422777		1	ALTERNATEUR
2		11107421		1	BOULON, Hex, M10 x 60, 8.8
3		896-11010		2	RONDELLE, M10 x 21.5 x 2.5, HT
4		12577211		1	CONTRE-ECROU, M10 x 1.5, Cl 8
5		11190679		3	RONDELLE BELLEVILLE, Belleville, M10.5
6		827-10130		1	BOULON, Hex, M10 x 130, 10.9

639	01	p1	03/08

PROTECTIONS RADIATEUR

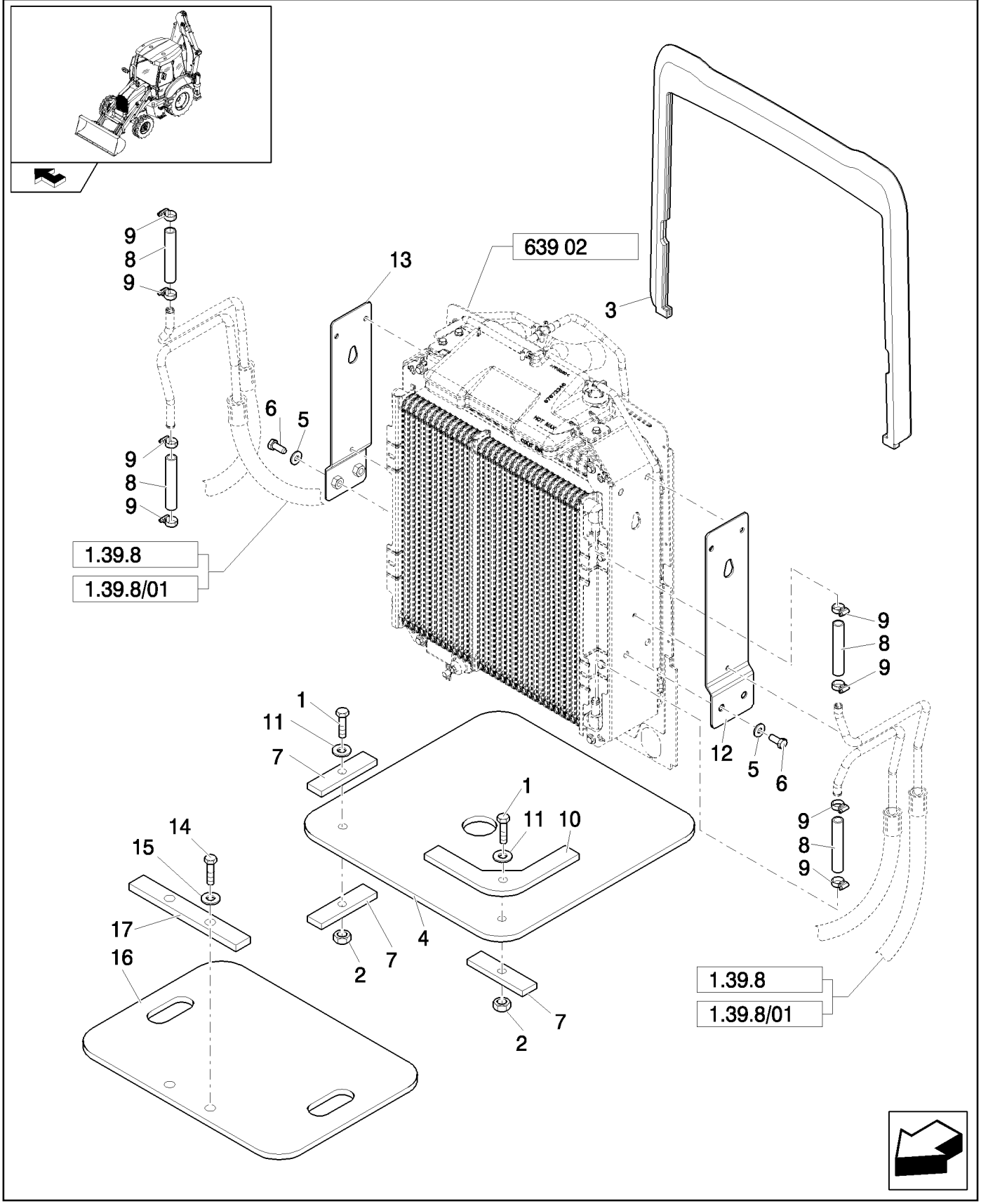

PROTECTIONS RADIATEUR

REF	FN	PART NUMBER	YR/SN	QTY	DESCRIPTION
1		47049163		4	VIS
2		47042260		4	ECROU
3		87624746		1	JOINT
4		87440497		2	COUVERCLE
5		12646901		4	RONDELLE, 12x28x3
6		11112421		4	BOULON, Hex, M12 x 30, 8.8
7		87440498		6	PLAQUE DE SERRAGE
8		87302508		4	TUYAU FLEXIBLE
9		87314076		8	COLLIER
10		87440499		2	PLAQUE DE SERRAGE
11		47048962		8	RONDELLE
12		87673338		1	PATTE FIXATION
13		87673339		1	PATTE FIXATION
14		16043821		2	BOULON, Hex, M8 x 30, 8.8
15		11193879		2	RONDELLE BELLEVILLE, Belleville, M8.4
16		85827830		1	JOINT, CAOUTCHOUC
17		85827831		1	PLAQUE

With Air Conditioner

B95B

639	02	p1	03/08

RADIATEUR À EAU, HUILE HYDRAULIQUE ET TRANSMISSION

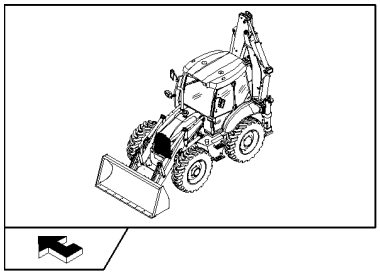

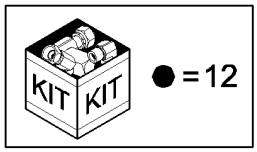

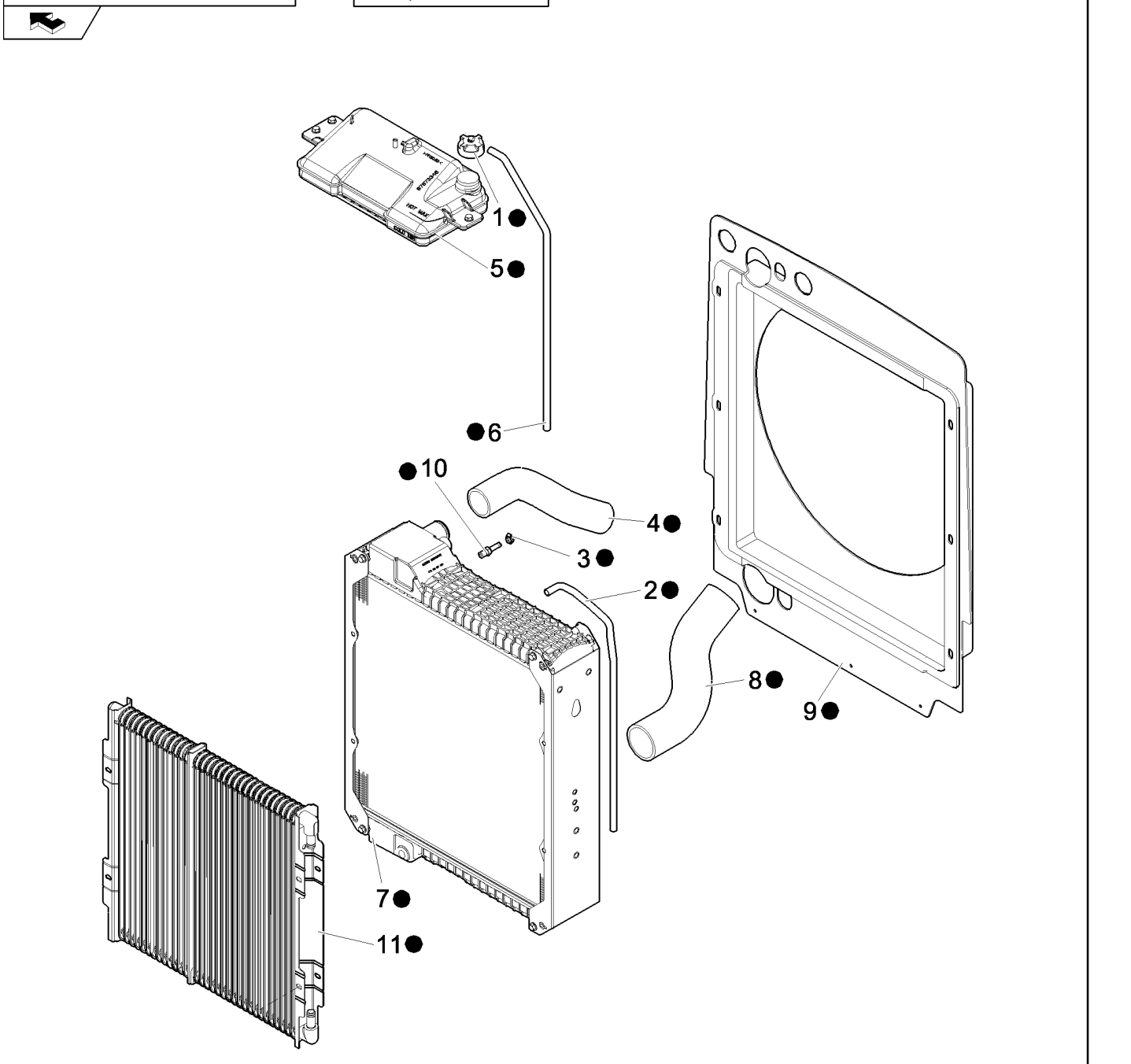

RADIATEUR À EAU, HUILE HYDRAULIQUE ET TRANSMISSION

REF	FN	PART NUMBER	YR/SN	QTY	DESCRIPTION
1		87673335		1	CHAPEAU
2		87673347		1	FLEXIBLE
3		87673334		1	KIT
4		87528978		1	FLEXIBLE
5		87673346		1	CUVE
6		87675597		1	FLEXIBLE
7	1	87310155		1	RADIATEUR
8		87407272		1	FLEXIBLE
9		87683149		1	BUSE
10		87016893		1	RACCORD, 1/4" Hose X 1/4" NPTF Beaded
11	2	87410099		1	REFROIDISSEUR D'HUILE
12		87670081		1	RADIATEUR

(1) Water
(2) Oil Cooler

With Air Conditioner

B95B

TUBULURES DE REFROIDISSEMENT AFTER-COOLER

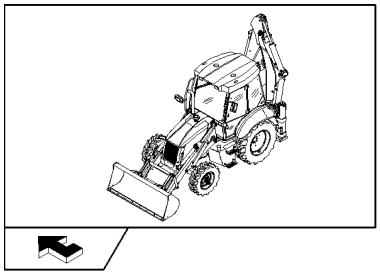

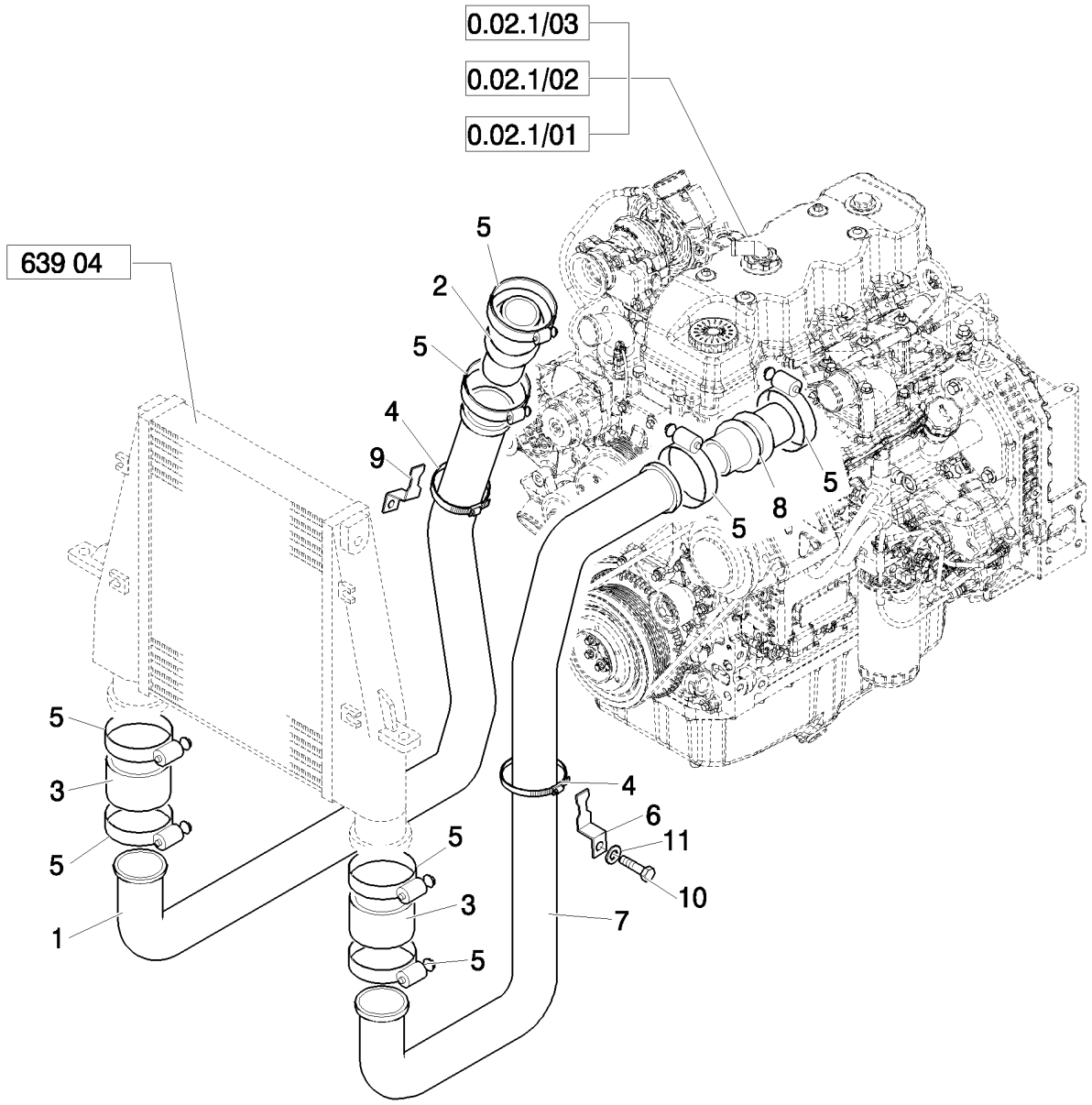

TUBULURES DE REFROIDISSEMENT AFTER-COOLER

REF	FN	PART NUMBER	YR/SN	QTY	DESCRIPTION
1		87548192		1	TUBE
2		86994498		1	FLEXIBLE, M10X40
3		86982960		2	FLEXIBLE
4		86624194		4	BRIDE, FLEXIBLE, #36, 1.81/2.75 Type F Worm, M10X35
5		87410724		8	BRIDE
6		87561489		1	PATTE FIXATION
7		87554030		1	TUBE
8		86982962		1	FLEXIBLE
9		86983163		1	PATTE FIXATION
10		47042342		2	VIS
11		47048992		2	RONDELLE

639	04	p1	03/08

RADIATEUR: AFTER-COOLER

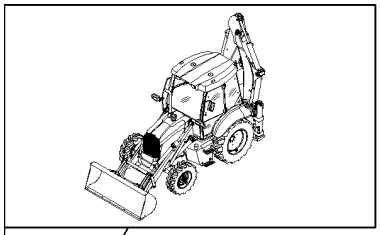

RADIATEUR: AFTER-COOLER

REF	FN	PART NUMBER	YR/SN	QTY	DESCRIPTION
1		87573731		1	REFROIDISSEUR
2		47048972		2	RONDELLE
3		11106021		2	BOULON, Hex, M10 x 20, 8.8, Full Thd
4		87559628		1	PATTE FIXATION
5		87559274		1	PATTE FIXATION
6		47048440		6	RONDELLE
7		47049187		2	VIS, M10x35
8		47048759		2	PASSE-FIL
9		47048646		2	ENTRETOISE
10		47049088		2	VIS, M10x50
11		47048963		4	RONDELLE, 11x20x2.0mm
12		47048668		2	JOINT
13		87404427		2	PATTE FIXATION
14		47049041		2	ECROU
15		85826361		2	VIS

VERSION MOTEUR: SUPPORTS

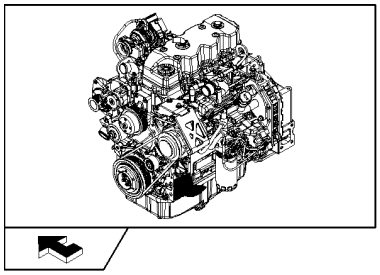

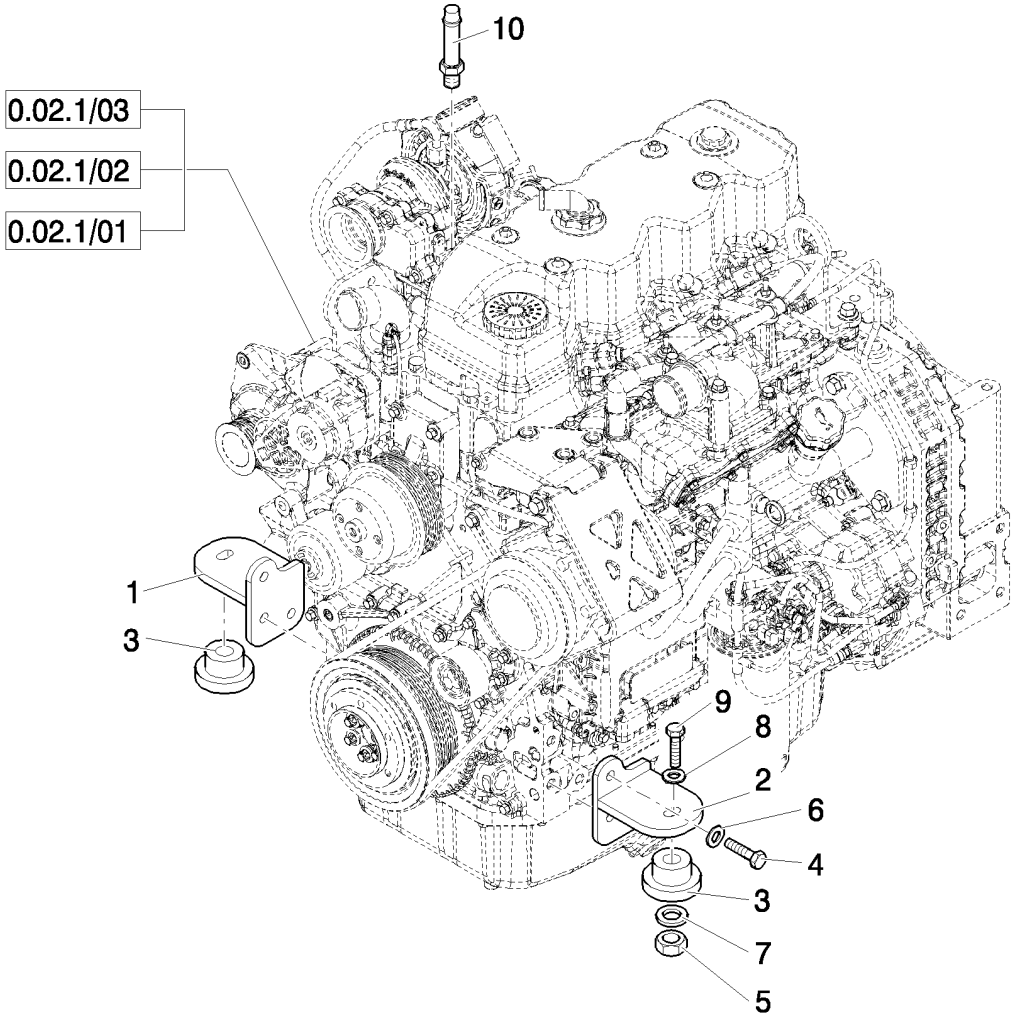

VERSION MOTEUR: SUPPORTS

REF	FN	PART NUMBER	YR/SN	QTY	DESCRIPTION
1		87407275		1	SUPPORT MOTEUR
2		87368320		1	SUPPORT MOTEUR
3		87416966		2	ISOLATEUR
4		11112421		6	BOULON, Hex, M12 x 30, 8.8
5		16105011		2	CONTRE-ECROU, M12x1.25
6		47048976		6	RONDELLE, M12
7		85801585		2	RONDELLE D'ETANCHEITE, 65mm OD
8		85802618		2	RONDELLE D'ETANCHEITE
9		87410647		2	VIS, M12x1.25x90
10		87016893		1	RACCORD, 1/4" Hose X 1/4" NPTF Beaded

ÉQUIPEMENT MOTEUR: VENTILATEUR AVEC JOINT GLUANT

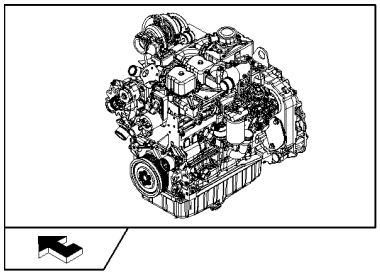

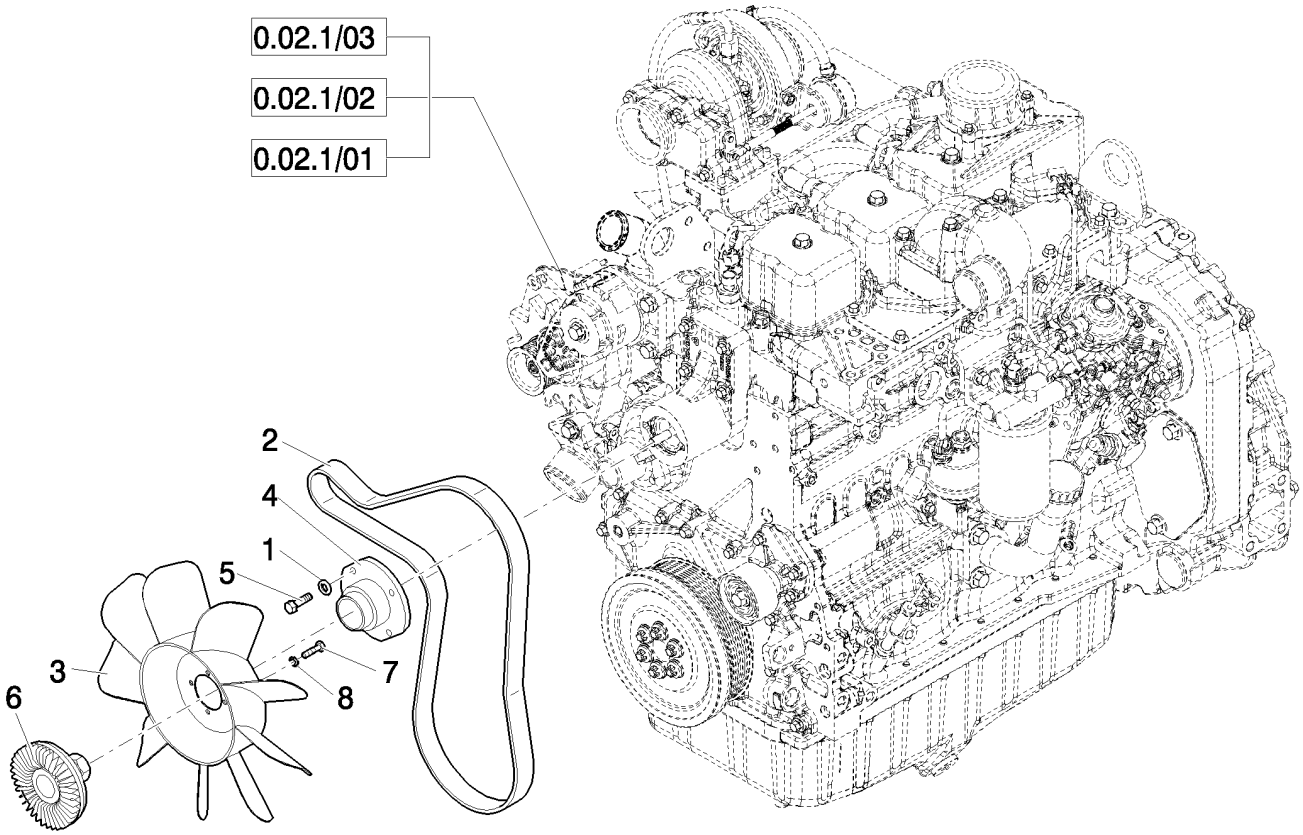

ÉQUIPEMENT MOTEUR: VENTILATEUR AVEC JOINT GLUANT

REF	FN	PART NUMBER	YR/SN	QTY	DESCRIPTION
1		47048972		4	RONDELLE
2		87415774		1	COURROIE
3		47049943		1	VENTILATEUR
4		47049809		1	ADAPTEUR
5		47049186		4	BOULON, Hex, M10 x 30, 8.8
6		87340008		1	COMMANDE-ENTRAINEM.
7		16043221		4	VIS, Hex, M8 x 16, 8.8
8		47048992		4	RONDELLE

VERSION MOTEUR: DÉMARREUR

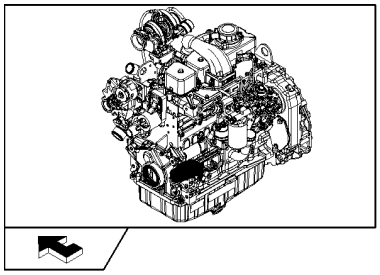

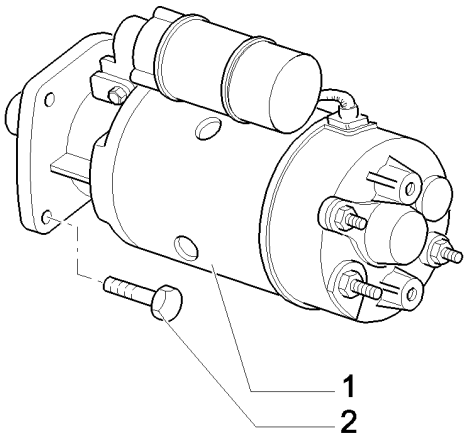

VERSION MOTEUR: DÉMARREUR

REF	FN	PART NUMBER	YR/SN	QTY	DESCRIPTION
1		86992395		1	DEMARREUR
2		86511845		2	BOULON, Hex Flg, M10 x 35, 8.8, M10x35

ACCESOIRE MOTEUR

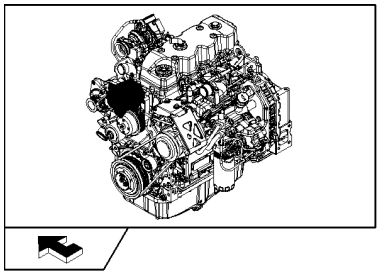

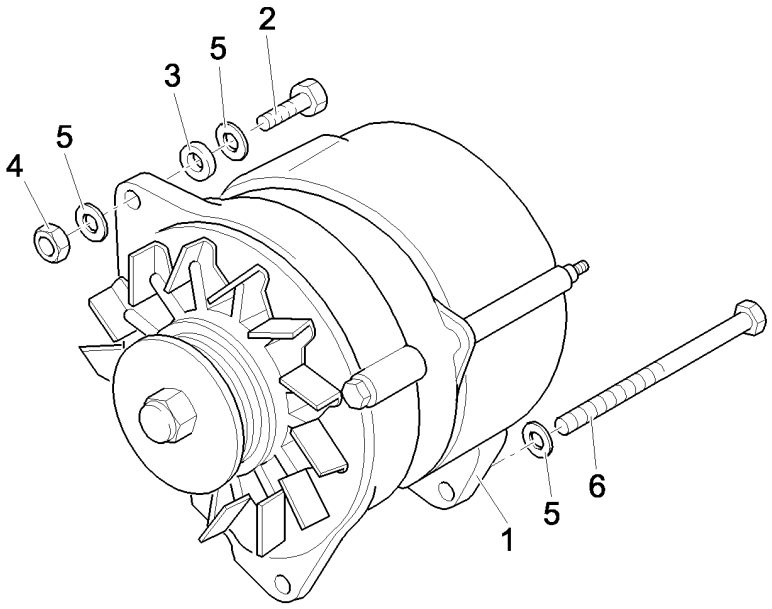

ACCESOIRE MOTEUR

REF	FN	PART NUMBER	YR/SN	QTY	DESCRIPTION
1		87422777		1	ALTERNATEUR
2		11107421		1	BOULON, Hex, M10 x 60, 8.8
3		896-11010		2	RONDELLE, M10 x 21.5 x 2.5, HT
4		12577211		1	CONTRE-ECROU, M10 x 1.5, Cl 8
5		11190679		3	RONDELLE BELLEVILLE, Belleville, M10.5
6		827-10130		1	BOULON, Hex, M10 x 130, 10.9

646	01	p1	04/08

JEU DE PIÈCES MACHINE POUR LA CLIMATISATION

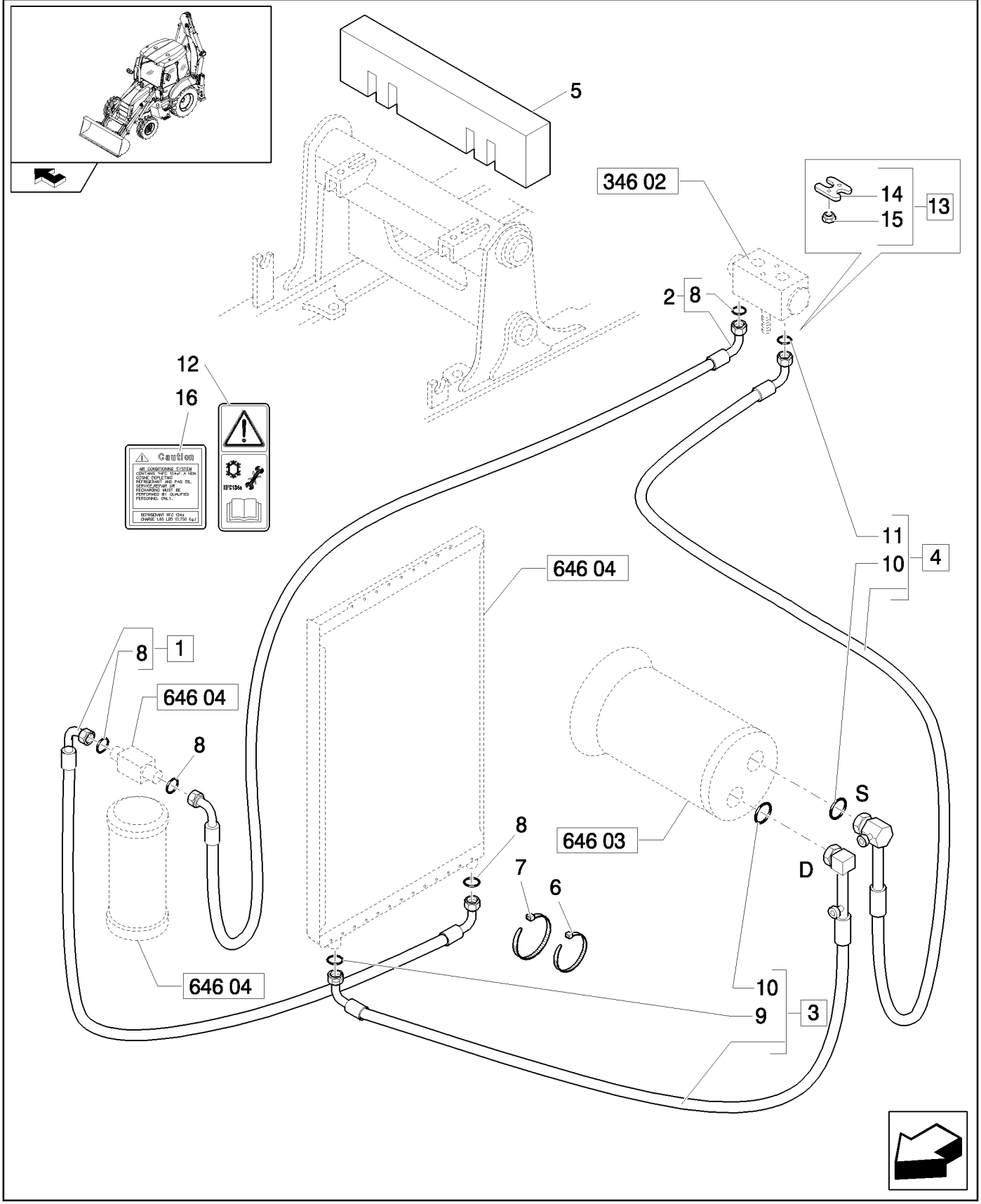

JEU DE PIÈCES MACHINE POUR LA CLIMATISATION

REF	FN	PART NUMBER	YR/SN	QTY	DESCRIPTION
1	1	87315364		1	TUYAU FLEXIBLE, Assy
2	1	87315368		1	TUYAU FLEXIBLE, Assy
3	2	87565311		1	TUYAU FLEXIBLE, Assy
3	2, 3	87315371		1	TUYAU FLEXIBLE, Assy
4	4	87565319		1	TUYAU FLEXIBLE, Assy
4	3, 4	87315381		1	TUYAU FLEXIBLE, Assy
5		85817287		1	JOINT
6		14560187		2	SERRE-CABLE, 178mm lg, L=203.2 mm
7		47048451		4	SERRE-CABLE, M8 x 384
8		85805013		4	JOINT THORIQUE
9		85805006		1	JOINT THORIQUE
10		85817186		2	JOINT THORIQUE
11		85805014		1	JOINT THORIQUE
12		85804441		1	DECALCOMANIE
13		85821131		1	FLASQUE
14		85805008		1	FLASQUE
15		14040611		1	ECROU
16		87324469		1	DECALCOMANIE

(1) Includes 8 in q.ty 2
(2) Includes 9, 10 in q.ty 1
(3) Only for B90B, B90BLR (EU) - B90B (NA)
(4) Includes 10 in q.ty 1, 11

646	02	p1	03/08

GROUPE BRANCHEM. COMPRESSEUR A/C

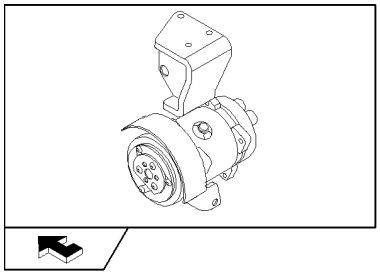

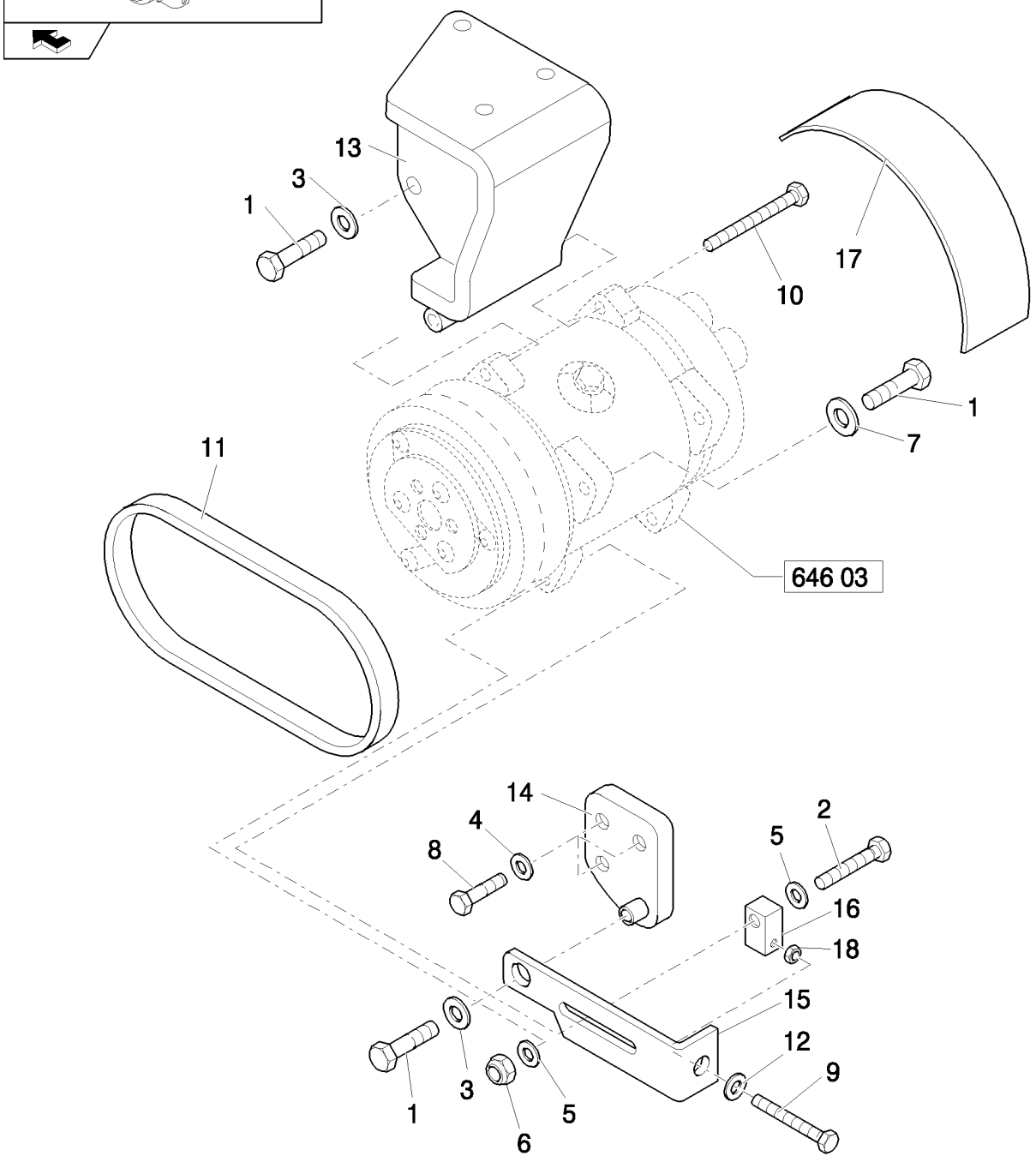

GROUPE BRANCHEM. COMPRESSEUR A/C

REF	FN	PART NUMBER	YR/SN	QTY	DESCRIPTION
1		11106421		3	BOULON, Hex, M10 x 30, 8.8
2		11107421		1	BOULON, Hex, M10 x 60, 8.8
3		11190574		2	RONDELLE BELLEVILLE, Belleville, M10.5
4		11193874		3	RONDELLE BELLEVILLE, Belleville, M8.4
5		14496601		2	RONDELLE, M10 x 20 x 2
6		12577211		1	CONTRE-ECROU, M10 x 1.5, Cl 8
7		12601474		1	RONDELLE, Wave, M10.5
8		16043621		3	BOULON, Hex, M8 x 25, 8.8
9		15213921		1	BOULON, Hex, M8 x 70, 8.8, Full Thd
10		14421621		1	VIS
11		87565328		1	COURROIE
11	1	87304910		1	COURROIE
12		14496534		1	RONDELLE
13		87565321		1	SUPPORT
13	1	87315441		1	SUPPORT
14		87565322		1	SUPPORT
14	1	87315446		1	SUPPORT
15		87565326		1	TENDEUR D'AMORTIS.
15	1	87315457		1	TENDEUR DE COURROIE
16		87315459		1	BLOC
17		87565346		1	GARANT
17	1	87315460		1	GARANT
18		16102211		1	ECROU, M8, Cl 10

(1) Only for B90B, B90BLR (EU) - B90B (NA)

646	03	p1	03/08

COMPRESSEUR A/C

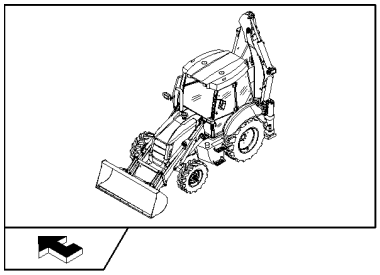

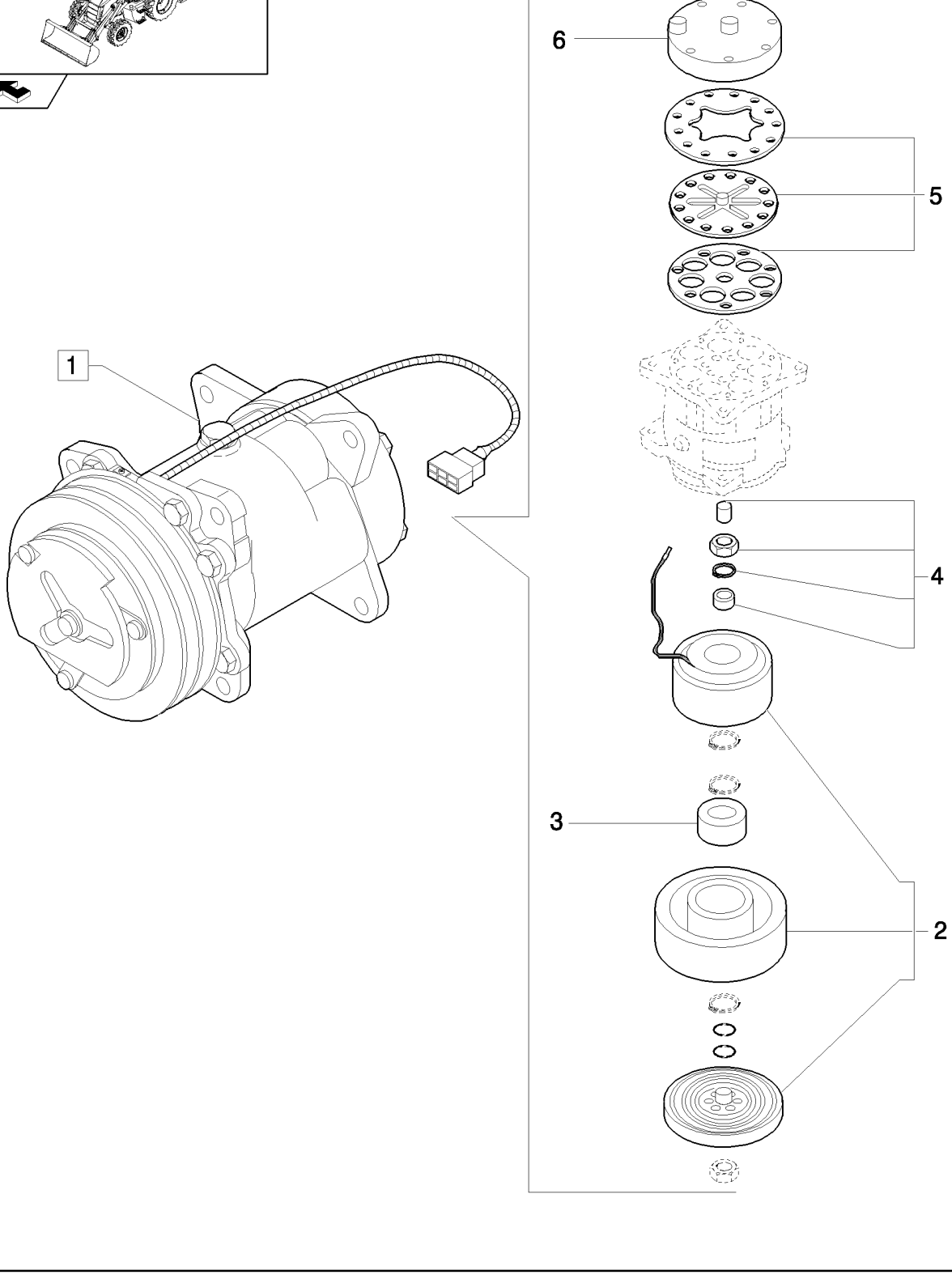

COMPRESSEUR A/C

REF	FN	PART NUMBER	YR/SN	QTY	DESCRIPTION
1		85817170		1	COMPRESSEUR CLIMATIS., (SD7H15) Assy
2		85817171		1	KIT
3		85817172		3	ROULEMENT
4		85817173		1	KIT
5		85817174		1	KIT
6		85817175		1	KIT

646	04	p1	04/08

GROUPE BRANCHEM. FILTRE A/C & CONDENSEUR

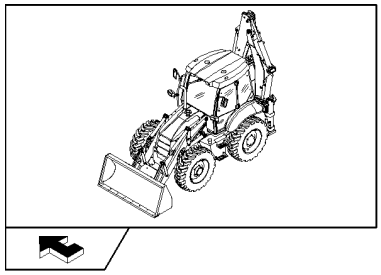

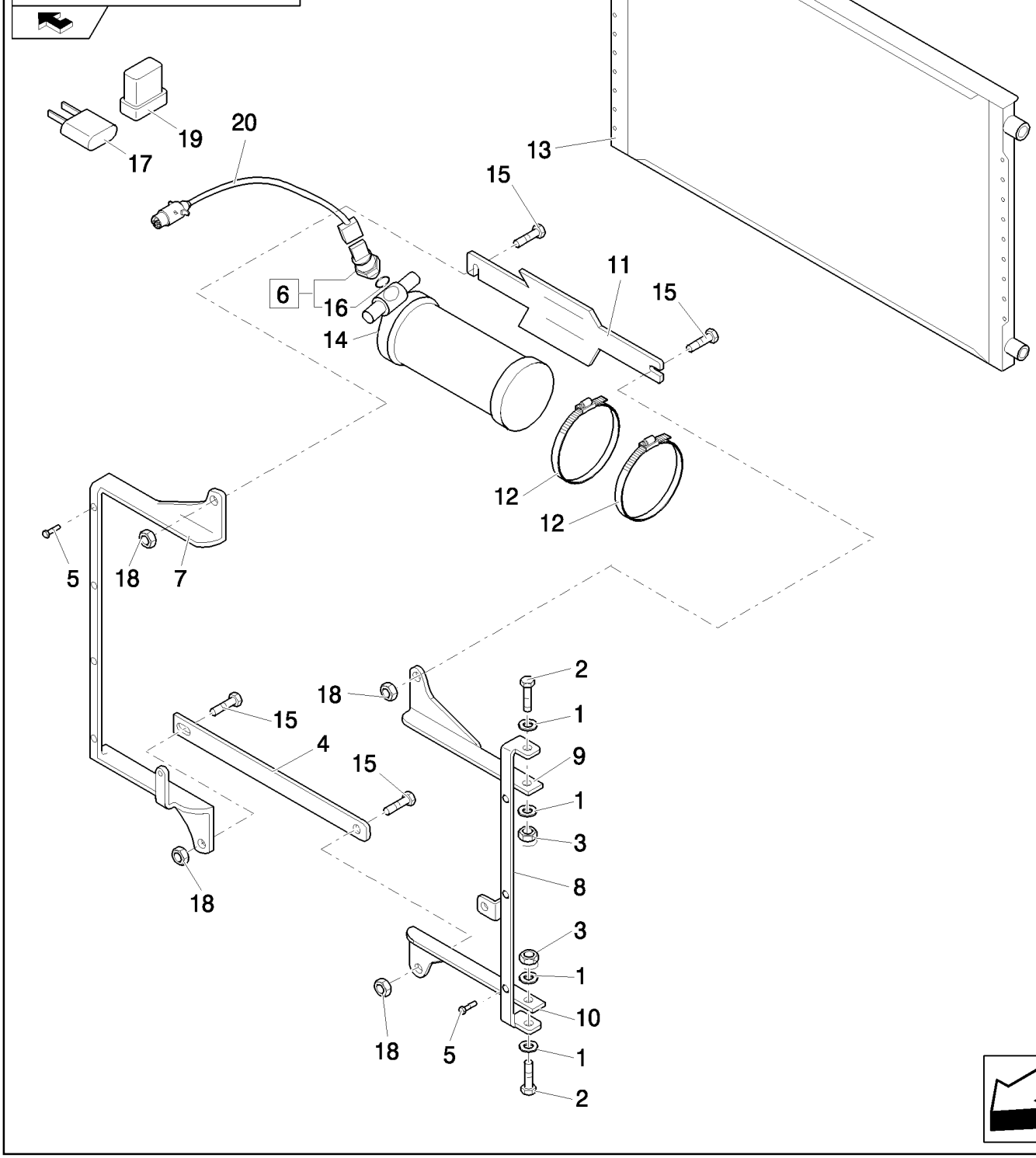

GROUPE BRANCHEM. FILTRE A/C & CONDENSEUR

REF	FN	PART NUMBER	YR/SN	QTY	DESCRIPTION
1		14496534		4	RONDELLE
2		16043421		2	VIS, Hex, M8 x 20, 8.8
3		16104111		2	CONTRE-ECROU, M8 x 1.25, Cl 8
4		87315252		1	PATTE FIXATION
5		85819184		7	VIS
6		85804065		1	TRANSMETTEUR ASSY, Assy
7		87630384		1	PATTE FIXATION
8		87646126		1	PATTE FIXATION
9		87630386		1	PATTE FIXATION, RH
10		87630383		1	PATTE FIXATION, LH
11		87315236		1	PATTE FIXATION
12		87315239		2	BRIDE, FLEXIBLE
13		87314566		1	CONDENSATEUR
14		87315241		1	FILTRE A AIR CABINE
15		16043621		4	BOULON, Hex, M8 x 25, 8.8
18		14040711		4	RONDELLE
16		85819185		1	JOINT
17		11054990		1	FUSIBLE, 10 Amp
19		85821537		1	RELAIS
20		87569316		1	RALLONGE

COLONNE DIRECTION, FIXE & REGLABLE

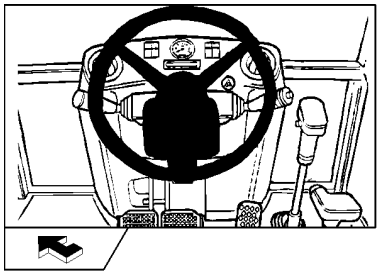

EQUIP.650

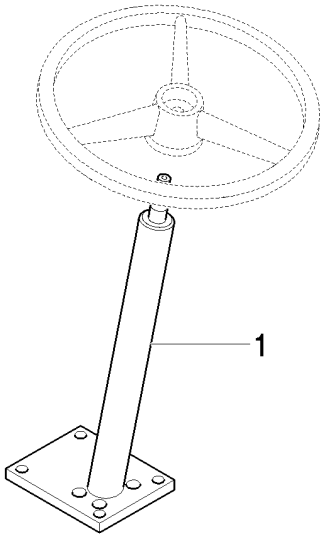

EQUIP.651

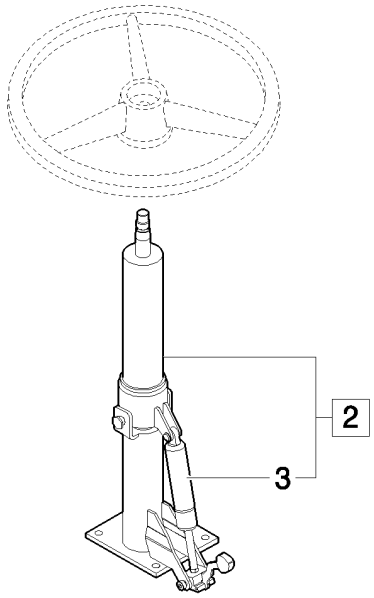

COLONNE DIRECTION, FIXE & REGLABLE

REF	FN	PART NUMBER	YR/SN	QTY	DESCRIPTION
1	1	87324864		1	COLONNE DE DIRECTION
2		87560586		1	COLONNE DE DIRECTION, Assy
3	2	87560589		1	COMPAS

(1) Only for Power Shuttle
(2) Only for B115B

698		p1	04/08

CHEMISE COULISSANTE,INSTALLATION HYDRAULIQUE MISE DE NIVEAU STRUCTURE MACHINE & COMMUTATEUR ON/OFF

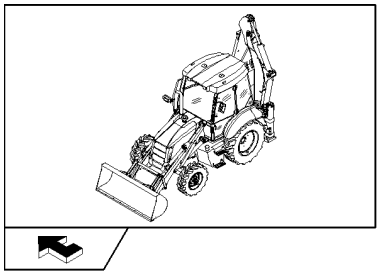

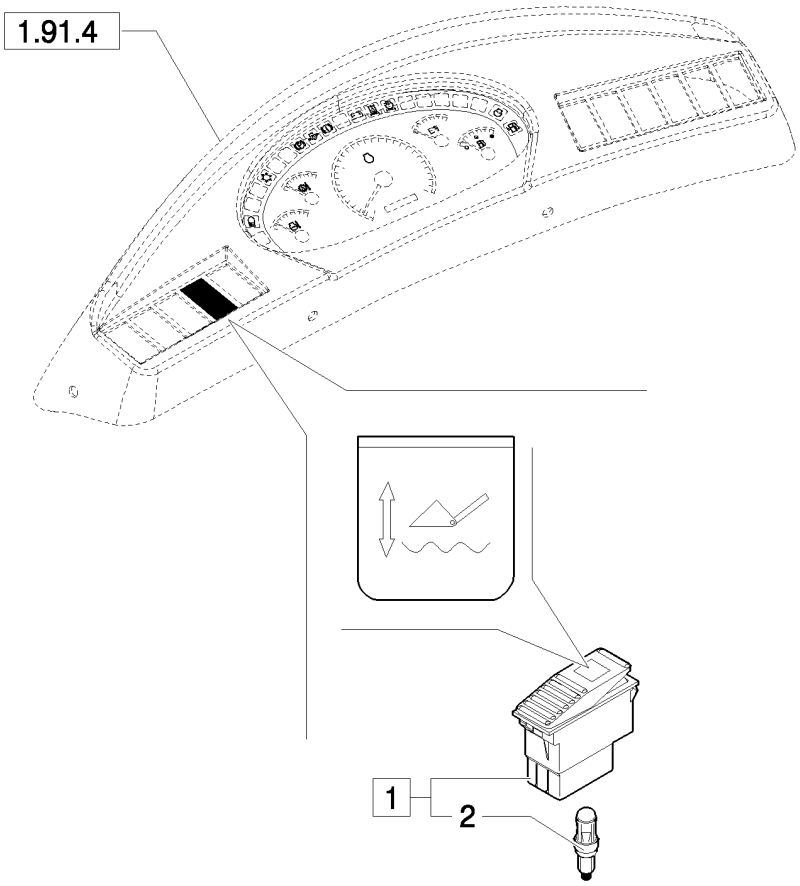

CHEMISE COULISSANTE,INSTALLATION HYDRAULIQUE MISE DE NIVEAU STRUCTURE MACHINE & COMMUTATEUR ON/OFF

REF	FN	PART NUMBER	YR/SN	QTY	DESCRIPTION
1		85817674		1	CONTACTEUR, Assy
2		14143790		1	AMPOULE

699		p1	04/08

BOUTON MARTEAU MANUEL

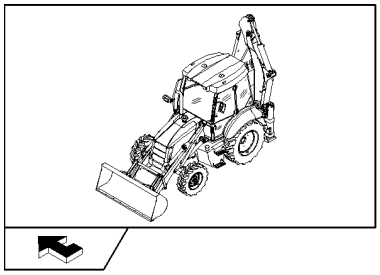

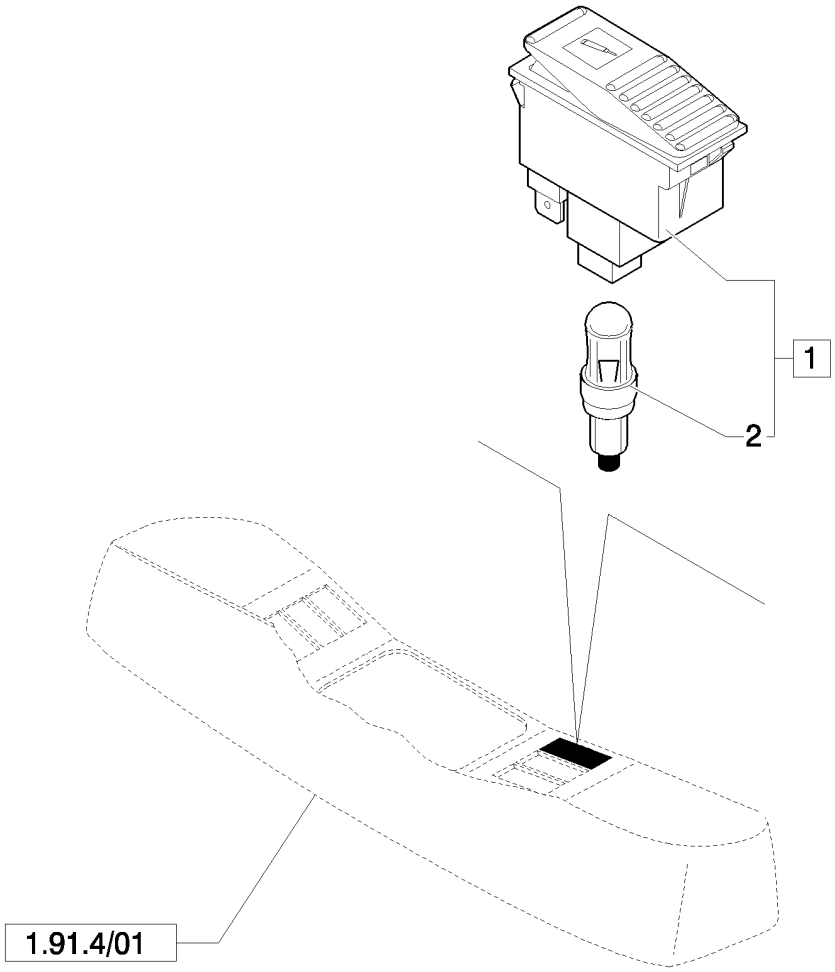

BOUTON MARTEAU MANUEL

REF	FN	PART NUMBER	YR/SN	QTY	DESCRIPTION
1		85819072		1	CONTACTEUR, Assy
2		14143790		1	AMPOULE

700	01	p1	04/08

CONDUITS HYDRAULIQUES BRAS GODETS 4X1 ET 6X1 (POWER SHIFT, POWER SHUTTLE)

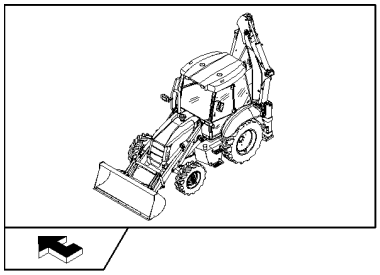

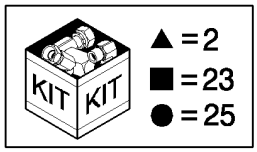

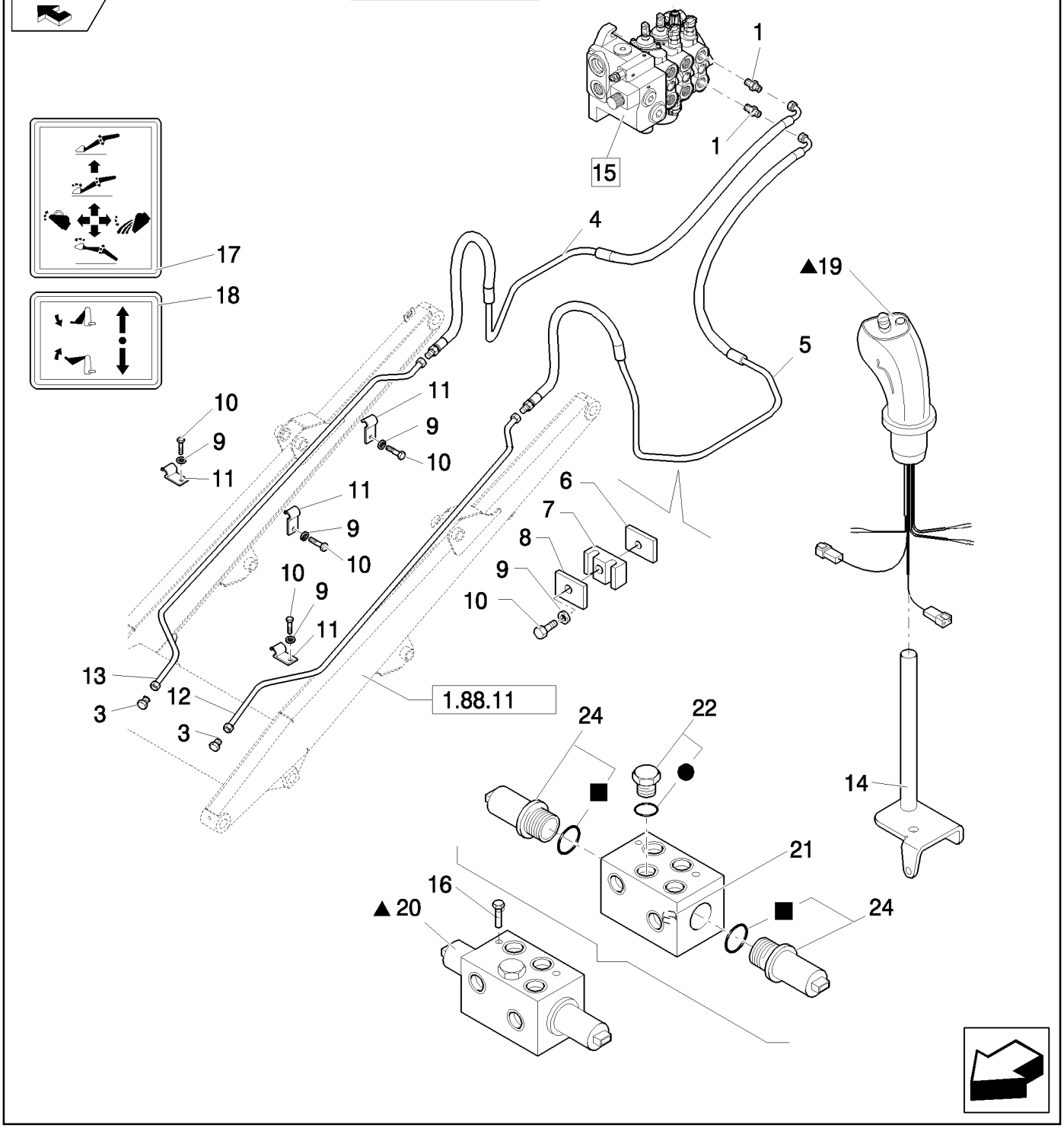

CONDUITS HYDRAULIQUES BRAS GODETS 4X1 ET 6X1 (POWER SHIFT, POWER SHUTTLE)

REF	FN	PART NUMBER	YR/SN	QTY	DESCRIPTION
1		85805258		2	RACCORD, 9/16"-16 ORS x 1 1/16"-12, O-Ring
2	1	87739987		1	KIT
2	2	87739988		1	KIT
3		85803408		2	BOUCHON
4		85819572		1	TUYAU HYDRAULIQUE
5		85819571		1	TUYAU HYDRAULIQUE, LH
6		85805340		2	PLAQUE
7		85805193		2	BRIDE
8		85805195		2	PLAQUE
9		11193979		8	RONDELLE BELLEVILLE, Belleville, M8.4
10		16043821		8	BOULON, Hex, M8 x 30, 8.8
11		85805247		6	BRIDE
12		85805864		1	TUYAU HYDRAULIQUE, LH
13		85805865		1	TUYAU HYDRAULIQUE, RH
14		87646646		1	LEVIER
15		87305111		1	DISTRIBUTEUR, Assy
16		14300521		2	VIS, Hex Soc Hd, M6 x 75, 8.8
17		85804346		1	DECALCOMANIE
18		87305209		1	DECALCOMANIE
19	1	87382109		1	POIGNÉE, Loader, Powershift, W/Detent, Declutch, Horn; Includes 87387702 Grip W/2 Buttons; 87387703 Prop Roller W/Detented Position; 87387719 Transmission & Horn Button Harness; 87387722 Bi-Directional PWM Driver Harness
19	2	87382112		1	POIGNÉE, Loader, Powershuttle, W/Detent, Declutch; Incl 87387751 Grip W/1 Button; 87387703 Prop Roller W/Detented Position; 87387754 Transmission Button Harness; 87387722 Bi-Directional PWM Driver Harness
20		87739689		1	DISTRIBUTEUR, Assy
21		87311363		1	ORIFICE
22		87739122		1	SOUPAPE
23		85828000		1	POCHETTE DE JOINTS

(1) Only for Power Shift
(2) Only for Power Shuttle

700	01	p2	04/08

CONDUITS HYDRAULIQUES BRAS GODETS 4X1 ET 6X1 (POWER SHIFT, POWER SHUTTLE)

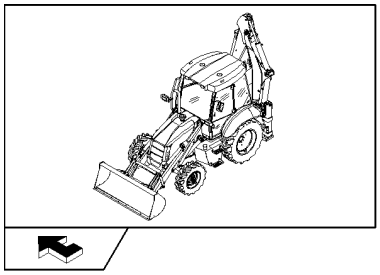

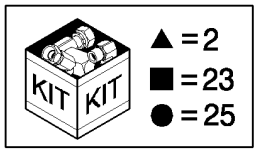

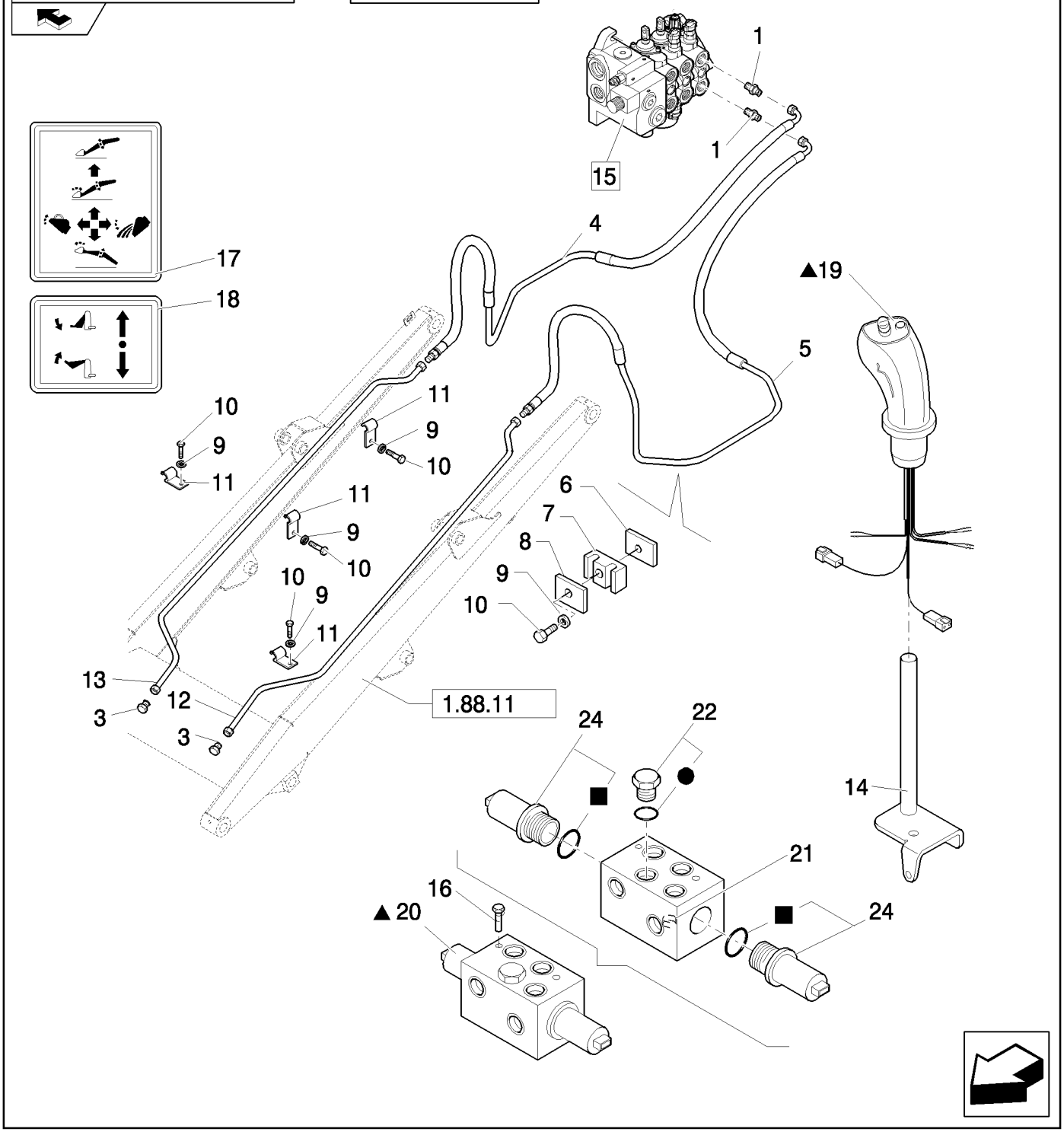

CONDUITS HYDRAULIQUES BRAS GODETS 4X1 ET 6X1 (POWER SHIFT, POWER SHUTTLE)

REF	FN	PART NUMBER	YR/SN	QTY	DESCRIPTION
24		85827993		2	ELECTRO-VALVE
25		85828001		1	POCHETTE DE JOINTS

700	02	p1	03/08

CONDUITS HYDRAULIQUES MACHINE GODETS 4X1 ET 6X1 (POWER SHIFT, POWER SHUTTLE)

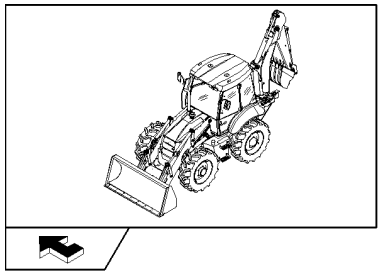

CONDUITS HYDRAULIQUES MACHINE GODETS 4X1 ET 6X1 (POWER SHIFT, POWER SHUTTLE)

REF	FN	PART NUMBER	YR/SN	QTY	DESCRIPTION
1		85802234		1	COUDE
2		85803312		1	RACCORD
3		218-5053		2	RACCORD, 7/16"-20, 37º x 7/16"-20, O-Ring
4		218-5057		4	RACCORD, 9/16"-18, 37º x 9/16"-18, O-Ring
5		85826100		1	REDUCTEUR
6		85828211		1	ACCOUPLEMANT RAP MALE
7		87305211		1	TUYAU FLEXIBLE
8		87303401		1	TUYAU FLEXIBLE
9		87303400		2	TUYAU FLEXIBLE

700	03	p1	04/08

DISTRIBUTEUR PALE A TROIS SECTEURS (POWER SHIFT , POWER SHUTTLE)

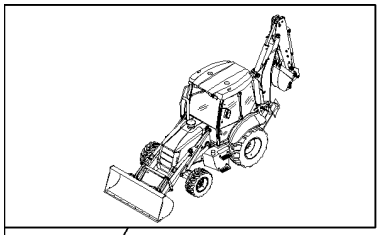

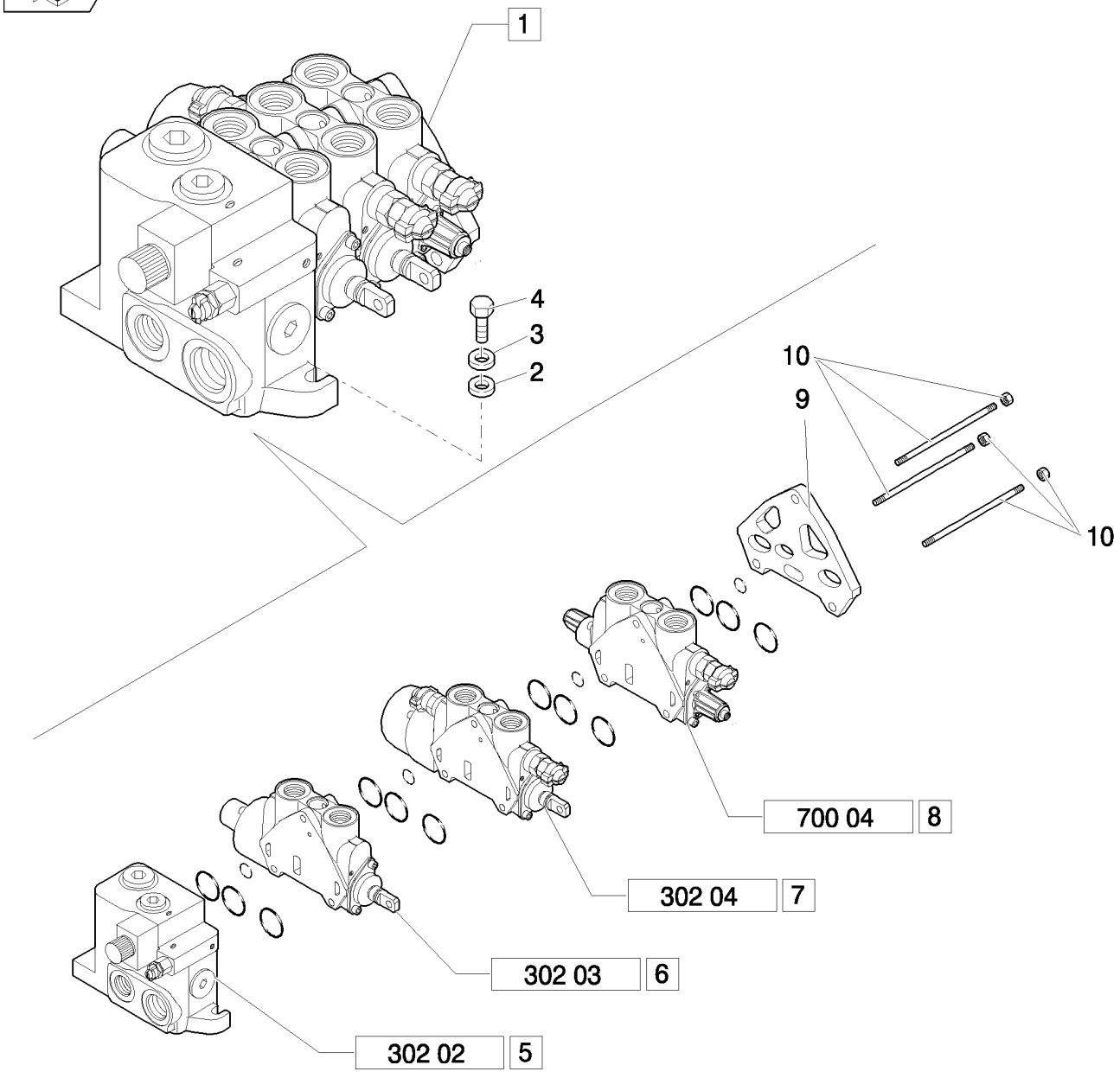

DISTRIBUTEUR PALE A TROIS SECTEURS (POWER SHIFT , POWER SHUTTLE)

REF	FN	PART NUMBER	YR/SN	QTY	DESCRIPTION
1		87305111		1	DISTRIBUTEUR, Assy
2		11190679		3	RONDELLE BELLEVILLE, Belleville, M10.5
3		13578621		3	RONDELLE, 10x30x2
4		11234721		3	BOULON, Hex, M10 x 1.25 x 45, 8.8
5		85825468		1	ELEMENT DISTR HYDR, Assy
6	1	87558567		1	SECTEUR, Assy
7	2	85825469		1	ELEMENT DISTR HYDR, Assy
8	3	87346911		1	ELEMENT DE LIAISON, Assy
9		85826924		1	SECTEUR
10		85825474		1	TIRANT FILETE

(1) Boom Cylinder
(2) Bucket Cylinder
(3) Option

721	01	p1	04/08

BALANCIER TÉLÉSCOPIQUE AVEC COMMANDE À PÉDALE (CENTER PIVOT): DISTRIBUTEUR - NA

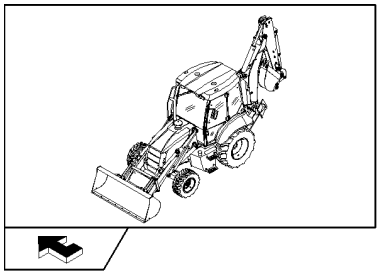

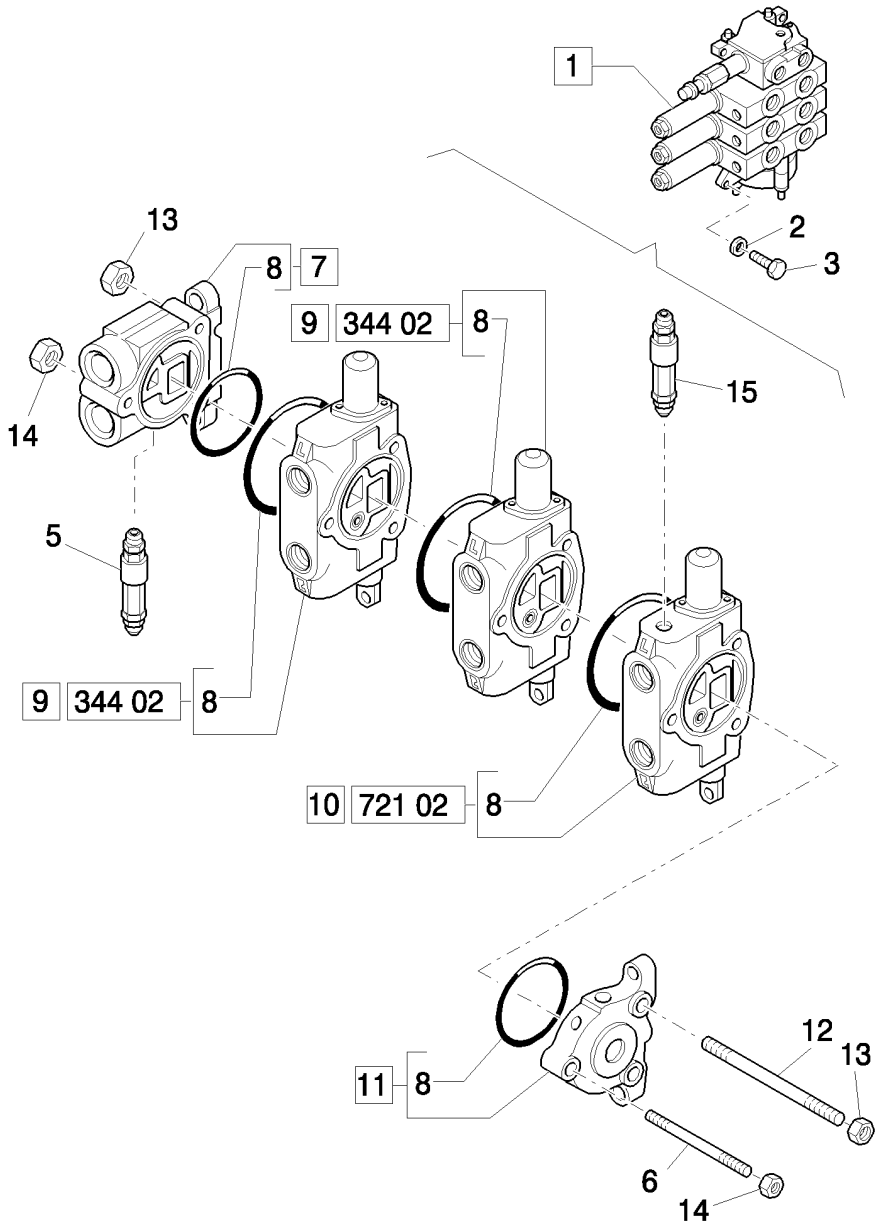

BALANCIER TÉLÉSCOPIQUE AVEC COMMANDE À PÉDALE (CENTER PIVOT): DISTRIBUTEUR - NA

REF	FN	PART NUMBER	YR/SN	QTY	DESCRIPTION
1		87331094		1	DISTRIBUTEUR, Assy
2		11193879		3	RONDELLE BELLEVILLE, Belleville, M8.4
3		16043921		3	VIS, M8x1,25x35
5		85819721		1	SOUPAPE HYDRAULIQUE
6		9968528		1	GOUJON
7		9968524		1	ELEMENT DISTR HYDR, Assy
8		9968476		4	JOINT THORIQUE
9		9970107		2	ELEMENT DISTR HYDR, Assy
10		9968526		1	ELEMENT DISTR HYDR, Assy
11		9968527		1	ELEMENT DISTR HYDR, Assy
12		9968529		2	GOUJON
13		9968441		4	ECROU
14		9968440		2	ECROU
15		87331276		1	SOUPAPE HYDRAULIQUE

Mechanical Version B95B

721	02	p1	03/08

DISTRIBUTEUR STABILISATEUR, 3 ESECTION (CENTER PIVOT) - NA

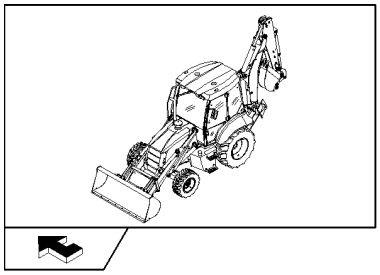

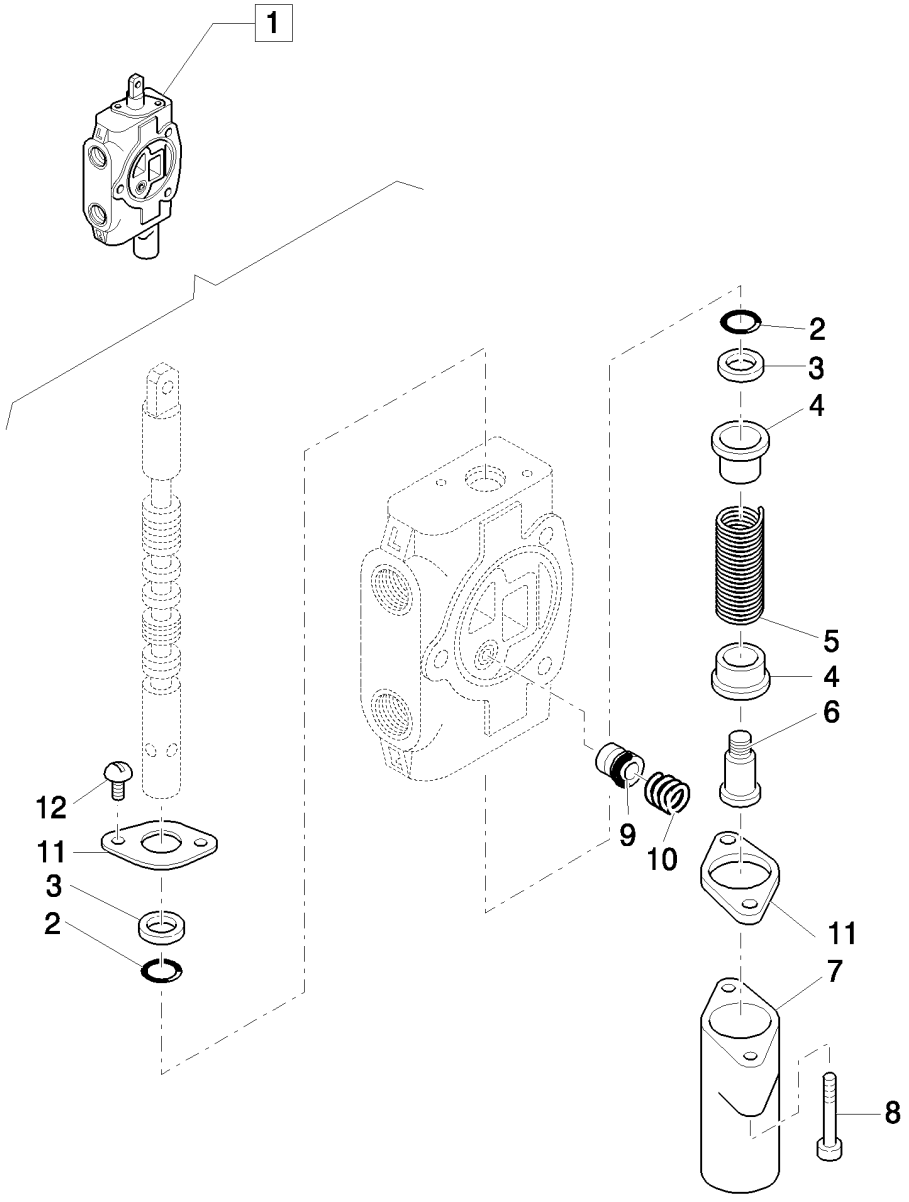

DISTRIBUTEUR STABILISATEUR, 3 ESECTION (CENTER PIVOT) - NA

REF	FN	PART NUMBER	YR/SN	QTY	DESCRIPTION
1		9968526		1	ELEMENT DISTR HYDR, Assy
2		85813418		2	JOINT THORIQUE
3		85813419		2	RACLEUR BALAIS
4		9968481		2	SIÈGE
5		9968531		1	RESSORT
6		9968483		1	VIS
7		9968484		1	COUVERCLE
8		9968486		2	VIS
9		9968477		1	VALVE A CLAPET
10		9968478		1	RESSORT
11		9968480		2	FLASQUE
12		9968460		2	VIS

Mechanical Version	B95B

MANCHONS DISTRIBUTEUR BRAS TELESCOPIQUE, SECTION HED(CENTER PIVOT) - NA

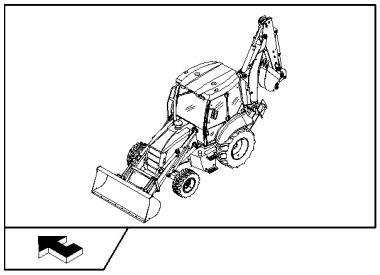

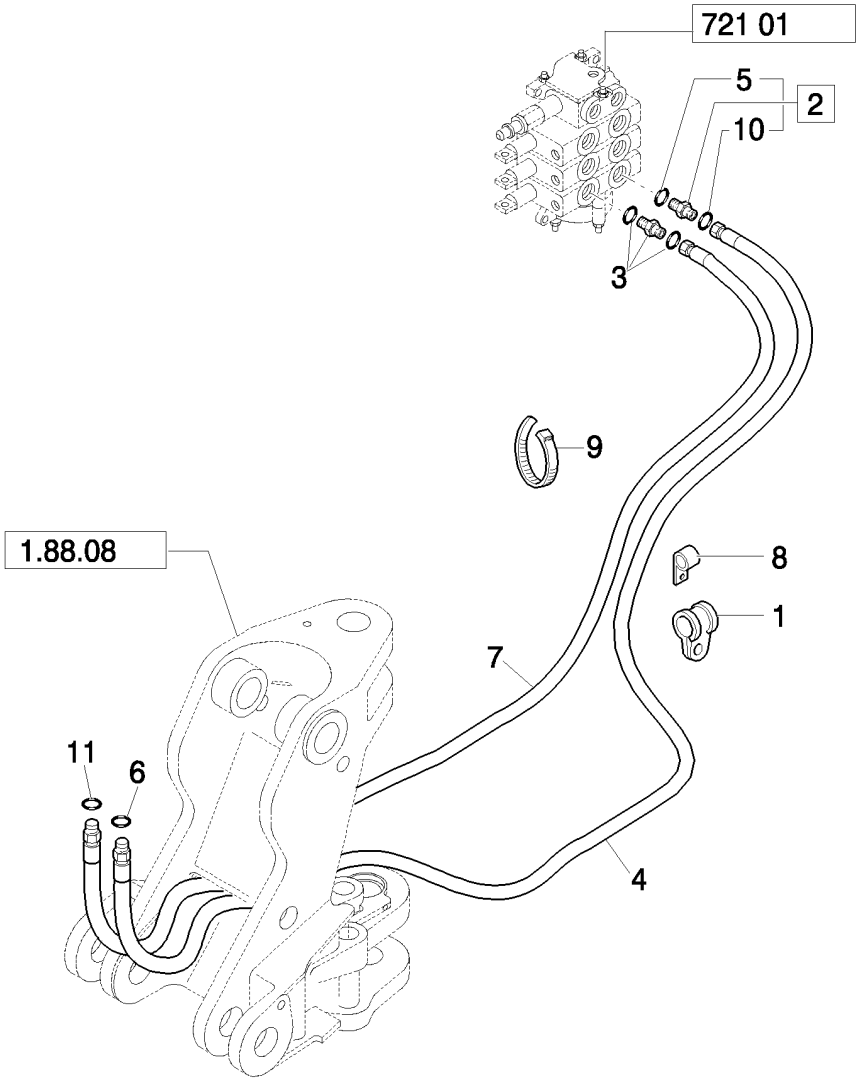

MANCHONS DISTRIBUTEUR BRAS TELESCOPIQUE, SECTION HED(CENTER PIVOT) - NA

REF	FN	PART NUMBER	YR/SN	QTY	DESCRIPTION
1		85812029		1	BRIDE
2		83963374		1	RACCORD
3		85803234		1	RACCORD
4		85812214		1	FLEXIBLE HYDRAULIQUE, 2700mm lg
5		80128825		1	JOINT THORIQUE
6		9992298		1	JOINT THORIQUE, -014, 90 Duro, .489" ID x .070" Thk
7		87638574		1	TUYAU FLEXIBLE
8		85803393		2	BRIDE
9		85803332		4	SERRE-CABLE, M4.8 x 180
10		89992298		1	JOINT THORIQUE
11		9992069		1	JOINT THORIQUE, -016, 90 Duro, .614" ID x .070" Thk

Mechanical Version B95B

721	04	p1	03/08

BALANCIER TÉLÉSCOPIQUE AVEC COMMANDE À PÉDALE (CENTER PIVOT): SYSTÈME BALANCIER TÉLÉSCOPIQUE: VÉRIN TÉLÉSCOPIQUE -

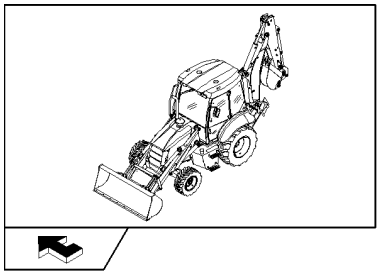

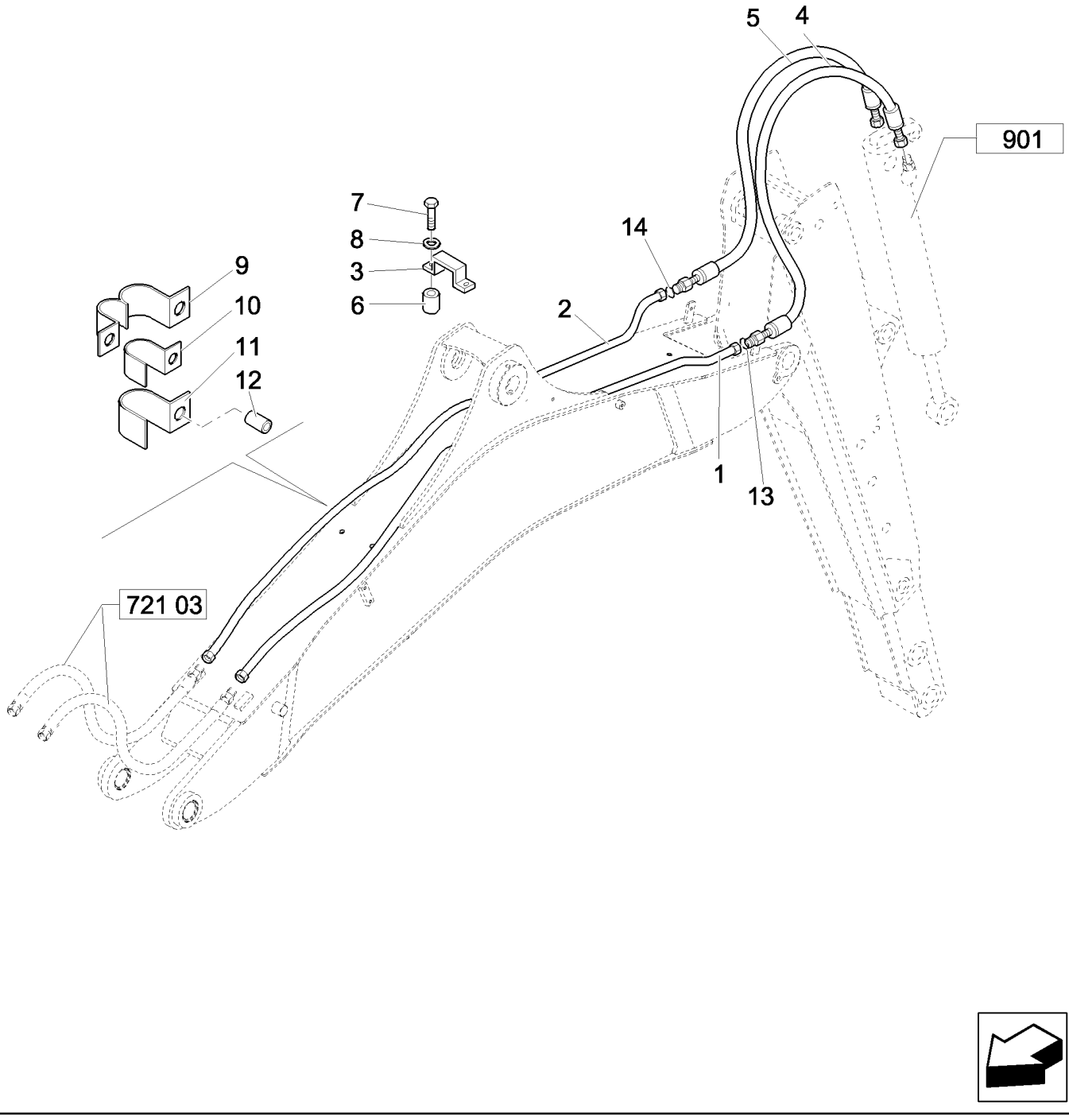

BALANCIER TÉLÉSCOPIQUE AVEC COMMANDE À PÉDALE (CENTER PIVOT): SYSTÈME BALANCIER TÉLÉSCOPIQUE: VÉRIN TÉLÉSCOPI

REF	FN	PART NUMBER	YR/SN	QTY	DESCRIPTION
1		87617945		1	TUYAUTERIE PRESSION, 16 mm OD Tube
2		87621518		1	TUYAUTERIE PRESSION, 12 mm OD Tube
3		85802900		1	BRIDE
4	1	87619506		1	TUYAU FLEXIBLE
5	2	85817108		1	FLEXIBLE HYDRAULIQUE
6		87610565		1	ENTRETOISE
7		16044021		2	BOULON, Hex, M8 x 40, 8.8
8		11193879		2	RONDELLE BELLEVILLE, Belleville, M8.4
9		85802529		2	BRIDE
10		85802527		2	BRIDE
11		85802528		2	BRIDE
12		87615734		1	ENTRETOISE
13		9992069		1	JOINT THORIQUE, -016, 90 Duro, .614" ID x .070" Thk
14		9992298		1	JOINT THORIQUE, -014, 90 Duro, .489" ID x .070" Thk

(1) Includes 13
(2) Includes 14

Mechanical Version B95B

721	05	p1	03/08

BALANCIER TÉLÉSCOPIQUE AVEC COMMANDE À PÉDALE (CENTER PIVOT): SYSTÈME BALANCIER TÉLÉSCOPIQUE: VÉRIN DU GODET - NA

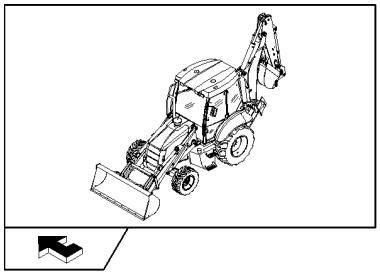

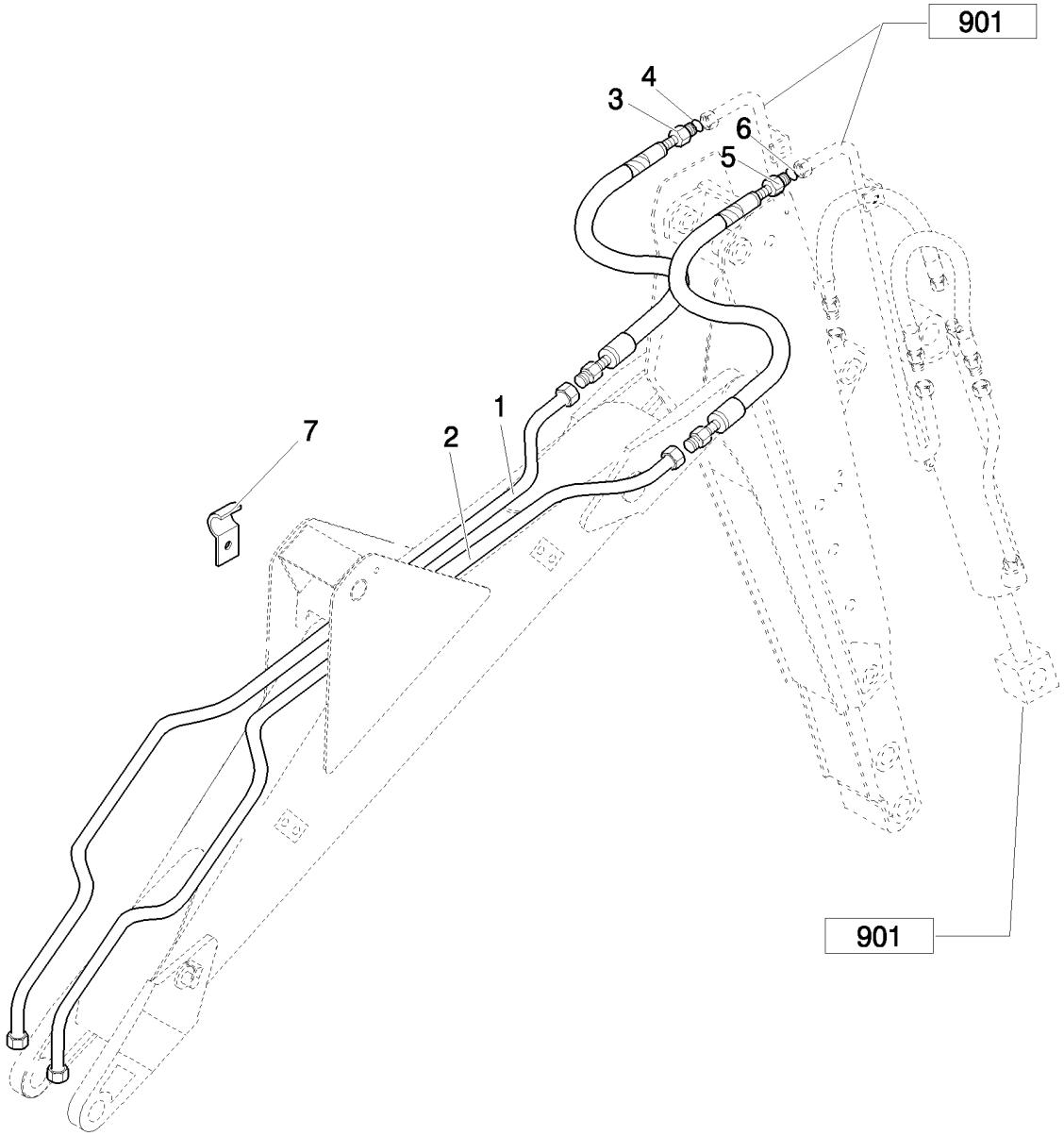

BALANCIER TÉLÉSCOPIQUE AVEC COMMANDE À PÉDALE (CENTER PIVOT): SYSTÈME BALANCIER TÉLÉSCOPIQUE: VÉRIN DU GODET -

REF	FN	PART NUMBER	YR/SN	QTY	DESCRIPTION
1		87614629		1	TUYAUTERIE PRESSION, 20 mm OD Tube
2		87614627		1	TUYAUTERIE PRESSION, 16 mm OD Tube
3	1	85817106		1	TUYAU FLEXIBLE
4		9991976		2	JOINT THORIQUE, -018, 90 Duro, .739" ID x .070" Thk
5	2	85817107		1	TUYAU FLEXIBLE
6		9992069		2	JOINT THORIQUE, -016, 90 Duro, .614" ID x .070" Thk
7		87610539		1	CAVALIER-SERRE-TUBE

(1) Includes 4
(2) Includes 6

Mechanical Version B95B

BALANCIER TÉLÉSCOPIQUE AVEC COMMANDE À PÉDALE (CENTER PIVOT) - NA

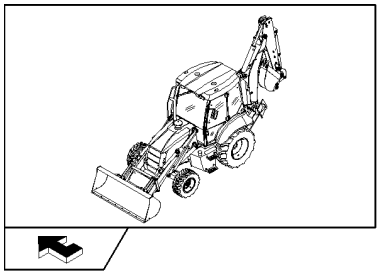

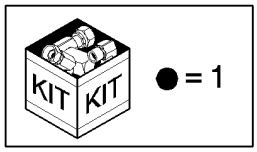

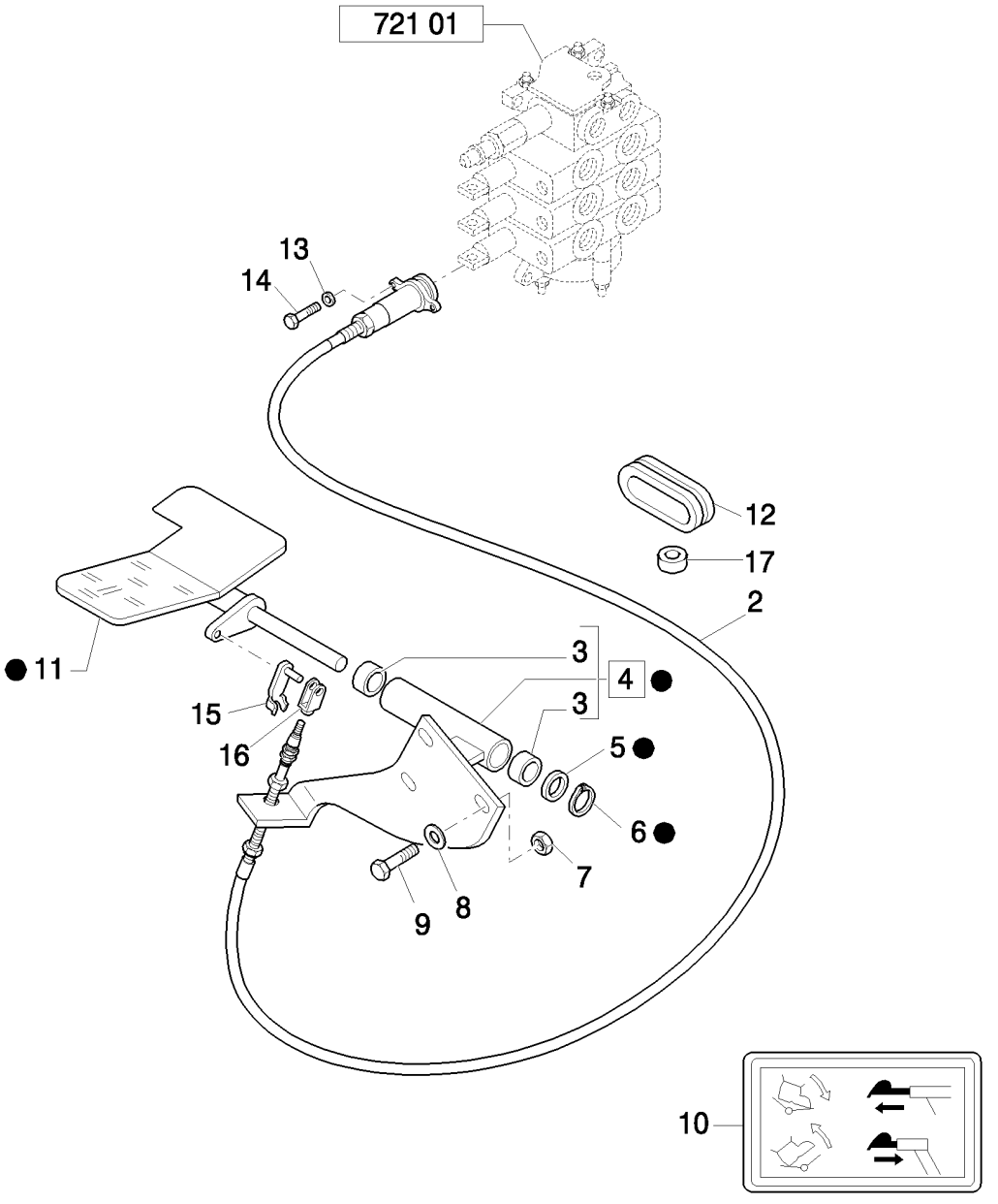

BALANCIER TÉLÉSCOPIQUE AVEC COMMANDE À PÉDALE (CENTER PIVOT) - NA

REF	FN	PART NUMBER	YR/SN	QTY	DESCRIPTION
1		85802509		1	PEDALE, Assy
2	1	85813103		1	CABLE
3		85802494		2	BAGUE
4		85801599		1	PLAQUE, Assy
5		14496901		1	RONDELLE, M16 x 30 x 3
6		83911366		1	CIRCLIP
7		16104111		3	CONTRE-ECROU, M8 x 1.25, Cl 8
8		16043621		3	BOULON, Hex, M8 x 25, 8.8
9		11193879		3	RONDELLE BELLEVILLE, Belleville, M8.4
10		85803786		1	DECALCOMANIE
11		85802510		1	PEDALE
12		85803517		2	BAGUE CAOUTCHOUC
13		85813201		4	RONDELLE
14		85813200		4	VIS
15		85813186		2	CLIP
16		85813187		2	FOURCHETTE
17		85802903		1	ISOLANT

(1) Includes 13 - 16

Mechanical Version B95B

DISTRIBUTEUR MARTEAU ARRIERE

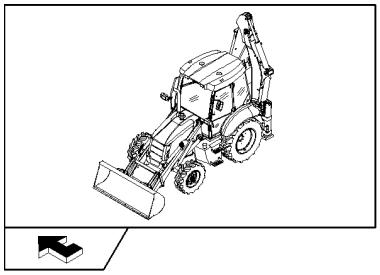

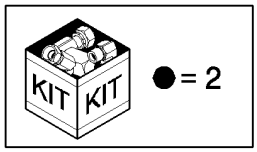

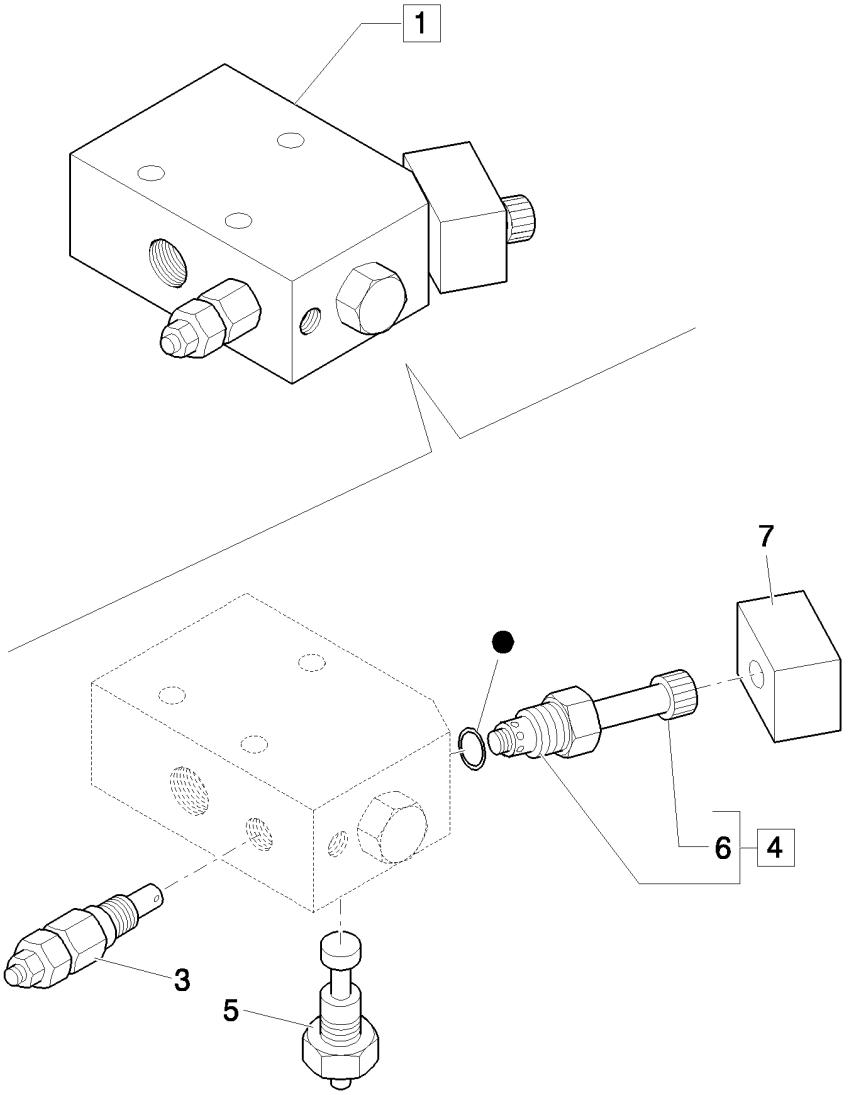

DISTRIBUTEUR MARTEAU ARRIERE

REF	FN	PART NUMBER	YR/SN	QTY	DESCRIPTION
1		87677466		1	SOUPAPE HYDRAULIQUE, ASSY
2		9970181		1	POCHETTE DE JOINTS, Gaskets
3		87358201		1	SOUPAPE HYDRAULIQUE, ASSY
4		87358194		1	SOUPAPE HYDRAULIQUE, ASSY
5		9970179		1	REGULATEUR, Assy
6		9970384		1	ECROU
7		87357715		1	TRANSMETTEUR ASSY

724/01	01	p1	04/08

CIRCUIT HYDRAULIQUE MACHINE POUR MARTEAU (CENTER PIVOT)

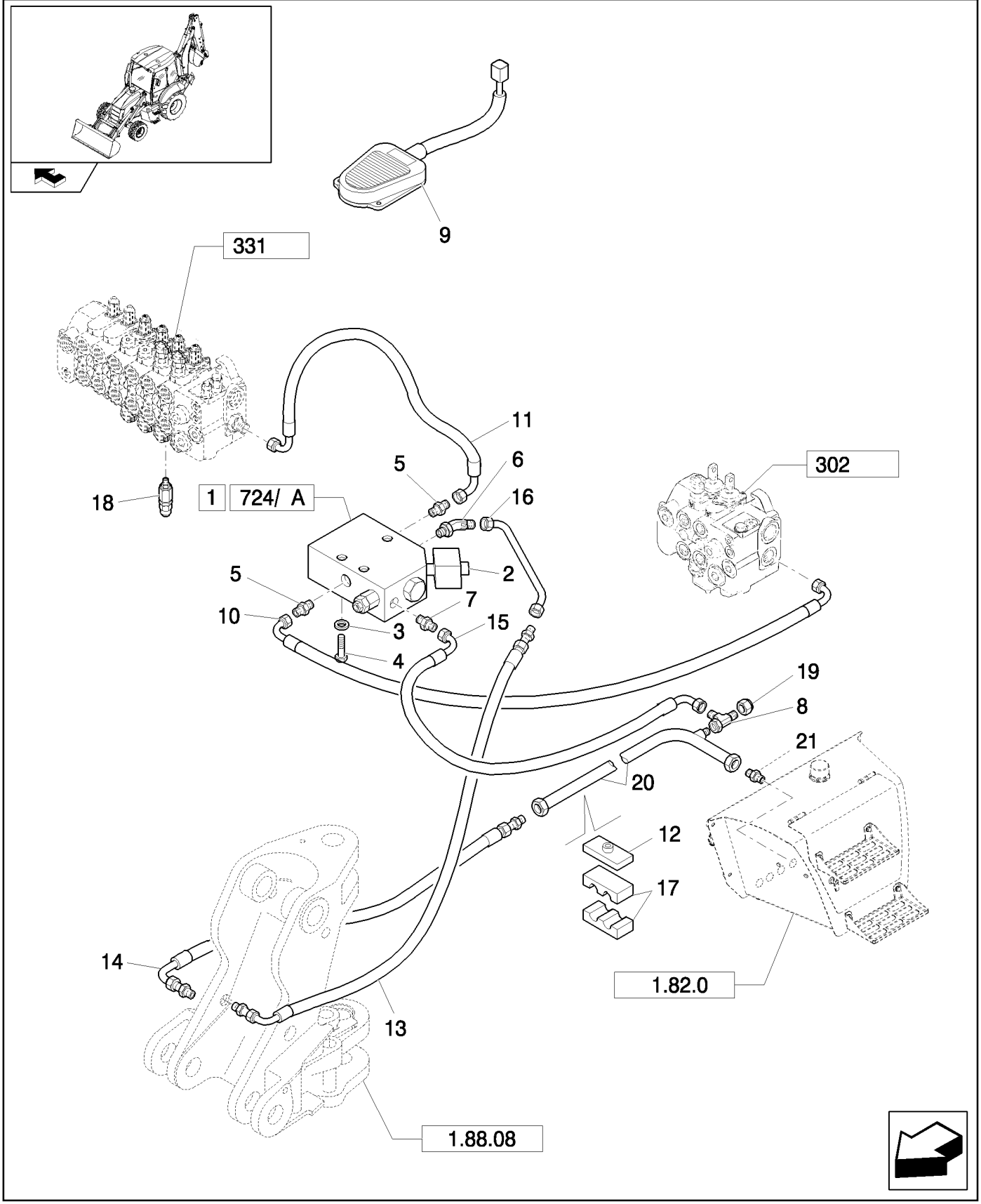

CIRCUIT HYDRAULIQUE MACHINE POUR MARTEAU (CENTER PIVOT)

REF	FN	PART NUMBER	YR/SN	QTY	DESCRIPTION
1		87677466		1	SOUPAPE HYDRAULIQUE, Assy
2		87357715		1	TRANSMETTEUR ASSY
3		11193879		3	RONDELLE BELLEVILLE, Belleville, M8.4
4		16044821		3	BOULON, Hex, M8 x 80, 8.8
5		85803486		2	RACCORD
6		85803487		1	COUDE
7		83963371		1	RACCORD
8		85807876		1	TE
9		85826123		1	COMMUTATEUR COMPLET
10		85802776		1	FLEXIBLE HYDRAULIQUE, 1150mm lg
11		85803428		1	FLEXIBLE HYDRAULIQUE, 850mm lg
12		87390531		1	PLAQUE
13		85817634		1	FLEXIBLE HYDRAULIQUE
14		85817635		1	FLEXIBLE HYDRAULIQUE
15		85817633		1	FLEXIBLE HYDRAULIQUE
16		85817629		1	TUYAU HYDRAULIQUE
17		87390530		1	BRIDE
18		85812116		1	SOUPAPE, DÉCHARGE
19		83987627		1	CHAPEAU
20		85826987		1	TUYAU HYDRAULIQUE
21		85802801		1	RACCORD, 1-11/16"-12 ORSx1-5/16"-12 SAE O-ring

Pilot Control Version	B95B

724/01	02	p1	03/08

CIRCUIT HYDRAULIQUE BRAS MARTEAU (CENTER PIVOT)

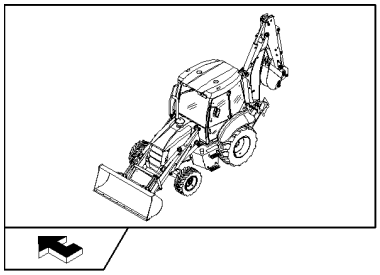

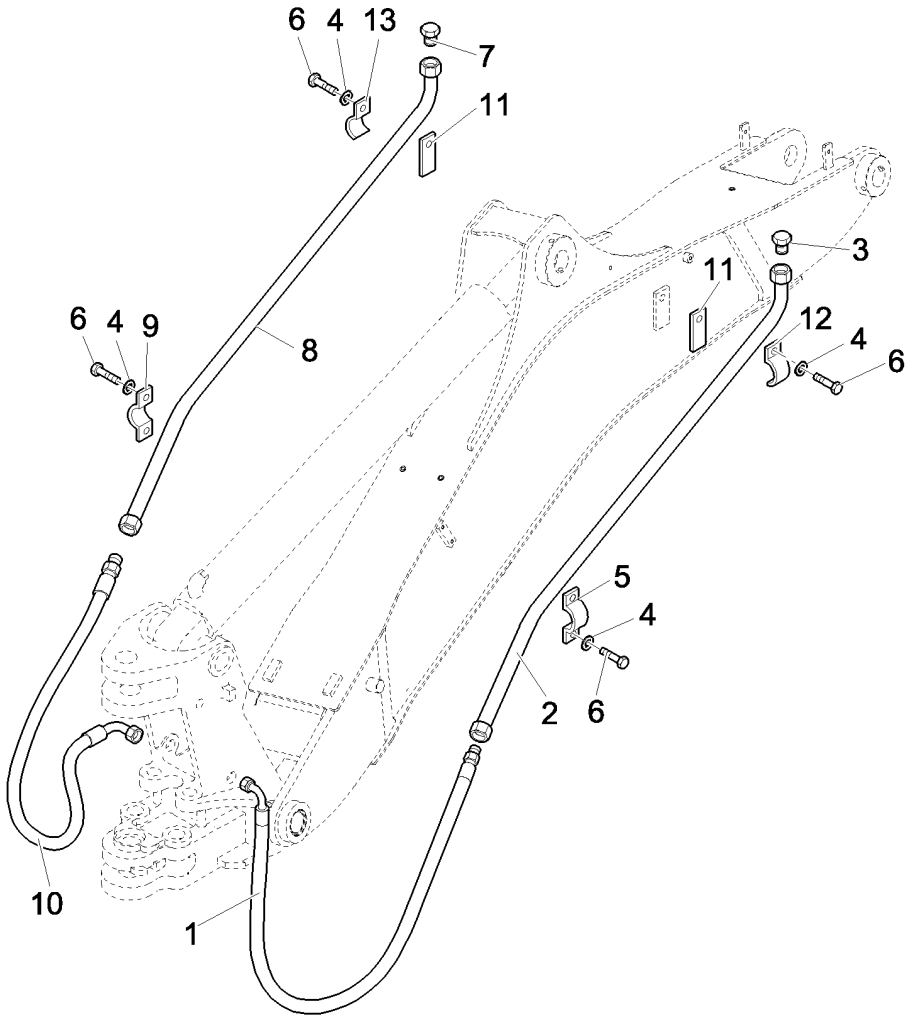

CIRCUIT HYDRAULIQUE BRAS MARTEAU (CENTER PIVOT)

REF	FN	PART NUMBER	YR/SN	QTY	DESCRIPTION
1		85819619		1	FLEXIBLE HYDRAULIQUE
2		87622842		1	TUYAUTERIE PRESSION
3		85801397		1	BOUCHON
4		11190579		8	RONDELLE BELLEVILLE, Belleville, M10.5
5		87310951		1	BRIDE
6		11106221		4	BOULON, Hex, M10 x 25, 8.8, Full Thd, M6x16
7		85801452		1	BOUCHON
8		87616236		1	TUYAUTERIE PRESSION
9		87310952		1	BRIDE
10		85819618		1	FLEXIBLE HYDRAULIQUE
11		87630711		2	PLAQUE
12		87624517		1	CAVALIER-SERRE-TUBE
13		87629471		1	CAVALIER-SERRE-TUBE

Pilot Control Version B95B

724/02		p1	03/08

INSTALLATION HYDRAULIQUE MARTEAU (CENTER PIVOT)

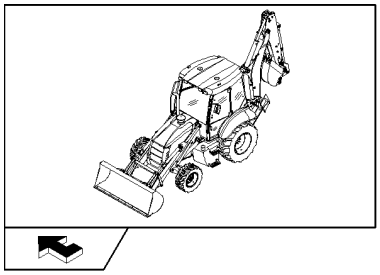

INSTALLATION HYDRAULIQUE MARTEAU (CENTER PIVOT)

REF	FN	PART NUMBER	YR/SN	QTY	DESCRIPTION
1		87677466		1	SOUPAPE HYDRAULIQUE
2		87357715		1	TRANSMETTEUR ASSY
3		11193879		3	RONDELLE BELLEVILLE, Belleville, M8.4
4		16044821		3	BOULON, Hex, M8 x 80, 8.8
5		85803486		2	RACCORD
6		85803487		1	COUDE, 45°
7		83963371		1	RACCORD
8		85807876		1	TE
9		85826123		1	COMMUTATEUR COMPLET
10		87390531		1	PLAQUE
11		85803428		1	FLEXIBLE HYDRAULIQUE, 850mm lg
12		85802801		1	RACCORD
13		85826987		1	TUYAU HYDRAULIQUE
14		83987627		1	CHAPEAU
15		85817633		1.	FLEXIBLE HYDRAULIQUE
16		85817629		1	TUYAU HYDRAULIQUE
17		87390530		1	BRIDE
18		9968595		1	SOUPAPE, DÉCHARGE
19		85817635		1	FLEXIBLE HYDRAULIQUE
20		85817634		1	FLEXIBLE HYDRAULIQUE

Mechanical Version B95B

725		p1	03/08

MARTEAU PIQUEUR - BALANCIER TELESCOPIQUE

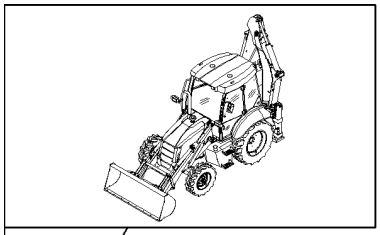

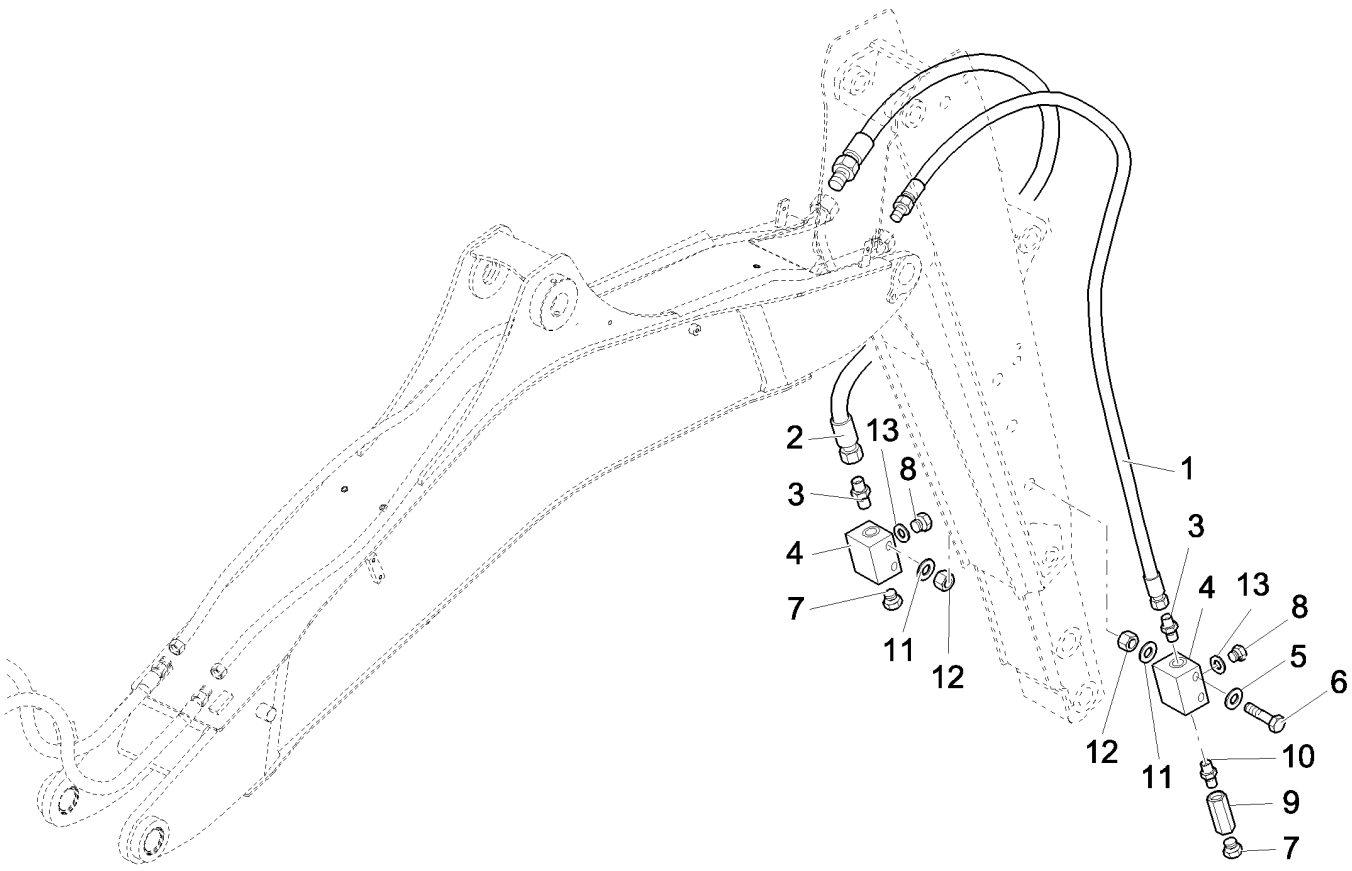

MARTEAU PIQUEUR - BALANCIER TELESCOPIQUE

REF	FN	PART NUMBER	YR/SN	QTY	DESCRIPTION
1		85819621		1	FLEXIBLE HYDRAULIQUE
2		85819620		1	FLEXIBLE HYDRAULIQUE
3		85803486		2	RACCORD
4		85802247		2	BLOC
5		11193879		4	RONDELLE BELLEVILLE, Belleville, M8.4
6		16045021		4	BOULON, Hex, M8 x 90, 8.8
7		85802457		2	BOUCHON
8		85803409		2	BOUCHON
9		85802372		1	CLAPET ANTI-RETOUR, 10 Bar
10		85804879		1	RACCORD
11		12647121		6	RONDELLE, M8 x 20 x 3
12		14048211		2	CONTRE-ECROU, M8 x 1.25, Cl 8
13		80167269		2	JOINT THORIQUE

725/01	01	p1	04/08

CIRCUIT HYDRAULIQUE ENSEMBLE BRAS GODETS 4X1 ET 6X1 (POWER SHUTTLE) - NA

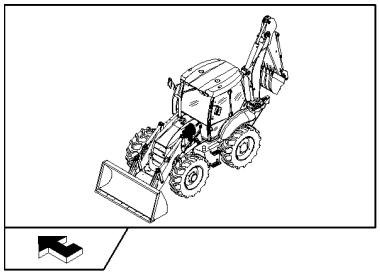

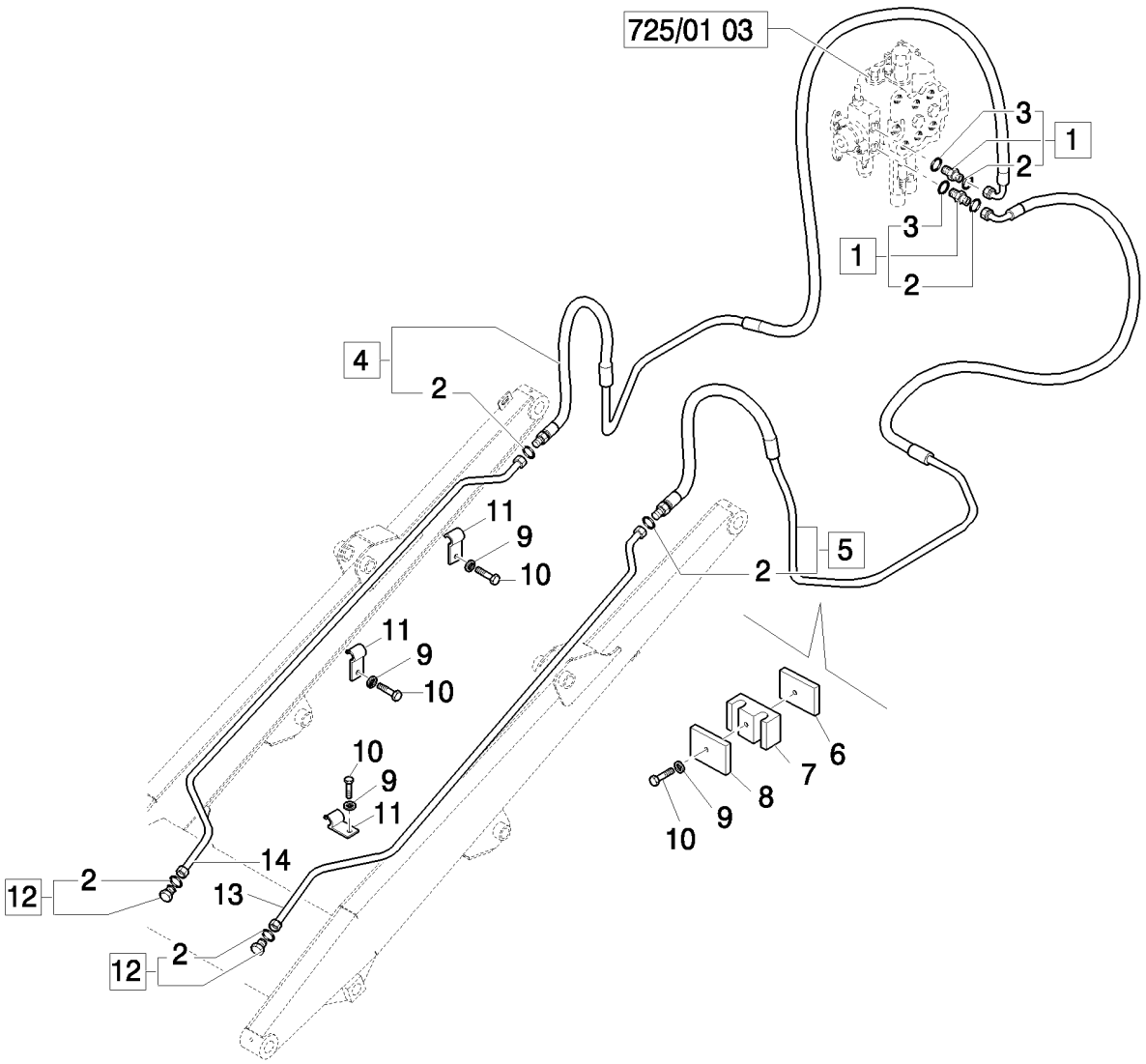

CIRCUIT HYDRAULIQUE ENSEMBLE BRAS GODETS 4X1 ET 6X1 (POWER SHUTTLE) - NA

REF	FN	PART NUMBER	YR/SN	QTY	DESCRIPTION
1		83963376		2	RACCORD
2		89992298		6	JOINT THORIQUE
3		80167269		2	JOINT THORIQUE
4		85805863		1	FLEXIBLE HYDRAULIQUE, Assy, RH
5		85805862		1	FLEXIBLE HYDRAULIQUE, Assy, LH
6		85805340		2	PLAQUE
7		85805193		2	BRIDE
8		85805195		2	PLAQUE
9		11193979		8	RONDELLE BELLEVILLE, Belleville, M8.4
10		16043821		8	BOULON, Hex, M8 x 30, 8.8
11		85805247		6	BRIDE
12		85803408		2	BOUCHON, Assy
13		85805864		1	TUYAU HYDRAULIQUE, LH
14		85805865		1	TUYAU HYDRAULIQUE, RH

Mechanical Version	B95B

725/01	02	p1	04/08

ENSEMBLE CONDUITS HYDRAULIQUES MACHINE GODETS 4X1 ET 6X1 (POWER SHUTTLE) - NA

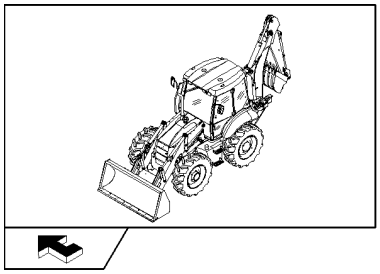

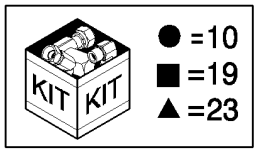

ENSEMBLE CONDUITS HYDRAULIQUES MACHINE GODETS 4X1 ET 6X1 (POWER SHUTTLE) - NA

REF	FN	PART NUMBER	YR/SN	QTY	DESCRIPTION
1		85802234		2	COUDE
2		85805318		2	COUDE, 90º, 9/16"-18, 37º x 9/16"-18, O-Ring
3		47050685		2	RACCORD
4		47050686		1	RACCORD
5		85826100		1	REDUCTEUR
6		85828211		1	ACCOUPLEMANT RAP MALE
7		87316092		1	TUYAU FLEXIBLE
8		87316096		1	TUYAU FLEXIBLE
9		87316091		2	TUYAU FLEXIBLE
10		87739988		1	KIT
11		87382112		1	POIGNÉE, Loader, Powershuttle, W/Detent, Declutch; Includes 87387751 Grip W/1 Button; 87387703 Prop Roller W/Detented Position; 87387754 Transmission Button Harness; 87387722 Bi-Directional PWM Driver Harness
12		85804346		1	DECALCOMANIE
13		87305209		4	DECALCOMANIE
14		201-422		4	TE, 11/16"-16 ORFS x 11/16"-16 Fem Sw Run
15		87739689		1	DISTRIBUTEUR, Assy
16		14300521		1	VIS, Hex Soc Hd, M6 x 75, 8.8, M6x75
17		87311363		1	ORIFICE
18		87739122		1	SOUPAPE
19		85828000		1	POCHETTE DE JOINTS
20		85827993		2	ELECTRO-VALVE
21		85817531		1	TE
22		87646604		1	LEVIER
23		85828001		1	POCHETTE DE JOINTS

Mechanical Control Version B95B

725/01	03	p1	04/08

DISTRIBUTEUR CHARGEUSE, 3 SECTIONS (CENTER PIVOT) - NA

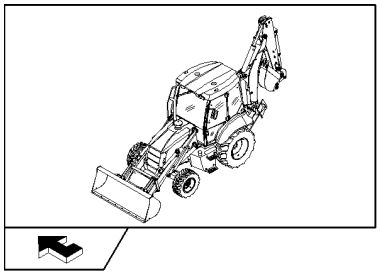

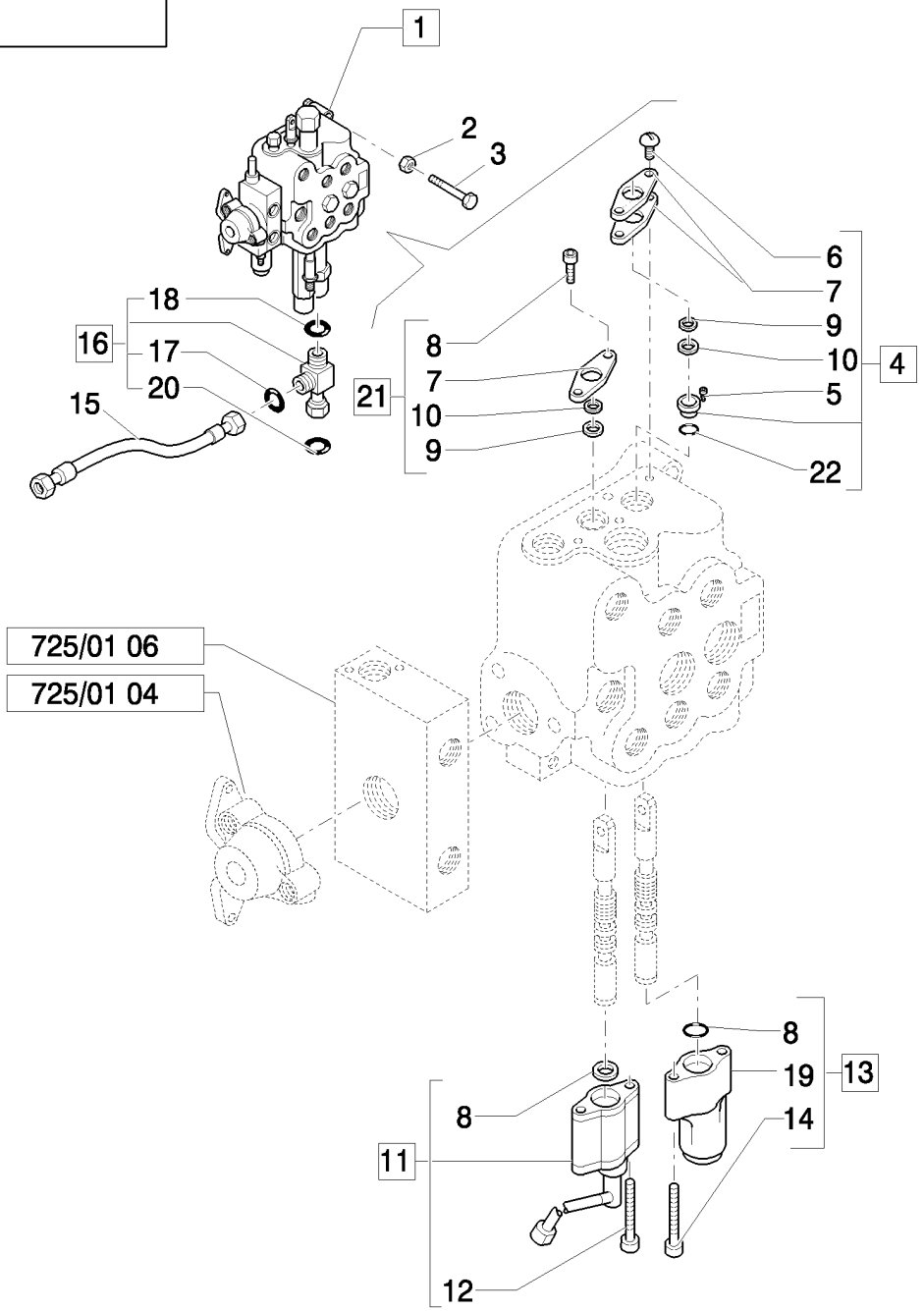

DISTRIBUTEUR CHARGEUSE, 3 SECTIONS (CENTER PIVOT) - NA

REF	FN	PART NUMBER	YR/SN	QTY	DESCRIPTION
1		87326256		1	ELEMENT DISTR HYDR, Assy
2		11190579		3	RONDELLE BELLEVILLE, Belleville, M10.5
3		14308221		3	VIS, Hex Soc Hd, M10 x 1.25 x 65, 8.8
4		9968455		1	KIT
5		9968457		1	ENTRETOISE
6		9968456		2	VIS
7		9968458		3	FLASQUE
8		9968460		2	VIS
9		9968489		4	JOINT
10		9968490		2	RACLEUR BALAIS
11		85808403		1	BUTÉE, agnetic Detent, Assy
12		9968451		2	VIS
13		85817025		1	TIROIR
14		9968454		2	VIS
15		85816804		1	FLEXIBLE HYDRAULIQUE, 550mm lg
16		85817531		1	TE, Assy
17		9825770		1	JOINT THORIQUE, -011, 90 Duro, .301" ID x .070" Thk
18		9824050		1	JOINT THORIQUE, -021, 90 Duro, .926" ID x .070" Thk
19		9968513		1	COUVERCLE
20		89626929		1	JOINT THORIQUE, 90 Duro, 1.048" ID x .116" Thk
21		87319445		1	BOULON A OEIL, Assy
22		87327076		1	JOINT THORIQUE

Mechanical Version B95B

DISTRIBUTEUR CHARGEUSE, 3 SECTIONS, CALOTTE & SOUPAPE DECHARGE (CENTER PIVOT) - NA

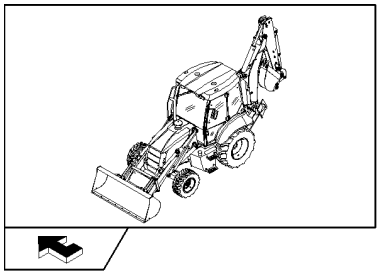

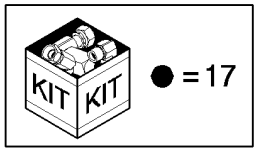

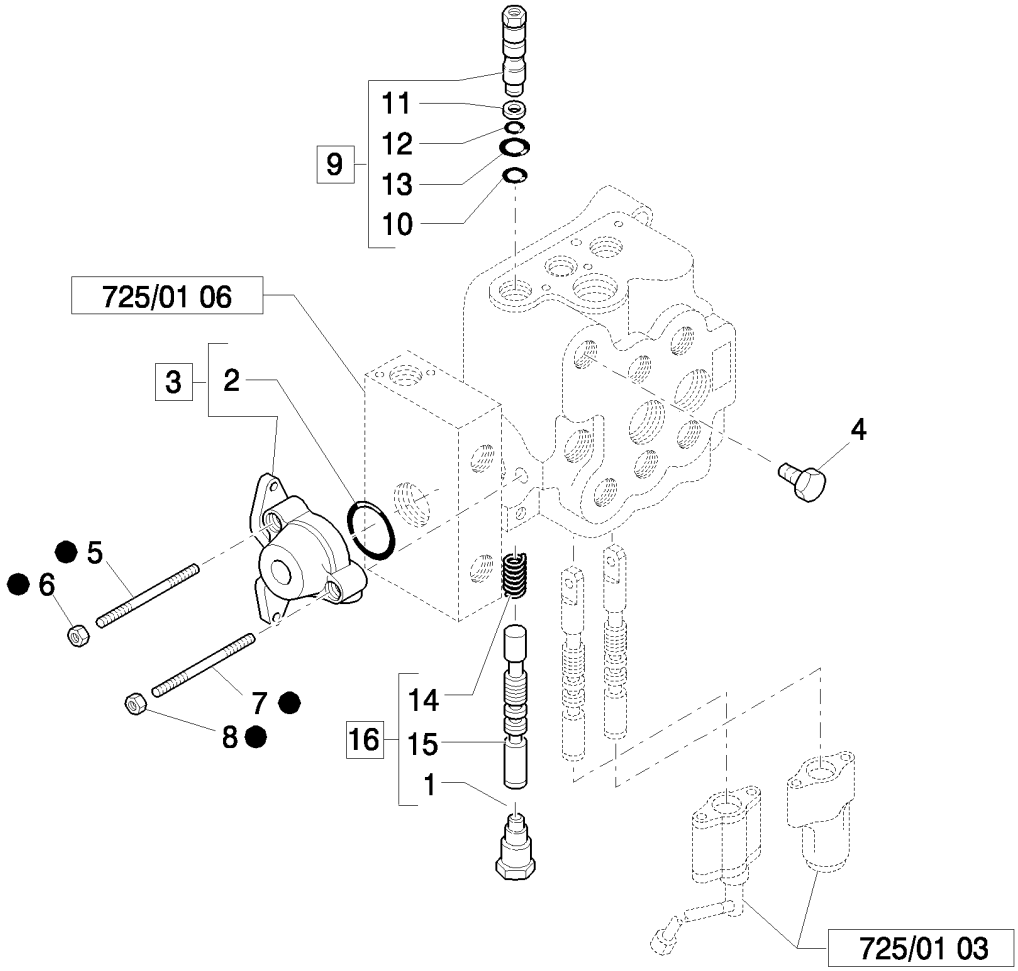

DISTRIBUTEUR CHARGEUSE, 3 SECTIONS, CALOTTE & SOUPAPE DECHARGE (CENTER PIVOT) - NA

REF	FN	PART NUMBER	YR/SN	QTY	DESCRIPTION
1		9968464		1	BOUCHON, Assy
2		9968476		1	JOINT THORIQUE
3		9968443		1	ELEMENT DISTR HYDR, Assy
4		85807857		1	BOUCHON
5		9968439		2	GOUJON
6		9968441		2	ECROU
7		9968438		1	TIRANT FILETE
8		9968440		1	ECROU
9		85815667		1	VALVE BY-PASS
10		85815668		1	JOINT THORIQUE
11		9968467		1	CONTRE-JOINT
12		9968466		1	JOINT THORIQUE
13		9968468		1	JOINT THORIQUE
14		9968488		1	RESSORT
15		85807858		1	TIROIR
16		87327632		1	TIROIR, Assy
17		87326258		1	KIT DE TRANSFORMATION

Mechanical Version B95B

725/01	05	p1	04/08

DISTRIBUTEUR CHARGEUSE, 3 SECTIONS, SOUPAPES D'EVACUATION ET DE RETENUE (CENTER PIVOT) - NA

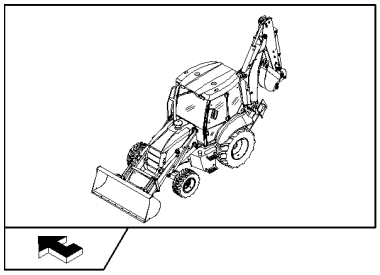

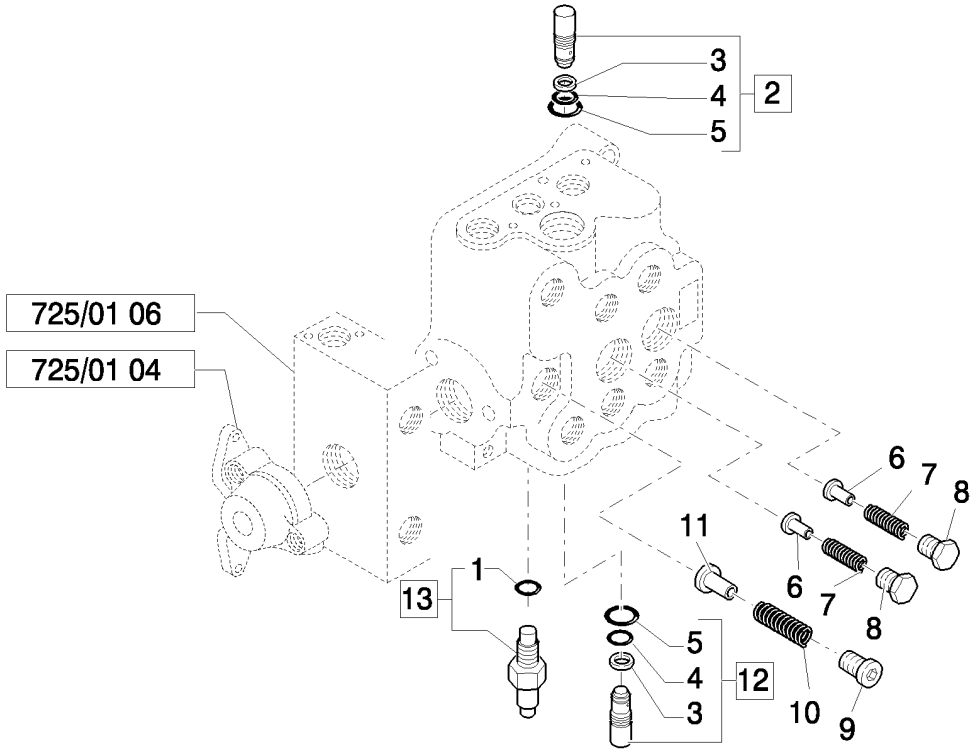

DISTRIBUTEUR CHARGEUSE, 3 SECTIONS, SOUPAPES D'EVACUATION ET DE RETENUE (CENTER PIVOT) - NA

REF	FN	PART NUMBER	YR/SN	QTY	DESCRIPTION
1		85819945		1	JOINT THORIQUE, Assy
2		87302609		1	SOUPAPE, DÉCHARGE, Assy
3		87302608		2	CONTRE-JOINT
4		9968471		2	JOINT THORIQUE
5		9968470		2	JOINT THORIQUE
6		9968444		2	PLONGEUR
7		9968445		2	RESSORT
8		9968446		2	BOUCHON
9		9968449		1	BOUCHON
10		9968448		1	RESSORT
11		9968447		1	PLONGEUR
12		87302611		1	SOUPAPE, DÉCHARGE, Assy
13		85819722		1	SOUPAPE HYDRAULIQUE, Assy

DISTRIBUTEUR PALE A TROIS SECTEURS - BENNE SECTEUR 4X1 - 6X1(CENTER PIVOT) - NA

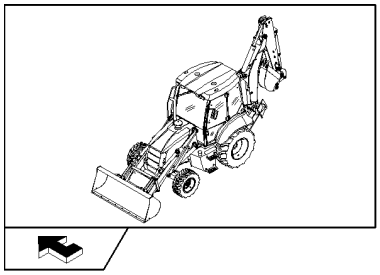

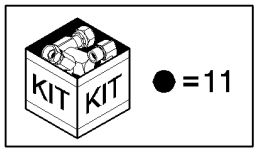

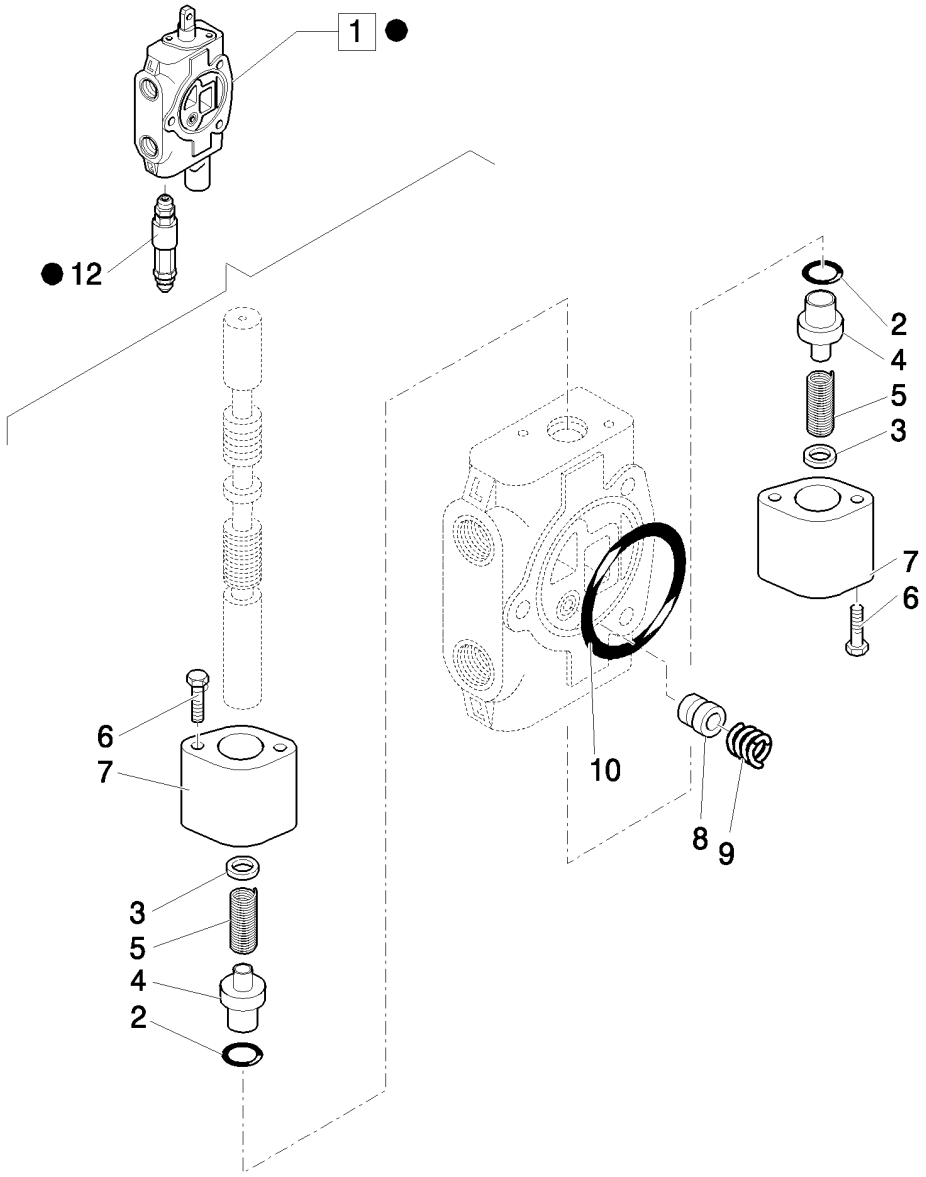

DISTRIBUTEUR PALE A TROIS SECTEURS - BENNE SECTEUR 4X1 - 6X1(CENTER PIVOT) - NA

REF	FN	PART NUMBER	YR/SN	QTY	DESCRIPTION
1		87326257		1	ELEMENT DISTR HYDR, Assy
2		87327044		2	JOINT THORIQUE
3		87327053		2	ENTRETOISE
4		87327049		2	SIÈGE
5		87327052		2	RESSORT
6		87327057		2	VIS
7		87327046		2	BOUCHON
8		9968477		1	VALVE A CLAPET
9		9968478		1	RESSORT
10		9968476		1	JOINT THORIQUE
11		87326258		1	KIT DE TRANSFORMATION
12		9968595		1	SOUPAPE, DÉCHARGE

Mechanical Version B95B

INSTALLATION HYDR. BRAS TELESCOPIQUE COMMANDE A PEDALE (CENTER PIVOT) - NA

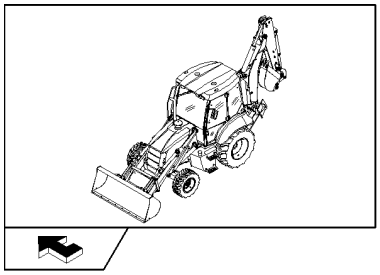

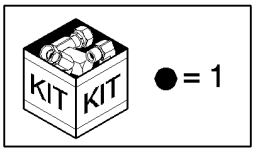

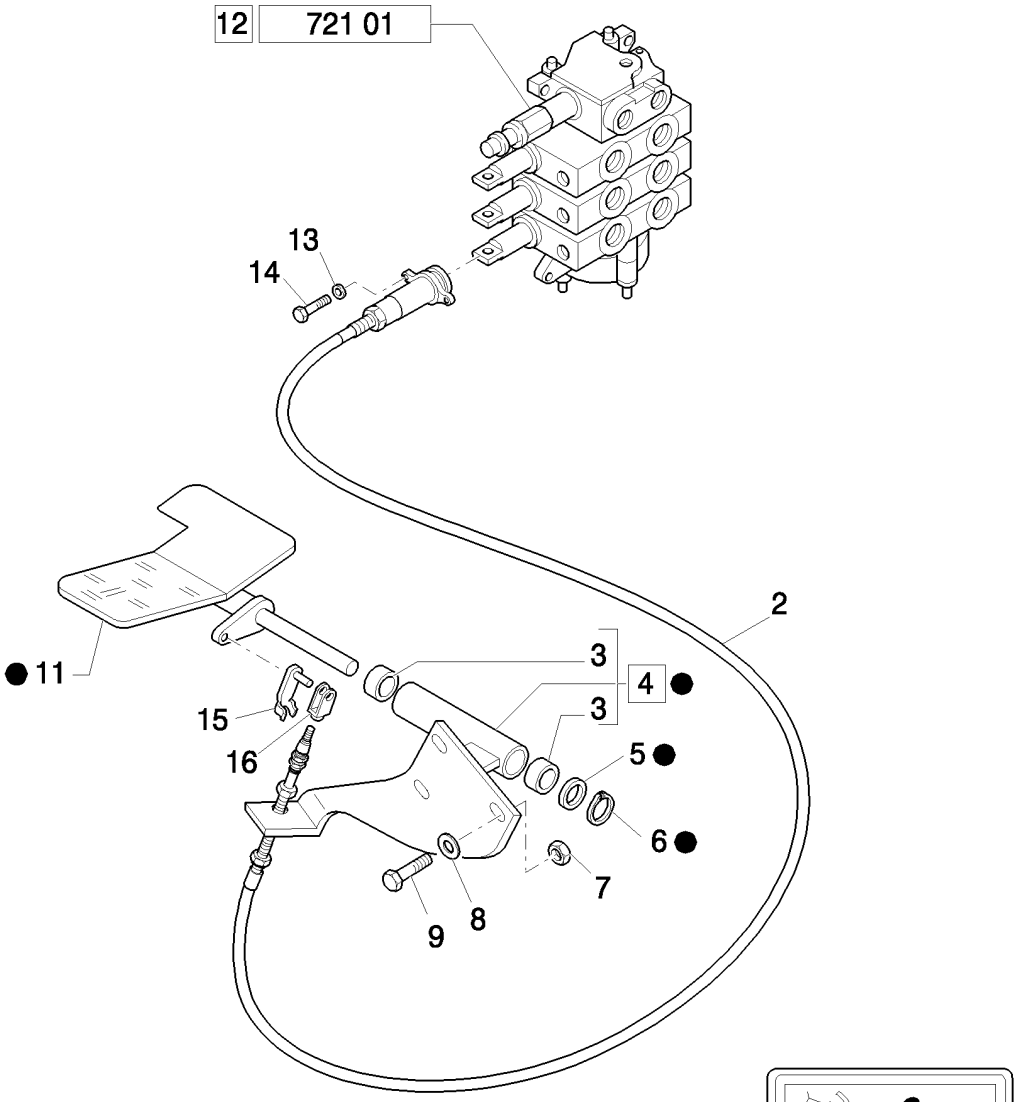

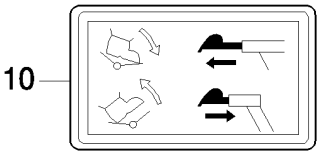

INSTALLATION HYDR. BRAS TELESCOPIQUE COMMANDE A PEDALE (CENTER PIVOT) - NA

REF	FN	PART NUMBER	YR/SN	QTY	DESCRIPTION
1		85802509		1	PEDALE, Assy
2	1	85813103		1	CABLE
3		85802494		2	BAGUE
4		85801599		1	PLAQUE, Assy
5		14496901		1	RONDELLE, M16 x 30 x 3
6		83911366		1	CIRCLIP
7		16104111		3	CONTRE-ECROU, M8 x 1.25, Cl 8
8		16043621		3	BOULON, Hex, M8 x 25, 8.8
9		11193879		3	RONDELLE BELLEVILLE, Belleville, M8.4
10		85803786		1	DECALCOMANIE
11		85802510		1	PEDALE
12		87331094		1	DISTRIBUTEUR, Assy
13		85813201		4	RONDELLE
14		85813200		4	VIS
15		85813186		2	CLIP
16		85813187		2	FOURCHETTE

(1) Includes 13 - 16

Mechanical Version B95B

728	01	p1	04/08

SYSTÈME MARTEAU À MAIN: SORTIE

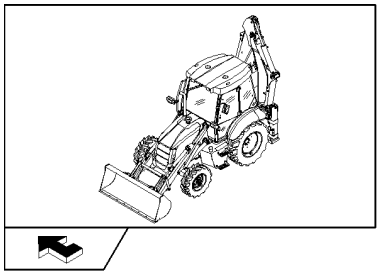

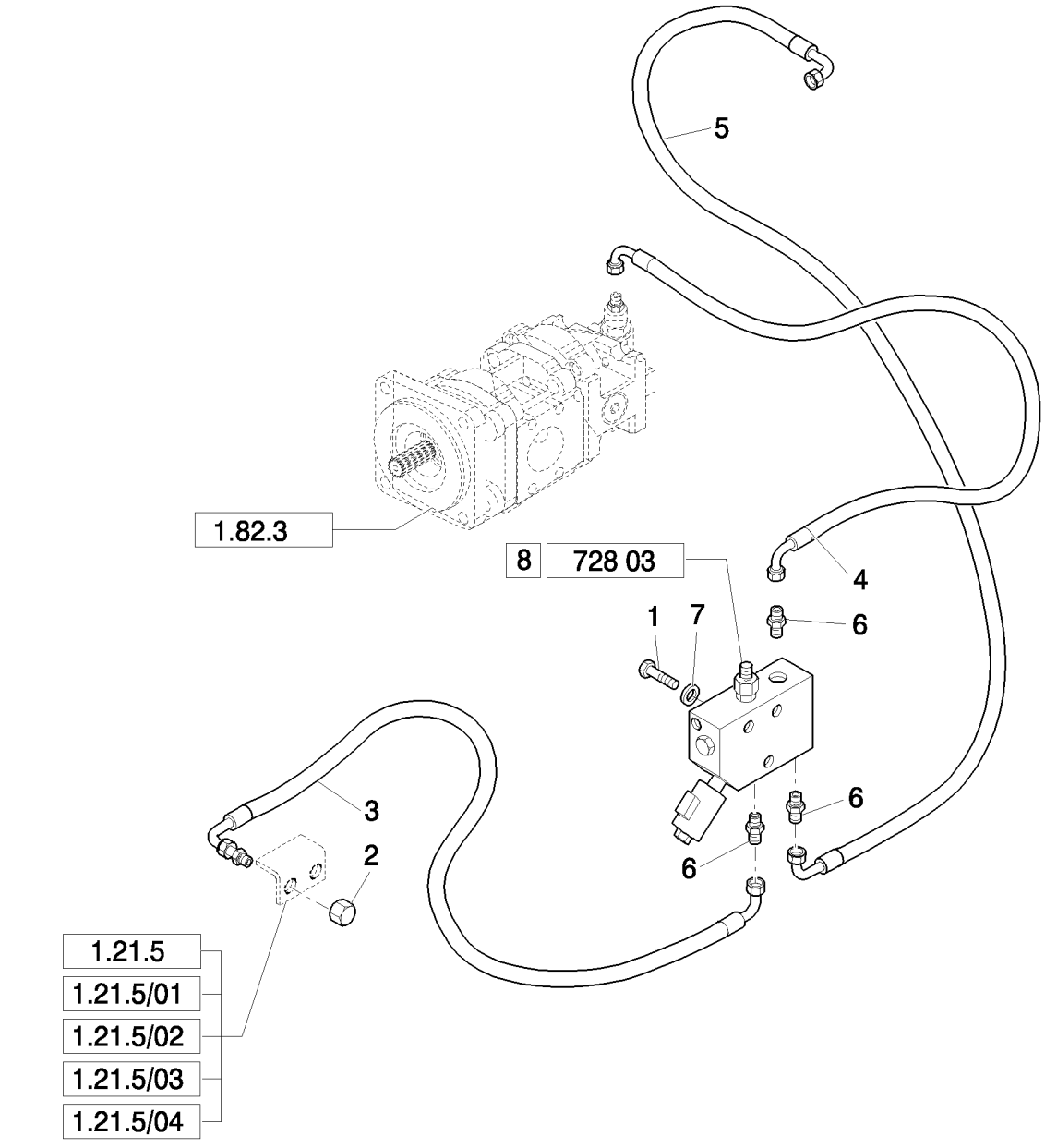

SYSTÈME MARTEAU À MAIN: SORTIE

REF	FN	PART NUMBER	YR/SN	QTY	DESCRIPTION
1		16044521		3	BOULON, Hex, M8 x 65, 8.8
2		83987627		1	CHAPEAU
3		87619499		1	TUYAU FLEXIBLE
4	1	87614752		1	TUYAU FLEXIBLE
4	2	87621906		1	TUYAU FLEXIBLE
5	1	87621913		1	TUYAU FLEXIBLE
6		85803234		3	RACCORD
7		11193879		3	RONDELLE BELLEVILLE, Belleville, M8.4
8		87677506		1	SOUPAPE HYDRAULIQUE, Assy

(1) Excluded Mechanical Version (NA)
(2) Only for Mechanical Version (NA)

728	02	p1	04/08

SYSTÈME MARTEAU À MAIN: RETOUR

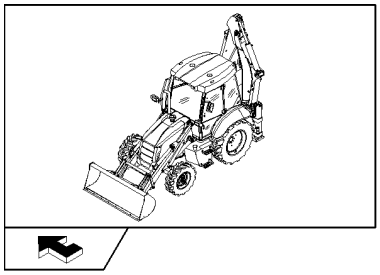

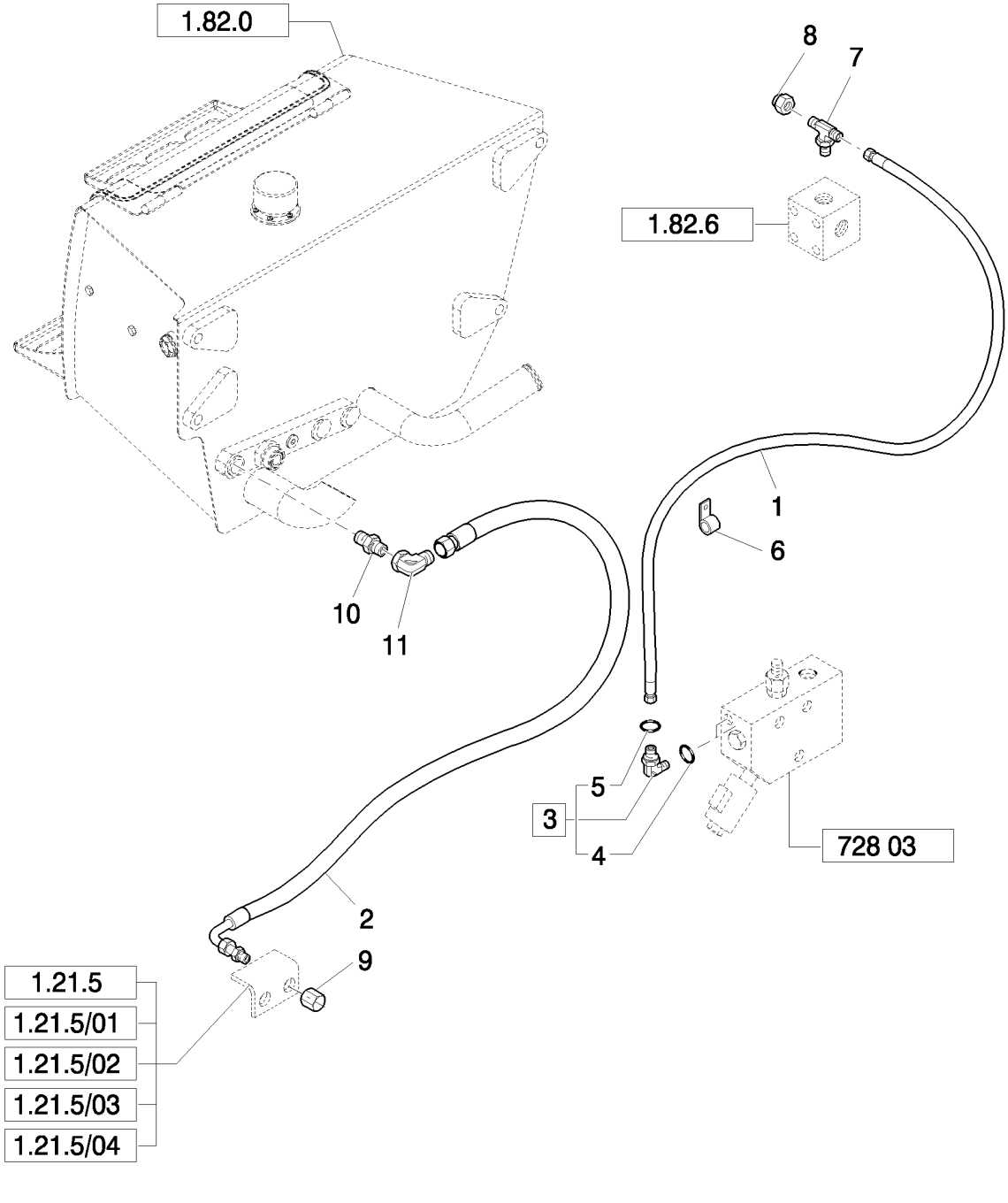

SYSTÈME MARTEAU À MAIN: RETOUR

REF	FN	PART NUMBER	YR/SN	QTY	DESCRIPTION
1		85803230		1	TUYAU FLEXIBLE, 1050mm lg
2		85803231		1	TUYAU FLEXIBLE, 900mm lg
3		83961741		1	COUDE, Assy
4		81844851		1	JOINT THORIQUE
5		81845037		1	JOINT THORIQUE
6		85803393		1	BRIDE
7		85802780		1	TE
8		81871325		1	COUVERCLE
9		83987627		1	CHAPEAU
10		85803241		1	RACCORD
11		85827861		1	RACCORD

728	03	p1	04/08

VALVE MARTEAU MANUEL

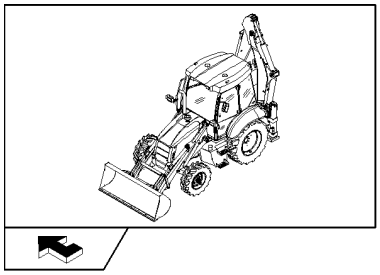

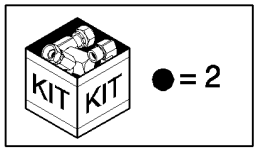

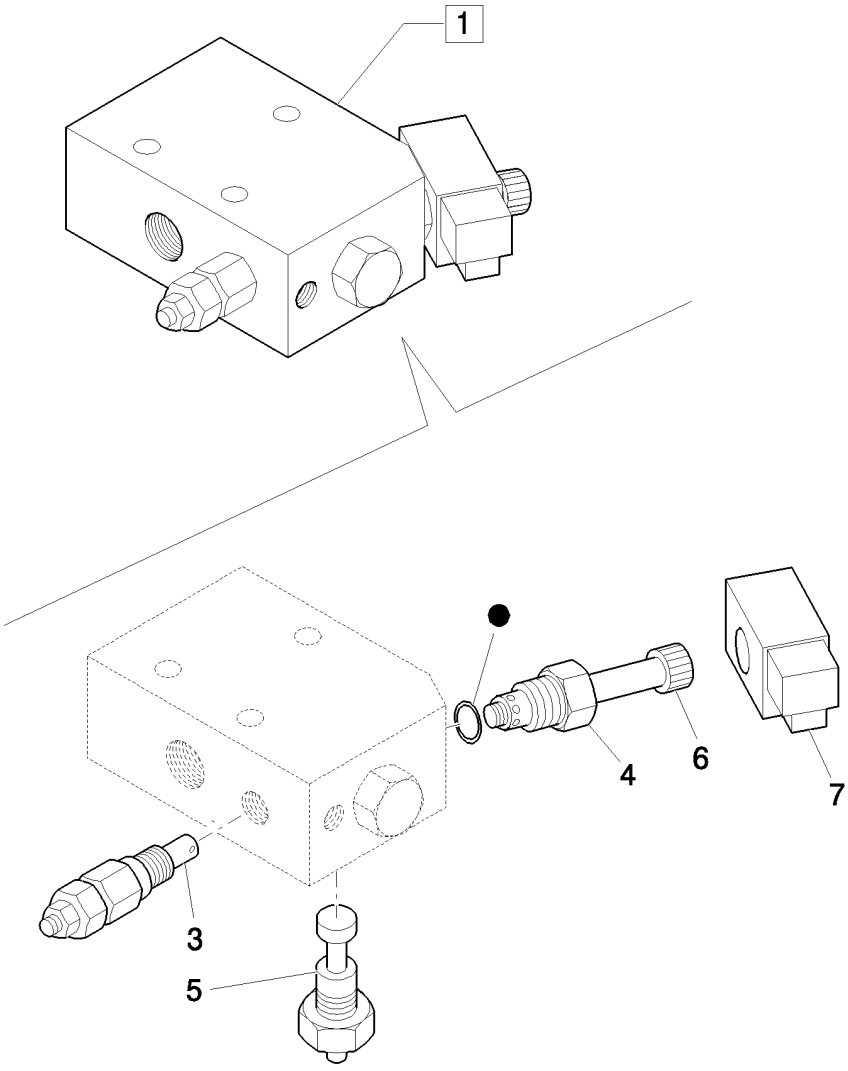

VALVE MARTEAU MANUEL

REF	FN	PART NUMBER	YR/SN	QTY	DESCRIPTION
1		87677506		1	SOUPAPE HYDRAULIQUE, Assy
2		87358193		1	KIT, GASKETS
3		87358196		1	SOUPAPE HYDRAULIQUE
4		87358194		1	SOUPAPE HYDRAULIQUE
5		9970383		1	ELECTRO-VALVE
6		9970384		1	ECROU
7		87357715		1	TRANSMETTEUR ASSY

733		p1	04/08

RACCORD RAPIDE MECANIQUE ARRIERE

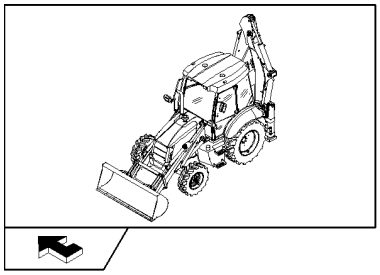

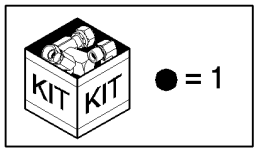

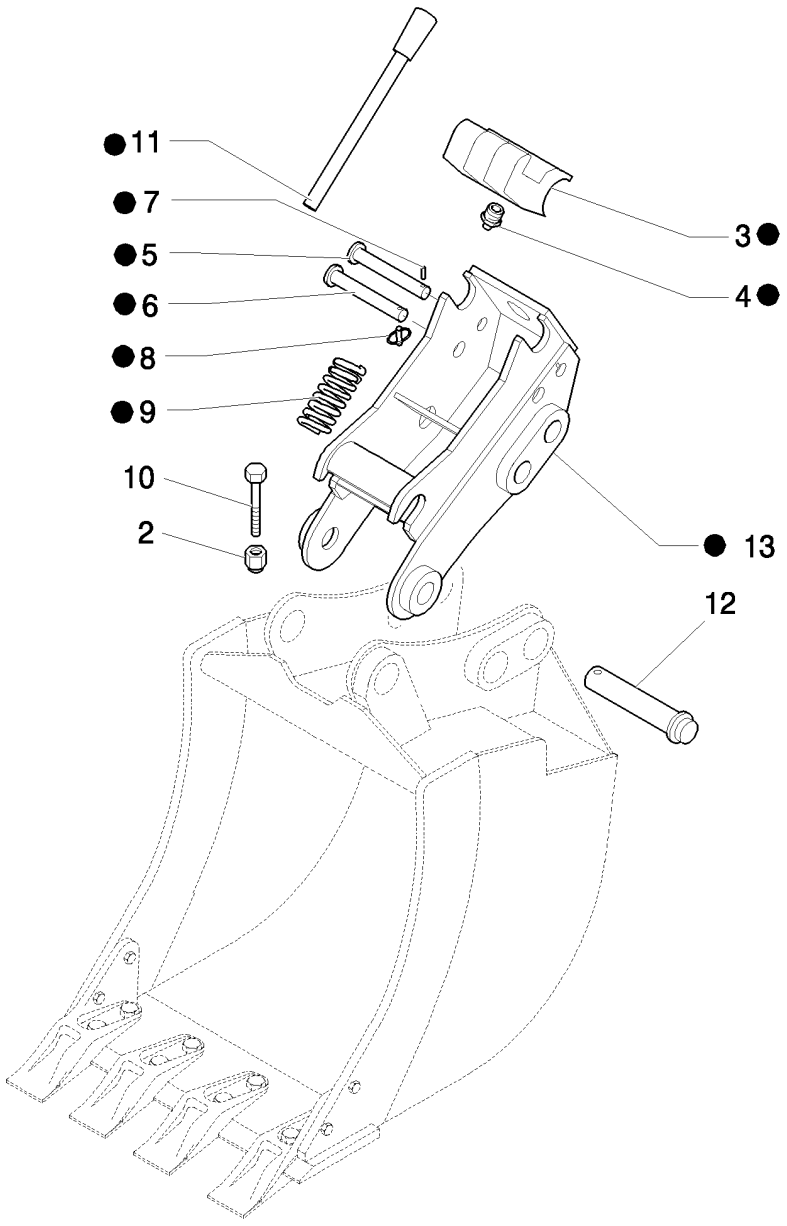

RACCORD RAPIDE MECANIQUE ARRIERE

REF	FN	PART NUMBER	YR/SN	QTY	DESCRIPTION
1		87677533		1	DISQUE COUPLEUR, Assy
2		12574511		2	CONTRE-ECROU, M10 x 1.25, Cl 8
3		85827552		1	CROCHET
4		85824266		1	GRAISSEUR
5		85827553		1	CROCHET, 1.26" dia x 10.3" lg
6		87677542		1	GOUPILLE
7		85825285		1	AXE
8		87677544		1	GOUPILLE D'ARRÊT
9		85824268		1	RESSORT
10		15972034		2	BOULON, Hex, M10 x 110, 10.9
11		87677546		1	POIGNÉE
12		85803005		2	AXE
13		87677538		1	DISQUE COUPLEUR

734		p1	03/08

RACCORD RAPIDE MECANIQUE AVANT

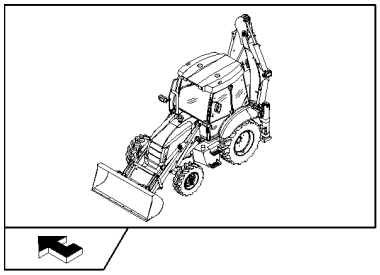

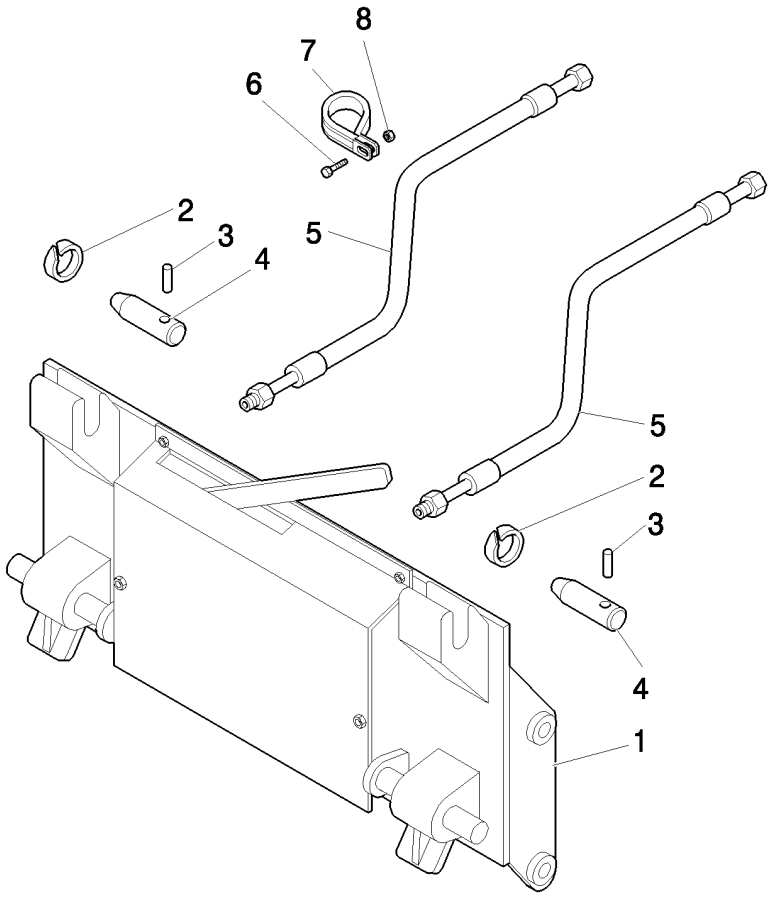

RACCORD RAPIDE MECANIQUE AVANT

REF	FN	PART NUMBER	YR/SN	QTY	DESCRIPTION
1		85824397		1	PLAQUE DE SERRAGE
2		85802992		2	ANNEAU
3		85802993		2	AXE
4		85801051		2	AXE
5		85813378		2	FLEXIBLE HYDRAULIQUE, 1000mm lg
6		16043921		2	VIS, M8x1.25x35
7		85803393		2	BRIDE
8		16104111		2	CONTRE-ECROU, M8 x 1.25, Cl 8

758		p1	04/08

GYROPHARE

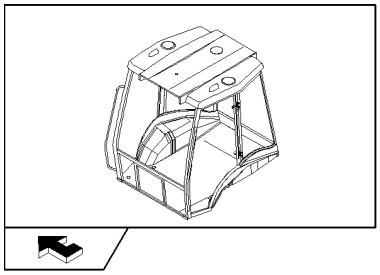

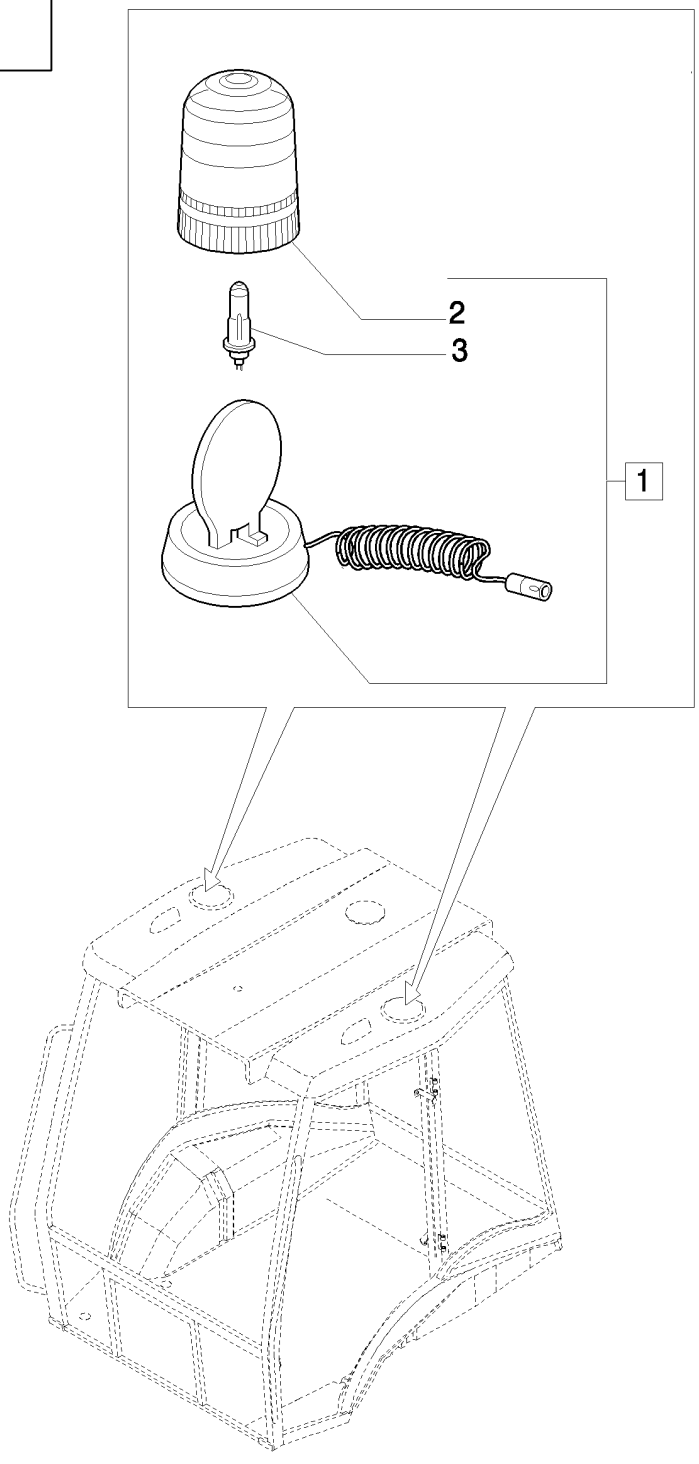

GYROPHARE

REF	FN	PART NUMBER	YR/SN	QTY	DESCRIPTION
1		85817129		1	GYROPHARE, Assy
2		85817131		1	CABOCHON
3		85817130		1	AMPOULE

CONSOLE AVANT SANS TACHYMETRE (POWER SHUTTLE, ROPS)

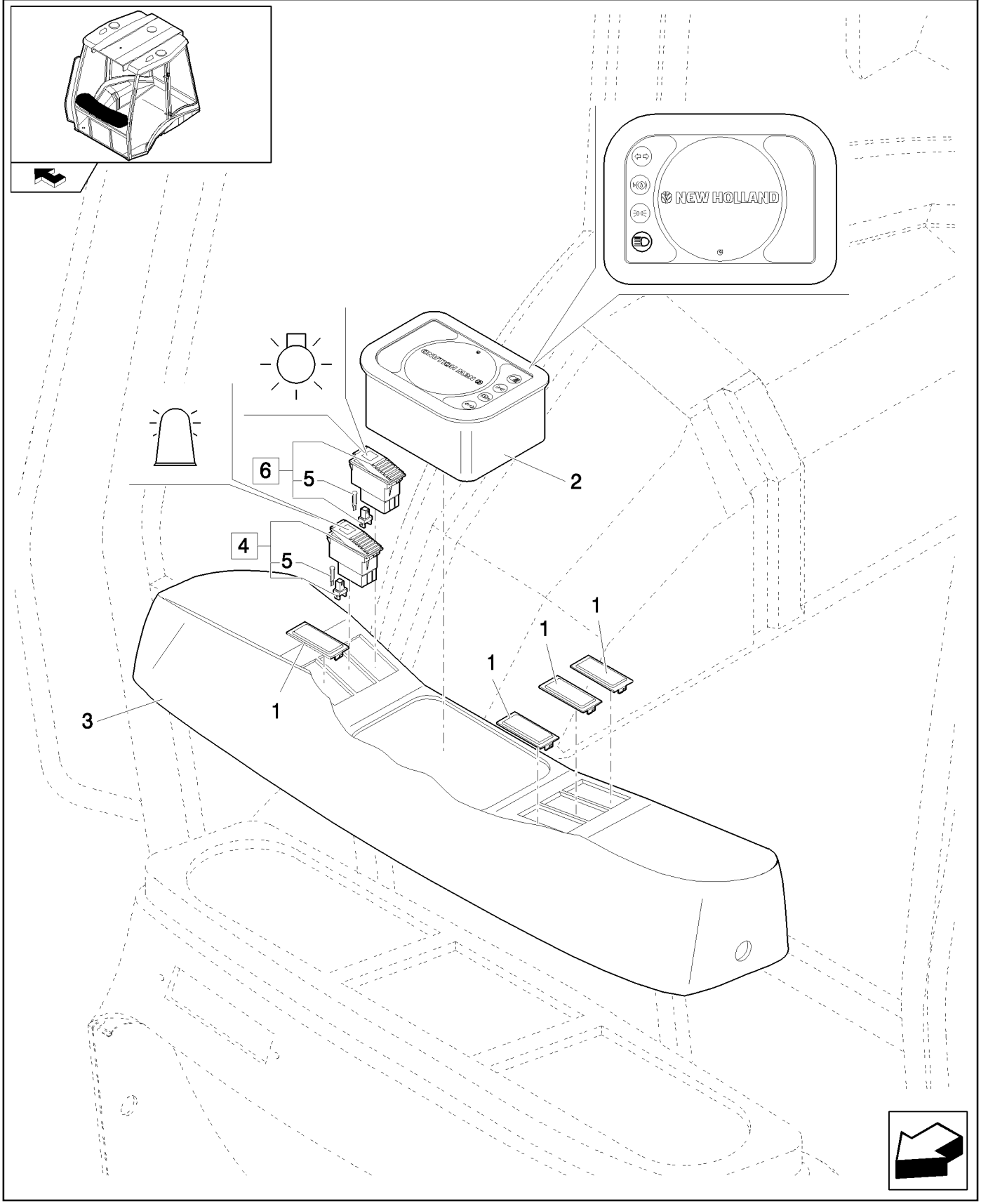

CONSOLE AVANT SANS TACHYMETRE (POWER SHUTTLE, ROPS)

REF	FN	PART NUMBER	YR/SN	QTY	DESCRIPTION
1		85825254		4	BOUCHON
2		87521741		1	COMPTEUR DE VITESSE
3		85818940		1	INSTRUMENTS DE BORD
4		85818827		1	CONTACTEUR, Assy
5		14143790		4	AMPOULE
6		85818828		1	COMM. LUMIERES, Assy

CONSOLE AVANT SANS TACHYMETRE (POWER SHUTTLE, CAB)

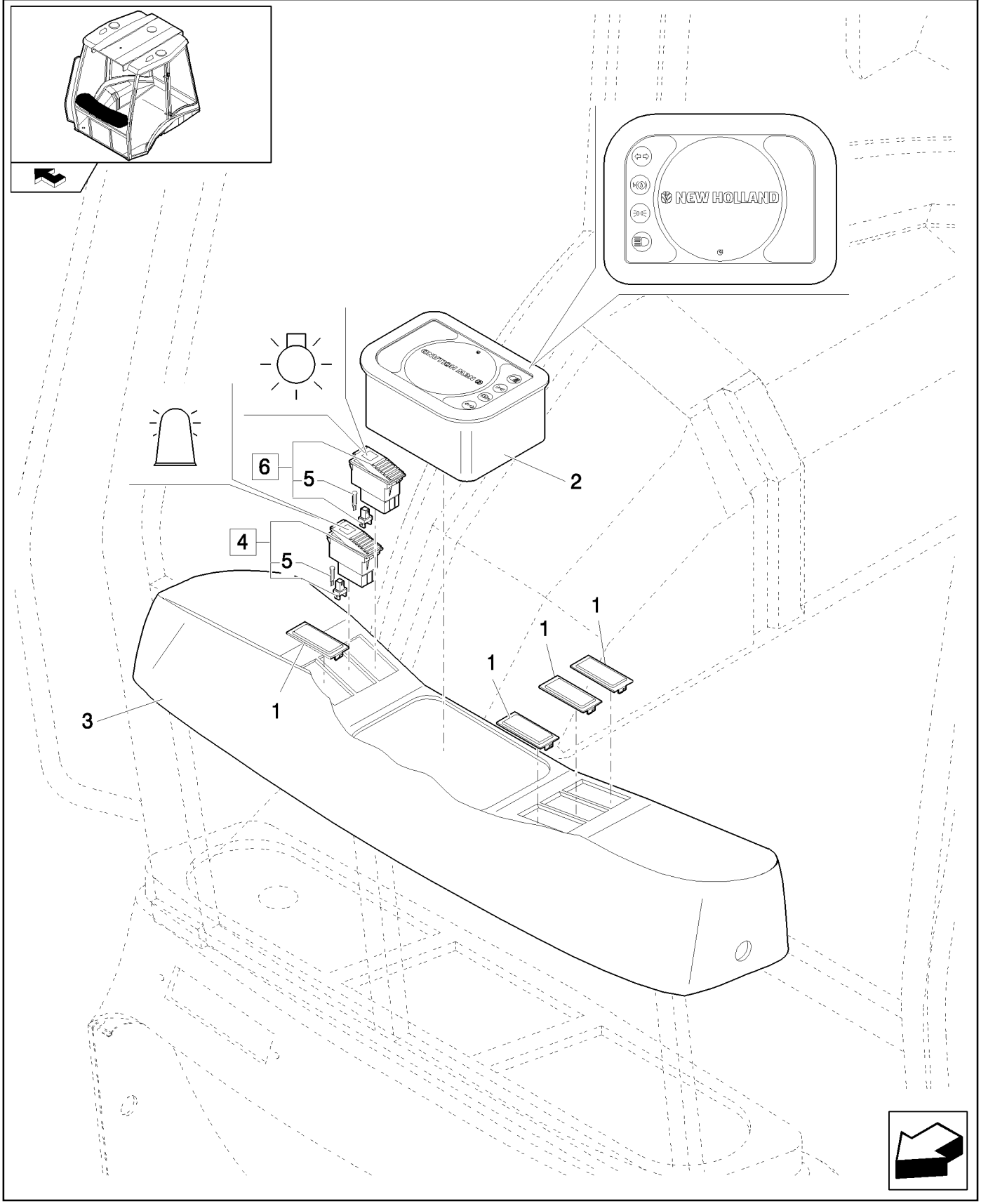

CONSOLE AVANT SANS TACHYMETRE (POWER SHUTTLE, CAB)

REF	FN	PART NUMBER	YR/SN	QTY	DESCRIPTION
1		85825254		4	BOUCHON
2		87521741		1	COMPTEUR DE VITESSE
3		85818826		1	INSTRUMENTS DE BORD
4		85818827		1	CONTACTEUR, Assy
5		14143790		4	AMPOULE
6		85818828		1	COMM. LUMIERES, Assy

788		p1	04/08

CONSOLE AVANT AVEC TACHYMETRE (ROPS)

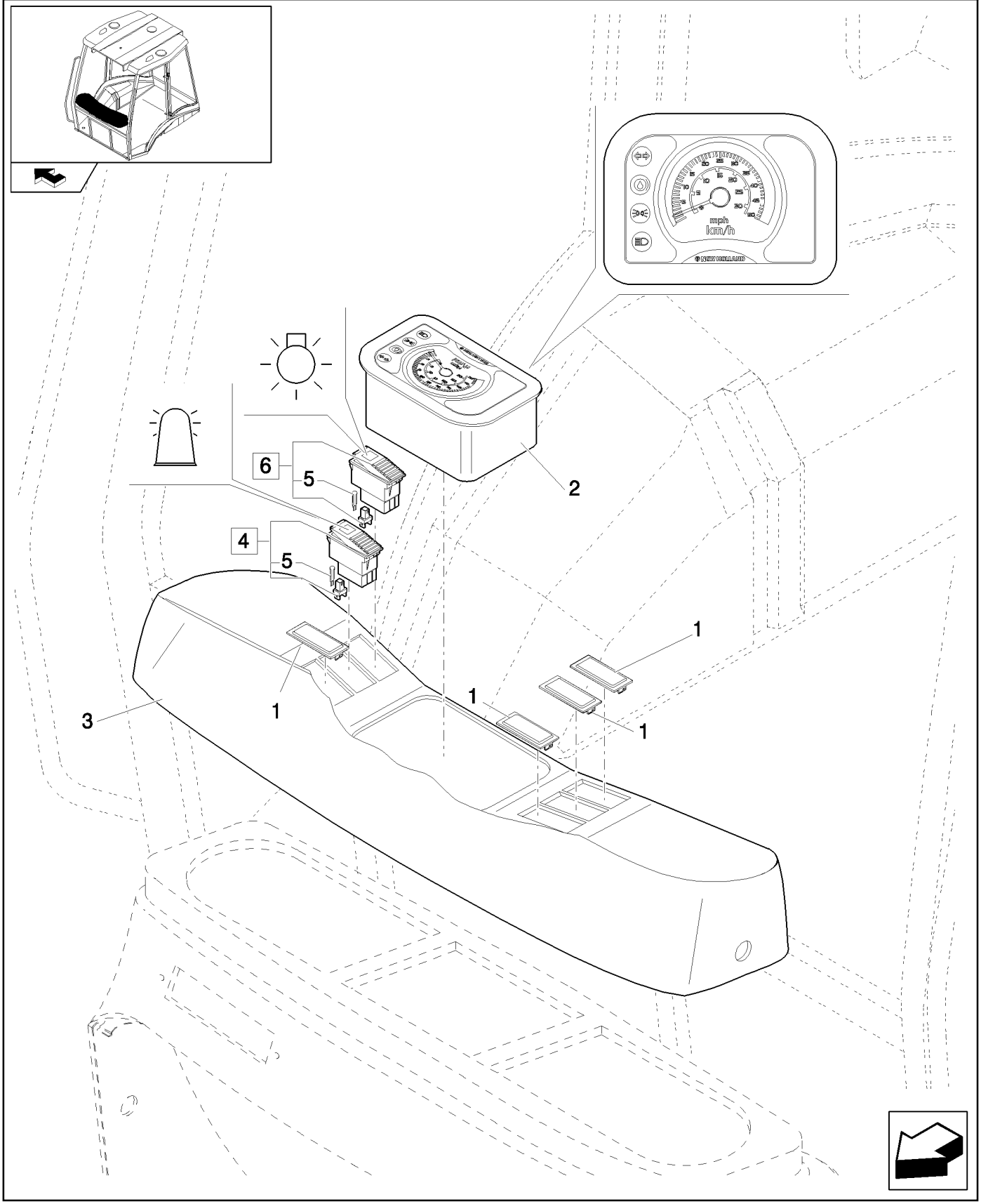

CONSOLE AVANT AVEC TACHYMETRE (ROPS)

REF	FN	PART NUMBER	YR/SN	QTY	DESCRIPTION
1		85825254		4	BOUCHON
2		87521822		1	COMPTEUR DE VITESSE
3		85818940		1	INSTRUMENTS DE BORD
4		85818827		1	CONTACTEUR, Assy
5		14143790		2	AMPOULE
6		85818828		1	COMM. LUMIERES, Assy

788/01		p1	04/08

CONSOLE AVANT AVEC TACHYMETRE (CAB) (POWER SHUTTLE)

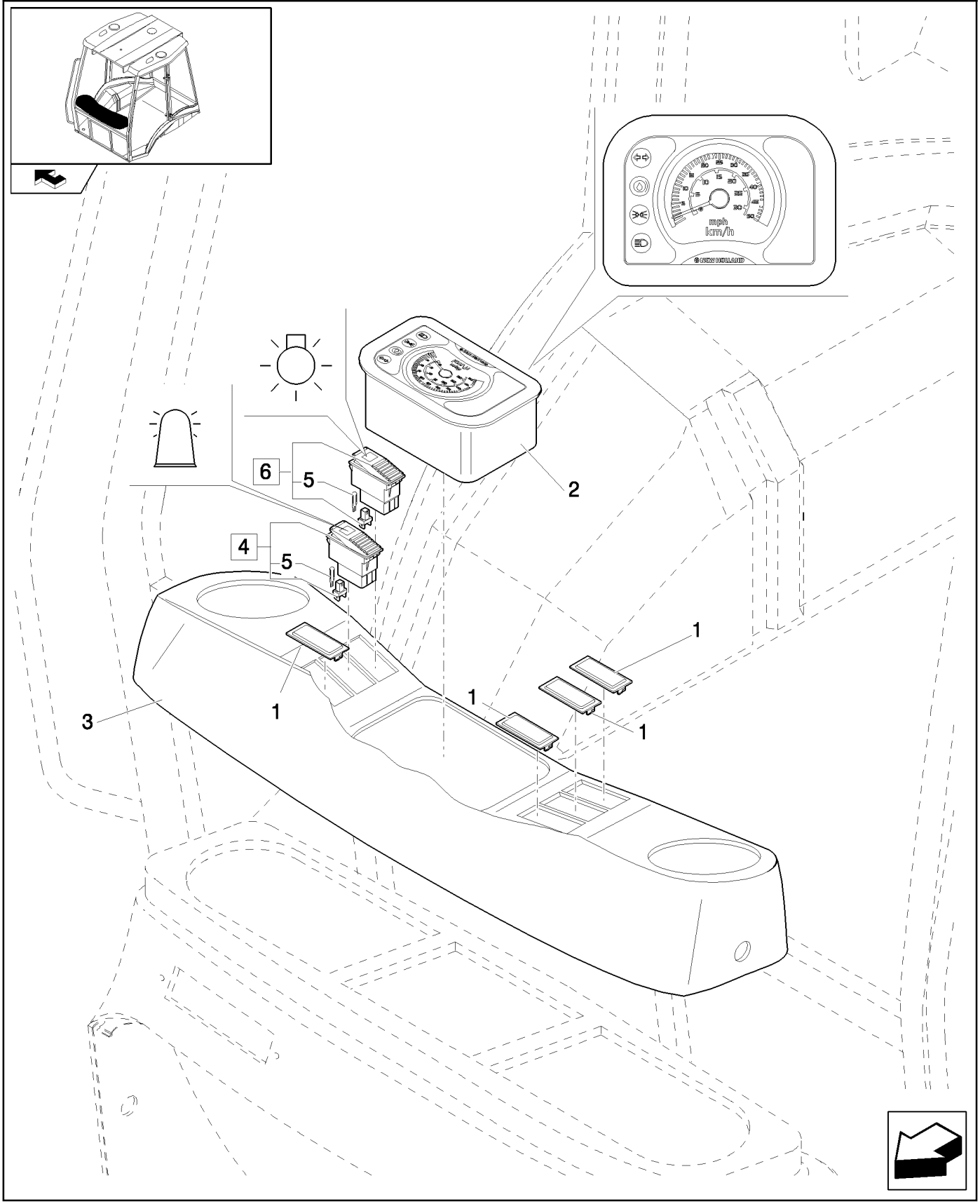

CONSOLE AVANT AVEC TACHYMETRE (CAB) (POWER SHUTTLE)

REF	FN	PART NUMBER	YR/SN	QTY	DESCRIPTION
1		85825254		4	BOUCHON
2		87521822		1	COMPTEUR DE VITESSE
3		85818826		1	INSTRUMENTS DE BORD
4		85818827		1	CONTACTEUR, Assy
5		14143790		2	AMPOULE
6		85818828		1	COMM. LUMIERES, Assy

789		p1	03/08

DETECTEUR DE VITESSE (P.SHUTTLE)

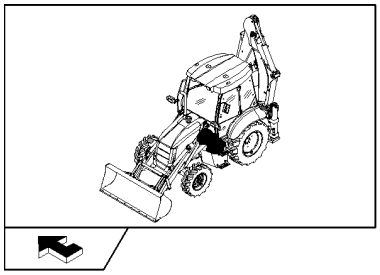

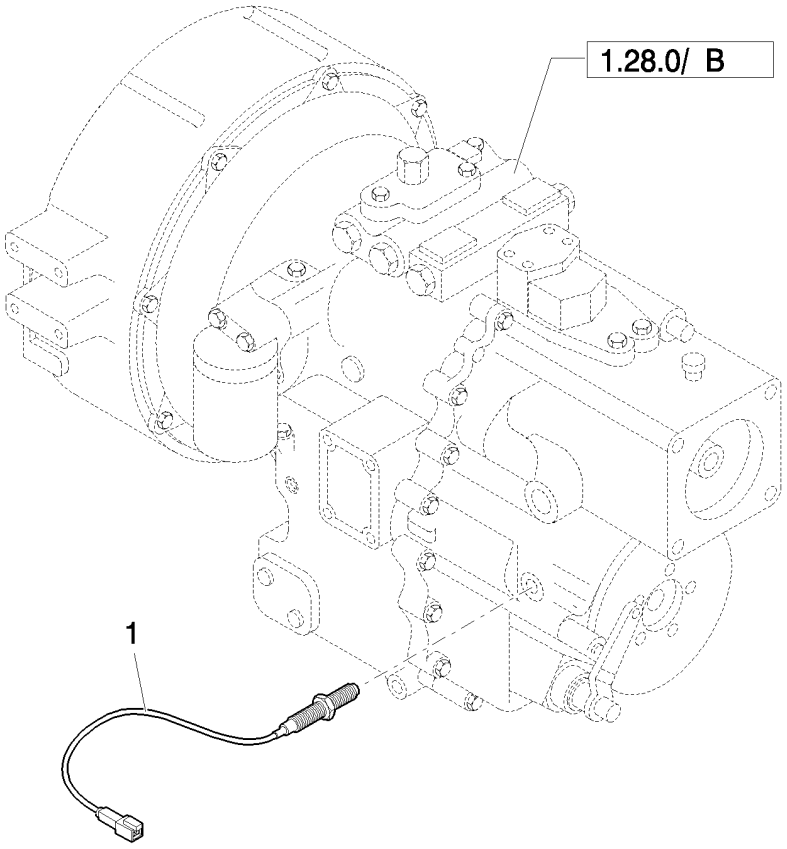

DETECTEUR DE VITESSE (P.SHUTTLE)

REF	FN	PART NUMBER	YR/SN	QTY	DESCRIPTION
1		85804156		1	CAPTEUR

793		p1	03/08

FEUX DE TRAVAIL AVANT - CABINE

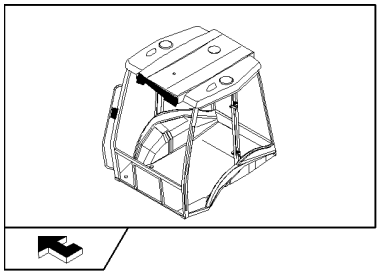

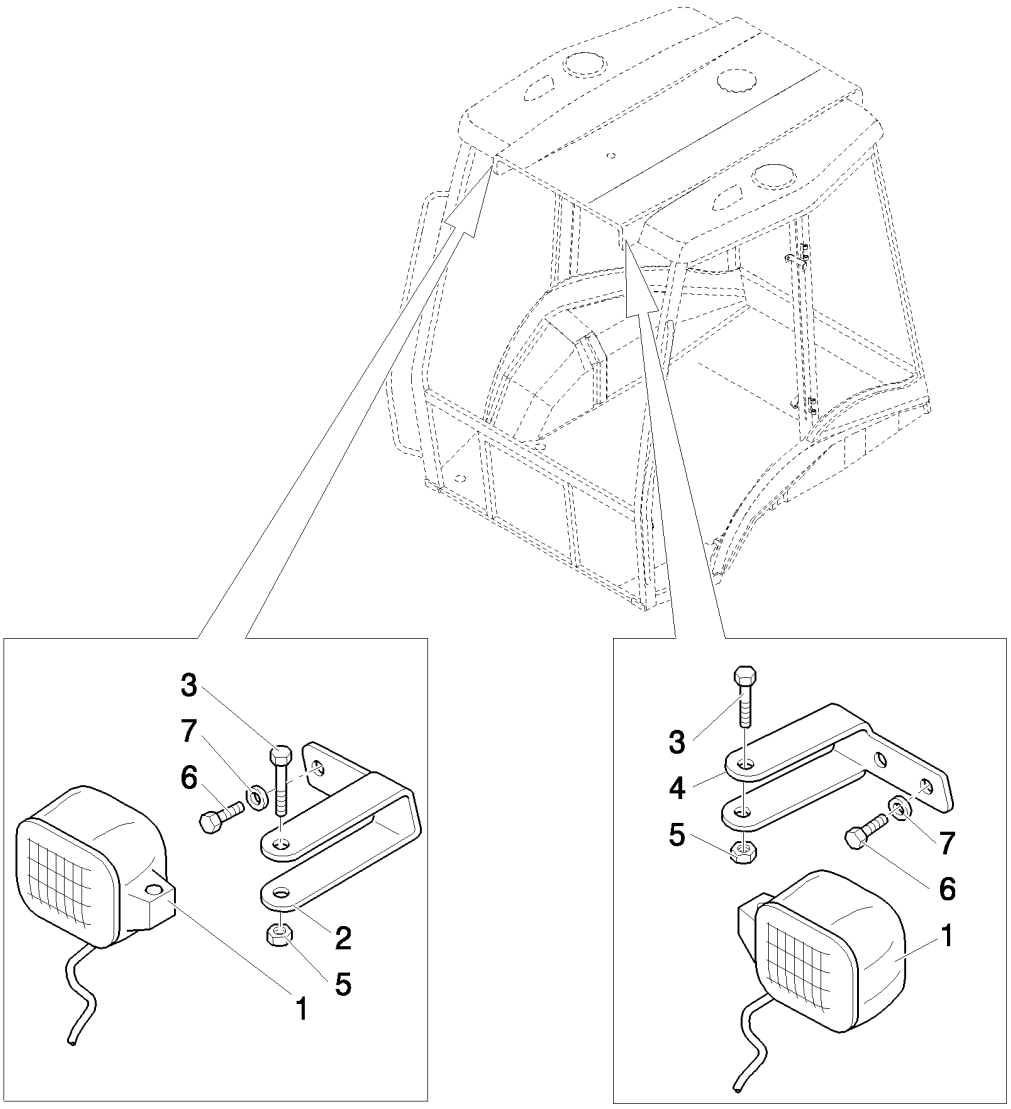

FEUX DE TRAVAIL AVANT - CABINE

REF	FN	PART NUMBER	YR/SN	QTY	DESCRIPTION
1		85819200		2	PHARE, Includes H3 12V 55W Bulb, Order 9703399 For Bulb
2		85819188		1	PATTE FIXATION, RH
3		16044324		2	BOULON, Hex, M8 x 55, 8.8
4		85819189		1	PATTE FIXATION
5		16104111		2	CONTRE-ECROU, M8 x 1.25, Cl 8
6		10902124		4	BOULON, Hex, M6 x 14, 8.8, Full Thd
7		11197774		4	RONDELLE BELLEVILLE, Belleville, M6.4

FEUX DE TRAVAIL AVANT (ROPS)

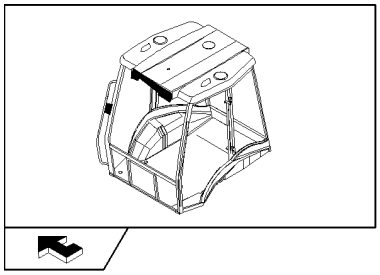

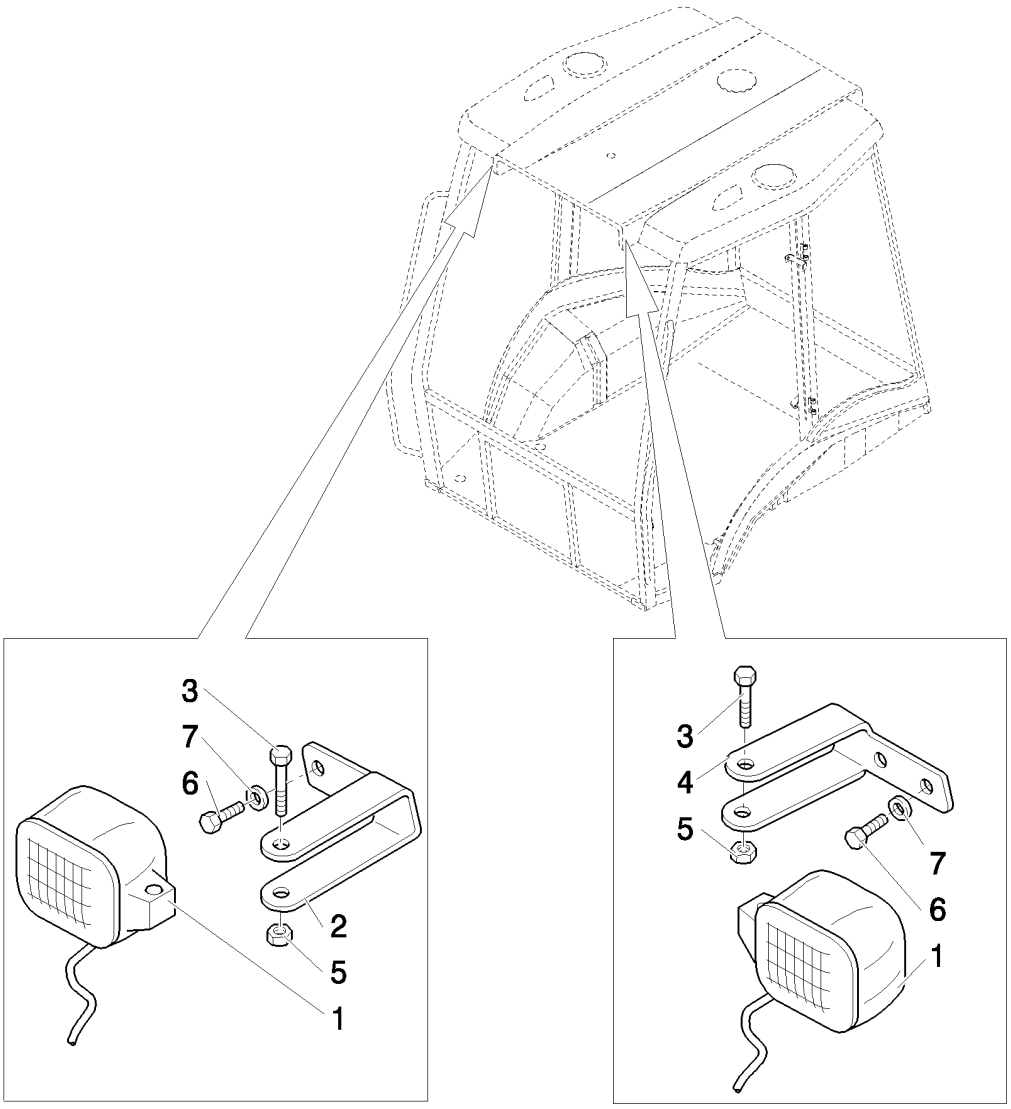

FEUX DE TRAVAIL AVANT (ROPS)

REF	FN	PART NUMBER	YR/SN	QTY	DESCRIPTION
1		85819200		2	PHARE, Includes H3 12V 55W Bulb, Order 9703399 For Bulb
2		85819188		1	PATTE FIXATION, RH
3		16044324		2	BOULON, Hex, M8 x 55, 8.8
4		85819189		1	PATTE FIXATION
5		16104111		2	CONTRE-ECROU, M8 x 1.25, Cl 8
6		10902124		4	BOULON, Hex, M6 x 14, 8.8, Full Thd
7		11197774		4	RONDELLE BELLEVILLE, Belleville, M6.4

LAMPES ET PHARES - CABINE

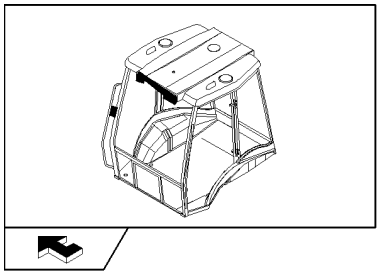

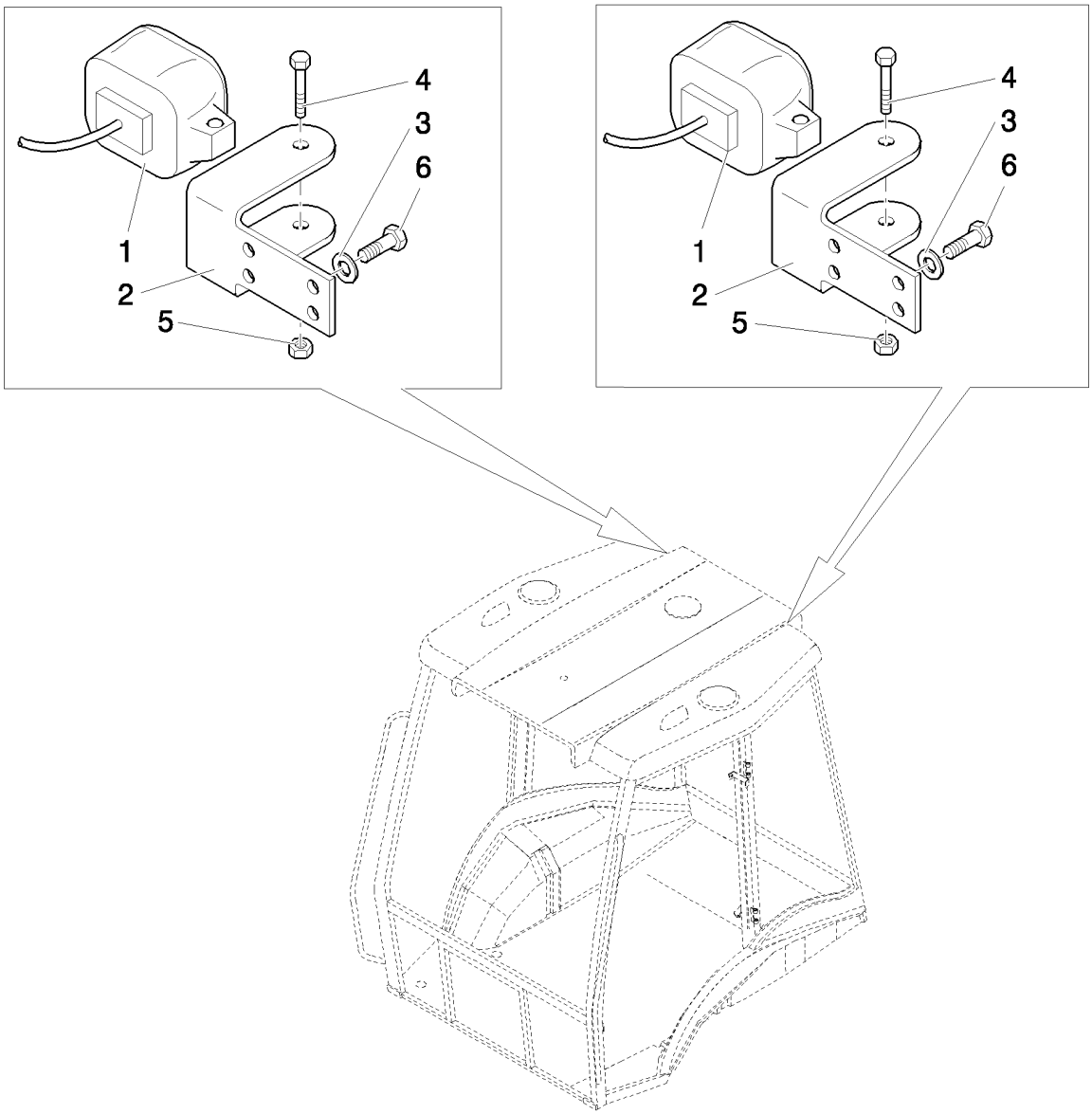

LAMPES ET PHARES - CABINE

REF	FN	PART NUMBER	YR/SN	QTY	DESCRIPTION
1		85819200		2	PHARE, Includes H3 12V 55W Bulb, Order 9703399 For Bulb
2		85819192		2	PATTE FIXATION, LH
3		11197774		4	RONDELLE BELLEVILLE, Belleville, M6.4
4		16044324		2	BOULON, Hex, M8 x 55, 8.8
5		16104111		2	CONTRE-ECROU, M8 x 1.25, Cl 8
6		10902124		4	BOULON, Hex, M6 x 14, 8.8, Full Thd

794/01		p1	03/08

LAMPES ET PHARES (ROPS)

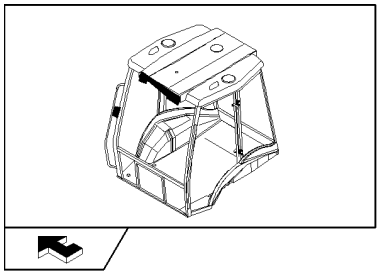

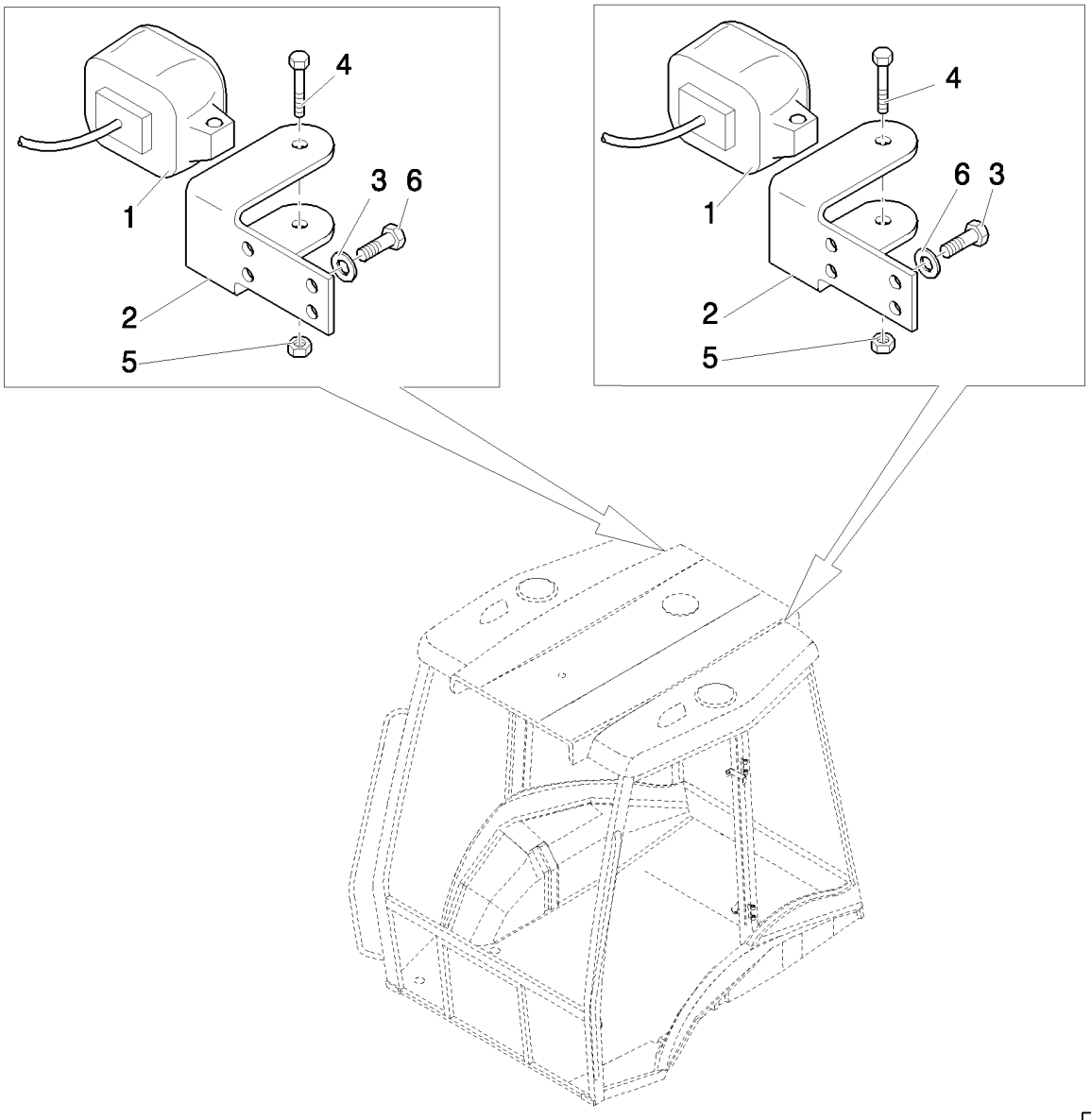

LAMPES ET PHARES (ROPS)

REF	FN	PART NUMBER	YR/SN	QTY	DESCRIPTION
1		85819200		2	PHARE, Includes H3 12V 55W Bulb, Order 9703399 For Bulb
2		85819192		2	PATTE FIXATION, LH
3		11197774		4	RONDELLE BELLEVILLE, Belleville, M6.4
4		16044324		2	BOULON, Hex, M8 x 55, 8.8
5		16104111		2	CONTRE-ECROU, M8 x 1.25, Cl 8
6		10902124		4	BOULON, Hex, M6 x 14, 8.8, Full Thd

ANTIVOL

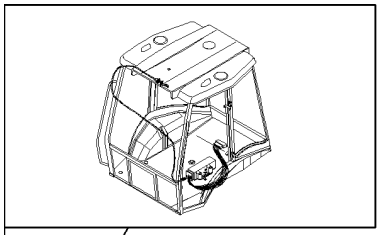

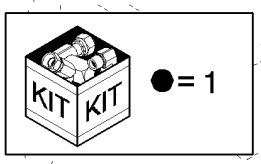

ANTIVOL

REF	FN	PART NUMBER	YR/SN	QTY	DESCRIPTION
1		85819765		1	KIT
2		12574011		2	CONTRE-ECROU, M4 x .7, Cl 8
3		12642821		2	RONDELLE, M4 x 12 x 1
4		14303324		2	VIS, Hex Soc Hd, M4 x 20, 8.8, Full Thd
5		85819766		1	COUVERTURE

803		p1	03/08

PARE-BOUE AVANT

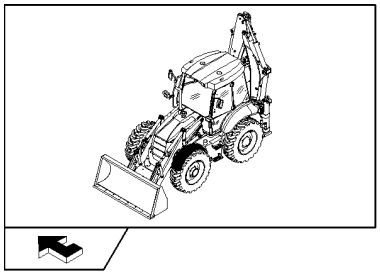

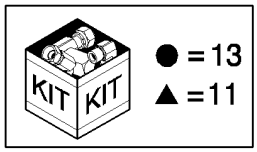

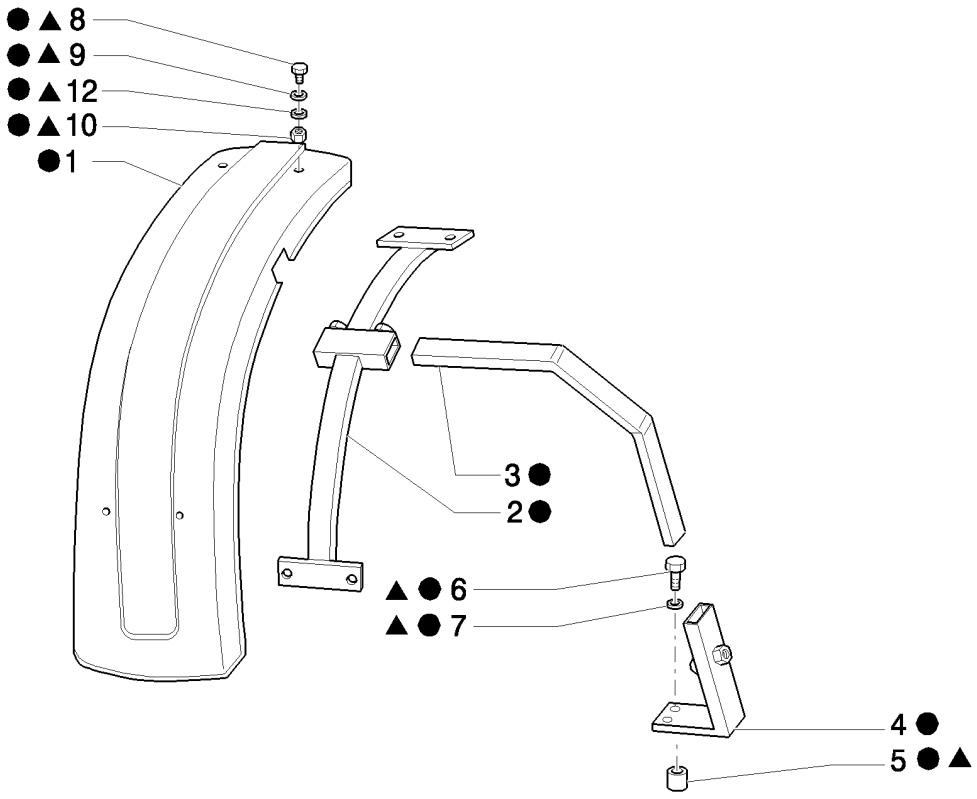

PARE-BOUE AVANT

REF	FN	PART NUMBER	YR/SN	QTY	DESCRIPTION
1		9968885		1	GARDE BOUE AVANT, LH
1		9968886		1	GARDE BOUE AVANT, RH
2		9968884		2	SUPPORT
3		85826132		2	SUPPORT
4		85826134		1	SUPPORT, RH
4		85826133		1	SUPPORT, LH
5		87348002		6	ENTRETOISE
6		11119121		6	BOULON, Hex, M16 x 60, 8.8
7		14496901		6	RONDELLE, M16 x 30 x 3
8		87302831		8	VIS, M6 x 20
9		11194779		8	RONDELLE BELLEVILLE, Belleville, M6.4, 6.5x18x1.5
10		12574211		8	CONTRE-ECROU, M6 x 1, Cl 8
11	1	87302715		1	POCHETTE, M10x20
12		11193279		8	RONDELLE BELLEVILLE, Belleville, M6.4
13		85826131		8	KIT

(1) Includes 5 - 12

PROTECTION CONTRE LA BOUE ARRIÈRE ET TOIT (ROPS / CAB) - NA

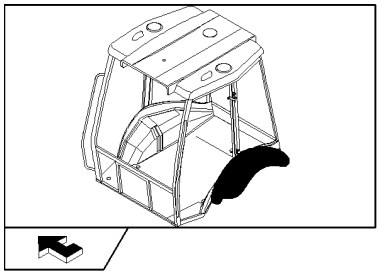

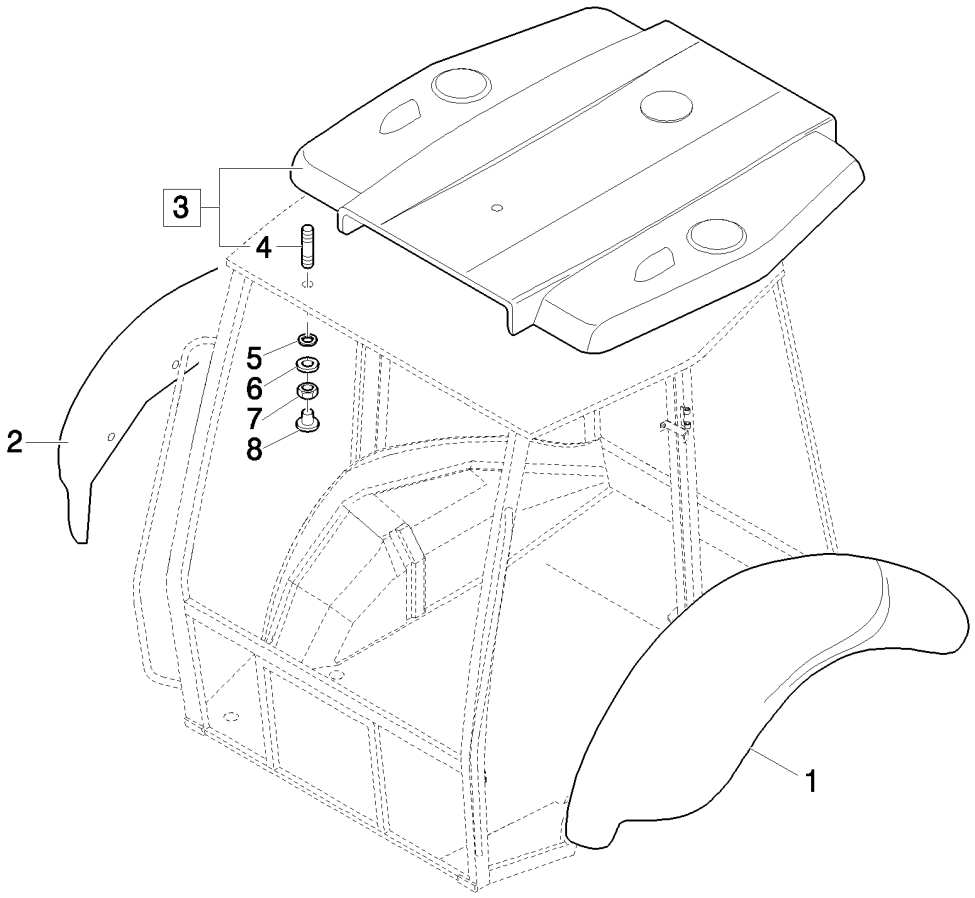

PROTECTION CONTRE LA BOUE ARRIÈRE ET TOIT (ROPS / CAB) - NA

REF	FN	PART NUMBER	YR/SN	QTY	DESCRIPTION
1		85817051		1	GARDE-BOUE
2		85817050		1	GARDE-BOUE
3	1	85819760		1	TOIT
3	2	85819763		1	TOIT
4		13517021		8	GOUJON
5		85801801		8	JOINT ANNULAIRE
6		12647004		8	RONDELLE, M8 x 25 x 2.5
7		16104111		8	CONTRE-ECROU, M8 x 1.25, Cl 8
8		79111978		8	BOUCHON

(1) Only for CAB
(2) Only for ROPS

SIEGE EN TISSU - CABINE

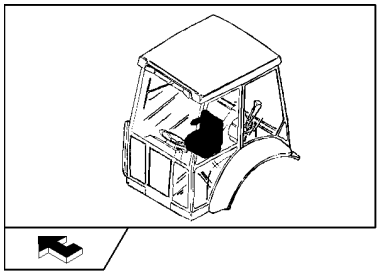

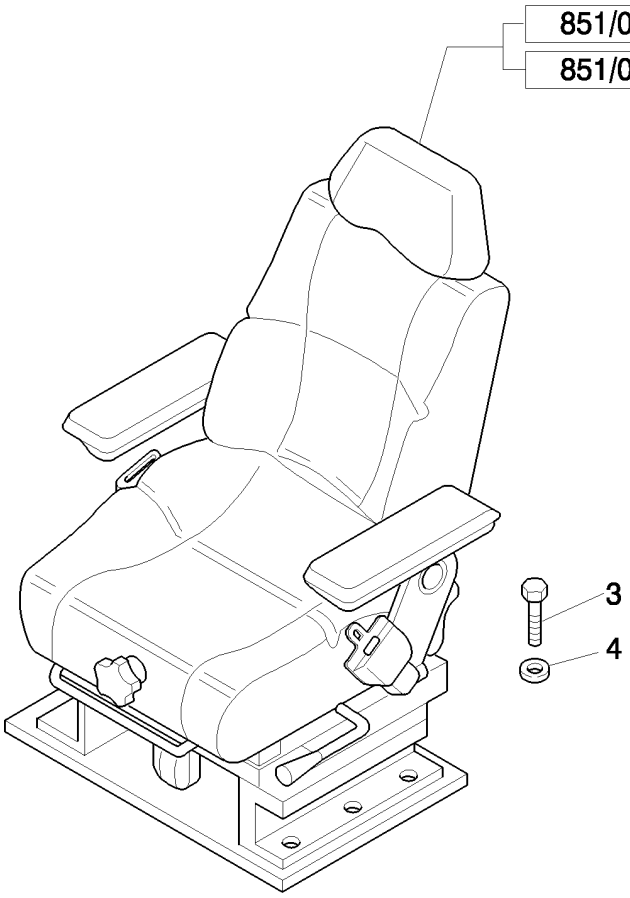

SIEGE EN TISSU - CABINE

REF	FN	PART NUMBER	YR/SN	QTY	DESCRIPTION
1	1, 2, 3	87576858		1	SIÈGE, Assy
1	1, 4, 3	87576859		1	SIÈGE, Assy
2	2, 5, 3	87576866		1	SIÈGE, Assy
2	4, 5, 3	87576867		1	SIÈGE, Assy
3		16043424		8	VIS, Hex, M8 x 20, 8.8, Full Thd
4		11198074		8	RONDELLE BELLEVILLE, Belleville, M8.4

(1) Mechanical Control Version
(2) 3" Seat Belt
(3) Only for NA
(4) 2" Seat Belt
(5) Only for Pilot Control Version

851/01	01	p1	04/08

COUSSINS SIEGE EN TISSU, ACCOUDOIRS & ACCESSOIRES

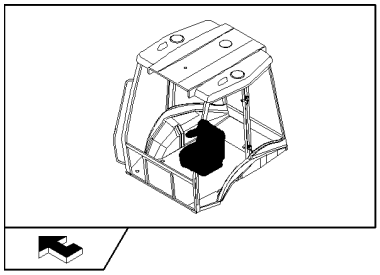

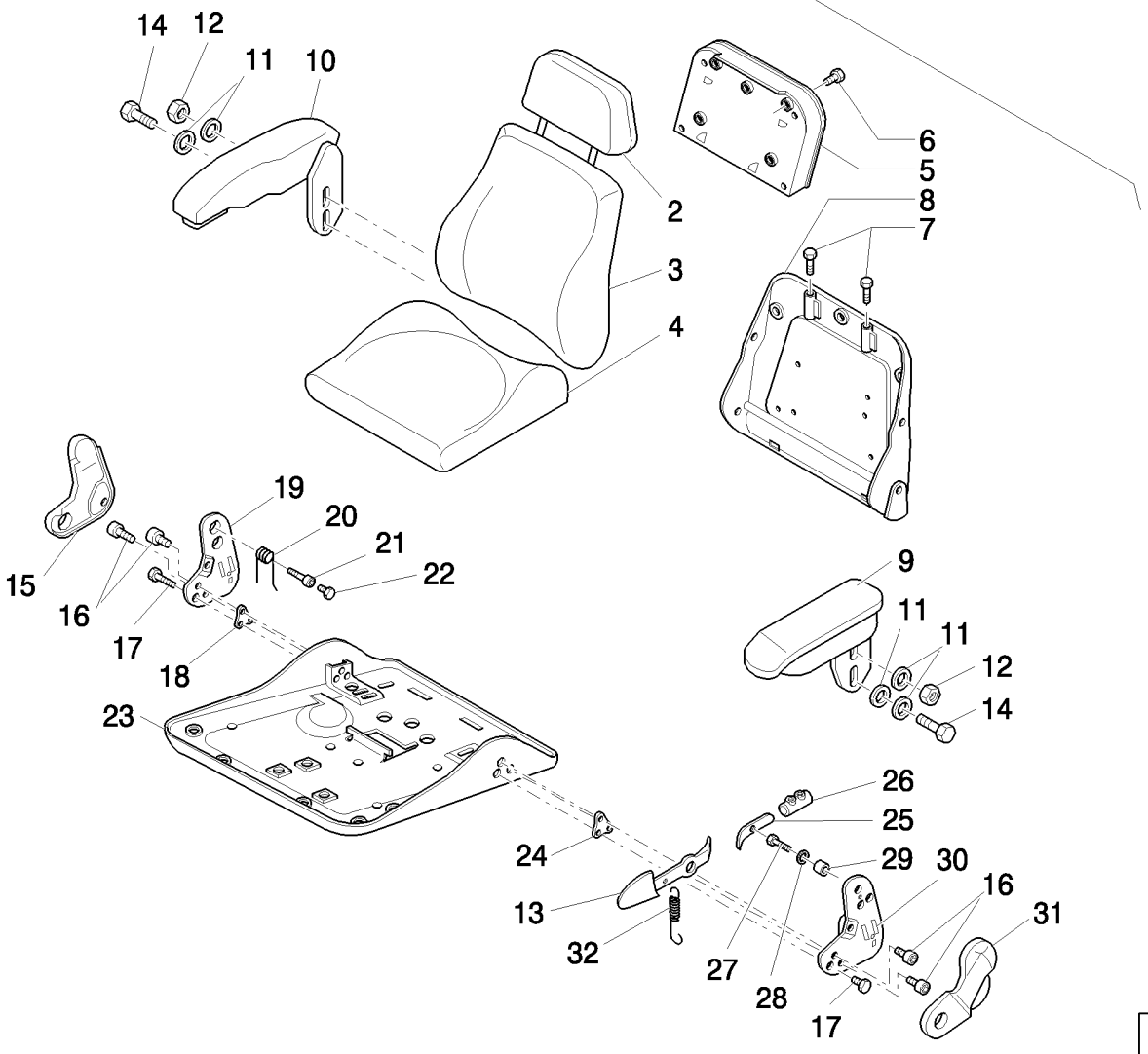

COUSSINS SIEGE EN TISSU, ACCOUDOIRS & ACCESSOIRES

REF	FN	PART NUMBER	YR/SN	QTY	DESCRIPTION
1	1	87576858		1	SIÈGE, Assy
1	1	87576859		1	SIÈGE, Assy
1	2	87576866		1	SIÈGE, Assy
1	2	87576867		1	SIÈGE, Assy
2		87613060		1	DOSSIER
3		87613073		1	DOSSIER
4		87613074		1	SIÈGE
5	3	85817481		1	SUPPORT
6		82034863		4	VIS
7		47335213		2	BAGUE
8	4	85817485		1	SIEGE, COMPOSANTS
9	5, 6	85817453		1	ACCOUDOIR, LH
9	7, 6	85828196		1	ACCOUDOIR, LH
10	6	85827918		1	ACCOUDOIR, RH
11		82034881		AR	RONDELLE
12		85817459		2	ECROU
13		85817478		1	LEVIER
14		83984666		1	VIS
15		85817466		1	COUVERTURE, RH
16		9972160		AR	VIS, M8x25
17		87395582		2	BOULON, 7/16"-20UNF x 60.0
18		85817470		1	PLAQUE
19		9960795		1	PLAQUE, RH
20		9960793		1	RESSORT
21		85817469		1	BAGUE
22		87613075		1	VIS, M8 x 40
23		85821419		1	PLAQUE DE SERRAGE
24		85817476		1	PLAQUE

(1) Mechanical Control Version
(2) Only for Pilot Control Version
(3) Includes 6
(4) Includes 7, 21
(5) Only for Mechanical Control Version 87576859 - 87576858
(6) Includes 11, 12, 14
(7) Only for Pilot Control Version 87576867 - 87576866

851/01	01	p2	04/08

COUSSINS SIEGE EN TISSU, ACCOUDOIRS & ACCESSOIRES

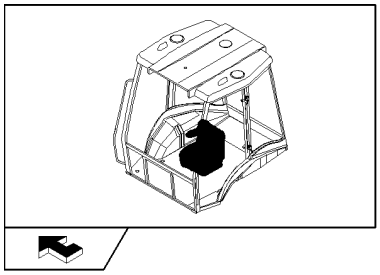

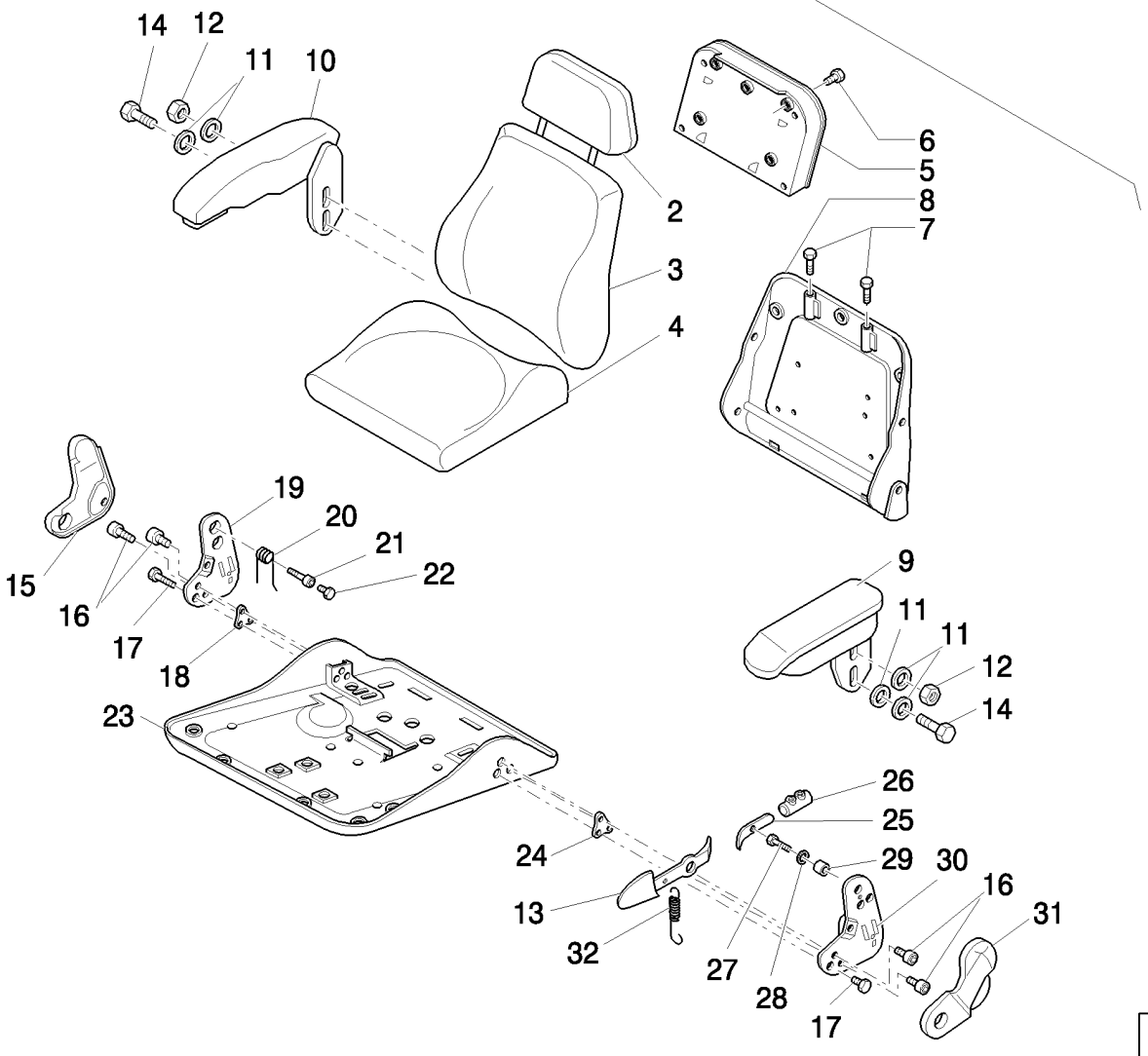

COUSSINS SIEGE EN TISSU, ACCOUDOIRS & ACCESSOIRES

REF	FN	PART NUMBER	YR/SN	QTY	DESCRIPTION
25		85817460		1	LEVIER
26		85821418		1	DISPOSITIF D'ARRET
27		82035038		1	VIS
28		9960692		AR	ENTRETOISE
29		85817477		1	ENTRETOISE
30		9960803		1	PLAQUE, LH
31		85817479		1	COUVERCLE, RH
32		9960797		1	RESSORT

851/01	02	p1	04/08

PLAQUE INSTALLATION SIEGE TISSU, GLISSIERES REGLAGE & CEINTURE

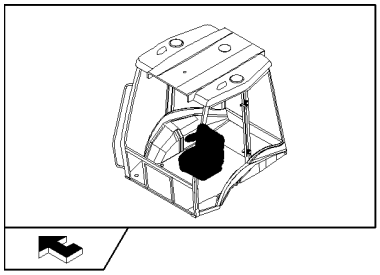

PLAQUE INSTALLATION SIEGE TISSU, GLISSIERES REGLAGE & CEINTURE

REF	FN	PART NUMBER	YR/SN	QTY	DESCRIPTION
1	1	87576858		1	SIÈGE, Assy
1	1	87576859		1	SIÈGE, Assy
1	2	87576866		1	SIÈGE, Assy
1	2	87576867		1	SIÈGE, Assy
2	3	71485488		1	COMMANDE
3		85817463		1	PLAQUE
4	4	85817464		1	VIS DE REGLAGE
5		9962962		1	VIS, M5 x 10
6		85817484		1	KIT
7		85817458		9	ECROU
8		9960692		AR	ENTRETOISE
9		9958776		9	ENTRETOISE
10		82034881		AR	RONDELLE
11		82034893		4	VIS
12		85819813		1	BAGUE
13		9972160		AR	VIS, M8x25
14	5	87395588		1	PLAQUE
15		85817465		4	VIS, M8 x 40
16		85817456		4	ENTRETOISE
17	6	87364220		1	CEINTURE DE SÉCURITÉ, Assy
17	7	87364221		1	CEINTURE DE SÉCURITÉ, Assy
18		85817482		1	POMMEAU
19		85824204		2	PATTE FIXATION

(1) Mechanical Control Version
(2) Only for Pilot Control Version
(3) Includes 3 - 5
(4) Includes 3, 5
(5) Includes 18
(6) 2" Seat Belt
(7) 3" Seat Belt

851/01	03	p1	04/08

PARTIES SUSPENSIONS SUPERIEURES SIEGE TISSU

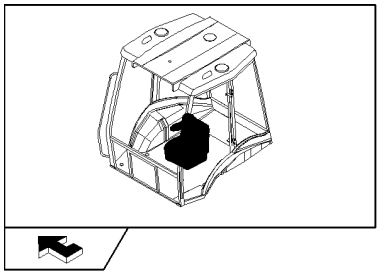

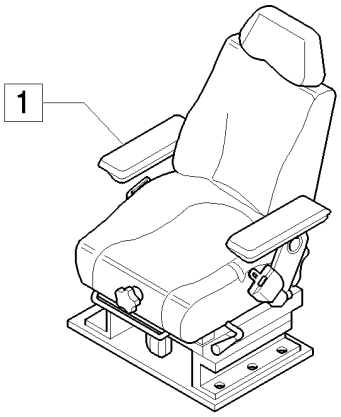

2 SEE ALSO TAV. 851/01 04

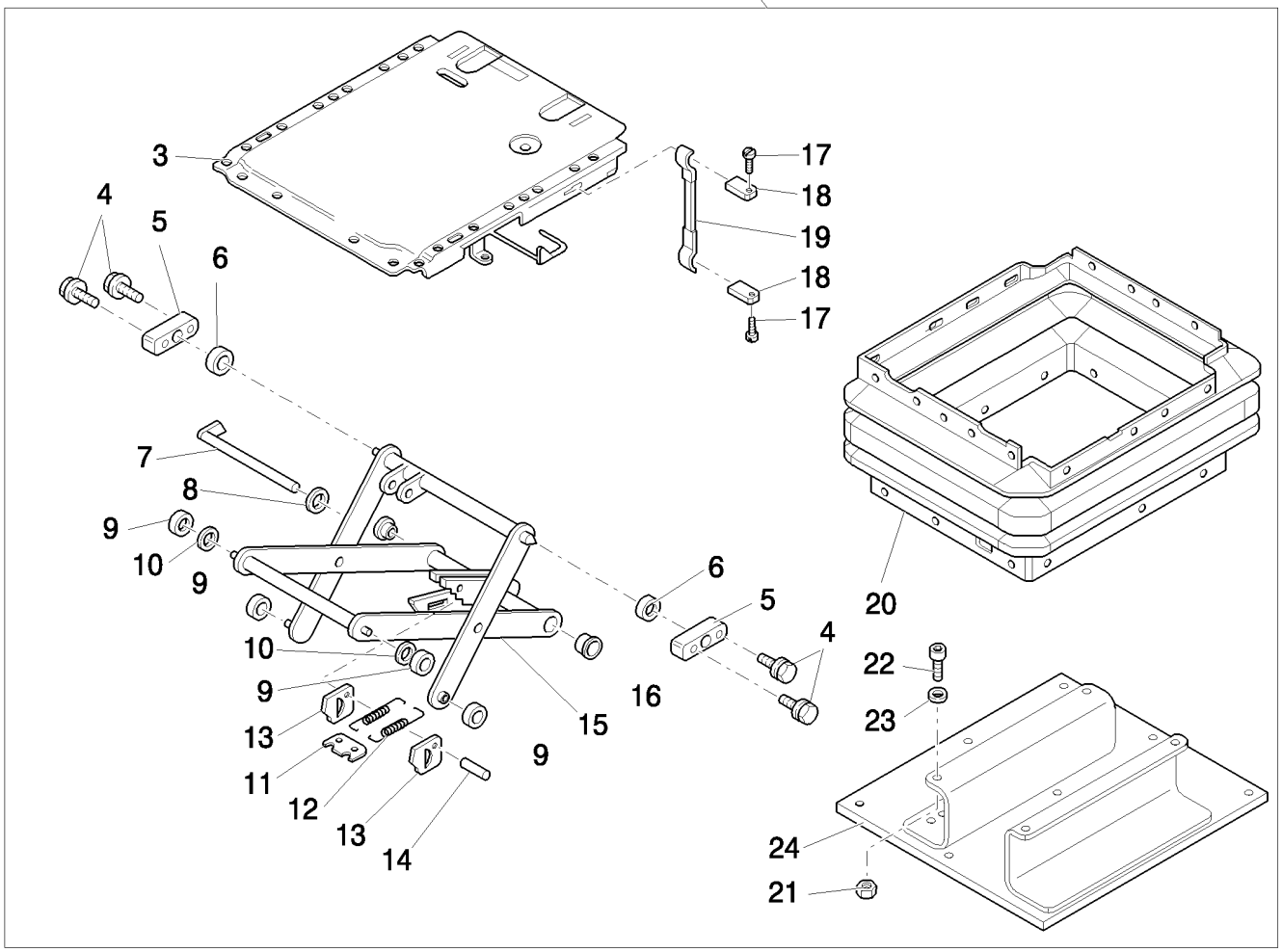

PARTIES SUSPENSIONS SUPERIEURES SIEGE TISSU

REF	FN	PART NUMBER	YR/SN	QTY	DESCRIPTION
1	1	87576858		1	SIÈGE, Assy
1	1	87576859		1	SIÈGE, Assy
1	2	87576866		1	SIÈGE, Assy
1	2	87576867		1	SIÈGE, Assy
2		85817426		1	SUSPENSION, Assy
3		85817450		1	PLAQUE
4		85817444		4	VIS, M6 x 16
5	3	82035094		2	ROULEMENT
6		85817445		2	BAGUE
7		85817429		1	BOULON
8		82035127		1	RONDELLE
9		82035031		4	ROULEAU
10		85817442		2	BAGUE
11		82035030		1	PLAQUE
12		85817430		2	RESSORT
13		9958792		2	PLAQUE
14		82035036		1	BOULON
15	4	85817446		1	SUSPENSION
16		9960755		2	BAGUE
17		85817448		2	RIVET
18		85817449		2	PLAQUE
19	5	85817447		1	POIGNÉE
20		85817428		1	SOUFFLET
21		85817458		4	ECROU, M8
22		82034893		4	VIS
23		82034881		4	RONDELLE
24		85817427		1	PLAQUE DE SERRAGE

(1) Mechanical Control Version
(2) Only for Pilot Control Version
(3) Includes 4, 6
(4) Includes 7, 9 - 14, 16
(5) Includes 17, 18

851/01	04	p1	04/08

PARTIES SUSPENSIONS INFERIEURES SIEGE TISSU

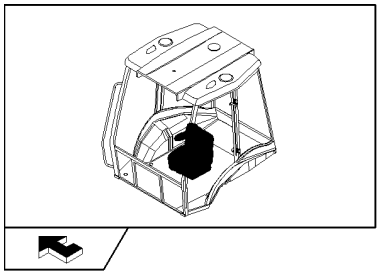

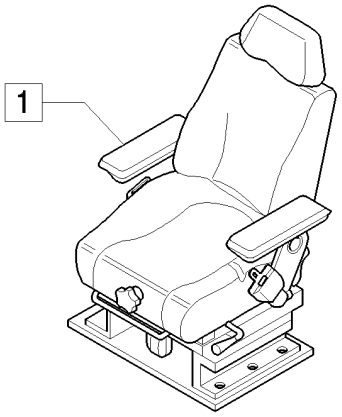

2 SEE ALSO TAV. 851/01 03

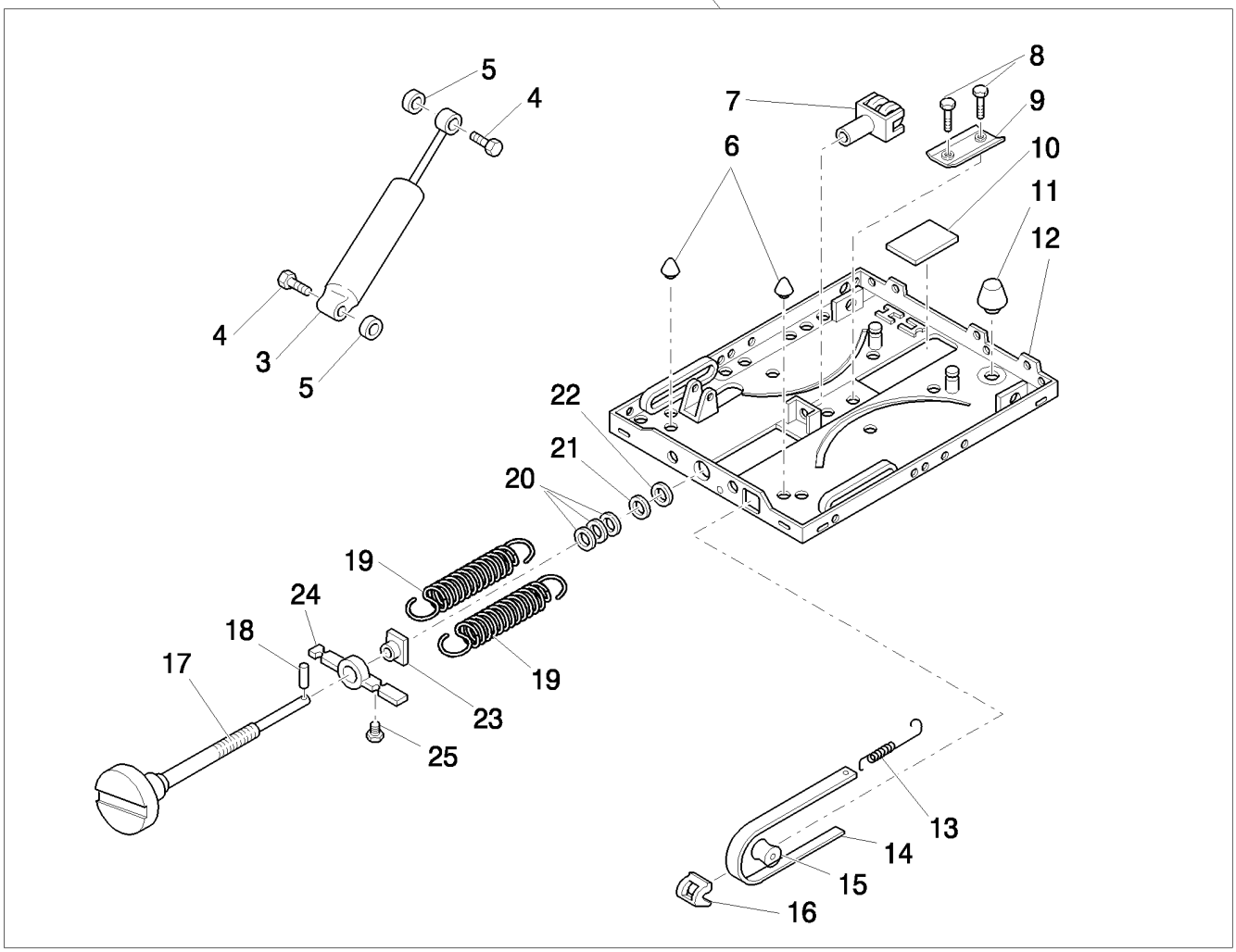

PARTIES SUSPENSIONS INFERIEURES SIEGE TISSU

REF	FN	PART NUMBER	YR/SN	QTY	DESCRIPTION
1	1	87576858		1	SIÈGE, Assy
1	1	87576859		1	SIÈGE, Assy
1	2	87576866		1	SIÈGE, Assy
1	2	87576867		1	SIÈGE, Assy
2		85817426		1	SUSPENSION, Assy
3	3	85817431		1	AMORTISSEUR
4		82035040		2	BOULON
5		82035128		2	RONDELLE
6		85817440		2	PARE-CHOCS CAOUTCHOUC
7		82035043		1	FOURCHE
8		82035037		2	RIVET
9		82035054		1	PROFILE, BOURRELET
10		82035032		1	PLAQUE
11		85817441		1	PARE-CHOCS CAOUTCHOUC
12	4	85817436		1	SUSPENSION
13		82035039		1	RESSORT
14	5	85817443		1	INDICATEUR
15		82035029		1	ROULEAU
16		82035025		1	GUIDE
17	6	85817451		1	VIS DE REGLAGE
18		85817433		1	PION
19		85817434		2	RESSORT
20		82035035		1	JEU-DE-RONDELLES
21		82035028		1	RONDELLE
22		85817435		1	BAGUE
23		82035034		1	ECROU
24		82035027		1	PATTE FIXATION
25		82035033		1	RETENEUR

(1) Mechanical Control Version
(2) Only for Pilot Control Version
(3) Includes 4, 5
(4) Includes 6, 8 - 11
(5) Includes 13, 15, 16
(6) Includes 18

855		p1	04/08

SIEGE PNEUMATIQUE EN TISSU - CABINE

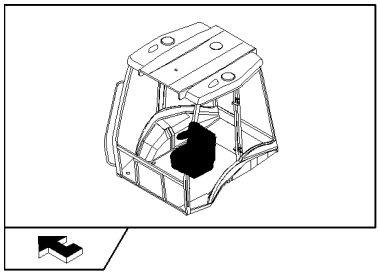

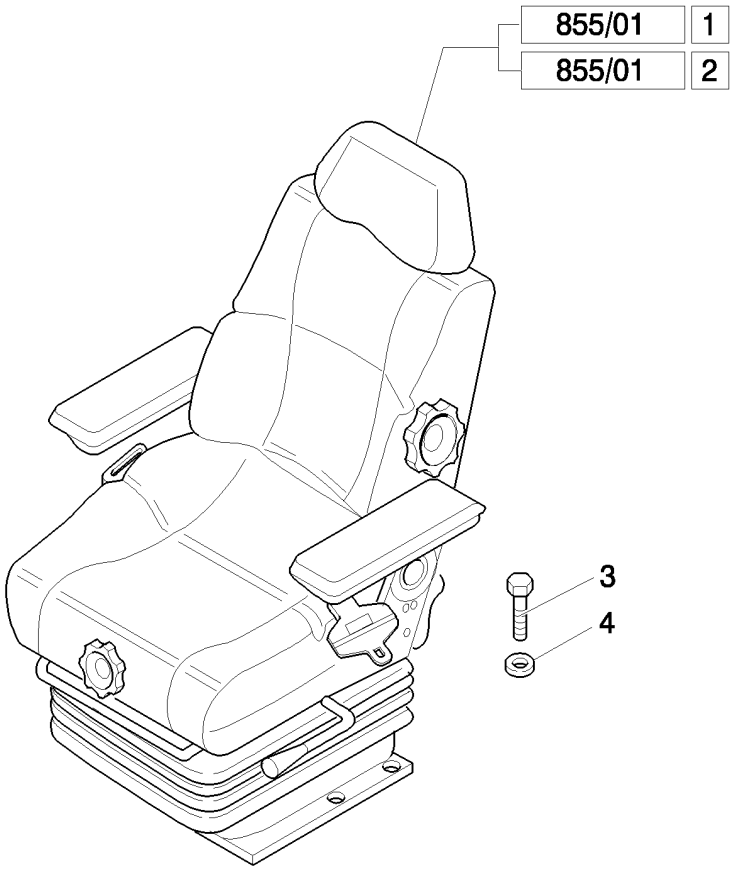

SIEGE PNEUMATIQUE EN TISSU - CABINE

REF	FN	PART NUMBER	YR/SN	QTY	DESCRIPTION
1	1, 2, 3	87576861		1	SIÈGE, Assy
1	1, 4, 3	87576862		1	SIÈGE, Assy
2	2, 5, 3	87576868		1	SIÈGE, Assy
2	4, 5, 3	87576869		1	SIÈGE, Assy
3		16043424		8	VIS, Hex, M8 x 20, 8.8, Full Thd
4		11198074		8	RONDELLE BELLEVILLE, Belleville, M8.4

(1) Mechanical Control Version
(2) 2" Seat Belt
(3) Only for NA
(4) 3" Seat Belt
(5) Only for Pilot Control Version

855/01	01	p1	04/08

COUSSINS SIEGE PNEUMATIQUE, ACCOUDOIRS & ACCESSOIRES

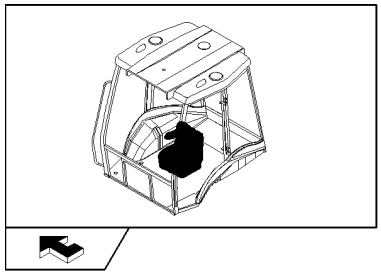

COUSSINS SIEGE PNEUMATIQUE, ACCOUDOIRS & ACCESSOIRES

REF	FN	PART NUMBER	YR/SN	QTY	DESCRIPTION
1	1	87576861		1	SIÈGE, Assy
1	1	87576862		1	SIÈGE, Assy
1	2	87576868		1	SIÈGE, Assy
1	2	87576869		1	SIÈGE, Assy
2		87613060		1	DOSSIER
3		87613718		1	DOSSIER
4		87613074		1	SIÈGE
5	3	85817481		1	SUPPORT
6		82034863		4	VIS
7		47335213		2	BAGUE
8	4	85817532		1	APPUI-TÊTE
9	5, 6	85817453		1	ACCOUDOIR, LH
9	7, 6	85828196		7	ACCOUDOIR
10	8	85827918		1	ACCOUDOIR, RH
11		82034881		AR	RONDELLE
12		85817459		2	ECROU, M8
13		83984666		1	VIS
14		13838071		2	BOULON, Hex Serr Flg, M8 x 20
15		85817466		1	COUVERTURE, RH
16		9972160		6	VIS
17		87395582		2	BOULON, 7/16"-20UNF x 60.0
18		85817470		1	PLAQUE
19		9960795		1	PLAQUE, RH
20		9960793		1	RESSORT
21		85817469		1	BAGUE
22		87613075		1	VIS
23		85821419		1	PLAQUE DE SERRAGE

(1) Mechanical Control Version
(2) Only for Pilot Control Version
(3) Includes 6
(4) Includes 7, 34
(5) Only for Mechanical Control Version 87576861 - 87576862
(6) Includes 11 - 13
(7) Only for Pilot Control Version 87576868 - 87576869
(8) Includes 11, 12, 14

855/01	01	p2	04/08

COUSSINS SIEGE PNEUMATIQUE, ACCOUDOIRS & ACCESSOIRES

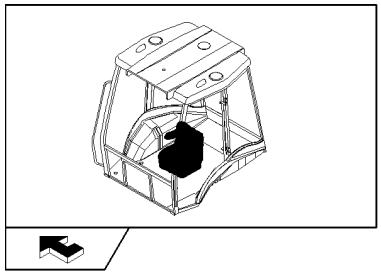

COUSSINS SIEGE PNEUMATIQUE, ACCOUDOIRS & ACCESSOIRES

REF	FN	PART NUMBER	YR/SN	QTY	DESCRIPTION
24		85817476		1	PLAQUE
25		85817460		1	LEVIER
26		85821418		1	DISPOSITIF D'ARRET
27		82035038		1	VIS
28		9960692		AR	ENTRETOISE
29		85817477		1	ENTRETOISE
30		9960803		1	PLAQUE, LH
31		85817479		1	COUVERCLE, LH
32		85817478		1	LEVIER
33		9960797		1	RESSORT
34		9967970		1	KIT
35		82034897		3	RIVET
36		85817534		1	VIS DE REGLAGE

855/01	02	p1	04/08

PLAQUE INSTALLATION SIEGE PNEUMATIQUE, GLISSIERES REGL & CEINTURE

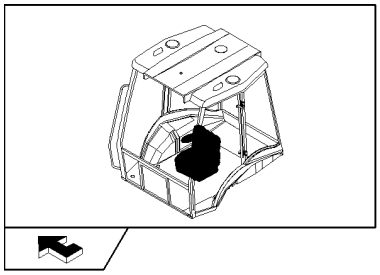

PLAQUE INSTALLATION SIEGE PNEUMATIQUE, GLISSIERES REGL & CEINTURE

REF	FN	PART NUMBER	YR/SN	QTY	DESCRIPTION
1	1	87576861		1	SIÈGE, Assy
1	1	87576862		1	SIÈGE, Assy
1	2	87576868		1	SIÈGE, Assy
1	2	87576869		1	SIÈGE, Assy
2	3	71485488		1	COMMANDE
3		85817463		1	PLAQUE
4	4	85817464		1	VIS DE REGLAGE
5		9962962		1	VIS, M5 x 10
6		85817484		1	KIT
7		85817458		8	ECROU
8		9960692		AR	ENTRETOISE
9		9958776		8	ENTRETOISE
10		82034881		AR	RONDELLE
11		9972160		AR	VIS, M8x25
12		85824204		1	PATTE FIXATION
13		82034893		AR	VIS
14	5	87395588		1	PLAQUE
15		85817536		4	VIS
16		85817456		4	ENTRETOISE
17	6	87364220		1	CEINTURE DE SÉCURITÉ
17	7	87364221		1	CEINTURE DE SÉCURITÉ
18		85817482		1	POMMEAU
19		85819813		1	BAGUE

(1) Mechanical Control Version
(2) Only for Pilot Control Version
(3) Includes 4
(4) Includes 3, 5
(5) Includes 18
(6) 2" Seat Belt
(7) 3" Seat Belt

855/01	03	p1	04/08

PARTIES SUSPENSIONS SUPERIEURES SIEGE PNEUMATIQUE

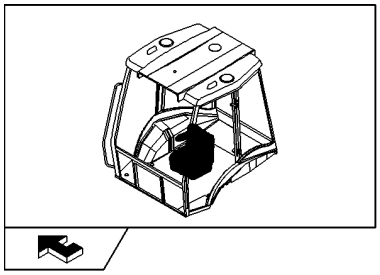

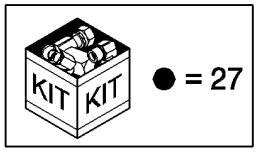

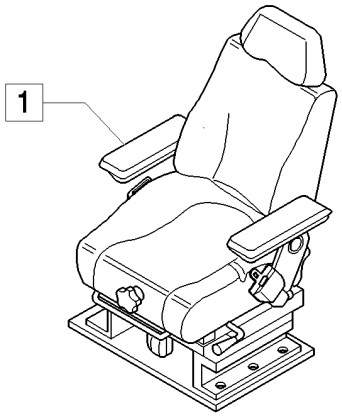

2 SEE ALSO TAV. 855/01 04
SEE ALSO TAV. 855/01 05

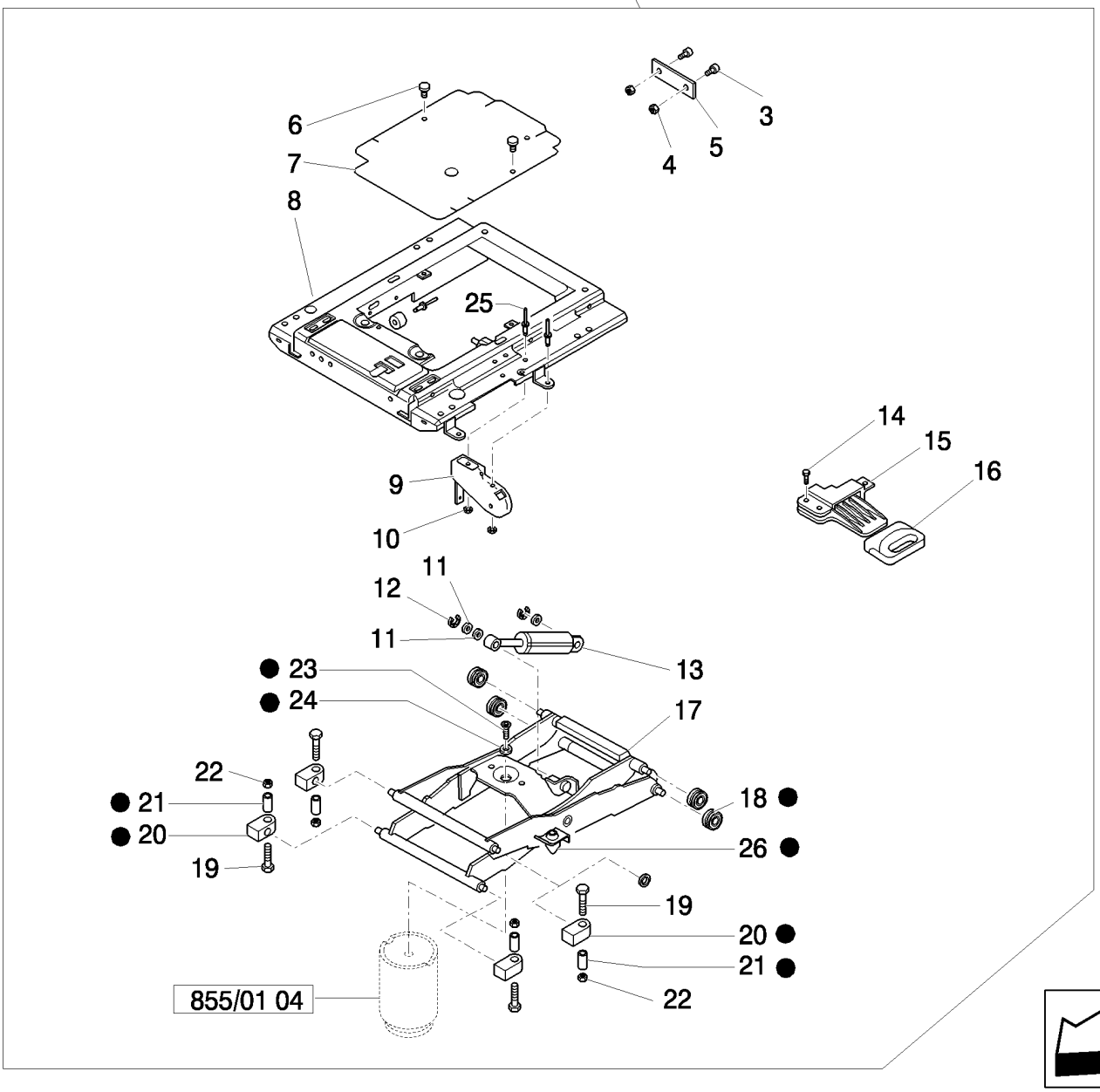

PARTIES SUSPENSIONS SUPERIEURES SIEGE PNEUMATIQUE

REF	FN	PART NUMBER	YR/SN	QTY	DESCRIPTION
1	1	87576861		1	SIÈGE, Assy
1	1	87576862		1	SIÈGE, Assy
1	2	87576868		1	SIÈGE, Assy
1	2	87576869		1	SIÈGE, Assy
18		85817482		1	POMMEAU
2		85817529		1	SUSPENSION
3		82034894		2	VIS
4		85817494		1	PLAQUE
5		85817458		2	ECROU
6		NS		AR	NON FOURNI
7	3	85817486		1	COUVERCLE
8		85824436		1	AMORTISSEUR
9		85817489		2	RONDELLE
10		85817490		1	KIT
11		NS		3	NON FOURNI
12		85817496		2	RONDELLE
13	4	85824434		1	AMORTISSEUR
14		85819815		3	VIS
15		85817493		1	COMMANDE
16		85817492		1	POIGNÉE
17	5	87615608		1	SUSPENSION
18		82035057		4	ROULEAU
19		NS		4	NON FOURNI
20		87613742		AR	BUTÉE A BILLES
21		82035053		AR	TUBE
22		NS		AR	NON FOURNI
23		NS		AR	NON FOURNI
24		NS		AR	NON FOURNI
25		85817488		2	RIVET
26		82035126		2	PARE-CHOCS

(1) Mechanical Control Version
(2) Only for Pilot Control Version
(3) Includes 6
(4) Includes 12
(5) Includes 18, 20

855/01	03	p2	04/08

PARTIES SUSPENSIONS SUPERIEURES SIEGE PNEUMATIQUE

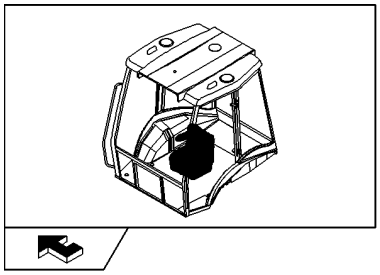

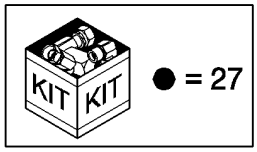

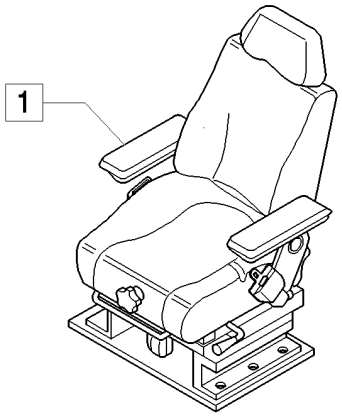

2 SEE ALSO TAV. 855/01 04
SEE ALSO TAV. 855/01 05

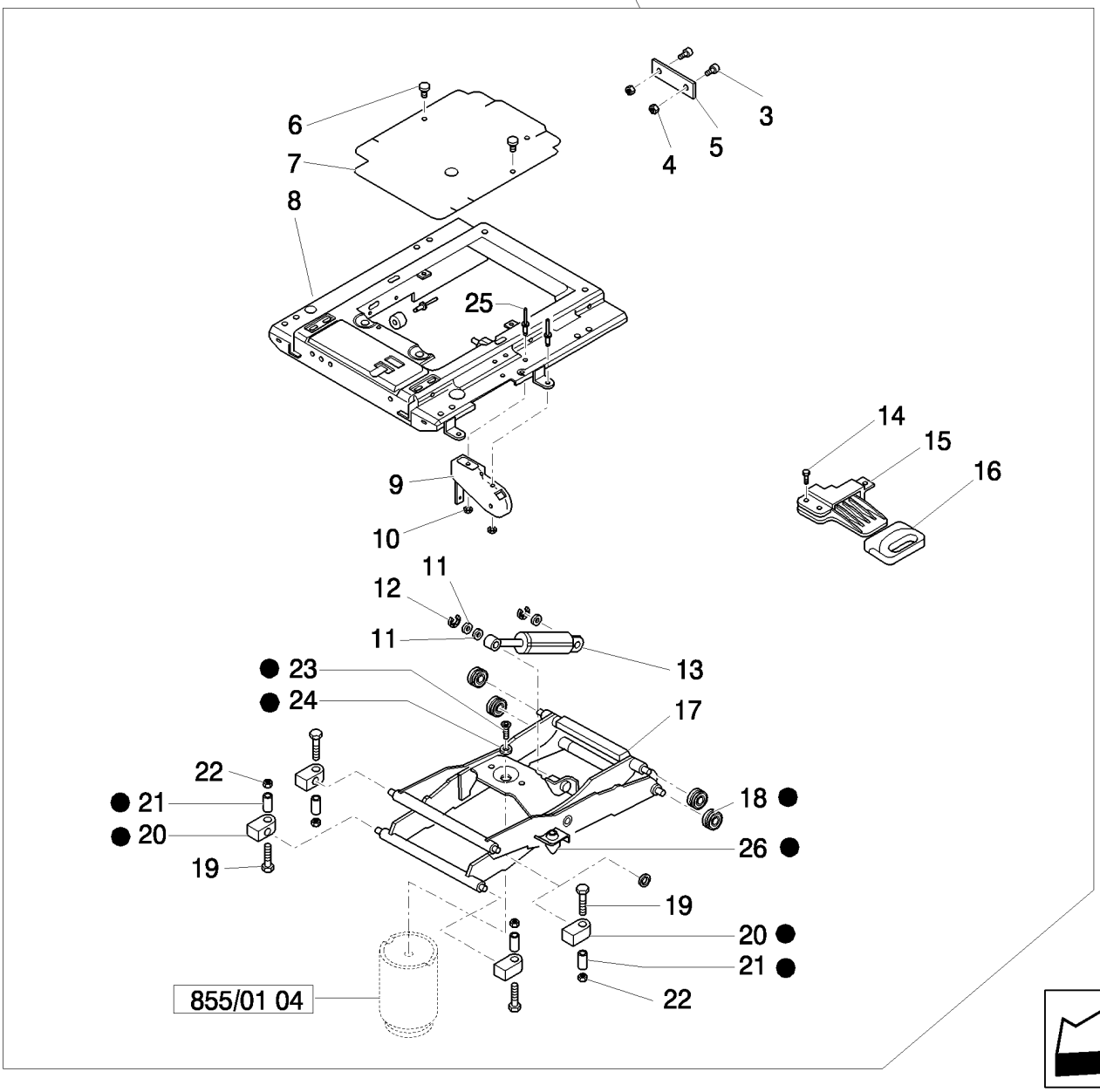

PARTIES SUSPENSIONS SUPERIEURES SIEGE PNEUMATIQUE

REF	FN	PART NUMBER	YR/SN	QTY		DESCRIPTION
27		82848105		1	KIT	

855/01	04	p1	04/08

PARTIES SUSPENSIONS INFERIEURES SIEGE TISSU PNEUMATIQUE

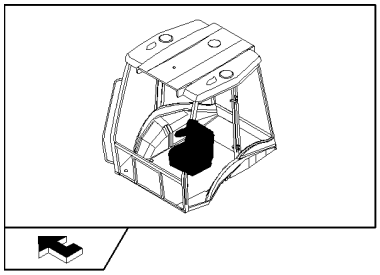

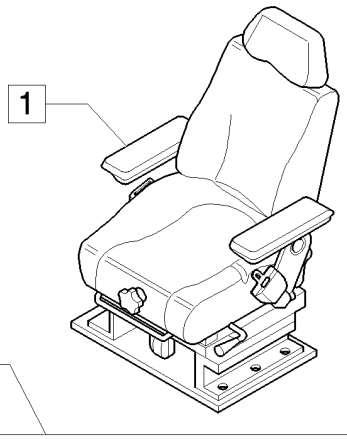

2 SEE ALSO TAV. 855/01 03
SEE ALSO TAV. 855/01 05

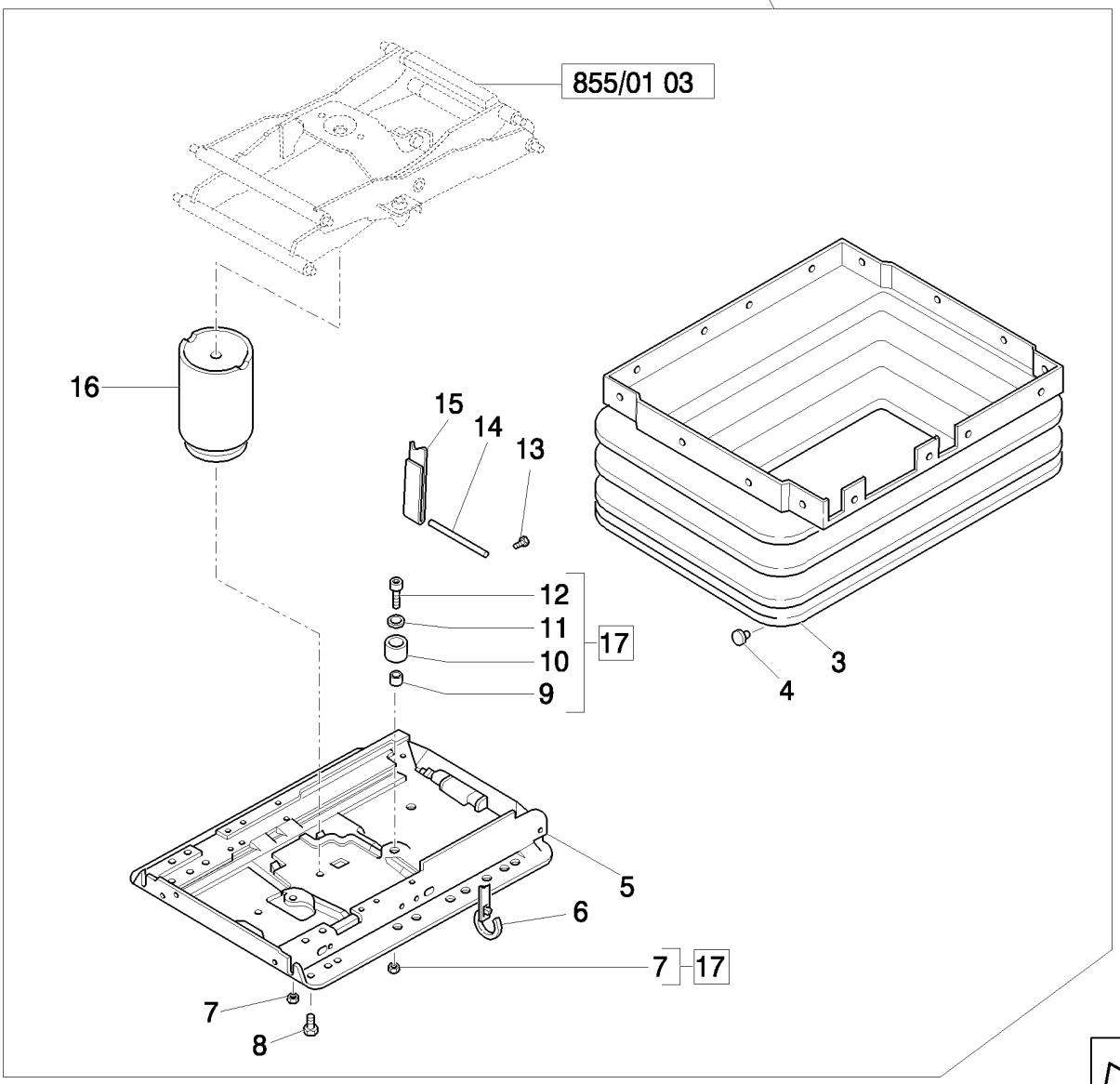

PARTIES SUSPENSIONS INFERIEURES SIEGE TISSU PNEUMATIQUE

REF	FN	PART NUMBER	YR/SN	QTY	DESCRIPTION
1	1	87576861		1	SIÈGE, Assy
1	1	87576862		1	SIÈGE, Assy
1	2	87576868		1	SIÈGE, Assy
1	2	87576869		1	SIÈGE, Assy
2		85817529		1	SUSPENSION, Assy
3	3	85827920		1	SOUFFLET
4		NS		AR	NON FOURNI
5	4	87615611		1	SUSPENSION
6		NS		AR	NON FOURNI
7		NS		AR	NON FOURNI
8		NS		1	NON FOURNI, M8x20
9		NS		1	NON FOURNI
10	5	NS		1	NON FOURNI
11		NS		1	NON FOURNI
12		NS		1	NON FOURNI, M8x20
13		9962962		1	VIS
14		85817513		1	AXE
15		85817512		1	REVETEMENT
16		87396450		1	RESSORT
17		85817523		1	GARANT

(1) Mechanical Control Version
(2) Only for Pilot Control Version
(3) Includes 4
(4) Includes 4, 7, 10
(5) Includes 4, 7, 9, 11, 12

855/01	05	p1	04/08

COMPRESSEUR & TUBES SIEGE PNEUMATIQUE EN TISSU

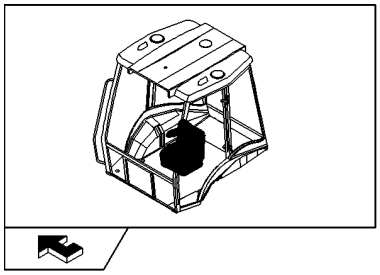

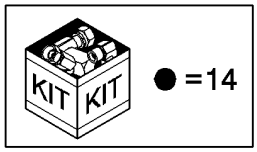

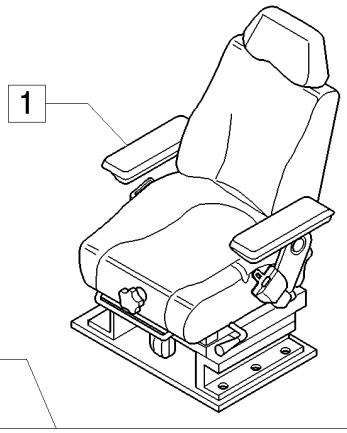

2 SEE ALSO TAV. 855/01 03
SEE ALSO TAV. 855/01 04

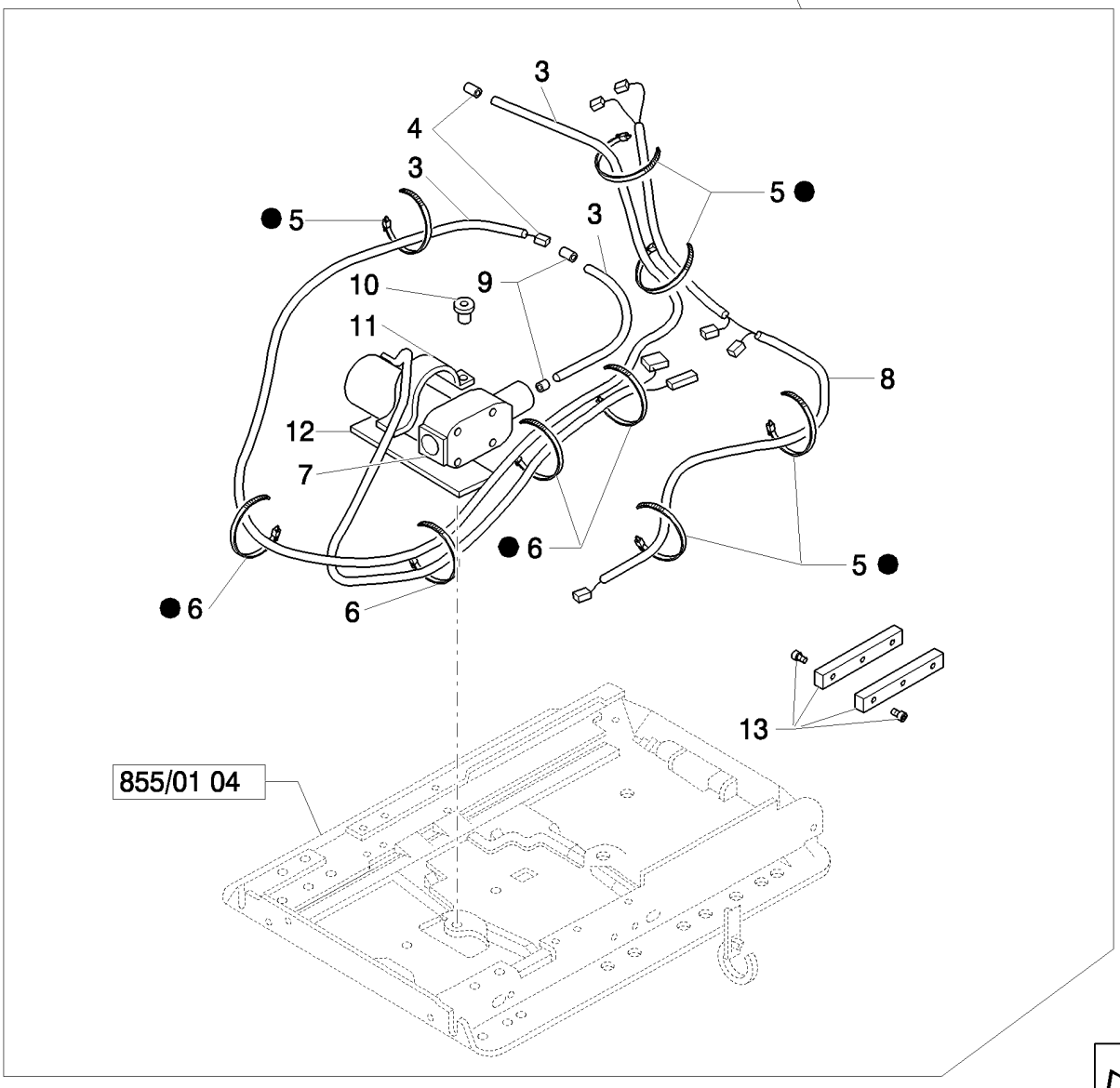

COMPRESSEUR & TUBES SIEGE PNEUMATIQUE EN TISSU

REF	FN	PART NUMBER	YR/SN	QTY	DESCRIPTION
1	1	87576861		1	SIÈGE, Assy
1	1	87576862		1	SIÈGE, Assy
1	2	87576868		1	SIÈGE, Assy
1	2	87576869		1	SIÈGE, Assy
2		85817529		1	SUSPENSION, Assy
3		87313729		1	COLIS DE RÉPARATION
4		NS		2	NON FOURNI
5		NS		AR	NON FOURNI
6		NS		4	NON FOURNI
7		82035076		1	COMPRESSEUR
8		85819814		1	FAISCEAU COMPLET
9		NS		2	NON FOURNI
10		NS		1	NON FOURNI
11		NS		1	NON FOURNI
12		NS		1	NON FOURNI
13		47335175		1	BUTÉE
14		82848105		1	KIT

(1) Mechanical Control Version
(2) Only for Pilot Control Version

COUSSINS SIEGE EN VINYLE, ACCOUDOIRS & ACCESSOIRES (ROPS)

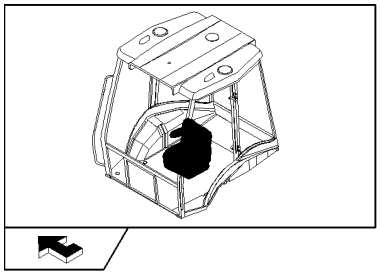

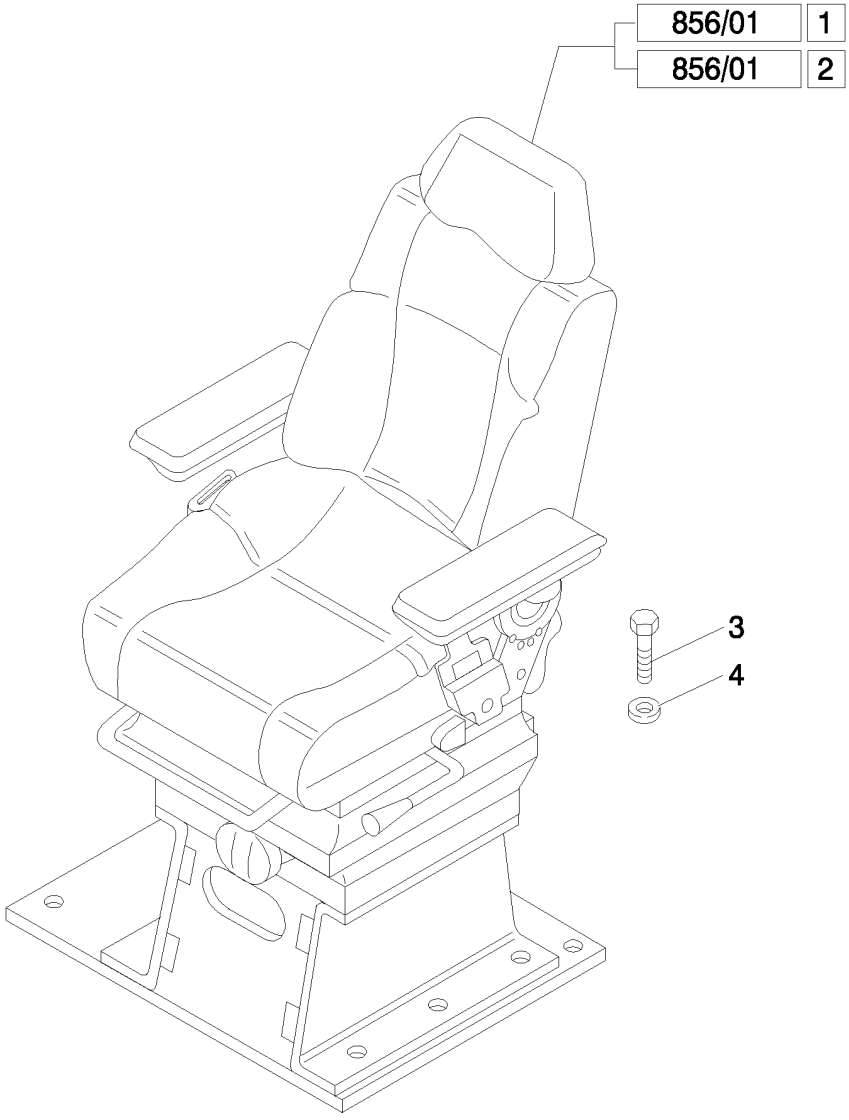

COUSSINS SIEGE EN VINYLE, ACCOUDOIRS & ACCESSOIRES (ROPS)

REF	FN	PART NUMBER	YR/SN	QTY	DESCRIPTION
1	1, 2, 3	87576855		1	SIÈGE, Assy
1	1, 4, 3	87576856		1	SIÈGE, Assy
2	2, 3, 5	87576863		1	SIÈGE, Assy
2	4, 3, 5	87576865		1	SIÈGE, Assy
3		16043424		8	VIS, Hex, M8 x 20, 8.8, Full Thd
4		11198074		8	RONDELLE BELLEVILLE, Belleville, M8.4

(1) Mechanical Control Version
(2) 2" Seat Belt
(3) Consists Of Page 856/01 01 To 856/01 04
(4) 3" Seat Belt
(5) Only for Pilot Control Version

856/01	01	p1	04/08

SIEGE EN VINYLE AVEC ACCOUDOIRS (ROPS)

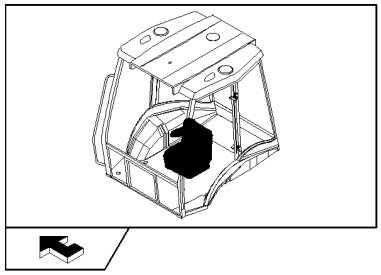

SIEGE EN VINYLE AVEC ACCOUDOIRS (ROPS)

REF	FN	PART NUMBER	YR/SN	QTY	DESCRIPTION
1	1	87576855		1	SIÈGE, Assy
1	1	87576856		1	SIÈGE, Assy
1	2	87576863		1	SIÈGE, Assy
1	2	87576865		1	SIÈGE, Assy
2		85817562		1	APPUI-TÊTE
3		87613577		1	DOSSIER, Cap, HH, CL 8.8, M8x1.25x20
4		85817564		1	COUSSIN DE SIEGE
5	3	85817481		1	SUPPORT
6		82034863		4	VIS
7		47335213		2	BAGUE
8	4	85817485		1	SIEGE, COMPOSANTS
9	5, 6	85817453		1	ACCOUDOIR
9	5, 7	85828196		1	ACCOUDOIR
10	8	85827918		1	ACCOUDOIR
11		82034881		AR	RONDELLE
12		85817459		2	ECROU
13		83984666		1	VIS
14		13838071		1	BOULON, Hex Serr Flg, M8 x 20
15		85817466		1	COUVERTURE
16		9972160		AR	VIS
17		87395582		2	BOULON, 7/16"-20UNFx60.0
18		85817470		1	PLAQUE
19		9960795		1	PLAQUE
20		9960793		1	RESSORT
21		85817469		1	BAGUE
22		85817471		1	VIS
23		85821419		1	PLAQUE DE SERRAGE

(1) Mechanical Control Version
(2) Only for Pilot Control Version
(3) Includes 6
(4) Includes 7, 21
(5) Includes 11 - 13
(6) Mechanical Control Version
(7) Only for Pilot Control Version
(8) Includes 11, 12, 14

856/01	01	p2	04/08

SIEGE EN VINYLE AVEC ACCOUDOIRS (ROPS)

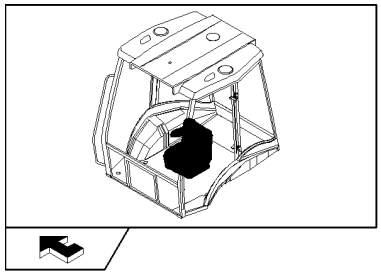

SIEGE EN VINYLE AVEC ACCOUDOIRS (ROPS)

REF	FN	PART NUMBER	YR/SN	QTY	DESCRIPTION
24		85817476		1	PLAQUE
25		85817460		1	LEVIER
26		85821418		1	DISPOSITIF D'ARRET
27		82035038		1	VIS
28		9960692		AR	ENTRETOISE
29		85817477		1	ENTRETOISE
30		9960803		1	PLAQUE
31		85817479		1	COUVERCLE
32		85817478		1	LEVIER
33		87613075		1	VIS
34		9960797		1	RESSORT

856/01	02	p1	04/08

PLAQUE INSTALLATION SIEGE VINYLE, GLISSIERES REGLAGE & CEINTURE (ROPS)

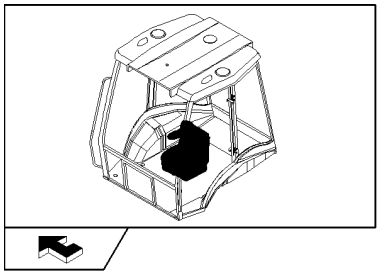

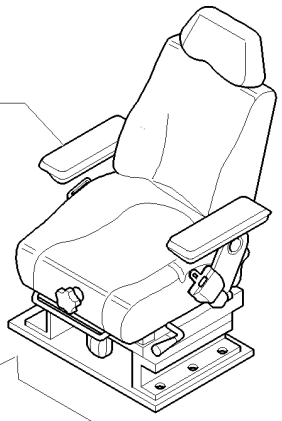

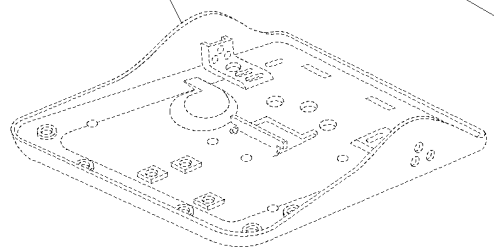

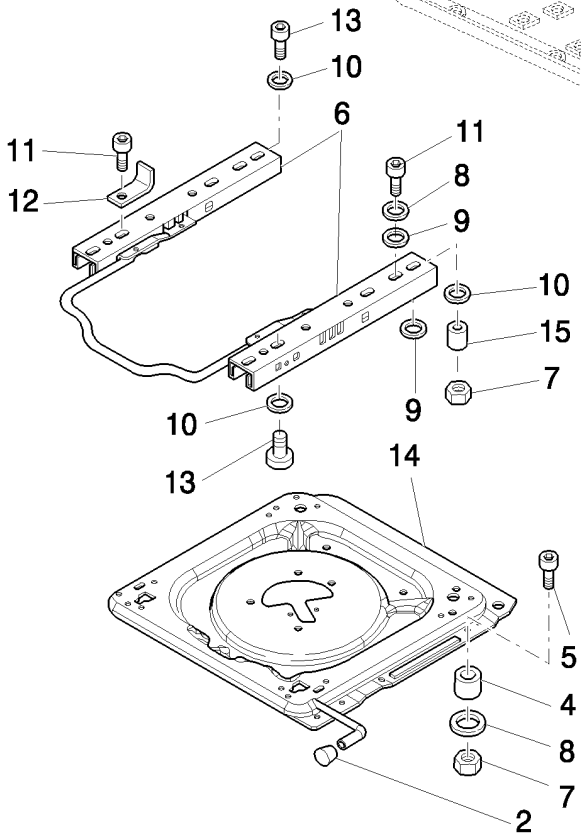

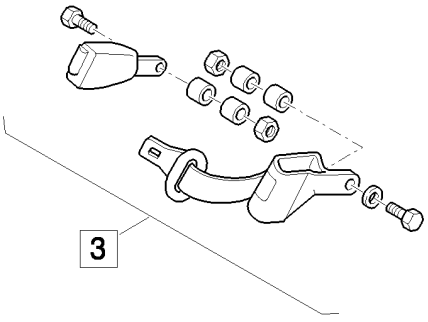

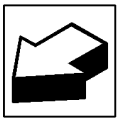

PLAQUE INSTALLATION SIEGE VINYLE, GLISSIERES REGLAGE & CEINTURE (ROPS)

REF	FN	PART NUMBER	YR/SN	QTY	DESCRIPTION
1	1	87576855		1	SIÈGE, Assy
1	1	87576856		1	SIÈGE, Assy
1	2	87576863		1	SIÈGE, Assy
1	2	87576865		1	SIÈGE, Assy
2		85817482		1	POMMEAU
3	3	87364220		1	CEINTURE DE SÉCURITÉ, Assy
3	4	87364221		1	CEINTURE DE SÉCURITÉ, Assy
4		85817456		4	ENTRETOISE
5		85817465		4	VIS, M8 x 40
6		85817484		1	KIT
7		85817458		8	ECROU
8		9960692		AR	ENTRETOISE
9		9958776		8	ENTRETOISE
10		82034881		AR	RONDELLE
11		9972160		8	VIS, M8x25
12		85824204		1	PATTE FIXATION
13		82034893		4	VIS, M8x20
14	5	87395588		1	PLAQUE
15		85819813		1	BAGUE

(1) Mechanical Control Version
(2) Only for Pilot Control Version
(3) 2" Seat Belt
(4) 3" Seat Belt
(5) Includes 10 - 12

856/01	03	p1	04/08

PARTIES SUSPENSIONS SUPERIEURES SIEGE VINYLE (ROPS)

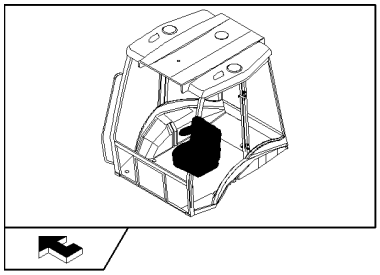

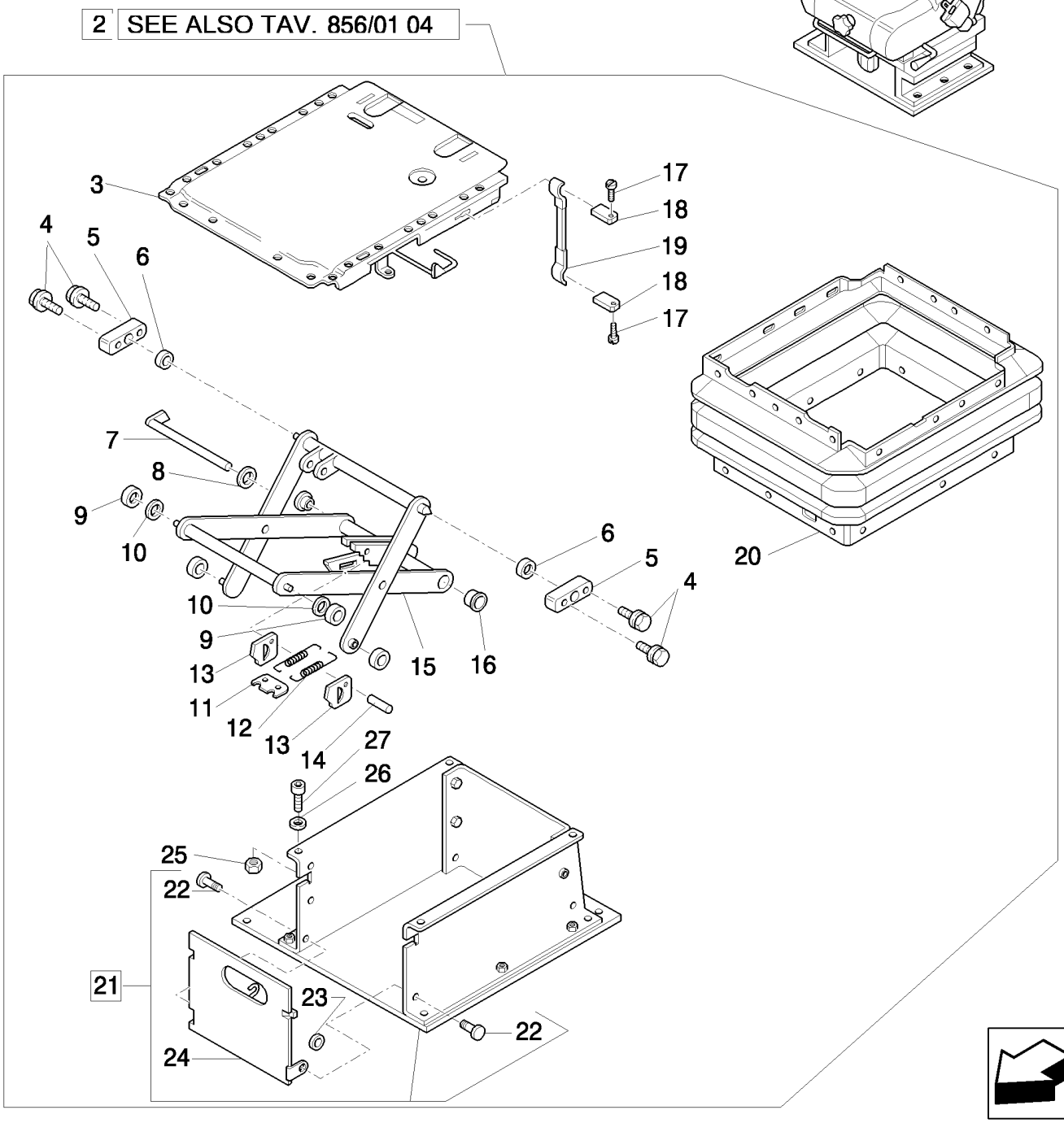

PARTIES SUSPENSIONS SUPERIEURES SIEGE VINYLE (ROPS)

REF	FN	PART NUMBER	YR/SN	QTY	DESCRIPTION
1	1	87576855		1	SIÈGE, Assy
1	1	87576856		1	SIÈGE, Assy
1	2	87576863		1	SIÈGE, Assy
1	2	87576865		1	SIÈGE, Assy
2		85817556		1	SUSPENSION
3		85817450		1	PLAQUE
4		85817444		4	VIS, M6 x 16
5	3	82035094		2	ROULEMENT
6		85817445		2	BAGUE
7		85817429		1	BOULON
8		82035127		1	RONDELLE
9		82035031		4	ROULEAU
10		85817442		2	BAGUE
11		82035030		1	PLAQUE
12		85817430		2	RESSORT
13		9958792		2	PLAQUE
14		82035036		1	BOULON
15	4	85817446		1	SUSPENSION
16		9960755		2	BAGUE
17		85817448		2	RIVET
18		85817449		2	PLAQUE
19	5	85817447		1	POIGNÉE
20		85817428		1	SOUFFLET
21	6	85817561		1	SOCLE
22		85817559		2	BOULON
23		85817560		2	RONDELLE
24		85817558		1	PORTE
25		85817458		4	ECROU, M8
26		82034881		4	RONDELLE

(1) Mechanical Control Version
(2) Only for Pilot Control Version
(3) Includes 4, 6
(4) Includes 7, 9 - 14, 16
(5) Includes 17, 18
(6) Includes 22 - 24

856/01	03	p2	04/08

PARTIES SUSPENSIONS SUPERIEURES SIEGE VINYLE (ROPS)

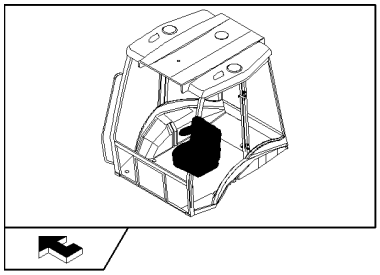

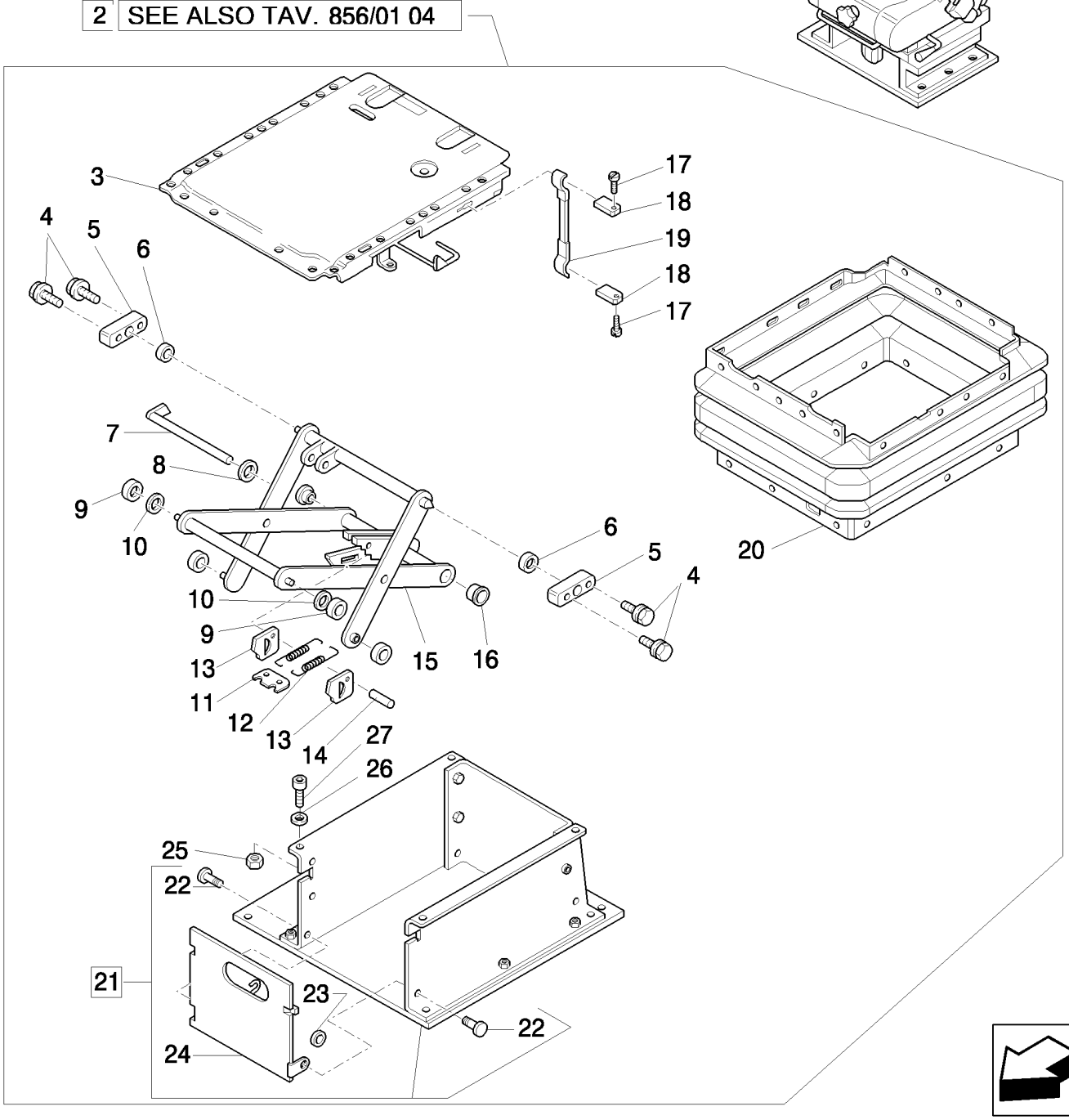

PARTIES SUSPENSIONS SUPERIEURES SIEGE VINYLE (ROPS)

REF	FN	PART NUMBER	YR/SN	QTY	DESCRIPTION
27		82034893		4	VIS

856/01	04	p1	04/08

PARTIES SUSPENSIONS INFERIEURES SIEGE VINYLE (ROPS)

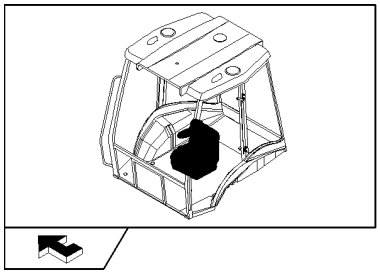

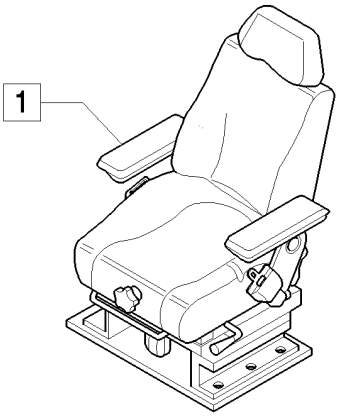

2 SEE ALSO TAV. 856/01 03

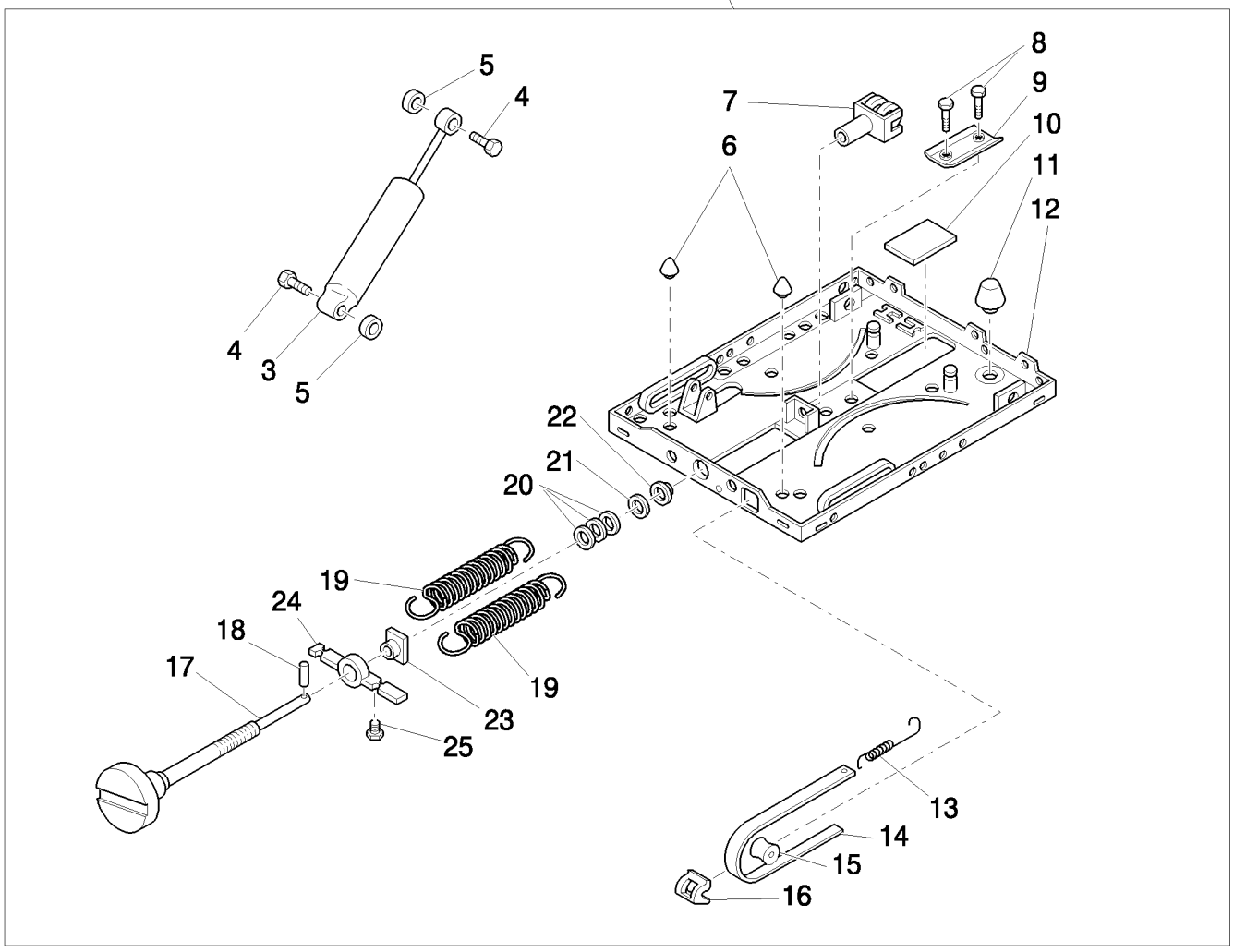

PARTIES SUSPENSIONS INFERIEURES SIEGE VINYLE (ROPS)

REF	FN	PART NUMBER	YR/SN	QTY	DESCRIPTION
1	1	87576855		1	SIÈGE, Assy
1	1	87576856		1	SIÈGE, Assy
1	2	87576863		1	SIÈGE, Assy
1	2	87576865		1	SIÈGE, Assy
2		85817556		1	SUSPENSION
3	3	85817431		1	AMORTISSEUR
4		82035040		2	BOULON
5		82035128		2	RONDELLE
6		85817440		2	PARE-CHOCS CAOUTCHOUC
7		82035043		1	FOURCHE
8		82035037		2	RIVET
9		82035054		1	PROFILE, BOURRELET
10		82035032		1	PLAQUE
11		85817441		1	PARE-CHOCS CAOUTCHOUC
12	4	85817436		1	SUSPENSION
13		82035039		1	RESSORT
14	5	85817443		1	INDICATEUR
15		82035029		1	ROULEAU
16		82035025		1	GUIDE
17	6	85817451		1	VIS DE REGLAGE
18		85817433		1	PION
19		85817434		2	RESSORT
20		82035035		1	JEU-DE-RONDELLES
21		82035028		1	RONDELLE
22		85817435		1	BAGUE
23		82035034		1	ECROU
24		82035027		1	PATTE FIXATION
25		82035033		1	RETENEUR

(1) Mechanical Control Version
(2) Only for Pilot Control Version
(3) Includes 4, 5
(4) Includes 6, 8 - 11
(5) Includes 13, 15, 16, 25
(6) Includes 18

879		p1	04/08

MIROIR RÉTROVISEUR DROIT CABINE

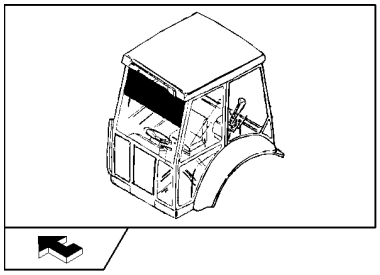

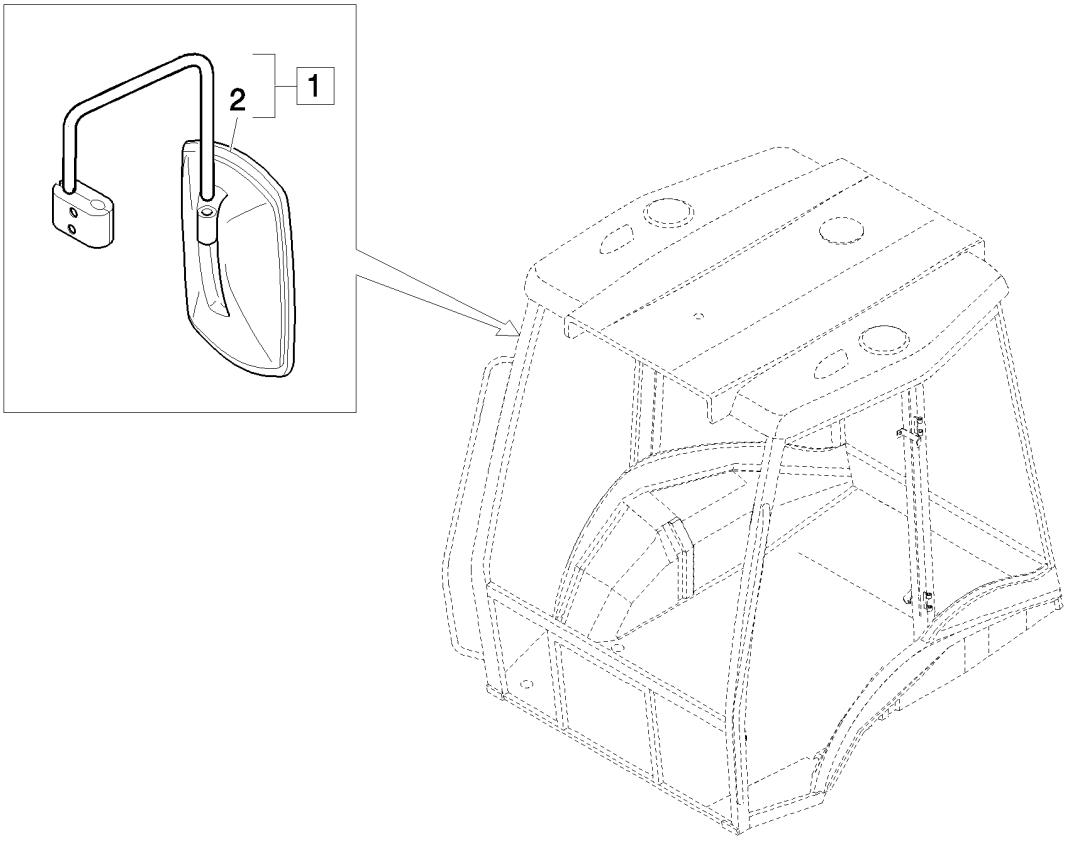

MIROIR RÉTROVISEUR DROIT CABINE

REF	FN	PART NUMBER	YR/SN	QTY	DESCRIPTION
1		85820136		1	RETROVISEUR, DRT, Assy, DX
2		85820138		1	RÉTROVISEUR

888		p1	03/08

PROTECTION ET DÉCALCOMANIE BALANCIER

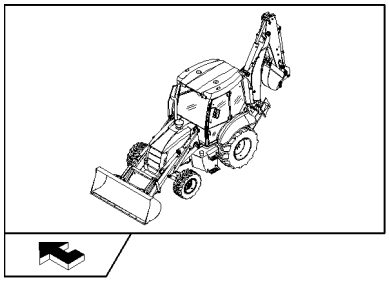

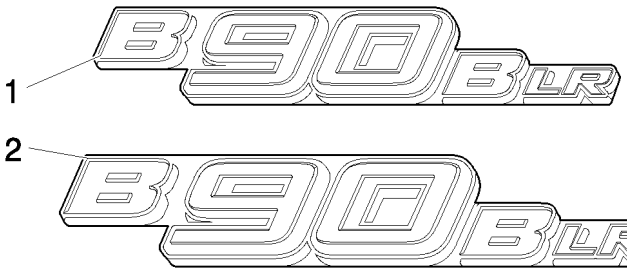

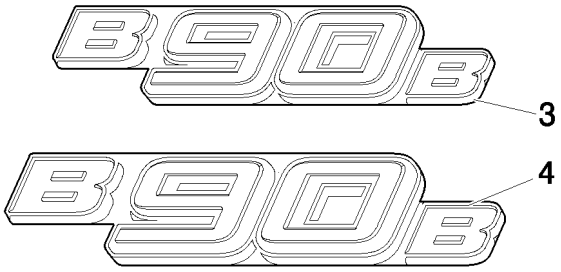

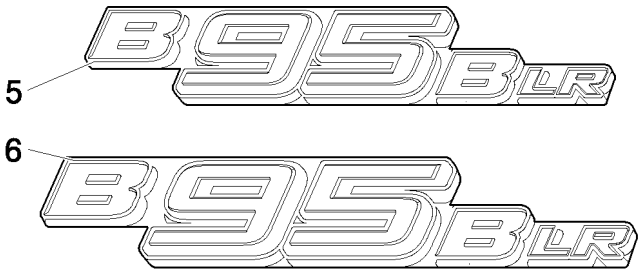

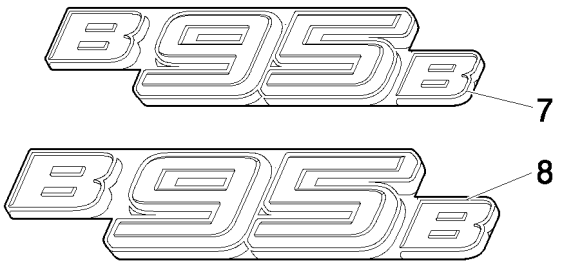

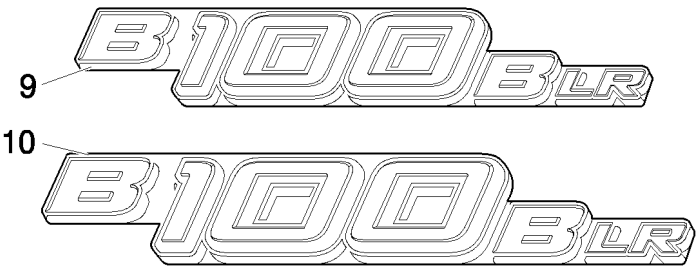

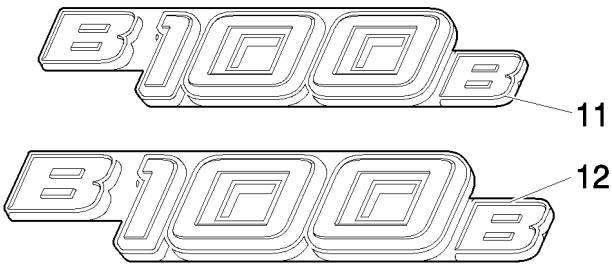

PROTECTION ET DÉCALCOMANIE BALANCIER

REF	FN	PART NUMBER	YR/SN	QTY	DESCRIPTION
1		87729598		2	DECALCOMANIE
2		87729599		2	DECALCOMANIE
3		87729596		2	DECALCOMANIE
4		87729597		2	DECALCOMANIE
5		87729602		2	DECALCOMANIE
6		87729603		2	DECALCOMANIE
7		87729600		2	DECALCOMANIE
8		87729601		2	DECALCOMANIE
9		87729608		2	DECALCOMANIE
10		87729609		2	DECALCOMANIE
11		87729606		2	DECALCOMANIE
12		87729607		2	DECALCOMANIE

900	01	p1	04/08

BALANCIER LONG: ENSEMBLE

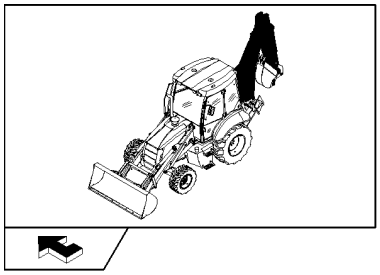

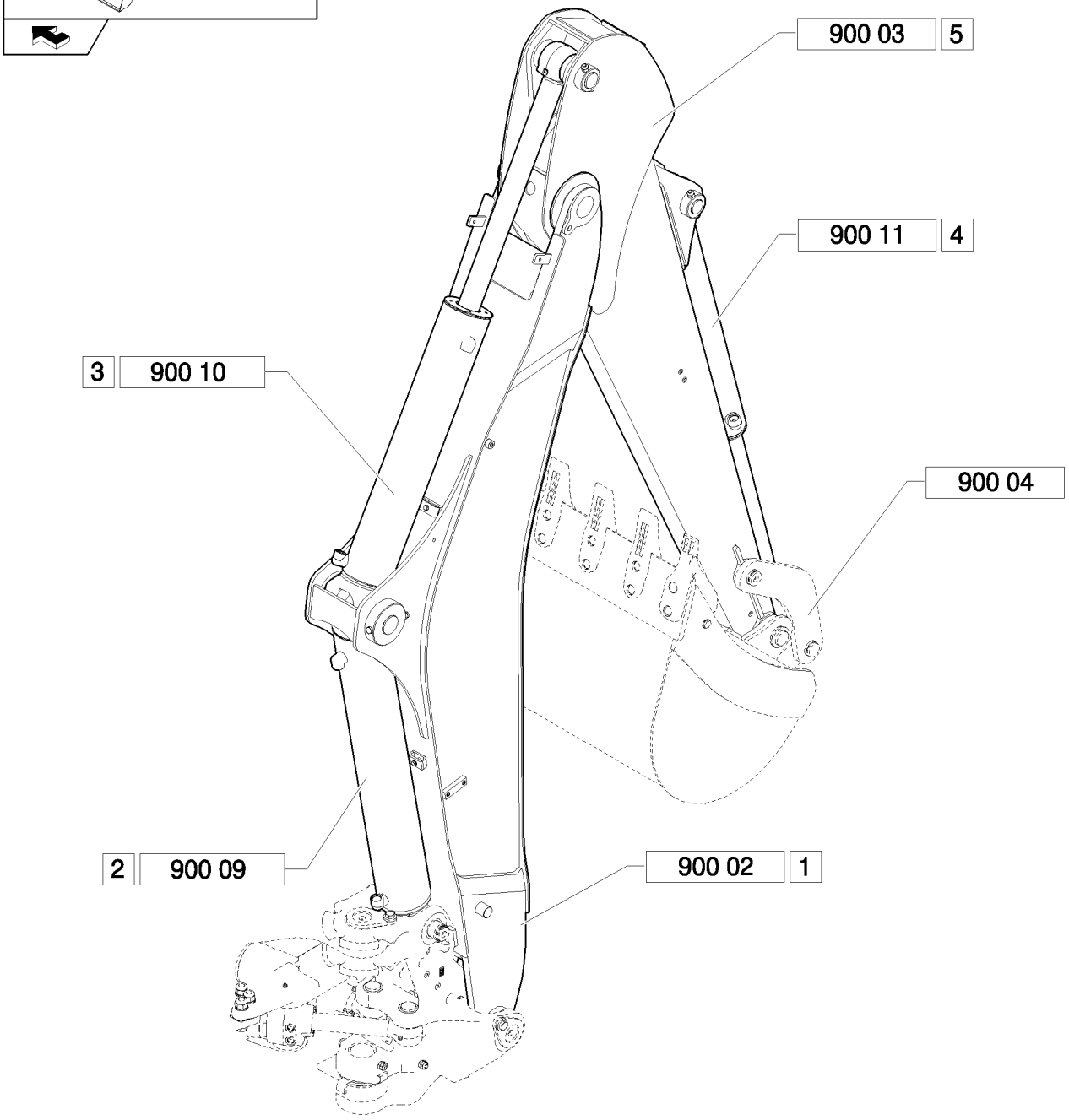

BALANCIER LONG: ENSEMBLE

REF	FN	PART NUMBER	YR/SN	QTY	DESCRIPTION
1		87576064		1	GODET ESCAVATEUR, Assy
2		87597583		1	VERIN, Assy
3		87594954		1	VERIN, Assy
4		87382007		1	VERIN, Assy
5		87592386		1	BALANCIER, Assy

900	02	p1	04/08

FLECHE - BALANCIER LONG

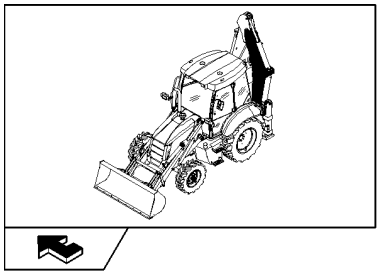

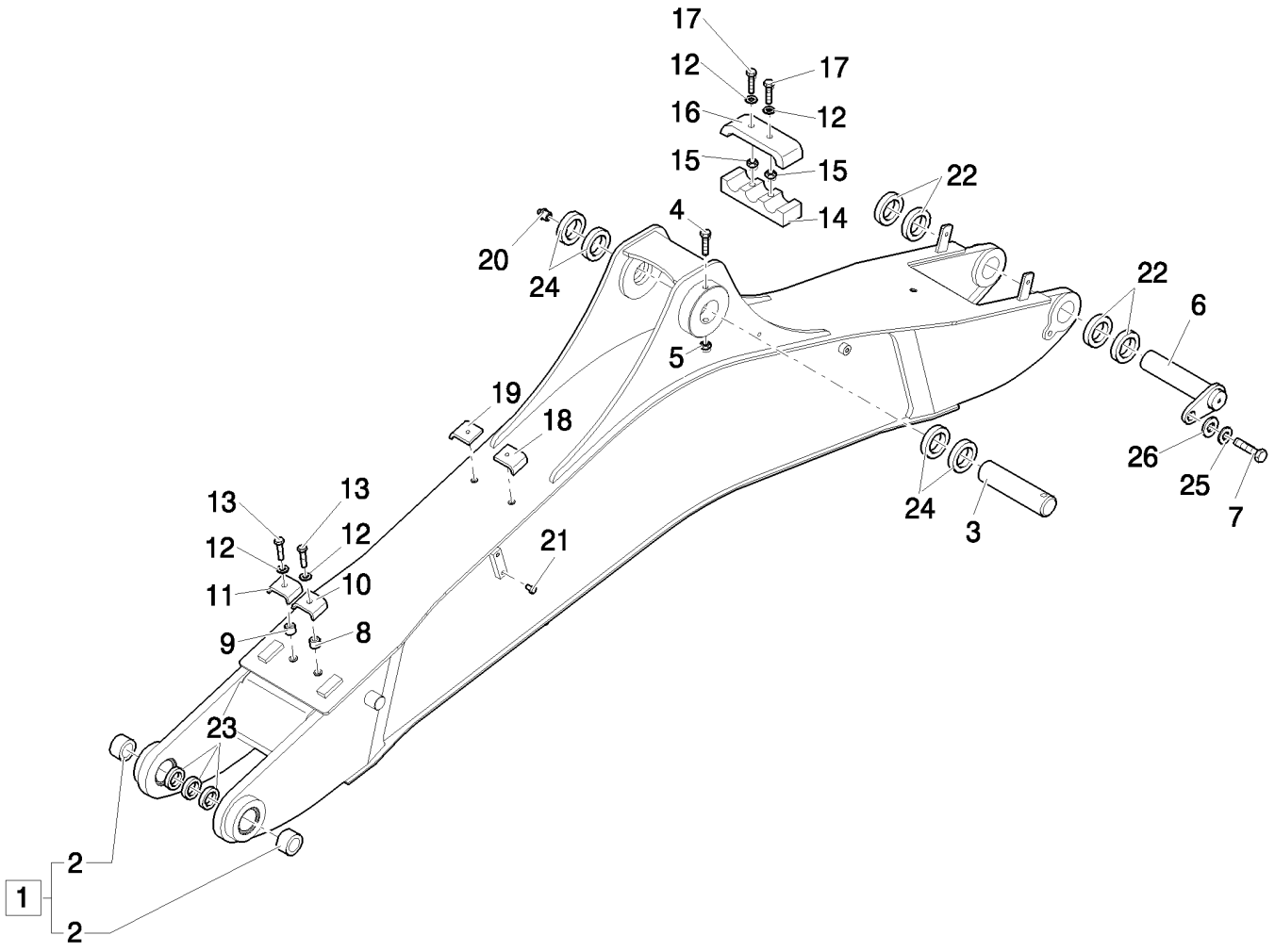

FLECHE - BALANCIER LONG

REF	FN	PART NUMBER	YR/SN	QTY	DESCRIPTION
1		87576064		1	GODET ESCAVATEUR, Assy
2		83910557		2	ANNEAU
3		87590903		1	AXE
4		15542121		1	BOULON, Hex, M12 x 1.25 x 150, 8.8
5		16105011		1	CONTRE-ECROU
6		85815607		1	AXE
7		85802397		1	VIS
8		85802902		1	ENTRETOISE
9		85802901		1	ENTRETOISE
10		85802900		1	BRIDE
11		85802899		1	BRIDE
12		11193879		6	RONDELLE BELLEVILLE, Belleville, M8.4
13		16044221		2	BOULON, Hex, M8 x 50, 8.8
14		85802895		1	BRIDE
15		85802893		2	ENTRETOISE
16		85802894		1	ETRIER PROFILE EN U
17		16044421		4	BOULON, Hex, M8 x 60, 8.8
18		85815627		2	BRIDE
19		85815628		2	BRIDE
20		83416242		1	GRAISSEUR
21		87310961		6	BOUCHON
22		85805295		4	CALE D'EPAISSEUR
23		85805296		3	CALE D'EPAISSEUR
24		85818916		4	CALE D'EPAISSEUR
25		85815607		1	AXE
26		87747362		1	FLEXIBLE

900	03	p1	04/08

BALANCIER LONG

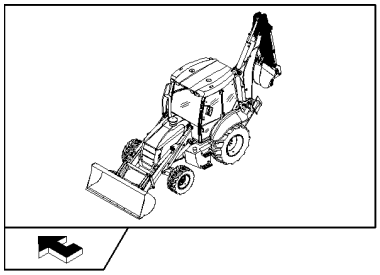

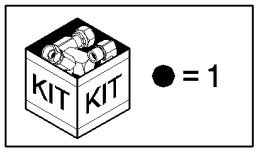

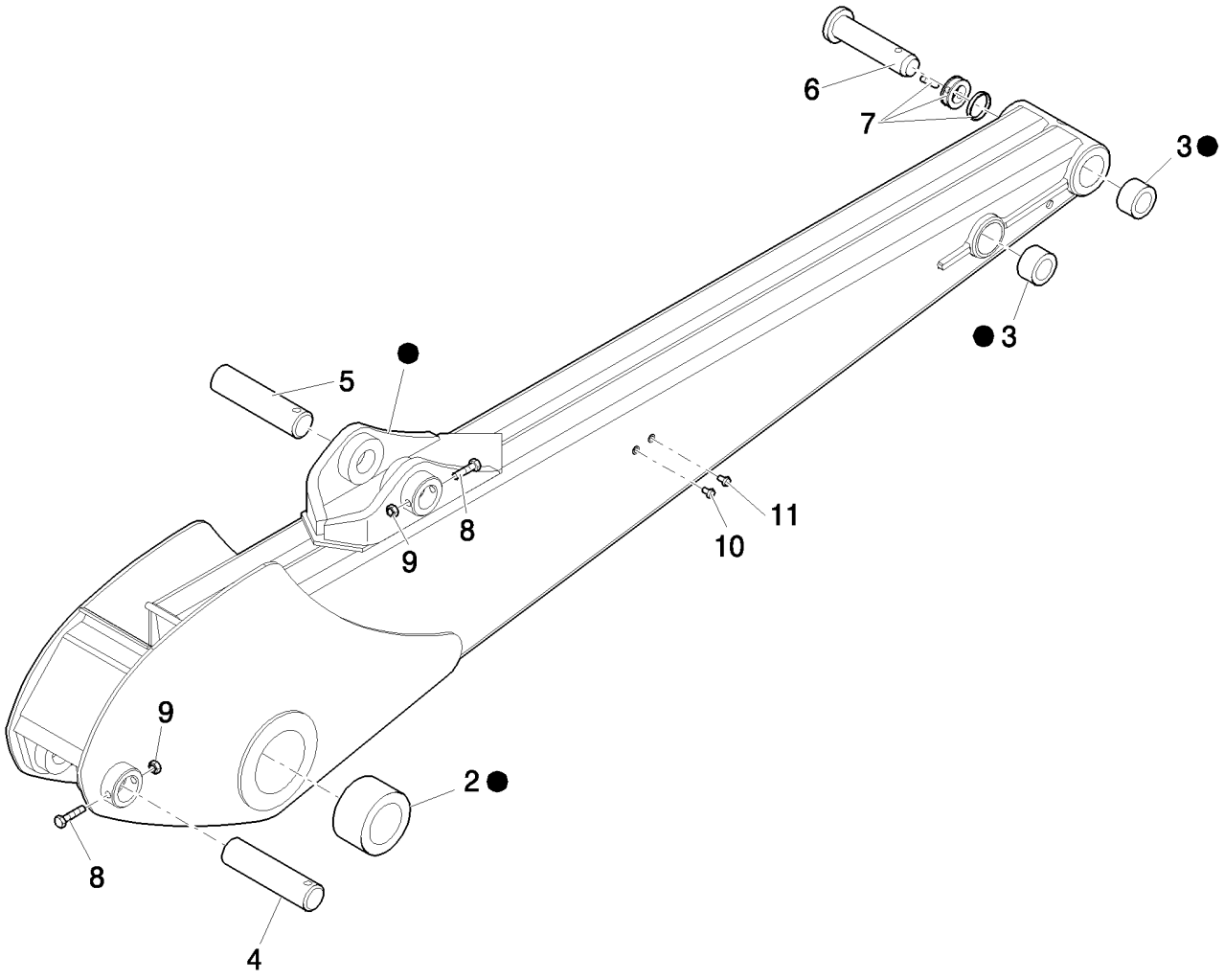

BALANCIER LONG

REF	FN	PART NUMBER	YR/SN	QTY	DESCRIPTION
1		87592386		1	BALANCIER, Assy
2		83910546		2	BAGUE
3		83910548		4	BAGUE
4		87594196		1	AXE
5		87577359		1	AXE
6		85803005		1	AXE
7		85802975		1	CHEVILLE
8		15542921		2	BOULON, Hex, M12 x 1.25 x 95, 8.8
9		16105011		2	CONTRE-ECROU
10		85804447		4	BOUCHON

900	04	p1	04/08

BALANCIER LONG/COURT - CINEMATIQUE GODET

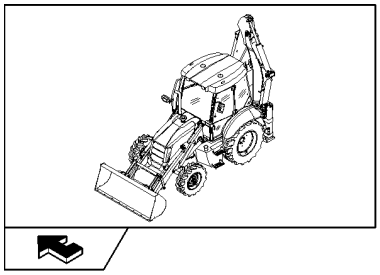

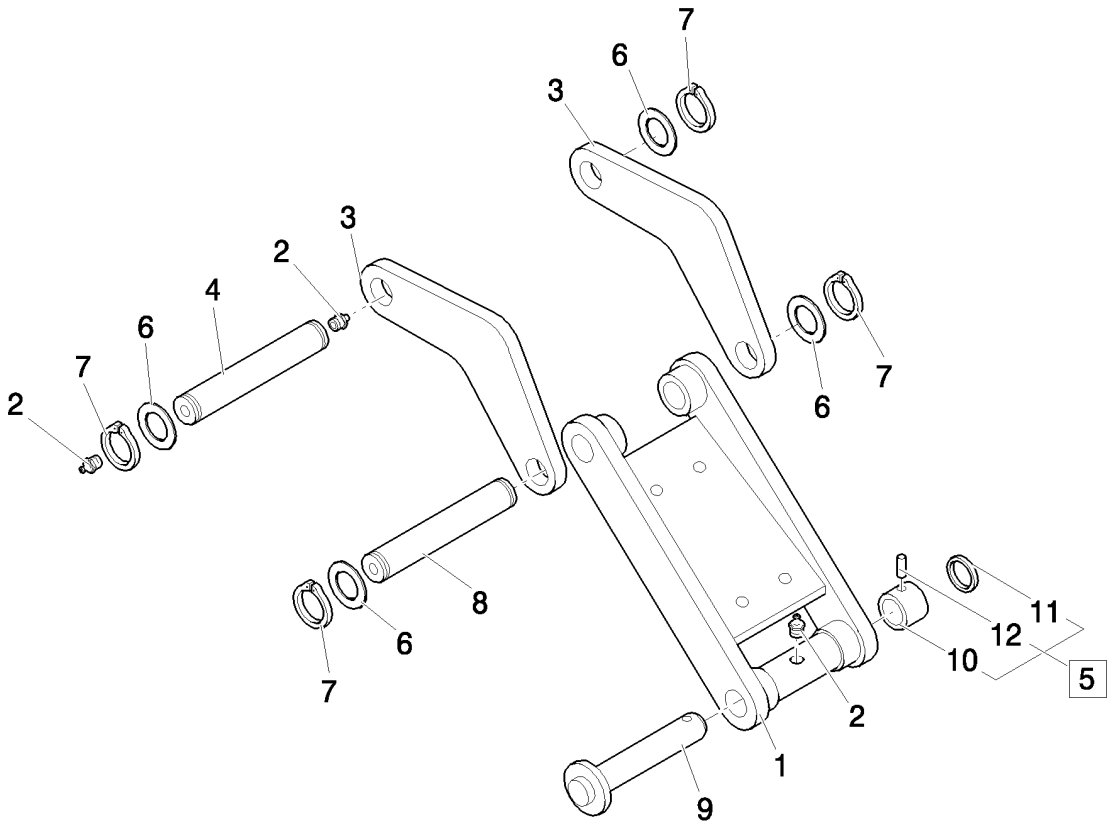

BALANCIER LONG/COURT - CINEMATIQUE GODET

REF	FN	PART NUMBER	YR/SN	QTY	DESCRIPTION
1		85803613		1	MAILLON
2		83416242		3	GRAISSEUR, 1/8"-27
3		87589579		2	MAILLON
4		85815517		1	AXE
5		85802975		1	CHEVILLE, Assy
6		83910977		4	ENTRETOISE
7		11069071		4	ANNEAU D'ARRÊT, M45, Ext
8		85813469		1	AXE
9		85803005		1	AXE
10		85802643		1	ENTRETOISE
11		85802974		1	ANNEAU
12		85802976		1	AXE

BALANCIER: SYSTÈME BALANCIER, FLÈCHE ET VÉRIN DU BALANCIER

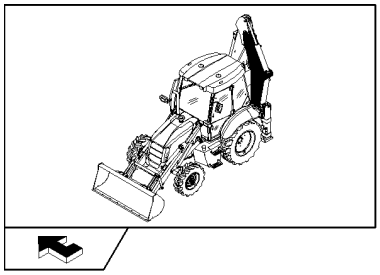

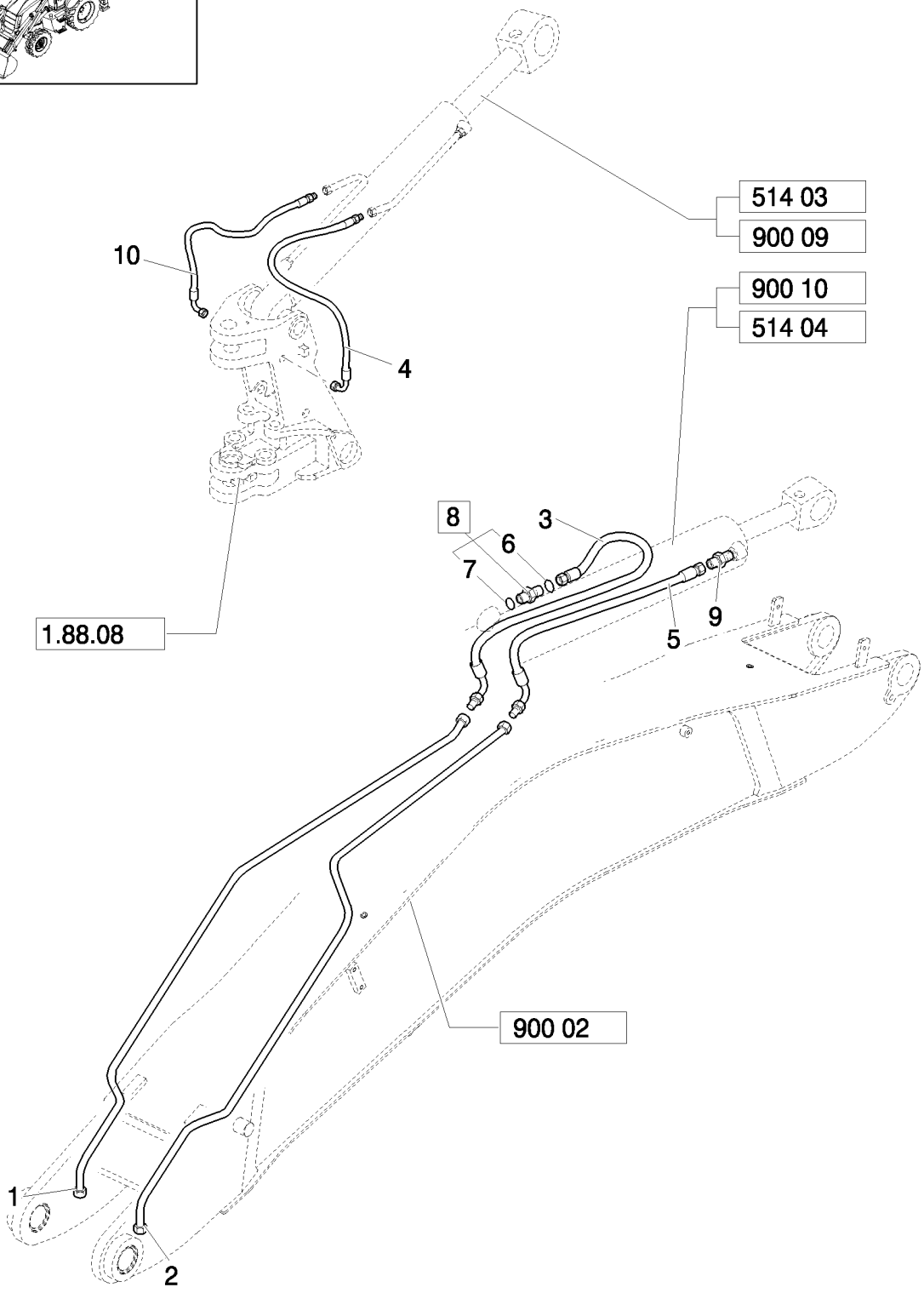

BALANCIER: SYSTÈME BALANCIER, FLÈCHE ET VÉRIN DU BALANCIER

REF	FN	PART NUMBER	YR/SN	QTY	DESCRIPTION
1		87614628		1	TUYAU
2		87614614		1	TUYAU
3		87683904		1	TUYAU FLEXIBLE
4		87621914		1	TUYAU FLEXIBLE
5		87683905		1	TUYAU FLEXIBLE
6		89991976		1	JOINT THORIQUE
7		80167266		1	JOINT THORIQUE, 90 Duro, .924" ID x .116" Thk
8		83962538		1	RACCORD, Assy, 1-3/16"-12 ORS x 1-1/16"-12 SAE O-Ring
9		83962539		1	RACCORD
10		87619512		1	TUYAU FLEXIBLE

BALANCIER: CIRCUIT HYDRAULIQUE VÉRIN DU GODET

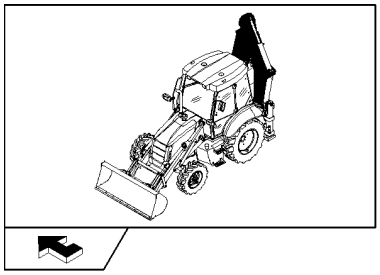

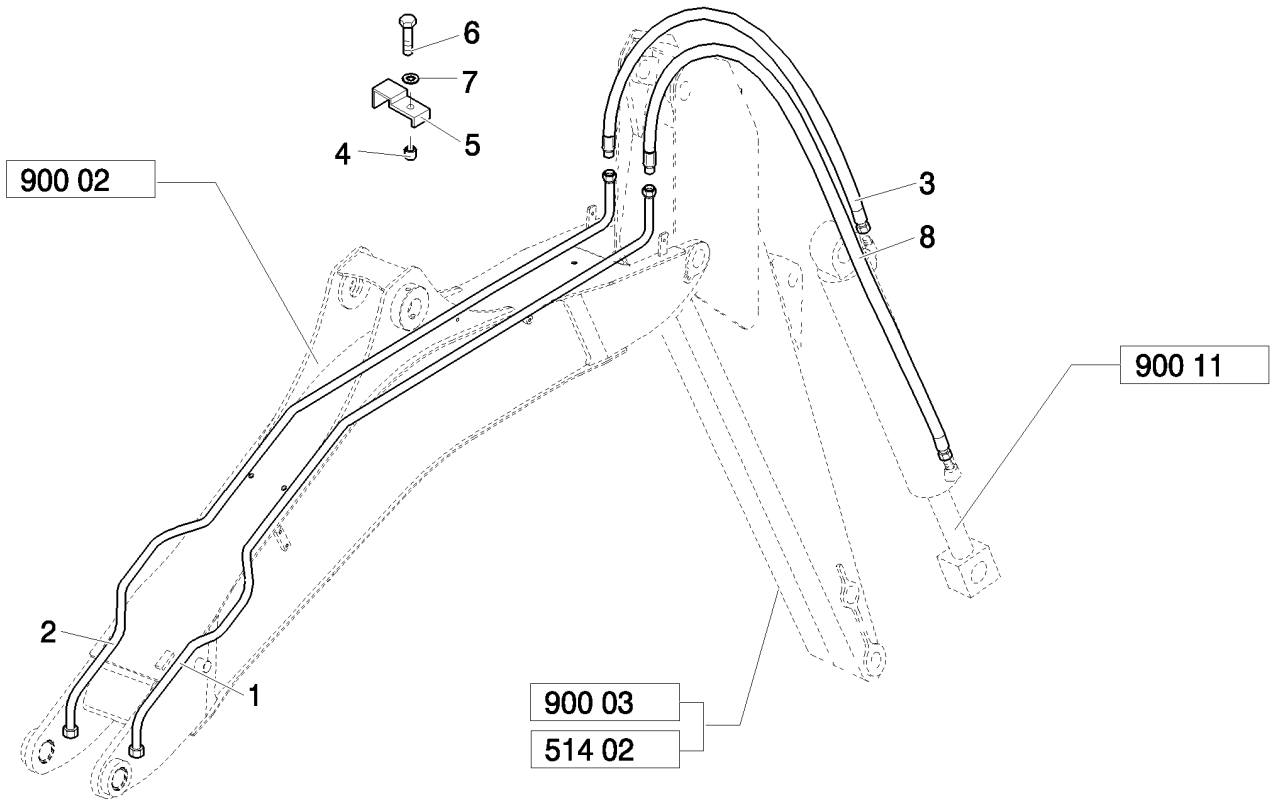

BALANCIER: CIRCUIT HYDRAULIQUE VÉRIN DU GODET

REF	FN	PART NUMBER	YR/SN	QTY	DESCRIPTION
1		87636636		1	TUYAU
2		87636637		1	TUYAU
3	1	87684509		1	TUYAU FLEXIBLE
3	2	87684511			TUYAU FLEXIBLE
4		85802901		1	ENTRETOISE
5		85802909		1	BRIDE
6		16044221		1	BOULON, Hex, M8 x 50, 8.8
7		11193979		1	RONDELLE BELLEVILLE, Belleville, M8.4
8	1	87684507		1	TUYAU FLEXIBLE
8	2	87684508		1	TUYAU FLEXIBLE

(1) Only for Long Dipper
(2) Only for Short Dipper

900	07	p1	04/08

BALANCIER: CIRCUIT HYDRAULIQUE VÉRIN DE FLÈCHE

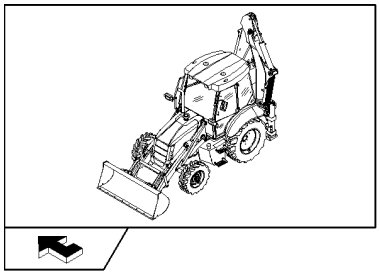

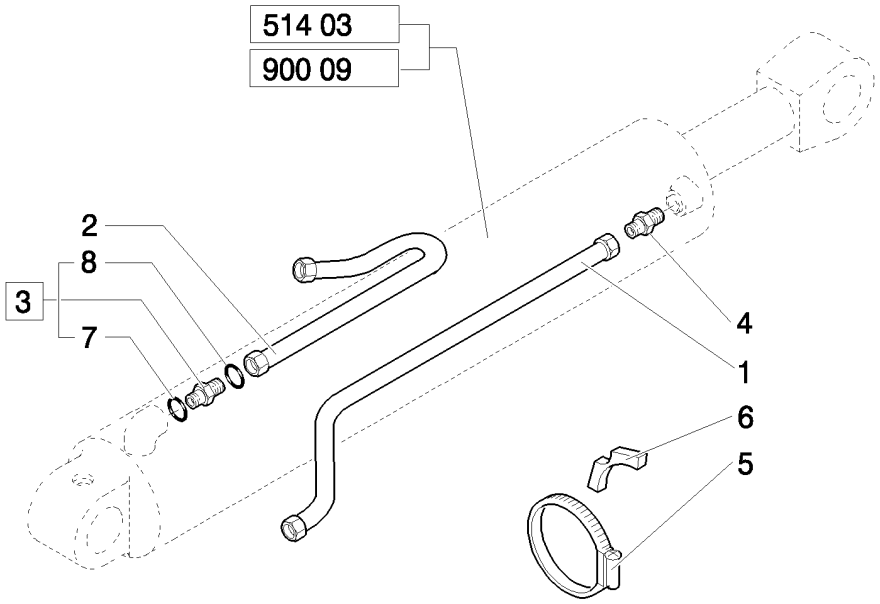

BALANCIER: CIRCUIT HYDRAULIQUE VÉRIN DE FLÈCHE

REF	FN	PART NUMBER	YR/SN	QTY	DESCRIPTION
1		87624533		1	TUYAU
2		85816813		1	TUYAU HYDRAULIQUE
3		83962538		1	RACCORD, Assy, 1-3/16"-12 ORS x 1-1/16"-12 SAE O-Ring
4		83962539		1	RACCORD
5		85802744		1	BRIDE, FLEXIBLE
6		87303912		2	BLOC
7		80167266		1	JOINT THORIQUE, 90 Duro, .924" ID x .116" Thk
8		89991976		1	JOINT THORIQUE, 90 Duro, .739" ID x .070" Thk

BALANCIER - CIRCUIT HYDRAULIQUE

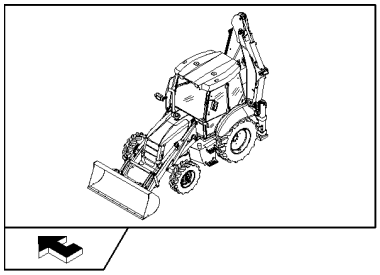

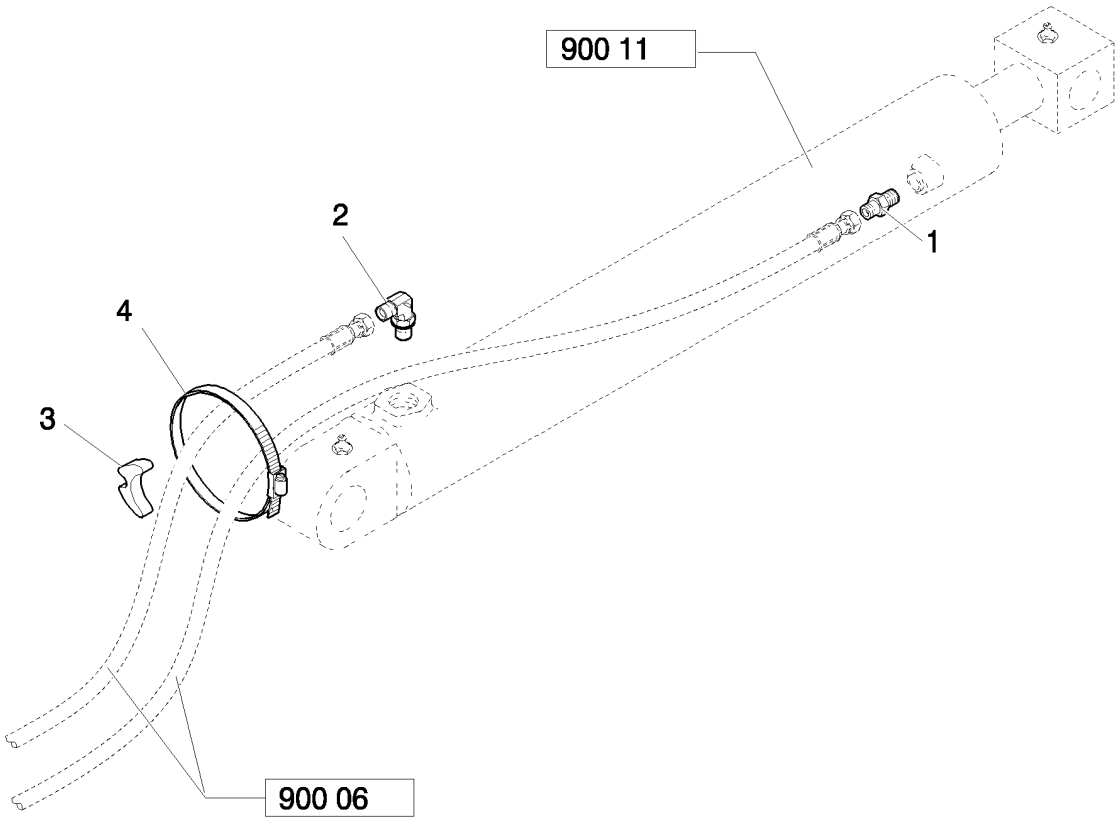

BALANCIER - CIRCUIT HYDRAULIQUE

REF	FN	PART NUMBER	YR/SN	QTY	DESCRIPTION
1		83962539		1	RACCORD
2		85802957		1	COUDE, 90º, 1 3/16"-12 ORS x 1 1/16"-12 SAE O-Ring
3		87565305		1	PIECE DE FIXATION
4		85803008		1	BRIDE, FLEXIBLE

900	09	p1	04/08

CYLINDRE HYDRAULIQUE LEVAGE - BALANCIER TELESCOPIQUE LONG

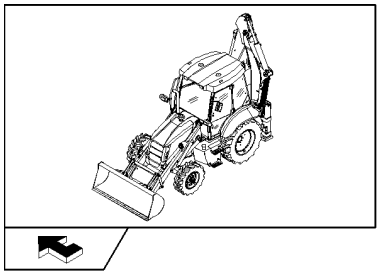

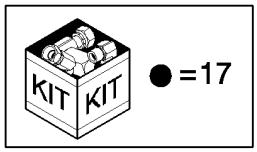

CYLINDRE HYDRAULIQUE LEVAGE - BALANCIER TELESCOPIQUE LONG

REF	FN	PART NUMBER	YR/SN	QTY	DESCRIPTION
1		87597583		1	VERIN, Assy
2		87597479		1	PRESSE-ETOUPE, Assy
3		D95146		1	JOINT-RACLEUR
4		87597482		2	PISTON
5		87600654		1	TRINGLE
6		87597480		2	PRESSE-ETOUPE
7		83416242		2	GRAISSEUR, 1/8"-27
8		G109908		1	BAGUE
9		444640A1		1	JOINT
10		380621A1		1	CONTRE-JOINT, 4.734" ID x .139" Thk
11		86982444		1	BOULON SPECIAL, M33x2x90
12		238-5249		1	JOINT THORIQUE
13		87597481		1	PISTON, Assy
14		87530709		1	JOINT
15		87530710		1	JOINT
16		87402623		1	ANNEAU
17	1	87654843		1	POCHETTE DE JOINTS
18		G109395		1	VIS AUTO-TARAUDEUSE
19		D149079		2	BAGUE
20		87597471		1	TUBE, Assy

(1) Includes 3, 8 - 10, 12, 14 - 16

900	10	p1	04/08

CYLINDRE HYDRAULIQUE EXCAVATION

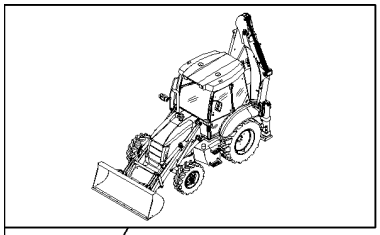

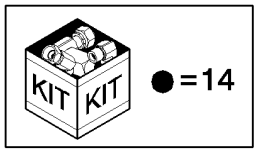

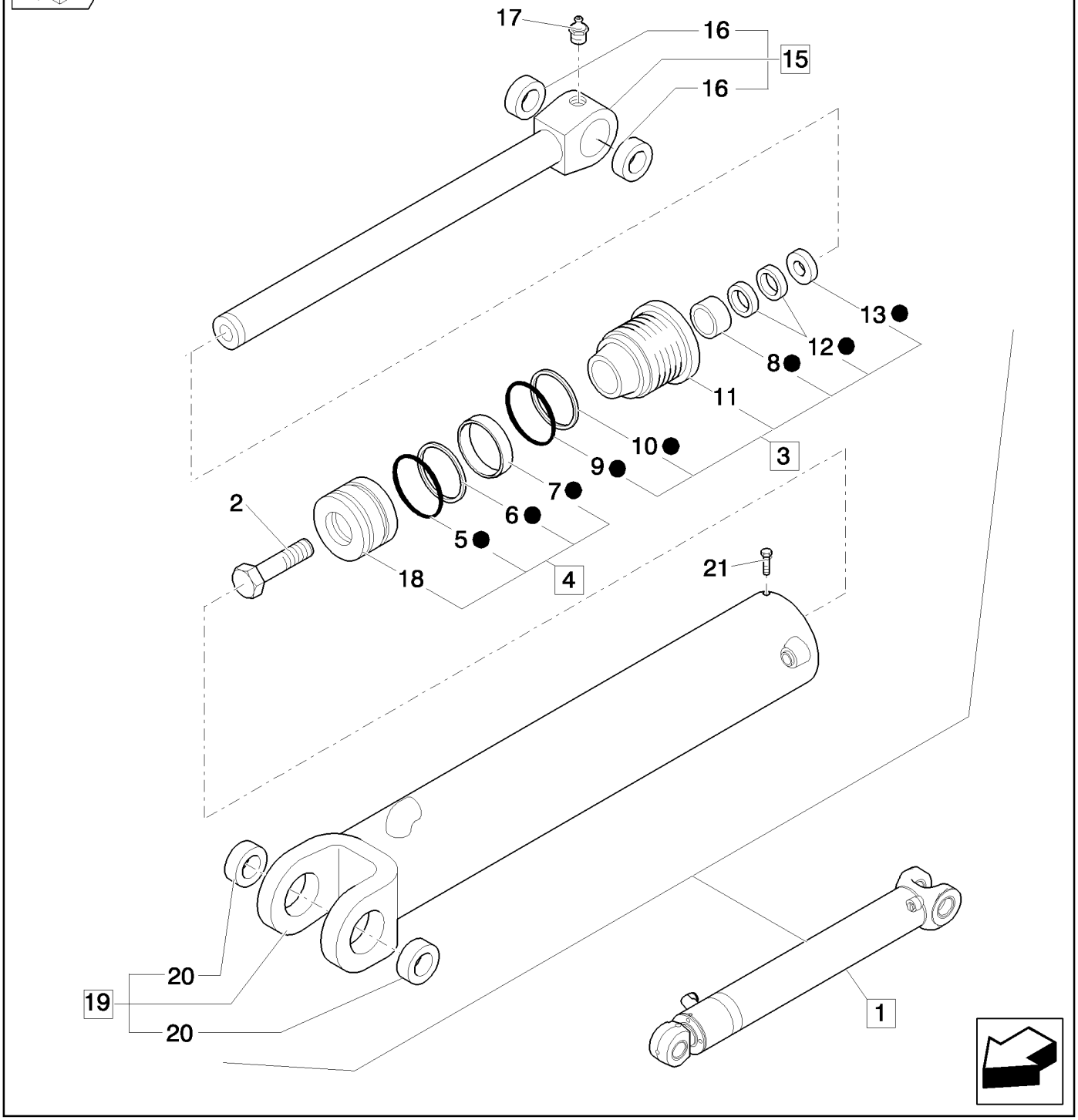

CYLINDRE HYDRAULIQUE EXCAVATION

REF	FN	PART NUMBER	YR/SN	QTY	DESCRIPTION
1		87594954		1	VERIN, Assy
2		86982444		1	BOULON SPECIAL
3		87598244		1	PRESSE-ETOUPE, Assy
4		87591992		1	PISTON, Assy
5		G102091		1	JOINT
6		G102092		1	ANNEAU
7		G102090		2	ANNEAU
8		G109908		1	BAGUE
9		238-5247		1	JOINT THORIQUE, -247, 70 Duro, 4.609" ID x .139" Thk
10		G107970		1	ANNEAU
11		87598245		1	PRESSE-ETOUPE
12		1542879C1		1	POCHETTE DE JOINTS
13		D95146		1	JOINT-RACLEUR
14	1	87654845		1	POCHETTE DE JOINTS
15		87382089		1	TRINGLE, Assy
16		D149079		2	BAGUE
17		83416242		1	GRAISSEUR, 1/8"-27
18		87591991		1	PISTON
19		87591981		1	TUBE, Assy
20		123407A1		2	ANNEAU
21		G109395		1	VIS AUTO-TARAUDEUSE

(1) Includes 5 - 10, 12, 13

900	11	p1	05/08

CYLINDRE HYDRAULIQUE BENNE

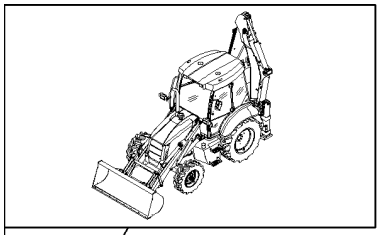

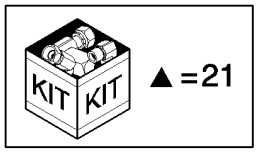

CYLINDRE HYDRAULIQUE BENNE

REF	FN	PART NUMBER	YR/SN	QTY	DESCRIPTION
1		G109908		1	BAGUE
2		87648324		1	PRESSE-ETOUPE
3		86982442		1	BOULON SPECIAL
4		238-5235		1	JOINT THORIQUE, -235, 70 Duro, 3.109" ID x .139" Thk
5		1986905C1		1	PISTON, Assy
6		87381990		1	TRINGLE, Assy
7		87581125		4	BAGUE
8		D38858		1	CONTRE-JOINT
9		G100711		1	Bague D"Usure
10		87381987		1	TUBE, Assy
11		1542879C1		1	POCHETTE DE JOINTS
12		83416242		2	GRAISSEUR, 1/8"-27
13		D95146		1	JOINT-RACLEUR
14		1986906C1		1	PISTON
15		G100709		1	JOINT
16		G100710		1	ANNEAU
17		87646222		2	BAGUE
18		87382007		1	VERIN, Assy
19		87648323		1	PRESSE-ETOUPE, Assy
20		G109395		1	VIS AUTO-TARAUDEUSE
21	1	1542923C2		1	POCHETTE DE JOINTS

(1) Includes 1, 4, 8, 9, 11, 13, 15, 16

901	01	p1	05/08

BALANCIER TÉLÉSCOPIQUE LONG: ENSEMBLE

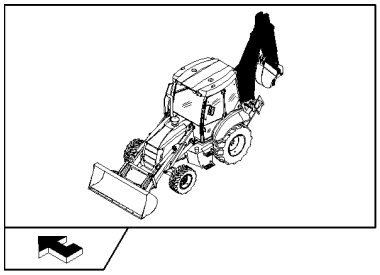

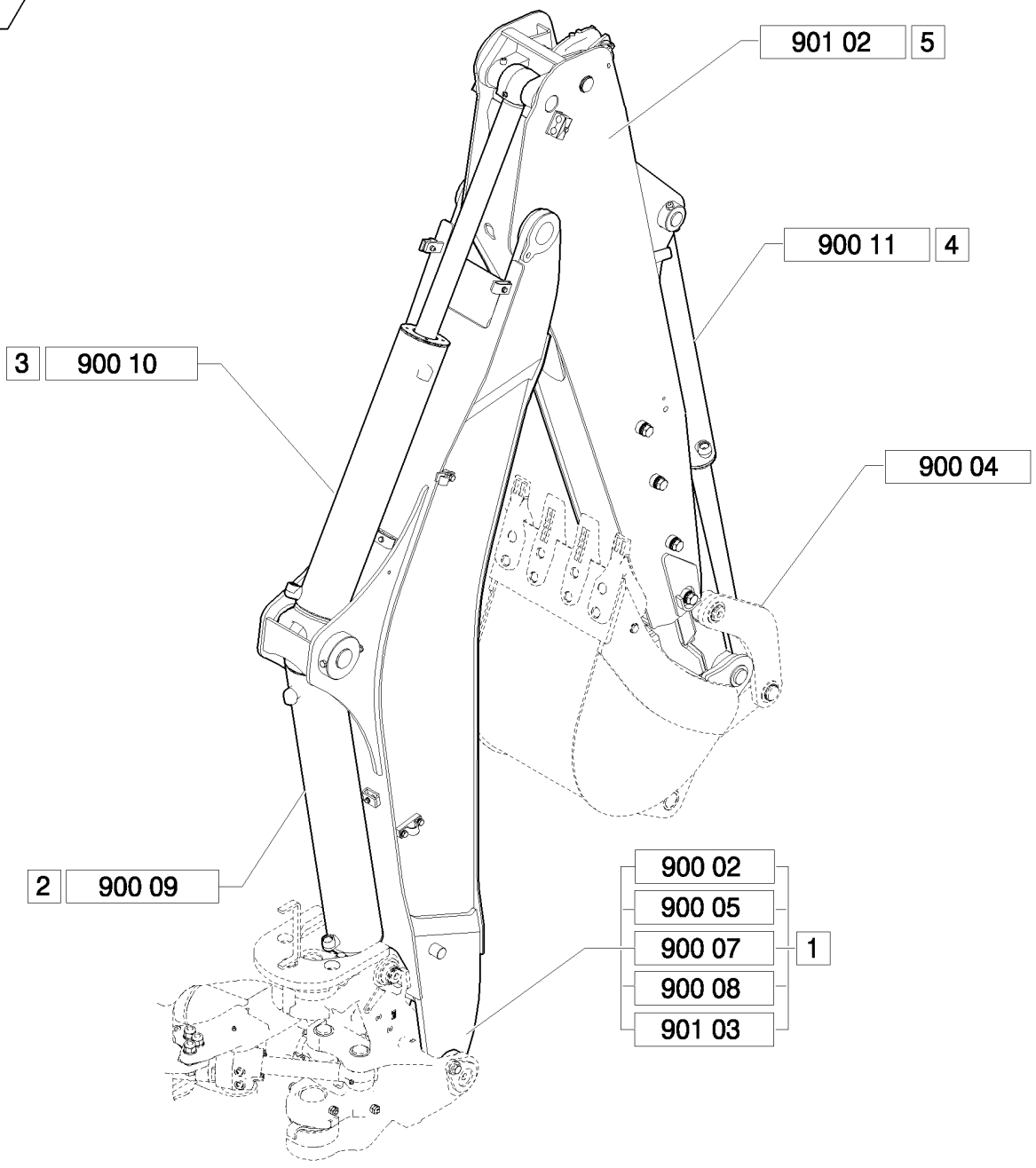

BALANCIER TÉLÉSCOPIQUE LONG: ENSEMBLE

REF	FN	PART NUMBER	YR/SN	QTY	DESCRIPTION
1		87576064		1	GODET ESCAVATEUR, Assy
2		87597583		1	VERIN, Assy
3		87594954		1	VERIN, Assy
4		87382007		1	VERIN, Assy
5		87639619		1	BRAS, Assy

901	02	p1	05/08

BALANCIER TELESCOPIQUE LONG

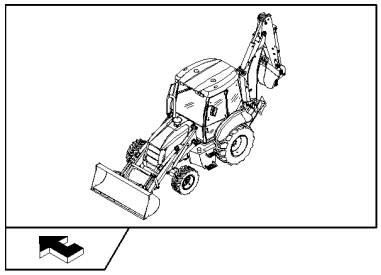

BALANCIER TELESCOPIQUE LONG

REF	FN	PART NUMBER	YR/SN	QTY	DESCRIPTION
1		87639619		1	BRAS, Assy
2		83910546		2	BAGUE
3	1	85802975		1	CHEVILLE
4		87583508		1	AXE
5		85801309		1	AXE
6		83911019		4	CIRCLIP
7		11121321		8	VIS
8		14497121		8	RONDELLE, M20 x 37 x 3
9		85801307		32	RONDELLE
10		85808473		4	PATIN
11		85808472		4	PATIN
12		16105011		1	CONTRE-ECROU
13		11190579		8	RONDELLE BELLEVILLE, Belleville, M10.5
14		11106721		8	BOULON, Hex, M10 x 38, 8.8, Full Thd
15		14332521		1	VIS, Hex Soc Hd, M12 x 1.25 x 100, 8.8
16		87392513		2	COLLIER
17		87392509		2	PLAQUE
18		16044121		2	BOULON, Hex, M8 x 45, 8.8
19		85803005		1	AXE
20		85801314		1	AXE
21		83902702		2	GOUPILLE
22		85801308		1	AXE
23		83910548		4	BAGUE
24		14497401		2	RONDELLE FREIN
25	2	87583485		1	BRAS
26	3	87583496		1	BRAS
27		87392516		2	COLLIER
28		87577359		1	AXE
29		16105011		1	CONTRE-ECROU
30		85802976		1	AXE
31		81870039		4	ATTACHE
32		15542921		1	BOULON, Hex, M12 x 1.25 x 95, 8.8

(1) Includes 30, 34, 35
(2) Includes 10 - 12
(3) Includes 23

901	02	p2	05/08

BALANCIER TELESCOPIQUE LONG

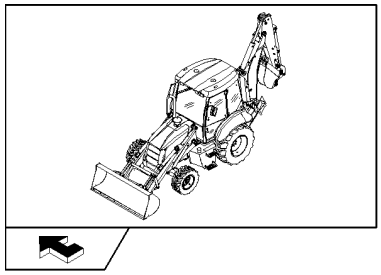

BALANCIER TELESCOPIQUE LONG

REF	FN	PART NUMBER	YR/SN	QTY	DESCRIPTION
33		83416242		2	GRAISSEUR
34		85802643		1	ENTRETOISE
35		85802974		1	ANNEAU

901	03	p1	03/08

BALANCIER TELESCOPIQUE - CIRCUIT HYDRAULIQUE

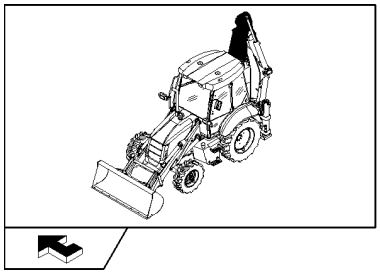

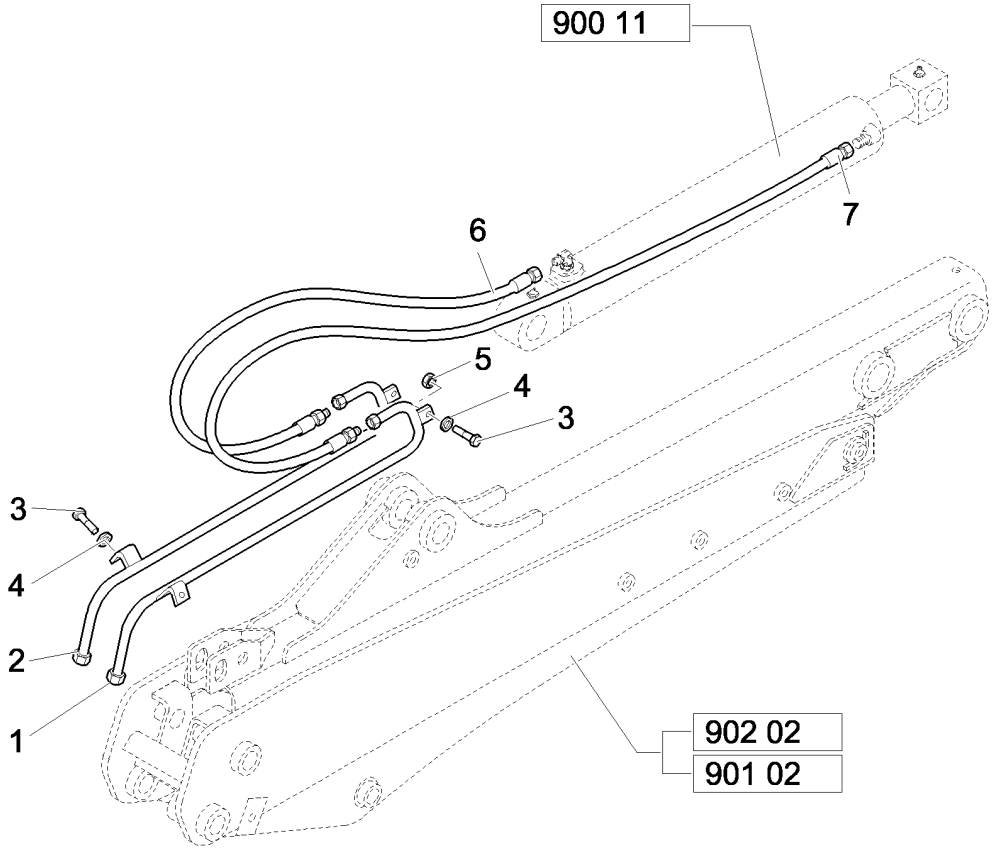

BALANCIER TELESCOPIQUE - CIRCUIT HYDRAULIQUE

REF	FN	PART NUMBER	YR/SN	QTY	DESCRIPTION
1	1	85816815		1	TUYAU HYDRAULIQUE
1	2	85815679		1	TUYAU HYDRAULIQUE
2	1	85816817		1	TUYAU HYDRAULIQUE
2	2	85815677		1	TUYAU HYDRAULIQUE
3		16043621		4	BOULON, Hex, M8 x 25, 8.8
4		11193979		4	RONDELLE BELLEVILLE, Belleville, M8.4
5		14048211		2	CONTRE-ECROU, M8 x 1.25, Cl 8
6	1	87621911		1	TUYAU FLEXIBLE
6	2	87636395		1	TUYAU FLEXIBLE
7	1	87619511		1	TUYAU FLEXIBLE
7	2	87636396		1	TUYAU FLEXIBLE

(1) Only for Telescopic Dipper Short
(2) Only for Telescopic Dipper Long

901	04	p1	05/08

BALANCIER TÉLÉSCOPIQUE LONG: VÉRIN HYDRAULIQUE TÉLÉSCOPIQUE

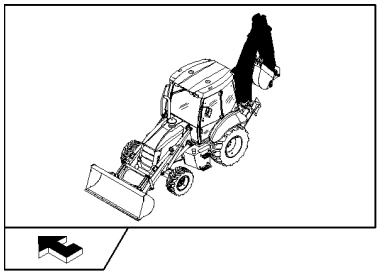

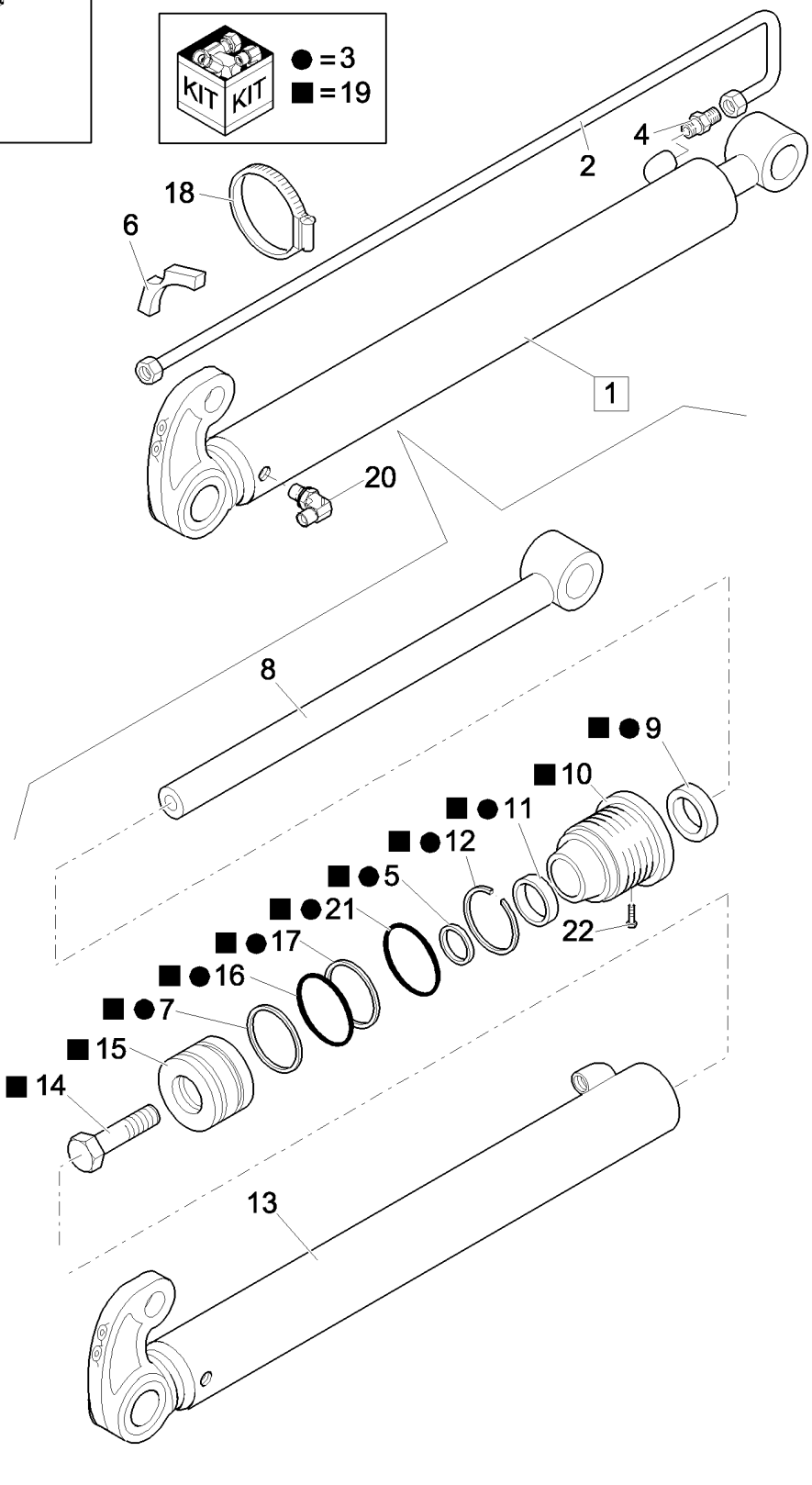

BALANCIER TÉLÉSCOPIQUE LONG: VÉRIN HYDRAULIQUE TÉLÉSCOPIQUE

REF	FN	PART NUMBER	YR/SN	QTY	DESCRIPTION
1		87327259		1	VERIN HYDRAULIQUE, Assy
2		87327251		1	TUYAU RIGIDE
3		87342131		1	KIT
4		83963374		1	RACCORD
5		1542875C1		1	POCHETTE DE JOINTS
6		87303910		1	ENTRETOISE
7		G100444		1	JOINT
8		87313722		1	TRINGLE
9		D95143		1	JOINT
10		297281A1		1	PALIER DE VERIN
11		G102425		1	BAGUE
12		G109298		1	ANNEAU
13		87313720		1	CHEMISE DE CYLINDRE
14		86982435		1	BOULON SPECIAL
15		G107277		1	PISTON
16		G102288		1	JOINT-D'ETANCH. ASS.
17		G100449		1	Bague D"Usure
18		85803010		1	BRIDE, FLEXIBLE
19		110692A4		1	PISTON
20		83971549		1	COUDE
21		238-5231		1	JOINT THORIQUE, -231, 70 Duro, 2.609" ID x .139" Thk
22		G109395		1	VIS AUTO-TARAUDEUSE

902	01	p1	05/08

BALANCIER TÉLÉSCOPIQUE COURT: ENSEMBLE

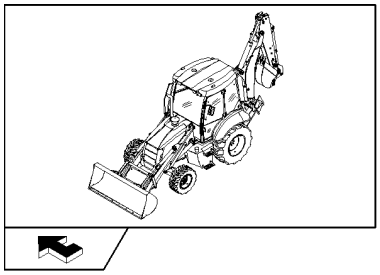

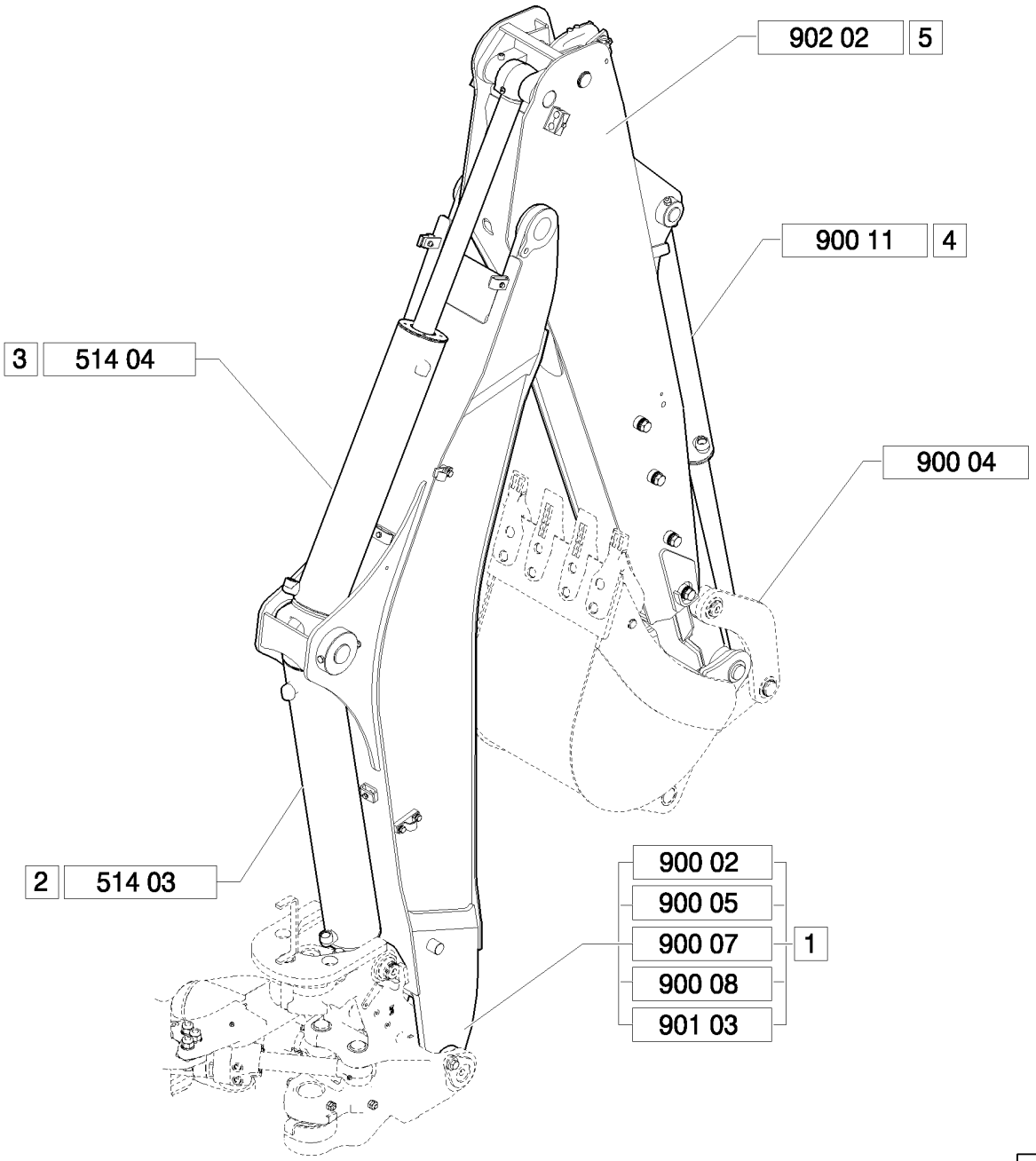

BALANCIER TÉLÉSCOPIQUE COURT: ENSEMBLE

REF	FN	PART NUMBER	YR/SN	QTY	DESCRIPTION
1		87576064		1	GODET ESCAVATEUR, Assy
2		87613157		1	VERIN, Assy
3		87382083		1	VERIN, Assy
4		87382007		1	VERIN, Assy
5		87598703		1	BRAS, Assy

902	02	p1	05/08

BALANCIER TELESCOPIQUE COURT

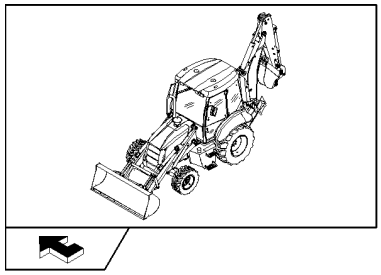

BALANCIER TELESCOPIQUE COURT

REF	FN	PART NUMBER	YR/SN	QTY	DESCRIPTION
1		87598703		1	BRAS, Assy
2		83910546		2	BAGUE
3		81870039		4	ATTACHE
4		87583508		1	AXE
5		85801309		1	AXE
6		83911019		4	CIRCLIP
7		11121321		8	VIS
8		14497121		8	RONDELLE, M20 x 37 x 3
9		85801307		32	RONDELLE
10		85808473		4	PATIN
11		85808472		4	PATIN
12		16105011		1	CONTRE-ECROU
13		11190579		8	RONDELLE BELLEVILLE, Belleville, M10.5
14		11106721		8	BOULON, Hex, M10 x 38, 8.8, Full Thd
15		14332521		1	VIS, Hex Soc Hd, M12 x 1.25 x 100, 8.8
16		87392516		2	COLLIER
17		87392509		2	PLAQUE
18		16044121		2	BOULON, Hex, M8 x 45, 8.8
19		15542921		1	BOULON, Hex, M12 x 1.25 x 95, 8.8
20		85801314		1	AXE
21		83902702		2	GOUPILLE
22		85801308		1	AXE
23		83910548		4	BAGUE
24		14497401		2	RONDELLE FREIN
25	1	87583510		1	BRAS
26	2	87583516		1	BRAS
27		87392513		2	COLLIER
28		16105011		1	CONTRE-ECROU
29		87577359		1	AXE

(1) Includes 2
(2) Includes 23

902	03	p1	05/08

BALANCIER TÉLÉSCOPIQUE COURT: VÉRIN HYDRAULIQUE TÉLÉSCOPIQUE

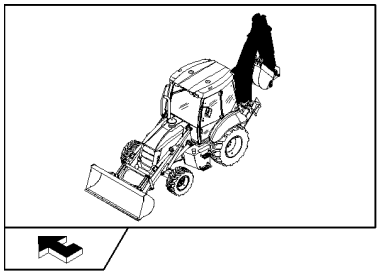

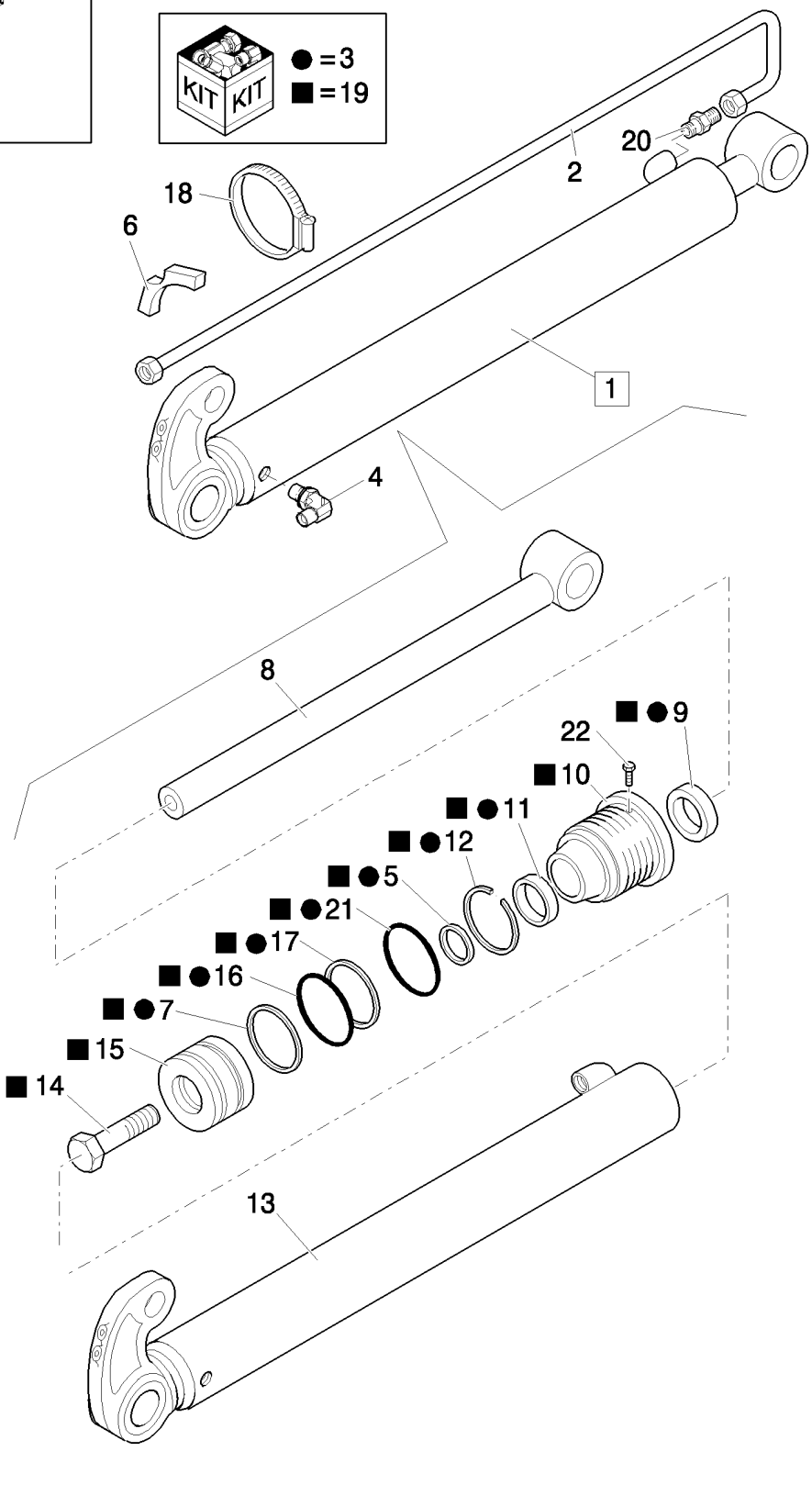

BALANCIER TÉLÉSCOPIQUE COURT: VÉRIN HYDRAULIQUE TÉLÉSCOPIQUE

REF	FN	PART NUMBER	YR/SN	QTY	DESCRIPTION
1		87327264		1	VERIN HYDRAULIQUE, Assy
2		87327252		1	TUYAU RIGIDE
3		87342131		1	KIT
4		83971549		1	COUDE
5		1542875C1		1	POCHETTE DE JOINTS
6		87303910		1	ENTRETOISE
7		G100444		1	JOINT
8		87314278		1	TRINGLE
9		D95143		1	JOINT
10		297281A1		1	PALIER DE VERIN
11		G102425		1	BAGUE
12		G109298		1	ANNEAU
13		87314277		1	CHEMISE DE CYLINDRE
14		86982435		1	BOULON SPECIAL
15		G107277		1	PISTON
16		G100443		1	JOINT
17		G100449		1	Bague D"Usure
18		85803010		1	BRIDE, FLEXIBLE
19		110692A4		1	PISTON
20		83963374		1	RACCORD
21		238-5231		1	JOINT THORIQUE, -231, 70 Duro, 2.609" ID x .139" Thk
22		86642312		1	VIS AUTO-TARAUDEUSE, Hex Hd, #8 x 3/8"

990		p1	05/08

OUTILS

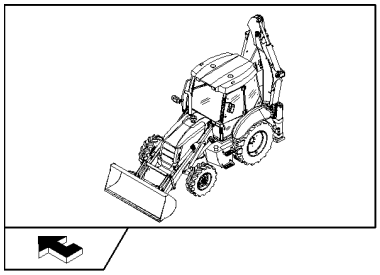

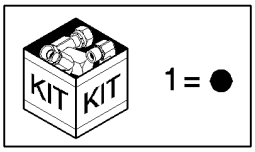

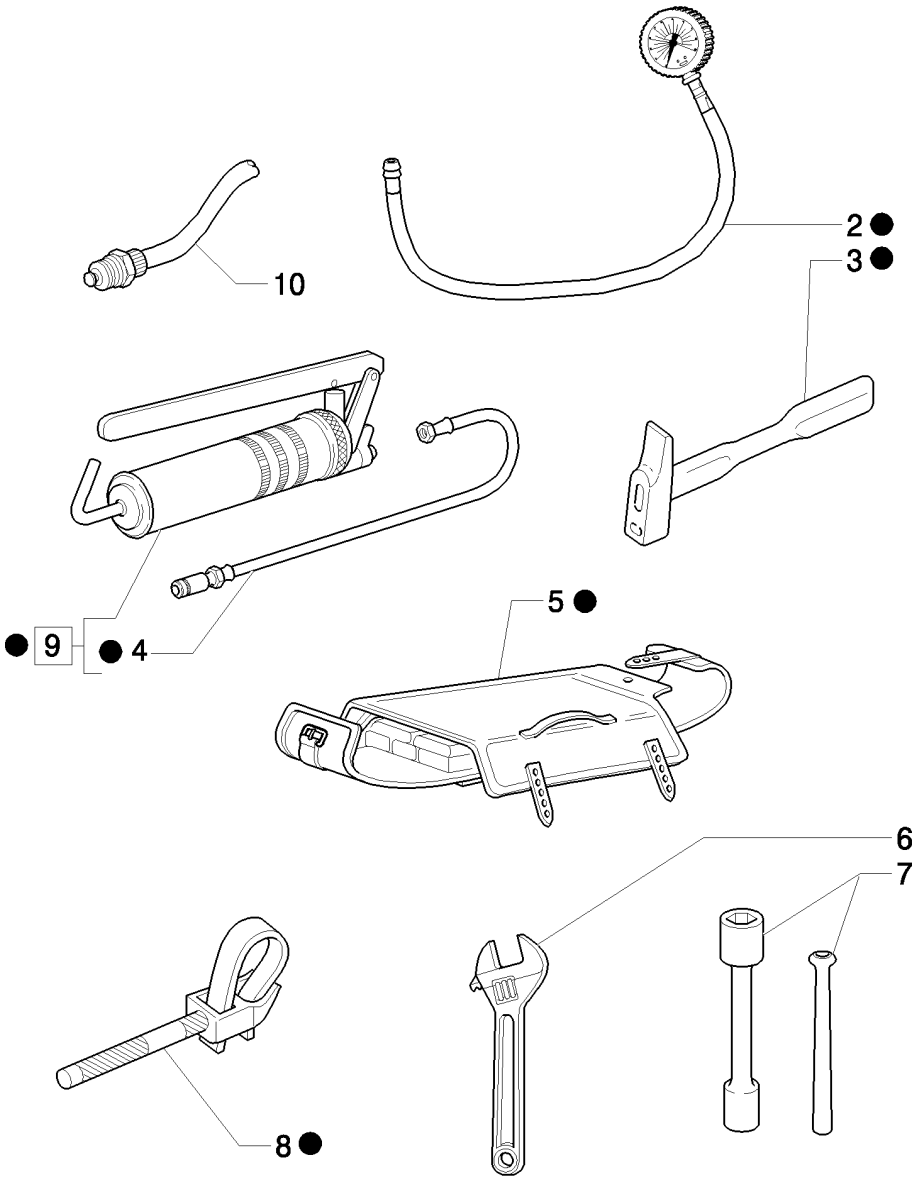

OUTILS

REF	FN	PART NUMBER	YR/SN	QTY	DESCRIPTION
1		85803394		1	KIT OUTILLAGE
1	1	85813113		1	KIT OUTILLAGE
2		85803396		1	JAUGE
3		14582790		1	MARTEAU
4		79028981		1	TUYAU FLEXIBLE
5		79062734		1	TROUSSE A OUTILS
6		71431438		1	CLE DE REGLAGE
7		85803395		1	CLÉ A DOUILLE
7	1	85813110		1	CLE A TUBE
8		71304923		1	CLE SPECIALE
9		79028977		1	POMPE A GRAISSE, Assy
10		85826260		1	SOUPAPE DE VIDANGE

(1) Only for B115B

PLAQUETTES - NA

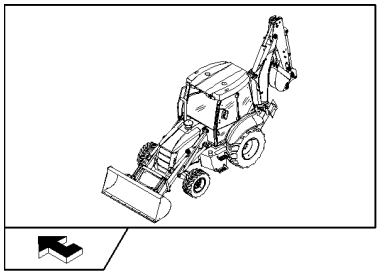

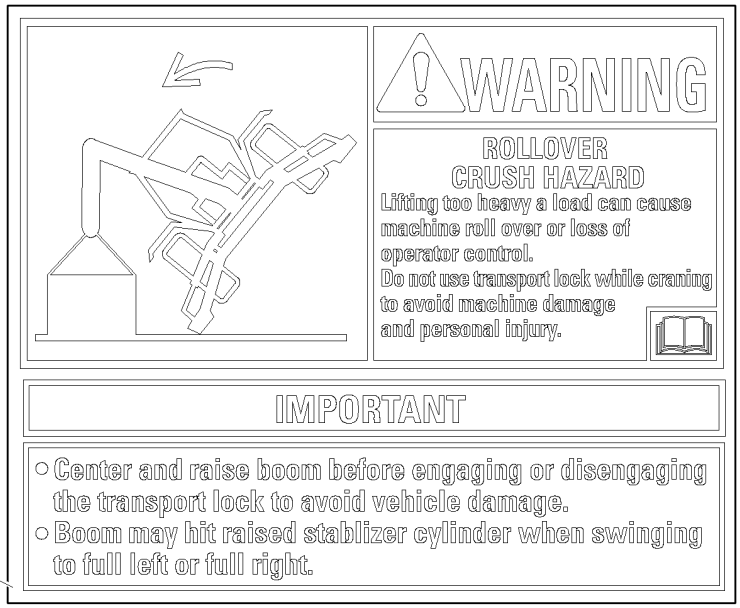

1

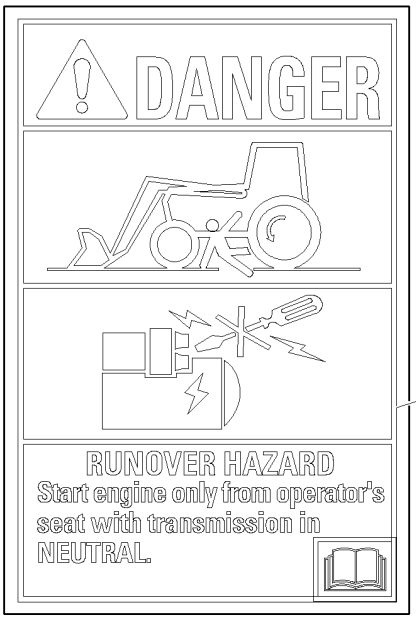

4

7

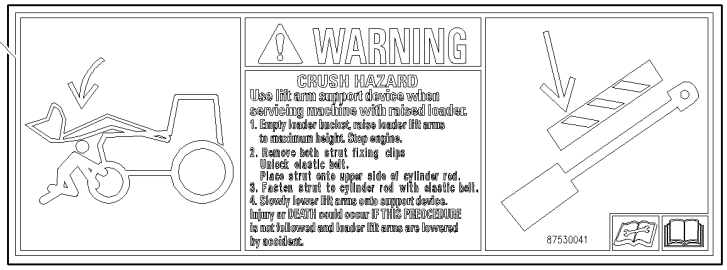



6

5

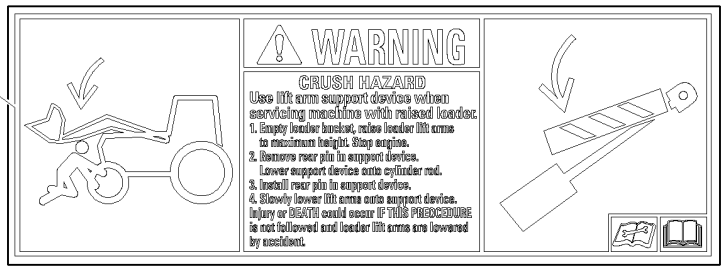

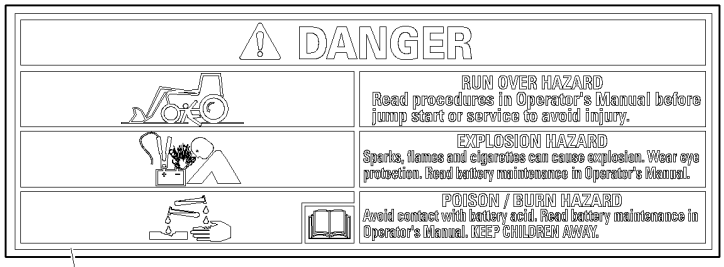

2

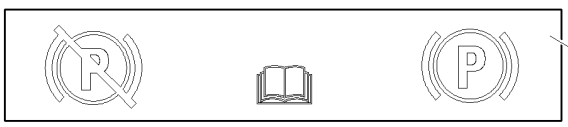

3



8

PLAQUETTES - NA

REF	FN	PART NUMBER	YR/SN	QTY	DESCRIPTION
1		85821924		1	DECALCOMANIE, ENGLISH
1		85828069		1	ETIQUETTE ALARME, FRENCH
1		85828070		1	ETIQUETTE ALARME, SPANISH
2		85821917		1	DECALCOMANIE, ENGLISH
2		85828088		1	ETIQUETTE DANGER, FRENCH
2		85828089		1	ETIQUETTE DANGER, SPANISH
3		85821925		1	DECALCOMANIE
4		85821918		1	DECALCOMANIE, FRENCH
4		85828086		1	SIGNAL D'AVERTISSEME, SPANISH
4		85828087		1	ETIQUETTE DANGER, ENGLISH
5		85821919		2	DECALCOMANIE, ENGLISH
5		85828090		2	ETIQUETTE DANGER, FRENCH
5		85828091		2	ETIQUETTE DANGER, SPANISH
6	1	85821921		1	DECALCOMANIE, ENGLISH
6		85828084		1	ETIQUETTE ALARME, FRENCH
6		85828085		1	ETIQUETTE DANGER, SPANISH
7	2	87530041		1	DECALCOMANIE, ENGLISH
7	3	87608143		1	DECALCOMANIE, FRENCH
7	2	87608145		1	DECALCOMANIE, SPANISH
8		87596091		1	DECALCOMANIE, SPANISH
8		87581010		1	DECALCOMANIE, ENGLISH
8		87596089		1	DECALCOMANIE, FRENCH

(1) Except for B115B
(2) Only for B95BTC, B115B
(3) Only for B115B

993	02	p1	03/08

PLAQUETTES - NA

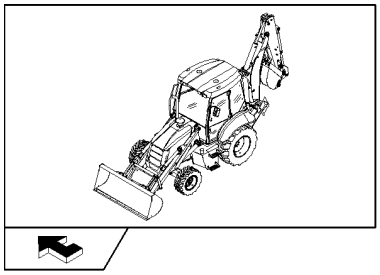

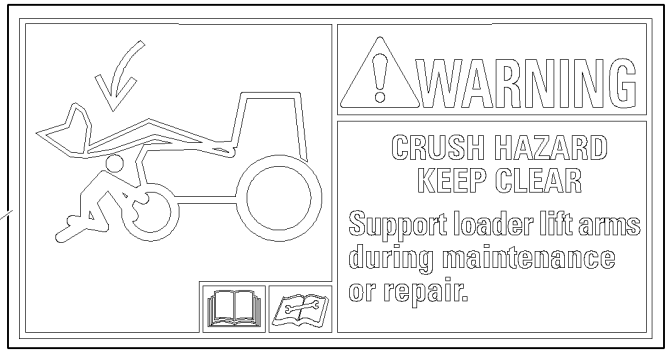

2

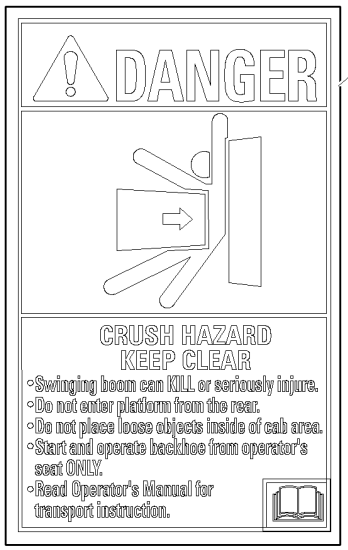

1

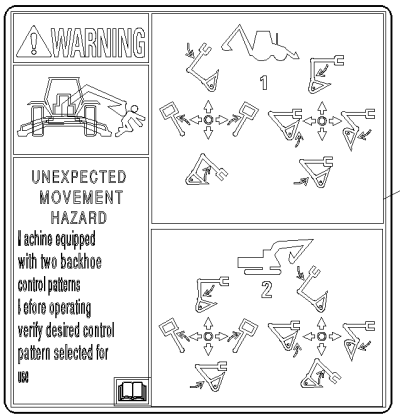

5

6



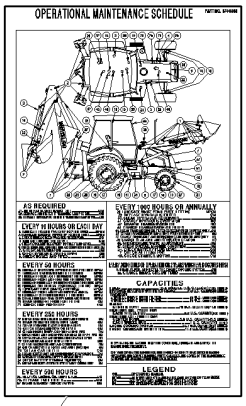

8

7

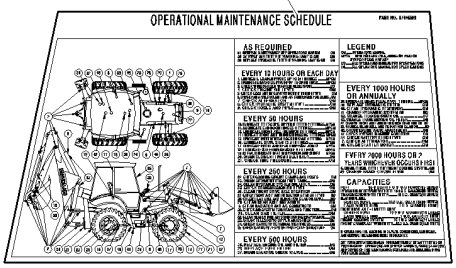

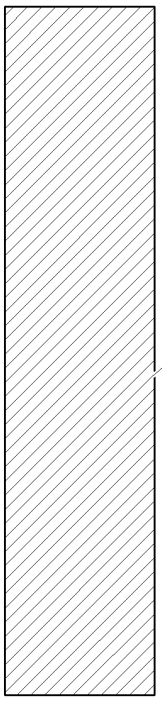

3

4

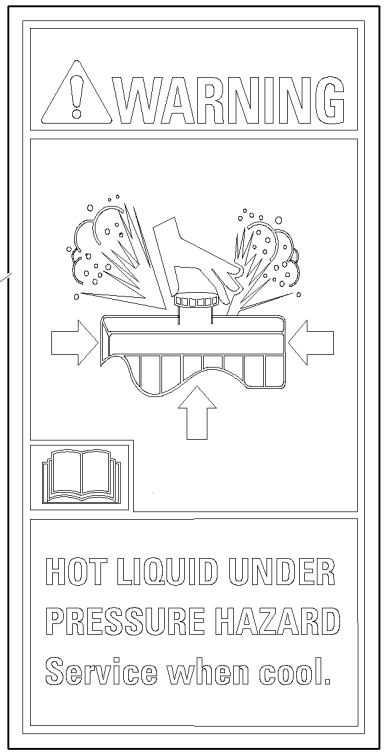

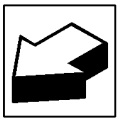

PLAQUETTES - NA

REF	FN	PART NUMBER	YR/SN	QTY	DESCRIPTION
1		85821922		2	DECALCOMANIE, ENGLISH
1		85828080		2	ETIQUETTE DANGER, FRENCH
1		85828081		2	ETIQUETTE DANGER, SPANISH
2		85821946		2	DECALCOMANIE, ENGLISH
2		85828082		2	ETIQUETTE ALARME, FRENCH
2		85828083		2	ETIQUETTE ALARME, SPANISH
3		86547781		2	DECALCOMANIE
4		85821916		1	DECALCOMANIE, ENGLISH
4		85828094		1	ETIQUETTE ALARME, FRENCH
4		85828095		1	ETIQUETTE ALARME, SPANISH
5	1	87305413		1	DECALCOMANIE, ENGLISH
6		85821927		2	DECALCOMANIE
6		85828097		2	DECALCOMANIE
6		85828098		2	DECALCOMANIE
7	2	87615426		1	DECALCOMANIE, FRENCH
7	2	87615425		1	DECALCOMANIE, SPANISH
7	2	87615424		1	DECALCOMANIE, ENGLISH
7	3	87615421		1	DECALCOMANIE
7	3	87615422		1	DECALCOMANIE
8		87615417		1	DECALCOMANIE, SPANISH
8		87577194		1	DECALCOMANIE, ENGLISH

(1) Only for NA Pilot Control Version
(2) Only for B115B
(3) Only for B95BTC

995		p1	03/08

DÉMARRAGE À FROID

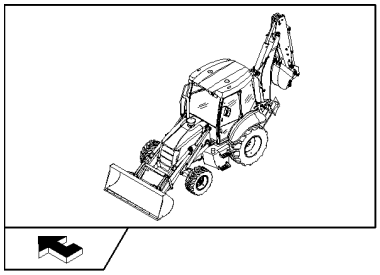

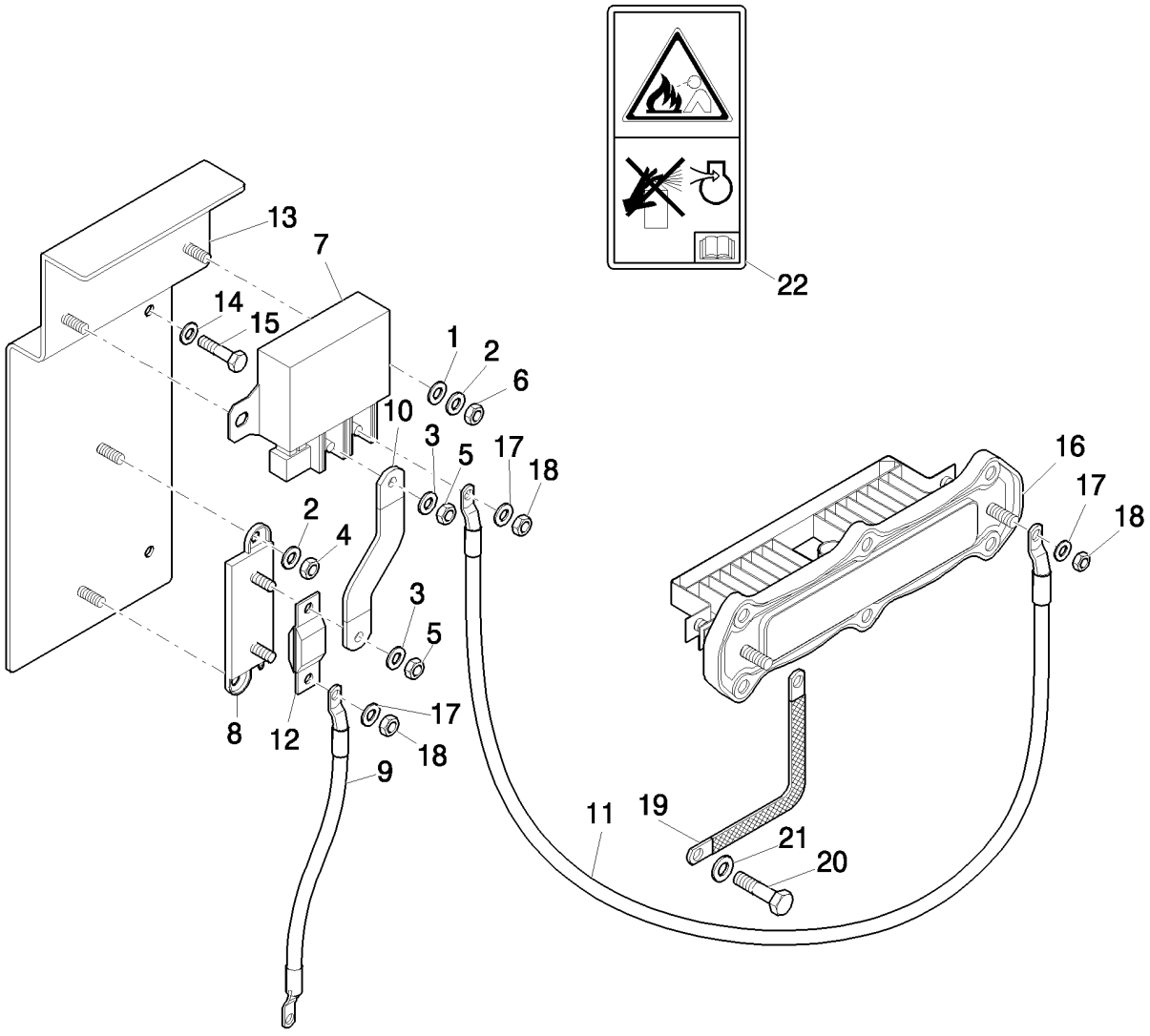

DÉMARRAGE À FROID

REF	FN	PART NUMBER	YR/SN	QTY	DESCRIPTION
1		322357		2	RONDELLE BELLEVILLE, Belleville, M6
2		13577701		4	RONDELLE
3		11193979		2	RONDELLE BELLEVILLE, Belleville, M8.4
4		15896211		2	ECROU, M6, Cl 8
5		16104111		2	CONTRE-ECROU, M8 x 1.25, Cl 8
6		12574111		4	CONTRE-ECROU, M5 x .8, Cl 8
7		86619908		1	RELAIS
8		87302554		1	CONNECTEUR
9		87571508		1	CABLE
10		87571509		1	CABLE
11		87571511		1	CABLE
12		87410602		1	FUSIBLE
13		87571513		1	SUPPORT
14		16043621		2	BOULON, Hex, M8 x 25, 8.8
15		11193979		2	RONDELLE BELLEVILLE, Belleville, M8.4
16		2854837		1	RECHAUFFEUR
17		14499304		4	RONDELLE, M6 x 11 x 1.6
18		12574211		2	CONTRE-ECROU, M6 x 1, Cl 8
19		87571512		1	CABLE, MASSE
20		16042924		1	BOULON, Hex, M8 x 10, 8.8, Full Thd
21		12642704		1	RONDELLE FREIN
22		8603095		1	ETIQUETTE ALARME
22	1	8603092		1	ETIQUETTE ALARME

(1) Only for NA

Number	Figure	Sequence	Ref.
{87397053}	1.83.0	02	14
{87653084}	1.83.0	02	14
10007871	394	03	16
10250644	622		3
10398580	1.96.7/05		15
	1.96.7/06		15
10398680	1.91.4	06	22
	1.91.4/02	06	17
	1.95.2		2
10398980	1.91.4	06	7
	1.91.4/02	06	7
	1.93.0	01	11
	1.93.0/01	01	11
10399580	1.91.6		4
10427201	1.91.1/01		5
	1.93.0	01	16
	1.93.0/01	01	16
	1.93.0/02	01	16
10444721	1.96.2/01		5
10450090	1.91.4	06	15
10450190	1.88.01	02	11
10517274	1.95.0	01	8
10519204	1.91.4	02	4
	1.91.4	06	13
	1.91.4/02	02	4
10519404	1.92.4	01	14
	1.92.4	02	1
10519411	1.82.6/01	10	11
10519604	1.92.6	01	8
	1.93.0	02	8
	1.93.0	04	3
	1.93.0/01	02	3
10520431	1.21.5		9
	1.87.8		3
	1.88.11/09A		3
	291		5
10615274	1.91.4	02	10
	1.91.4	06	2
	1.91.4/02	06	2
10615374	1.95.1		21
10615774	1.95.5	01	3
10702711	1.92.4	02	3
10717311	1.83.0	04	4
10717421	1.88.08	01	10
	1.88.08	02	8
10766901	1.44.1		9
	1.44.1/01		9
10791414	1.95.5	01	12
10794011	1.95.1		31
10802801	1.44.1		6
	1.44.1/01		6
10902124	1.91.7/01		6
	1.91.7/02		6
	793		6
	793/01		6
	794		6
	794/01		6
10902221	1.82.6/01	10	12
10902224	1.96.7/05		10
	1.96.7/06		10
10902321	1.91.3		2
	1.96.2/01		3
10902421	1.87.2		5
10902424	1.93.7		2
	1.95.3		1
	346	02	6
	347	02	6
10902524	1.93.0/01	02	15
	1.93.0/03		8
10902624	1.91.4	06	20
	1.91.4/02	06	15
	1.93.0	04	10
	1.93.0/01	02	10
	1.95.0	02	10
10902834	331	04	10
10903021	1.29.1		5
10903224	1.92.4	02	6
10977821	331	04	31
10978024	1.95.1		20
10979421	1.88.11/05A	02	14
11054590	1.91.4	02	5
	1.91.4/02	02	5
11054790	1.91.4	02	3
	1.91.4	03	7
	1.91.4/02	02	3
	1.91.4/02	03	4
11054890	1.91.4	02	7
	1.91.4/02	02	7
11054990	1.91.4	02	8
	1.91.4/02	02	8
	646	04	17
11055090	1.91.4	02	9
	1.91.4/02	02	9
11064071	1.88.11/05A	01	10
11064176	1.95.0	02	3
11065374	1.83.0	03	12
11065476	1.95.1		14
11067376	1.95.0	01	10
11069071	900	04	7
110692A4	901	04	19
	902	03	19
11087776	1.92.4	01	12
11088076	1.92.6	03	3
11088176	1.95.0	01	1
11106021	1.28.0/ A	01	25
	1.28.0/ B	01	13
	1.83.0	02	6
	1.83.0	04	2
	638	04	3
	639	04	3
11106221	1.82.6	06	7
	1.82.6	16	4
	1.82.6/01	05	6
	1.82.6/01	11	4
	1.83.0	02	8
	1.88.01	01	6
	724/01	02	6
11106321	1.83.0	02	3
11106421	1.19.1		7
	437		11
	646	02	1
11106434	1.28.0		20
11106634	1.15.0	01	12
11106721	901	02	14
	902	02	14
11107321	1.88.08	01	17
11107421	636	08	2
	638	08	2
	639	08	2
	646	02	2
11107634	1.15.0	02	2
11112221	1.94.2		10
11112421	1.14.0		11
	1.82.0		13
	638	01	14
	638	05	4
	639	01	6
	639	05	4
11112434	1.28.0		17
11112634	1.28.0		15
11112821	1.88.12/03		16
	1.88.12/03A		14
11119121	803		6
11120521	290		3
	291		3
11121321	901	02	7
	902	02	7
11190574	1.95.0	01	17
	1.95.5	01	6
	646	02	3
11190579	1.82.6	06	5
	1.82.6	13	15
	1.82.6	16	5
	1.82.6/01	05	5
	1.82.6/01	09	15
	1.82.6/01	11	5

Number	Figure	Sequence	Ref.	Number	Figure	Sequence	Ref.
11190579	1.88.01	01	7	11193979	1.82.6	07	12
	1.88.08	01	2		1.82.6	11	7
	336/01	01	2		1.82.6/01	02	5
	437		13		1.87.2		10
	724/01	02	4		1.88.08	01	4
	725/01	03	2		1.92.4	02	13
	901	02	13		700	01	9
	902	02	13		725/01	01	9
11190679	1.88.11/05A	01	7		900	06	7
	302	01	10		901	03	4
	331/ B	01	3		995		15
	333/01B	01	3		995		3
	437		19	11194679	1.87.2		4
	638	08	5	11194779	803		9
	639	08	5	11197774	1.91.7/01		7
	700	03	2		1.91.7/02		7
11190779	1.28.0		7		346	02	7
	1.28.0/ A	02	4		347	02	7
	1.28.0/ B	02	4		793		7
	1.82.6	04	9		793/01		7
	1.82.6/01	03	15		794		3
	1.82.6/01	04	9		794/01		3
	1.88.12/03		17	11197779	1.29.1		6
	1.88.12/03A		19		1.91.3		3
	393		6		1.96.2/01		2
	394	01	10		331	04	12
	394/01	01	7	11197879	1.75.2	02	6
11191579	1.83.0	01	6	11198074	1.92.9	03	9
11193274	1.91.4	06	21		1.96.7/05		2
	1.91.4/02	06	16		1.96.7/06		2
	1.93.0/01	02	16		851		4
	1.93.0/03		9		855		4
	1.93.7		1		856		4
	1.95.0	02	11	11198379	1.15.0	01	5
	1.95.2		3	11198479	1.15.0	01	10
	1.95.3		2	11198679	1.21.5		25
	1.96.7/05		11		1.28.0		14
	1.96.7/06		11	11200679	1.44.0/ B	01	13
11193279	1.88.11/05A	02	15	11234721	302	01	8
	803		12		331/ B	01	2
11193874	1.21.5		27		333/01B	01	2
	1.83.0	02	12		700	03	4
	1.92.5		3	11383634	1.88.11		15
	1.95.0	02	4	11394334	201		1
	1.95.1		16	11701621	1.95.0	01	20
	1.95.2		8	11701711	1.75.2	04	12
	1.96.2	01	5	11701721	1.15.0	02	4
	391		6	117359A1	514	03	18
	646	02	4	11991971	1.88.11/05A	01	11
11193879	1.42.0		2		1.88.12/03		9
	1.75.2	01	7		1.88.12/03A		11
	1.82.6	03	7		393		14
	1.82.6	15	11		394	02	6
	1.82.6/01	03	7		394	03	17
	1.88.01	01	2	12059980	622		6
	1.88.11/07A		13	12164111	1.83.0	01	8
	1.88.11/07C		13	12164114	1.95.0	01	11
	1.91.4/02	06	18	123407A1	514	04	20
	333	04	8		900	10	20
	337	01	10	12574011	1.91.4	02	11
	337	02	4		1.91.4	02	15
	344	01	2		1.91.4	06	3
	638	01	7		1.91.4/02	02	11
	639	01	15		1.91.4/02	06	3
	721	01	2		1.96.2/01		8
	721	04	8		416		4
	721	06	9		622		4
	724/01	01	3		796		2
	724/02		3	12574111	1.92.9	03	18
	725		5		1.96.0		6
	727/01		9		331	04	18
	728	01	7		347	04	12
	900	02	12		995		6
11193974	1.93.0/02	01	22	12574211	1.82.6/01	10	13
	346	01	2		1.83.0	01	13
	347	01	2		1.93.0	02	17
11193977	1.83.0	01	10		1.96.2/01		9
11193979	1.82.6	02	10		346	02	9

Number	Figure	Sequence	Ref.	Number	Figure	Sequence	Ref.
12574211	347	02	5	13000690	347	05	5
	803		10	13000990	346	05	20
	995		18		347	05	7
12574215	1.92.9	02	16	13272214	1.91.4	06	9
12574511	733		2		1.91.4/02	06	20
12574825	201		3	13272319	1.95.1		30
12574921	1.87.8		8	13272477	394	01	22
12575121	1.87.8		4		394	01	3
	1.88.11/09A		4		416		3
12575321	1.44.0/ B	01	10	13273911	1.92.6	01	6
12577211	636	08	4	13274117	1.95.3		3
	638	08	4	13274217	1.93.0	01	21
	639	08	4		1.93.0/01	01	21
	646	02	6		1.93.0/02	01	28
12577221	1.15.0	01	13	13276217	1.92.9	02	12
12577411	290		4	13276617	1.93.0	03	3
	291		4	13276621	1.92.6	02	3
12577711	291		7	13297817	1.91.6		6
12601174	346	04	13	13309417	1.91.4	06	14
	347	04	14	13311017	1.93.0	01	4
12601474	646	02	7		1.93.0/01	01	7
12637824	1.92.9	03	19		1.93.0/02	01	14
12638107	1.93.0	02	11		1.93.5	02	2
12638504	1.92.4	01	7	13311214	1.93.5/01	01	3
	1.92.9	02	8	13311217	1.93.0	04	8
12638511	1.19.1		8		1.93.0/01	01	4
	1.75.2	04	6		1.93.0/01	02	18
12638601	1.19.1		6		1.93.0/02	01	4
12638621	1.15.0	01	11		1.93.0/03		2
	1.15.0	02	5	13311817	1.91.6		2
	1.83.0	04	5	13313417	1.92.9	01	8
12640601	1.92.6	02	2		1.93.0	02	3
12640621	1.93.0	04	11		1.93.4		5
	1.93.0/01	02	11		1.96.7/04		2
12641004	536/02		4		1.96.7/07		2
12642501	1.83.0	02	9	13399076	1.95.0	02	18
12642704	995		21	13400776	1.95.1		5
12642804	1.93.5	02	1	13406911	1.44.1		8
	1.93.5/01	02	1		1.44.1/01		8
	622		5		1.92.6	03	4
12642821	1.93.4		6	13407214	1.95.0	01	2
	1.95.0	01	14	13423271	1.95.0	02	6
	796		3	13507104	1.83.0	05	5
12643701	1.92.6	01	5	13507401	1.83.0	04	3
12643711	1.98.1	09	2	13517021	1.94.0/01		5
12643721	1.83.0	01	12		835		4
	1.87.2		3	13577701	995		2
12644921	1.44.1		10	13578621	302	01	9
	1.44.1/01		10		331/ B	01	13
12646204	1.92.5		5		333/01B	01	14
12646701	1.14.6		7		700	03	3
12646704	1.91.5	02	5	13580001	1.83.0	01	5
	1.92.9	01	6	13580121	290		2
12646721	1.15.0	01	16		291		2
12646901	638	01	13	13789621	302	01	15
	639	01	5	13812631	394	01	20
12646904	1.92.9	02	5	13838071	855/01	01	14
12646921	1.82.6/01	04	15		856/01	01	14
	1.82.6/01	09	16	13940370	394	01	14
12647004	1.92.9	02	10		394	03	2
	1.93.0	02	2	14040611	646	01	15
	1.94.0/01		2	14040711	646	04	18
	835		6	14048211	1.75.2	01	8
12647121	1.75.2	01	9		1.75.2	04	5
	1.75.2	02	3		1.82.6	02	11
	1.82.6	10	6		1.82.6	10	5
	1.82.6	16	2		1.82.6	15	12
	1.82.6/01	07	10		1.82.6/01	07	7
	1.82.6/01	11	2		1.88.11/05A	01	23
	725		11		1.88.11/07A		12
12647701	1.93.0	01	22		1.88.11/07C		12
	1.93.0	01	3		1.88.12/03		5
	1.93.0/01	01	22		1.88.12/03A		13
	1.93.0/01	01	3		393		15
	1.93.0/02	01	27		394	02	2
12678401	346	04	5		394	03	10
	347	04	11		725		12
13000690	346	05	16		901	03	5

Number	Figure	Sequence	Ref.	Number	Figure	Sequence	Ref.
14048214	1.92.6	01	3	14496901	721	06	5
14048221	1.82.6	16	1		727/01		5
	1.82.6/01	11	1		803		7
	337	01	11	14496931	1.82.6	12	12
	337	02	3		1.87.8		6
14059314	1.93.0	01	10	14497001	1.88.11/08		8
	1.93.0	02	7	14497121	1.44.1		13
	1.93.0/01	01	10		1.44.1/01		13
14084011	1.93.0	02	6		901	02	8
14084111	1.91.7/01		8		902	02	8
	1.91.7/02		1	14497331	1.44.0/ B	01	9
14084814	1.93.0	01	10	14497401	901	02	24
	1.93.0	02	7		902	02	24
	1.93.0/01	01	10	14499301	1.83.0	03	11
	1.93.0/02	01	10	14499304	995		17
14143790	1.91.4/02	04	4	14499421	1.15.0	01	18
	698		2	14560087	1.91.4	04	3
	699		2		1.91.4/02	04	3
	787		5	14560187	1.14.6		1
	787/01		5		1.75.2	01	4
	788		5		1.82.6	04	13
	788/01		5		1.82.6	13	14
14161771	1.92.9	03	5		1.88.11/03		13
14189176	1.93.5	02	6		1.95.0	02	13
	1.93.5/01	02	6		331	09	4
14197790	1.93.4		3		646	01	6
14300521	700	01	16	14568887	1.88.12/03		20
	725/01	02	16		1.88.12/03A		16
14301521	1.96.0		7		1.93.5	01	10
14302921	331/ A		10		1.95.5	01	14
	333/ A		10		393		4
14303324	1.93.4		2		394/01	01	4
	1.95.0	01	15	14582790	990		3
	1.95.5	01	5	14591687	1.91.7/01		1
	622		2	14642191	1.93.5	02	8
	796		4		1.93.5/01	02	3
14304021	331/ A		2	15201934	1.88.08	02	7
14304724	1.96.0		4	15212721	1.95.0	03	5
14305321	1.39.8		14	15212921	1.95.2		4
14305621	1.88.11/08		3	15213334	1.15.0	01	15
14306324	1.95.0	02	5	15213621	1.82.6	15	10
14306424	1.92.9	02	9		1.88.11/07A		11
	1.95.1		15		1.88.11/07C		11
14306821	331	03	3	15213721	331	02	6
14308221	336/01	01	3	15213921	646	02	9
	725/01	03	3	15215821	1.89.9/01		2
14332521	901	02	15	15216421	1.89.9/01		7
	902	02	15	1542875C1	901	04	5
14358724	1.96.0		4		902	03	5
14358921	333/ A		2	1542879C1	900	10	12
14372671	1.93.5	02	7		900	11	11
	346	04	11	1542923C2	900	11	21
14421621	646	02	10	15540321	1.88.12/03		18
14422021	1.82.6	01	3		1.88.12/03A		18
	1.82.6/01	01	3		393		9
14432334	1.95.5	01	4		394/01	01	8
14440327	1.93.5	01	4	15540421	394	01	5
	346	05	14	15540534	1.21.5		24
	347	06	3	15540721	1.14.0		3
14441421	1.83.0	01	2		1.82.0		8
14441521	1.93.0	03	7	15540821	1.29.1		4
	1.93.0/02	01	21		1.82.6/01	03	14
14441524	1.82.6	03	6		1.82.6/01	04	14
	1.82.6/01	03	6	15541621	1.82.6	04	10
14442321	1.83.0	03	5		1.82.6/01	04	8
14442421	1.92.6	01	7	15542121	900	02	4
14447021	1.95.0	03	6	15542921	514	02	7
14464680	1.82.6	01	5		900	03	8
	1.82.6/01	01	5		901	02	32
14466880	1.82.3/01		5		902	02	19
14496407	1.92.9	02	15	15627011	1.93.0	02	9
14496521	1.88.11/05A	01	15	15687475	331/ C	01	9
14496534	646	02	12		331/ C	02	9
	646	04	1		333/ C	01	9
14496601	646	02	5		333/ C	02	9
14496621	1.15.0	01	4	15687801	347	04	13
14496721	1.29.1		10	15693507	1.93.5	02	3
14496901	1.88.12/03		13		1.93.5/01	02	2

Number	Figure	Sequence	Ref.	Number	Figure	Sequence	Ref.
15693507	346	04	12	16044121	391		8
15811387	1.92.9	02	11		901	02	18
15896211	995		4		902	02	18
15910607	1.93.5	02	14	16044124	1.92.5		4
15970521	1.88.11/05A	01	6	16044221	1.82.6	02	14
15970524	1.95.0	01	18		1.82.6	13	13
15970721	1.82.6/01	09	14		1.82.6/01	02	20
15970724	1.95.5	01	7		900	02	13
15970921	1.82.6/01	06	5		900	06	6
15971321	437		17	16044321	1.88.11/03		1
15972034	733		10		391		5
15981221	1.83.0	01	7	16044324	1.91.7/01		4
15981834	1.87.8		11		1.91.7/02		4
15982134	1.87.8		5		793		3
15988734	1.88.11		16		793/01		3
15988934	1.88.11/09A		5		794		4
15989134	1.21.5		10		794/01		4
15989334	1.87.8		2	16044421	1.75.2	04	10
15999434	1.44.0/ B	01	11		1.82.6	11	6
16040821	331	03	6		1.82.6	16	6
16040834	1.15.0	01	6		1.82.6/01	11	6
16041821	291		6		1.88.11/07A		18
16042924	1.91.4	06	10		1.88.11/07C		18
	995		20		900	02	17
16043021	1.75.2	01	6	16044521	728	01	1
	1.88.01	02	13	16044821	724/01	01	4
16043121	1.91.4/02	06	10		724/02		4
16043221	1.14.6		9	16045021	725		6
	638	06	6	16100810	1.83.0	02	19
	639	06	7	16100811	1.83.0	03	3
16043324	1.92.9	01	5		331	02	7
16043421	1.19.1		9	16100821	1.15.0	01	14
	1.21.5		28	16101511	1.82.6/01	09	11
	1.42.0		3		393		5
	1.75.2	02	13		394	01	9
	1.82.0		27		394/01	01	10
	646	04	2	16102211	646	02	18
16043424	1.93.0/02	01	7	16102311	1.88.11/05A	01	9
	1.96.7/05		3		1.88.12/03		3
	1.96.7/06		3		1.88.12/03A		2
	851		3		393		16
	855		3		394	02	4
	856		3		394	03	13
16043621	1.82.6	07	13	16102411	1.91.5	02	6
	1.88.01	01	3	16102911	1.88.11/05A	01	12
	1.88.08	01	19		1.88.12/03		2
	394	03	4		1.88.12/03A		4
	646	02	8		393		17
	646	04	15		394	02	5
	721	06	8		394	03	9
	727/01		8	16104111	1.75.2	02	2
	901	03	3		1.82.6	02	16
	995		14		1.82.6/01	02	21
16043624	1.92.9	03	20		1.83.0	03	8
	1.95.2		7		1.87.2		9
	1.96.2	01	6		1.91.7/01		5
	346	01	15		1.91.7/02		5
	347	01	12		1.92.9	02	6
16043821	1.14.6		13		1.92.9	03	7
	1.82.6	07	17		1.94.0/01		3
	638	01	15		394	03	5
	639	01	14		646	04	3
	700	01	10		721	06	7
	725/01	01	10		727/01		7
16043824	1.75.2	04	8		734		8
	1.93.0	01	7		793		5
	1.93.0	04	4		793/01		5
	1.93.0/01	02	4		794		5
16043921	1.95.0	01	19		794/01		5
	344	01	3		835		7
	721	01	3		995		5
	734		6	16104511	1.92.6	03	11
16044021	1.82.6	02	8	16105011	1.28.0		12
	1.82.6	10	8		1.29.1		3
	1.82.6/01	02	6		514	02	8
	1.82.6/01	07	8		638	05	5
	333	04	7		639	05	5
	721	04	7		900	02	5

Number	Figure	Sequence	Ref.	Number	Figure	Sequence	Ref.
16105011	900	03	9	2852484	0.17.3		3
	901	02	12	2852485	0.27.0/01		12
	901	02	29	2852488	0.14.0/01	01	3
	902	02	12	2852500	0.17.3		2
	902	02	28	2852511	0.32.3/01		5
16105111	1.92.9	02	2	2852602	0.06.6/01		20
1986905C1	900	11	5	2852744	0.07.7/01		3
1986906C1	900	11	14	2852774	0.06.3/01	01	3
201-112	1.82.6	12	2	2852776	0.06.6/01		10
201-422	725/01	02	14	2852804	0.14.0/01	01	10
218-5053	700	02	3	2852805	0.14.0/01	01	11
218-5057	700	02	4	2852817	0.17.0		3
225315C1	331/ C	01	6	2852818	0.17.0		6
	331/ C	02	6	2852820	0.17.0		10
	333/ C	01	6	2852821	0.17.0		15
225318C1	331/ C	01	7	2852825	0.17.0		4
	331/ C	02	7	2852865	0.04.3/01	03	2
	333/ C	01	7	2853410	0.27.0/01		10
225350C1	333/ C	01	11	2853412	0.27.0/01		11
	333/ C	02	11	2853414	0.30.0		1
225353C1	333/ C	01	12	2853535	0.06.6/01		19
	333/ C	02	12	2853537	0.14.9/01		2
238-5231	901	04	21	2853722	0.31.5/01		9
	902	03	21	2853728	0.04.2		10
238-5235	900	11	4	2853780	0.31.5/01		2
238-5245	514	04	9	2853781	0.31.5/01		3
238-5247	514	03	10	2853822	0.08.0		1
	900	10	9	2853826	0.06.3/01	02	1
238-5249	900	09	12	2853858	0.06.3/01	01	1
276-2446	1.88.11/01		26	2854030	0.08.2/01		3
276-2456	1.88.11/09	02	15	2854072	0.32.3/01		2
2830082	0.04.0/01		1	2854079	0.17.0		20
2830222	0.06.6/01		7	2854282	0.17.0		5
2830433	0.10.5	01	7	2854292	0.17.0		22
2830444	0.07.7/01		2		1.95.0	02	14
2830559	0.31.5/01		10		1.95.0	03	3
2830706	0.06.0/01		17	2854491	0.32.3/01		15
2830707	0.06.0/01		17	2854530	0.06.6/01		18
2830948	0.10.5	02	3	2854542	0.14.9/01		5
2831031	0.10.5	01	8	2854543	0.14.9/01		4
2831266	0.06.0/01		3	2854544	0.14.9/01		8
2831287	0.06.0/01		7	2854563	0.20.0/01		2
2831297	0.08.1/01		3	2854564	0.20.0/01		3
2831298	0.08.1/01		1	2854566	0.20.0/01		7
2831302	0.10.5	02	6	2854593	0.17.0		26
2831303	0.10.5	02	5	2854594	0.17.0		18
2831305	0.10.5	02	1	2854596	0.17.0		19
2831354	0.10.5	01	9	2854606	0.14.0/01	02	2
2852011	0.04.2		4	2854609	0.14.0/01	02	6
2852012	0.04.2		7	2854700	0.07.1/01		8
2852013	0.04.2		9	2854701	0.07.1/01		9
2852016	0.04.2		5	2854702	0.07.1/01		6
2852047	0.32.0		2	2854812	0.06.3/01	01	4
2852049	0.08.3		1	2854837	995		16
2852051	0.08.3		2	2855150	0.17.0		23
2852054	0.08.4		3	2855336	0.20.4/01		1
2852071	0.24.0/01		5	2855427	0.20.3/01		1
2852072	0.24.0/01		4	2855428	0.20.3/01		3
2852100	0.30.5/01		13	2855430	0.20.3/01		4
2852101	0.30.5/01		14	2855491	0.14.0/01	02	5
2852114	0.32.0		1	2855503	0.14.9/01		1
2852161	0.34.0/01		2	2855743	0.10.5	01	12
2852162	0.34.0/01		3	2855744	0.10.5	01	10
2852170	0.34.5		1	2855746	0.10.5	02	4
2852171	0.34.5		5	2855753	0.10.5	01	2
2852172	0.34.5		6	2855773	0.45.0/01		1
2852180	0.40.0/01		1	2855774	0.45.0/01		2
2852181	0.32.3/01		4	2855776	0.32.3/01		3
2852195	0.30.5/01		8	2855780	0.30.5/01		10
2852196	0.30.5/01		15	2855787	0.27.0/01		7
2852197	0.30.5/01		12	2855792	0.20.0/01		1
2852202	0.04.0/01		17	2855795	0.20.3/01		5
2852234	0.04.2		1	2855801	0.04.3/01	01	4
	0.14.0/01	01	13	2855803	0.04.3/01	03	8
2852267	0.07.1/01		7	2855805	0.07.1/01		1
2852428	0.06.6/01		12	2855807	0.07.7/01		1
2852434	0.14.9/01		9	2855809	0.07.1/01		4
2852473	0.32.6/01		4	2855813	0.27.0/01		1

Number	Figure	Sequence	Ref.	Number	Figure	Sequence	Ref.
2855815	0.27.0/01		2	47048963	638	04	11
2855818	0.14.9/01		7		638	04	15
2855819	0.14.9/01		6		639	04	11
2855823	0.32.6/01		2	47048964	1.39.8		5
2855886	0.17.3		1		1.82.6	05	8
2855949	0.34.0/01		1		1.82.6/01	06	8
2855950	0.34.0/01		4	47048969	331	02	8
2856035	0.27.0/01		9	47048971	331	03	2
2856086	0.04.2		6	47048972	1.82.0		24
2856458	0.06.6/01		2		638	04	2
2856460	0.06.6/01		15		638	06	8
2856543	0.32.6/01		3		639	04	2
2856701	0.24.0/01		3		639	06	1
2856707	0.06.3/01	01	2	47048973	1.14.0		4
297281A1	901	04	10		1.82.0		14
	902	03	10	47048976	1.14.0		8
2992147	0.08.0		4		1.82.0		9
2992148	0.08.0		4		638	05	6
2992149	0.08.0		4		639	05	6
2992153	0.08.0		3	47048992	331	02	9
2992154	0.08.0		3		638	03	11
2992155	0.08.0		3		638	06	7
322357	995		1		639	03	11
328955A1	1.44.0/ B	02	34		639	06	8
380621A1	900	09	10	47048993	1.75.2	02	9
412005	131		3	47049010	1.75.2	02	10
	321		2	47049031	1.75.2	02	11
413-1036	1.82.6	12	10	47049032	331	02	19
42541849	0.14.0/01A		3	47049041	1.82.0		25
42541850	0.14.0/01A		2		131		5
42541851	0.14.0/01A		10		321		5
42547619	0.14.0/01A		4		331	02	10
42548060	0.14.0/01A		6		331	05	2
42550486	0.14.0/01A		9		638	04	9
42550487	0.14.0/01A		7		639	04	14
42550488	0.14.0/01A		5	47049065	331	03	7
42550932	0.14.0/01A		8	47049082	331	02	11
444640A1	900	09	9	47049088	638	04	10
446178A1	514	04	12		639	04	10
446195A1	514	04	7	47049094	1.88.11/01		13
446481A1	514	04	6	47049151	331	02	20
44910052	1.92.6	01	2	47049161	1.82.6	02	12
44910053	1.92.6	01	2	47049163	638	01	1
47042074	1.82.0		34		639	01	1
47042260	638	01	10	47049176	1.28.6		4
	639	01	2	47049184	1.82.6	05	4
47042342	638	03	10		1.82.6/01	06	4
	639	03	10	47049185	1.82.0		23
47042364	1.39.8		9	47049186	1.75.2	04	11
	1.82.6	05	5		638	06	4
47044673	1.94.2		8		639	06	5
47044758	1.82.0		35	47049187	638	04	7
47044780	331	09	5		639	04	7
47048440	638	04	6	47049372	1.28.0		19
	639	04	6		1.28.0/ A	01	26
47048451	1.94.2		9		1.28.0/ B	01	25
	646	01	7	47049404	331	05	15
47048646	639	04	9	47049442	331	05	13
47048664	1.39.8		4	47049590	131		7
	1.82.6	05	9		321		6
	1.82.6/01	06	9	47049809	638	06	1
47048668	638	04	12		639	06	4
	639	04	12	47049943	638	06	3
47048759	638	04	8		639	06	3
	639	04	8	47050653	331	06	10
47048788	131		6		331	07	14
	321		9		331	08	7
47048895	1.75.2	02	1		333	02	10
47048896	1.94.2		4	47050658	1.28.6		3
47048898	1.15.0	01	7	47050671	1.14.0		5
47048959	1.96.2/01		4		1.82.0		10
47048962	1.82.0		28	47050685	331	06	11
	638	01	12		333	02	11
	639	01	11		725/01	02	3
47048963	1.82.6	05	6	47050686	331	04	15
	1.82.6/01	06	6		331	07	13
	131		4		331	08	6
	321		10		725/01	02	4

Number	Figure	Sequence	Ref.	Number	Figure	Sequence	Ref.
47120173	331	07	12	4895378	0.04.3/01	03	4
47335175	855/01	05	13	4895379	0.04.3/01	03	5
47335213	851/01	01	7	4895392	0.04.0/01		13
	855/01	01	7		0.32.3/01		9
	856/01	01	7	4895393	0.04.0/01		14
4890088	0.14.0/01	01	6		0.32.3/01		10
4890189	0.17.0		8	4895406	0.06.0/01		13
4890190	0.17.0		9		0.27.0/01		3
4890193	0.17.0		11	4895407	0.06.0/01		14
4890343	0.34.5		3	4895408	0.06.0/01		15
4890634	0.14.0/01	01	7	4895432	0.06.6/01		1
4890635	0.14.0/01	01	14		0.07.1/01		2
4890700	0.14.0/01	01	4	4895462	0.20.3/01		6
4890732	0.34.5		9	4895477	0.17.0		12
4890832	0.04.3/01	02	4	4895483	0.14.0/01	02	1
4890833	0.04.3/01	03	6	4895489	0.04.2		2
4890926	0.14.0/01	02	8	4895538	0.04.2		8
4890929	0.14.0/01	02	3	4895586	0.10.5	01	6
4890964	0.17.0		24	4895605	0.04.0/01		9
4891024	0.06.0/01		1	4895610	0.27.0/01		5
4891025	0.06.0/01		2	4895623	0.32.3/01		6
4891209	0.04.3/01	02	5	4895625	0.32.3/01		7
	0.10.5	02	7	4895817	0.17.0		1
4891353	0.04.0/01		6	4896052	0.06.6/01		21
4891385	0.14.0/01	01	8	4896329	0.20.4/01		3
4892255	0.17.0		14	4896381	0.12.0/01		2
4892426	0.34.5		8	4896404	0.31.5/01		4
4892708	0.08.1/01		2	4896406	0.31.5/01		9
4892712	0.08.2/01		2	4896409	0.31.5/01		6
4892732	0.34.5		7	4896410	0.31.5/01		7
4892867	0.08.4		2	4896419	0.12.0/01		5
4892915	0.04.3/01	03	2	4896542	0.17.0		21
4893036	0.06.0/01		10	4896773	0.08.4		1
	0.32.3/01		13	4896884	0.14.9/01		10
	0.32.3/01		8	4896897	0.27.0/01		8
4893244	0.06.0/01		16	4896939	0.04.3/01	01	3
4893386	0.08.0		2	4896947	0.10.5	01	5
4893389	0.14.0/01	01	12	4896952	0.14.0/01	01	2
4893391	0.31.5/01		8	4896996	0.20.3/01		8
4893487	0.06.6/01		16		0.20.4/01		4
4893739	0.14.0/01	02	4	4897024	0.04.3/01	02	1
4893936	0.06.3/01	01	5	4897048	0.10.5	01	4
4893962	0.14.0/01	01	9	4897071	0.10.5	01	3
4894095	0.20.3/01		2	4897125	0.10.5	01	1
	0.20.4/01		2	4897224	0.17.0		13
4894218	0.04.0/01		8		0.20.0/01		5
4894641	0.08.3		3	4897245	0.06.6/01		4
4895031	0.06.6/01		17	4897248	0.06.6/01		3
4895037	0.27.0/01		6	4897330	0.27.0/01		4
4895038	0.04.0/01		4	4897457	0.12.0/01		4
4895039	0.04.0/01		3	4897480	0.30.0		1
4895040	0.04.0/01		7	4897499	0.04.3/01	03	2
4895045	0.31.5/01		5	4897934	0.10.5	01	11
4895049	0.04.0/01		15	4898301	0.04.2		3
4895051	0.06.0/01		5	4898482	0.24.0/01		6
4895052	0.06.0/01		6	4898877	0.20.0/01		4
4895065	0.06.6/01		8	4898921	0.14.0/01	01	5
4895067	0.06.6/01		11		0.14.0/01A		1
4895068	0.06.6/01		5	4899003	0.14.0/01	01	1
4895073	0.06.0/01		8	4899009	0.04.0/01		11
4895074	0.06.0/01		9	4899019	0.31.5/01		1
4895078	0.32.3/01		14	4899020	0.14.9/01		3
4895080	0.32.3/01		11	4899026	0.04.0/01		2
4895082	0.32.3/01		12		0.04.3/01	01	1
4895085	0.06.0/01		11		0.04.3/01	03	1
4895089	0.06.0/01		12	4899027	0.10.5	02	2
4895107	0.30.5/01		2	4899037	0.45.0/01		4
4895133	0.24.0/01		2	4899039	0.07.1/01		3
4895155	0.04.3/01	03	3	4899046	0.08.0		5
4895157	0.17.0		17	4899053	0.34.5		2
4895164	0.30.5/01		1	4899057	0.17.0		2
4895198	0.06.6/01		6	4899058	0.30.5/01		9
4895228	0.04.0/01		5	4899063	0.04.3/01	02	3
4895291	0.34.5		4	4899068	0.04.3/01	03	2
	0.40.0/01		2		0.12.0/01		3
4895292	0.34.0/01		6	4899072	0.04.0/01		12
4895323	0.10.5	02	8	4899073	0.04.3/01	01	3
4895336	0.07.7/01		4	4899076	0.04.3/01	03	2

Number	Figure	Sequence	Ref.	Number	Figure	Sequence	Ref.
4899078	0.04.3/01	01	2	71304923	990		8
	0.04.3/01	02	2	71431438	990		6
	0.17.0		25	71485488	851/01	02	2
4899079	0.12.0/01		1		855/01	02	2
	0.32.0		3	72273491	1.82.0		37
	0.34.0/01		5	784122	1.91.1/01		4
	0.45.0/01		3	79028977	990		9
4899080	0.12.0/01		6	79028981	990		4
4899081	0.06.0/01		4	79062734	990		5
4899089	0.06.6/01		9	79072960	392	01	11
4899090	0.30.0		2		392	02	10
4899091	0.04.2		2	79089592	1.93.0	04	7
4899093	0.04.3/01	01	3		1.93.0/02	01	13
4899103	0.20.3/01		7		1.93.5	01	8
4899106	0.30.5/01		7		1.93.5/01	01	2
4899107	0.30.5/01		3	79105220	1.93.5	01	9
4899108	0.30.5/01		4	79111815	1.93.0	01	12
4899109	0.04.3/01	03	2		1.93.0/01	01	12
	0.10.5	01	11		1.93.0/02	01	12
	0.32.3/01		1	79111978	1.91.4	06	17
4899110	0.17.0		7		1.91.4/02	06	6
	0.32.6/01		1		1.92.9	01	12
4899115	0.04.0/01		10		1.93.0	02	13
4899118	0.24.0/01		1		1.93.0/02	01	23
4899119	0.07.7/01		5		1.96.7/05		6
4899121	0.30.5/01		11		1.96.7/06		6
4899124	0.17.0		16		835		8
4899143	0.04.3/01	03	7	80087308	1.44.0/ B	02	25
4899228	0.06.3/01	01	6	80128825	1.82.6	13	3
4899239	0.06.3/01	01	7		1.82.6/01	03	16
4899245	0.06.6/01		13		1.82.6/01	09	5
4899256	0.06.6/01		14		1.88.11/07A		3
4899467	0.30.5/01		5		1.88.11/07C		3
4899519	0.30.5/01		6		1.95.5	02	7
4899689	0.14.0/01	02	7		337	01	15
4899803	0.04.0/01		16		337	02	15
4899815	0.17.3		2		437		18
4899921	0.07.1/01		5		721	03	5
4983992	1.95.0	01	5	80167266	1.82.6	01	7
4985122	1.95.1		13		1.82.6	14	2
4985127	1.95.1		3		1.82.6	15	2
4988275	1.95.1		6		1.82.6/01	01	6
4998760	1.95.5	01	11		1.82.6/01	04	16
4999021	1.93.0	04	9		900	05	7
	1.93.0/01	02	9		900	07	7
	1.93.0/02	01	25	80167268	1.82.6	04	2
504153150	0.06.3/01	02	2		1.82.6	05	10
504153151	0.06.3/01	02	4		1.82.6	06	6
5105729	1.95.1		11		1.82.6/01	04	11
5106733	1.95.1		18		1.82.6/01	05	8
5110153	1.95.1		7		1.82.6/01	06	10
5110155	1.95.1		9	80167269	1.82.6	02	3
5112712	1.91.4	06	8		1.82.6/01	02	1
	1.91.4/02	06	8		1.82.6/01	02	16
	1.92.6	03	13		1.82.6/01	07	5
	346	05	22		1.82.6/01	08	2
	347	05	9		1.82.6/01	09	12
5118658	1.91.7/02		18		1.82.6/01	10	4
5131437	1.95.1		10		1.88.11/03		10
5132136	1.92.9	02	13		725		13
	1.92.9	03	8		725/01	01	3
5135069	1.98.1	09	4	80263136	1.44.0/ B	01	12
5138360	1.98.1	09	3	80280248	1.44.0/ B	03	37
5148062	1.95.0	01	3	80510884	1.44.0/ B	03	17
5148131	1.93.0	02	15	80510892	1.44.0/ B	03	6
5148132	1.93.0	02	14	8093882	0.08.1/01		4
5148946	1.95.5	01	10	8094853	0.08.2/01		1
5153180	1.95.0	01	12	8094854	0.08.2/01		1
5155381	1.95.0	02	21	8094960	0.08.1/01		4
5155701	1.95.0	02	15	8094961	0.08.1/01		4
5155703	1.95.0	02	16	81728114	1.44.0/ B	03	8
	1.95.0	03	2	81800471	1.44.0/ B	03	12
5162852	1.94.0/01		8	81800472	1.44.0/ B	03	7
5175736	1.91.5	02	7	81800474	1.44.0/ B	03	2
5176441	1.93.4		1	81800475	1.44.0/ B	03	4
5178468	1.93.0	02	5	81800486	1.44.1		2
5183854	1.92.6	03	8		1.44.1/01		2
614-10040	1.82.6	12	3	81800488	1.44.1		7

Number	Figure	Sequence	Ref.
81800488	1.44.1/01		7
81802548	1.44.0/ B	02	3
81802560	1.44.0/ B	02	22
81803273	1.44.0/ B	02	15
81803275	1.44.0/ B	02	16
81803334	1.44.0/ B	02	10
81803336	1.44.0/ B	02	26
81803345	1.44.0/ B	02	28
81803413	1.44.0/ B	03	5
81803424	1.44.0/ B	03	11
81803445	1.44.0/ B	03	13
81803451	1.44.0/ B	03	15
81803474	1.44.0/ B	03	1
81803491	1.44.0/ B	02	23
81803502	1.44.0/ B	02	23
81803503	1.44.0/ B	02	23
81803504	1.44.0/ B	02	23
81803505	1.44.0/ B	02	23
81803506	1.44.0/ B	02	23
81803507	1.44.0/ B	02	23
81803508	1.44.0/ B	02	23
81803509	1.44.0/ B	02	23
81803510	1.44.0/ B	02	23
81803511	1.44.0/ B	02	23
81803515	1.44.0/ B	03	30
81803516	1.44.0/ B	03	30
81803517	1.44.0/ B	03	30
81803519	1.44.0/ B	03	30
81803520	1.44.0/ B	03	30
81803521	1.44.0/ B	03	30
81803522	1.44.0/ B	03	30
81803542	1.44.0/ B	03	21
81804978	1.44.0/ B	02	24
81805231	1.44.1		11
	1.44.1/01		11
81809406	1.44.0/ B	01	8
81812261	1.44.0/ B	03	3
81812912	1.44.0/ B	01	24
81816246	1.44.0/ B	03	10
81818397	1.44.0/ B	01	18
81818824	1.21.5		16
	1.88.11/01		3
	1.88.11/02	01	2
	1.88.11/06A		16
	1.88.11/06A		17
81820047	1.44.0/ B	01	20
81820846	1.44.0/ B	02	18
81820849	1.44.0/ B	02	13
81821237	536/02		9
81821263	536/02		3
81821267	1.44.0/ B	03	36
81821691	1.44.1		3
	1.44.1/01		3
81822462	1.44.1		17
	1.44.1/01		17
81823610	1.44.0/ B	02	14
81823746	536/02		5
81824478	1.44.0/ B	03	20
81827354	1.44.0/ B	03	24
81832258	1.82.6	13	7
81834042	1.44.0/ B	03	26
81834073	1.44.0/ B	03	33
81844851	1.82.6	03	11
	1.82.6	04	14
	1.82.6/01	03	11
	1.82.6/01	03	17
	728	02	4
81845030	1.82.6	13	6
81845037	728	02	5
81845041	1.44.0/ B	01	26
81845711	1.44.0/ B	03	23
81845713	1.44.0/ B	03	35
81845714	1.44.0/ B	03	27
81846884	1.44.0/ B	02	21
81847146	1.44.0/ B	03	25
81847148	1.44.0/ B	03	31
81847149	1.44.0/ B	03	31
81847150	1.44.0/ B	03	31
81847151	1.44.0/ B	03	31
81847152	1.44.0/ B	03	31
81847153	1.44.0/ B	03	31
81847154	1.44.0/ B	03	31
81847155	1.44.0/ B	03	31
81847156	1.44.0/ B	03	31
81847157	1.44.0/ B	03	31
81847158	1.44.0/ B	03	31
81847159	1.44.0/ B	03	31
81847160	1.44.0/ B	03	31
81847161	1.44.0/ B	03	31
81847162	1.44.0/ B	03	31
81854753	1.44.0/ B	02	12
81855916	1.88.11/05A	01	18
81866390	1.44.0/ B	01	17
81867742	1.92.6	03	12
81869714	1.92.6	03	10
81870039	1.93.0	01	15
	1.93.0	02	16
	1.93.0/01	01	15
	514	02	10
	901	02	31
	902	02	3
81871325	728	02	8
81871439	1.92.4	01	15
81871864	1.92.4	01	10
	1.92.4	02	10
81872028	1.92.4	02	7
81872036	1.92.4	01	6
81875248	1.21.5		4
81876885	1.44.0/ B	03	14
81878514	1.44.0/ B	01	25
81900328	1.88.11		12
	1.88.11/02	02	2
	1.88.11/05A	02	19
81901809	1.88.11		2
81901837	1.21.5		7
81901896	1.88.11		10
81901897	1.88.11/01		10
81902174	1.88.11/01		8
	1.88.11/02	01	6
81902463	1.88.11		6
	1.88.11/02	02	3
82000409	1.92.6	03	9
82001909	1.93.0	04	13
	1.93.0/01	02	2
	1.93.0/02	01	24
82003283	1.96.7/04		5
	1.96.7/07		5
82003369	1.95.0	02	9
82022833	1.91.1		1
82026949	1.95.0	01	13
82034863	851/01	01	6
	855/01	01	6
	856/01	01	6
82034881	851/01	01	11
	851/01	02	10
	851/01	03	23
	855/01	01	11
	855/01	02	10
	856/01	01	11
	856/01	02	10
	856/01	03	26
82034893	851/01	02	11
	851/01	03	22
	855/01	02	13
	856/01	02	13
	856/01	03	27
82034894	855/01	03	3
82034897	855/01	01	35
82035025	851/01	04	16
	856/01	04	16
82035027	851/01	04	24
	856/01	04	24
82035028	851/01	04	21
	856/01	04	21
82035029	851/01	04	15
	856/01	04	15

Number	Figure	Sequence	Ref.
82035030	851/01	03	11
	856/01	03	11
82035031	851/01	03	9
	856/01	03	9
82035032	851/01	04	10
	856/01	04	10
82035033	851/01	04	25
	856/01	04	25
82035034	851/01	04	23
	856/01	04	23
82035035	851/01	04	20
	856/01	04	20
82035036	851/01	03	14
	856/01	03	14
82035037	851/01	04	8
	856/01	04	8
82035038	851/01	01	27
	855/01	01	27
	856/01	01	27
82035039	851/01	04	13
	856/01	04	13
82035040	851/01	04	4
	856/01	04	4
82035043	851/01	04	7
	856/01	04	7
82035053	855/01	03	21
82035054	851/01	04	9
	856/01	04	9
82035057	855/01	03	18
82035076	855/01	05	7
82035094	851/01	03	5
	856/01	03	5
82035126	855/01	03	26
82035127	851/01	03	8
	856/01	03	8
82035128	851/01	04	5
	856/01	04	5
827-10130	636	08	5
	638	08	6
	639	08	6
8274447	1.88.08	02	15
82848105	855/01	03	27
	855/01	05	14
82859922	1.92.4	01	1
82879400	1.88.11/05A	02	3
82895716	1.44.0/ B	01	21
829-1410	1.82.6	12	4
82958118	1.44.0/ B	02	29
82958961	1.44.0/ B	03	22
82959373	1.44.0/ B	01	23
82959375	1.44.0/ B	03	16
82979988	1.44.0/ B	02	27
83416242	1.21.5		12
	1.88.08	01	11
	1.88.08	02	4
	1.88.11		7
	1.88.11/02	01	3
	1.88.11/02	02	4
	1.88.11/06A		19
	1.88.11/09A		6
	514	03	7
	514	04	17
	900	02	20
	900	04	2
	900	09	7
	900	10	17
	900	11	12
	901	02	33
83417133	1.44.0/ B	01	6
83417169	1.44.0/ B	03	29
83901443	1.82.6	02	4
	1.82.6/01	02	17
	1.82.6/01	02	3
	1.82.6/01	07	3
	1.82.6/01	08	3
	1.82.6/01	10	3
	437		15
83902702	901	02	21

Number	Figure	Sequence	Ref.
83902702	902	02	21
83902710	1.88.11/02	01	8
83904750	1.44.1		16
	1.44.1/01		16
83909107	1.44.0/ B	01	3
83910546	514	02	2
	900	03	2
	901	02	2
	902	02	2
83910548	514	02	4
	900	03	3
	901	02	23
	902	02	23
83910557	900	02	2
83910599	1.88.11/09	02	5
83910601	1.88.11/09	02	3
83910629	1.21.5		18
83910630	1.21.5		17
83910634	386		3
	387		1
	388		1
	389		1
	390/01		1
	515/01		3
	516/01		1
	517/01		1
	518/01		1
	519/01		1
	520/01		1
	521		1
83910645	1.21.5		5
	1.88.11/09A		2
83910977	1.21.5		21
	1.88.08	02	2
	900	04	6
83911000	1.21.5		11
83911019	1.21.5		20
	1.88.08	02	3
	901	02	6
	902	02	6
83911020	1.21.5		6
83911366	1.88.11/05A	02	8
	1.88.12/03		14
	721	06	6
	727/01		6
83911686	1.44.1		14
	1.44.1/01		14
83912246	1.44.0/ B	03	34
83912378	1.88.11/09	02	4
83925620	1.44.0/ B	01	22
83931289	1.88.11/09	02	18
83931313	1.88.11/09	02	7
83937179	1.44.0/ B	03	19
83937315	1.88.11/02	01	9
83947107	1.44.0/ B	03	38
83948308	1.44.1		5
	1.44.1/01		5
83949810	1.44.0/ B	03	32
83949811	1.44.0/ B	02	20
83949812	1.44.0/ B	03	39
83949838	1.44.1		1
	1.44.1/01		1
83952932	1.44.1		4
	1.44.1/01		4
83955462	1.44.0/ B	01	2
83955490	1.44.0/ B	01	15
83957533	1.44.0/ B	03	28
83961521	1.91.4	06	12
83961741	728	02	3
83961823	1.93.0	02	10
83961985	1.92.4	01	3
	1.92.4	02	8
	1.92.4	03	7
83961987	1.92.4	01	13
	1.92.4	02	12
	1.92.6	02	6
83962179	1.82.6	04	16
83962538	1.82.6	01	6

Number	Figure	Sequence	Ref.
83962538	1.82.6	14	1
	1.82.6	15	1
	1.82.6/01	01	7
	1.82.6/01	04	5
	900	05	8
	900	07	3
83962539	1.82.6	10	3
	1.82.6	11	1
	1.82.6	14	4
	1.82.6	15	4
	333	03	3
	900	05	9
	900	07	4
	900	08	1
83962659	1.88.11/05A	02	2
83962811	1.88.11/02	01	7
83962918	394	01	6
83962919	394	01	18
83963000	1.82.6	02	2
	1.82.6/01	02	14
	1.82.6/01	07	4
	1.82.6/01	08	1
	1.82.6/01	10	2
	392	01	6
	392	02	4
83963153	1.92.4	01	5
83963371	1.42.0		4
	1.82.6	03	3
	1.82.6	04	11
	1.82.6/01	03	3
	331	08	2
	724/01	01	7
	724/02		7
83963374	1.82.6	13	5
	1.82.6/01	09	3
	1.88.11/07A		1
	1.88.11/07C		1
	1.95.5	02	3
	337	01	4
	337	02	6
	391		4
	437		5
	721	03	2
	901	04	4
	902	03	20
83963375	1.82.6	04	1
	1.82.6/01	04	1
83963376	1.82.6/01	09	10
	1.88.11/03		5
	725/01	01	1
83963422	1.88.11/05A	02	10
83963433	1.88.11/05A	02	1
83964146	1.92.6	03	2
83971549	1.82.6	13	2
	1.82.6/01	03	8
	1.82.6/01	09	1
	391		7
	437		4
	901	04	20
	902	03	4
83971567	1.44.1		15
	1.44.1/01		15
83976357	1.92.4	02	4
83983763	1.42.0		13
	1.88.11/07A		24
83984666	851/01	01	14
	855/01	01	13
	856/01	01	13
83985067	1.42.0		12
	1.88.11/07A		4
	1.88.11/07C		4
83987627	724/01	01	19
	724/02		14
	728	01	2
	728	02	9
83989915	1.44.0/ B	03	9
83994150	1.91.7/02		17
	1.92.9	01	13
83994150	1.96.7/05		7
	1.96.7/06		7
83994372	1.92.6	03	6
83994378	1.92.6	03	7
83994395	1.92.6	03	5
83994579	1.44.0/ B	03	18
83995356	1.92.4	01	8
83998909	1.88.11/09	02	8
83999466	1.21.5		19
84058418	331	02	13
85700130	1.88.11		5
85700224	81.00		2
	82.00	01	2
	83.00	01	2
85700341	1.88.11/05A	02	13
85700728	1.21.5		2
85800007	1.88.11/09	02	19
85800103	1.88.11/01		7
85800105	1.88.11/01		9
85800303	1.88.11/09	02	14
85800504	1.88.11/02	01	5
85800603	1.88.11/06A		3
85800604	1.88.11/06A		2
85800965	1.88.11/09A		9
85800990	1.88.11/09	02	6
85801026	1.88.08	02	1
85801029	1.88.08	01	3
85801034	522		1
	522/01		1
	525		1
	536		7
	537		7
85801040	522		6
	536		8
	537		8
85801042	520		6
	527		9
85801044	520		1
	527		1
85801049	1.88.11/01		2
	1.88.11/02	02	5
85801050	1.88.11/01		5
85801051	1.88.11		14
	471	01	3
	472	01	1
	473	01	1
	474	01	1
	520		4
	522		2
	522/01		16
	525		16
	527		3
	536		6
	537		5
	734		4
85801076	1.88.08	01	14
85801079	1.88.08	02	5
85801087	1.88.11		11
85801092	1.95.0	02	12
85801093	1.95.0	02	17
85801097	386		1
	387		3
	388		3
	389		3
	390/01		3
	515/01		1
	516/01		3
	517/01		3
	518/01		3
	519/01		3
	520/01		3
	521		3
85801098	386		4
	387		2
	388		2
	389		2
	390/01		2
	515/01		4

Number	Figure	Sequence	Ref.
85801098	516/01		2
	517/01		2
	518/01		2
	519/01		2
	520/01		2
	521		2
85801110	1.21.5		3
85801153	1.88.11/09A		7
85801161	471	01	7
	473	01	5
	525		22
	527		8
	537		1
85801191	1.88.08	02	13
85801218	1.14.0		6
	1.82.0		11
85801249	1.82.0		2
85801262	1.21.5		22
85801307	901	02	9
	902	02	9
85801308	901	02	22
	902	02	22
85801309	901	02	5
	902	02	5
85801314	901	02	20
	902	02	20
85801319	1.87.8		1
85801324	1.87.8		9
85801371	471	01	2
	472	01	4
	473	01	4
	474	01	4
	525		20
	527		7
	536		3
	537		3
85801397	724/01	02	3
85801452	724/01	02	7
85801470	471	01	1
	472	01	6
	473	01	6
	474	01	6
	525		19
	527		6
	536		2
	537		2
85801486	522/01		14
	525		14
85801488	393		2
	394/01	01	9
85801502	393		1
	394/01	01	1
85801514	393		13
85801515	393		18
85801518	1.88.12/03		22
	1.88.12/03A		20
	393		8
	394/01	01	6
85801562	1.88.12/03A		12
85801564	1.88.12/03A		3
85801566	1.88.12/03A		8
85801585	1.28.0		9
	638	05	7
	639	05	7
85801596	1.88.11/03		11
85801599	721	06	4
	727/01		4
85801621	1.92.3		1
85801622	1.92.3		2
85801623	1.92.3		3
85801624	1.92.6	02	7
85801625	1.92.6	02	7
85801626	1.92.4	03	3
85801628	1.92.4	03	2
85801630	1.92.3		4
85801631	1.92.3		5
85801632	1.92.9	01	2
85801649	1.93.0	01	2
85801649	1.93.0/01	01	2
	1.93.0/02	01	2
85801651	1.93.0	03	4
85801739	1.92.9	01	1
85801799	1.92.6	02	4
85801800	1.92.6	02	5
85801801	1.92.6	02	12
	1.94.0/01		6
	835		5
85801811	1.92.9	01	3
85801812	1.92.9	02	1
85801813	1.92.9	02	1
85801814	1.92.9	02	3
85801815	1.92.9	02	4
85801816	1.92.9	02	7
85801820	1.92.9	03	11
85801821	1.92.9	03	11
85801823	1.92.9	03	14
85801824	1.92.9	03	15
85801825	1.92.9	03	16
85801826	1.92.9	01	9
85801827	1.92.9	02	14
85801828	1.92.9	01	7
85801829	1.92.9	01	10
85801830	1.92.9	03	2
85801831	1.92.9	03	1
85801832	1.92.9	03	3
85801833	1.92.9	03	4
85801834	1.92.9	03	6
85801860	1.95.0	01	7
85801938	1.96.0		1
85801939	1.96.0		3
85801941	1.95.0	02	8
85801953	1.96.7/05		16
	1.96.7/06		14
85801968	1.96.7/05		1
	1.96.7/06		1
85801976	1.95.5	01	13
85801979	1.93.0	03	2
85801991	1.92.9	01	11
	1.93.0/01	02	17
	1.93.0/02	01	3
	1.93.0/03		3
	1.93.5	02	4
	1.93.5/01	02	4
85802018	1.92.9	03	12
85802107	1.91.6		3
85802141	1.93.5	02	15
85802142	1.93.5	02	9
	1.93.5/01	02	9
85802143	1.93.5	02	10
	1.93.5/01	02	10
85802144	1.93.5	02	11
	1.93.5/01	02	11
85802145	1.93.5	02	12
	1.93.5/01	02	7
85802146	1.93.5	02	13
85802205	622		7
85802214	1.82.6	02	13
	1.82.6/01	02	18
85802223	1.92.3		8
	1.92.6	02	9
85802224	1.92.3		9
	1.92.6	02	13
85802225	1.96.7/05		4
	1.96.7/06		4
85802227	1.96.7/05		14
	1.96.7/06		16
	394	01	21
85802234	700	02	1
	725/01	02	1
85802247	725		4
85802250	1.91.4	02	16
	1.91.4/02	02	10
85802307	1.92.6	02	10
85802309	1.96.7/04		1
	1.96.7/05		17
	1.96.7/06		13

Number	Figure	Sequence	Ref.
85802309	1.96.7/07		1
85802310	1.91.4	06	4
	1.91.4/02	06	13
	1.96.7/04		3
	1.96.7/05		13
	1.96.7/06		12
	1.96.7/07		3
85802334	1.92.3		6
	1.92.6	02	8
85802338	1.21.5		13
85802344	1.92.9	03	17
85802345	1.92.9	03	17
85802346	1.92.9	03	21
85802347	1.92.9	03	21
85802351	1.92.9	03	13
85802372	725		9
85802396	1.88.08	01	13
	1.88.08	02	11
85802397	1.88.08	01	12
	1.88.08	02	12
	900	02	7
85802398	1.91.5	02	4
85802403	1.88.11/05A	02	9
85802405	1.88.11/05A	02	5
85802441	1.98.0/01		7
85802457	725		7
85802478	1.91.4	02	1
85802494	1.88.11/05A	01	2
	1.88.12/03		25
	1.88.12/03A		21
	394	01	12
	394	03	7
	721	06	3
	727/01		3
85802509	721	06	1
	727/01		1
85802510	721	06	11
	727/01		11
85802513	1.44.1		12
	1.44.1/01		12
85802515	1.44.1/01		18
85802527	333	04	10
	721	04	10
85802528	333	04	11
	721	04	11
85802529	333	04	9
	721	04	9
85802580	1.82.0		20
85802599	201		2
85802618	1.28.0		11
	1.89.9/01		3
	331	03	8
	638	05	8
	639	05	8
85802620	1.88.11/07A		17
	1.88.11/07C		17
85802640	1.95.5	02	1
85802642	1.82.6/01	02	10
	1.82.6/01	04	6
	1.82.6/01	10	1
85802643	900	04	10
	901	02	34
85802647	394	01	4
85802682	393		1
	394/01	01	2
85802683	1.28.0/ A	02	8
	1.28.0/ B	02	13
85802684	1.28.0/ A	02	7
	1.28.0/ B	02	7
85802724	1.88.11/05A	01	1
85802734	1.88.11/05A	01	5
85802735	1.88.11/05A	01	13
85802736	1.88.11/05A	01	8
85802737	1.88.11/05A	01	16
85802738	1.88.11/05A	01	14
	1.88.12/03		8
	1.88.12/03A		10
	393		19
85802738	394	02	7
	394	03	14
85802741	1.88.11/05A	01	19
85802742	1.88.11/05A	01	21
85802743	1.19.1		5
	1.88.11/03		6
	176		2
	337	01	14
	337	02	12
85802744	900	07	5
85802761	1.95.5	02	5
85802763	1.96.2	01	9
85802776	1.82.6/01	02	11
	724/01	01	10
85802777	1.82.6/01	04	2
85802780	728	02	7
85802799	1.82.6/01	04	7
85802801	1.82.6	05	1
	1.82.6	06	2
	1.82.6/01	05	2
	1.82.6/01	06	1
	724/01	01	21
	724/02		12
85802803	392	01	3
	392	02	5
85802805	337	01	6
	337	02	8
85802820	1.88.11/07A		5
	1.88.11/07C		5
85802838	1.82.6/01	04	4
85802839	1.82.6/01	04	3
85802842	1.88.12/03		19
	1.88.12/03A		17
85802843	393		3
	394/01	01	3
85802847	1.29.1		8
85802872	1.88.08	02	10
85802890	1.82.6	02	9
	1.82.6/01	02	13
	1.82.6/01	03	12
	1.82.6/01	04	13
	1.94.2		6
85802891	1.82.6	10	7
	1.82.6/01	07	9
85802893	900	02	15
85802894	900	02	16
85802895	900	02	14
85802899	900	02	11
85802900	333	04	3
	721	04	3
	900	02	10
85802901	900	02	9
	900	06	4
85802902	900	02	8
85802903	1.21.5		8
	721	06	17
85802909	900	06	5
85802947	1.29.1		1
85802950	1.88.11/08		7
85802954	1.82.6/01	09	13
85802955	1.82.6	04	6
	1.82.6	13	1
	1.82.6/01	04	12
	1.82.6/01	09	2
85802957	900	08	2
85802958	1.82.6/01	02	9
85802960	1.82.6	05	12
	1.82.6/01	06	12
85802961	1.88.11/03		4
85802965	1.88.11/07A		7
	1.88.11/07C		7
85802974	514	02	13
	900	04	11
	901	02	35
85802975	514	02	11
	900	03	7
	900	04	5
	901	02	3

Number	Figure	Sequence	Ref.
85802976	900	04	12
	901	02	30
85802992	1.88.11		4
	1.88.11/01		12
	1.88.11/02	02	7
	471	01	5
	472	01	3
	473	01	3
	474	01	3
	520		5
	522		4
	522/01		17
	525		17
	527		5
	535		4
	536		4
	537		4
	734		2
85802993	1.88.11		13
	1.88.11/01		11
	1.88.11/02	02	6
	471	01	4
	472	01	7
	473	01	7
	474	01	7
	520		3
	522		3
	522/01		18
	525		18
	527		4
	535		5
	536		5
	537		6
	734		3
85803005	514	02	6
	733		12
	900	03	6
	900	04	9
	901	02	19
85803008	1.88.11/03		8
	1.88.11/07A		8
	1.88.11/07C		8
	337	02	10
	900	08	4
85803010	1.88.11/08		5
	337	01	7
	901	04	18
	902	03	18
85803013	1.19.1		12
85803039	1.88.11/09A		7
85803079	1.94.2		5
85803107	393		7
	394/01	01	11
85803124	393		7
	394/01	01	5
85803139	535		3
85803141	535		2
85803192	1.88.08	01	8
85803193	1.88.08	01	6
85803196	1.88.08	01	1
85803197	1.88.08	01	5
85803198	1.88.08	02	6
85803215	1.88.11/05A	01	17
85803224	522/01		19
	525		21
85803230	728	02	1
85803231	728	02	2
85803234	721	03	3
	728	01	6
85803241	728	02	10
85803277	1.88.11/05A	02	16
85803297	1.88.11/05A	02	7
85803312	1.95.0	03	4
	331	04	30
	331	06	9
	331	07	15
	333	02	9
	700	02	2
85803332	1.42.0		10
	721	03	9
85803360	394	03	1
85803364	394	03	3
85803382	394	01	2
85803393	333	03	5
	721	03	8
	728	02	6
	734		7
85803394	990		1
85803395	990		7
85803396	990		2
85803408	700	01	3
	725/01	01	12
85803409	725		8
85803428	724/01	01	11
	724/02		11
85803447	394	03	15
85803477	1.88.12/03		6
85803486	1.82.6	02	1
	724/01	01	5
	724/02		5
	725		3
85803487	724/01	01	6
	724/02		6
85803517	1.88.11/07A		19
	1.88.11/07C		19
	721	06	12
85803540	394	01	8
85803613	900	04	1
85803617	1.88.11/09A		1
85803635	1.88.11/02	02	1
85803643	1.88.11		3
85803647	1.88.11		8
85803782	394/01	01	13
85803783	394/01	01	14
85803786	721	06	10
	727/01		10
85803788	1.96.2	02	6
85803789	1.98.0/01		14
85803884	1.75.2	01	5
85803917	394	02	8
85803959	1.21.5		14
85803960	1.21.5		14
85803986	1.91.4	02	12
	1.91.4/02	02	12
85804026	1.88.11/05A	02	4
85804038	346	02	13
85804041	346	02	3
	347	02	3
85804051	346	03	7
	347	03	3
85804065	646	04	6
85804091	1.98.0/01		5
85804156	789		1
85804171	1.21.5		23
85804275	1.28.0		18
85804276	1.28.0		2
85804323	622		1
85804338	1.98.0/01		4
85804341	1.98.0/01		2
85804344	393		11
85804345	393		12
85804346	302	01	12
	390		2
	700	01	17
	725/01	02	12
85804347	176		1
85804362	1.91.6		5
85804366	1.88.11/05A	02	11
85804375	1.88.11/05A	01	22
	1.88.12/03		4
	1.88.12/03A		5
	393		20
	394	02	3
	394	03	12
85804376	1.88.11/05A	01	20
	1.88.12/03		1

Number	Figure	Sequence	Ref.	Number	Figure	Sequence	Ref.
85804376	1.88.12/03A		1	85805203	1.82.6	07	21
	394	03	11	85805206	1.82.6	07	18
85804441	646	01	12	85805207	1.82.6	07	20
85804447	514	02	12	85805208	1.82.6	07	19
	514	02	9	85805209	1.82.6	07	16
	900	03	10	85805210	1.82.6	07	14
85804493	1.87.8		10	85805211	1.82.6	07	15
85804539	1.88.12/03A		22	85805217	337	02	7
85804540	393		10	85805218	337	01	1
85804541	394/01	01	12	85805220	337	01	3
85804573	1.82.6	16	3		337	02	14
	1.82.6/01	11	3	85805221	337	01	8
85804574	1.82.6	16	8		337	02	13
	1.82.6/01	11	8	85805223	337	02	5
85804602	175		1	85805224	337	01	9
85804617	1.92.4	03	1	85805228	338		1
85804674	1.91.1/01		1	85805232	1.42.0		1
85804675	1.91.1/01		2	85805247	700	01	11
	1.91.4	03	4		725/01	01	11
	1.91.4/02	03	1	85805251	1.95.1		29
85804676	1.96.0		5	85805258	1.82.6	12	11
85804734	1.96.7/04		4		1.82.6	13	12
	1.96.7/07		4		1.88.11/07A		21
85804736	394	03	8		333	03	2
85804750	1.93.0	01	18		700	01	1
	1.93.0/01	01	18	85805262	337	01	5
	1.93.0/02	01	18	85805264	337	01	12
	1.93.5	01	7	85805271	337	02	9
	1.93.5/01	01	4	85805273	337	02	9
85804780	394	01	1	85805277	1.95.0	01	16
85804781	394	01	19	85805283	1.95.0	01	6
85804782	394	01	7	85805285	1.95.0	01	4
85804787	394	01	13	85805295	900	02	22
85804791	394	01	16	85805296	900	02	23
85804794	394	01	15	85805303	1.87.2		6
85804801	394	01	11	85805304	1.87.2		7
85804803	394	02	1	85805305	1.87.2		8
85804847	535		1	85805308	1.93.0/02	01	11
85804848	535		1	85805318	1.42.0		5
85804863	1.93.0	04	2		331	08	4
85804864	1.93.0	04	5		725/01	02	2
85804865	1.93.0	03	1	85805323	1.93.0	01	5
85804866	1.93.0	04	6		1.93.0/01	01	5
85804867	1.93.0	03	1		1.93.0/02	01	5
85804869	1.92.4	01	4		1.93.5	01	5
85804870	1.92.4	02	5		1.93.5/01	01	5
85804878	536/02		8	85805340	700	01	6
85804879	392	01	9		725/01	01	6
	725		10	85805383	1.91.4	06	11
85804947	1.82.6/01	10	10		1.91.4/02	06	11
85805003	346	02	14	85805440	1.95.1		4
85805004	346	02	15	85805441	1.95.1		2
85805005	346	02	11	85805448	1.92.4	01	9
85805006	346	02	10		1.92.4	02	9
	646	01	9		1.92.4	03	6
85805008	646	01	14	85805498	1.88.12/03		7
85805013	646	01	8		394	02	1
85805014	646	01	11	85805502	1.82.6	03	8
85805065	1.92.3		7	85805548	1.95.0	03	7
	1.92.6	02	11	85805567	1.88.11/03		9
85805108	1.88.11/08		1	85805571	1.92.8		1
85805111	1.88.11/08		2	85805591	1.93.0	03	6
85805113	1.88.11/08		4	85805616	1.88.11/05A	01	4
85805115	392	02	1		1.88.12/03		11
85805123	392	02	9		1.88.12/03A		6
85805124	392	01	4	85805619	1.88.11/08		6
	392	02	2	85805648	1.88.08	01	18
85805126	392	02	8	85805655	1.95.0	03	4
85805137	1.88.08	01	15	85805659	1.92.6	02	1
85805142	1.87.2		11	85805663	201		5
85805166	1.82.6	04	8	85805664	201		6
85805167	1.82.6	04	5	85805685	1.75.2	01	3
85805168	1.82.6	04	7	85805686	1.75.2	01	2
85805193	700	01	7	85805690	1.88.12/03A		9
	725/01	01	7	85805692	1.88.12/03A		7
85805195	700	01	8	85805703	1.40.0	01	18
	725/01	01	8	85805704	1.40.0	01	22
85805200	1.96.7/05		8	85805705	1.40.0	01	25

Number	Figure	Sequence	Ref.
85805706	1.40.0	01	14
85805707	1.40.0	01	21
	1.40.0	02	29
85805709	1.40.0	02	28
	402	03	14
85805710	1.40.0	02	30
85805711	1.40.0	02	22
	402	03	3
85805770	1.92.6	01	4
85805771	1.92.6	01	4
85805772	1.95.5	01	9
85805773	1.95.5	01	9
85805774	1.95.5	01	2
85805775	1.95.5	01	2
85805777	1.94.0/01		9
85805803	1.93.0/02	01	6
85805806	1.88.12/03		15
85805807	201		4
85805819	1.93.0	01	14
	1.93.0/01	01	14
	1.93.0/02	01	29
85805824	1.82.6	06	9
85805838	1.82.6	02	6
85805840	1.82.6	06	1
85805854	1.82.6	07	1
85805855	1.82.6	07	2
85805856	1.82.6	07	5
85805857	1.82.6	07	6
85805858	1.82.6	07	3
85805859	1.82.6	07	4
85805860	1.82.6	07	7
85805861	1.82.6	07	8
85805862	725/01	01	5
85805863	725/01	01	4
85805864	700	01	12
	725/01	01	13
85805865	700	01	13
	725/01	01	14
85805869	1.82.6	07	11
85805870	1.82.6	07	9
85805872	1.82.6	07	10
85805909	1.98.0/01		13
85805973	1.40.0	01	7
	402	01	23
85805974	1.40.0	02	31
85805975	1.40.0	02	7
	402	02	7
85805976	1.40.0	02	6
	402	02	6
85805977	1.40.0	02	5
	402	02	5
85805978	1.40.0	02	16
	402	02	16
85805979	1.40.0	02	11
85805980	1.40.0	02	12
85805982	1.40.0	02	15
	402	02	15
85805983	1.40.0	02	14
85805984	1.40.0	02	8
	402	02	20
85805986	1.40.0	02	13
	402	02	13
85805987	1.40.0	02	3
	402	02	3
85805988	402	02	8
85805989	1.40.0	02	4
	402	02	4
85805990	1.40.0	02	18
	402	02	18
85805992	1.40.0	02	19
	402	02	19
85805999	402	06	2
85806003	1.40.0	02	20
	402	03	1
85806004	402	05	1
85806006	402	03	11
85806008	402	03	7
85806009	402	03	5
85806010	1.40.0	02	27
	402	03	6
85806011	402	03	12
85806012	402	03	15
85806014	402	03	16
85806015	402	03	17
85806016	402	03	13
85806019	1.28.0/ A	04	16
	1.28.0/ B	04	16
85806023	1.93.0	01	9
	1.93.0/01	01	9
	1.93.0/02	01	9
	1.96.7/05		9
85806089	1.93.5	01	6
	1.93.5/01	01	6
85806095	1.91.5	01	3
85806098	1.91.5	01	2
85806132	1.91.4	06	18
	1.91.4/02	04	7
85806133	1.91.4	04	2
	1.91.4/02	04	6
85806134	1.91.4	02	17
85806135	1.91.4	02	6
	1.91.4/02	02	6
85806136	1.91.4	06	1
85806154	1.93.0	02	12
85806184	1.91.5	01	5
85806185	1.91.5	01	6
85806245	1.88.12/03		23
85807283	402	06	5
85807284	402	06	6
85807827	1.82.6/01	12	18
85807828	1.82.6/01	12	21
85807829	1.82.6/01	12	22
85807830	1.82.6/01	12	19
85807831	1.82.6/01	12	20
85807832	1.82.6/01	12	15
85807833	1.82.6/01	12	25
85807834	1.82.6/01	12	24
85807855	1.91.1/01		7
85807857	336/01	02	4
	336/01	05	11
	725/01	04	4
85807858	336/01	02	15
	336/01	05	9
	725/01	04	15
85807866	1.91.1/01		3
85807867	522		5
	536		7
	537		9
85807868	520		2
	527		2
85807873	1.88.11/07A		6
	1.88.11/07C		6
85807874	1.88.11/07A		15
	1.88.11/07C		15
85807876	724/01	01	8
	724/02		8
85807914	394	03	15
85807926	394	03	6
85808390	1.95.5/ A	01	2
85808403	336/01	01	11
	725/01	03	11
85808419	1.95.2		5
85808422	1.21.5		15
	1.88.12/03		21
	1.88.12/03A		23
85808460	1.91.4	06	19
	1.91.4/02	06	14
	1.93.0	02	1
	1.93.0/02	01	20
85808472	901	02	11
	902	02	11
85808473	901	02	10
	902	02	10
85811432	386		2
	387		4
	388		4

Number	Figure	Sequence	Ref.	Number	Figure	Sequence	Ref.
85811432	389		4	85812085	1.28.0/ A	03	5
	390/01		4		1.28.0/ B	03	9
	515/01		2	85812086	1.28.0/ A	03	2
	516/01		4		1.28.0/ B	03	1
	517/01		4	85812087	1.28.0/ A	03	1
	518/01		4		1.28.0/ B	03	2
	519/01		4	85812091	1.28.0/ A	03	15
	520/01		4		1.28.0/ B	03	16
	521		4	85812092	1.28.0/ A	04	3
85811440	472	01	5		1.28.0/ B	04	3
	474	01	5	85812094	1.28.0/ A	02	3
	536		1		1.28.0/ B	02	3
85811870	1.82.6	01	2	85812096	1.28.0/ A	01	3
	1.82.6/01	01	2		1.28.0/ B	01	24
85811921	331/ B	01	12	85812113	302	04	12
	331/ B	02	2	85812114	331/ B	04	4
	333/01B	01	13		331/ B	09	4
85811922	331/ B	02	3	85812115	331/ B	05	6
85811923	302	02	3		331/ B	10	6
	331/ B	02	4	85812116	302	04	8
85811933	302	04	9		331/ B	03	4
	331/ B	03	5		331/ B	06	6
	331/ B	04	5		331/ B	08	4
	331/ B	05	4		331/ B	11	6
	331/ B	06	4		724/01	01	18
	331/ B	08	5	85812117	331/ B	03	6
	331/ B	09	5		331/ B	08	6
	331/ B	10	4	85812170	1.82.6/01	03	1
	331/ B	11	4	85812171	1.82.6	03	1
	333/01B	02	5		1.82.6/01	03	2
85811934	302	02	6	85812173	1.82.6	03	2
	331/ B	02	5		331	08	9
	331/ B	03	2	85812174	1.82.6	04	12
	331/ B	04	2	85812202	1.42.0		8
	331/ B	05	2	85812211	333	03	4
	331/ B	06	2	85812212	1.42.0		11
	331/ B	08	2	85812214	721	03	4
	331/ B	09	2	85812252	1.92.6	01	1
	331/ B	10	2	85812253	1.92.6	01	1
	331/ B	11	2	85812254	1.92.4	03	4
	333/01B	02	2	85812255	1.92.4	03	5
85811935	302	04	10	85812260	81.00		1
	331/ B	10	3	85812278	1.88.01	01	4
85811937	331/ B	05	3	85812364	1.92.9	02	17
	331/ B	06	3	85812365	1.92.9	01	14
	331/ B	11	3	85813054	1.40.0	02	26
85811938	302	02	5	85813059	402	04	1
	302	03	4	85813060	402	04	1
	302	04	4	85813079	346	02	2
	331/ B	03	3		347	02	2
	331/ B	04	3	85813100	1.96.2	01	13
	331/ B	05	5	85813103	721	06	2
	331/ B	06	5		727/01		2
	331/ B	07	2	85813104	1.96.2	02	1
	331/ B	08	3	85813110	990		7
	331/ B	09	3	85813113	990		1
	331/ B	10	5	85813133	1.96.2	01	4
	331/ B	11	5	85813134	1.96.2	01	2
	331/ B	12	2	85813135	1.96.2	01	3
	333/01B	02	3	85813136	1.96.2	01	1
85811946	302	02	4	85813137	1.96.2	01	8
	331/ B	02	6	85813138	1.96.2	01	7
85811954	302	02	7	85813186	1.96.2	02	4
85811958	331/ B	01	4		721	06	15
85811959	333/01B	01	4		727/01		15
85811985	536/02		1	85813187	1.96.2	02	5
85811986	536/02		1		721	06	16
85811989	536/02		7		727/01		16
85811990	536/02		6	85813200	1.96.2	02	3
85811991	536/02		6		721	06	14
85811992	536/02		2		727/01		14
85812021	1.96.7/05		5	85813201	1.96.2	02	2
	1.96.7/06		5		721	06	13
85812029	333	03	6		727/01		13
	721	03	1	85813244	1.82.3/01		2
85812080	1.93.0	04	14	85813300	1.28.0/ A	04	7
	1.93.0/01	02	5		1.28.0/ B	04	7
85812081	1.93.0/02	01	15	85813318	1.28.0/ A	04	15

Number	Figure	Sequence	Ref.
85813318	1.28.0/ B	04	15
85813350	1.82.0		19
85813351	1.82.0		17
85813352	1.82.0		6
85813353	1.82.0		22
85813354	1.82.0		18
85813361	337	01	18
85813362	1.82.6	11	4
	1.82.6/01	08	6
85813363	1.82.6	10	4
	1.82.6/01	07	6
	337	02	18
85813377	1.42.0		7
85813378	734		5
85813379	1.82.6	11	5
	1.82.6/01	08	7
	1.88.11/03		15
85813380	1.82.6	10	9
	1.82.6/01	07	11
	1.88.11/03		14
85813407	1.88.01	01	9
85813418	344	02	2
	721	02	2
85813419	344	02	3
	721	02	3
85813469	900	04	8
85815505	392	01	1
	392	02	7
85815506	337	01	2
	337	02	2
85815517	900	04	4
85815536	1.95.1		19
85815537	1.95.1		19
85815549	1.95.1		28
85815550	1.95.1		22
85815552	1.95.1		25
85815554	1.95.1		26
85815555	1.95.1		24
85815556	1.95.1		23
85815567	1.82.6/01	02	12
85815568	1.82.6/01	01	11
85815580	1.82.6/01	02	2
85815581	1.82.6/01	01	10
85815583	437		14
85815607	900	02	25
	900	02	6
85815614	1.42.0		9
85815615	1.42.0		6
85815620	437		2
85815627	900	02	18
85815628	900	02	19
85815667	336/01	02	9
	336/01	05	2
	725/01	04	9
85815668	336/01	02	10
	336/01	05	6
	725/01	04	10
85815677	901	03	2
85815679	901	03	1
85816760	416		2
85816770	1.95.1		17
85816776	1.88.08	02	9
85816793	336/01	05	1
85816804	336/01	01	15
	336/01	05	12
	725/01	03	15
85816813	900	07	2
85816815	901	03	1
85816817	901	03	2
85817001	1.28.0/ A	01	13
	1.28.0/ B	01	16
85817002	1.28.0/ A	03	9
	1.28.0/ B	03	5
85817004	MPARTS	00	8
	1.28.0/ A	03	11
	1.28.0/ B	03	14
85817006	1.28.0/ A	04	21
	1.28.0/ B	04	21
85817007	1.28.0/ A	04	22
	1.28.0/ B	04	22
85817025	336/01	01	13
	725/01	03	13
85817050	835		2
85817051	835		1
85817106	333	05	3
	721	05	3
85817107	333	05	4
	721	05	5
85817108	333	04	5
	721	04	5
85817129	758		1
85817130	758		3
85817131	758		2
85817163	1.28.0/ A	01	12
	1.28.0/ A	04	5
	1.28.0/ B	01	15
	1.28.0/ B	04	5
85817164	1.28.0/ A	01	6
	1.28.0/ B	01	4
85817165	1.28.0/ A	03	10
	1.28.0/ B	03	13
85817169	1.28.0/ A	01	18
	1.28.0/ B	01	20
85817170	646	03	1
85817171	646	03	2
85817172	646	03	3
85817173	646	03	4
85817174	646	03	5
85817175	646	03	6
85817186	646	01	10
85817189	346	02	8
	347	02	8
85817190	1.28.0/ B	01	7
85817201	336/01	04	1
85817210	1.92.5		2
85817211	1.92.5		1
85817212	1.92.5		2
85817213	1.92.5		1
85817226	1.82.6	03	4
	1.82.6/01	03	4
	331	08	8
85817230	1.82.6	15	7
85817231	1.82.6	15	8
85817252	1.89.9/01		5
85817287	1.93.0/03		1
	646	01	5
85817289	346	02	1
	347	02	1
85817295	346	03	9
85817426	851/01	03	2
	851/01	04	2
85817427	851/01	03	24
85817428	851/01	03	20
	856/01	03	20
85817429	851/01	03	7
	856/01	03	7
85817430	851/01	03	12
	856/01	03	12
85817431	851/01	04	3
	856/01	04	3
85817433	851/01	04	18
	856/01	04	18
85817434	851/01	04	19
	856/01	04	19
85817435	851/01	04	22
	856/01	04	22
85817436	851/01	04	12
	856/01	04	12
85817440	851/01	04	6
	856/01	04	6
85817441	851/01	04	11
	856/01	04	11
85817442	851/01	03	10
	856/01	03	10
85817443	851/01	04	14
	856/01	04	14

Number	Figure	Sequence	Ref.	Number	Figure	Sequence	Ref.
85817444	851/01	03	4	85817490	855/01	03	10
	856/01	03	4	85817492	855/01	03	16
85817445	851/01	03	6	85817493	855/01	03	15
	856/01	03	6	85817494	855/01	03	4
85817446	851/01	03	15	85817496	855/01	03	12
	856/01	03	15	85817512	855/01	04	15
85817447	851/01	03	19	85817513	855/01	04	14
	856/01	03	19	85817523	855/01	04	17
85817448	851/01	03	17	85817529	855/01	03	2
	856/01	03	17		855/01	04	2
85817449	851/01	03	18		855/01	05	2
	856/01	03	18	85817531	336/01	01	16
85817450	851/01	03	3		336/01	05	7
	856/01	03	3		725/01	02	21
85817451	851/01	04	17		725/01	03	16
	856/01	04	17	85817532	855/01	01	8
85817453	851/01	01	9	85817534	855/01	01	36
	855/01	01	9	85817536	855/01	02	15
	856/01	01	9	85817556	856/01	03	2
85817456	851/01	02	16		856/01	04	2
	855/01	02	16	85817558	856/01	03	24
	856/01	02	4	85817559	856/01	03	22
85817458	851/01	02	7	85817560	856/01	03	23
	851/01	03	21	85817561	856/01	03	21
	855/01	02	7	85817562	856/01	01	2
	855/01	03	5	85817564	856/01	01	4
	856/01	02	7	85817596	1.82.6/01	01	12
	856/01	03	25		1.82.6/01	02	7
85817459	851/01	01	12	85817622	1.88.11/05A	02	17
	855/01	01	12	85817623	1.88.11/05A	02	18
	856/01	01	12	85817629	724/01	01	16
85817460	851/01	01	25		724/02		16
	855/01	01	25	85817633	724/01	01	15
	856/01	01	25		724/02		15
85817463	851/01	02	3	85817634	724/01	01	13
	855/01	02	3		724/02		20
85817464	851/01	02	4	85817635	724/01	01	14
	855/01	02	4		724/02		19
85817465	851/01	02	15	85817669	331/ B	02	8
	856/01	02	5	85817672	1.75.2	02	5
85817466	851/01	01	15	85817674	698		1
	855/01	01	15	85817685	1.93.7		3
	856/01	01	15	85817686	1.93.7		4
85817469	851/01	01	21	85817697	402	06	9
	855/01	01	21	85817698	402	03	4
	856/01	01	21	85818818	1.91.4	05	3
85817470	851/01	01	18		1.91.4/02	05	3
	855/01	01	18	85818819	1.91.4	05	4
	856/01	01	18		1.91.4/02	05	4
85817471	856/01	01	22	85818820	1.91.4	04	1
85817474	1.82.6	15	9	85818823	1.91.4	05	14
85817476	851/01	01	24	85818826	787/01		3
	855/01	01	24		788/01		3
	856/01	01	24	85818827	787		4
85817477	851/01	01	29		787/01		4
	855/01	01	29		788		4
	856/01	01	29		788/01		4
85817478	851/01	01	13	85818828	787		6
	855/01	01	32		787/01		6
	856/01	01	32		788		6
85817479	851/01	01	31		788/01		6
	855/01	01	31	85818895	1.91.4	05	5
	856/01	01	31	85818909	1.82.6	04	4
85817481	851/01	01	5	85818916	900	02	24
	855/01	01	5	85818940	787		3
	856/01	01	5		788		3
85817482	851/01	02	18	85818943	333	04	6
	855/01	02	18	85819013	1.44.1		18
	855/01	03	18	85819016	1.93.0/02	01	30
	856/01	02	2	85819017	1.92.9	01	15
85817484	851/01	02	6	85819018	1.92.9	01	4
	855/01	02	6	85819040	302	03	9
	856/01	02	6		302	04	13
85817485	851/01	01	8	85819041	1.95.5	02	2
	856/01	01	8	85819058	1.82.6	15	5
85817486	855/01	03	7	85819059	1.82.6	15	6
85817488	855/01	03	25	85819060	1.82.6	13	8
85817489	855/01	03	9	85819061	1.82.6	13	9

Number	Figure	Sequence	Ref.	Number	Figure	Sequence	Ref.
85819062	1.82.6	14	6	85819378	333/01B	02	7
85819063	1.82.6	14	7	85819407	1.93.5/01	01	1
85819064	1.82.6	14	5	85819451	346	05	2
85819065	1.82.6	14	8	85819452	346	05	1
85819072	699		1		347	05	1
85819074	338		3	85819453	346	05	11
85819142	1.91.4	05	7	85819454	1.93.5	01	3
85819144	1.91.4/02	04	5		346	05	7
85819148	302	02	10	85819467	1.88.01	02	1
	302	03	2	85819468	1.88.01	01	10
	302	04	2	85819469	1.88.01	02	2
	331/ B	03	7	85819471	1.88.01	02	3
	331/ B	04	6	85819477	1.88.01	01	12
	331/ B	05	7	85819478	1.88.01	01	13
	331/ B	06	7	85819479	1.88.01	01	14
	331/ B	07	3	85819480	1.88.01	01	17
	331/ B	08	7	85819481	1.88.01	01	15
	331/ B	09	6	85819482	1.88.01	01	5
	331/ B	10	7	85819488	1.88.01	01	8
	331/ B	11	7	85819567	1.93.5	01	2
	331/ B	12	3	85819568	1.91.4	01	3
	333/01B	02	6	85819569	1.91.6		1
85819177	1.95.0	03	1	85819571	700	01	5
85819179	1.88.11/05A	02	12	85819572	700	01	4
85819184	346	01	9	85819586	1.91.4/02	04	2
	347	01	8	85819588	1.91.4/02	04	2
	646	04	5	85819592	1.93.5	01	11
85819185	646	04	16	85819618	724/01	02	10
85819186	1.38.1		8	85819619	724/01	02	1
85819188	1.91.7/02		13	85819620	725		2
	793		2	85819621	725		1
	793/01		2	85819649	336/01	01	1
85819189	1.91.7/02		15	85819684	344	01	1
	793		4	85819721	344	01	5
	793/01		4		721	01	5
85819190	1.91.7/01		3	85819722	336/01	03	13
	1.91.7/02		3		725/01	05	13
85819191	1.91.7/01		9	85819724	1.91.4/02	01	1
	1.91.7/02		9	85819725	1.91.4/02	01	1
85819192	1.91.7/02		16	85819727	1.82.6	13	10
	794		2		1.82.6/01	09	4
	794/01		2	85819728	1.82.6	13	9
85819193	1.91.4	06	6		1.82.6/01	09	9
	1.91.4/02	06	12	85819729	1.82.6	13	11
85819194	1.91.7/01		11		1.82.6/01	09	7
	1.91.7/02		11	85819730	1.82.6	13	8
85819195	1.91.4	06	16		1.82.6/01	09	8
	1.91.4/02	06	22	85819760	835		3
85819196	1.91.7/01		14	85819763	835		3
	1.91.7/02		10	85819765	796		1
85819197	1.91.7/01		10	85819766	796		5
	1.91.7/02		8	85819813	851/01	02	12
85819198	1.91.7/01		12		855/01	02	19
	1.91.7/02		14		856/01	02	15
85819199	1.91.7/01		13	85819814	855/01	05	8
	1.91.7/02		12	85819815	855/01	03	14
85819200	1.91.7/01		2	85819826	1.91.5	01	7
	1.91.7/02		2	85819827	1.91.5	01	1
	793		1	85819914	1.95.0	02	7
	793/01		1	85819915	1.95.0	02	19
	794		1	85819945	336/01	03	1
	794/01		1		344	01	13
85819237	416		1		725/01	05	1
85819285	1.93.0	01	13	85820008	471	02	4
	1.93.0/01	01	13		472	02	4
85819287	1.93.0	02	4		473	02	23
85819289	1.93.5	01	1		474	02	23
85819291	1.93.5	01	1	85820009	471	02	5
85819378	302	03	3		472	02	5
	302	04	3		473	02	22
	331/ B	03	8		474	02	22
	331/ B	04	7	85820011	471	02	7
	331/ B	05	8		472	02	7
	331/ B	06	8		473	02	38
	331/ B	07	4		474	02	38
	331/ B	08	8	85820012	471	02	8
	331/ B	10	8		472	02	8
	331/ B	12	4		473	02	39

Number	Figure	Sequence	Ref.	Number	Figure	Sequence	Ref.
85820012	474	02	39	85820160	1.88.11/07C		21
85820013	471	02	9	85820167	1.89.9/01		1
	472	02	9	85820170	1.89.9/01		8
	473	02	19	85820172	1.89.9/01		6
	474	02	19	85820237	1.91.5	02	10
85820014	471	02	10	85820282	1.95.5	02	6
	472	02	10	85820283	337	01	21
	473	02	12		337	02	21
	474	02	12	85820285	337	01	22
85820015	471	02	11		337	02	22
	472	02	11	85820819	471	01	6
	473	02	20		472	01	2
	474	02	20		473	01	2
85820016	471	02	12		474	01	2
	472	02	12	85820836	392	01	7
	473	02	16	85820844	391		1
	474	02	16	85820908	1.38.1		6
85820017	471	02	13	85820909	1.28.0/ A	06	4
	472	02	13		1.28.0/ B	06	4
	473	02	17		1.38.1		10
	474	02	17	85820912	392	01	2
85820018	471	02	14	85820913	392	02	6
	472	02	14	85820914	1.38.1		9
	473	02	3	85821126	1.88.11/07A		20
	474	02	3		1.88.11/07C		20
85820020	471	02	16	85821127	391		2
	472	02	16	85821131	646	01	13
	473	02	37	85821153	1.91.5	02	1
	474	02	37	85821172	1.95.1		27
85820026	471	02	22	85821173	1.95.1		26
	472	02	22	85821235	331/ B	02	10
	473	02	8	85821236	302	02	9
	474	02	8		331/ B	02	11
85820027	471	02	23	85821268	1.88.01	01	1
	472	02	23	85821270	1.88.01	01	18
	473	02	35	85821271	1.88.01	01	19
	474	02	35	85821273	1.88.01	02	7
85820030	471	02	24	85821277	1.88.01	02	9
	472	02	24	85821278	1.88.01	02	4
	473	02	41	85821279	1.88.01	02	10
	474	02	41	85821316	1.96.2	01	10
85820031	471	02	25	85821326	1.91.4/02	06	9
	472	02	25	85821333	1.91.5	02	11
	473	02	6	85821334	1.91.5	02	13
	474	02	6	85821335	1.91.5	02	3
85820035	471	02	28	85821336	1.91.5	02	9
	472	02	28	85821337	1.91.5	02	2
	473	02	4	85821338	1.91.5	02	8
	474	02	4	85821410	1.91.4	03	6
85820052	471/01		11		1.91.4/02	03	6
85820054	471/01		10	85821418	851/01	01	26
85820056	471/01		12		855/01	01	26
85820064	473	02	32		856/01	01	26
	474	02	32	85821419	851/01	01	23
85820068	473	02	9		855/01	01	23
	474	02	9		856/01	01	23
85820069	473	02	33	85821452	1.28.0/ A	05	15
	474	02	33		1.28.0/ B	05	15
85820105	1.95.5	01	8	85821454	1.28.0/ A	05	16
85820107	1.98.1	09	1		1.28.0/ B	05	16
85820109	1.82.6	13	10	85821514	331	05	7
85820128	331/ B	02	7	85821515	331	05	11
85820129	331/ B	02	9	85821516	331	05	10
85820130	302	03	5	85821520	331	05	12
	302	04	5	85821534	331	09	9
85820136	879		1	85821536	331	04	32
85820138	1.93.4		7	85821537	331	09	6
	284		2		646	04	19
	879		2	85821788	386		5
85820139	1.93.4		8		387		5
	284		1		388		5
85820141	1.96.7/05		12		389		5
85820154	1.38.1		5		390/01		5
85820156	1.75.2	02	4		515/01		5
85820157	1.38.1		2		516/01		5
85820159	1.88.11/07A		22		517/01		5
	1.88.11/07C		22		518/01		5
85820160	1.88.11/07A		23		519/01		5

Number	Figure	Sequence	Ref.	Number	Figure	Sequence	Ref.
85821788	520/01		5	85825254	1.91.4/02	05	6
	521		5		1.91.4/02	06	1
85821916	993	02	4		787		1
85821917	993	01	2		787/01		1
85821918	993	01	4		788		1
85821919	993	01	5		788/01		1
85821920	1.98.0/01		9	85825285	733		7
85821921	993	01	6	85825330	1.91.4	01	2
85821922	993	02	1	85825355	1.82.6	05	7
85821923	1.98.0/01		6		1.82.6/01	06	7
85821924	993	01	1	85825392	1.14.0		2
85821925	993	01	3	85825440	131		1
85821926	1.98.0/01		1	85825465	1.88.12/03		12
85821927	993	02	6	85825468	302	01	2
85821946	993	02	2		302	02	1
85824053	331	02	14		700	03	5
85824054	331	02	15	85825469	302	01	4
85824059	331	02	16		302	04	1
85824067	331	05	1		700	03	7
85824080	331	05	6	85825471	302	04	6
85824081	331	05	8	85825472	302	02	2
85824114	1.95.0	02	2	85825473	333/01B	01	15
85824187	1.29.1		7	85825474	700	03	10
85824196	1.82.3/01		4	85825475	302	01	6
85824204	851/01	02	19	85825477	331/ B	02	13
	855/01	02	12	85825506	1.28.0/ A	06	5
	856/01	02	12		1.28.0/ B	01	23
85824211	437		6		1.28.0/ B	06	5
85824227	1.88.01	01	20		1.28.0/ B	08	20
85824266	733		4	85826020	MPARTS	00	8
85824268	733		9	85826080	1.95.5	02	4
85824281	302	04	11	85826093	1.82.6	02	6
	331/ B	03	9	85826099	1.95.1		29
	331/ B	05	9	85826100	331	08	5
	331/ B	06	9		700	02	5
	331/ B	07	5		725/01	02	5
	331/ B	08	9	85826123	724/01	01	9
	331/ B	10	9		724/02		9
	331/ B	11	9	85826131	803		13
	331/ B	12	5	85826132	803		3
	333/01B	02	8	85826133	803		4
85824282	302	03	8	85826134	803		4
	331/ B	04	8	85826208	321		1
	331/ B	09	8	85826250	331/ B	01	11
85824283	302	03	10		333/01B	01	12
	302	04	14	85826260	990		10
85824308	392	01	10	85826274	338		2
85824339	1.40.0	01	1	85826275	337	02	19
85824345	402	02	9	85826276	337	01	19
85824346	402	01	8	85826339	331/ B	01	7
	402	04	6		331/ B	09	1
85824347	1.40.0	01	16		333/01B	01	8
85824352	1.40.0	02	9	85826340	331/ B	01	10
85824356	548		1		331/ B	12	1
85824381	1.14.6		11		333/01B	01	11
85824393	1.93.5	02	5	85826344	331/ B	03	10
85824397	734		1		331/ B	04	9
85824434	855/01	03	13		331/ B	05	10
85824436	855/01	03	8		331/ B	06	10
85824450	1.91.5	02	12		331/ B	07	6
85824463	1.88.12/03		10		331/ B	08	10
85824469	1.40.0	01	20		331/ B	09	9
85825129	1.91.4/02	06	4		331/ B	10	10
85825136	1.91.4/02	06	19		331/ B	11	10
85825154	1.82.0		29		331/ B	12	6
85825155	1.82.0		30		333/01B	02	9
85825158	1.14.0		7	85826345	331/ B	09	7
85825169	1.82.6	05	3		331/ B	11	8
	1.82.6/01	06	3	85826360	331/ B	01	10
85825177	473	02	15		331/ B	07	1
	474	02	15	85826361	638	04	14
85825188	302	01	1		639	04	15
85825191	1.93.0	01	8	85826382	1.82.0		31
	1.93.0/01	01	8	85826383	1.82.0		32
	1.93.0/02	01	8	85826901	331/ B	01	6
85825198	1.91.4	02	14		331/ B	08	1
	1.91.4/02	02	1		333/01B	01	7
85825254	1.91.4	05	6	85826903	331/ B	01	8

Number	Figure	Sequence	Ref.
85826903	331/ B	10	1
	333/01B	01	9
85826906	321		7
85826924	302	01	5
	700	03	9
85826930	331/ B	01	6
	331/ B	03	1
85826931	331/ B	01	7
	331/ B	04	1
85826932	331/ B	01	8
	331/ B	05	1
85826943	1.29.1		2
85826964	1.75.2	02	14
85826986	1.82.6/01	05	1
85826987	724/01	01	20
	724/02		13
85827041	1.82.6	01	4
	1.82.6/01	01	4
85827067	1.40.0	02	23
	402	03	8
85827068	402	05	10
85827070	402	06	4
85827072	321		3
85827076	331	07	9
85827077	331	07	4
85827078	331	07	11
85827080	331	07	10
85827082	331	07	6
85827084	331	07	1
85827085	331	07	2
85827086	331	07	3
85827087	331	07	5
85827088	331	06	8
	333	02	8
85827089	331	06	4
	333	02	4
85827090	331	06	7
	333	02	7
85827091	331	06	3
	333	02	3
85827092	331	06	5
	333	02	5
85827093	331	06	1
	333	02	1
85827094	331	06	2
	333	02	2
85827095	331	06	6
	333	02	6
85827097	333	02	12
85827100	1.82.6/01	02	15
	1.82.6/01	12	1
85827101	1.82.6/01	12	13
	1.82.6/01	14	13
85827102	1.82.6/01	12	11
	1.82.6/01	13	13
85827128	1.88.11/06A		18
85827416	321		12
85827466	331	07	8
85827467	331	07	7
85827471	333/ A		18
85827472	331/ A		1
85827475	331	08	3
85827476	331	08	1
85827531	331	07	17
85827532	331	07	18
85827533	331	07	16
85827534	331	07	19
85827548	1.91.1/01		6
	1.93.0	01	17
	1.93.0/01	01	17
	1.93.0/02	01	17
85827552	733		3
85827553	733		5
85827725	402	01	1
85827726	402	01	1
85827738	402	01	16
85827739	402	02	2
85827740	402	02	1
85827741	402	06	1
85827764	1.28.0/ A	04	1
	1.28.0/ B	04	1
85827769	1.28.0/ A	01	1
85827770	1.28.0/ A	01	2
85827771	1.28.0/ A	05	7
	1.28.0/ B	05	7
85827772	1.28.0/ A	05	8
	1.28.0/ B	05	8
85827773	1.28.0/ A	05	13
	1.28.0/ B	05	13
85827774	1.28.0/ A	05	14
	1.28.0/ B	05	14
85827776	1.28.0/ A	04	23
	1.28.0/ B	04	23
85827777	1.28.0/ A	04	20
	1.28.0/ B	04	20
85827779	1.28.0/ A	04	8
	1.28.0/ B	04	8
85827782	1.28.0/ B	08	5
85827783	1.28.0/ B	01	2
85827784	1.28.0/ B	01	3
85827787	1.88.11/05A	01	3
85827797	1.28.0/ A	04	6
	1.28.0/ B	04	6
85827798	1.28.0/ A	04	2
	1.28.0/ B	04	2
85827799	1.28.0/ A	04	24
	1.28.0/ B	04	24
85827803	1.28.0/ A	06	9
	1.28.0/ B	06	22
85827817	1.93.0/02	01	19
85827820	394	01	17
85827822	416		5
85827823	1.82.6	04	5
85827824	1.82.6	05	2
	1.82.6/01	06	2
85827830	638	01	5
	639	01	16
85827831	638	01	6
	639	01	17
85827832	1.95.1		1
85827833	1.95.1		8
85827834	1.95.1		32
85827836	1.92.9	03	10
85827850	1.96.2	01	12
85827853	337	02	1
85827861	728	02	11
85827918	851/01	01	10
	855/01	01	10
	856/01	01	10
85827920	855/01	04	3
85827991	331/ A		3
85827992	331/ A		15
	333/ A		15
85827993	331/ A		11
	333/ A		11
	700	01	24
	725/01	02	20
85827994	331/ A		9
	333/ A		9
85827995	331/ A		7
	333/ A		7
85827996	331/ A		6
	333/ A		6
85827997	331/ A		13
	333/ A		13
85827998	331/ A		8
	333/ A		8
85827999	331/ A		4
	333/ A		4
85828000	331/ A		12
	333/ A		12
	700	01	23
	725/01	02	19
85828001	331/ A		14
	333/ A		14
	700	01	25

Number	Figure	Sequence	Ref.
85828001	725/01	02	23
85828002	331/ A		5
	333/ A		5
85828003	331/ A		16
	333/ A		16
85828004	333/ A		3
85828005	331/ A		17
	333/ A		17
85828013	331/ A		18
85828015	333/ A		1
85828017	1.82.0		36
85828069	993	01	1
85828070	993	01	1
85828080	993	02	1
85828081	993	02	1
85828082	993	02	2
85828083	993	02	2
85828084	993	01	6
85828085	993	01	6
85828086	993	01	4
85828087	993	01	4
85828088	993	01	2
85828089	993	01	2
85828090	993	01	5
85828091	993	01	5
85828094	993	02	4
85828095	993	02	4
85828097	993	02	6
85828098	993	02	6
85828107	1.82.0		33
85828196	851/01	01	9
	855/01	01	9
	856/01	01	9
85828211	700	02	6
	725/01	02	6
85828213	1.96.2/01		7
85828216	331	09	1
85828252	1.96.0		2
85828254	1.88.11		9
86021837	1.95.1		12
8603092	995		22
8603095	995		22
8605735	1.14.6		2
86500514	1.98.0/01		3
86505999	1.44.0/ B	01	8
86507337	1.88.11/05A	02	6
86511208	1.88.11/07A		25
	391		9
86511646	1.44.0/ B	01	14
86511845	0.36.0		2
	636	07	2
	638	07	2
	639	07	2
86536749	1.44.0/ B	01	5
86547781	993	02	3
86552793	1.44.0/ B	01	7
86552794	1.44.0/ B	01	7
86576091	1.44.0/ B	02	33
86584272	1.44.0/ B	02	17
86584273	1.44.0/ B	02	11
86592700	1.83.0	02	2
86597537	1.44.0/ B	01	27
86619908	995		7
86624194	638	03	4
	639	03	4
86625073	331	04	28
86625128	331/ C	01	12
	331/ C	02	13
86625199	331	04	13
86632588	1.44.0/ B	01	30
	1.44.0/ B	02	31
86642312	902	03	22
86982435	901	04	14
	902	03	14
86982442	900	11	3
86982444	514	04	2
	900	09	11
	900	10	2
86982960	638	03	3
	639	03	3
86982962	638	03	8
	639	03	8
86983163	638	03	9
	639	03	9
86984549	331	05	9
86985587	1.14.0		9
86988086	095		1
	096		1
	331	09	7
86989616	331	05	5
86989733	MPARTS	00	4
	1.82.6	06	4
	1.82.6/01	05	4
86990460	331	03	1
86990712	1.28.0		3
86990713	1.28.0		4
86992395	0.36.0		1
	636	07	1
	638	07	1
	639	07	1
86993546	1.28.0/ A	01	22
	1.28.0/ B	01	1
86994498	638	03	2
	639	03	2
86999310	331	05	14
87000312	331/ C	01	16
	331/ C	02	17
	333/ C	01	16
	333/ C	02	16
87015745	1.83.0	01	11
87016893	638	02	10
	638	05	10
	639	02	10
	639	05	10
87017743	1.39.8		8
87017744	1.39.8		7
87019767	1.28.0		16
	1.28.0/ A	01	8
	1.28.0/ B	01	26
87021704	1.28.0		6
87022296	331	04	16
87030508	1.15.0	01	17
87037944	331/ C	01	4
	331/ C	02	4
	333/ C	01	4
	333/ C	02	4
87302151	1.21.5		26
87302508	638	01	8
	639	01	8
87302554	995		8
87302607	336/01	03	14
87302608	336/01	03	3
	725/01	05	3
87302609	336/01	03	2
	725/01	05	2
87302611	336/01	03	12
	725/01	05	12
87302705	1.95.0	02	20
87302715	803		11
87302760	1.44.0/ B	02	7
87302761	1.44.0/ B	02	8
87302831	803		8
87302958	1.88.01	01	11
87302959	1.88.01	02	6
87302960	1.88.01	02	5
87302961	1.88.01	02	12
87302965	1.88.01	01	16
87302967	1.88.01	02	8
87303261	1.91.3		1
87303400	700	02	9
87303401	700	02	8
87303780	1.87.8		1
87303909	1.88.11/03		12
87303910	337	01	13
	901	04	6
	902	03	6

Number	Figure	Sequence	Ref.
87303912	1.88.11/07A		9
	1.88.11/07C		9
	337	02	11
	900	07	6
87304344	1.44.0/ B	02	1
87304345	1.44.0/ B	02	1
87304810	1.92.6	03	1
87304842	1.88.12/03		24
87304910	646	02	11
87305111	700	01	15
	700	03	1
87305209	700	01	18
	725/01	02	13
87305211	700	02	7
87305413	331	04	26
	993	02	5
87305604	331	09	3
87305611	331	09	2
87305713	1.44.0/ B	02	5
87305953	331	04	26
87306186	333	02	13
87306929	402	06	3
87306930	402	06	7
87306932	402	01	6
87306933	402	06	8
87306934	402	02	21
87307656	331	04	11
87307807	0.06.3/01	02	3
87308018	1.44.0/ B	02	4
87308614	471	02	2
	472	02	2
	473	02	24
	474	02	24
87308749	331/ B	02	12
87308838	331/ C	01	8
	331/ C	02	8
	333/ C	01	8
	333/ C	02	8
87308839	331/ C	01	10
	331/ C	02	10
	333/ C	01	10
	333/ C	02	10
87309923	331	04	1
87309924	331	04	2
87310085	331	04	17
87310098	331	04	22
87310155	638	02	7
	639	02	7
87310285	1.88.08	01	16
87310286	471	02	15
	472	02	15
	473	02	36
	474	02	36
87310354	471	02	27
	472	02	27
	473	02	2
	474	02	2
87310367	473	02	13
	474	02	13
87310368	473	02	11
	474	02	11
87310369	473	02	14
	474	02	14
87310370	473	02	34
	474	02	34
87310372	473	02	10
	474	02	10
87310373	473	02	43
	474	02	43
87310374	473	02	44
	474	02	44
87310375	473	02	26
	474	02	26
87310434	471	02	26
	472	02	26
	473	02	1
	474	02	1
87310951	724/01	02	5
87310952	724/01	02	9
87310961	900	02	21
87311102	302	01	7
	390		3
87311103	302	01	7
	390		3
87311154	1.38.1		7
87311302	302	01	13
87311303	302	01	14
87311306	302	01	13
87311363	700	01	21
	725/01	02	17
87311836	302	01	16
87311838	302	01	16
87312027	1.88.12/03A		15
87312328	471	02	3
	472	02	3
	473	02	21
	474	02	21
87312330	471	02	6
	472	02	6
	473	02	40
	474	02	40
87312331	471	02	17
	472	02	17
	473	02	5
	474	02	5
87312333	471	02	21
	472	02	21
	473	02	25
	474	02	25
87312335	471	02	31
	472	02	31
	473	02	30
	474	02	30
87312340	471	02	18
	472	02	18
	473	02	28
	474	02	28
87312342	471	02	19
	472	02	19
	473	02	27
	474	02	27
87312343	471	02	20
	472	02	20
	473	02	31
	474	02	31
87313720	901	04	13
87313722	901	04	8
87313729	855/01	05	3
87313813	1.92.4	02	2
87313966	1.44.0/ B	01	19
	1.44.0/ B	02	2
87314076	1.39.8		3
	638	01	9
	639	01	9
87314211	1.44.0/ B	01	4
	1.44.0/ B	02	32
87314277	902	03	13
87314278	902	03	8
87314323	346	01	1
	347	01	1
87314330	346	01	7
	347	01	7
87314350	346	01	8
87314351	346	01	12
87314353	346	01	17
87314355	346	01	20
	347	01	5
87314357	346	01	18
87314367	MPARTS	00	7
	346	01	10
	347	01	10
87314369	346	02	5
87314518	346	01	16
87314520	346	01	14
87314524	346	02	12
87314526	346	03	3

Number	Figure	Sequence	Ref.
87314527	346	02	4
	347	02	4
87314554	346	03	6
	347	03	6
87314566	646	04	13
87314726	346	03	1
	347	03	1
87314729	346	03	10
	347	03	7
87314730	346	01	5
87314743	346	04	1
	347	04	1
87314747	346	04	2
	347	04	2
87314749	346	04	3
	347	04	3
87314750	346	04	4
87314751	346	04	14
87314753	346	04	6
	347	04	6
87314767	346	05	17
87314769	346	05	18
	347	05	3
	347	05	6
87314771	346	05	3
87314772	346	05	4
87314773	346	05	5
87314946	346	05	8
87314947	346	05	9
87314948	346	05	10
87315029	346	01	11
	347	01	13
87315236	646	04	11
87315239	646	04	12
87315241	646	04	14
87315252	646	04	4
87315364	646	01	1
87315368	646	01	2
87315371	646	01	3
87315381	646	01	4
87315438	1.82.6	06	3
	1.82.6/01	05	3
87315441	646	02	13
87315446	646	02	14
87315457	646	02	15
87315459	646	02	16
87315460	646	02	17
87315521	1.88.11/02	01	1
87315525	1.88.11/01		1
87315528	1.88.11/06A		1
87315529	1.88.11/09	02	1
	1.88.11/09A		8
87315628	1.87.2		13
87315641	1.87.2		1
87315643	1.87.2		2
87316091	725/01	02	9
87316092	725/01	02	7
87316096	725/01	02	8
87316439	347	01	9
87316442	347	04	5
87316443	347	04	4
87316861	391		3
87318746	1.91.4/02	03	2
87318747	346	03	4
	347	03	4
87318749	1.91.4	03	2
87318750	346	03	5
	347	03	5
87318763	347	06	2
87319018	347	06	1
87319437	346	05	15
	347	05	4
87319443	346	05	21
	347	05	8
87319445	725/01	03	21
87319448	346	05	6
87319727	1.94.0/01		7
87319744	394	01	17
87319754	1.96.7/06		9
87319785	1.93.0	01	6
	1.93.0/01	01	6
87319801	1.93.0	04	1
87319803	1.93.0	04	12
	1.93.0/01	02	12
87323749	1.93.0	04	16
	1.93.0/01	02	8
87324469	646	01	16
87324490	1.95.2		1
87324496	1.95.2		6
87324535	1.95.2		1
87324864	650		1
87324991	1.94.2		1
87326170	1.44.0/ B	02	19
87326256	725/01	03	1
87326257	725/01	06	1
87326258	725/01	04	17
	725/01	06	11
87327044	725/01	06	2
87327046	725/01	06	7
87327049	725/01	06	4
87327052	725/01	06	5
87327053	725/01	06	3
87327057	725/01	06	6
87327076	336/01	01	10
	725/01	03	22
87327251	901	04	2
87327252	902	03	2
87327259	901	04	1
87327264	902	03	1
87327632	725/01	04	16
87331094	721	01	1
	727/01		12
87331276	721	01	15
87334836	1.44.0/ B	01	29
	1.44.0/ B	02	30
87334860	346	04	8
	347	04	8
87334861	346	04	9
	347	04	9
87340008	638	06	5
	639	06	6
87341088	333/01B	02	4
87342131	901	04	3
	902	03	3
87345955	1.39.8		6
87346213	1.98.1	09	11
87346382	1.98.1	09	11
87346911	700	03	8
87348000	1.44.0/ B	01	16
87348002	803		5
87348165	1.89.9/01		4
87349055	1.94.0/01		1
87349058	1.94.0/01		1
87349851	331	04	27
87350247	1.94.0/01		4
87350477	1.82.6	12	1
87351460	1.82.6	12	1
87353314	392	02	3
87353316	392	01	5
87353724	1.92.4	01	11
87353741	1.14.0		12
	1.82.0		38
87354650	1.92.2		1
87354652	1.92.2		2
87355226	1.14.0		1
87356499	1.82.6	12	5
87356501	1.82.6	12	6
87357715	724/ A		7
	724/01	01	2
	724/02		2
	728	03	7
87358140	346	01	4
	347	01	4
87358141	346	01	13
	347	01	11
87358142	346	03	11

Number	Figure	Sequence	Ref.
87358193	728	03	2
87358194	724/ A		4
	728	03	4
87358196	728	03	3
87358201	724/ A		3
87358348	346	03	2
	346	04	7
	347	04	7
87358349	346	04	10
	347	04	10
87358808	437		7
87358815	437		1
87358817	437		8
87358818	437		9
87360424	1.95.5	01	1
	1.95.5/ A	01	1
87361461	1.82.6	12	7
87362065	346	05	13
	347	05	2
87362068	346	01	3
	346	05	12
	347	05	11
87362094	1.93.0	03	5
87362098	1.93.0	03	5
87362336	1.82.3/01		1
87363478	1.88.08	01	9
87364220	851/01	02	17
	855/01	02	17
	856/01	02	3
87364221	851/01	02	17
	855/01	02	17
	856/01	02	3
87368320	638	05	2
	639	05	2
87371811	1.82.6	12	1
87371906	1.91.4	04	5
	1.91.4/02	04	9
87371907	1.91.4	04	4
	1.91.4/02	04	10
87376137	1.82.6	12	10
87376297	1.83.0	06	1
87381987	900	11	10
87381990	900	11	6
87382007	514	01	4
	900	01	4
	900	11	18
	901	01	4
	902	01	4
87382083	514	01	3
	514	04	1
	902	01	3
87382086	514	04	19
87382089	514	04	15
	900	10	15
87382092	514	04	21
87382109	700	01	19
87382112	700	01	19
	725/01	02	11
87382188	514	04	4
87382189	514	04	10
87382190	514	04	3
87382191	514	04	11
87385465	1.83.0	05	1
87386551	437		10
87387139	1.98.0/01		8
87390511	1.88.11/03		3
	1.88.11/07A		16
	1.88.11/07C		16
87390514	1.88.11/03		2
	1.88.11/07A		10
	1.88.11/07C		10
87390530	724/01	01	17
	724/02		17
87390531	724/01	01	12
	724/02		10
87390534	1.88.11/07A		14
	1.88.11/07C		14
87392509	901	02	17
87392509	902	02	17
87392513	901	02	16
	902	02	27
87392516	901	02	27
	902	02	16
87395481	471	02	32
	472	02	32
	473	02	29
	474	02	29
87395482	471	02	29
	472	02	29
	473	02	42
	474	02	42
87395486	473	02	46
	474	02	46
87395582	851/01	01	17
	855/01	01	17
	856/01	01	17
87395588	851/01	02	14
	855/01	02	14
	856/01	02	14
87396450	855/01	04	16
87396492	1.92.4	01	2
87396515	1.92.4	01	2
87396525	1.92.4	02	11
87396528	1.92.4	02	11
87398198	1.95.0	02	1
	1.95.0/ A		1
87400114	1.28.0/ A	01	11
	1.28.0/ B	01	14
87401111	096		3
87402306	331	03	5
87402623	900	09	16
87402742	1.88.11/01		6
87403241	1.82.0		16
87403649	514	04	5
87403672	1.14.6		12
87404427	638	04	13
	639	04	13
87405018	131		8
	321		13
87405628	1.28.0		21
87405629	1.28.0		13
87405706	331	02	18
87405859	1.88.11/01		21
87406299	1.82.0		39
87406750	1.88.11/02	01	17
87406921	1.88.11/06A		11
87406934	1.28.0/ A	01	23
	1.28.0/ B	01	6
87407206	1.75.2	04	3
87407272	638	02	8
	639	02	8
87407275	638	05	1
	639	05	1
87407463	1.82.0		3
87407464	1.82.0		4
87407465	1.82.0		5
87407758	1.28.0		1
87407927	1.96.2	01	11
	1.96.2/01		6
87407928	1.82.0		12
87408277	1.96.7/06		8
87408479	1.28.6		1
87408557	1.28.6		2
87408633	1.88.11/02	01	18
87408634	1.88.11/01		14
87408635	1.88.11/06A		13
87408636	1.88.11/09	02	12
87408893	1.93.0	04	15
	1.93.0/01	02	7
87409201	1.28.0/ A	01	24
	1.28.0/ B	01	12
87409315	1.91.4/02	06	21
87409316	1.75.2	02	7
	1.91.4	06	23
87410099	638	02	11
	639	02	11

Number	Figure	Sequence	Ref.	Number	Figure	Sequence	Ref.
87410105	331	04	8	87428020	1.88.11/02	01	4
87410108	1.93.0/01	02	6	87428023	331/ C	01	3
87410268	1.75.2	04	7		331/ C	02	3
87410385	1.93.0/01	02	1		333/ C	01	3
87410602	995		12		333/ C	02	3
87410647	1.28.0		8	87428627	1.88.11/02	01	13
	638	05	9	87428628	1.88.11/01		25
	639	05	9	87428630	1.88.11/06A		15
87410724	638	03	5	87428631	1.88.11/09	02	11
	639	03	5	87430028	331	05	3
87412400	1.88.11/06A		4	87431300	331	04	29
87414332	1.88.11/02	01	16	87431301	331	04	14
87414333	1.88.11/01		22	87431461	1.91.4/02	03	2
87414334	1.88.11/06A		12	87431469	1.91.4	03	3
87414335	1.88.11/09	02	13		1.91.4/02	03	3
87414340	1.88.11/02	01	14	87433032	1.88.11/09	02	22
87414341	1.88.11/01		23	87433514	331	04	23
87414342	1.88.11/06A		10	87433515	331	04	24
87414343	1.88.11/09	02	25	87433890	1.91.4	03	1
87414560	1.14.6		6		1.91.4/02	04	1
87414964	1.88.11/02	01	12	87433891	1.91.4	03	1
87414965	1.88.11/02	01	11		1.91.4/02	04	1
87414966	1.88.11/01		18	87434992	331	02	1
	1.88.11/09	02	21	87435242	333/ C	02	7
87414969	1.88.11/01		15	87435243	331/ C	02	11
	1.88.11/09	02	23	87435372	331	04	9
87414970	1.88.11/01		17	87435381	095		2
	1.88.11/09	02	16		096		2
87414971	1.88.11/06A		6		331	09	8
87414974	1.88.11/06A		5	87435506	331/ C	01	14
87414975	1.88.11/06A		7		331/ C	02	15
87414983	1.82.6	06	1		333/ C	01	14
87415115	1.88.11/02	01	10		333/ C	02	14
87415116	1.88.11/01		19	87436225	331/ C	01	2
87415208	1.75.2	04	9		331/ C	02	2
87415774	638	06	2		333/ C	01	2
	639	06	2		333/ C	02	2
87415781	321		8	87437366	331	04	5
87415930	1.98.1	09	12	87437369	331	04	6
87416929	131		2	87437371	333/ C	01	19
87416966	638	05	3		333/ C	02	6
	639	05	3	87437372	331/ C	02	12
87416967	1.28.0		10	87437688	331	04	4
87417207	1.82.0		7	87437689	331	04	3
87418368	331	04	20	87437804	1.15.0	02	3
87418369	331	04	21	87438046	331/ C	01	15
87419454	1.96.2/01		1		331/ C	02	16
87419455	1.96.2/01		1		333/ C	01	15
87421143	1.88.11/02	01	15		333/ C	02	15
87421144	1.88.11/01		20	87440396	1.88.11/02	01	20
87421145	1.88.11/06A		9	87440401	1.88.11/01		16
87421149	1.88.11/09	02	20	87440410	1.88.11/06A		8
87421909	331	04	25	87440497	638	01	2
87422777	636	08	1		639	01	4
	638	08	1	87440498	638	01	4
	639	08	1		639	01	7
87422783	1.88.11/09	02	2	87440499	638	01	11
87423802	331	04	7		639	01	10
87423812	331	04	33	87442378	1.93.0/03		5
87424195	1.88.11/02	01	19	87442379	1.93.0/03		4
87424196	1.88.11/01		4	87443692	331	05	4
87424267	331/ C	01	13	87443721	331/ C	01	5
	331/ C	02	14		331/ C	02	5
	333/ C	01	13		333/ C	01	5
	333/ C	02	13		333/ C	02	5
87424838	1.88.11/09	02	10	87445307	1.88.11/09	02	26
87424935	1.88.11/09	02	28	87445758	1.88.11/09	02	27
87425225	331	03	4	87447132	1.29.1		9
87426546	1.93.0/01	02	13	87448432	393		
	1.93.0/03		6		394/01	01	
87426550	1.93.0/01	02	14	87449373	1.82.6	12	8
	1.93.0/03		7	87452511	331	04	19
87426960	331	02	3	87453110	331	02	17
87427004	331	02	2	87453116	331	02	4
87427925	1.75.2	02	12	87453117	331	02	5
87428011	1.88.11/06A		14	87453118	331	02	12
87428014	1.88.11/09	02	9	87455335	1.88.11/09	02	24
87428020	1.88.11/01		24	87473026	1.15.0	01	8

Number	Figure	Sequence	Ref.
87473167	1.83.0	01	1
87473250	1.15.0	01	9
87474192	1.15.0	01	1
87477173	1.83.0	05	6
87516888	1.82.6	02	7
87517471	1.93.0	01	19
	1.93.0/01	01	19
87517988	1.95.0	01	9
87518902	1.95.3		5
87521741	787		2
	787/01		2
87521757	1.91.4	05	2
	1.91.4/02	05	2
87521822	788		2
	788/01		2
87527167	1.91.4	05	12
	1.91.4/02	05	5
87528964	1.95.3		4
87528978	638	02	4
	639	02	4
87529531	321		11
87530041	993	01	7
87530241	1.82.3/01		3
87530709	900	09	14
87530710	900	09	15
87536826	1.91.4	05	8
	1.91.4/02	05	8
87536827	1.91.4	05	9
	1.91.4/02	05	9
87539792	1.91.4	05	13
87540632	1.91.4	05	1
	1.91.4/02	05	1
87540633	1.93.0	01	20
	1.93.0/01	01	20
	1.93.0/02	01	26
87542345	1.44.0/ B	02	6
87542348	1.44.0/ B	02	9
87542350	1.44.0/ B	02	9
87542398	1.44.0/ B	01	1
87543600	1.93.0	01	1
87543654	1.93.0/01	01	1
87543716	1.93.0/02	01	1
87544169	1.75.2	01	1
87546419	1.91.4	01	1
	1.91.4/02	01	2
87546922	331/ C	01	17
	333/ C	01	18
87547309	331/ C	01	11
	333/ C	01	17
87548192	638	03	1
	639	03	1
87550456	1.91.4	05	11
87550746	1.94.2		3
87551537	1.93.5	02	13
	1.93.5/01	02	8
87552124	1.91.4	02	2
87552125	1.91.4	02	13
	1.91.4/02	02	13
87552126	1.91.4	03	2
87552128	1.91.4	06	6
	1.91.4/02	06	12
87552416	1.38.1		4
87552418	1.38.1		1
87552670	1.93.5	02	5
	1.93.5/01	02	5
87553661	1.94.2		2
87554030	638	03	7
	639	03	7
87554286	1.91.4/02	03	2
87554901	1.91.4/02	02	2
87557215	473	02	7
	474	02	7
87557803	1.91.4	05	10
	1.91.4/02	05	10
87558491	1.91.4/02	05	7
87558567	302	01	3
	302	03	1
	700	03	6
87558574	333/01B	01	6
	333/01B	02	1
87558870	302	03	6
87559274	638	04	5
	639	04	5
87559628	638	04	4
	639	04	4
87560586	650		2
87560589	650		3
87561489	638	03	6
	639	03	6
87562089	1.75.2	04	13
87563601	1.14.6		8
	1.14.6/ A		1
87564241	1.75.2	04	1
87564242	1.75.2	01	1
87565124	1.75.2	04	4
87565305	900	08	3
87565311	646	01	3
87565319	646	01	4
87565321	646	02	13
87565322	646	02	14
87565326	646	02	15
87565328	646	02	11
87565346	646	02	17
87567355	1.75.2	04	15
87567356	1.75.2	04	14
	1.94.2		7
87567413	131		9
87567694	346	04	4
87568472	321		4
87569316	646	04	20
87569583	1.82.6	03	5
	1.82.6/01	03	5
87569589	1.87.8		7
87570395	638	04	17
87570398	638	04	16
87571508	995		9
87571509	995		10
87571511	995		11
87571512	995		19
87571513	995		13
87571706	1.14.6		4
87573078	331	09	3
87573079	331	09	2
87573550	471	02	30
	472	02	30
87573552	473	02	45
	474	02	45
87573731	638	04	1
	639	04	1
87573861	471	02	1
	471/01		1
	472	02	1
	473	02	18
	474	02	18
87573868	471/01		9
87574080	471/01		3
87574092	471/01		4
87574097	471/01		7
87574098	471/01		8
87574099	471/01		6
87574189	1.82.0		26
87574479	1.82.6/01	04	3
87574523	471/01		2
87574524	471/01		5
87575394	1.88.08	01	7
87575966	1.98.0/01		10
87576064	514	01	1
	900	01	1
	900	02	1
	901	01	1
	902	01	1
87576855	856		1
	856/01	01	1
	856/01	02	1
	856/01	03	1
	856/01	04	1

Number	Figure	Sequence	Ref.
87576856	856		1
	856/01	01	1
	856/01	02	1
	856/01	03	1
	856/01	04	1
87576858	851		1
	851/01	01	1
	851/01	02	1
	851/01	03	1
	851/01	04	1
87576859	851		1
	851/01	01	1
	851/01	02	1
	851/01	03	1
	851/01	04	1
87576861	855		1
	855/01	01	1
	855/01	02	1
	855/01	03	1
	855/01	04	1
	855/01	05	1
87576862	855		1
	855/01	01	1
	855/01	02	1
	855/01	03	1
	855/01	04	1
	855/01	05	1
87576863	856		2
	856/01	01	1
	856/01	02	1
	856/01	03	1
	856/01	04	1
87576865	856		2
	856/01	01	1
	856/01	02	1
	856/01	03	1
	856/01	04	1
87576866	851		2
	851/01	01	1
	851/01	02	1
	851/01	03	1
	851/01	04	1
87576867	851		2
	851/01	01	1
	851/01	02	1
	851/01	03	1
	851/01	04	1
87576868	855		2
	855/01	01	1
	855/01	02	1
	855/01	03	1
	855/01	04	1
	855/01	05	1
87576869	855		2
	855/01	01	1
	855/01	02	1
	855/01	03	1
	855/01	04	1
	855/01	05	1
87577194	993	02	8
87577246	1.82.0		1
87577359	514	02	5
	900	03	5
	901	02	28
	902	02	29
87581010	993	01	8
87581125	900	11	7
87582179	0.08.2/01		4
87582180	0.08.2/01		4
87583485	901	02	25
87583496	901	02	26
87583508	901	02	4
	902	02	4
87583510	902	02	25
87583516	902	02	26
87587692	0.02.1/01		1
87589234	096		4
87589579	900	04	3
87589951	1.39.8		13
87590894	1.39.8		1
87590903	900	02	3
87591241	1.39.8		2
87591981	900	10	19
87591991	900	10	18
87591992	900	10	4
87592386	900	01	5
	900	03	1
87592724	1.39.8		10
87592822	1.39.8		11
87593493	514	01	5
	514	02	3
87594196	514	02	1
	900	03	4
87594954	900	01	3
	900	10	1
	901	01	3
87596072	1.88.08	02	17
87596086	1.98.0/01		11
87596087	1.98.0/01		12
87596089	993	01	8
87596091	993	01	8
87597003	1.88.08	02	16
87597471	900	09	20
87597479	900	09	2
87597480	900	09	6
87597481	900	09	13
87597482	900	09	4
87597583	900	01	2
	900	09	1
	901	01	2
87597631	175		2
	176		3
87598240	514	03	17
87598244	514	03	2
	900	10	3
87598245	514	03	6
	900	10	11
87598246	514	03	13
87598247	514	03	11
87598248	514	03	12
87598703	902	01	5
	902	02	1
87600615	1.91.4	02	18
	1.91.4/02	02	14
87600654	514	03	5
	900	09	5
87601605	1.91.4/02	04	2
87601608	1.91.4	04	1
87603835	1.83.0	02	13
87607670	519/01		6
87607818	386		6
87607821	387		6
87607824	388		6
87607825	389		6
87607827	390/01		6
87607837	517/01		6
87608143	993	01	7
87608145	993	01	7
87609028	518/01		6
87609039	1.14.6		5
87609121	516/01		6
87609138	1.91.4/02	02	2
87609145	1.91.4	02	2
87609146	1.91.4	02	13
	1.91.4/02	02	13
87609344	515/01		6
87609724	1.98.1	09	7
87610539	333	05	5
	721	05	7
87610565	333	05	6
	721	04	6
87610829	1.88.08	02	14
87610834	1.88.08	02	14
87610858	331/ B	01	5
	331/ B	02	1
	333/01B	01	5

Number	Figure	Sequence	Ref.
87612469	1.14.6/ A		6
87612472	1.14.6/ A		2
87612475	1.14.6/ A		7
87612722	1.39.8		12
87613060	851/01	01	2
	855/01	01	2
87613073	851/01	01	3
87613074	851/01	01	4
	855/01	01	4
87613075	851/01	01	22
	855/01	01	22
	856/01	01	33
87613157	514	01	2
	514	03	20
	902	01	2
87613577	856/01	01	3
87613623	1.83.0	02	17
	1.83.0	04	1
87613641	1.75.2	02	8
87613718	855/01	01	3
87613742	855/01	03	20
87614614	900	05	2
87614627	333	05	2
	721	05	2
87614628	900	05	1
87614629	333	05	1
	721	05	1
87614694	1.83.0	01	9
87614751	1.82.6	02	5
87614752	1.82.6/01	02	4
	728	01	4
87614753	1.82.6	01	9
87615417	993	02	8
87615421	993	02	7
87615422	993	02	7
87615424	993	02	7
87615425	993	02	7
87615426	993	02	7
87615608	855/01	03	17
87615611	855/01	04	5
87615734	333	04	12
	721	04	12
87616236	724/01	02	8
87617261	346	03	8
	347	03	2
87617945	333	04	1
	721	04	1
87618259	347	01	3
87618261	346	01	19
87618272	346	01	6
	347	01	6
87618524	1.15.0	01	1
87619484	1.82.6	15	6
	1.82.6/01	10	6
87619495	1.82.6	14	5
	1.82.6/01	10	14
87619496	1.82.6	14	7
	1.82.6/01	10	7
87619499	728	01	3
87619504	1.82.6/01	07	2
	1.82.6/01	08	4
87619505	1.82.6/01	07	1
	1.82.6/01	08	5
87619506	333	04	4
	721	04	4
87619507	1.82.6	11	3
87619508	1.82.6	10	1
87619509	1.82.6	11	2
87619510	1.82.6	10	2
87619511	901	03	7
87619512	900	05	10
87621518	333	04	2
	721	04	2
87621906	728	01	4
87621907	1.82.6	15	5
	1.82.6/01	10	5
87621908	1.82.6	14	6
	1.82.6/01	10	9
87621910	1.82.6/01	02	8
87621911	901	03	6
87621912	1.82.6/01	01	9
87621913	728	01	5
87621914	900	05	4
87621920	1.82.6	14	8
87622842	724/01	02	2
87624517	724/01	02	12
87624533	900	07	1
87624743	1.83.0	03	6
87624744	1.83.0	03	7
87624745	1.83.0	03	10
87624746	638	01	3
	639	01	3
87626855	1.21.5		1
87628768	1.91.5	01	4
87628806	1.91.5	01	8
87629471	724/01	02	13
87630383	646	04	10
87630384	646	04	7
87630386	646	04	9
87630711	724/01	02	11
87630900	1.88.11		1
87631460	1.82.6	16	7
	1.82.6/01	11	7
87631462	1.82.6	02	15
	1.82.6/01	02	19
87631531	1.82.6/01	10	8
87631623	MPARTS	00	5
	1.19.1		13
87631625	MPARTS	00	6
	1.19.1		14
87631670	1.19.1		15
87631830	290		1
87631832	291		1
87631834	291		1
87632691	1.83.0	01	4
87636291	1.75.2	04	2
87636395	901	03	6
87636396	901	03	7
87636546	1.83.0	02	4
87636636	900	06	1
87636637	900	06	2
87637579	1.19.1		1
87638572	437		3
87638573	437		12
87638574	721	03	7
87638575	333	03	1
87638778	1.14.6		3
87639182	1.15.0	01	2
87639183	1.19.1		3
87639619	901	01	5
	901	02	1
87640751	1.91.4	03	5
	1.91.4/02	03	5
87641276	1.87.2		12
87643906	1.83.0	02	16
87643908	1.83.0	02	11
87643911	1.83.0	06	2
87643912	1.83.0	06	3
87643913	1.83.0	06	4
87646126	646	04	8
87646222	900	11	17
87646604	390		1
	725/01	02	22
87646646	302	01	11
	700	01	14
87647474	1.19.1		10
87647609	1.19.1		11
87647914	392	01	8
87648323	900	11	19
87648324	900	11	2
87648638	392	01	12
87648639	392	02	11
87651689	1.14.6		10
87652764	346	05	23
	347	05	12
87652770	346	05	19

Number	Figure	Sequence	Ref.	Number	Figure	Sequence	Ref.
87652770	347	05	10	87685957	333/ C	01	1
87652862	1.83.0	02	15		335		4
87653086	1.83.0	06	2	87686869	1.83.0	05	4
87653101	1.91.4	04	6	87687141	331/ C	01	18
	1.91.4/02	04	8		331/ C	02	18
87653220	1.83.0	06	3		333/ C	01	20
87653297	1.98.1	08	1		333/ C	02	17
87654073	1.83.0	02	5	87687399	1.83.0	03	9
87654842	514	03	16	87687644	1.98.1	09	6
87654843	900	09	17	87689317	1.91.4	06	5
87654844	514	04	14		1.91.4/02	06	5
87654845	900	10	14	87691652	1.98.1	09	8
87658926	1.15.0	01	3	87694197	1.83.0	03	2
87659514	521		6	87696662	1.83.0	02	10
87661002	520/01		6		1.83.0	05	2
87663635	83.00	01	1	87701340	1.98.1	09	5
87664294	83.00	01	1	87701725	1.19.1		2
87664399	82.00	01	1	87702352	1.14.0		10
87664439	83.00	01	1		1.82.0		15
87664534	82.00	01	1	87729596	888		3
87664555	83.00	01	1	87729597	888		4
87665407	1.93.4		4	87729598	888		1
87669736	1.83.0	06	4	87729599	888		2
87669785	1.83.0	05	3	87729600	888		7
87669786	1.83.0	01	3	87729601	888		8
	1.83.0	03	1	87729602	888		5
87670081	638	02	12	87729603	888		6
	639	02	12	87729606	888		11
87673011	1.83.0	02	7	87729607	888		12
87673334	638	02	3	87729608	888		9
	639	02	3	87729609	888		10
87673335	638	02	1	87734093	331	01	1
	639	02	1		331/ B	01	1
87673338	638	01	16	87734101	331	01	1
	639	01	12		331/ B	01	1
87673339	638	01	17	87734106	333	01	2
	639	01	13		333/01B	01	1
87673346	638	02	5		335		1
	639	02	5	87734107	333	01	1
87673347	638	02	2		335		2
	639	02	2	87734721	302	02	8
87673905	1.15.0	02	1	87735363	302	03	7
87673972	1.40.0	02	2		302	04	7
87673991	1.40.0	02	1	87739122	700	01	22
87674137	1.98.1	09	10		725/01	02	18
87675597	638	02	6	87739689	700	01	20
	639	02	6		725/01	02	15
87676333	1.82.6	01	1	87739987	700	01	2
	1.82.6/01	01	1	87739988	700	01	2
87677466	724/ A		1		725/01	02	10
	724/01	01	1	87741687	1.83.0	02	1
	724/02		1	87742983	1.83.0	03	4
87677506	728	01	8	87743160	1.93.0/01	01	1
	728	03	1	87743161	1.93.0	01	1
87677533	733		1	87743162	1.93.0/02	01	1
87677538	733		13	87745631	1.93.0/02	01	1
87677542	733		6	87747362	900	02	26
87677544	733		8	87748117	1.83.0	02	18
87677546	733		11		1.83.0	05	2
87683149	638	02	9	87749354	1.28.0		5
	639	02	9	87749355	1.28.0		5
87683904	900	05	3	87750941	1.19.1		4
87683905	900	05	5	87758451	331/ B	01	9
87684507	900	06	8		331/ B	11	1
87684508	900	06	8		333/01B	01	10
87684509	900	06	3	87758454	331/ B	01	9
87684511	900	06	3		331/ B	06	1
87685948	331	01	4	87802964	1.98.1	09	9
	331/ C	02	1	87803192	MPARTS	00	1
	333	01	5	87803197	MPARTS	00	1
	335		5		0.20.0/01		6
87685954	331	01	2	87803260	MPARTS	00	3
87685955	333	01	4		0.30.2		1
	333/ C	02	1	87803444	MPARTS	00	2
	335		3		1.14.6/ A		4
87685956	331	01	3	87840170	1.14.6/ A		5
	331/ C	01	1	87840171	1.14.6/ A		3
87685957	333	01	3	87840173	1.14.6/ A		10

Number	Figure	Sequence	Ref.	Number	Figure	Sequence	Ref.
87840177	1.14.6/ A		8	9967673	1.40.0	01	19
87840178	1.14.6/ A		9	9967678	1.40.0	01	23
895-11010	1.82.6	12	9	9967679	1.40.0	01	24
896-11010	636	08	3	9967681	402	01	12
	638	08	3	9967682	402	01	13
	639	08	3	9967683	1.40.0	01	26
89617873	1.82.6	03	9		402	01	15
	1.82.6	04	15	9967687	1.40.0	02	21
	1.82.6/01	03	9		402	03	2
89626929	336/01	01	20	9967734	402	05	9
	336/01	05	15	9967736	402	05	4
	725/01	03	20	9967739	402	05	5
89706729	1.44.0/ B	01	28	9967740	402	05	6
89824050	1.82.6	04	3	9967741	402	05	7
	1.82.6/01	04	10	9967769	1.40.0	01	17
	336/01	01	18		402	01	2
	336/01	05	13	9967970	855/01	01	34
89824051	1.82.6	05	11	9967990	1.40.0	01	15
	1.82.6	06	8		402	01	17
	1.82.6/01	05	7	9967991	1.40.0	01	2
	1.82.6/01	06	11		402	01	18
89825770	336/01	01	17	9967992	1.40.0	01	3
	336/01	05	14		402	01	19
	337	01	17	9967993	1.40.0	01	4
	337	02	17		402	01	20
89991976	1.82.6	01	8	9967994	1.40.0	01	5
	1.82.6	14	3		402	01	21
	1.82.6	15	3	9967995	1.40.0	01	11
	1.82.6/01	01	8		402	01	27
	1.82.6/01	04	17	9967996	1.40.0	01	6
	900	05	6		402	01	22
	900	07	8	9967997	402	01	4
89992298	1.82.6	13	4	9968002	402	01	9
	1.82.6/01	03	10	9968003	402	01	10
	1.82.6/01	09	6	9968004	402	01	11
	1.88.11/03		7	9968005	402	01	14
	1.88.11/07A		2	9968006	1.40.0	01	8
	1.88.11/07C		2		402	01	24
	1.95.5	02	8	9968007	1.40.0	01	9
	337	01	16		402	01	25
	337	02	16	9968008	1.40.0	01	10
	437		16		402	01	26
	721	03	10	9968009	1.40.0	01	12
	725/01	01	2		402	01	28
9824050	725/01	03	18	9968010	1.40.0	01	13
9825770	725/01	03	17		402	01	5
9958776	851/01	02	9	9968019	402	01	7
	855/01	02	9	9968021	1.40.0	02	10
	856/01	02	9		402	02	10
9958792	851/01	03	13	9968022	402	02	11
	856/01	03	13	9968023	402	02	12
9960692	851/01	01	28	9968025	402	02	14
	851/01	02	8	9968028	1.40.0	02	17
	855/01	01	28		402	02	17
	855/01	02	8	9968031	402	04	3
	856/01	01	28	9968032	402	04	2
	856/01	02	8	9968033	402	04	4
9960755	851/01	03	16	9968034	402	04	5
	856/01	03	16	9968037	402	04	13
9960793	851/01	01	20	9968038	402	04	13
	855/01	01	20	9968039	402	04	13
	856/01	01	20	9968040	402	04	13
9960795	851/01	01	19	9968041	402	04	13
	855/01	01	19	9968042	402	04	13
	856/01	01	19	9968043	402	04	13
9960797	851/01	01	32	9968044	402	04	13
	855/01	01	33	9968045	402	04	13
	856/01	01	34	9968046	402	04	13
9960803	851/01	01	30	9968047	402	04	7
	855/01	01	30	9968048	402	04	9
	856/01	01	30	9968049	402	04	8
9962962	851/01	02	5	9968050	402	04	10
	855/01	02	5	9968051	402	04	11
	855/01	04	13	9968052	402	04	12
9966352	402	05	2	9968054	402	05	8
9966354	402	05	3	9968070	1.40.0	02	24
9966356	402	05	11		402	03	9
9967672	402	01	3	9968071	1.40.0	02	25

Number	Figure	Sequence	Ref.	Number	Figure	Sequence	Ref.
9968071	402	03	10	9968259	1.28.0/ B	08	2
9968083	402	03	19	9968260	1.28.0/ A	06	23
9968084	402	03	18		1.28.0/ B	06	23
9968144	522/01		15	9968261	1.28.0/ A	05	27
	525		15		1.28.0/ B	05	27
9968146	522/01		3	9968262	1.28.0/ A	05	26
	525		3		1.28.0/ B	05	26
9968147	522/01		4	9968263	1.28.0/ A	05	26
	525		4		1.28.0/ B	05	26
9968148	522/01		5	9968264	1.28.0/ A	05	26
	525		5		1.28.0/ B	05	26
9968149	522/01		6	9968265	1.28.0/ A	05	26
	525		6		1.28.0/ B	05	26
9968150	522/01		7	9968266	1.28.0/ A	05	26
	525		7		1.28.0/ B	05	26
9968151	522/01		8	9968267	1.28.0/ A	05	26
	525		8		1.28.0/ B	05	26
9968152	522/01		9	9968268	1.28.0/ A	05	24
	525		9		1.28.0/ B	05	24
9968153	522/01		10	9968269	1.28.0/ A	06	17
	525		10		1.28.0/ B	06	17
9968154	522/01		11	9968270	1.28.0/ A	06	8
	525		11		1.28.0/ A	07	3
9968155	522/01		12		1.28.0/ B	06	8
	525		12		1.28.0/ B	07	3
9968156	522/01		13	9968271	1.28.0/ A	06	6
	525		13		1.28.0/ A	07	5
9968218	1.28.0/ A	01	4		1.28.0/ B	06	6
	1.28.0/ A	02	11		1.28.0/ B	07	5
	1.28.0/ A	03	7	9968272	1.28.0/ A	06	7
	1.28.0/ A	07	14		1.28.0/ A	07	4
	1.28.0/ B	02	11		1.28.0/ B	06	7
	1.28.0/ B	03	15		1.28.0/ B	07	4
	1.28.0/ B	07	14	9968273	1.28.0/ A	06	7
9968219	1.28.0/ A	01	5		1.28.0/ A	07	4
	1.28.0/ A	02	9		1.28.0/ B	06	7
	1.28.0/ A	03	6		1.28.0/ B	07	4
	1.28.0/ A	07	10	9968274	1.28.0/ A	06	7
	1.28.0/ B	02	9		1.28.0/ A	07	4
	1.28.0/ B	03	8		1.28.0/ B	06	7
	1.28.0/ B	07	10		1.28.0/ B	07	4
9968223	1.28.0/ A	06	15	9968275	1.28.0/ A	06	7
	1.28.0/ B	06	15		1.28.0/ A	07	4
9968226	1.28.0/ A	05	18		1.28.0/ B	06	7
	1.28.0/ B	05	18		1.28.0/ B	07	4
9968228	1.28.0/ A	05	2	9968276	1.28.0/ A	05	17
	1.28.0/ B	05	2		1.28.0/ B	05	17
9968229	1.28.0/ B	08	11		1.28.0/ B	08	3
9968230	1.28.0/ A	05	30	9968277	1.28.0/ A	07	1
	1.28.0/ B	05	30		1.28.0/ B	07	1
9968232	1.28.0/ B	08	10	9968278	1.28.0/ A	06	22
9968233	1.28.0/ B	08	17		1.28.0/ B	06	19
9968234	1.28.0/ B	08	12	9968279	1.28.0/ A	05	1
9968235	1.28.0/ B	08	15		1.28.0/ B	05	1
9968236	1.28.0/ B	08	16	9968280	1.28.0/ A	07	2
9968239	1.28.0/ B	08	9		1.28.0/ B	07	2
9968240	1.28.0/ B	08	7	9968281	1.28.0/ A	05	25
9968244	1.28.0/ B	08	4		1.28.0/ B	05	25
9968246	1.28.0/ A	06	18	9968282	1.28.0/ A	05	28
	1.28.0/ B	06	18		1.28.0/ B	05	28
9968247	1.28.0/ A	06	16	9968285	1.28.0/ A	05	21
	1.28.0/ B	06	16		1.28.0/ B	05	21
9968248	1.28.0/ A	06	13	9968286	1.28.0/ A	05	5
	1.28.0/ B	06	13		1.28.0/ B	05	5
9968249	1.28.0/ B	06	9	9968287	1.28.0/ A	05	9
9968250	1.28.0/ A	06	11		1.28.0/ B	05	9
	1.28.0/ B	06	11	9968288	1.28.0/ A	05	10
9968251	1.28.0/ A	06	12		1.28.0/ B	05	10
	1.28.0/ B	06	12	9968289	1.28.0/ A	05	12
9968252	1.28.0/ A	06	10		1.28.0/ B	05	12
	1.28.0/ B	06	10	9968290	1.28.0/ A	05	11
9968253	1.28.0/ A	06	21		1.28.0/ B	05	11
	1.28.0/ B	06	21	9968291	1.28.0/ A	05	6
9968254	1.28.0/ B	08	8		1.28.0/ B	05	6
9968255	1.28.0/ B	08	1	9968297	1.28.0/ B	08	14
9968256	1.28.0/ B	08	2	9968298	1.28.0/ B	08	13
9968257	1.28.0/ B	08	2	9968299	1.28.0/ A	04	14
9968258	1.28.0/ B	08	2		1.28.0/ B	04	14

Number	Figure	Sequence	Ref.	Number	Figure	Sequence	Ref.
9968300	1.28.0/ B	08	21	9968356	1.28.0/ A	01	7
9968301	1.28.0/ B	08	19		1.28.0/ B	01	5
9968302	1.28.0/ A	05	4	9968358	1.28.0/ A	06	20
	1.28.0/ B	05	4		1.28.0/ B	06	20
9968304	1.28.0/ A	05	3	9968359	1.28.0/ A	01	15
	1.28.0/ B	05	3		1.28.0/ B	01	17
9968305	1.28.0/ A	05	22	9968360	1.28.0/ A	01	17
	1.28.0/ B	05	22		1.28.0/ B	01	19
9968306	1.28.0/ A	06	2	9968361	1.28.0/ A	01	16
	1.28.0/ B	06	2		1.28.0/ B	01	18
	1.28.0/ B	08	23	9968362	1.28.0/ A	01	19
	1.38.1		12		1.28.0/ B	01	21
9968307	1.28.0/ A	06	14	9968364	1.28.0/ A	02	12
	1.28.0/ B	06	14		1.28.0/ B	02	12
9968308	1.28.0/ A	06	1	9968365	1.28.0/ A	01	21
	1.28.0/ B	06	1		1.28.0/ B	01	10
	1.28.0/ B	08	18	9968368	1.28.0/ A	02	10
	1.38.1		3		1.28.0/ B	02	10
9968309	1.28.0/ A	06	3	9968370	1.28.0/ A	04	19
	1.28.0/ B	06	3		1.28.0/ B	04	19
	1.28.0/ B	08	22	9968371	1.28.0/ A	02	5
	1.38.1		11		1.28.0/ B	02	5
9968311	1.28.0/ A	01	9	9968374	1.28.0/ A	03	13
	1.28.0/ B	01	11		1.28.0/ B	03	11
9968312	1.28.0/ A	01	10	9968375	1.28.0/ A	03	14
9968313	1.28.0/ A	01	14		1.28.0/ B	03	10
	1.28.0/ B	01	22	9968382	1.28.0/ B	02	8
9968314	1.28.0/ A	05	29	9968383	1.28.0/ B	02	14
	1.28.0/ B	05	29	9968393	1.28.0/ B	08	6
9968315	1.28.0/ A	07	9	9968396	1.28.0/ A	06	19
	1.28.0/ B	07	9	9968438	725/01	04	7
9968316	1.28.0/ A	07	8	9968439	725/01	04	5
	1.28.0/ B	07	8	9968440	336/01	02	8
9968317	1.28.0/ A	07	11		344	01	4
	1.28.0/ B	07	11		721	01	14
9968318	1.28.0/ A	07	12		725/01	04	8
	1.28.0/ B	07	12	9968441	336/01	02	6
9968319	1.28.0/ A	07	6		344	01	6
	1.28.0/ B	07	6		721	01	13
9968322	1.28.0/ A	07	7		725/01	04	6
	1.28.0/ B	07	7	9968443	336/01	02	3
9968323	1.28.0/ A	07	13		725/01	04	3
	1.28.0/ B	07	13	9968444	336/01	03	6
9968324	1.28.0/ A	04	9		725/01	05	6
	1.28.0/ B	04	9	9968445	336/01	03	7
9968326	1.28.0/ A	04	11		725/01	05	7
	1.28.0/ B	04	11	9968446	336/01	03	8
9968327	1.28.0/ A	04	10		725/01	05	8
	1.28.0/ B	04	10	9968447	1.82.6/01	12	10
9968328	1.28.0/ A	04	12		336/01	03	11
	1.28.0/ B	04	12		725/01	05	11
9968333	1.28.0/ A	02	6	9968448	1.82.6/01	12	9
	1.28.0/ B	02	6		336/01	03	10
9968334	1.28.0/ A	02	2		725/01	05	10
	1.28.0/ B	02	2	9968449	336/01	03	9
9968336	1.28.0/ A	03	3		725/01	05	9
	1.28.0/ B	03	7	9968451	336/01	01	12
9968337	1.28.0/ B	03	3		725/01	03	12
9968339	1.28.0/ A	01	20	9968454	336/01	01	14
	1.28.0/ B	01	9		725/01	03	14
9968340	1.28.0/ B	03	6	9968455	336/01	01	4
9968341	1.28.0/ A	05	19		725/01	03	4
	1.28.0/ B	05	19	9968456	336/01	01	6
9968342	1.28.0/ A	05	20		725/01	03	6
	1.28.0/ B	05	20	9968457	336/01	01	5
9968343	1.28.0/ A	05	20		725/01	03	5
	1.28.0/ B	05	20	9968458	1.82.6/01	13	11
9968344	1.28.0/ A	05	20		1.82.6/01	14	11
	1.28.0/ B	05	20		336/01	01	7
9968345	1.28.0/ A	05	20		725/01	03	7
	1.28.0/ B	05	20	9968460	1.82.6/01	13	12
9968347	1.28.0/ A	05	23		1.82.6/01	14	12
	1.28.0/ B	05	23		336/01	01	21
9968350	1.28.0/ A	02	1		344	02	12
	1.28.0/ B	02	1		721	02	12
9968351	1.28.0/ B	01	8		725/01	03	8
9968354	1.28.0/ A	03	12	9968461	336/01	04	6
	1.28.0/ B	03	12	9968464	336/01	02	1

Number	Figure	Sequence	Ref.
9968464	336/01	05	10
	725/01	04	1
9968465	336/01	04	2
9968466	336/01	02	12
	336/01	04	4
	336/01	05	4
	725/01	04	12
9968467	336/01	02	11
	336/01	04	3
	336/01	05	3
	725/01	04	11
9968468	1.82.6/01	12	8
	336/01	02	13
	336/01	04	5
	336/01	05	5
	725/01	04	13
9968470	336/01	03	5
	725/01	05	5
9968471	336/01	03	4
	725/01	05	4
9968476	336/01	02	2
	344	01	8
	721	01	8
	725/01	04	2
	725/01	06	10
9968477	344	02	9
	721	02	9
	725/01	06	8
9968478	344	02	10
	721	02	10
	725/01	06	9
9968480	344	02	11
	721	02	11
9968481	344	02	4
	721	02	4
9968483	344	02	6
	721	02	6
9968484	344	02	7
	721	02	7
9968486	344	02	8
	721	02	8
9968488	336/01	02	14
	336/01	05	8
	725/01	04	14
9968489	1.82.6/01	13	2
	1.82.6/01	14	2
	336/01	01	8
	725/01	03	9
9968490	1.82.6/01	13	3
	1.82.6/01	14	3
	336/01	01	9
	725/01	03	10
9968494	1.82.6/01	12	14
9968495	1.82.6/01	12	12
	1.82.6/01	13	1
	1.82.6/01	14	1
9968497	1.82.6/01	12	6
9968498	1.82.6/01	12	7
9968500	1.82.6/01	12	4
9968501	1.82.6/01	12	2
9968502	1.82.6/01	12	3
9968503	1.82.6/01	12	5
9968504	1.82.6/01	12	29
9968505	1.82.6/01	12	29
9968506	1.82.6/01	12	16
9968507	1.82.6/01	12	17
9968508	1.82.6/01	12	28
9968510	1.82.6/01	13	9
	1.82.6/01	14	9
9968511	1.82.6/01	13	10
	1.82.6/01	14	10
9968512	1.82.6/01	13	4
	1.82.6/01	14	4
9968513	1.82.6/01	13	7
	1.82.6/01	14	7
	336/01	01	19
	725/01	03	19
9968514	1.82.6/01	13	5
9968514	1.82.6/01	14	5
9968515	1.82.6/01	13	6
	1.82.6/01	14	6
9968516	1.82.6/01	13	8
	1.82.6/01	14	8
9968520	336/01	02	7
9968521	336/01	02	5
9968523	1.82.6/01	12	23
9968524	344	01	7
	721	01	7
9968526	721	01	10
	721	02	1
9968527	344	01	11
	721	01	11
9968528	721	01	6
9968529	721	01	12
9968531	344	02	5
	721	02	5
9968532	344	01	12
9968533	344	01	10
9968595	1.82.6/01	12	26
	724/02		18
	725/01	06	12
9968596	1.82.6/01	12	27
9968676	1.28.0/ A	03	8
	1.28.0/ B	03	4
9968791	1.82.6	03	10
	1.82.6/01	03	13
9968884	803		2
9968885	803		1
9968886	803		1
9968926	1.28.0/ A	04	17
	1.28.0/ B	04	17
9968927	1.28.0/ A	04	18
	1.28.0/ B	04	18
9969170	522/01		2
	525		2
9969281	1.28.0/ A	04	13
	1.28.0/ B	04	13
9969380	1.82.0		21
9969445	1.28.0/ A	04	4
	1.28.0/ B	04	4
9969449	1.28.0/ A	03	4
9970107	344	01	9
	344	02	1
	721	01	9
9970179	724/ A		5
9970181	724/ A		2
9970383	728	03	5
9970384	337	01	20
	337	02	20
	724/ A		6
	728	03	6
9972160	851/01	01	16
	851/01	02	13
	855/01	01	16
	855/01	02	11
	856/01	01	16
	856/01	02	11
9991976	721	05	4
9992069	333	04	13
	721	03	11
	721	04	13
	721	05	6
9992298	333	04	14
	721	03	6
	721	04	14
D139225	MPARTS	00	2
D149079	514	03	19
	514	04	16
	900	09	19
	900	10	16
D38858	900	11	8
D95143	901	04	9
	902	03	9
D95146	514	03	3
	514	04	18
	900	09	3

Number	Figure	Sequence	Ref.	Number	Figure	Sequence	Ref.
D95146	900	10	13				
	900	11	13				
G100443	902	03	16				
G100444	901	04	7				
	902	03	7				
G100449	901	04	17				
	902	03	17				
G100709	900	11	15				
G100710	900	11	16				
G100711	900	11	9				
G102090	514	03	1				
	900	10	7				
G102091	514	03	15				
	900	10	5				
G102092	514	03	14				
	900	10	6				
G102288	901	04	16				
G102425	901	04	11				
	902	03	11				
G107277	901	04	15				
	902	03	15				
G107970	514	03	9				
	900	10	10				
G109298	901	04	12				
	902	03	12				
G109395	514	03	4				
	514	04	13				
	900	09	18				
	900	10	21				
	900	11	20				
	901	04	22				
G109908	514	03	8				
	514	04	8				
	900	09	8				
	900	10	8				
	900	11	1				
NS	855/01	03	11				
	855/01	03	19				
	855/01	03	22				
	855/01	03	23				
	855/01	03	24				
	855/01	03	6				
	855/01	04	10				
	855/01	04	11				
	855/01	04	12				
	855/01	04	4				
	855/01	04	6				
	855/01	04	7				
	855/01	04	8				
	855/01	04	9				
	855/01	05	10				
	855/01	05	11				
	855/01	05	12				
	855/01	05	4				
	855/01	05	5				
	855/01	05	6				
	855/01	05	9				

NOTES

NEW HOLLAND

CATÁLOGO DE PIEZAS

CARGADORA DE RETROEXCAVADORA

B95B
NIVEL 3

Bur • Publicado en 01Feb 08
Impreso en EE.UU. • Número de libro/formulario 87659788 LAS
Copyright © 2006. CNH America, LLC. Todos los derechos reservados.

CNH America LLC se reserva el derecho a mejorar el diseño o cambiar las especificaciones en cualquier momento sin incurrir por ello en la obligación de actualizar correspondientemente las unidades vendidas previamente.

Todos los datos de esta publicación están sujetos a variaciones en la producción. Las dimensiones y los pesos son sólo aproximados. Las ilustraciones no muestran necesariamente productos con su dotación estándar. Para obtener información exacta sobre cualquier producto en particular, ponerse en contacto con el distribuidor.

HISTORIAL DE REVISIONES			
Publicación	Fecha de publicación	Máquinas aplicables	Observaciones
Primera edición	01Feb 08	B95B Nivel 3 Cargadora de Retroexcavadora	87659788 LAS

Se prohíbe terminantemente el uso del contenido editorial o gráfico sin el consentimiento expreso por escrito de
CNH America LLC. Carol Stream, IL 60188 EE.UU.

TABLE OF CONTENTS

MAIN		SECCIONES PRINCIPALES
MPARTS	00	PIEZAS PARA MANUTENCIÓN
SEC. 01	03	MOTOR
SEC. 01	04	MOTOR
SEC. 02		TANQUE COMBUSTIBLE-SILENCIADOR-RADIATOR-FILTRO DE AIRE
SEC. 03	01	CAMBIO DE VELOCIDADES
SEC. 04		EJE DELANTERO
SEC. 05		EJE TRASERO
SEC. 06		ELECTRICO
SEC. 07		CORREDERAS
SEC. 08		CAPOT
SEC. 09	01	CARGADOR
SEC. 09	03	RETRO
SEC. 11		RUEDAS
SEC. 18		VARIANTES
0.0040/01	01	EQUIPO OPCIONAL - NA
0.0040/01	02	EQUIPO OPCIONAL - NA
0.0040/01	03	EQUIPO OPCIONAL - NA
0.02.1/01		MOTOR
0.04.0/01		BLOQUE CILINDROS
0.04.2		CARTER DE ACEITE
0.04.3/01	01	TAPAS DEL BLOQUE
0.04.3/01	02	TAPAS DEL BLOQUE
0.04.3/01	03	TAPAS DEL BLOQUE
0.06.0/01		CULATA DE CILINDROS
0.06.3/01	01	TAPAS CULATA
0.06.3/01	02	TAPAS CULATA
0.06.6/01		EJE BALANCINES
0.07.1/01		COLLECTOR DE ASPIRACION
0.07.7/01		COLLECTOR DE ESCAPE
0.08.0		CIGUENAL
0.08.1/01		BIELA PISTON
0.08.2/01		EMBOLO - MOTOR
0.08.3		VOLANTE MOTOR
0.08.4		POLEA - CIGUENAL
0.10.5	01	EQUILIBRADOR, ENGRENAJES Y ARBOLES
0.10.5	02	EQUILIBRADOR, ENGRENAJES Y ARBOLES
0.12.0/01		ARBOL DE LEVAS - PINONES DE LA DISTRIBUCION
0.14.0/01	01	BOMBA DE INYECCION
0.14.0/01	02	GRUPO DE INYECCION - INYECTOR
0.14.0/01A		BOMBA DE INYECCION - COMPONENTES
0.14.9/01		GRUPO DE INYECCION - TUBERIAS
0.17.0		INYECCIÓN ELECTRÓNICA
0.17.3		SISTEMA ELÉCTRICO MOTOR
0.20.0/01		FILTRO COMBUSTIBLE
0.20.3/01		TUBERIAS - COMBUSTIBLE
0.20.4/01		GRUPO DE INYECCION - TUBERIAS
0.24.0/01		TURBOCOMPRESSOR
0.27.0/01		VARILLA DE NIVEL - ACEITE DEL MOTOR
0.30.0		BOMBA DE ACEITE - MOTOR
0.30.2		FILTRO DE ACEITE - MOTOR

TABLE OF CONTENTS

0.30.5/01		TUBERIAS - ACEITE DEL MOTOR
0.31.5/01		CAMBIADOR DE CALOR - MOTOR
0.32.0		BOMBA DE AGUA
0.32.3/01		SISTEMA DE REFRIGERACIÓN - MOTOR
0.32.6/01		TERMOSTATO - REFRIGERACION DEL MOTOR
0.34.0/01		BOMBA DE AGUA - MANDO
0.34.5		POLEA DEL VENTILADOR
0.36.0		MOTOR ACOPLADO
0.40.0/01		ALTERNADOR
0.45.0/01		GANCHOS DE MANOIBRA - MOTOR
1.14.0		TANQUE DEL COMBUSTIBLE Y ACCESORIOS
1.14.6		TUBO COMBUSTIBLE
1.14.6/ A		FILTRO DE COMBUSTIBLE
1.15.0	01	SILENCIADOR Y EXTENSIONES
1.15.0	02	TUBO DE ESCAPE
1.19.1		FILTRO DE AIRE Y MANGUITOS
1.21.5		BASTIDOR (CENTER PIVOT)
1.28.0		TRANSMISIÓN
1.28.0/ A	01	COMPONENTES DEL CONVERTIDOR PAR DE TORSIÓN (2WD POWER-SHUTTLE)
1.28.0/ A	02	COMPONENTES EXTERIORES CAJA DE CAMBIO (2WD POWER-SHUTTLE)
1.28.0/ A	03	COMPONENTES HIDRÁULICOS CAJA DE CAMBIO (2WD POWER-SHUTTLE)
1.28.0/ A	04	FRENO DE ESTACIONAMIENTO (2WD POWER-SHUTTLE)
1.28.0/ A	05	TREN DE ENGRANAJES CAMBIO DE VELOCIDAD (2WD POWER-SHUTTLE)
1.28.0/ A	06	EJE DE TRANSMISIÓN FRONTAL (2WD POWER-SHUTTLE)
1.28.0/ A	07	ENGRANAJES CAJA DE CAMBIO DE MARCHA (2WD POWER-SHUTTLE)
1.28.0/ B	01	COMPONENTES CONVERTIDOR PAR DE TORSIÓN Y ENGRANAJES CAJA DE CAMBIO DE MARCHA (4WD POWER-SHUTTLE)
1.28.0/ B	02	COMPONENTES EXTERIORES CAJA DE CAMBIO MARCHA (4WD POWER-SHUTTLE)
1.28.0/ B	03	COMPONENTES HIDRÁULICOS CAJA DE CAMBIO MARCHA (4WD POWER-SHUTTLE)
1.28.0/ B	04	FRENO DE ESTACIONAMIENTO (4WD POWER-SHUTTLE)
1.28.0/ B	05	CAMBIO DE VELOCIDAD (4WD POWER-SHUTTLE)
1.28.0/ B	06	EJE DE TRANSMISIÓN FRONTAL (4WD POWER-SHUTTLE)
1.28.0/ B	07	ENGRANAJES CAJA DE CAMBIO MARCHA (4WD POWER-SHUTTLE)
1.28.0/ B	08	ENGRANAJES EJE DE TRANSMISIÓN POSTERIOR (4WD POWER-SHUTTLE)
1.28.6		INDICADOR DE NIVEL ACEITE / AÑADIR (POWER-SHUTTLE)
1.29.1		MANDOS EXTERIORES (POWER-SHUTTLE)
1.38.1		EJE DE TRANSMISIÓN FRONTAL Y POSTERIOR (POWER-SHUTTLE)
1.39.8		TUBOS DE REFRIGERACION ACEITE TRANSMISION (POWER-SHUTTLE)
1.40.0	01	PUENTE ANTERIOR (2WD)
1.40.0	02	CONJUNTO DE DIRECCIÓN Y CUBOS FRONTALES (2WD)
1.42.0		SISTEMA HIDRÁULICO HIDRODIRECCIÓN
1.44.0/ B	01	EJE TRASERO (POWER-SHUTTLE) (CENTER PIVOT) - NA
1.44.0/ B	02	CONJUNTO DE BLOQUEO DIFERENCIAL Y ACTIVACIÓN (POWER SHUTTLE) (PIVOTE CENTRAL): NA
1.44.0/ B	03	CONJUNTO ENGRANAJE CÓNICO EJE POSTERIOR (POWER SHUTTLE) (PIVOTE CENTRAL): NA
1.44.1		MANDO DIFERENCIAL (POWER-SHUTTLE)
1.44.1/01		MANDO DIFERENCIAL (POWER-SHUTTLE) (CENTER PIVOT) - NA
1.75.2	01	CABLEADO POSTERIOR BASTIDOR Y CABLE DE TIERRA (POWER SHUTTLE): NA
1.75.2	02	INTERRUPTOR BLOQUEO BATERÍA Y CABLE DE TIERRA (POWER SHUTTLE) - NA

TABLE OF CONTENTS

1.75.2	04	CABLEADO MOTOR (POWER SHUTTLE) - NA
1.82.0		DEPOSITO DE ACEITE HIDRAULICA
1.82.3/01		BOMBA HIDRÁULICA (35+35-154L/MM)
1.82.6	01	TUBOS INSTALACIÓN HIDRÁULICA: ALIMENTACIÓN ACEITE BOMBA
1.82.6	02	TUBOS INSTALACIÓN HIDRÁULICA: ALIMENTACIÓN DISTRIBUIDOR
1.82.6	03	TUBOS INSTALACIÓN HIDRÁULICA: ENTRADA PRESIÓN
1.82.6	04	TUBOS INSTALACIÓN HIDRÁULICA: DESCARGA DISTRIBUIDOR
1.82.6	05	TUBOS INSTALACIÓN HIDRÁULICA: RETORNO AL DEPÓSITO
1.82.6	06	TUBOS INSTALACIÓN HIDRÁULICA: FILTRO ACEITE Y VÁLVULA DE CONTROL
1.82.6	07	TUBOS INSTALACIÓN HIDRÁULICA: CILINDROS DEL EQUIPO CARGADOR
1.82.6	10	TUBOS DEL CIRCUITO HIDRAULICO
1.82.6	11	TUBOS DEL CIRCUITO HIDRAULICO
1.82.6	12	TUBOS DE LA INSTALACIÓN HIDRÁULICA 4WS (PIVOTE CENTRAL): NA
1.82.6	13	TUBOS INSTALACIÓN HIDRÁULICA: CILINDRO DE ORIENTACIÓN
1.82.6	14	TUBOS INSTALACIÓN HIDRÁULICA: CILINDRO EQUIPO RETROEXCAVADOR
1.82.6	15	TUBOS INSTALACIÓN HIDRÁULICA: CILINDRO BRAZO DE ELEVACIÓN EQUIPO RETROEXCAVADOR
1.82.6	16	COLLARES DE LOS MANGUITOS DE LA PLACA DE ROTACIÓN (CENTER PIVOT)
1.82.6/01	01	ASPIRACIÓN BOMBA HIDRÁULICA ANTERIOR Y MANGUITOS SALIDA (CENTER PIVOT) - NA
1.82.6/01	02	ESTABILIZADOR BOMBA HIDRÁULICA POSTERIOR, MANGUITOS VÁLVULAS EXCAVADORA Y CARGADOR (CP) - NA
1.82.6/01	03	TUBOS DE LA INSTALACIÓN HIDRÁULICA (PIVOTE CENTRAL): NA: ENTRADA PRESIÓN
1.82.6/01	04	TUBERÍAS DEL COLECTOR DE RETORNO - NA
1.82.6/01	05	GRUPO FILTRO Y TUBERÍAS DEL COLECTOR DE RETORNO (CENTER PIVOT) - NA
1.82.6/01	06	TUBOS DE LA INSTALACIÓN HIDRÁULICA (PIVOTE CENTRAL): NA: RETORNO AL DEPÓSITO
1.82.6/01	07	TUBERÍAS DEL CILINDRO DE ELEVACIÓN DEL CARGADOR (CENTER PIVOT) - NA
1.82.6/01	08	TUBERÍAS DEL CILINDRO DEL CUCHARÓN CARGADOR (CENTER PIVOT) - NA
1.82.6/01	09	TUBERÍAS DEL CILINDRO DE OSCILACIÓN DE LA EXCAVADORA (CENTER PIVOT) - NA
1.82.6/01	10	TUBERÍAS DE LOS DISTRIBUIDORES DE LA EXCAVADORA (CENTER PIVOT) - NA
1.82.6/01	11	COLLARES DE LOS MANGUITOS DE LA PLACA DE ROTACIÓN (CENTER PIVOT) - NA
1.82.6/01	12	DISTRIBUIDOR DE LA EXCAVADORA (CENTER PIVOT) - NA
1.82.6/01	13	SECCIÓN DE LA VÁLVULA CUCHARA (CENTER PIVOT) - NA
1.82.6/01	14	SECCIÓN DE LA VÁLVULA CUCHARÓN, BARRA OSCIL. Y LANZA DE ENGANCHE (CENTER PIVOT) - NA
1.83.0	01	REJILLA Y ACCESORIOS
1.83.0	02	PROTECCIÓN Y ACCESORIOS
1.83.0	03	KIT BLOQUEO PUERTA
1.83.0	04	CONJUNTO PLACA DE BLOQUEO
1.83.0	05	KIT BISAGRA DE PROTECCIÓN BASCULANTE
1.83.0	06	COMPONENTES CONJUNTO PROTECCIÓN BASCULANTE
1.87.2		PANTALLAS DE LA CABINA
1.87.8		COMPONENTES DE FIJACION DE LA CABINA
1.88.01	01	TIRANTE DE BLOQUEO TRANSPORTE EQUIPO POSTERIOR (PIVOTE CENTRAL): NA
1.88.01	02	CABLE DE BLOQUEO TRANSPORTE EQUIPO POSTERIOR (PIVOTE CENTRAL): NA
1.88.08	01	GRUPO BRAZO OSCIL., CASQUILLOS Y PERNOS
1.88.08	02	PERNOS BARRA OSCIL. Y GANCHO DE BLOQUEO TRANSPORTE
1.88.11		BRAZOS Y ARTICULACIONES

TABLE OF CONTENTS

1.88.11/01		CILINDRO ELEVADOR
1.88.11/02	01	CILINDRO DE MANDO DEL CUCHARON
1.88.11/02	02	CILINDRO DE MANDO DEL CUCHARON
1.88.11/03		TUBERIAS DEL CILINDRO ELEVADOR Y CUCHARON
1.88.11/05A	01	EMPALMES AUTONIVELANTES, MANDOS DEL CARGADOR (CENTER PIVOT MECANICO) - NA
1.88.11/05A	02	EMPALMES AUTONIVELANTES, BRAZO DEL CARGADOR (CENTER PIVOT) - NA
1.88.11/06A		CILINDROS ESTABILIZADORES (CENTER PIVOT)
1.88.11/07A		TUBOS PARA CILINDROS ESTABILIZADORES (CENTER PIVOT PILOT)
1.88.11/07C		TUBOS PARA CILINDROS ESTABILIZADORES (CENTER PIVOT MECANICO) - NA
1.88.11/08		SENSOR DE RETORNO EXCAVACIÓN
1.88.11/09	02	CILINDROS TRASERO DEL OSCILACIÓN
1.88.11/09A		CILINDROS Y PLACA ROTACION (CENTER PIVOT)
1.88.12/03		SOPORTE DE LOS DISTRIBUIDORES ANTERIORES Y REENVIOS (CENTER PIVOT - SIDE SHIFT)
1.88.12/03A		SOPORTE DE LOS DISTRIBUIDORES ANTERIORES Y REENVIOS (CENTER PIVOT) - NA
1.89.9/01		SOPORTE VALVULA DISTRIBUIDORA DE LA PARTE TRASERA HUSCO (CENTER PIVOT) - NA
1.91.1		CABINA : PLAFON
1.91.1/01		BASTIDOR DE SEGURIDAD: APARADOS DE CONTROL (ROPS) - NA
1.91.3		ALARMA AUXILIAR
1.91.4	01	CABLEADO DEL TECHO CABINA (CABINA, POWER SHUTTLE)
1.91.4	02	UNIDAD DE MANDO CAJA FUSIBLES (CABINA, POWER SHUTTLE)
1.91.4	03	INTERRUP. DE ENCENDIDO, PUNTO DE ENCEND., TABLERO DE FUSIBLES CABL. CONSOLA LAT. (CAB PT)
1.91.4	04	CABLEADO FRONTAL Y UNIDAD DE MANDO (CABINA, POWER SHUTTLE)
1.91.4	05	SALPICADERO ANTERIOR (CAB POWER SHUTTLE)
1.91.4	06	COMPONENTES DE LA INSTALACIÓN ELÉCTRICA DE LA CABINA (CABINA, POWER SHUTTLE)
1.91.4/02	01	CABLEADO DEL TECHO CABINA (ROPS POWER SHUTTLE)
1.91.4/02	02	UNIDAD DE MANDO CAJA FUSIBLES (ROPS POWER SHUTTLE)
1.91.4/02	03	INTERR. DE ENCENDIDO, PUNTO DE ENCEND., TABLERO DE FUSIBLES CABL. CONSOLA LAT. (ROPS PT)
1.91.4/02	04	CABLEADO FRONTAL Y UNIDAD DE MANDO (ROPS POWER SHUTTLE)
1.91.4/02	05	CONSOLA DERECHA CON INSTRUMENTOS (ROPS POWER SHUTTLE) - NA
1.91.4/02	06	COMPONENTES DE LA INSTALACIÓN ELÉCTRICA DE LA CABINA (ROPS POWER SHUTTLE)
1.91.5	01	LAVAPARABRISAS ANTERIOR Y POSTERIOR
1.91.5	02	DEPÓSITO Y BOQUILLAS LIMPIAPARABRISAS
1.91.6		ANTENA RADIO Y TAPA ALTAVOCES
1.91.7/01		LÁMPARAS Y FAROS - ROPS - NA
1.91.7/02		LÁMPARAS Y FAROS - CABINA - NA
1.92.2		CABINA: ESTRUTURA-PUERTAS
1.92.3		CRISTALES FRONTALES Y JUNTAS
1.92.4	01	FIJACIONES CRISTAL LATERALES PUERTA
1.92.4	02	FIJACIONES CRISTAL LATERAL CABINA
1.92.4	03	CRISTALES LATERALES
1.92.5		GUARDABARROS TRASERO
1.92.6	01	COMPONENTES DEFINICION PUERTAS
1.92.6	02	COMPONENTES CUMPLIMIENTO PUERTA: LADO INFERIOR

TABLE OF CONTENTS

1.92.6	03	COMPONENTES BISAGRA DE CIERRE PUERTA
1.92.8		JUNTA CORTAFUEGO, ROPS (POWER SHUTTLE)
1.92.9	01	CRISTALES POSTERIORES Y COMPONENTES
1.92.9	02	BISAGRA DE CIERRE CRISTAL POSTERIOR
1.92.9	03	BISAGRAS Y CIERRE CRISTAL POSTERIOR
1.93.0	01	CABINA : REVESTIMIENTO (POWER SHUTTLE, POWER SHIFT)
1.93.0	02	CABINA : REVESTIMIENTO (POWER SHUTTLE, POWER SHIFT)
1.93.0	03	CABINA / COBERTURA LATERAL Y SUELO FRONTAL (POWER SHUTTLE: POWER SHIFT)
1.93.0	04	CABINA / CONSOLA POSTERIOR Y COBERTURA DEL SUELO (POWER SHUTTLE: POWER SHIFT)
1.93.0/01	01	CABINA : REVESTIMIENTO (POWER SHUTTLE, POWER SHIFT)
1.93.0/01	02	CABINA / COBERTURA DEL SUELO Y COMPONENTES (POWER SHUTTLE: POWER SHIFT)
1.93.0/02	01	COBERTURA LATERAL DERECHA, CONSOLA POSTERIOR ROPS (PIVOTE CENTRAL): NA
1.93.0/03		RIVESTIMIENTOS MAQUINAS (ROPS) - NA
1.93.4		ESPEJO RETROVISOR - PARASOL
1.93.5	01	CABINA / TABLERO DE MANDOS FRONTAL
1.93.5	02	CABINA / FIJACIONES DEL TABLERO DE MANDOS Y JUNTAS
1.93.5/01	01	CONSOLA ANTERIOR - ROPS (POWER SHUTTLE) - NA
1.93.5/01	02	GUARNICIÓN Y ELEMENTOS DE FIJACIÓN CONSOLA DERECHA - ROPS (POWER SHUTTLE) - NA
1.93.7		RETROVISOR INTERIOR (POWER SHUTTLE) ROPS
1.94.0/01		CAB / ROPS: TECHO Y COBERTURA INTERIOR: NA
1.94.2		MANGUITOS AGUA DE CALEFACCIÓN
1.95.0	01	CABINA / ROPS : PEDAL DEL FRENO
1.95.0	02	CABINA / ROPS / BOMBA DEL FRENO
1.95.0	03	CABINA / ROPS / TUBOS DE LA INSTALACIÓN DEL FRENO
1.95.0/ A		CABINA / ROPS / CILINDRO BOMBA DEL FRENO
1.95.1		CABINA / ROPS / PALANCA DEL FRENO DE ESTACIONAMIENTO Y CABLE DE MANDO
1.95.2		MANDO DEL TRANSPORT LOCK - NA
1.95.3		MANDO DE ACELERADOR ELECTRÓNICO MANUAL/A PEDAL
1.95.5	01	COLUMNA DE DIRECCIÓN Y COBERTURA: NA
1.95.5	02	MANGUITOS INSTALACIÓN DE DIRECCIÓN: NA
1.95.5/ A	01	SERVO DIRECCIÓN: NA
1.96.0		PALANCA DE ADELANTE/ATRÁS Y MULTIFUNCIONES
1.96.2	01	MANDOS ESTABILIZADORES (SIDE SHIFT - EU) - (CENTER PIVOT - NA)
1.96.2	02	MANDOS ESTABILIZADORES (CENTER PIVOT) - NA
1.96.2/01		DIAGNOSTICO PILOT CONTROL
1.96.7/04		PERNOS DE CIERRE Y TAPONES ROPS (PIVOTE CENTRAL): NA
1.96.7/05		CABINA / DIFERENTES COMPONENTES (PIVOTE CENTRAL): NA
1.96.7/06		CABINA: DIFERENTES COMPONENTES (CENTER PIVOT): NA
1.96.7/07		PERNOS DE CIERRE Y TAPONES ROPS (PIVOTE CENTRAL): NA
1.98.0/01		CALCOMANÍAS DE SÍMBOLOS E INFORMACIÓN (POWER SHUTTLE - POWER SHIFT) - NA
1.98.1	08	MODELO DE IDENTIFICACIÓN: ADHESIVOS DE SEGURIDAD
1.98.1	09	IDENTIFICACIÓN MODELO B90B / B90BLR - B959B / B95BLR - B100B / B100BLR
81.00		RUEDAS DELANTERAS (2WD) - NA
82.00	01	RUEDAS DIRECTRICES Y MOTRICES(4WD) - NA

TABLE OF CONTENTS

83.00	01	RUEDAS POSTERIOR - NA
095		CONTROL ESTABILIZADOR SIN ELEVACIÓN AUTOMÁTICA (CENTER PIVOT)
096		CONTROL ESTABILIZADOR CON ELEVACIÓN AUTOMÁTICA (CENTER PIVOT)
131		BATERIA INDIVIDUAL
175		TAPA ASPIRACIÓN DE AIRE Y PRE-FILTRO
176		TAPA ASPIRACIÓN DE AIRE Y PRE-FILTRO
201		GANCHOS DE ELEVACION DE LA PALA Y PARTE POSTERIOR
284		ESPEJO RETROVISOR (CAB) - NA
290		CONTRAPESO FRONTAL: 2WS
291		CONTRAPESO FRONTAL: 2WS
302	01	DISTRIBUIDOR DE LA PALA DE DOS SECCIONES
302	02	DISTRIBUIDOR DE 2 SECCIONES EQUIPO CARGADOR: SECCIÓN DE ASPIRACIÓN
302	03	DISTRIBUIDOR DE 2 SECCIONES EQUIPO CARGADOR: SECCIÓN BRAZO DE ELEVACIÓN
302	04	DISTRIBUIDOR DE LA PALA DE DOS SECCIONES
321		DOBLE BATERIA
331	01	COLUMNA COMPLETA 6 SECCIONES (CENTER PIVOT)
331	02	SOPORTE PARA VÁLVULA DE CONTROL PILOTO, COMPLETO
331	03	SOPORTE PARA VÁLVULA DE CONTROL PILOTO, COMPLETO
331	04	SOPORTE PARA VÁLVULA DE CONTROL PILOTO, COMPLETO
331	05	SOPORTE PARA VÁLVULA DE CONTROL PILOTO, COMPLETO
331	06	SECCIÓN 6 - SOPORTE PARA VÁLVULA DE CONTROL PILOTO, COMPLETO
331	07	SOPORTE PARA VÁLVULA DE CONTROL PILOTO, COMPLETO
331	08	SOPORTE PARA VÁLVULA DE CONTROL PILOTO, COMPLETO
331	09	SOPORTE PARA VÁLVULA DE CONTROL PILOTO, COMPLETO
331/ A		VALVULA DE MANDO PROPORCIONAL 6 SECCIONES
331/ B	01	DISTRIBUIDOR EXCAVADORA, 6 SECCIONES (CENTER PIVOT)
331/ B	02	DISTRIBUIDOR EXCAVADORA, SECCIÓN ENTRADA (CENTER PIVOT)
331/ B	03	DISTRIBUIDOR EXCAVADORA, SECCIÓN LANZA DE ENGANCHE (CENTER PIVOT)
331/ B	04	DISTRIBUIDOR EXCAVADORA, SECCIÓN OSCIL. (CENTER PIVOT)
331/ B	05	DISTRIBUIDOR EXCAVADORA, SECCIÓN CUCHARÓN (CENTER PIVOT)
331/ B	06	DISTRIBUIDOR EXCAVADORA, SECCIÓN DIPPERSTICK (CENTER PIVOT)
331/ B	07	DISTRIBUIDOR EXCAVADORA, SECCIÓN ESTABILIZADOR (CENTER PIVOT)
331/ B	08	DISTRIBUIDOR EXCAVADORA, SECCIÓN LANZA DE ENGANCHE (CENTER PIVOT)
331/ B	09	DISTRIBUIDOR EXCAVADORA, SECCIÓN OSCIL. (CENTER PIVOT)
331/ B	10	DISTRIBUIDOR EXCAVADORA, SECCIÓN CUCHARÓN (CENTER PIVOT)
331/ B	11	DISTRIBUIDOR EXCAVADORA, SECCIÓN DIPPERSTICK (CENTER PIVOT)
331/ B	12	DISTRIBUIDOR EXCAVADORA, SECCIÓN ESTABILIZADOR (CENTER PIVOT)
331/ C	01	VÁLVULA DE PILOTAJE DEL MANIPULADOR (DERECHA)
331/ C	02	VÁLVULA, PALANCA DE CONTROL IZQUIERDO
333	01	COLUMNA COMPLETA 7 SECCIONES (CENTER PIVOT)
333	02	CONJUNTO COLUMNA PARA SERVOMANDO DE 7 SECCIONES: INSTALACIÓN HIDRÁULICA DISTRIBUIDOR, VÁLVULA PROPORCIONAL
333	03	CONJUNTO COLUMNA PARA SERVOMANDO DE 7 SECCIONES (PIVOTE CENTRAL): INSTALACIÓN DISTRIBUIDOR
333	04	CONJUNTO COLUMNA PARA SERVOMANDO DE 7 SECCIONES (PIVOTE CENTRAL): INSTALACIÓN CILINDRO TELESCÓPICO
333	05	CONJUNTO COLUMNA PARA SERVOMANDO DE 7 SECCIONES (PIVOTE CENTRAL): INSTALACIÓN CILINDRO DE LA CUCHARA
333/ A		VALVULA DE MANDO PROPORCIONAL 7 SECCIONES
333/ C	01	VÁLVULA DE PILOTAJE DEL MANIPULADOR (DERECHA) 7 CARRETES

TABLE OF CONTENTS

333/ C	02	VÁLVULA DE PILOTAJE DEL MANIPULADOR (DERECHA) 7 CARRETES
333/01B	01	SECCIÓN 7 VÁLVULA DE CONTROL DE LA EXCAVADORA (CENTER PIVOT) - NA
333/01B	02	DISTRIBUIDOR DE 7 SECCIONES EQUIPO RETROEXCAVADOR (PIVOTE CENTRAL): NA: CILINDRO TELESCÓPICO
335		COLUMNA COMPLETA 7 SECCIONES (CENTER PIVOT)
336/01	01	DISTRIBUIDOR CARGADOR 2 SECCIONES (CENTER PIVOT) - NA
336/01	02	DISTRIBUIDOR CARGADOR, 2 SECCIONES, TAPA Y VÁLVULA DE DESCARGA (CENTER PIVOT) - NA
336/01	03	DISTRIBUIDOR CARGADOR, 2 SECCIONES, VÁLVULA DE ALIVIO Y RETENCIÓN (CENTER PIVOT) - NA
336/01	04	DISTRIBUIDOR CARGADOR, 2 SECCIONES, EQUIPO BY-PASS (CENTER PIVOT) - NA
336/01	05	DISTRIBUIDOR CARGADOR, 2 SECCIONES, EQUIPO DESCARGA O VÁLVULA VOLTEO (CENTER PIVOT) - NA
337	01	VÁLVULA DE BLOQUEO EN LOS CILINDROS BASCULANTES DEL EQUIPO CARGADOR
337	02	VALVULA DE BLOQUEO EN LOS CILINDROS DE LEVANTAMIENTO PALA
338		VALVULA DE BLOQUEO EN LOS CILINDROS DE LEVANTAMIENTO PALA
344	01	DISTRIBUIDOR ESTABILIZADOR, 2 SECCIONES (CENTER PIVOT) - NA
344	02	DISTRIBUIDOR ESTABILIZADOR, SECCIÓN DERECHA E IZQUIERDA (CENTER PIVOT) - NA
346	01	ALOJAMIENTO Y FILTROS A/A
346	02	VENTILADOR Y SERPENTINES A/A
346	03	MANGUITOS ESPIRALES DE CALEFACCIÓN
346	04	PANEL DE MANDO CALEFACCIÓN Y A/A
346	05	CONDUCTOS CONSOLAS CALEFACCIÓN Y A/A
347	01	ALOJAMIENTO Y FILTROS
347	02	VENTILADOR Y SERPENTINES RECALENTADOR
347	03	MANGUITOS ESPIRALES DE CALEFACCIÓN
347	04	PANEL DE MANDO CALEFACCIÓN Y A/A
347	05	CONDUCTOS CONSOLAS CALEFACCIÓN Y A/A
347	06	TAPON ENVOLTURA CALEFACCIÓN CABINA
386		CUCHARÓN RETROEXCAVADORA 12" (305 MM) HD CON DIENTES ENSAMBLADOS CON CLAVIJAS - NA
387		CUCHARÓN RETROEXCAVADORA 18" (457MM) HD CON DIENTES ENSAMBLADOS CON CLAVIJAS - NA
388		CUCHARÓN RETROEXCAVADORA 24" (610MM) HD CON DIENTES ENSAMBLADOS CON CLAVIJAS - NA
389		CUCHARÓN RETROEXCAVADORA 30" (762MM) HD CON DIENTES ENSAMBLADOS CON CLAVIJAS - NA
390		DISTRIBUIDOR CARGADOR, 2 SECCIONES, PALANCA - NA
390/01		CUCHARÓN RETROEXCAVADORA 36" (910MM) HD CON DIENTES ENSAMBLADOS CON CLAVIJAS - NA
391		VALVULA DE BLOQUEO PARA CUCHARON 4X1 / 6X1
392	01	VÁLVULA DE BLOQUEO EN CILINDRO DEL BRAZO DE ELEVACIÓN Y EQUIPO RETROEXCAVADOR
392	02	VÁLVULA DE BLOQUEO EN CILINDRO Y EQUIPO RETROEXCAVADOR
393		MANDOS EXCAVADORA DE PALANCA, PALANCA, TAPA CONTRA EL POLVO Y CALCOM. - NA
394	01	MANDOS EQUIPO RETROEXCAVADOR DE 4 PALANCAS, CONSOLA, PALANCAS Y PALANCA A ESCUADRA (PIVOTE CENTRAL: SIDE SHIFT): PALANCAS DE MANDO

TABLE OF CONTENTS

394	02	MANDOS EQUIPO RETROEXCAVADOR DE 4 PALANCAS, CONSOLA, CONJUNTO TIRANTE SUPERIOR (PIVOTE CENTRAL: SIDE SHIFT): TIRANTES SUPERIORES
394	03	MANDOS EQUIPO RETROEXCAVADOR DE 4 PALANCAS, CONSOLA, CONJUNTO TIRANTE INFERIOR (PIVOTE CENTRAL: SIDE SHIFT): TIRANTES INFERIORES
394/01	01	MANDOS EQUIPO RETROEXCAVADOR ISO DE 2 PALANCAS, PALANCAS, PROTECCIÓN CONTRA EL POLVO, ADHESIVOS (PIVOTE CENTRAL) - NA -PALANCAS DE MANDO -PALANCAS DE MANDO
402	01	EJE DELANTERO (4WD), ALOJAMIENTO, CASQUILLOS Y SOPORTES - NA
402	02	EJE DELANTERO (4WD), ALOJAMIENTO OSCILANTE Y CILINDRO DE DIRECCION - NA
402	03	EJE DELANTERO (4WD), CUBOS - NA
402	04	EJE DELANTERO (4WD), GRUPO PIÑÓN Y CORONA DENTADA - NA
402	05	EJE DELANTERO (4WD), DIFERENCIAL - NA
402	06	EJE FRONTAL 4WD, EJE ARTICULADO
416		COMPONENTES DEL MARTILLO DE LOS SISTEMAS (CAB - ROPS)
437		VALVULA DE CAMISA,SISTEMA HIDRÁULICO NIVELACIÓN DE LA ESTRUCTURA MÁQUINA
471	01	CUCHARON 4X1 (1 M³) CON CUCHILLA "COMMON GREY"
471	02	CUCHARA 4X1 (1 M3) CON PALA “COMMON GREY”: DESGASTE CUCHARA
471/01		CILINDRO HIDRAULICO (CUCHARON 4X1-6X1)
472	01	CUCHARON 4X1 (1 M³) CON DIENTE "COMMON GREY"
472	02	CUCHARA 4X1 (1 M3) CON DIENTES “COMMON GREY”: DESGASTE CUCHARA
473	01	CUCHARON 6X1 (1 M³) CON CUCHILLA "COMMON GREY"
473	02	CUCHARA 6X1 (1 M3) CON PALA “COMMON GREY”: DESGASTE CUCHARA
474	01	CUCHARON 6X1 (1 M³) CON DIENTE "COMMON GREY"
474	02	CUCHARA 6X1 (1 M3) CON DIENTES “COMMON GREY”: DESGASTE CUCHARA
514	01	BRAZO DE EXCAVACION CORTO
514	02	BRAZO DE EXCAVACION CORTO
514	03	CILINDRO HIDRAULICO DE ELEVACION
514	04	CILINDRO HIDRAULICO DE EXCAVACION
515/01		CUCHARÓN RETROEXCAVADORA 12"(305 MM) CON DIENTES ENSAMBLADOS CON CLAVIJAS - NA
516/01		CUCHARÓN RETROEXCAVADORA 18" (457MM) CON DIENTES ENSAMBLADOS CON CLAVIJAS - NA
517/01		CUCHARÓN RETROEXCAVADORA 24"(610 MM) CON DIENTES ENSAMBLADOS CON CLAVIJAS - NA
518/01		CUCHARÓN RETROEXCAVADORA 30"(762 MM) CON DIENTES ENSAMBLADOS CON CLAVIJAS - NA
519/01		CUCHARÓN RETROEXCAVADORA 36" (910MM) CON DIENTES ENSAMBLADOS CON CLAVIJAS - NA
520		CUCHARON DE (0.88 M³) SIN DIENTES
520/01		CUCHARÓN RETROEXCAVADORA 18"(457 MM) CON DIENTES ENSAMBLADOS CON CLAVIJAS (EXTRA HD) - NA
521		CUCHARÓN RETROEXCAVADORA 24" (610MM) CON DIENTES ENSAMBLADOS CON CLAVIJAS (EXTRA HD) - NA
522		CUCHARON DE (1 M³) SIN DIENTES
522/01		CUCHARON ESTANDAR DE (1 M³) CON HORQUILLAS
525		CUCHARON ESTANDAR DE (1 M³) CON HORQUILLAS Y HOJA REVERSIBLE
527		CUCHARON DE (0.88 M³) Y CUCHILLA REV.SUPLEMEN.
535		PIE ESTABILIZADOR TIERRA (CENTER PIVOT)
536		CUCHARON ESTANDAR DE (1 M³) CON DIENTE

TABLE OF CONTENTS

536/02		PIE ESTABILIZADOR REVERSIBLE (CENTER PIVOT)
537		CUCHARON ESTANDAR DE (1 M³) CON CUCHILLA REV. SUPLEMEN.
548		CUCHARA EXPURGADORA DE ZANJAS
622		VENTILADOR INTERNO - CAB
636	07	EQUIPAMIENTO DEL MOTOR: MOTOR DE ARRANQUE
636	08	MOTOR ACOPLADO - ALTERNADOR
638	01	PROTECCIONES DEL RADIADOR
638	02	RADIADOR DEL AGUA, ACEITE HIDRÁULICO Y TRANSMISIÓN
638	03	TUBOS DE REFRIGERACIÓN AFTER-COOLER
638	04	RADIADOR: POSENFRIADOR
638	05	EQUIPAMIENTO DEL MOTOR: SOPORTES
638	06	EQUIPO MOTOR: ROTOR CON JUNTA VISCOSA: EU
638	07	MOTOR ACOPLADO - ARRANCADOR
638	08	MOTOR ACOPLADO: ALTERNADOR
639	01	PROTECCIONES DEL RADIADOR
639	02	RADIADOR DEL AGUA, ACEITE HIDRÁULICO Y TRANSMISIÓN
639	03	TUBOS DE REFRIGERACIÓN AFTER-COOLER
639	04	RADIADOR: POSENFRIADOR
639	05	EQUIPAMIENTO DEL MOTOR: SOPORTES
639	06	EQUIPO MOTOR: ROTOR CON JUNTA VISCOSA
639	07	EQUIPAMIENTO DEL MOTOR: MOTOR DE ARRANQUE
639	08	MOTOR ACOPLADO
646	01	JUEGO DE PIEZAS DE AIRE ACONDICIONADO DE LA MÁQUINA
646	02	GRUPO EMPALME COMPRESOR A/A
646	03	COMPRESOR A/A
646	04	GRUPO EMPALME FILTRO A/A Y CONDENSADOR
650		COLUMNA DE DIRECCIÓN, FIJA Y REGULABLE
698		VALVULA DE CAMISA,SISTEMA HIDRÁULICO NIVELACIÓN DE LA ESTRUCTURA MÁQUINA 2 INTERRUPTOR ON/OFF
699		INTERRUPTOR MARTILLO MANUAL
700	01	CONDUCTOS HIDRÁULICOS BRAZO CUCHARA 4X1 Y 6X1 (POWER SHIFT, POWER SHUTTLE)
700	02	CONDUCTOS HIDRÁULICOS MÁQUINA CUCHARA 4X1 Y 6X1 (POWER SHIFT, POWER SHUTTLE)
700	03	DISTRIBUIDOR DE LA PALA DE TRES SECCIONES (POWER SHIFT , POWER SHUTTLE)
721	01	MANDO A PEDAL BALANCÍN TELESCÓPICO (PIVOTE CENTRAL): DISTRIBUIDOR: NA
721	02	DISTRIBUIDOR ESTABILIZADOR, 3. SECCIÓN (CENTER PIVOT): NA
721	03	MANGUITOS DISTRIBUDOR DEL BRAZO TELESCOPICO, SECCIÓN HED(CENTER PIVOT) - NA
721	04	BALANCÍN TELESCÓPICO CON MANDO A PEDAL (PIVOTE CENTRAL): INSTALACIÓN BALANCÍN TELESCÓPICO: CILINDRO TELESCÓPICO - NA
721	05	BALANCÍN TELESCÓPICO CON MANDO A PEDAL (PIVOTE CENTRAL): INSTALACIÓN BALANCÍN TELESCÓPICO: CILINDRO CUCHARA - NA
721	06	MANDO A PEDAL BALANCÍN TELESCÓPICO (PIVOTE CENTRAL): NA
724/ A		DISTRIBUIDOR MARTILLO TRASERO
724/01	01	INSTALACIÓN HIDRÁULICA MÁQUINA PARA MARTILLO HIDRÁULICO (PIVOTE CENTRAL)
724/01	02	INSTALACIÓN HIDRÁULICA BRAZO MARTILLO (PIVOTE CENTRAL)
724/02		CIRCUITO HIDRAULICO DEL MARTILLO (CENTER PIVOT)
725		EQUIPO MARTILLO NEUMÁTICO DE BRAZO DE ELEVACION A BRAZO DEMOLEDOR

TABLE OF CONTENTS

725/01	01	INSTALACIÓN HIDRÁULICA CONJUNTO BRAZO CUCHARA 4X1 Y 6X1 (POWER SHUTTLE): NA
725/01	02	CONJUNTO CONDUCTO HIDRÁULICO CONJUNTO MÁQUINA CUCHARA 4X1 Y 6X1 (POWER SHUTTLE): NA
725/01	03	DISTRIBUIDOR CARGADOR, 3 SECCIONES (CENTER PIVOT) - NA
725/01	04	DISTRIBUIDOR CARGADOR, 3 SECCIONES, TAPA Y VÁLVULA DE DESCARGA (CENTER PIVOT) - NA
725/01	05	DISTRIBUIDOR CARGADOR, 3 SECCIONES, VÁLVULA DE ALIVIO Y RETENCIÓN (CENTER PIVOT) - NA
725/01	06	DISTRIBUIDOR DE LA PALA DE TRES SECCIONES - CUCHARON SECCIONES 4X1 - 6X1(CENTER PIVOT) - NA
727/01		CIRCUITO HIDR. DEL BRAZO TELESCOPICO MANDO A PEDAL (CENTER PIVOT) - NA
728	01	INSTALACIÓN MARTILLO HIDRÁULICO MANUAL: ALIMENTACIÓN
728	02	INSTALACIÓN MARTILLO HIDRÁULICO LATERAL: RETORNO
728	03	VÁLVULA MARTILLO MANUAL
733		EMPALME RAPIDO MECANICO PARTE TRASERA
734		EMPALME RAPIDO MECANICO PARTE DELANTERA
758		FARO GIRATORIO
787		CONSOLA ANTERIOR SIN TAQUÍMETRO (POWER SHUTTLE, ROPS)
787/01		CONSOLA ANTERIOR SIN TAQUÍMETRO (POWER SHUTTLE, CAB)
788		CONSOLA ANTERIOR CON TAQUÍMETRO (ROPS)
788/01		CONSOLA ANTERIOR CON TAQUÍMETRO (CAB) (POWER SHUTTLE)
789		SENSOR DE VELOCIDAD (P.SHUTTLE)
793		LUCES DE TRABAJO DELANTERAS - CABINA
793/01		LUCES DE TRABAJO DELANTERAS (ROPS)
794		LÁMPARAS Y FAROS - CABINA
794/01		LÁMPARAS Y FAROS (ROPS)
796		ANTIRROBO
803		GUARDABARROS DELANTEROS
835		GUARDABARROS POSTERIOR Y TECHO (ROPS: CABINA): NA
851		ASIENTO DE TAPICERÍA - CABINA
851/01	01	COJINES ASIENTO DE TAPICERÍA, BRAZOS Y ACCESORIOS
851/01	02	PLACA DE INSTALACIÓN ASIENTO DE TAPICERÍA, GUÍAS DE REGULACIÓN Y CINTURÓN
851/01	03	PARTES SUSPENSIONES SUPERIORES ASIENTO DE TAPICERÍA
851/01	04	PARTES SUSPENSIONES INFERIORES ASIENTO DE TAPICERÍA
855		ASIENTO NEUMÁTICO DE TAPICERÍA - CABINA
855/01	01	COJINES ASIENTO NEUMÁTICO, BRAZOS Y ACCESORIOS
855/01	02	PLACA DE INSTALACIÓN ASIENTO NEUMÁTICO, GUÍAS DE REGULACIÓN Y CINTURÓN
855/01	03	PARTES SUSPENSIONES SUPERIORES ASIENTO NEUMÁTICO DE TAPICERÍA
855/01	04	PARTES SUSPENSIONES INFERIORES ASIENTO NEUMÁTICO DE TAPICERÍA
855/01	05	COMPRESOR Y TUBOS ASIENTO NEUMÁTICO DE TAPICERÍA
856		COJINES ASIENTO DE VINILO, BRAZOS Y ACCESORIOS (ROPS)
856/01	01	ASIENTO DE VINILO CON BRAZOS (ROPS)
856/01	02	PLACA DE INSTALACIÓN ASIENTO DE VINILO, GUÍAS DE REGUL. Y CINTURÓN (ROPS)
856/01	03	PARTES SUSPENSIONES SUPERIORES ASIENTO DE VINILO (ROPS)
856/01	04	PARTES SUSPENSIONES INFERIORES ASIENTO DE VINILO (ROPS)
879		ESPEJO POSTERIOR DERECHO CABINA

TABLE OF CONTENTS

888		PROTECCIÓN Y ADHESIVO BALANCÍN
900	01	BALANCÍN LARGO: CONJUNTO
900	02	BRAZO DE ESCAVACION LARGO - BRAZO DE ELEVACION
900	03	BRAZO DE ESCAVACION LARGO
900	04	BRAZO DE ESCAVACION LARGO/CORTO - CINEMATISMO CUCHARON
900	05	BALANCÍN: INSTALACIÓN BALANCÍN Y CILINDRO BALANCÍN
900	06	BALANCÍN: INSTALACIÓN HIDRÁULICA CILINDRO CUCHARA
900	07	BALANCÍN: INSTALACIÓN HIDRÁULICA CILINDRO BRAZO DE ELEVACIÓN
900	08	BRAZO DE ESCAVACION - INSTALACION HIDRAULICA
900	09	CILINDRO HIDRAULICO DE ELEVACION - BRAZO TELESCOPICO LARGO
900	10	CILINDRO HIDRAULICO DE EXCAVACION
900	11	CILINDRO HIDRAULICO DEL CUCHARON
901	01	BALANCÍN TELESCÓPICO LARGO: CONJUNTO
901	02	BRAZO TELESCOPICO LARGO
901	03	BRAZO TELESCOPICO - INSTALACION HIDRAULICA
901	04	BALANCÍN TELESCÓPICO LARGO: CILINDRO HIDRÁULICO TELESCÓPICO
902	01	BALANCÍN TELESCÓPICO CORTO: CONJUNTO
902	02	BRAZO TELESCOPICO CORTO
902	03	BALANCÍN TELESCÓPICO CORTO: CILINDRO HIDRÁULICO TELESCÓPICO
990		HERRAMIENTAS
993	01	PLACAS - NA
993	02	PLACAS - NA
995		ARRANQUE EN FRÍO

NOTAS

INFORMACIÓN GENERAL

NOTA DE PATENTE

El contenido de este manual es propiedad de esta compañía. La reproducción o el uso de cualquier parte para cualquier otro propósito que no sea el funcionamiento y mantenimiento de nuestro equipo está permitido solamente si se autoriza expresamente por escrito.

Pueden obtenerse copias adicionales en su concesionario. Dirigir sus pedidos a su concesionario y hacer referencia al número de publicación que aparece en la parte inferior de la contraportada o en la cubierta de su manual.

POLÍTICA DE LA COMPAÑÍA

La política de la compañía, de mejora continua, se reserva el derecho a cambiar los precios y a realizar cambios en el diseño y las especificaciones en cualquier momento sin previo aviso ni obligación de modificar las unidades fabricadas con anterioridad.

Todos los datos que se dan en este libro están sujetos a variaciones de producción. Las dimensiones y los pesos son aproximados solamente y las ilustraciones no muestran necesariamente las máquinas en condiciones estándar. Para información exacta sobre cualquier máquina en particular, ponerse en contacto con el concesionario.

PIEZAS Y ACCESORIOS

Se han diseñado piezas y accesorios específicamente para estas máquinas.

Quisiéramos señalar que la compañía NO ha examinado y aprobado otras piezas y accesorios “no genuinos”. La instalación y/o el uso de tales productos puede tener efectos negativos en las características de diseño de su máquina y, por lo tanto, afectar su seguridad. La compañía no se responsabiliza por los daños causados por el uso de piezas y accesorios “no genuinos”.

MEJORAS

Estamos continuamente intentando mejorar nuestros productos. Se reserva el derecho a mejorar el diseño o realizar cambios cuando resulte práctico y posible llevarlo a cabo, sin incurrir por ello en la obligación de realizar estos cambios o actualizar las unidades vendidas previamente.

CÓDIGOS DE LOS MODELOS

El rango de las máquinas que se incluyen puede que no esté disponible en todos los países o mercados. Por lo tanto, para obtener la información más actualizada consultar con su concesionario local.

AYUDA AL PROPIETARIO

Deseamos que esté completamente satisfecho con su inversión. Normalmente, cualquier problema con el equipo, será resuelto por el departamento de mantenimiento del concesionario. Sin embargo, pueden producirse malentendidos. Si el problema no ha sido resuelto a su satisfacción, le sugerimos lo siguiente:

1. Hablar con el propietario o gerente general del concesionario, explicar el problema y solicitar su ayuda. Cuando se necesite de ayuda especial, el concesionario tiene acceso directo con nuestras oficinas.
2. Proporcione al concesionario la siguiente información:
   - Su nombre, dirección y número de teléfono
   - Modelo de la máquina y número de serie
   - Nombre del concesionario y dirección
   - Fecha de compra de la máquina y tiempo de uso
   - Naturaleza del problema

Recuerde que el problema probablemente será resuelto en el concesionario, utilizando las instalaciones, equipo y personal del mismo. Así que es importante que el primer contacto sea con el concesionario.

PIEZAS DE REPUESTO

Para mantener la eficacia operativa, usar piezas de repuesto originales.

Al pedir piezas, proporcionar la siguiente información:

- Modelo de la máquina
- Números de serie de la máquina y el motor
- Número de pieza del catálogo de piezas

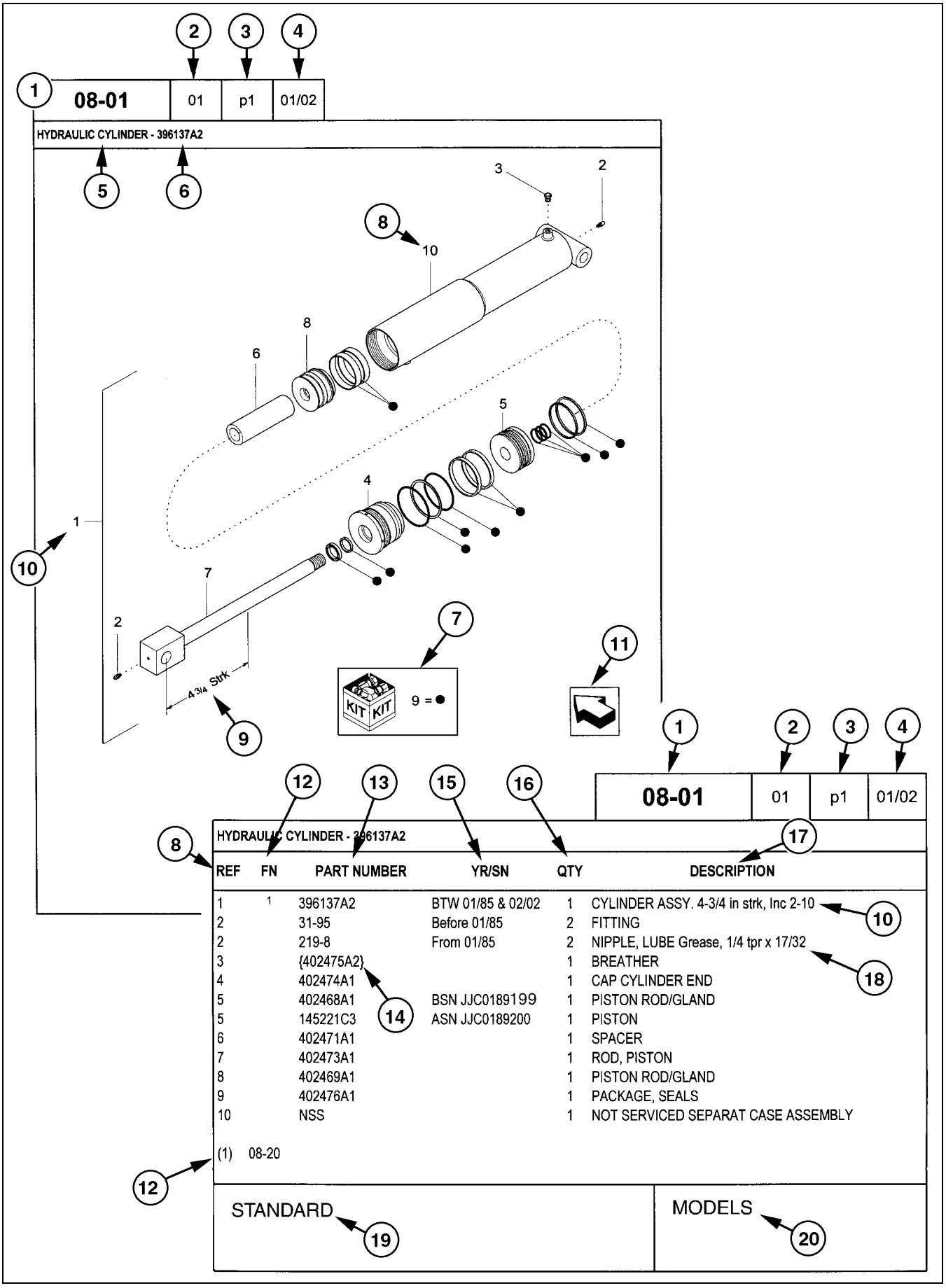

REF	FN	PART NUMBER	YR/SN	QTY	DESCRIPTION
1	1	396137A2	BTW 01/85 & 02/02	1	CYLINDER ASSY. 4-3/4 in strk, Inc 2-10
2		31-95	Before 01/85	2	FITTING
2		219-8	From 01/85	2	NIPPLE, LUBE Grease, 1/4 tpr x 17/32
3		{402475A2}		1	BREATHER
4		402474A1		1	CAP CYLINDER END
5		402468A1	BSN JJC0189199	1	PISTON ROD/GLAND
5		145221C3	ASN JJC0189200	1	PISTON
6		402471A1		1	SPACER
7		402473A1		1	ROD, PISTON
8		402469A1		1	PISTON ROD/GLAND
9		402476A1		1	PACKAGE, SEALS
10		NSS		1	NOT SERVICED SEPARAT CASE ASSEMBLY

(1) 08-20

STANDARD

MODELS

CÓMO USAR EL CATÁLOGO DE PIEZAS

1. Número de figura
2. Código de secuencia con número de figura
3. Número de página en el código de secuencia
4. Fecha de impresión (mes/año)
5. Descripción de la figura
6. Información general sobre la figura
7. Piezas suministradas en los juegos de reparación según la referencia del símbolo
8. Leyenda de referencia del número de pieza (REF)
9. Especificaciones técnicas referentes a la pieza indicada
10. Leyenda de figura que incluye artículos en paréntesis, los artículos incluidos pueden encontrarse también en el área de descripción adicional
11. Orientación – La flecha muestra la parte delantera de la máquina.
12. Pie de página – Información adicional referente al número de pieza. En este ejemplo, 08-20 equivale a otra figura en la que se muestra esta pieza.
13. Número de pieza
    NSS = Piezas que no reciben mantenimiento por separado (piezas sin mantenimiento)
    Números en paréntesis = No disponibles como piezas de mantenimiento en este mercado
14. No disponibles como piezas de mantenimiento en este mercado
15. YR/SN

    Año
    Antes de 01/85 = Pieza en fabricación en enero de 1985 y anteriormente
    Desde 01/85 = Pieza en fabricación desde enero de 1985 y posteriormente
    BTW 01/85 & 02/02 = Pieza válida para máquinas fabricadas entre enero de 1985 y febrero de 2002

    Número de serie (N.I.P.)
    BSN JJC0268800 = Pieza válida para el número de serie JJC0268800 y anteriores
    ASN JJC0268800 = Pieza válida para el número de serie JJC0268800 y posteriores
    BTW JJC0178000 & JJC0179000 = Pieza válida para los números de serie entre JJC0178000 y JJC0179000
16. Cantidad total de piezas referidas en la página. La cantidad puede reemplazarse por las siguientes instrucciones:
    SR = Según se requiera
    X = Según se requiera
17. Descripción de la pieza
18. Información adicional sobre la pieza para ayudar a confirmar la identificación
19. Notas de figura
20. Número(s) de modelo

LADO DERECHO E IZQUIERDO

La referencia al lado derecho e izquierdo en este catálogo se identifica con el operador de pie en la parte trasera de la unidad básica (sin accesorio trasero), mirando hacia el frente de la máquina (con desplazamiento de avance normal).

Para las páginas que cubren los accesorios de la máquina, el lado derecho e izquierdo se definen con el operador sentado en la posición correcta de funcionamiento del accesorio.

DIMENSIONES

Las dimensiones métricas e imperiales de la tornillería no muestran el número de medida de roscas anchas estándares. El número después de un punto y coma (;) es la clase o el grado de la tornillería. Una coma (,) representa el punto decimal (.) usando en dimensiones imperiales (EE.UU.).

EXPLICACIÓN DE LAS ABREVIATURAS

AC	corriente alterna
adj	ajustable
amp	amperios
AR	según sea necesario
ASN	número de serie y posterior NIP y posterior

blkhd	mamparo
br	sucursal
BSN	antes del número de serie antes del NIP
BTW	entre

cc	centímetros cúbicos
cl	clase
cmprsn	compresión
cn pt	punto de cono
cp pt	punto de copa
CRS	acero de aleación de cromo
CST	acero al carbono
cu yd	yarda cúbica

DC	corriente continua
deg	grados
dg pt	punto de garra
dia	diámetro
dr type	tipo de transmisión

fc	superficie
fc sl	superficie de sellado
fem	hembra
fem PT	rosca hembra de tubería
fl	ensanche
flat pt	punto plano
ft	pies (o pie)

ga	calibre
gal	galón o galones
gpm	galones por minuto
gr	grado

hd	cabeza
hdg pt	punto de media garra
hp	potencia en C.V.
ID	diámetro interior
in	pulgada o pulgadas
Incl.	incluye
inv fl	ensanche invertido

K	kilo
kg	kilogramo
km/h	kilómetros por hora

L	litro
lb	libras
lb-ft	libra pie
lg	largo
LH	lado izquierdo
LH thd	rosca izquierda

M	(prefijo) tamaño de rosca en métrico
m	metro
ml	milímetro
mm	milímetros

NF	National Fine
No.	número
NPT	National Pipe Thread
NS	National Super Fine

OD	diámetro exterior
ohm	unidad eléctrica de resistencia
Or	junta tórica
ORB	refuerzo de junta tórica
ORFS	superficie de sellado de junta tórica
ov cntr	sobre el centro
ov pt	punto oval
oz	onza

P	pitch
psi	libras por pulgada cuadrada
pt	pinta
PT	rosca de la tubería

rd	redondo/a
rd holes	agujeros redondos
RH	lado derecho
RH thd	rosca derecha
rpm	revoluciones por minuto

sl	autobloqueante
sq	cuadrado/a
SST	acero inoxidable
st	autorroscante
strk	carrera
sw	balancín

T	dientes
thk	grueso/a
tpr	ahusado/a
tube OD	diámetro exterior del tubo

V	voltio o voltios
W	vatio o vatios
X	según sea necesario
yd	yardas

SECTION INDEX
General

MAIN		SECCIONES PRINCIPALES
MPARTS	00	PIEZAS PARA MANUTENCIÓN
SEC. 01	03	MOTOR
SEC. 01	04	MOTOR
SEC. 02		TANQUE COMBUSTIBLE-SILENCIADOR-RADIATOR-FILTRO DE AIRE
SEC. 03	01	CAMBIO DE VELOCIDADES
SEC. 04		EJE DELANTERO
SEC. 05		EJE TRASERO
SEC. 06		ELECTRICO
SEC. 07		CORREDERAS
SEC. 08		CAPOT
SEC. 09	01	CARGADOR
SEC. 09	03	RETRO
SEC. 11		RUEDAS
SEC. 18		VARIANTES
0.0040/01	01	EQUIPO OPCIONAL - NA
0.0040/01	02	EQUIPO OPCIONAL - NA
0.0040/01	03	EQUIPO OPCIONAL - NA

SECCIONES PRINCIPALES

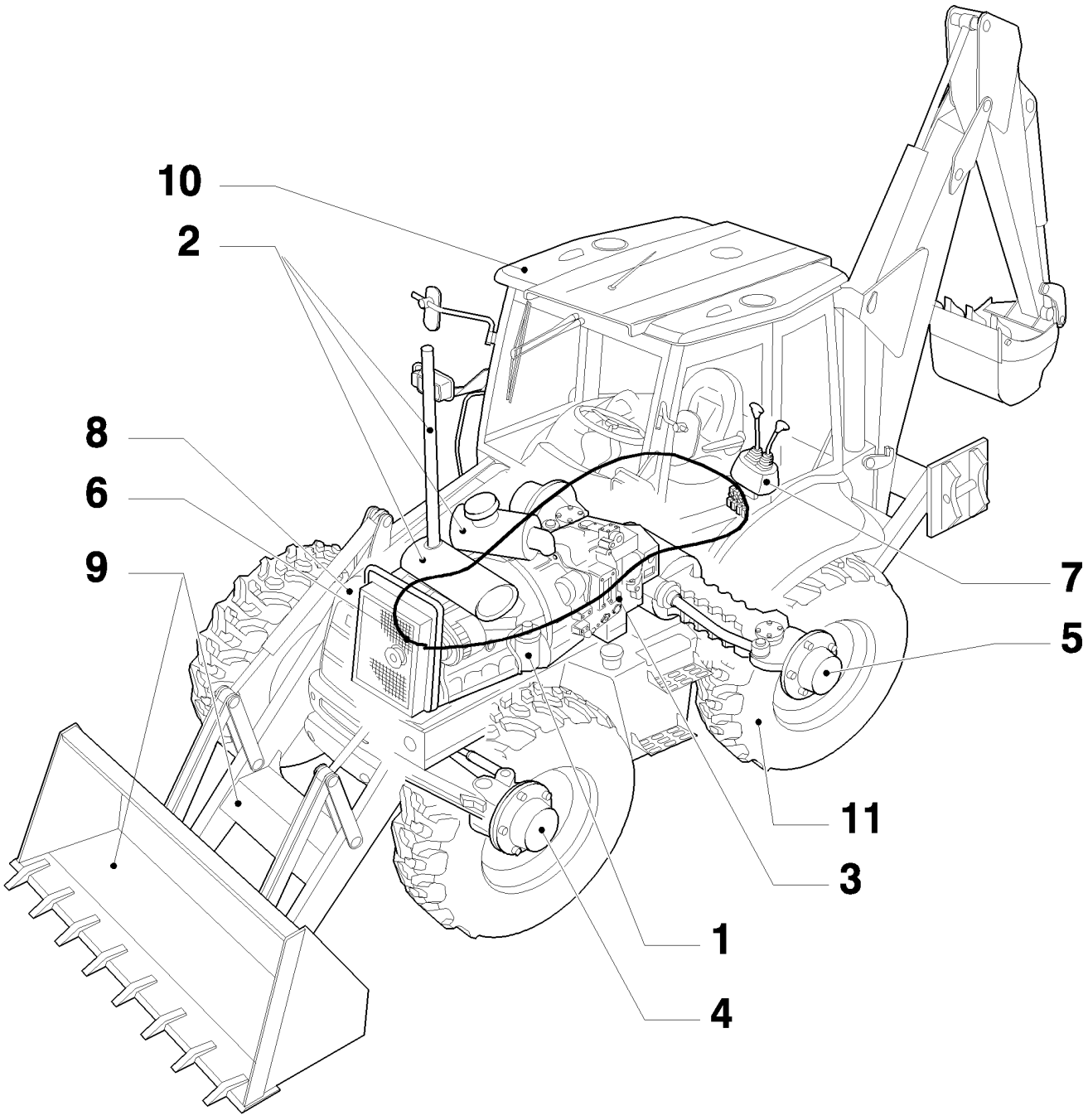

SECCIONES PRINCIPALES

REF	FN	PART NUMBER	YR/SN	QTY	DENOMINACION

PIEZAS PARA MANUTENCIÓN

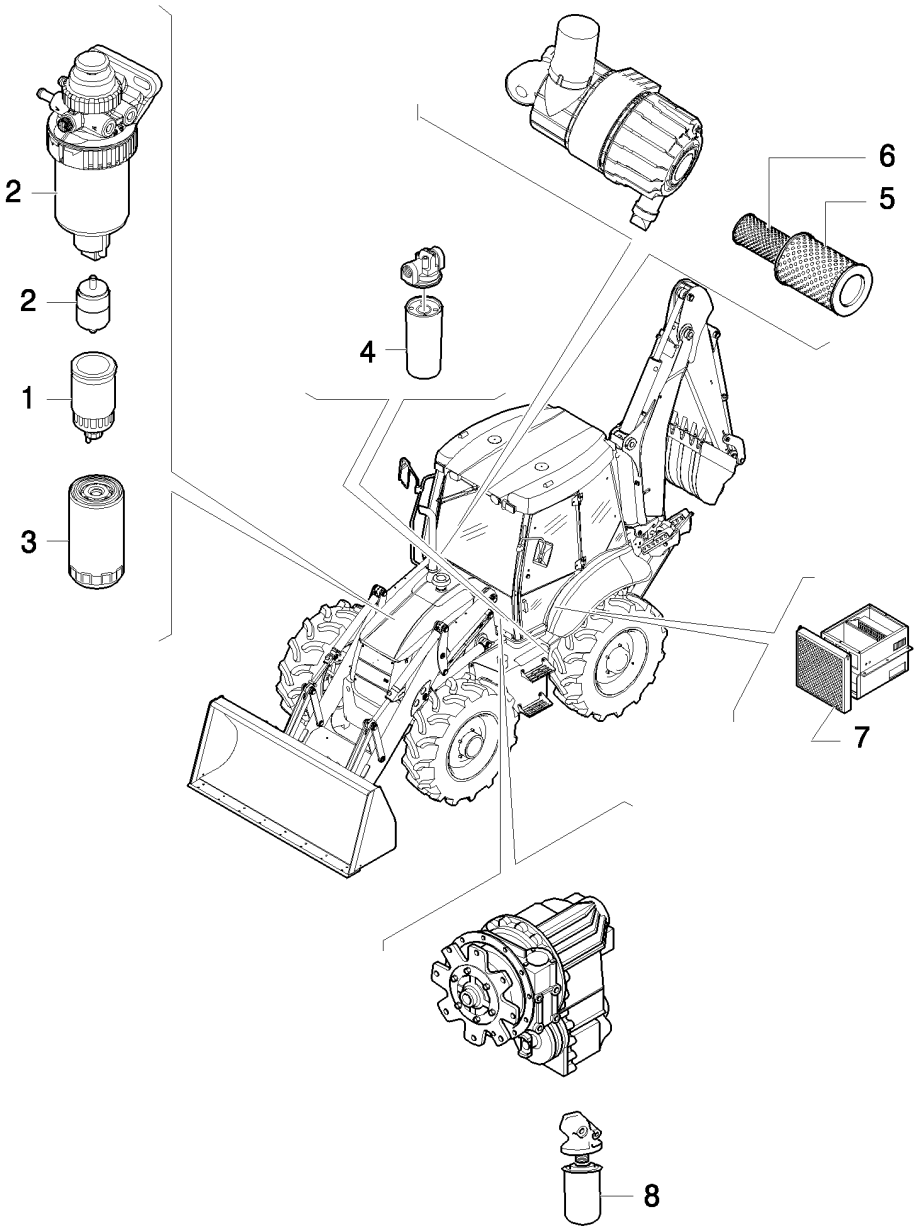

PIEZAS PARA MANUTENCIÓN

REF	FN	PART NUMBER	YR/SN	QTY	DENOMINACION
1		87803197		1	FILTRO DE COMBUSTIBLE
1		87803192		1	FILTRO DE COMBUSTIBLE
2		87803444		1	FILTRO DE COMBUSTIBLE
2		D139225		1	FILTRO DE COMBUSTIBLE
3		87803260		1	FILTRO DE ACEITE
4		86989733		1	FILTRO, ACEITE HIDRAULICO
5		87631623		1	FILTRO DE AIRE
6		87631625		1	FILTRO DE AIRE
7		87314367		1	FILTRO, CABINA
8		85817004		1	FILTRO
8		85826020		1	FILTRO, ACEITE HIDRAULICO

MOTOR

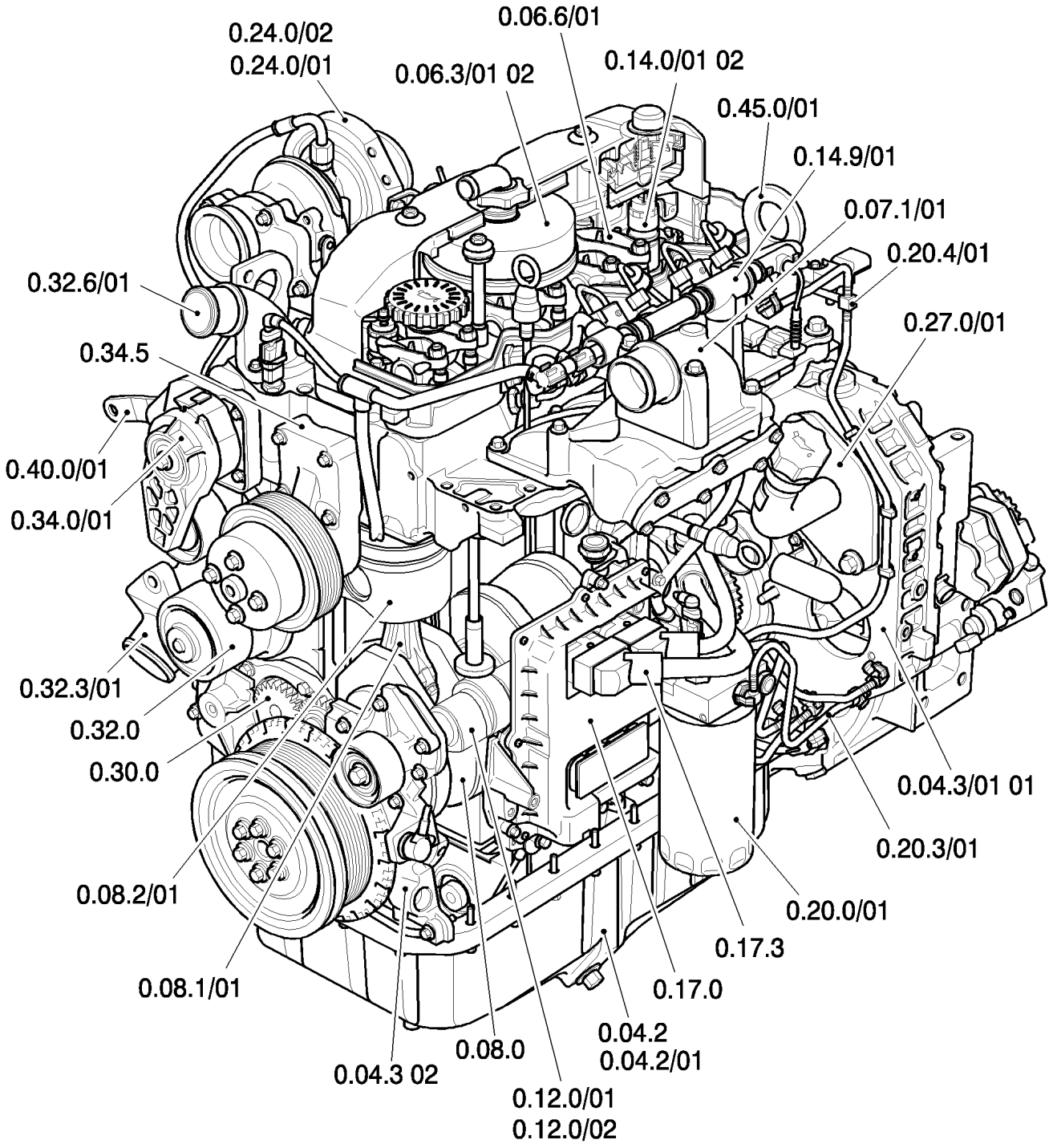
0.24.0/02
0.24.0/01
0.06.6/01
0.06.3/01 02
0.14.0/01 02
0.45.0/01
0.14.9/01
0.07.1/01
0.20.4/01
0.27.0/01
0.32.6/01
0.34.5
0.40.0/01
0.34.0/01
0.32.3/01
0.32.0
0.30.0
0.08.2/01
0.08.1/01
0.04.3 02
0.08.0
0.12.0/01
0.12.0/02
0.04.2
0.04.2/01
0.17.0
0.17.3
0.20.0/01
0.20.3/01
0.04.3/01 01

MOTOR

REF	FN	PART NUMBER	YR/SN	QTY	DENOMINACION

MOTOR

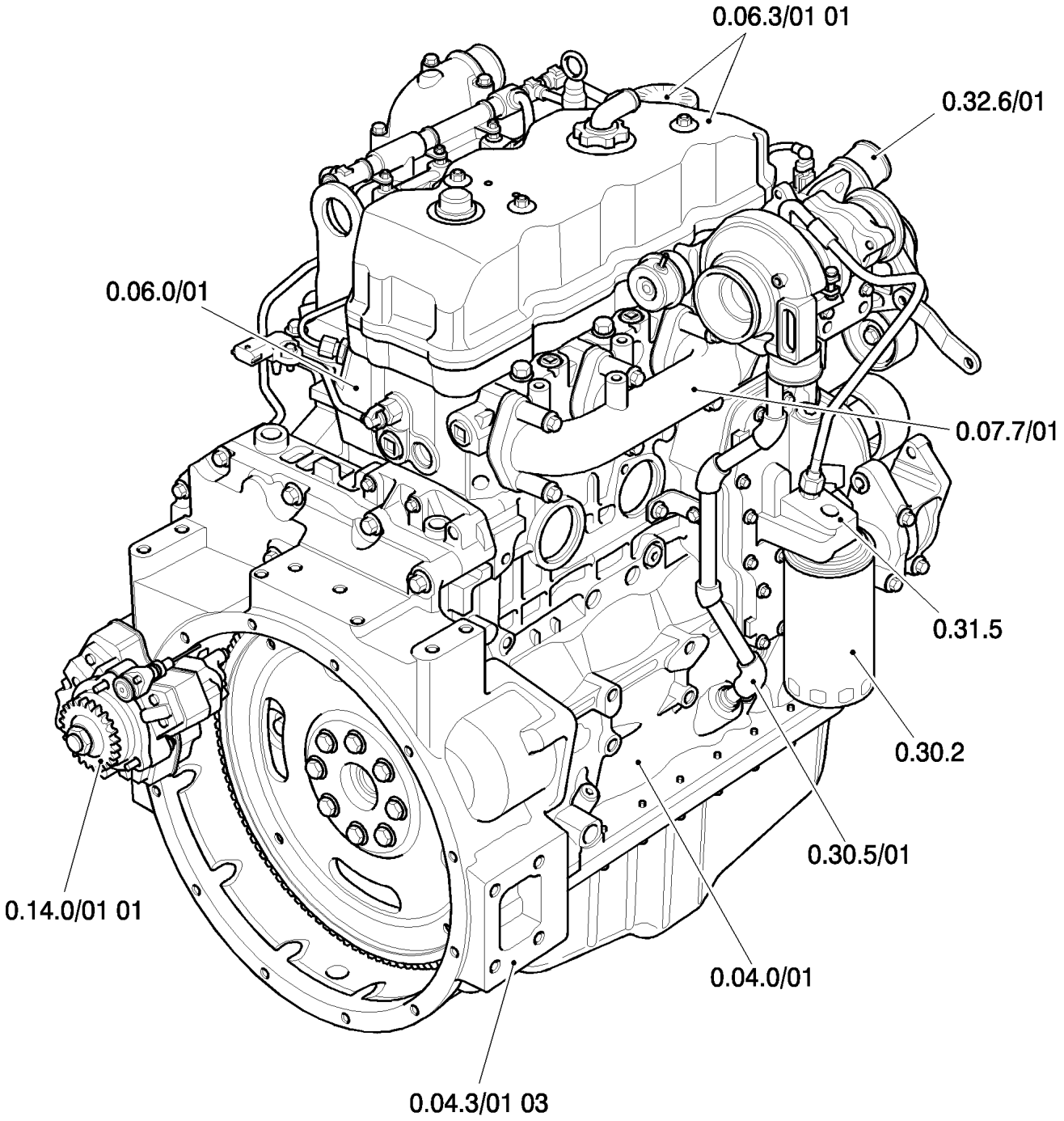
0.06.3/01 01
0.32.6/01
0.06.0/01
0.07.7/01
0.31.5
0.30.2
0.30.5/01
0.14.0/01 01
0.04.0/01
0.04.3/01 03

MOTOR

REF	FN	PART NUMBER	YR/SN	QTY	DENOMINACION

TANQUE COMBUSTIBLE-SILENCIADOR-RADIATOR-FILTRO DE AIRE

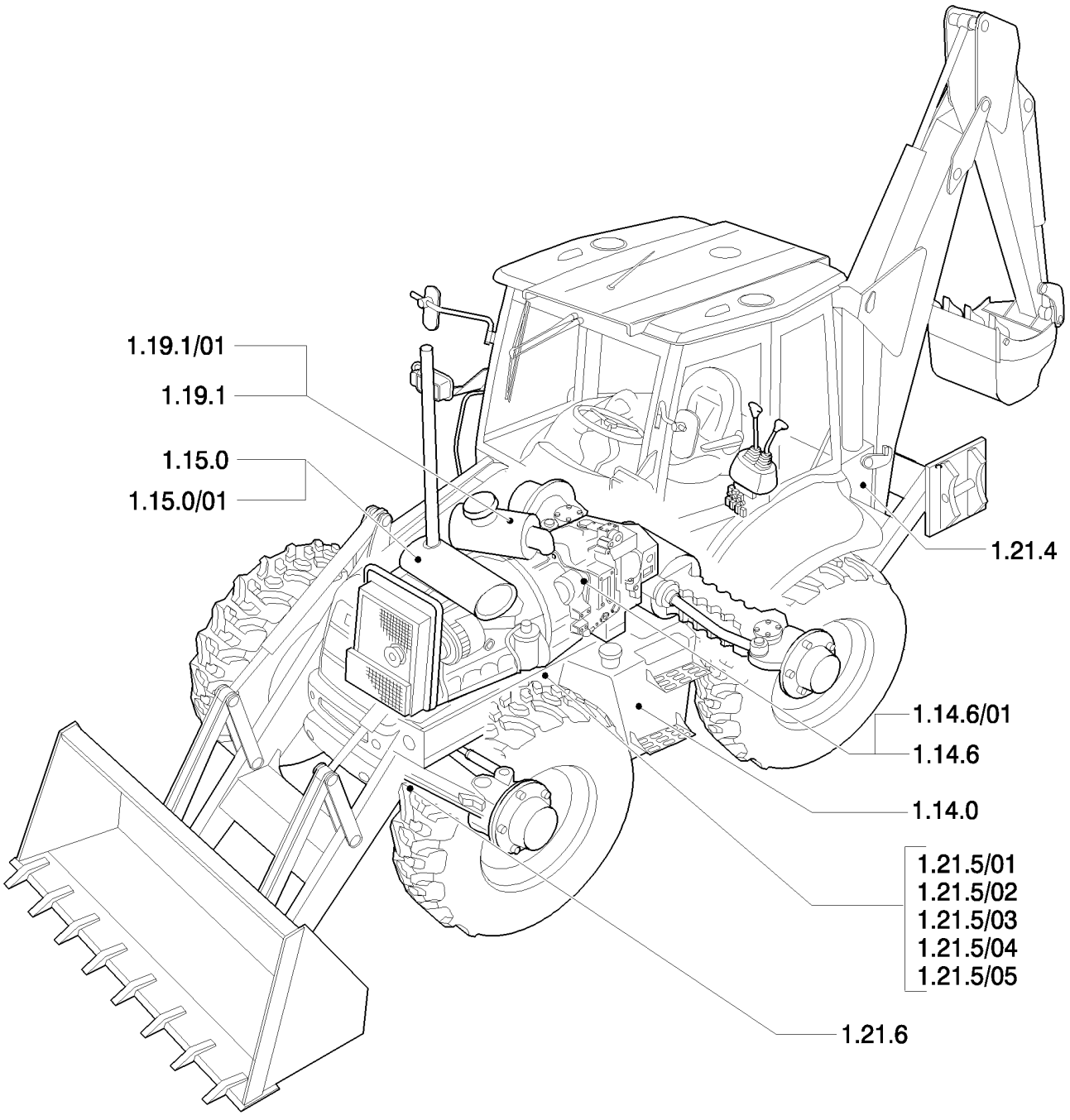

TANQUE COMBUSTIBLE-SILENCIADOR-RADIATOR-FILTRO DE AIRE

REF	FN	PART NUMBER	YR/SN	QTY	DENOMINACION

CAMBIO DE VELOCIDADES

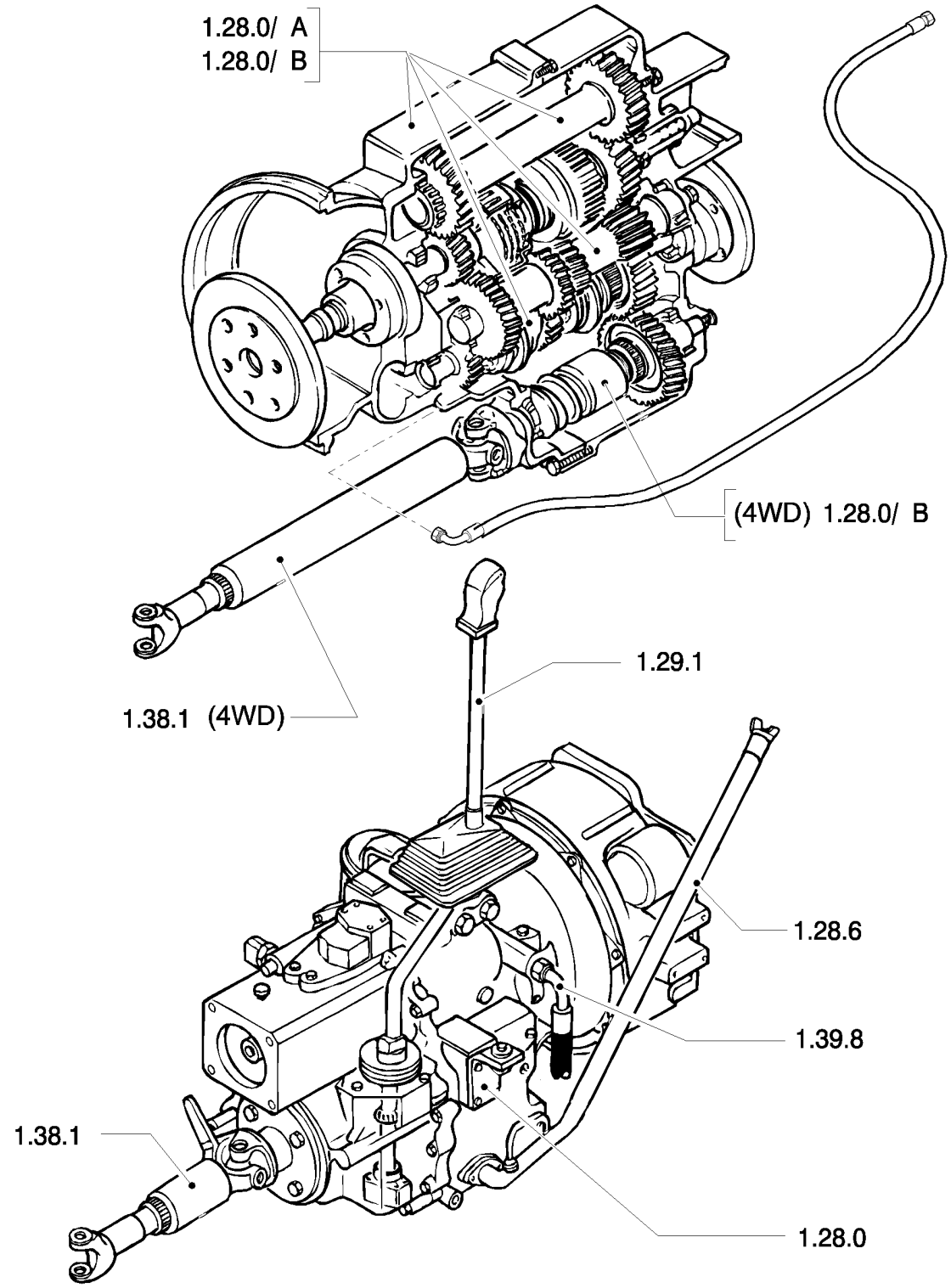

CAMBIO DE VELOCIDADES

REF	FN	PART NUMBER	YR/SN	QTY	DENOMINACION

EJE DELANTERO

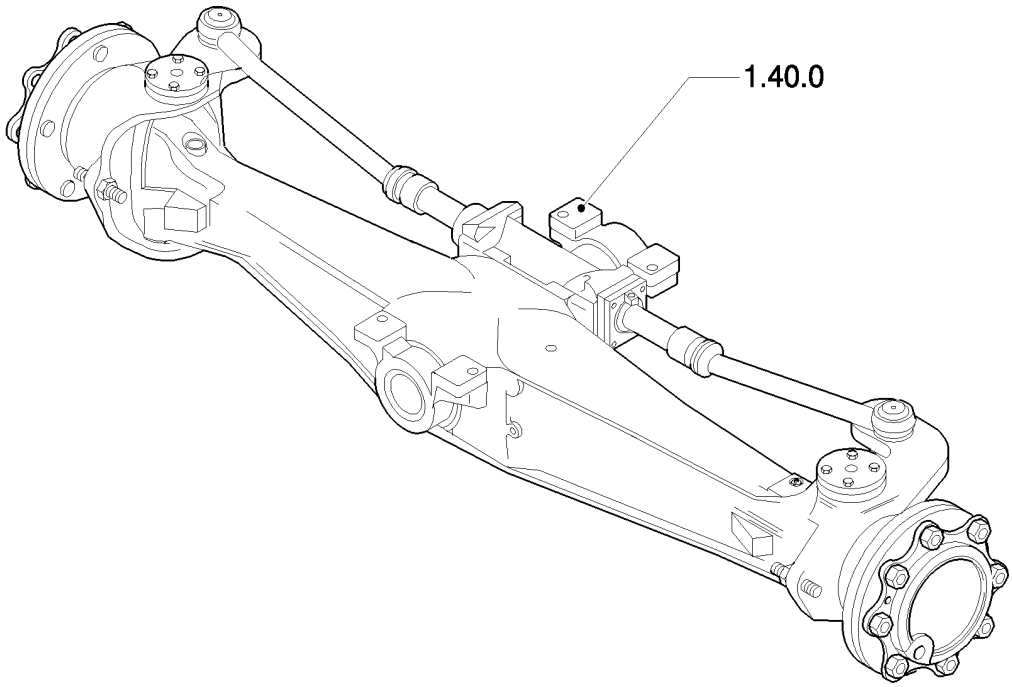

EJE DELANTERO

REF	FN	PART NUMBER	YR/SN	QTY	DENOMINACION

EJE TRASERO

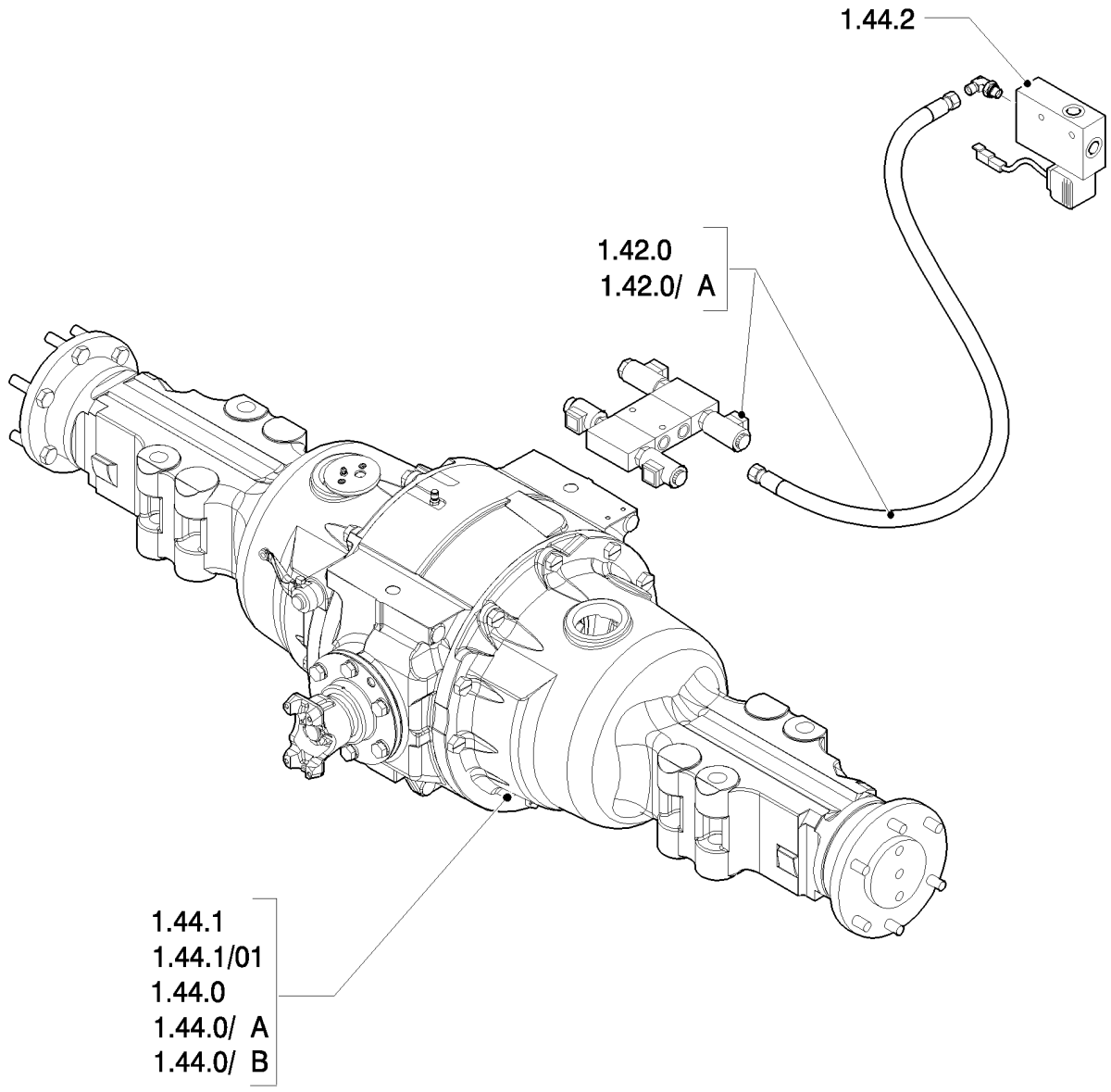

EJE TRASERO

REF	FN	PART NUMBER	YR/SN	QTY	DENOMINACION

ELECTRICO

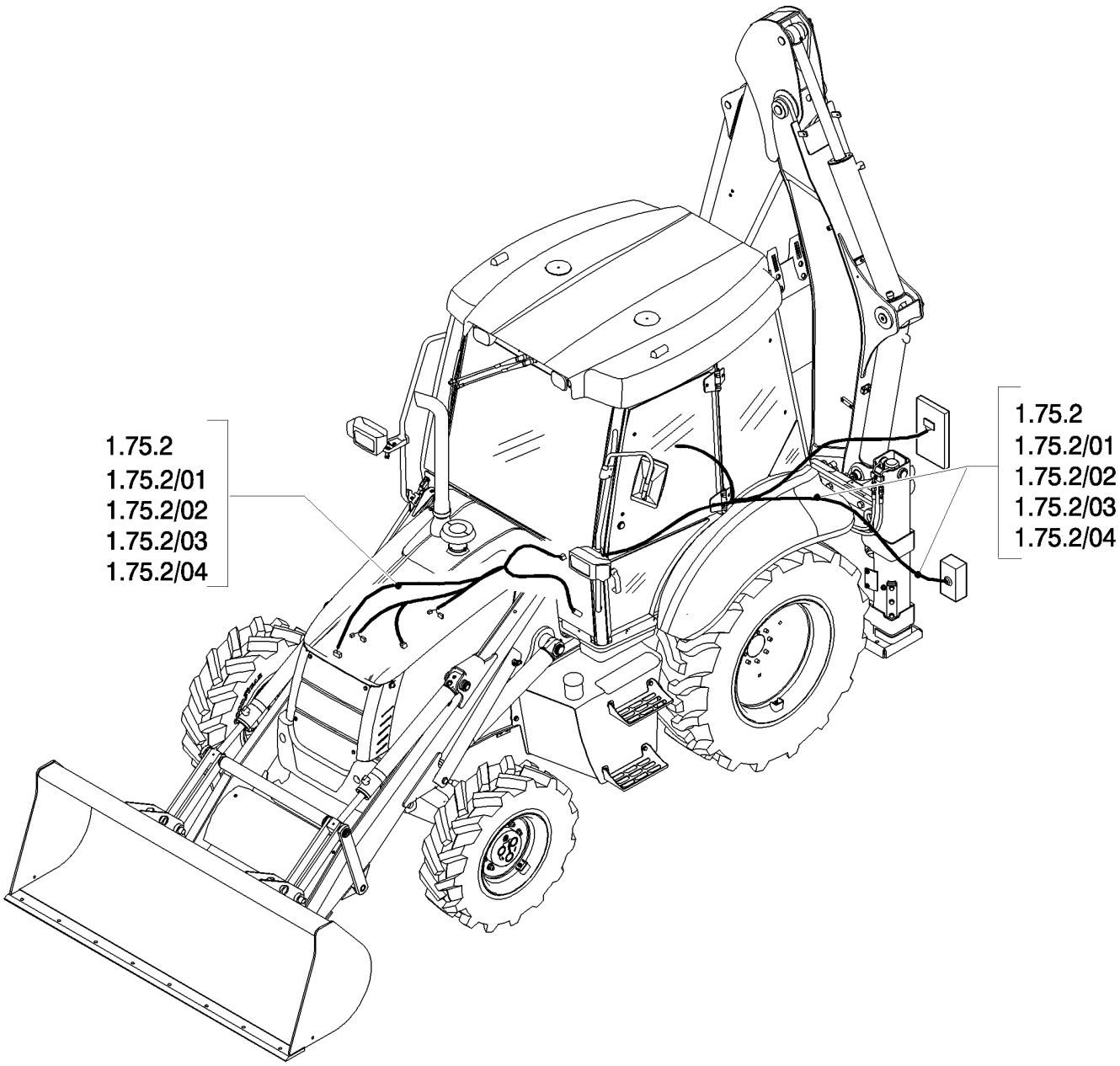
1.75.2
1.75.2/01
1.75.2/02
1.75.2/03
1.75.2/04
1.75.2
1.75.2/01
1.75.2/02
1.75.2/03
1.75.2/04

ELECTRICO

REF	FN	PART NUMBER	YR/SN	QTY	DENOMINACION

CORREDERAS

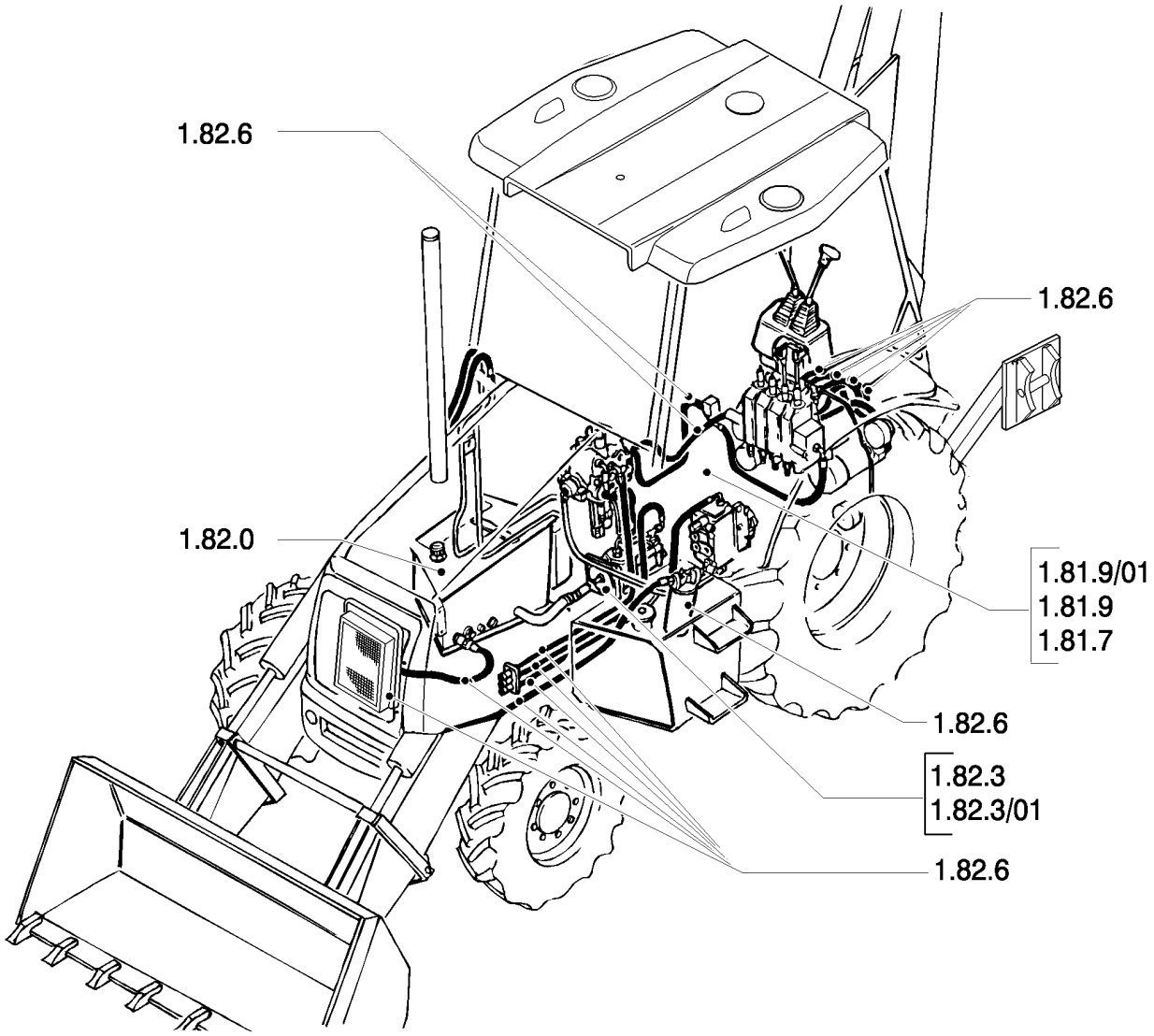

CORREDERAS

REF	FN	PART NUMBER	YR/SN	QTY	DENOMINACION

CAPOT

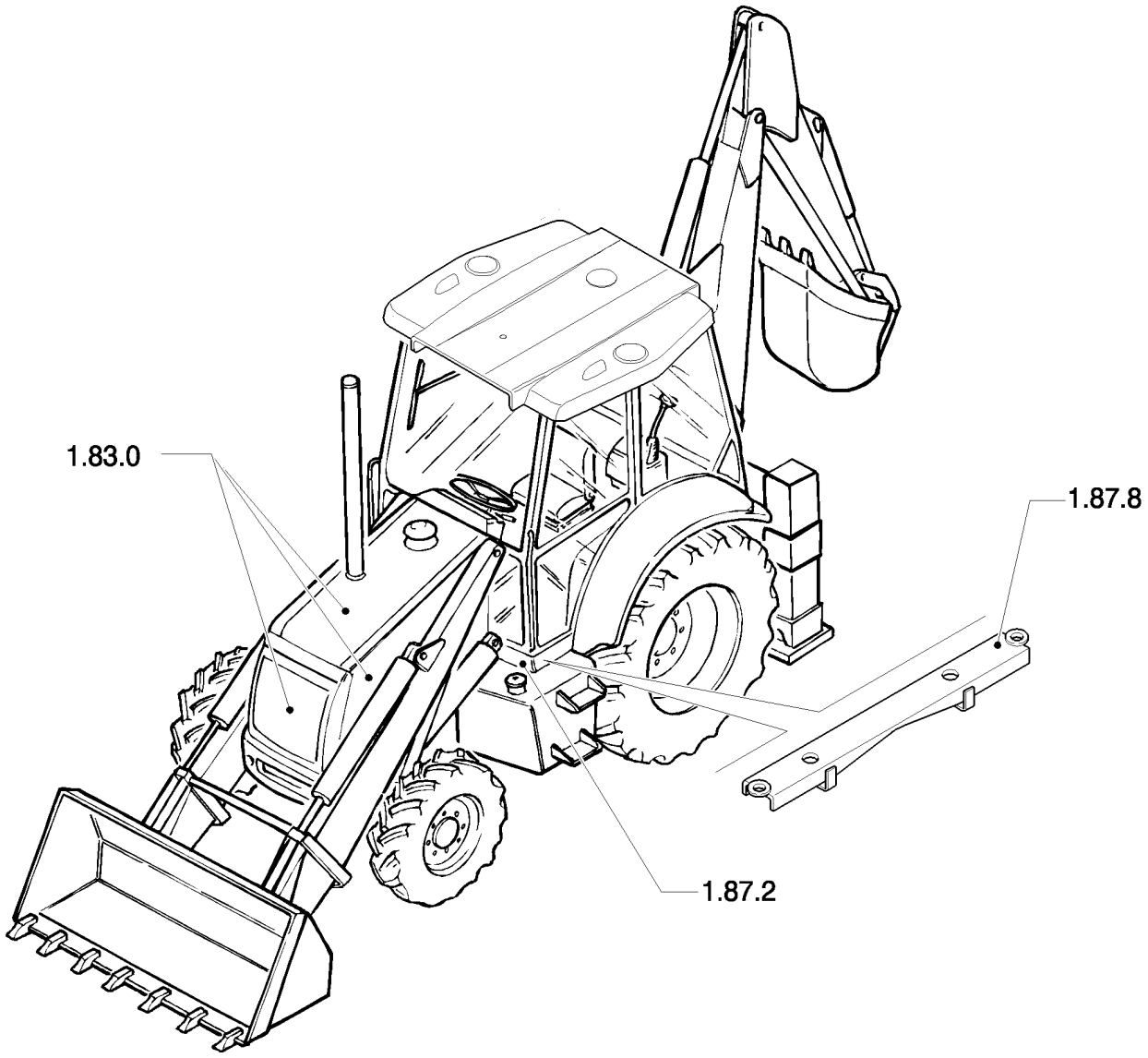

CAPOT

REF	FN	PART NUMBER	YR/SN	QTY	DENOMINACION

CARGADOR

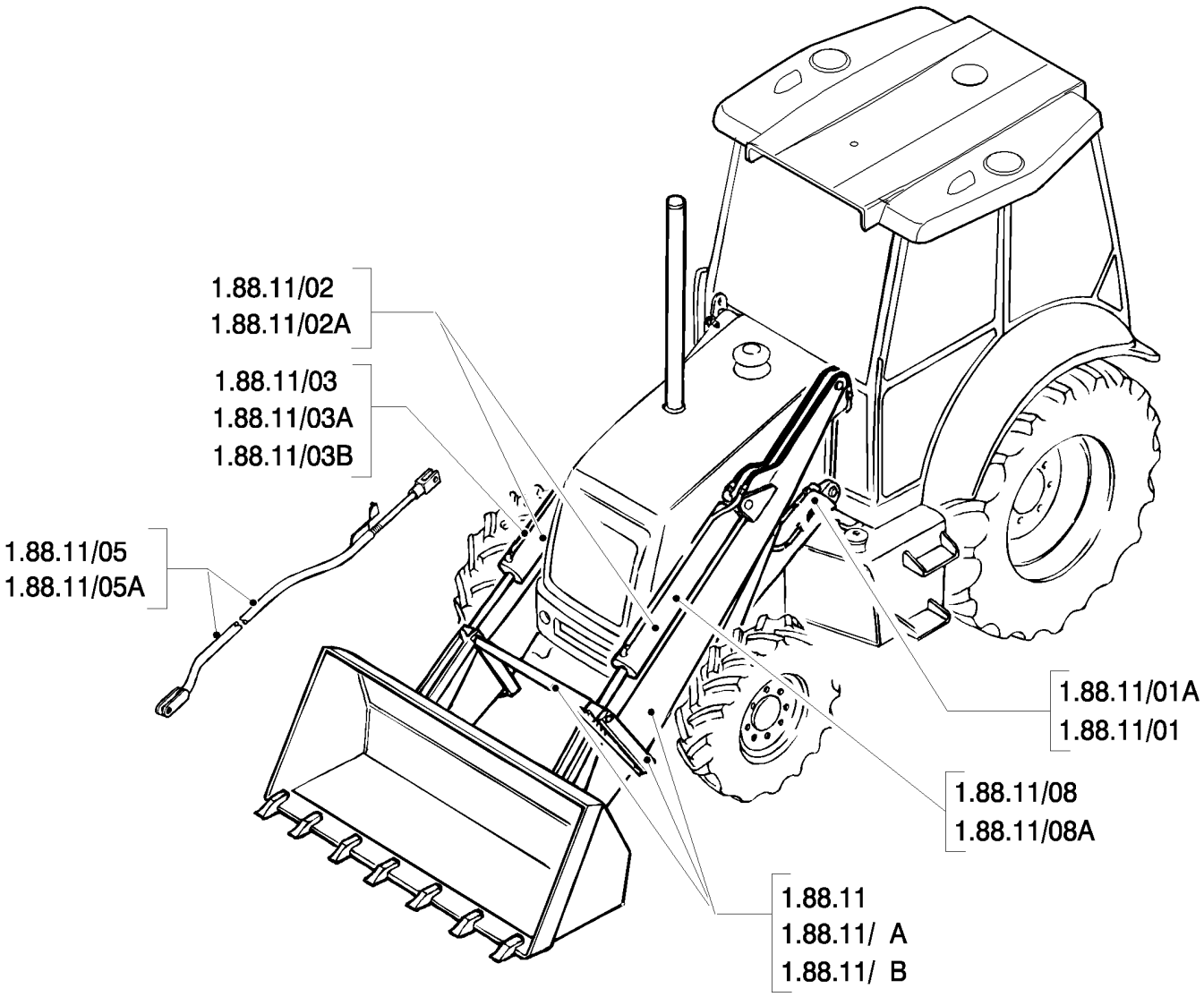
1.88.11/02
1.88.11/02A
1.88.11/03
1.88.11/03A
1.88.11/03B
1.88.11/05
1.88.11/05A
1.88.11/01A
1.88.11/01
1.88.11/08
1.88.11/08A
1.88.11
1.88.11/ A
1.88.11/ B

CARGADOR

REF	FN	PART NUMBER	YR/SN	QTY	DENOMINACION

RETRO

CENTER PIVOT

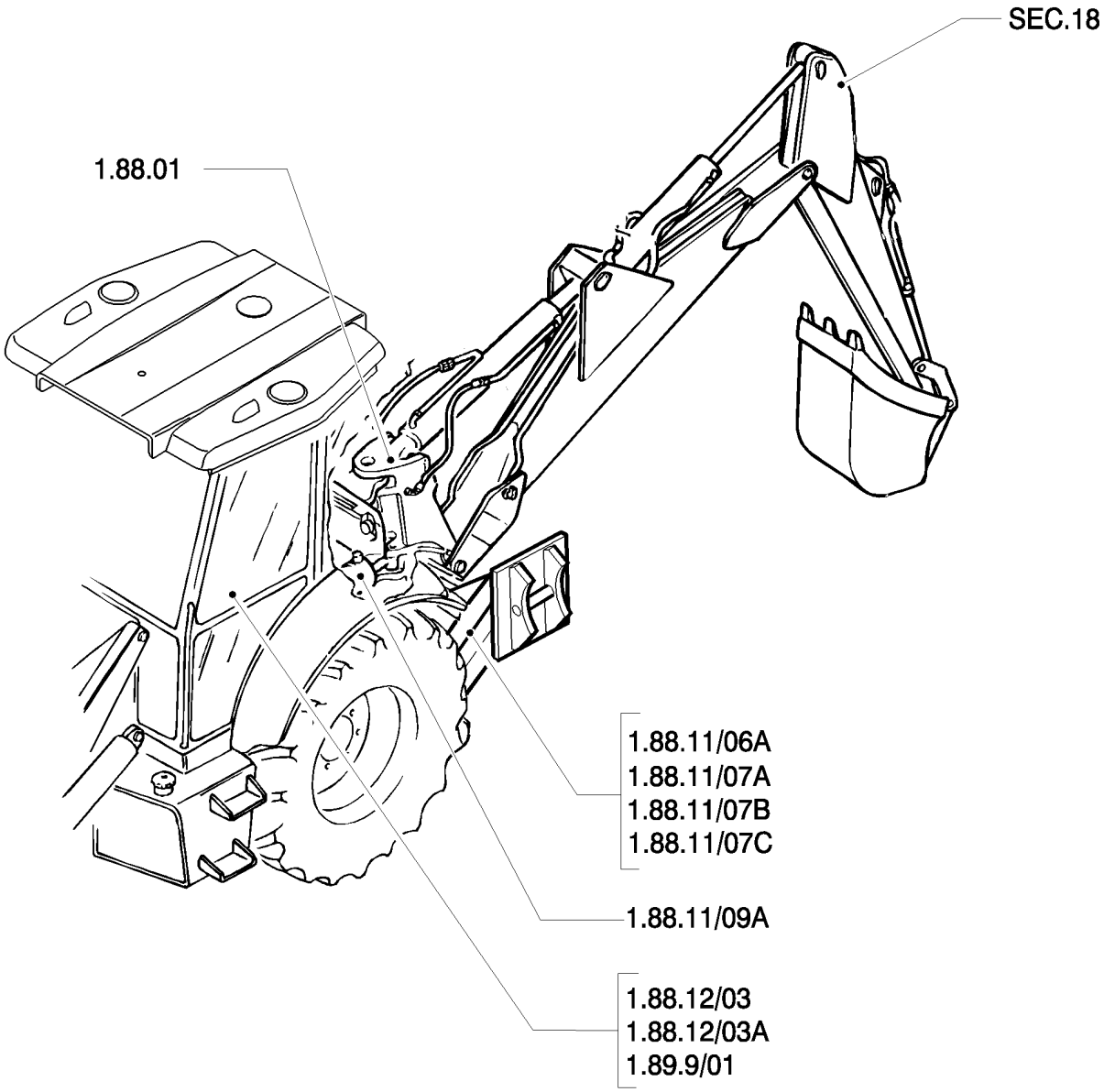

RETRO

REF	FN	PART NUMBER	YR/SN	QTY	DENOMINACION

RUEDAS

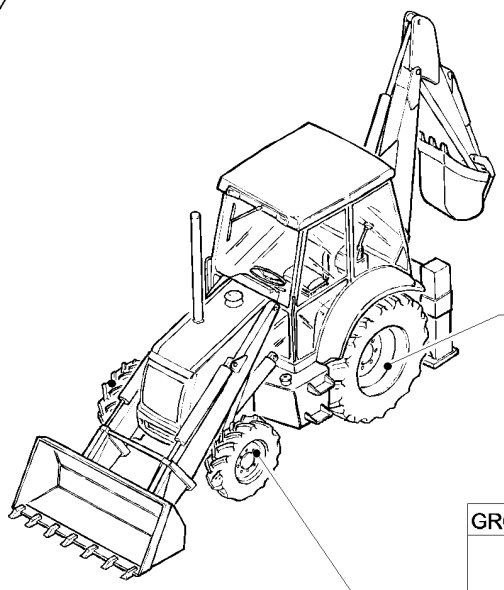

GROUP	EQUIP	TIRE SIZE	RIM
83.00	83.52	16.9 - 28 R4-10PLY TITAN	W15LX 28
	83.62	16.9 - 28 R4 - 12PR	W14LX 28
	83.64	16.9 - 24 R4 - 10PR	W15LX 24
	83.65	17.5 - L24 R4 - 10PR	W15LX 24
	83.91	19.5 - 24 R4 - 10PR	W16LX 24
	83.92	18.4 - 26 R4 - 12PR	DW16L X26
	83.92	21L24 R4 - 10PR	W18L X24
	83.93	18.4 - 26 R1 - 12PR	DW16L X26
	83.93	19.5 x 24 "JUMBO HULK"	W16L X24
	83.96	480/80 R26 IT520	DW16LX26
	83.97	16.9 - 28	W14L X28Z
	83.98	18.4 - 26	DW16L X26

GROUP	EQUIP	TIRE SIZE	RIM
82.00	82.75	14 -17.5NHS - 8PR	10.5 X 17.5
	82.76	12 -16.5NHS -8PR	9,75 X 16,5
	82.76	12 - 16.3 HULK	9,75 X 16,5
	82.76	12 - 16.5 HULK	9,75 X 16,5
	82.78	10.5/80 -18I3 - 10PR	9 X 18
	82.79	12.5/80 -18I3 - 10PR	9 X 18
	82.80	12.5/80 -18I3 - 10PR	9 X 18
	82.87	320/80-R18-IT520	9 X 18
	82.89	12.5 - 18	9 X 18

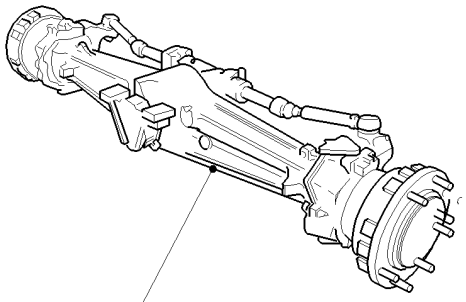

GROUP	EQUIP	TIRE SIZE	RIM
81.00	81.38	11L - 16SLF3 - 10PR	W8LX 16

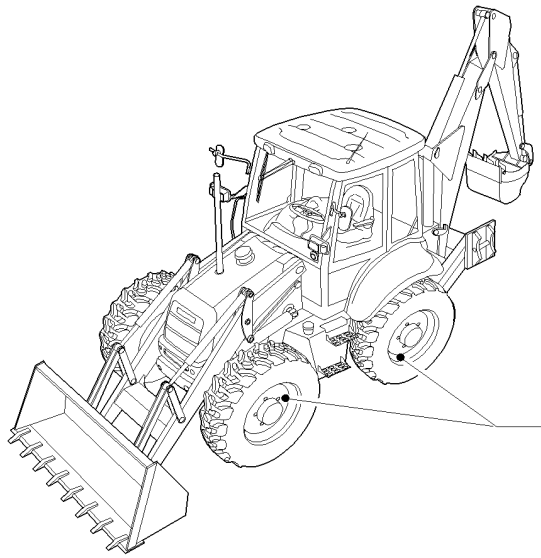

GROUP	EQUIP	TIRE SIZE	RIM
85.00	85.64	16.9 - 24 R4 - 12PR	W14LX 24
	85.64	16.9 - 24 R4 - 12PR (I.S.G.)	W15LX 24
	85.65	16.9 - 28 R4 - 12PR	W15LX 28
	85.65	16.9 - 28 R4 12PLY GY (I.S.G.T.)	W14LX 28
	85.66	440/80 R28 156A8 IT530	W14LX 28
	85.67	440/80 R28 156A8 IT520	W14LX 28

RUEDAS

REF	FN	PART NUMBER	YR/SN	QTY	DENOMINACION

VARIANTES

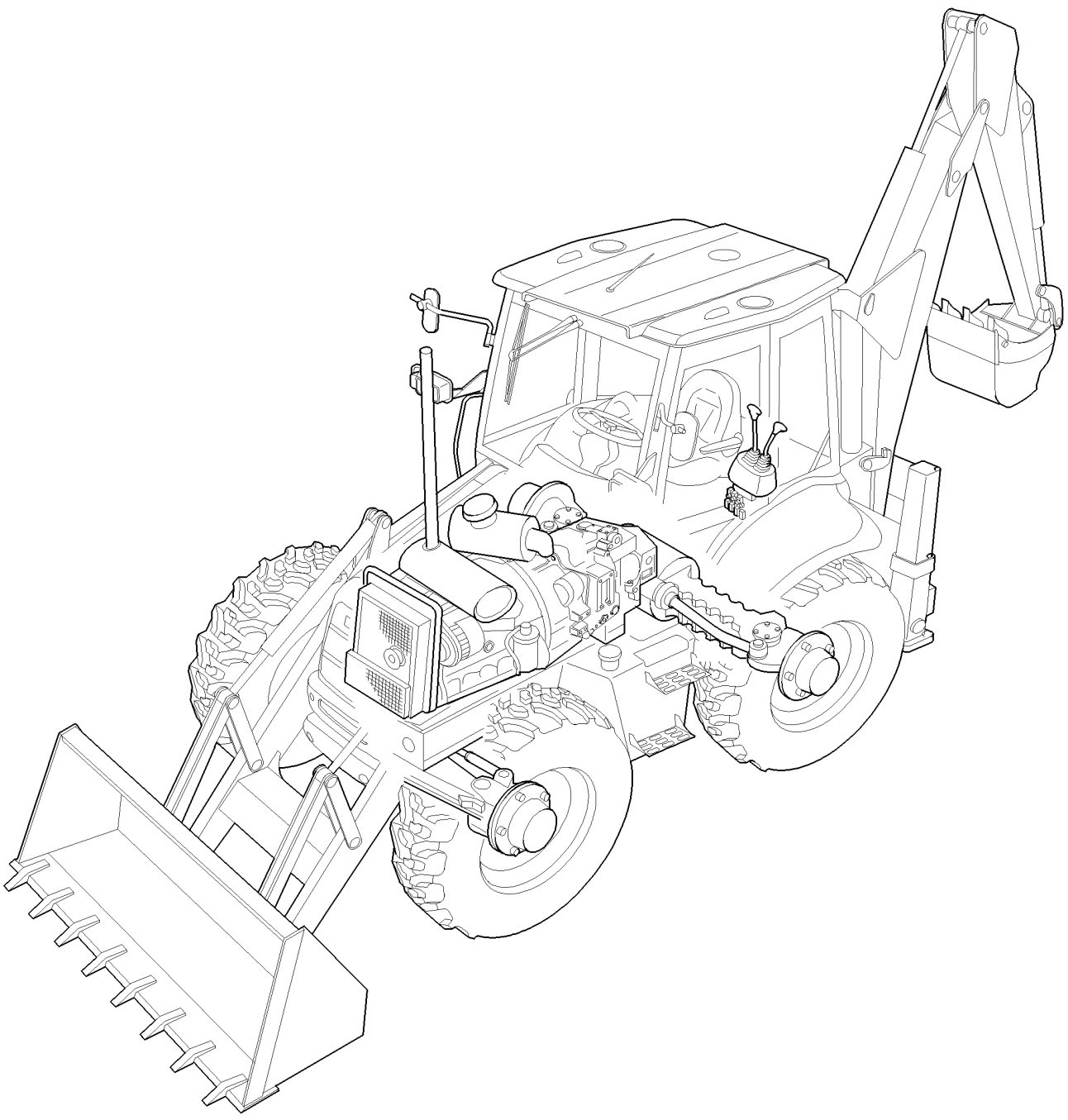

VARIANTES

REF	FN	PART NUMBER	YR/SN	QTY	DENOMINACION

EQUIPO OPCIONAL - NA

VARIANT CODE	DESCRIPTION	APPLICATION					
		B90B	B95B	B95BLR	B95BTC	B110B	B115B
095	Stabilizer control without auto-up (CENTER PIVOT)	●	●	●	●	●	●
096	Stabilizer control with auto-up (CENTER PIVOT)	●	●	●	●	●	●
130	Approval for Europe	●	●	●	●	●	●
131 - 131/01	Single Battery	●	●	●	●	●	●
141	Approval for France	●	●	●	●	●	●
142	Approval for Russia	●	●	●	●	●	●
175	Air intake cap & pre-cleaner	●	●	●	●	●	●
176	Air intake cap & pre-cleaner	●	●	●	●	●	●
201	Shovel and rear lifting hooks	●	●	●	●	●	●
207	Rear counterweight	●					
284	Rear mirror (CAB)	●	●	●	●	●	
290 - 291 293	Front counterweight	●	●	●	●	●	●
300	Backhoe control valve, 6 sections (CENTER PIVOT)						●
302	Two-section control valve for loader	●	●	●	●	●	●
321 - 321/01	Double battery	●	●	●	●	●	●
331	Tower assy 6 sections (CENTER PIVOT)	●	●	●	●	●	●
331/ A	Proportional control valve 6 sections	●	●	●	●	●	●
331/ B	Backhoe control valve, 6 sections (CENTER PIVOT)	●	●	●	●	●	●
331/ C	Pilot valve of hydraulic control lever (RIGHT HAND - LEFT HAND)	●	●	●	●	●	●
333	Tower assy 7 sections (CENTER PIVOT)	●	●	●	●	●	●
333/01B	7-sections excavator control valve (CENTER PIVOT)	●	●	●	●	●	●
333/ A	Proportional control valve 7 sections	●	●	●	●	●	●
333/ C	Pilot valve of hydraulic control lever (RIGHT HANDS) 7 spools	●	●	●	●	●	●
335	Tower assy 7 sections (CENTER PIVOT)	●	●	●	●	●	●
337	Lock valve on loader cylinders	●	●	●	●	●	
338	Lock valve on loader lift cylinders	●	●	●	●	●	●
339	Lock valve on bucket cylinder						●
341/ A	Proportional valve 4 operations	●	●	●	●	●	●
342	Valve with viscous joint	●					
344	Stabilizer control valve, two sections (CENTER PIVOT)	●	●	●	●	●	
346	A/C housing & filters	●	●	●	●	●	●
347	Housing & filters	●	●	●	●	●	●
350	2 lever backhoe controls						●
351	JCB 2 lever backhoe controls						●
358	ISO 2 lever backhoe controls						●
386	Backhoe bucket 12" (305MM) HD with thorned tines	●	●	●	●	●	●
387	Backhoe bucket 18" (457MM) HD with thorned tines	●	●	●	●	●	●
388	Backhoe bucket 24" (610MM) HD with thorned tines	●	●	●	●	●	●
389	Backhoe bucket 30" (762MM) HD with thorned tines	●	●	●	●	●	●
390	Loader control valve, two section, lever & decal	●	●	●	●	●	
390/01	Backhoe bucket 36" (910MM) HD with thorned tines	●	●	●	●	●	●
391	Lock valve for bucket 4X1 / 6X1	●	●	●	●	●	●
392	Locking valve on backhoe lift and dipp. Cylinder	●	●	●	●	●	●
393	2 lever backhoe controls, lever, boot & decals	●	●	●	●	●	●
394	4 lever backhoe controls, console, levers & bellcrannk (CENTER PIVOT - SIDE SHIFT)	●	●	●	●	●	
394/01	ISO 2 lever backhoe controls, lever, boot & decals (CENTER PIVOT)	●	●	●	●	●	
397	Suspended load handling on machine side	●	●	●	●	●	●
398	Lock valve on loader boom cylinder and backhoe dipper cylinder	●	●	●	●	●	●
400	Front axle (4WS) - box						●
401	Rear axle, RH & center housing (4WS)						●
402	4WD front axle. Housing, bushing & supportt	●	●	●	●	●	
415	Front axle - (4WD) w/gear, bevel					●	
416	System hammer components (CAB - ROPS)	●	●	●	●	●	●
431 - 432	1 M3 standard bucket				●		
433	Bucket 4X1 with blade				●		
434	Bucket 4X1 with tines				●		
437	Glide ride valve, hydraulic system for machine frame levelling	●	●	●	●	●	●
469	Bucket 6X1 (1,15 M3) with blade "COMMON GRAY"						●
470	Bucket 6X1 (1,15 M3) with blade "COMMON GRAY"						●
471	Bucket 4X1 (1 M3) with blade "COMMON GRAY"	●	●	●		●	
471/01	Hydraulic cylinder (BUCKET 4X1 - 6X1)	●	●	●	●	●	●
471/02	Bucket 4X1 (1 M3) with blade "COMMON GRAY"				●		
472 - 472/01	Bucket 4X1 (1 M3) with tines "COMMON GRAY"	●	●	●	●	●	
473	Bucket 6X1 (1 M3) with blade "COMMON GRAY"	●	●	●		●	

EQUIPO OPCIONAL - NA

REF	FN	PART NUMBER	YR/SN	QTY	DENOMINACION

EQUIPO OPCIONAL - NA

VARIANT CODE	DESCRIPTION	APPLICATION					
		B90B	B95B	B95BLR	B95BTC	B110B	B115B
474	Bucket 6X1 (1 M3) with tines "COMMON GRAY"	●	●	●		●	
475	Bucket 4X1 (1,15 M3) with blade "COMMON GRAY"						●
476	Bucket 4X1 (1,15 M3) with tines "COMMON GRAY"						●
487	24" (610MM) backhoe bucket with pin teeth						●
500	1,13 M3 bucket						●
501	1,13 M3 bucket w/tines						●
502	1,13 M3 bucket with extra reversible blade						●
515/01	12" (350MM) backhoe bucket with pin teeth	●	●	●	●	●	●
516/01	18" (457MM) backhoe bucket with pin teeth	●	●	●	●	●	●
517/01	24" (610MM) backhoe bucket with pin teeth	●	●	●	●	●	●
518/01	30" (762MM) backhoe bucket with pin teeth	●	●	●	●	●	●
519/01	36" (914MM) backhoe bucket with pin teeth	●	●	●	●	●	●
520	0.88 M3 bucket without tines	●	●	●	●		
520/01	18" (457MM) backhoe bucket with pin teeth (EXTRA HD)	●	●	●	●	●	●
521	Pin tooth kit, 24" (610MM) backhoe buckets (EXTRA HD)	●	●	●	●	●	●
522	1,13 M3 bucket	●	●	●		●	
522/01	Standard 1MC bucket with forks	●	●	●		●	
522/02	1 M3 bucket with cutter				●		
525	Standard 1MC bucket with forks and reversible blade	●	●	●		●	
527	0.88 M3 bucket and extra reversible blade	●	●	●			
533	1,15 M3 bucket with forks and cutter blade						●
534	1,15 M3 bucket with forks and extra reversible blade						●
535	Stabilizer foot ground (CENTER PIVOT)	●	●	●	●	●	●
536	Standard 1MC bucket with tines	●	●	●		●	
536/01	1 M3 bucket with tines and cutter				●		
536/02	Reversible stabilizer leg (CENTER PIVOT)	●	●	●	●	●	●
537	Standard 1MC bucket with extra reversible blade	●	●	●		●	
537/01	1 M3 bucket with additional reversible blade				●		
548	Ditch cleaning bucket	●	●	●	●	●	●
622	Internal fan	●	●	●	●	●	●
636 - 637 638 - 639	Radiator	●	●	●	●	●	●
642	Egs control, 20 & 40km/h (POWER SHIFT)					●	●
646	Machine part air conditioning set	●	●	●	●	●	●
650	Steering column, fixed & adjustable	●	●	●	●	●	●
698	Glide ride valve, hydraulic system for machine frame levelling & ON/OFF switch	●	●	●	●	●	●
699	Hand hammer switch	●	●	●	●	●	
700	4X1 & 6X1 bucket hydraulic lines (POWER SHIFT, POWER SHUTTLE)	●	●	●	●	●	●
700/01	4X1 & 6X1 bucket hydraulic lines (4WS)						●
700/02	4X1 & 6X1 bucket hydraulic lines				●		
703	Pedal-operated telescopic dipper hydraulic system (7 SECTION)						●
721	Telescopic control valve, 3 sections (CENTER PIVOT)	●	●	●	●	●	
724/01	Hydraulic system for hammer (CENTER PIVOT)	●	●	●	●	●	●
724/02	Hydraulic system for hammer (CENTER PIVOT)	●	●	●	●	●	
724/ A	Rear hammer control valve	●	●	●	●	●	●
725	Hammer kit from lifting arm to demolition arm	●	●	●	●	●	●
725/01	4X1 & 6X1 bucket hydraulic lines (POWER SHUTTLE)	●	●	●	●	●	
725/02	4X1 & 6X1 bucket hydraulic lines (POWER SHIFT)	●	●	●	●		●
725/03	4X1 & 6X1 bucket hyraulic lines (POWER SHUTTLE)				●		
727	Hydraulic system presetting for telescopic links pedal operated						●
727/01	Hydraulic system prearrangement (CENTER PIVOT)	●	●	●	●	●	
728	Manual hammer system	●	●	●	●	●	●
733	Rear mechanical quick-coupling	●	●	●	●	●	●
734	Front mechanical quick-coupling	●	●	●		●	
758	Rotating beacon	●	●	●	●	●	●
787	Front console without speedometer (POWER SHUTTLE, ROPS)	●	●	●	●	●	
787/01	Front console without speedometer (POWER SHUTTLE, CAB)	●	●	●	●	●	
788	Front console with speedometer (ROPS)	●	●	●	●	●	
788/01	Front console with speedometer (CAB)	●	●	●	●	●	
789	Speed sensor (POWER SHUTTLE)	●	●	●	●	●	
793	Front working light (CAB)	●	●	●	●	●	●
793/01	Front working light (ROPS)	●	●	●	●	●	
794	Lamps & lights (CAB)	●	●	●	●	●	●
794/01	Lamps & lights (ROPS)	●	●	●	●	●	
796	Antitheft	●	●	●	●	●	●

EQUIPO OPCIONAL - NA

REF	FN	PART NUMBER	YR/SN	QTY	DENOMINACION

EQUIPO OPCIONAL - NA

VARIANT CODE	DESCRIPTION	APPLICATION					
		B90B	B95B	B95BLR	B95BTC	B110B	B115B
803	Fenders, front	●	●	●	●	●	
851	Cloth seat & attaching hardware - cabine	●	●	●	●	●	●
851/01	Cloth seat cushinos, armrests & related parts	●	●	●	●	●	●
853	Rear mudguards and roof (ROPS - CAB)	●	●	●	●	●	●
855	Air ride cloth seat & attaching hardware - cabine	●	●	●	●	●	●
855/01	Air ride cloth seat cushinos, armrests & related parts	●	●	●	●	●	●
856	Vinyl seat cushinos, armrests & related parts (ROPS)	●	●	●	●	●	
856/01	Vinyl seat with armrests & mounting hardware (ROPS)	●	●	●	●	●	
860	Fenders, front						●
879	Right back view mirror	●	●	●	●	●	●
888	Arm and guard decal	●	●	●	●		
900	Boom - long dipper	●	●	●	●	●	●
901	Telescopic dipper long	●	●	●	●	●	●
902	Short telescopic dipper	●	●	●	●		
987	Foward/Reverse & steering decals - POWER SHIFT						●
990	Tool kit	●	●	●	●	●	●
992	Cab warning & information decals (POWER SHUTTLE - POWER SHIFT)	●	●	●	●	●	●
993	Plates	●	●	●	●	●	●
995 - 995/01	Cold start	●	●	●	●	●	●
998	Foward/Reverse & steering decals - POWER SHIFT					●	●

EQUIPO OPCIONAL - NA

REF	FN	PART NUMBER	YR/SN	QTY	DENOMINACION

NOTAS

SECTION INDEX
Motor

0.02.1/01		MOTOR
0.04.0/01		BLOQUE CILINDROS
0.04.2		CARTER DE ACEITE
0.04.3/01	01	TAPAS DEL BLOQUE
0.04.3/01	02	TAPAS DEL BLOQUE
0.04.3/01	03	TAPAS DEL BLOQUE
0.06.0/01		CULATA DE CILINDROS
0.06.3/01	01	TAPAS CULATA
0.06.3/01	02	TAPAS CULATA
0.06.6/01		EJE BALANCINES
0.07.1/01		COLLECTOR DE ASPIRACION
0.07.7/01		COLLECTOR DE ESCAPE
0.08.0		CIGUENAL
0.08.1/01		BIELA PISTON
0.08.2/01		EMBOLO - MOTOR
0.08.3		VOLANTE MOTOR
0.08.4		POLEA - CIGUENAL
0.10.5	01	EQUILIBRADOR, ENGRENAJES Y ARBOLES
0.10.5	02	EQUILIBRADOR, ENGRENAJES Y ARBOLES
0.12.0/01		ARBOL DE LEVAS - PINONES DE LA DISTRIBUCION
0.14.0/01	01	BOMBA DE INYECCION
0.14.0/01	02	GRUPO DE INYECCION - INYECTOR
0.14.0/01A		BOMBA DE INYECCION - COMPONENTES
0.14.9/01		GRUPO DE INYECCION - TUBERIAS
0.17.0		INYECCIÓN ELECTRÓNICA
0.17.3		SISTEMA ELÉCTRICO MOTOR
0.20.0/01		FILTRO COMBUSTIBLE
0.20.3/01		TUBERIAS - COMBUSTIBLE
0.20.4/01		GRUPO DE INYECCION - TUBERIAS
0.24.0/01		TURBOCOMPRESSOR
0.27.0/01		VARILLA DE NIVEL - ACEITE DEL MOTOR
0.30.0		BOMBA DE ACEITE - MOTOR
0.30.2		FILTRO DE ACEITE - MOTOR
0.30.5/01		TUBERIAS - ACEITE DEL MOTOR
0.31.5/01		CAMBIADOR DE CALOR - MOTOR
0.32.0		BOMBA DE AGUA
0.32.3/01		SISTEMA DE REFRIGERACIÓN - MOTOR
0.32.6/01		TERMOSTATO - REFRIGERACION DEL MOTOR
0.34.0/01		BOMBA DE AGUA - MANDO
0.34.5		POLEA DEL VENTILADOR
0.36.0		MOTOR ACOPLADO
0.40.0/01		ALTERNADOR
0.45.0/01		GANCHOS DE MANOIBRA - MOTOR

MOTOR

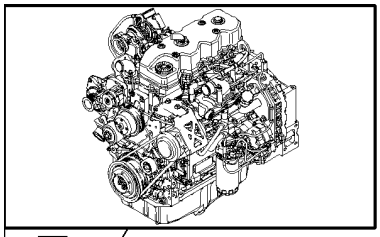

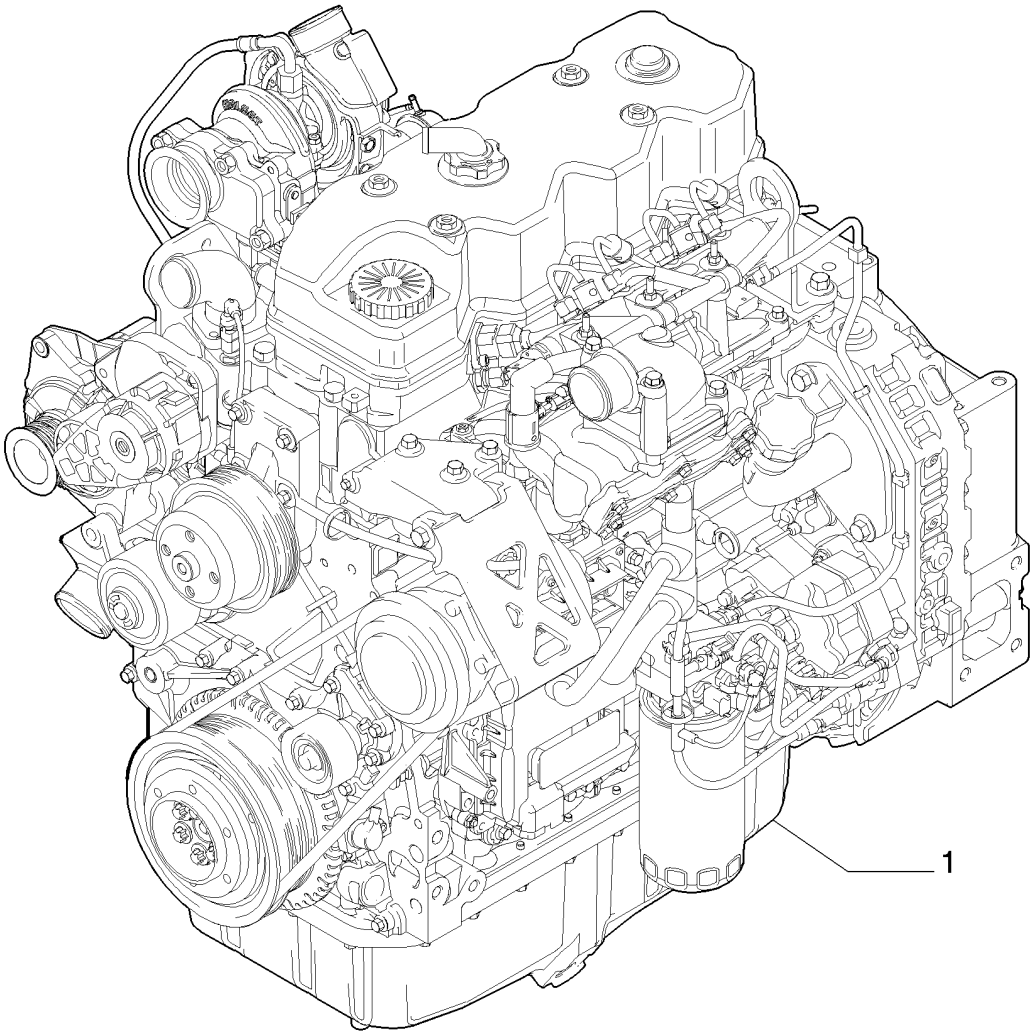

MOTOR

REF	FN	PART NUMBER	YR/SN	QTY	DENOMINACION
1		87587692		1	MOTOR, - ASSY

BLOQUE CILINDROS

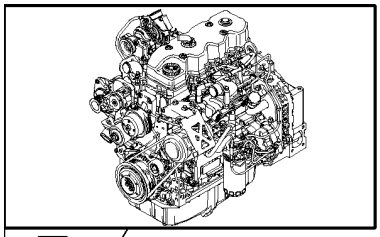

KIT KIT ● = 1

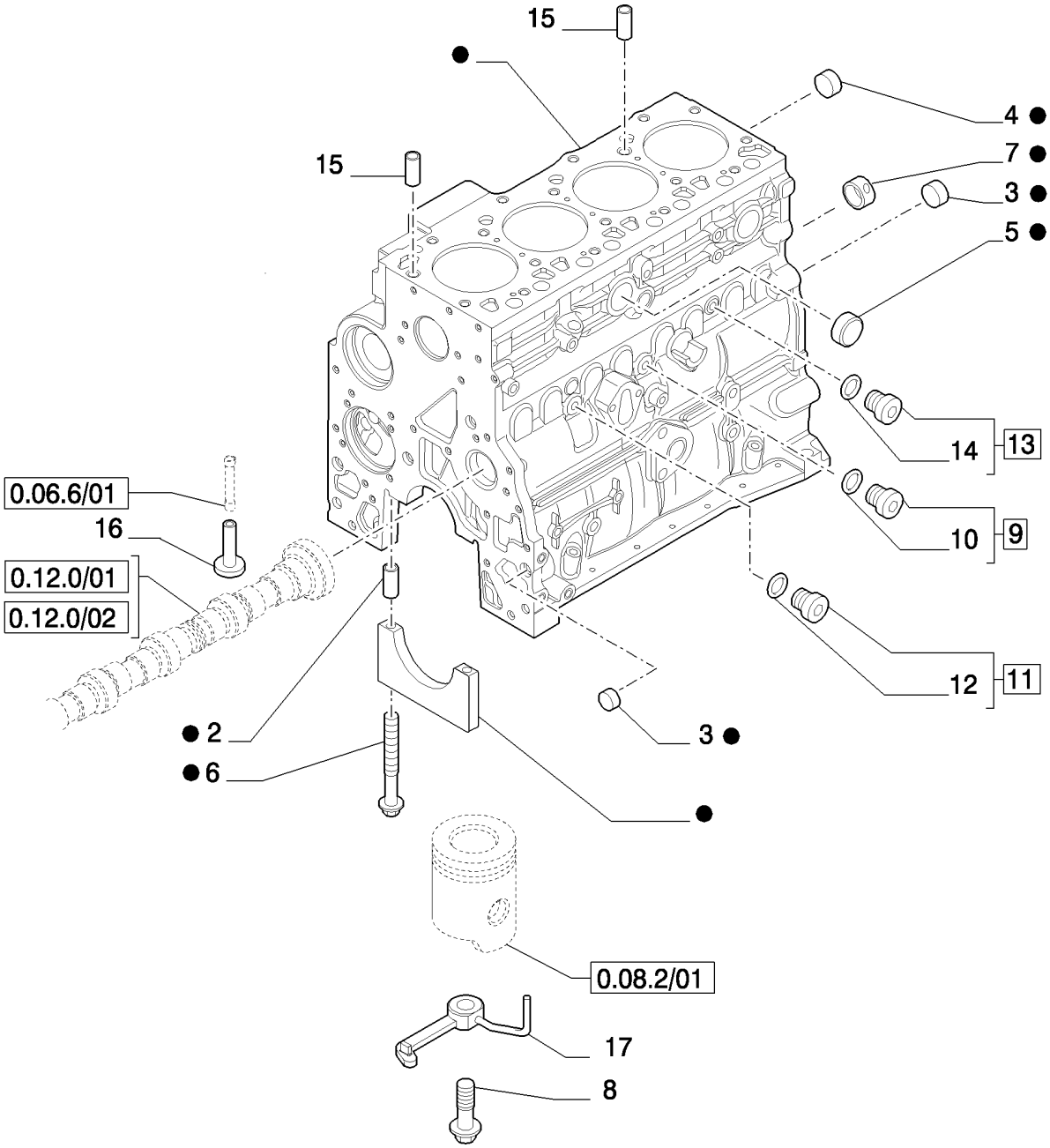

BLOQUE CILINDROS

REF	FN	PART NUMBER	YR/SN	QTY	DENOMINACION
1		2830082		1	BLOQUE DE CILINDROS, - ASSY
2		4899026		10	PITON
3		4895039		3	TAPÓN
4		4895038		4	TAPÓN
5		4895228		2	TAPÓN
6		4891353		10	TORNILLO, Flg Hd, M12 x 1.5 x 120
7		4895040		1	CASQUILLO
8		4894218		4	TORNILLO
9		4895605		1	TAPÓN, 14x1.5 - ASSY
10		4899115		1	JUNTA HERMETICA
11		4899009		1	TAPÓN, 10x1.5 - ASSY
12		4899072		1	JUNTA HERMETICA
13		4895392		1	TAPÓN, 18x1.5 - ASSY
14		4895393		1	JUNTA HERMETICA
15		4895049		2	PITON
16		4899803		8	EMPUJADOR
17		2852202		4	TOBERA

CARTER DE ACEITE

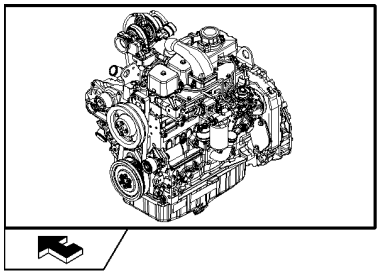

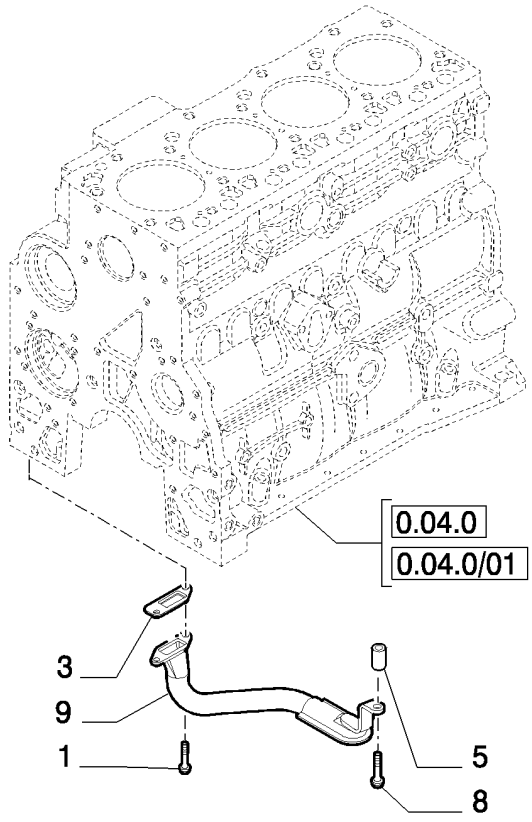

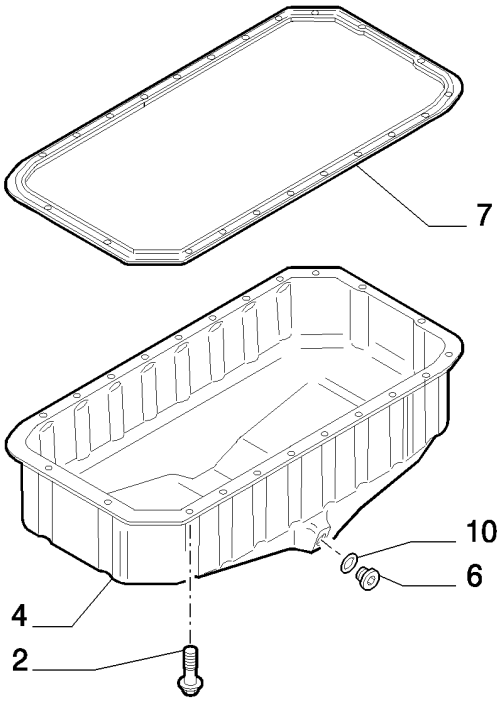

CARTER DE ACEITE

REF	FN	PART NUMBER	YR/SN	QTY	DENOMINACION
1		2852234		2	TORNILLO, Hex Flg, M8 x 1.25 x 20
2		4899091		22	TORNILLO, Hex Flg, M8 x 1.25 x 40
2		4895489		2	TORNILLO
3		4898301		1	JUNTA HERMETICA, - ASSY
4		2852011		1	CARTER DE ACEITE
5		2852016		1	SEPARADOR
6		2856086		1	TAPÓN
7		2852012		1	JUNTA HERMETICA
8		4895538		1	TORNILLO
9		2852013		1	TAMIZ DE ALCACHOFA
10		2853728		1	JUNTA HERMETICA

TAPAS DEL BLOQUE

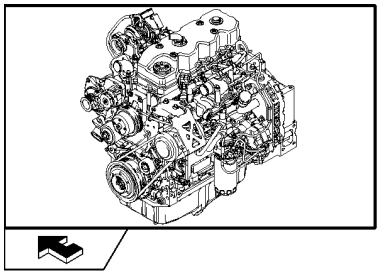

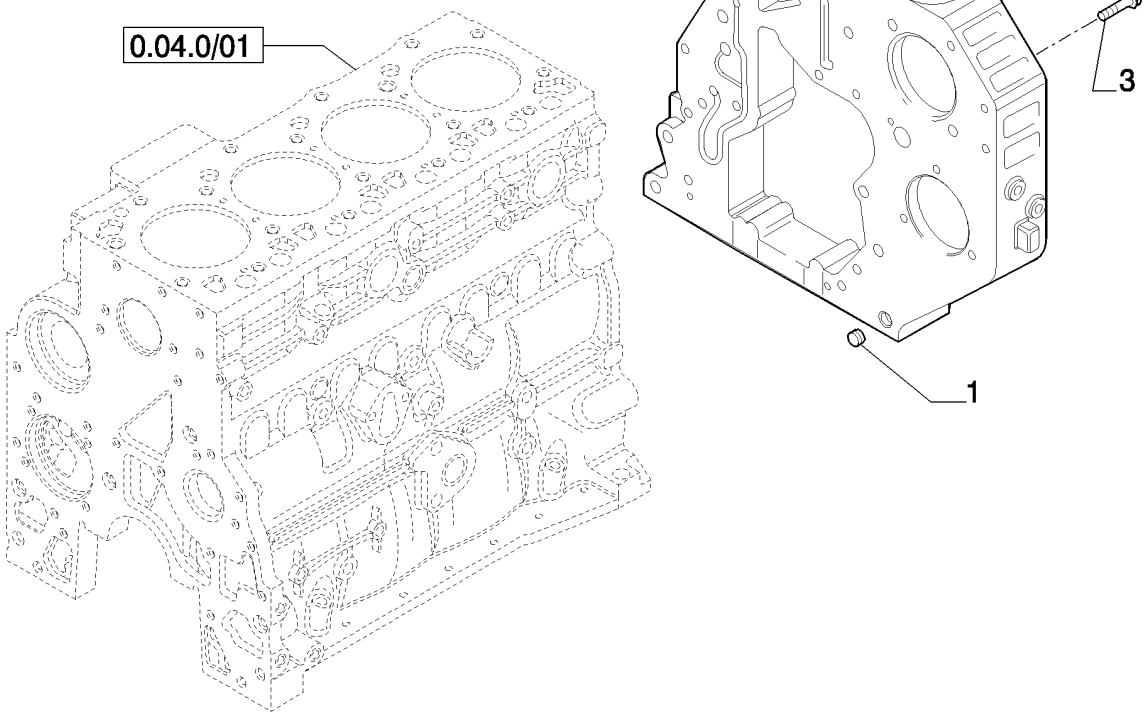

TAPAS DEL BLOQUE

REF	FN	PART NUMBER	YR/SN	QTY	DENOMINACION
1		4899026		2	PITON
2		4899078		4	TORNILLO, Hex Flg, M8 x 1.25 x 45
3		4899093		2	TORNILLO, Hex Flg, M10 x 1.5 x 30
3		4899073		1	TORNILLO, Hex Flg, M12 x 1.75 x 30
3		4896939		3	TORNILLO, M10x1.5x50
4		2855801		1	CAVIDAD

TAPAS DEL BLOQUE

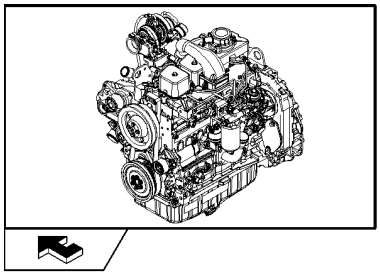

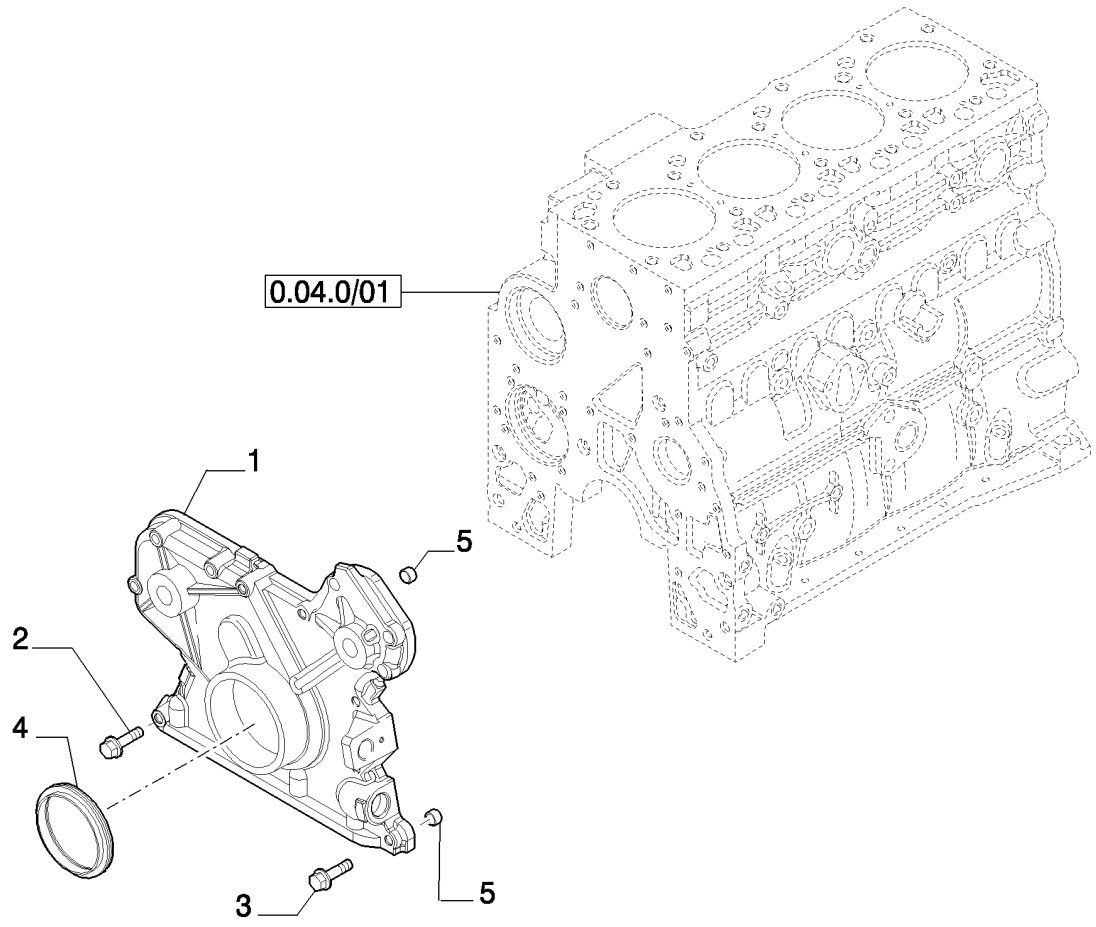

TAPAS DEL BLOQUE

REF	FN	PART NUMBER	YR/SN	QTY	DENOMINACION
1		4897024		1	TAPADERA, - FRONT
2		4899078		5	TORNILLO, Hex Flg, M8 x 1.25 x 45
3		4899063		8	TORNILLO, Hex Flg, M8 x 1.25 x 30
4		4890832		1	ANILLO DE CIERRE
5		4891209		2	PITON

TAPAS DEL BLOQUE

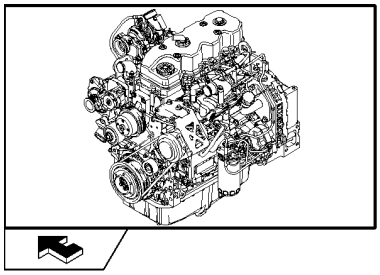

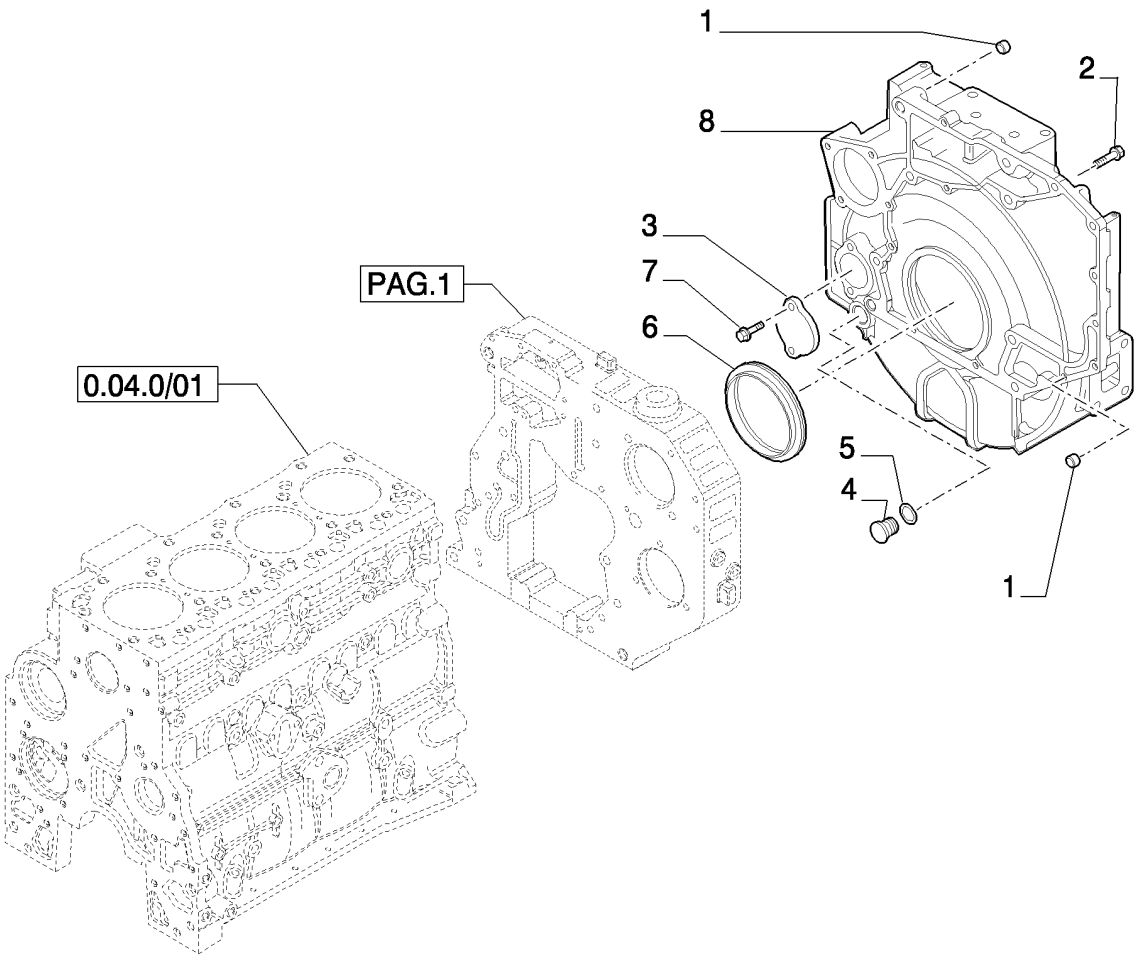

TAPAS DEL BLOQUE

REF	FN	PART NUMBER	YR/SN	QTY	DENOMINACION
1		4899026		2	PITON
2		4899109		2	TORNILLO, Hex, M10 x 1.5 x 80
2		4892915		7	TORNILLO, M10x1.5x40
2		4899076		6	TORNILLO, Hex Flg, M12 x 1.75 x 80
2		4897499		2	TORNILLO, M12x1.75x120
2		4899068		2	TORNILLO, Hex Flg , M8 x 1.25 x 16
2		2852865		2	TORNILLO, M10x35
3		4895155		1	TAPADERA
4		4895378		1	TAPÓN
5		4895379		1	JUNTA HERMETICA, M21.82 ID x 3.53 Thk
6		4890833		1	ANILLO DE CIERRE
7		4899143		2	TORNILLO, Hex Flg, M10 x 1.5 x 140
8		2855803		1	CAVIDAD

CULATA DE CILINDROS

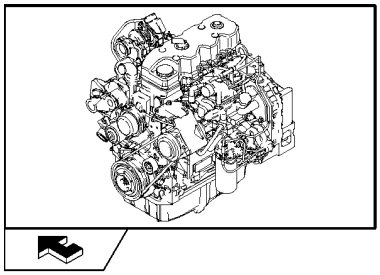

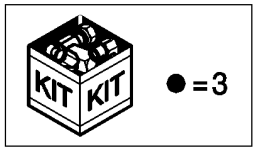

CULATA DE CILINDROS

REF	FN	PART NUMBER	YR/SN	QTY	DENOMINACION
1		4891024		8	TORNILLO
2		4891025		10	TORNILLO
3		2831266		1	CULATA, -ASSY
4		4899081		32	CHAVETA CONICA
5		4895051		8	VALVULA DE ESCAPE
6		4895052		8	VÁLVULA DE ADMISIÓN
7		2831287		16	RESORTE DE ASIENTO
8		4895073		16	MUELLE, VÁLVULA
9		4895074		16	TAZA
10		4893036		1	TAPÓN
11		4895085		9	TAPÓN, 25.74mm OD
12		4895089		7	TAPÓN, .886" OD
13		4895406		5	TAPÓN, 9.8mm OD
14		4895407		1	TAPÓN, 38.28mm OD
15		4895408		2	TAPÓN, .511" OD
16		4893244		16	ASIENTO DE VALVULA
17		2830706		1	JUNTA DE CULATA, SP=1.25
17		2830707		1	JUNTA DE CULATA, SP=1.15

TAPAS CULATA

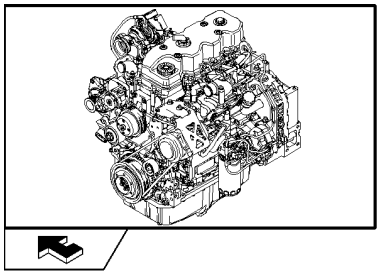

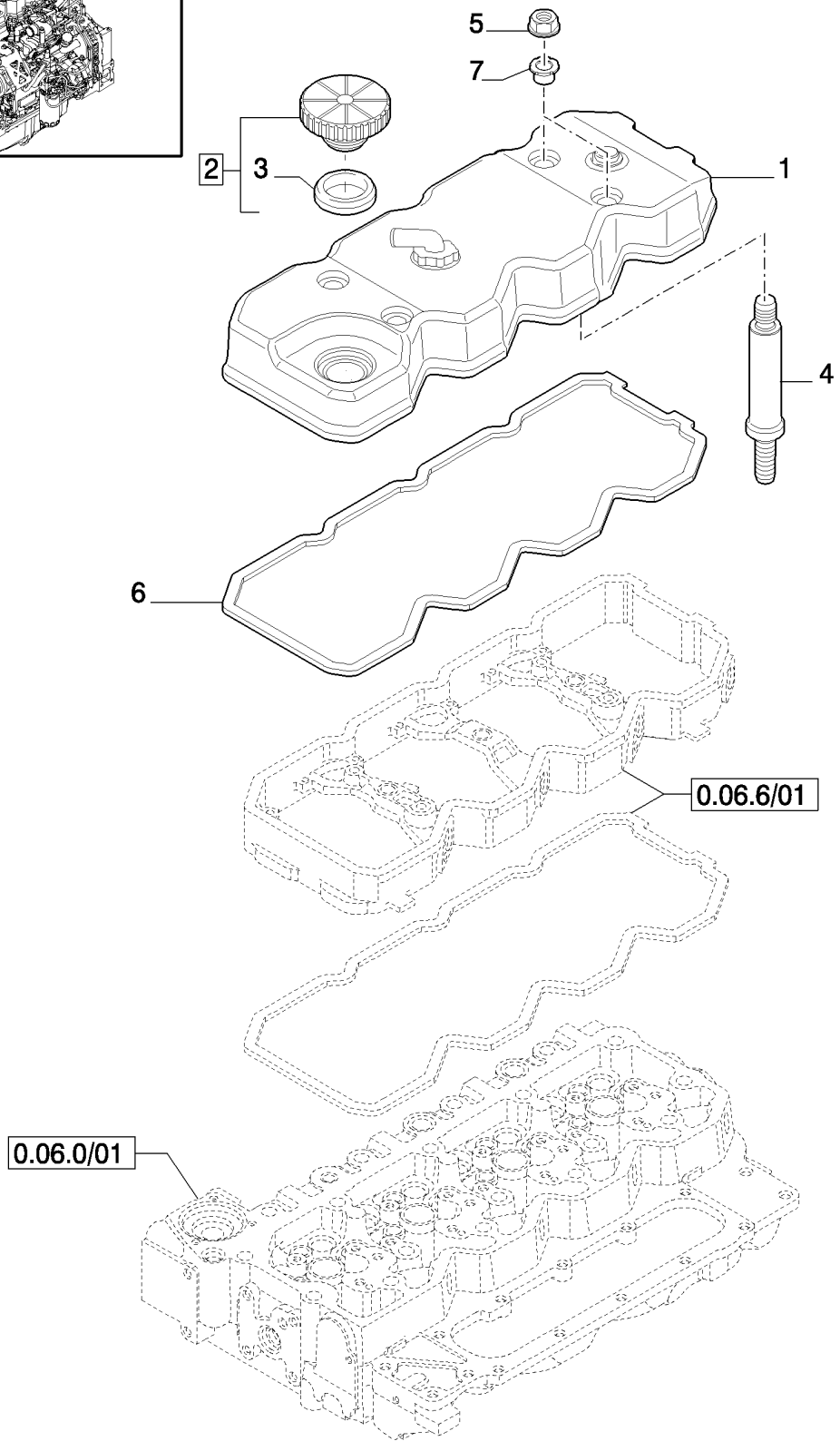

TAPAS CULATA

REF	FN	PART NUMBER	YR/SN	QTY	DENOMINACION
1	1	2853858		1	CUBRE VÁLVULA, - ASSY
2		2856707		1	TAPA DE DEPOSITO, - ASSY
3		2852774		1	JUNTA HERMETICA
4		2854812		4	PRISIONERO
5		4893936		4	TUERCA
6		4899228		1	JUNTA HERMETICA
7		4899239		4	SILENTBLOC

(1) See Page 2 (Incl. p/n 2853826)

TAPAS CULATA

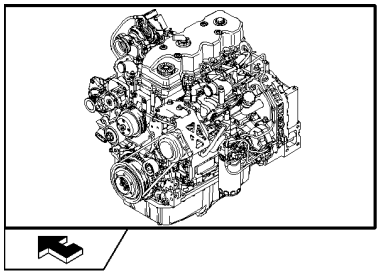

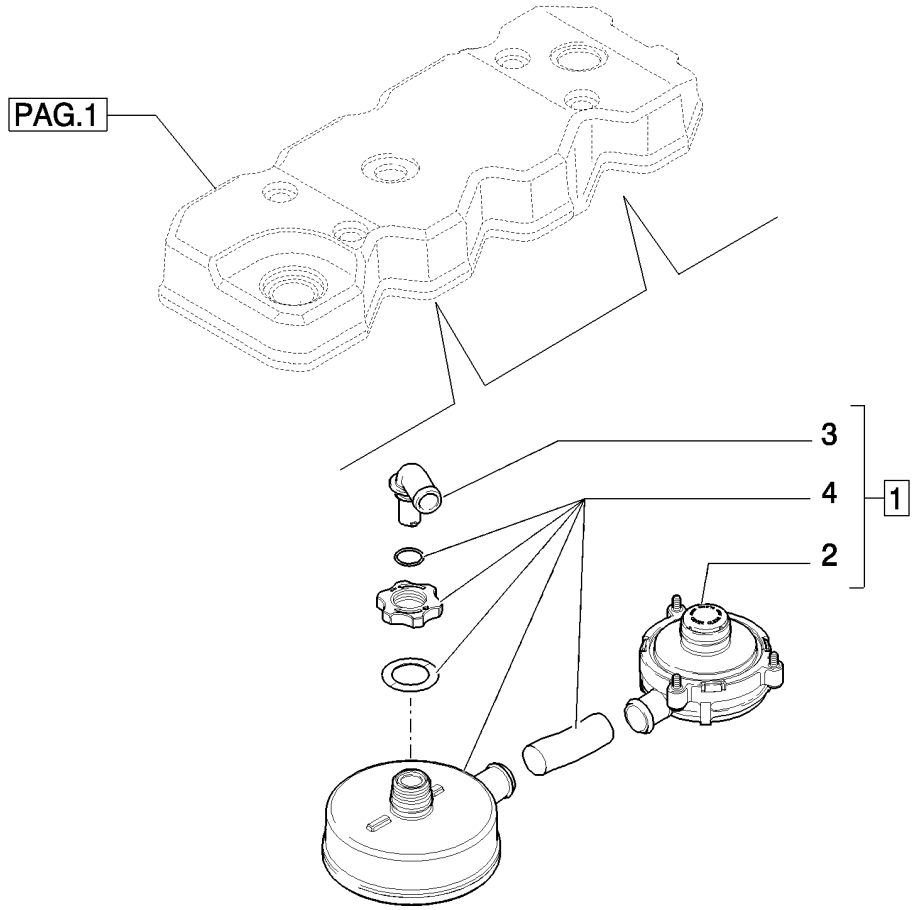

TAPAS CULATA

REF	FN	PART NUMBER	YR/SN	QTY	DENOMINACION
1		2853826		1	RESPIRADERO, - ASSY
2		504153150		1	VALVULA
3		87307807		1	CODO
4		504153151		1	ELEMENTO

EJE BALANCINES

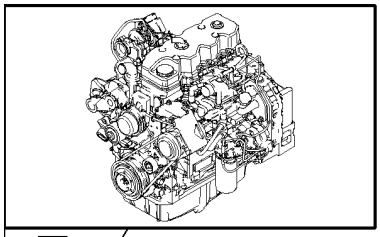

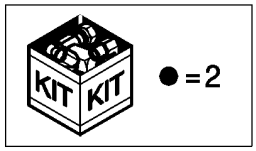

EJE BALANCINES

REF	FN	PART NUMBER	YR/SN	QTY	DENOMINACION
1		4895432		3	TORNILLO, M8x1.25x70
2		2856458		4	BALANCIN, - ASSY
3		4897248		2	RETENEDOR
4		4897245		2	ENCAJE
5		4895068		1	BALANCIN, - ASSY
6		4895198		2	TUERCA
7		2830222		2	TORNILLO DE REGLAGE
8		4895065		2	SEPARADOR
9		4899089		2	TORNILLO, Hex Flg, M8 x 1.25 x 50
10		2852776		2	ARANDELA, 6x11
11		4895067		1	BALANCIN, - ASSY
12		2852428		4	SUJETADOR
13		4899245		3	MANGUITO
14		4899256		1	CAVIDAD, - ASSY
15		2856460		2	TORNILLO
16		4893487		4	SOPORTE
17		4895031		8	VARILLA DE EMPUJE
18		2854530		8	SOPORTE-TRAVIESA
19		2853535		1	JUNTA HERMETICA
20		2852602		2	TORNILLO, 6x16
21		4896052		2	GRUPO DE CABLES

COLLECTOR DE ASPIRACION

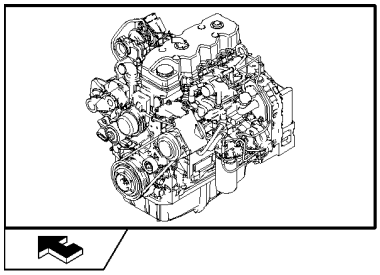



COLLECTOR DE ASPIRACION

REF	FN	PART NUMBER	YR/SN	QTY	DENOMINACION
1		2855805		1	COLECTOR DE ADMISION
2		4895432		1	TORNILLO
3		4899039		6	TORNILLO, Hex Flg, M8 x 1.25 x 25
4		2855809		1	COLECTOR
5		4899921		1	JUNTA HERMETICA
6		2854702		6	TORNILLO, M6x20
7		2852267		2	TORNILLO
8		2854700		1	TAPADERA
9		2854701		1	JUNTA HERMETICA

COLLECTOR DE ESCAPE

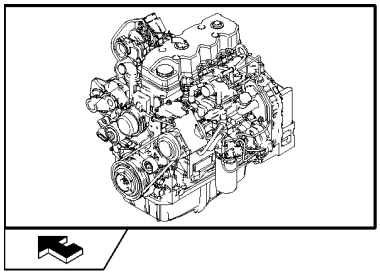

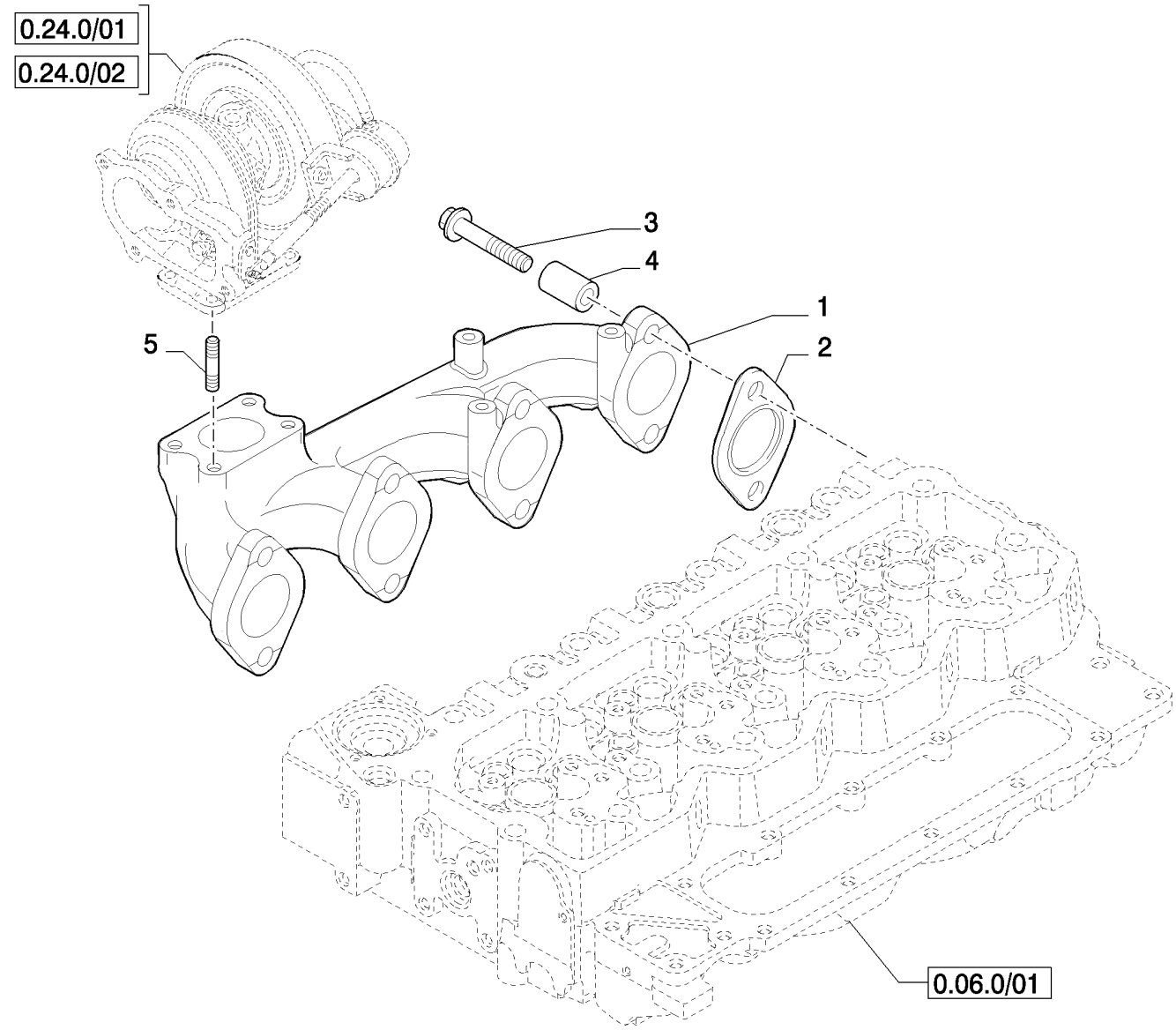

COLLECTOR DE ESCAPE

REF	FN	PART NUMBER	YR/SN	QTY	DENOMINACION
1		2855807		1	COLECTOR DE ESCAPE
2		2830444		4	JUNTA HERMETICA
3		2852744		8	TORNILLO
4		4895336		8	SEPARADOR
5		4899119		4	PRISIONERO

CIGUENAL

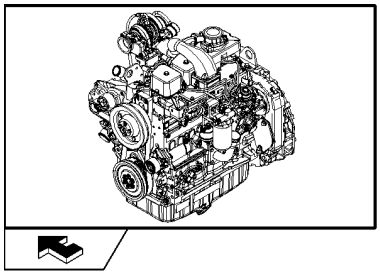

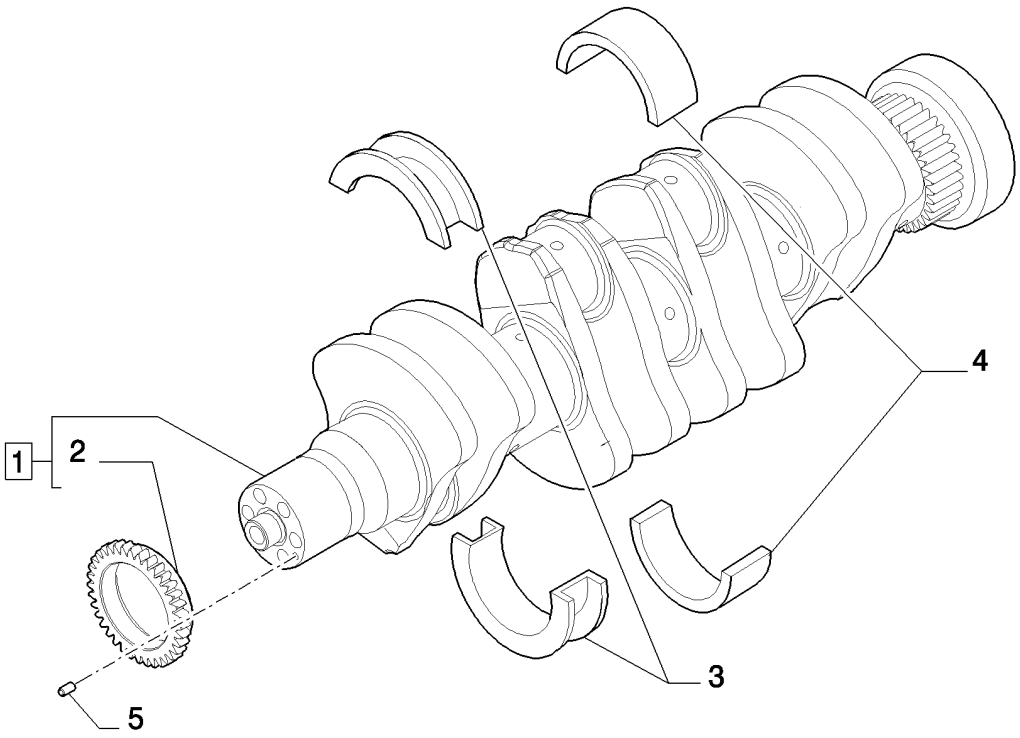

CIGUENAL

REF	FN	PART NUMBER	YR/SN	QTY	DENOMINACION
1		2853822		1	CIGÜEÑAL, - ASSY
2		4893386		1	ENGRANAJE
3		2992153		1	JUEGO SEMIANILLOS, STD (THRUST)
3		2992154		1	JUEGO SEMIANILLOS+0.508, + 0.250 (THRUST)
3		2992155		1	JUEGO SEMIANILLOS +0,25, + 0.500 (THRUST)
4		2992147		4	SERIE SEMICOJENETES
4		2992148		4	SERIE SEMICOJENET.-0.254
4		2992149		4	SERIE SEMICOJENET.-0.508m
5		4899046		1	PITON

BIELA PISTON

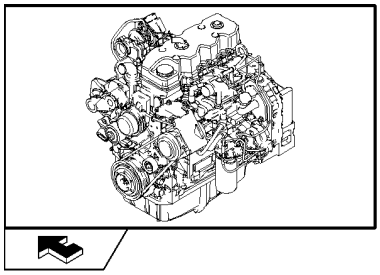

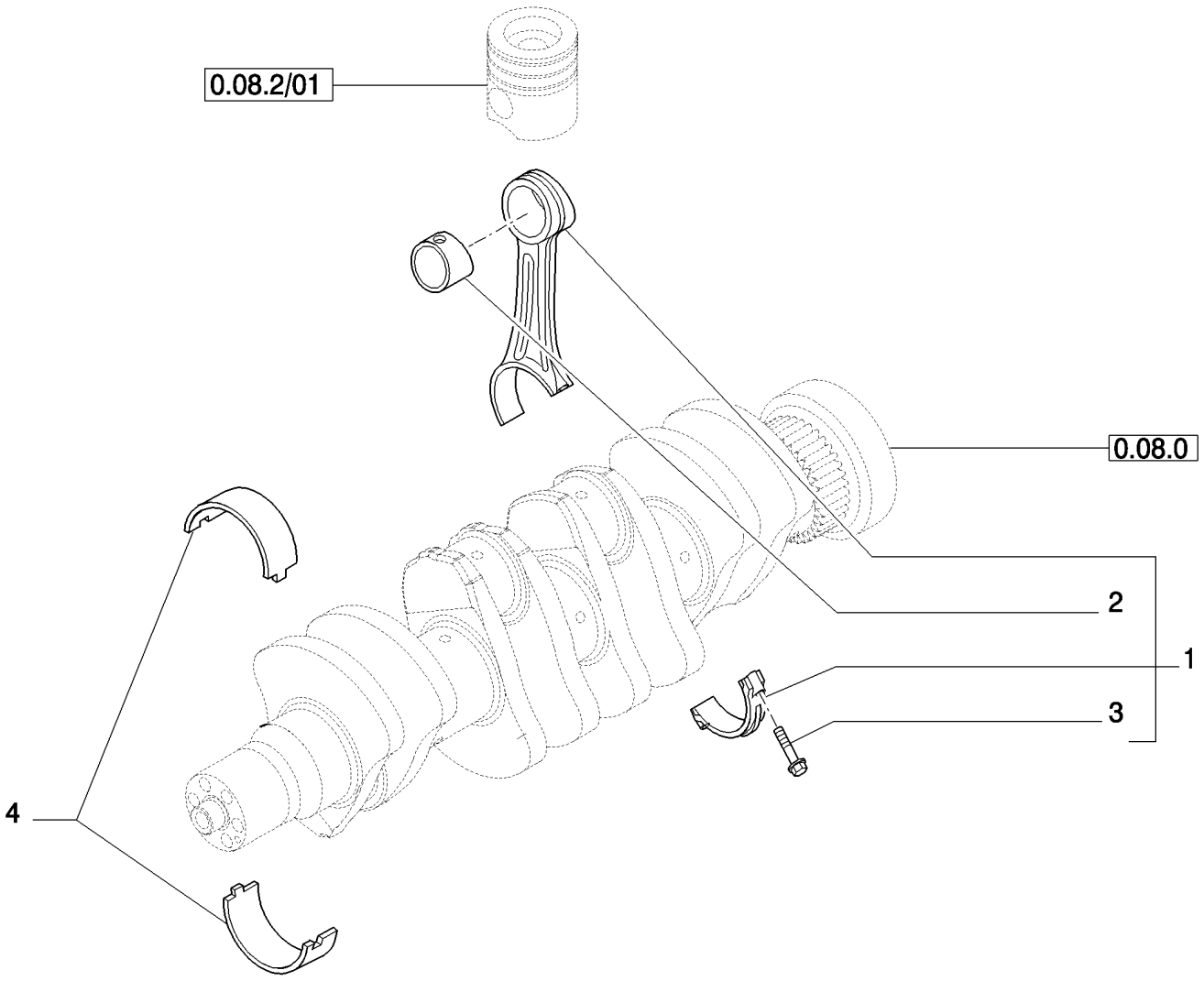

BIELA PISTON

REF	FN	PART NUMBER	YR/SN	QTY	DENOMINACION
1		2831298		4	BIELA DE EMBOLO, - ASSY
2		4892708		1	CASQUILLO
3		2831297		2	TORNILLO
4		8093882		4	SERIE SEMICOJIN.BANCO
4		8094960		4	SERIE SEMICOJIN.BANCO, (-0.250)
4		8094961		4	SERIE SEMICOJIN.BANCO, (-0.500)

EMBOLO - MOTOR

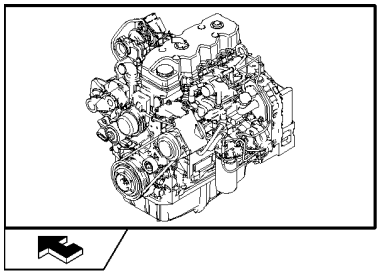

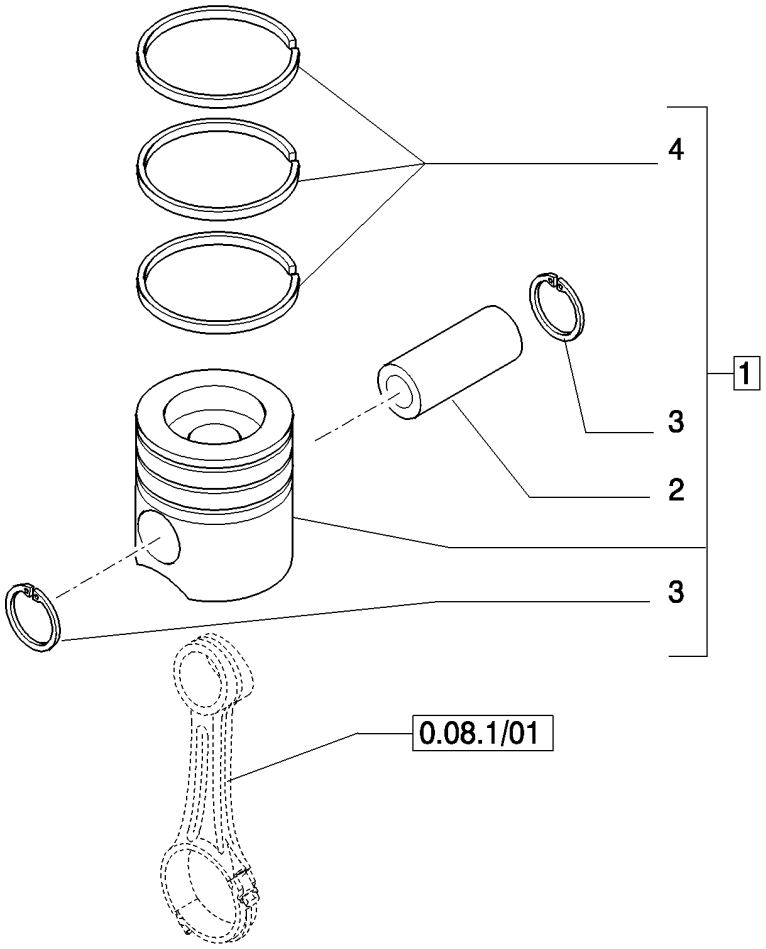

EMBOLO - MOTOR

REF	FN	PART NUMBER	YR/SN	QTY	DENOMINACION
1		8094853		4	SERIE PISTONES, - ASSY (STD)
1		8094854		4	SERIE PISTONES, - ASSY (+0.4)
2		4892712		1	BULON DEL EMBOLO
3		2854030		2	ANILLO DE RESORTE
4		87582179		1	SERIE ANILLO PISTON, (STD)
4		87582180		1	SERIE ANILLO PISTON, (+0.4)

VOLANTE MOTOR

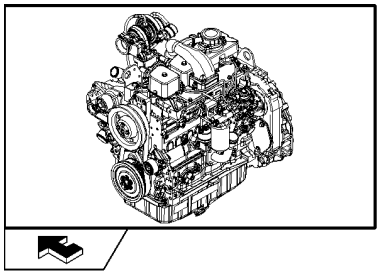

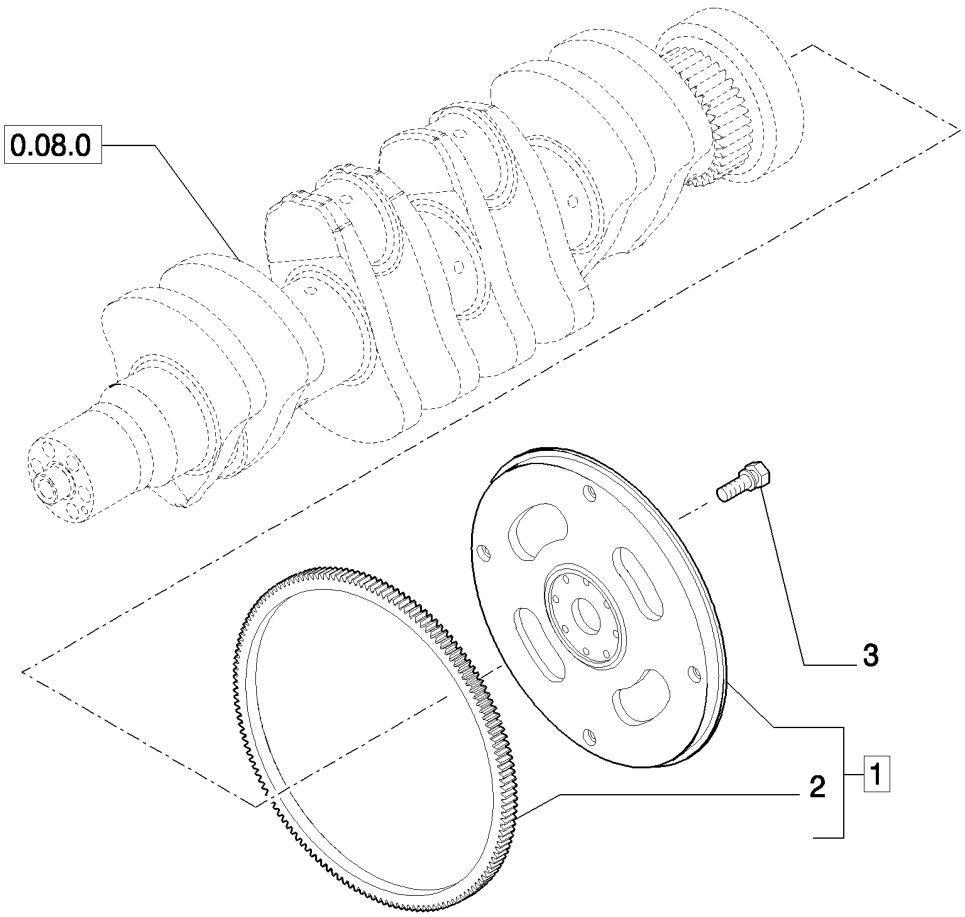

VOLANTE MOTOR

REF	FN	PART NUMBER	YR/SN	QTY	DENOMINACION
1		2852049		1	VOLANTE DEL MOTOR, - ASSY
2		2852051		1	CORONA DENTADA
3		4894641		8	TORNILLO, Wash Hd, M12 x 1.25 x 31

POLEA - CIGUENAL

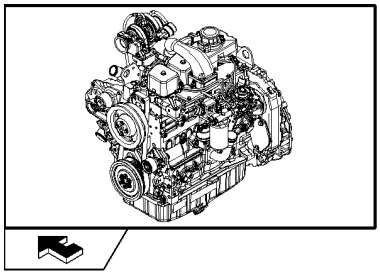

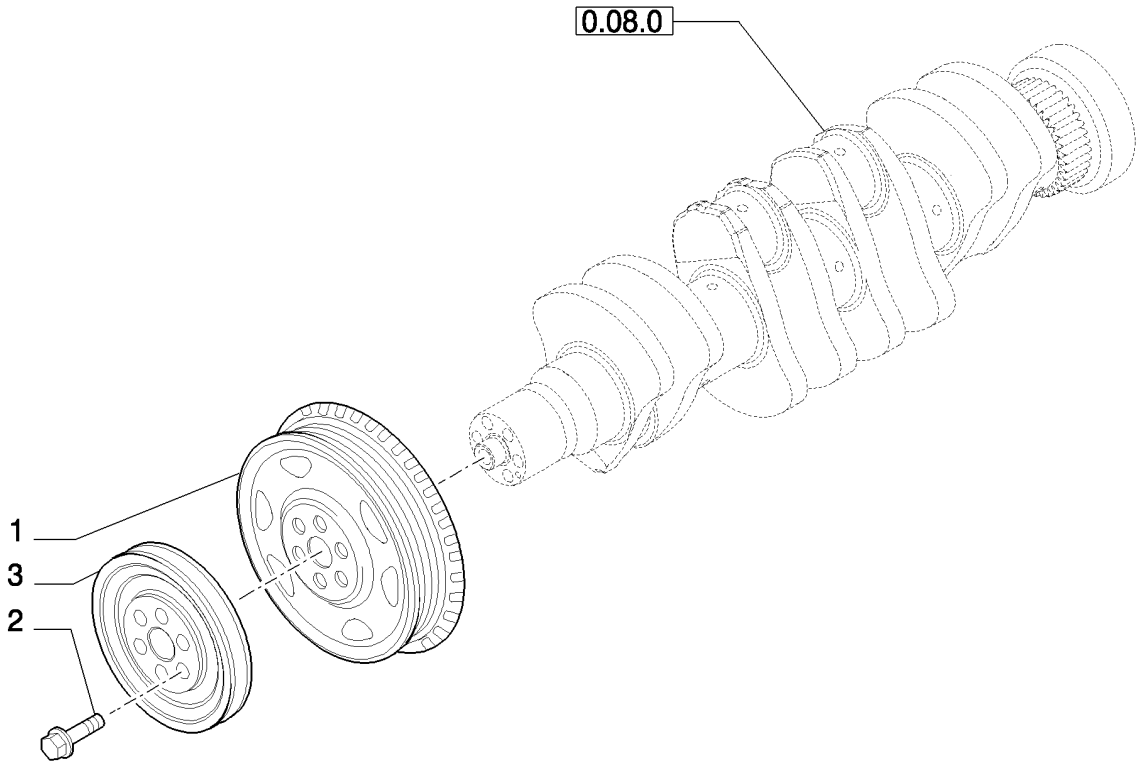

POLEA - CIGUENAL

REF	FN	PART NUMBER	YR/SN	QTY	DENOMINACION
1		4896773		1	POLEA
2		4892867		6	TORNILLO, Torx Wash Hd, M12 x 1.25 x 78.5
3		2852054		1	POLEA

EQUILIBRADOR, ENGRENAJES Y ARBOLES

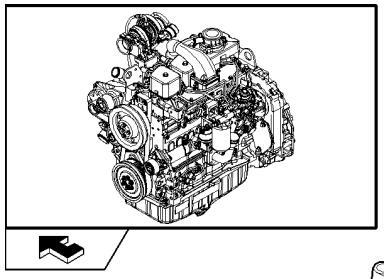

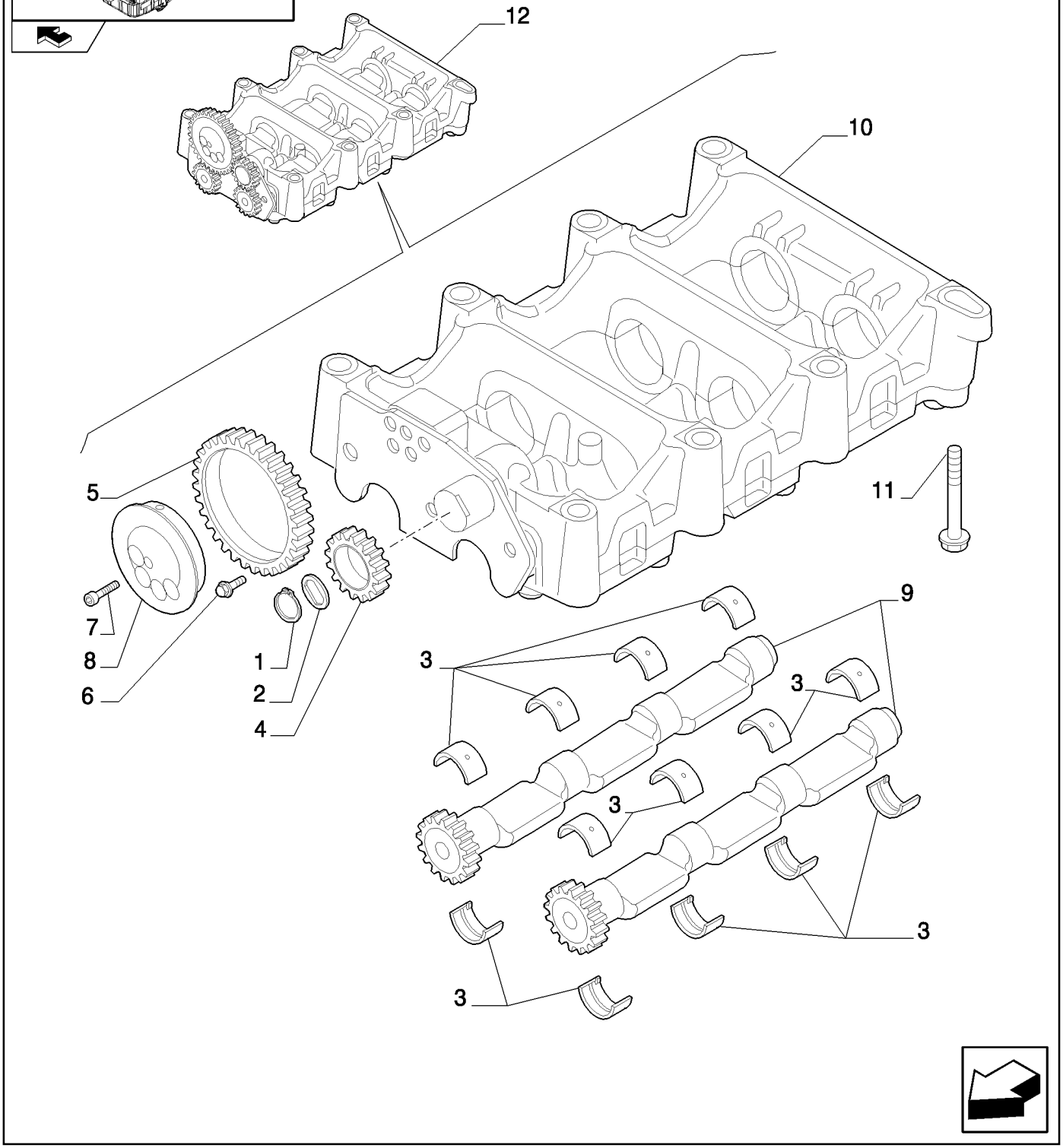

EQUILIBRADOR, ENGRENAJES Y ARBOLES

REF	FN	PART NUMBER	YR/SN	QTY	DENOMINACION
1		4897125		1	ANILLO DE RESORTE
2		2855753		1	PLACA DE APOYO
3		4897071		16	CASQUILLO
4		4897048		1	PIÑÓN LOCO
5		4896947		1	PIÑÓN LOCO
6		4895586		3	TORNILLO
7		2830433		5	TORNILLO
8		2831031		1	ARBOL DE REENVIO
9		2831354		2	EJE
10	1	2855744		1	CAVIDAD, - ASSY
11		4899109		7	TORNILLO, Hex, M10 x 1.5 x 80
11		4897934		1	TORNILLO
12		2855743		1	EQUILIBRADOR, - ASSY

(1) See Page 2

EQUILIBRADOR, ENGRENAJES Y ARBOLES

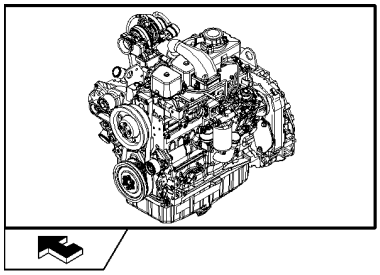

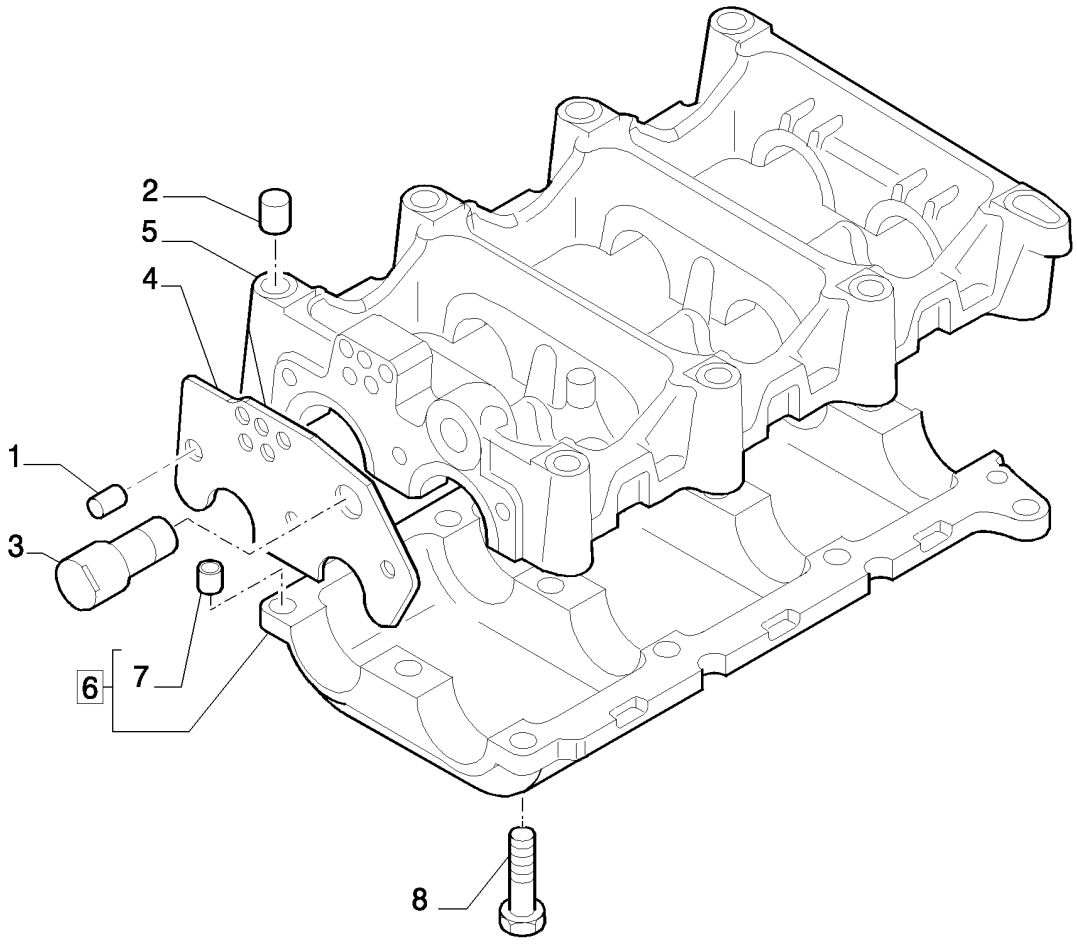

EQUILIBRADOR, ENGRENAJES Y ARBOLES

REF	FN	PART NUMBER	YR/SN	QTY	DENOMINACION
1		2831305		1	PITON
2		4899027		2	PITON
3		2830948		1	ARBOL DE REENVIO
4		2855746		1	PLACA DE APOYO
5		2831303		1	ESTRUCTURA
6		2831302		1	ESTRUCTURA, - ASSY
7		4891209		6	PITON
8		4895323		12	TORNILLO

ARBOL DE LEVAS - PINONES DE LA DISTRIBUCION

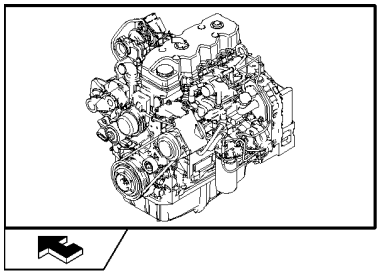

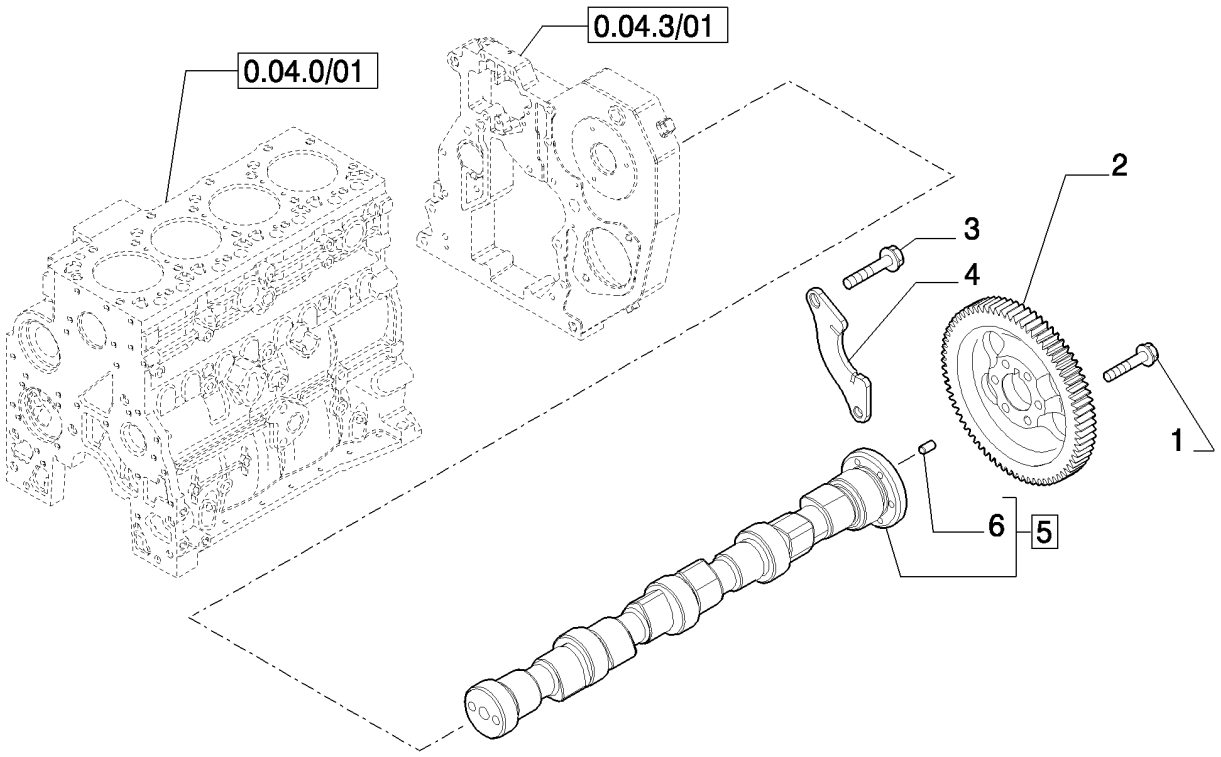

ARBOL DE LEVAS - PINONES DE LA DISTRIBUCION

REF	FN	PART NUMBER	YR/SN	QTY	DENOMINACION
1		4899079		6	TORNILLO, Hex Flg, M8 x 1.25 x 25
2		4896381		1	ENGRANAJE
3		4899068		2	TORNILLO, Hex Flg , M8 x 1.25 x 16
4		4897457		1	SOPORTE
5		4896419		1	ARBOL DE LEVAS, - ASSY
6		4899080		1	PITON

BOMBA DE INYECCION

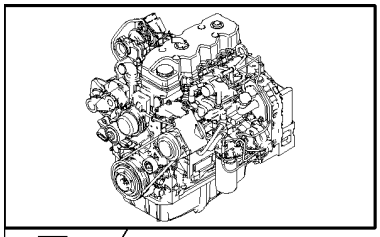

KIT KIT ● = 5

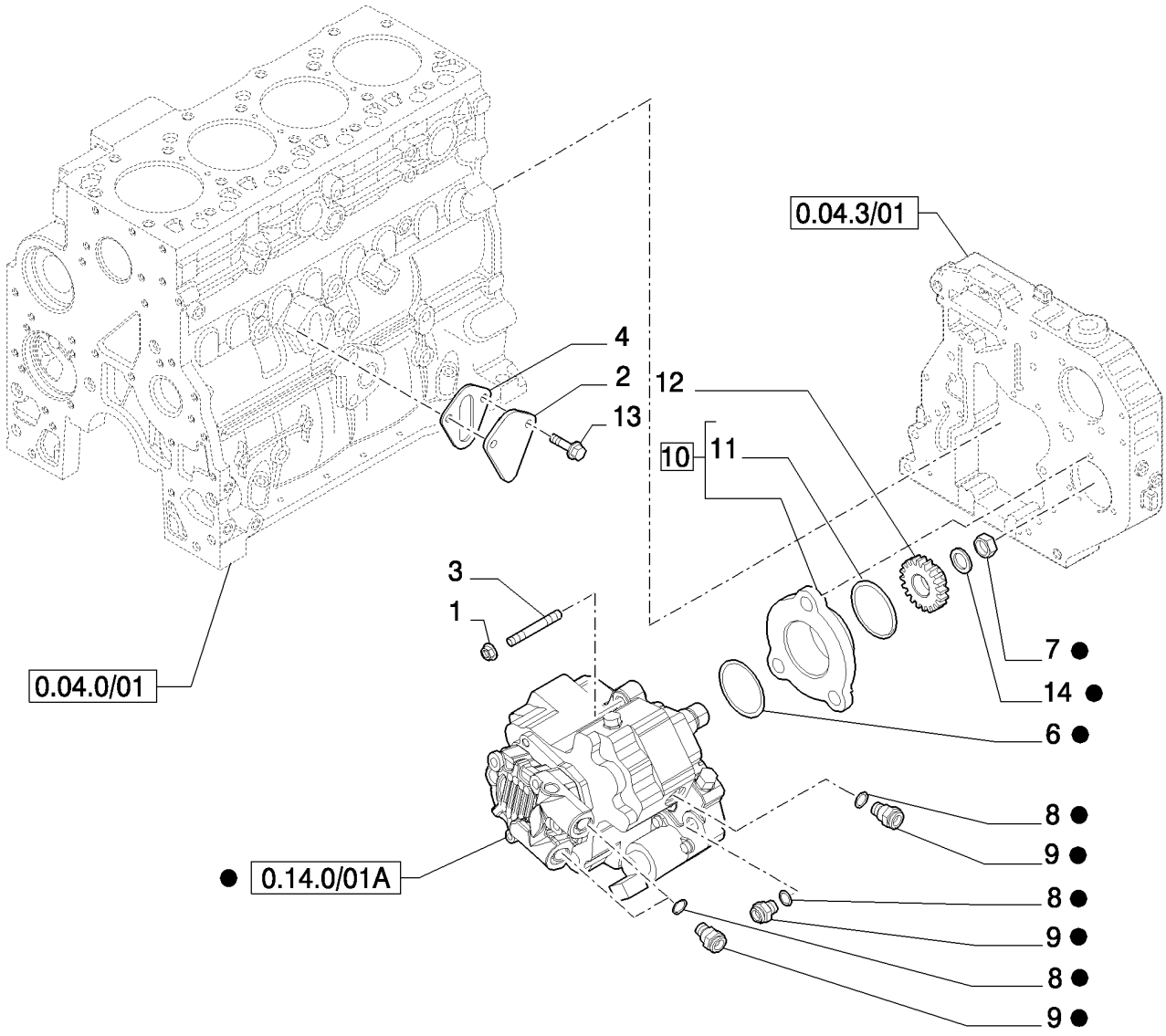

BOMBA DE INYECCION

REF	FN	PART NUMBER	YR/SN	QTY	DENOMINACION
1		4899003		3	TUERCA
2		4896952		1	TAPADERA
3		2852488		1	PRISIONERO, M8x1.25x50
4		4890700		1	JUNTA HERMETICA
5	1	4898921		1	BOMBA DE INYECCION, - ASSY
6		4890088		1	JUNTA HERMETICA
7		4890634		1	TUERCA
8		4891385		4	JUNTA HERMETICA
9		4893962		4	EMPALME RAPIDO
10		2852804		1	CUBO
11		2852805		1	JUNTA HERMETICA
12		4893389		1	PINON CONDUCIDO
13		2852234		2	TORNILLO, Hex Flg, M8 x 1.25 x 20
14		4890635		1	ARANDELA

(1) See Page 0.14.0/01A

GRUPO DE INYECCION - INYECTOR

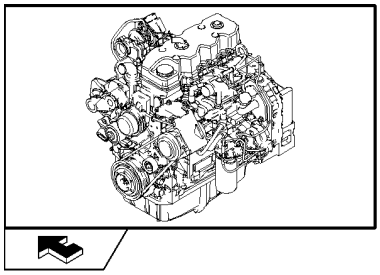

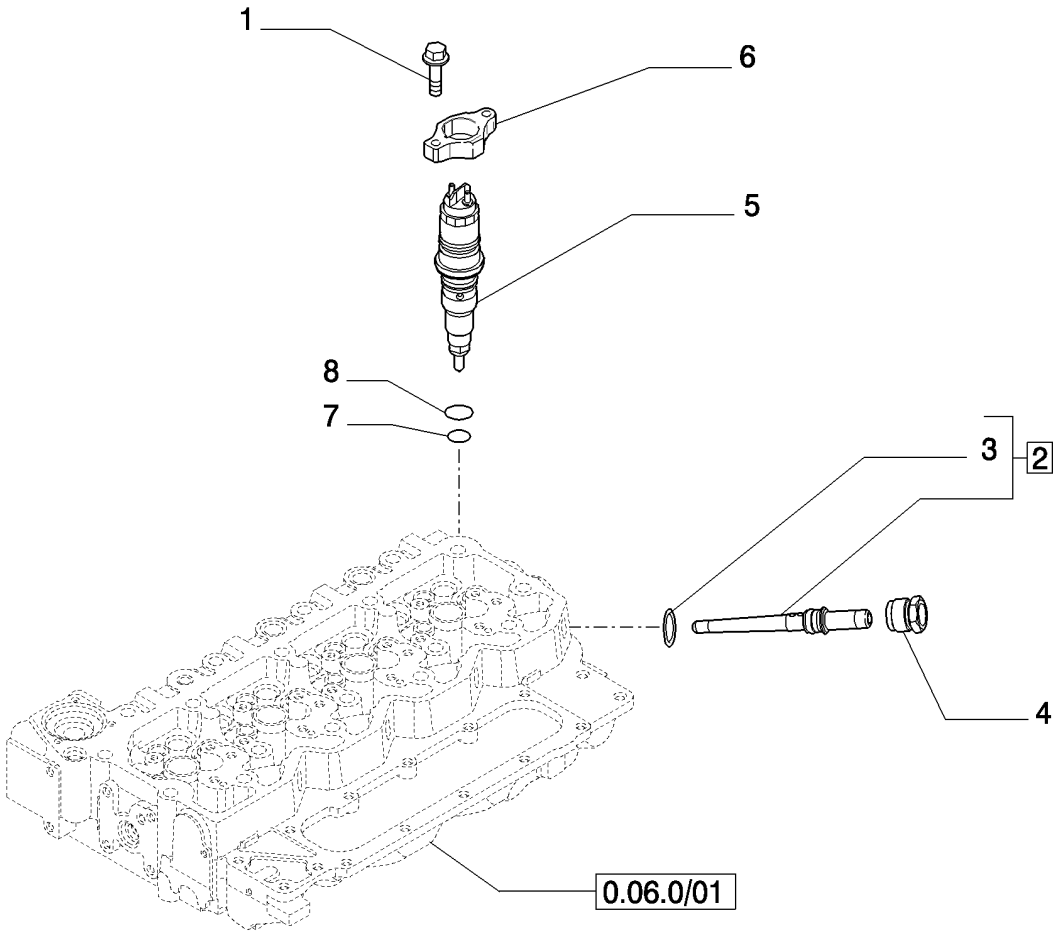

GRUPO DE INYECCION - INYECTOR

REF	FN	PART NUMBER	YR/SN	QTY	DENOMINACION
1		4895483		8	TORNILLO, M6x1.0x25
2		2854606		4	CONEXION, - ASSY
3		4890929		1	JUNTA HERMETICA
4		4893739		4	TUERCA DE TUBERÍA
5		2855491		4	INYECTOR
6		2854609		4	PIEZA DE SOPORTE
7		4899689		4	JUNTA HERMETICA
8		4890926		4	JUNTA HERMETICA

BOMBA DE INYECCION - COMPONENTES

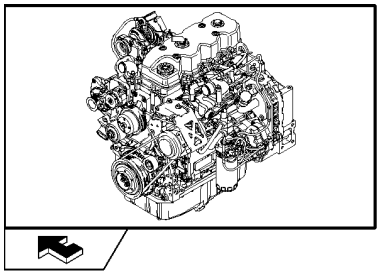

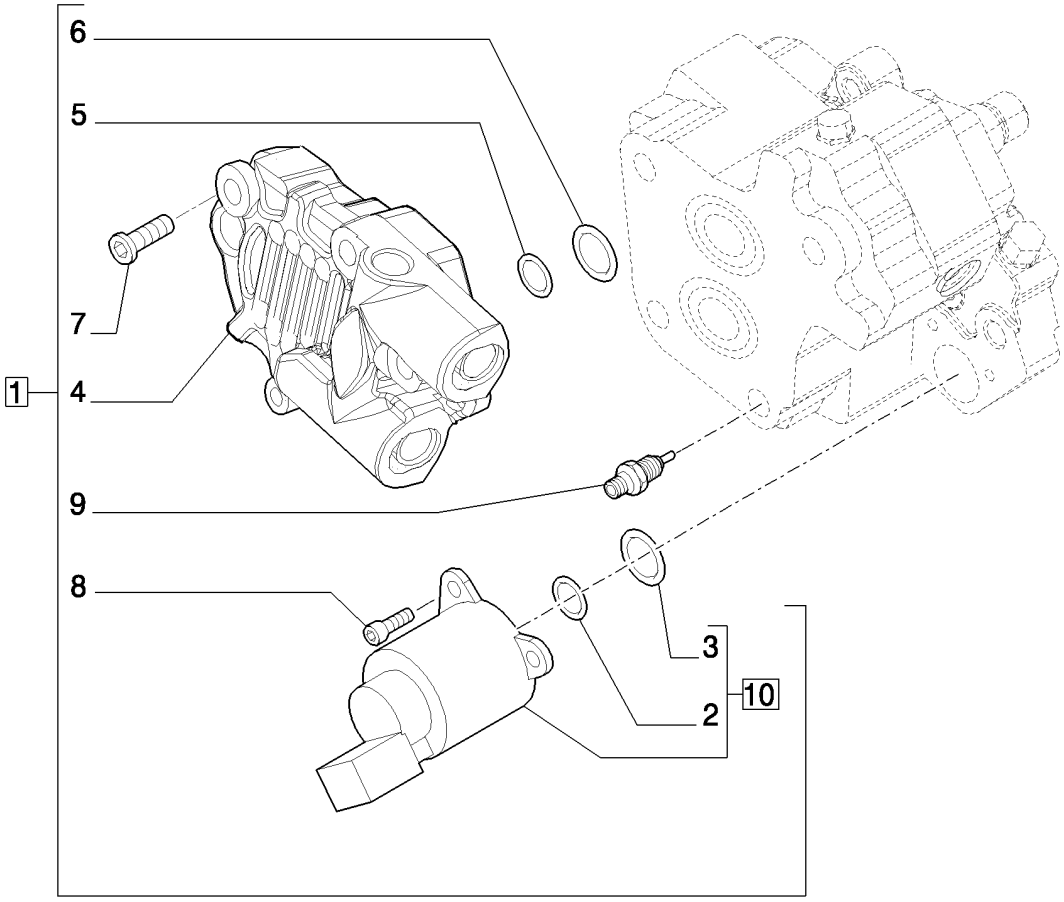

BOMBA DE INYECCION - COMPONENTES

REF	FN	PART NUMBER	YR/SN	QTY	DENOMINACION
1		4898921		1	BOMBA DE INYECCION, - ASSY
2		42541850		1	JUNTA HERMETICA
3		42541849		1	JUNTA HERMETICA
4		42547619		1	BOMBA DE ALIMENTACION
5		42550488		1	JUNTA HERMETICA
6		42548060		1	JUNTA HERMETICA
7		42550487		4	TORNILLO
8		42550932		3	TORNILLO
9		42550486		1	VALVULA
10		42541851		1	SOLENOIDE, - ASSY

GRUPO DE INYECCION - TUBERIAS

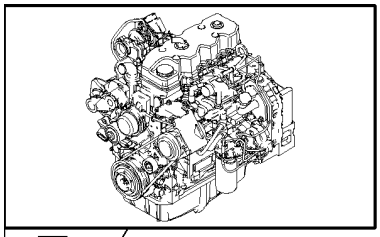

KIT KIT ● = 1



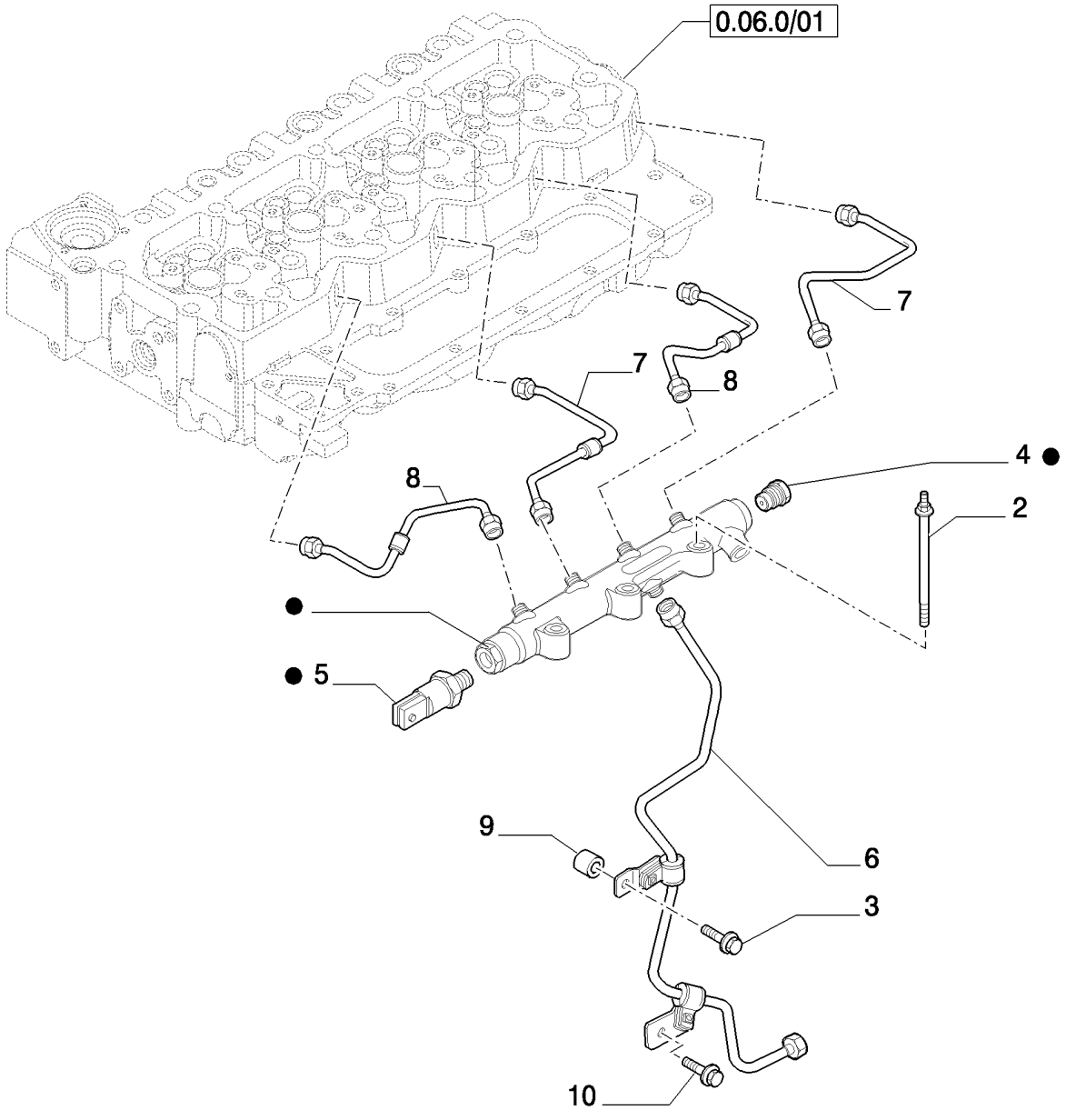



GRUPO DE INYECCION - TUBERIAS

REF	FN	PART NUMBER	YR/SN	QTY	DENOMINACION
1		2855503		1	COLECTOR, - ASSY
2		2853537		3	TORNILLO
3		4899020		1	TORNILLO, M8x1.25x16
4		2854543		1	VÁLVULA, DESCARGA
5		2854542		1	SENSOR
6		2855819		1	MANGUERA INJECCION
7		2855818		2	MANGUERA INJECCION
8		2854544		2	MANGUERA INJECCION
9		2852434		1	SEPARADOR
10		4896884		1	TORNILLO

INYECCIÓN ELECTRÓNICA

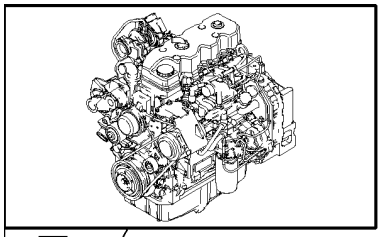

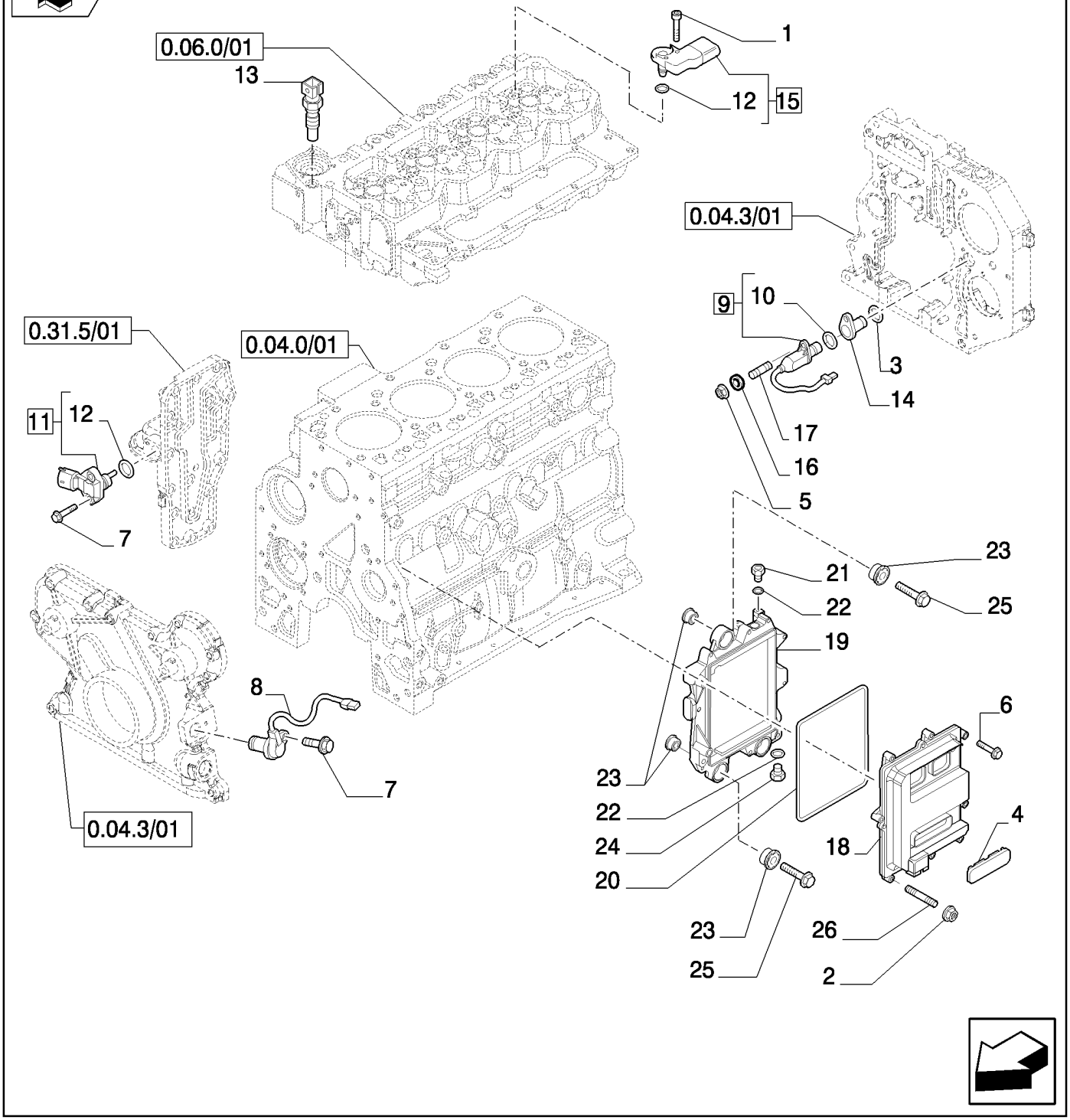

INYECCIÓN ELECTRÓNICA

REF	FN	PART NUMBER	YR/SN	QTY	DENOMINACION
1		4895817		1	TORNILLO
2		4899057		1	TUERCA
3		2852817		1	JUNTA HERMETICA, 23.5x1.7
4		2852825		1	TAPÓN
5		2854282		1	TUERCA
6		2852818		7	TORNILLO, M6x30
7		4899110		3	TORNILLO, Hex Flg, M6 x 1 x 20
8		4890189		1	SENSOR
9		4890190		1	SENSOR, - ASSY
10		2852820		1	JUNTA HERMETICA, 17.17x1.78
11		4890193		1	SENSOR, - ASSY
12		4895477		1	JUNTA HERMETICA
13		4897224		1	SENSOR, Temperature
14		4892255		1	CAVIDAD
15		2852821		1	SENSOR, - ASSY
16		4899124		1	ARANDELA
17		4895157		1	PRISIONERO
18		2854594		1	MODULE
19		2854596		1	PIEZA DE SOPORTE
20		2854079		1	JUNTA HERMETICA
21		4896542		1	RACOR, M12x1.5
22		2854292		2	JUNTA CIRCULAR
23		2855150		6	PLOT DE SUSPENSIÓN
24		4890964		1	CONEXION
25		4899078		3	TORNILLO, Hex Flg, M8 x 1.25 x 45
26		2854593		1	PRISIONERO

SISTEMA ELÉCTRICO MOTOR

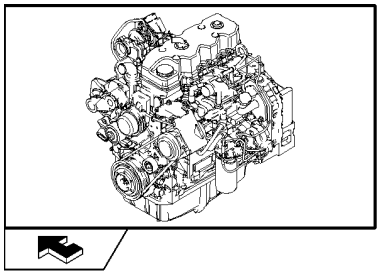

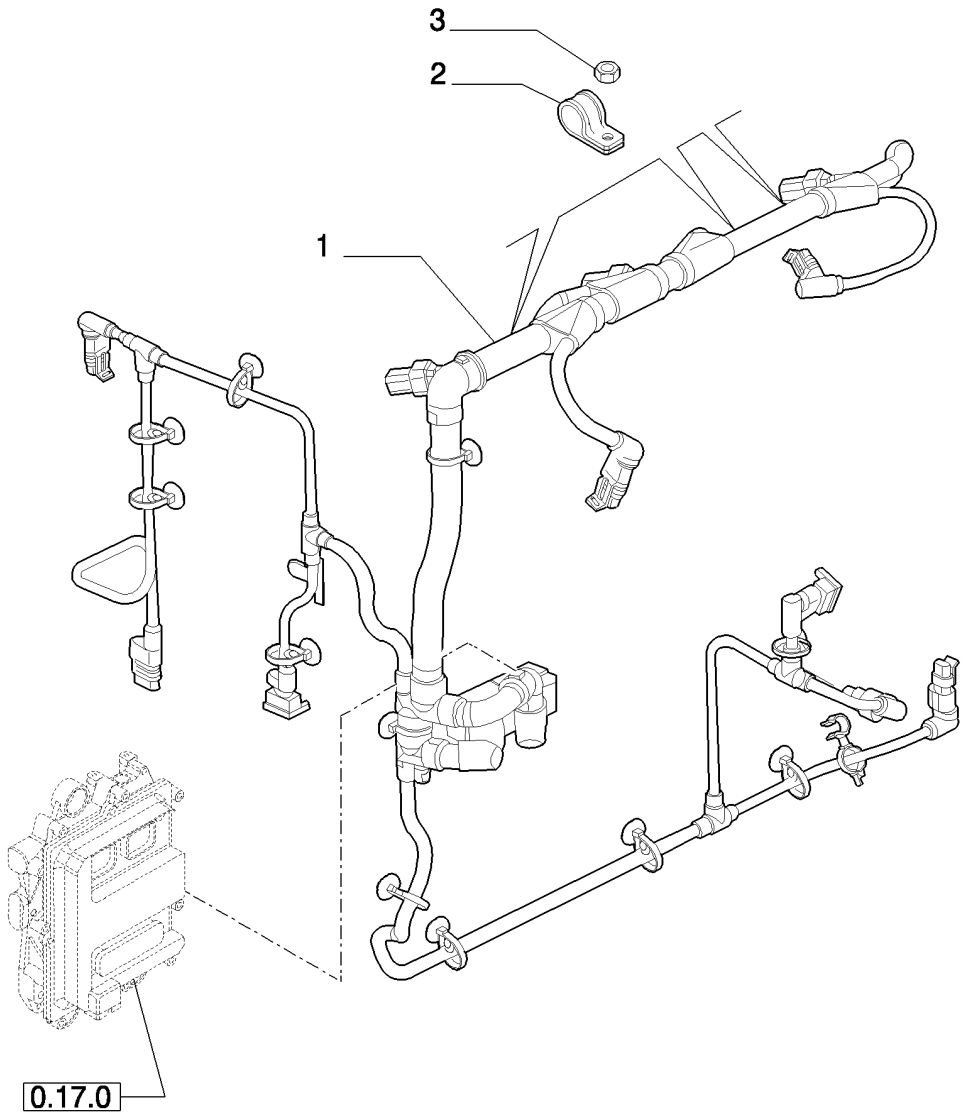

SISTEMA ELÉCTRICO MOTOR

REF	FN	PART NUMBER	YR/SN	QTY	DENOMINACION
1		2855886		1	GRUPO DE CABLES
2		4899815		2	PLACA DE SUJECION
2		2852500		1	BORNE
3		2852484		3	TUERCA

FILTRO COMBUSTIBLE

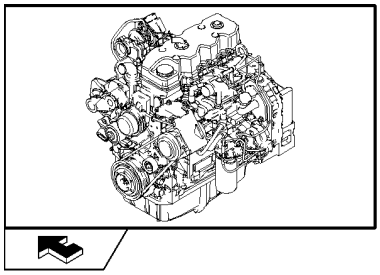

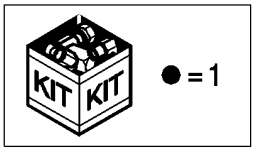

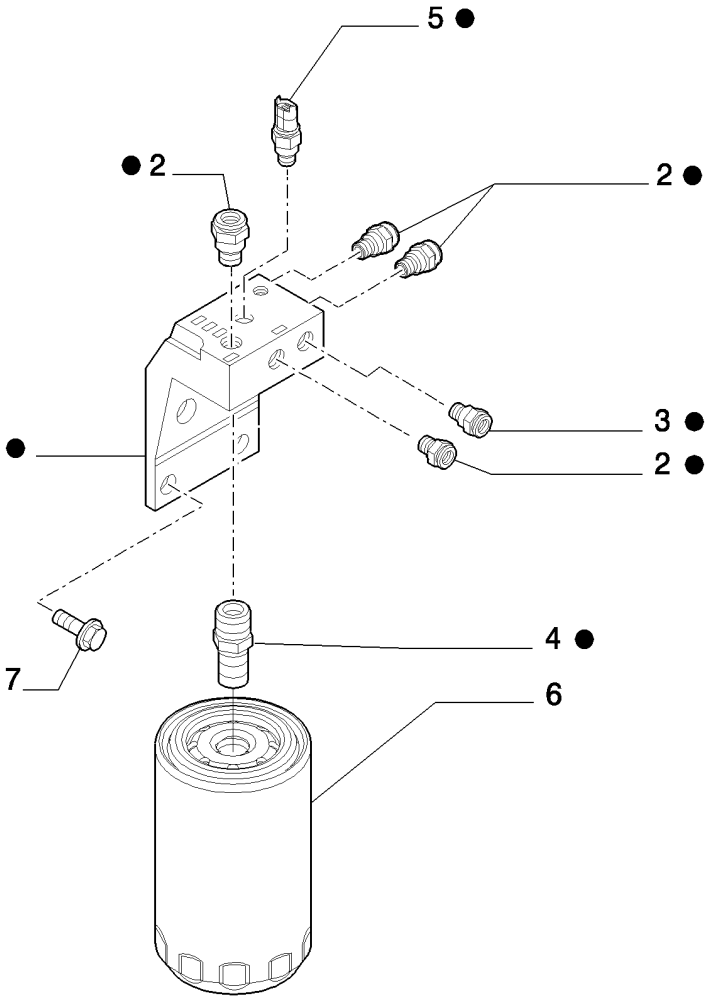

FILTRO COMBUSTIBLE

REF	FN	PART NUMBER	YR/SN	QTY	DENOMINACION
1		2855792		1	CAVIDAD, - ASSY
2		2854563		4	CONEXION
3		2854564		1	CONEXION
4		4898877		1	CONEXION
5		4897224		1	SENSOR, Temperature
6		87803197		1	FILTRO DE COMBUSTIBLE
7		2854566		2	TORNILLO, M12x30

TUBERIAS - COMBUSTIBLE

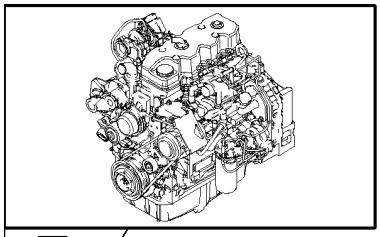

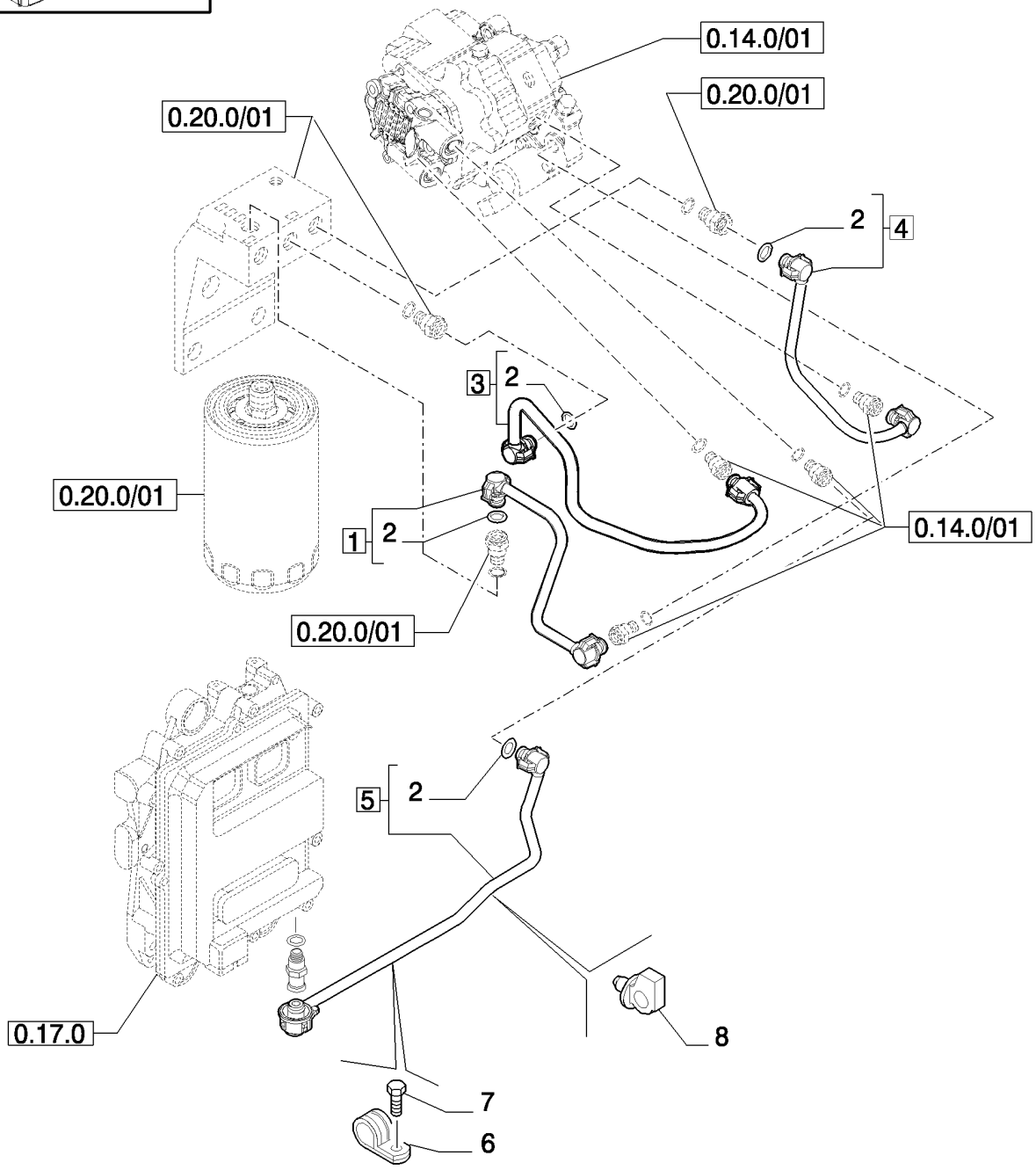

TUBERIAS - COMBUSTIBLE

REF	FN	PART NUMBER	YR/SN	QTY	DENOMINACION
1		2855427		1	CUELLO DE CARGA, - ASSY
2		4894095		6	JUNTA HERMETICA
3		2855428		1	CUELLO DE CARGA, - ASSY
4		2855430		1	CUELLO DE CARGA, - ASSY
5		2855795		1	MANGUERA INJECCION, - ASSY
6		4895462		1	BORNE
7		4899103		1	TORNILLO, Hex Flg, M8 x 1.25 x 12
8		4896996		1	BORNE

GRUPO DE INYECCION - TUBERIAS

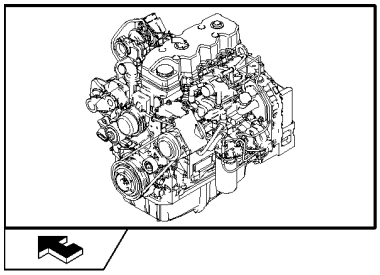

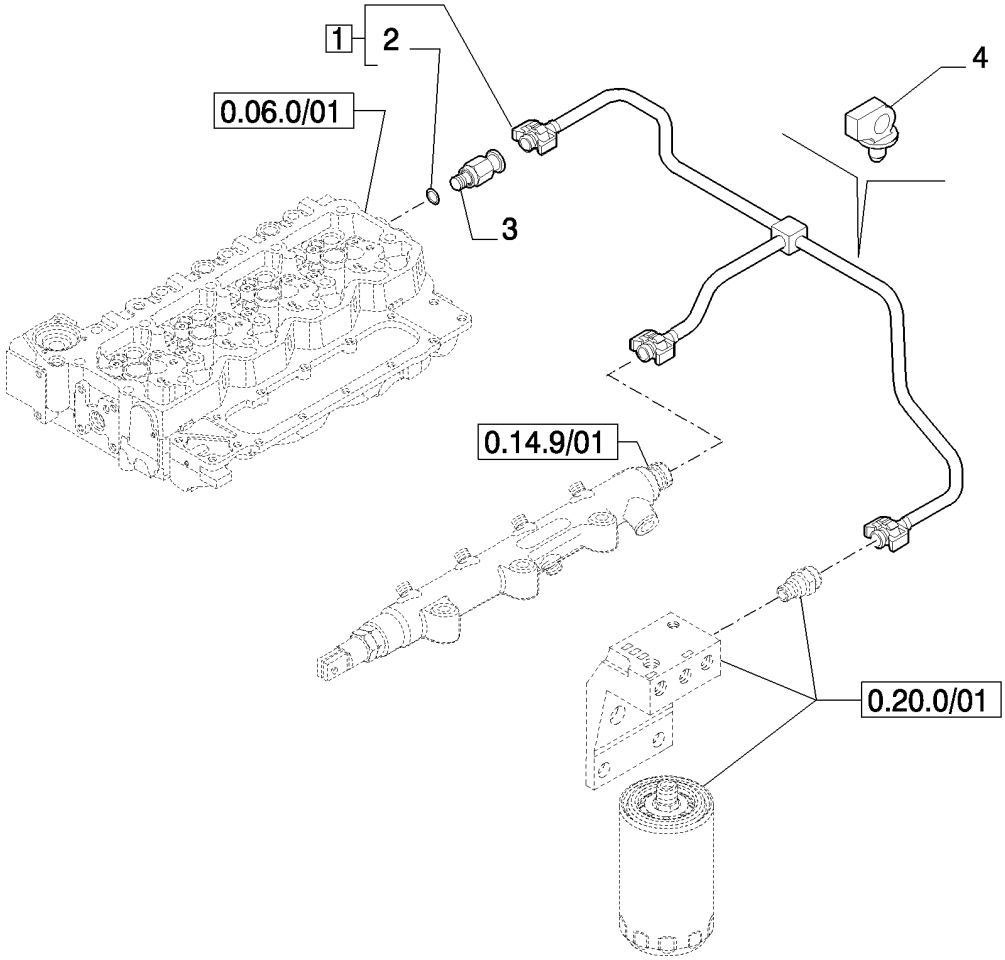

GRUPO DE INYECCION - TUBERIAS

REF	FN	PART NUMBER	YR/SN	QTY	DENOMINACION
1		2855336		1	TUBO DE RETORNO, - ASSY
2		4894095		3	JUNTA HERMETICA
3		4896329		1	VÁLVULA, DESCARGA
4		4896996		1	BORNE

TURBOCOMPRESSOR

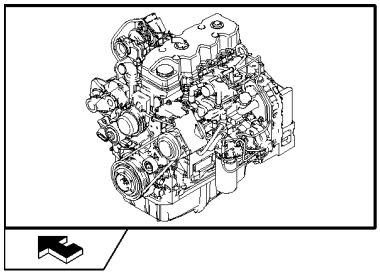

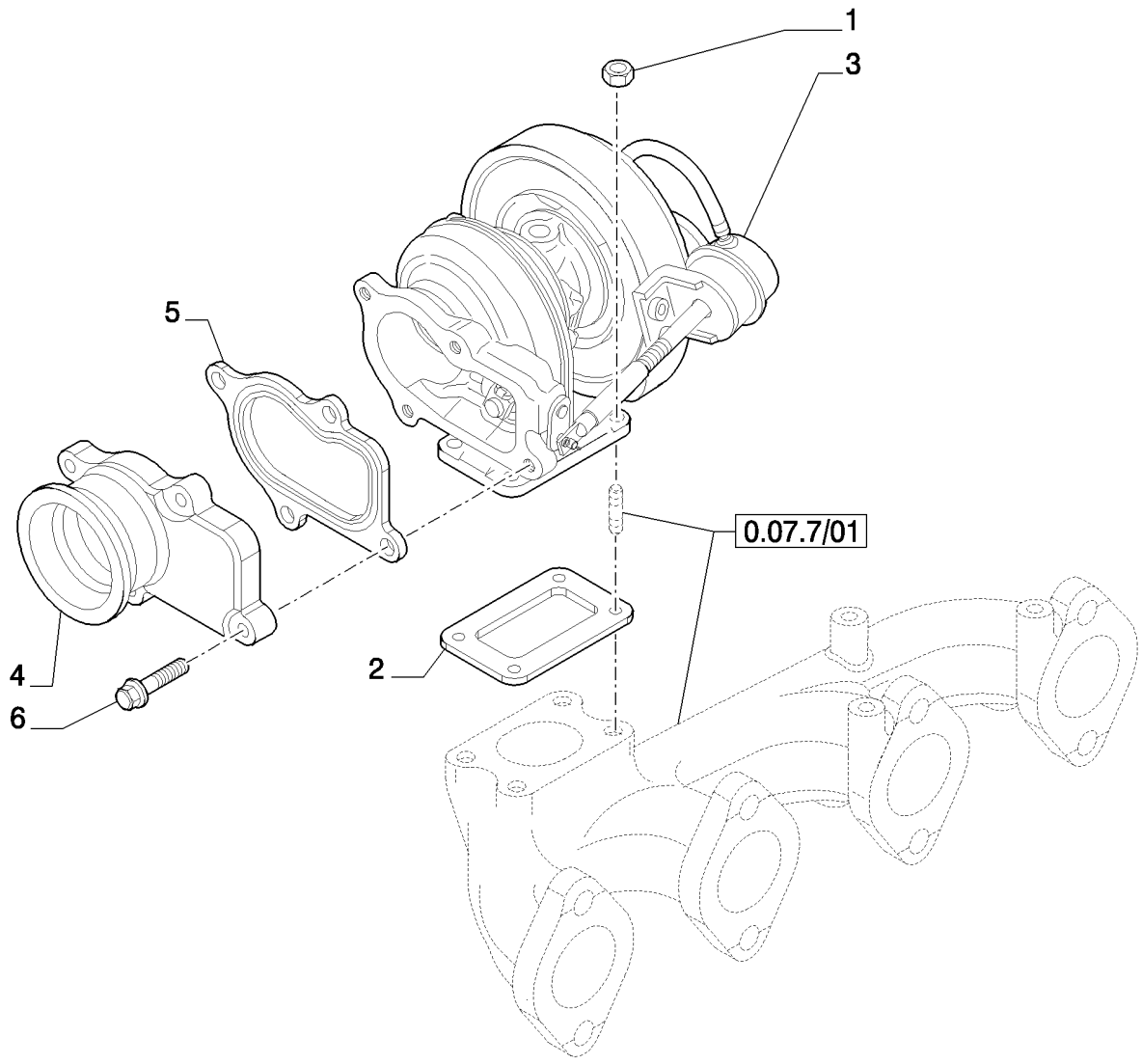

TURBOCOMPRESSOR

REF	FN	PART NUMBER	YR/SN	QTY	DENOMINACION
1		4899118		4	TUERCA
2		4895133		1	JUNTA HERMETICA
3		2856701		1	TURBOCOMPRESOR
4		2852072		1	COLECTOR DE ESCAPE
5		2852071		1	JUNTA HERMETICA
6		4898482		4	TORNILLO, Flg Hd, M8 x 1.25 x 30

VARILLA DE NIVEL - ACEITE DEL MOTOR

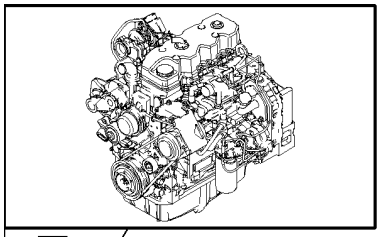

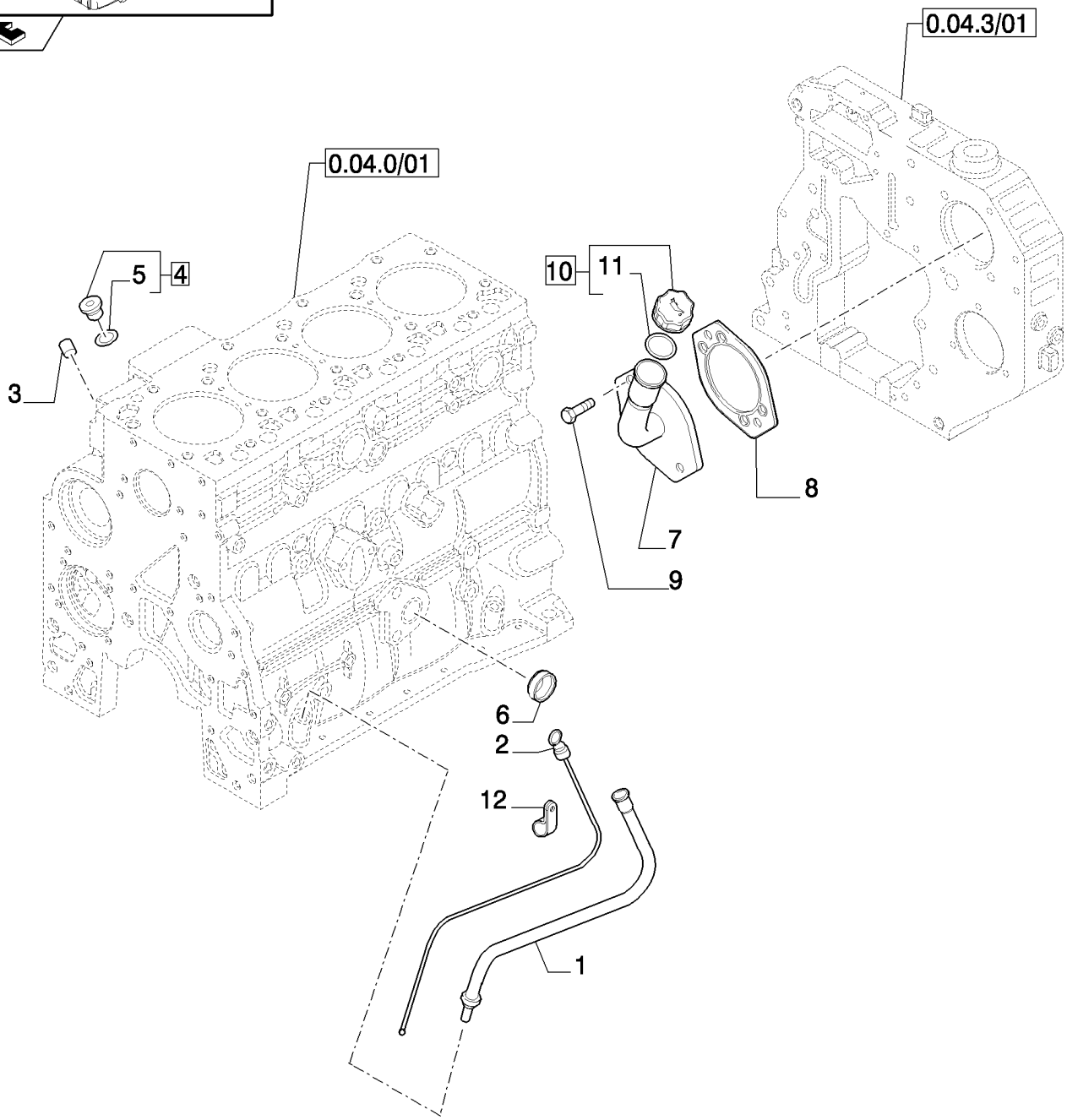

VARILLA DE NIVEL - ACEITE DEL MOTOR

REF	FN	PART NUMBER	YR/SN	QTY	DENOMINACION
1		2855813		1	TUBO, - OIL LEVEL
2		2855815		1	VARILLA DE NIVEL
3		4895406		2	TAPÓN
4		4897330		2	TAPÓN, - ASSY
5		4895610		1	JUNTA HERMETICA
6		4895037		1	TAPÓN
7		2855787		1	TUBO
8		4896897		1	JUNTA HERMETICA
9		2856035		2	TORNILLO
10		2853410		1	TAPON DE LLENADO, - ASSY
11		2853412		1	JUNTA HERMETICA
12		2852485		1	PIEZA DE SOPORTE

BOMBA DE ACEITE - MOTOR

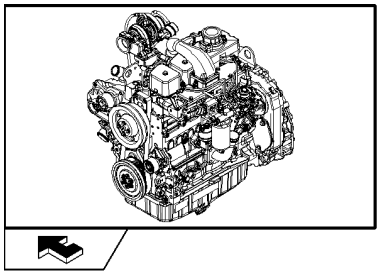

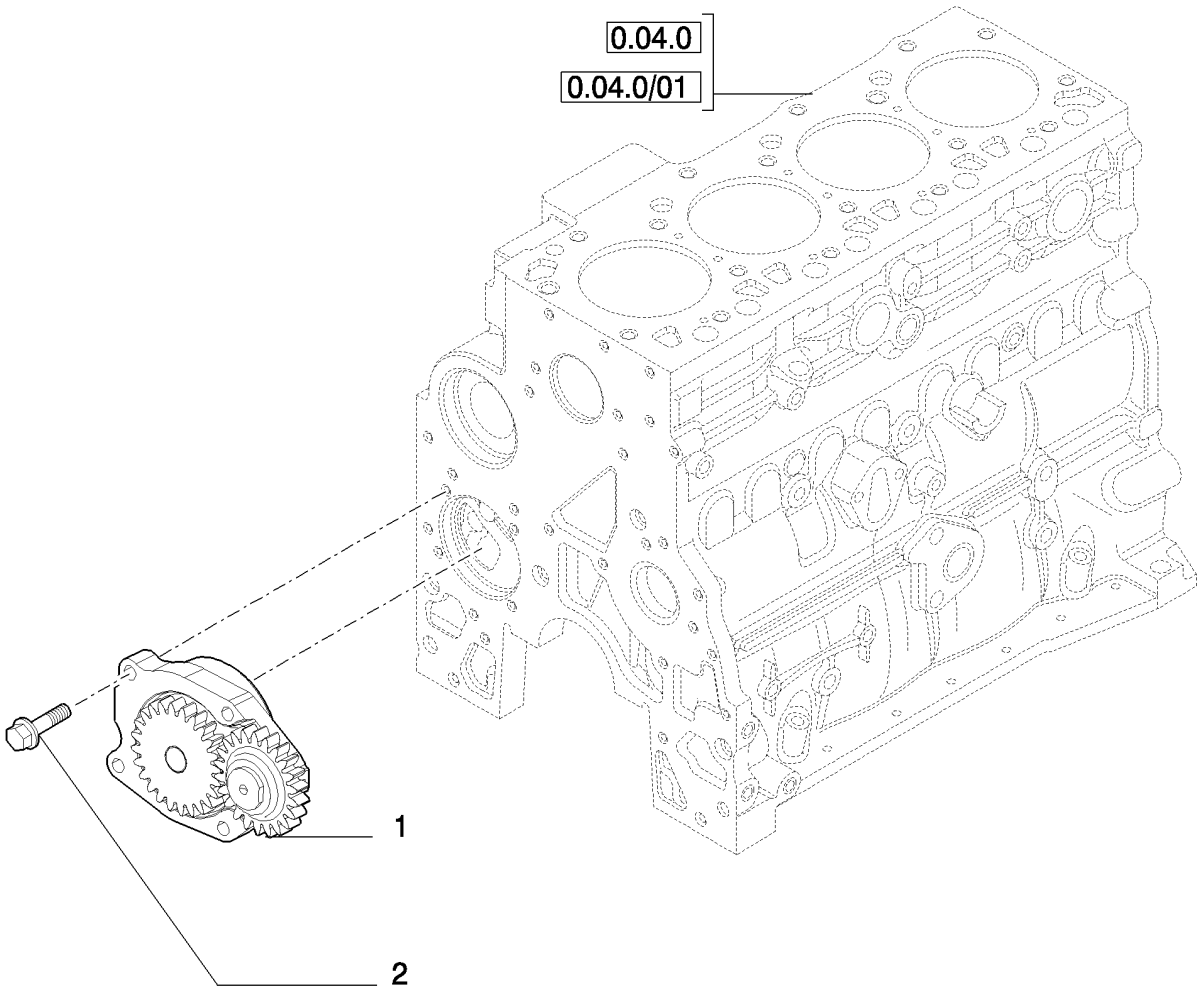

BOMBA DE ACEITE - MOTOR

REF	FN	PART NUMBER	YR/SN	QTY	DENOMINACION
1		4897480		1	BOMBA DE ACEITE, In alternative
1		2853414		1	BOMBA DE ACEITE, In alternative
2		4899090		4	TORNILLO, Hex Flg, M8 x 1.25 x 30

FILTRO DE ACEITE - MOTOR

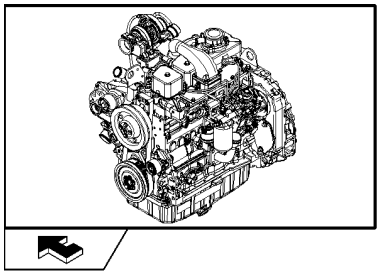

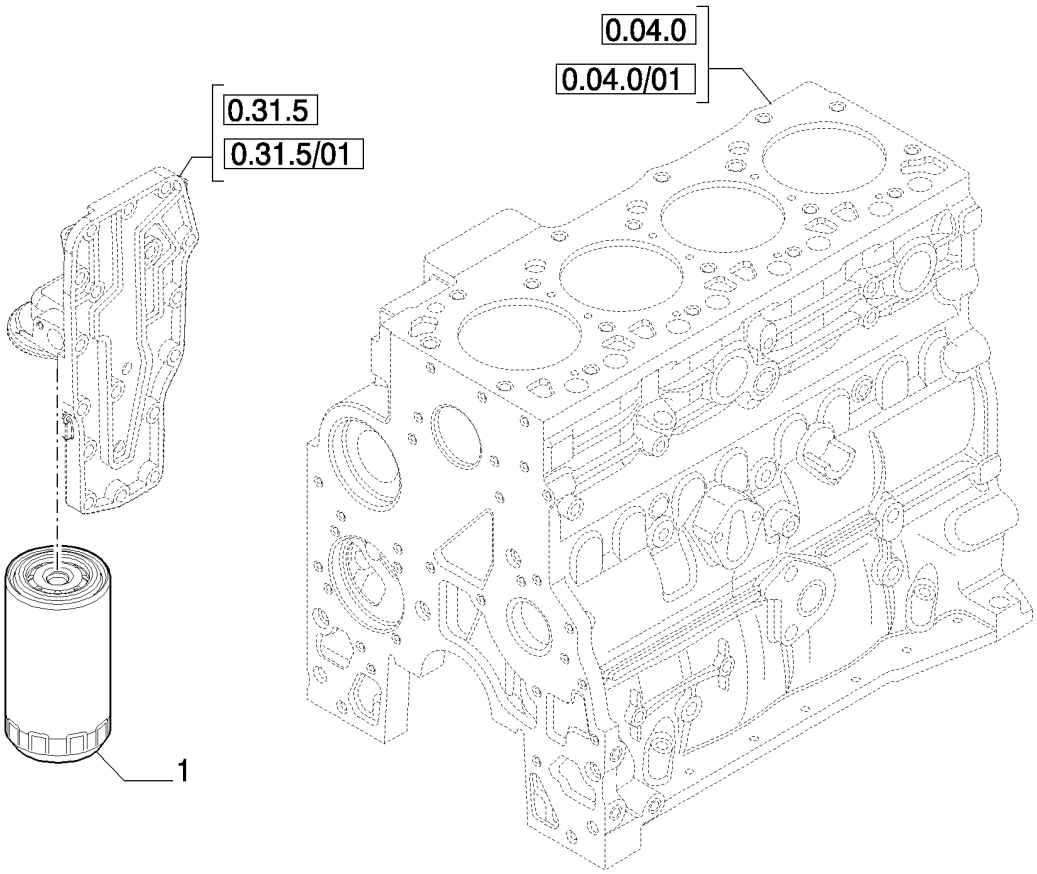

FILTRO DE ACEITE - MOTOR

REF	FN	PART NUMBER	YR/SN	QTY	DENOMINACION
1		87803260		1	FILTRO DE ACEITE, 2/4 Valve

TUBERIAS - ACEITE DEL MOTOR

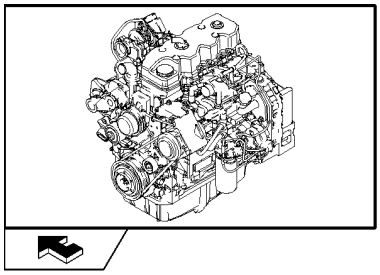

TUBERIAS - ACEITE DEL MOTOR

REF	FN	PART NUMBER	YR/SN	QTY	DENOMINACION
1		4895164		2	TORNILLO
2		4895107		1	RACOR, - ASSY
3		4899107		1	JUNTA HERMETICA
4		4899108		2	JUNTA HERMETICA
5		4899467		1	JUNTA HERMETICA
6		4899519		1	BORNE
7		4899106		1	RACOR, - ASSY
8		2852195		1	HOSE, HYDRAULIC
9		4899058		2	JUNTA HERMETICA, M17.12 ID x 2.62 Thk
10		2855780		1	CUELLO DE CARGA, - ASSY
11		4899121		1	JUNTA HERMETICA
12		2852197		1	TUERCA, M6
13		2852100		1	TORNILLO, M8x1.25x16
14		2852101		1	TORNILLO, M6x16
15		2852196		1	PIEZA DE SOPORTE

CAMBIADOR DE CALOR - MOTOR

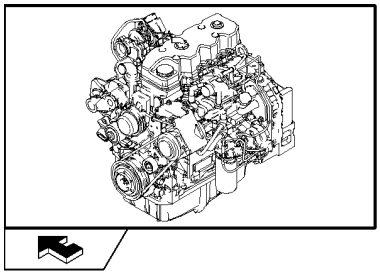

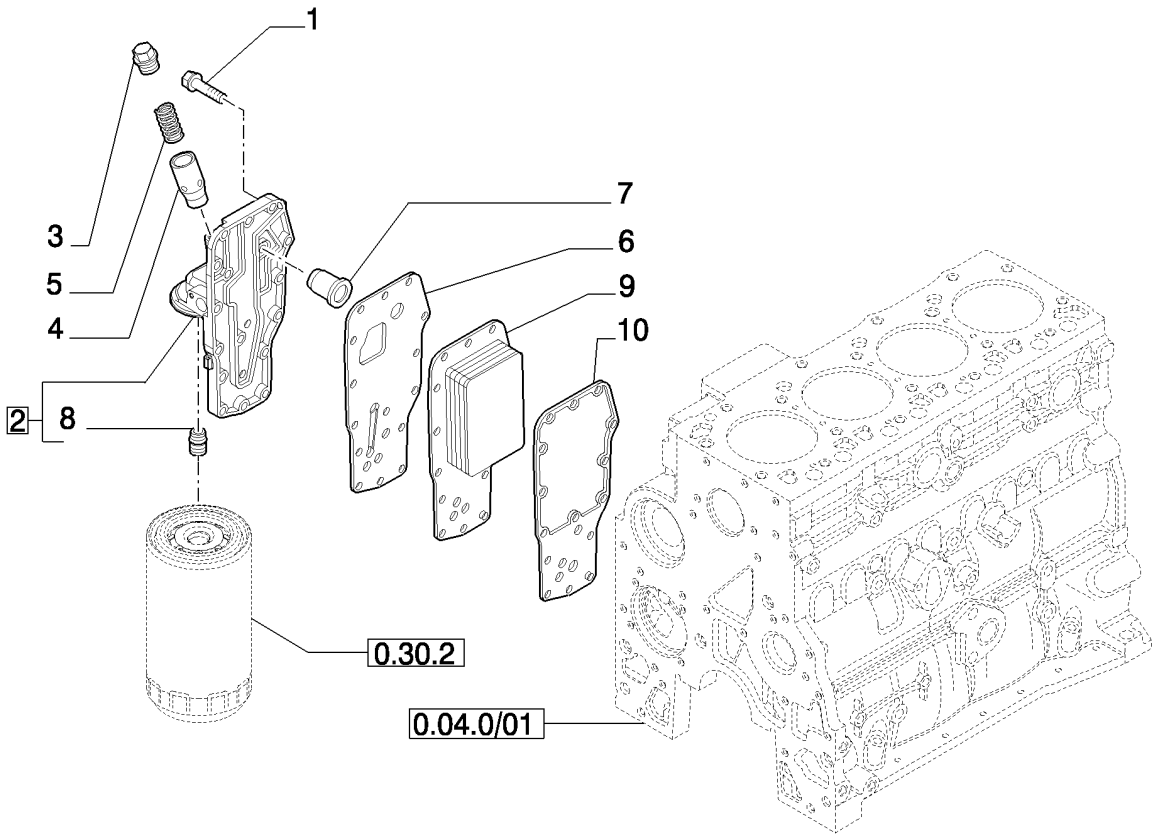

CAMBIADOR DE CALOR - MOTOR

REF	FN	PART NUMBER	YR/SN	QTY	DENOMINACION
1		4899019		15	TORNILLO, Hex Flg, M8 x 1.25 x 35
2		2853780		1	Cabeza De Filtro, - ASSY
3		2853781		1	TAPÓN, - ASSY
4		4896404		1	EMBOLO
5		4895045		1	RESORTE
6		4896409		1	JUNTA HERMETICA
7		4896410		1	VÁLVULA, DESCARGA
8		4893391		1	ADAPTOR
9		2853722		1	CAMBIADOR DE CALOR
9		4896406		1	RADIADOR ACEITE
10		2830559		1	JUNTA HERMETICA

BOMBA DE AGUA

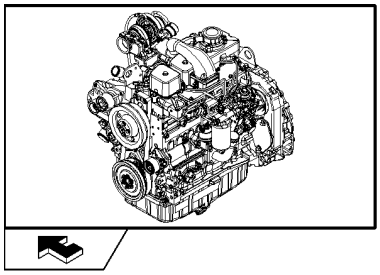

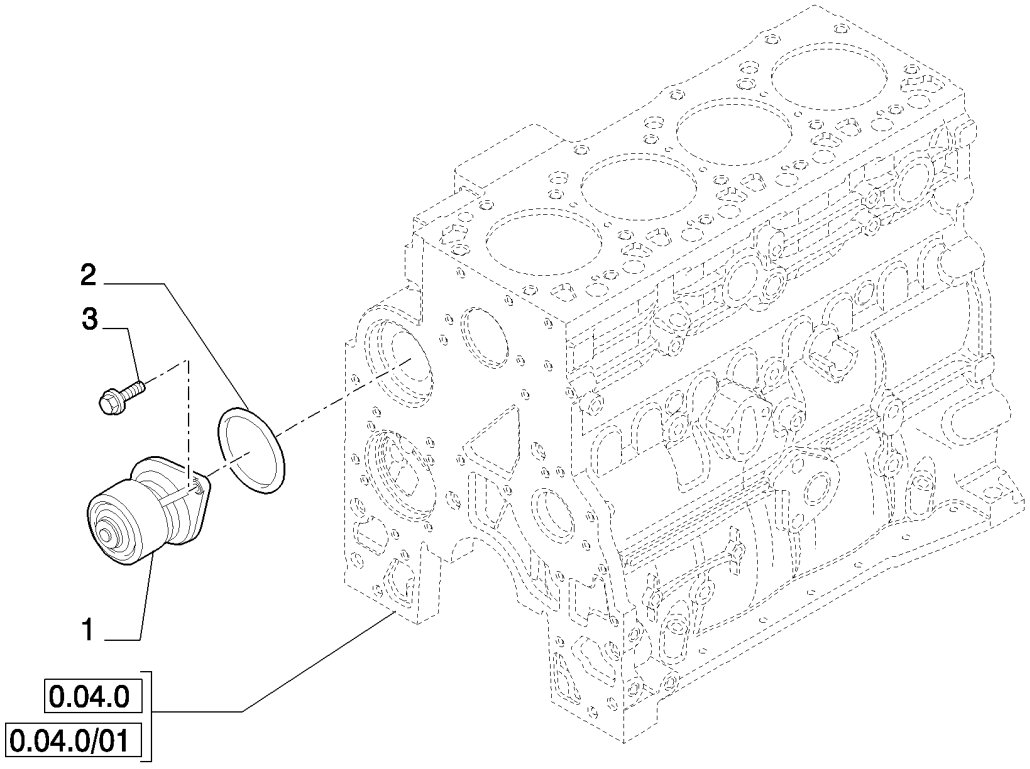

BOMBA DE AGUA

REF	FN	PART NUMBER	YR/SN	QTY	DENOMINACION
1		2852114		1	BOMBA DE AGUA
2		2852047		1	RETEN
3		4899079		2	TORNILLO, Hex Flg, M8 x 1.25 x 25

SISTEMA DE REFRIGERACIÓN - MOTOR

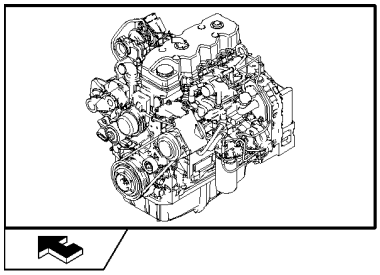

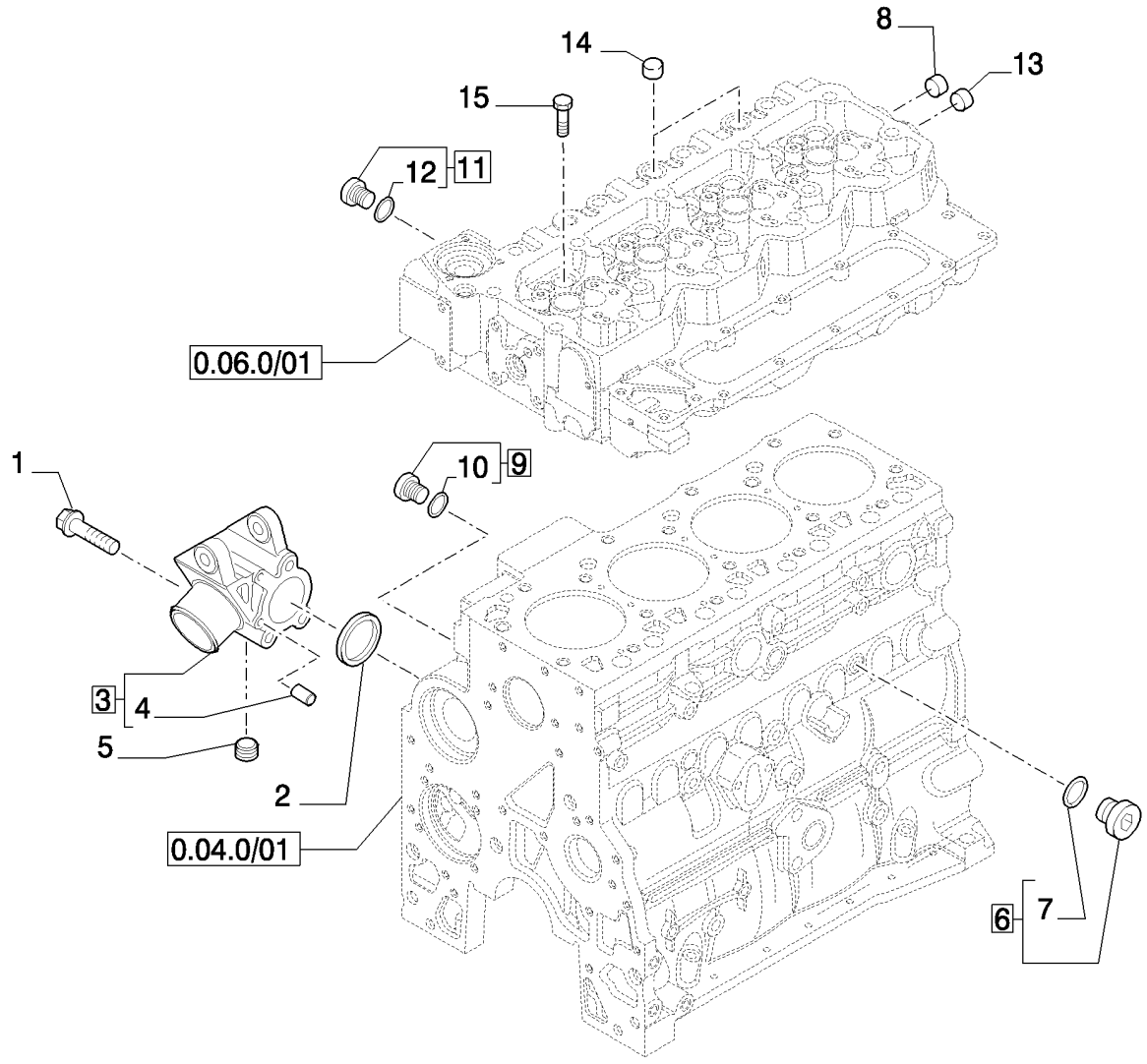

SISTEMA DE REFRIGERACIÓN - MOTOR

REF	FN	PART NUMBER	YR/SN	QTY	DENOMINACION
1		4899109		3	TORNILLO, Hex, M10 x 1.5 x 80
2		2854072		1	JUNTA HERMETICA
3		2855776		1	SOPORTE, - ASSY
4		2852181		2	SEPARADOR
5		2852511		1	TAPÓN
6		4895623		1	TAPÓN
7		4895625		1	JUNTA HERMETICA
8		4893036		1	TAPÓN
9		4895392		1	TAPÓN, - ASSY
10		4895393		1	JUNTA HERMETICA
11		4895080		1	TAPÓN, - ASSY
12		4895082		1	JUNTA HERMETICA
13		4893036		1	TAPÓN
14		4895078		2	TAPÓN
15		2854491		1	TAPÓN

TERMOSTATO - REFRIGERACION DEL MOTOR

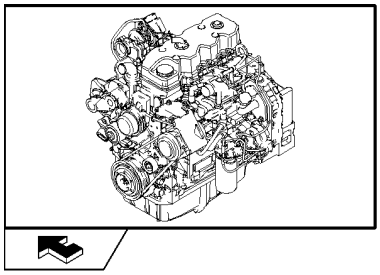

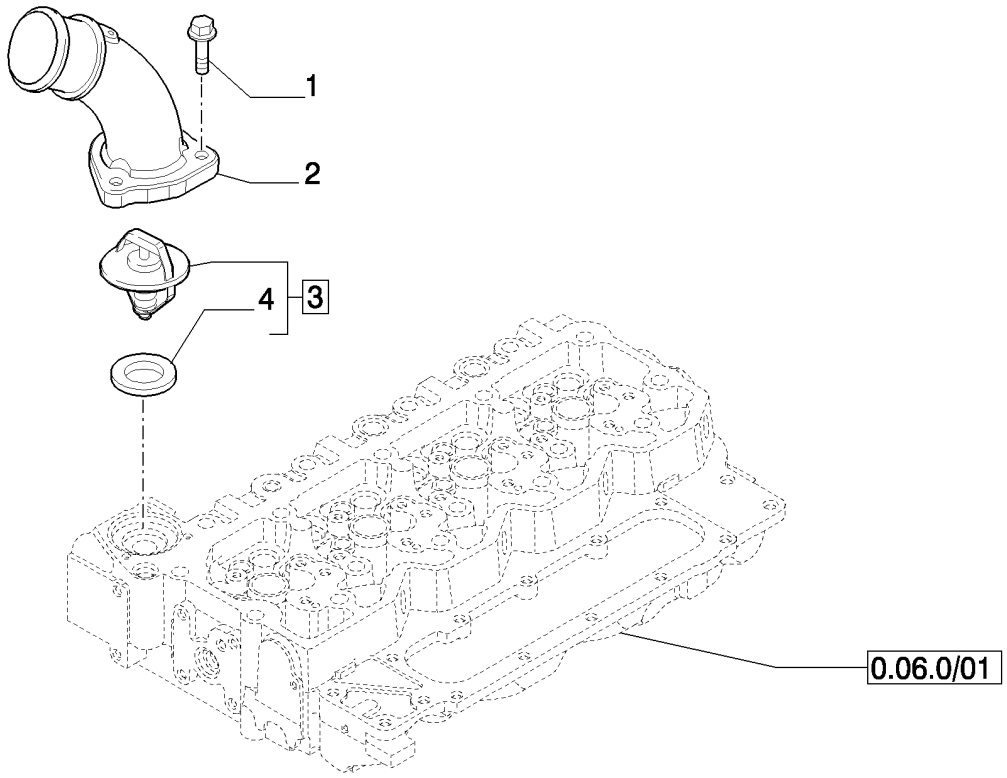

TERMOSTATO - REFRIGERACION DEL MOTOR

REF	FN	PART NUMBER	YR/SN	QTY	DENOMINACION
1		4899110		3	TORNILLO, Hex Flg, M6 x 1 x 20
2		2855823		1	TAPADERA
3		2856543		1	TERMOSTATO, - ASSY
4		2852473		1	JUNTA HERMETICA

BOMBA DE AGUA - MANDO

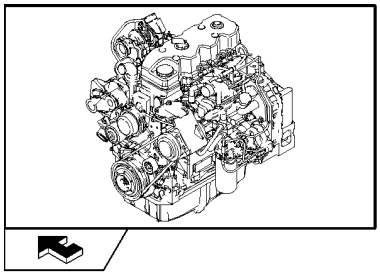

BOMBA DE AGUA - MANDO

REF	FN	PART NUMBER	YR/SN	QTY	DENOMINACION
1		2855949		1	SOPORTE
2		2852161		1	TENSOR DE CORREA
3		2852162		1	POLEA
4		2855950		1	CORREA
5		4899079		2	TORNILLO, Hex Flg, M8 x 1.25 x 25
6		4895292		1	TORNILLO

POLEA DEL VENTILADOR

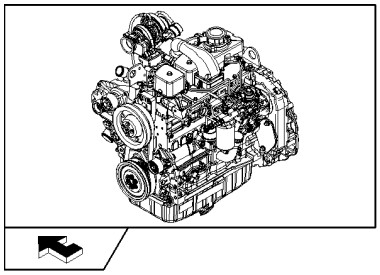

KIT KIT ● = 1

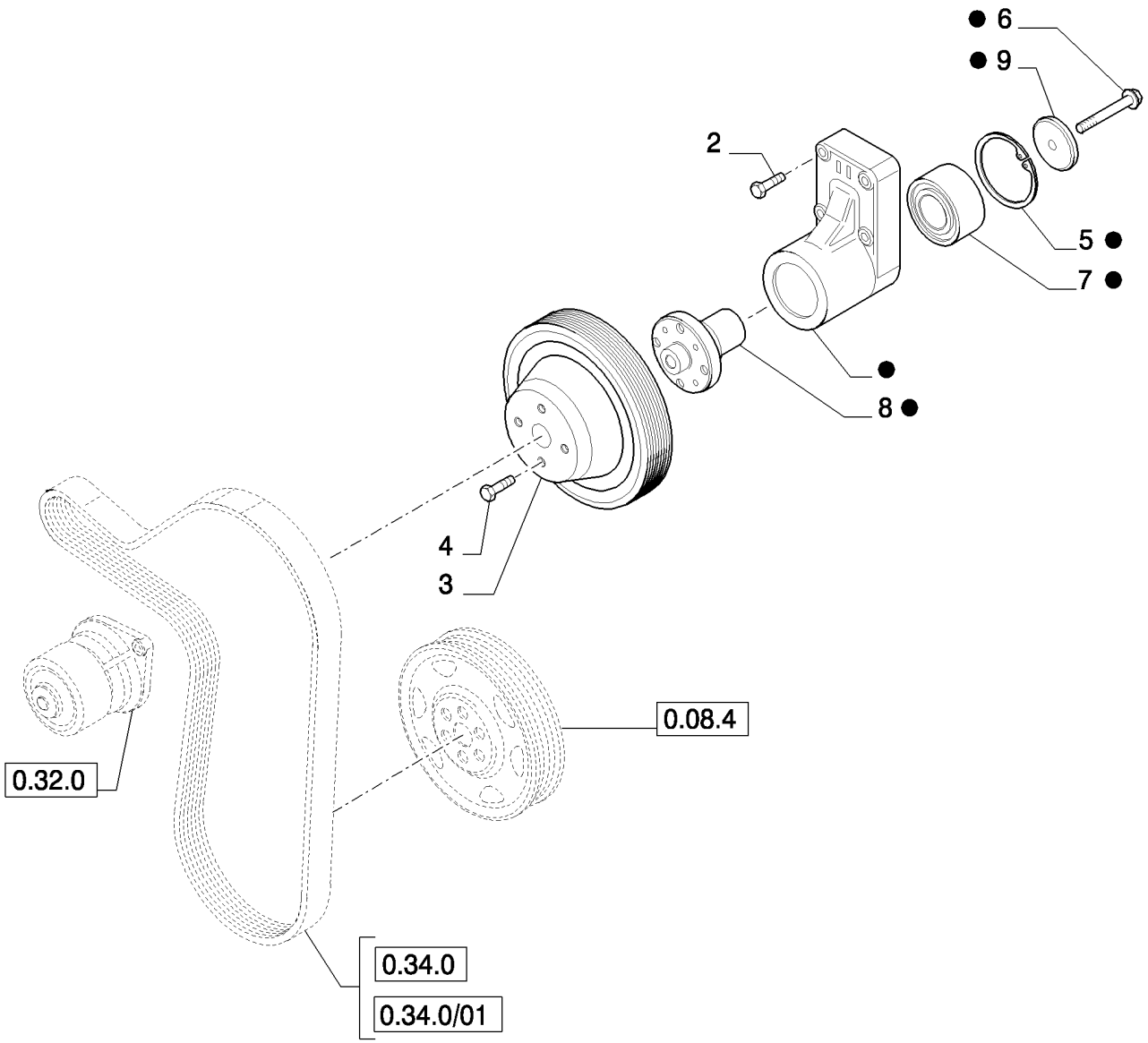

POLEA DEL VENTILADOR

REF	FN	PART NUMBER	YR/SN	QTY	DENOMINACION
1		2852170		1	SOPORTE, - ASSY
2		4899053		4	TORNILLO, Hex Flg, M8 x 45
3		4890343		1	POLEA
4		4895291		4	TORNILLO, Hex Flg, M10 x 1.5 x 20, M10x1.5x20
5		2852171		1	ANILLO DE RESORTE
6		2852172		1	TORNILLO
7		4892732		1	RODAMIENTO DE BOLAS
8		4892426		1	CUBO
9		4890732		1	RETENEDOR

MOTOR ACOPLADO

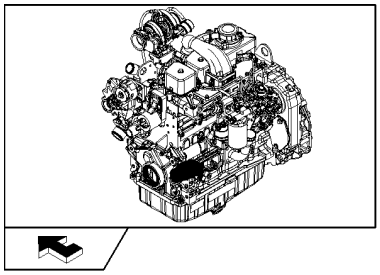

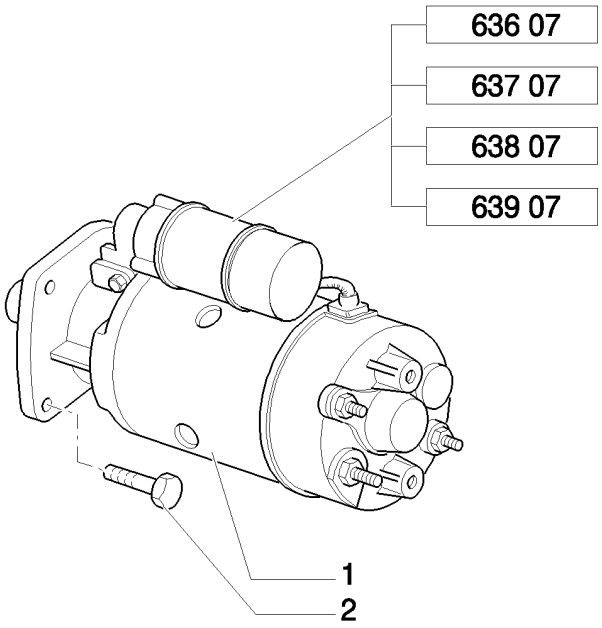

MOTOR ACOPLADO

REF	FN	PART NUMBER	YR/SN	QTY	DENOMINACION
1		86992395		1	MOTOR DE ARRANQUE
2		86511845		1	TORNILLO, Hex Flg, M10 x 35, 8.8

ALTERNADOR

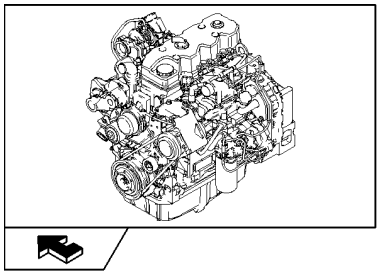

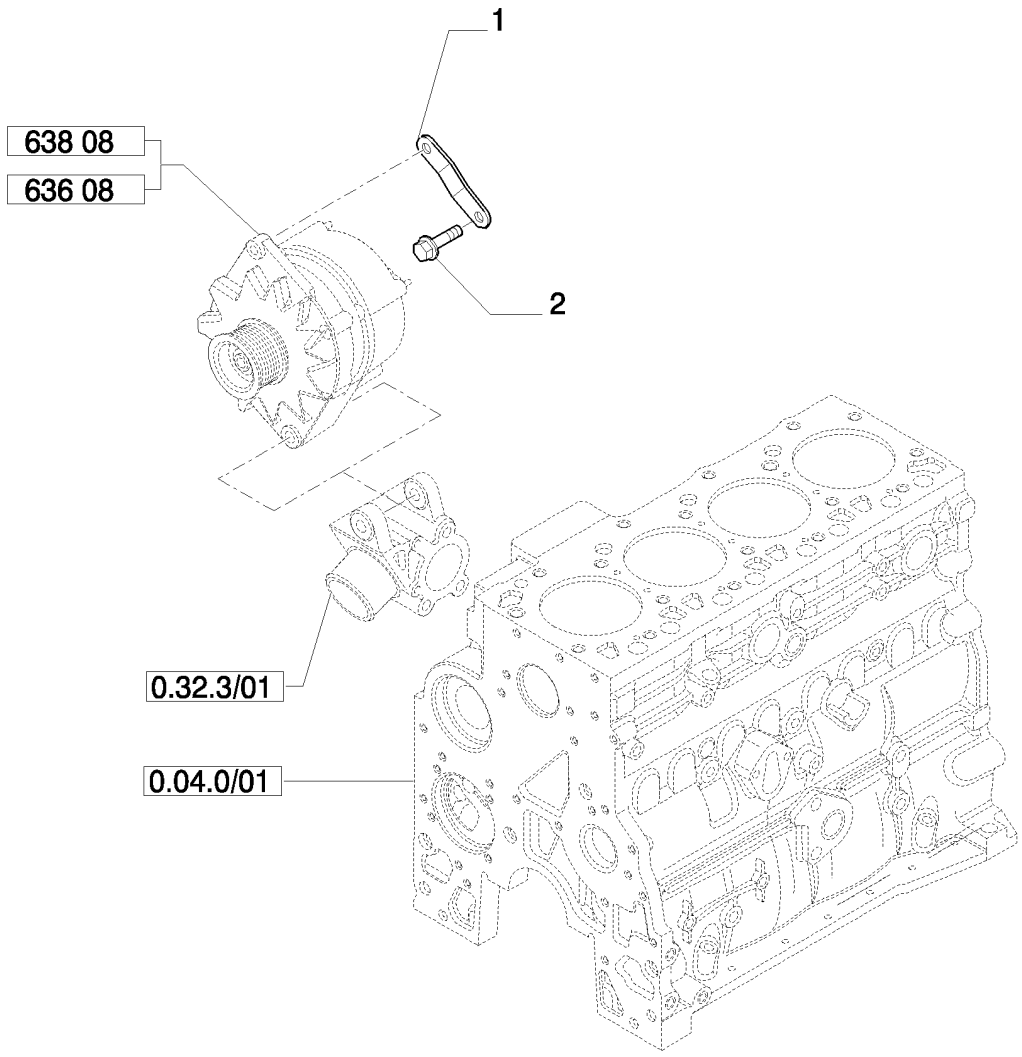

ALTERNADOR

REF	FN	PART NUMBER	YR/SN	QTY	DENOMINACION
1		2852180		1	PIEZA DE SOPORTE
2		4895291		1	TORNILLO, Hex Flg, M10 x 1.5 x 20, M10x1.5x20

GANCHOS DE MANOIBRA - MOTOR

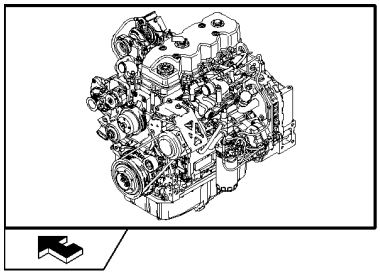

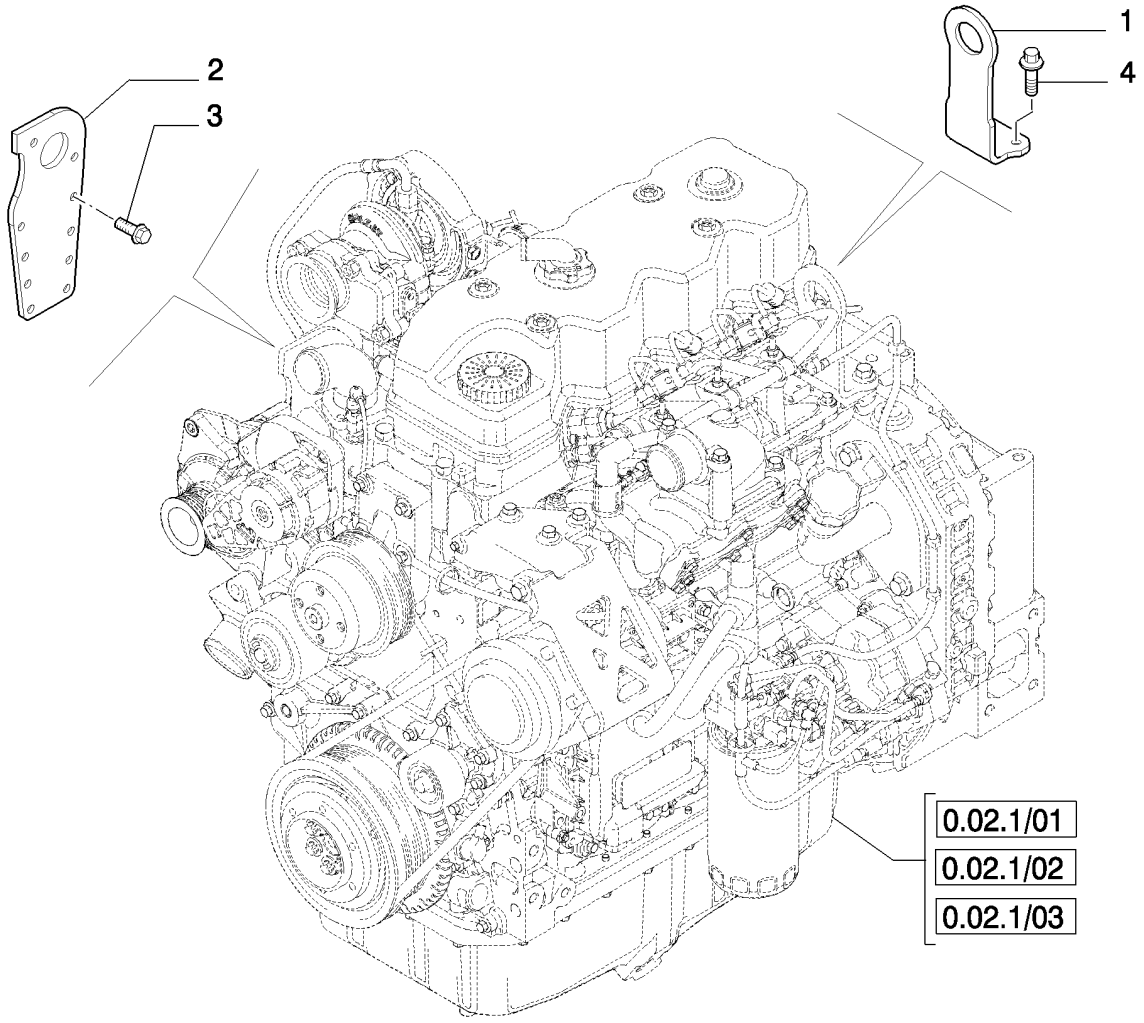

GANCHOS DE MANOIBRA - MOTOR

REF	FN	PART NUMBER	YR/SN	QTY	DENOMINACION
1		2855773		1	PIEZA DE SOPORTE
2		2855774		1	PIEZA DE SOPORTE
3		4899079		4	TORNILLO, Hex Flg, M8 x 1.25 x 25
4		4899037		2	TORNILLO

NOTAS

SECTION INDEX
Equipo Motor

1.14.0		TANQUE DEL COMBUSTIBLE Y ACCESORIOS
1.14.6		TUBO COMBUSTIBLE
1.14.6/ A		FILTRO DE COMBUSTIBLE
1.15.0	01	SILENCIADOR Y EXTENSIONES
1.15.0	02	TUBO DE ESCAPE
1.19.1		FILTRO DE AIRE Y MANGUITOS
1.21.5		BASTIDOR (CENTER PIVOT)

TANQUE DEL COMBUSTIBLE Y ACCESORIOS

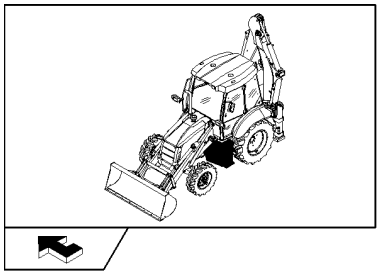

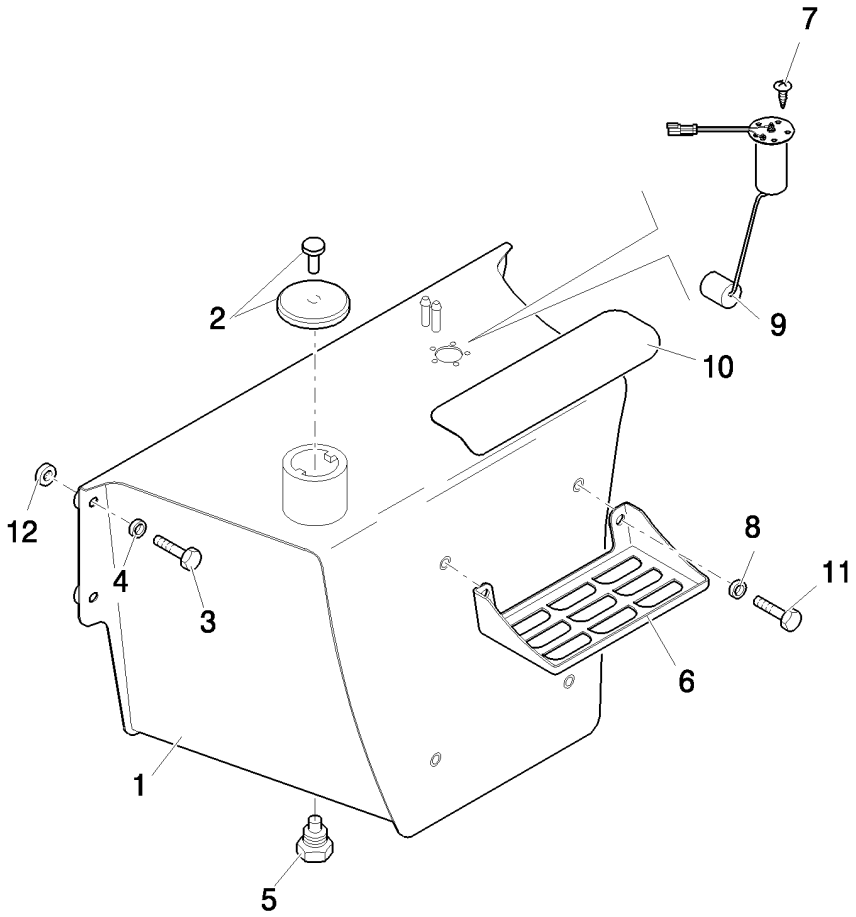

TANQUE DEL COMBUSTIBLE Y ACCESORIOS

REF	FN	PART NUMBER	YR/SN	QTY	DENOMINACION
1		87355226		1	TANQUE COMBUSTIBLE
2		85825392		1	TAPON DISPOSIT.CON LLAVE
3		15540721		4	TORNILLO, Hex, M12 x 1.25 x 45, 8.8, Full Thd
4		47048973		4	ARANDELA
5		47050671		1	TAPÓN
6		85801218		2	CALCE DE REGLAJE
7		85825158		5	TORNILLO, M5x12
8		47048976		4	ARANDELA, M12
9		86985587		1	CONTACTOR
10		87702352		1	TIRA CONTRA DESLIZAM.
11		11112421		4	TORNILLO, Hex, M12 x 30, 8.8
12		87353741		4	SEPARADOR

1.14.6		p1	03/08

TUBO COMBUSTIBLE

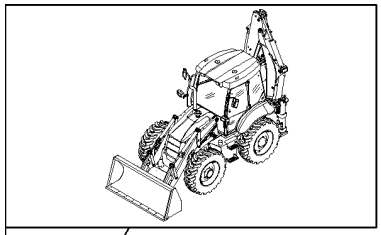

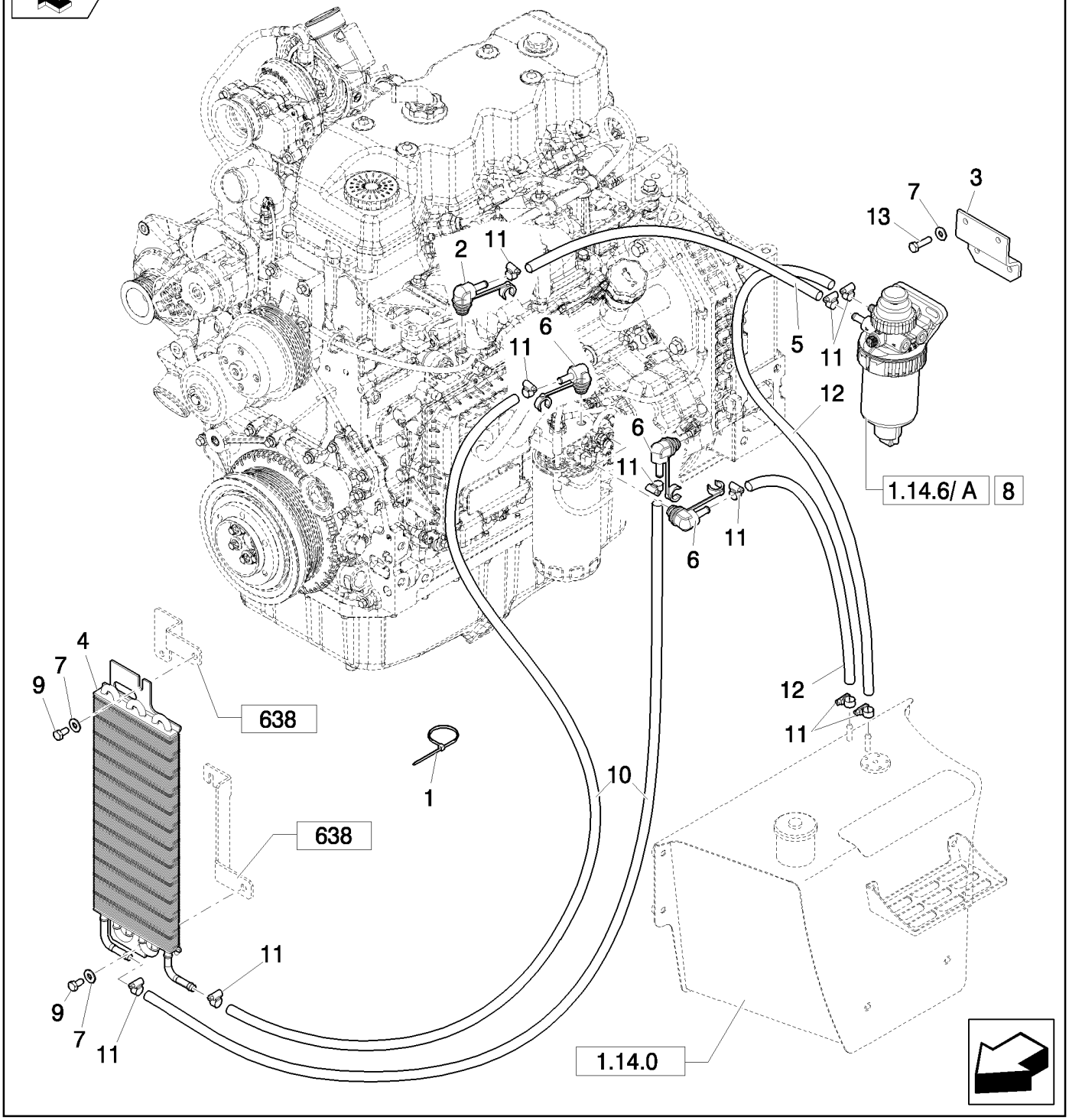

TUBO COMBUSTIBLE

REF	FN	PART NUMBER	YR/SN	QTY	DENOMINACION
1		14560187		7	CIERRA CABLES, 178mm lg, L=203.2 mm
2		8605735		1	CONEXION
3		87638778		1	PIEZA DE SOPORTE
4		87571706		1	ENFRIADOR
5		87609039		1	MANGA FLEXIBLE
6		87414560		3	CONEXION
7		12646701		6	ARANDELA, M8 x 20 x 2
8		87563601		1	FILTRO DE COMBUSTIBLE, Assy
9		16043221		2	TORNILLO, Hex, M8 x 16, 8.8
10		87651689		2	MANGA FLEXIBLE
11		85824381		10	ABRAZADERA MANGUERA
12		87403672		2	MANGA FLEXIBLE
13		16043821		6	TORNILLO, Hex, M8 x 30, 8.8

FILTRO DE COMBUSTIBLE

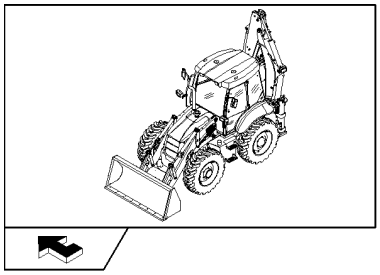

FILTRO DE COMBUSTIBLE

REF	FN	PART NUMBER	YR/SN	QTY	DENOMINACION
1		87563601		1	FILTRO DE COMBUSTIBLE, Assy
2		87612472		1	EQUIPO
3		87840171		1	ANILLO DE CIERRE
4		87803444		1	FILTRO DE COMBUSTIBLE
5		87840170		1	RETENEDOR
6		87612469		1	ANILLO DE CIERRE
7		87612475		1	EQUIPO
8		87840177		1	JUNTA HERMETICA
9		87840178		1	TAPÓN
10		87840173		1	RETENEDOR

1.15.0	01	p1	03/08

SILENCIADOR Y EXTENSIONES

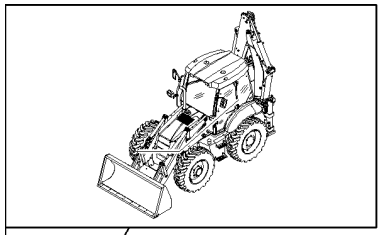

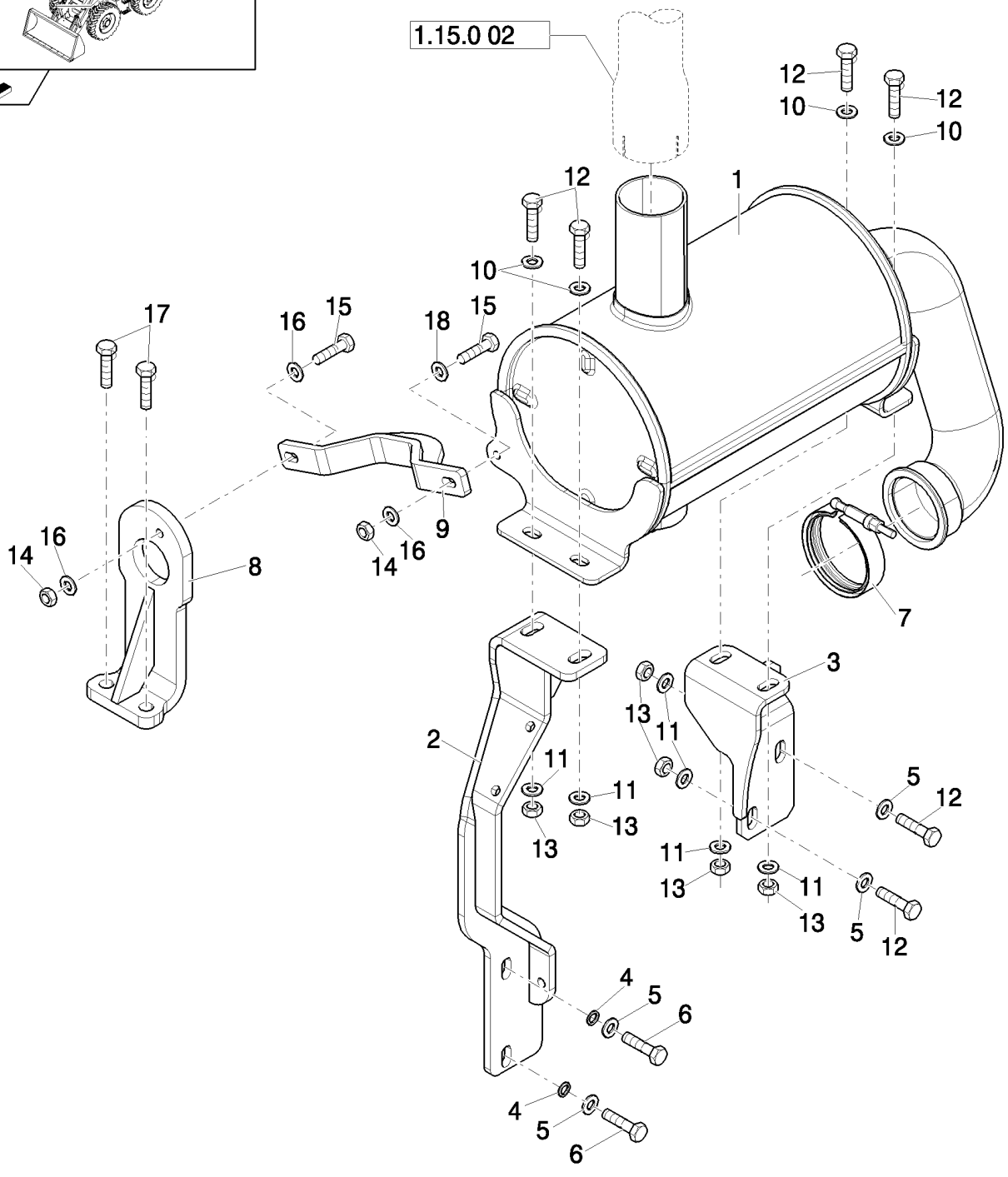

SILENCIADOR Y EXTENSIONES

REF	FN	PART NUMBER	YR/SN	QTY	DENOMINACION
1	1	87618524		1	SILENCIADOR
1	2	87474192		1	SILENCIADOR
2		87639182		1	PIEZA DE SOPORTE
3		87658926		1	SOPORTE
4		14496621		2	ARANDELA, M10 x 21 x 2
5		11198379		4	ARANDELA ABANICO, Belleville, M10.5
6		16040834		2	TORNILLO
7		47048898		1	COLLAR
8		87473026		1	GANCHO
9		87473250		1	SOPORTE
10		11198479		4	ARANDELA
11		12638621		6	ARANDELA
12		11106634		6	TORNILLO, Hex, M10 x 35, 10.9, Full Thd
13		12577221		6	CONTRA TUERCA, M10 x 1.5, Cl 10
14		16100821		2	TUERCA, M8, Cl 10
15		15213334		2	TORNILLO
16		12646721		3	ARANDELA, M8 x 20 x 2
17		87030508		2	TORNILLO, Hex Flg, M12 x 30, 10.9, Full Thd
18		14499421		2	ARANDELA

(1) Only for B95B, B95BLR, B95BTC, B110B, B115B
(2) Only for B100B, B100BLR

TUBO DE ESCAPE

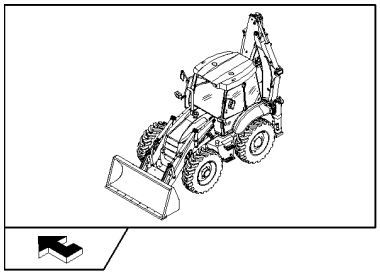

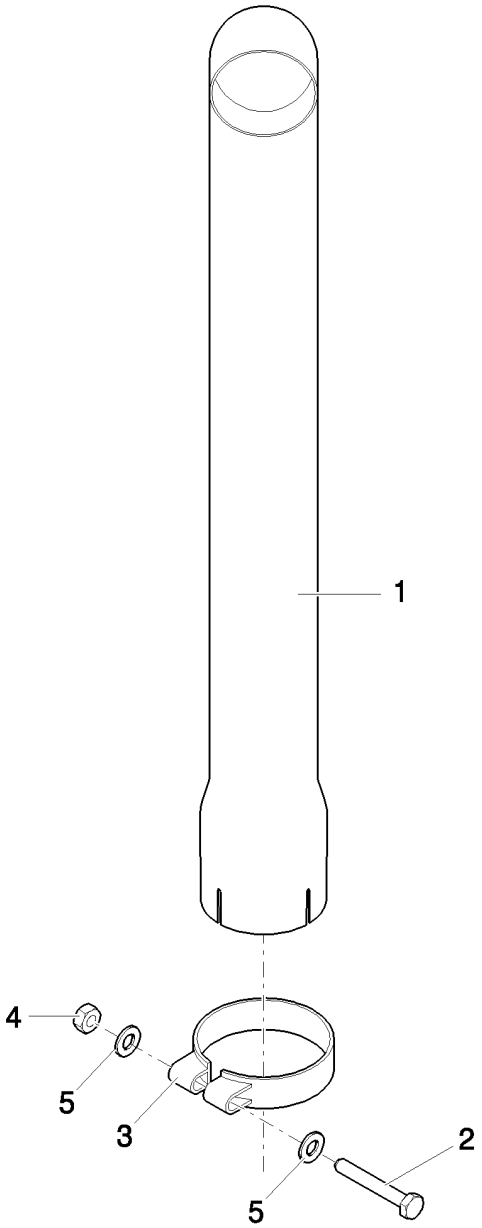

TUBO DE ESCAPE

REF	FN	PART NUMBER	YR/SN	QTY	DENOMINACION
1		87673905		1	TUBO DE ESCAPE
2		11107634		1	TORNILLO
3		87437804		1	SOPORTE CIERRA TUBO
4		11701721		1	TUERCA, M10, Cl 10
5		12638621		2	ARANDELA

FILTRO DE AIRE Y MANGUITOS

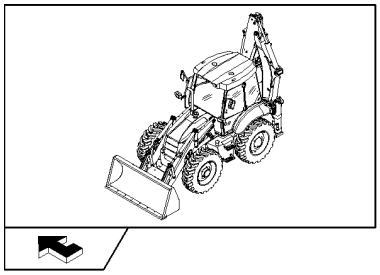

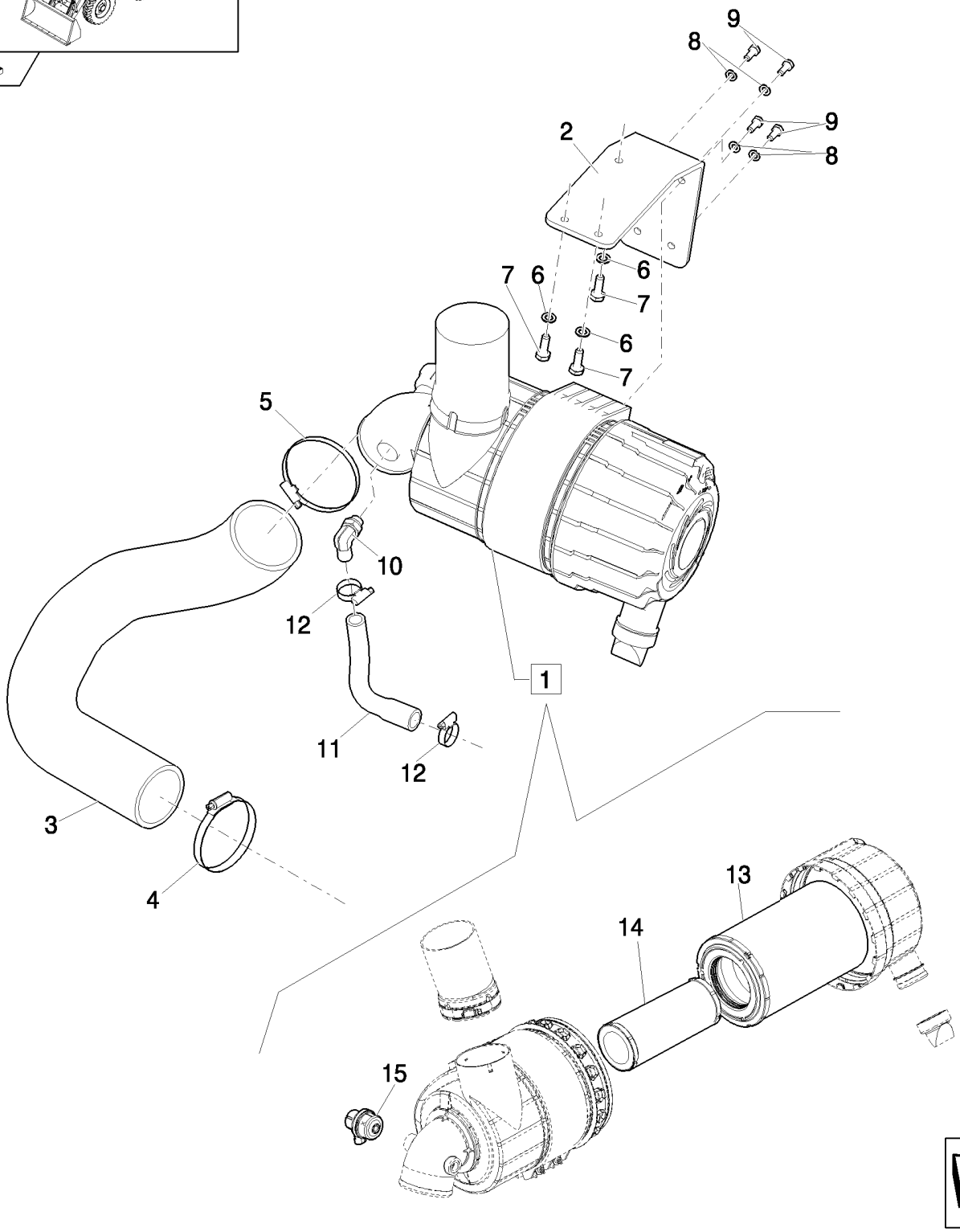

FILTRO DE AIRE Y MANGUITOS

REF	FN	PART NUMBER	YR/SN	QTY	DENOMINACION
1		87637579		1	FILTRO CONJ
2		87701725		1	SOPORTE
3		87639183		1	MANGA FLEXIBLE
4		87750941		1	BORNE
5		85802743		1	ABRAZADERA MANGUERA
6		12638601		3	ARANDELA, M10 x 18 x 2
7		11106421		3	TORNILLO, Hex, M10 x 30, 8.8
8		12638511		4	ARANDELA, M8 x 15 x 1.5
9		16043421		4	TORNILLO, Hex, M8 x 20, 8.8
10		87647474		1	CONEXION
11		87647609		1	MANGA FLEXIBLE
12		85803013		2	ABRAZADERA MANGUERA
13		87631623		1	FILTRO DE AIRE
14		87631625		1	FILTRO DE AIRE
15		87631670		1	INDICADOR

BASTIDOR (CENTER PIVOT)

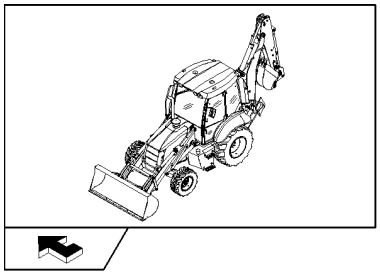

KIT KIT ● = 1

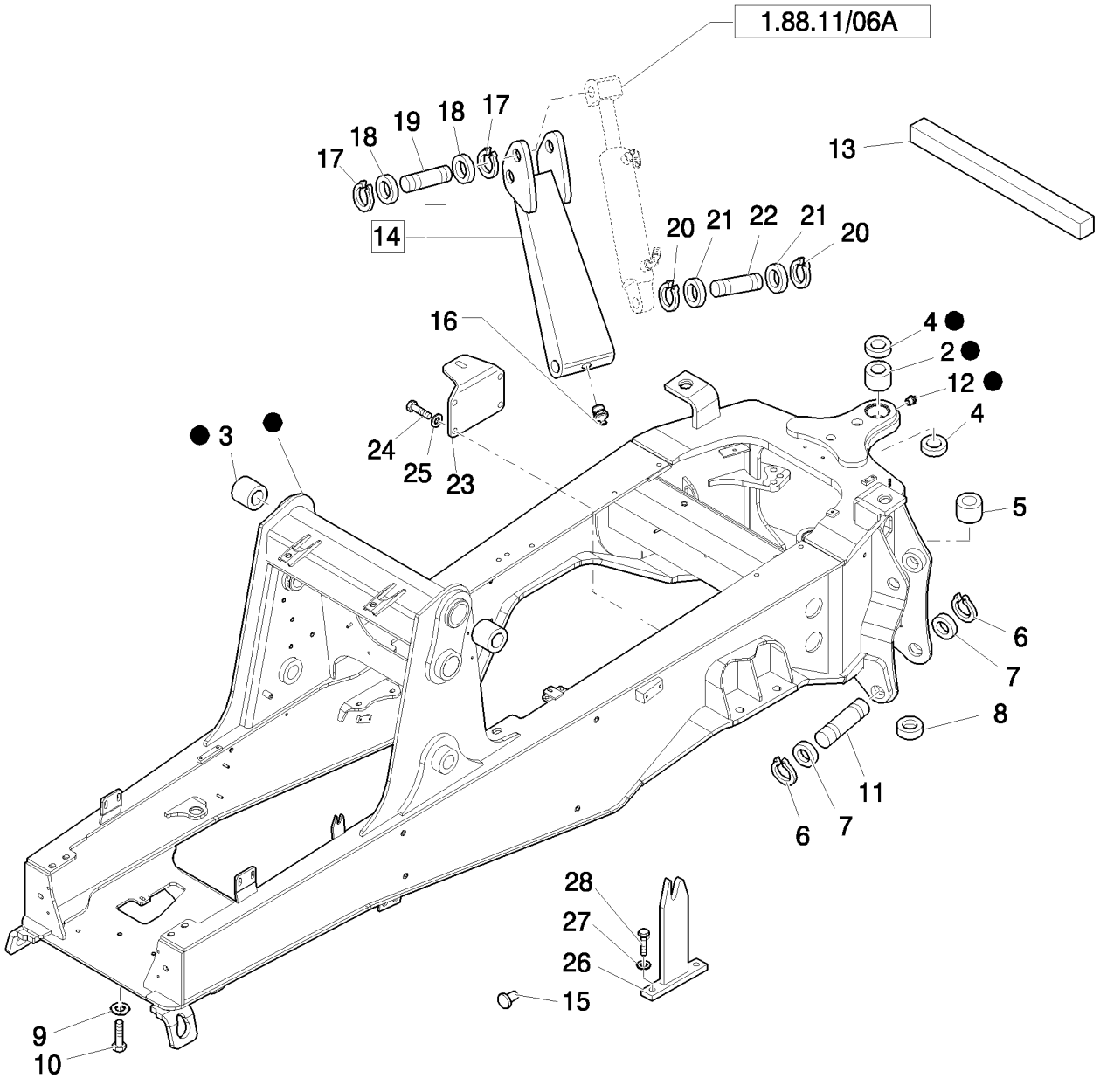

BASTIDOR (CENTER PIVOT)

REF	FN	PART NUMBER	YR/SN	QTY	DENOMINACION
1	1	87626855		1	BASTIDOR
2		85700728		2	CASQUILLO
3		85801110		2	CASQUILLO
4		81875248		4	JUNTA HERMETICA
5		83910645		2	CASQUILLO
6		83911020		4	ANILLO DE RESORTE
7		81901837		4	ARANDELA
8	2	85802903		1	AISLADOR
9		10520431		6	ARANDELA, 20x35
10		15989134		6	TORNILLO, Hex, M20 x 100, 10.9
11		83911000		2	PERNO
12		83416242		2	ENGRASADOR
13		85802338		1	TIRCA
14		85803959		1	ESTABILIZADOR, Assy, LH
14		85803960		1	ESTABILIZADOR, Assy, RH
15		85808422		2	TAPÓN
16		81818824		2	ENGRASADOR, 90º, 1/8"-27 NPT
17		83910630		4	ANILLO
18		83910629		4	ARANDELA
19		83999466		2	PERNO
20		83911019		4	RETENEDOR
21		83910977		4	SEPARADOR
22		85801262		2	PERNO
23		85804171		1	SOPORTE
24		15540534		4	TORNILLO, Hex, M12 x 1.25 x 35, 10.9, Full Thd
25		11198679		4	ARANDELA ABANICO, Belleville, M13
26		87302151		1	SOPORTE, RH
27		11193874		2	ARANDELA ABANICO, Belleville, M8.4
28		16043421		2	TORNILLO, Hex, M8 x 20, 8.8

(1) Includes 2, 3, 5
(2) Only for NA

NOTAS

SECTION INDEX

Engrenajes y Toma de Fuerza

1.28.0		TRANSMISIÓN
1.28.0/ A	01	COMPONENTES DEL CONVERTIDOR PAR DE TORSIÓN (2WD POWER-SHUTTLE)
1.28.0/ A	02	COMPONENTES EXTERIORES CAJA DE CAMBIO (2WD POWER-SHUTTLE)
1.28.0/ A	03	COMPONENTES HIDRÁULICOS CAJA DE CAMBIO (2WD POWER-SHUTTLE)
1.28.0/ A	04	FRENO DE ESTACIONAMIENTO (2WD POWER-SHUTTLE)
1.28.0/ A	05	TREN DE ENGRANAJES CAMBIO DE VELOCIDAD (2WD POWER-SHUTTLE)
1.28.0/ A	06	EJE DE TRANSMISIÓN FRONTAL (2WD POWER-SHUTTLE)
1.28.0/ A	07	ENGRANAJES CAJA DE CAMBIO DE MARCHA (2WD POWER-SHUTTLE)
1.28.0/ B	01	COMPONENTES CONVERTIDOR PAR DE TORSIÓN Y ENGRANAJES CAJA DE CAMBIO DE MARCHA (4WD POWER-SHUTTLE)
1.28.0/ B	02	COMPONENTES EXTERIORES CAJA DE CAMBIO MARCHA (4WD POWER-SHUTTLE)
1.28.0/ B	03	COMPONENTES HIDRÁULICOS CAJA DE CAMBIO MARCHA (4WD POWER-SHUTTLE)
1.28.0/ B	04	FRENO DE ESTACIONAMIENTO (4WD POWER-SHUTTLE)
1.28.0/ B	05	CAMBIO DE VELOCIDAD (4WD POWER-SHUTTLE)
1.28.0/ B	06	EJE DE TRANSMISIÓN FRONTAL (4WD POWER-SHUTTLE)
1.28.0/ B	07	ENGRANAJES CAJA DE CAMBIO MARCHA (4WD POWER-SHUTTLE)
1.28.0/ B	08	ENGRANAJES EJE DE TRANSMISIÓN POSTERIOR (4WD POWER-SHUTTLE)
1.28.6		INDICADOR DE NIVEL ACEITE / AÑADIR (POWER-SHUTTLE)
1.29.1		MANDOS EXTERIORES (POWER-SHUTTLE)
1.38.1		EJE DE TRANSMISIÓN FRONTAL Y POSTERIOR (POWER-SHUTTLE)
1.39.8		TUBOS DE REFRIGERACION ACEITE TRANSMISION (POWER-SHUTTLE)

TRANSMISIÓN

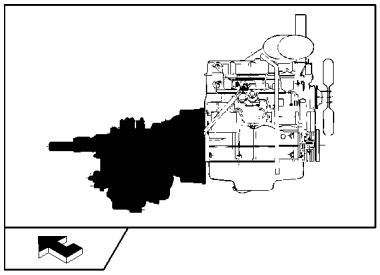

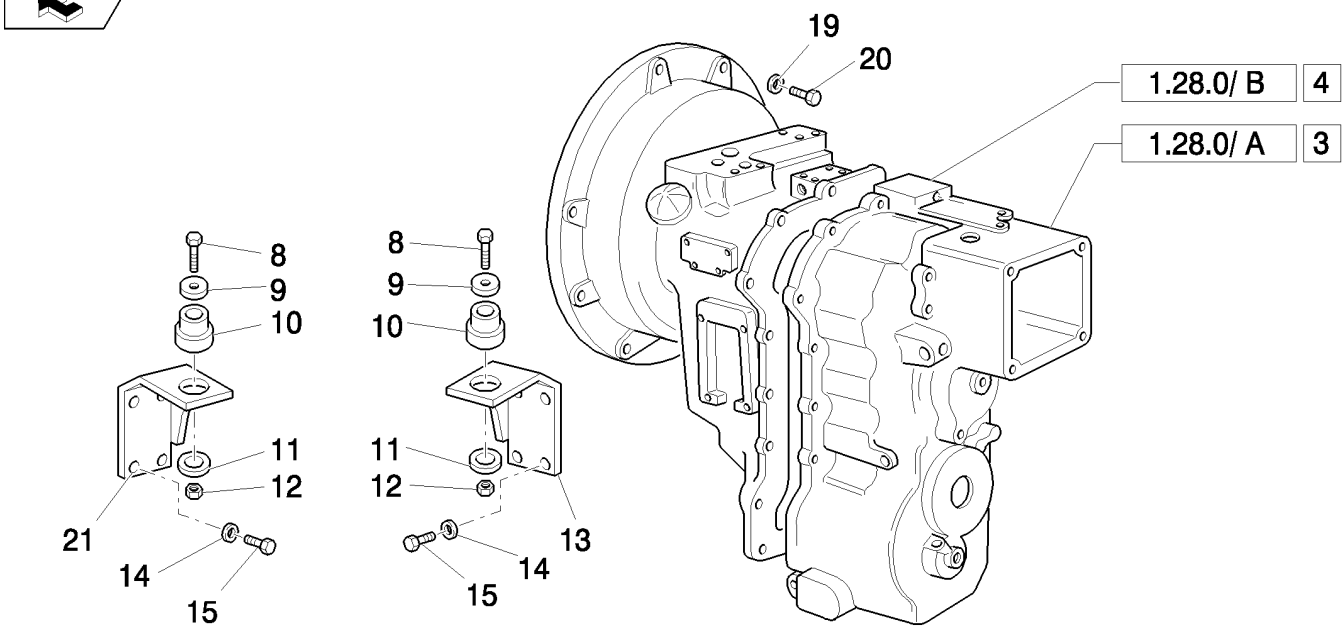

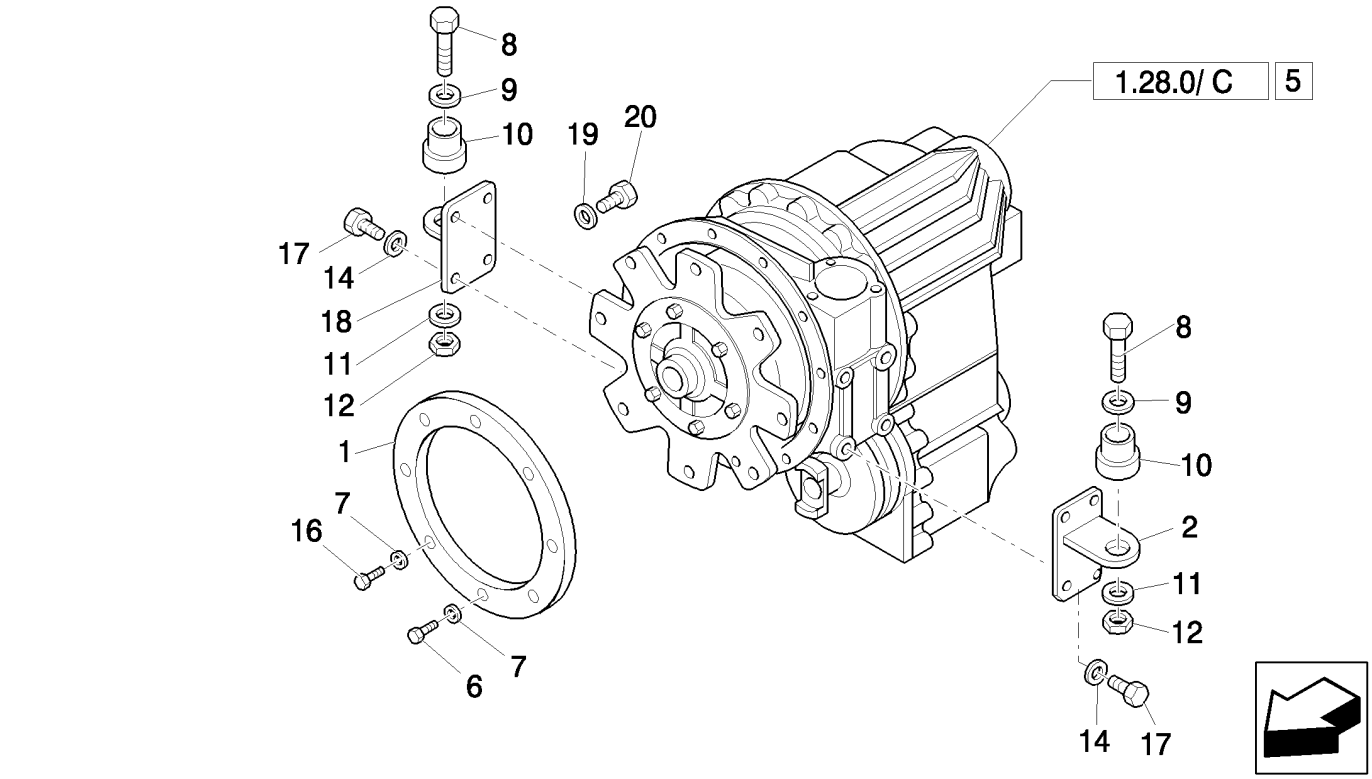

TRANSMISIÓN

REF	FN	PART NUMBER	YR/SN	QTY	DENOMINACION
1		87407758		1	ANILLO
2		85804276		1	SOPORTE, LH
3	1	86990712		1	CAMBIO DE VELOCIDAD, Assy
4	2, 3	86990713		1	CAMBIO DE VELOCIDAD, Assy
5	4	87749355		1	CAMBIO DE VELOCIDAD, 2WS, Assy
5	5	87749354		1	CAMBIO DE VELOCIDAD, 4WS, Assy
6		87021704		4	TORNILLO, 12 Pt Hd, M10 x 1.25 x 50, 12.9
7		11190779		4	ARANDELA ABANICO, Belleville, M13
8		87410647		2	TORNILLO, M12x1.25x90
9		85801585		2	JUNTA HERMETICA, 65mm OD
10		87416967		2	SOPORTE
11		85802618		2	JUNTA HERMETICA
12		16105011		2	CONTRA TUERCA, M12x1.75x1.25
13		87405629		1	SOPORTE, LH
14		11198679		8	ARANDELA ABANICO, Belleville, M13
15		11112634		8	TORNILLO, M12x35
16		87019767		4	TORNILLO, 12 Pt Hd, M10 x 1.25 x 30, 12.9
17		11112434		8	TORNILLO, Hex, M12 x 30, 10.9, Full Thd
18		85804275		1	SOPORTE, RH
19		47049372		12	ARANDELA
20		11106434		12	TORNILLO, Hex, M10 x 30, 10.9, Full Thd
21		87405628		1	SOPORTE, RH

(1) Only for 2WD, Power Shuttle
(2) Only for 4WD, Power Shuttle
(3) Repair and exchange component available - call Avatar Components, 1-800-453-3544, ext. 122
(4) Only for B110B 4WD, Power Shift
(5) Only for B115B 4WD, Power Shift

COMPONENTES DEL CONVERTIDOR PAR DE TORSIÓN (2WD POWER-SHUTTLE)

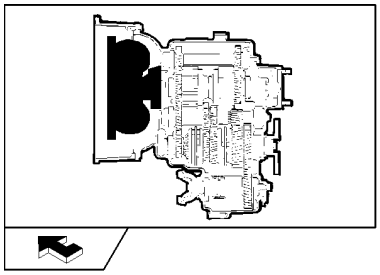

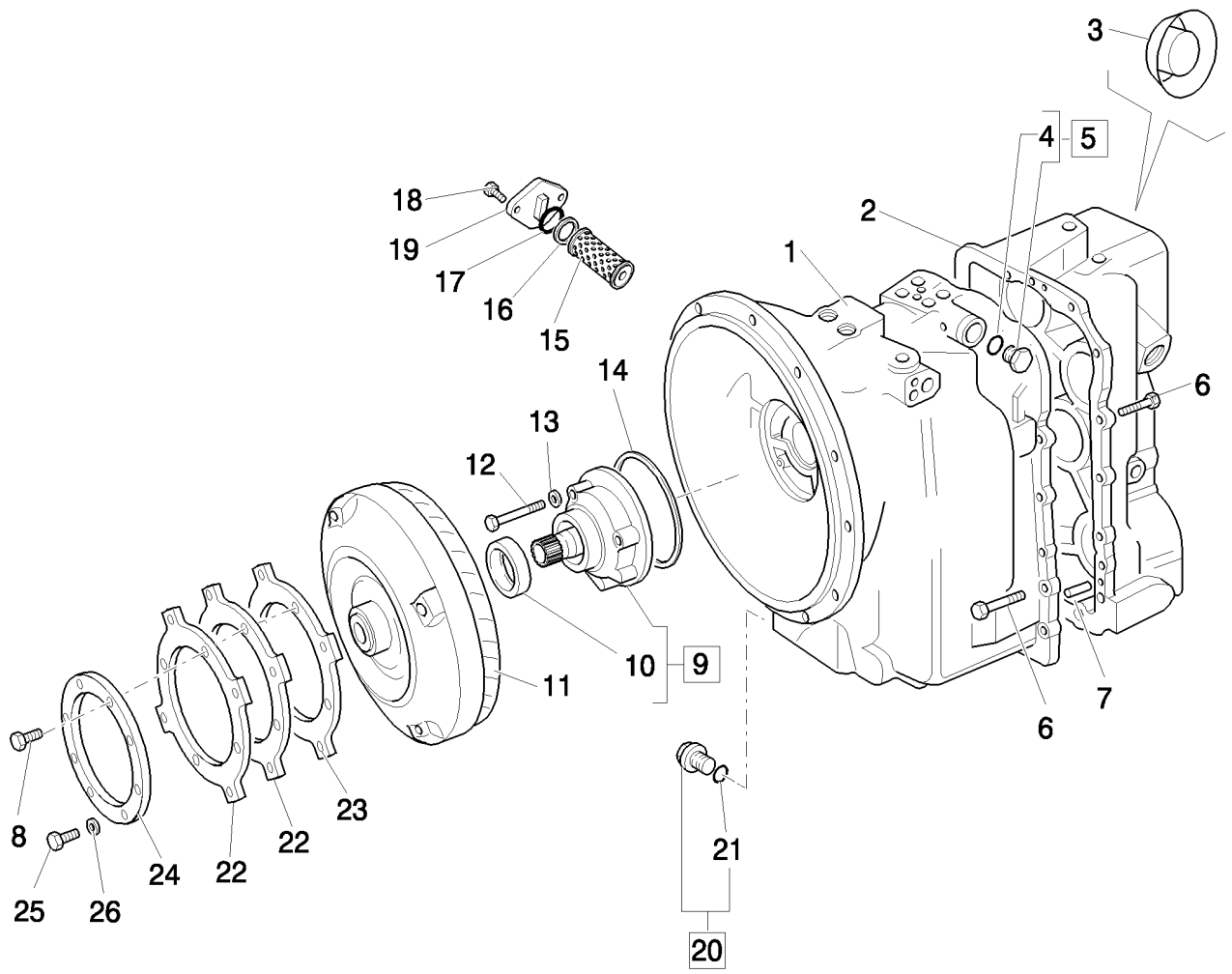

COMPONENTES DEL CONVERTIDOR PAR DE TORSIÓN (2WD POWER-SHUTTLE)

REF	FN	PART NUMBER	YR/SN	QTY	DENOMINACION
1		85827769		1	CAJA ENGRANAJE
2		85827770		1	CAJA ENGRANAJE
3		85812096		1	TAPÓN
4		9968218		1	JUNTA HERMETICA, 9/16"
5		9968219		1	TAPÓN, Assy, 9/16" UNF, 2
6		85817164		17	TORNILLO
7		9968356		2	PITON
8		87019767		4	TORNILLO, 12 Pt Hd, M10 x 1.25 x 30, 12.9, M10x1.25x90
9		9968311		1	BOMBA, Assy, M10x30
10		9968312		1	ANILLO DE CIERRE
11		87400114		1	CONVERTIDOR DE PAR
12		85817163		7	TORNILLO
13		85817001		4	ARANDELA
14		9968313		1	RETEN
15		9968359		1	FILTRO
16		9968361		1	ARANDELA
17		9968360		1	JUNTA HERMETICA
18		85817169		2	TORNILLO
19		9968362		1	CAMPANA
20		9968339		1	TAPÓN, Assy
21		9968365		1	JUNTA HERMETICA
22		86993546		1	PLACA
23		87406934		1	PLACA
24		87409201		1	Placa De Apoyo
25		11106021		4	TORNILLO, Hex, M10 x 20, 8.8, Full Thd
26		47049372		4	ARANDELA

COMPONENTES EXTERIORES CAJA DE CAMBIO (2WD POWER-SHUTTLE)

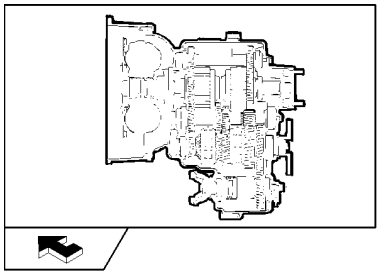

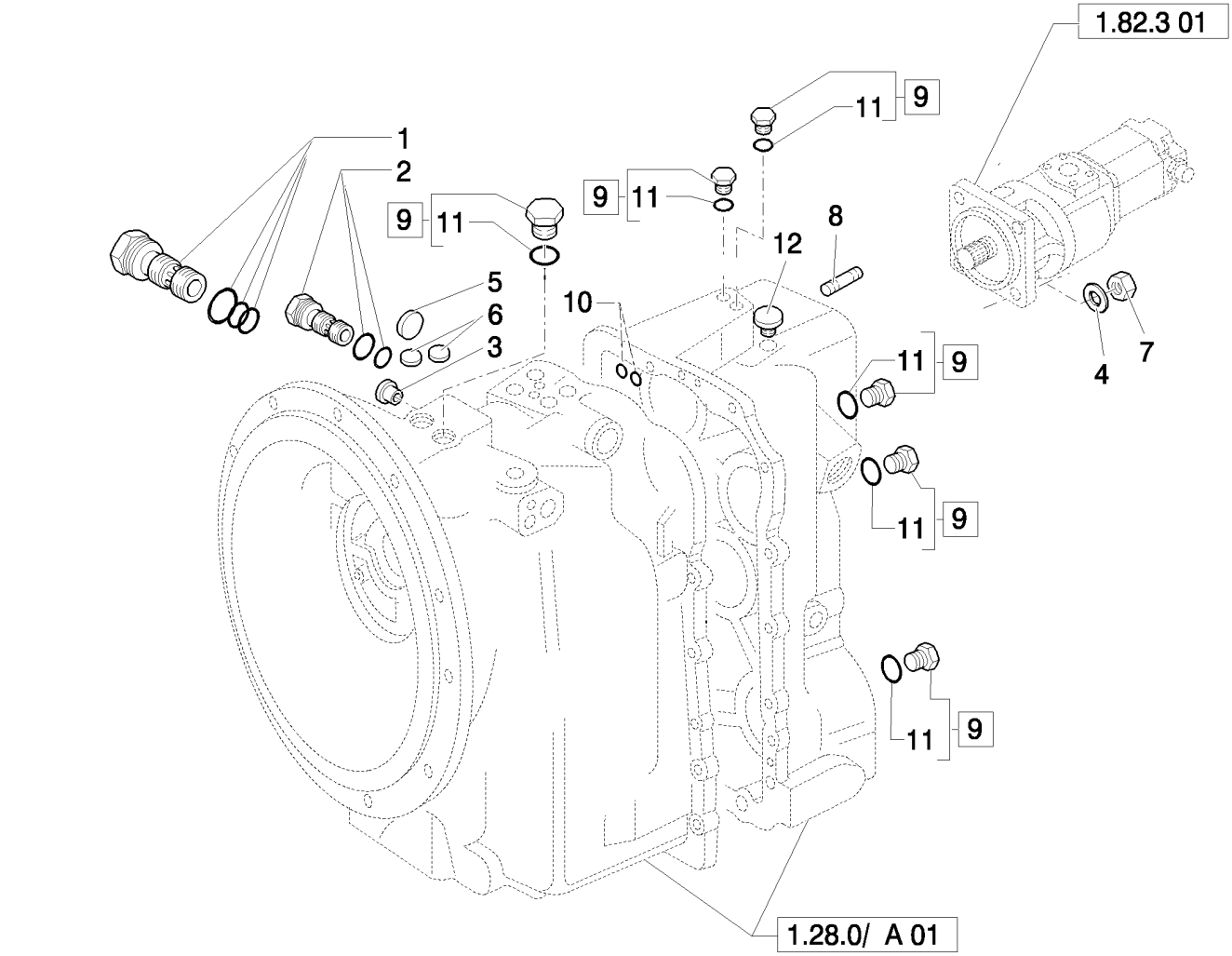

COMPONENTES EXTERIORES CAJA DE CAMBIO (2WD POWER-SHUTTLE)

REF	FN	PART NUMBER	YR/SN	QTY	DENOMINACION
1		9968350		1	VALVULA DISTRIBUIDORA, ydraulic Pressure Regulator
2		9968334		1	VÁLVULA, DESCARGA, Hydraulic Converter Relief
3		85812094		2	TAPÓN
4		11190779		4	ARANDELA ABANICO, Belleville, M13
5		9968371		1	TAPÓN, Expansion, 1"
6		9968333		2	TAPÓN, Tyers, .5"
7		85802684		4	TUERCA
8		85802683		4	PRISIONERO, 1/2"
9		9968219		AR	TAPÓN, Assy, 9/16" UNF
10		9968368		3	JUNTA HERMETICA, .512" ID x .094" Thk
11		9968218		AR	JUNTA HERMETICA, 9/16"
12		9968364		1	RESPIRADERO

COMPONENTES HIDRÁULICOS CAJA DE CAMBIO (2WD POWER-SHUTTLE)

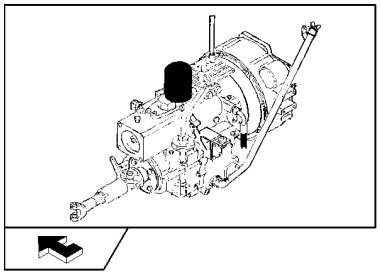

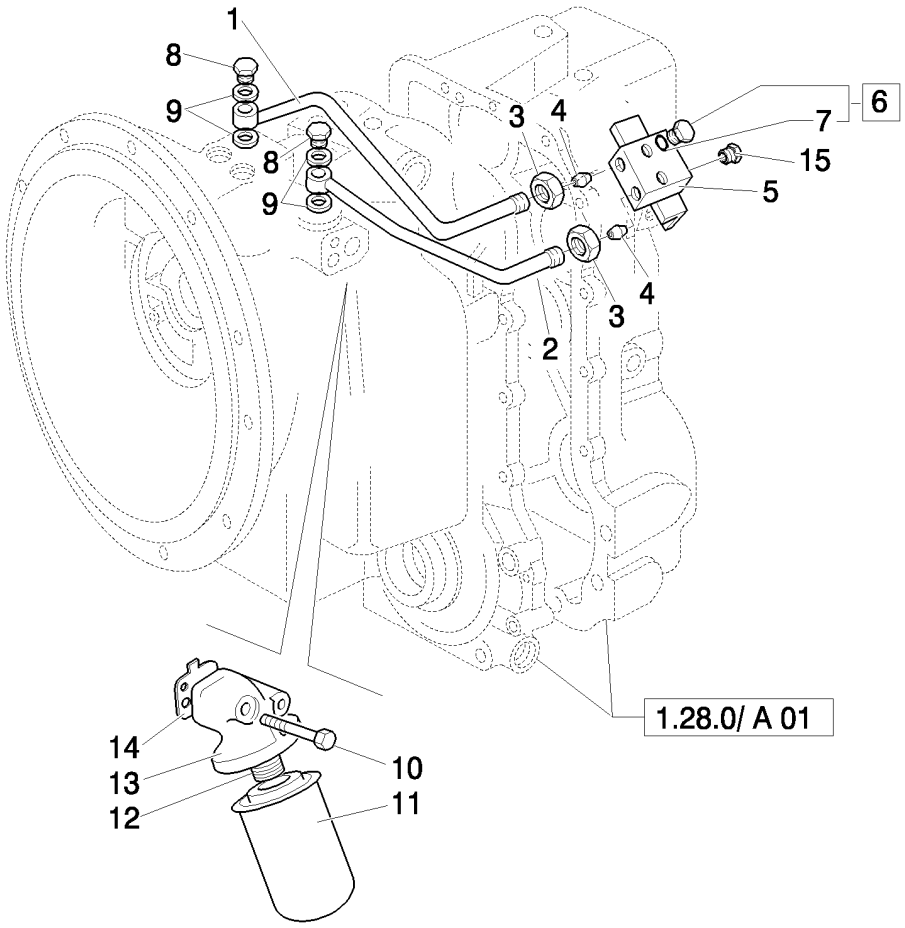

COMPONENTES HIDRÁULICOS CAJA DE CAMBIO (2WD POWER-SHUTTLE)

REF	FN	PART NUMBER	YR/SN	QTY	DENOMINACION
1		85812087		1	TUBO
2		85812086		1	TUBO
3		9968336		2	TUERCA
4		9969449		4	RACOR
5		85812085		1	TABLERO DE BORNES
6		9968219		2	TAPÓN, Assy, 9/16" UNF
7		9968218		2	JUNTA HERMETICA, 9/16"
8		9968676		2	BOQUILLA
9		85817002		4	ARANDELA
10		85817165		2	TORNILLO
11		85817004		1	FILTRO
12		9968354		1	ADAPTOR
13		9968374		1	Cabeza De Filtro
14		9968375		1	JUNTA HERMETICA
15		85812091		1	TAPÓN

1.28.0/ A	04	p1	04/08

FRENO DE ESTACIONAMIENTO (2WD POWER-SHUTTLE)

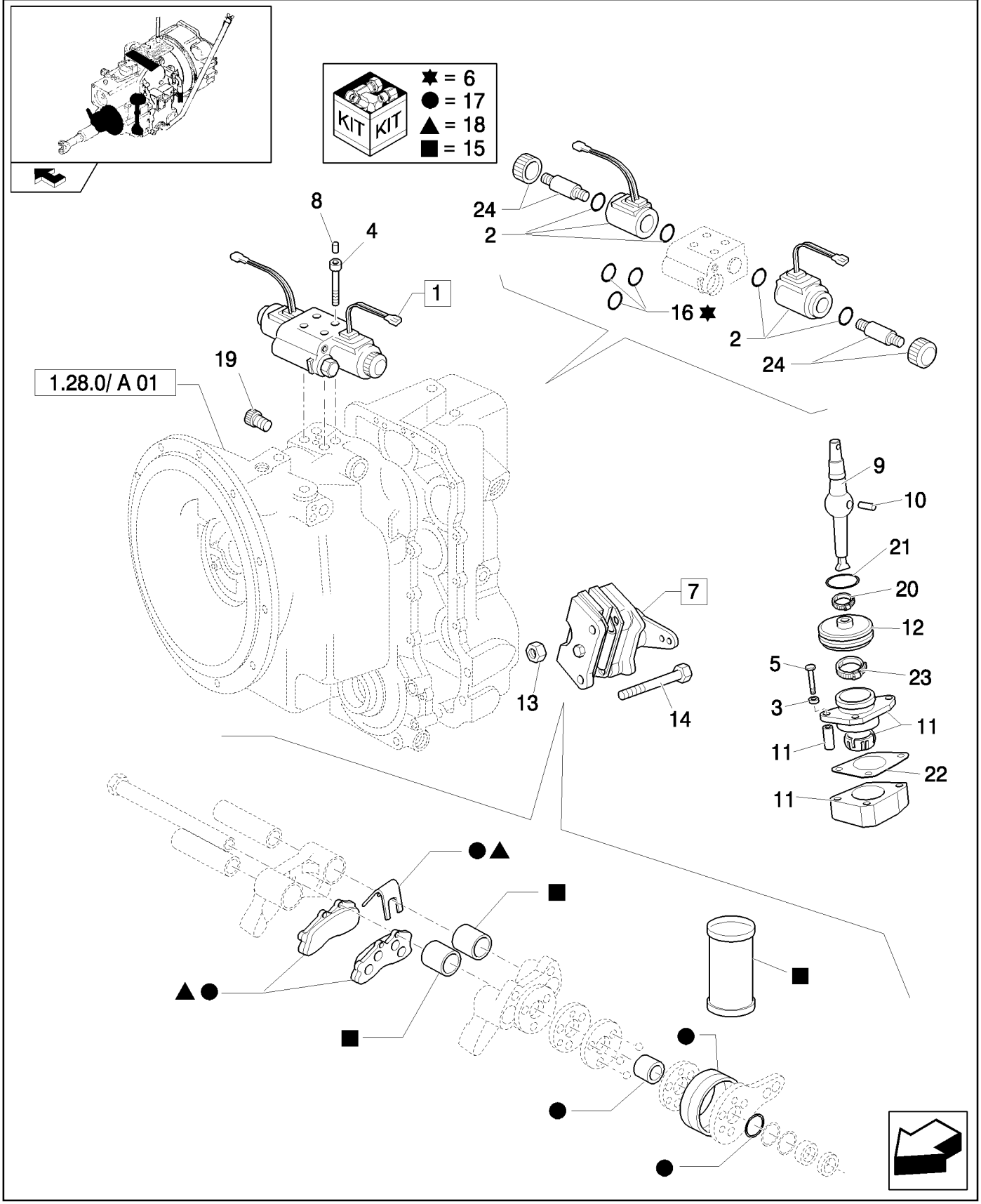

FRENO DE ESTACIONAMIENTO (2WD POWER-SHUTTLE)

REF	FN	PART NUMBER	YR/SN	QTY	DENOMINACION
1		85827764		1	VALVULA HIDRAULICA, Assy
2		85827798		2	BOBINA
3		85812092		3	ARANDELA
4		9969445		4	TORNILLO
5		85817163		3	TORNILLO
6		85827797		1	JUEGO DE REPARACION
7		85813300		1	FRENO DE EMERGENCIA, Assy
8		85827779		4	TAPÓN
9		9968324		1	PALANCA
10		9968327		1	PERNO
11		9968326		1	SOPORTE
12		9968328		1	CASQUETE
13		9969281		2	TUERCA
14		9968299		2	TORNILLO
15		85813318		2	JUEGO DE REPARACION
16		85806019		1	HERMETICA
17		9968926		1	EQUIPO
18		9968927		1	EQUIPO
19		9968370		2	TAPÓN
20		85827777		1	CIERRA CABLES
21		85817006		1	JUNTA HERMETICA
22		85817007		1	JUNTA HERMETICA
23		85827776		1	CIERRA CABLES
24		85827799		1	EQUIPO

TREN DE ENGRANAJES CAMBIO DE VELOCIDAD (2WD POWER-SHUTTLE)

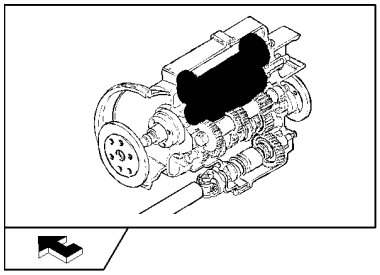

TREN DE ENGRANAJES CAMBIO DE VELOCIDAD (2WD POWER-SHUTTLE)

REF	FN	PART NUMBER	YR/SN	QTY	DENOMINACION
1		9968279		3	ARANDELA
2		9968228		2	COJINETE DE EMBRAGUE
3		9968304		4	RODAMIENTO DE RPDILLOS, 50x5x17
4		9968302		2	SEPARADOR
5		9968286		1	ENGRANAJE, 30T
6		9968291		3	ANILLO DE RESORTE
7		85827771		2	GARFIO DE MUELLE
8		85827772		2	RESORTE
9		9968287		2	RETENEDOR
10		9968288		2	PLACA DORSAL
11		9968290		12	DISCO EMBRAGUE
12		9968289		12	DISCO, EMBRAG.
13		85827773		2	EMBOLO
14		85827774		2	RESORTE
15		85821452		1	EJE
16		85821454		1	BUJE, 2.234" IDx.139" Thk
17		9968276		1	EMPUJADOR DE RODILLO
18		9968226		4	JUNTA HERMETICA
19		9968341		1	JUNTA HERMETICA, M80 x 70 x 2
20		9968342		AR	SUPLEMENTO, 24T-25T
20		9968343		AR	SUPLEMENTO, M80 x 70 x .076
20		9968344		AR	SUPLEMENTO, M80 x 70 x .178
20		9968345		AR	SUPLEMENTO, M80 x 70 x .599
21		9968285		1	ENGRANAJE, 24T
22		9968305		1	EMPUJADOR DE RODILLO
23		9968347		1	EJE
24		9968268		2	EMPUJADOR DE RODILLO
25		9968281		1	ENGRANAJE, 24T-25T
26		9968262		AR	SUPLEMENTO, 0.002mm Thk
26		9968263		AR	SUPLEMENTO, 0.003mm Thk
26		9968264		AR	SUPLEMENTO, 0.003mm Thk
26		9968265		AR	SUPLEMENTO, 0.007mm Thk
26		9968266		AR	SUPLEMENTO, 0.015mm Thk
26		9968267		AR	SUPLEMENTO, 0.020mm Thk
27		9968261		1	SEPARADOR

1.28.0/ A	05	p2	04/08

TREN DE ENGRANAJES CAMBIO DE VELOCIDAD (2WD POWER-SHUTTLE)

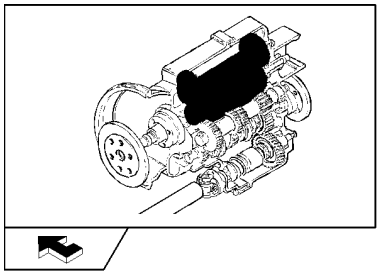

TREN DE ENGRANAJES CAMBIO DE VELOCIDAD (2WD POWER-SHUTTLE)

REF	FN	PART NUMBER	YR/SN	QTY	DENOMINACION
28		9968282		1	EJE, Assy
29		9968314		1	RETEN, 40 mm
30		9968230		1	ARANDELA, M40 x 70 x 4

EJE DE TRANSMISIÓN FRONTAL (2WD POWER-SHUTTLE)

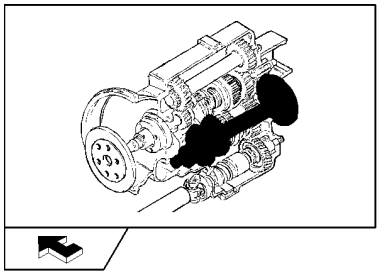

EJE DE TRANSMISIÓN FRONTAL (2WD POWER-SHUTTLE)

REF	FN	PART NUMBER	YR/SN	QTY	DENOMINACION
1		9968308		1	TORNILLO
2		9968306		1	ARANDELA
3		9968309		1	JUNTA HERMETICA, 1.29" IDx.139" Thk
4		85820909		1	BRIDA
5		85825506		1	ANILLO DE CIERRE, M48x62x8
6		9968271		1	SEPARADOR
7		9968272		AR	SUPLEMENTO, 0.051mm Thk
7		9968273		AR	SUPLEMENTO, 0.076mm Thk
7		9968274		AR	SUPLEMENTO, 0.178mm Thk
7		9968275		AR	SUPLEMENTO, 0.559mm Thk
8		9968270		1	RODAMIENTO DE BOLAS
9		85827803		1	ENGRANAJE, 4th Output Shaft 19T
10		9968252		1	SEPARADOR
11		9968250		2	RODAMIENTO DE RPDILLOS
12		9968251		1	SEPARADOR
13		9968248		1	ENGRANAJE, 43T, 1ST
14		9968307		2	SINCRONIZADOR
15		9968223		2	MANGUITO
16		9968247		1	ENGRANAJE, 37T, 2ND
17		9968269		1	EJE
18		9968246		1	ENGRANAJE, 28T, 3RD
19		9968396		1	SEPARADOR
20		9968358		1	TAPON DEL DEPOSITO, Sealing Cap, 2.25"
21		9968253		1	ANILLO DE RESORTE
22		9968278		1	EMPUJADOR DE RODILLO
23		9968260		1	ARANDELA, 55x4

ENGRANAJES CAJA DE CAMBIO DE MARCHA (2WD POWER-SHUTTLE)

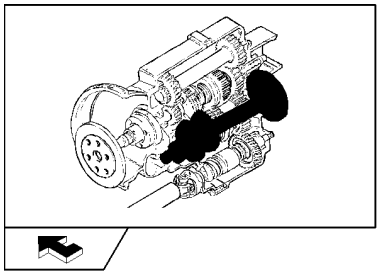

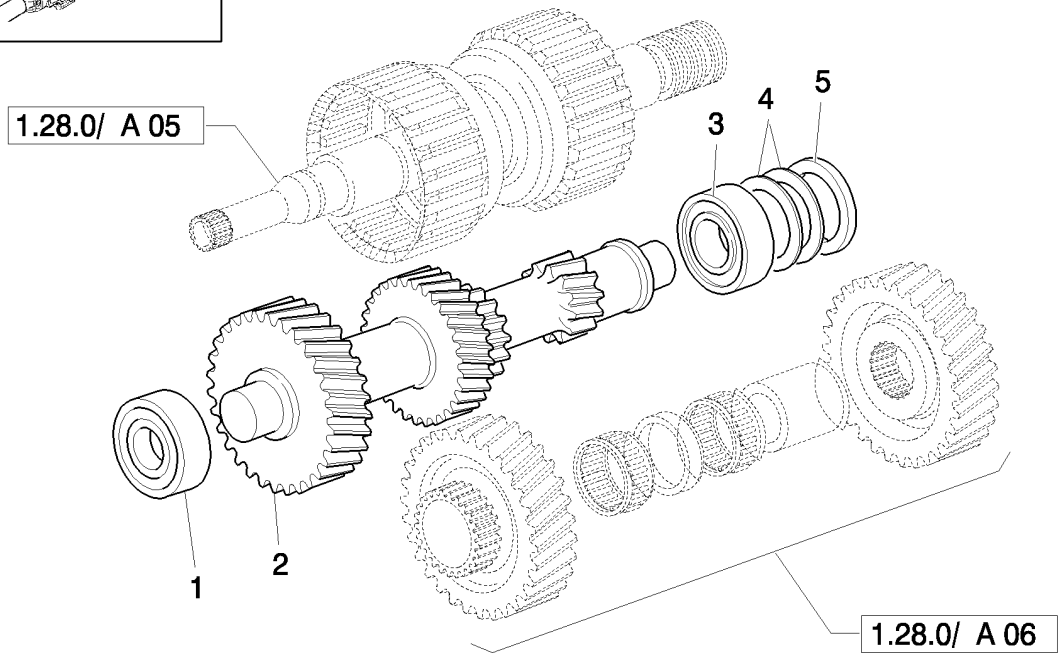

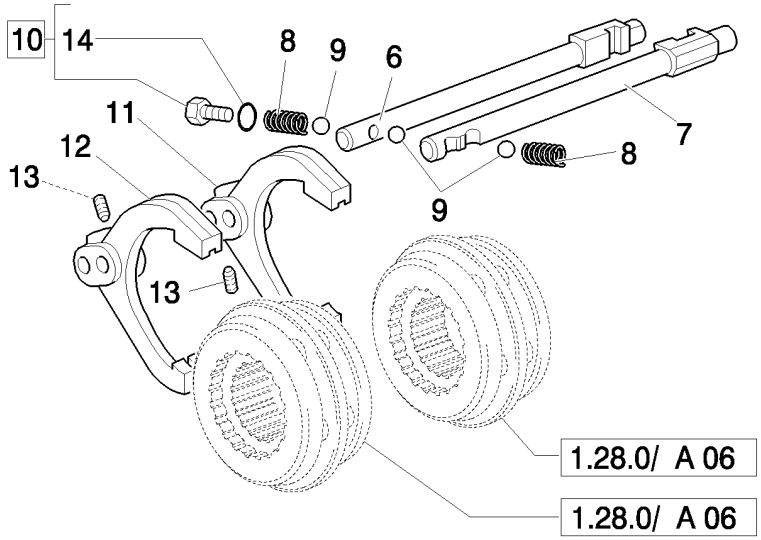

ENGRANAJES CAJA DE CAMBIO DE MARCHA (2WD POWER-SHUTTLE)

REF	FN	PART NUMBER	YR/SN	QTY	DENOMINACION
1		9968277		1	EMPUJADOR DE RODILLO
2		9968280		1	EJE, 35T-29T-20T-13T
3		9968270		1	RODAMIENTO DE BOLAS
4		9968272		AR	SUPLEMENTO, 0.051mm Thk
4		9968273		AR	SUPLEMENTO, 0.076mm Thk
4		9968274		AR	SUPLEMENTO, 0.178mm Thk
4		9968275		AR	SUPLEMENTO, 0.559mm Thk
5		9968271		1	SEPARADOR
6		9968319		1	RAIL DE CAMBIO, 1st-2nd
7		9968322		1	RAIL DE CAMBIO, 3rd-4th
8		9968316		2	RESORTE
9		9968315		3	BOLA
10		9968219		1	TAPÓN, Assy, 9/16" UNF
11		9968317		1	HORQUILLA, 1st-2nd
12		9968318		1	HORQUILLA, 3rd-4th
13		9968323		2	TORNILLO
14		9968218		AR	JUNTA HERMETICA, 9/16"

COMPONENTES CONVERTIDOR PAR DE TORSIÓN Y ENGRANAJES CAJA DE CAMBIO DE MARCHA (4WD POWER-SHUTTLE)

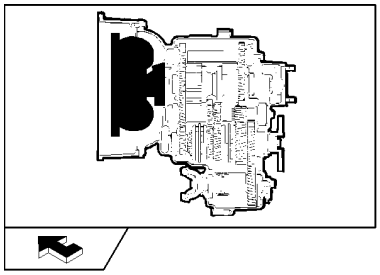

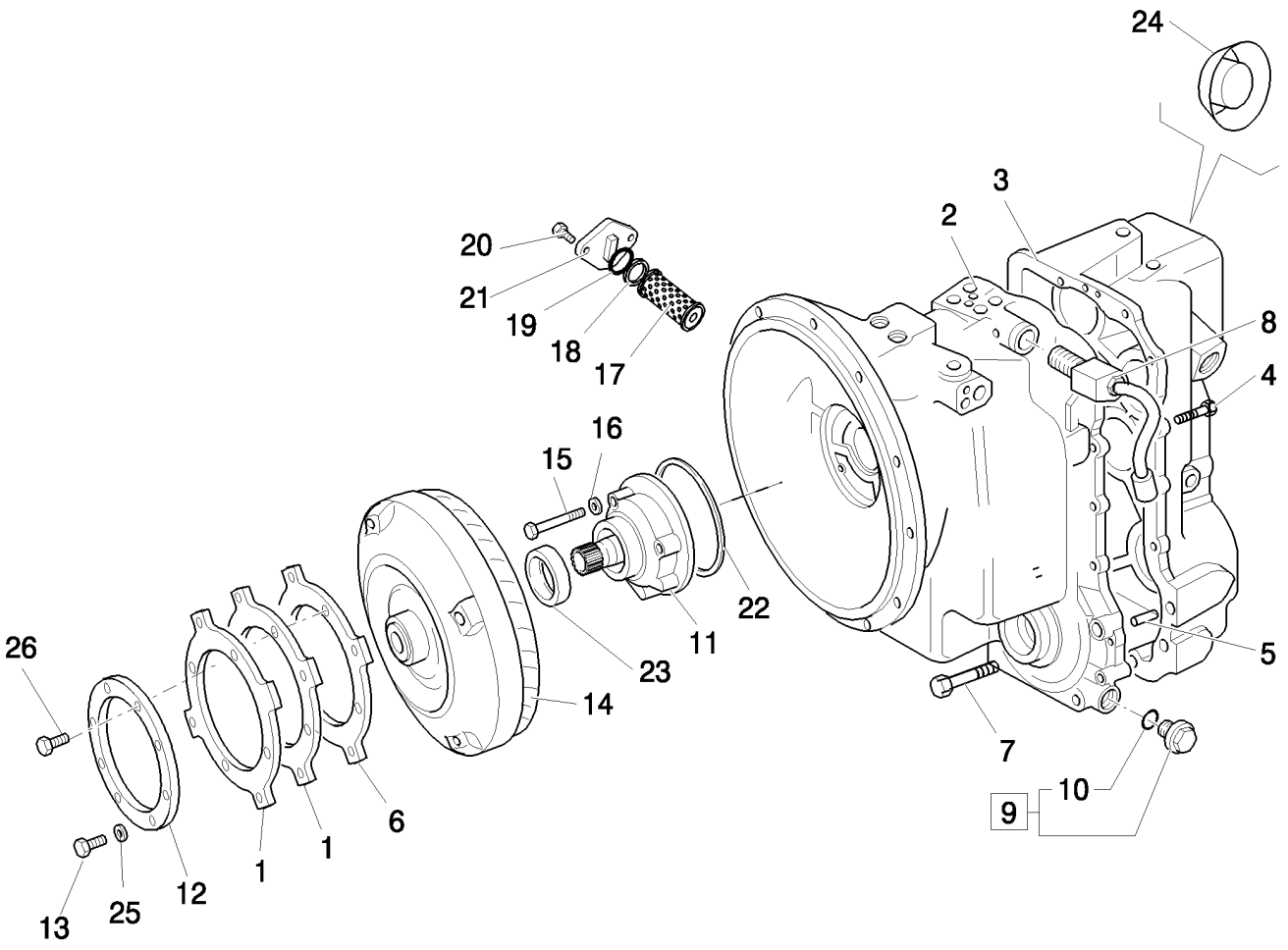

COMPONENTES CONVERTIDOR PAR DE TORSIÓN Y ENGRANAJES CAJA DE CAMBIO DE MARCHA (4WD POWER-SHUTTLE)

REF	FN	PART NUMBER	YR/SN	QTY	DENOMINACION
1		86993546		2	PLACA
2		85827783		1	CAJA ENGRANAJE
3		85827784		1	CAJA ENGRANAJE
4		85817164		14	TORNILLO
5		9968356		2	PITON
6		87406934		1	PLACA
7		85817190		4	TORNILLO
8		9968351		1	ELECTROVÁLVULA, 4WD Solenoid
9		9968339		1	TAPÓN, Assy
10		9968365		1	JUNTA HERMETICA
11		9968311		1	BOMBA
12		87409201		1	Placa De Apoyo
13		11106021		4	TORNILLO, Hex, M10 x 20, 8.8, Full Thd
14		87400114		1	CONVERTIDOR DE PAR
15		85817163		7	TORNILLO
16		85817001		4	ARANDELA
17		9968359		1	FILTRO
18		9968361		1	ARANDELA
19		9968360		1	JUNTA HERMETICA
20		85817169		2	TORNILLO
21		9968362		1	CAMPANA
22		9968313		1	RETEN
23		85825506		1	ANILLO DE CIERRE
24		85812096		1	TAPÓN
25		47049372		4	ARANDELA
26		87019767		4	TORNILLO, 12 Pt Hd, M10 x 1.25 x 30, 12.9, M10x1.25x90

COMPONENTES EXTERIORES CAJA DE CAMBIO MARCHA (4WD POWER-SHUTTLE)

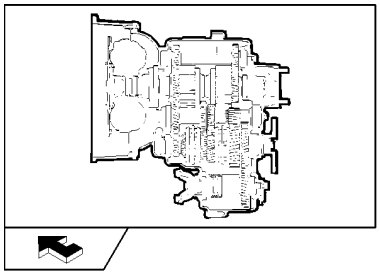

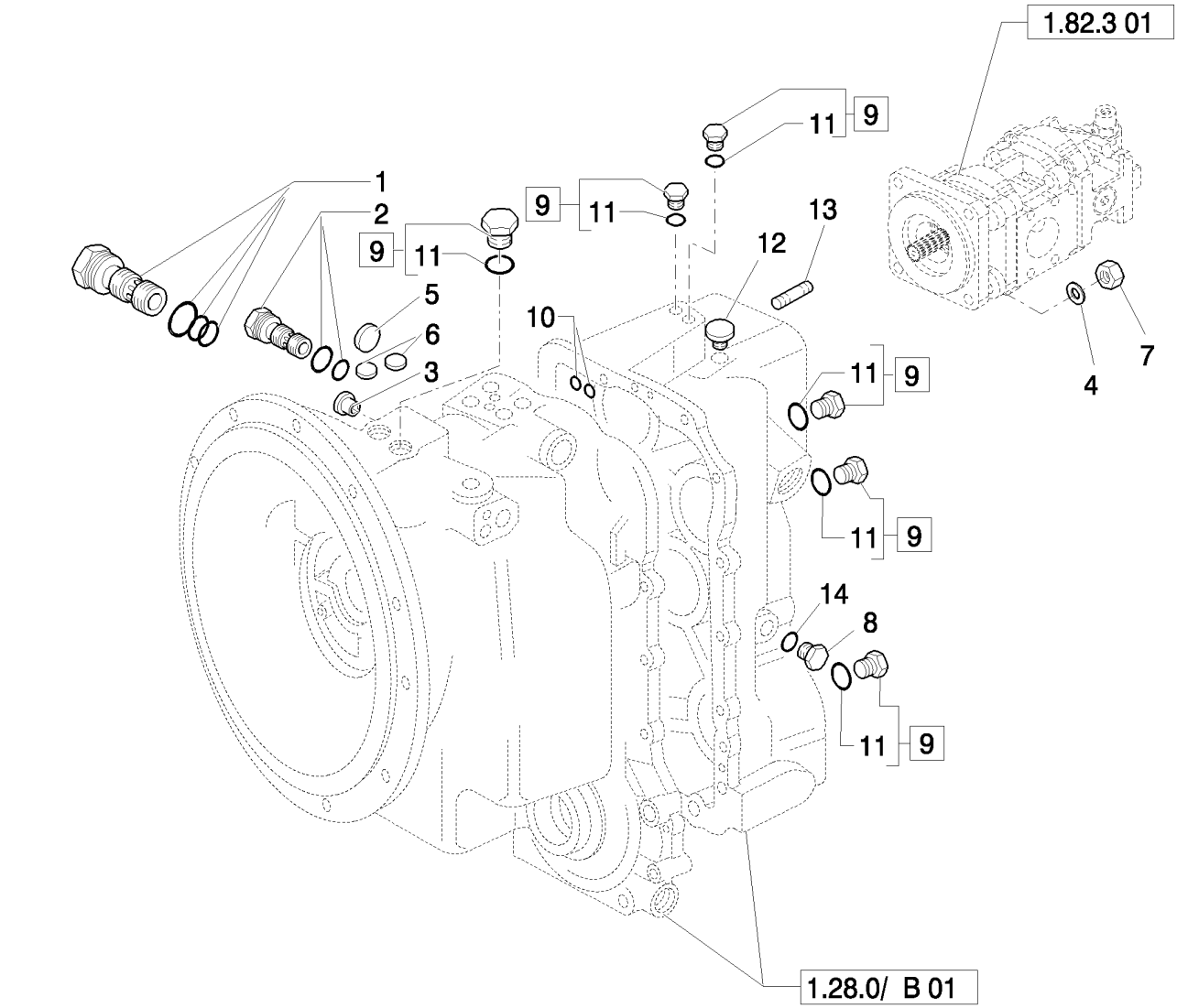

COMPONENTES EXTERIORES CAJA DE CAMBIO MARCHA (4WD POWER-SHUTTLE)

REF	FN	PART NUMBER	YR/SN	QTY	DENOMINACION
1		9968350		1	VALVULA DISTRIBUIDORA, Hydraulic Pressure Regulator
2		9968334		1	VÁLVULA, DESCARGA, Hydraulic Converter Relief
3		85812094		2	TAPÓN
4		11190779		4	ARANDELA ABANICO, Belleville, M13
5		9968371		1	TAPÓN, Expansion, 1"
6		9968333		2	TAPÓN, Tyers, .5"
7		85802684		4	TUERCA
8		9968382		1	TAPÓN
9		9968219		AR	TAPÓN, Assy, 9/16" UNF
10		9968368		4	JUNTA HERMETICA, .512" IDx.094"Thk
11		9968218		AR	JUNTA HERMETICA, 9/16"
12		9968364		1	RESPIRADERO
13		85802683		4	PRISIONERO, 1/2"
14		9968383		1	ARANDELA

COMPONENTES HIDRÁULICOS CAJA DE CAMBIO MARCHA (4WD POWER-SHUTTLE)

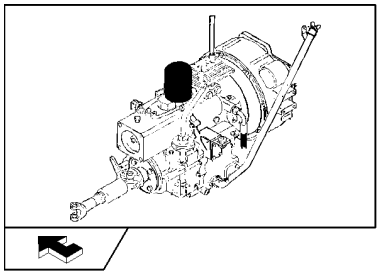

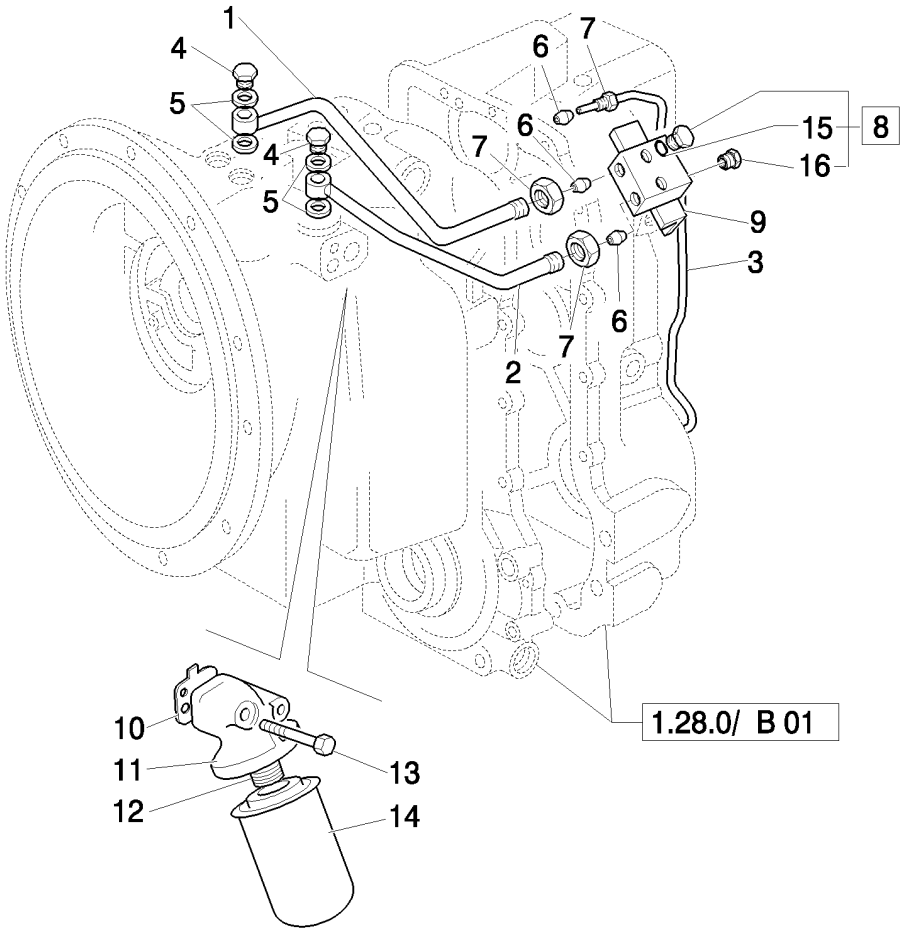

COMPONENTES HIDRÁULICOS CAJA DE CAMBIO MARCHA (4WD POWER-SHUTTLE)

REF	FN	PART NUMBER	YR/SN	QTY	DENOMINACION
1		85812086		1	TUBO
2		85812087		1	TUBO
3		9968337		1	TUBO, 4WD
4		9968676		2	BOQUILLA
5		85817002		4	ARANDELA
6		9968340		AR	RACOR
7		9968336		AR	TUERCA
8		9968219		2	TAPÓN, Assy, 9/16" UNF
9		85812085		1	TABLERO DE BORNES
10		9968375		1	JUNTA HERMETICA
11		9968374		1	Cabeza De Filtro
12		9968354		1	ADAPTOR
13		85817165		2	TORNILLO
14		85817004		1	FILTRO
15		9968218		AR	JUNTA HERMETICA, 9/16"
16		85812091		1	TAPÓN

1.28.0/ B	04	p1	04/08

FRENO DE ESTACIONAMIENTO (4WD POWER-SHUTTLE)

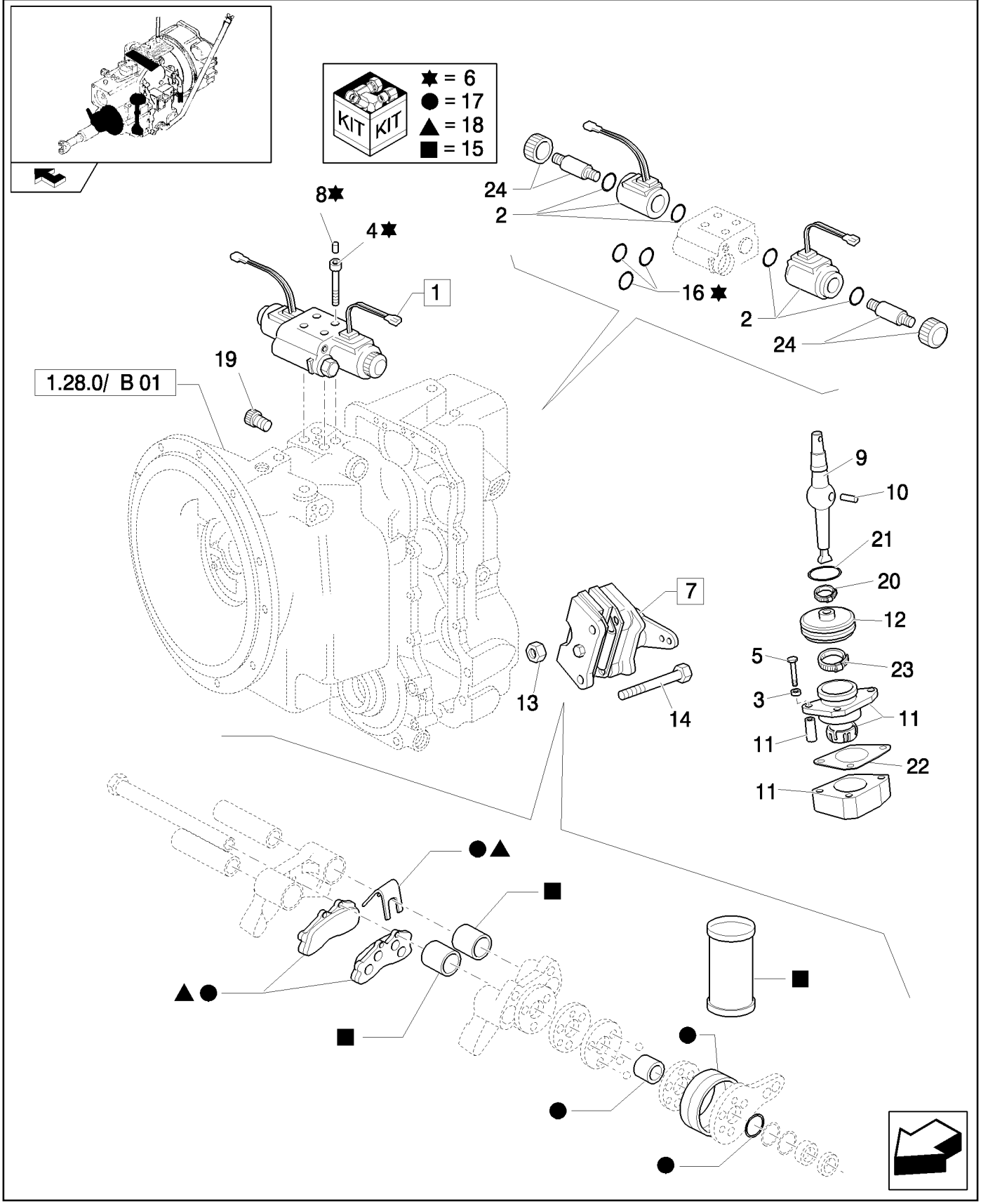

FRENO DE ESTACIONAMIENTO (4WD POWER-SHUTTLE)

REF	FN	PART NUMBER	YR/SN	QTY	DENOMINACION
1		85827764		1	VALVULA HIDRAULICA, Assy
2		85827798		2	BOBINA
3		85812092		3	ARANDELA
4		9969445		4	TORNILLO
5		85817163		3	TORNILLO
6		85827797		1	JUEGO DE REPARACION
7		85813300		1	FRENO DE EMERGENCIA, Assy
8		85827779		4	TAPÓN, 2WD
9		9968324		1	PALANCA
10		9968327		1	PERNO
11		9968326		1	SOPORTE
12		9968328		1	CASQUETE
13		9969281		2	TUERCA
14		9968299		2	TORNILLO
15		85813318		1	JUEGO DE REPARACION
16		85806019		1	HERMETICA
17		9968926		1	EQUIPO
18		9968927		1	EQUIPO
19		9968370		2	TAPÓN, Plastic, .25"
20		85827777		1	CIERRA CABLES
21		85817006		1	JUNTA HERMETICA
22		85817007		1	JUNTA HERMETICA
23		85827776		1	CIERRA CABLES
24		85827799		1	EQUIPO

CAMBIO DE VELOCIDAD (4WD POWER-SHUTTLE)

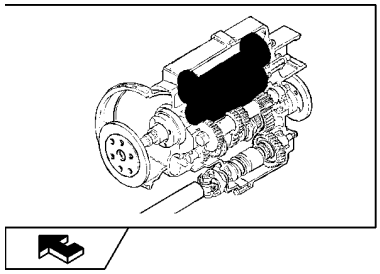

CAMBIO DE VELOCIDAD (4WD POWER-SHUTTLE)

REF	FN	PART NUMBER	YR/SN	QTY	DENOMINACION
1		9968279		3	ARANDELA, 50x70x4
2		9968228		2	COJINETE DE EMBRAGUE
3		9968304		4	RODAMIENTO DE RPDILLOS, 50x5x17
4		9968302		2	SEPARADOR
5		9968286		1	ENGRANAJE, 30T
6		9968291		3	ANILLO DE RESORTE
7		85827771		2	GARFIO DE MUELLE
8		85827772		2	RESORTE
9		9968287		2	RETENEDOR
10		9968288		2	PLACA DORSAL
11		9968290		12	DISCO EMBRAGUE
12		9968289		12	DISCO, EMBRAG.
13		85827773		2	EMBOLO
14		85827774		2	RESORTE
15		85821452		1	EJE
16		85821454		1	BUJE
17		9968276		1	EMPUJADOR DE RODILLO
18		9968226		4	JUNTA HERMETICA
19		9968341		1	JUNTA HERMETICA, M80 x 70 x 2
20		9968342		AR	SUPLEMENTO, 24T-25T
20		9968343		AR	SUPLEMENTO, M80 x 70 x .076
20		9968344		AR	SUPLEMENTO, M80 x 70 x .178
20		9968345		AR	SUPLEMENTO, M80 x 70 x .599
21		9968285		1	ENGRANAJE, 24T
22		9968305		1	EMPUJADOR DE RODILLO
23		9968347		1	EJE
24		9968268		2	EMPUJADOR DE RODILLO
25		9968281		1	ENGRANAJE, 24T-25T
26		9968262		AR	SUPLEMENTO, 0.002mm Thk
26		9968263		AR	SUPLEMENTO, 0.003mm Thk
26		9968264		AR	SUPLEMENTO, 0.003mm Thk
26		9968265		AR	SUPLEMENTO, 0.007mm Thk
26		9968266		AR	SUPLEMENTO, 0.015mm Thk
26		9968267		AR	SUPLEMENTO, 0.020mm Thk
27		9968261		1	SEPARADOR

CAMBIO DE VELOCIDAD (4WD POWER-SHUTTLE)

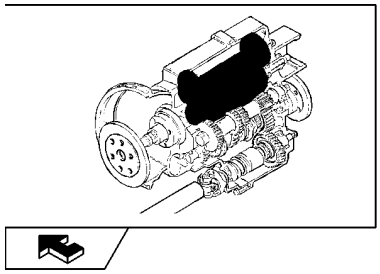

CAMBIO DE VELOCIDAD (4WD POWER-SHUTTLE)

REF	FN	PART NUMBER	YR/SN	QTY	DENOMINACION
28		9968282		1	EJE, Assy
29		9968314		1	RETEN, 40 mm
30		9968230		1	ARANDELA, M40 x 70 x 4

EJE DE TRANSMISIÓN FRONTAL (4WD POWER-SHUTTLE)

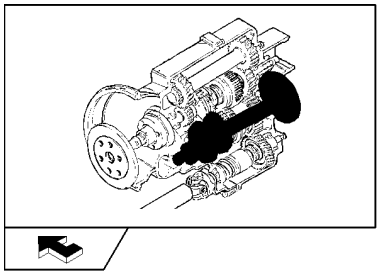

EJE DE TRANSMISIÓN FRONTAL (4WD POWER-SHUTTLE)

REF	FN	PART NUMBER	YR/SN	QTY	DENOMINACION
1		9968308		1	TORNILLO
2		9968306		1	ARANDELA
3		9968309		1	JUNTA HERMETICA, 1.29"IDx.139"Thk
4		85820909		1	BRIDA
5		85825506		1	ANILLO DE CIERRE, M48x62x8
6		9968271		1	SEPARADOR
7		9968272		AR	SUPLEMENTO, 0.051mm Thk
7		9968273		AR	SUPLEMENTO, 0.076mm Thk
7		9968274		AR	SUPLEMENTO, 0.178mm Thk
7		9968275		AR	SUPLEMENTO, 0.559mm Thk
8		9968270		1	RODAMIENTO DE BOLAS
9		9968249		1	ENGRANAJE, 4WD
10		9968252		1	SEPARADOR
11		9968250		2	RODAMIENTO DE RPDILLOS
12		9968251		1	SEPARADOR
13		9968248		1	ENGRANAJE, 43T, 1ST
14		9968307		2	SINCRONIZADOR
15		9968223		2	MANGUITO
16		9968247		1	ENGRANAJE, 37T, 2ND
17		9968269		1	EJE
18		9968246		1	ENGRANAJE, 28T 3RD
19		9968278		1	EMPUJADOR DE RODILLO
20		9968358		1	TAPON DEL DEPOSITO, Sealing Cap, 2.25"
21		9968253		1	ANILLO DE RESORTE
22		85827803		1	ENGRANAJE, 4th Output Shaft 19T
23		9968260		1	ARANDELA, 55x35x4

ENGRANAJES CAJA DE CAMBIO MARCHA (4WD POWER-SHUTTLE)

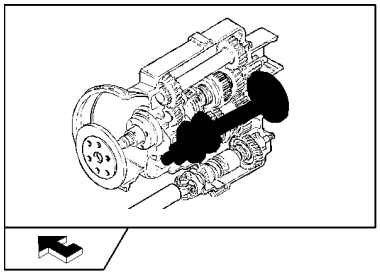

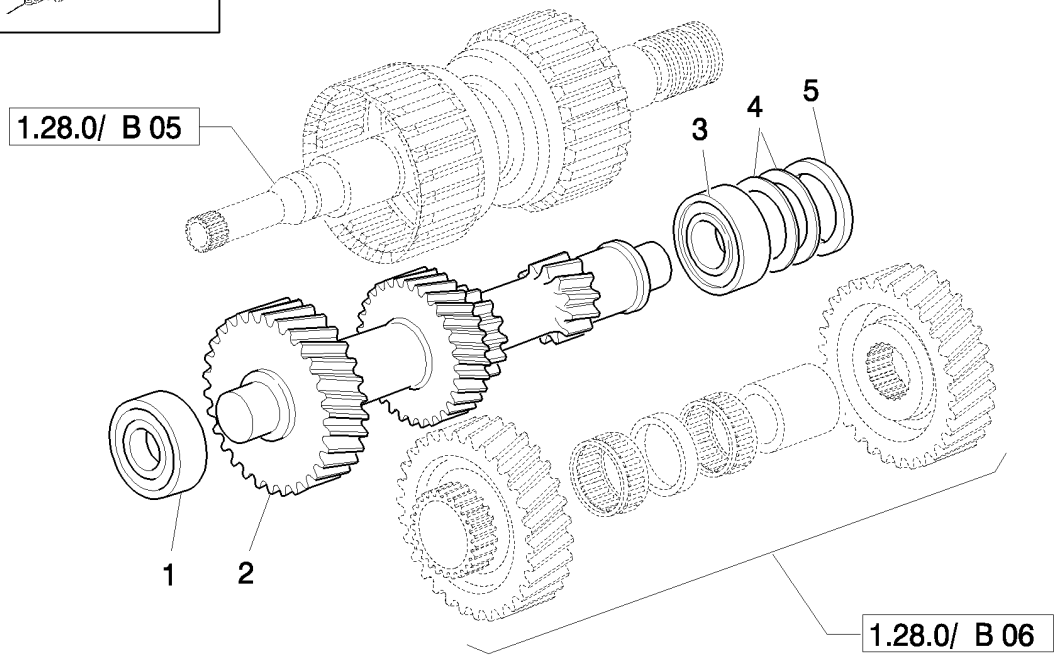

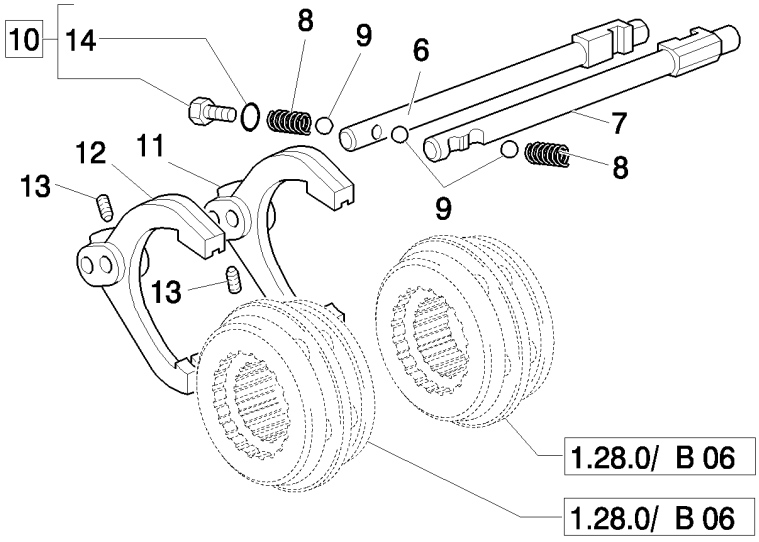

ENGRANAJES CAJA DE CAMBIO MARCHA (4WD POWER-SHUTTLE)

REF	FN	PART NUMBER	YR/SN	QTY	DENOMINACION
1		9968277		1	EMPUJADOR DE RODILLO
2		9968280		1	EJE, 35T-29T-20T-13T
3		9968270		1	RODAMIENTO DE BOLAS
4		9968272		AR	SUPLEMENTO, 0.051mm Thk
4		9968273		AR	SUPLEMENTO, 0.076mm Thk
4		9968274		AR	SUPLEMENTO, 0.178mm Thk
4		9968275		AR	SUPLEMENTO, 0.559mm Thk
5		9968271		1	SEPARADOR
6		9968319		1	RAIL DE CAMBIO, 1st-2nd
7		9968322		1	RAIL DE CAMBIO, 3rd-4th
8		9968316		2	RESORTE
9		9968315		3	BOLA
10		9968219		AR	TAPÓN, Assy, 9/16" UNF
11		9968317		1	HORQUILLA, 1st-2nd
12		9968318		1	HORQUILLA, 3rd-4th
13		9968323		2	TORNILLO
14		9968218		AR	JUNTA HERMETICA, 9/16"

1.28.0/ B	08	p1	04/08

ENGRANAJES EJE DE TRANSMISIÓN POSTERIOR (4WD POWER-SHUTTLE)

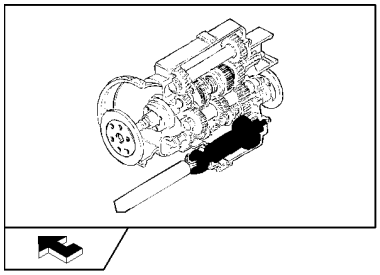

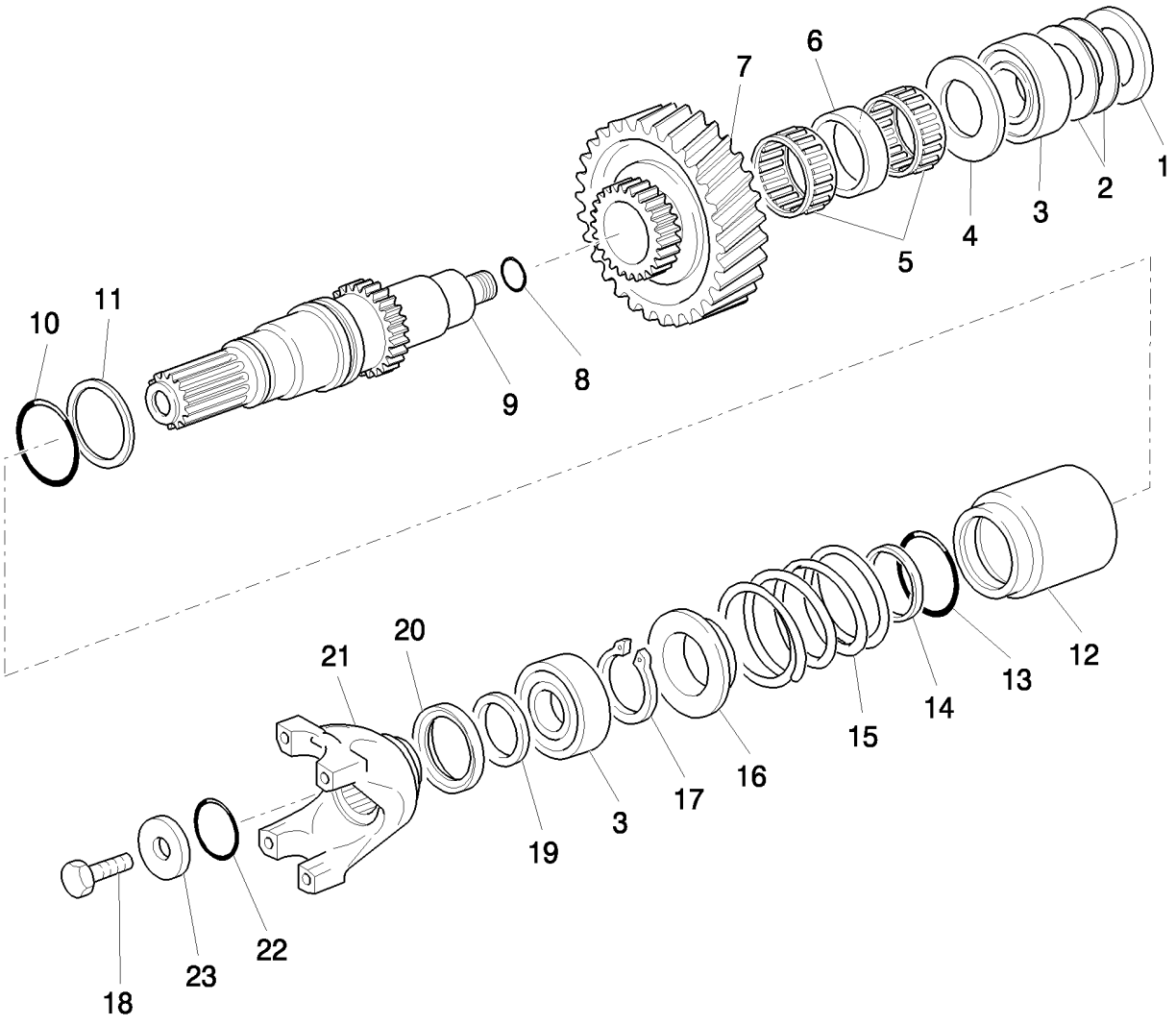

ENGRANAJES EJE DE TRANSMISIÓN POSTERIOR (4WD POWER-SHUTTLE)

REF	FN	PART NUMBER	YR/SN	QTY	DENOMINACION
1		9968255		1	SEPARADOR
2		9968256		AR	SUPLEMENTO, 67.5 x 58 x 0.051 mm
2		9968257		AR	SUPLEMENTO, 67.5 x 58 x 0.076 mm
2		9968258		AR	SUPLEMENTO, 67.5x58x0.178
2		9968259		AR	SUPLEMENTO, 67.5 x 58 x 0.599 mm
3		9968276		2	EMPUJADOR DE RODILLO
4		9968244		1	ARANDELA DE TOPE, 65 x 40.5 x 4
5		85827782		2	RODAMIENTO DE RPDILLOS
6		9968393		1	SEPARADOR
7		9968240		1	ENGRANAJE, 35T
8		9968254		1	JUNTA HERMETICA
9		9968239		1	EJE
10		9968232		1	JUNTA HERMETICA, 1.859"IDx.139"Thk
11		9968229		1	JUNTA HERMETICA
12		9968234		1	EMBRAGUE
13		9968298		1	JUNTA HERMETICA, 2.234"IDx.139"Thk
14		9968297		1	JUNTA HERMETICA
15		9968235		1	RESORTE
16		9968236		1	SOPORTE
17		9968233		1	ANILLO DE RESORTE
18		9968308		1	TORNILLO
19		9968301		1	SEPARADOR
20		85825506		1	ANILLO DE CIERRE, M48x62x8
21		9968300		1	HORQUILLA, Mudfinger Dust Cap Not Serviced Separately, Order 9968300 Yoke
22		9968309		1	JUNTA HERMETICA, 1.29"IDx.139"Thk
23		9968306		1	ARANDELA

INDICADOR DE NIVEL ACEITE / AÑADIR (POWER-SHUTTLE)

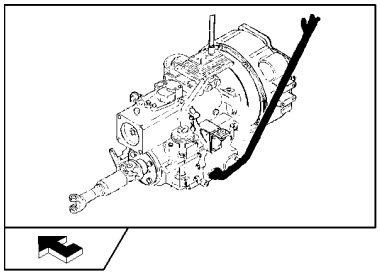

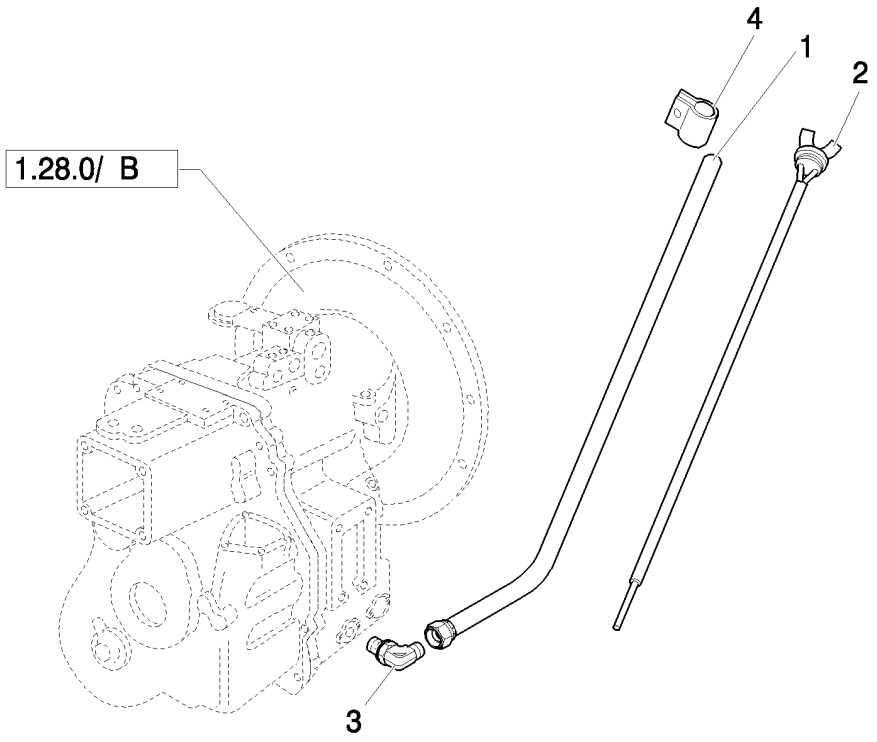

INDICADOR DE NIVEL ACEITE / AÑADIR (POWER-SHUTTLE)

REF	FN	PART NUMBER	YR/SN	QTY	DENOMINACION
1		87408479		1	TUBO
2		87408557		1	VARILLA DE NIVEL
3		47050658		1	CODO
4		47049176		1	BORNE

MANDOS EXTERIORES (POWER-SHUTTLE)

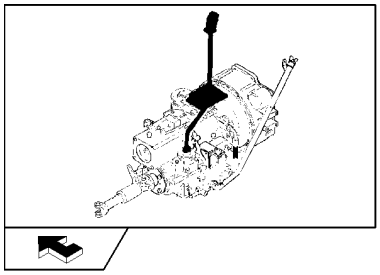

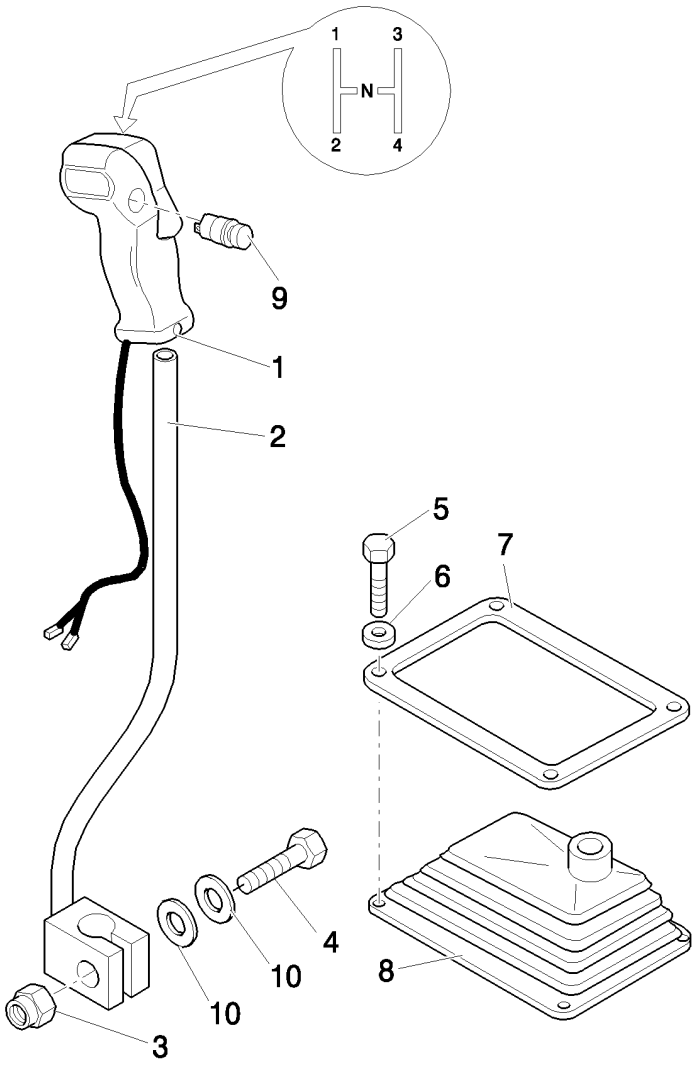

MANDOS EXTERIORES (POWER-SHUTTLE)

REF	FN	PART NUMBER	YR/SN	QTY	DENOMINACION
1		85802947		1	POMO, Assy
2		85826943		1	PALANCA
3		16105011		1	CONTRA TUERCA, M12x1.25
4		15540821		1	TORNILLO, Hex, M12 x 1.25 x 50, 8.8
5		10903021		4	TORNILLO, Hex, M6 x 35, 8.8
6		11197779		4	ARANDELA ABANICO, Belleville, M6.4
7		85824187		1	RETENEDOR
8		85802847		1	CASQUETE
9		87447132		1	INTERRUPTOR
10		14496721		2	ARANDELA, M12 x 24 x 2.5

EJE DE TRANSMISIÓN FRONTAL Y POSTERIOR (POWER-SHUTTLE)

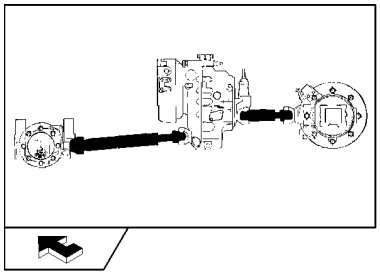

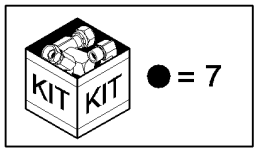

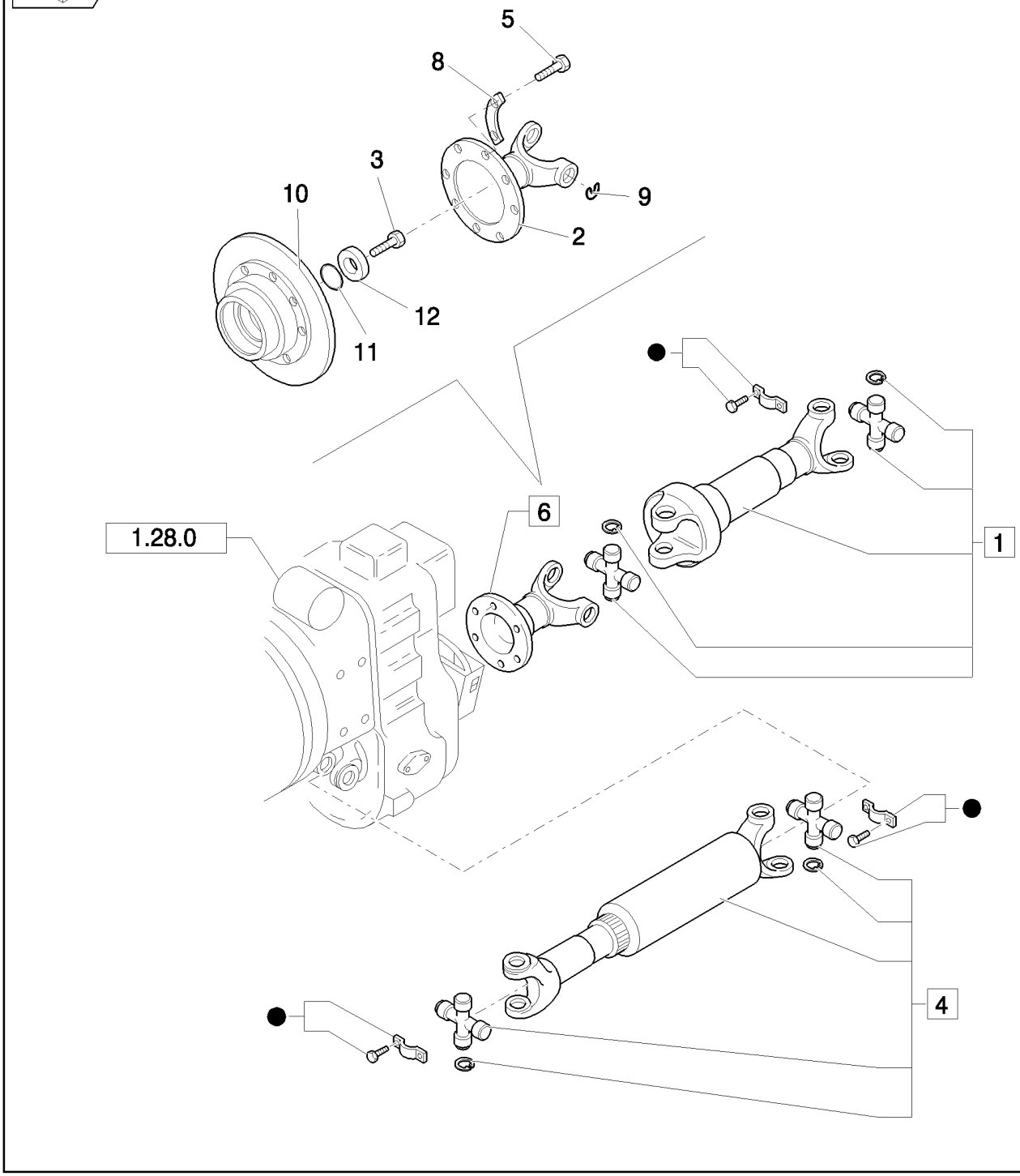

EJE DE TRANSMISIÓN FRONTAL Y POSTERIOR (POWER-SHUTTLE)

REF	FN	PART NUMBER	YR/SN	QTY	DENOMINACION
1		87552418		1	TRANS. DE CARDAN, Assy
2		85820157		1	BRIDA
3		9968308		1	TORNILLO
4		87552416		1	TRANS. DE CARDAN, Assy
5		85820154		8	TORNILLO, M10 x 1.5
6	1	85820908		1	KIT, SERVICE
7		87311154		4	PIEZA DE SOPORTE, Front
8		85819186		4	TAPADERA
9		85820914		2	RETENEDOR
10		85820909		1	BRIDA
11		9968309		1	JUNTA HERMETICA, 1.29"IDx.139"Thk
12		9968306		1	ARANDELA

(1) Trasformation Kit from DIN100 to DIN120

TUBOS DE REFRIGERACION ACEITE TRANSMISION (POWER-SHUTTLE)

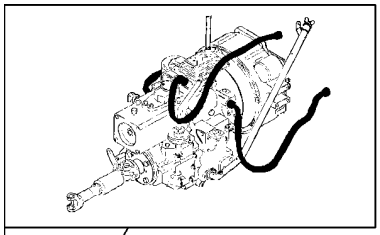

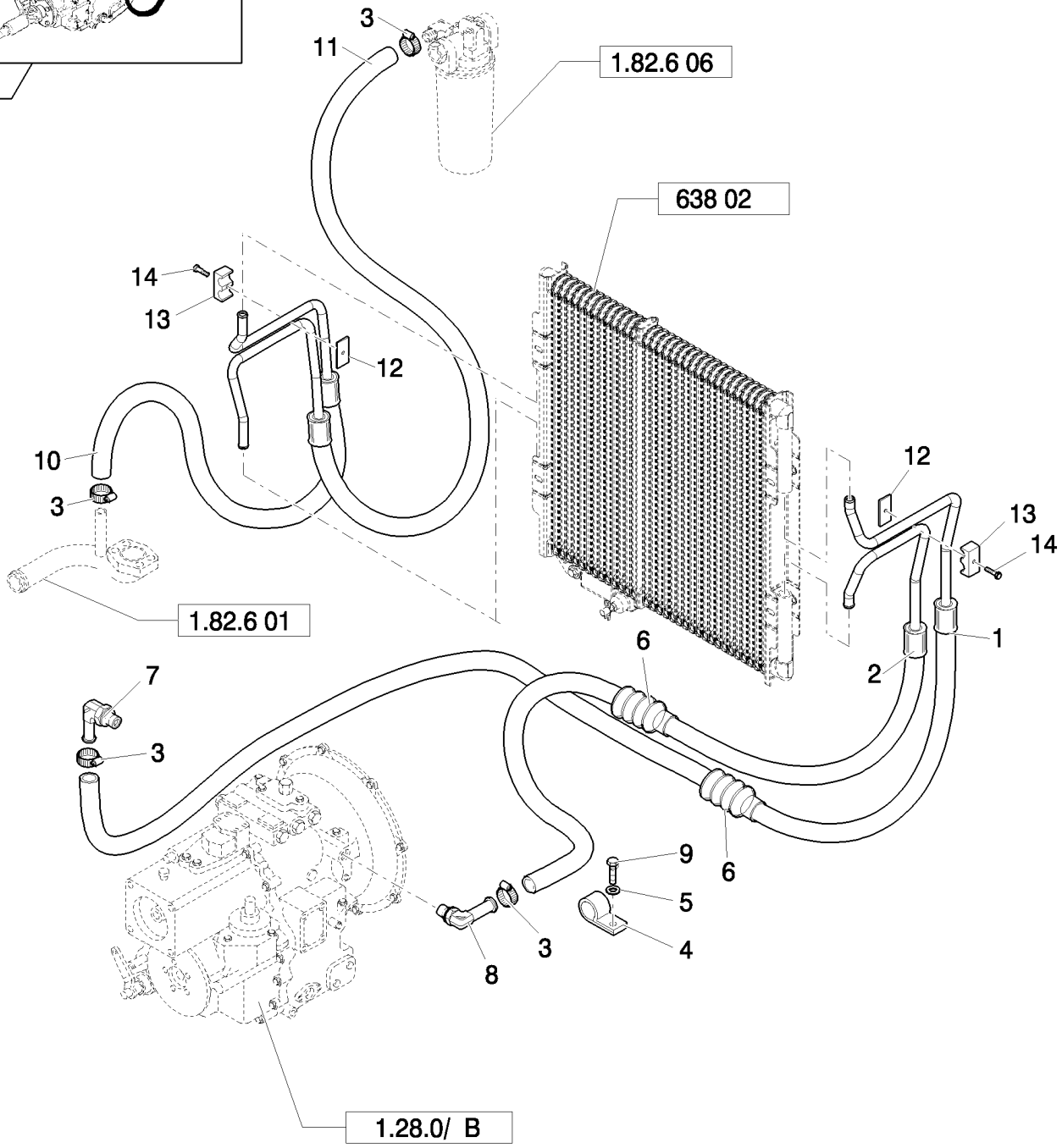

TUBOS DE REFRIGERACION ACEITE TRANSMISION (POWER-SHUTTLE)

REF	FN	PART NUMBER	YR/SN	QTY	DENOMINACION
1		87590894		1	CUELLO DE CARGA
2		87591241		1	CUELLO DE CARGA
3		87314076		4	ABRAZADERA
4		47048664		1	BORNE
5		47048964		1	ARANDELA
6		87345955		2	PROTECCION
7		87017744		1	CONEXION, 90º, 5/8" Hose x 1 5/16"-12 ORB Beaded
8		87017743		1	CONEXION, 45º, 5/8" Hose x 1 5/16"-12 ORB Beaded
9		47042364		1	TORNILLO
10		87592724		1	CUELLO DE CARGA
11		87592822		1	CUELLO DE CARGA
12		87612722		2	PIEZA DE SOPORTE
13		87589951		2	BORNE
14		14305321		2	TORNILLO, Hex Soc Hd, M6 x 20, 8.8

NOTAS

SECTION INDEX
Eje Delantero

1.40.0	01	PUENTE ANTERIOR (2WD)
1.40.0	02	CONJUNTO DE DIRECCIÓN Y CUBOS FRONTALES (2WD)

PUENTE ANTERIOR (2WD)

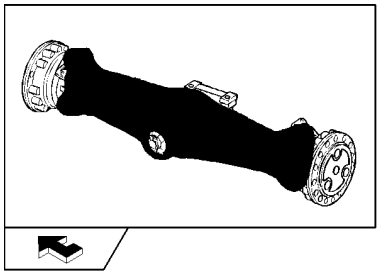

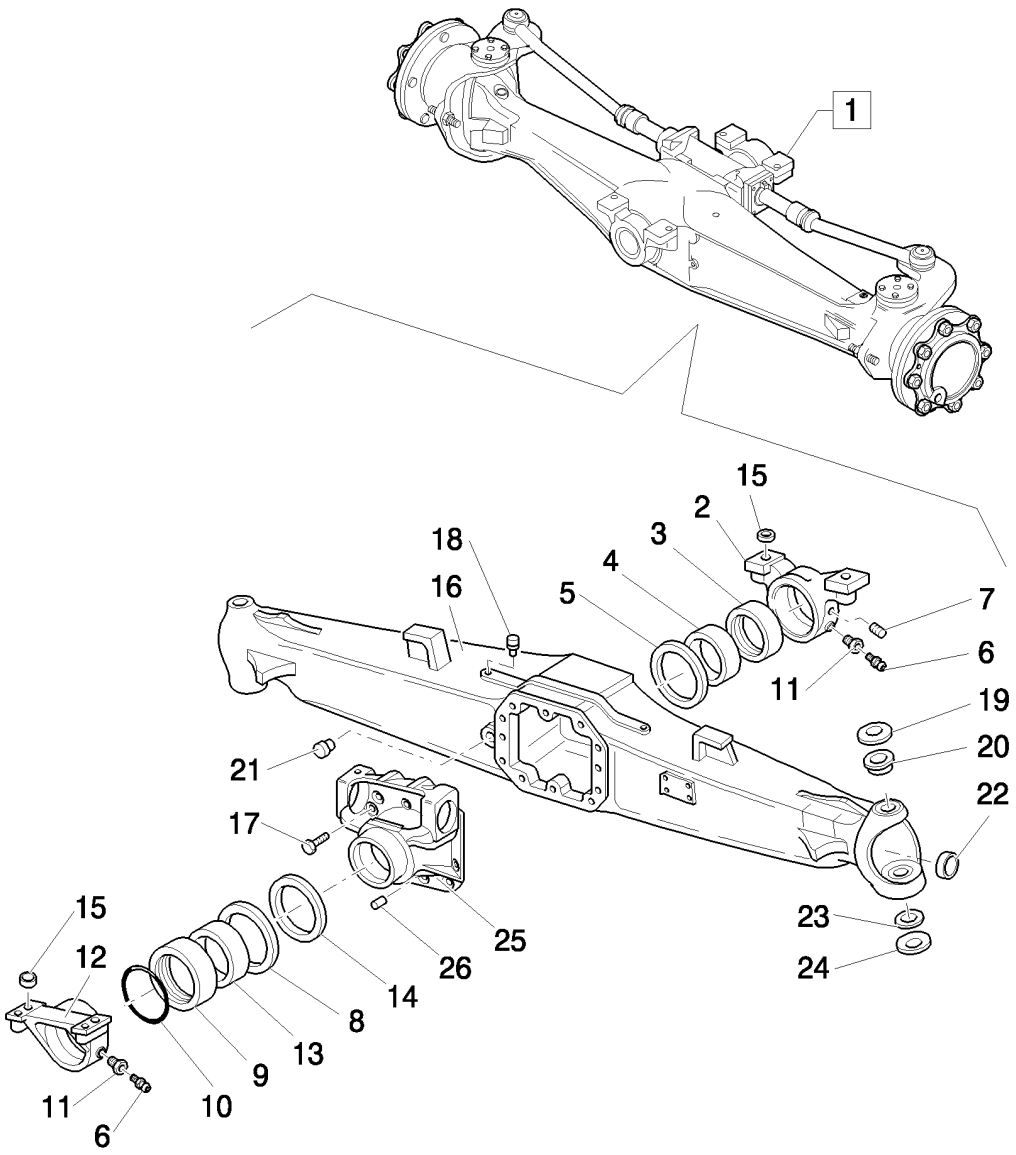

PUENTE ANTERIOR (2WD)

REF	FN	PART NUMBER	YR/SN	QTY	DENOMINACION
1		85824339		1	EJE DELANTERO, Assy
2		9967991		1	SOPORTE
3		9967992		1	CASQUILLO, 125x115x5
4		9967993		1	CASQUILLO, 115x105x44
5		9967994		1	ARANDELA DE TOPE
6		9967996		2	ENGRASADOR
7		85805973		1	TORNILLO, M8x1
8		9968006		1	ARANDELA DE TOPE
9		9968007		1	ANILLO, 135x125x5
10		9968008		1	JUNTA HERMETICA
11		9967995		2	TORNILLO
12		9968009		1	SOPORTE
13		9968010		1	CASQUILLO
14		85805706		1	TAPÓN, DIA=92x12
15		9967990		4	CASQUILLO, 30x21x16.5
16		85824347		1	CÁRTER DE PUENTE
17		9967769		10	TORNILLO, M12x1.75x33
18		85805703		1	TAPÓN, M10 x 1
19		9967673		2	ARANDELA
20		85824469		2	CASQUILLO
21		85805707		1	TAPÓN, M22 x 1.5
22		85805704		2	TAPÓN
23		9967678		2	PISTA DE RODAMIENTO
24		9967679		2	ARANDELA
25		85805705		1	SOPORTE
26		9967683		2	PASADOR TUBOLAR, 15x35

CONJUNTO DE DIRECCIÓN Y CUBOS FRONTALES (2WD)

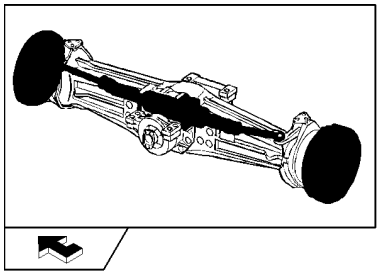

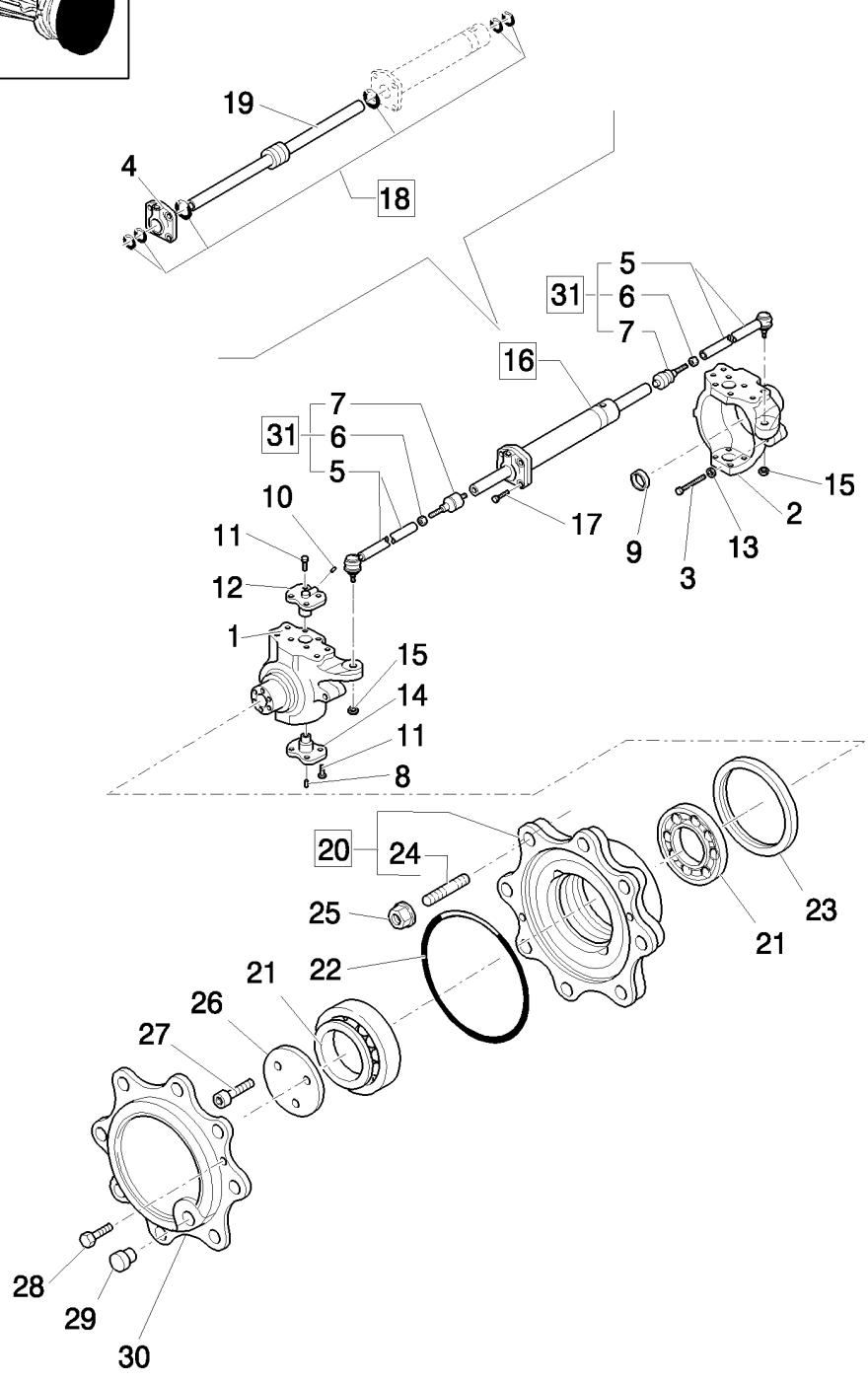

CONJUNTO DE DIRECCIÓN Y CUBOS FRONTALES (2WD)

REF	FN	PART NUMBER	YR/SN	QTY	DENOMINACION
1		87673991		1	CAVIDAD
2		87673972		1	JUNTA GIRATORIA
3		85805987		2	TORNILLO, M16x100
4		85805989		1	CULATA
5		85805977		2	TIRANTE
6		85805976		2	TUERCA, M18x1.5
7		85805975		2	JUNTA DE ROTULA
8		85805984		2	ENGRASADOR, M6x1
9		85824352		2	TAPÓN
10		9968021		2	ENGRASADOR, M6x2
11		85805979		16	TORNILLO, M12x1.75x30
12		85805980		2	PERNO
13		85805986		2	TUERCA, M16
14		85805983		2	PERNO
15		85805982		2	TUERCA, M18x1,5
16		85805978		1	CILINDRO DIRECTION, Assy
17		9968028		4	TORNILLO, M12x45
18		85805990		1	SERIE DE JUNTAS
19		85805992		1	VARILLA
20		85806003		2	EQUIPO, Assy
21		9967687		4	COJINETE
22		85805711		2	JUNTA HERMETICA
23		85827067		2	JUNTA DE ACEITE
24		9968070		16	PRISIONERO
25		9968071		16	TUERCA, Wheel, M18 x 1.5
26		85813054		2	ARANDELA DE TOPE
27		85806010		6	TORNILLO, M10x4.5
28		85805709		4	TORNILLO, M8x20
29		85805707		2	TAPÓN, M22 x 1.5
30		85805710		2	TAPADERA
31		85805974		2	TIRANTE, Assy

NOTAS

SECTION INDEX
Eje Posterior

1.42.0		SISTEMA HIDRÁULICO HIDRODIRECCIÓN
1.44.0/ B	01	EJE TRASERO (POWER-SHUTTLE) (CENTER PIVOT) - NA
1.44.0/ B	02	CONJUNTO DE BLOQUEO DIFERENCIAL Y ACTIVACIÓN (POWER SHUTTLE) (PIVOTE CENTRAL): NA
1.44.0/ B	03	CONJUNTO ENGRANAJE CÓNICO EJE POSTERIOR (POWER SHUTTLE) (PIVOTE CENTRAL): NA
1.44.1		MANDO DIFERENCIAL (POWER-SHUTTLE)
1.44.1/01		MANDO DIFERENCIAL (POWER-SHUTTLE) (CENTER PIVOT) - NA

SISTEMA HIDRÁULICO HIDRODIRECCIÓN

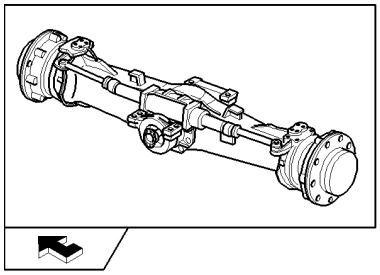

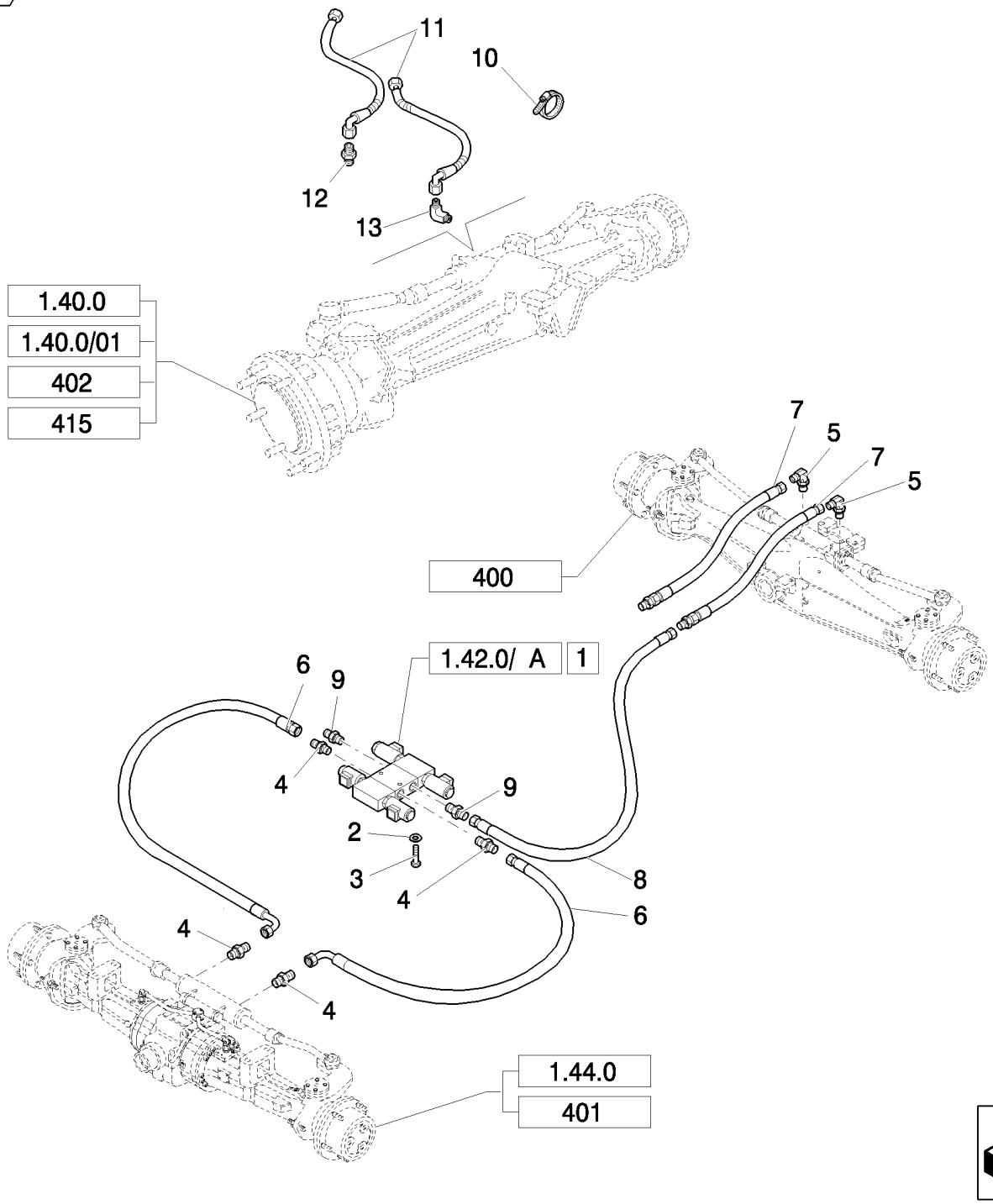

SISTEMA HIDRÁULICO HIDRODIRECCIÓN

REF	FN	PART NUMBER	YR/SN	QTY	DENOMINACION
1	1	85805232		1	VALVULA HIDRAULICA, Assy
2	1	11193879		2	ARANDELA ABANICO, Belleville, M8.4
3	1	16043421		2	TORNILLO, Hex, M8 x 20, 8.8
4		83963371		4	RACOR
5	1	85805318		2	CODO, 90º, 9/16"-18, 37º x 9/16"-18, O-Ring
6	1	85815615		2	HOSE, HYDRAULIC
7	1	85813377		2	MANGA FLEXIBLE
8	1	85812202		1	HOSE, HYDRAULIC
9	1	85815614		2	RACOR, 11/16"-16 ORS x 9/16"-18, O-Ring
10	2	85803332		1	CIERRA CABLES, M4.8 x 180
11	2	85812212		2	HOSE, HYDRAULIC, 1050mm lg
12	2	83985067		1	RACOR, Includes O-Rings 9617873 & 9992298
13	2	83983763		1	RACOR

(1) Only for B115B (EU) - B115B (NA)

(2) Only for B95B, B95BTC, B100B, B100BTC, B110B (NA) - B95B, B95BLR, B100B, B100BLR, B110B (EU)

1.44.0/ B	01	p1	04/08

EJE TRASERO (POWER-SHUTTLE) (CENTER PIVOT) - NA

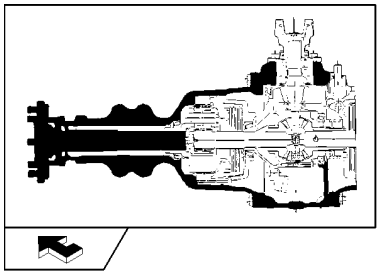

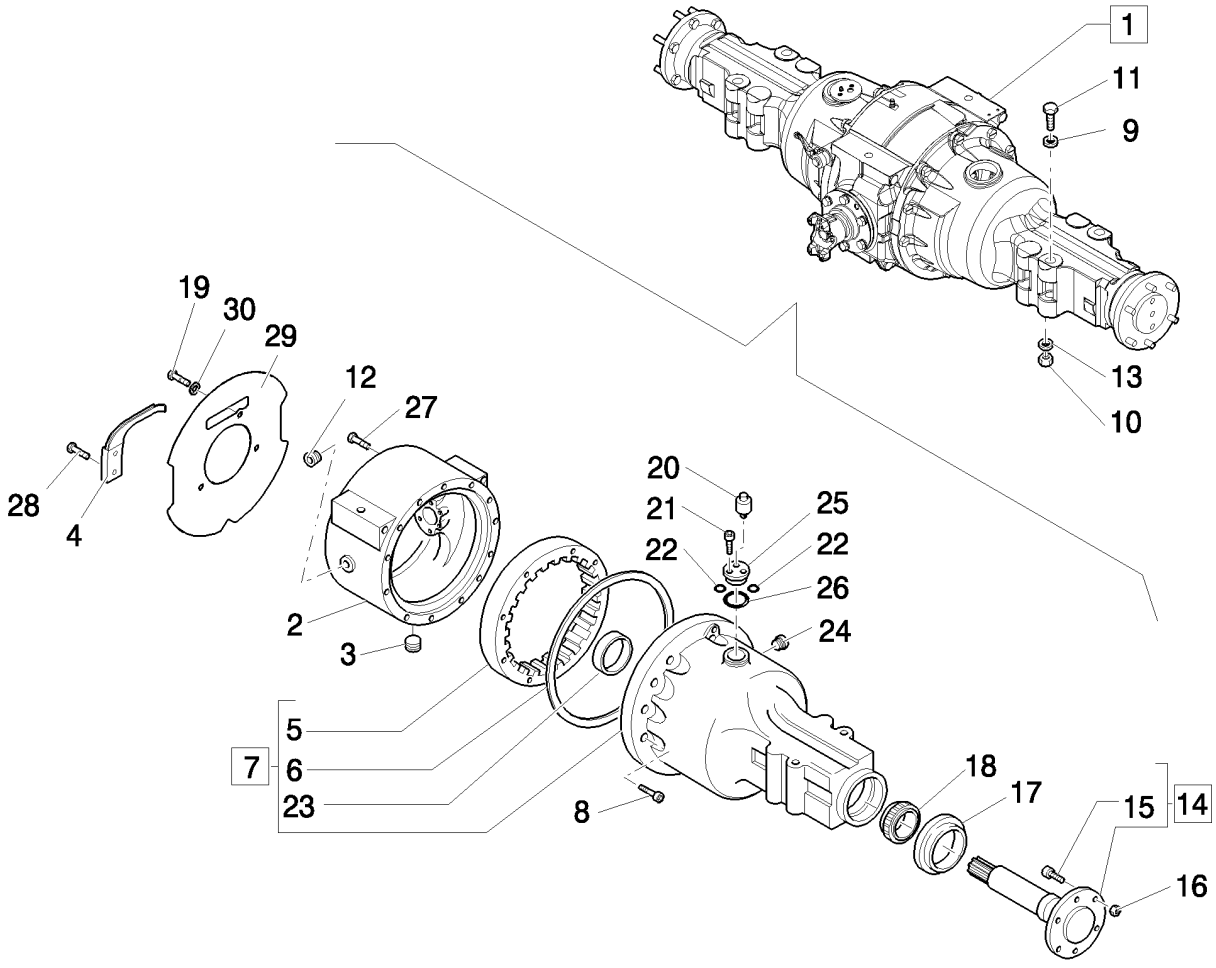

EJE TRASERO (POWER-SHUTTLE) (CENTER PIVOT) - NA

REF	FN	PART NUMBER	YR/SN	QTY	DENOMINACION
1		87542398		1	EJE, Assy, 4,62
2		83955462		1	CAVIDAD
3		83909107		1	TAPÓN
4		87314211		4	BLOQUE MOTOR, 9/16"-12-18 x 7.88"
5		86536749		2	PINON PLANETARIO
6		83417133		2	JUNTA HERMETICA
7		86552793		1	CÁRTER DE PUENTE, Assy, LH
7		86552794		1	CÁRTER DE PUENTE, Assy, RH
8		86505999		25	TORNILLO, Hex, 5/8"-11 x 2", G5
8		81809406		1	TORNILLO
9		14497331		4	ARANDELA
10		12575321		4	CONTRA TUERCA, M24 x 2, Cl 10
11		15999434		4	TORNILLO, M24 x 2 x 220
12		80263136		1	TAPON MAGNETICO
13		11200679		4	ARANDELA DE FRENO
14		86511646		2	EJE, Assy
15		83955490		16	TORNILLO, 3/4"-16 x 2.32"
16		87348000		16	TUERCA
17		81866390		2	JUNTA DE LABIOS
18		81818397		2	CONO
19		87313966		2	TORNILLO
20		81820047		2	TORNILLO DE PURGA
21		82895716		4	TORNILLO, 1/4-20X1,75
22		83925620		4	JUNTA HERMETICA, 90 Duro, .375" ID x .103" Thk
23		82959373		2	TAZA
24		81812912		1	TAPÓN, 1/2"-11 x 1/2"
25		81878514		2	COLECTOR
26		81845041		2	JUNTA HERMETICA
27		86597537		2	TORNILLO
28		89706729		2	TORNILLO
29		87334836		1	PLACA DE SUJECION
30		86632588		3	ARANDELA, 13/32" x 13/16" x .065", HDN

CONJUNTO DE BLOQUEO DIFERENCIAL Y ACTIVACIÓN (POWER SHUTTLE) (PIVOTE CENTRAL): NA

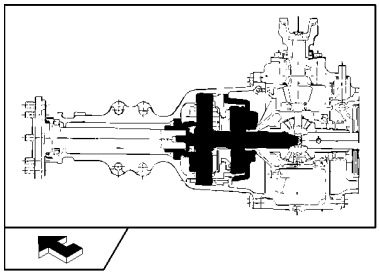

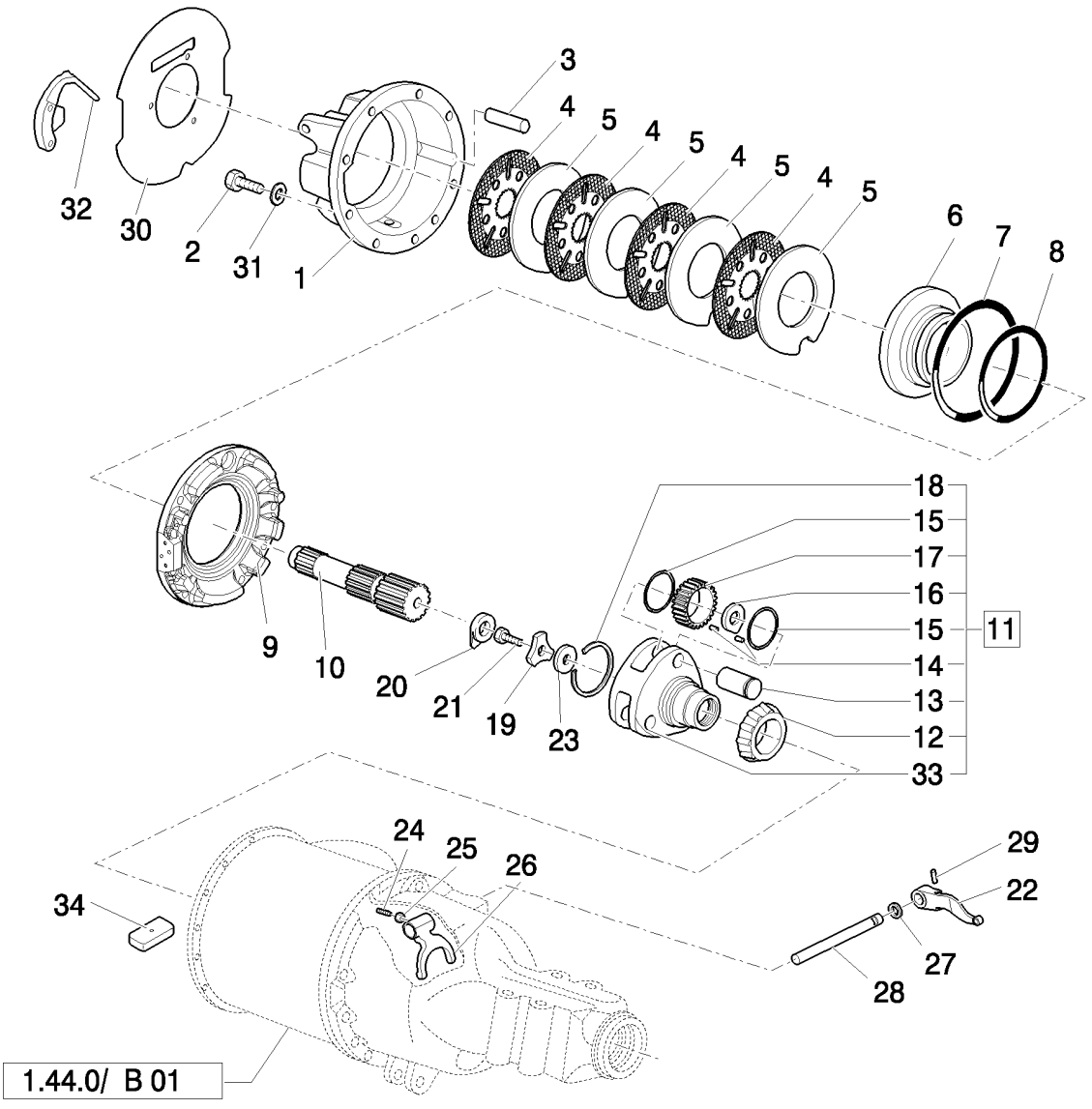

CONJUNTO DE BLOQUEO DIFERENCIAL Y ACTIVACIÓN (POWER SHUTTLE) (PIVOTE CENTRAL): NA

REF	FN	PART NUMBER	YR/SN	QTY	DENOMINACION
1		87304345		1	CAVIDAD, RH
1		87304344		1	CAVIDAD, LH
2		87313966		3	TORNILLO, Cap, HH, G8, 9/16"-12 x 5"
3		81802548		4	PERNO, G8, 9/16"-18
4		87308018		8	DISCO DE FRENO
5		87305713		8	DISCO DE FRENO
6		87542345		2	EMBOLO
7		87302760		2	JUNTA HERMETICA, -253, 5.359" ID x .139" Thk
8		87302761		2	JUNTA HERMETICA, -253, 7.484" ID x .139" Thk
9		87542348		1	CAVIDAD, RH
9		87542350		1	CAVIDAD, LH
10		81803334		2	PIÑÓN SOLAR
11		86584273		2	EJE DE SATELITES, Assy
12		81854753		2	CONO
13		81820849		6	EJE
14		81823610		AR	COJINETE
15		81803273		12	ARANDELA DE TOPE
16		81803275		6	SEPARADOR
17		86584272		6	PINON PLANETARIO
18		81820846		2	RETENEDOR
19		87326170		2	ARANDELA
20		83949811		2	PLACA DE FRENO
21		81846884		2	TORNILLO, HH, 7/8"-14 x 1-5/8"
22		81802560		1	PALANCA
23		81803491		1	SEPARADOR, .050/.049" Thk
23		81803502		AR	SEPARADOR, .054/.053" Thk, (1.372/1.346 mm)
23		81803503		AR	SEPARADOR, .058/.057" Thk, (1.473/1.448 mm)
23		81803504		AR	SEPARADOR, .062/.061" Thk, (1.575/1.549 mm)
23		81803505		AR	SEPARADOR, .066/.065" Thk, (1.676/1.651 mm)
23		81803506		AR	SEPARADOR, .070/.069" Thk, (1.778/1.753 mm)
23		81803507		AR	SEPARADOR, .074/.073" Thk, (1.880/1.854 mm)
23		81803508		AR	SEPARADOR, .078/.077" Thk, (1.981/1.956 mm)
23		81803509		AR	SEPARADOR, .082/.081" Thk, (2.083/2.057 mm)
23		81803510		AR	SEPARADOR, .086/.085" Thk, (2.184/2.159 mm)
23		81803511		AR	SEPARADOR, .090/.089" Thk, (2.286/2.261 mm)

CONJUNTO DE BLOQUEO DIFERENCIAL Y ACTIVACIÓN (POWER SHUTTLE) (PIVOTE CENTRAL): NA

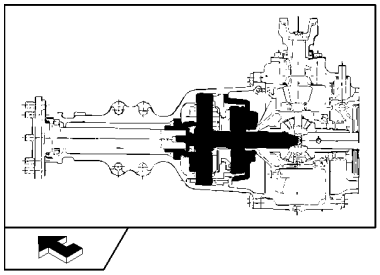

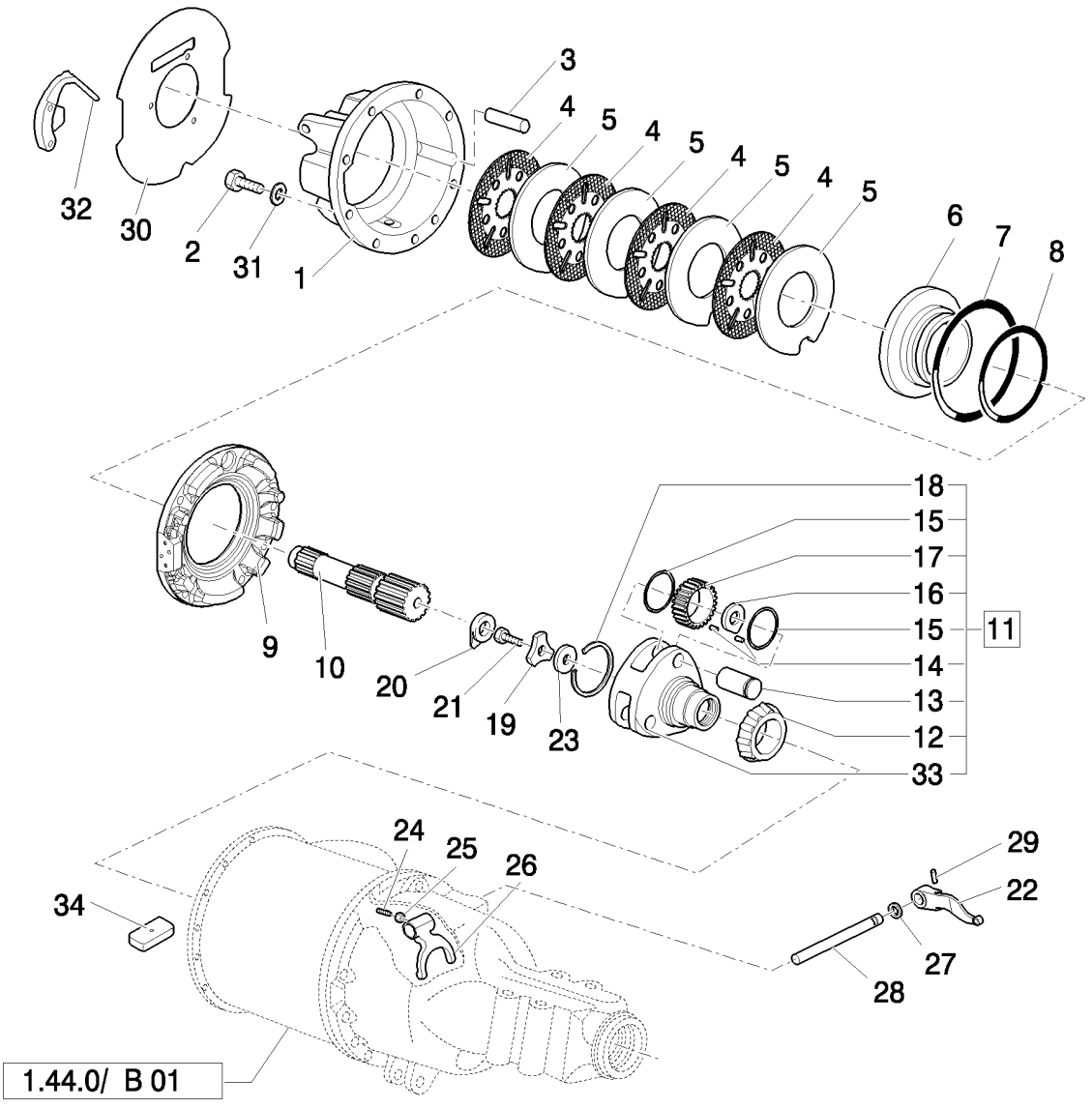

CONJUNTO DE BLOQUEO DIFERENCIAL Y ACTIVACIÓN (POWER SHUTTLE) (PIVOTE CENTRAL): NA

REF	FN	PART NUMBER	YR/SN	QTY	DENOMINACION
24		81804978		1	TORNILLO, Set, 3/8"-24 x 7/16"
25		80087308		1	TUERCA
26		81803336		1	HORQUETA
27		82979988		1	JUNTA HERMETICA
28		81803345		1	EJE
29		82958118		1	PASADOR TUBOLAR
30		87334836		1	PLACA DE SUJECION
31		86632588		1	ARANDELA, 13/32" x 13/16" x .065", HDN
32		87314211		1	BLOQUE MOTOR
33		86576091		1	EJE DE SATELITES
34		328955A1		2	

1.44.0/ B	03	p1	03/08

CONJUNTO ENGRANAJE CÓNICO EJE POSTERIOR (POWER SHUTTLE) (PIVOTE CENTRAL): NA

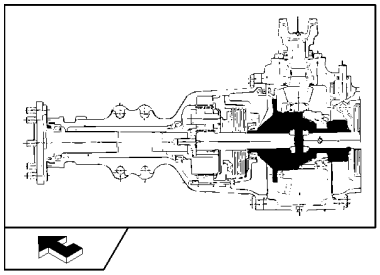

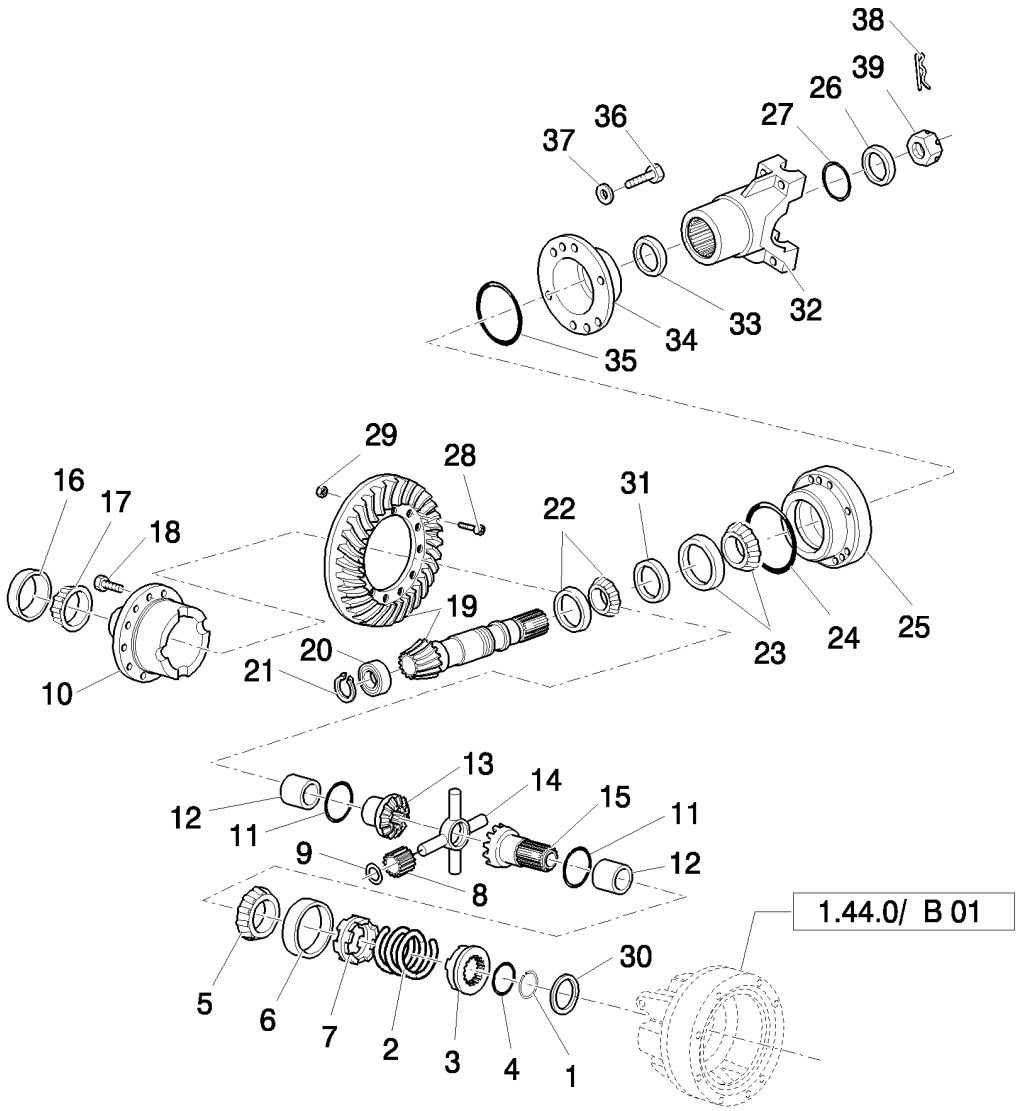

CONJUNTO ENGRANAJE CÓNICO EJE POSTERIOR (POWER SHUTTLE) (PIVOTE CENTRAL): NA

REF	FN	PART NUMBER	YR/SN	QTY	DENOMINACION
1		81803474		1	ANILLO DE FRENO
2		81800474		1	RESORTE, Differential Lock Coupler
3		81812261		1	ADAPTOR
4		81800475		1	ARANDELA, Differential Lock, Coupler Stop
5		81803413		1	CONO
6		80510892		1	PISTA DE RODAMIENTO, RH
7		81800472		1	ADAPTOR, Differential Lock Gear Case
8		81728114		4	PINON
9		83989915		4	ARANDELA DE FRENO
10		81816246		1	CAVIDAD
11		81803424		2	ARANDELA DE TOPE, RH
12		81800471		2	CASQUILLO, RH
13		81803445		1	ENGRANAJE
14		81876885		1	CRUCETA
15		81803451		1	ENGRANAJE, RH
16		82959375		1	PISTA DE RODAMIENTO
17		80510884		1	CONO
18		83994579		8	TORNILLO, Cap, HH, G8, Self-Locking, 1/2"-13 x 2-7/8"
19		83937179		1	JUEGO DE PIÑONES, 4,62
20		81824478		1	RODAMIENTO DE RODILLOS
21		81803542		1	ANILLO DE FRENO
22		82958961		1	EMPUJADOR DE RODILLO
23		81845711		1	CONO
24		81827354		1	JUNTA HERMETICA, 4.625" ID x .139" Thk
25		81847146		1	RETENEDOR
26		81834042		1	ARANDELA
27		81845714		1	ANILLO DE CIERRE
28		83957533		12	TORNILLO, HH, G8, 1/2"-20 x 1-5/8"
29		83417169		12	CONTRA TUERCA, 1/2"-20, GA, Lock, G2, 1/2"-20
30		81803515		AR	SUPLEMENTO, 0,965/1,016
30		81803516		AR	SUPLEMENTO, .046/.044" Thk, (1.118-1.168 mm)
30		81803517		AR	SUPLEMENTO, .052/.050" Thk, (1.321/1.270 mm)
30		81803519		AR	SUPLEMENTO, .064/.062" Thk, (1.626/1.575 mm)
30		81803520		AR	SUPLEMENTO, .070/.068" Thk, (1.778/1.727 mm)

CONJUNTO ENGRANAJE CÓNICO EJE POSTERIOR (POWER SHUTTLE) (PIVOTE CENTRAL): NA

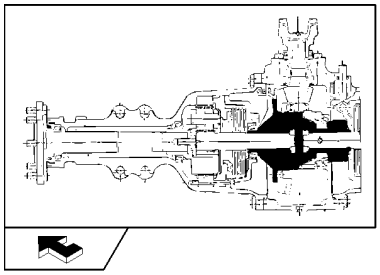

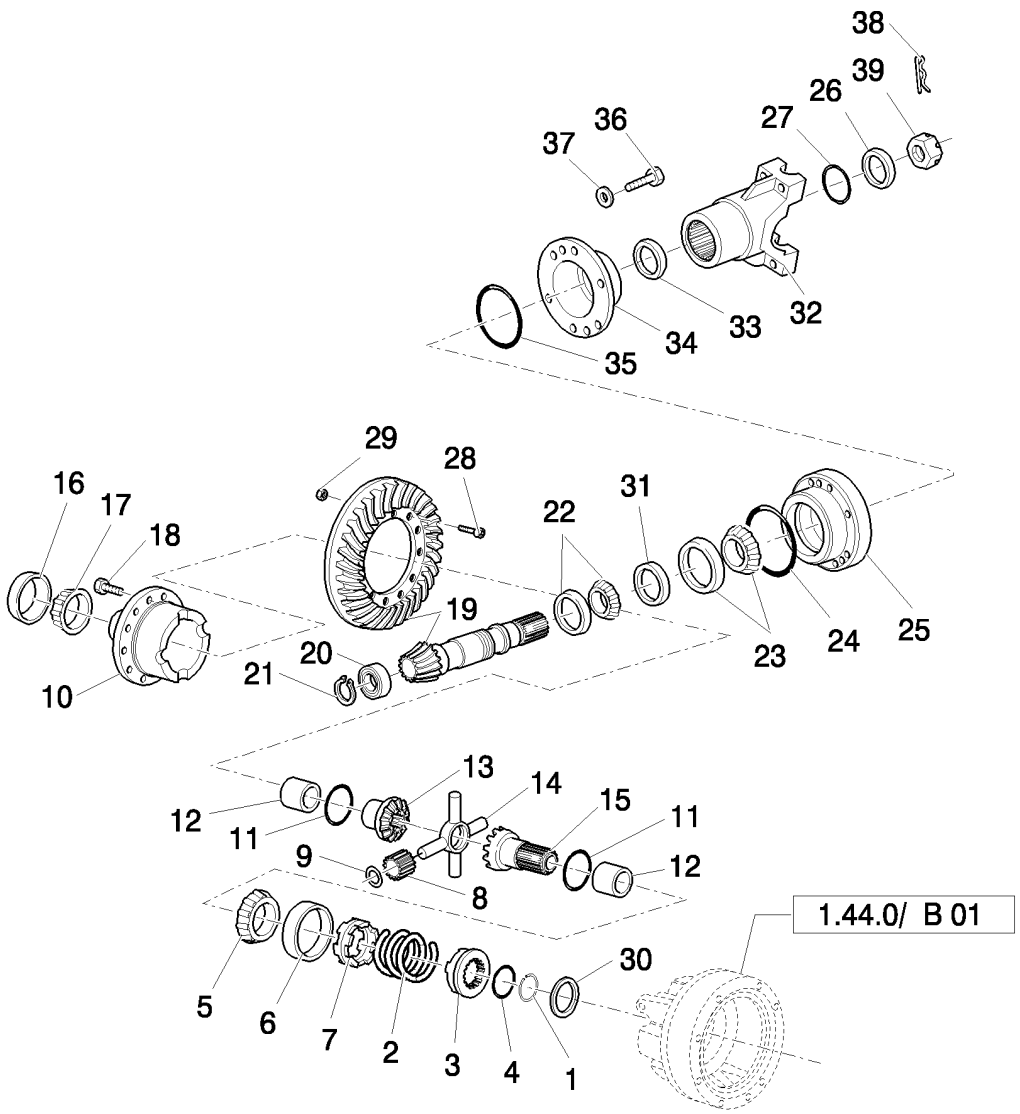

CONJUNTO ENGRANAJE CÓNICO EJE POSTERIOR (POWER SHUTTLE) (PIVOTE CENTRAL): NA

REF	FN	PART NUMBER	YR/SN	QTY	DENOMINACION
30		81803521		AR	SUPLEMENTO, .076/.074" Thk, (1.930/1.880 mm)
30		81803522		AR	SUPLEMENTO, .082/.080" Thk, (2.083/2.032 mm)
31		81847148		AR	SEPARADOR, 31,852/31,864
31		81847149		AR	SEPARADOR, 31,902/31,915
31		81847150		AR	SEPARADOR, 31,953/31,966
31		81847151		AR	SEPARADOR, 32,004/32,017
31		81847152		AR	SEPARADOR, 32,055/32,068
31		81847153		AR	SEPARADOR, 32,106/32,118
31		81847154		AR	SEPARADOR, 32,156/32,169
31		81847155		AR	SEPARADOR, 32,207/32,220
31		81847156		AR	SEPARADOR, 32,258/32,271
31		81847157		AR	SEPARADOR, 32,309/32,322
31		81847158		AR	SEPARADOR, 32,360/32,372
31		81847159		AR	SEPARADOR, 32,410/32,423
31		81847160		AR	SEPARADOR, 32,461/32,474
31		81847161		AR	SEPARADOR, 32,512/32,525
31		81847162		AR	SEPARADOR, 32,563/32,576
32		83949810		1	BRIDA
33		81834073		1	JUNTA DE ACEITE
34		83912246		1	RETENEDOR
35		81845713		1	ANILLO DE CIERRE
36		81821267		6	TORNILLO, 9/16-12X1,50
37		80280248		6	ARANDELA DE FRENO
38		83947107		1	PERNO, Cotter, 3/16" x 2.125"
39		83949812		1	TUERCA, Slotted, 1-1/4"-18

MANDO DIFERENCIAL (POWER-SHUTTLE)

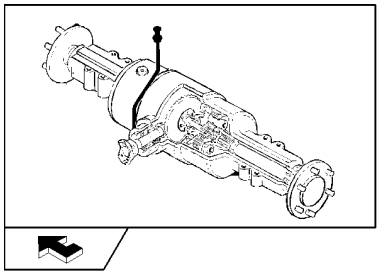

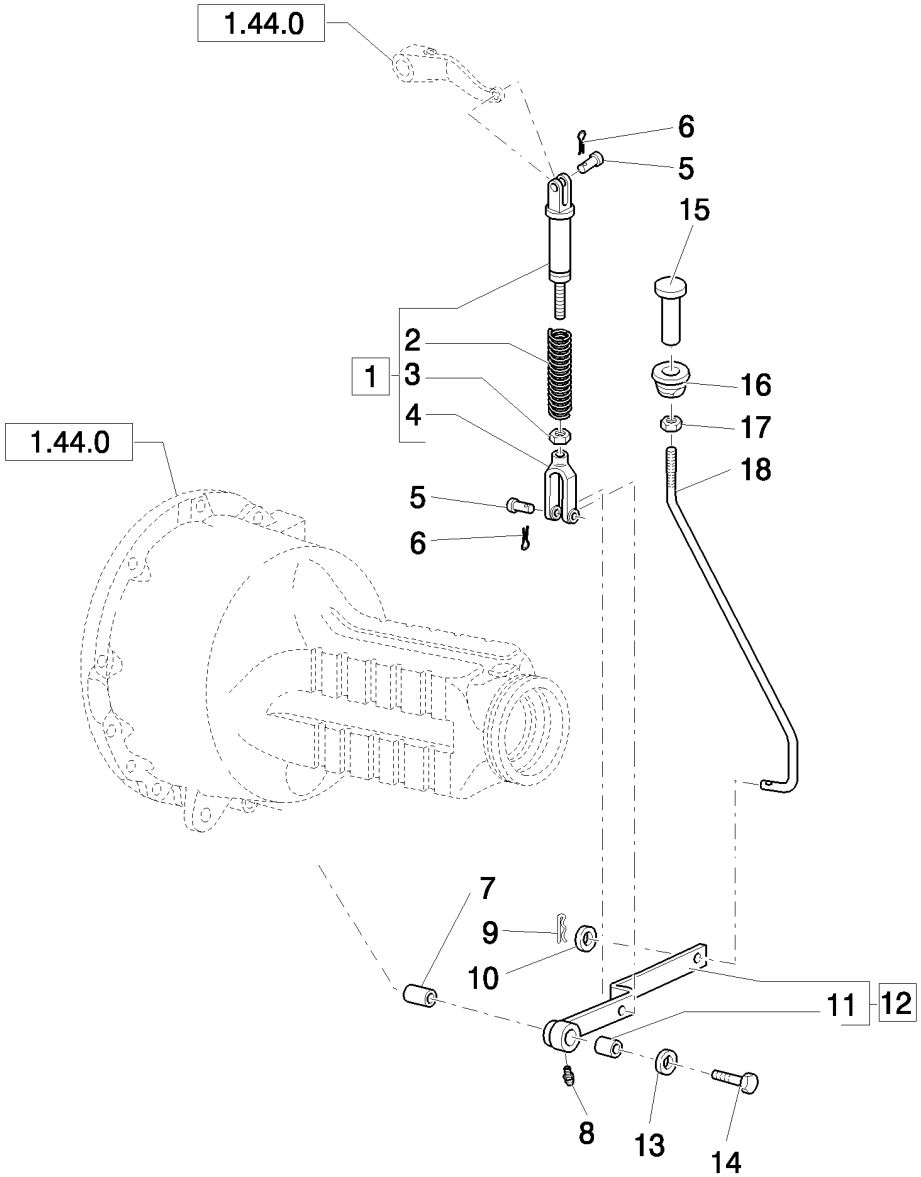

MANDO DIFERENCIAL (POWER-SHUTTLE)

REF	FN	PART NUMBER	YR/SN	QTY	DENOMINACION
1		83949838		1	VARILLA, Assy
2		81800486		1	RESORTE
3		81821691		1	TUERCA
4		83952932		1	HORQUILLA PEQUENA
5		83948308		2	PERNO
6		10802801		2	PASADOR ABIERTO, M2.5 x 25
7		81800488		1	SEPARADOR
8		13406911		1	ENGRASADOR, 1/4"-28
9		10766901		1	PASADOR ABIERTO, M3.2 x 25
10		12644921		1	ARANDELA, M14 x 32 x 4
11		81805231		1	CASQUILLO
12		85802513		1	PALANCA
13		14497121		1	ARANDELA, M20 x 37 x 3
14		83911686		1	TORNILLO
15		83971567		1	PEDAL
16		83904750		1	CASQUILLO
17		81822462		1	TUERCA, Jam, 1/2"-20, G2
18		85819013		1	TIRANTE

MANDO DIFERENCIAL (POWER-SHUTTLE) (CENTER PIVOT) - NA

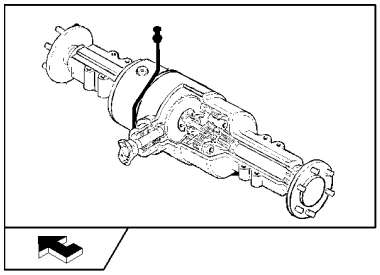

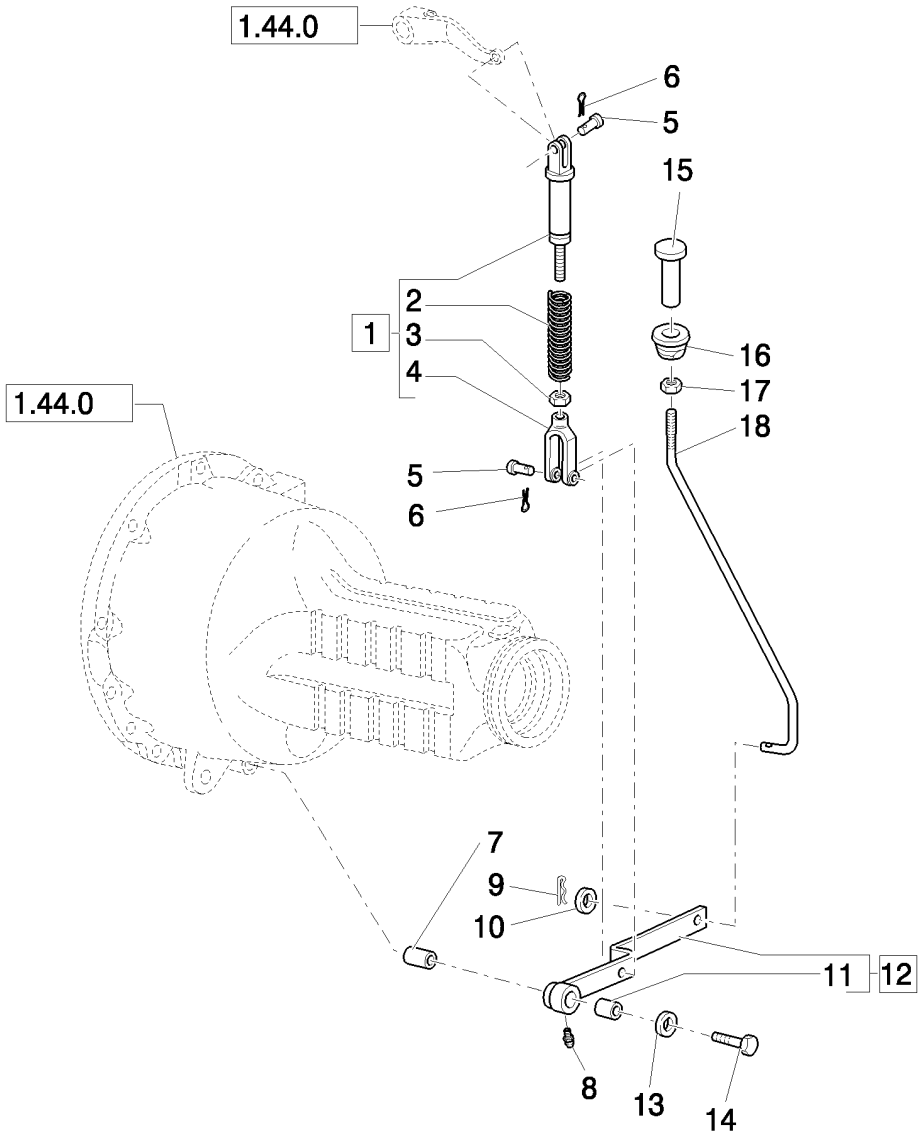

MANDO DIFERENCIAL (POWER-SHUTTLE) (CENTER PIVOT) - NA

REF	FN	PART NUMBER	YR/SN	QTY	DENOMINACION
1		83949838		1	VARILLA, Assy
2		81800486		1	RESORTE, Inside Rod Tube
3		81821691		1	TUERCA
4		83952932		1	HORQUILLA PEQUENA
5		83948308		2	PERNO
6		10802801		2	PASADOR ABIERTO, M2.5 x 25
7		81800488		1	SEPARADOR
8		13406911		1	ENGRASADOR, 1/4"-28
9		10766901		1	PASADOR ABIERTO, M3.2 x 25
10		12644921		1	ARANDELA, M14 x 32 x 4
11		81805231		1	CASQUILLO
12		85802513		1	PALANCA, Assy
13		14497121		1	ARANDELA, M20 x 37 x 3
14		83911686		1	TORNILLO
15		83971567		1	PEDAL
16		83904750		1	CASQUILLO
17		81822462		1	TUERCA, Jam, 1/2"-20, G2
18		85802515		1	VARILLA

NOTAS

1.75.2	01	CABLEADO POSTERIOR BASTIDOR Y CABLE DE TIERRA (POWER SHUTTLE): NA
1.75.2	02	INTERRUPTOR BLOQUEO BATERÍA Y CABLE DE TIERRA (POWER SHUTTLE) - NA
1.75.2	04	CABLEADO MOTOR (POWER SHUTTLE) - NA

1.75.2	01	p1	03/08

CABLEADO POSTERIOR BASTIDOR Y CABLE DE TIERRA (POWER SHUTTLE): NA

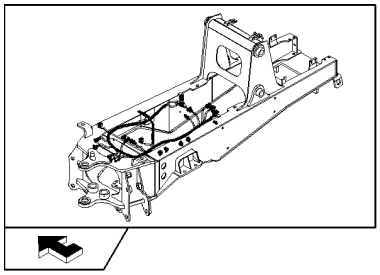

CABLEADO POSTERIOR BASTIDOR Y CABLE DE TIERRA (POWER SHUTTLE): NA

REF	FN	PART NUMBER	YR/SN	QTY	DENOMINACION
1	1	87544169		1	HAZ
1	2	87564242		1	HAZ
2		85805686		4	COLLAR
3		85805685		2	COLLAR
4		14560187		55	CIERRA CABLES, 178mm lg, L=203.2 mm
5		85803884		1	Cable De Masa
6		16043021		1	TORNILLO, Hex, M8 x 12, 8.8, Full Thd
7		11193879		1	ARANDELA ABANICO, Belleville, M8.4
8		14048211		1	CONTRA TUERCA, M8 x 1.25, Cl 8
9		12647121		1	ARANDELA, M8 x 20 x 3

(1) Only for B90B
(2) Only for B95B, B95BLR, B95BTC, B110B

INTERRUPTOR BLOQUEO BATERÍA Y CABLE DE TIERRA (POWER SHUTTLE) - NA

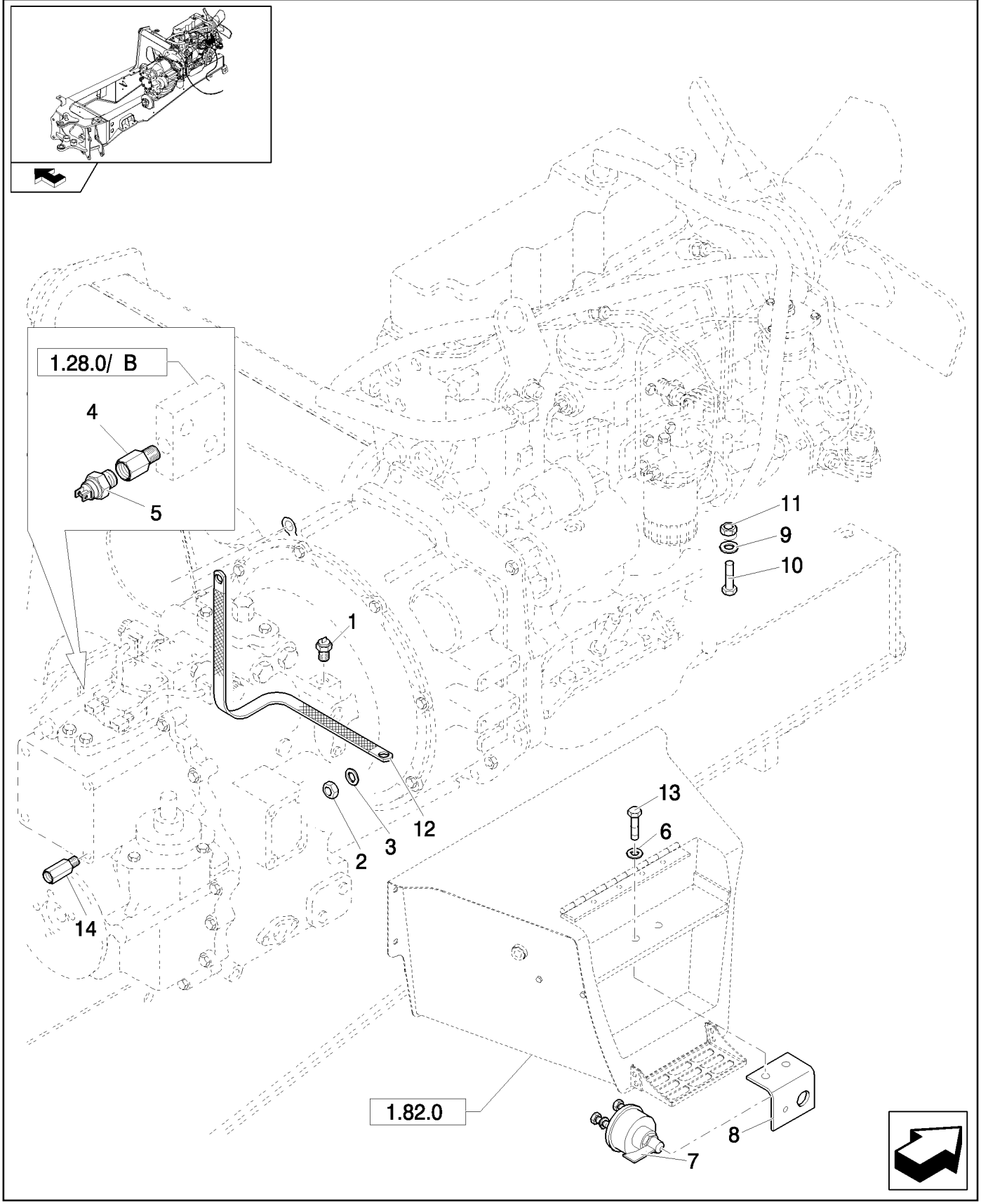

INTERRUPTOR BLOQUEO BATERÍA Y CABLE DE TIERRA (POWER SHUTTLE) - NA

REF	FN	PART NUMBER	YR/SN	QTY	DENOMINACION
1		47048895		2	SENSOR
2		16104111		1	CONTRA TUERCA, M8 x 1.25, Cl 8
3		12647121		1	ARANDELA, M8 x 20 x 3
4		85820156		1	ADAPTOR
5		85817672		1	INTERRUPTOR DE PRESION, Trans. Oil Pressure
6	1	11197879		2	ARANDELA ABANICO, Belleville, M8.4
7	1	87409316		1	CONTACTOR
8	1	87613641		1	SOPORTE
9		47048993		1	ARANDELA
10		47049010		1	TORNILLO, M10x20
11		47049031		1	TUERCA, M10
12	1	87427925		1	CABLE
13	1	16043421		2	TORNILLO, Hex, M8 x 20, 8.8
14		85826964		1	RACOR

(1) Only for B95B, B95BLR, B95BTC, B110B

1.75.2	04	p1	03/08

CABLEADO MOTOR (POWER SHUTTLE) - NA

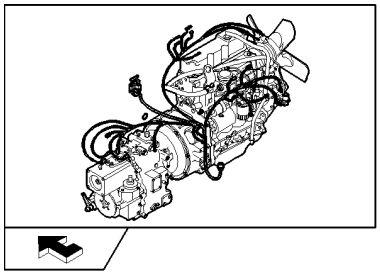

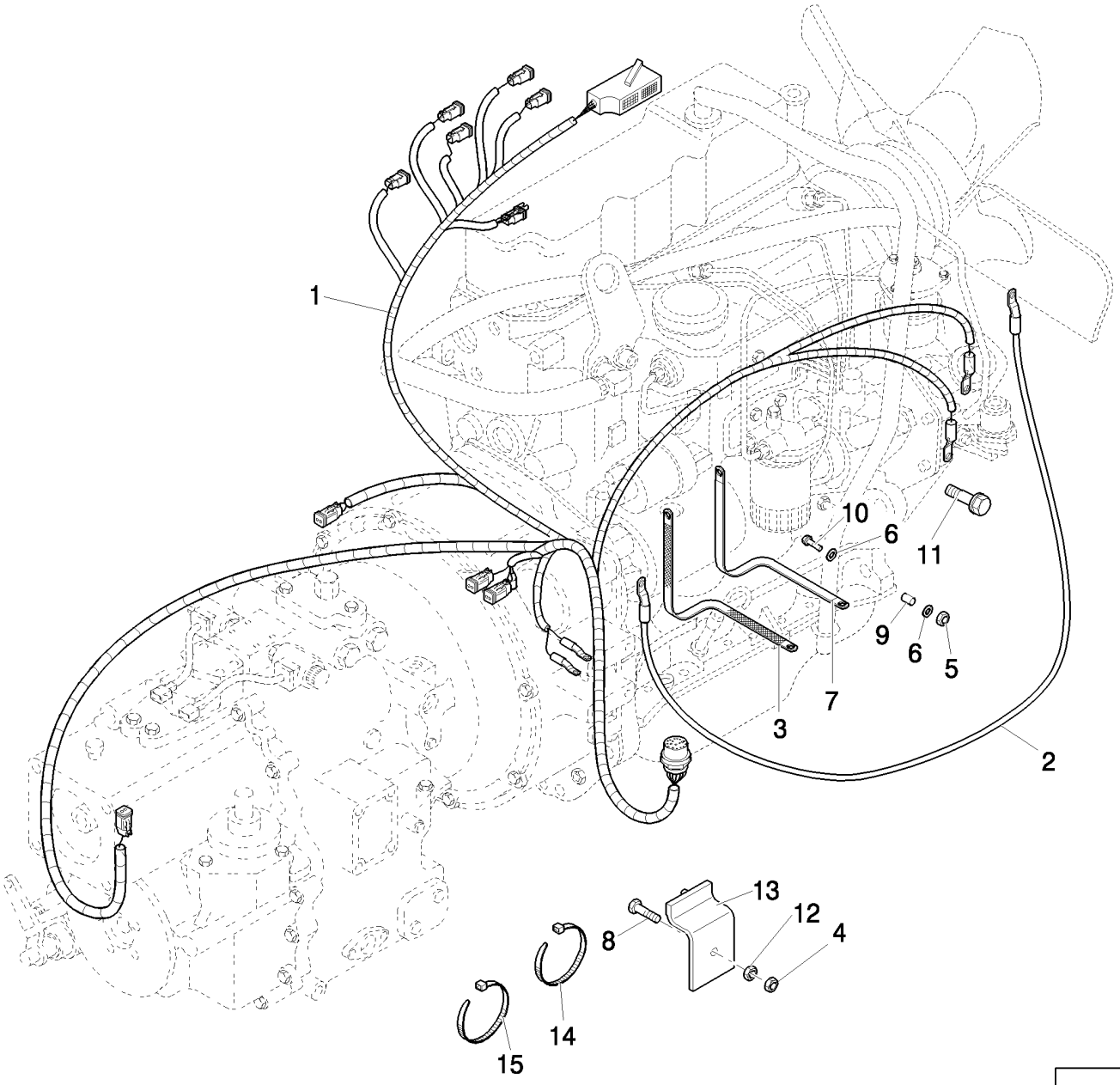

CABLEADO MOTOR (POWER SHUTTLE) - NA

REF	FN	PART NUMBER	YR/SN	QTY	DENOMINACION
1		87564241		1	HAZ, Includes 87431470 3 amp diode
2		87636291		1	CABLE
3		87407206		1	Cable De Masa
4		87565124		1	TUERCA
5		14048211		1	CONTRA TUERCA, M8 x 1.25, Cl 8
6		12638511		2	ARANDELA, M8 x 15 x 1.5, 8x15
7		87410268		1	Cable De Masa
8		16043824		1	TORNILLO, Hex, M8 x 30, 8.8, Full Thd
9		87415208		1	SEPARADOR
10		16044421		2	TORNILLO, Hex, M8 x 60, 8.8
11		47049186		1	TORNILLO, Hex, M10 x 30, 8.8
12		11701711		1	TUERCA, M10, Cl 8
13		87562089		1	TAPADERA
14		87567356		4	BORNE
15		87567355		4	BORNE

NOTAS

SECTION INDEX
Instalación Hidráulica

1.82.0		DEPOSITO DE ACEITE HIDRAULICA
1.82.3/01		BOMBA HIDRÁULICA (35+35-154L/MM)
1.82.6	01	TUBOS INSTALACIÓN HIDRÁULICA: ALIMENTACIÓN ACEITE BOMBA
1.82.6	02	TUBOS INSTALACIÓN HIDRÁULICA: ALIMENTACIÓN DISTRIBUIDOR
1.82.6	03	TUBOS INSTALACIÓN HIDRÁULICA: ENTRADA PRESIÓN
1.82.6	04	TUBOS INSTALACIÓN HIDRÁULICA: DESCARGA DISTRIBUIDOR
1.82.6	05	TUBOS INSTALACIÓN HIDRÁULICA: RETORNO AL DEPÓSITO
1.82.6	06	TUBOS INSTALACIÓN HIDRÁULICA: FILTRO ACEITE Y VÁLVULA DE CONTROL
1.82.6	07	TUBOS INSTALACIÓN HIDRÁULICA: CILINDROS DEL EQUIPO CARGADOR
1.82.6	10	TUBOS DEL CIRCUITO HIDRAULICO
1.82.6	11	TUBOS DEL CIRCUITO HIDRAULICO
1.82.6	12	TUBOS DE LA INSTALACIÓN HIDRÁULICA 4WS (PIVOTE CENTRAL): NA
1.82.6	13	TUBOS INSTALACIÓN HIDRÁULICA: CILINDRO DE ORIENTACIÓN
1.82.6	14	TUBOS INSTALACIÓN HIDRÁULICA: CILINDRO EQUIPO RETROEXCAVADOR
1.82.6	15	TUBOS INSTALACIÓN HIDRÁULICA: CILINDRO BRAZO DE ELEVACIÓN EQUIPO RETROEXCAVADOR
1.82.6	16	COLLARES DE LOS MANGUITOS DE LA PLACA DE ROTACIÓN (CENTER PIVOT)
1.82.6/01	01	ASPIRACIÓN BOMBA HIDRÁULICA ANTERIOR Y MANGUITOS SALIDA (CENTER PIVOT) - NA
1.82.6/01	02	ESTABILIZADOR BOMBA HIDRÁULICA POSTERIOR, MANGUITOS VÁLVULAS EXCAVADORA Y CARGADOR (CP) - NA
1.82.6/01	03	TUBOS DE LA INSTALACIÓN HIDRÁULICA (PIVOTE CENTRAL): NA: ENTRADA PRESIÓN
1.82.6/01	04	TUBERÍAS DEL COLECTOR DE RETORNO - NA
1.82.6/01	05	GRUPO FILTRO Y TUBERÍAS DEL COLECTOR DE RETORNO (CENTER PIVOT) - NA
1.82.6/01	06	TUBOS DE LA INSTALACIÓN HIDRÁULICA (PIVOTE CENTRAL): NA: RETORNO AL DEPÓSITO
1.82.6/01	07	TUBERÍAS DEL CILINDRO DE ELEVACIÓN DEL CARGADOR (CENTER PIVOT) - NA
1.82.6/01	08	TUBERÍAS DEL CILINDRO DEL CUCHARÓN CARGADOR (CENTER PIVOT) - NA
1.82.6/01	09	TUBERÍAS DEL CILINDRO DE OSCILACIÓN DE LA EXCAVADORA (CENTER PIVOT) - NA
1.82.6/01	10	TUBERÍAS DE LOS DISTRIBUIDORES DE LA EXCAVADORA (CENTER PIVOT) - NA
1.82.6/01	11	COLLARES DE LOS MANGUITOS DE LA PLACA DE ROTACIÓN (CENTER PIVOT) - NA
1.82.6/01	12	DISTRIBUIDOR DE LA EXCAVADORA (CENTER PIVOT) - NA
1.82.6/01	13	SECCIÓN DE LA VÁLVULA CUCHARA (CENTER PIVOT) - NA
1.82.6/01	14	SECCIÓN DE LA VÁLVULA CUCHARÓN, BARRA OSCIL. Y LANZA DE ENGANCHE (CENTER PIVOT) - NA

1.82.0		p1	05/08

DEPOSITO DE ACEITE HIDRAULICA

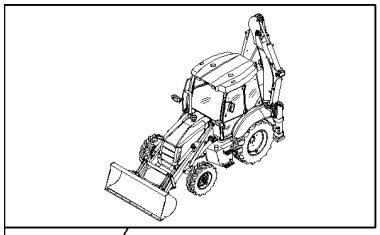

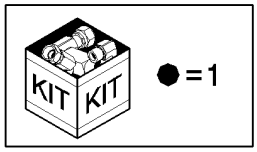

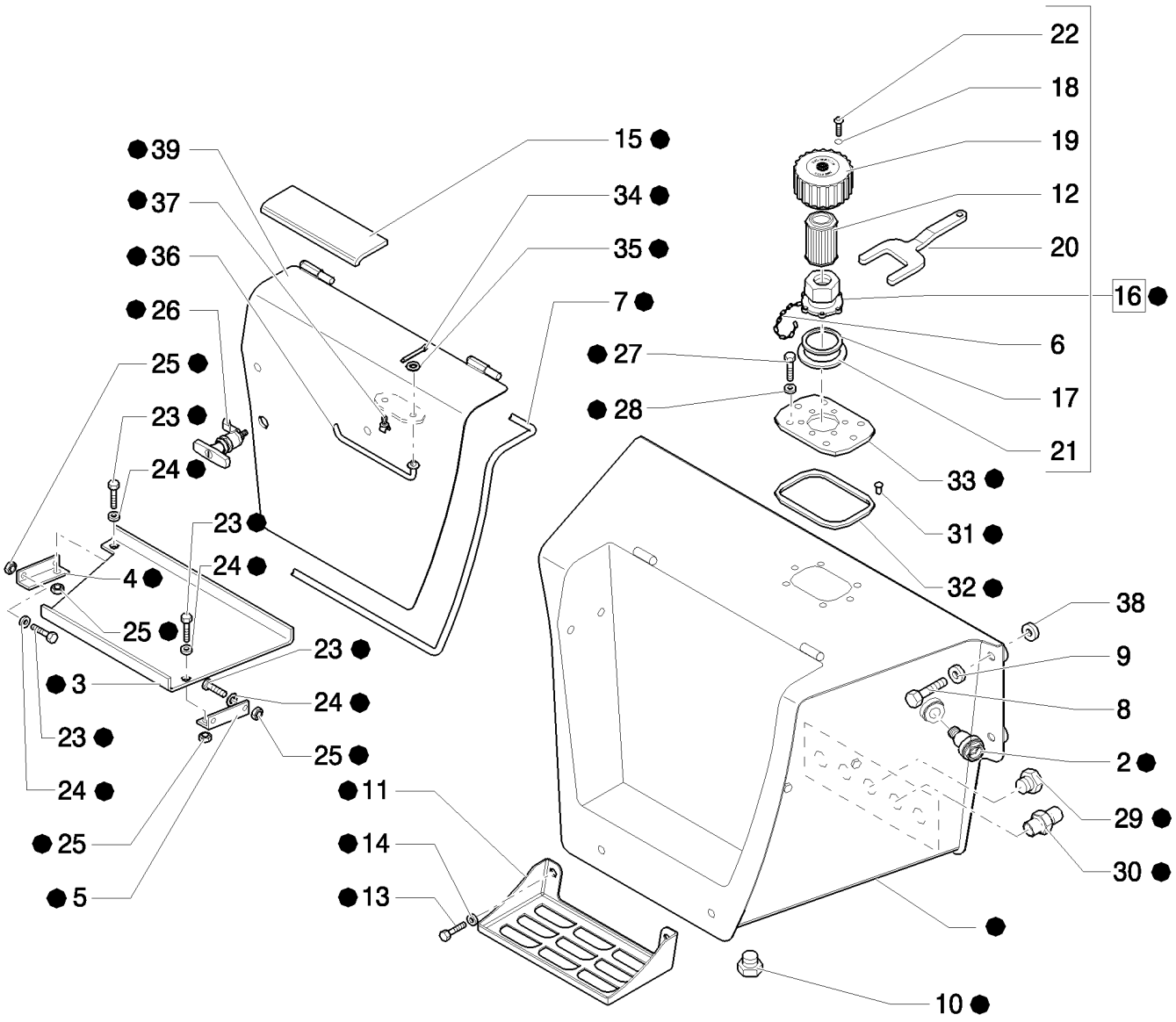

DEPOSITO DE ACEITE HIDRAULICA

REF	FN	PART NUMBER	YR/SN	QTY	DENOMINACION
1		87577246		1	DEPOSITO, Assy
2		85801249		1	INDICADOR DE NIVEL
3		87407463		1	BANDEJA
4		87407464		1	PIEZA DE SOPORTE
5		87407465		1	PIEZA DE SOPORTE
6		85813352		1	BRIDA
7		87417207		1	JUNTA DE CAUCHO
8		15540721		4	TORNILLO, Hex, M12 x 1.25 x 45, 8.8, Full Thd
9		47048976		4	ARANDELA
10		47050671		2	TAPÓN
11		85801218		2	CALCE DE REGLAJE
12		87407928		1	FILTRO
13		11112421		4	TORNILLO, Hex, M12 x 30, 8.8
14		47048973		4	ARANDELA
15		87702352		1	TIRA CONTRA DESLIZAM.
16		87403241		1	TAPA DE DEPOSITO, Assy
17		85813351		1	JUNTA HERMETICA
18		85813354		6	JUNTA HERMETICA
19		85813350		1	TAPÓN
20		85802580		1	LLAVE ESPECIAL
21		9969380		1	JUNTA HERMETICA
22		85813353		6	TORNILLO
23		47049185		4	TORNILLO
24		47048972		4	ARANDELA
25		47049041		4	TUERCA
26		87574189		1	MANECILLA
27		16043421		6	TORNILLO, Hex, M8 x 20, 8.8
28		47048962		6	ARANDELA
29		85825154		3	TAPÓN
30		85825155		1	RACOR
31		85826382		7	TUERCA
32		85826383		1	JUNTA HERMETICA
33		85828107		1	PLACA
34		47042074		1	PERNO
35		47044758		1	ARANDELA

1.82.0		p2	05/08

DEPOSITO DE ACEITE HIDRAULICA

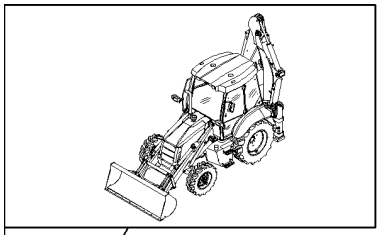

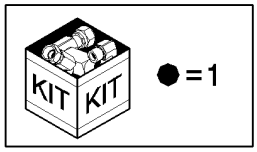

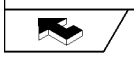

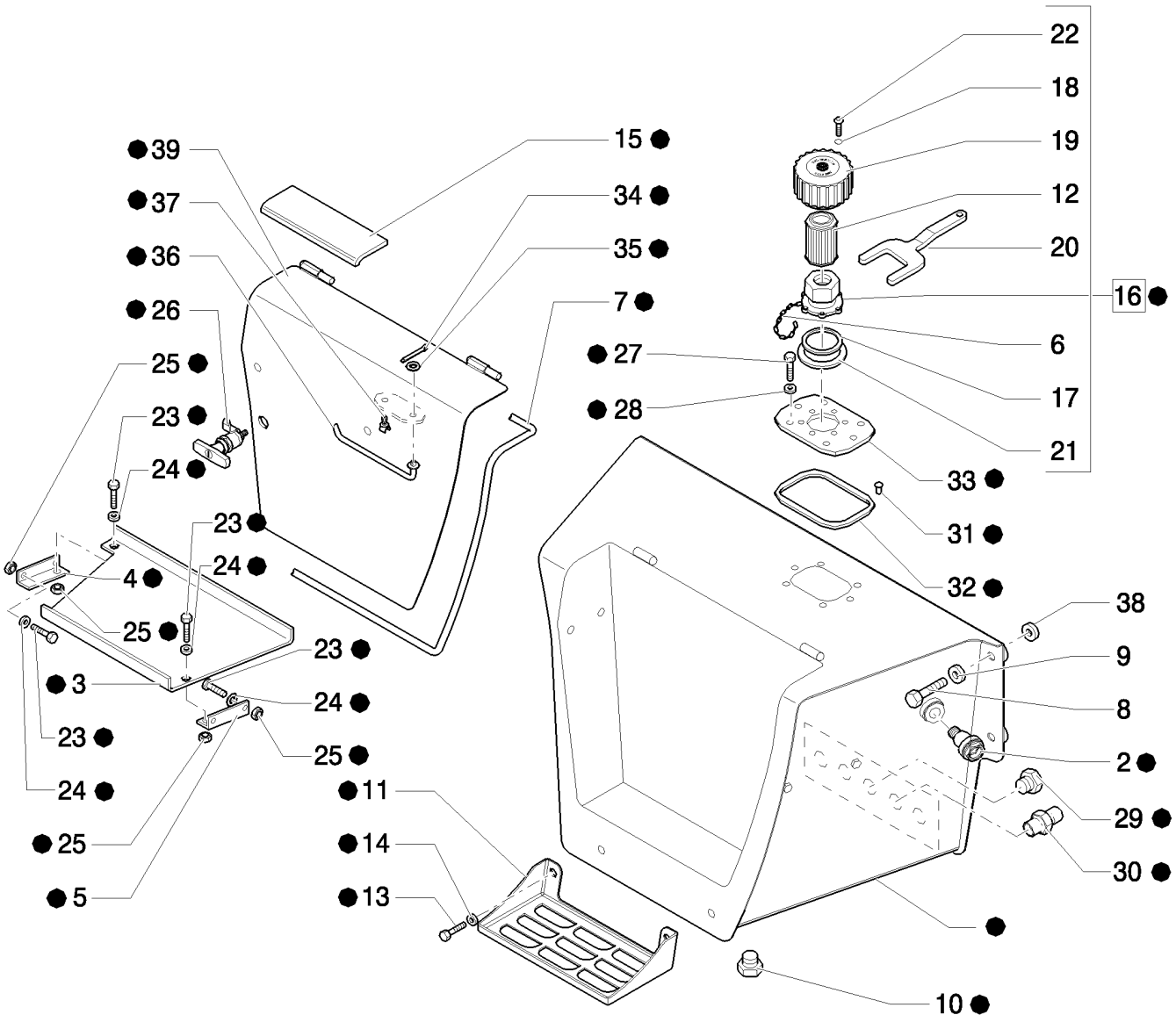



DEPOSITO DE ACEITE HIDRAULICA

REF	FN	PART NUMBER	YR/SN	QTY	DENOMINACION
36		85828017		1	PALANCA
37		72273491		1	BORNE
38		87353741		4	SEPARADOR
39		87406299		1	TAPADERA

BOMBA HIDRÁULICA (35+35-154L/MM)

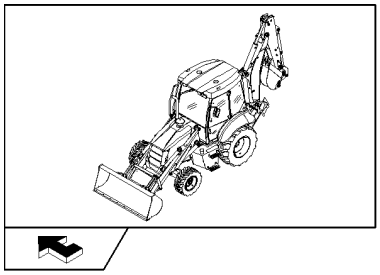

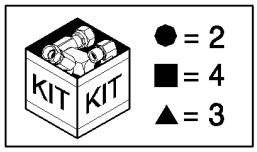

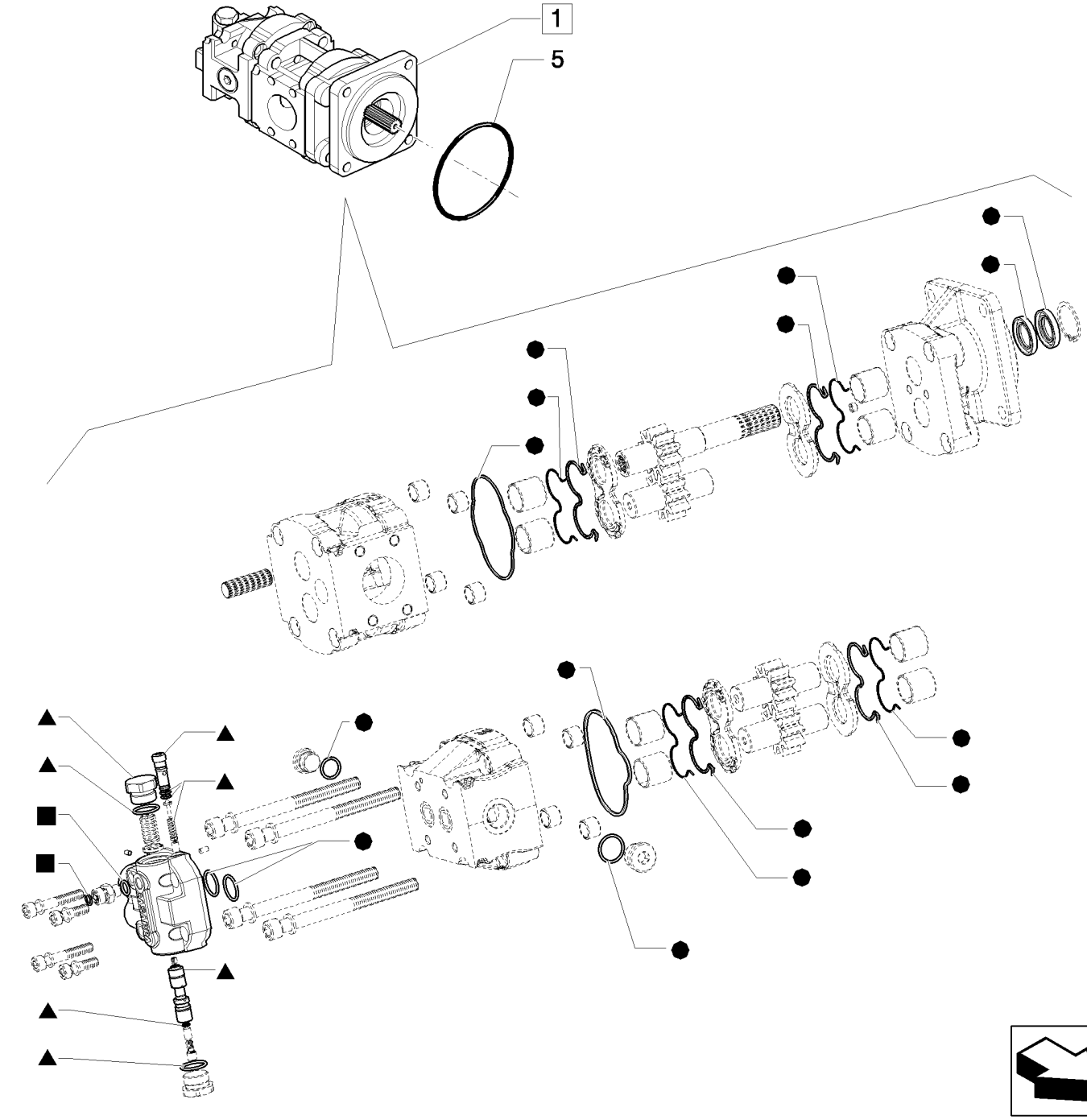

BOMBA HIDRÁULICA (35+35-154L/MM)

REF	FN	PART NUMBER	YR/SN	QTY	DENOMINACION
1		87362336		1	BOMBA HIDRÁULICA, Assy
2		85813244		1	SERIE DE JUNTAS, Seal
3		87530241		1	TAPADERA
4		85824196		1	RACOR
5		14466880		1	JUNTA HERMETICA, -250, 70 Duro, 4.984" ID x .139" Thk

1.82.6	01	p1	04/08

TUBOS INSTALACIÓN HIDRÁULICA: ALIMENTACIÓN ACEITE BOMBA

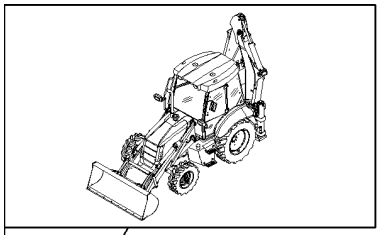

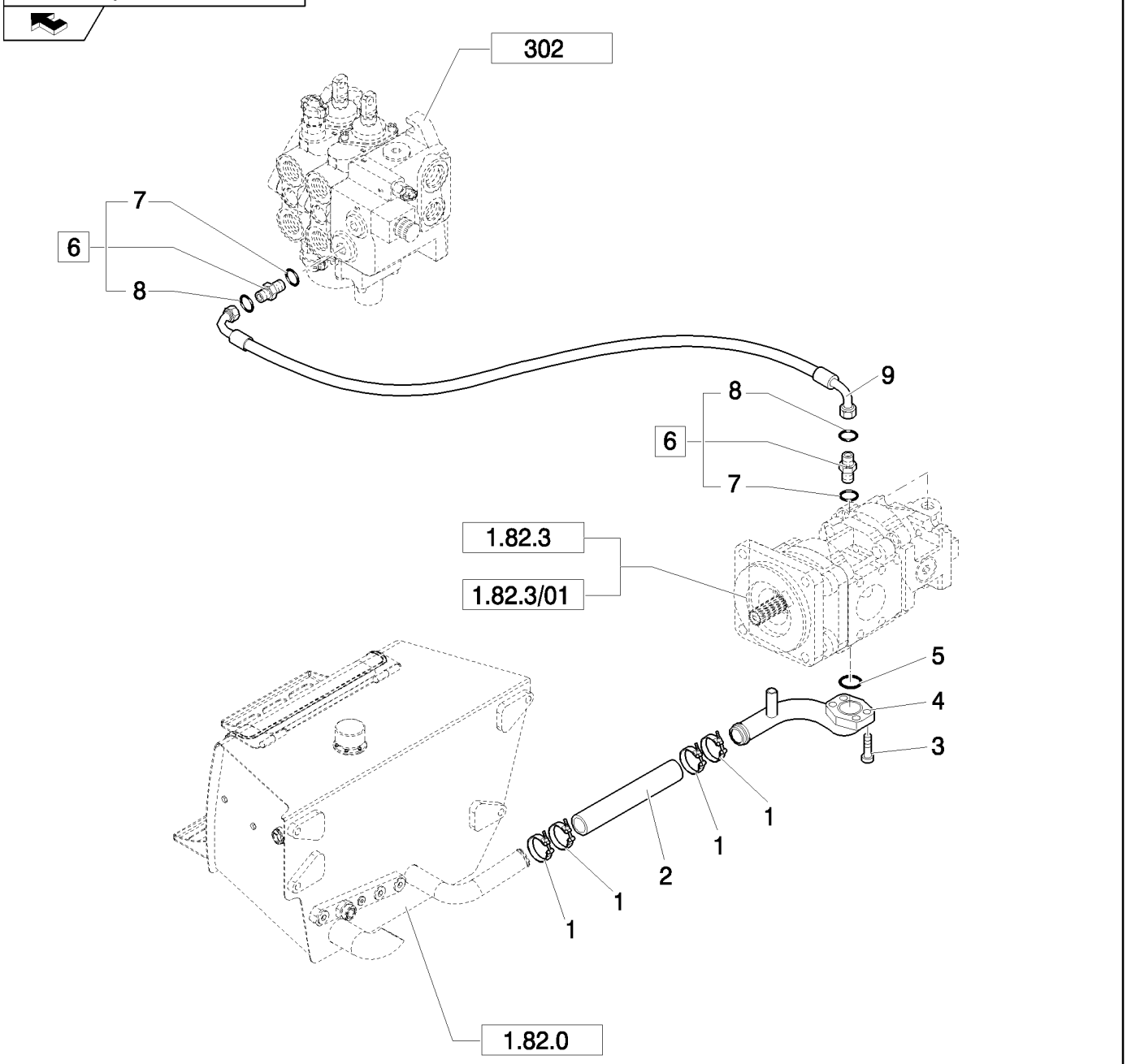

TUBOS INSTALACIÓN HIDRÁULICA: ALIMENTACIÓN ACEITE BOMBA

REF	FN	PART NUMBER	YR/SN	QTY	DENOMINACION
1		87676333		4	BORNE
2		85811870		1	MANGA
3		14422021		3	TORNILLO, Hex Soc Hd, M12 x 30, 8.8
4		85827041		1	TUBO
5		14464680		1	JUNTA HERMETICA, -228, 70 Duro, 2.234" ID x .139" Thk
6		83962538		2	RACOR, Assy
7		80167266		2	JUNTA HERMETICA
8		89991976		2	JUNTA HERMETICA
9		87614753		1	MANGA FLEXIBLE

Mechanical Version / Pilot Version

B95B

TUBOS INSTALACIÓN HIDRÁULICA: ALIMENTACIÓN DISTRIBUIDOR

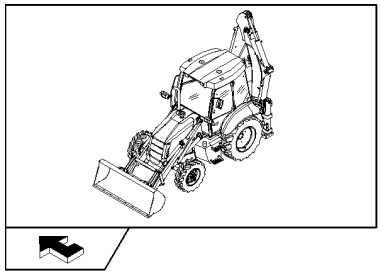

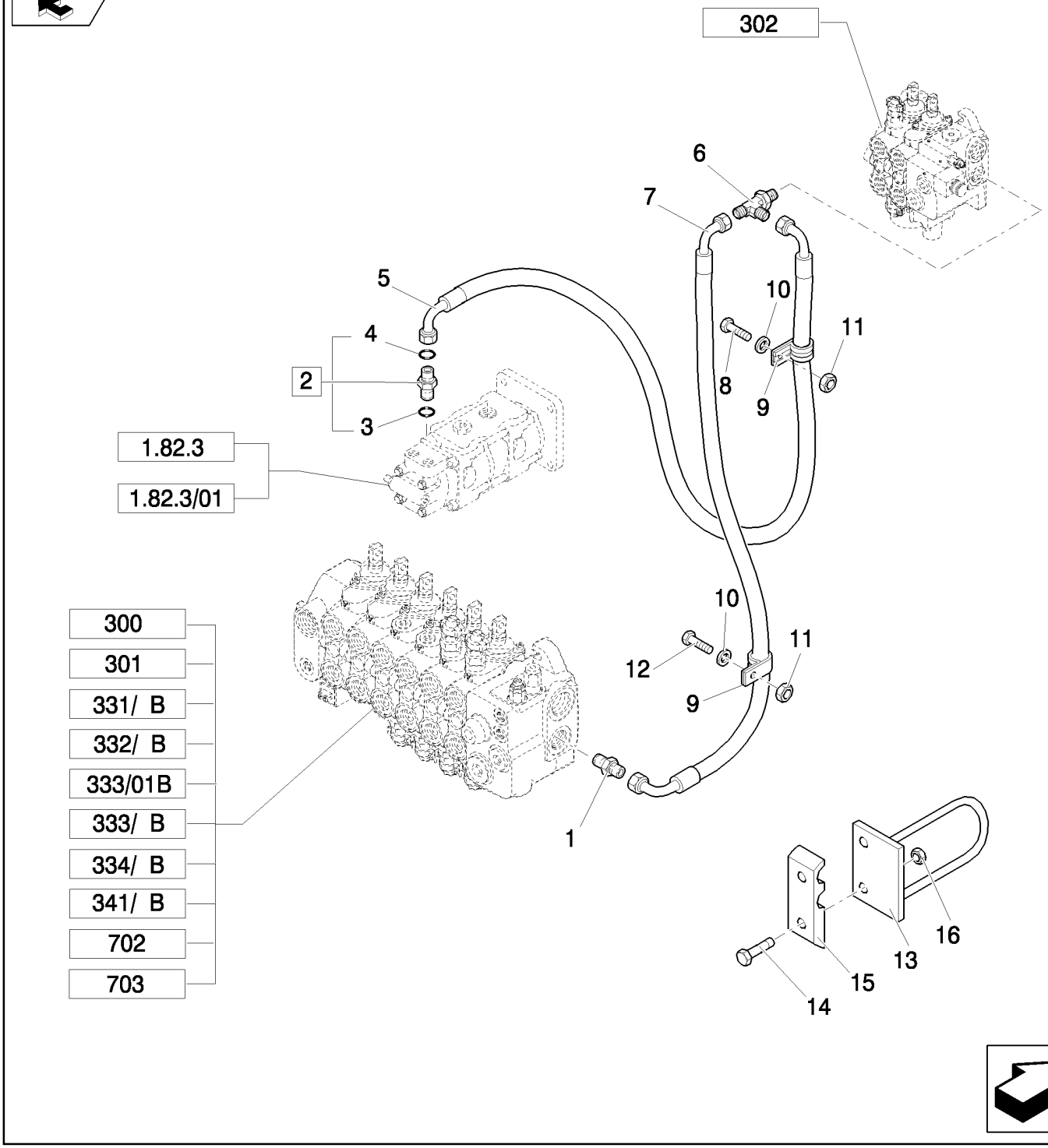

TUBOS INSTALACIÓN HIDRÁULICA: ALIMENTACIÓN DISTRIBUIDOR

REF	FN	PART NUMBER	YR/SN	QTY	DENOMINACION
1		85803486		1	RACOR
2		83963000		1	RACOR, Assy
3		80167269		1	JUNTA HERMETICA
4		83901443		1	JUNTA HERMETICA
5		87614751		1	MANGA FLEXIBLE
6	1	85805838		1	RACOR DE TRES BOCAS
6	2	85826093		1	RACOR-T
7		87516888		1	MANGA FLEXIBLE, L=MM.1080
8		16044021		2	TORNILLO, Hex, M8 x 40, 8.8
9		85802890		2	BORNE
10		11193979		2	ARANDELA ABANICO, Belleville, M8.4
11		14048211		2	CONTRA TUERCA, M8 x 1.25, Cl 8
12		47049161		1	TORNILLO
13	3	85802214		2	SOPORTE
14	3	16044221		2	TORNILLO, Hex, M8 x 50, 8.8
15	3	87631462		2	PIEZA DE SOPORTE
16	3	16104111		2	CONTRA TUERCA, M8 x 1.25, Cl 8

(1) Only for Mechanical Version
(2) Only for Pilot Version
(3) Only for NA Version - B115B EU Pilot Center Version

1.82.6	03	p1	04/08

TUBOS INSTALACIÓN HIDRÁULICA: ENTRADA PRESIÓN

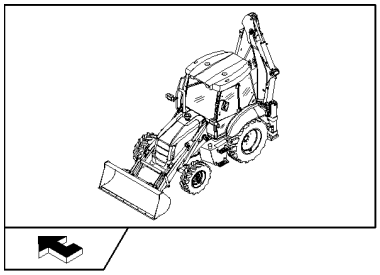

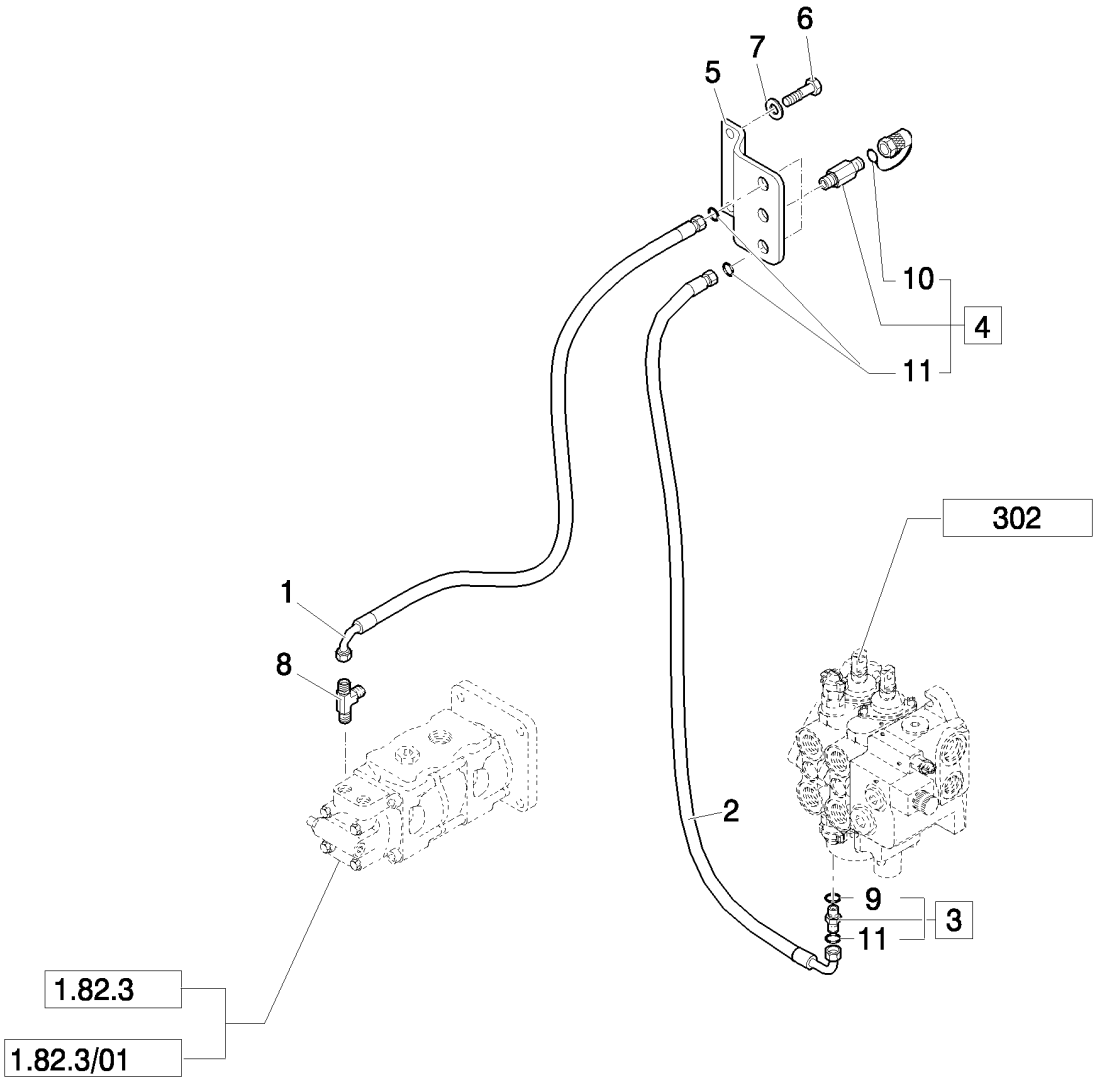

TUBOS INSTALACIÓN HIDRÁULICA: ENTRADA PRESIÓN

REF	FN	PART NUMBER	YR/SN	QTY	DENOMINACION
1		85812171		1	MANGA FLEXIBLE, 1450mm lg
2		85812173		1	MANGA FLEXIBLE
3		83963371		1	RACOR, Assy
4		85817226		2	EMPALME RAPIDO, Assy
5		87569583		1	PLACA
6		14441524		2	TORNILLO
7		11193879		2	ARANDELA ABANICO, Belleville, M8.4
8		85805502		1	RACOR-T
9		89617873		1	JUNTA HERMETICA
10		9968791		2	TAPÓN
11		81844851		4	JUNTA HERMETICA, 90 Duro, .375" ID x .070" Thk

Mechanical Version / Pilot Version

B95B

1.82.6	04	p1	04/08

TUBOS INSTALACIÓN HIDRÁULICA: DESCARGA DISTRIBUIDOR

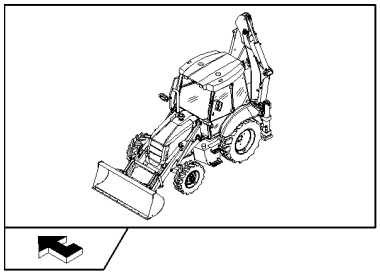

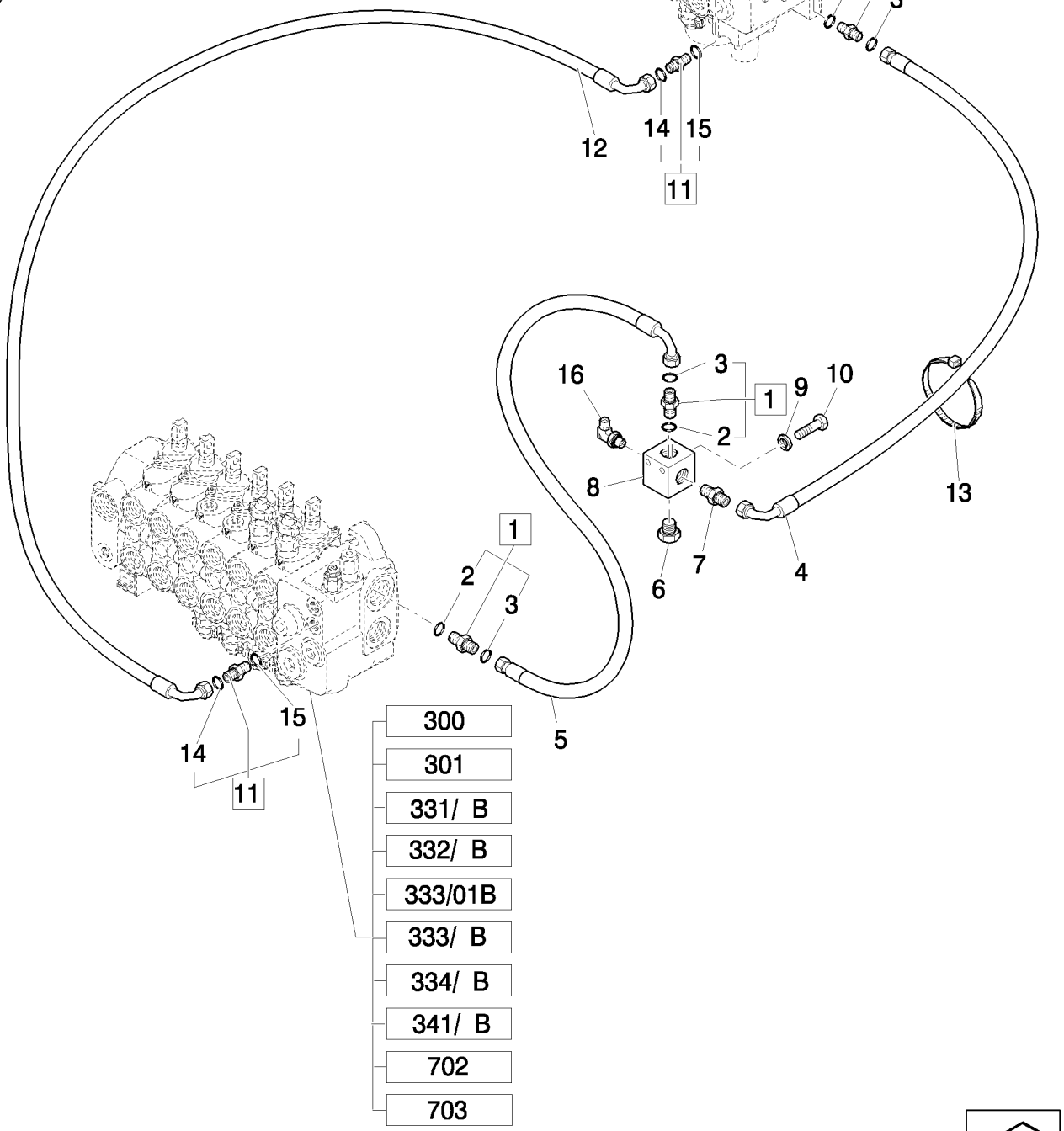

TUBOS INSTALACIÓN HIDRÁULICA: DESCARGA DISTRIBUIDOR

REF	FN	PART NUMBER	YR/SN	QTY	DENOMINACION
1		83963375		3	RACOR, Assy
2		80167268		3	JUNTA HERMETICA
3		89824050		3	JUNTA HERMETICA
4		85818909		1	MANGA FLEXIBLE
5	1	85805167		1	MANGA FLEXIBLE
5	2	85827823		1	MANGA FLEXIBLE
6		85802955		1	TAPÓN
7		85805168		1	RACOR
8		85805166		1	BLOQUE MOTOR
9		11190779		2	ARANDELA ABANICO, Belleville, M13, 12x24x2.8
10		15541621		2	TORNILLO, Hex, M12 x 1.25 x 100, 8.8
11		83963371		2	RACOR, Assy
12		85812174		1	MANGA FLEXIBLE
13		14560187		2	CIERRA CABLES, 178mm lg
14		81844851		2	JUNTA HERMETICA, 90 Duro, .375" ID x .070" Thk
15		89617873		2	JUNTA HERMETICA, 90 Duro, .468" ID x .078" Thk
16	2	83962179		1	CODO, 90°

(1) Only for Mechanical Version
(2) Only for Pilot Version

1.82.6	05	p1	04/08

TUBOS INSTALACIÓN HIDRÁULICA: RETORNO AL DEPÓSITO

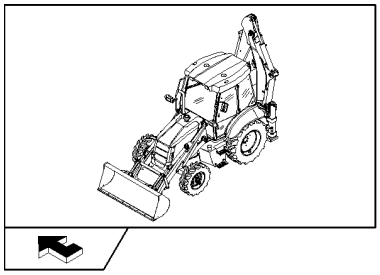

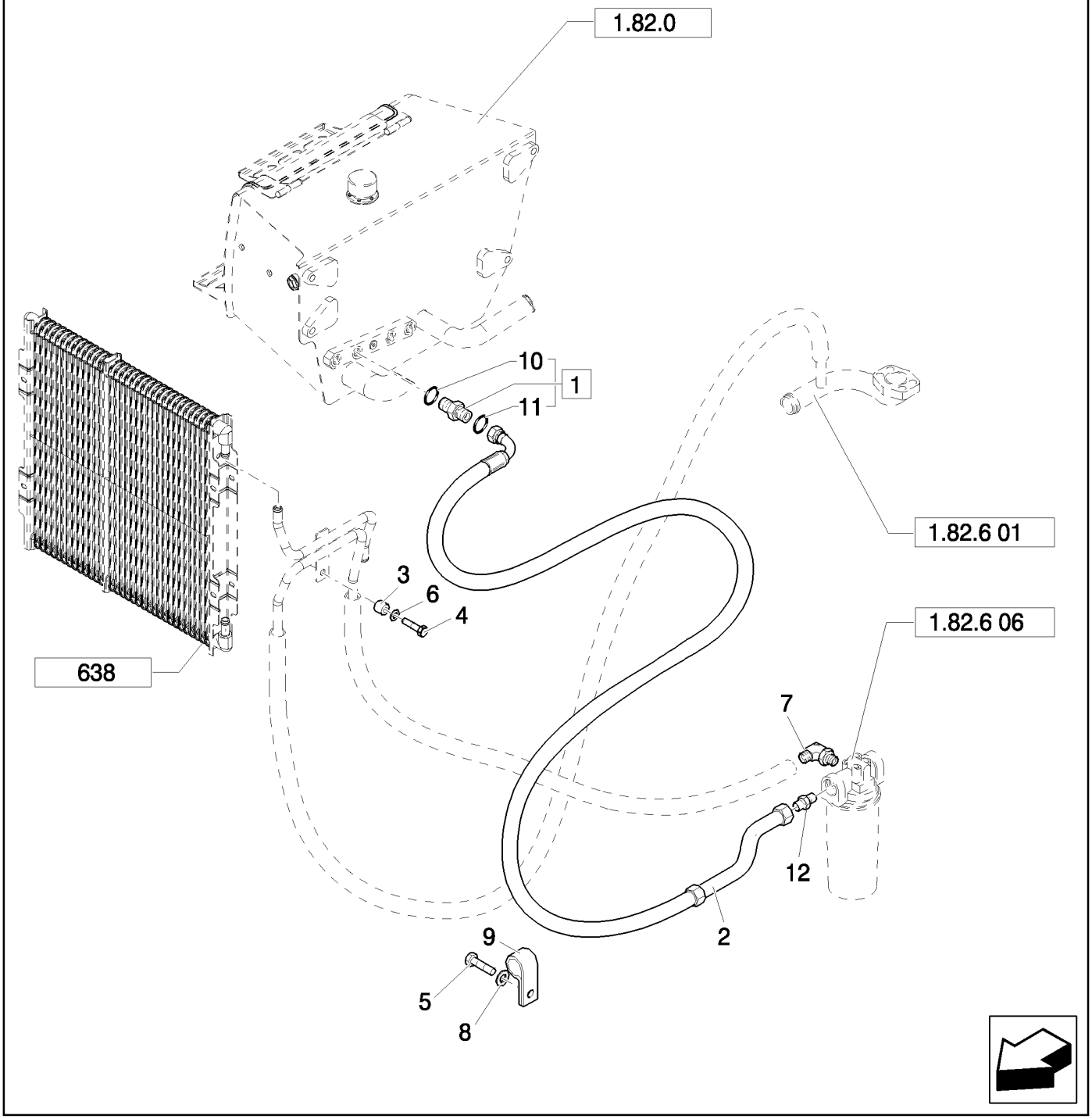

TUBOS INSTALACIÓN HIDRÁULICA: RETORNO AL DEPÓSITO

REF	FN	PART NUMBER	YR/SN	QTY	DENOMINACION
1		85802801		1	RACOR, Assy, 1-11/16"-12 ORS x 1-5/16"-12 SAE O-ring
2		85827824		1	MANGA FLEXIBLE
3		85825169		1	SEPARADOR
4		47049184		4	TORNILLO
5		47042364		1	TORNILLO, M12x25
6		47048963		1	ARANDELA
7		85825355		1	RACOR
8		47048964		1	ARANDELA
9		47048664		1	BORNE
10		80167268		1	JUNTA HERMETICA
11		89824051		1	JUNTA HERMETICA
12		85802960		1	RACOR

TUBOS INSTALACIÓN HIDRÁULICA: FILTRO ACEITE Y VÁLVULA DE CONTROL

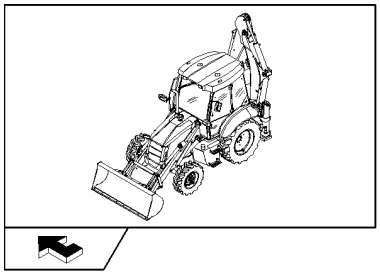

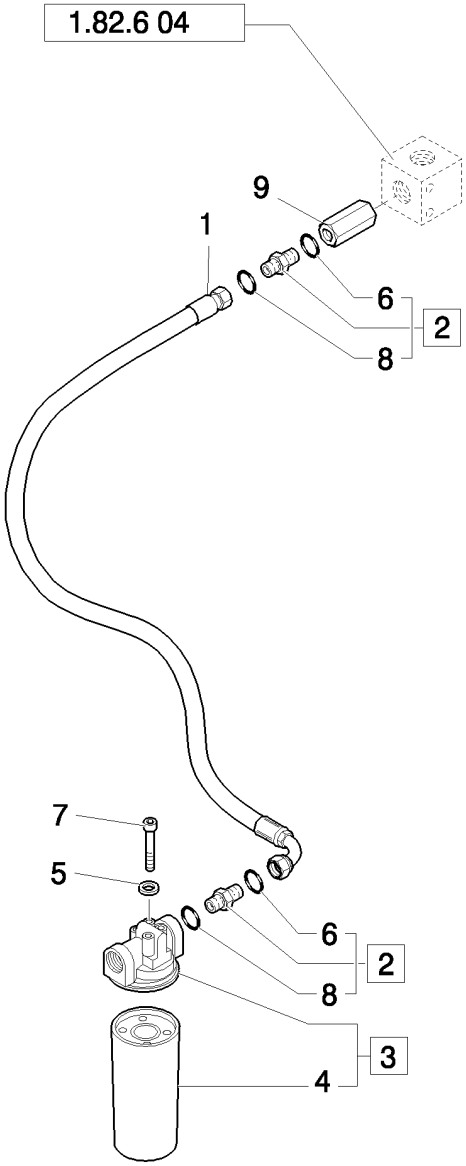

TUBOS INSTALACIÓN HIDRÁULICA: FILTRO ACEITE Y VÁLVULA DE CONTROL

REF	FN	PART NUMBER	YR/SN	QTY	DENOMINACION
1	1	87414983		1	MANGA FLEXIBLE
1	2	85805840		1	MANGA FLEXIBLE
2		85802801		2	RACOR, Assy, 1-11/16"-12 ORS x 1-5/16"-12 SAE O-ring
3		87315438		1	FILTRO CONJ
4		86989733		1	FILTRO, ACEITE HIDRAULICO
5		11190579		4	ARANDELA ABANICO, Belleville, M10.5
6		80167268		2	JUNTA HERMETICA
7		11106221		4	TORNILLO, Hex, M10 x 25, 8.8, Full Thd
8		89824051		2	JUNTA HERMETICA
9	1	85805824		1	VALVULA DE CIERRE

(1) Only for Side Shift
(2) Only for Center Pivot

Mechanical Version / Pilot Version

B95B

1.82.6	07	p1	03/08

TUBOS INSTALACIÓN HIDRÁULICA: CILINDROS DEL EQUIPO CARGADOR

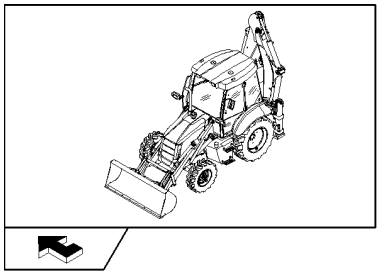

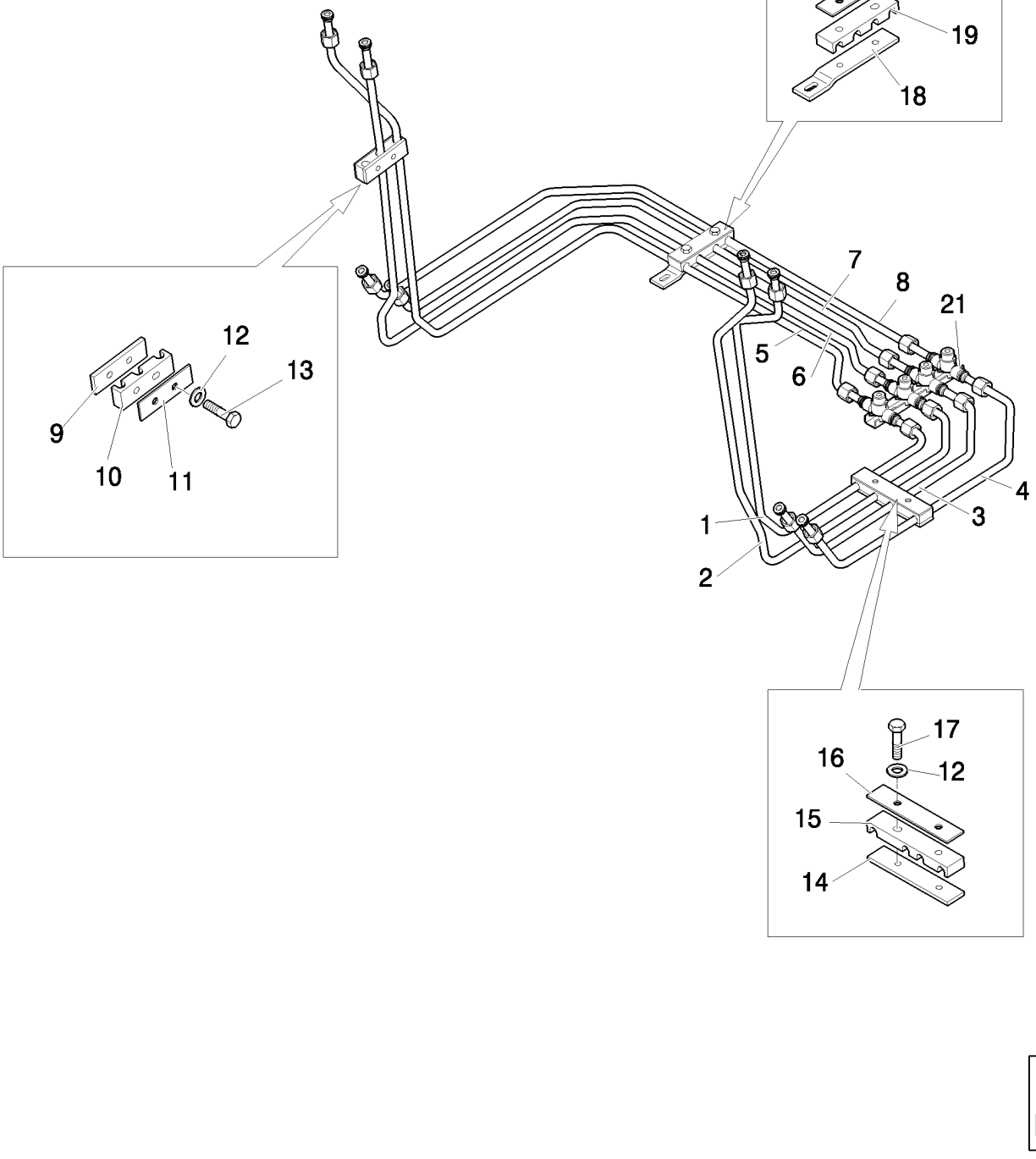

TUBOS INSTALACIÓN HIDRÁULICA: CILINDROS DEL EQUIPO CARGADOR

REF	FN	PART NUMBER	YR/SN	QTY	DENOMINACION
1		85805854		1	TUBERIA HIDRAULICO, LH
2		85805855		1	TUBERIA HIDRAULICO, LH
3		85805858		1	TUBERIA HIDRAULICO, LH
4		85805859		1	TUBERIA HIDRAULICO, LH
5		85805856		1	TUBERIA HIDRAULICO, RH
6		85805857		1	TUBERIA HIDRAULICO, RH
7		85805860		1	TUBERIA HIDRAULICO, RH
8		85805861		1	TUBERIA HIDRAULICO, RH
9		85805870		2	PLACA
10		85805872		2	BORNE
11		85805869		2	PLACA
12		11193979		8	ARANDELA ABANICO, Belleville, M8.4
13		16043621		2	TORNILLO, Hex, M8 x 25, 8.8
14		85805210		2	PLACA
15		85805211		2	BORNE
16		85805209		2	PLACA
17		16043821		6	TORNILLO, Hex, M8 x 30, 8.8
18		85805206		1	PIEZA DE SOPORTE
19		85805208		1	BORNE
20		85805207		1	PLACA
21		85805203		1	COLECTOR

Mechanical Version / Pilot Version

B95B

1.82.6	10	p1	03/08

TUBOS DEL CIRCUITO HIDRAULICO

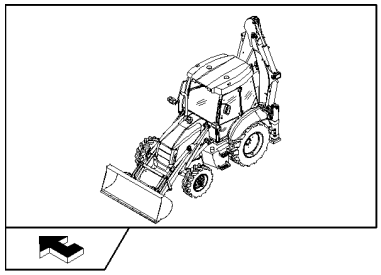

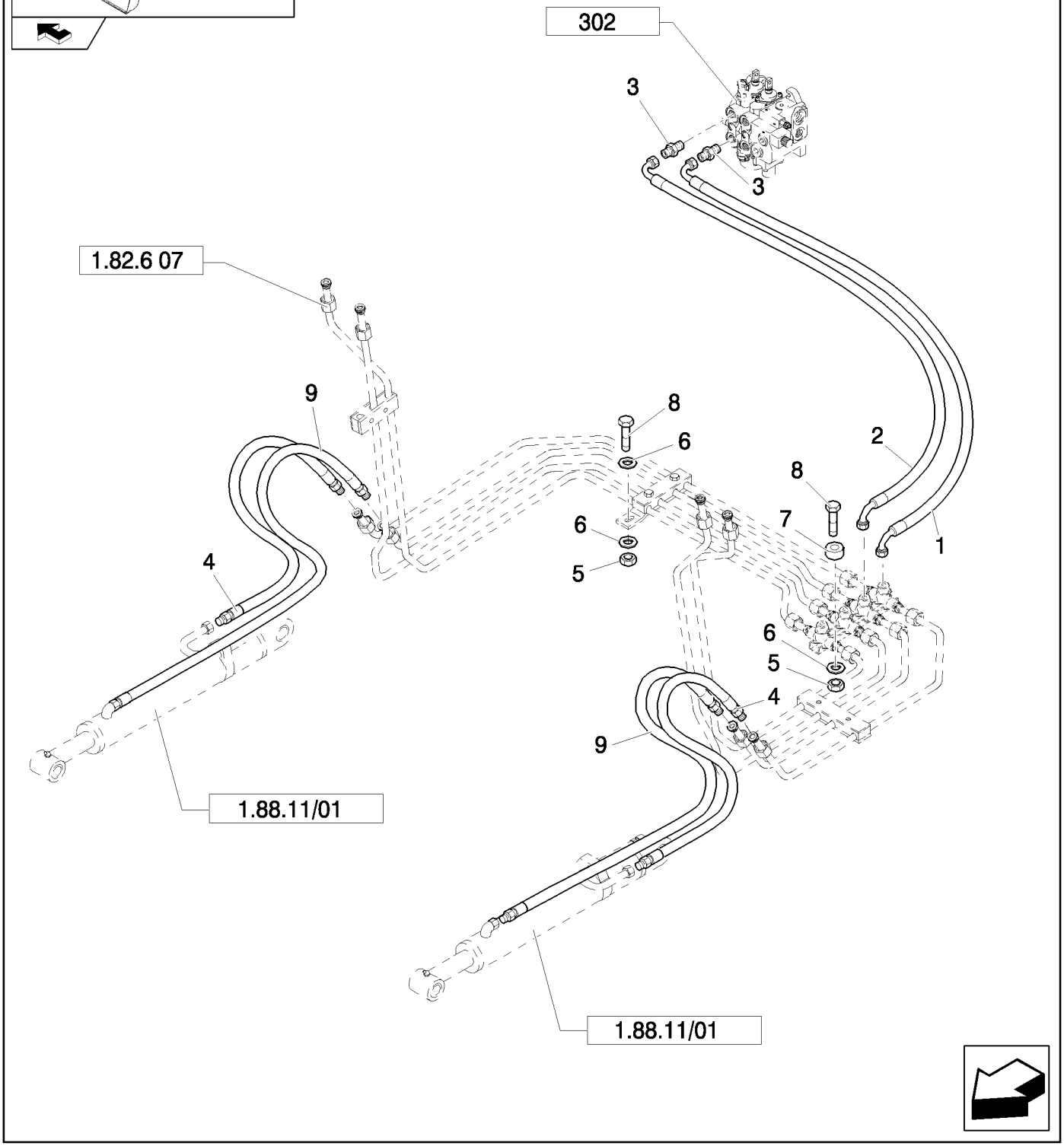

TUBOS DEL CIRCUITO HIDRAULICO

REF	FN	PART NUMBER	YR/SN	QTY	DENOMINACION
1		87619508		1	MANGA FLEXIBLE
2		87619510		1	MANGA FLEXIBLE
3		83962539		2	RACOR, 1-1/16-12 ORB x 1-14 ORFS; Incl. 167266, 9992069 O-Rings
4		85813363		2	MANGA FLEXIBLE, 550mm lg
5		14048211		2	CONTRA TUERCA, M8 x 1.25, Cl 8
6		12647121		3	ARANDELA, M8 x 20 x 3
7		85802891		2	SEPARADOR
8		16044021		2	TORNILLO, Hex, M8 x 40, 8.8
9		85813380		2	MANGA FLEXIBLE

Mechanical Version / Pilot Version

B95B

1.82.6	11	p1	03/08

TUBOS DEL CIRCUITO HIDRAULICO

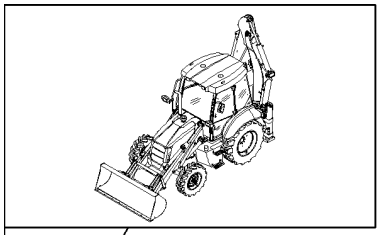

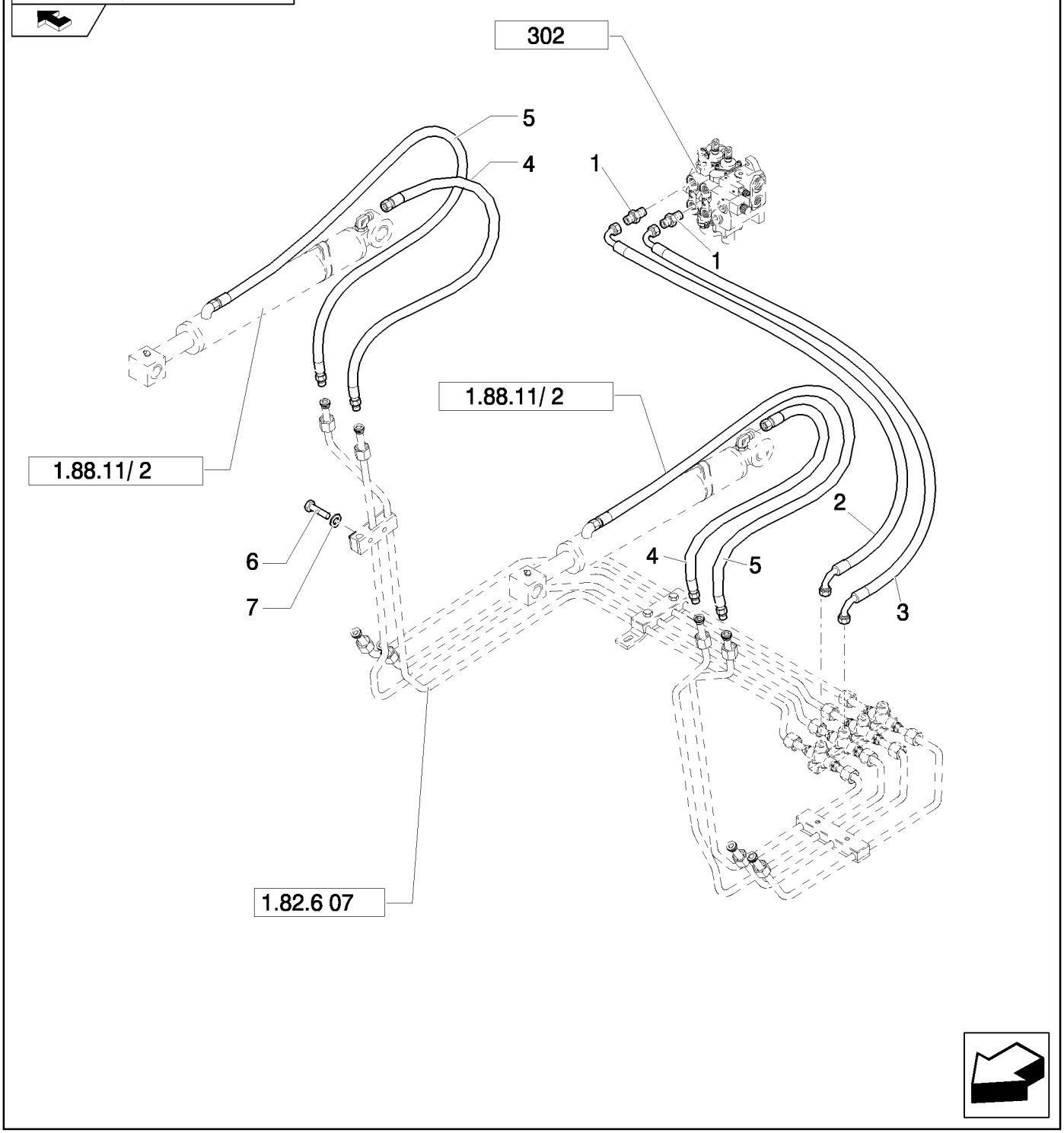

TUBOS DEL CIRCUITO HIDRAULICO

REF	FN	PART NUMBER	YR/SN	QTY	DENOMINACION
1		83962539		2	RACOR, 1-1/16-12 ORB x 1-14 ORFS; Incl. 167266, 9992069 O-Rings
2		87619509		1	MANGA FLEXIBLE
3		87619507		1	MANGA FLEXIBLE
4		85813362		2	MANGA FLEXIBLE, 1130mm lg
5		85813379		2	MANGA FLEXIBLE
6		16044421		2	TORNILLO, Hex, M8 x 60, 8.8
7		11193979		2	ARANDELA ABANICO, Belleville, M8.4

Mechanical Version / Pilot Version

B95B

1.82.6	12	p1	03/08

TUBOS DE LA INSTALACIÓN HIDRÁULICA 4WS (PIVOTE CENTRAL): NA

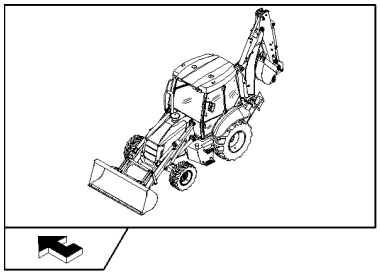

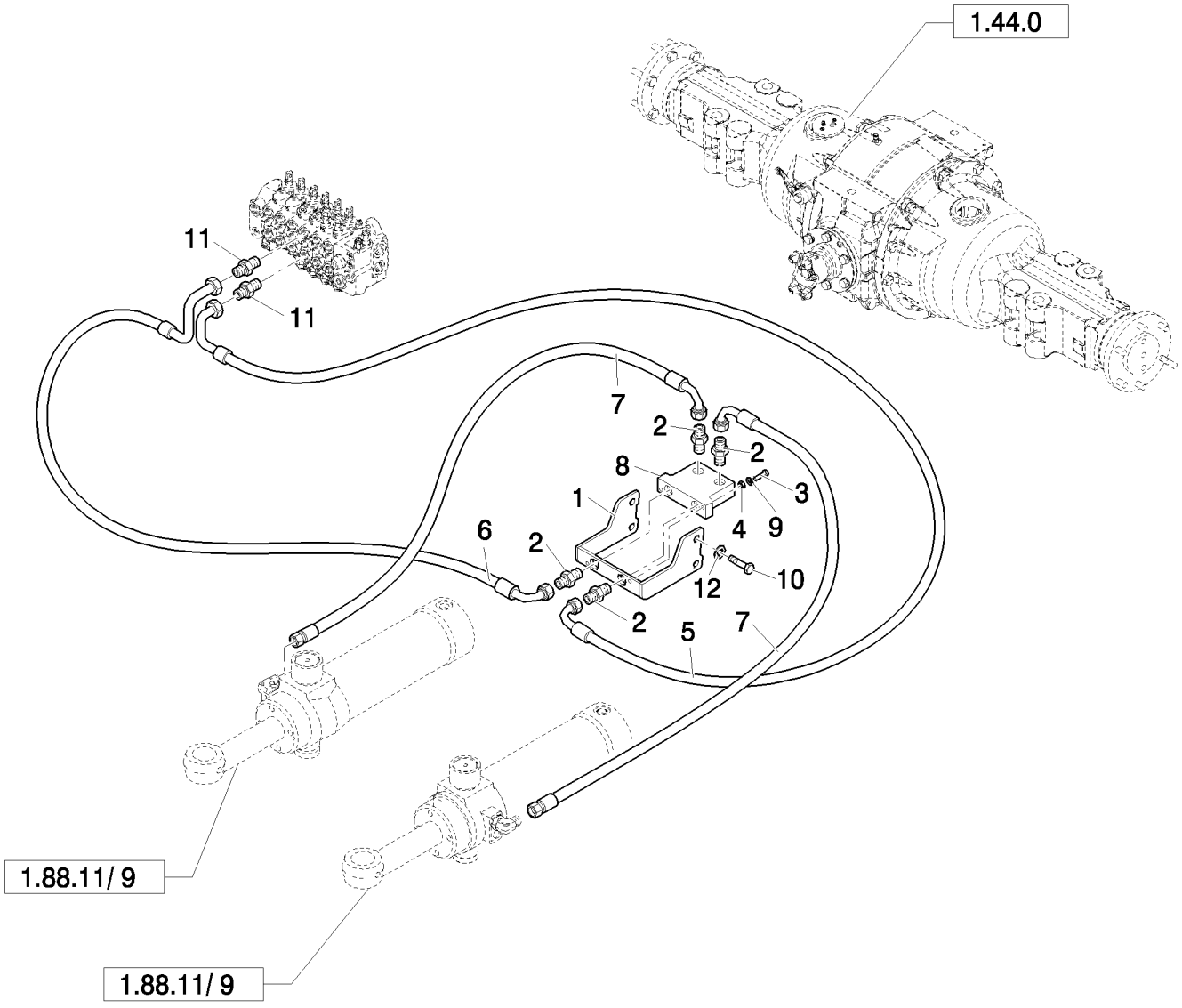

TUBOS DE LA INSTALACIÓN HIDRÁULICA 4WS (PIVOTE CENTRAL): NA

REF	FN	PART NUMBER	YR/SN	QTY	DENOMINACION
1	1	87371811		1	SOPORTE
1	2	87350477		1	PIEZA DE SOPORTE
1	3	87351460		1	PIEZA DE SOPORTE
2		201-112		4	RACOR, 13/16"-16 ORFS x 7/8"-14 ORB
3		614-10040		2	TORNILLO, Hex, M10 x 40, 8.8, Full Thd, M10x40
4		829-1410		2	TUERCA, M10, Cl 10
5		87356499		1	MANGA FLEXIBLE
6		87356501		1	MANGA FLEXIBLE
7		87361461		2	MANGA FLEXIBLE
8		87449373		1	VALVULA HIDRAULICA
9		895-11010		4	ARANDELA, M10 x 20 x 2, 11 x 21 x 2
10		413-1036		4	TORNILLO, Hex, 5/8"-11 x 2 1/4", G5
10	4	87376137		4	BOQUILLA
11		85805258		2	RACOR, 9/16"-16 ORS x 1 1/16"-12, O-Ring
12	3	14496931		1	ARANDELA, M16 x 30 x 3

(1) Except for B115B
(2) Only for Power Shuttle
(3) Only for Power Shift
(4) Only for B115B

Pilot Control Version

B95B

1.82.6	13	p1	04/08

TUBOS INSTALACIÓN HIDRÁULICA: CILINDRO DE ORIENTACIÓN

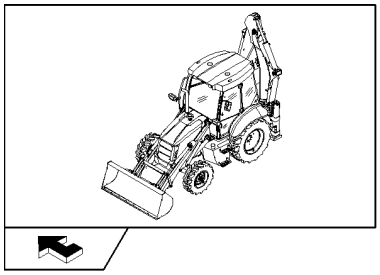

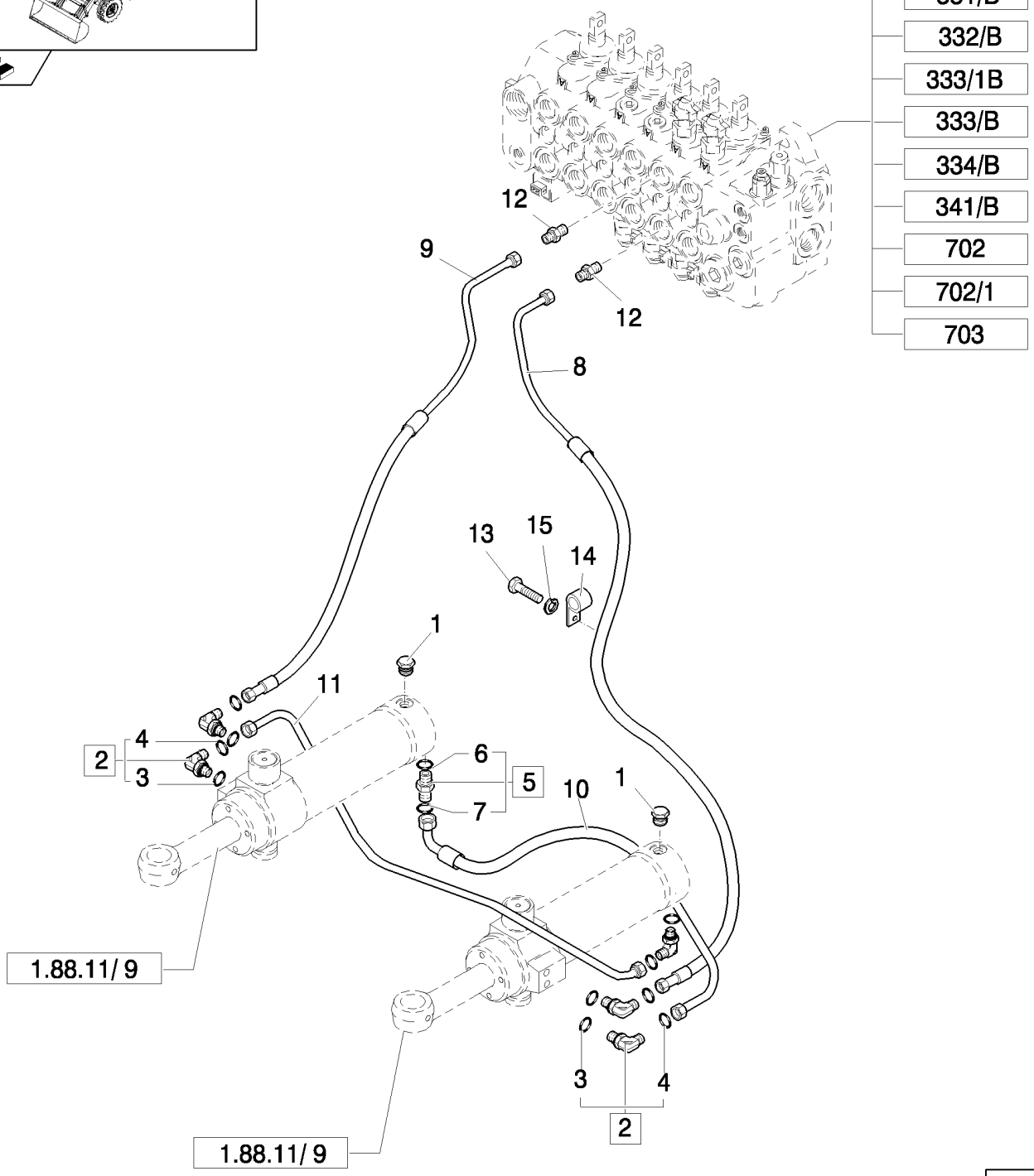

TUBOS INSTALACIÓN HIDRÁULICA: CILINDRO DE ORIENTACIÓN

REF	FN	PART NUMBER	YR/SN	QTY	DENOMINACION
1		85802955		2	TAPÓN
2		83971549		5	CODO, Assy
3		80128825		5	JUNTA HERMETICA
4		89992298		5	JUNTA HERMETICA
5		83963374		1	RACOR, Assy
6		81845030		1	TUERCA
7		81832258		1	JUNTA HERMETICA
8	1	85819730		1	HOSE, HYDRAULIC
8	2	85819060		1	TUBERIA HIDRAULICO
9	1	85819728		1	HOSE, HYDRAULIC
9	2	85819061		1	HOSE, HYDRAULIC
10	1	85819727		1	HOSE, HYDRAULIC, 415mm lg
10	2	85820109		1	TUBERIA HIDRAULICO
11		85819729		1	HOSE, HYDRAULIC
12		85805258		2	RACOR, 9/16"-16 ORS x 1 1/16"-12, O-Ring
13		16044221		2	TORNILLO, Hex, M8 x 50, 8.8
14		14560187		2	CIERRA CABLES, 178mm lg, L=203.2 mm
15		11190579		2	ARANDELA ABANICO, Belleville, M10.5

(1) Only for B110B - B115B Center Pivot, Pilot Version, Power Shift
(2) Only for Side Shift

TUBOS INSTALACIÓN HIDRÁULICA: CILINDRO EQUIPO RETROEXCAVADOR

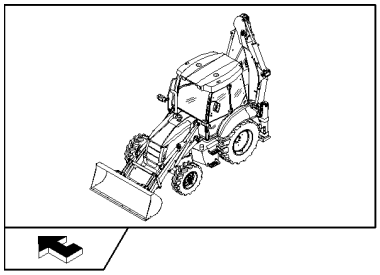

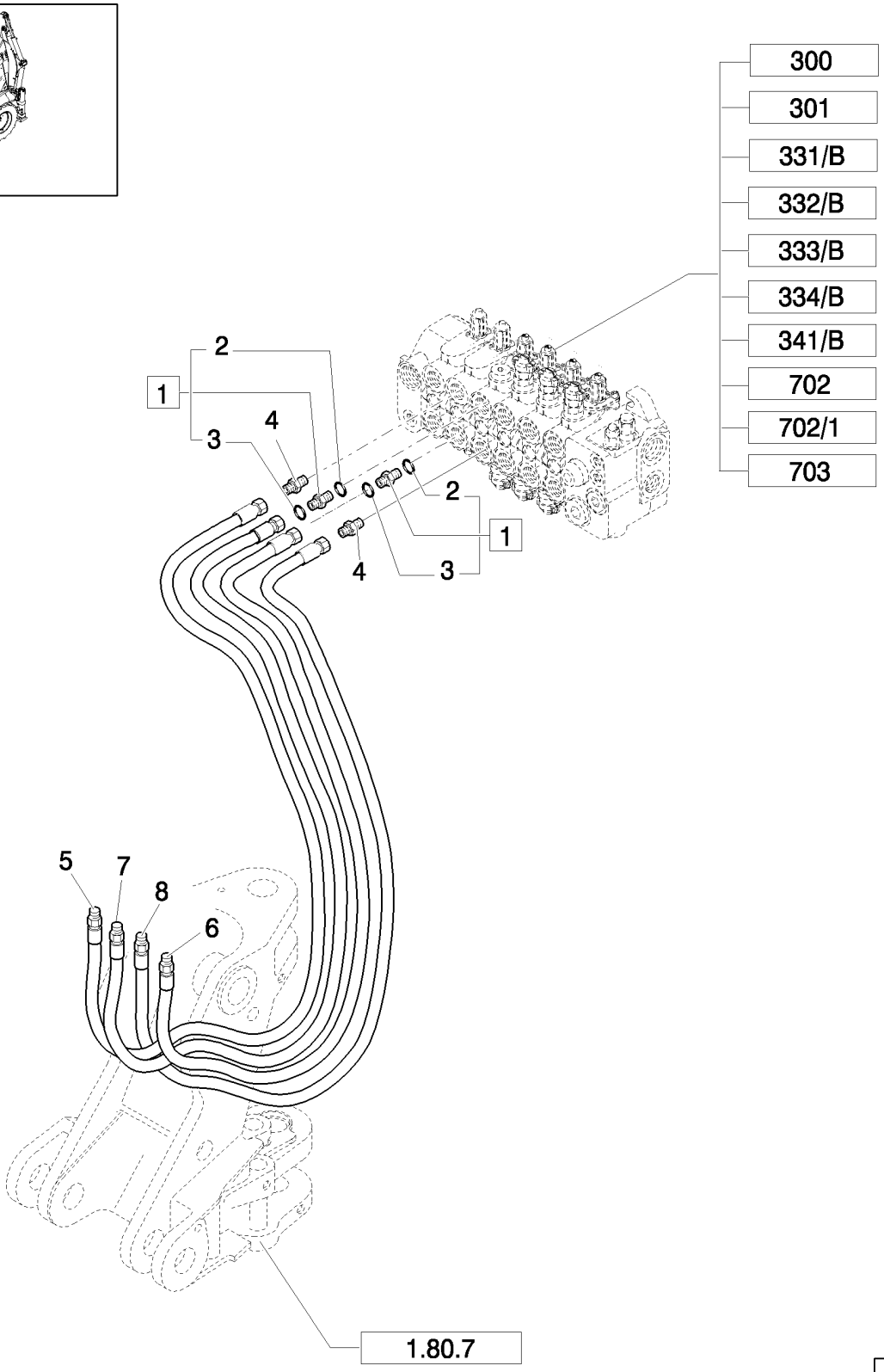

TUBOS INSTALACIÓN HIDRÁULICA: CILINDRO EQUIPO RETROEXCAVADOR

REF	FN	PART NUMBER	YR/SN	QTY	DENOMINACION
1		83962538		2	RACOR, Assy
2		80167266		2	JUNTA HERMETICA
3		89991976		2	JUNTA HERMETICA
4		83962539		2	RACOR, 1-1/16-12 ORB x 1-14 ORFS; Incl. 167266, 9992069 O-Rings
5	1	87619495		1	MANGA FLEXIBLE
5	2	85819064		1	HOSE, HYDRAULIC
6	1	87621908		1	MANGA FLEXIBLE
6	2	85819062		1	HOSE, HYDRAULIC
7	1	87619496		1	MANGA FLEXIBLE
7	2	85819063		1	HOSE, HYDRAULIC
8	1	87621920		1	MANGA FLEXIBLE
8	2	85819065		1	HOSE, HYDRAULIC

(1) Only for Center Pivot
(2) Only for Side Shift

Mechanical Version / Pilot Version

B95B

1.82.6	15	p1	04/08

TUBOS INSTALACIÓN HIDRÁULICA: CILINDRO BRAZO DE ELEVACIÓN EQUIPO RETROEXCAVADOR

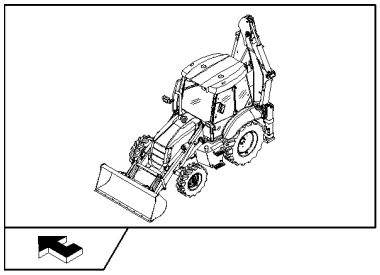

TUBOS INSTALACIÓN HIDRÁULICA: CILINDRO BRAZO DE ELEVACIÓN EQUIPO RETROEXCAVADOR

REF	FN	PART NUMBER	YR/SN	QTY	DENOMINACION
1		83962538		1	RACOR, Assy
2		80167266		1	JUNTA HERMETICA
3		89991976		1	JUNTA HERMETICA
4		83962539		1	RACOR, 1-1/16-12 ORB x 1-14 ORFS; Incl. 167266, 9992069 O-Rings
5	1	85819058		1	TUBERIA HIDRAULICO
5	2	87621907		1	MANGA FLEXIBLE
6	1	85819059		1	TUBERIA HIDRAULICO
6	3	87619484		1	MANGA FLEXIBLE
7	1	85817230		2	BORNE
8	1	85817231		2	BORNE
9	1	85817474		2	CIERRA CABLES
10	1	15213621		4	TORNILLO, Hex, M8 x 55, 8.8, Full Thd
11	1	11193879		4	ARANDELA ABANICO, Belleville, M8.4
12	1	14048211		4	CONTRA TUERCA, M8 x 1.25, Cl 8

(1) Only for Side Shift
(2) Only for Center Pivot
(3) Only for Pilot Version

1.82.6	16	p1	03/08

COLLARES DE LOS MANGUITOS DE LA PLACA DE ROTACIÓN (CENTER PIVOT)

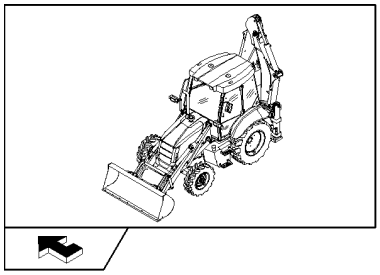

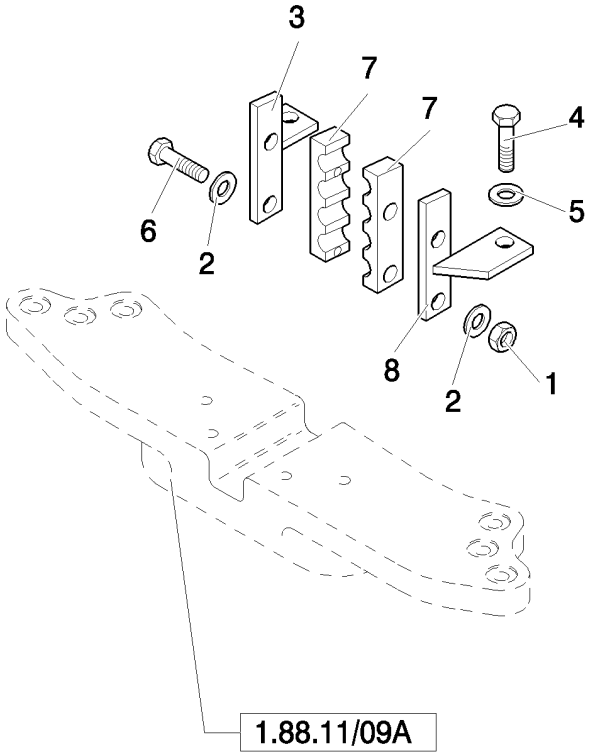

COLLARES DE LOS MANGUITOS DE LA PLACA DE ROTACIÓN (CENTER PIVOT)

REF	FN	PART NUMBER	YR/SN	QTY	DENOMINACION
1		14048221		2	CONTRA TUERCA, M8 x 1.25, Cl 10
2		12647121		2	ARANDELA, M8 x 20 x 3
3		85804573		1	SOPORTE
4		11106221		2	TORNILLO, Hex, M10 x 25, 8.8, Full Thd
5		11190579		2	ARANDELA ABANICO, Belleville, M10.5
6		16044421		2	TORNILLO, Hex, M8 x 60, 8.8
7		87631460		2	BORNE
8		85804574		1	SOPORTE

1.82.6/01	01	p1	04/08

ASPIRACIÓN BOMBA HIDRÁULICA ANTERIOR Y MANGUITOS SALIDA (CENTER PIVOT) - NA

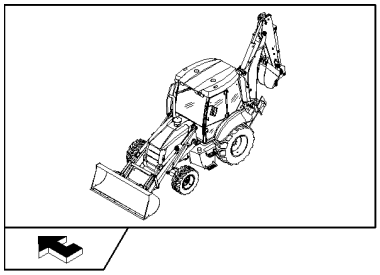

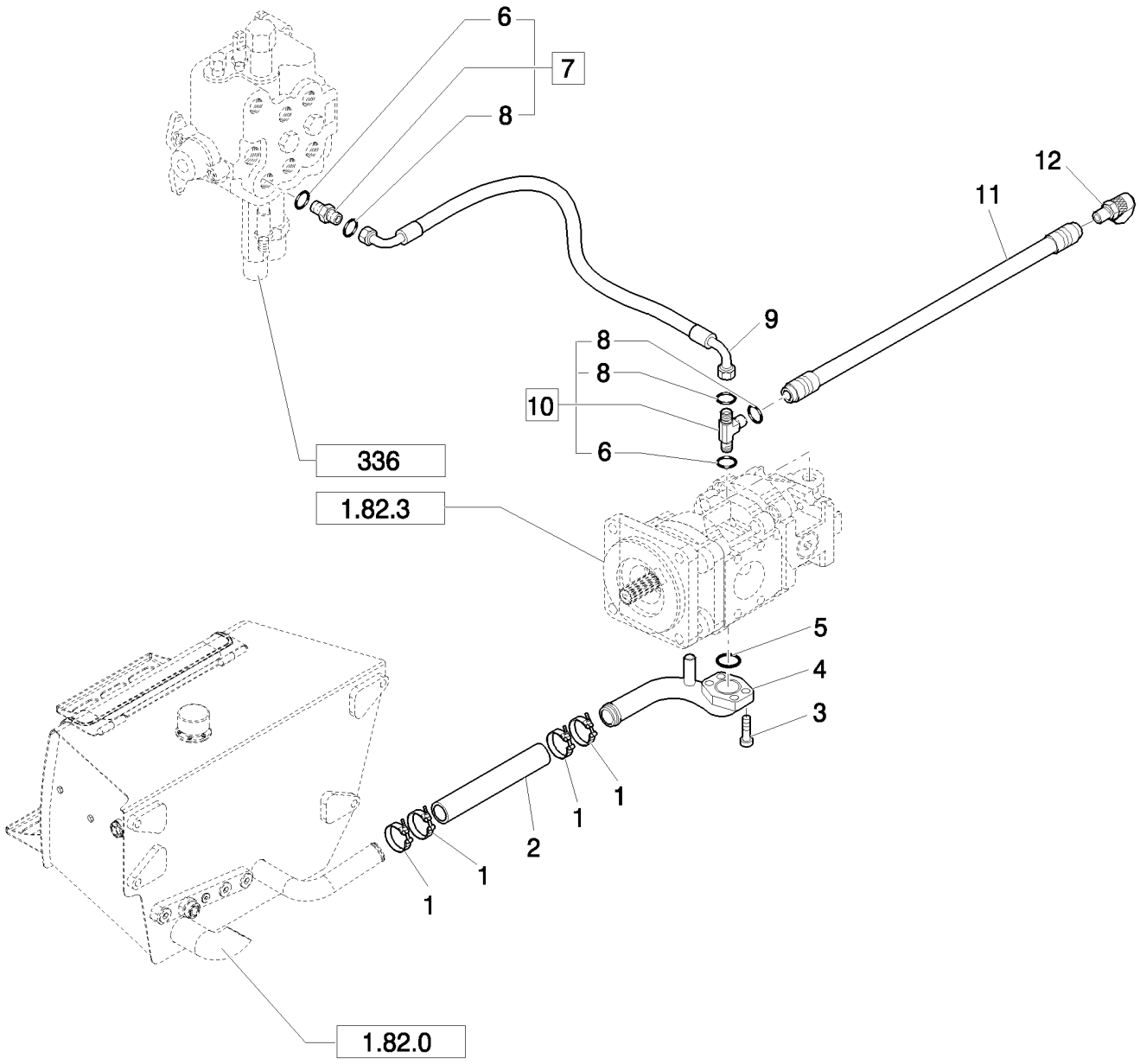

ASPIRACIÓN BOMBA HIDRÁULICA ANTERIOR Y MANGUITOS SALIDA (CENTER PIVOT) - NA

REF	FN	PART NUMBER	YR/SN	QTY	DENOMINACION
1		87676333		4	BORNE
2		85811870		1	MANGA
3		14422021		3	TORNILLO, Hex Soc Hd, M12 x 30, 8.8
4		85827041		1	TUBO
5		14464680		1	JUNTA HERMETICA, -228, 70 Duro, 2.234" ID x .139" Thk
6		80167266		2	JUNTA HERMETICA
7		83962538		1	RACOR, Assy
8		89991976		3	JUNTA HERMETICA
9		87621912		1	MANGA FLEXIBLE
10		85815581		1	RACOR-T, Assy
11		85815568		1	HOSE, HYDRAULIC
12		85817596		1	EMPALME RAPIDO

Mechanical Version	B95B

1.82.6/01	02	p1	05/08

ESTABILIZADOR BOMBA HIDRÁULICA POSTERIOR, MANGUITOS VÁLVULAS EXCAVADORA Y CARGADOR (CP) - NA

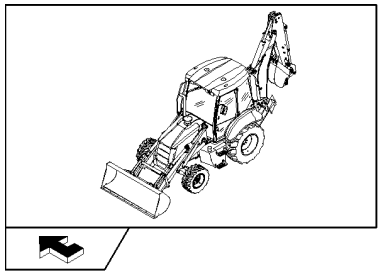

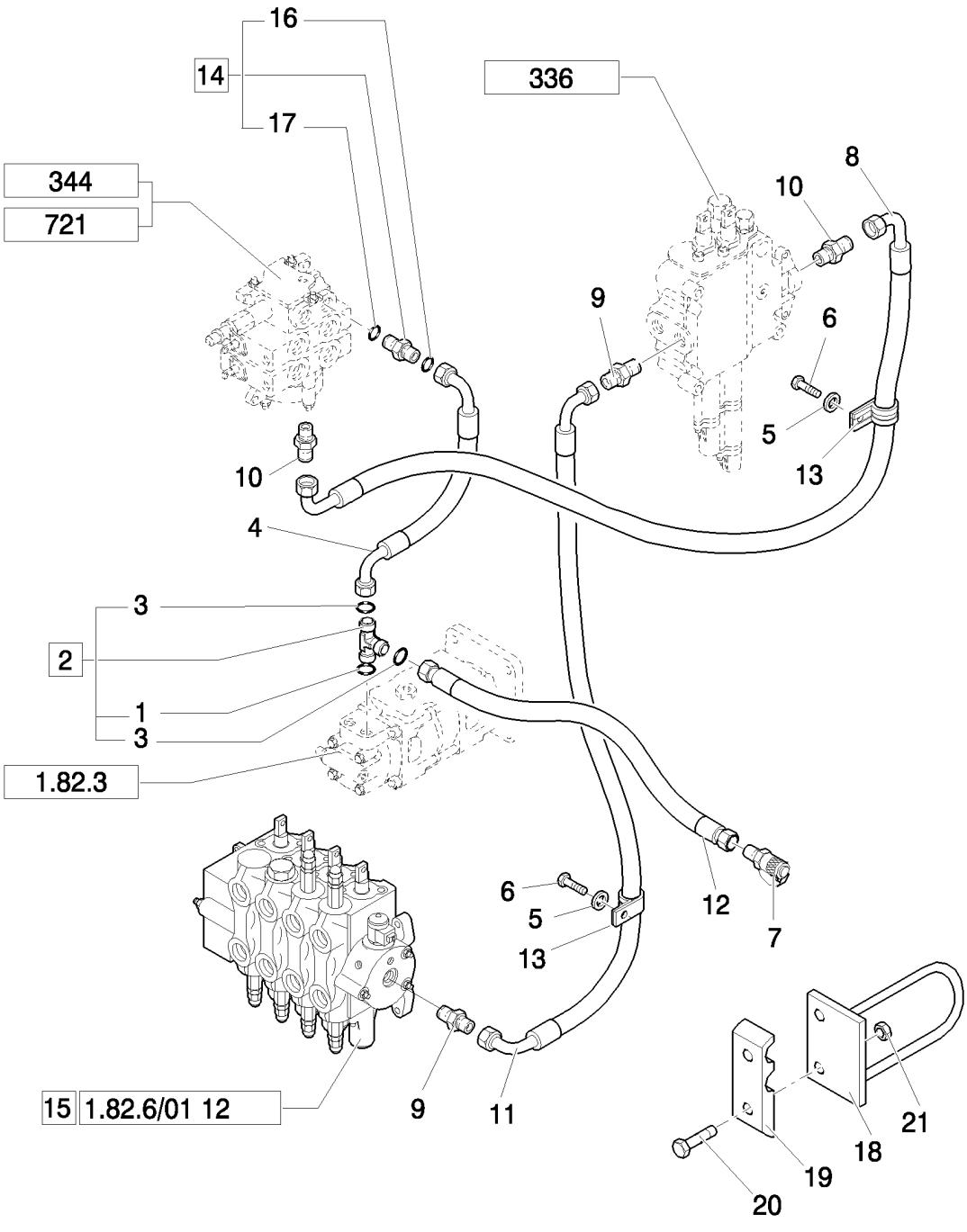

ESTABILIZADOR BOMBA HIDRÁULICA POSTERIOR, MANGUITOS VÁLVULAS EXCAVADORA Y CARGADOR (CP) - NA

REF	FN	PART NUMBER	YR/SN	QTY	DENOMINACION
1		80167269		1	JUNTA HERMETICA
2		85815580		1	RACOR, Assy
3		83901443		2	JUNTA HERMETICA
4		87614752		1	MANGA FLEXIBLE
5		11193979		2	ARANDELA ABANICO, Belleville, M8.4
6		16044021		2	TORNILLO, Hex, M8 x 40, 8.8
7		85817596		1	EMPALME RAPIDO
8		87621910		1	MANGA FLEXIBLE
9		85802958		1	RACOR
10		85802642		2	RACOR, 1-3/16"-12 ORS x 7/8"-14 SAE O-Ring
11		85802776		1	HOSE, HYDRAULIC, 1150mm lg
12		85815567		1	HOSE, HYDRAULIC
13		85802890		2	BORNE
14		83963000		1	RACOR, Assy
15		85827100		1	VALVULA DISTRIBUIDORA
16		80167269		1	JUNTA HERMETICA
17		83901443		1	JUNTA HERMETICA
18		85802214		2	SOPORTE
19		87631462		2	PIEZA DE SOPORTE
20		16044221		2	TORNILLO, Hex, M8 x 50, 8.8
21		16104111		2	CONTRA TUERCA, M8 x 1.25, Cl 8

Mechanical Version B95B

TUBOS DE LA INSTALACIÓN HIDRÁULICA (PIVOTE CENTRAL): NA: ENTRADA PRESIÓN

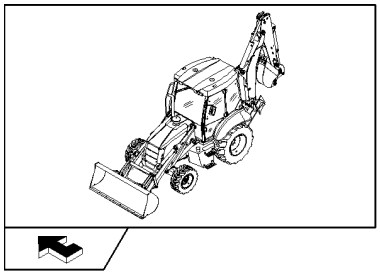

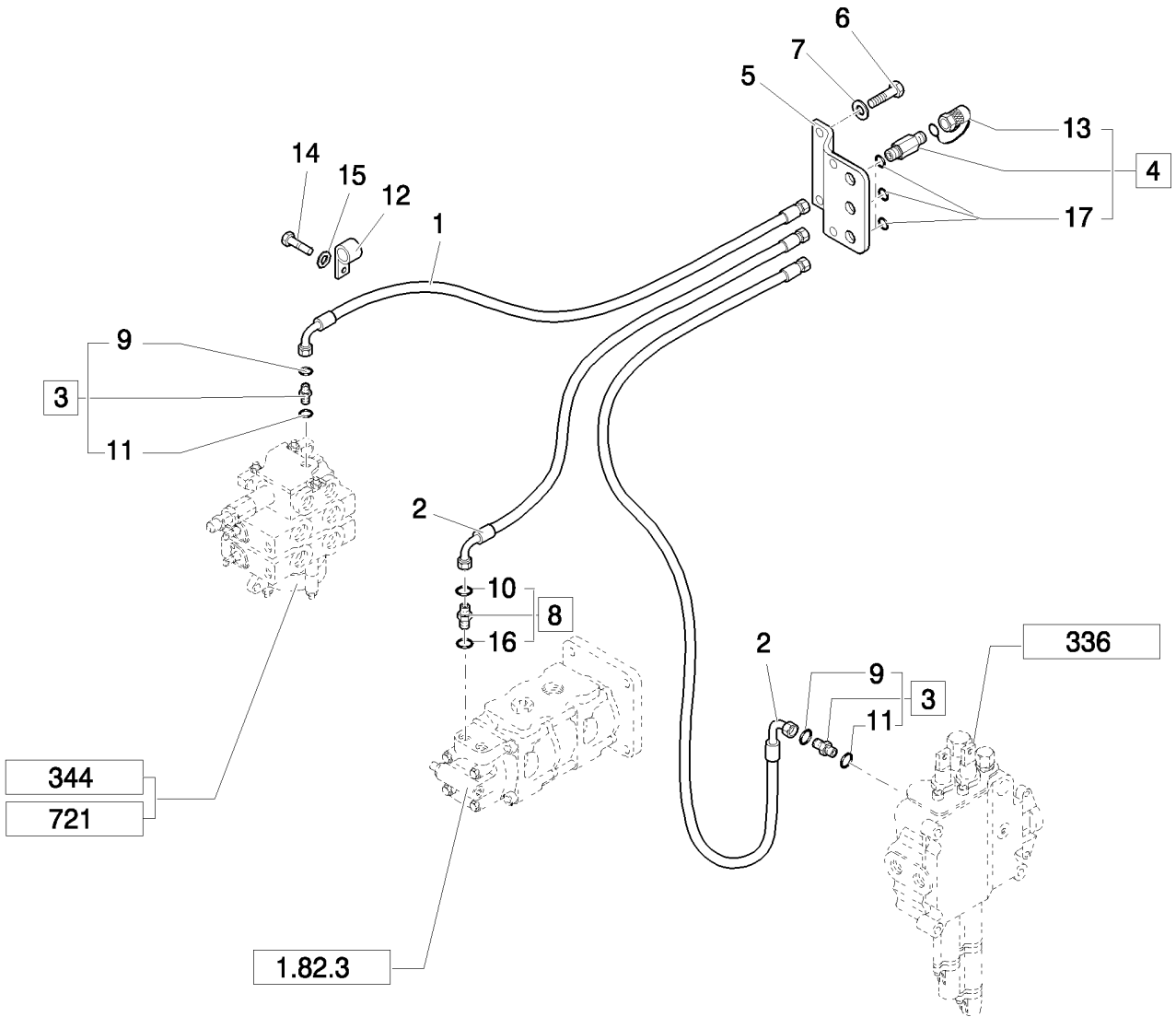

TUBOS DE LA INSTALACIÓN HIDRÁULICA (PIVOTE CENTRAL): NA: ENTRADA PRESIÓN

REF	FN	PART NUMBER	YR/SN	QTY	DENOMINACION
1		85812170		1	MANGA FLEXIBLE, 1250mm lg
2		85812171		2	MANGA FLEXIBLE, 1450mm lg
3		83963371		2	RACOR, Assy
4		85817226		3	EMPALME RAPIDO, Assy
5		87569583		1	PLACA
6		14441524		2	TORNILLO
7		11193879		2	ARANDELA ABANICO, Belleville, M8.4
8		83971549		1	CODO, Assy
9		89617873		5	JUNTA HERMETICA, 90 Duro, .468" ID x .078" Thk
10		89992298		1	JUNTA HERMETICA
11		81844851		5	JUNTA HERMETICA, 90 Duro, .375" ID x .070" Thk
12		85802890		2	BORNE
13		9968791		3	TAPÓN
14		15540821		2	TORNILLO, Hex, M12 x 1.25 x 50, 8.8
15		11190779		2	ARANDELA ABANICO, Belleville, M13
16		80128825		1	JUNTA HERMETICA
17		81844851		3	JUNTA HERMETICA

TUBERÍAS DEL COLECTOR DE RETORNO - NA

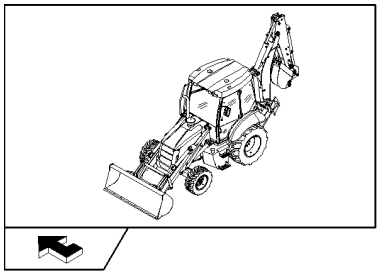

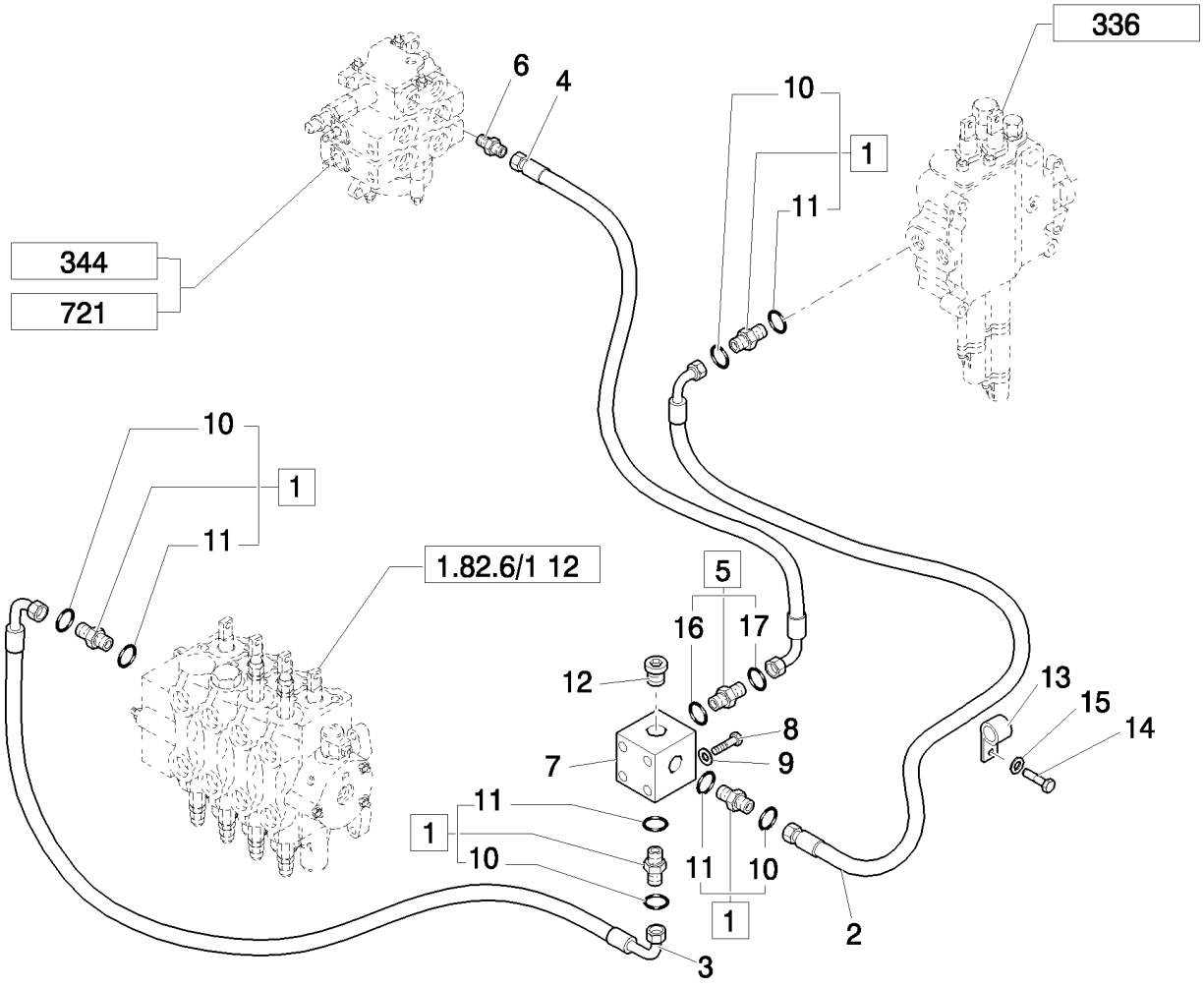

TUBERÍAS DEL COLECTOR DE RETORNO - NA

REF	FN	PART NUMBER	YR/SN	QTY	DENOMINACION
1		83963375		4	RACOR, Assy
2		85802777		1	MANGA FLEXIBLE, 1100mm lg
3		85802839		1	MANGA FLEXIBLE, 500mm lg
3	1	87574479		1	MANGA
4		85802838		1	HOSE, HYDRAULIC, 700mm lg
5		83962538		1	RACOR, Assy
6		85802642		1	RACOR, 1-3/16"-12 ORS x 7/8"-14 SAE O-Ring
7		85802799		1	TABLERO DE BORNES
8		15541621		2	TORNILLO, Hex, M12 x 1.25 x 100, 8.8
9		11190779		2	ARANDELA ABANICO, Belleville, M13
10		89824050		4	JUNTA HERMETICA
11		80167268		4	JUNTA HERMETICA
12		85802955		1	TAPÓN
13		85802890		1	BORNE
14		15540821		1	TORNILLO, Hex, M12 x 1.25 x 50, 8.8
15		12646921		1	ARANDELA, M12 x 28 x 3
16		80167266		1	JUNTA HERMETICA
17		89991976		1	JUNTA HERMETICA

(1) Only for B95BTC

1.82.6/01	05	p1	04/08

GRUPO FILTRO Y TUBERÍAS DEL COLECTOR DE RETORNO (CENTER PIVOT) - NA

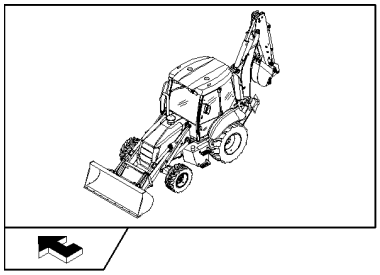

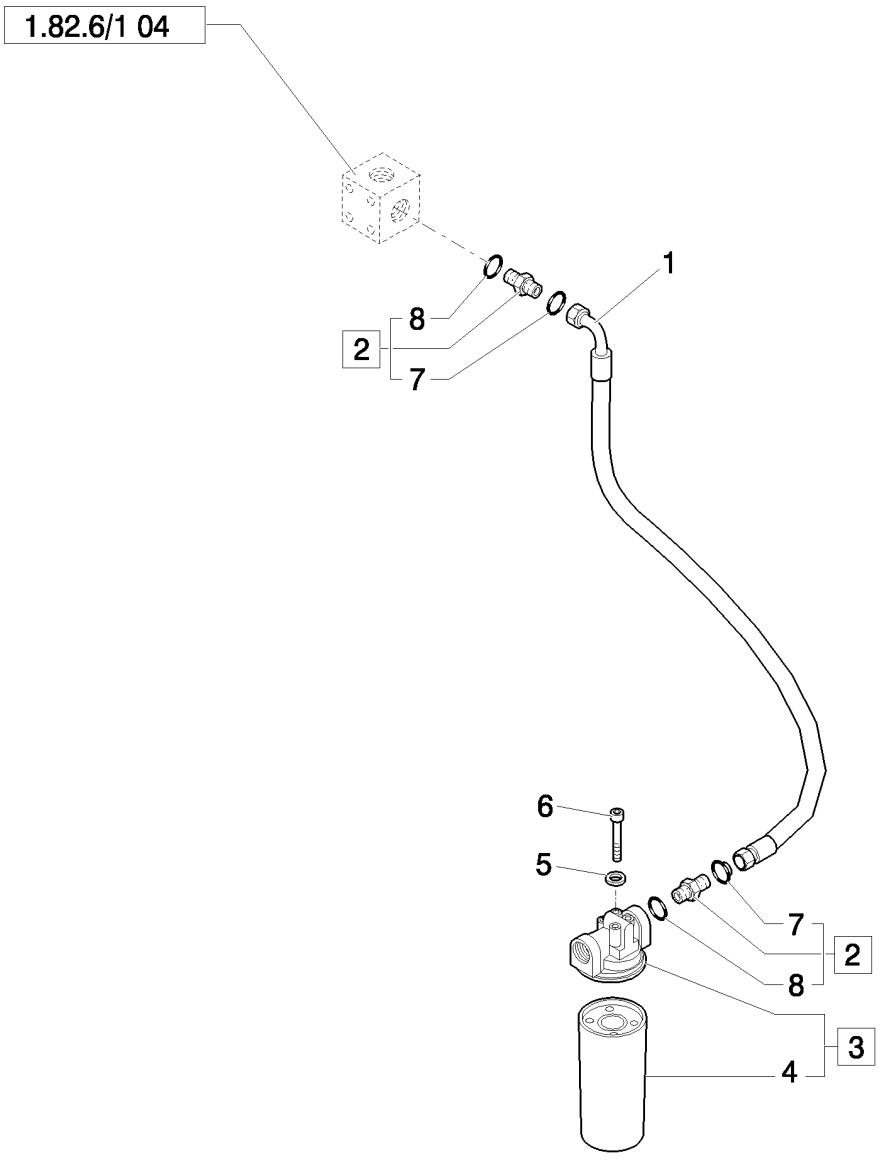

GRUPO FILTRO Y TUBERÍAS DEL COLECTOR DE RETORNO (CENTER PIVOT) - NA

REF	FN	PART NUMBER	YR/SN	QTY	DENOMINACION
1		85826986		1	MANGA FLEXIBLE
2		85802801		2	RACOR, Assy
3		87315438		1	FILTRO CONJ, Assy
4		86989733		1	FILTRO, ACEITE HIDRAULICO
5		11190579		4	ARANDELA ABANICO, Belleville, M10.5
6		11106221		4	TORNILLO, Hex, M10 x 25, 8.8, Full Thd
7		89824051		2	JUNTA HERMETICA
8		80167268		2	JUNTA HERMETICA

Mechanical Version	B95B

1.82.6/01	06	p1	04/08

TUBOS DE LA INSTALACIÓN HIDRÁULICA (PIVOTE CENTRAL): NA: RETORNO AL DEPÓSITO

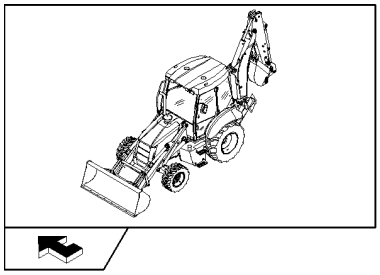

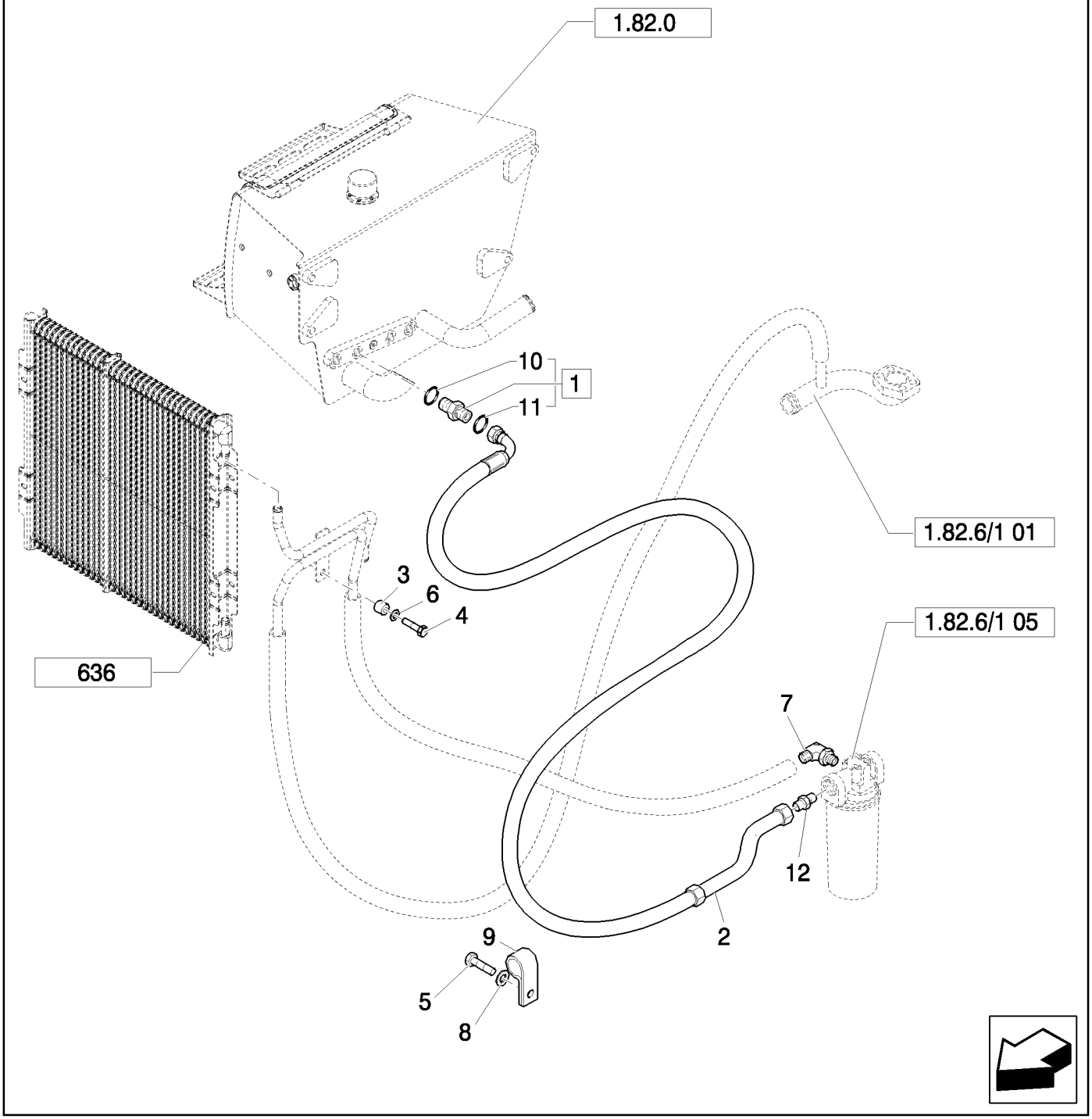

TUBOS DE LA INSTALACIÓN HIDRÁULICA (PIVOTE CENTRAL): NA: RETORNO AL DEPÓSITO

REF	FN	PART NUMBER	YR/SN	QTY	DENOMINACION
1		85802801		1	RACOR, Assy, 1-11/16"-12 ORS x 1-5/16"-12 SAE O-ring
2		85827824		1	MANGA FLEXIBLE
3		85825169		1	SEPARADOR
4		47049184		4	TORNILLO
5		15970921		1	TORNILLO, Hex, M10 x 1.25 x 35, 8.8, Full Thd, M12x25
6		47048963		1	ARANDELA
7		85825355		1	RACOR
8		47048964		1	ARANDELA
9		47048664		1	BORNE
10		80167268		1	JUNTA HERMETICA
11		89824051		1	JUNTA HERMETICA
12		85802960		1	RACOR

Mechanical Version	B95B

1.82.6/01	07	p1	04/08

TUBERÍAS DEL CILINDRO DE ELEVACIÓN DEL CARGADOR (CENTER PIVOT) - NA

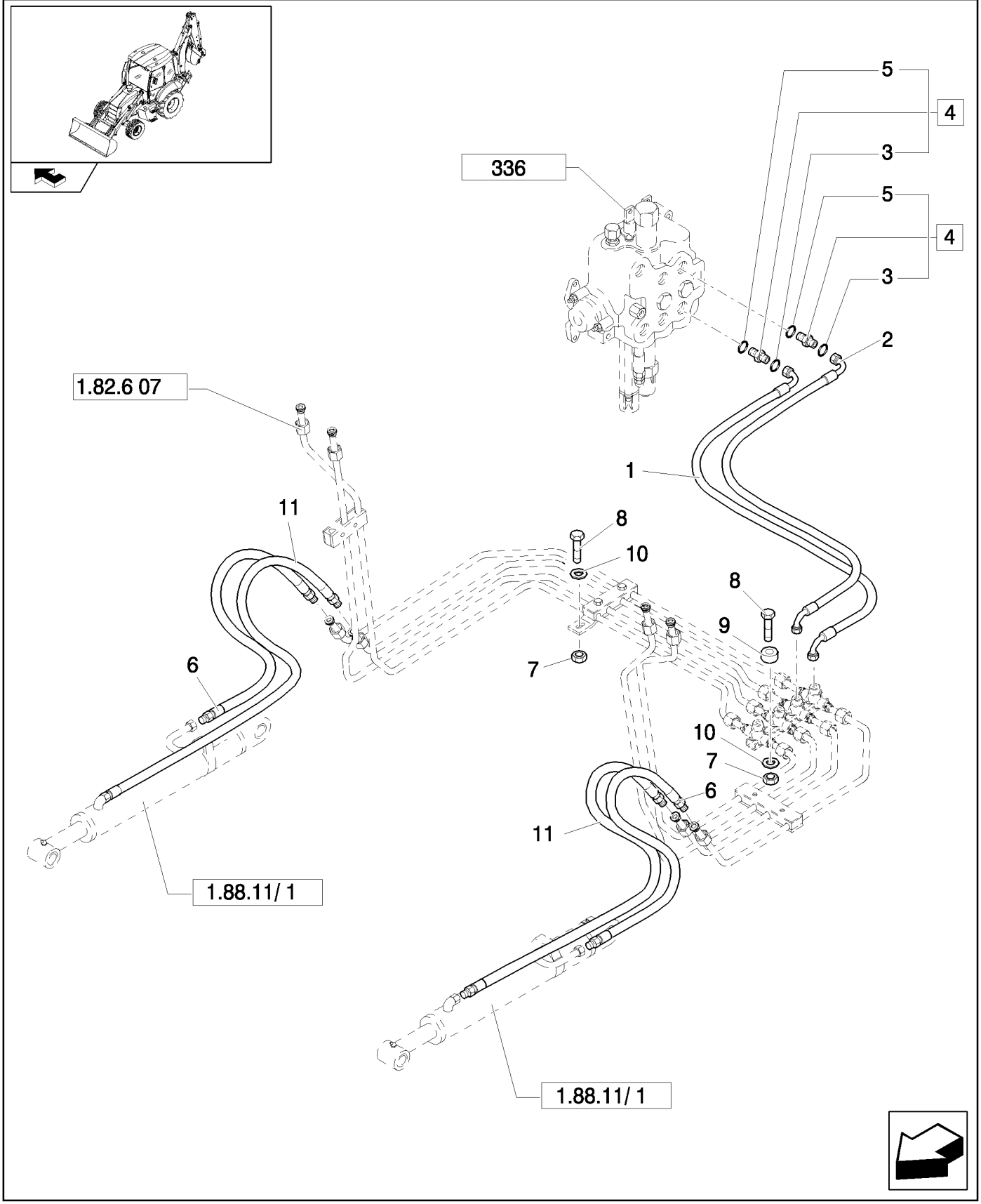

TUBERÍAS DEL CILINDRO DE ELEVACIÓN DEL CARGADOR (CENTER PIVOT) - NA

REF	FN	PART NUMBER	YR/SN	QTY	DENOMINACION
1		87619505		1	MANGA FLEXIBLE
2		87619504		1	MANGA FLEXIBLE
3		83901443		2	JUNTA HERMETICA
4		83963000		2	RACOR, Assy
5		80167269		2	JUNTA HERMETICA
6		85813363		2	MANGA FLEXIBLE, 550mm lg
7		14048211		2	CONTRA TUERCA, M8 x 1.25, Cl 8
8		16044021		2	TORNILLO, Hex, M8 x 40, 8.8
9		85802891		1	SEPARADOR
10		12647121		2	ARANDELA, M8 x 20 x 3
11		85813380		2	MANGA FLEXIBLE

Mechanical Version	B95B

1.82.6/01	08	p1	04/08

TUBERÍAS DEL CILINDRO DEL CUCHARÓN CARGADOR (CENTER PIVOT) - NA

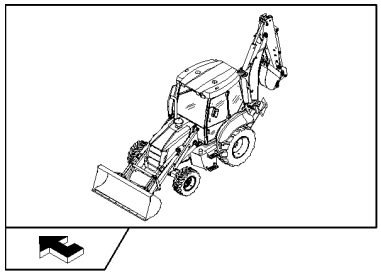

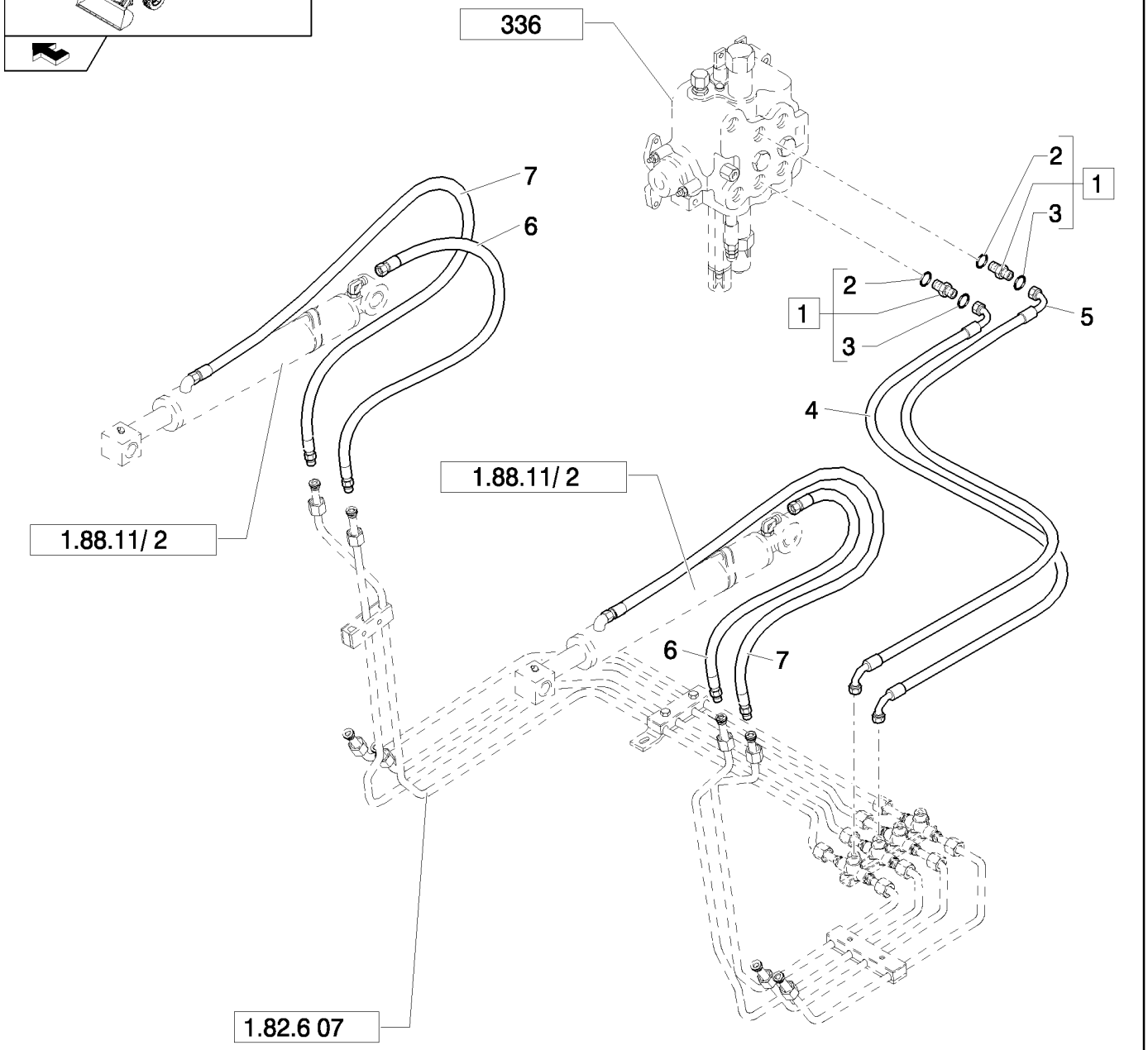

TUBERÍAS DEL CILINDRO DEL CUCHARÓN CARGADOR (CENTER PIVOT) - NA

REF	FN	PART NUMBER	YR/SN	QTY	DENOMINACION
1		83963000		2	RACOR, Assy
2		80167269		2	JUNTA HERMETICA
3		83901443		2	JUNTA HERMETICA
4		87619504		1	MANGA FLEXIBLE
5		87619505		1	MANGA FLEXIBLE
6		85813362		2	MANGA FLEXIBLE, 1130mm lg
7		85813379		2	MANGA FLEXIBLE

1.82.6/01	09	p1	04/08

TUBERÍAS DEL CILINDRO DE OSCILACIÓN DE LA EXCAVADORA (CENTER PIVOT) - NA

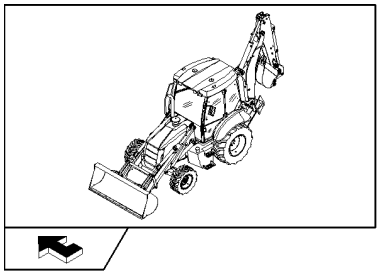

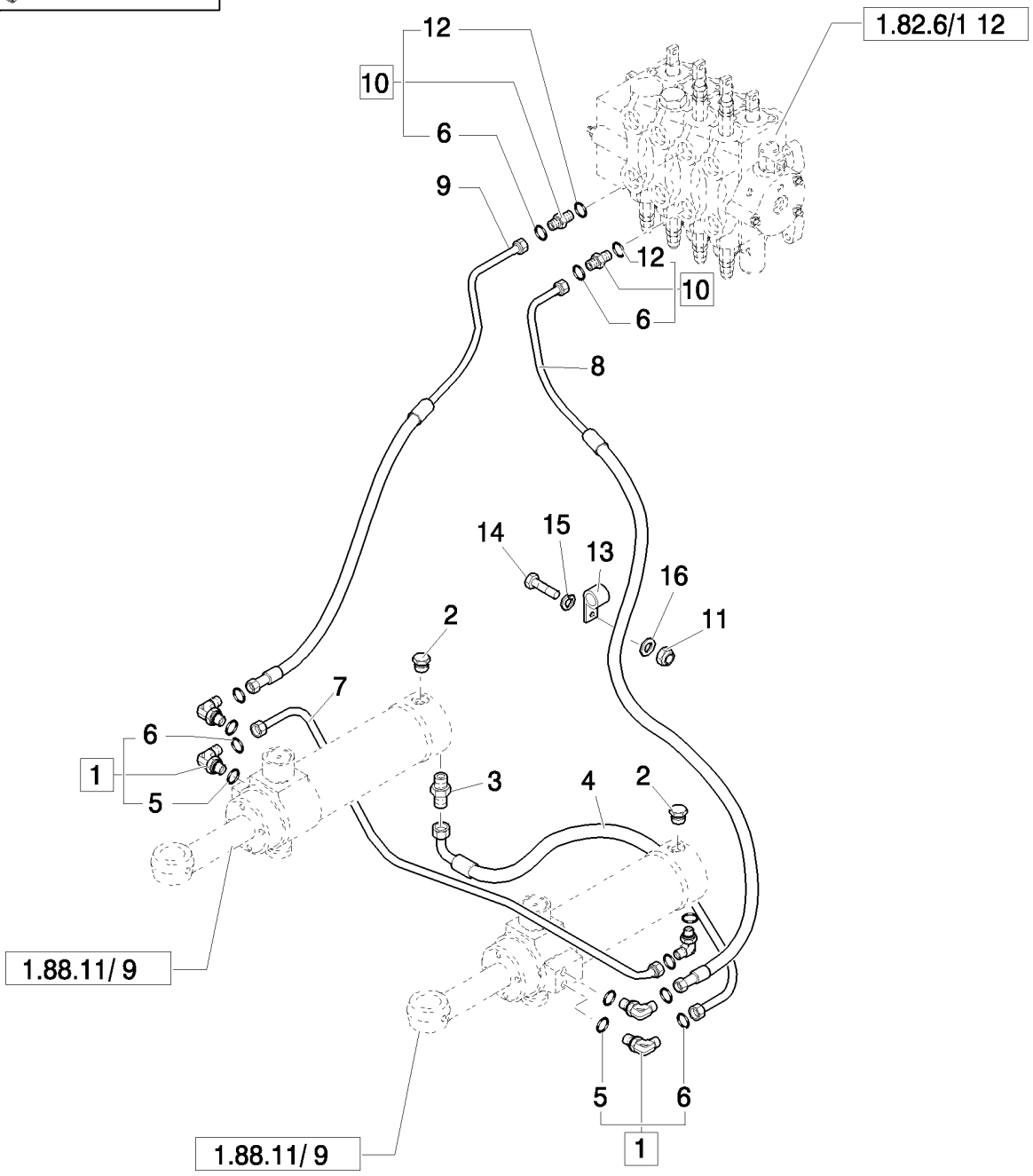

TUBERÍAS DEL CILINDRO DE OSCILACIÓN DE LA EXCAVADORA (CENTER PIVOT) - NA

REF	FN	PART NUMBER	YR/SN	QTY	DENOMINACION
1		83971549		4	CODO, Assy
2		85802955		2	TAPÓN
3		83963374		1	RACOR
4		85819727		1	HOSE, HYDRAULIC, 415mm lg
5		80128825		6	JUNTA HERMETICA
6		89992298		6	JUNTA HERMETICA
7		85819729		1	HOSE, HYDRAULIC
8		85819730		1	HOSE, HYDRAULIC
9		85819728		1	HOSE, HYDRAULIC
10		83963376		2	RACOR, Assy
11		16101511		1	TUERCA, M12 x 1.25, Cl 8
12		80167269		2	JUNTA HERMETICA
13		85802954		1	BORNE
14		15970721		1	TORNILLO, Hex, M10 x 1.25 x 25, 8.8, Full Thd
15		11190579		1	ARANDELA ABANICO, Belleville, M10.5
16		12646921		1	ARANDELA, M12 x 28 x 3

Mechanical Version B95B

1.82.6/01	10	p1	04/08

TUBERÍAS DE LOS DISTRIBUIDORES DE LA EXCAVADORA (CENTER PIVOT) - NA

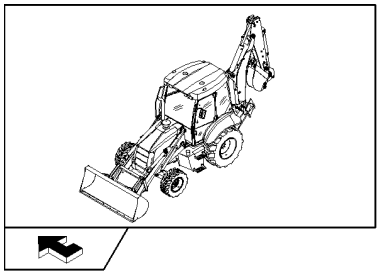

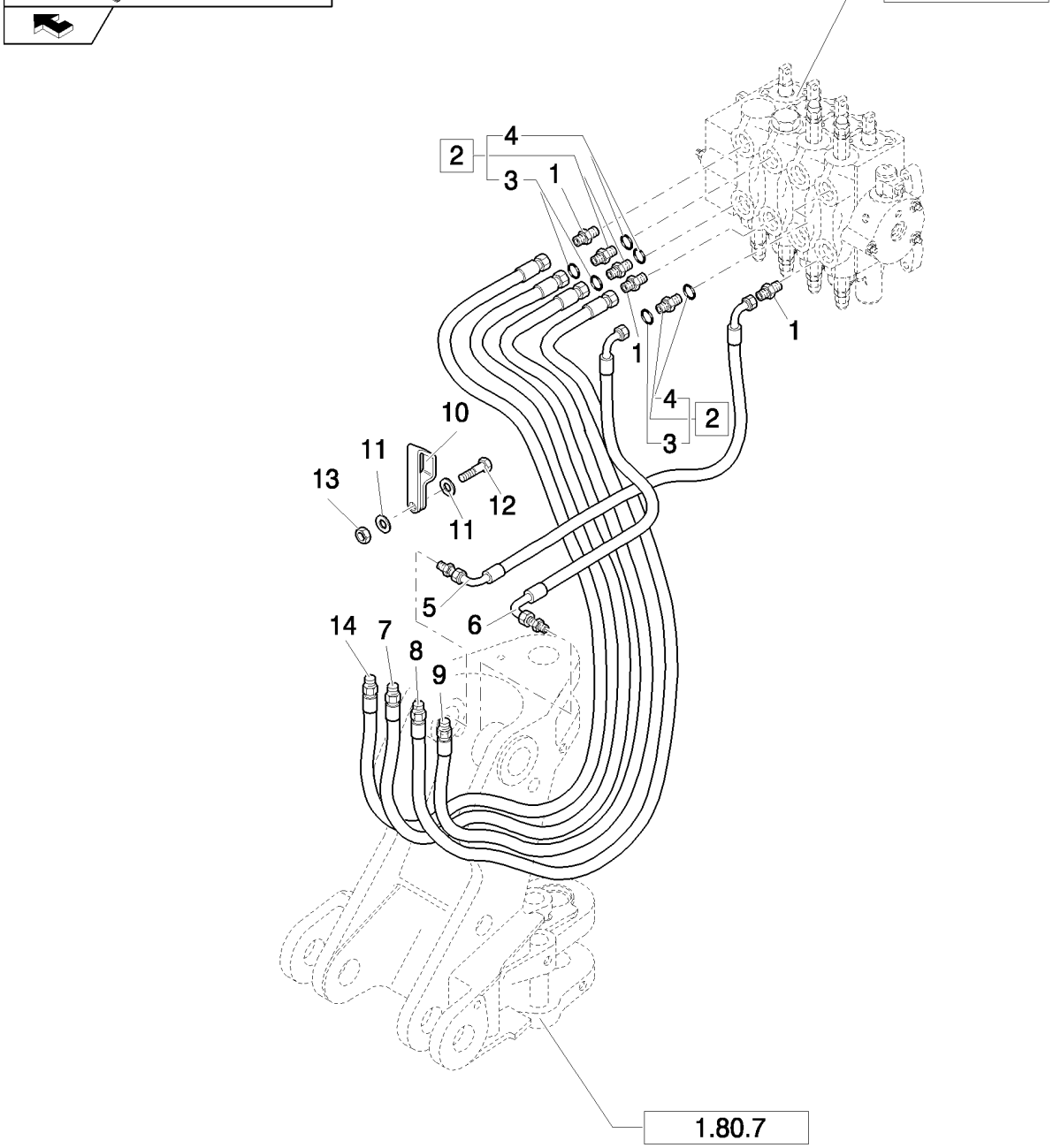

TUBERÍAS DE LOS DISTRIBUIDORES DE LA EXCAVADORA (CENTER PIVOT) - NA

REF	FN	PART NUMBER	YR/SN	QTY	DENOMINACION
1		85802642		3	RACOR, 1-3/16"-12 ORS x 7/8"-14 SAE O-Ring
2		83963000		3	RACOR, Assy
3		83901443		3	JUNTA HERMETICA
4		80167269		3	JUNTA HERMETICA
5		87621907		1	MANGA FLEXIBLE
6		87619484		1	MANGA FLEXIBLE
7		87619496		1	MANGA FLEXIBLE
8		87631531		1	MANGA FLEXIBLE
9		87621908		1	MANGA FLEXIBLE
10		85804947		1	BORNE
11		10519411		2	ARANDELA, M6 x 11.95 x 1.6
12		10902221		1	TORNILLO, Hex, M6 x 16, 8.8
13		12574211		1	CONTRA TUERCA, M6 x 1, Cl 8
14		87619495		1	MANGA FLEXIBLE

Mechanical Version B95B

COLLARES DE LOS MANGUITOS DE LA PLACA DE ROTACIÓN (CENTER PIVOT) - NA

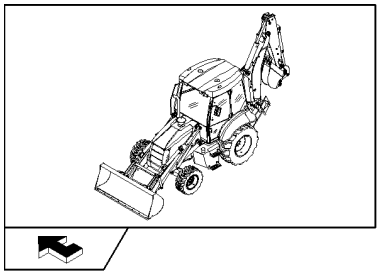

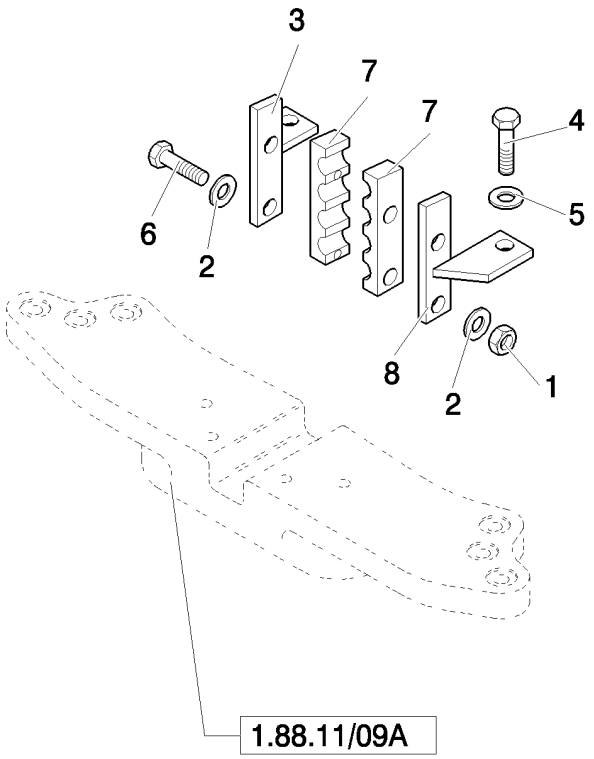

COLLARES DE LOS MANGUITOS DE LA PLACA DE ROTACIÓN (CENTER PIVOT) - NA

REF	FN	PART NUMBER	YR/SN	QTY	DENOMINACION
1		14048221		2	CONTRA TUERCA, M8 x 1.25, Cl 10
2		12647121		2	ARANDELA, M8 x 20 x 3
3		85804573		1	SOPORTE
4		11106221		2	TORNILLO, Hex, M10 x 25, 8.8, Full Thd
5		11190579		2	ARANDELA ABANICO, Belleville, M10.5
6		16044421		2	TORNILLO, Hex, M8 x 60, 8.8
7		87631460		2	BORNE
8		85804574		1	SOPORTE

1.82.6/01	12	p1	04/08

DISTRIBUIDOR DE LA EXCAVADORA (CENTER PIVOT) - NA

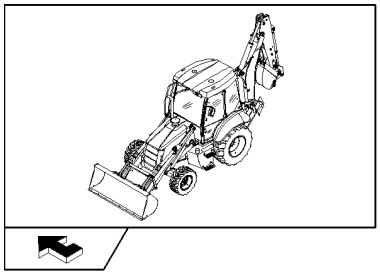

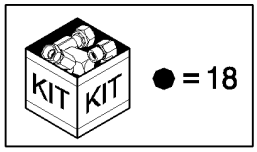

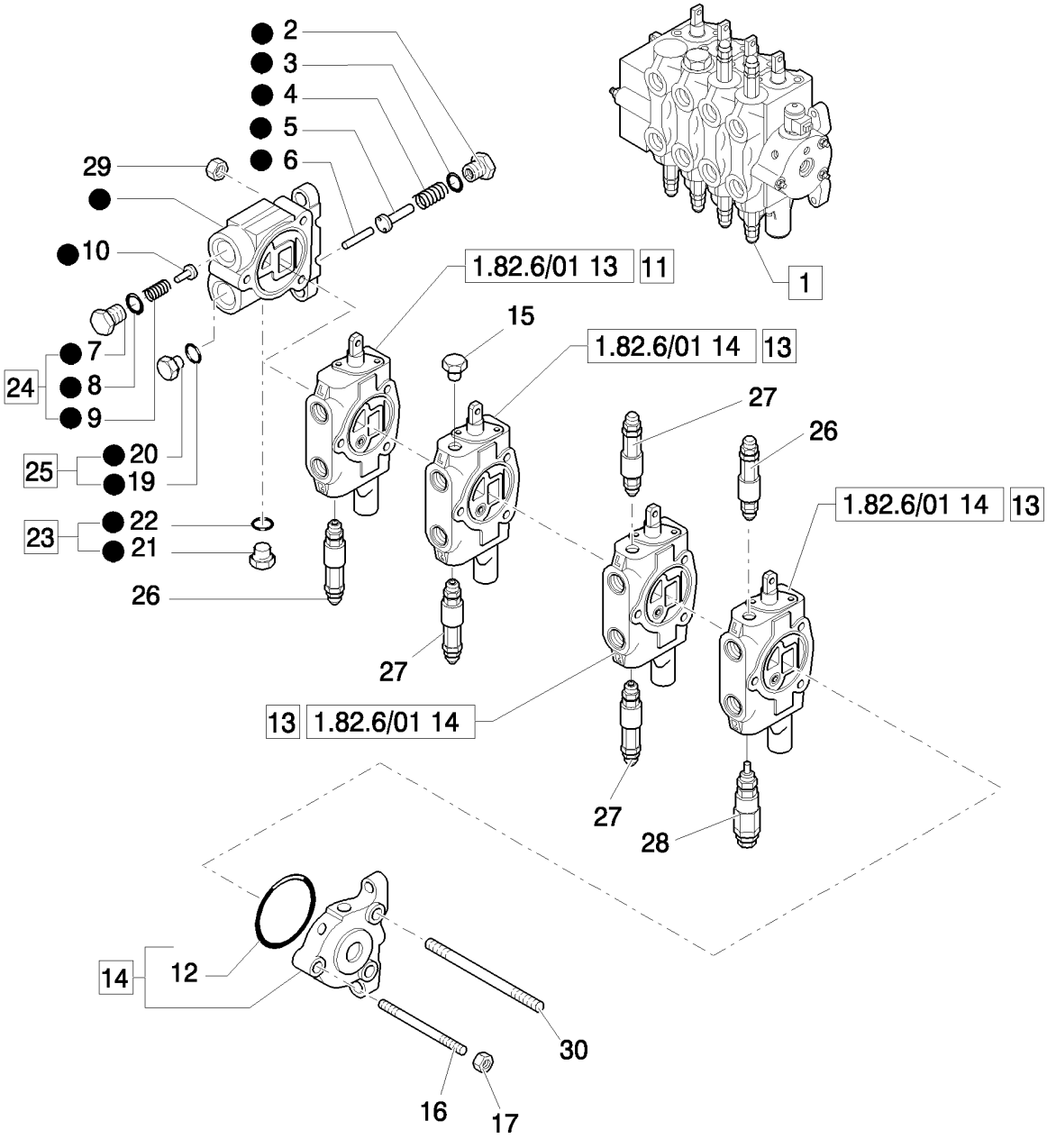

DISTRIBUIDOR DE LA EXCAVADORA (CENTER PIVOT) - NA

REF	FN	PART NUMBER	YR/SN	QTY	DENOMINACION
1		85827100		1	VALVULA DISTRIBUIDORA, Assy
2		9968501		1	TAPÓN
3		9968502		1	JUNTA HERMETICA
4		9968500		1	RESORTE
5		9968503		1	EMBOLO
6		9968497		1	PERNO
7		9968498		1	TAPÓN
8		9968468		1	JUNTA HERMETICA
9		9968448		1	RESORTE
10		9968447		1	EMBOLO
11		85827102		1	DISTRIBUIDOR HYDR, Assy
12		9968495		1	JUNTA HERMETICA
13		85827101		3	DISTRIBUIDOR HYDR, Assy
14		9968494		1	DISTRIBUIDOR HYDR, Assy
15		85807832		1	TAPÓN
16		9968506		1	VARILLA ROSCADA
17		9968507		1	TUERCA
18		85807827		1	DISTRIBUIDOR HYDR
19		85807830		1	JUNTA HERMETICA
20		85807831		1	TAPÓN
21		85807828		1	TAPÓN
22		85807829		1	JUNTA HERMETICA
23		9968523		1	TAPÓN, Assy
24		85807834		1	TAPÓN, Assy
25		85807833		1	TAPÓN, Assy
26		9968595		2	VÁLVULA, DESCARGA
27		9968596		3	VÁLVULA, DESCARGA
28		9968508		1	VÁLVULA, DESCARGA
29		9968504		1	TUERCA
29		9968505		1	VARILLA ROSCADA

Mechanical Version	B95B

1.82.6/01	13	p1	04/08

SECCIÓN DE LA VÁLVULA CUCHARA (CENTER PIVOT) - NA

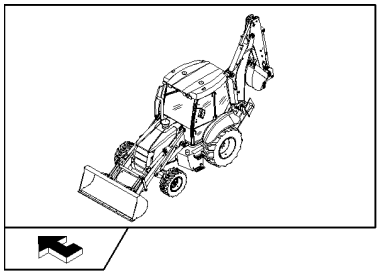

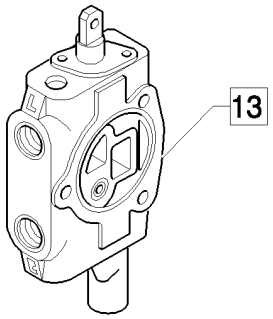

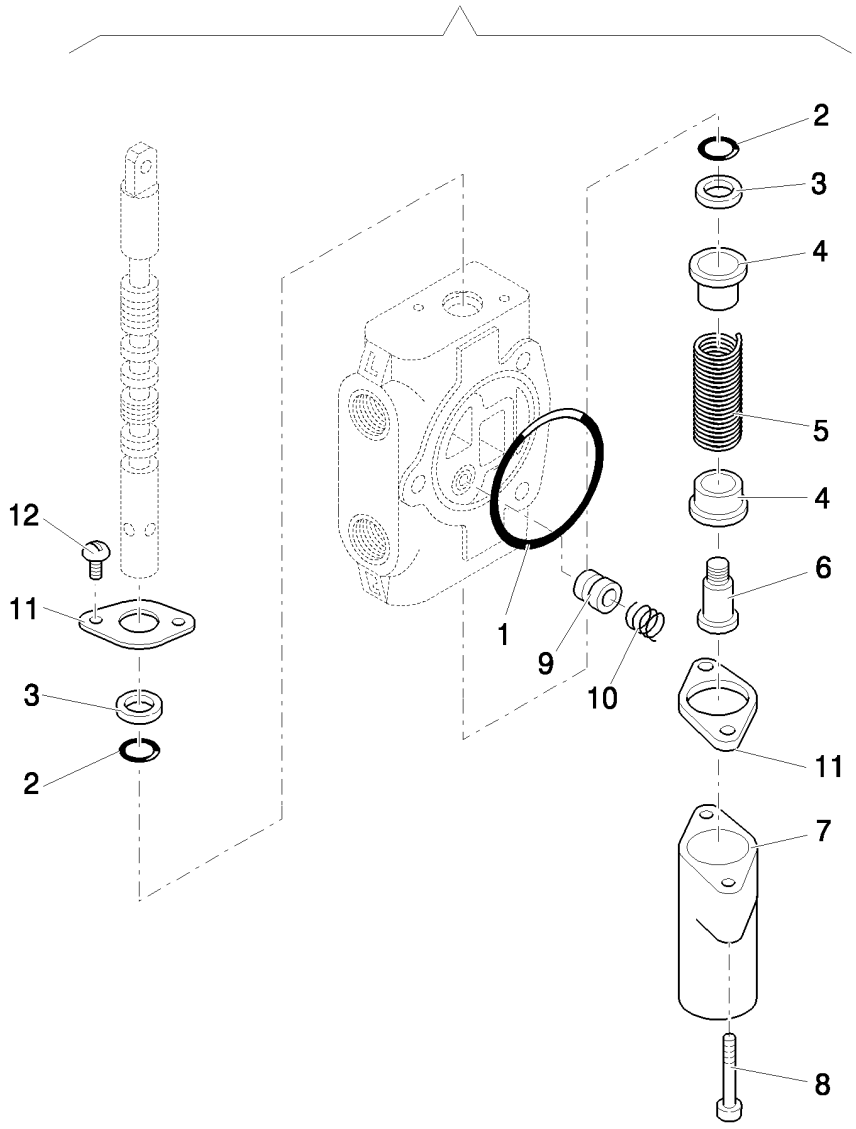

SECCIÓN DE LA VÁLVULA CUCHARA (CENTER PIVOT) - NA

REF	FN	PART NUMBER	YR/SN	QTY	DENOMINACION
1		9968495		1	JUNTA HERMETICA
2		9968489		1	ANILLO DE CIERRE
3		9968490		1	LIMPIADOR
4		9968512		1	ALOJAMIENTO
5		9968514		1	RESORTE
6		9968515		1	PISTONCILLO
7		9968513		1	TAPADERA
8		9968516		1	TORNILLO
9		9968510		2	EMBOLO
10		9968511		1	RESORTE
11		9968458		2	BRIDA
12		9968460		1	TORNILLO
13		85827102		1	DISTRIBUIDOR HYDR, Assy

Mechanical Version	B95B

1.82.6/01	14	p1	04/08

SECCIÓN DE LA VÁLVULA CUCHARÓN, BARRA OSCIL. Y LANZA DE ENGANCHE (CENTER PIVOT) - NA

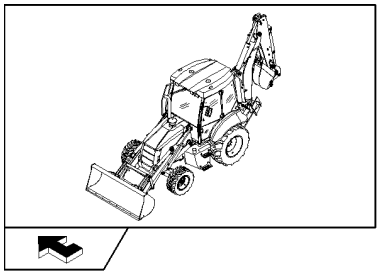

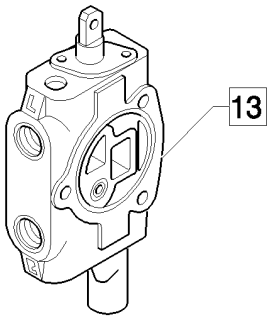

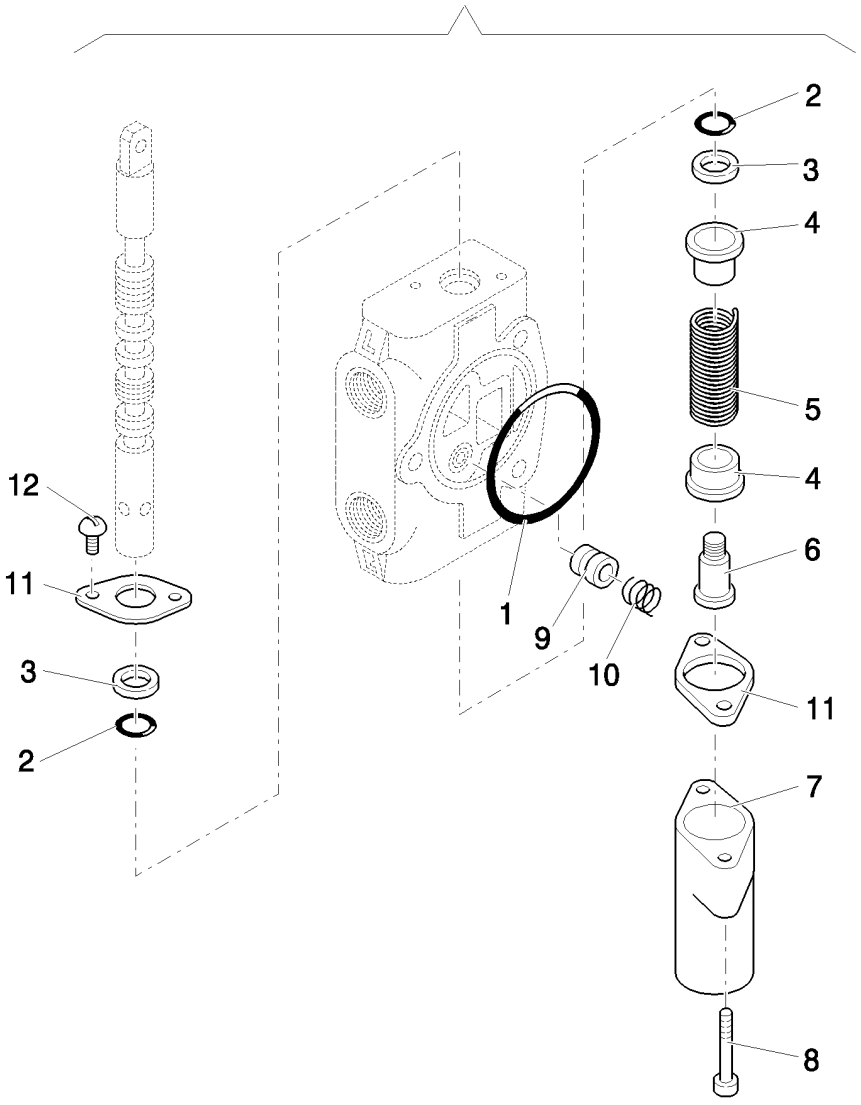

SECCIÓN DE LA VÁLVULA CUCHARÓN, BARRA OSCIL. Y LANZA DE ENGANCHE (CENTER PIVOT) - NA

REF	FN	PART NUMBER	YR/SN	QTY	DENOMINACION
1		9968495		1	JUNTA HERMETICA
2		9968489		1	ANILLO DE CIERRE
3		9968490		1	LIMPIADOR
4		9968512		2	ALOJAMIENTO
5		9968514		1	RESORTE
6		9968515		1	PISTONCILLO
7		9968513		1	TAPADERA
8		9968516		1	TORNILLO
9		9968510		1	EMBOLO
10		9968511		1	RESORTE
11		9968458		2	BRIDA
12		9968460		1	TORNILLO
13		85827101		1	DISTRIBUIDOR HYDR, Assy

Mechanical Version	B95B

NOTAS

SECTION INDEX

Chapeados/Calcomanías

1.83.0	01	REJILLA Y ACCESORIOS
1.83.0	02	PROTECCIÓN Y ACCESORIOS
1.83.0	03	KIT BLOQUEO PUERTA
1.83.0	04	CONJUNTO PLACA DE BLOQUEO
1.83.0	05	KIT BISAGRA DE PROTECCIÓN BASCULANTE
1.83.0	06	COMPONENTES CONJUNTO PROTECCIÓN BASCULANTE
1.87.2		PANTALLAS DE LA CABINA
1.87.8		COMPONENTES DE FIJACION DE LA CABINA

1.83.0	01	p1	04/08

REJILLA Y ACCESORIOS

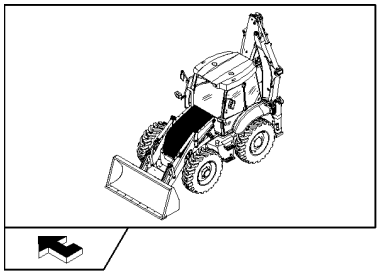

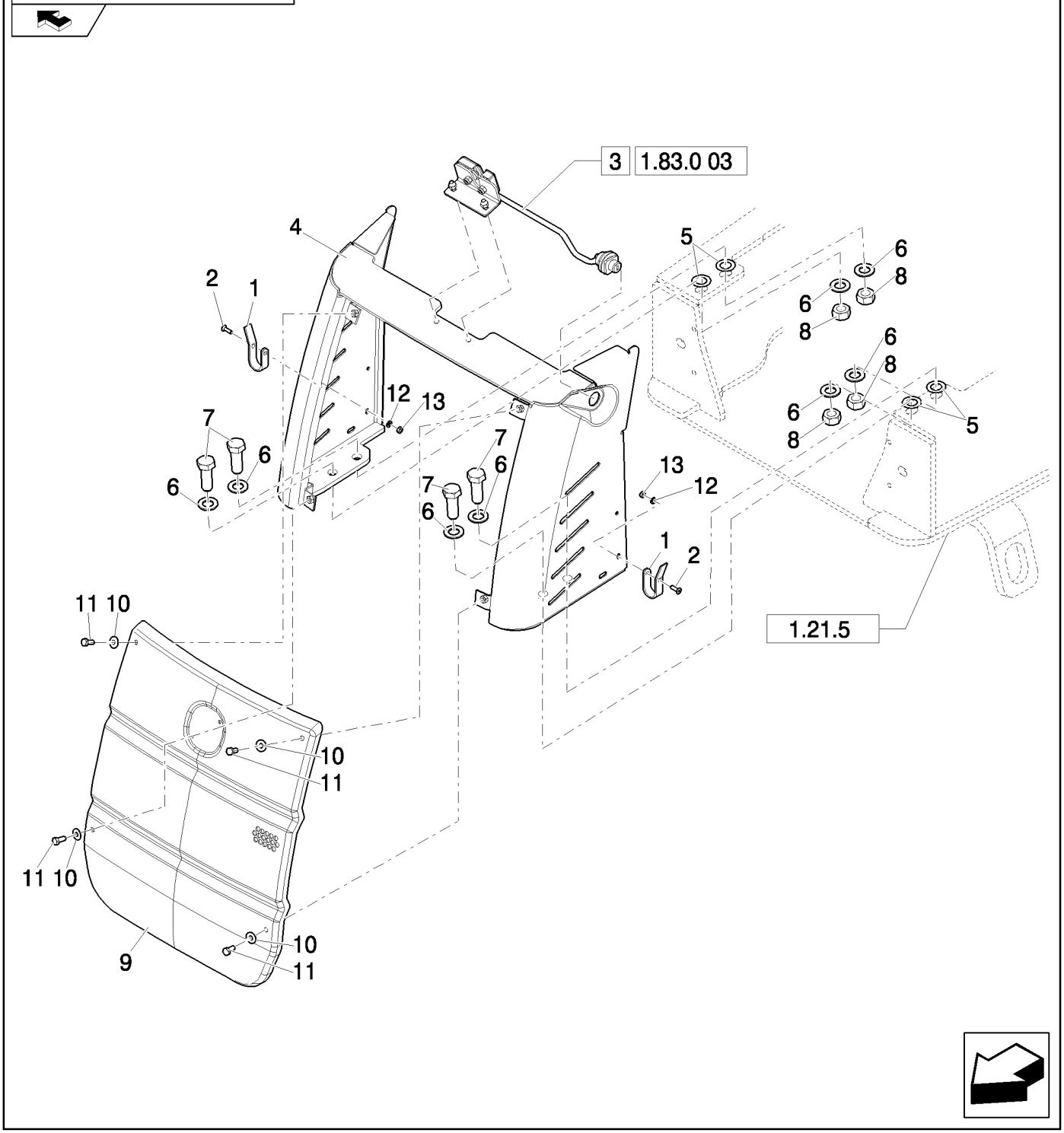

REJILLA Y ACCESORIOS

REF	FN	PART NUMBER	YR/SN	QTY	DENOMINACION
1		87473167		2	PIEZA DE SOPORTE
2		14441421		2	TORNILLO, Hex Soc Flat Hd, M6 x 20, 8.8
3		87669786		1	CERRADURA, Assy
4		87632691		1	TAPADERA
5		13580001		4	ARANDELA
6		11191579		8	ARANDELA ABANICO, Belleville, M17
7		15981221		4	TORNILLO, Hex, M16 x 65, 8.8
8		12164111		4	TUERCA
9		87614694		1	CALANDRIA
10		11193977		4	ARANDELA
11		87015745		4	TORNILLO, Hex, M8 x 20, 5.8, Full Thd
12		12643721		2	ARANDELA, M6 x 18 x 1.5
13		12574211		2	CONTRA TUERCA, M6 x 1, Cl 8

PROTECCIÓN Y ACCESORIOS

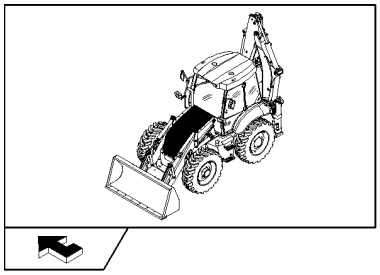

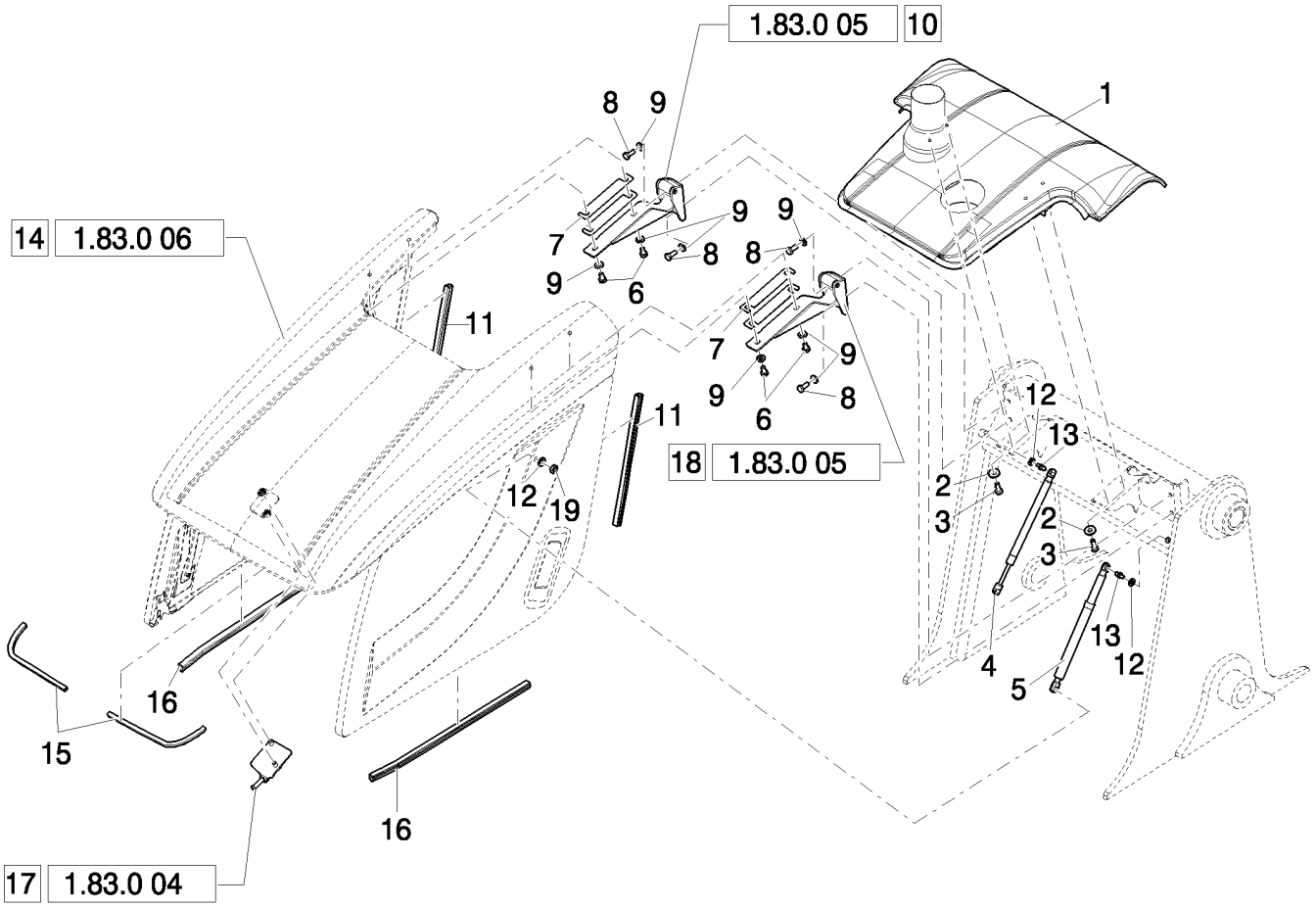

PROTECCIÓN Y ACCESORIOS

REF	FN	PART NUMBER	YR/SN	QTY	DENOMINACION
1		87741687		1	Capo De Motor
2		86592700		4	ARANDELA, M10 x 28 x 4, HT
3		11106321		4	TORNILLO, Hex, M10 x 28, 8.8, Full Thd
4		87636546		1	RESORTE
5		87654073		1	AMORTIGUADOR
6		11106021		4	TORNILLO, Hex, M10 x 20, 8.8, Full Thd
7		87673011		4	SUPLEMENTO
8		11106221		4	TORNILLO, Hex, M10 x 25, 8.8, Full Thd
9		12642501		8	ARANDELA, M10 x 22 x 2
10		87696662		1	BISAGRA, Assy
11		87643908		2	JUNTA DE CAUCHO
12		11193874		4	ARANDELA ABANICO, Belleville, M8.4
13		87603835		4	PRISIONERO
14	1	{87397053}		1	Assy
15		87652862		2	JUNTA DE CAUCHO
14	2	{87653084}		1	Assy
16		87643906		2	JUNTA DE CAUCHO
17		87613623		1	MULETILLA DE FIJACION, Assy
18		87748117		1	BISAGRA, Assy
19		16100810		2	TUERCA, M8, Cl 8

(1) Only for EU
(2) Only for NA

1.83.0	03	p1	04/08

KIT BLOQUEO PUERTA

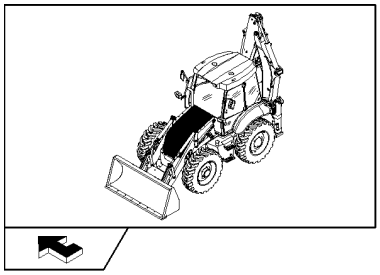

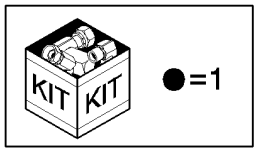

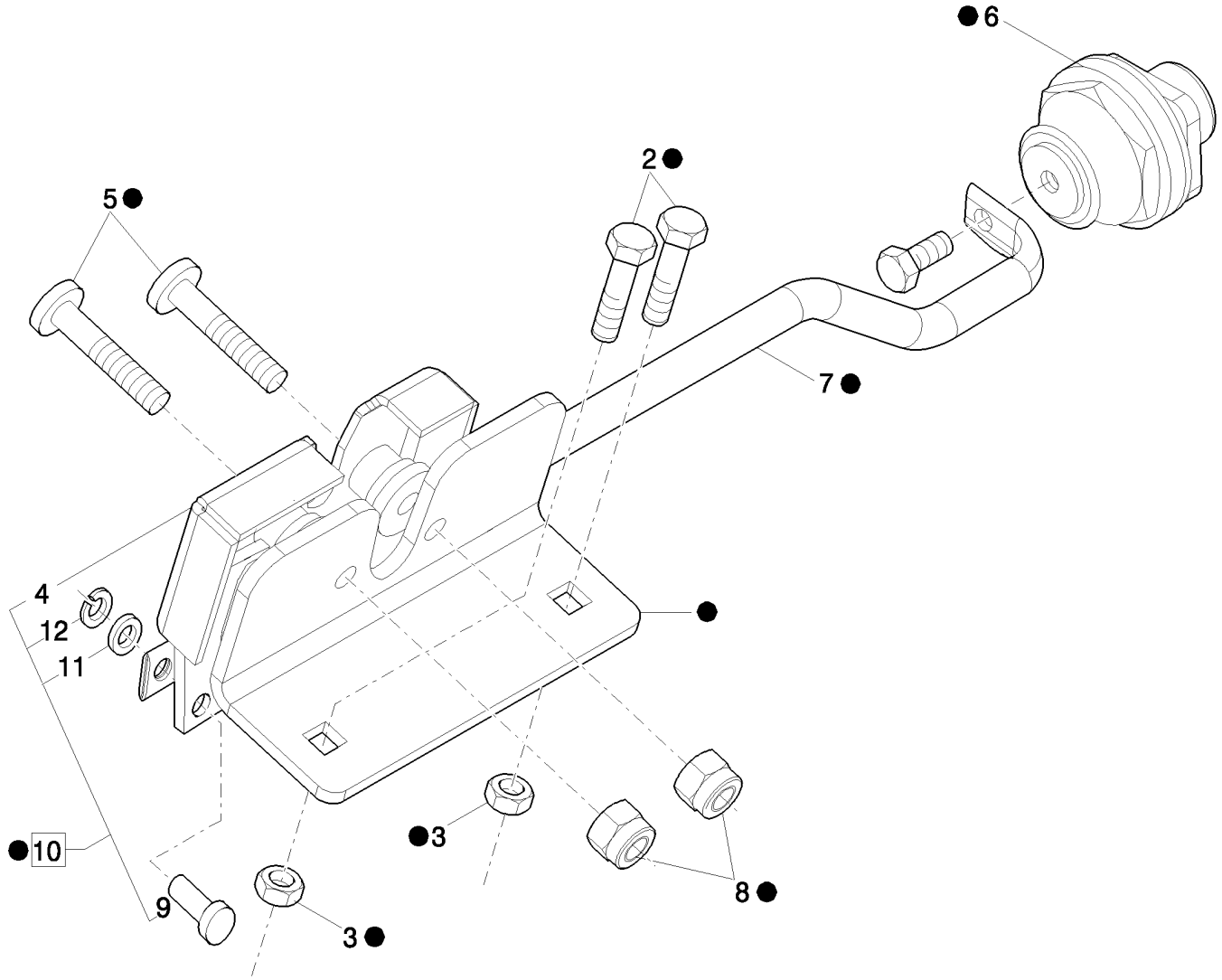

KIT BLOQUEO PUERTA

REF	FN	PART NUMBER	YR/SN	QTY	DENOMINACION
1		87669786		1	CERRADURA, Assy
2		87694197		2	TORNILLO
3		16100811		2	TUERCA, M8, Cl 8
4		87742983		1	CERRADURA
5		14442321		2	TORNILLO, Hex Soc Flat Hd, M8 x 35, 8.8
6		87624743		1	TAPÓN
7		87624744		1	VARILLA
8		16104111		2	CONTRA TUERCA, M8 x 1.25, Cl 8
9		87687399		1	PERNO
10		87624745		1	CERRADURA, Assy
11		14499301		1	ARANDELA, M6 x 12 x 1.6
12		11065374		1	ANILLO DE RESORTE, M5, Ext

1.83.0	04	p1	03/08

CONJUNTO PLACA DE BLOQUEO

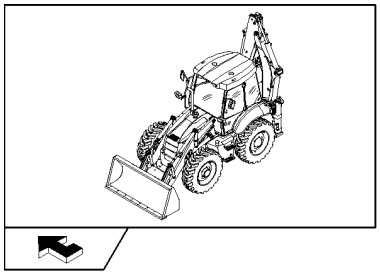

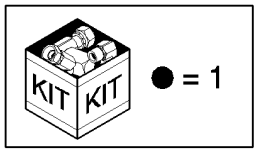

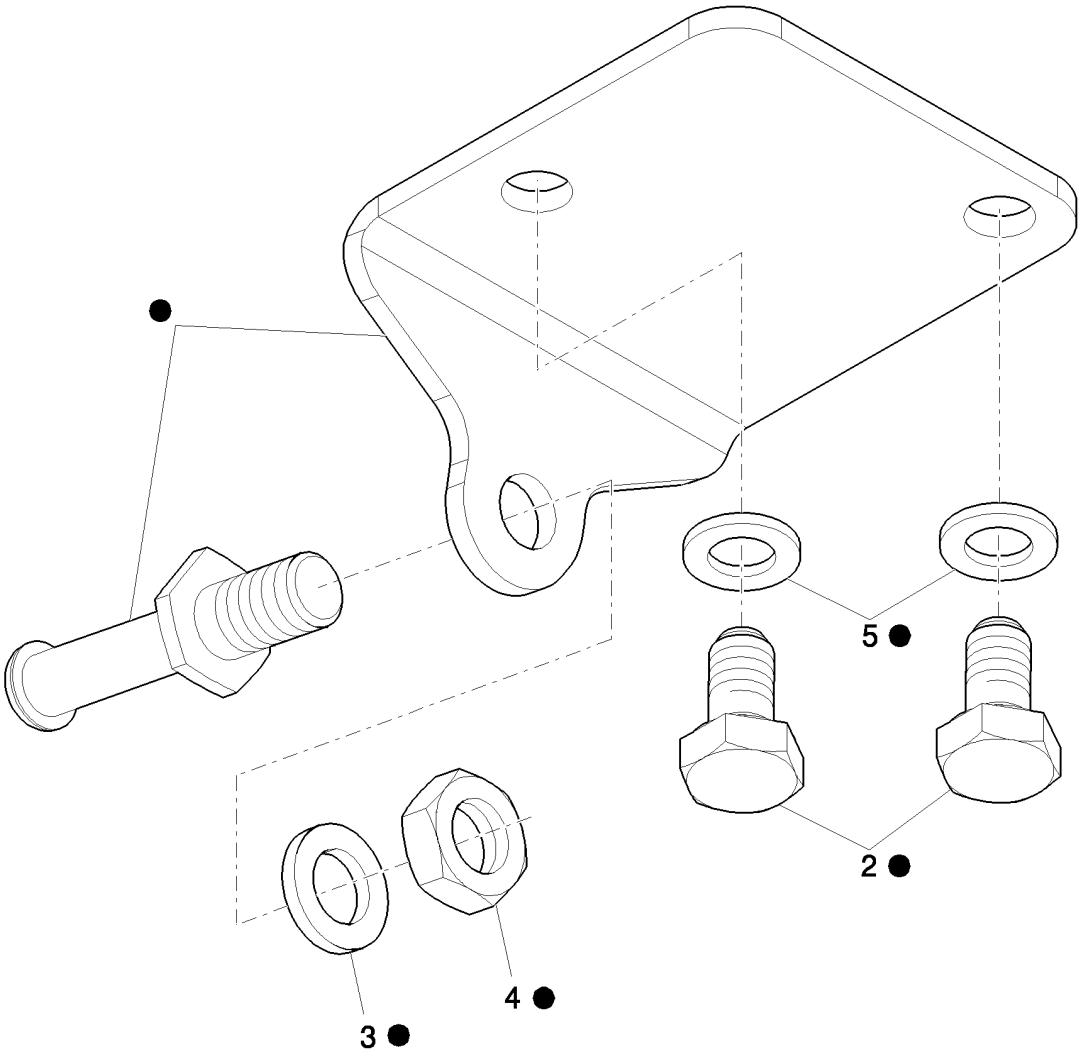

CONJUNTO PLACA DE BLOQUEO

REF	FN	PART NUMBER	YR/SN	QTY	DENOMINACION
1		87613623		1	MULETILLA DE FIJACION, Assy
2		11106021		2	TORNILLO, Hex, M10 x 20, 8.8, Full Thd
3		13507401		1	ARANDELA, M12 x 20 x 2
4		10717311		1	TUERCA, Thin, M12 x 1.75, Cl 04
5		12638621		2	ARANDELA

1.83.0	05	p1	04/08

KIT BISAGRA DE PROTECCIÓN BASCULANTE

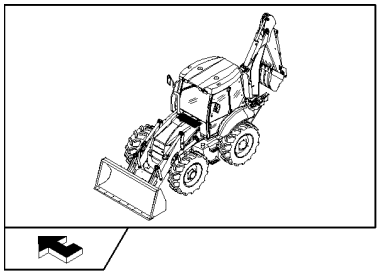

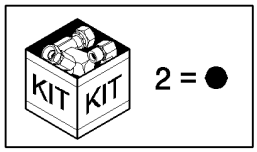

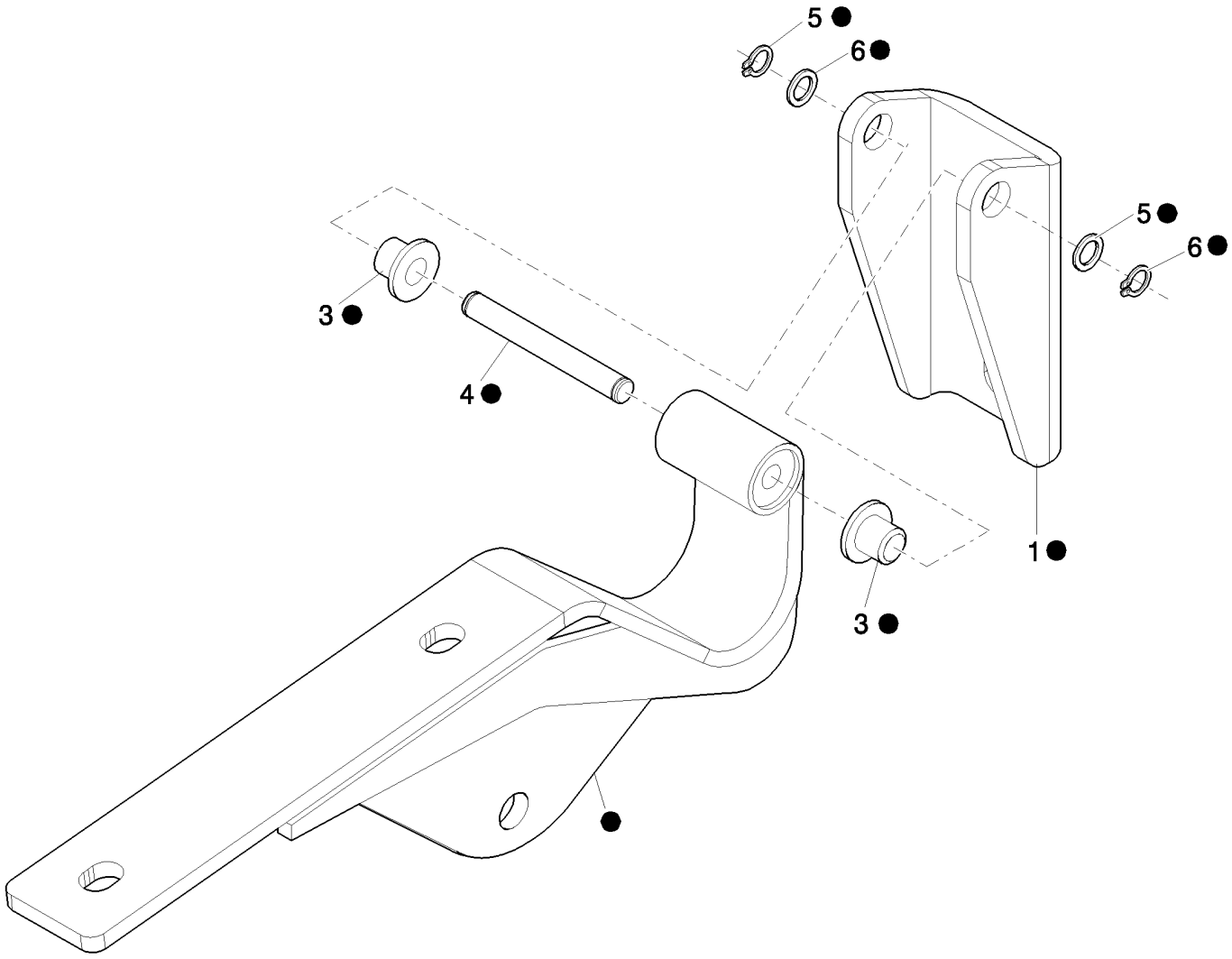

KIT BISAGRA DE PROTECCIÓN BASCULANTE

REF	FN	PART NUMBER	YR/SN	QTY	DENOMINACION
1		87385465		2	PIEZA DE SOPORTE
2	1	87696662		1	BISAGRA, Assy
2	2	87748117		1	BISAGRA, Assy
3		87669785		4	CASQUILLO
4		87686869		2	PERNO
5		13507104		4	ARANDELA
6		87477173		4	ANILLO

(1) Right Side
(2) Left Side

1.83.0	06	p1	03/08

COMPONENTES CONJUNTO PROTECCIÓN BASCULANTE

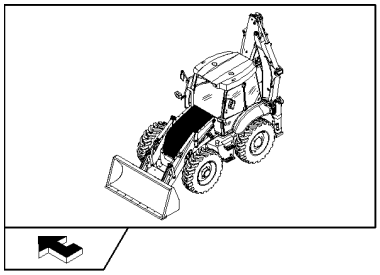

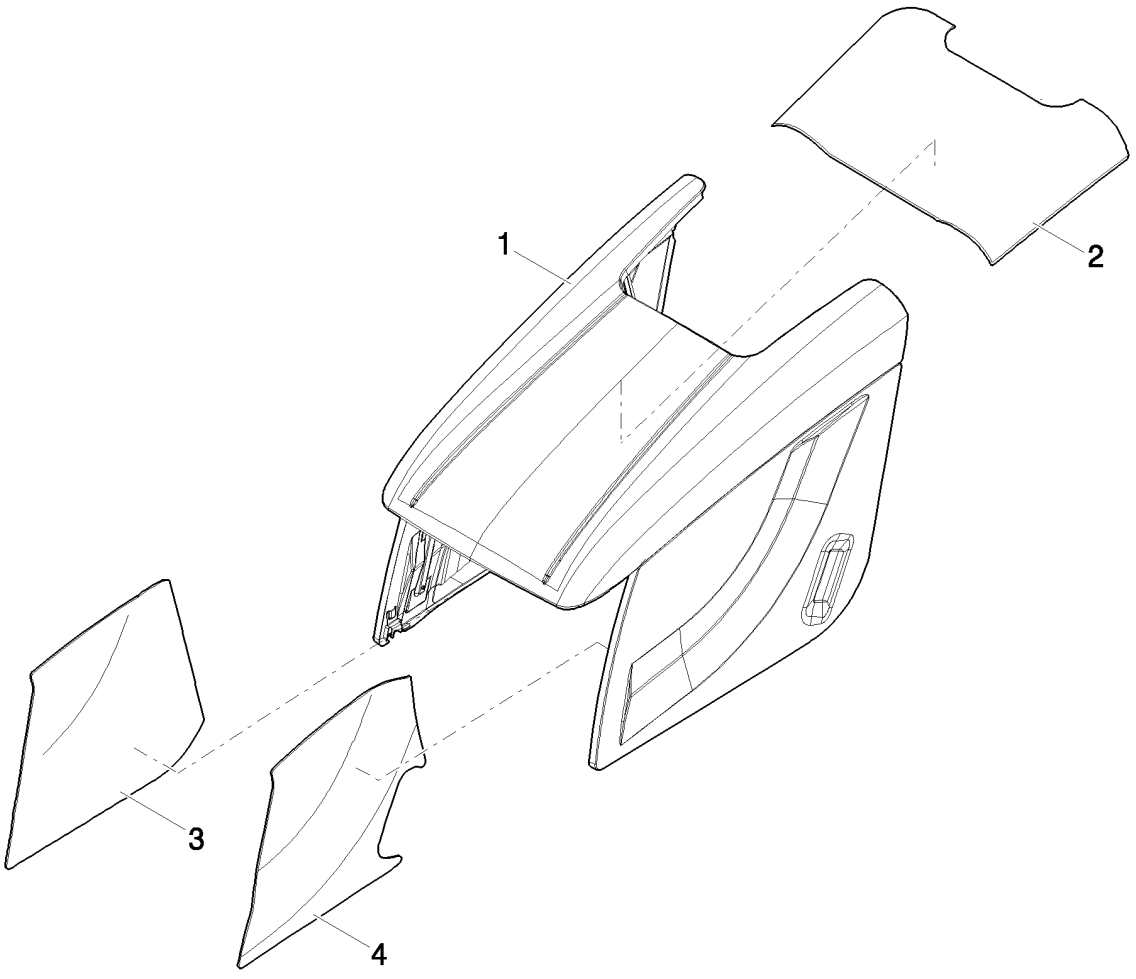

COMPONENTES CONJUNTO PROTECCIÓN BASCULANTE

REF	FN	PART NUMBER	YR/SN	QTY	DENOMINACION
1		87376297		1	Capo De Motor
2	1	87643911		1	CAPOT MOVIL
2	2	87653086		1	CAPOT MOVIL
3	1	87643912		1	CAPOT MOVIL
3	2	87653220		1	CAPOT MOVIL
4	1	87643913		1	CAPOT MOVIL
4	2	87669736		1	CAPOT MOVIL

(1) Only for EU
(2) Only for NA

PANTALLAS DE LA CABINA

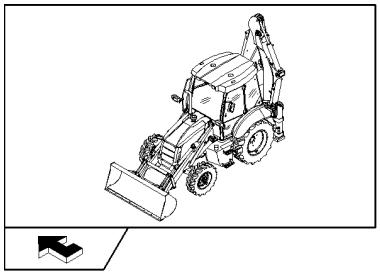

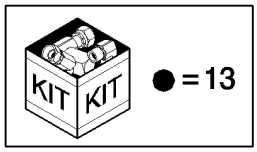

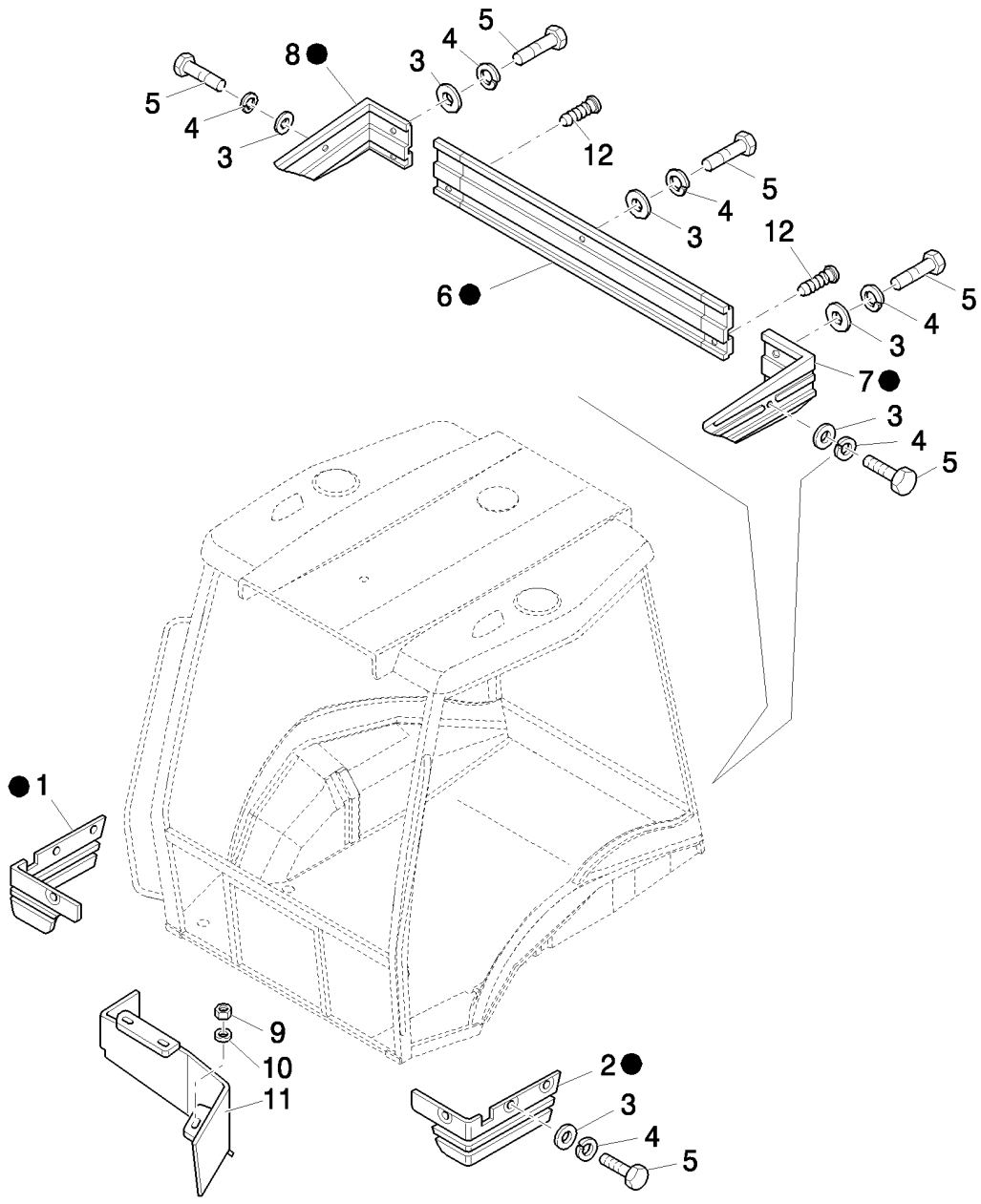

PANTALLAS DE LA CABINA

REF	FN	PART NUMBER	YR/SN	QTY	DENOMINACION
1		87315641		1	TAPADERA, RH
2		87315643		1	TAPADERA, LH
3		12643721		11	ARANDELA, M6 x 18 x 1.5
4		11194679		11	ARANDELA ABANICO, Belleville, M6.4
5		10902421		11	TORNILLO, Hex, M6 x 20, 8.8
6		85805303		1	TAPADERA
7		85805304		1	TAPADERA, LH
8		85805305		1	TAPADERA, RH
9		16104111		3	CONTRA TUERCA, M8 x 1.25, Cl 8
10		11193979		3	ARANDELA ABANICO, Belleville, M8.4
11		85805142		1	CONTRAPANEL
12		87641276		2	TAPÓN
13		87315628		1	EQUIPO

COMPONENTES DE FIJACION DE LA CABINA

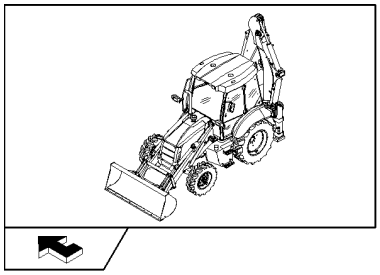

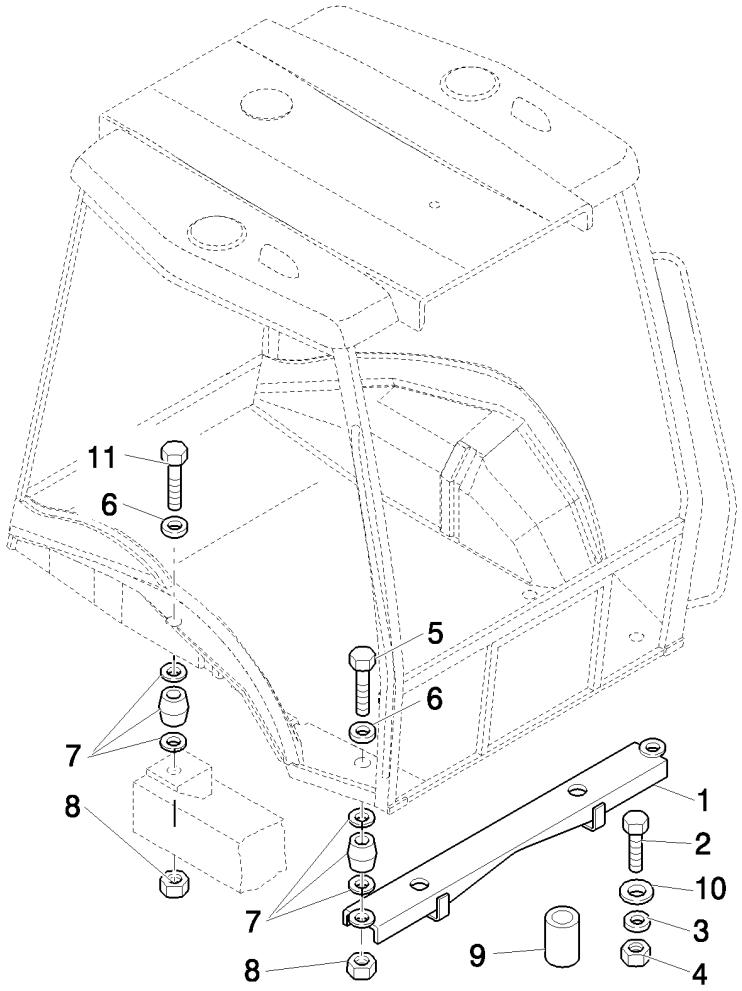

COMPONENTES DE FIJACION DE LA CABINA

REF	FN	PART NUMBER	YR/SN	QTY	DENOMINACION
1	1, 2	85801319		1	SOPORTE
1	3, 4	87303780		1	SOPORTE
2		15989334		2	TORNILLO, Hex, M20 x 1.5 x 110, 10.9
3		10520431		2	ARANDELA
4		12575121		2	CONTRA TUERCA, M20 x 1.5, Cl 10
5		15982134		2	TORNILLO, Hex, M16 x 140, 10.9
6		14496931		4	ARANDELA, M16 x 30 x 3
7		87569589		4	SILENTBLOC
8		12574921		4	CONTRA TUERCA, M16 x 1.5, Cl 10
9		85801324		2	SEPARADOR
10		85804493		2	ARANDELA, 21 x 40 x 6
11		15981834		2	TORNILLO, Hex, M16 x 1.5 x 120, 10.9

(1) Only for B90B, B90BLR, B100BLR, B110B (EU)
(2) Only for B90B, B95B, B95BLR, B110B (NA)
(3) Only for B115B (EU)
(4) Only for B95BTC, B115B (NA)

NOTAS

SECTION INDEX

Cargadora/Retrocargadoras

1.88.01	01	TIRANTE DE BLOQUEO TRANSPORTE EQUIPO POSTERIOR (PIVOTE CENTRAL): NA
1.88.01	02	CABLE DE BLOQUEO TRANSPORTE EQUIPO POSTERIOR (PIVOTE CENTRAL): NA
1.88.08	01	GRUPO BRAZO OSCIL., CASQUILLOS Y PERNOS
1.88.08	02	PERNOS BARRA OSCIL. Y GANCHO DE BLOQUEO TRANSPORTE
1.88.11		BRAZOS Y ARTICULACIONES
1.88.11/01		CILINDRO ELEVADOR
1.88.11/02	01	CILINDRO DE MANDO DEL CUCHARON
1.88.11/02	02	CILINDRO DE MANDO DEL CUCHARON
1.88.11/03		TUBERIAS DEL CILINDRO ELEVADOR Y CUCHARON
1.88.11/05A	01	EMPALMES AUTONIVELANTES, MANDOS DEL CARGADOR (CENTER PIVOT MECANICO) - NA
1.88.11/05A	02	EMPALMES AUTONIVELANTES, BRAZO DEL CARGADOR (CENTER PIVOT) - NA
1.88.11/06A		CILINDROS ESTABILIZADORES (CENTER PIVOT)
1.88.11/07A		TUBOS PARA CILINDROS ESTABILIZADORES (CENTER PIVOT PILOT)
1.88.11/07C		TUBOS PARA CILINDROS ESTABILIZADORES (CENTER PIVOT MECANICO) - NA
1.88.11/08		SENSOR DE RETORNO EXCAVACIÓN
1.88.11/09	02	CILINDROS TRASERO DEL OSCILACIÓN
1.88.11/09A		CILINDROS Y PLACA ROTACION (CENTER PIVOT)
1.88.12/03		SOPORTE DE LOS DISTRIBUIDORES ANTERIORES Y REENVIOS (CENTER PIVOT - SIDE SHIFT)
1.88.12/03A		SOPORTE DE LOS DISTRIBUIDORES ANTERIORES Y REENVIOS (CENTER PIVOT) - NA
1.89.9/01		SOPORTE VALVULA DISTRIBUIDORA DE LA PARTE TRASERA HUSCO (CENTER PIVOT) - NA

1.88.01	01	p1	04/08

TIRANTE DE BLOQUEO TRANSPORTE EQUIPO POSTERIOR (PIVOTE CENTRAL): NA

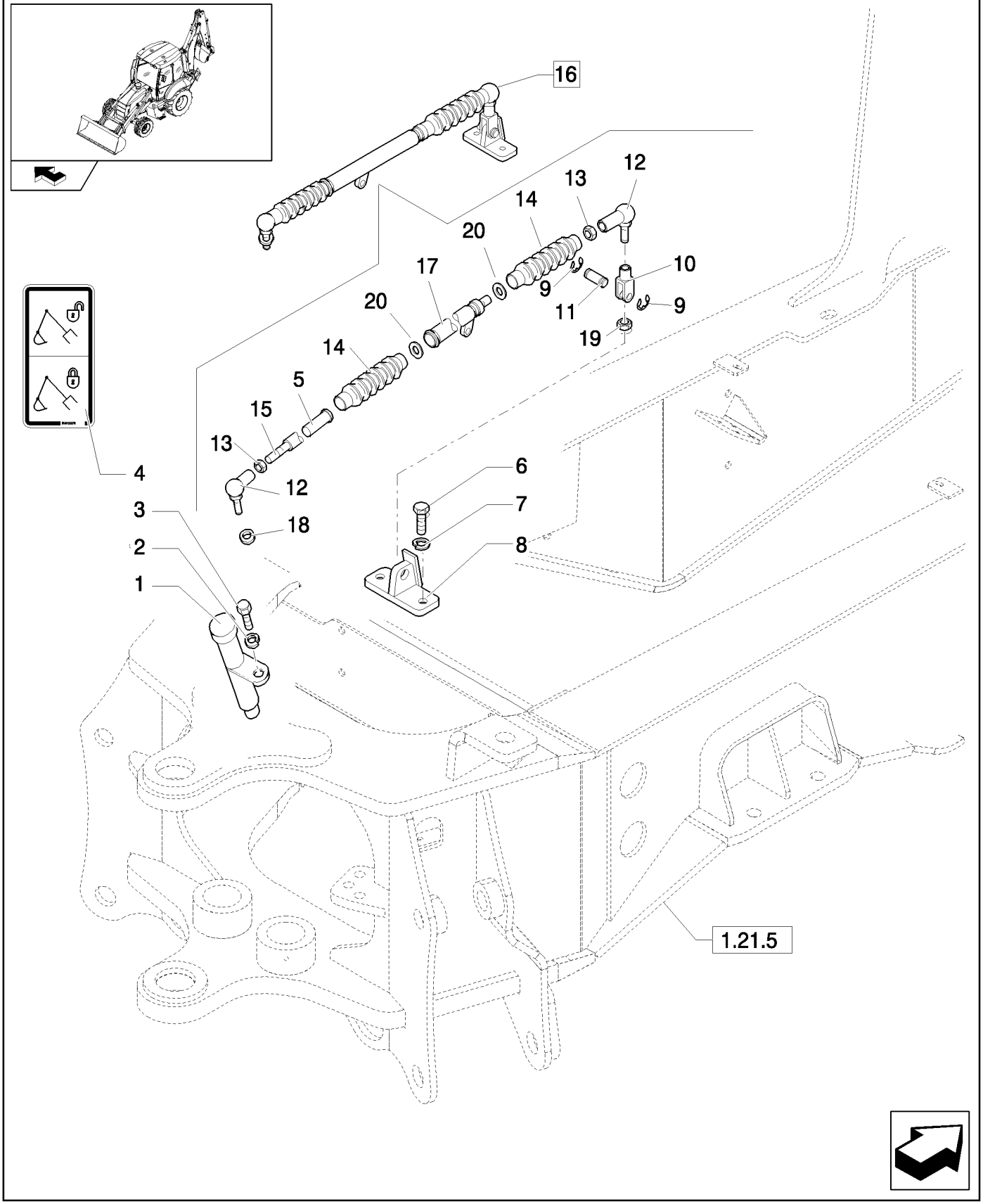

TIRANTE DE BLOQUEO TRANSPORTE EQUIPO POSTERIOR (PIVOTE CENTRAL): NA

REF	FN	PART NUMBER	YR/SN	QTY	DENOMINACION
1		85821268		1	AMORTIGUADOR
2		11193879		2	ARANDELA ABANICO, Belleville, M8.4
3		16043621		1	TORNILLO, Hex, M8 x 25, 8.8
4		85812278		1	CALCOMANIA
5		85819482		1	CASQUILLO
6		11106221		4	TORNILLO, Hex, M10 x 25, 8.8, Full Thd
7		11190579		4	ARANDELA ABANICO, Belleville, M10.5
8		85819488		1	SOPORTE
9		85813407		2	ANILLO
10		85819468		1	HORQUILLA PEQUENA
11		87302958		1	PASADOR DE HORQUILLA
12		85819477		2	JUNTA DE ROTULA
13		85819478		3	TUERCA, M10
14		85819479		2	FUELLE
15		85819481		1	VARILLA
16		87302965		1	TIRANTE, Assy
17		85819480		1	TUBO
18		85821270		1	ARANDELA
19		85821271		1	TUERCA, M16
20		85824227		2	BORNE

1.88.01	02	p1	04/08

CABLE DE BLOQUEO TRANSPORTE EQUIPO POSTERIOR (PIVOTE CENTRAL): NA

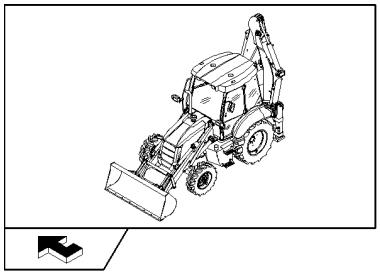

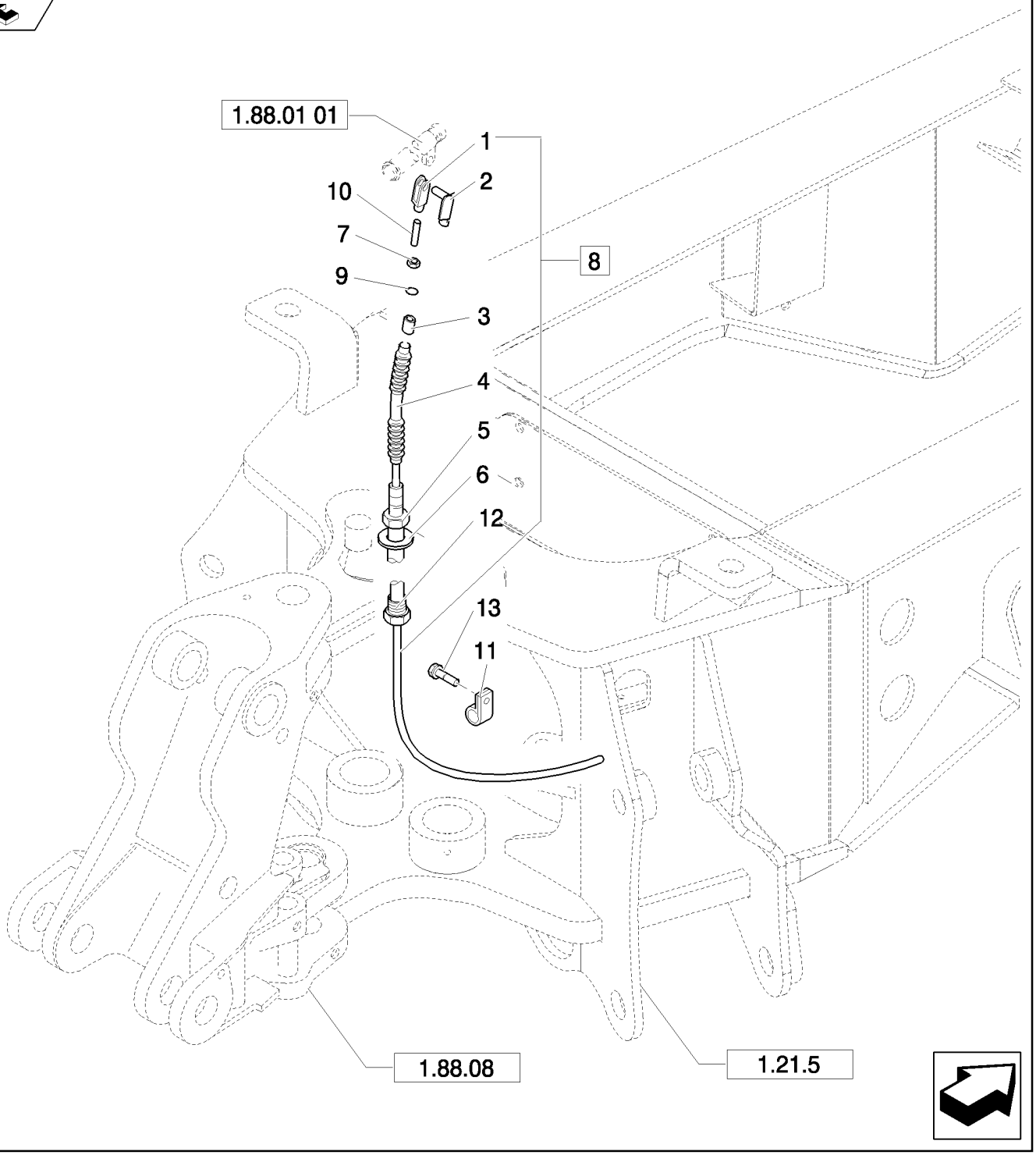

CABLE DE BLOQUEO TRANSPORTE EQUIPO POSTERIOR (PIVOTE CENTRAL): NA

REF	FN	PART NUMBER	YR/SN	QTY	DENOMINACION
1		85819467		1	HORQUILLA PEQUENA
2		85819469		1	SUJETADOR
3		85819471		1	PASACABLES
4		85821278		1	FUELLE
5		87302960		2	TUERCA
6		87302959		1	ARANDELA
7		85821273		1	TUERCA
8		87302967		1	CABLE, Assy
9		85821277		1	GUARNICION DE CAUCHO
10		85821279		1	VARILLA
11		10450190		1	BORNE
12		87302961		1	REGULADOR, M8 x 1.25
13		16043021		1	TORNILLO, Hex, M8 x 12, 8.8, Full Thd

1.88.08	01	p1	04/08

GRUPO BRAZO OSCIL., CASQUILLOS Y PERNOS

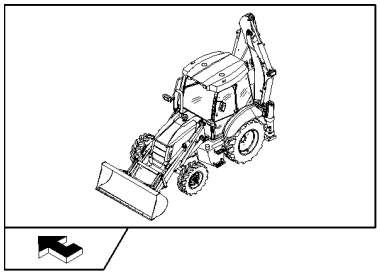

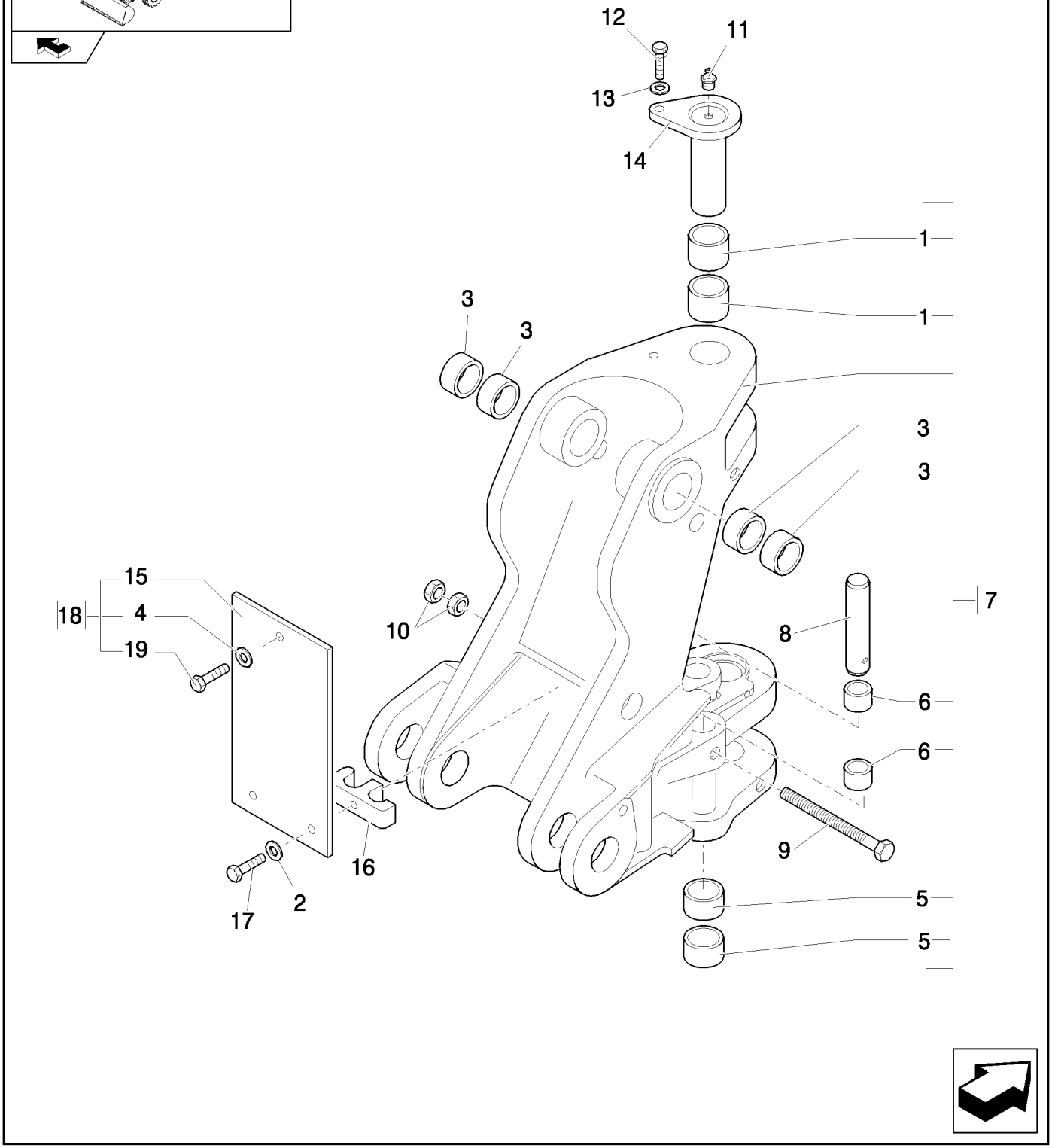

GRUPO BRAZO OSCIL., CASQUILLOS Y PERNOS

REF	FN	PART NUMBER	YR/SN	QTY	DENOMINACION
1		85803196		2	CASQUILLO
2		11190579		2	ARANDELA ABANICO, Belleville, M10.5
3		85801029		4	CASQUILLO
4		11193979		1	ARANDELA ABANICO, Belleville, M8.4
5		85803197		2	CASQUILLO
6		85803193		4	CASQUILLO
7		87575394		1	TORRECILLA, Assy, P/N 85801028 in Primer colour
8		85803192		2	PERNO, Swing Cylinder
9		87363478		1	TORNILLO, M10x270
10		10717421		2	TUERCA, Thin, M14 x 2, Cl 05, M14
11		83416242		3	ENGRASADOR, 1/8"-27
12		85802397		1	TORNILLO, M16X40
13		85802396		1	ARANDELA
14		85801076		1	PERNO
15		85805137		1	PLACA
16		87310285		1	BORNE
17		11107321		2	TORNILLO, Hex, M10 x 55, 8.8
18		85805648		1	EQUIPO, Assy
19		16043621		1	TORNILLO, Hex, M8 x 25, 8.8

1.88.08	02	p1	05/08

PERNOS BARRA OSCIL. Y GANCHO DE BLOQUEO TRANSPORTE

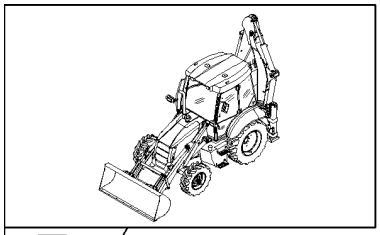

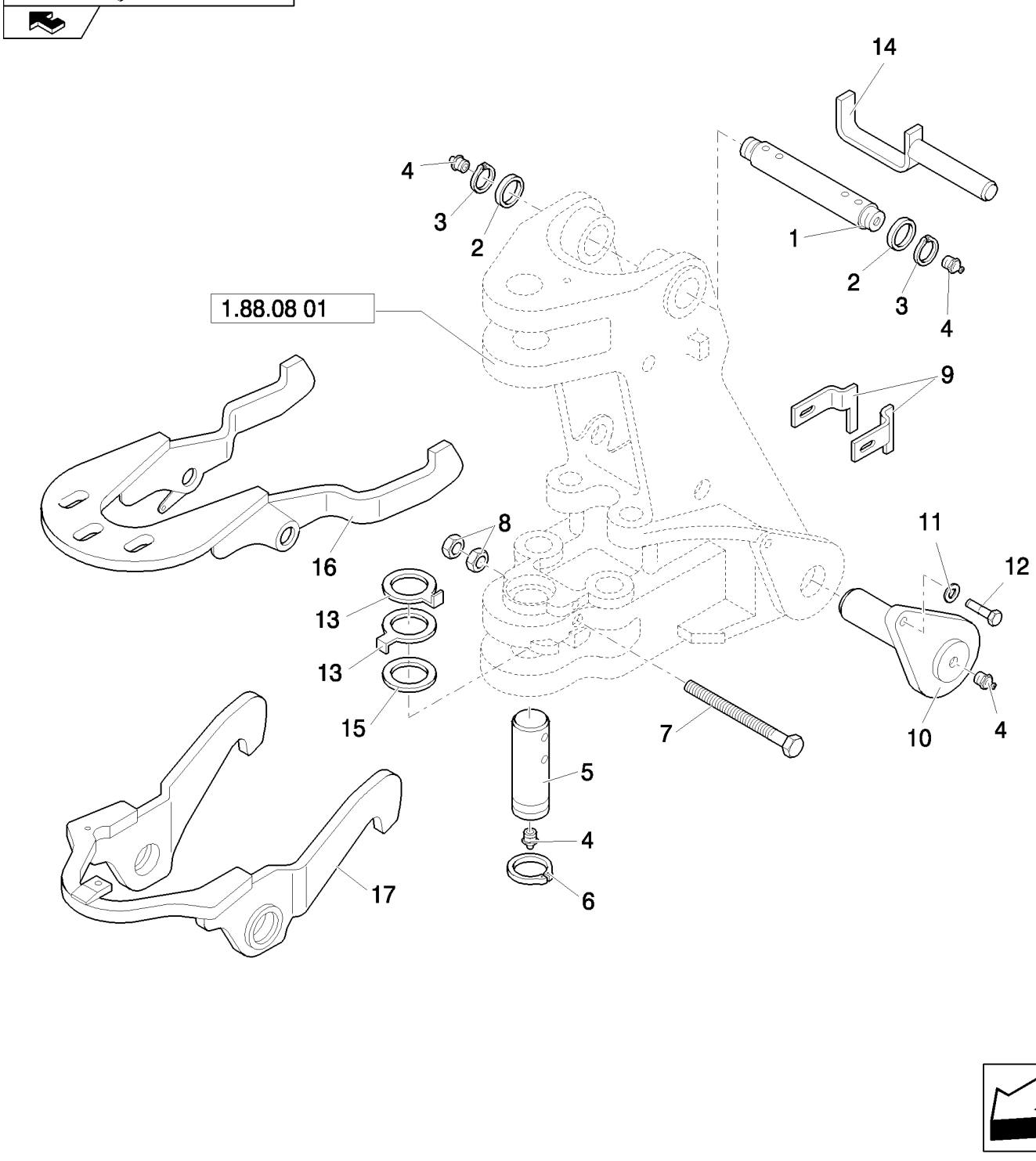

PERNOS BARRA OSCIL. Y GANCHO DE BLOQUEO TRANSPORTE

REF	FN	PART NUMBER	YR/SN	QTY	DENOMINACION
1		85801026		1	PERNO
2		83910977		2	SEPARADOR, M45X66X3
3		83911019		2	RETENEDOR
4		83416242		3	ENGRASADOR, 1/8"-27
5		85801079		1	PERNO
6		85803198		1	RETENEDOR
7		15201934		1	TORNILLO, Hex, M14 x 170, 10.9, M14x170
8		10717421		2	TUERCA, Thin, M14 x 2, Cl 05, M14
9		85816776		1	EQUIPO
10		85802872		2	PERNO
11		85802396		2	ARANDELA
12		85802397		2	TORNILLO, M16X40
13		85801191		2	SEPARADOR
14	1	87610829		1	PERNO
14	2	87610834		1	PERNO
15		8274447		1	SUPLEMENTO, 1mm Thk
16	1	87597003		1	GANCHO DE BLOQUEO
17	2	87596072		1	GANCHO DE BLOQUEO

(1) Only for Trans. Lock Hydraulic
(2) Only for Trans. Lock Mechanic

BRAZOS Y ARTICULACIONES

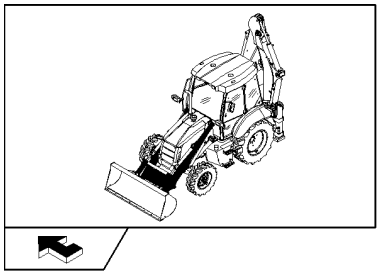

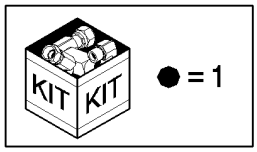

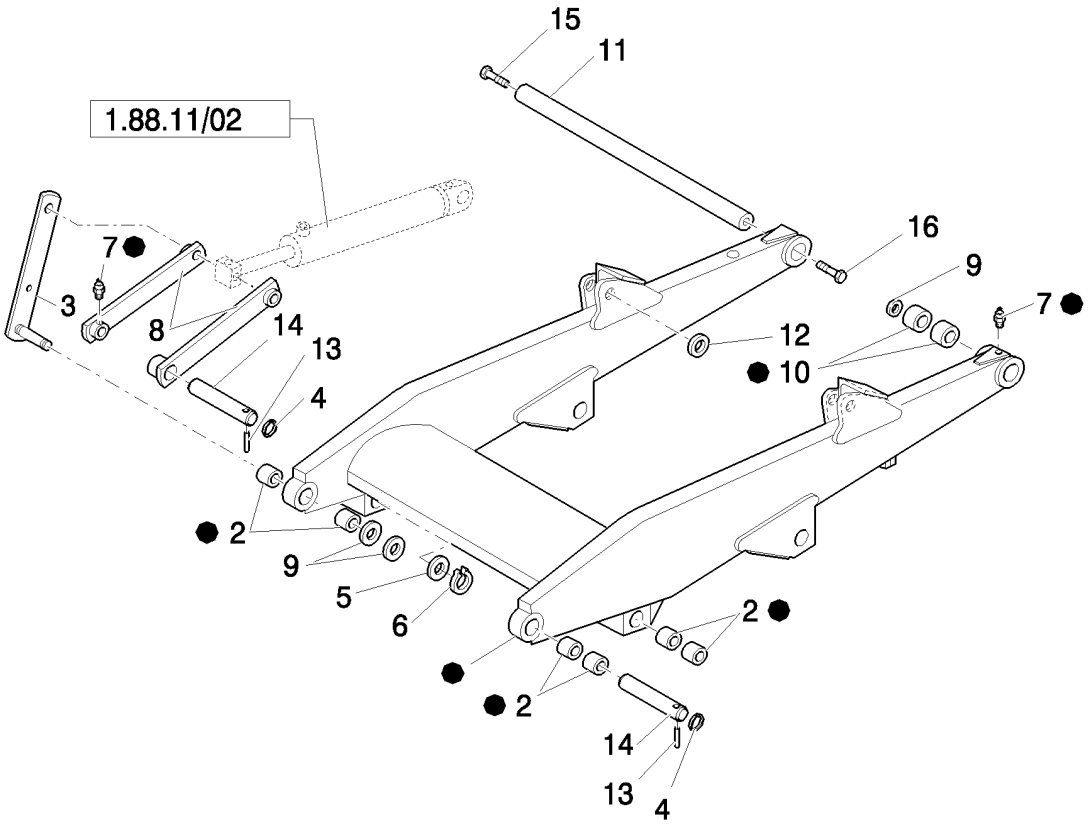

BRAZOS Y ARTICULACIONES

REF	FN	PART NUMBER	YR/SN	QTY	DENOMINACION
1		87630900		1	BRAZO DE ELEVACION, Assy
2		81901809		8	CASQUILLO
3		85803643		2	ESLABON
4		85802992		4	ANILLO
5		85700130		2	ARANDELA
6		81902463		2	ANILLO
7		83416242		10	ENGRASADOR
8		85803647		4	BIELA
9		85828254		2	SUPLEMENTO
10		81901896		4	CASQUILLO
11		85801087		1	PERNO
12		81900328		2	ARANDELA
13		85802993		4	PERNO
14		85801051		4	PERNO
15		11383634		1	TORNILLO, Hex, M20 x 1.5 x 50, 10.9, Full Thd
16		15988734		1	TORNILLO, Hex, M20 x 1.5 x 80, 10.9

1.88.11/01		p1	04/08

CILINDRO ELEVADOR

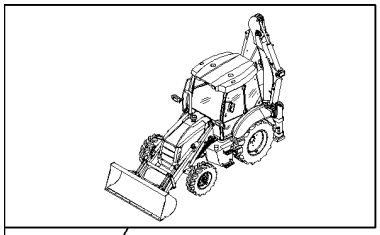

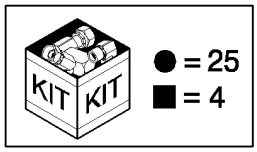

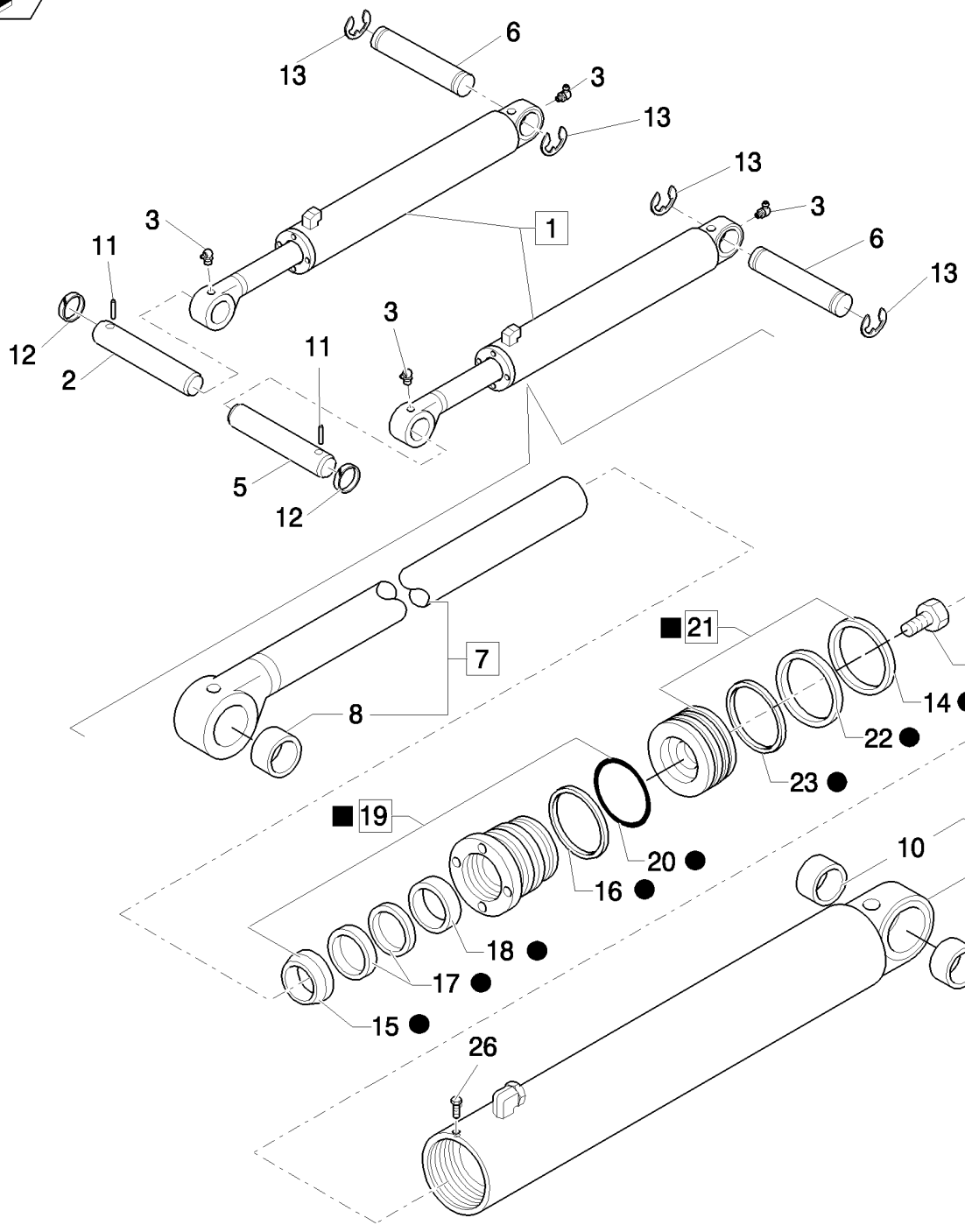

CILINDRO ELEVADOR

REF	FN	PART NUMBER	YR/SN	QTY	DENOMINACION
1		87315525		2	CILINDRO HIDRAULICO, Assy
2		85801049		1	PERNO
3		81818824		4	ENGRASADOR, 90º, 1/8"-27 NPT
4		87424196		2	JUEGO DE REPARACION
5		85801050		1	PERNO
6		87402742		2	PERNO
7		85800103		2	VARILLA, Assy
8		81902174		2	CASQUILLO
9		85800105		2	TUBO, Assy
10		81901897		4	CASQUILLO
11		85802993		2	PERNO
12		85802992		2	ANILLO
13		47049094		4	RETENEDOR
14		87408634		2	Anillo De Desgaste
15		87414969		2	ANILLO DE CIERRE
16		87440401		2	JUNTA
17		87414970		2	SERIE DE JUNTAS
18		87414966		2	COJINETTE, NYLON
19		87415116		2	EMPAQUETADURA, Assy
20		87421144		2	JUNTA HERMETICA
21		87405859		2	EMBOLO, Assy
22		87414333		2	ANILLO DE CIERRE
23		87414341		2	ANILLO
24		87428020		2	TORNILLO
25		87428628		1	SERIE DE JUNTAS
26		276-2446		1	TORNILLO AUTOROSCANTE, Hex Hd, #8 x 3/8"

1.88.11/02	01	p1	04/08

CILINDRO DE MANDO DEL CUCHARON

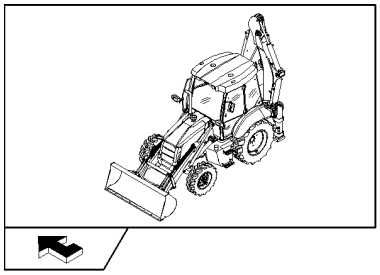

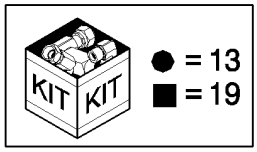

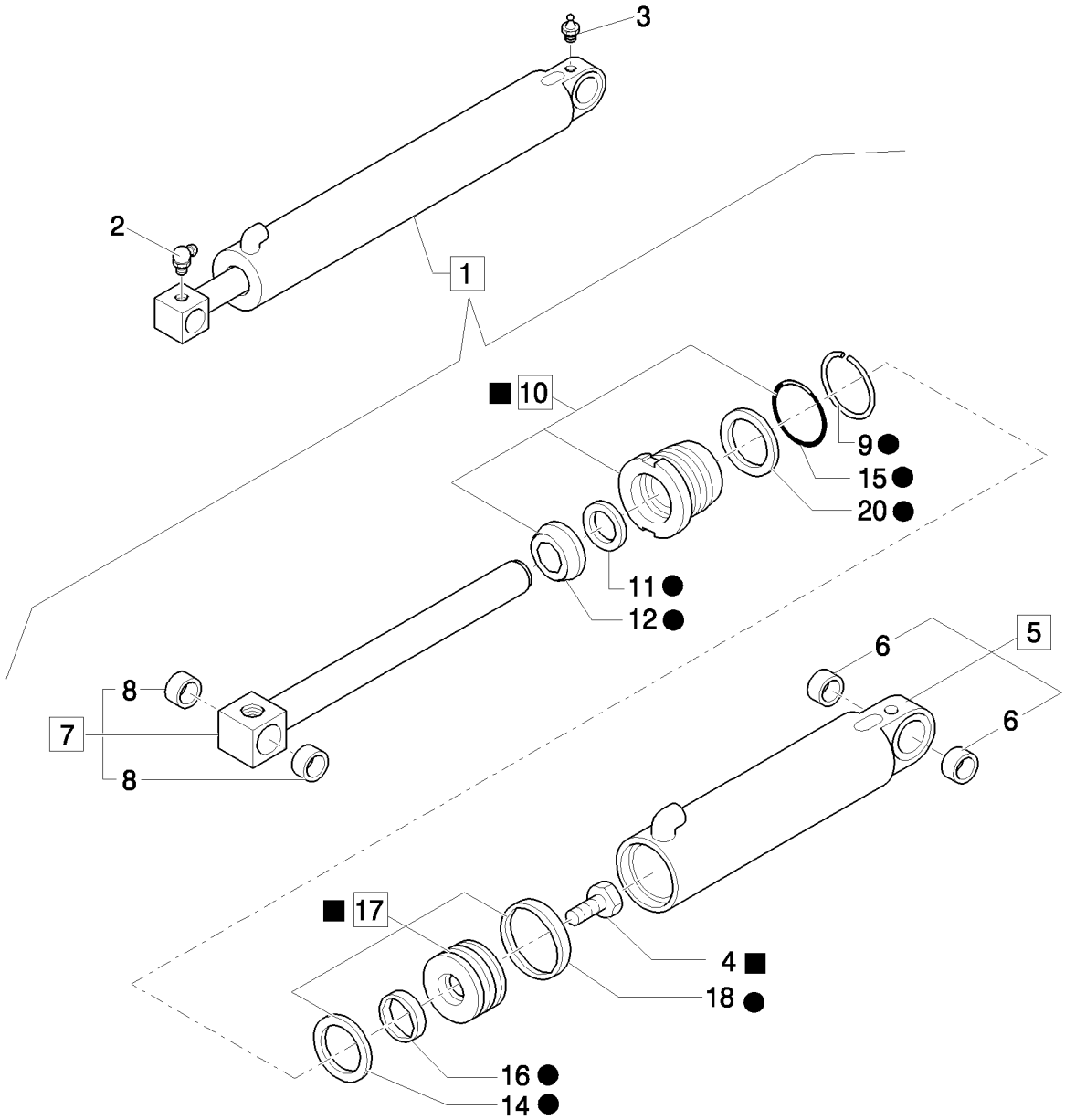

CILINDRO DE MANDO DEL CUCHARON

REF	FN	PART NUMBER	YR/SN	QTY	DENOMINACION
1		87315521		2	CILINDRO HIDRAULICO, Assy,Loader Bucket
2		81818824		2	ENGRASADOR, 90º, 1/8"-27 NPT, 1/8-27-90GR
3		83416242		2	ENGRASADOR, 1/8"-27
4		87428020		2	TORNILLO
5		85800504		2	TUBO, Assy
6		81902174		4	CASQUILLO
7		83962811		2	VARILLA, Assy
8		83902710		4	CASQUILLO
9		83937315		2	HILO
10		87415115		2	EMPAQUETADURA, Assy
11		87414965		2	SERIE DE JUNTAS
12		87414964		2	LIMPIADOR
13		87428627		1	SERIE DE JUNTAS
14		87414340		2	ANILLO
15		87421143		2	JUNTA HERMETICA
16		87414332		2	ANILLO DE CIERRE
17		87406750		2	EMBOLO, Assy
18		87408633		2	Anillo De Desgaste
19		87424195		1	JUEGO DE REPARACION
20		87440396		1	JUNTA

1.88.11/02	02	p1	03/08

CILINDRO DE MANDO DEL CUCHARON

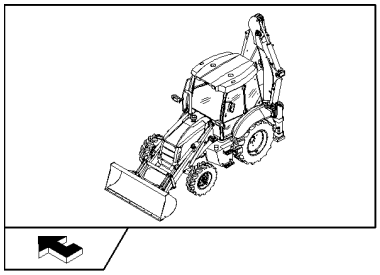

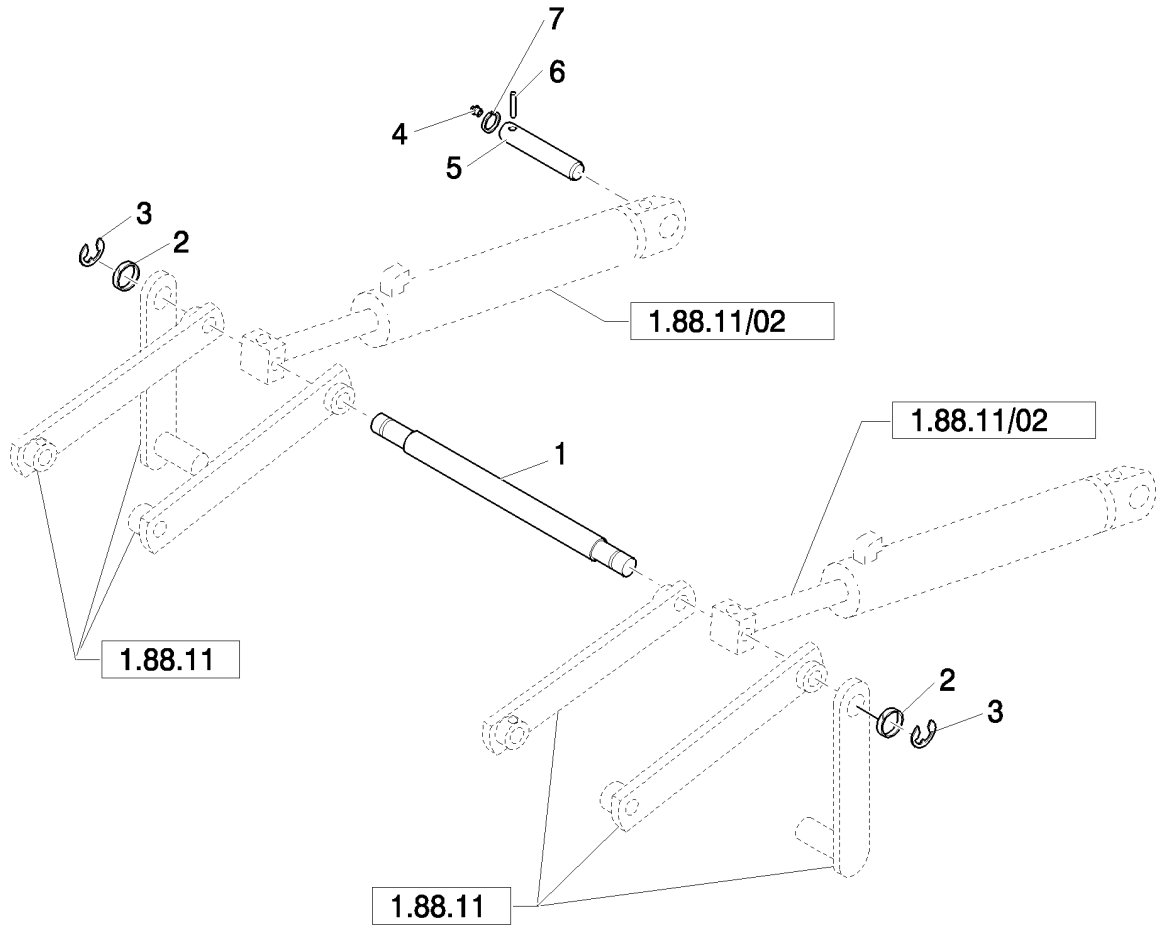

CILINDRO DE MANDO DEL CUCHARON

REF	FN	PART NUMBER	YR/SN	QTY	DENOMINACION
1		85803635		1	SEPARADOR
2		81900328		2	ARANDELA
3		81902463		2	ANILLO
4		83416242		2	ENGRASADOR
5		85801049		2	PERNO, 38mm x 159mm
6		85802993		2	PERNO
7		85802992		2	ANILLO

1.88.11/03		p1	04/08

TUBERIAS DEL CILINDRO ELEVADOR Y CUCHARON

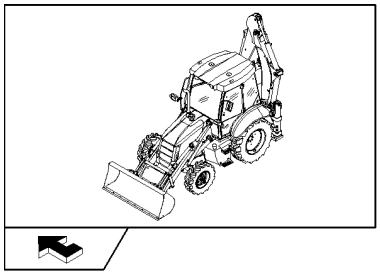

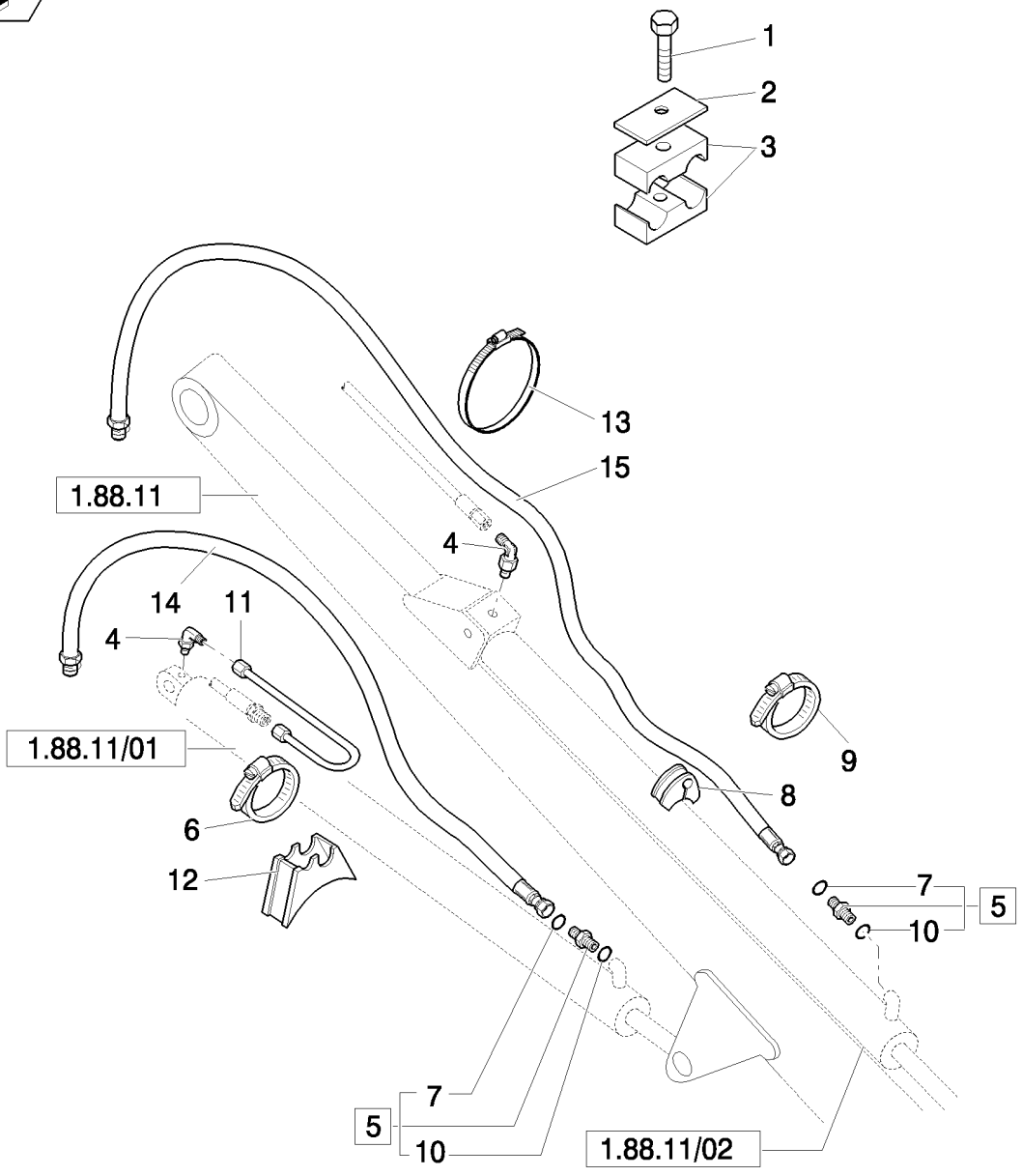

TUBERIAS DEL CILINDRO ELEVADOR Y CUCHARON

REF	FN	PART NUMBER	YR/SN	QTY	DENOMINACION
1		16044321		2	TORNILLO, Hex, M8 x 55, 8.8
2		87390514		2	PLACA
3		87390511		4	COLLAR
4		85802961		4	CODO
5		83963376		4	RACOR, Assy
6		85802743		2	ABRAZADERA MANGUERA
7		89992298		8	JUNTA HERMETICA
8		85803008		2	ABRAZADERA MANGUERA
9		85805567		2	BLOQUE MOTOR
10		80167269		10	JUNTA HERMETICA
11		85801596		2	TUBO
12		87303909		2	BLOQUE MOTOR
13		14560187		2	CIERRA CABLES, 178mm lg, L=203.2 mm
14		85813380		2	MANGA FLEXIBLE
15		85813379		2	MANGA FLEXIBLE

1.88.11/05A	01	p1	05/08

EMPALMES AUTONIVELANTES, MANDOS DEL CARGADOR (CENTER PIVOT MECANICO) - NA

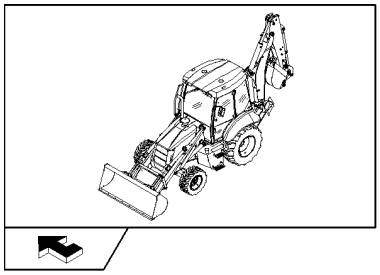

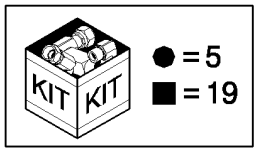

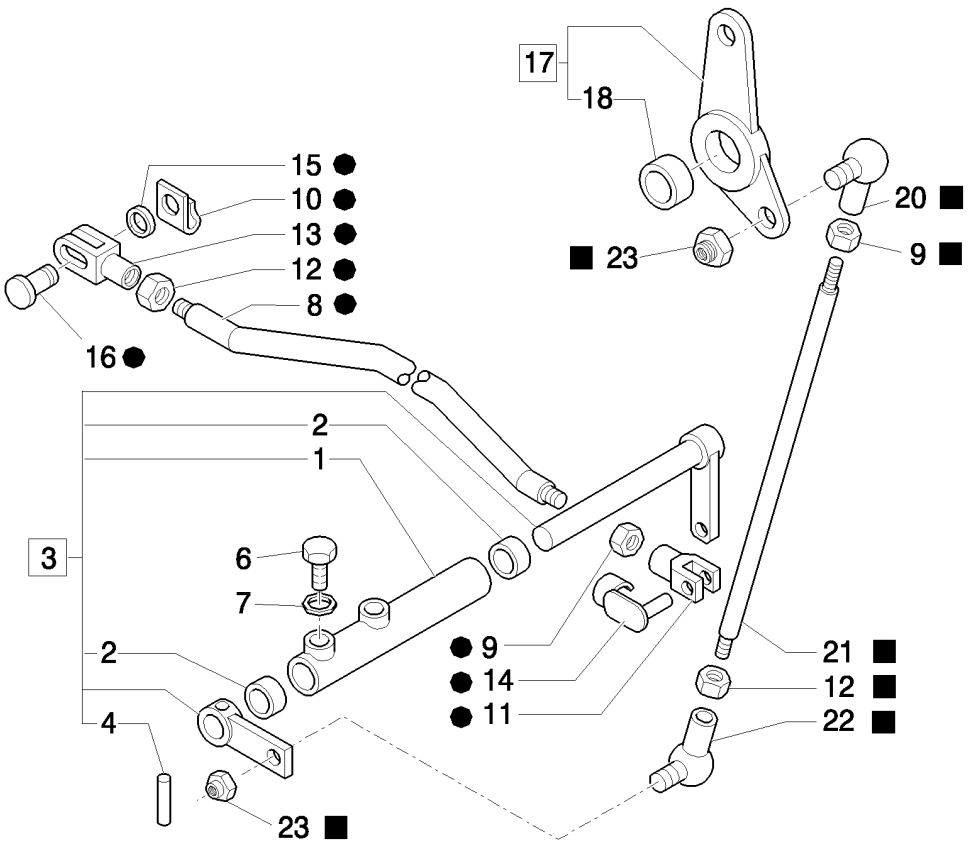

EMPALMES AUTONIVELANTES, MANDOS DEL CARGADOR (CENTER PIVOT MECANICO) - NA

REF	FN	PART NUMBER	YR/SN	QTY	DENOMINACION
1		85802724		1	PALANCA, Assy
2		85802494		2	CASQUILLO
3		85827787		1	PALANCA, Assy
4		85805616		1	PERNO
5		85802734		1	TIRANTE, Assy
6		15970521		1	TORNILLO, Hex, M10 x 1.25 x 20, 8.8, Full Thd
7		11190679		2	ARANDELA ABANICO, Belleville, M10.5
8		85802736		1	TIRANTE
9		16102311		2	TUERCA, Thin, M8 x 1.25, Cl 04
10		11064071		1	SUJETADOR
11		11991971		1	HORQUILLA PEQUENA
12		16102911		2	TUERCA, Thin, M8 x 1.25, Cl 04, LH
13		85802735		1	HORQUILLA PEQUENA
14		85802738		1	RETENEDOR
15		14496521		1	ARANDELA, M8 x 17 x 1.6
16		85802737		2	PERNO
17		85803215		1	PALANCA, Assy
18		81855916		1	CASQUILLO
19		85802741		1	TIRANTE, Assy
20		85804376		1	JUNTA DE ROTULA
21		85802742		1	TIRANTE
22		85804375		1	JUNTA DE ROTULA
23		14048211		2	CONTRA TUERCA, M8 x 1.25, Cl 8

1.88.11/05A	02	p1	03/08

EMPALMES AUTONIVELANTES, BRAZO DEL CARGADOR (CENTER PIVOT) - NA

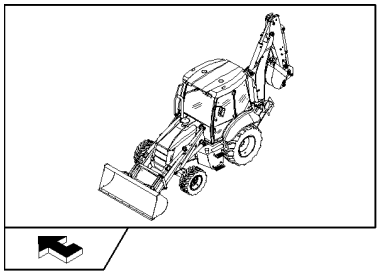

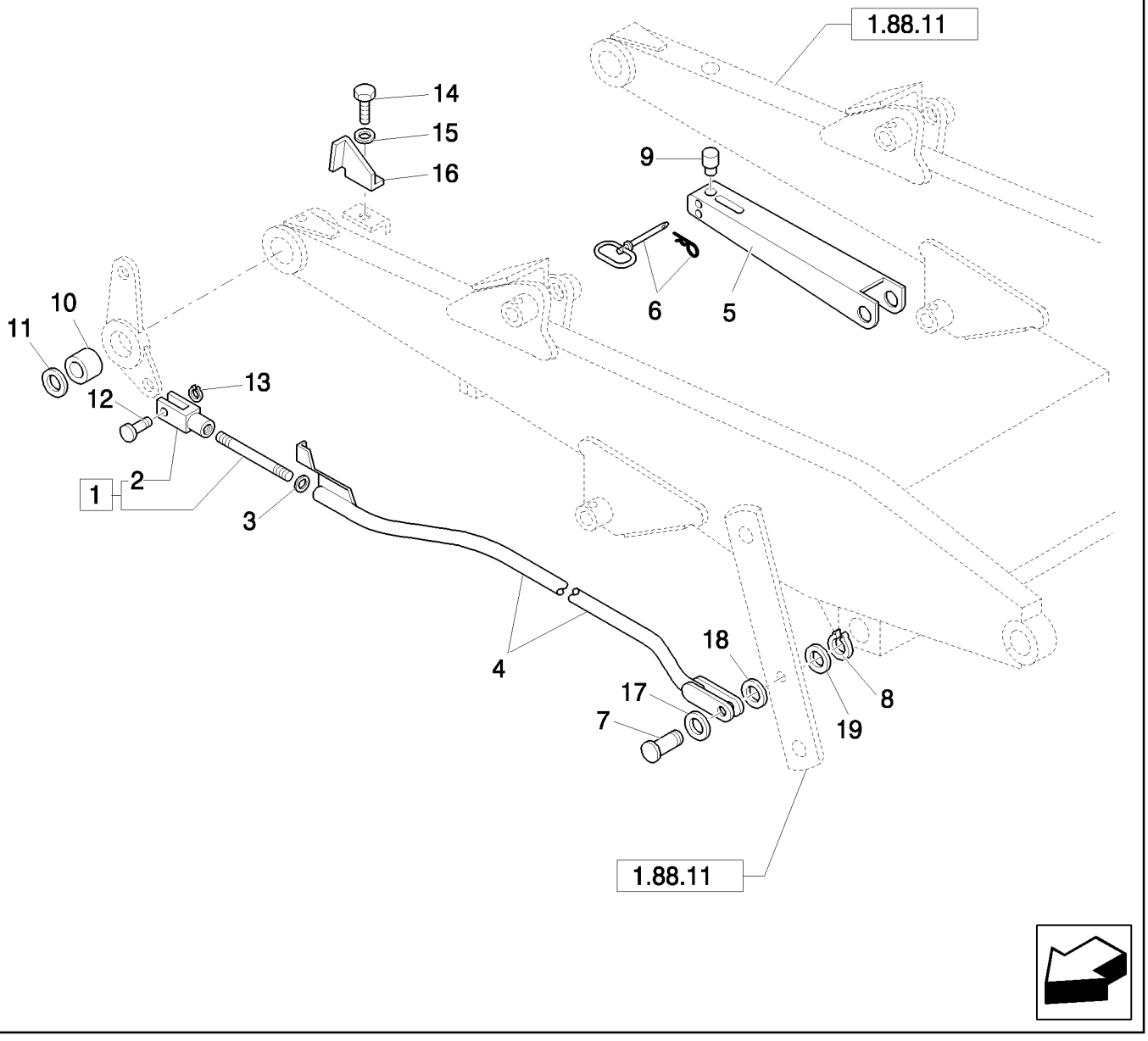

EMPALMES AUTONIVELANTES, BRAZO DEL CARGADOR (CENTER PIVOT) - NA

REF	FN	PART NUMBER	YR/SN	QTY	DENOMINACION
1		83963433		1	VARILLA, Assy
2		83962659		1	HORQUILLA PEQUENA
3		82879400		1	ARANDELA
4		85804026		1	ESLABON
5		85802405		1	CILINDRO DE CERRADUR, Strut; Loader Lift Cylinder Lockout; Incl. Ref 9
6		86507337		1	PASADOR DE ENGANCHE
7		85803297		1	PERNO
8		83911366		1	RETENEDOR
9		85802403		1	TAPÓN, Pad, Strut Prop
10		83963422		1	SEPARADOR
11		85804366		1	ARANDELA
12		85819179		1	PERNO
13		85700341		1	RETENEDOR
14		10979421		1	TORNILLO, Hex, M6 x 10, 8.8, Full Thd
15		11193279		1	ARANDELA ABANICO, Belleville, M6.4
16		85803277		1	PLACA
17		85817622		AR	ARANDELA
18		85817623		AR	ARANDELA
19		81900328		1	ARANDELA

1.88.11/06A		p1	05/08

CILINDROS ESTABILIZADORES (CENTER PIVOT)

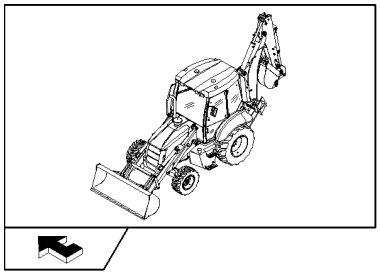

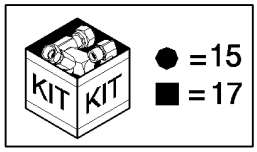

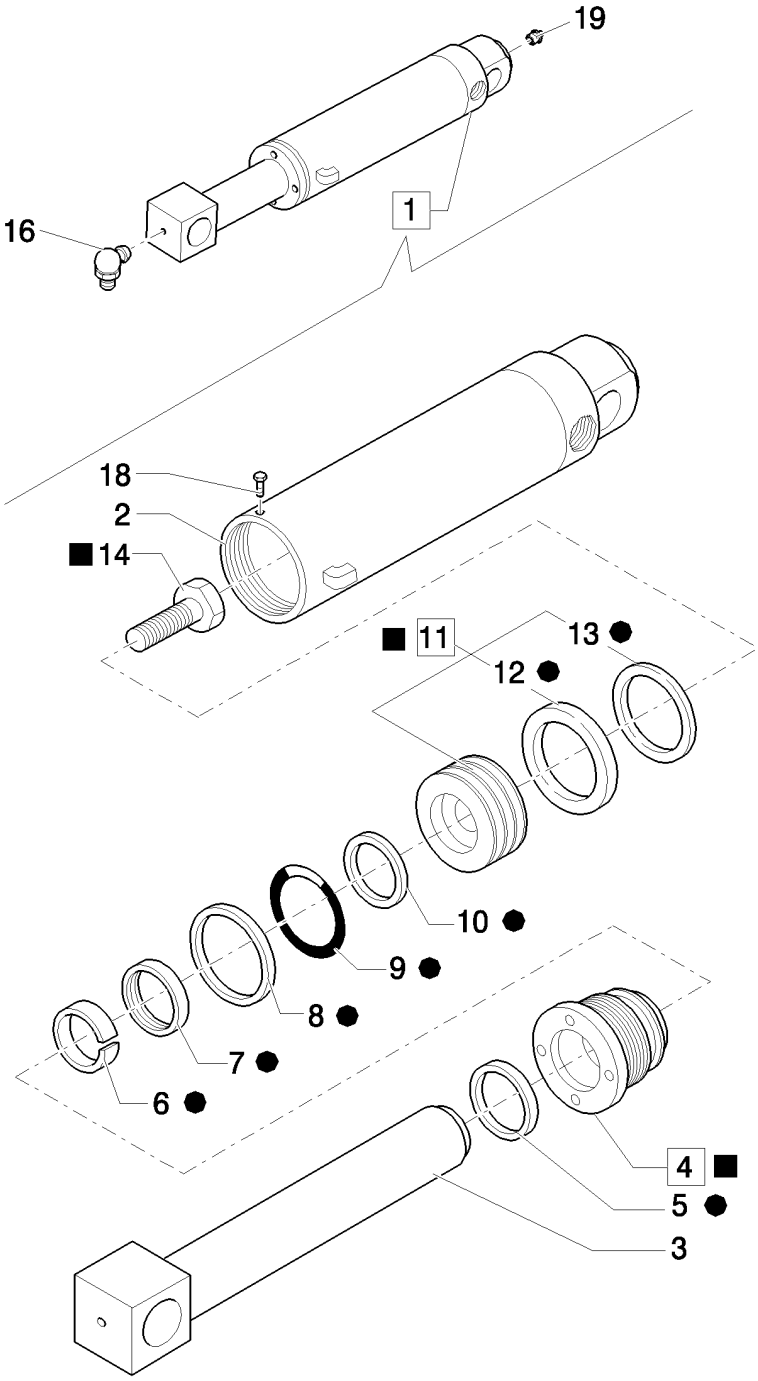

CILINDROS ESTABILIZADORES (CENTER PIVOT)

REF	FN	PART NUMBER	YR/SN	QTY	DENOMINACION
1		87315528		2	CILINDRO HIDRAULICO, Assy
2		85800604		2	CUERPO DE CILINDRO
3		85800603		2	VARILLA
4	1	87412400		2	CULATA, Assy
5		87414974		2	LIMPIADOR
6		87414971		2	CASQUILLO
7		87414975		2	SERIE DE JUNTAS
8		87440410		2	JUNTA
9		87421145		2	JUNTA HERMETICA
10		87414342		2	ANILLO
11		87406921		2	EMBOLO, Assy
12		87414334		2	ANILLO DE CIERRE
13		87408635		2	Anillo De Desgaste
14		87428011		2	TORNILLO
15		87428630		1	SERIE DE JUNTAS
16		81818824		2	ENGRASADOR, 90º, 1/8"-27 NPT
17		81818824		2	ENGRASADOR, 90º, 1/8"-27 NPT, Assy, 1/8"-27
18		85827128		1	TORNILLO
19		83416242		2	ENGRASADOR

(1) Includes 5 - 9

TUBOS PARA CILINDROS ESTABILIZADORES (CENTER PIVOT PILOT)

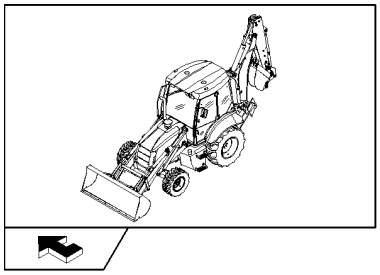

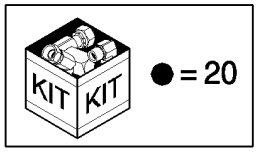

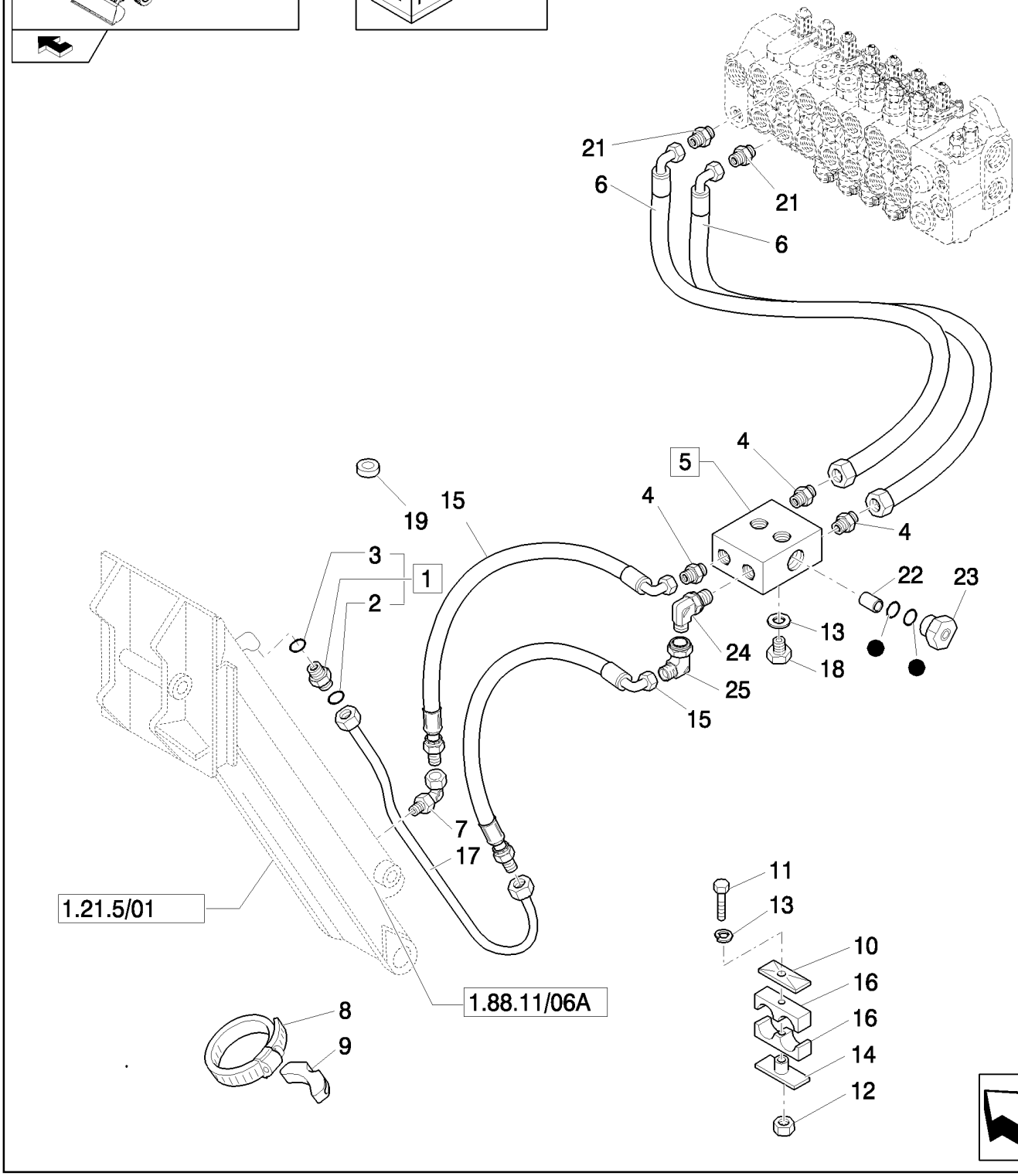

TUBOS PARA CILINDROS ESTABILIZADORES (CENTER PIVOT PILOT)

REF	FN	PART NUMBER	YR/SN	QTY	DENOMINACION
1		83963374		2	RACOR, Assy
2		89992298		6	JUNTA HERMETICA
3		80128825		6	JUNTA HERMETICA
4		83985067		6	RACOR, Includes O-Rings 9617873 & 9992298
5	1	85802820		2	VALVULA DE CIERRE, Assy
6		85807873		4	MANGA FLEXIBLE, 946mm lg
7		85802965		2	RACOR
8		85803008		2	ABRAZADERA MANGUERA
9		87303912		2	BLOQUE MOTOR
10		87390514		2	PLACA
11		15213621		2	TORNILLO, Hex, M8 x 55, 8.8, Full Thd
12		14048211		2	CONTRA TUERCA, M8 x 1.25, Cl 8
13		11193879		6	ARANDELA ABANICO, Belleville, M8.4
14		87390534		2	PLACA
15		85807874		4	MANGA FLEXIBLE, 1676mm lg
16		87390511		4	COLLAR
17		85802620		2	TUBERIA HIDRAULICO
18		16044421		4	TORNILLO, Hex, M8 x 60, 8.8
19		85803517		2	CASQUILLO DE GOMA
20		85821126		2	EQUIPO
21		85805258		4	RACOR, 9/16"-16 ORS x 1 1/16"-12, O-Ring
22		85820159		1	EMBOLO
23		85820160		2	VALVULA HIDRAULICA
24		83983763		2	RACOR
25		86511208		2	CODO

(1) Includes 20 - 23

1.88.11/07C		p1	04/08

TUBOS PARA CILINDROS ESTABILIZADORES (CENTER PIVOT MECANICO) - NA

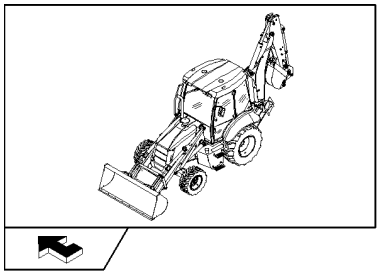

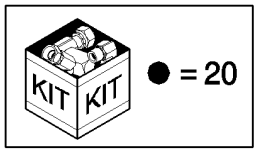

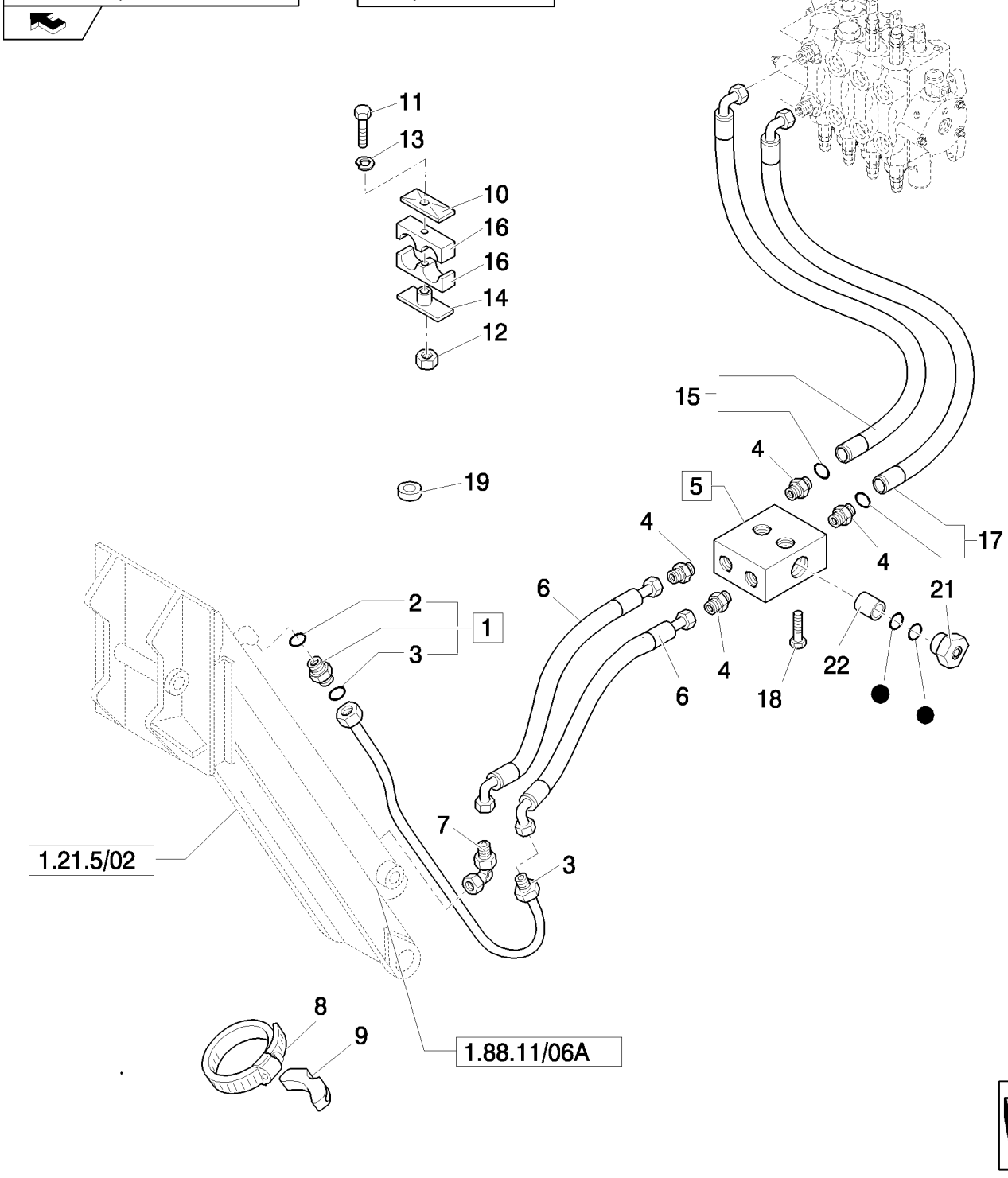

TUBOS PARA CILINDROS ESTABILIZADORES (CENTER PIVOT MECANICO) - NA

REF	FN	PART NUMBER	YR/SN	QTY	DENOMINACION
1		83963374		6	RACOR, Assy
2		89992298		6	JUNTA HERMETICA
3		80128825		6	JUNTA HERMETICA
4		83985067		8	RACOR, Includes O-Rings 9617873 & 9992298
5	1	85802820		2	VALVULA DE CIERRE, Assy
6		85807873		4	MANGA FLEXIBLE, 946mm lg
7		85802965		2	RACOR
8		85803008		2	ABRAZADERA MANGUERA
9		87303912		2	BLOQUE MOTOR
10		87390514		2	PLACA
11		15213621		2	TORNILLO, Hex, M8 x 55, 8.8, Full Thd
12		14048211		2	CONTRA TUERCA, M8 x 1.25, Cl 8
13		11193879		6	ARANDELA ABANICO, Belleville, M8.4
14		87390534		2	PLACA
15		85807874		4	MANGA FLEXIBLE, 1676mm lg
16		87390511		4	COLLAR
17		85802620		2	TUBERIA HIDRAULICO
18		16044421		4	TORNILLO, Hex, M8 x 60, 8.8
19		85803517		2	CASQUILLO DE GOMA
20		85821126		2	EQUIPO
21		85820160		2	VALVULA HIDRAULICA
22		85820159		1	EMBOLO

(1) Includes 20 - 22

SENSOR DE RETORNO EXCAVACIÓN

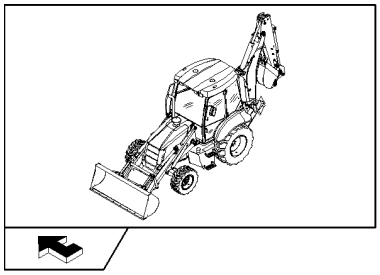

EU
B95B
B95BLR
B100B
B100BLR
B110B

NA
B95B
B95BLR
B100B
B110B

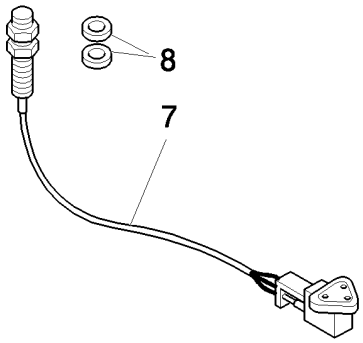

B115B EU

B115B NA

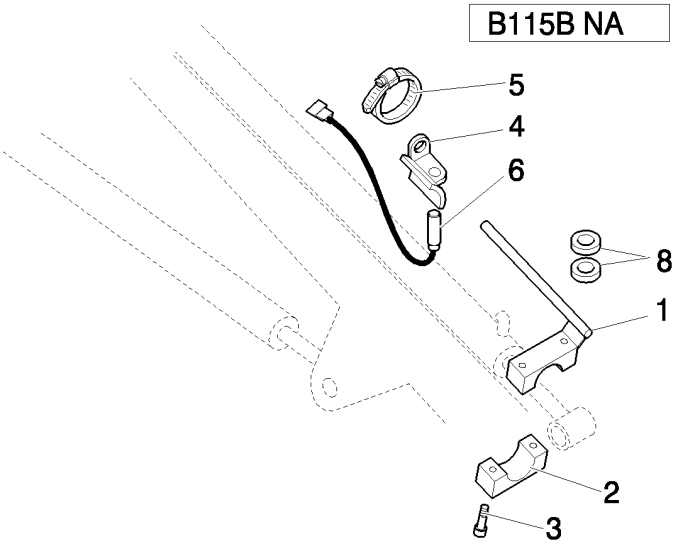

SENSOR DE RETORNO EXCAVACIÓN

REF	FN	PART NUMBER	YR/SN	QTY	DENOMINACION
1		85805108		1	VARILLA
2		85805111		1	BLOQUE MOTOR
3		14305621		2	TORNILLO, Hex Soc Hd, M6 x 35, 8.8
4		85805113		1	SOPORTE
5		85803010		2	ABRAZADERA MANGUERA
6		85805619		1	SENSOR, Pigtail Length = 2600mm
7		85802950		1	SENSOR, Pigtail Length = 400mm
8		14497001		4	ARANDELA DE FRENO, 19X34X3

1.88.11/09	02	p1	04/08

CILINDROS TRASERO DEL OSCILACIÓN

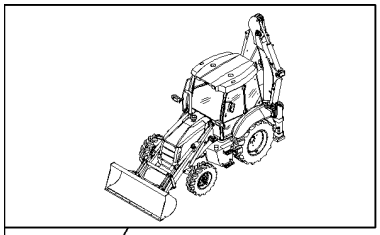

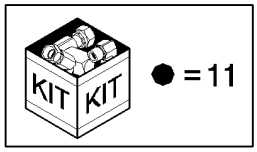

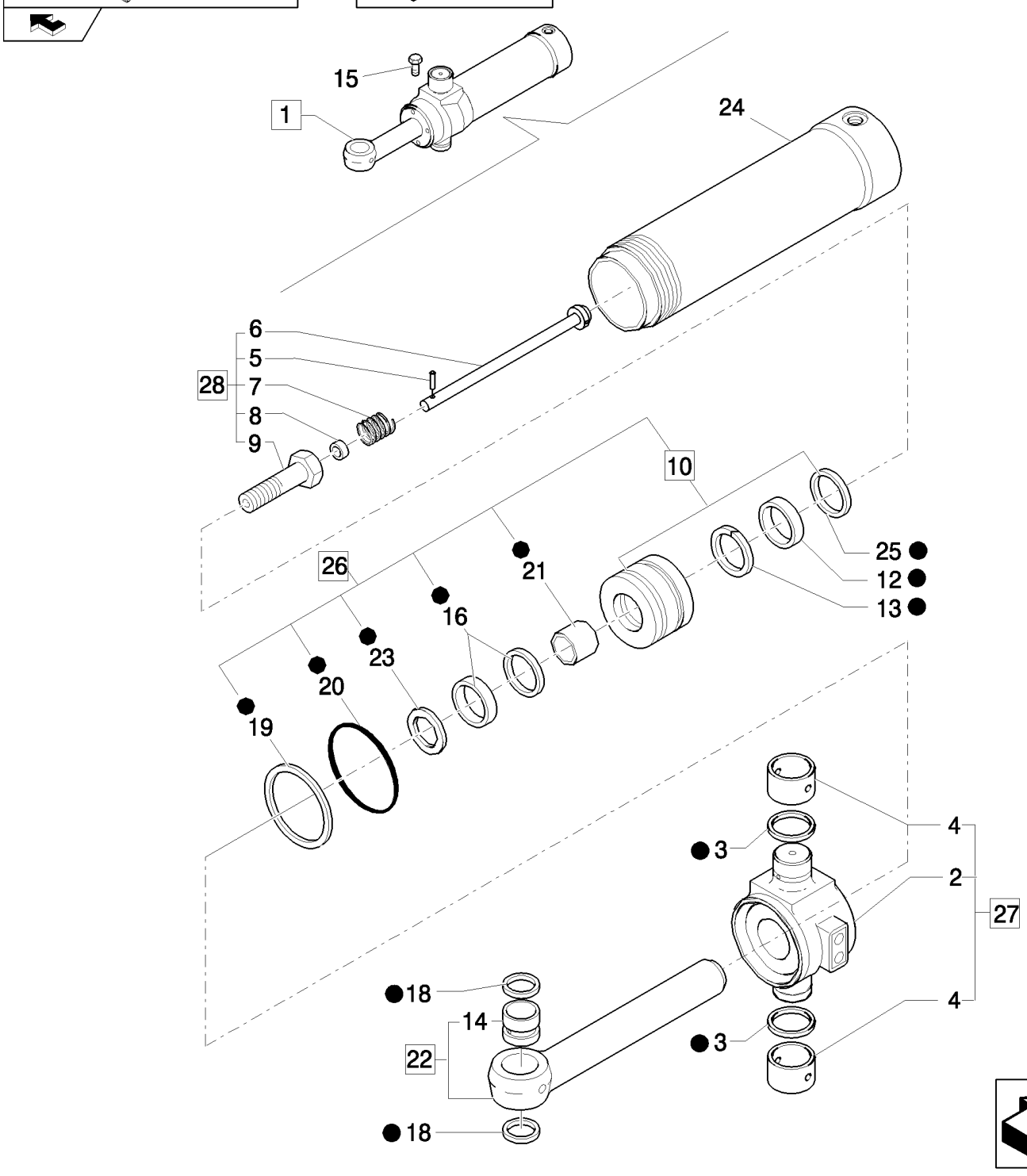

CILINDROS TRASERO DEL OSCILACIÓN

REF	FN	PART NUMBER	YR/SN	QTY	DENOMINACION
1		87315529		1	CILINDRO HIDRAULICO, Assy
2		87422783		1	MUÑÓN
3		83910601		2	ANILLO DE CIERRE, Seal
4		83912378		2	CASQUILLO
5		83910599		1	PERNO
6		85800990		1	VARILLA
7		83931313		1	RESORTE
8		83998909		1	CASQUILLO
9		87428014		1	TORNILLO, M30x2x100
10		87424838		1	EMBOLO, Assy
11		87428631		1	SERIE DE JUNTAS
12		87408636		1	Anillo De Desgaste
13		87414335		1	JUNTA GANCHO
14		85800303		1	CASQUILLO
15		276-2456		1	TORNILLO AUTOROSCANTE
16		87414970		1	SERIE DE JUNTAS, 50 mm Rod
18		83931289		2	JUNTA GANCHO
19		85800007		1	JUNTA, Back-up
20		87421149		1	JUNTA HERMETICA, 4.734" ID x .139" Thk
21		87414966		1	COJINETTE, NYLON, 50 mm Rod
22		87433032		1	VARILLA, Assy
23		87414969		1	ANILLO DE CIERRE, 50 mm Rod
24		87455335		1	CULATA
25		87414343		1	ANILLO
26		87445307		1	SERIE DE JUNTAS, Assy
27		87445758		1	MUÑÓN, Assy
28		87424935		1	TORNILLO, Assy

1.88.11/09A		p1	04/08

CILINDROS Y PLACA ROTACION (CENTER PIVOT)

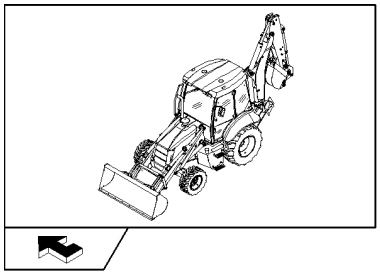

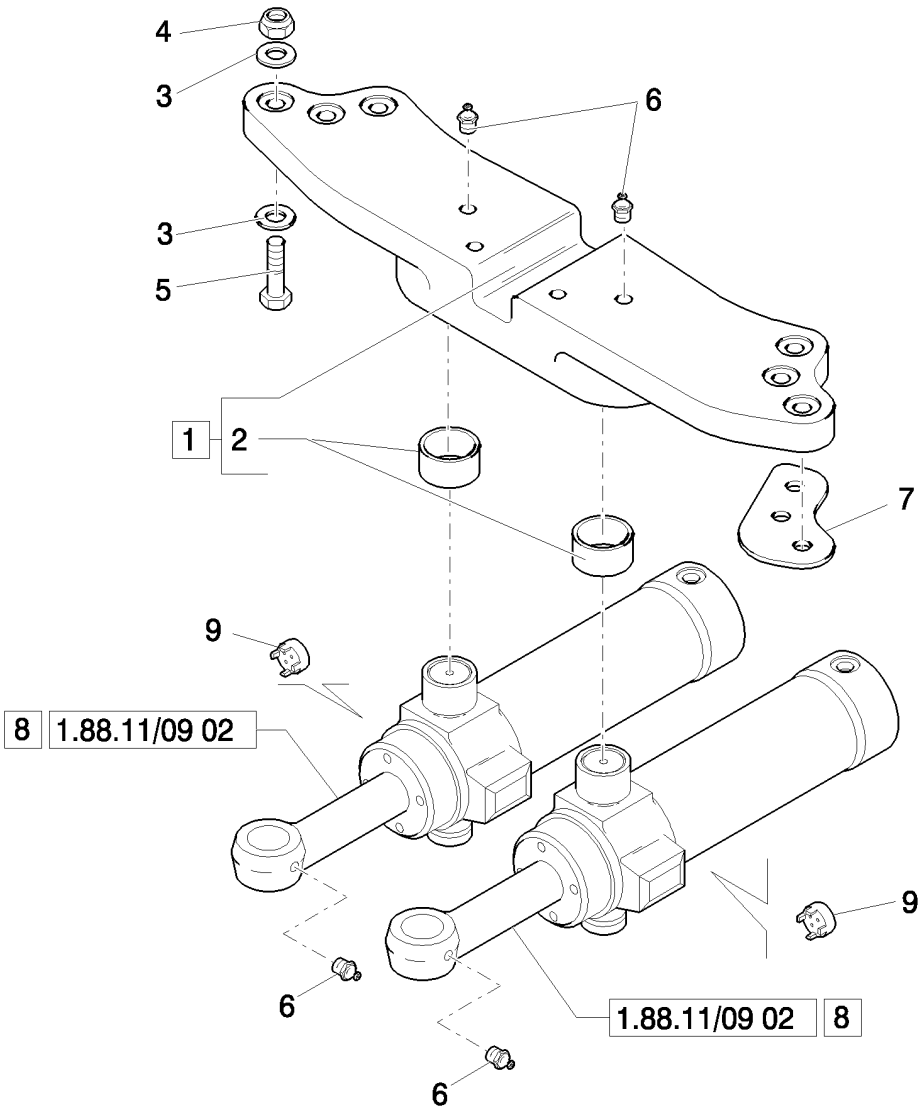

CILINDROS Y PLACA ROTACION (CENTER PIVOT)

REF	FN	PART NUMBER	YR/SN	QTY	DENOMINACION
1		85803617		1	PLACA DE SUJECION, Assy
2		83910645		2	CASQUILLO
3		10520431		12	ARANDELA
4		12575121		6	CONTRA TUERCA, M20 x 1.5, Cl 10
5		15988934		6	TORNILLO, Hex, M20 x 90, 10.9
6		83416242		4	ENGRASADOR, 1/8"-27
7		85801153		4	SUPLEMENTO
7		85803039		2	SUPLEMENTO
8		87315529		2	CILINDRO HIDRAULICO, Assy
9	1	85800965		2	REDUCTOR

(1) Only for B115B (EU)

1.88.12/03		p1	04/08

SOPORTE DE LOS DISTRIBUIDORES ANTERIORES Y REENVIOS (CENTER PIVOT - SIDE SHIFT)

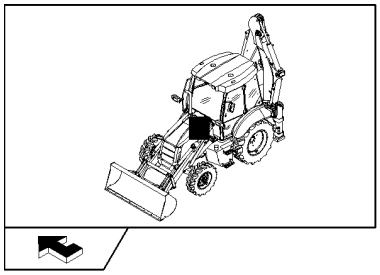

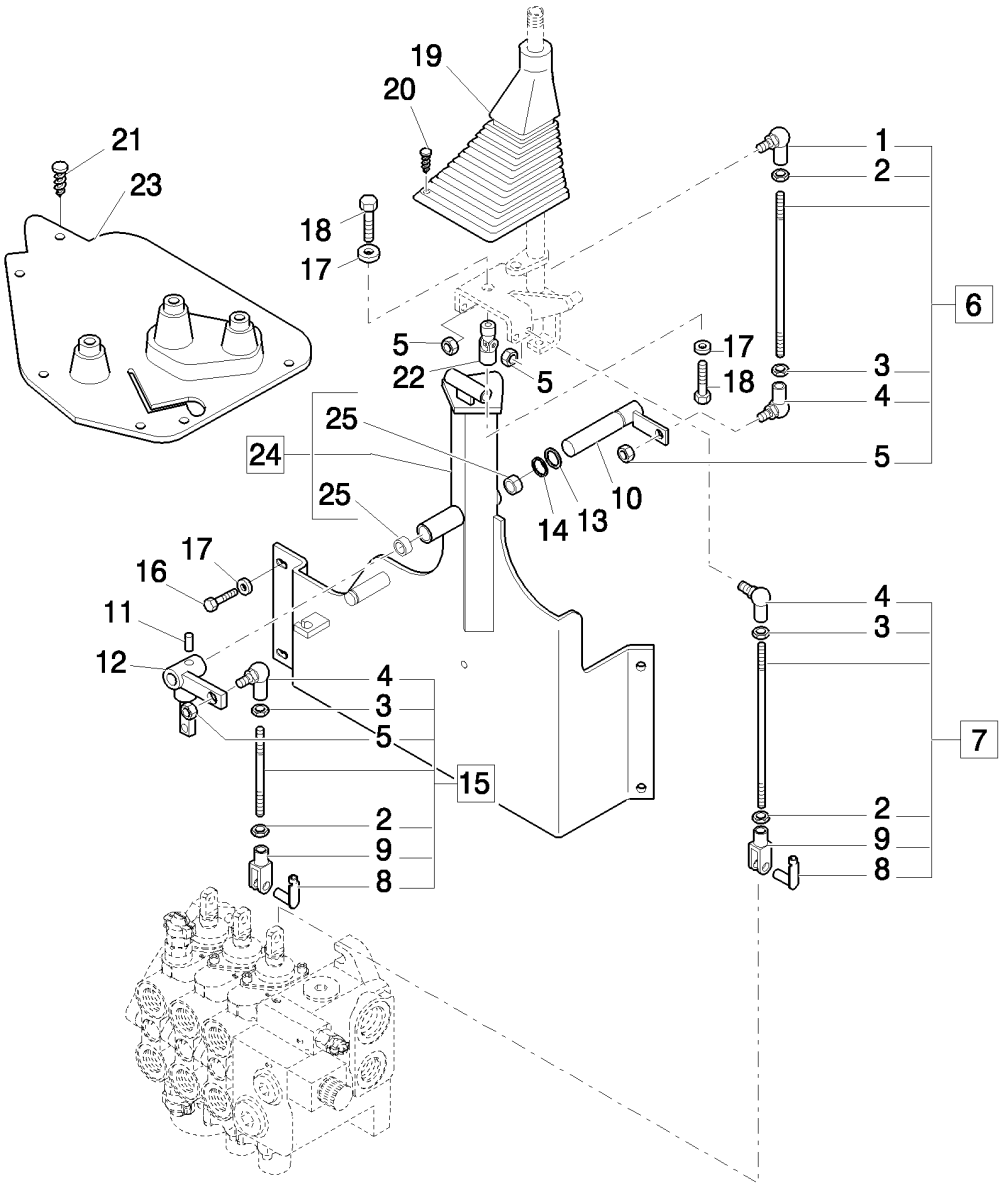

SOPORTE DE LOS DISTRIBUIDORES ANTERIORES Y REENVIOS (CENTER PIVOT - SIDE SHIFT)

REF	FN	PART NUMBER	YR/SN	QTY	DENOMINACION
1		85804376		1	JUNTA DE ROTULA
2		16102911		3	TUERCA, Thin, M8 x 1.25, Cl 04, LH
3		16102311		3	TUERCA, Thin, M8 x 1.25, Cl 04
4		85804375		3	JUNTA DE ROTULA
5		14048211		5	CONTRA TUERCA, M8 x 1.25, Cl 8
6		85803477		1	TIRANTE, Assy
7		85805498		1	TIRANTE, Assy
8		85802738		2	RETENEDOR
9		11991971		2	HORQUILLA PEQUENA
10		85824463		1	PALANCA
11		85805616		1	PERNO
12		85825465		1	RODILLO TENSADOR
13		14496901		1	ARANDELA, M16 x 30 x 3
14		83911366		1	RETENEDOR
15		85805806		1	TIRANTE, Assy
16		11112821		4	TORNILLO, Hex, M12 x 40, 8.8, Full Thd
17		11190779		5	ARANDELA ABANICO, Belleville, M13
18		15540321		1	TORNILLO, Hex, M12 x 1.25 x 25, 8.8, Full Thd
19		85802842		1	CASQUETE
20		14568887		4	BOTON DE RESORTE, 8x20
21		85808422		6	TAPÓN
22		85801518		1	CARDÁN
23		85806245		1	CASQUETE
24		87304842		1	SOPORTE, Assy
25		85802494		2	CASQUILLO

Excluded Mechanical Version NA

B95B

1.88.12/03A		p1	04/08

SOPORTE DE LOS DISTRIBUIDORES ANTERIORES Y REENVIOS (CENTER PIVOT) - NA

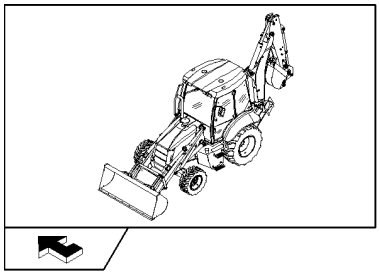

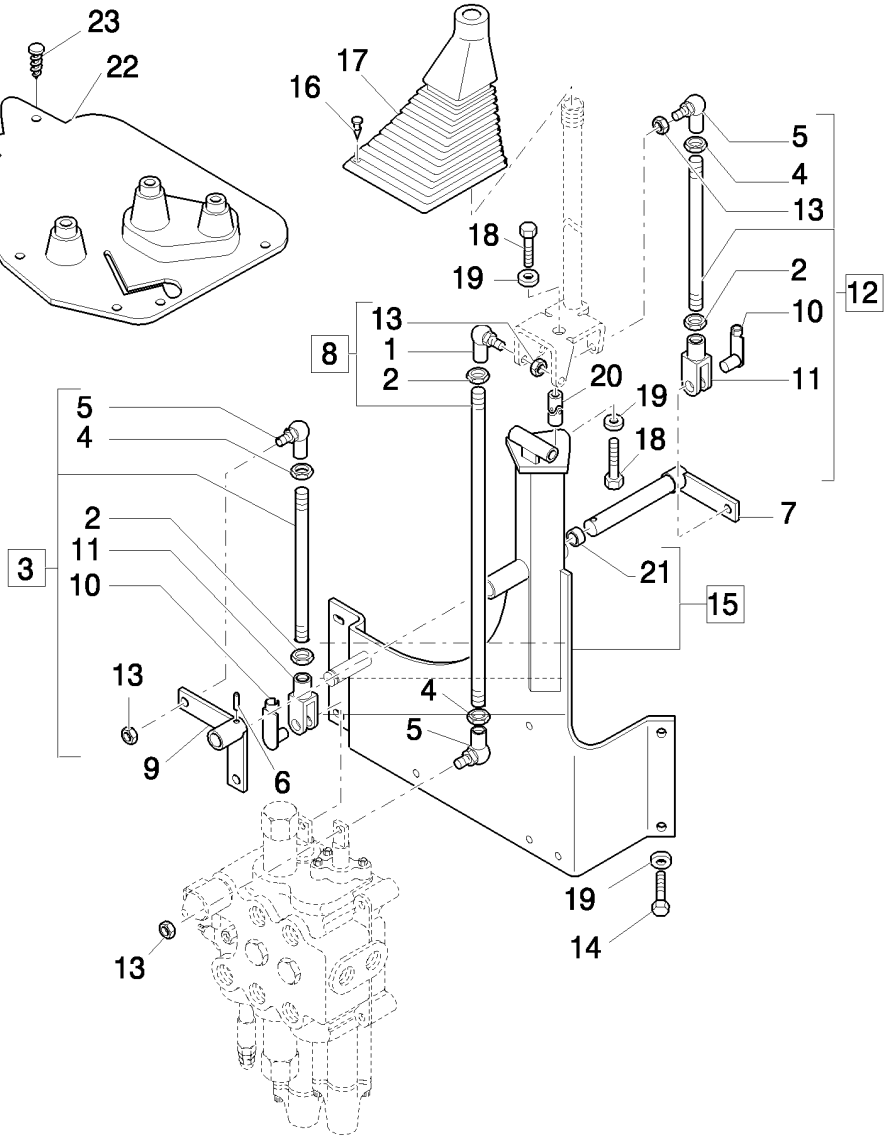

SOPORTE DE LOS DISTRIBUIDORES ANTERIORES Y REENVIOS (CENTER PIVOT) - NA

REF	FN	PART NUMBER	YR/SN	QTY	DENOMINACION
1		85804376		1	JUNTA DE ROTULA
2		16102311		3	TUERCA, Thin, M8 x 1.25, Cl 04
3		85801564		1	TIRANTE, Assy
4		16102911		3	TUERCA, Thin, M8 x 1.25, Cl 04, LH
5		85804375		3	JUNTA DE ROTULA
6		85805616		1	PERNO
7		85805692		1	PERNO
8		85801566		1	TIRANTE, Assy
9		85805690		1	PALANCA
10		85802738		2	RETENEDOR
11		11991971		2	HORQUILLA PEQUENA
12		85801562		1	TIRANTE, Assy
13		14048211		4	CONTRA TUERCA, M8 x 1.25, Cl 8
14		11112821		4	TORNILLO, Hex, M12 x 40, 8.8, Full Thd
15		87312027		1	SOPORTE, Assy
16		14568887		4	BOTON DE RESORTE
17		85802842		1	CASQUETE
18		15540321		2	TORNILLO, Hex, M12 x 1.25 x 25, 8.8, Full Thd
19		11190779		6	ARANDELA ABANICO, Belleville, M13
20		85801518		1	CARDÁN
21		85802494		2	CASQUILLO
22	1	85804539		1	TAPADERA
23	1	85808422		6	TAPÓN

(1) Only for CAB

Mechanical Version B95B

1.89.9/01		p1	03/08

SOPORTE VALVULA DISTRIBUIDORA DE LA PARTE TRASERA HUSCO (CENTER PIVOT) - NA

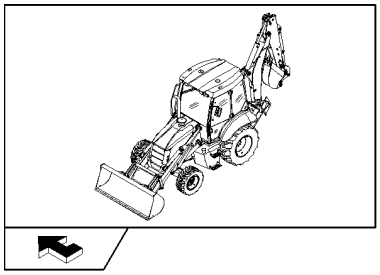

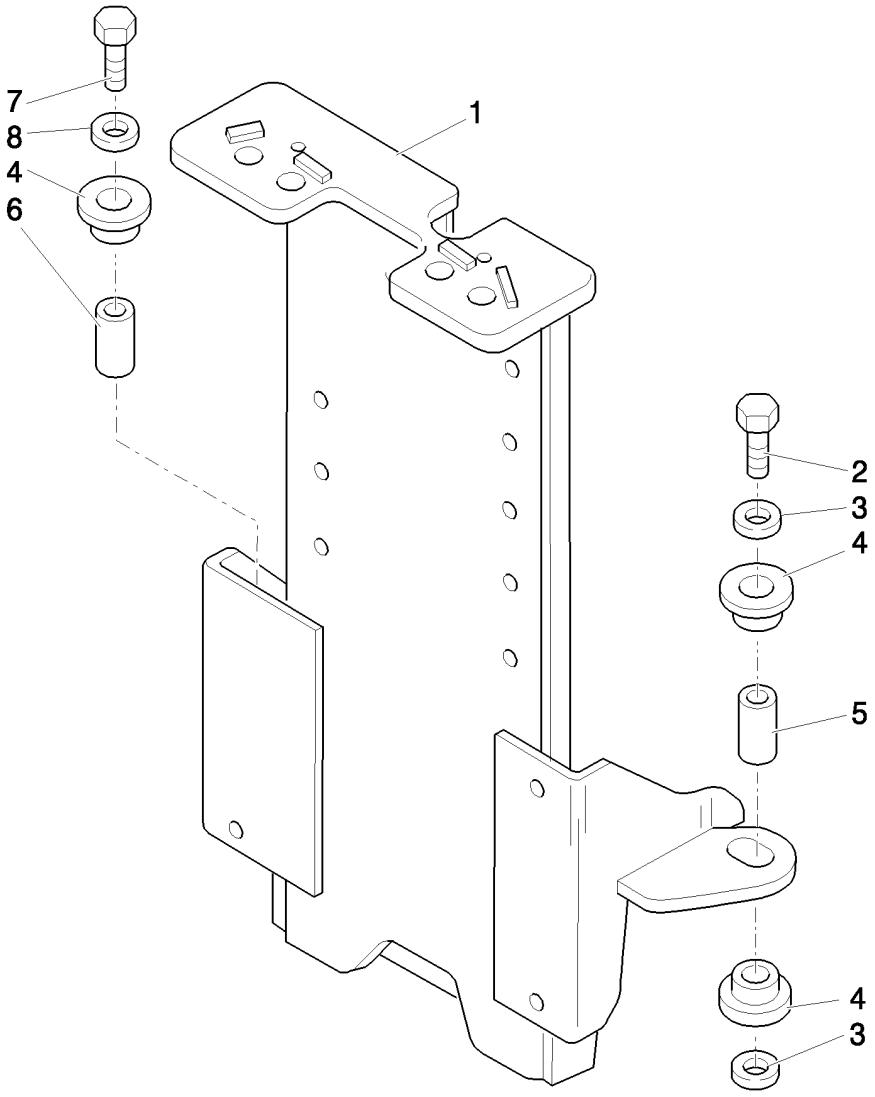

SOPORTE VALVULA DISTRIBUIDORA DE LA PARTE TRASERA HUSCO (CENTER PIVOT) - NA

REF	FN	PART NUMBER	YR/SN	QTY	DENOMINACION
1		85820167		1	SOPORTE
2		15215821		2	TORNILLO, Hex, M12 x 60, 8.8, Full Thd
3		85802618		5	JUNTA HERMETICA, 13x41x3
4		87348165		6	AISLADOR
5		85817252		2	CASQUILLO, 12.5 x 16.5 x 24
6		85820172		1	CASQUILLO, 12.5 x 16.5 x 22
7		15216421		1	TORNILLO, Hex, M12 x 90, 8.8, Full Thd
8		85820170		1	SEPARADOR

Mechanical Version B95B

NOTAS

SECTION INDEX
Plataforma de Conductor

1.91.1		CABINA : PLAFON
1.91.1/01		BASTIDOR DE SEGURIDAD: APARADOS DE CONTROL (ROPS) - NA
1.91.3		ALARMA AUXILIAR
1.91.4	01	CABLEADO DEL TECHO CABINA (CABINA, POWER SHUTTLE)
1.91.4	02	UNIDAD DE MANDO CAJA FUSIBLES (CABINA, POWER SHUTTLE)
1.91.4	03	INTERRUP. DE ENCENDIDO, PUNTO DE ENCEND., TABLERO DE FUSIBLES CABL. CONSOLA LAT. (CAB PT)
1.91.4	04	CABLEADO FRONTAL Y UNIDAD DE MANDO (CABINA, POWER SHUTTLE)
1.91.4	05	SALPICADERO ANTERIOR (CAB POWER SHUTTLE)
1.91.4	06	COMPONENTES DE LA INSTALACIÓN ELÉCTRICA DE LA CABINA (CABINA, POWER SHUTTLE)
1.91.4/02	01	CABLEADO DEL TECHO CABINA (ROPS POWER SHUTTLE)
1.91.4/02	02	UNIDAD DE MANDO CAJA FUSIBLES (ROPS POWER SHUTTLE)
1.91.4/02	03	INTERR. DE ENCENDIDO, PUNTO DE ENCEND., TABLERO DE FUSIBLES CABL. CONSOLA LAT. (ROPS PT)
1.91.4/02	04	CABLEADO FRONTAL Y UNIDAD DE MANDO (ROPS POWER SHUTTLE)
1.91.4/02	05	CONSOLA DERECHA CON INSTRUMENTOS (ROPS POWER SHUTTLE) - NA
1.91.4/02	06	COMPONENTES DE LA INSTALACIÓN ELÉCTRICA DE LA CABINA (ROPS POWER SHUTTLE)
1.91.5	01	LAVAPARABRISAS ANTERIOR Y POSTERIOR
1.91.5	02	DEPÓSITO Y BOQUILLAS LIMPIAPARABRISAS
1.91.6		ANTENA RADIO Y TAPA ALTAVOCES
1.91.7/01		LÁMPARAS Y FAROS - ROPS - NA
1.91.7/02		LÁMPARAS Y FAROS - CABINA - NA
1.92.2		CABINA: ESTRUTURA-PUERTAS
1.92.3		CRISTALES FRONTALES Y JUNTAS
1.92.4	01	FIJACIONES CRISTAL LATERALES PUERTA
1.92.4	02	FIJACIONES CRISTAL LATERAL CABINA
1.92.4	03	CRISTALES LATERALES
1.92.5		GUARDABARROS TRASERO
1.92.6	01	COMPONENTES DEFINICION PUERTAS
1.92.6	02	COMPONENTES CUMPLIMIENTO PUERTA: LADO INFERIOR
1.92.6	03	COMPONENTES BISAGRA DE CIERRE PUERTA
1.92.8		JUNTA CORTAFUEGO, ROPS (POWER SHUTTLE)
1.92.9	01	CRISTALES POSTERIORES Y COMPONENTES
1.92.9	02	BISAGRA DE CIERRE CRISTAL POSTERIOR
1.92.9	03	BISAGRAS Y CIERRE CRISTAL POSTERIOR
1.93.0	01	CABINA : REVESTIMIENTO (POWER SHUTTLE, POWER SHIFT)
1.93.0	02	CABINA : REVESTIMIENTO (POWER SHUTTLE, POWER SHIFT)
1.93.0	03	CABINA / COBERTURA LATERAL Y SUELO FRONTAL (POWER SHUTTLE: POWER SHIFT)
1.93.0	04	CABINA / CONSOLA POSTERIOR Y COBERTURA DEL SUELO (POWER SHUTTLE: POWER SHIFT)
1.93.0/01	01	CABINA : REVESTIMIENTO (POWER SHUTTLE, POWER SHIFT)
1.93.0/01	02	CABINA / COBERTURA DEL SUELO Y COMPONENTES (POWER SHUTTLE: POWER SHIFT)
1.93.0/02	01	COBERTURA LATERAL DERECHA, CONSOLA POSTERIOR ROPS (PIVOTE CENTRAL): NA
1.93.0/03		RIVESTIMIENTOS MAQUINAS (ROPS) - NA
1.93.4		ESPEJO RETROVISOR - PARASOL
1.93.5	01	CABINA / TABLERO DE MANDOS FRONTAL

SECTION INDEX
Plataforma de Conductor

1.93.5	02	CABINA / FIJACIONES DEL TABLERO DE MANDOS Y JUNTAS
1.93.5/01	01	CONSOLA ANTERIOR - ROPS (POWER SHUTTLE) - NA
1.93.5/01	02	GUARNICIÓN Y ELEMENTOS DE FIJACIÓN CONSOLA DERECHA - ROPS (POWER SHUTTLE) - NA
1.93.7		RETROVISOR INTERIOR (POWER SHUTTLE) ROPS
1.94.0/01		CAB / ROPS: TECHO Y COBERTURA INTERIOR: NA
1.94.2		MANGUITOS AGUA DE CALEFACCIÓN
1.95.0	01	CABINA / ROPS : PEDAL DEL FRENO
1.95.0	02	CABINA / ROPS / BOMBA DEL FRENO
1.95.0	03	CABINA / ROPS / TUBOS DE LA INSTALACIÓN DEL FRENO
1.95.0/ A		CABINA / ROPS / CILINDRO BOMBA DEL FRENO
1.95.1		CABINA / ROPS / PALANCA DEL FRENO DE ESTACIONAMIENTO Y CABLE DE MANDO
1.95.2		MANDO DEL TRANSPORT LOCK - NA
1.95.3		MANDO DE ACELERADOR ELECTRÓNICO MANUAL/A PEDAL
1.95.5	01	COLUMNA DE DIRECCIÓN Y COBERTURA: NA
1.95.5	02	MANGUITOS INSTALACIÓN DE DIRECCIÓN: NA
1.95.5/ A	01	SERVO DIRECCIÓN: NA
1.96.0		PALANCA DE ADELANTE/ATRÁS Y MULTIFUNCIONES
1.96.2	01	MANDOS ESTABILIZADORES (SIDE SHIFT - EU) - (CENTER PIVOT - NA)
1.96.2	02	MANDOS ESTABILIZADORES (CENTER PIVOT) - NA
1.96.2/01		DIAGNOSTICO PILOT CONTROL
1.96.7/04		PERNOS DE CIERRE Y TAPONES ROPS (PIVOTE CENTRAL): NA
1.96.7/05		CABINA / DIFERENTES COMPONENTES (PIVOTE CENTRAL): NA
1.96.7/06		CABINA: DIFERENTES COMPONENTES (CENTER PIVOT): NA
1.96.7/07		PERNOS DE CIERRE Y TAPONES ROPS (PIVOTE CENTRAL): NA
1.98.0/01		CALCOMANÍAS DE SÍMBOLOS E INFORMACIÓN (POWER SHUTTLE - POWER SHIFT) - NA
1.98.1	08	MODELO DE IDENTIFICACIÓN: ADHESIVOS DE SEGURIDAD
1.98.1	09	IDENTIFICACIÓN MODELO B90B / B90BLR - B959B / B95BLR - B100B / B100BLR

NOTAS

CABINA : PLAFON

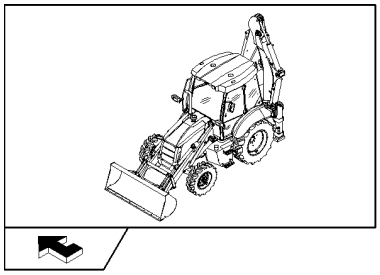

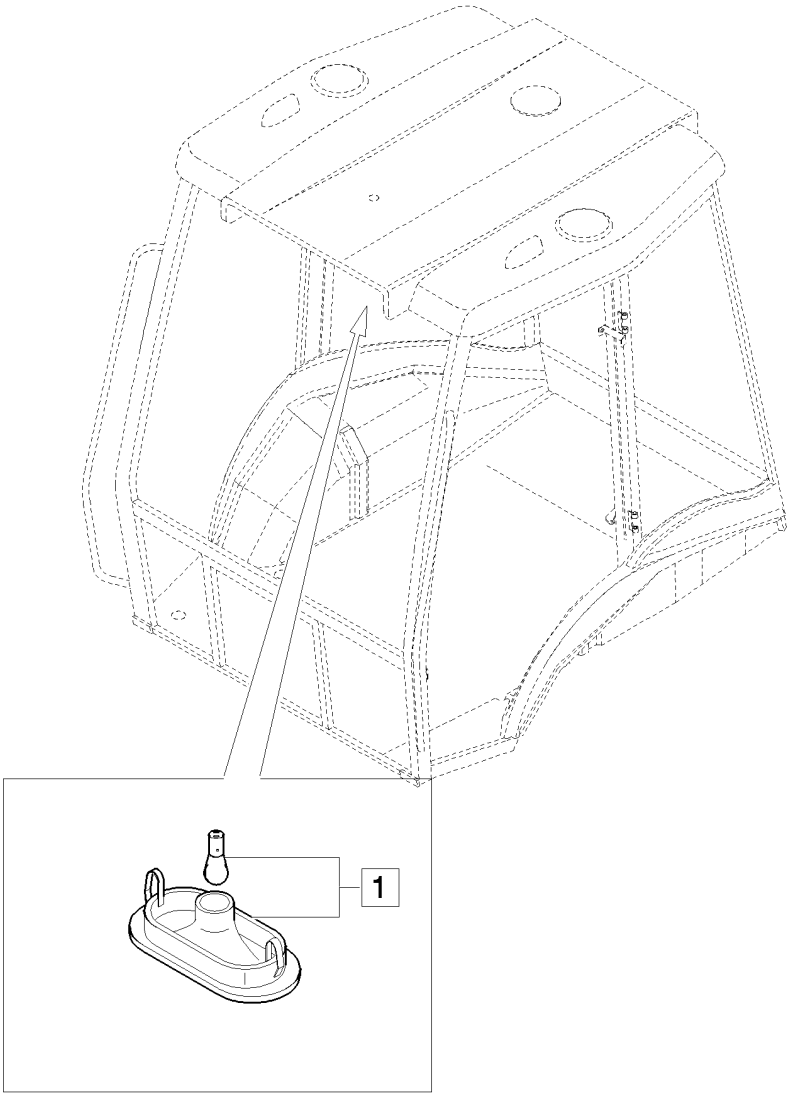

CABINA : PLAFON

REF	FN	PART NUMBER	YR/SN	QTY	DENOMINACION
1		82022833		1	PLAFON, Assy

BASTIDOR DE SEGURIDAD: APARADOS DE CONTROL (ROPS) - NA

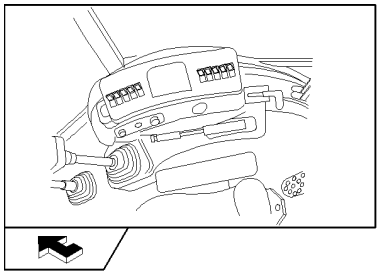

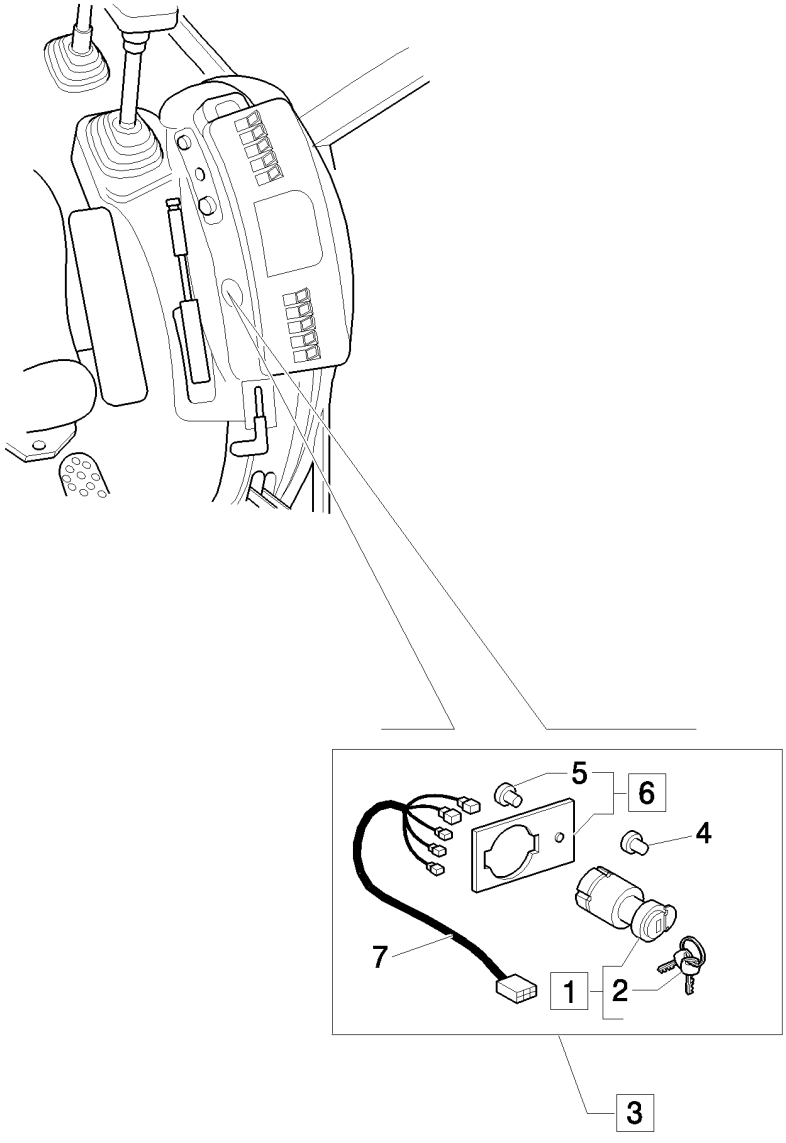

BASTIDOR DE SEGURIDAD: APARADOS DE CONTROL (ROPS) - NA

REF	FN	PART NUMBER	YR/SN	QTY	DENOMINACION
1		85804674		1	CONMUTADOR DE ARRANQ, Assy
2		85804675		2	LLAVE DE CONTACTO
3		85807866		1	KIT DE MODIFICACION, Assy
4		784122		1	TAPÓN
5		10427201		1	REMACHE
6		85827548		1	PLACA, Assy
7		85807855		1	GRUPO DE CABLES

ALARMA AUXILIAR

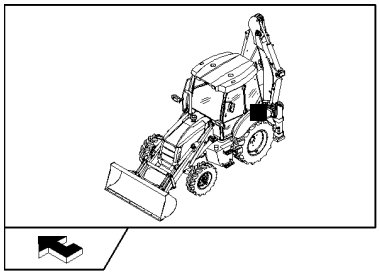

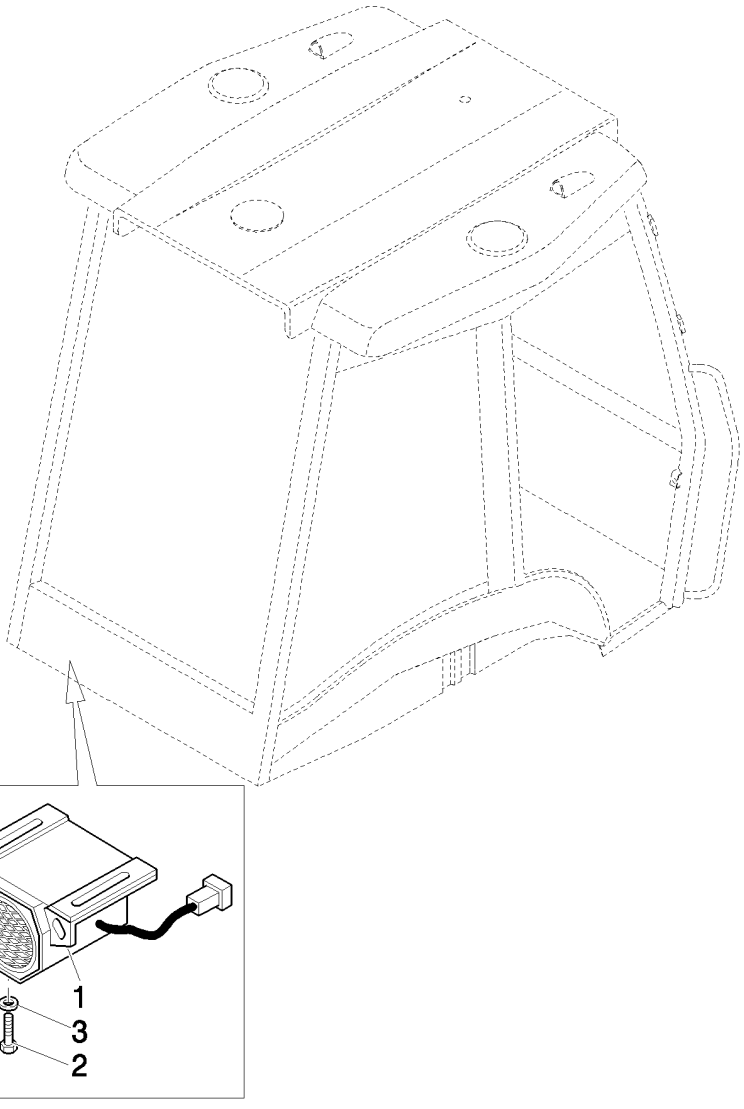

ALARMA AUXILIAR

REF	FN	PART NUMBER	YR/SN	QTY	DENOMINACION
1		87303261		1	ALARMA
2		10902321		2	TORNILLO, Hex, M6 x 18, 8.8, Full Thd
3		11197779		2	ARANDELA ABANICO, Belleville, M6.4

1.91.4	01	p1	03/08

CABLEADO DEL TECHO CABINA (CABINA, POWER SHUTTLE)

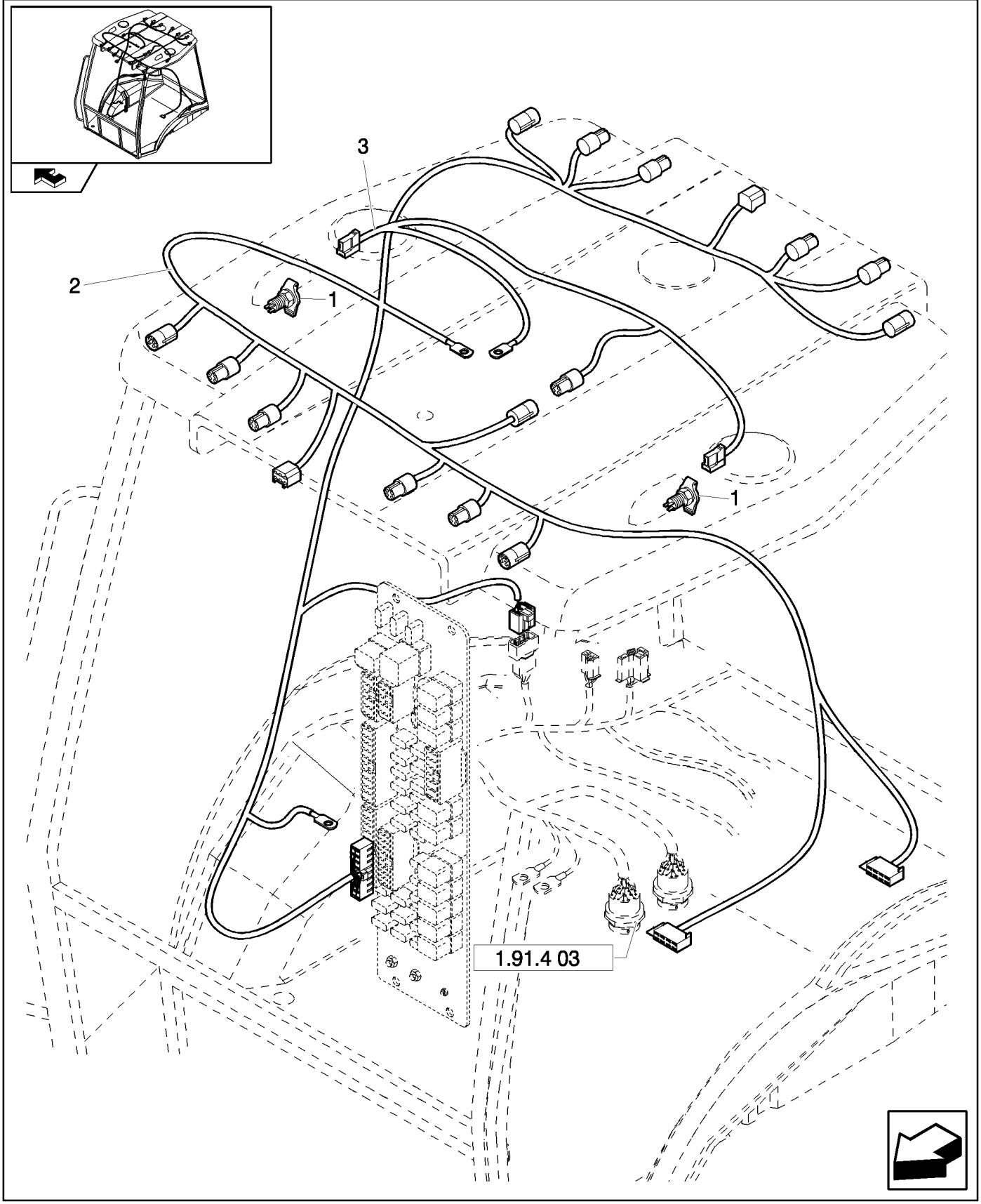

CABLEADO DEL TECHO CABINA (CABINA, POWER SHUTTLE)

REF	FN	PART NUMBER	YR/SN	QTY	DENOMINACION
1		87546419		2	ENCAJE, Mating Part is 86508819 Plug
2		85825330		1	GRUPO DE CABLES
3		85819568		1	GRUPO DE CABLES, Rotary Beacon

UNIDAD DE MANDO CAJA FUSIBLES (CABINA, POWER SHUTTLE)

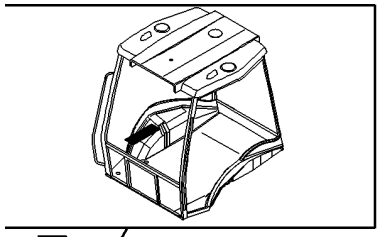

UNIDAD DE MANDO CAJA FUSIBLES (CABINA, POWER SHUTTLE)

REF	FN	PART NUMBER	YR/SN	QTY	DENOMINACION
1		85802478		4	AISLADOR
2	1	87552124		1	CAJA ELECTRONICA, Assy
2	2	87609145		1	CAJA ELECTRONICA, Assy
3		11054790		1	FUSIBLE
4		10519204		1	ARANDELA, M4 x 9 x .8
5		11054590		2	FUSIBLE
6		85806135		1	AISLADOR
7		11054890		3	FUSIBLE
8		11054990		7	FUSIBLE, 10 Amp
9		11055090		10	FUSIBLE
10		10615274		4	ARANDELA DE FRENO, Ext Tooth, M4
11		12574011		1	CONTRA TUERCA, M4 x .7, Cl 8
12		85803986		1	CONECTADOR, Flasher
13	1	87552125		1	CUERPO
13	2	87609146		1	CIRCUITO IMPRESO
14		85825198		9	CONECTADOR
15		12574011		4	CONTRA TUERCA, M4 x .7, Cl 8
16		85802250		1	CALCOMANIA
17		85806134		1	FUSIBLE
18	2	87600615		1	TIMBRE ZUMBADOR

(1) Except for B90B, B90BLR
(2) Only for B90B, B90BLR

1.91.4	03	p1	05/08

INTERRUP. DE ENCENDIDO, PUNTO DE ENCEND., TABLERO DE FUSIBLES CABL. CONSOLA LAT. (CAB PT)

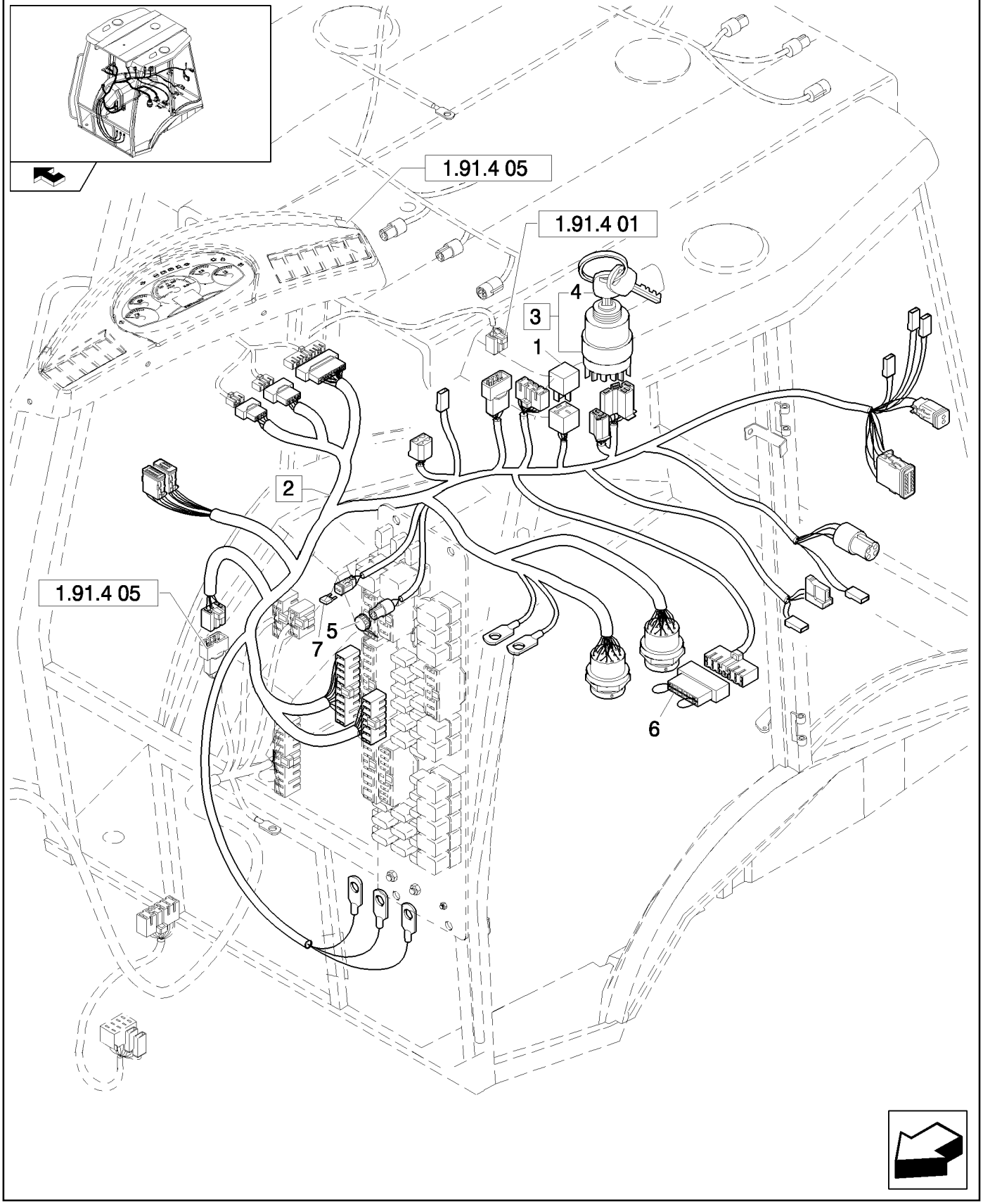

INTERRUP. DE ENCENDIDO, PUNTO DE ENCEND., TABLERO DE FUSIBLES CABL. CONSOLA LAT. (CAB PT)

REF	FN	PART NUMBER	YR/SN	QTY	DENOMINACION
1	1	87433890		1	ADAPTOR
1	2	87433891		1	ADAPTOR
2	3, 4	87552126		1	CABLE ELECTRICO, Assy
2	5	87318749		1	GRUPO DE CABLES, Assy
3		87431469		1	CONMUTADOR DE ARRANQ, Assy, 3A
4		85804675		2	LLAVE DE CONTACTO
5		87640751		1	TAPÓN
6		85821410		1	BLOQUE MOTOR
7		11054790		1	FUSIBLE

(1) Only for EU
(2) Only for NA
(3) Includes 5 - 7
(4) Except for B90B, B90BLR
(5) Only for B90B, B90BLR

CABLEADO FRONTAL Y UNIDAD DE MANDO (CABINA, POWER SHUTTLE)

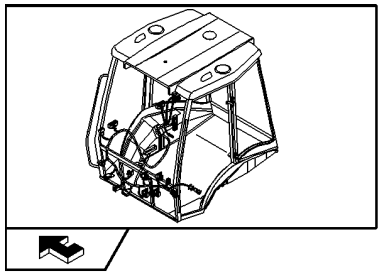

KIT KIT ■ = 6

CABLEADO FRONTAL Y UNIDAD DE MANDO (CABINA, POWER SHUTTLE)

REF	FN	PART NUMBER	YR/SN	QTY	DENOMINACION
1	1, 2	87601608		1	HAZ, Assy
1	3, 2	85818820		1	GRUPO DE CABLES, Assy
2		85806133		1	INTERR. LAMPARA INTERMIT.
3	4	14560087		10	CIERRA CABLES
4	4	87371907		1	HAZ
5	4	87371906		2	DIODO
6	4	87653101		1	EQUIPO

(1) Except for B90B, B90BLR
(2) Includes 2
(3) Only for B90B, B90BLR
(4) Only for B95BTC

1.91.4	05	p1	03/08

SALPICADERO ANTERIOR (CAB POWER SHUTTLE)

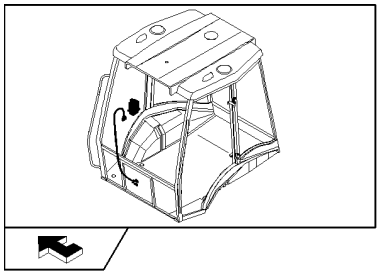

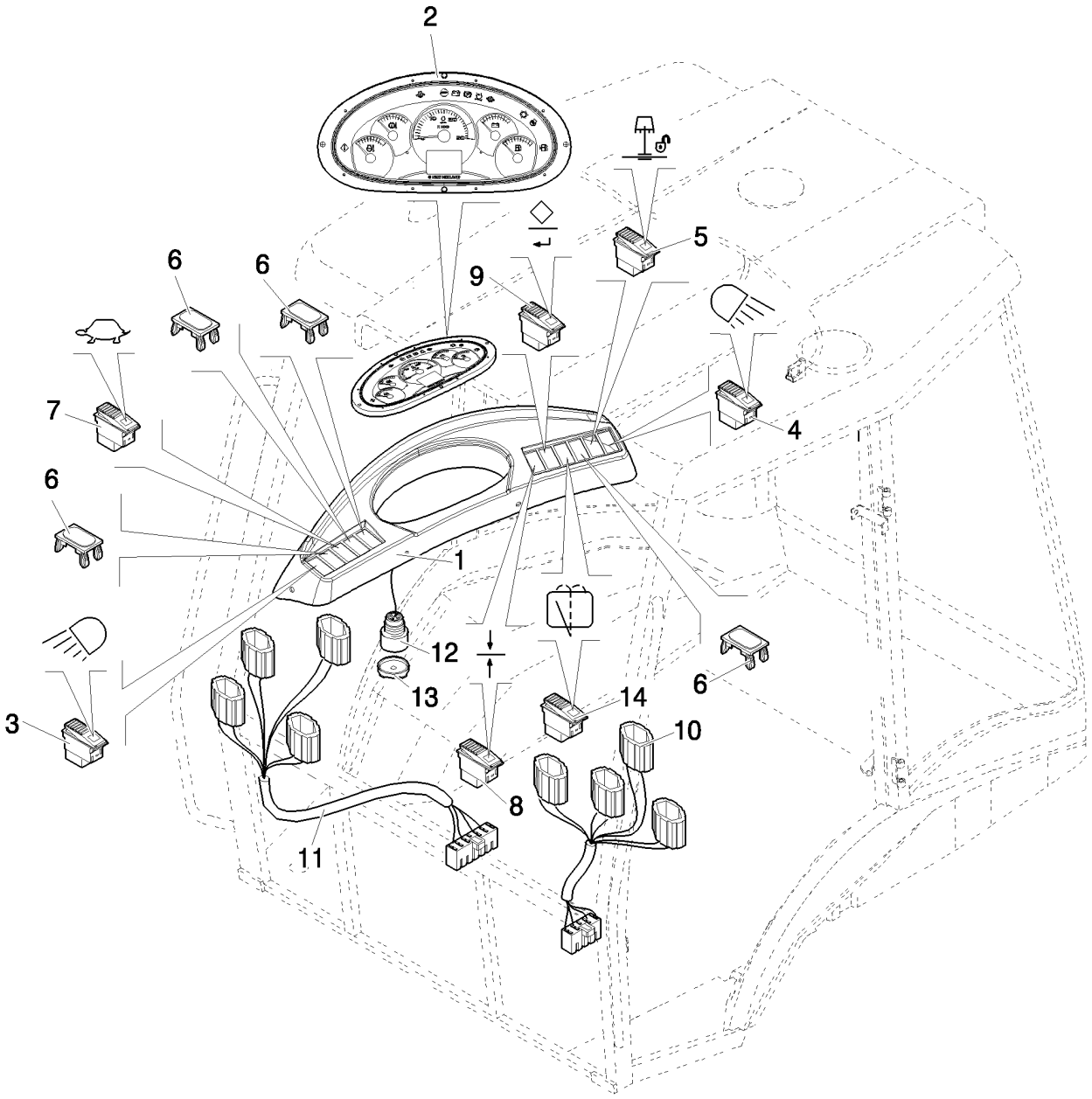

SALPICADERO ANTERIOR (CAB POWER SHUTTLE)

REF	FN	PART NUMBER	YR/SN	QTY	DENOMINACION
1		87540632		1	TABLIERO
2		87521757		1	GRUPO
3		85818818		1	INTERRUPTOR
4		85818819		1	CONTACTOR
5	1	85818895		1	CONTACTOR
6		85825254		6	TAPÓN
7	1	85819142		1	CONTACTOR
8		87536826		1	CONTACTOR
9		87536827		1	CONTACTOR
10		87557803		1	TABLIERO
11		87550456		1	TABLIERO
12		87527167		1	BOCINA
13		87539792		1	TAPADERA
14		85818823		1	INTERRUPT. LIMPIAPARABRIS

(1) Only for EU

Mechanical Version / Pilot Control Version B95B

1.91.4	06	p1	03/08

COMPONENTES DE LA INSTALACIÓN ELÉCTRICA DE LA CABINA (CABINA, POWER SHUTTLE)

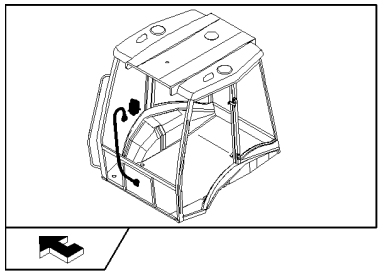

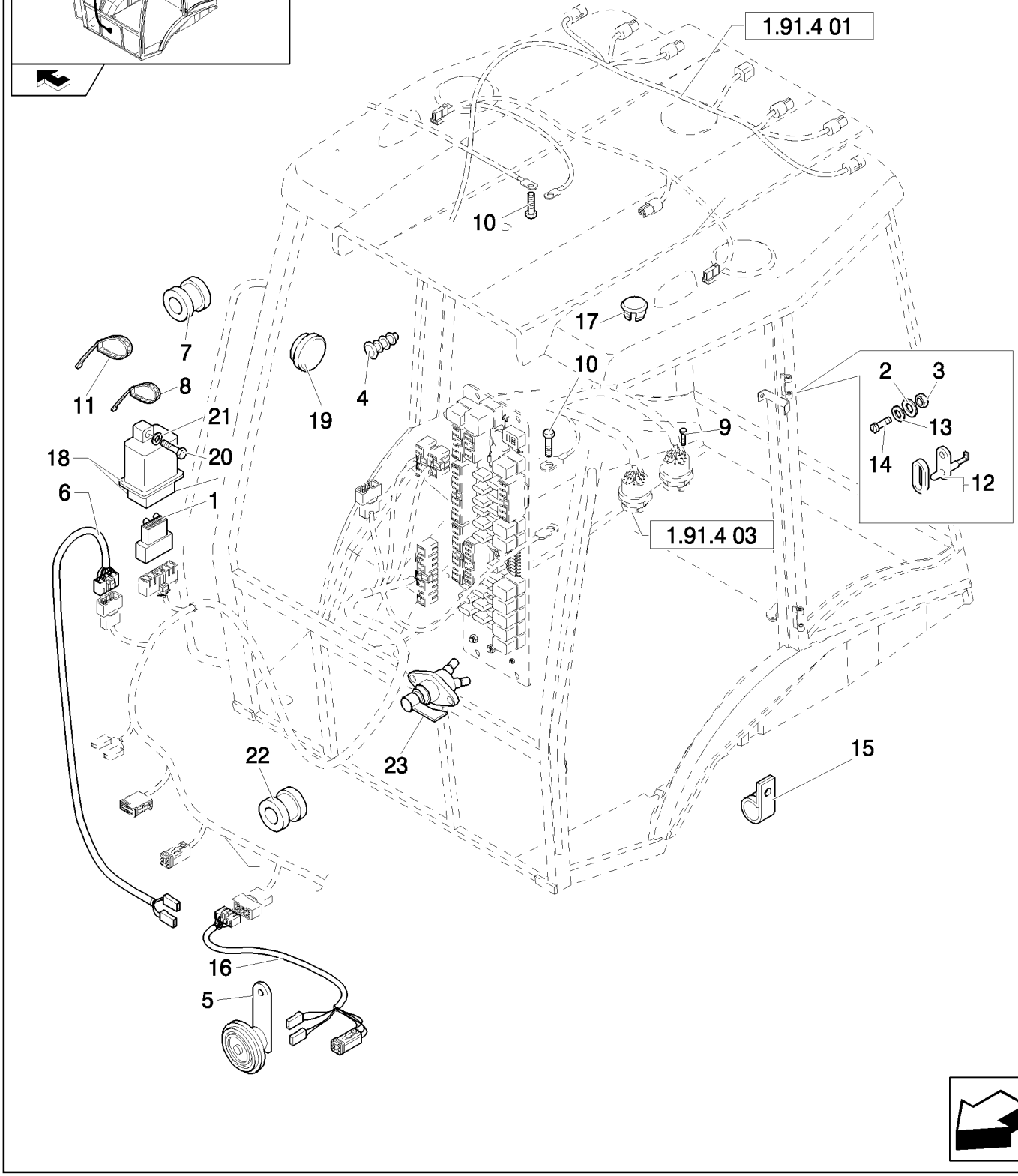

COMPONENTES DE LA INSTALACIÓN ELÉCTRICA DE LA CABINA (CABINA, POWER SHUTTLE)

REF	FN	PART NUMBER	YR/SN	QTY	DENOMINACION
1	1	85806136		1	CONECTOR
2		10615274		6	ARANDELA DE FRENO, Ext Tooth, M4
3		12574011		6	CONTRA TUERCA, M4 x .7, Cl 8
4		85802310		1	TAPÓN
5		87689317		1	BOCINA
6	1	85819193		1	GRUPO DE CABLES
6	2	87552128		1	CABLE ELECTRICO
7		10398980		1	PASACABLES
8		5112712		5	COLLAR, M4.8 x 283
9	3	13272214		2	TORNILLO, Cross Pan Hd, M4 x 16
10		16042924		2	TORNILLO, Hex, M8 x 10, 8.8, Full Thd
11		85805383		30	CIERRA CABLES
12		83961521		2	CONTACTOR
13		10519204		2	ARANDELA, M4 x 9 x .8
14		13309417		2	TORNILLO, Cross Oval Hd, M4 x 20
15		10450090		1	BORNE
16	1	85819195		1	GRUPO DE CABLES
17		79111978		1	TAPÓN
18	2	85806132		1	RELE DE INTERMITENCIA, Circuit Board
19	2	85808460		1	TAPÓN
20	2	10902624		1	TORNILLO, Hex, M6 x 25, 8.8, Full Thd
21	2	11193274		1	ARANDELA ABANICO, Belleville, M6.4
22	1	10398680		2	PASACABLES
23	3	87409316		1	CONTACTOR

(1) Only for EU
(2) Only for NA
(3) Only for B90B, B90BLR

Mechanical Version / Pilot Control Version

B95B

1.91.4/02	01	p1	03/08

CABLEADO DEL TECHO CABINA (ROPS POWER SHUTTLE)

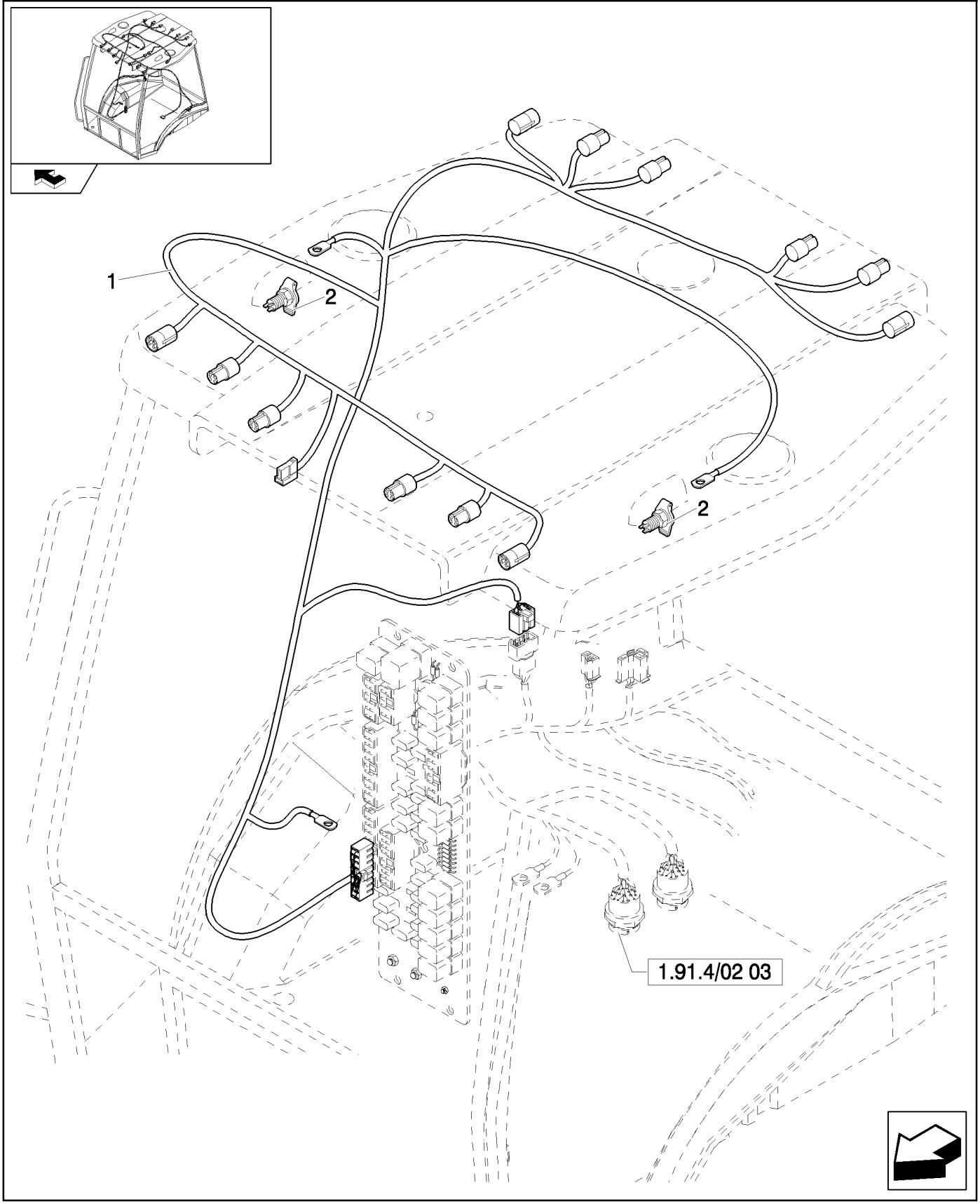

CABLEADO DEL TECHO CABINA (ROPS POWER SHUTTLE)

REF	FN	PART NUMBER	YR/SN	QTY	DENOMINACION
1	1	85819724		1	GRUPO DE CABLES
1	2	85819725		1	GRUPO DE CABLES
2		87546419		2	ENCAJE, Mating Part is 86508819 Plug

(1) Only for NA
(2) Only for EU

UNIDAD DE MANDO CAJA FUSIBLES (ROPS POWER SHUTTLE)

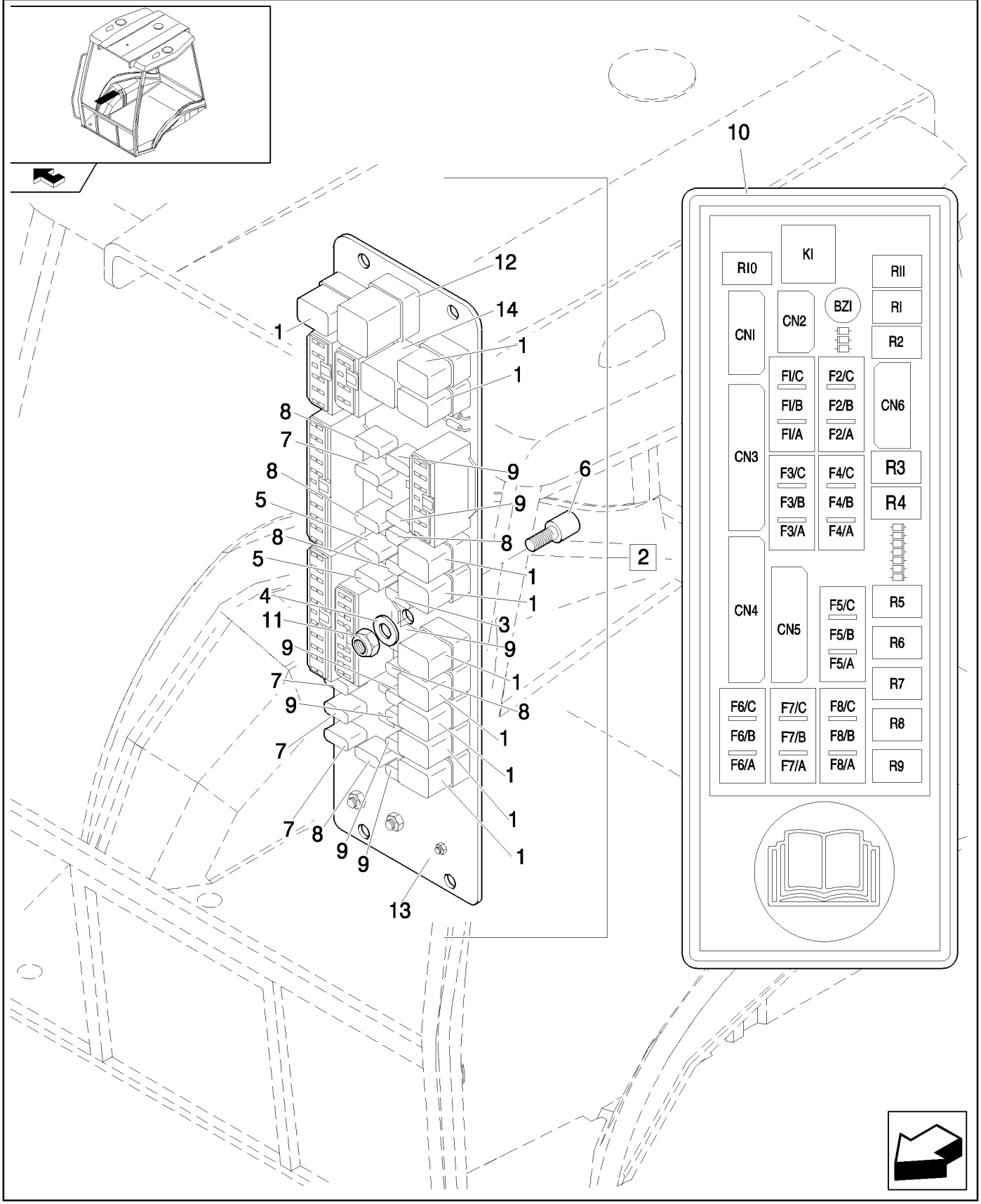

UNIDAD DE MANDO CAJA FUSIBLES (ROPS POWER SHUTTLE)

REF	FN	PART NUMBER	YR/SN	QTY	DENOMINACION
1		85825198		11	CONECTADOR
2	1	87554901		1	CAJA ELECTRONICA, Assy
2	2	87609138		1	CAJA ELECTRONICA, Assy
3		11054790		1	FUSIBLE, 5A
4		10519204		1	ARANDELA, M4 x 9 x .8
5		11054590		2	FUSIBLE, 3A
6		85806135		1	AISLADOR
7		11054890		3	FUSIBLE, 7,5A
8		11054990		6	FUSIBLE, 10 Amp
9		11055090		8	FUSIBLE, 15A
10		85802250		1	CALCOMANIA
11		12574011		1	CONTRA TUERCA, M4 x .7, Cl 8
12		85803986		1	CONECTADOR, Flasher
13	1	87552125		1	CUERPO
13	2	87609146		1	CIRCUITO IMPRESO
14	2	87600615		1	TIMBRE ZUMBADOR

(1) Except for B90B, B90BLR
(2) Only for B90B, B90BLR

1.91.4/02	03	p1	05/08

INTERR. DE ENCENDIDO, PUNTO DE ENCEND., TABLERO DE FUSIBLES CABL. CONSOLA LAT. (ROPS PT)

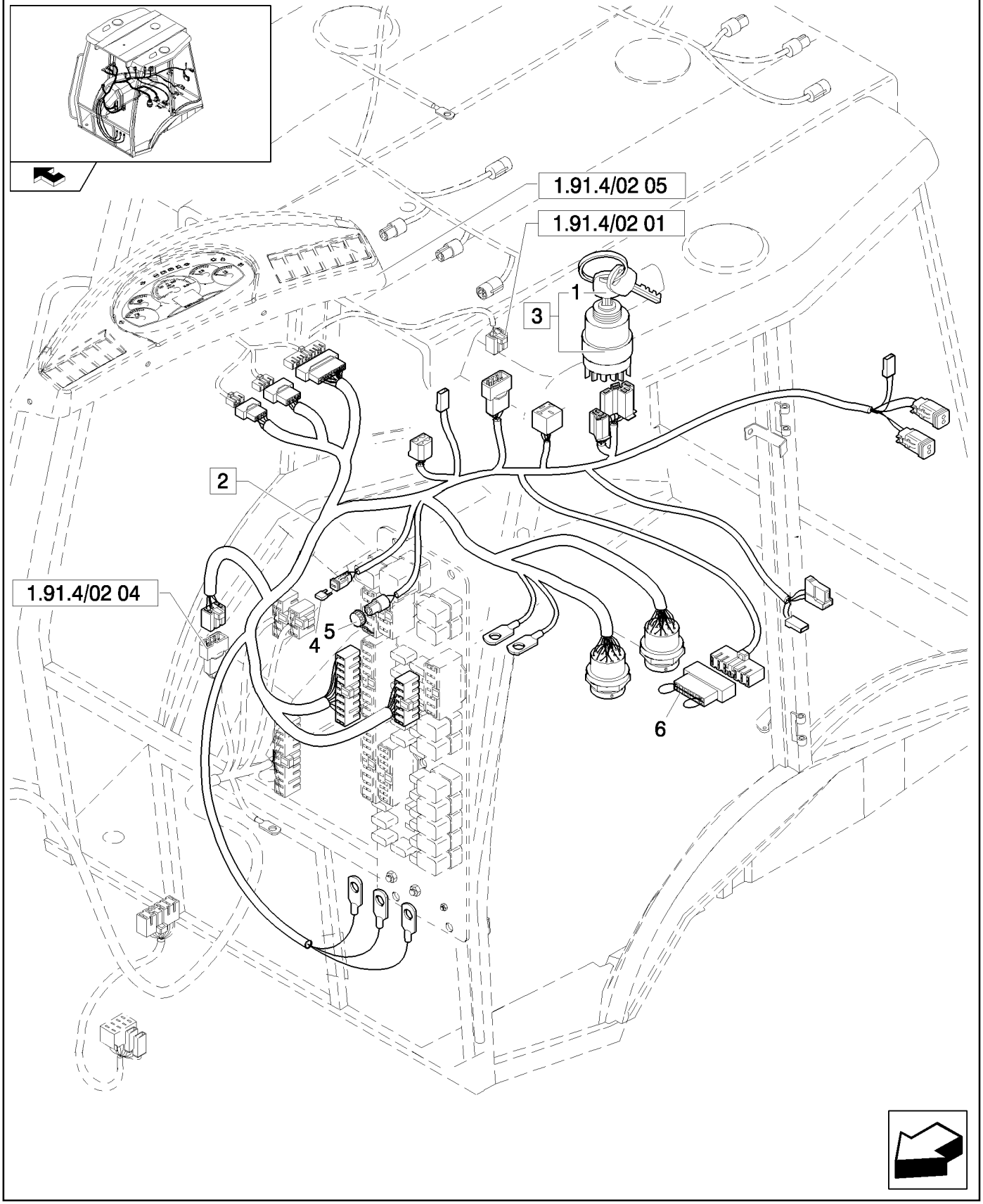

INTERR. DE ENCENDIDO, PUNTO DE ENCEND., TABLERO DE FUSIBLES CABL. CONSOLA LAT. (ROPS PT)

REF	FN	PART NUMBER	YR/SN	QTY	DENOMINACION
1		85804675		1	LLAVE DE CONTACTO
2	1	87554286		1	CABLE ELECTRICO
2	2	87431461		1	GRUPO DE CABLES
2	3	87318746		1	GRUPO DE CABLES
3		87431469		1	CONMUTADOR DE ARRANQ, Assy
4	1	11054790		1	FUSIBLE
5	1	87640751		1	TAPÓN
6		85821410		1	BLOQUE MOTOR

(1) Except for B90B, B90BLR
(2) Only for B90B (NA)
(3) Only for B90B, B90BLR (EU)

CABLEADO FRONTAL Y UNIDAD DE MANDO (ROPS POWER SHUTTLE)

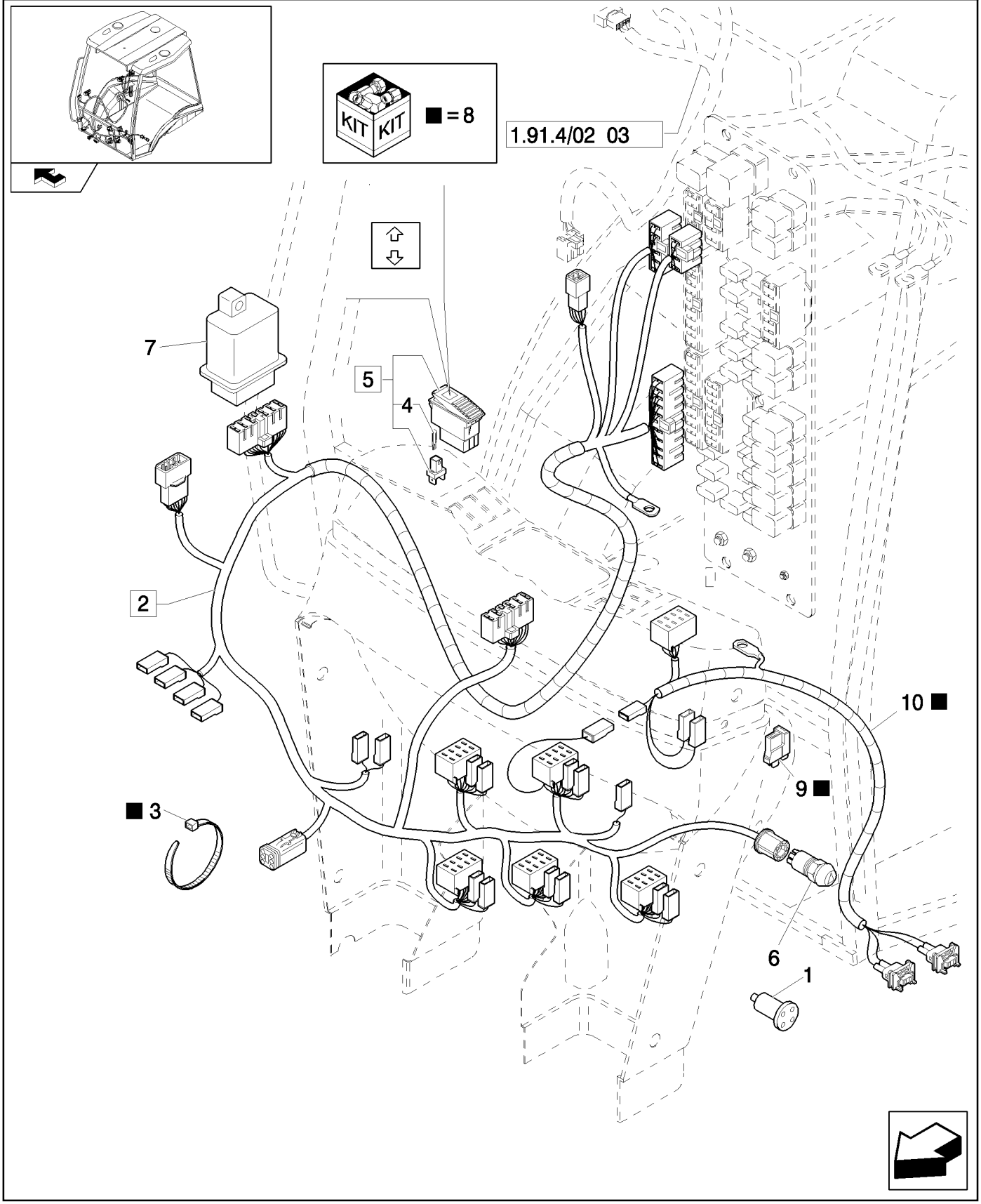

CABLEADO FRONTAL Y UNIDAD DE MANDO (ROPS POWER SHUTTLE)

REF	FN	PART NUMBER	YR/SN	QTY	DENOMINACION
1	1	87433891		1	ADAPTOR
1	2	87433890		1	ADAPTOR
2	3, 4	87601605		1	HAZ, Assy
2	3, 5	85819586		1	GRUPO DE CABLES, Assy
2	2, 6	85819588		1	GRUPO DE CABLES, Assy
3	7	14560087		10	CIERRA CABLES
4	1	14143790		1	BOMBILLA
5	1	85819144		1	CONTACTOR, Assy
6		85806133		1	INTERR. LAMPARA INTERMIT.
7	1	85806132		1	RELE DE INTERMITENCIA
8	7	87653101		1	EQUIPO
9	7	87371906		2	DIODO
10	7	87371907		1	HAZ

(1) Only for NA
(2) Only for B90B, B90BLR (EU)
(3) Includes 5 - 7
(4) Except for B90B, B90BLR
(5) Only for B90B (NA)
(6) Includes 6
(7) Only for B95BTC

1.91.4/02	05	p1	03/08

CONSOLA DERECHA CON INSTRUMENTOS (ROPS POWER SHUTTLE) - NA

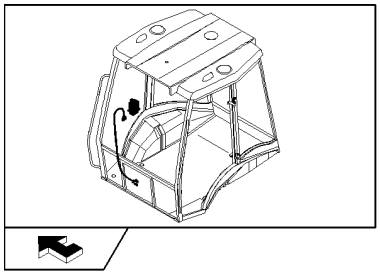

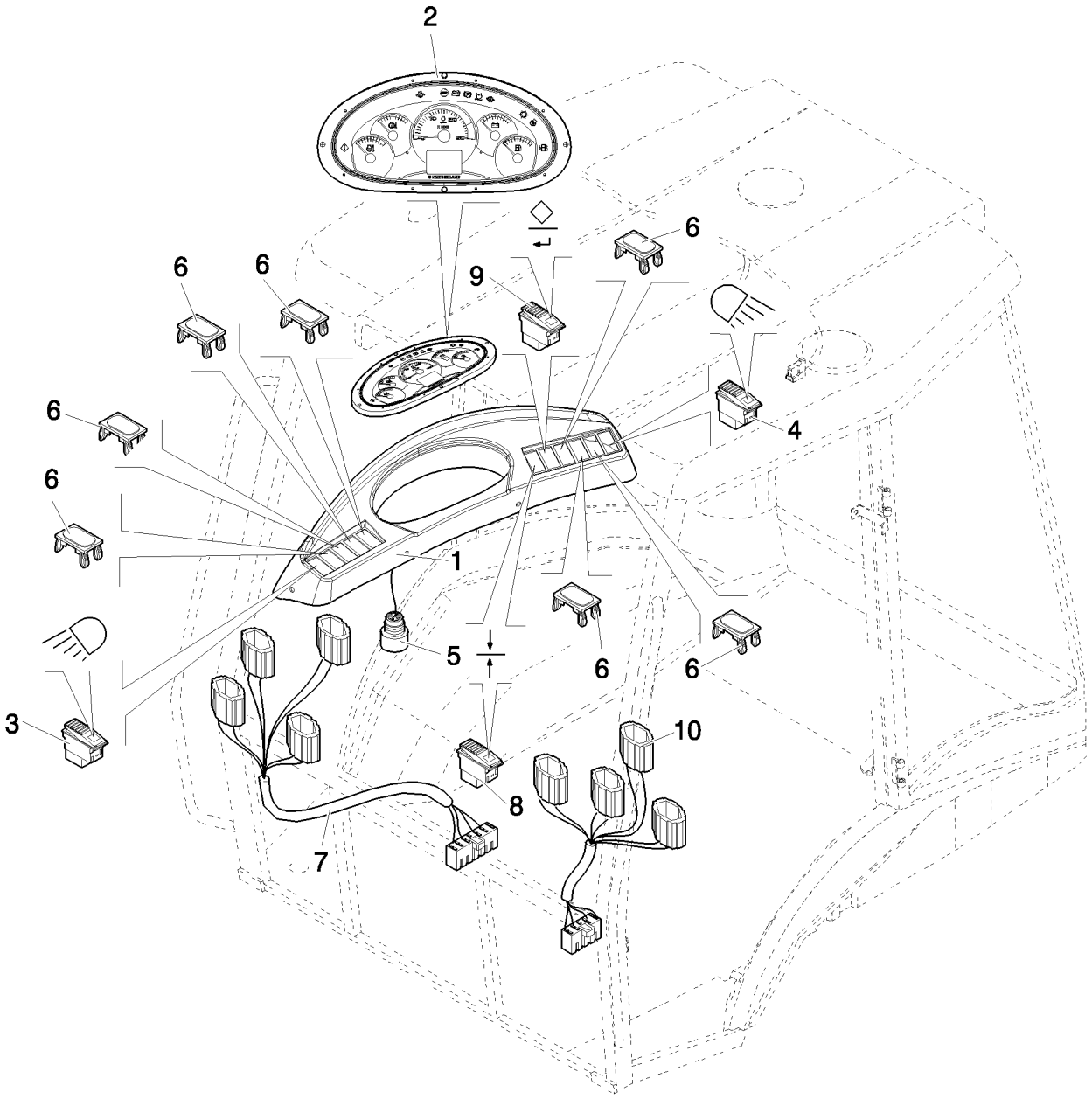

CONSOLA DERECHA CON INSTRUMENTOS (ROPS POWER SHUTTLE) - NA

REF	FN	PART NUMBER	YR/SN	QTY	DENOMINACION
1		87540632		1	TABLIERO
2		87521757		1	GRUPO
3		85818818		1	INTERRUPTOR
4		85818819		1	CONTACTOR
5		87527167		1	BOCINA
6		85825254		7	TAPÓN
7		87558491		1	CABLE ELECTRICO
8		87536826		1	CONTACTOR
9		87536827		1	CONTACTOR
10		87557803		1	TABLIERO

COMPONENTES DE LA INSTALACIÓN ELÉCTRICA DE LA CABINA (ROPS POWER SHUTTLE)

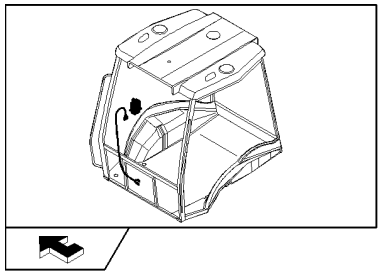

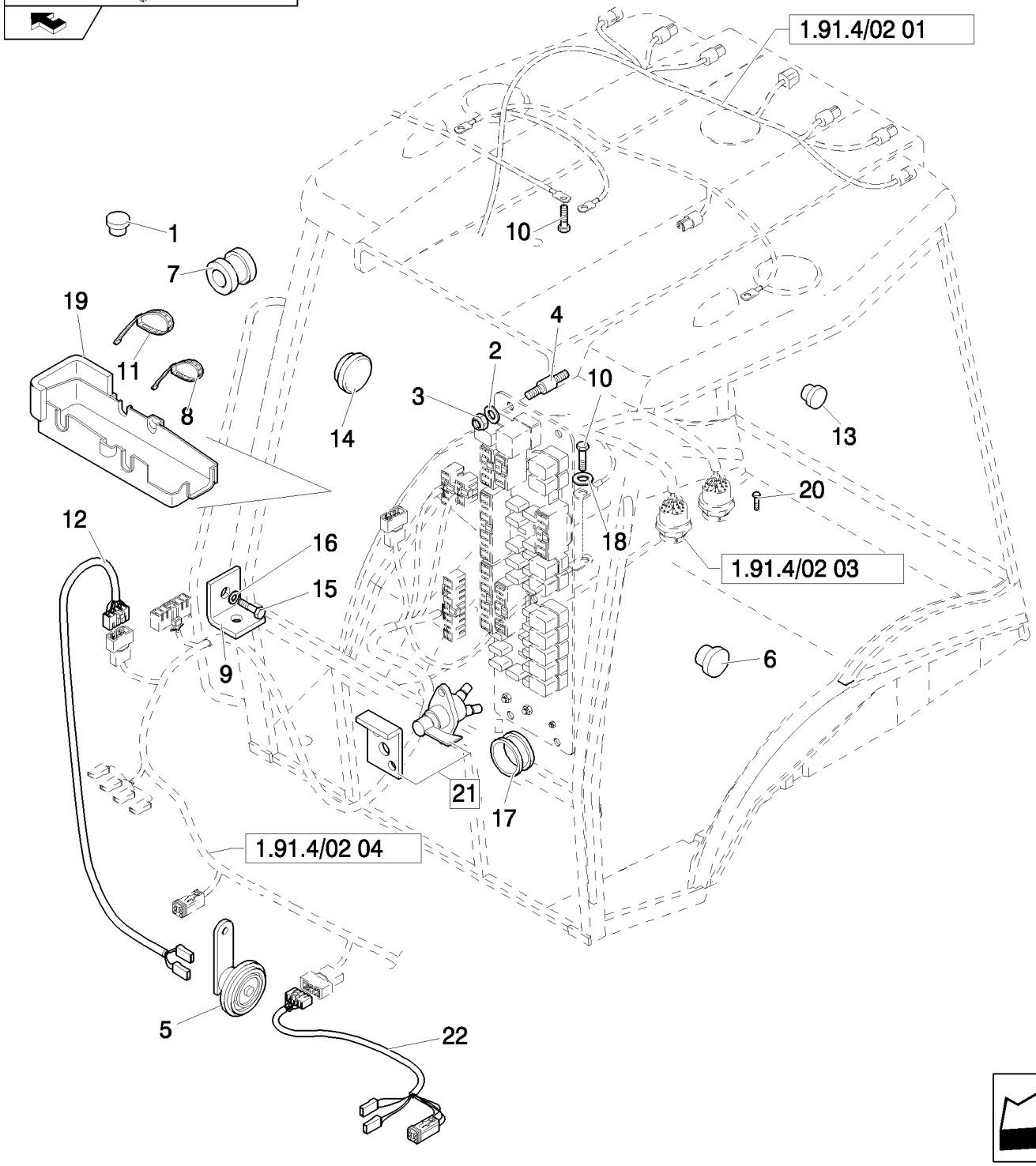

COMPONENTES DE LA INSTALACIÓN ELÉCTRICA DE LA CABINA (ROPS POWER SHUTTLE)

REF	FN	PART NUMBER	YR/SN	QTY	DENOMINACION
1		85825254		1	TAPÓN
2		10615274		4	ARANDELA DE FRENO, Ext Tooth, M4
3		12574011		4	CONTRA TUERCA, M4 x .7, Cl 8
4		85825129		4	AISLADOR
5		87689317		1	BOCINA
6	1	79111978		1	TAPÓN
7		10398980		2	PASACABLES
8		5112712		5	COLLAR, M4.8 x 283
9	1	85821326		1	SOPORTE
10		16043121		2	TORNILLO, Hex, M8 x 14, 8.8, Full Thd
11		85805383		26	CIERRA CABLES
12	1	87552128		1	CABLE ELECTRICO
12	2	85819193		1	GRUPO DE CABLES
13	1	85802310		1	TAPÓN
14	1	85808460		1	TAPÓN
15	1	10902624		1	TORNILLO, Hex, M6 x 25, 8.8, Full Thd
16	1	11193274		1	ARANDELA ABANICO, Belleville, M6.4
17		10398680		7	PASACABLES
18		11193879		2	ARANDELA ABANICO, Belleville, M8.4
19		85825136		1	COBERTURA
20	3	13272214		2	TORNILLO, Cross Pan Hd, M4 x 16
21	2	87409315		1	EQUIPO, Assy
22	2	85819195		1	GRUPO DE CABLES

(1) Only for NA
(2) Only for EU
(3) Only for B90B, B90BLR

LAVAPARABRISAS ANTERIOR Y POSTERIOR

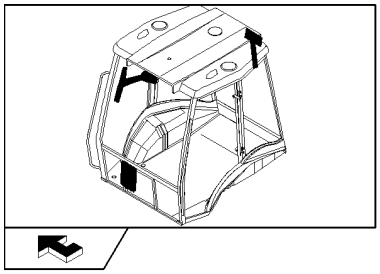

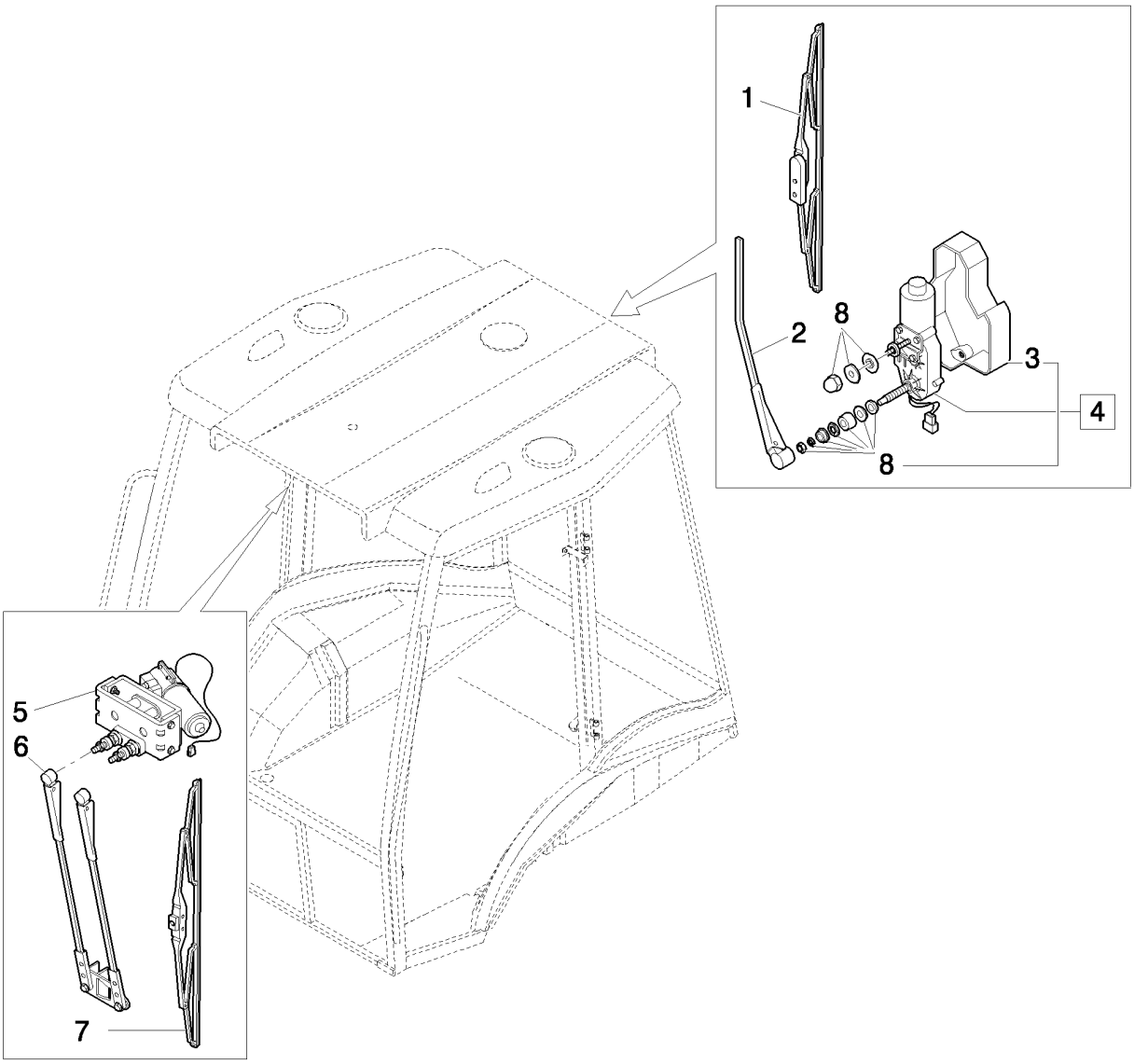

LAVAPARABRISAS ANTERIOR Y POSTERIOR

REF	FN	PART NUMBER	YR/SN	QTY	DENOMINACION
1		85819827		1	RASQUETA LIMPIAPARABR., Rear
2		85806098		1	BRAZO LIMPIAPARABRISAS, Rear
3		85806095		1	TAPADERA, Rear
4		87628768		1	LIMPIA-PARABRISAS, Assy, Rear
5		85806184		1	LIMPIA-PARABRISAS, Front
6		85806185		1	BRAZO LIMPIAPARABRISAS, Front
7		85819826		1	RASQUETA LIMPIAPARABR., Front
8		87628806		1	EQUIPO

1.91.5	02	p1	05/08

DEPÓSITO Y BOQUILLAS LIMPIAPARABRISAS

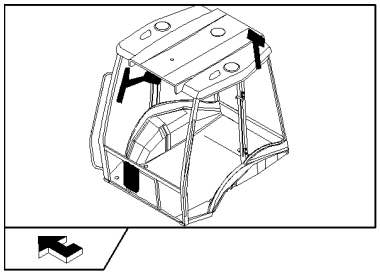

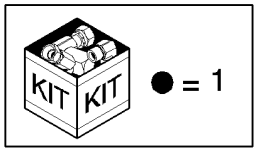

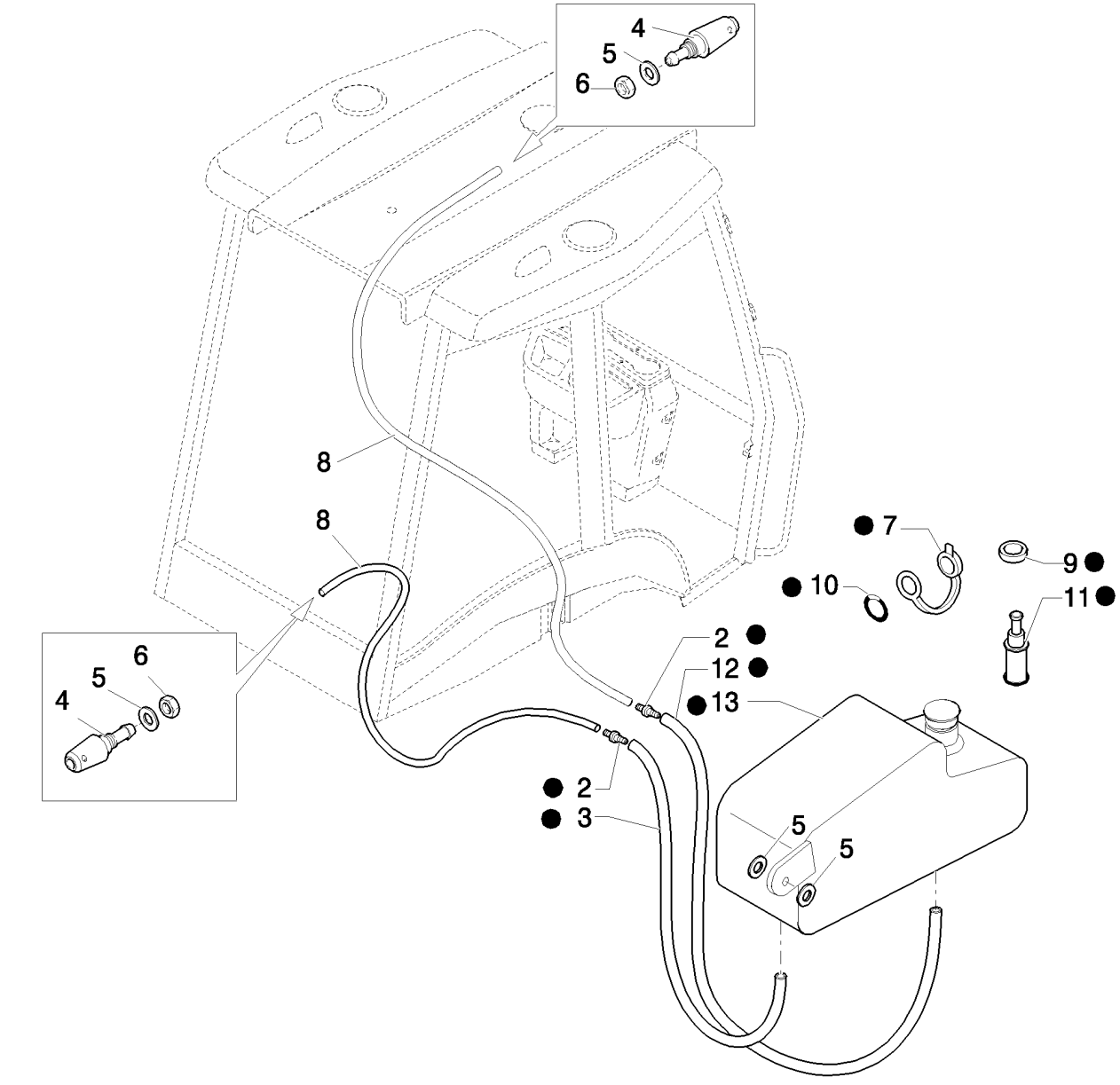

DEPÓSITO Y BOQUILLAS LIMPIAPARABRISAS

REF	FN	PART NUMBER	YR/SN	QTY	DENOMINACION
1		85821153		1	CUBETA, Assy
2		85821337		2	VALVULA DE CIERRE
3		85821335		1	MANGA FLEXIBLE
4		85802398		2	PULVERIZADOR
5		12646704		2	ARANDELA, M8 x 20 x 2
6		16102411		2	TUERCA, Thin, M8 x 1, Cl 04
7		5175736		1	TAPON DEL DEPOSITO
8		85821338		2	MANGA FLEXIBLE
9		85821336		2	RETEN
10		85820237		1	JUNTA HERMETICA
11		85821333		2	BOMBA
12		85824450		1	MANGA FLEXIBLE
13		85821334		1	DEPOSITO LAVACRIST.

ANTENA RADIO Y TAPA ALTAVOCES

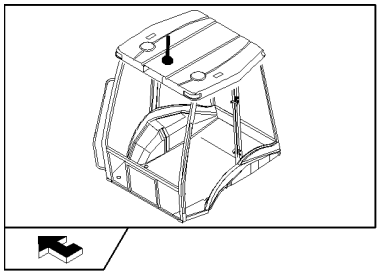

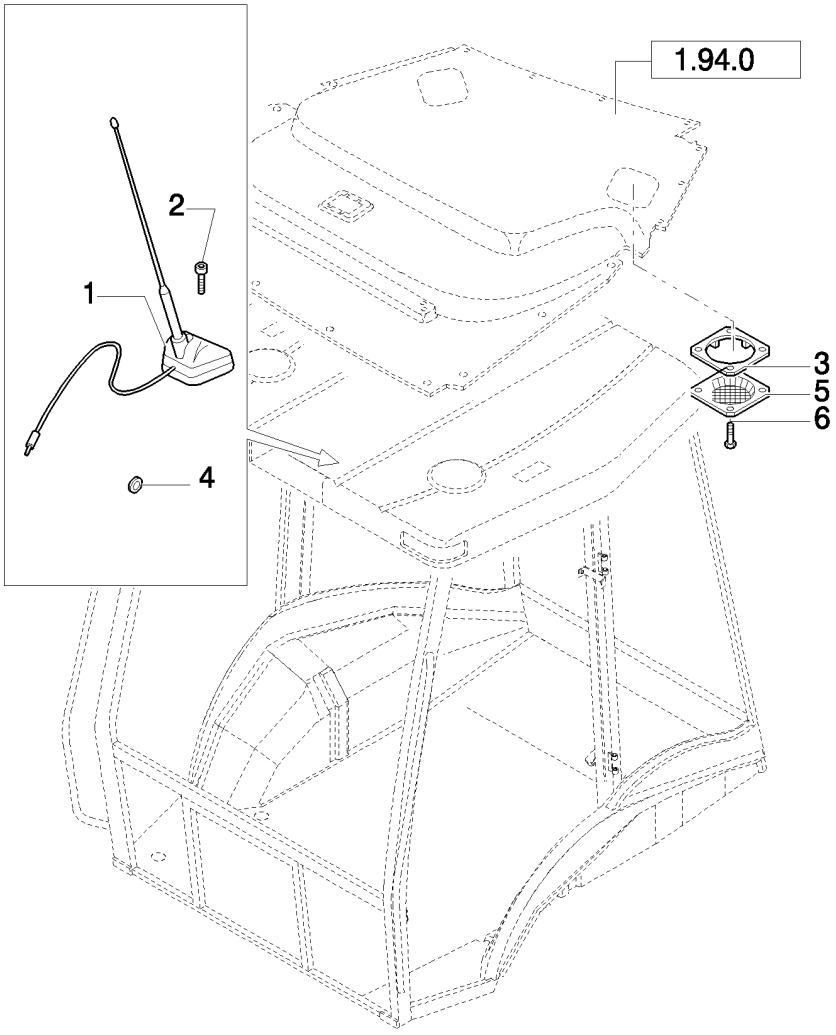

ANTENA RADIO Y TAPA ALTAVOCES

REF	FN	PART NUMBER	YR/SN	QTY	DENOMINACION
1		85819569		1	ANTENA ELECTRICA
2		13311817		1	TORNILLO, Cross Oval Hd, M5 x 40
3		85802107		2	PLACA DE MONTAJE
4		10399580		1	PASACABLES
5		85804362		2	CALANDRIA
6		13297817		8	TORNILLO

LÁMPARAS Y FAROS - ROPS - NA

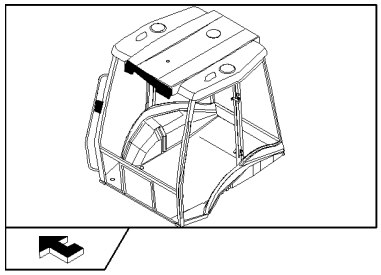

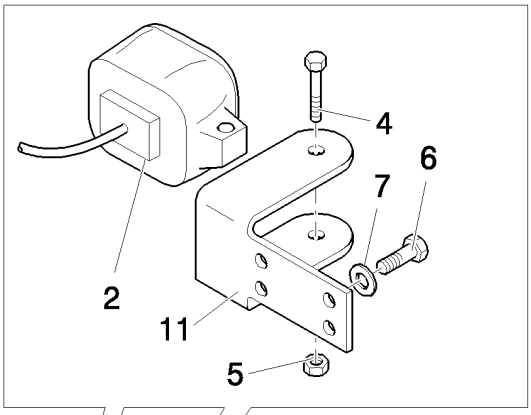

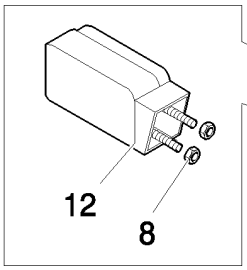

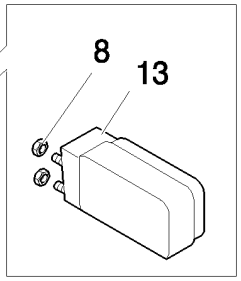

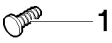

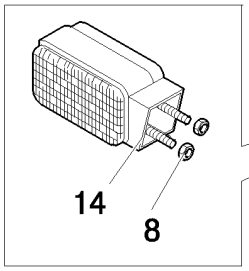

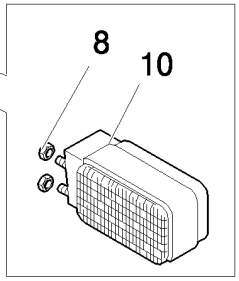

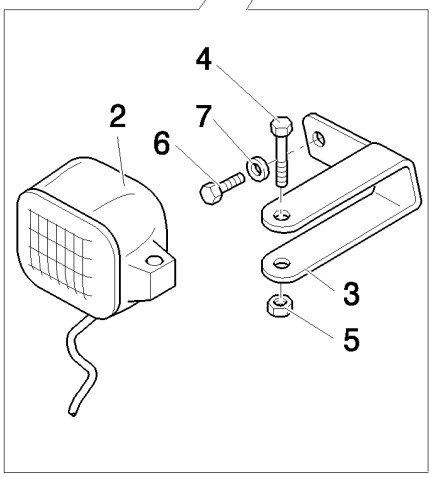

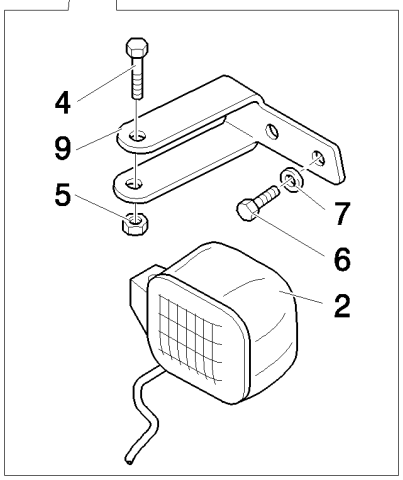



LÁMPARAS Y FAROS - ROPS - NA

REF	FN	PART NUMBER	YR/SN	QTY	DENOMINACION
1		14591687		1	BOTON
2		85819200		4	FARO, Includes H3 12V 55W Bulb, Order 9703399 For Bulb
3		85819190		1	PIEZA DE SOPORTE, RH
4		16044324		4	TORNILLO, Hex, M8 x 55, 8.8
5		16104111		4	CONTRA TUERCA, M8 x 1.25, Cl 8
6		10902124		8	TORNILLO, Hex, M6 x 14, 8.8, Full Thd
7		11197774		8	ARANDELA ABANICO, Belleville, M6.4
8		14084111		8	TUERCA, M5 x .8, Flg
9		85819191		1	PIEZA DE SOPORTE, LH
10		85819197		1	FARO DELANTERO, LH; Solid Amber Lens
11		85819194		2	PIEZA DE SOPORTE
12		85819198		1	LUZ POSTERIOR, RH; Red/Amber Lens
13		85819199		1	LUZ POSTERIOR, LH; Red/Amber Lens
14		85819196		1	FARO DELANTERO, RH; Solid Amber Lens

LÁMPARAS Y FAROS - CABINA - NA

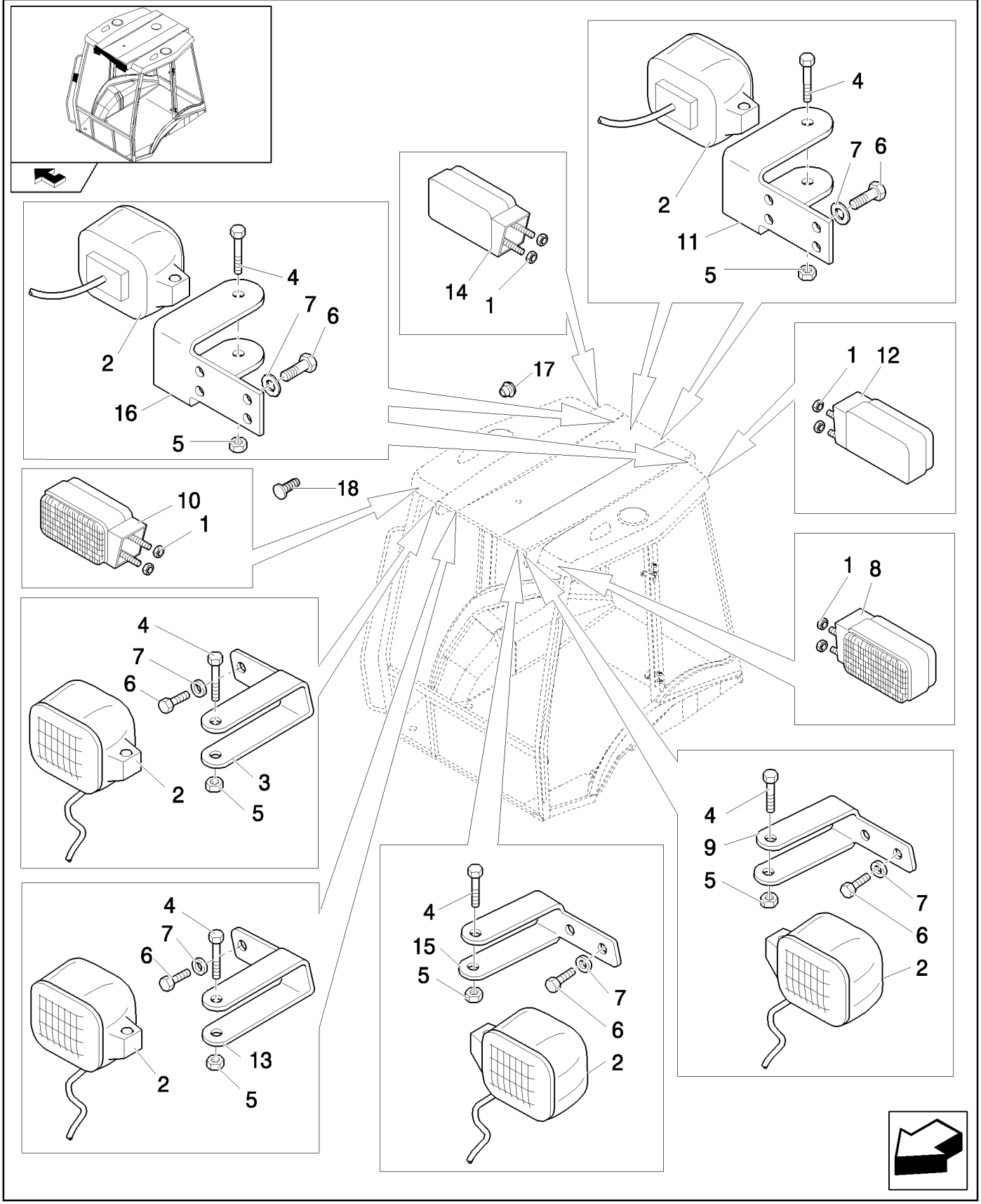

LÁMPARAS Y FAROS - CABINA - NA

REF	FN	PART NUMBER	YR/SN	QTY	DENOMINACION
1		14084111		8	TUERCA, M5 x .8, Flg
2		85819200		8	FARO
3		85819190		1	PIEZA DE SOPORTE
4		16044324		8	TORNILLO, Hex, M8 x 55, 8.8
5		16104111		8	CONTRA TUERCA, M8 x 1.25, Cl 8
6		10902124		24	TORNILLO, Hex, M6 x 14, 8.8, Full Thd
7		11197774		24	ARANDELA ABANICO, Belleville, M6.4
8		85819197		1	FARO DELANTERO
9		85819191		1	PIEZA DE SOPORTE
10		85819196		1	FARO DELANTERO
11		85819194		2	PIEZA DE SOPORTE
12		85819199		1	LUZ POSTERIOR
13	1	85819188		1	PIEZA DE SOPORTE
14		85819198		1	LUZ POSTERIOR
15	1	85819189		1	PIEZA DE SOPORTE
16	1	85819192		2	PIEZA DE SOPORTE
17	2	83994150		1	TAPÓN
18	2	5118658		1	TAPÓN

(1) Only for Power Shift
(2) Only for Power Shuttle

CABINA: ESTRUTURA-PUERTAS

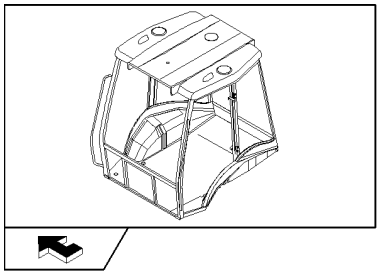

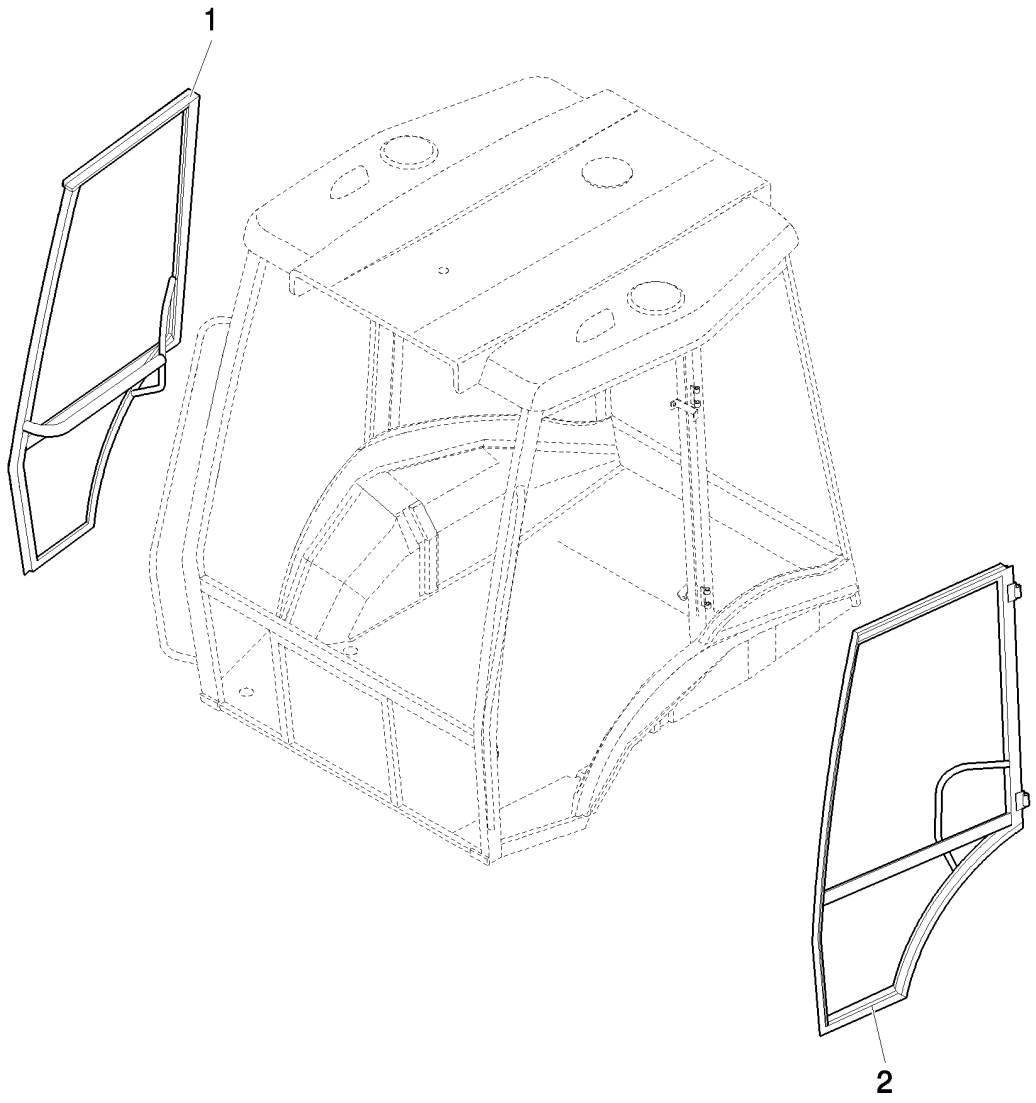

CABINA: ESTRUTURA-PUERTAS

REF	FN	PART NUMBER	YR/SN	QTY	DENOMINACION
1		87354650		1	BASTIDOR, RH
2		87354652		1	BASTIDOR, LH

CRISTALES FRONTALES Y JUNTAS

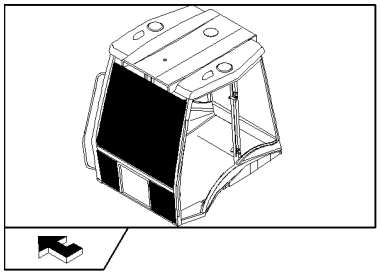

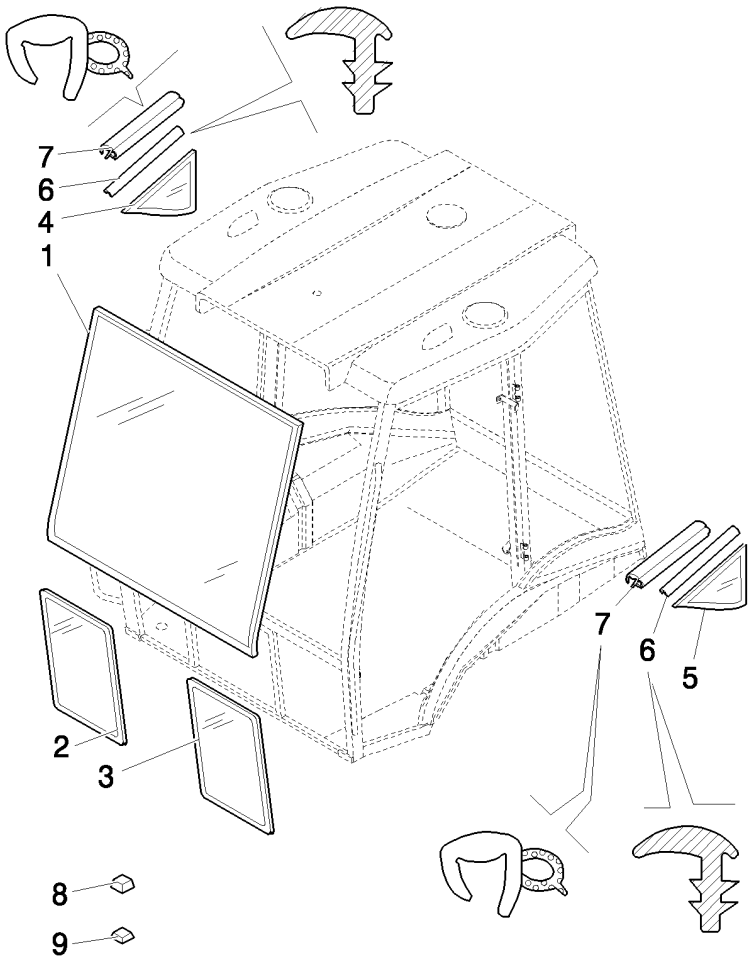

CRISTALES FRONTALES Y JUNTAS

REF	FN	PART NUMBER	YR/SN	QTY	DENOMINACION
1		85801621		1	VIDRIO
2		85801622		1	VENTANA, RH
3		85801623		1	VENTANA, LH
4		85801630		1	VENTANA, RH
5		85801631		1	VENTANA, LH
6		85802334		M	JUNTA HERMETICA
7		85805065		2	JUNTA HERMETICA
8		85802223		8	SEPARADOR
9		85802224		10	SEPARADOR

1.92.4	01	p1	05/08

FIJACIONES CRISTAL LATERALES PUERTA

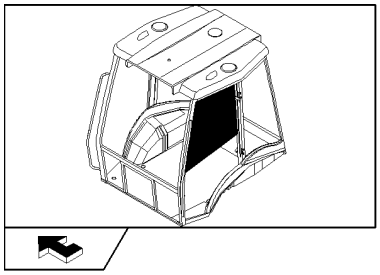

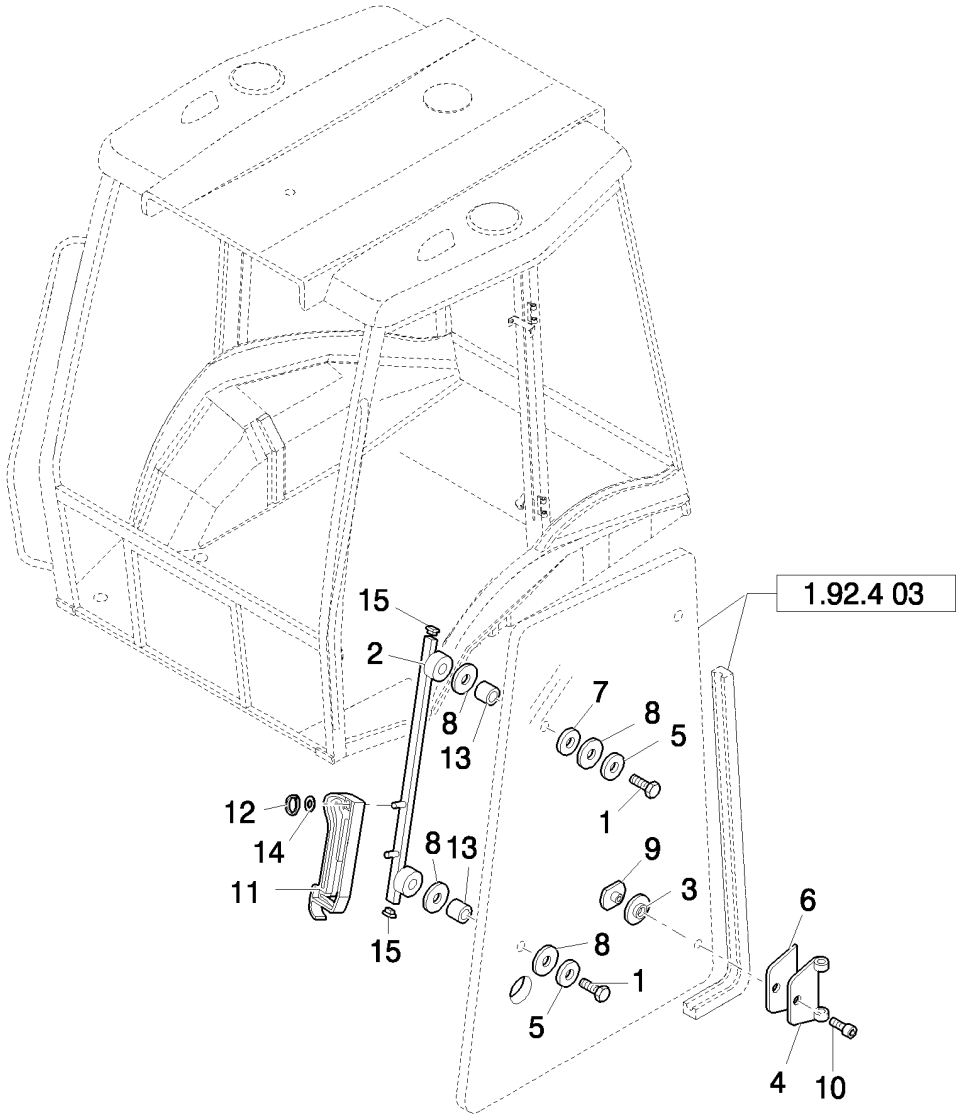

FIJACIONES CRISTAL LATERALES PUERTA

REF	FN	PART NUMBER	YR/SN	QTY	DENOMINACION
1		82859922		4	TORNILLO
2		87396515		1	SOPORTE, RH
2		87396492		1	SOPORTE, LH
3		83961985		4	SEPARADOR
4		85804869		4	BISAGRA
5		83963153		4	SEPARADOR
6		81872036		4	JUNTA DE CAUCHO
7		12638504		4	ARANDELA, M8 x 15 x 1.5
8		83995356		12	CASQUILLO
9		85805448		4	VIROLA METALICA
10		81871864		4	TORNILLO, Socket Drive, M8x1.25x16
11		87353724		4	MANECILLA
12		11087776		4	RETENEDOR, M6
13		83961987		4	SEPARADOR
14		10519404		2	ARANDELA, M6 x 11.95 x 1.6
15		81871439		8	TAPON DEL DEPOSITO

1.92.4	02	p1	04/08

FIJACIONES CRISTAL LATERAL CABINA

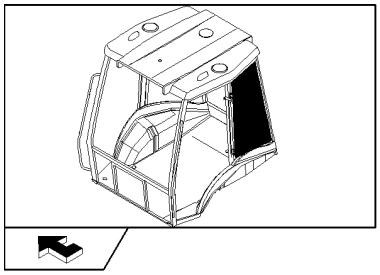

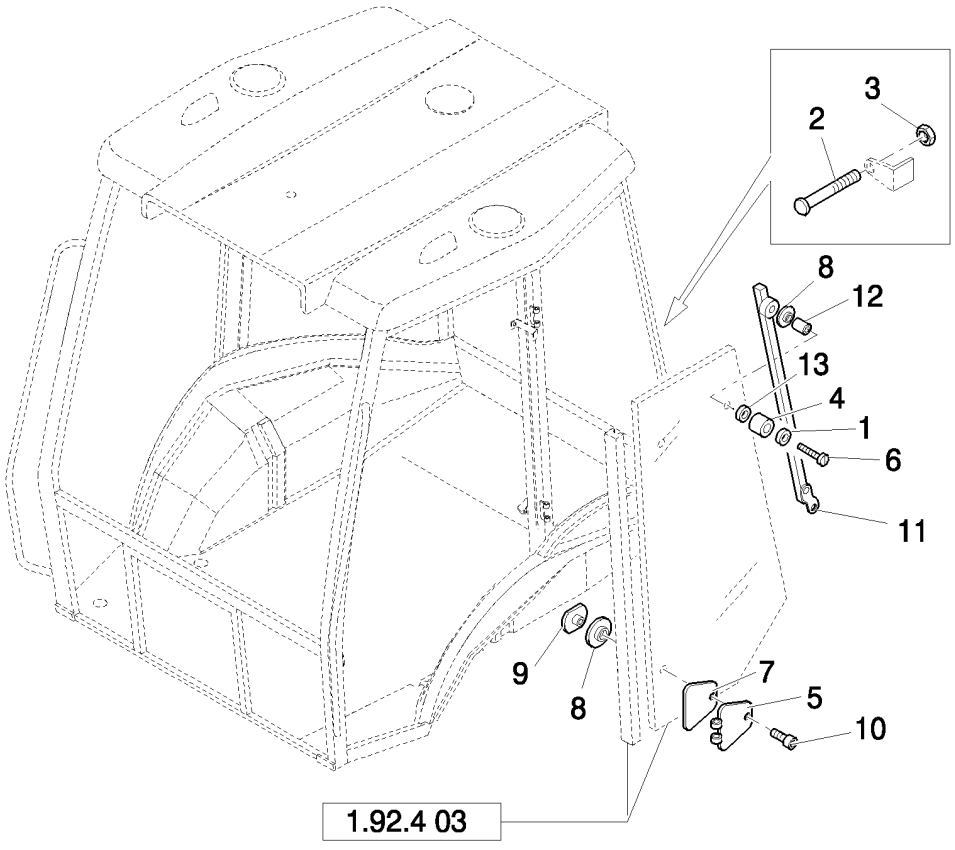

FIJACIONES CRISTAL LATERAL CABINA

REF	FN	PART NUMBER	YR/SN	QTY	DENOMINACION
1		10519404		2	ARANDELA, M6 x 11.95 x 1.6
2		87313813		4	PERNO
3		10702711		8	TUERCA
4		83976357		2	PARACHOQUES
5		85804870		4	BISAGRA
6		10903224		2	VALVULA HIDRAULICA, Hex, M6 x 40, 8.8
7		81872028		4	SEPARADOR
8		83961985		4	SEPARADOR
9		85805448		4	VIROLA METALICA
10		81871864		4	TORNILLO, Socket Drive, M8 x 1.25 x 16
11		87396525		1	SOPORTE, RH
12		83961987		2	SEPARADOR
11		87396528		1	SOPORTE, LH
13		11193979		2	ARANDELA ABANICO, Belleville, M8.4

1.92.4	03	p1	04/08

CRISTALES LATERALES

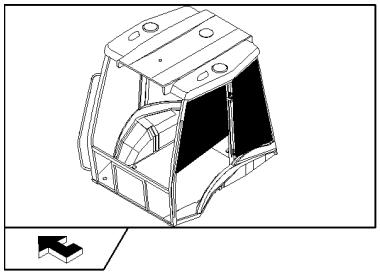

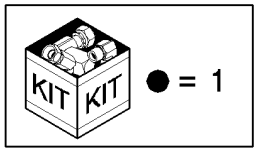

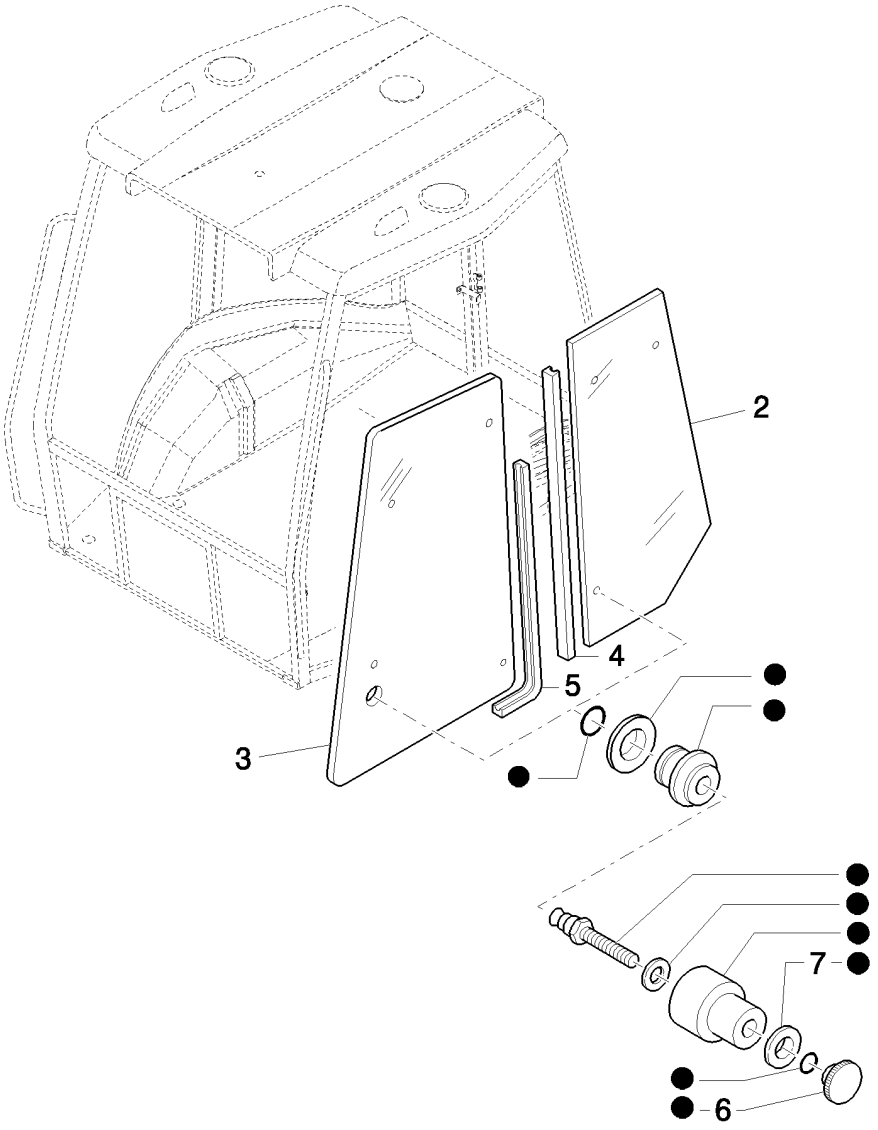

CRISTALES LATERALES

REF	FN	PART NUMBER	YR/SN	QTY	DENOMINACION
1		85804617		2	EQUIPO
2		85801628		2	VENTANA
3		85801626		2	VENTANA
4		85812254		2	PORCION DE GOMMA, 3150 mm lg
5		85812255		2	PORCION DE GOMMA, 3315 mm lg
6		85805448		2	VIROLA METALICA
7		83961985		2	SEPARADOR

1.92.5		p1	03/08

GUARDABARROS TRASERO

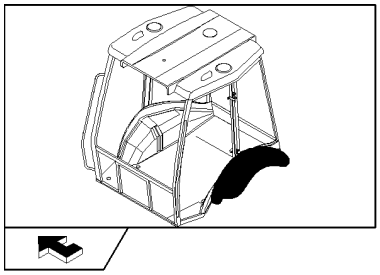

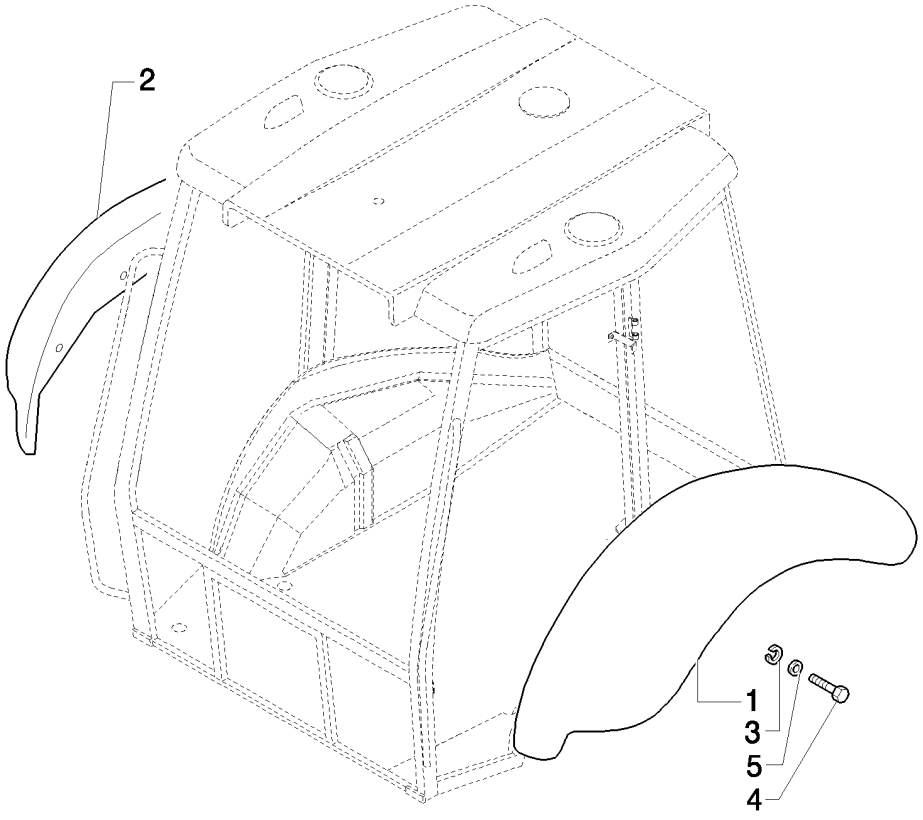

GUARDABARROS TRASERO

REF	FN	PART NUMBER	YR/SN	QTY	DENOMINACION
1	1, 2	85817211		1	GUARDABARROS, LH
1	3	85817213		1	GUARDABARROS, LH
2	1, 2	85817210		1	GUARDABARROS, RH
2	3	85817212		1	GUARDABARROS, RH
3		11193874		10	ARANDELA ABANICO, Belleville, M8.4
4		16044124		10	TORNILLO, Hex, M8 x 45, 8.8
5		12646204		10	ARANDELA, M8 x 35 x 3

(1) Only for B90B, B100B, B100BLR, B110B (EU)
(2) Only for B90B, B95B, B95BLR, B95BTC, B110B (NA)
(3) Only for B115B

1.92.6	01	p1	05/08

COMPONENTES DEFINICION PUERTAS

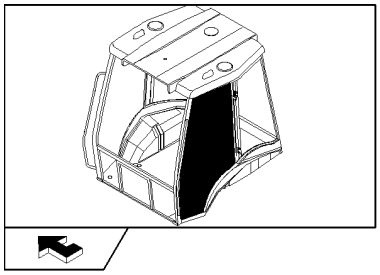

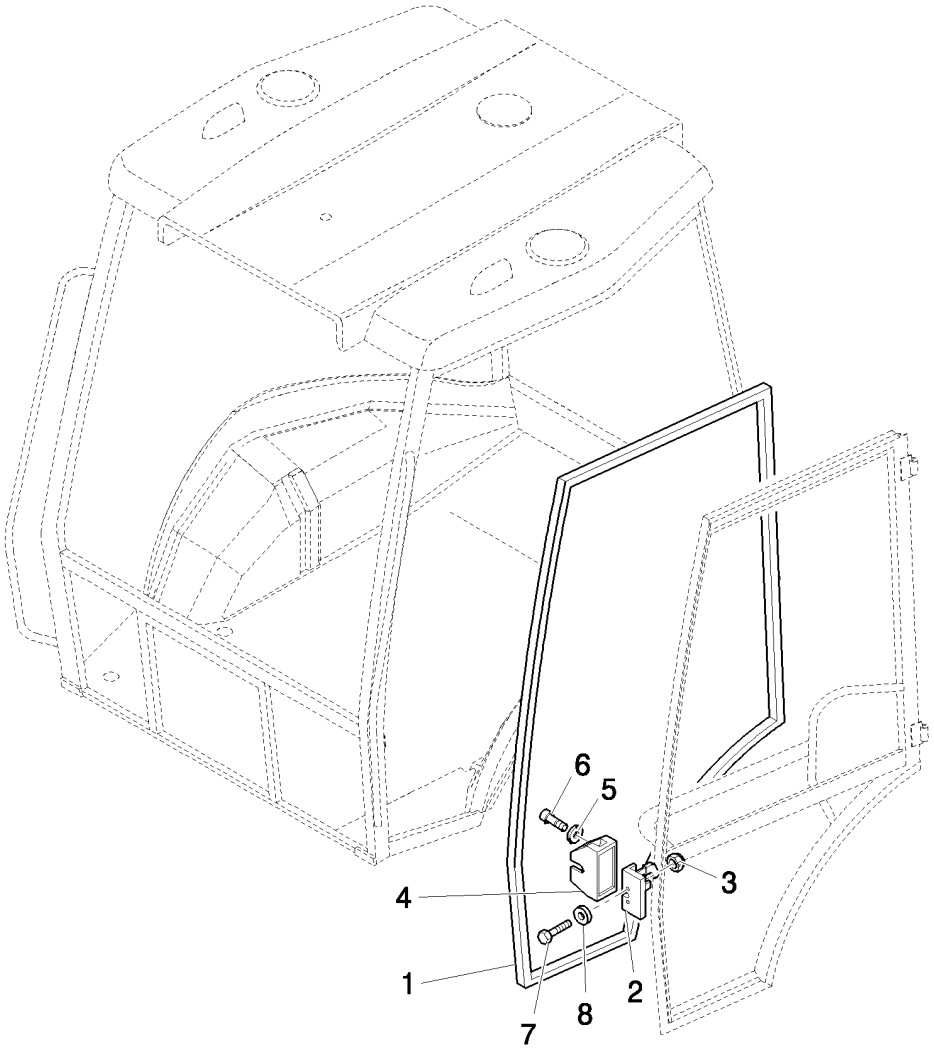

COMPONENTES DEFINICION PUERTAS

REF	FN	PART NUMBER	YR/SN	QTY	DENOMINACION
1		85812252		1	JUNTA DE PUERTA, RH
1		85812253		1	JUNTA DE PUERTA, LH
2		44910052		1	CERRADURA PUERTA, IZ, LH
2		44910053		1	CERRADURA PUERTA, RH
3		14048214		4	CONTRA TUERCA, M8 x 1.25
4		85805771		1	TAPADERA, LH
4		85805770		1	TAPADERA, RH
5		12643701		4	ARANDELA, M6 x 18 x 1.5
6		13273911		4	TORNILLO, Cross Pan Hd, M5 x 10
7		14442421		4	TORNILLO, Hex Soc Flat Hd, M8 x 40, 8.8
8		10519604		4	ARANDELA, M8 x 17 x 2

1.92.6	02	p1	05/08

COMPONENTES CUMPLIMIENTO PUERTA: LADO INFERIOR

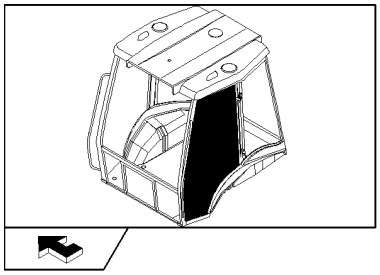

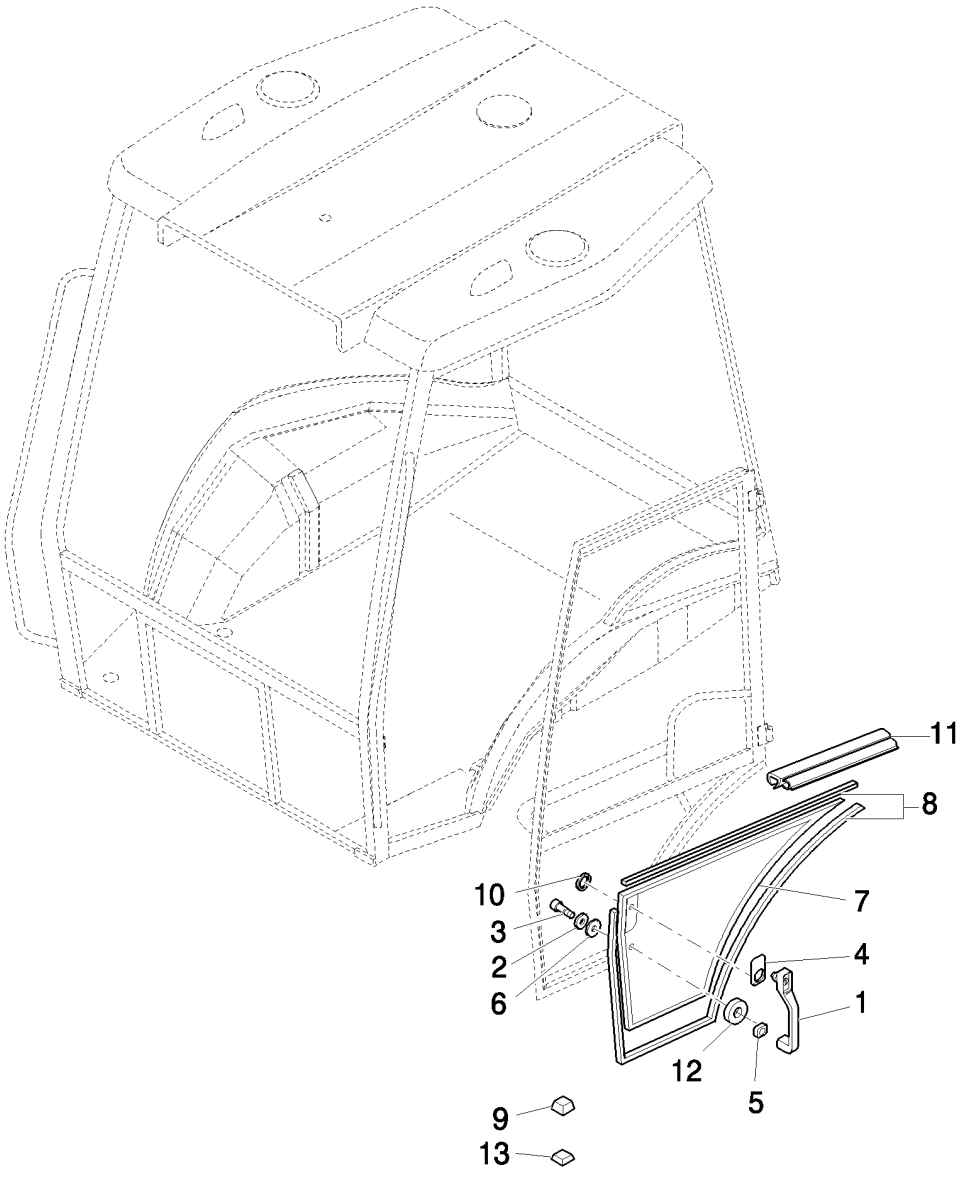

COMPONENTES CUMPLIMIENTO PUERTA: LADO INFERIOR

REF	FN	PART NUMBER	YR/SN	QTY	DENOMINACION
1		85805659		2	MANECILLA
2		12640601		2	ARANDELA, M6 x 25 x 2
3		13276621		2	TORNILLO, Cross Pan Hd, M6 x 25, 8.8
4		85801799		2	JUNTA HERMETICA
5		85801800		2	JUNTA DE CAUCHO
6		83961987		4	SEPARADOR
7		85801624		1	VENTANA, RH
7		85801625		1	VENTANA, LH
8		85802334		MT	JUNTA HERMETICA
9		85802223		20	SEPARADOR
10		85802307		2	RETEN
11		85805065		2	JUNTA HERMETICA
12		85801801		2	RETEN, 24X6X2
13		85802224		10	SEPARADOR

1.92.6	03	p1	03/08

COMPONENTES BISAGRA DE CIERRE PUERTA

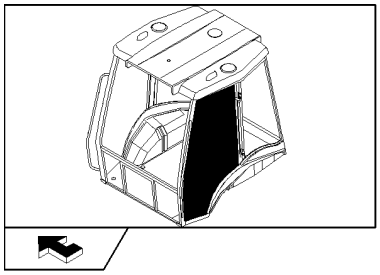

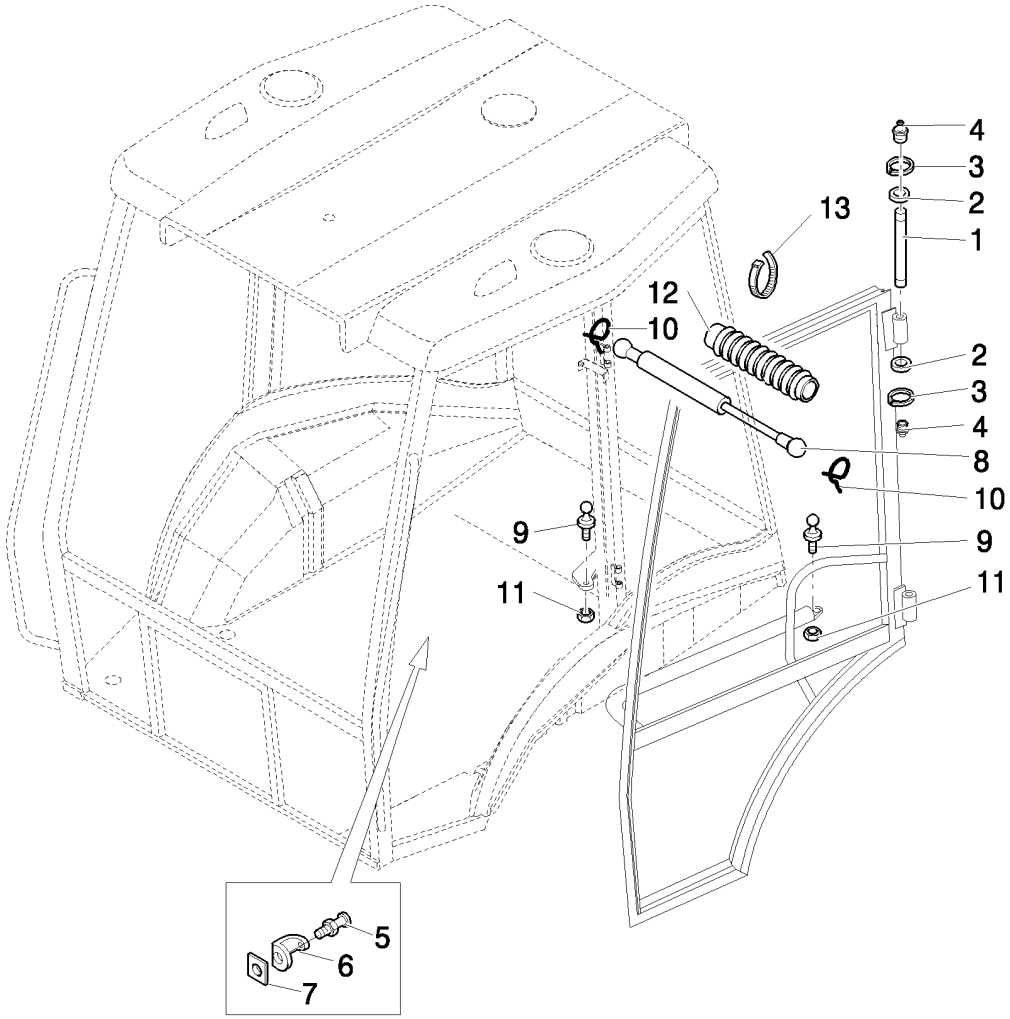

COMPONENTES BISAGRA DE CIERRE PUERTA

REF	FN	PART NUMBER	YR/SN	QTY	DENOMINACION
1		87304810		4	PERNO
2		83964146		24	ARANDELA
3		11088076		8	RETENEDOR, M10, D.9
4		13406911		4	ENGRASADOR, 1/4"-28
5		83994395		2	CHAPA
6		83994372		2	DEFENSA
7		83994378		2	TUERCA, M12 x 1
8		5183854		2	COMPAS
9		82000409		4	PIVOTE DE LA ROTULA
10		81869714		4	SUJETADOR
11		16104511		4	CONTRA TUERCA, M8 x 1.25, Cl 8.8
12		81867742		2	CASQUETE
13		5112712		4	COLLAR, M4.8 x 283

JUNTA CORTAFUEGO, ROPS (POWER SHUTTLE)

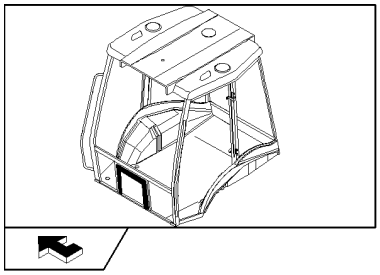

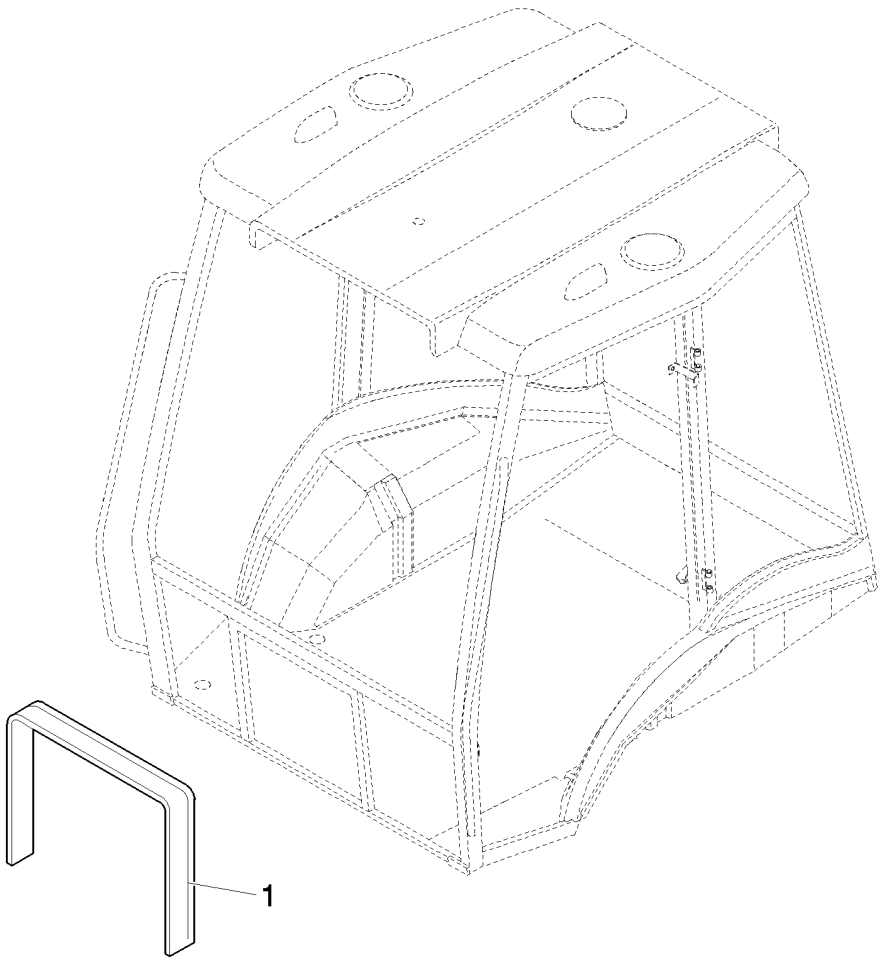

JUNTA CORTAFUEGO, ROPS (POWER SHUTTLE)

REF	FN	PART NUMBER	YR/SN	QTY	DENOMINACION
1		85805571		1	PORCION DE GOMMA

1.92.9	01	p1	03/08

CRISTALES POSTERIORES Y COMPONENTES

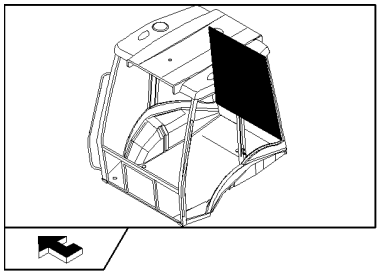

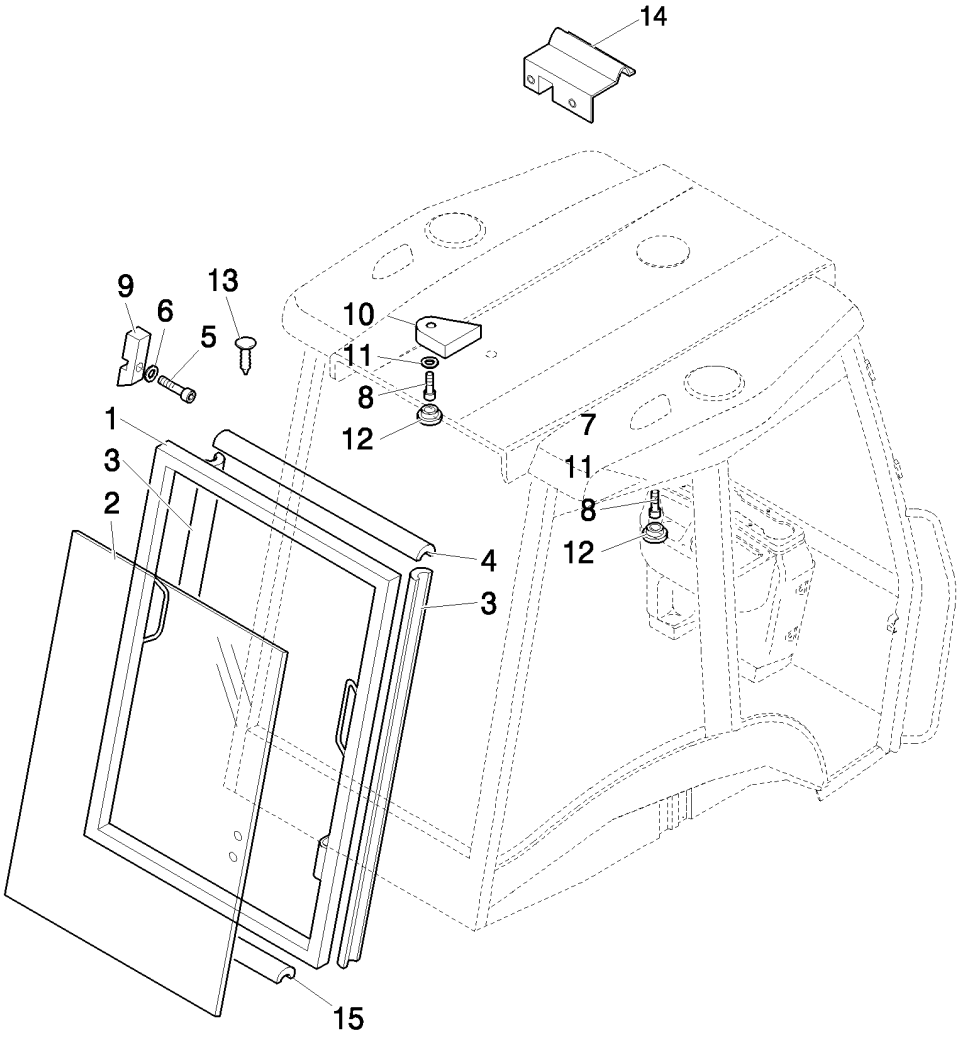

CRISTALES POSTERIORES Y COMPONENTES

REF	FN	PART NUMBER	YR/SN	QTY	DENOMINACION
1		85801739		1	PUERTA
2		85801632		1	VENTANA
3		85801811		2	PERFIL
4		85819018		1	PORCION DE GOMMA, L=965
5		16043324		2	TORNILLO, Hex, M8 x 18, 8.8, Full Thd
6		12646704		2	ARANDELA, M8 x 20 x 2
7		85801828		1	TACO, RH
8		13313417		2	TORNILLO, Cross Oval Hd, M6 x 25
9		85801826		2	DISPOSITIVO DE TOPE
10		85801829		1	TACO, LH
11		85801991		2	ARANDELA
12		79111978		2	TAPÓN
13		83994150		2	TAPÓN
14		85812365		1	PLACA DE SUJECION
15		85819017		1	PORCION DE GOMMA, L=1010

1.92.9	02	p1	04/08

BISAGRA DE CIERRE CRISTAL POSTERIOR

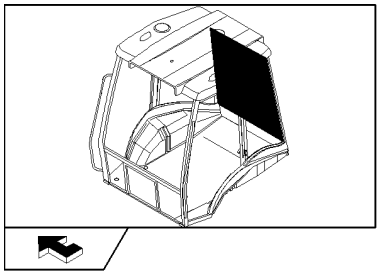

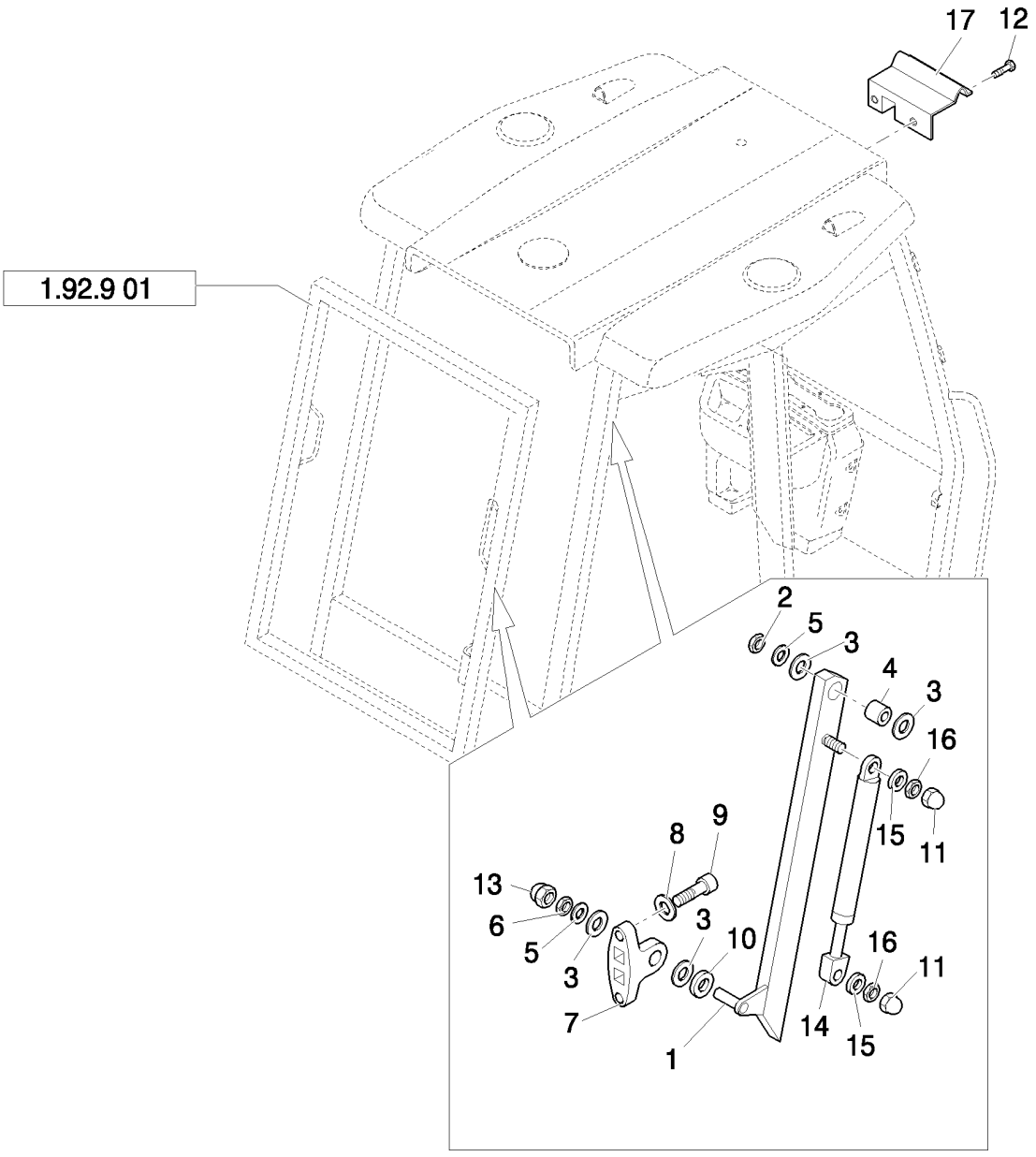

BISAGRA DE CIERRE CRISTAL POSTERIOR

REF	FN	PART NUMBER	YR/SN	QTY	DENOMINACION
1		85801812		1	SOPORTE, RH
1		85801813		1	SOPORTE, LH
3		85801814		12	SEPARADOR
2		16105111		2	CONTRA TUERCA, M12 x 1.25, Cl 8
4		85801815		2	CASQUILLO
5		12646904		4	ARANDELA, M12 x 28 x 3
6		16104111		2	CONTRA TUERCA, M8 x 1.25, Cl 8
7		85801816		2	SOPORTE
8		12638504		4	ARANDELA, M8 x 15 x 1.5
9		14306424		4	TORNILLO, Hex Soc Hd, M8 x 25, 8.8
10		12647004		2	ARANDELA, M8 x 25 x 2.5
11		15811387		4	TAPON DEL DEPOSITO
12		13276217		2	TORNILLO, Cross Pan Hd, M6 x 16
13		5132136		2	CAPUCHA DE TAPON
14		85801827		2	COMPAS
15		14496407		4	ARANDELA
16		12574215		4	CONTRA TUERCA, M6 x 1, Cl 8
17		85812364		1	RETENEDOR

1.92.9	03	p1	05/08

BISAGRAS Y CIERRE CRISTAL POSTERIOR

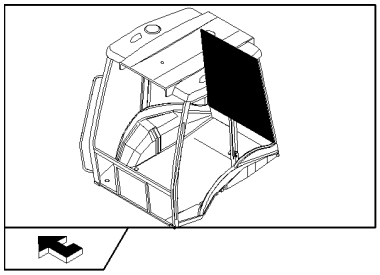

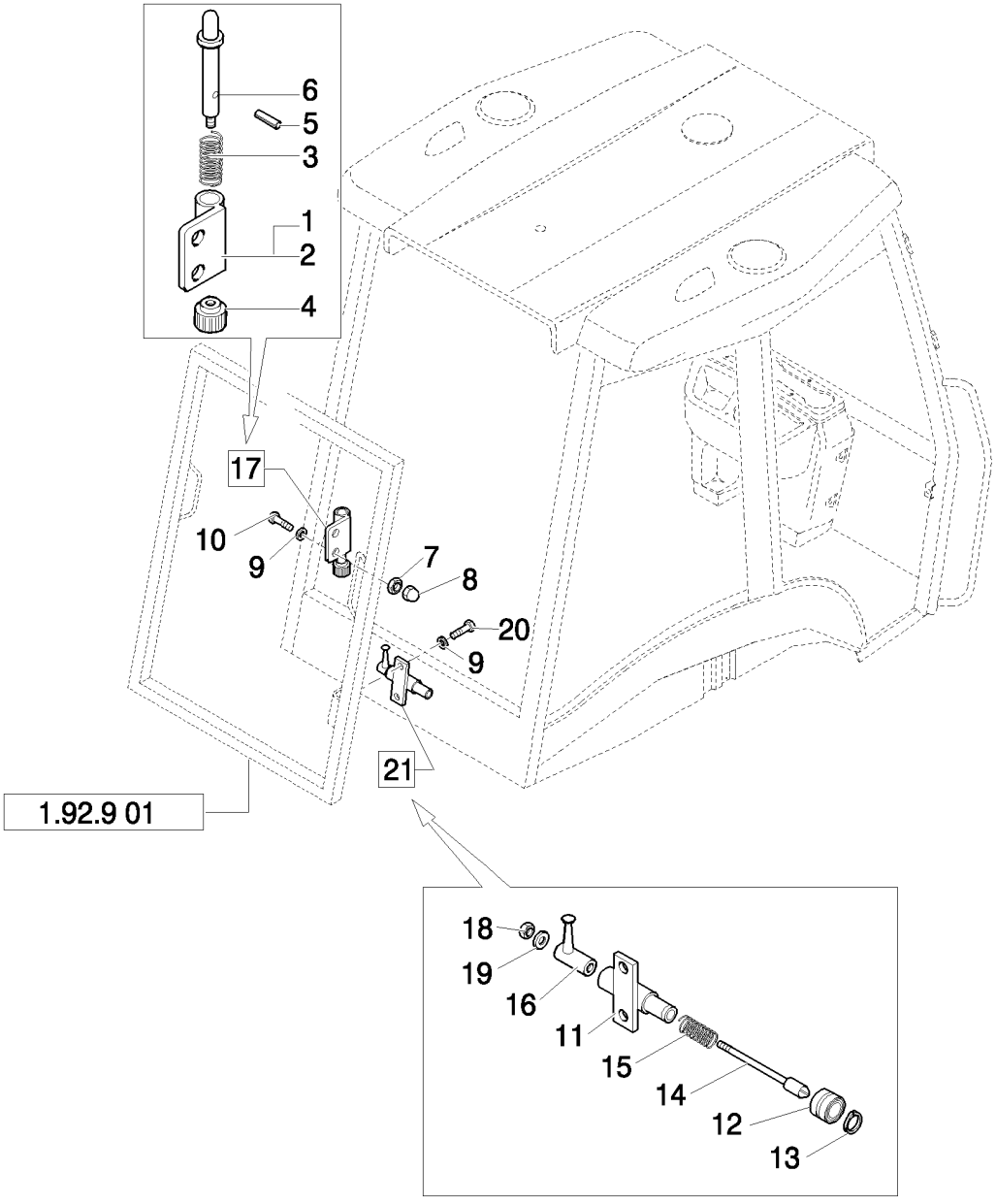

BISAGRAS Y CIERRE CRISTAL POSTERIOR

REF	FN	PART NUMBER	YR/SN	QTY	DENOMINACION
1		85801831		1	BLOQUE MOTOR, LH
2		85801830		1	BLOQUE MOTOR, RH
3		85801832		2	RESORTE
4		85801833		2	POMO
5		14161771		2	PASADOR DE FIJACION, M3 x 16, Slotted
6		85801834		2	PERNO
7		16104111		4	CONTRA TUERCA, M8 x 1.25, Cl 8
8		5132136		4	CAPUCHA DE TAPON
9		11198074		8	ARANDELA ABANICO, Belleville, M8.4
10		85827836		4	TORNILLO, Cap, HH, CL 8.8, M8 x 1.25 x 25
11		85801820		1	PERNO, RH
11		85801821		1	PERNO, LH
12		85802018		2	RODAMIENTO DE RODILLOS
13		85802351		2	RETENEDOR
14		85801823		2	PERNO
15		85801824		2	RESORTE
16		85801825		2	PESTILLO
17		85802345		2	BISAGRA, Assy, LH
17		85802344		4	BISAGRA, Assy, RH
18		12574111		2	CONTRA TUERCA, M5 x .8, Cl 8
19		12637824		2	ARANDELA
20		16043624		4	TORNILLO, Hex, M8 x 25, 8.8, Full Thd
21		85802346		1	BLOQUE MOTOR, Assy, RH
21		85802347		1	BLOQUE MOTOR, Assy, LH

1.93.0	01	p1	04/08

CABINA : REVESTIMIENTO (POWER SHUTTLE, POWER SHIFT)

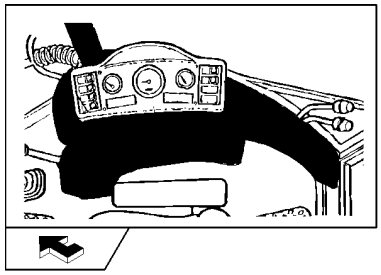

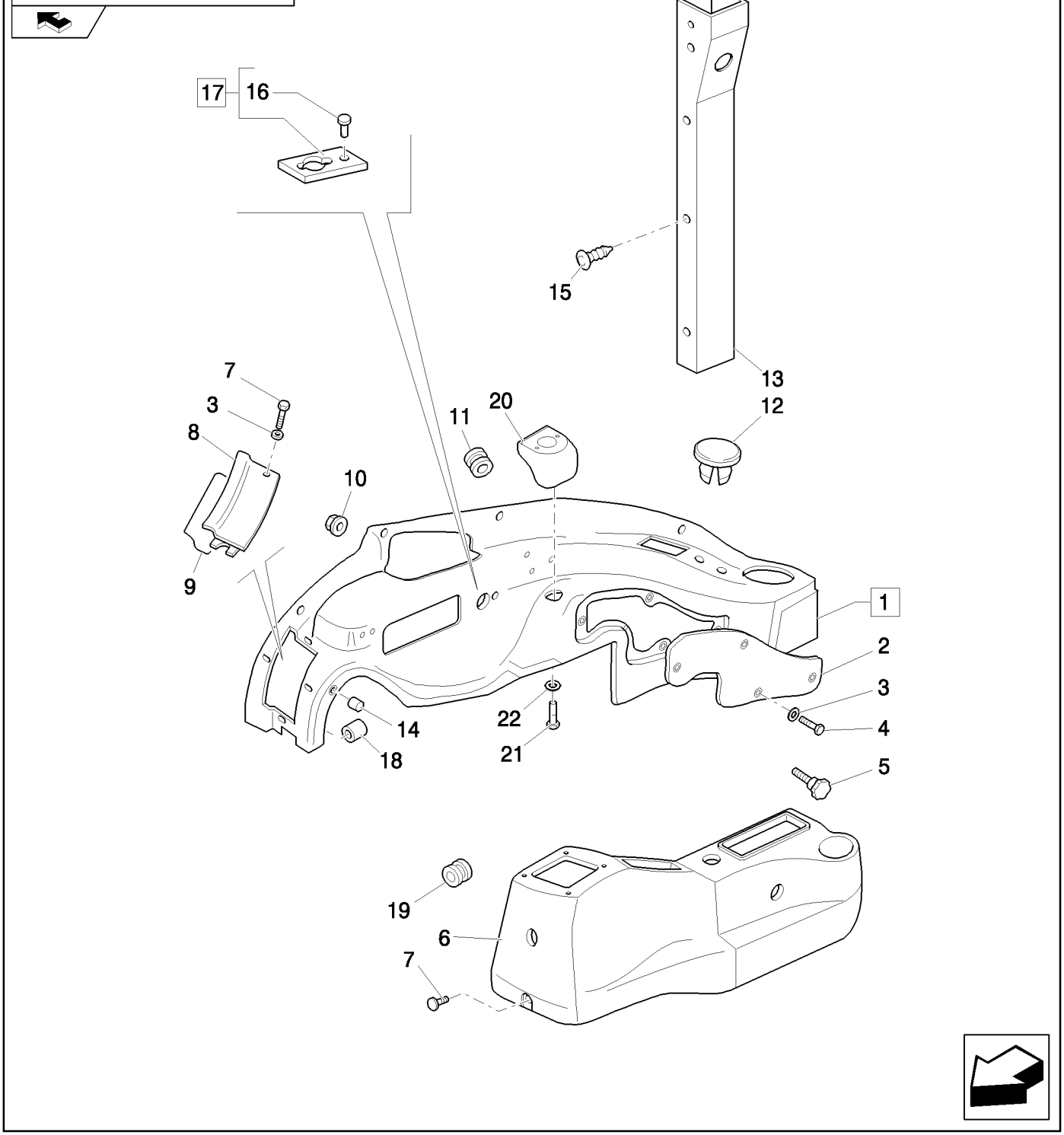

CABINA : REVESTIMIENTO (POWER SHUTTLE, POWER SHIFT)

REF	FN	PART NUMBER	YR/SN	QTY	DENOMINACION
1	1	87543600		1	RIVESTIMIENTO, Assy
1	2	87743161		1	TAPADERA, Assy
2		85801649		1	RIVESTIMIENTO
3		12647701		2	ARANDELA
4		13311017		5	TORNILLO, Cross Oval Hd, M5 x 16
5		85805323		1	POMO
6		87319785		1	RIVESTIMIENTO
7		16043824		AR	TORNILLO, Hex, M8 x 30, 8.8, Full Thd
8		85825191		1	TAPADERA
9		85806023		1	BANDA HERMETICIDAD
10	3	14084814		5	TUERCA, M8 x 1.25, Flg
10		14059314		5	TUERCA
11		10398980		1	PASACABLES, 46X5
12		79111815		1	TAPÓN
13		85819285		1	RIVESTIMIENTO, RH
14		85805819		4	CASQUILLO ROSCADO
15		81870039		6	BOTON DE RESORTE
16		10427201		1	REMACHE
17		85827548		1	PLACA, Assy
18		85804750		6	CASQUILLO ROSCADO
19		87517471		1	ANILLO AISLADOR
20	4	87540633		1	TABLIERO
21	4	13274217		2	TORNILLO, Pan Hd, M5 x 16, 5.8
22	4	12647701		2	ARANDELA

(1) Includes 2, 8, 9, 18
(2) Only for B90B, B90BLR CAB (EU)
(3) Only for Power Shuttle
(4) Except for B90B, B90BLR

Mechanical Version	B95B

CABINA : REVESTIMIENTO (POWER SHUTTLE, POWER SHIFT)

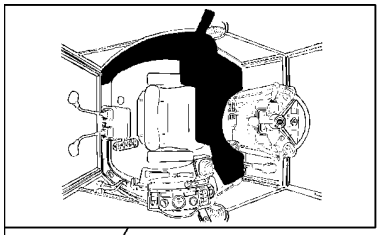

CABINA : REVESTIMIENTO (POWER SHUTTLE, POWER SHIFT)

REF	FN	PART NUMBER	YR/SN	QTY	DENOMINACION
1		85808460		1	TAPÓN
2		12647004		8	ARANDELA, M8 x 25 x 2.5, D=24
3		13313417		6	TORNILLO, Cross Oval Hd, M6 x 25
4		85819287		1	RIVESTIMIENTO, Assy, LH
5		5178468		1	PERCHA
6		14084011		1	TUERCA, M4 x .7, Flg
7		14059314		4	TUERCA
7	1	14084814		4	TUERCA, M8 x 1.25, Flg
8		10519604		4	ARANDELA, M8 x 17 x 2
9		15627011		12	REMACHE
10		83961823		1	BANDA
11		12638107		1	SEPARADOR, 5X14
12		85806154		1	REMACHE
13		79111978		1	TAPÓN
14		5148132		1	CONTRA TUERCA
15		5148131		1	CAVIDAD, 1,2W
16		81870039		6	BOTON DE RESORTE
17		12574211		1	CONTRA TUERCA, M6 x 1, Cl 8

(1) Only for Power Shuttle

Mechanical Version / Pilot Version B95B

CABINA / COBERTURA LATERAL Y SUELO FRONTAL (POWER SHUTTLE: POWER SHIFT)

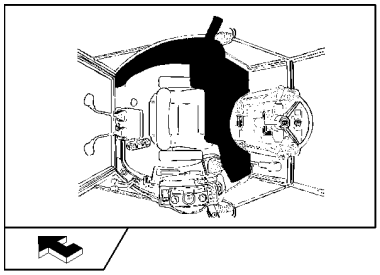

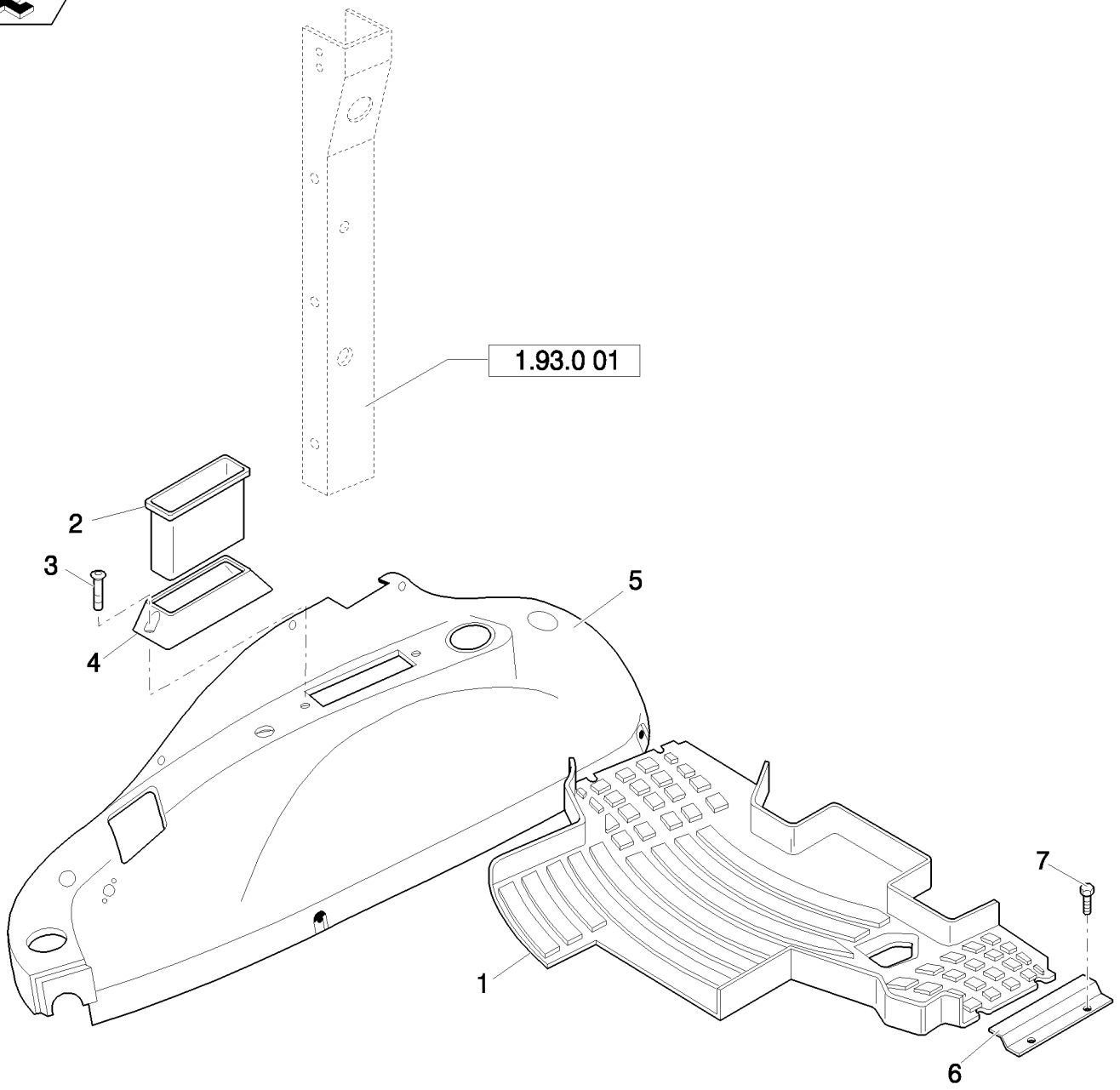

CABINA / COBERTURA LATERAL Y SUELO FRONTAL (POWER SHUTTLE: POWER SHIFT)

REF	FN	PART NUMBER	YR/SN	QTY	DENOMINACION
1	1	85804867		1	TAPETE DE SUELO
1	2	85804865		1	TAPETE DE SUELO
2		85801979		1	RECIPIENTE
3		13276617		2	TORNILLO, Cross Pan Hd, M6 x 25
4		85801651		1	CAVIDAD
5	3	87362094		1	RIVESTIMIENTO
5	4	87362098		1	RIVESTIMIENTO
6		85805591		2	UMBRAL DE PUERTA
7		14441521		4	TORNILLO, Hex Soc Flat Hd, M6 x 25, 8.8

(1) Only for Power Shift
(2) Only for Power Shuttle
(3) Only for EU includes B115B (NA)
(4) Except for B115B

Mechanical Version / Pilot Version	B95B

1.93.0	04	p1	03/08

CABINA / CONSOLA POSTERIOR Y COBERTURA DEL SUELO (POWER SHUTTLE: POWER SHIFT)

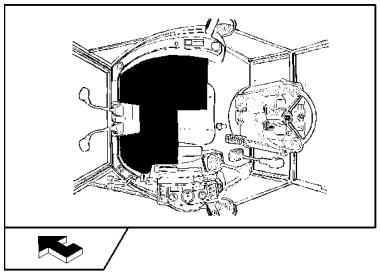

CABINA / CONSOLA POSTERIOR Y COBERTURA DEL SUELO (POWER SHUTTLE: POWER SHIFT)

REF	FN	PART NUMBER	YR/SN	QTY	DENOMINACION
1		87319801		1	REPISA
2		85804863		1	DESCANSAPIE
3		10519604		4	ARANDELA, M8 x 17 x 2
4		16043824		4	TORNILLO, Hex, M8 x 30, 8.8, Full Thd
5		85804864		1	DESCANSAPIE
6		85804866		1	TAPETE DE SUELO
7		79089592		1	ARANDELA
8		13311217		5	TORNILLO, Cross Oval Hd, M5 x 20
9		4999021		1	JUNTA HERMETICA
10		10902624		4	TORNILLO, Hex, M6 x 25, 8.8, Full Thd
11		12640621		4	ARANDELA, M6 x 25 x 2
12		87319803		2	TAPÓN
13		82001909		1	PASACABLES
14		85812080		4	TUERCA
15		87408893		1	CONTRAPANEL
16		87323749		1	PIEZA DE SOPORTE

1.93.0/01	01	p1	04/08

CABINA : REVESTIMIENTO (POWER SHUTTLE, POWER SHIFT)

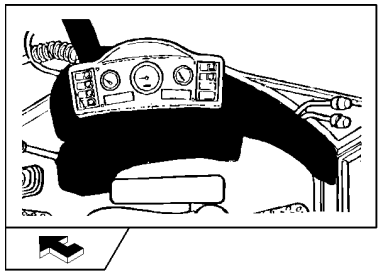

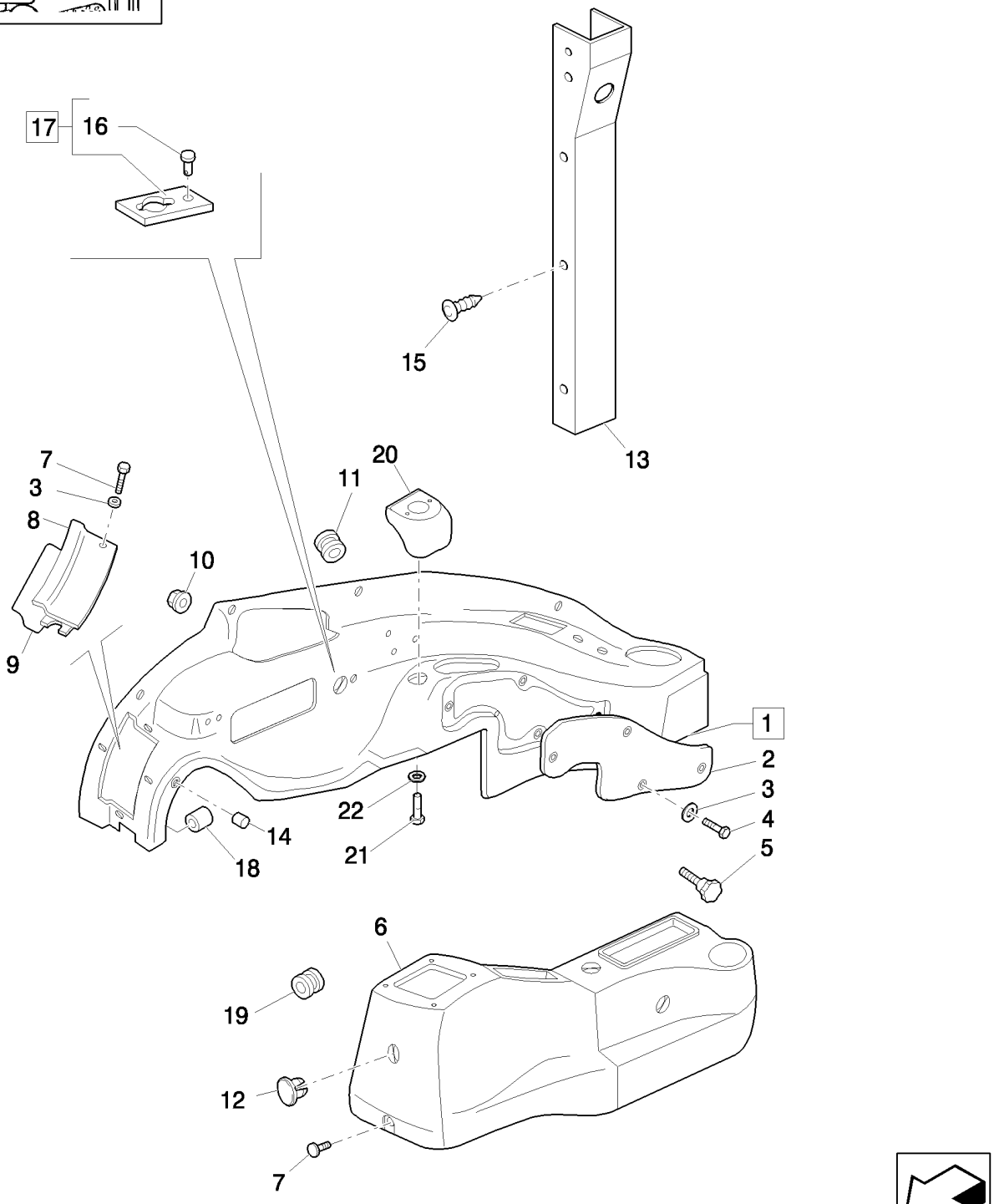

CABINA : REVESTIMIENTO (POWER SHUTTLE, POWER SHIFT)

REF	FN	PART NUMBER	YR/SN	QTY	DENOMINACION
1	1	87543654		1	RIVESTIMIENTO, Assy
1	2	87743160		1	TAPADERA, Assy
2		85801649		1	RIVESTIMIENTO
3		12647701		2	ARANDELA
4		13311217		5	TORNILLO, Cross Oval Hd, M5 x 20
5		85805323		1	POMO
6		87319785		1	RIVESTIMIENTO
7		13311017		AR	TORNILLO, Cross Oval Hd, M5 x 16
8		85825191		1	TAPADERA
9		85806023		1	BANDA HERMETICIDAD
10		14084814		5	TUERCA, M8 x 1.25, Flg
10	3	14059314		5	TUERCA, M8
11		10398980		1	PASACABLES, 46X5
12		79111815		1	TAPÓN
13		85819285		1	RIVESTIMIENTO, RH
14		85805819		4	CASQUILLO ROSCADO
15		81870039		6	BOTON DE RESORTE
16		10427201		1	REMACHE
17		85827548		1	PLACA, Assy
18		85804750		6	CASQUILLO ROSCADO
19		87517471		1	ANILLO AISLADOR
20	4	87540633		1	TABLIERO
21	4	13274217		2	TORNILLO, Pan Hd, M5 x 16, 5.8
22	4	12647701		2	ARANDELA

(1) Includes 2, 8, 9, 14, 18
(2) Only for B90B, B90BLR (EU) - B90B (NA)
(3) Only for Power Shift
(4) Except for B90B, B90BLR (EU) - B90B (NA)

Pilot Control Version B95B

1.93.0/01	02	p1	03/08

CABINA / COBERTURA DEL SUELO Y COMPONENTES (POWER SHUTTLE: POWER SHIFT)

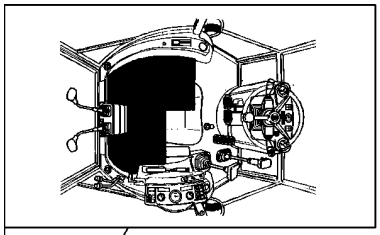

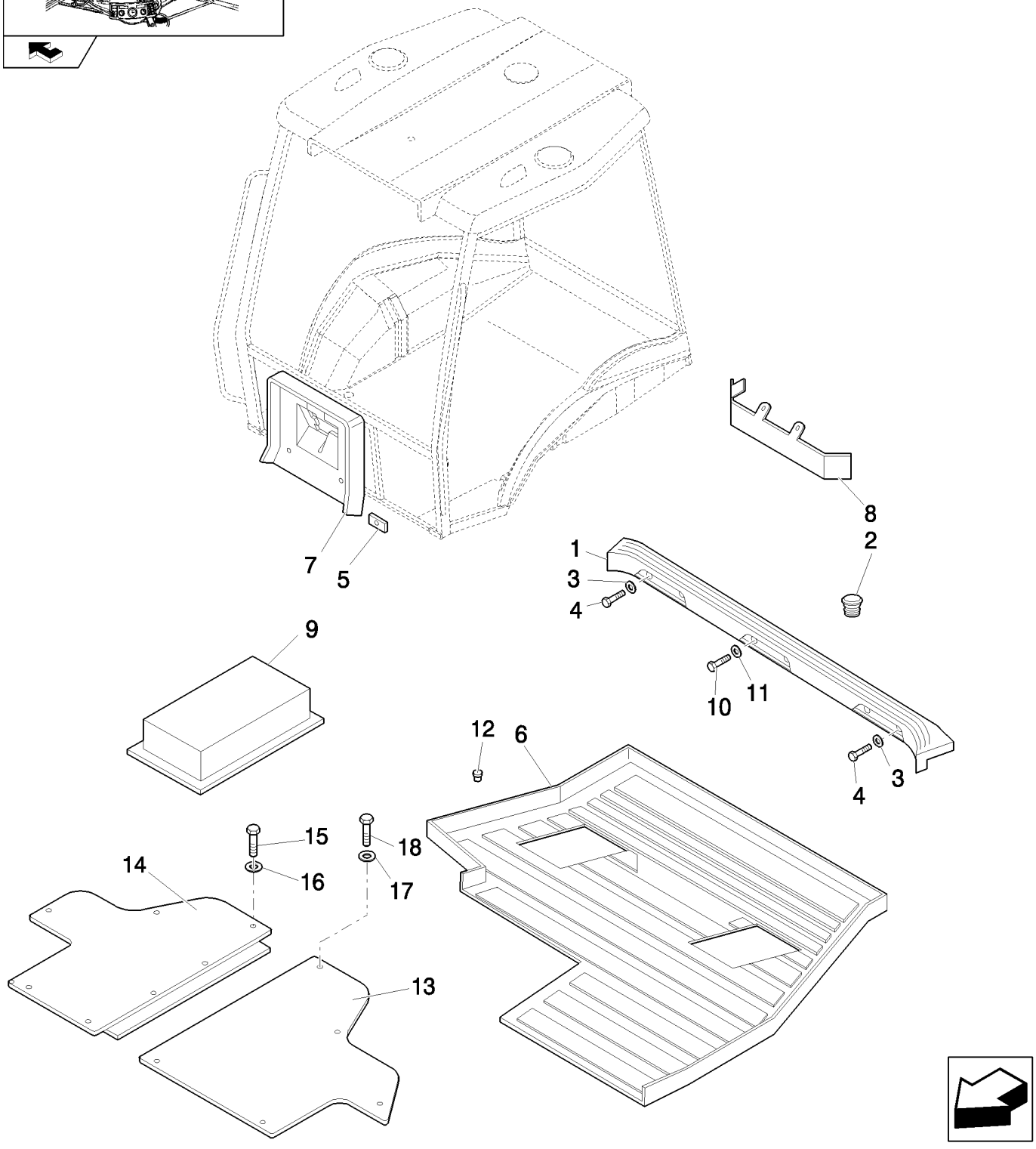

CABINA / COBERTURA DEL SUELO Y COMPONENTES (POWER SHUTTLE: POWER SHIFT)

REF	FN	PART NUMBER	YR/SN	QTY	DENOMINACION
1		87410385		1	CONTRAPANEL
2		82001909		1	PASACABLES
3		10519604		4	ARANDELA, M8 x 17 x 2
4		16043824		4	TORNILLO, Hex, M8 x 30, 8.8, Full Thd
5		85812080		1	TUERCA
6		87410108		1	ALFOMBRA
7		87408893		1	CONTRAPANEL
8		87323749		10	PIEZA DE SOPORTE
9		4999021		1	JUNTA HERMETICA
10		10902624		4	TORNILLO, Hex, M6 x 25, 8.8, Full Thd
11		12640621		4	ARANDELA, M6 x 25 x 2
12		87319803		10	TAPÓN
13		87426546		1	CONJUNTO TAPA SUPERIOR
14		87426550		1	CONJUNTO TAPA SUPERIOR
15		10902524		10	TORNILLO, Hex, M6 x 22, 8.8, Full Thd
16		11193274		10	ARANDELA ABANICO, Belleville, M6.4
17		85801991		5	ARANDELA
18		13311217		5	TORNILLO, Cross Oval Hd, M5 x 20

Pilot Version B95B

1.93.0/02	01	p1	04/08

COBERTURA LATERAL DERECHA, CONSOLA POSTERIOR ROPS (PIVOTE CENTRAL): NA

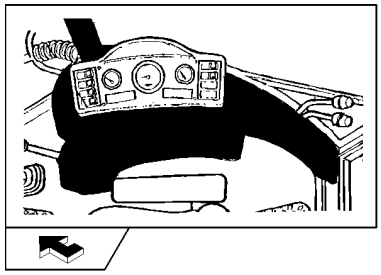

COBERTURA LATERAL DERECHA, CONSOLA POSTERIOR ROPS (PIVOTE CENTRAL): NA

REF	FN	PART NUMBER	YR/SN	QTY	DENOMINACION
1	1, 2	87543716		1	RIVESTIMIENTO, Assy
1	3, 1	87745631		1	TAPADERA, Assy
1	4, 1	87743162		1	TAPADERA, Assy
2		85801649		1	RIVESTIMIENTO
3		85801991		AR	ARANDELA
4		13311217		5	TORNILLO, Cross Oval Hd, M5 x 20
5		85805323		1	POMO
6		85805803		1	PORTA OBJETOS
7		16043424		4	TORNILLO, Hex, M8 x 20, 8.8, Full Thd
8		85825191		1	TAPADERA, Fuse Panel
9		85806023		1	BANDA HERMETICIDAD
10		14084814		5	TUERCA, M8 x 1.25, Flg
11		85805308		1	ANILLO DE CIERRE
12		79111815		1	TAPÓN
13		79089592		2	ARANDELA, D=24
14		13311017		4	TORNILLO, Cross Oval Hd, M5 x 16
15		85812081		1	PORCION DE GOMMA
16		10427201		1	REMACHE
17		85827548		1	PLACA, Assy
18		85804750		6	CASQUILLO ROSCADO
19	2	85827817		1	CONTENEDOR PLASTICO
20		85808460		1	TAPÓN
21		14441521		2	TORNILLO, Hex Soc Flat Hd, M6 x 25, 8.8
22		11193974		4	ARANDELA ABANICO, Belleville, M8.4
23		79111978		1	TAPÓN
24		82001909		1	PASACABLES
25		4999021		1	JUNTA HERMETICA
26	2	87540633		1	TABLIERO
27	2	12647701		2	ARANDELA
28	2	13274217		2	TORNILLO, Pan Hd, M5 x 16, 5.8
29		85805819		4	CASQUILLO ROSCADO

(1) Includes 2, 8, 9, 18, 29
(2) Only for B95B, B95BLR, B95BTC, B110B
(3) Only for B90B Mechanical Version
(4) Only for B90B Pilot Version

1.93.0/02	01	p2	04/08

COBERTURA LATERAL DERECHA, CONSOLA POSTERIOR ROPS (PIVOTE CENTRAL): NA

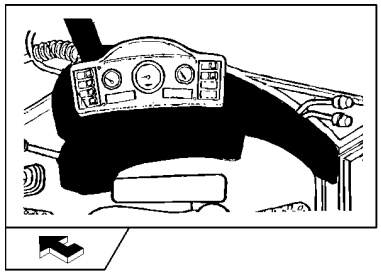

COBERTURA LATERAL DERECHA, CONSOLA POSTERIOR ROPS (PIVOTE CENTRAL): NA

REF	FN	PART NUMBER	YR/SN	QTY	DENOMINACION
30		85819016		1	PORCION DE GOMMA

RIVESTIMIENTOS MAQUINAS (ROPS) - NA

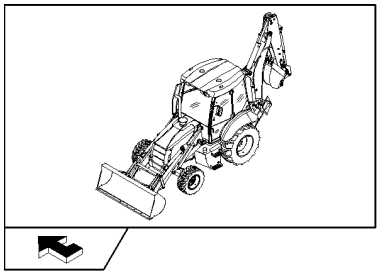

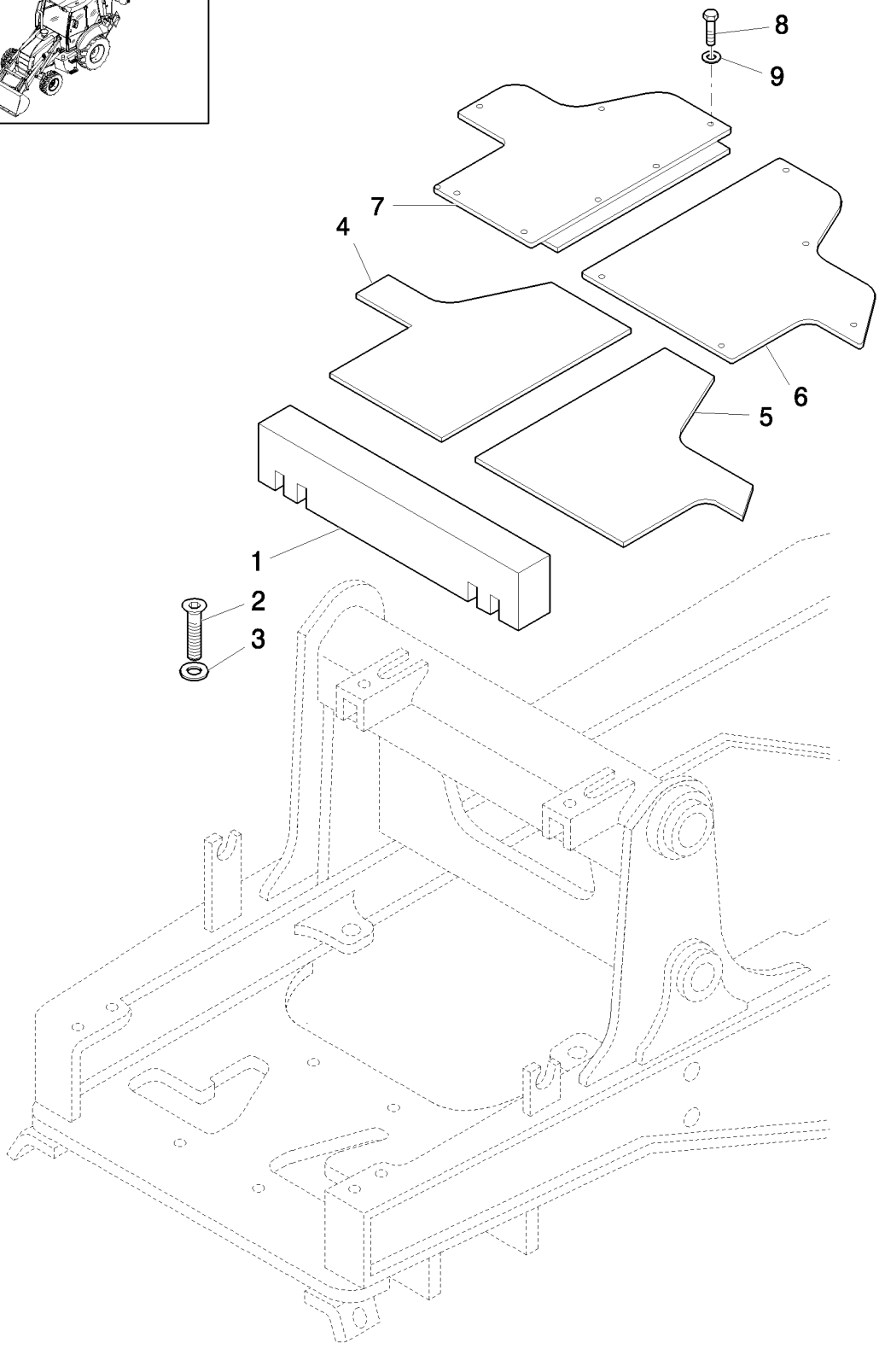

RIVESTIMIENTOS MAQUINAS (ROPS) - NA

REF	FN	PART NUMBER	YR/SN	QTY	DENOMINACION
1		85817287		1	ANILLO DE CIERRE
2		13311217		5	TORNILLO, Cross Oval Hd, M5 x 20
3		85801991		5	ARANDELA
4	1	87442379		1	ALFOMBRA
5	1	87442378		1	ALFOMBRA
6	1	87426546		1	CONJUNTO TAPA SUPERIOR
7	1	87426550		1	CONJUNTO TAPA SUPERIOR, RH
8	1	10902524		10	TORNILLO, Hex, M6 x 22, 8.8, Full Thd
9	1	11193274		10	ARANDELA ABANICO, Belleville, M6.4

(1) Only for Pilot Version

ESPEJO RETROVISOR - PARASOL

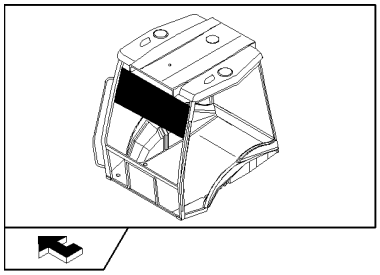

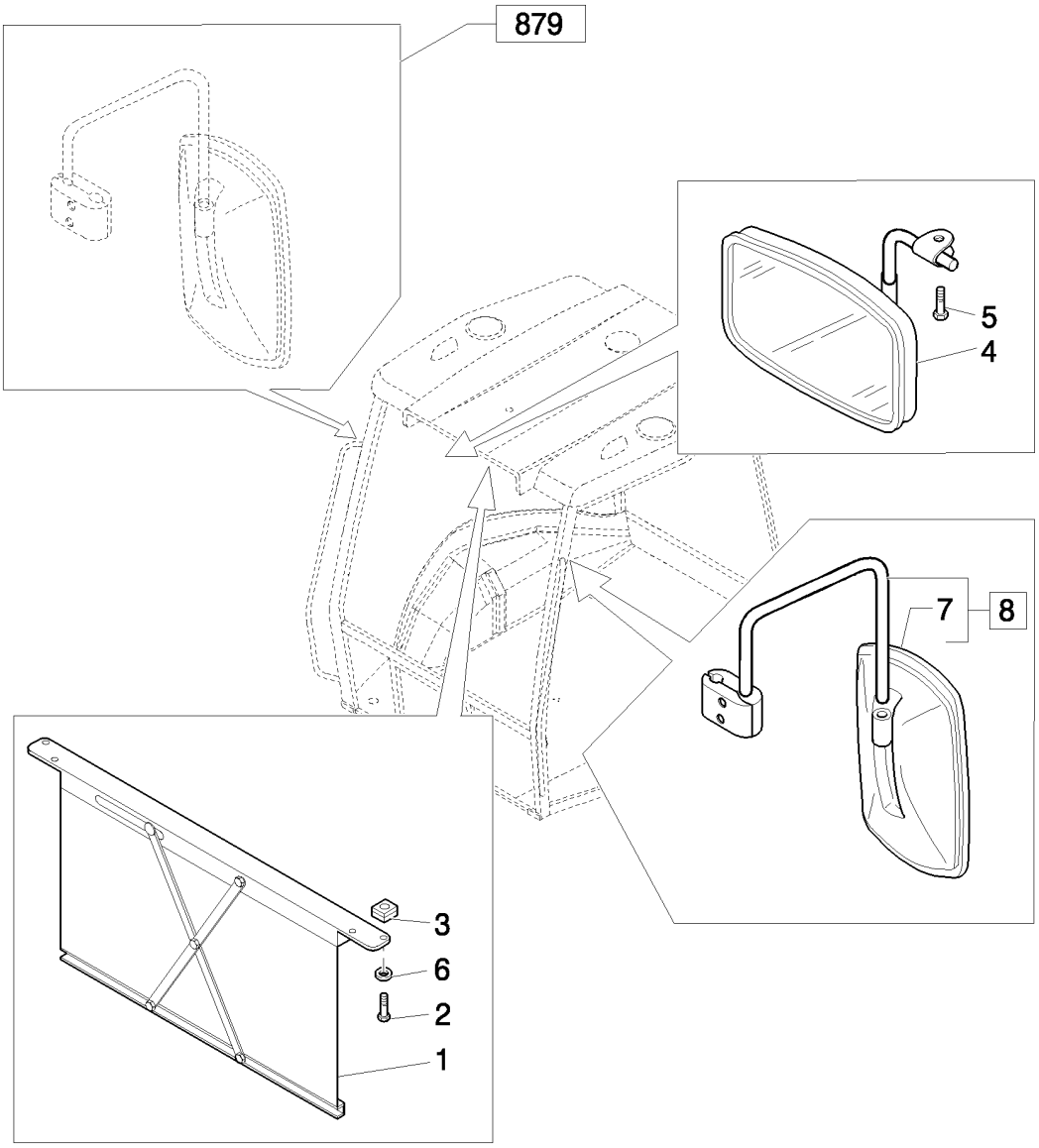



ESPEJO RETROVISOR - PARASOL

REF	FN	PART NUMBER	YR/SN	QTY	DENOMINACION
1		5176441		1	SOMBRILLA
2		14303324		4	TORNILLO, Hex Soc Hd, M4 x 20, 8.8, Full Thd
3		14197790		4	TUERCA, M4 x .7, Cage
4		87665407		1	ESPEJO RETROVISOR
5		13313417		1	TORNILLO, Cross Oval Hd, M6 x 25
6		12642821		4	ARANDELA, M4 x 12 x 1
7	1	85820138		1	ESPEJO RETROVISOR
8	1	85820139		1	ESPEJO, Assy

(1) Only for CAB

CABINA / TABLERO DE MANDOS FRONTAL

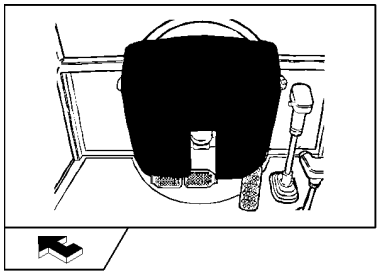

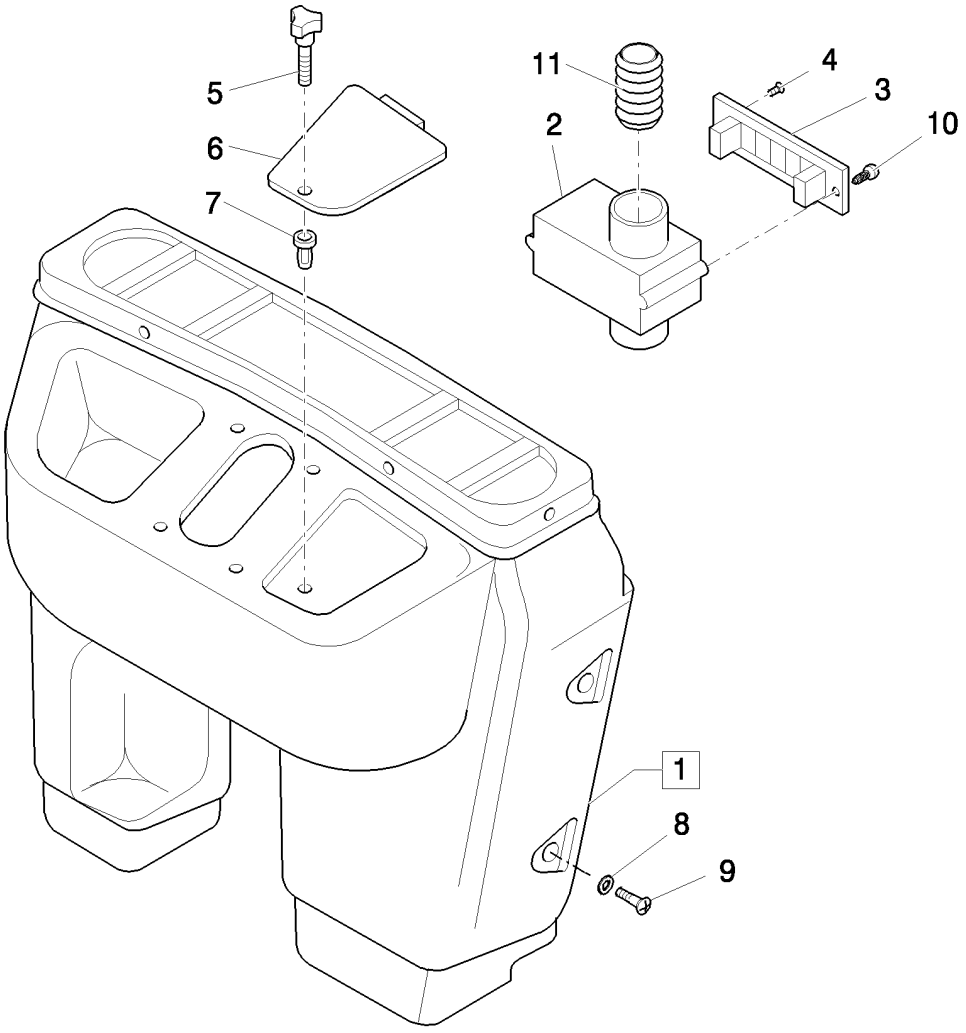

CABINA / TABLERO DE MANDOS FRONTAL

REF	FN	PART NUMBER	YR/SN	QTY	DENOMINACION
1	1, 2, 3	85819289		1	PANEL DE INSTRUMENT., Assy
1	1, 4	85819291		1	PANEL DE INSTRUMENT., Assy
2		85819567		2	CONDUCTO DE AIRE
3		85819454		2	DIFUSOR
4		14440327		4	TORNILLO, Hex Soc Flat Hd, M4 x 20, 8.8
5		85805323		1	POMO, M5
6		85806089		1	TAPADERA
7		85804750		5	CASQUILLO ROSCADO, M5
8		79089592		AR	ARANDELA, D=24
9		79105220		AR	TUERCA DE FRENO, Cross Oval Csk Hd, M6 x 20
10		14568887		4	BOTON DE RESORTE, 8X20
11		85819592		2	MANGUITO

(1) Includes 2 - 7
(2) Only for B90B, B95B, B95BLR, B95BTC, B110B (NA)
(3) Only for B90B, B90BLR, B100B, B100BLR, B110B (EU)
(4) Only for B115B

CABINA / FIJACIONES DEL TABLERO DE MANDOS Y JUNTAS

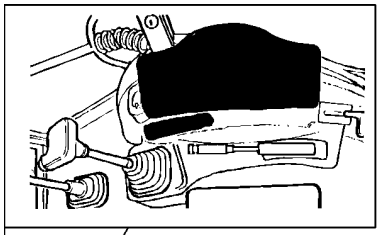

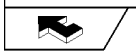

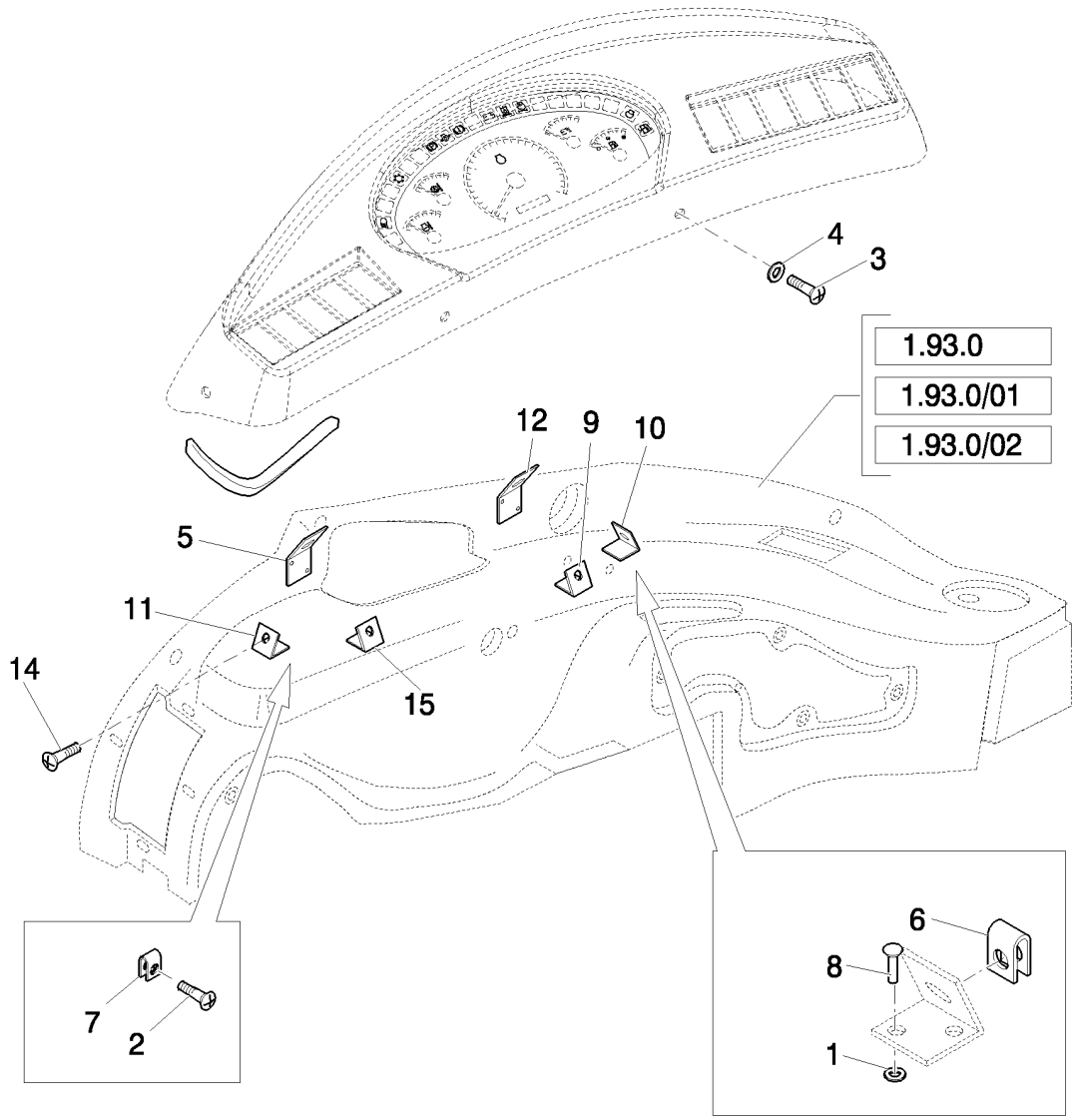

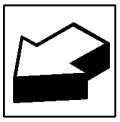

CABINA / FIJACIONES DEL TABLERO DE MANDOS Y JUNTAS

REF	FN	PART NUMBER	YR/SN	QTY	DENOMINACION
1		12642804		12	ARANDELA, M4 x 12 x 1
2		13311017		4	TORNILLO, Cross Oval Hd, M5 x 16, CAB
3		15693507		AR	TORNILLO AUTOROSCANTE, Cross Oval Hd, M4.8 x 22
4		85801991		AR	ARANDELA
5	1	87552670		1	ANILLO DE CIERRE
5	2	85824393		1	JUNTA DE CAUCHO
6		14189176		6	TUERCA, J, #10
7		14372671		2	TUERCA, M4.2, U, 12.4mm long, CAB
8		14642191		12	REMACHE
9		85802142		2	PIEZA DE SOPORTE
10		85802143		1	PIEZA DE SOPORTE
11		85802144		1	PIEZA DE SOPORTE
12		85802145		1	PIEZA DE SOPORTE
13	1	87551537		1	PIEZA DE SOPORTE
13	2	85802146		1	PIEZA DE SOPORTE
14		15910607		2	TORNILLO
15	2	85802141		1	PIEZA DE SOPORTE

(1) Except for B90B, B90BLR
(2) Only for B90B, B90BLR

CONSOLA ANTERIOR - ROPS (POWER SHUTTLE) - NA

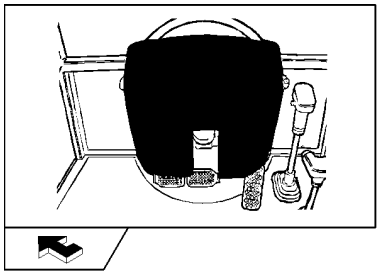

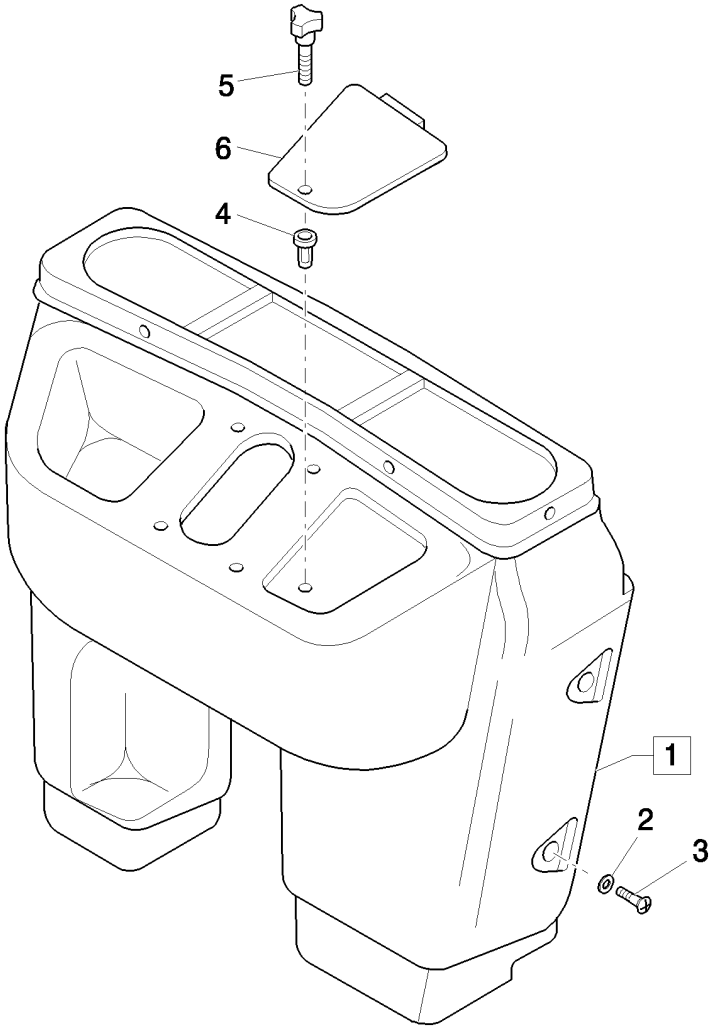

CONSOLA ANTERIOR - ROPS (POWER SHUTTLE) - NA

REF	FN	PART NUMBER	YR/SN	QTY	DENOMINACION
1	1	85819407		1	PANEL DE INSTRUMENT., Assy, ROPS
2		79089592		5	ARANDELA, D=24
3		13311214		4	TORNILLO, Cross Oval Hd, M5 x 20, M6X20
4		85804750		5	CASQUILLO ROSCADO, M5
5		85805323		1	POMO, M5
6		85806089		1	TAPADERA

(1) Includes 4 - 6

GUARNICIÓN Y ELEMENTOS DE FIJACIÓN CONSOLA DERECHA - ROPS (POWER SHUTTLE) - NA

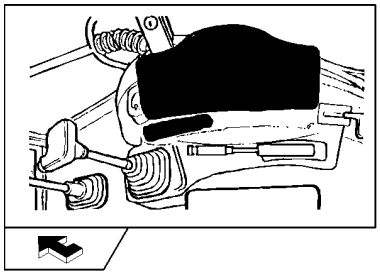

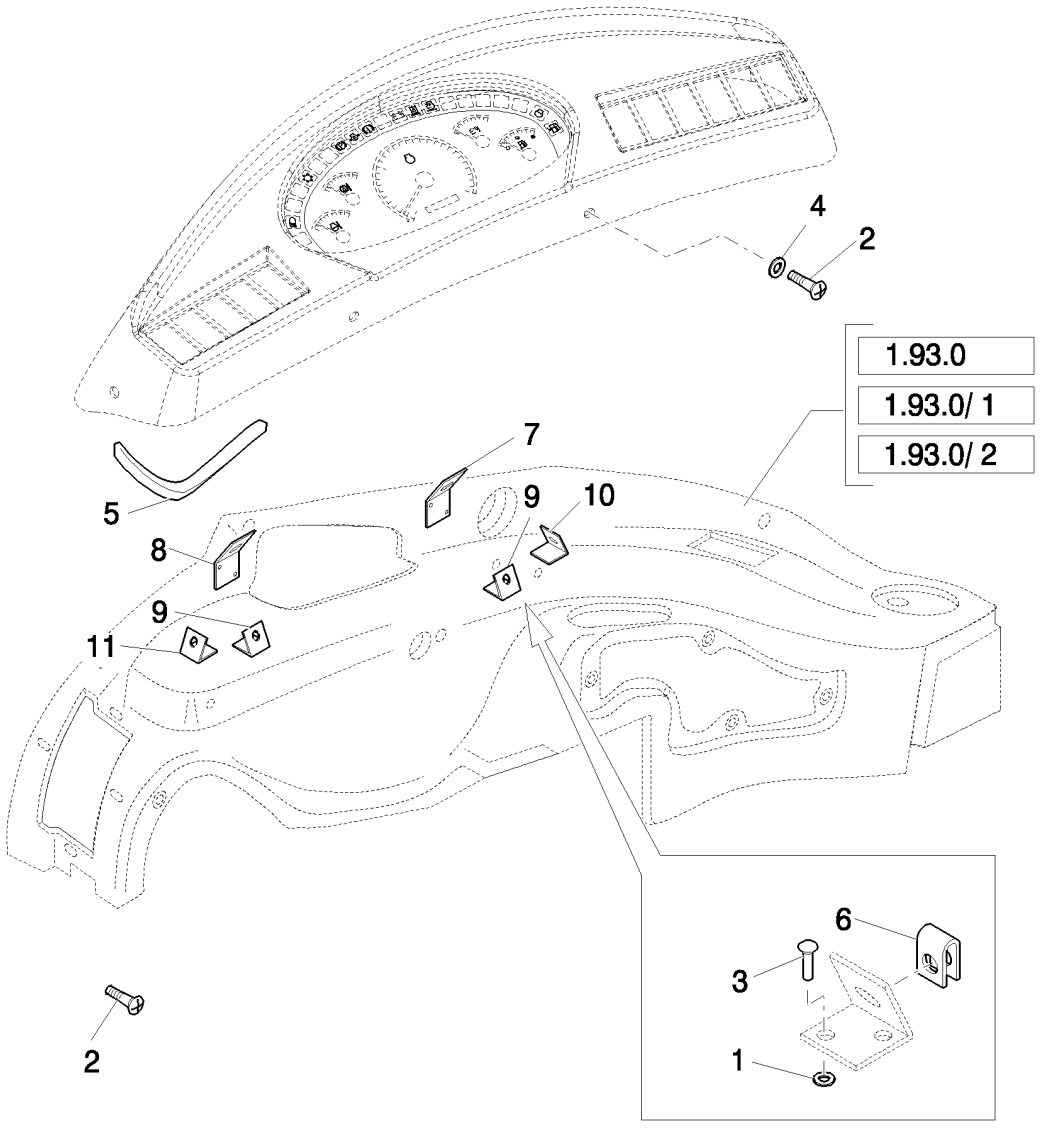

GUARNICIÓN Y ELEMENTOS DE FIJACIÓN CONSOLA DERECHA - ROPS (POWER SHUTTLE) - NA

REF	FN	PART NUMBER	YR/SN	QTY	DENOMINACION
1		12642804		12	ARANDELA, M4 x 12 x 1
2		15693507		AR	TORNILLO AUTOROSCANTE, Cross Oval Hd, M4.8 x 22
3		14642191		12	REMACHE
4		85801991		AR	ARANDELA
5		87552670		1	ANILLO DE CIERRE
6		14189176		6	TUERCA, J, #10
7		85802145		1	PIEZA DE SOPORTE
8		87551537		1	PIEZA DE SOPORTE
9		85802142		2	PIEZA DE SOPORTE
10		85802143		1	PIEZA DE SOPORTE
11		85802144		1	PIEZA DE SOPORTE

RETROVISOR INTERIOR (POWER SHUTTLE) ROPS

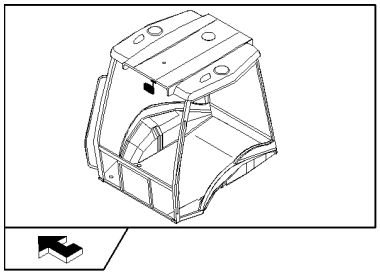

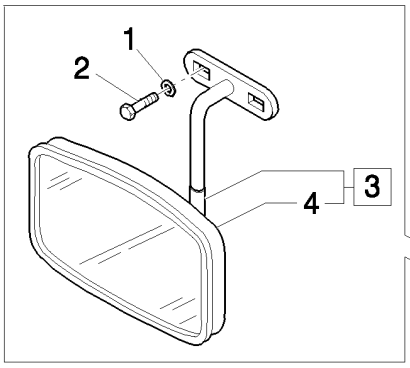

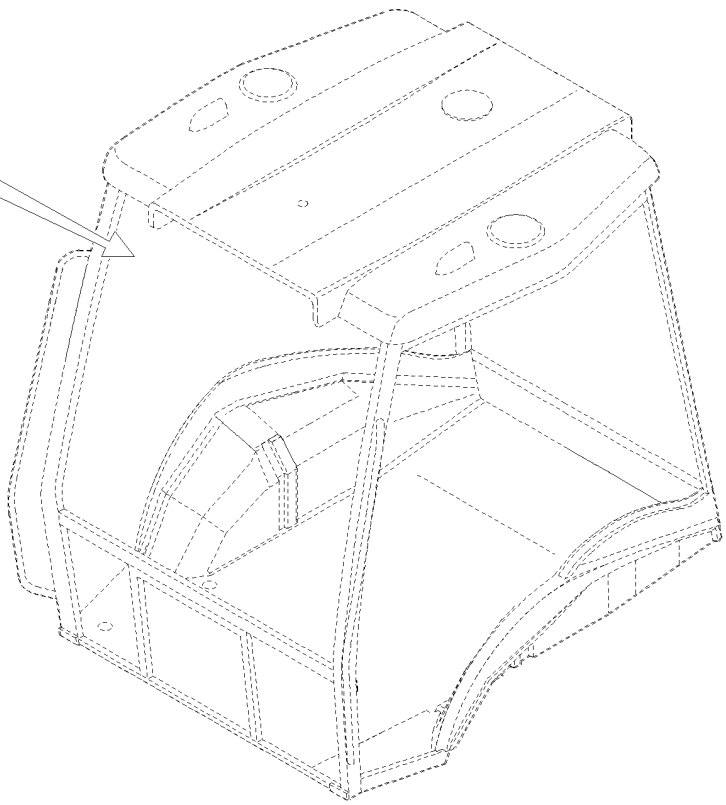

RETROVISOR INTERIOR (POWER SHUTTLE) ROPS

REF	FN	PART NUMBER	YR/SN	QTY	DENOMINACION
1		11193274		2	ARANDELA ABANICO, Belleville, M6.4
2		10902424		2	TORNILLO, Hex, M6 x 20, 8.8, Full Thd
3		85817685		1	ESPEJO RETROVISOR, Assy
4		85817686		1	ESPEJO RETROVISOR

CAB / ROPS: TECHO Y COBERTURA INTERIOR: NA

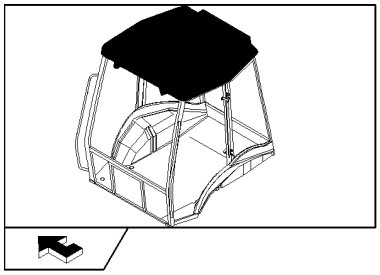

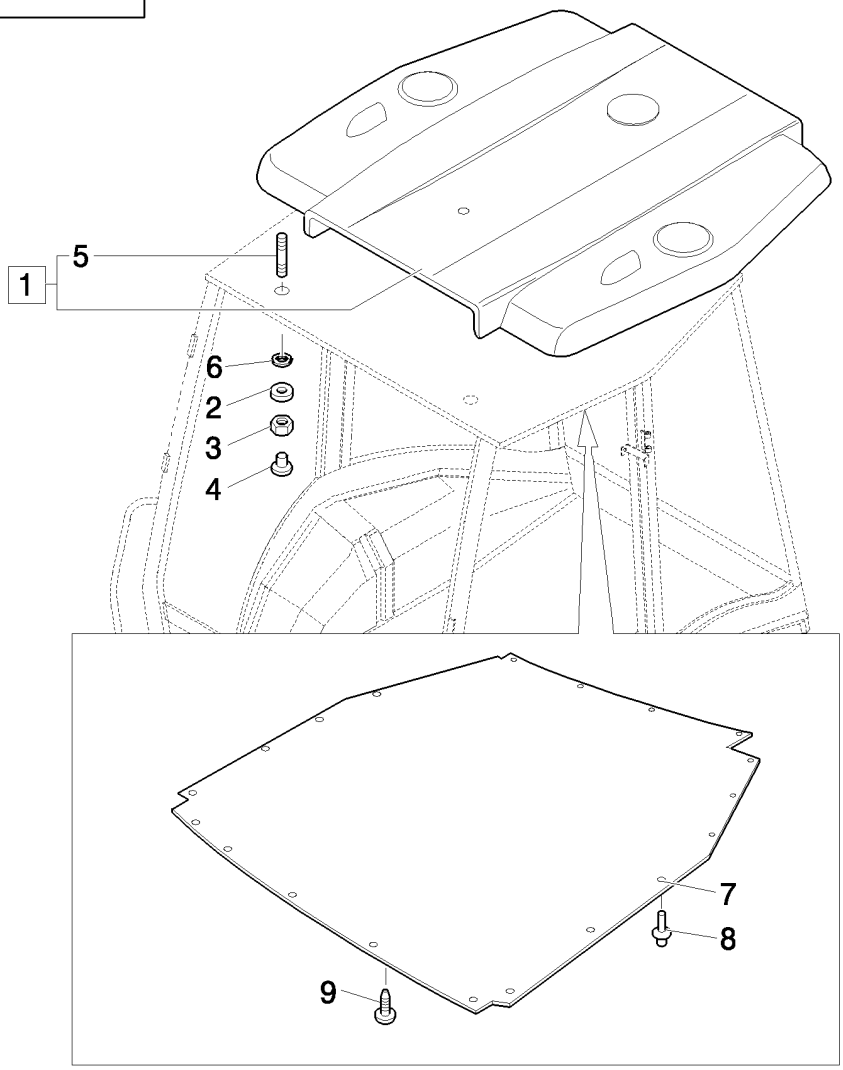

CAB / ROPS: TECHO Y COBERTURA INTERIOR: NA

REF	FN	PART NUMBER	YR/SN	QTY	DENOMINACION
1	1	87349058		1	TECHO, Assy
1	2	87349055		1	TECHO, Assy
2		12647004		8	ARANDELA, M8 x 25 x 2.5
3		16104111		8	CONTRA TUERCA, M8 x 1.25, Cl 8
4		87350247		8	TAPÓN
5		13517021		8	PRISIONERO
6		85801801		8	RETEN
7	2	87319727		1	RIVESTIMIENTO
8	2	5162852		21	BOTON DE RESORTE
9	2	85805777		1	TAPÓN

(1) Only for ROPS
(2) Only for CAB

1.94.2		p1	03/08

MANGUITOS AGUA DE CALEFACCIÓN

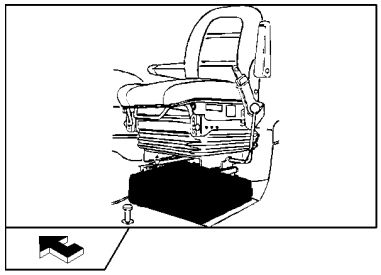

MANGUITOS AGUA DE CALEFACCIÓN

REF	FN	PART NUMBER	YR/SN	QTY	DENOMINACION
1		87324991		1	MANGA FLEXIBLE
2		87553661		1	MANGA
3		87550746		1	CONEXION
4		47048896		1	VALVULA HIDRAULICA
5		85803079		4	ABRAZADERA MANGUERA
6		85802890		1	BORNE
7		87567356		1	BORNE
8		47044673		1	ARANDELA
9		47048451		4	CIERRA CABLES, M8 x 384
10		11112221		1	TORNILLO, Hex, M12 x 25, 8.8, Full Thd

CABINA / ROPS : PEDAL DEL FRENO

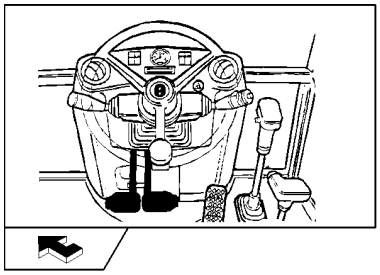

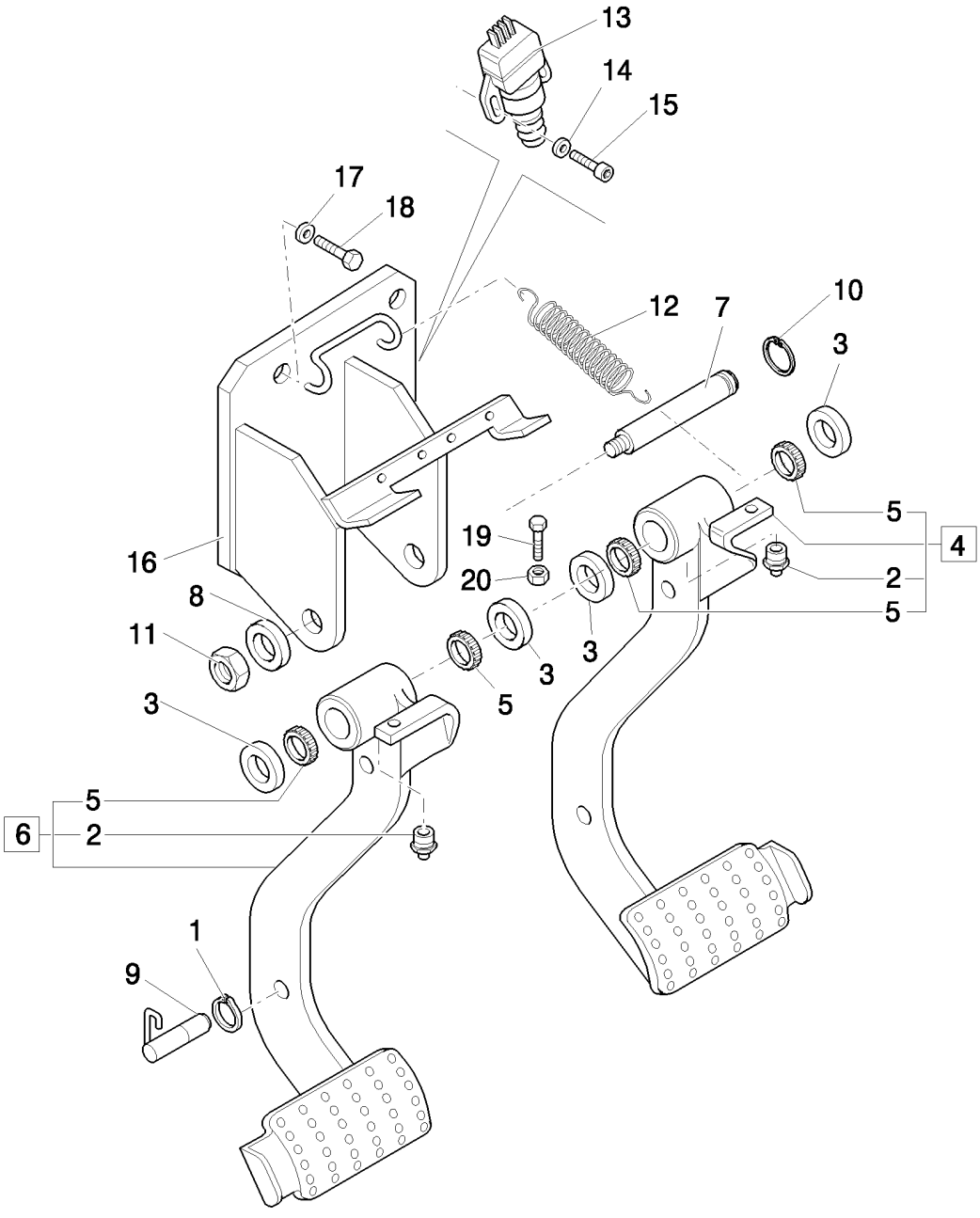

CABINA / ROPS : PEDAL DEL FRENO

REF	FN	PART NUMBER	YR/SN	QTY	DENOMINACION
1		11088176		1	RETENEDOR, M11
2		13407214		2	ENGRASADOR
3		5148062		4	ARANDELA
4		85805285		1	PEDAL, Assy, RH
5		4983992		4	RODAMIENTO DE RPDILLOS
6		85805283		1	PEDAL, Assy, LH
7		85801860		1	PERNO
8		10517274		1	ARANDELA DE FRENO
9		87517988		1	BLOQUE MOTOR
10		11067376		1	ANILLO DE RESORTE, M25, Ext
11		12164114		1	TUERCA, M16 x 1.5
12		5153180		1	RESORTE
13		82026949		2	CONTACTOR, Brake
14		12642821		4	ARANDELA, M4 x 12 x 1, W/Cab
15		14303324		4	TORNILLO, Hex Soc Hd, M4 x 20, 8.8, Full Thd, W/Cab
16		85805277		1	SOPORTE
17		11190574		4	ARANDELA ABANICO, Belleville, M10.5
18		15970524		4	TORNILLO, Hex, M10 x 1.25 x 20, 8.8, Full Thd
19		16043921		2	TORNILLO, M8 x 1,25 x 35
20		11701621		2	TUERCA, M8, Cl 10

CABINA / ROPS / BOMBA DEL FRENO

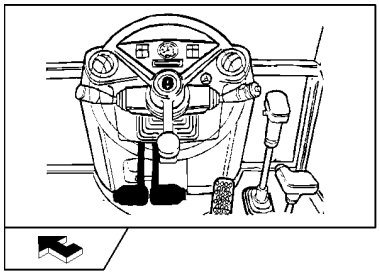

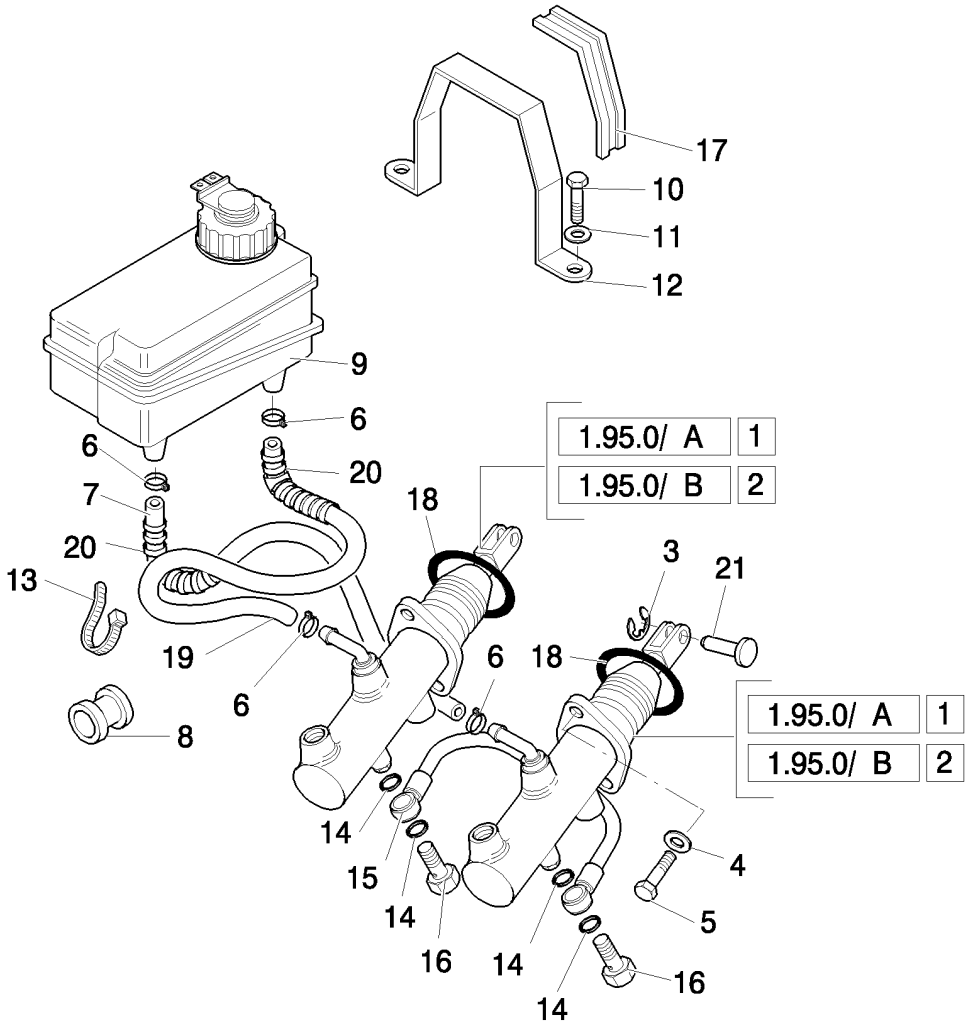

CABINA / ROPS / BOMBA DEL FRENO

REF	FN	PART NUMBER	YR/SN	QTY	DENOMINACION
1	1	87398198		2	CILINDRO DE FRENO, Assy
2	2	85824114		2	BOMBA HIDRÁULICA, Assy
3		11064176		2	SUJETADOR
4		11193874		4	ARANDELA ABANICO, Belleville, M8.4
5		14306324		4	TORNILLO, Hex Soc Hd, M8 x 20, 8.8
6		13423271		4	COLLAR
7		85819914		1	TUBO
8		85801941		2	AMORTIGUADOR
9		82003369		1	CUBA
10		10902624		2	TORNILLO, Hex, M6 x 25, 8.8, Full Thd
11		11193274		2	ARANDELA ABANICO, Belleville, M6.4
12		85801092		1	PIEZA DE SOPORTE
13		14560187		1	CIERRA CABLES, 178mm lg, L=203.2 mm
14		2854292		8	JUNTA CIRCULAR
15		5155701		1	TUBO
16		5155703		2	BOQUILLA, M12x1.25x22
17		85801093		1	TIRCA
18	3	13399076		2	RETENEDOR
19		85819915		1	TUBO
20		87302705		2	FUNDA
21		5155381		2	PERNO

(1) Only for B90B, B90BLR, B100B, B100BLR, B110B (EU) - B90B, B95B, B95BLR, B110B (NA)
(2) Only for B115B (EU) - B115B (NA)
(3) Only for CAB

CABINA / ROPS / TUBOS DE LA INSTALACIÓN DEL FRENO

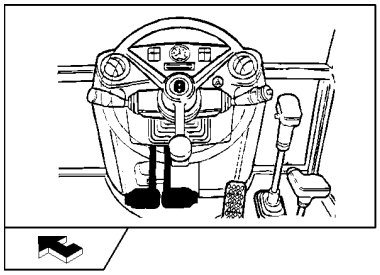

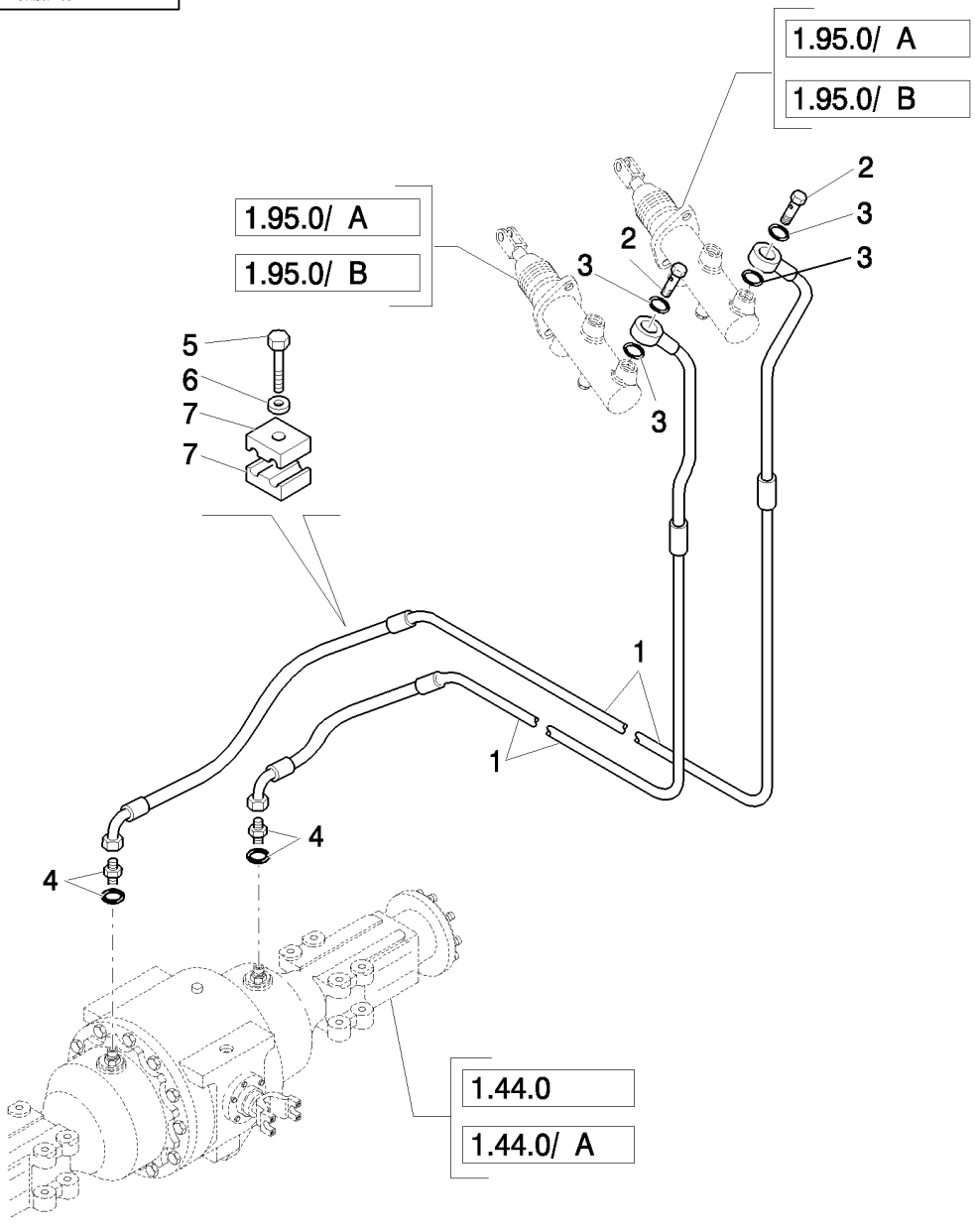

CABINA / ROPS / TUBOS DE LA INSTALACIÓN DEL FRENO

REF	FN	PART NUMBER	YR/SN	QTY	DENOMINACION
1		85819177		2	TUBO DE FRENO
2		5155703		2	BOQUILLA
3		2854292		4	JUNTA CIRCULAR
4	1	85803312		2	RACOR
4	2	85805655		2	CODO
5		15212721		2	TORNILLO, Hex, M6 x 40, 8.8, Full Thd
6		14447021		2	ARANDELA, M5 x 15 x 1
7		85805548		4	SUJETADOR

(1) Only for B90B, B90BLR, B100B, B100BLR, BB110B (EU) - B90B, B95B, B95BLR, B110B (NA)
(2) Only for B115B (EU) - B115B (NA)

CABINA / ROPS / CILINDRO BOMBA DEL FRENO

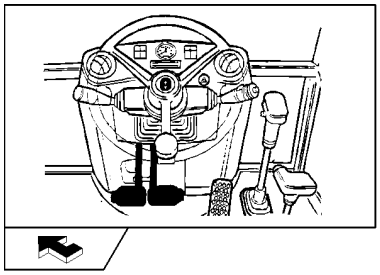

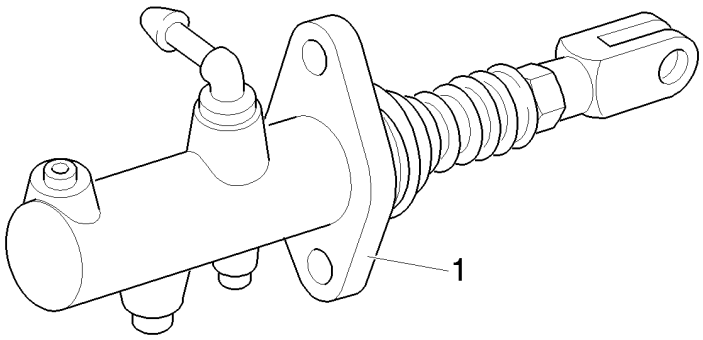

CABINA / ROPS / CILINDRO BOMBA DEL FRENO

REF	FN	PART NUMBER	YR/SN	QTY	DENOMINACION
1		87398198		1	CILINDRO DE FRENO

CABINA / ROPS / PALANCA DEL FRENO DE ESTACIONAMIENTO Y CABLE DE MANDO

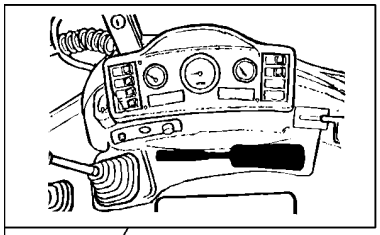

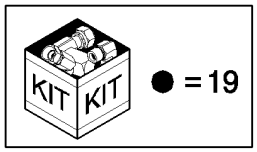

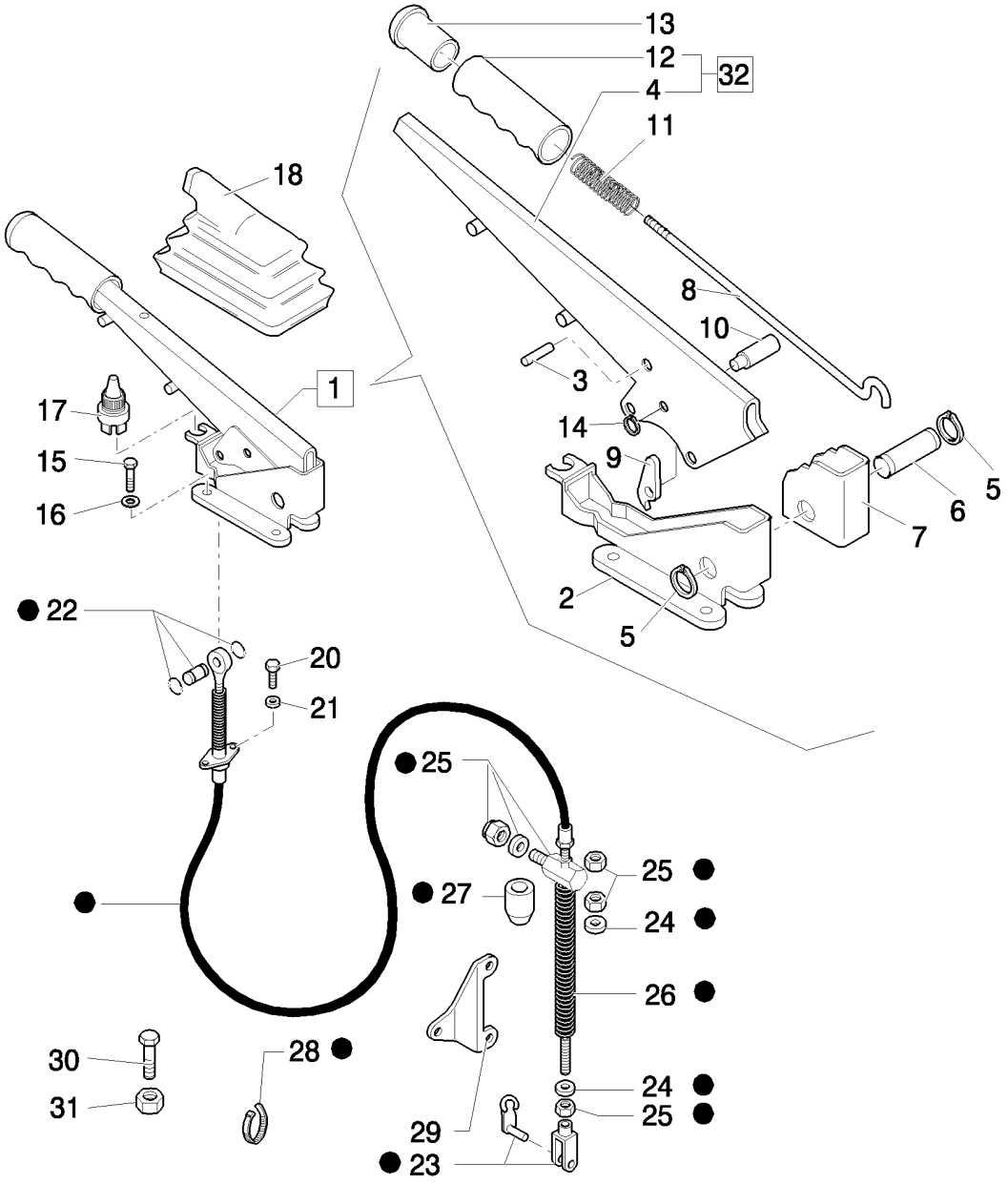

CABINA / ROPS / PALANCA DEL FRENO DE ESTACIONAMIENTO Y CABLE DE MANDO

REF	FN	PART NUMBER	YR/SN	QTY	DENOMINACION
1		85827832		1	PALANCA, Assy
2		85805441		1	SOPORTE
3		4985127		1	REMACHE
4		85805440		1	PALANCA
5		13400776		2	ANILLO DE FRENO
6		4988275		1	PERNO
7		5110153		1	ROQUETE
8		85827833		1	VARILLA DE NIVEL
9		5110155		1	TRINQUETE
10		5131437		1	PERNO
11		5105729		1	RESORTE
12		86021837		1	PERILLA
13		4985122		1	BOTON
14		11065476		1	ANILLO DE RESORTE, M6, Ext
15		14306424		4	TORNILLO, Hex Soc Hd, M8 x 25, 8.8
16		11193874		4	ARANDELA ABANICO, Belleville, M8.4
17		85816770		1	INTERRUPTOR
18		5106733		1	CASQUETE
19	1	85815536		1	CABLE, Assy
19	2	85815537		1	CABLE, Assy
20		10978024		2	TORNILLO, Hex, M5 x 20, 8.8, Full Thd
21		10615374		2	ARANDELA
22		85815550		1	JUNTA DE ROTULA
23		85815556		1	HORQUILLA PEQUENA
24		85815555		1	ARANDELA, 22 x 10.2 x 2
25		85815552		1	RACOR ORIENTABLE
26	3	85815554		1	RESORTE
26	2	85821173		1	RESORTE
27		85821172		1	JUNTA HERMETICA
28		85815549		1	CIERRA CABLES
29	4	85826099		1	SOPORTE

(1) Only for B90B, B90BLR, B100B, B100BLR, B110B (EU) - B90B, B95B, B95BLR, B95BTC, B110B (NA)
(2) Only for B115B (EU) - B115B (NA)
(3) Only for B90B, B90BLR, B100B, B100BLR, B110B (EU) - B90B, B95B, B95BLR, B110B (NA)
(4) Only for Power Shuttle

CABINA / ROPS / PALANCA DEL FRENO DE ESTACIONAMIENTO Y CABLE DE MANDO

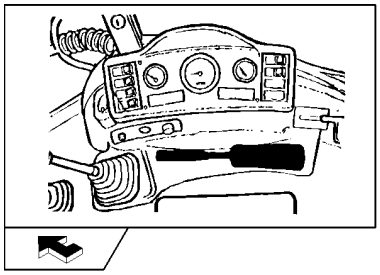

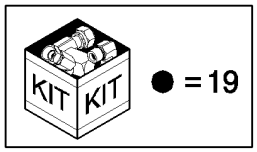

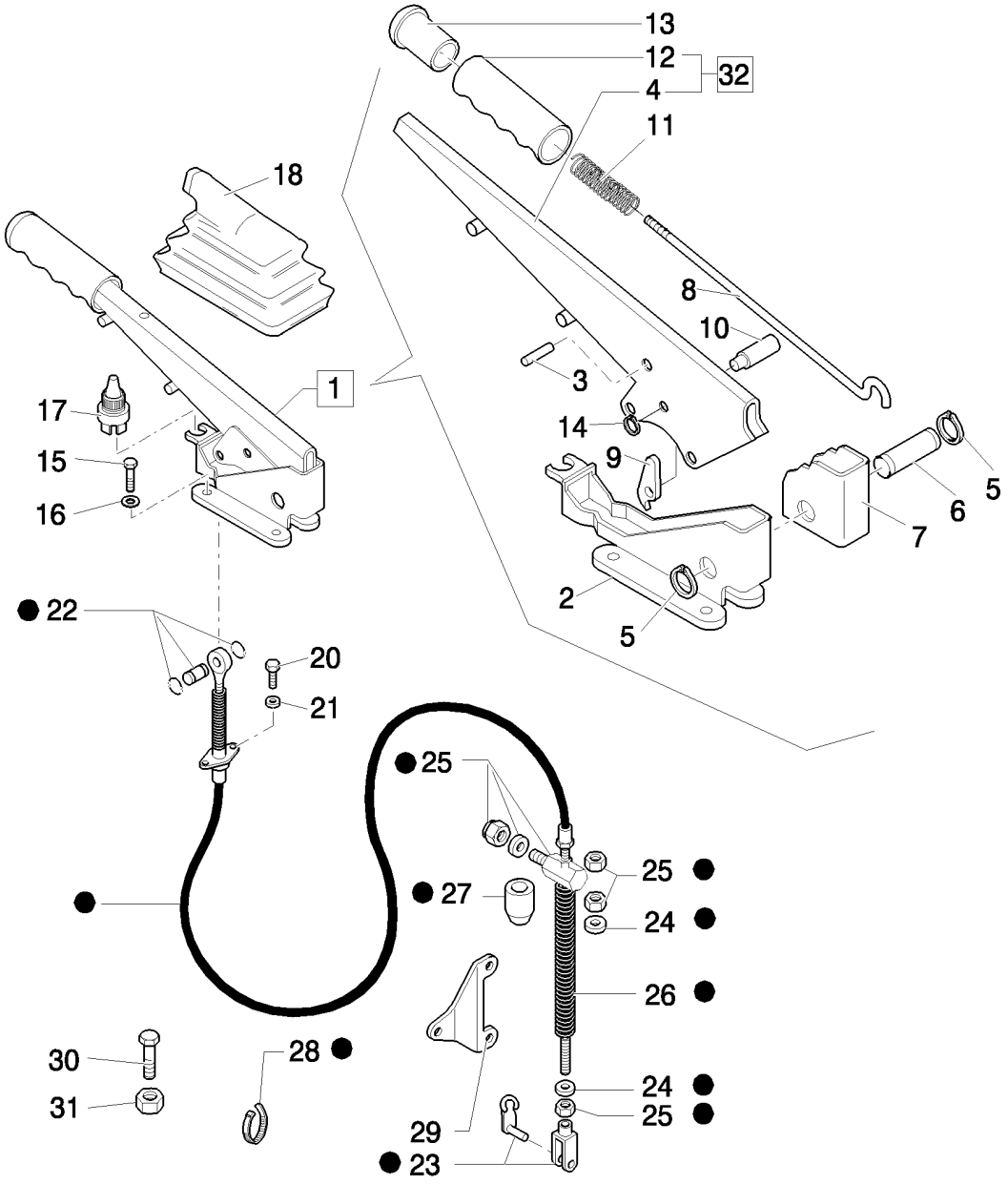

CABINA / ROPS / PALANCA DEL FRENO DE ESTACIONAMIENTO Y CABLE DE MANDO

REF	FN	PART NUMBER	YR/SN	QTY	DENOMINACION
29	1	85805251		1	SOPORTE
30		13272319		1	TORNILLO
31		10794011		1	TUERCA, M4, Cl 8
32		85827834		1	PALANCA, Assy

(1) Only for Power Shift

MANDO DEL TRANSPORT LOCK - NA

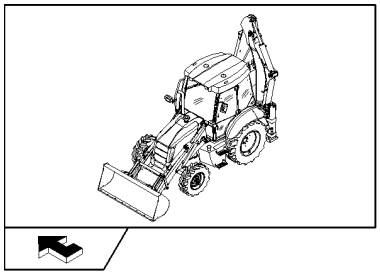

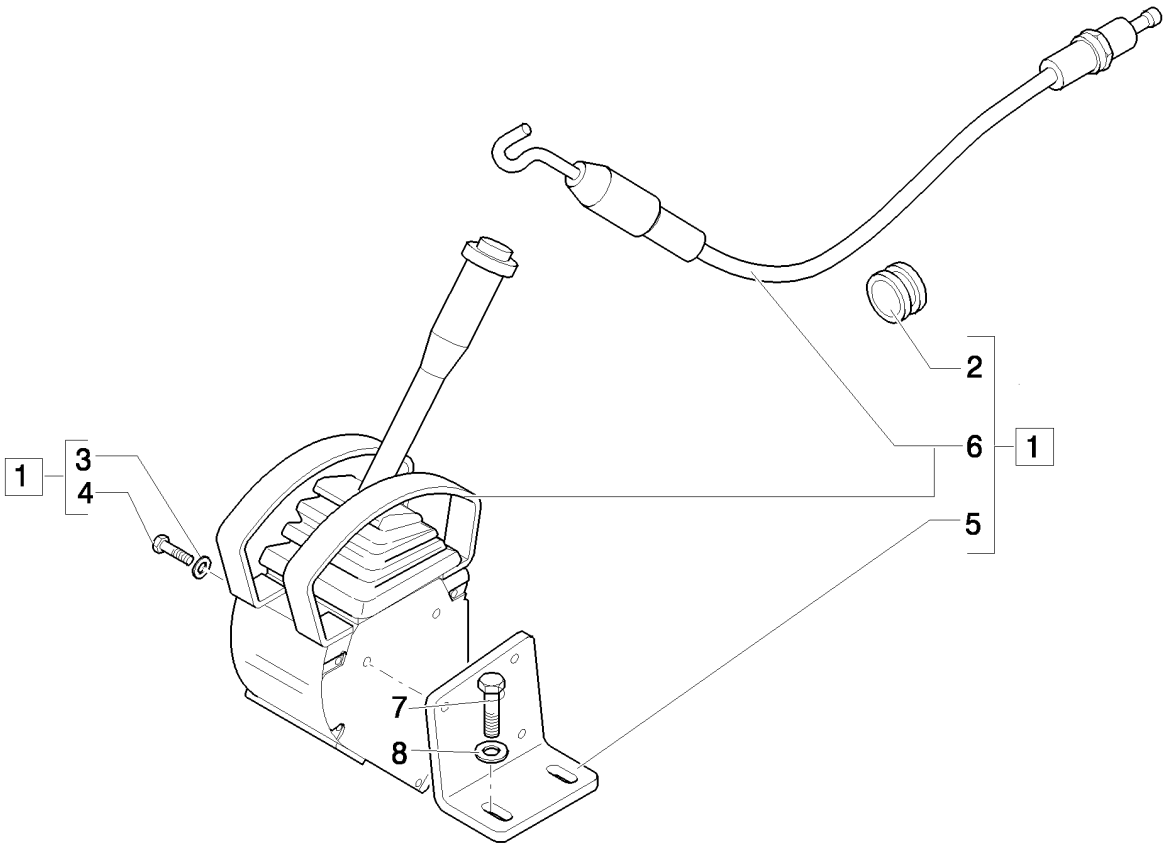

MANDO DEL TRANSPORT LOCK - NA

REF	FN	PART NUMBER	YR/SN	QTY	DENOMINACION
1	1	87324535		1	PALANCA, Assy, TRANSPORT LOCK; Not Serviced As An Assembly, Order Components
1	2	87324490		1	PALANCA, Assy
2		10398680		1	PASACABLES
3		11193274		3	ARANDELA ABANICO, Belleville, M6.4
4		15212921		3	TORNILLO, Hex, M6 x 50, 8.8, Full Thd
5		85808419		1	SOPORTE
6		87324496		1	PALANCA
7		16043624		2	TORNILLO, Hex, M8 x 25, 8.8, Full Thd
8		11193874		2	ARANDELA ABANICO, Belleville, M8.4

(1) Only for ROPS
(2) Only for CAB

MANDO DE ACELERADOR ELECTRÓNICO MANUAL/A PEDAL

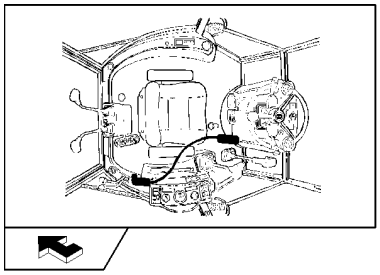

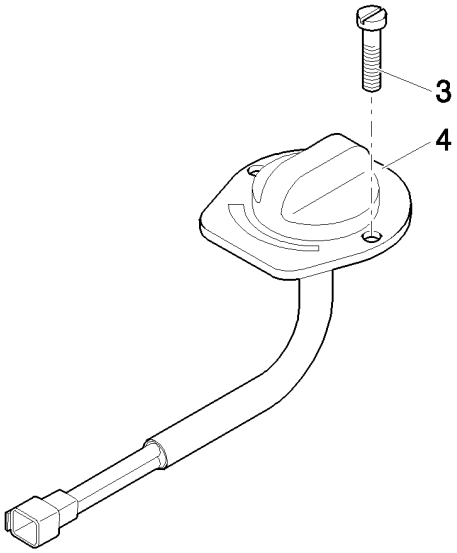

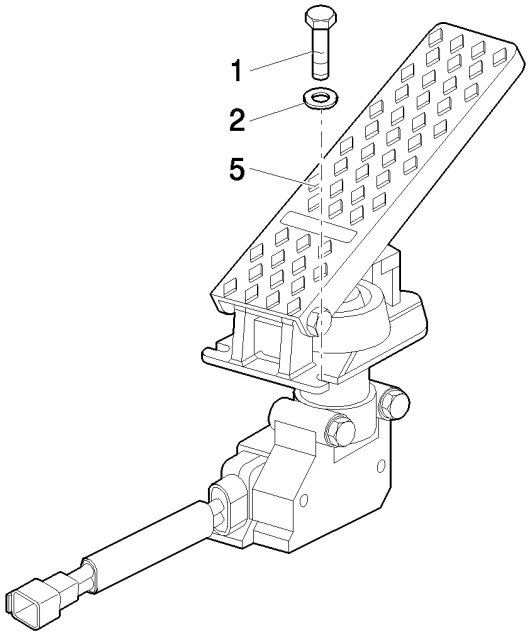

MANDO DE ACELERADOR ELECTRÓNICO MANUAL/A PEDAL

REF	FN	PART NUMBER	YR/SN	QTY	DENOMINACION
1		10902424		3	TORNILLO, Hex, M6 x 20, 8.8, Full Thd
2		11193274		3	ARANDELA ABANICO, Belleville, M6.4
3		13274117		2	TORNILLO
4		87528964		1	MANDO DEL ACELERADOR
5		87518902		1	PEDAL

COLUMNA DE DIRECCIÓN Y COBERTURA: NA

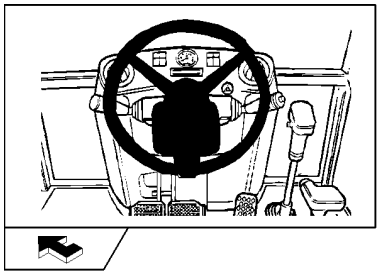

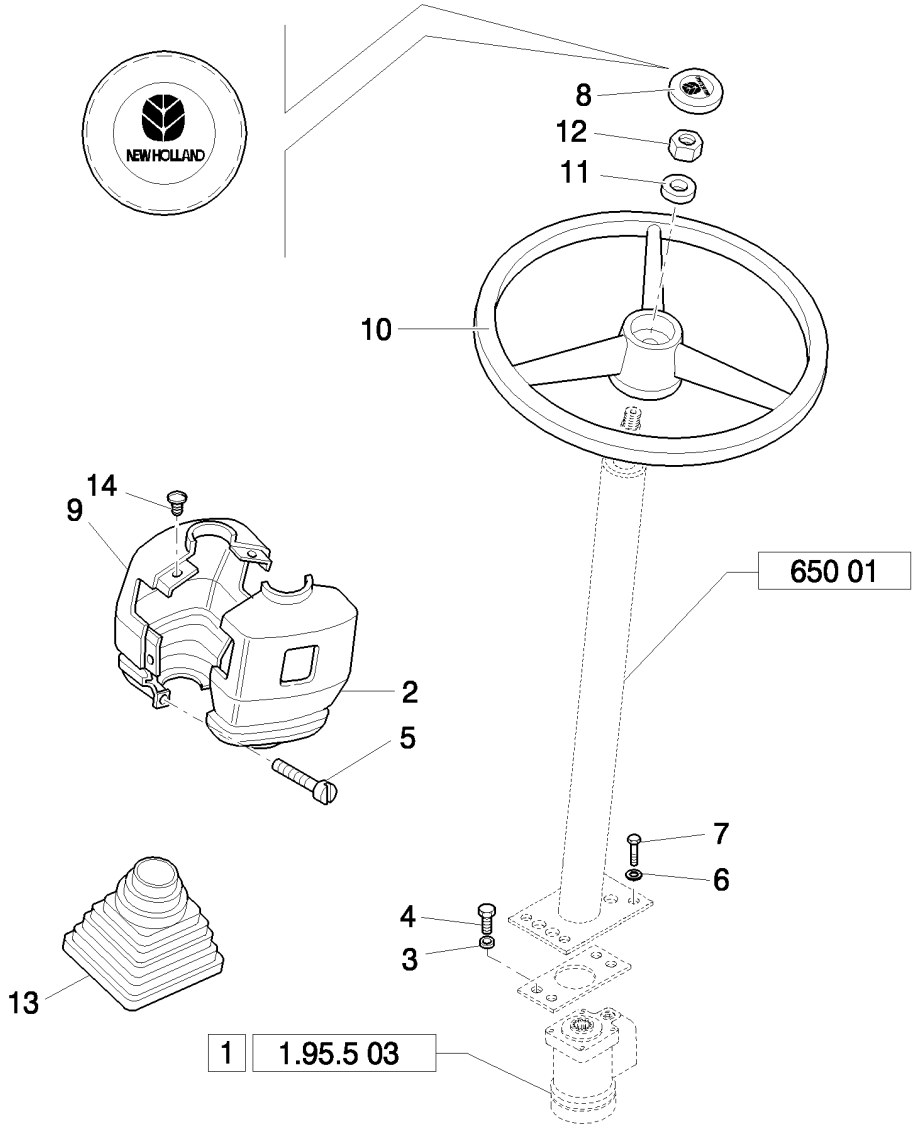

COLUMNA DE DIRECCIÓN Y COBERTURA: NA

REF	FN	PART NUMBER	YR/SN	QTY	DENOMINACION
1		87360424		1	DIRECCION HIDRAULICA, Assy
2	1	85805775		1	TAPADERA, Upper
2	2	85805774		1	TAPADERA
3		10615774		4	ARANDELA DE FRENO
4		14432334		4	TORNILLO, Hex Soc Hd, M10 x 22, 10.9
5		14303324		4	TORNILLO, Hex Soc Hd, M4 x 20, 8.8, Full Thd
6		11190574		4	ARANDELA ABANICO, Belleville, M10.5
7		15970724		4	TORNILLO, Hex, M10 x 1.25 x 25, 8.8, Full Thd
8		85820105		1	TAPON DEL DEPOSITO
9	3	85805772		1	TAPADERA, LOWER
9	4	85805773		1	TAPADERA
10		5148946		1	VOLANTE DE DIRECCION
11		4998760		1	ARANDELA
12		10791414		1	TUERCA, M16X1,5
13		85801976		1	CASQUETE
14		14568887		4	BOTON DE RESORTE

(1) Only for Power Shuttle Rops
(2) Only for CAB Power Shuttle / Power Shift
(3) Only for Power Shuttle
(4) Only for CAB Power Shift

MANGUITOS INSTALACIÓN DE DIRECCIÓN: NA

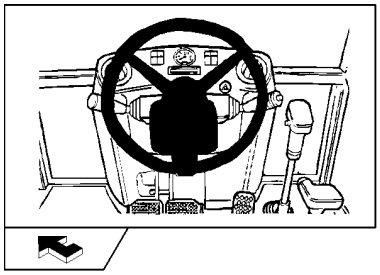

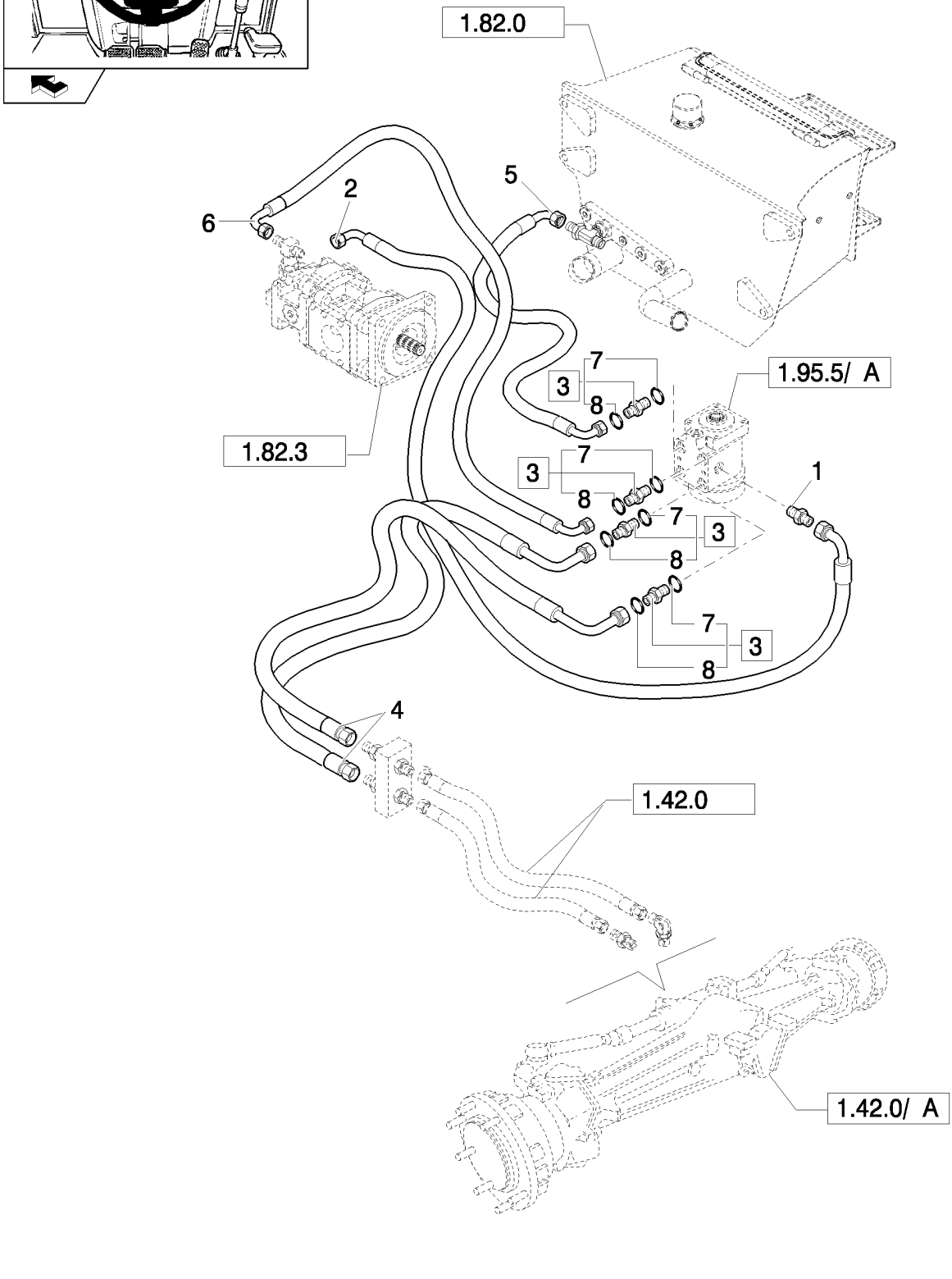

MANGUITOS INSTALACIÓN DE DIRECCIÓN: NA

REF	FN	PART NUMBER	YR/SN	QTY	DENOMINACION
1		85802640		1	RACOR
2		85819041		1	MANGA FLEXIBLE
3		83963374		4	RACOR, Assy
4		85826080		2	MANGA FLEXIBLE, RH CYLINDER
5		85802761		1	HOSE, HYDRAULIC, 1100mm lg
6		85820282		1	MANGA FLEXIBLE
7		80128825		4	JUNTA HERMETICA
8		89992298		4	JUNTA HERMETICA

1.95.5/ A	01	p1	04/08

SERVO DIRECCIÓN: NA

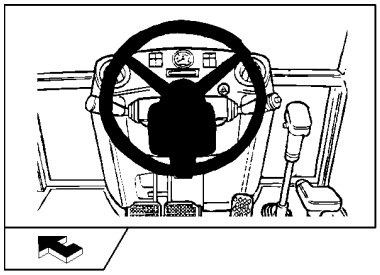

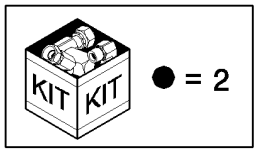

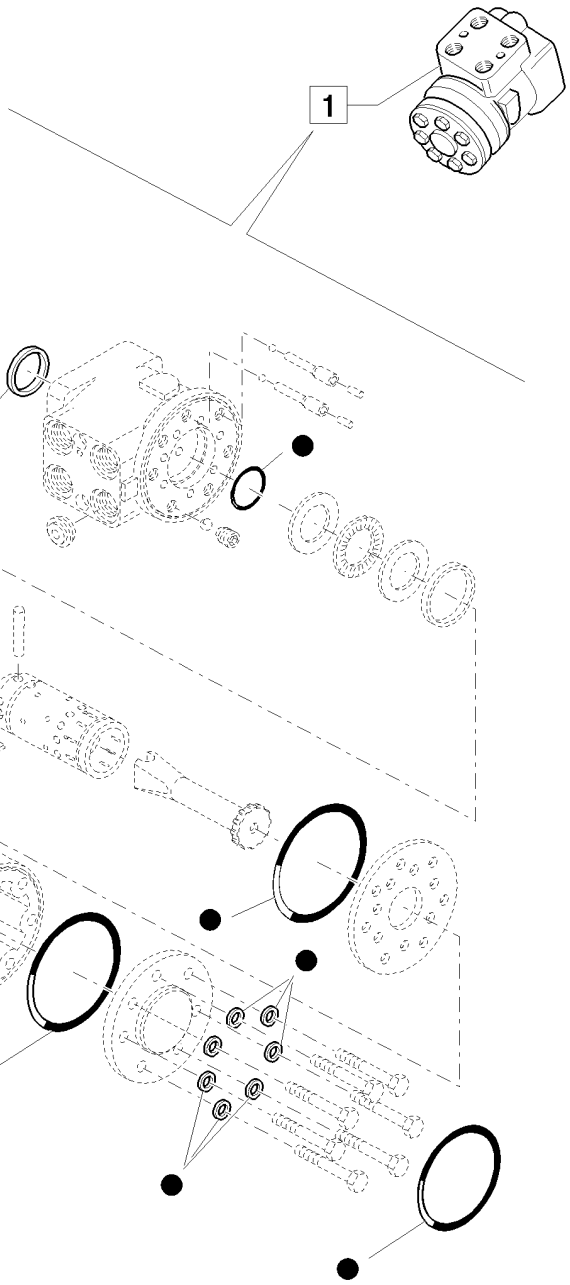

SERVO DIRECCIÓN: NA

REF	FN	PART NUMBER	YR/SN	QTY	DENOMINACION
1		87360424		1	DIRECCION HIDRAULICA, Assy
2		85808390		1	SERIE DE JUNTAS

PALANCA DE ADELANTE/ATRÁS Y MULTIFUNCIONES

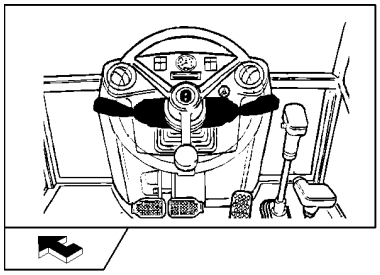

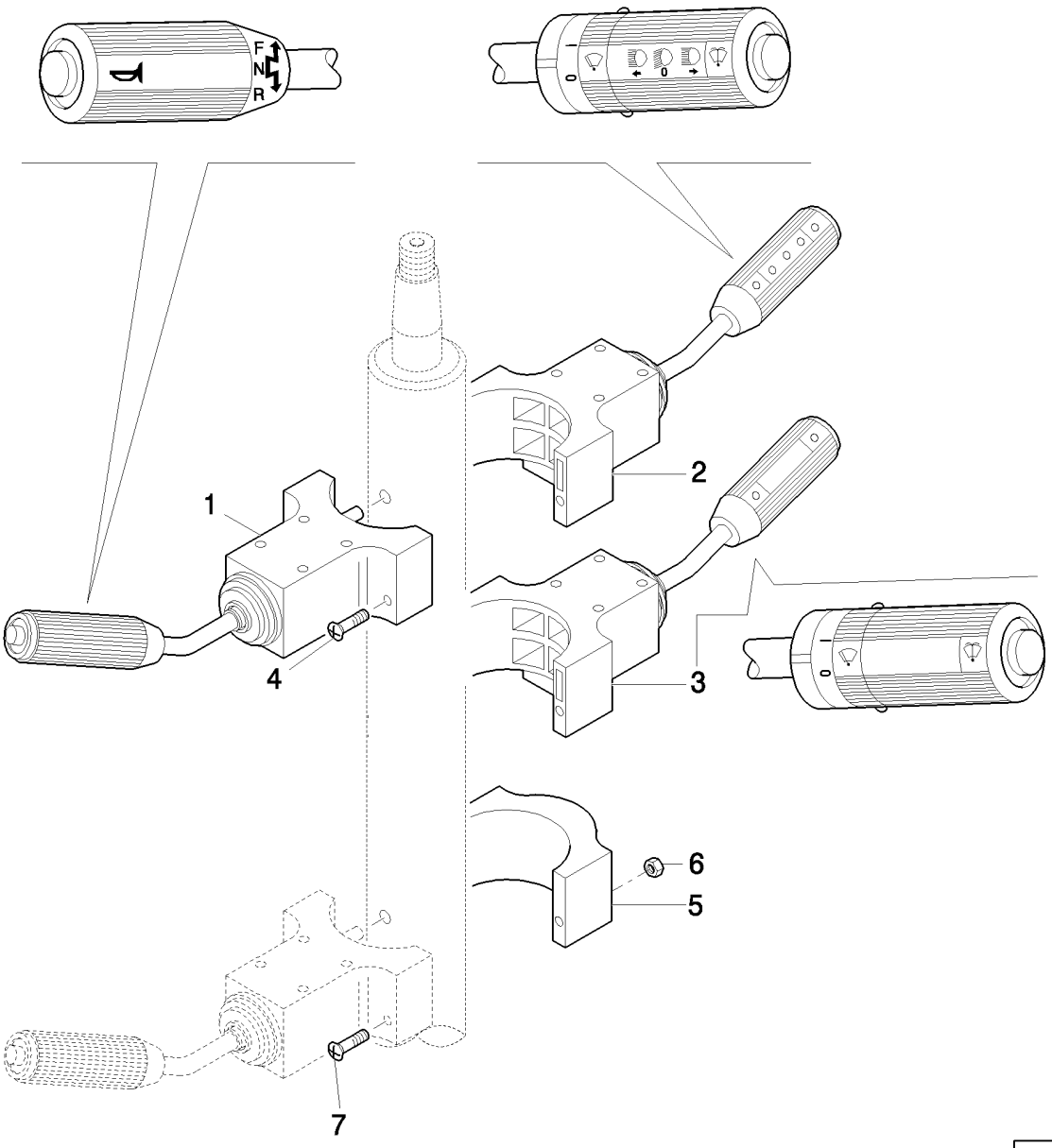

PALANCA DE ADELANTE/ATRÁS Y MULTIFUNCIONES

REF	FN	PART NUMBER	YR/SN	QTY	DENOMINACION
1	1	85801938		1	PALANCA MANDO
2	2	85828252		1	INTERRUPTOR
3	3	85801939		1	CONTACTOR
4	1	14304724		2	TORNILLO, Hex Soc Hd, M5 x 50, 8.8, Full Thd
4	4	14358724		2	TORNILLO
5	5	85804676		1	BORNE
6	5	12574111		2	CONTRA TUERCA, M5 x .8, Cl 8
7	5	14301521		2	TORNILLO, Hex Soc Hd, M5 x 60, 8.8

(1) Only for Power Shuttle
(2) Only for Power Shift / Shuttle (EU)
(3) Only for Power Shuttle / Power Shift (NA) CAB
(4) Only for Power Shift
(5) Only for ROPS

1.96.2	01	p1	04/08

MANDOS ESTABILIZADORES (SIDE SHIFT - EU) - (CENTER PIVOT - NA)

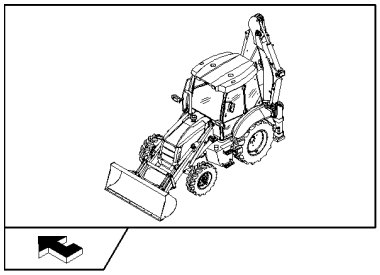

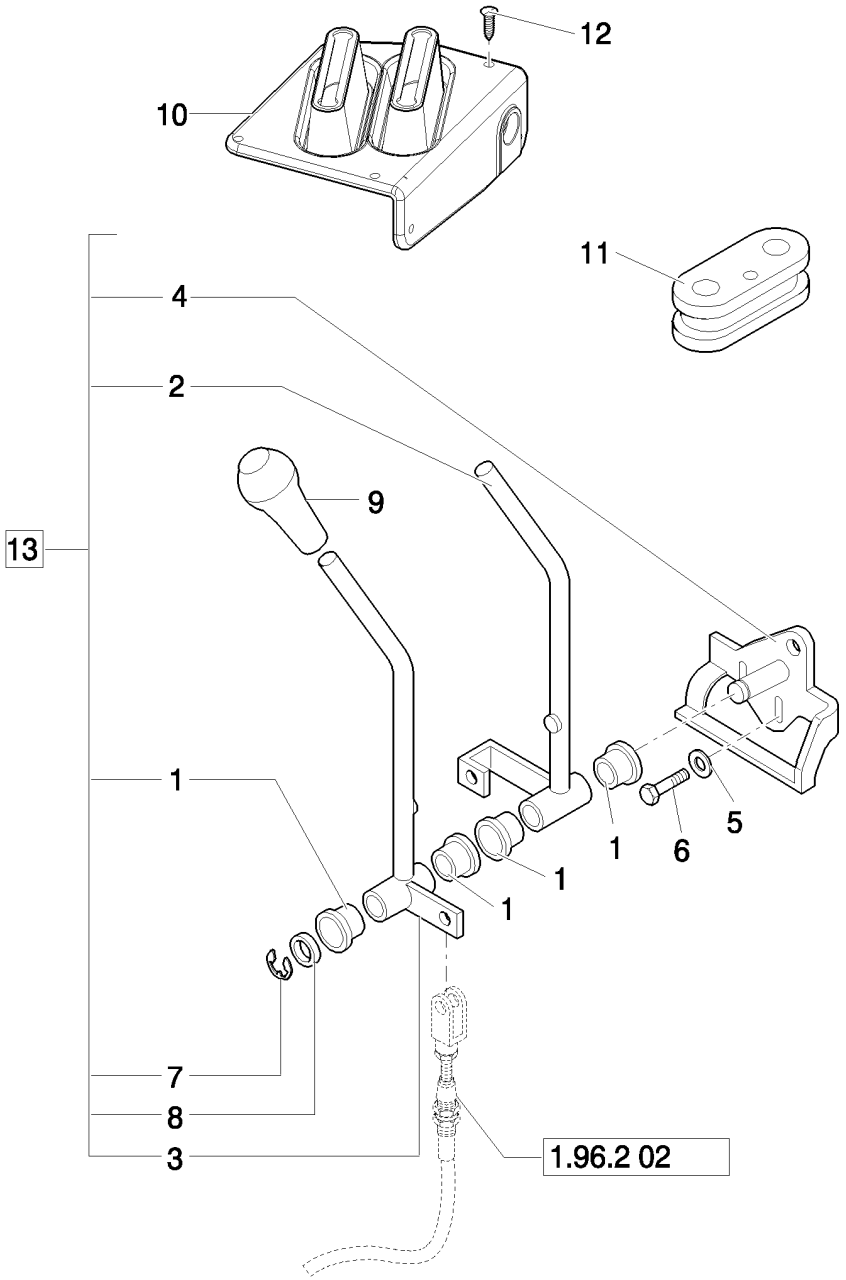

MANDOS ESTABILIZADORES (SIDE SHIFT - EU) - (CENTER PIVOT - NA)

REF	FN	PART NUMBER	YR/SN	QTY	DENOMINACION
1		85813136		4	CASQUILLO
2		85813134		1	PALANCA, RH
3		85813135		1	PALANCA, LH
4		85813133		1	SOPORTE
5		11193874		2	ARANDELA ABANICO, Belleville, M8.4
6		16043624		2	TORNILLO, Hex, M8 x 25, 8.8, Full Thd
7		85813138		1	RETENEDOR
8		85813137		1	ARANDELA
9		85802763		2	POMO
10		85821316		1	CASQUETE
11		87407927		1	PLOT DE SUSPENSIÓN
12		85827850		6	TAPÓN
13		85813100		1	PALANCA DE MANDO, Assy

Mechanical Version	B95B

MANDOS ESTABILIZADORES (CENTER PIVOT) - NA

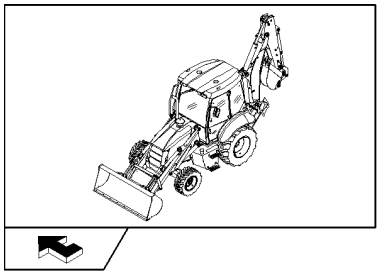

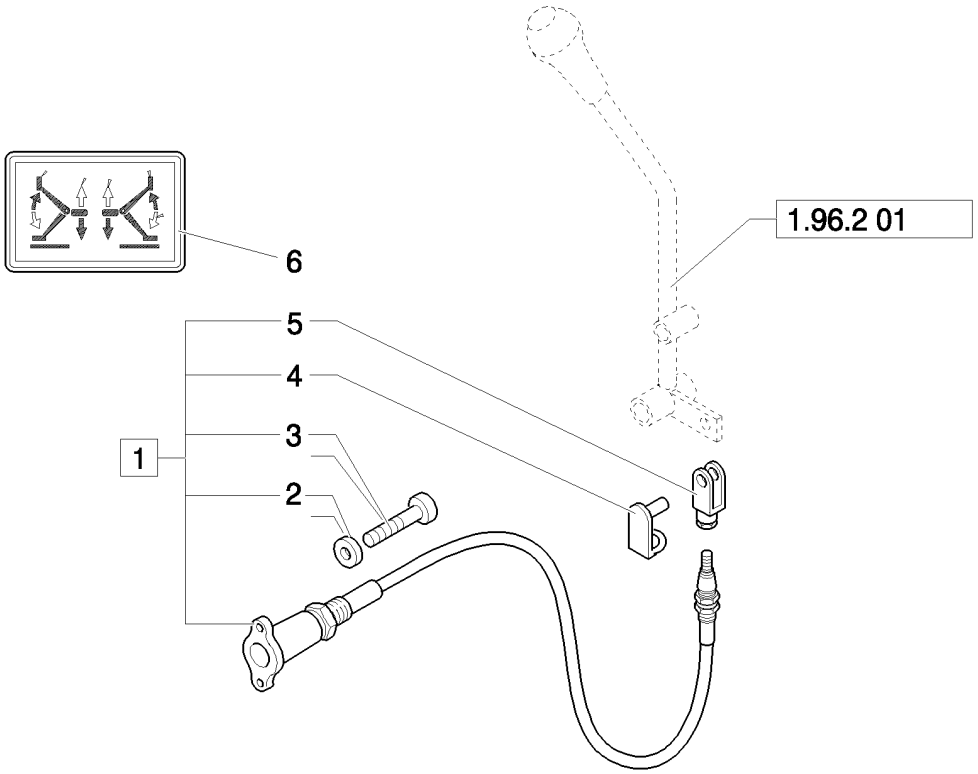

MANDOS ESTABILIZADORES (CENTER PIVOT) - NA

REF	FN	PART NUMBER	YR/SN	QTY	DENOMINACION
1		85813104		2	CABLE, Assy
2		85813201		4	ARANDELA
3		85813200		4	TORNILLO, M6 x 15
4		85813186		2	SUJETADOR
5		85813187		2	HORQUILLA PEQUENA
6		85803788		1	IDEOGRAMOS

Mechanical Version	B95B

DIAGNOSTICO PILOT CONTROL

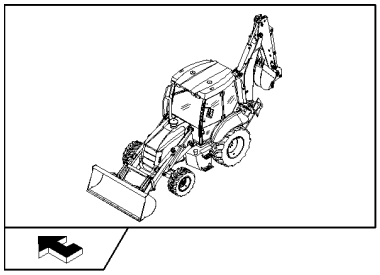

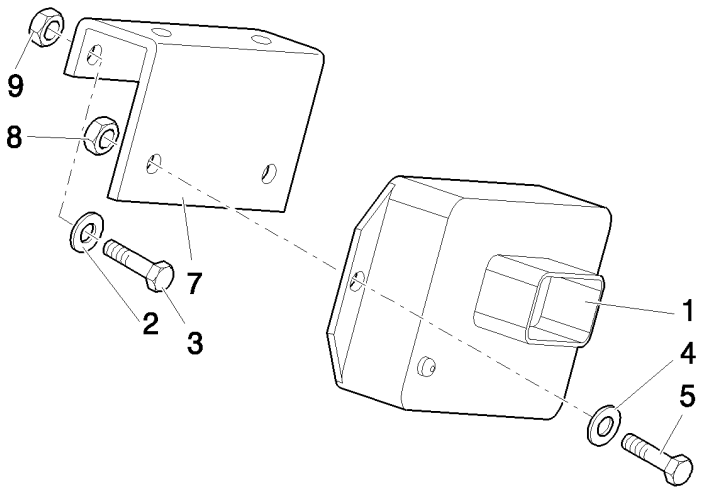

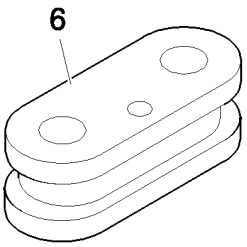

DIAGNOSTICO PILOT CONTROL

REF	FN	PART NUMBER	YR/SN	QTY	DENOMINACION
1	1	87419454		1	MODULE
1	2	87419455		1	GRUPO REGULADOR
2		11197779		2	ARANDELA ABANICO, Belleville, M6.4
3		10902321		2	TORNILLO, Hex, M6 x 18, 8.8, Full Thd
4		47048959		2	ARANDELA
5		10444721		2	TORNILLO, Hex, M4 x 14, 8.8, Full Thd, M4x20
6		87407927		1	PLOT DE SUSPENSIÓN
7		85828213		1	SOPORTE
8		12574011		2	CONTRA TUERCA, M4 x .7, Cl 8
9		12574211		2	CONTRA TUERCA, M6 x 1, Cl 8

(1) 6/7 function black color
(2) 8 function white color

Pilot Control Version 87419454 Black Box Controller for Machines W/O Bi-Directional Auxiliary Hydraulics; 87419455 White Box Controller for Machines W/Bi-Directional Auxiliary Hydraulics. 87419455 Can Service All Machines Equipped With or Without Bi-Directional Auxiliary Hydraulics.

B95B

PERNOS DE CIERRE Y TAPONES ROPS (PIVOTE CENTRAL): NA

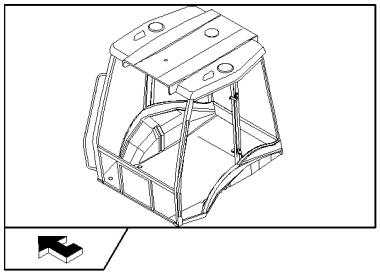

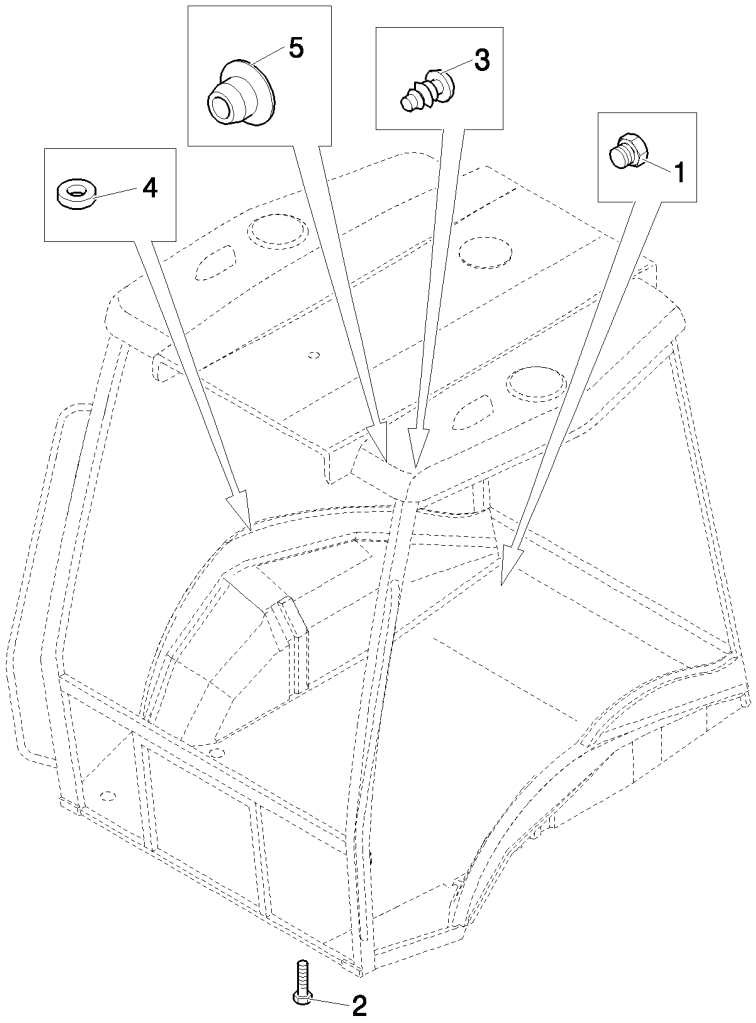

PERNOS DE CIERRE Y TAPONES ROPS (PIVOTE CENTRAL): NA

REF	FN	PART NUMBER	YR/SN	QTY	DENOMINACION
1		85802309		4	TAPÓN
2		13313417		4	TORNILLO, Cross Oval Hd, M6 x 25
3		85802310		4	TAPÓN
4		85804734		5	ARANDELA ELASTICA
5		82003283		4	TAPÓN

Mechanical Version B95B

CABINA / DIFERENTES COMPONENTES (PIVOTE CENTRAL): NA

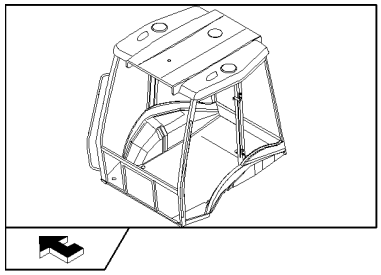

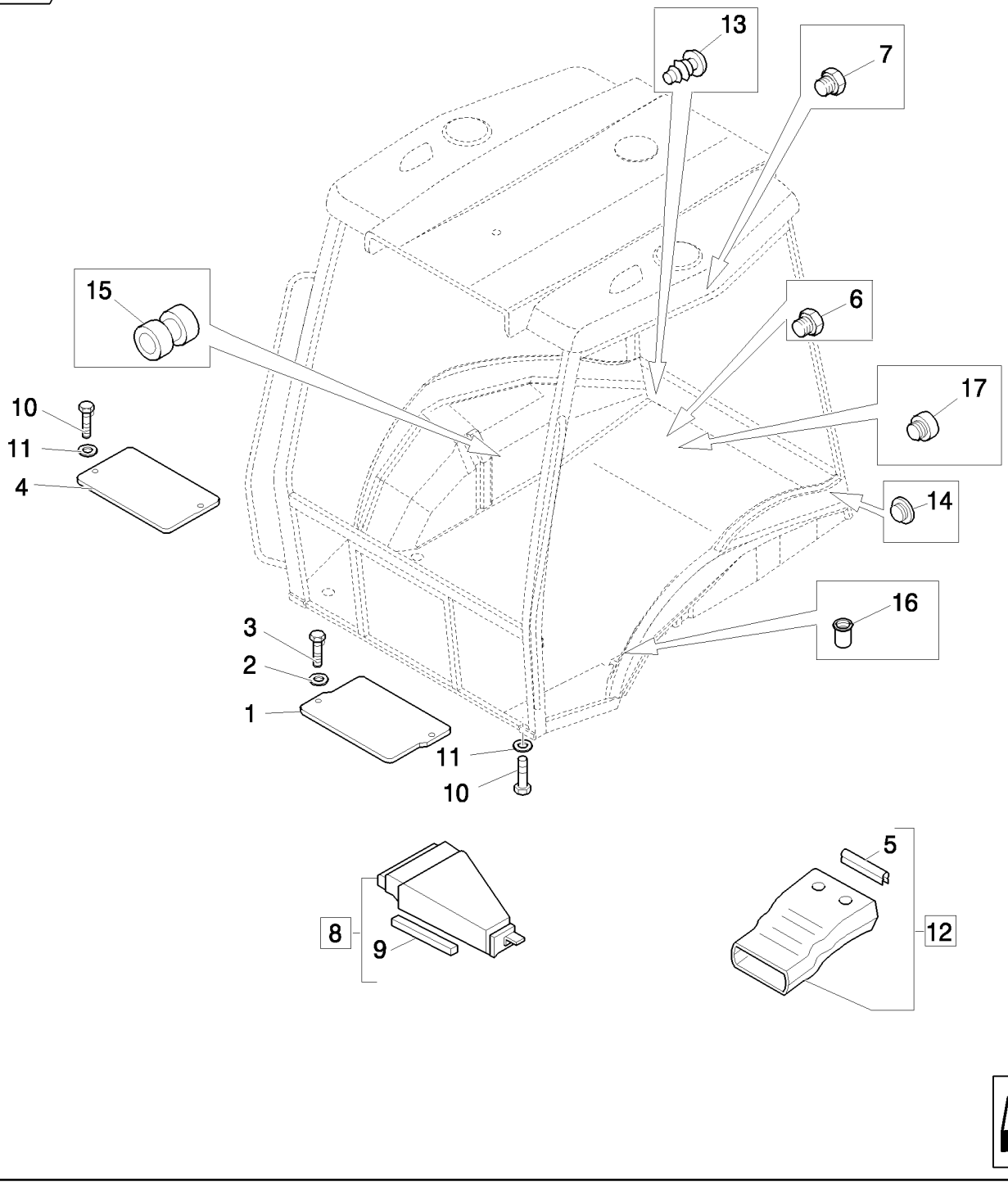

CABINA / DIFERENTES COMPONENTES (PIVOTE CENTRAL): NA

REF	FN	PART NUMBER	YR/SN	QTY	DENOMINACION
1		85801968		1	PLACA
2		11198074		2	ARANDELA ABANICO, Belleville, M8.4
3		16043424		2	TORNILLO, Hex, M8 x 20, 8.8, Full Thd
4	1	85802225		1	TAPADERA
5		85812021		1	BANDA HERMETICIDAD
6		79111978		10	TAPÓN
7		83994150		2	TAPÓN
8		85805200		1	CONDUCTO DE AIRE, Assy, Front
9		85806023		1	BANDA HERMETICIDAD
10		10902224		5	TORNILLO, Hex, M6 x 16, 8.8, Full Thd
11		11193274		5	ARANDELA ABANICO, Belleville, M6.4
12		85820141		1	CONDUCTO DE AIRE, Assy
13		85802310		4	TAPÓN
14	1	85802227		1	TAPÓN
15		10398580		2	PASACABLES
16		85801953		2	REMACHE
17		85802309		2	TAPÓN

(1) Only for Power Shift

Mechanical Version B95B

1.96.7/06		p1	03/08

CABINA: DIFERENTES COMPONENTES (CENTER PIVOT): NA

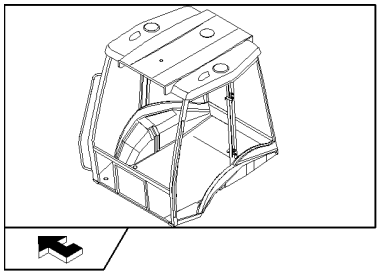

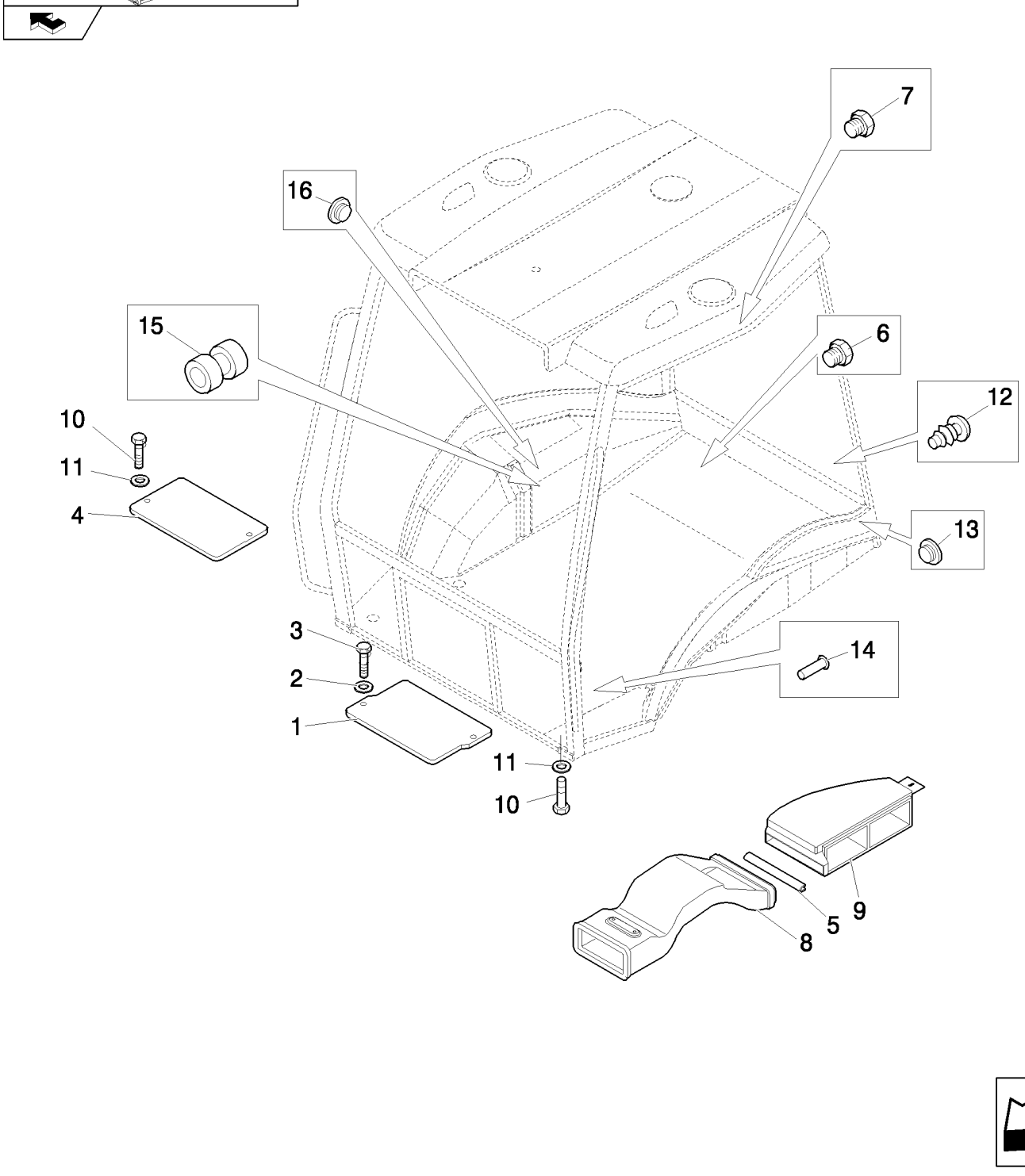

CABINA: DIFERENTES COMPONENTES (CENTER PIVOT): NA

REF	FN	PART NUMBER	YR/SN	QTY	DENOMINACION
1		85801968		1	PLACA
2		11198074		2	ARANDELA ABANICO, Belleville, M8.4
3		16043424		2	TORNILLO, Hex, M8 x 20, 8.8, Full Thd
4	1	85802225		1	TAPADERA
5		85812021		1	BANDA HERMETICIDAD
6		79111978		10	TAPÓN
7		83994150		2	TAPÓN
8		87408277		1	CONDUCTO DE AIRE, FRONT
9		87319754		1	CONDUCTO DE AIRE
10		10902224		11	TORNILLO, Hex, M6 x 16, 8.8, Full Thd
11		11193274		11	ARANDELA ABANICO, Belleville, M6.4
12		85802310		4	TAPÓN
13		85802309		2	TAPÓN
14		85801953		2	REMACHE
15		10398580		2	PASACABLES
16	1	85802227		1	TAPÓN

(1) Only for Power Shift

PERNOS DE CIERRE Y TAPONES ROPS (PIVOTE CENTRAL): NA

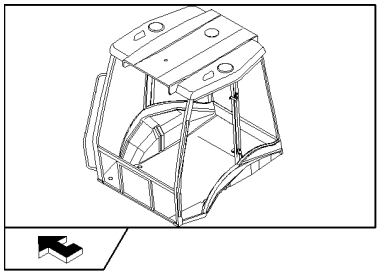

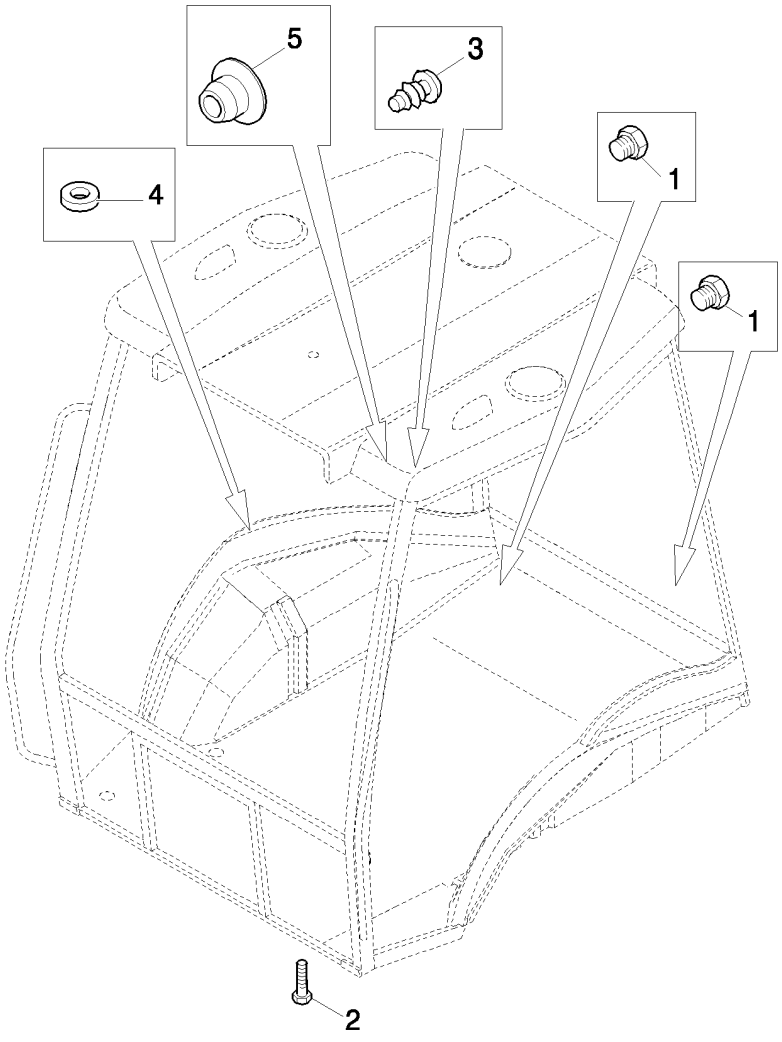

PERNOS DE CIERRE Y TAPONES ROPS (PIVOTE CENTRAL): NA

REF	FN	PART NUMBER	YR/SN	QTY	DENOMINACION
1		85802309		4	TAPÓN
2		13313417		4	TORNILLO, Cross Oval Hd, M6 x 25
3		85802310		4	TAPÓN
4		85804734		5	ARANDELA ELASTICA
5		82003283		4	TAPÓN

CALCOMANÍAS DE SÍMBOLOS E INFORMACIÓN (POWER SHUTTLE - POWER SHIFT) - NA

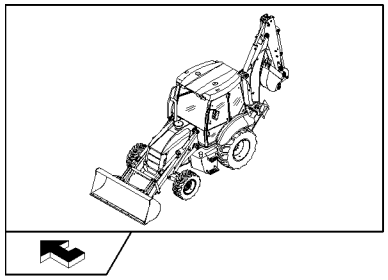

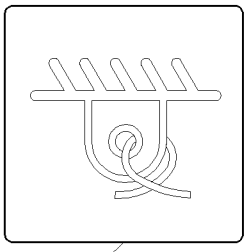

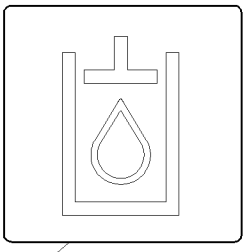

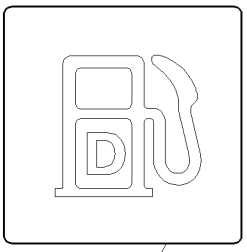

3

2

4

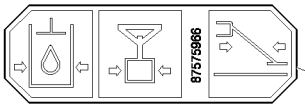

10

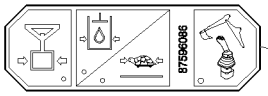

11

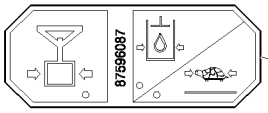

12

5

TORQUE CONVERTER TRANSMISSION WITH CLUTCH DISCONNECT

F
N
R

BEFORE STARTING - Place both shuttle (power reversing) and gear shift lever in neutral and assure parking brake is applied.

TO SHIFT - Select operating gear (1, 2, 3, or 4), then use shuttle lever to select direction of travel

1 3 N 2 4

SHUTTLE SHIFTING - Reduce engine speed when changing direction of travel from (F) to (R)

CLUTCH DISCONNECT - Press button on loader control or gear shift levers to disconnect hydraulic clutch during loader lift cycle or gear changes.

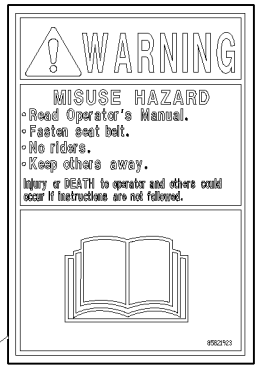

6

9

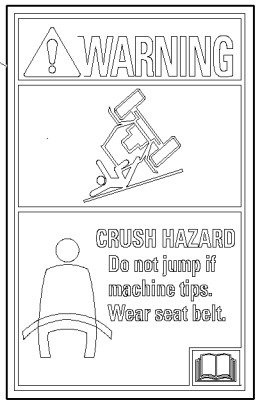

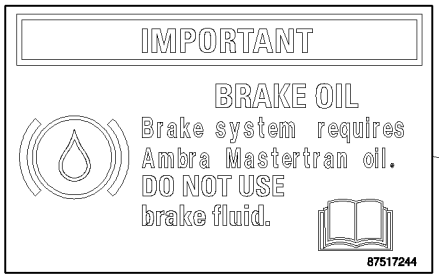

1

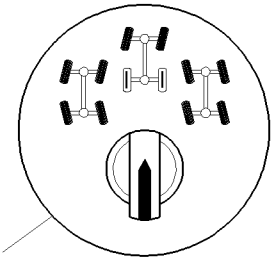

13



8

7

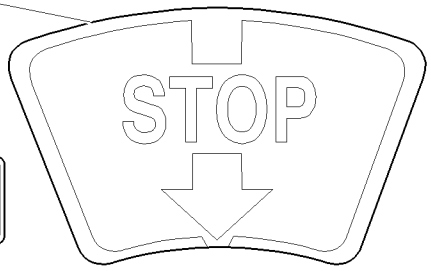

14



CALCOMANÍAS DE SÍMBOLOS E INFORMACIÓN (POWER SHUTTLE - POWER SHIFT) - NA

REF	FN	PART NUMBER	YR/SN	QTY	DENOMINACION
1		85821926		1	CALCOMANIA
2		85804341		1	CALCOMANIA
3		86500514		4	CALCOMANIA
4		85804338		1	CALCOMANIA
5	1	85804091		1	CALCOMANIA
6		85821923		1	CALCOMANIA
7		85802441		1	CALCOMANIA
8	2	87387139		1	CALCOMANIA
9		85821920		1	DECAL, WARNING
10	3	87575966		1	CALCOMANIA
11	4	87596086		1	CALCOMANIA
12	5	87596087		1	CALCOMANIA
13	6	85805909		1	CALCOMANIA
14	7	85803789		1	IDEOGRAMOS

(1) Only for Power Shuttle
(2) Except for B115B
(3) Only for Mechanical Version HUSCO
(4) Only for Pilot Version
(5) Only for Mechanical Version REXROTH
(6) Only for B115B
(7) Only for B90B

MODELO DE IDENTIFICACIÓN: ADHESIVOS DE SEGURIDAD

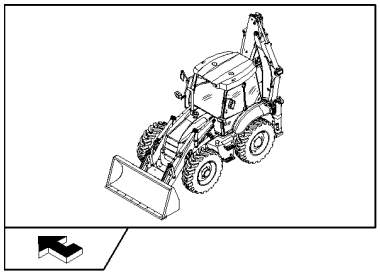

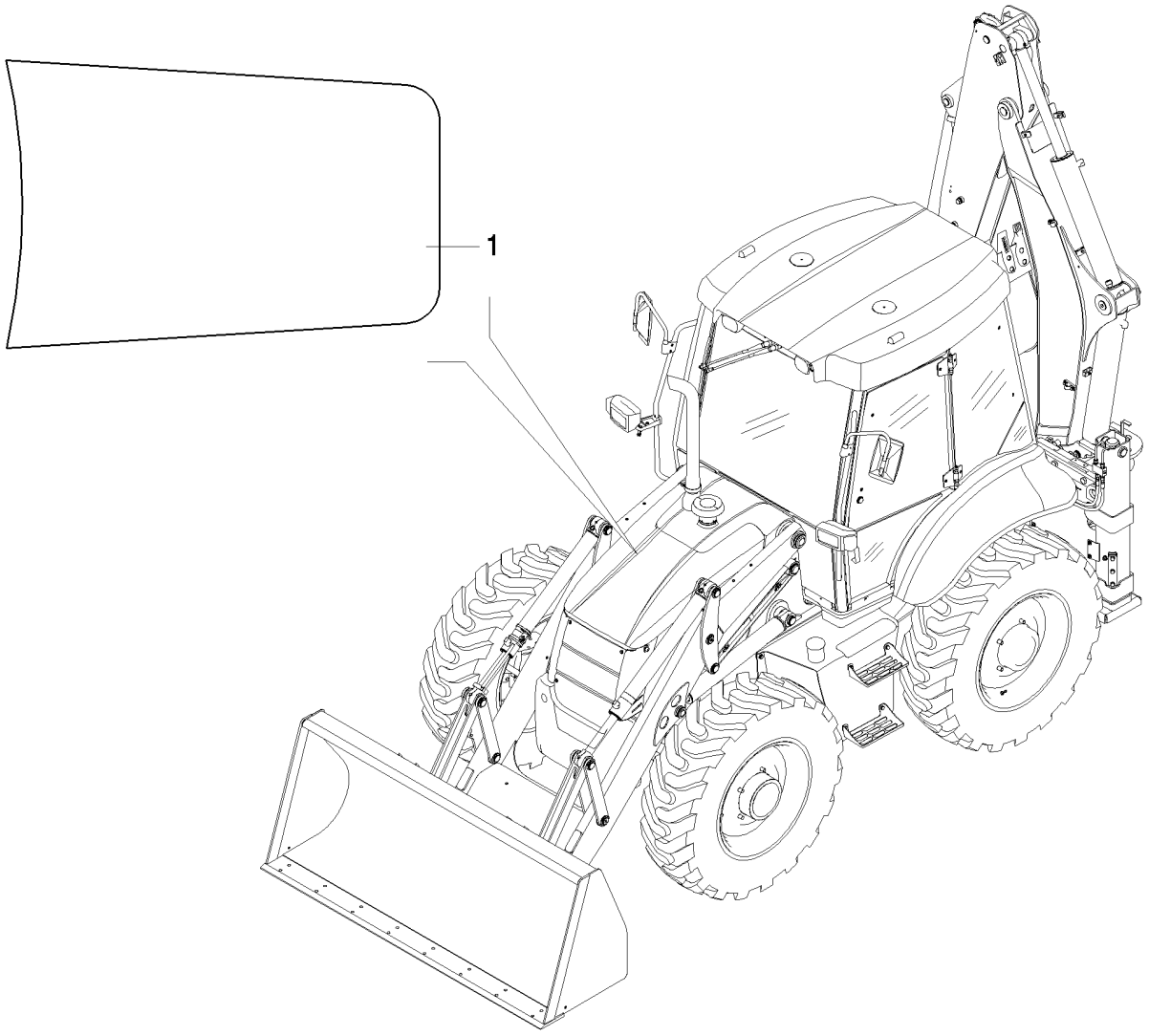

MODELO DE IDENTIFICACIÓN: ADHESIVOS DE SEGURIDAD

REF	FN	PART NUMBER	YR/SN	QTY	DENOMINACION
1		87653297		1	CALCOMANIA

1.98.1	09	p1	03/08

IDENTIFICACIÓN MODELO B90B / B90BLR - B959B / B95BLR - B100B / B100BLR

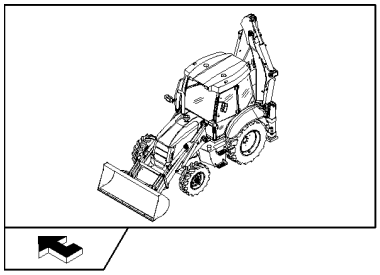

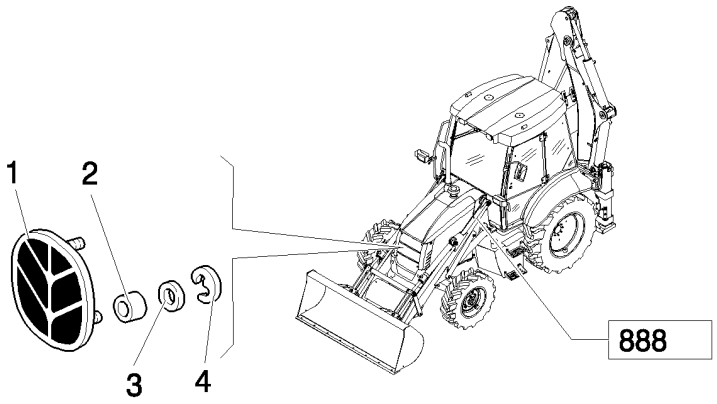



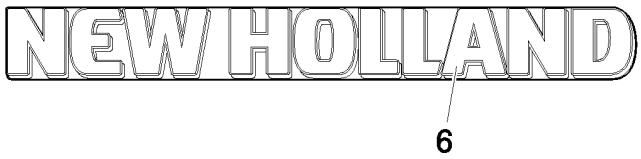

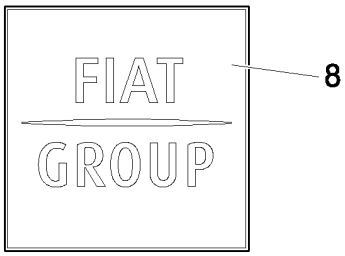

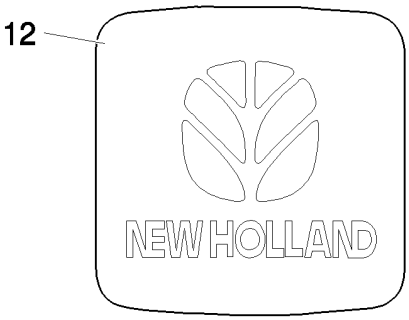

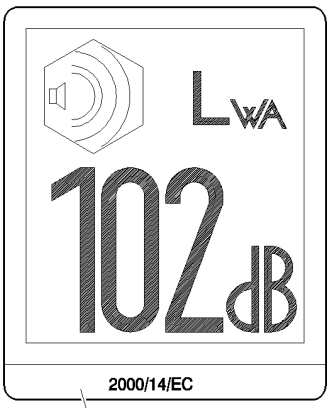

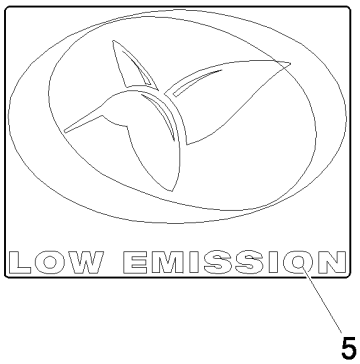

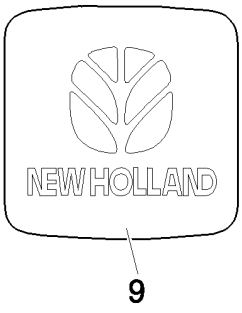



IDENTIFICACIÓN MODELO B90B / B90BLR - B959B / B95BLR - B100B / B100BLR

REF	FN	PART NUMBER	YR/SN	QTY	DENOMINACION
1		85820107		1	SIMBOLO
2		12643711		2	ARANDELA
3		5138360		2	GUARNICION DE CAUCHO
4		5135069		2	SUJETADOR
5		87701340		2	CALCOMANIA
6	1	87687644		2	CALCOMANIA, L=MM.1338
7	1	87609724		2	CALCOMANIA, L=MM.949
8	1	87691652		2	CALCOMANIA
9		87802964		1	SIMBOLO
10		87674137		1	CALCOMANIA, L=MM.404
11	2, 3	87346382		1	CALCOMANIA
11	4, 3	87346213		1	CALCOMANIA
12		87415930		2	CALCOMANIA

(1) Except for NA Version
(2) Only for B90B, B90BLR (ROPS)
(3) Except for B95B, B95BLR (NA)
(4) Except for B90B, B90BLR (ROPS)

NOTAS

SECTION INDEX

Ruedas

81.00		RUEDAS DELANTERAS (2WD) - NA
82.00	01	RUEDAS DIRECTRICES Y MOTRICES(4WD) - NA
83.00	01	RUEDAS POSTERIOR - NA

RUEDAS DELANTERAS (2WD) - NA

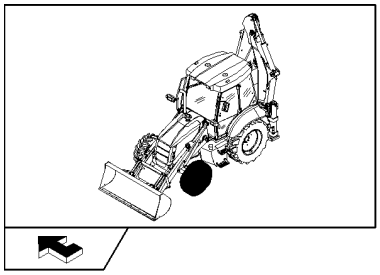

EQUIP	TIRE SIZE	RIM
81.38	11L - 16TLF3 - 10PR	W8LX 16

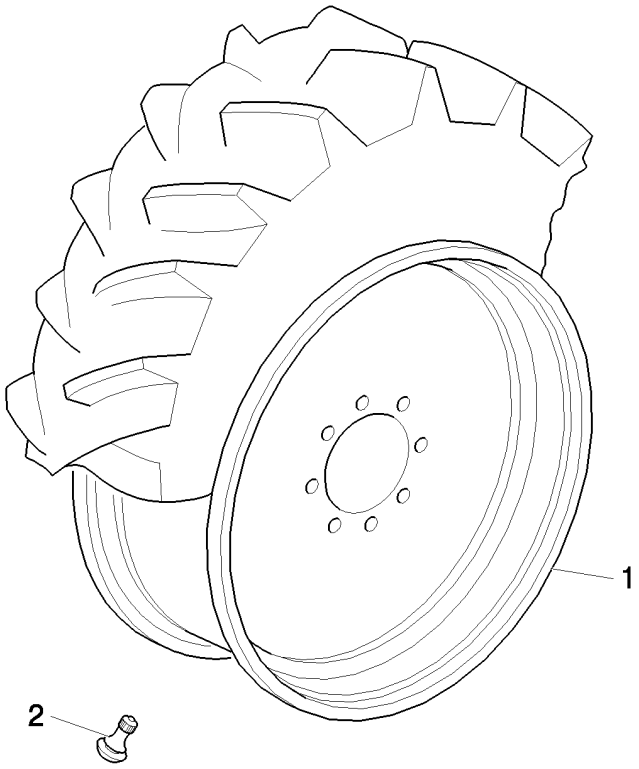

RUEDAS DELANTERAS (2WD) - NA

REF	FN	PART NUMBER	YR/SN	QTY	DENOMINACION
1		85812260		2	RUEDA, W8L x 16
2		85700224		2	VASTAGO DE VALVULA

RUEDAS DIRECTRICES Y MOTRICES(4WD) - NA

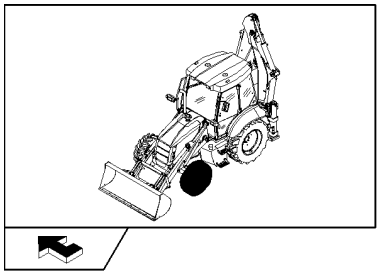

EQUIP	TIRE SIZE	RIM
82.78	14-17.5 R4 - 10PR	10.5 X 17.5
82.79	12-16.5 R4 - 10PR	9.75 X 16.5
82.79	12.16.5 HULK	9.75 X 16.5

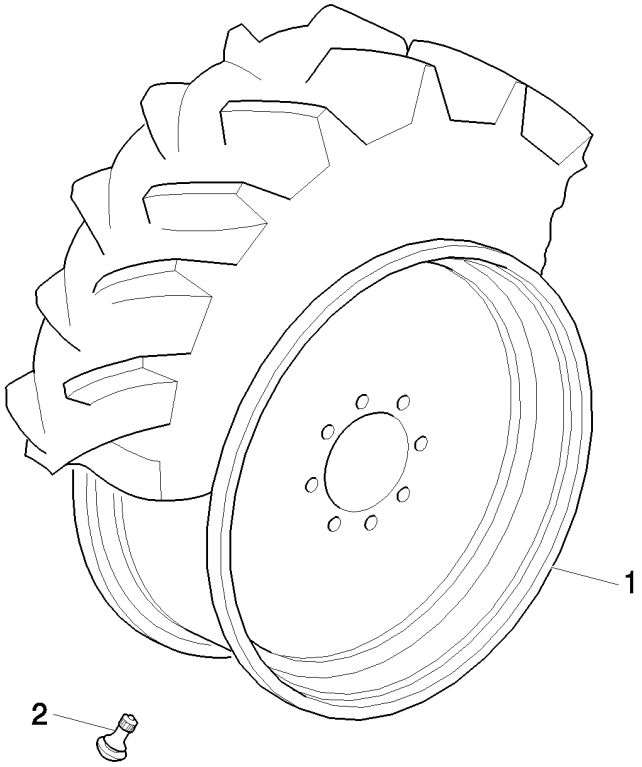

RUEDAS DIRECTRICES Y MOTRICES(4WD) - NA

REF	FN	PART NUMBER	YR/SN	QTY	DENOMINACION
1		87664399		2	RUEDA, 10.5 x 17.5
1		87664534		2	RUEDA, 9.75 x 16.5
2		85700224		2	VASTAGO DE VALVULA

RUEDAS POSTERIOR - NA

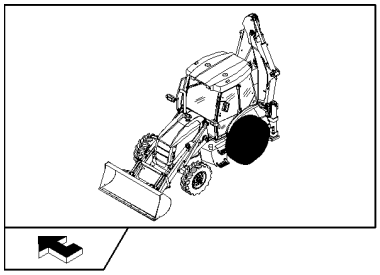

EQUIP	TIRE SIZE	RIM
83.66	16.9-28 R4 - 10PR	W14X28
83.93	16.9-24 R4 - 10PR	W15LX24
83.94	17.5L24 R4 - 10PR	W15LX24
83.93	16.9-24 R4 - 10PR	W16LX24
83.62	19.5-24 "JUMBO"	W16LX24
83.62	16.9-24 R4 - 10PR	W18LX24

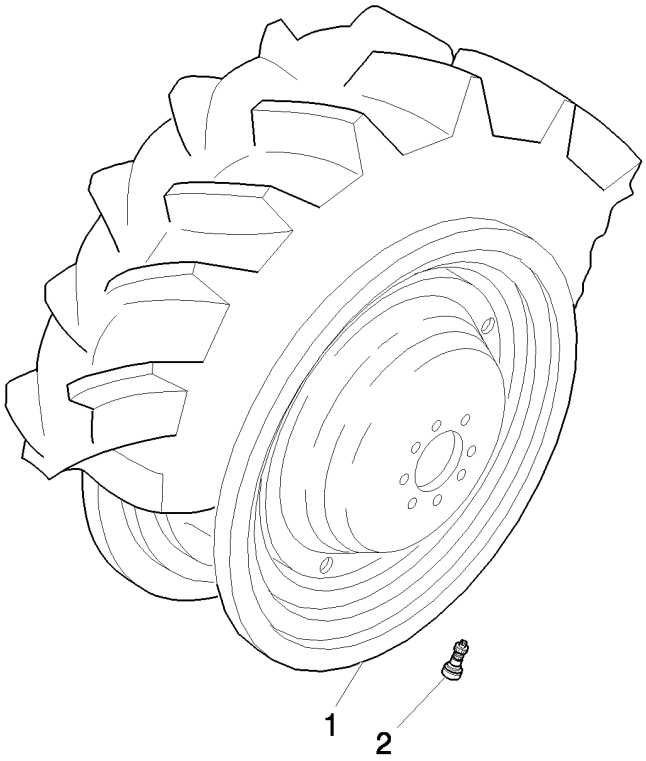

RUEDAS POSTERIOR - NA

REF	FN	PART NUMBER	YR/SN	QTY	DENOMINACION
1		87664294		2	RUEDA, W14 x 28
1		87664555		2	RUEDA, W16L x 24
1		87663635		2	RUEDA, W15L x 24
1		87664439		2	RUEDA, W18L x 24
2		85700224		2	VASTAGO DE VALVULA

NOTAS

SECTION INDEX

Variantes

095		CONTROL ESTABILIZADOR SIN ELEVACIÓN AUTOMÁTICA (CENTER PIVOT)
096		CONTROL ESTABILIZADOR CON ELEVACIÓN AUTOMÁTICA (CENTER PIVOT)
131		BATERIA INDIVIDUAL
175		TAPA ASPIRACIÓN DE AIRE Y PRE-FILTRO
176		TAPA ASPIRACIÓN DE AIRE Y PRE-FILTRO
201		GANCHOS DE ELEVACION DE LA PALA Y PARTE POSTERIOR
284		ESPEJO RETROVISOR (CAB) - NA
290		CONTRAPESO FRONTAL: 2WS
291		CONTRAPESO FRONTAL: 2WS
302	01	DISTRIBUIDOR DE LA PALA DE DOS SECCIONES
302	02	DISTRIBUIDOR DE 2 SECCIONES EQUIPO CARGADOR: SECCIÓN DE ASPIRACIÓN
302	03	DISTRIBUIDOR DE 2 SECCIONES EQUIPO CARGADOR: SECCIÓN BRAZO DE ELEVACIÓN
302	04	DISTRIBUIDOR DE LA PALA DE DOS SECCIONES
321		DOBLE BATERIA
331	01	COLUMNA COMPLETA 6 SECCIONES (CENTER PIVOT)
331	02	SOPORTE PARA VÁLVULA DE CONTROL PILOTO, COMPLETO
331	03	SOPORTE PARA VÁLVULA DE CONTROL PILOTO, COMPLETO
331	04	SOPORTE PARA VÁLVULA DE CONTROL PILOTO, COMPLETO
331	05	SOPORTE PARA VÁLVULA DE CONTROL PILOTO, COMPLETO
331	06	SECCIÓN 6 - SOPORTE PARA VÁLVULA DE CONTROL PILOTO, COMPLETO
331	07	SOPORTE PARA VÁLVULA DE CONTROL PILOTO, COMPLETO
331	08	SOPORTE PARA VÁLVULA DE CONTROL PILOTO, COMPLETO
331	09	SOPORTE PARA VÁLVULA DE CONTROL PILOTO, COMPLETO
331/ A		VALVULA DE MANDO PROPORCIONAL 6 SECCIONES
331/ B	01	DISTRIBUIDOR EXCAVADORA, 6 SECCIONES (CENTER PIVOT)
331/ B	02	DISTRIBUIDOR EXCAVADORA, SECCIÓN ENTRADA (CENTER PIVOT)
331/ B	03	DISTRIBUIDOR EXCAVADORA, SECCIÓN LANZA DE ENGANCHE (CENTER PIVOT)
331/ B	04	DISTRIBUIDOR EXCAVADORA, SECCIÓN OSCIL. (CENTER PIVOT)
331/ B	05	DISTRIBUIDOR EXCAVADORA, SECCIÓN CUCHARÓN (CENTER PIVOT)
331/ B	06	DISTRIBUIDOR EXCAVADORA, SECCIÓN DIPPERSTICK (CENTER PIVOT)
331/ B	07	DISTRIBUIDOR EXCAVADORA, SECCIÓN ESTABILIZADOR (CENTER PIVOT)
331/ B	08	DISTRIBUIDOR EXCAVADORA, SECCIÓN LANZA DE ENGANCHE (CENTER PIVOT)
331/ B	09	DISTRIBUIDOR EXCAVADORA, SECCIÓN OSCIL. (CENTER PIVOT)
331/ B	10	DISTRIBUIDOR EXCAVADORA, SECCIÓN CUCHARÓN (CENTER PIVOT)
331/ B	11	DISTRIBUIDOR EXCAVADORA, SECCIÓN DIPPERSTICK (CENTER PIVOT)
331/ B	12	DISTRIBUIDOR EXCAVADORA, SECCIÓN ESTABILIZADOR (CENTER PIVOT)
331/ C	01	VÁLVULA DE PILOTAJE DEL MANIPULADOR (DERECHA)
331/ C	02	VÁLVULA, PALANCA DE CONTROL IZQUIERDO
333	01	COLUMNA COMPLETA 7 SECCIONES (CENTER PIVOT)
333	02	CONJUNTO COLUMNA PARA SERVOMANDO DE 7 SECCIONES: INSTALACIÓN HIDRÁULICA DISTRIBUIDOR, VÁLVULA PROPORCIONAL
333	03	CONJUNTO COLUMNA PARA SERVOMANDO DE 7 SECCIONES (PIVOTE CENTRAL): INSTALACIÓN DISTRIBUIDOR
333	04	CONJUNTO COLUMNA PARA SERVOMANDO DE 7 SECCIONES (PIVOTE CENTRAL): INSTALACIÓN CILINDRO TELESCÓPICO
333	05	CONJUNTO COLUMNA PARA SERVOMANDO DE 7 SECCIONES (PIVOTE CENTRAL): INSTALACIÓN CILINDRO DE LA CUCHARA
333/ A		VALVULA DE MANDO PROPORCIONAL 7 SECCIONES
333/ C	01	VÁLVULA DE PILOTAJE DEL MANIPULADOR (DERECHA) 7 CARRETES
333/ C	02	VÁLVULA DE PILOTAJE DEL MANIPULADOR (DERECHA) 7 CARRETES

SECTION INDEX
Variantes

333/01B	01	SECCIÓN 7 VÁLVULA DE CONTROL DE LA EXCAVADORA (CENTER PIVOT) - NA
333/01B	02	DISTRIBUIDOR DE 7 SECCIONES EQUIPO RETROEXCAVADOR (PIVOTE CENTRAL): NA: CILINDRO TELESCÓPICO
335		COLUMNA COMPLETA 7 SECCIONES (CENTER PIVOT)
336/01	01	DISTRIBUIDOR CARGADOR 2 SECCIONES (CENTER PIVOT) - NA
336/01	02	DISTRIBUIDOR CARGADOR, 2 SECCIONES, TAPA Y VÁLVULA DE DESCARGA (CENTER PIVOT) - NA
336/01	03	DISTRIBUIDOR CARGADOR, 2 SECCIONES, VÁLVULA DE ALIVIO Y RETENCIÓN (CENTER PIVOT) - NA
336/01	04	DISTRIBUIDOR CARGADOR, 2 SECCIONES, EQUIPO BY-PASS (CENTER PIVOT) - NA
336/01	05	DISTRIBUIDOR CARGADOR, 2 SECCIONES, EQUIPO DESCARGA O VÁLVULA VOLTEO (CENTER PIVOT) - NA
337	01	VÁLVULA DE BLOQUEO EN LOS CILINDROS BASCULANTES DEL EQUIPO CARGADOR
337	02	VALVULA DE BLOQUEO EN LOS CILINDROS DE LEVANTAMIENTO PALA
338		VALVULA DE BLOQUEO EN LOS CILINDROS DE LEVANTAMIENTO PALA
344	01	DISTRIBUIDOR ESTABILIZADOR, 2 SECCIONES (CENTER PIVOT) - NA
344	02	DISTRIBUIDOR ESTABILIZADOR, SECCIÓN DERECHA E IZQUIERDA (CENTER PIVOT) - NA
346	01	ALOJAMIENTO Y FILTROS A/A
346	02	VENTILADOR Y SERPENTINES A/A
346	03	MANGUITOS ESPIRALES DE CALEFACCIÓN
346	04	PANEL DE MANDO CALEFACCIÓN Y A/A
346	05	CONDUCTOS CONSOLAS CALEFACCIÓN Y A/A
347	01	ALOJAMIENTO Y FILTROS
347	02	VENTILADOR Y SERPENTINES RECALENTADOR
347	03	MANGUITOS ESPIRALES DE CALEFACCIÓN
347	04	PANEL DE MANDO CALEFACCIÓN Y A/A
347	05	CONDUCTOS CONSOLAS CALEFACCIÓN Y A/A
347	06	TAPON ENVOLTURA CALEFACCIÓN CABINA
386		CUCHARÓN RETROEXCAVADORA 12" (305 MM) HD CON DIENTES ENSAMBLADOS CON CLAVIJAS - NA
387		CUCHARÓN RETROEXCAVADORA 18" (457MM) HD CON DIENTES ENSAMBLADOS CON CLAVIJAS - NA
388		CUCHARÓN RETROEXCAVADORA 24" (610MM) HD CON DIENTES ENSAMBLADOS CON CLAVIJAS - NA
389		CUCHARÓN RETROEXCAVADORA 30" (762MM) HD CON DIENTES ENSAMBLADOS CON CLAVIJAS - NA
390		DISTRIBUIDOR CARGADOR, 2 SECCIONES, PALANCA - NA
390/01		CUCHARÓN RETROEXCAVADORA 36" (910MM) HD CON DIENTES ENSAMBLADOS CON CLAVIJAS - NA
391		VALVULA DE BLOQUEO PARA CUCHARON 4X1 / 6X1
392	01	VÁLVULA DE BLOQUEO EN CILINDRO DEL BRAZO DE ELEVACIÓN Y EQUIPO RETROEXCAVADOR
392	02	VÁLVULA DE BLOQUEO EN CILINDRO Y EQUIPO RETROEXCAVADOR
393		MANDOS EXCAVADORA DE PALANCA, PALANCA, TAPA CONTRA EL POLVO Y CALCOM. - NA
394	01	MANDOS EQUIPO RETROEXCAVADOR DE 4 PALANCAS, CONSOLA, PALANCAS Y PALANCA A ESCUADRA (PIVOTE CENTRAL: SIDE SHIFT): PALANCAS DE MANDO
394	02	MANDOS EQUIPO RETROEXCAVADOR DE 4 PALANCAS, CONSOLA, CONJUNTO TIRANTE SUPERIOR (PIVOTE CENTRAL: SIDE SHIFT): TIRANTES SUPERIORES

SECTION INDEX
Variantes

394	03	MANDOS EQUIPO RETROEXCAVADOR DE 4 PALANCAS, CONSOLA, CONJUNTO TIRANTE INFERIOR (PIVOTE CENTRAL: SIDE SHIFT): TIRANTES INFERIORES
394/01	01	MANDOS EQUIPO RETROEXCAVADOR ISO DE 2 PALANCAS, PALANCAS, PROTECCIÓN CONTRA EL POLVO, ADHESIVOS (PIVOTE CENTRAL) - NA -PALANCAS DE MANDO
402	01	EJE DELANTERO (4WD), ALOJAMIENTO, CASQUILLOS Y SOPORTES - NA
402	02	EJE DELANTERO (4WD), ALOJAMIENTO OSCILANTE Y CILINDRO DE DIRECCION - NA
402	03	EJE DELANTERO (4WD), CUBOS - NA
402	04	EJE DELANTERO (4WD), GRUPO PIÑÓN Y CORONA DENTADA - NA
402	05	EJE DELANTERO (4WD), DIFERENCIAL - NA
402	06	EJE FRONTAL 4WD, EJE ARTICULADO
416		COMPONENTES DEL MARTILLO DE LOS SISTEMAS (CAB - ROPS)
437		VALVULA DE CAMISA,SISTEMA HIDRÁULICO NIVELACIÓN DE LA ESTRUCTURA MÁQUINA
471	01	CUCHARON 4X1 (1 M³) CON CUCHILLA "COMMON GREY"
471	02	CUCHARA 4X1 (1 M3) CON PALA “COMMON GREY”: DESGASTE CUCHARA
471/01		CILINDRO HIDRAULICO (CUCHARON 4X1-6X1)
472	01	CUCHARON 4X1 (1 M³) CON DIENTE "COMMON GREY"
472	02	CUCHARA 4X1 (1 M3) CON DIENTES “COMMON GREY”: DESGASTE CUCHARA
473	01	CUCHARON 6X1 (1 M³) CON CUCHILLA "COMMON GREY"
473	02	CUCHARA 6X1 (1 M3) CON PALA “COMMON GREY”: DESGASTE CUCHARA
474	01	CUCHARON 6X1 (1 M³) CON DIENTE "COMMON GREY"
474	02	CUCHARA 6X1 (1 M3) CON DIENTES “COMMON GREY”: DESGASTE CUCHARA
514	01	BRAZO DE EXCAVACION CORTO
514	02	BRAZO DE EXCAVACION CORTO
514	03	CILINDRO HIDRAULICO DE ELEVACION
514	04	CILINDRO HIDRAULICO DE EXCAVACION
515/01		CUCHARÓN RETROEXCAVADORA 12"(305 MM) CON DIENTES ENSAMBLADOS CON CLAVIJAS - NA
516/01		CUCHARÓN RETROEXCAVADORA 18" (457MM) CON DIENTES ENSAMBLADOS CON CLAVIJAS - NA
517/01		CUCHARÓN RETROEXCAVADORA 24"(610 MM) CON DIENTES ENSAMBLADOS CON CLAVIJAS - NA
518/01		CUCHARÓN RETROEXCAVADORA 30"(762 MM) CON DIENTES ENSAMBLADOS CON CLAVIJAS - NA
519/01		CUCHARÓN RETROEXCAVADORA 36" (910MM) CON DIENTES ENSAMBLADOS CON CLAVIJAS - NA
520		CUCHARON DE (0.88 M³) SIN DIENTES
520/01		CUCHARÓN RETROEXCAVADORA 18"(457 MM) CON DIENTES ENSAMBLADOS CON CLAVIJAS (EXTRA HD) - NA
521		CUCHARÓN RETROEXCAVADORA 24" (610MM) CON DIENTES ENSAMBLADOS CON CLAVIJAS (EXTRA HD) - NA
522		CUCHARON DE (1 M³) SIN DIENTES
522/01		CUCHARON ESTANDAR DE (1 M³) CON HORQUILLAS
525		CUCHARON ESTANDAR DE (1 M³) CON HORQUILLAS Y HOJA REVERSIBLE
527		CUCHARON DE (0.88 M³) Y CUCHILLA REV.SUPLEMEN.
535		PIE ESTABILIZADOR TIERRA (CENTER PIVOT)
536		CUCHARON ESTANDAR DE (1 M³) CON DIENTE
536/02		PIE ESTABILIZADOR REVERSIBLE (CENTER PIVOT)
537		CUCHARON ESTANDAR DE (1 M³) CON CUCHILLA REV. SUPLEMEN.

SECTION INDEX
Variantes

548		CUCHARA EXPURGADORA DE ZANJAS
622		VENTILADOR INTERNO - CAB
636	07	EQUIPAMIENTO DEL MOTOR: MOTOR DE ARRANQUE
636	08	MOTOR ACOPLADO - ALTERNADOR
638	01	PROTECCIONES DEL RADIADOR
638	02	RADIADOR DEL AGUA, ACEITE HIDRÁULICO Y TRANSMISIÓN
638	03	TUBOS DE REFRIGERACIÓN AFTER-COOLER
638	04	RADIADOR: POSENFRIADOR
638	05	EQUIPAMIENTO DEL MOTOR: SOPORTES
638	06	EQUIPO MOTOR: ROTOR CON JUNTA VISCOSA: EU
638	07	MOTOR ACOPLADO - ARRANCADOR
638	08	MOTOR ACOPLADO: ALTERNADOR
639	01	PROTECCIONES DEL RADIADOR
639	02	RADIADOR DEL AGUA, ACEITE HIDRÁULICO Y TRANSMISIÓN
639	03	TUBOS DE REFRIGERACIÓN AFTER-COOLER
639	04	RADIADOR: POSENFRIADOR
639	05	EQUIPAMIENTO DEL MOTOR: SOPORTES
639	06	EQUIPO MOTOR: ROTOR CON JUNTA VISCOSA
639	07	EQUIPAMIENTO DEL MOTOR: MOTOR DE ARRANQUE
639	08	MOTOR ACOPLADO
646	01	JUEGO DE PIEZAS DE AIRE ACONDICIONADO DE LA MÁQUINA
646	02	GRUPO EMPALME COMPRESOR A/A
646	03	COMPRESOR A/A
646	04	GRUPO EMPALME FILTRO A/A Y CONDENSADOR
650		COLUMNA DE DIRECCIÓN, FIJA Y REGULABLE
698		VALVULA DE CAMISA,SISTEMA HIDRÁULICO NIVELACIÓN DE LA ESTRUCTURA MÁQUINA 2 INTERRUPTOR ON/OFF
699		INTERRUPTOR MARTILLO MANUAL
700	01	CONDUCTOS HIDRÁULICOS BRAZO CUCHARA 4X1 Y 6X1 (POWER SHIFT, POWER SHUTTLE)
700	02	CONDUCTOS HIDRÁULICOS MÁQUINA CUCHARA 4X1 Y 6X1 (POWER SHIFT, POWER SHUTTLE)
700	03	DISTRIBUIDOR DE LA PALA DE TRES SECCIONES (POWER SHIFT , POWER SHUTTLE)
721	01	MANDO A PEDAL BALANCÍN TELESCÓPICO (PIVOTE CENTRAL): DISTRIBUIDOR: NA
721	02	DISTRIBUIDOR ESTABILIZADOR, 3. SECCIÓN (CENTER PIVOT): NA
721	03	MANGUITOS DISTRIBUDOR DEL BRAZO TELESCOPICO, SECCIÓN HED(CENTER PIVOT) - NA
721	04	BALANCÍN TELESCÓPICO CON MANDO A PEDAL (PIVOTE CENTRAL): INSTALACIÓN BALANCÍN TELESCÓPICO: CILINDRO TELESCÓPICO - NA
721	05	BALANCÍN TELESCÓPICO CON MANDO A PEDAL (PIVOTE CENTRAL): INSTALACIÓN BALANCÍN TELESCÓPICO: CILINDRO CUCHARA - NA
721	06	MANDO A PEDAL BALANCÍN TELESCÓPICO (PIVOTE CENTRAL): NA
724/ A		DISTRIBUIDOR MARTILLO TRASERO
724/01	01	INSTALACIÓN HIDRÁULICA MÁQUINA PARA MARTILLO HIDRÁULICO (PIVOTE CENTRAL)
724/01	02	INSTALACIÓN HIDRÁULICA BRAZO MARTILLO (PIVOTE CENTRAL)
724/02		CIRCUITO HIDRAULICO DEL MARTILLO (CENTER PIVOT)
725		EQUIPO MARTILLO NEUMÁTICO DE BRAZO DE ELEVACION A BRAZO DEMOLEDOR
725/01	01	INSTALACIÓN HIDRÁULICA CONJUNTO BRAZO CUCHARA 4X1 Y 6X1 (POWER SHUTTLE): NA

SECTION INDEX
Variantes

725/01	02	CONJUNTO CONDUCTO HIDRÁULICO CONJUNTO MÁQUINA CUCHARA 4X1 Y 6X1 (POWER SHUTTLE): NA
725/01	03	DISTRIBUIDOR CARGADOR, 3 SECCIONES (CENTER PIVOT) - NA
725/01	04	DISTRIBUIDOR CARGADOR, 3 SECCIONES, TAPA Y VÁLVULA DE DESCARGA (CENTER PIVOT) - NA
725/01	05	DISTRIBUIDOR CARGADOR, 3 SECCIONES, VÁLVULA DE ALIVIO Y RETENCIÓN (CENTER PIVOT) - NA
725/01	06	DISTRIBUIDOR DE LA PALA DE TRES SECCIONES - CUCHARON SECCIONES 4X1 - 6X1(CENTER PIVOT) - NA
727/01		CIRCUITO HIDR. DEL BRAZO TELESCOPICO MANDO A PEDAL (CENTER PIVOT) - NA
728	01	INSTALACIÓN MARTILLO HIDRÁULICO MANUAL: ALIMENTACIÓN
728	02	INSTALACIÓN MARTILLO HIDRÁULICO LATERAL: RETORNO
728	03	VÁLVULA MARTILLO MANUAL
733		EMPALME RAPIDO MECANICO PARTE TRASERA
734		EMPALME RAPIDO MECANICO PARTE DELANTERA
758		FARO GIRATORIO
787		CONSOLA ANTERIOR SIN TAQUÍMETRO (POWER SHUTTLE, ROPS)
787/01		CONSOLA ANTERIOR SIN TAQUÍMETRO (POWER SHUTTLE, CAB)
788		CONSOLA ANTERIOR CON TAQUÍMETRO (ROPS)
788/01		CONSOLA ANTERIOR CON TAQUÍMETRO (CAB) (POWER SHUTTLE)
789		SENSOR DE VELOCIDAD (P.SHUTTLE)
793		LUCES DE TRABAJO DELANTERAS - CABINA
793/01		LUCES DE TRABAJO DELANTERAS (ROPS)
794		LÁMPARAS Y FAROS - CABINA
794/01		LÁMPARAS Y FAROS (ROPS)
796		ANTIRROBO
803		GUARDABARROS DELANTEROS
835		GUARDABARROS POSTERIOR Y TECHO (ROPS: CABINA): NA
851		ASIENTO DE TAPICERÍA - CABINA
851/01	01	COJINES ASIENTO DE TAPICERÍA, BRAZOS Y ACCESORIOS
851/01	02	PLACA DE INSTALACIÓN ASIENTO DE TAPICERÍA, GUÍAS DE REGULACIÓN Y CINTURÓN
851/01	03	PARTES SUSPENSIONES SUPERIORES ASIENTO DE TAPICERÍA
851/01	04	PARTES SUSPENSIONES INFERIORES ASIENTO DE TAPICERÍA
855		ASIENTO NEUMÁTICO DE TAPICERÍA - CABINA
855/01	01	COJINES ASIENTO NEUMÁTICO, BRAZOS Y ACCESORIOS
855/01	02	PLACA DE INSTALACIÓN ASIENTO NEUMÁTICO, GUÍAS DE REGULACIÓN Y CINTURÓN
855/01	03	PARTES SUSPENSIONES SUPERIORES ASIENTO NEUMÁTICO DE TAPICERÍA
855/01	04	PARTES SUSPENSIONES INFERIORES ASIENTO NEUMÁTICO DE TAPICERÍA
855/01	05	COMPRESOR Y TUBOS ASIENTO NEUMÁTICO DE TAPICERÍA
856		COJINES ASIENTO DE VINILO, BRAZOS Y ACCESORIOS (ROPS)
856/01	01	ASIENTO DE VINILO CON BRAZOS (ROPS)
856/01	02	PLACA DE INSTALACIÓN ASIENTO DE VINILO, GUÍAS DE REGUL. Y CINTURÓN (ROPS)
856/01	03	PARTES SUSPENSIONES SUPERIORES ASIENTO DE VINILO (ROPS)
856/01	04	PARTES SUSPENSIONES INFERIORES ASIENTO DE VINILO (ROPS)
879		ESPEJO POSTERIOR DERECHO CABINA
888		PROTECCIÓN Y ADHESIVO BALANCÍN
900	01	BALANCÍN LARGO: CONJUNTO

SECTION INDEX

Variantes

900	02	BRAZO DE ESCAVACION LARGO - BRAZO DE ELEVACION
900	03	BRAZO DE ESCAVACION LARGO
900	04	BRAZO DE ESCAVACION LARGO/CORTO - CINEMATISMO CUCHARON
900	05	BALANCÍN: INSTALACIÓN BALANCÍN Y CILINDRO BALANCÍN
900	06	BALANCÍN: INSTALACIÓN HIDRÁULICA CILINDRO CUCHARA
900	07	BALANCÍN: INSTALACIÓN HIDRÁULICA CILINDRO BRAZO DE ELEVACIÓN
900	08	BRAZO DE ESCAVACION - INSTALACION HIDRAULICA
900	09	CILINDRO HIDRAULICO DE ELEVACION - BRAZO TELESCOPICO LARGO
900	10	CILINDRO HIDRAULICO DE EXCAVACION
900	11	CILINDRO HIDRAULICO DEL CUCHARON
901	01	BALANCÍN TELESCÓPICO LARGO: CONJUNTO
901	02	BRAZO TELESCOPICO LARGO
901	03	BRAZO TELESCOPICO - INSTALACION HIDRAULICA
901	04	BALANCÍN TELESCÓPICO LARGO: CILINDRO HIDRÁULICO TELESCÓPICO
902	01	BALANCÍN TELESCÓPICO CORTO: CONJUNTO
902	02	BRAZO TELESCOPICO CORTO
902	03	BALANCÍN TELESCÓPICO CORTO: CILINDRO HIDRÁULICO TELESCÓPICO
990		HERRAMIENTAS
993	01	PLACAS - NA
993	02	PLACAS - NA
995		ARRANQUE EN FRÍO

NOTAS

CONTROL ESTABILIZADOR SIN ELEVACIÓN AUTOMÁTICA (CENTER PIVOT)

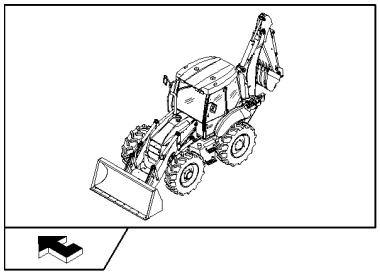

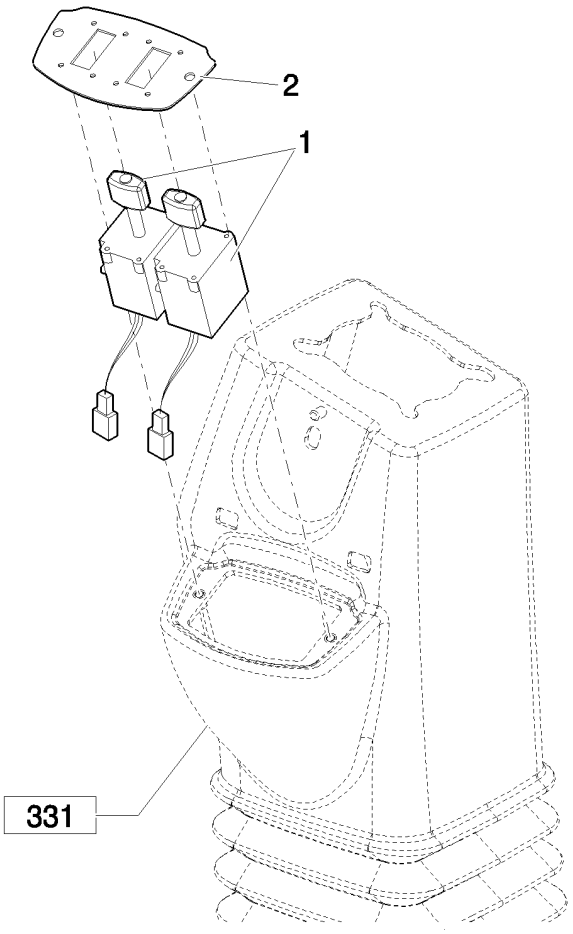

CONTROL ESTABILIZADOR SIN ELEVACIÓN AUTOMÁTICA (CENTER PIVOT)

REF	FN	PART NUMBER	YR/SN	QTY	DENOMINACION
1		86988086		2	JOYSTICK
2		87435381		1	PLACA DE MONTAJE

Pilot Control Version

B95B

096		p1	03/08

CONTROL ESTABILIZADOR CON ELEVACIÓN AUTOMÁTICA (CENTER PIVOT)

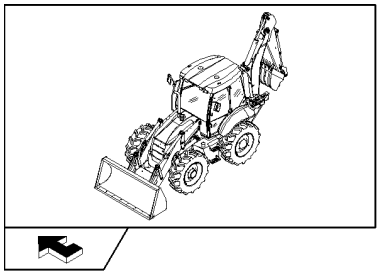

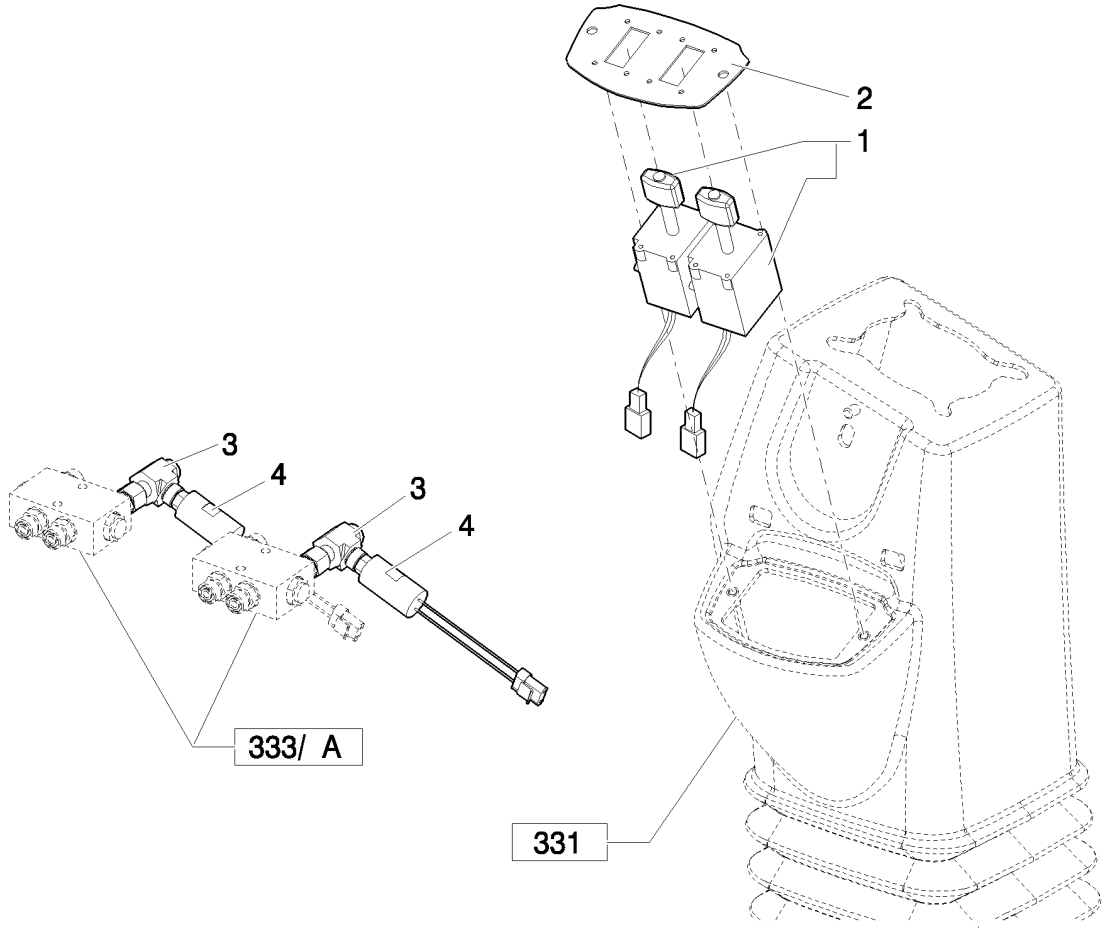

CONTROL ESTABILIZADOR CON ELEVACIÓN AUTOMÁTICA (CENTER PIVOT)

REF	FN	PART NUMBER	YR/SN	QTY	DENOMINACION
1		86988086		2	JOYSTICK
2		87435381		1	PLACA DE MONTAJE
3		87401111		2	RACOR
4		87589234		2	INTERRUPTOR DE PRESION

Pilot Control Version

B95B

131		p1	03/08

BATERIA INDIVIDUAL

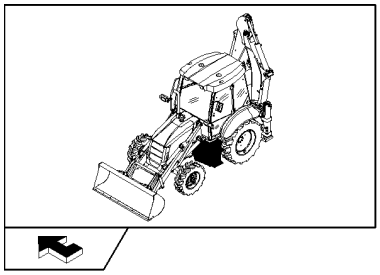

BATERIA INDIVIDUAL

REF	FN	PART NUMBER	YR/SN	QTY	DENOMINACION
1		85825440		1	BATERIA CARGA HUMEDA, CANADIAN.
2		87416929		1	PIEZA DE SOPORTE
3		412005		2	TORNILLO, Hex, M10 x 220, 8.8, M10x220
4		47048963		2	ARANDELA
5		47049041		2	TUERCA, M10
6		47048788		2	PIEZ ANGULAR
7		47049590		1	CALCOMANIA
8		87405018		1	Cable De Masa
9		87567413		1	CABLE

175		p1	03/08

TAPA ASPIRACIÓN DE AIRE Y PRE-FILTRO

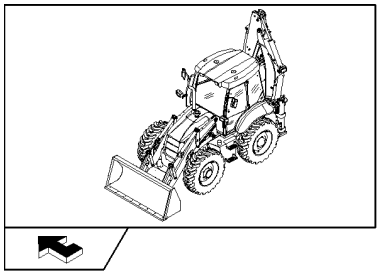

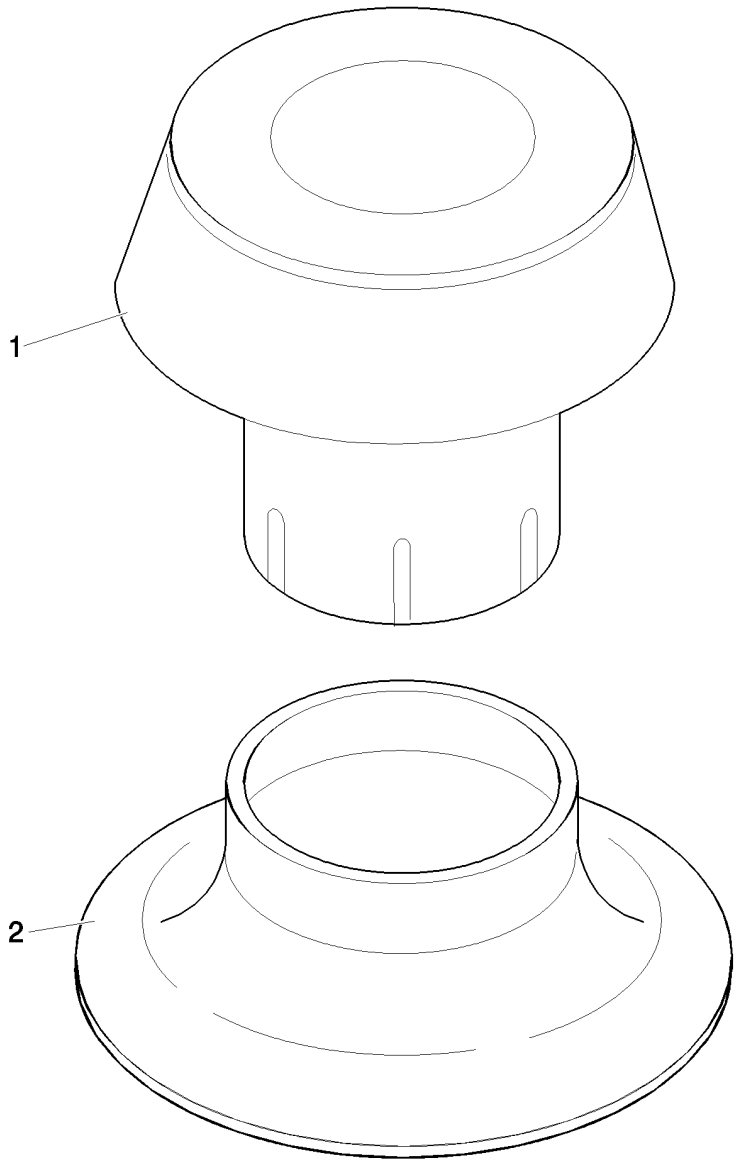

TAPA ASPIRACIÓN DE AIRE Y PRE-FILTRO

REF	FN	PART NUMBER	YR/SN	QTY	DENOMINACION
1		85804602		1	TAPON DEL DEPOSITO
2	1	87597631		1	TAPADERA

(1) Only for B100B, B100BLR, B110B, B115B (EU) - B95BLR, B95BTC, B110B, B115B (NA)

176		p1	04/08

TAPA ASPIRACIÓN DE AIRE Y PRE-FILTRO

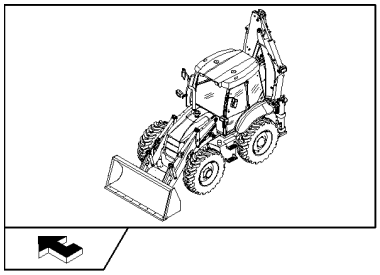

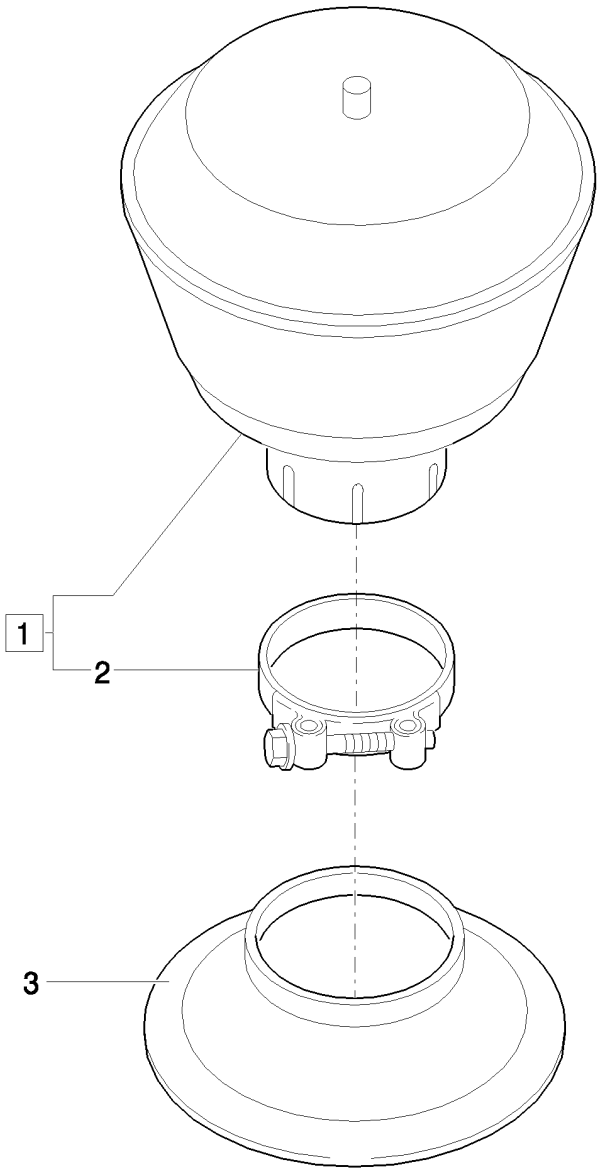

TAPA ASPIRACIÓN DE AIRE Y PRE-FILTRO

REF	FN	PART NUMBER	YR/SN	QTY	DENOMINACION
1		85804347		1	PRE PURIFICADOR, Assy
2	1	85802743		1	ABRAZADERA MANGUERA
3	1	87597631		1	TAPADERA

(1) Only for B100B, B100BLR, B110B, B115B (EU) - B95BLR, B95BTC, B110B, B115B (NA)

GANCHOS DE ELEVACION DE LA PALA Y PARTE POSTERIOR

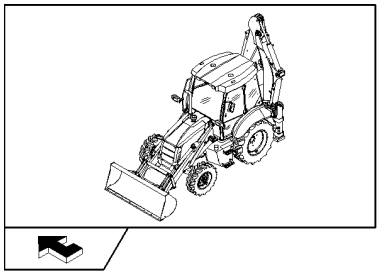

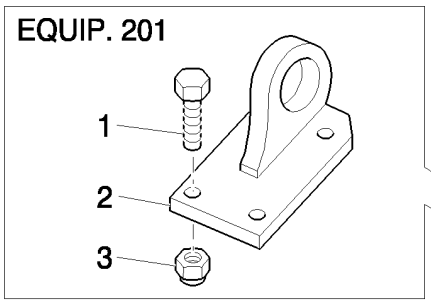

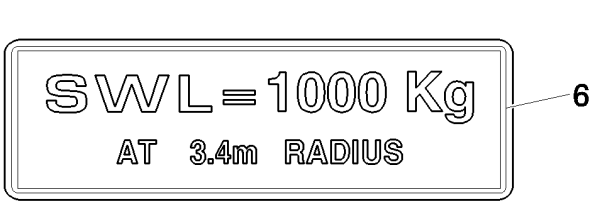

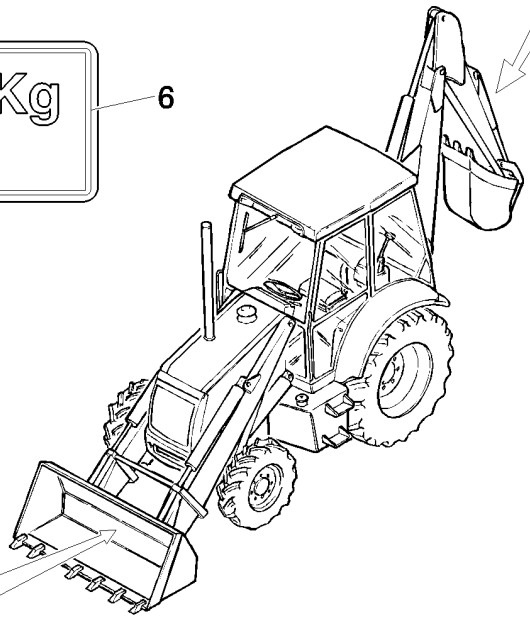

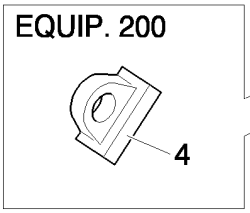

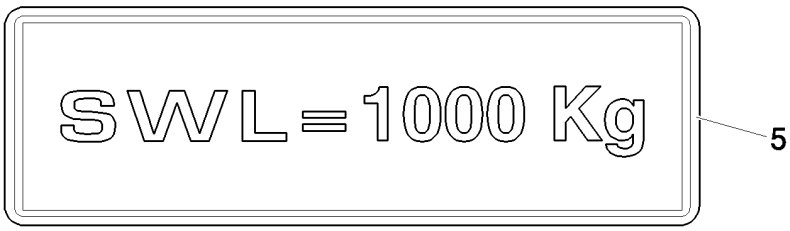

GANCHOS DE ELEVACION DE LA PALA Y PARTE POSTERIOR

REF	FN	PART NUMBER	YR/SN	QTY	DENOMINACION
1		11394334		4	TORNILLO, Hex, M14 x 1.5 x 45, 8.8, Full Thd, (Equip.201)
2		85802599		1	GAZA, (EQUIP.201)
3		12574825		4	CONTRA TUERCA, M14 x 1.5, Cl 10, (EQUIP.201)
4		85805807		1	GAZA, (Equip.200)
5		85805663		1	CALCOMANIA, (EQUIP.200)
6		85805664		1	CALCOMANIA, (EQUIP.201)

284		p1	04/08

ESPEJO RETROVISOR (CAB) - NA

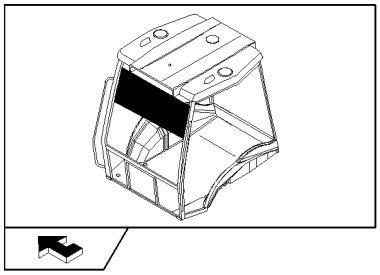

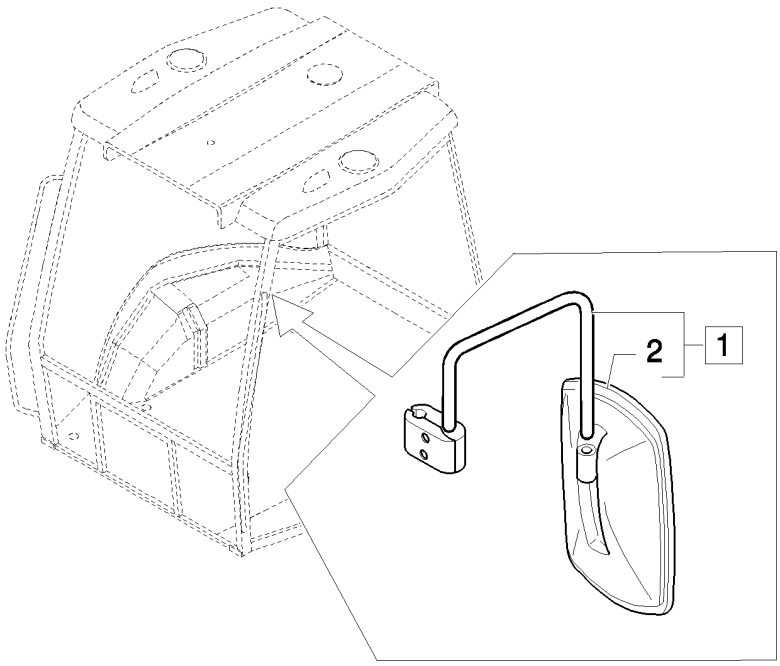

ESPEJO RETROVISOR (CAB) - NA

REF	FN	PART NUMBER	YR/SN	QTY	DENOMINACION
1		85820139		1	ESPEJO, Assy
2		85820138		2	ESPEJO RETROVISOR

290		p1	03/08

CONTRAPESO FRONTAL: 2WS

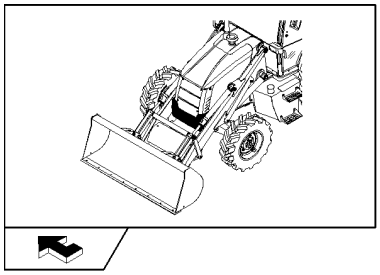

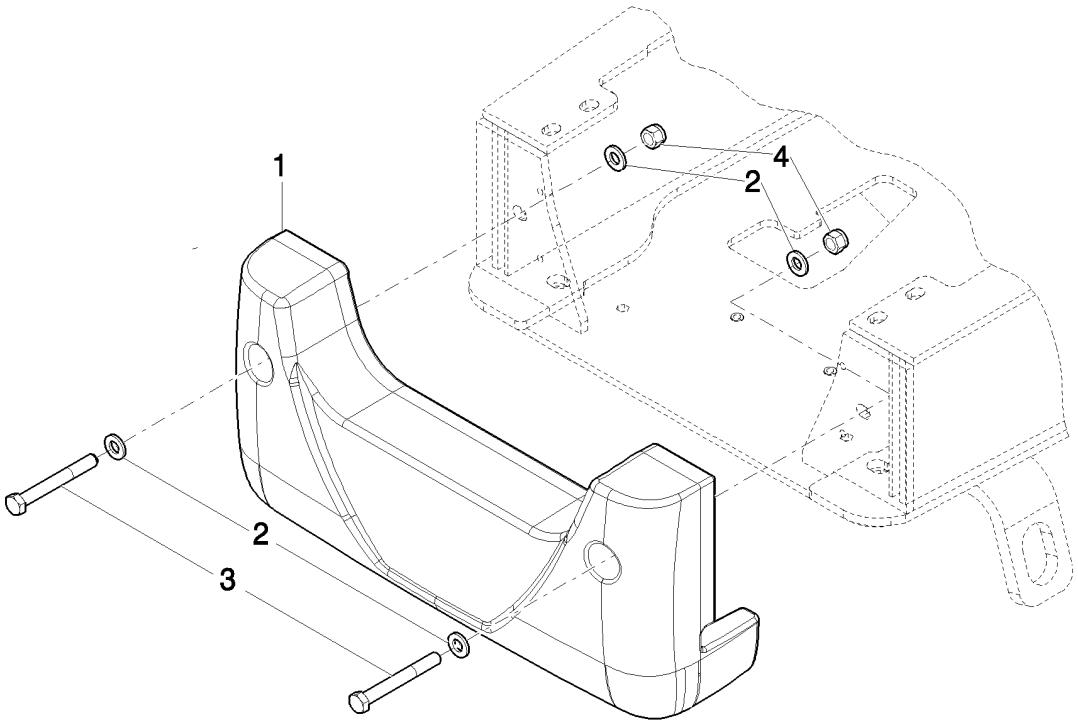

CONTRAPESO FRONTAL: 2WS

REF	FN	PART NUMBER	YR/SN	QTY	DENOMINACION
1		87631830		1	LASTRE
2		13580121		4	ARANDELA
3		11120521		2	TORNILLO, Hex, M16 x 130, 8.8
4		12577411		2	CONTRA TUERCA, M16 x 2, Cl 8

291		p1	03/08

CONTRAPESO FRONTAL: 2WS

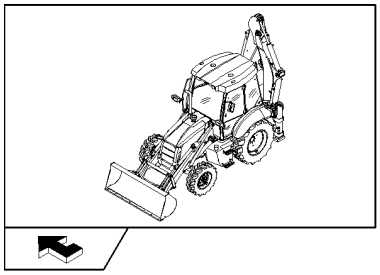

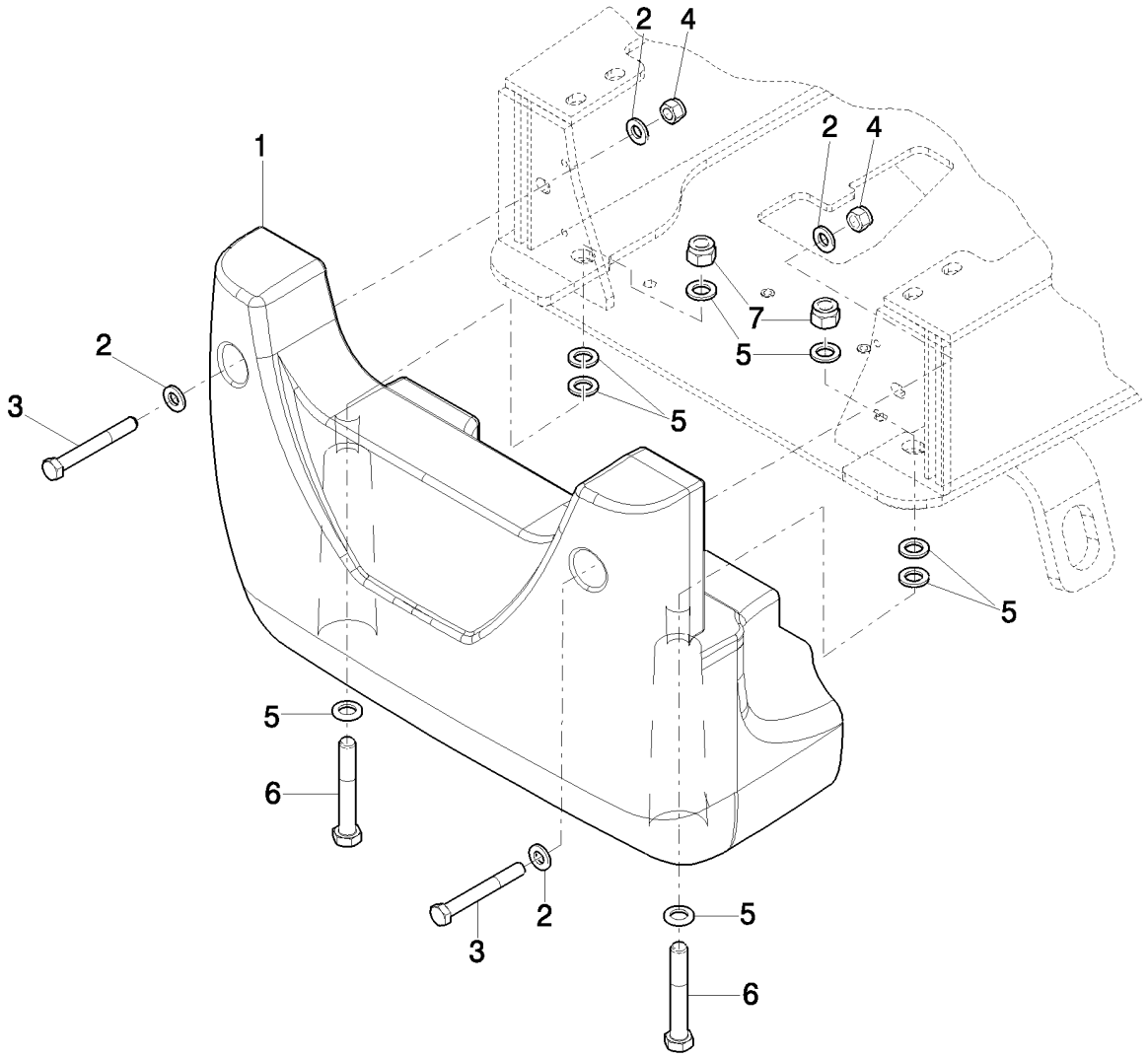

CONTRAPESO FRONTAL: 2WS

REF	FN	PART NUMBER	YR/SN	QTY	DENOMINACION
1		87631834		1	LASTRE, Equip. 292
1		87631832		1	LASTRE, Equip. 291
2		13580121		4	ARANDELA
3		11120521		2	TORNILLO, Hex, M16 x 130, 8.8
4		12577411		2	CONTRA TUERCA, M16 x 2, Cl 8
5		10520431		8	ARANDELA
6		16041821		2	TORNILLO, Hex, M20 x 130, 8.8
7		12577711		2	CONTRA TUERCA, M20 x 2.5, Cl 8

302	01	p1	04/08

DISTRIBUIDOR DE LA PALA DE DOS SECCIONES

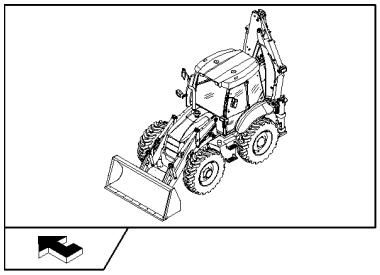

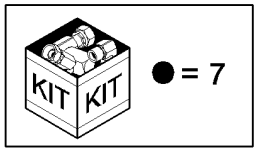

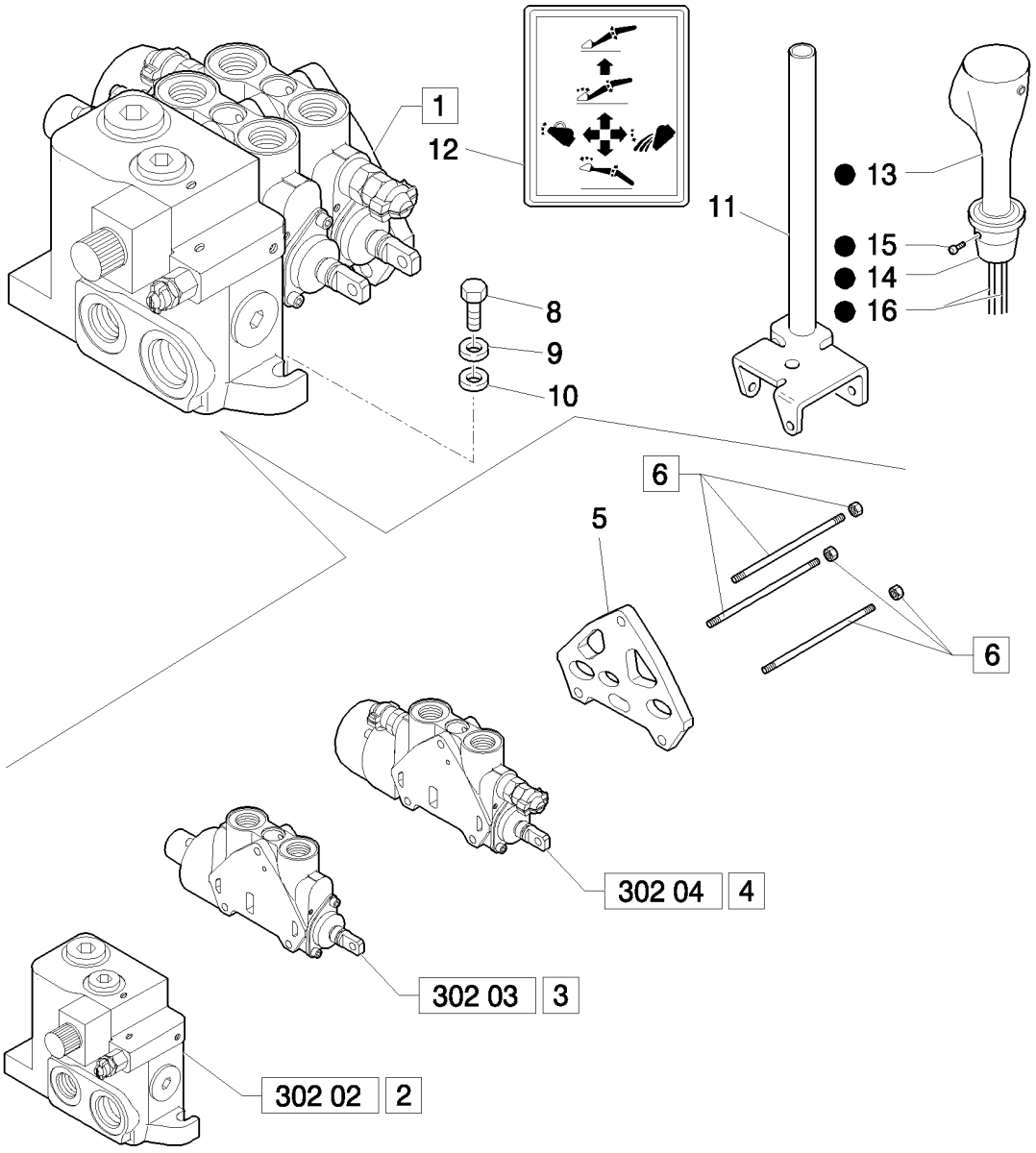

DISTRIBUIDOR DE LA PALA DE DOS SECCIONES

REF	FN	PART NUMBER	YR/SN	QTY	DENOMINACION
1		85825188		1	VALVULA DISTRIBUIDORA, Assy
2		85825468		1	DISTRIBUIDOR HYDR, Assy
3	1	87558567		1	SECTOR, Assy
4	2	85825469		1	DISTRIBUIDOR HYDR, Assy
5		85826924		1	SECTOR, Assy
6		85825475		1	VARILLA FILETADA, TIE RODS
7	3	87311102		1	JOYSTICK
7	4	87311103		1	JOYSTICK
8		11234721		3	TORNILLO, Hex, M10 x 1.25 x 45, 8.8
9		13578621		3	ARANDELA, 10x30x2
10		11190679		3	ARANDELA ABANICO, Belleville, M10.5
11		87646646		1	PALANCA
12		85804346		1	CALCOMANIA
13	3	87311302		1	PERILLA
13	4	87311306		1	PERILLA
14		87311303		1	CUBO
15		13789621		2	TORNILLO DE AJUSTE, Hex Soc, M8 x 10, Flat Pt
16	3	87311836		1	GRUPO DE CABLES
16	4	87311838		1	GRUPO DE CABLES, Includes Switch

(1) LOADER
(2) Bucket
(3) Only for Power Shift
(4) Only for Power Shuttle

NA: Only for Pilot Version except B115B (Mechanical Version / Pilot Version)

B95B

302	02	p1	04/08

DISTRIBUIDOR DE 2 SECCIONES EQUIPO CARGADOR: SECCIÓN DE ASPIRACIÓN

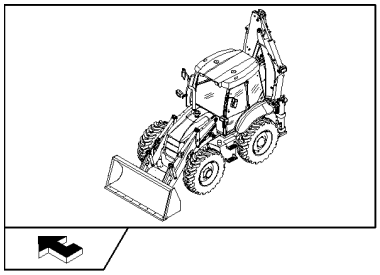

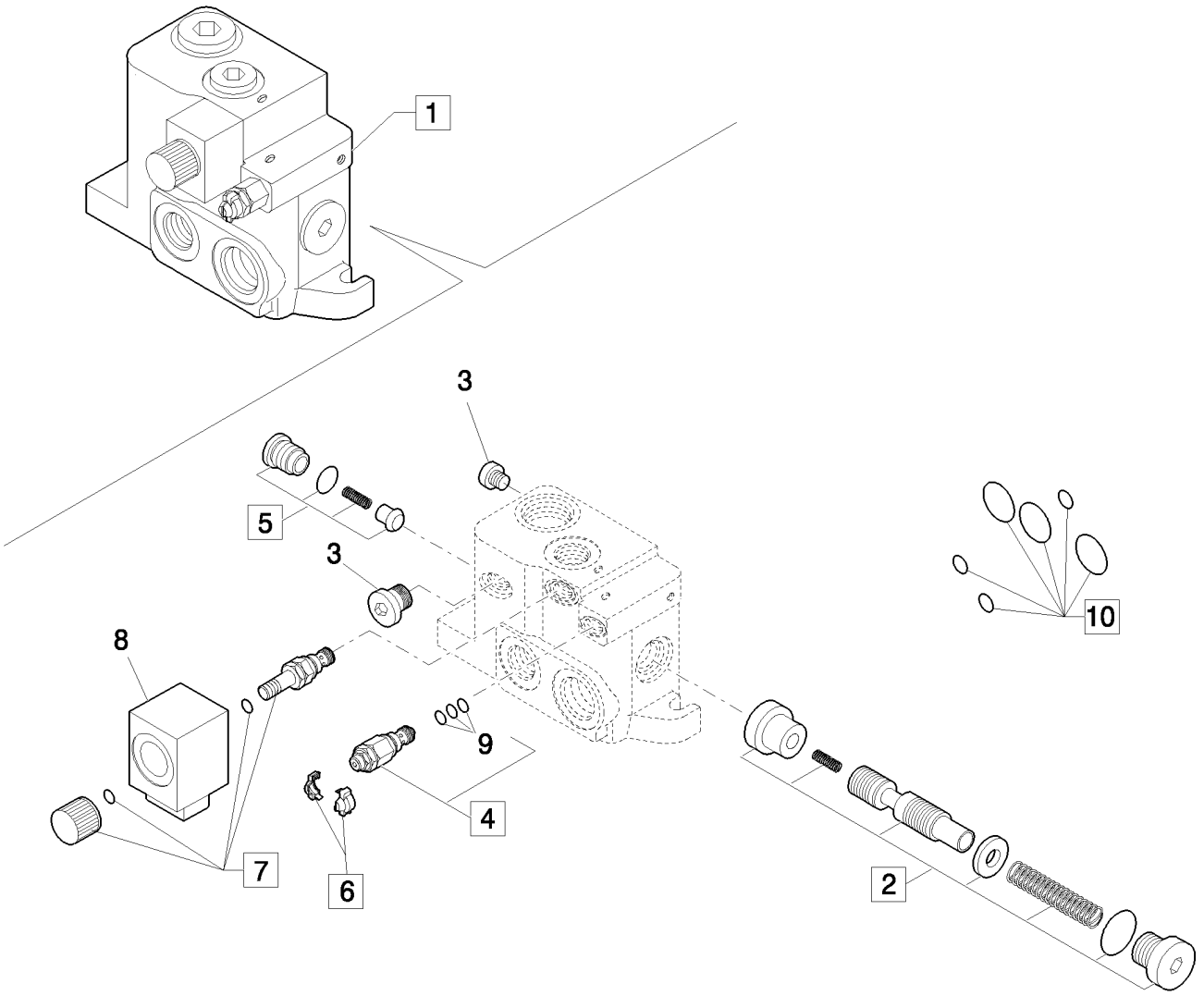

DISTRIBUIDOR DE 2 SECCIONES EQUIPO CARGADOR: SECCIÓN DE ASPIRACIÓN

REF	FN	PART NUMBER	YR/SN	QTY	DENOMINACION
1		85825468		1	DISTRIBUIDOR HYDR, Assy
2		85825472		1	EQUIPO, Assy
3		85811923		2	TAPÓN
4		85811946		1	VÁLVULA, DESCARGA
5		85811938		1	VALVULA DE CIERRE, Assy
6		85811934		1	EQUIPO
7		85811954		1	EQUIPO, Assy
8		87734721		1	SOLENOIDE
9		85821236		1	SERIE DE JUNTAS
10		85819148		1	SERIE DE JUNTAS

NA: Only for Pilot Version except B115B (Mechanical Version / Pilot Version)

302	03	p1	04/08

DISTRIBUIDOR DE 2 SECCIONES EQUIPO CARGADOR: SECCIÓN BRAZO DE ELEVACIÓN

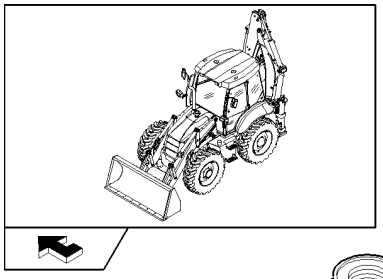

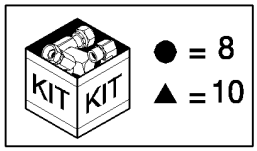

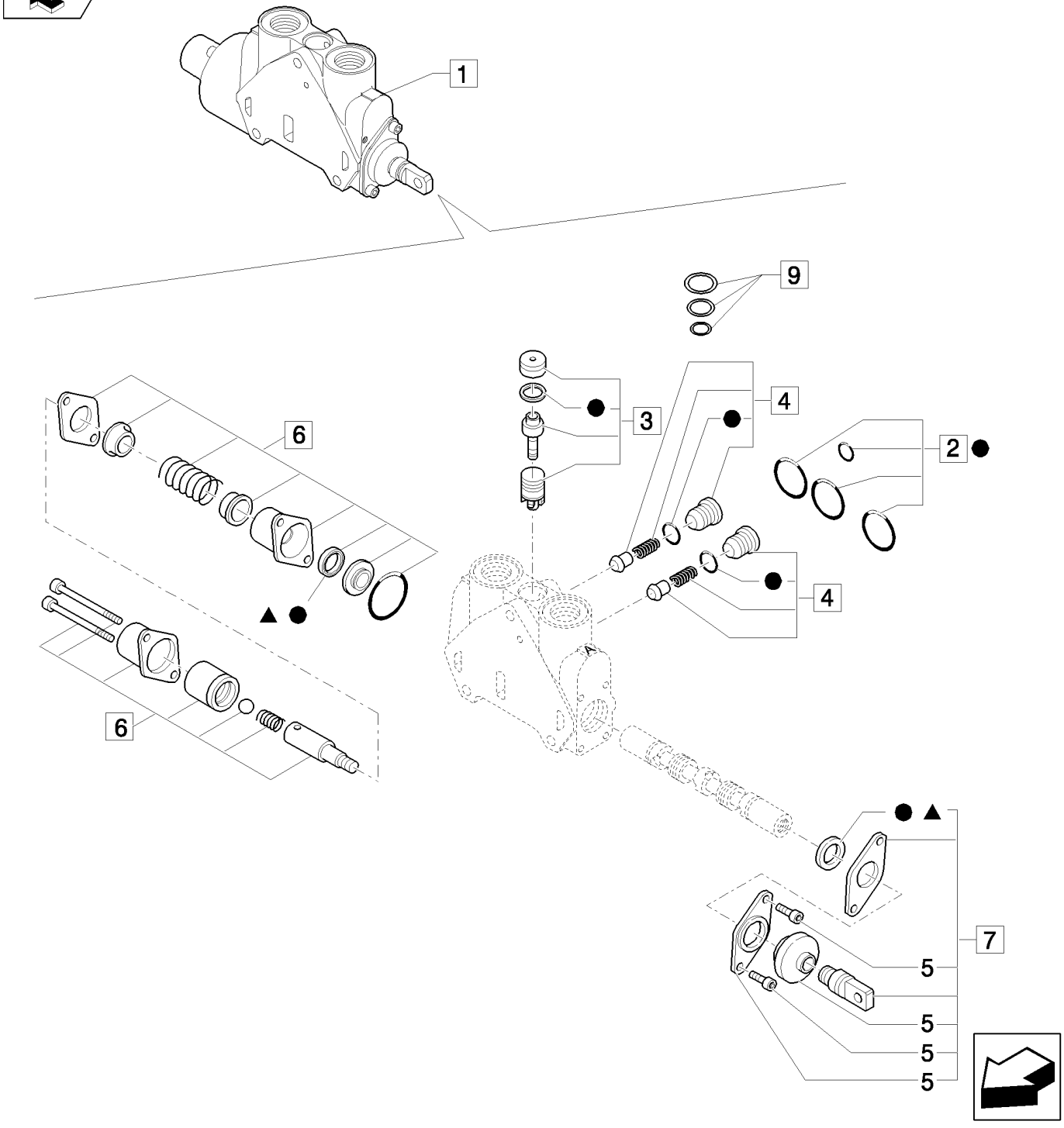

DISTRIBUIDOR DE 2 SECCIONES EQUIPO CARGADOR: SECCIÓN BRAZO DE ELEVACIÓN

REF	FN	PART NUMBER	YR/SN	QTY	DENOMINACION
1		87558567		1	SECTOR, Assy
2		85819148		1	SERIE DE JUNTAS, Seals
3		85819378		1	SERIE DE JUNTAS, Valve
4		85811938		2	VALVULA DE CIERRE, Valve, Assy
5		85820130		1	CASQUETE
6		87558870		1	EQUIPO, Cover Assy
7		87735363		1	JUEGO DE REPARACION, Working Assy
8		85824282		1	EQUIPO, Seals
9		85819040		1	SERIE DE JUNTAS, Compensator Seal
10		85824283		1	SERIE DE JUNTAS, Spool Seal

NA: Only for Pilot Version except B115B (Mechanical Version / Pilot Version)

302	04	p1	04/08

DISTRIBUIDOR DE LA PALA DE DOS SECCIONES

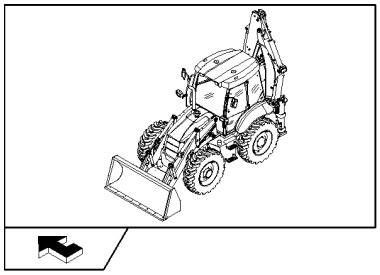

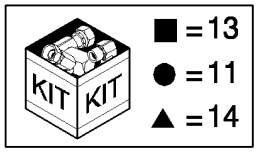

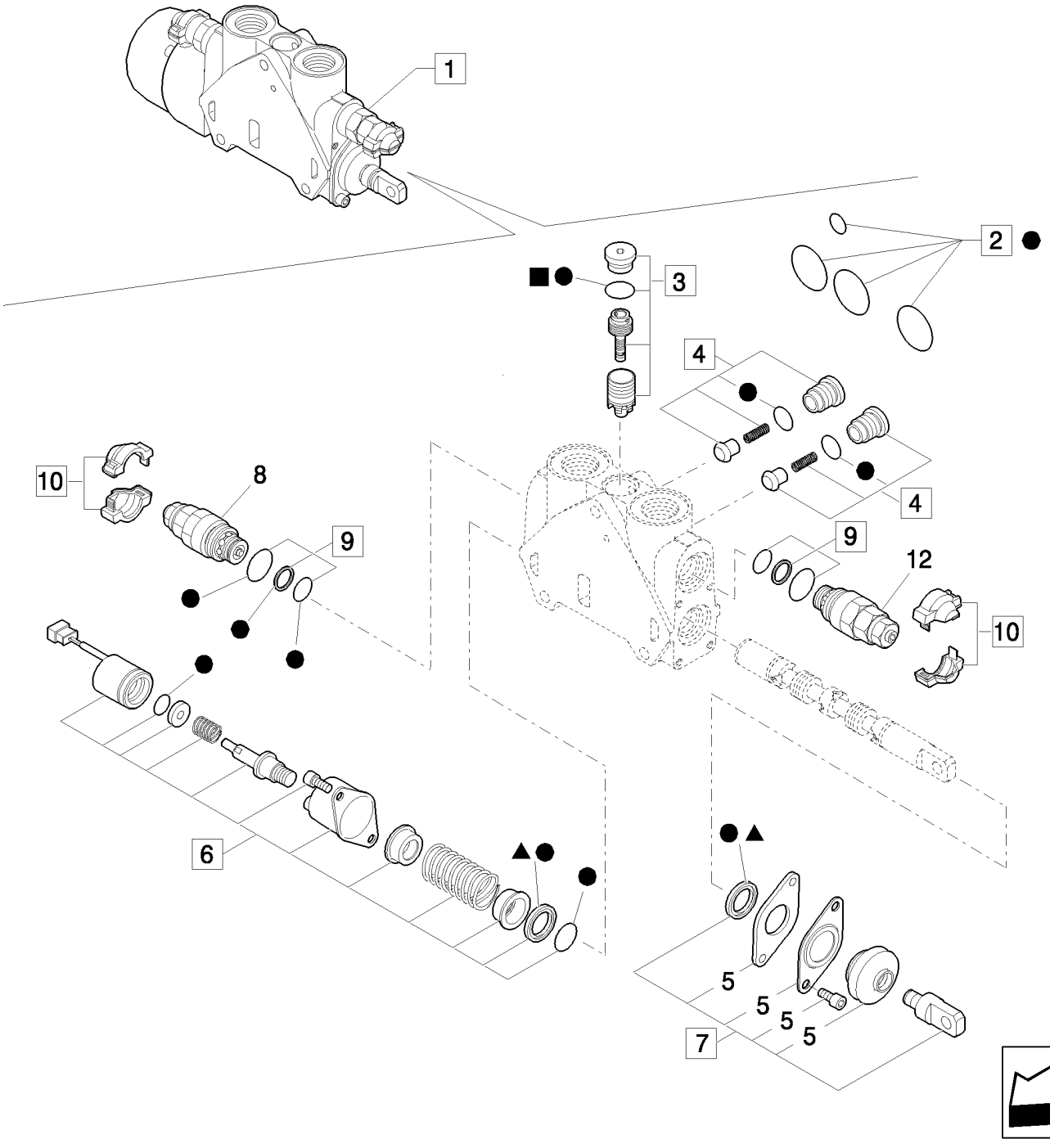

DISTRIBUIDOR DE LA PALA DE DOS SECCIONES

REF	FN	PART NUMBER	YR/SN	QTY	DENOMINACION
1		85825469		1	DISTRIBUIDOR HYDR, Assy
2		85819148		1	SERIE DE JUNTAS, Seals
3		85819378		1	SERIE DE JUNTAS, Valve
4		85811938		2	VALVULA DE CIERRE, Valve
5		85820130		1	CASQUETE
6		85825471		1	EQUIPO, Cover Assy
7		87735363		1	JUEGO DE REPARACION, Working Assy
8	1, 2	85812116		1	VÁLVULA, DESCARGA
9		85811933		2	SERIE DE JUNTAS, Valve Seals
10		85811935		2	EQUIPO, Cover
11		85824281		1	SERIE DE JUNTAS, Seals
12	1, 3	85812113		1	VALVULA HIDRAULICA
13		85819040		1	SERIE DE JUNTAS, Compensator Seal
14		85824283		1	SERIE DE JUNTAS, Spool Seal

(1) Includes 9, 10
(2) 240 BAR
(3) 165 BAR

NA: Only for Pilot Version except B115B (Mechanical Version / Pilot Version)

321		p1	03/08

DOBLE BATERIA

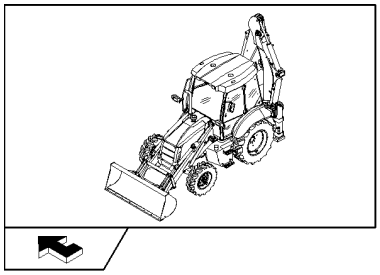

DOBLE BATERIA

REF	FN	PART NUMBER	YR/SN	QTY	DENOMINACION
1		85826208		2	BATERIA CARGA HUMEDA, U.S.
2		412005		4	TORNILLO, Hex, M10 x 220, 8.8, M10x220
3		85827072		1	CABLE ELECTRICO
4		87568472		1	CABLE
5		47049041		4	TUERCA, M10
6		47049590		AR	CALCOMANIA
7		85826906		2	DEFENSA
8		87415781		2	PIEZA DE SOPORTE
9		47048788		4	PIEZ ANGULAR
10		47048963		4	ARANDELA
11		87529531		4	PLACA DE SUJECION
12		85827416		1	CABLE. MASA
13		87405018		1	Cable De Masa

331	01	p1	04/08

COLUMNA COMPLETA 6 SECCIONES (CENTER PIVOT)

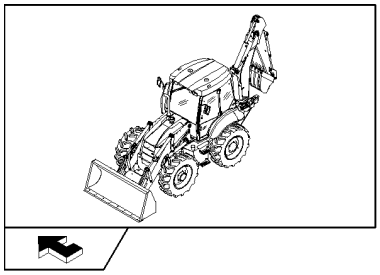

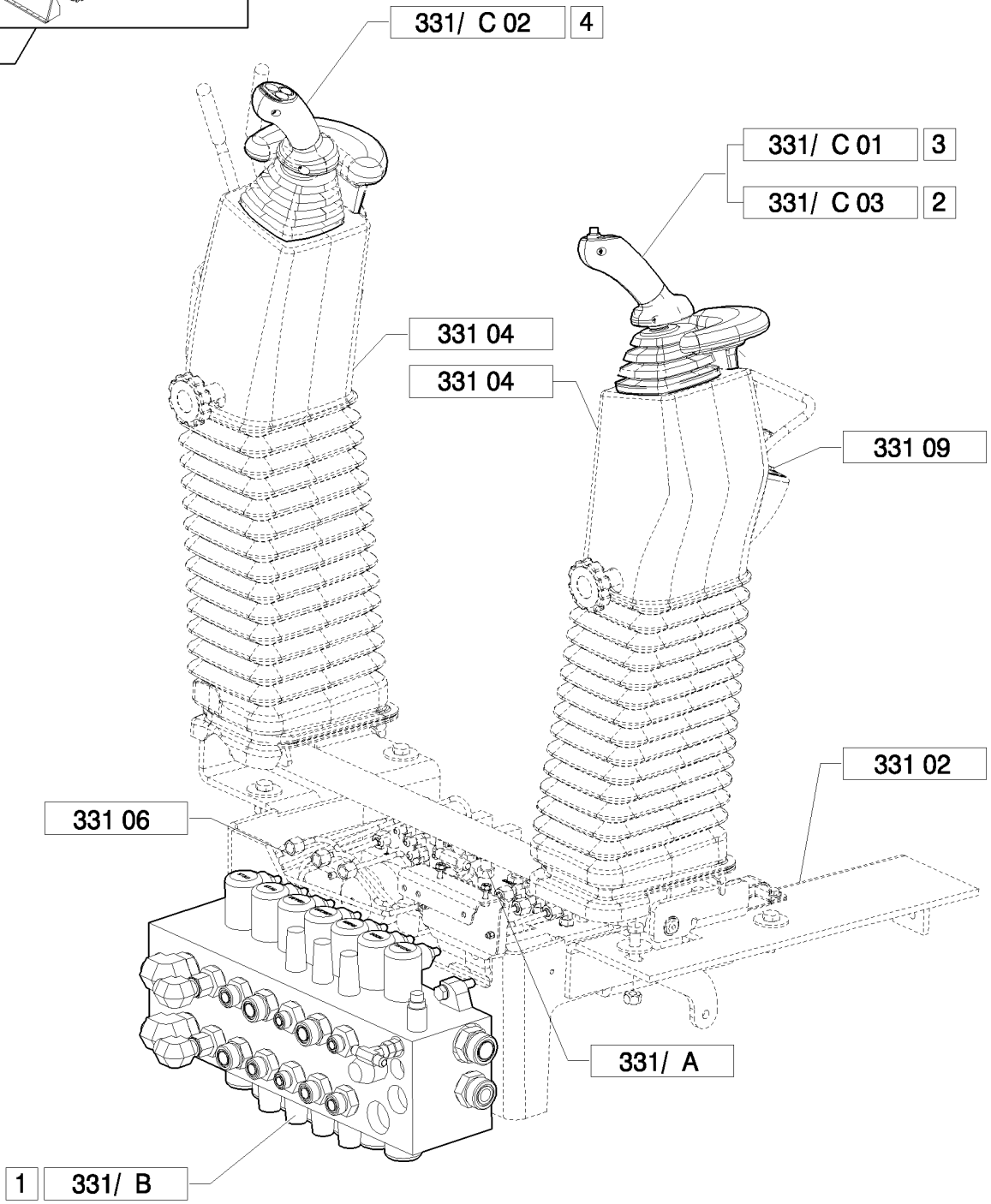

COLUMNA COMPLETA 6 SECCIONES (CENTER PIVOT)

REF	FN	PART NUMBER	YR/SN	QTY	DENOMINACION
1	1	87734101		1	VALVULA DISTRIBUIDORA, Assy
1	2	87734093		1	VALVULA DISTRIBUIDORA, Assy
2	3	87685954		1	VALVULA DISTRIBUIDORA, Assy
3	4	87685956		1	VALVULA DISTRIBUIDORA, Assy
4		87685948		1	VALVULA DISTRIBUIDORA, Assy

(1) Only for B110B, B115B (EU)
(2) Only for NA
(3) Only for B90B
(4) Except for B90B

Pilot Control Version

B95B

331	02	p1	03/08

SOPORTE PARA VÁLVULA DE CONTROL PILOTO, COMPLETO

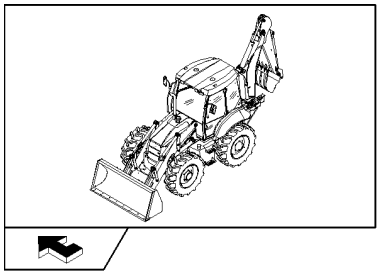

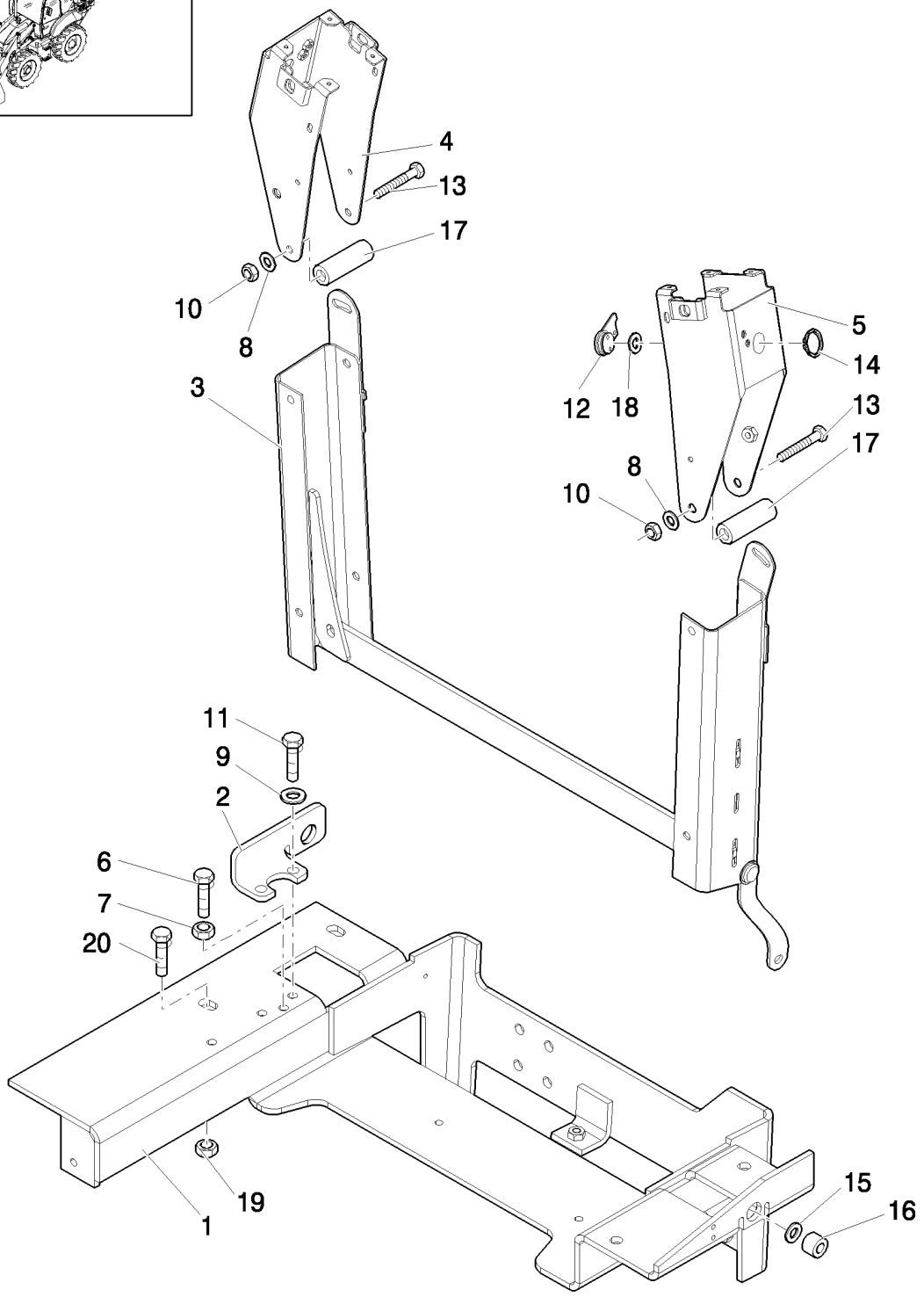

SOPORTE PARA VÁLVULA DE CONTROL PILOTO, COMPLETO

REF	FN	PART NUMBER	YR/SN	QTY	DENOMINACION
1		87434992		1	SOPORTE
2		87427004		1	SOPORTE
3		87426960		1	PIVOTE (CONJUNTO)
4		87453116		1	SOPORTE
5		87453117		1	SOPORTE
6		15213721		1	TORNILLO, Hex, M8 x 60, 8.8, Full Thd
7		16100811		1	TUERCA, M8, Cl 8
8		47048969		4	ARANDELA
9		47048992		2	ARANDELA
10		47049041		2	TUERCA
11		47049082		2	TORNILLO
12		87453118		1	PALANCA
13		84058418		2	TORNILLO, Hex, M10 x 125, 8.8
14		85824053		1	JUNTA HERMETICA
15		85824054		4	ARANDELA
16		85824059		2	CASQUILLO
17		87453110		2	SEPARADOR
18		87405706		1	ARANDELA
19		47049032		4	TUERCA
20		47049151		4	TORNILLO

Pilot Control Version	B95B

331	03	p1	03/08

SOPORTE PARA VÁLVULA DE CONTROL PILOTO, COMPLETO

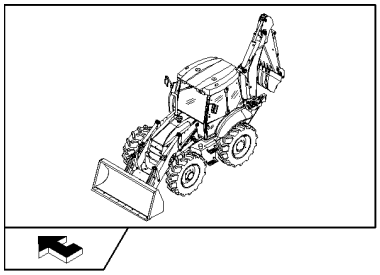

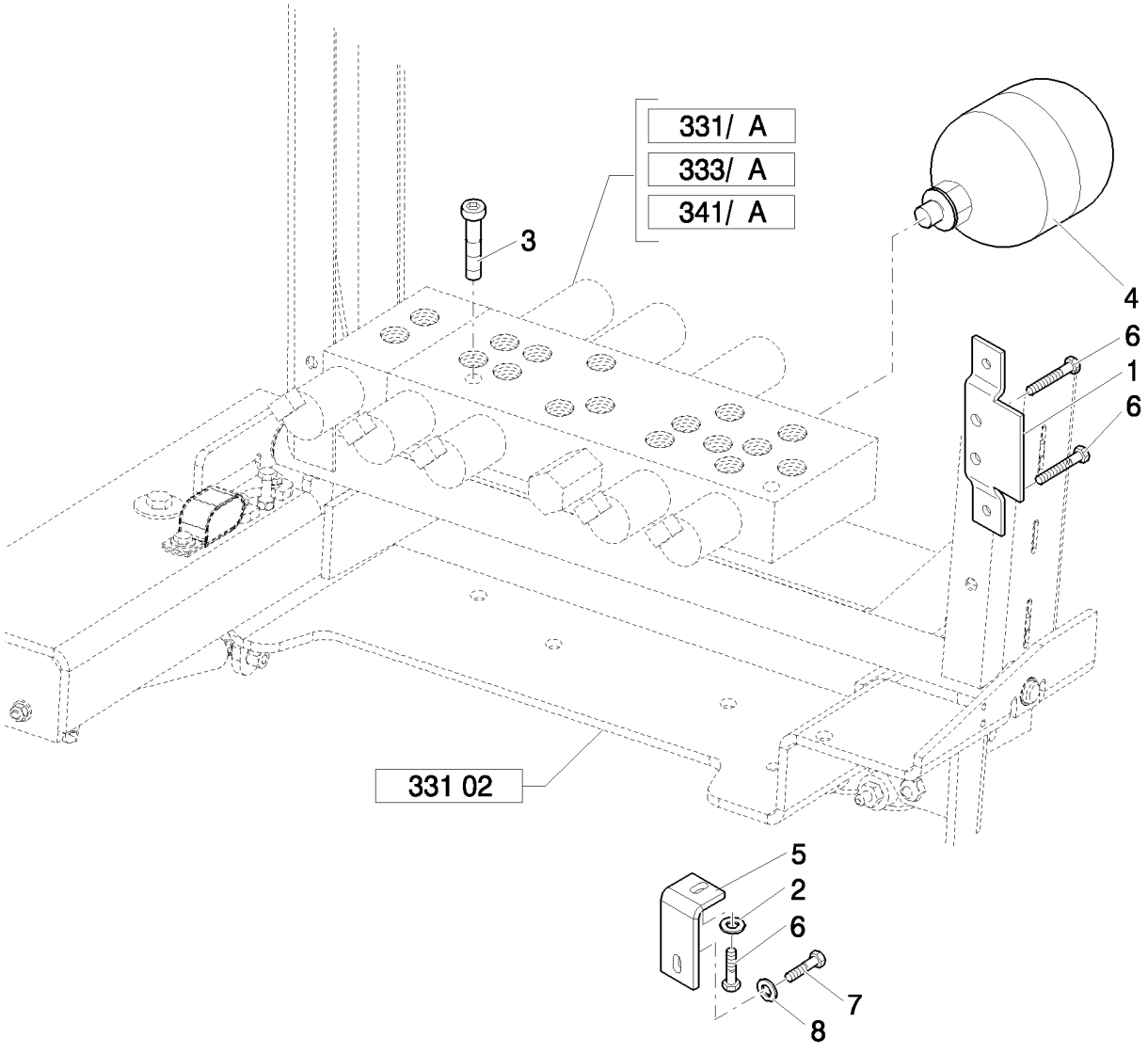

SOPORTE PARA VÁLVULA DE CONTROL PILOTO, COMPLETO

REF	FN	PART NUMBER	YR/SN	QTY	DENOMINACION
1		86990460		1	PLACA DE MONTAJE
2		47048971		1	ARANDELA
3		14306821		2	TORNILLO, Hex Soc Hd, M8 x 45, 8.8
4		87425225		1	ACUMULADOR
5		87402306		1	PIEZA DE SOPORTE
6		16040821		3	TORNILLO, Hex, M10 x 40, 8.8, Full Thd
7		47049065		1	TORNILLO
8		85802618		1	JUNTA HERMETICA

Pilot Control Version	B95B

331	04	p1	03/08

SOPORTE PARA VÁLVULA DE CONTROL PILOTO, COMPLETO

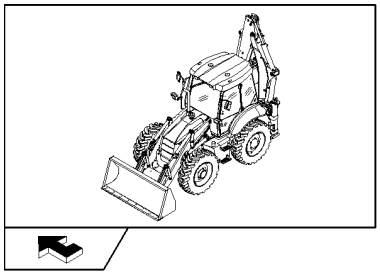

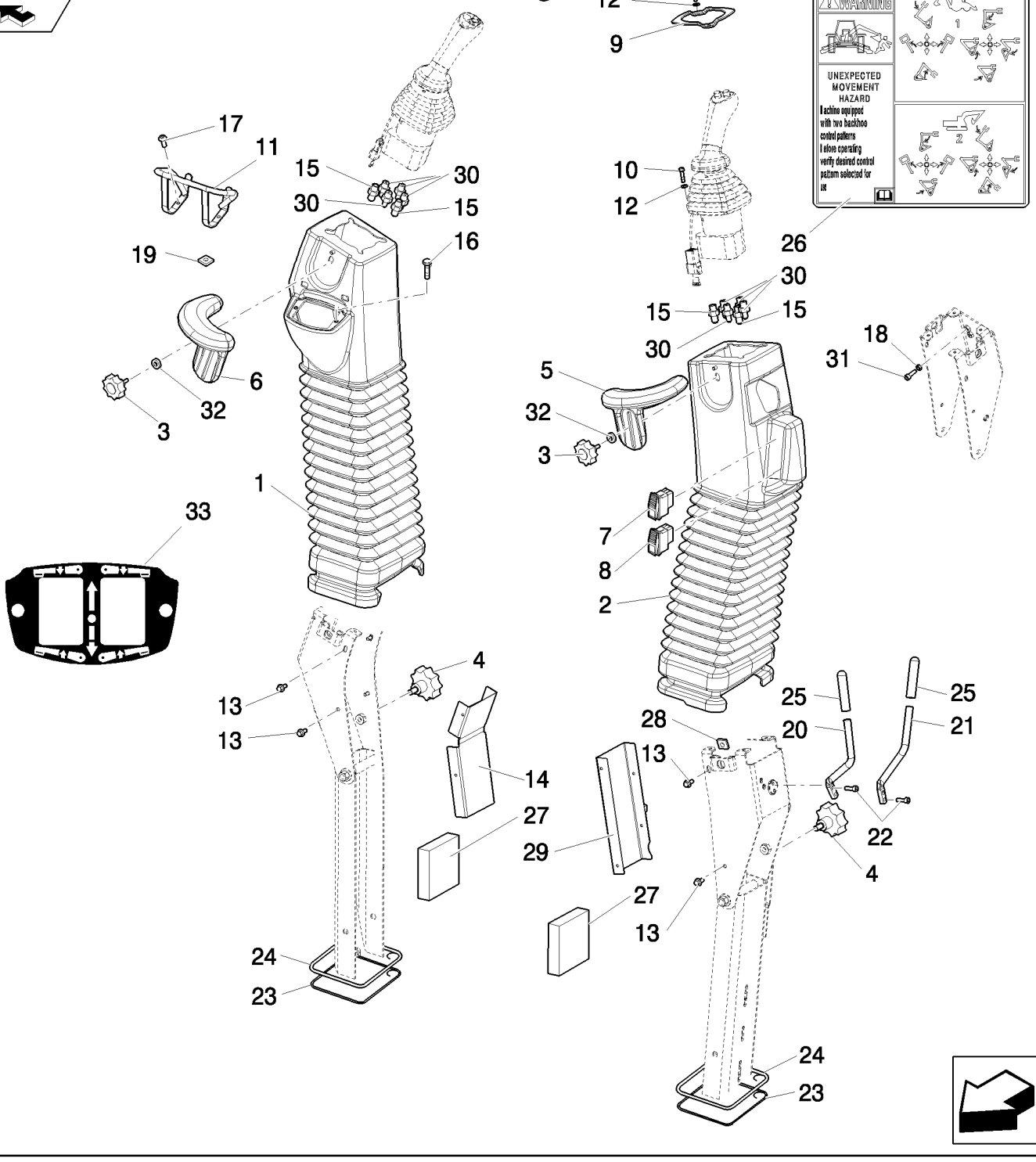

SOPORTE PARA VÁLVULA DE CONTROL PILOTO, COMPLETO

REF	FN	PART NUMBER	YR/SN	QTY	DENOMINACION
1		87309923		1	CASQUETE
2		87309924		1	CASQUETE
3		87437689		2	POMO
4		87437688		2	POMO
5		87437366		1	APOYABRAZOS
6		87437369		1	APOYABRAZOS
7		87423802		1	CONTACTOR
8		87410105		1	CONTACTOR
9		87435372		2	PLACA DE SUJECION
10		10902834		8	TORNILLO
11		87307656		1	DEFENSA
12		11197779		8	ARANDELA ABANICO, Belleville, M6.4
13		86625199		8	TORNILLO AUTOROSCANTE, Hex Flg Hd, M6 x 13
14		87431301		1	PROTECCION
15		47050686		4	RACOR
16		87022296		8	TORNILLO, Cross Pan Hd, M3 x 8
17		87310085		2	TORNILLO AUTOROSCANTE
18		12574111		1	CONTRA TUERCA, M5 x .8, Cl 8
19		87452511		2	TUERCA
20		87418368		1	VARILLA
21		87418369		1	VARILLA
22		87310098		4	TORNILLO, M6 x 20
23		87433514		2	JUNTA HERMETICA
24		87433515		2	JUNTA HERMETICA
25		87421909		2	MANGO
26	1	87305953		1	CALCOMANIA
26	2	87305413		1	CALCOMANIA
27		87349851		2	FORRO AISLANTE
28		86625073		2	TUERCA, M6, U
29		87431300		1	DEFENSA
30		85803312		8	RACOR
31		10977821		1	TORNILLO, Hex, M5 x 16, 8.8, Full Thd
32		85821536		2	ARANDELA, M6 x 25 x 1.6

(1) Only for EU
(2) Only for NA

Pilot Control Version	B95B

331	04	p2	03/08

SOPORTE PARA VÁLVULA DE CONTROL PILOTO, COMPLETO

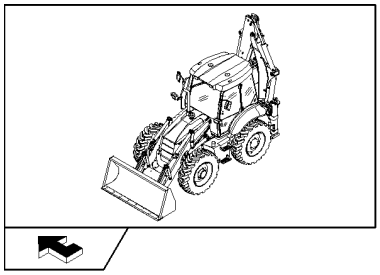

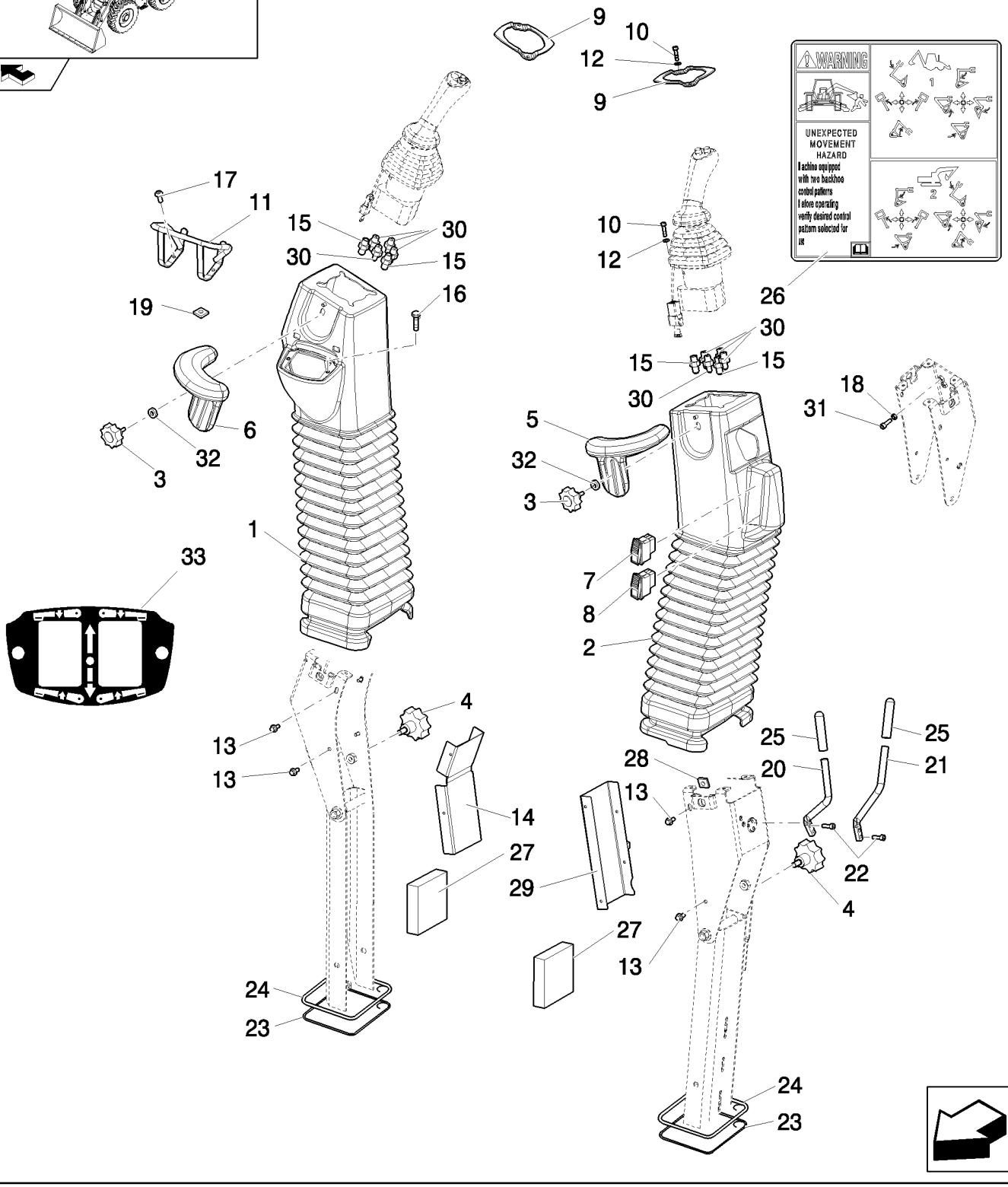

SOPORTE PARA VÁLVULA DE CONTROL PILOTO, COMPLETO

REF	FN	PART NUMBER	YR/SN	QTY	DENOMINACION
33		87423812		1	CALCOMANIA

Pilot Control Version	B95B

331	05	p1	03/08

SOPORTE PARA VÁLVULA DE CONTROL PILOTO, COMPLETO

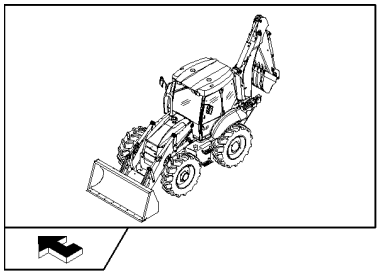

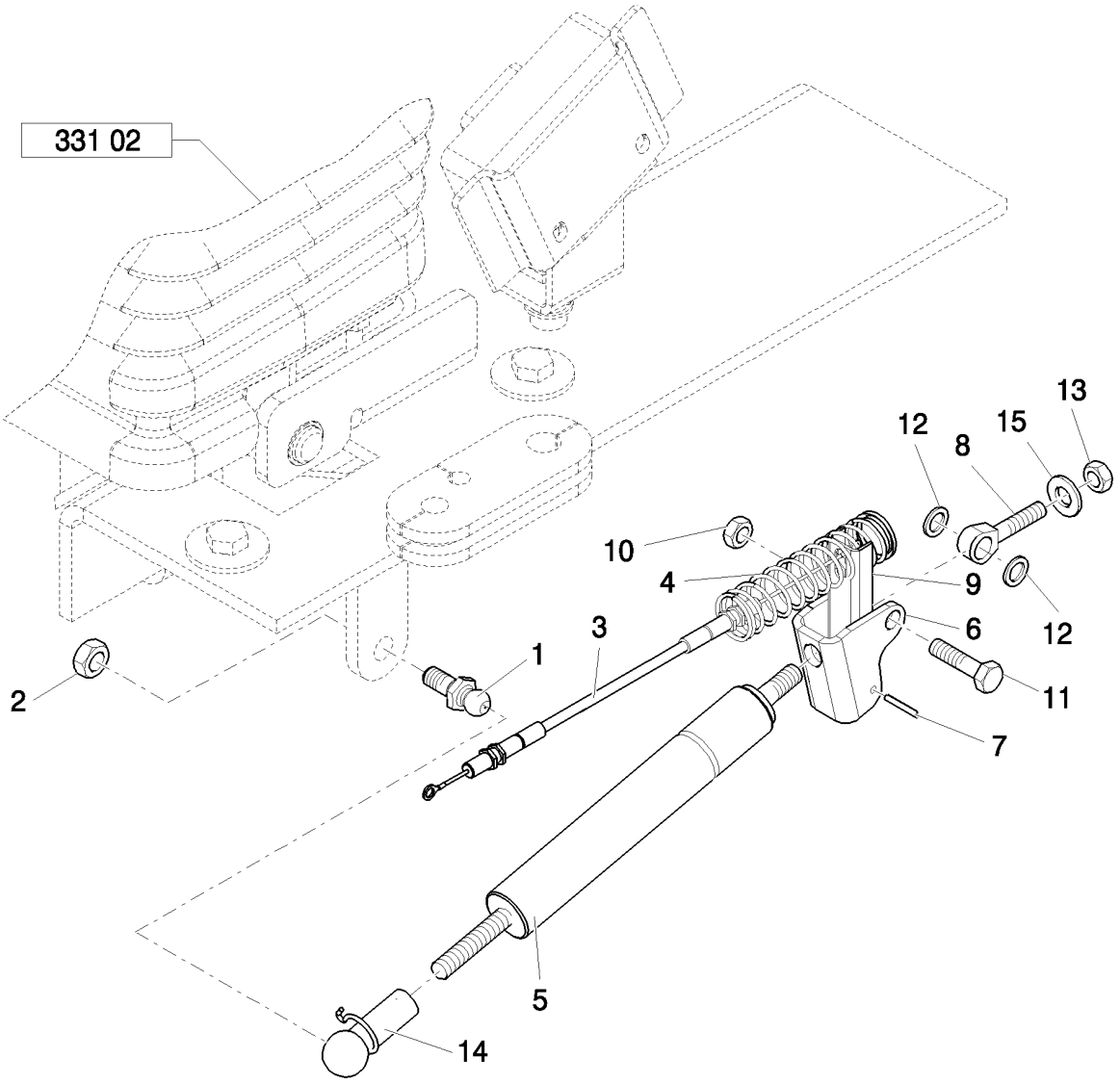

SOPORTE PARA VÁLVULA DE CONTROL PILOTO, COMPLETO

REF	FN	PART NUMBER	YR/SN	QTY	DENOMINACION
1		85824067		1	PIVOTE DE LA ROTULA
2		47049041		1	TUERCA, M10
3		87430028		1	CABLE
4		87443692		1	RESORTE
5		86989616		1	COMPAS
6		85824080		1	PIEZA DE SOPORTE
7		85821514		2	PERNO
8		85824081		1	JUNTA DE ROTULA
9		86984549		1	CANAL
10		85821516		1	TUERCA
11		85821515		1	TORNILLO
12		85821520		2	SEPARADOR
13		47049442		2	TUERCA
14		86999310		1	SUJETADOR
15		47049404		1	ARANDELA

Pilot Control Version B95B

331	06	p1	03/08

SECCIÓN 6 - SOPORTE PARA VÁLVULA DE CONTROL PILOTO, COMPLETO

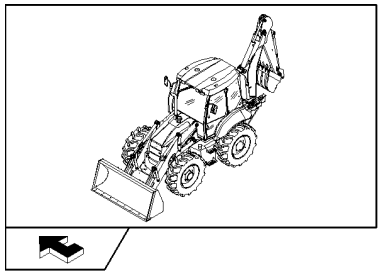

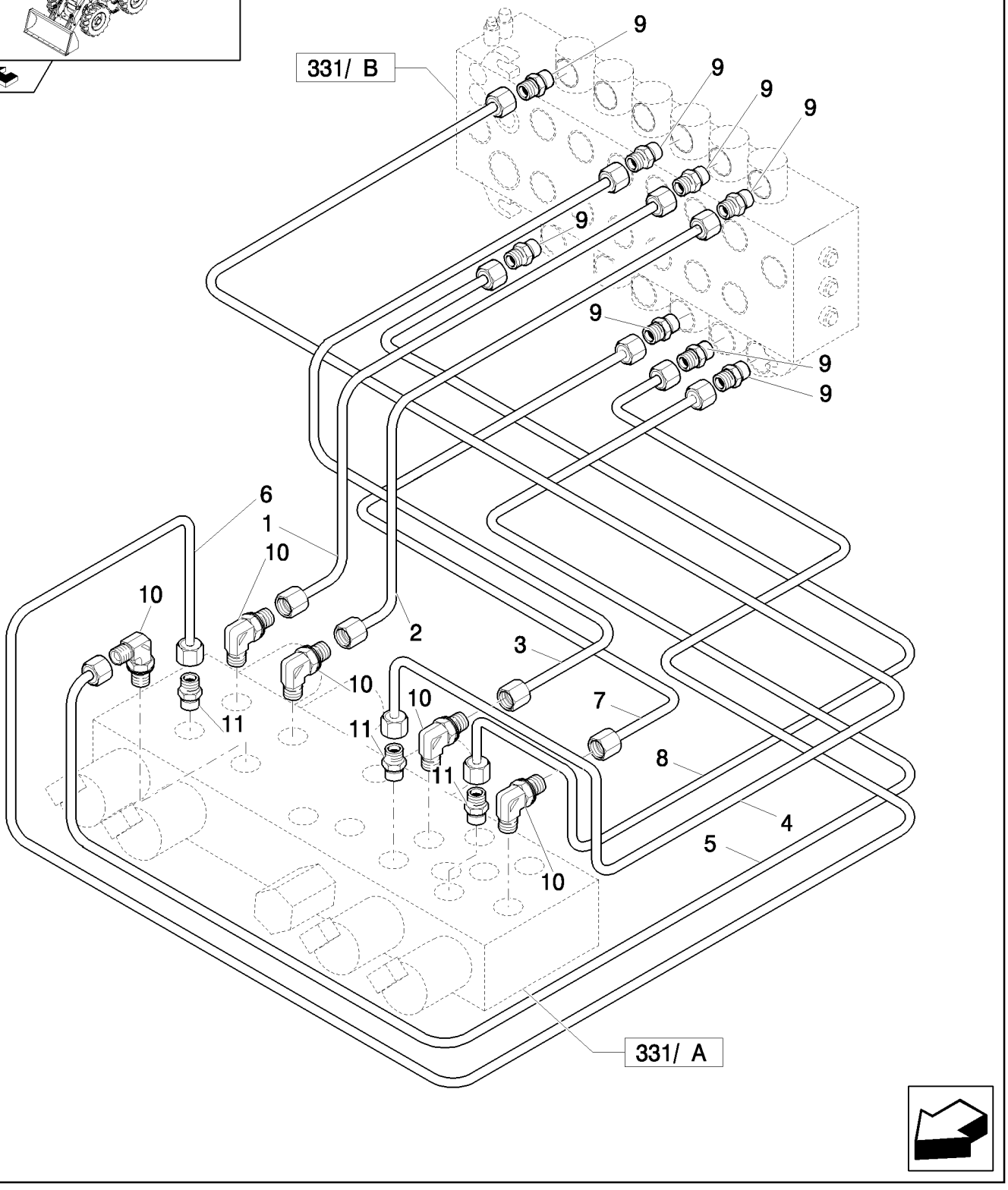

SECCIÓN 6 - SOPORTE PARA VÁLVULA DE CONTROL PILOTO, COMPLETO

REF	FN	PART NUMBER	YR/SN	QTY	DENOMINACION
1		85827093		1	TUBERIA HIDRAULICO
2		85827094		1	TUBERIA HIDRAULICO
3		85827091		1	TUBERIA HIDRAULICO
4		85827089		1	TUBERIA HIDRAULICO
5		85827092		1	TUBERIA HIDRAULICO
6		85827095		1	TUBERIA HIDRAULICO
7		85827090		1	TUBERIA HIDRAULICO
8		85827088		1	TUBERIA HIDRAULICO
9		85803312		7	RACOR
10		47050653		5	CODO
11		47050685		3	RACOR

Pilot Control Version

B95B

331	07	p1	03/08

SOPORTE PARA VÁLVULA DE CONTROL PILOTO, COMPLETO

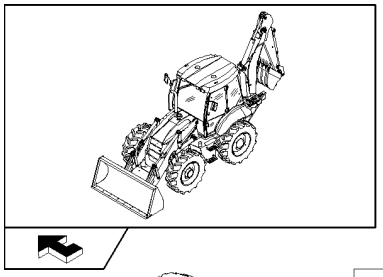

SOPORTE PARA VÁLVULA DE CONTROL PILOTO, COMPLETO

REF	FN	PART NUMBER	YR/SN	QTY	DENOMINACION
1		85827084		1	MANGA FLEXIBLE
2		85827085		1	MANGA FLEXIBLE
3		85827086		1	MANGA FLEXIBLE
4		85827077		1	MANGA FLEXIBLE
5		85827087		1	MANGA FLEXIBLE
6		85827082		1	MANGA FLEXIBLE
7		85827467		1	CODO
8		85827466		2	RACOR-T
9		85827076		1	MANGA FLEXIBLE
10		85827080		1	MANGA FLEXIBLE
11		85827078		1	MANGA FLEXIBLE
12		47120173		2	RACOR-T
13		47050686		3	RACOR
14		47050653		3	CODO
15		85803312		4	RACOR
16		85827533		1	MANGA FLEXIBLE
17		85827531		1	MANGA FLEXIBLE
18		85827532		1	MANGA FLEXIBLE
19		85827534		1	MANGA FLEXIBLE

Pilot Control Version	B95B

331	08	p1	03/08

SOPORTE PARA VÁLVULA DE CONTROL PILOTO, COMPLETO

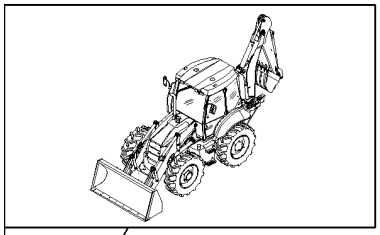

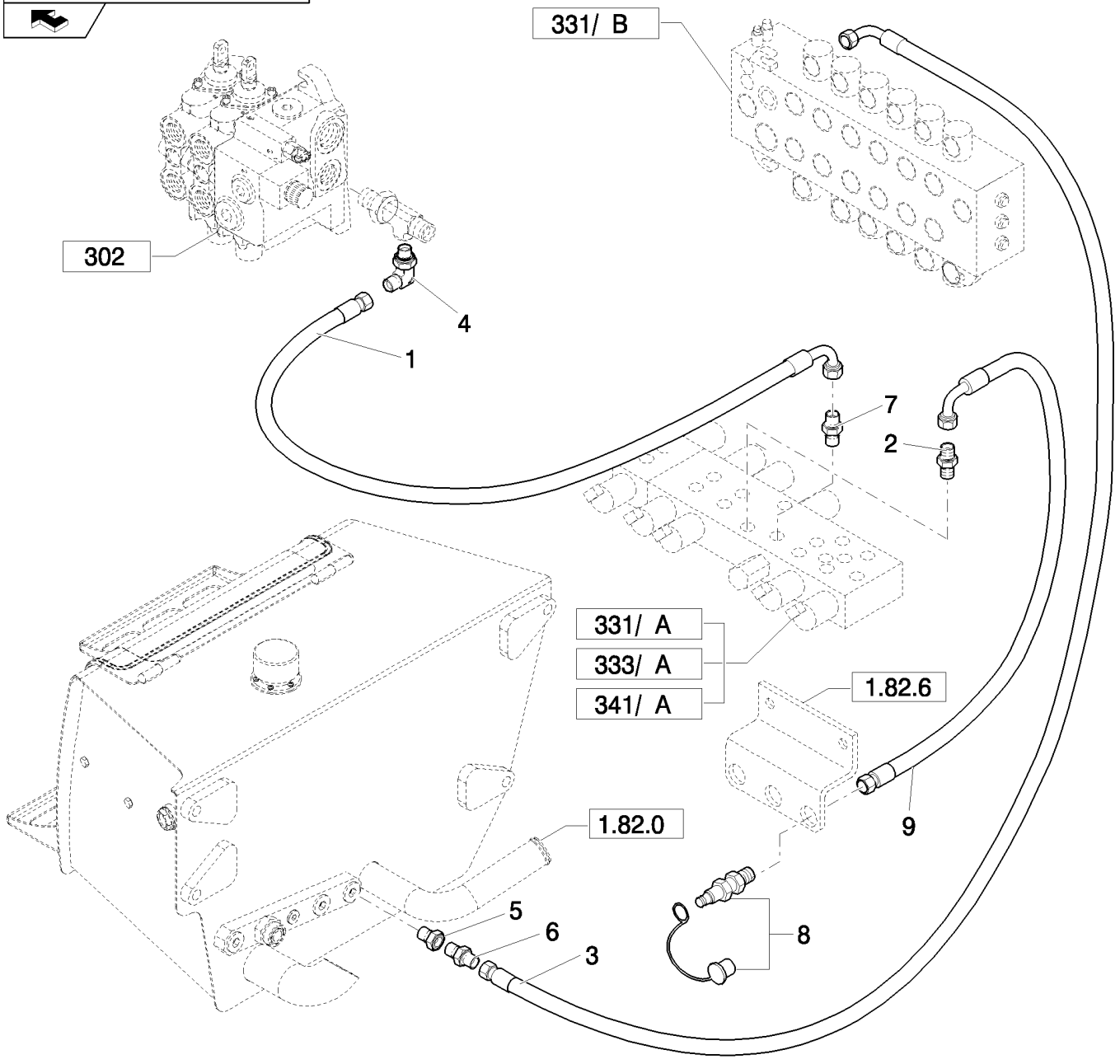

SOPORTE PARA VÁLVULA DE CONTROL PILOTO, COMPLETO

REF	FN	PART NUMBER	YR/SN	QTY	DENOMINACION
1		85827476		1	MANGA FLEXIBLE
2		83963371		1	RACOR
3		85827475		1	MANGA FLEXIBLE
4		85805318		1	CODO, 90º, 9/16"-18, 37º x 9/16"-18, O-Ring
5		85826100		1	REDUCTOR
6		47050686		1	RACOR
7		47050653		1	CODO
8		85817226		1	EMPALME RAPIDO
9		85812173		1	MANGA FLEXIBLE

Pilot Control Version	B95B

331	09	p1	03/08

SOPORTE PARA VÁLVULA DE CONTROL PILOTO, COMPLETO

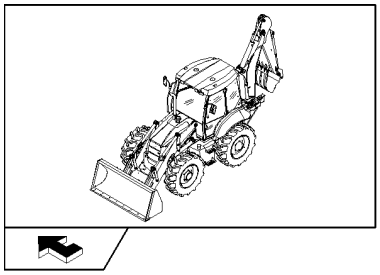

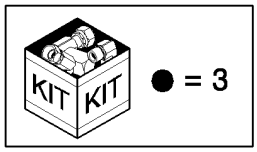

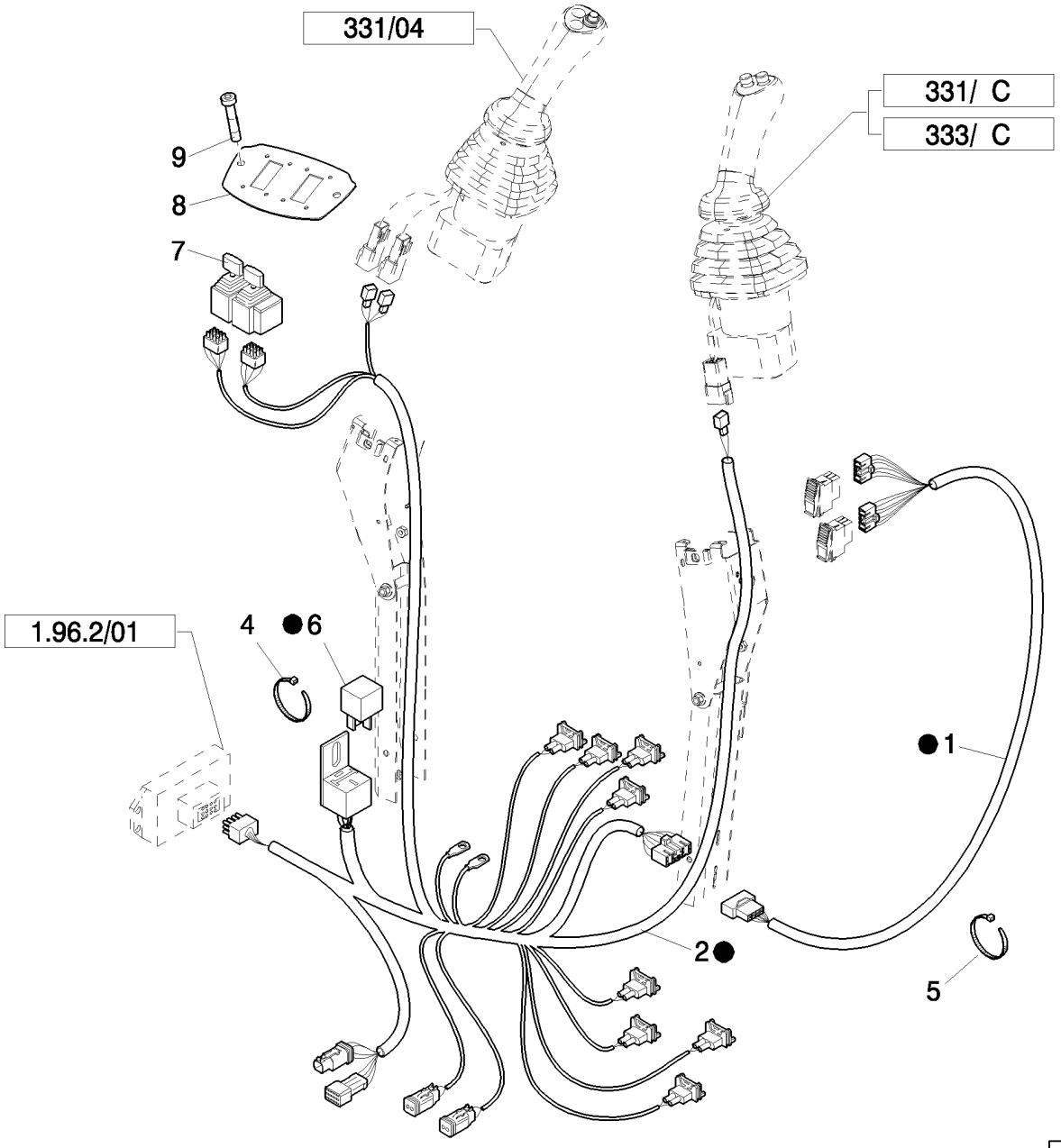

SOPORTE PARA VÁLVULA DE CONTROL PILOTO, COMPLETO

REF	FN	PART NUMBER	YR/SN	QTY	DENOMINACION
1		85828216		1	GRUPO DE CABLES
2	1	87305611		1	GRUPO DE CABLES
2	2	87573079		1	HAZ
3	3, 1	87305604		1	GRUPO DE CABLES
3	3, 2	87573078		1	HAZ
4		14560187		7	CIERRA CABLES, 178mm lg, L=203.2 mm
5		47044780		2	CABLE
6		85821537		1	CONECTADOR
7		86988086		2	JOYSTICK
8		87435381		1	PLACA DE MONTAJE
9		85821534		2	TORNILLO

(1) Only for B90B, B90BLR (EU) - B90B(NA
(2) Only for B100B, B100BLR, B110B, B115B (EU) - B95B, B95BLR, B95BTC, B110B, B115B (NA)
(3) Includes 1, 2, 6

Pilot Control Version	B95B

VALVULA DE MANDO PROPORCIONAL 6 SECCIONES

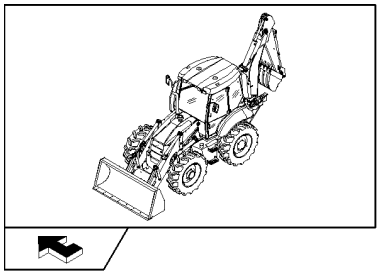

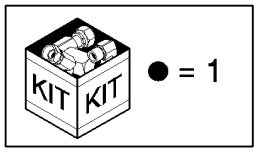

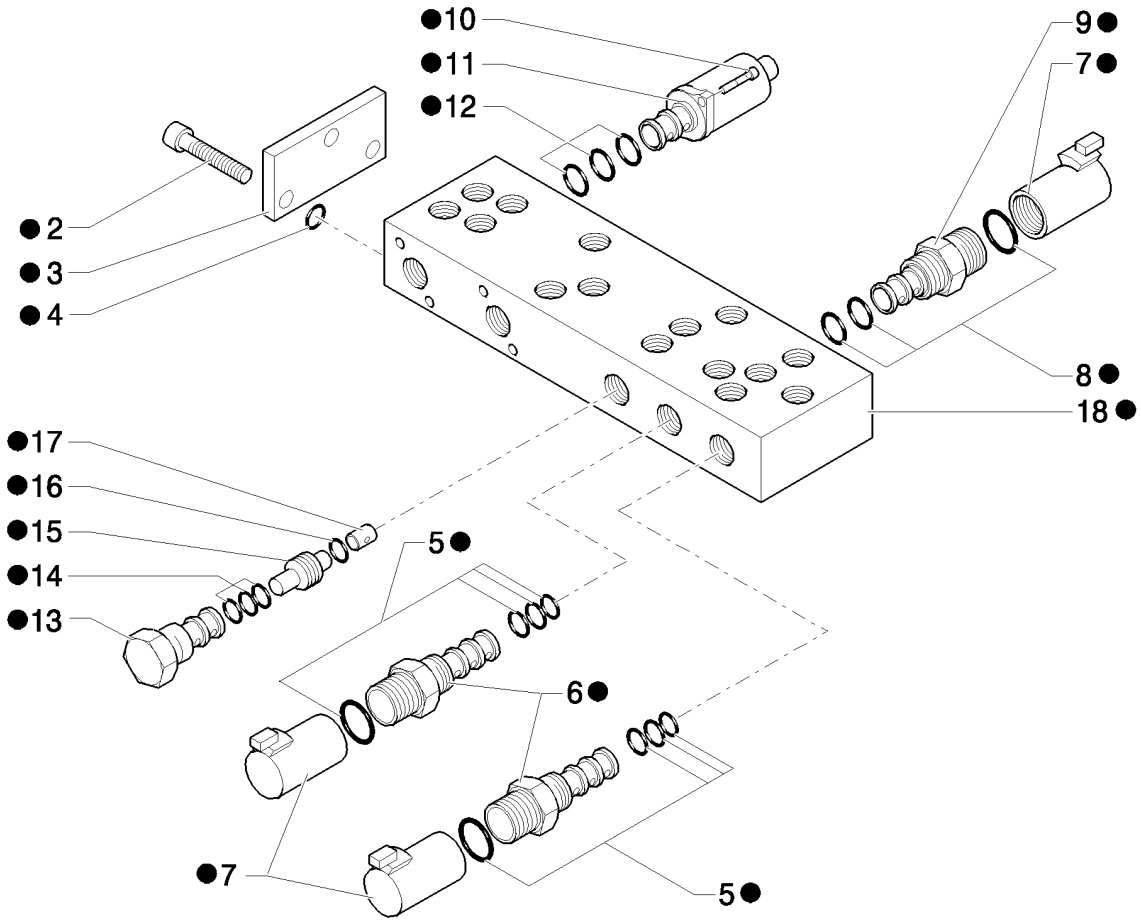

VALVULA DE MANDO PROPORCIONAL 6 SECCIONES

REF	FN	PART NUMBER	YR/SN	QTY	DENOMINACION
1		85827472		1	VALVULA HIDRAULICA
2		14304021		3	TORNILLO, Hex Soc Hd, M5 x 10, 8.8
3		85827991		1	PLACA
4		85827999		1	SERIE DE JUNTAS
5		85828002		2	SERIE DE JUNTAS
6	1	85827996		2	ELECTROVÁLVULA
7		85827995		3	BOBINA
8		85827998		1	SERIE DE JUNTAS
9	2	85827994		1	ELECTROVÁLVULA
10		14302921		8	TORNILLO, Hex, M4 x 10, 8.8, Full Thd
11		85827993		4	ELECTROVÁLVULA
12		85828000		4	SERIE DE JUNTAS
13		85827997		1	VALVULA, CARTRIDGE, HYDRAULIC PRESSURE REDUCING VALVE
14		85828001		1	SERIE DE JUNTAS
15		85827992		1	VALVULA DE CIERRE
16		85828003		1	JUNTA HERMETICA
17		85828005		1	ORIFICIO
18		85828013		1	CUERPO

(1) Includes 5, 7
(2) Includes 7, 8

Pilot Control Version

B95B

331/ B	01	p1	04/08

DISTRIBUIDOR EXCAVADORA, 6 SECCIONES (CENTER PIVOT)

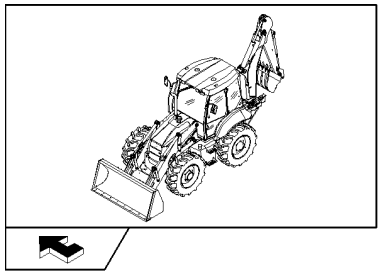

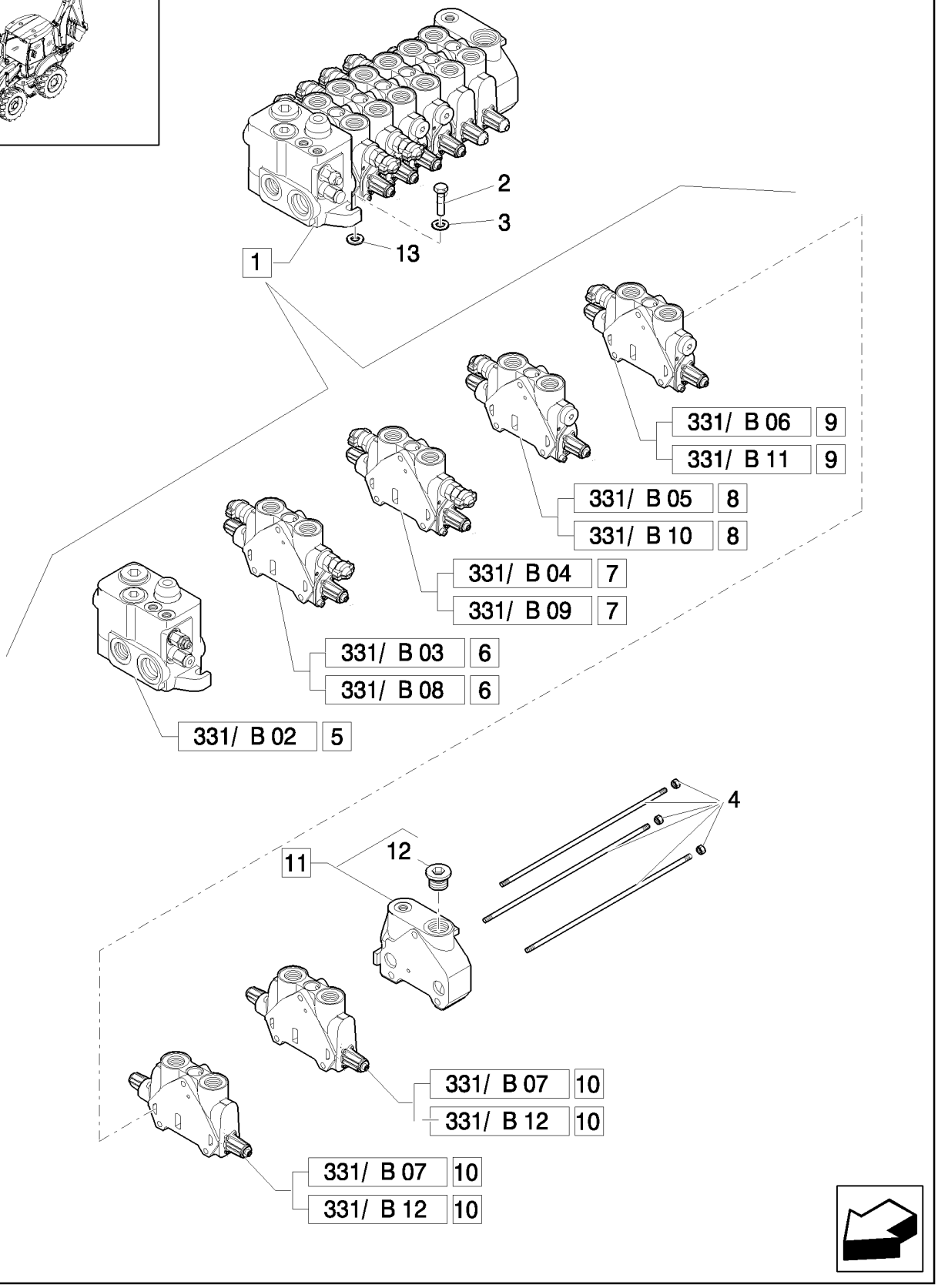

DISTRIBUIDOR EXCAVADORA, 6 SECCIONES (CENTER PIVOT)

REF	FN	PART NUMBER	YR/SN	QTY	DENOMINACION
1	1	87734101		1	VALVULA DISTRIBUIDORA, Assy
1	2	87734093		1	VALVULA DISTRIBUIDORA, Assy
2		11234721		3	TORNILLO, Hex, M10 x 1.25 x 45, 8.8
3		11190679		3	ARANDELA ABANICO, Belleville, M10.5
4		85811958		1	EQUIPO
5		87610858		1	DISTRIBUIDOR HYDR, Assy
6	1, 3	85826930		1	SECTOR, Assy
6	4, 3	85826901		1	DISTRIBUIDOR HYDR, Assy
7	5, 1	85826931		1	SECTOR, Assy
7	5, 4	85826339		1	DISTRIBUIDOR HYDR, Assy
8	6, 1	85826932		1	SECTOR, Assy
8	6, 4	85826903		1	SECTOR, Assy
9	1, 7	87758454		1	PISTONCILLO, Assy
9	4, 7	87758451		1	PISTONCILLO, Assy
10	1, 8	85826360		2	SECTOR, Assy
10	4, 8	85826340		2	DISTRIBUIDOR HYDR, Assy
11		85826250		1	DISTRIBUIDOR HYDR
12		85811921		1	TAPÓN, 1-1/16"-12 UNF 2A
13		13578621		3	ARANDELA

(1) Only for B110B, B115B (EU)
(2) Center Pivot
(3) Boom Cylinder
(4) Only for NA
(5) Swing Cylinder
(6) Bucket Cylinder
(7) Dipper Cylinder
(8) Stabilizer Cylinder

Pilot Control Version

B95B

331/ B	02	p1	04/08

DISTRIBUIDOR EXCAVADORA, SECCIÓN ENTRADA (CENTER PIVOT)

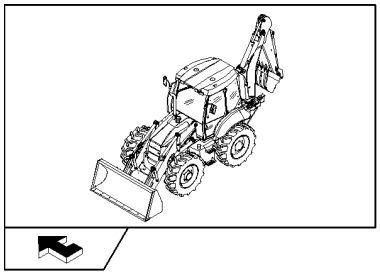

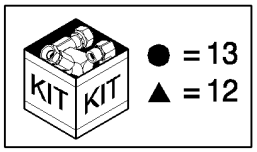

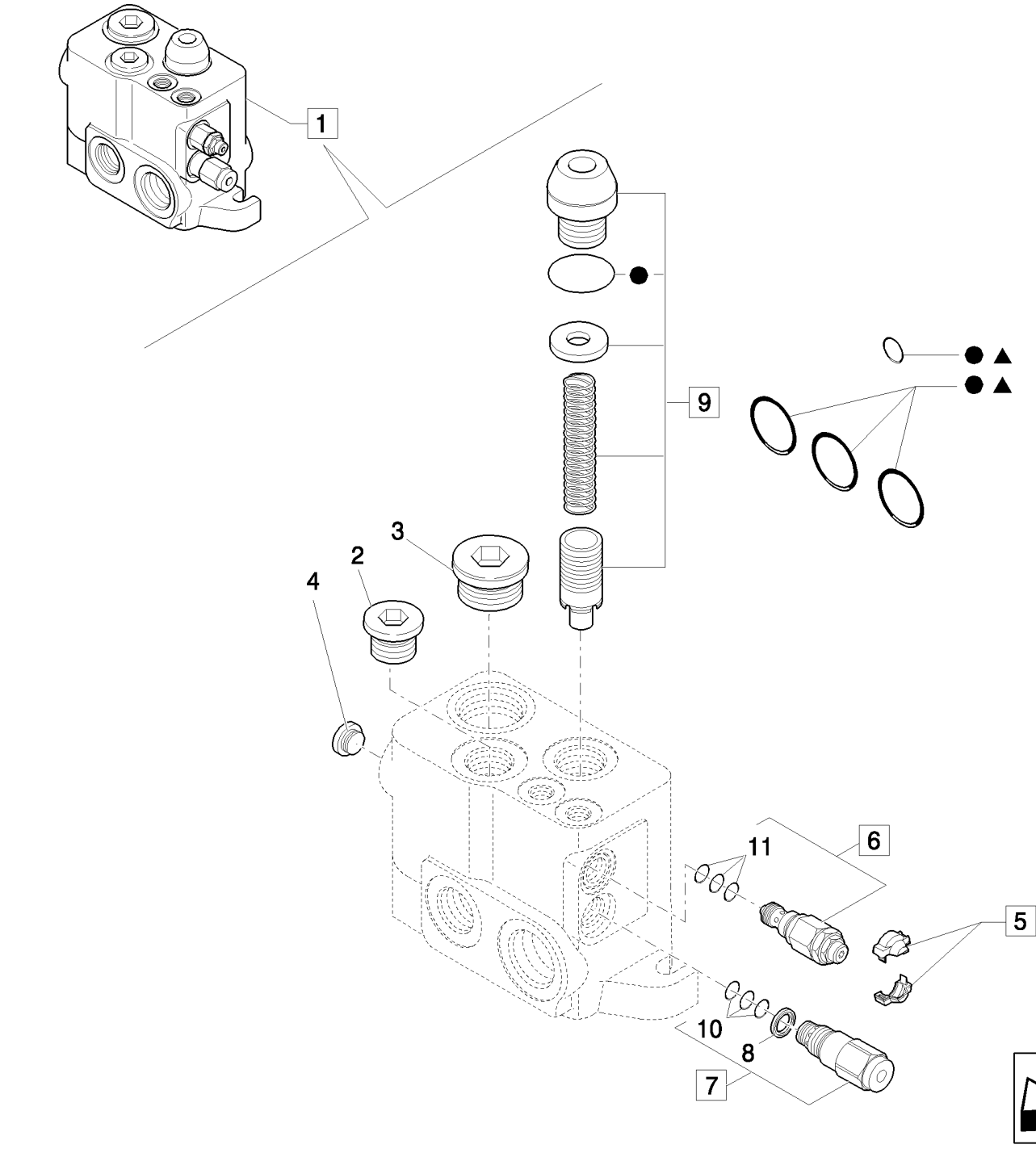

DISTRIBUIDOR EXCAVADORA, SECCIÓN ENTRADA (CENTER PIVOT)

REF	FN	PART NUMBER	YR/SN	QTY	DENOMINACION
1		87610858		1	DISTRIBUIDOR HYDR, Assy
2		85811921		1	TAPÓN, 1-1/16"-12 UNF 2A
3		85811922		1	TAPÓN, 1-5/16"-12 UNF 2A
4		85811923		1	TAPÓN
5		85811934		1	EQUIPO, Cover
6		85811946		1	VÁLVULA, DESCARGA, Assy
7		85820128		1	REGULADOR, Assy
8		85817669		1	JUNTA HERMETICA
9		85820129		1	EQUIPO, Regulation Assy
10		85821235		1	SERIE DE JUNTAS, Seal, Flow Regulator
11		85821236		1	SERIE DE JUNTAS, Seal, LS Pressure Relief
12		87308749		1	SERIE DE JUNTAS, Seals
13		85825477		1	SERIE DE JUNTAS, Seal

Pilot Control Version

B95B

331/ B	03	p1	04/08

DISTRIBUIDOR EXCAVADORA, SECCIÓN LANZA DE ENGANCHE (CENTER PIVOT)

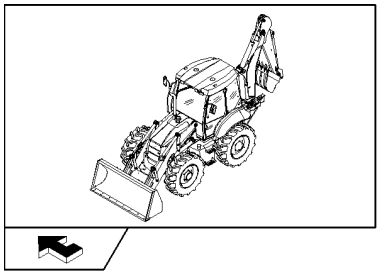

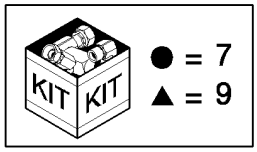

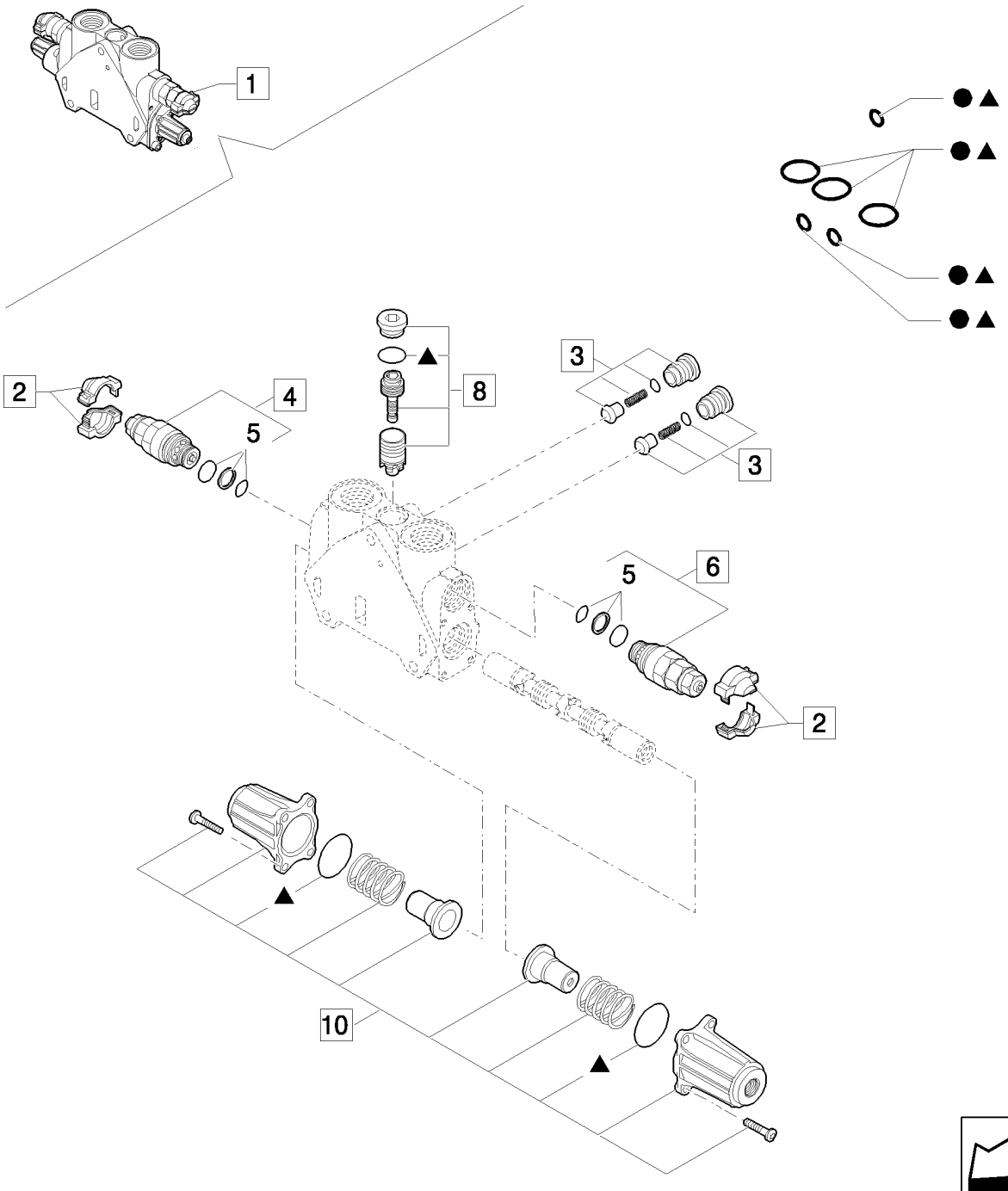

DISTRIBUIDOR EXCAVADORA, SECCIÓN LANZA DE ENGANCHE (CENTER PIVOT)

REF	FN	PART NUMBER	YR/SN	QTY	DENOMINACION
1		85826930		1	SECTOR, Assy
2		85811934		2	EQUIPO, Cover
3		85811938		2	VALVULA DE CIERRE, Valve, Assy
4	1	85812116		2	VÁLVULA, DESCARGA, Assy
5		85811933		2	SERIE DE JUNTAS, Valve Seals
6	2	85812117		2	VALVULA HIDRAULICA
7		85819148		1	SERIE DE JUNTAS, Seals
8		85819378		1	SERIE DE JUNTAS, Valve
9		85824281		1	SERIE DE JUNTAS, Cover Assy
10		85826344		1	EQUIPO

(1) 240 BAR
(2) 315 BAR

Pilot Control Version

B95B

DISTRIBUIDOR EXCAVADORA, SECCIÓN OSCIL. (CENTER PIVOT)

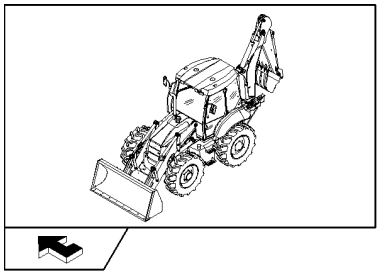

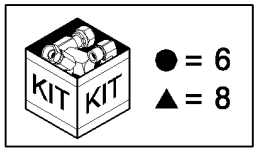

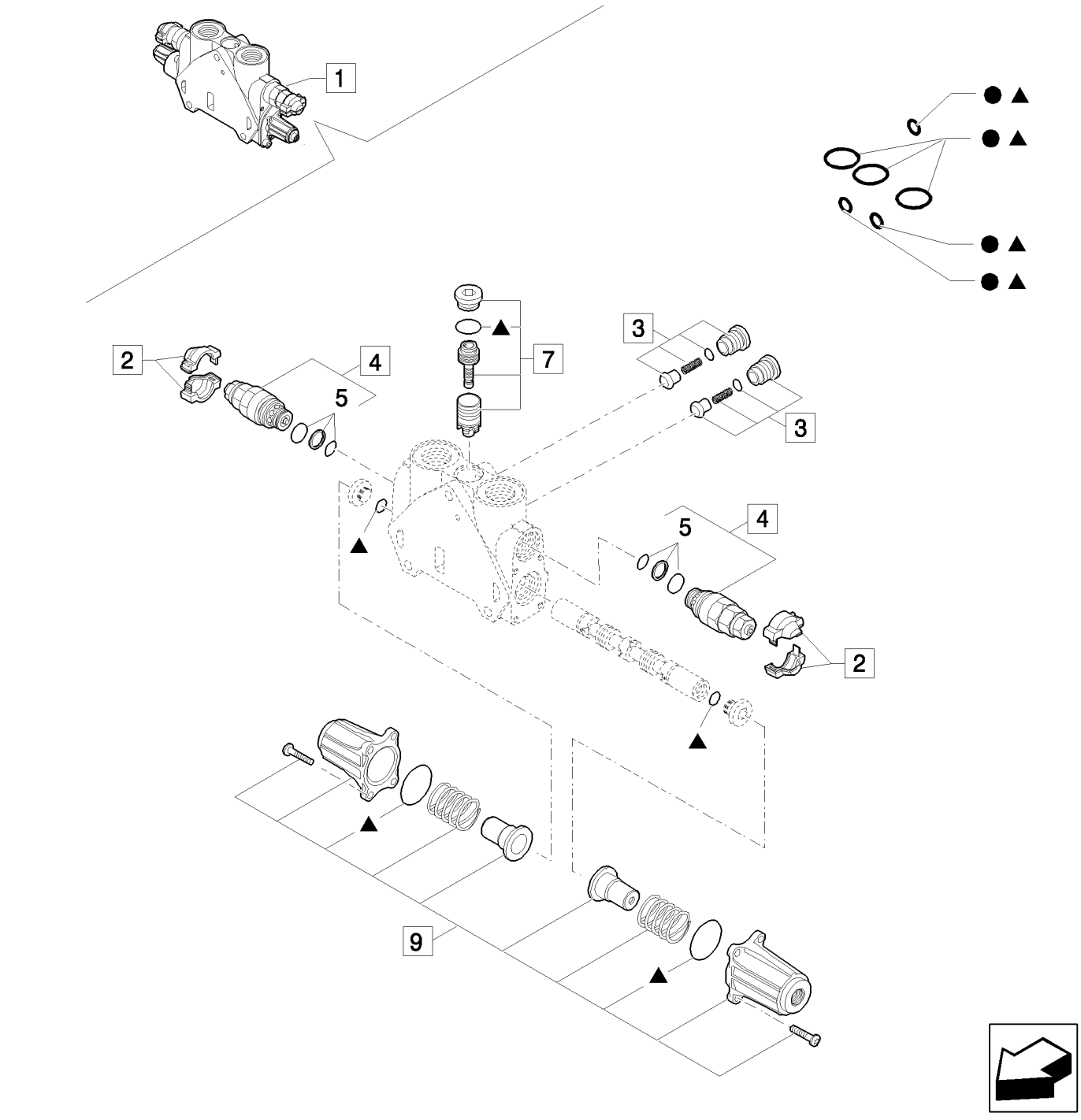

DISTRIBUIDOR EXCAVADORA, SECCIÓN OSCIL. (CENTER PIVOT)

REF	FN	PART NUMBER	YR/SN	QTY	DENOMINACION
1		85826931		1	SECTOR, Assy
2		85811934		2	EQUIPO, Cover
3		85811938		2	VALVULA DE CIERRE, Valve, Assy
4	1	85812114		2	VALVULA HIDRAULICA, Assy
5		85811933		2	SERIE DE JUNTAS, Secondary Valve
6		85819148		1	SERIE DE JUNTAS, Seals
7		85819378		1	SERIE DE JUNTAS, Seals
8		85824282		1	EQUIPO
9		85826344		1	EQUIPO

(1) 205 BAR

Pilot Control Version

B95B

331/ B	05	p1	04/08

DISTRIBUIDOR EXCAVADORA, SECCIÓN CUCHARÓN (CENTER PIVOT)

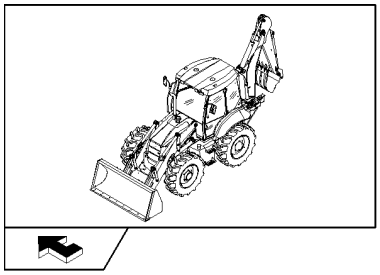

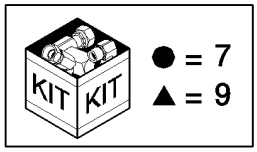

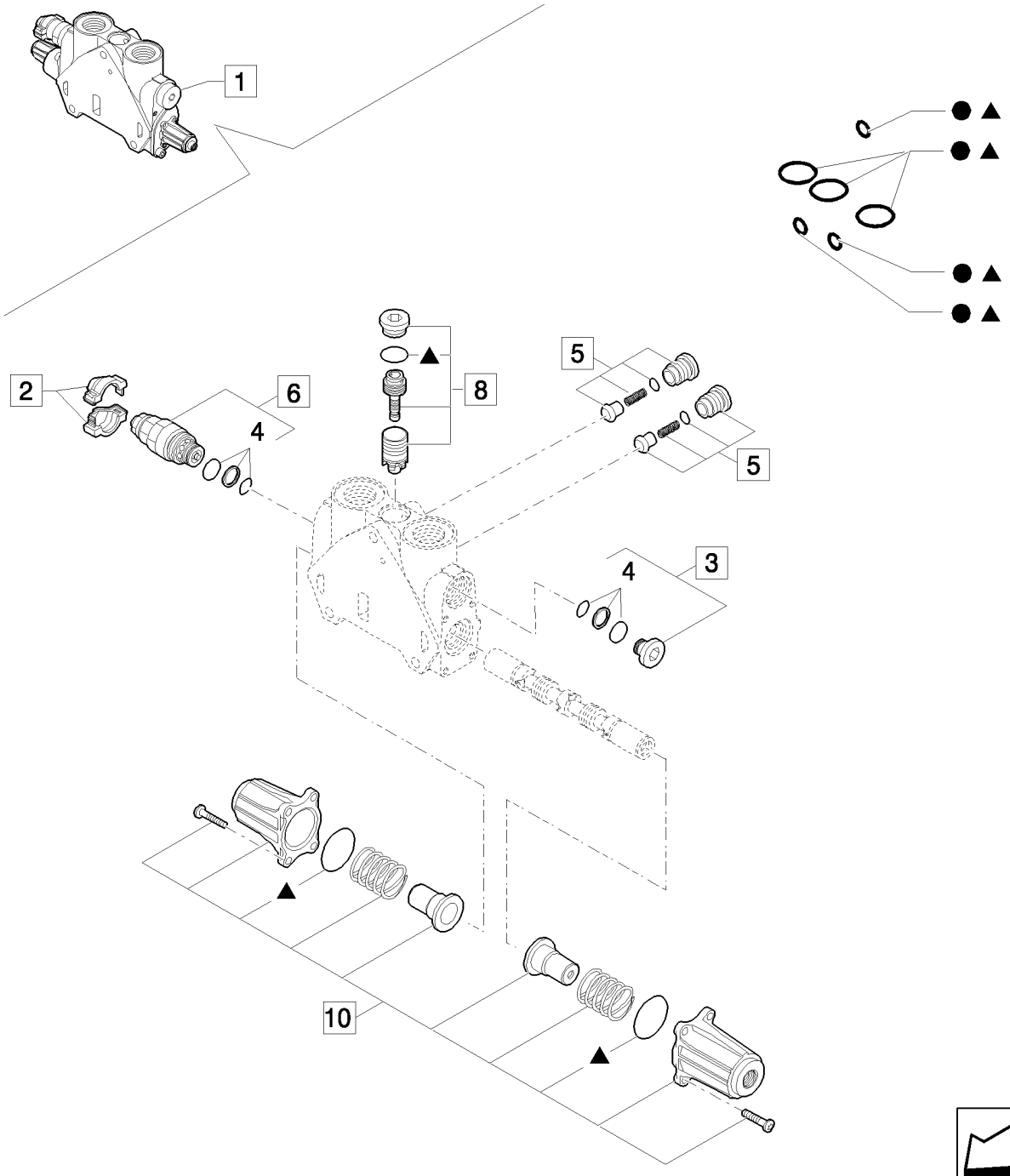

DISTRIBUIDOR EXCAVADORA, SECCIÓN CUCHARÓN (CENTER PIVOT)

REF	FN	PART NUMBER	YR/SN	QTY	DENOMINACION
1		85826932		1	SECTOR, Assy
2		85811934		1	EQUIPO, Cover
3		85811937		1	TAPÓN, Assy
4		85811933		1	SERIE DE JUNTAS, Valve Seals
5		85811938		1	VALVULA DE CIERRE, Valve, Assy
6	1	85812115		1	VALVULA HIDRAULICA, Assy
7		85819148		1	SERIE DE JUNTAS, Seals
8		85819378		1	SERIE DE JUNTAS, Valve
9		85824281		1	SERIE DE JUNTAS, Seals
10		85826344		2	EQUIPO, Cover Assy

(1) 220 BAR

Pilot Control Version

B95B

331/ B	06	p1	04/08

DISTRIBUIDOR EXCAVADORA, SECCIÓN DIPPERSTICK (CENTER PIVOT)

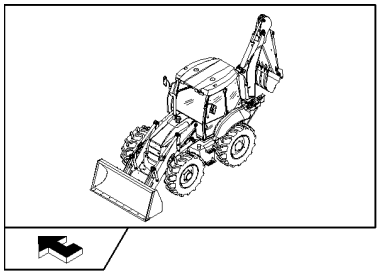

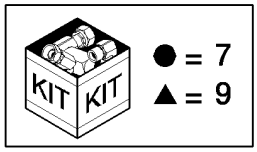

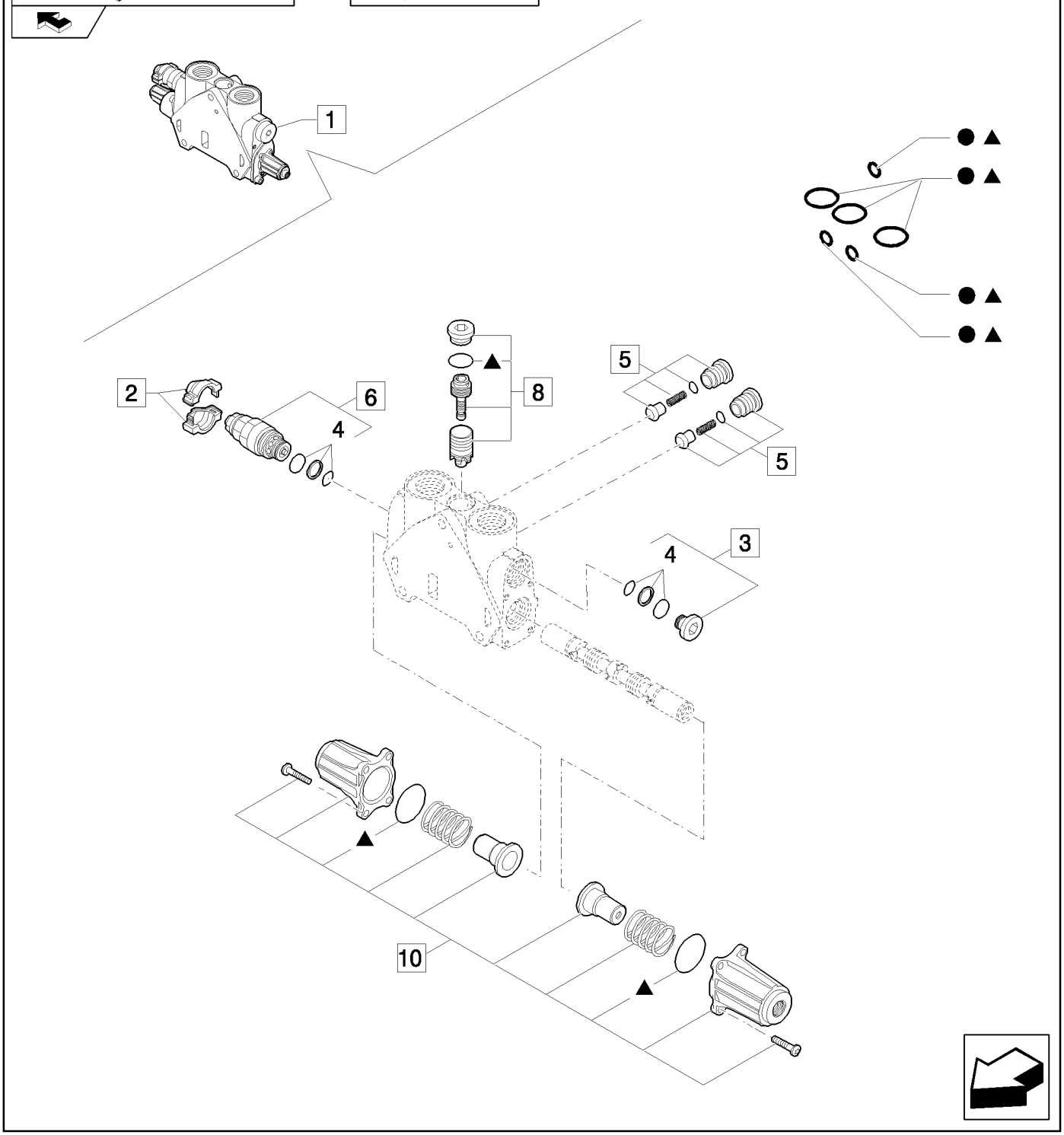

DISTRIBUIDOR EXCAVADORA, SECCIÓN DIPPERSTICK (CENTER PIVOT)

REF	FN	PART NUMBER	YR/SN	QTY	DENOMINACION
1		87758454		1	PISTONCILLO, Assy
2		85811934		1	EQUIPO, Cover
3		85811937		1	TAPÓN, Assy
4		85811933		1	SERIE DE JUNTAS, Valve Seals
5		85811938		2	VALVULA DE CIERRE, Valve, Assy
6	1	85812116		1	VÁLVULA, DESCARGA, Assy
7		85819148		1	SERIE DE JUNTAS, Seals
8		85819378		1	SERIE DE JUNTAS, Valve
9		85824281		1	SERIE DE JUNTAS, Seals
10		85826344		1	EQUIPO, Cover Assy

(1) 240 BAR

Pilot Control Version

B95B

331/ B	07	p1	04/08

DISTRIBUIDOR EXCAVADORA, SECCIÓN ESTABILIZADOR (CENTER PIVOT)

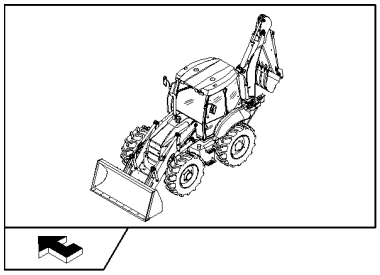

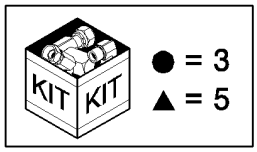

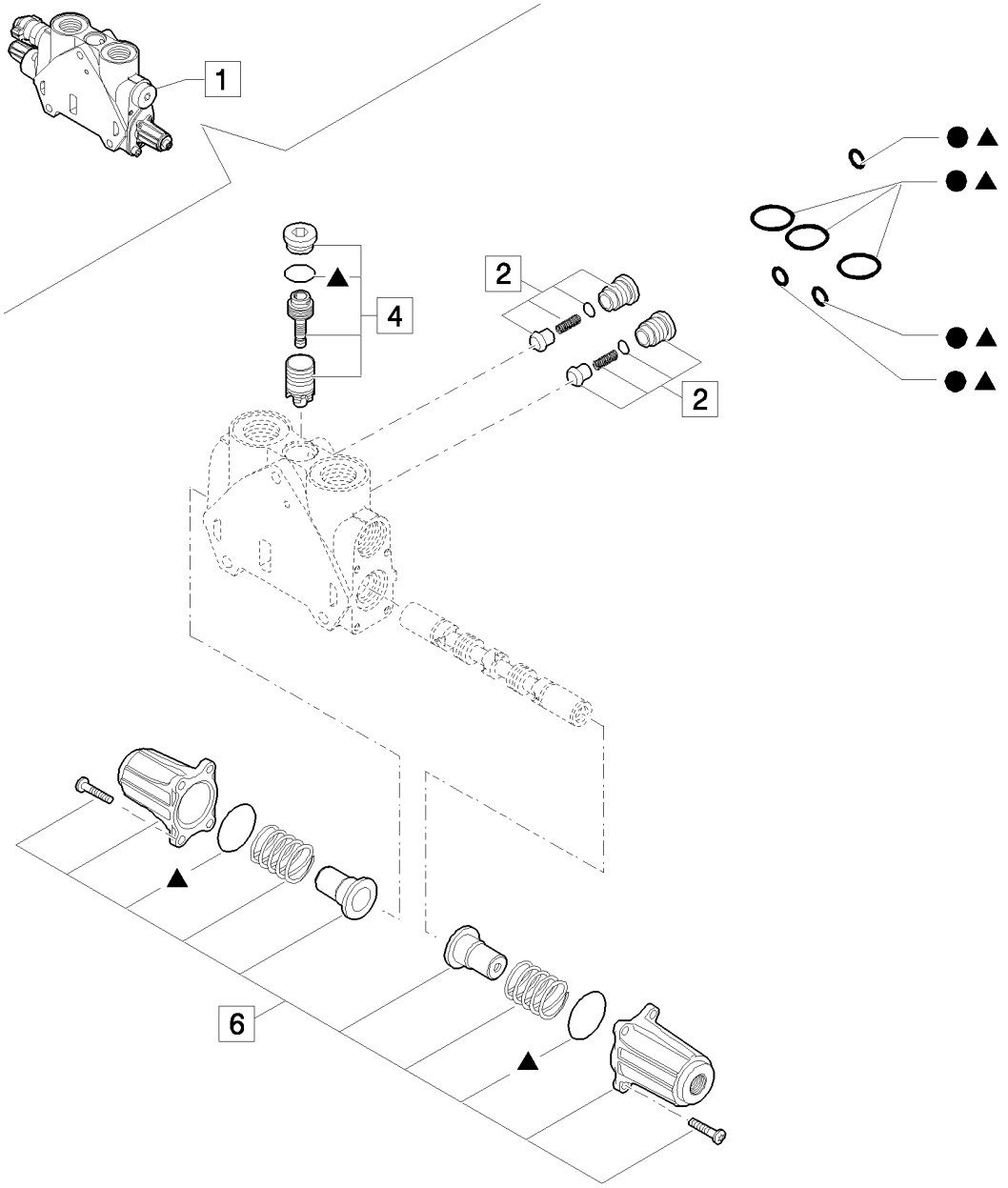

DISTRIBUIDOR EXCAVADORA, SECCIÓN ESTABILIZADOR (CENTER PIVOT)

REF	FN	PART NUMBER	YR/SN	QTY	DENOMINACION
1		85826360		2	SECTOR, Assy
2		85811938		2	VALVULA DE CIERRE, Valve, Assy
3		85819148		1	SERIE DE JUNTAS, Seals
4		85819378		1	SERIE DE JUNTAS, Valve
5		85824281		1	SERIE DE JUNTAS, Seals
6		85826344		1	EQUIPO, Cover Assy

Pilot Control Version

B95B

331/ B	08	p1	04/08

DISTRIBUIDOR EXCAVADORA, SECCIÓN LANZA DE ENGANCHE (CENTER PIVOT)

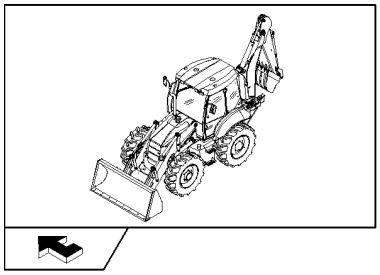

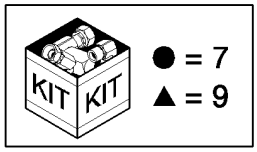

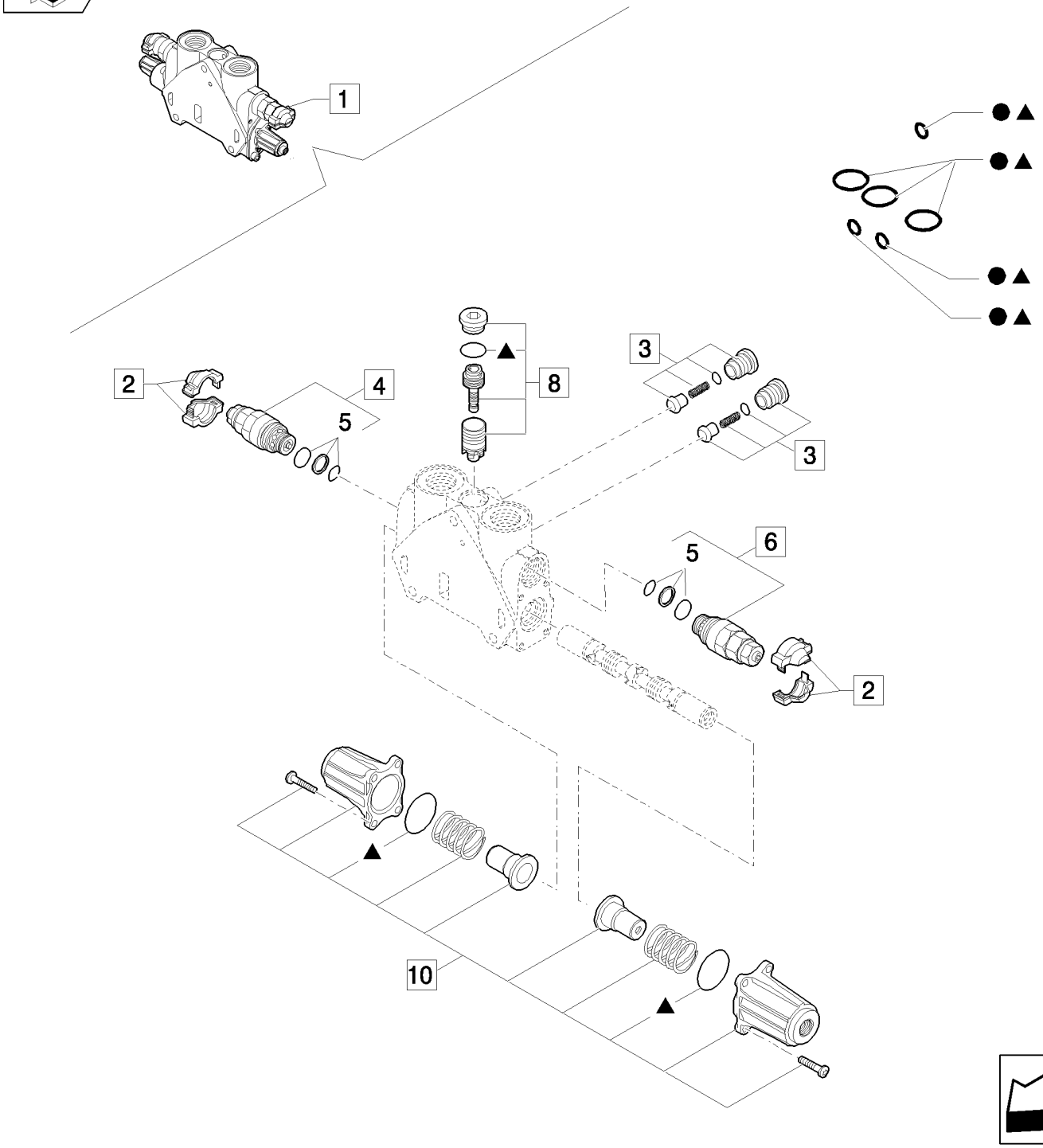

DISTRIBUIDOR EXCAVADORA, SECCIÓN LANZA DE ENGANCHE (CENTER PIVOT)

REF	FN	PART NUMBER	YR/SN	QTY	DENOMINACION
1		85826901		1	DISTRIBUIDOR HYDR, Assy
2		85811934		2	EQUIPO, Cover
3		85811938		2	VALVULA DE CIERRE, Valve, Assy
4	1	85812116		2	VÁLVULA, DESCARGA, Assy
5		85811933		2	SERIE DE JUNTAS, Valve Seals
6	2	85812117		2	VALVULA HIDRAULICA, Assy
7		85819148		1	SERIE DE JUNTAS, Seals
8		85819378		1	SERIE DE JUNTAS, Valve
9		85824281		1	SERIE DE JUNTAS, Cover Assy
10		85826344		1	EQUIPO

(1) 240 BAR
(2) 315 BAR

331/ B	09	p1	04/08

DISTRIBUIDOR EXCAVADORA, SECCIÓN OSCIL. (CENTER PIVOT)

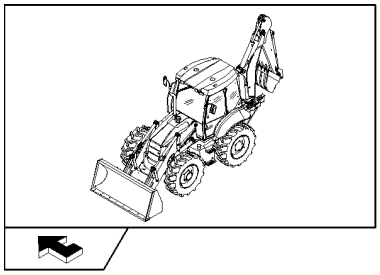

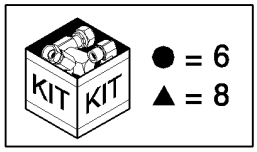

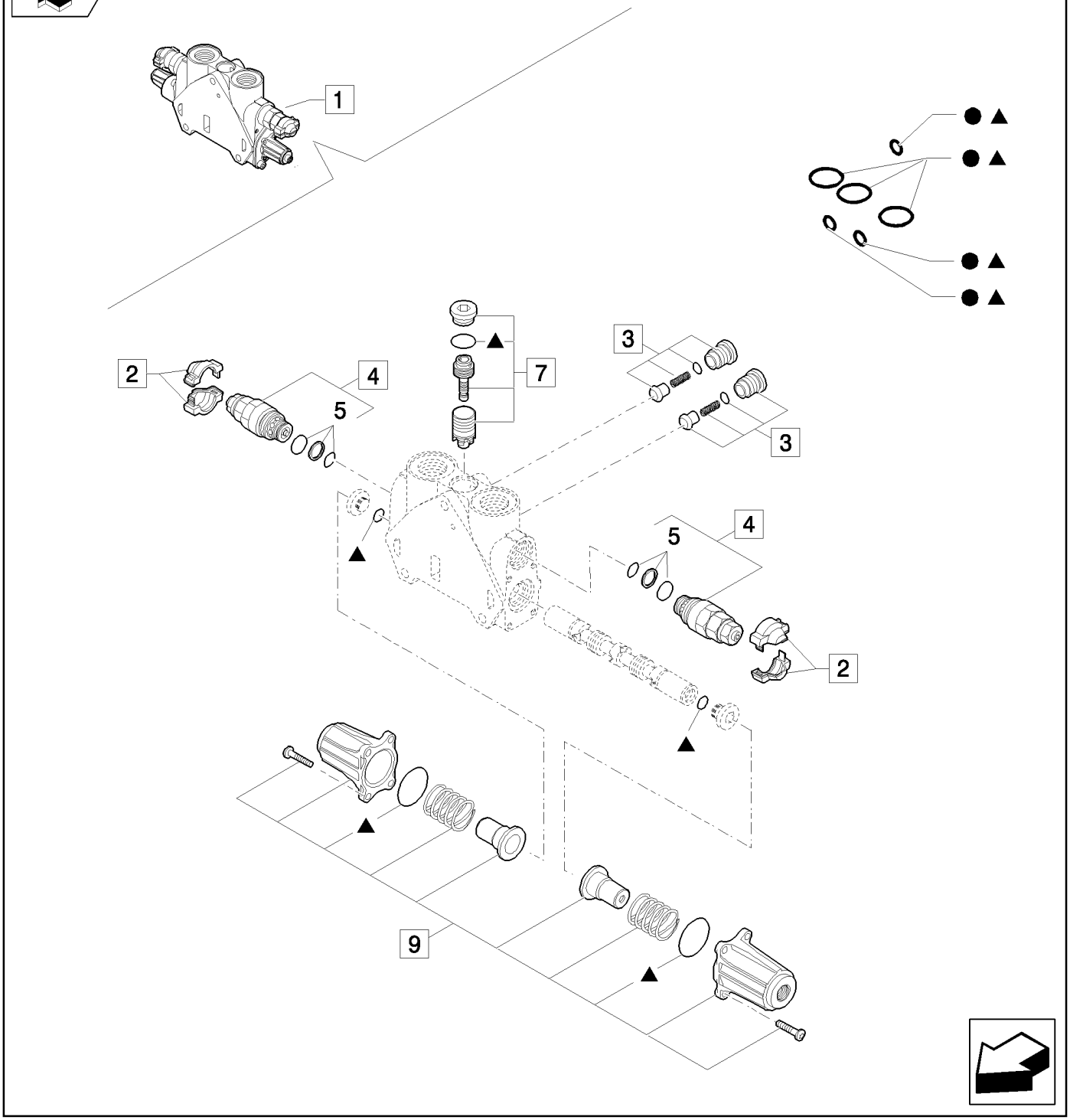

DISTRIBUIDOR EXCAVADORA, SECCIÓN OSCIL. (CENTER PIVOT)

REF	FN	PART NUMBER	YR/SN	QTY	DENOMINACION
1		85826339		1	DISTRIBUIDOR HYDR, Assy
2		85811934		2	EQUIPO, Cover
3		85811938		2	VALVULA DE CIERRE, Valve, Assy
4	1	85812114		2	VALVULA HIDRAULICA, Assy
5		85811933		2	SERIE DE JUNTAS, Secondary Valve
6		85819148		1	SERIE DE JUNTAS, Seals
7		85826345		1	EQUIPO, Seals
8		85824282		1	EQUIPO
9		85826344		1	EQUIPO

(1) 205 BAR

Pilot Control Version

B95B

331/ B	10	p1	04/08

DISTRIBUIDOR EXCAVADORA, SECCIÓN CUCHARÓN (CENTER PIVOT)

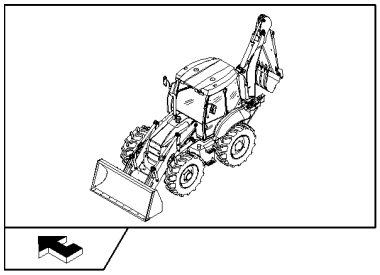

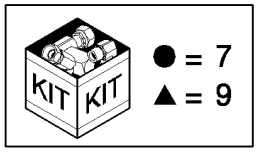

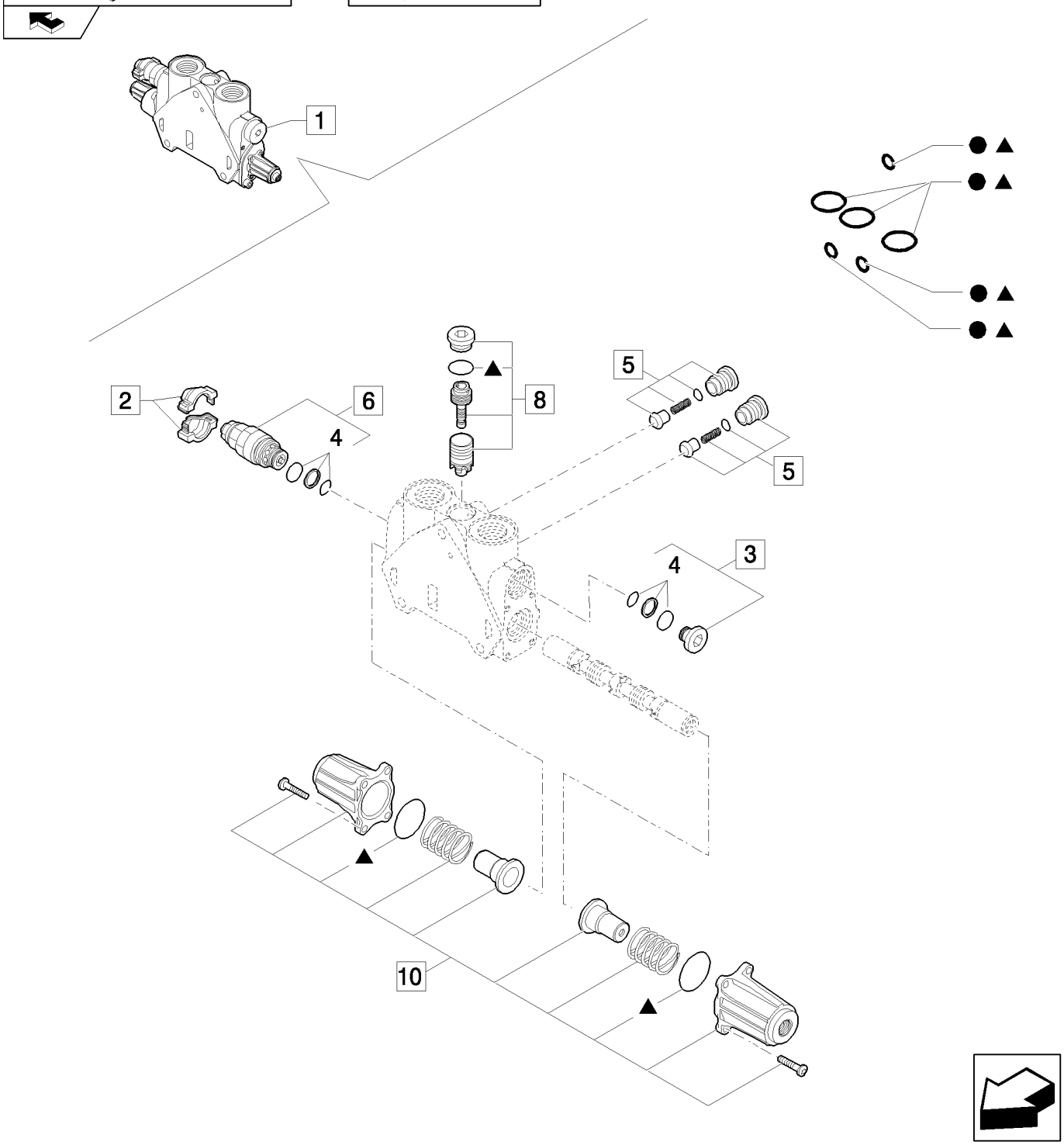

DISTRIBUIDOR EXCAVADORA, SECCIÓN CUCHARÓN (CENTER PIVOT)

REF	FN	PART NUMBER	YR/SN	QTY	DENOMINACION
1		85826903		1	SECTOR, Assy
2		85811934		1	EQUIPO, Cover
3		85811935		1	EQUIPO
4		85811933		1	SERIE DE JUNTAS, Valve Seals
5		85811938		1	VALVULA DE CIERRE, Valve, Assy
6	1	85812115		1	VALVULA HIDRAULICA, Assy
7		85819148		1	SERIE DE JUNTAS, Seals
8		85819378		1	SERIE DE JUNTAS, Valve
9		85824281		1	SERIE DE JUNTAS, Seals
10		85826344		2	EQUIPO, Cover Assy

(1) 220 BAR

Pilot Control Version

B95B

331/ B	11	p1	04/08

DISTRIBUIDOR EXCAVADORA, SECCIÓN DIPPERSTICK (CENTER PIVOT)

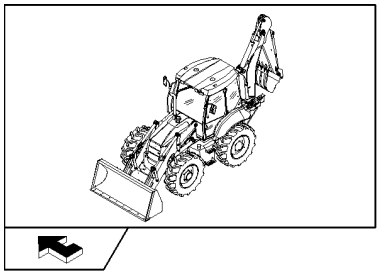

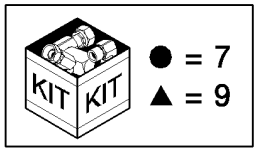

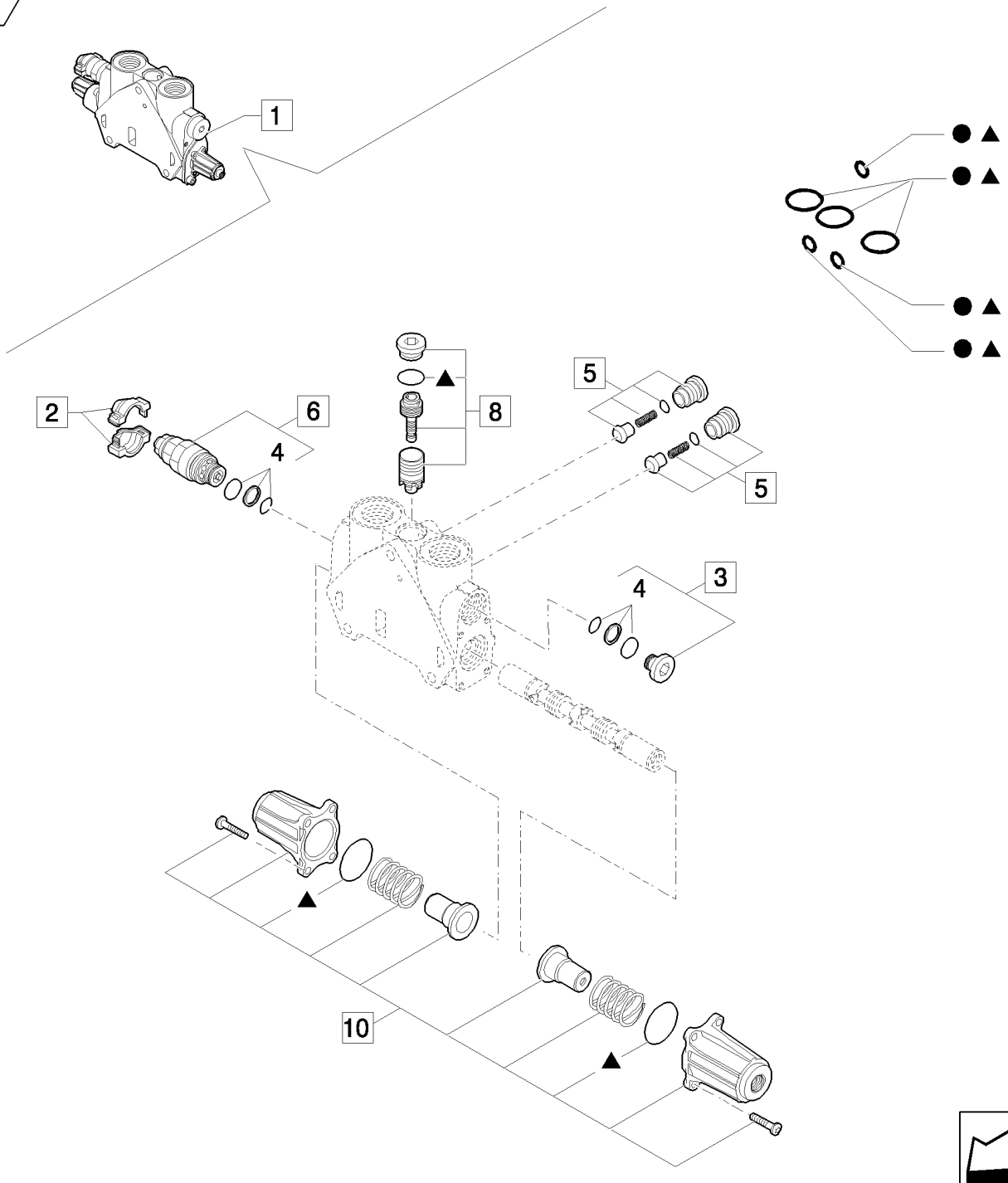

DISTRIBUIDOR EXCAVADORA, SECCIÓN DIPPERSTICK (CENTER PIVOT)

REF	FN	PART NUMBER	YR/SN	QTY	DENOMINACION
1		87758451		1	PISTONCILLO, Assy
2		85811934		1	EQUIPO, Cover
3		85811937		1	TAPÓN, Assy
4		85811933		1	SERIE DE JUNTAS, Valve Seals
5		85811938		2	VALVULA DE CIERRE, Valve, Assy
6	1	85812116		1	VÁLVULA, DESCARGA, Assy
7		85819148		1	SERIE DE JUNTAS, Seals
8		85826345		1	EQUIPO, Valve
9		85824281		1	SERIE DE JUNTAS, Seals
10		85826344		1	EQUIPO, Cover Assy

(1) 240 BAR

331/ B	12	p1	04/08

DISTRIBUIDOR EXCAVADORA, SECCIÓN ESTABILIZADOR (CENTER PIVOT)

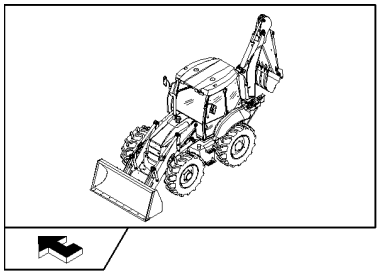

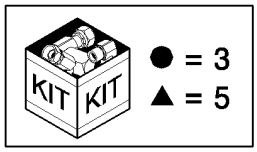

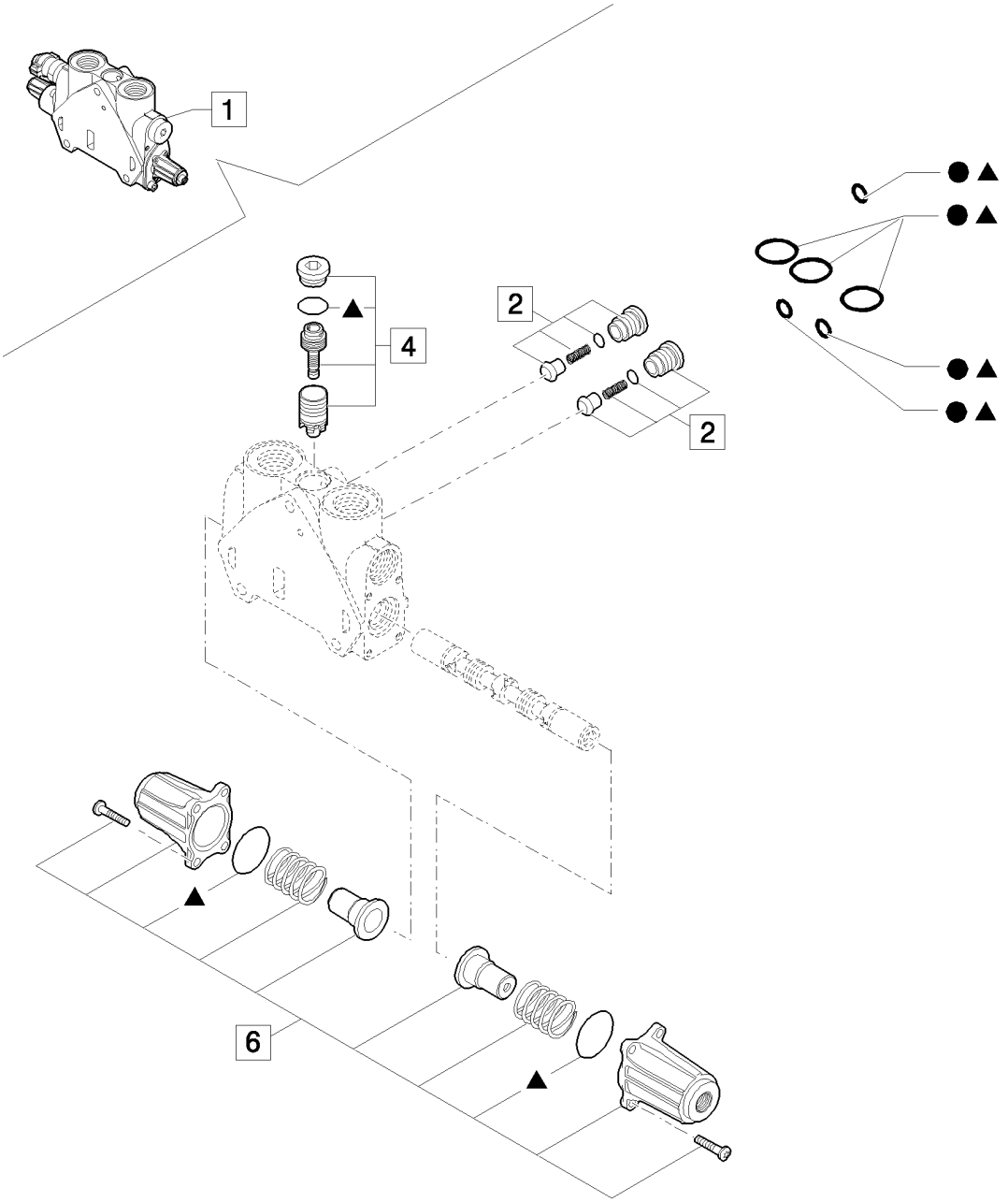

DISTRIBUIDOR EXCAVADORA, SECCIÓN ESTABILIZADOR (CENTER PIVOT)

REF	FN	PART NUMBER	YR/SN	QTY	DENOMINACION
1		85826340		2	DISTRIBUIDOR HYDR, Assy
2		85811938		2	VALVULA DE CIERRE, Valve, Assy
3		85819148		1	SERIE DE JUNTAS, Seals
4		85819378		1	SERIE DE JUNTAS, Valve
5		85824281		1	SERIE DE JUNTAS, Seals
6		85826344		1	EQUIPO, Cover Assy

331/ C	01	p1	04/08

VÁLVULA DE PILOTAJE DEL MANIPULADOR (DERECHA)

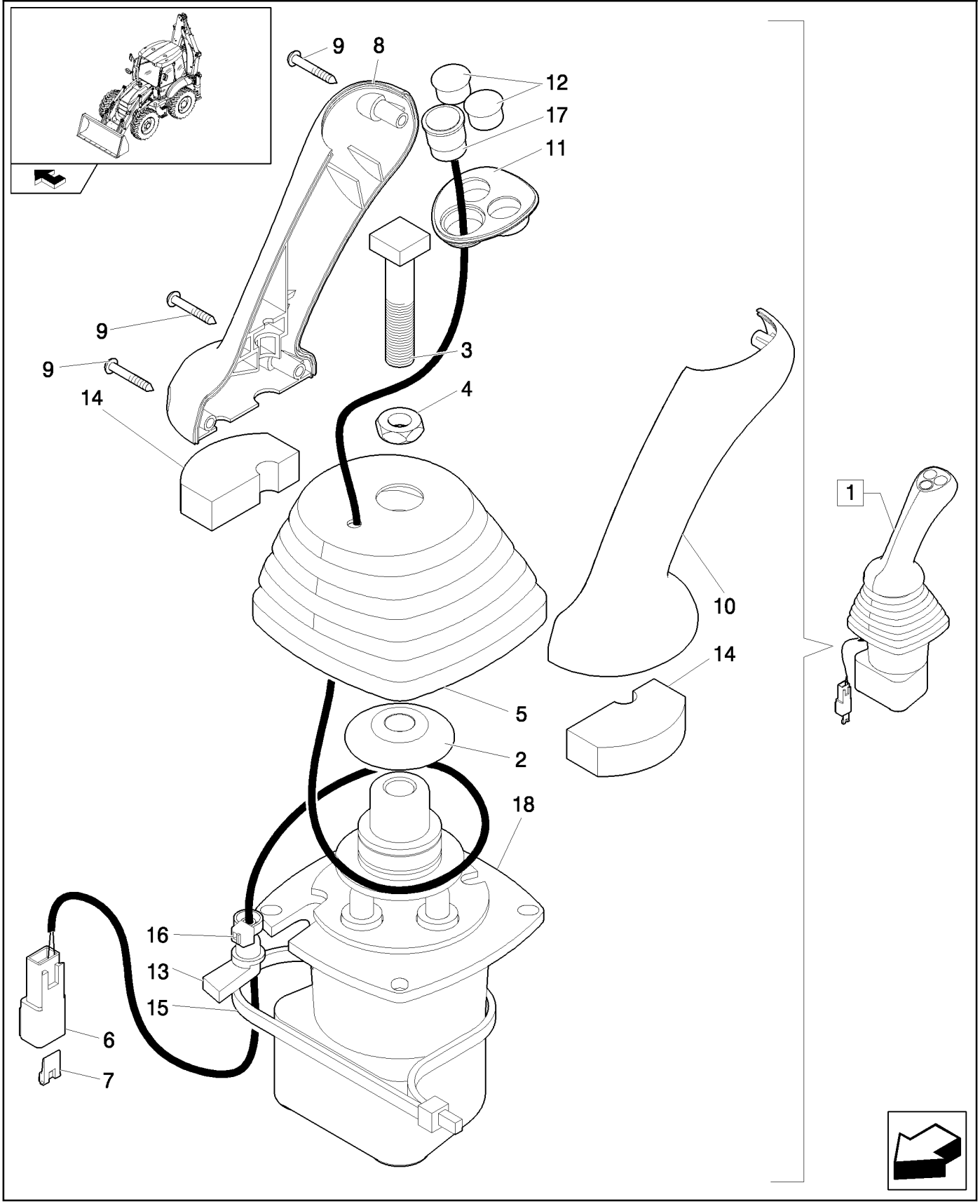

VÁLVULA DE PILOTAJE DEL MANIPULADOR (DERECHA)

REF	FN	PART NUMBER	YR/SN	QTY	DENOMINACION
1		87685956		1	VALVULA DISTRIBUIDORA, Assy, RH
2		87436225		1	RETENEDOR
3		87428023		1	TORNILLO
4		87037944		1	TUERCA, Thin, M12 x 1.75, Cl 05
5		87443721		1	CASQUETE
6		225315C1		1	CONECTOR
7		225318C1		1	CUNA
8		87308838		1	PERILLA
9		15687475		3	TORNILLO AUTOROSCANTE, Pan Hd, M3.5 x 25, Stainless
10		87308839		1	PERILLA
11		87547309		1	MARCO
12		86625128		2	TAPÓN, Dome, .562" hole, Nylon
13		87424267		1	PASACABLES
14		87435506		2	ANILLO DE CIERRE
15		87438046		1	CIERRA CABLES
16		87000312		1	CIERRA CABLES
17		87546922		1	CONTACTOR
18		87687141		1	VÁLVULA DE PILOTAJE

331/ C	02	p1	04/08

VÁLVULA, PALANCA DE CONTROL IZQUIERDO

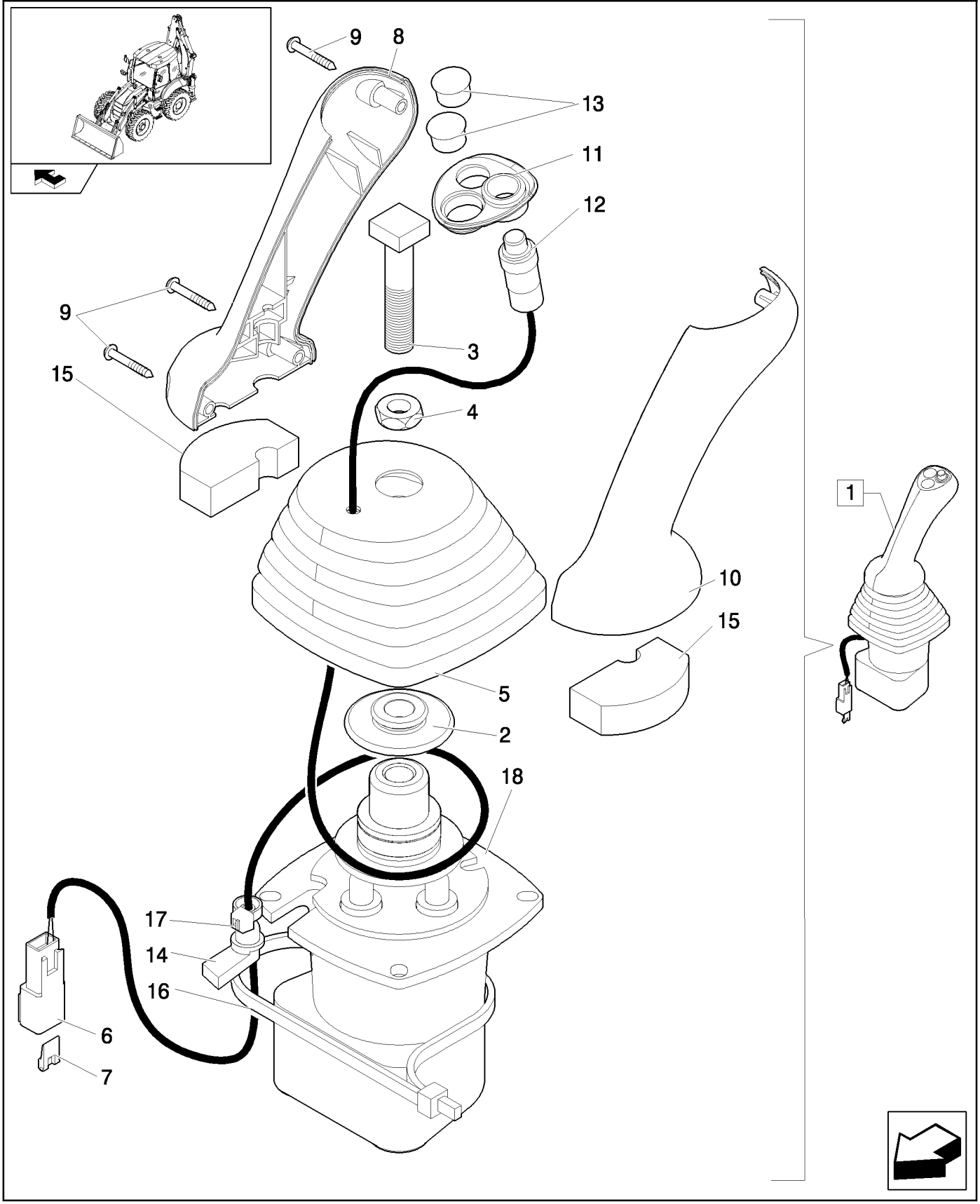

VÁLVULA, PALANCA DE CONTROL IZQUIERDO

REF	FN	PART NUMBER	YR/SN	QTY	DENOMINACION
1		87685948		1	VALVULA DISTRIBUIDORA, Assy
2		87436225		1	RETENEDOR
3		87428023		1	TORNILLO
4		87037944		1	TUERCA, Thin, M12 x 1.75, Cl 05
5		87443721		1	CASQUETE
6		225315C1		1	CONECTOR
7		225318C1		1	CUNA
8		87308838		1	PERILLA
9		15687475		3	TORNILLO AUTOROSCANTE, Pan Hd, M3.5 x 25, Stainless
10		87308839		1	PERILLA
11		87435243		1	MARCO
12		87437372		1	CONTACTOR
13		86625128		2	TAPÓN, Dome, .562" hole, Nylon
14		87424267		1	PASACABLES
15		87435506		2	ANILLO DE CIERRE
16		87438046		1	CIERRA CABLES
17		87000312		1	CIERRA CABLES
18		87687141		1	VÁLVULA DE PILOTAJE

333	01	p1	04/08

COLUMNA COMPLETA 7 SECCIONES (CENTER PIVOT)

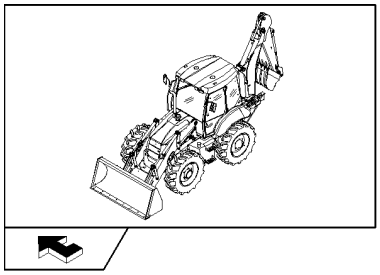

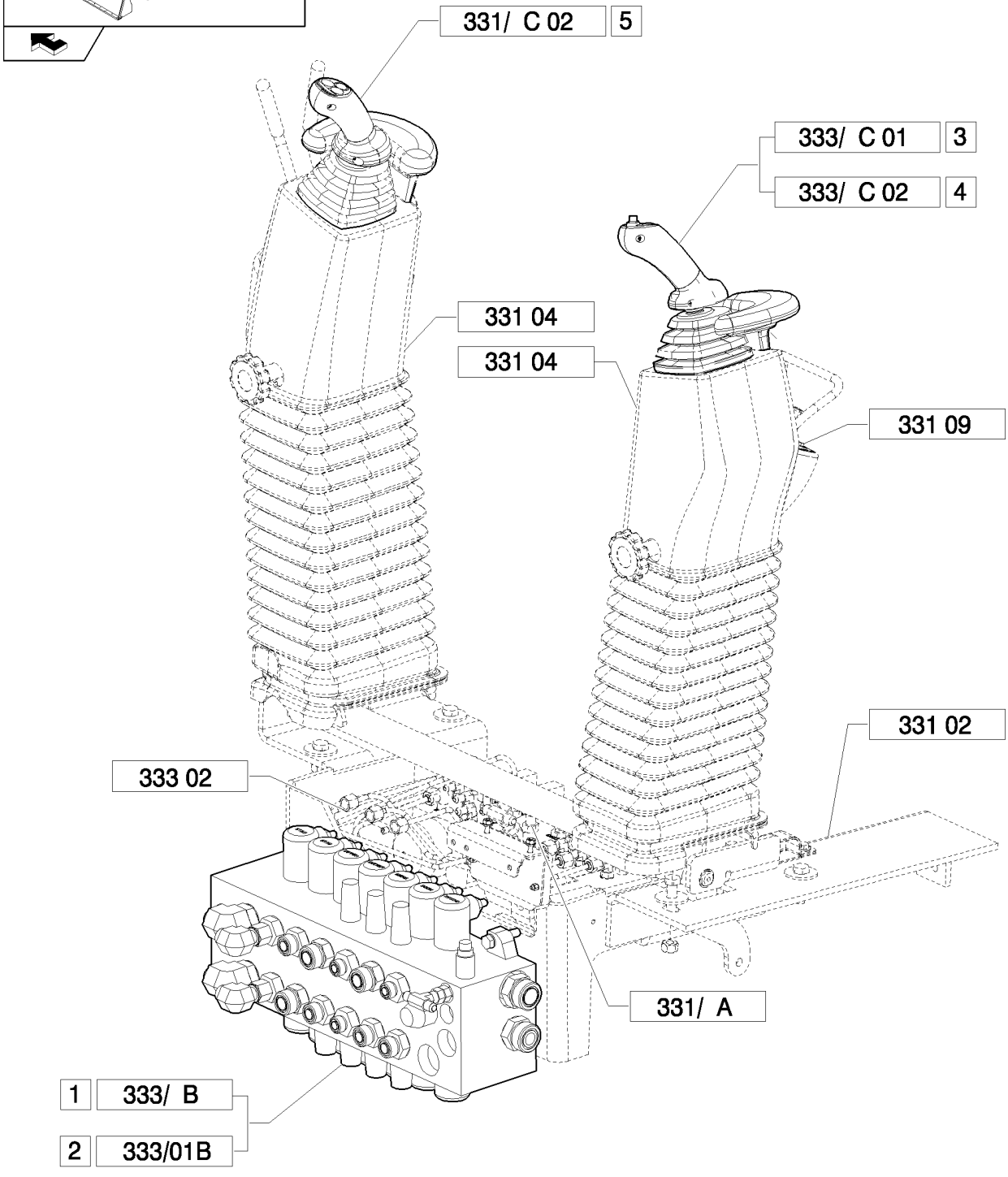

COLUMNA COMPLETA 7 SECCIONES (CENTER PIVOT)

REF	FN	PART NUMBER	YR/SN	QTY	DENOMINACION
1	1	87734107		1	VALVULA DISTRIBUIDORA, Assy
2	2	87734106		1	VALVULA DISTRIBUIDORA, Assy
3	3	87685957		1	VALVULA DISTRIBUIDORA, Assy
4	4	87685955		1	VALVULA DISTRIBUIDORA, Assy
5		87685948		1	VALVULA DISTRIBUIDORA, Assy

(1) Only for B110B, B115B (EU)
(2) Only for NA
(3) Except for B90B
(4) Only for B90B

Pilot Control Version

B95B

333	02	p1	03/08

CONJUNTO COLUMNA PARA SERVOMANDO DE 7 SECCIONES: INSTALACIÓN HIDRÁULICA DISTRIBUIDOR, VÁLVULA PROPORCIONAL

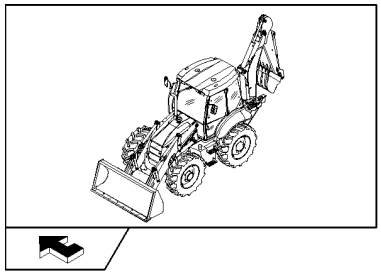

CONJUNTO COLUMNA PARA SERVOMANDO DE 7 SECCIONES: INSTALACIÓN HIDRÁULICA DISTRIBUIDOR, VÁLVULA PROPORCIONAL

REF	FN	PART NUMBER	YR/SN	QTY	DENOMINACION
1		85827093		1	TUBERIA HIDRAULICO
2		85827094		1	TUBERIA HIDRAULICO
3		85827091		1	TUBERIA HIDRAULICO
4		85827089		1	TUBERIA HIDRAULICO
5		85827092		1	TUBERIA HIDRAULICO
6		85827095		1	TUBERIA HIDRAULICO
7		85827090		1	TUBERIA HIDRAULICO
8		85827088		1	TUBERIA HIDRAULICO
9		85803312		9	RACOR
10		47050653		6	CODO
11		47050685		4	RACOR
12		85827097		1	TUBERIA HIDRAULICO
13		87306186		1	TUBERIA HIDRAULICO

333	03	p1	03/08

CONJUNTO COLUMNA PARA SERVOMANDO DE 7 SECCIONES (PIVOTE CENTRAL): INSTALACIÓN DISTRIBUIDOR

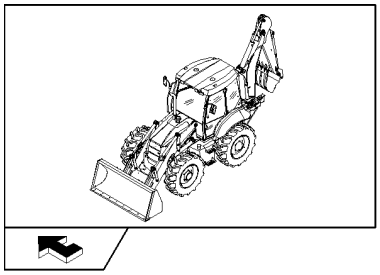

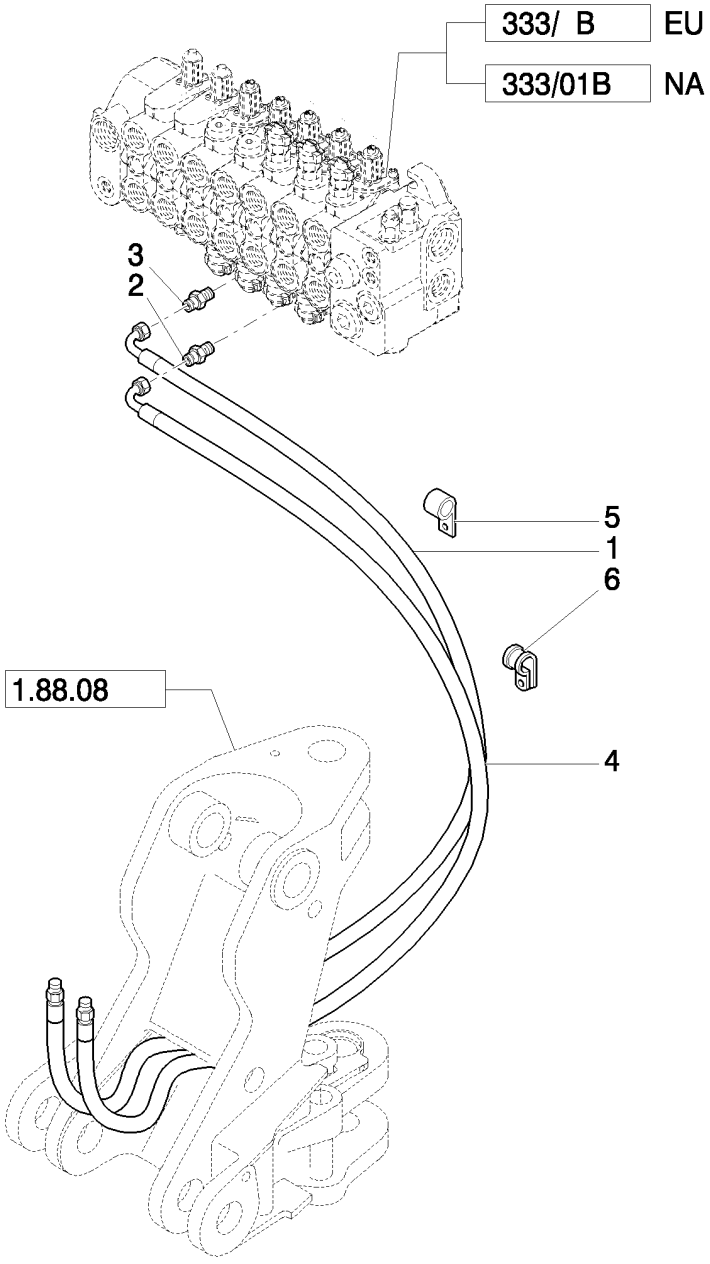

CONJUNTO COLUMNA PARA SERVOMANDO DE 7 SECCIONES (PIVOTE CENTRAL): INSTALACIÓN DISTRIBUIDOR

REF	FN	PART NUMBER	YR/SN	QTY	DENOMINACION
1		87638575		1	MANGA FLEXIBLE
2		85805258		1	RACOR, 9/16"-16 ORS x 1 1/16"-12, O-Ring
3		83962539		1	RACOR
4		85812211		1	MANGA FLEXIBLE
5		85803393		2	BORNE
6		85812029		4	BORNE

333	04	p1	05/08

CONJUNTO COLUMNA PARA SERVOMANDO DE 7 SECCIONES (PIVOTE CENTRAL): INSTALACIÓN CILINDRO TELESCÓPICO

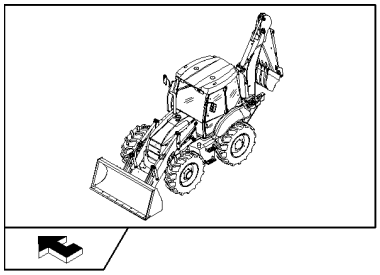

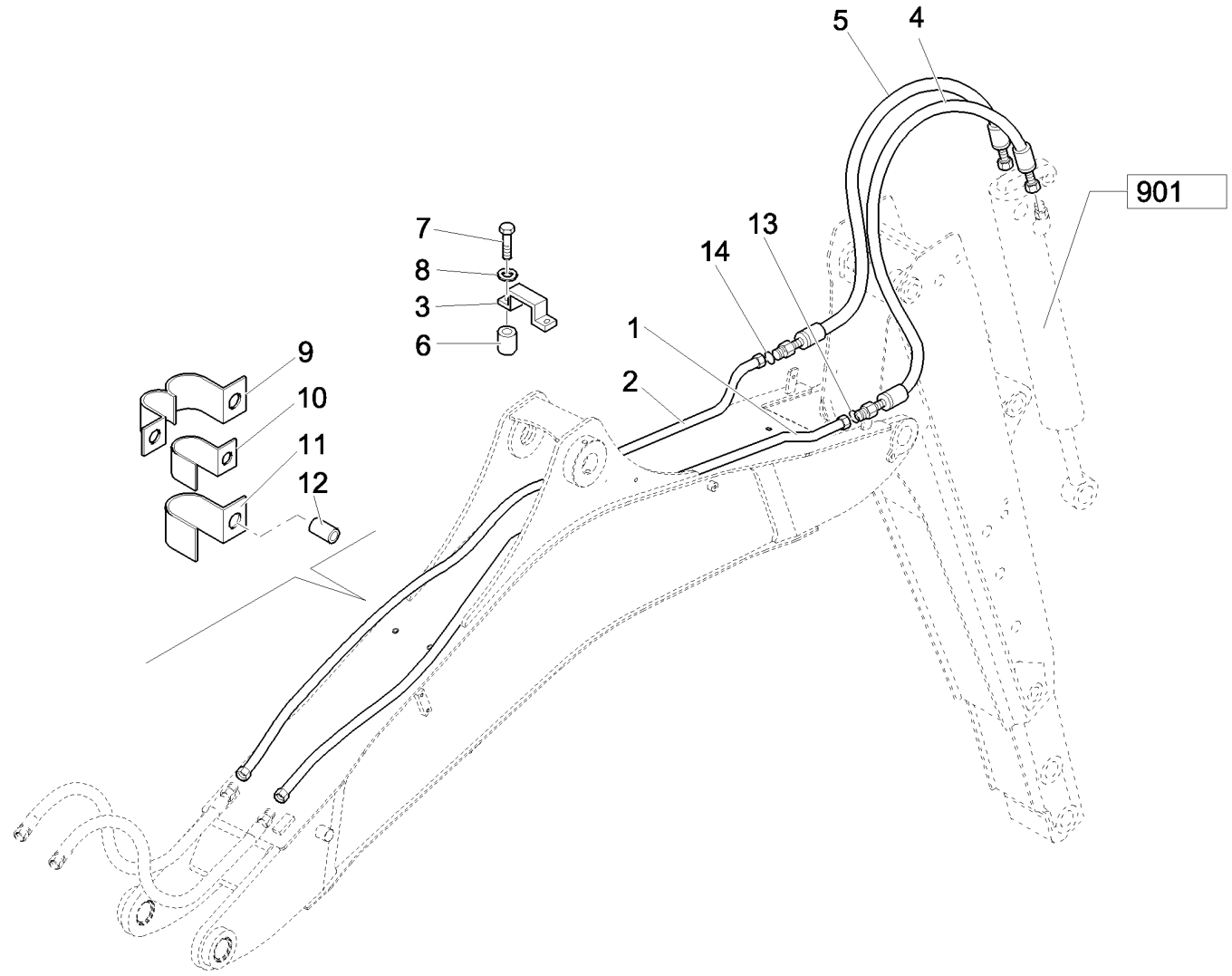

CONJUNTO COLUMNA PARA SERVOMANDO DE 7 SECCIONES (PIVOTE CENTRAL): INSTALACIÓN CILINDRO TELESCÓPICO

REF	FN	PART NUMBER	YR/SN	QTY	DENOMINACION
1		87617945		1	TUBO DE PRESION, 16 mm OD Tube
2		87621518		1	TUBO DE PRESION, 12 mm OD Tube
3		85802900		1	BORNE
4		87619506		1	MANGA FLEXIBLE
5		85817108		1	HOSE, HYDRAULIC
6		85818943		1	SEPARADOR
7		16044021		2	TORNILLO, Hex, M8 x 40, 8.8
8		11193879		2	ARANDELA ABANICO, Belleville, M8.4
9		85802529		1	BORNE
10		85802527		2	BORNE
11		85802528		2	BORNE
12		87615734		1	SEPARADOR
13		9992069		1	JUNTA HERMETICA, -016, 90 Duro, .614" ID x .070" Thk
14		9992298		1	JUNTA HERMETICA, -014, 90 Duro, .489" ID x .070" Thk

333	05	p1	03/08

CONJUNTO COLUMNA PARA SERVOMANDO DE 7 SECCIONES (PIVOTE CENTRAL): INSTALACIÓN CILINDRO DE LA CUCHARA

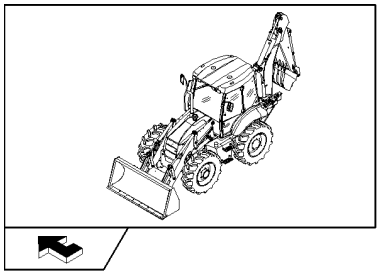

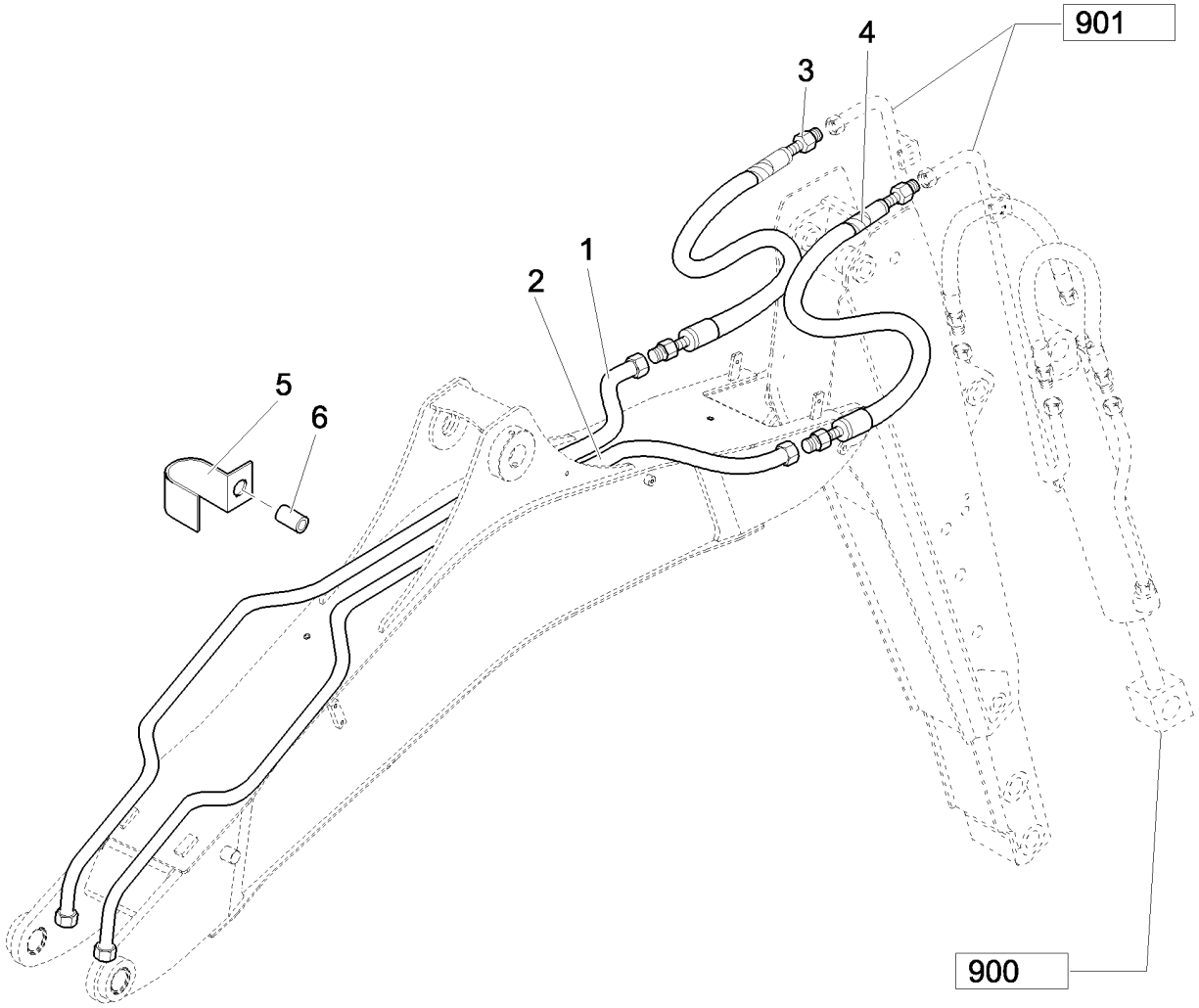

CONJUNTO COLUMNA PARA SERVOMANDO DE 7 SECCIONES (PIVOTE CENTRAL): INSTALACIÓN CILINDRO DE LA CUCHARA

REF	FN	PART NUMBER	YR/SN	QTY	DENOMINACION
1		87614629		1	TUBO DE PRESION, 20 mm OD Tube
2		87614627		1	TUBO DE PRESION, 16 mm OD Tube
3		85817106		1	MANGA FLEXIBLE
4		85817107		1	MANGA FLEXIBLE
5		87610539		1	SOPORTE CIERRA TUBO
6		87610565		1	SEPARADOR

333/ A		p1	03/08

VALVULA DE MANDO PROPORCIONAL 7 SECCIONES

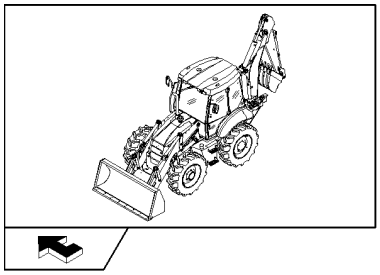

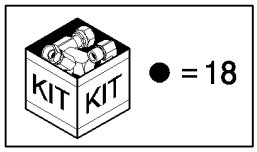

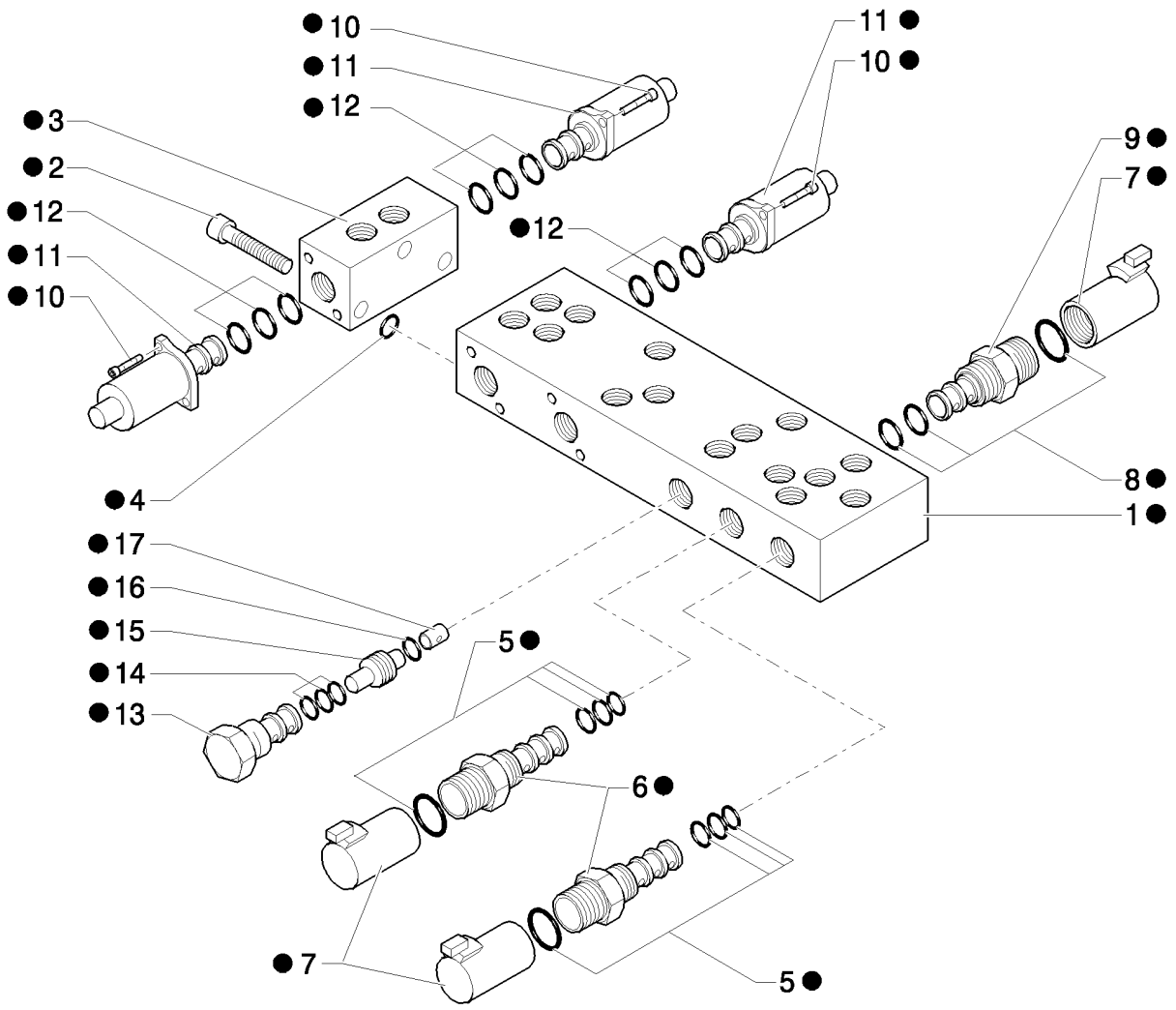

VALVULA DE MANDO PROPORCIONAL 7 SECCIONES

REF	FN	PART NUMBER	YR/SN	QTY	DENOMINACION
1		85828015		1	CUERPO
2		14358921		3	TORNILLO, Hex Soc Hd, M5 x 45, 10.9
3		85828004		1	CUERPO, M6x60
4		85827999		1	SERIE DE JUNTAS
5		85828002		2	SERIE DE JUNTAS
6	1	85827996		2	ELECTROVÁLVULA
7		85827995		3	BOBINA
8		85827998		1	SERIE DE JUNTAS
9	2	85827994		1	ELECTROVÁLVULA
10		14302921		12	TORNILLO, Hex, M4 x 10, 8.8, Full Thd
11		85827993		6	ELECTROVÁLVULA
12		85828000		4	SERIE DE JUNTAS
13		85827997		1	VALVULA, CARTRIDGE, HYDRAULIC PRESSURE REDUCING VALVE
14		85828001		1	SERIE DE JUNTAS
15		85827992		1	VALVULA DE CIERRE
16		85828003		1	JUNTA HERMETICA
17		85828005		1	ORIFICIO
18		85827471		1	VALVULA HIDRAULICA

(1) Includes 5, 7
(2) Includes 7, 8

Pilot Control Version

B95B

333/ C	01	p1	04/08

VÁLVULA DE PILOTAJE DEL MANIPULADOR (DERECHA) 7 CARRETES

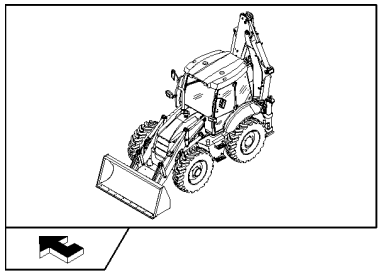

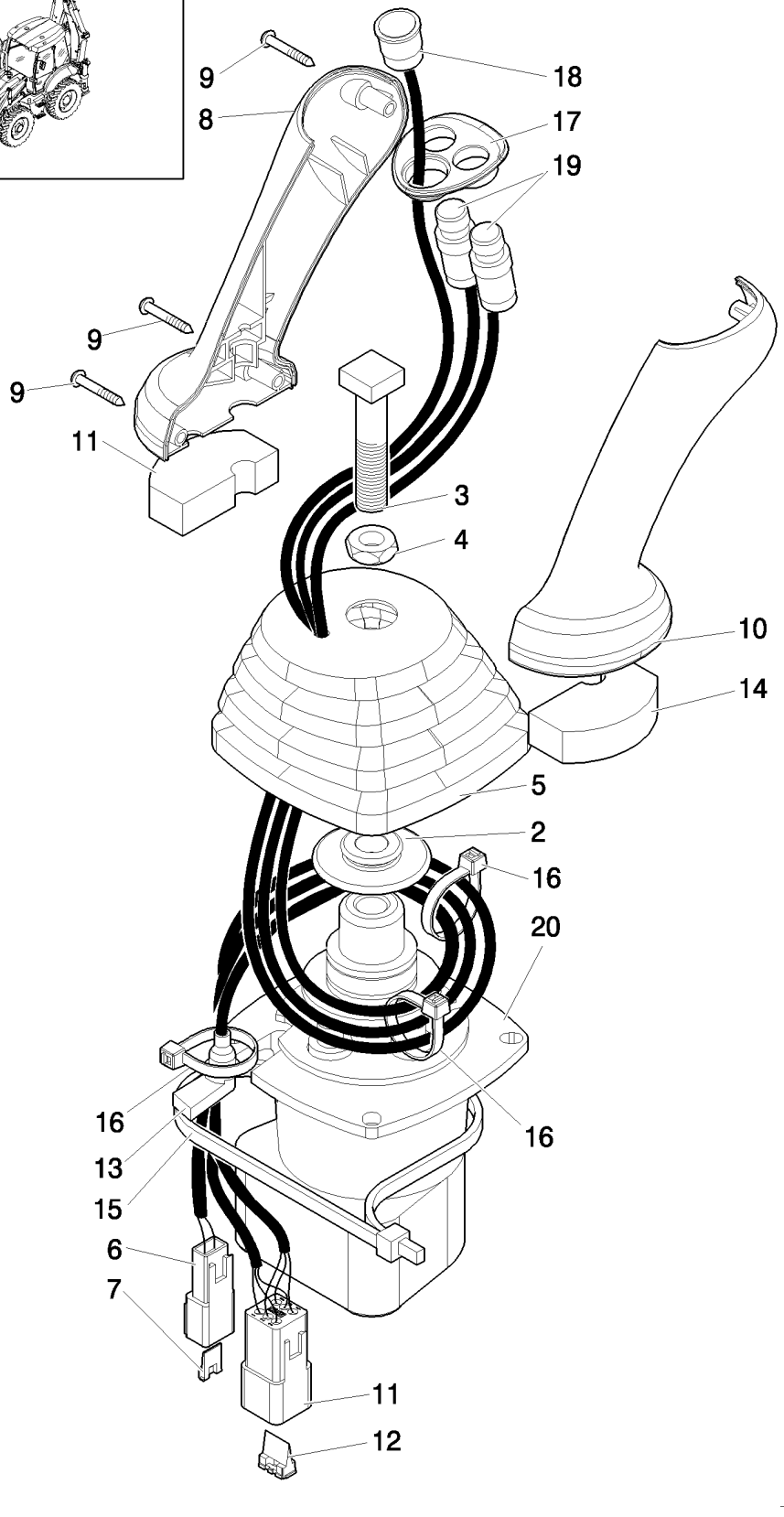

VÁLVULA DE PILOTAJE DEL MANIPULADOR (DERECHA) 7 CARRETES

REF	FN	PART NUMBER	YR/SN	QTY	DENOMINACION
1		87685957		1	VALVULA DISTRIBUIDORA, Assy
2		87436225		1	RETENEDOR
3		87428023		1	TORNILLO
4		87037944		1	TUERCA, Thin, M12 x 1.75, Cl 05
5		87443721		1	CASQUETE
6		225315C1		1	CONECTOR
7		225318C1		1	CUNA
8		87308838		1	PERILLA
9		15687475		3	TORNILLO AUTOROSCANTE, Pan Hd, M3.5 x 25, Stainless
10		87308839		1	PERILLA
11		225350C1		1	CONECTOR
12		225353C1		1	CUNA
13		87424267		1	PASACABLES
14		87435506		2	ANILLO DE CIERRE
15		87438046		1	CIERRA CABLES
16		87000312		3	CIERRA CABLES
17		87547309		1	MARCO
18		87546922		1	CONTACTOR
19		87437371		2	INTERRUPTOR
20		87687141		1	VÁLVULA DE PILOTAJE

333/ C	02	p1	04/08

VÁLVULA DE PILOTAJE DEL MANIPULADOR (DERECHA) 7 CARRETES

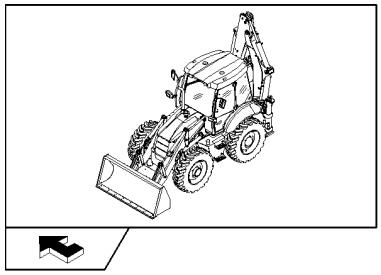

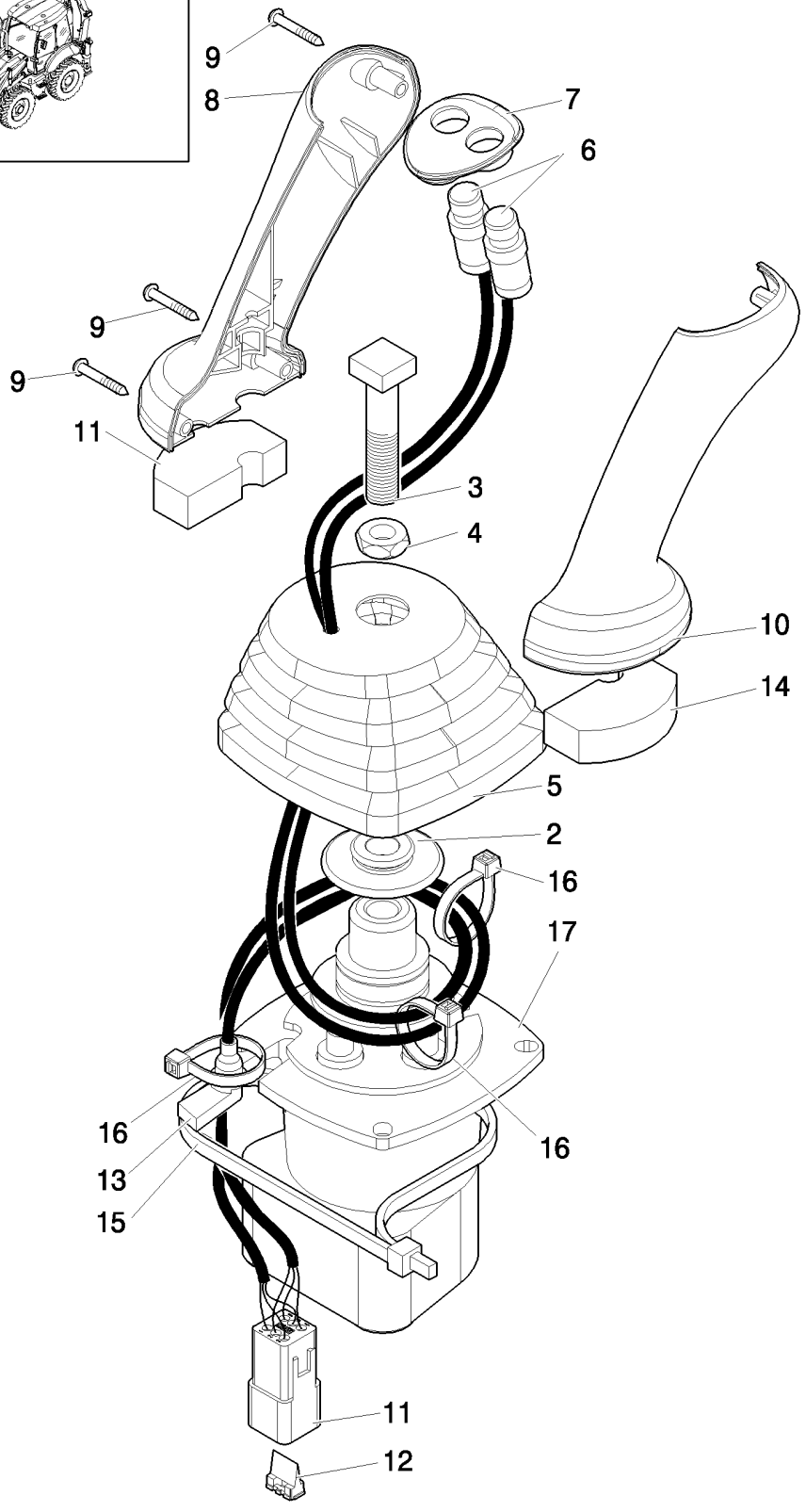

VÁLVULA DE PILOTAJE DEL MANIPULADOR (DERECHA) 7 CARRETES

REF	FN	PART NUMBER	YR/SN	QTY	DENOMINACION
1		87685955		1	VALVULA DISTRIBUIDORA, Assy
2		87436225		1	RETENEDOR
3		87428023		1	TORNILLO
4		87037944		1	TUERCA, Thin, M12 x 1.75, Cl 05
5		87443721		1	CASQUETE
6		87437371		2	INTERRUPTOR
7		87435242		1	MARCO
8		87308838		1	PERILLA
9		15687475		3	TORNILLO AUTOROSCANTE, Pan Hd, M3.5 x 25, Stainless
10		87308839		1	PERILLA
11		225350C1		1	CONECTOR
12		225353C1		1	CUNA
13		87424267		1	PASACABLES
14		87435506		2	ANILLO DE CIERRE
15		87438046		1	CIERRA CABLES
16		87000312		3	CIERRA CABLES
17		87687141		1	VÁLVULA DE PILOTAJE

SECCIÓN 7 VÁLVULA DE CONTROL DE LA EXCAVADORA (CENTER PIVOT) - NA

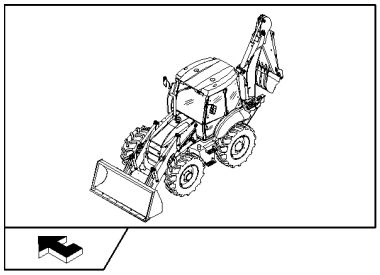

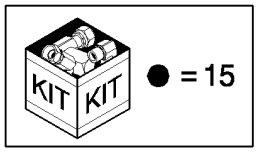

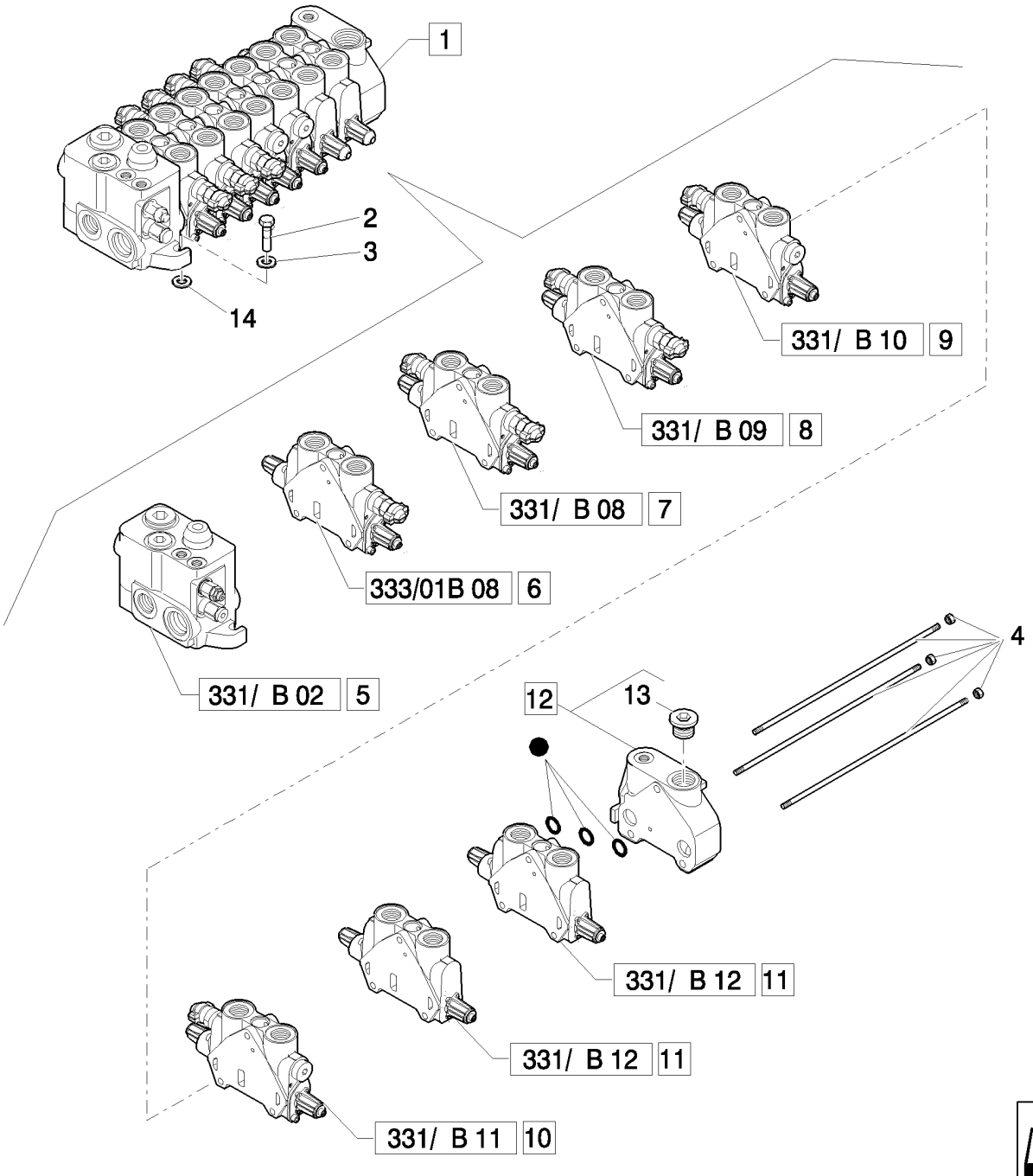

SECCIÓN 7 VÁLVULA DE CONTROL DE LA EXCAVADORA (CENTER PIVOT) - NA

REF	FN	PART NUMBER	YR/SN	QTY	DENOMINACION
1		87734106		1	VALVULA DISTRIBUIDORA, Assy
2		11234721		3	TORNILLO, Hex, M10 x 1.25 x 45, 8.8
3		11190679		3	ARANDELA ABANICO, Belleville, M10.5
4		85811959		1	EQUIPO
5		87610858		1	DISTRIBUIDOR HYDR, Assy
6	1	87558574		1	SECTOR, Assy
7	2	85826901		1	DISTRIBUIDOR HYDR, Assy
8	3	85826339		1	DISTRIBUIDOR HYDR, Assy
9	4	85826903		1	SECTOR, Assy
10	5	87758451		1	PISTONCILLO, Assy
11	6	85826340		2	DISTRIBUIDOR HYDR, Assy
12		85826250		1	DISTRIBUIDOR HYDR, Assy
13		85811921		1	TAPÓN, 1-1/16"-12 UNF 2A
14		13578621		3	ARANDELA
15		85825473		1	SERIE DE JUNTAS

(1) Telescopic Cylinder
(2) Boom Cylinder
(3) Swing Cylinder
(4) Dipper Cylinder
(5) Arm Cylinder
(6) Stabilizer Cylinder

Pilot Control Version

B95B

333/01B	02	p1	04/08

DISTRIBUIDOR DE 7 SECCIONES EQUIPO RETROEXCAVADOR (PIVOTE CENTRAL): NA: CILINDRO TELESCÓPICO

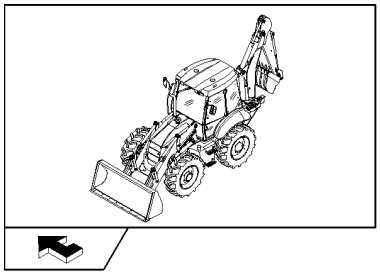

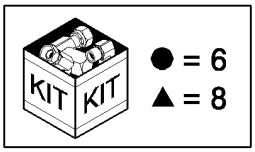

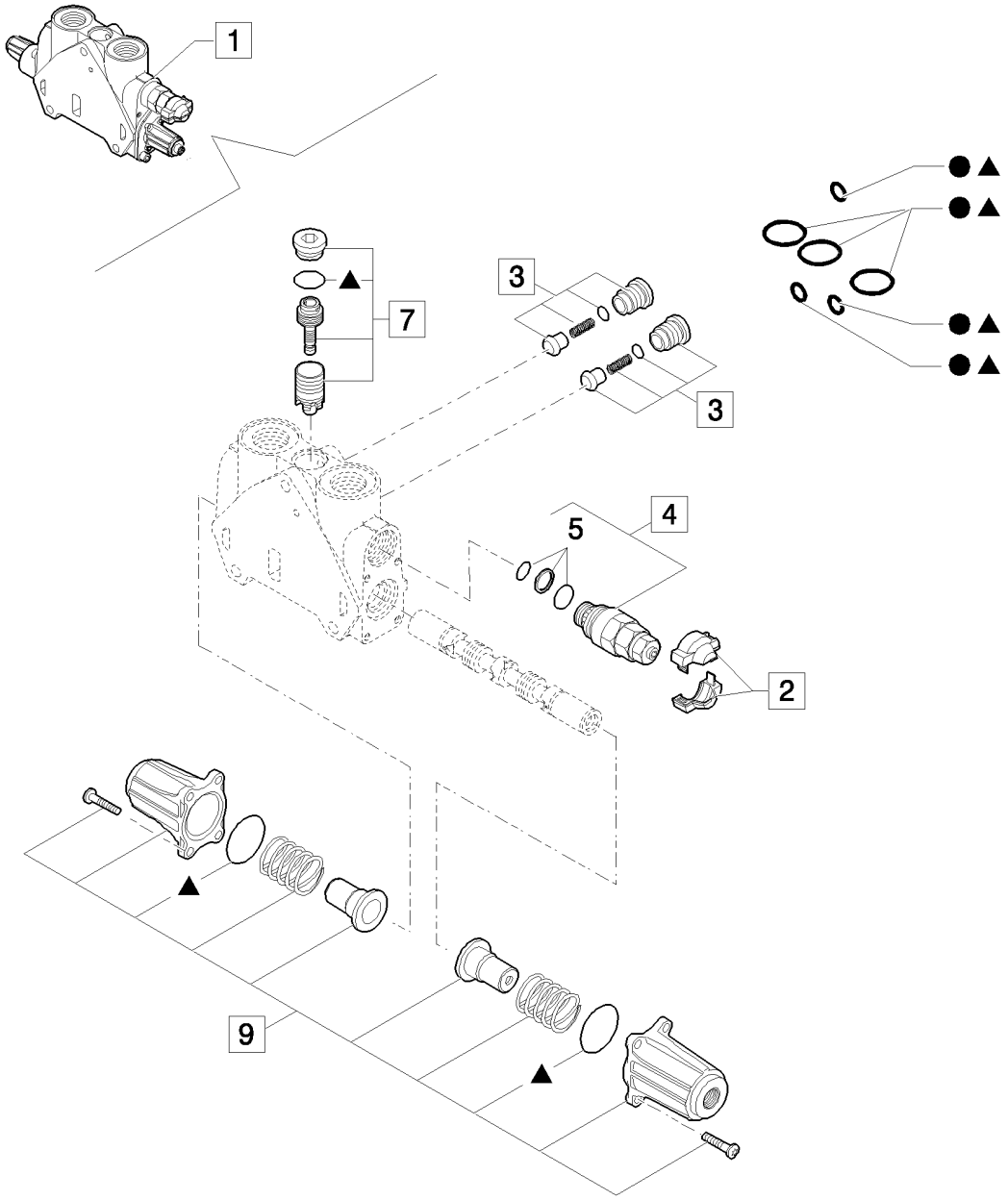

DISTRIBUIDOR DE 7 SECCIONES EQUIPO RETROEXCAVADOR (PIVOTE CENTRAL): NA: CILINDRO TELESCÓPICO

REF	FN	PART NUMBER	YR/SN	QTY	DENOMINACION
1		87558574		1	SECTOR, Assy
2		85811934		2	EQUIPO, Cover
3		85811938		2	VALVULA DE CIERRE, Valve, Assy
4	1	87341088		2	VALVULA HIDRAULICA, Assy
5		85811933		1	SERIE DE JUNTAS, Valve Seals
6		85819148		1	SERIE DE JUNTAS, Seals
7		85819378		1	SERIE DE JUNTAS, Valve
8		85824281		1	SERIE DE JUNTAS, Seals
9		85826344		1	EQUIPO, Cover Assy

(1) 124 BAR

335		p1	04/08

COLUMNA COMPLETA 7 SECCIONES (CENTER PIVOT)

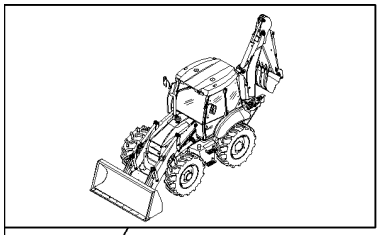

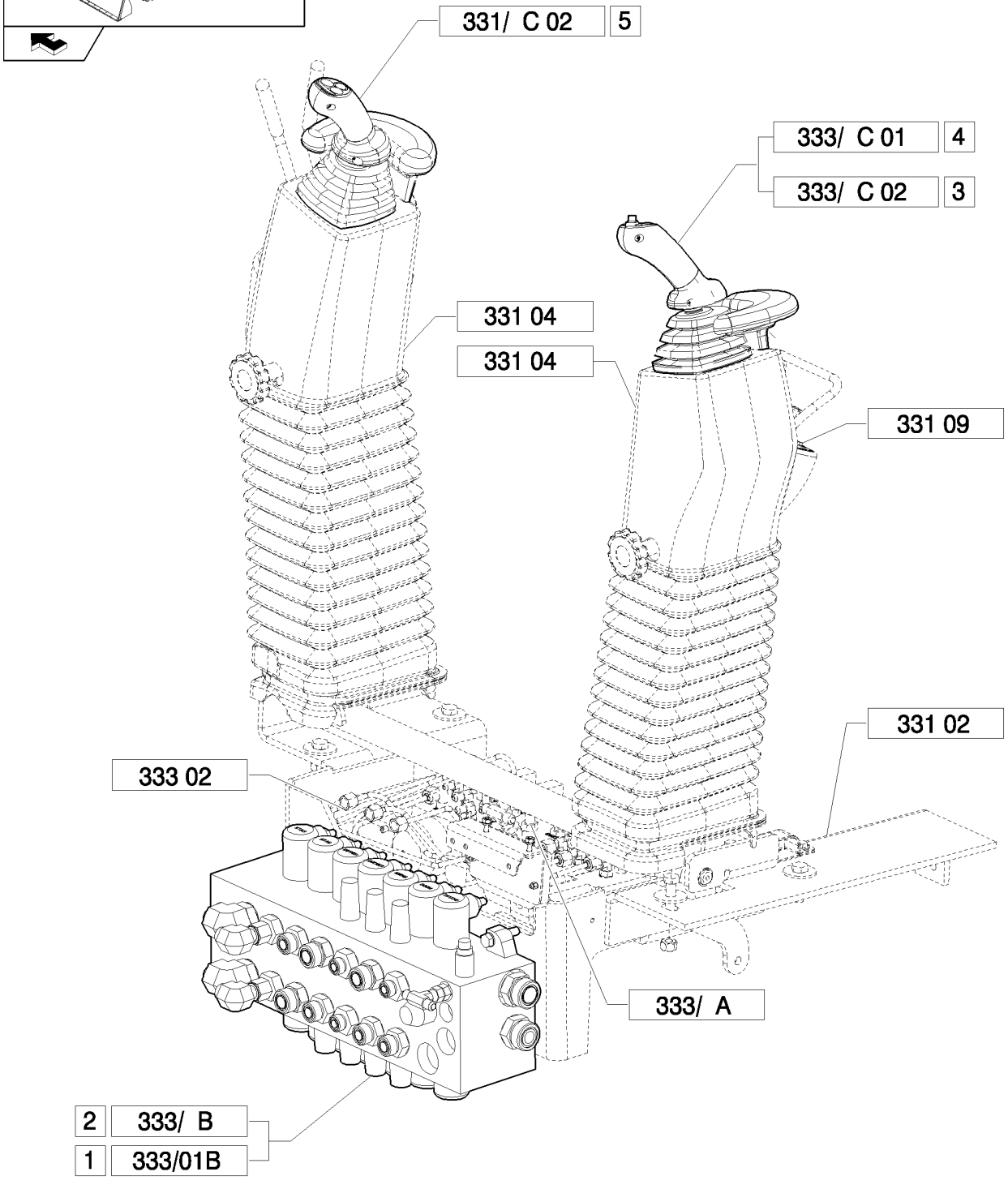

COLUMNA COMPLETA 7 SECCIONES (CENTER PIVOT)

REF	FN	PART NUMBER	YR/SN	QTY	DENOMINACION
1	1	87734106		1	VALVULA DISTRIBUIDORA, Assy
2	2	87734107		1	VALVULA DISTRIBUIDORA, Assy
3	3	87685955		1	VALVULA DISTRIBUIDORA, Assy
4	4	87685957		1	VALVULA DISTRIBUIDORA, Assy
5		87685948		1	VALVULA DISTRIBUIDORA, Assy

(1) Only for NA
(2) Only for B110B, B115B Center Pivot EU
(3) Only for B90B, B90BLR(EU) - B90B, B90BLR (NA)
(4) Only for Center Pivot EU / NA

Pilot Control Version B95B

336/01	01	p1	04/08

DISTRIBUIDOR CARGADOR 2 SECCIONES (CENTER PIVOT) - NA

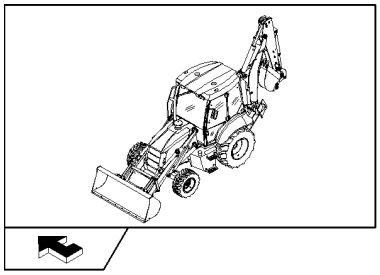

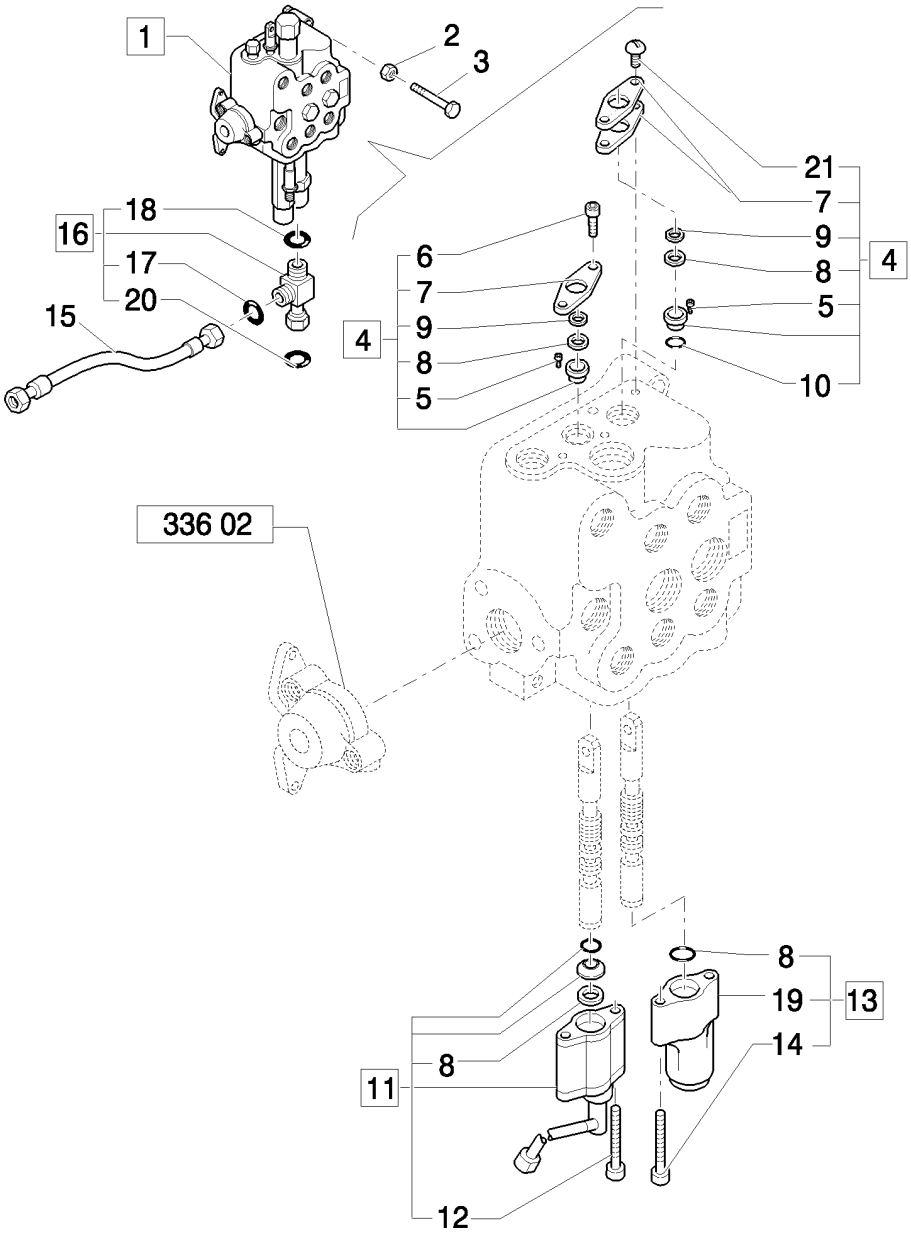

DISTRIBUIDOR CARGADOR 2 SECCIONES (CENTER PIVOT) - NA

REF	FN	PART NUMBER	YR/SN	QTY	DENOMINACION
1		85819649		1	VALVULA DISTRIBUIDORA, Assy
2		11190579		3	ARANDELA ABANICO, Belleville, M10.5
3		14308221		3	TORNILLO, Hex Soc Hd, M10 x 1.25 x 65, 8.8
4		9968455		1	EQUIPO
5		9968457		1	SEPARADOR
6		9968456		2	TORNILLO
7		9968458		3	BRIDA
8		9968489		4	ANILLO DE CIERRE
9		9968490		1	LIMPIADOR
10		87327076		1	JUNTA HERMETICA
11		85808403		1	DISPOSITIVO DE TOPE, Magnetic Detent, Assy
12		9968451		2	TORNILLO
13		85817025		1	PISTONCILLO, Assy
14		9968454		2	TORNILLO
15		85816804		1	HOSE, HYDRAULIC, 550mm lg
16		85817531		1	RACOR-T, Assy
17		89825770		1	JUNTA HERMETICA
18		89824050		1	JUNTA HERMETICA
19		9968513		1	TAPADERA
20		89626929		1	JUNTA HERMETICA, 90 Duro, 1.048" ID x .116" Thk
21		9968460		2	TORNILLO

Mechanical Version B95B

336/01	02	p1	04/08

DISTRIBUIDOR CARGADOR, 2 SECCIONES, TAPA Y VÁLVULA DE DESCARGA (CENTER PIVOT) - NA

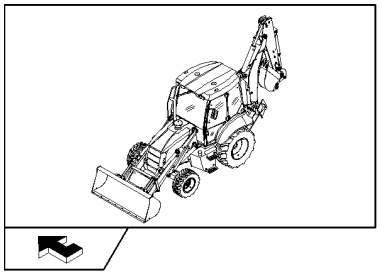

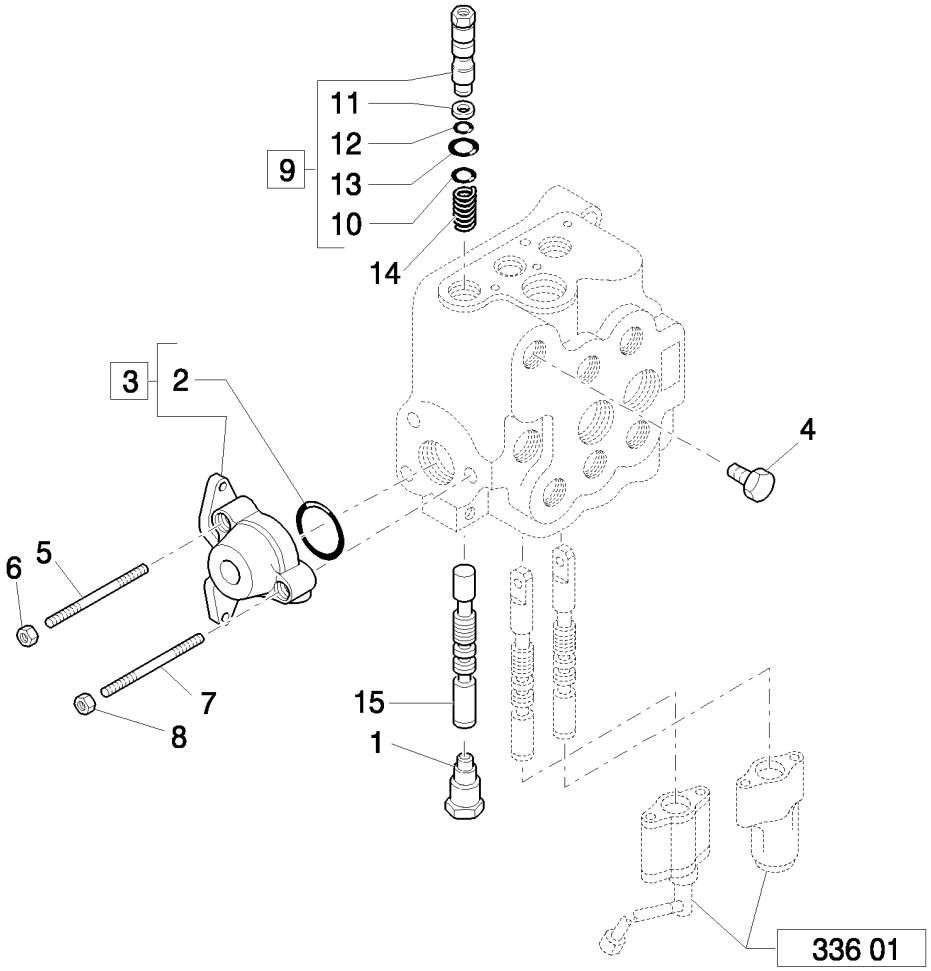

DISTRIBUIDOR CARGADOR, 2 SECCIONES, TAPA Y VÁLVULA DE DESCARGA (CENTER PIVOT) - NA

REF	FN	PART NUMBER	YR/SN	QTY	DENOMINACION
1		9968464		1	TAPÓN, Assy
2		9968476		1	JUNTA HERMETICA
3		9968443		1	DISTRIBUIDOR HYDR, Assy
4		85807857		1	TAPÓN
5		9968521		2	PRISIONERO
6		9968441		2	TUERCA
7		9968520		1	PRISIONERO
8		9968440		1	TUERCA
9		85815667		1	VÁLVULA BYPASS, Assy
10		85815668		1	JUNTA HERMETICA
11		9968467		1	JUNTA
12		9968466		1	JUNTA HERMETICA
13		9968468		1	JUNTA HERMETICA
14		9968488		1	RESORTE
15		85807858		1	PISTONCILLO

Mechanical Version	B95B

336/01	03	p1	04/08

DISTRIBUIDOR CARGADOR, 2 SECCIONES, VÁLVULA DE ALIVIO Y RETENCIÓN (CENTER PIVOT) - NA

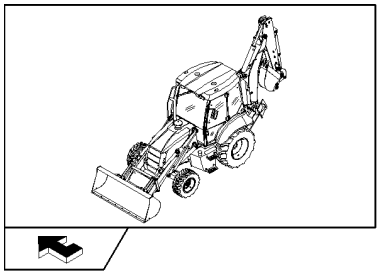

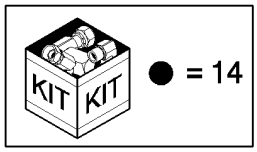

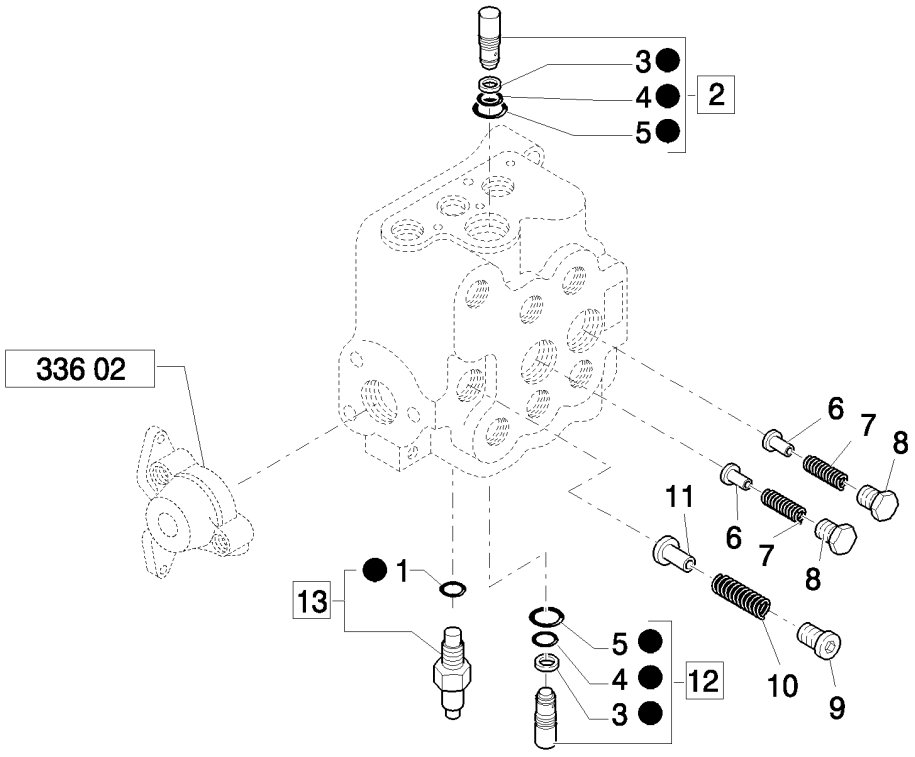

DISTRIBUIDOR CARGADOR, 2 SECCIONES, VÁLVULA DE ALIVIO Y RETENCIÓN (CENTER PIVOT) - NA

REF	FN	PART NUMBER	YR/SN	QTY	DENOMINACION
1		85819945		1	JUNTA HERMETICA, Assy
2		87302609		1	VÁLVULA, DESCARGA, Assy
3		87302608		2	JUNTA
4		9968471		2	JUNTA HERMETICA
5		9968470		2	JUNTA HERMETICA
6		9968444		2	EMBOLO
7		9968445		2	RESORTE
8		9968446		2	TAPÓN
9		9968449		1	TAPÓN
10		9968448		1	RESORTE
11		9968447		1	EMBOLO
12		87302611		1	VÁLVULA, DESCARGA, Assy
13		85819722		1	VALVULA HIDRAULICA, Assy
14		87302607		2	SERIE DE JUNTAS

Mechanical Version	B95B

DISTRIBUIDOR CARGADOR, 2 SECCIONES, EQUIPO BY-PASS (CENTER PIVOT) - NA

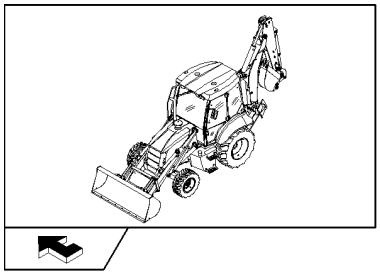

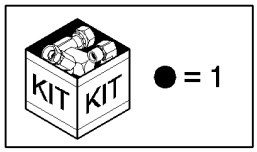

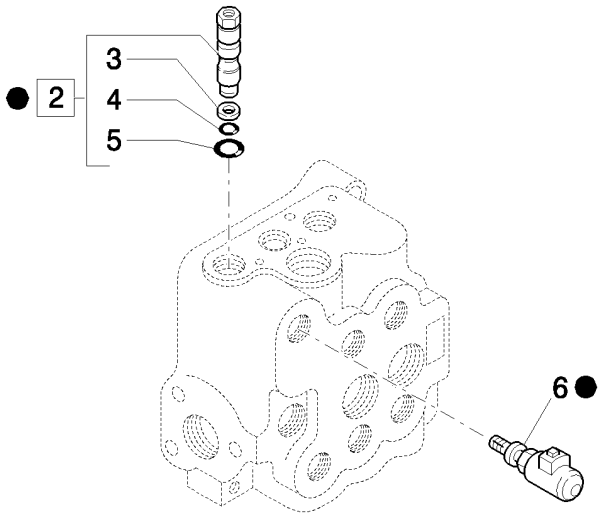

DISTRIBUIDOR CARGADOR, 2 SECCIONES, EQUIPO BY-PASS (CENTER PIVOT) - NA

REF	FN	PART NUMBER	YR/SN	QTY	DENOMINACION
1		85817201		1	KIT DE MODIFICACION
2		9968465		1	VÁLVULA DE PILOTAJE, Assy
3		9968467		1	JUNTA
4		9968466		1	JUNTA HERMETICA
5		9968468		1	JUNTA HERMETICA
6		9968461		1	SOLENOIDE

Mechanical Version	B95B

336/01	05	p1	04/08

DISTRIBUIDOR CARGADOR, 2 SECCIONES, EQUIPO DESCARGA O VÁLVULA VOLTEO (CENTER PIVOT) - NA

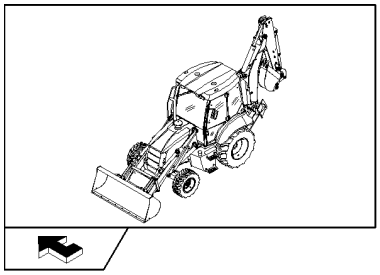

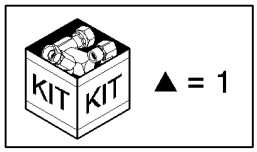

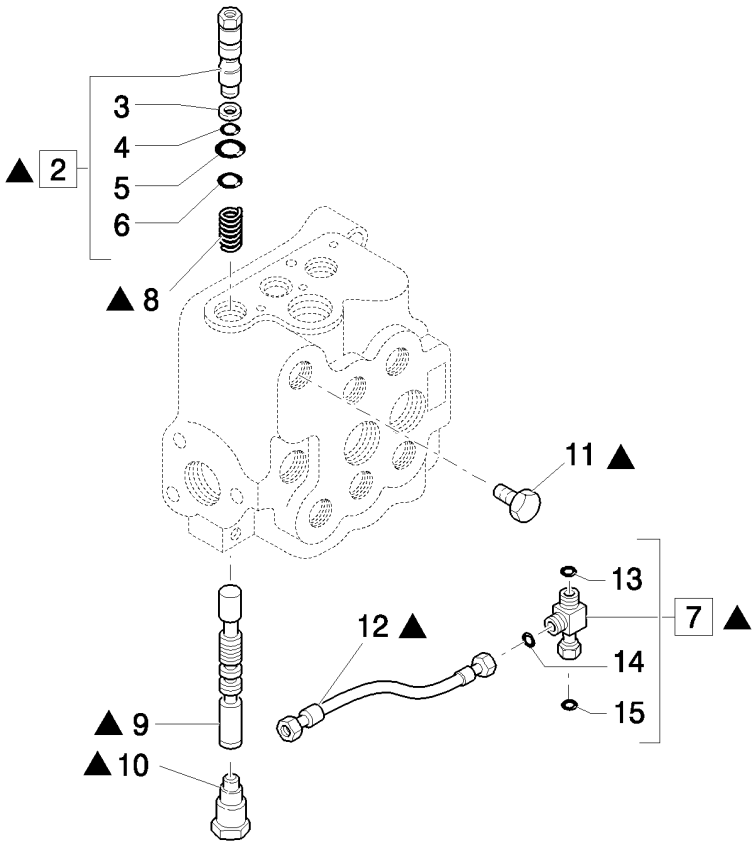

DISTRIBUIDOR CARGADOR, 2 SECCIONES, EQUIPO DESCARGA O VÁLVULA VOLTEO (CENTER PIVOT) - NA

REF	FN	PART NUMBER	YR/SN	QTY	DENOMINACION
1		85816793		1	EQUIPO
2		85815667		1	VÁLVULA BYPASS, Assy
3		9968467		1	JUNTA
4		9968466		1	JUNTA HERMETICA
5		9968468		1	JUNTA HERMETICA
6		85815668		1	JUNTA HERMETICA
7		85817531		1	RACOR-T, Assy
8		9968488		1	RESORTE
9		85807858		1	PISTONCILLO
10		9968464		1	TAPÓN
11		85807857		1	TAPÓN
12		85816804		1	HOSE, HYDRAULIC, 550mm lg
13		89824050		1	JUNTA HERMETICA
14		89825770		1	JUNTA HERMETICA
15		89626929		1	JUNTA HERMETICA, 90 Duro, 1.048" ID x .116" Thk

Mechanical Version	B95B

337	01	p1	04/08

VÁLVULA DE BLOQUEO EN LOS CILINDROS BASCULANTES DEL EQUIPO CARGADOR

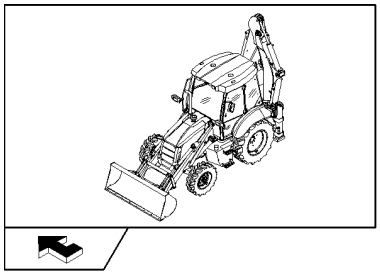

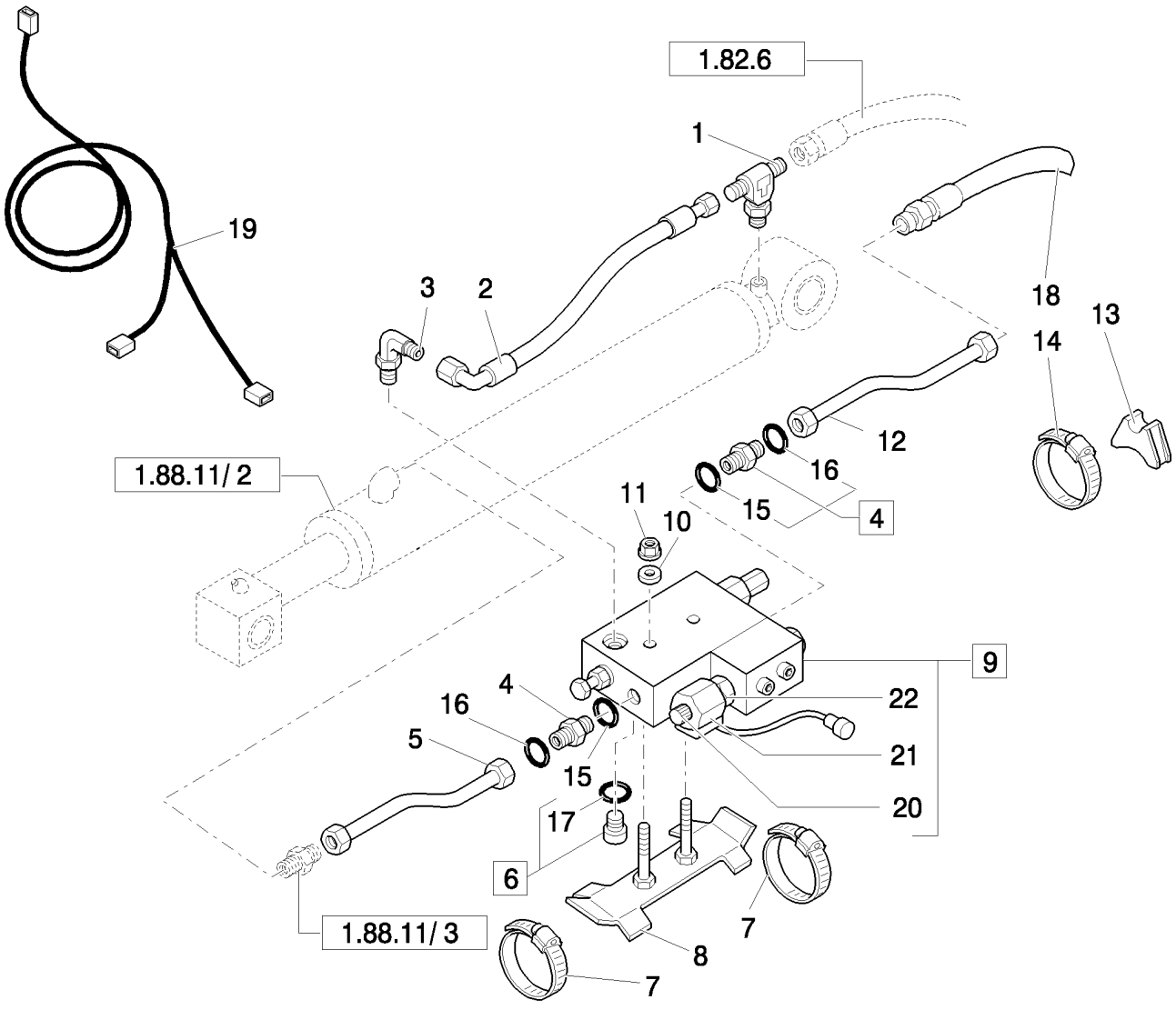

VÁLVULA DE BLOQUEO EN LOS CILINDROS BASCULANTES DEL EQUIPO CARGADOR

REF	FN	PART NUMBER	YR/SN	QTY	DENOMINACION
1		85805218		2	RACOR-T
2		85815506		2	MANGA FLEXIBLE
3		85805220		2	CODO
4		83963374		4	RACOR, Assy
5		85805262		2	TUBERIA HIDRAULICO
6		85802805		2	TAPÓN, Assy
7		85803010		4	ABRAZADERA MANGUERA
8		85805221		2	SOPORTE
9		85805224		2	VALVULA HIDRAULICA, Assy
10		11193879		4	ARANDELA ABANICO, Belleville, M8.4
11		14048221		4	CONTRA TUERCA, M8 x 1.25, Cl 10
12		85805264		2	TUBERIA HIDRAULICO
13		87303910		2	SEPARADOR
14		85802743		2	ABRAZADERA MANGUERA
15		80128825		2	JUNTA HERMETICA
16		89992298		2	JUNTA HERMETICA
17		89825770		1	JUNTA HERMETICA
18		85813361		2	HOSE, HYDRAULIC, 1130mm lg
19		85826276		1	GRUPO DE CABLES
20		9970384		2	TUERCA
21		85820283		2	BOBINA
22		85820285		2	VALVULA HIDRAULICA

337	02	p1	04/08

VALVULA DE BLOQUEO EN LOS CILINDROS DE LEVANTAMIENTO PALA

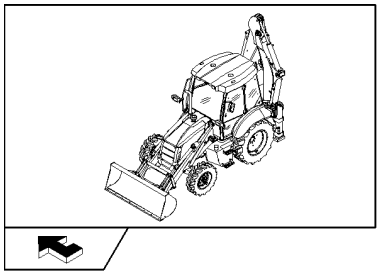

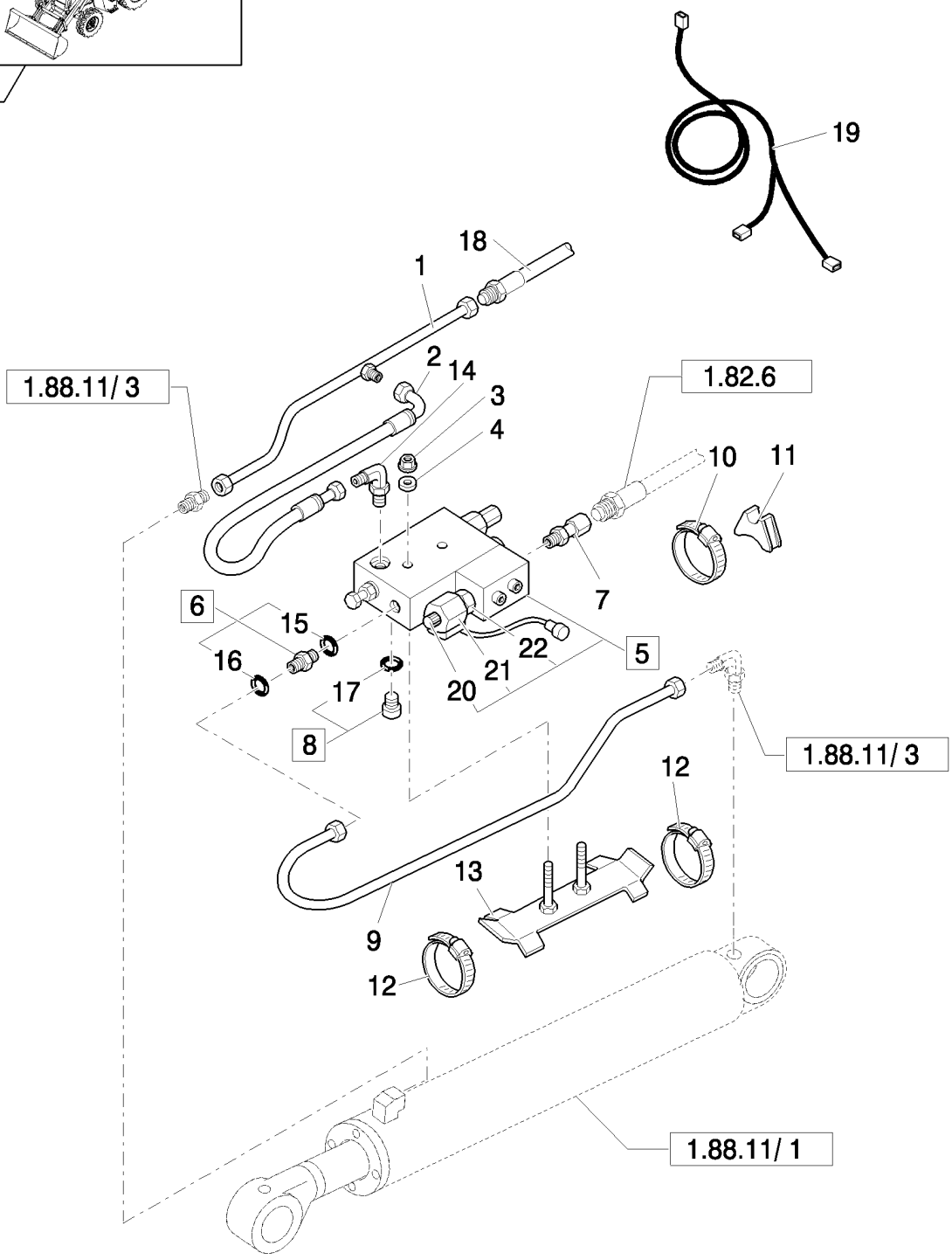

VALVULA DE BLOQUEO EN LOS CILINDROS DE LEVANTAMIENTO PALA

REF	FN	PART NUMBER	YR/SN	QTY	DENOMINACION
1		85827853		2	TUBERIA HIDRAULICO
2		85815506		2	MANGA FLEXIBLE
3		14048221		4	CONTRA TUERCA, M8 x 1.25, Cl 10
4		11193879		4	ARANDELA ABANICO, Belleville, M8.4
5		85805223		2	VALVULA HIDRAULICA, Assy
6		83963374		2	RACOR, Assy
7		85805217		2	RACOR
8		85802805		2	TAPÓN, Assy
9		85805271		1	TUBERIA HIDRAULICO, LH
9		85805273		1	TUBERIA HIDRAULICO, RH
10		85803008		2	ABRAZADERA MANGUERA
11		87303912		2	BLOQUE MOTOR
12		85802743		4	ABRAZADERA MANGUERA
13		85805221		2	SOPORTE
14		85805220		2	CODO
15		80128825		2	JUNTA HERMETICA
16		89992298		2	JUNTA HERMETICA
17		89825770		2	JUNTA HERMETICA
18		85813363		2	MANGA FLEXIBLE, 550mm lg
19		85826275		1	GRUPO DE CABLES
20		9970384		2	TUERCA
21		85820283		2	BOBINA
22		85820285		2	VALVULA HIDRAULICA

338		p1	03/08

VALVULA DE BLOQUEO EN LOS CILINDROS DE LEVANTAMIENTO PALA

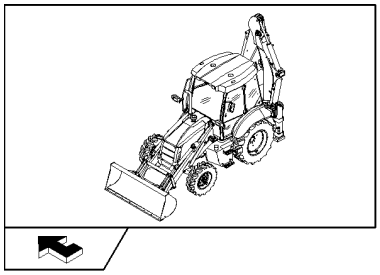

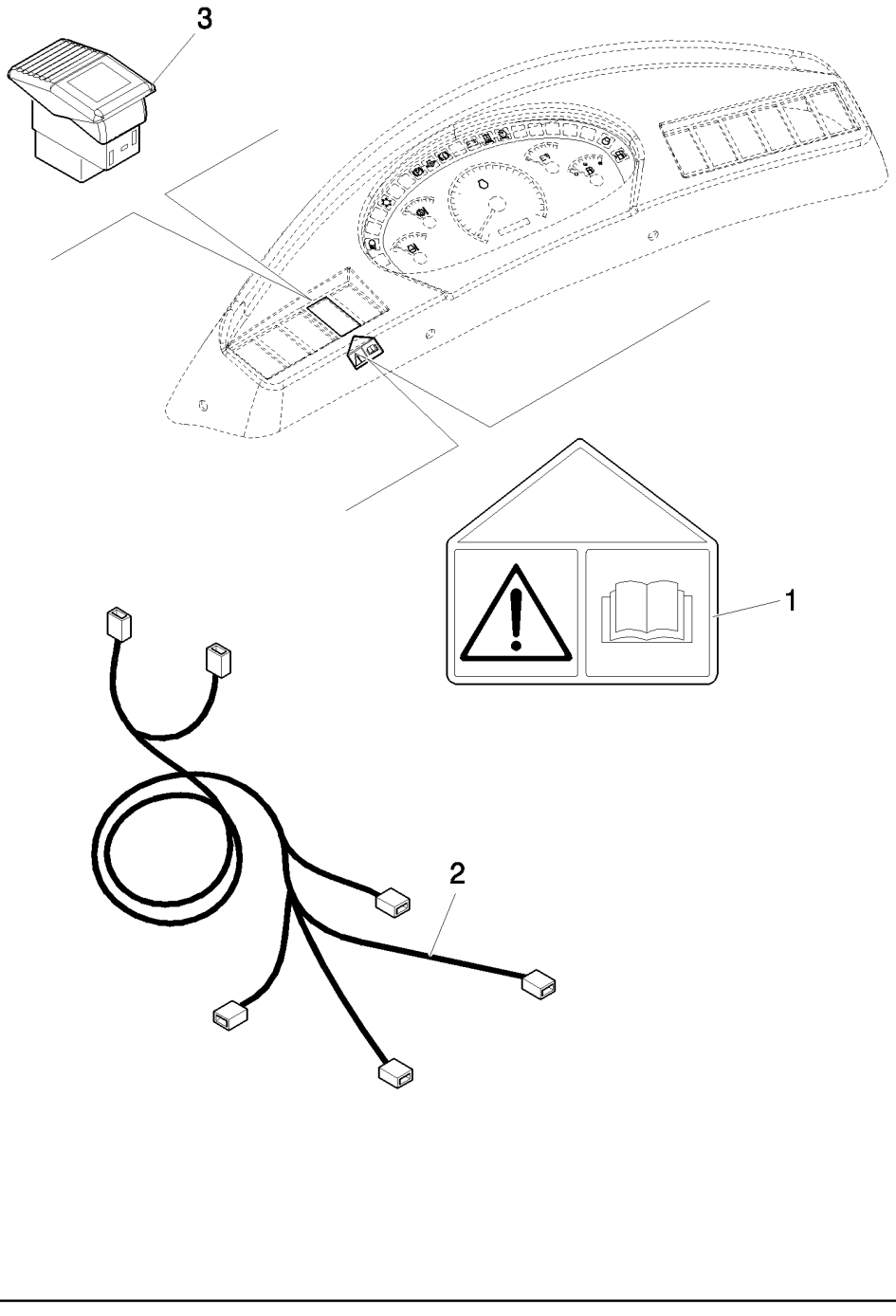

VALVULA DE BLOQUEO EN LOS CILINDROS DE LEVANTAMIENTO PALA

REF	FN	PART NUMBER	YR/SN	QTY	DENOMINACION
1		85805228		1	CALCOMANIA
2		85826274		1	HAZ
3		85819074		1	CONTACTOR

DISTRIBUIDOR ESTABILIZADOR, 2 SECCIONES (CENTER PIVOT) - NA

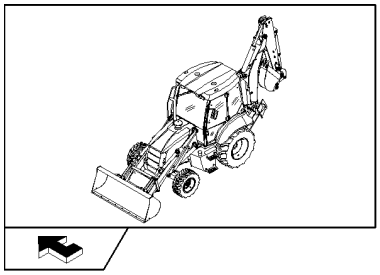

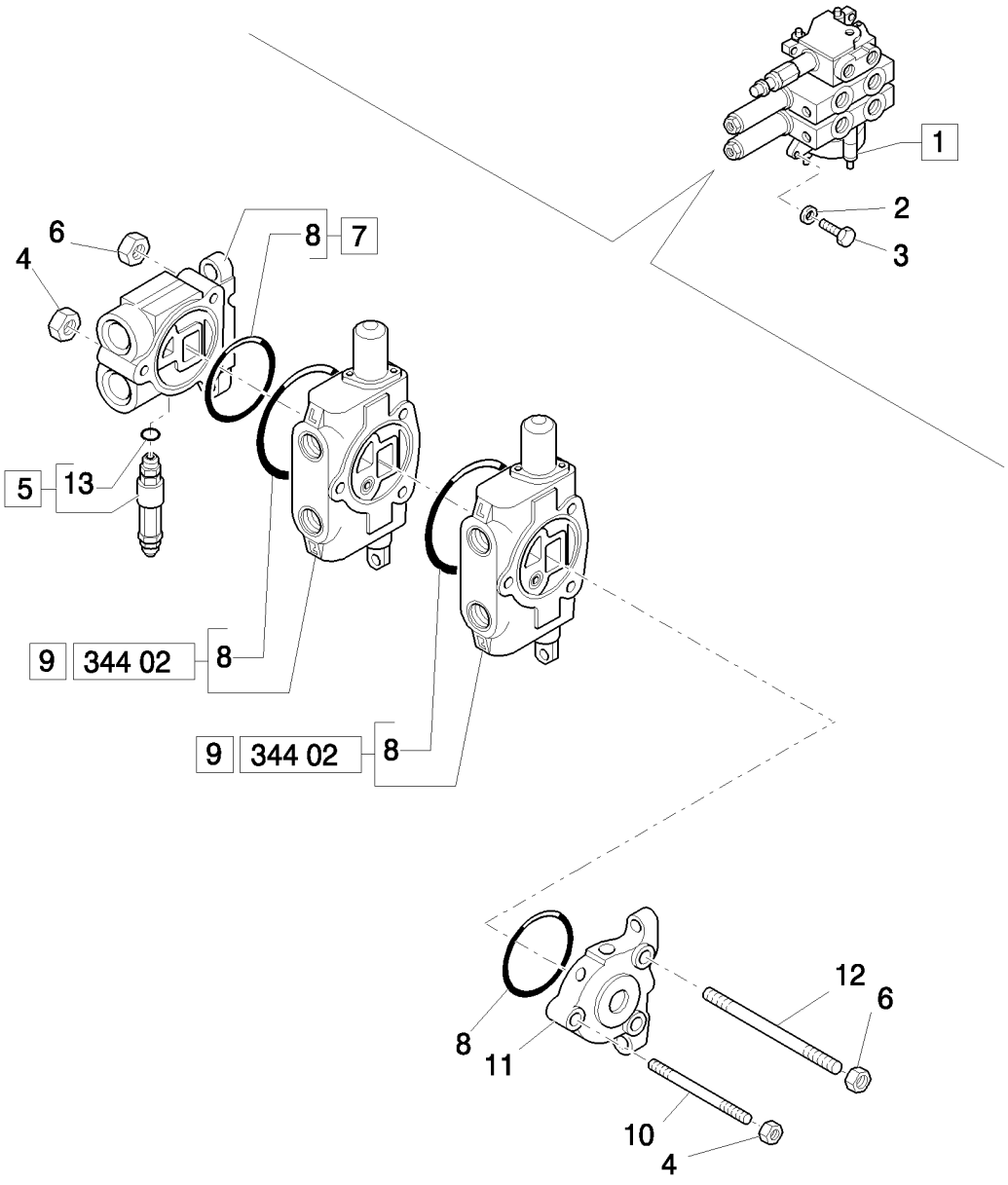

DISTRIBUIDOR ESTABILIZADOR, 2 SECCIONES (CENTER PIVOT) - NA

REF	FN	PART NUMBER	YR/SN	QTY	DENOMINACION
1		85819684		1	VALVULA DISTRIBUIDORA, Assy
2		11193879		3	ARANDELA ABANICO, Belleville, M8.4
3		16043921		3	TORNILLO, M8x1.25x35
4		9968440		2	TUERCA
5		85819721		1	VALVULA HIDRAULICA
6		9968441		4	TUERCA
7		9968524		1	DISTRIBUIDOR HYDR
8		9968476		4	JUNTA HERMETICA
9		9970107		2	DISTRIBUIDOR HYDR, Assy
10		9968533		1	PRISIONERO
11		9968527		1	DISTRIBUIDOR HYDR
12		9968532		2	PRISIONERO
13		85819945		1	JUNTA HERMETICA

Mechanical Version	B95B

344	02	p1	04/08

DISTRIBUIDOR ESTABILIZADOR, SECCIÓN DERECHA E IZQUIERDA (CENTER PIVOT) - NA

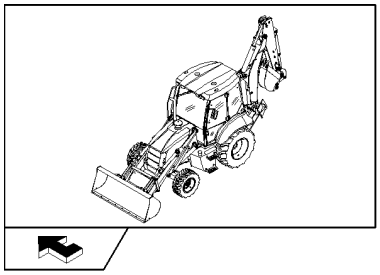

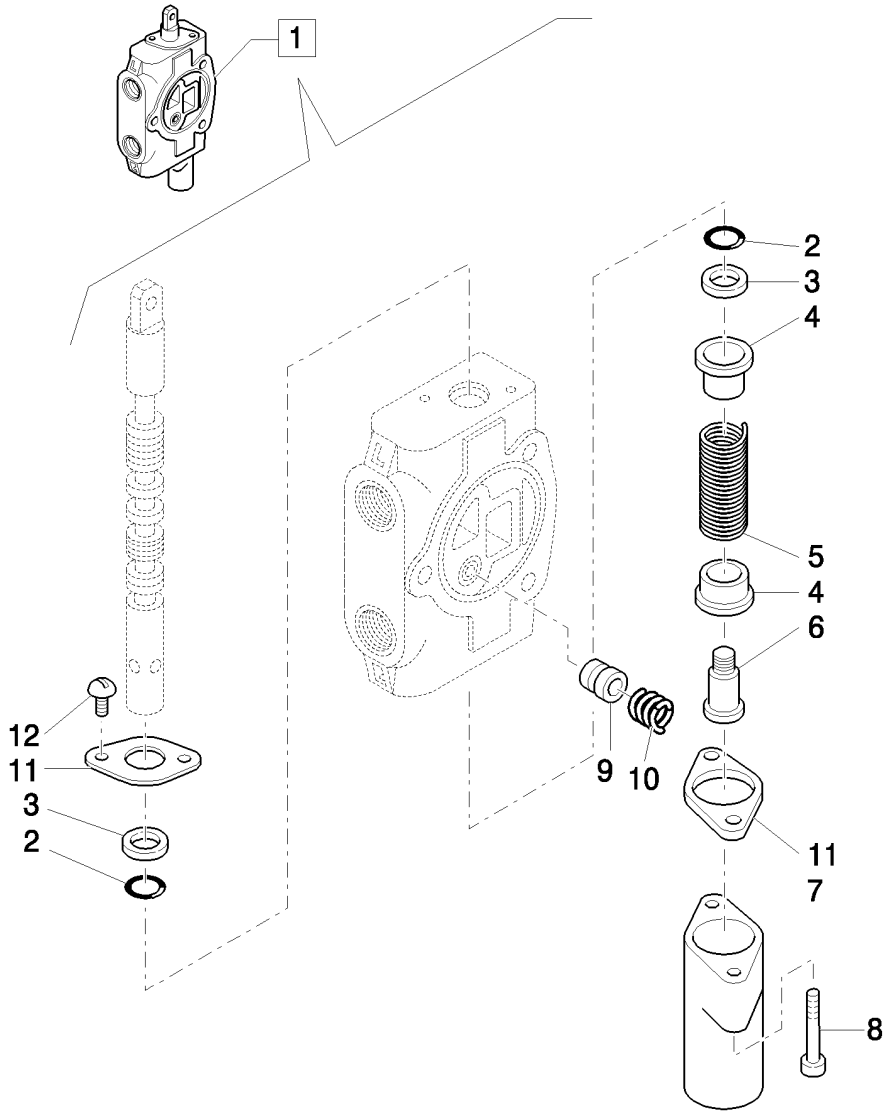

DISTRIBUIDOR ESTABILIZADOR, SECCIÓN DERECHA E IZQUIERDA (CENTER PIVOT) - NA

REF	FN	PART NUMBER	YR/SN	QTY	DENOMINACION
1		9970107		1	DISTRIBUIDOR HYDR, Assy
2		85813418		2	JUNTA HERMETICA
3		85813419		2	LIMPIADOR
4		9968481		2	ASIENTO
5		9968531		1	RESORTE
6		9968483		1	TORNILLO
7		9968484		1	TAPADERA
8		9968486		2	TORNILLO
9		9968477		1	POPPET
10		9968478		1	RESORTE
11		9968480		2	BRIDA
12		9968460		2	TORNILLO

Mechanical Version	B95B

346	01	p1	03/08

ALOJAMIENTO Y FILTROS A/A

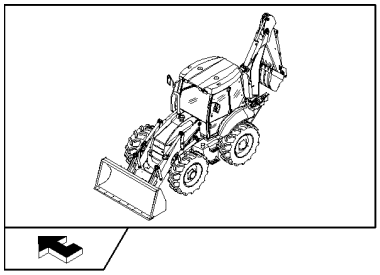

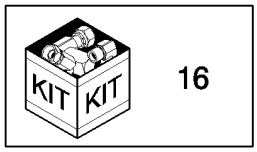

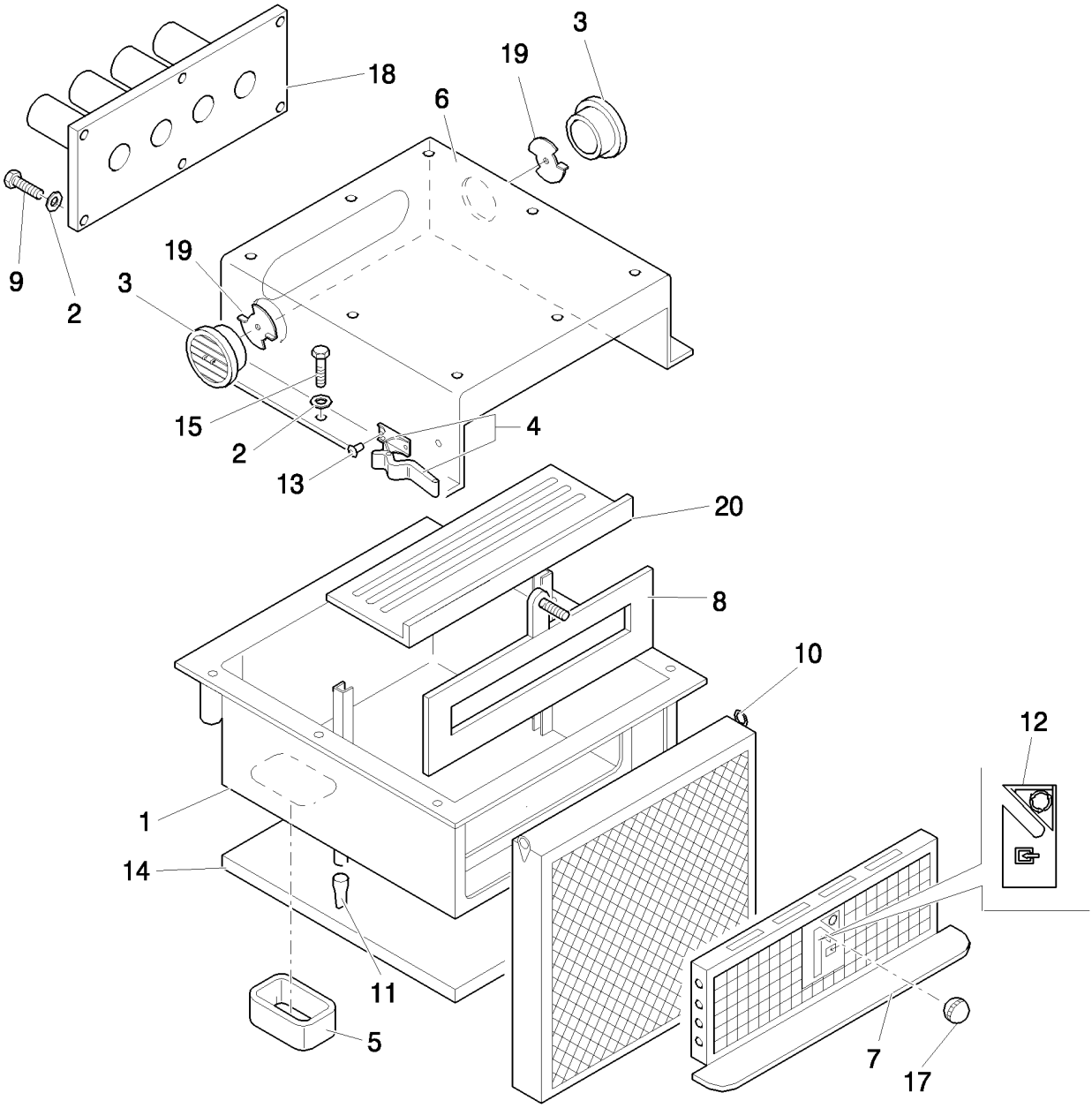

ALOJAMIENTO Y FILTROS A/A

REF	FN	PART NUMBER	YR/SN	QTY	DENOMINACION
1		87314323		1	CAVIDAD
2		11193974		6	ARANDELA ABANICO, Belleville, M8.4
3		87362068		2	SALIDA
4		87358140		2	PERILLA
5		87314730		1	ESPUMA AISLANTE
6		87618272		1	TAPADERA
7		87314330		1	CALANDRIA
8		87314350		1	TAPA
9		85819184		13	TORNILLO
10		87314367		1	FILTRO, CABINA
11		87315029		2	VÁLVULA DE POLVO
12		87314351		1	CALCOMANIA
13		87358141		4	REMACHE
14		87314520		1	ESPUMA AISLANTE
15		16043624		6	TORNILLO, Hex, M8 x 25, 8.8, Full Thd
16		87314518		1	ESPUMA AISLANTE, - KIT
17		87314353		1	POMO
18		87314357		1	CONDUCTO DE AIRE
19		87618261		2	DEFLECTOR
20		87314355		1	FONDO

346	02	p1	04/08

VENTILADOR Y SERPENTINES A/A

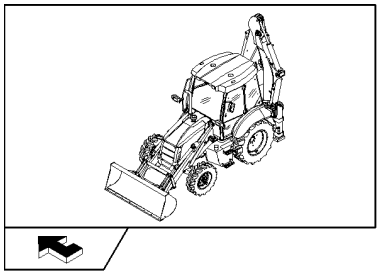

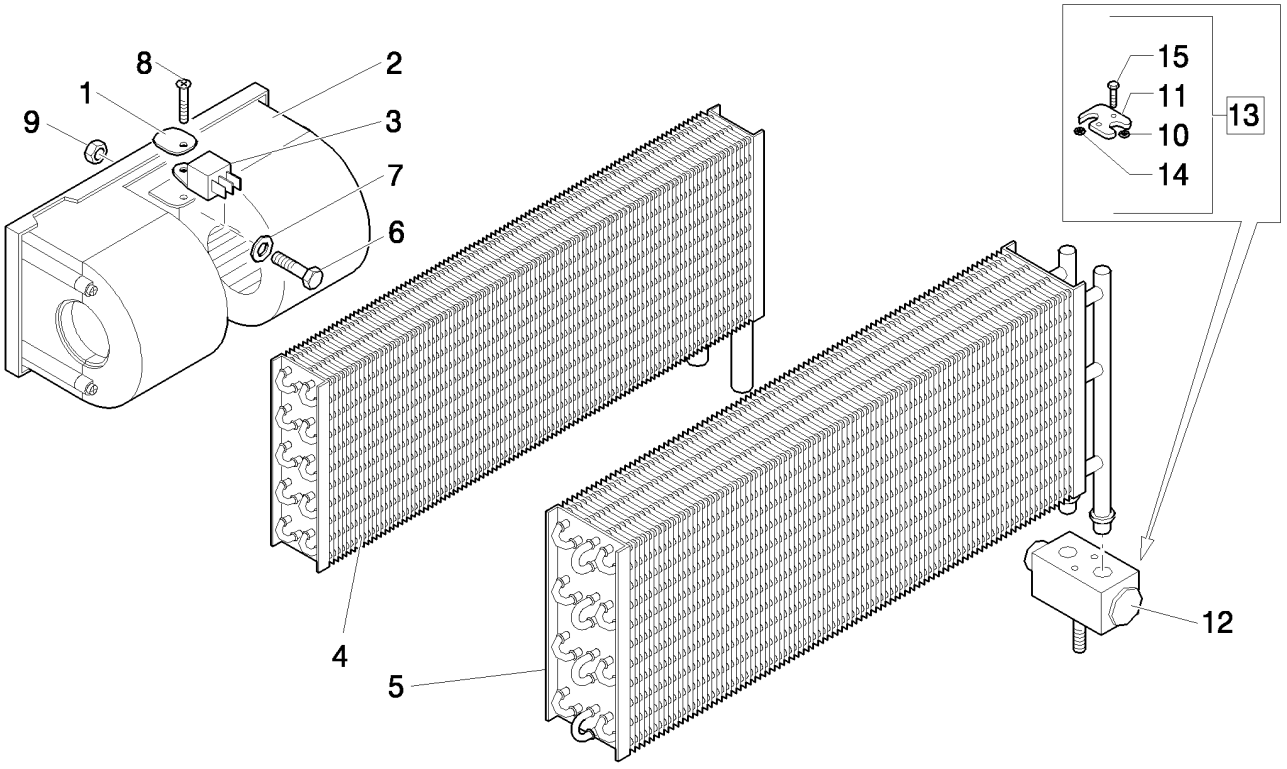

VENTILADOR Y SERPENTINES A/A

REF	FN	PART NUMBER	YR/SN	QTY	DENOMINACION
1		85817289		1	PLACA DE SUJECION
2		85813079		1	ELECTROVENTILADOR
3		85804041		1	RESISTENCIA
4		87314527		1	RECALENTADOR
5		87314369		1	EVAPORADOR
6		10902424		1	TORNILLO, Hex, M6 x 20, 8.8, Full Thd
7		11197774		1	ARANDELA ABANICO, Belleville, M6.4
8		85817189		1	TORNILLO
9		12574211		1	CONTRA TUERCA, M6 x 1, Cl 8
10		85805006		1	JUNTA HERMETICA
11		85805005		1	BRIDA
12		87314524		1	VALVULA DISTRIBUIDORA
13		85804038		1	BRIDA, Assy
14		85805003		1	JUNTA HERMETICA
15		85805004		2	TORNILLO

346	03	p1	04/08

MANGUITOS ESPIRALES DE CALEFACCIÓN

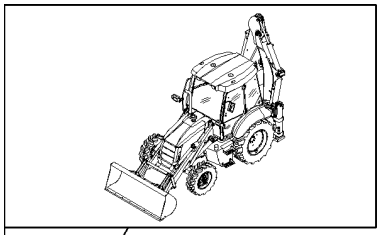

MANGUITOS ESPIRALES DE CALEFACCIÓN

REF	FN	PART NUMBER	YR/SN	QTY	DENOMINACION
1		87314726		4	ABRAZADERA MANGUERA
2		87358348		1	ARANDELA
3		87314526		1	TERMOSTATO
4		87318747		1	MANGA FLEXIBLE
5		87318750		1	MANGA FLEXIBLE
6		87314554		1	GRIFO
7		85804051		1	TUBO
8		87617261		2	TORNILLO
9		85817295		1	TUERCA
10		87314729		2	ANILLO DE CIERRE
11		87358142		2	ABRAZADERA

346	04	p1	03/08

PANEL DE MANDO CALEFACCIÓN Y A/A

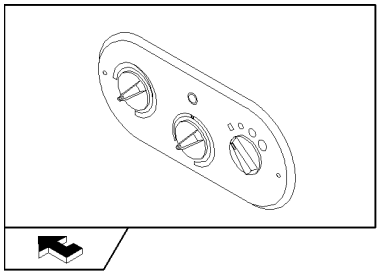

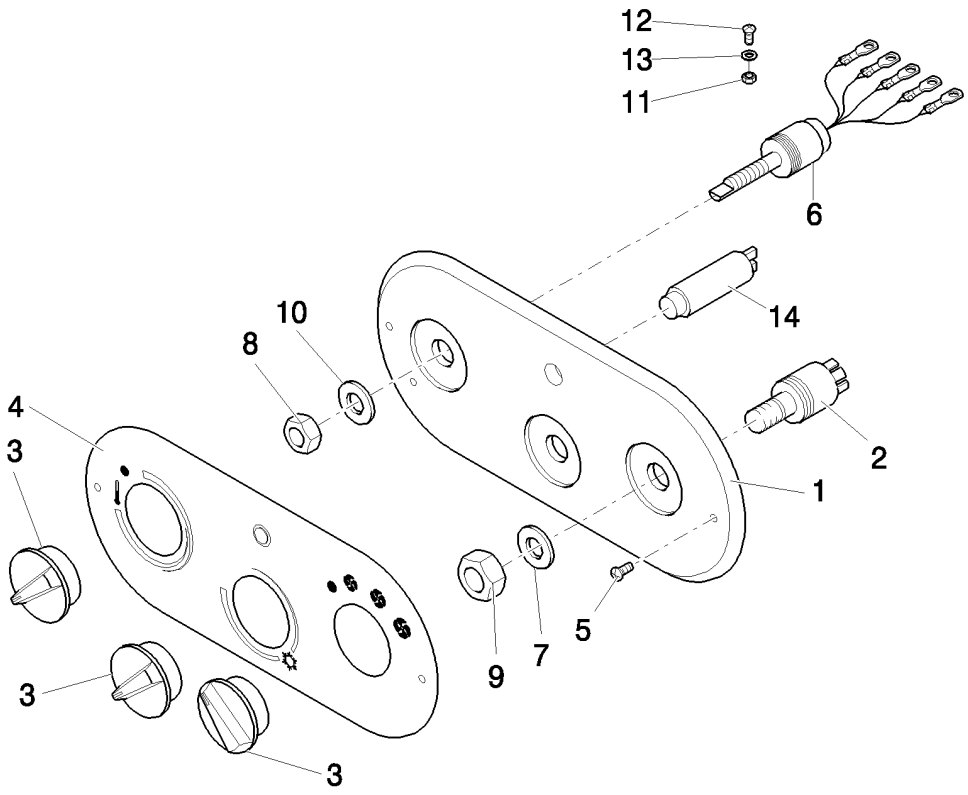

PANEL DE MANDO CALEFACCIÓN Y A/A

REF	FN	PART NUMBER	YR/SN	QTY	DENOMINACION
1		87314743		1	TABLIERO
2		87314747		1	CONTACTOR
3		87314749		3	POMO
4	1	87567694		1	PANTALLA PROTECTORA
4	2	87314750		1	CALCOMANIA
5		12678401		2	TORNILLO
6		87314753		1	POTENCIOMETRO
7		87358348		1	ARANDELA, 13X20
8		87334860		1	TUERCA
9		87334861		1	TUERCA, 12,5X18X1,5
10		87358349		1	ARANDELA, 10,5X16X1,5
11		14372671		2	TUERCA, M4.2, U, 12.4mm long
12		15693507		2	TORNILLO AUTOROSCANTE, Cross Oval Hd, M4.8 x 22
13		12601174		2	ARANDELA, Wave, M4.3
14	2	87314751		1	BOMBILLA

(1) Only for B95B, B95BLR, B95BTC, B110B, B115B (NA) - B100B, B100BLR, B110B, B115B (EU)
(2) Only for B90B, B90BLR (EU) - B90B (NA)

346	05	p1	03/08

CONDUCTOS CONSOLAS CALEFACCIÓN Y A/A

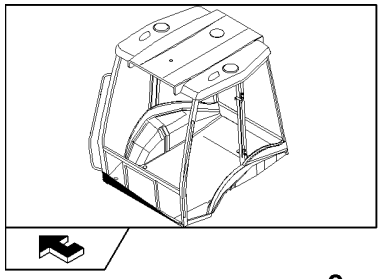

CONDUCTOS CONSOLAS CALEFACCIÓN Y A/A

REF	FN	PART NUMBER	YR/SN	QTY	DENOMINACION
1		85819452		5	MANGA
2		85819451		1	MANGA
3		87314771		1	CONDUCTO DE AIRE
4		87314772		2	CONDUCTO DE AIRE
5		87314773		1	CONDUCTO DE AIRE
6		87319448		1	CONDUCTO DE AIRE
7		85819454		2	DIFUSOR
8		87314946		1	DISTRIBUDOR
9		87314947		1	DISTRIBUDOR
10		87314948		1	CODO
11		85819453		1	CODO
12		87362068		2	SALIDA
13		87362065		2	DIFUSOR
14		14440327		4	TORNILLO, Hex Soc Flat Hd, M4 x 20, 8.8
15		87319437		1	CONDUCTO DE AIRE
16		13000690		6	ABRAZADERA MANGUERA
17		87314767		2	CONDUCTO DE AIRE
18		87314769		2	CONDUCTO DE AIRE
19		87652770		1	CODO
20		13000990		4	ABRAZADERA MANGUERA
21		87319443		1	CONDUCTO DE AIRE
22		5112712		12	COLLAR, M4.8 x 283
23		87652764		1	CODO

347	01	p1	03/08

ALOJAMIENTO Y FILTROS

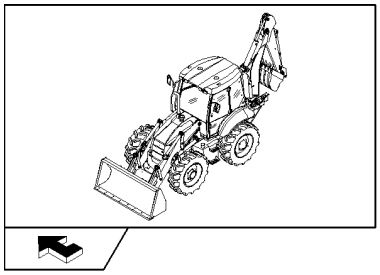

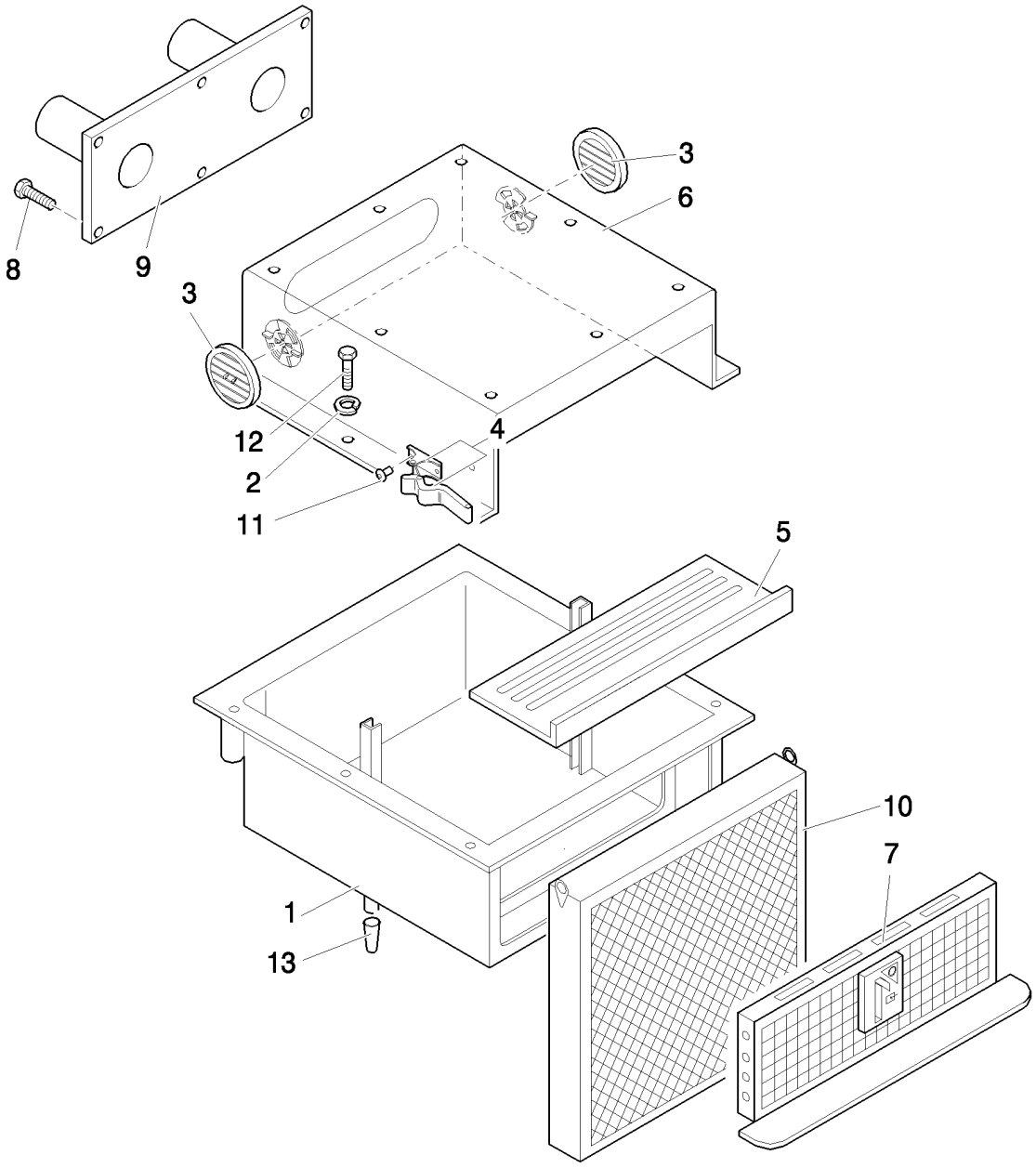

ALOJAMIENTO Y FILTROS

REF	FN	PART NUMBER	YR/SN	QTY	DENOMINACION
1		87314323		1	CAVIDAD
2		11193974		6	ARANDELA ABANICO, Belleville, M8.4
3		87618259		2	DEFLECTOR
4		87358140		2	PERILLA
5		87314355		1	FONDO
6		87618272		1	TAPADERA
7		87314330		1	CALANDRIA
8		85819184		13	TORNILLO
9		87316439		1	CONDUCTO DE AIRE
10		87314367		1	FILTRO, CABINA
11		87358141		4	REMACHE
12		16043624		6	TORNILLO, Hex, M8 x 25, 8.8, Full Thd
13		87315029		2	VÁLVULA DE POLVO

347	02	p1	03/08

VENTILADOR Y SERPENTINES RECALENTADOR

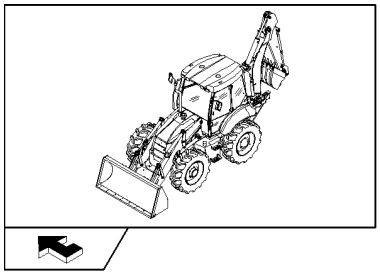

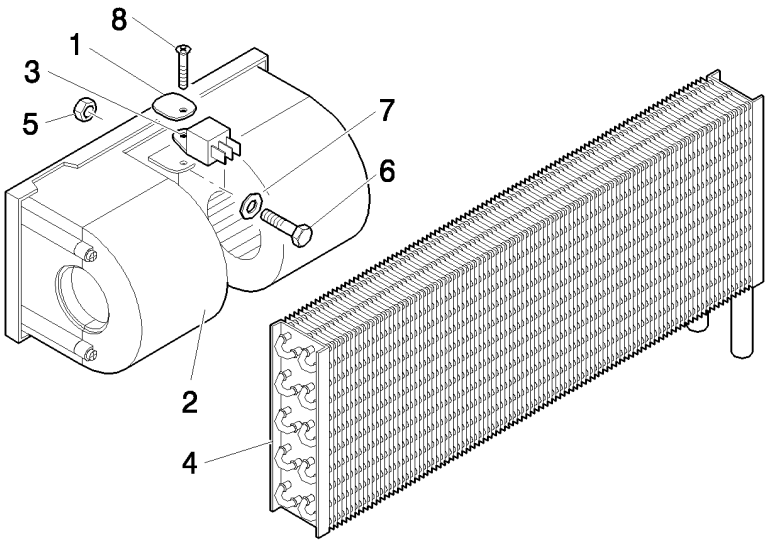

VENTILADOR Y SERPENTINES RECALENTADOR

REF	FN	PART NUMBER	YR/SN	QTY	DENOMINACION
1		85817289		1	PLACA DE SUJECION
2		85813079		1	ELECTROVENTILADOR
3		85804041		1	RESISTENCIA
4		87314527		1	RECALENTADOR
5		12574211		1	CONTRA TUERCA, M6 x 1, Cl 8
6		10902424		1	TORNILLO, Hex, M6 x 20, 8.8, Full Thd
7		11197774		1	ARANDELA ABANICO, Belleville, M6.4
8		85817189		1	TORNILLO

MANGUITOS ESPIRALES DE CALEFACCIÓN

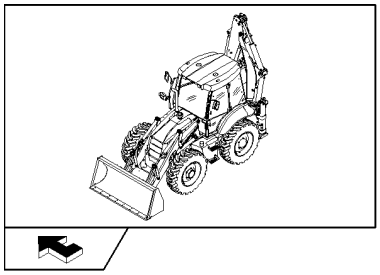

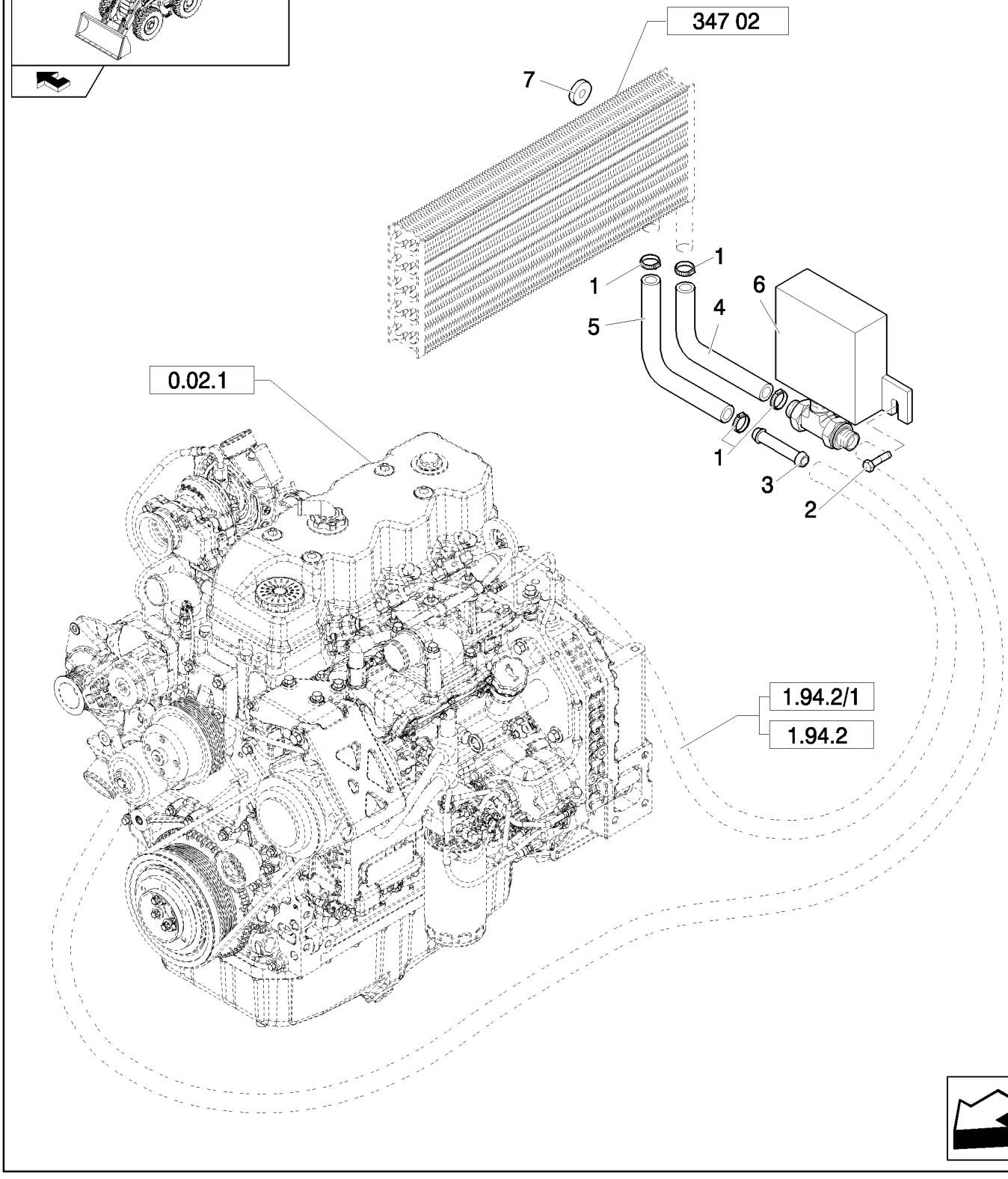

MANGUITOS ESPIRALES DE CALEFACCIÓN

REF	FN	PART NUMBER	YR/SN	QTY	DENOMINACION
1		87314726		4	ABRAZADERA MANGUERA
2		87617261		2	TORNILLO
3		85804051		1	TUBO
4		87318747		1	MANGA FLEXIBLE
5		87318750		1	MANGA FLEXIBLE
6		87314554		1	GRIFO
7		87314729		2	ANILLO DE CIERRE

347	04	p1	03/08

PANEL DE MANDO CALEFACCIÓN Y A/A

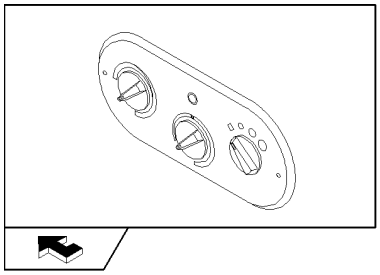

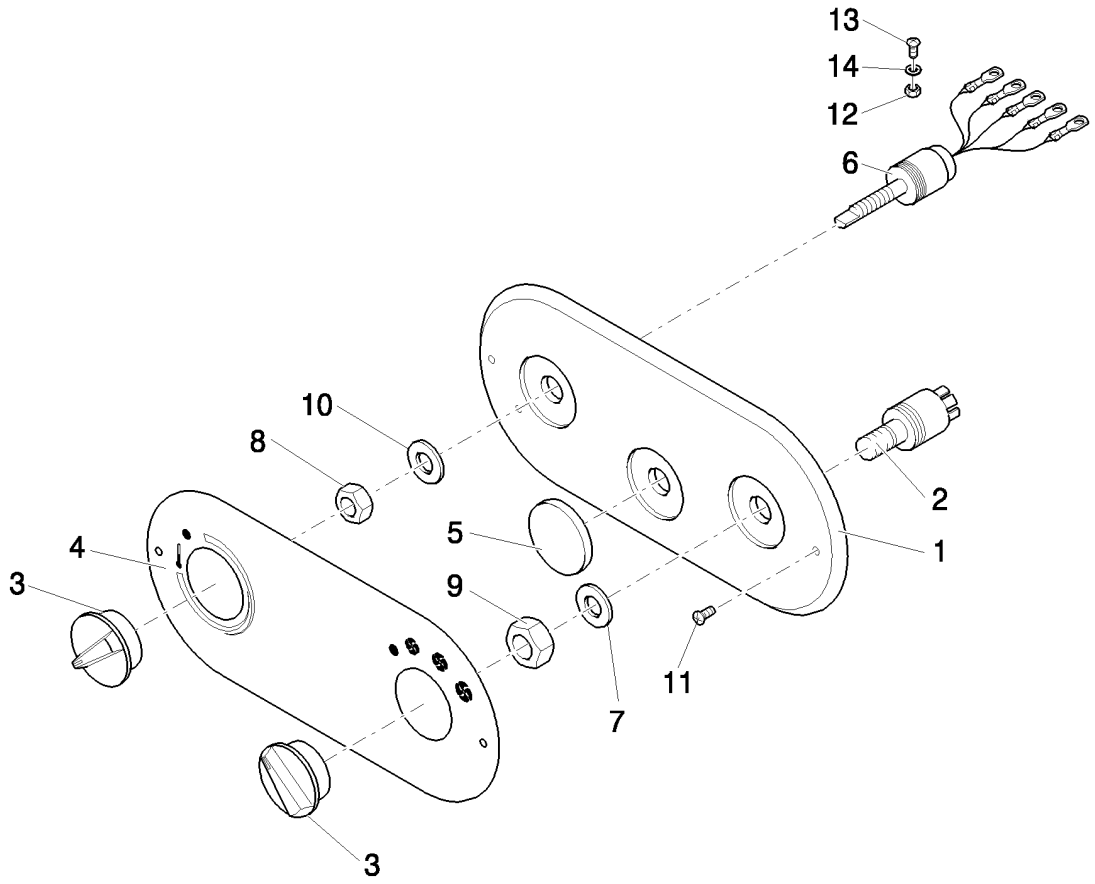

PANEL DE MANDO CALEFACCIÓN Y A/A

REF	FN	PART NUMBER	YR/SN	QTY	DENOMINACION
1		87314743		1	TABLIERO
2		87314747		1	CONTACTOR
3		87314749		2	POMO
4		87316443		1	CALCOMANIA
5		87316442		1	TAPÓN
6		87314753		1	POTENCIOMETRO
7		87358348		1	ARANDELA, 12,5X18X1,5
8		87334860		1	TUERCA
9		87334861		1	TUERCA
10		87358349		1	ARANDELA, 10,5X16X1,5
11		12678401		2	TORNILLO
12		12574111		2	CONTRA TUERCA, M5 x .8, Cl 8
13		15687801		2	TORNILLO AUTOROSCANTE, Cross Pan Hd, M4.8 x 9.5
14		12601174		2	ARANDELA, Wave, M4.3

347	05	p1	03/08

CONDUCTOS CONSOLAS CALEFACCIÓN Y A/A

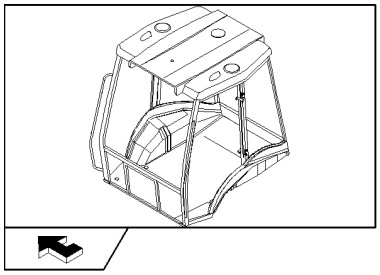

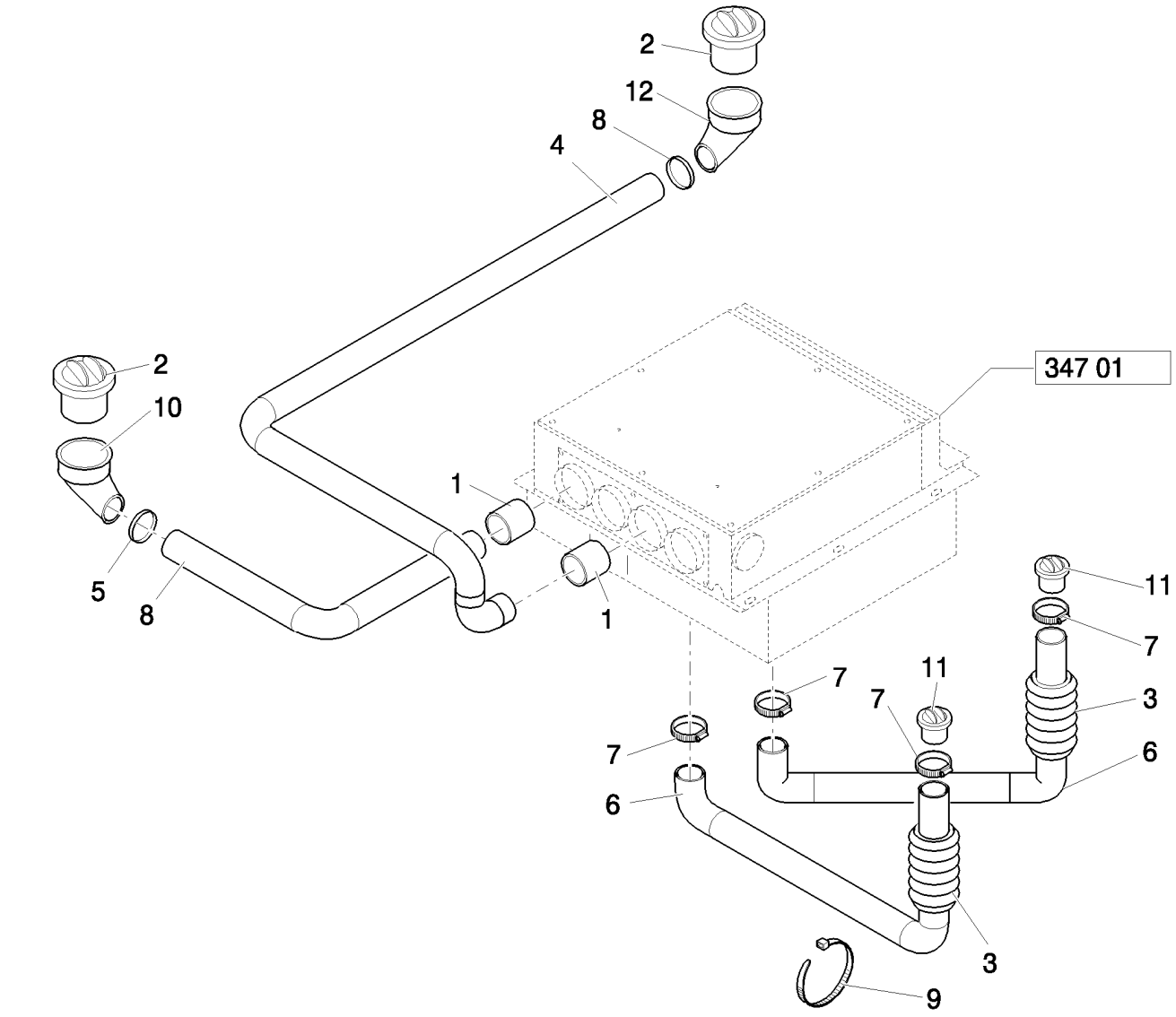

CONDUCTOS CONSOLAS CALEFACCIÓN Y A/A

REF	FN	PART NUMBER	YR/SN	QTY	DENOMINACION
1		85819452		2	MANGA
2		87362065		2	DIFUSOR
3		87314769		2	CONDUCTO DE AIRE
4		87319437		1	CONDUCTO DE AIRE
5		13000690		2	ABRAZADERA MANGUERA
6		87314769		2	CONDUCTO DE AIRE
7		13000990		4	ABRAZADERA MANGUERA
8		87319443		1	CONDUCTO DE AIRE
9		5112712		12	COLLAR, M4.8 x 283
10		87652770		1	CODO
11		87362068		2	SALIDA
12		87652764		1	CODO

347	06	p1	03/08

TAPON ENVOLTURA CALEFACCIÓN CABINA

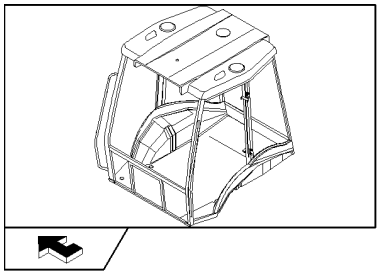

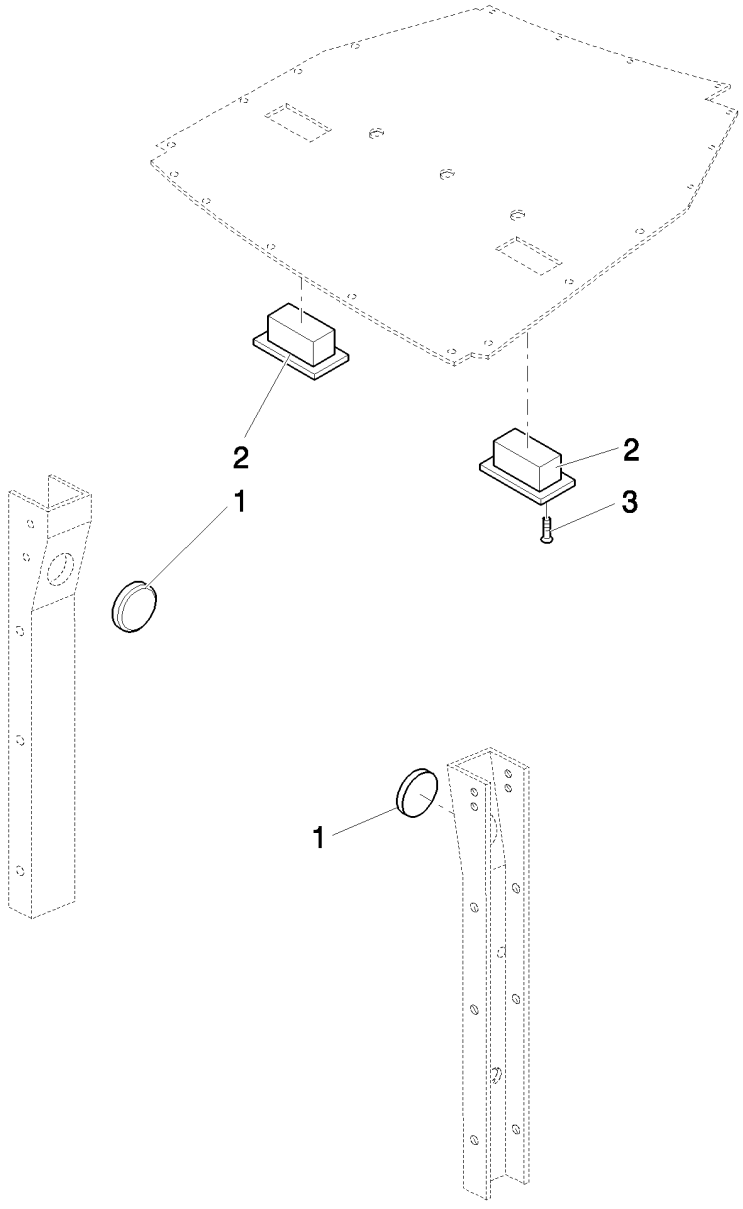

TAPON ENVOLTURA CALEFACCIÓN CABINA

REF	FN	PART NUMBER	YR/SN	QTY	DENOMINACION
1		87319018		2	TAPÓN
2		87318763		2	TAPÓN
3		14440327		4	TORNILLO, Hex Soc Flat Hd, M4 x 20, 8.8

386		p1	03/08

CUCHARÓN RETROEXCAVADORA 12" (305 MM) HD CON DIENTES ENSAMBLADOS CON CLAVIJAS - NA

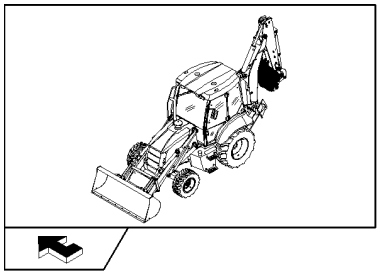

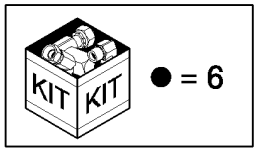

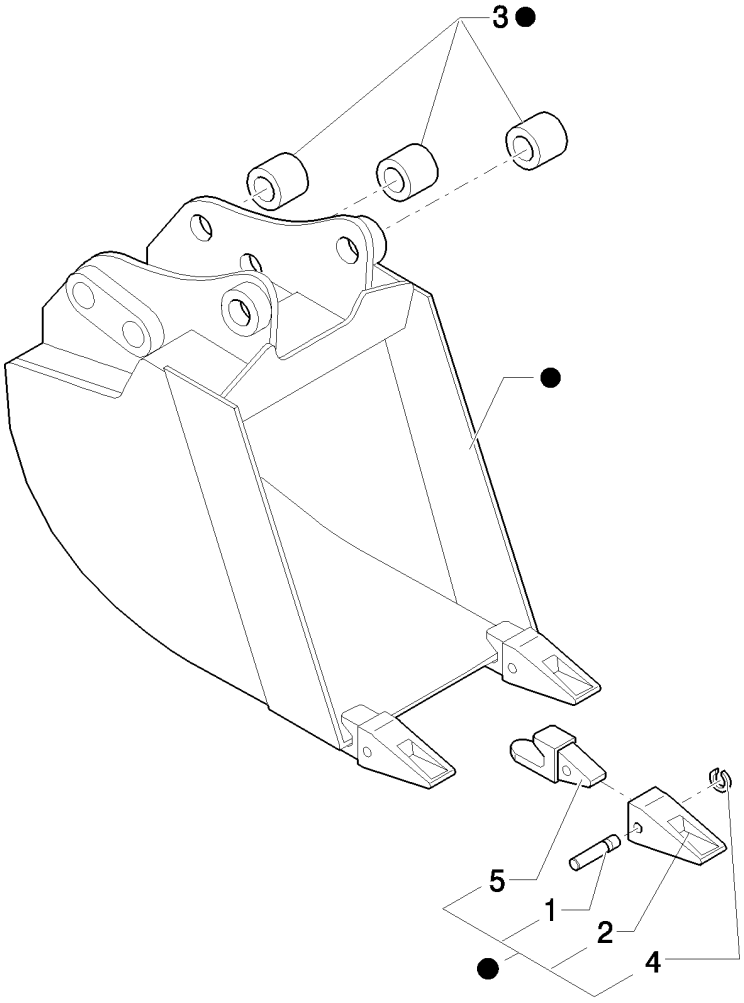

CUCHARÓN RETROEXCAVADORA 12" (305 MM) HD CON DIENTES ENSAMBLADOS CON CLAVIJAS - NA

REF	FN	PART NUMBER	YR/SN	QTY	DENOMINACION
1		85801097		3	PERNO
2		85811432		3	DIENTE DE CUCHARA
3		83910634		6	CASQUILLO
4		85801098		3	ANILLO
5		85821788		3	PORTADIENTE
6		87607818		1	CUCHARA

387		p1	03/08

CUCHARÓN RETROEXCAVADORA 18" (457MM) HD CON DIENTES ENSAMBLADOS CON CLAVIJAS - NA

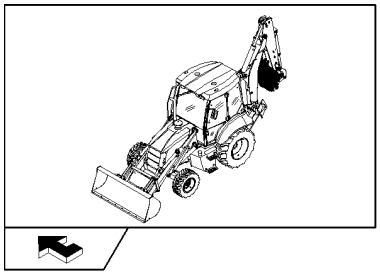

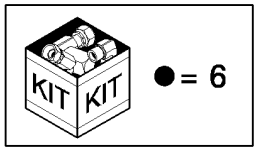

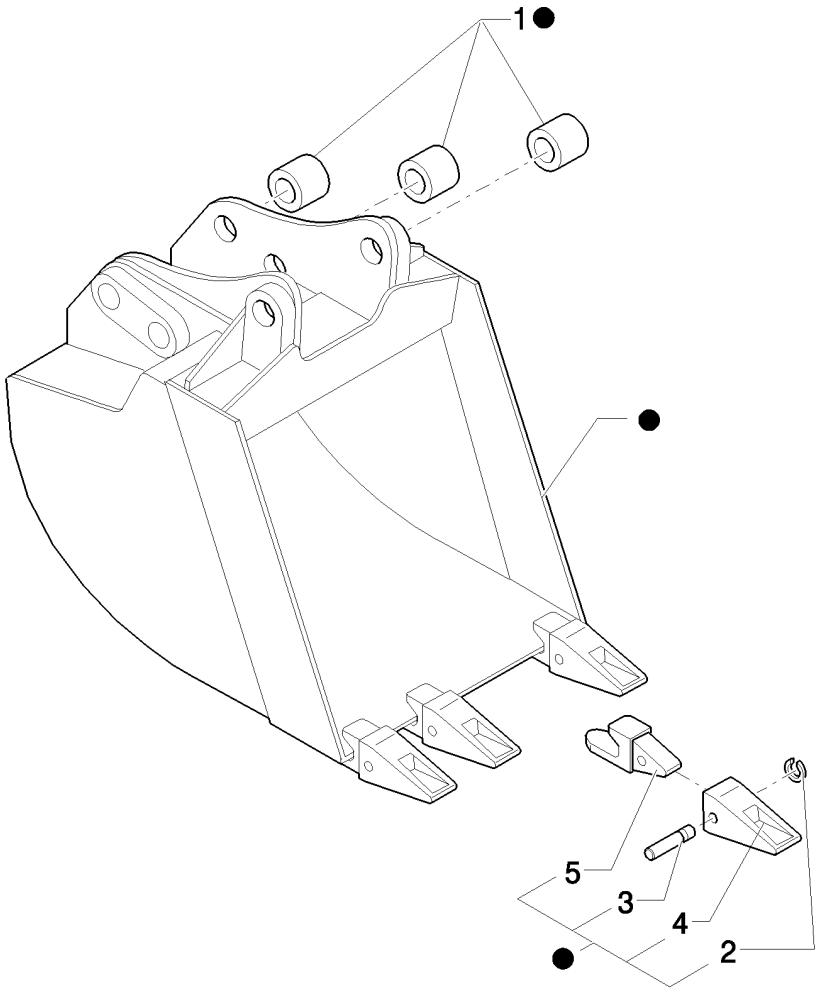

CUCHARÓN RETROEXCAVADORA 18" (457MM) HD CON DIENTES ENSAMBLADOS CON CLAVIJAS - NA

REF	FN	PART NUMBER	YR/SN	QTY	DENOMINACION
1		83910634		6	CASQUILLO
2		85801098		4	ANILLO
3		85801097		4	PERNO
4		85811432		4	DIENTE DE CUCHARA
5		85821788		4	PORTADIENTE
6		87607821		1	CUCHARA

CUCHARÓN RETROEXCAVADORA 24" (610MM) HD CON DIENTES ENSAMBLADOS CON CLAVIJAS - NA

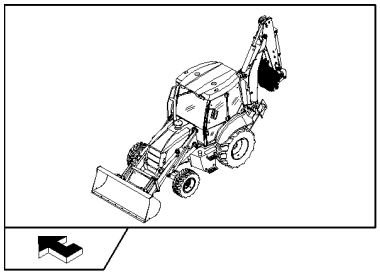

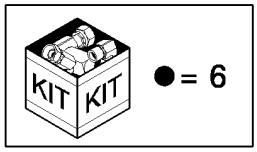

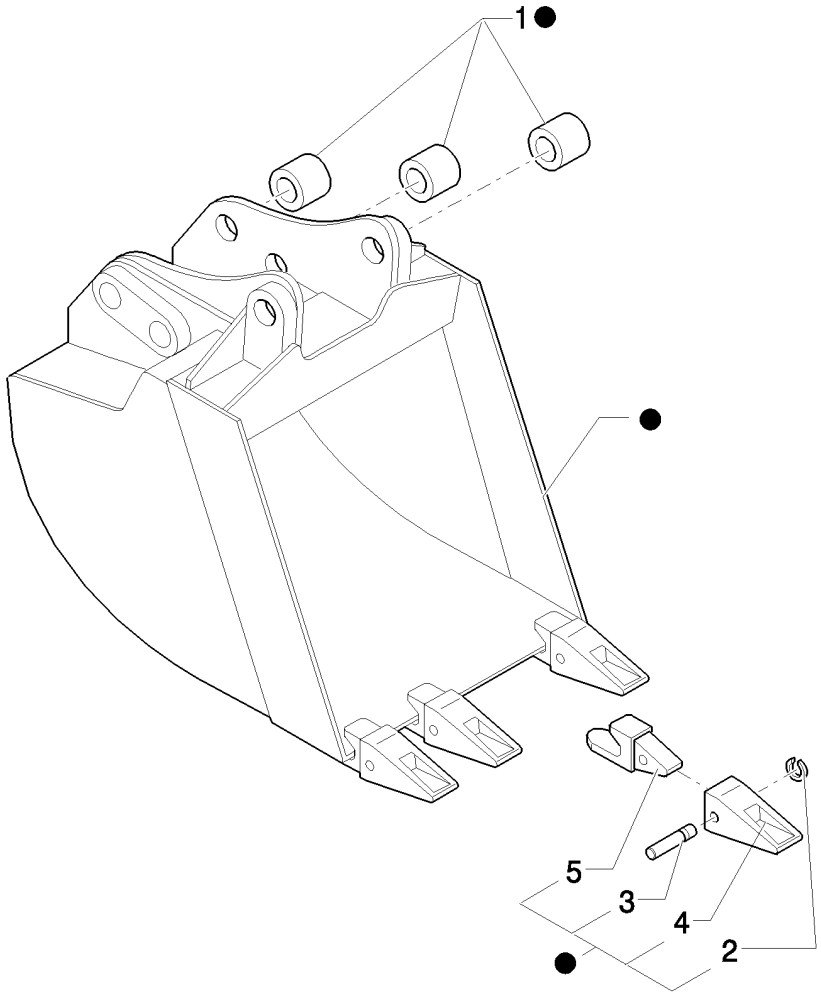

CUCHARÓN RETROEXCAVADORA 24" (610MM) HD CON DIENTES ENSAMBLADOS CON CLAVIJAS - NA

REF	FN	PART NUMBER	YR/SN	QTY	DENOMINACION
1		83910634		6	CASQUILLO
2		85801098		4	ANILLO
3		85801097		4	PERNO
4		85811432		4	DIENTE DE CUCHARA
5		85821788		4	PORTADIENTE
6		87607824		1	CUCHARA

389		p1	03/08

CUCHARÓN RETROEXCAVADORA 30" (762MM) HD CON DIENTES ENSAMBLADOS CON CLAVIJAS - NA

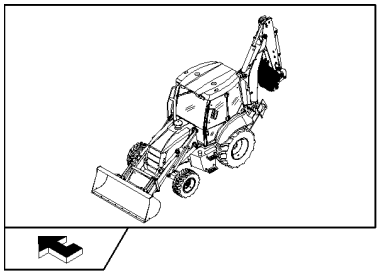

KIT KIT ● = 6

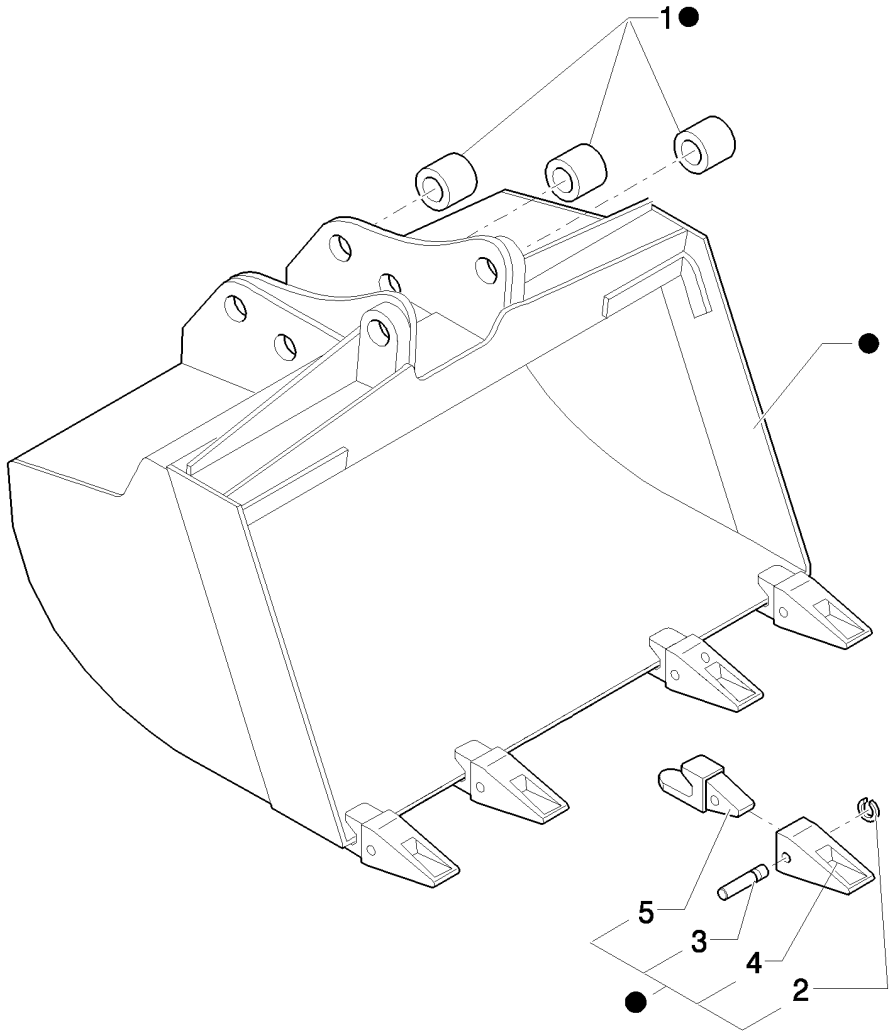

CUCHARÓN RETROEXCAVADORA 30" (762MM) HD CON DIENTES ENSAMBLADOS CON CLAVIJAS - NA

REF	FN	PART NUMBER	YR/SN	QTY	DENOMINACION
1		83910634		6	CASQUILLO
2		85801098		5	ANILLO
3		85801097		5	PERNO
4		85811432		5	DIENTE DE CUCHARA
5		85821788		5	PORTADIENTE
6		87607825		1	CUCHARA

DISTRIBUIDOR CARGADOR, 2 SECCIONES, PALANCA - NA

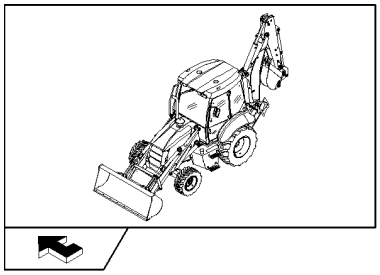

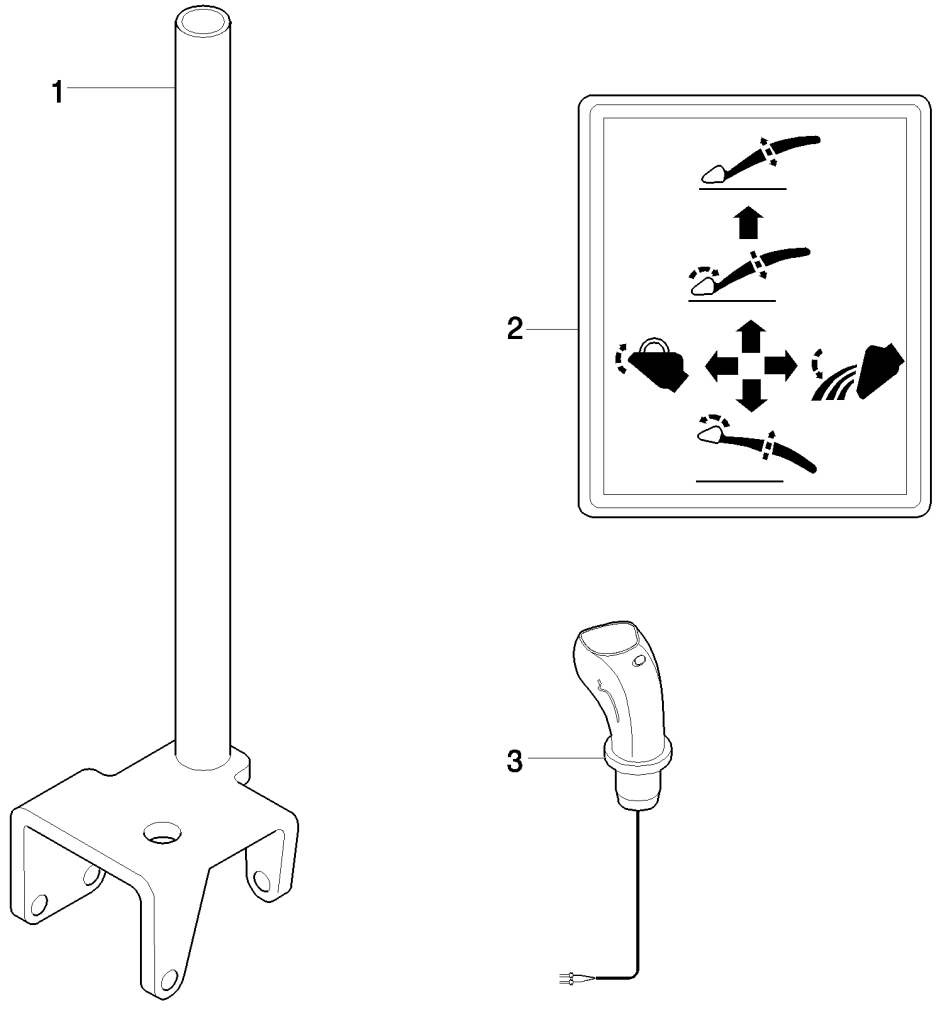

DISTRIBUIDOR CARGADOR, 2 SECCIONES, PALANCA - NA

REF	FN	PART NUMBER	YR/SN	QTY	DENOMINACION
1	1	87646604		1	PALANCA
2		85804346		1	CALCOMANIA
3	1	87311102		1	JOYSTICK
3	2	87311103		1	JOYSTICK

(1) Only for Power Shift
(2) Only for Power Shuttle

Mechanical Version B95B

390/01		p1	03/08

CUCHARÓN RETROEXCAVADORA 36" (910MM) HD CON DIENTES ENSAMBLADOS CON CLAVIJAS - NA

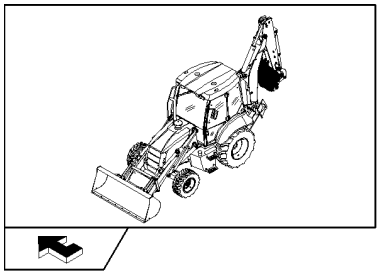

KIT KIT ●= 6

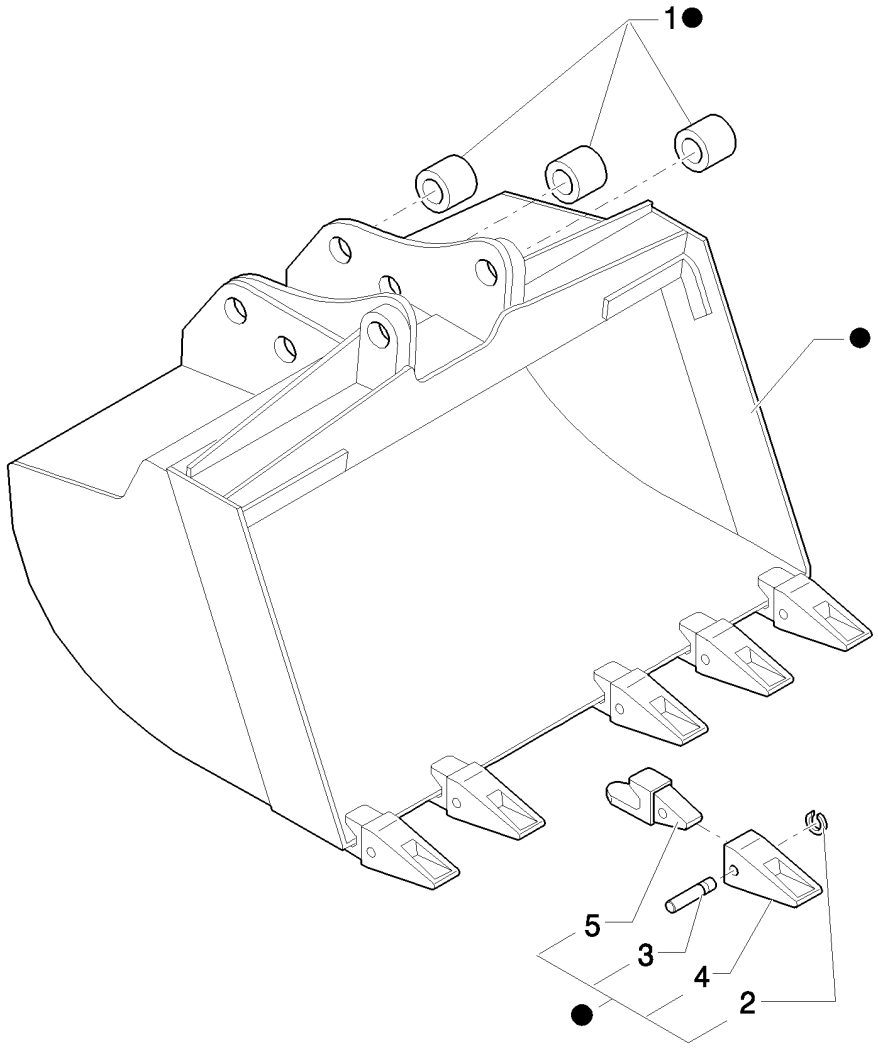

CUCHARÓN RETROEXCAVADORA 36" (910MM) HD CON DIENTES ENSAMBLADOS CON CLAVIJAS - NA

REF	FN	PART NUMBER	YR/SN	QTY	DENOMINACION
1		83910634		6	CASQUILLO
2		85801098		6	ANILLO
3		85801097		6	PERNO
4		85811432		6	DIENTE DE CUCHARA
5		85821788		6	PORTADIENTE
6		87607827		1	CUCHARA

391		p1	03/08

VALVULA DE BLOQUEO PARA CUCHARON 4X1 / 6X1

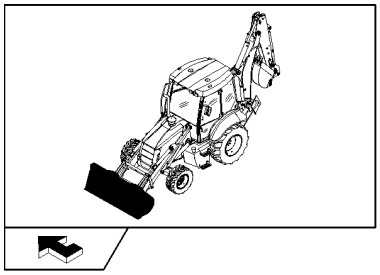

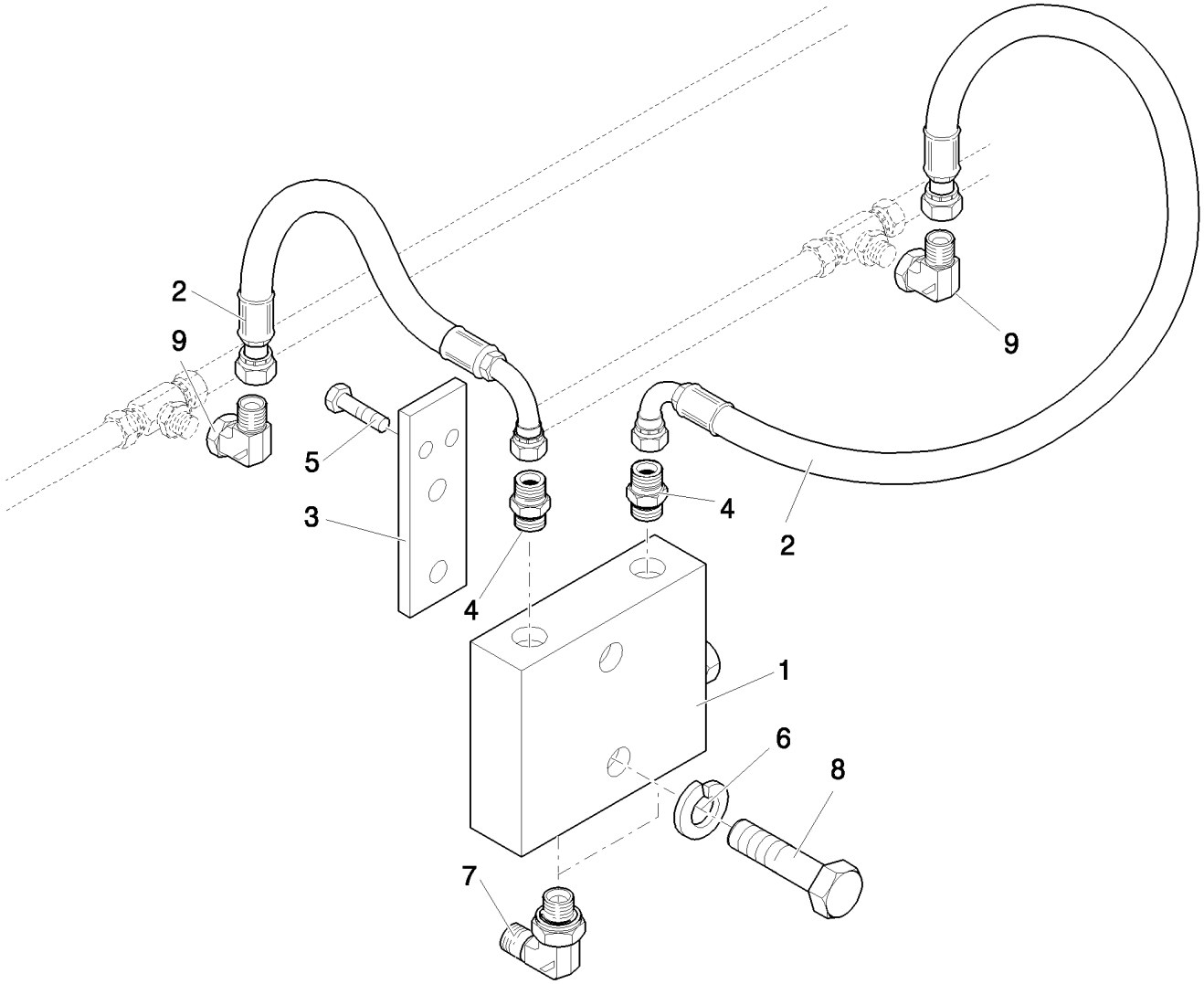

VALVULA DE BLOQUEO PARA CUCHARON 4X1 / 6X1

REF	FN	PART NUMBER	YR/SN	QTY	DENOMINACION
1		85820844		1	VALVULA HIDRAULICA
2		85821127		2	MANGA FLEXIBLE
3		87316861		1	PLACA
4		83963374		2	RACOR
5		16044321		2	TORNILLO, Hex, M8 x 55, 8.8
6		11193874		4	ARANDELA ABANICO, Belleville, M8.4
7		83971549		2	CODO
8		16044121		2	TORNILLO, Hex, M8 x 45, 8.8
9		86511208		2	CODO

392	01	p1	04/08

VÁLVULA DE BLOQUEO EN CILINDRO DEL BRAZO DE ELEVACIÓN Y EQUIPO RETROEXCAVADOR

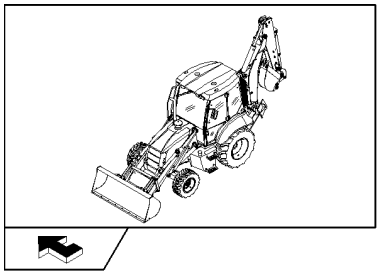

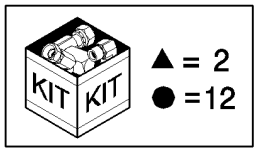

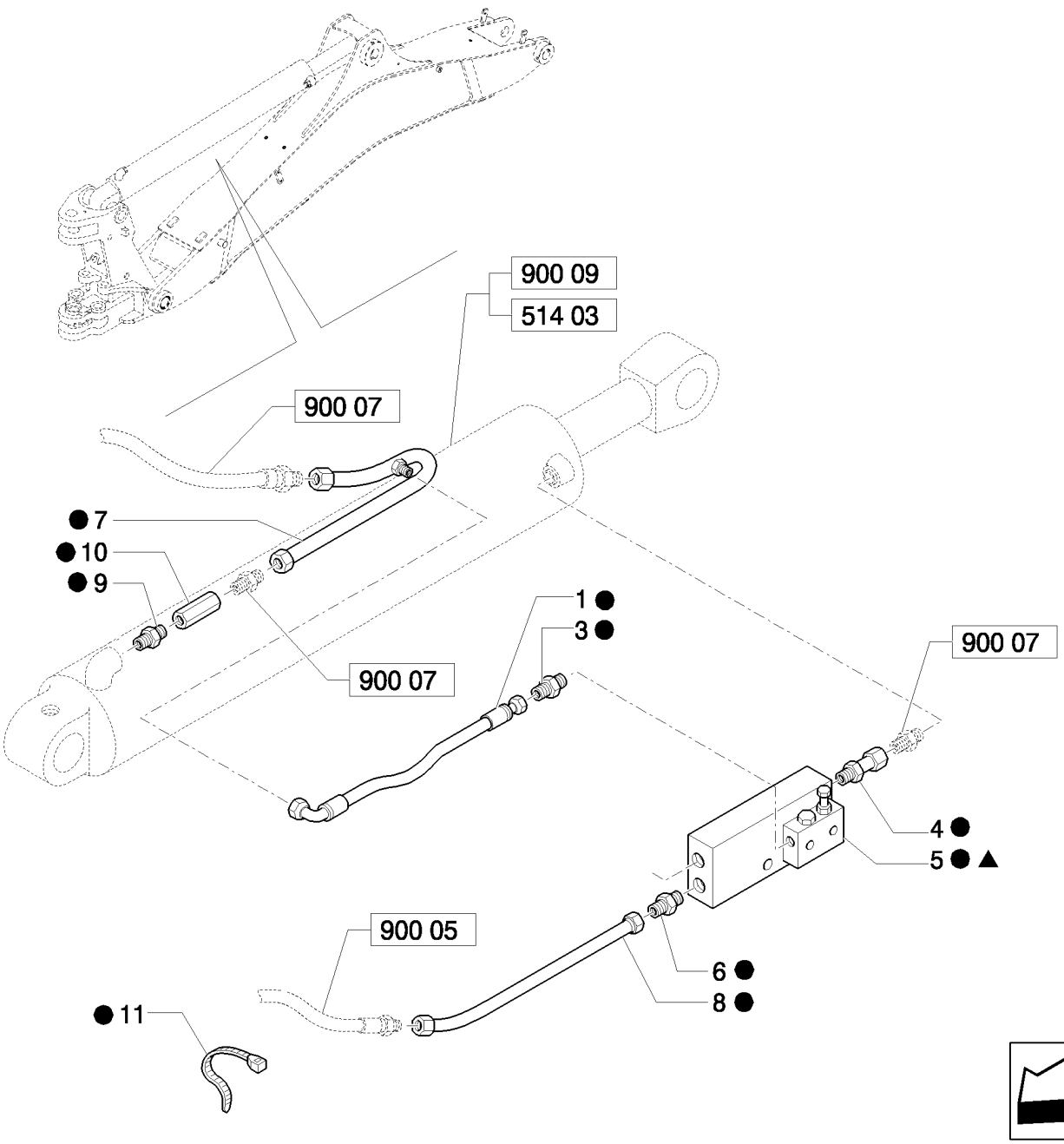

VÁLVULA DE BLOQUEO EN CILINDRO DEL BRAZO DE ELEVACIÓN Y EQUIPO RETROEXCAVADOR

REF	FN	PART NUMBER	YR/SN	QTY	DENOMINACION
1		85815505		1	HOSE, HYDRAULIC, 600mm lg
2		85820912		AR	EQUIPO
3		85802803		1	RACOR
4		85805124		1	RACOR
5	1	87353316		1	VALVULA DE SECURIDAD, Assy
6		83963000		2	RACOR
7		85820836		1	TUBERIA HIDRAULICO
8		87647914		1	TUBO DE PRESION
9		85804879		1	RACOR
10		85824308		1	VALVULA HIDRAULICA
11		79072960		2	CIERRA CABLES
12		87648638		1	EQUIPO

(1) Includes 2

392	02	p1	03/08

VÁLVULA DE BLOQUEO EN CILINDRO Y EQUIPO RETROEXCAVADOR

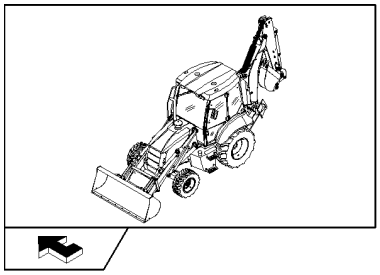

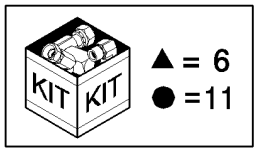

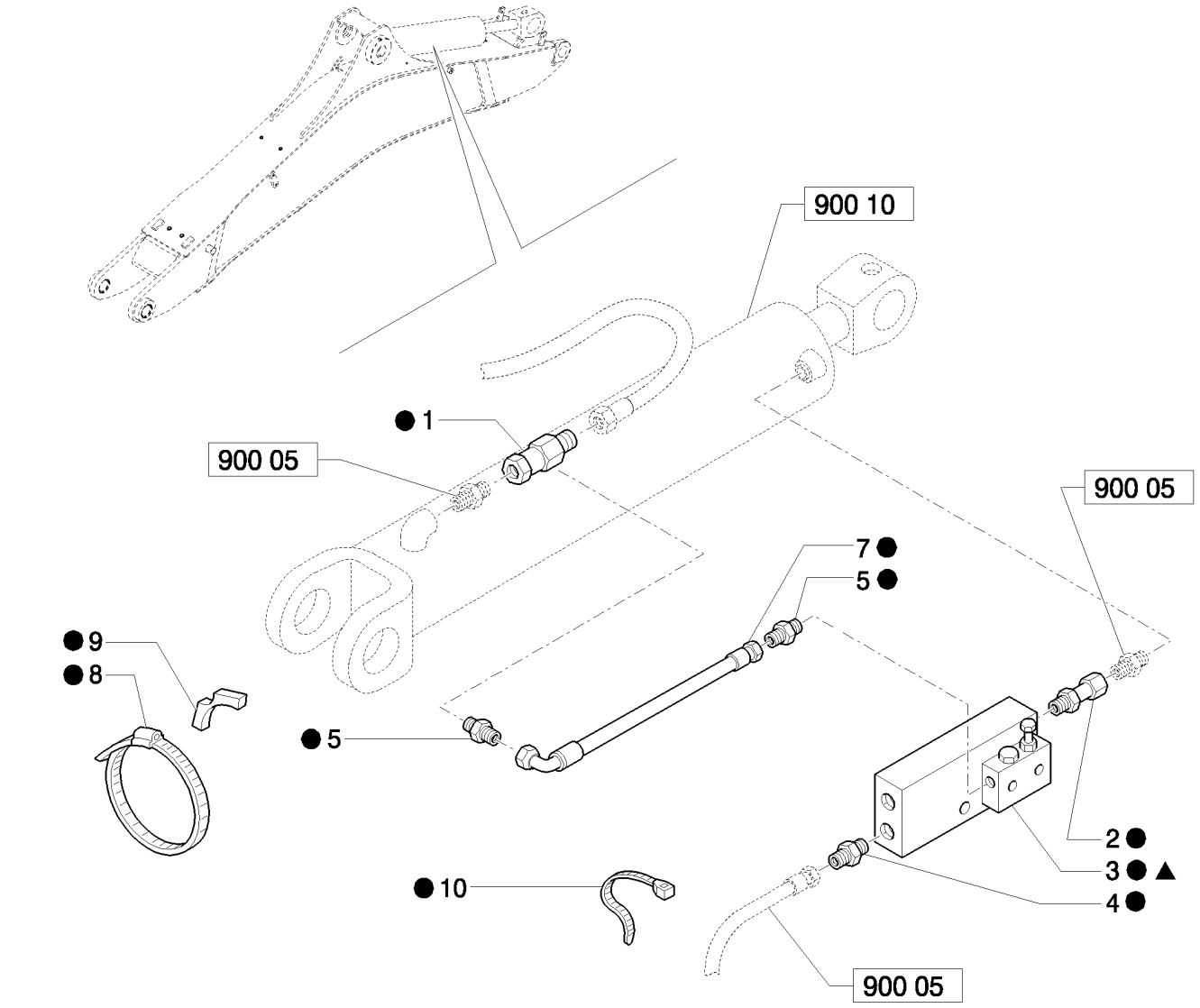

VÁLVULA DE BLOQUEO EN CILINDRO Y EQUIPO RETROEXCAVADOR

REF	FN	PART NUMBER	YR/SN	QTY	DENOMINACION
1		85805115		1	RACOR
2		85805124		1	RACOR
3	1	87353314		1	VALVULA DE SECURIDAD, ASSY
4		83963000		2	RACOR
5		85802803		2	RACOR
6		85820913		1	EQUIPO
7		85815505		1	HOSE, HYDRAULIC, 600mm lg
8		85805126		1	ABRAZADERA MANGUERA
9		85805123		1	SEPARADOR
10		79072960		2	CIERRA CABLES
11		87648639		1	EQUIPO

(1) Includes 6

393		p1	04/08

MANDOS EXCAVADORA DE PALANCA, PALANCA, TAPA CONTRA EL POLVO Y CALCOM. - NA

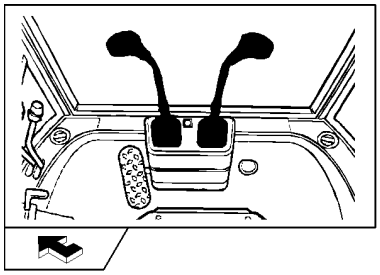

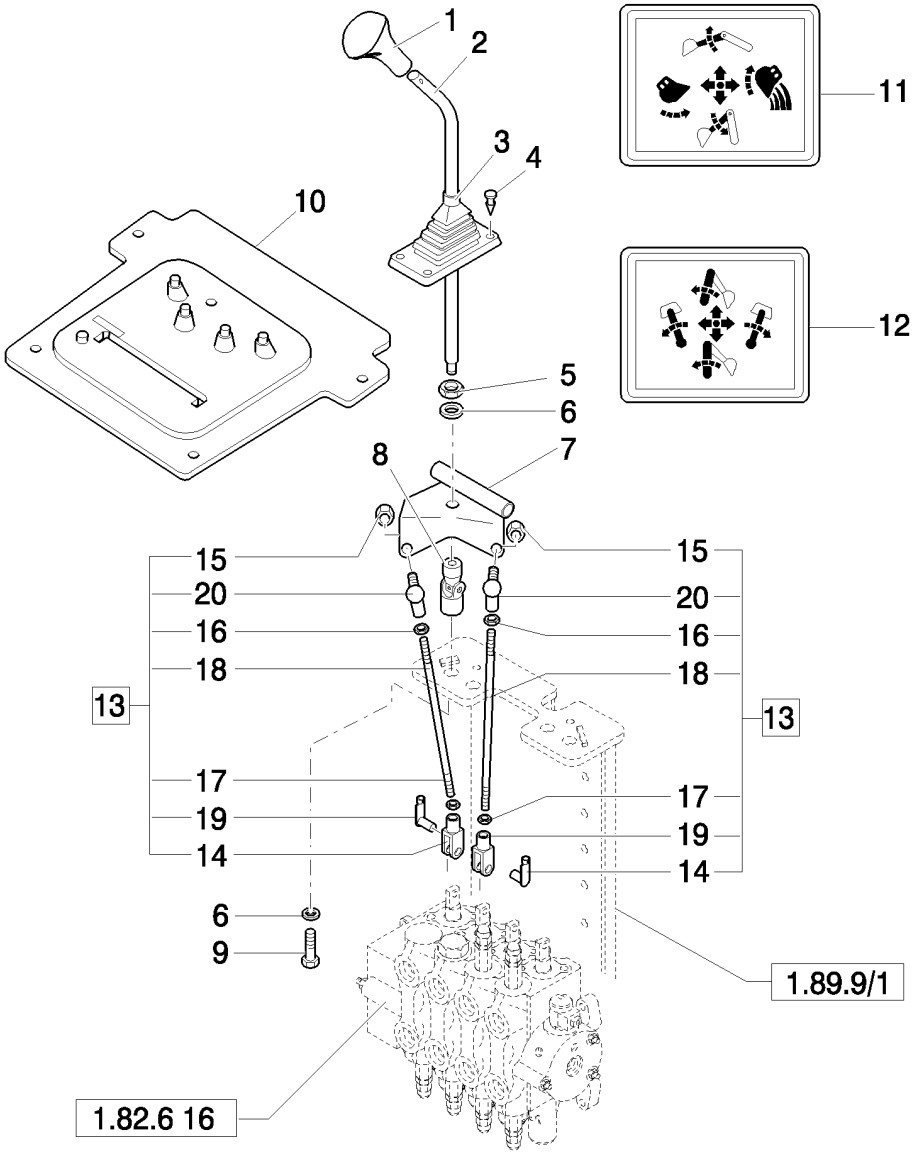

MANDOS EXCAVADORA DE PALANCA, PALANCA, TAPA CONTRA EL POLVO Y CALCOM. - NA

REF	FN	PART NUMBER	YR/SN	QTY	DENOMINACION
1		85801502		1	POMO, Without Horn Switch
1		85802682		1	POMO, Includes 13796621 M5 x 8mm long Setscrew; With 87448432 Horn Switch
		87448432		1	INTERRUPTOR, Horn
2		85801488		2	PALANCA
3		85802843		2	CASQUETE
4		14568887		8	BOTON DE RESORTE
5		16101511		2	TUERCA, M12 x 1.25, Cl 8
6		11190779		4	ARANDELA ABANICO, Belleville, M13
7		85803124		1	PIEZA DE SOPORTE, LH
7		85803107		1	PIEZA DE SOPORTE, RH
8		85801518		2	CARDÁN
9		15540321		2	TORNILLO, Hex, M12 x 1.25 x 25, 8.8, Full Thd
10	1	85804540		1	CASQUETE
11		85804344		1	IDEOGRAMOS
12		85804345		1	IDEOGRAMOS
13		85801514		4	TIRANTE, Assy
14		11991971		1	HORQUILLA PEQUENA
15		14048211		1	CONTRA TUERCA, M8 x 1.25, Cl 8
16		16102311		1	TUERCA, Thin, M8 x 1.25, Cl 04
17		16102911		1	TUERCA, Thin, M8 x 1.25, Cl 04, LH
18		85801515		1	TIRANTE
19		85802738		1	RETENEDOR
20		85804375		1	JUNTA DE ROTULA

(1) Only for CAB

Mechanical Version B95B

394	01	p1	04/08

MANDOS EQUIPO RETROEXCAVADOR DE 4 PALANCAS, CONSOLA, PALANCAS Y PALANCA A ESCUADRA (PIVOTE CENTRAL: SIDE SHIFT): P

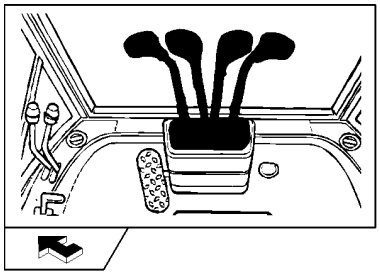

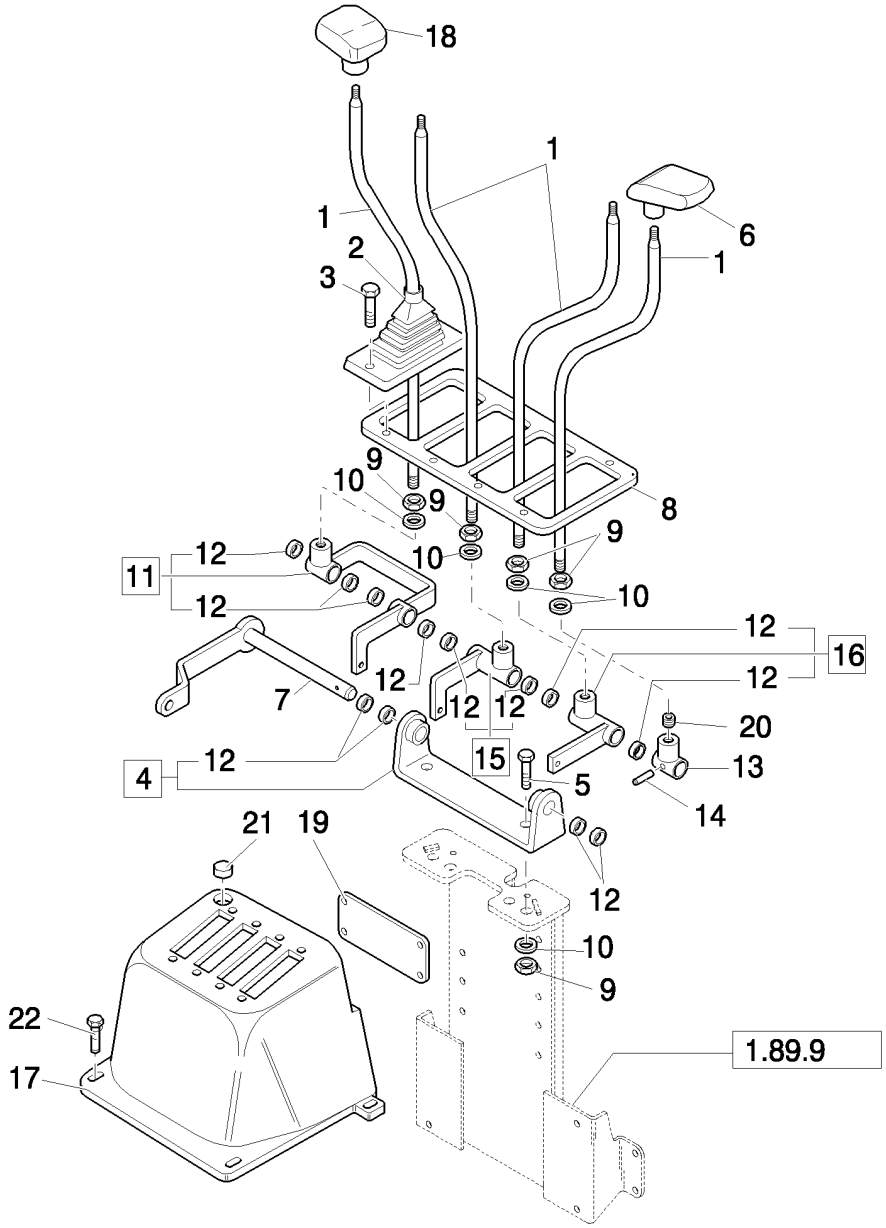

MANDOS EQUIPO RETROEXCAVADOR DE 4 PALANCAS, CONSOLA, PALANCAS Y PALANCA A ESCUADRA (PIVOTE CENTRAL: SIDE SHI

REF	FN	PART NUMBER	YR/SN	QTY	DENOMINACION
1		85804780		4	PALANCA
2		85803382		4	CASQUETE
3		13272477		8	TORNILLO, Cross Pan Hd, M4 x 20, 12.9
4		85802647		1	SOPORTE, Assy
5		15540421		2	TORNILLO, Hex, M12 x 1.25 x 30, 8.8, Full Thd
6		83962918		2	MANECILLA, LH
7		85804782		1	PERNO
8		85803540		1	PLACA
9		16101511		6	TUERCA, M12 x 1.25, Cl 8
10		11190779		6	ARANDELA ABANICO, Belleville, M13
11		85804801		1	CODO DE PALANCA, Assy
12		85802494		12	CASQUILLO
13		85804787		1	CODO DE PALANCA
14		13940370		1	PASADOR TUBOLAR, M5 x 26, Coiled
15		85804794		1	CODO DE PALANCA, Assy
16		85804791		1	CODO DE PALANCA, Assy
17	1	87319744		1	TABLIERO
17	2	85827820		1	CONTENEDOR PLASTICO
18		83962919		2	MANECILLA, RH
19	2	85804781		1	TAPADERA
20		13812631		1	TORNILLO DE AJUSTE, Hex Soc, M12 x 12, Flat Pt
21		85802227		1	TAPÓN
22		13272477		8	TORNILLO, Cross Pan Hd, M4 x 20, 12.9

(1) Side Shift - Center Pivot - CAB
(2) ROPS

Mechanical Version B95B

MANDOS EQUIPO RETROEXCAVADOR DE 4 PALANCAS, CONSOLA, CONJUNTO TIRANTE SUPERIOR (PIVOTE CENTRAL: SIDE SHIFT): TIRANT

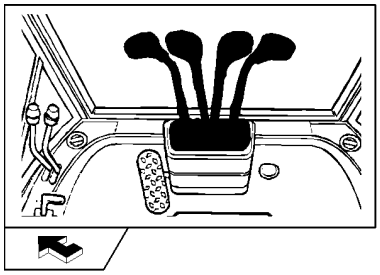

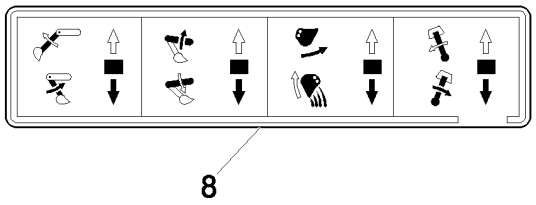

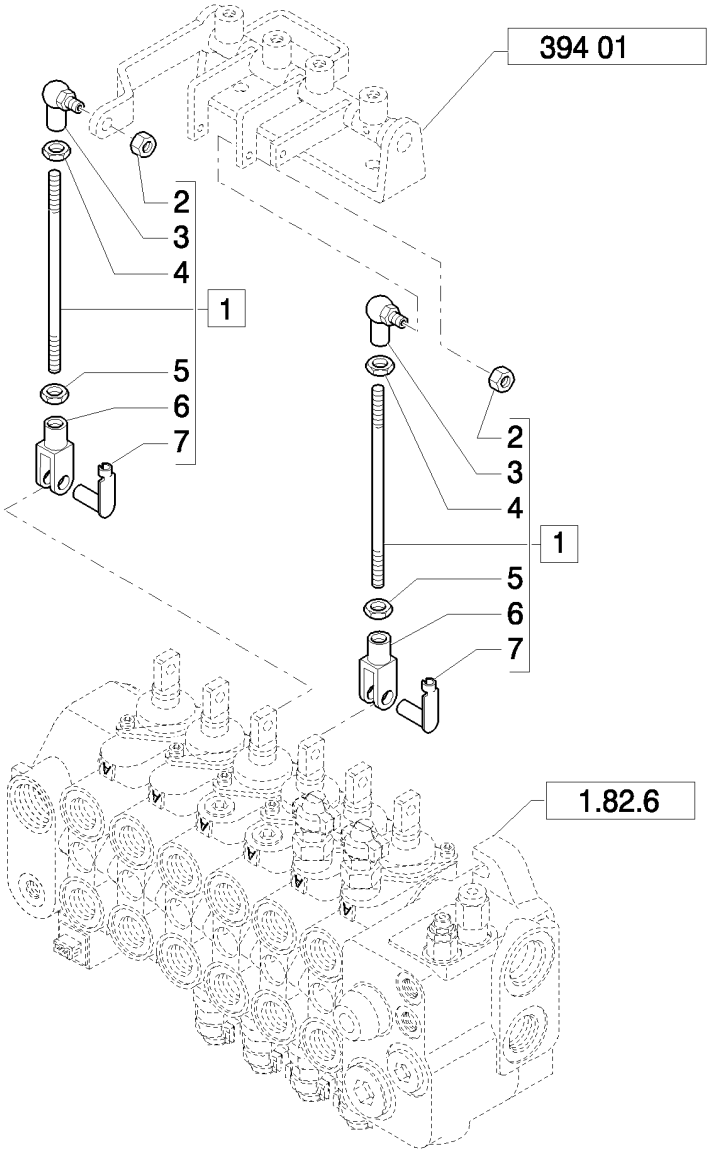

MANDOS EQUIPO RETROEXCAVADOR DE 4 PALANCAS, CONSOLA, CONJUNTO TIRANTE SUPERIOR (PIVOTE CENTRAL: SIDE SHIFT): TI

REF	FN	PART NUMBER	YR/SN	QTY	DENOMINACION
1	1	85804803		2	TIRANTE, Assy
1	2	85805498		2	TIRANTE, Assy
2		14048211		2	CONTRA TUERCA, M8 x 1.25, Cl 8
3		85804375		2	JUNTA DE ROTULA
4		16102311		2	TUERCA, Thin, M8 x 1.25, Cl 04
5		16102911		2	TUERCA, Thin, M8 x 1.25, Cl 04, LH
6		11991971		2	HORQUILLA PEQUENA
7		85802738		2	RETENEDOR
8		85803917		1	CALCOMANIA

(1) ROPS
(2) Side Shift - Center Pivot - CAB

Mechanical Version B95B

MANDOS EQUIPO RETROEXCAVADOR DE 4 PALANCAS, CONSOLA, CONJUNTO TIRANTE INFERIOR (PIVOTE CENTRAL: SIDE SHIFT): TIRANTE

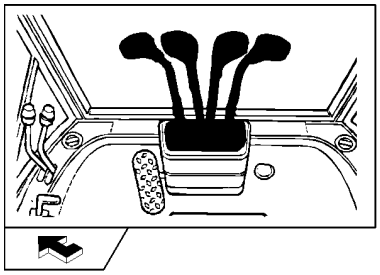

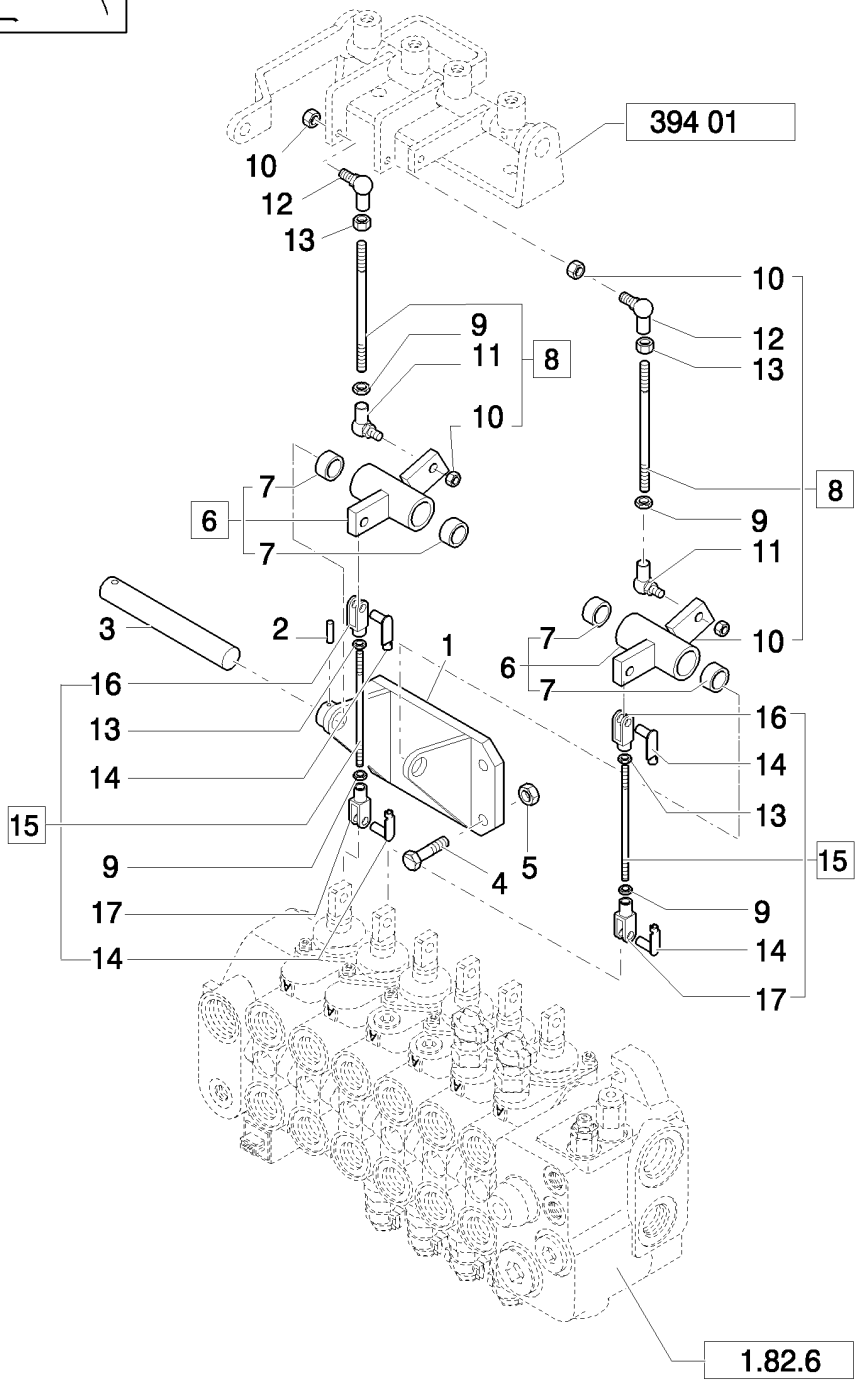

MANDOS EQUIPO RETROEXCAVADOR DE 4 PALANCAS, CONSOLA, CONJUNTO TIRANTE INFERIOR (PIVOTE CENTRAL: SIDE SHIFT): TIR

REF	FN	PART NUMBER	YR/SN	QTY	DENOMINACION
1		85803360		1	SOPORTE
2		13940370		1	PASADOR TUBOLAR, M5 x 26, Coiled
3		85803364		1	PERNO
4		16043621		4	TORNILLO, Hex, M8 x 25, 8.8
5		16104111		4	CONTRA TUERCA, M8 x 1.25, Cl 8
6		85807926		2	CODO DE PALANCA
7		85802494		4	CASQUILLO
8		85804736		2	TIRANTE, Assy
9		16102911		4	TUERCA, Thin, M8 x 1.25, Cl 04, LH
10		14048211		4	CONTRA TUERCA, M8 x 1.25, Cl 8
11		85804376		2	JUNTA DE ROTULA
12		85804375		2	JUNTA DE ROTULA
13		16102311		6	TUERCA, Thin, M8 x 1.25, Cl 04
14		85802738		4	RETENEDOR
15	1	85803447		2	TIRANTE, Assy
15	2	85807914		2	TIRANTE, Assy
16		10007871		2	HORQUILLA
17		11991971		2	HORQUILLA PEQUENA

(1) ROPS
(2) Side Shift - Center Pivot - CAB

394/01	01	p1	03/08

MANDOS EQUIPO RETROEXCAVADOR ISO DE 2 PALANCAS, PALANCAS, PROTECCIÓN CONTRA EL POLVO, ADHESIVOS (PIVOTE CENTRAL) -

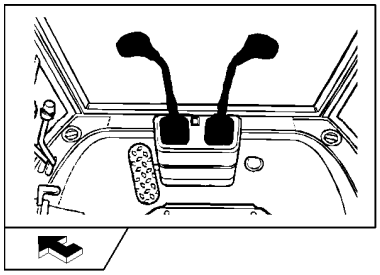

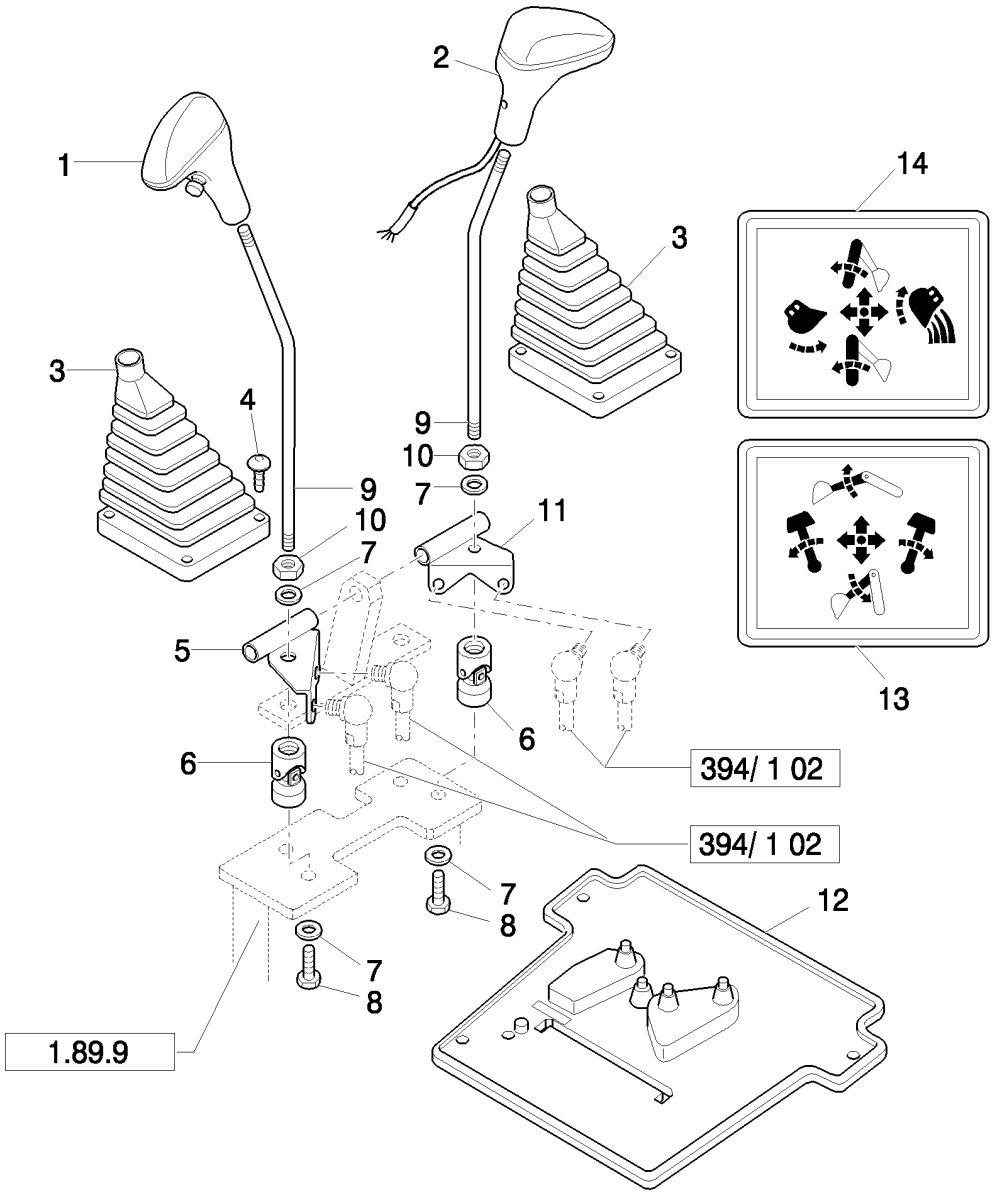

MANDOS EQUIPO RETROEXCAVADOR ISO DE 2 PALANCAS, PALANCAS, PROTECCIÓN CONTRA EL POLVO, ADHESIVOS (PIVOTE CENTI

REF	FN	PART NUMBER	YR/SN	QTY	DENOMINACION
1		85801502		1	POMO, Without Horn Switch
2		85802682		1	POMO, Includes 13796621 M5 x 8mm long Setscrew; With 87448432 Horn Switch
		87448432		1	INTERRUPTOR, Horn
3		85802843		2	CASQUETE
4		14568887		8	BOTON DE RESORTE, 8X20
5		85803124		1	PIEZA DE SOPORTE, L.H.
6		85801518		2	CARDÁN
7		11190779		4	ARANDELA ABANICO, Belleville, M13
8		15540321		2	TORNILLO, Hex, M12 x 1.25 x 25, 8.8, Full Thd
9		85801488		2	PALANCA
10		16101511		2	TUERCA, M12 x 1.25, Cl 8
11		85803107		1	PIEZA DE SOPORTE, R.H.
12	1	85804541		1	CASQUETE, w/Cab
13		85803782		1	CALCOMANIA
14		85803783		1	CALCOMANIA

(1) Only for CAB

Mechanical Version	B95B

402	01	p1	04/08

EJE DELANTERO (4WD), ALOJAMIENTO, CASQUILLOS Y SOPORTES - NA

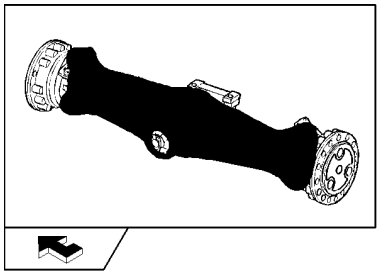

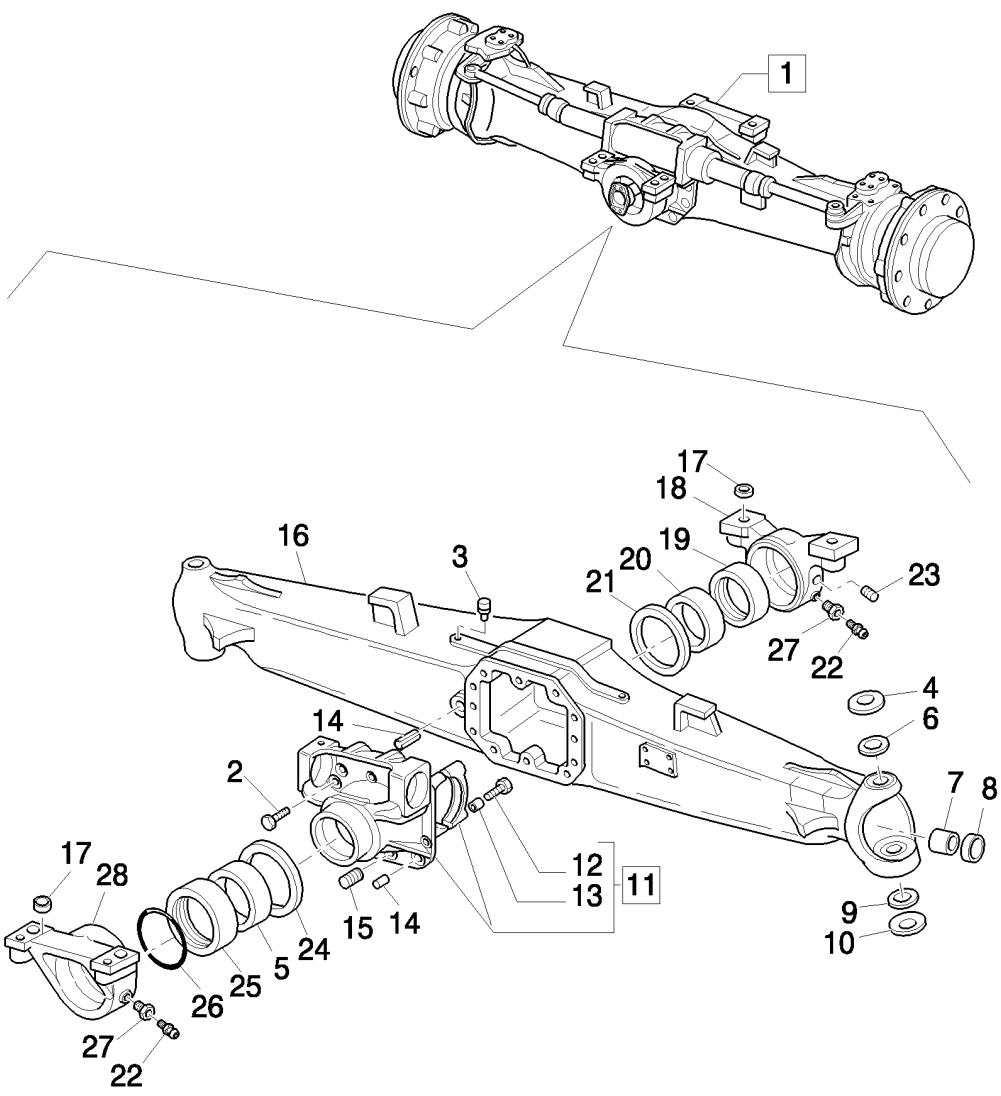

EJE DELANTERO (4WD), ALOJAMIENTO, CASQUILLOS Y SOPORTES - NA

REF	FN	PART NUMBER	YR/SN	QTY	DENOMINACION
1	1	85827726		1	EJE (CONJUNTO)
1	2	85827725		1	EJE (CONJUNTO)
2		9967769		10	TORNILLO, Cap, HH, M12X1.75X33
3		9967672		1	TAPÓN, M10X1
4		9967997		2	ARANDELA
5		9968010		1	CASQUILLO
6		87306932		2	CASQUILLO
7		9968019		2	CASQUILLO
8		85824346		2	ANILLO DE CIERRE
9		9968002		2	COJINETE, 2 piece
10		9968003		2	ARANDELA
11		9968004		1	SOPORTE, Assy
12		9967681		4	TORNILLO
13		9967682		4	CASQUILLO
14		9968005		2	TAPON DE VIACIADO
15		9967683		2	PASADOR TUBOLAR
16		85827738		1	CÁRTER DE PUENTE
17		9967990		4	CASQUILLO
18		9967991		1	SOPORTE, Front
19		9967992		1	CASQUILLO
20		9967993		1	CASQUILLO
21		9967994		1	ARANDELA DE TOPE
22		9967996		2	ENGRASADOR
23		85805973		1	TORNILLO, M8X1
24		9968006		1	ARANDELA DE TOPE
25		9968007		1	ANILLO
26		9968008		1	JUNTA HERMETICA
27		9967995		2	TORNILLO
28		9968009		1	SOPORTE, Rear

(1) Power Shuttle 13.714
(2) Power Shuttle 14.308

EJE DELANTERO (4WD), ALOJAMIENTO OSCILANTE Y CILINDRO DE DIRECCION - NA

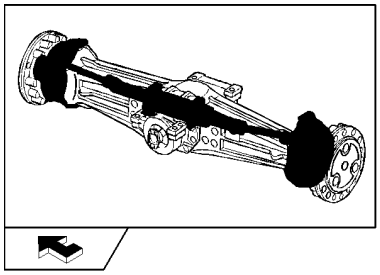

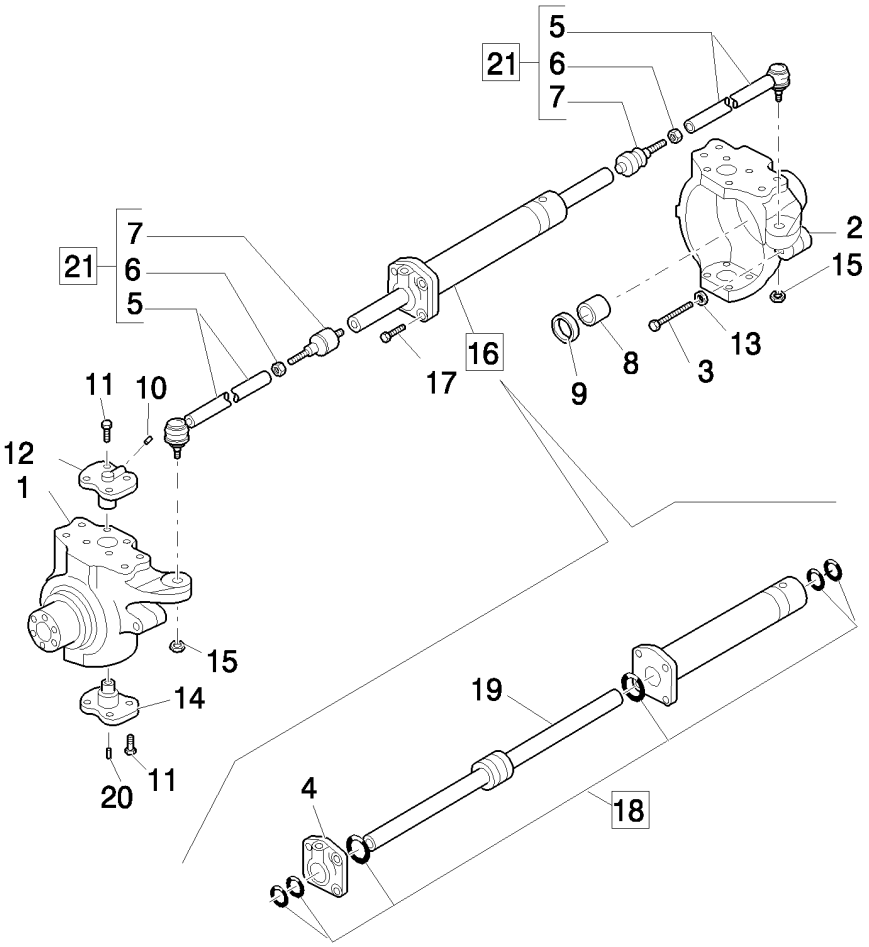

EJE DELANTERO (4WD), ALOJAMIENTO OSCILANTE Y CILINDRO DE DIRECCION - NA

REF	FN	PART NUMBER	YR/SN	QTY	DENOMINACION
1		85827740		1	APARATO ATADOR, Assy, LH; 8 Bolt Holes
2		85827739		1	APARATO ATADOR, Assy, RH; 8 Bolt Holes
3		85805987		2	TORNILLO, M16x100
4		85805989		1	CULATA
5		85805977		2	TIRANTE
6		85805976		2	TUERCA, M18x1.5
7		85805975		2	JUNTA DE ROTULA
8		85805988		2	ANILLO BRONCE
9		85824345		2	ANILLO DE CIERRE
10		9968021		2	ENGRASADOR, M6x2
11		9968022		14	TORNILLO, M14 x 2 x 35
12		9968023		2	PIVOTE
13		85805986		2	TUERCA, M16
14		9968025		2	PERNO
15		85805982		2	TUERCA, M18x1.5
16		85805978		1	CILINDRO DIRECTION, Assy
17		9968028		4	TORNILLO, M12x45
18		85805990		1	SERIE DE JUNTAS
19		85805992		1	VARILLA
20		85805984		2	ENGRASADOR, M6x1
21		87306934		2	TIRANTE, Assy

402	03	p1	03/08

EJE DELANTERO (4WD), CUBOS - NA

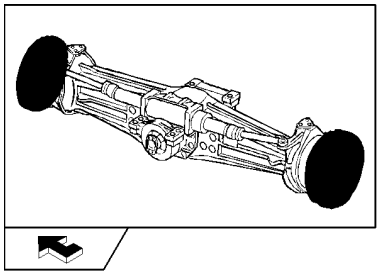

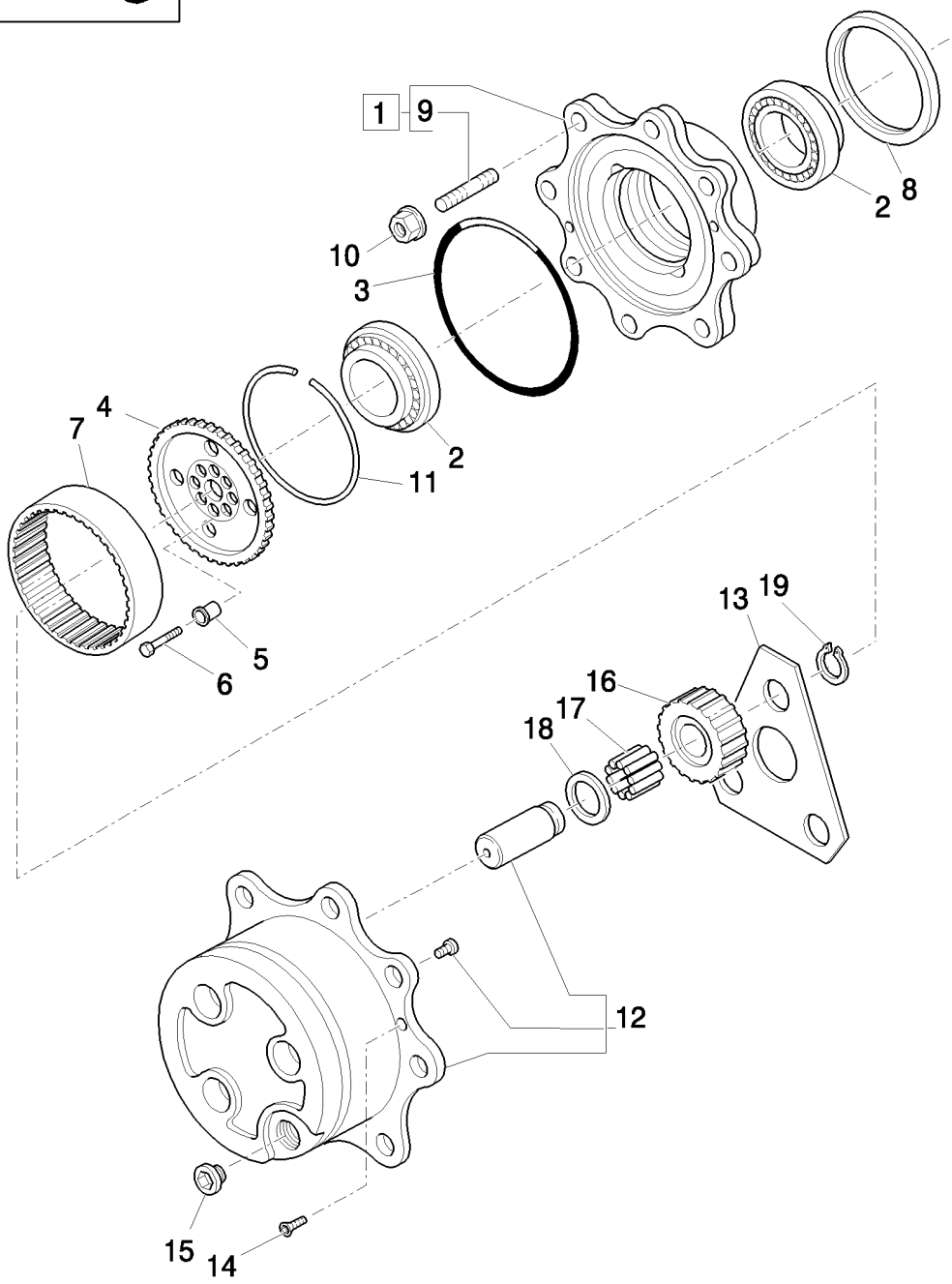

EJE DELANTERO (4WD), CUBOS - NA

REF	FN	PART NUMBER	YR/SN	QTY	DENOMINACION
1		85806003		2	EQUIPO
2		9967687		4	COJINETE
3		85805711		2	JUNTA HERMETICA
4		85817698		2	CUBO
5		85806009		16	CASQUILLO
6		85806010		16	TORNILLO, M10 x 45
7		85806008		2	CORONA DENTADA
8		85827067		2	JUNTA DE ACEITE, Seal, Oil
9		9968070		16	PRISIONERO
10		9968071		16	TUERCA, Wheel, M18 x 1.5
11		85806006		2	ANILLO
12		85806011		2	EQUIPO
13		85806016		2	ARANDELA DE TOPE
14		85805709		4	TORNILLO, M8 x 20
15		85806012		2	TAPÓN, M30 x 2
16		85806014		6	PINON PLANETARIO, T23
17		85806015		AR	XXX, (Qty 1=10 Pieces)
18		9968084		6	ARANDELA DE TOPE, M55 x 34.6 x 1.5
19		9968083		6	RETENEDOR

EJE DELANTERO (4WD), GRUPO PIÑÓN Y CORONA DENTADA - NA

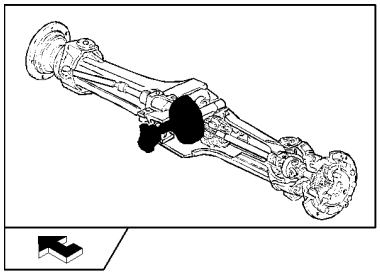

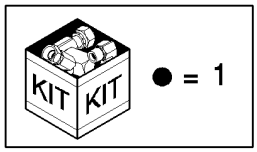

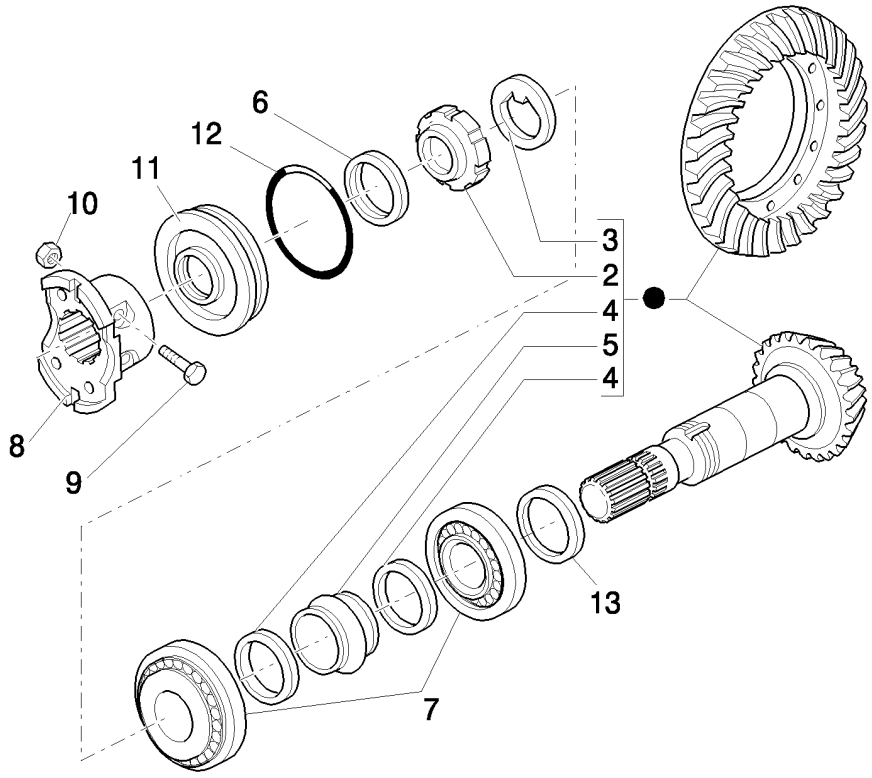

EJE DELANTERO (4WD), GRUPO PIÑÓN Y CORONA DENTADA - NA

REF	FN	PART NUMBER	YR/SN	QTY	DENOMINACION
1	1	85813060		1	JUEGO DE PIÑONES, 13/31
1	2	85813059		1	JUEGO DE PIÑONES, 14/32
2		9968032		1	VIROLA METALICA, M40 x 1.5
3		9968031		1	ARANDELA DE FRENO
4		9968033		2	ARANDELA, 50 x 40.5 x
5		9968034		1	SEPARADOR
6		85824346		1	ANILLO DE CIERRE, Seal, Oil, M35 x 52 x 16
7		9968047		2	EMPUJADOR DE RODILLO
8		9968049		1	BRIDA
9		9968048		2	TORNILLO, M10 x 60
10		9968050		2	TUERCA, M10 x 1.25
11		9968051		1	TAPADERA
12		9968052		1	JUNTA HERMETICA
13		9968037		AR	SUPLEMENTO, 2.5 mm
13		9968038		AR	SUPLEMENTO, 2.6 mm
13		9968039		AR	SUPLEMENTO, 2.7 mm
13		9968040		AR	SUPLEMENTO, 2.8 mm
13		9968041		AR	SUPLEMENTO, 2.9 mm
13		9968042		AR	SUPLEMENTO, 3.0 mm
13		9968043		AR	SUPLEMENTO, 3.1 mm
13		9968044		AR	SUPLEMENTO, 3.2 mm
13		9968045		AR	SUPLEMENTO, 3.3 mm
13		9968046		AR	SUPLEMENTO, 3.4 mm

(1) Consist Ref. Number : 2 - 5, Ratio=14.308 Axles 8582775

(2) Consist Ref. Number : 2 - 5, Ratio=13.174 Axles 8582776

EJE DELANTERO (4WD), DIFERENCIAL - NA

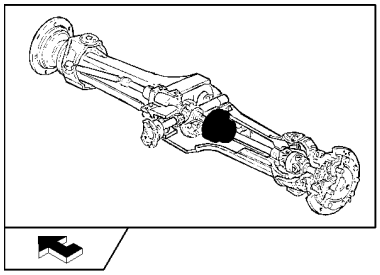

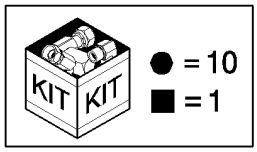

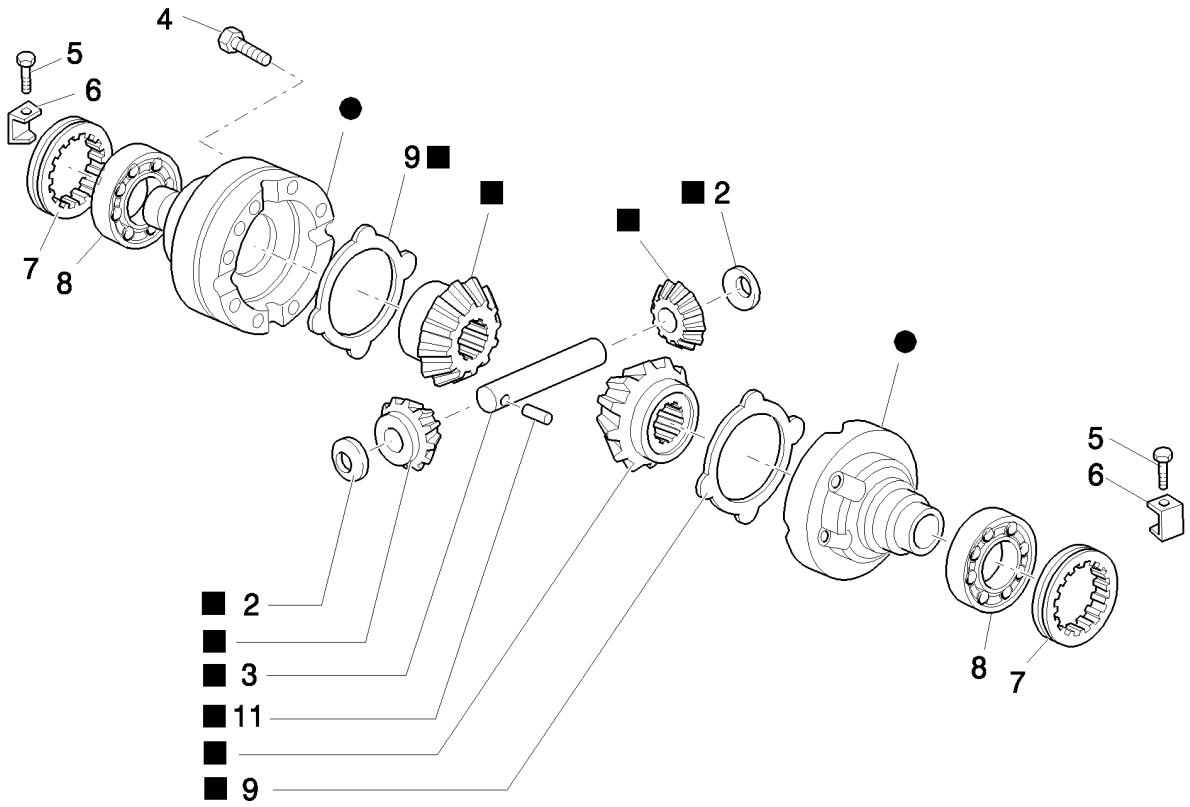

EJE DELANTERO (4WD), DIFERENCIAL - NA

REF	FN	PART NUMBER	YR/SN	QTY	DENOMINACION
1		85806004		1	EQUIPO
2		9966352		2	ARANDELA DE TOPE
3		9966354		1	PERNO
4		9967736		12	TORNILLO, M10 x 1.5 x 75
5		9967739		2	TORNILLO, M6 x 10
6		9967740		2	SUJETADOR
7		9967741		2	VIROLA METALICA
8		9968054		2	EMPUJADOR DE RODILLO
9		9967734		2	DISCO DE ACCIONAMIENTO
10		85827068		1	CAVIDAD
11		9966356		1	PASADOR TUBOLAR, 7 x 40

EJE FRONTAL 4WD, EJE ARTICULADO

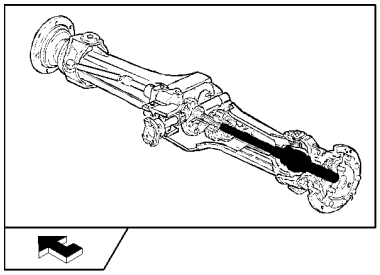

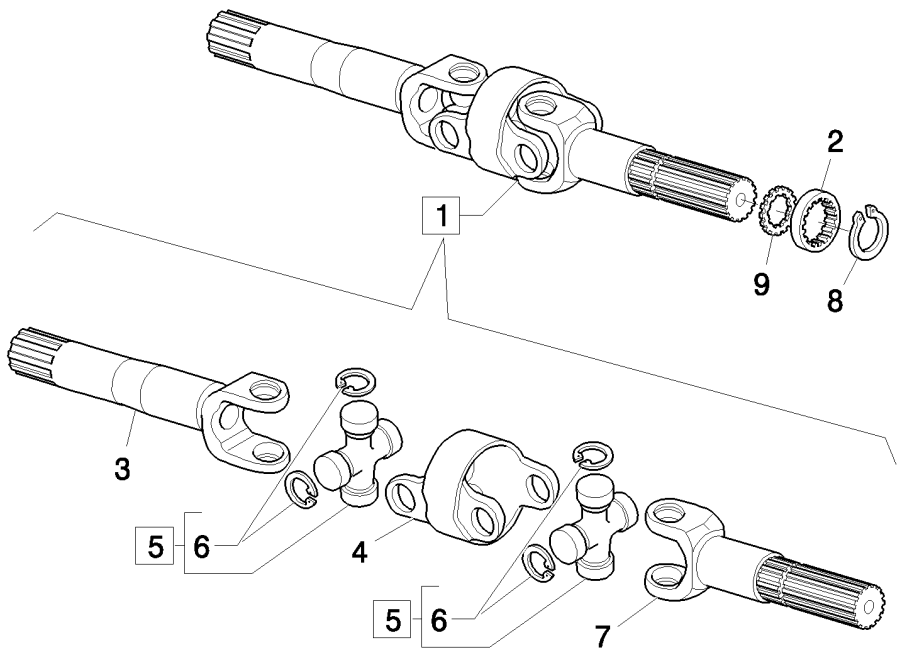

EJE FRONTAL 4WD, EJE ARTICULADO

REF	FN	PART NUMBER	YR/SN	QTY	DENOMINACION
1		85827741		2	EJE ARTICULADO, Assy
2		85805999		2	ARANDELA DE TOPE
3		87306929		1	EJE
4		85827070		2	CUERPO
5		85807283		2	CRUCETA, Assy
6		85807284		1	ANILLO DE RESORTE
7		87306930		2	EJE
8		87306933		2	ANILLO DE RESORTE
9		85817697		2	ARANDELA DE TOPE

COMPONENTES DEL MARTILLO DE LOS SISTEMAS (CAB - ROPS)

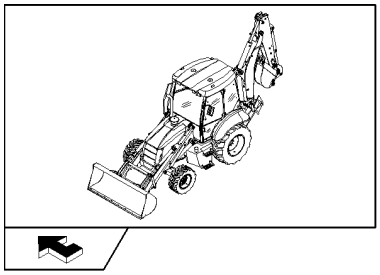

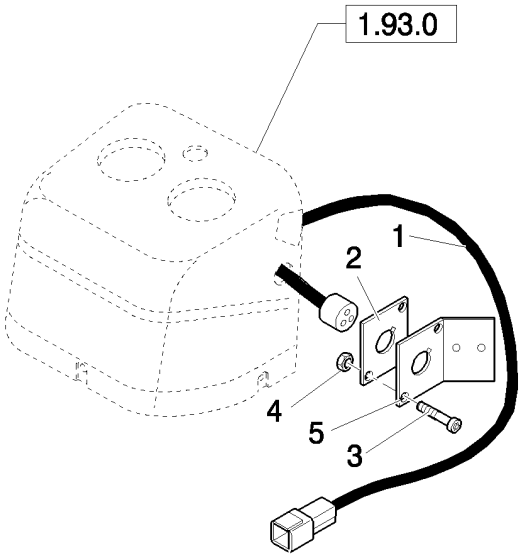

COMPONENTES DEL MARTILLO DE LOS SISTEMAS (CAB - ROPS)

REF	FN	PART NUMBER	YR/SN	QTY	DENOMINACION
1		85819237		1	GRUPO DE CABLES
2		85816760		1	PLACA
3		13272477		2	TORNILLO, Cross Pan Hd, M4 x 20, 12.9
4		12574011		2	CONTRA TUERCA, M4 x .7, Cl 8
5	1	85827822		1	PLACA DE MONTAJE

(1) Only for ROPS

437		p1	04/08

VALVULA DE CAMISA,SISTEMA HIDRÁULICO NIVELACIÓN DE LA ESTRUCTURA MÁQUINA

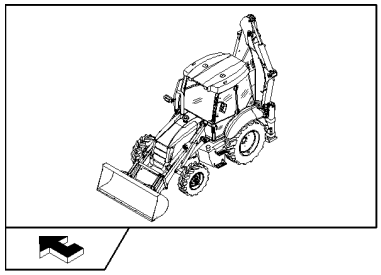

VALVULA DE CAMISA,SISTEMA HIDRÁULICO NIVELACIÓN DE LA ESTRUCTURA MÁQUINA

REF	FN	PART NUMBER	YR/SN	QTY	DENOMINACION
1		87358815		2	MANGA FLEXIBLE
2		85815620		1	MANGA FLEXIBLE
3		87638572		1	MANGA FLEXIBLE
4		83971549		4	CODO, Assy
5		83963374		2	RACOR, Assy
6		85824211		1	CABLE ELECTRICO
7		87358808		1	PIEZA DE SOPORTE
8		87358817		1	VALVULA HIDRAULICA
9		87358818		1	ACUMULADOR
10		87386551		1	CUELLO DE CARGA
11		11106421		2	TORNILLO, Hex, M10 x 30, 8.8
12		87638573		1	MANGA FLEXIBLE
13		11190579		3	ARANDELA ABANICO, Belleville, M10.5
14		85815583		2	RACOR-T, Assy
15		83901443		2	JUNTA HERMETICA
16		89992298		8	JUNTA HERMETICA
17		15971321		1	TORNILLO, Hex, M10 x 75, 8.8
18		80128825		6	JUNTA HERMETICA
19		11190679		2	ARANDELA ABANICO, Belleville, M10.5

471	01	p1	03/08

CUCHARON 4X1 (1 M³) CON CUCHILLA "COMMON GREY"

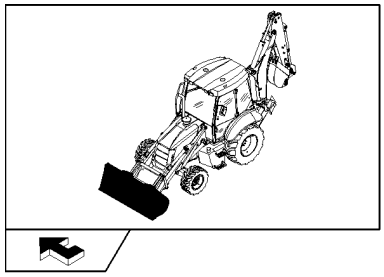

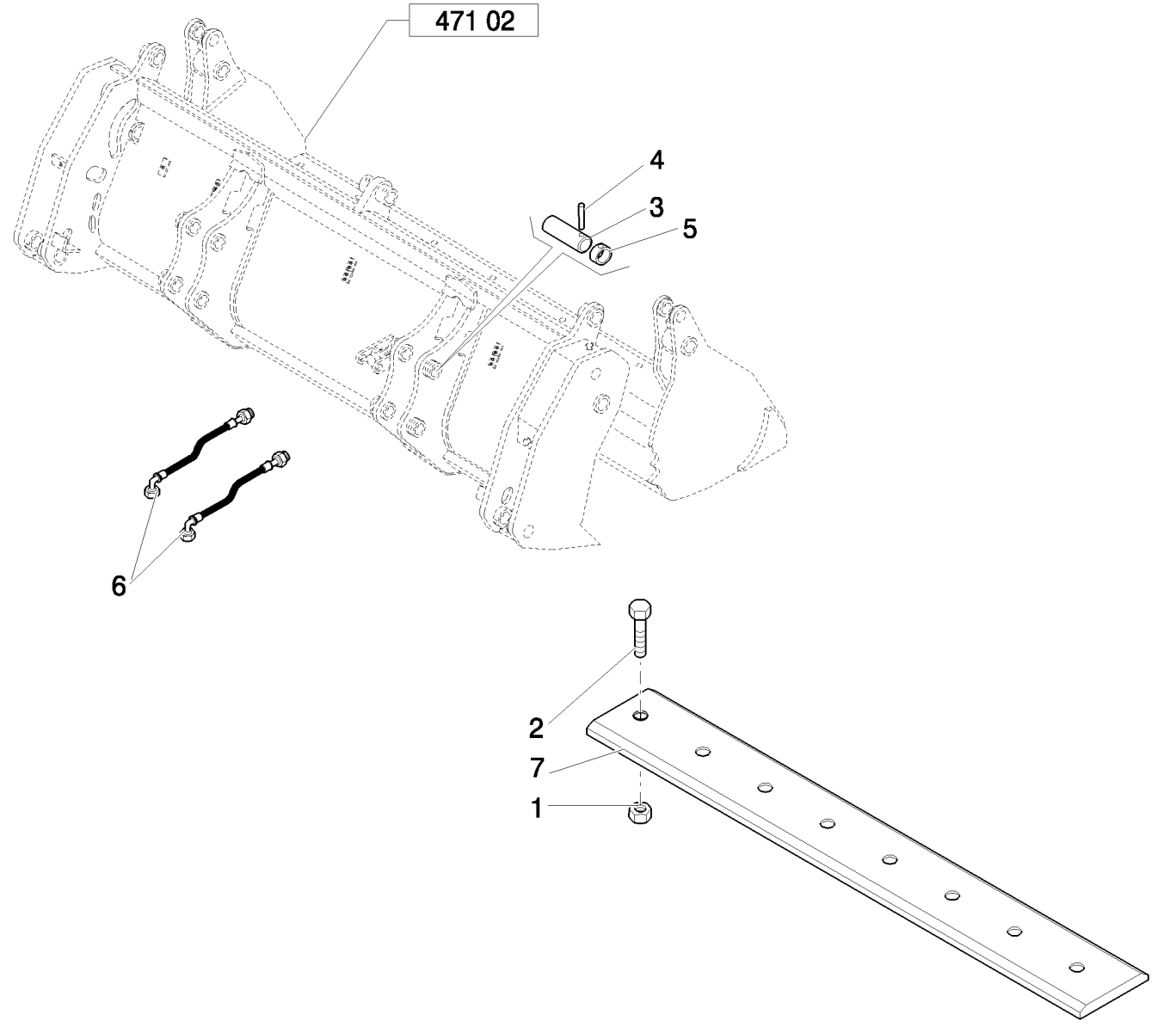

CUCHARON 4X1 (1 M³) CON CUCHILLA "COMMON GREY"

REF	FN	PART NUMBER	YR/SN	QTY	DENOMINACION
1		85801470		8	TUERCA, 5/8"-11, G8
2		85801371		8	PERNO DE ARADO, 5/8"-11 x 2 1/4"
3		85801051		4	PERNO
4		85802993		4	PERNO
5		85802992		4	ANILLO
6		85820819		2	MANGA FLEXIBLE
7	1	85801161		1	CUCHILLA DE ATAQUE

(1) Reversible bolt on

CUCHARA 4X1 (1 M3) CON PALA “COMMON GREY”: DESGASTE CUCHARA

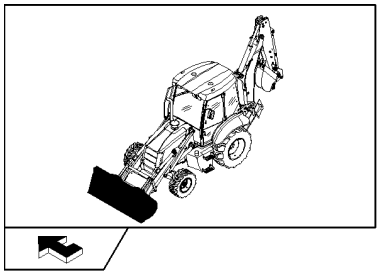

KIT KIT ● = 30

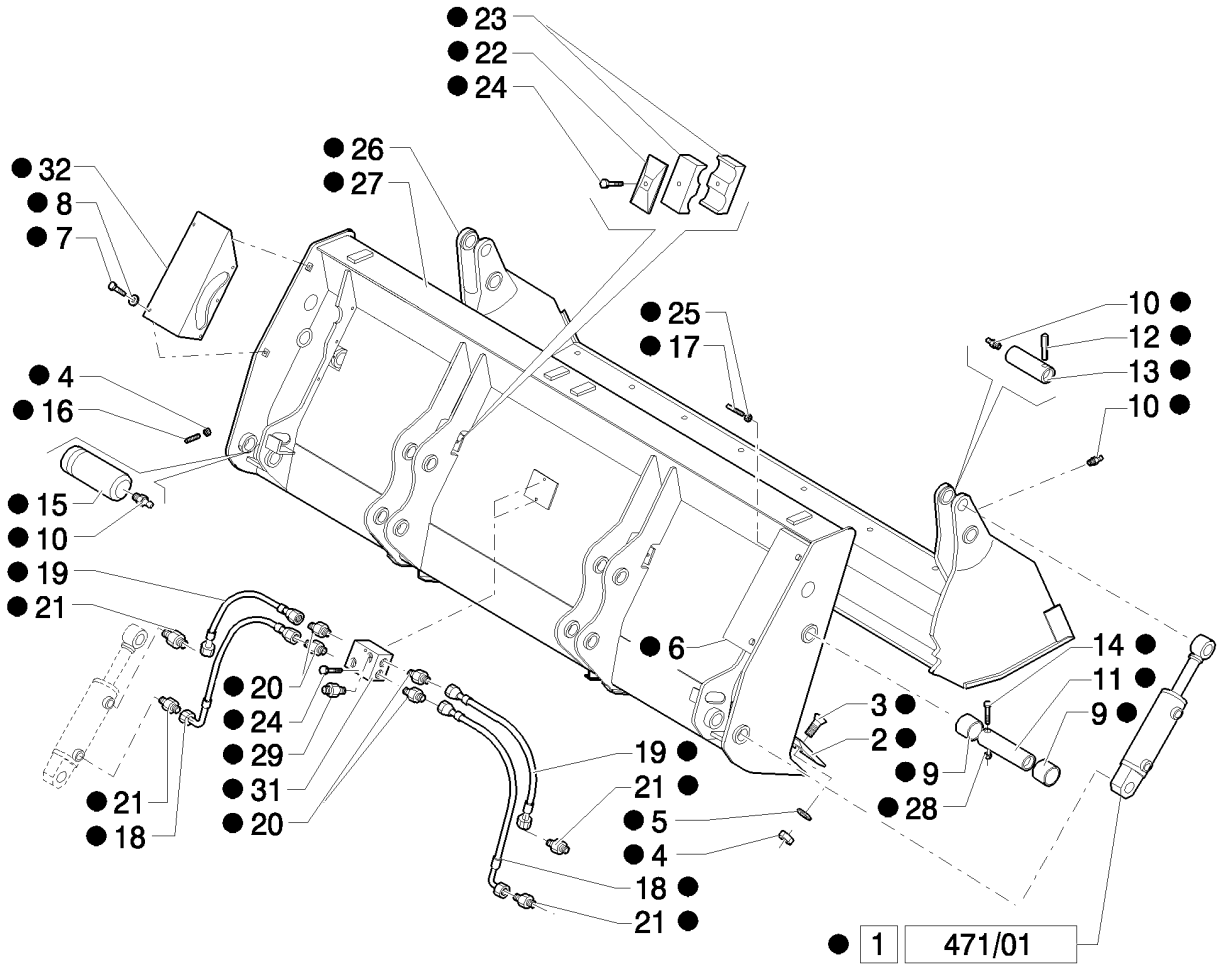

CUCHARA 4X1 (1 M3) CON PALA "COMMON GREY": DESGASTE CUCHARA

REF	FN	PART NUMBER	YR/SN	QTY	DENOMINACION
1		87573861		2	CILINDRO, Assy
2		87308614		1	HOJA
3		87312328		8	TORNILLO, M14 x 40
4		85820008		10	TUERCA, M14 x 2
5		85820009		8	JUNTA HERMETICA
6		87312330		1	DEFENSA, RH
7		85820011		10	TORNILLO
8		85820012		10	JUNTA HERMETICA
9		85820013		4	CASQUILLO
10		85820014		6	ENGRASADOR, M10 x 1
11		85820015		2	PERNO
12		85820016		2	PASADOR TUBOLAR, 10 x 80
13		85820017		2	PERNO
14		85820018		2	TORNILLO, M10 x 90
15		87310286		2	PERNO
16		85820020		2	TORNILLO, M14 x 30
17		87312331		1	TORNILLO, M8 x 120
18		87312340		2	MANGA FLEXIBLE
19		87312342		2	MANGA FLEXIBLE
20		87312343		4	RACOR
21		87312333		4	RACOR
22		85820026		2	PLACA
23		85820027		4	BORNE
24		85820030		4	TORNILLO, M8 x 45
25		85820031		1	TUERCA, M8
26		87310434		1	CUCHARA
27		87310354		1	CUCHARA
28		85820035		2	TUERCA, M10x1,5
29		87395482		2	RACOR, Assy
30		87573550		1	CUCHARA MULTI USO
31		87312335		1	CONEXION
32		87395481		1	DEFENSA

471/01		p1	04/08

CILINDRO HIDRAULICO (CUCHARON 4X1-6X1)

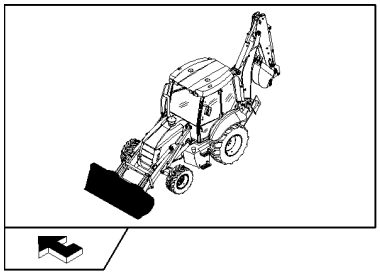

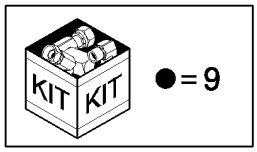

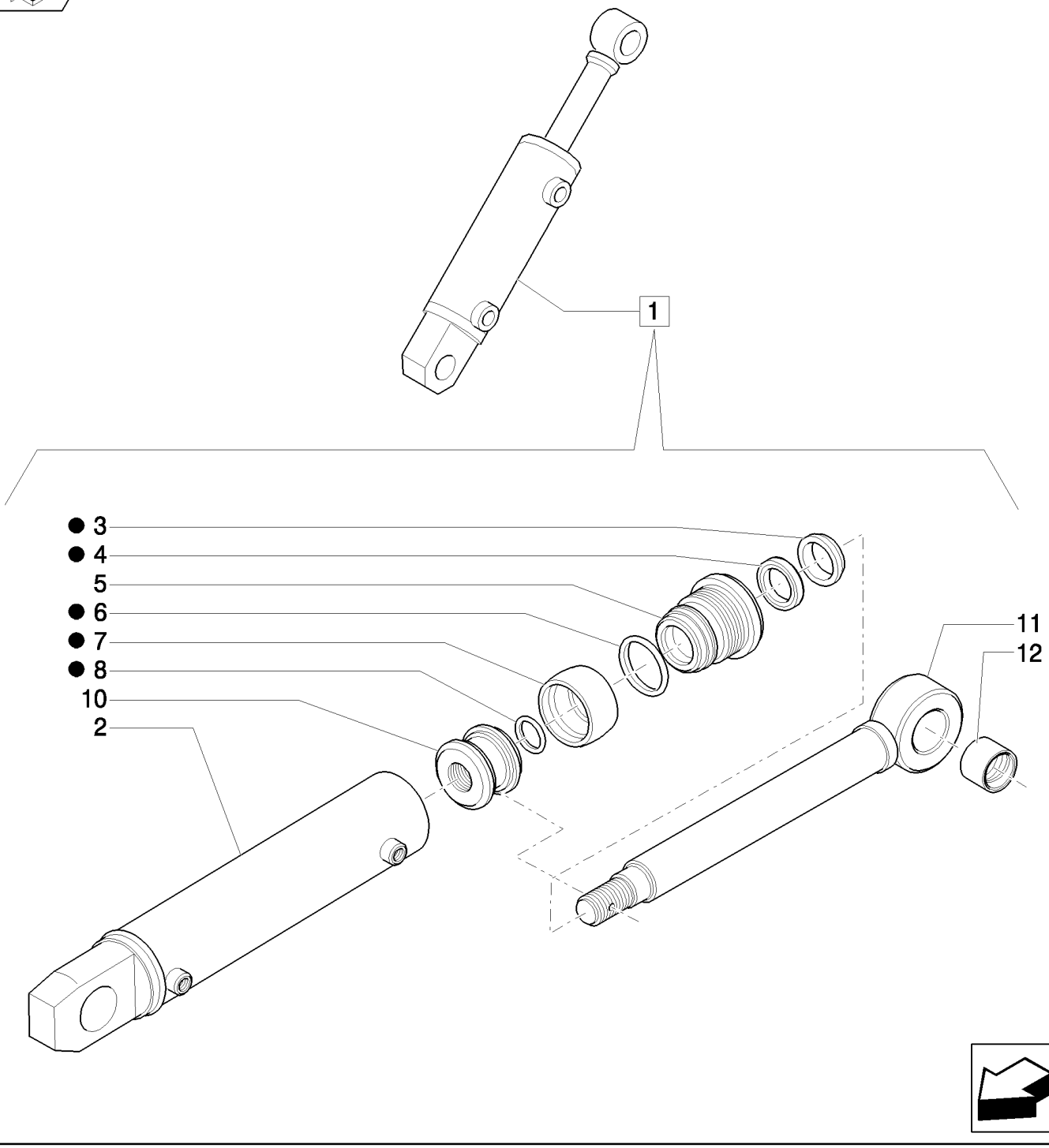

CILINDRO HIDRAULICO (CUCHARON 4X1-6X1)

REF	FN	PART NUMBER	YR/SN	QTY	DENOMINACION
1		87573861		1	CILINDRO, Assy
2		87574523		1	TUBO AISLANTE
3		87574080		1	RASQUETA
4		87574092		1	ANILLO DE CIERRE
5		87574524		1	FONDO
6		87574099		1	ANILLO DE CIERRE
7		87574097		1	ANILLO DE CIERRE
8		87574098		1	JUNTA HERMETICA
9	1	87573868		1	JUEGO JUNTAS
10		85820054		1	EMBOLO, Part May or May Not Have Hole For 85820055 Roll Pin; If Part Does Not Have Hole, The Piston Is Fixed To The Rod With Loctite 243
11		85820052		1	VASTAGO CILINDRO, Part May or May Not Have Hole For 85820055 Roll Pin; If Part Does Not Have Hole, The Piston Is Fixed To The Rod With Loctite 243
12		85820056		1	CASQUILLO

(1) Insludes 3, 4, 6 - 8

472	01	p1	03/08

CUCHARON 4X1 (1 M³) CON DIENTE "COMMON GREY"

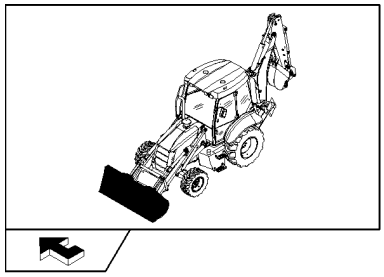

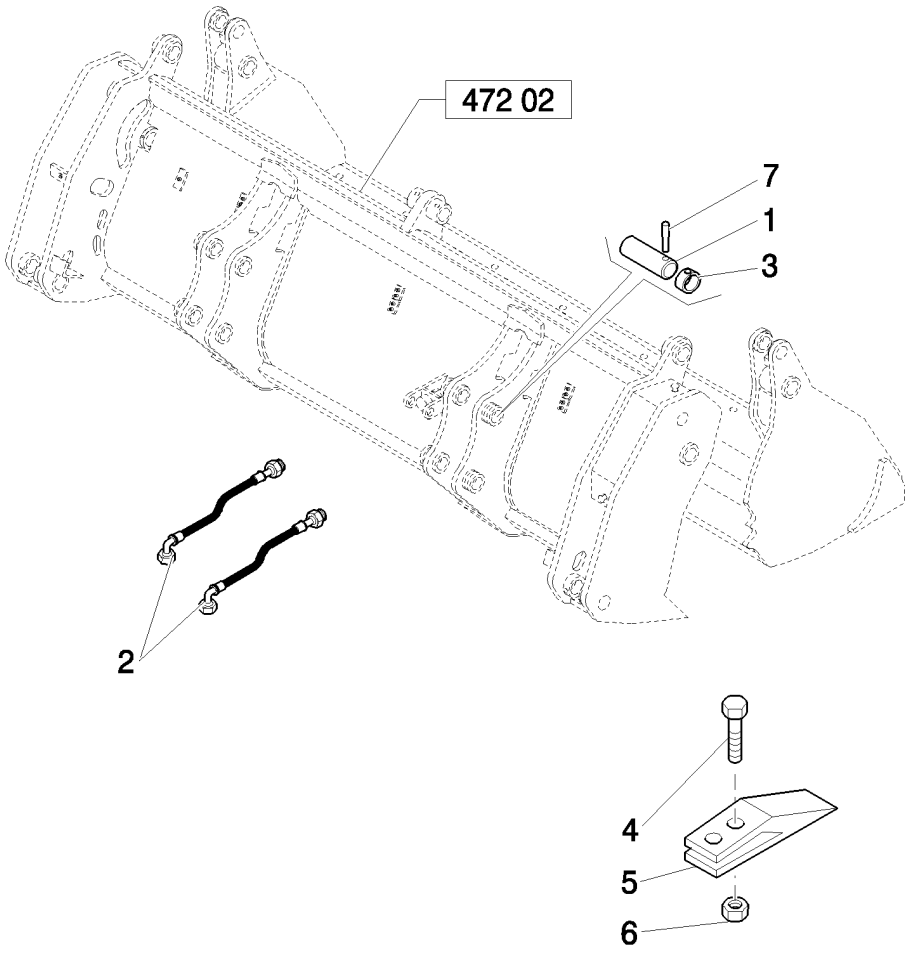

CUCHARON 4X1 (1 M³) CON DIENTE "COMMON GREY"

REF	FN	PART NUMBER	YR/SN	QTY	DENOMINACION
1		85801051		4	PERNO
2		85820819		2	MANGA FLEXIBLE, L=800 mm
3		85802992		4	ANILLO
4		85801371		16	PERNO DE ARADO, 5/8"-11 x 2 1/4"
5		85811440		8	PORTADIENTE
6		85801470		16	TUERCA, 5/8"-11, G8
7		85802993		4	PERNO

CUCHARA 4X1 (1 M3) CON DIENTES “COMMON GREY”: DESGASTE CUCHARA

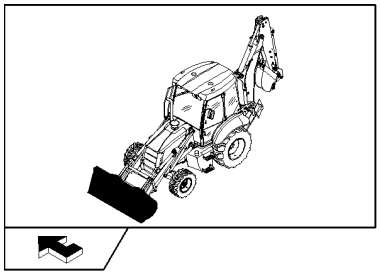

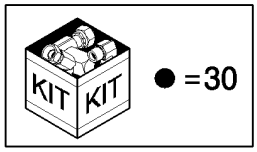

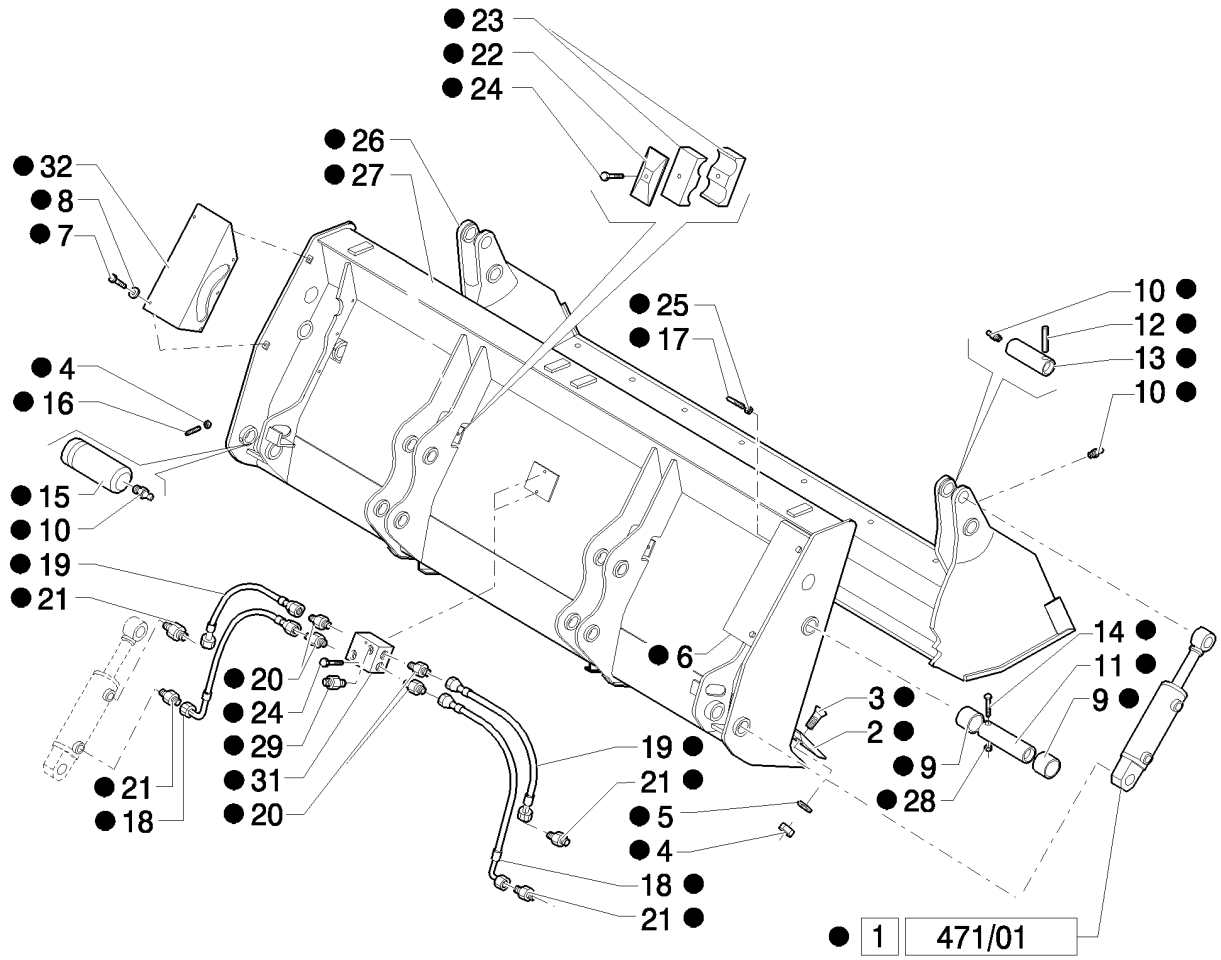

CUCHARA 4X1 (1 M3) CON DIENTES "COMMON GREY": DESGASTE CUCHARA

REF	FN	PART NUMBER	YR/SN	QTY	DENOMINACION
1		87573861		2	CILINDRO, Assy
2		87308614		1	HOJA
3		87312328		8	TORNILLO, M14 x 40
4		85820008		10	TUERCA, M14 x 2
5		85820009		8	JUNTA HERMETICA
6		87312330		1	DEFENSA, RH
7		85820011		10	TORNILLO
8		85820012		10	JUNTA HERMETICA
9		85820013		4	CASQUILLO
10		85820014		6	ENGRASADOR, M10 x 1
11		85820015		2	PERNO
12		85820016		2	PASADOR TUBOLAR, 10 x 80
13		85820017		2	PERNO
14		85820018		2	TORNILLO, M10 x 90
15		87310286		2	PERNO
16		85820020		2	TORNILLO, M14 x 30
17		87312331		1	TORNILLO, M8 x 120
18		87312340		2	MANGA FLEXIBLE
19		87312342		2	MANGA FLEXIBLE
20		87312343		4	RACOR
21		87312333		4	RACOR
22		85820026		2	PLACA
23		85820027		4	BORNE
24		85820030		4	TORNILLO, M8 x 45
25		85820031		1	TUERCA, M8
26		87310434		1	CUCHARA
27		87310354		1	CUCHARA
28		85820035		2	TUERCA, M10x1,5
29		87395482		2	RACOR
30		87573550		1	CUCHARA MULTI USO, Assy
31		87312335		1	CONEXION
32		87395481		1	DEFENSA

473	01	p1	03/08

CUCHARON 6X1 (1 M³) CON CUCHILLA "COMMON GREY"

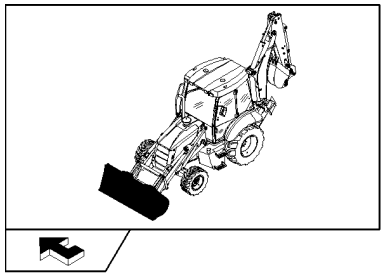

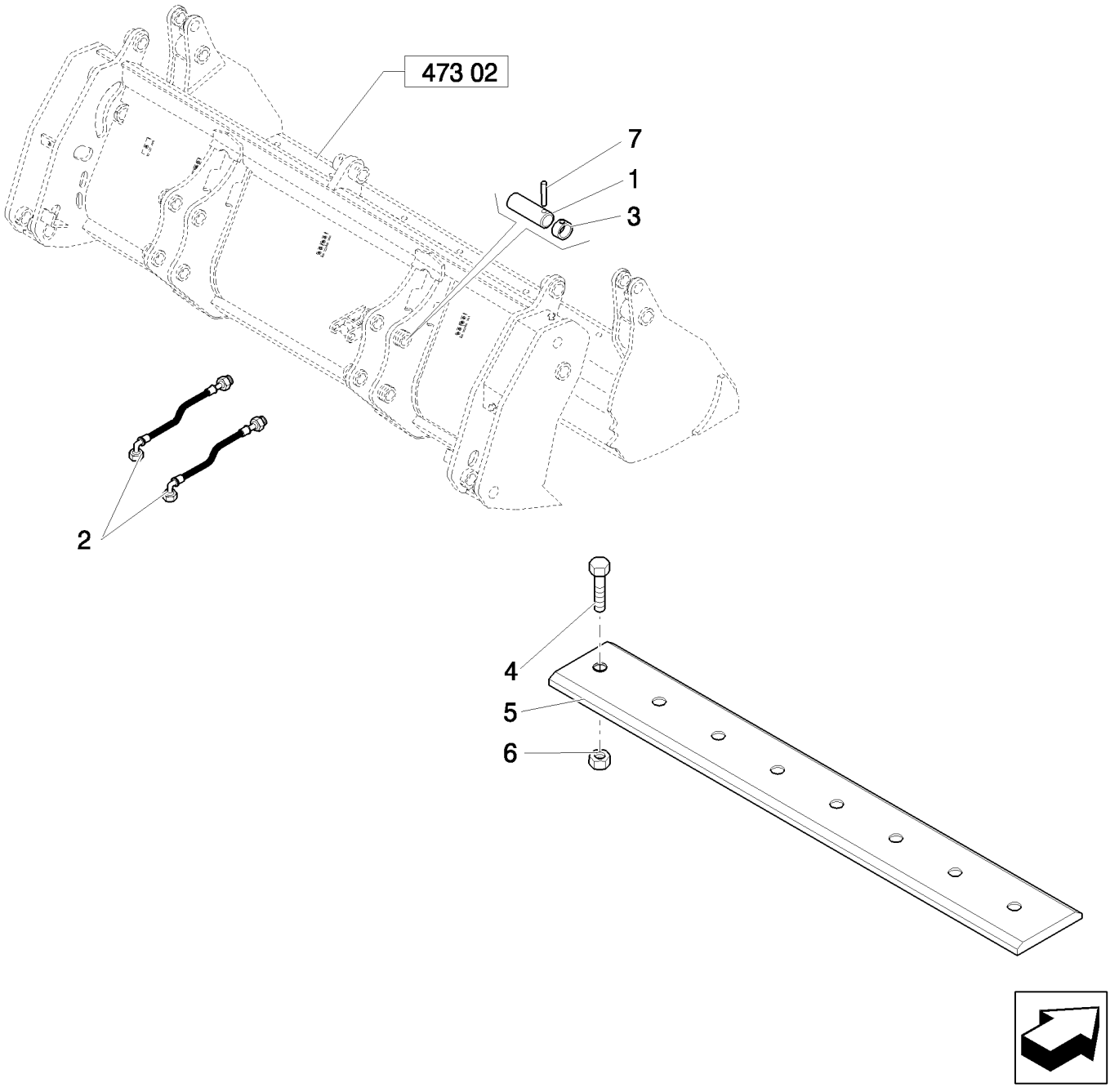

CUCHARON 6X1 (1 M³) CON CUCHILLA "COMMON GREY"

REF	FN	PART NUMBER	YR/SN	QTY	DENOMINACION
1		85801051		4	PERNO
2		85820819		2	MANGA FLEXIBLE, L=800 mm
3		85802992		4	ANILLO
4		85801371		8	PERNO DE ARADO, 5/8"-11 x 2 1/4"
5		85801161		1	CUCHILLA DE ATAQUE
6		85801470		8	TUERCA, 5/8"-11, G8
7		85802993		4	PERNO

473	02	p1	04/08

CUCHARA 6X1 (1 M3) CON PALA “COMMON GREY”: DESGASTE CUCHARA

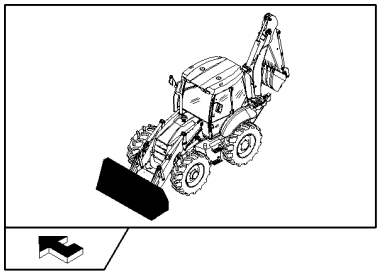

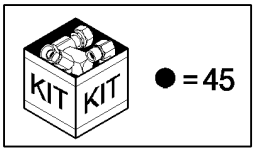

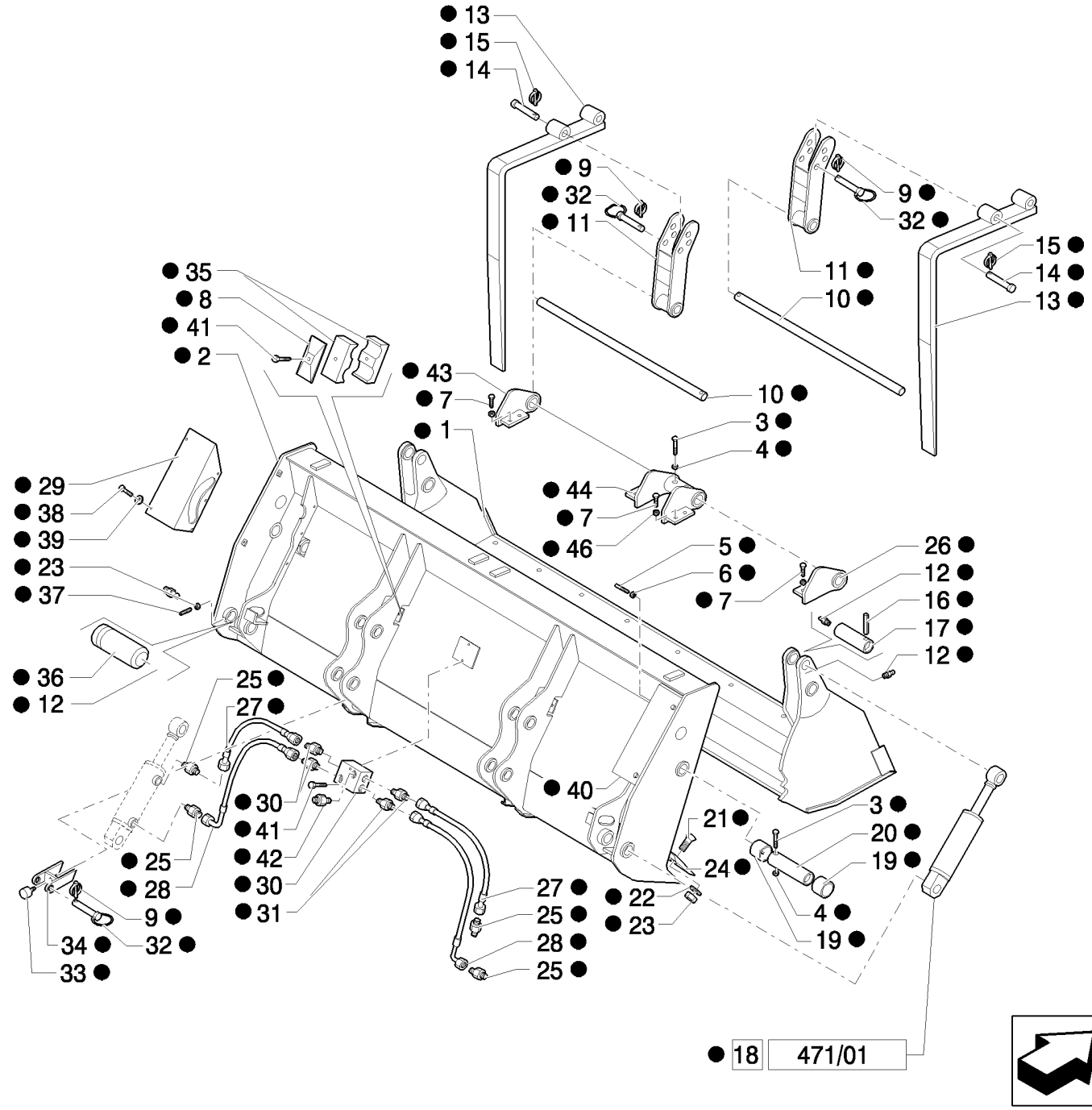

CUCHARA 6X1 (1 M3) CON PALA "COMMON GREY": DESGASTE CUCHARA

REF	FN	PART NUMBER	YR/SN	QTY	DENOMINACION
1		87310434		1	CUCHARA
2		87310354		1	CUCHARA
3		85820018		4	TORNILLO, M10 x 90
4		85820035		4	TUERCA, M10x1,5
5		87312331		1	TORNILLO, M8 x 120
6		85820031		1	TUERCA, M8
7		87557215		8	TORNILLO, M16x35
8		85820026		2	PLACA
9		85820068		4	PASADOR DE FIJACION, D=11
10		87310372		2	EJE
11		87310368		2	SOPORTE
12		85820014		6	ENGRASADOR, M10 x 1
13		87310367		2	HORUILLA PARA CUCHARA
14		87310369		2	PERNO
15		85825177		2	PASADOR DE FIJACION, D=8
16		85820016		2	PASADOR TUBOLAR, 10 x 80
17		85820017		2	PERNO
18		87573861		2	CILINDRO, Assy
19		85820013		4	CASQUILLO
20		85820015		2	PERNO
21		87312328		8	TORNILLO, M14 x 40
22		85820009		8	JUNTA HERMETICA
23		85820008		10	TUERCA, M14 x 2
24		87308614		1	HOJA
25		87312333		4	RACOR
26		87310375		1	BISAGRA, RH
27		87312342		2	MANGA FLEXIBLE
28		87312340		2	MANGA FLEXIBLE
29		87395481		1	DEFENSA
30		87312335		1	CONEXION
31		87312343		4	RACOR
32		85820064		2	PERNO
33		85820069		2	TAPÓN
34		87310370		2	PIEZA DE SOPORTE
35		85820027		4	BORNE

473	02	p2	04/08

CUCHARA 6X1 (1 M3) CON PALA “COMMON GREY”: DESGASTE CUCHARA

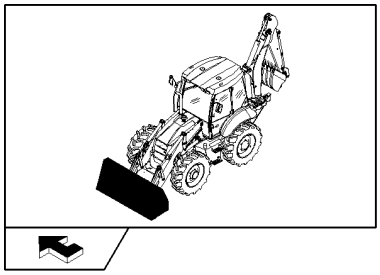

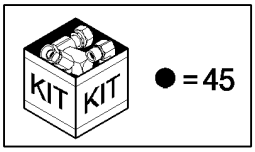

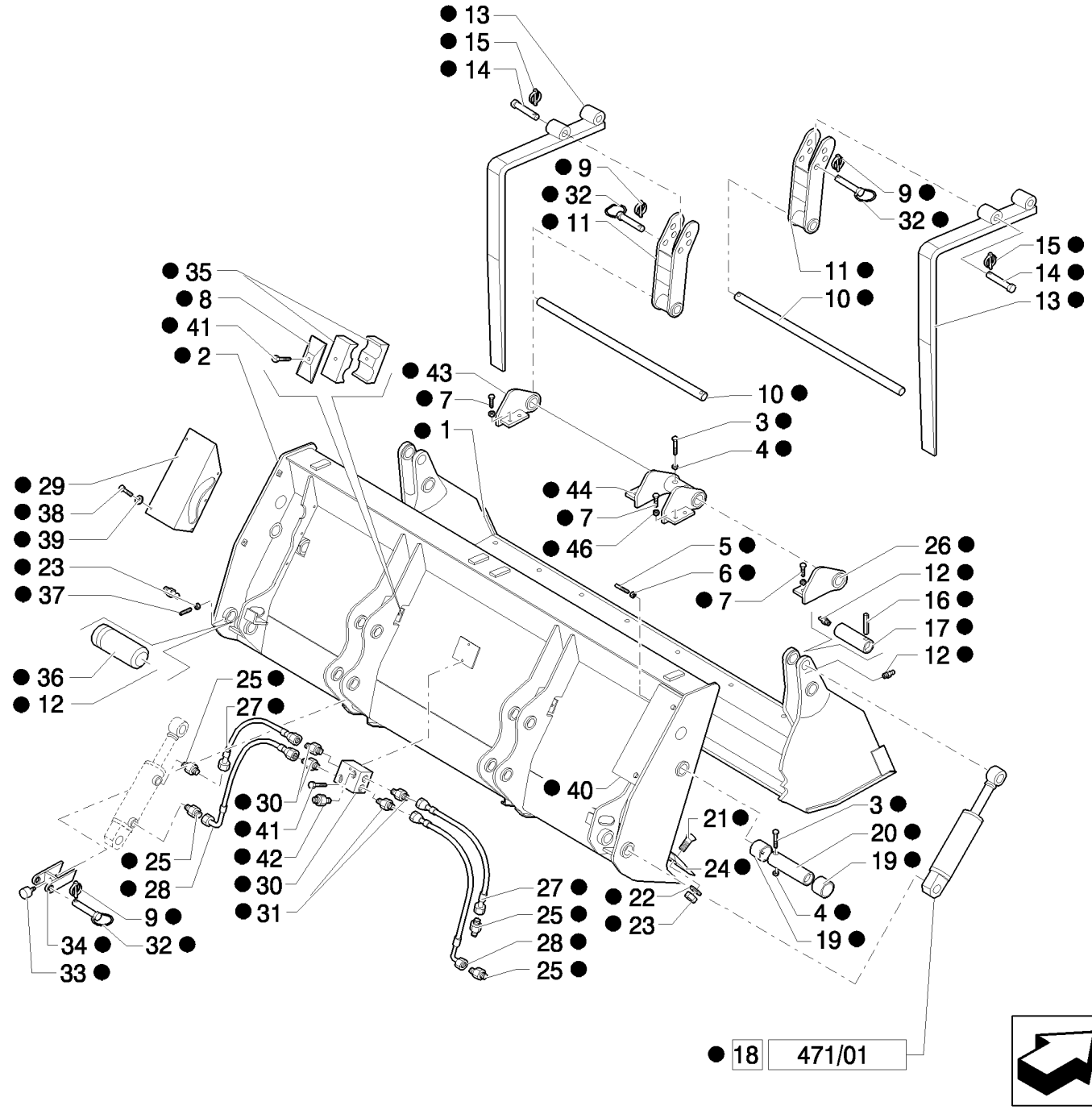

CUCHARA 6X1 (1 M3) CON PALA "COMMON GREY": DESGASTE CUCHARA

REF	FN	PART NUMBER	YR/SN	QTY	DENOMINACION
36		87310286		2	PERNO
37		85820020		2	TORNILLO, M14 x 30
38		85820011		10	TORNILLO, M8x16
39		85820012		10	JUNTA HERMETICA
40		87312330		1	DEFENSA, RH
41		85820030		4	TORNILLO, M8 x 45
42		87395482		2	RACOR
43		87310373		1	BISAGRA, LH
44		87310374		1	BISAGRA
45		87573552		1	CUCHARA, Assy
46		87395486		8	ARANDELA

474	01	p1	03/08

CUCHARON 6X1 (1 M³) CON DIENTE "COMMON GREY"

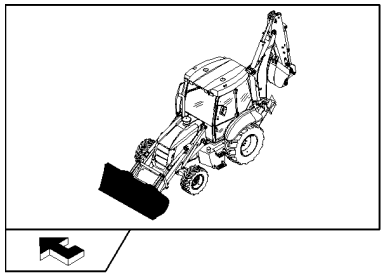

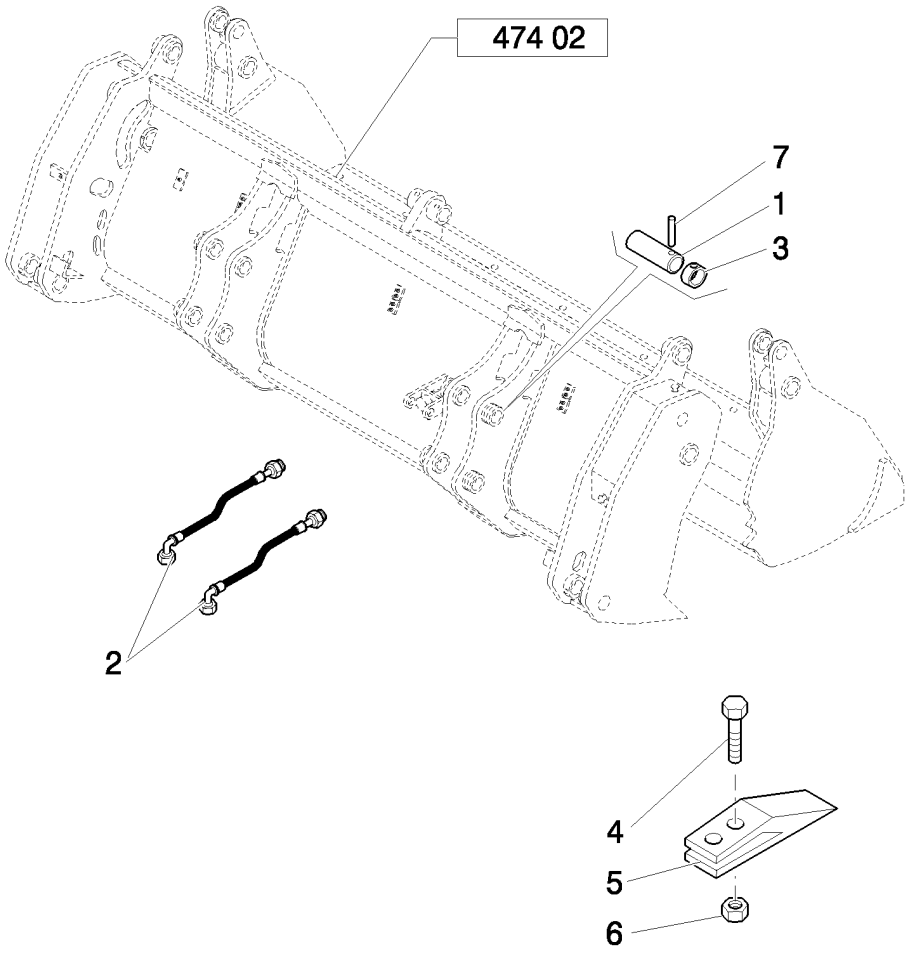

CUCHARON 6X1 (1 M³) CON DIENTE "COMMON GREY"

REF	FN	PART NUMBER	YR/SN	QTY	DENOMINACION
1		85801051		4	PERNO
2		85820819		2	MANGA FLEXIBLE, L=800 mm
3		85802992		4	ANILLO
4		85801371		16	PERNO DE ARADO, 5/8"-11 x 2 1/4"
5		85811440		8	PORTADIENTE
6		85801470		16	TUERCA, 5/8"-11, G8
7		85802993		4	PERNO

474	02	p1	04/08

CUCHARA 6X1 (1 M3) CON DIENTES “COMMON GREY”: DESGASTE CUCHARA

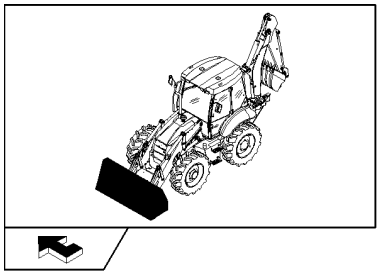

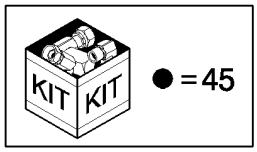

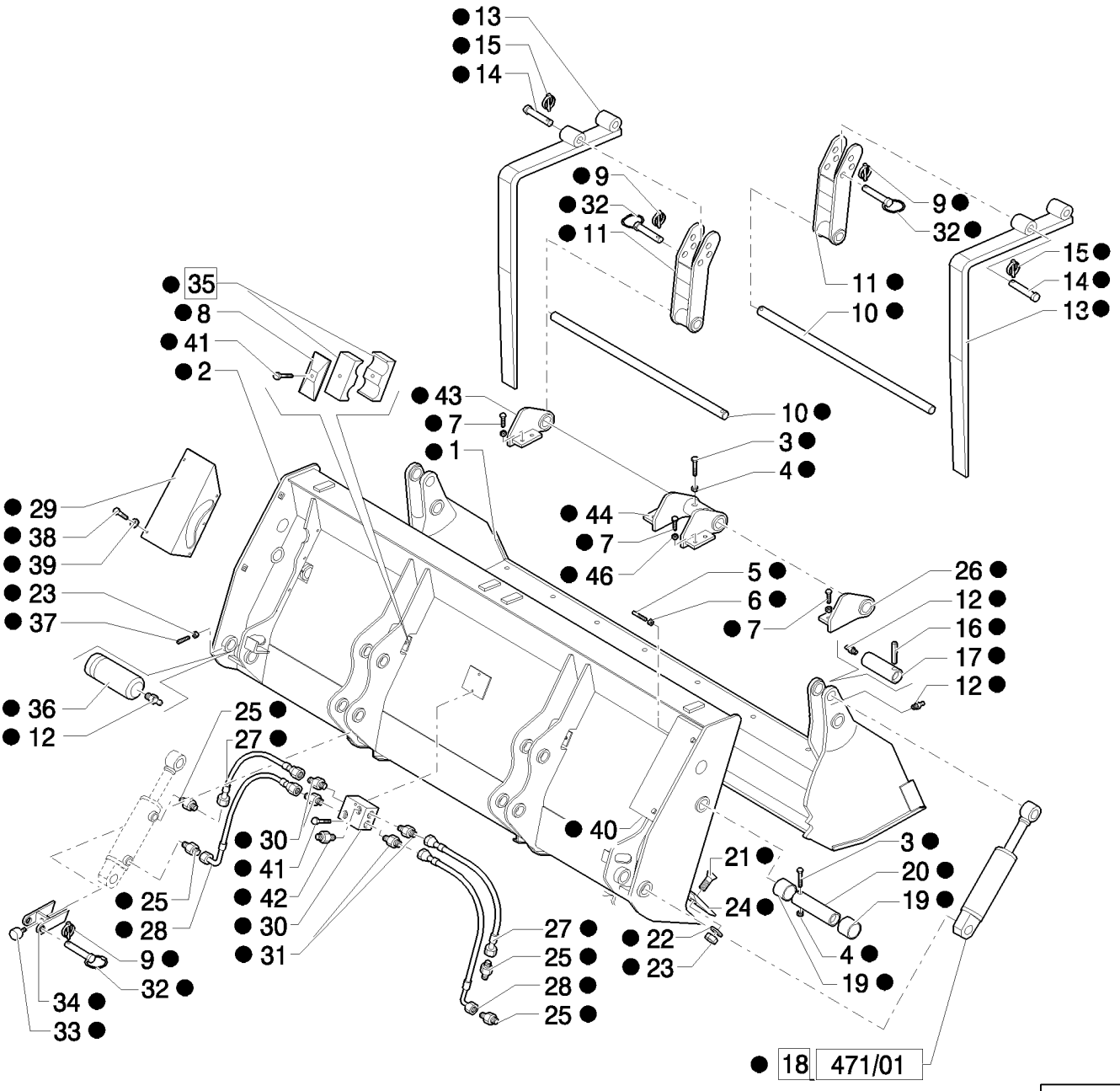

CUCHARA 6X1 (1 M3) CON DIENTES "COMMON GREY": DESGASTE CUCHARA

REF	FN	PART NUMBER	YR/SN	QTY	DENOMINACION
1		87310434		1	CUCHARA
2		87310354		1	CUCHARA
3		85820018		4	TORNILLO, M10 x 90
4		85820035		4	TUERCA, M10x1,5
5		87312331		1	TORNILLO, M8 x 120
6		85820031		1	TUERCA, M8
7		87557215		8	TORNILLO, M16x35
8		85820026		2	PLACA
9		85820068		4	PASADOR DE FIJACION, D=11
10		87310372		2	EJE
11		87310368		2	SOPORTE
12		85820014		6	ENGRASADOR, M10 x 1
13		87310367		2	HORUILLA PARA CUCHARA
14		87310369		2	PERNO
15		85825177		2	PASADOR DE FIJACION, D=8
16		85820016		2	PASADOR TUBOLAR, 10 x 80
17		85820017		2	PERNO
18		87573861		2	CILINDRO, Assy
19		85820013		4	CASQUILLO
20		85820015		2	PERNO
21		87312328		8	TORNILLO, M14 x 40
22		85820009		8	JUNTA HERMETICA
23		85820008		10	TUERCA, M14 x 2
24		87308614		1	HOJA
25		87312333		4	RACOR
26		87310375		1	BISAGRA, RH
27		87312342		2	MANGA FLEXIBLE
28		87312340		2	MANGA FLEXIBLE
29		87395481		1	DEFENSA
30		87312335		1	CONEXION
31		87312343		4	RACOR
32		85820064		2	PERNO
33		85820069		2	TAPÓN
34		87310370		2	PIEZA DE SOPORTE
35		85820027		4	BORNE

CUCHARA 6X1 (1 M3) CON DIENTES “COMMON GREY”: DESGASTE CUCHARA

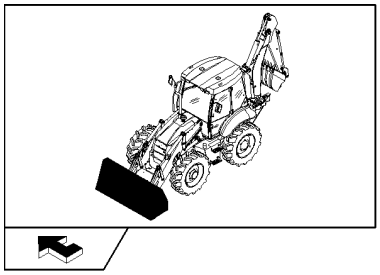

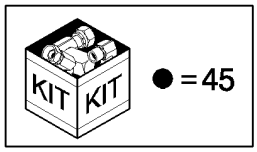

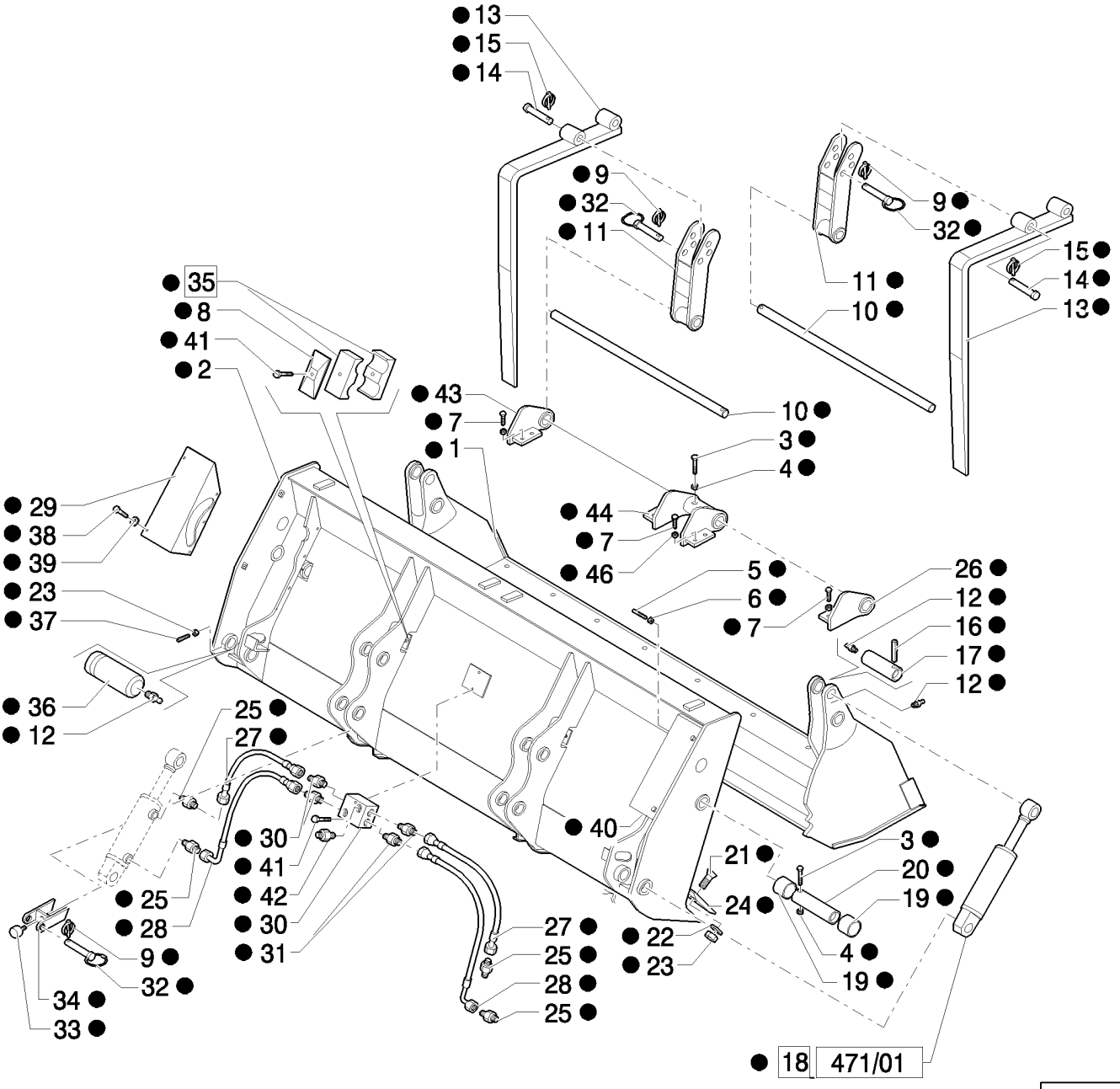

CUCHARA 6X1 (1 M3) CON DIENTES "COMMON GREY": DESGASTE CUCHARA

REF	FN	PART NUMBER	YR/SN	QTY	DENOMINACION
36		87310286		2	PERNO
37		85820020		2	TORNILLO, M14 x 30
38		85820011		10	TORNILLO, M8x16
39		85820012		10	JUNTA HERMETICA
40		87312330		1	DEFENSA
41		85820030		4	TORNILLO, M8 x 45
42		87395482		2	RACOR
43		87310373		1	BISAGRA, LH
44		87310374		1	BISAGRA
45		87573552		1	CUCHARA, Assy
46		87395486		8	ARANDELA

514	01	p1	04/08

BRAZO DE EXCAVACION CORTO

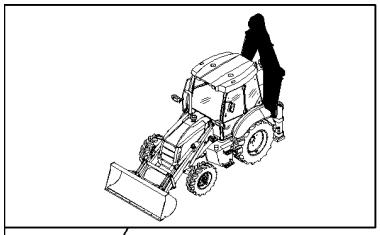

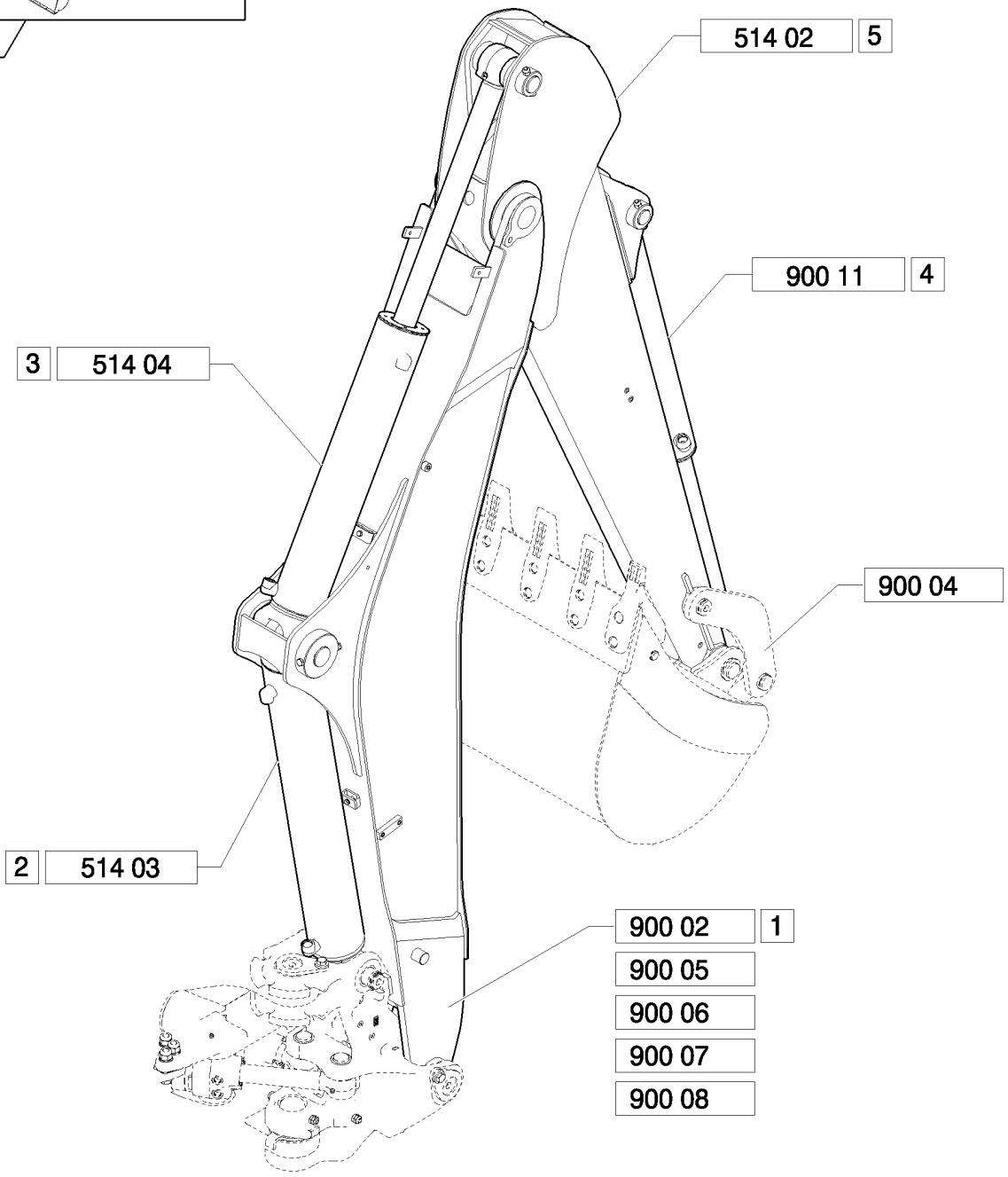

BRAZO DE EXCAVACION CORTO

REF	FN	PART NUMBER	YR/SN	QTY	DENOMINACION
1		87576064		1	CUCHARA, Assy
2		87613157		1	CILINDRO, Assy
3		87382083		1	CILINDRO, Assy
4		87382007		1	CILINDRO, Assy
5		87593493		1	BALANCÍN, Assy, 1/8"-27

BRAZO DE EXCAVACION CORTO

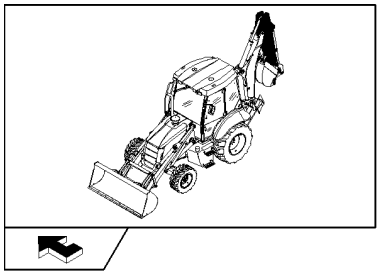

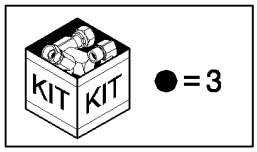

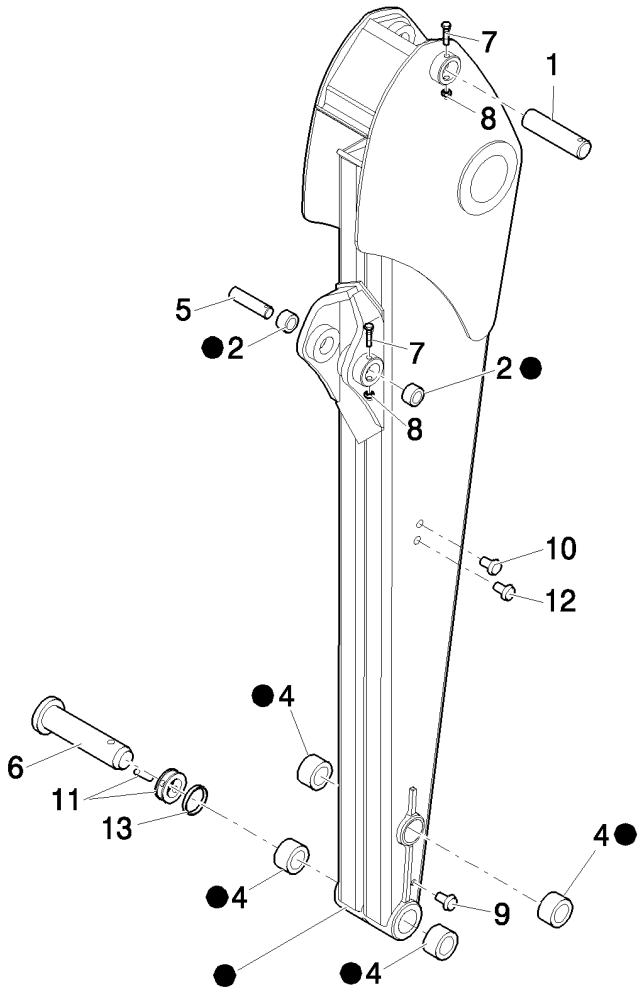

BRAZO DE EXCAVACION CORTO

REF	FN	PART NUMBER	YR/SN	QTY	DENOMINACION
1		87594196		1	PERNO
2		83910546		2	CASQUILLO, 2.175" ID x 2.80" OD x 1.969"
3		87593493		1	BALANCÍN
4		83910548		4	CASQUILLO
5		87577359		1	PERNO
6		85803005		1	PERNO
7		15542921		2	TORNILLO, Hex, M12 x 1.25 x 95, 8.8
8		16105011		2	CONTRA TUERCA
9		85804447		4	TAPÓN
10		81870039		4	BOTON DE RESORTE
11		85802975		2	PASADOR DE FIJACION
12		85804447		4	TAPÓN
13		85802974		2	ANILLO

514	03	p1	04/08

CILINDRO HIDRAULICO DE ELEVACION

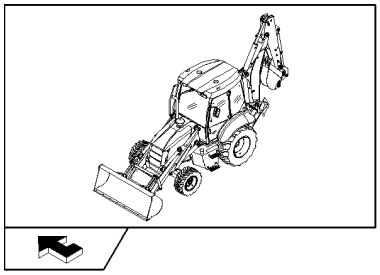

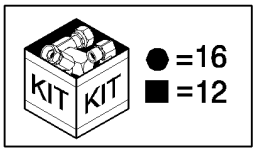

CILINDRO HIDRAULICO DE ELEVACION

REF	FN	PART NUMBER	YR/SN	QTY	DENOMINACION
1		G102090		1	ANILLO
2		87598244		1	EMPAQUETADURA, Assy
3		D95146		1	JUNTA GANCHO
4		G109395		2	TORNILLO AUTOROSCANTE
5		87600654		1	VARILLA, Assy
6		87598245		1	EMPAQUETADURA
7		83416242		2	ENGRASADOR, 1/8"-27
8		G109908		1	CASQUILLO
9		G107970		1	ANILLO
10		238-5247		1	JUNTA HERMETICA, -247, 70 Duro, 4.609" ID x .139" Thk
11		87598247		1	EMBOLO
12		87598248		1	PAQUETE
13		87598246		1	EMBOLO, Assy
14		G102092		1	ANILLO
15		G102091		1	ANILLO DE CIERRE
16		87654842		1	SERIE DE JUNTAS
17		87598240		1	TUBO, Assy
18		117359A1		1	ANILLO
19		D149079		2	CASQUILLO
20		87613157		1	CILINDRO, Assy

514	04	p1	04/08

CILINDRO HIDRAULICO DE EXCAVACION

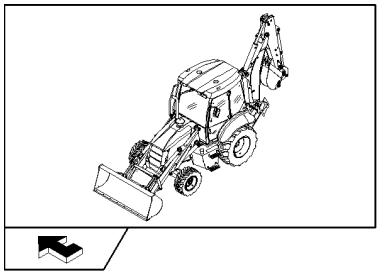

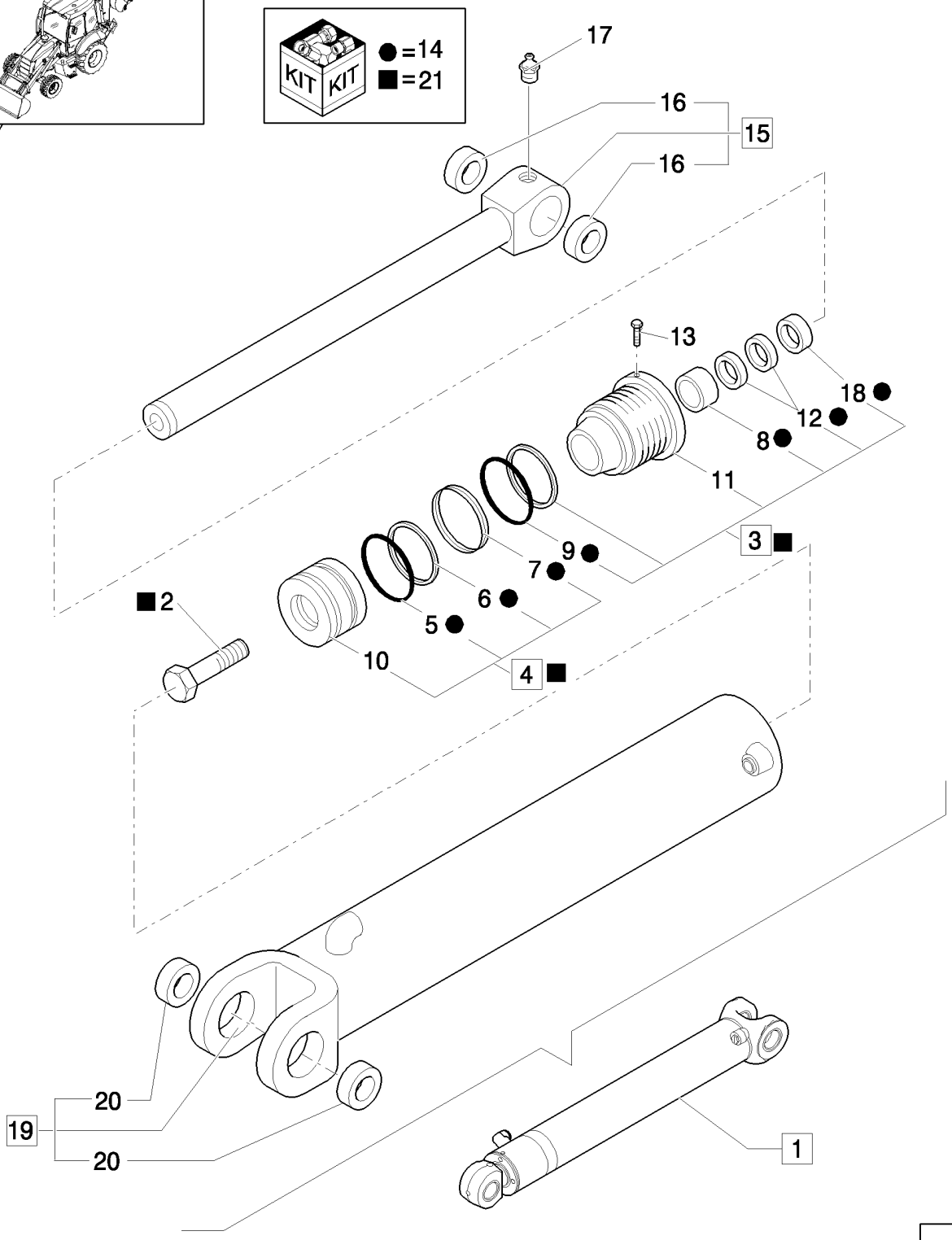

CILINDRO HIDRAULICO DE EXCAVACION

REF	FN	PART NUMBER	YR/SN	QTY	DENOMINACION
1		87382083		1	CILINDRO, Assy
2		86982444		1	PERNO ESPECIAL
3		87382190		1	EMPAQUETADURA, Assy
4		87382188		1	EMBOLO, Assy
5		87403649		1	ANILLO DE CIERRE
6		446481A1		1	ANILLO DE CIERRE
7		446195A1		1	ANILLO DE CIERRE
8		G109908		1	CASQUILLO
9		238-5245		1	JUNTA HERMETICA, -245, 70 Duro, 4.359" ID x .139" Thk
10		87382189		1	EMBOLO
11		87382191		1	EMPAQUETADURA
12		446178A1		1	ANILLO DE CIERRE
13		G109395		1	TORNILLO AUTOROSCANTE
14		87654844		1	SERIE DE JUNTAS
15		87382089		1	VARILLA, Assy
16		D149079		2	CASQUILLO
17		83416242		1	ENGRASADOR, 1/8"-27
18		D95146		1	JUNTA GANCHO
19		87382086		1	TUBO, Assy
20		123407A1		2	ANILLO
21		87382092		1	PAQUETE

CUCHARÓN RETROEXCAVADORA 12"(305 MM) CON DIENTES ENSAMBLADOS CON CLAVIJAS - NA

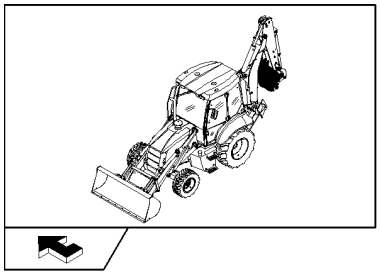

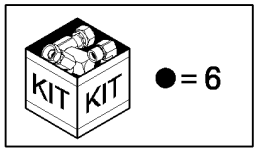

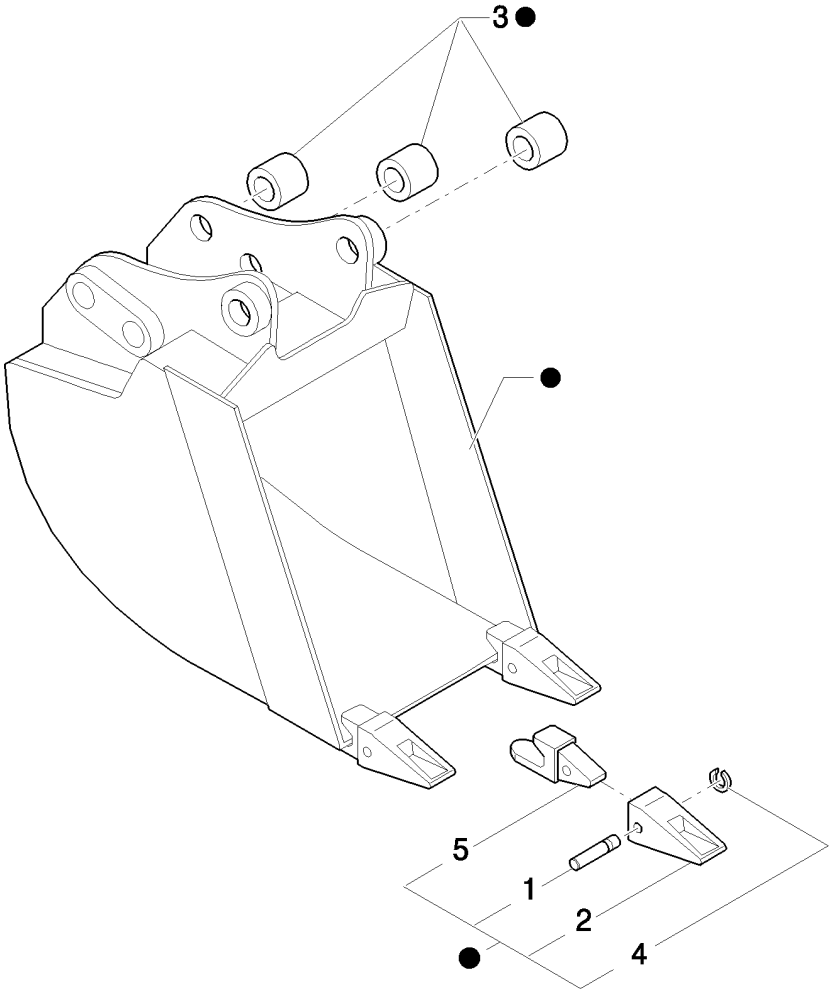

CUCHARÓN RETROEXCAVADORA 12"(305 MM) CON DIENTES ENSAMBLADOS CON CLAVIJAS - NA

REF	FN	PART NUMBER	YR/SN	QTY	DENOMINACION
1		85801097		3	PERNO
2		85811432		3	DIENTE DE CUCHARA
3		83910634		6	CASQUILLO
4		85801098		3	ANILLO
5		85821788		3	PORTADIENTE
6		87609344		1	CUCHARA, Assy

516/01		p1	04/08

CUCHARÓN RETROEXCAVADORA 18" (457MM) CON DIENTES ENSAMBLADOS CON CLAVIJAS - NA

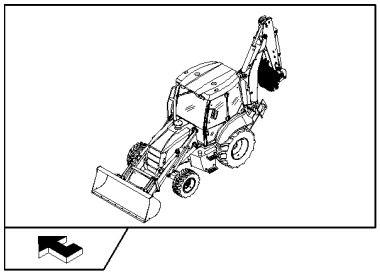

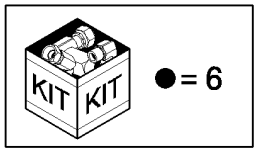

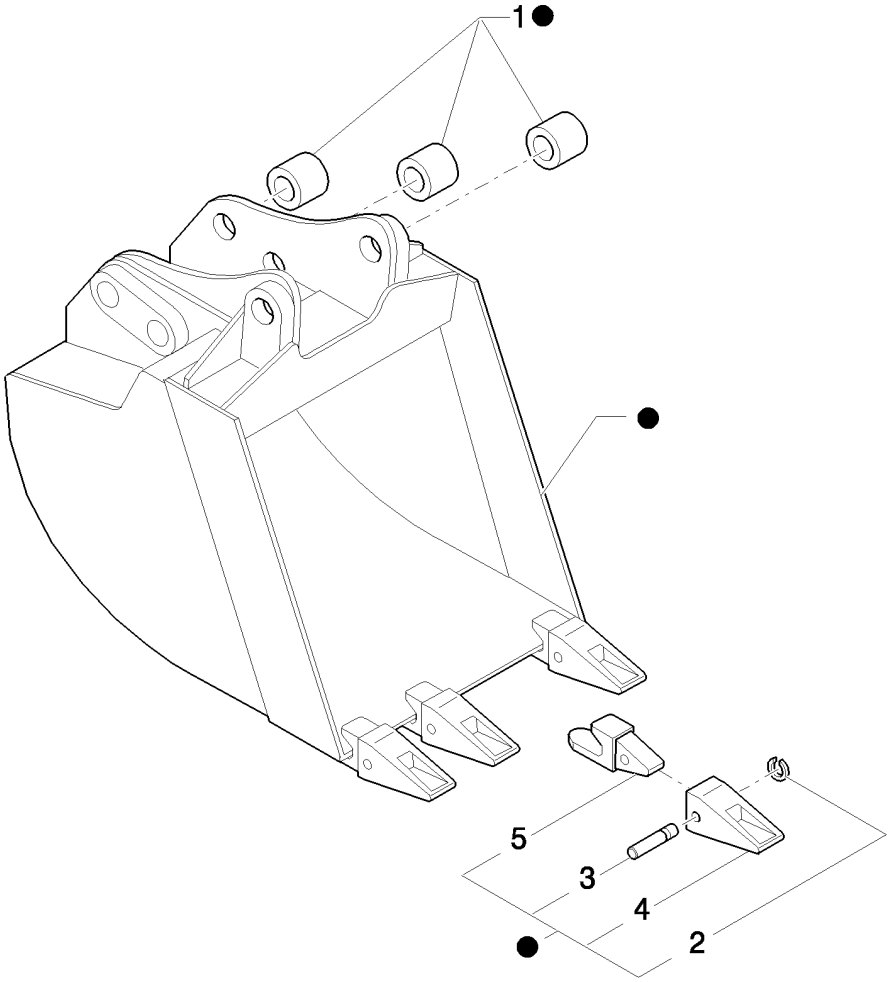

CUCHARÓN RETROEXCAVADORA 18" (457MM) CON DIENTES ENSAMBLADOS CON CLAVIJAS - NA

REF	FN	PART NUMBER	YR/SN	QTY	DENOMINACION
1		83910634		6	CASQUILLO
2		85801098		4	ANILLO
3		85801097		4	PERNO
4		85811432		4	DIENTE DE CUCHARA
5		85821788		4	PORTADIENTE
6		87609121		1	CUCHARA, Assy

CUCHARÓN RETROEXCAVADORA 24"(610 MM) CON DIENTES ENSAMBLADOS CON CLAVIJAS - NA

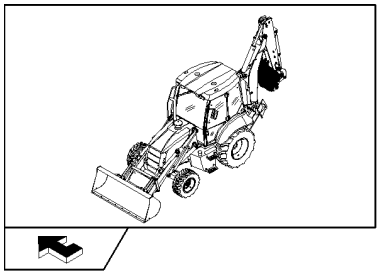

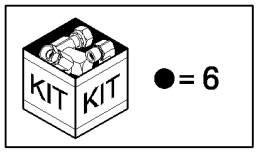

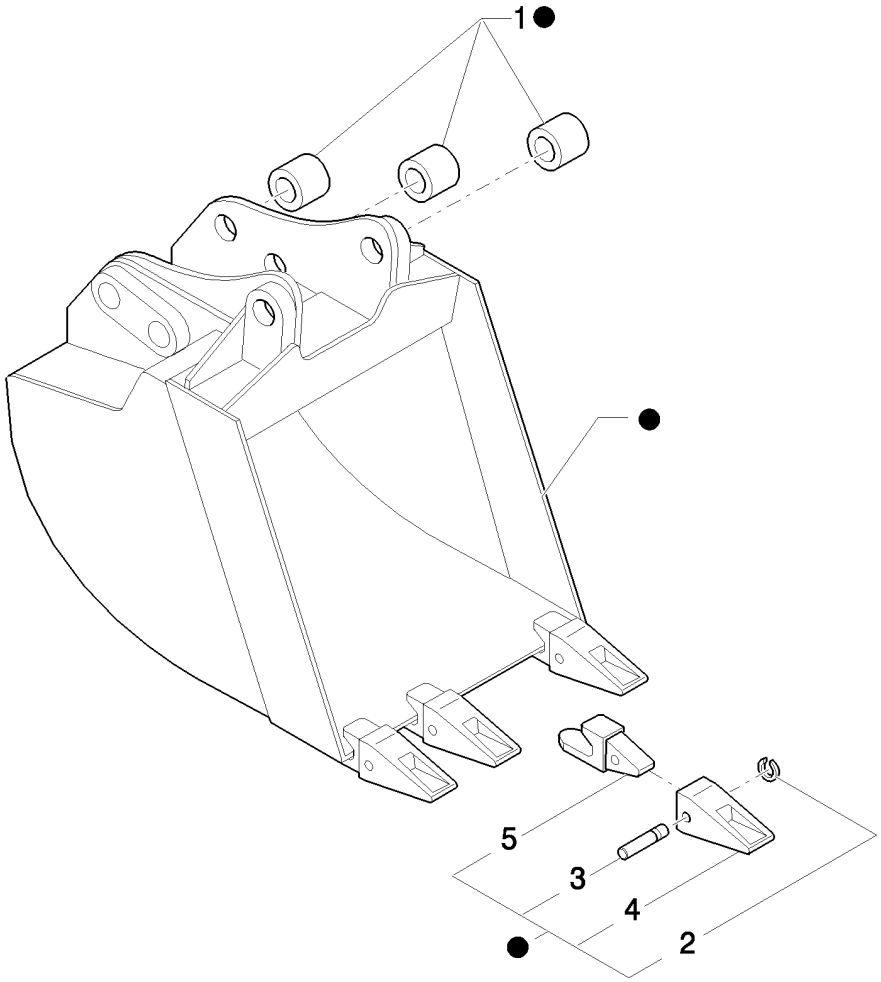

CUCHARÓN RETROEXCAVADORA 24"(610 MM) CON DIENTES ENSAMBLADOS CON CLAVIJAS - NA

REF	FN	PART NUMBER	YR/SN	QTY	DENOMINACION
1		83910634		6	CASQUILLO
2		85801098		4	ANILLO
3		85801097		4	PERNO
4		85811432		4	DIENTE DE CUCHARA
5		85821788		4	PORTADIENTE
6		87607837		1	CUCHARA, Assy

CUCHARÓN RETROEXCAVADORA 30"(762 MM) CON DIENTES ENSAMBLADOS CON CLAVIJAS - NA

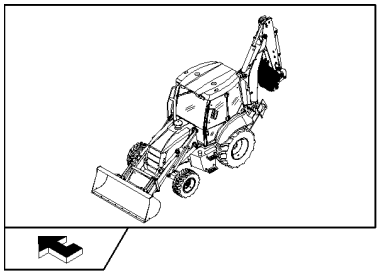

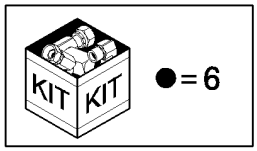

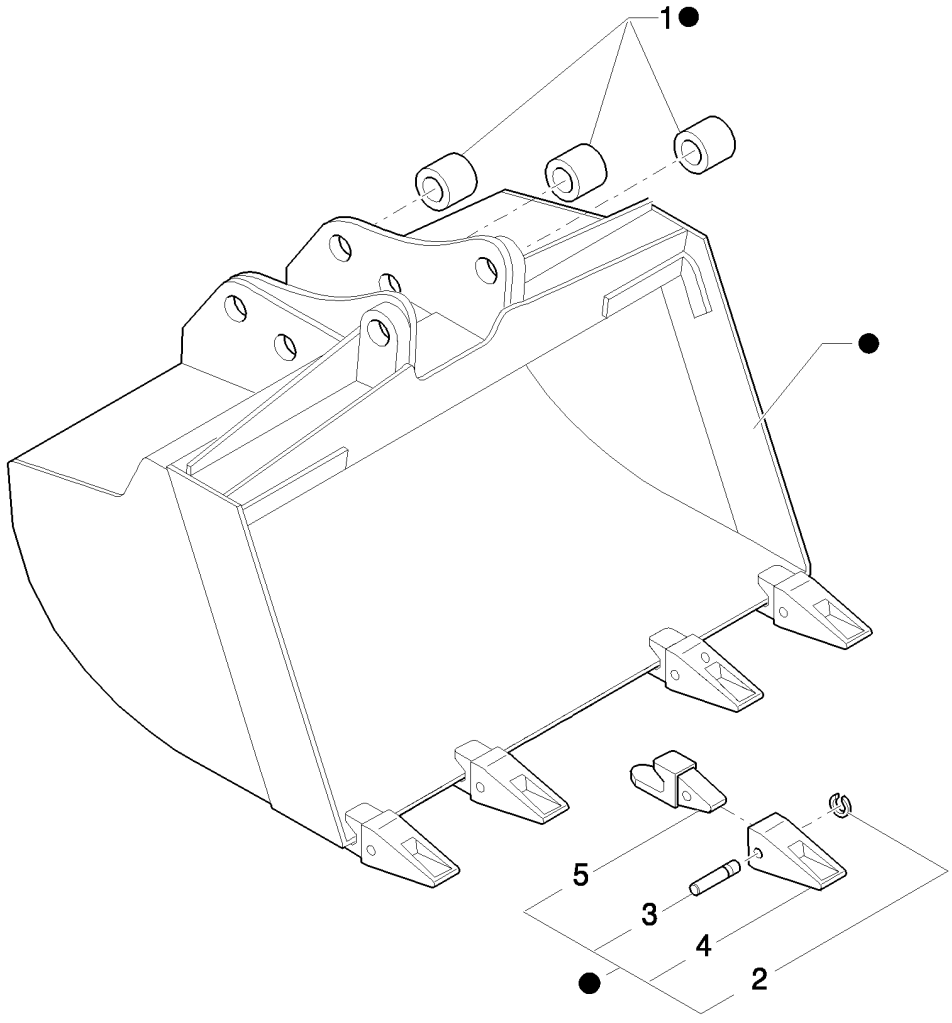

CUCHARÓN RETROEXCAVADORA 30"(762 MM) CON DIENTES ENSAMBLADOS CON CLAVIJAS - NA

REF	FN	PART NUMBER	YR/SN	QTY	DENOMINACION
1		83910634		6	CASQUILLO
2		85801098		5	ANILLO
3		85801097		5	PERNO
4		85811432		5	DIENTE DE CUCHARA
5		85821788		5	PORTADIENTE
6		87609028		1	CUCHARA, Assy

519/01		p1	04/08

CUCHARÓN RETROEXCAVADORA 36" (910MM) CON DIENTES ENSAMBLADOS CON CLAVIJAS - NA

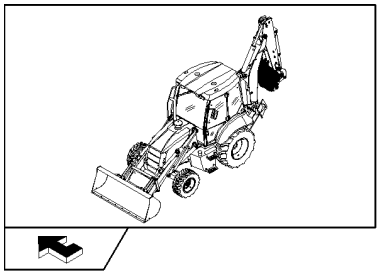

KIT KIT ●=6

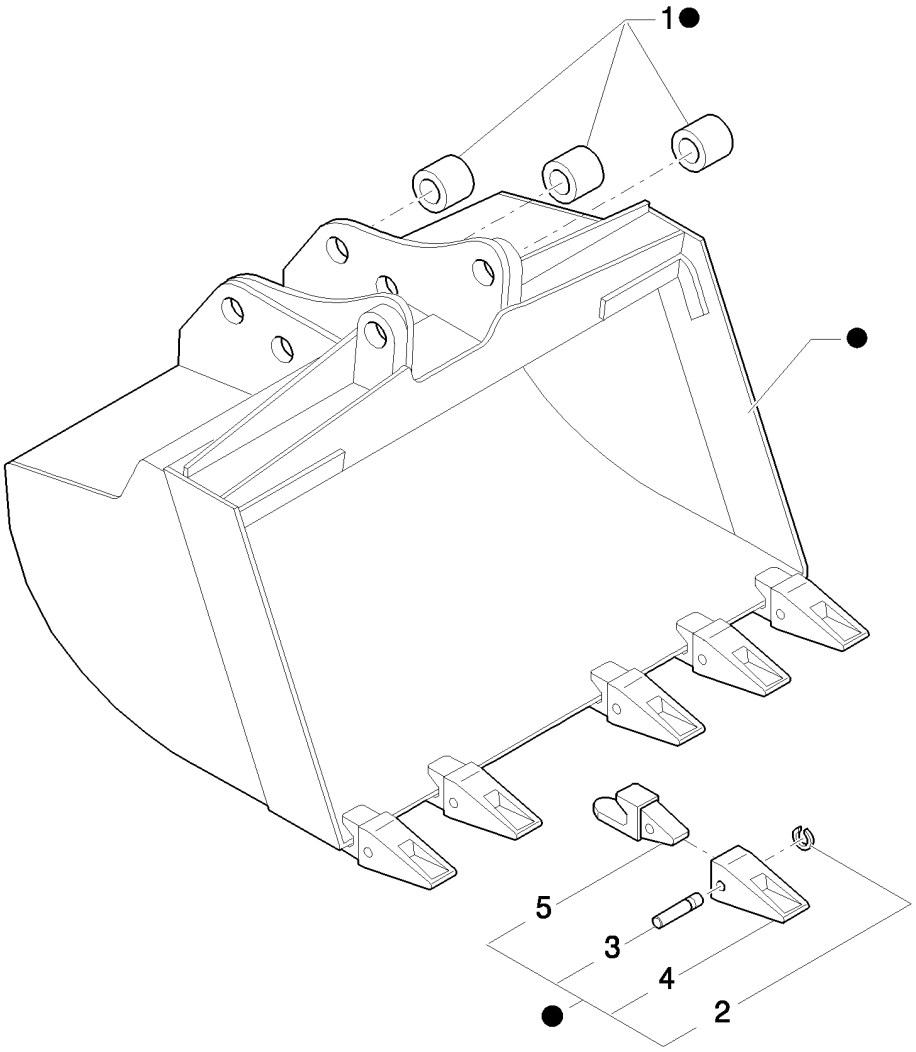

CUCHARÓN RETROEXCAVADORA 36" (910MM) CON DIENTES ENSAMBLADOS CON CLAVIJAS - NA

REF	FN	PART NUMBER	YR/SN	QTY	DENOMINACION
1		83910634		6	CASQUILLO
2		85801098		6	ANILLO
3		85801097		6	PERNO
4		85811432		6	DIENTE DE CUCHARA
5		85821788		6	PORTADIENTE
6		87607670		1	CUCHARA, Assy

520		p1	04/08

CUCHARON DE (0.88 M³) SIN DIENTES

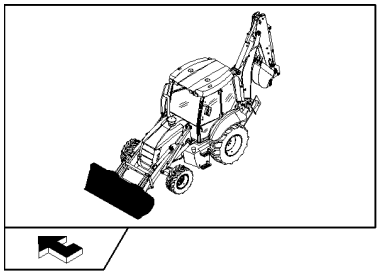

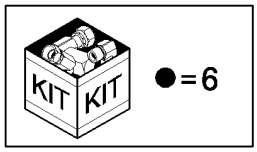

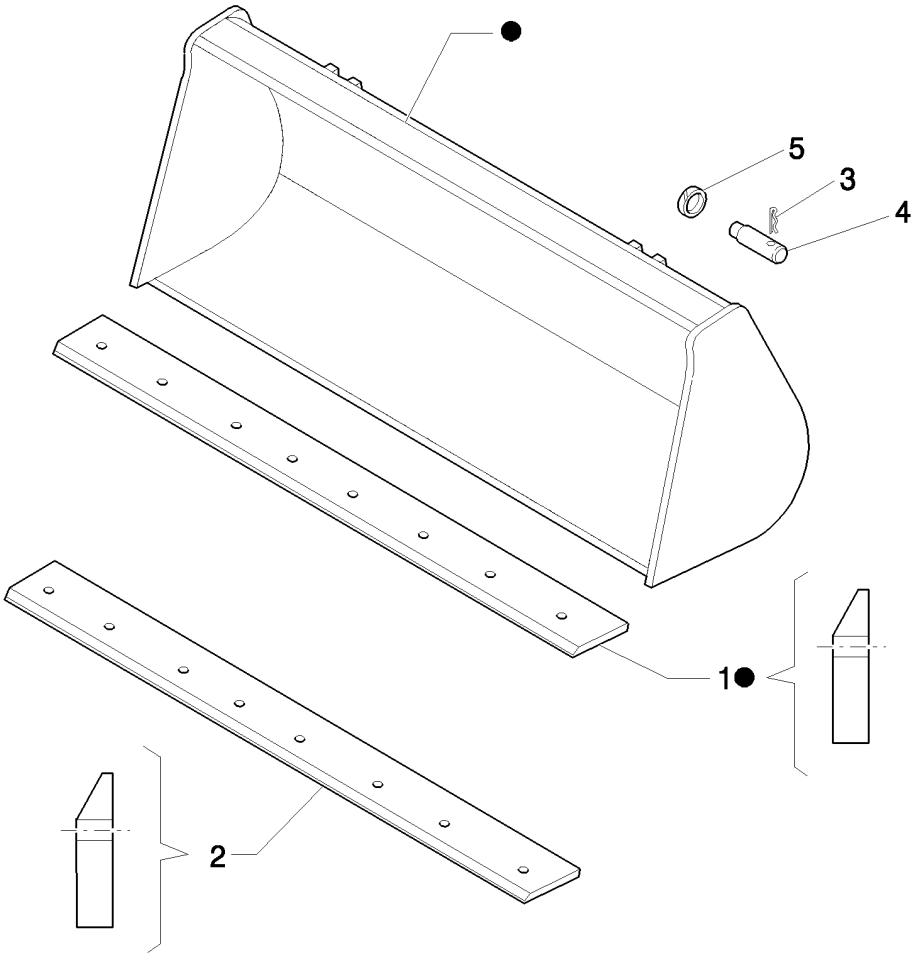

CUCHARON DE (0.88 M³) SIN DIENTES

REF	FN	PART NUMBER	YR/SN	QTY	DENOMINACION
1	1	85801044		1	CUCHILLA DE ATAQUE, 27 Deg. cutting edge
2	2	85807868		1	CUCHILLA DE ATAQUE
3		85802993		4	PERNO
4		85801051		4	PERNO
5		85802992		4	ANILLO
6		85801042		1	CUCHARA, Assy

(1) Part welded to bucket
(2) Non-reversible weld on

CUCHARÓN RETROEXCAVADORA 18"(457 MM) CON DIENTES ENSAMBLADOS CON CLAVIJAS (EXTRA HD) - NA

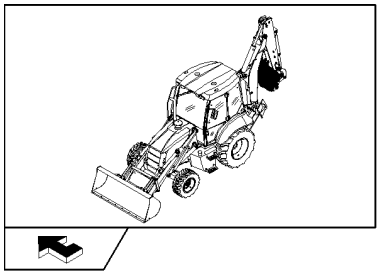

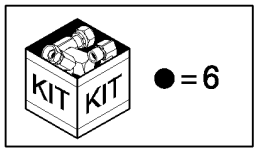

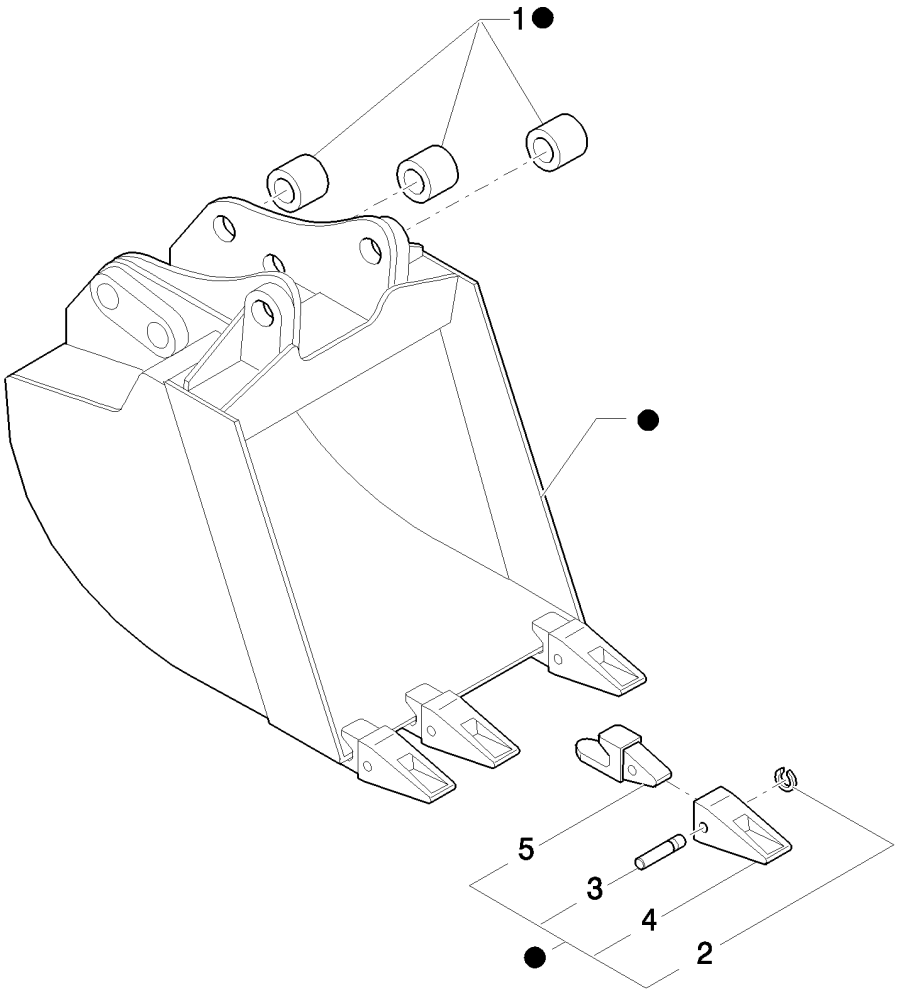

CUCHARÓN RETROEXCAVADORA 18"(457 MM) CON DIENTES ENSAMBLADOS CON CLAVIJAS (EXTRA HD) - NA

REF	FN	PART NUMBER	YR/SN	QTY	DENOMINACION
1		83910634		6	CASQUILLO
2		85801098		4	ANILLO
3		85801097		4	PERNO
4		85811432		4	DIENTE DE CUCHARA
5		85821788		4	PORTADIENTE
6		87661002		1	CUCHARA, Assy

CUCHARÓN RETROEXCAVADORA 24" (610MM) CON DIENTES ENSAMBLADOS CON CLAVIJAS (EXTRA HD) - NA

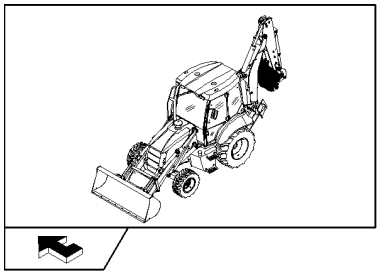

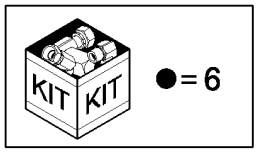

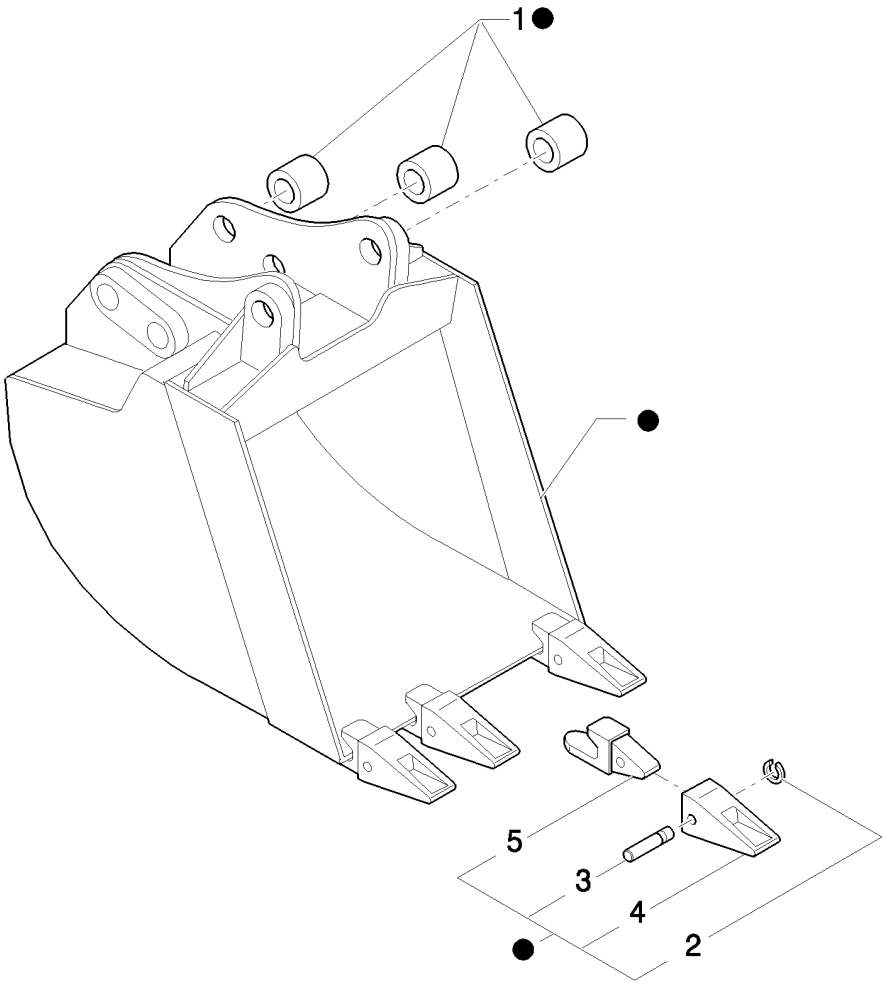

CUCHARÓN RETROEXCAVADORA 24" (610MM) CON DIENTES ENSAMBLADOS CON CLAVIJAS (EXTRA HD) - NA

REF	FN	PART NUMBER	YR/SN	QTY	DENOMINACION
1		83910634		6	CASQUILLO
2		85801098		4	ANILLO
3		85801097		4	PERNO
4		85811432		4	DIENTE DE CUCHARA
5		85821788		4	PORTADIENTE
6		87659514		1	CUCHARA, Assy

522		p1	04/08

CUCHARON DE (1 M³) SIN DIENTES

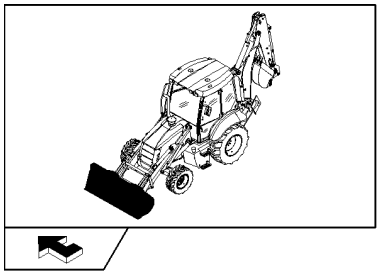

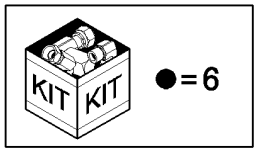

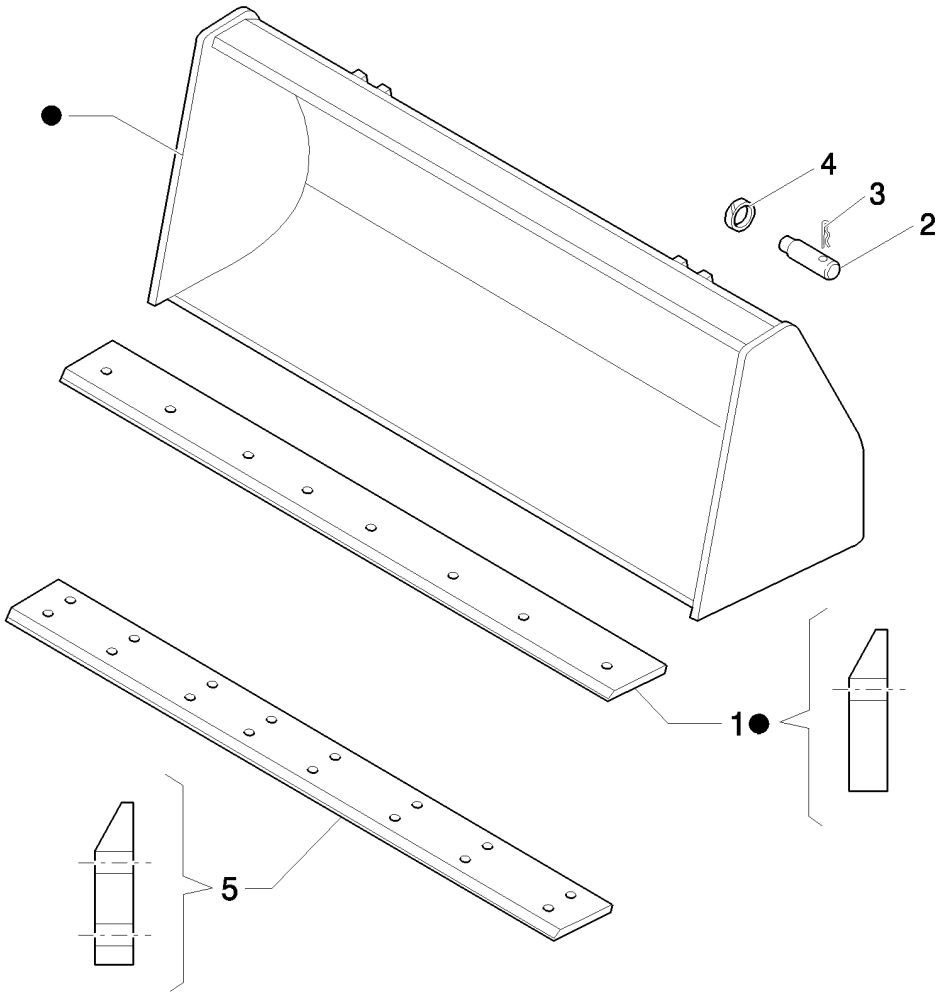

CUCHARON DE (1 M³) SIN DIENTES

REF	FN	PART NUMBER	YR/SN	QTY	DENOMINACION
1	1	85801034		1	CUCHILLA DE ATAQUE
2		85801051		4	PERNO
3		85802993		4	PERNO
4		85802992		4	ANILLO
5	2	85807867		1	CUCHILLA DE ATAQUE, 200mm W x 2250 L
6		85801040		1	CUCHARA, Assy

(1) Part welded to bucket
(2) Non-reversible weld on

522/01		p1	04/08

CUCHARON ESTANDAR DE (1 M³) CON HORQUILLAS

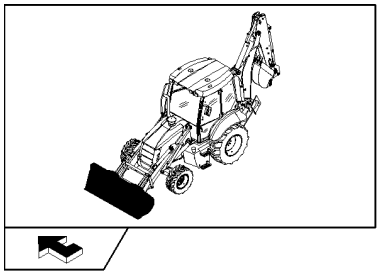

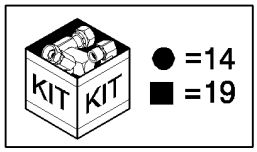

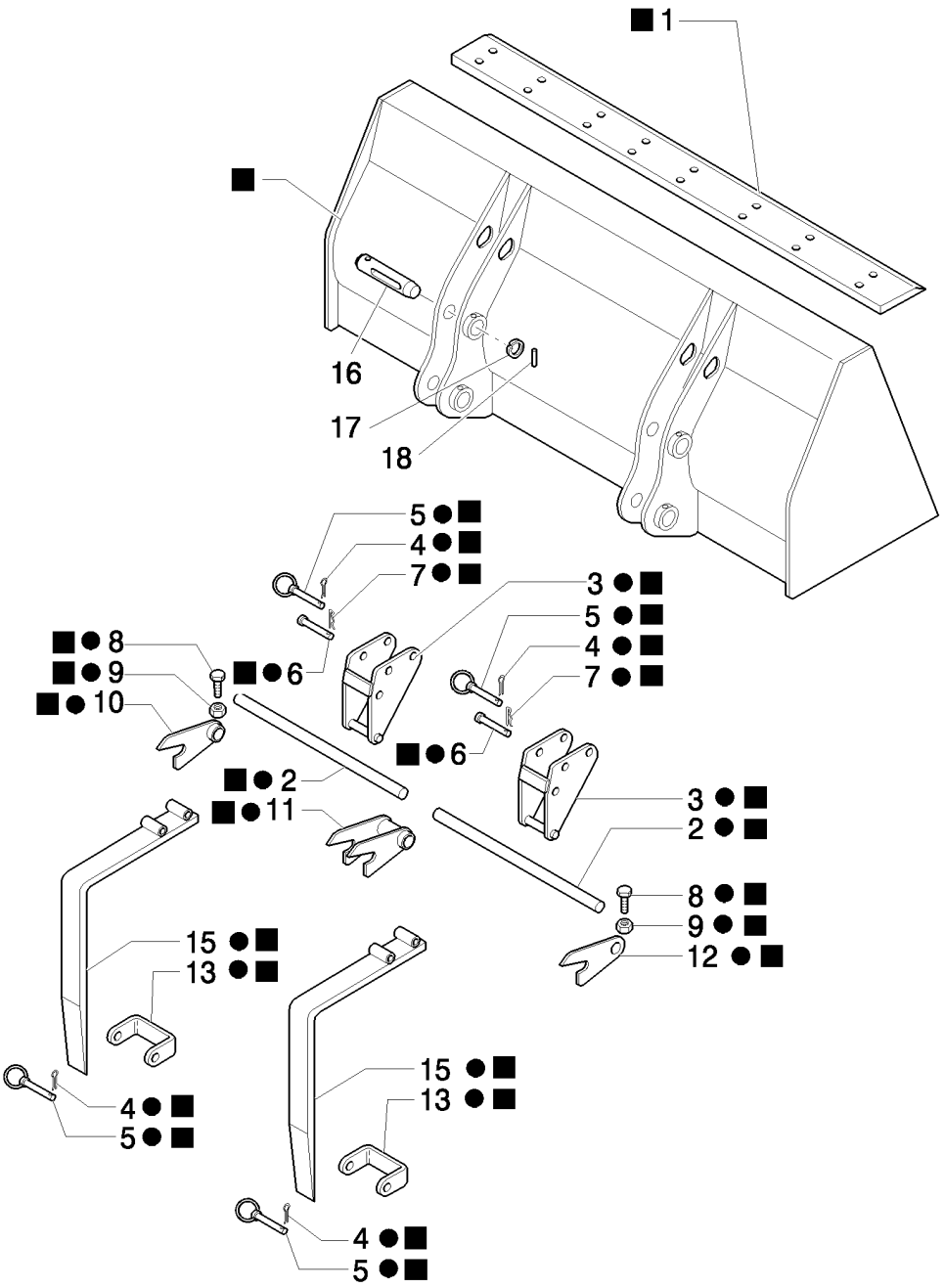

CUCHARON ESTANDAR DE (1 M³) CON HORQUILLAS

REF	FN	PART NUMBER	YR/SN	QTY	DENOMINACION
1	1	85801034		1	CUCHILLA DE ATAQUE
2		9969170		2	VARILLA
3		9968146		2	SOPORTE
4		9968147		4	PASADOR TUBOLAR
5		9968148		4	PASADOR DE FIJACION
6		9968149		2	PERNO
7		9968150		2	PASADOR ABIERTO
8		9968151		2	TORNILLO
9		9968152		4	TUERCA, M10
10		9968153		1	BISAGRA
11		9968154		1	BISAGRA
12		9968155		1	BISAGRA
13		9968156		2	PRLONGACION
14		85801486		1	KIT DE MODIFICACION, FORKS
15		9968144		2	HORQUETA
16		85801051		4	PERNO
17		85802992		4	ANILLO
18		85802993		4	PERNO
19		85803224		1	CUCHARA, Assy

(1) Part welded to bucket

525		p1	04/08

CUCHARON ESTANDAR DE (1 M³) CON HORQUILLAS Y HOJA REVERSIBLE

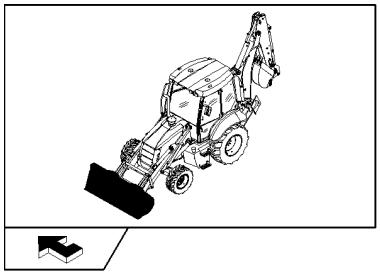

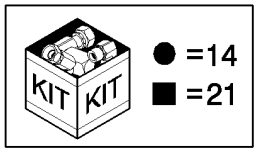

CUCHARON ESTANDAR DE (1 M³) CON HORQUILLAS Y HOJA REVERSIBLE

REF	FN	PART NUMBER	YR/SN	QTY	DENOMINACION
1	1	85801034		1	CUCHILLA DE ATAQUE
2		9969170		2	VARILLA
3		9968146		2	SOPORTE
4		9968147		4	PASADOR TUBOLAR
5		9968148		4	PASADOR DE FIJACION
6		9968149		2	PERNO
7		9968150		2	PASADOR ABIERTO
8		9968151		2	TORNILLO
9		9968152		4	TUERCA, M10
10		9968153		1	BISAGRA
11		9968154		1	BISAGRA
12		9968155		1	BISAGRA
13		9968156		2	PRLONGACION
14		85801486		1	KIT DE MODIFICACION, FORKS
15		9968144		2	HORQUETA
16		85801051		4	PERNO
17		85802992		4	ANILLO
18		85802993		4	PERNO
19		85801470		8	TUERCA, 5/8"-11, G8
20		85801371		8	PERNO DE ARADO, 5/8"-11 x 2 1/4"
21		85803224		1	CUCHARA, Assy
22	2	85801161		1	CUCHILLA DE ATAQUE

(1) Part welded to bucket
(2) Reversible bolt on

527		p1	04/08

CUCHARON DE (0.88 M³) Y CUCHILLA REV.SUPLEMEN.

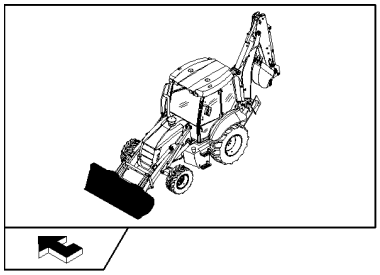

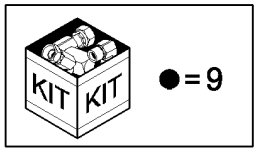

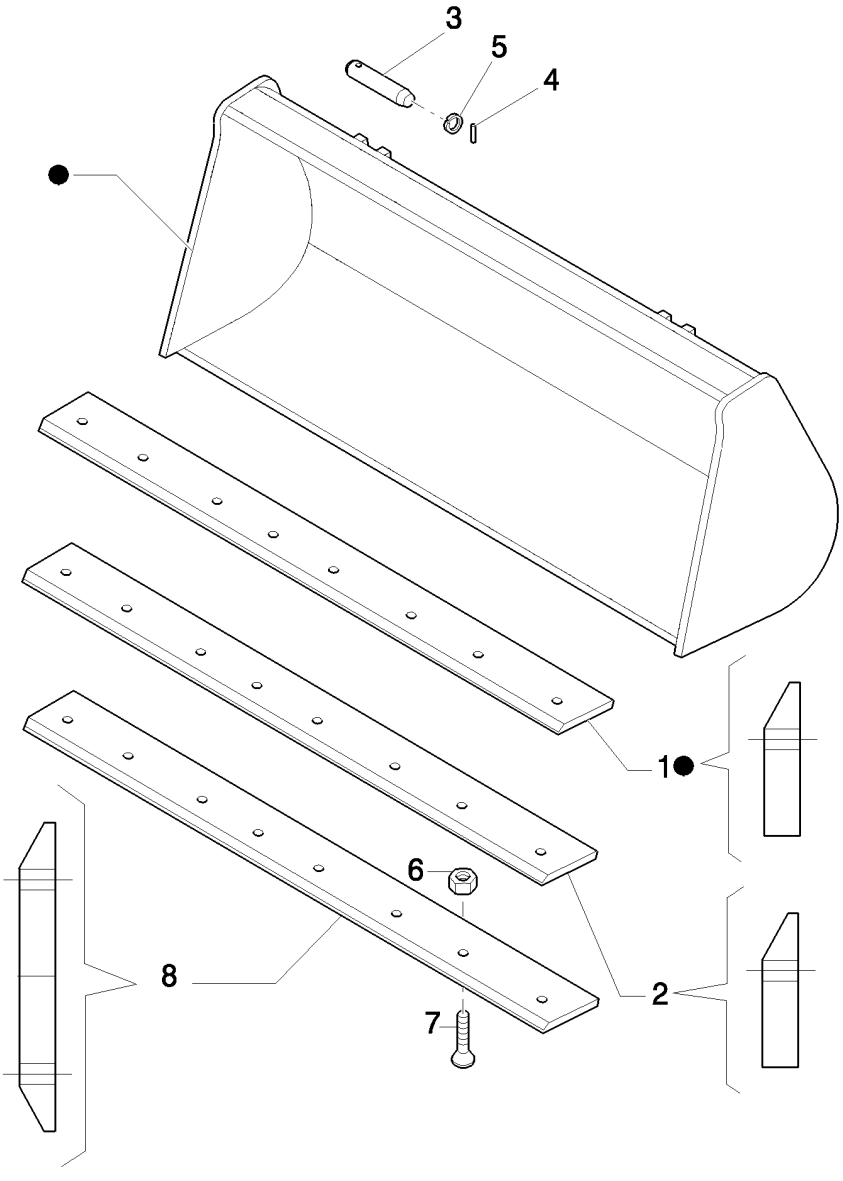

CUCHARON DE (0.88 M³) Y CUCHILLA REV.SUPLEMEN.

REF	FN	PART NUMBER	YR/SN	QTY	DENOMINACION
1	1	85801044		1	CUCHILLA DE ATAQUE, 27 Deg. cutting edge
2		85807868		1	CUCHILLA DE ATAQUE, N.A. ONLY
3		85801051		4	PERNO
4		85802993		4	PERNO
5		85802992		4	ANILLO
6		85801470		8	TUERCA, 5/8"-11, G8
7		85801371		8	PERNO DE ARADO, 5/8"-11 x 2 1/4"
8	2	85801161		1	CUCHILLA DE ATAQUE, 35 Deg. cutting edge
9		85801042		1	CUCHARA, Assy

(1) Part welded to bucket
(2) Reversible bolt on

535		p1	03/08

PIE ESTABILIZADOR TIERRA (CENTER PIVOT)

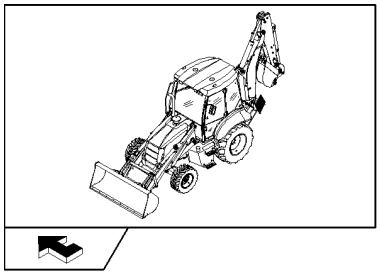

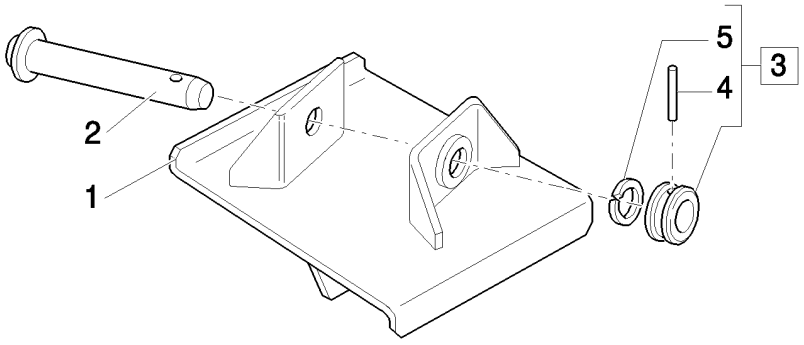

PIE ESTABILIZADOR TIERRA (CENTER PIVOT)

REF	FN	PART NUMBER	YR/SN	QTY	DENOMINACION
1		85804847		1	TACO, RH
1		85804848		1	TACO, LH
2		85803141		2	PERNO
3		85803139		2	PASADOR DE FIJACION, Assy
4		85802992		2	ANILLO
5		85802993		2	PERNO

536		p1	04/08

CUCHARON ESTANDAR DE (1 M³) CON DIENTE

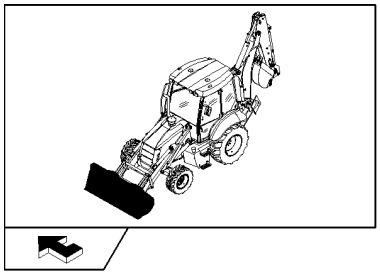

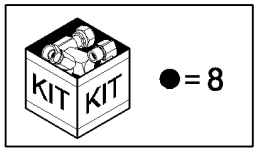

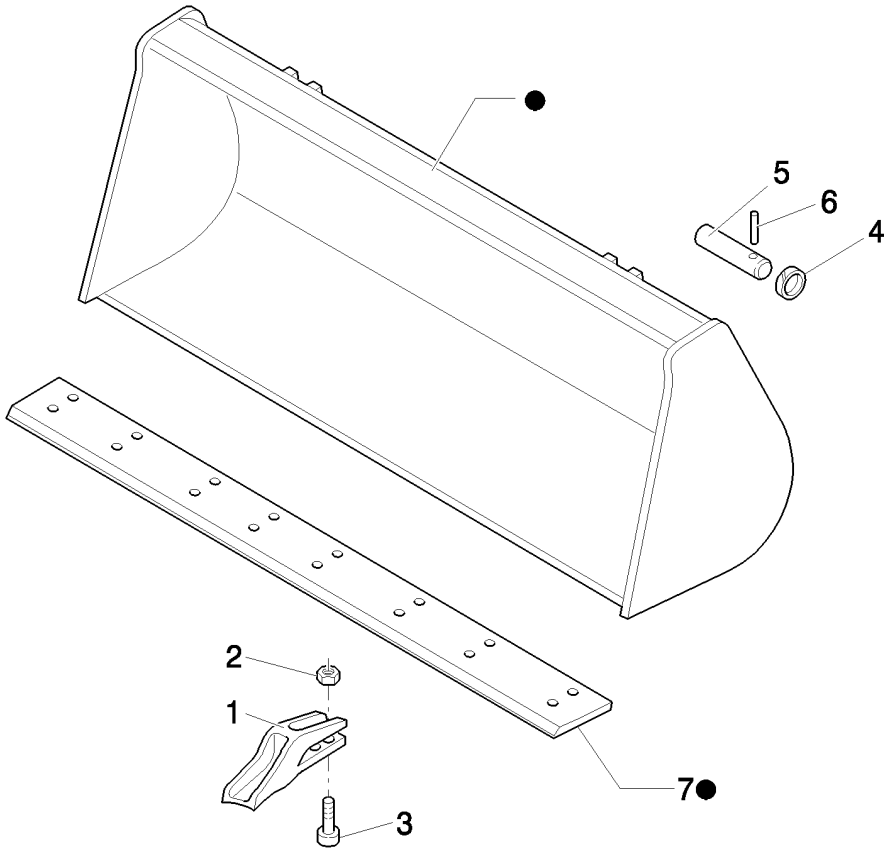

CUCHARON ESTANDAR DE (1 M³) CON DIENTE

REF	FN	PART NUMBER	YR/SN	QTY	DENOMINACION
1		85811440		8	PORTADIENTE
2		85801470		16	TUERCA, 5/8"-11, G8
3		85801371		16	PERNO DE ARADO, 5/8"-11 x 2 1/4"
4		85802992		4	ANILLO
5		85802993		4	PERNO
6		85801051		4	PERNO
7	1	85801034		1	CUCHILLA DE ATAQUE
7		85807867		1	CUCHILLA DE ATAQUE, 200mm W x 2250 L
8		85801040		1	CUCHARA, Assy

(1) PART WELDED TO BUCKET

536/02		p1	04/08

PIE ESTABILIZADOR REVERSIBLE (CENTER PIVOT)

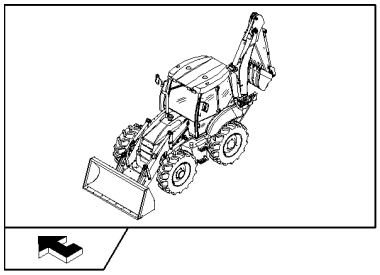

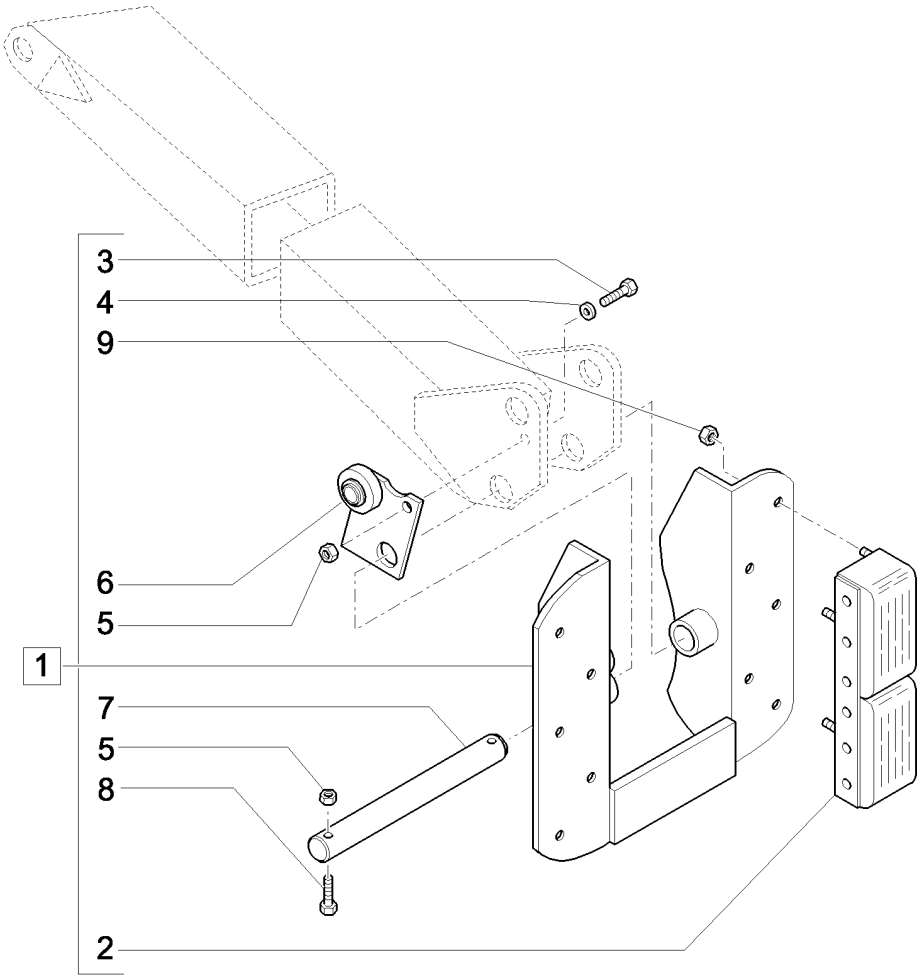

PIE ESTABILIZADOR REVERSIBLE (CENTER PIVOT)

REF	FN	PART NUMBER	YR/SN	QTY	DENOMINACION
1		85811985		1	PIE, Assy, LH
1		85811986		1	PIE, Assy, RH
2		85811992		4	PLACA, CAUCHO
3		81821263		2	TORNILLO, Hex, 3/8"-16 x 1 1/2", G5
4		12641004		2	ARANDELA, M10 x 20 x 3
5		81823746		6	TUERCA, 3/8"-16
6		85811990		1	PIEZA DE SOPORTE, LH
6		85811991		1	PIEZA DE SOPORTE, RH; Shown in Illustration
7		85811989		2	PERNO
8		85804878		4	TORNILLO
9		81821237		20	TUERCA, 7/16"-14, G5, 7/16"-14

537		p1	04/08

CUCHARON ESTANDAR DE (1 M³) CON CUCHILLA REV. SUPLEMEN.

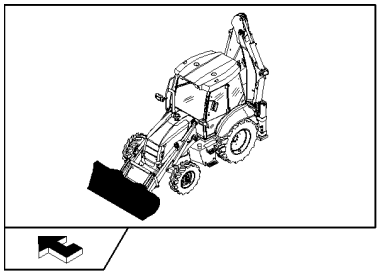

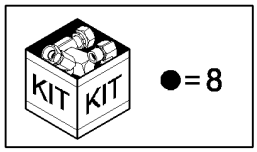

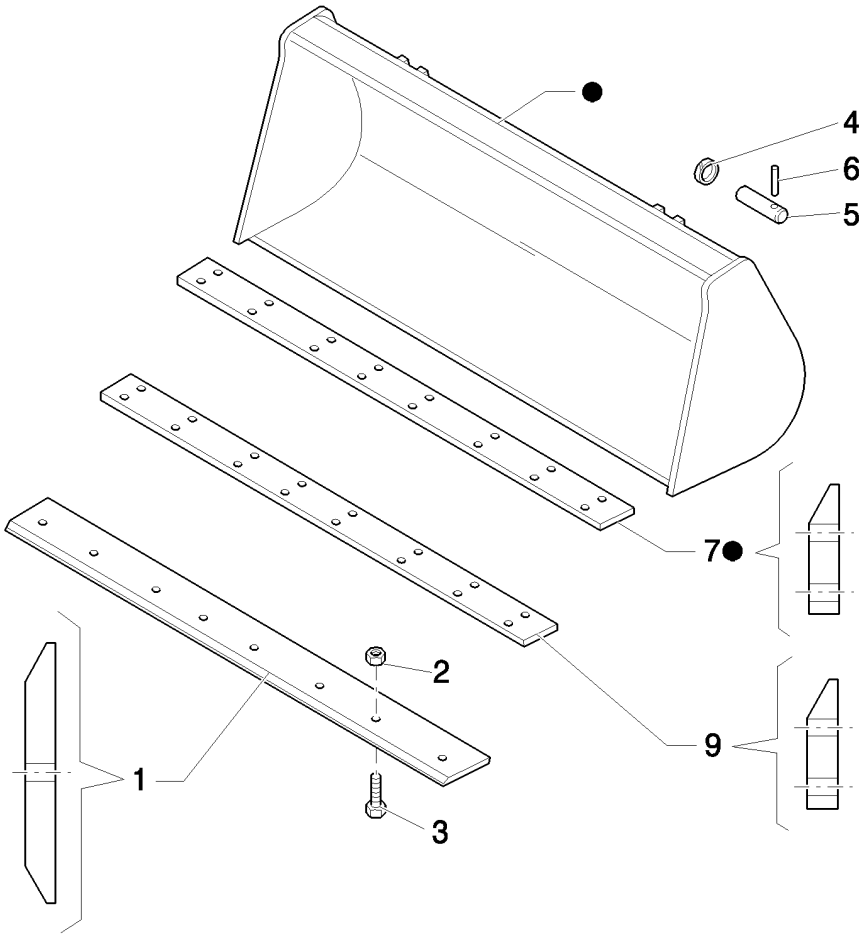

CUCHARON ESTANDAR DE (1 M³) CON CUCHILLA REV. SUPLEMEN.

REF	FN	PART NUMBER	YR/SN	QTY	DENOMINACION
1	1	85801161		1	CUCHILLA DE ATAQUE, 35 Deg. cutting edge
2		85801470		8	TUERCA, 5/8"-11, G8
3		85801371		8	PERNO DE ARADO, 5/8"-11 x 2 1/4"
4		85802992		4	ANILLO
5		85801051		4	PERNO
6		85802993		4	PERNO
7	2	85801034		1	CUCHILLA DE ATAQUE
8		85801040		1	CUCHARA, Assy
9		85807867		1	CUCHILLA DE ATAQUE, 200mm W x 2250 L

(1) Reversible bolt on
(2) PART WELDED TO BUCKET

548		p1	03/08

CUCHARA EXPURGADORA DE ZANJAS

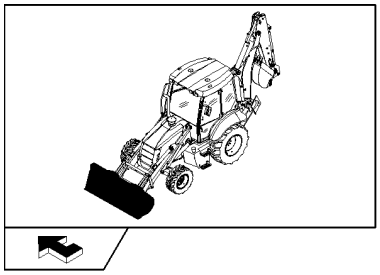

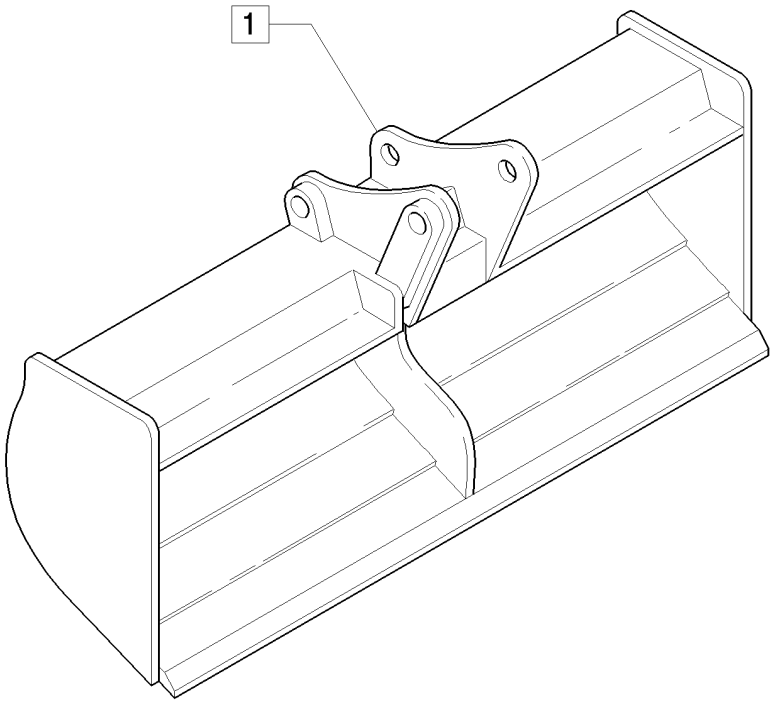

CUCHARA EXPURGADORA DE ZANJAS

REF	FN	PART NUMBER	YR/SN	QTY	DENOMINACION
1		85824356		1	CUCHARA

622		p1	04/08

VENTILADOR INTERNO - CAB

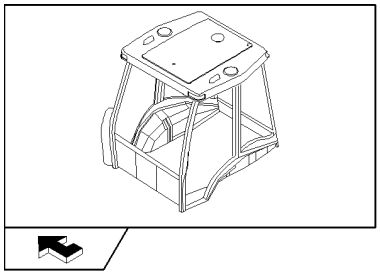

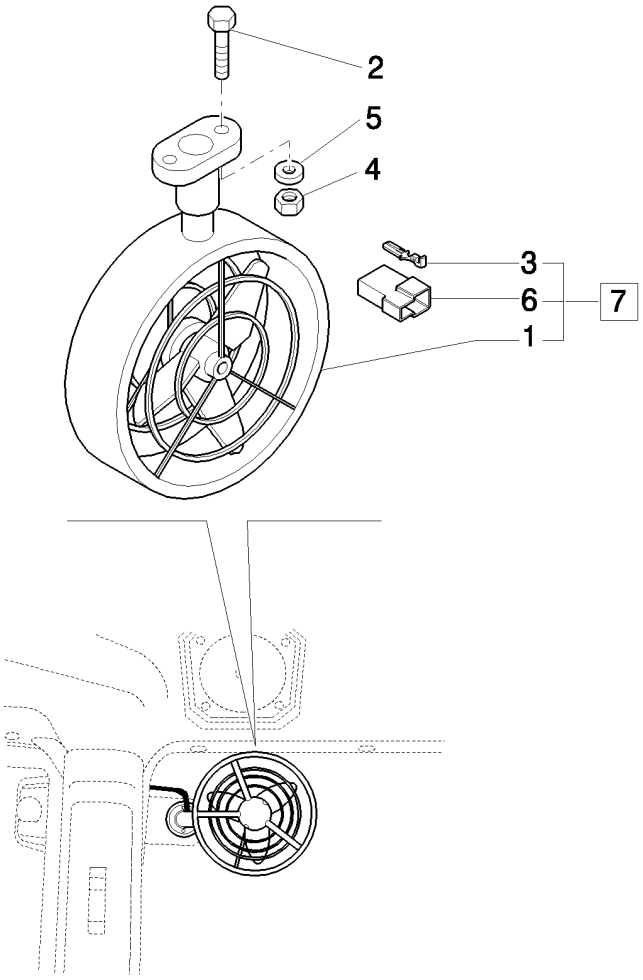

VENTILADOR INTERNO - CAB

REF	FN	PART NUMBER	YR/SN	QTY	DENOMINACION
1		85804323		1	VENTILADOR
2		14303324		2	TORNILLO, Hex Soc Hd, M4 x 20, 8.8, Full Thd
3		10250644		2	CONECTOR TERMINAL
4		12574011		2	CONTRA TUERCA, M4 x .7, Cl 8
5		12642804		2	ARANDELA, M4 x 12 x 1
6		12059980		1	CONECTOR
7		85802205		1	VENTILADOR, Assy

EQUIPAMIENTO DEL MOTOR: MOTOR DE ARRANQUE

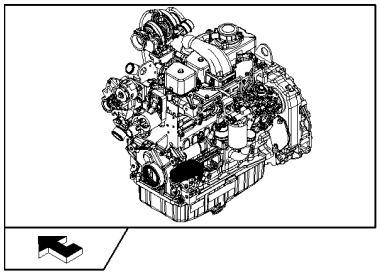

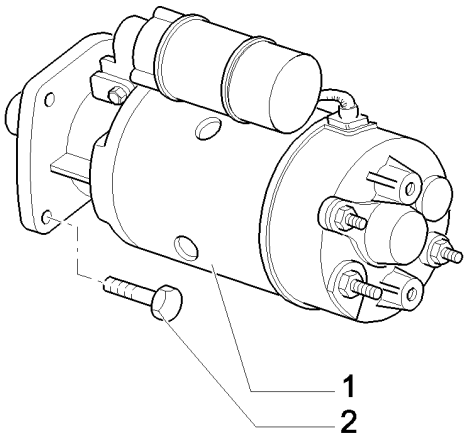

EQUIPAMIENTO DEL MOTOR: MOTOR DE ARRANQUE

REF	FN	PART NUMBER	YR/SN	QTY	DENOMINACION
1		86992395		1	MOTOR DE ARRANQUE
2		86511845		1	TORNILLO, Hex Flg, M10 x 35, 8.8

MOTOR ACOPLADO - ALTERNADOR

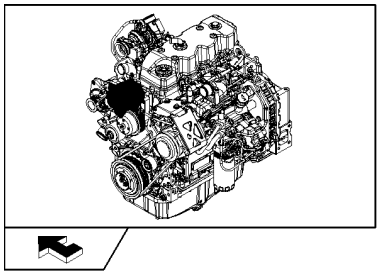

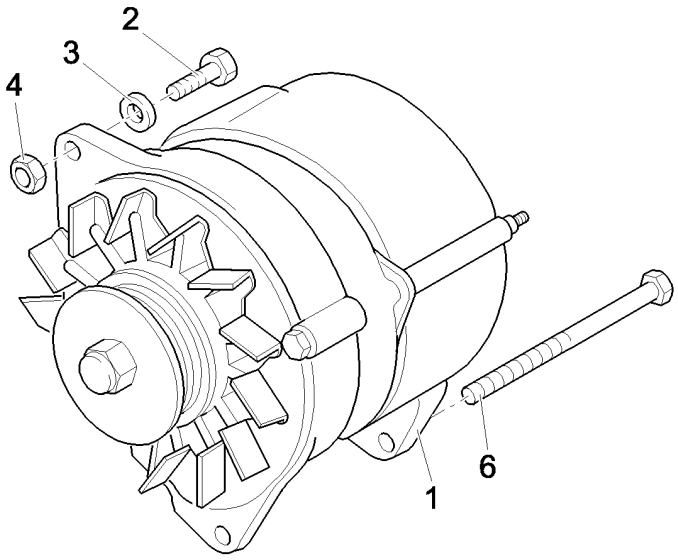

MOTOR ACOPLADO - ALTERNADOR

REF	FN	PART NUMBER	YR/SN	QTY	DENOMINACION
1		87422777		1	ALTERNADOR
2		11107421		1	TORNILLO, Hex, M10 x 60, 8.8
3		896-11010		2	ARANDELA, M10 x 21.5 x 2.5, HT
4		12577211		1	CONTRA TUERCA, M10 x 1.5, Cl 8
5		827-10130		1	TORNILLO, Hex, M10 x 130, 10.9

638	01	p1	03/08

PROTECCIONES DEL RADIADOR

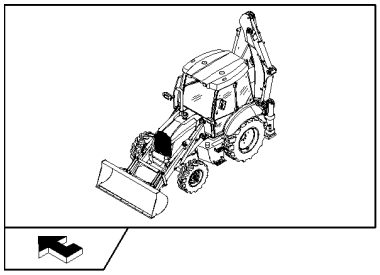

PROTECCIONES DEL RADIADOR

REF	FN	PART NUMBER	YR/SN	QTY	DENOMINACION
1		47049163		4	TORNILLO
2		87440497		2	TAPADERA
3		87624746		1	ANILLO DE CIERRE
4		87440498		6	PLACA DE SUJECION
5		85827830		1	JUNTA DE CAUCHO
6		85827831		1	PLACA
7		11193879		2	ARANDELA ABANICO, Belleville, M8.4
8		87302508		4	MANGA FLEXIBLE
9		87314076		8	ABRAZADERA
10		47042260		4	TUERCA
11		87440499		2	PLACA DE SUJECION
12		47048962		8	ARANDELA
13		12646901		4	ARANDELA, 12x28x3
14		11112421		4	TORNILLO, Hex, M12 x 30, 8.8
15		16043821		2	TORNILLO, Hex, M8 x 30, 8.8
16		87673338		1	PIEZA DE SOPORTE
17		87673339		1	PIEZA DE SOPORTE

Without Air Conditioner

638	02	p1	03/08

RADIADOR DEL AGUA, ACEITE HIDRÁULICO Y TRANSMISIÓN

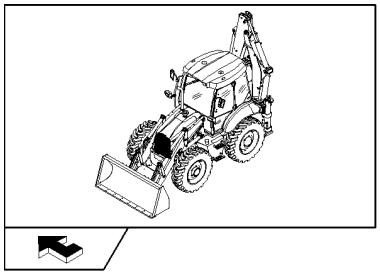

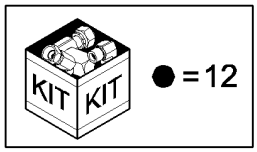

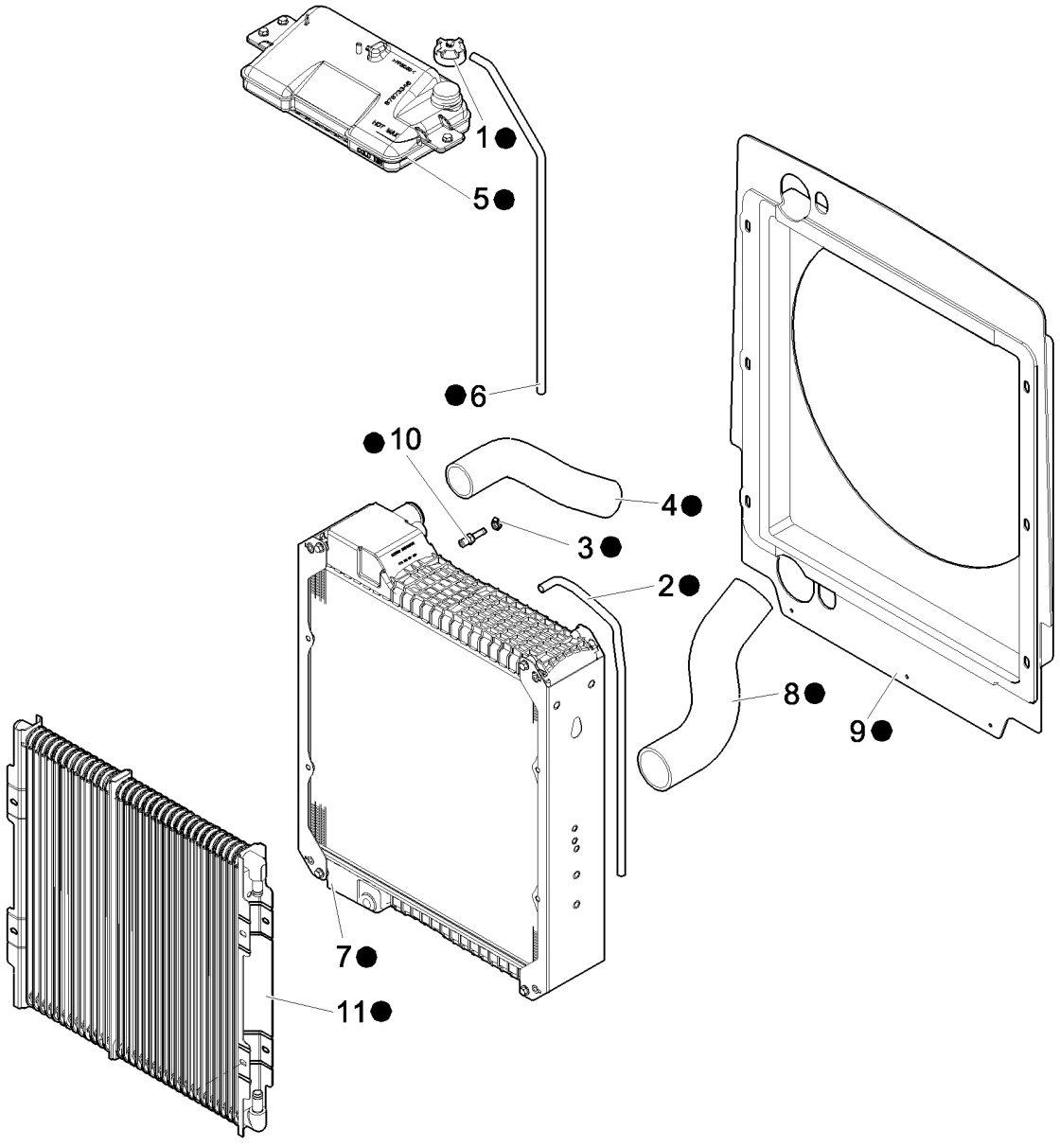



RADIADOR DEL AGUA, ACEITE HIDRÁULICO Y TRANSMISIÓN

REF	FN	PART NUMBER	YR/SN	QTY	DENOMINACION
1		87673335		1	TAPON DEL DEPOSITO
2		87673347		1	MANGA
3		87673334		1	EQUIPO
4		87528978		1	MANGA
5		87673346		1	TAZA
6		87675597		1	MANGA
7	1	87310155		1	RADIADOR
8		87407272		1	MANGA
9		87683149		1	BOQUILLA
10		87016893		1	CONEXION, 1/4" Hose X 1/4" NPTF Beaded
11	2	87410099		1	RADIADOR ACEITE
12		87670081		1	RADIADOR

(1) Water
(2) Oil Cooler

Without Air Conditioner

B95B

638	03	p1	03/08

TUBOS DE REFRIGERACIÓN AFTER-COOLER

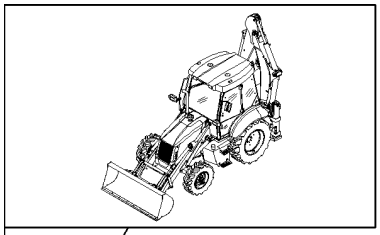

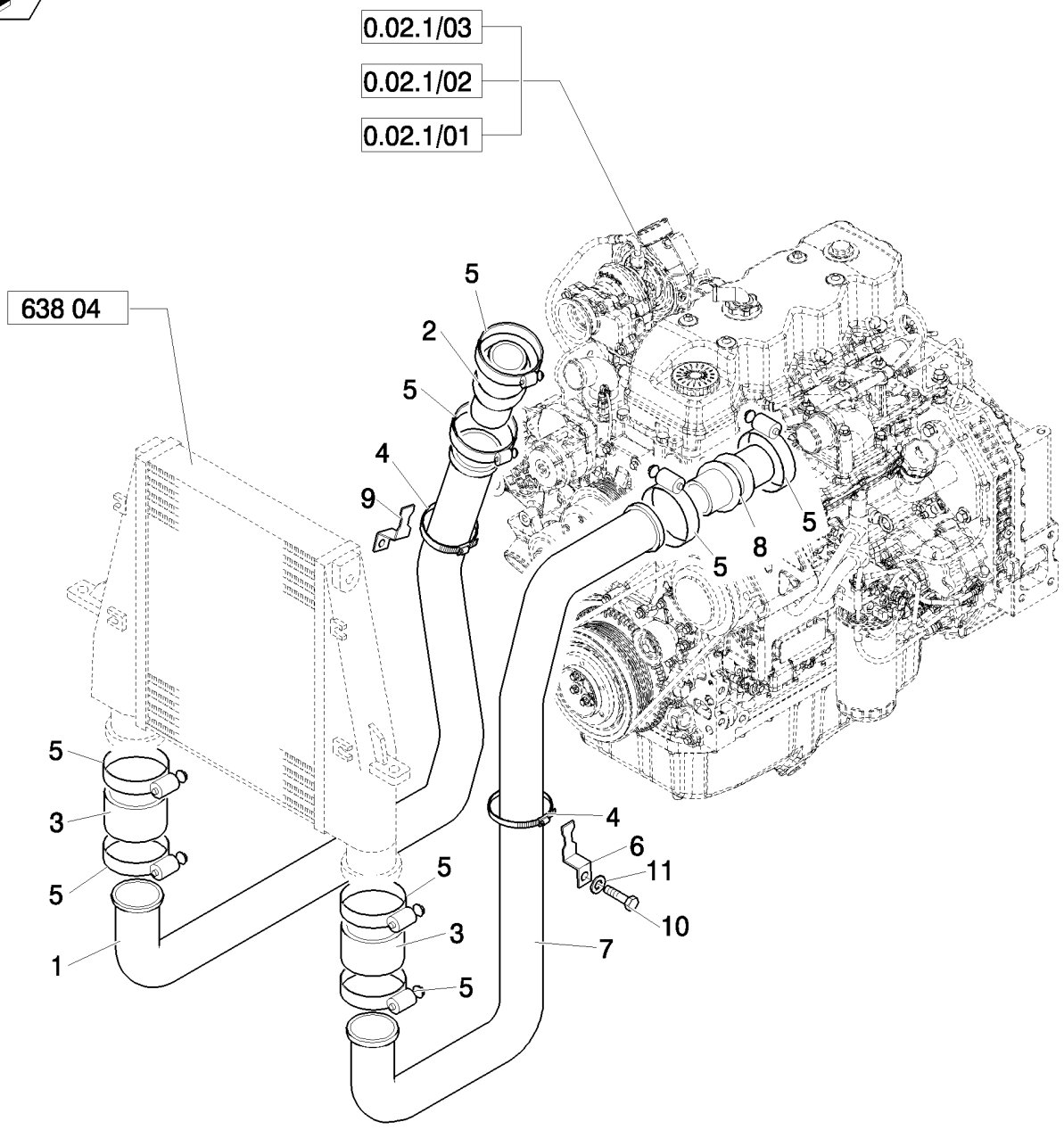

TUBOS DE REFRIGERACIÓN AFTER-COOLER

REF	FN	PART NUMBER	YR/SN	QTY	DENOMINACION
1		87548192		1	TUBO
2		86994498		1	MANGA, M10X40
3		86982960		2	MANGA
4		86624194		4	ABRAZADERA MANGUERA, #36, 1.81/2.75 Type F Worm, M10X35
5		87410724		8	BORNE
6		87561489		1	PIEZA DE SOPORTE
7		87554030		1	TUBO
8		86982962		1	MANGA
9		86983163		1	PIEZA DE SOPORTE
10		47042342		2	TORNILLO
11		47048992		2	ARANDELA

638	04	p1	03/08

RADIADOR: POSENFRIADOR

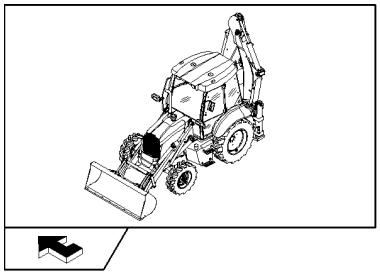

RADIADOR: POSENFRIADOR

REF	FN	PART NUMBER	YR/SN	QTY	DENOMINACION
1		87573731		1	ENFRIADOR
2		47048972		2	ARANDELA
3		11106021		2	TORNILLO, Hex, M10 x 20, 8.8, Full Thd
4		87559628		1	PIEZA DE SOPORTE
5		87559274		1	PIEZA DE SOPORTE
6		47048440		6	ARANDELA
7		47049187		2	TORNILLO, M10x35
8		47048759		2	PASACABLES
9		47049041		2	TUERCA
10		47049088		2	TORNILLO, M10x50
11		47048963		4	ARANDELA, 11x20x2.0mm
12		47048668		2	JUNTA HERMETICA
13		87404427		2	PIEZA DE SOPORTE
14		85826361		2	TORNILLO
15		47048963		4	ARANDELA
16		87570398		1	PIEZA DE SOPORTE
17		87570395		1	PIEZA DE SOPORTE

638	05	p1	03/08

EQUIPAMIENTO DEL MOTOR: SOPORTES

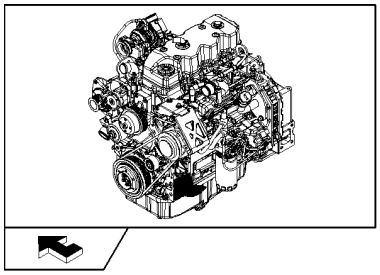

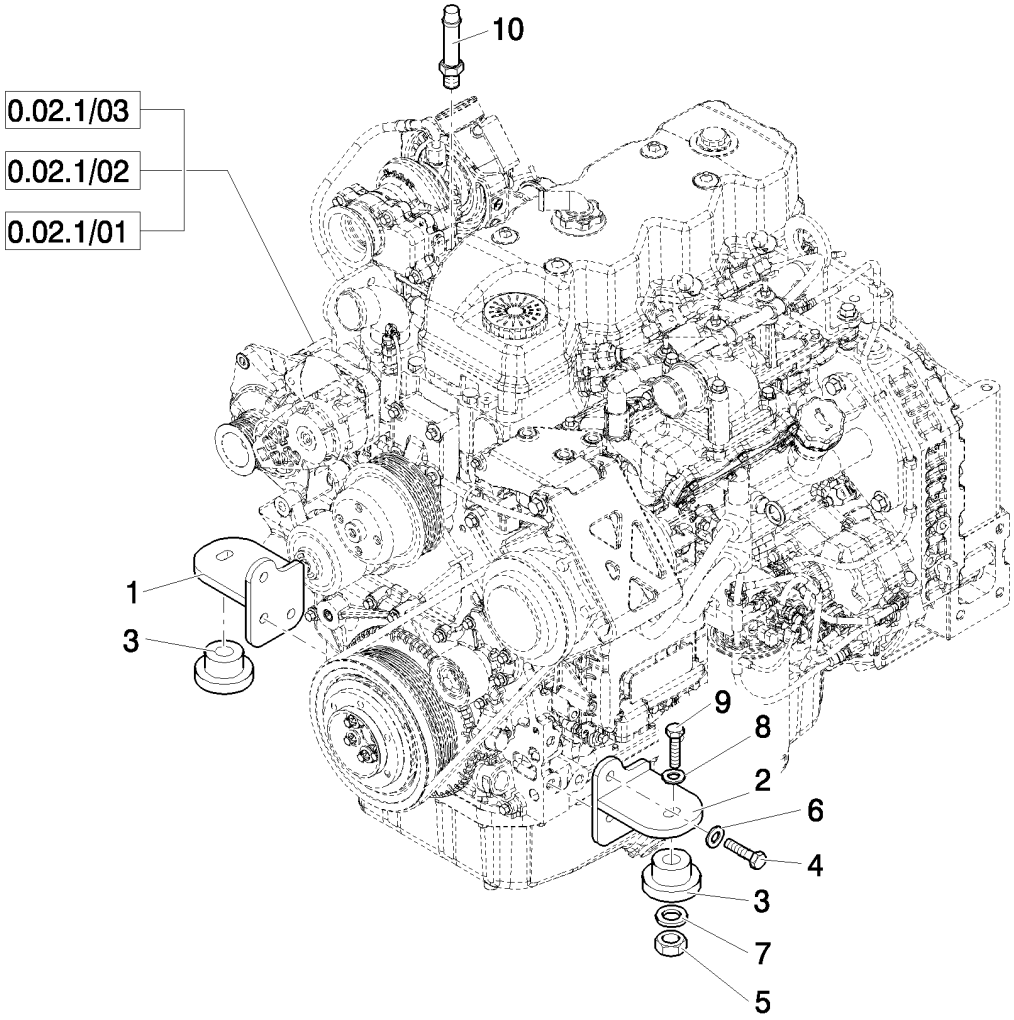

EQUIPAMIENTO DEL MOTOR: SOPORTES

REF	FN	PART NUMBER	YR/SN	QTY	DENOMINACION
1		87407275		1	SOPORTE MOTOR
2		87368320		1	SOPORTE MOTOR
3		87416966		2	AISLADOR
4		11112421		6	TORNILLO, Hex, M12 x 30, 8.8
5		16105011		2	CONTRA TUERCA, M12x1.25
6		47048976		6	ARANDELA, M12
7		85801585		2	JUNTA HERMETICA, 65mm OD
8		85802618		2	JUNTA HERMETICA
9		87410647		2	TORNILLO, M12x1.25x90
10		87016893		1	CONEXION, 1/4" Hose X 1/4" NPTF Beaded

EQUIPO MOTOR: ROTOR CON JUNTA VISCOSA: EU

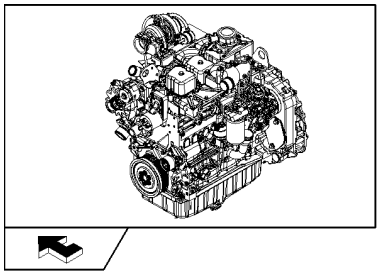

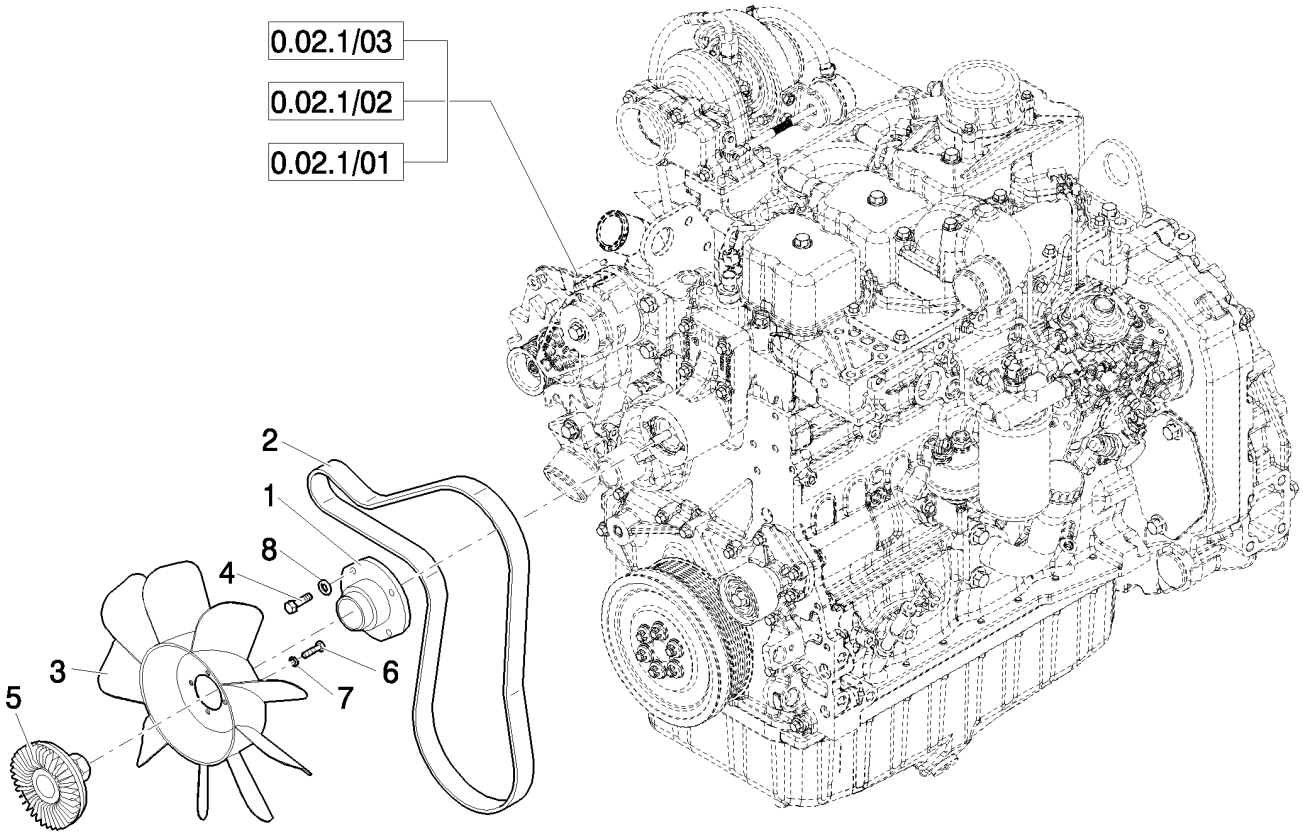

EQUIPO MOTOR: ROTOR CON JUNTA VISCOSA: EU

REF	FN	PART NUMBER	YR/SN	QTY	DENOMINACION
1		47049809		1	ADAPTOR
2		87415774		1	CORREA
3		47049943		1	VENTILADOR
4		47049186		4	TORNILLO, Hex, M10 x 30, 8.8
5		87340008		1	MANDO
6		16043221		4	TORNILLO, Hex, M8 x 16, 8.8
7		47048992		4	ARANDELA
8		47048972		4	ARANDELA

MOTOR ACOPLADO - ARRANCADOR

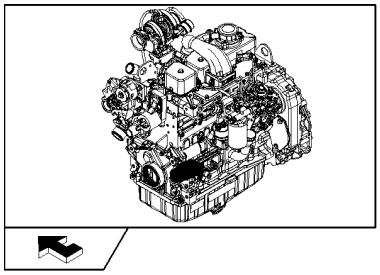

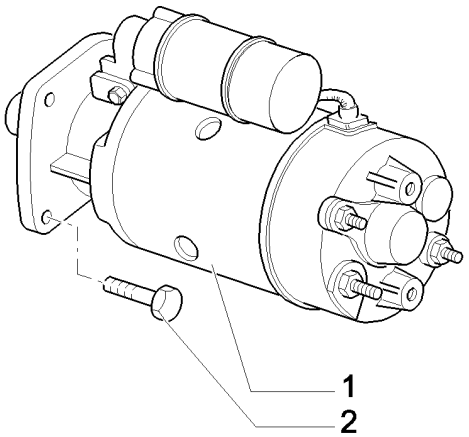

MOTOR ACOPLADO - ARRANCADOR

REF	FN	PART NUMBER	YR/SN	QTY	DENOMINACION
1		86992395		1	MOTOR DE ARRANQUE
2		86511845		2	TORNILLO, Hex Flg, M10 x 35, 8.8, M10x35

MOTOR ACOPLADO: ALTERNADOR

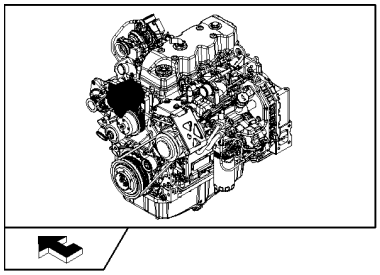

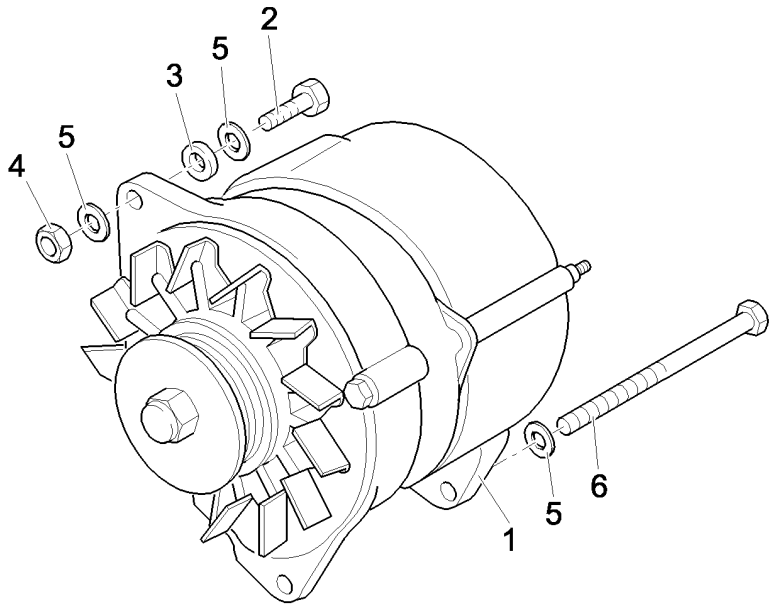

MOTOR ACOPLADO: ALTERNADOR

REF	FN	PART NUMBER	YR/SN	QTY	DENOMINACION
1		87422777		1	ALTERNADOR
2		11107421		1	TORNILLO, Hex, M10 x 60, 8.8
3		896-11010		2	ARANDELA, M10 x 21.5 x 2.5, HT
4		12577211		1	CONTRA TUERCA, M10 x 1.5, Cl 8
5		11190679		3	ARANDELA ABANICO, Belleville, M10.5
6		827-10130		1	TORNILLO, Hex, M10 x 130, 10.9

639	01	p1	03/08

PROTECCIONES DEL RADIADOR

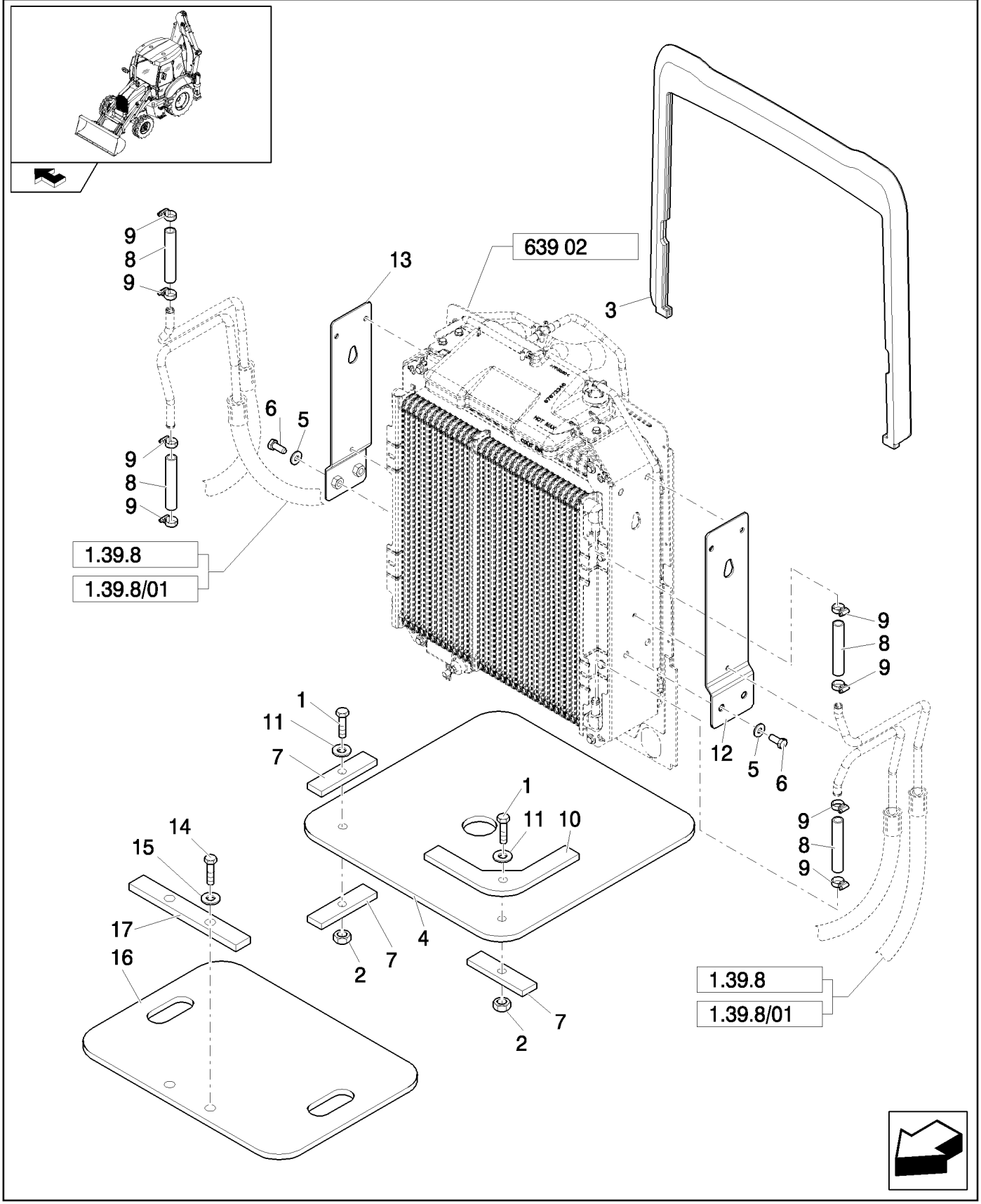

PROTECCIONES DEL RADIADOR

REF	FN	PART NUMBER	YR/SN	QTY	DENOMINACION
1		47049163		4	TORNILLO
2		47042260		4	TUERCA
3		87624746		1	ANILLO DE CIERRE
4		87440497		2	TAPADERA
5		12646901		4	ARANDELA, 12x28x3
6		11112421		4	TORNILLO, Hex, M12 x 30, 8.8
7		87440498		6	PLACA DE SUJECION
8		87302508		4	MANGA FLEXIBLE
9		87314076		8	ABRAZADERA
10		87440499		2	PLACA DE SUJECION
11		47048962		8	ARANDELA
12		87673338		1	PIEZA DE SOPORTE
13		87673339		1	PIEZA DE SOPORTE
14		16043821		2	TORNILLO, Hex, M8 x 30, 8.8
15		11193879		2	ARANDELA ABANICO, Belleville, M8.4
16		85827830		1	JUNTA DE CAUCHO
17		85827831		1	PLACA

With Air Conditioner

B95B

639	02	p1	03/08

RADIADOR DEL AGUA, ACEITE HIDRÁULICO Y TRANSMISIÓN

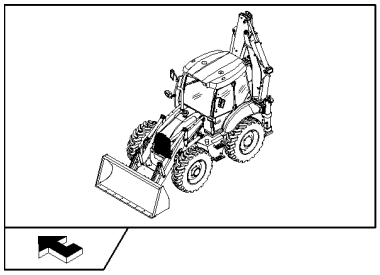

KIT KIT ● = 12

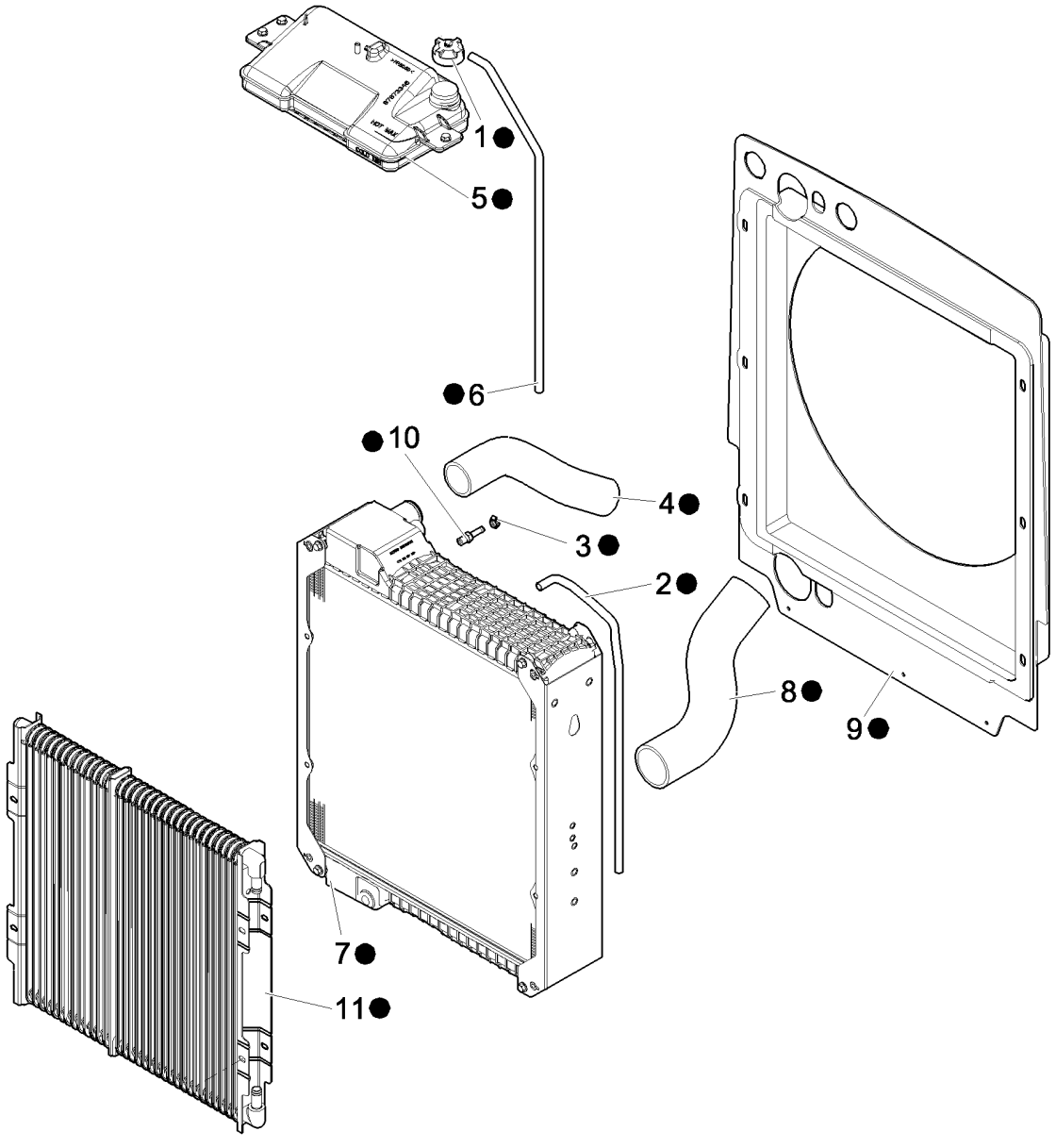

RADIADOR DEL AGUA, ACEITE HIDRÁULICO Y TRANSMISIÓN

REF	FN	PART NUMBER	YR/SN	QTY	DENOMINACION
1		87673335		1	TAPON DEL DEPOSITO
2		87673347		1	MANGA
3		87673334		1	EQUIPO
4		87528978		1	MANGA
5		87673346		1	TAZA
6		87675597		1	MANGA
7	1	87310155		1	RADIADOR
8		87407272		1	MANGA
9		87683149		1	BOQUILLA
10		87016893		1	CONEXION, 1/4" Hose X 1/4" NPTF Beaded
11	2	87410099		1	RADIADOR ACEITE
12		87670081		1	RADIADOR

(1) Water
(2) Oil Cooler

With Air Conditioner

639	03	p1	03/08

TUBOS DE REFRIGERACIÓN AFTER-COOLER

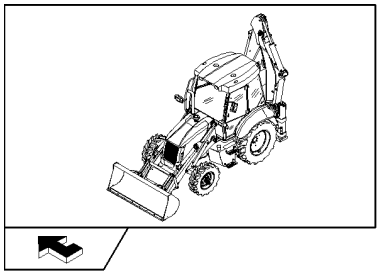

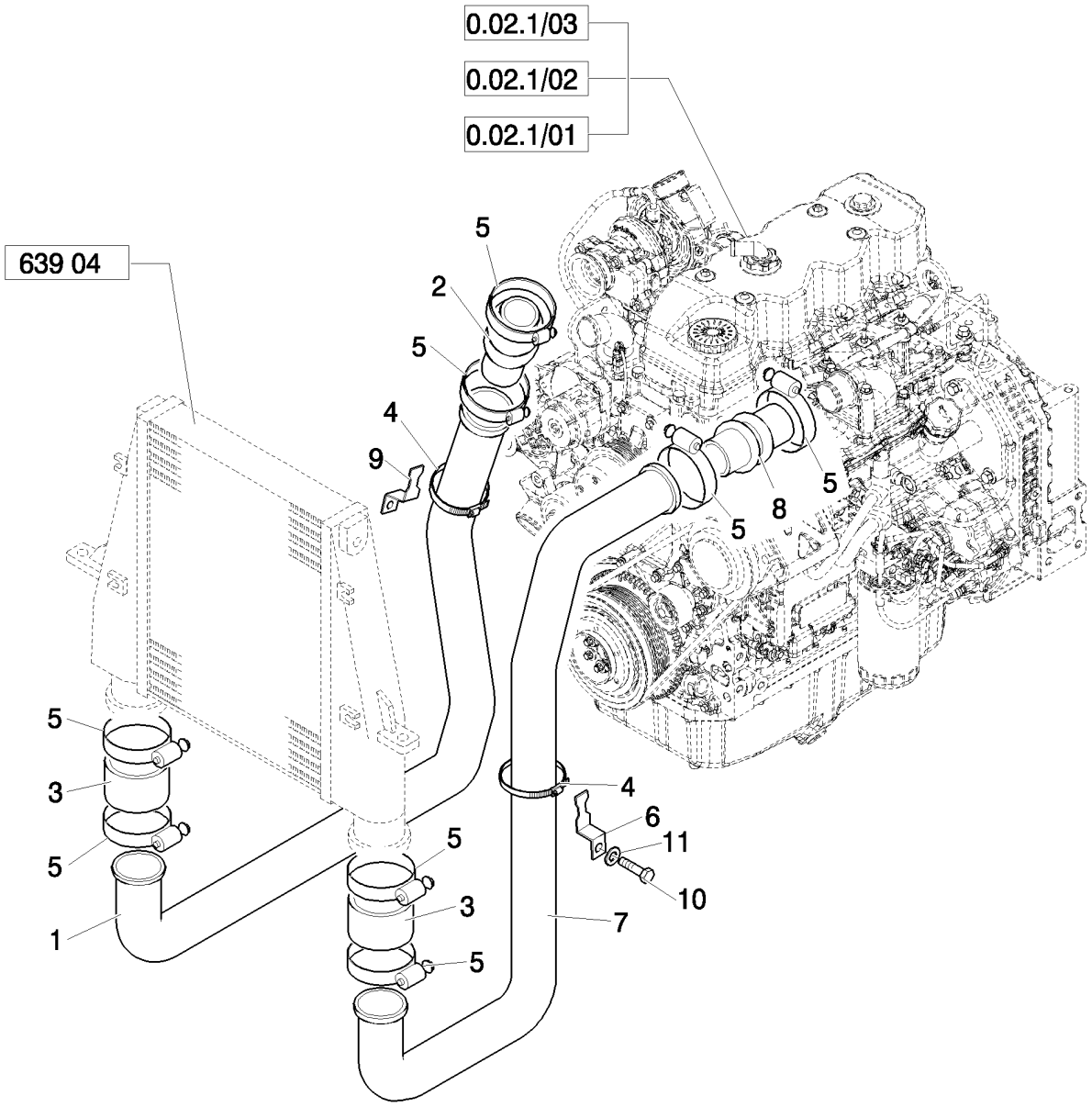

TUBOS DE REFRIGERACIÓN AFTER-COOLER

REF	FN	PART NUMBER	YR/SN	QTY	DENOMINACION
1		87548192		1	TUBO
2		86994498		1	MANGA, M10X40
3		86982960		2	MANGA
4		86624194		4	ABRAZADERA MANGUERA, #36, 1.81/2.75 Type F Worm, M10X35
5		87410724		8	BORNE
6		87561489		1	PIEZA DE SOPORTE
7		87554030		1	TUBO
8		86982962		1	MANGA
9		86983163		1	PIEZA DE SOPORTE
10		47042342		2	TORNILLO
11		47048992		2	ARANDELA

639	04	p1	03/08

RADIADOR: POSENFRIADOR

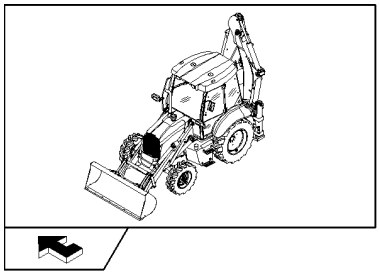

RADIADOR: POSENFRIADOR

REF	FN	PART NUMBER	YR/SN	QTY	DENOMINACION
1		87573731		1	ENFRIADOR
2		47048972		2	ARANDELA
3		11106021		2	TORNILLO, Hex, M10 x 20, 8.8, Full Thd
4		87559628		1	PIEZA DE SOPORTE
5		87559274		1	PIEZA DE SOPORTE
6		47048440		6	ARANDELA
7		47049187		2	TORNILLO, M10x35
8		47048759		2	PASACABLES
9		47048646		2	SEPARADOR
10		47049088		2	TORNILLO, M10x50
11		47048963		4	ARANDELA, 11x20x2.0mm
12		47048668		2	JUNTA HERMETICA
13		87404427		2	PIEZA DE SOPORTE
14		47049041		2	TUERCA
15		85826361		2	TORNILLO

EQUIPAMIENTO DEL MOTOR: SOPORTES

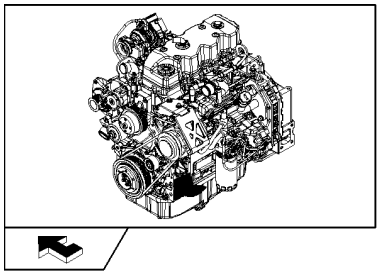

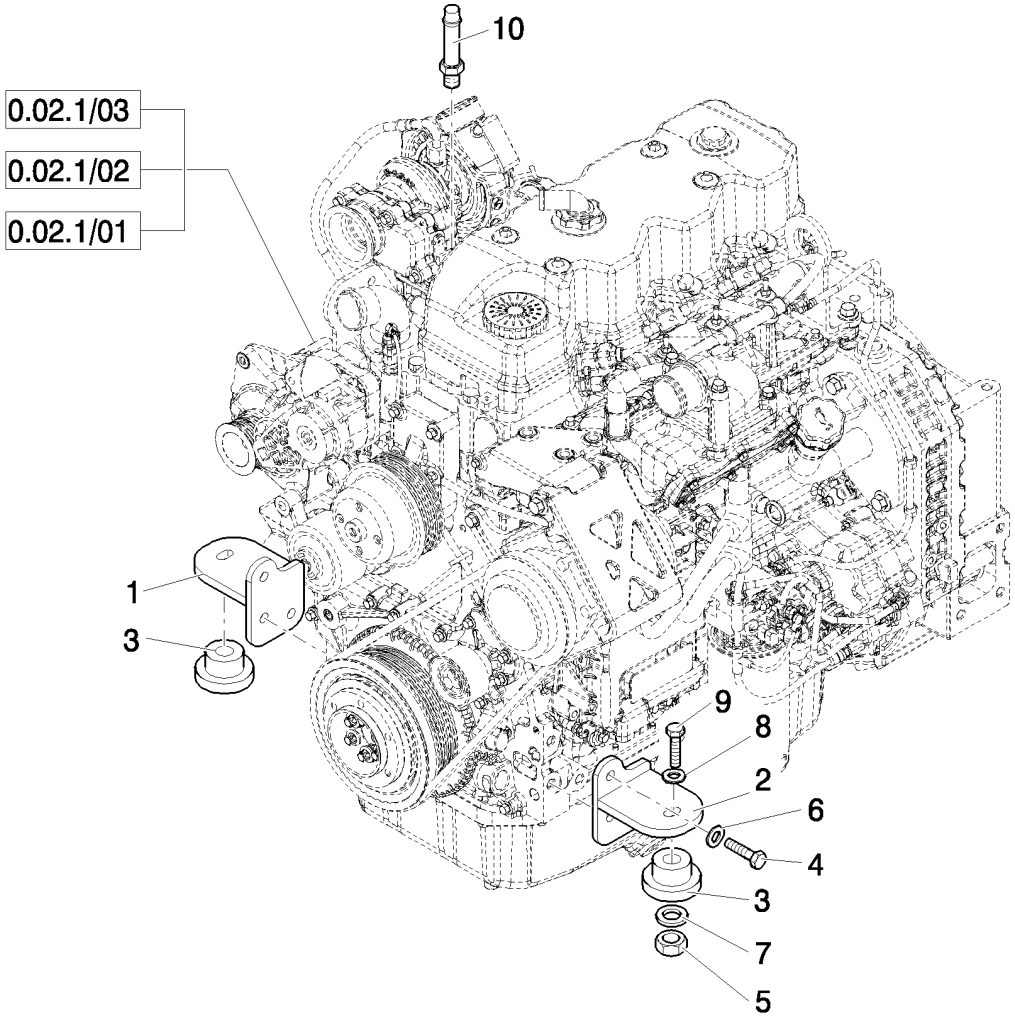

EQUIPAMIENTO DEL MOTOR: SOPORTES

REF	FN	PART NUMBER	YR/SN	QTY	DENOMINACION
1		87407275		1	SOPORTE MOTOR
2		87368320		1	SOPORTE MOTOR
3		87416966		2	AISLADOR
4		11112421		6	TORNILLO, Hex, M12 x 30, 8.8
5		16105011		2	CONTRA TUERCA, M12x1.25
6		47048976		6	ARANDELA, M12
7		85801585		2	JUNTA HERMETICA, 65mm OD
8		85802618		2	JUNTA HERMETICA
9		87410647		2	TORNILLO, M12x1.25x90
10		87016893		1	CONEXION, 1/4" Hose X 1/4" NPTF Beaded

639	06	p1	03/08

EQUIPO MOTOR: ROTOR CON JUNTA VISCOSA

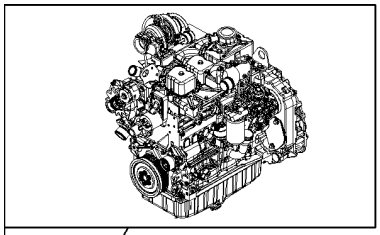

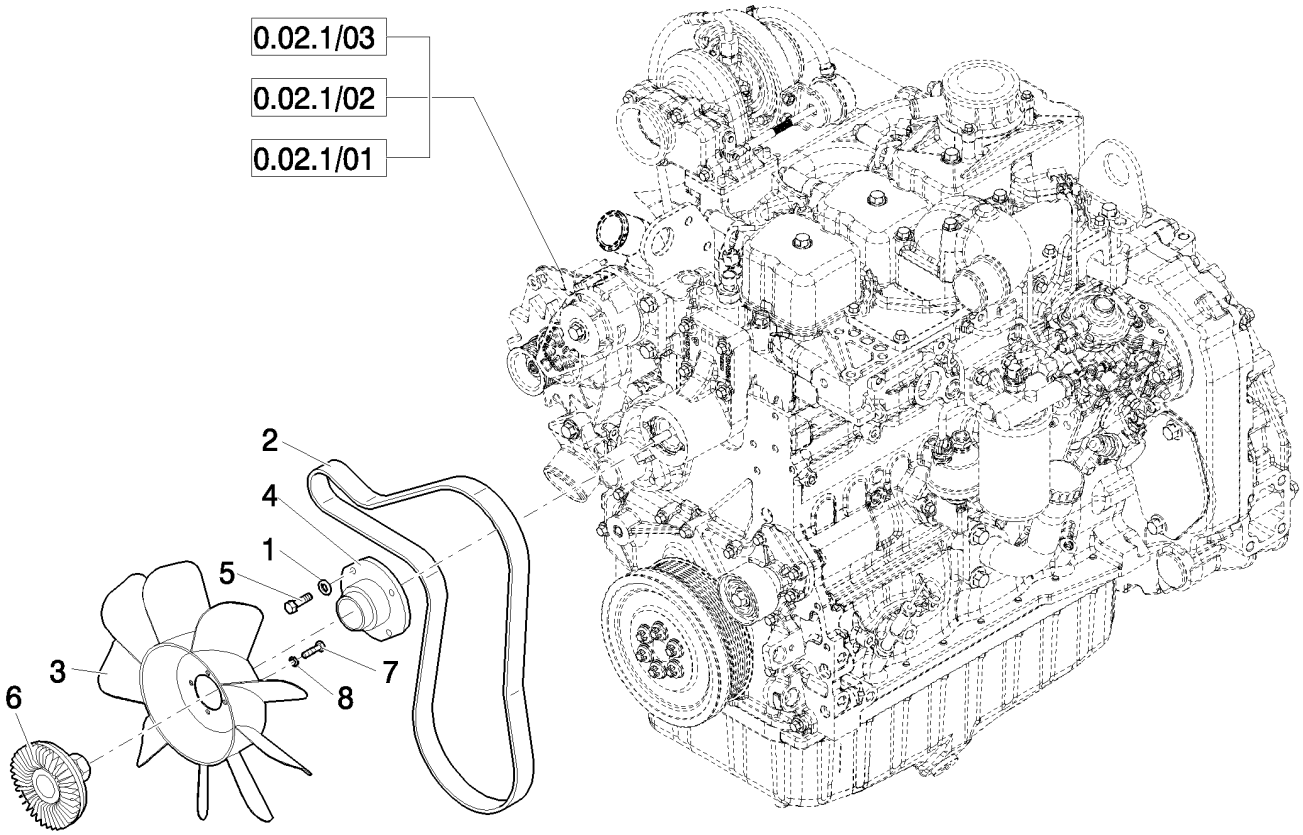

EQUIPO MOTOR: ROTOR CON JUNTA VISCOSA

REF	FN	PART NUMBER	YR/SN	QTY	DENOMINACION
1		47048972		4	ARANDELA
2		87415774		1	CORREA
3		47049943		1	VENTILADOR
4		47049809		1	ADAPTOR
5		47049186		4	TORNILLO, Hex, M10 x 30, 8.8
6		87340008		1	MANDO
7		16043221		4	TORNILLO, Hex, M8 x 16, 8.8
8		47048992		4	ARANDELA

EQUIPAMIENTO DEL MOTOR: MOTOR DE ARRANQUE

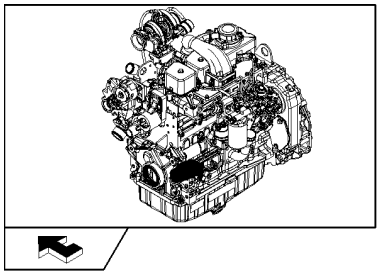

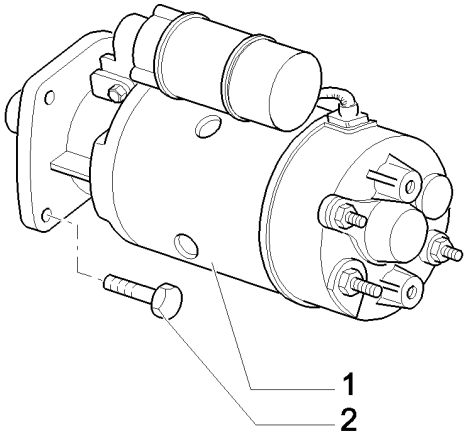

EQUIPAMIENTO DEL MOTOR: MOTOR DE ARRANQUE

REF	FN	PART NUMBER	YR/SN	QTY	DENOMINACION
1		86992395		1	MOTOR DE ARRANQUE
2		86511845		2	TORNILLO, Hex Flg, M10 x 35, 8.8, M10x35

MOTOR ACOPLADO

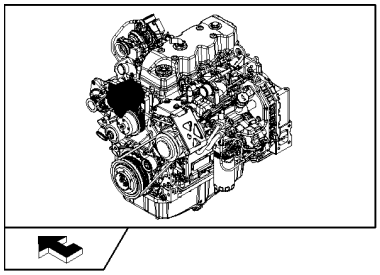

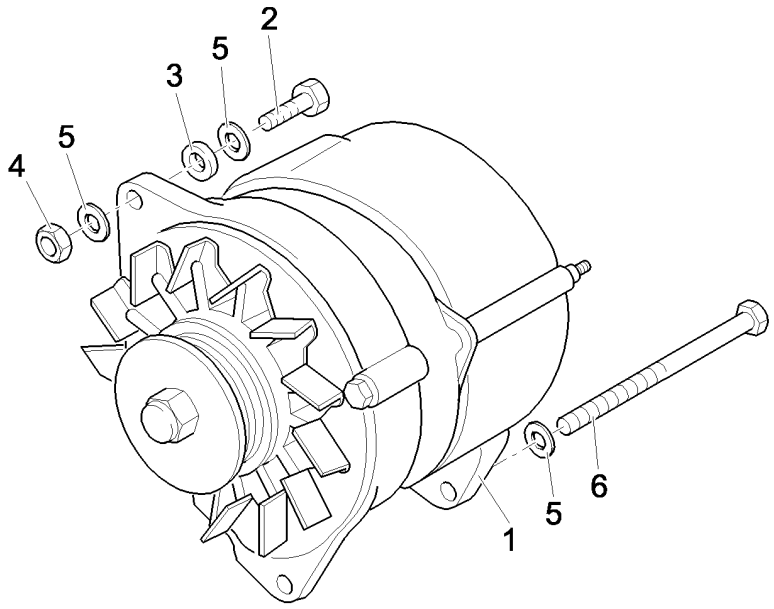

MOTOR ACOPLADO

REF	FN	PART NUMBER	YR/SN	QTY	DENOMINACION
1		87422777		1	ALTERNADOR
2		11107421		1	TORNILLO, Hex, M10 x 60, 8.8
3		896-11010		2	ARANDELA, M10 x 21.5 x 2.5, HT
4		12577211		1	CONTRA TUERCA, M10 x 1.5, Cl 8
5		11190679		3	ARANDELA ABANICO, Belleville, M10.5
6		827-10130		1	TORNILLO, Hex, M10 x 130, 10.9

646	01	p1	04/08

JUEGO DE PIEZAS DE AIRE ACONDICIONADO DE LA MÁQUINA

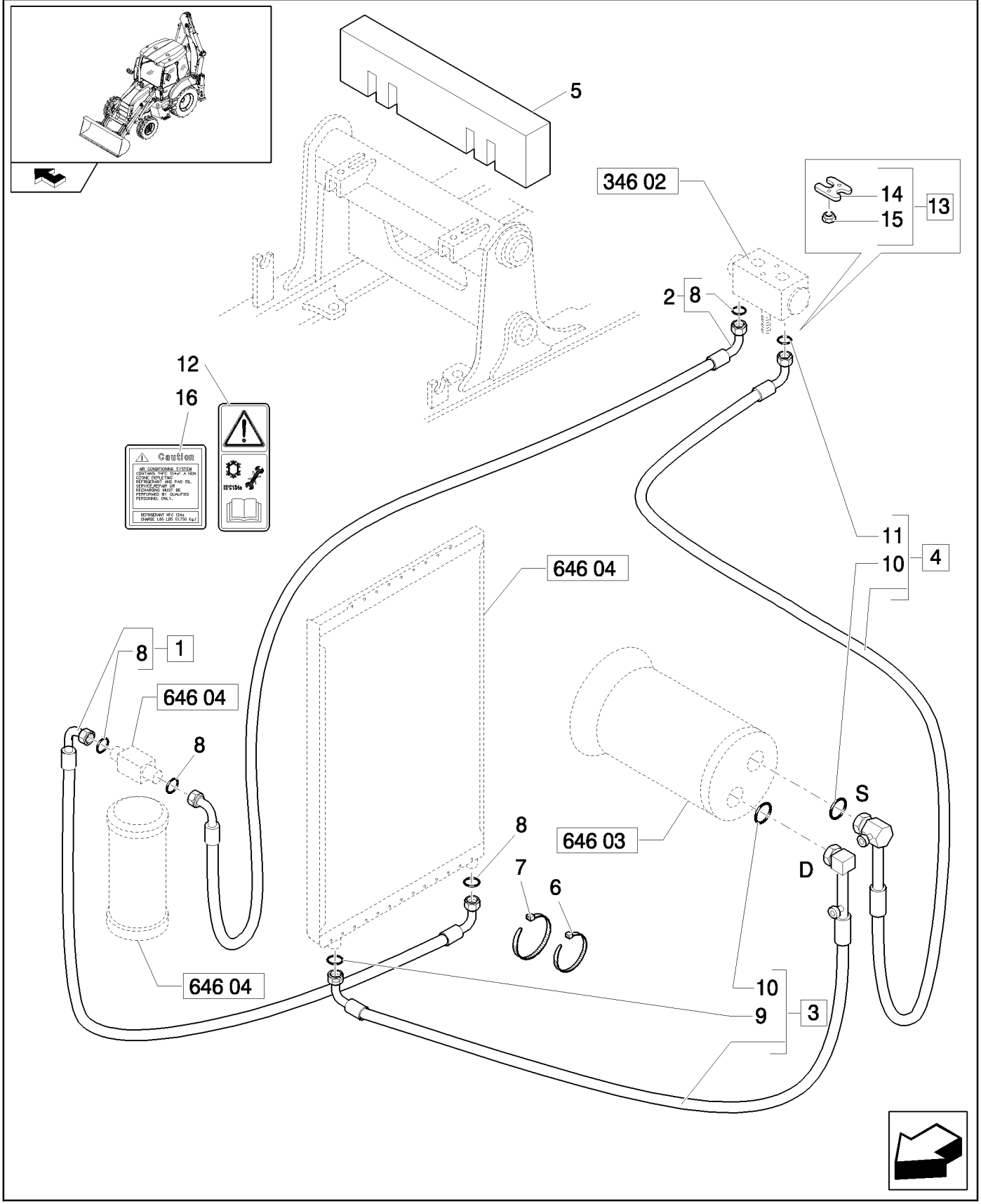

JUEGO DE PIEZAS DE AIRE ACONDICIONADO DE LA MÁQUINA

REF	FN	PART NUMBER	YR/SN	QTY	DENOMINACION
1	1	87315364		1	MANGA FLEXIBLE, Assy
2	1	87315368		1	MANGA FLEXIBLE, Assy
3	2	87565311		1	MANGA FLEXIBLE, Assy
3	2, 3	87315371		1	MANGA FLEXIBLE, Assy
4	4	87565319		1	MANGA FLEXIBLE, Assy
4	3, 4	87315381		1	MANGA FLEXIBLE, Assy
5		85817287		1	ANILLO DE CIERRE
6		14560187		2	CIERRA CABLES, 178mm lg, L=203.2 mm
7		47048451		4	CIERRA CABLES, M8 x 384
8		85805013		4	JUNTA HERMETICA
9		85805006		1	JUNTA HERMETICA
10		85817186		2	JUNTA HERMETICA
11		85805014		1	JUNTA HERMETICA
12		85804441		1	CALCOMANIA
13		85821131		1	BRIDA
14		85805008		1	BRIDA
15		14040611		1	TUERCA
16		87324469		1	CALCOMANIA

(1) Includes 8 in q.ty 2
(2) Includes 9, 10 in q.ty 1
(3) Only for B90B, B90BLR (EU) - B90B (NA)
(4) Includes 10 in q.ty 1, 11

646	02	p1	03/08

GRUPO EMPALME COMPRESOR A/A

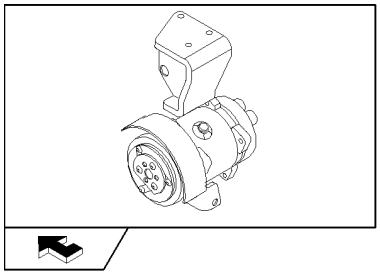

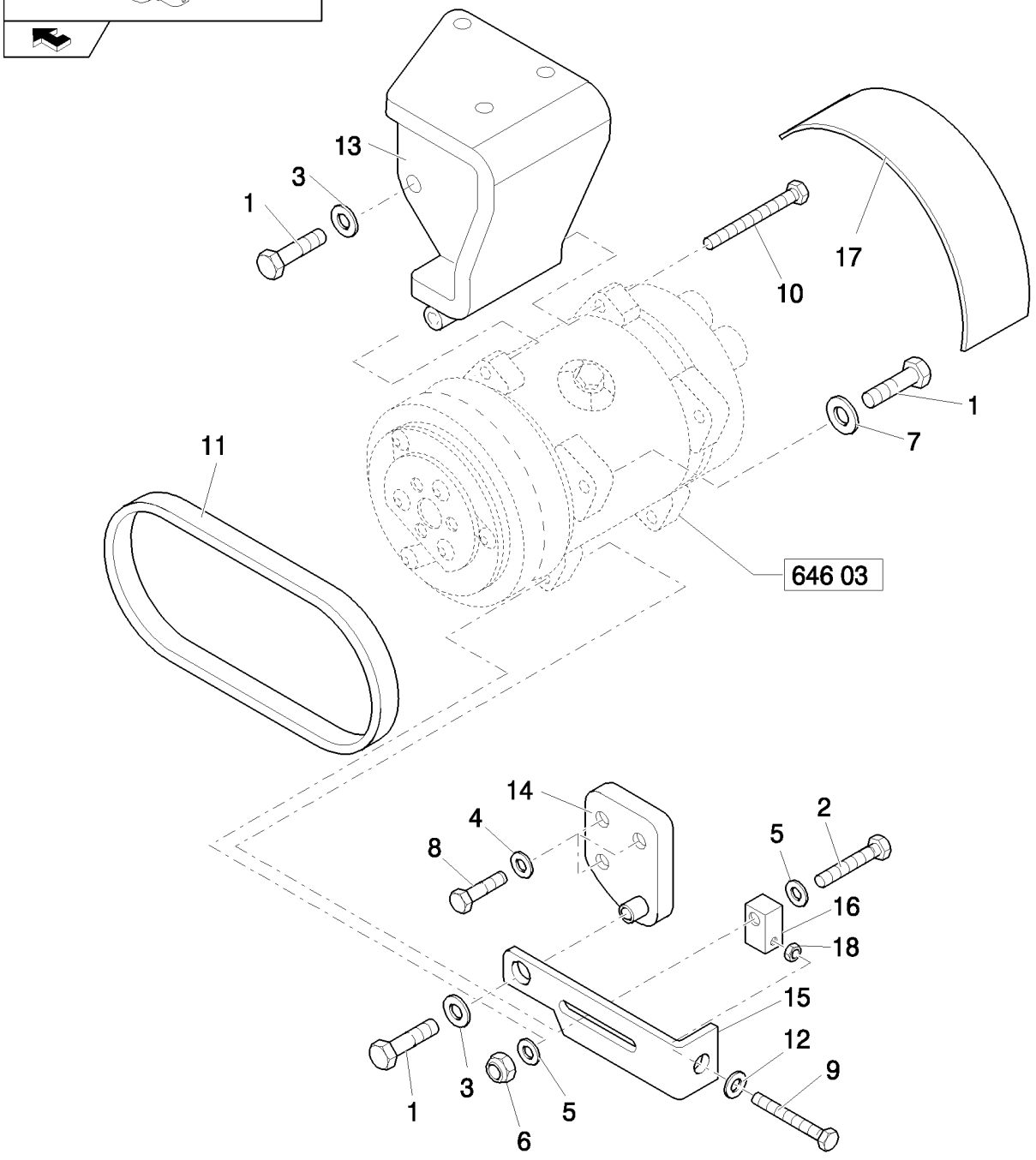

GRUPO EMPALME COMPRESOR A/A

REF	FN	PART NUMBER	YR/SN	QTY	DENOMINACION
1		11106421		3	TORNILLO, Hex, M10 x 30, 8.8
2		11107421		1	TORNILLO, Hex, M10 x 60, 8.8
3		11190574		2	ARANDELA ABANICO, Belleville, M10.5
4		11193874		3	ARANDELA ABANICO, Belleville, M8.4
5		14496601		2	ARANDELA, M10 x 20 x 2
6		12577211		1	CONTRA TUERCA, M10 x 1.5, Cl 8
7		12601474		1	ARANDELA, Wave, M10.5
8		16043621		3	TORNILLO, Hex, M8 x 25, 8.8
9		15213921		1	TORNILLO, Hex, M8 x 70, 8.8, Full Thd
10		14421621		1	TORNILLO
11		87565328		1	CORREA
11	1	87304910		1	CORREA
12		14496534		1	ARANDELA
13		87565321		1	SOPORTE
13	1	87315441		1	SOPORTE
14		87565322		1	SOPORTE
14	1	87315446		1	SOPORTE
15		87565326		1	TENSOR
15	1	87315457		1	TENSOR DE CORREA
16		87315459		1	BLOQUE MOTOR
17		87565346		1	DEFENSA
17	1	87315460		1	DEFENSA
18		16102211		1	TUERCA, M8, Cl 10

(1) Only for B90B, B90BLR (EU) - B90B (NA)

646	03	p1	03/08

COMPRESOR A/A

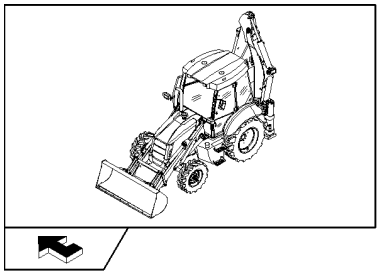

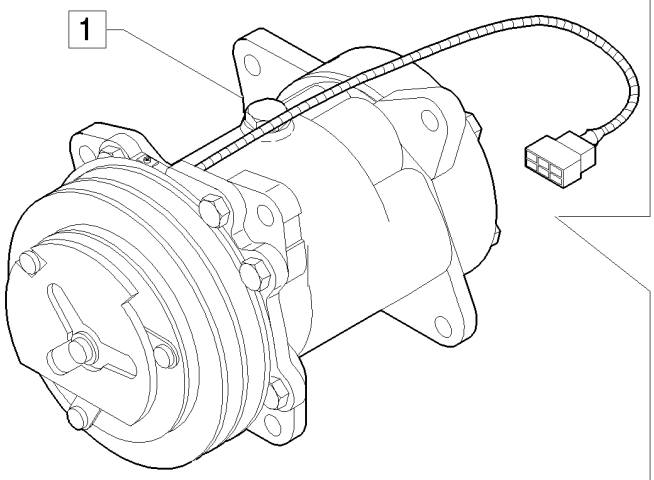

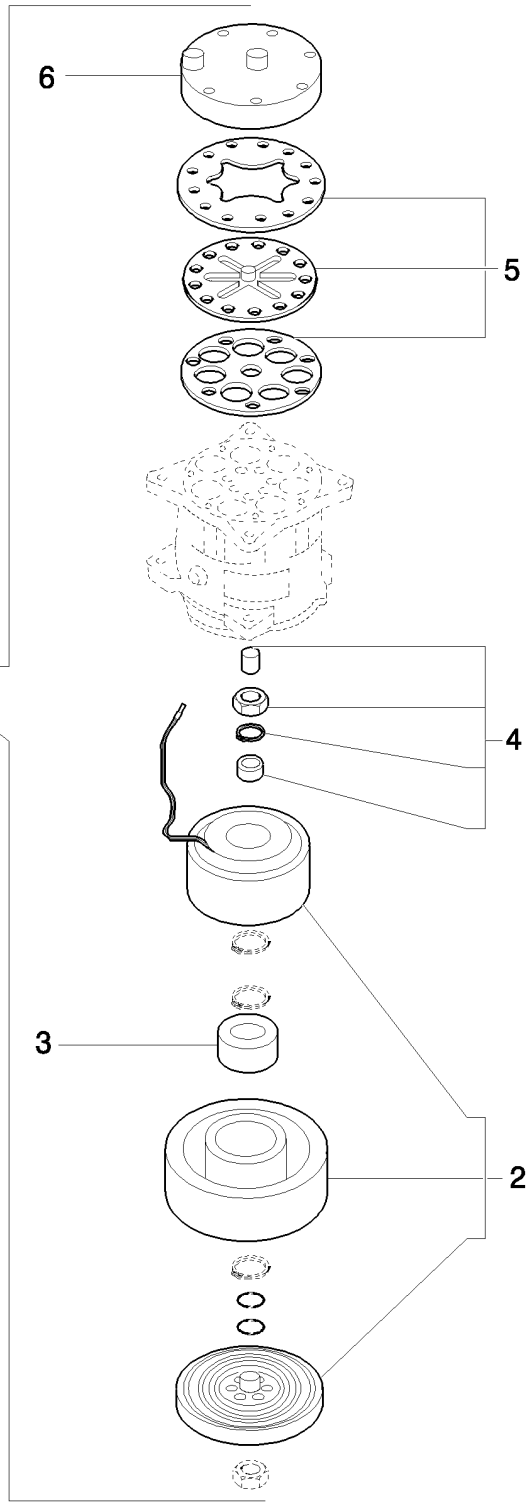

COMPRESOR A/A

REF	FN	PART NUMBER	YR/SN	QTY	DENOMINACION
1		85817170		1	COMPRESOR ACOND., (SD7H15) Assy
2		85817171		1	EQUIPO
3		85817172		3	COJINETE
4		85817173		1	EQUIPO
5		85817174		1	EQUIPO
6		85817175		1	EQUIPO

646	04	p1	04/08

GRUPO EMPALME FILTRO A/A Y CONDENSADOR

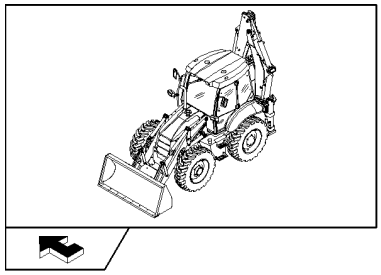

GRUPO EMPALME FILTRO A/A Y CONDENSADOR

REF	FN	PART NUMBER	YR/SN	QTY	DENOMINACION
1		14496534		4	ARANDELA
2		16043421		2	TORNILLO, Hex, M8 x 20, 8.8
3		16104111		2	CONTRA TUERCA, M8 x 1.25, Cl 8
4		87315252		1	PIEZA DE SOPORTE
5		85819184		7	TORNILLO
6		85804065		1	CONTACTOR, Assy
7		87630384		1	PIEZA DE SOPORTE
8		87646126		1	PIEZA DE SOPORTE
9		87630386		1	PIEZA DE SOPORTE, RH
10		87630383		1	PIEZA DE SOPORTE, LH
11		87315236		1	PIEZA DE SOPORTE
12		87315239		2	ABRAZADERA MANGUERA
13		87314566		1	CONDENSADOR
14		87315241		1	FILTRO, CABINA
15		16043621		4	TORNILLO, Hex, M8 x 25, 8.8
18		14040711		4	ARANDELA
16		85819185		1	JUNTA HERMETICA
17		11054990		1	FUSIBLE, 10 Amp
19		85821537		1	CONECTADOR
20		87569316		1	PROLONGACION

COLUMNA DE DIRECCIÓN, FIJA Y REGULABLE

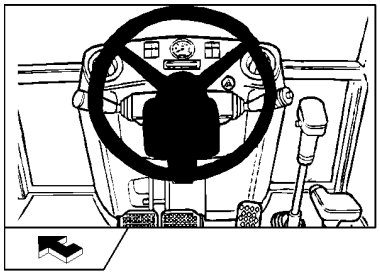

EQUIP.650

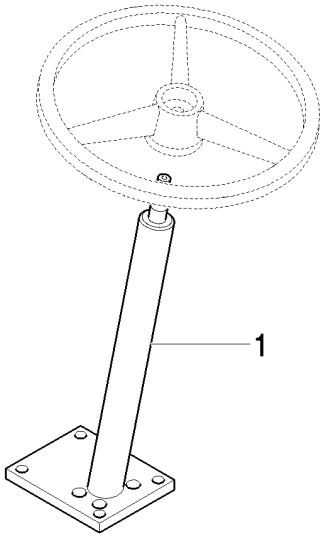

EQUIP.651

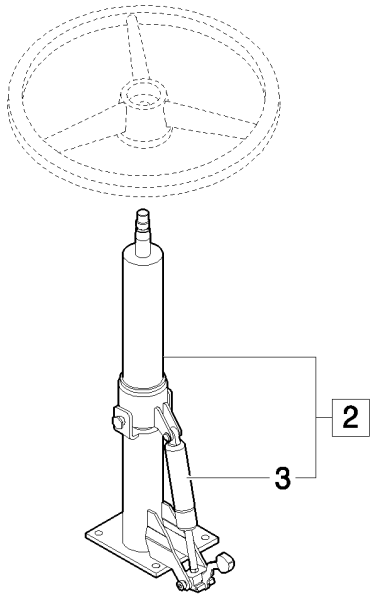

COLUMNA DE DIRECCIÓN, FIJA Y REGULABLE

REF	FN	PART NUMBER	YR/SN	QTY	DENOMINACION
1	1	87324864		1	COLUMNA DE DIRECCION
2		87560586		1	COLUMNA DE DIRECCION, Assy
3	2	87560589		1	COMPAS

(1) Only for Power Shuttle
(2) Only for B115B

698		p1	04/08

VALVULA DE CAMISA,SISTEMA HIDRÁULICO NIVELACIÓN DE LA ESTRUCTURA MÁQUINA 2 INTERRUPTOR ON/OFF

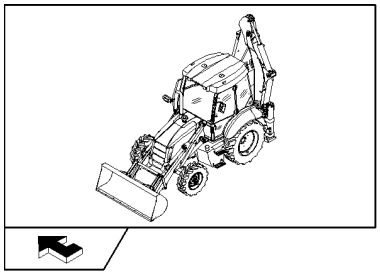

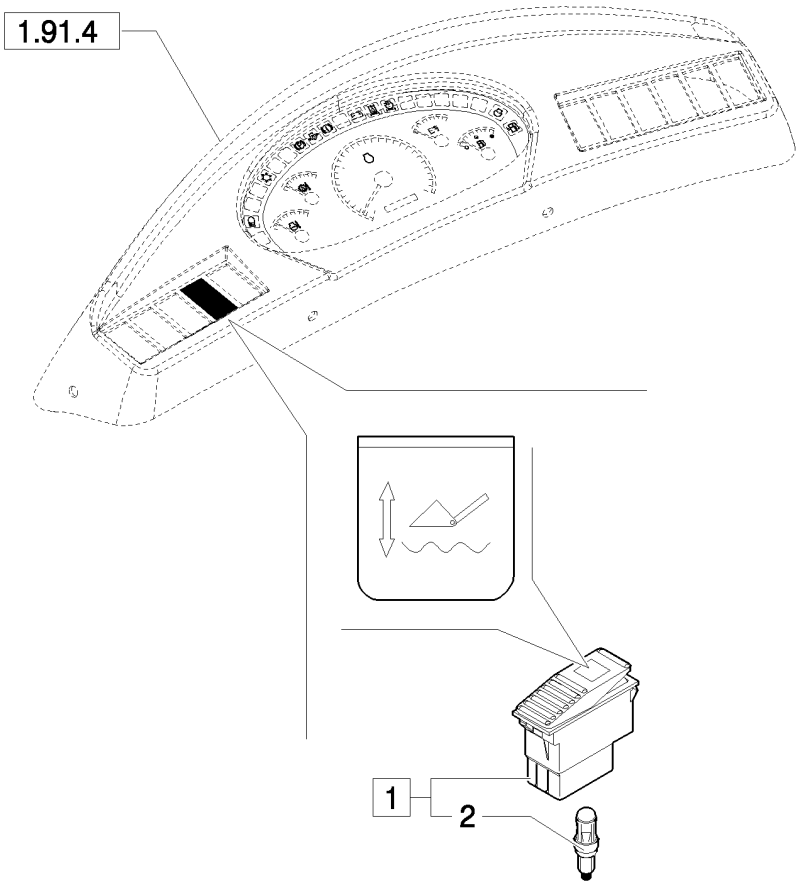

VALVULA DE CAMISA,SISTEMA HIDRÁULICO NIVELACIÓN DE LA ESTRUCTURA MÁQUINA 2 INTERRUPTOR ON/OFF

REF	FN	PART NUMBER	YR/SN	QTY	DENOMINACION
1		85817674		1	CONTACTOR, Assy
2		14143790		1	BOMBILLA

699		p1	04/08

INTERRUPTOR MARTILLO MANUAL

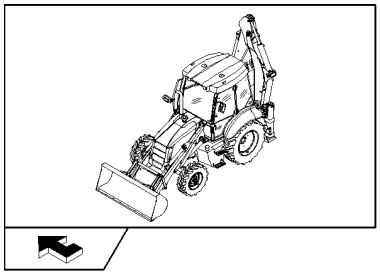

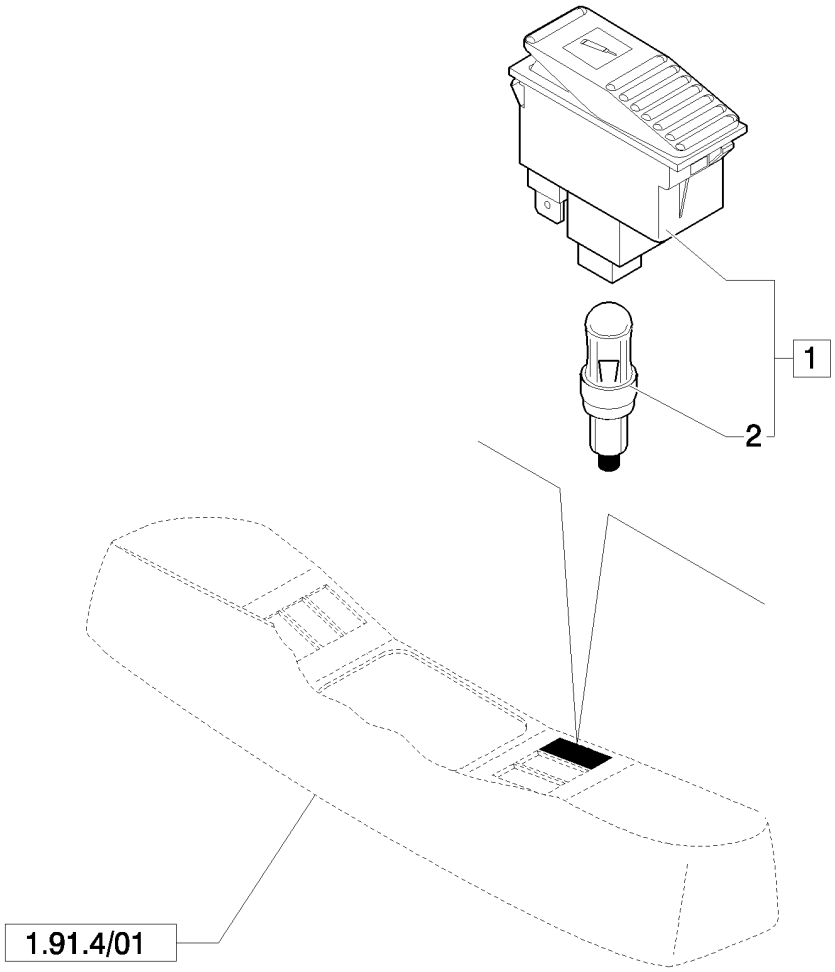

INTERRUPTOR MARTILLO MANUAL

REF	FN	PART NUMBER	YR/SN	QTY	DENOMINACION
1		85819072		1	CONTACTOR, Assy
2		14143790		1	BOMBILLA

700	01	p1	04/08

CONDUCTOS HIDRÁULICOS BRAZO CUCHARA 4X1 Y 6X1 (POWER SHIFT, POWER SHUTTLE)

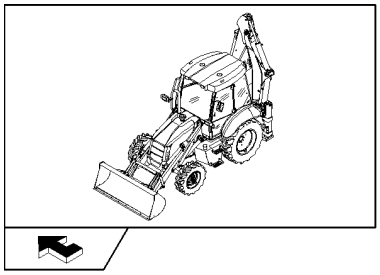

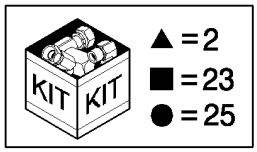

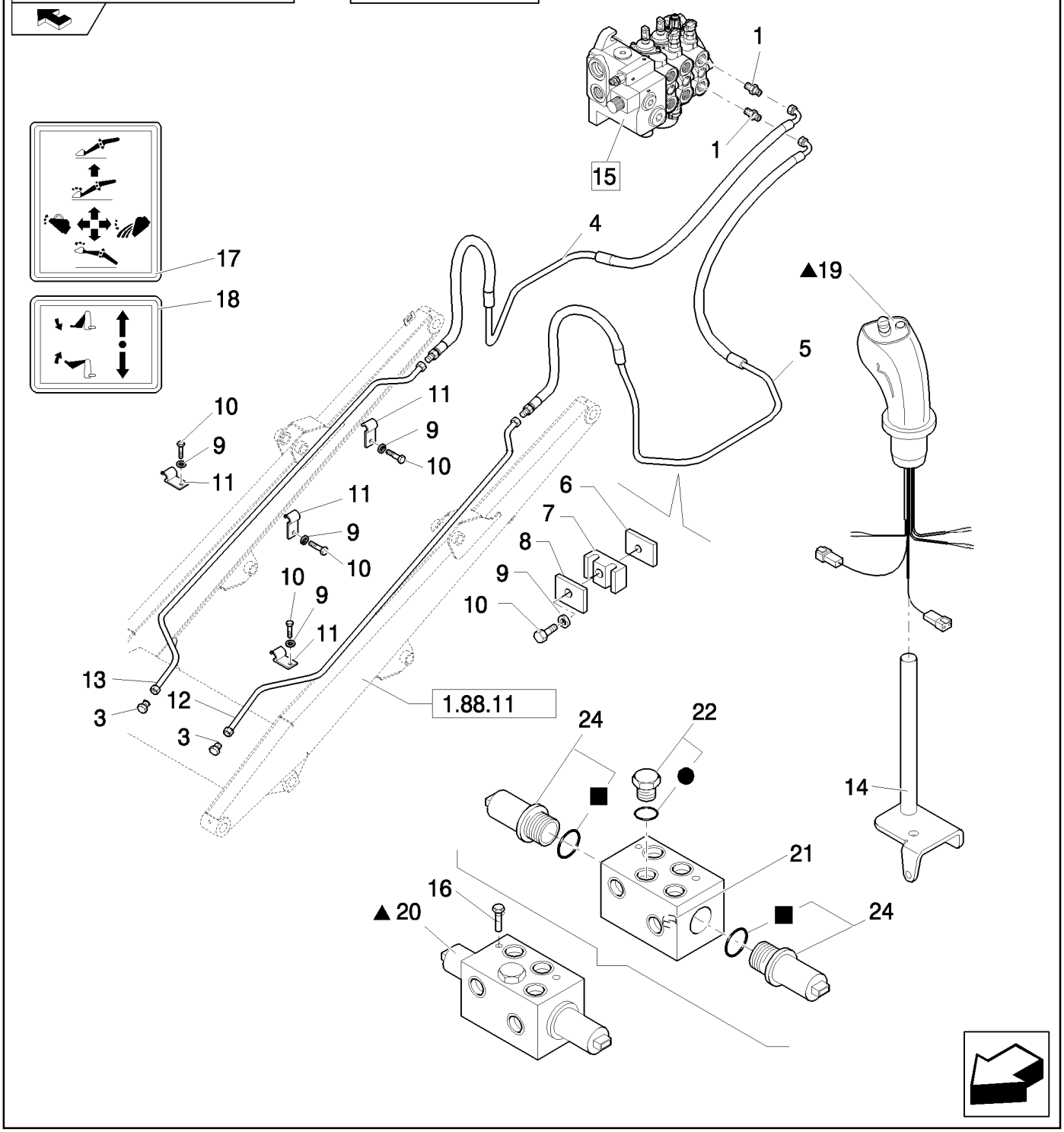

CONDUCTOS HIDRÁULICOS BRAZO CUCHARA 4X1 Y 6X1 (POWER SHIFT, POWER SHUTTLE)

REF	FN	PART NUMBER	YR/SN	QTY	DENOMINACION
1		85805258		2	RACOR, 9/16"-16 ORS x 1 1/16"-12, O-Ring
2	1	87739987		1	EQUIPO
2	2	87739988		1	EQUIPO
3		85803408		2	TAPÓN
4		85819572		1	TUBERIA HIDRAULICO
5		85819571		1	TUBERIA HIDRAULICO, LH
6		85805340		2	PLACA
7		85805193		2	BORNE
8		85805195		2	PLACA
9		11193979		8	ARANDELA ABANICO, Belleville, M8.4
10		16043821		8	TORNILLO, Hex, M8 x 30, 8.8
11		85805247		6	BORNE
12		85805864		1	TUBERIA HIDRAULICO, LH
13		85805865		1	TUBERIA HIDRAULICO, RH
14		87646646		1	PALANCA
15		87305111		1	VALVULA DISTRIBUIDORA, Assy
16		14300521		2	TORNILLO, Hex Soc Hd, M6 x 75, 8.8
17		85804346		1	CALCOMANIA
18		87305209		1	CALCOMANIA
19	1	87382109		1	MANECILLA, Loader, Powershift, W/Detent, Declutch, Horn; Includes 87387702 Grip W/2 Buttons; 87387703 Prop Roller W/Detented Position; 87387719 Transmission & Horn Button Harness; 87387722 Bi-Directional PWM Driver Harness
19	2	87382112		1	MANECILLA, Loader, Powershuttle, W/Detent, Declutch; Incl 87387751 Grip W/1 Button; 87387703 Prop Roller W/Detented Position; 87387754 Transmission Button Harness; 87387722 Bi-Directional PWM Driver Harness
20		87739689		1	VALVULA DISTRIBUIDORA, Assy
21		87311363		1	ORIFICIO
22		87739122		1	VALVULA
23		85828000		1	SERIE DE JUNTAS

(1) Only for Power Shift
(2) Only for Power Shuttle

700	01	p2	04/08

CONDUCTOS HIDRÁULICOS BRAZO CUCHARA 4X1 Y 6X1 (POWER SHIFT, POWER SHUTTLE)

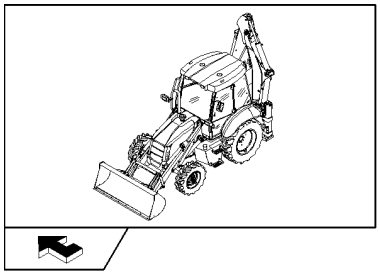

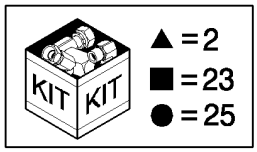

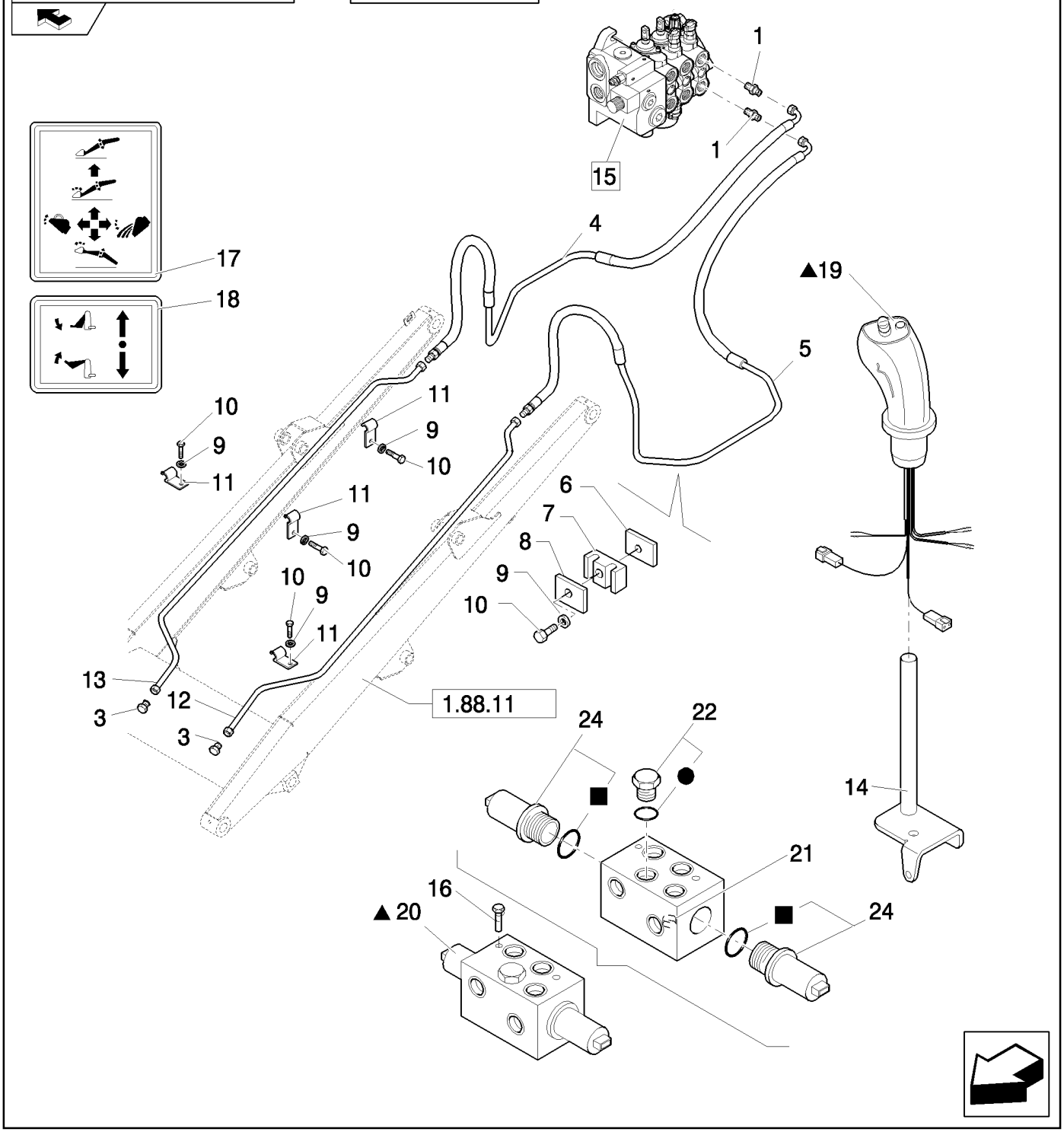

CONDUCTOS HIDRÁULICOS BRAZO CUCHARA 4X1 Y 6X1 (POWER SHIFT, POWER SHUTTLE)

REF	FN	PART NUMBER	YR/SN	QTY	DENOMINACION
24		85827993		2	ELECTROVÁLVULA
25		85828001		1	SERIE DE JUNTAS

700	02	p1	03/08

CONDUCTOS HIDRÁULICOS MÁQUINA CUCHARA 4X1 Y 6X1 (POWER SHIFT, POWER SHUTTLE)

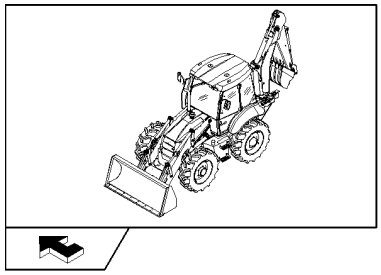

CONDUCTOS HIDRÁULICOS MÁQUINA CUCHARA 4X1 Y 6X1 (POWER SHIFT, POWER SHUTTLE)

REF	FN	PART NUMBER	YR/SN	QTY	DENOMINACION
1		85802234		1	CODO
2		85803312		1	RACOR
3		218-5053		2	RACOR, 7/16"-20, 37º x 7/16"-20, O-Ring
4		218-5057		4	RACOR, 9/16"-18, 37º x 9/16"-18, O-Ring
5		85826100		1	REDUCTOR
6		85828211		1	EMPALME RAPIDO
7		87305211		1	MANGA FLEXIBLE
8		87303401		1	MANGA FLEXIBLE
9		87303400		2	MANGA FLEXIBLE

700	03	p1	04/08

DISTRIBUIDOR DE LA PALA DE TRES SECCIONES (POWER SHIFT , POWER SHUTTLE)

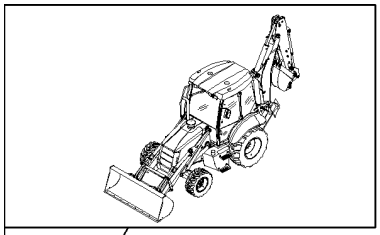

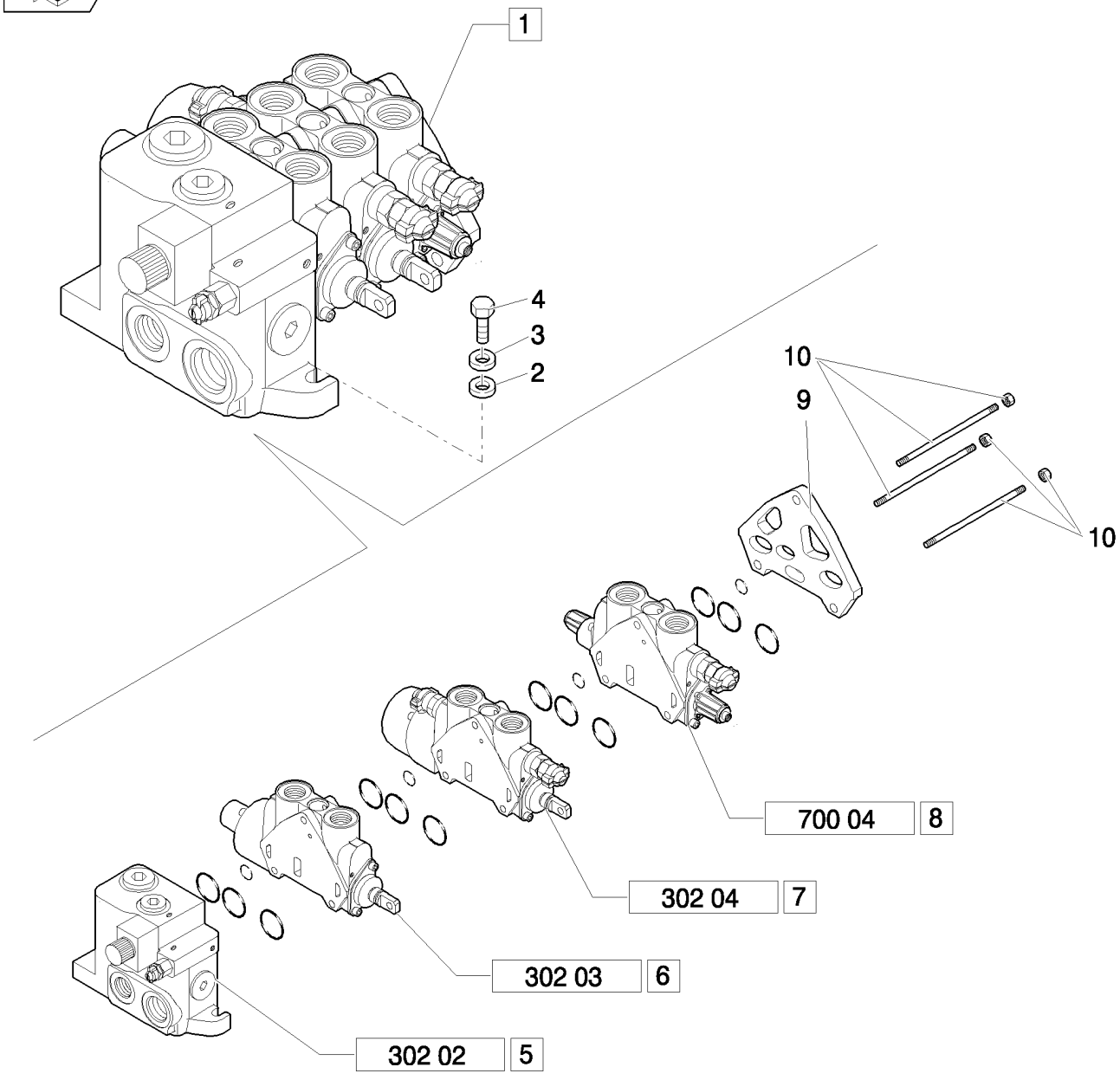

DISTRIBUIDOR DE LA PALA DE TRES SECCIONES (POWER SHIFT , POWER SHUTTLE)

REF	FN	PART NUMBER	YR/SN	QTY	DENOMINACION
1		87305111		1	VALVULA DISTRIBUIDORA, Assy
2		11190679		3	ARANDELA ABANICO, Belleville, M10.5
3		13578621		3	ARANDELA, 10x30x2
4		11234721		3	TORNILLO, Hex, M10 x 1.25 x 45, 8.8
5		85825468		1	DISTRIBUIDOR HYDR, Assy
6	1	87558567		1	SECTOR, Assy
7	2	85825469		1	DISTRIBUIDOR HYDR, Assy
8	3	87346911		1	ELEMENTO DE UNION, Assy
9		85826924		1	SECTOR
10		85825474		1	VARILLA FILETADA

(1) Boom Cylinder
(2) Bucket Cylinder
(3) Option

721	01	p1	04/08

MANDO A PEDAL BALANCÍN TELESCÓPICO (PIVOTE CENTRAL): DISTRIBUIDOR: NA

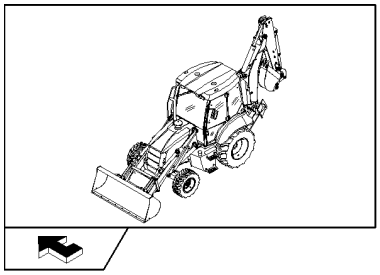

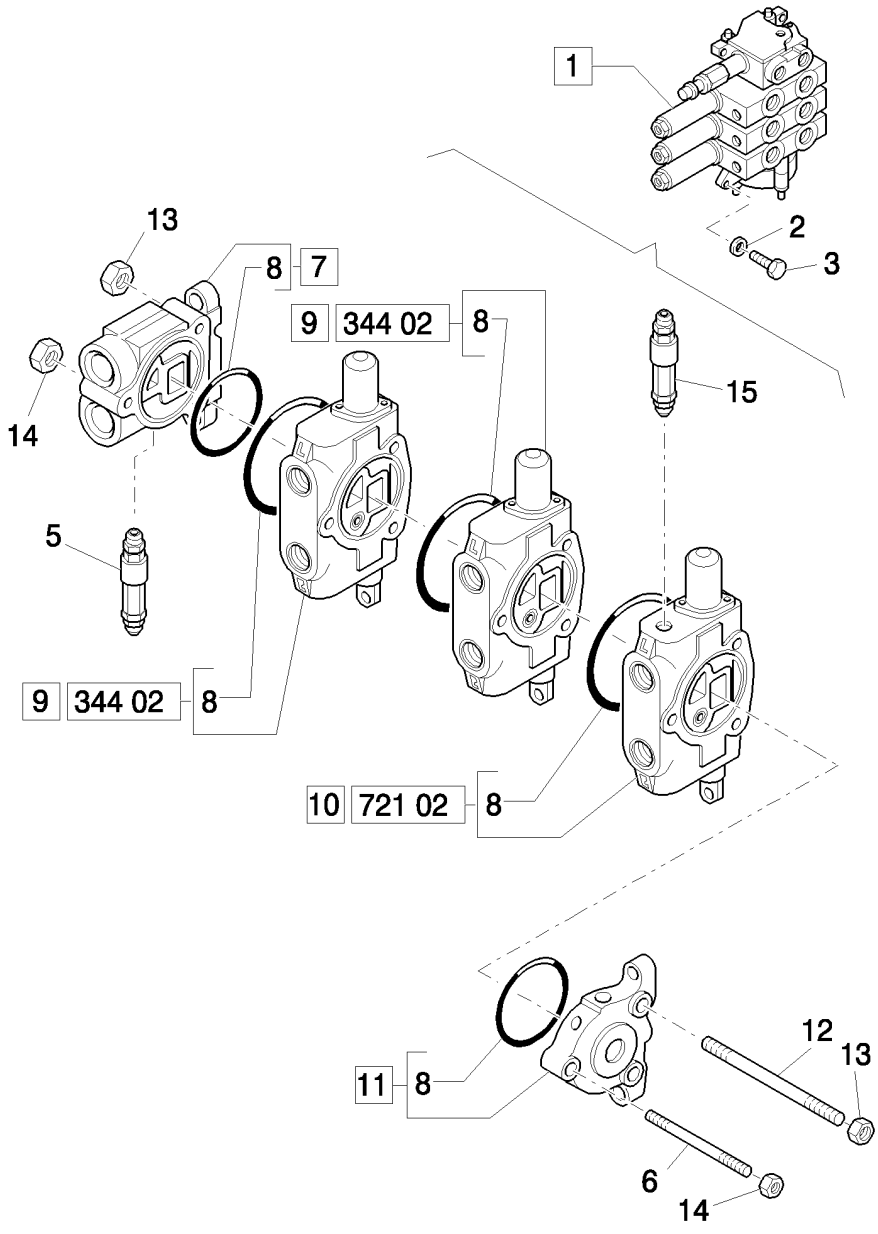

MANDO A PEDAL BALANCÍN TELESCÓPICO (PIVOTE CENTRAL): DISTRIBUIDOR: NA

REF	FN	PART NUMBER	YR/SN	QTY	DENOMINACION
1		87331094		1	DISTRIBUDOR, Assy
2		11193879		3	ARANDELA ABANICO, Belleville, M8.4
3		16043921		3	TORNILLO, M8x1,25x35
5		85819721		1	VALVULA HIDRAULICA
6		9968528		1	PRISIONERO
7		9968524		1	DISTRIBUIDOR HYDR, Assy
8		9968476		4	JUNTA HERMETICA
9		9970107		2	DISTRIBUIDOR HYDR, Assy
10		9968526		1	DISTRIBUIDOR HYDR, Assy
11		9968527		1	DISTRIBUIDOR HYDR, Assy
12		9968529		2	PRISIONERO
13		9968441		4	TUERCA
14		9968440		2	TUERCA
15		87331276		1	VALVULA HIDRAULICA

Mechanical Version	B95B

721	02	p1	03/08

DISTRIBUIDOR ESTABILIZADOR, 3. SECCIÓN (CENTER PIVOT): NA

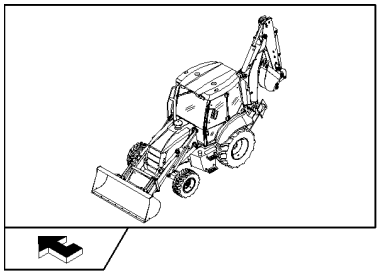

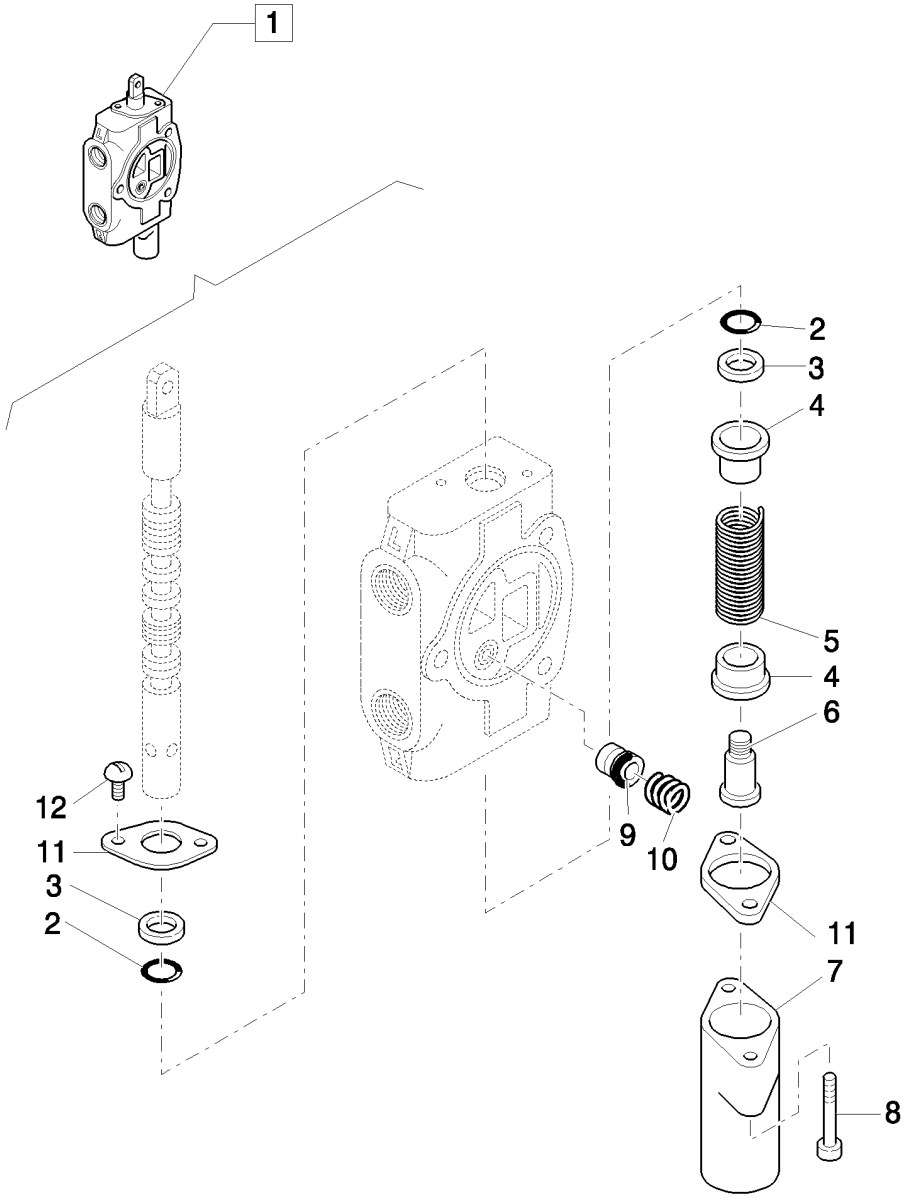

DISTRIBUIDOR ESTABILIZADOR, 3. SECCIÓN (CENTER PIVOT): NA

REF	FN	PART NUMBER	YR/SN	QTY	DENOMINACION
1		9968526		1	DISTRIBUIDOR HYDR, Assy
2		85813418		2	JUNTA HERMETICA
3		85813419		2	LIMPIADOR
4		9968481		2	ASIENTO
5		9968531		1	RESORTE
6		9968483		1	TORNILLO
7		9968484		1	TAPADERA
8		9968486		2	TORNILLO
9		9968477		1	POPPET
10		9968478		1	RESORTE
11		9968480		2	BRIDA
12		9968460		2	TORNILLO

Mechanical Version	B95B

MANGUITOS DISTRIBUDOR DEL BRAZO TELESCOPICO, SECCIÓN HED(CENTER PIVOT) - NA

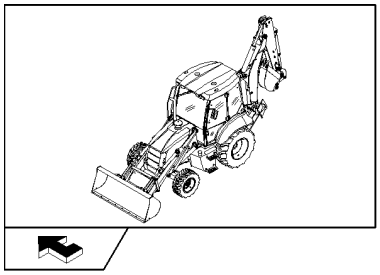

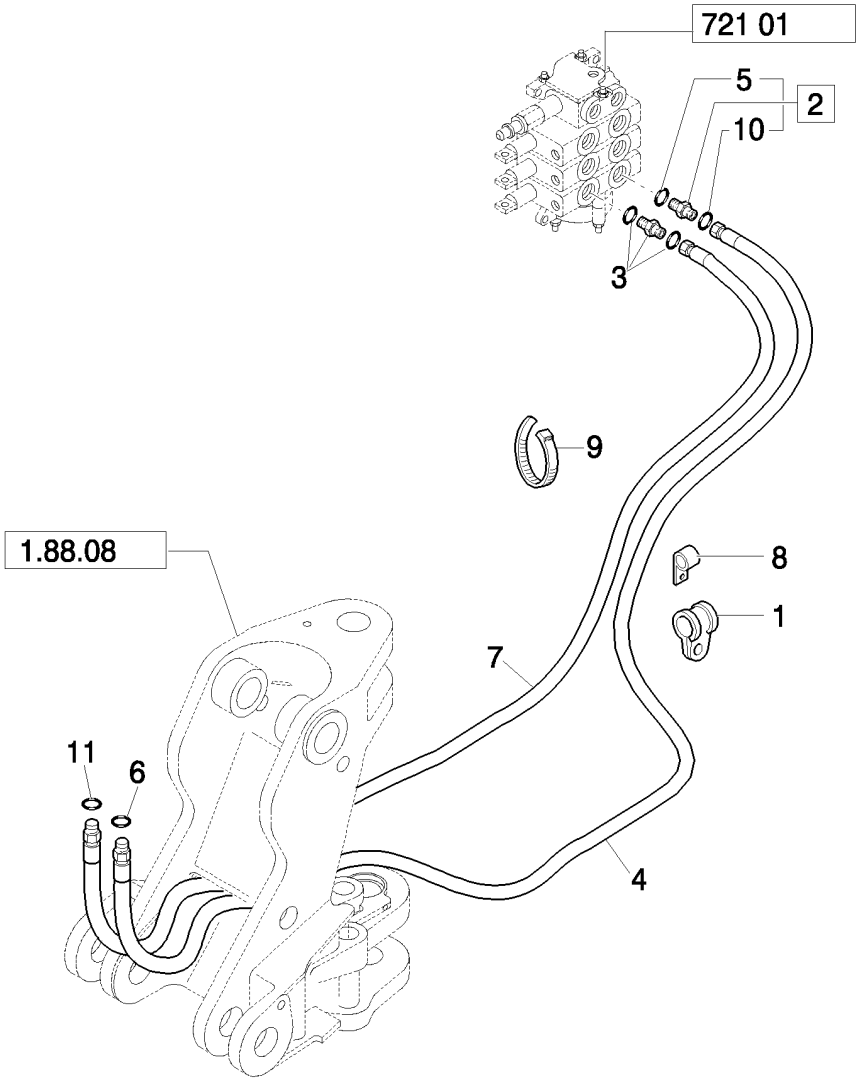

MANGUITOS DISTRIBUDOR DEL BRAZO TELESCOPICO, SECCIÓN HED(CENTER PIVOT) - NA

REF	FN	PART NUMBER	YR/SN	QTY	DENOMINACION
1		85812029		1	BORNE
2		83963374		1	RACOR
3		85803234		1	RACOR
4		85812214		1	HOSE, HYDRAULIC, 2700mm lg
5		80128825		1	JUNTA HERMETICA
6		9992298		1	JUNTA HERMETICA, -014, 90 Duro, .489" ID x .070" Thk
7		87638574		1	MANGA FLEXIBLE
8		85803393		2	BORNE
9		85803332		4	CIERRA CABLES, M4.8 x 180
10		89992298		1	JUNTA HERMETICA
11		9992069		1	JUNTA HERMETICA, -016, 90 Duro, .614" ID x .070" Thk

Mechanical Version B95B

721	04	p1	03/08

BALANCÍN TELESCÓPICO CON MANDO A PEDAL (PIVOTE CENTRAL): INSTALACIÓN BALANCÍN TELESCÓPICO: CILINDRO TELESCÓPICO - NA

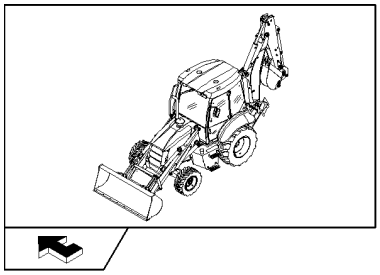

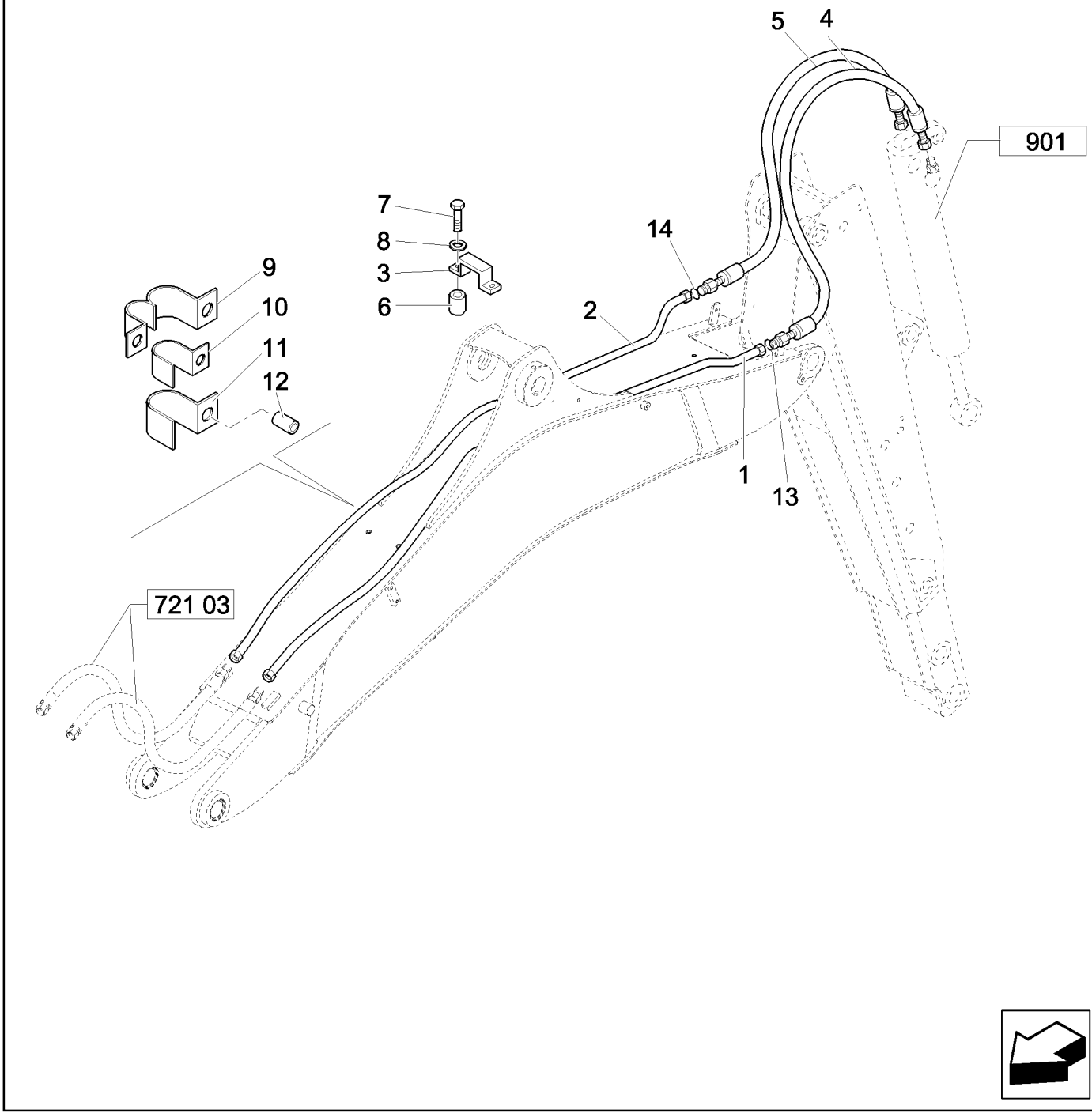

BALANCÍN TELESCÓPICO CON MANDO A PEDAL (PIVOTE CENTRAL): INSTALACIÓN BALANCÍN TELESCÓPICO: CILINDRO TELESCÓPICO

REF	FN	PART NUMBER	YR/SN	QTY	DENOMINACION
1		87617945		1	TUBO DE PRESION, 16 mm OD Tube
2		87621518		1	TUBO DE PRESION, 12 mm OD Tube
3		85802900		1	BORNE
4	1	87619506		1	MANGA FLEXIBLE
5	2	85817108		1	HOSE, HYDRAULIC
6		87610565		1	SEPARADOR
7		16044021		2	TORNILLO, Hex, M8 x 40, 8.8
8		11193879		2	ARANDELA ABANICO, Belleville, M8.4
9		85802529		2	BORNE
10		85802527		2	BORNE
11		85802528		2	BORNE
12		87615734		1	SEPARADOR
13		9992069		1	JUNTA HERMETICA, -016, 90 Duro, .614" ID x .070" Thk
14		9992298		1	JUNTA HERMETICA, -014, 90 Duro, .489" ID x .070" Thk

(1) Includes 13
(2) Includes 14

Mechanical Version B95B

721	05	p1	03/08

BALANCÍN TELESCÓPICO CON MANDO A PEDAL (PIVOTE CENTRAL): INSTALACIÓN BALANCÍN TELESCÓPICO: CILINDRO CUCHARA - NA

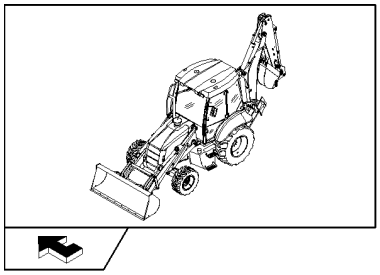

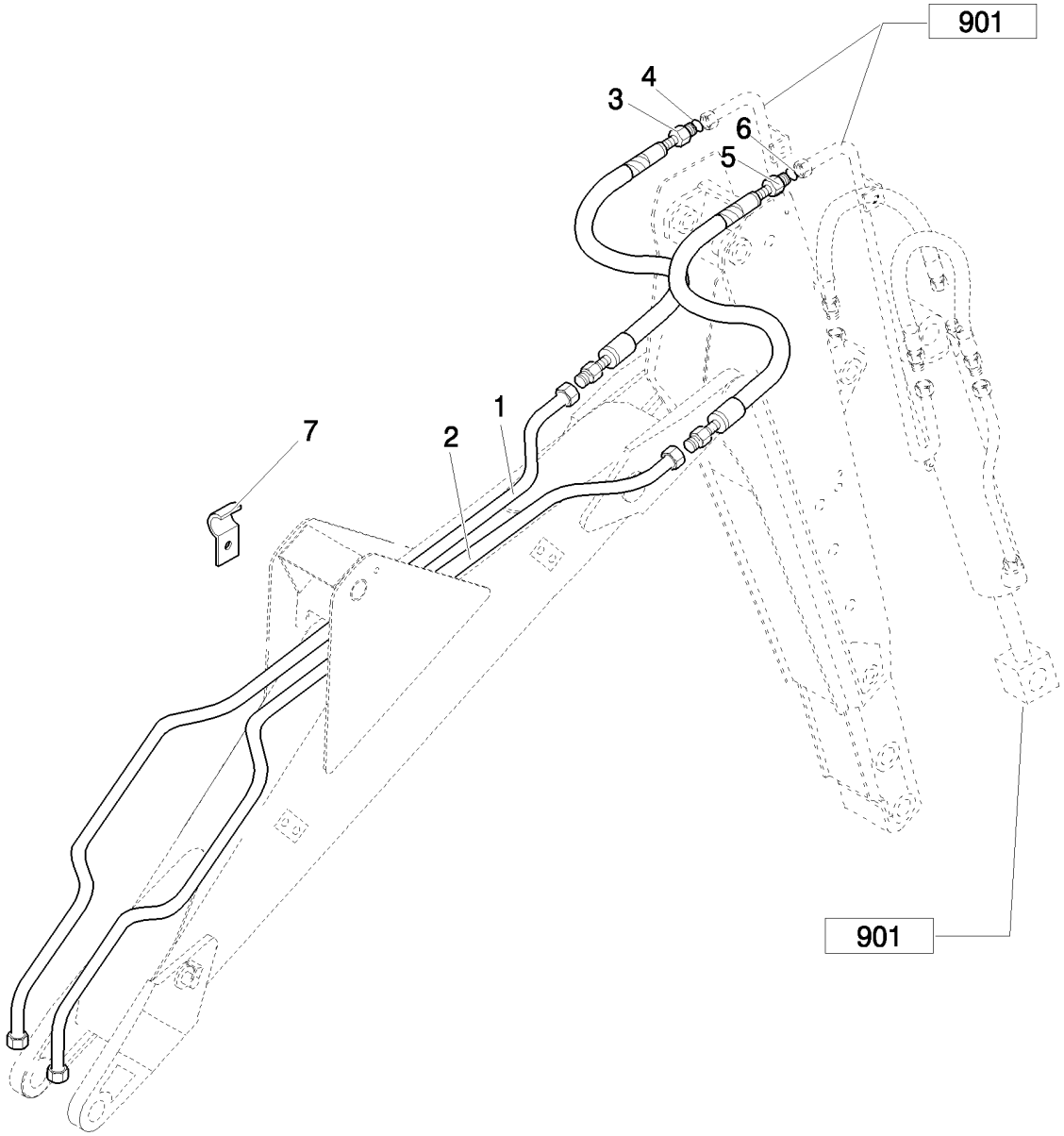

BALANCÍN TELESCÓPICO CON MANDO A PEDAL (PIVOTE CENTRAL): INSTALACIÓN BALANCÍN TELESCÓPICO: CILINDRO CUCHARA - N

REF	FN	PART NUMBER	YR/SN	QTY	DENOMINACION
1		87614629		1	TUBO DE PRESION, 20 mm OD Tube
2		87614627		1	TUBO DE PRESION, 16 mm OD Tube
3	1	85817106		1	MANGA FLEXIBLE
4		9991976		2	JUNTA HERMETICA, -018, 90 Duro, .739" ID x .070" Thk
5	2	85817107		1	MANGA FLEXIBLE
6		9992069		2	JUNTA HERMETICA, -016, 90 Duro, .614" ID x .070" Thk
7		87610539		1	SOPORTE CIERRA TUBO

(1) Includes 4
(2) Includes 6

Mechanical Version B95B

MANDO A PEDAL BALANCÍN TELESCÓPICO (PIVOTE CENTRAL): NA

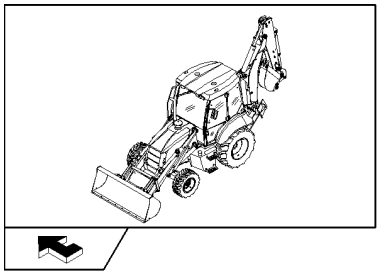

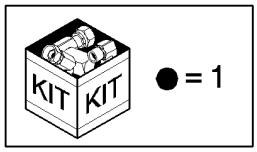

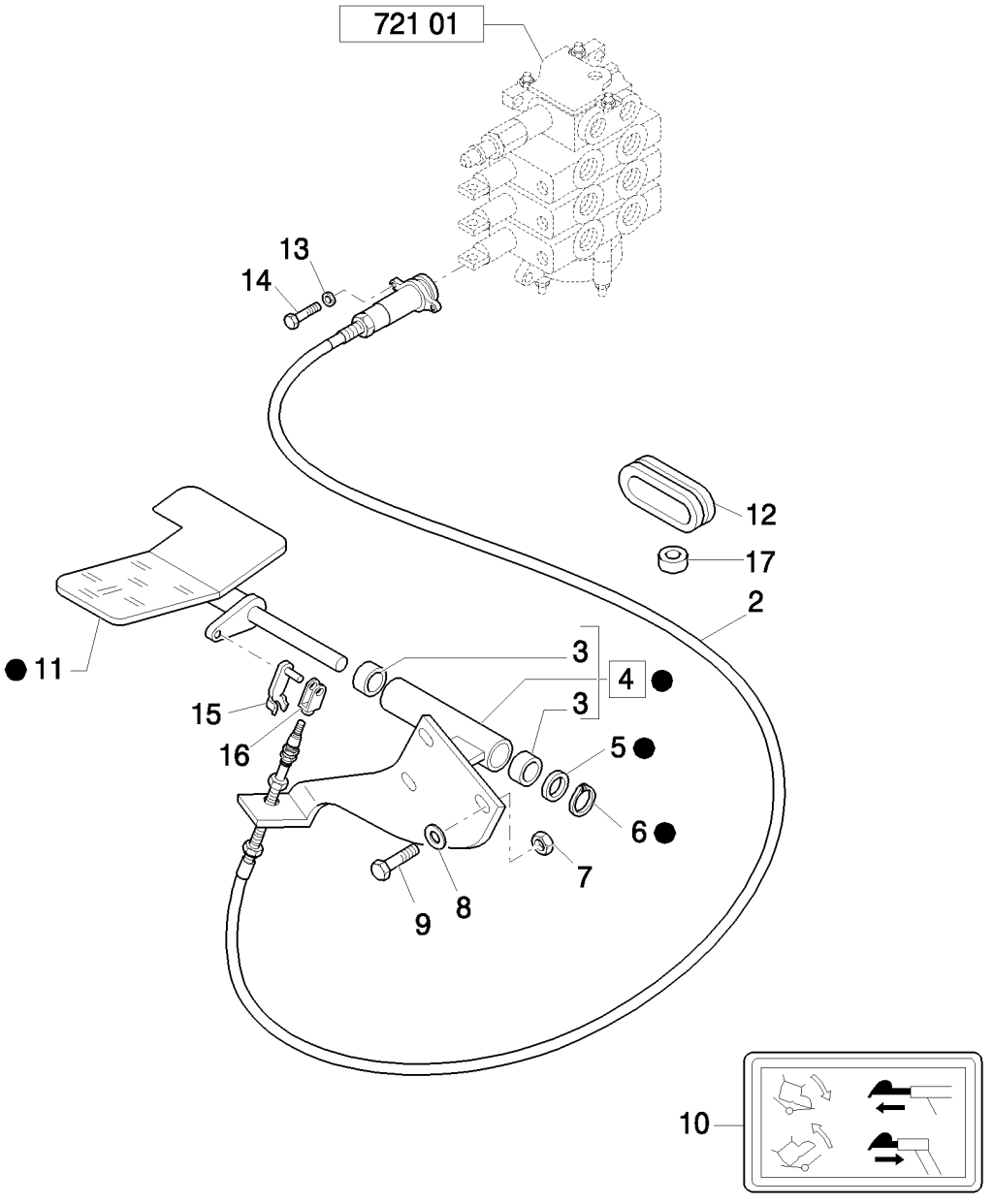

MANDO A PEDAL BALANCÍN TELESCÓPICO (PIVOTE CENTRAL): NA

REF	FN	PART NUMBER	YR/SN	QTY	DENOMINACION
1		85802509		1	PEDAL, Assy
2	1	85813103		1	CABLE
3		85802494		2	CASQUILLO
4		85801599		1	PLACA, Assy
5		14496901		1	ARANDELA, M16 x 30 x 3
6		83911366		1	RETENEDOR
7		16104111		3	CONTRA TUERCA, M8 x 1.25, Cl 8
8		16043621		3	TORNILLO, Hex, M8 x 25, 8.8
9		11193879		3	ARANDELA ABANICO, Belleville, M8.4
10		85803786		1	CALCOMANIA
11		85802510		1	PEDAL
12		85803517		2	CASQUILLO DE GOMA
13		85813201		4	ARANDELA
14		85813200		4	TORNILLO
15		85813186		2	SUJETADOR
16		85813187		2	HORQUILLA PEQUENA
17		85802903		1	AISLADOR

(1) Includes 13 - 16

Mechanical Version B95B

DISTRIBUIDOR MARTILLO TRASERO

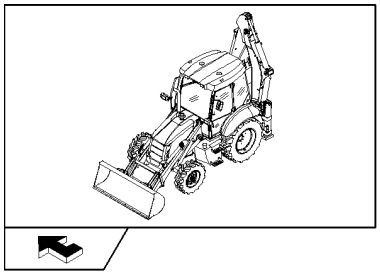

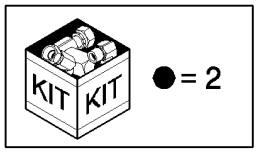

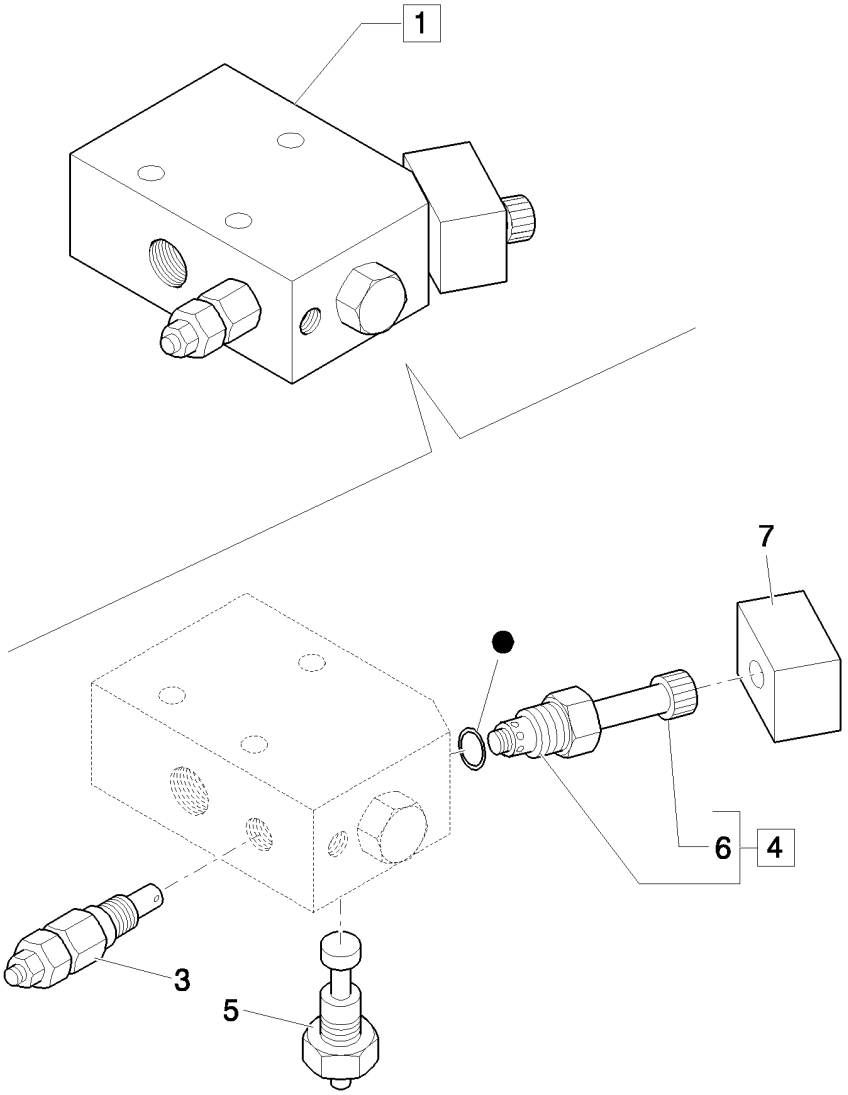

DISTRIBUIDOR MARTILLO TRASERO

REF	FN	PART NUMBER	YR/SN	QTY	DENOMINACION
1		87677466		1	VALVULA HIDRAULICA, ASSY
2		9970181		1	SERIE DE JUNTAS, Gaskets
3		87358201		1	VALVULA HIDRAULICA, ASSY
4		87358194		1	VALVULA HIDRAULICA, ASSY
5		9970179		1	REGULADOR, Assy
6		9970384		1	TUERCA
7		87357715		1	CONTACTOR

724/01	01	p1	04/08

INSTALACIÓN HIDRÁULICA MÁQUINA PARA MARTILLO HIDRÁULICO (PIVOTE CENTRAL)

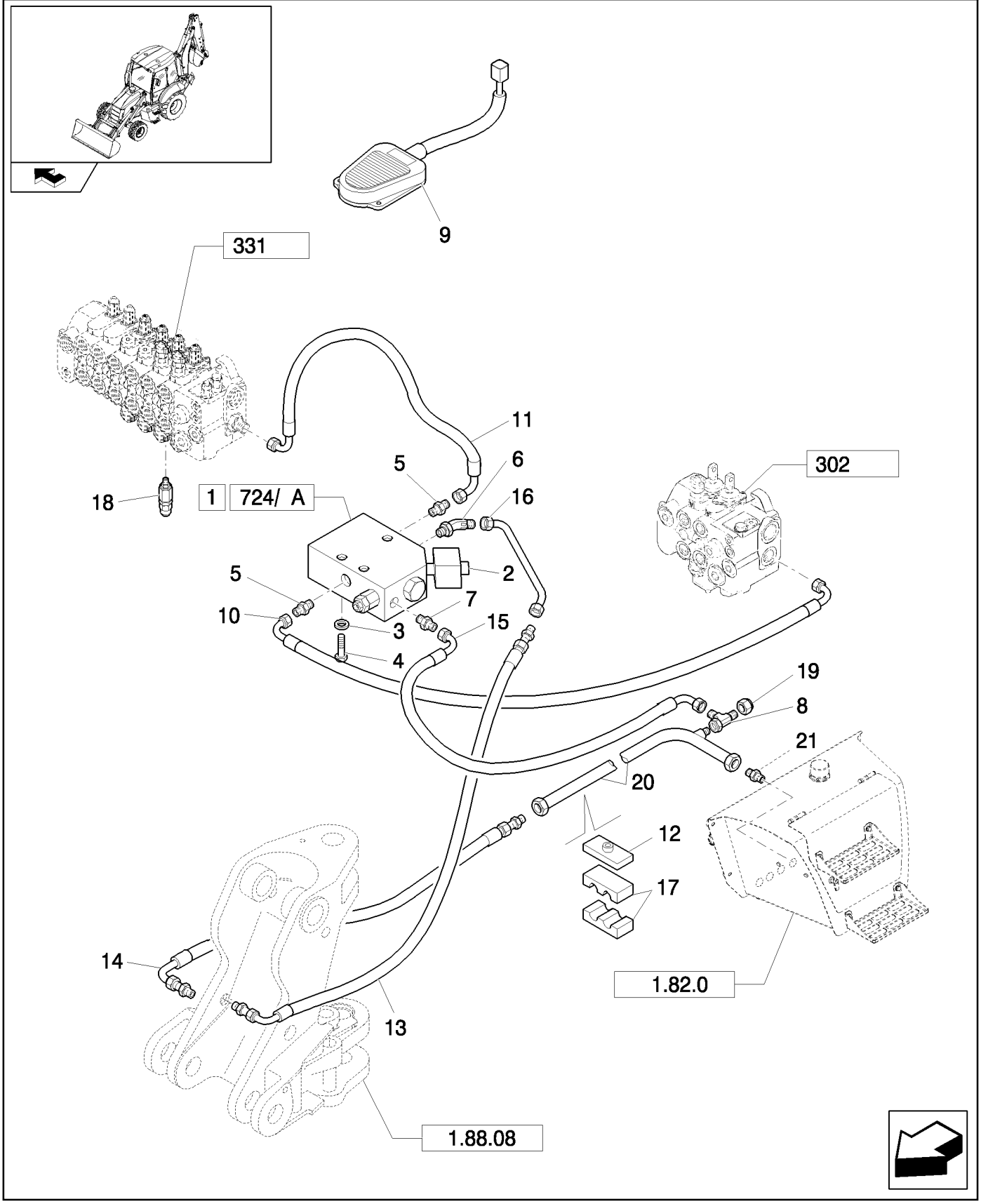

INSTALACIÓN HIDRÁULICA MÁQUINA PARA MARTILLO HIDRÁULICO (PIVOTE CENTRAL)

REF	FN	PART NUMBER	YR/SN	QTY	DENOMINACION
1		87677466		1	VALVULA HIDRAULICA, Assy
2		87357715		1	CONTACTOR
3		11193879		3	ARANDELA ABANICO, Belleville, M8.4
4		16044821		3	TORNILLO, Hex, M8 x 80, 8.8
5		85803486		2	RACOR
6		85803487		1	CODO
7		83963371		1	RACOR
8		85807876		1	RACOR-T
9		85826123		1	INTERRUPTOR
10		85802776		1	HOSE, HYDRAULIC, 1150mm lg
11		85803428		1	HOSE, HYDRAULIC, 850mm lg
12		87390531		1	PLACA
13		85817634		1	HOSE, HYDRAULIC
14		85817635		1	HOSE, HYDRAULIC
15		85817633		1	HOSE, HYDRAULIC
16		85817629		1	TUBERIA HIDRAULICO
17		87390530		1	BORNE
18		85812116		1	VÁLVULA, DESCARGA
19		83987627		1	TAPON DEL DEPOSITO
20		85826987		1	TUBERIA HIDRAULICO
21		85802801		1	RACOR, 1-11/16"-12 ORSx1-5/16"-12 SAE O-ring

Pilot Control Version	B95B

724/01	02	p1	03/08

INSTALACIÓN HIDRÁULICA BRAZO MARTILLO (PIVOTE CENTRAL)

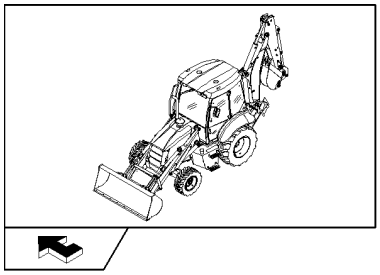

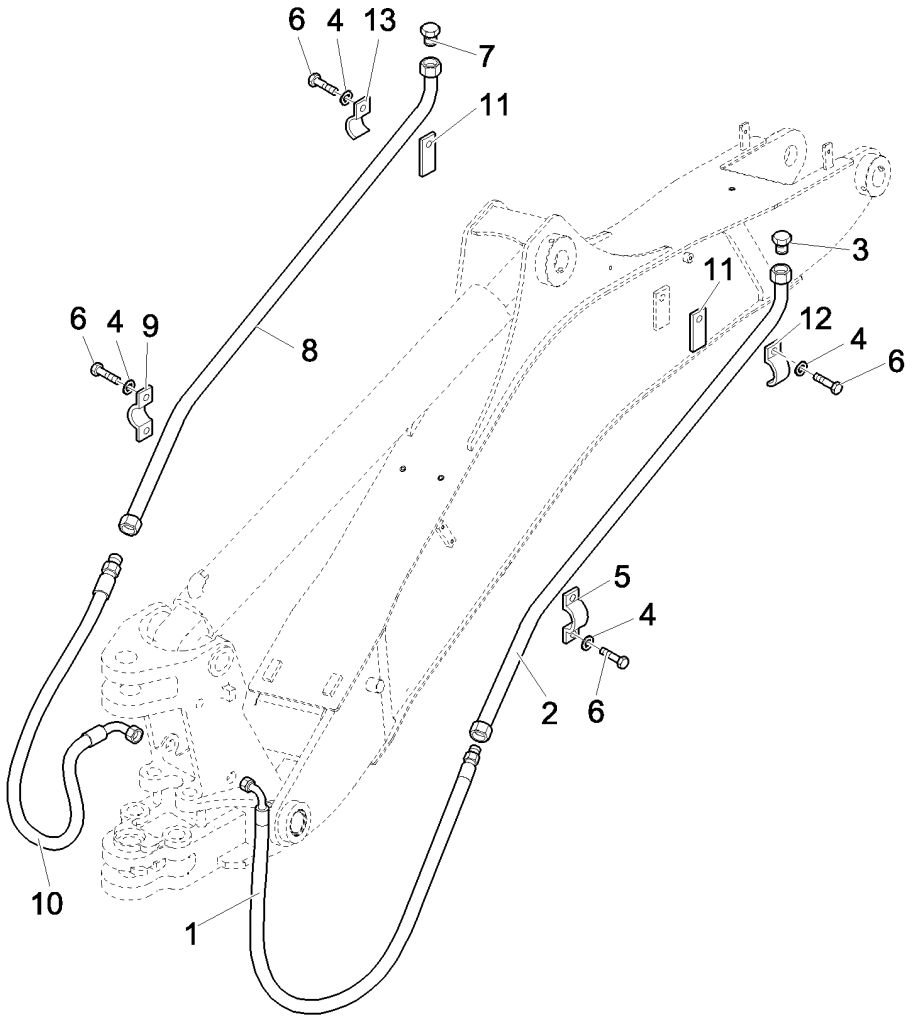

INSTALACIÓN HIDRÁULICA BRAZO MARTILLO (PIVOTE CENTRAL)

REF	FN	PART NUMBER	YR/SN	QTY	DENOMINACION
1		85819619		1	HOSE, HYDRAULIC
2		87622842		1	TUBO DE PRESION
3		85801397		1	TAPÓN
4		11190579		8	ARANDELA ABANICO, Belleville, M10.5
5		87310951		1	BORNE
6		11106221		4	TORNILLO, Hex, M10 x 25, 8.8, Full Thd, M6x16
7		85801452		1	TAPÓN
8		87616236		1	TUBO DE PRESION
9		87310952		1	BORNE
10		85819618		1	HOSE, HYDRAULIC
11		87630711		2	PLACA
12		87624517		1	SOPORTE CIERRA TUBO
13		87629471		1	SOPORTE CIERRA TUBO

Pilot Control Version B95B

724/02		p1	03/08

CIRCUITO HIDRAULICO DEL MARTILLO (CENTER PIVOT)

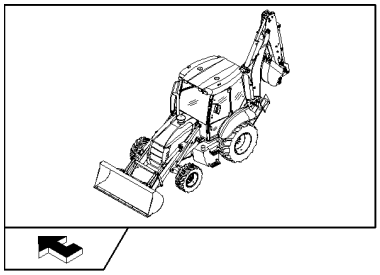

CIRCUITO HIDRAULICO DEL MARTILLO (CENTER PIVOT)

REF	FN	PART NUMBER	YR/SN	QTY	DENOMINACION
1		87677466		1	VALVULA HIDRAULICA
2		87357715		1	CONTACTOR
3		11193879		3	ARANDELA ABANICO, Belleville, M8.4
4		16044821		3	TORNILLO, Hex, M8 x 80, 8.8
5		85803486		2	RACOR
6		85803487		1	CODO, 45°
7		83963371		1	RACOR
8		85807876		1	RACOR-T
9		85826123		1	INTERRUPTOR
10		87390531		1	PLACA
11		85803428		1	HOSE, HYDRAULIC, 850mm lg
12		85802801		1	RACOR
13		85826987		1	TUBERIA HIDRAULICO
14		83987627		1	TAPON DEL DEPOSITO
15		85817633		1.	HOSE, HYDRAULIC
16		85817629		1	TUBERIA HIDRAULICO
17		87390530		1	BORNE
18		9968595		1	VÁLVULA, DESCARGA
19		85817635		1	HOSE, HYDRAULIC
20		85817634		1	HOSE, HYDRAULIC

Mechanical Version B95B

725		p1	03/08

EQUIPO MARTILLO NEUMÁTICO DE BRAZO DE ELEVACION A BRAZO DEMOLEDOR

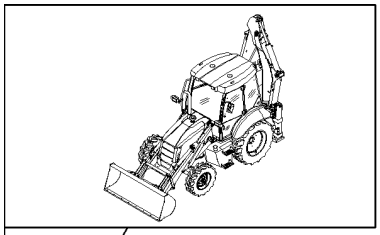

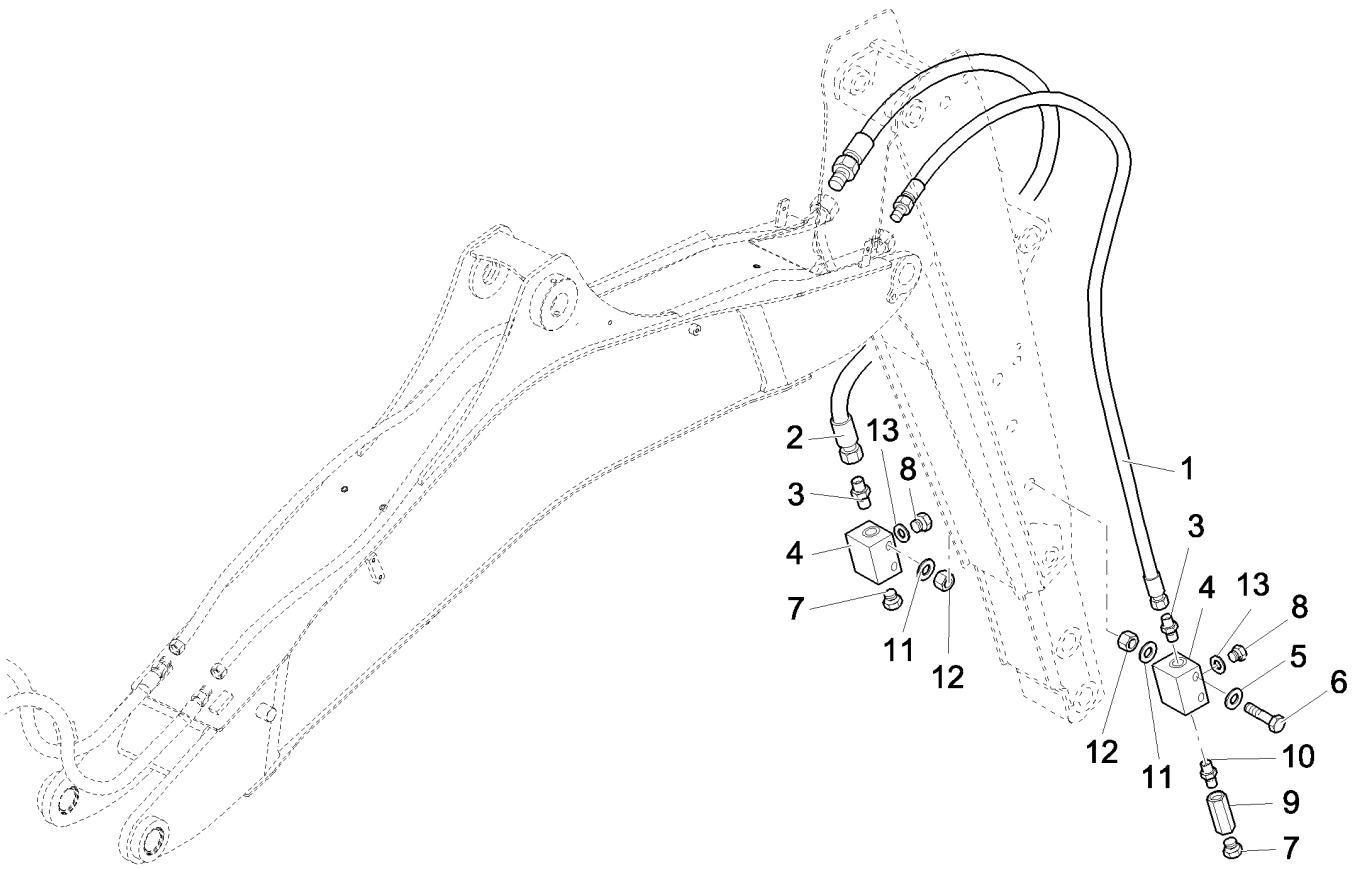

EQUIPO MARTILLO NEUMÁTICO DE BRAZO DE ELEVACION A BRAZO DEMOLEDOR

REF	FN	PART NUMBER	YR/SN	QTY	DENOMINACION
1		85819621		1	HOSE, HYDRAULIC
2		85819620		1	HOSE, HYDRAULIC
3		85803486		2	RACOR
4		85802247		2	BLOQUE MOTOR
5		11193879		4	ARANDELA ABANICO, Belleville, M8.4
6		16045021		4	TORNILLO, Hex, M8 x 90, 8.8
7		85802457		2	TAPÓN
8		85803409		2	TAPÓN
9		85802372		1	VALVULA DE CIERRE, 10 Bar
10		85804879		1	RACOR
11		12647121		6	ARANDELA, M8 x 20 x 3
12		14048211		2	CONTRA TUERCA, M8 x 1.25, Cl 8
13		80167269		2	JUNTA HERMETICA

725/01	01	p1	04/08

INSTALACIÓN HIDRÁULICA CONJUNTO BRAZO CUCHARA 4X1 Y 6X1 (POWER SHUTTLE): NA

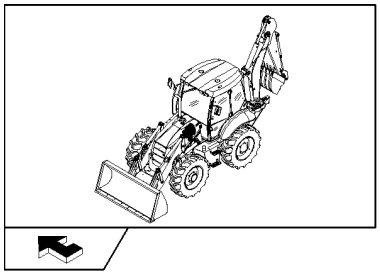

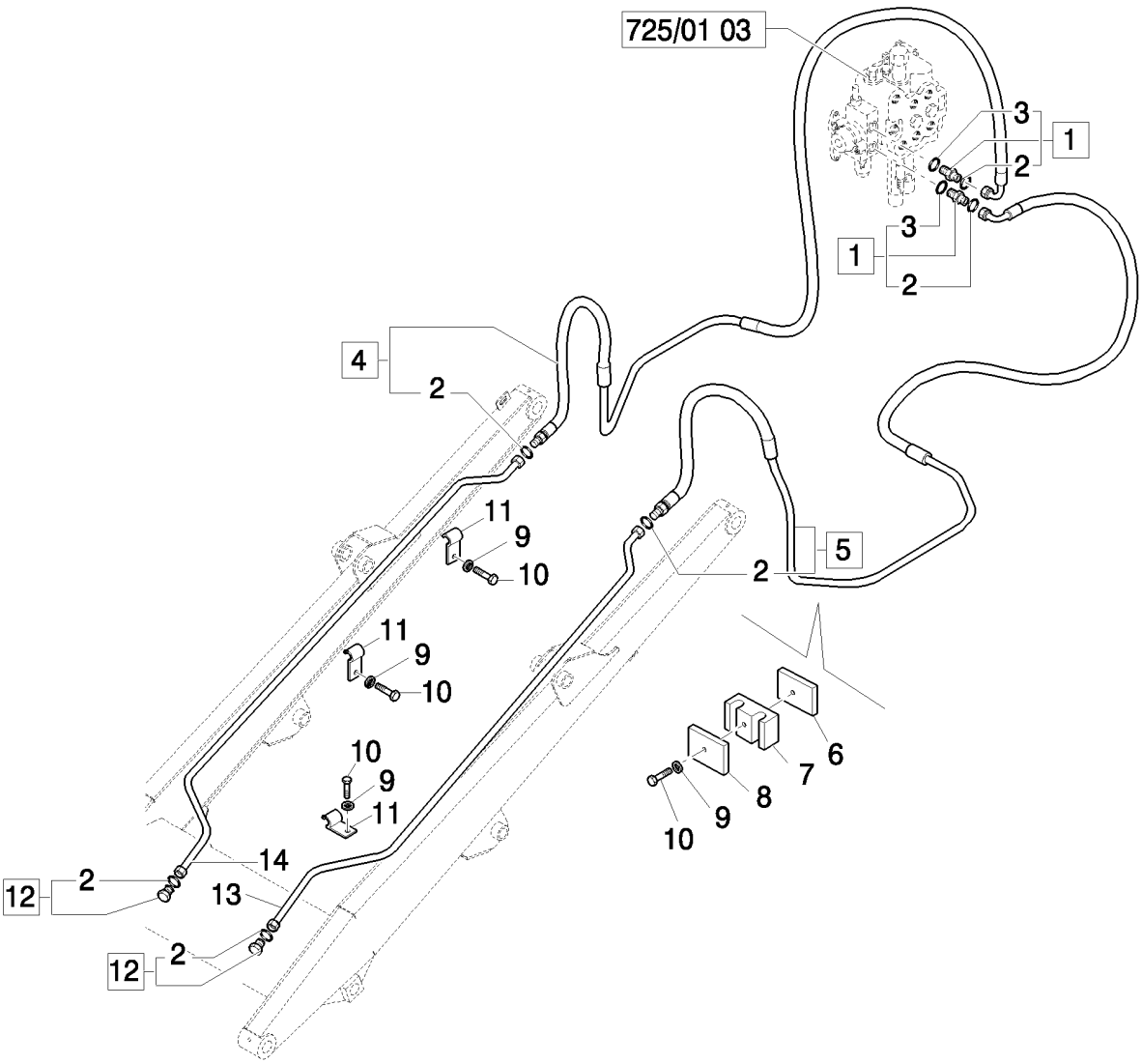

INSTALACIÓN HIDRÁULICA CONJUNTO BRAZO CUCHARA 4X1 Y 6X1 (POWER SHUTTLE): NA

REF	FN	PART NUMBER	YR/SN	QTY	DENOMINACION
1		83963376		2	RACOR
2		89992298		6	JUNTA HERMETICA
3		80167269		2	JUNTA HERMETICA
4		85805863		1	HOSE, HYDRAULIC, Assy, RH
5		85805862		1	HOSE, HYDRAULIC, Assy, LH
6		85805340		2	PLACA
7		85805193		2	BORNE
8		85805195		2	PLACA
9		11193979		8	ARANDELA ABANICO, Belleville, M8.4
10		16043821		8	TORNILLO, Hex, M8 x 30, 8.8
11		85805247		6	BORNE
12		85803408		2	TAPÓN, Assy
13		85805864		1	TUBERIA HIDRAULICO, LH
14		85805865		1	TUBERIA HIDRAULICO, RH

Mechanical Version B95B

725/01	02	p1	04/08

CONJUNTO CONDUCTO HIDRÁULICO CONJUNTO MÁQUINA CUCHARA 4X1 Y 6X1 (POWER SHUTTLE): NA

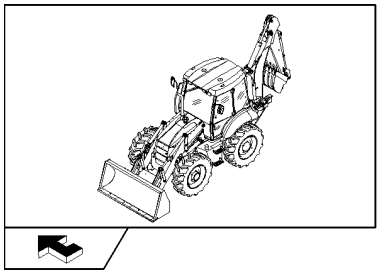

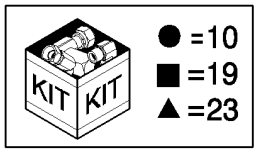

CONJUNTO CONDUCTO HIDRÁULICO CONJUNTO MÁQUINA CUCHARA 4X1 Y 6X1 (POWER SHUTTLE): NA

REF	FN	PART NUMBER	YR/SN	QTY	DENOMINACION
1		85802234		2	CODO
2		85805318		2	CODO, 90º, 9/16"-18, 37º x 9/16"-18, O-Ring
3		47050685		2	RACOR
4		47050686		1	RACOR
5		85826100		1	REDUCTOR
6		85828211		1	EMPALME RAPIDO
7		87316092		1	MANGA FLEXIBLE
8		87316096		1	MANGA FLEXIBLE
9		87316091		2	MANGA FLEXIBLE
10		87739988		1	EQUIPO
11		87382112		1	MANECILLA, Loader, Powershuttle, W/Detent, Declutch; Includes 87387751 Grip W/1 Button; 87387703 Prop Roller W/Detented Position; 87387754 Transmission Button Harness; 87387722 Bi-Directional PWM Driver Harness
12		85804346		1	CALCOMANIA
13		87305209		4	CALCOMANIA
14		201-422		4	RACOR-T, 11/16"-16 ORFS x 11/16"-16 Fem Sw Run
15		87739689		1	VALVULA DISTRIBUIDORA, Assy
16		14300521		1	TORNILLO, Hex Soc Hd, M6 x 75, 8.8, M6x75
17		87311363		1	ORIFICIO
18		87739122		1	VALVULA
19		85828000		1	SERIE DE JUNTAS
20		85827993		2	ELECTROVÁLVULA
21		85817531		1	RACOR-T
22		87646604		1	PALANCA
23		85828001		1	SERIE DE JUNTAS

Mechanical Control Version B95B

DISTRIBUIDOR CARGADOR, 3 SECCIONES (CENTER PIVOT) - NA

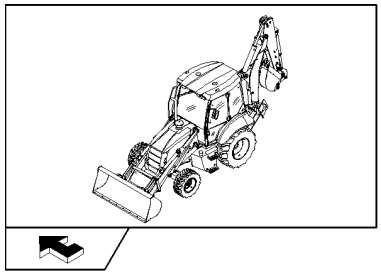

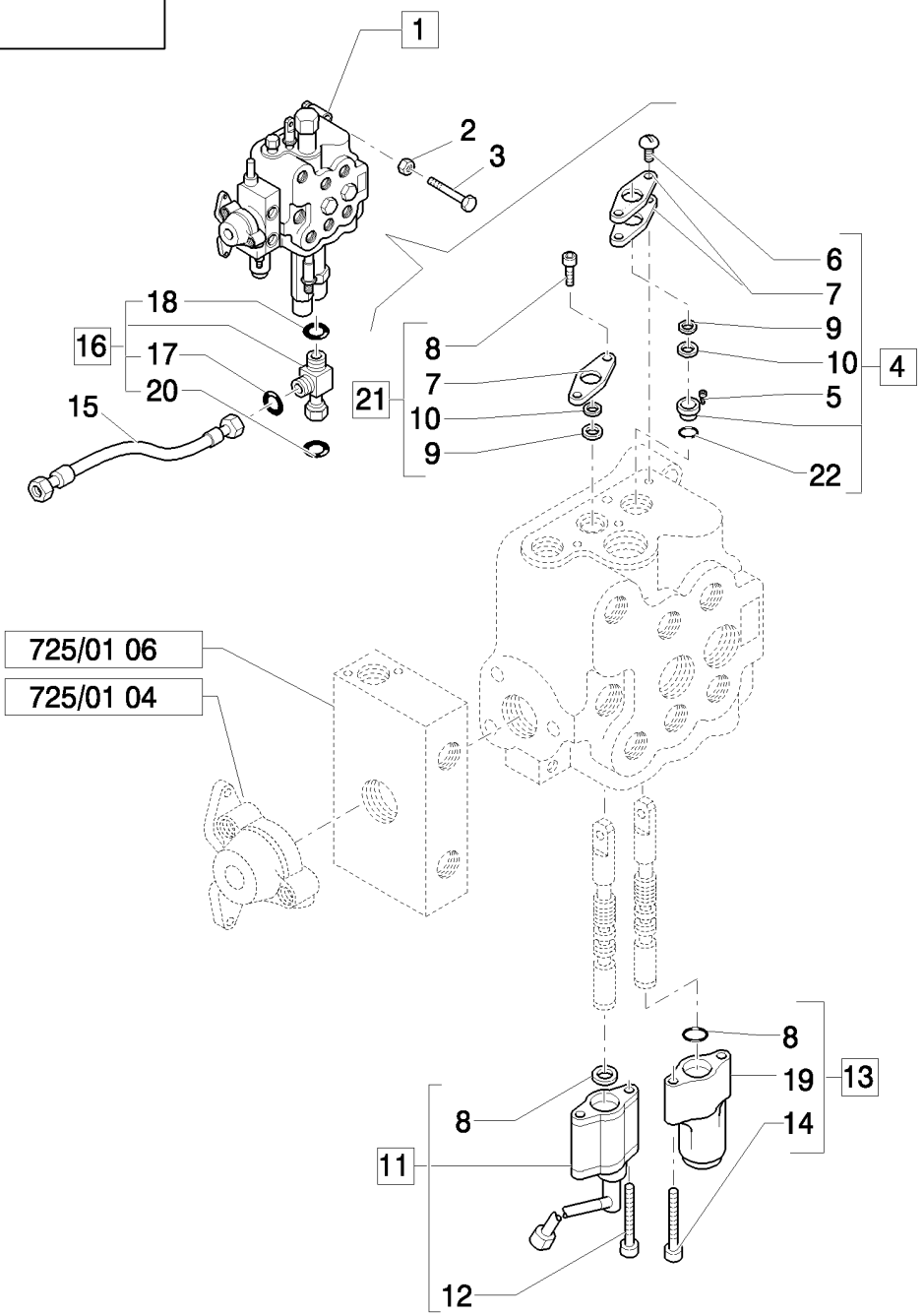

DISTRIBUIDOR CARGADOR, 3 SECCIONES (CENTER PIVOT) - NA

REF	FN	PART NUMBER	YR/SN	QTY	DENOMINACION
1		87326256		1	DISTRIBUIDOR HYDR, Assy
2		11190579		3	ARANDELA ABANICO, Belleville, M10.5
3		14308221		3	TORNILLO, Hex Soc Hd, M10 x 1.25 x 65, 8.8
4		9968455		1	EQUIPO
5		9968457		1	SEPARADOR
6		9968456		2	TORNILLO
7		9968458		3	BRIDA
8		9968460		2	TORNILLO
9		9968489		4	ANILLO DE CIERRE
10		9968490		2	LIMPIADOR
11		85808403		1	DISPOSITIVO DE TOPE, agnetic Detent, Assy
12		9968451		2	TORNILLO
13		85817025		1	PISTONCILLO
14		9968454		2	TORNILLO
15		85816804		1	HOSE, HYDRAULIC, 550mm lg
16		85817531		1	RACOR-T, Assy
17		9825770		1	JUNTA HERMETICA, -011, 90 Duro, .301" ID x .070" Thk
18		9824050		1	JUNTA HERMETICA, -021, 90 Duro, .926" ID x .070" Thk
19		9968513		1	TAPADERA
20		89626929		1	JUNTA HERMETICA, 90 Duro, 1.048" ID x .116" Thk
21		87319445		1	PERNO, OJO, Assy
22		87327076		1	JUNTA HERMETICA

Mechanical Version B95B

DISTRIBUIDOR CARGADOR, 3 SECCIONES, TAPA Y VÁLVULA DE DESCARGA (CENTER PIVOT) - NA

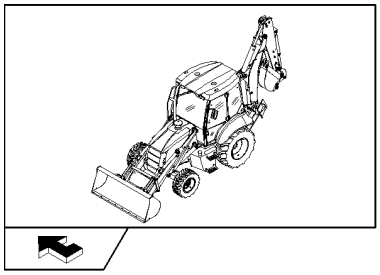

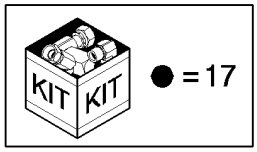

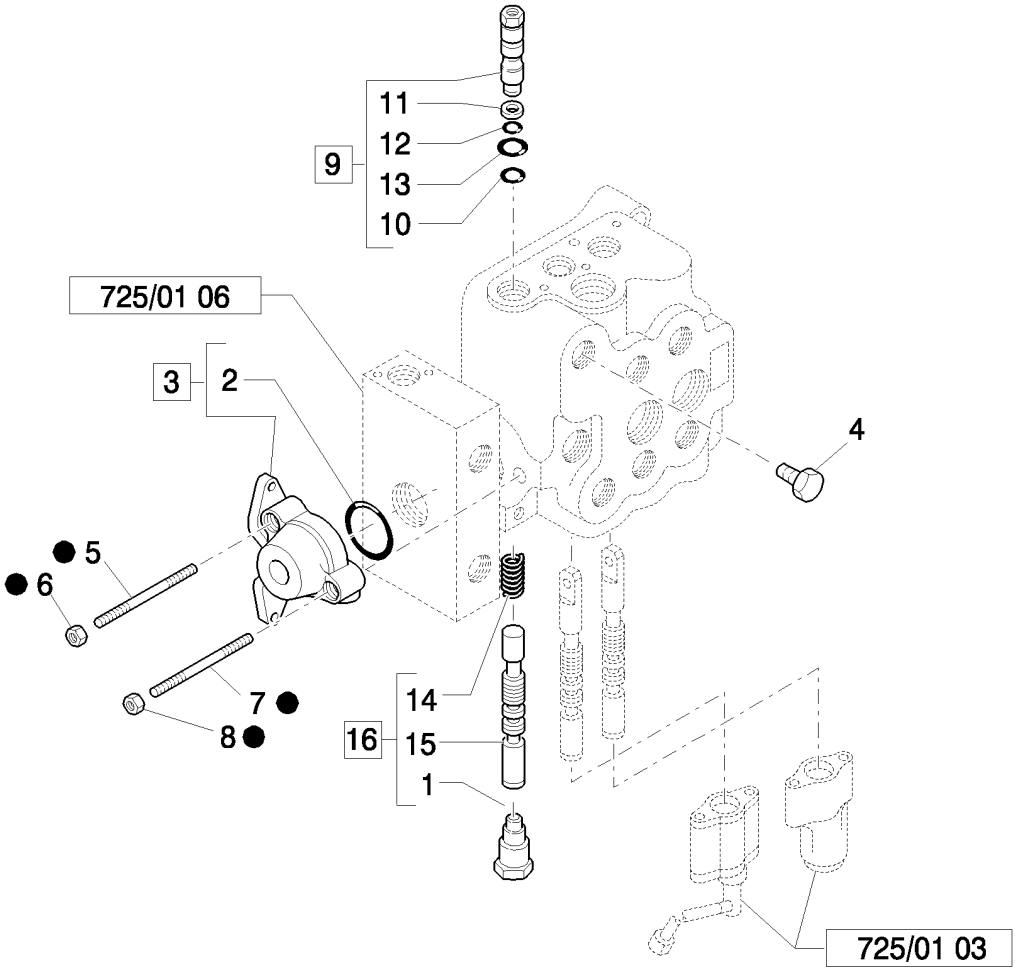

DISTRIBUIDOR CARGADOR, 3 SECCIONES, TAPA Y VÁLVULA DE DESCARGA (CENTER PIVOT) - NA

REF	FN	PART NUMBER	YR/SN	QTY	DENOMINACION
1		9968464		1	TAPÓN, Assy
2		9968476		1	JUNTA HERMETICA
3		9968443		1	DISTRIBUIDOR HYDR, Assy
4		85807857		1	TAPÓN
5		9968439		2	PRISIONERO
6		9968441		2	TUERCA
7		9968438		1	VARILLA FILETADA
8		9968440		1	TUERCA
9		85815667		1	VÁLVULA BYPASS
10		85815668		1	JUNTA HERMETICA
11		9968467		1	JUNTA
12		9968466		1	JUNTA HERMETICA
13		9968468		1	JUNTA HERMETICA
14		9968488		1	RESORTE
15		85807858		1	PISTONCILLO
16		87327632		1	PISTONCILLO, Assy
17		87326258		1	KIT DE MODIFICACION

Mechanical Version	B95B

725/01	05	p1	04/08

DISTRIBUIDOR CARGADOR, 3 SECCIONES, VÁLVULA DE ALIVIO Y RETENCIÓN (CENTER PIVOT) - NA

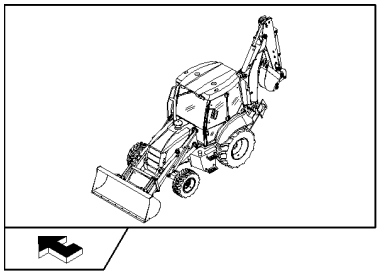

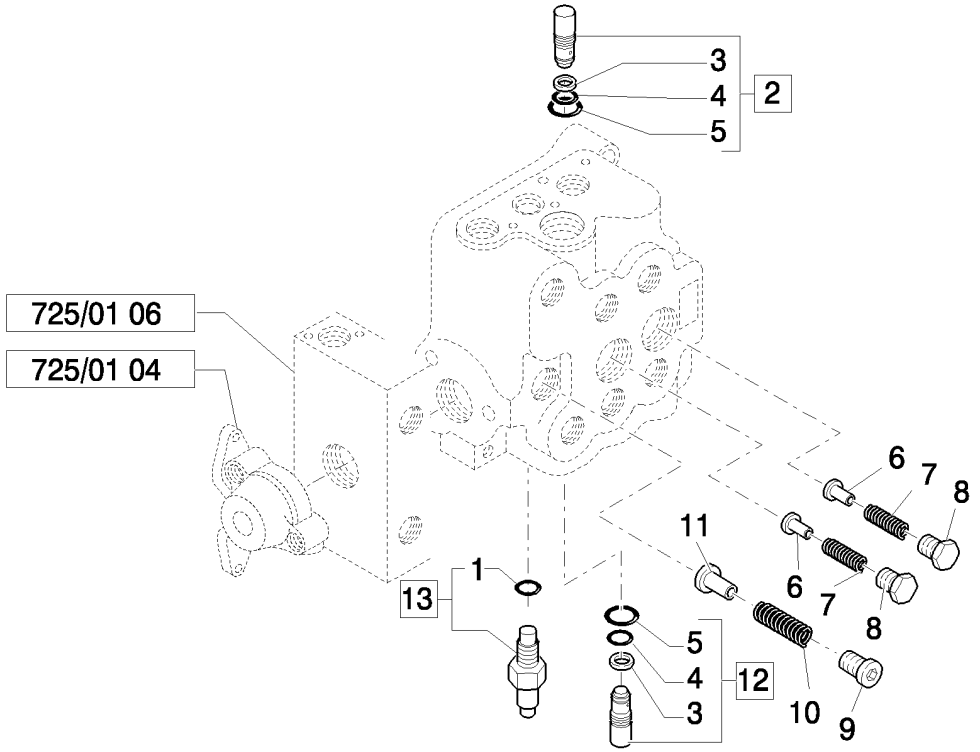

DISTRIBUIDOR CARGADOR, 3 SECCIONES, VÁLVULA DE ALIVIO Y RETENCIÓN (CENTER PIVOT) - NA

REF	FN	PART NUMBER	YR/SN	QTY	DENOMINACION
1		85819945		1	JUNTA HERMETICA, Assy
2		87302609		1	VÁLVULA, DESCARGA, Assy
3		87302608		2	JUNTA
4		9968471		2	JUNTA HERMETICA
5		9968470		2	JUNTA HERMETICA
6		9968444		2	EMBOLO
7		9968445		2	RESORTE
8		9968446		2	TAPÓN
9		9968449		1	TAPÓN
10		9968448		1	RESORTE
11		9968447		1	EMBOLO
12		87302611		1	VÁLVULA, DESCARGA, Assy
13		85819722		1	VALVULA HIDRAULICA, Assy

725/01	06	p1	04/08

DISTRIBUIDOR DE LA PALA DE TRES SECCIONES - CUCHARON SECCIONES 4X1 - 6X1(CENTER PIVOT) - NA

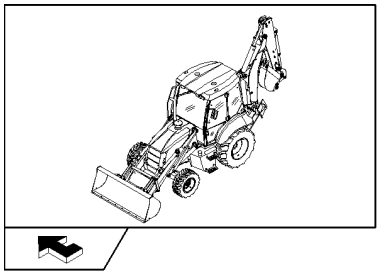

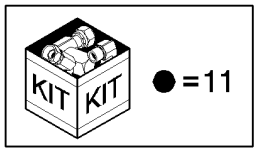

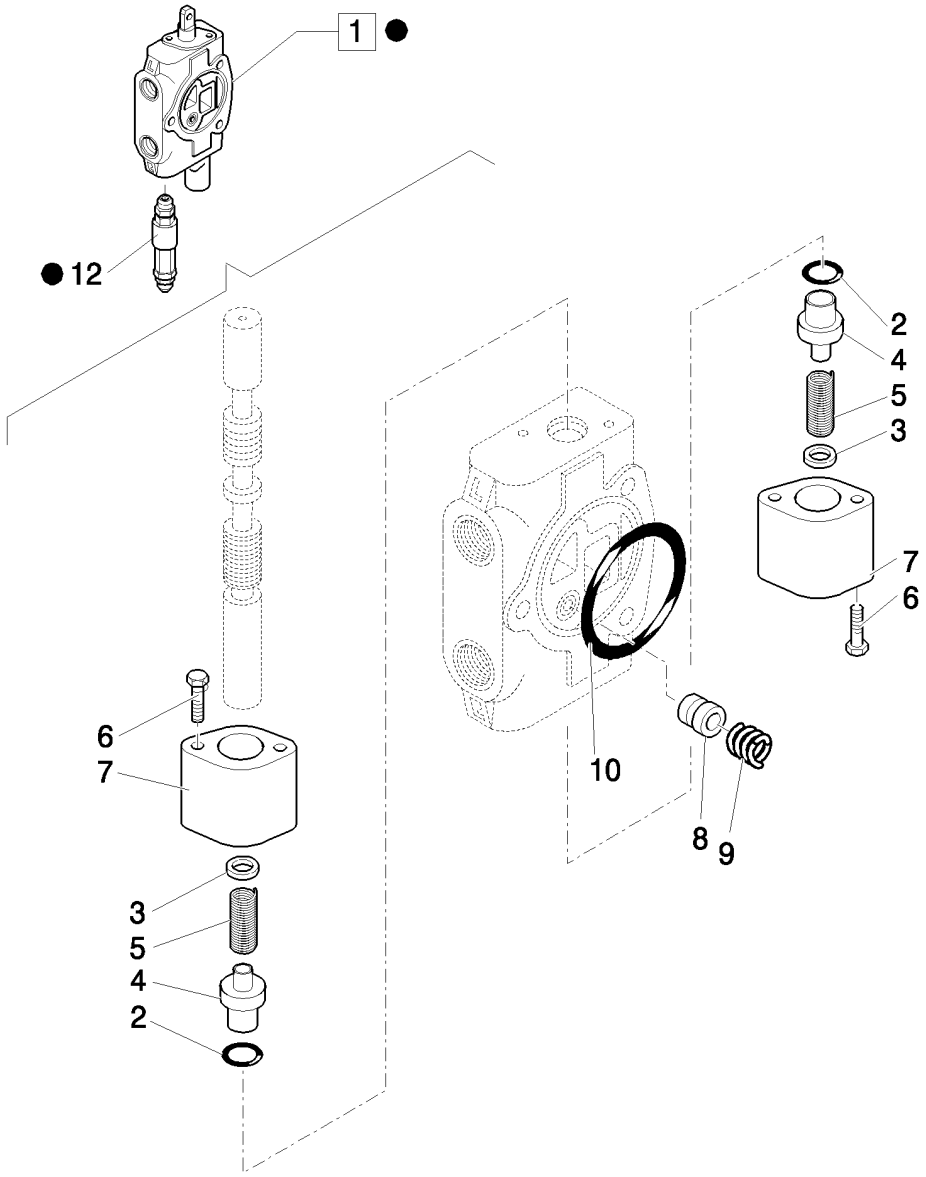

DISTRIBUIDOR DE LA PALA DE TRES SECCIONES - CUCHARON SECCIONES 4X1 - 6X1(CENTER PIVOT) - NA

REF	FN	PART NUMBER	YR/SN	QTY	DENOMINACION
1		87326257		1	DISTRIBUIDOR HYDR, Assy
2		87327044		2	JUNTA HERMETICA
3		87327053		2	SEPARADOR
4		87327049		2	ASIENTO
5		87327052		2	RESORTE
6		87327057		2	TORNILLO
7		87327046		2	TAPÓN
8		9968477		1	POPPET
9		9968478		1	RESORTE
10		9968476		1	JUNTA HERMETICA
11		87326258		1	KIT DE MODIFICACION
12		9968595		1	VÁLVULA, DESCARGA

Mechanical Version B95B

CIRCUITO HIDR. DEL BRAZO TELESCOPICO MANDO A PEDAL (CENTER PIVOT) - NA

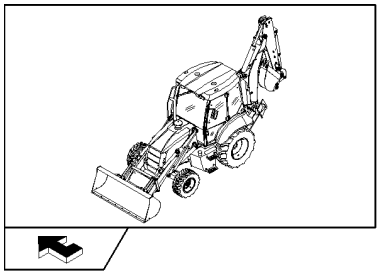

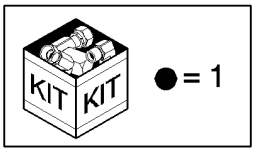

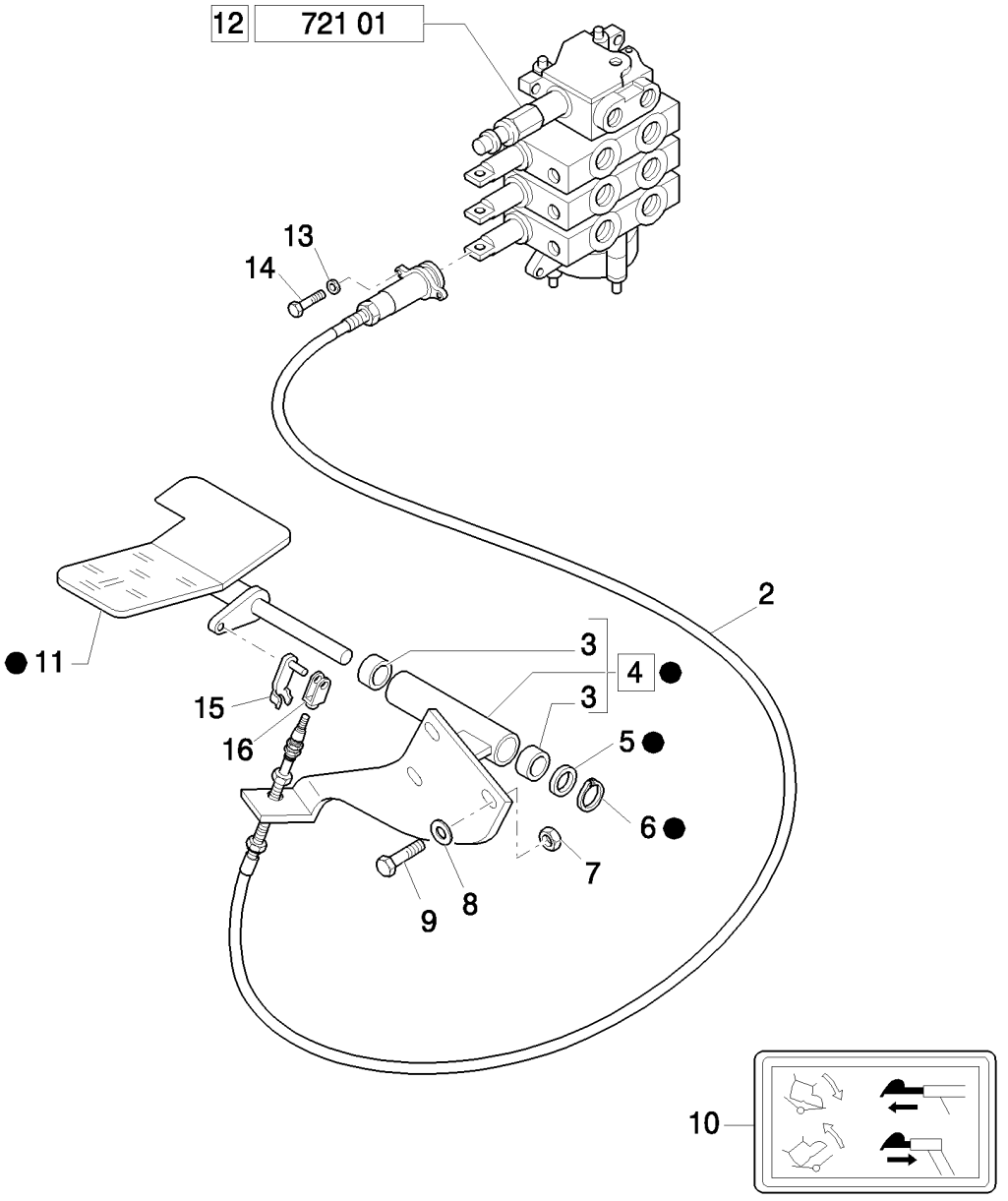

CIRCUITO HIDR. DEL BRAZO TELESCOPICO MANDO A PEDAL (CENTER PIVOT) - NA

REF	FN	PART NUMBER	YR/SN	QTY	DENOMINACION
1		85802509		1	PEDAL, Assy
2	1	85813103		1	CABLE
3		85802494		2	CASQUILLO
4		85801599		1	PLACA, Assy
5		14496901		1	ARANDELA, M16 x 30 x 3
6		83911366		1	RETENEDOR
7		16104111		3	CONTRA TUERCA, M8 x 1.25, Cl 8
8		16043621		3	TORNILLO, Hex, M8 x 25, 8.8
9		11193879		3	ARANDELA ABANICO, Belleville, M8.4
10		85803786		1	CALCOMANIA
11		85802510		1	PEDAL
12		87331094		1	DISTRIBUDOR, Assy
13		85813201		4	ARANDELA
14		85813200		4	TORNILLO
15		85813186		2	SUJETADOR
16		85813187		2	HORQUILLA PEQUENA

(1) Includes 13 - 16

Mechanical Version B95B

728	01	p1	04/08

INSTALACIÓN MARTILLO HIDRÁULICO MANUAL: ALIMENTACIÓN

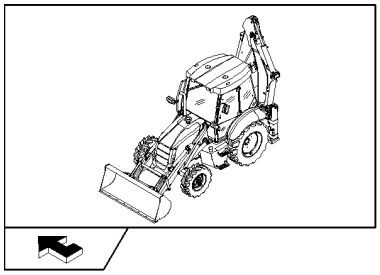

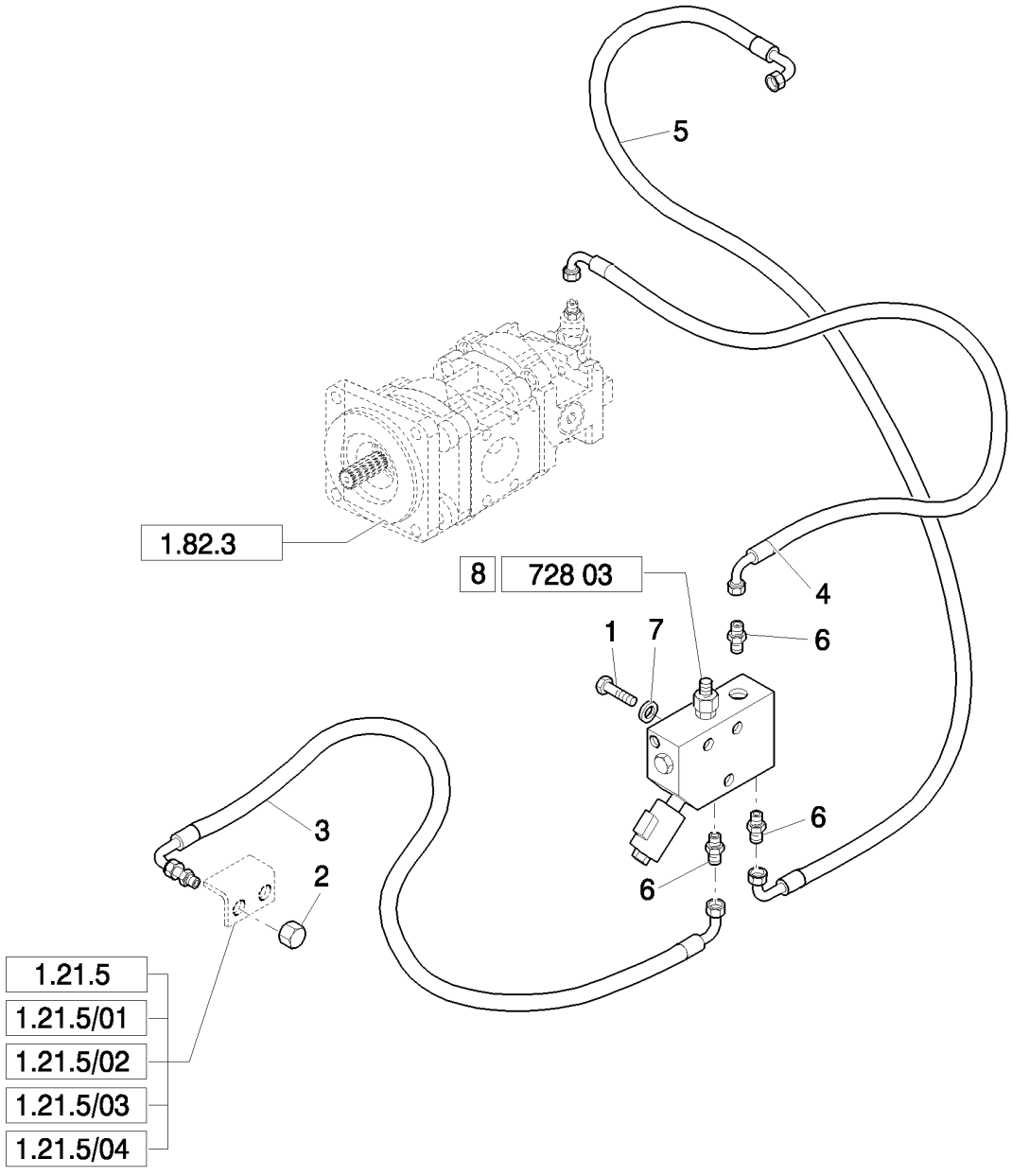

INSTALACIÓN MARTILLO HIDRÁULICO MANUAL: ALIMENTACIÓN

REF	FN	PART NUMBER	YR/SN	QTY	DENOMINACION
1		16044521		3	TORNILLO, Hex, M8 x 65, 8.8
2		83987627		1	TAPON DEL DEPOSITO
3		87619499		1	MANGA FLEXIBLE
4	1	87614752		1	MANGA FLEXIBLE
4	2	87621906		1	MANGA FLEXIBLE
5	1	87621913		1	MANGA FLEXIBLE
6		85803234		3	RACOR
7		11193879		3	ARANDELA ABANICO, Belleville, M8.4
8		87677506		1	VALVULA HIDRAULICA, Assy

(1) Excluded Mechanical Version (NA)
(2) Only for Mechanical Version (NA)

728	02	p1	04/08

INSTALACIÓN MARTILLO HIDRÁULICO LATERAL: RETORNO

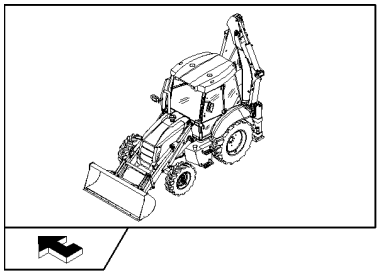

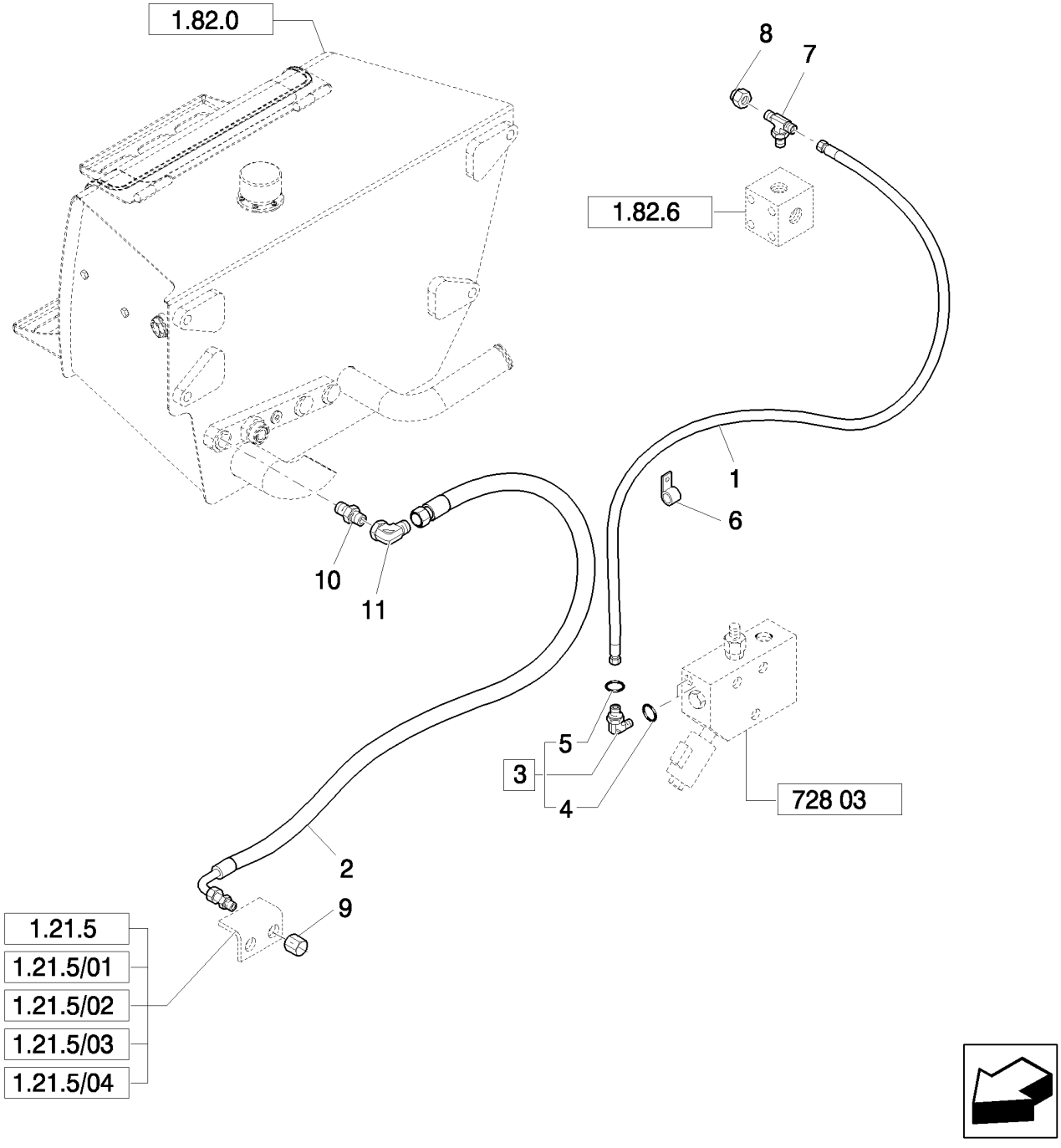

INSTALACIÓN MARTILLO HIDRÁULICO LATERAL: RETORNO

REF	FN	PART NUMBER	YR/SN	QTY	DENOMINACION
1		85803230		1	MANGA FLEXIBLE, 1050mm lg
2		85803231		1	MANGA FLEXIBLE, 900mm lg
3		83961741		1	CODO, Assy
4		81844851		1	JUNTA HERMETICA
5		81845037		1	JUNTA HERMETICA
6		85803393		1	BORNE
7		85802780		1	RACOR-T
8		81871325		1	TAPADERA
9		83987627		1	TAPON DEL DEPOSITO
10		85803241		1	RACOR
11		85827861		1	RACOR

728	03	p1	04/08

VÁLVULA MARTILLO MANUAL

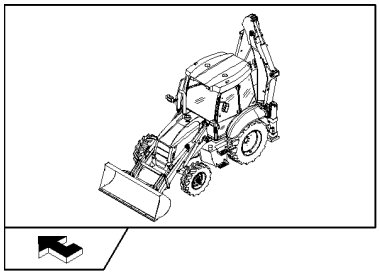

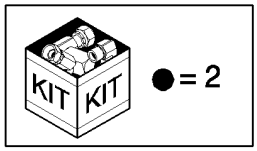

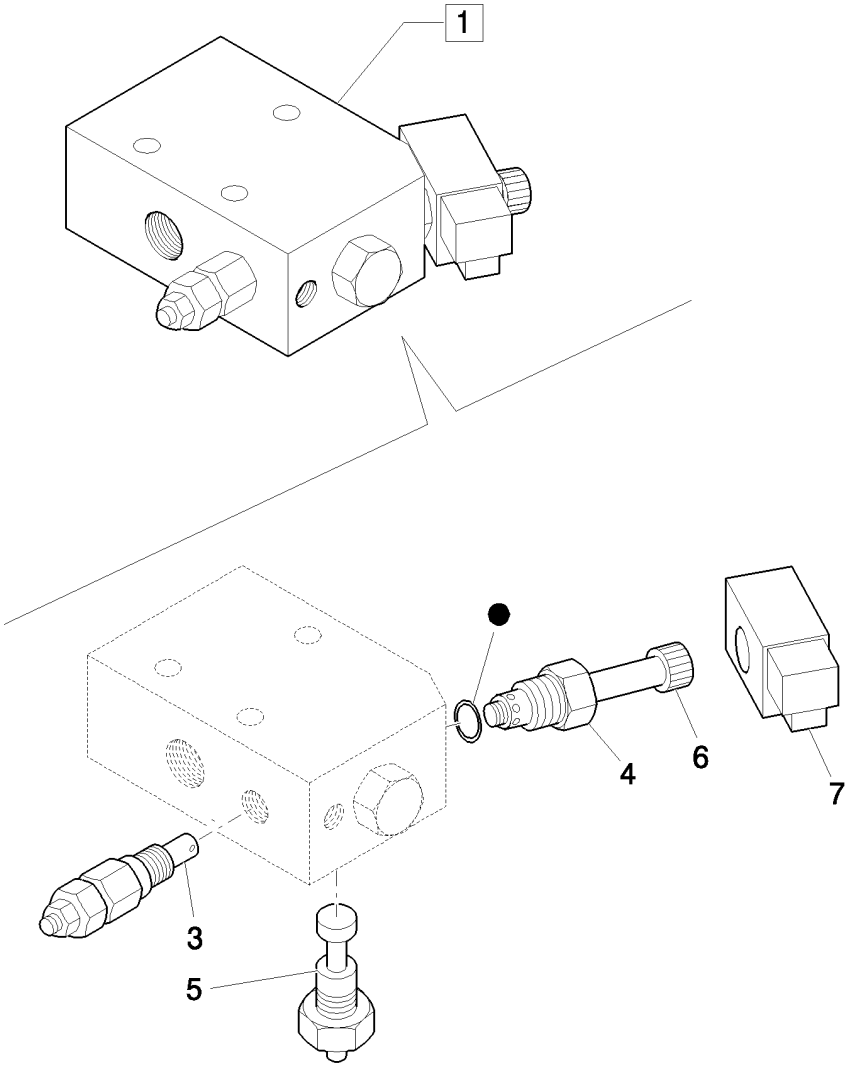

VÁLVULA MARTILLO MANUAL

REF	FN	PART NUMBER	YR/SN	QTY	DENOMINACION
1		87677506		1	VALVULA HIDRAULICA, Assy
2		87358193		1	EQUIPO, GASKETS
3		87358196		1	VALVULA HIDRAULICA
4		87358194		1	VALVULA HIDRAULICA
5		9970383		1	ELECTROVÁLVULA
6		9970384		1	TUERCA
7		87357715		1	CONTACTOR

733		p1	04/08

EMPALME RAPIDO MECANICO PARTE TRASERA

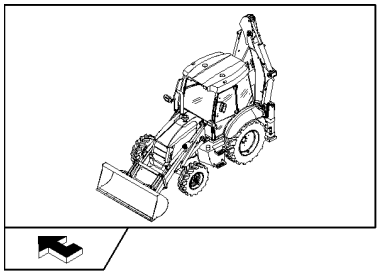

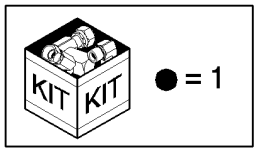

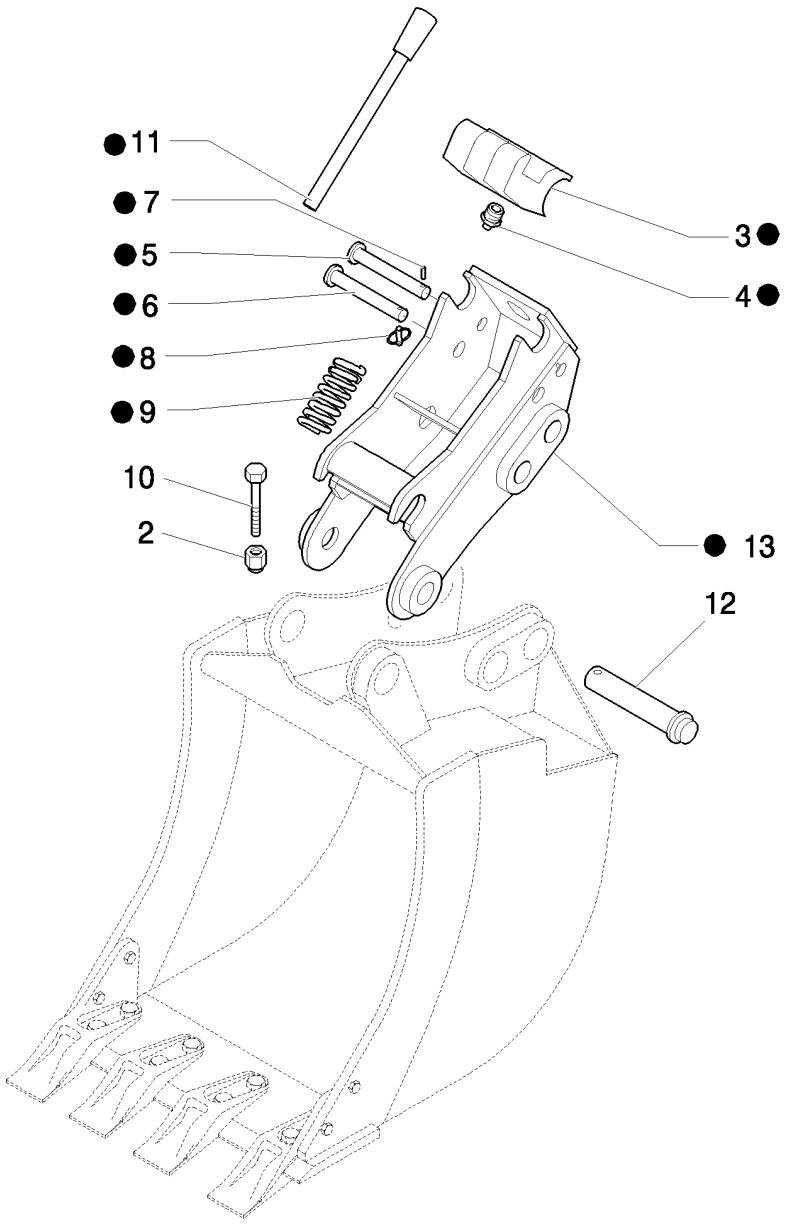

EMPALME RAPIDO MECANICO PARTE TRASERA

REF	FN	PART NUMBER	YR/SN	QTY	DENOMINACION
1		87677533		1	ACOPLADOR, Assy
2		12574511		2	CONTRA TUERCA, M10 x 1.25, Cl 8
3		85827552		1	GANCHO
4		85824266		1	ENGRASADOR
5		85827553		1	GANCHO, 1.26" dia x 10.3" lg
6		87677542		1	PASADOR
7		85825285		1	PERNO
8		87677544		1	PASADOR CHAVETTA
9		85824268		1	RESORTE
10		15972034		2	TORNILLO, Hex, M10 x 110, 10.9
11		87677546		1	MANECILLA
12		85803005		2	PERNO
13		87677538		1	ACOPLADOR

734		p1	03/08

EMPALME RAPIDO MECANICO PARTE DELANTERA

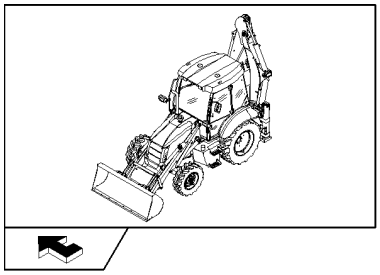

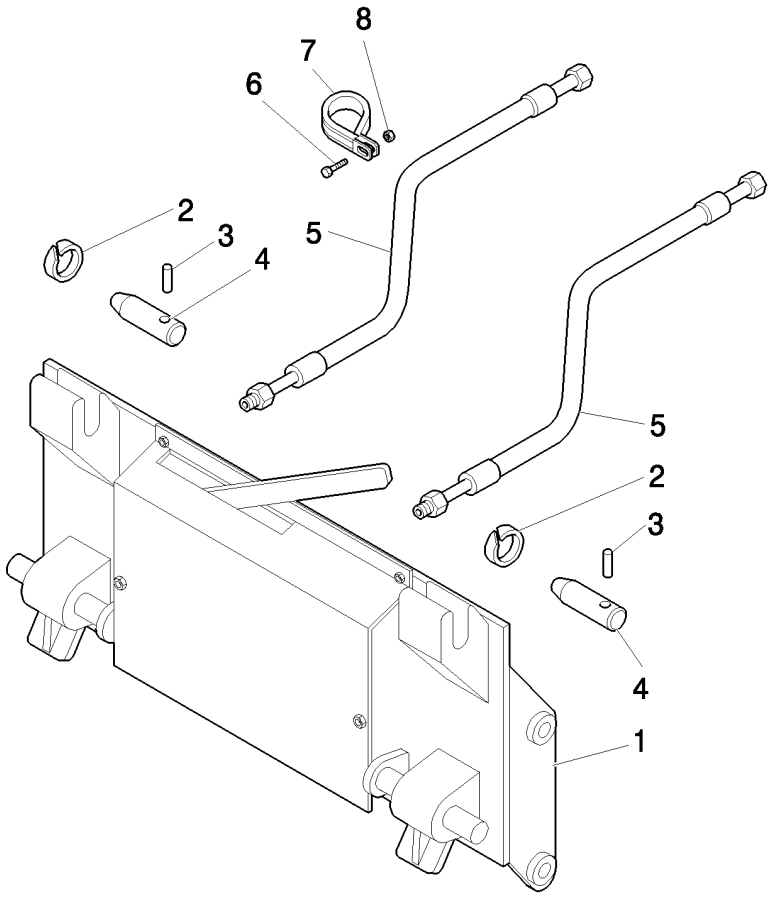

EMPALME RAPIDO MECANICO PARTE DELANTERA

REF	FN	PART NUMBER	YR/SN	QTY	DENOMINACION
1		85824397		1	PLACA DE SUJECION
2		85802992		2	ANILLO
3		85802993		2	PERNO
4		85801051		2	PERNO
5		85813378		2	HOSE, HYDRAULIC, 1000mm lg
6		16043921		2	TORNILLO, M8x1.25x35
7		85803393		2	BORNE
8		16104111		2	CONTRA TUERCA, M8 x 1.25, Cl 8

758		p1	04/08

FARO GIRATORIO

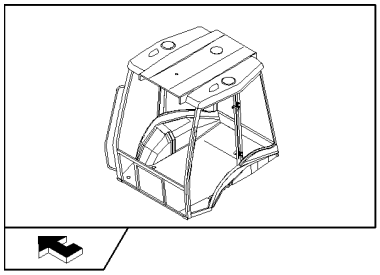

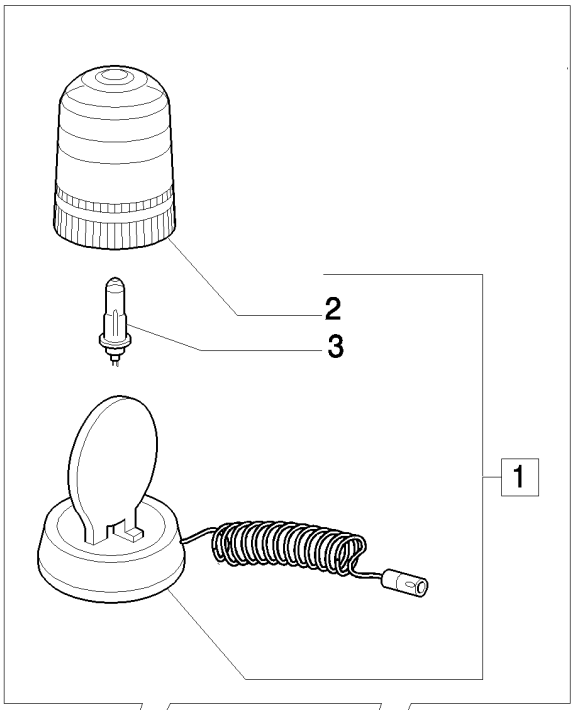

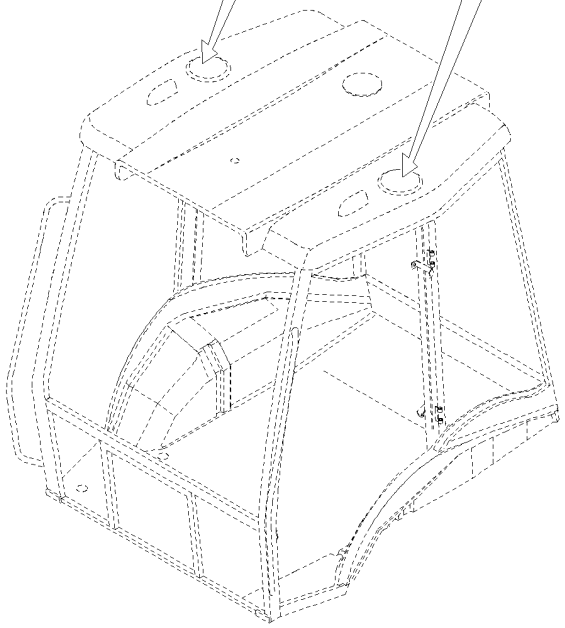

FARO GIRATORIO

REF	FN	PART NUMBER	YR/SN	QTY	DENOMINACION
1		85817129		1	LUZ GIRATORIA, Assy
2		85817131		1	TAPA TRANSLUCIDA
3		85817130		1	BOMBILLA

787		p1	04/08

CONSOLA ANTERIOR SIN TAQUÍMETRO (POWER SHUTTLE, ROPS)

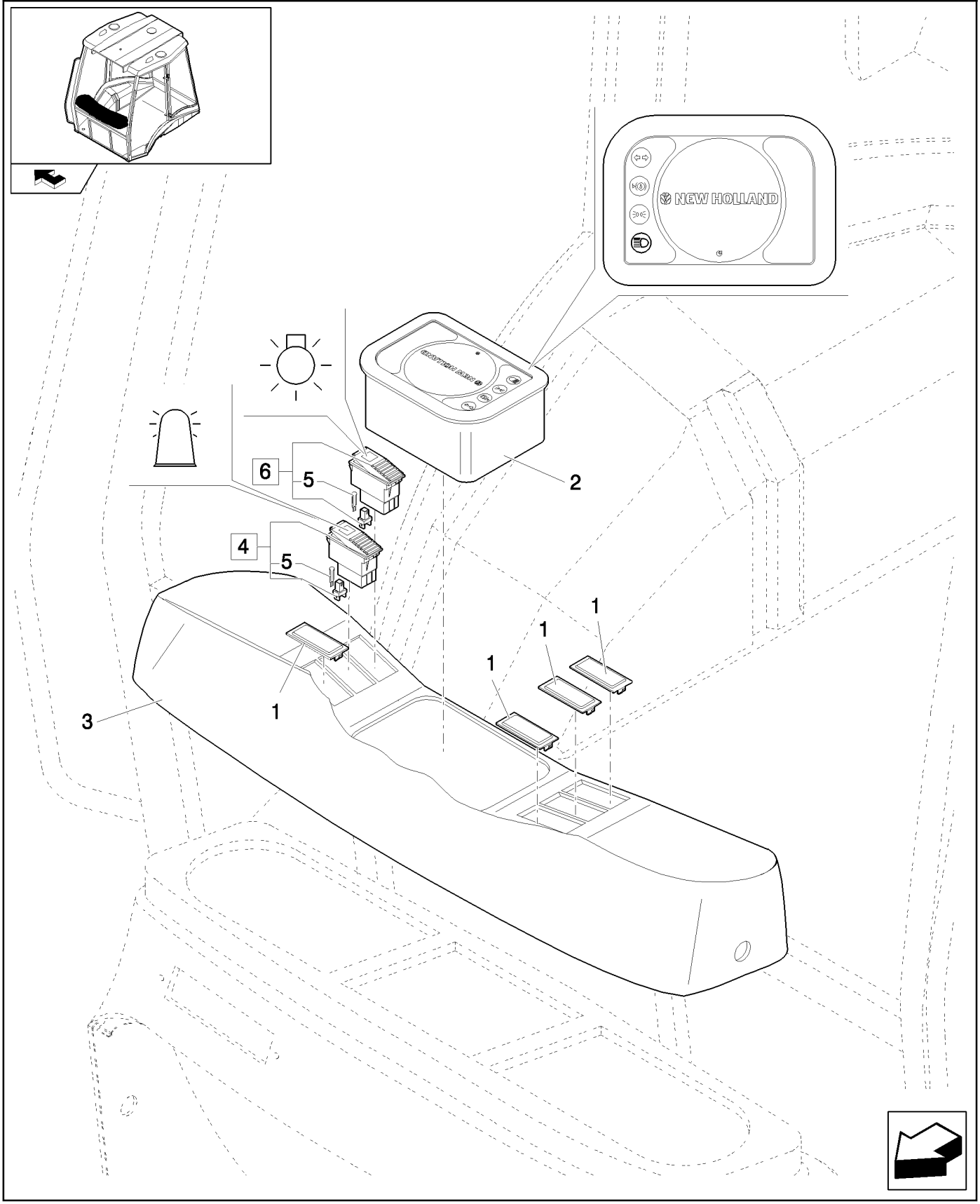

CONSOLA ANTERIOR SIN TAQUÍMETRO (POWER SHUTTLE, ROPS)

REF	FN	PART NUMBER	YR/SN	QTY	DENOMINACION
1		85825254		4	TAPÓN
2		87521741		1	VELOCIMETRO
3		85818940		1	TABLIERO
4		85818827		1	CONTACTOR, Assy
5		14143790		4	BOMBILLA
6		85818828		1	INTERRUPTOR, Assy

787/01		p1	04/08

CONSOLA ANTERIOR SIN TAQUÍMETRO (POWER SHUTTLE, CAB)

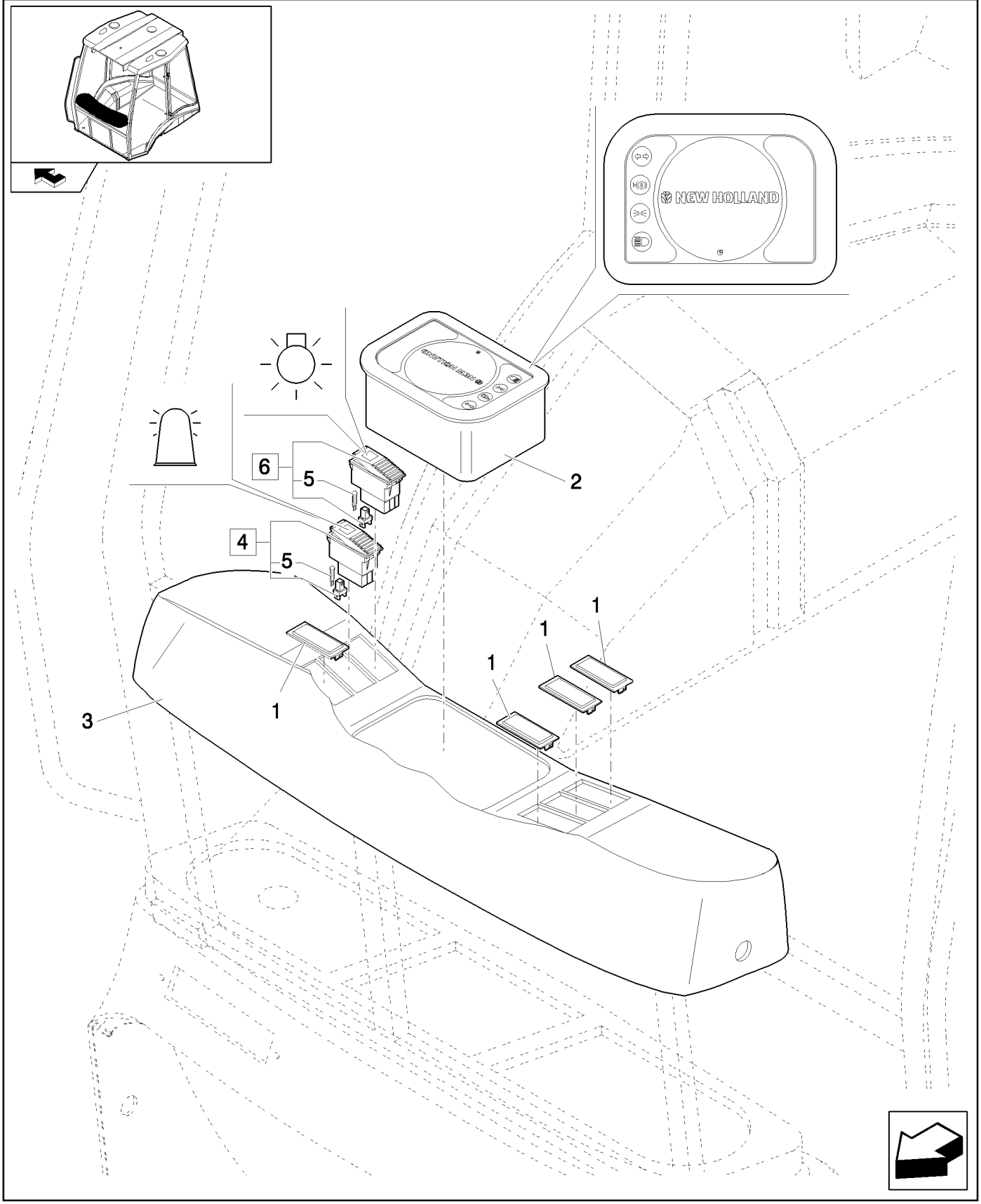

CONSOLA ANTERIOR SIN TAQUÍMETRO (POWER SHUTTLE, CAB)

REF	FN	PART NUMBER	YR/SN	QTY	DENOMINACION
1		85825254		4	TAPÓN
2		87521741		1	VELOCIMETRO
3		85818826		1	TABLIERO
4		85818827		1	CONTACTOR, Assy
5		14143790		4	BOMBILLA
6		85818828		1	INTERRUPTOR, Assy

788		p1	04/08

CONSOLA ANTERIOR CON TAQUÍMETRO (ROPS)

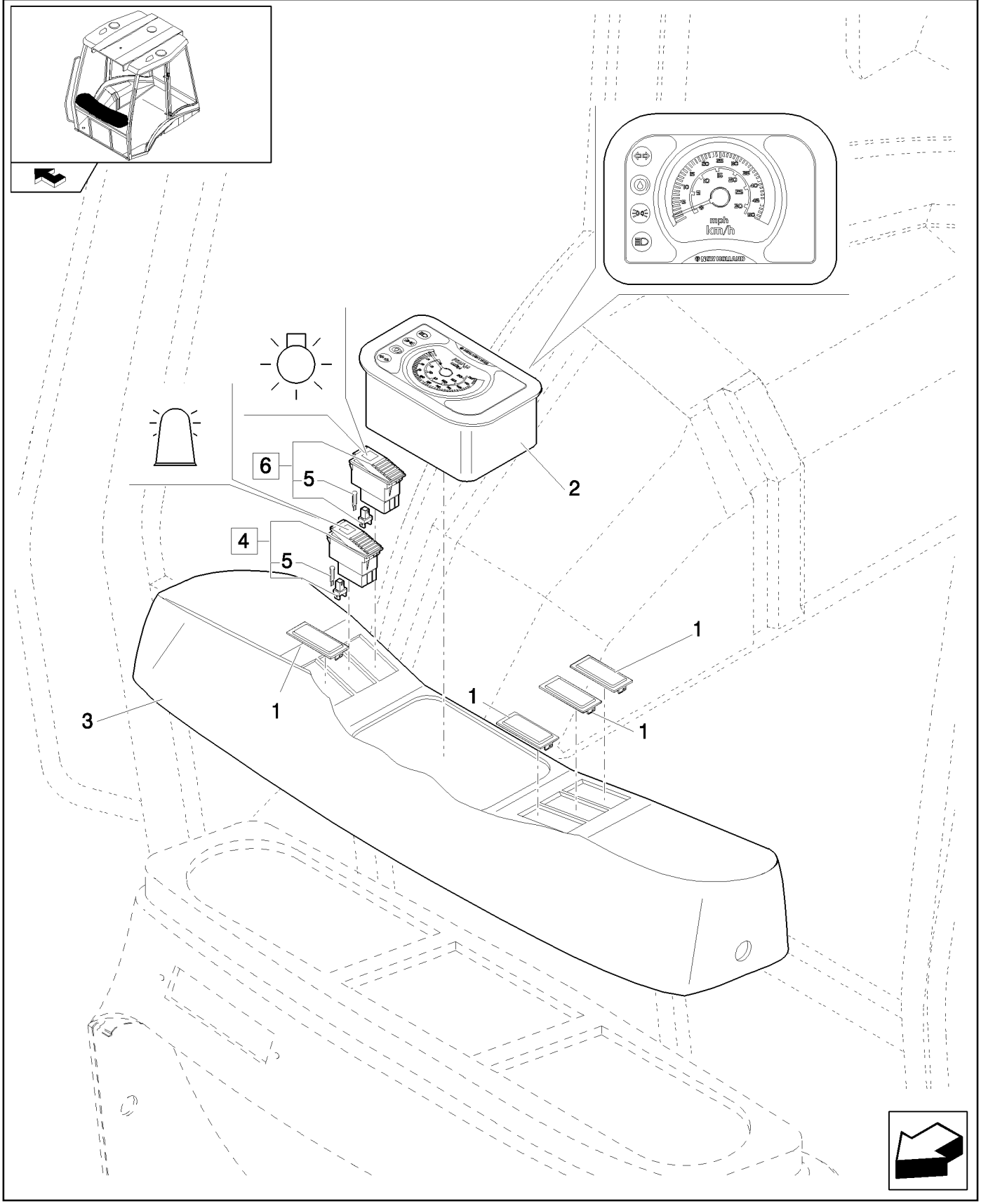

CONSOLA ANTERIOR CON TAQUÍMETRO (ROPS)

REF	FN	PART NUMBER	YR/SN	QTY	DENOMINACION
1		85825254		4	TAPÓN
2		87521822		1	VELOCIMETRO
3		85818940		1	TABLIERO
4		85818827		1	CONTACTOR, Assy
5		14143790		2	BOMBILLA
6		85818828		1	INTERRUPTOR, Assy

788/01		p1	04/08

CONSOLA ANTERIOR CON TAQUÍMETRO (CAB) (POWER SHUTTLE)

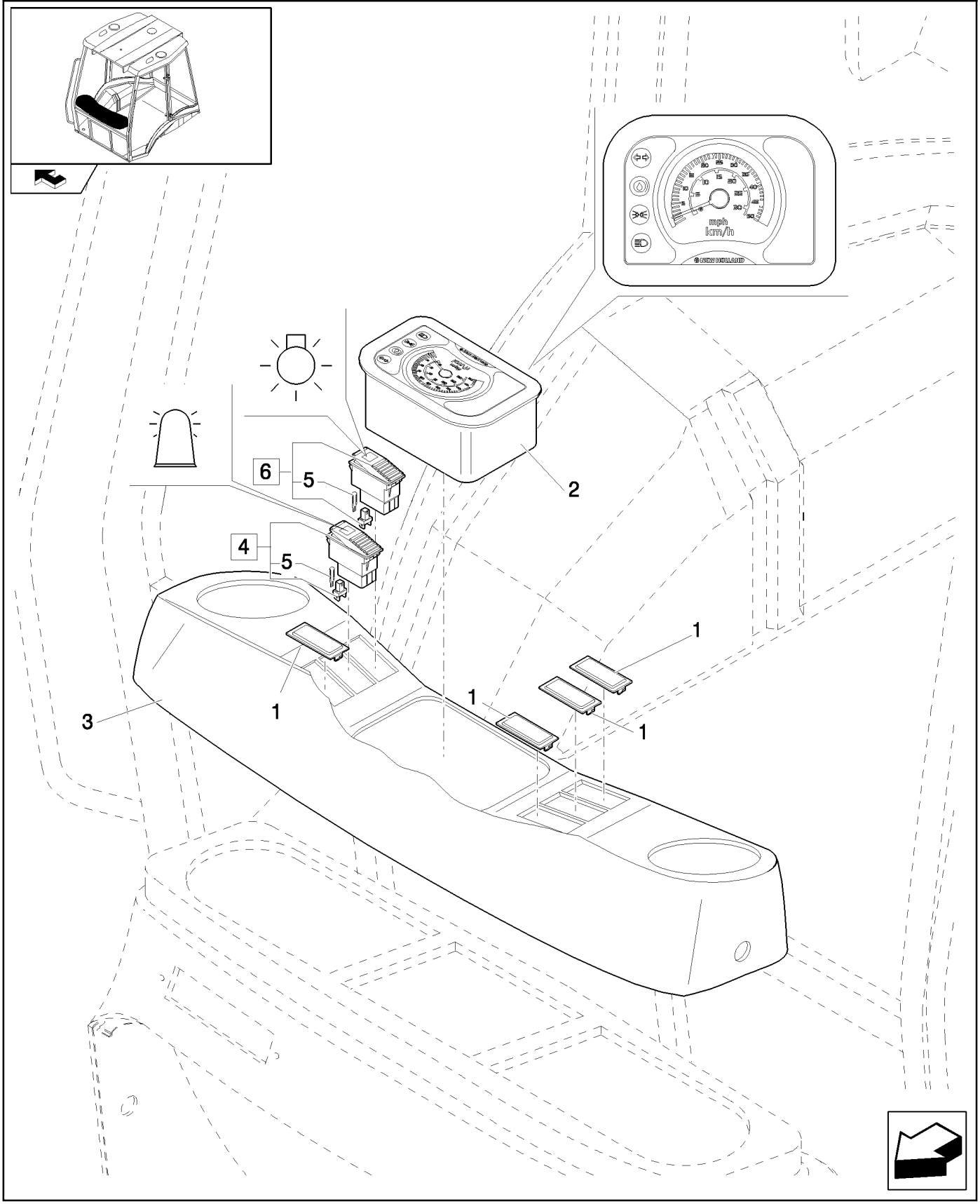

CONSOLA ANTERIOR CON TAQUÍMETRO (CAB) (POWER SHUTTLE)

REF	FN	PART NUMBER	YR/SN	QTY	DENOMINACION
1		85825254		4	TAPÓN
2		87521822		1	VELOCIMETRO
3		85818826		1	TABLIERO
4		85818827		1	CONTACTOR, Assy
5		14143790		2	BOMBILLA
6		85818828		1	INTERRUPTOR, Assy

789		p1	03/08

SENSOR DE VELOCIDAD (P.SHUTTLE)

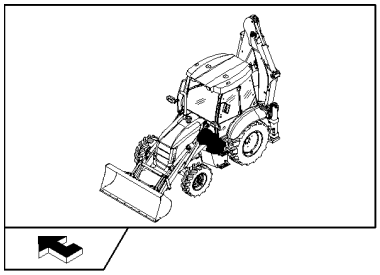

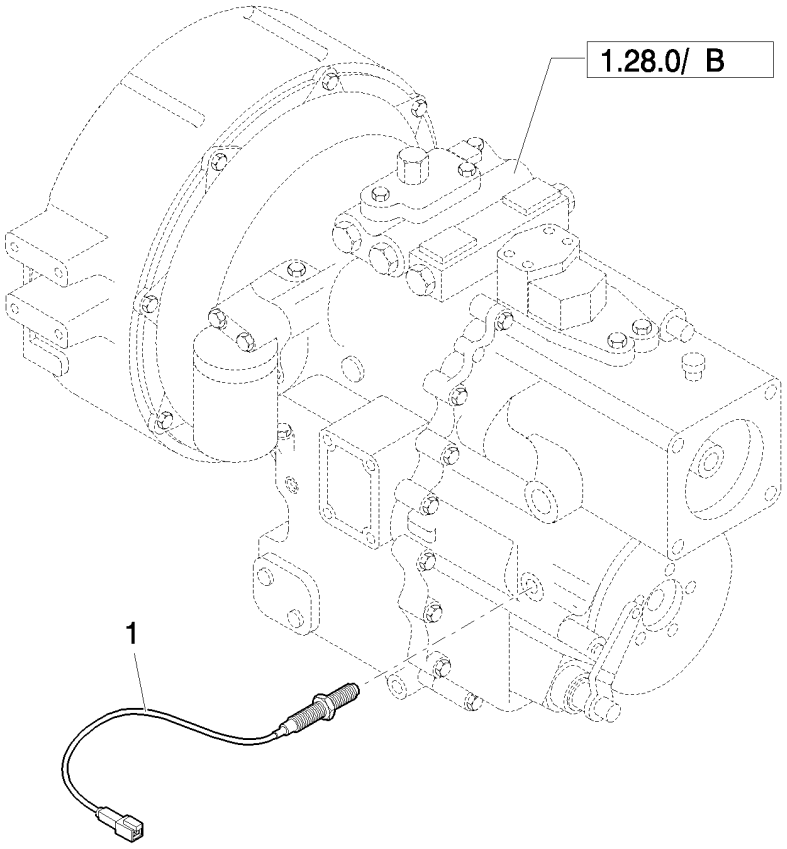

SENSOR DE VELOCIDAD (P.SHUTTLE)

REF	FN	PART NUMBER	YR/SN	QTY	DENOMINACION
1		85804156		1	SENSOR

793		p1	03/08

LUCES DE TRABAJO DELANTERAS - CABINA

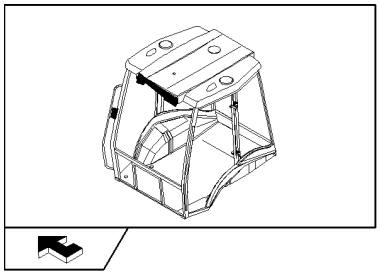

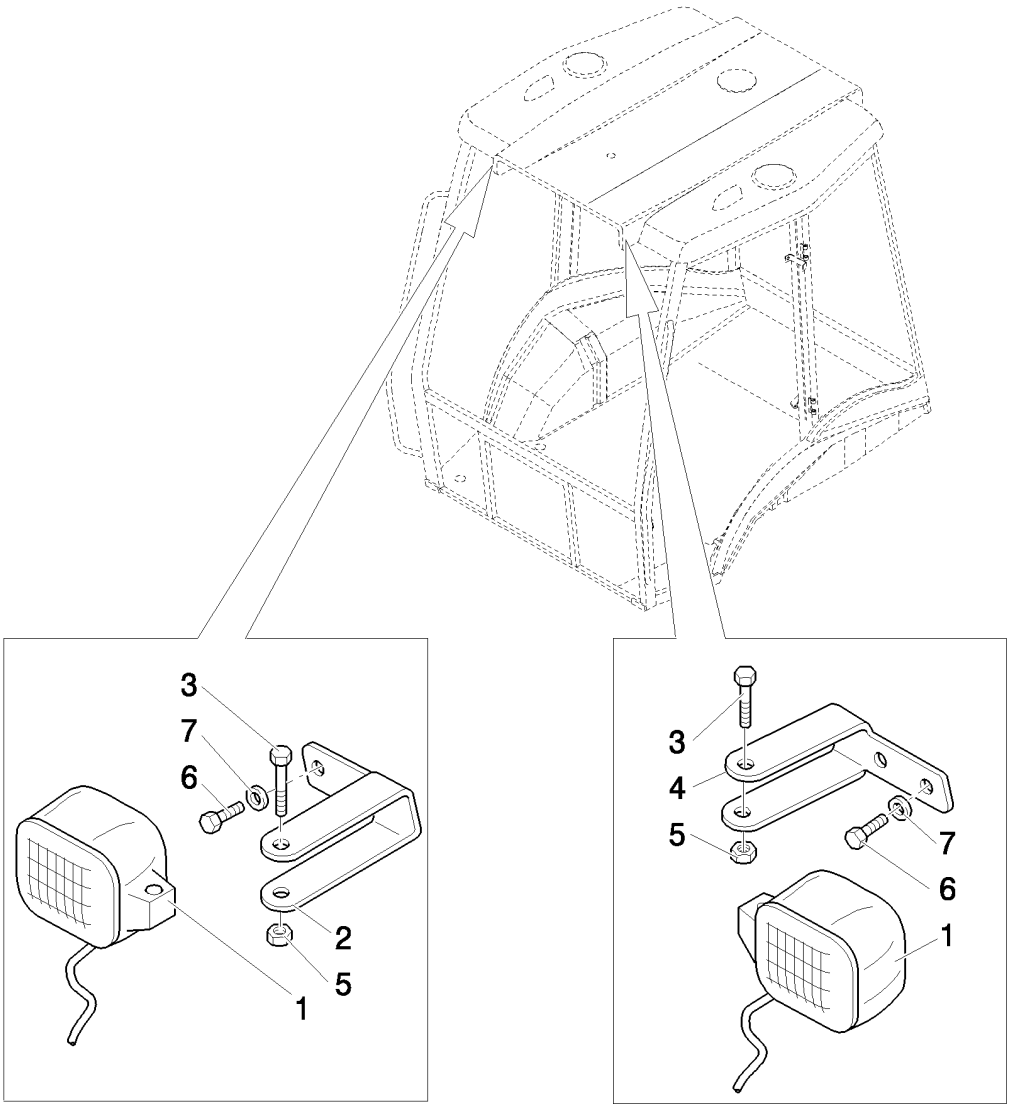

LUCES DE TRABAJO DELANTERAS - CABINA

REF	FN	PART NUMBER	YR/SN	QTY	DENOMINACION
1		85819200		2	FARO, Includes H3 12V 55W Bulb, Order 9703399 For Bulb
2		85819188		1	PIEZA DE SOPORTE, RH
3		16044324		2	TORNILLO, Hex, M8 x 55, 8.8
4		85819189		1	PIEZA DE SOPORTE
5		16104111		2	CONTRA TUERCA, M8 x 1.25, Cl 8
6		10902124		4	TORNILLO, Hex, M6 x 14, 8.8, Full Thd
7		11197774		4	ARANDELA ABANICO, Belleville, M6.4

LUCES DE TRABAJO DELANTERAS (ROPS)

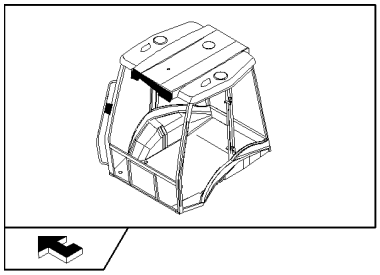

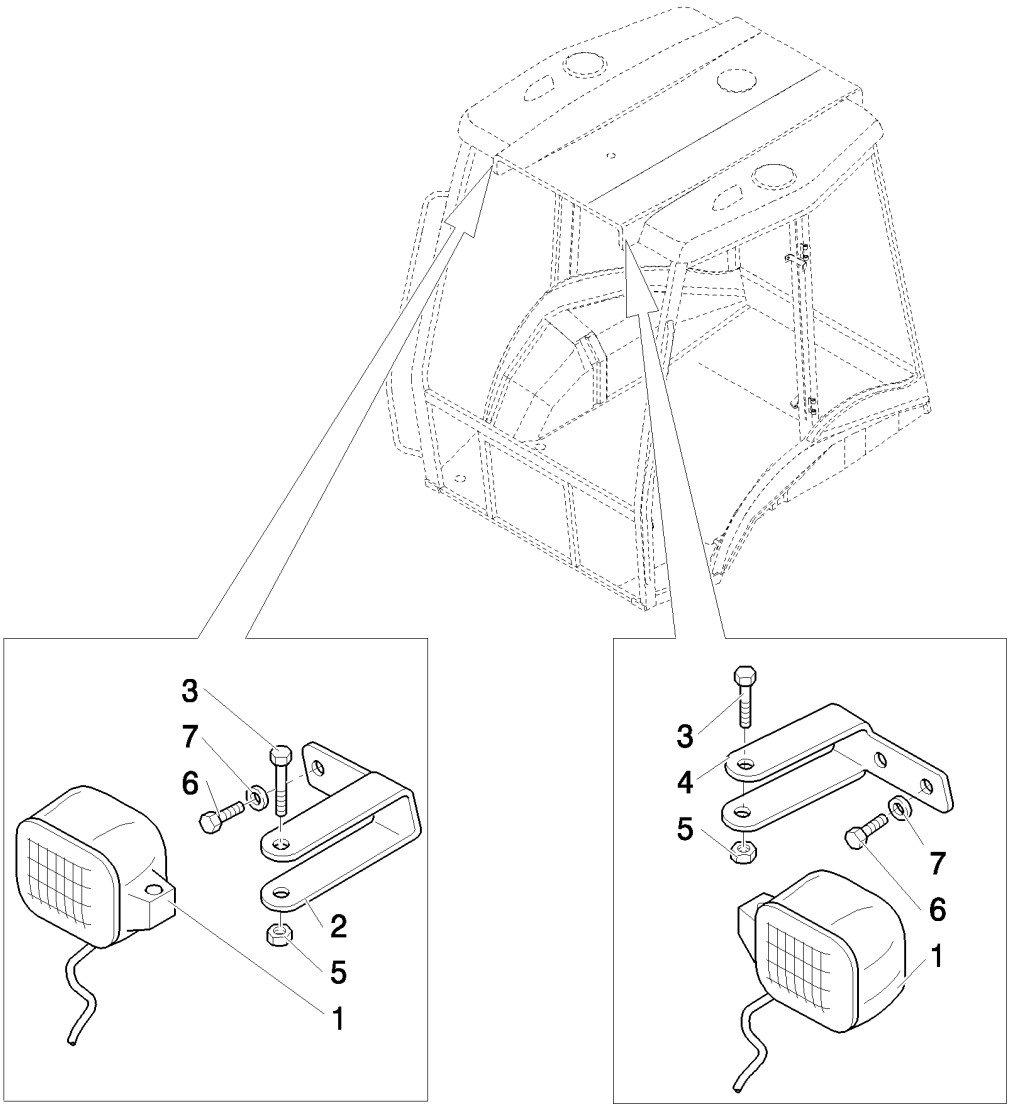

LUCES DE TRABAJO DELANTERAS (ROPS)

REF	FN	PART NUMBER	YR/SN	QTY	DENOMINACION
1		85819200		2	FARO, Includes H3 12V 55W Bulb, Order 9703399 For Bulb
2		85819188		1	PIEZA DE SOPORTE, RH
3		16044324		2	TORNILLO, Hex, M8 x 55, 8.8
4		85819189		1	PIEZA DE SOPORTE
5		16104111		2	CONTRA TUERCA, M8 x 1.25, Cl 8
6		10902124		4	TORNILLO, Hex, M6 x 14, 8.8, Full Thd
7		11197774		4	ARANDELA ABANICO, Belleville, M6.4

LÁMPARAS Y FAROS - CABINA

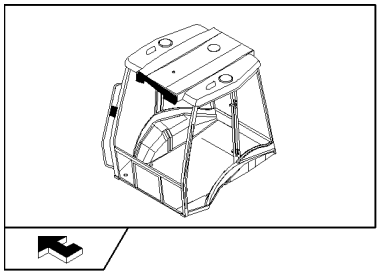

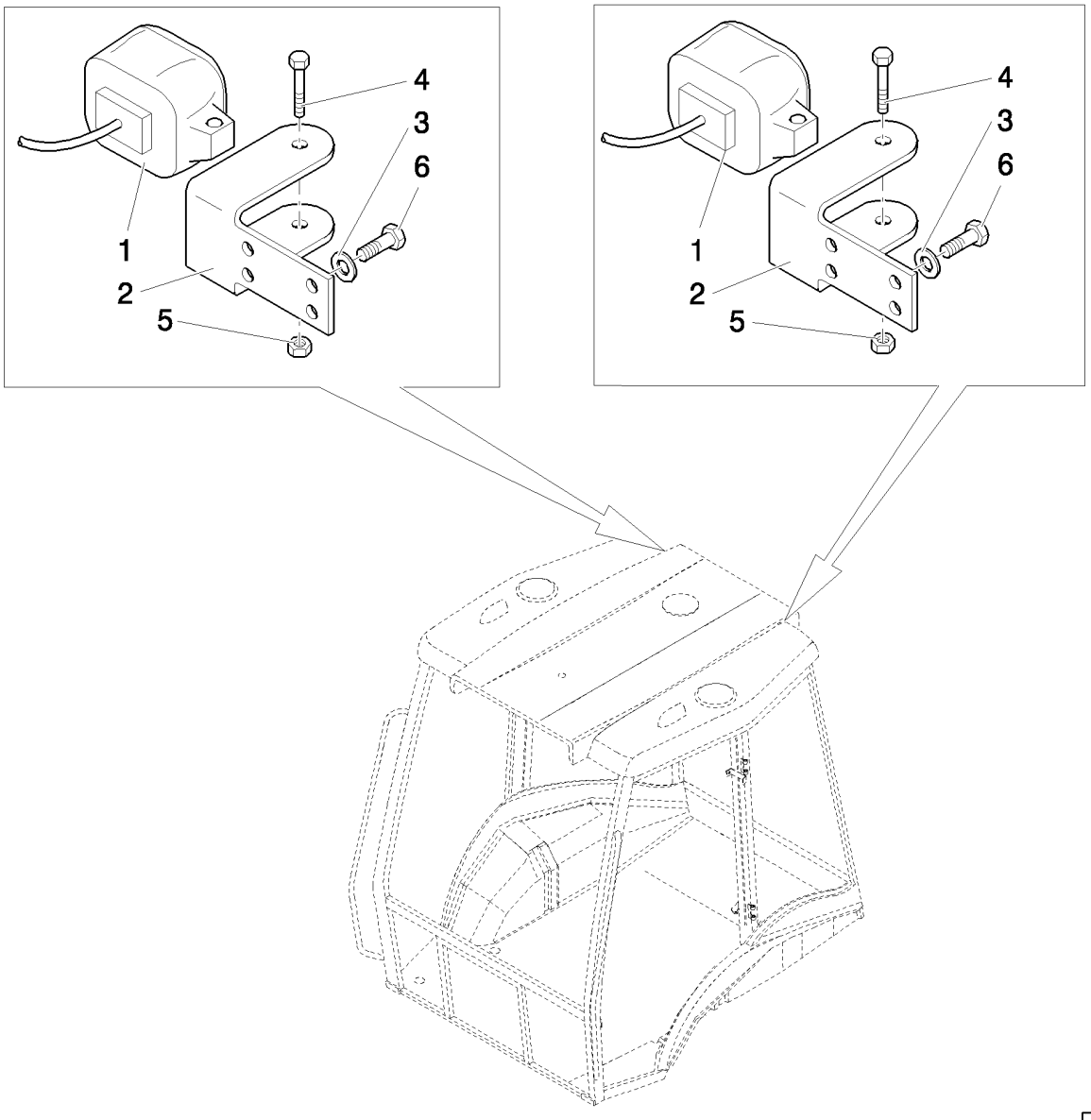

LÁMPARAS Y FAROS - CABINA

REF	FN	PART NUMBER	YR/SN	QTY	DENOMINACION
1		85819200		2	FARO, Includes H3 12V 55W Bulb, Order 9703399 For Bulb
2		85819192		2	PIEZA DE SOPORTE, LH
3		11197774		4	ARANDELA ABANICO, Belleville, M6.4
4		16044324		2	TORNILLO, Hex, M8 x 55, 8.8
5		16104111		2	CONTRA TUERCA, M8 x 1.25, Cl 8
6		10902124		4	TORNILLO, Hex, M6 x 14, 8.8, Full Thd

LÁMPARAS Y FAROS (ROPS)

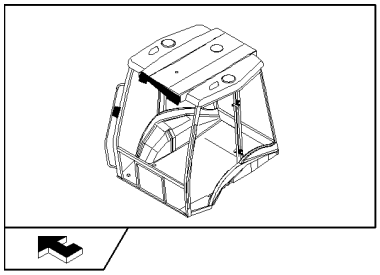

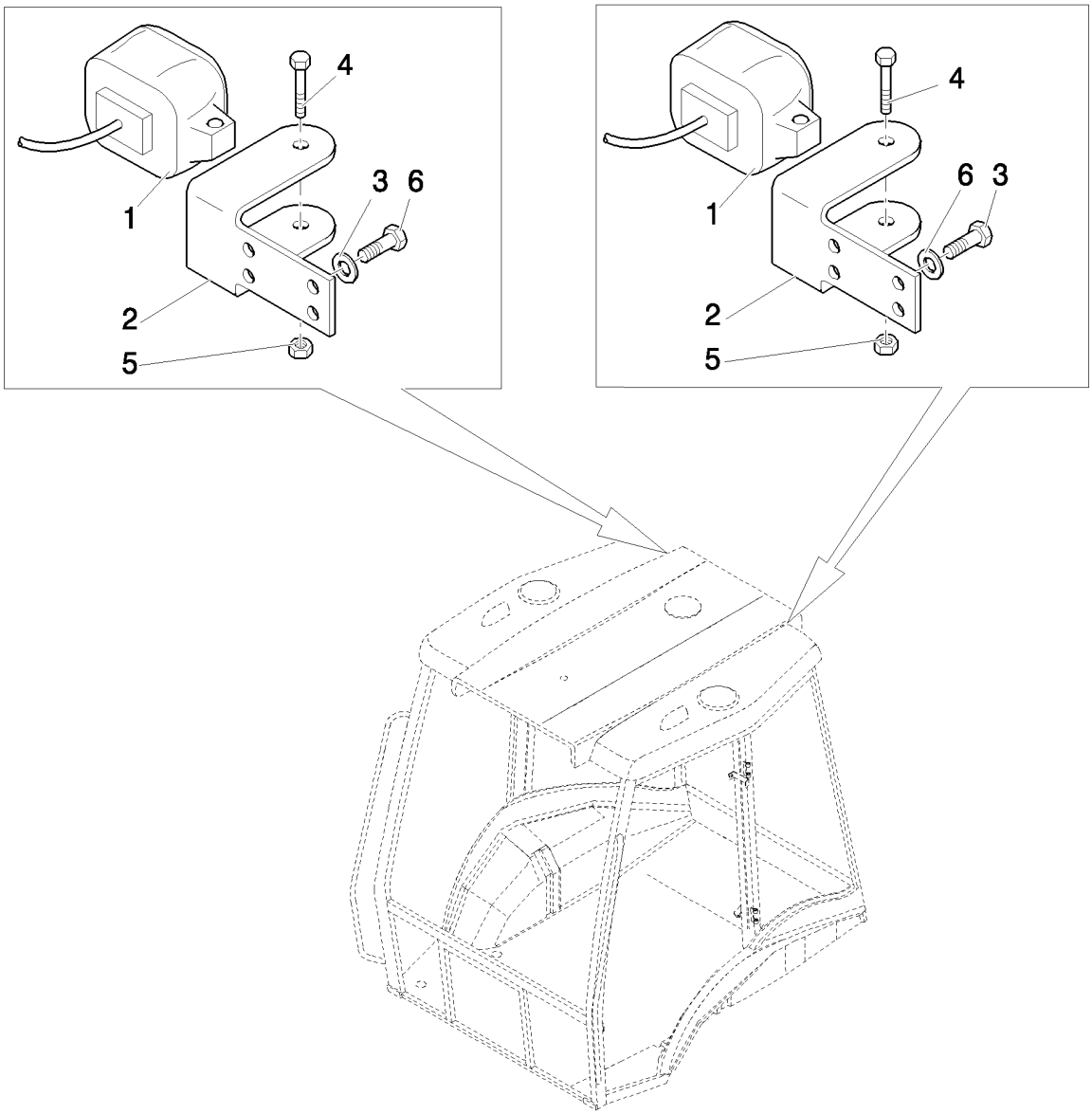

LÁMPARAS Y FAROS (ROPS)

REF	FN	PART NUMBER	YR/SN	QTY	DENOMINACION
1		85819200		2	FARO, Includes H3 12V 55W Bulb, Order 9703399 For Bulb
2		85819192		2	PIEZA DE SOPORTE, LH
3		11197774		4	ARANDELA ABANICO, Belleville, M6.4
4		16044324		2	TORNILLO, Hex, M8 x 55, 8.8
5		16104111		2	CONTRA TUERCA, M8 x 1.25, Cl 8
6		10902124		4	TORNILLO, Hex, M6 x 14, 8.8, Full Thd

ANTIRROBO

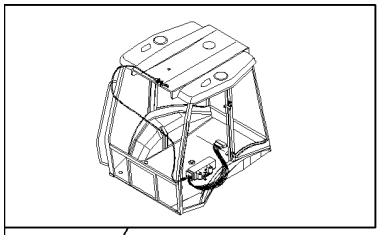

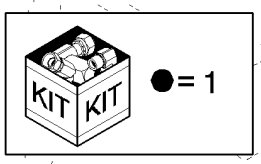

ANTIRROBO

REF	FN	PART NUMBER	YR/SN	QTY	DENOMINACION
1		85819765		1	EQUIPO
2		12574011		2	CONTRA TUERCA, M4 x .7, Cl 8
3		12642821		2	ARANDELA, M4 x 12 x 1
4		14303324		2	TORNILLO, Hex Soc Hd, M4 x 20, 8.8, Full Thd
5		85819766		1	COBERTURA

GUARDABARROS DELANTEROS

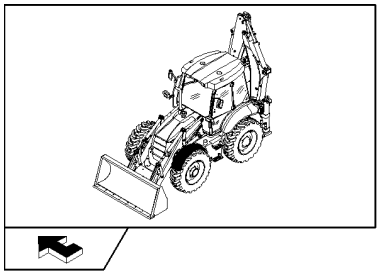

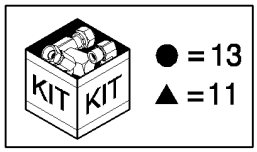

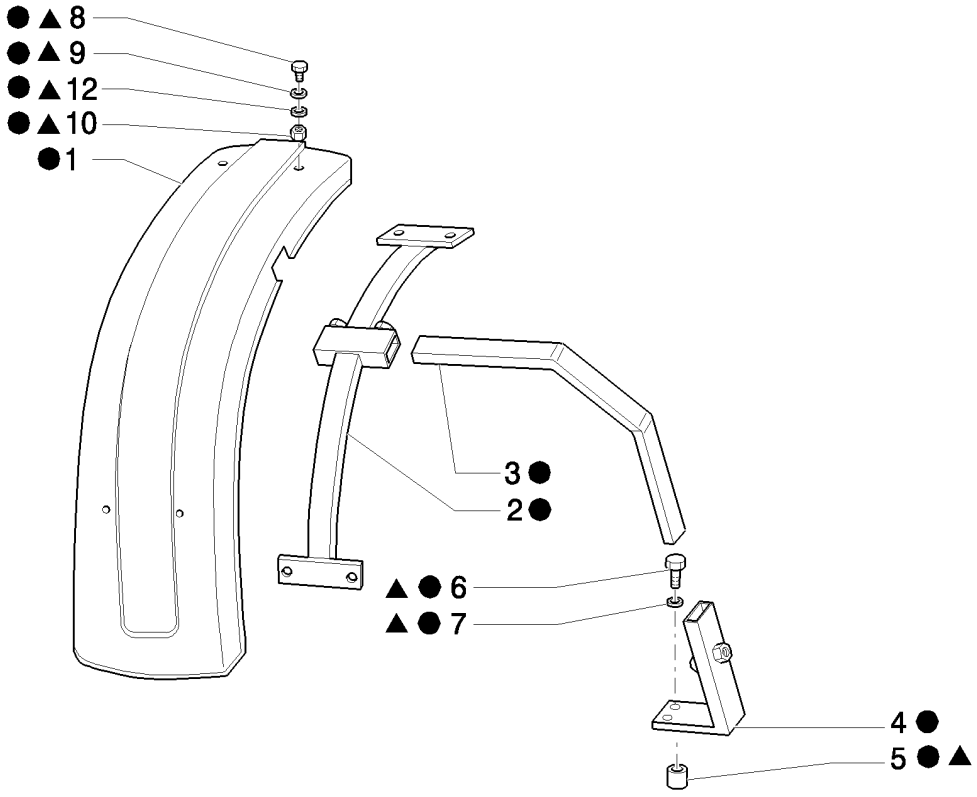

GUARDABARROS DELANTEROS

REF	FN	PART NUMBER	YR/SN	QTY	DENOMINACION
1		9968885		1	GUARDABARROS, LH
1		9968886		1	GUARDABARROS, RH
2		9968884		2	SOPORTE
3		85826132		2	SOPORTE
4		85826134		1	SOPORTE, RH
4		85826133		1	SOPORTE, LH
5		87348002		6	SEPARADOR
6		11119121		6	TORNILLO, Hex, M16 x 60, 8.8
7		14496901		6	ARANDELA, M16 x 30 x 3
8		87302831		8	TORNILLO, M6 x 20
9		11194779		8	ARANDELA ABANICO, Belleville, M6.4, 6.5x18x1.5
10		12574211		8	CONTRA TUERCA, M6 x 1, Cl 8
11	1	87302715		1	JEUGO, M10x20
12		11193279		8	ARANDELA ABANICO, Belleville, M6.4
13		85826131		8	EQUIPO

(1) Includes 5 - 12

835		p1	03/08

GUARDABARROS POSTERIOR Y TECHO (ROPS: CABINA): NA

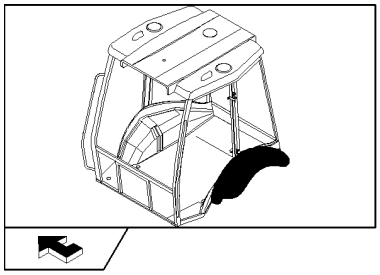

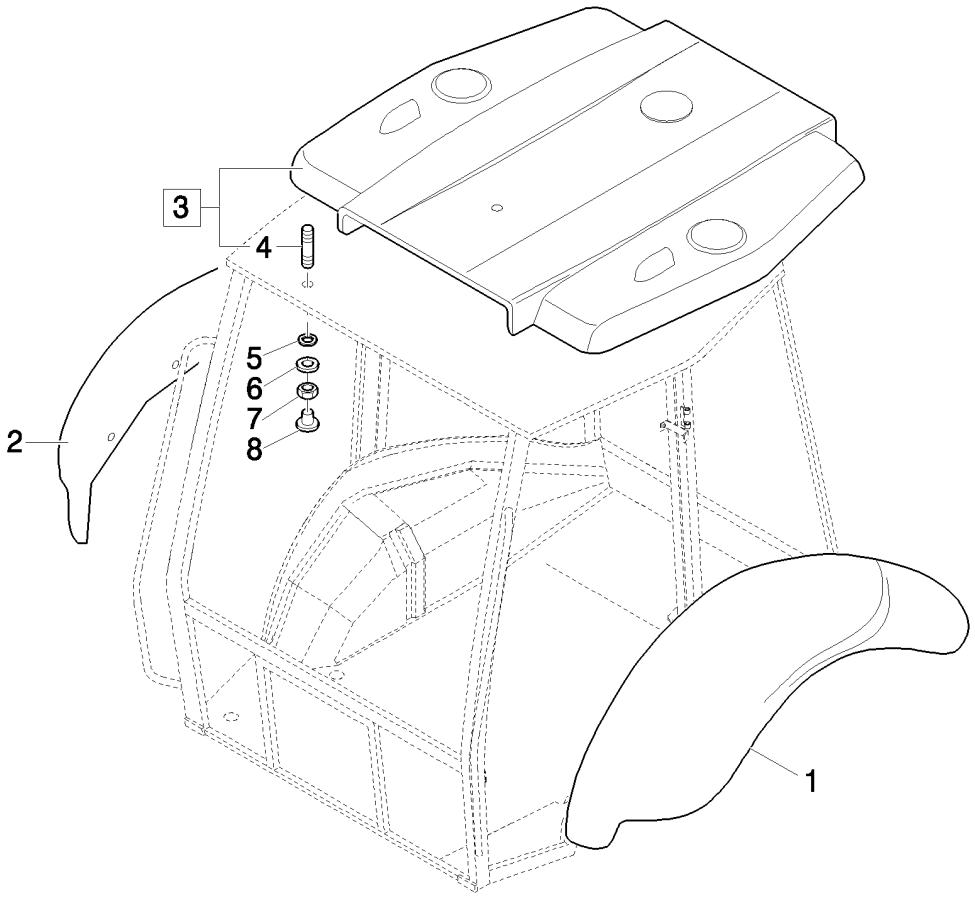

GUARDABARROS POSTERIOR Y TECHO (ROPS: CABINA): NA

REF	FN	PART NUMBER	YR/SN	QTY	DENOMINACION
1		85817051		1	GUARDABARROS
2		85817050		1	GUARDABARROS
3	1	85819760		1	TECHO
3	2	85819763		1	TECHO
4		13517021		8	PRISIONERO
5		85801801		8	RETEN
6		12647004		8	ARANDELA, M8 x 25 x 2.5
7		16104111		8	CONTRA TUERCA, M8 x 1.25, Cl 8
8		79111978		8	TAPÓN

(1) Only for CAB
(2) Only for ROPS

ASIENTO DE TAPICERÍA - CABINA

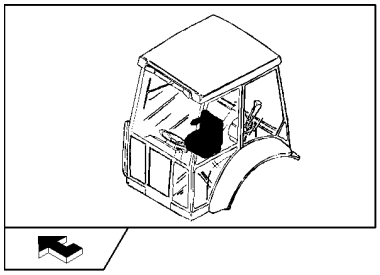

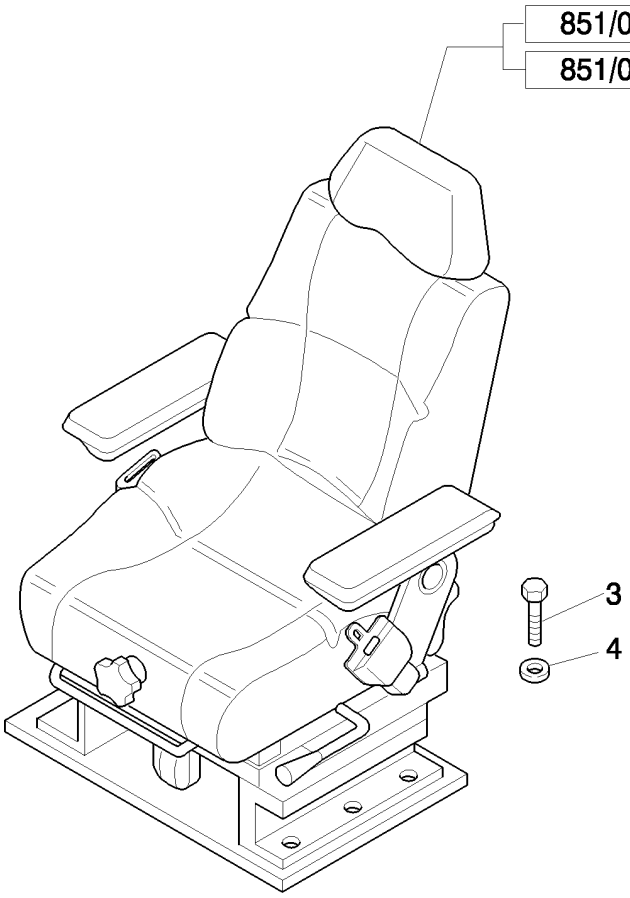

ASIENTO DE TAPICERÍA - CABINA

REF	FN	PART NUMBER	YR/SN	QTY	DENOMINACION
1	1, 2, 3	87576858		1	ASIENTO, Assy
1	1, 4, 3	87576859		1	ASIENTO, Assy
2	2, 5, 3	87576866		1	ASIENTO, Assy
2	4, 5, 3	87576867		1	ASIENTO, Assy
3		16043424		8	TORNILLO, Hex, M8 x 20, 8.8, Full Thd
4		11198074		8	ARANDELA ABANICO, Belleville, M8.4

(1) Mechanical Control Version
(2) 3" Seat Belt
(3) Only for NA
(4) 2" Seat Belt
(5) Only for Pilot Control Version

851/01	01	p1	04/08

COJINES ASIENTO DE TAPICERÍA, BRAZOS Y ACCESORIOS

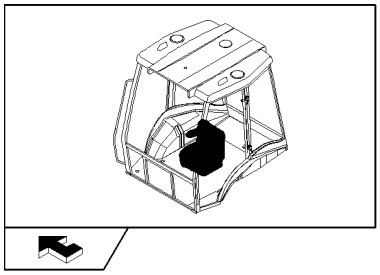

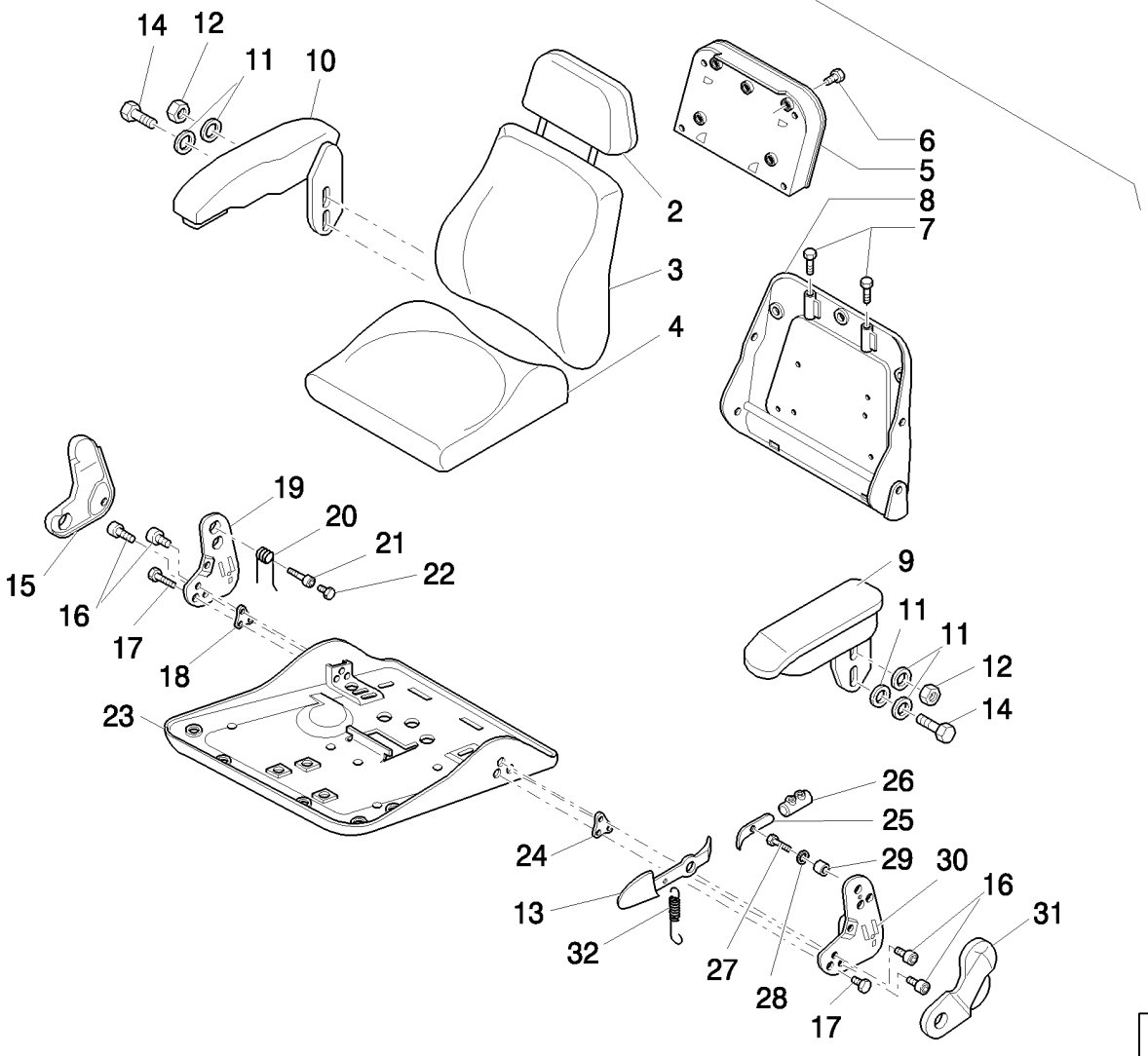

COJINES ASIENTO DE TAPICERÍA, BRAZOS Y ACCESORIOS

REF	FN	PART NUMBER	YR/SN	QTY	DENOMINACION
1	1	87576858		1	ASIENTO, Assy
1	1	87576859		1	ASIENTO, Assy
1	2	87576866		1	ASIENTO, Assy
1	2	87576867		1	ASIENTO, Assy
2		87613060		1	RESPALDO
3		87613073		1	RESPALDO
4		87613074		1	ASIENTO
5	3	85817481		1	SOPORTE
6		82034863		4	TORNILLO
7		47335213		2	CASQUILLO
8	4	85817485		1	RESPALDO
9	5, 6	85817453		1	APOYABRAZOS, LH
9	7, 6	85828196		1	APOYABRAZOS, LH
10	6	85827918		1	APOYABRAZOS, RH
11		82034881		AR	ARANDELA
12		85817459		2	TUERCA
13		85817478		1	PALANCA
14		83984666		1	TORNILLO
15		85817466		1	COBERTURA, RH
16		9972160		AR	TORNILLO, M8x25
17		87395582		2	TORNILLO, 7/16"-20UNF x 60.0
18		85817470		1	PLACA
19		9960795		1	PLACA, RH
20		9960793		1	RESORTE
21		85817469		1	CASQUILLO
22		87613075		1	TORNILLO, M8 x 40
23		85821419		1	PLACA DE SUJECION
24		85817476		1	PLACA

(1) Mechanical Control Version
(2) Only for Pilot Control Version
(3) Includes 6
(4) Includes 7, 21
(5) Only for Mechanical Control Version 87576859 - 87576858
(6) Includes 11, 12, 14
(7) Only for Pilot Control Version 87576867 - 87576866

851/01	01	p2	04/08

COJINES ASIENTO DE TAPICERÍA, BRAZOS Y ACCESORIOS

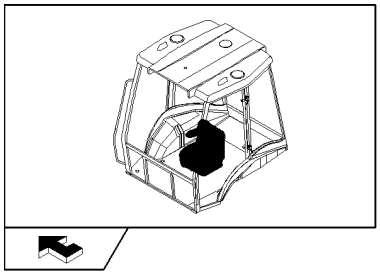

COJINES ASIENTO DE TAPICERÍA, BRAZOS Y ACCESORIOS

REF	FN	PART NUMBER	YR/SN	QTY	DENOMINACION
25		85817460		1	PALANCA
26		85821418		1	TOPE
27		82035038		1	TORNILLO
28		9960692		AR	SEPARADOR
29		85817477		1	SEPARADOR
30		9960803		1	PLACA, LH
31		85817479		1	TAPADERA, RH
32		9960797		1	RESORTE

851/01	02	p1	04/08

PLACA DE INSTALACIÓN ASIENTO DE TAPICERÍA, GUÍAS DE REGULACIÓN Y CINTURÓN

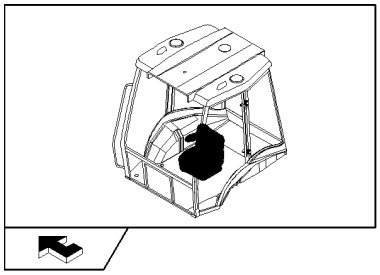

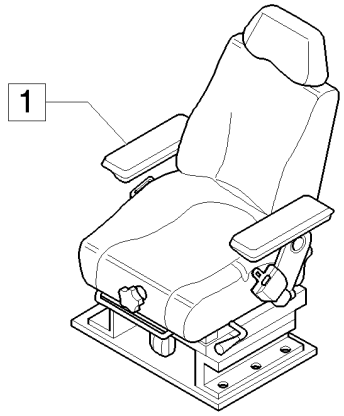

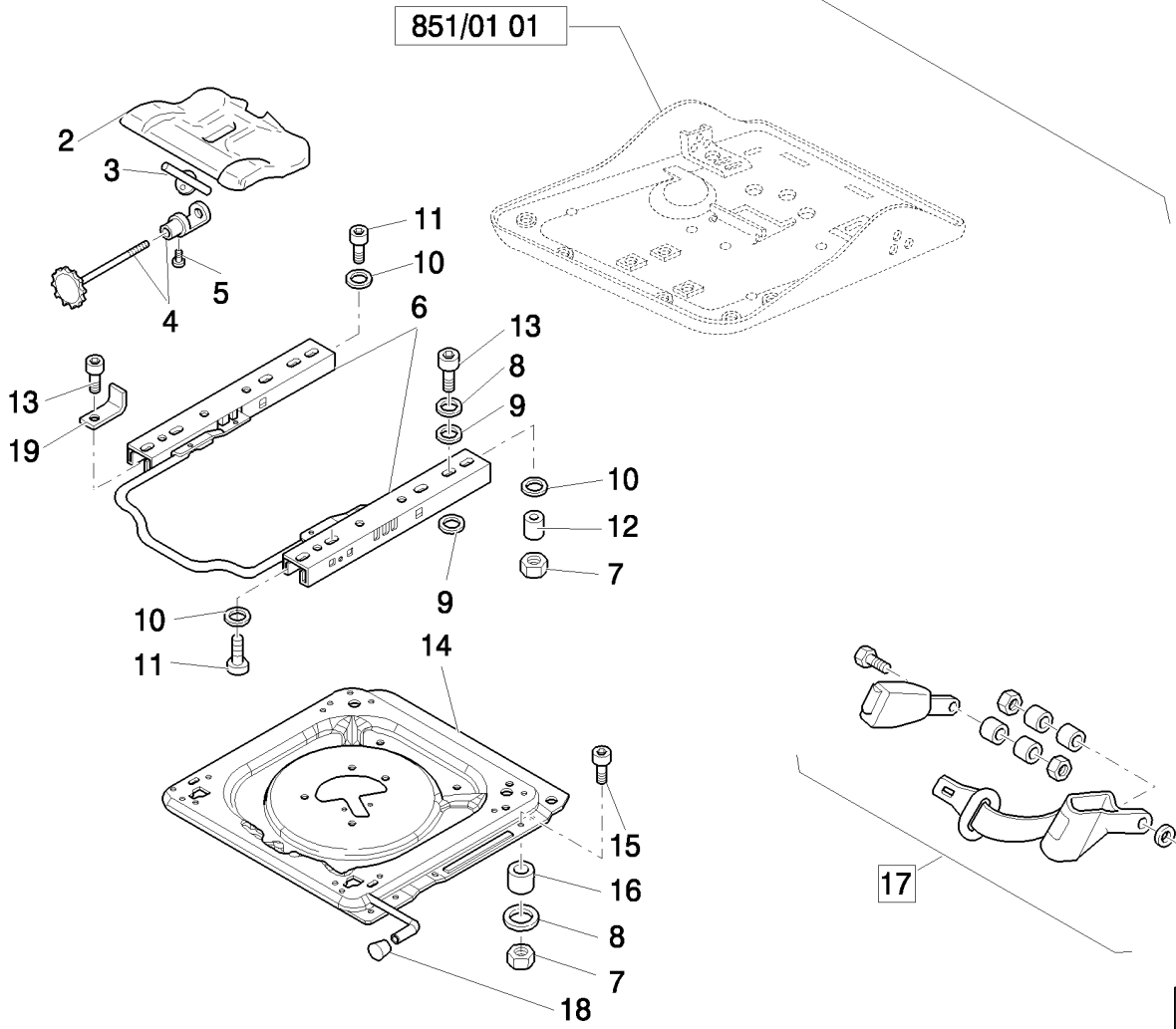

PLACA DE INSTALACIÓN ASIENTO DE TAPICERÍA, GUÍAS DE REGULACIÓN Y CINTURÓN

REF	FN	PART NUMBER	YR/SN	QTY	DENOMINACION
1	1	87576858		1	ASIENTO, Assy
1	1	87576859		1	ASIENTO, Assy
1	2	87576866		1	ASIENTO, Assy
1	2	87576867		1	ASIENTO, Assy
2	3	71485488		1	MANDO
3		85817463		1	PLACA
4	4	85817464		1	TORNILLO DE REGLAGE
5		9962962		1	TORNILLO, M5 x 10
6		85817484		1	EQUIPO
7		85817458		9	TUERCA
8		9960692		AR	SEPARADOR
9		9958776		9	SEPARADOR
10		82034881		AR	ARANDELA
11		82034893		4	TORNILLO
12		85819813		1	CASQUILLO
13		9972160		AR	TORNILLO, M8x25
14	5	87395588		1	PLACA
15		85817465		4	TORNILLO, M8 x 40
16		85817456		4	SEPARADOR
17	6	87364220		1	CINTURÓN, SEGURIDAD, Assy
17	7	87364221		1	CINTURÓN, SEGURIDAD, Assy
18		85817482		1	POMO
19		85824204		2	PIEZA DE SOPORTE

(1) Mechanical Control Version
(2) Only for Pilot Control Version
(3) Includes 3 - 5
(4) Includes 3, 5
(5) Includes 18
(6) 2" Seat Belt
(7) 3" Seat Belt

851/01	03	p1	04/08

PARTES SUSPENSIONES SUPERIORES ASIENTO DE TAPICERÍA

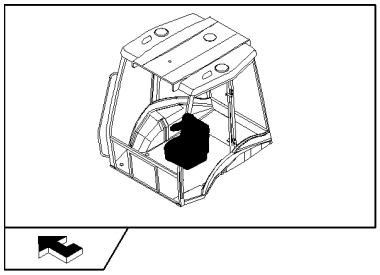

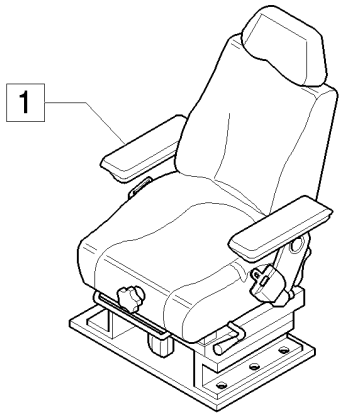

2 SEE ALSO TAV. 851/01 04

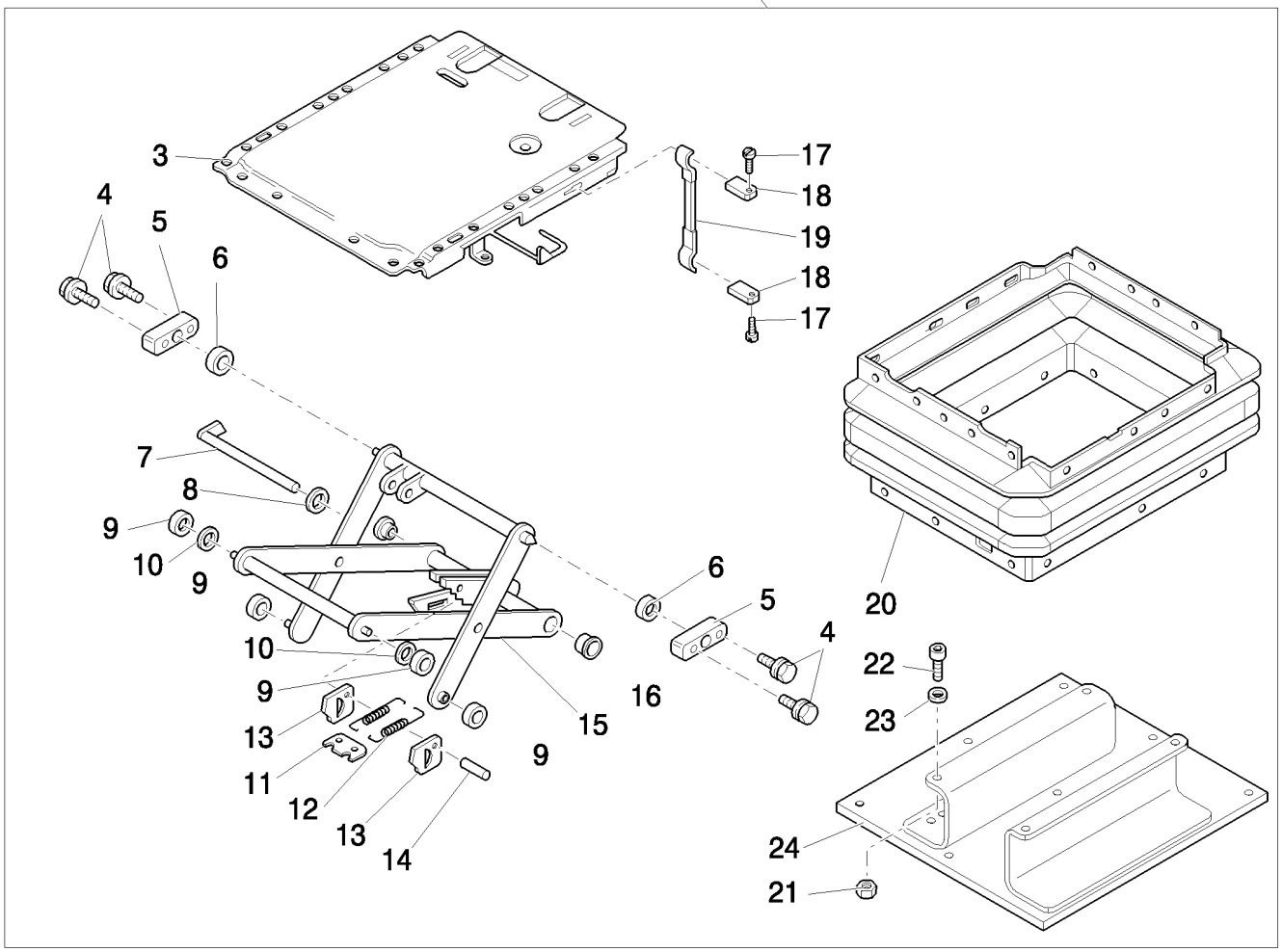

PARTES SUSPENSIONES SUPERIORES ASIENTO DE TAPICERÍA

REF	FN	PART NUMBER	YR/SN	QTY	DENOMINACION
1	1	87576858		1	ASIENTO, Assy
1	1	87576859		1	ASIENTO, Assy
1	2	87576866		1	ASIENTO, Assy
1	2	87576867		1	ASIENTO, Assy
2		85817426		1	SUSPENSION, Assy
3		85817450		1	PLACA
4		85817444		4	TORNILLO, M6 x 16
5	3	82035094		2	COJINETE
6		85817445		2	CASQUILLO
7		85817429		1	TORNILLO
8		82035127		1	ARANDELA
9		82035031		4	RODILLO
10		85817442		2	CASQUILLO
11		82035030		1	PLACA
12		85817430		2	RESORTE
13		9958792		2	PLACA
14		82035036		1	TORNILLO
15	4	85817446		1	SUSPENSION
16		9960755		2	CASQUILLO
17		85817448		2	REMACHE
18		85817449		2	PLACA
19	5	85817447		1	MANECILLA
20		85817428		1	FUELLE
21		85817458		4	TUERCA, M8
22		82034893		4	TORNILLO
23		82034881		4	ARANDELA
24		85817427		1	PLACA DE SUJECION

(1) Mechanical Control Version
(2) Only for Pilot Control Version
(3) Includes 4, 6
(4) Includes 7, 9 - 14, 16
(5) Includes 17, 18

851/01	04	p1	04/08

PARTES SUSPENSIONES INFERIORES ASIENTO DE TAPICERÍA

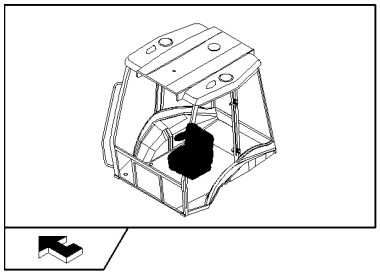

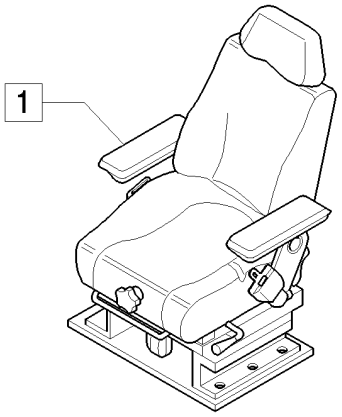

2 SEE ALSO TAV. 851/01 03

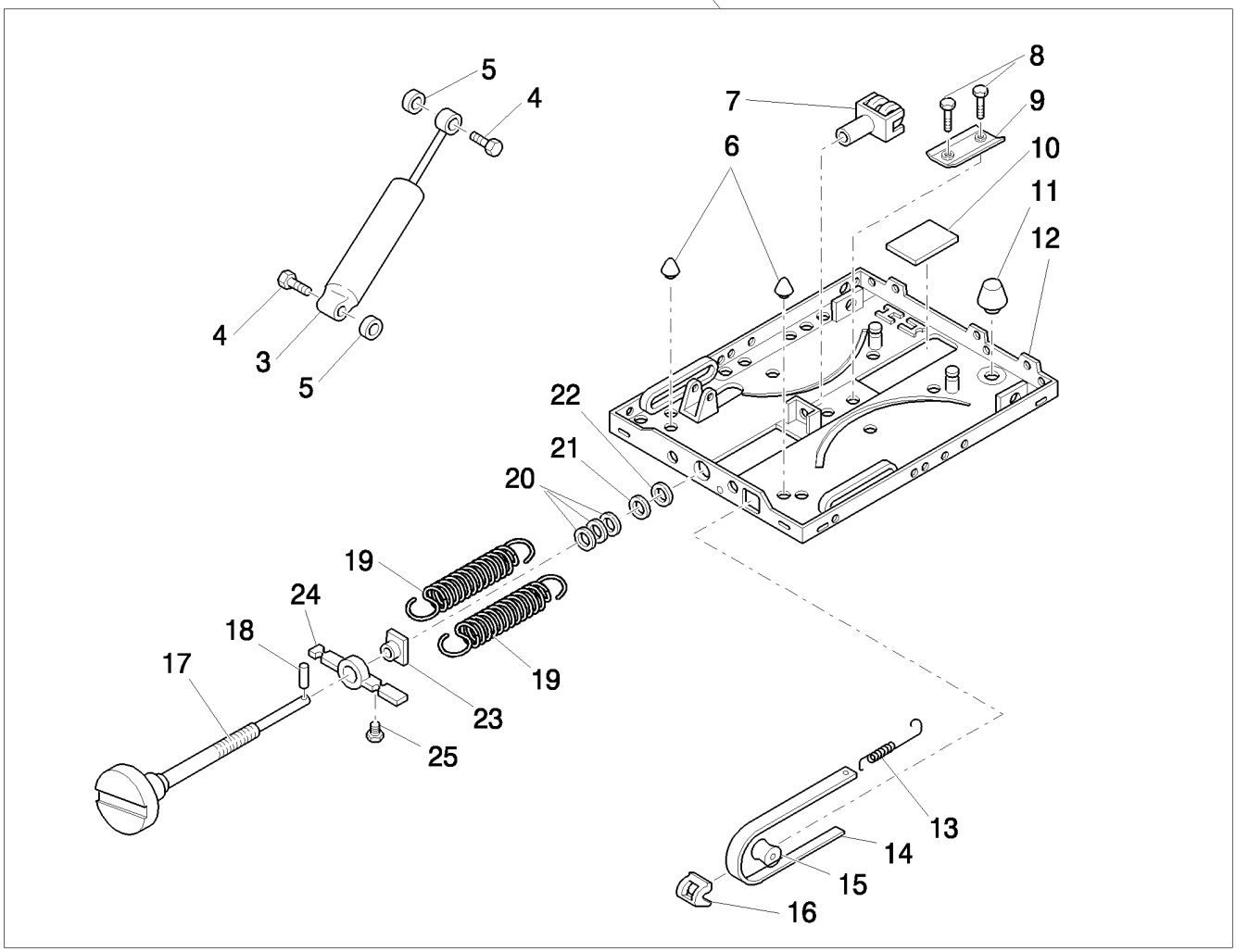

PARTES SUSPENSIONES INFERIORES ASIENTO DE TAPICERÍA

REF	FN	PART NUMBER	YR/SN	QTY	DENOMINACION
1	1	87576858		1	ASIENTO, Assy
1	1	87576859		1	ASIENTO, Assy
1	2	87576866		1	ASIENTO, Assy
1	2	87576867		1	ASIENTO, Assy
2		85817426		1	SUSPENSION, Assy
3	3	85817431		1	AMORTIGUADOR
4		82035040		2	TORNILLO
5		82035128		2	ARANDELA
6		85817440		2	PARAGOLPES DE GOMA
7		82035043		1	HORQUETA
8		82035037		2	REMACHE
9		82035054		1	PERFIL
10		82035032		1	PLACA
11		85817441		1	PARAGOLPES DE GOMA
12	4	85817436		1	SUSPENSION
13		82035039		1	RESORTE
14	5	85817443		1	TESTIGO
15		82035029		1	RODILLO
16		82035025		1	GUIA
17	6	85817451		1	TORNILLO DE REGLAGE
18		85817433		1	PITON
19		85817434		2	RESORTE
20		82035035		1	JUEGO ARANDELAS
21		82035028		1	ARANDELA
22		85817435		1	CASQUILLO
23		82035034		1	TUERCA
24		82035027		1	PIEZA DE SOPORTE
25		82035033		1	RETENEDOR

(1) Mechanical Control Version
(2) Only for Pilot Control Version
(3) Includes 4, 5
(4) Includes 6, 8 - 11
(5) Includes 13, 15, 16
(6) Includes 18

855		p1	04/08

ASIENTO NEUMÁTICO DE TAPICERÍA - CABINA

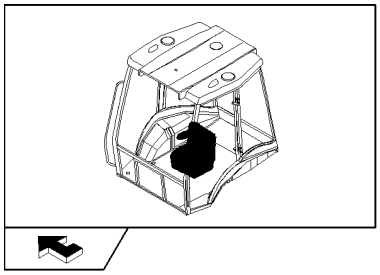

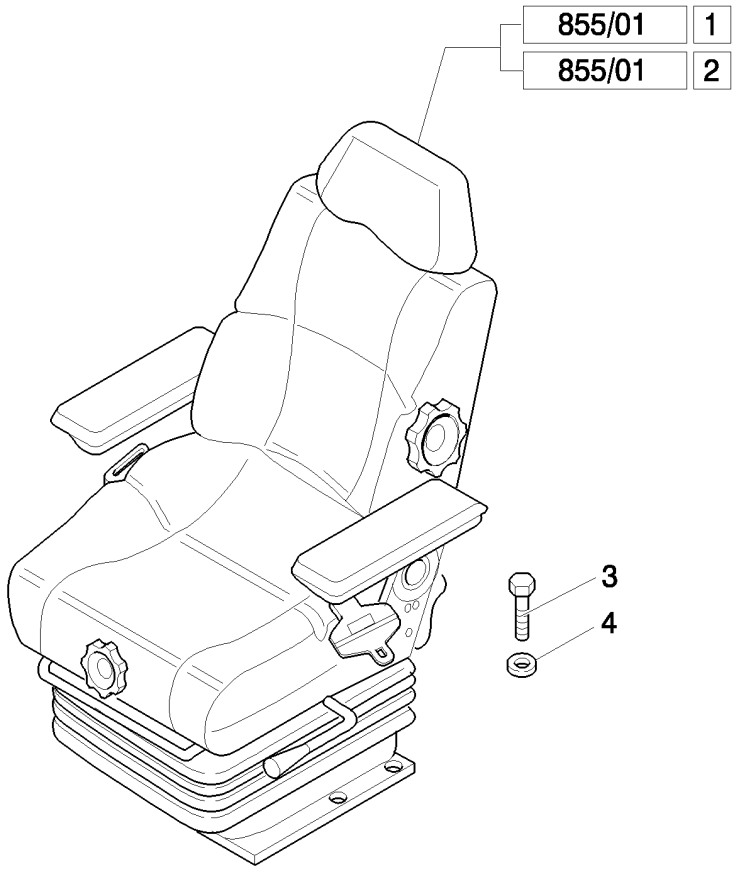

ASIENTO NEUMÁTICO DE TAPICERÍA - CABINA

REF	FN	PART NUMBER	YR/SN	QTY	DENOMINACION
1	1, 2, 3	87576861		1	ASIENTO, Assy
1	1, 4, 3	87576862		1	ASIENTO, Assy
2	2, 5, 3	87576868		1	ASIENTO, Assy
2	4, 5, 3	87576869		1	ASIENTO, Assy
3		16043424		8	TORNILLO, Hex, M8 x 20, 8.8, Full Thd
4		11198074		8	ARANDELA ABANICO, Belleville, M8.4

(1) Mechanical Control Version
(2) 2" Seat Belt
(3) Only for NA
(4) 3" Seat Belt
(5) Only for Pilot Control Version

855/01	01	p1	04/08

COJINES ASIENTO NEUMÁTICO, BRAZOS Y ACCESORIOS

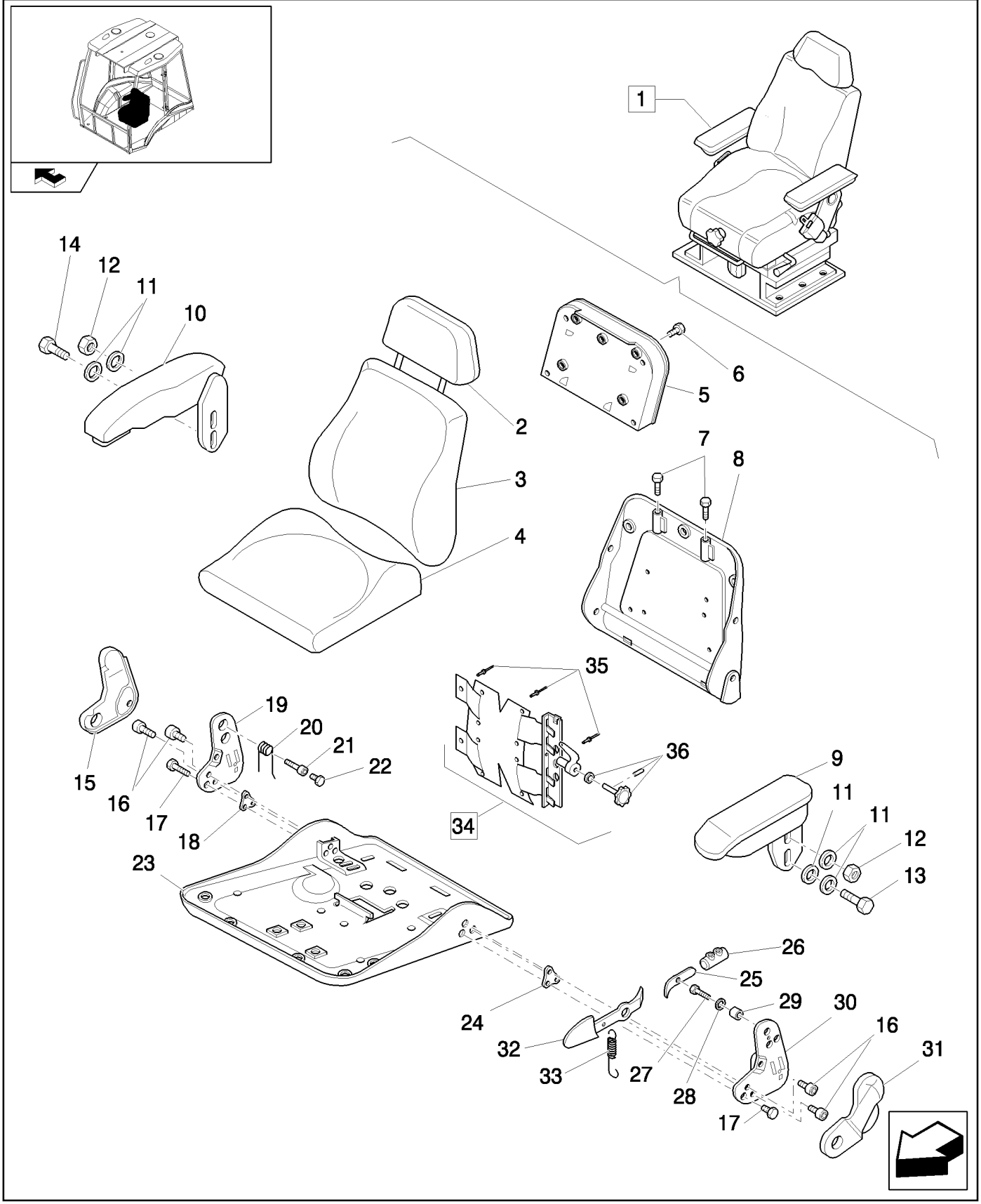

COJINES ASIENTO NEUMÁTICO, BRAZOS Y ACCESORIOS

REF	FN	PART NUMBER	YR/SN	QTY	DENOMINACION
1	1	87576861		1	ASIENTO, Assy
1	1	87576862		1	ASIENTO, Assy
1	2	87576868		1	ASIENTO, Assy
1	2	87576869		1	ASIENTO, Assy
2		87613060		1	RESPALDO
3		87613718		1	RESPALDO
4		87613074		1	ASIENTO
5	3	85817481		1	SOPORTE
6		82034863		4	TORNILLO
7		47335213		2	CASQUILLO
8	4	85817532		1	APOYACABEZA
9	5, 6	85817453		1	APOYABRAZOS, LH
9	7, 6	85828196		7	APOYABRAZOS
10	8	85827918		1	APOYABRAZOS, RH
11		82034881		AR	ARANDELA
12		85817459		2	TUERCA, M8
13		83984666		1	TORNILLO
14		13838071		2	TORNILLO, Hex Serr Flg, M8 x 20
15		85817466		1	COBERTURA, RH
16		9972160		6	TORNILLO
17		87395582		2	TORNILLO, 7/16"-20UNF x 60.0
18		85817470		1	PLACA
19		9960795		1	PLACA, RH
20		9960793		1	RESORTE
21		85817469		1	CASQUILLO
22		87613075		1	TORNILLO
23		85821419		1	PLACA DE SUJECION

(1) Mechanical Control Version
(2) Only for Pilot Control Version
(3) Includes 6
(4) Includes 7, 34
(5) Only for Mechanical Control Version 87576861 - 87576862
(6) Includes 11 - 13
(7) Only for Pilot Control Version 87576868 - 87576869
(8) Includes 11, 12, 14

855/01	01	p2	04/08

COJINES ASIENTO NEUMÁTICO, BRAZOS Y ACCESORIOS

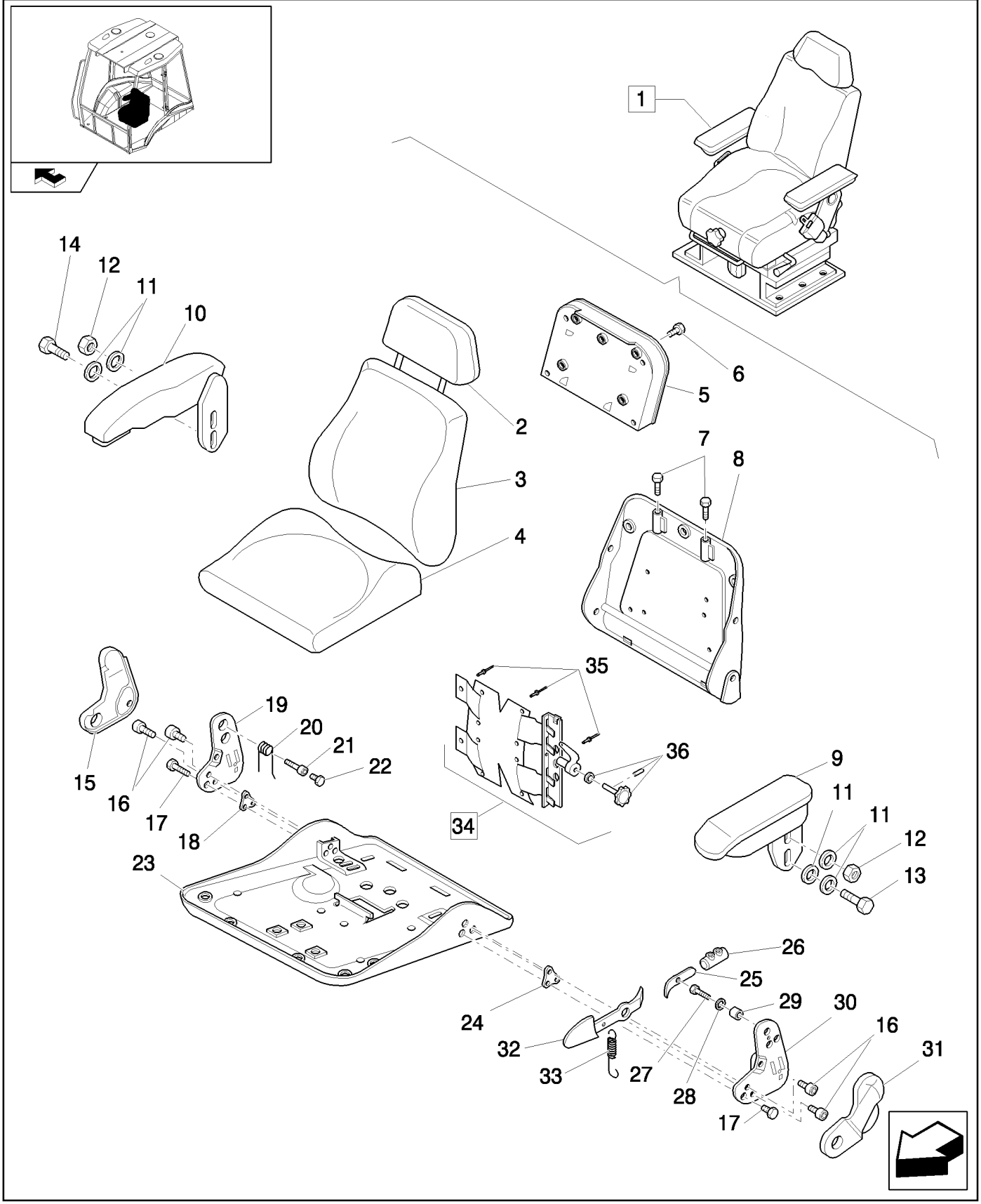

COJINES ASIENTO NEUMÁTICO, BRAZOS Y ACCESORIOS

REF	FN	PART NUMBER	YR/SN	QTY	DENOMINACION
24		85817476		1	PLACA
25		85817460		1	PALANCA
26		85821418		1	TOPE
27		82035038		1	TORNILLO
28		9960692		AR	SEPARADOR
29		85817477		1	SEPARADOR
30		9960803		1	PLACA, LH
31		85817479		1	TAPADERA, LH
32		85817478		1	PALANCA
33		9960797		1	RESORTE
34		9967970		1	EQUIPO
35		82034897		3	REMACHE
36		85817534		1	TORNILLO DE REGLAGE

855/01	02	p1	04/08

PLACA DE INSTALACIÓN ASIENTO NEUMÁTICO, GUÍAS DE REGULACIÓN Y CINTURÓN

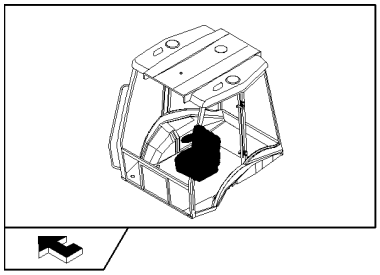

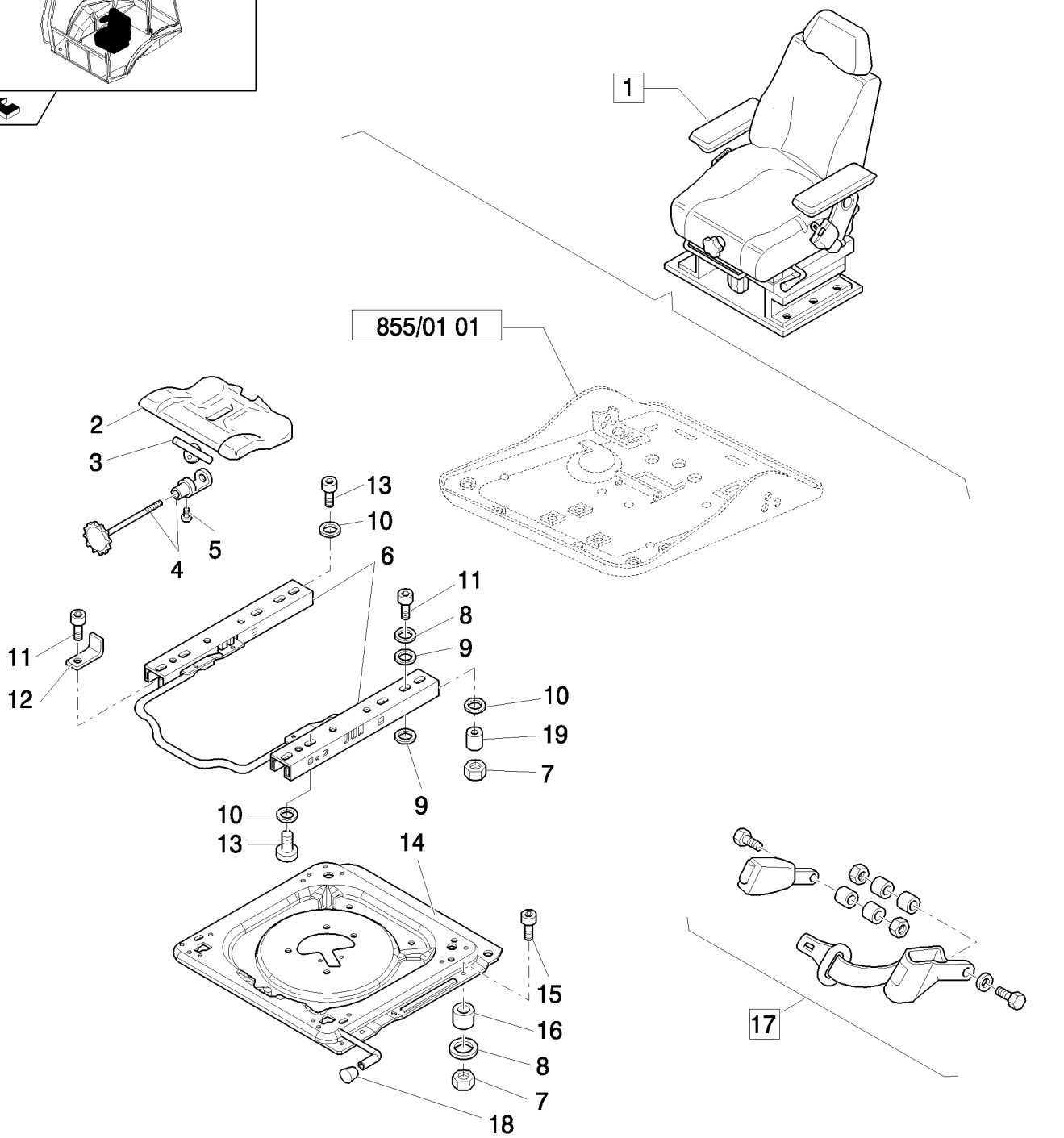

PLACA DE INSTALACIÓN ASIENTO NEUMÁTICO, GUÍAS DE REGULACIÓN Y CINTURÓN

REF	FN	PART NUMBER	YR/SN	QTY	DENOMINACION
1	1	87576861		1	ASIENTO, Assy
1	1	87576862		1	ASIENTO, Assy
1	2	87576868		1	ASIENTO, Assy
1	2	87576869		1	ASIENTO, Assy
2	3	71485488		1	MANDO
3		85817463		1	PLACA
4	4	85817464		1	TORNILLO DE REGLAGE
5		9962962		1	TORNILLO, M5 x 10
6		85817484		1	EQUIPO
7		85817458		8	TUERCA
8		9960692		AR	SEPARADOR
9		9958776		8	SEPARADOR
10		82034881		AR	ARANDELA
11		9972160		AR	TORNILLO, M8x25
12		85824204		1	PIEZA DE SOPORTE
13		82034893		AR	TORNILLO
14	5	87395588		1	PLACA
15		85817536		4	TORNILLO
16		85817456		4	SEPARADOR
17	6	87364220		1	CINTURÓN, SEGURIDAD
17	7	87364221		1	CINTURÓN, SEGURIDAD
18		85817482		1	POMO
19		85819813		1	CASQUILLO

(1) Mechanical Control Version
(2) Only for Pilot Control Version
(3) Includes 4
(4) Includes 3, 5
(5) Includes 18
(6) 2" Seat Belt
(7) 3" Seat Belt

PARTES SUSPENSIONES SUPERIORES ASIENTO NEUMÁTICO DE TAPICERÍA

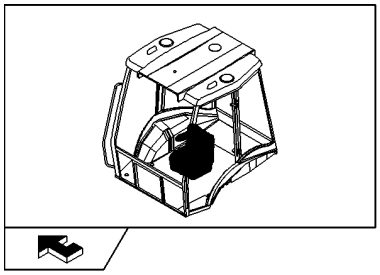

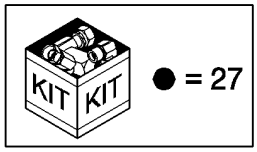

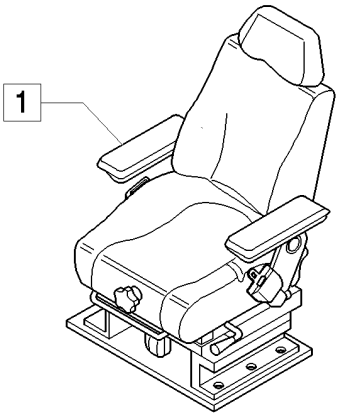

2 SEE ALSO TAV. 855/01 04
SEE ALSO TAV. 855/01 05

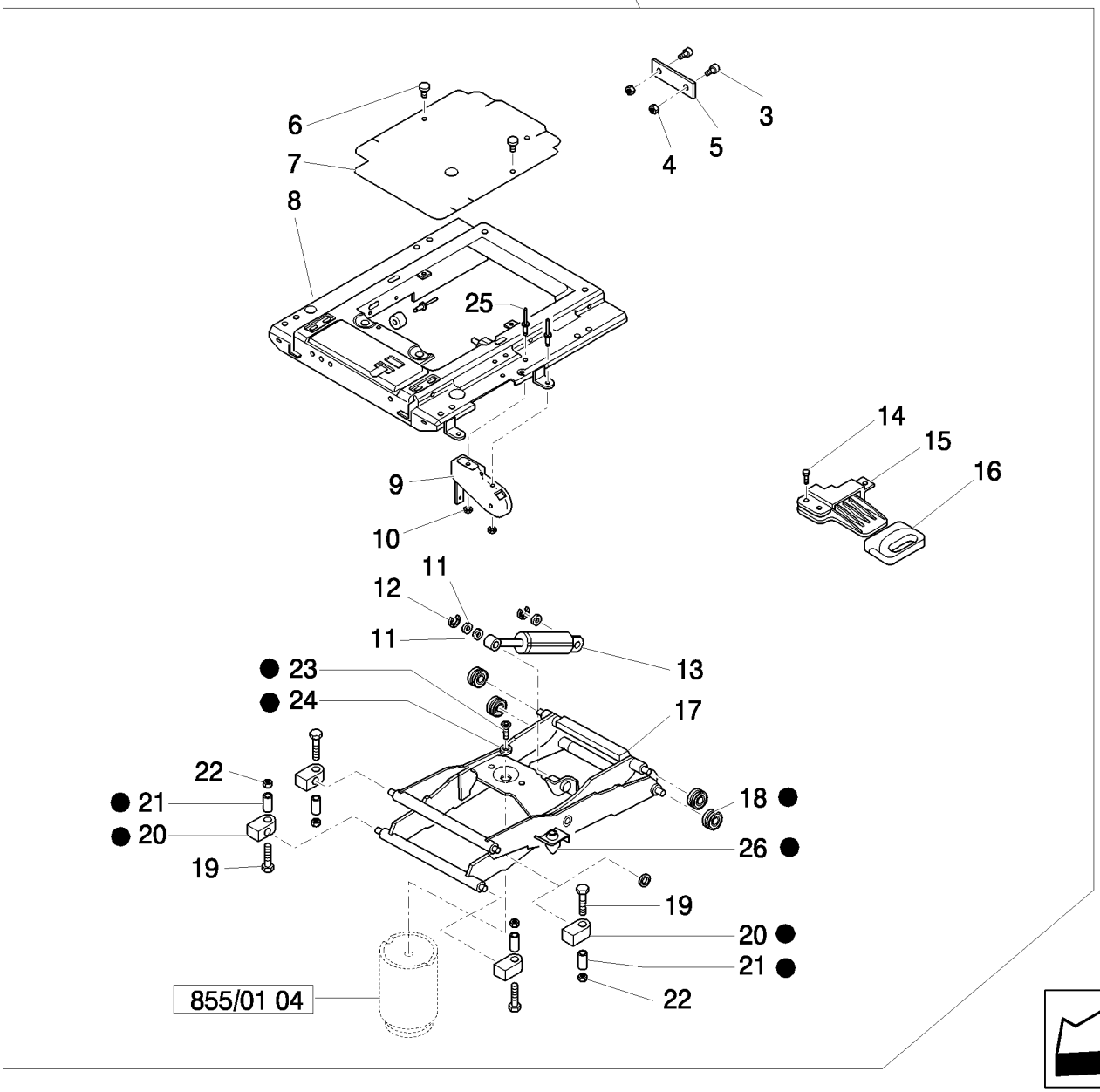

PARTES SUSPENSIONES SUPERIORES ASIENTO NEUMÁTICO DE TAPICERÍA

REF	FN	PART NUMBER	YR/SN	QTY	DENOMINACION
1	1	87576861		1	ASIENTO, Assy
1	1	87576862		1	ASIENTO, Assy
1	2	87576868		1	ASIENTO, Assy
1	2	87576869		1	ASIENTO, Assy
18		85817482		1	POMO
2		85817529		1	SUSPENSION
3		82034894		2	TORNILLO
4		85817494		1	PLACA
5		85817458		2	TUERCA
6		NS		AR	NO SE REPARA
7	3	85817486		1	TAPADERA
8		85824436		1	AMORTIGUADOR
9		85817489		2	ARANDELA
10		85817490		1	EQUIPO
11		NS		3	NO SE REPARA
12		85817496		2	ARANDELA
13	4	85824434		1	AMORTIGUADOR
14		85819815		3	TORNILLO
15		85817493		1	MANDO
16		85817492		1	MANECILLA
17	5	87615608		1	SUSPENSION
18		82035057		4	RODILLO
19		NS		4	NO SE REPARA
20		87613742		AR	COJINETE DE EMBRAGUE
21		82035053		AR	TUBO
22		NS		AR	NO SE REPARA
23		NS		AR	NO SE REPARA
24		NS		AR	NO SE REPARA
25		85817488		2	REMACHE
26		82035126		2	PARACHOQUES

(1) Mechanical Control Version
(2) Only for Pilot Control Version
(3) Includes 6
(4) Includes 12
(5) Includes 18, 20

PARTES SUSPENSIONES SUPERIORES ASIENTO NEUMÁTICO DE TAPICERÍA

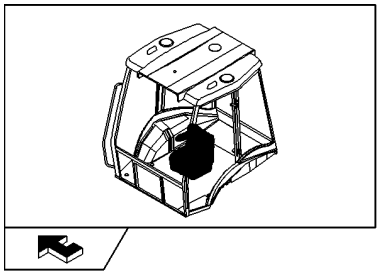

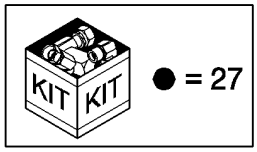

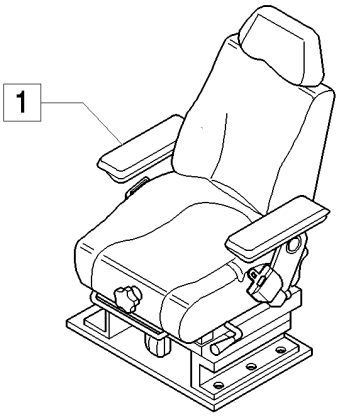

2 SEE ALSO TAV. 855/01 04
SEE ALSO TAV. 855/01 05

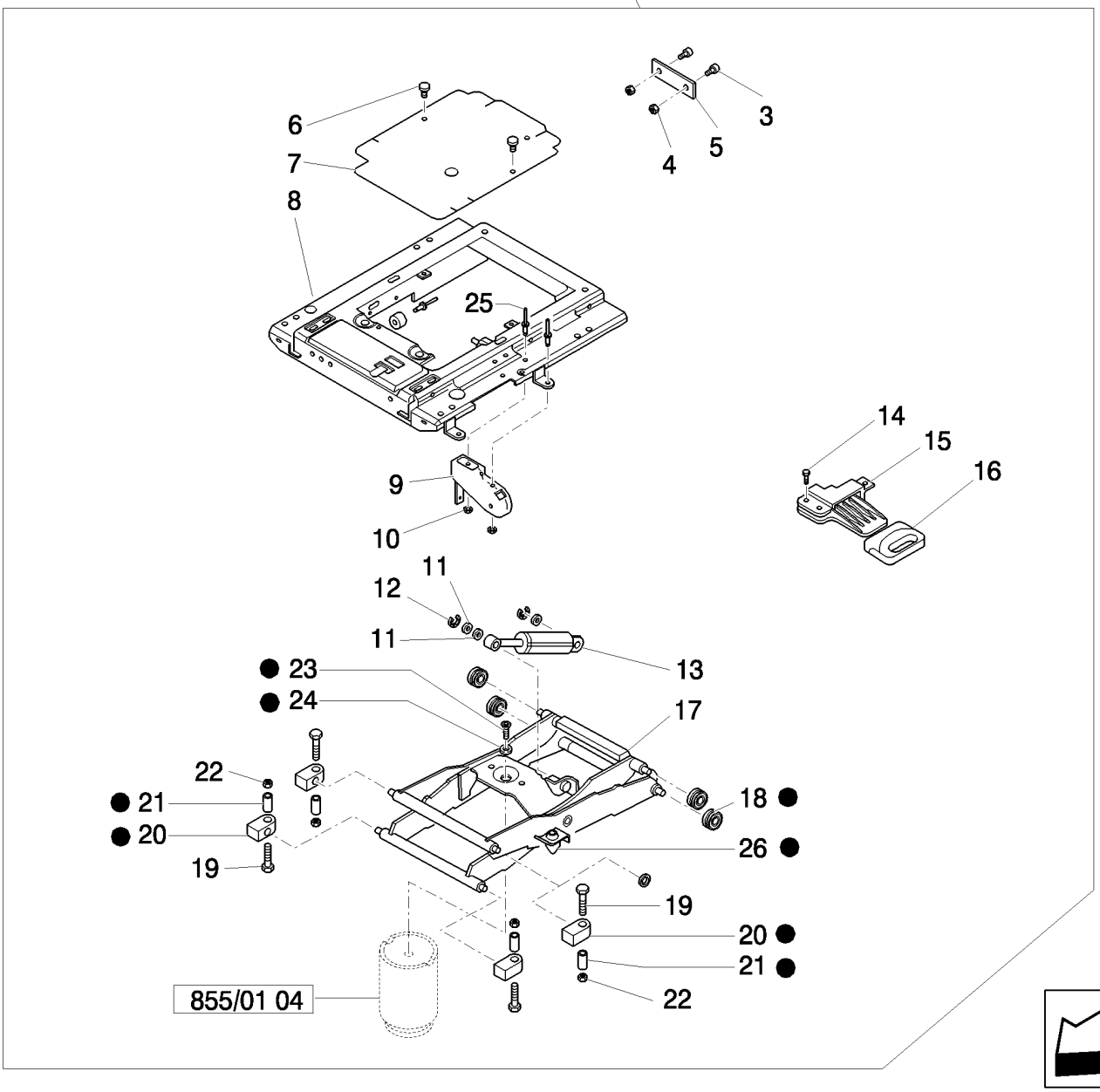

PARTES SUSPENSIONES SUPERIORES ASIENTO NEUMÁTICO DE TAPICERÍA

REF	FN	PART NUMBER	YR/SN	QTY	DENOMINACION
27		82848105		1	EQUIPO

855/01	04	p1	04/08

PARTES SUSPENSIONES INFERIORES ASIENTO NEUMÁTICO DE TAPICERÍA

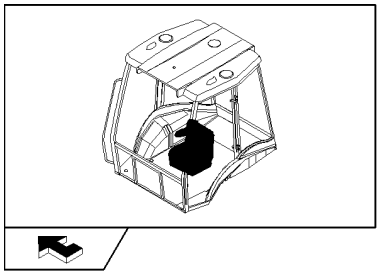

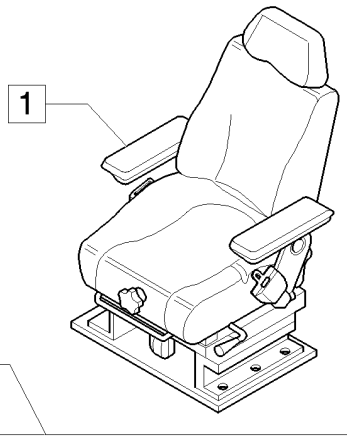

2 SEE ALSO TAV. 855/01 03
SEE ALSO TAV. 855/01 05

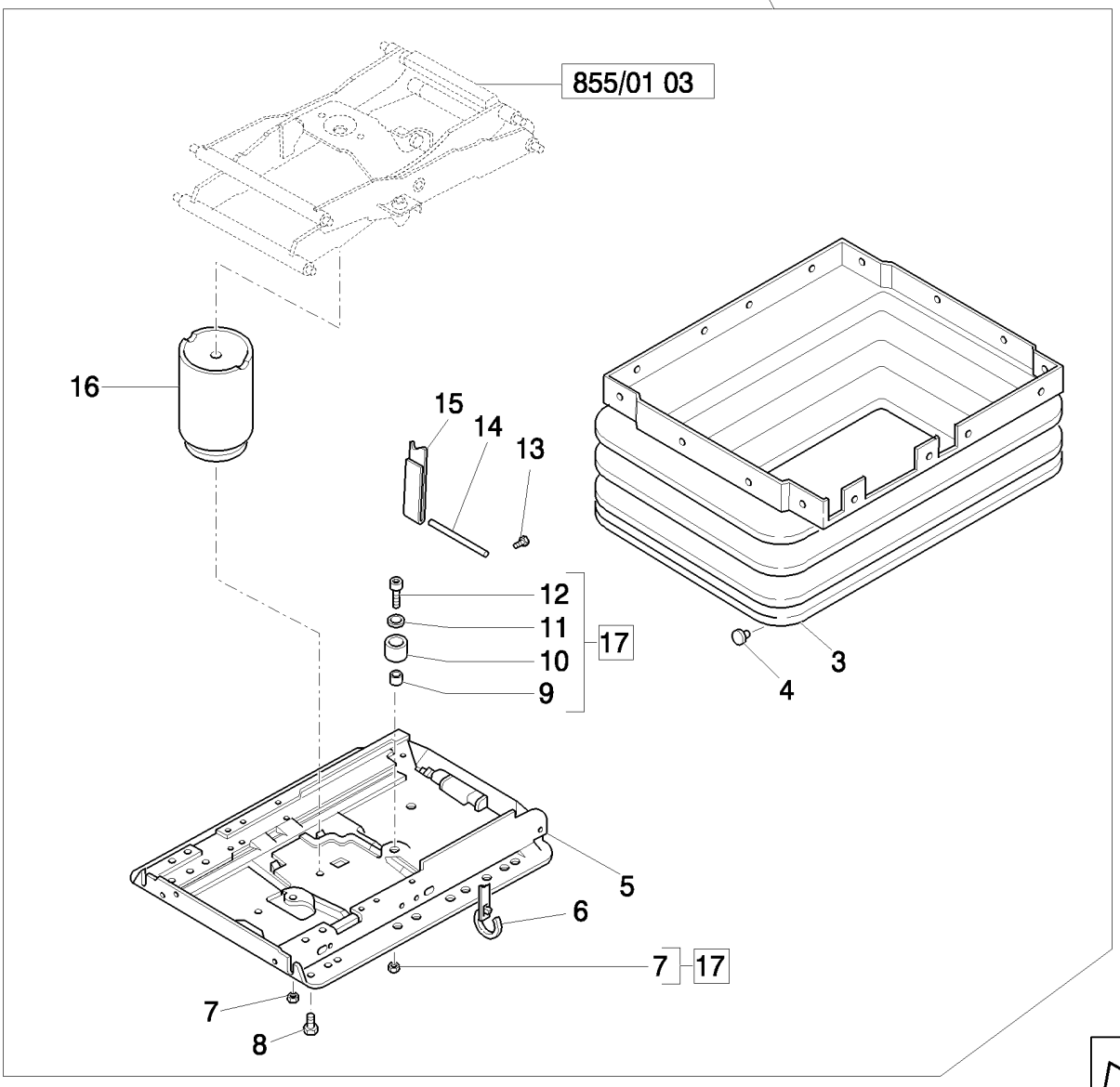

PARTES SUSPENSIONES INFERIORES ASIENTO NEUMÁTICO DE TAPICERÍA

REF	FN	PART NUMBER	YR/SN	QTY	DENOMINACION
1	1	87576861		1	ASIENTO, Assy
1	1	87576862		1	ASIENTO, Assy
1	2	87576868		1	ASIENTO, Assy
1	2	87576869		1	ASIENTO, Assy
2		85817529		1	SUSPENSION, Assy
3	3	85827920		1	FUELLE
4		NS		AR	NO SE REPARA
5	4	87615611		1	SUSPENSION
6		NS		AR	NO SE REPARA
7		NS		AR	NO SE REPARA
8		NS		1	NO SE REPARA, M8x20
9		NS		1	NO SE REPARA
10	5	NS		1	NO SE REPARA
11		NS		1	NO SE REPARA
12		NS		1	NO SE REPARA, M8x20
13		9962962		1	TORNILLO
14		85817513		1	PERNO
15		85817512		1	RIVESTIMIENTO
16		87396450		1	RESORTE
17		85817523		1	DEFENSA

(1) Mechanical Control Version
(2) Only for Pilot Control Version
(3) Includes 4
(4) Includes 4, 7, 10
(5) Includes 4, 7, 9, 11, 12

855/01	05	p1	04/08

COMPRESOR Y TUBOS ASIENTO NEUMÁTICO DE TAPICERÍA

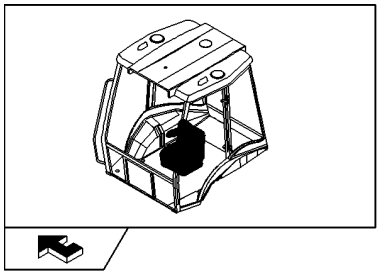

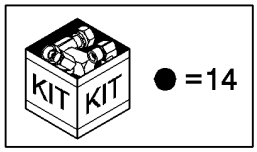

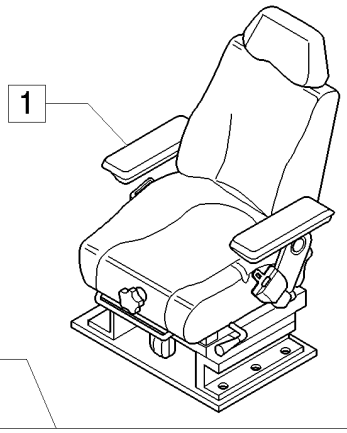

2 SEE ALSO TAV. 855/01 03
SEE ALSO TAV. 855/01 04

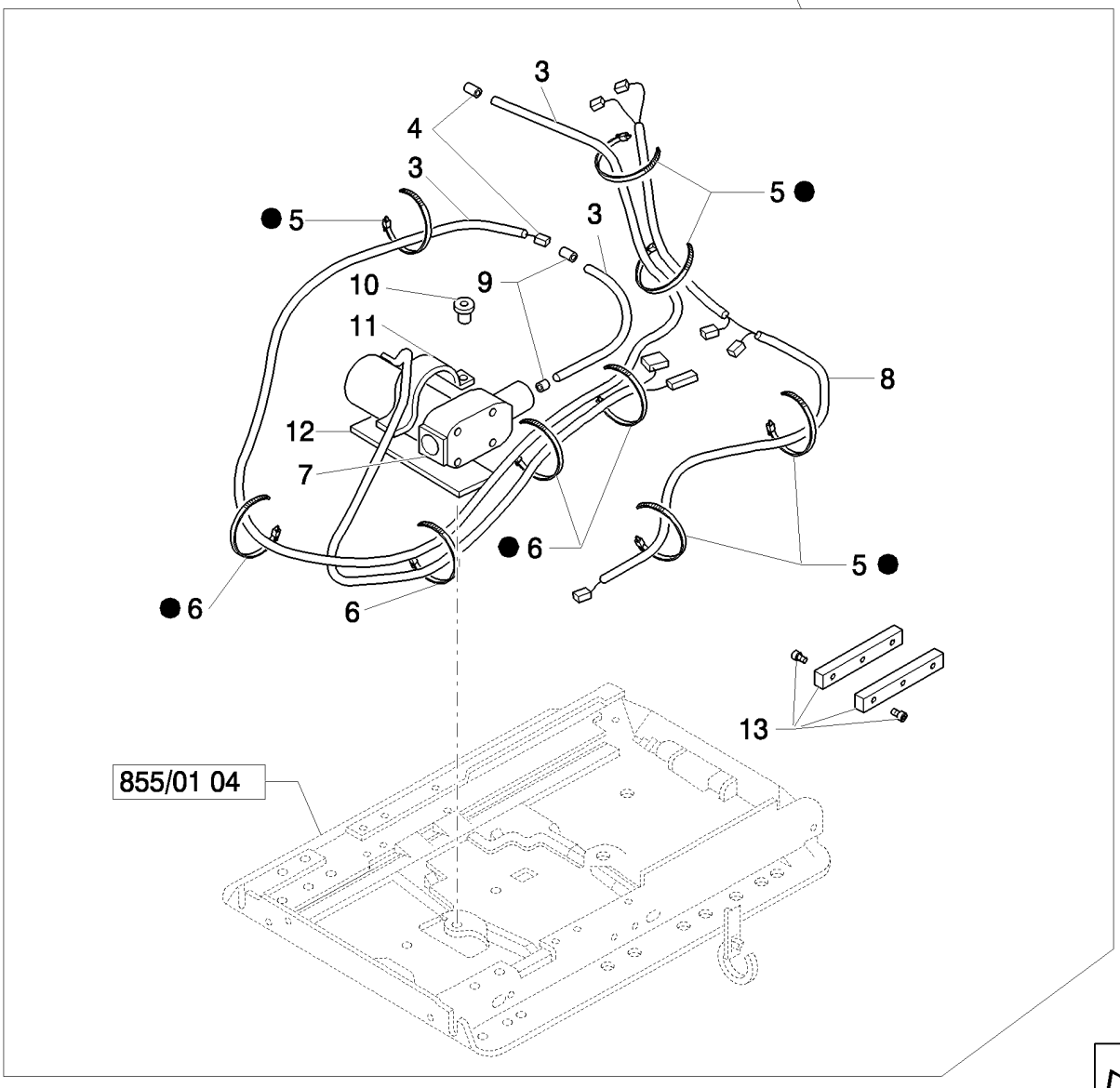

COMPRESOR Y TUBOS ASIENTO NEUMÁTICO DE TAPICERÍA

REF	FN	PART NUMBER	YR/SN	QTY	DENOMINACION
1	1	87576861		1	ASIENTO, Assy
1	1	87576862		1	ASIENTO, Assy
1	2	87576868		1	ASIENTO, Assy
1	2	87576869		1	ASIENTO, Assy
2		85817529		1	SUSPENSION, Assy
3		87313729		1	JUEGO DE REPARACION
4		NS		2	NO SE REPARA
5		NS		AR	NO SE REPARA
6		NS		4	NO SE REPARA
7		82035076		1	COMPRESSOR
8		85819814		1	GRUPO DE CABLES
9		NS		2	NO SE REPARA
10		NS		1	NO SE REPARA
11		NS		1	NO SE REPARA
12		NS		1	NO SE REPARA
13		47335175		1	DISPOSITIVO DE TOPE
14		82848105		1	EQUIPO

(1) Mechanical Control Version
(2) Only for Pilot Control Version

COJINES ASIENTO DE VINILO, BRAZOS Y ACCESORIOS (ROPS)

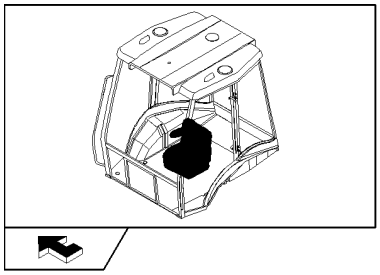

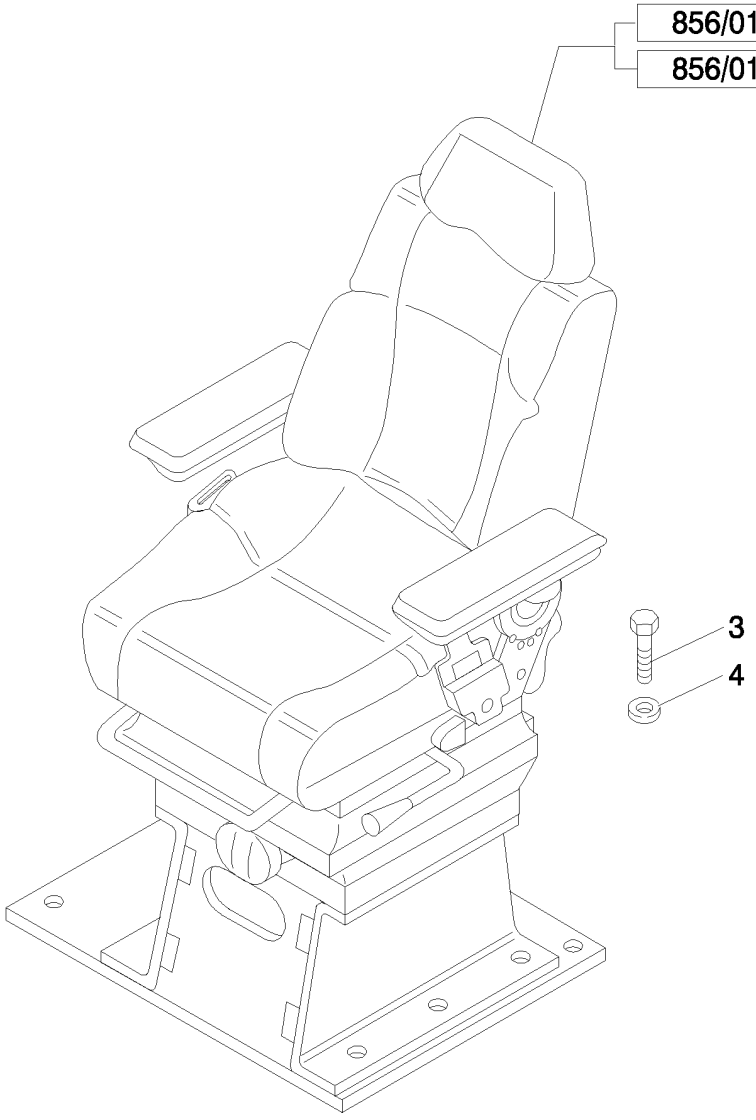

COJINES ASIENTO DE VINILO, BRAZOS Y ACCESORIOS (ROPS)

REF	FN	PART NUMBER	YR/SN	QTY	DENOMINACION
1	1, 2, 3	87576855		1	ASIENTO, Assy
1	1, 4, 3	87576856		1	ASIENTO, Assy
2	2, 3, 5	87576863		1	ASIENTO, Assy
2	4, 3, 5	87576865		1	ASIENTO, Assy
3		16043424		8	TORNILLO, Hex, M8 x 20, 8.8, Full Thd
4		11198074		8	ARANDELA ABANICO, Belleville, M8.4

(1) Mechanical Control Version
(2) 2" Seat Belt
(3) Consists Of Page 856/01 01 To 856/01 04
(4) 3" Seat Belt
(5) Only for Pilot Control Version

856/01	01	p1	04/08

ASIENTO DE VINILO CON BRAZOS (ROPS)

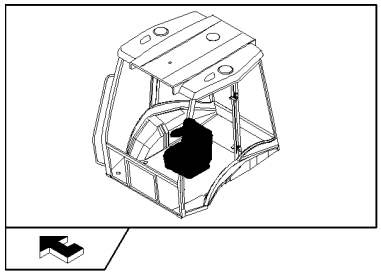

ASIENTO DE VINILO CON BRAZOS (ROPS)

REF	FN	PART NUMBER	YR/SN	QTY	DENOMINACION
1	1	87576855		1	ASIENTO, Assy
1	1	87576856		1	ASIENTO, Assy
1	2	87576863		1	ASIENTO, Assy
1	2	87576865		1	ASIENTO, Assy
2		85817562		1	APOYACABEZA
3		87613577		1	RESPALDO, Cap, HH, CL 8.8, M8x1.25x20
4		85817564		1	COJIN
5	3	85817481		1	SOPORTE
6		82034863		4	TORNILLO
7		47335213		2	CASQUILLO
8	4	85817485		1	RESPALDO
9	5, 6	85817453		1	APOYABRAZOS
9	5, 7	85828196		1	APOYABRAZOS
10	8	85827918		1	APOYABRAZOS
11		82034881		AR	ARANDELA
12		85817459		2	TUERCA
13		83984666		1	TORNILLO
14		13838071		1	TORNILLO, Hex Serr Flg, M8 x 20
15		85817466		1	COBERTURA
16		9972160		AR	TORNILLO
17		87395582		2	TORNILLO, 7/16"-20UNFx60.0
18		85817470		1	PLACA
19		9960795		1	PLACA
20		9960793		1	RESORTE
21		85817469		1	CASQUILLO
22		85817471		1	TORNILLO
23		85821419		1	PLACA DE SUJECION

(1) Mechanical Control Version
(2) Only for Pilot Control Version
(3) Includes 6
(4) Includes 7, 21
(5) Includes 11 - 13
(6) Mechanical Control Version
(7) Only for Pilot Control Version
(8) Includes 11, 12, 14

856/01	01	p2	04/08

ASIENTO DE VINILO CON BRAZOS (ROPS)

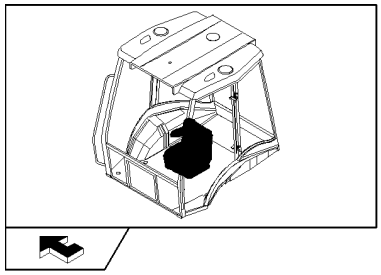

ASIENTO DE VINILO CON BRAZOS (ROPS)

REF	FN	PART NUMBER	YR/SN	QTY	DENOMINACION
24		85817476		1	PLACA
25		85817460		1	PALANCA
26		85821418		1	TOPE
27		82035038		1	TORNILLO
28		9960692		AR	SEPARADOR
29		85817477		1	SEPARADOR
30		9960803		1	PLACA
31		85817479		1	TAPADERA
32		85817478		1	PALANCA
33		87613075		1	TORNILLO
34		9960797		1	RESORTE

856/01	02	p1	04/08

PLACA DE INSTALACIÓN ASIENTO DE VINILO, GUÍAS DE REGUL. Y CINTURÓN (ROPS)

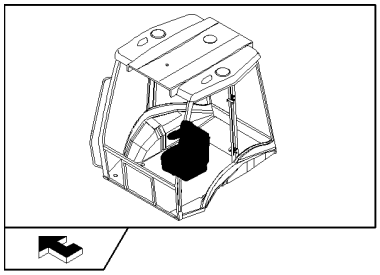

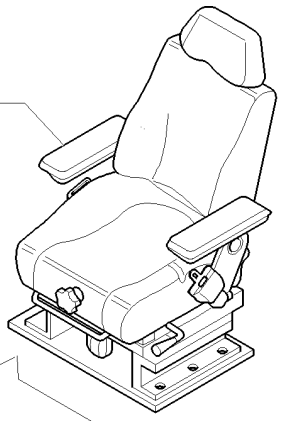

1

856/01 01

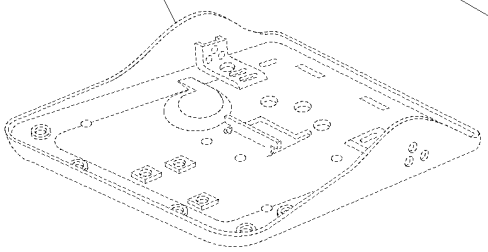

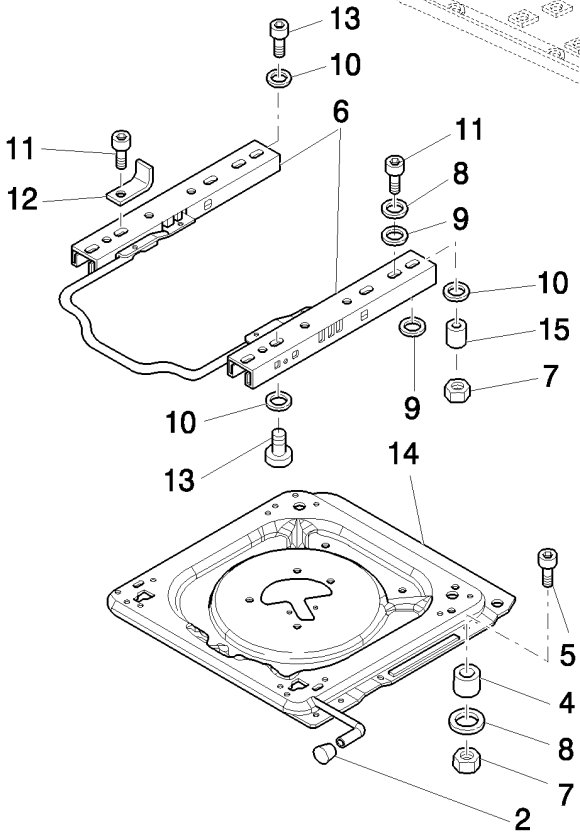

13
10
6
11
12
11
8
9
10
15
7
9
10
13
14
5
4
8
7
2

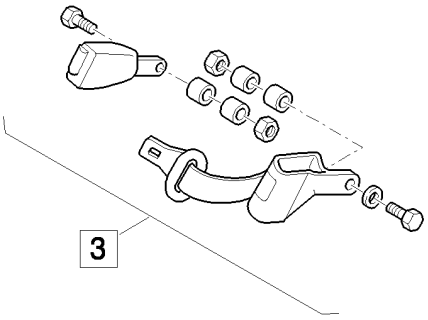

3

PLACA DE INSTALACIÓN ASIENTO DE VINILO, GUÍAS DE REGUL. Y CINTURÓN (ROPS)

REF	FN	PART NUMBER	YR/SN	QTY	DENOMINACION
1	1	87576855		1	ASIENTO, Assy
1	1	87576856		1	ASIENTO, Assy
1	2	87576863		1	ASIENTO, Assy
1	2	87576865		1	ASIENTO, Assy
2		85817482		1	POMO
3	3	87364220		1	CINTURÓN, SEGURIDAD, Assy
3	4	87364221		1	CINTURÓN, SEGURIDAD, Assy
4		85817456		4	SEPARADOR
5		85817465		4	TORNILLO, M8 x 40
6		85817484		1	EQUIPO
7		85817458		8	TUERCA
8		9960692		AR	SEPARADOR
9		9958776		8	SEPARADOR
10		82034881		AR	ARANDELA
11		9972160		8	TORNILLO, M8x25
12		85824204		1	PIEZA DE SOPORTE
13		82034893		4	TORNILLO, M8x20
14	5	87395588		1	PLACA
15		85819813		1	CASQUILLO

(1) Mechanical Control Version
(2) Only for Pilot Control Version
(3) 2" Seat Belt
(4) 3" Seat Belt
(5) Includes 10 - 12

856/01	03	p1	04/08

PARTES SUSPENSIONES SUPERIORES ASIENTO DE VINILO (ROPS)

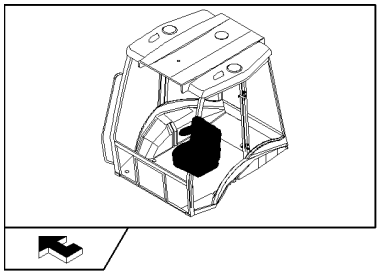

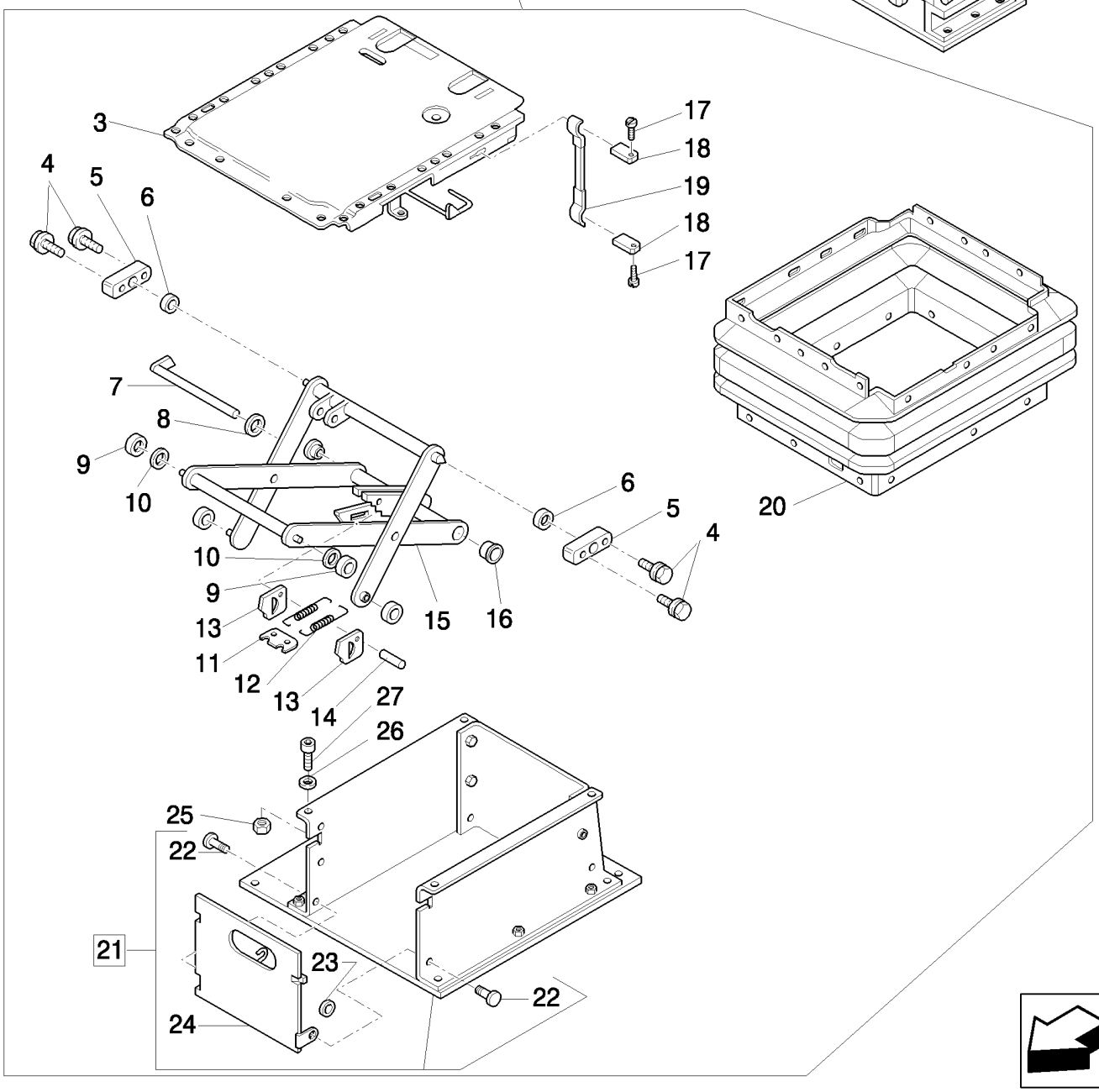

PARTES SUSPENSIONES SUPERIORES ASIENTO DE VINILO (ROPS)

REF	FN	PART NUMBER	YR/SN	QTY	DENOMINACION
1	1	87576855		1	ASIENTO, Assy
1	1	87576856		1	ASIENTO, Assy
1	2	87576863		1	ASIENTO, Assy
1	2	87576865		1	ASIENTO, Assy
2		85817556		1	SUSPENSION
3		85817450		1	PLACA
4		85817444		4	TORNILLO, M6 x 16
5	3	82035094		2	COJINETE
6		85817445		2	CASQUILLO
7		85817429		1	TORNILLO
8		82035127		1	ARANDELA
9		82035031		4	RODILLO
10		85817442		2	CASQUILLO
11		82035030		1	PLACA
12		85817430		2	RESORTE
13		9958792		2	PLACA
14		82035036		1	TORNILLO
15	4	85817446		1	SUSPENSION
16		9960755		2	CASQUILLO
17		85817448		2	REMACHE
18		85817449		2	PLACA
19	5	85817447		1	MANECILLA
20		85817428		1	FUELLE
21	6	85817561		1	APOYO
22		85817559		2	TORNILLO
23		85817560		2	ARANDELA
24		85817558		1	PUERTA
25		85817458		4	TUERCA, M8
26		82034881		4	ARANDELA

(1) Mechanical Control Version
(2) Only for Pilot Control Version
(3) Includes 4, 6
(4) Includes 7, 9 - 14, 16
(5) Includes 17, 18
(6) Includes 22 - 24

856/01	03	p2	04/08

PARTES SUSPENSIONES SUPERIORES ASIENTO DE VINILO (ROPS)

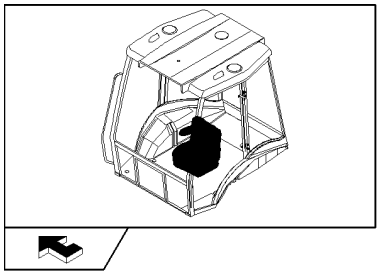

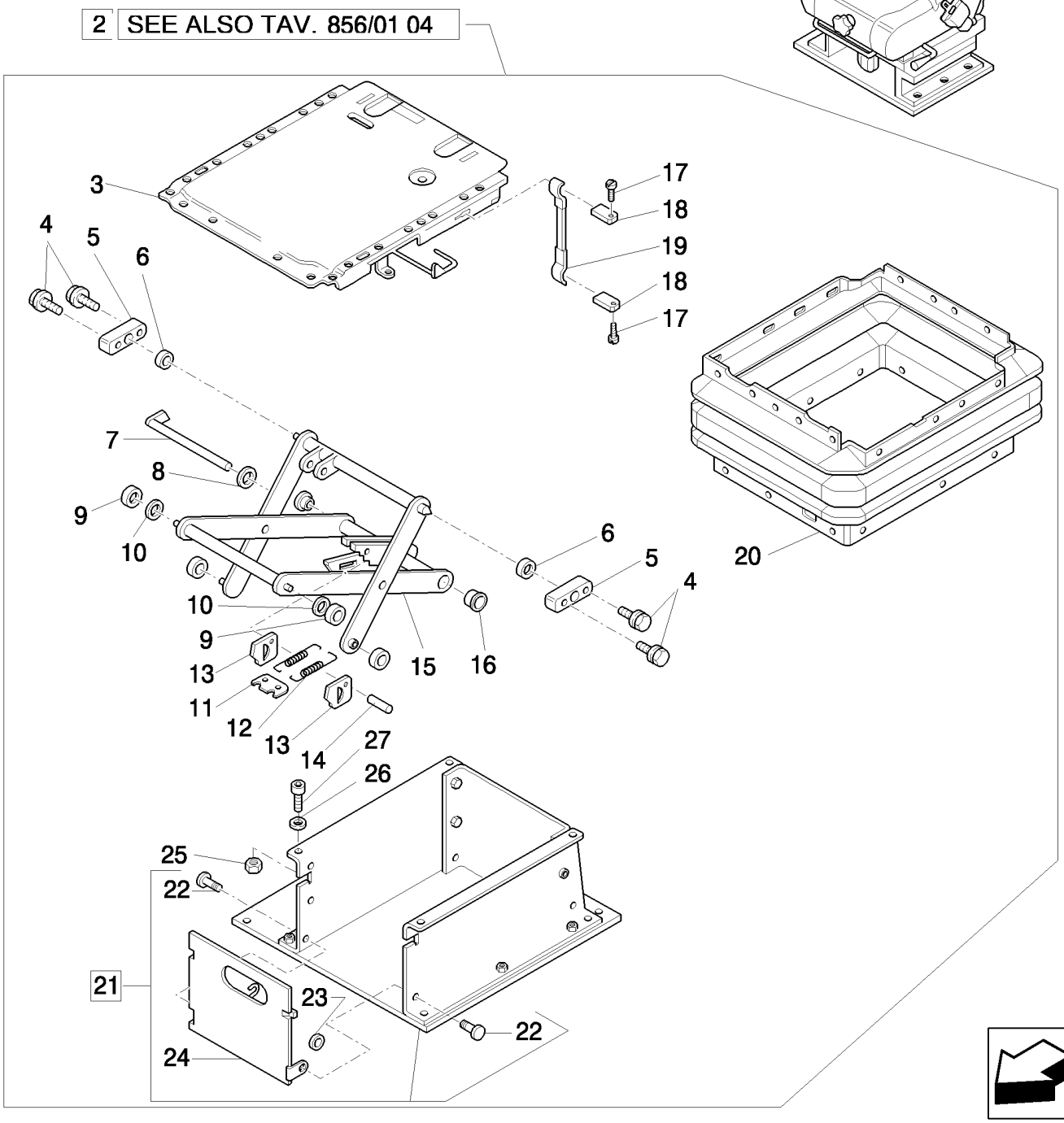

PARTES SUSPENSIONES SUPERIORES ASIENTO DE VINILO (ROPS)

REF	FN	PART NUMBER	YR/SN	QTY	DENOMINACION
27		82034893		4	TORNILLO

PARTES SUSPENSIONES INFERIORES ASIENTO DE VINILO (ROPS)

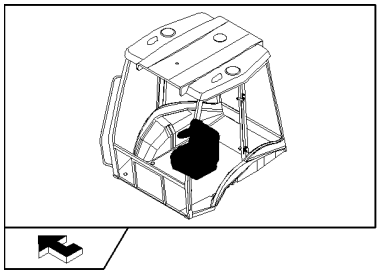

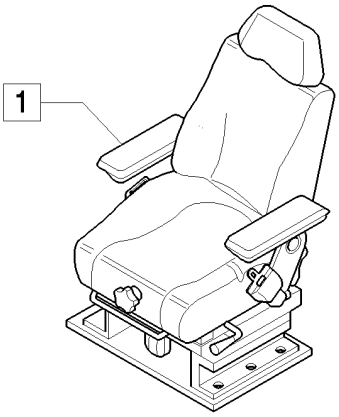

2 SEE ALSO TAV. 856/01 03

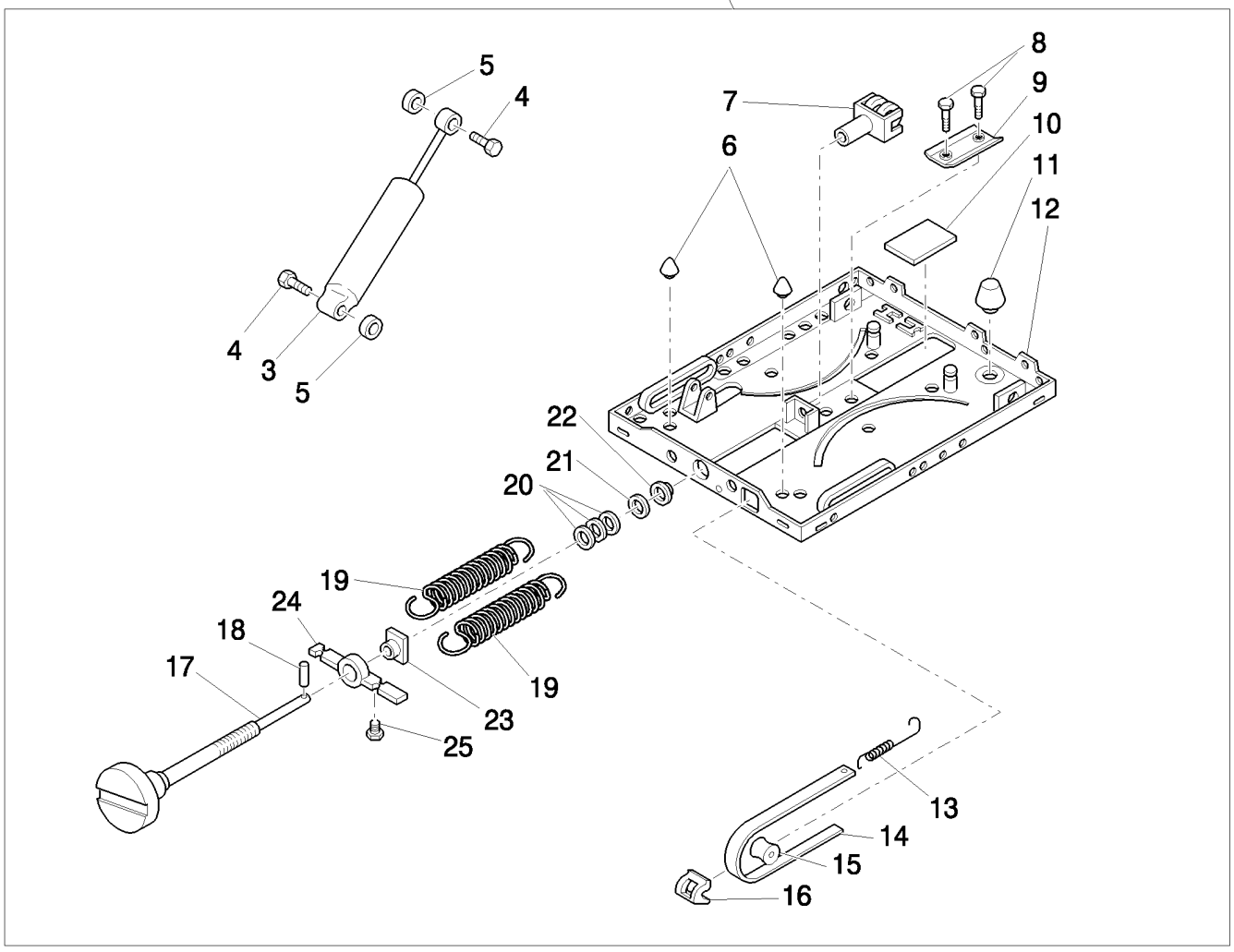

PARTES SUSPENSIONES INFERIORES ASIENTO DE VINILO (ROPS)

REF	FN	PART NUMBER	YR/SN	QTY	DENOMINACION
1	1	87576855		1	ASIENTO, Assy
1	1	87576856		1	ASIENTO, Assy
1	2	87576863		1	ASIENTO, Assy
1	2	87576865		1	ASIENTO, Assy
2		85817556		1	SUSPENSION
3	3	85817431		1	AMORTIGUADOR
4		82035040		2	TORNILLO
5		82035128		2	ARANDELA
6		85817440		2	PARAGOLPES DE GOMA
7		82035043		1	HORQUETA
8		82035037		2	REMACHE
9		82035054		1	PERFIL
10		82035032		1	PLACA
11		85817441		1	PARAGOLPES DE GOMA
12	4	85817436		1	SUSPENSION
13		82035039		1	RESORTE
14	5	85817443		1	TESTIGO
15		82035029		1	RODILLO
16		82035025		1	GUIA
17	6	85817451		1	TORNILLO DE REGLAGE
18		85817433		1	PITON
19		85817434		2	RESORTE
20		82035035		1	JUEGO ARANDELAS
21		82035028		1	ARANDELA
22		85817435		1	CASQUILLO
23		82035034		1	TUERCA
24		82035027		1	PIEZA DE SOPORTE
25		82035033		1	RETENEDOR

(1) Mechanical Control Version
(2) Only for Pilot Control Version
(3) Includes 4, 5
(4) Includes 6, 8 - 11
(5) Includes 13, 15, 16, 25
(6) Includes 18

879		p1	04/08

ESPEJO POSTERIOR DERECHO CABINA

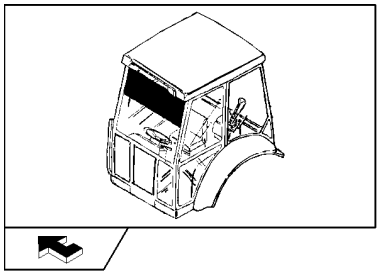

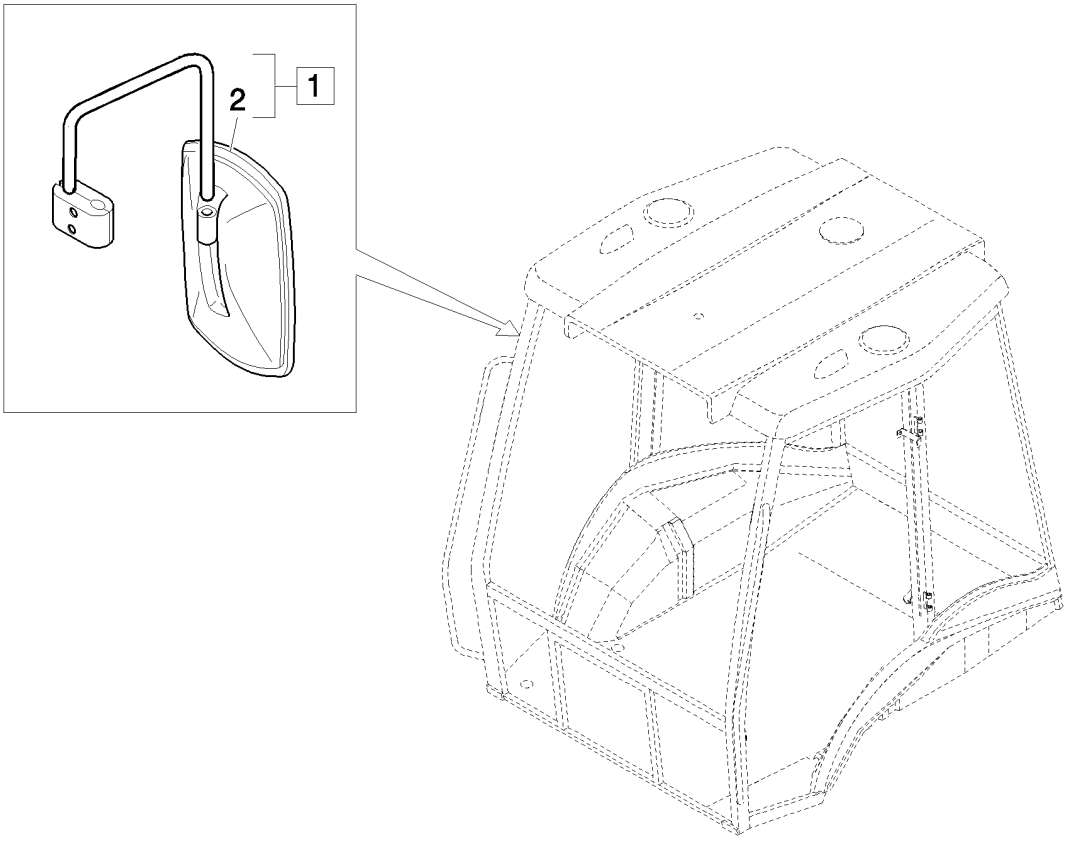

ESPEJO POSTERIOR DERECHO CABINA

REF	FN	PART NUMBER	YR/SN	QTY	DENOMINACION
1		85820136		1	ESPEJO, Assy, DX
2		85820138		1	ESPEJO RETROVISOR

888		p1	03/08

PROTECCIÓN Y ADHESIVO BALANCÍN

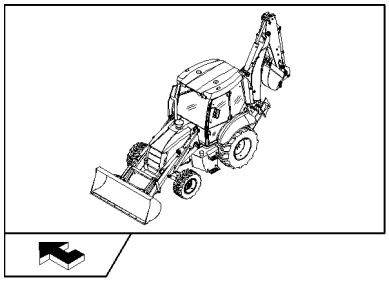

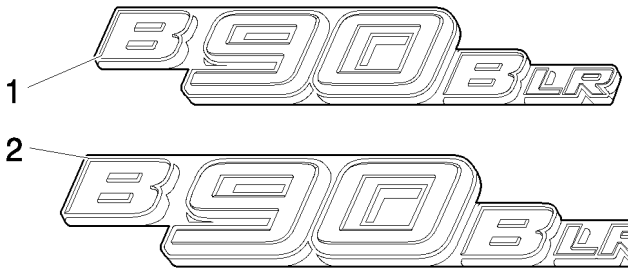

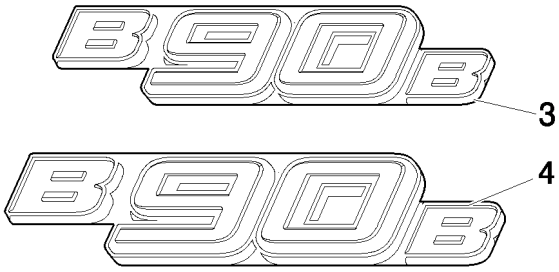

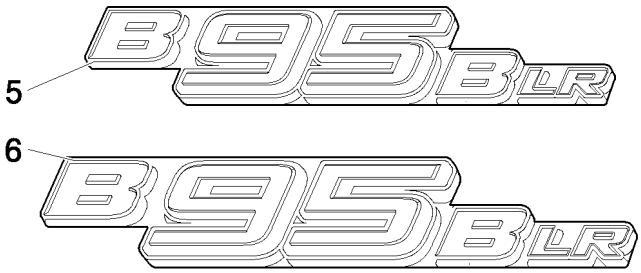

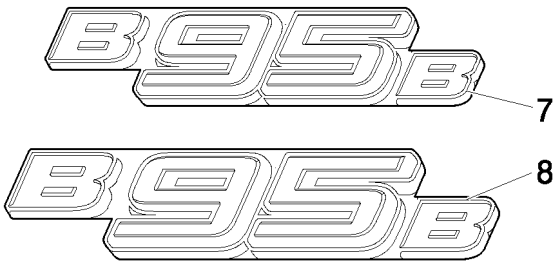

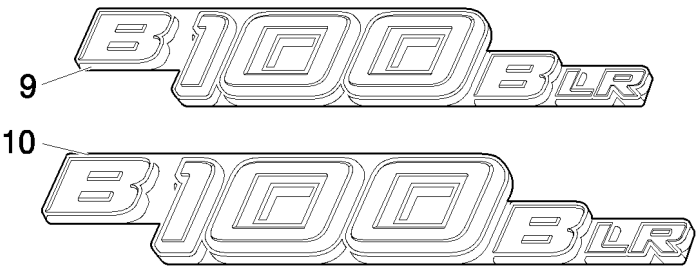

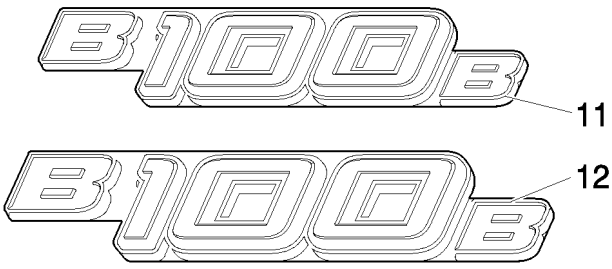

PROTECCIÓN Y ADHESIVO BALANCÍN

REF	FN	PART NUMBER	YR/SN	QTY	DENOMINACION
1		87729598		2	CALCOMANIA
2		87729599		2	CALCOMANIA
3		87729596		2	CALCOMANIA
4		87729597		2	CALCOMANIA
5		87729602		2	CALCOMANIA
6		87729603		2	CALCOMANIA
7		87729600		2	CALCOMANIA
8		87729601		2	CALCOMANIA
9		87729608		2	CALCOMANIA
10		87729609		2	CALCOMANIA
11		87729606		2	CALCOMANIA
12		87729607		2	CALCOMANIA

900	01	p1	04/08

BALANCÍN LARGO: CONJUNTO

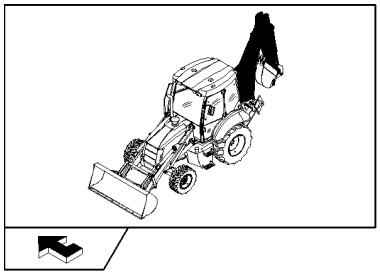

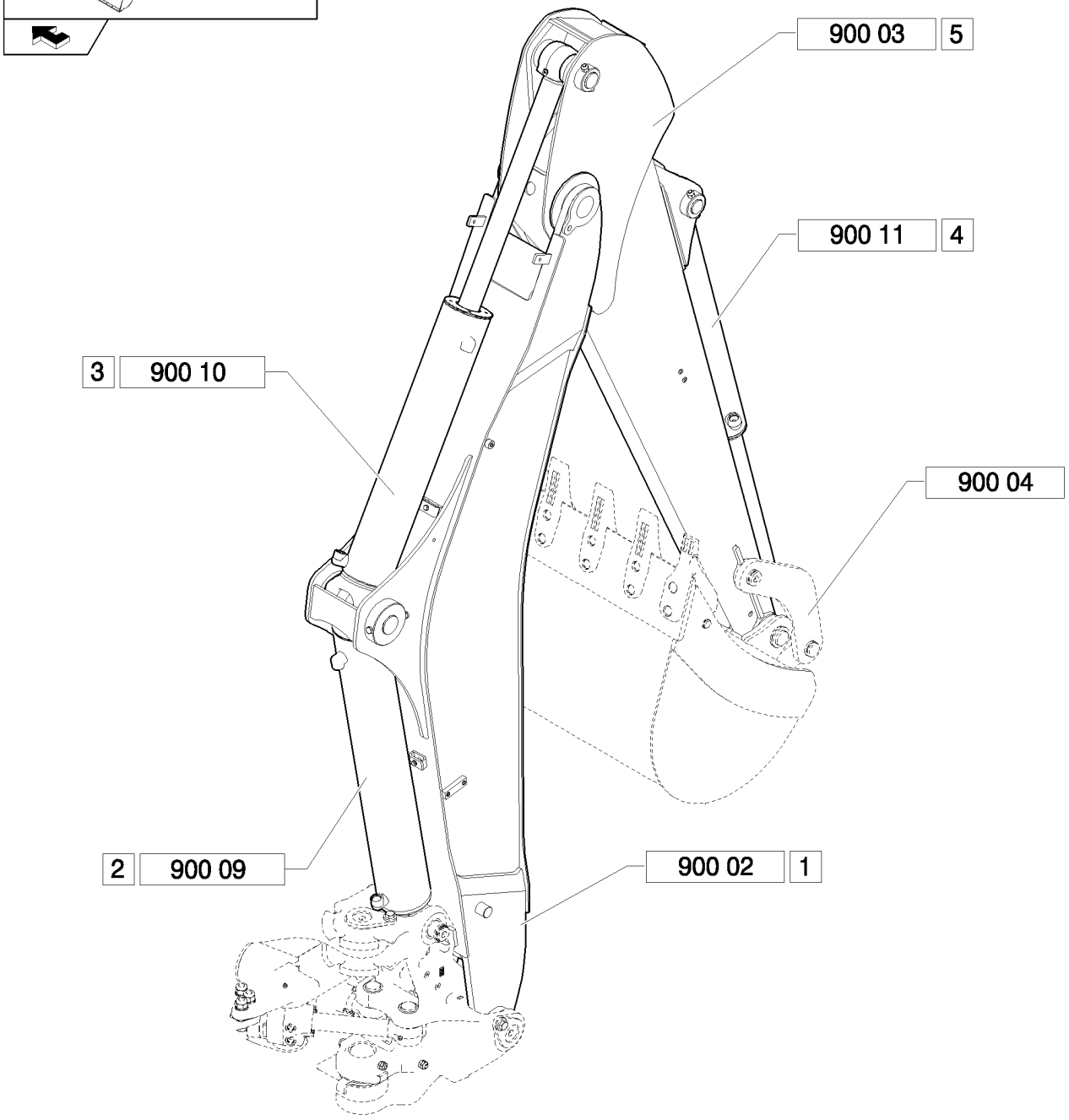

BALANCÍN LARGO: CONJUNTO

REF	FN	PART NUMBER	YR/SN	QTY	DENOMINACION
1		87576064		1	CUCHARA, Assy
2		87597583		1	CILINDRO, Assy
3		87594954		1	CILINDRO, Assy
4		87382007		1	CILINDRO, Assy
5		87592386		1	BALANCÍN, Assy

900	02	p1	04/08

BRAZO DE ESCAVACION LARGO - BRAZO DE ELEVACION

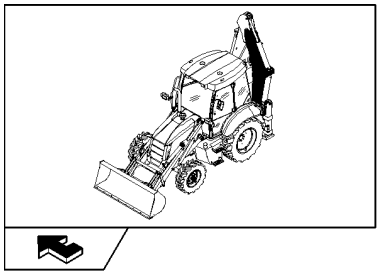

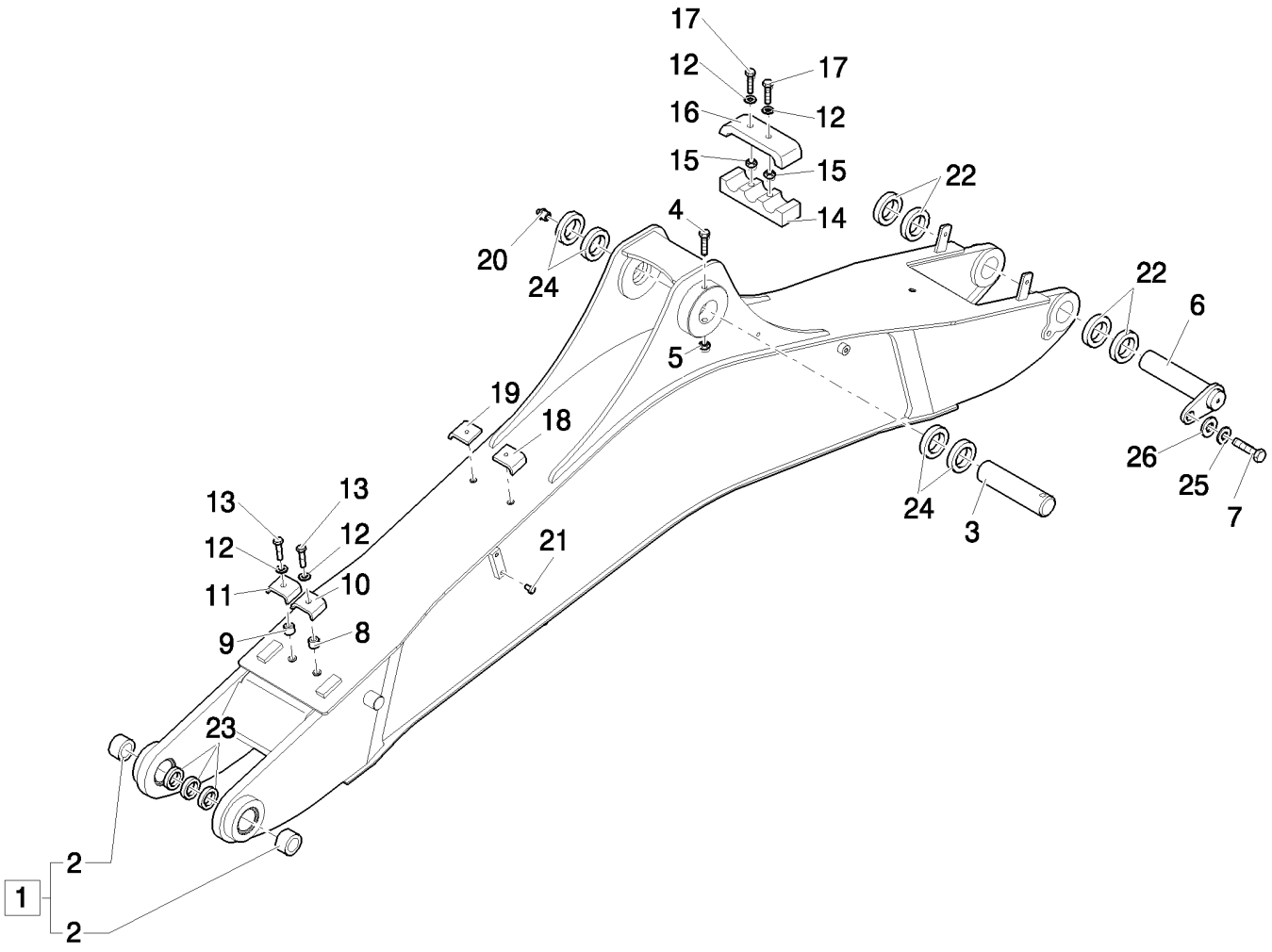

BRAZO DE ESCAVACION LARGO - BRAZO DE ELEVACION

REF	FN	PART NUMBER	YR/SN	QTY	DENOMINACION
1		87576064		1	CUCHARA, Assy
2		83910557		2	ANILLO
3		87590903		1	PERNO
4		15542121		1	TORNILLO, Hex, M12 x 1.25 x 150, 8.8
5		16105011		1	CONTRA TUERCA
6		85815607		1	PERNO
7		85802397		1	TORNILLO
8		85802902		1	SEPARADOR
9		85802901		1	SEPARADOR
10		85802900		1	BORNE
11		85802899		1	BORNE
12		11193879		6	ARANDELA ABANICO, Belleville, M8.4
13		16044221		2	TORNILLO, Hex, M8 x 50, 8.8
14		85802895		1	BORNE
15		85802893		2	SEPARADOR
16		85802894		1	PRLONGACION
17		16044421		4	TORNILLO, Hex, M8 x 60, 8.8
18		85815627		2	BORNE
19		85815628		2	BORNE
20		83416242		1	ENGRASADOR
21		87310961		6	TAPÓN
22		85805295		4	SUPLEMENTO
23		85805296		3	SUPLEMENTO
24		85818916		4	SUPLEMENTO
25		85815607		1	PERNO
26		87747362		1	MANGA

900	03	p1	04/08

BRAZO DE ESCAVACION LARGO

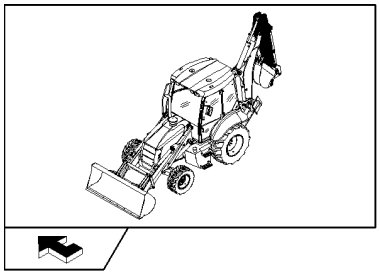

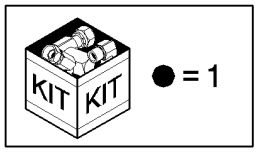

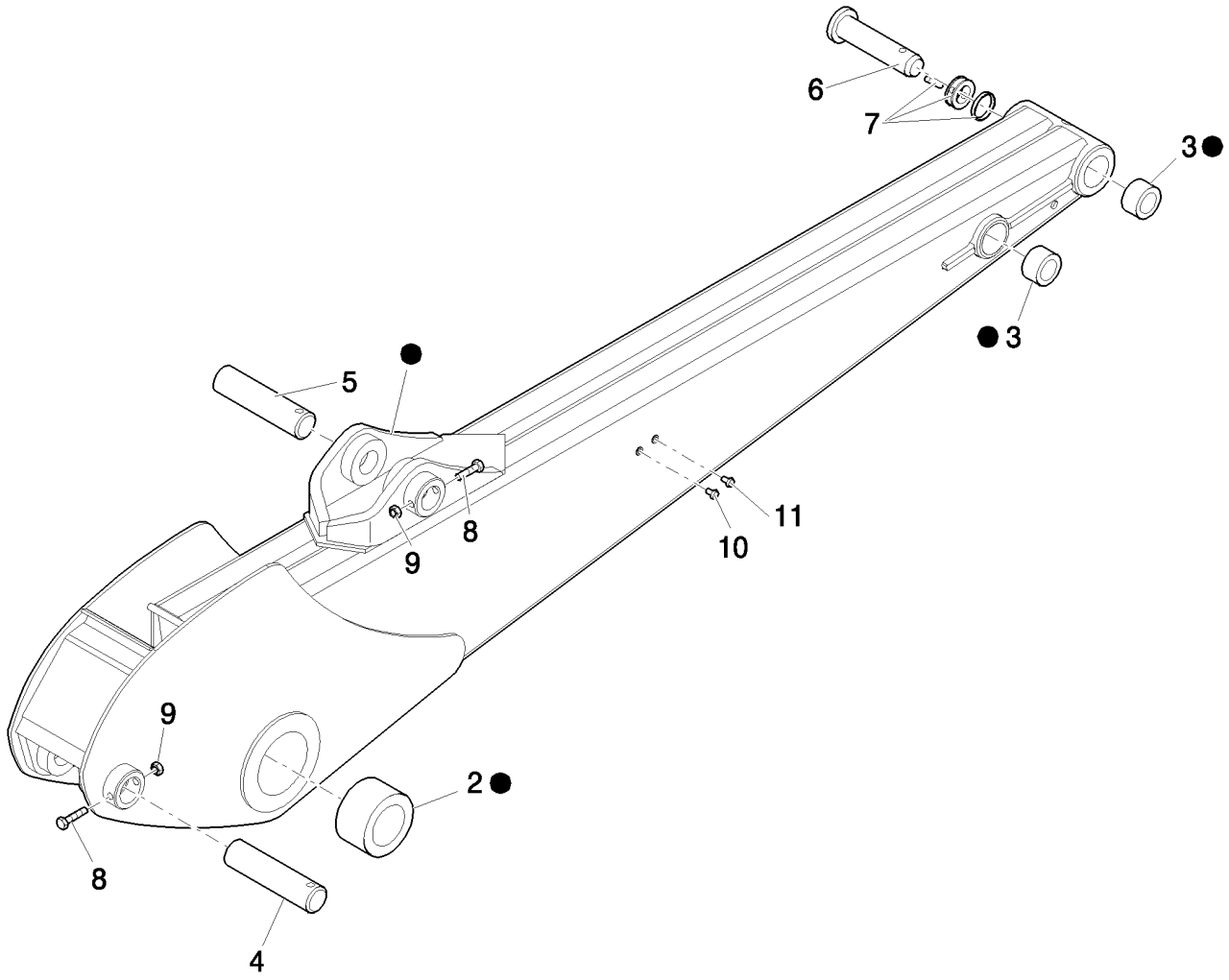

BRAZO DE ESCAVACION LARGO

REF	FN	PART NUMBER	YR/SN	QTY	DENOMINACION
1		87592386		1	BALANCÍN, Assy
2		83910546		2	CASQUILLO
3		83910548		4	CASQUILLO
4		87594196		1	PERNO
5		87577359		1	PERNO
6		85803005		1	PERNO
7		85802975		1	PASADOR DE FIJACION
8		15542921		2	TORNILLO, Hex, M12 x 1.25 x 95, 8.8
9		16105011		2	CONTRA TUERCA
10		85804447		4	TAPÓN

900	04	p1	04/08

BRAZO DE ESCAVACION LARGO/CORTO - CINEMATISMO CUCHARON

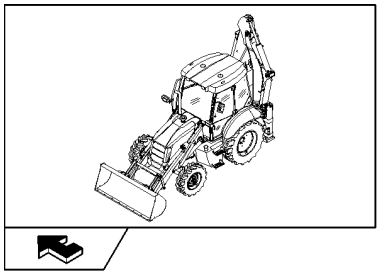

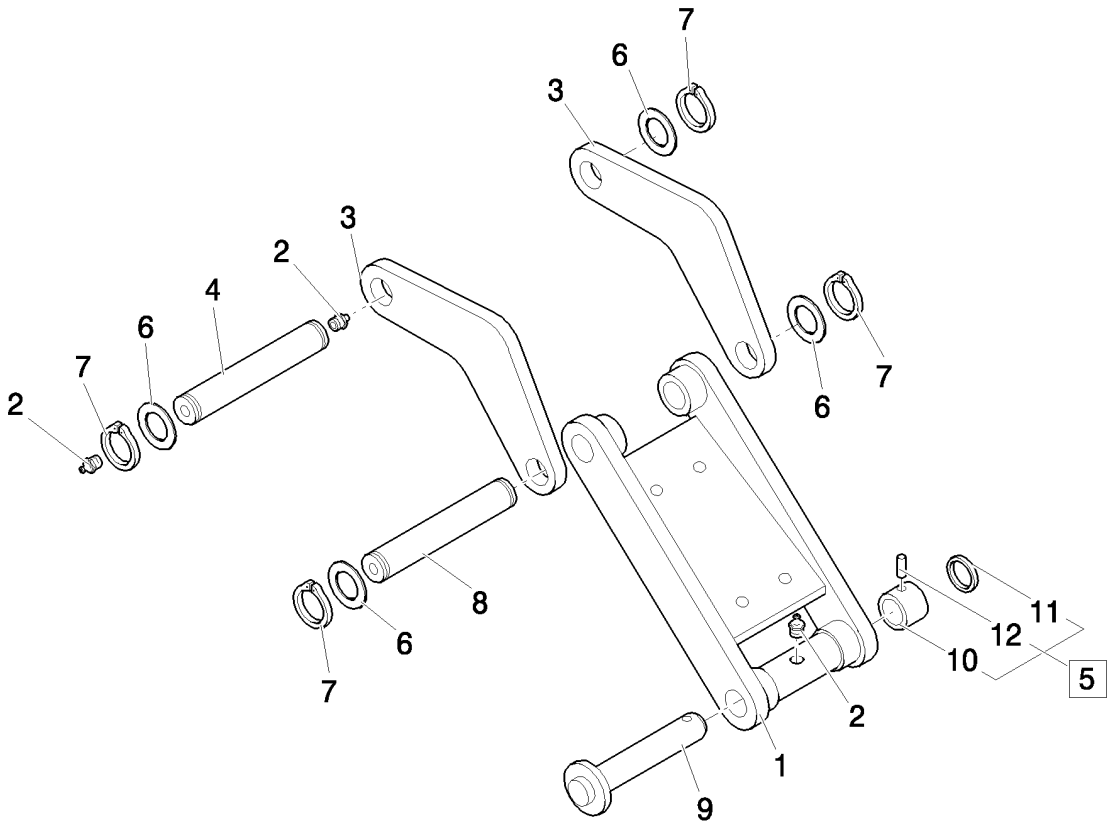

BRAZO DE ESCAVACION LARGO/CORTO - CINEMATISMO CUCHARON

REF	FN	PART NUMBER	YR/SN	QTY	DENOMINACION
1		85803613		1	ESLABON
2		83416242		3	ENGRASADOR, 1/8"-27
3		87589579		2	ESLABON
4		85815517		1	PERNO
5		85802975		1	PASADOR DE FIJACION, Assy
6		83910977		4	SEPARADOR
7		11069071		4	ANILLO DE RESORTE, M45, Ext
8		85813469		1	PERNO
9		85803005		1	PERNO
10		85802643		1	SEPARADOR
11		85802974		1	ANILLO
12		85802976		1	PERNO

900	05	p1	04/08

BALANCÍN: INSTALACIÓN BALANCÍN Y CILINDRO BALANCÍN

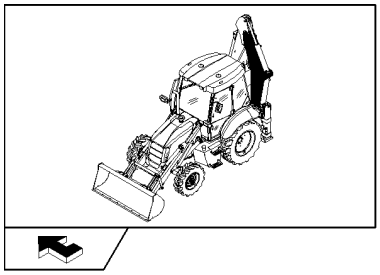

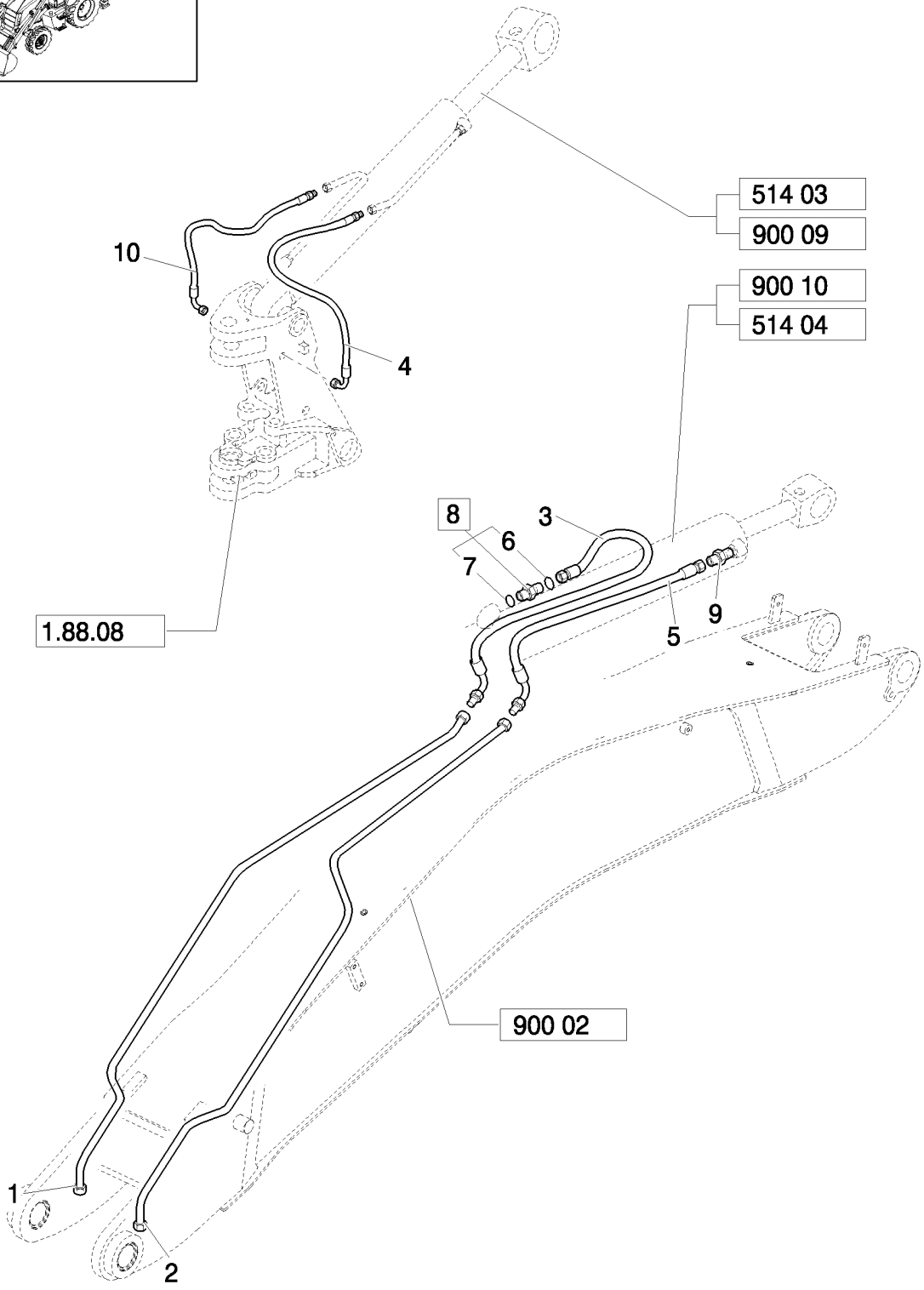

BALANCÍN: INSTALACIÓN BALANCÍN Y CILINDRO BALANCÍN

REF	FN	PART NUMBER	YR/SN	QTY	DENOMINACION
1		87614628		1	CUELLO DE CARGA
2		87614614		1	CUELLO DE CARGA
3		87683904		1	MANGA FLEXIBLE
4		87621914		1	MANGA FLEXIBLE
5		87683905		1	MANGA FLEXIBLE
6		89991976		1	JUNTA HERMETICA
7		80167266		1	JUNTA HERMETICA, 90 Duro, .924" ID x .116" Thk
8		83962538		1	RACOR, Assy, 1-3/16"-12 ORS x 1-1/16"-12 SAE O-Ring
9		83962539		1	RACOR
10		87619512		1	MANGA FLEXIBLE

900	06	p1	03/08

BALANCÍN: INSTALACIÓN HIDRÁULICA CILINDRO CUCHARA

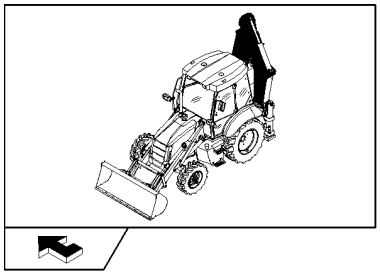

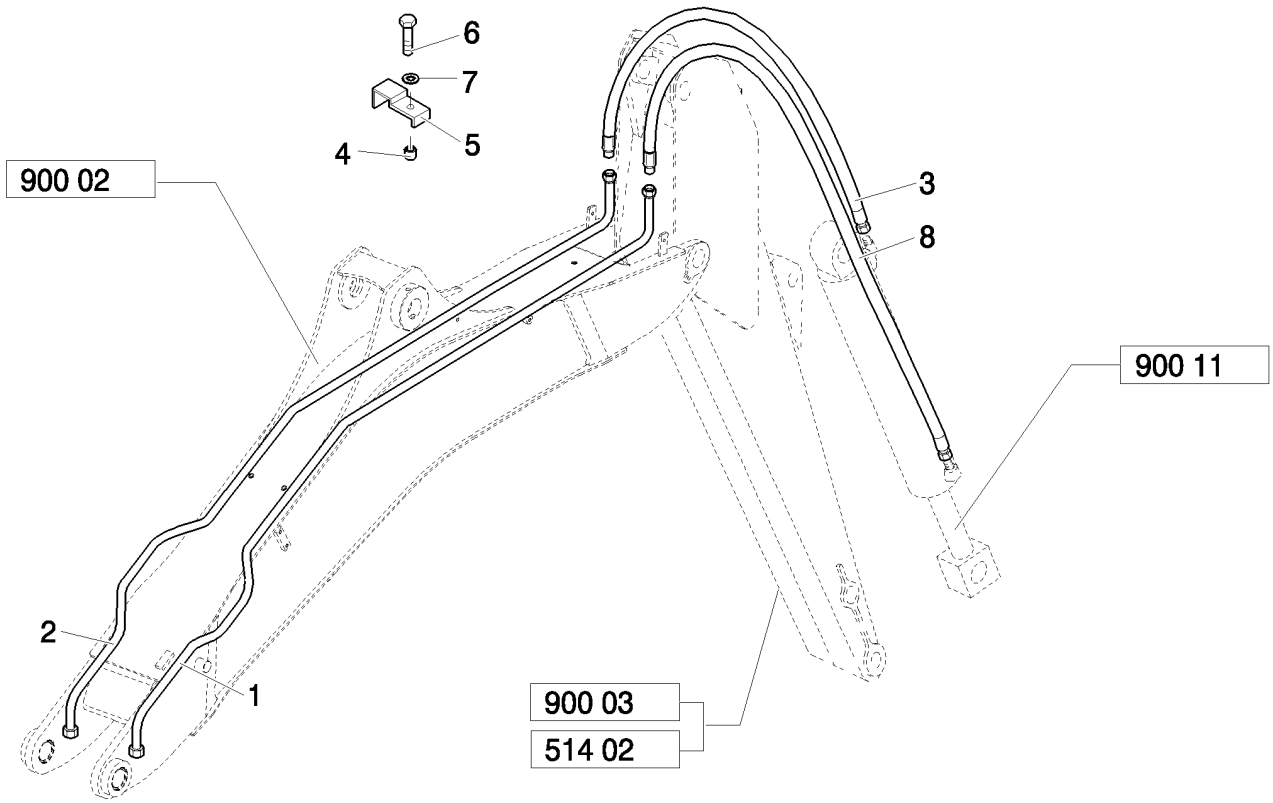

BALANCÍN: INSTALACIÓN HIDRÁULICA CILINDRO CUCHARA

REF	FN	PART NUMBER	YR/SN	QTY	DENOMINACION
1		87636636		1	CUELLO DE CARGA
2		87636637		1	CUELLO DE CARGA
3	1	87684509		1	MANGA FLEXIBLE
3	2	87684511			MANGA FLEXIBLE
4		85802901		1	SEPARADOR
5		85802909		1	BORNE
6		16044221		1	TORNILLO, Hex, M8 x 50, 8.8
7		11193979		1	ARANDELA ABANICO, Belleville, M8.4
8	1	87684507		1	MANGA FLEXIBLE
8	2	87684508		1	MANGA FLEXIBLE

(1) Only for Long Dipper
(2) Only for Short Dipper

900	07	p1	04/08

BALANCÍN: INSTALACIÓN HIDRÁULICA CILINDRO BRAZO DE ELEVACIÓN

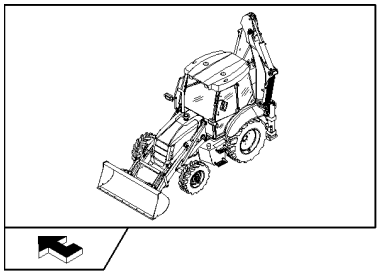

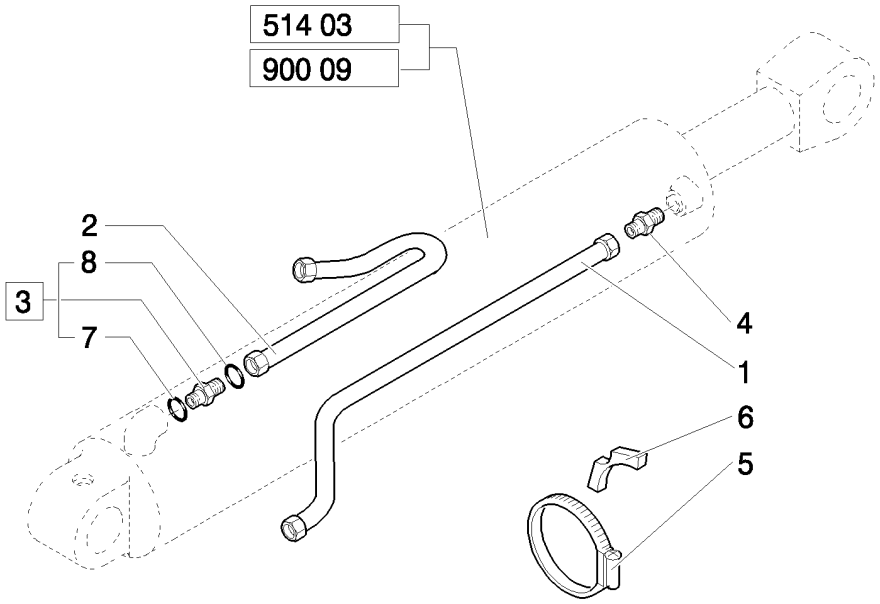

BALANCÍN: INSTALACIÓN HIDRÁULICA CILINDRO BRAZO DE ELEVACIÓN

REF	FN	PART NUMBER	YR/SN	QTY	DENOMINACION
1		87624533		1	CUELLO DE CARGA
2		85816813		1	TUBERIA HIDRAULICO
3		83962538		1	RACOR, Assy, 1-3/16"-12 ORS x 1-1/16"-12 SAE O-Ring
4		83962539		1	RACOR
5		85802744		1	ABRAZADERA MANGUERA
6		87303912		2	BLOQUE MOTOR
7		80167266		1	JUNTA HERMETICA, 90 Duro, .924" ID x .116" Thk
8		89991976		1	JUNTA HERMETICA, 90 Duro, .739" ID x .070" Thk

900	08	p1	03/08

BRAZO DE ESCAVACION - INSTALACION HIDRAULICA

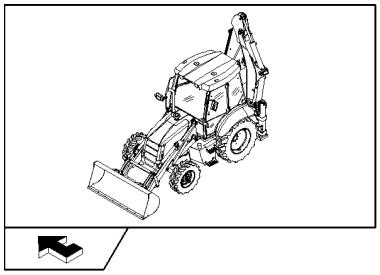

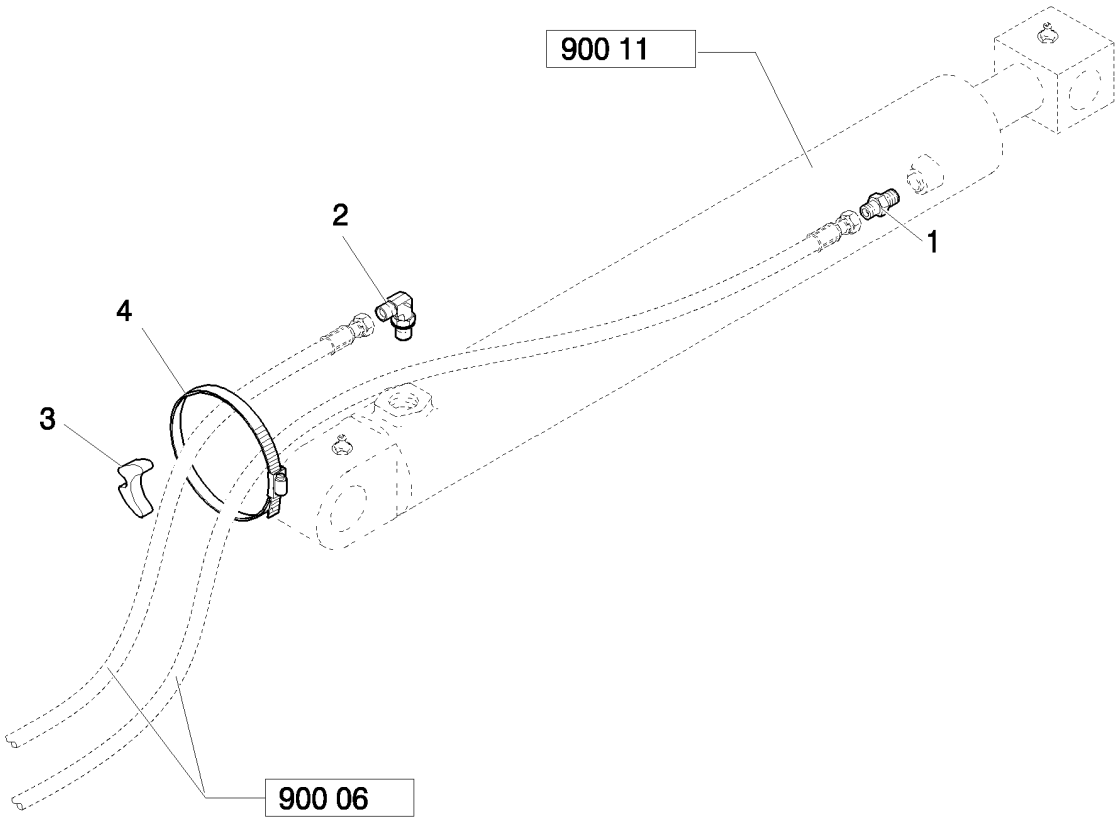

BRAZO DE ESCAVACION - INSTALACION HIDRAULICA

REF	FN	PART NUMBER	YR/SN	QTY	DENOMINACION
1		83962539		1	RACOR
2		85802957		1	CODO, 90º, 1 3/16"-12 ORS x 1 1/16"-12 SAE O-Ring
3		87565305		1	FIJACION
4		85803008		1	ABRAZADERA MANGUERA

900	09	p1	04/08

CILINDRO HIDRAULICO DE ELEVACION - BRAZO TELESCOPICO LARGO

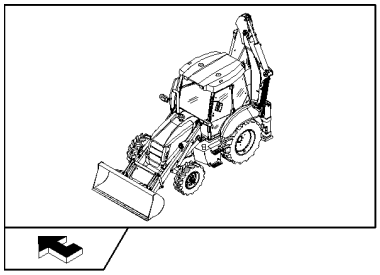

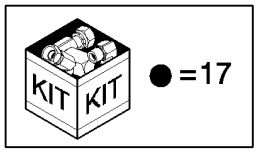

CILINDRO HIDRAULICO DE ELEVACION - BRAZO TELESCOPICO LARGO

REF	FN	PART NUMBER	YR/SN	QTY	DENOMINACION
1		87597583		1	CILINDRO, Assy
2		87597479		1	EMPAQUETADURA, Assy
3		D95146		1	JUNTA GANCHO
4		87597482		2	EMBOLO
5		87600654		1	VARILLA
6		87597480		2	EMPAQUETADURA
7		83416242		2	ENGRASADOR, 1/8"-27
8		G109908		1	CASQUILLO
9		444640A1		1	ANILLO DE CIERRE
10		380621A1		1	JUNTA, 4.734" ID x .139" Thk
11		86982444		1	PERNO ESPECIAL, M33x2x90
12		238-5249		1	JUNTA HERMETICA
13		87597481		1	EMBOLO, Assy
14		87530709		1	ANILLO DE CIERRE
15		87530710		1	ANILLO DE CIERRE
16		87402623		1	ANILLO
17	1	87654843		1	SERIE DE JUNTAS
18		G109395		1	TORNILLO AUTOROSCANTE
19		D149079		2	CASQUILLO
20		87597471		1	TUBO, Assy

(1) Includes 3, 8 - 10, 12, 14 - 16

900	10	p1	04/08

CILINDRO HIDRAULICO DE EXCAVACION

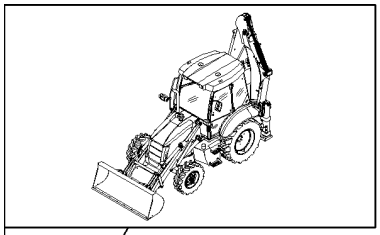

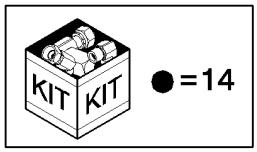

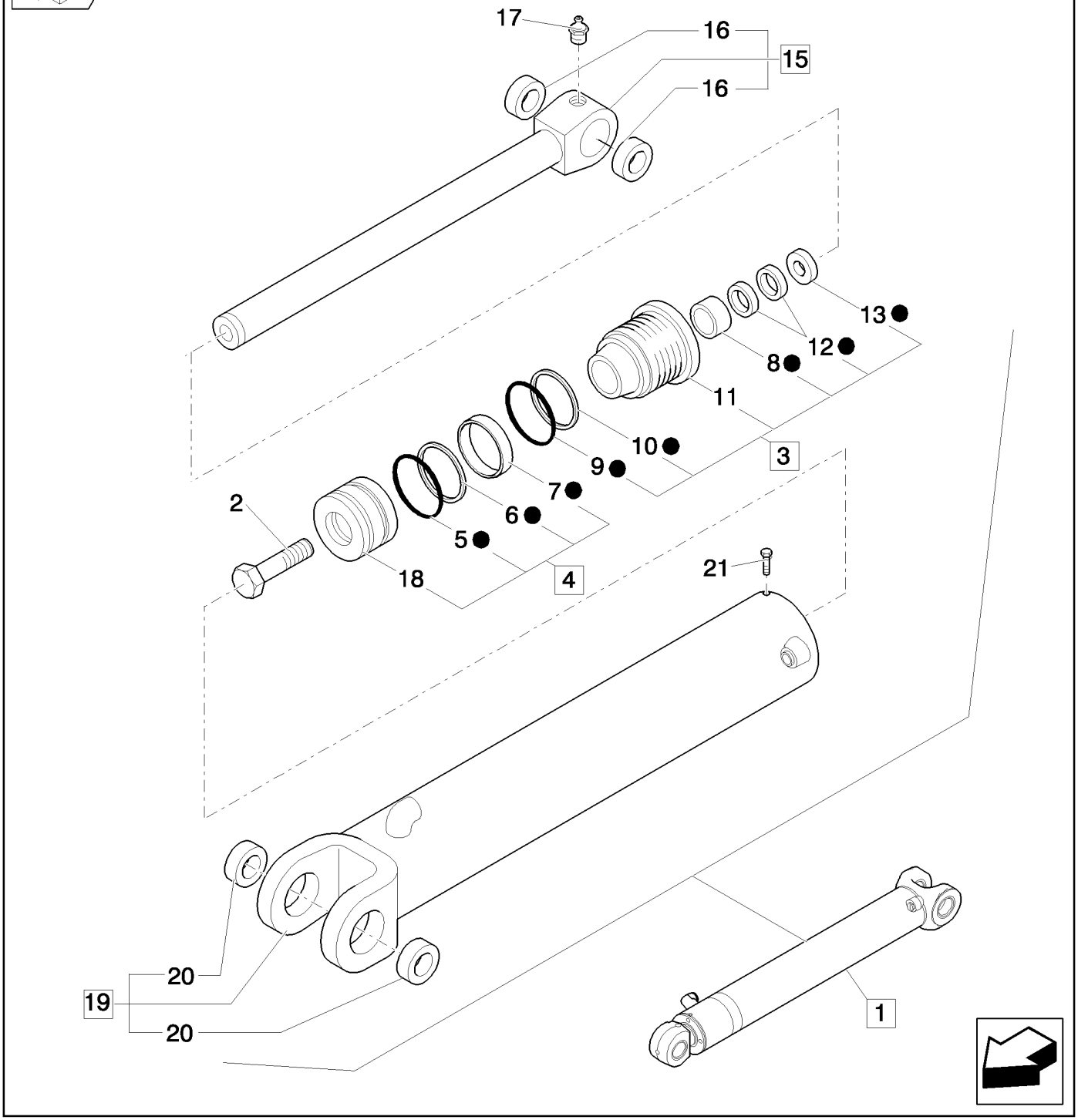

CILINDRO HIDRAULICO DE EXCAVACION

REF	FN	PART NUMBER	YR/SN	QTY	DENOMINACION
1		87594954		1	CILINDRO, Assy
2		86982444		1	PERNO ESPECIAL
3		87598244		1	EMPAQUETADURA, Assy
4		87591992		1	EMBOLO, Assy
5		G102091		1	ANILLO DE CIERRE
6		G102092		1	ANILLO
7		G102090		2	ANILLO
8		G109908		1	CASQUILLO
9		238-5247		1	JUNTA HERMETICA, -247, 70 Duro, 4.609" ID x .139" Thk
10		G107970		1	ANILLO
11		87598245		1	EMPAQUETADURA
12		1542879C1		1	SERIE DE JUNTAS
13		D95146		1	JUNTA GANCHO
14	1	87654845		1	SERIE DE JUNTAS
15		87382089		1	VARILLA, Assy
16		D149079		2	CASQUILLO
17		83416242		1	ENGRASADOR, 1/8"-27
18		87591991		1	EMBOLO
19		87591981		1	TUBO, Assy
20		123407A1		2	ANILLO
21		G109395		1	TORNILLO AUTOROSCANTE

(1) Includes 5 - 10, 12, 13

900	11	p1	05/08

CILINDRO HIDRAULICO DEL CUCHARON

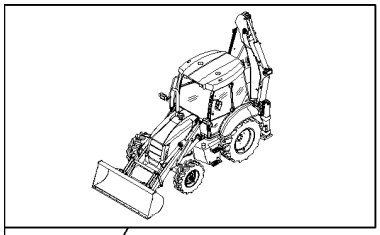

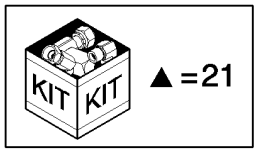

CILINDRO HIDRAULICO DEL CUCHARON

REF	FN	PART NUMBER	YR/SN	QTY	DENOMINACION
1		G109908		1	CASQUILLO
2		87648324		1	EMPAQUETADURA
3		86982442		1	PERNO ESPECIAL
4		238-5235		1	JUNTA HERMETICA, -235, 70 Duro, 3.109" ID x .139" Thk
5		1986905C1		1	EMBOLO, Assy
6		87381990		1	VARILLA, Assy
7		87581125		4	CASQUILLO
8		D38858		1	JUNTA
9		G100711		1	Anillo De Desgaste
10		87381987		1	TUBO, Assy
11		1542879C1		1	SERIE DE JUNTAS
12		83416242		2	ENGRASADOR, 1/8"-27
13		D95146		1	JUNTA GANCHO
14		1986906C1		1	EMBOLO
15		G100709		1	ANILLO DE CIERRE
16		G100710		1	ANILLO
17		87646222		2	CASQUILLO
18		87382007		1	CILINDRO, Assy
19		87648323		1	EMPAQUETADURA, Assy
20		G109395		1	TORNILLO AUTOROSCANTE
21	1	1542923C2		1	SERIE DE JUNTAS

(1) Includes 1, 4, 8, 9, 11, 13, 15, 16

901	01	p1	05/08

BALANCÍN TELESCÓPICO LARGO: CONJUNTO

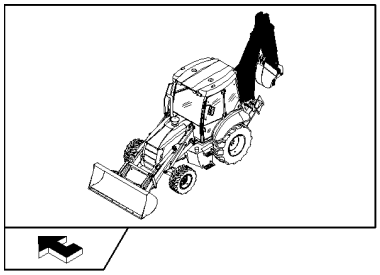

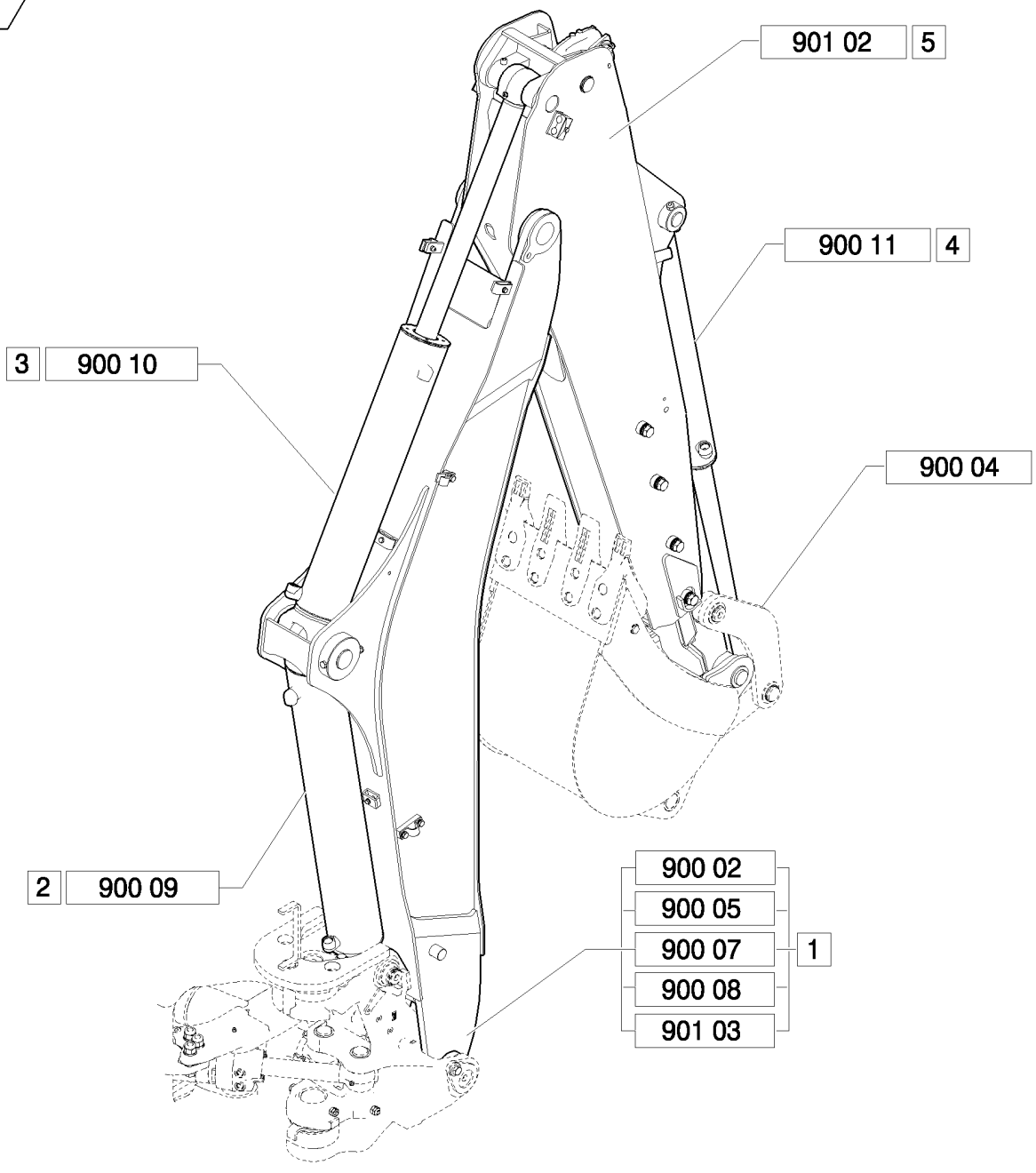

BALANCÍN TELESCÓPICO LARGO: CONJUNTO

REF	FN	PART NUMBER	YR/SN	QTY	DENOMINACION
1		87576064		1	CUCHARA, Assy
2		87597583		1	CILINDRO, Assy
3		87594954		1	CILINDRO, Assy
4		87382007		1	CILINDRO, Assy
5		87639619		1	BRAZO, Assy

901	02	p1	05/08

BRAZO TELESCOPICO LARGO

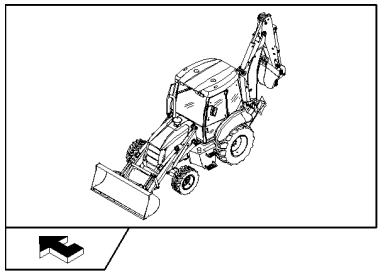

BRAZO TELESCOPICO LARGO

REF	FN	PART NUMBER	YR/SN	QTY	DENOMINACION
1		87639619		1	BRAZO, Assy
2		83910546		2	CASQUILLO
3	1	85802975		1	PASADOR DE FIJACION
4		87583508		1	PERNO
5		85801309		1	PERNO
6		83911019		4	RETENEDOR
7		11121321		8	TORNILLO
8		14497121		8	ARANDELA, M20 x 37 x 3
9		85801307		32	ARANDELA
10		85808473		4	PATIN
11		85808472		4	PATIN
12		16105011		1	CONTRA TUERCA
13		11190579		8	ARANDELA ABANICO, Belleville, M10.5
14		11106721		8	TORNILLO, Hex, M10 x 38, 8.8, Full Thd
15		14332521		1	TORNILLO, Hex Soc Hd, M12 x 1.25 x 100, 8.8
16		87392513		2	COLLAR
17		87392509		2	PLACA
18		16044121		2	TORNILLO, Hex, M8 x 45, 8.8
19		85803005		1	PERNO
20		85801314		1	PERNO
21		83902702		2	PASADOR ABIERTO
22		85801308		1	PERNO
23		83910548		4	CASQUILLO
24		14497401		2	ARANDELA DE FRENO
25	2	87583485		1	BRAZO
26	3	87583496		1	BRAZO
27		87392516		2	COLLAR
28		87577359		1	PERNO
29		16105011		1	CONTRA TUERCA
30		85802976		1	PERNO
31		81870039		4	BOTON DE RESORTE
32		15542921		1	TORNILLO, Hex, M12 x 1.25 x 95, 8.8

(1) Includes 30, 34, 35
(2) Includes 10 - 12
(3) Includes 23

901	02	p2	05/08

BRAZO TELESCOPICO LARGO

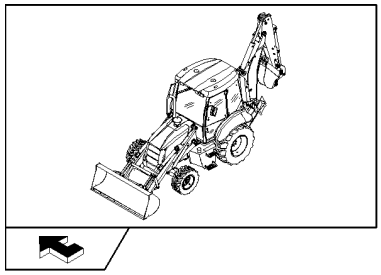

BRAZO TELESCOPICO LARGO

REF	FN	PART NUMBER	YR/SN	QTY	DENOMINACION
33		83416242		2	ENGRASADOR
34		85802643		1	SEPARADOR
35		85802974		1	ANILLO

901	03	p1	03/08

BRAZO TELESCOPICO - INSTALACION HIDRAULICA

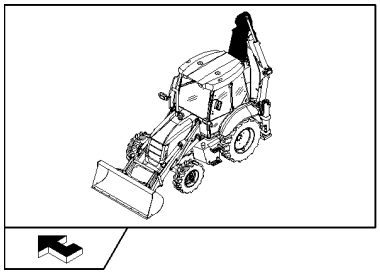

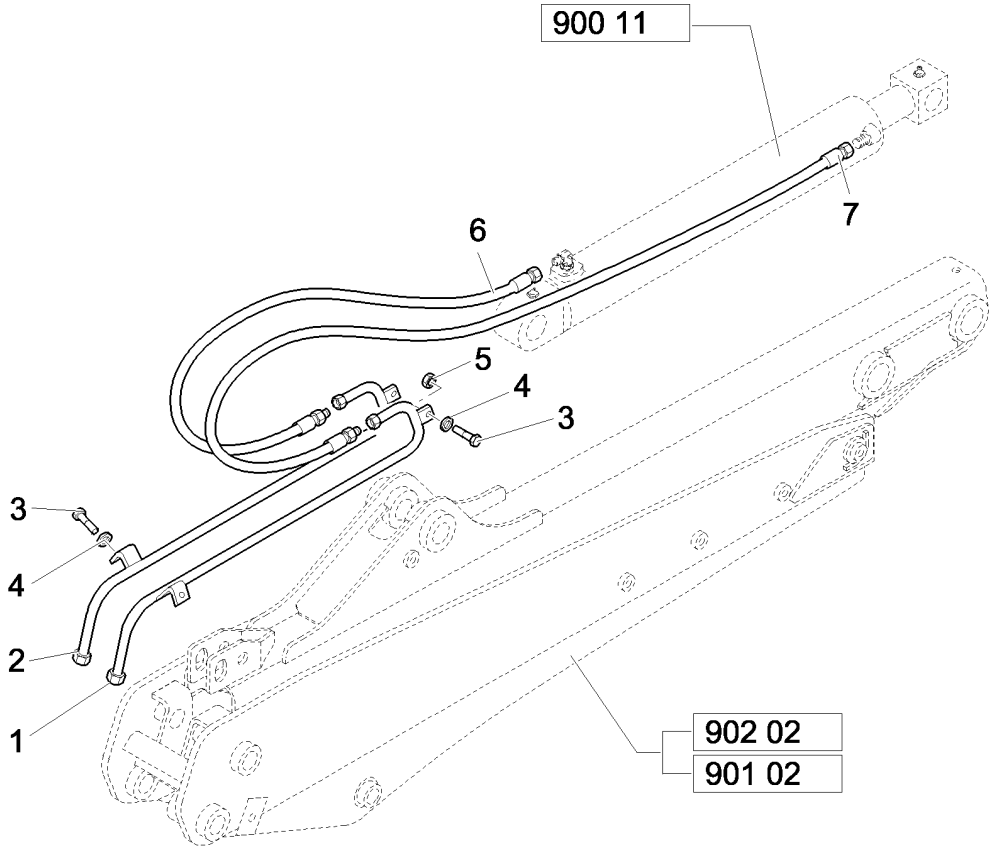

BRAZO TELESCOPICO - INSTALACION HIDRAULICA

REF	FN	PART NUMBER	YR/SN	QTY	DENOMINACION
1	1	85816815		1	TUBERIA HIDRAULICO
1	2	85815679		1	TUBERIA HIDRAULICO
2	1	85816817		1	TUBERIA HIDRAULICO
2	2	85815677		1	TUBERIA HIDRAULICO
3		16043621		4	TORNILLO, Hex, M8 x 25, 8.8
4		11193979		4	ARANDELA ABANICO, Belleville, M8.4
5		14048211		2	CONTRA TUERCA, M8 x 1.25, Cl 8
6	1	87621911		1	MANGA FLEXIBLE
6	2	87636395		1	MANGA FLEXIBLE
7	1	87619511		1	MANGA FLEXIBLE
7	2	87636396		1	MANGA FLEXIBLE

(1) Only for Telescopic Dipper Short
(2) Only for Telescopic Dipper Long

901	04	p1	05/08

BALANCÍN TELESCÓPICO LARGO: CILINDRO HIDRÁULICO TELESCÓPICO

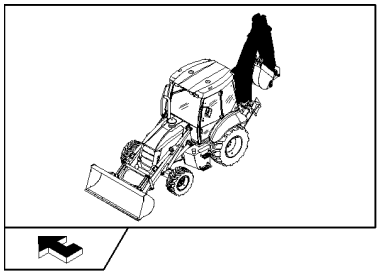

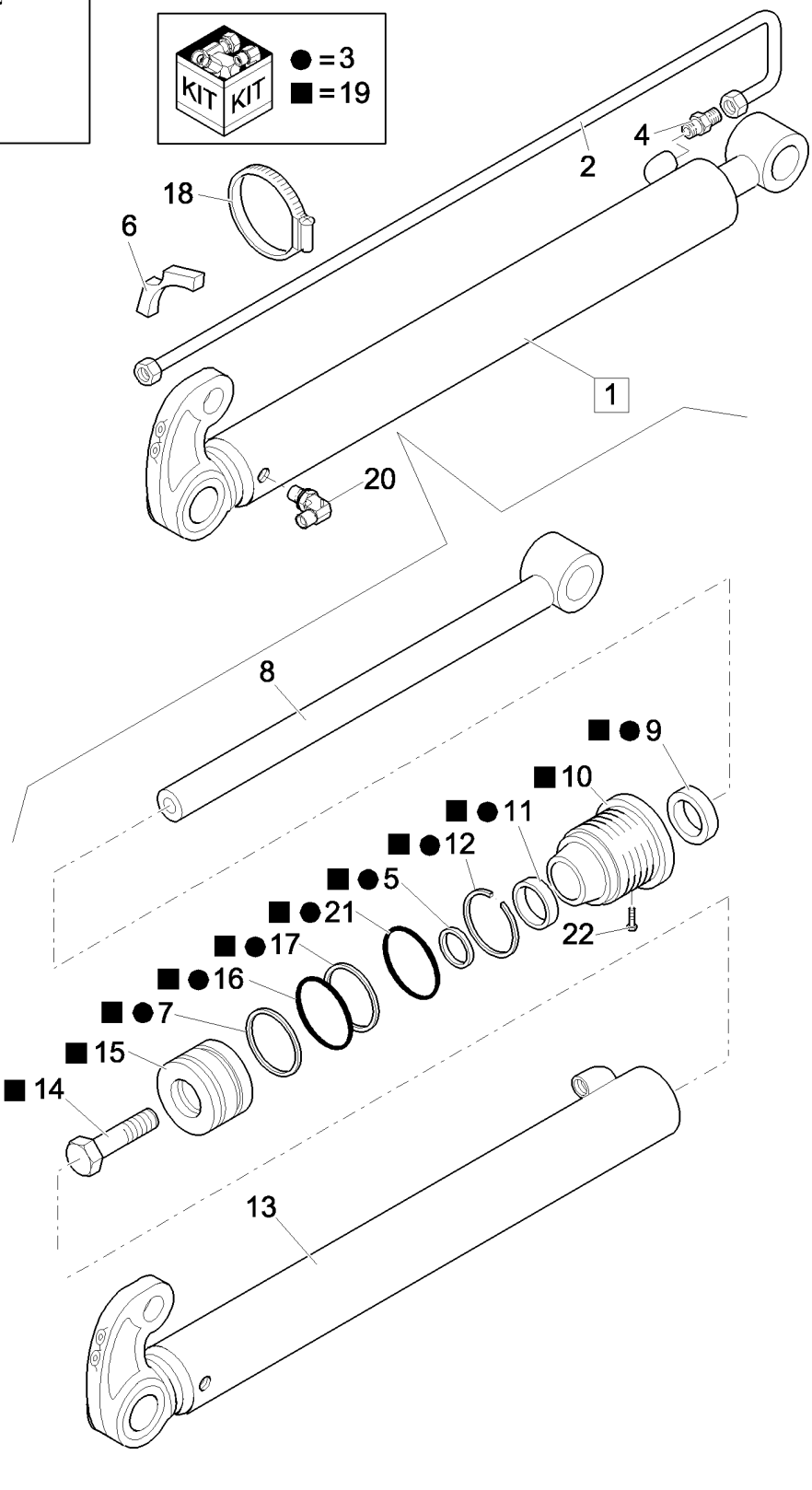

BALANCÍN TELESCÓPICO LARGO: CILINDRO HIDRÁULICO TELESCÓPICO

REF	FN	PART NUMBER	YR/SN	QTY	DENOMINACION
1		87327259		1	CILINDRO HIDRAULICO, Assy
2		87327251		1	TUBO RIGIDO
3		87342131		1	EQUIPO
4		83963374		1	RACOR
5		1542875C1		1	SERIE DE JUNTAS
6		87303910		1	SEPARADOR
7		G100444		1	ANILLO DE CIERRE
8		87313722		1	VARILLA
9		D95143		1	ANILLO DE CIERRE
10		297281A1		1	PALIER
11		G102425		1	CASQUILLO
12		G109298		1	ANILLO
13		87313720		1	CAMISA
14		86982435		1	PERNO ESPECIAL
15		G107277		1	EMBOLO
16		G102288		1	SELLO (CONJUNTO)
17		G100449		1	Anillo De Desgaste
18		85803010		1	ABRAZADERA MANGUERA
19		110692A4		1	EMBOLO
20		83971549		1	CODO
21		238-5231		1	JUNTA HERMETICA, -231, 70 Duro, 2.609" ID x .139" Thk
22		G109395		1	TORNILLO AUTOROSCANTE

902	01	p1	05/08

BALANCÍN TELESCÓPICO CORTO: CONJUNTO

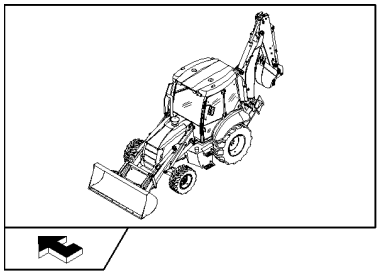

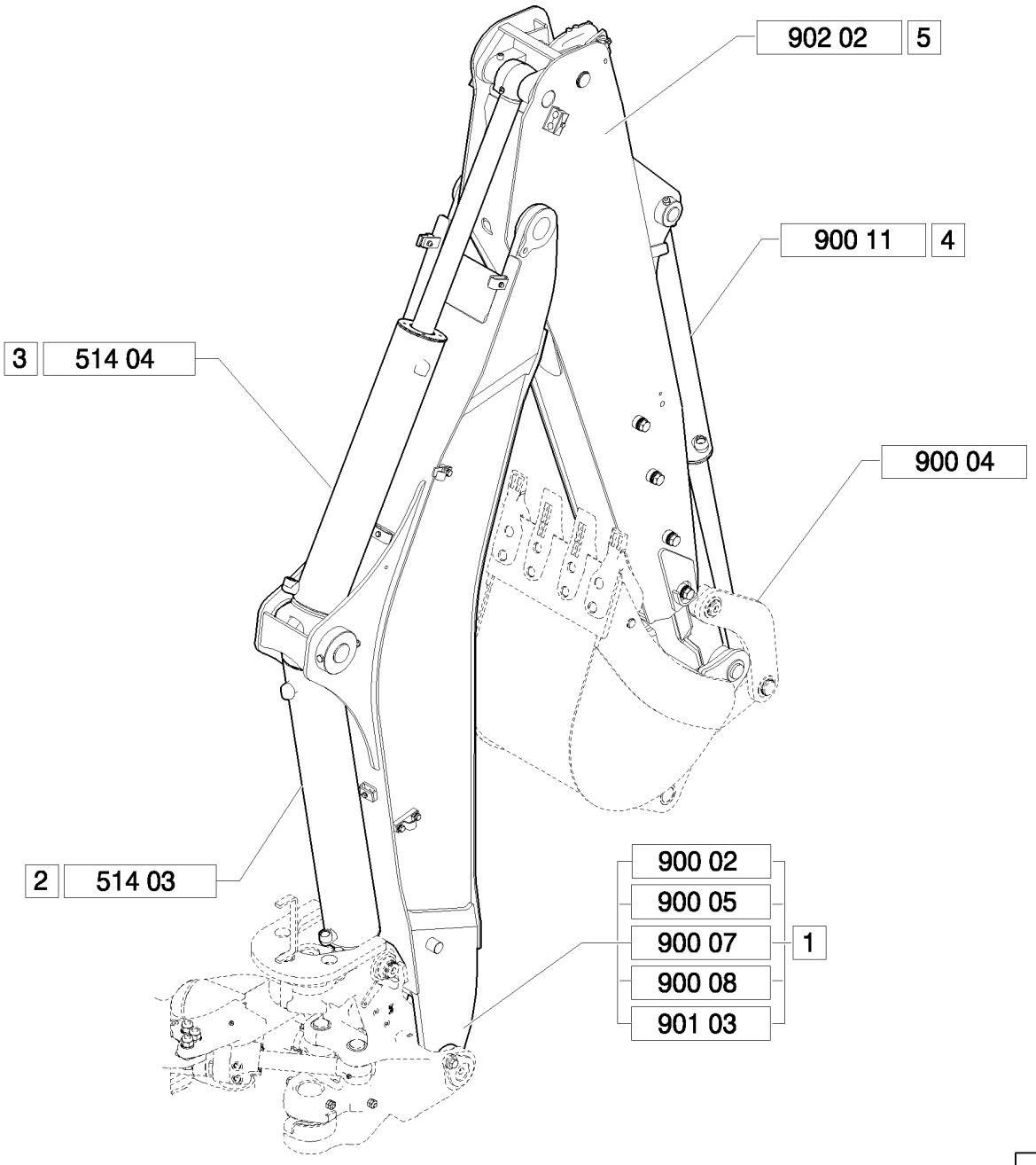

BALANCÍN TELESCÓPICO CORTO: CONJUNTO

REF	FN	PART NUMBER	YR/SN	QTY	DENOMINACION
1		87576064		1	CUCHARA, Assy
2		87613157		1	CILINDRO, Assy
3		87382083		1	CILINDRO, Assy
4		87382007		1	CILINDRO, Assy
5		87598703		1	BRAZO, Assy

902	02	p1	05/08

BRAZO TELESCOPICO CORTO

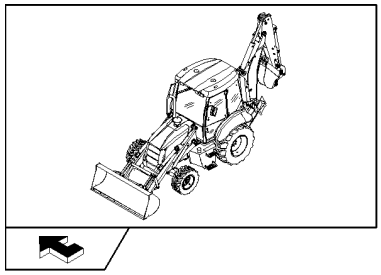

BRAZO TELESCOPICO CORTO

REF	FN	PART NUMBER	YR/SN	QTY	DENOMINACION
1		87598703		1	BRAZO, Assy
2		83910546		2	CASQUILLO
3		81870039		4	BOTON DE RESORTE
4		87583508		1	PERNO
5		85801309		1	PERNO
6		83911019		4	RETENEDOR
7		11121321		8	TORNILLO
8		14497121		8	ARANDELA, M20 x 37 x 3
9		85801307		32	ARANDELA
10		85808473		4	PATIN
11		85808472		4	PATIN
12		16105011		1	CONTRA TUERCA
13		11190579		8	ARANDELA ABANICO, Belleville, M10.5
14		11106721		8	TORNILLO, Hex, M10 x 38, 8.8, Full Thd
15		14332521		1	TORNILLO, Hex Soc Hd, M12 x 1.25 x 100, 8.8
16		87392516		2	COLLAR
17		87392509		2	PLACA
18		16044121		2	TORNILLO, Hex, M8 x 45, 8.8
19		15542921		1	TORNILLO, Hex, M12 x 1.25 x 95, 8.8
20		85801314		1	PERNO
21		83902702		2	PASADOR ABIERTO
22		85801308		1	PERNO
23		83910548		4	CASQUILLO
24		14497401		2	ARANDELA DE FRENO
25	1	87583510		1	BRAZO
26	2	87583516		1	BRAZO
27		87392513		2	COLLAR
28		16105011		1	CONTRA TUERCA
29		87577359		1	PERNO

(1) Includes 2
(2) Includes 23

902	03	p1	05/08

BALANCÍN TELESCÓPICO CORTO: CILINDRO HIDRÁULICO TELESCÓPICO

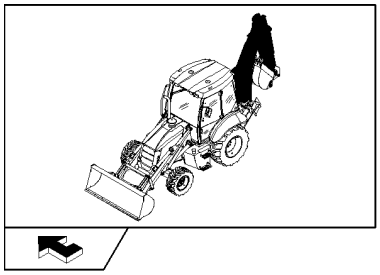

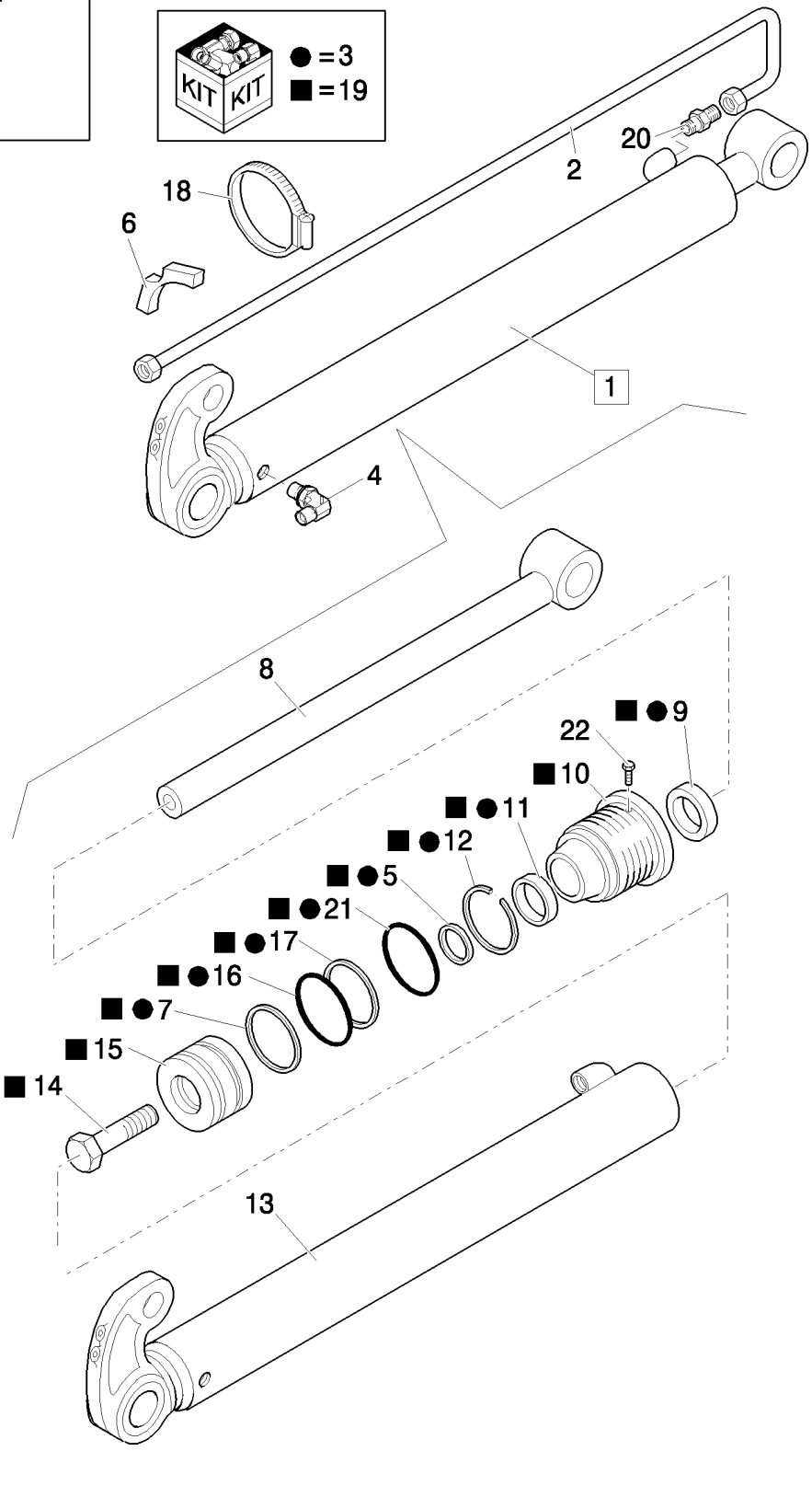

BALANCÍN TELESCÓPICO CORTO: CILINDRO HIDRÁULICO TELESCÓPICO

REF	FN	PART NUMBER	YR/SN	QTY	DENOMINACION
1		87327264		1	CILINDRO HIDRAULICO, Assy
2		87327252		1	TUBO RIGIDO
3		87342131		1	EQUIPO
4		83971549		1	CODO
5		1542875C1		1	SERIE DE JUNTAS
6		87303910		1	SEPARADOR
7		G100444		1	ANILLO DE CIERRE
8		87314278		1	VARILLA
9		D95143		1	ANILLO DE CIERRE
10		297281A1		1	PALIER
11		G102425		1	CASQUILLO
12		G109298		1	ANILLO
13		87314277		1	CAMISA
14		86982435		1	PERNO ESPECIAL
15		G107277		1	EMBOLO
16		G100443		1	JUNTA HERMETICA
17		G100449		1	Anillo De Desgaste
18		85803010		1	ABRAZADERA MANGUERA
19		110692A4		1	EMBOLO
20		83963374		1	RACOR
21		238-5231		1	JUNTA HERMETICA, -231, 70 Duro, 2.609" ID x .139" Thk
22		86642312		1	TORNILLO AUTOROSCANTE, Hex Hd, #8 x 3/8"

990		p1	05/08

HERRAMIENTAS

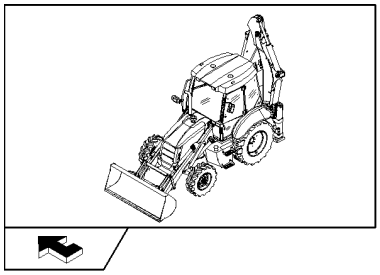

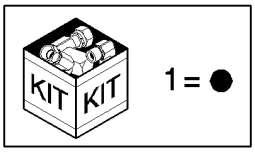

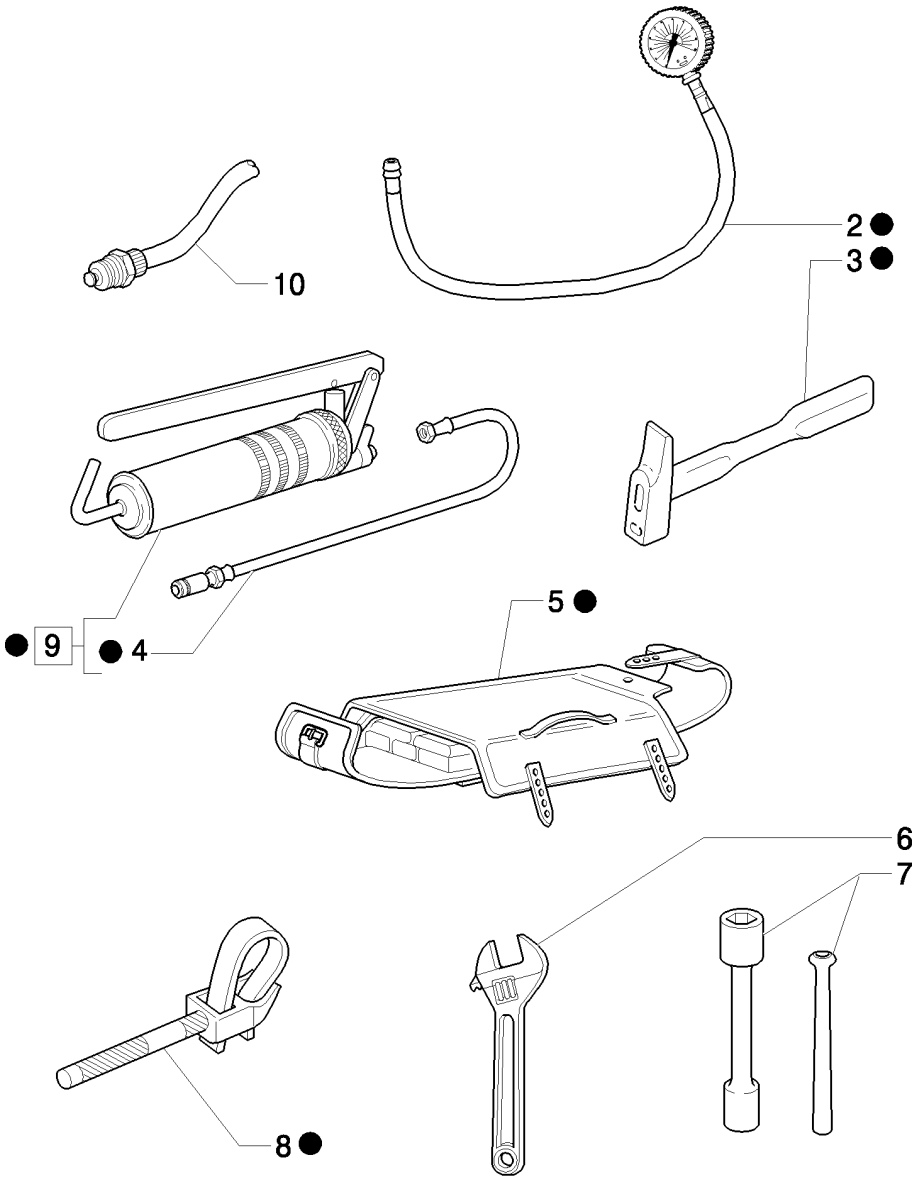

HERRAMIENTAS

REF	FN	PART NUMBER	YR/SN	QTY	DENOMINACION
1		85803394		1	HERRAMIENTAS
1	1	85813113		1	HERRAMIENTAS
2		85803396		1	CALIBRE
3		14582790		1	MARATILLO
4		79028981		1	MANGA FLEXIBLE
5		79062734		1	BOLSA, HERRAMIENTAS
6		71431438		1	LLAVE DE REGLAJE
7		85803395		1	PORTA LLAVES
7	1	85813110		1	LLAVE DE TUBO
8		71304923		1	LLAVE ESPECIAL
9		79028977		1	BOMBA DE MANO, Assy
10		85826260		1	GRIFO DE VACIADO

(1) Only for B115B

PLACAS - NA

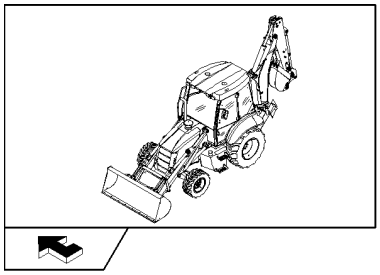

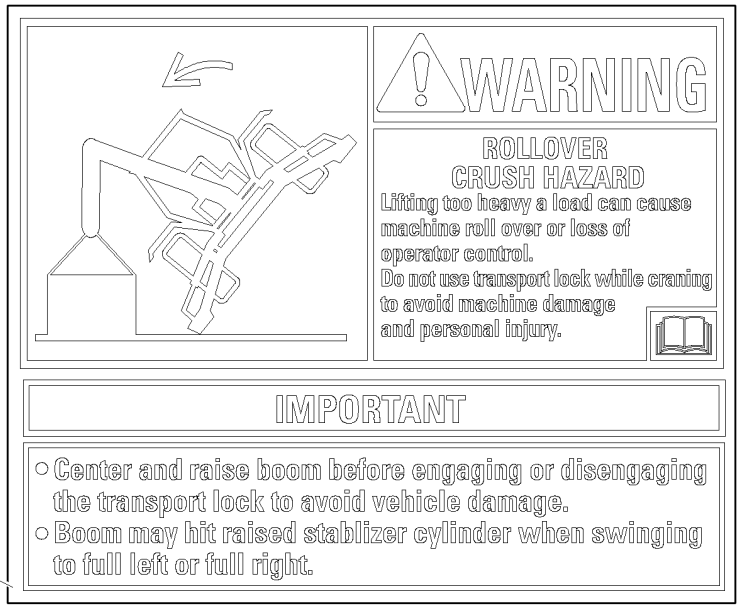

1

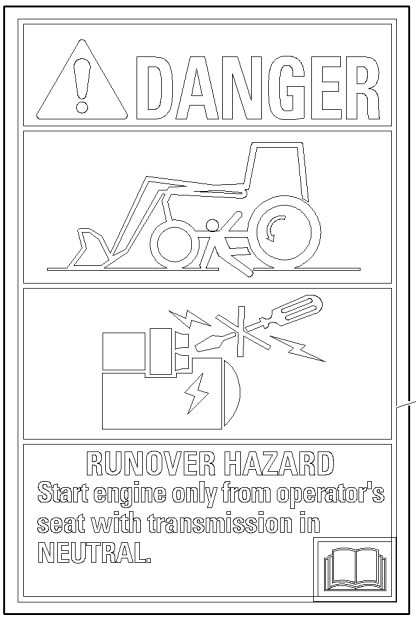

4

7

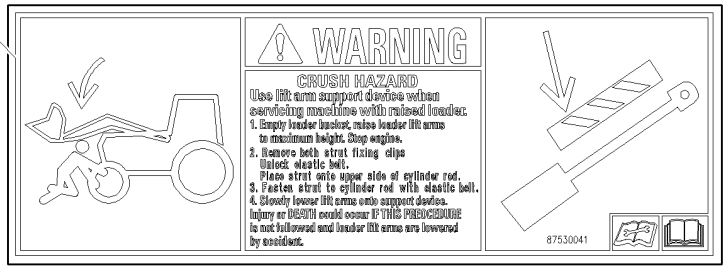



5

6

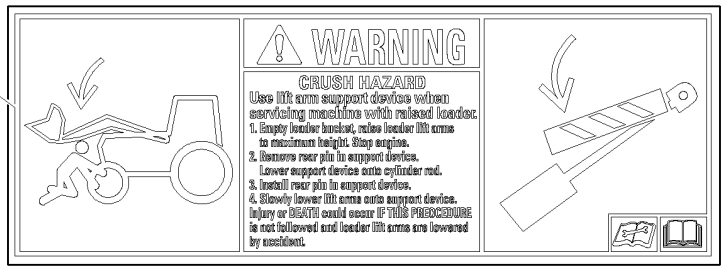

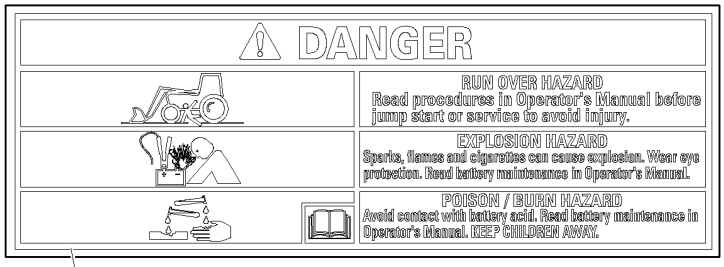

2

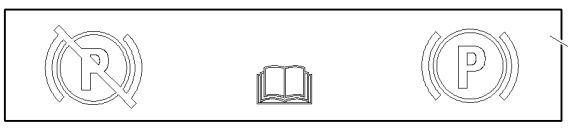

3



8

PLACAS - NA

REF	FN	PART NUMBER	YR/SN	QTY	DENOMINACION
1		85821924		1	CALCOMANIA, ENGLISH
1		85828069		1	DECAL, WARNING, FRENCH
1		85828070		1	DECAL, WARNING, SPANISH
2		85821917		1	CALCOMANIA, ENGLISH
2		85828088		1	DECAL, DANGER, FRENCH
2		85828089		1	DECAL, DANGER, SPANISH
3		85821925		1	CALCOMANIA
4		85821918		1	CALCOMANIA, FRENCH
4		85828086		1	SENALES ADVERT, SPANISH
4		85828087		1	DECAL, DANGER, ENGLISH
5		85821919		2	CALCOMANIA, ENGLISH
5		85828090		2	DECAL, DANGER, FRENCH
5		85828091		2	DECAL, DANGER, SPANISH
6	1	85821921		1	CALCOMANIA, ENGLISH
6		85828084		1	DECAL, WARNING, FRENCH
6		85828085		1	DECAL, DANGER, SPANISH
7	2	87530041		1	CALCOMANIA, ENGLISH
7	3	87608143		1	CALCOMANIA, FRENCH
7	2	87608145		1	CALCOMANIA, SPANISH
8		87596091		1	CALCOMANIA, SPANISH
8		87581010		1	CALCOMANIA, ENGLISH
8		87596089		1	CALCOMANIA, FRENCH

(1) Except for B115B
(2) Only for B95BTC, B115B
(3) Only for B115B

PLACAS - NA

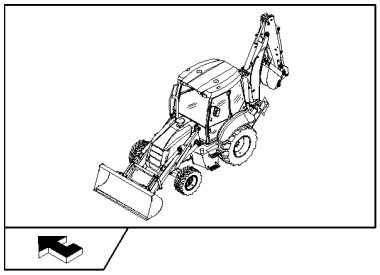

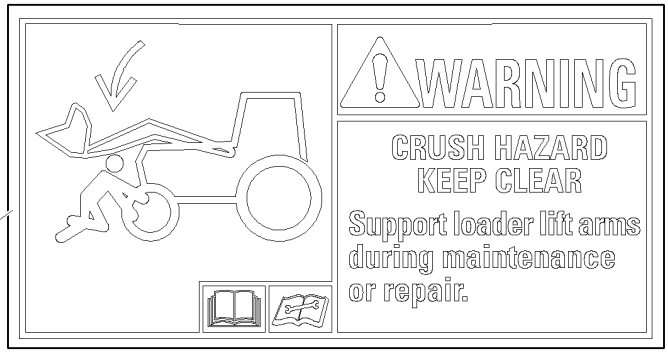

2

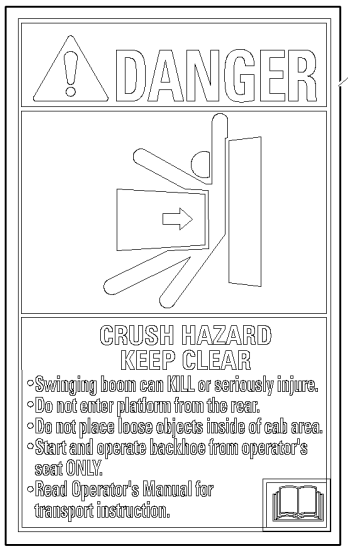

1

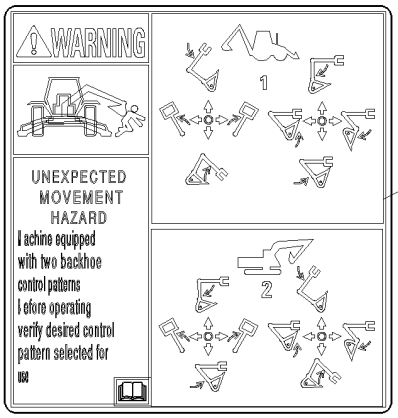

5

6



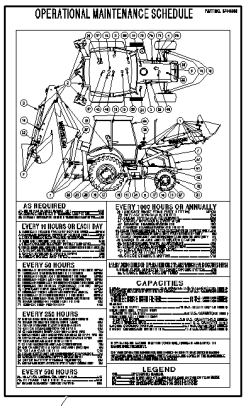

8

7

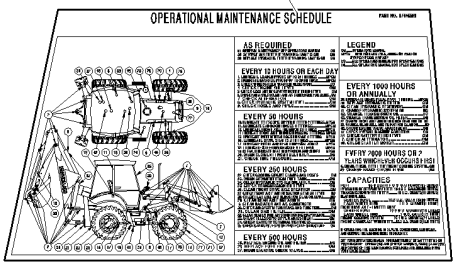

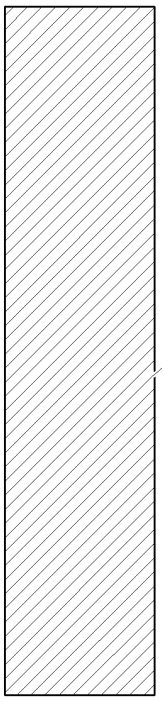

3

4

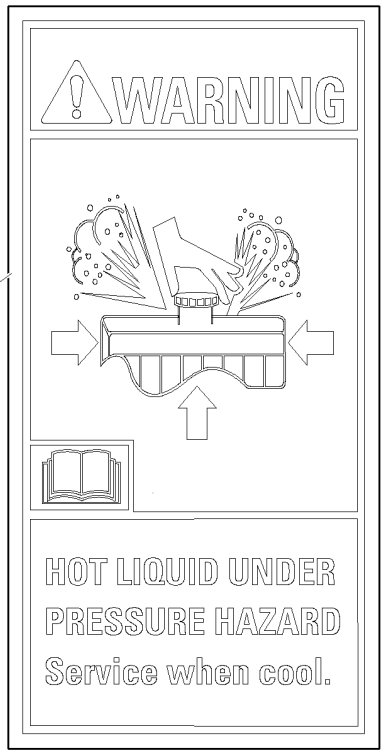

PLACAS - NA

REF	FN	PART NUMBER	YR/SN	QTY	DENOMINACION
1		85821922		2	CALCOMANIA, ENGLISH
1		85828080		2	DECAL, DANGER, FRENCH
1		85828081		2	DECAL, DANGER, SPANISH
2		85821946		2	CALCOMANIA, ENGLISH
2		85828082		2	DECAL, WARNING, FRENCH
2		85828083		2	DECAL, WARNING, SPANISH
3		86547781		2	CALCOMANIA
4		85821916		1	CALCOMANIA, ENGLISH
4		85828094		1	DECAL, WARNING, FRENCH
4		85828095		1	DECAL, WARNING, SPANISH
5	1	87305413		1	CALCOMANIA, ENGLISH
6		85821927		2	CALCOMANIA
6		85828097		2	CALCOMANIA
6		85828098		2	CALCOMANIA
7	2	87615426		1	CALCOMANIA, FRENCH
7	2	87615425		1	CALCOMANIA, SPANISH
7	2	87615424		1	CALCOMANIA, ENGLISH
7	3	87615421		1	CALCOMANIA
7	3	87615422		1	CALCOMANIA
8		87615417		1	CALCOMANIA, SPANISH
8		87577194		1	CALCOMANIA, ENGLISH

(1) Only for NA Pilot Control Version
(2) Only for B115B
(3) Only for B95BTC

ARRANQUE EN FRÍO

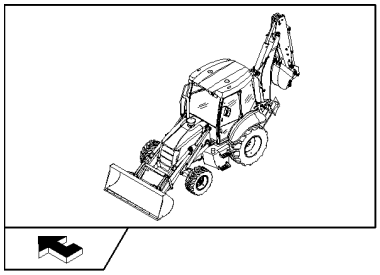

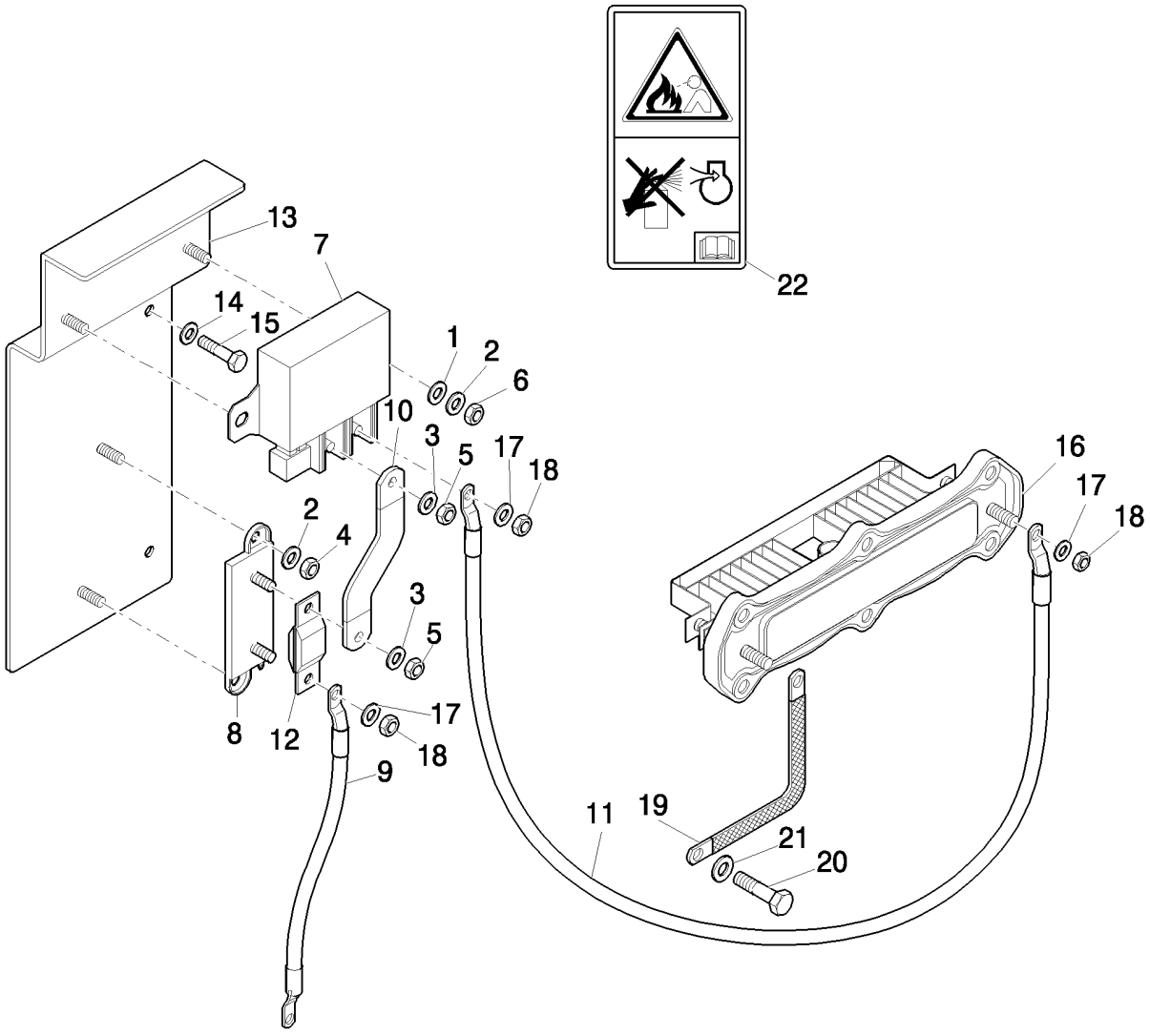

ARRANQUE EN FRÍO

REF	FN	PART NUMBER	YR/SN	QTY	DENOMINACION
1		322357		2	ARANDELA ABANICO, Belleville, M6
2		13577701		4	ARANDELA
3		11193979		2	ARANDELA ABANICO, Belleville, M8.4
4		15896211		2	TUERCA, M6, Cl 8
5		16104111		2	CONTRA TUERCA, M8 x 1.25, Cl 8
6		12574111		4	CONTRA TUERCA, M5 x .8, Cl 8
7		86619908		1	CONECTADOR
8		87302554		1	CONECTOR
9		87571508		1	CABLE
10		87571509		1	CABLE
11		87571511		1	CABLE
12		87410602		1	FUSIBLE
13		87571513		1	SOPORTE
14		16043621		2	TORNILLO, Hex, M8 x 25, 8.8
15		11193979		2	ARANDELA ABANICO, Belleville, M8.4
16		2854837		1	RECALENTADOR
17		14499304		4	ARANDELA, M6 x 11 x 1.6
18		12574211		2	CONTRA TUERCA, M6 x 1, Cl 8
19		87571512		1	CABLE. MASA
20		16042924		1	TORNILLO, Hex, M8 x 10, 8.8, Full Thd
21		12642704		1	ARANDELA DE FRENO
22		8603095		1	DECAL, WARNING
22	1	8603092		1	DECAL, WARNING

(1) Only for NA

Number	Figure	Sequence	Ref.
{87397053}	1.83.0	02	14
{87653084}	1.83.0	02	14
10007871	394	03	16
10250644	622		3
10398580	1.96.7/05		15
	1.96.7/06		15
10398680	1.91.4	06	22
	1.91.4/02	06	17
	1.95.2		2
10398980	1.91.4	06	7
	1.91.4/02	06	7
	1.93.0	01	11
	1.93.0/01	01	11
10399580	1.91.6		4
10427201	1.91.1/01		5
	1.93.0	01	16
	1.93.0/01	01	16
	1.93.0/02	01	16
10444721	1.96.2/01		5
10450090	1.91.4	06	15
10450190	1.88.01	02	11
10517274	1.95.0	01	8
10519204	1.91.4	02	4
	1.91.4	06	13
	1.91.4/02	02	4
10519404	1.92.4	01	14
	1.92.4	02	1
10519411	1.82.6/01	10	11
10519604	1.92.6	01	8
	1.93.0	02	8
	1.93.0	04	3
	1.93.0/01	02	3
10520431	1.21.5		9
	1.87.8		3
	1.88.11/09A		3
	291		5
10615274	1.91.4	02	10
	1.91.4	06	2
	1.91.4/02	06	2
10615374	1.95.1		21
10615774	1.95.5	01	3
10702711	1.92.4	02	3
10717311	1.83.0	04	4
10717421	1.88.08	01	10
	1.88.08	02	8
10766901	1.44.1		9
	1.44.1/01		9
10791414	1.95.5	01	12
10794011	1.95.1		31
10802801	1.44.1		6
	1.44.1/01		6
10902124	1.91.7/01		6
	1.91.7/02		6
	793		6
	793/01		6
	794		6
	794/01		6
10902221	1.82.6/01	10	12
10902224	1.96.7/05		10
	1.96.7/06		10
10902321	1.91.3		2
	1.96.2/01		3
10902421	1.87.2		5
10902424	1.93.7		2
	1.95.3		1
	346	02	6
	347	02	6
10902524	1.93.0/01	02	15
	1.93.0/03		8
10902624	1.91.4	06	20
	1.91.4/02	06	15
	1.93.0	04	10
	1.93.0/01	02	10
	1.95.0	02	10
10902834	331	04	10
10903021	1.29.1		5
10903224	1.92.4	02	6
10977821	331	04	31
10978024	1.95.1		20
10979421	1.88.11/05A	02	14
11054590	1.91.4	02	5
	1.91.4/02	02	5
11054790	1.91.4	02	3
	1.91.4	03	7
	1.91.4/02	02	3
	1.91.4/02	03	4
11054890	1.91.4	02	7
	1.91.4/02	02	7
11054990	1.91.4	02	8
	1.91.4/02	02	8
	646	04	17
11055090	1.91.4	02	9
	1.91.4/02	02	9
11064071	1.88.11/05A	01	10
11064176	1.95.0	02	3
11065374	1.83.0	03	12
11065476	1.95.1		14
11067376	1.95.0	01	10
11069071	900	04	7
110692A4	901	04	19
	902	03	19
11087776	1.92.4	01	12
11088076	1.92.6	03	3
11088176	1.95.0	01	1
11106021	1.28.0/ A	01	25
	1.28.0/ B	01	13
	1.83.0	02	6
	1.83.0	04	2
	638	04	3
	639	04	3
11106221	1.82.6	06	7
	1.82.6	16	4
	1.82.6/01	05	6
	1.82.6/01	11	4
	1.83.0	02	8
	1.88.01	01	6
	724/01	02	6
11106321	1.83.0	02	3
11106421	1.19.1		7
	437		11
	646	02	1
11106434	1.28.0		20
11106634	1.15.0	01	12
11106721	901	02	14
	902	02	14
11107321	1.88.08	01	17
11107421	636	08	2
	638	08	2
	639	08	2
	646	02	2
11107634	1.15.0	02	2
11112221	1.94.2		10
11112421	1.14.0		11
	1.82.0		13
	638	01	14
	638	05	4
	639	01	6
	639	05	4
11112434	1.28.0		17
11112634	1.28.0		15
11112821	1.88.12/03		16
	1.88.12/03A		14
11119121	803		6
11120521	290		3
	291		3
11121321	901	02	7
	902	02	7
11190574	1.95.0	01	17
	1.95.5	01	6
	646	02	3
11190579	1.82.6	06	5
	1.82.6	13	15
	1.82.6	16	5
	1.82.6/01	05	5
	1.82.6/01	09	15
	1.82.6/01	11	5

Number	Figure	Sequence	Ref.	Number	Figure	Sequence	Ref.
11190579	1.88.01	01	7	11193979	1.82.6	07	12
	1.88.08	01	2		1.82.6	11	7
	336/01	01	2		1.82.6/01	02	5
	437		13		1.87.2		10
	724/01	02	4		1.88.08	01	4
	725/01	03	2		1.92.4	02	13
	901	02	13		700	01	9
	902	02	13		725/01	01	9
11190679	1.88.11/05A	01	7		900	06	7
	302	01	10		901	03	4
	331/ B	01	3		995		15
	333/01B	01	3		995		3
	437		19	11194679	1.87.2		4
	638	08	5	11194779	803		9
	639	08	5	11197774	1.91.7/01		7
	700	03	2		1.91.7/02		7
11190779	1.28.0		7		346	02	7
	1.28.0/ A	02	4		347	02	7
	1.28.0/ B	02	4		793		7
	1.82.6	04	9		793/01		7
	1.82.6/01	03	15		794		3
	1.82.6/01	04	9		794/01		3
	1.88.12/03		17	11197779	1.29.1		6
	1.88.12/03A		19		1.91.3		3
	393		6		1.96.2/01		2
	394	01	10		331	04	12
	394/01	01	7	11197879	1.75.2	02	6
11191579	1.83.0	01	6	11198074	1.92.9	03	9
11193274	1.91.4	06	21		1.96.7/05		2
	1.91.4/02	06	16		1.96.7/06		2
	1.93.0/01	02	16		851		4
	1.93.0/03		9		855		4
	1.93.7		1		856		4
	1.95.0	02	11	11198379	1.15.0	01	5
	1.95.2		3	11198479	1.15.0	01	10
	1.95.3		2	11198679	1.21.5		25
	1.96.7/05		11		1.28.0		14
	1.96.7/06		11	11200679	1.44.0/ B	01	13
11193279	1.88.11/05A	02	15	11234721	302	01	8
	803		12		331/ B	01	2
11193874	1.21.5		27		333/01B	01	2
	1.83.0	02	12		700	03	4
	1.92.5		3	11383634	1.88.11		15
	1.95.0	02	4	11394334	201		1
	1.95.1		16	11701621	1.95.0	01	20
	1.95.2		8	11701711	1.75.2	04	12
	1.96.2	01	5	11701721	1.15.0	02	4
	391		6	117359A1	514	03	18
	646	02	4	11991971	1.88.11/05A	01	11
11193879	1.42.0		2		1.88.12/03		9
	1.75.2	01	7		1.88.12/03A		11
	1.82.6	03	7		393		14
	1.82.6	15	11		394	02	6
	1.82.6/01	03	7		394	03	17
	1.88.01	01	2	12059980	622		6
	1.88.11/07A		13	12164111	1.83.0	01	8
	1.88.11/07C		13	12164114	1.95.0	01	11
	1.91.4/02	06	18	123407A1	514	04	20
	333	04	8		900	10	20
	337	01	10	12574011	1.91.4	02	11
	337	02	4		1.91.4	02	15
	344	01	2		1.91.4	06	3
	638	01	7		1.91.4/02	02	11
	639	01	15		1.91.4/02	06	3
	721	01	2		1.96.2/01		8
	721	04	8		416		4
	721	06	9		622		4
	724/01	01	3		796		2
	724/02		3	12574111	1.92.9	03	18
	725		5		1.96.0		6
	727/01		9		331	04	18
	728	01	7		347	04	12
	900	02	12		995		6
11193974	1.93.0/02	01	22	12574211	1.82.6/01	10	13
	346	01	2		1.83.0	01	13
	347	01	2		1.93.0	02	17
11193977	1.83.0	01	10		1.96.2/01		9
11193979	1.82.6	02	10		346	02	9

Number	Figure	Sequence	Ref.	Number	Figure	Sequence	Ref.
12574211	347	02	5	13000690	347	05	5
	803		10	13000990	346	05	20
	995		18		347	05	7
12574215	1.92.9	02	16	13272214	1.91.4	06	9
12574511	733		2		1.91.4/02	06	20
12574825	201		3	13272319	1.95.1		30
12574921	1.87.8		8	13272477	394	01	22
12575121	1.87.8		4		394	01	3
	1.88.11/09A		4		416		3
12575321	1.44.0/ B	01	10	13273911	1.92.6	01	6
12577211	636	08	4	13274117	1.95.3		3
	638	08	4	13274217	1.93.0	01	21
	639	08	4		1.93.0/01	01	21
	646	02	6		1.93.0/02	01	28
12577221	1.15.0	01	13	13276217	1.92.9	02	12
12577411	290		4	13276617	1.93.0	03	3
	291		4	13276621	1.92.6	02	3
12577711	291		7	13297817	1.91.6		6
12601174	346	04	13	13309417	1.91.4	06	14
	347	04	14	13311017	1.93.0	01	4
12601474	646	02	7		1.93.0/01	01	7
12637824	1.92.9	03	19		1.93.0/02	01	14
12638107	1.93.0	02	11		1.93.5	02	2
12638504	1.92.4	01	7	13311214	1.93.5/01	01	3
	1.92.9	02	8	13311217	1.93.0	04	8
12638511	1.19.1		8		1.93.0/01	01	4
	1.75.2	04	6		1.93.0/01	02	18
12638601	1.19.1		6		1.93.0/02	01	4
12638621	1.15.0	01	11		1.93.0/03		2
	1.15.0	02	5	13311817	1.91.6		2
	1.83.0	04	5	13313417	1.92.9	01	8
12640601	1.92.6	02	2		1.93.0	02	3
12640621	1.93.0	04	11		1.93.4		5
	1.93.0/01	02	11		1.96.7/04		2
12641004	536/02		4		1.96.7/07		2
12642501	1.83.0	02	9	13399076	1.95.0	02	18
12642704	995		21	13400776	1.95.1		5
12642804	1.93.5	02	1	13406911	1.44.1		8
	1.93.5/01	02	1		1.44.1/01		8
	622		5		1.92.6	03	4
12642821	1.93.4		6	13407214	1.95.0	01	2
	1.95.0	01	14	13423271	1.95.0	02	6
	796		3	13507104	1.83.0	05	5
12643701	1.92.6	01	5	13507401	1.83.0	04	3
12643711	1.98.1	09	2	13517021	1.94.0/01		5
12643721	1.83.0	01	12		835		4
	1.87.2		3	13577701	995		2
12644921	1.44.1		10	13578621	302	01	9
	1.44.1/01		10		331/ B	01	13
12646204	1.92.5		5		333/01B	01	14
12646701	1.14.6		7		700	03	3
12646704	1.91.5	02	5	13580001	1.83.0	01	5
	1.92.9	01	6	13580121	290		2
12646721	1.15.0	01	16		291		2
12646901	638	01	13	13789621	302	01	15
	639	01	5	13812631	394	01	20
12646904	1.92.9	02	5	13838071	855/01	01	14
12646921	1.82.6/01	04	15		856/01	01	14
	1.82.6/01	09	16	13940370	394	01	14
12647004	1.92.9	02	10		394	03	2
	1.93.0	02	2	14040611	646	01	15
	1.94.0/01		2	14040711	646	04	18
	835		6	14048211	1.75.2	01	8
12647121	1.75.2	01	9		1.75.2	04	5
	1.75.2	02	3		1.82.6	02	11
	1.82.6	10	6		1.82.6	10	5
	1.82.6	16	2		1.82.6	15	12
	1.82.6/01	07	10		1.82.6/01	07	7
	1.82.6/01	11	2		1.88.11/05A	01	23
	725		11		1.88.11/07A		12
12647701	1.93.0	01	22		1.88.11/07C		12
	1.93.0	01	3		1.88.12/03		5
	1.93.0/01	01	22		1.88.12/03A		13
	1.93.0/01	01	3		393		15
	1.93.0/02	01	27		394	02	2
12678401	346	04	5		394	03	10
	347	04	11		725		12
13000690	346	05	16		901	03	5

Number	Figure	Sequence	Ref.	Number	Figure	Sequence	Ref.
14048214	1.92.6	01	3	14496901	721	06	5
14048221	1.82.6	16	1		727/01		5
	1.82.6/01	11	1		803		7
	337	01	11	14496931	1.82.6	12	12
	337	02	3		1.87.8		6
14059314	1.93.0	01	10	14497001	1.88.11/08		8
	1.93.0	02	7	14497121	1.44.1		13
	1.93.0/01	01	10		1.44.1/01		13
14084011	1.93.0	02	6		901	02	8
14084111	1.91.7/01		8		902	02	8
	1.91.7/02		1	14497331	1.44.0/ B	01	9
14084814	1.93.0	01	10	14497401	901	02	24
	1.93.0	02	7		902	02	24
	1.93.0/01	01	10	14499301	1.83.0	03	11
	1.93.0/02	01	10	14499304	995		17
14143790	1.91.4/02	04	4	14499421	1.15.0	01	18
	698		2	14560087	1.91.4	04	3
	699		2		1.91.4/02	04	3
	787		5	14560187	1.14.6		1
	787/01		5		1.75.2	01	4
	788		5		1.82.6	04	13
	788/01		5		1.82.6	13	14
14161771	1.92.9	03	5		1.88.11/03		13
14189176	1.93.5	02	6		1.95.0	02	13
	1.93.5/01	02	6		331	09	4
14197790	1.93.4		3		646	01	6
14300521	700	01	16	14568887	1.88.12/03		20
	725/01	02	16		1.88.12/03A		16
14301521	1.96.0		7		1.93.5	01	10
14302921	331/ A		10		1.95.5	01	14
	333/ A		10		393		4
14303324	1.93.4		2		394/01	01	4
	1.95.0	01	15	14582790	990		3
	1.95.5	01	5	14591687	1.91.7/01		1
	622		2	14642191	1.93.5	02	8
	796		4		1.93.5/01	02	3
14304021	331/ A		2	15201934	1.88.08	02	7
14304724	1.96.0		4	15212721	1.95.0	03	5
14305321	1.39.8		14	15212921	1.95.2		4
14305621	1.88.11/08		3	15213334	1.15.0	01	15
14306324	1.95.0	02	5	15213621	1.82.6	15	10
14306424	1.92.9	02	9		1.88.11/07A		11
	1.95.1		15		1.88.11/07C		11
14306821	331	03	3	15213721	331	02	6
14308221	336/01	01	3	15213921	646	02	9
	725/01	03	3	15215821	1.89.9/01		2
14332521	901	02	15	15216421	1.89.9/01		7
	902	02	15	1542875C1	901	04	5
14358724	1.96.0		4		902	03	5
14358921	333/ A		2	1542879C1	900	10	12
14372671	1.93.5	02	7		900	11	11
	346	04	11	1542923C2	900	11	21
14421621	646	02	10	15540321	1.88.12/03		18
14422021	1.82.6	01	3		1.88.12/03A		18
	1.82.6/01	01	3		393		9
14432334	1.95.5	01	4		394/01	01	8
14440327	1.93.5	01	4	15540421	394	01	5
	346	05	14	15540534	1.21.5		24
	347	06	3	15540721	1.14.0		3
14441421	1.83.0	01	2		1.82.0		8
14441521	1.93.0	03	7	15540821	1.29.1		4
	1.93.0/02	01	21		1.82.6/01	03	14
14441524	1.82.6	03	6		1.82.6/01	04	14
	1.82.6/01	03	6	15541621	1.82.6	04	10
14442321	1.83.0	03	5		1.82.6/01	04	8
14442421	1.92.6	01	7	15542121	900	02	4
14447021	1.95.0	03	6	15542921	514	02	7
14464680	1.82.6	01	5		900	03	8
	1.82.6/01	01	5		901	02	32
14466880	1.82.3/01		5		902	02	19
14496407	1.92.9	02	15	15627011	1.93.0	02	9
14496521	1.88.11/05A	01	15	15687475	331/ C	01	9
14496534	646	02	12		331/ C	02	9
	646	04	1		333/ C	01	9
14496601	646	02	5		333/ C	02	9
14496621	1.15.0	01	4	15687801	347	04	13
14496721	1.29.1		10	15693507	1.93.5	02	3
14496901	1.88.12/03		13		1.93.5/01	02	2

Number	Figure	Sequence	Ref.	Number	Figure	Sequence	Ref.
15693507	346	04	12	16044121	391		8
15811387	1.92.9	02	11		901	02	18
15896211	995		4		902	02	18
15910607	1.93.5	02	14	16044124	1.92.5		4
15970521	1.88.11/05A	01	6	16044221	1.82.6	02	14
15970524	1.95.0	01	18		1.82.6	13	13
15970721	1.82.6/01	09	14		1.82.6/01	02	20
15970724	1.95.5	01	7		900	02	13
15970921	1.82.6/01	06	5		900	06	6
15971321	437		17	16044321	1.88.11/03		1
15972034	733		10		391		5
15981221	1.83.0	01	7	16044324	1.91.7/01		4
15981834	1.87.8		11		1.91.7/02		4
15982134	1.87.8		5		793		3
15988734	1.88.11		16		793/01		3
15988934	1.88.11/09A		5		794		4
15989134	1.21.5		10		794/01		4
15989334	1.87.8		2	16044421	1.75.2	04	10
15999434	1.44.0/ B	01	11		1.82.6	11	6
16040821	331	03	6		1.82.6	16	6
16040834	1.15.0	01	6		1.82.6/01	11	6
16041821	291		6		1.88.11/07A		18
16042924	1.91.4	06	10		1.88.11/07C		18
	995		20		900	02	17
16043021	1.75.2	01	6	16044521	728	01	1
	1.88.01	02	13	16044821	724/01	01	4
16043121	1.91.4/02	06	10		724/02		4
16043221	1.14.6		9	16045021	725		6
	638	06	6	16100810	1.83.0	02	19
	639	06	7	16100811	1.83.0	03	3
16043324	1.92.9	01	5		331	02	7
16043421	1.19.1		9	16100821	1.15.0	01	14
	1.21.5		28	16101511	1.82.6/01	09	11
	1.42.0		3		393		5
	1.75.2	02	13		394	01	9
	1.82.0		27		394/01	01	10
	646	04	2	16102211	646	02	18
16043424	1.93.0/02	01	7	16102311	1.88.11/05A	01	9
	1.96.7/05		3		1.88.12/03		3
	1.96.7/06		3		1.88.12/03A		2
	851		3		393		16
	855		3		394	02	4
	856		3		394	03	13
16043621	1.82.6	07	13	16102411	1.91.5	02	6
	1.88.01	01	3	16102911	1.88.11/05A	01	12
	1.88.08	01	19		1.88.12/03		2
	394	03	4		1.88.12/03A		4
	646	02	8		393		17
	646	04	15		394	02	5
	721	06	8		394	03	9
	727/01		8	16104111	1.75.2	02	2
	901	03	3		1.82.6	02	16
	995		14		1.82.6/01	02	21
16043624	1.92.9	03	20		1.83.0	03	8
	1.95.2		7		1.87.2		9
	1.96.2	01	6		1.91.7/01		5
	346	01	15		1.91.7/02		5
	347	01	12		1.92.9	02	6
16043821	1.14.6		13		1.92.9	03	7
	1.82.6	07	17		1.94.0/01		3
	638	01	15		394	03	5
	639	01	14		646	04	3
	700	01	10		721	06	7
	725/01	01	10		727/01		7
16043824	1.75.2	04	8		734		8
	1.93.0	01	7		793		5
	1.93.0	04	4		793/01		5
	1.93.0/01	02	4		794		5
16043921	1.95.0	01	19		794/01		5
	344	01	3		835		7
	721	01	3		995		5
	734		6	16104511	1.92.6	03	11
16044021	1.82.6	02	8	16105011	1.28.0		12
	1.82.6	10	8		1.29.1		3
	1.82.6/01	02	6		514	02	8
	1.82.6/01	07	8		638	05	5
	333	04	7		639	05	5
	721	04	7		900	02	5

Number	Figure	Sequence	Ref.	Number	Figure	Sequence	Ref.
16105011	900	03	9	2852484	0.17.3		3
	901	02	12	2852485	0.27.0/01		12
	901	02	29	2852488	0.14.0/01	01	3
	902	02	12	2852500	0.17.3		2
	902	02	28	2852511	0.32.3/01		5
16105111	1.92.9	02	2	2852602	0.06.6/01		20
1986905C1	900	11	5	2852744	0.07.7/01		3
1986906C1	900	11	14	2852774	0.06.3/01	01	3
201-112	1.82.6	12	2	2852776	0.06.6/01		10
201-422	725/01	02	14	2852804	0.14.0/01	01	10
218-5053	700	02	3	2852805	0.14.0/01	01	11
218-5057	700	02	4	2852817	0.17.0		3
225315C1	331/ C	01	6	2852818	0.17.0		6
	331/ C	02	6	2852820	0.17.0		10
	333/ C	01	6	2852821	0.17.0		15
225318C1	331/ C	01	7	2852825	0.17.0		4
	331/ C	02	7	2852865	0.04.3/01	03	2
	333/ C	01	7	2853410	0.27.0/01		10
225350C1	333/ C	01	11	2853412	0.27.0/01		11
	333/ C	02	11	2853414	0.30.0		1
225353C1	333/ C	01	12	2853535	0.06.6/01		19
	333/ C	02	12	2853537	0.14.9/01		2
238-5231	901	04	21	2853722	0.31.5/01		9
	902	03	21	2853728	0.04.2		10
238-5235	900	11	4	2853780	0.31.5/01		2
238-5245	514	04	9	2853781	0.31.5/01		3
238-5247	514	03	10	2853822	0.08.0		1
	900	10	9	2853826	0.06.3/01	02	1
238-5249	900	09	12	2853858	0.06.3/01	01	1
276-2446	1.88.11/01		26	2854030	0.08.2/01		3
276-2456	1.88.11/09	02	15	2854072	0.32.3/01		2
2830082	0.04.0/01		1	2854079	0.17.0		20
2830222	0.06.6/01		7	2854282	0.17.0		5
2830433	0.10.5	01	7	2854292	0.17.0		22
2830444	0.07.7/01		2		1.95.0	02	14
2830559	0.31.5/01		10		1.95.0	03	3
2830706	0.06.0/01		17	2854491	0.32.3/01		15
2830707	0.06.0/01		17	2854530	0.06.6/01		18
2830948	0.10.5	02	3	2854542	0.14.9/01		5
2831031	0.10.5	01	8	2854543	0.14.9/01		4
2831266	0.06.0/01		3	2854544	0.14.9/01		8
2831287	0.06.0/01		7	2854563	0.20.0/01		2
2831297	0.08.1/01		3	2854564	0.20.0/01		3
2831298	0.08.1/01		1	2854566	0.20.0/01		7
2831302	0.10.5	02	6	2854593	0.17.0		26
2831303	0.10.5	02	5	2854594	0.17.0		18
2831305	0.10.5	02	1	2854596	0.17.0		19
2831354	0.10.5	01	9	2854606	0.14.0/01	02	2
2852011	0.04.2		4	2854609	0.14.0/01	02	6
2852012	0.04.2		7	2854700	0.07.1/01		8
2852013	0.04.2		9	2854701	0.07.1/01		9
2852016	0.04.2		5	2854702	0.07.1/01		6
2852047	0.32.0		2	2854812	0.06.3/01	01	4
2852049	0.08.3		1	2854837	995		16
2852051	0.08.3		2	2855150	0.17.0		23
2852054	0.08.4		3	2855336	0.20.4/01		1
2852071	0.24.0/01		5	2855427	0.20.3/01		1
2852072	0.24.0/01		4	2855428	0.20.3/01		3
2852100	0.30.5/01		13	2855430	0.20.3/01		4
2852101	0.30.5/01		14	2855491	0.14.0/01	02	5
2852114	0.32.0		1	2855503	0.14.9/01		1
2852161	0.34.0/01		2	2855743	0.10.5	01	12
2852162	0.34.0/01		3	2855744	0.10.5	01	10
2852170	0.34.5		1	2855746	0.10.5	02	4
2852171	0.34.5		5	2855753	0.10.5	01	2
2852172	0.34.5		6	2855773	0.45.0/01		1
2852180	0.40.0/01		1	2855774	0.45.0/01		2
2852181	0.32.3/01		4	2855776	0.32.3/01		3
2852195	0.30.5/01		8	2855780	0.30.5/01		10
2852196	0.30.5/01		15	2855787	0.27.0/01		7
2852197	0.30.5/01		12	2855792	0.20.0/01		1
2852202	0.04.0/01		17	2855795	0.20.3/01		5
2852234	0.04.2		1	2855801	0.04.3/01	01	4
	0.14.0/01	01	13	2855803	0.04.3/01	03	8
2852267	0.07.1/01		7	2855805	0.07.1/01		1
2852428	0.06.6/01		12	2855807	0.07.7/01		1
2852434	0.14.9/01		9	2855809	0.07.1/01		4
2852473	0.32.6/01		4	2855813	0.27.0/01		1

Number	Figure	Sequence	Ref.	Number	Figure	Sequence	Ref.
2855815	0.27.0/01		2	47048963	638	04	11
2855818	0.14.9/01		7		638	04	15
2855819	0.14.9/01		6		639	04	11
2855823	0.32.6/01		2	47048964	1.39.8		5
2855886	0.17.3		1		1.82.6	05	8
2855949	0.34.0/01		1		1.82.6/01	06	8
2855950	0.34.0/01		4	47048969	331	02	8
2856035	0.27.0/01		9	47048971	331	03	2
2856086	0.04.2		6	47048972	1.82.0		24
2856458	0.06.6/01		2		638	04	2
2856460	0.06.6/01		15		638	06	8
2856543	0.32.6/01		3		639	04	2
2856701	0.24.0/01		3		639	06	1
2856707	0.06.3/01	01	2	47048973	1.14.0		4
297281A1	901	04	10		1.82.0		14
	902	03	10	47048976	1.14.0		8
2992147	0.08.0		4		1.82.0		9
2992148	0.08.0		4		638	05	6
2992149	0.08.0		4		639	05	6
2992153	0.08.0		3	47048992	331	02	9
2992154	0.08.0		3		638	03	11
2992155	0.08.0		3		638	06	7
322357	995		1		639	03	11
328955A1	1.44.0/ B	02	34		639	06	8
380621A1	900	09	10	47048993	1.75.2	02	9
412005	131		3	47049010	1.75.2	02	10
	321		2	47049031	1.75.2	02	11
413-1036	1.82.6	12	10	47049032	331	02	19
42541849	0.14.0/01A		3	47049041	1.82.0		25
42541850	0.14.0/01A		2		131		5
42541851	0.14.0/01A		10		321		5
42547619	0.14.0/01A		4		331	02	10
42548060	0.14.0/01A		6		331	05	2
42550486	0.14.0/01A		9		638	04	9
42550487	0.14.0/01A		7		639	04	14
42550488	0.14.0/01A		5	47049065	331	03	7
42550932	0.14.0/01A		8	47049082	331	02	11
444640A1	900	09	9	47049088	638	04	10
446178A1	514	04	12		639	04	10
446195A1	514	04	7	47049094	1.88.11/01		13
446481A1	514	04	6	47049151	331	02	20
44910052	1.92.6	01	2	47049161	1.82.6	02	12
44910053	1.92.6	01	2	47049163	638	01	1
47042074	1.82.0		34		639	01	1
47042260	638	01	10	47049176	1.28.6		4
	639	01	2	47049184	1.82.6	05	4
47042342	638	03	10		1.82.6/01	06	4
	639	03	10	47049185	1.82.0		23
47042364	1.39.8		9	47049186	1.75.2	04	11
	1.82.6	05	5		638	06	4
47044673	1.94.2		8		639	06	5
47044758	1.82.0		35	47049187	638	04	7
47044780	331	09	5		639	04	7
47048440	638	04	6	47049372	1.28.0		19
	639	04	6		1.28.0/ A	01	26
47048451	1.94.2		9		1.28.0/ B	01	25
	646	01	7	47049404	331	05	15
47048646	639	04	9	47049442	331	05	13
47048664	1.39.8		4	47049590	131		7
	1.82.6	05	9		321		6
	1.82.6/01	06	9	47049809	638	06	1
47048668	638	04	12		639	06	4
	639	04	12	47049943	638	06	3
47048759	638	04	8		639	06	3
	639	04	8	47050653	331	06	10
47048788	131		6		331	07	14
	321		9		331	08	7
47048895	1.75.2	02	1		333	02	10
47048896	1.94.2		4	47050658	1.28.6		3
47048898	1.15.0	01	7	47050671	1.14.0		5
47048959	1.96.2/01		4		1.82.0		10
47048962	1.82.0		28	47050685	331	06	11
	638	01	12		333	02	11
	639	01	11		725/01	02	3
47048963	1.82.6	05	6	47050686	331	04	15
	1.82.6/01	06	6		331	07	13
	131		4		331	08	6
	321		10		725/01	02	4

Number	Figure	Sequence	Ref.	Number	Figure	Sequence	Ref.
47120173	331	07	12	4895378	0.04.3/01	03	4
47335175	855/01	05	13	4895379	0.04.3/01	03	5
47335213	851/01	01	7	4895392	0.04.0/01		13
	855/01	01	7		0.32.3/01		9
	856/01	01	7	4895393	0.04.0/01		14
4890088	0.14.0/01	01	6		0.32.3/01		10
4890189	0.17.0		8	4895406	0.06.0/01		13
4890190	0.17.0		9		0.27.0/01		3
4890193	0.17.0		11	4895407	0.06.0/01		14
4890343	0.34.5		3	4895408	0.06.0/01		15
4890634	0.14.0/01	01	7	4895432	0.06.6/01		1
4890635	0.14.0/01	01	14		0.07.1/01		2
4890700	0.14.0/01	01	4	4895462	0.20.3/01		6
4890732	0.34.5		9	4895477	0.17.0		12
4890832	0.04.3/01	02	4	4895483	0.14.0/01	02	1
4890833	0.04.3/01	03	6	4895489	0.04.2		2
4890926	0.14.0/01	02	8	4895538	0.04.2		8
4890929	0.14.0/01	02	3	4895586	0.10.5	01	6
4890964	0.17.0		24	4895605	0.04.0/01		9
4891024	0.06.0/01		1	4895610	0.27.0/01		5
4891025	0.06.0/01		2	4895623	0.32.3/01		6
4891209	0.04.3/01	02	5	4895625	0.32.3/01		7
	0.10.5	02	7	4895817	0.17.0		1
4891353	0.04.0/01		6	4896052	0.06.6/01		21
4891385	0.14.0/01	01	8	4896329	0.20.4/01		3
4892255	0.17.0		14	4896381	0.12.0/01		2
4892426	0.34.5		8	4896404	0.31.5/01		4
4892708	0.08.1/01		2	4896406	0.31.5/01		9
4892712	0.08.2/01		2	4896409	0.31.5/01		6
4892732	0.34.5		7	4896410	0.31.5/01		7
4892867	0.08.4		2	4896419	0.12.0/01		5
4892915	0.04.3/01	03	2	4896542	0.17.0		21
4893036	0.06.0/01		10	4896773	0.08.4		1
	0.32.3/01		13	4896884	0.14.9/01		10
	0.32.3/01		8	4896897	0.27.0/01		8
4893244	0.06.0/01		16	4896939	0.04.3/01	01	3
4893386	0.08.0		2	4896947	0.10.5	01	5
4893389	0.14.0/01	01	12	4896952	0.14.0/01	01	2
4893391	0.31.5/01		8	4896996	0.20.3/01		8
4893487	0.06.6/01		16		0.20.4/01		4
4893739	0.14.0/01	02	4	4897024	0.04.3/01	02	1
4893936	0.06.3/01	01	5	4897048	0.10.5	01	4
4893962	0.14.0/01	01	9	4897071	0.10.5	01	3
4894095	0.20.3/01		2	4897125	0.10.5	01	1
	0.20.4/01		2	4897224	0.17.0		13
4894218	0.04.0/01		8		0.20.0/01		5
4894641	0.08.3		3	4897245	0.06.6/01		4
4895031	0.06.6/01		17	4897248	0.06.6/01		3
4895037	0.27.0/01		6	4897330	0.27.0/01		4
4895038	0.04.0/01		4	4897457	0.12.0/01		4
4895039	0.04.0/01		3	4897480	0.30.0		1
4895040	0.04.0/01		7	4897499	0.04.3/01	03	2
4895045	0.31.5/01		5	4897934	0.10.5	01	11
4895049	0.04.0/01		15	4898301	0.04.2		3
4895051	0.06.0/01		5	4898482	0.24.0/01		6
4895052	0.06.0/01		6	4898877	0.20.0/01		4
4895065	0.06.6/01		8	4898921	0.14.0/01	01	5
4895067	0.06.6/01		11		0.14.0/01A		1
4895068	0.06.6/01		5	4899003	0.14.0/01	01	1
4895073	0.06.0/01		8	4899009	0.04.0/01		11
4895074	0.06.0/01		9	4899019	0.31.5/01		1
4895078	0.32.3/01		14	4899020	0.14.9/01		3
4895080	0.32.3/01		11	4899026	0.04.0/01		2
4895082	0.32.3/01		12		0.04.3/01	01	1
4895085	0.06.0/01		11		0.04.3/01	03	1
4895089	0.06.0/01		12	4899027	0.10.5	02	2
4895107	0.30.5/01		2	4899037	0.45.0/01		4
4895133	0.24.0/01		2	4899039	0.07.1/01		3
4895155	0.04.3/01	03	3	4899046	0.08.0		5
4895157	0.17.0		17	4899053	0.34.5		2
4895164	0.30.5/01		1	4899057	0.17.0		2
4895198	0.06.6/01		6	4899058	0.30.5/01		9
4895228	0.04.0/01		5	4899063	0.04.3/01	02	3
4895291	0.34.5		4	4899068	0.04.3/01	03	2
	0.40.0/01		2		0.12.0/01		3
4895292	0.34.0/01		6	4899072	0.04.0/01		12
4895323	0.10.5	02	8	4899073	0.04.3/01	01	3
4895336	0.07.7/01		4	4899076	0.04.3/01	03	2

Number	Figure	Sequence	Ref.	Number	Figure	Sequence	Ref.
4899078	0.04.3/01	01	2	71304923	990		8
	0.04.3/01	02	2	71431438	990		6
	0.17.0		25	71485488	851/01	02	2
4899079	0.12.0/01		1		855/01	02	2
	0.32.0		3	72273491	1.82.0		37
	0.34.0/01		5	784122	1.91.1/01		4
	0.45.0/01		3	79028977	990		9
4899080	0.12.0/01		6	79028981	990		4
4899081	0.06.0/01		4	79062734	990		5
4899089	0.06.6/01		9	79072960	392	01	11
4899090	0.30.0		2		392	02	10
4899091	0.04.2		2	79089592	1.93.0	04	7
4899093	0.04.3/01	01	3		1.93.0/02	01	13
4899103	0.20.3/01		7		1.93.5	01	8
4899106	0.30.5/01		7		1.93.5/01	01	2
4899107	0.30.5/01		3	79105220	1.93.5	01	9
4899108	0.30.5/01		4	79111815	1.93.0	01	12
4899109	0.04.3/01	03	2		1.93.0/01	01	12
	0.10.5	01	11		1.93.0/02	01	12
	0.32.3/01		1	79111978	1.91.4	06	17
4899110	0.17.0		7		1.91.4/02	06	6
	0.32.6/01		1		1.92.9	01	12
4899115	0.04.0/01		10		1.93.0	02	13
4899118	0.24.0/01		1		1.93.0/02	01	23
4899119	0.07.7/01		5		1.96.7/05		6
4899121	0.30.5/01		11		1.96.7/06		6
4899124	0.17.0		16		835		8
4899143	0.04.3/01	03	7	80087308	1.44.0/ B	02	25
4899228	0.06.3/01	01	6	80128825	1.82.6	13	3
4899239	0.06.3/01	01	7		1.82.6/01	03	16
4899245	0.06.6/01		13		1.82.6/01	09	5
4899256	0.06.6/01		14		1.88.11/07A		3
4899467	0.30.5/01		5		1.88.11/07C		3
4899519	0.30.5/01		6		1.95.5	02	7
4899689	0.14.0/01	02	7		337	01	15
4899803	0.04.0/01		16		337	02	15
4899815	0.17.3		2		437		18
4899921	0.07.1/01		5		721	03	5
4983992	1.95.0	01	5	80167266	1.82.6	01	7
4985122	1.95.1		13		1.82.6	14	2
4985127	1.95.1		3		1.82.6	15	2
4988275	1.95.1		6		1.82.6/01	01	6
4998760	1.95.5	01	11		1.82.6/01	04	16
4999021	1.93.0	04	9		900	05	7
	1.93.0/01	02	9		900	07	7
	1.93.0/02	01	25	80167268	1.82.6	04	2
504153150	0.06.3/01	02	2		1.82.6	05	10
504153151	0.06.3/01	02	4		1.82.6	06	6
5105729	1.95.1		11		1.82.6/01	04	11
5106733	1.95.1		18		1.82.6/01	05	8
5110153	1.95.1		7		1.82.6/01	06	10
5110155	1.95.1		9	80167269	1.82.6	02	3
5112712	1.91.4	06	8		1.82.6/01	02	1
	1.91.4/02	06	8		1.82.6/01	02	16
	1.92.6	03	13		1.82.6/01	07	5
	346	05	22		1.82.6/01	08	2
	347	05	9		1.82.6/01	09	12
5118658	1.91.7/02		18		1.82.6/01	10	4
5131437	1.95.1		10		1.88.11/03		10
5132136	1.92.9	02	13		725		13
	1.92.9	03	8		725/01	01	3
5135069	1.98.1	09	4	80263136	1.44.0/ B	01	12
5138360	1.98.1	09	3	80280248	1.44.0/ B	03	37
5148062	1.95.0	01	3	80510884	1.44.0/ B	03	17
5148131	1.93.0	02	15	80510892	1.44.0/ B	03	6
5148132	1.93.0	02	14	8093882	0.08.1/01		4
5148946	1.95.5	01	10	8094853	0.08.2/01		1
5153180	1.95.0	01	12	8094854	0.08.2/01		1
5155381	1.95.0	02	21	8094960	0.08.1/01		4
5155701	1.95.0	02	15	8094961	0.08.1/01		4
5155703	1.95.0	02	16	81728114	1.44.0/ B	03	8
	1.95.0	03	2	81800471	1.44.0/ B	03	12
5162852	1.94.0/01		8	81800472	1.44.0/ B	03	7
5175736	1.91.5	02	7	81800474	1.44.0/ B	03	2
5176441	1.93.4		1	81800475	1.44.0/ B	03	4
5178468	1.93.0	02	5	81800486	1.44.1		2
5183854	1.92.6	03	8		1.44.1/01		2
614-10040	1.82.6	12	3	81800488	1.44.1		7

Number	Figure	Sequence	Ref.
81800488	1.44.1/01		7
81802548	1.44.0/ B	02	3
81802560	1.44.0/ B	02	22
81803273	1.44.0/ B	02	15
81803275	1.44.0/ B	02	16
81803334	1.44.0/ B	02	10
81803336	1.44.0/ B	02	26
81803345	1.44.0/ B	02	28
81803413	1.44.0/ B	03	5
81803424	1.44.0/ B	03	11
81803445	1.44.0/ B	03	13
81803451	1.44.0/ B	03	15
81803474	1.44.0/ B	03	1
81803491	1.44.0/ B	02	23
81803502	1.44.0/ B	02	23
81803503	1.44.0/ B	02	23
81803504	1.44.0/ B	02	23
81803505	1.44.0/ B	02	23
81803506	1.44.0/ B	02	23
81803507	1.44.0/ B	02	23
81803508	1.44.0/ B	02	23
81803509	1.44.0/ B	02	23
81803510	1.44.0/ B	02	23
81803511	1.44.0/ B	02	23
81803515	1.44.0/ B	03	30
81803516	1.44.0/ B	03	30
81803517	1.44.0/ B	03	30
81803519	1.44.0/ B	03	30
81803520	1.44.0/ B	03	30
81803521	1.44.0/ B	03	30
81803522	1.44.0/ B	03	30
81803542	1.44.0/ B	03	21
81804978	1.44.0/ B	02	24
81805231	1.44.1		11
	1.44.1/01		11
81809406	1.44.0/ B	01	8
81812261	1.44.0/ B	03	3
81812912	1.44.0/ B	01	24
81816246	1.44.0/ B	03	10
81818397	1.44.0/ B	01	18
81818824	1.21.5		16
	1.88.11/01		3
	1.88.11/02	01	2
	1.88.11/06A		16
	1.88.11/06A		17
81820047	1.44.0/ B	01	20
81820846	1.44.0/ B	02	18
81820849	1.44.0/ B	02	13
81821237	536/02		9
81821263	536/02		3
81821267	1.44.0/ B	03	36
81821691	1.44.1		3
	1.44.1/01		3
81822462	1.44.1		17
	1.44.1/01		17
81823610	1.44.0/ B	02	14
81823746	536/02		5
81824478	1.44.0/ B	03	20
81827354	1.44.0/ B	03	24
81832258	1.82.6	13	7
81834042	1.44.0/ B	03	26
81834073	1.44.0/ B	03	33
81844851	1.82.6	03	11
	1.82.6	04	14
	1.82.6/01	03	11
	1.82.6/01	03	17
	728	02	4
81845030	1.82.6	13	6
81845037	728	02	5
81845041	1.44.0/ B	01	26
81845711	1.44.0/ B	03	23
81845713	1.44.0/ B	03	35
81845714	1.44.0/ B	03	27
81846884	1.44.0/ B	02	21
81847146	1.44.0/ B	03	25
81847148	1.44.0/ B	03	31
81847149	1.44.0/ B	03	31
81847150	1.44.0/ B	03	31
81847151	1.44.0/ B	03	31
81847152	1.44.0/ B	03	31
81847153	1.44.0/ B	03	31
81847154	1.44.0/ B	03	31
81847155	1.44.0/ B	03	31
81847156	1.44.0/ B	03	31
81847157	1.44.0/ B	03	31
81847158	1.44.0/ B	03	31
81847159	1.44.0/ B	03	31
81847160	1.44.0/ B	03	31
81847161	1.44.0/ B	03	31
81847162	1.44.0/ B	03	31
81854753	1.44.0/ B	02	12
81855916	1.88.11/05A	01	18
81866390	1.44.0/ B	01	17
81867742	1.92.6	03	12
81869714	1.92.6	03	10
81870039	1.93.0	01	15
	1.93.0	02	16
	1.93.0/01	01	15
	514	02	10
	901	02	31
	902	02	3
81871325	728	02	8
81871439	1.92.4	01	15
81871864	1.92.4	01	10
	1.92.4	02	10
81872028	1.92.4	02	7
81872036	1.92.4	01	6
81875248	1.21.5		4
81876885	1.44.0/ B	03	14
81878514	1.44.0/ B	01	25
81900328	1.88.11		12
	1.88.11/02	02	2
	1.88.11/05A	02	19
81901809	1.88.11		2
81901837	1.21.5		7
81901896	1.88.11		10
81901897	1.88.11/01		10
81902174	1.88.11/01		8
	1.88.11/02	01	6
81902463	1.88.11		6
	1.88.11/02	02	3
82000409	1.92.6	03	9
82001909	1.93.0	04	13
	1.93.0/01	02	2
	1.93.0/02	01	24
82003283	1.96.7/04		5
	1.96.7/07		5
82003369	1.95.0	02	9
82022833	1.91.1		1
82026949	1.95.0	01	13
82034863	851/01	01	6
	855/01	01	6
	856/01	01	6
82034881	851/01	01	11
	851/01	02	10
	851/01	03	23
	855/01	01	11
	855/01	02	10
	856/01	01	11
	856/01	02	10
	856/01	03	26
82034893	851/01	02	11
	851/01	03	22
	855/01	02	13
	856/01	02	13
	856/01	03	27
82034894	855/01	03	3
82034897	855/01	01	35
82035025	851/01	04	16
	856/01	04	16
82035027	851/01	04	24
	856/01	04	24
82035028	851/01	04	21
	856/01	04	21
82035029	851/01	04	15
	856/01	04	15

Number	Figure	Sequence	Ref.
82035030	851/01	03	11
	856/01	03	11
82035031	851/01	03	9
	856/01	03	9
82035032	851/01	04	10
	856/01	04	10
82035033	851/01	04	25
	856/01	04	25
82035034	851/01	04	23
	856/01	04	23
82035035	851/01	04	20
	856/01	04	20
82035036	851/01	03	14
	856/01	03	14
82035037	851/01	04	8
	856/01	04	8
82035038	851/01	01	27
	855/01	01	27
	856/01	01	27
82035039	851/01	04	13
	856/01	04	13
82035040	851/01	04	4
	856/01	04	4
82035043	851/01	04	7
	856/01	04	7
82035053	855/01	03	21
82035054	851/01	04	9
	856/01	04	9
82035057	855/01	03	18
82035076	855/01	05	7
82035094	851/01	03	5
	856/01	03	5
82035126	855/01	03	26
82035127	851/01	03	8
	856/01	03	8
82035128	851/01	04	5
	856/01	04	5
827-10130	636	08	5
	638	08	6
	639	08	6
8274447	1.88.08	02	15
82848105	855/01	03	27
	855/01	05	14
82859922	1.92.4	01	1
82879400	1.88.11/05A	02	3
82895716	1.44.0/ B	01	21
829-1410	1.82.6	12	4
82958118	1.44.0/ B	02	29
82958961	1.44.0/ B	03	22
82959373	1.44.0/ B	01	23
82959375	1.44.0/ B	03	16
82979988	1.44.0/ B	02	27
83416242	1.21.5		12
	1.88.08	01	11
	1.88.08	02	4
	1.88.11		7
	1.88.11/02	01	3
	1.88.11/02	02	4
	1.88.11/06A		19
	1.88.11/09A		6
	514	03	7
	514	04	17
	900	02	20
	900	04	2
	900	09	7
	900	10	17
	900	11	12
	901	02	33
83417133	1.44.0/ B	01	6
83417169	1.44.0/ B	03	29
83901443	1.82.6	02	4
	1.82.6/01	02	17
	1.82.6/01	02	3
	1.82.6/01	07	3
	1.82.6/01	08	3
	1.82.6/01	10	3
	437		15
83902702	901	02	21

Number	Figure	Sequence	Ref.
83902702	902	02	21
83902710	1.88.11/02	01	8
83904750	1.44.1		16
	1.44.1/01		16
83909107	1.44.0/ B	01	3
83910546	514	02	2
	900	03	2
	901	02	2
	902	02	2
83910548	514	02	4
	900	03	3
	901	02	23
	902	02	23
83910557	900	02	2
83910599	1.88.11/09	02	5
83910601	1.88.11/09	02	3
83910629	1.21.5		18
83910630	1.21.5		17
83910634	386		3
	387		1
	388		1
	389		1
	390/01		1
	515/01		3
	516/01		1
	517/01		1
	518/01		1
	519/01		1
	520/01		1
	521		1
83910645	1.21.5		5
	1.88.11/09A		2
83910977	1.21.5		21
	1.88.08	02	2
	900	04	6
83911000	1.21.5		11
83911019	1.21.5		20
	1.88.08	02	3
	901	02	6
	902	02	6
83911020	1.21.5		6
83911366	1.88.11/05A	02	8
	1.88.12/03		14
	721	06	6
	727/01		6
83911686	1.44.1		14
	1.44.1/01		14
83912246	1.44.0/ B	03	34
83912378	1.88.11/09	02	4
83925620	1.44.0/ B	01	22
83931289	1.88.11/09	02	18
83931313	1.88.11/09	02	7
83937179	1.44.0/ B	03	19
83937315	1.88.11/02	01	9
83947107	1.44.0/ B	03	38
83948308	1.44.1		5
	1.44.1/01		5
83949810	1.44.0/ B	03	32
83949811	1.44.0/ B	02	20
83949812	1.44.0/ B	03	39
83949838	1.44.1		1
	1.44.1/01		1
83952932	1.44.1		4
	1.44.1/01		4
83955462	1.44.0/ B	01	2
83955490	1.44.0/ B	01	15
83957533	1.44.0/ B	03	28
83961521	1.91.4	06	12
83961741	728	02	3
83961823	1.93.0	02	10
83961985	1.92.4	01	3
	1.92.4	02	8
	1.92.4	03	7
83961987	1.92.4	01	13
	1.92.4	02	12
	1.92.6	02	6
83962179	1.82.6	04	16
83962538	1.82.6	01	6

Number	Figure	Sequence	Ref.
83962538	1.82.6	14	1
	1.82.6	15	1
	1.82.6/01	01	7
	1.82.6/01	04	5
	900	05	8
	900	07	3
83962539	1.82.6	10	3
	1.82.6	11	1
	1.82.6	14	4
	1.82.6	15	4
	333	03	3
	900	05	9
	900	07	4
	900	08	1
83962659	1.88.11/05A	02	2
83962811	1.88.11/02	01	7
83962918	394	01	6
83962919	394	01	18
83963000	1.82.6	02	2
	1.82.6/01	02	14
	1.82.6/01	07	4
	1.82.6/01	08	1
	1.82.6/01	10	2
	392	01	6
	392	02	4
83963153	1.92.4	01	5
83963371	1.42.0		4
	1.82.6	03	3
	1.82.6	04	11
	1.82.6/01	03	3
	331	08	2
	724/01	01	7
	724/02		7
83963374	1.82.6	13	5
	1.82.6/01	09	3
	1.88.11/07A		1
	1.88.11/07C		1
	1.95.5	02	3
	337	01	4
	337	02	6
	391		4
	437		5
	721	03	2
	901	04	4
	902	03	20
83963375	1.82.6	04	1
	1.82.6/01	04	1
83963376	1.82.6/01	09	10
	1.88.11/03		5
	725/01	01	1
83963422	1.88.11/05A	02	10
83963433	1.88.11/05A	02	1
83964146	1.92.6	03	2
83971549	1.82.6	13	2
	1.82.6/01	03	8
	1.82.6/01	09	1
	391		7
	437		4
	901	04	20
	902	03	4
83971567	1.44.1		15
	1.44.1/01		15
83976357	1.92.4	02	4
83983763	1.42.0		13
	1.88.11/07A		24
83984666	851/01	01	14
	855/01	01	13
	856/01	01	13
83985067	1.42.0		12
	1.88.11/07A		4
	1.88.11/07C		4
83987627	724/01	01	19
	724/02		14
	728	01	2
	728	02	9
83989915	1.44.0/ B	03	9
83994150	1.91.7/02		17
	1.92.9	01	13
83994150	1.96.7/05		7
	1.96.7/06		7
83994372	1.92.6	03	6
83994378	1.92.6	03	7
83994395	1.92.6	03	5
83994579	1.44.0/ B	03	18
83995356	1.92.4	01	8
83998909	1.88.11/09	02	8
83999466	1.21.5		19
84058418	331	02	13
85700130	1.88.11		5
85700224	81.00		2
	82.00	01	2
	83.00	01	2
85700341	1.88.11/05A	02	13
85700728	1.21.5		2
85800007	1.88.11/09	02	19
85800103	1.88.11/01		7
85800105	1.88.11/01		9
85800303	1.88.11/09	02	14
85800504	1.88.11/02	01	5
85800603	1.88.11/06A		3
85800604	1.88.11/06A		2
85800965	1.88.11/09A		9
85800990	1.88.11/09	02	6
85801026	1.88.08	02	1
85801029	1.88.08	01	3
85801034	522		1
	522/01		1
	525		1
	536		7
	537		7
85801040	522		6
	536		8
	537		8
85801042	520		6
	527		9
85801044	520		1
	527		1
85801049	1.88.11/01		2
	1.88.11/02	02	5
85801050	1.88.11/01		5
85801051	1.88.11		14
	471	01	3
	472	01	1
	473	01	1
	474	01	1
	520		4
	522		2
	522/01		16
	525		16
	527		3
	536		6
	537		5
	734		4
85801076	1.88.08	01	14
85801079	1.88.08	02	5
85801087	1.88.11		11
85801092	1.95.0	02	12
85801093	1.95.0	02	17
85801097	386		1
	387		3
	388		3
	389		3
	390/01		3
	515/01		1
	516/01		3
	517/01		3
	518/01		3
	519/01		3
	520/01		3
	521		3
85801098	386		4
	387		2
	388		2
	389		2
	390/01		2
	515/01		4

Number	Figure	Sequence	Ref.
85801098	516/01		2
	517/01		2
	518/01		2
	519/01		2
	520/01		2
	521		2
85801110	1.21.5		3
85801153	1.88.11/09A		7
85801161	471	01	7
	473	01	5
	525		22
	527		8
	537		1
85801191	1.88.08	02	13
85801218	1.14.0		6
	1.82.0		11
85801249	1.82.0		2
85801262	1.21.5		22
85801307	901	02	9
	902	02	9
85801308	901	02	22
	902	02	22
85801309	901	02	5
	902	02	5
85801314	901	02	20
	902	02	20
85801319	1.87.8		1
85801324	1.87.8		9
85801371	471	01	2
	472	01	4
	473	01	4
	474	01	4
	525		20
	527		7
	536		3
	537		3
85801397	724/01	02	3
85801452	724/01	02	7
85801470	471	01	1
	472	01	6
	473	01	6
	474	01	6
	525		19
	527		6
	536		2
	537		2
85801486	522/01		14
	525		14
85801488	393		2
	394/01	01	9
85801502	393		1
	394/01	01	1
85801514	393		13
85801515	393		18
85801518	1.88.12/03		22
	1.88.12/03A		20
	393		8
	394/01	01	6
85801562	1.88.12/03A		12
85801564	1.88.12/03A		3
85801566	1.88.12/03A		8
85801585	1.28.0		9
	638	05	7
	639	05	7
85801596	1.88.11/03		11
85801599	721	06	4
	727/01		4
85801621	1.92.3		1
85801622	1.92.3		2
85801623	1.92.3		3
85801624	1.92.6	02	7
85801625	1.92.6	02	7
85801626	1.92.4	03	3
85801628	1.92.4	03	2
85801630	1.92.3		4
85801631	1.92.3		5
85801632	1.92.9	01	2
85801649	1.93.0	01	2
85801649	1.93.0/01	01	2
	1.93.0/02	01	2
85801651	1.93.0	03	4
85801739	1.92.9	01	1
85801799	1.92.6	02	4
85801800	1.92.6	02	5
85801801	1.92.6	02	12
	1.94.0/01		6
	835		5
85801811	1.92.9	01	3
85801812	1.92.9	02	1
85801813	1.92.9	02	1
85801814	1.92.9	02	3
85801815	1.92.9	02	4
85801816	1.92.9	02	7
85801820	1.92.9	03	11
85801821	1.92.9	03	11
85801823	1.92.9	03	14
85801824	1.92.9	03	15
85801825	1.92.9	03	16
85801826	1.92.9	01	9
85801827	1.92.9	02	14
85801828	1.92.9	01	7
85801829	1.92.9	01	10
85801830	1.92.9	03	2
85801831	1.92.9	03	1
85801832	1.92.9	03	3
85801833	1.92.9	03	4
85801834	1.92.9	03	6
85801860	1.95.0	01	7
85801938	1.96.0		1
85801939	1.96.0		3
85801941	1.95.0	02	8
85801953	1.96.7/05		16
	1.96.7/06		14
85801968	1.96.7/05		1
	1.96.7/06		1
85801976	1.95.5	01	13
85801979	1.93.0	03	2
85801991	1.92.9	01	11
	1.93.0/01	02	17
	1.93.0/02	01	3
	1.93.0/03		3
	1.93.5	02	4
	1.93.5/01	02	4
85802018	1.92.9	03	12
85802107	1.91.6		3
85802141	1.93.5	02	15
85802142	1.93.5	02	9
	1.93.5/01	02	9
85802143	1.93.5	02	10
	1.93.5/01	02	10
85802144	1.93.5	02	11
	1.93.5/01	02	11
85802145	1.93.5	02	12
	1.93.5/01	02	7
85802146	1.93.5	02	13
85802205	622		7
85802214	1.82.6	02	13
	1.82.6/01	02	18
85802223	1.92.3		8
	1.92.6	02	9
85802224	1.92.3		9
	1.92.6	02	13
85802225	1.96.7/05		4
	1.96.7/06		4
85802227	1.96.7/05		14
	1.96.7/06		16
	394	01	21
85802234	700	02	1
	725/01	02	1
85802247	725		4
85802250	1.91.4	02	16
	1.91.4/02	02	10
85802307	1.92.6	02	10
85802309	1.96.7/04		1
	1.96.7/05		17
	1.96.7/06		13

Number	Figure	Sequence	Ref.
85802309	1.96.7/07		1
85802310	1.91.4	06	4
	1.91.4/02	06	13
	1.96.7/04		3
	1.96.7/05		13
	1.96.7/06		12
	1.96.7/07		3
85802334	1.92.3		6
	1.92.6	02	8
85802338	1.21.5		13
85802344	1.92.9	03	17
85802345	1.92.9	03	17
85802346	1.92.9	03	21
85802347	1.92.9	03	21
85802351	1.92.9	03	13
85802372	725		9
85802396	1.88.08	01	13
	1.88.08	02	11
85802397	1.88.08	01	12
	1.88.08	02	12
	900	02	7
85802398	1.91.5	02	4
85802403	1.88.11/05A	02	9
85802405	1.88.11/05A	02	5
85802441	1.98.0/01		7
85802457	725		7
85802478	1.91.4	02	1
85802494	1.88.11/05A	01	2
	1.88.12/03		25
	1.88.12/03A		21
	394	01	12
	394	03	7
	721	06	3
	727/01		3
85802509	721	06	1
	727/01		1
85802510	721	06	11
	727/01		11
85802513	1.44.1		12
	1.44.1/01		12
85802515	1.44.1/01		18
85802527	333	04	10
	721	04	10
85802528	333	04	11
	721	04	11
85802529	333	04	9
	721	04	9
85802580	1.82.0		20
85802599	201		2
85802618	1.28.0		11
	1.89.9/01		3
	331	03	8
	638	05	8
	639	05	8
85802620	1.88.11/07A		17
	1.88.11/07C		17
85802640	1.95.5	02	1
85802642	1.82.6/01	02	10
	1.82.6/01	04	6
	1.82.6/01	10	1
85802643	900	04	10
	901	02	34
85802647	394	01	4
85802682	393		1
	394/01	01	2
85802683	1.28.0/ A	02	8
	1.28.0/ B	02	13
85802684	1.28.0/ A	02	7
	1.28.0/ B	02	7
85802724	1.88.11/05A	01	1
85802734	1.88.11/05A	01	5
85802735	1.88.11/05A	01	13
85802736	1.88.11/05A	01	8
85802737	1.88.11/05A	01	16
85802738	1.88.11/05A	01	14
	1.88.12/03		8
	1.88.12/03A		10
	393		19
85802738	394	02	7
	394	03	14
85802741	1.88.11/05A	01	19
85802742	1.88.11/05A	01	21
85802743	1.19.1		5
	1.88.11/03		6
	176		2
	337	01	14
	337	02	12
85802744	900	07	5
85802761	1.95.5	02	5
85802763	1.96.2	01	9
85802776	1.82.6/01	02	11
	724/01	01	10
85802777	1.82.6/01	04	2
85802780	728	02	7
85802799	1.82.6/01	04	7
85802801	1.82.6	05	1
	1.82.6	06	2
	1.82.6/01	05	2
	1.82.6/01	06	1
	724/01	01	21
	724/02		12
85802803	392	01	3
	392	02	5
85802805	337	01	6
	337	02	8
85802820	1.88.11/07A		5
	1.88.11/07C		5
85802838	1.82.6/01	04	4
85802839	1.82.6/01	04	3
85802842	1.88.12/03		19
	1.88.12/03A		17
85802843	393		3
	394/01	01	3
85802847	1.29.1		8
85802872	1.88.08	02	10
85802890	1.82.6	02	9
	1.82.6/01	02	13
	1.82.6/01	03	12
	1.82.6/01	04	13
	1.94.2		6
85802891	1.82.6	10	7
	1.82.6/01	07	9
85802893	900	02	15
85802894	900	02	16
85802895	900	02	14
85802899	900	02	11
85802900	333	04	3
	721	04	3
	900	02	10
85802901	900	02	9
	900	06	4
85802902	900	02	8
85802903	1.21.5		8
	721	06	17
85802909	900	06	5
85802947	1.29.1		1
85802950	1.88.11/08		7
85802954	1.82.6/01	09	13
85802955	1.82.6	04	6
	1.82.6	13	1
	1.82.6/01	04	12
	1.82.6/01	09	2
85802957	900	08	2
85802958	1.82.6/01	02	9
85802960	1.82.6	05	12
	1.82.6/01	06	12
85802961	1.88.11/03		4
85802965	1.88.11/07A		7
	1.88.11/07C		7
85802974	514	02	13
	900	04	11
	901	02	35
85802975	514	02	11
	900	03	7
	900	04	5
	901	02	3

Number	Figure	Sequence	Ref.
85802976	900	04	12
	901	02	30
85802992	1.88.11		4
	1.88.11/01		12
	1.88.11/02	02	7
	471	01	5
	472	01	3
	473	01	3
	474	01	3
	520		5
	522		4
	522/01		17
	525		17
	527		5
	535		4
	536		4
	537		4
	734		2
85802993	1.88.11		13
	1.88.11/01		11
	1.88.11/02	02	6
	471	01	4
	472	01	7
	473	01	7
	474	01	7
	520		3
	522		3
	522/01		18
	525		18
	527		4
	535		5
	536		5
	537		6
	734		3
85803005	514	02	6
	733		12
	900	03	6
	900	04	9
	901	02	19
85803008	1.88.11/03		8
	1.88.11/07A		8
	1.88.11/07C		8
	337	02	10
	900	08	4
85803010	1.88.11/08		5
	337	01	7
	901	04	18
	902	03	18
85803013	1.19.1		12
85803039	1.88.11/09A		7
85803079	1.94.2		5
85803107	393		7
	394/01	01	11
85803124	393		7
	394/01	01	5
85803139	535		3
85803141	535		2
85803192	1.88.08	01	8
85803193	1.88.08	01	6
85803196	1.88.08	01	1
85803197	1.88.08	01	5
85803198	1.88.08	02	6
85803215	1.88.11/05A	01	17
85803224	522/01		19
	525		21
85803230	728	02	1
85803231	728	02	2
85803234	721	03	3
	728	01	6
85803241	728	02	10
85803277	1.88.11/05A	02	16
85803297	1.88.11/05A	02	7
85803312	1.95.0	03	4
	331	04	30
	331	06	9
	331	07	15
	333	02	9
	700	02	2
85803332	1.42.0		10
	721	03	9
85803360	394	03	1
85803364	394	03	3
85803382	394	01	2
85803393	333	03	5
	721	03	8
	728	02	6
	734		7
85803394	990		1
85803395	990		7
85803396	990		2
85803408	700	01	3
	725/01	01	12
85803409	725		8
85803428	724/01	01	11
	724/02		11
85803447	394	03	15
85803477	1.88.12/03		6
85803486	1.82.6	02	1
	724/01	01	5
	724/02		5
	725		3
85803487	724/01	01	6
	724/02		6
85803517	1.88.11/07A		19
	1.88.11/07C		19
	721	06	12
85803540	394	01	8
85803613	900	04	1
85803617	1.88.11/09A		1
85803635	1.88.11/02	02	1
85803643	1.88.11		3
85803647	1.88.11		8
85803782	394/01	01	13
85803783	394/01	01	14
85803786	721	06	10
	727/01		10
85803788	1.96.2	02	6
85803789	1.98.0/01		14
85803884	1.75.2	01	5
85803917	394	02	8
85803959	1.21.5		14
85803960	1.21.5		14
85803986	1.91.4	02	12
	1.91.4/02	02	12
85804026	1.88.11/05A	02	4
85804038	346	02	13
85804041	346	02	3
	347	02	3
85804051	346	03	7
	347	03	3
85804065	646	04	6
85804091	1.98.0/01		5
85804156	789		1
85804171	1.21.5		23
85804275	1.28.0		18
85804276	1.28.0		2
85804323	622		1
85804338	1.98.0/01		4
85804341	1.98.0/01		2
85804344	393		11
85804345	393		12
85804346	302	01	12
	390		2
	700	01	17
	725/01	02	12
85804347	176		1
85804362	1.91.6		5
85804366	1.88.11/05A	02	11
85804375	1.88.11/05A	01	22
	1.88.12/03		4
	1.88.12/03A		5
	393		20
	394	02	3
	394	03	12
85804376	1.88.11/05A	01	20
	1.88.12/03		1

Number	Figure	Sequence	Ref.	Number	Figure	Sequence	Ref.
85804376	1.88.12/03A		1	85805203	1.82.6	07	21
	394	03	11	85805206	1.82.6	07	18
85804441	646	01	12	85805207	1.82.6	07	20
85804447	514	02	12	85805208	1.82.6	07	19
	514	02	9	85805209	1.82.6	07	16
	900	03	10	85805210	1.82.6	07	14
85804493	1.87.8		10	85805211	1.82.6	07	15
85804539	1.88.12/03A		22	85805217	337	02	7
85804540	393		10	85805218	337	01	1
85804541	394/01	01	12	85805220	337	01	3
85804573	1.82.6	16	3		337	02	14
	1.82.6/01	11	3	85805221	337	01	8
85804574	1.82.6	16	8		337	02	13
	1.82.6/01	11	8	85805223	337	02	5
85804602	175		1	85805224	337	01	9
85804617	1.92.4	03	1	85805228	338		1
85804674	1.91.1/01		1	85805232	1.42.0		1
85804675	1.91.1/01		2	85805247	700	01	11
	1.91.4	03	4		725/01	01	11
	1.91.4/02	03	1	85805251	1.95.1		29
85804676	1.96.0		5	85805258	1.82.6	12	11
85804734	1.96.7/04		4		1.82.6	13	12
	1.96.7/07		4		1.88.11/07A		21
85804736	394	03	8		333	03	2
85804750	1.93.0	01	18		700	01	1
	1.93.0/01	01	18	85805262	337	01	5
	1.93.0/02	01	18	85805264	337	01	12
	1.93.5	01	7	85805271	337	02	9
	1.93.5/01	01	4	85805273	337	02	9
85804780	394	01	1	85805277	1.95.0	01	16
85804781	394	01	19	85805283	1.95.0	01	6
85804782	394	01	7	85805285	1.95.0	01	4
85804787	394	01	13	85805295	900	02	22
85804791	394	01	16	85805296	900	02	23
85804794	394	01	15	85805303	1.87.2		6
85804801	394	01	11	85805304	1.87.2		7
85804803	394	02	1	85805305	1.87.2		8
85804847	535		1	85805308	1.93.0/02	01	11
85804848	535		1	85805318	1.42.0		5
85804863	1.93.0	04	2		331	08	4
85804864	1.93.0	04	5		725/01	02	2
85804865	1.93.0	03	1	85805323	1.93.0	01	5
85804866	1.93.0	04	6		1.93.0/01	01	5
85804867	1.93.0	03	1		1.93.0/02	01	5
85804869	1.92.4	01	4		1.93.5	01	5
85804870	1.92.4	02	5		1.93.5/01	01	5
85804878	536/02		8	85805340	700	01	6
85804879	392	01	9		725/01	01	6
	725		10	85805383	1.91.4	06	11
85804947	1.82.6/01	10	10		1.91.4/02	06	11
85805003	346	02	14	85805440	1.95.1		4
85805004	346	02	15	85805441	1.95.1		2
85805005	346	02	11	85805448	1.92.4	01	9
85805006	346	02	10		1.92.4	02	9
	646	01	9		1.92.4	03	6
85805008	646	01	14	85805498	1.88.12/03		7
85805013	646	01	8		394	02	1
85805014	646	01	11	85805502	1.82.6	03	8
85805065	1.92.3		7	85805548	1.95.0	03	7
	1.92.6	02	11	85805567	1.88.11/03		9
85805108	1.88.11/08		1	85805571	1.92.8		1
85805111	1.88.11/08		2	85805591	1.93.0	03	6
85805113	1.88.11/08		4	85805616	1.88.11/05A	01	4
85805115	392	02	1		1.88.12/03		11
85805123	392	02	9		1.88.12/03A		6
85805124	392	01	4	85805619	1.88.11/08		6
	392	02	2	85805648	1.88.08	01	18
85805126	392	02	8	85805655	1.95.0	03	4
85805137	1.88.08	01	15	85805659	1.92.6	02	1
85805142	1.87.2		11	85805663	201		5
85805166	1.82.6	04	8	85805664	201		6
85805167	1.82.6	04	5	85805685	1.75.2	01	3
85805168	1.82.6	04	7	85805686	1.75.2	01	2
85805193	700	01	7	85805690	1.88.12/03A		9
	725/01	01	7	85805692	1.88.12/03A		7
85805195	700	01	8	85805703	1.40.0	01	18
	725/01	01	8	85805704	1.40.0	01	22
85805200	1.96.7/05		8	85805705	1.40.0	01	25

Number	Figure	Sequence	Ref.
85805706	1.40.0	01	14
85805707	1.40.0	01	21
	1.40.0	02	29
85805709	1.40.0	02	28
	402	03	14
85805710	1.40.0	02	30
85805711	1.40.0	02	22
	402	03	3
85805770	1.92.6	01	4
85805771	1.92.6	01	4
85805772	1.95.5	01	9
85805773	1.95.5	01	9
85805774	1.95.5	01	2
85805775	1.95.5	01	2
85805777	1.94.0/01		9
85805803	1.93.0/02	01	6
85805806	1.88.12/03		15
85805807	201		4
85805819	1.93.0	01	14
	1.93.0/01	01	14
	1.93.0/02	01	29
85805824	1.82.6	06	9
85805838	1.82.6	02	6
85805840	1.82.6	06	1
85805854	1.82.6	07	1
85805855	1.82.6	07	2
85805856	1.82.6	07	5
85805857	1.82.6	07	6
85805858	1.82.6	07	3
85805859	1.82.6	07	4
85805860	1.82.6	07	7
85805861	1.82.6	07	8
85805862	725/01	01	5
85805863	725/01	01	4
85805864	700	01	12
	725/01	01	13
85805865	700	01	13
	725/01	01	14
85805869	1.82.6	07	11
85805870	1.82.6	07	9
85805872	1.82.6	07	10
85805909	1.98.0/01		13
85805973	1.40.0	01	7
	402	01	23
85805974	1.40.0	02	31
85805975	1.40.0	02	7
	402	02	7
85805976	1.40.0	02	6
	402	02	6
85805977	1.40.0	02	5
	402	02	5
85805978	1.40.0	02	16
	402	02	16
85805979	1.40.0	02	11
85805980	1.40.0	02	12
85805982	1.40.0	02	15
	402	02	15
85805983	1.40.0	02	14
85805984	1.40.0	02	8
	402	02	20
85805986	1.40.0	02	13
	402	02	13
85805987	1.40.0	02	3
	402	02	3
85805988	402	02	8
85805989	1.40.0	02	4
	402	02	4
85805990	1.40.0	02	18
	402	02	18
85805992	1.40.0	02	19
	402	02	19
85805999	402	06	2
85806003	1.40.0	02	20
	402	03	1
85806004	402	05	1
85806006	402	03	11
85806008	402	03	7
85806009	402	03	5
85806010	1.40.0	02	27
	402	03	6
85806011	402	03	12
85806012	402	03	15
85806014	402	03	16
85806015	402	03	17
85806016	402	03	13
85806019	1.28.0/ A	04	16
	1.28.0/ B	04	16
85806023	1.93.0	01	9
	1.93.0/01	01	9
	1.93.0/02	01	9
	1.96.7/05		9
85806089	1.93.5	01	6
	1.93.5/01	01	6
85806095	1.91.5	01	3
85806098	1.91.5	01	2
85806132	1.91.4	06	18
	1.91.4/02	04	7
85806133	1.91.4	04	2
	1.91.4/02	04	6
85806134	1.91.4	02	17
85806135	1.91.4	02	6
	1.91.4/02	02	6
85806136	1.91.4	06	1
85806154	1.93.0	02	12
85806184	1.91.5	01	5
85806185	1.91.5	01	6
85806245	1.88.12/03		23
85807283	402	06	5
85807284	402	06	6
85807827	1.82.6/01	12	18
85807828	1.82.6/01	12	21
85807829	1.82.6/01	12	22
85807830	1.82.6/01	12	19
85807831	1.82.6/01	12	20
85807832	1.82.6/01	12	15
85807833	1.82.6/01	12	25
85807834	1.82.6/01	12	24
85807855	1.91.1/01		7
85807857	336/01	02	4
	336/01	05	11
	725/01	04	4
85807858	336/01	02	15
	336/01	05	9
	725/01	04	15
85807866	1.91.1/01		3
85807867	522		5
	536		7
	537		9
85807868	520		2
	527		2
85807873	1.88.11/07A		6
	1.88.11/07C		6
85807874	1.88.11/07A		15
	1.88.11/07C		15
85807876	724/01	01	8
	724/02		8
85807914	394	03	15
85807926	394	03	6
85808390	1.95.5/ A	01	2
85808403	336/01	01	11
	725/01	03	11
85808419	1.95.2		5
85808422	1.21.5		15
	1.88.12/03		21
	1.88.12/03A		23
85808460	1.91.4	06	19
	1.91.4/02	06	14
	1.93.0	02	1
	1.93.0/02	01	20
85808472	901	02	11
	902	02	11
85808473	901	02	10
	902	02	10
85811432	386		2
	387		4
	388		4

Number	Figure	Sequence	Ref.	Number	Figure	Sequence	Ref.
85811432	389		4	85812085	1.28.0/ A	03	5
	390/01		4		1.28.0/ B	03	9
	515/01		2	85812086	1.28.0/ A	03	2
	516/01		4		1.28.0/ B	03	1
	517/01		4	85812087	1.28.0/ A	03	1
	518/01		4		1.28.0/ B	03	2
	519/01		4	85812091	1.28.0/ A	03	15
	520/01		4		1.28.0/ B	03	16
	521		4	85812092	1.28.0/ A	04	3
85811440	472	01	5		1.28.0/ B	04	3
	474	01	5	85812094	1.28.0/ A	02	3
	536		1		1.28.0/ B	02	3
85811870	1.82.6	01	2	85812096	1.28.0/ A	01	3
	1.82.6/01	01	2		1.28.0/ B	01	24
85811921	331/ B	01	12	85812113	302	04	12
	331/ B	02	2	85812114	331/ B	04	4
	333/01B	01	13		331/ B	09	4
85811922	331/ B	02	3	85812115	331/ B	05	6
85811923	302	02	3		331/ B	10	6
	331/ B	02	4	85812116	302	04	8
85811933	302	04	9		331/ B	03	4
	331/ B	03	5		331/ B	06	6
	331/ B	04	5		331/ B	08	4
	331/ B	05	4		331/ B	11	6
	331/ B	06	4		724/01	01	18
	331/ B	08	5	85812117	331/ B	03	6
	331/ B	09	5		331/ B	08	6
	331/ B	10	4	85812170	1.82.6/01	03	1
	331/ B	11	4	85812171	1.82.6	03	1
	333/01B	02	5		1.82.6/01	03	2
85811934	302	02	6	85812173	1.82.6	03	2
	331/ B	02	5		331	08	9
	331/ B	03	2	85812174	1.82.6	04	12
	331/ B	04	2	85812202	1.42.0		8
	331/ B	05	2	85812211	333	03	4
	331/ B	06	2	85812212	1.42.0		11
	331/ B	08	2	85812214	721	03	4
	331/ B	09	2	85812252	1.92.6	01	1
	331/ B	10	2	85812253	1.92.6	01	1
	331/ B	11	2	85812254	1.92.4	03	4
	333/01B	02	2	85812255	1.92.4	03	5
85811935	302	04	10	85812260	81.00		1
	331/ B	10	3	85812278	1.88.01	01	4
85811937	331/ B	05	3	85812364	1.92.9	02	17
	331/ B	06	3	85812365	1.92.9	01	14
	331/ B	11	3	85813054	1.40.0	02	26
85811938	302	02	5	85813059	402	04	1
	302	03	4	85813060	402	04	1
	302	04	4	85813079	346	02	2
	331/ B	03	3		347	02	2
	331/ B	04	3	85813100	1.96.2	01	13
	331/ B	05	5	85813103	721	06	2
	331/ B	06	5		727/01		2
	331/ B	07	2	85813104	1.96.2	02	1
	331/ B	08	3	85813110	990		7
	331/ B	09	3	85813113	990		1
	331/ B	10	5	85813133	1.96.2	01	4
	331/ B	11	5	85813134	1.96.2	01	2
	331/ B	12	2	85813135	1.96.2	01	3
	333/01B	02	3	85813136	1.96.2	01	1
85811946	302	02	4	85813137	1.96.2	01	8
	331/ B	02	6	85813138	1.96.2	01	7
85811954	302	02	7	85813186	1.96.2	02	4
85811958	331/ B	01	4		721	06	15
85811959	333/01B	01	4		727/01		15
85811985	536/02		1	85813187	1.96.2	02	5
85811986	536/02		1		721	06	16
85811989	536/02		7		727/01		16
85811990	536/02		6	85813200	1.96.2	02	3
85811991	536/02		6		721	06	14
85811992	536/02		2		727/01		14
85812021	1.96.7/05		5	85813201	1.96.2	02	2
	1.96.7/06		5		721	06	13
85812029	333	03	6		727/01		13
	721	03	1	85813244	1.82.3/01		2
85812080	1.93.0	04	14	85813300	1.28.0/ A	04	7
	1.93.0/01	02	5		1.28.0/ B	04	7
85812081	1.93.0/02	01	15	85813318	1.28.0/ A	04	15

Number	Figure	Sequence	Ref.
85813318	1.28.0/ B	04	15
85813350	1.82.0		19
85813351	1.82.0		17
85813352	1.82.0		6
85813353	1.82.0		22
85813354	1.82.0		18
85813361	337	01	18
85813362	1.82.6	11	4
	1.82.6/01	08	6
85813363	1.82.6	10	4
	1.82.6/01	07	6
	337	02	18
85813377	1.42.0		7
85813378	734		5
85813379	1.82.6	11	5
	1.82.6/01	08	7
	1.88.11/03		15
85813380	1.82.6	10	9
	1.82.6/01	07	11
	1.88.11/03		14
85813407	1.88.01	01	9
85813418	344	02	2
	721	02	2
85813419	344	02	3
	721	02	3
85813469	900	04	8
85815505	392	01	1
	392	02	7
85815506	337	01	2
	337	02	2
85815517	900	04	4
85815536	1.95.1		19
85815537	1.95.1		19
85815549	1.95.1		28
85815550	1.95.1		22
85815552	1.95.1		25
85815554	1.95.1		26
85815555	1.95.1		24
85815556	1.95.1		23
85815567	1.82.6/01	02	12
85815568	1.82.6/01	01	11
85815580	1.82.6/01	02	2
85815581	1.82.6/01	01	10
85815583	437		14
85815607	900	02	25
	900	02	6
85815614	1.42.0		9
85815615	1.42.0		6
85815620	437		2
85815627	900	02	18
85815628	900	02	19
85815667	336/01	02	9
	336/01	05	2
	725/01	04	9
85815668	336/01	02	10
	336/01	05	6
	725/01	04	10
85815677	901	03	2
85815679	901	03	1
85816760	416		2
85816770	1.95.1		17
85816776	1.88.08	02	9
85816793	336/01	05	1
85816804	336/01	01	15
	336/01	05	12
	725/01	03	15
85816813	900	07	2
85816815	901	03	1
85816817	901	03	2
85817001	1.28.0/ A	01	13
	1.28.0/ B	01	16
85817002	1.28.0/ A	03	9
	1.28.0/ B	03	5
85817004	MPARTS	00	8
	1.28.0/ A	03	11
	1.28.0/ B	03	14
85817006	1.28.0/ A	04	21
	1.28.0/ B	04	21
85817007	1.28.0/ A	04	22
	1.28.0/ B	04	22
85817025	336/01	01	13
	725/01	03	13
85817050	835		2
85817051	835		1
85817106	333	05	3
	721	05	3
85817107	333	05	4
	721	05	5
85817108	333	04	5
	721	04	5
85817129	758		1
85817130	758		3
85817131	758		2
85817163	1.28.0/ A	01	12
	1.28.0/ A	04	5
	1.28.0/ B	01	15
	1.28.0/ B	04	5
85817164	1.28.0/ A	01	6
	1.28.0/ B	01	4
85817165	1.28.0/ A	03	10
	1.28.0/ B	03	13
85817169	1.28.0/ A	01	18
	1.28.0/ B	01	20
85817170	646	03	1
85817171	646	03	2
85817172	646	03	3
85817173	646	03	4
85817174	646	03	5
85817175	646	03	6
85817186	646	01	10
85817189	346	02	8
	347	02	8
85817190	1.28.0/ B	01	7
85817201	336/01	04	1
85817210	1.92.5		2
85817211	1.92.5		1
85817212	1.92.5		2
85817213	1.92.5		1
85817226	1.82.6	03	4
	1.82.6/01	03	4
	331	08	8
85817230	1.82.6	15	7
85817231	1.82.6	15	8
85817252	1.89.9/01		5
85817287	1.93.0/03		1
	646	01	5
85817289	346	02	1
	347	02	1
85817295	346	03	9
85817426	851/01	03	2
	851/01	04	2
85817427	851/01	03	24
85817428	851/01	03	20
	856/01	03	20
85817429	851/01	03	7
	856/01	03	7
85817430	851/01	03	12
	856/01	03	12
85817431	851/01	04	3
	856/01	04	3
85817433	851/01	04	18
	856/01	04	18
85817434	851/01	04	19
	856/01	04	19
85817435	851/01	04	22
	856/01	04	22
85817436	851/01	04	12
	856/01	04	12
85817440	851/01	04	6
	856/01	04	6
85817441	851/01	04	11
	856/01	04	11
85817442	851/01	03	10
	856/01	03	10
85817443	851/01	04	14
	856/01	04	14

Number	Figure	Sequence	Ref.	Number	Figure	Sequence	Ref.
85817444	851/01	03	4	85817490	855/01	03	10
	856/01	03	4	85817492	855/01	03	16
85817445	851/01	03	6	85817493	855/01	03	15
	856/01	03	6	85817494	855/01	03	4
85817446	851/01	03	15	85817496	855/01	03	12
	856/01	03	15	85817512	855/01	04	15
85817447	851/01	03	19	85817513	855/01	04	14
	856/01	03	19	85817523	855/01	04	17
85817448	851/01	03	17	85817529	855/01	03	2
	856/01	03	17		855/01	04	2
85817449	851/01	03	18		855/01	05	2
	856/01	03	18	85817531	336/01	01	16
85817450	851/01	03	3		336/01	05	7
	856/01	03	3		725/01	02	21
85817451	851/01	04	17		725/01	03	16
	856/01	04	17	85817532	855/01	01	8
85817453	851/01	01	9	85817534	855/01	01	36
	855/01	01	9	85817536	855/01	02	15
	856/01	01	9	85817556	856/01	03	2
85817456	851/01	02	16		856/01	04	2
	855/01	02	16	85817558	856/01	03	24
	856/01	02	4	85817559	856/01	03	22
85817458	851/01	02	7	85817560	856/01	03	23
	851/01	03	21	85817561	856/01	03	21
	855/01	02	7	85817562	856/01	01	2
	855/01	03	5	85817564	856/01	01	4
	856/01	02	7	85817596	1.82.6/01	01	12
	856/01	03	25		1.82.6/01	02	7
85817459	851/01	01	12	85817622	1.88.11/05A	02	17
	855/01	01	12	85817623	1.88.11/05A	02	18
	856/01	01	12	85817629	724/01	01	16
85817460	851/01	01	25		724/02		16
	855/01	01	25	85817633	724/01	01	15
	856/01	01	25		724/02		15
85817463	851/01	02	3	85817634	724/01	01	13
	855/01	02	3		724/02		20
85817464	851/01	02	4	85817635	724/01	01	14
	855/01	02	4		724/02		19
85817465	851/01	02	15	85817669	331/ B	02	8
	856/01	02	5	85817672	1.75.2	02	5
85817466	851/01	01	15	85817674	698		1
	855/01	01	15	85817685	1.93.7		3
	856/01	01	15	85817686	1.93.7		4
85817469	851/01	01	21	85817697	402	06	9
	855/01	01	21	85817698	402	03	4
	856/01	01	21	85818818	1.91.4	05	3
85817470	851/01	01	18		1.91.4/02	05	3
	855/01	01	18	85818819	1.91.4	05	4
	856/01	01	18		1.91.4/02	05	4
85817471	856/01	01	22	85818820	1.91.4	04	1
85817474	1.82.6	15	9	85818823	1.91.4	05	14
85817476	851/01	01	24	85818826	787/01		3
	855/01	01	24		788/01		3
	856/01	01	24	85818827	787		4
85817477	851/01	01	29		787/01		4
	855/01	01	29		788		4
	856/01	01	29		788/01		4
85817478	851/01	01	13	85818828	787		6
	855/01	01	32		787/01		6
	856/01	01	32		788		6
85817479	851/01	01	31		788/01		6
	855/01	01	31	85818895	1.91.4	05	5
	856/01	01	31	85818909	1.82.6	04	4
85817481	851/01	01	5	85818916	900	02	24
	855/01	01	5	85818940	787		3
	856/01	01	5		788		3
85817482	851/01	02	18	85818943	333	04	6
	855/01	02	18	85819013	1.44.1		18
	855/01	03	18	85819016	1.93.0/02	01	30
	856/01	02	2	85819017	1.92.9	01	15
85817484	851/01	02	6	85819018	1.92.9	01	4
	855/01	02	6	85819040	302	03	9
	856/01	02	6		302	04	13
85817485	851/01	01	8	85819041	1.95.5	02	2
	856/01	01	8	85819058	1.82.6	15	5
85817486	855/01	03	7	85819059	1.82.6	15	6
85817488	855/01	03	25	85819060	1.82.6	13	8
85817489	855/01	03	9	85819061	1.82.6	13	9

Number	Figure	Sequence	Ref.	Number	Figure	Sequence	Ref.
85819062	1.82.6	14	6	85819378	333/01B	02	7
85819063	1.82.6	14	7	85819407	1.93.5/01	01	1
85819064	1.82.6	14	5	85819451	346	05	2
85819065	1.82.6	14	8	85819452	346	05	1
85819072	699		1		347	05	1
85819074	338		3	85819453	346	05	11
85819142	1.91.4	05	7	85819454	1.93.5	01	3
85819144	1.91.4/02	04	5		346	05	7
85819148	302	02	10	85819467	1.88.01	02	1
	302	03	2	85819468	1.88.01	01	10
	302	04	2	85819469	1.88.01	02	2
	331/ B	03	7	85819471	1.88.01	02	3
	331/ B	04	6	85819477	1.88.01	01	12
	331/ B	05	7	85819478	1.88.01	01	13
	331/ B	06	7	85819479	1.88.01	01	14
	331/ B	07	3	85819480	1.88.01	01	17
	331/ B	08	7	85819481	1.88.01	01	15
	331/ B	09	6	85819482	1.88.01	01	5
	331/ B	10	7	85819488	1.88.01	01	8
	331/ B	11	7	85819567	1.93.5	01	2
	331/ B	12	3	85819568	1.91.4	01	3
	333/01B	02	6	85819569	1.91.6		1
85819177	1.95.0	03	1	85819571	700	01	5
85819179	1.88.11/05A	02	12	85819572	700	01	4
85819184	346	01	9	85819586	1.91.4/02	04	2
	347	01	8	85819588	1.91.4/02	04	2
	646	04	5	85819592	1.93.5	01	11
85819185	646	04	16	85819618	724/01	02	10
85819186	1.38.1		8	85819619	724/01	02	1
85819188	1.91.7/02		13	85819620	725		2
	793		2	85819621	725		1
	793/01		2	85819649	336/01	01	1
85819189	1.91.7/02		15	85819684	344	01	1
	793		4	85819721	344	01	5
	793/01		4		721	01	5
85819190	1.91.7/01		3	85819722	336/01	03	13
	1.91.7/02		3		725/01	05	13
85819191	1.91.7/01		9	85819724	1.91.4/02	01	1
	1.91.7/02		9	85819725	1.91.4/02	01	1
85819192	1.91.7/02		16	85819727	1.82.6	13	10
	794		2		1.82.6/01	09	4
	794/01		2	85819728	1.82.6	13	9
85819193	1.91.4	06	6		1.82.6/01	09	9
	1.91.4/02	06	12	85819729	1.82.6	13	11
85819194	1.91.7/01		11		1.82.6/01	09	7
	1.91.7/02		11	85819730	1.82.6	13	8
85819195	1.91.4	06	16		1.82.6/01	09	8
	1.91.4/02	06	22	85819760	835		3
85819196	1.91.7/01		14	85819763	835		3
	1.91.7/02		10	85819765	796		1
85819197	1.91.7/01		10	85819766	796		5
	1.91.7/02		8	85819813	851/01	02	12
85819198	1.91.7/01		12		855/01	02	19
	1.91.7/02		14		856/01	02	15
85819199	1.91.7/01		13	85819814	855/01	05	8
	1.91.7/02		12	85819815	855/01	03	14
85819200	1.91.7/01		2	85819826	1.91.5	01	7
	1.91.7/02		2	85819827	1.91.5	01	1
	793		1	85819914	1.95.0	02	7
	793/01		1	85819915	1.95.0	02	19
	794		1	85819945	336/01	03	1
	794/01		1		344	01	13
85819237	416		1		725/01	05	1
85819285	1.93.0	01	13	85820008	471	02	4
	1.93.0/01	01	13		472	02	4
85819287	1.93.0	02	4		473	02	23
85819289	1.93.5	01	1		474	02	23
85819291	1.93.5	01	1	85820009	471	02	5
85819378	302	03	3		472	02	5
	302	04	3		473	02	22
	331/ B	03	8		474	02	22
	331/ B	04	7	85820011	471	02	7
	331/ B	05	8		472	02	7
	331/ B	06	8		473	02	38
	331/ B	07	4		474	02	38
	331/ B	08	8	85820012	471	02	8
	331/ B	10	8		472	02	8
	331/ B	12	4		473	02	39

Number	Figure	Sequence	Ref.	Number	Figure	Sequence	Ref.
85820012	474	02	39	85820160	1.88.11/07C		21
85820013	471	02	9	85820167	1.89.9/01		1
	472	02	9	85820170	1.89.9/01		8
	473	02	19	85820172	1.89.9/01		6
	474	02	19	85820237	1.91.5	02	10
85820014	471	02	10	85820282	1.95.5	02	6
	472	02	10	85820283	337	01	21
	473	02	12		337	02	21
	474	02	12	85820285	337	01	22
85820015	471	02	11		337	02	22
	472	02	11	85820819	471	01	6
	473	02	20		472	01	2
	474	02	20		473	01	2
85820016	471	02	12		474	01	2
	472	02	12	85820836	392	01	7
	473	02	16	85820844	391		1
	474	02	16	85820908	1.38.1		6
85820017	471	02	13	85820909	1.28.0/ A	06	4
	472	02	13		1.28.0/ B	06	4
	473	02	17		1.38.1		10
	474	02	17	85820912	392	01	2
85820018	471	02	14	85820913	392	02	6
	472	02	14	85820914	1.38.1		9
	473	02	3	85821126	1.88.11/07A		20
	474	02	3		1.88.11/07C		20
85820020	471	02	16	85821127	391		2
	472	02	16	85821131	646	01	13
	473	02	37	85821153	1.91.5	02	1
	474	02	37	85821172	1.95.1		27
85820026	471	02	22	85821173	1.95.1		26
	472	02	22	85821235	331/ B	02	10
	473	02	8	85821236	302	02	9
	474	02	8		331/ B	02	11
85820027	471	02	23	85821268	1.88.01	01	1
	472	02	23	85821270	1.88.01	01	18
	473	02	35	85821271	1.88.01	01	19
	474	02	35	85821273	1.88.01	02	7
85820030	471	02	24	85821277	1.88.01	02	9
	472	02	24	85821278	1.88.01	02	4
	473	02	41	85821279	1.88.01	02	10
	474	02	41	85821316	1.96.2	01	10
85820031	471	02	25	85821326	1.91.4/02	06	9
	472	02	25	85821333	1.91.5	02	11
	473	02	6	85821334	1.91.5	02	13
	474	02	6	85821335	1.91.5	02	3
85820035	471	02	28	85821336	1.91.5	02	9
	472	02	28	85821337	1.91.5	02	2
	473	02	4	85821338	1.91.5	02	8
	474	02	4	85821410	1.91.4	03	6
85820052	471/01		11		1.91.4/02	03	6
85820054	471/01		10	85821418	851/01	01	26
85820056	471/01		12		855/01	01	26
85820064	473	02	32		856/01	01	26
	474	02	32	85821419	851/01	01	23
85820068	473	02	9		855/01	01	23
	474	02	9		856/01	01	23
85820069	473	02	33	85821452	1.28.0/ A	05	15
	474	02	33		1.28.0/ B	05	15
85820105	1.95.5	01	8	85821454	1.28.0/ A	05	16
85820107	1.98.1	09	1		1.28.0/ B	05	16
85820109	1.82.6	13	10	85821514	331	05	7
85820128	331/ B	02	7	85821515	331	05	11
85820129	331/ B	02	9	85821516	331	05	10
85820130	302	03	5	85821520	331	05	12
	302	04	5	85821534	331	09	9
85820136	879		1	85821536	331	04	32
85820138	1.93.4		7	85821537	331	09	6
	284		2		646	04	19
	879		2	85821788	386		5
85820139	1.93.4		8		387		5
	284		1		388		5
85820141	1.96.7/05		12		389		5
85820154	1.38.1		5		390/01		5
85820156	1.75.2	02	4		515/01		5
85820157	1.38.1		2		516/01		5
85820159	1.88.11/07A		22		517/01		5
	1.88.11/07C		22		518/01		5
85820160	1.88.11/07A		23		519/01		5

Number	Figure	Sequence	Ref.	Number	Figure	Sequence	Ref.
85821788	520/01		5	85825254	1.91.4/02	05	6
	521		5		1.91.4/02	06	1
85821916	993	02	4		787		1
85821917	993	01	2		787/01		1
85821918	993	01	4		788		1
85821919	993	01	5		788/01		1
85821920	1.98.0/01		9	85825285	733		7
85821921	993	01	6	85825330	1.91.4	01	2
85821922	993	02	1	85825355	1.82.6	05	7
85821923	1.98.0/01		6		1.82.6/01	06	7
85821924	993	01	1	85825392	1.14.0		2
85821925	993	01	3	85825440	131		1
85821926	1.98.0/01		1	85825465	1.88.12/03		12
85821927	993	02	6	85825468	302	01	2
85821946	993	02	2		302	02	1
85824053	331	02	14		700	03	5
85824054	331	02	15	85825469	302	01	4
85824059	331	02	16		302	04	1
85824067	331	05	1		700	03	7
85824080	331	05	6	85825471	302	04	6
85824081	331	05	8	85825472	302	02	2
85824114	1.95.0	02	2	85825473	333/01B	01	15
85824187	1.29.1		7	85825474	700	03	10
85824196	1.82.3/01		4	85825475	302	01	6
85824204	851/01	02	19	85825477	331/ B	02	13
	855/01	02	12	85825506	1.28.0/ A	06	5
	856/01	02	12		1.28.0/ B	01	23
85824211	437		6		1.28.0/ B	06	5
85824227	1.88.01	01	20		1.28.0/ B	08	20
85824266	733		4	85826020	MPARTS	00	8
85824268	733		9	85826080	1.95.5	02	4
85824281	302	04	11	85826093	1.82.6	02	6
	331/ B	03	9	85826099	1.95.1		29
	331/ B	05	9	85826100	331	08	5
	331/ B	06	9		700	02	5
	331/ B	07	5		725/01	02	5
	331/ B	08	9	85826123	724/01	01	9
	331/ B	10	9		724/02		9
	331/ B	11	9	85826131	803		13
	331/ B	12	5	85826132	803		3
	333/01B	02	8	85826133	803		4
85824282	302	03	8	85826134	803		4
	331/ B	04	8	85826208	321		1
	331/ B	09	8	85826250	331/ B	01	11
85824283	302	03	10		333/01B	01	12
	302	04	14	85826260	990		10
85824308	392	01	10	85826274	338		2
85824339	1.40.0	01	1	85826275	337	02	19
85824345	402	02	9	85826276	337	01	19
85824346	402	01	8	85826339	331/ B	01	7
	402	04	6		331/ B	09	1
85824347	1.40.0	01	16		333/01B	01	8
85824352	1.40.0	02	9	85826340	331/ B	01	10
85824356	548		1		331/ B	12	1
85824381	1.14.6		11		333/01B	01	11
85824393	1.93.5	02	5	85826344	331/ B	03	10
85824397	734		1		331/ B	04	9
85824434	855/01	03	13		331/ B	05	10
85824436	855/01	03	8		331/ B	06	10
85824450	1.91.5	02	12		331/ B	07	6
85824463	1.88.12/03		10		331/ B	08	10
85824469	1.40.0	01	20		331/ B	09	9
85825129	1.91.4/02	06	4		331/ B	10	10
85825136	1.91.4/02	06	19		331/ B	11	10
85825154	1.82.0		29		331/ B	12	6
85825155	1.82.0		30		333/01B	02	9
85825158	1.14.0		7	85826345	331/ B	09	7
85825169	1.82.6	05	3		331/ B	11	8
	1.82.6/01	06	3	85826360	331/ B	01	10
85825177	473	02	15		331/ B	07	1
	474	02	15	85826361	638	04	14
85825188	302	01	1		639	04	15
85825191	1.93.0	01	8	85826382	1.82.0		31
	1.93.0/01	01	8	85826383	1.82.0		32
	1.93.0/02	01	8	85826901	331/ B	01	6
85825198	1.91.4	02	14		331/ B	08	1
	1.91.4/02	02	1		333/01B	01	7
85825254	1.91.4	05	6	85826903	331/ B	01	8

Number	Figure	Sequence	Ref.
85826903	331/ B	10	1
	333/01B	01	9
85826906	321		7
85826924	302	01	5
	700	03	9
85826930	331/ B	01	6
	331/ B	03	1
85826931	331/ B	01	7
	331/ B	04	1
85826932	331/ B	01	8
	331/ B	05	1
85826943	1.29.1		2
85826964	1.75.2	02	14
85826986	1.82.6/01	05	1
85826987	724/01	01	20
	724/02		13
85827041	1.82.6	01	4
	1.82.6/01	01	4
85827067	1.40.0	02	23
	402	03	8
85827068	402	05	10
85827070	402	06	4
85827072	321		3
85827076	331	07	9
85827077	331	07	4
85827078	331	07	11
85827080	331	07	10
85827082	331	07	6
85827084	331	07	1
85827085	331	07	2
85827086	331	07	3
85827087	331	07	5
85827088	331	06	8
	333	02	8
85827089	331	06	4
	333	02	4
85827090	331	06	7
	333	02	7
85827091	331	06	3
	333	02	3
85827092	331	06	5
	333	02	5
85827093	331	06	1
	333	02	1
85827094	331	06	2
	333	02	2
85827095	331	06	6
	333	02	6
85827097	333	02	12
85827100	1.82.6/01	02	15
	1.82.6/01	12	1
85827101	1.82.6/01	12	13
	1.82.6/01	14	13
85827102	1.82.6/01	12	11
	1.82.6/01	13	13
85827128	1.88.11/06A		18
85827416	321		12
85827466	331	07	8
85827467	331	07	7
85827471	333/ A		18
85827472	331/ A		1
85827475	331	08	3
85827476	331	08	1
85827531	331	07	17
85827532	331	07	18
85827533	331	07	16
85827534	331	07	19
85827548	1.91.1/01		6
	1.93.0	01	17
	1.93.0/01	01	17
	1.93.0/02	01	17
85827552	733		3
85827553	733		5
85827725	402	01	1
85827726	402	01	1
85827738	402	01	16
85827739	402	02	2
85827740	402	02	1
85827741	402	06	1
85827764	1.28.0/ A	04	1
	1.28.0/ B	04	1
85827769	1.28.0/ A	01	1
85827770	1.28.0/ A	01	2
85827771	1.28.0/ A	05	7
	1.28.0/ B	05	7
85827772	1.28.0/ A	05	8
	1.28.0/ B	05	8
85827773	1.28.0/ A	05	13
	1.28.0/ B	05	13
85827774	1.28.0/ A	05	14
	1.28.0/ B	05	14
85827776	1.28.0/ A	04	23
	1.28.0/ B	04	23
85827777	1.28.0/ A	04	20
	1.28.0/ B	04	20
85827779	1.28.0/ A	04	8
	1.28.0/ B	04	8
85827782	1.28.0/ B	08	5
85827783	1.28.0/ B	01	2
85827784	1.28.0/ B	01	3
85827787	1.88.11/05A	01	3
85827797	1.28.0/ A	04	6
	1.28.0/ B	04	6
85827798	1.28.0/ A	04	2
	1.28.0/ B	04	2
85827799	1.28.0/ A	04	24
	1.28.0/ B	04	24
85827803	1.28.0/ A	06	9
	1.28.0/ B	06	22
85827817	1.93.0/02	01	19
85827820	394	01	17
85827822	416		5
85827823	1.82.6	04	5
85827824	1.82.6	05	2
	1.82.6/01	06	2
85827830	638	01	5
	639	01	16
85827831	638	01	6
	639	01	17
85827832	1.95.1		1
85827833	1.95.1		8
85827834	1.95.1		32
85827836	1.92.9	03	10
85827850	1.96.2	01	12
85827853	337	02	1
85827861	728	02	11
85827918	851/01	01	10
	855/01	01	10
	856/01	01	10
85827920	855/01	04	3
85827991	331/ A		3
85827992	331/ A		15
	333/ A		15
85827993	331/ A		11
	333/ A		11
	700	01	24
	725/01	02	20
85827994	331/ A		9
	333/ A		9
85827995	331/ A		7
	333/ A		7
85827996	331/ A		6
	333/ A		6
85827997	331/ A		13
	333/ A		13
85827998	331/ A		8
	333/ A		8
85827999	331/ A		4
	333/ A		4
85828000	331/ A		12
	333/ A		12
	700	01	23
	725/01	02	19
85828001	331/ A		14
	333/ A		14
	700	01	25

Number	Figure	Sequence	Ref.
85828001	725/01	02	23
85828002	331/ A		5
	333/ A		5
85828003	331/ A		16
	333/ A		16
85828004	333/ A		3
85828005	331/ A		17
	333/ A		17
85828013	331/ A		18
85828015	333/ A		1
85828017	1.82.0		36
85828069	993	01	1
85828070	993	01	1
85828080	993	02	1
85828081	993	02	1
85828082	993	02	2
85828083	993	02	2
85828084	993	01	6
85828085	993	01	6
85828086	993	01	4
85828087	993	01	4
85828088	993	01	2
85828089	993	01	2
85828090	993	01	5
85828091	993	01	5
85828094	993	02	4
85828095	993	02	4
85828097	993	02	6
85828098	993	02	6
85828107	1.82.0		33
85828196	851/01	01	9
	855/01	01	9
	856/01	01	9
85828211	700	02	6
	725/01	02	6
85828213	1.96.2/01		7
85828216	331	09	1
85828252	1.96.0		2
85828254	1.88.11		9
86021837	1.95.1		12
8603092	995		22
8603095	995		22
8605735	1.14.6		2
86500514	1.98.0/01		3
86505999	1.44.0/ B	01	8
86507337	1.88.11/05A	02	6
86511208	1.88.11/07A		25
	391		9
86511646	1.44.0/ B	01	14
86511845	0.36.0		2
	636	07	2
	638	07	2
	639	07	2
86536749	1.44.0/ B	01	5
86547781	993	02	3
86552793	1.44.0/ B	01	7
86552794	1.44.0/ B	01	7
86576091	1.44.0/ B	02	33
86584272	1.44.0/ B	02	17
86584273	1.44.0/ B	02	11
86592700	1.83.0	02	2
86597537	1.44.0/ B	01	27
86619908	995		7
86624194	638	03	4
	639	03	4
86625073	331	04	28
86625128	331/ C	01	12
	331/ C	02	13
86625199	331	04	13
86632588	1.44.0/ B	01	30
	1.44.0/ B	02	31
86642312	902	03	22
86982435	901	04	14
	902	03	14
86982442	900	11	3
86982444	514	04	2
	900	09	11
	900	10	2
86982960	638	03	3
	639	03	3
86982962	638	03	8
	639	03	8
86983163	638	03	9
	639	03	9
86984549	331	05	9
86985587	1.14.0		9
86988086	095		1
	096		1
	331	09	7
86989616	331	05	5
86989733	MPARTS	00	4
	1.82.6	06	4
	1.82.6/01	05	4
86990460	331	03	1
86990712	1.28.0		3
86990713	1.28.0		4
86992395	0.36.0		1
	636	07	1
	638	07	1
	639	07	1
86993546	1.28.0/ A	01	22
	1.28.0/ B	01	1
86994498	638	03	2
	639	03	2
86999310	331	05	14
87000312	331/ C	01	16
	331/ C	02	17
	333/ C	01	16
	333/ C	02	16
87015745	1.83.0	01	11
87016893	638	02	10
	638	05	10
	639	02	10
	639	05	10
87017743	1.39.8		8
87017744	1.39.8		7
87019767	1.28.0		16
	1.28.0/ A	01	8
	1.28.0/ B	01	26
87021704	1.28.0		6
87022296	331	04	16
87030508	1.15.0	01	17
87037944	331/ C	01	4
	331/ C	02	4
	333/ C	01	4
	333/ C	02	4
87302151	1.21.5		26
87302508	638	01	8
	639	01	8
87302554	995		8
87302607	336/01	03	14
87302608	336/01	03	3
	725/01	05	3
87302609	336/01	03	2
	725/01	05	2
87302611	336/01	03	12
	725/01	05	12
87302705	1.95.0	02	20
87302715	803		11
87302760	1.44.0/ B	02	7
87302761	1.44.0/ B	02	8
87302831	803		8
87302958	1.88.01	01	11
87302959	1.88.01	02	6
87302960	1.88.01	02	5
87302961	1.88.01	02	12
87302965	1.88.01	01	16
87302967	1.88.01	02	8
87303261	1.91.3		1
87303400	700	02	9
87303401	700	02	8
87303780	1.87.8		1
87303909	1.88.11/03		12
87303910	337	01	13
	901	04	6
	902	03	6

Number	Figure	Sequence	Ref.
87303912	1.88.11/07A		9
	1.88.11/07C		9
	337	02	11
	900	07	6
87304344	1.44.0/ B	02	1
87304345	1.44.0/ B	02	1
87304810	1.92.6	03	1
87304842	1.88.12/03		24
87304910	646	02	11
87305111	700	01	15
	700	03	1
87305209	700	01	18
	725/01	02	13
87305211	700	02	7
87305413	331	04	26
	993	02	5
87305604	331	09	3
87305611	331	09	2
87305713	1.44.0/ B	02	5
87305953	331	04	26
87306186	333	02	13
87306929	402	06	3
87306930	402	06	7
87306932	402	01	6
87306933	402	06	8
87306934	402	02	21
87307656	331	04	11
87307807	0.06.3/01	02	3
87308018	1.44.0/ B	02	4
87308614	471	02	2
	472	02	2
	473	02	24
	474	02	24
87308749	331/ B	02	12
87308838	331/ C	01	8
	331/ C	02	8
	333/ C	01	8
	333/ C	02	8
87308839	331/ C	01	10
	331/ C	02	10
	333/ C	01	10
	333/ C	02	10
87309923	331	04	1
87309924	331	04	2
87310085	331	04	17
87310098	331	04	22
87310155	638	02	7
	639	02	7
87310285	1.88.08	01	16
87310286	471	02	15
	472	02	15
	473	02	36
	474	02	36
87310354	471	02	27
	472	02	27
	473	02	2
	474	02	2
87310367	473	02	13
	474	02	13
87310368	473	02	11
	474	02	11
87310369	473	02	14
	474	02	14
87310370	473	02	34
	474	02	34
87310372	473	02	10
	474	02	10
87310373	473	02	43
	474	02	43
87310374	473	02	44
	474	02	44
87310375	473	02	26
	474	02	26
87310434	471	02	26
	472	02	26
	473	02	1
	474	02	1
87310951	724/01	02	5
87310952	724/01	02	9
87310961	900	02	21
87311102	302	01	7
	390		3
87311103	302	01	7
	390		3
87311154	1.38.1		7
87311302	302	01	13
87311303	302	01	14
87311306	302	01	13
87311363	700	01	21
	725/01	02	17
87311836	302	01	16
87311838	302	01	16
87312027	1.88.12/03A		15
87312328	471	02	3
	472	02	3
	473	02	21
	474	02	21
87312330	471	02	6
	472	02	6
	473	02	40
	474	02	40
87312331	471	02	17
	472	02	17
	473	02	5
	474	02	5
87312333	471	02	21
	472	02	21
	473	02	25
	474	02	25
87312335	471	02	31
	472	02	31
	473	02	30
	474	02	30
87312340	471	02	18
	472	02	18
	473	02	28
	474	02	28
87312342	471	02	19
	472	02	19
	473	02	27
	474	02	27
87312343	471	02	20
	472	02	20
	473	02	31
	474	02	31
87313720	901	04	13
87313722	901	04	8
87313729	855/01	05	3
87313813	1.92.4	02	2
87313966	1.44.0/ B	01	19
	1.44.0/ B	02	2
87314076	1.39.8		3
	638	01	9
	639	01	9
87314211	1.44.0/ B	01	4
	1.44.0/ B	02	32
87314277	902	03	13
87314278	902	03	8
87314323	346	01	1
	347	01	1
87314330	346	01	7
	347	01	7
87314350	346	01	8
87314351	346	01	12
87314353	346	01	17
87314355	346	01	20
	347	01	5
87314357	346	01	18
87314367	MPARTS	00	7
	346	01	10
	347	01	10
87314369	346	02	5
87314518	346	01	16
87314520	346	01	14
87314524	346	02	12
87314526	346	03	3

Number	Figure	Sequence	Ref.
87314527	346	02	4
	347	02	4
87314554	346	03	6
	347	03	6
87314566	646	04	13
87314726	346	03	1
	347	03	1
87314729	346	03	10
	347	03	7
87314730	346	01	5
87314743	346	04	1
	347	04	1
87314747	346	04	2
	347	04	2
87314749	346	04	3
	347	04	3
87314750	346	04	4
87314751	346	04	14
87314753	346	04	6
	347	04	6
87314767	346	05	17
87314769	346	05	18
	347	05	3
	347	05	6
87314771	346	05	3
87314772	346	05	4
87314773	346	05	5
87314946	346	05	8
87314947	346	05	9
87314948	346	05	10
87315029	346	01	11
	347	01	13
87315236	646	04	11
87315239	646	04	12
87315241	646	04	14
87315252	646	04	4
87315364	646	01	1
87315368	646	01	2
87315371	646	01	3
87315381	646	01	4
87315438	1.82.6	06	3
	1.82.6/01	05	3
87315441	646	02	13
87315446	646	02	14
87315457	646	02	15
87315459	646	02	16
87315460	646	02	17
87315521	1.88.11/02	01	1
87315525	1.88.11/01		1
87315528	1.88.11/06A		1
87315529	1.88.11/09	02	1
	1.88.11/09A		8
87315628	1.87.2		13
87315641	1.87.2		1
87315643	1.87.2		2
87316091	725/01	02	9
87316092	725/01	02	7
87316096	725/01	02	8
87316439	347	01	9
87316442	347	04	5
87316443	347	04	4
87316861	391		3
87318746	1.91.4/02	03	2
87318747	346	03	4
	347	03	4
87318749	1.91.4	03	2
87318750	346	03	5
	347	03	5
87318763	347	06	2
87319018	347	06	1
87319437	346	05	15
	347	05	4
87319443	346	05	21
	347	05	8
87319445	725/01	03	21
87319448	346	05	6
87319727	1.94.0/01		7
87319744	394	01	17
87319754	1.96.7/06		9
87319785	1.93.0	01	6
	1.93.0/01	01	6
87319801	1.93.0	04	1
87319803	1.93.0	04	12
	1.93.0/01	02	12
87323749	1.93.0	04	16
	1.93.0/01	02	8
87324469	646	01	16
87324490	1.95.2		1
87324496	1.95.2		6
87324535	1.95.2		1
87324864	650		1
87324991	1.94.2		1
87326170	1.44.0/ B	02	19
87326256	725/01	03	1
87326257	725/01	06	1
87326258	725/01	04	17
	725/01	06	11
87327044	725/01	06	2
87327046	725/01	06	7
87327049	725/01	06	4
87327052	725/01	06	5
87327053	725/01	06	3
87327057	725/01	06	6
87327076	336/01	01	10
	725/01	03	22
87327251	901	04	2
87327252	902	03	2
87327259	901	04	1
87327264	902	03	1
87327632	725/01	04	16
87331094	721	01	1
	727/01		12
87331276	721	01	15
87334836	1.44.0/ B	01	29
	1.44.0/ B	02	30
87334860	346	04	8
	347	04	8
87334861	346	04	9
	347	04	9
87340008	638	06	5
	639	06	6
87341088	333/01B	02	4
87342131	901	04	3
	902	03	3
87345955	1.39.8		6
87346213	1.98.1	09	11
87346382	1.98.1	09	11
87346911	700	03	8
87348000	1.44.0/ B	01	16
87348002	803		5
87348165	1.89.9/01		4
87349055	1.94.0/01		1
87349058	1.94.0/01		1
87349851	331	04	27
87350247	1.94.0/01		4
87350477	1.82.6	12	1
87351460	1.82.6	12	1
87353314	392	02	3
87353316	392	01	5
87353724	1.92.4	01	11
87353741	1.14.0		12
	1.82.0		38
87354650	1.92.2		1
87354652	1.92.2		2
87355226	1.14.0		1
87356499	1.82.6	12	5
87356501	1.82.6	12	6
87357715	724/ A		7
	724/01	01	2
	724/02		2
	728	03	7
87358140	346	01	4
	347	01	4
87358141	346	01	13
	347	01	11
87358142	346	03	11

Number	Figure	Sequence	Ref.
87358193	728	03	2
87358194	724/ A		4
	728	03	4
87358196	728	03	3
87358201	724/ A		3
87358348	346	03	2
	346	04	7
	347	04	7
87358349	346	04	10
	347	04	10
87358808	437		7
87358815	437		1
87358817	437		8
87358818	437		9
87360424	1.95.5	01	1
	1.95.5/ A	01	1
87361461	1.82.6	12	7
87362065	346	05	13
	347	05	2
87362068	346	01	3
	346	05	12
	347	05	11
87362094	1.93.0	03	5
87362098	1.93.0	03	5
87362336	1.82.3/01		1
87363478	1.88.08	01	9
87364220	851/01	02	17
	855/01	02	17
	856/01	02	3
87364221	851/01	02	17
	855/01	02	17
	856/01	02	3
87368320	638	05	2
	639	05	2
87371811	1.82.6	12	1
87371906	1.91.4	04	5
	1.91.4/02	04	9
87371907	1.91.4	04	4
	1.91.4/02	04	10
87376137	1.82.6	12	10
87376297	1.83.0	06	1
87381987	900	11	10
87381990	900	11	6
87382007	514	01	4
	900	01	4
	900	11	18
	901	01	4
	902	01	4
87382083	514	01	3
	514	04	1
	902	01	3
87382086	514	04	19
87382089	514	04	15
	900	10	15
87382092	514	04	21
87382109	700	01	19
87382112	700	01	19
	725/01	02	11
87382188	514	04	4
87382189	514	04	10
87382190	514	04	3
87382191	514	04	11
87385465	1.83.0	05	1
87386551	437		10
87387139	1.98.0/01		8
87390511	1.88.11/03		3
	1.88.11/07A		16
	1.88.11/07C		16
87390514	1.88.11/03		2
	1.88.11/07A		10
	1.88.11/07C		10
87390530	724/01	01	17
	724/02		17
87390531	724/01	01	12
	724/02		10
87390534	1.88.11/07A		14
	1.88.11/07C		14
87392509	901	02	17
87392509	902	02	17
87392513	901	02	16
	902	02	27
87392516	901	02	27
	902	02	16
87395481	471	02	32
	472	02	32
	473	02	29
	474	02	29
87395482	471	02	29
	472	02	29
	473	02	42
	474	02	42
87395486	473	02	46
	474	02	46
87395582	851/01	01	17
	855/01	01	17
	856/01	01	17
87395588	851/01	02	14
	855/01	02	14
	856/01	02	14
87396450	855/01	04	16
87396492	1.92.4	01	2
87396515	1.92.4	01	2
87396525	1.92.4	02	11
87396528	1.92.4	02	11
87398198	1.95.0	02	1
	1.95.0/ A		1
87400114	1.28.0/ A	01	11
	1.28.0/ B	01	14
87401111	096		3
87402306	331	03	5
87402623	900	09	16
87402742	1.88.11/01		6
87403241	1.82.0		16
87403649	514	04	5
87403672	1.14.6		12
87404427	638	04	13
	639	04	13
87405018	131		8
	321		13
87405628	1.28.0		21
87405629	1.28.0		13
87405706	331	02	18
87405859	1.88.11/01		21
87406299	1.82.0		39
87406750	1.88.11/02	01	17
87406921	1.88.11/06A		11
87406934	1.28.0/ A	01	23
	1.28.0/ B	01	6
87407206	1.75.2	04	3
87407272	638	02	8
	639	02	8
87407275	638	05	1
	639	05	1
87407463	1.82.0		3
87407464	1.82.0		4
87407465	1.82.0		5
87407758	1.28.0		1
87407927	1.96.2	01	11
	1.96.2/01		6
87407928	1.82.0		12
87408277	1.96.7/06		8
87408479	1.28.6		1
87408557	1.28.6		2
87408633	1.88.11/02	01	18
87408634	1.88.11/01		14
87408635	1.88.11/06A		13
87408636	1.88.11/09	02	12
87408893	1.93.0	04	15
	1.93.0/01	02	7
87409201	1.28.0/ A	01	24
	1.28.0/ B	01	12
87409315	1.91.4/02	06	21
87409316	1.75.2	02	7
	1.91.4	06	23
87410099	638	02	11
	639	02	11

Number	Figure	Sequence	Ref.	Number	Figure	Sequence	Ref.
87410105	331	04	8	87428020	1.88.11/02	01	4
87410108	1.93.0/01	02	6	87428023	331/ C	01	3
87410268	1.75.2	04	7		331/ C	02	3
87410385	1.93.0/01	02	1		333/ C	01	3
87410602	995		12		333/ C	02	3
87410647	1.28.0		8	87428627	1.88.11/02	01	13
	638	05	9	87428628	1.88.11/01		25
	639	05	9	87428630	1.88.11/06A		15
87410724	638	03	5	87428631	1.88.11/09	02	11
	639	03	5	87430028	331	05	3
87412400	1.88.11/06A		4	87431300	331	04	29
87414332	1.88.11/02	01	16	87431301	331	04	14
87414333	1.88.11/01		22	87431461	1.91.4/02	03	2
87414334	1.88.11/06A		12	87431469	1.91.4	03	3
87414335	1.88.11/09	02	13		1.91.4/02	03	3
87414340	1.88.11/02	01	14	87433032	1.88.11/09	02	22
87414341	1.88.11/01		23	87433514	331	04	23
87414342	1.88.11/06A		10	87433515	331	04	24
87414343	1.88.11/09	02	25	87433890	1.91.4	03	1
87414560	1.14.6		6		1.91.4/02	04	1
87414964	1.88.11/02	01	12	87433891	1.91.4	03	1
87414965	1.88.11/02	01	11		1.91.4/02	04	1
87414966	1.88.11/01		18	87434992	331	02	1
	1.88.11/09	02	21	87435242	333/ C	02	7
87414969	1.88.11/01		15	87435243	331/ C	02	11
	1.88.11/09	02	23	87435372	331	04	9
87414970	1.88.11/01		17	87435381	095		2
	1.88.11/09	02	16		096		2
87414971	1.88.11/06A		6		331	09	8
87414974	1.88.11/06A		5	87435506	331/ C	01	14
87414975	1.88.11/06A		7		331/ C	02	15
87414983	1.82.6	06	1		333/ C	01	14
87415115	1.88.11/02	01	10		333/ C	02	14
87415116	1.88.11/01		19	87436225	331/ C	01	2
87415208	1.75.2	04	9		331/ C	02	2
87415774	638	06	2		333/ C	01	2
	639	06	2		333/ C	02	2
87415781	321		8	87437366	331	04	5
87415930	1.98.1	09	12	87437369	331	04	6
87416929	131		2	87437371	333/ C	01	19
87416966	638	05	3		333/ C	02	6
	639	05	3	87437372	331/ C	02	12
87416967	1.28.0		10	87437688	331	04	4
87417207	1.82.0		7	87437689	331	04	3
87418368	331	04	20	87437804	1.15.0	02	3
87418369	331	04	21	87438046	331/ C	01	15
87419454	1.96.2/01		1		331/ C	02	16
87419455	1.96.2/01		1		333/ C	01	15
87421143	1.88.11/02	01	15		333/ C	02	15
87421144	1.88.11/01		20	87440396	1.88.11/02	01	20
87421145	1.88.11/06A		9	87440401	1.88.11/01		16
87421149	1.88.11/09	02	20	87440410	1.88.11/06A		8
87421909	331	04	25	87440497	638	01	2
87422777	636	08	1		639	01	4
	638	08	1	87440498	638	01	4
	639	08	1		639	01	7
87422783	1.88.11/09	02	2	87440499	638	01	11
87423802	331	04	7		639	01	10
87423812	331	04	33	87442378	1.93.0/03		5
87424195	1.88.11/02	01	19	87442379	1.93.0/03		4
87424196	1.88.11/01		4	87443692	331	05	4
87424267	331/ C	01	13	87443721	331/ C	01	5
	331/ C	02	14		331/ C	02	5
	333/ C	01	13		333/ C	01	5
	333/ C	02	13		333/ C	02	5
87424838	1.88.11/09	02	10	87445307	1.88.11/09	02	26
87424935	1.88.11/09	02	28	87445758	1.88.11/09	02	27
87425225	331	03	4	87447132	1.29.1		9
87426546	1.93.0/01	02	13	87448432	393		
	1.93.0/03		6		394/01	01	
87426550	1.93.0/01	02	14	87449373	1.82.6	12	8
	1.93.0/03		7	87452511	331	04	19
87426960	331	02	3	87453110	331	02	17
87427004	331	02	2	87453116	331	02	4
87427925	1.75.2	02	12	87453117	331	02	5
87428011	1.88.11/06A		14	87453118	331	02	12
87428014	1.88.11/09	02	9	87455335	1.88.11/09	02	24
87428020	1.88.11/01		24	87473026	1.15.0	01	8

Number	Figure	Sequence	Ref.
87473167	1.83.0	01	1
87473250	1.15.0	01	9
87474192	1.15.0	01	1
87477173	1.83.0	05	6
87516888	1.82.6	02	7
87517471	1.93.0	01	19
	1.93.0/01	01	19
87517988	1.95.0	01	9
87518902	1.95.3		5
87521741	787		2
	787/01		2
87521757	1.91.4	05	2
	1.91.4/02	05	2
87521822	788		2
	788/01		2
87527167	1.91.4	05	12
	1.91.4/02	05	5
87528964	1.95.3		4
87528978	638	02	4
	639	02	4
87529531	321		11
87530041	993	01	7
87530241	1.82.3/01		3
87530709	900	09	14
87530710	900	09	15
87536826	1.91.4	05	8
	1.91.4/02	05	8
87536827	1.91.4	05	9
	1.91.4/02	05	9
87539792	1.91.4	05	13
87540632	1.91.4	05	1
	1.91.4/02	05	1
87540633	1.93.0	01	20
	1.93.0/01	01	20
	1.93.0/02	01	26
87542345	1.44.0/ B	02	6
87542348	1.44.0/ B	02	9
87542350	1.44.0/ B	02	9
87542398	1.44.0/ B	01	1
87543600	1.93.0	01	1
87543654	1.93.0/01	01	1
87543716	1.93.0/02	01	1
87544169	1.75.2	01	1
87546419	1.91.4	01	1
	1.91.4/02	01	2
87546922	331/ C	01	17
	333/ C	01	18
87547309	331/ C	01	11
	333/ C	01	17
87548192	638	03	1
	639	03	1
87550456	1.91.4	05	11
87550746	1.94.2		3
87551537	1.93.5	02	13
	1.93.5/01	02	8
87552124	1.91.4	02	2
87552125	1.91.4	02	13
	1.91.4/02	02	13
87552126	1.91.4	03	2
87552128	1.91.4	06	6
	1.91.4/02	06	12
87552416	1.38.1		4
87552418	1.38.1		1
87552670	1.93.5	02	5
	1.93.5/01	02	5
87553661	1.94.2		2
87554030	638	03	7
	639	03	7
87554286	1.91.4/02	03	2
87554901	1.91.4/02	02	2
87557215	473	02	7
	474	02	7
87557803	1.91.4	05	10
	1.91.4/02	05	10
87558491	1.91.4/02	05	7
87558567	302	01	3
	302	03	1
	700	03	6
87558574	333/01B	01	6
	333/01B	02	1
87558870	302	03	6
87559274	638	04	5
	639	04	5
87559628	638	04	4
	639	04	4
87560586	650		2
87560589	650		3
87561489	638	03	6
	639	03	6
87562089	1.75.2	04	13
87563601	1.14.6		8
	1.14.6/ A		1
87564241	1.75.2	04	1
87564242	1.75.2	01	1
87565124	1.75.2	04	4
87565305	900	08	3
87565311	646	01	3
87565319	646	01	4
87565321	646	02	13
87565322	646	02	14
87565326	646	02	15
87565328	646	02	11
87565346	646	02	17
87567355	1.75.2	04	15
87567356	1.75.2	04	14
	1.94.2		7
87567413	131		9
87567694	346	04	4
87568472	321		4
87569316	646	04	20
87569583	1.82.6	03	5
	1.82.6/01	03	5
87569589	1.87.8		7
87570395	638	04	17
87570398	638	04	16
87571508	995		9
87571509	995		10
87571511	995		11
87571512	995		19
87571513	995		13
87571706	1.14.6		4
87573078	331	09	3
87573079	331	09	2
87573550	471	02	30
	472	02	30
87573552	473	02	45
	474	02	45
87573731	638	04	1
	639	04	1
87573861	471	02	1
	471/01		1
	472	02	1
	473	02	18
	474	02	18
87573868	471/01		9
87574080	471/01		3
87574092	471/01		4
87574097	471/01		7
87574098	471/01		8
87574099	471/01		6
87574189	1.82.0		26
87574479	1.82.6/01	04	3
87574523	471/01		2
87574524	471/01		5
87575394	1.88.08	01	7
87575966	1.98.0/01		10
87576064	514	01	1
	900	01	1
	900	02	1
	901	01	1
	902	01	1
87576855	856		1
	856/01	01	1
	856/01	02	1
	856/01	03	1
	856/01	04	1

Number	Figure	Sequence	Ref.
87576856	856		1
	856/01	01	1
	856/01	02	1
	856/01	03	1
	856/01	04	1
87576858	851		1
	851/01	01	1
	851/01	02	1
	851/01	03	1
	851/01	04	1
87576859	851		1
	851/01	01	1
	851/01	02	1
	851/01	03	1
	851/01	04	1
87576861	855		1
	855/01	01	1
	855/01	02	1
	855/01	03	1
	855/01	04	1
	855/01	05	1
87576862	855		1
	855/01	01	1
	855/01	02	1
	855/01	03	1
	855/01	04	1
	855/01	05	1
87576863	856		2
	856/01	01	1
	856/01	02	1
	856/01	03	1
	856/01	04	1
87576865	856		2
	856/01	01	1
	856/01	02	1
	856/01	03	1
	856/01	04	1
87576866	851		2
	851/01	01	1
	851/01	02	1
	851/01	03	1
	851/01	04	1
87576867	851		2
	851/01	01	1
	851/01	02	1
	851/01	03	1
	851/01	04	1
87576868	855		2
	855/01	01	1
	855/01	02	1
	855/01	03	1
	855/01	04	1
	855/01	05	1
87576869	855		2
	855/01	01	1
	855/01	02	1
	855/01	03	1
	855/01	04	1
	855/01	05	1
87577194	993	02	8
87577246	1.82.0		1
87577359	514	02	5
	900	03	5
	901	02	28
	902	02	29
87581010	993	01	8
87581125	900	11	7
87582179	0.08.2/01		4
87582180	0.08.2/01		4
87583485	901	02	25
87583496	901	02	26
87583508	901	02	4
	902	02	4
87583510	902	02	25
87583516	902	02	26
87587692	0.02.1/01		1
87589234	096		4
87589579	900	04	3
87589951	1.39.8		13
87590894	1.39.8		1
87590903	900	02	3
87591241	1.39.8		2
87591981	900	10	19
87591991	900	10	18
87591992	900	10	4
87592386	900	01	5
	900	03	1
87592724	1.39.8		10
87592822	1.39.8		11
87593493	514	01	5
	514	02	3
87594196	514	02	1
	900	03	4
87594954	900	01	3
	900	10	1
	901	01	3
87596072	1.88.08	02	17
87596086	1.98.0/01		11
87596087	1.98.0/01		12
87596089	993	01	8
87596091	993	01	8
87597003	1.88.08	02	16
87597471	900	09	20
87597479	900	09	2
87597480	900	09	6
87597481	900	09	13
87597482	900	09	4
87597583	900	01	2
	900	09	1
	901	01	2
87597631	175		2
	176		3
87598240	514	03	17
87598244	514	03	2
	900	10	3
87598245	514	03	6
	900	10	11
87598246	514	03	13
87598247	514	03	11
87598248	514	03	12
87598703	902	01	5
	902	02	1
87600615	1.91.4	02	18
	1.91.4/02	02	14
87600654	514	03	5
	900	09	5
87601605	1.91.4/02	04	2
87601608	1.91.4	04	1
87603835	1.83.0	02	13
87607670	519/01		6
87607818	386		6
87607821	387		6
87607824	388		6
87607825	389		6
87607827	390/01		6
87607837	517/01		6
87608143	993	01	7
87608145	993	01	7
87609028	518/01		6
87609039	1.14.6		5
87609121	516/01		6
87609138	1.91.4/02	02	2
87609145	1.91.4	02	2
87609146	1.91.4	02	13
	1.91.4/02	02	13
87609344	515/01		6
87609724	1.98.1	09	7
87610539	333	05	5
	721	05	7
87610565	333	05	6
	721	04	6
87610829	1.88.08	02	14
87610834	1.88.08	02	14
87610858	331/ B	01	5
	331/ B	02	1
	333/01B	01	5

Number	Figure	Sequence	Ref.
87612469	1.14.6/ A		6
87612472	1.14.6/ A		2
87612475	1.14.6/ A		7
87612722	1.39.8		12
87613060	851/01	01	2
	855/01	01	2
87613073	851/01	01	3
87613074	851/01	01	4
	855/01	01	4
87613075	851/01	01	22
	855/01	01	22
	856/01	01	33
87613157	514	01	2
	514	03	20
	902	01	2
87613577	856/01	01	3
87613623	1.83.0	02	17
	1.83.0	04	1
87613641	1.75.2	02	8
87613718	855/01	01	3
87613742	855/01	03	20
87614614	900	05	2
87614627	333	05	2
	721	05	2
87614628	900	05	1
87614629	333	05	1
	721	05	1
87614694	1.83.0	01	9
87614751	1.82.6	02	5
87614752	1.82.6/01	02	4
	728	01	4
87614753	1.82.6	01	9
87615417	993	02	8
87615421	993	02	7
87615422	993	02	7
87615424	993	02	7
87615425	993	02	7
87615426	993	02	7
87615608	855/01	03	17
87615611	855/01	04	5
87615734	333	04	12
	721	04	12
87616236	724/01	02	8
87617261	346	03	8
	347	03	2
87617945	333	04	1
	721	04	1
87618259	347	01	3
87618261	346	01	19
87618272	346	01	6
	347	01	6
87618524	1.15.0	01	1
87619484	1.82.6	15	6
	1.82.6/01	10	6
87619495	1.82.6	14	5
	1.82.6/01	10	14
87619496	1.82.6	14	7
	1.82.6/01	10	7
87619499	728	01	3
87619504	1.82.6/01	07	2
	1.82.6/01	08	4
87619505	1.82.6/01	07	1
	1.82.6/01	08	5
87619506	333	04	4
	721	04	4
87619507	1.82.6	11	3
87619508	1.82.6	10	1
87619509	1.82.6	11	2
87619510	1.82.6	10	2
87619511	901	03	7
87619512	900	05	10
87621518	333	04	2
	721	04	2
87621906	728	01	4
87621907	1.82.6	15	5
	1.82.6/01	10	5
87621908	1.82.6	14	6
	1.82.6/01	10	9
87621910	1.82.6/01	02	8
87621911	901	03	6
87621912	1.82.6/01	01	9
87621913	728	01	5
87621914	900	05	4
87621920	1.82.6	14	8
87622842	724/01	02	2
87624517	724/01	02	12
87624533	900	07	1
87624743	1.83.0	03	6
87624744	1.83.0	03	7
87624745	1.83.0	03	10
87624746	638	01	3
	639	01	3
87626855	1.21.5		1
87628768	1.91.5	01	4
87628806	1.91.5	01	8
87629471	724/01	02	13
87630383	646	04	10
87630384	646	04	7
87630386	646	04	9
87630711	724/01	02	11
87630900	1.88.11		1
87631460	1.82.6	16	7
	1.82.6/01	11	7
87631462	1.82.6	02	15
	1.82.6/01	02	19
87631531	1.82.6/01	10	8
87631623	MPARTS	00	5
	1.19.1		13
87631625	MPARTS	00	6
	1.19.1		14
87631670	1.19.1		15
87631830	290		1
87631832	291		1
87631834	291		1
87632691	1.83.0	01	4
87636291	1.75.2	04	2
87636395	901	03	6
87636396	901	03	7
87636546	1.83.0	02	4
87636636	900	06	1
87636637	900	06	2
87637579	1.19.1		1
87638572	437		3
87638573	437		12
87638574	721	03	7
87638575	333	03	1
87638778	1.14.6		3
87639182	1.15.0	01	2
87639183	1.19.1		3
87639619	901	01	5
	901	02	1
87640751	1.91.4	03	5
	1.91.4/02	03	5
87641276	1.87.2		12
87643906	1.83.0	02	16
87643908	1.83.0	02	11
87643911	1.83.0	06	2
87643912	1.83.0	06	3
87643913	1.83.0	06	4
87646126	646	04	8
87646222	900	11	17
87646604	390		1
	725/01	02	22
87646646	302	01	11
	700	01	14
87647474	1.19.1		10
87647609	1.19.1		11
87647914	392	01	8
87648323	900	11	19
87648324	900	11	2
87648638	392	01	12
87648639	392	02	11
87651689	1.14.6		10
87652764	346	05	23
	347	05	12
87652770	346	05	19

Number	Figure	Sequence	Ref.	Number	Figure	Sequence	Ref.
87652770	347	05	10	87685957	333/ C	01	1
87652862	1.83.0	02	15		335		4
87653086	1.83.0	06	2	87686869	1.83.0	05	4
87653101	1.91.4	04	6	87687141	331/ C	01	18
	1.91.4/02	04	8		331/ C	02	18
87653220	1.83.0	06	3		333/ C	01	20
87653297	1.98.1	08	1		333/ C	02	17
87654073	1.83.0	02	5	87687399	1.83.0	03	9
87654842	514	03	16	87687644	1.98.1	09	6
87654843	900	09	17	87689317	1.91.4	06	5
87654844	514	04	14		1.91.4/02	06	5
87654845	900	10	14	87691652	1.98.1	09	8
87658926	1.15.0	01	3	87694197	1.83.0	03	2
87659514	521		6	87696662	1.83.0	02	10
87661002	520/01		6		1.83.0	05	2
87663635	83.00	01	1	87701340	1.98.1	09	5
87664294	83.00	01	1	87701725	1.19.1		2
87664399	82.00	01	1	87702352	1.14.0		10
87664439	83.00	01	1		1.82.0		15
87664534	82.00	01	1	87729596	888		3
87664555	83.00	01	1	87729597	888		4
87665407	1.93.4		4	87729598	888		1
87669736	1.83.0	06	4	87729599	888		2
87669785	1.83.0	05	3	87729600	888		7
87669786	1.83.0	01	3	87729601	888		8
	1.83.0	03	1	87729602	888		5
87670081	638	02	12	87729603	888		6
	639	02	12	87729606	888		11
87673011	1.83.0	02	7	87729607	888		12
87673334	638	02	3	87729608	888		9
	639	02	3	87729609	888		10
87673335	638	02	1	87734093	331	01	1
	639	02	1		331/ B	01	1
87673338	638	01	16	87734101	331	01	1
	639	01	12		331/ B	01	1
87673339	638	01	17	87734106	333	01	2
	639	01	13		333/01B	01	1
87673346	638	02	5		335		1
	639	02	5	87734107	333	01	1
87673347	638	02	2		335		2
	639	02	2	87734721	302	02	8
87673905	1.15.0	02	1	87735363	302	03	7
87673972	1.40.0	02	2		302	04	7
87673991	1.40.0	02	1	87739122	700	01	22
87674137	1.98.1	09	10		725/01	02	18
87675597	638	02	6	87739689	700	01	20
	639	02	6		725/01	02	15
87676333	1.82.6	01	1	87739987	700	01	2
	1.82.6/01	01	1	87739988	700	01	2
87677466	724/ A		1		725/01	02	10
	724/01	01	1	87741687	1.83.0	02	1
	724/02		1	87742983	1.83.0	03	4
87677506	728	01	8	87743160	1.93.0/01	01	1
	728	03	1	87743161	1.93.0	01	1
87677533	733		1	87743162	1.93.0/02	01	1
87677538	733		13	87745631	1.93.0/02	01	1
87677542	733		6	87747362	900	02	26
87677544	733		8	87748117	1.83.0	02	18
87677546	733		11		1.83.0	05	2
87683149	638	02	9	87749354	1.28.0		5
	639	02	9	87749355	1.28.0		5
87683904	900	05	3	87750941	1.19.1		4
87683905	900	05	5	87758451	331/ B	01	9
87684507	900	06	8		331/ B	11	1
87684508	900	06	8		333/01B	01	10
87684509	900	06	3	87758454	331/ B	01	9
87684511	900	06	3		331/ B	06	1
87685948	331	01	4	87802964	1.98.1	09	9
	331/ C	02	1	87803192	MPARTS	00	1
	333	01	5	87803197	MPARTS	00	1
	335		5		0.20.0/01		6
87685954	331	01	2	87803260	MPARTS	00	3
87685955	333	01	4		0.30.2		1
	333/ C	02	1	87803444	MPARTS	00	2
	335		3		1.14.6/ A		4
87685956	331	01	3	87840170	1.14.6/ A		5
	331/ C	01	1	87840171	1.14.6/ A		3
87685957	333	01	3	87840173	1.14.6/ A		10

Number	Figure	Sequence	Ref.	Number	Figure	Sequence	Ref.
87840177	1.14.6/ A		8	9967673	1.40.0	01	19
87840178	1.14.6/ A		9	9967678	1.40.0	01	23
895-11010	1.82.6	12	9	9967679	1.40.0	01	24
896-11010	636	08	3	9967681	402	01	12
	638	08	3	9967682	402	01	13
	639	08	3	9967683	1.40.0	01	26
89617873	1.82.6	03	9		402	01	15
	1.82.6	04	15	9967687	1.40.0	02	21
	1.82.6/01	03	9		402	03	2
89626929	336/01	01	20	9967734	402	05	9
	336/01	05	15	9967736	402	05	4
	725/01	03	20	9967739	402	05	5
89706729	1.44.0/ B	01	28	9967740	402	05	6
89824050	1.82.6	04	3	9967741	402	05	7
	1.82.6/01	04	10	9967769	1.40.0	01	17
	336/01	01	18		402	01	2
	336/01	05	13	9967970	855/01	01	34
89824051	1.82.6	05	11	9967990	1.40.0	01	15
	1.82.6	06	8		402	01	17
	1.82.6/01	05	7	9967991	1.40.0	01	2
	1.82.6/01	06	11		402	01	18
89825770	336/01	01	17	9967992	1.40.0	01	3
	336/01	05	14		402	01	19
	337	01	17	9967993	1.40.0	01	4
	337	02	17		402	01	20
89991976	1.82.6	01	8	9967994	1.40.0	01	5
	1.82.6	14	3		402	01	21
	1.82.6	15	3	9967995	1.40.0	01	11
	1.82.6/01	01	8		402	01	27
	1.82.6/01	04	17	9967996	1.40.0	01	6
	900	05	6		402	01	22
	900	07	8	9967997	402	01	4
89992298	1.82.6	13	4	9968002	402	01	9
	1.82.6/01	03	10	9968003	402	01	10
	1.82.6/01	09	6	9968004	402	01	11
	1.88.11/03		7	9968005	402	01	14
	1.88.11/07A		2	9968006	1.40.0	01	8
	1.88.11/07C		2		402	01	24
	1.95.5	02	8	9968007	1.40.0	01	9
	337	01	16		402	01	25
	337	02	16	9968008	1.40.0	01	10
	437		16		402	01	26
	721	03	10	9968009	1.40.0	01	12
	725/01	01	2		402	01	28
9824050	725/01	03	18	9968010	1.40.0	01	13
9825770	725/01	03	17		402	01	5
9958776	851/01	02	9	9968019	402	01	7
	855/01	02	9	9968021	1.40.0	02	10
	856/01	02	9		402	02	10
9958792	851/01	03	13	9968022	402	02	11
	856/01	03	13	9968023	402	02	12
9960692	851/01	01	28	9968025	402	02	14
	851/01	02	8	9968028	1.40.0	02	17
	855/01	01	28		402	02	17
	855/01	02	8	9968031	402	04	3
	856/01	01	28	9968032	402	04	2
	856/01	02	8	9968033	402	04	4
9960755	851/01	03	16	9968034	402	04	5
	856/01	03	16	9968037	402	04	13
9960793	851/01	01	20	9968038	402	04	13
	855/01	01	20	9968039	402	04	13
	856/01	01	20	9968040	402	04	13
9960795	851/01	01	19	9968041	402	04	13
	855/01	01	19	9968042	402	04	13
	856/01	01	19	9968043	402	04	13
9960797	851/01	01	32	9968044	402	04	13
	855/01	01	33	9968045	402	04	13
	856/01	01	34	9968046	402	04	13
9960803	851/01	01	30	9968047	402	04	7
	855/01	01	30	9968048	402	04	9
	856/01	01	30	9968049	402	04	8
9962962	851/01	02	5	9968050	402	04	10
	855/01	02	5	9968051	402	04	11
	855/01	04	13	9968052	402	04	12
9966352	402	05	2	9968054	402	05	8
9966354	402	05	3	9968070	1.40.0	02	24
9966356	402	05	11		402	03	9
9967672	402	01	3	9968071	1.40.0	02	25

Number	Figure	Sequence	Ref.	Number	Figure	Sequence	Ref.
9968071	402	03	10	9968259	1.28.0/ B	08	2
9968083	402	03	19	9968260	1.28.0/ A	06	23
9968084	402	03	18		1.28.0/ B	06	23
9968144	522/01		15	9968261	1.28.0/ A	05	27
	525		15		1.28.0/ B	05	27
9968146	522/01		3	9968262	1.28.0/ A	05	26
	525		3		1.28.0/ B	05	26
9968147	522/01		4	9968263	1.28.0/ A	05	26
	525		4		1.28.0/ B	05	26
9968148	522/01		5	9968264	1.28.0/ A	05	26
	525		5		1.28.0/ B	05	26
9968149	522/01		6	9968265	1.28.0/ A	05	26
	525		6		1.28.0/ B	05	26
9968150	522/01		7	9968266	1.28.0/ A	05	26
	525		7		1.28.0/ B	05	26
9968151	522/01		8	9968267	1.28.0/ A	05	26
	525		8		1.28.0/ B	05	26
9968152	522/01		9	9968268	1.28.0/ A	05	24
	525		9		1.28.0/ B	05	24
9968153	522/01		10	9968269	1.28.0/ A	06	17
	525		10		1.28.0/ B	06	17
9968154	522/01		11	9968270	1.28.0/ A	06	8
	525		11		1.28.0/ A	07	3
9968155	522/01		12		1.28.0/ B	06	8
	525		12		1.28.0/ B	07	3
9968156	522/01		13	9968271	1.28.0/ A	06	6
	525		13		1.28.0/ A	07	5
9968218	1.28.0/ A	01	4		1.28.0/ B	06	6
	1.28.0/ A	02	11		1.28.0/ B	07	5
	1.28.0/ A	03	7	9968272	1.28.0/ A	06	7
	1.28.0/ A	07	14		1.28.0/ A	07	4
	1.28.0/ B	02	11		1.28.0/ B	06	7
	1.28.0/ B	03	15		1.28.0/ B	07	4
	1.28.0/ B	07	14	9968273	1.28.0/ A	06	7
9968219	1.28.0/ A	01	5		1.28.0/ A	07	4
	1.28.0/ A	02	9		1.28.0/ B	06	7
	1.28.0/ A	03	6		1.28.0/ B	07	4
	1.28.0/ A	07	10	9968274	1.28.0/ A	06	7
	1.28.0/ B	02	9		1.28.0/ A	07	4
	1.28.0/ B	03	8		1.28.0/ B	06	7
	1.28.0/ B	07	10		1.28.0/ B	07	4
9968223	1.28.0/ A	06	15	9968275	1.28.0/ A	06	7
	1.28.0/ B	06	15		1.28.0/ A	07	4
9968226	1.28.0/ A	05	18		1.28.0/ B	06	7
	1.28.0/ B	05	18		1.28.0/ B	07	4
9968228	1.28.0/ A	05	2	9968276	1.28.0/ A	05	17
	1.28.0/ B	05	2		1.28.0/ B	05	17
9968229	1.28.0/ B	08	11		1.28.0/ B	08	3
9968230	1.28.0/ A	05	30	9968277	1.28.0/ A	07	1
	1.28.0/ B	05	30		1.28.0/ B	07	1
9968232	1.28.0/ B	08	10	9968278	1.28.0/ A	06	22
9968233	1.28.0/ B	08	17		1.28.0/ B	06	19
9968234	1.28.0/ B	08	12	9968279	1.28.0/ A	05	1
9968235	1.28.0/ B	08	15		1.28.0/ B	05	1
9968236	1.28.0/ B	08	16	9968280	1.28.0/ A	07	2
9968239	1.28.0/ B	08	9		1.28.0/ B	07	2
9968240	1.28.0/ B	08	7	9968281	1.28.0/ A	05	25
9968244	1.28.0/ B	08	4		1.28.0/ B	05	25
9968246	1.28.0/ A	06	18	9968282	1.28.0/ A	05	28
	1.28.0/ B	06	18		1.28.0/ B	05	28
9968247	1.28.0/ A	06	16	9968285	1.28.0/ A	05	21
	1.28.0/ B	06	16		1.28.0/ B	05	21
9968248	1.28.0/ A	06	13	9968286	1.28.0/ A	05	5
	1.28.0/ B	06	13		1.28.0/ B	05	5
9968249	1.28.0/ B	06	9	9968287	1.28.0/ A	05	9
9968250	1.28.0/ A	06	11		1.28.0/ B	05	9
	1.28.0/ B	06	11	9968288	1.28.0/ A	05	10
9968251	1.28.0/ A	06	12		1.28.0/ B	05	10
	1.28.0/ B	06	12	9968289	1.28.0/ A	05	12
9968252	1.28.0/ A	06	10		1.28.0/ B	05	12
	1.28.0/ B	06	10	9968290	1.28.0/ A	05	11
9968253	1.28.0/ A	06	21		1.28.0/ B	05	11
	1.28.0/ B	06	21	9968291	1.28.0/ A	05	6
9968254	1.28.0/ B	08	8		1.28.0/ B	05	6
9968255	1.28.0/ B	08	1	9968297	1.28.0/ B	08	14
9968256	1.28.0/ B	08	2	9968298	1.28.0/ B	08	13
9968257	1.28.0/ B	08	2	9968299	1.28.0/ A	04	14
9968258	1.28.0/ B	08	2		1.28.0/ B	04	14

Number	Figure	Sequence	Ref.	Number	Figure	Sequence	Ref.
9968300	1.28.0/ B	08	21	9968356	1.28.0/ A	01	7
9968301	1.28.0/ B	08	19		1.28.0/ B	01	5
9968302	1.28.0/ A	05	4	9968358	1.28.0/ A	06	20
	1.28.0/ B	05	4		1.28.0/ B	06	20
9968304	1.28.0/ A	05	3	9968359	1.28.0/ A	01	15
	1.28.0/ B	05	3		1.28.0/ B	01	17
9968305	1.28.0/ A	05	22	9968360	1.28.0/ A	01	17
	1.28.0/ B	05	22		1.28.0/ B	01	19
9968306	1.28.0/ A	06	2	9968361	1.28.0/ A	01	16
	1.28.0/ B	06	2		1.28.0/ B	01	18
	1.28.0/ B	08	23	9968362	1.28.0/ A	01	19
	1.38.1		12		1.28.0/ B	01	21
9968307	1.28.0/ A	06	14	9968364	1.28.0/ A	02	12
	1.28.0/ B	06	14		1.28.0/ B	02	12
9968308	1.28.0/ A	06	1	9968365	1.28.0/ A	01	21
	1.28.0/ B	06	1		1.28.0/ B	01	10
	1.28.0/ B	08	18	9968368	1.28.0/ A	02	10
	1.38.1		3		1.28.0/ B	02	10
9968309	1.28.0/ A	06	3	9968370	1.28.0/ A	04	19
	1.28.0/ B	06	3		1.28.0/ B	04	19
	1.28.0/ B	08	22	9968371	1.28.0/ A	02	5
	1.38.1		11		1.28.0/ B	02	5
9968311	1.28.0/ A	01	9	9968374	1.28.0/ A	03	13
	1.28.0/ B	01	11		1.28.0/ B	03	11
9968312	1.28.0/ A	01	10	9968375	1.28.0/ A	03	14
9968313	1.28.0/ A	01	14		1.28.0/ B	03	10
	1.28.0/ B	01	22	9968382	1.28.0/ B	02	8
9968314	1.28.0/ A	05	29	9968383	1.28.0/ B	02	14
	1.28.0/ B	05	29	9968393	1.28.0/ B	08	6
9968315	1.28.0/ A	07	9	9968396	1.28.0/ A	06	19
	1.28.0/ B	07	9	9968438	725/01	04	7
9968316	1.28.0/ A	07	8	9968439	725/01	04	5
	1.28.0/ B	07	8	9968440	336/01	02	8
9968317	1.28.0/ A	07	11		344	01	4
	1.28.0/ B	07	11		721	01	14
9968318	1.28.0/ A	07	12		725/01	04	8
	1.28.0/ B	07	12	9968441	336/01	02	6
9968319	1.28.0/ A	07	6		344	01	6
	1.28.0/ B	07	6		721	01	13
9968322	1.28.0/ A	07	7		725/01	04	6
	1.28.0/ B	07	7	9968443	336/01	02	3
9968323	1.28.0/ A	07	13		725/01	04	3
	1.28.0/ B	07	13	9968444	336/01	03	6
9968324	1.28.0/ A	04	9		725/01	05	6
	1.28.0/ B	04	9	9968445	336/01	03	7
9968326	1.28.0/ A	04	11		725/01	05	7
	1.28.0/ B	04	11	9968446	336/01	03	8
9968327	1.28.0/ A	04	10		725/01	05	8
	1.28.0/ B	04	10	9968447	1.82.6/01	12	10
9968328	1.28.0/ A	04	12		336/01	03	11
	1.28.0/ B	04	12		725/01	05	11
9968333	1.28.0/ A	02	6	9968448	1.82.6/01	12	9
	1.28.0/ B	02	6		336/01	03	10
9968334	1.28.0/ A	02	2		725/01	05	10
	1.28.0/ B	02	2	9968449	336/01	03	9
9968336	1.28.0/ A	03	3		725/01	05	9
	1.28.0/ B	03	7	9968451	336/01	01	12
9968337	1.28.0/ B	03	3		725/01	03	12
9968339	1.28.0/ A	01	20	9968454	336/01	01	14
	1.28.0/ B	01	9		725/01	03	14
9968340	1.28.0/ B	03	6	9968455	336/01	01	4
9968341	1.28.0/ A	05	19		725/01	03	4
	1.28.0/ B	05	19	9968456	336/01	01	6
9968342	1.28.0/ A	05	20		725/01	03	6
	1.28.0/ B	05	20	9968457	336/01	01	5
9968343	1.28.0/ A	05	20		725/01	03	5
	1.28.0/ B	05	20	9968458	1.82.6/01	13	11
9968344	1.28.0/ A	05	20		1.82.6/01	14	11
	1.28.0/ B	05	20		336/01	01	7
9968345	1.28.0/ A	05	20		725/01	03	7
	1.28.0/ B	05	20	9968460	1.82.6/01	13	12
9968347	1.28.0/ A	05	23		1.82.6/01	14	12
	1.28.0/ B	05	23		336/01	01	21
9968350	1.28.0/ A	02	1		344	02	12
	1.28.0/ B	02	1		721	02	12
9968351	1.28.0/ B	01	8		725/01	03	8
9968354	1.28.0/ A	03	12	9968461	336/01	04	6
	1.28.0/ B	03	12	9968464	336/01	02	1

Number	Figure	Sequence	Ref.
9968464	336/01	05	10
	725/01	04	1
9968465	336/01	04	2
9968466	336/01	02	12
	336/01	04	4
	336/01	05	4
	725/01	04	12
9968467	336/01	02	11
	336/01	04	3
	336/01	05	3
	725/01	04	11
9968468	1.82.6/01	12	8
	336/01	02	13
	336/01	04	5
	336/01	05	5
	725/01	04	13
9968470	336/01	03	5
	725/01	05	5
9968471	336/01	03	4
	725/01	05	4
9968476	336/01	02	2
	344	01	8
	721	01	8
	725/01	04	2
	725/01	06	10
9968477	344	02	9
	721	02	9
	725/01	06	8
9968478	344	02	10
	721	02	10
	725/01	06	9
9968480	344	02	11
	721	02	11
9968481	344	02	4
	721	02	4
9968483	344	02	6
	721	02	6
9968484	344	02	7
	721	02	7
9968486	344	02	8
	721	02	8
9968488	336/01	02	14
	336/01	05	8
	725/01	04	14
9968489	1.82.6/01	13	2
	1.82.6/01	14	2
	336/01	01	8
	725/01	03	9
9968490	1.82.6/01	13	3
	1.82.6/01	14	3
	336/01	01	9
	725/01	03	10
9968494	1.82.6/01	12	14
9968495	1.82.6/01	12	12
	1.82.6/01	13	1
	1.82.6/01	14	1
9968497	1.82.6/01	12	6
9968498	1.82.6/01	12	7
9968500	1.82.6/01	12	4
9968501	1.82.6/01	12	2
9968502	1.82.6/01	12	3
9968503	1.82.6/01	12	5
9968504	1.82.6/01	12	29
9968505	1.82.6/01	12	29
9968506	1.82.6/01	12	16
9968507	1.82.6/01	12	17
9968508	1.82.6/01	12	28
9968510	1.82.6/01	13	9
	1.82.6/01	14	9
9968511	1.82.6/01	13	10
	1.82.6/01	14	10
9968512	1.82.6/01	13	4
	1.82.6/01	14	4
9968513	1.82.6/01	13	7
	1.82.6/01	14	7
	336/01	01	19
	725/01	03	19
9968514	1.82.6/01	13	5
9968514	1.82.6/01	14	5
9968515	1.82.6/01	13	6
	1.82.6/01	14	6
9968516	1.82.6/01	13	8
	1.82.6/01	14	8
9968520	336/01	02	7
9968521	336/01	02	5
9968523	1.82.6/01	12	23
9968524	344	01	7
	721	01	7
9968526	721	01	10
	721	02	1
9968527	344	01	11
	721	01	11
9968528	721	01	6
9968529	721	01	12
9968531	344	02	5
	721	02	5
9968532	344	01	12
9968533	344	01	10
9968595	1.82.6/01	12	26
	724/02		18
	725/01	06	12
9968596	1.82.6/01	12	27
9968676	1.28.0/ A	03	8
	1.28.0/ B	03	4
9968791	1.82.6	03	10
	1.82.6/01	03	13
9968884	803		2
9968885	803		1
9968886	803		1
9968926	1.28.0/ A	04	17
	1.28.0/ B	04	17
9968927	1.28.0/ A	04	18
	1.28.0/ B	04	18
9969170	522/01		2
	525		2
9969281	1.28.0/ A	04	13
	1.28.0/ B	04	13
9969380	1.82.0		21
9969445	1.28.0/ A	04	4
	1.28.0/ B	04	4
9969449	1.28.0/ A	03	4
9970107	344	01	9
	344	02	1
	721	01	9
9970179	724/ A		5
9970181	724/ A		2
9970383	728	03	5
9970384	337	01	20
	337	02	20
	724/ A		6
	728	03	6
9972160	851/01	01	16
	851/01	02	13
	855/01	01	16
	855/01	02	11
	856/01	01	16
	856/01	02	11
9991976	721	05	4
9992069	333	04	13
	721	03	11
	721	04	13
	721	05	6
9992298	333	04	14
	721	03	6
	721	04	14
D139225	MPARTS	00	2
D149079	514	03	19
	514	04	16
	900	09	19
	900	10	16
D38858	900	11	8
D95143	901	04	9
	902	03	9
D95146	514	03	3
	514	04	18
	900	09	3

Number	Figure	Sequence	Ref.	Number	Figure	Sequence	Ref.
D95146	900	10	13				
	900	11	13				
G100443	902	03	16				
G100444	901	04	7				
	902	03	7				
G100449	901	04	17				
	902	03	17				
G100709	900	11	15				
G100710	900	11	16				
G100711	900	11	9				
G102090	514	03	1				
	900	10	7				
G102091	514	03	15				
	900	10	5				
G102092	514	03	14				
	900	10	6				
G102288	901	04	16				
G102425	901	04	11				
	902	03	11				
G107277	901	04	15				
	902	03	15				
G107970	514	03	9				
	900	10	10				
G109298	901	04	12				
	902	03	12				
G109395	514	03	4				
	514	04	13				
	900	09	18				
	900	10	21				
	900	11	20				
	901	04	22				
G109908	514	03	8				
	514	04	8				
	900	09	8				
	900	10	8				
	900	11	1				
NS	855/01	03	11				
	855/01	03	19				
	855/01	03	22				
	855/01	03	23				
	855/01	03	24				
	855/01	03	6				
	855/01	04	10				
	855/01	04	11				
	855/01	04	12				
	855/01	04	4				
	855/01	04	6				
	855/01	04	7				
	855/01	04	8				
	855/01	04	9				
	855/01	05	10				
	855/01	05	11				
	855/01	05	12				
	855/01	05	4				
	855/01	05	5				
	855/01	05	6				
	855/01	05	9				

NOTAS