RUTHZIL TRATOR COMERCIAL DE PEÇAS LTDA 11 97083-6812 ROLANDO

NEW HOLLAND

B95RL

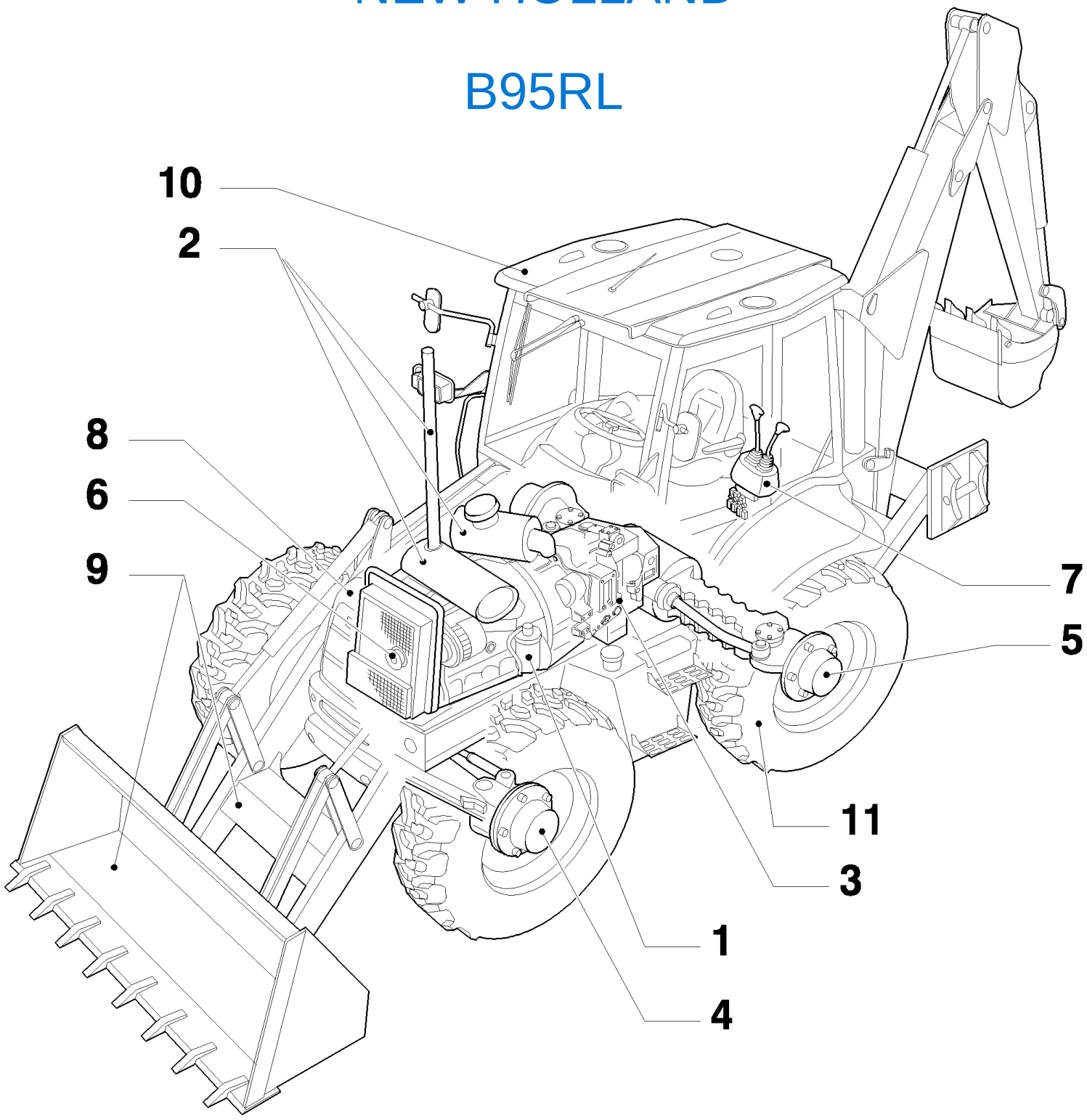

B95LR NA BACKHOE LOADER (1/06-)

MAIN(00) SECTIONS

Ref	Numero de Pieza	Ctd	Descripción

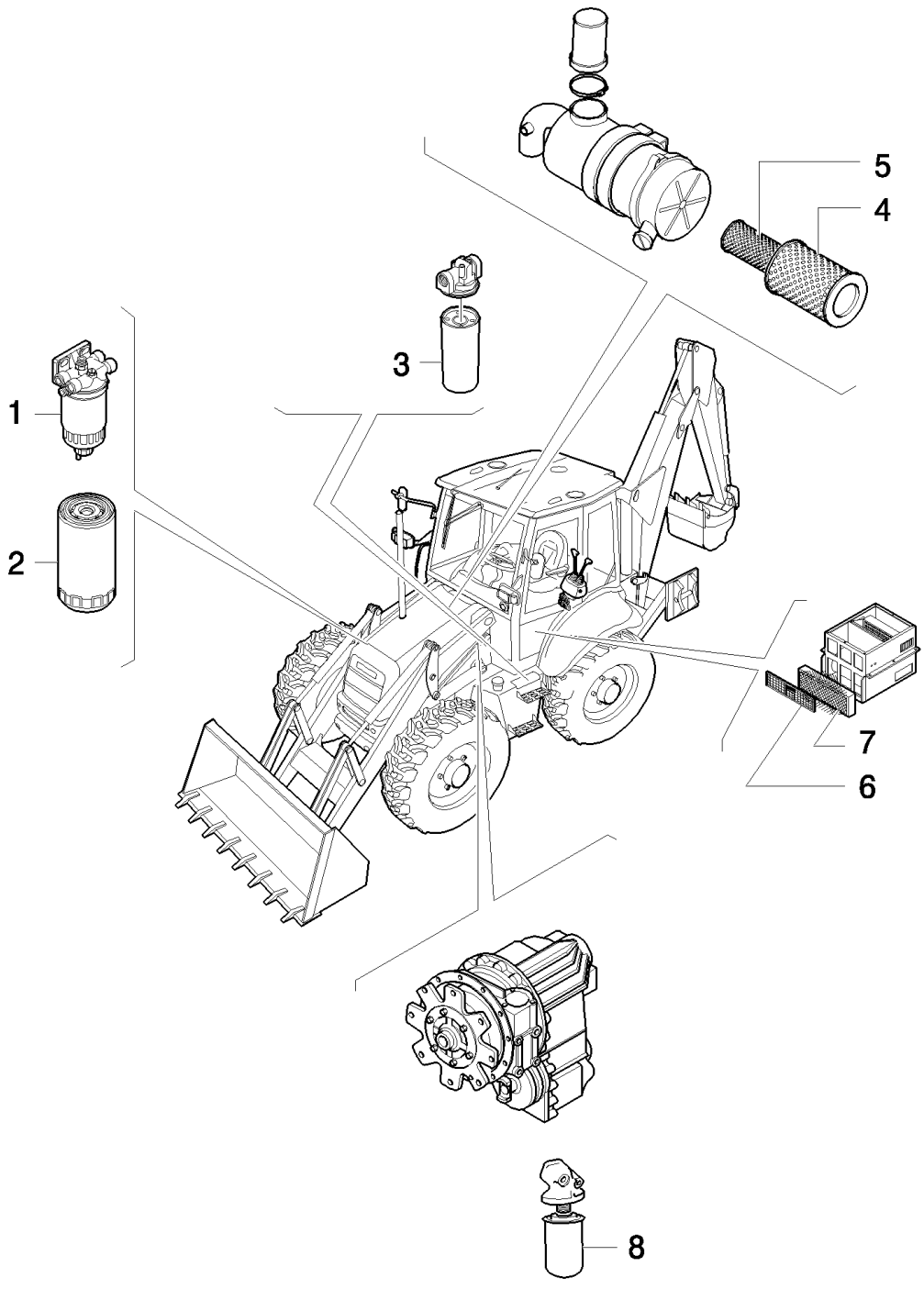
1
2
3
4
5
6
7
8

B95LR NA BACKHOE LOADER (1/06-)

MPARTS(00) MAINTENANCE PARTS

Ref	Numero de Pieza	Ctd	Descripción
1	1930010	1	FILTER, FUEL, , See Page 0.200 Ref : 6
2	87803260	1	FILTER, ENGINE OIL, , See Page 0.302 Ref : 1
3	86989733	1	FILTER, HYDRAULIC OIL, , See Page 1.821.6 Ref : 6
4	87438249	1	FILTER, ELEMENT, , See Page 1.19.1 Ref : 4
5	87438246	1	FILTER, ELEMENT, , See Page 1.19.1 Ref : 3
6	85826026	1	FILTER, CAB, , See Page 1.94.2 Ref : 4
7	85826032	1	FILTER, CAB, , See Page 1.94.2 Ref : 2
8	85817004	1	FILTER, , Power Shuttle 2 WD See Page 1.28.0/ A Ref : 14 And 4 WD See Page 1.28.0/ B Ref : 14
8	9968988	1	FILTER, HYDRAULIC OIL, , Power Shift See Page 1.28.0/ C Ref : 14

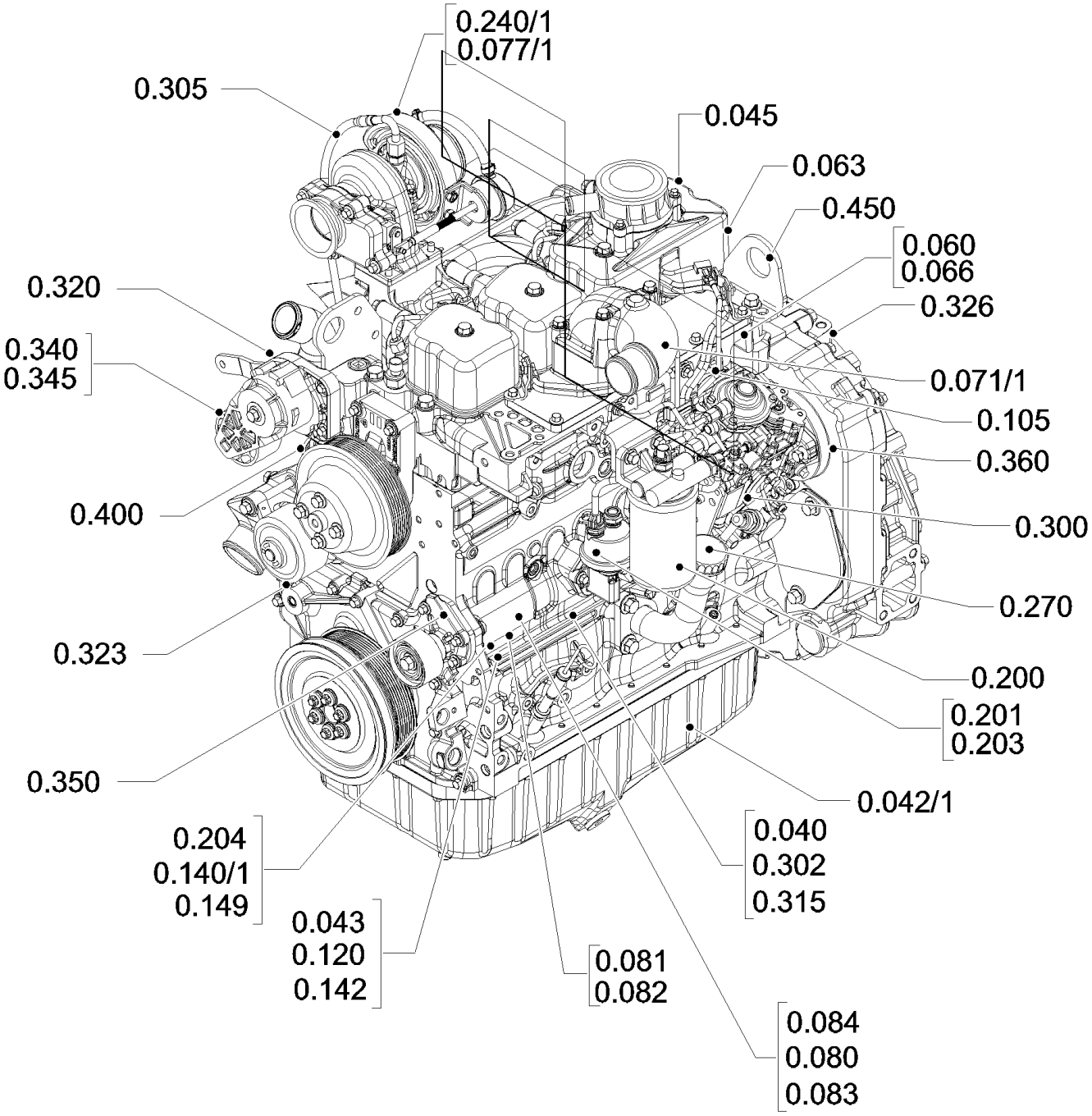
0.240/1
0.077/1
0.305
0.045
0.063
0.450
0.060
0.066
0.320
0.326
0.340
0.345
0.071/1
0.105
0.360
0.400
0.300
0.270
0.323
0.200
0.201
0.203
0.350
0.042/1
0.204
0.140/1
0.149
0.040
0.302
0.315
0.043
0.120
0.142
0.081
0.082
0.084
0.080
0.083

B95LR NA BACKHOE LOADER (1/06-)

SEC. 01(00) ENGINE 1/2

Ref	Numero de Pieza	Ctd	Descripción

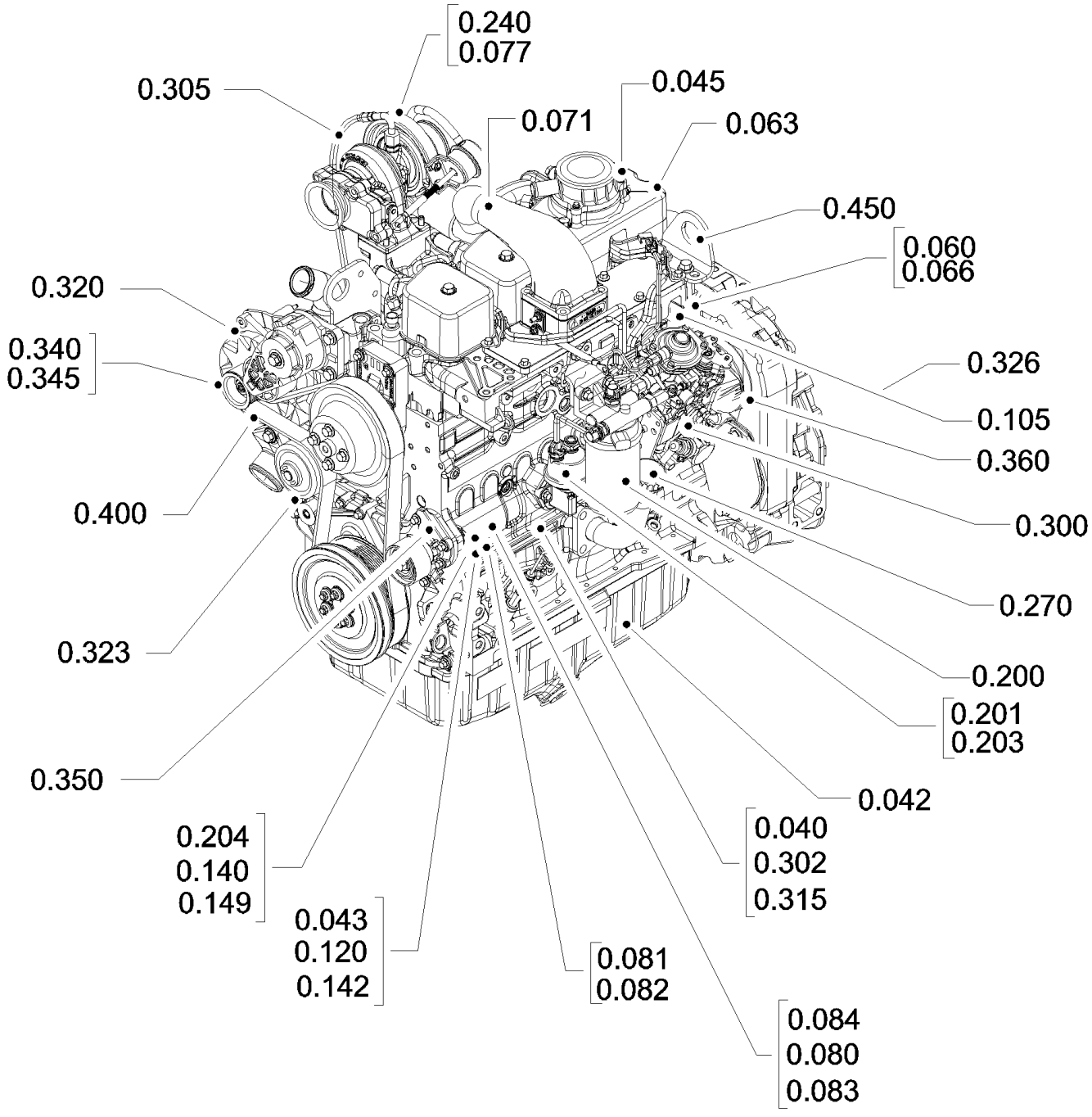
0.240
0.077
0.305
0.045
0.071
0.063
0.450
0.060
0.066
0.320
0.340
0.345
0.326
0.105
0.360
0.400
0.300
0.270
0.323
0.200
0.201
0.203
0.350
0.042
0.204
0.140
0.149
0.040
0.302
0.315
0.043
0.120
0.142
0.081
0.082
0.084
0.080
0.083

Ref	Numero de Pieza	Ctd	Descripción

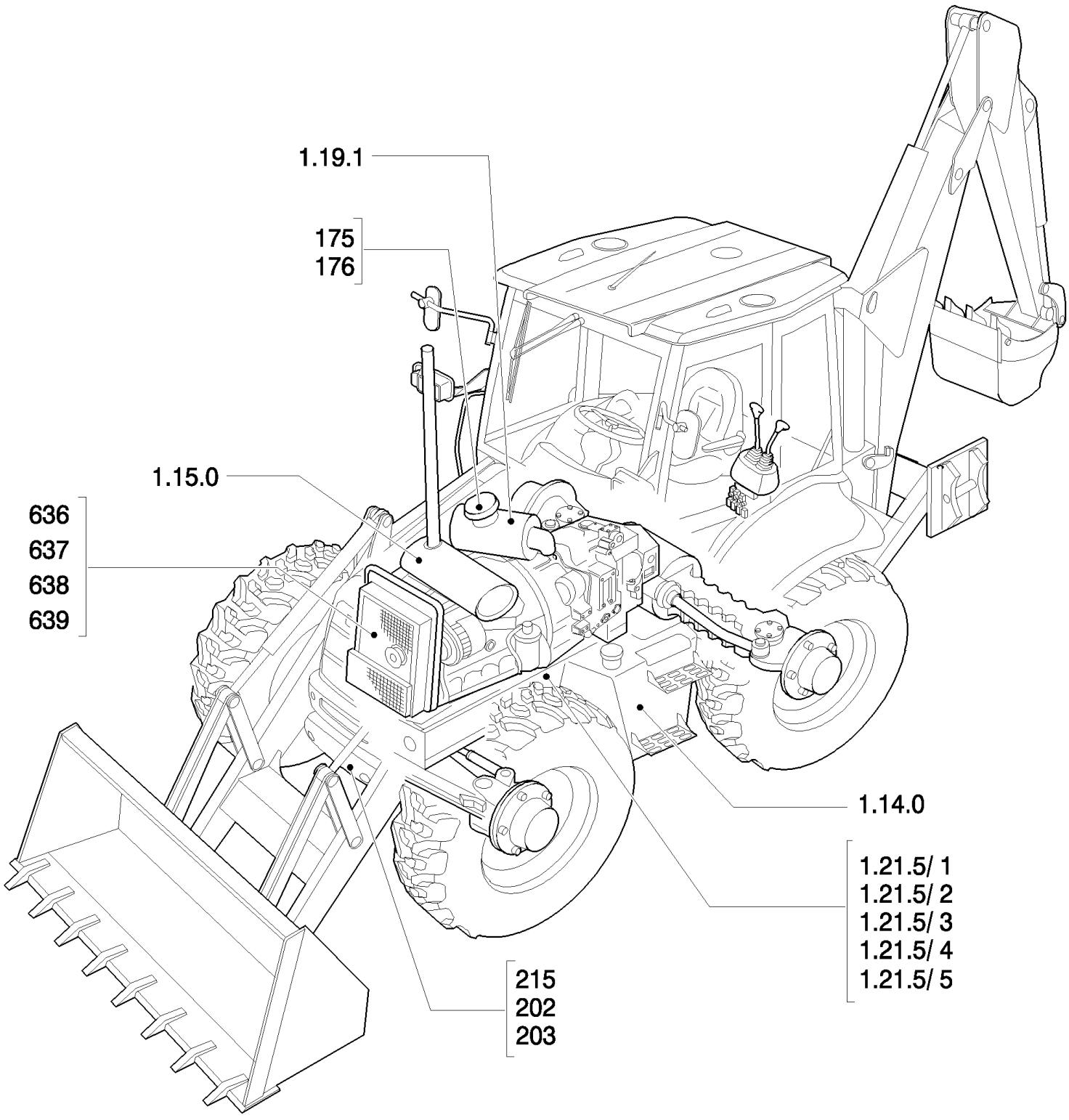
1.19.1
175
176
1.15.0
636
637
638
639
1.14.0
1.21.5/ 1
1.21.5/ 2
1.21.5/ 3
1.21.5/ 4
1.21.5/ 5
215
202
203

B95LR NA BACKHOE LOADER (1/06-)

SEC. 02(00) FUEL TANK - MUFFLER - RADIATOR - AIR CLEANER - CHASSIS

Ref	Numero de Pieza	Ctd	Descripción

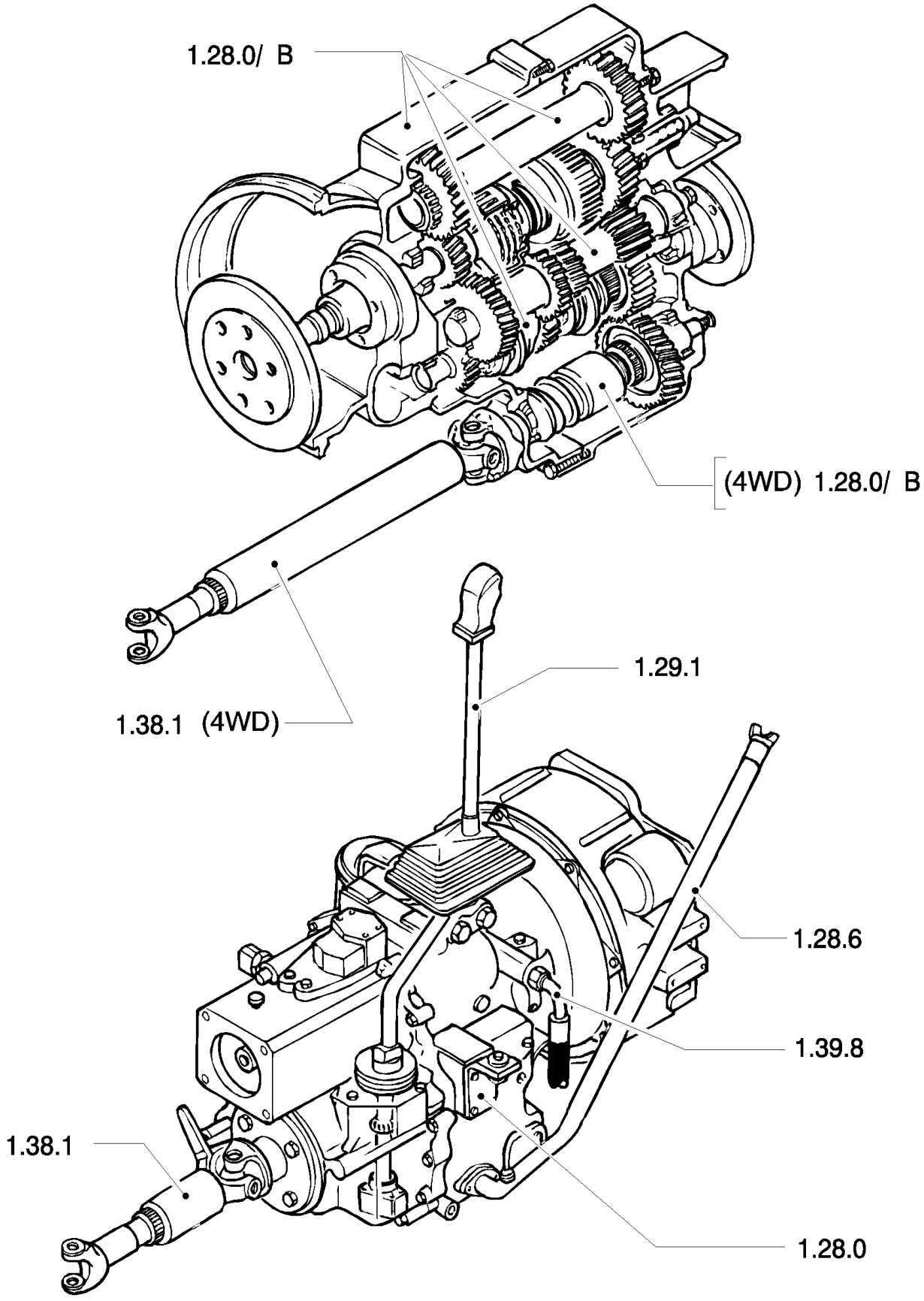
1.28.0/ B
(4WD) 1.28.0/ B
1.29.1
1.38.1 (4WD)
1.28.6
1.39.8
1.38.1
1.28.0

Ref	Numero de Pieza	Ctd	Descripción

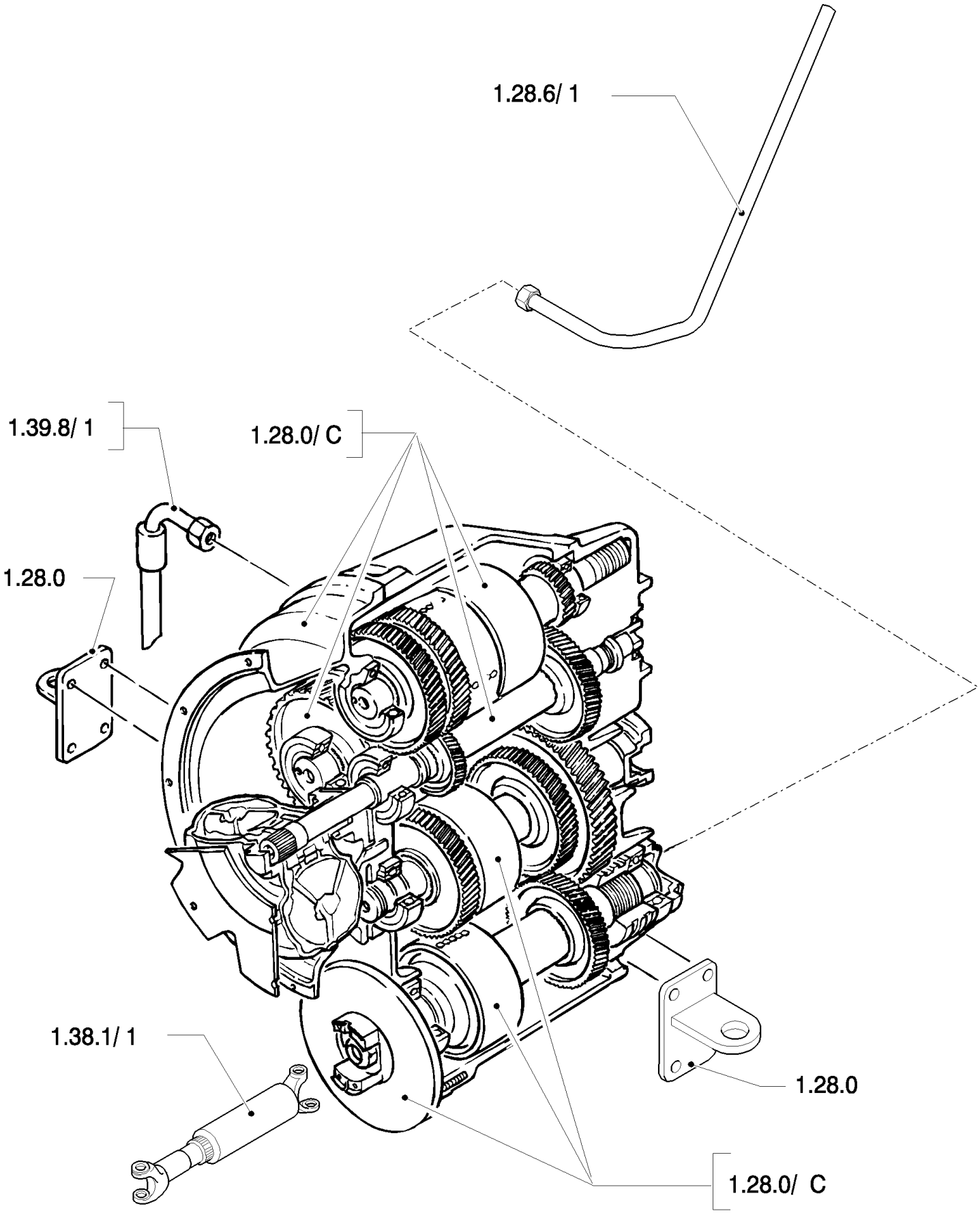
1.28.6/ 1
1.39.8/ 1
1.28.0/ C
1.28.0
1.38.1/ 1
1.28.0
1.28.0/ C

Ref	Numero de Pieza	Ctd	Descripción

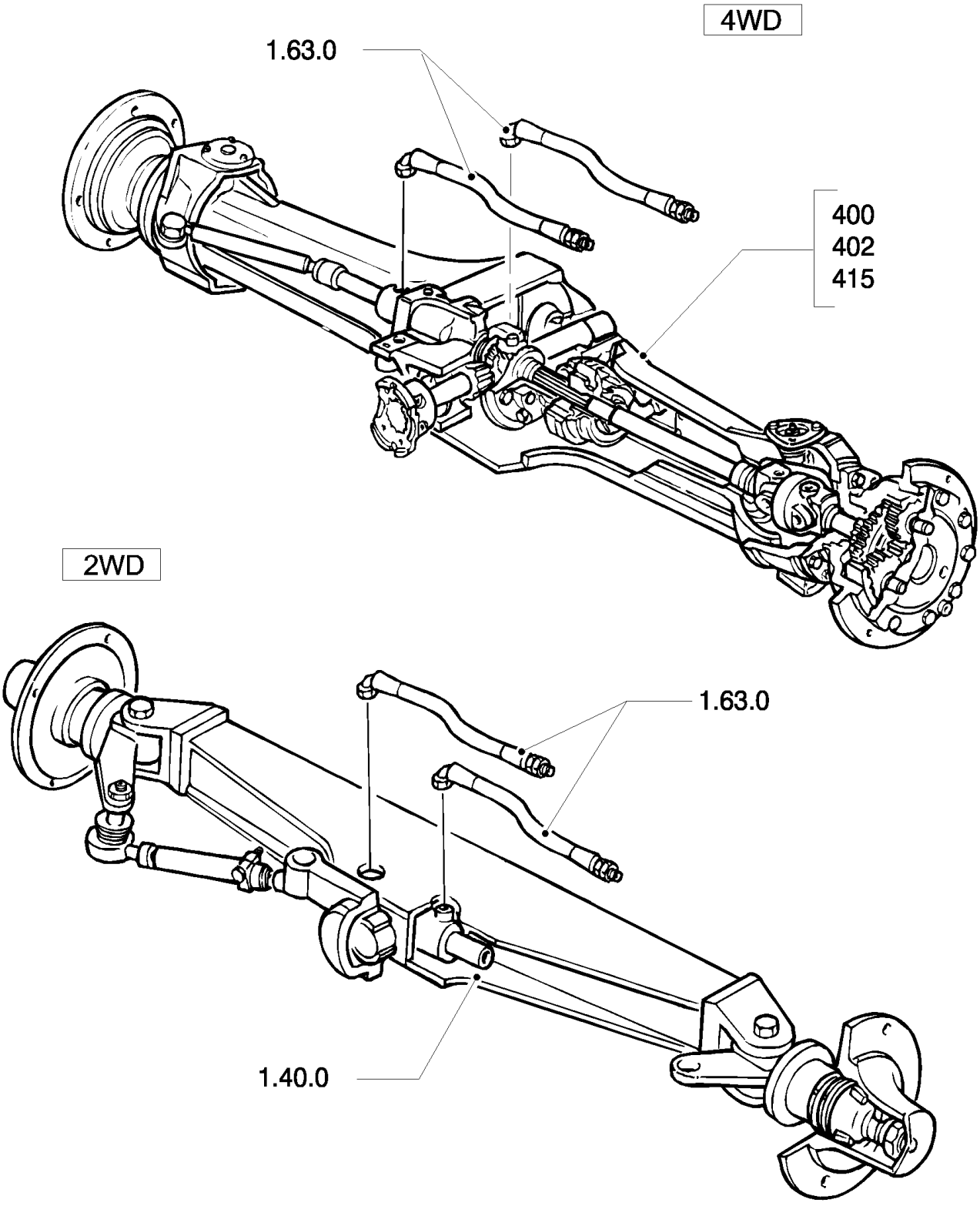
4WD
1.63.0
400
402
415
2WD
1.63.0
1.40.0

B95LR NA BACKHOE LOADER (1/06-)

SEC. 04(00) FRONT AXLE

Ref	Numero de Pieza	Ctd	Descripción

4WS

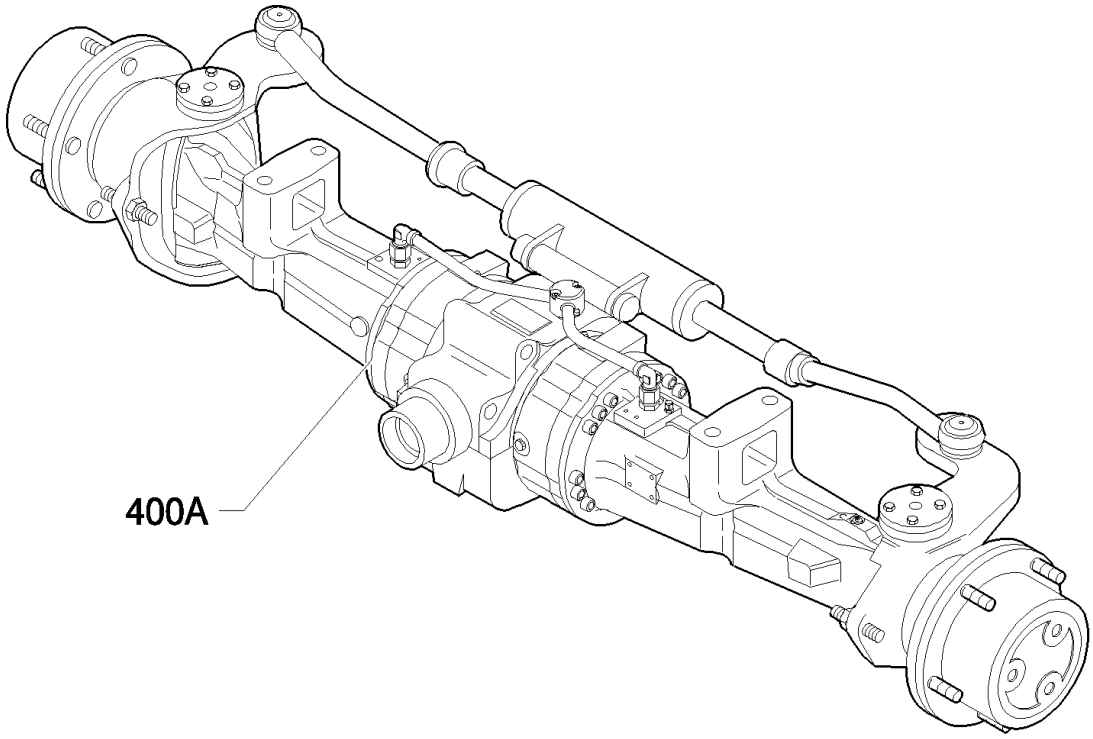

2WS

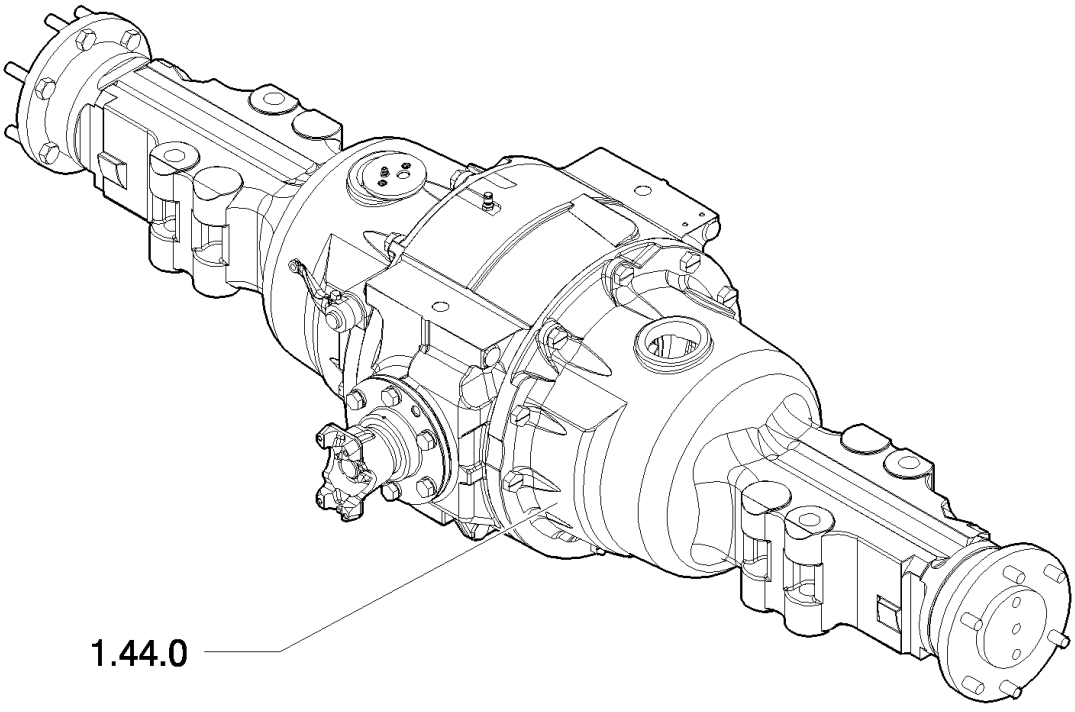

B95LR NA BACKHOE LOADER (1/06-)

SEC. 05(00) REAR AXLE

Ref	Numero de Pieza	Ctd	Descripción

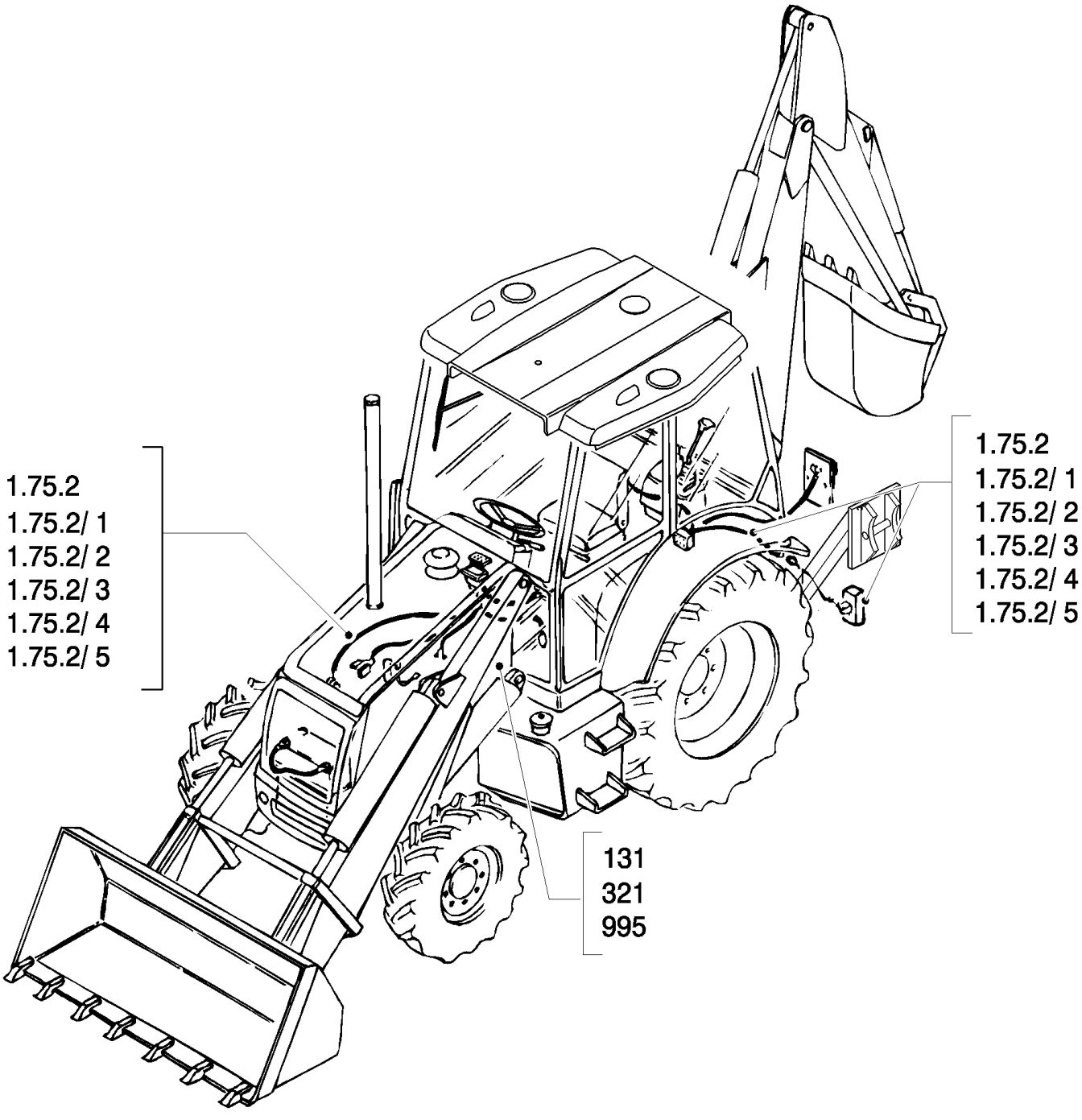
1.75.2
1.75.2/ 1
1.75.2/ 2
1.75.2/ 3
1.75.2/ 4
1.75.2/ 5
1.75.2
1.75.2/ 1
1.75.2/ 2
1.75.2/ 3
1.75.2/ 4
1.75.2/ 5
131
321
995

Ref	Numero de Pieza	Ctd	Descripción

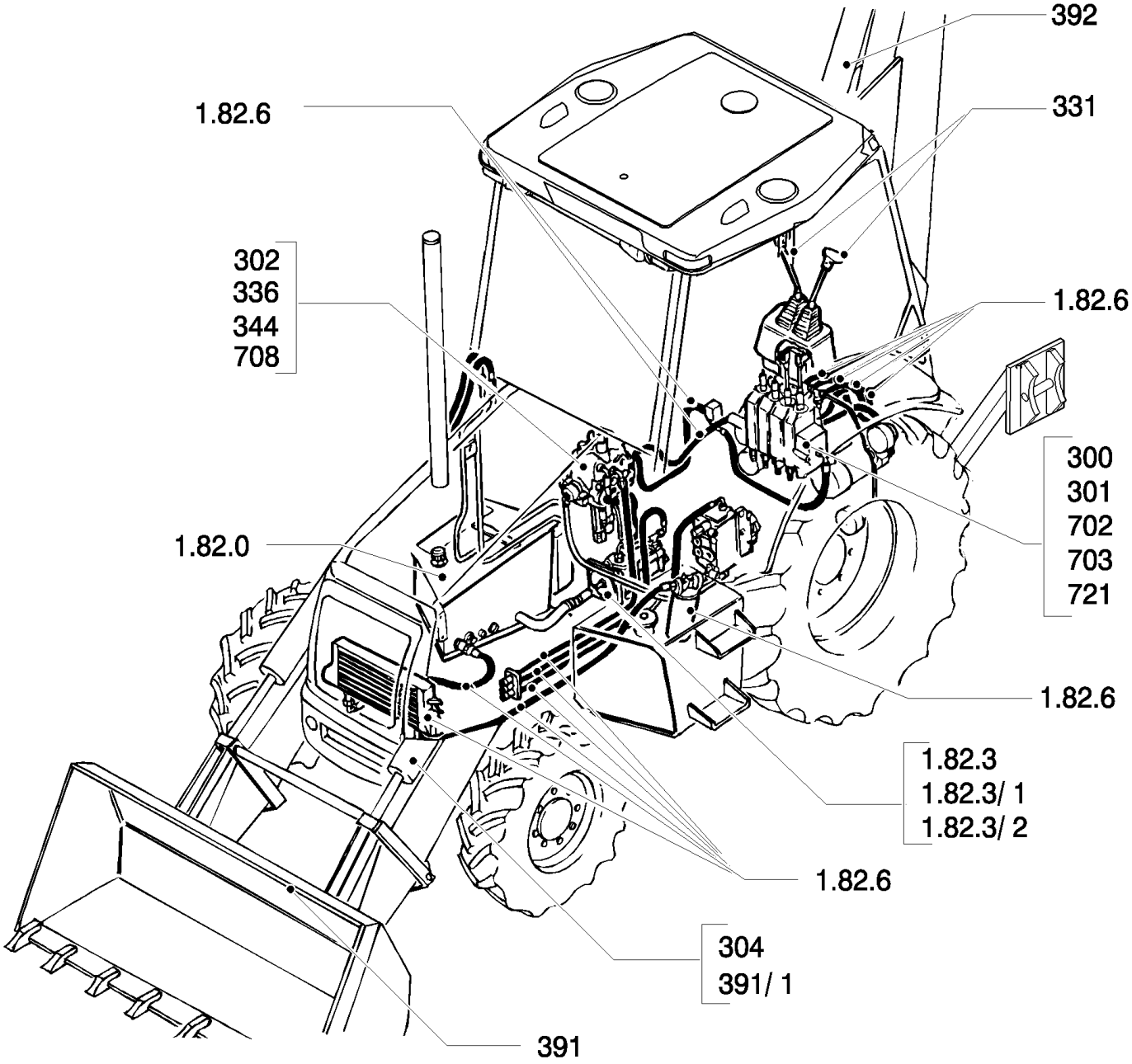
392
1.82.6
331
302
336
344
708
1.82.6
300
301
702
703
721
1.82.0
1.82.6
1.82.3
1.82.3/ 1
1.82.3/ 2
1.82.6
304
391/ 1
391

B95LR NA BACKHOE LOADER (1/06-)

SEC. 07(00) SLIDES VALVES

Ref	Numero de Pieza	Ctd	Descripción

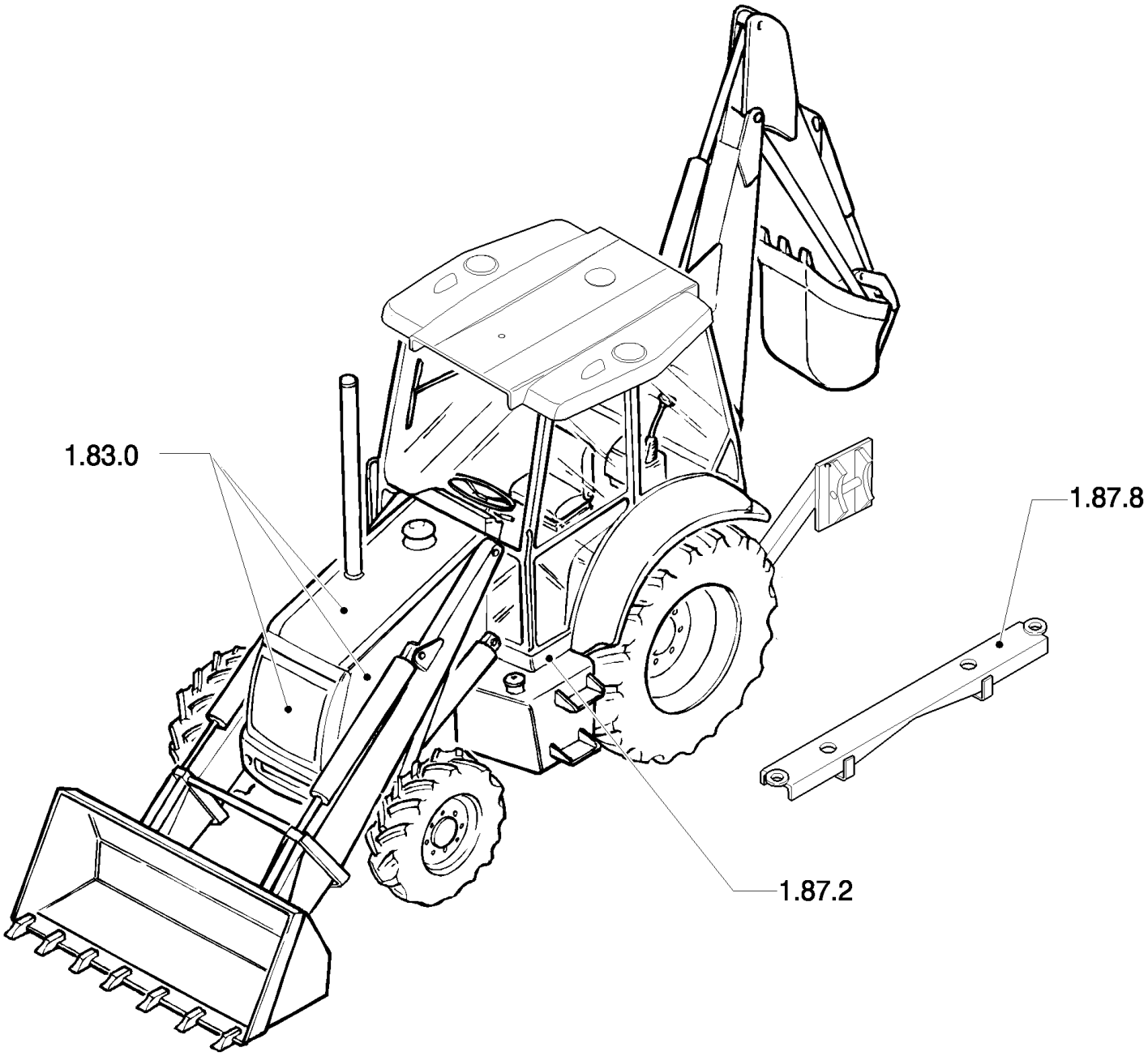
1.83.0
1.87.8
1.87.2

B95LR NA BACKHOE LOADER (1/06-)

SEC. 08(00) BODY & HOOD

Ref	Numero de Pieza	Ctd	Descripción

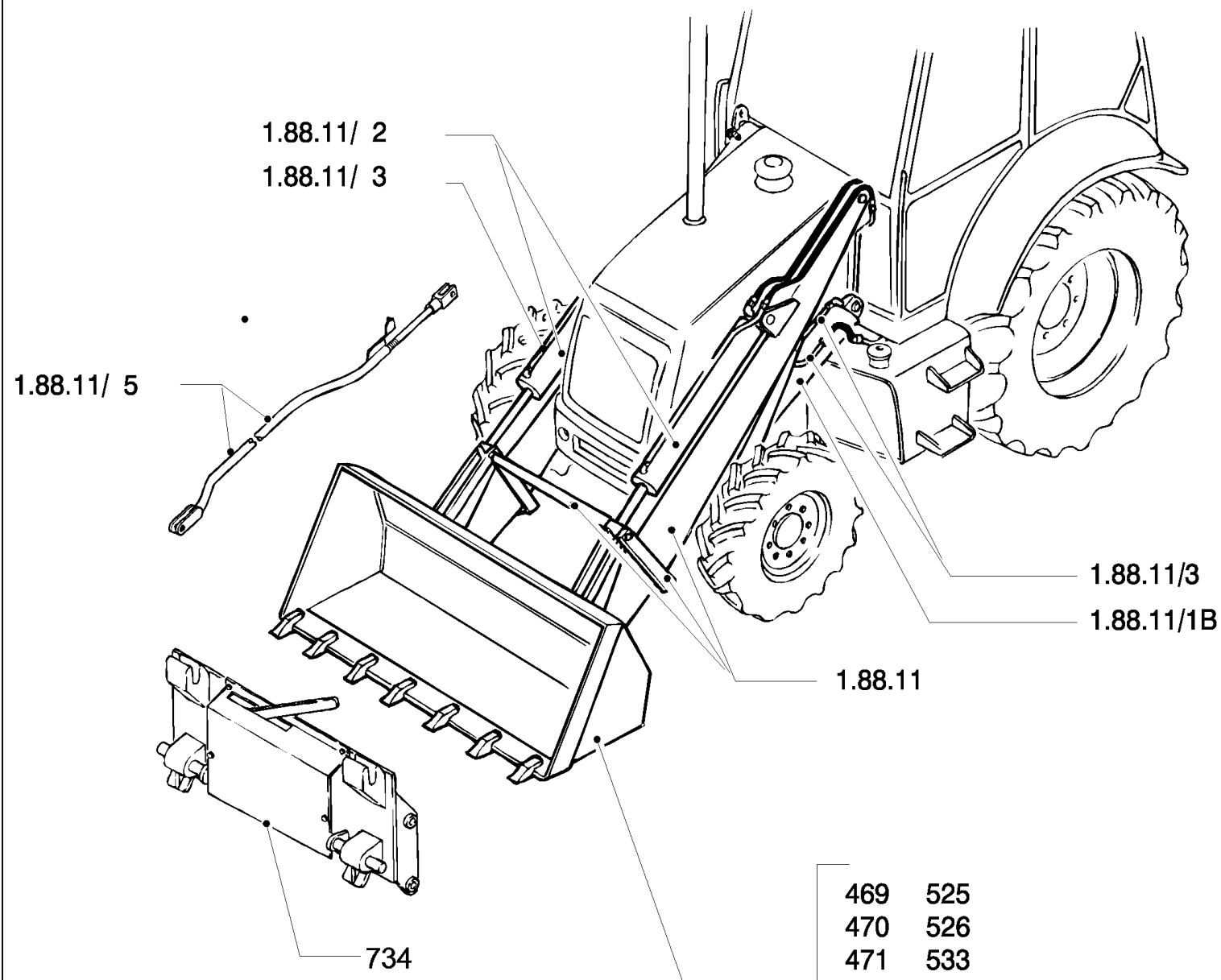

469	525
470	526
471	533
472	534
473	535/ 2
474	536/ 1
475	537/ 1
476	548
500	555
501	556
502	

Ref	Numero de Pieza	Ctd	Descripción

SIDE SHIFT

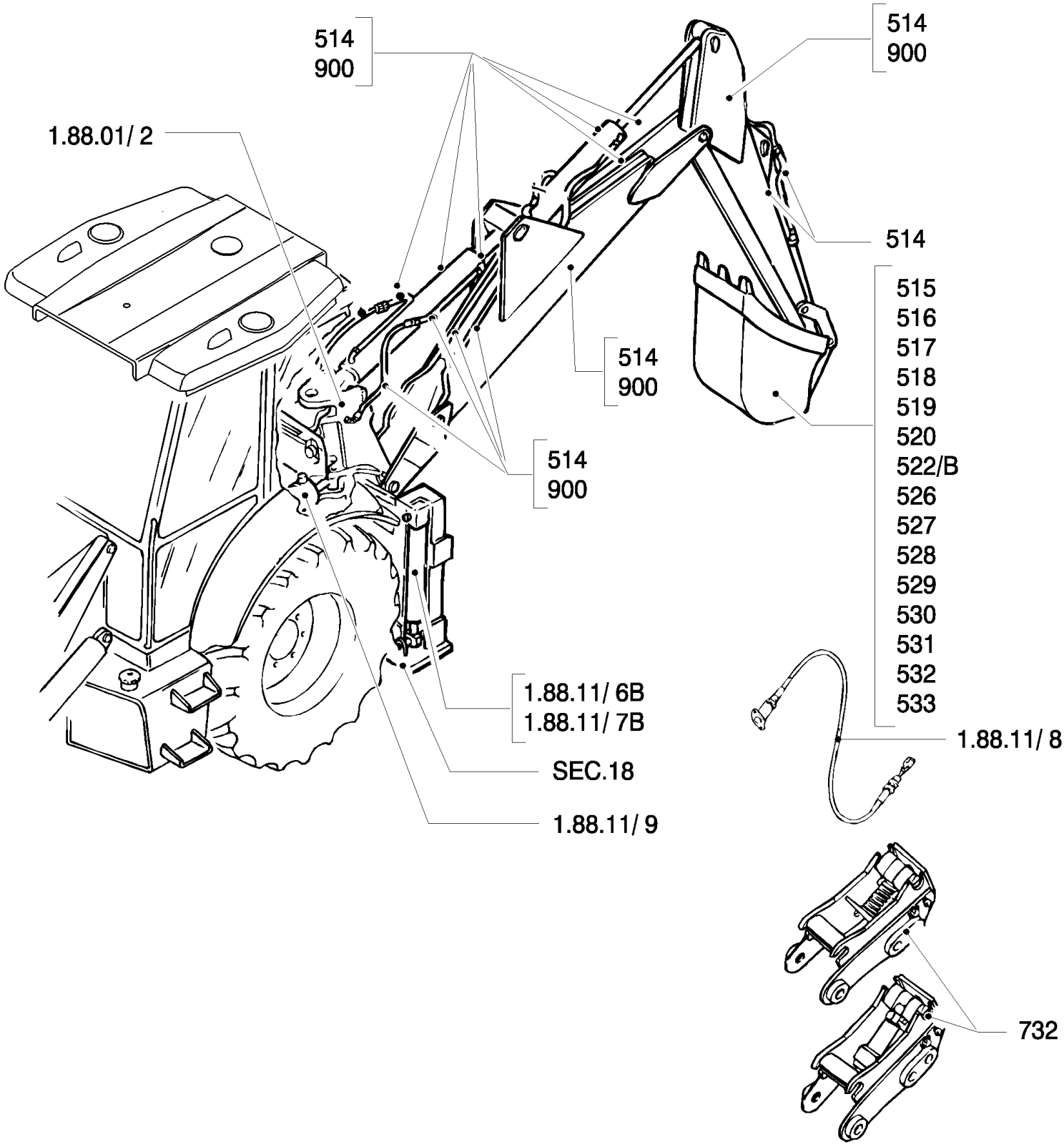
514
900
514
900
1.88.01/ 2
514
515
516
517
518
519
520
522/B
526
527
528
529
530
531
532
533
514
900
514
900
1.88.11/ 6B
1.88.11/ 7B
1.88.11/ 8
SEC.18
1.88.11/ 9
732

Ref	Numero de Pieza	Ctd	Descripción

CENTER PIVOT

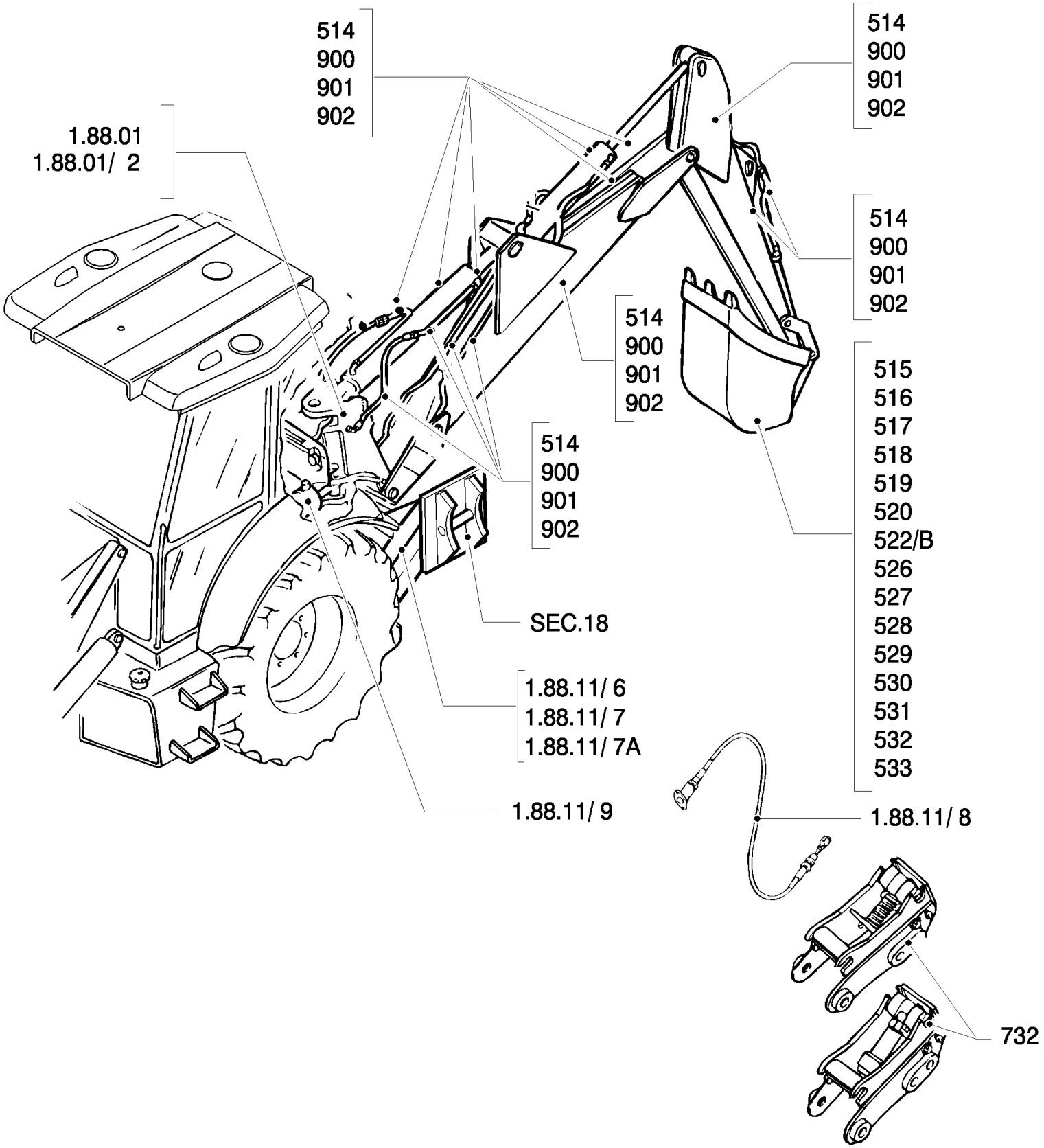

Ref	Numero de Pieza	Ctd	Descripción

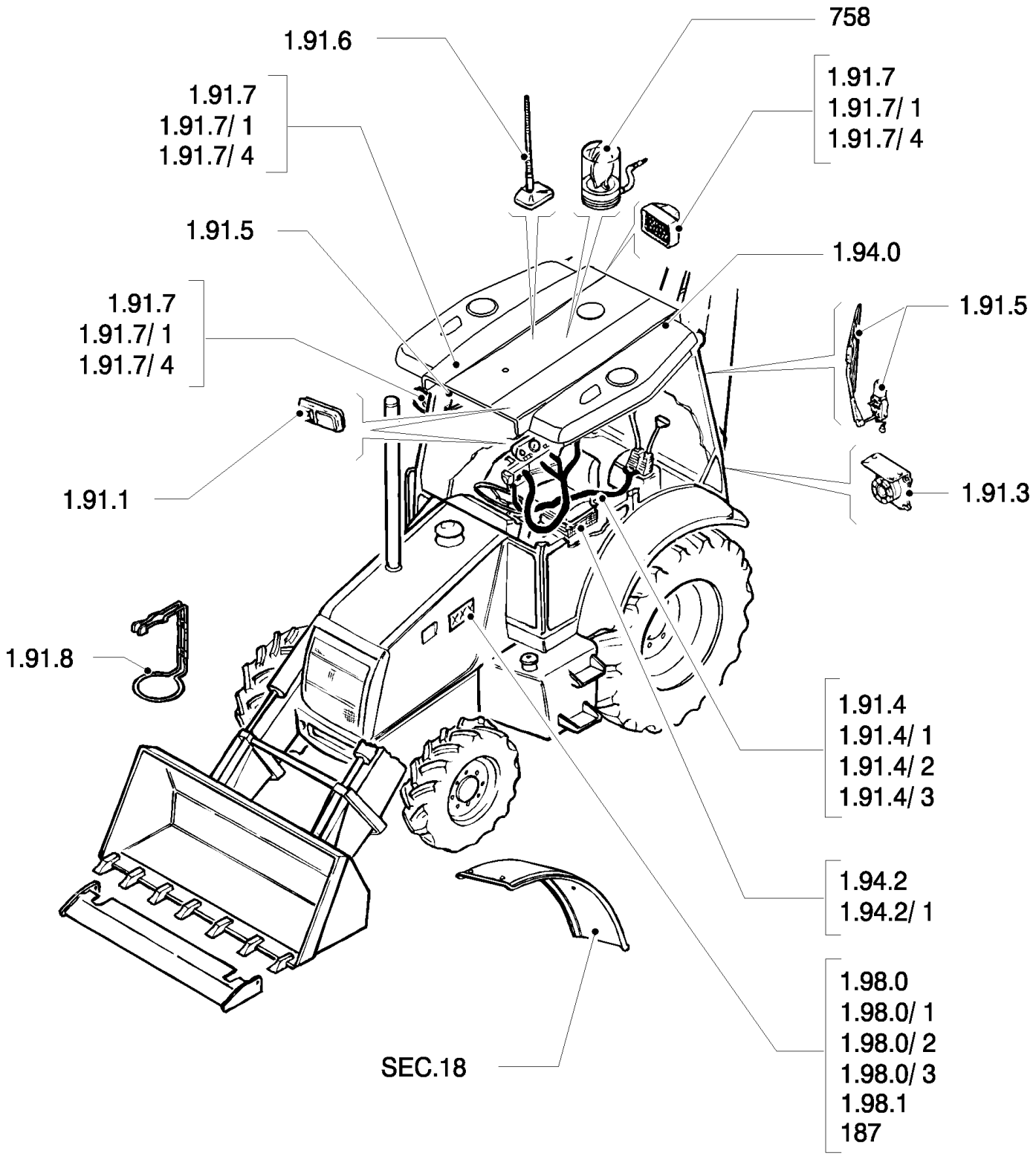
758
1.91.6
1.91.7
1.91.7/ 1
1.91.7/ 4
1.91.7
1.91.7/ 1
1.91.7/ 4
1.91.5
1.94.0
1.91.5
1.91.7
1.91.7/ 1
1.91.7/ 4
1.91.1
1.91.3
1.91.8
1.91.4
1.91.4/ 1
1.91.4/ 2
1.91.4/ 3
1.94.2
1.94.2/ 1
1.98.0
1.98.0/ 1
1.98.0/ 2
1.98.0/ 3
1.98.1
187
SEC.18

SEC. 10(00) BODY, HOOD & DRIVER'S POST 1/3

Ref	Numero de Pieza	Ctd	Descripción

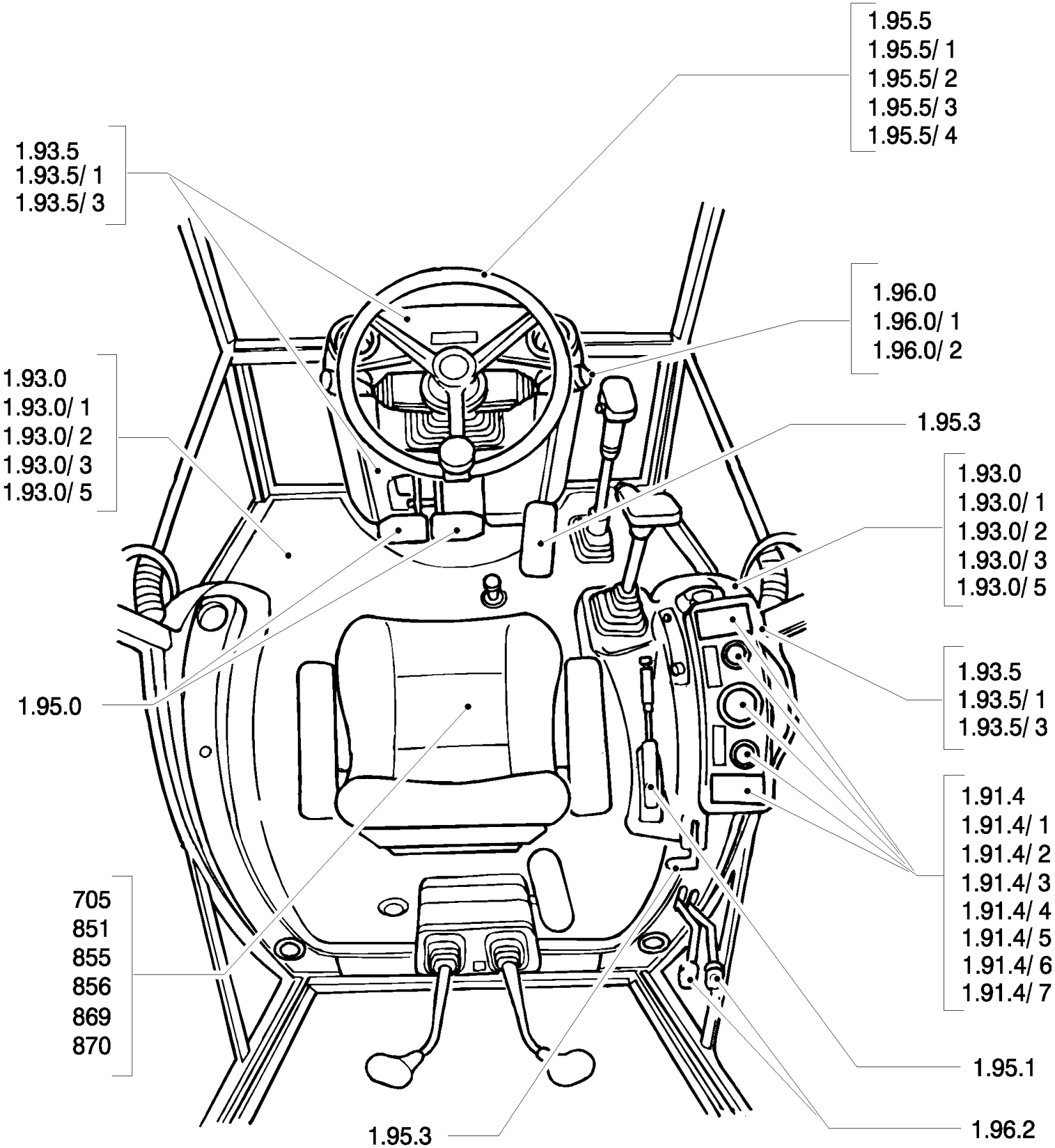
1.95.5
1.95.5/ 1
1.95.5/ 2
1.95.5/ 3
1.95.5/ 4
1.93.5
1.93.5/ 1
1.93.5/ 3
1.96.0
1.96.0/ 1
1.96.0/ 2
1.93.0
1.93.0/ 1
1.93.0/ 2
1.93.0/ 3
1.93.0/ 5
1.95.3
1.93.0
1.93.0/ 1
1.93.0/ 2
1.93.0/ 3
1.93.0/ 5
1.93.5
1.93.5/ 1
1.93.5/ 3
1.95.0
1.91.4
1.91.4/ 1
1.91.4/ 2
1.91.4/ 3
1.91.4/ 4
1.91.4/ 5
1.91.4/ 6
1.91.4/ 7
705
851
855
856
869
870
1.95.1
1.96.2
1.95.3

SEC. 10(01) BODY, HOOD & DRIVER'S POST 2/3

Ref	Numero de Pieza	Ctd	Descripción

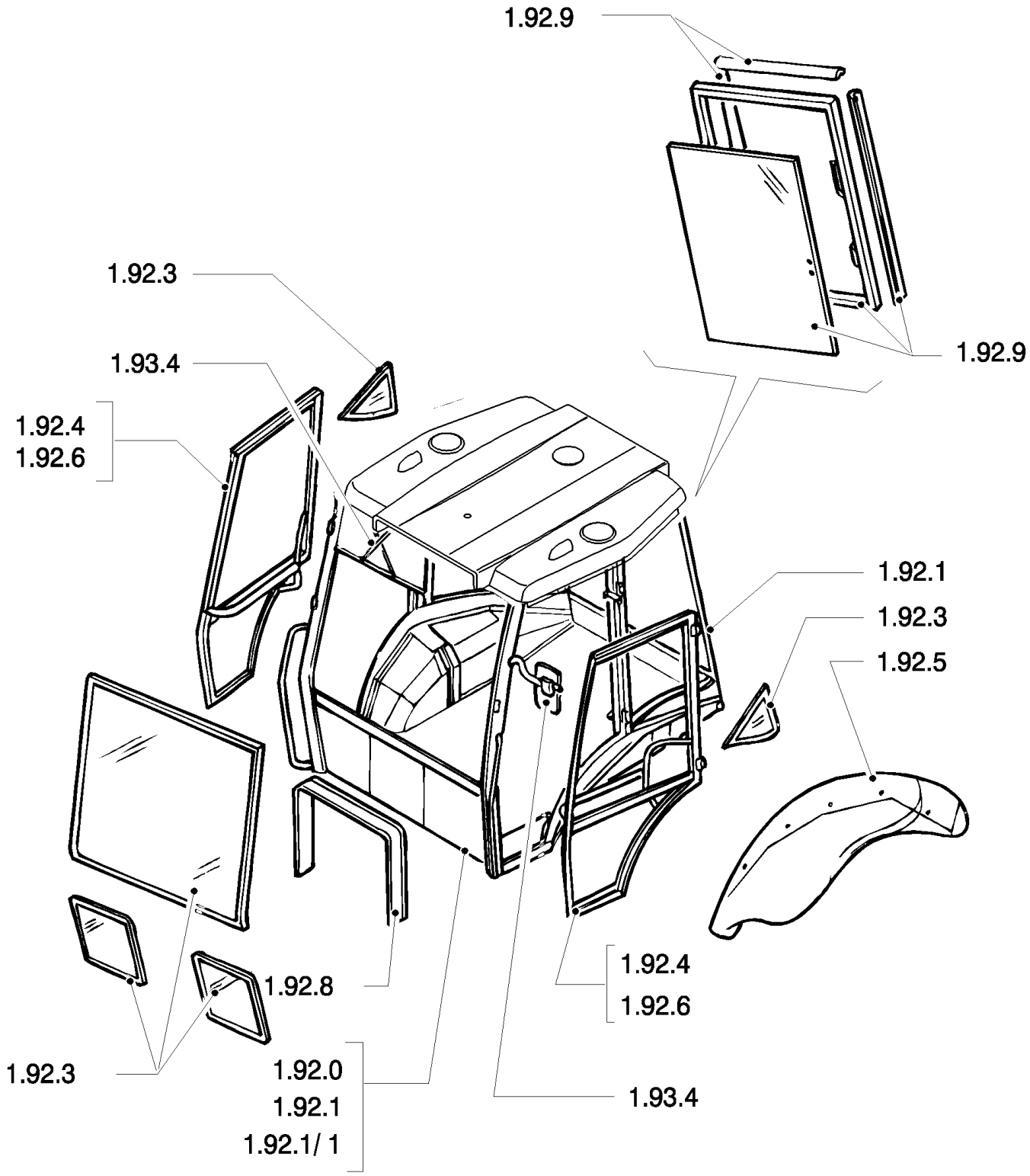
1.92.9
1.92.3
1.93.4
1.92.4
1.92.6
1.92.9
1.92.1
1.92.3
1.92.5
1.92.4
1.92.6
1.92.8
1.92.3
1.92.0
1.92.1
1.92.1/ 1
1.93.4

SEC. 10(02) BODY, HOOD & DRIVER'S POST 3/3

Ref	Numero de Pieza	Ctd	Descripción

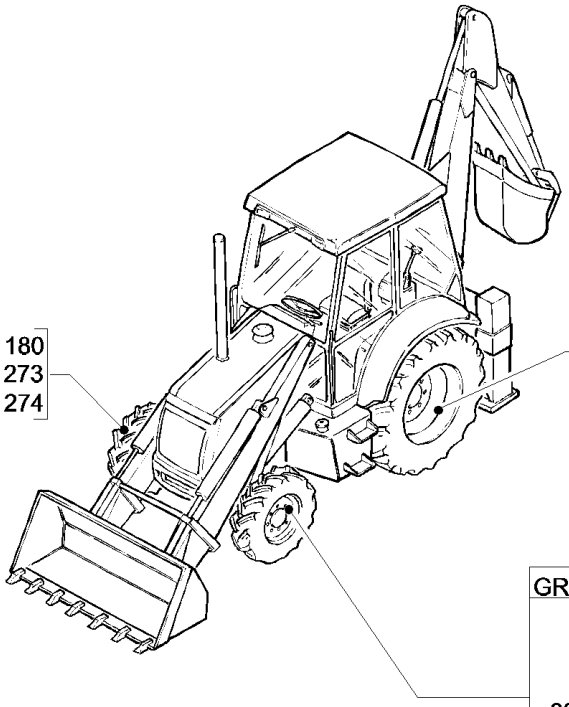

GROUP	EQUIP	TIRE SIZE	RIM
83.00	83.52	16.9 - 28 R4-10PLY TITAN	W15LX28Z
	83.62	16.9 - 28 R4 - 12PR	W14LX 28
	83.64	16.9 - 24 R4 - 10PR	W15LX 24
	83.65	17.5 - L24 R4 - 10PR	W15LX 24
	83.91	19.5 - 24 R4 - 10PR	W16LX 24
	83.92	18.4 - 26 R4 - 12PR	DW16L X26
	83.92	21L24 R4 - 10PR	W18L X24
	83.93	18.4 - 26 R1 - 12PR	DW16L X26
	83.93	19.5 x 24 "JUMBO NJLK"	W16L X24
	83.96	480/80 R26 IT520	DW16LX26
	83.97	16.9 - 28	W14L X28Z
	83.98	18.4 - 26	DW16L X26

GROUP	EQUIP	TIRE SIZE	RIM
82.00	82.75	14 -17.5NHS - 8PR	10.5 X 17.5
	82.76	12 -16.5NHS -8PR	9,75 X 16,5
	82.78	10.5/80 -18I3 - 10PR	9 X 18
	82.79	12.5/80 -18I3 - 10PR	9 X 18
	82.80	12.5/80 -18I3 - 10PR	9 X 18
	82.86	340/80-R18-136A8	9 X 18
	82.87	320/80-R18-IT520	9 X 18
	82.89	16.5 - 18	9 X 18

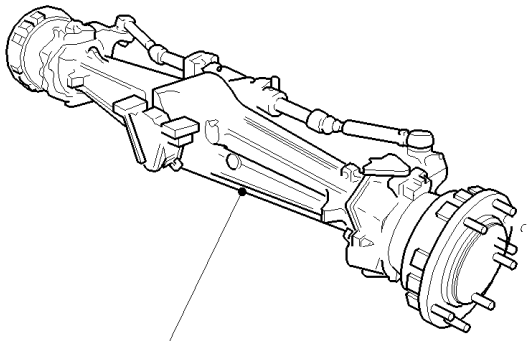

GROUP	EQUIP	TIRE SIZE	RIM
81.00	81.35	11L - 16F3 - 10PR	W8LX 16
	81.38	11L - 16SLF3 - 10PR	W8LX 16

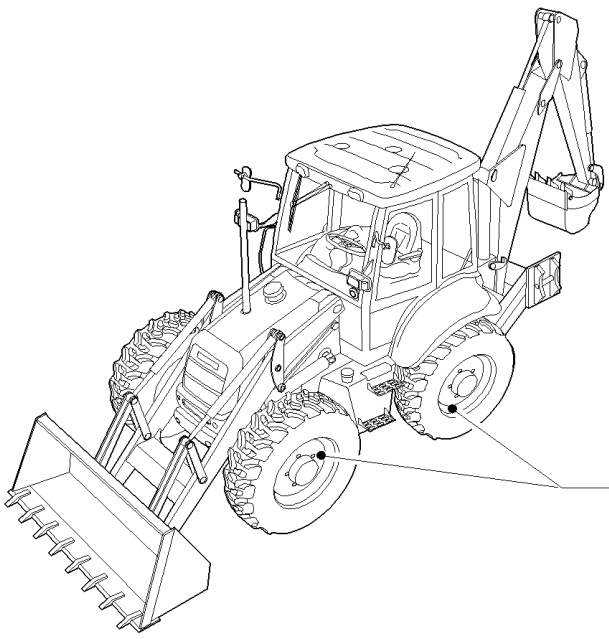

GROUP	EQUIP	TIRE SIZE	RIM
85.00	85.64	16.9 - 24 R4 - 12PR	W14LX 24
	85.64	16.9 - 24 R4 - 12PR (I.S.G.)	W15LX 24
	85.65	16.9 - 28 R4 - 12PR	W15LX 28
	85.65	16.9 - 28 R4 12PLY GY (I.S.G.T.)	W15LX 28
	85.66	440/80 R28 156A8 IT530	W14LX 28
	85.67	440/80 R28 156A8 IT520	W14LX 28

B95LR NA BACKHOE LOADER (1/06-)

SEC. 11(00) WHEELS

Ref	Numero de Pieza	Ctd	Descripción

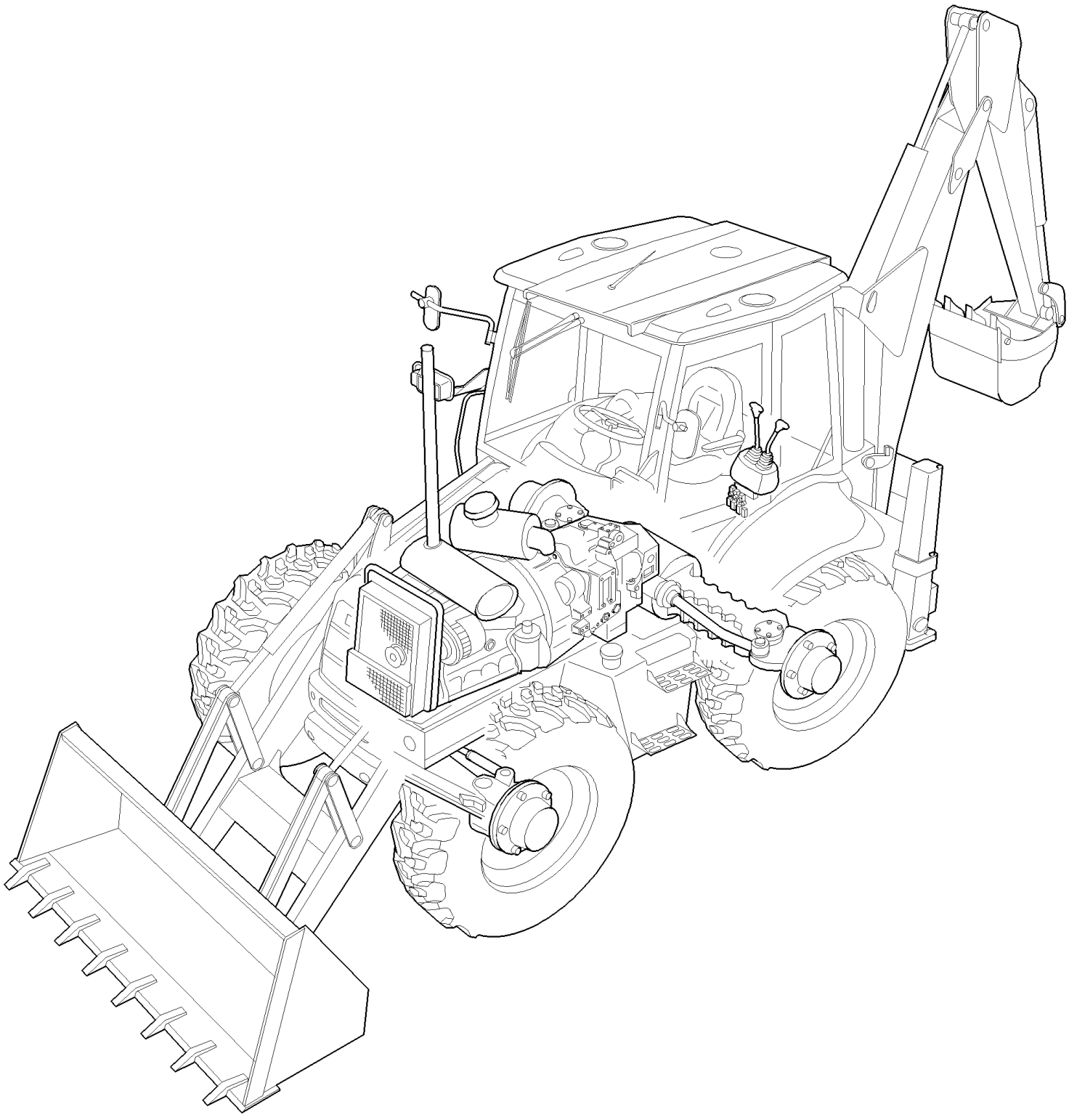

B95LR NA BACKHOE LOADER (1/06-)

SEC. 18(00) VARIATION

Ref	Numero de Pieza	Ctd	Descripción

0.021(01) ENGINE

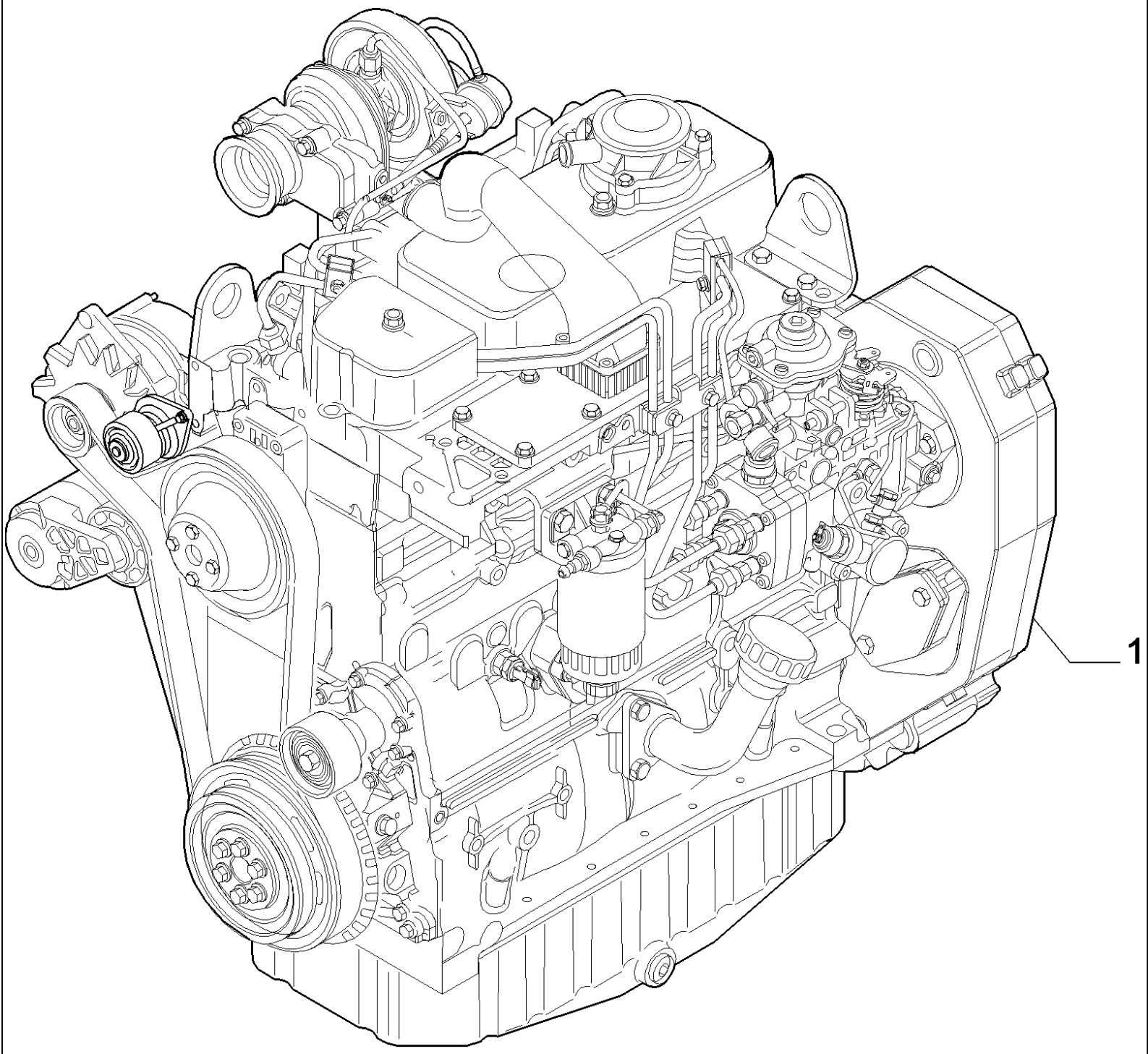

B95LR NA BACKHOE LOADER (1/06-)

0.021(01) ENGINE

Ref	Numero de Pieza	Ctd	Descripción
1	86990710	1	ENGINE, - ASSY, Only for B95, B95LR, B95TC
1	87342412	1	ENGINE, - ASSY

0.040(01) CYLINDER BLOCK

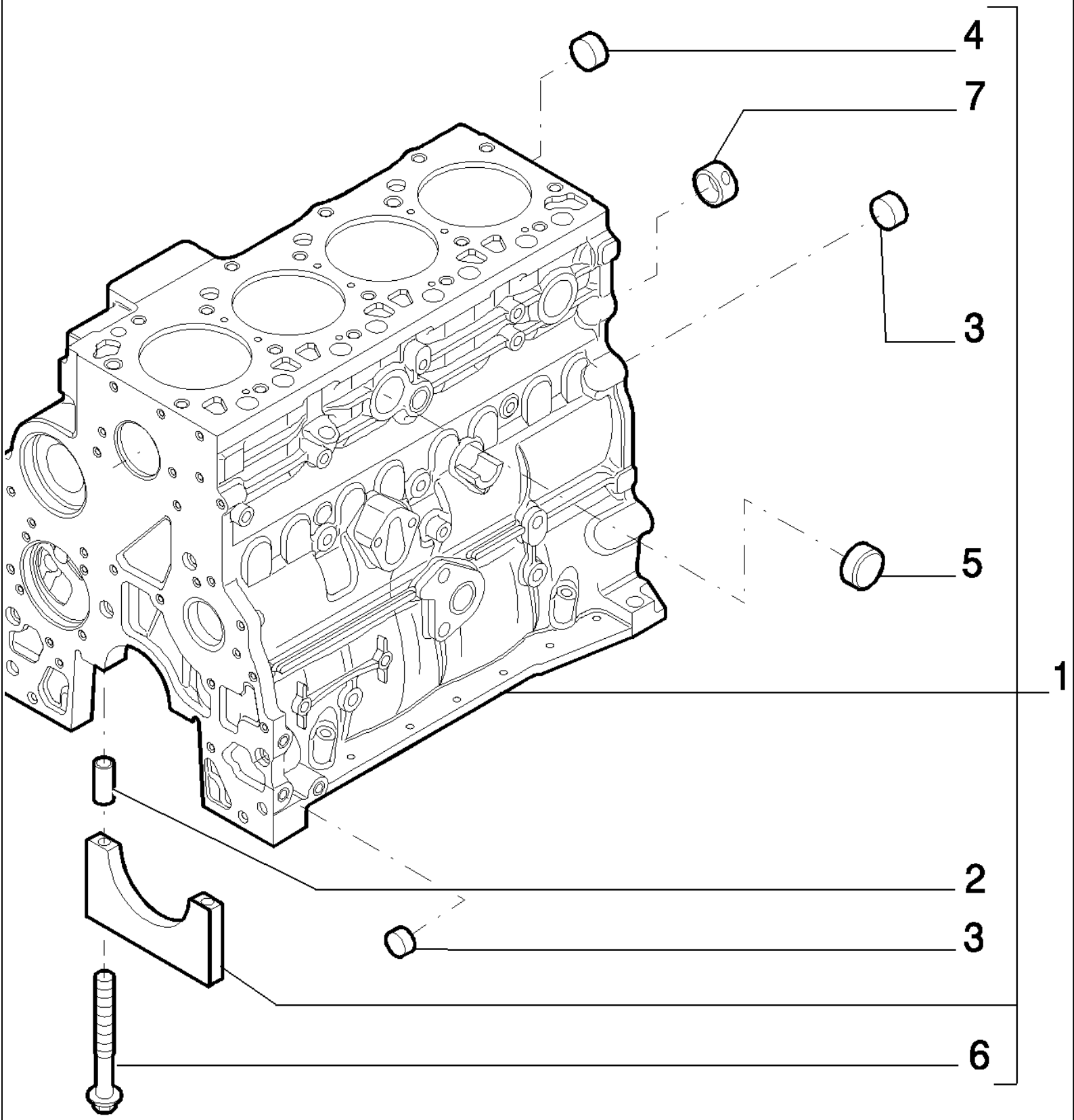

B95LR NA BACKHOE LOADER (1/06-)

0.040(01) CYLINDER BLOCK

Ref	Numero de Pieza	Ctd	Descripción
1	2830082	1	CYLINDER BLOCK, - ASSY
2	4899026	10	DOWEL,
3	4895039	3	PLUG, 17.73 mm OD
4	4895038	4	PLUG, 58.06 mm OD
5	4895228	2	PLUG, 35.23 mm OD
6	4891353	10	SCREW, Flg Hd, M12 x 1.5 x 120,
7	4895040	1	BUSHING,

0.040(02) CYLINDER BLOCK

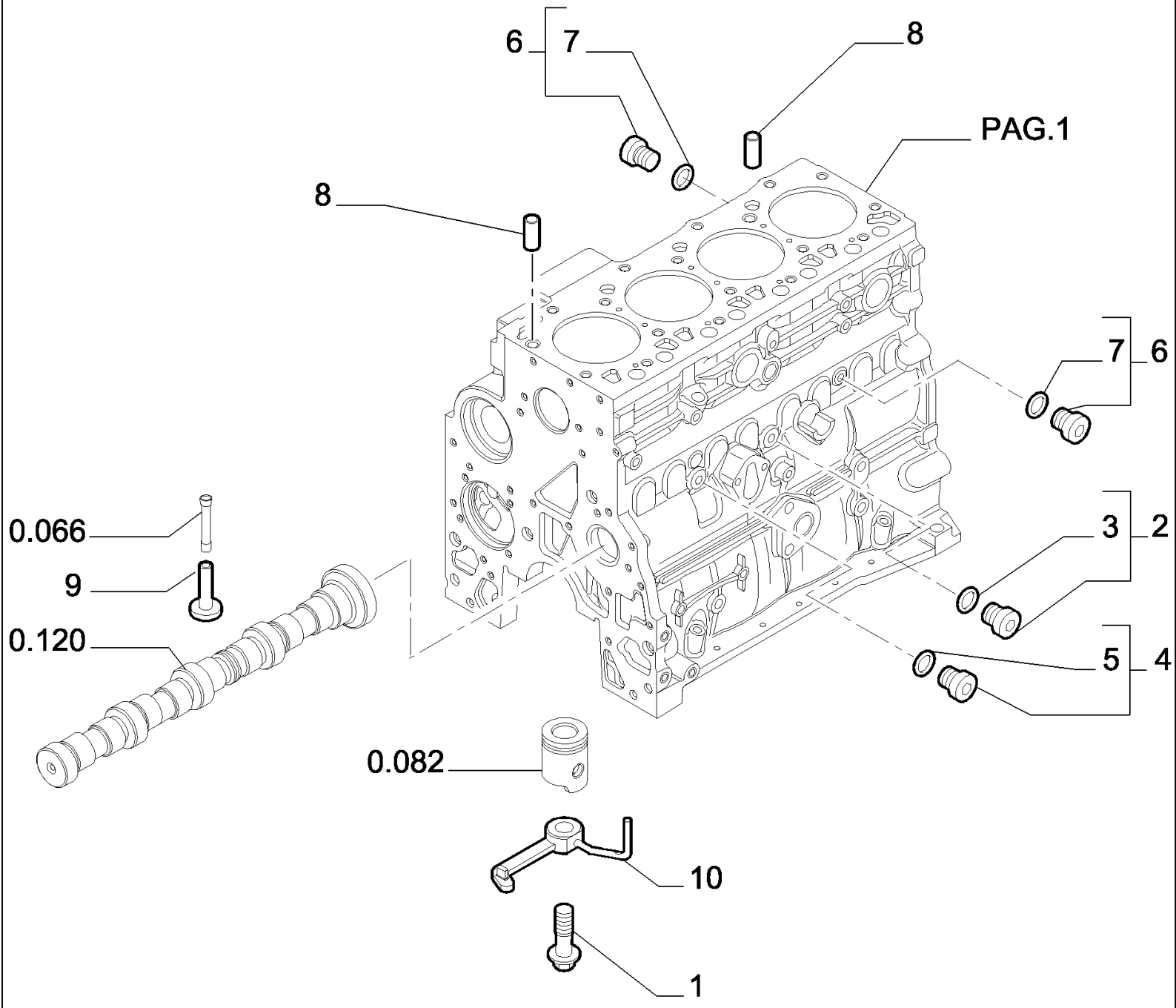

B95LR NA BACKHOE LOADER (1/06-)

0.040(02) CYLINDER BLOCK

Ref	Numero de Pieza	Ctd	Descripción
1	4894218	4	SCREW,
2	4895605	1	PLUG, 14x1.5 - ASSY
3	4899115	1	O-RING,
4	4899009	1	PLUG, 10x1.5 - ASSY
5	4899072	1	O-RING,
6	4895392	2	PLUG, 18x1.5 - ASSY
7	4895393	1	O-RING,
8	4895049	2	DOWEL,
9	4895180	8	TAPPET,
10	2852203	4	NOZZLE, LUB. OIL JET,

0.042(01) OIL PUMP, PAN

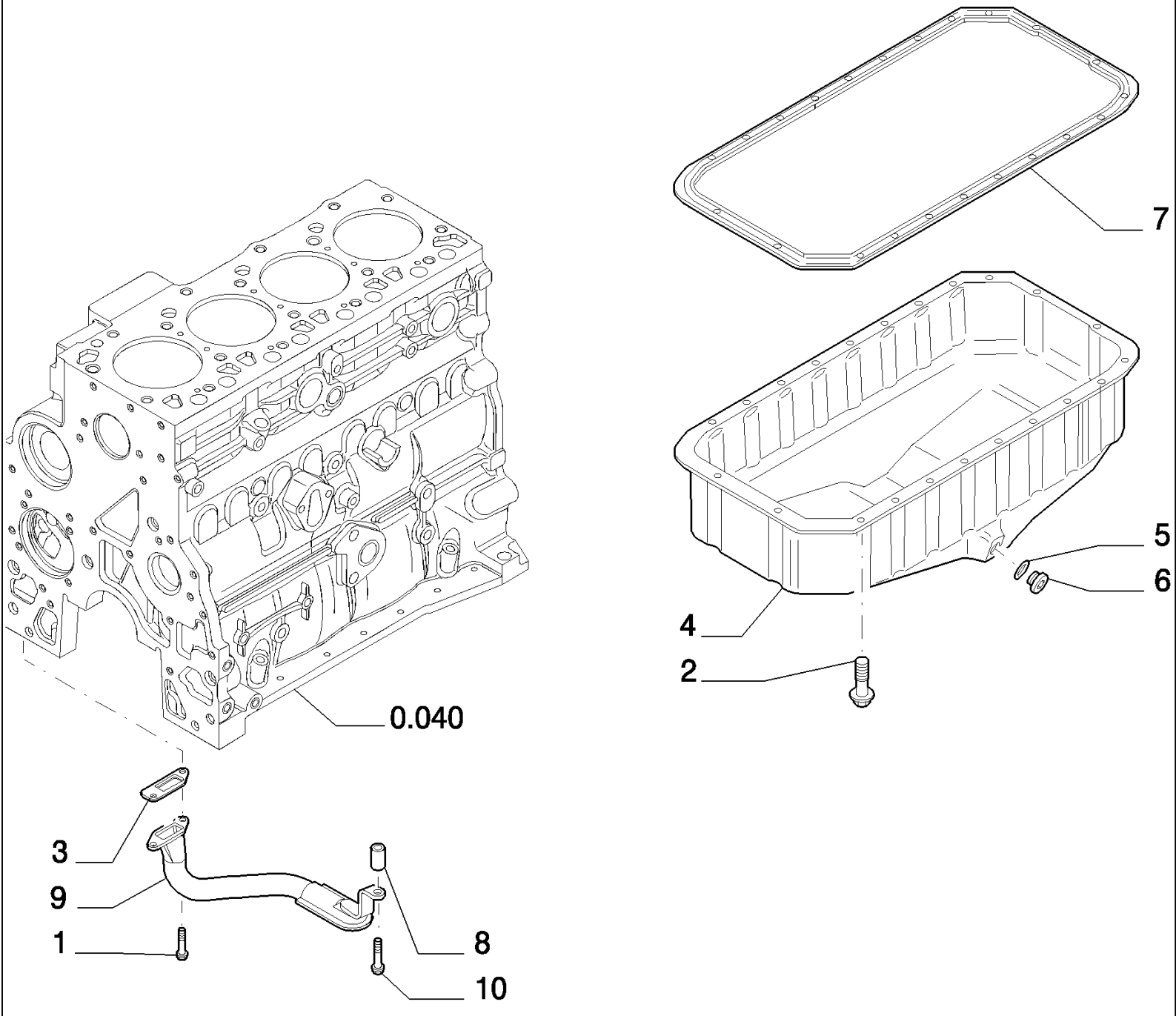

B95LR NA BACKHOE LOADER (1/06-)

0.042(01) OIL PUMP, PAN

Ref	Numero de Pieza	Ctd	Descripción
1	4899020	2	SCREW, M8X1.25X20
2	4899091	22	SCREW, Hex Flg, M8 x 1.25 x 40,
2	4895489	2	SCREW, M8X1.25X110
3	4898301	1	GASKET,
4	2852011	1	PAN, ENGINE OIL,
5	2853728	1	O-RING, 23,4X2,6
6	4894139	1	PLUG, 22X1.5
7	2852012	1	GASKET,
8	2852016	1	SPACER,
9	2852013	1	STRAINER, ELEMENT,
10	4895538	1	SCREW, M10X1.5X120

0.043(01) CYLINDER BLOCK - COVERS

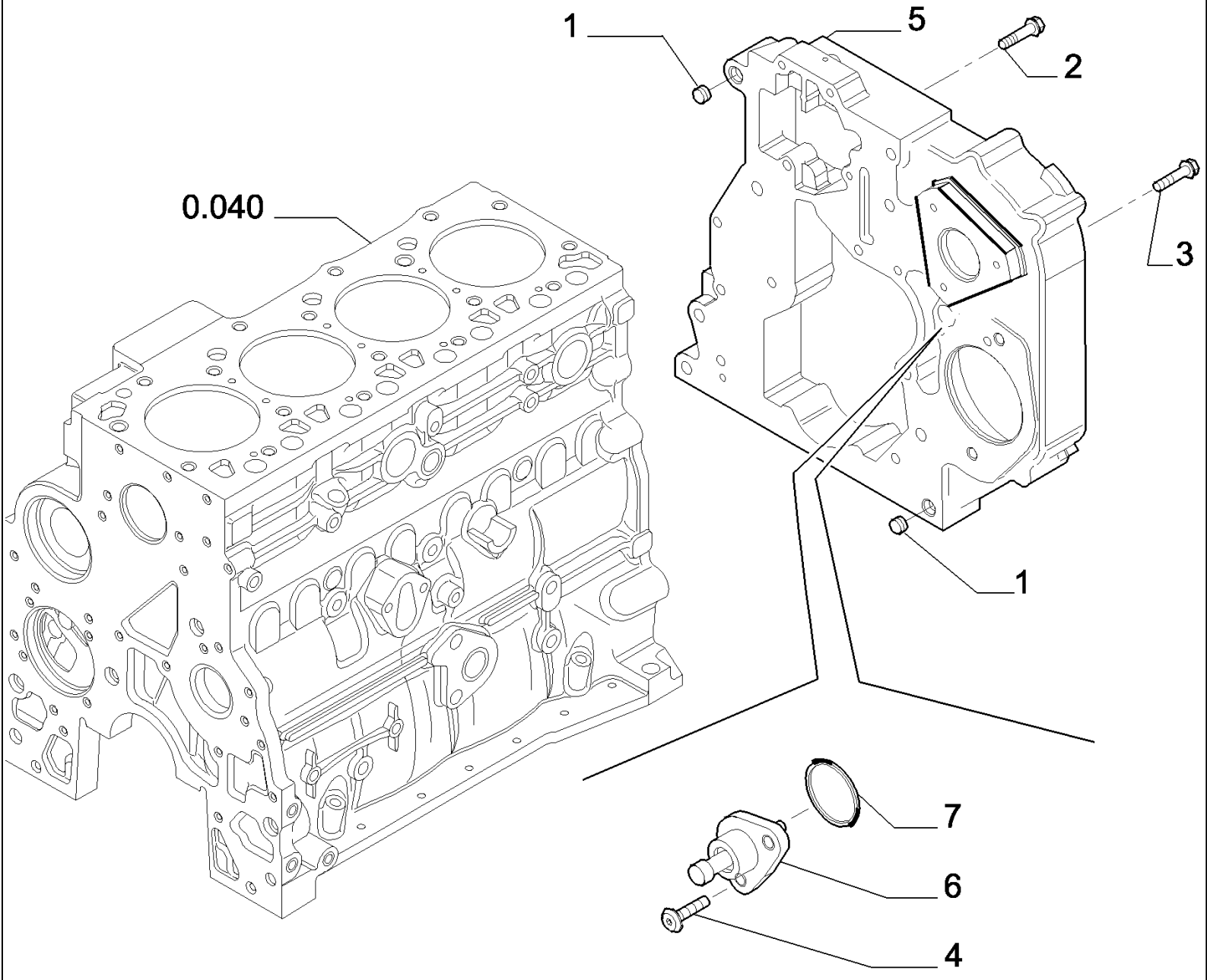

B95LR NA BACKHOE LOADER (1/06-)

0.043(01) CYLINDER BLOCK - COVERS

Ref	Numero de Pieza	Ctd	Descripción
1	4899026	2	DOWEL,
2	4899091	4	SCREW, Hex Flg, M8 x 1.25 x 40,
3	4899093	5	SCREW, Hex Flg, M10 x 1.5 x 30,
3	4899073	2	SCREW, Hex Flg, M12 x 1.75 x 30,
4	4895355	2	SCREW, Torx Rd Hd, M5 x .8 x 17,
5	504097164	1	
6	2852515	1	PIN,
7	17278780	1	O-RING,

0.043(02) CYLINDER BLOCK - COVERS

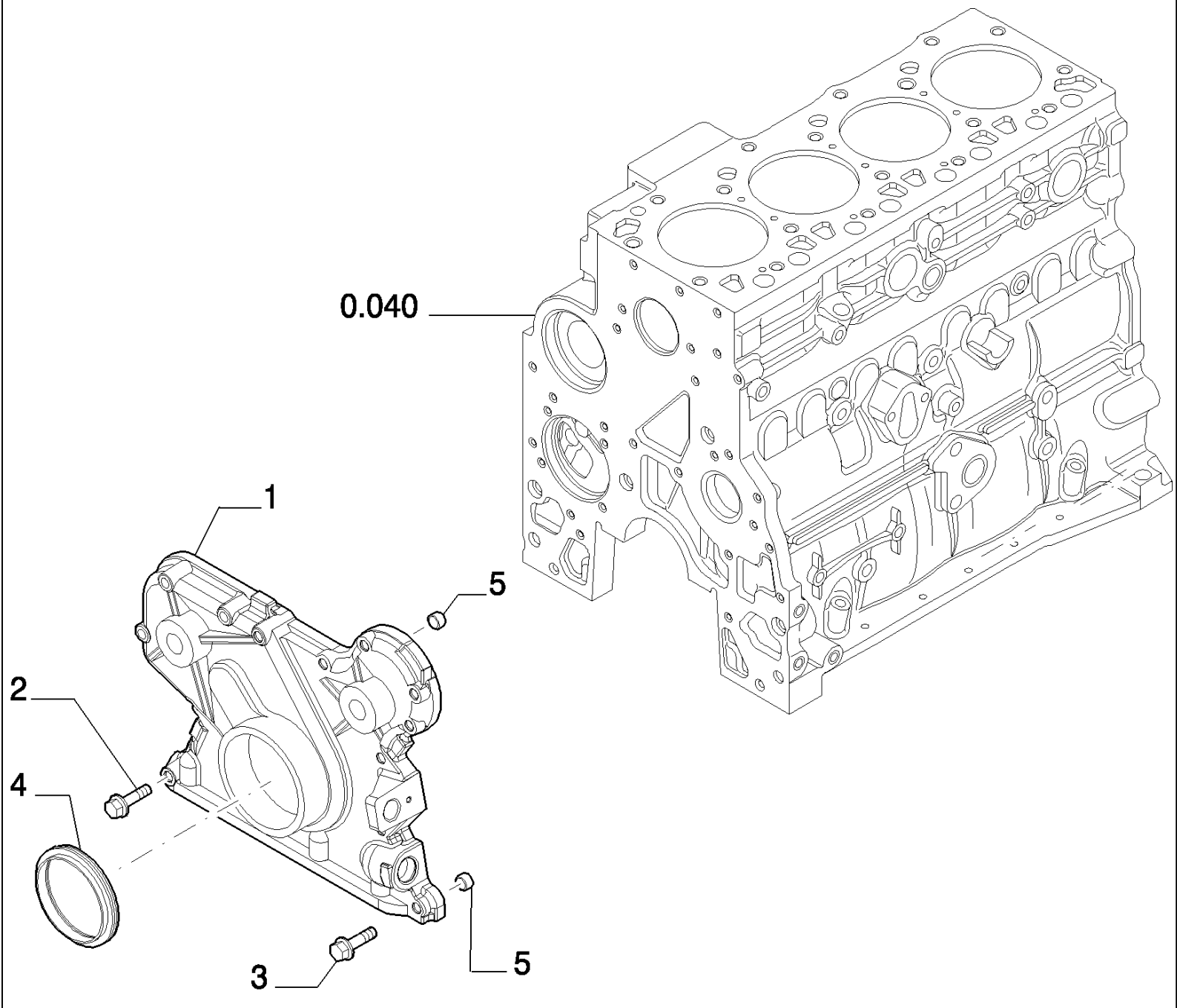

B95LR NA BACKHOE LOADER (1/06-)

0.043(02) CYLINDER BLOCK - COVERS

Ref	Numero de Pieza	Ctd	Descripción
1	4897024	1	COVER,
2	4899078	5	SCREW, Hex Flg, M8 x 1.25 x 45,
3	4899063	8	SCREW, Hex Flg, M8 x 1.25 x 30,
4	4890832	1	SEAL,
5	4891209	2	DOWEL,

0.043(03) CYLINDER BLOCK - COVERS

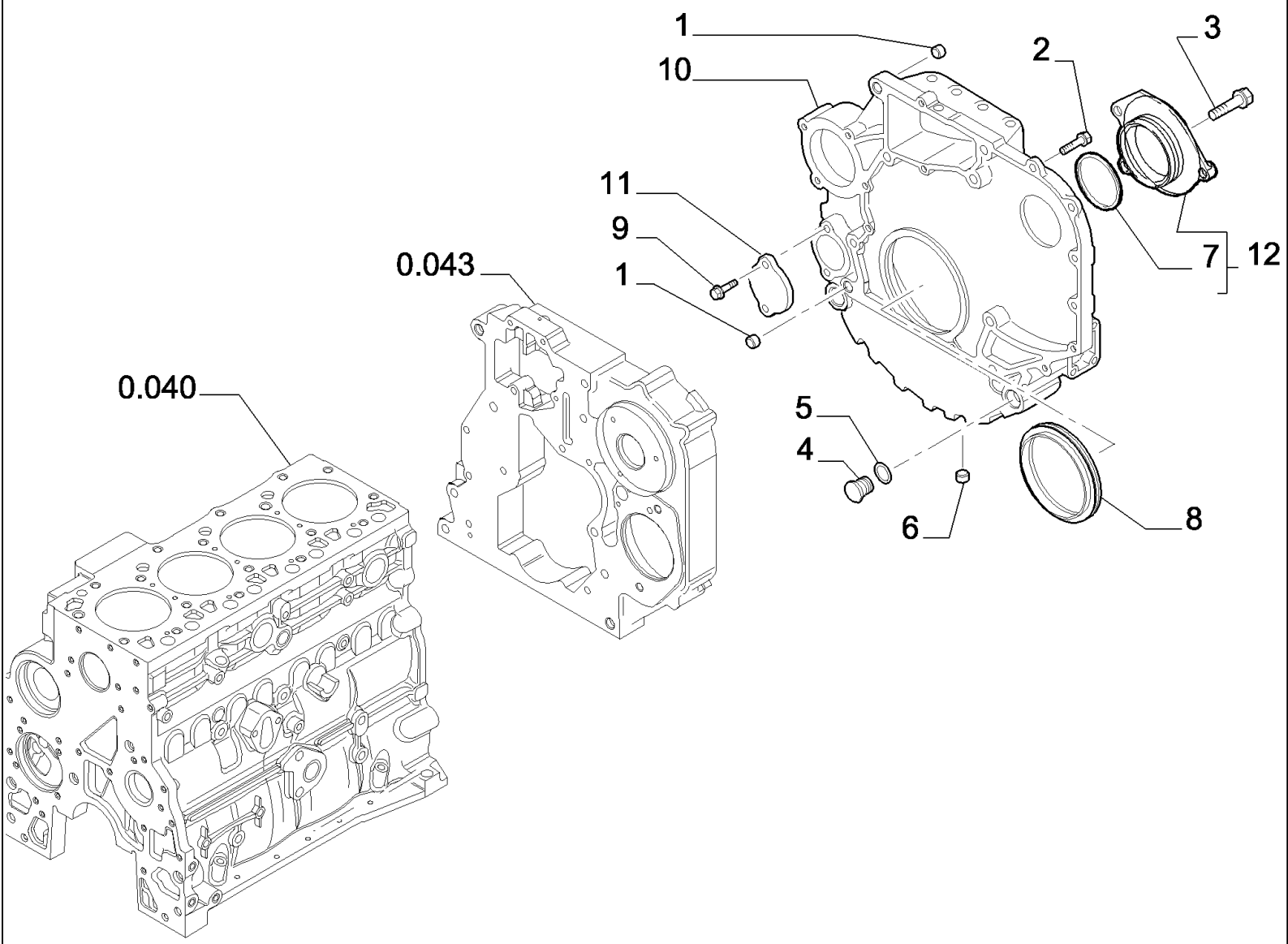

B95LR NA BACKHOE LOADER (1/06-)

0.043(03) CYLINDER BLOCK - COVERS

Ref	Numero de Pieza	Ctd	Descripción
1	4899026	2	DOWEL,
2	4899109	3	SCREW, Hex, M10 x 1.5 x 80,
2	4892915	8	SCREW, M10X1.5X40
2	4899076	5	SCREW, Hex Flg, M12 x 1.75 x 80,
2	4899074	2	SCREW, Hex Flg, M12 x 1.75 x 120, M12X1,75X120
2	2852865	2	SCREW, M10X35
2	4899143	1	SCREW, Hex Flg, M10 x 1.5 x 140, M10X1,5X140
3	4899020	3	SCREW, M8X20
4	4895378	2	PLUG,
5	4895379	2	O-RING, M21.82 ID x 3.53 Thk
6	4899079	1	SCREW, Hex Flg, M8 x 1.25 x 25,
7	17285481	1	GASKET, 75X87X2,62
8	4890833	1	SEAL,
9	4899068	2	SCREW, Hex Flg , M8 x 1.25 x 16,
10	2852023	1	COVER,
11	4895155	1	COVER,
12	2854073	1	COVER, - ASSY

0.060(01) CYLINDER HEAD

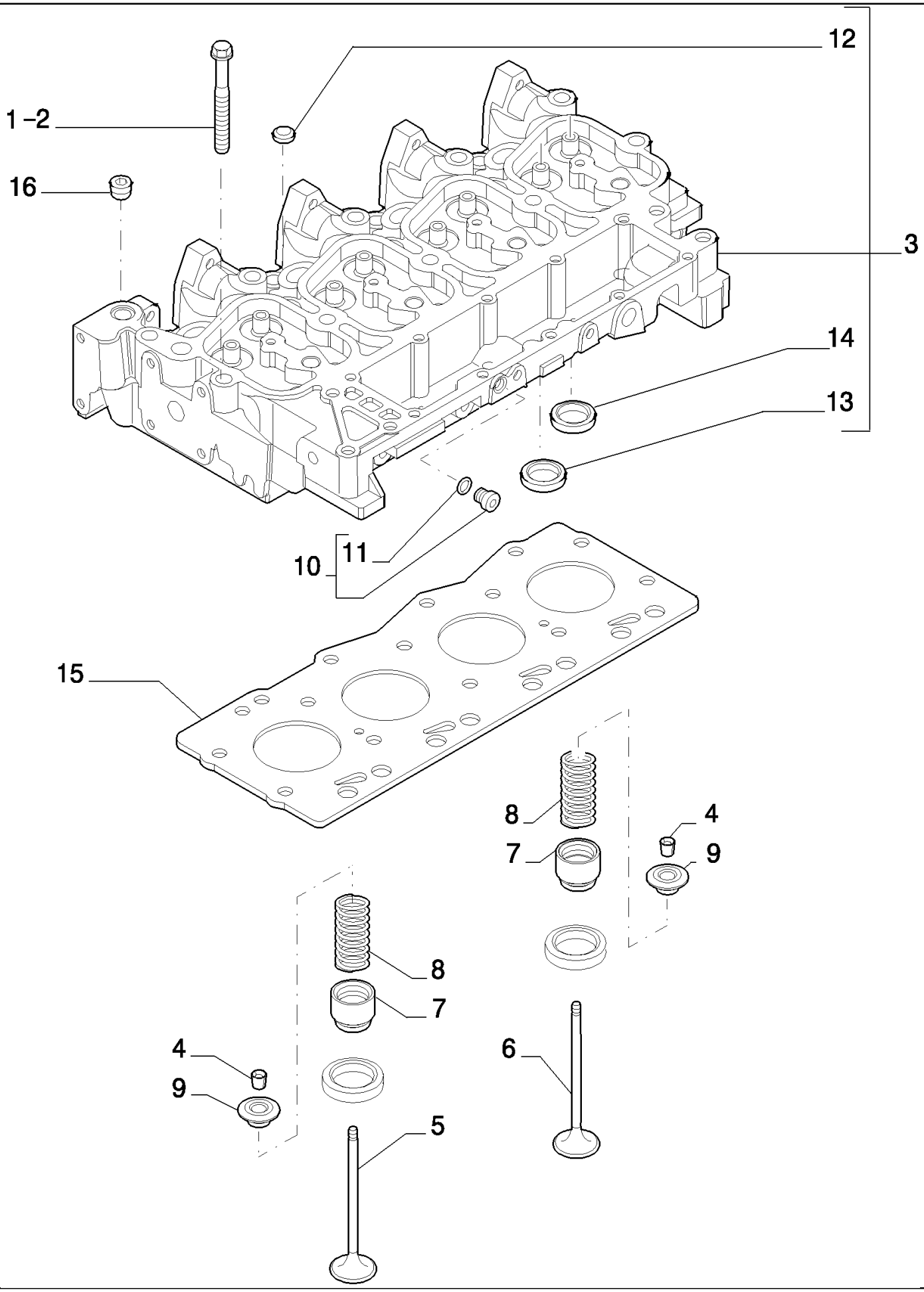

B95LR NA BACKHOE LOADER (1/06-)

0.060(01) CYLINDER HEAD

Ref	Numero de Pieza	Ctd	Descripción
1	4892861	4	SCREW, Wash Hd, M12 x 1.25 x 73, M12X1.75X73
2	4892859	10	SCREW, Wash Hd, M12 x 1.25 x 143,
3	4895790	1	CYLINDER HEAD, - ASSY
	87536180	1	CYLINDER HEAD, - ASSY Include Ref 3,4,5,6,7,8,9,10
4	4895183	16	COLLET,
5	4895188	4	VALVE, ENG EXHAUST, STD,
6	4895187	4	VALVE, ENGINE, INLET, STD,
7	4895347	8	SEAL,
8	4895215	8	SPRING, VALVE,
9	4895184	8	RETAINER,
10	4899009	1	PLUG, - ASSY 10X1.5
11	4899072	1	O-RING,
12	4895179	3	PLUG,
13	4897178	4	VALVE SEAT,
14	4897179	4	VALVE SEAT,
15	2830919	1	GASKET, CYLINDER HEAD, SP= 1.25
16	4895078	5	PLUG,

B95LR NA BACKHOE LOADER (1/06-)

0.063(01) CYLINDER HEAD - COVERS

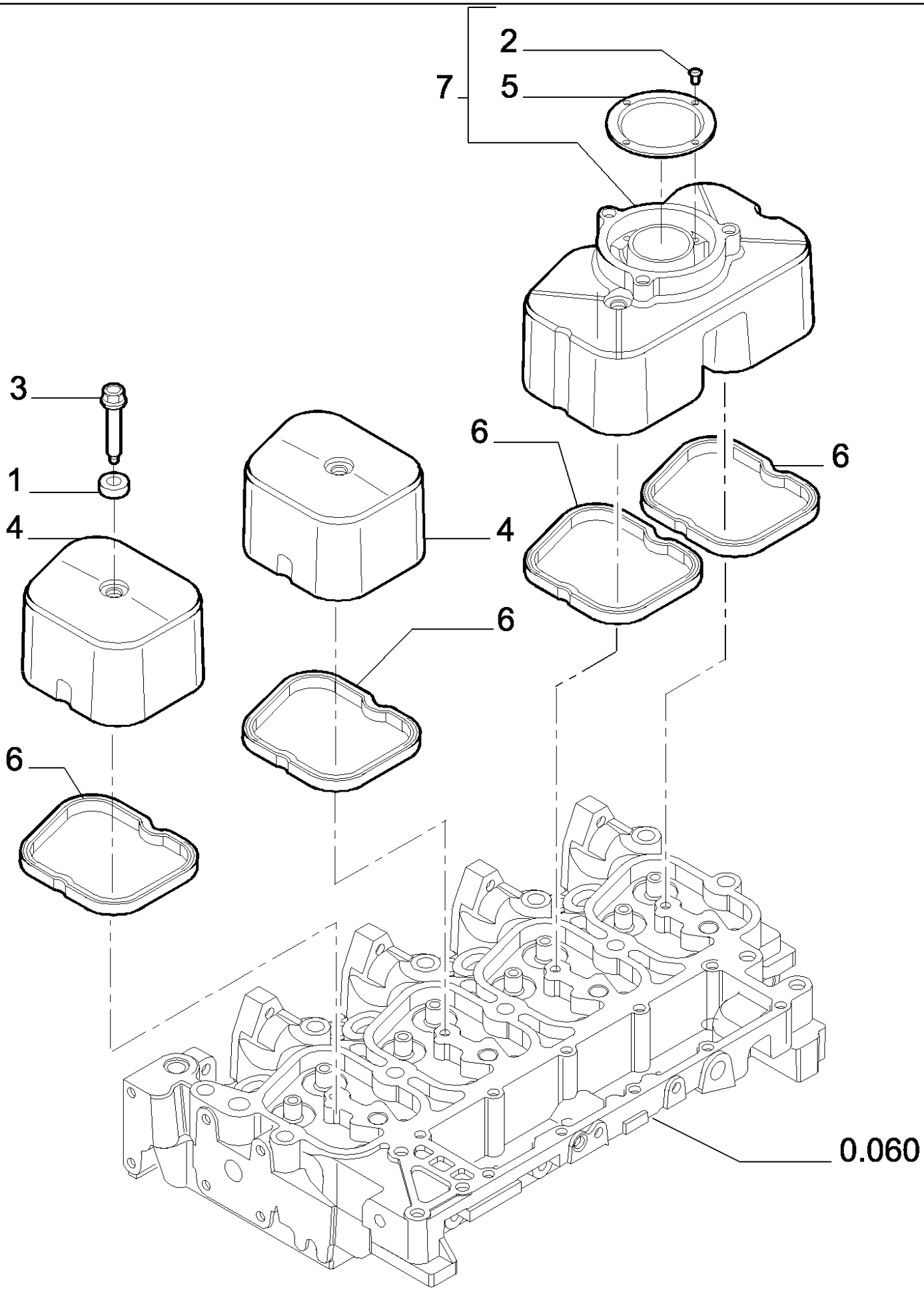

B95LR NA BACKHOE LOADER (1/06-)

0.063(01) CYLINDER HEAD - COVERS

Ref	Numero de Pieza	Ctd	Descripción
1	4895360	4	ISOLATOR,
2	2830281	4	SCREW, SELF TAPPING,
3	4895214	4	SCREW, M8X1.25X33
4	2852032	2	COVER,
5	2830775	1	BAFFLE,
6	2852033	4	GASKET,
7	2830784	1	COVER, VALVE, - ASSY

0.066(01) CYLINDER HEAD - VALVE MECHANISM

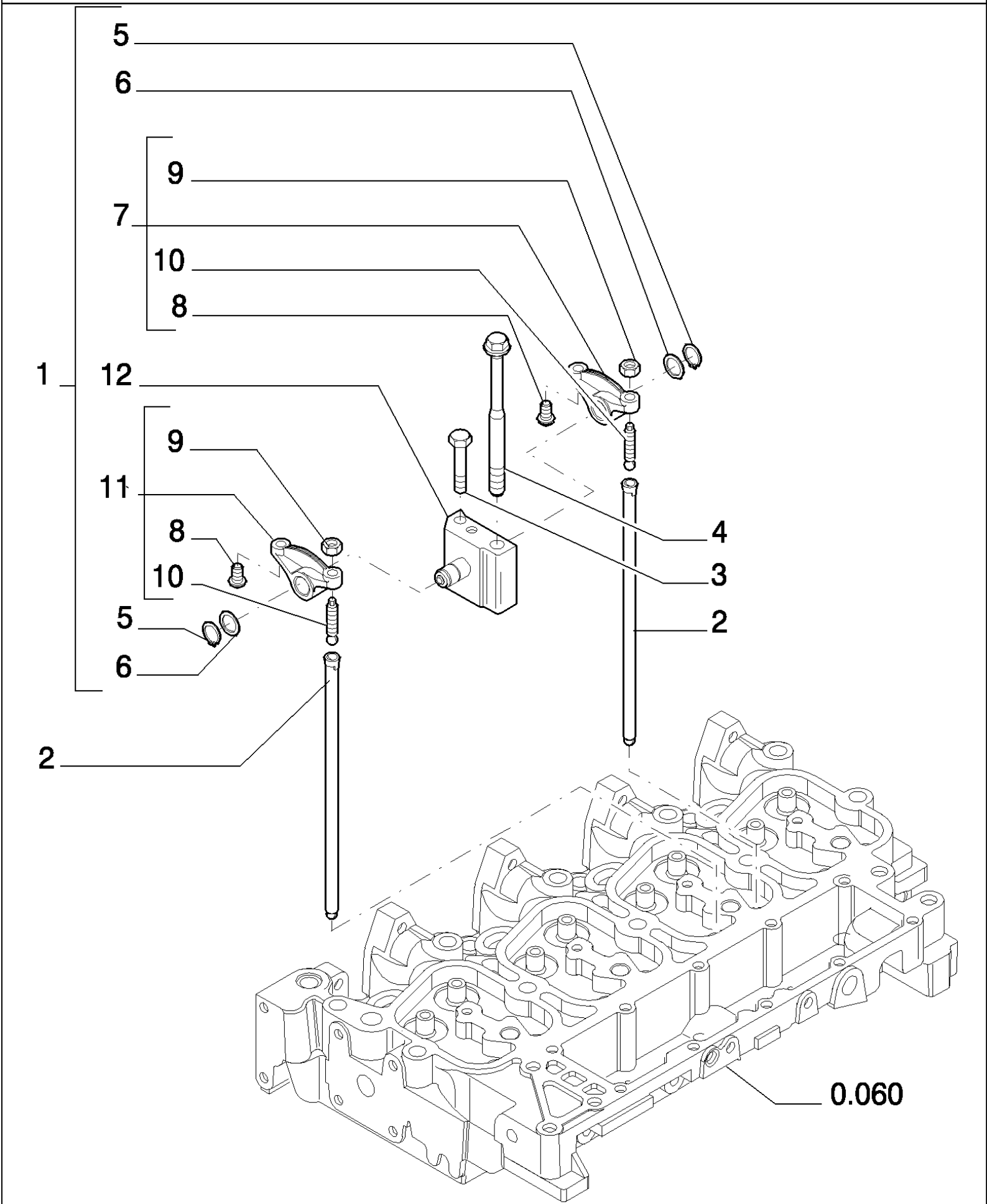

B95LR NA BACKHOE LOADER (1/06-)

0.066(01) CYLINDER HEAD - VALVE MECHANISM

Ref	Numero de Pieza	Ctd	Descripción
1	4895195	4	ROCKER ARM, - ASSY
2	4895361	8	ROD, PUSH,
3	2852866	4	SCREW,
4	4892860	4	SCREW, Wash Hd, M12 x 1.25 x 183, M12X1.75X183
5	4895363	2	RING, SNAP,
6	4895364	2	WASHER,
7	4895196	1	ROCKER ARM, - ASSY
8	4895365	2	INSERT,
9	4895198	2	NUT,
10	4895199	2	SCREW,
11	4895200	1	ROCKER ARM, - ASSY
12	4895204	1	SUPPORT,

B95LR NA BACKHOE LOADER (1/06-)

0.071(01) MANIFOLD - INTAKE

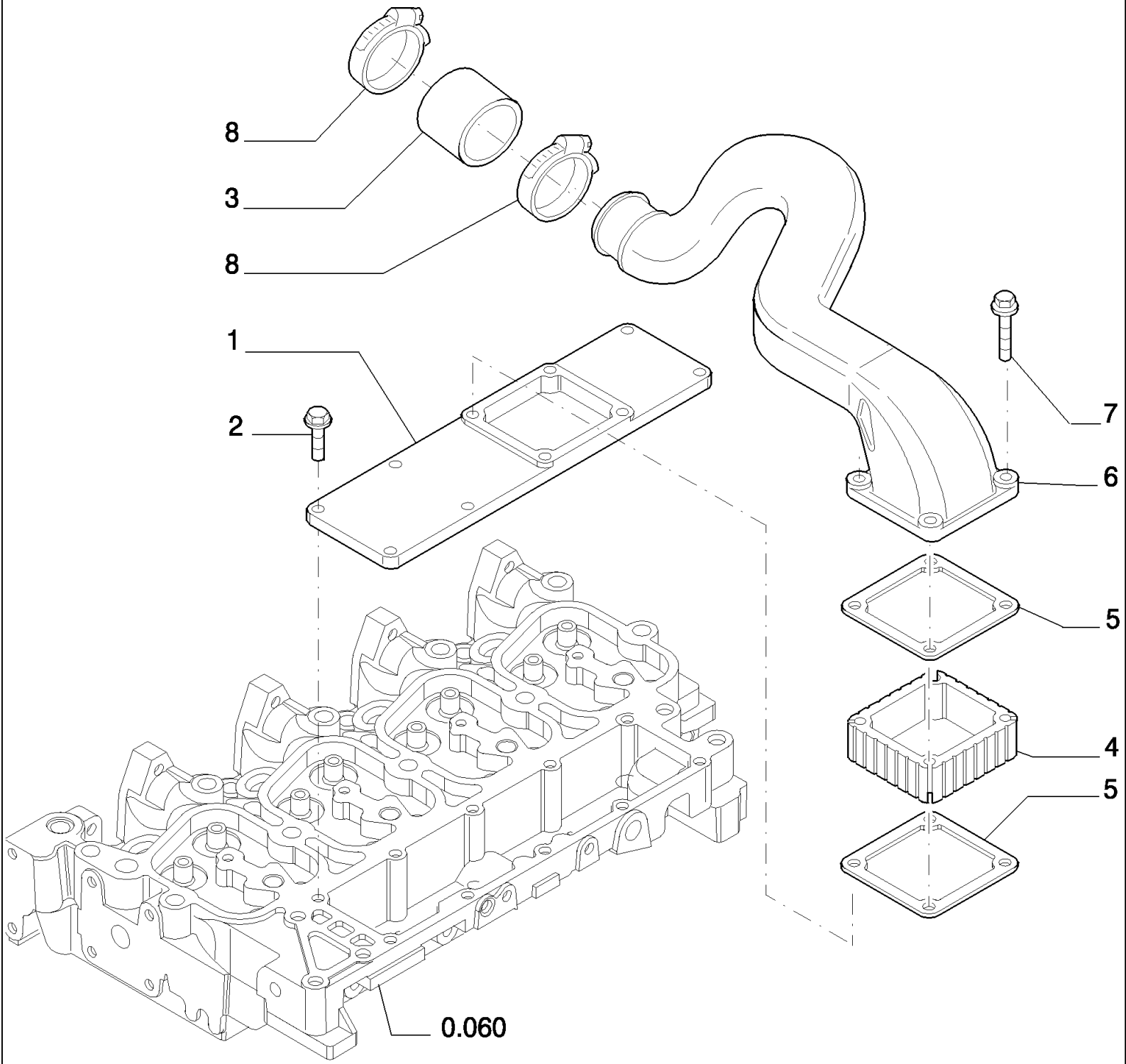

B95LR NA BACKHOE LOADER (1/06-)

0.071(01) MANIFOLD - INTAKE

Ref	Numero de Pieza	Ctd	Descripción
1	2852044	1	COVER,
2	4899039	6	SCREW, Hex Flg, M8 x 1.25 x 25,
3	2852029	1	SLEEVE,
4	4895648	1	SPACER,
5	4899921	2	GASKET,
6	2852030	1	PIPE, SUCTION,
7	4895294	4	SCREW, 8X140
8	4899629	2	CLAMP, HOSE,

B95LR NA BACKHOE LOADER (1/06-)

0.077(01) MANIFOLD - EXHAUST

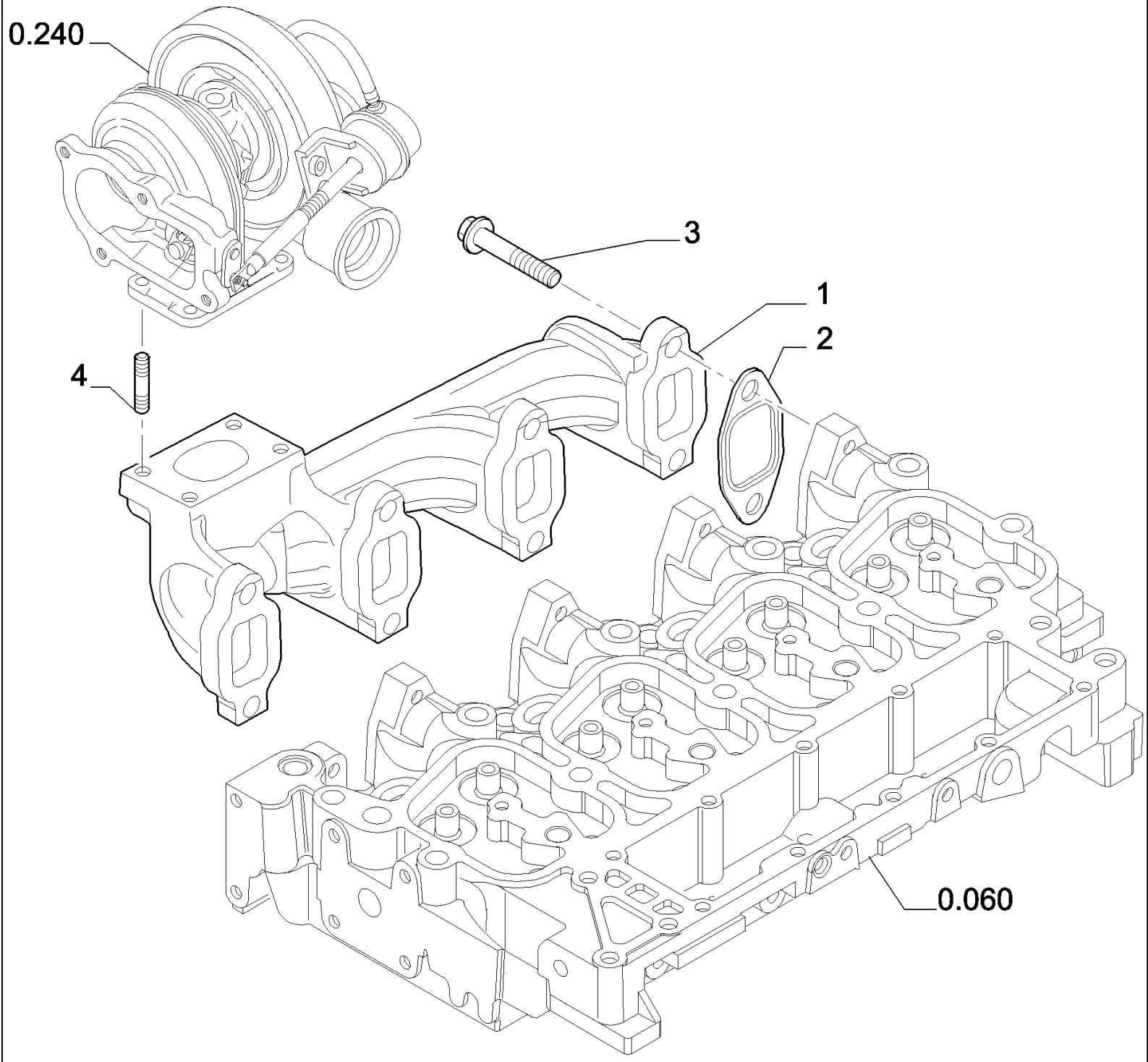

B95LR NA BACKHOE LOADER (1/06-)

0.077(01) MANIFOLD - EXHAUST

Ref	Numero de Pieza	Ctd	Descripción
1	2831203	1	MANIFOLD, EXHAUST,
2	2852743	4	GASKET,
3	2852834	8	SCREW, M10X1,5X40
4	4899119	4	STUD,

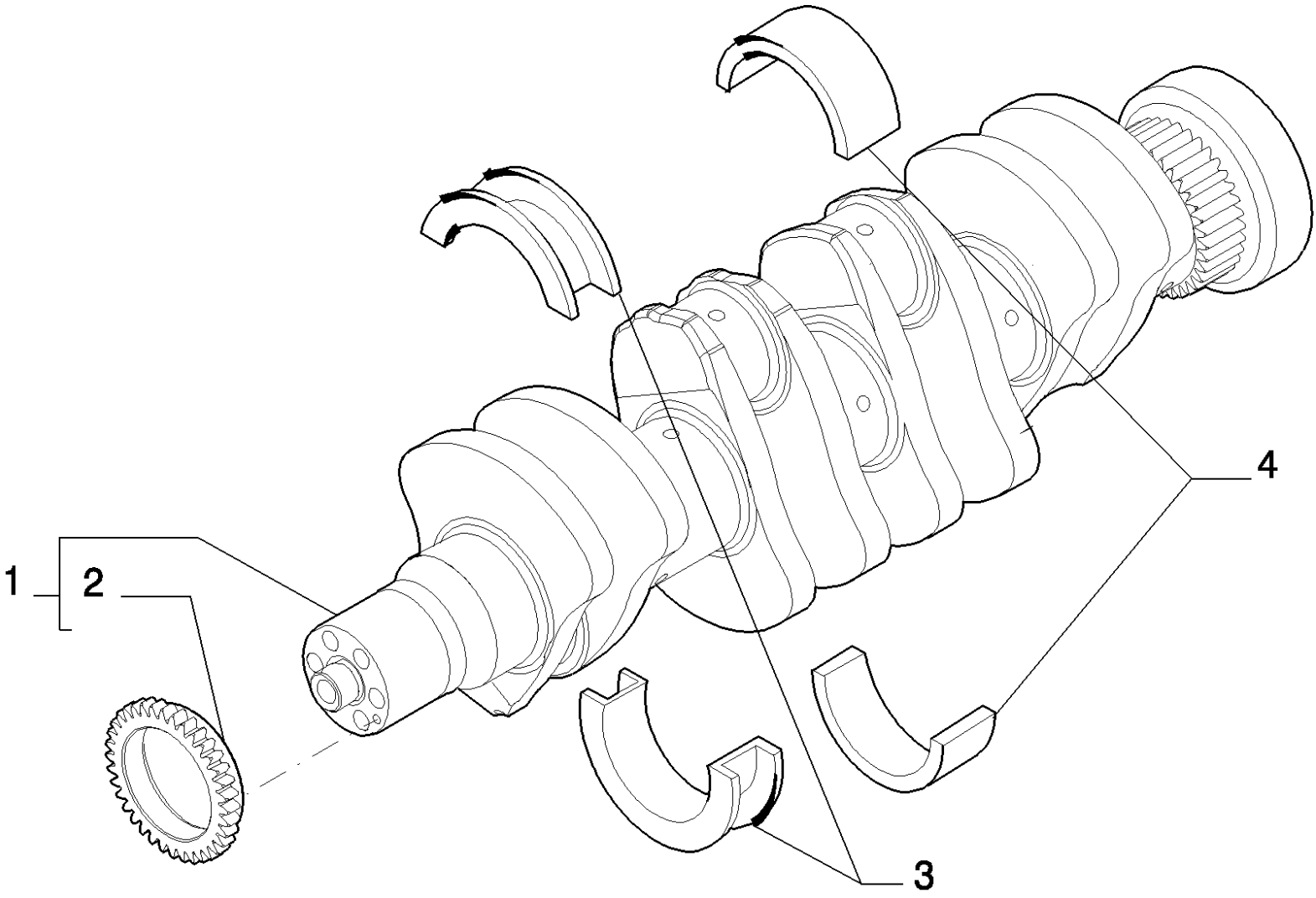
1
2
3
4

B95LR NA BACKHOE LOADER (1/06-)

0.080(01) CRANKSHAFT

Ref	Numero de Pieza	Ctd	Descripción
1	504095659	1	CRANKSHAFT, - ASSY
2	4893386	1	GEAR,
3	2992153	1	SET, THRUST WASHERS (STD), (+ 0.000) (+ 0.000)
3	2992154	1	SET,THRUST WASHERS +0.508, (+ 0.254) (+ 0.250)
3	2992155	1	SET, THRUST WASHERS +0.25, (+ 0.508) (+ 0.500)
4	2992147	4	SET OF MAIN BRGS.STD,
4	2992148	4	SET OF MAIN BRGS -0.254,
4	2992149	4	SET OF MAIN BRGS -0.508mm,

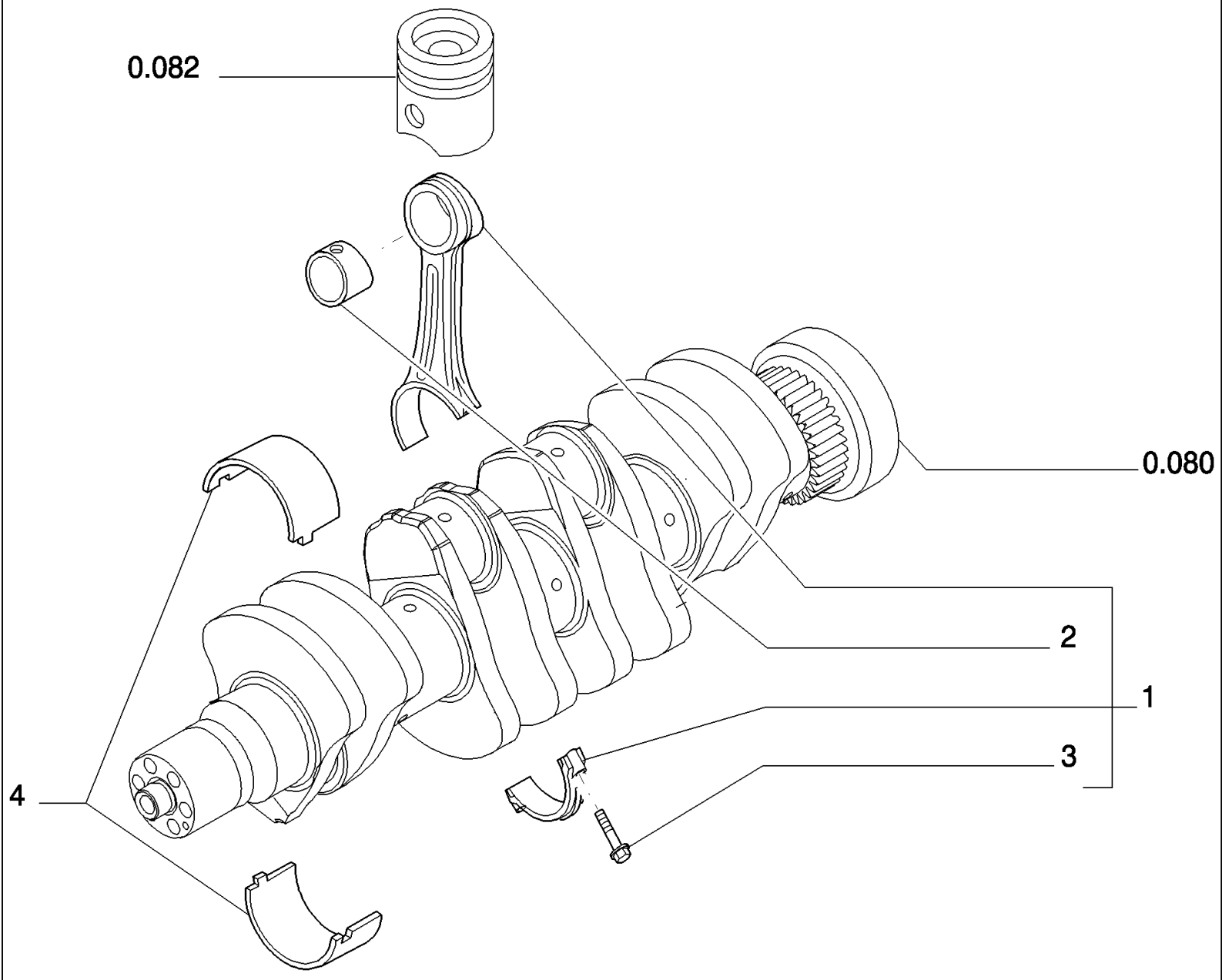
0.082
0.080
2
1
3
4

B95LR NA BACKHOE LOADER (1/06-)

0.081(01) PISTONS - CONNECTING ROD

Ref	Numero de Pieza	Ctd	Descripción
1	2831298	4	ROD, CONNECTING, - ASSY
2	4892708	1	BUSHING,
3	2831297	2	SCREW,
4	8093882	4	SET, CONN ROD BRGS (STD),

B95LR NA BACKHOE LOADER (1/06-)

0.082(01) PISTONS - CONNECTING ROD

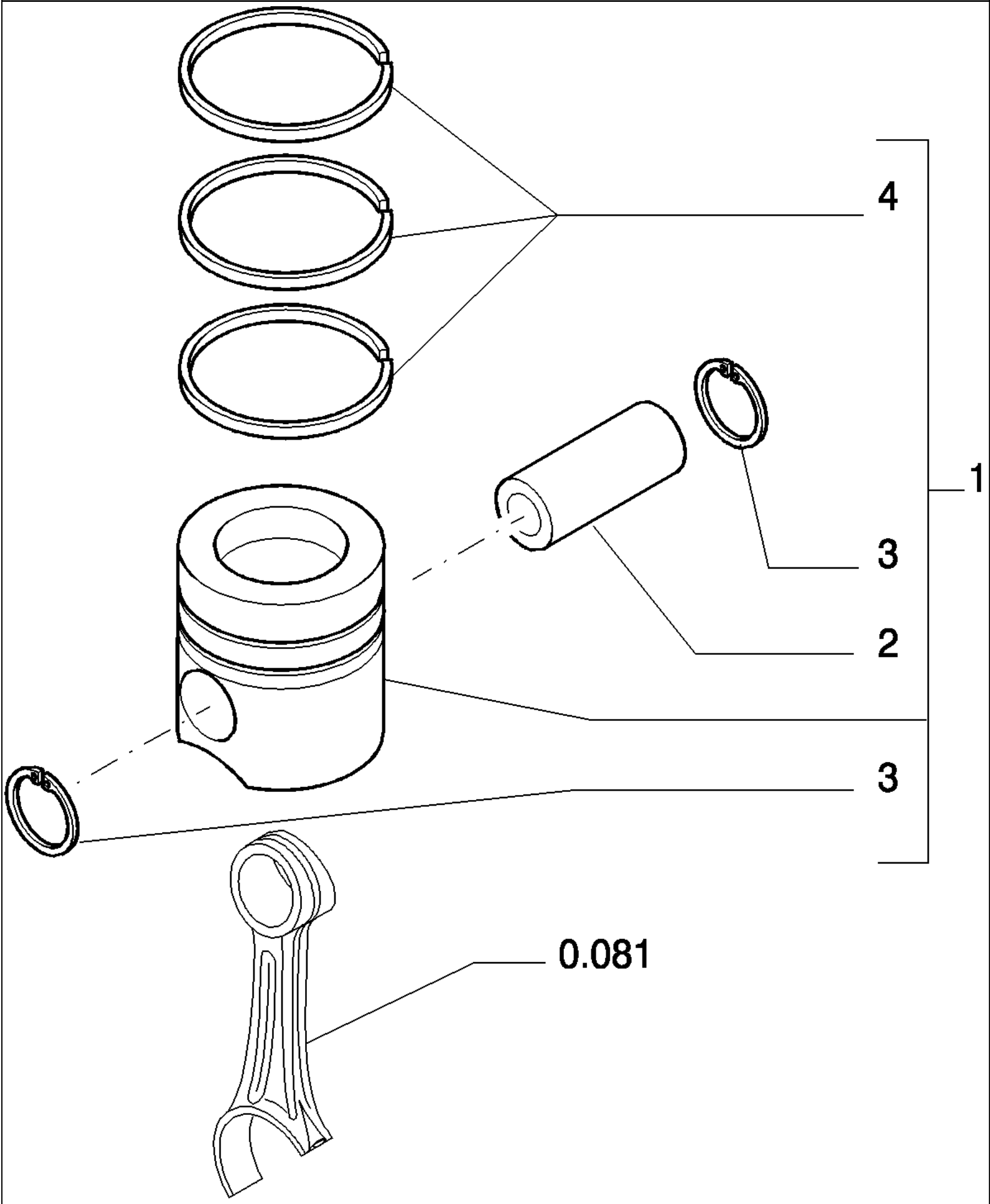

B95LR NA BACKHOE LOADER (1/06-)

0.082(01) PISTONS - CONNECTING ROD

Ref	Numero de Pieza	Ctd	Descripción
1	8094740	4	KIT, PISTON & RINGS, STD
1	8094753	4	KIT, PISTON & RINGS, + 0.4
2	4892712	1	PIN, PISTON,
3	4892713	2	RING, SNAP,
4	8094739	1	KIT, PISTON RINGS, STD
4	8094752	1	SET, PISTON RINGS + 0.4, + 0.4

0.083(01) FLYWHEEL - ENGINE

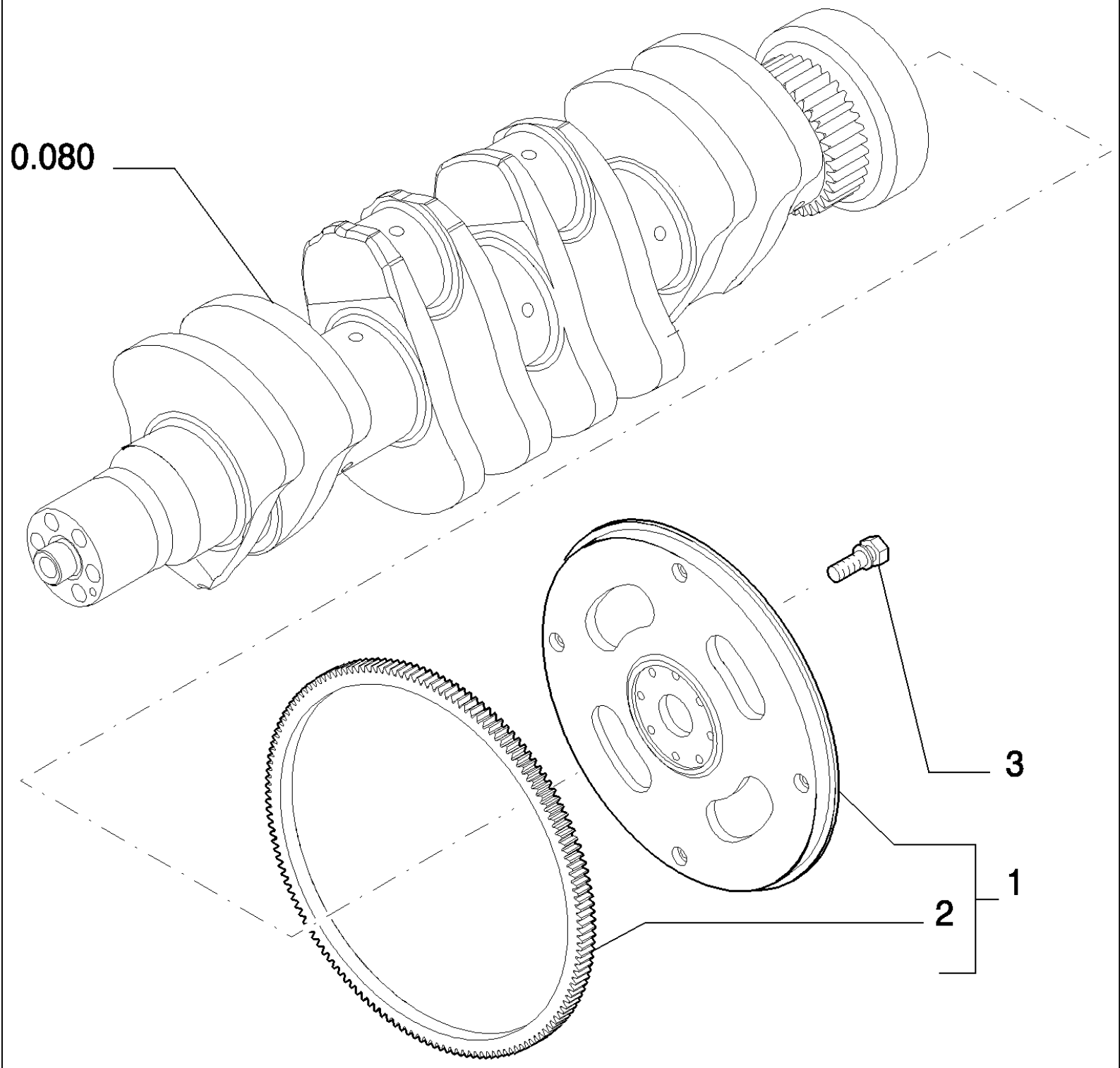

B95LR NA BACKHOE LOADER (1/06-)

0.083(01) FLYWHEEL - ENGINE

Ref	Numero de Pieza	Ctd	Descripción
1	2852049	1	FLYWHEEL, ENGINE, - ASSY
2	2852051	1	GEAR, RING,
3	4894641	8	SCREW, Wash Hd, M12 x 1.25 x 31,

0.084(01) PULLEY - CRANKSHAFT

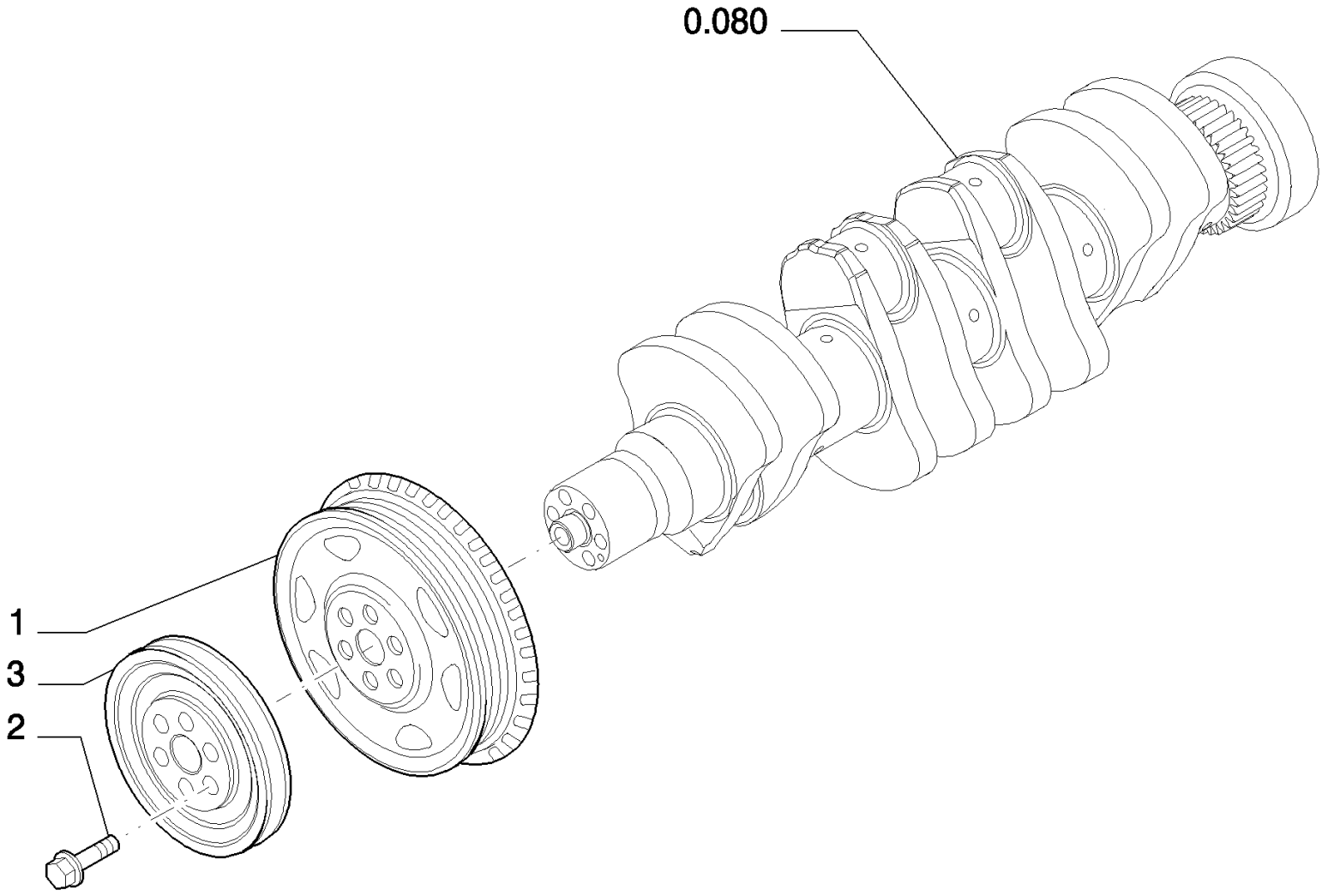

B95LR NA BACKHOE LOADER (1/06-)

0.084(01) PULLEY - CRANKSHAFT

Ref	Numero de Pieza	Ctd	Descripción
1	4896773	1	PULLEY,
2	4892867	6	SCREW, Torx Wash Hd, M12 x 1.25 x 78.5,
3	504061622	1	PULLEY,

0.105(01) DYNAMIC BALANCER, GEARS & SHAFTS

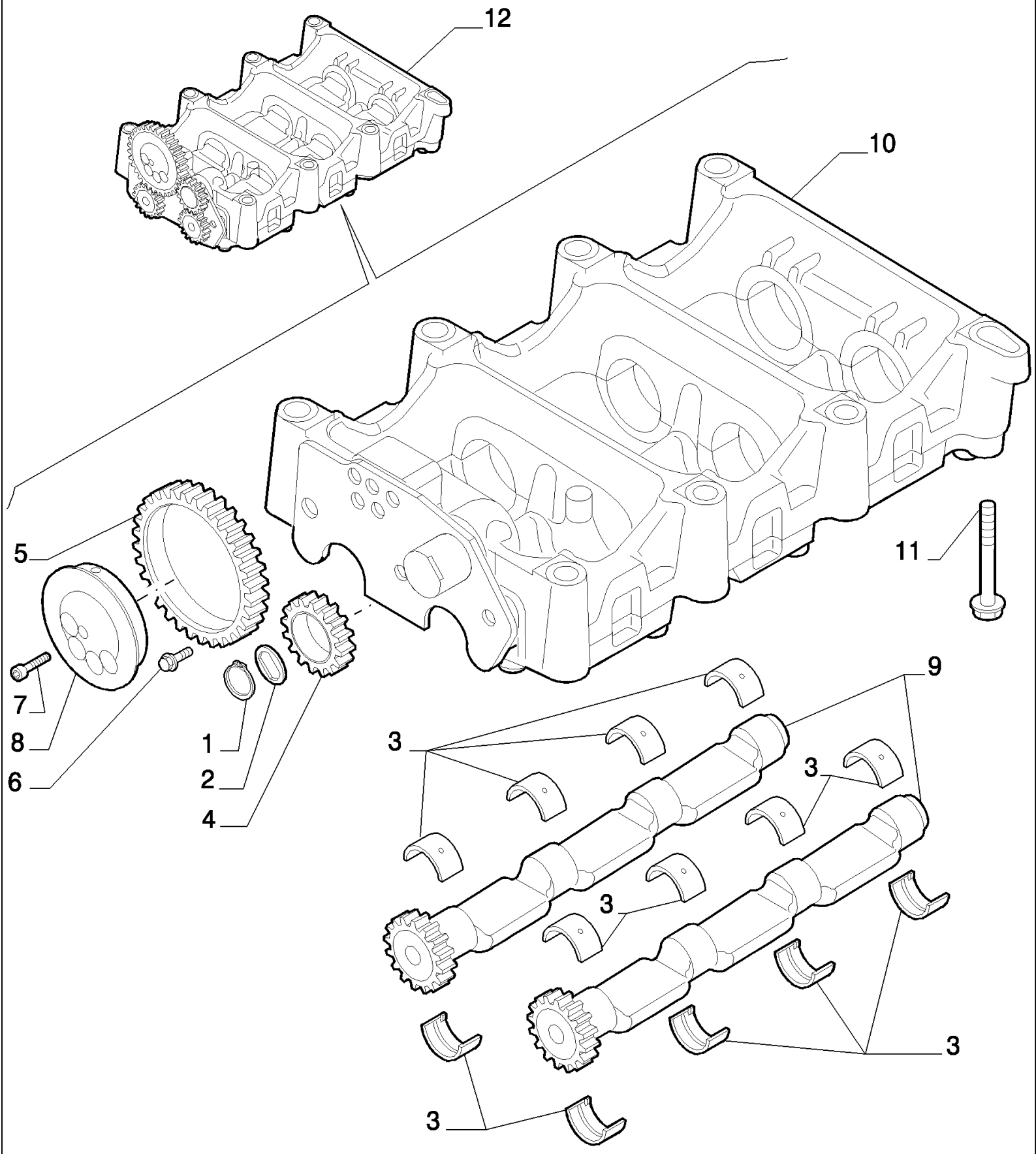

B95LR NA BACKHOE LOADER (1/06-)

0.105(01) DYNAMIC BALANCER, GEARS & SHAFTS

Ref	Numero de Pieza	Ctd	Descripción
1	2852870	1	
2	4897123	1	WASHER, THRUST,
3	4897071	16	BUSHING,
4	4897048	1	GEAR, IDLER,
5	4896947	1	GEAR, IDLER,
6	4895586	3	SCREW,
7	2830433	4	SCREW,
8	2831031	1	SHAFT, IDLE,
9	2853226	2	SHAFT ASSY.,
10	2831300	1	HOUSING, - ASSY, Assy See Page 2
11	4899109	7	SCREW, Hex, M10 x 1.5 x 80,
11	4897934	1	SCREW,
12	2853225	1	BALANCER, - ASSY

0.105(02) DYNAMIC BALANCER, GEARS & SHAFTS (2831300)

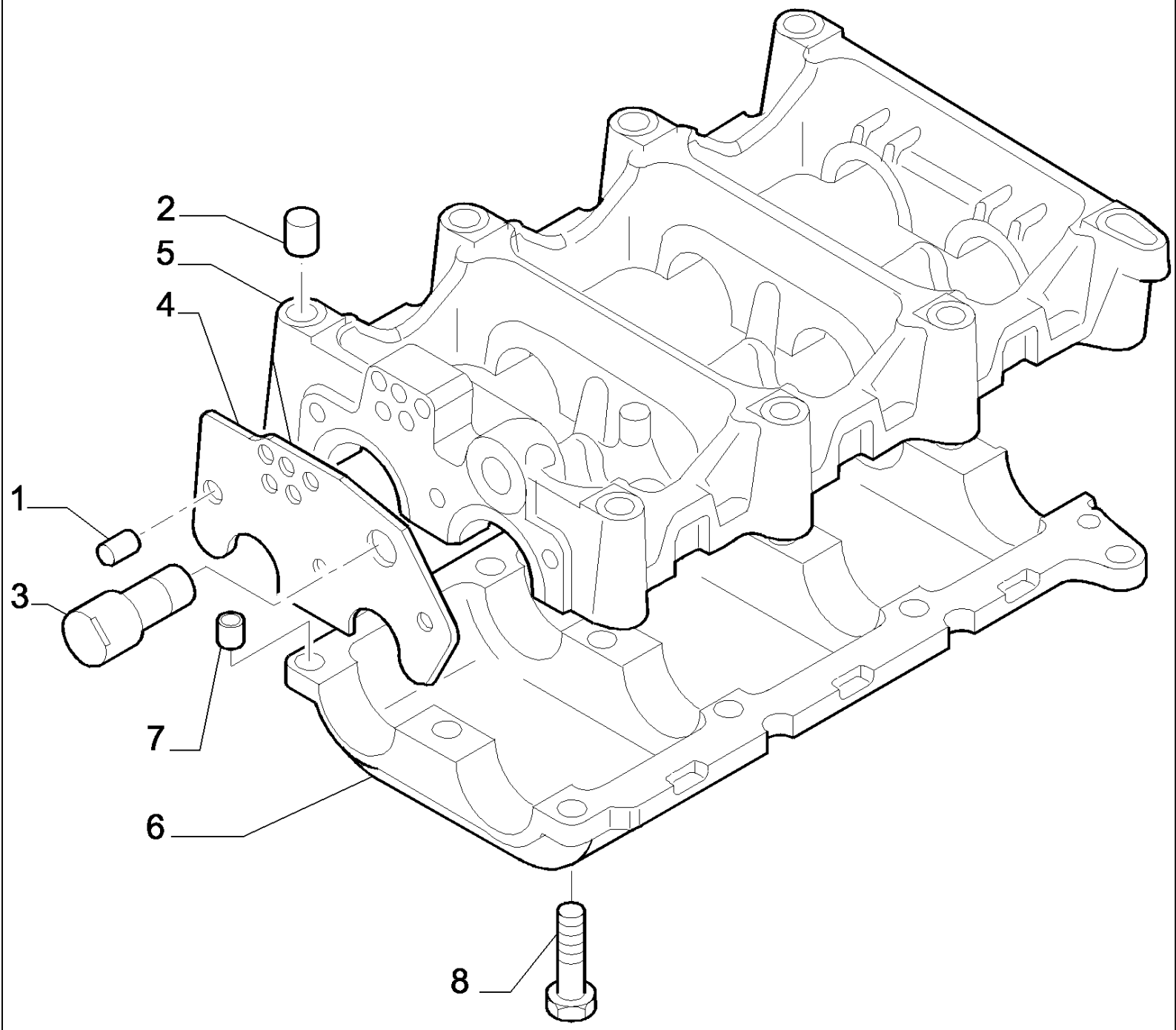

B95LR NA BACKHOE LOADER (1/06-)

0.105(02) DYNAMIC BALANCER, GEARS & SHAFTS (2831300)

Ref	Numero de Pieza	Ctd	Descripción
1	2831305	1	DOWEL,
2	4899027	2	DOWEL,
3	2830948	1	SHAFT, IDLE,
4	2830905	1	PLATE, THRUST,
5	2831303	1	FRAME,
6	2831304	1	
7	4891209	2	DOWEL,
8	4895323	12	SCREW,

0.120(01) CAMSHAFT

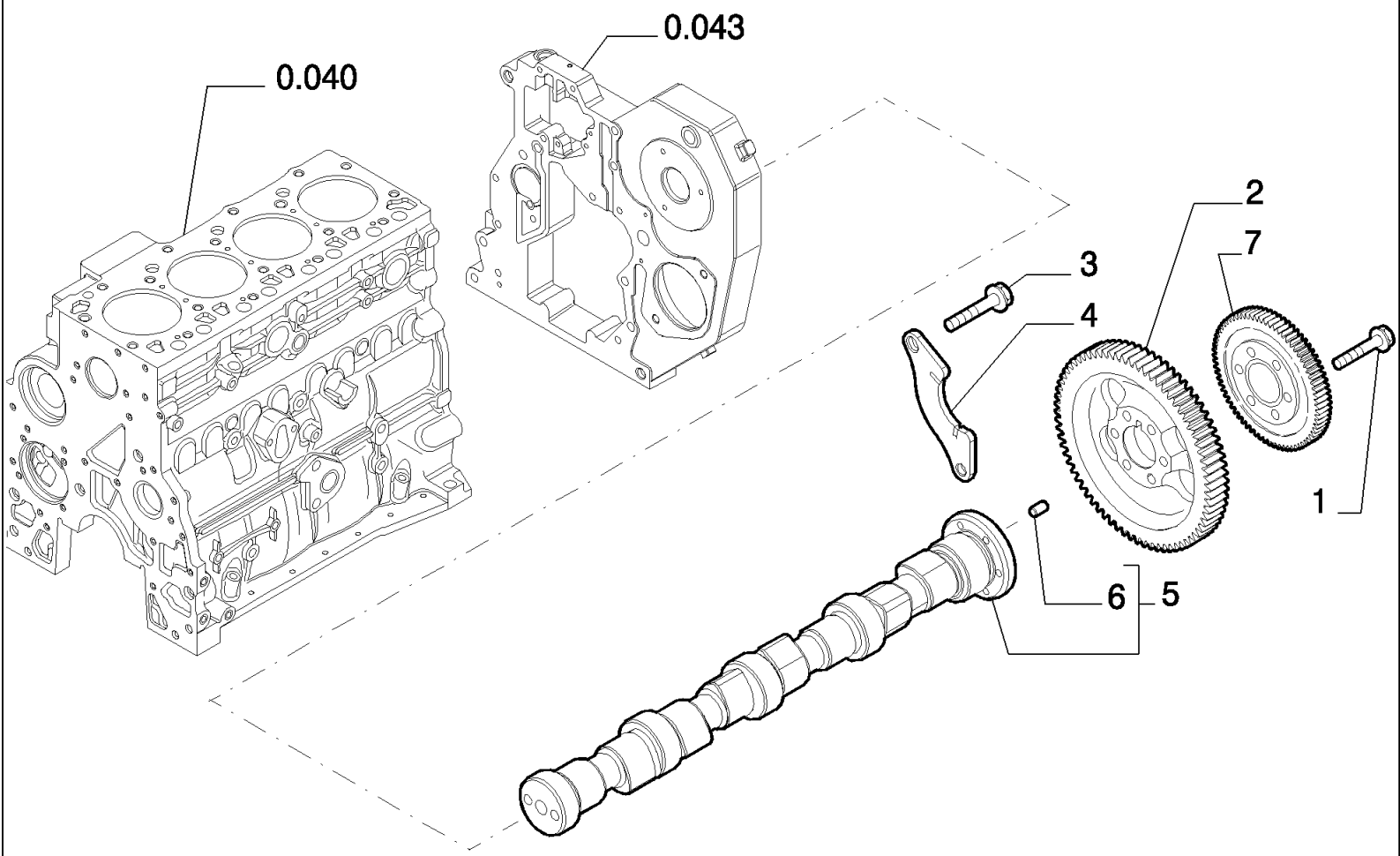

B95LR NA BACKHOE LOADER (1/06-)

0.120(01) CAMSHAFT

Ref	Numero de Pieza	Ctd	Descripción
1	4895323	6	SCREW,
2	2852062	1	GEAR,
3	4899068	2	SCREW, Hex Flg , M8 x 1.25 x 16,
4	4897457	1	SUPPORT,
5	2855099	1	CAMSHAFT, - ASSY
6	4899080	1	DOWEL,
7	2852063	1	GEAR, DRIVEN,

0.140(01) FUEL INJECTION PUMP

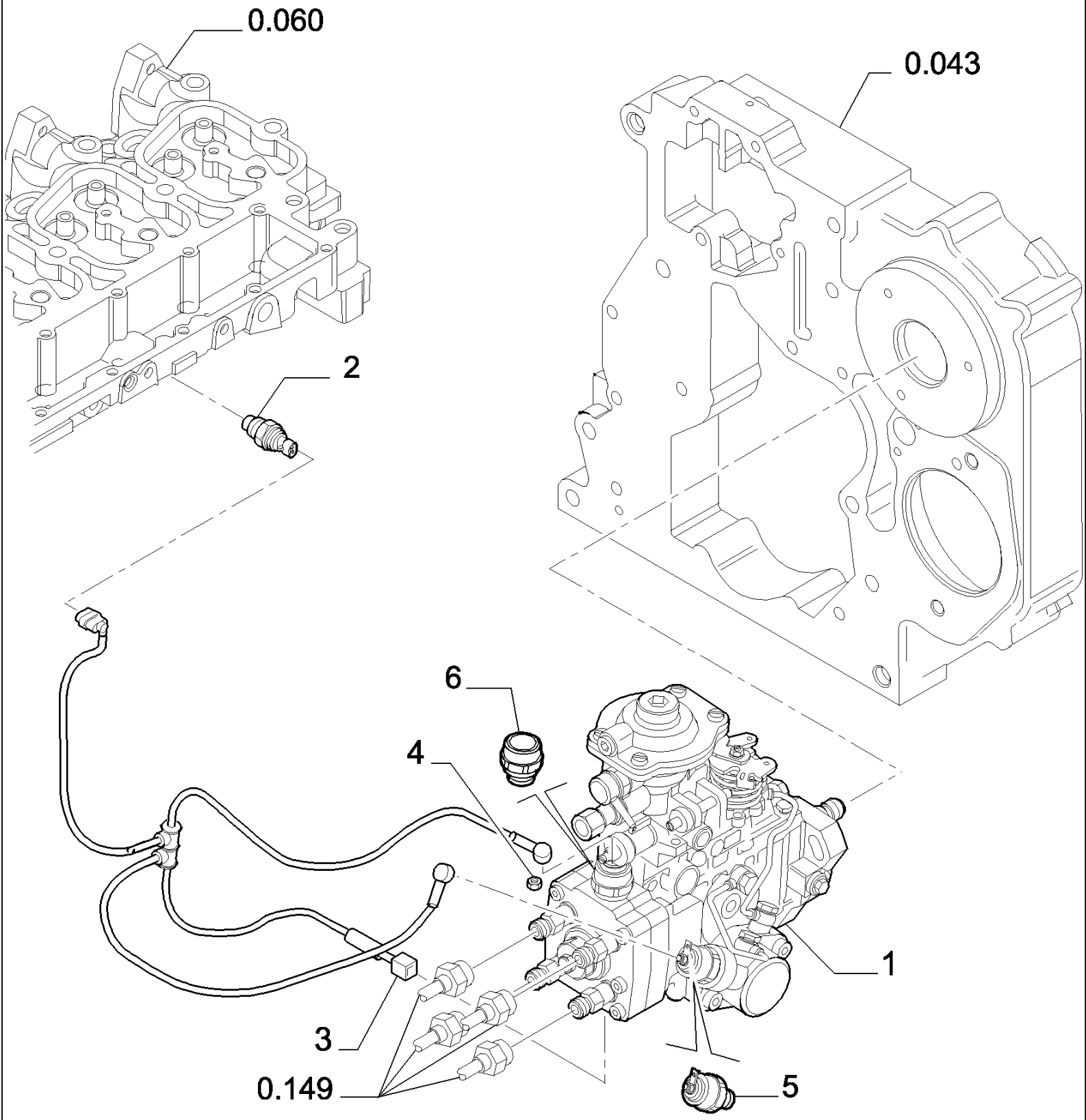

B95LR NA BACKHOE LOADER (1/06-)

0.140(01) FUEL INJECTION PUMP

Ref	Numero de Pieza	Ctd	Descripción
1	2852046	1	PUMP, FUEL, - ASSY; Includes 8190393 Fuel Injection Solennoid
2	2852087	1	SENSOR, Water Temperature
3	2852088	1	CONNECTOR, WIRE,
4	2852089	2	NUT,
5	8190393	1	SOLENOID, Fuel Shut-Off
6	2852741	1	SOLENOID, Fuel Shutoff

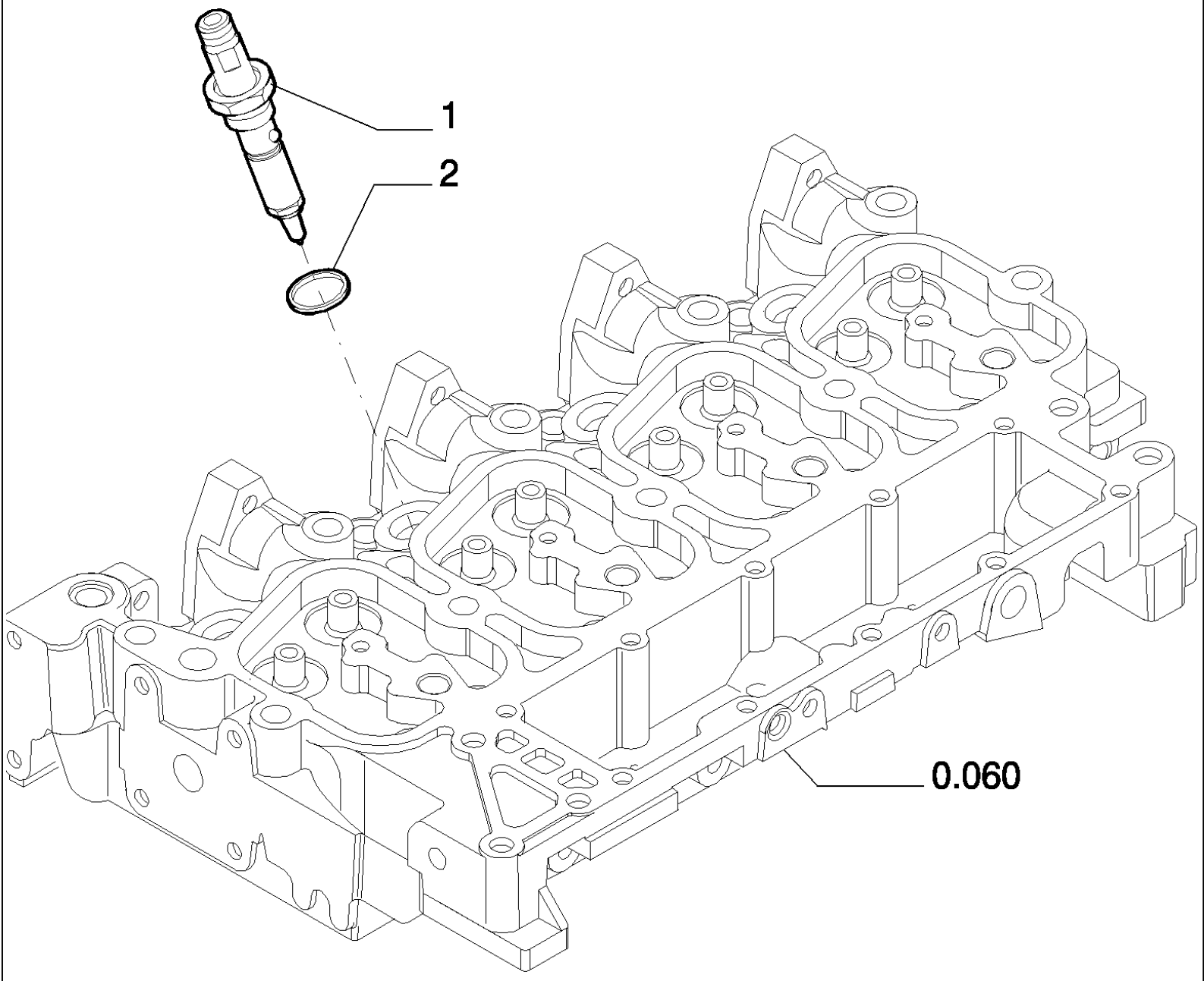
1
2
0.060

B95LR NA BACKHOE LOADER (1/06-)

0.140(02) FUEL INJECTION SYSTEM

Ref	Numero de Pieza	Ctd	Descripción
1	2852869	4	INJECTOR, FUEL SYSTEM,
2	4895297	4	SEALRING,

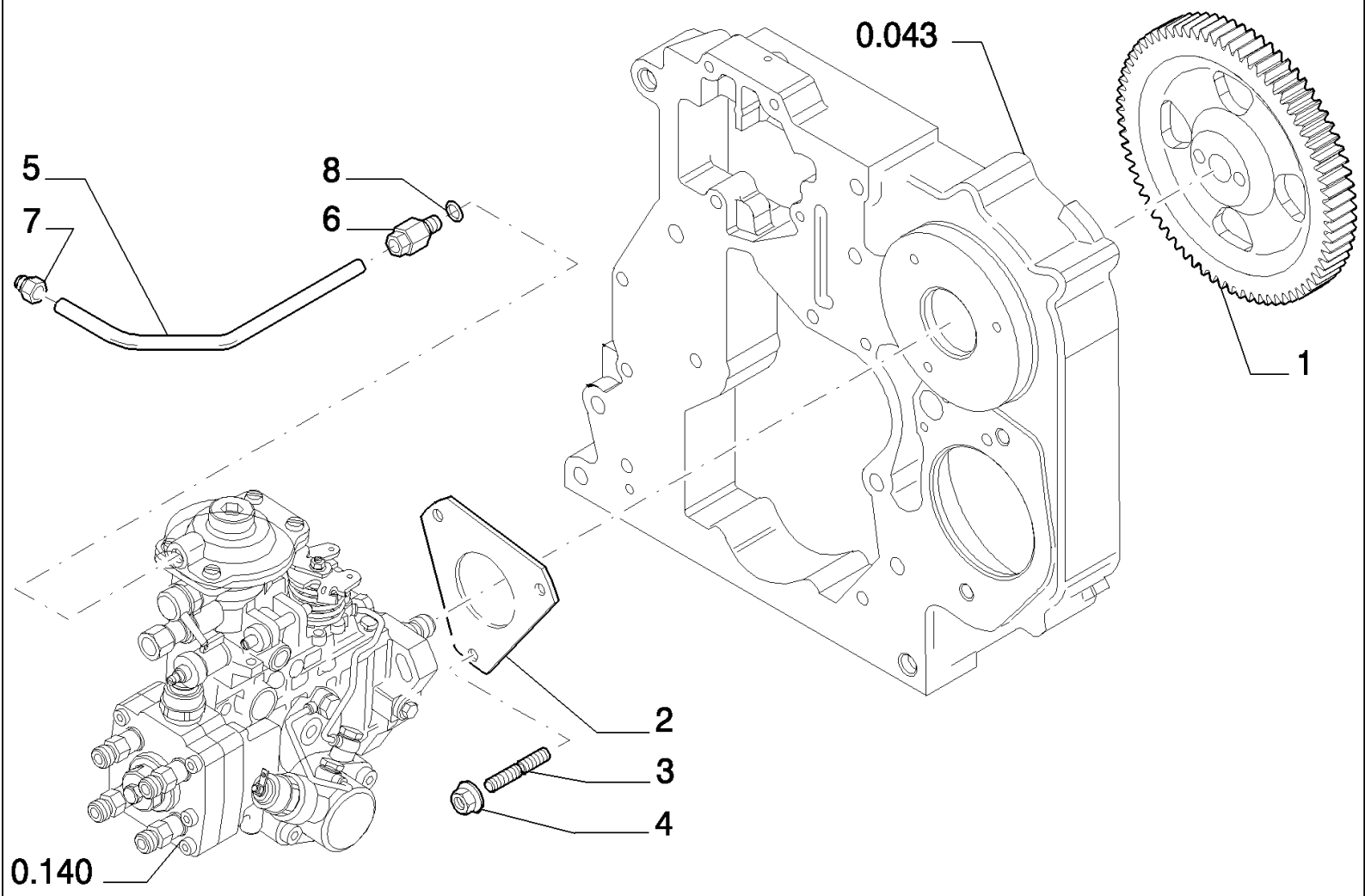
0.043
5
8
7
6
1
2
3
4
0.140

B95LR NA BACKHOE LOADER (1/06-)

0.142(01) FUEL INJECTION SYSTEM

Ref	Numero de Pieza	Ctd	Descripción
1	2854340	1	GEAR,
2	2852885	1	GASKET,
3	2852294	3	STUD,
4	4899003	3	NUT, 8X1.25
5	2852059	1	TUBE, RIGID,
6	4893518	1	FITTING, 8X1
7	4896770	1	FITTING, 10X1
8	2852057	1	SEAL WASHER,

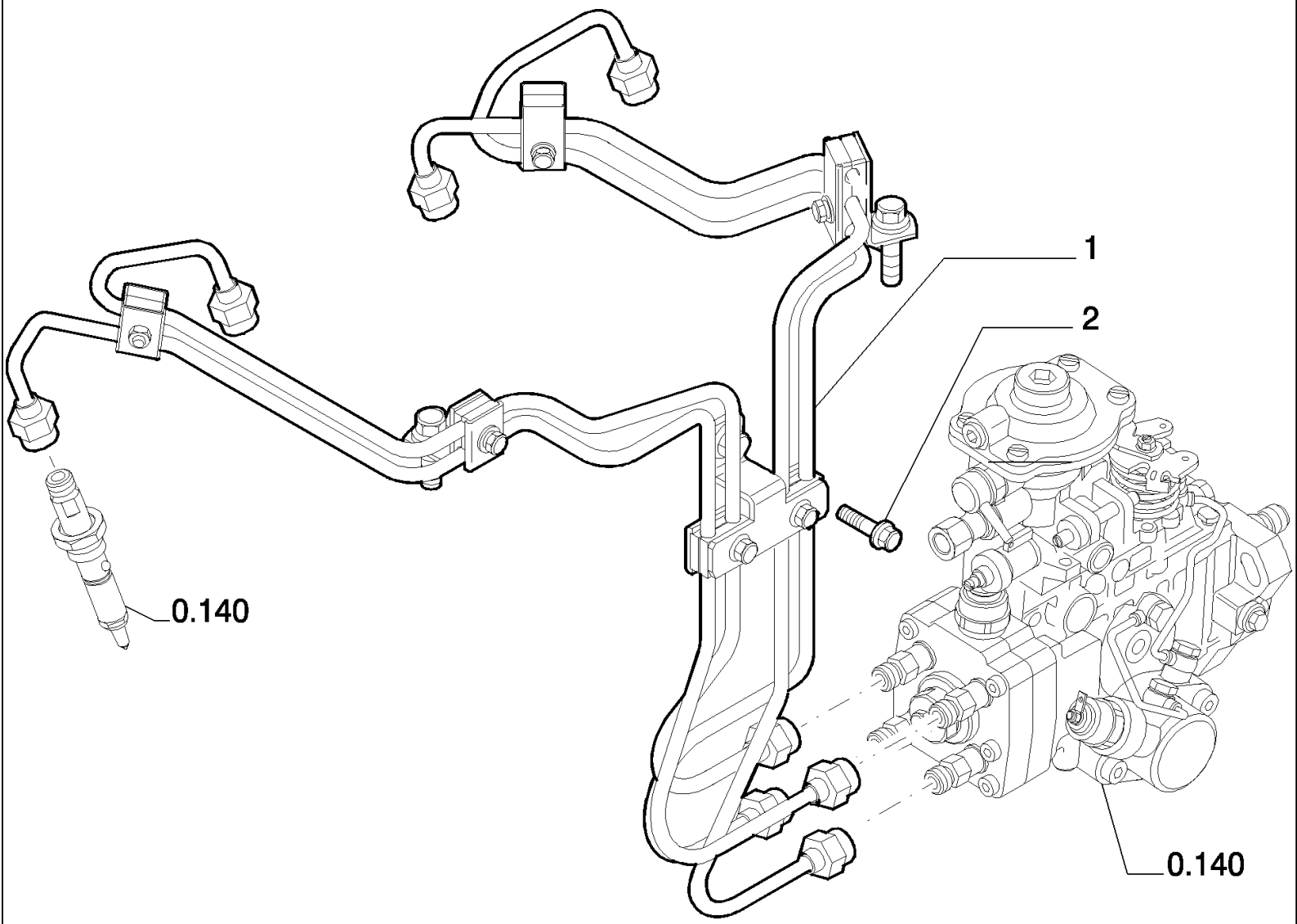
1
2
0.140
0.140

B95LR NA BACKHOE LOADER (1/06-)

0.149(01) FUEL INJECTION SYSTEM

Ref	Numero de Pieza	Ctd	Descripción
1	2852075	1	KIT, Fuel Injection Supply Tubes
2	4899068	1	SCREW, Hex Flg , M8 x 1.25 x 16,

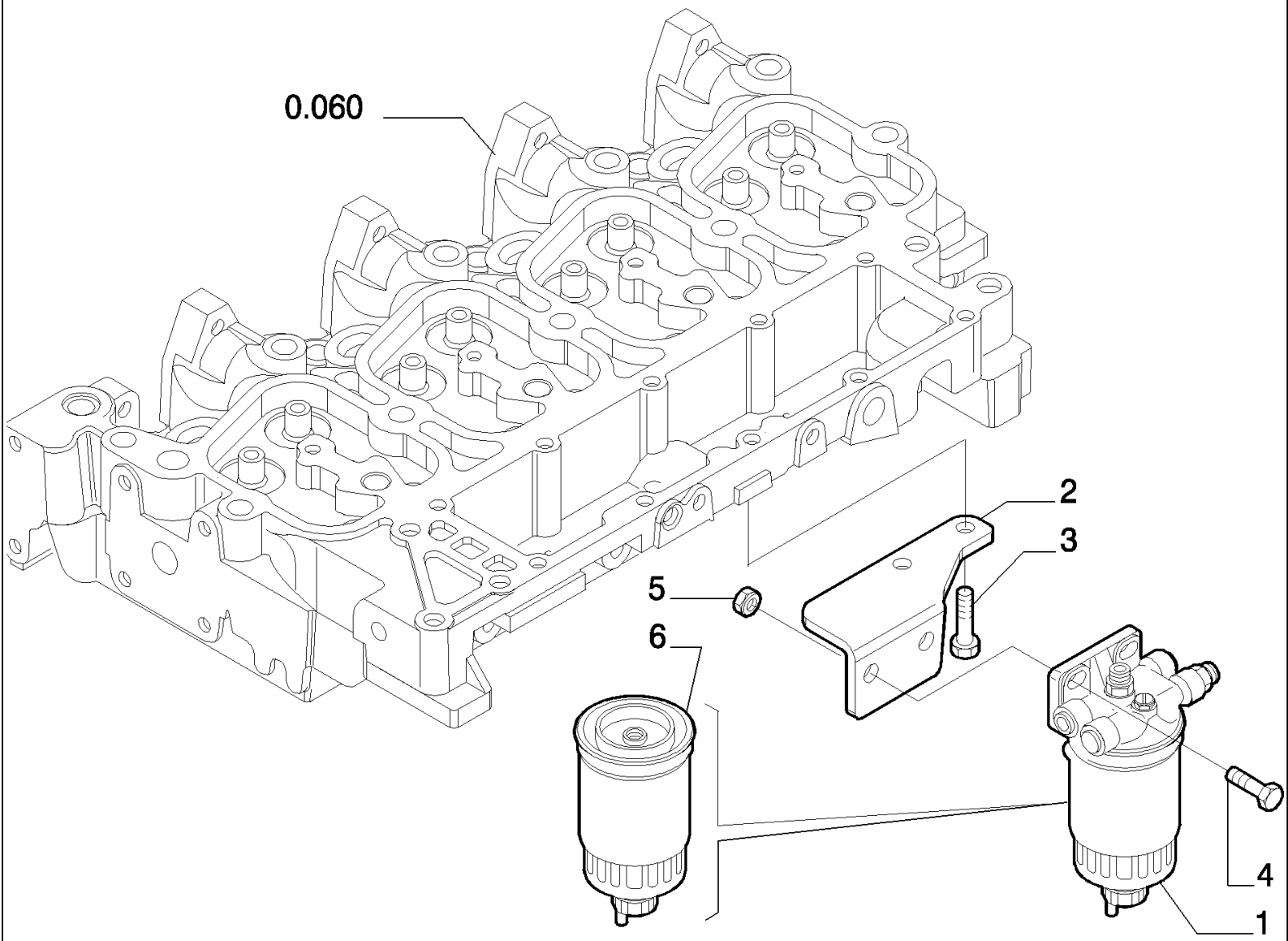
0.060
2
3
5
6
4
1

B95LR NA BACKHOE LOADER (1/06-)

0.200(01) FUEL FILTER

Ref	Numero de Pieza	Ctd	Descripción
1	2852098	1	FILTER ASSY, - ASSY
2	2852099	1	SUPPORT,
3	4899020	2	SCREW, M8X1,25X20
4	4899093	2	SCREW, Hex Flg, M10 x 1.5 x 30,
5	4895166	2	NUT, 10X1.5
6	1930010	1	FILTER, FUEL,

B95LR NA BACKHOE LOADER (1/06-)

0.201(01) FUEL PUMP

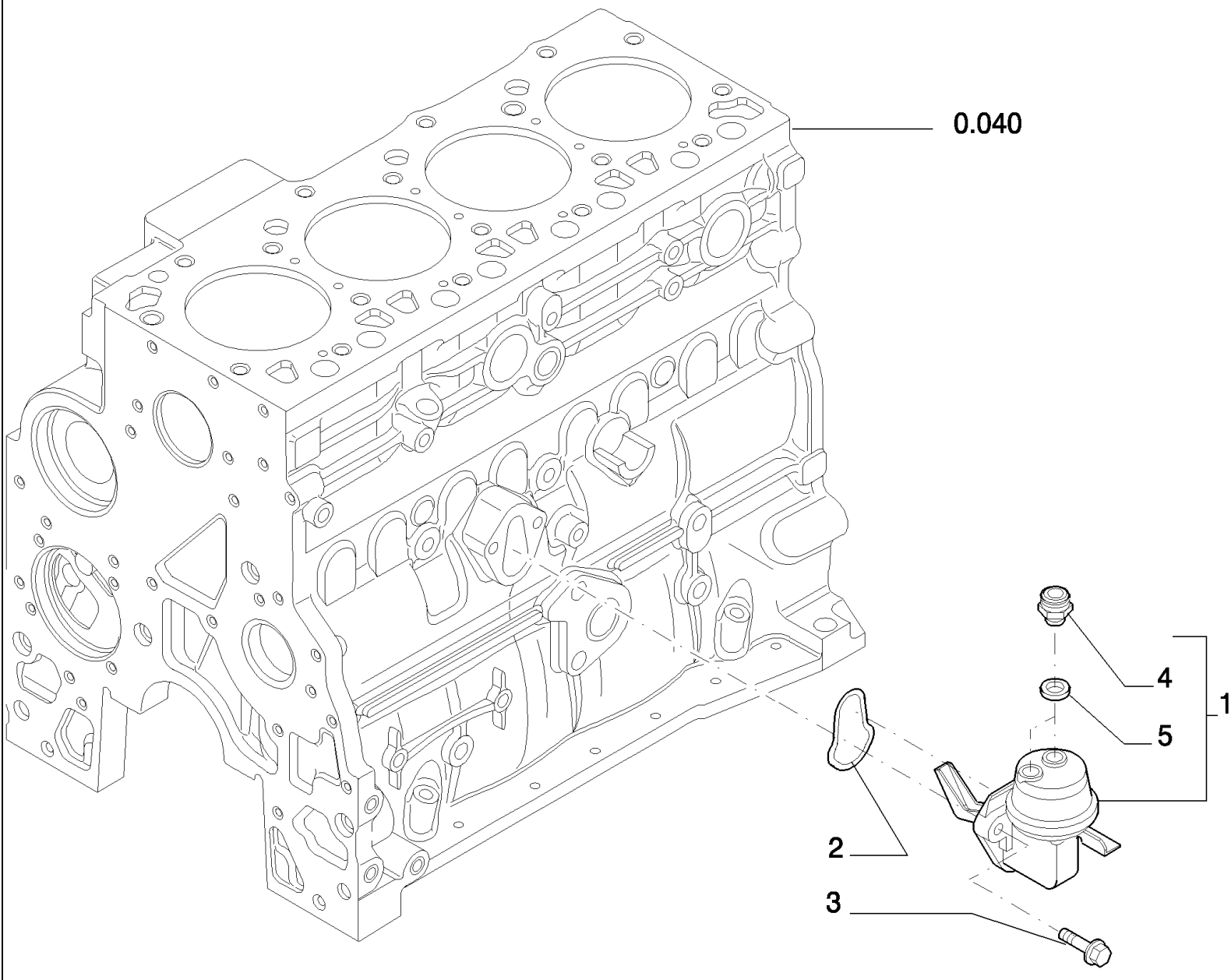

B95LR NA BACKHOE LOADER (1/06-)

0.201(01) FUEL PUMP

Ref	Numero de Pieza	Ctd	Descripción
1	2830266	1	PUMP, FUEL, - ASSY
2	2830156	1	O-RING,
3	4899031	2	SCREW, Hex Flg, M8 x 1.25 x 25,
4	4890964	2	FITTING,
5	4894721	2	WASHER, SEALING,

0.203(01) FUEL INJECTION SYSTEM

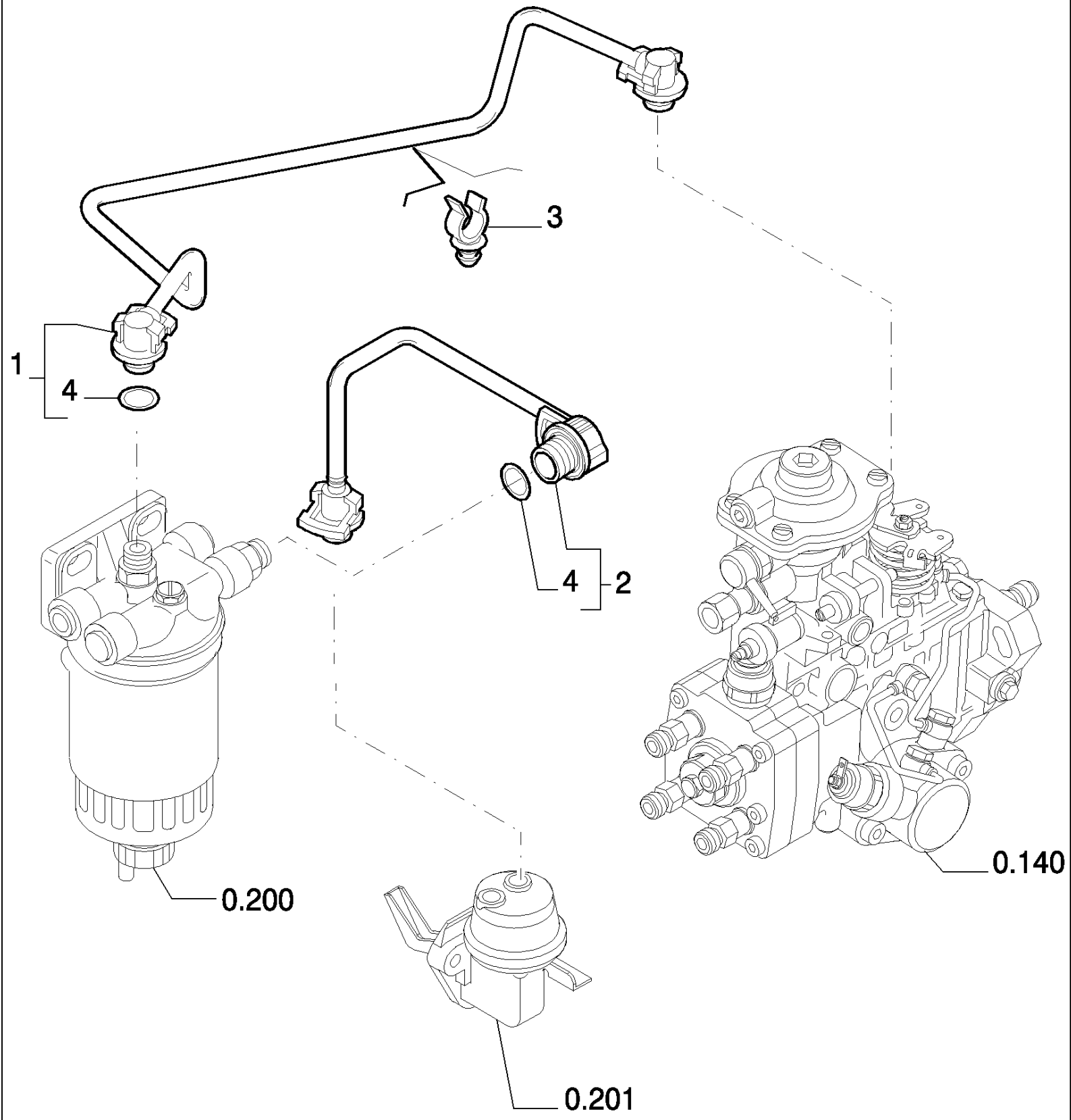

B95LR NA BACKHOE LOADER (1/06-)

0.203(01) FUEL INJECTION SYSTEM

Ref	Numero de Pieza	Ctd	Descripción
1	2852105	1	TUBE, - ASSY
2	2852594	1	TUBE, - ASSY
3	2852111	1	CLAMP,
4	4894095	2	O-RING,

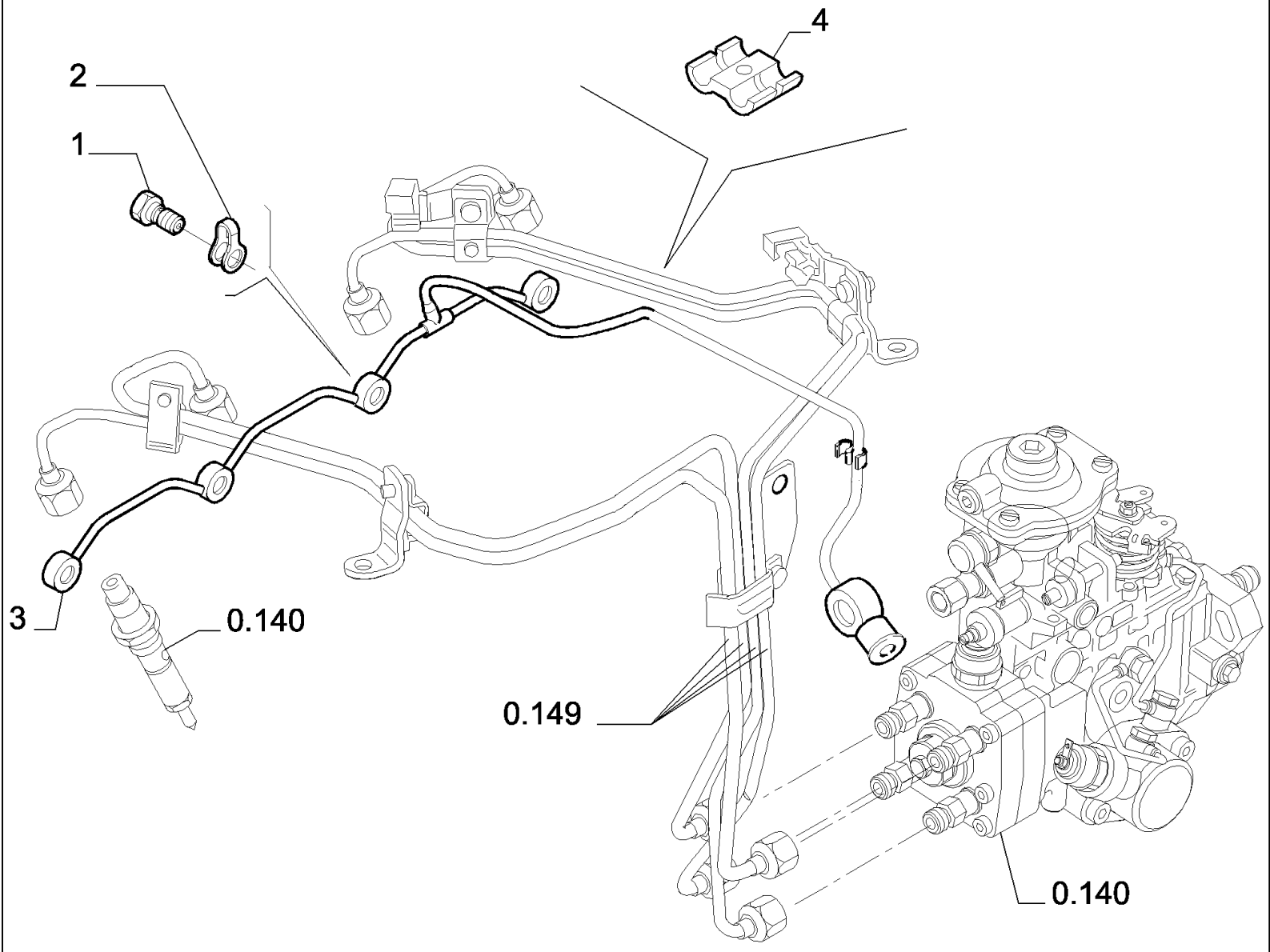
4
2
1
3
0.140
0.149
0.140

B95LR NA BACKHOE LOADER (1/06-)

0.204(01) FUEL INJECTION SYSTEM

Ref	Numero de Pieza	Ctd	Descripción
1	4895244	4	BOLT, BANJO,
2	4895305	4	SEAL,
3	2852065	1	TUBE, RIGID,
4	2852521	1	CLIP, SPRING,

0.240(01) TURBOCHARGER

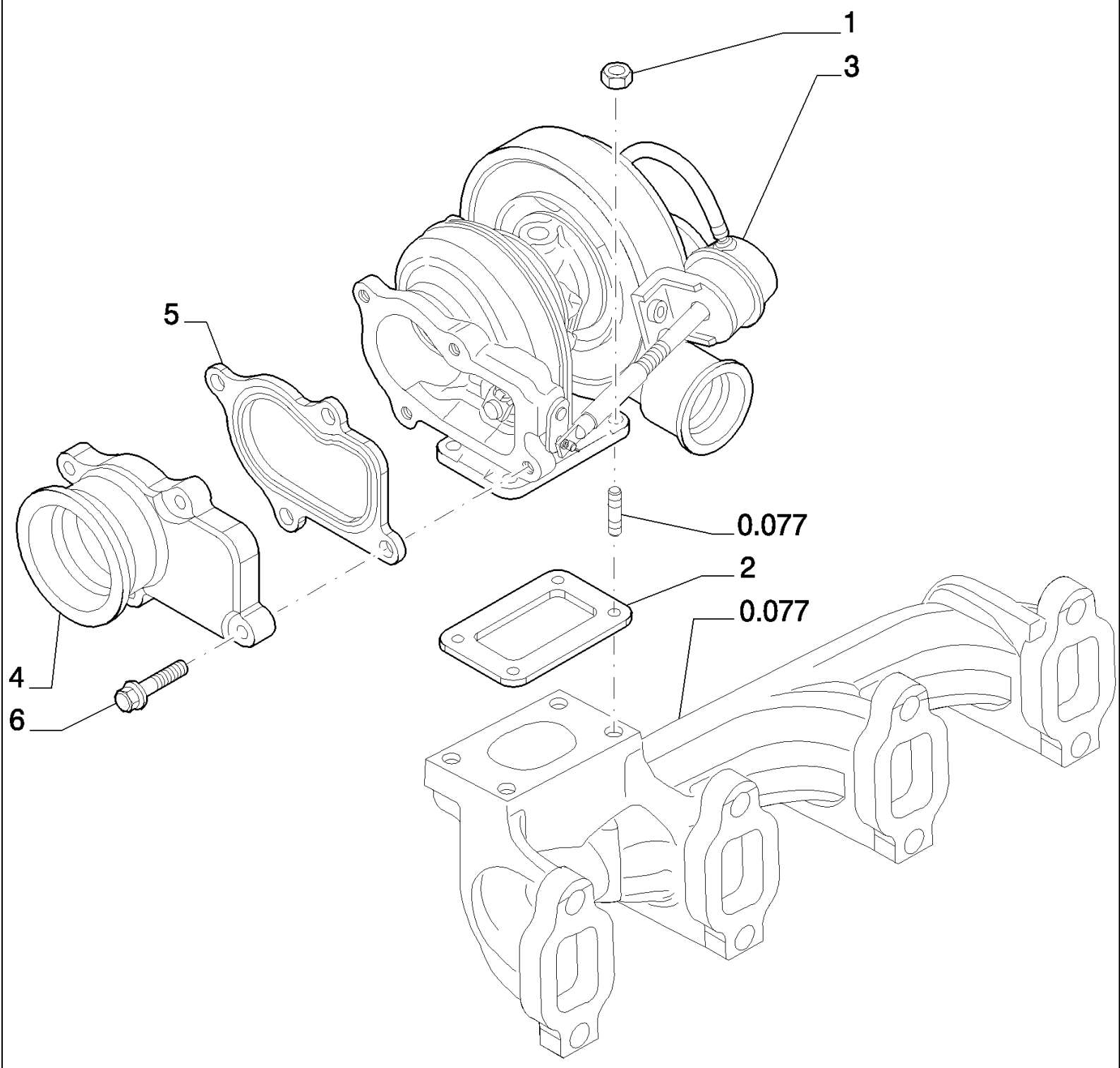

B95LR NA BACKHOE LOADER (1/06-)

0.240(01) TURBOCHARGER

Ref	Numero de Pieza	Ctd	Descripción
1	4899118	4	NUT,
2	4895133	1	GASKET,
3	504061374	1	TURBOCHARGER,
4	2852072	1	MANIFOLD, EXHAUST,
5	2852071	1	GASKET,
6	4898482	4	SCREW, Flg Hd, M8 x 1.25 x 30,

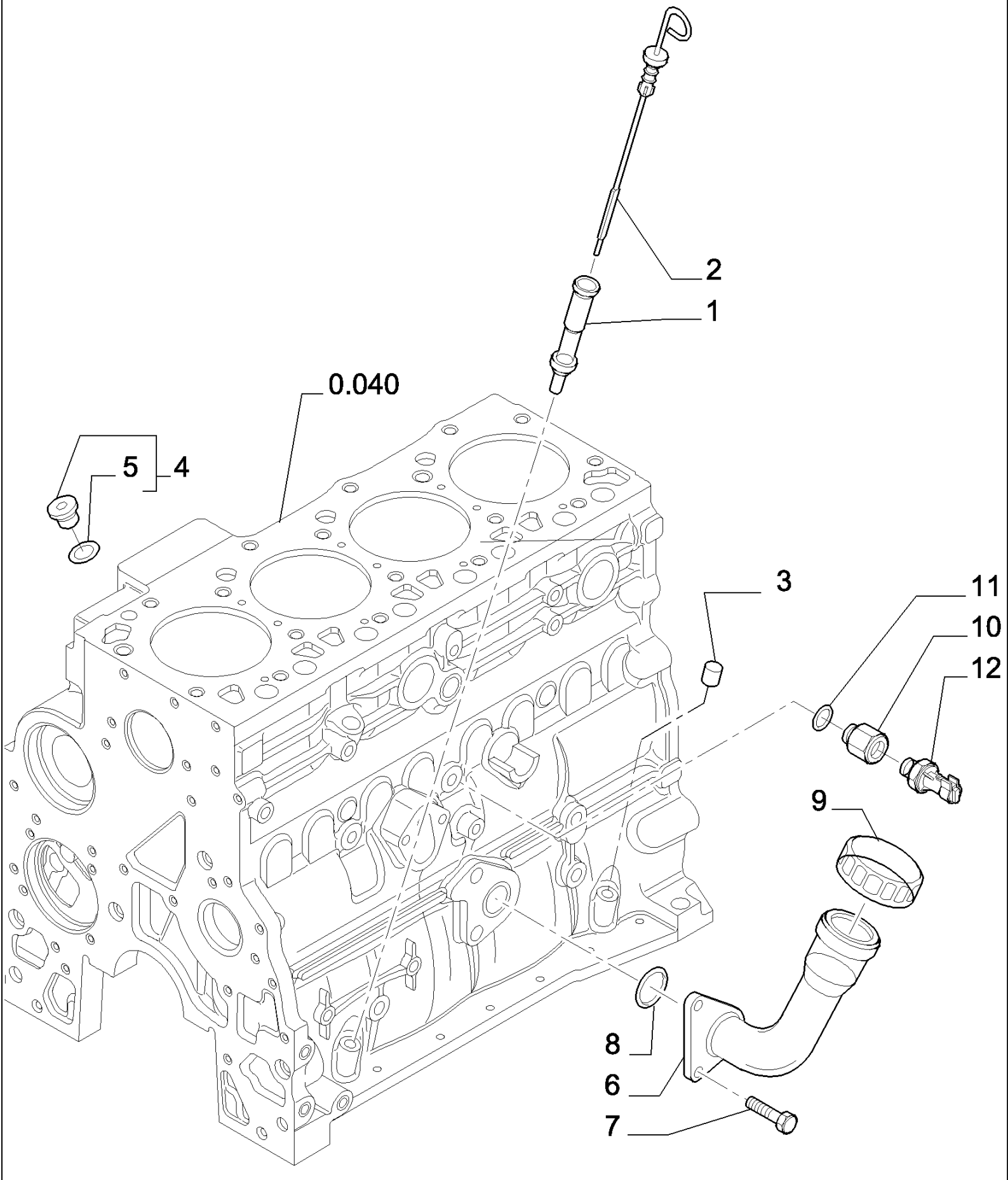
2
1
0.040
5
4
3
11
10
12
9
8
6
7

B95LR NA BACKHOE LOADER (1/06-)

0.270(01) ENGINE, OIL

Ref	Numero de Pieza	Ctd	Descripción
1	2852122	1	TUBE,
2	2852125	1	DIPSTICK,
3	4899036	1	PLUG,
4	4897330	2	PLUG, - ASSY
5	4895610	1	O-RING,
6	504011338	1	TUBE, , UP TO S/N ENGINE 148474
7	2852134	2	SCREW,
8	2852135	1	GASKET,
9	2852136	1	CAP, , UP TO S/N ENGINE 148474
10	504036358	1	ADAPTER,
11	4899115	1	O-RING,
12	87803147	1	SENDER UNIT, 87803147 or 87803148 Switch Are Interchangeable, Use Either Switch In Stock, Version : SIPEA
12	87803148	1	SENDER UNIT, 87803147 or 87803148 Switch Are Interchangeable, Use Either Switch In Stock, Version : BORLETTI

UP TO S/N ENGINE 148474

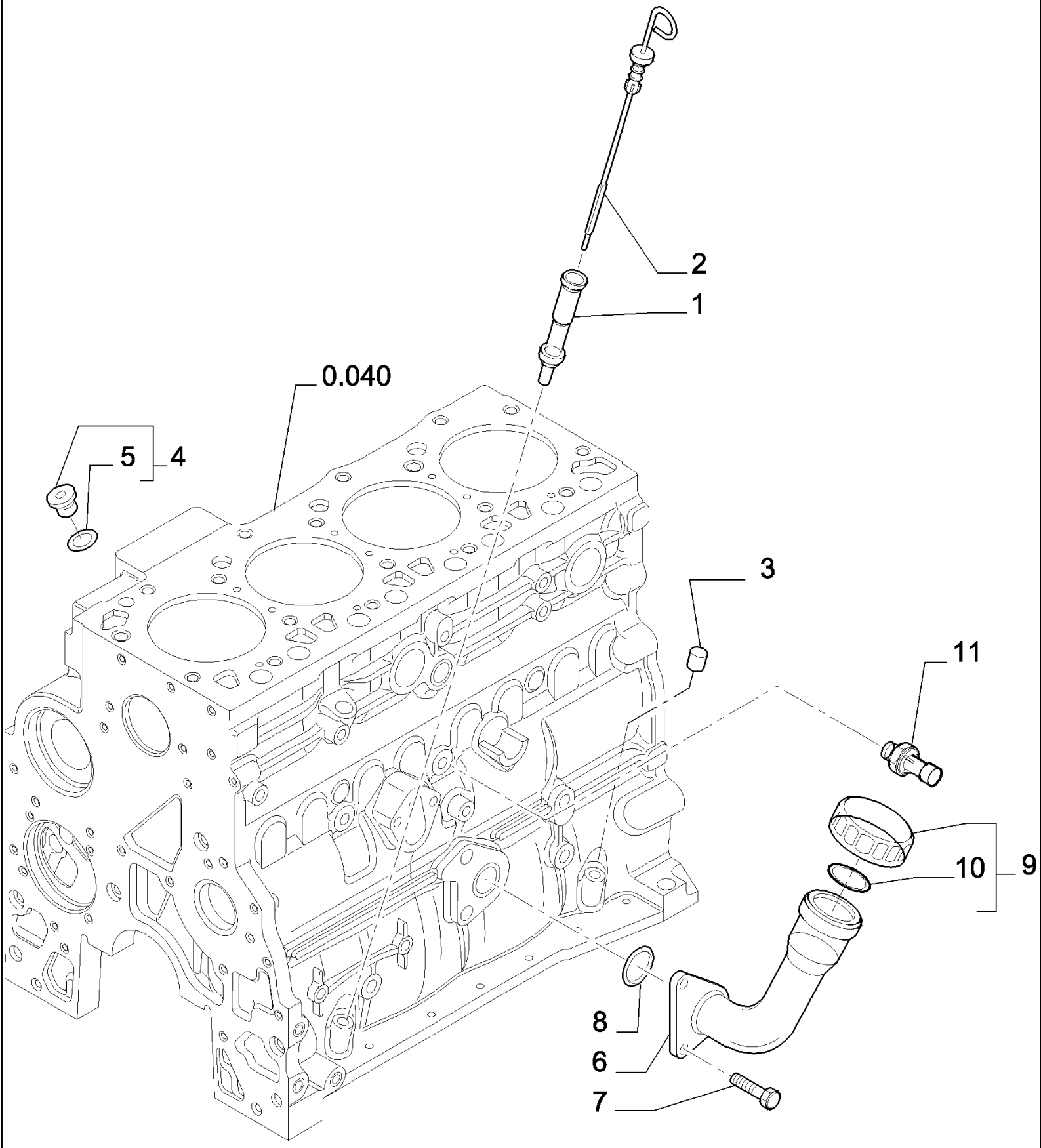
2
1
0.040
5
4
3
11
10
9
8
6
7

B95LR NA BACKHOE LOADER (1/06-)

0.270/A(01) ENGINE, OIL

Ref	Numero de Pieza	Ctd	Descripción
1	2852122	1	TUBE,
2	2852125	1	DIPSTICK,
3	4899036	1	PLUG,
4	4897330	2	PLUG, - ASSY
5	4895610	1	O-RING,
6	2853407	1	NECK FILLER, , FROM TO S/N ENGINE 148475
7	2852134	2	SCREW,
8	2852135	1	GASKET,
9	2853410	1	CAP, INTRODUCTION, - ASSY, FROM TO S/N ENGINE 148475
10	2853412	1	O-RING, , FROM TO S/N ENGINE 148475
11	2852889	1	SWITCH, PRESSURE,

FROM S/N ENGINE 148475

0.300(01) OIL PUMP - ENGINE

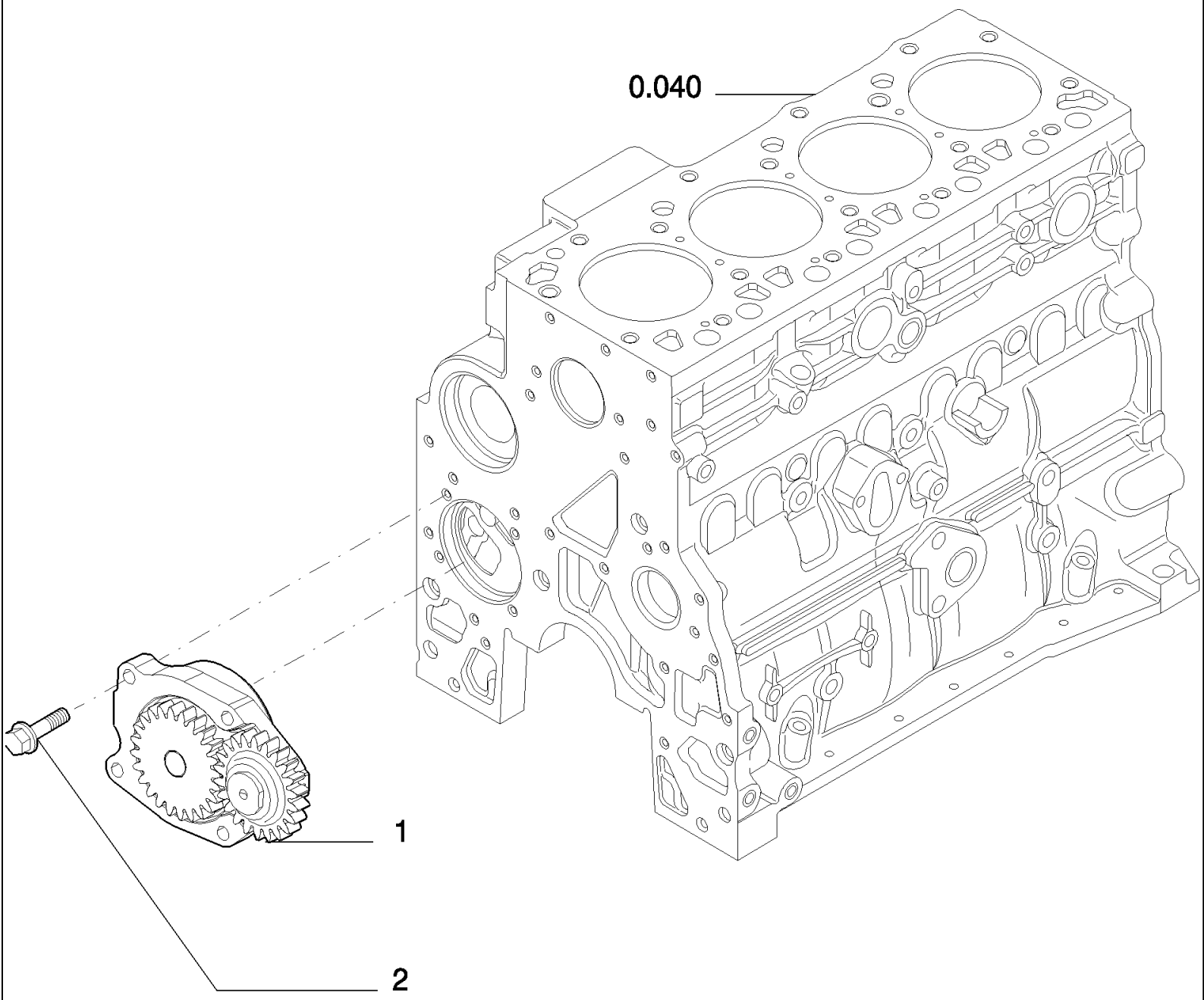

B95LR NA BACKHOE LOADER (1/06-)

0.300(01) OIL PUMP - ENGINE

Ref	Numero de Pieza	Ctd	Descripción
1	4897480	1	PUMP, ENGINE OIL,
2	4899090	4	SCREW, Hex Flg, M8 x 1.25 x 30,

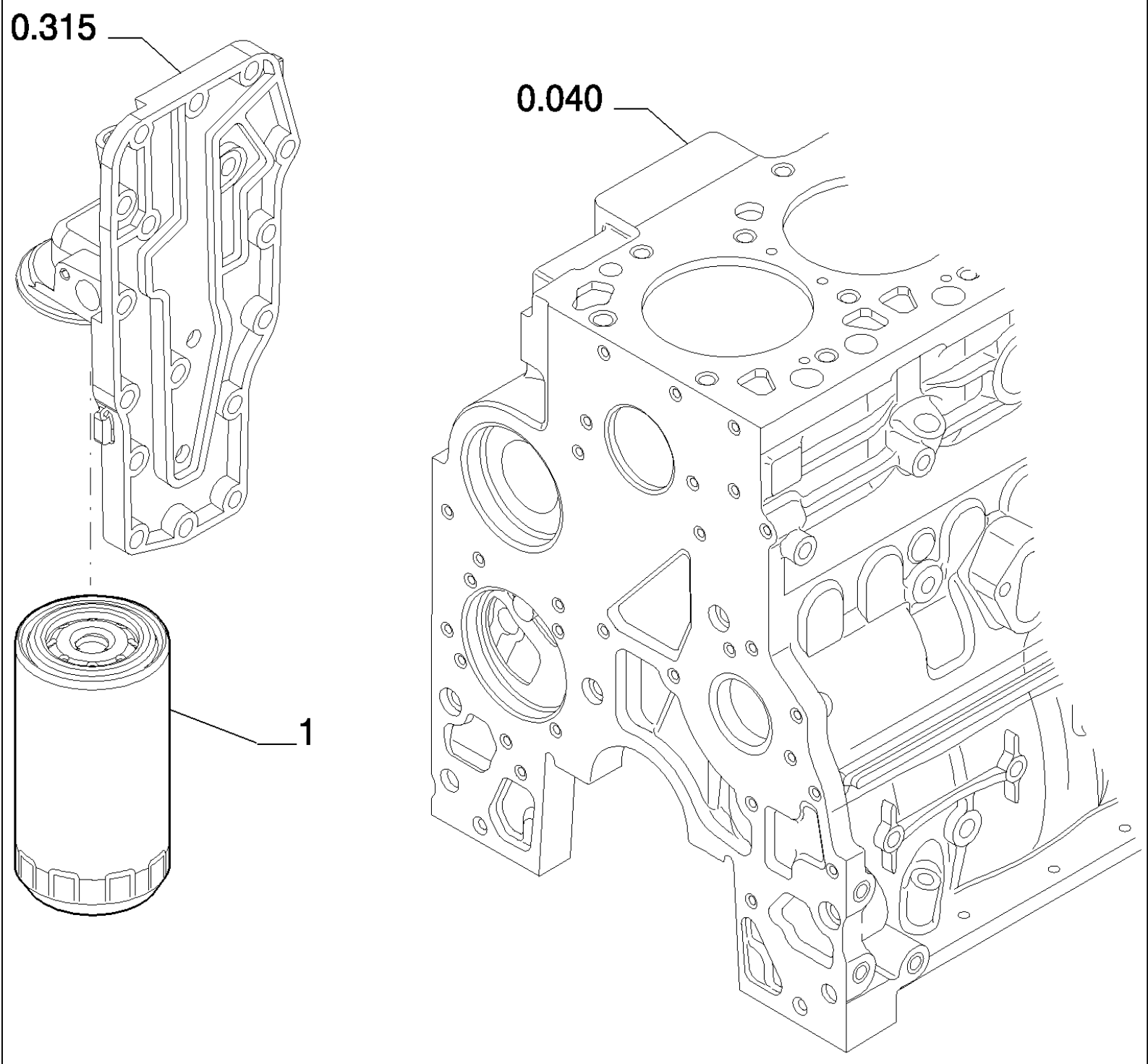
0.315
0.040
1

B95LR NA BACKHOE LOADER (1/06-)

0.302(01) OIL FILTERS - ENGINE

Ref	Numero de Pieza	Ctd	Descripción
1	87803260	1	FILTER, ENGINE OIL,

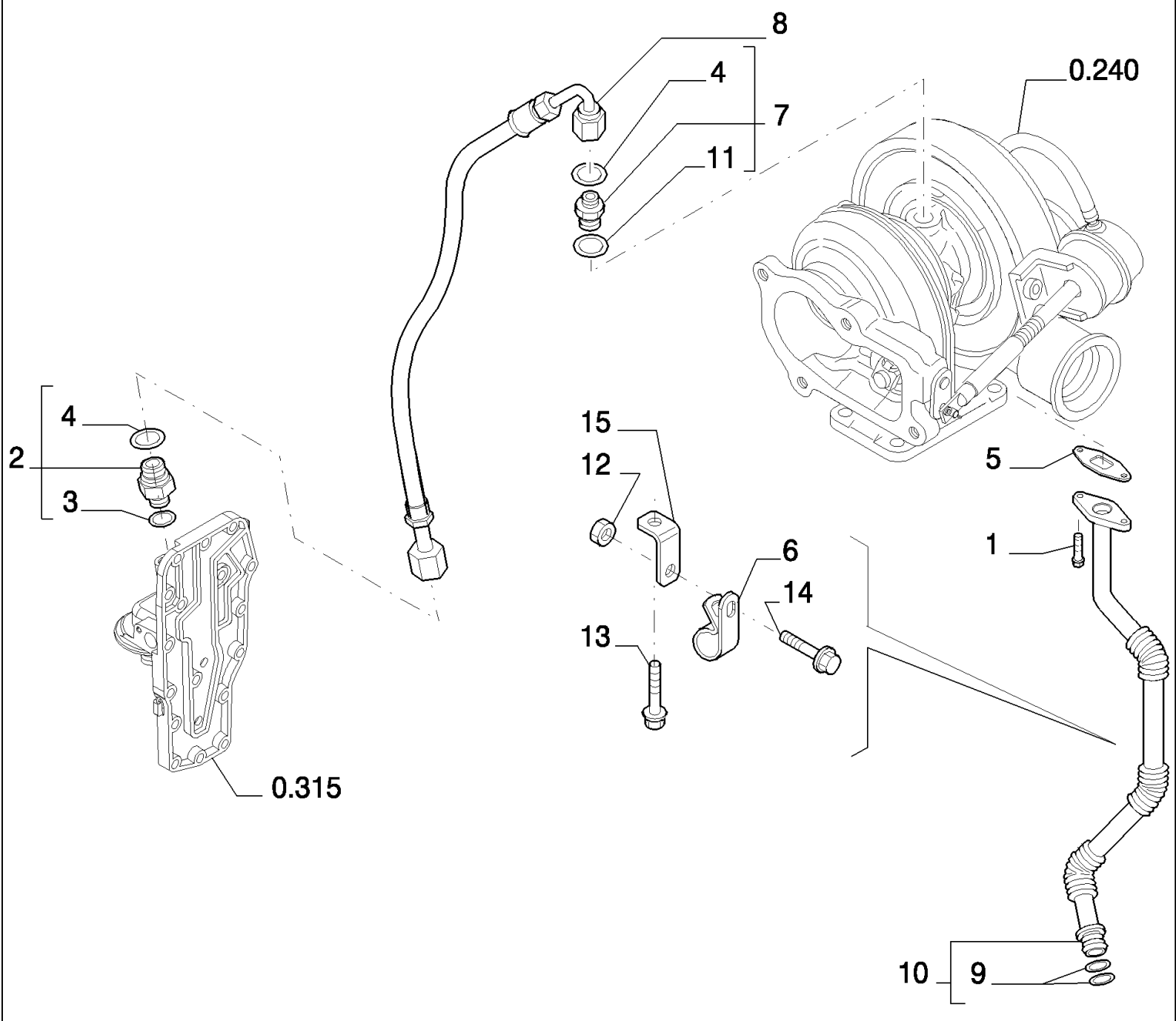
8
4
7
11
0.240
4
2
3
0.315
15
12
13
6
14
5
1
10
9

B95LR NA BACKHOE LOADER (1/06-)

0.305(01) PIPING - ENGINE OIL

Ref	Numero de Pieza	Ctd	Descripción
1	4895164	2	SCREW, M6X1X16
2	4895107	1	CONNECTOR, HYD., - ASSY
3	4899107	1	O-RING,
4	4899108	2	O-RING,
5	4899467	1	GASKET,
6	4899519	1	CLAMP,
7	4899106	1	CONNECTOR, HYD.,
8	2852195	1	HOSE,
9	4899058	2	O-RING, M17.12 ID x 2.62 Thk
10	504053166	1	PIPE, - ASSY
11	4899121	1	WASHER, SEALING,
12	2852197	1	NUT, M6
13	18138324	1	SCREW, M8X1.25X16
14	18137824	1	SCREW, M8X16
15	2852196	1	BRACKET,

0.315(01) OIL FILTER AND COOLER

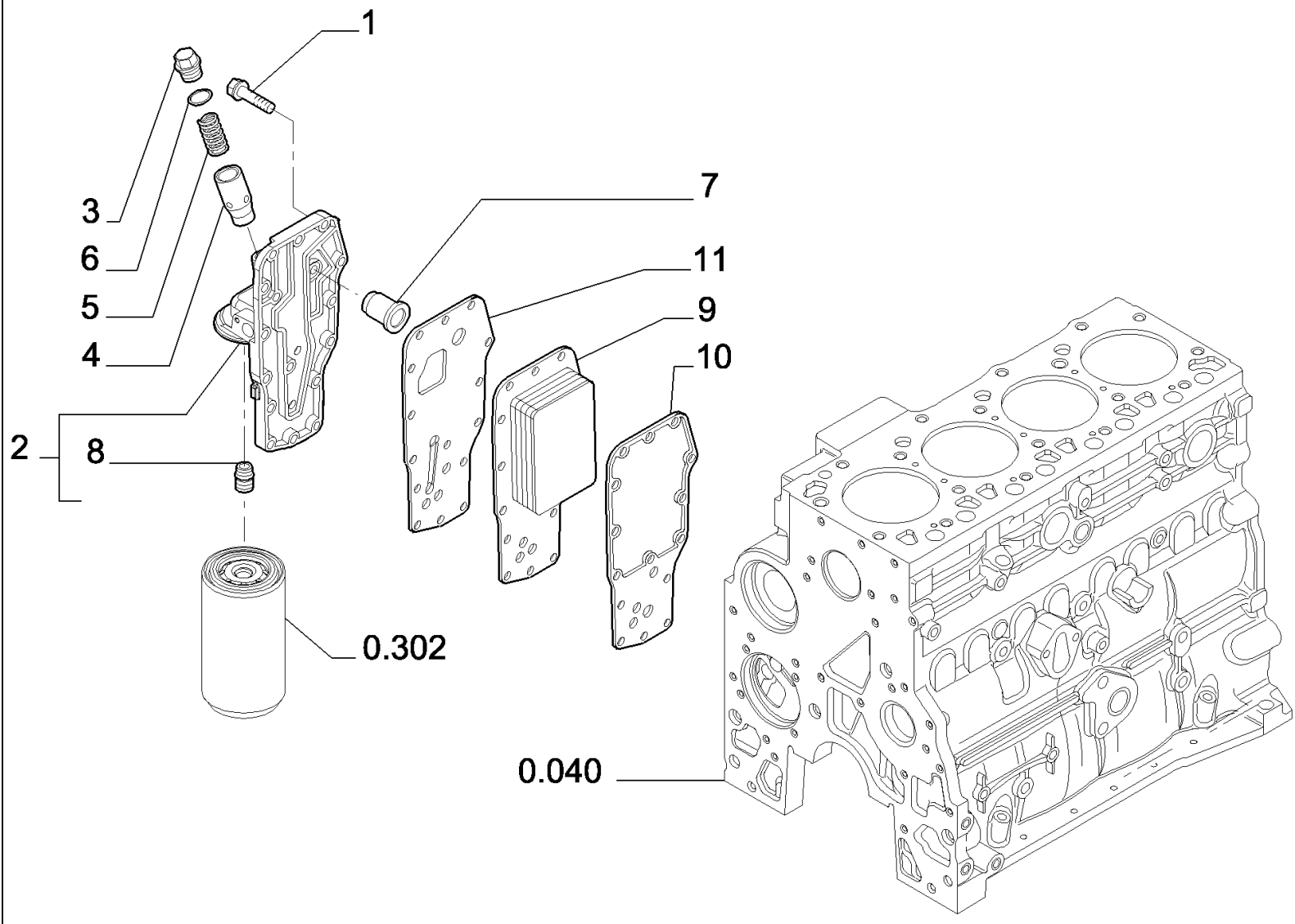

B95LR NA BACKHOE LOADER (1/06-)

0.315(01) OIL FILTER AND COOLER

Ref	Numero de Pieza	Ctd	Descripción
1	4899019	15	SCREW, Hex Flg, M8 x 1.25 x 35,
2	4899643	1	Head, Filter, - ASSY
3	4895043	1	PLUG,
4	4896404	1	PLUNGER,
5	4895045	1	SPRING,
6	4899035	1	O-RING, M18.39 ID x 2.69 Thk
7	4896410	1	VALVE, PRESSURE RELIEF,
8	4893391	1	ADAPTER,
9	4896406	1	COOLER, OIL,
10	2830559	1	GASKET,
11	4896409	1	GASKET,

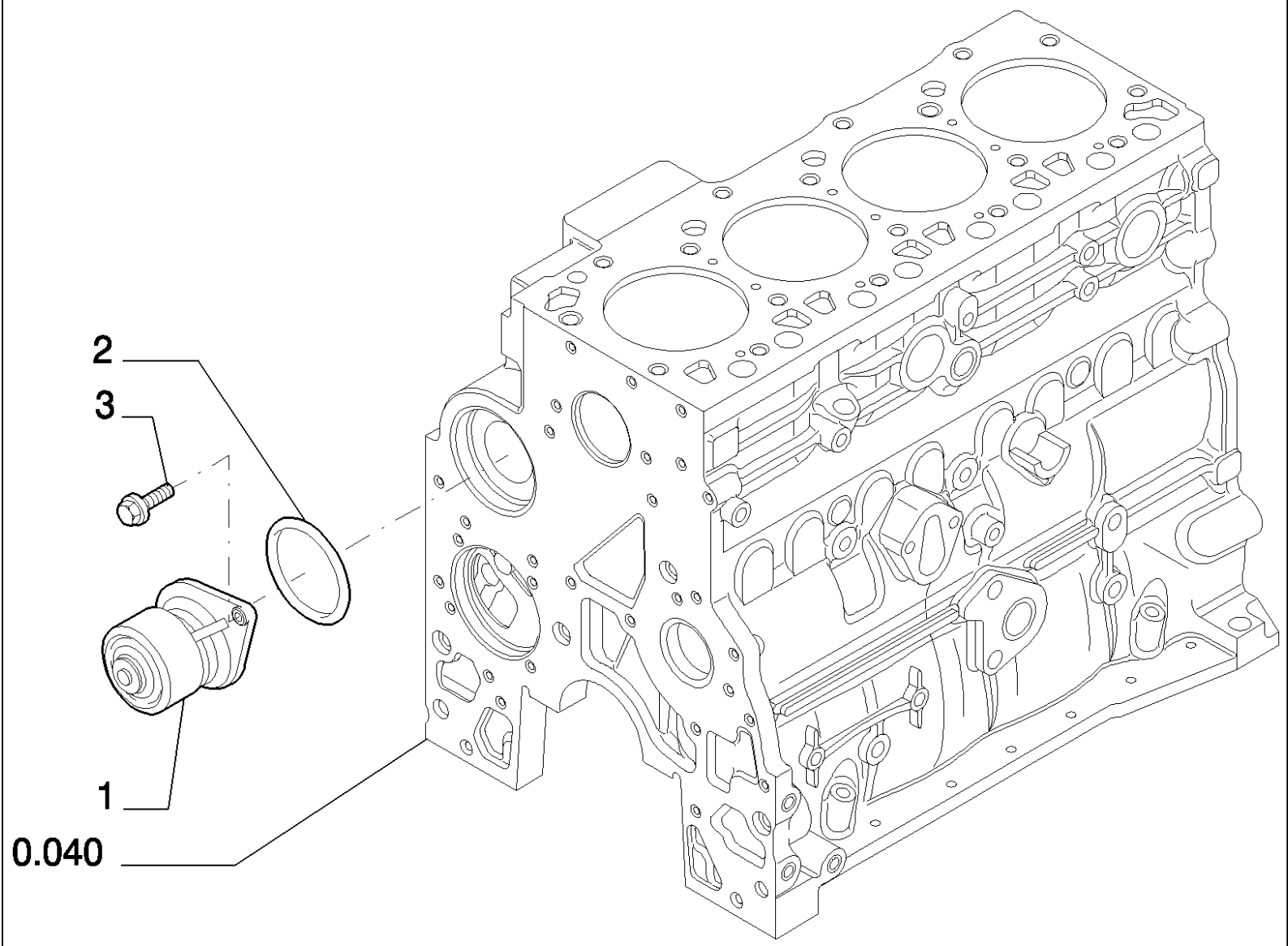
2
3
1
0.040

B95LR NA BACKHOE LOADER (1/06-)

0.320(01) WATER PUMP

Ref	Numero de Pieza	Ctd	Descripción
1	4891252	1	PUMP, WATER,
2	2852047	1	SEALRING,
3	4899079	2	SCREW, Hex Flg, M8 x 1.25 x 25,

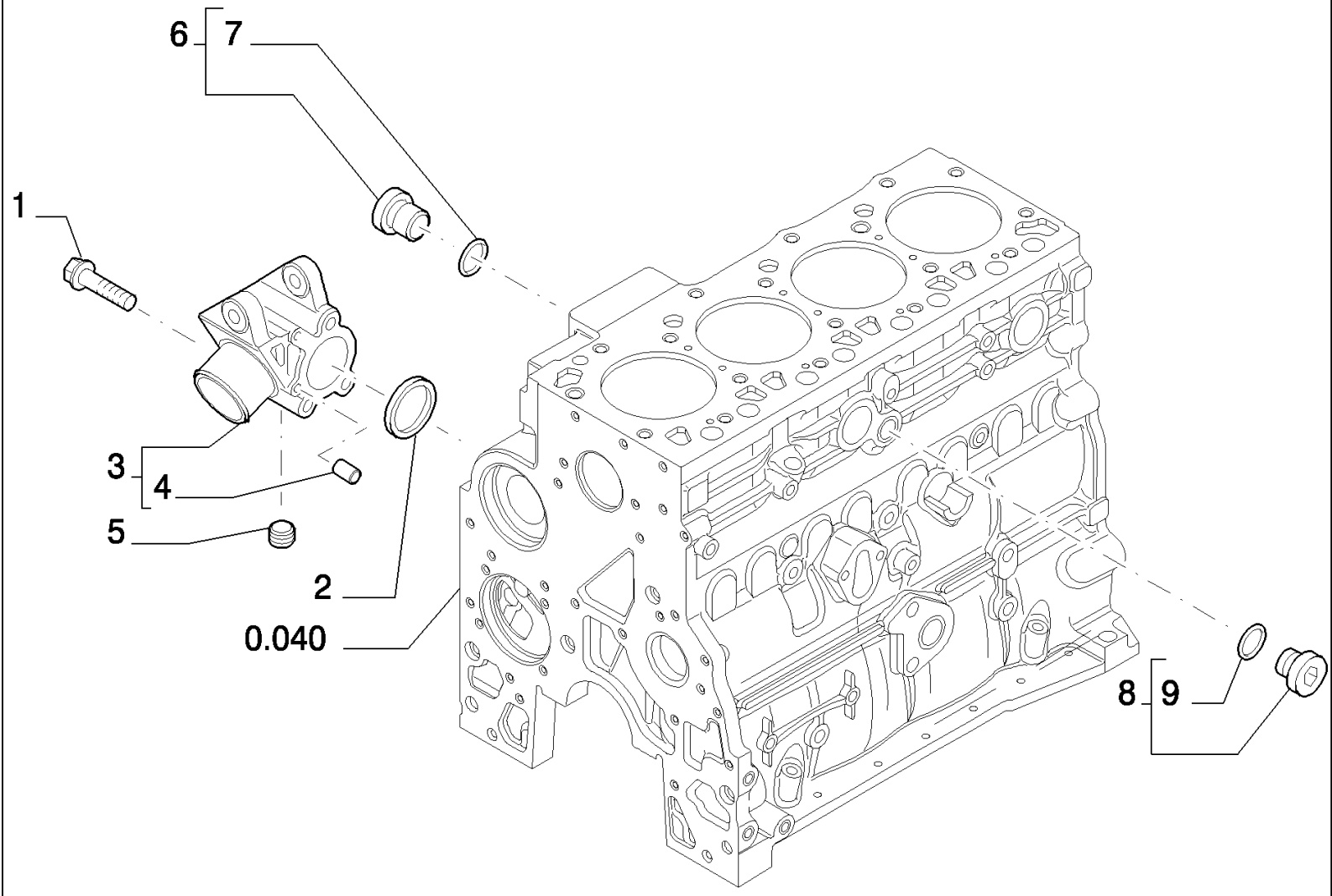
6
7
1
3
4
5
2
0.040
8
9

B95LR NA BACKHOE LOADER (1/06-)

0.323(01) COOLING SYSTEM - ENGINE

Ref	Numero de Pieza	Ctd	Descripción
1	4899109	3	SCREW, Hex, M10 x 1.5 x 80,
2	2854072	1	O-RING,
3	2852145	1	SUPPORT, - ASSY
4	4895576	2	DOWEL,
5	2852511	1	PLUG,
6	4895392	1	PLUG, - ASSY M18X1.5
7	4895393	1	O-RING,
8	4895623	1	PLUG, - ASSY
9	4895625	1	O-RING,

0.326(01) THERMOSTAT - ENGINE COOLING SYSTEM

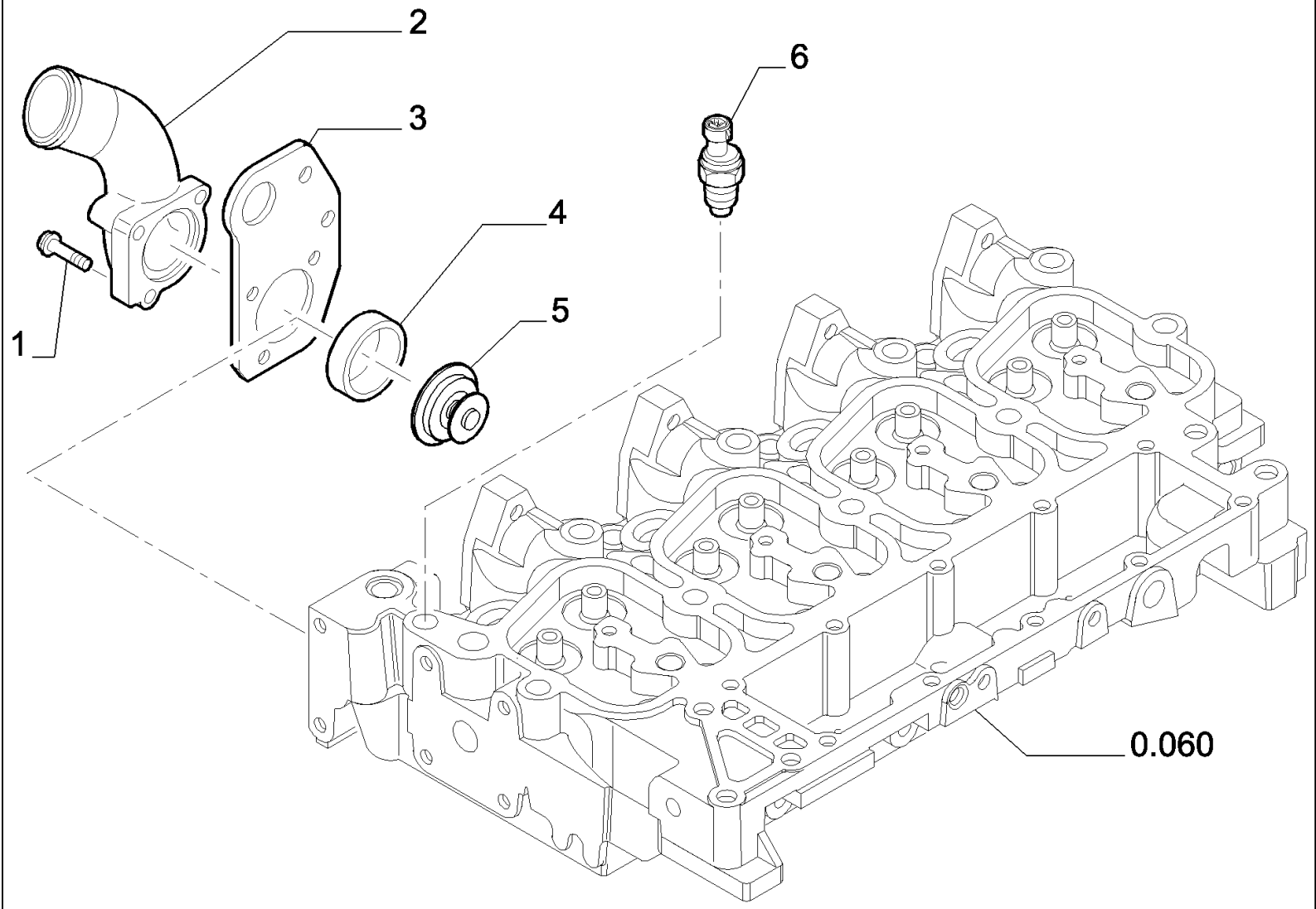

B95LR NA BACKHOE LOADER (1/06-)

0.326(01) THERMOSTAT - ENGINE COOLING SYSTEM

Ref	Numero de Pieza	Ctd	Descripción
1	2852151	1	SCREW, 8X35
1	2852155	2	SCREW, 8X80
2	2852153	1	ELBOW,
3	504052013	1	RING, LIFTING,
4	2852154	1	GASKET,
5	2852159	1	THERMOSTAT,
6	2852157	1	SENDER, TEMPERATURE,

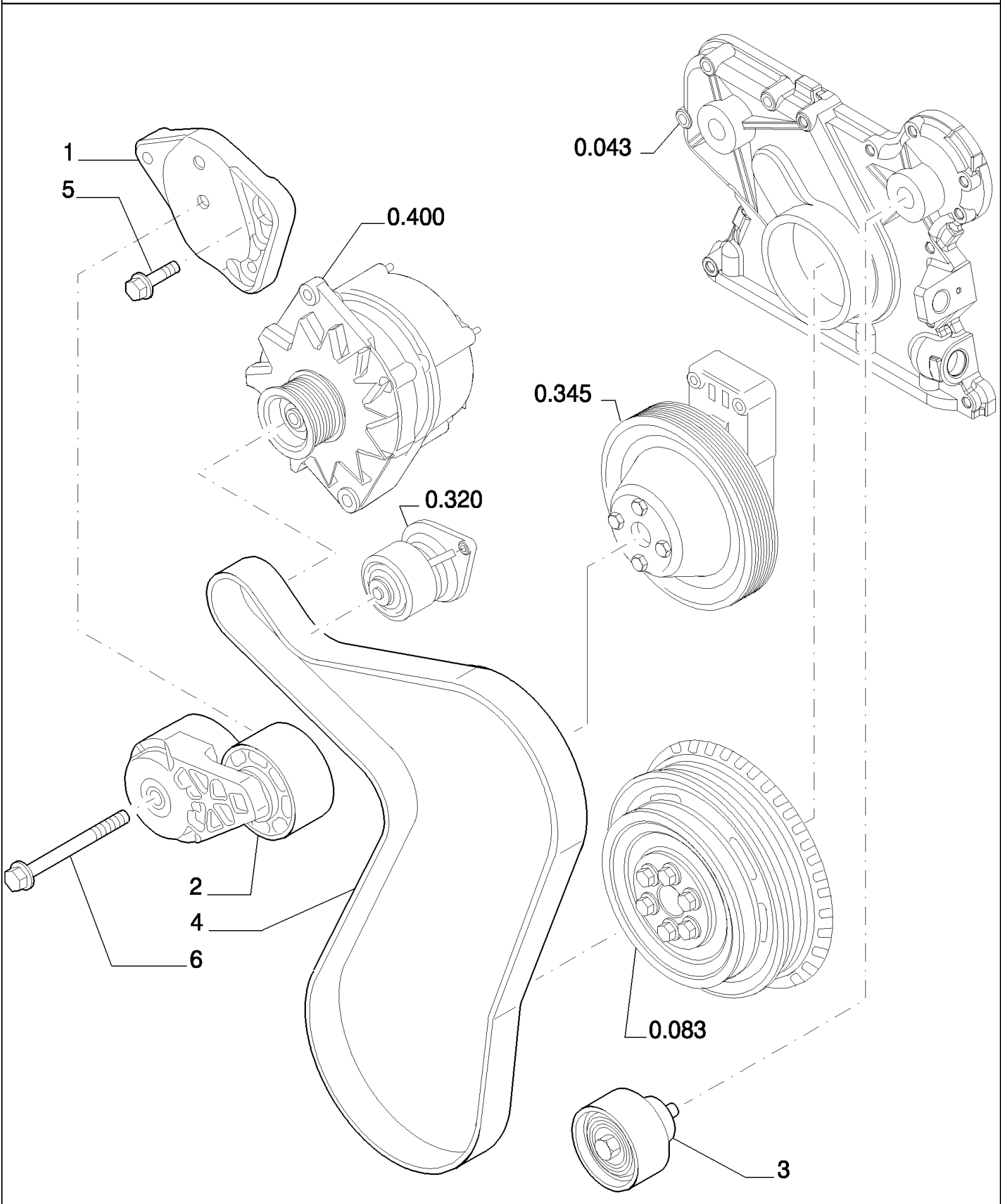
1
5
0.400
0.043
0.345
0.320
2
4
6
0.083
3

B95LR NA BACKHOE LOADER (1/06-)

0.340(01) WATER PUMP - CONTROL

Ref	Numero de Pieza	Ctd	Descripción
1	2852163	1	BRACKET, , UP TO S/N 031056821
2	2852161	1	TENSIONER, BELT,
3	2852162	1	PULLEY,
4	REF	1	INSTRUCTION, , UP TO S/N 031056821, See Page 636A 02
5	4899079	2	SCREW, Hex Flg, M8 x 1.25 x 25, , UP TO S/N 031056821
6	4899109	1	SCREW, Hex, M10 x 1.5 x 80, , UP TO S/N 031056821

UP TO S/N 031056821

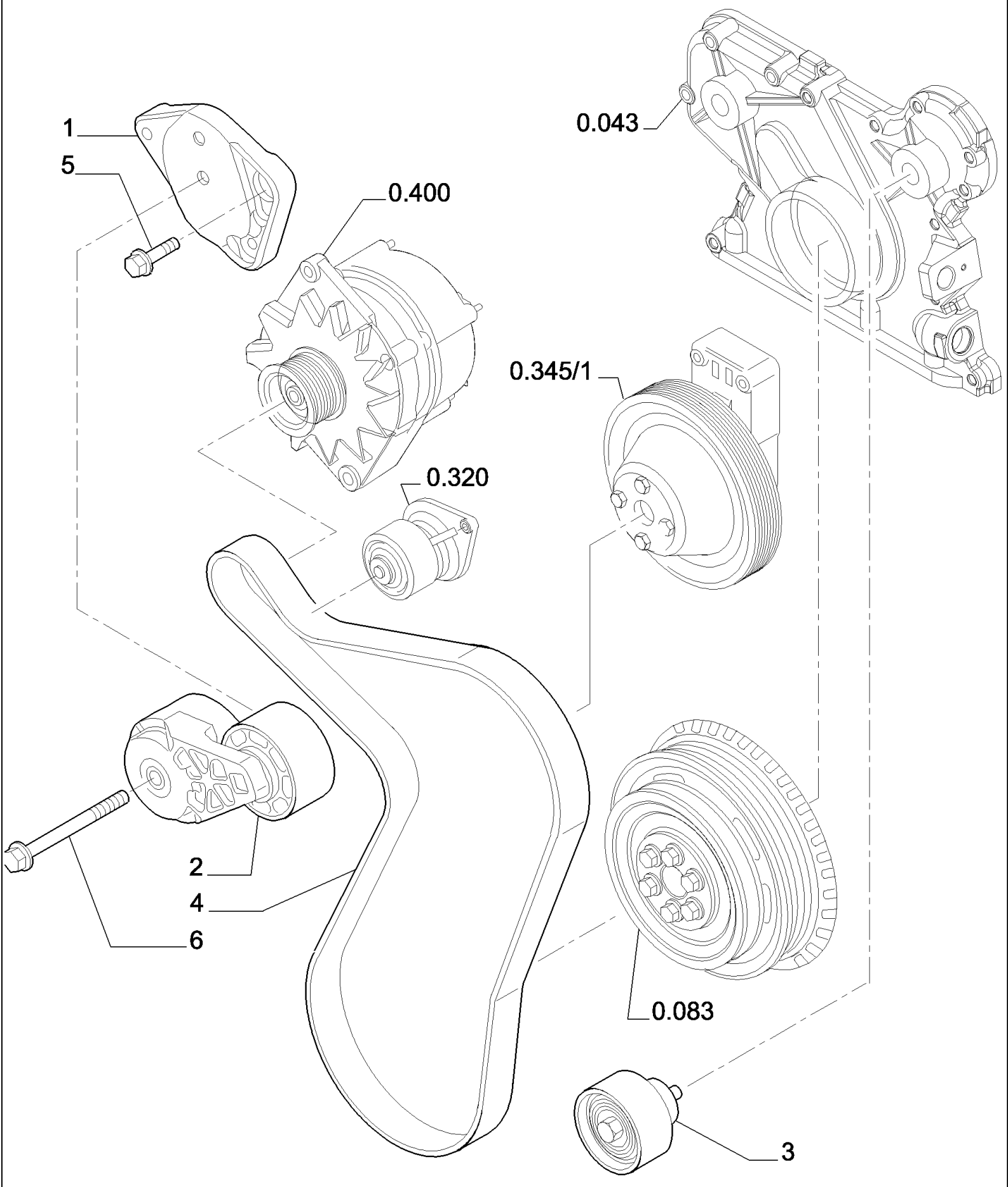
1
5
0.400
0.043
0.345/1
0.320
2
4
6
0.083
3

B95LR NA BACKHOE LOADER (1/06-)

0.340/A(01) WATER PUMP - CONTROL

Ref	Numero de Pieza	Ctd	Descripción
1	504069572	1	BRACKET, , FROM TO S/N 031056822
2	2852161	1	TENSIONER, BELT,
3	2852162	1	PULLEY,
4	504076395	1	BELT, TRANSMISSION, , FROM TO S/N 031056822
5	2852247	2	SCREW, M8X1,25X30, FROM TO S/N 031056822
6	4895292	1	SCREW, M10X1.5X70 , FROM TO S/N 031056822

FROM S/N 031056822 (12/01/2005)

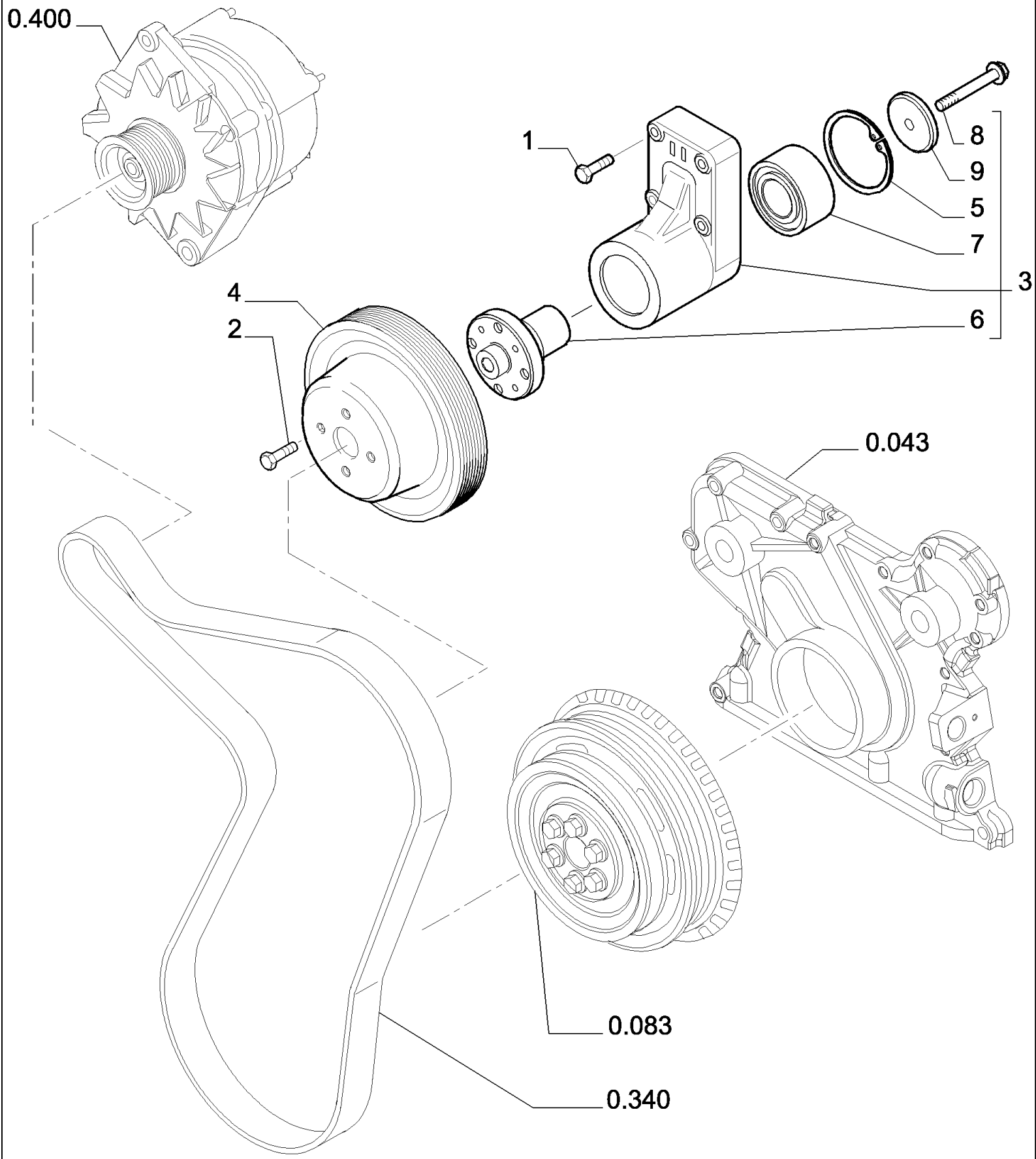
0.400
1
8
9
5
7
3
6
4
2
0.043
0.083
0.340

B95LR NA BACKHOE LOADER (1/06-)

0.345(01) FAN DRIVE

Ref	Numero de Pieza	Ctd	Descripción
1	4899053	4	SCREW, Hex Flg, M8 x 45, M8X1.25X45
2	4895291	4	SCREW, Hex Flg, M10 x 1.5 x 20, M10X1.5X20
3	2852170	1	SUPPORT, - ASSY
4	4895301	1	PULLEY, , UP TO S/N 031056821
5	2852171	1	RING, SNAP,
6	4892426	1	HUB,
7	4892732	1	BEARING, BALL,
8	2852172	1	SCREW, M10X70
9	4890732	1	RETAINER,

UP TO S/N 031056821

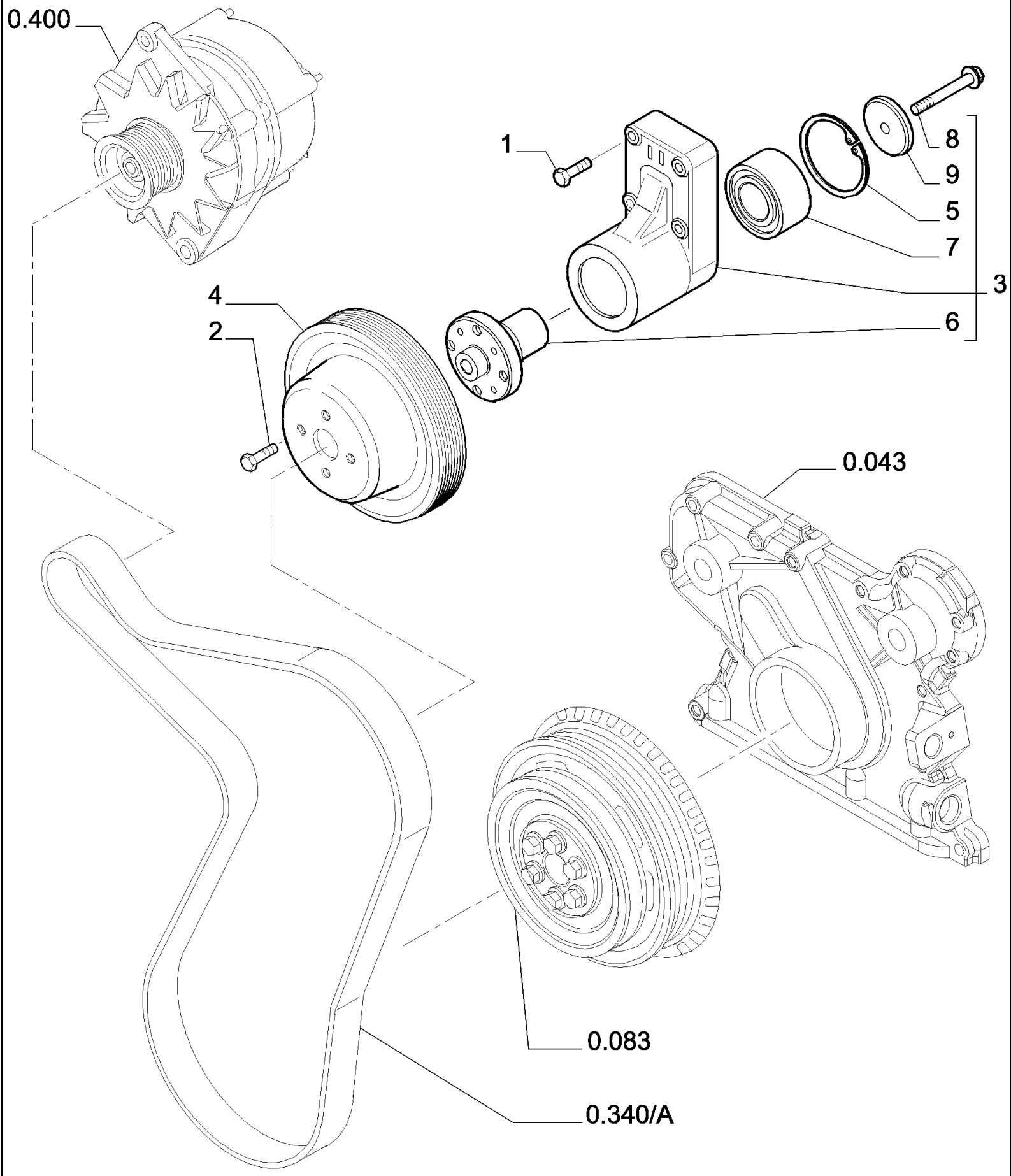
0.400
1
8
9
5
7
3
6
4
2
0.043
0.083
0.340/A

B95LR NA BACKHOE LOADER (1/06-)

0.345/A(01) FAN DRIVE

Ref	Numero de Pieza	Ctd	Descripción
1	4899053	4	SCREW, Hex Flg, M8 x 45, M8X1.25X45
2	4895291	4	SCREW, Hex Flg, M10 x 1.5 x 20, M10X1.5X20
3	2852170	1	SUPPORT, - ASSY
4	4890343	1	PULLEY, , FROM TO S/N 031056822
5	2852171	1	RING, SNAP,
6	4892426	1	HUB,
7	4892732	1	BEARING, BALL,
8	2852172	1	SCREW, M10X70
9	4890732	1	RETAINER,

FROM S/N 031056822 (12/01/2005)

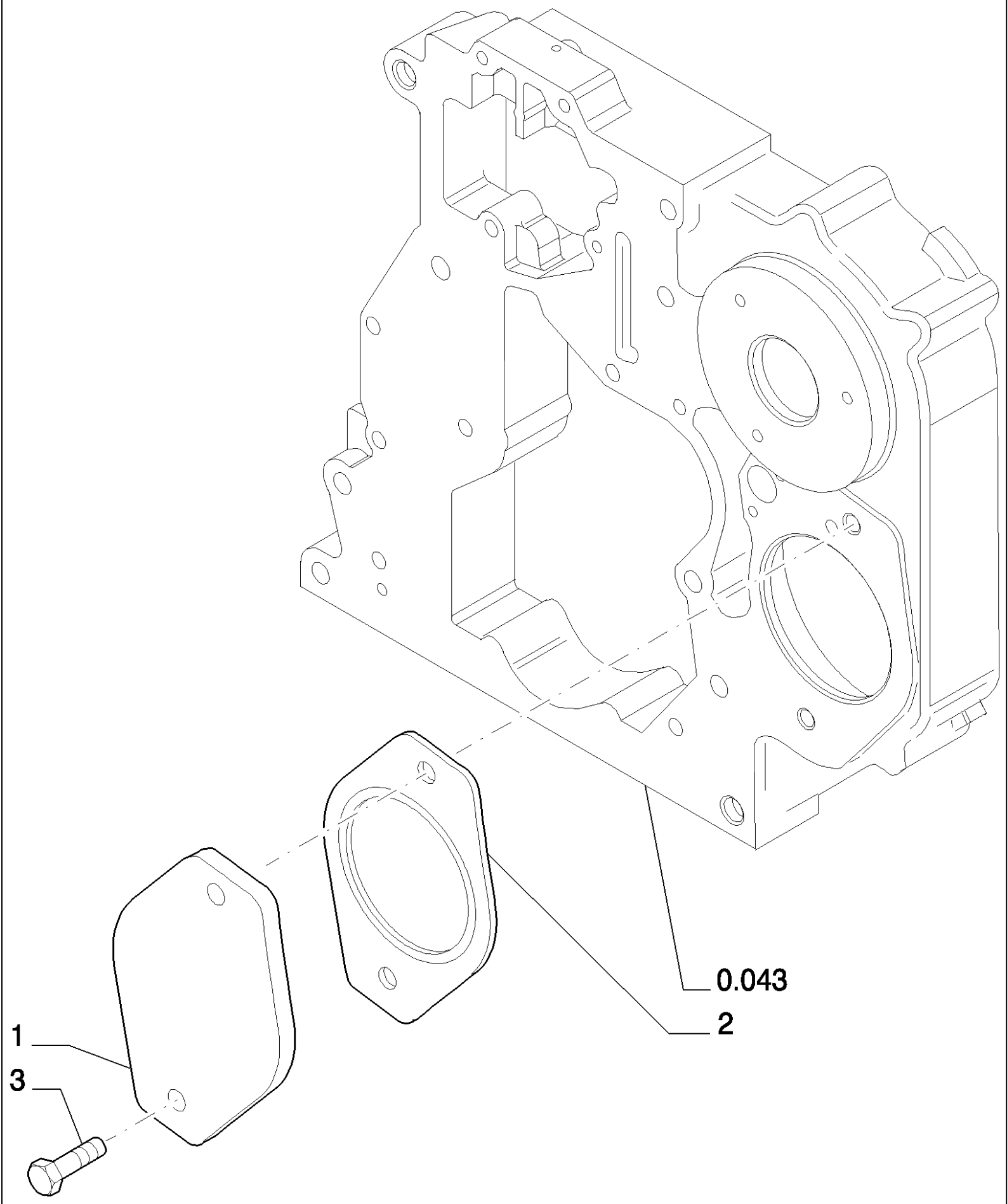
0.043
2
1
3

B95LR NA BACKHOE LOADER (1/06-)

0.350(01) POWER TAKE-OFF

Ref	Numero de Pieza	Ctd	Descripción
1	2852175	1	COVER,
2	4896897	1	GASKET,
3	4895327	2	SCREW,

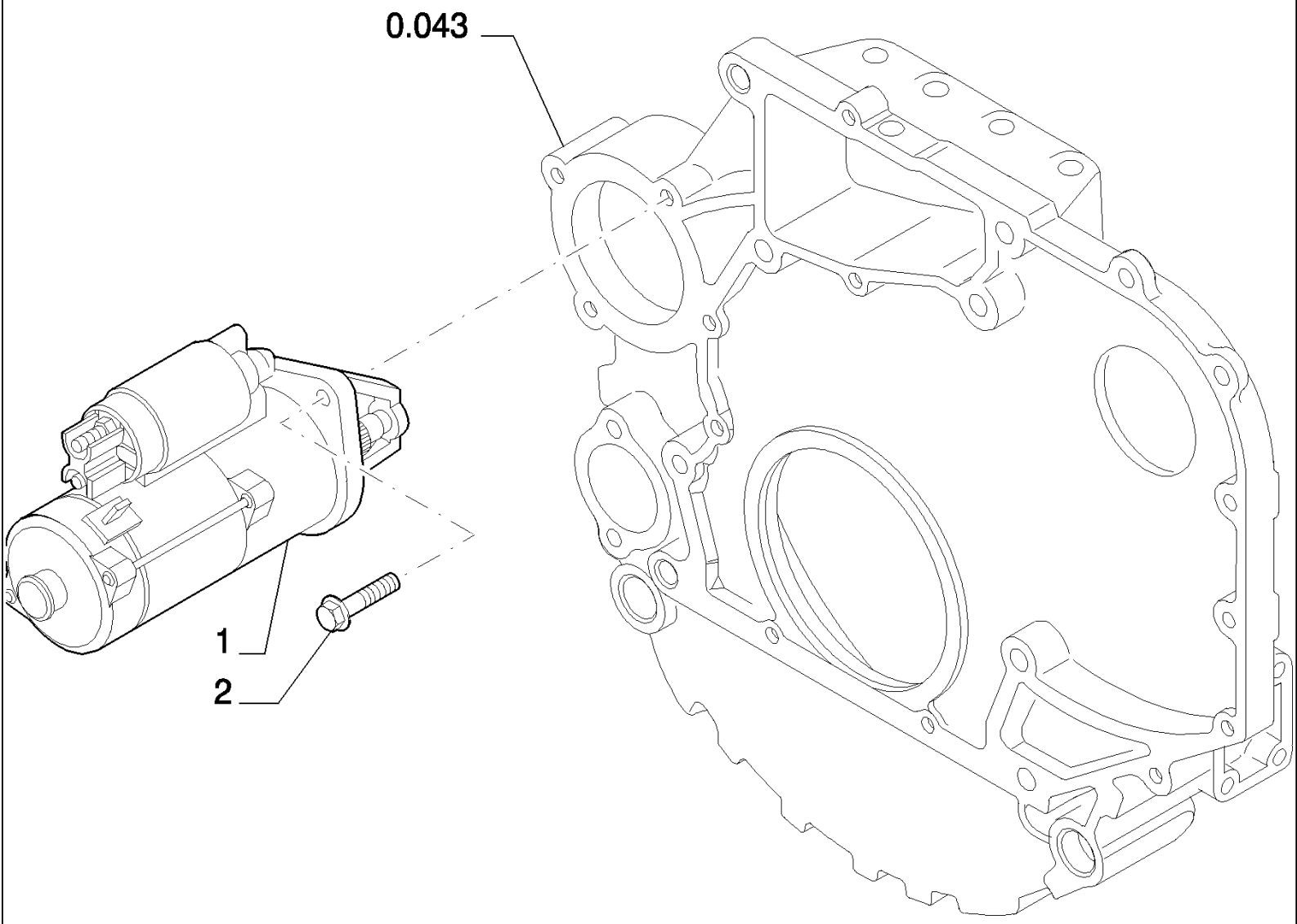
0.043
1
2

B95LR NA BACKHOE LOADER (1/06-)

0.360(01) STARTER MOTOR

Ref	Numero de Pieza	Ctd	Descripción
1	2852178	1	MOTOR, STARTER,
2	18139524	3	SCREW, M10X1.5X30

0.400(01) ALTERNATOR

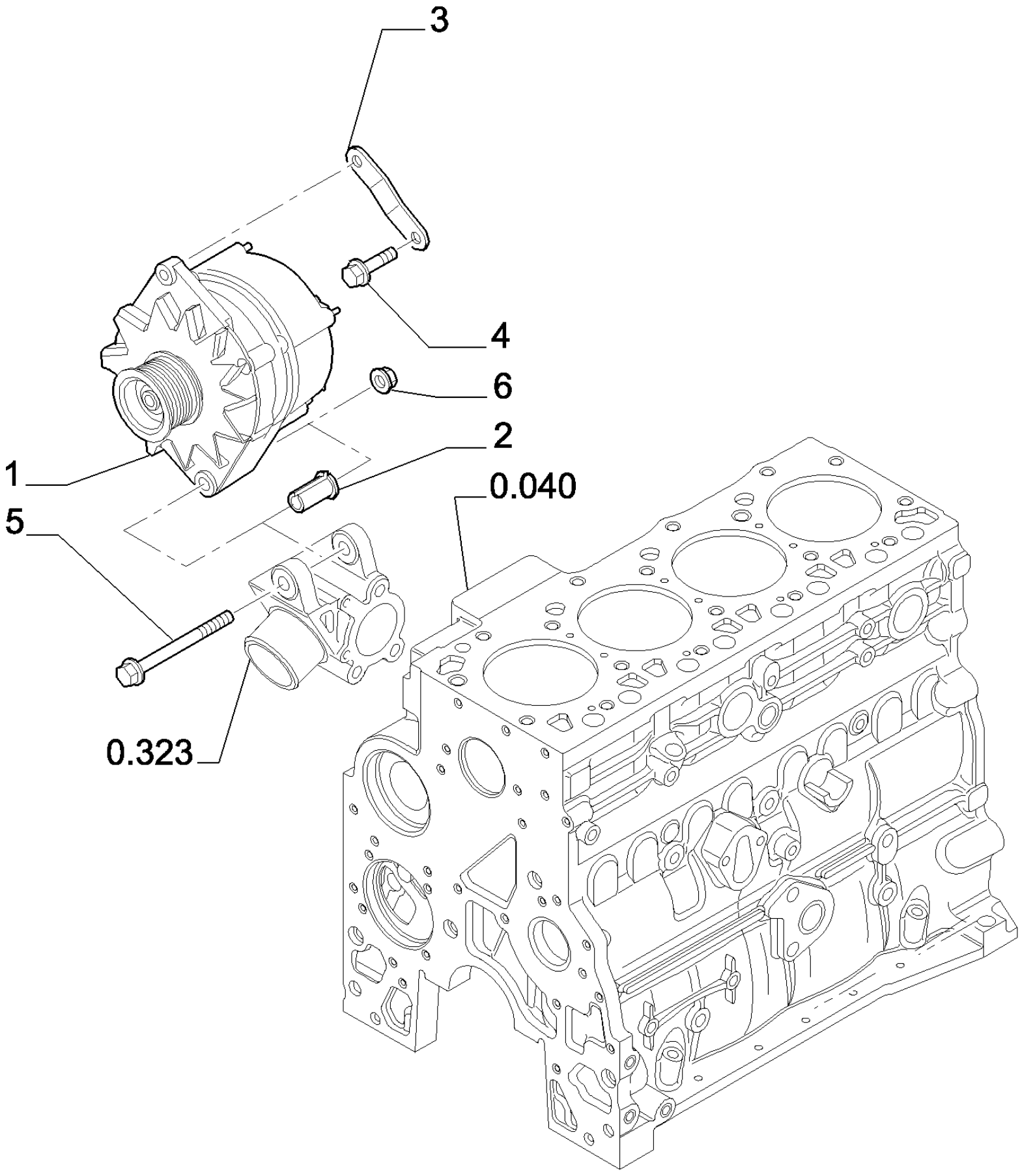

B95LR NA BACKHOE LOADER (1/06-)

0.400(01) ALTERNATOR

Ref	Numero de Pieza	Ctd	Descripción
1	87422777	1	ALTERNATOR, - ASSY, See Page 636A 04
2	2852181	1	SPACER,
3	2852180	1	BRACKET,
4	4895291	1	SCREW, Hex Flg, M10 x 1.5 x 20, M10X1.5X20
5	4895538	1	SCREW, M10X1.5X120
6	4895166	1	NUT, M10X1.5

0.450(01) ENGINE - LIFT HOOK

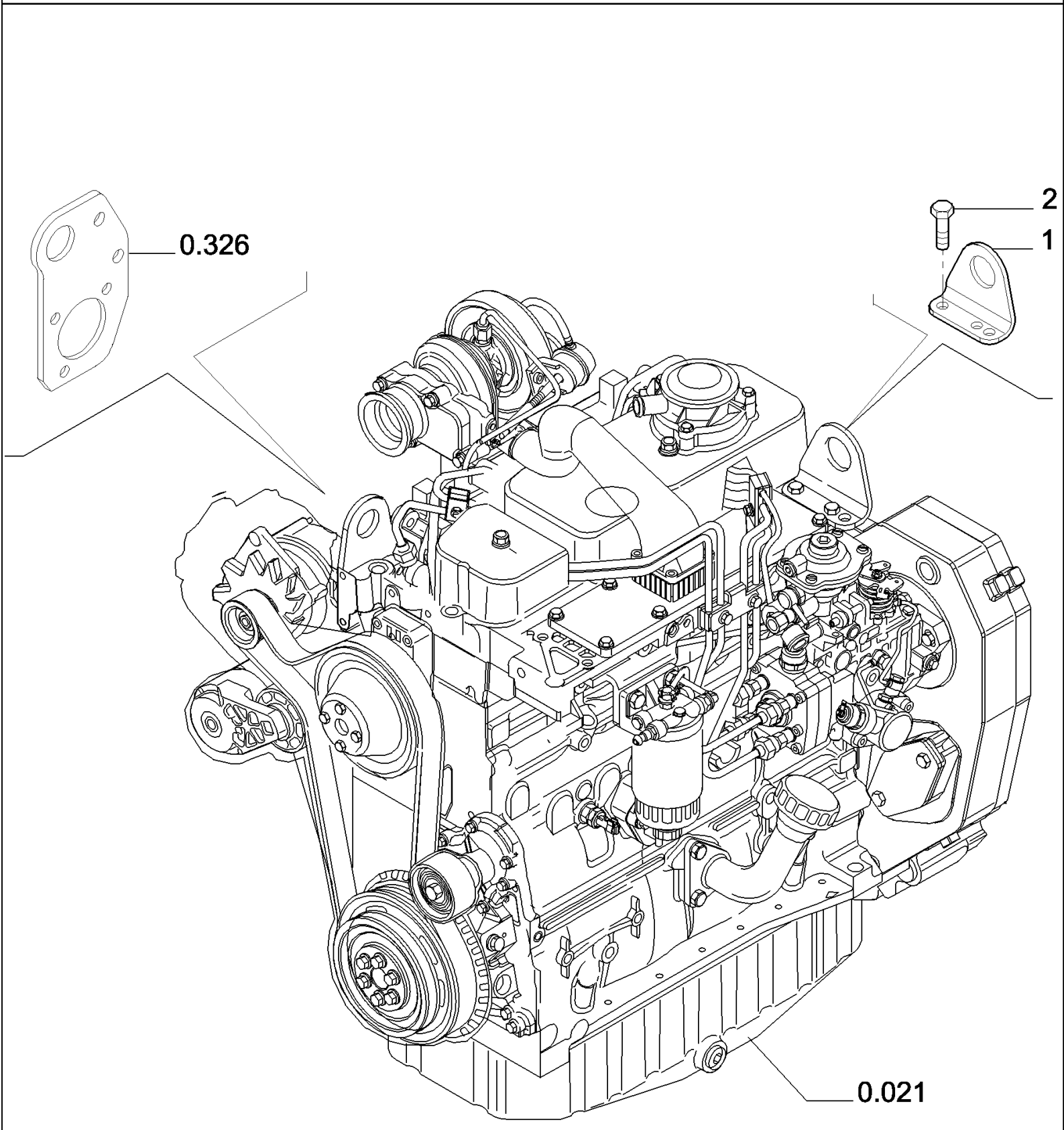

B95LR NA BACKHOE LOADER (1/06-)

0.450(01) ENGINE - LIFT HOOK

Ref	Numero de Pieza	Ctd	Descripción
1	2852183	1	RING, LIFTING,
2	4899073	2	SCREW, Hex Flg, M12 x 1.75 x 30,

B95LR NA BACKHOE LOADER (1/06-)

095(01) STABILIZER CONTROL WITHOUT AUTO-UP (CENTER PIVOT)

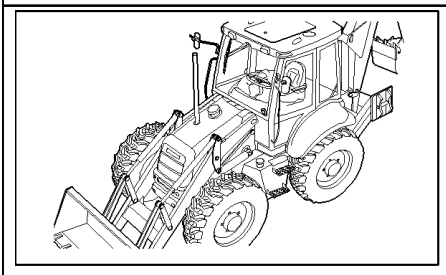

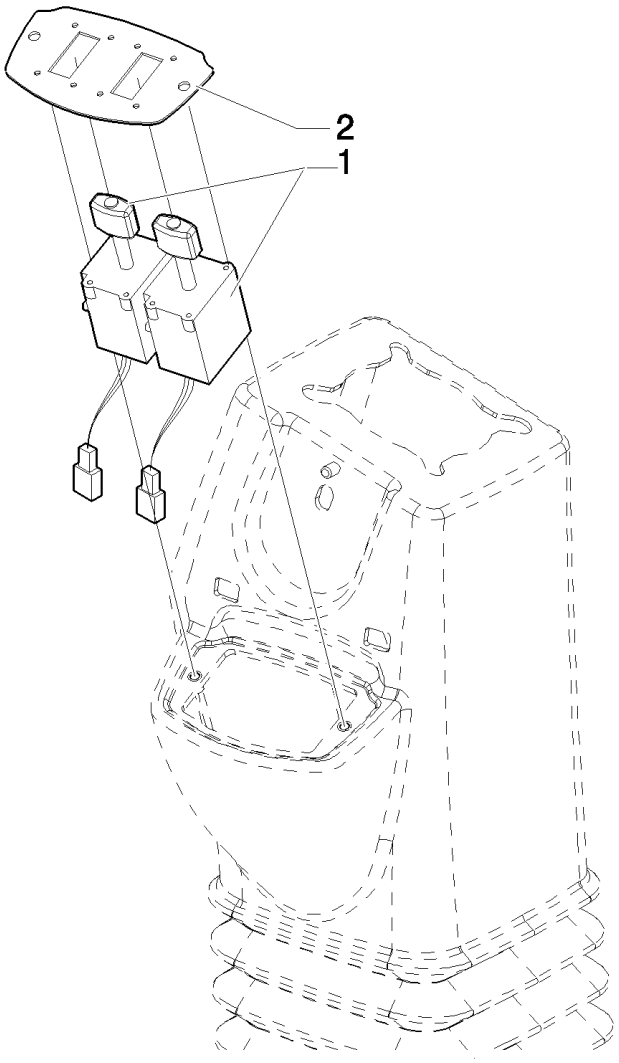

Pilot Control Version

B95LR NA BACKHOE LOADER (1/06-)

095(01) STABILIZER CONTROL WITHOUT AUTO-UP (CENTER PIVOT)

Ref	Numero de Pieza	Ctd	Descripción
1	86988086	2	JOYSTICK,
2	87435381	1	PLATE, MOUNTING,

Pilot Control Version

B95LR NA BACKHOE LOADER (1/06-)

096(01) STABILIZER CONTROL WITH AUTO-UP (CENTER PIVOT)

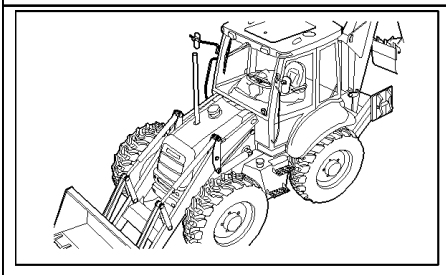

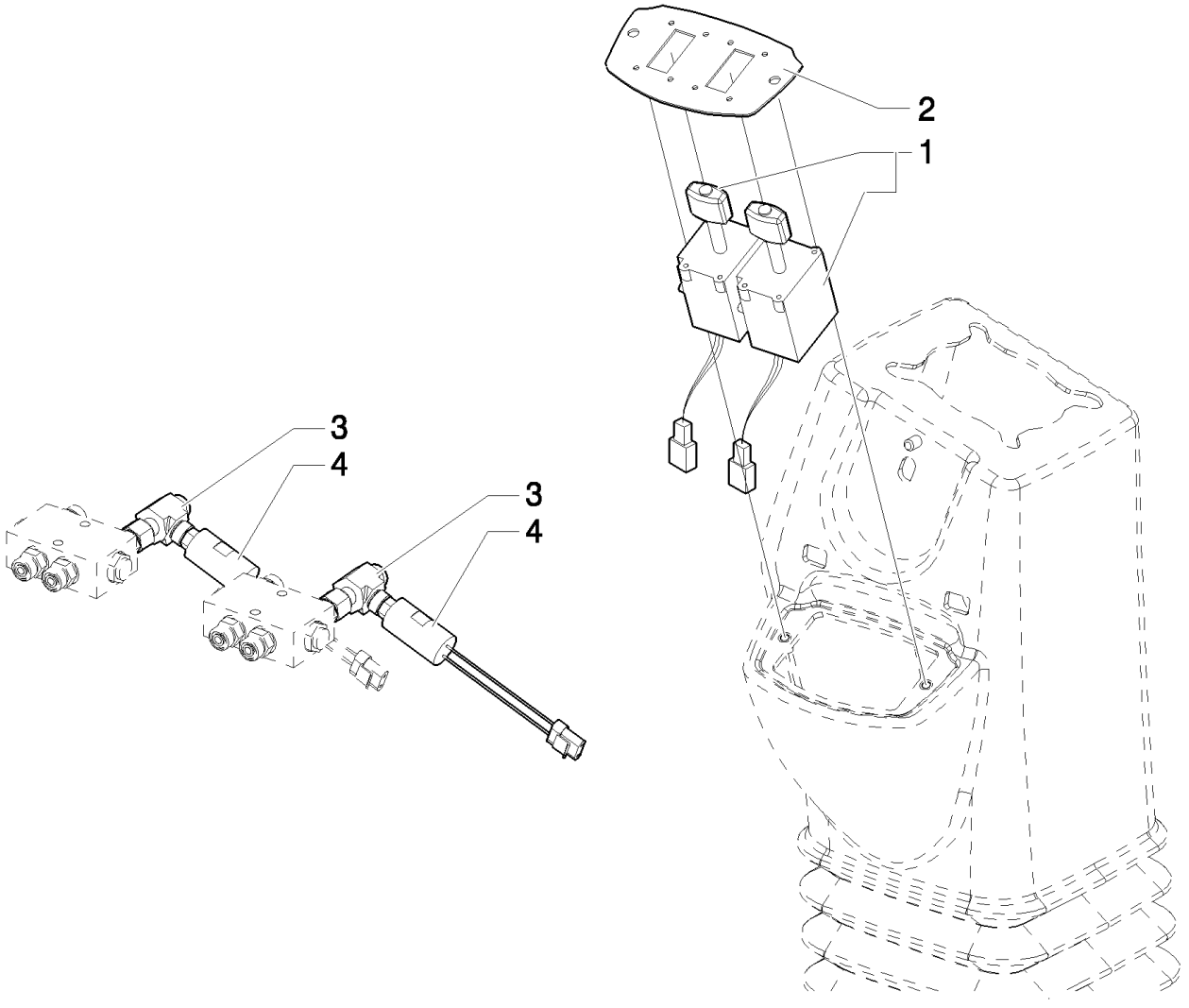

Pilot Control Version

B95LR NA BACKHOE LOADER (1/06-)

096(01) STABILIZER CONTROL WITH AUTO-UP (CENTER PIVOT)

Ref	Numero de Pieza	Ctd	Descripción
1	86988086	2	JOYSTICK,
2	87435381	1	PLATE, MOUNTING,
3	87401111	2	CONNECTOR, HYD.,
4	87589234	2	SWITCH, PRESSURE,

Pilot Control Version

1.11.5(01) SELF-LEVELING LINKAGE, LOADER CONTROLS (CENTER PIVOT)

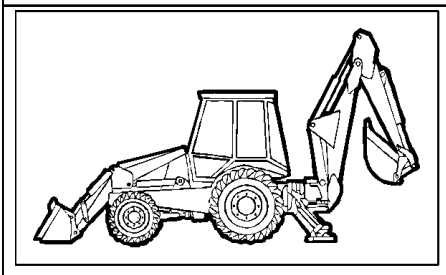

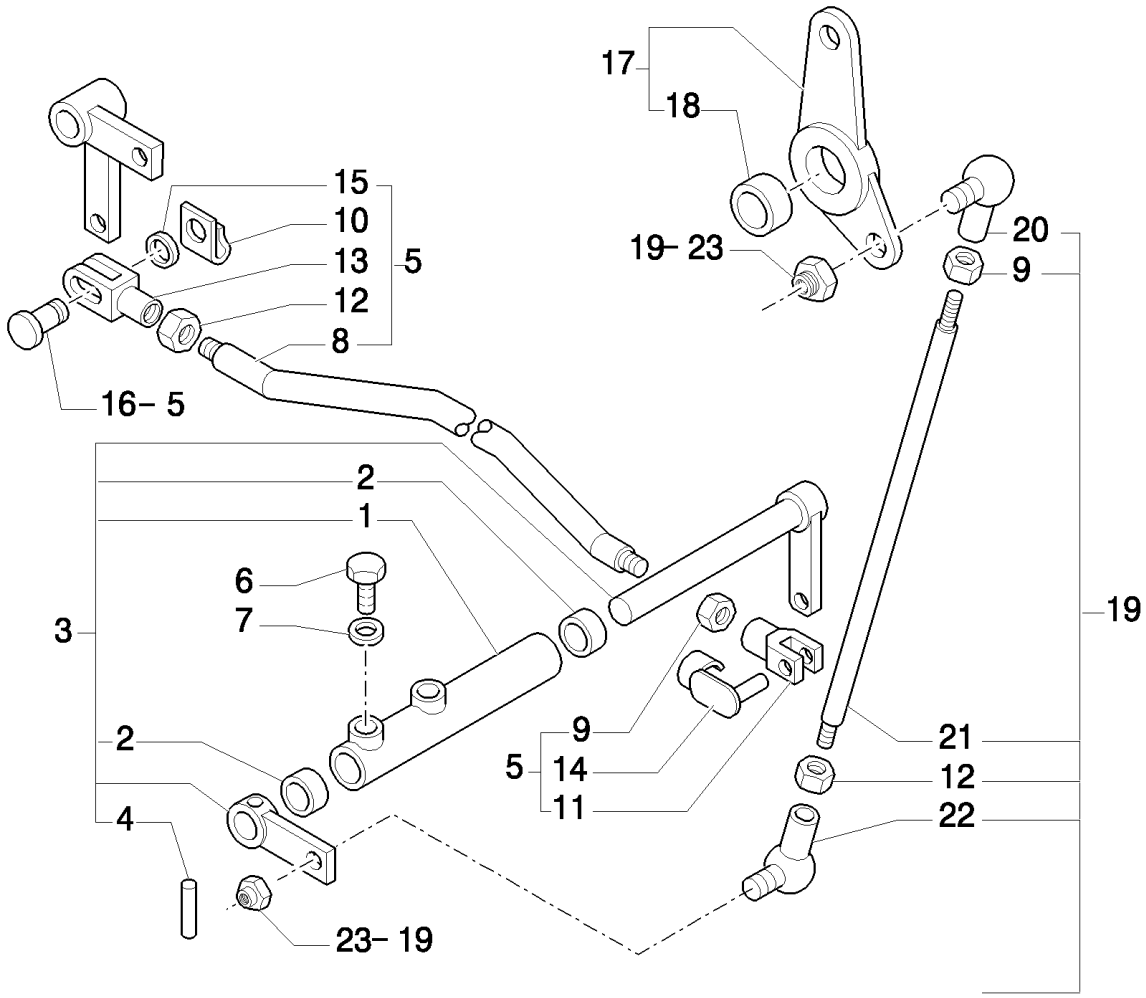

B95LR NA BACKHOE LOADER (1/06-)

1.11.5(01) SELF-LEVELING LINKAGE, LOADER CONTROLS (CENTER PIVOT)

Ref	Numero de Pieza	Ctd	Descripción
1	85802724	1	LEVER, Assy, Includes 2
2	85802494	2	BUSHING,
3	85827787	1	LEVER, ASSY
4	85805616	1	PIN,
5	85802734	1	TIE-ROD, Assy, Only for Center Pivot Meccanic
5	85825466	1	TIE-ROD, , Only for Center Pivot and Side Shift
6	15970521	2	BOLT, Hex, M10 x 1.25 x 20, 8.8, Full Thd,
7	11190679	2	WASHER, SPRING, Belleville, M10.5,
8	85802736	1	TIE-ROD, , Only for Center Pivot Meccanic
8	85825467	1	TIE-ROD, , Only for Center Pivot and Side Shift
9	16102311	2	NUT, Thin, M8 x 1.25, Cl 04,
10	11064071	1	CLIP,
11	11991971	1	CLEVIS,
12	16102911	2	NUT, Thin, M8 x 1.25, Cl 04, LH,
13	85802735	1	CLEVIS,
14	85802738	1	RETAINER,
15	14496521	1	WASHER, M8 x 17 x 1.6,
16	85802737	2	PIN,
17	85803215	1	LEVER,
18	81855916	1	BUSHING,
19	85802741	1	TIE-ROD,
20	85804376	1	BALL JOINT,
21	85802742	1	TIE-ROD,
22	85804375	1	BALL JOINT,
23	14048211	2	NUT, LOCK, M8 x 1.25, Cl 8,

1.11.5(02) SELF-LEVELING LINKAGE, LOADER ARM (CENTER PIVOT)

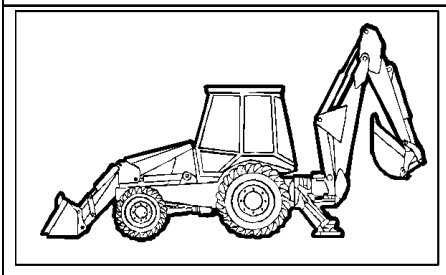

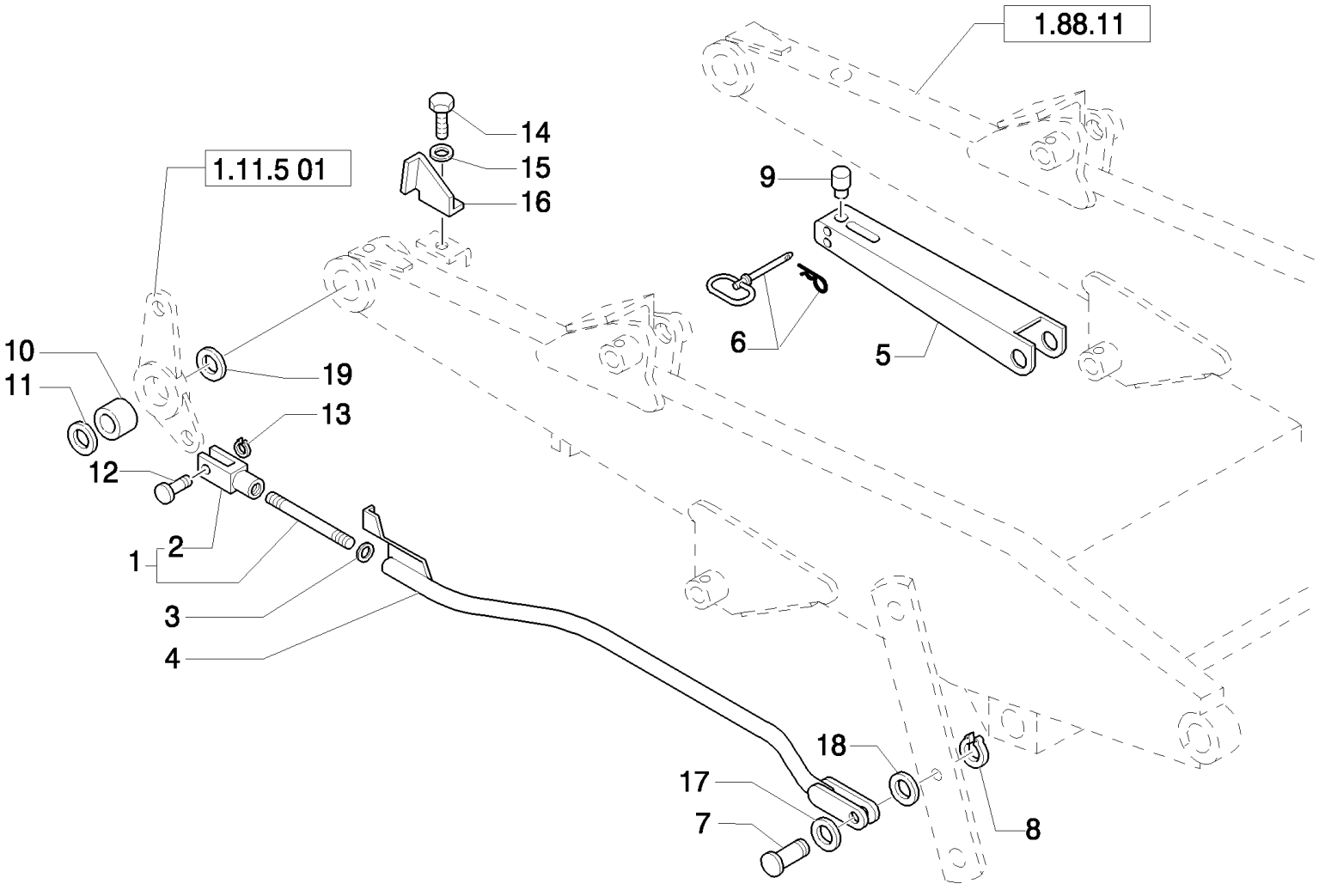

B95LR NA BACKHOE LOADER (1/06-)

1.11.5(02) SELF-LEVELING LINKAGE, LOADER ARM (CENTER PIVOT)

Ref	Numero de Pieza	Ctd	Descripción
1	83963433	1	ROD, Assy
2	83962659	1	CLEVIS,
3	82879400	1	WASHER,
4	85804026	1	LINK,
5	85802405	1	LOCK, CYLINDER, Strut; Loader Lift Cylinder Lockout; Incl. Ref 9
6	86507337	1	PIN, HITCH,
7	85803297	1	PIN,
8	83911366	1	RING, SNAP,
9	85802403	1	PLUG, Pad, Strut Prop
10	83963422	1	SPACER,
11	85804366	1	WASHER,
12	85819179	1	PIN,
13	85700341	1	CIRCLIP,
14	10979421	1	BOLT, Hex, M6 x 10, 8.8, Full Thd,
15	11193279	1	WASHER, SPRING, Belleville, M6.4,
16	85803277	1	PLATE,
17	85817622	AR	WASHER,
18	85817623	AR	WASHER,
19	81900328	1	WASHER,

1.14.0(01) FUEL TANK & RELATED PARTS

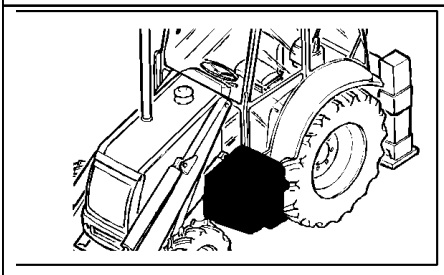

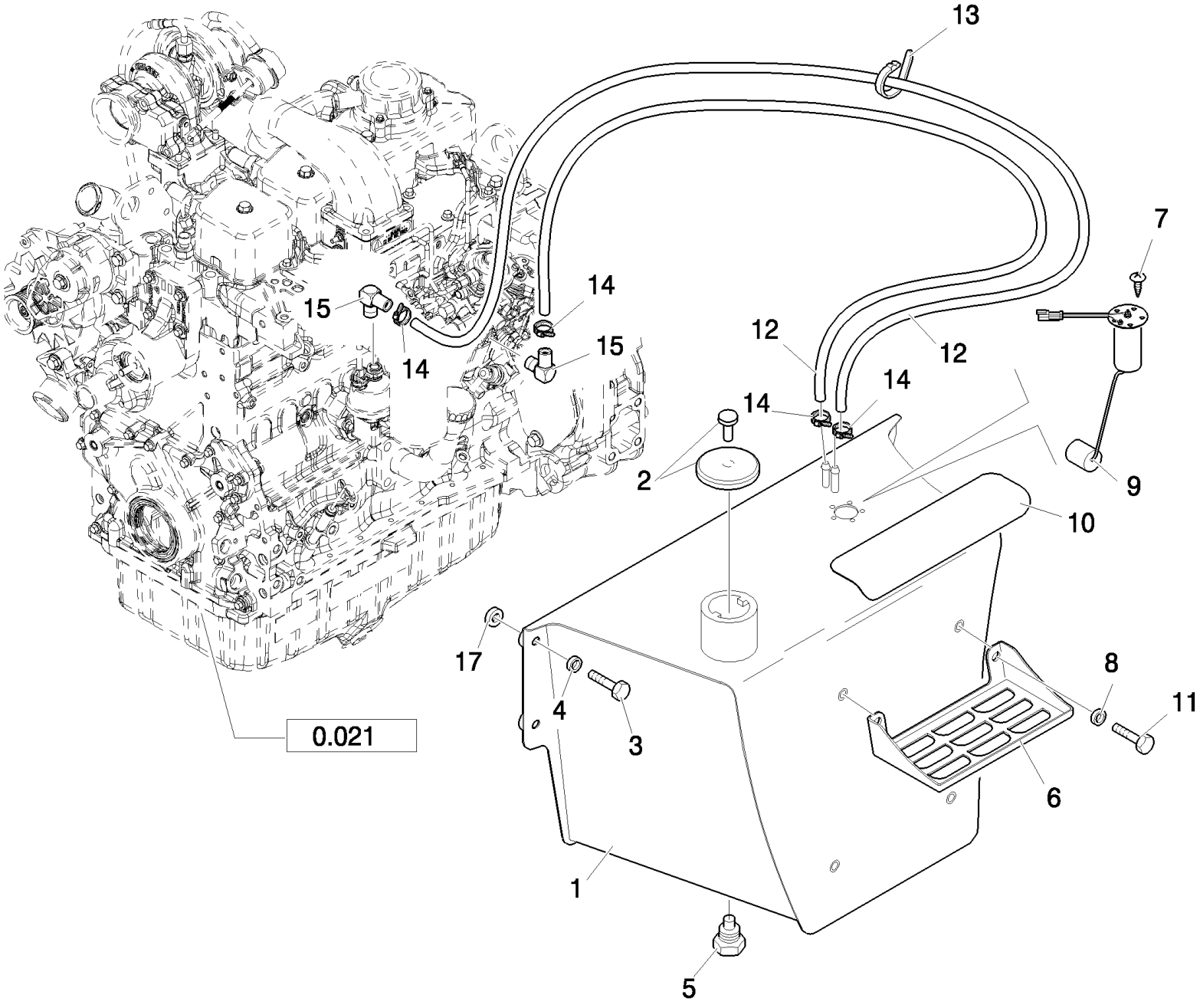

B95LR NA BACKHOE LOADER (1/06-)

1.14.0(01) FUEL TANK & RELATED PARTS

Ref	Numero de Pieza	Ctd	Descripción
1	87355226	1	FUEL TANK,
2	85825392	1	CAP FUEL, LOCKABLE,
3	15540721	4	BOLT, Hex, M12 x 1.25 x 45, 8.8, Full Thd,
4	47048973	4	WASHER,
5	47050671	1	PLUG,
6	85801218	2	PLATE, STEP,
7	85825158	5	SCREW, M5x12
8	47048976	4	WASHER, M12
9	86985587	1	SENDER UNIT,
10	87404910	1	STRIP, ANTI-SKID,
11	15540721	4	BOLT, Hex, M12 x 1.25 x 45, 8.8, Full Thd,
12	87403672	2	HOSE, FLEXIBLE,
13	14560187	4	STRAP, CABLE, 178mm lg, L=203.2 mm
14	85824381	4	CLAMP, HOSE,
15	87414560	2	FITTING,
17	87353741	4	SPACER,

1.15.0(01) MUFFLER & EXTENSIONS

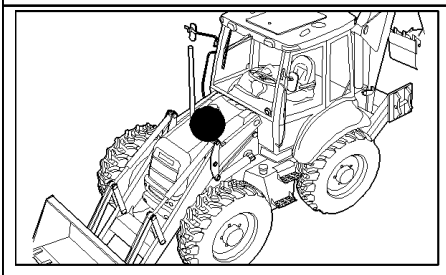

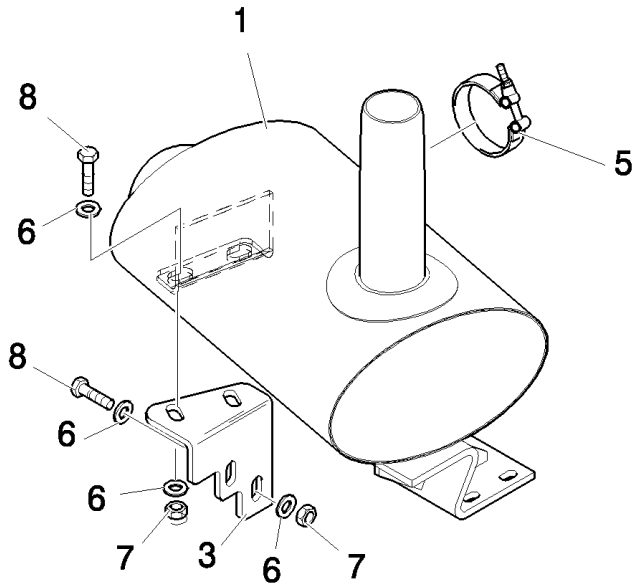

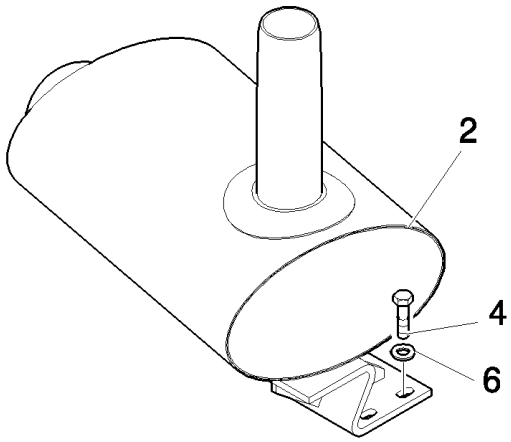

B95LR NA BACKHOE LOADER (1/06-)

1.15.0(01) MUFFLER & EXTENSIONS

Ref	Numero de Pieza	Ctd	Descripción
1	87347670	1	MUFFLER,
2	87347671	1	MUFFLER, , With Spark Arrester
3	87412988	1	BRACKET,
4	47049098	3	SCREW, M10x60
5	47048898	1	CLAMP,
6	47048972	11	WASHER, M10
7	47049041	4	NUT, M10
8	47049186	4	BOLT, Hex, M10 x 30, 8.8,

B95LR NA BACKHOE LOADER (1/06-)

1.15.0(02) MUFFLER & EXTENSIONS

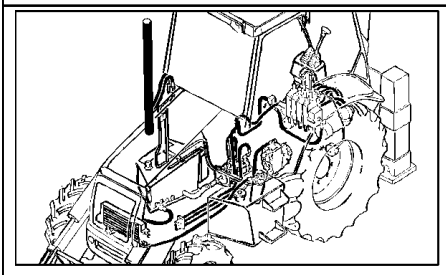

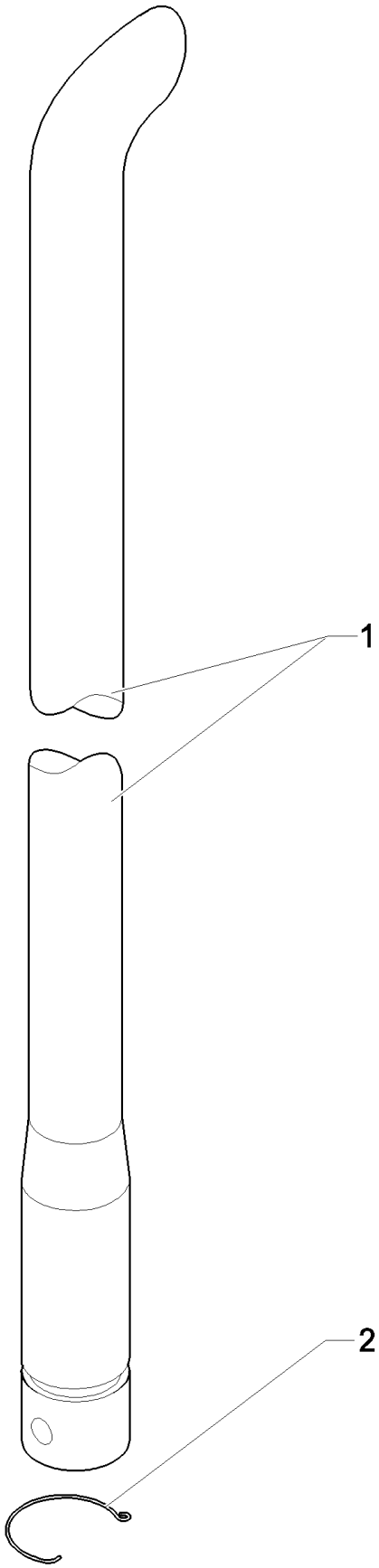

B95LR NA BACKHOE LOADER (1/06-)

1.15.0(02) MUFFLER & EXTENSIONS

Ref	Numero de Pieza	Ctd	Descripción
1	47055750	1	TUBE, RIGID,
2	87416643	1	SPRING,

1.17.2(01) EXPANSION TANK

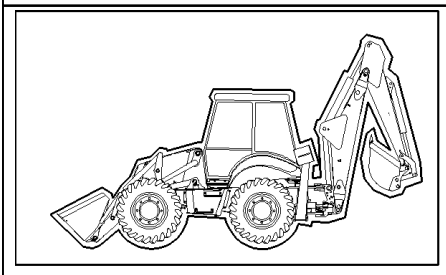

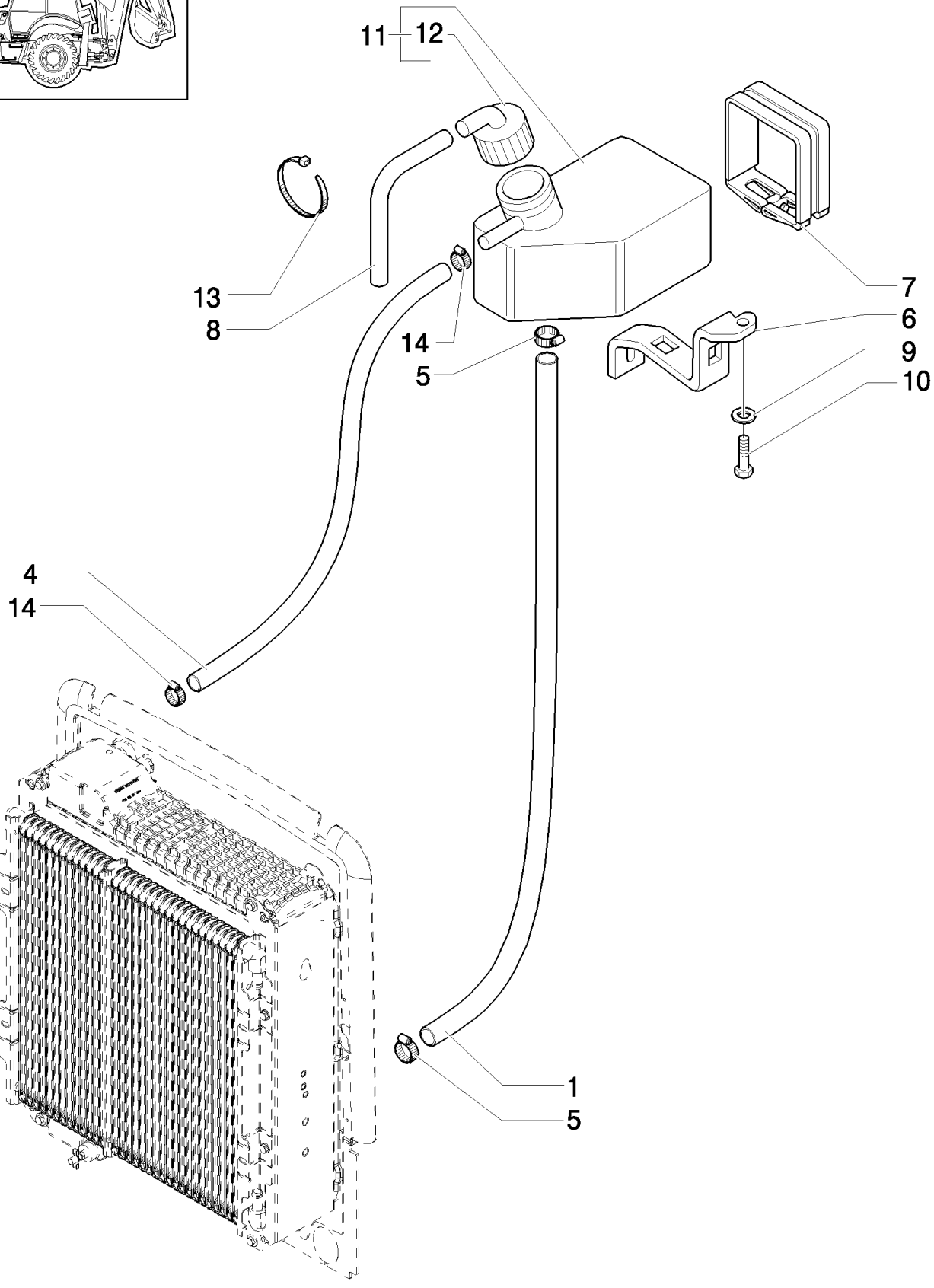

B95LR NA BACKHOE LOADER (1/06-)

1.17.2(01) EXPANSION TANK

Ref	Numero de Pieza	Ctd	Descripción
1	87410546	1	TUBE,
4	87410547	1	TUBE,
5	85803013	2	CLAMP, HOSE,
6	85805256	1	BRACKET,
7	85804302	1	CLAMP,
8	85803226	1	HOSE, FLEXIBLE, 1000mm lg,
9	11193979	2	WASHER, SPRING, Belleville, M8.4,
10	16043821	2	BOLT, Hex, M8 x 30, 8.8,
11	85802804	1	RESERVOIR,COOLANT EXPNSN,
12	85803019	1	CAP, FILLER,
13	14560187	4	STRAP, CABLE, 178mm lg, L=203.2 mm
14	85824381	2	CLAMP, HOSE,

B95LR NA BACKHOE LOADER (1/06-)

1.19.1(01) AIR CLEANER & HOSES

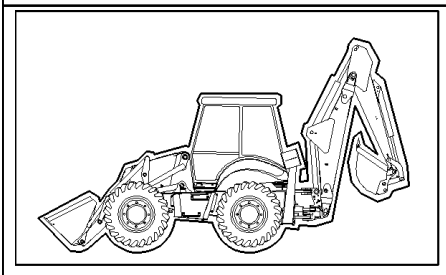

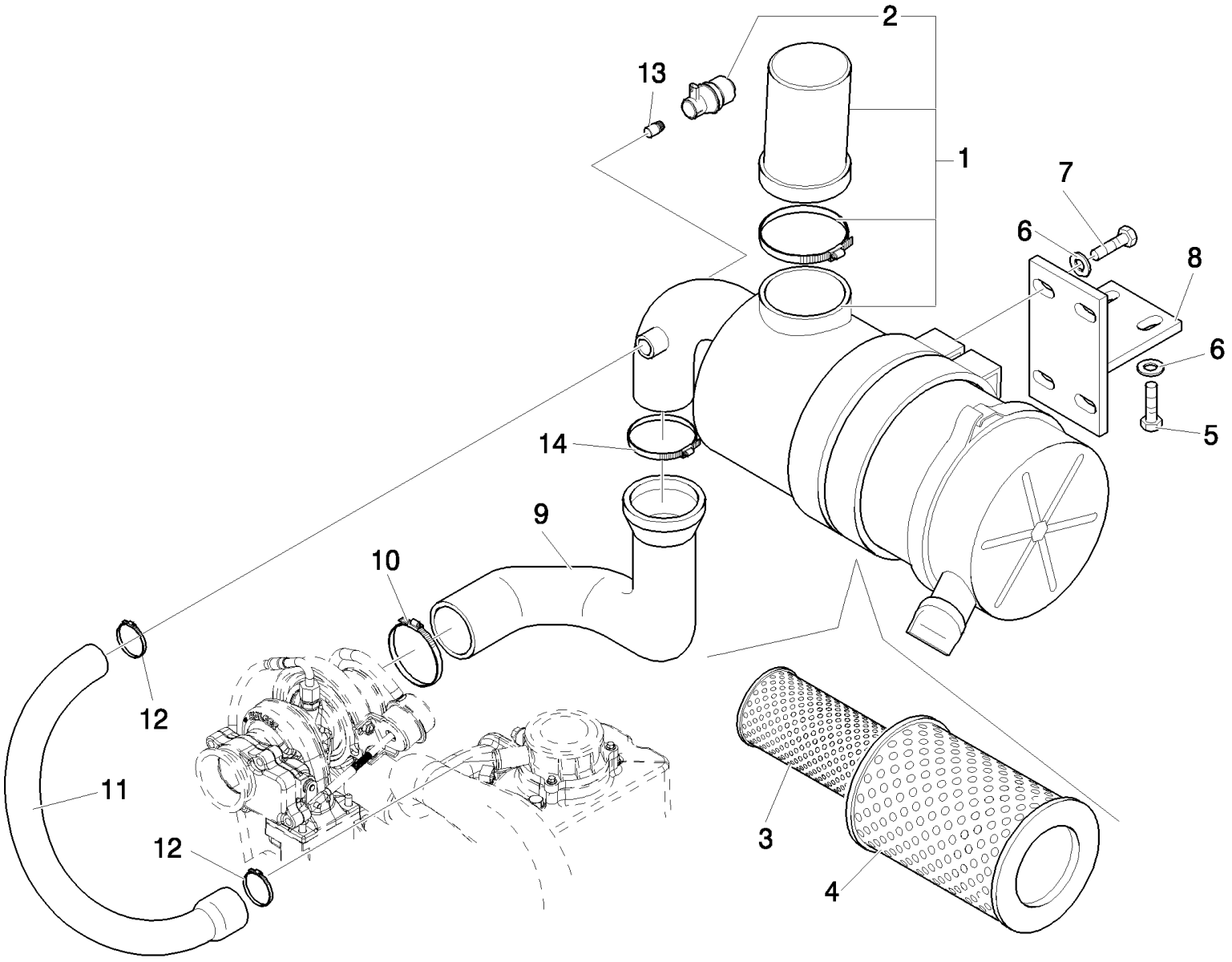

B95LR NA BACKHOE LOADER (1/06-)

1.19.1(01) AIR CLEANER & HOSES

Ref	Numero de Pieza	Ctd	Descripción
1	87442705	1	AIR CLEANER, ASSY; Incl. Ref 2 - 4
2	87442601	1	SWITCH,
3	87418365	1	FILTER, AIR, Secondary, Inner
4	87418364	1	FILTER, AIR, Primary, Outer
5	16043821	2	BOLT, Hex, M8 x 30, 8.8,
6	47048962	6	WASHER, 9x16x1.6
7	47049160	4	BOLT, Hex, M8 x 20, 8.8,
8	87412754	1	BRACKET,
9	87442309	1	HOSE, , UP TO S/N 031055222
9	87759048	1	KIT, Air Intake Hose; Includes 87742814 Hose and 87750941 Clamp; Replaces 87335345 Hose, FROM TO S/N 031055223
	87742814	1	HOSE, Hose
	87750941	1	CLAMP,
10	85803010	1	CLAMP, HOSE,
11	87442310	1	HOSE,
12	85803013	2	CLAMP, HOSE,
13	47048450	1	FITTING,
14	85802743	1	CLAMP, HOSE,

1.21.5/ 1(01) FRAME (CENTER PIVOT)

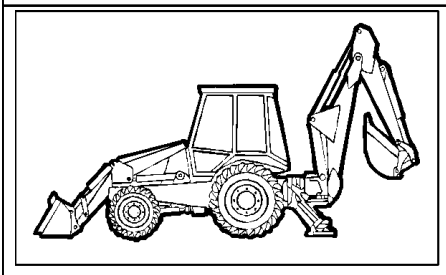

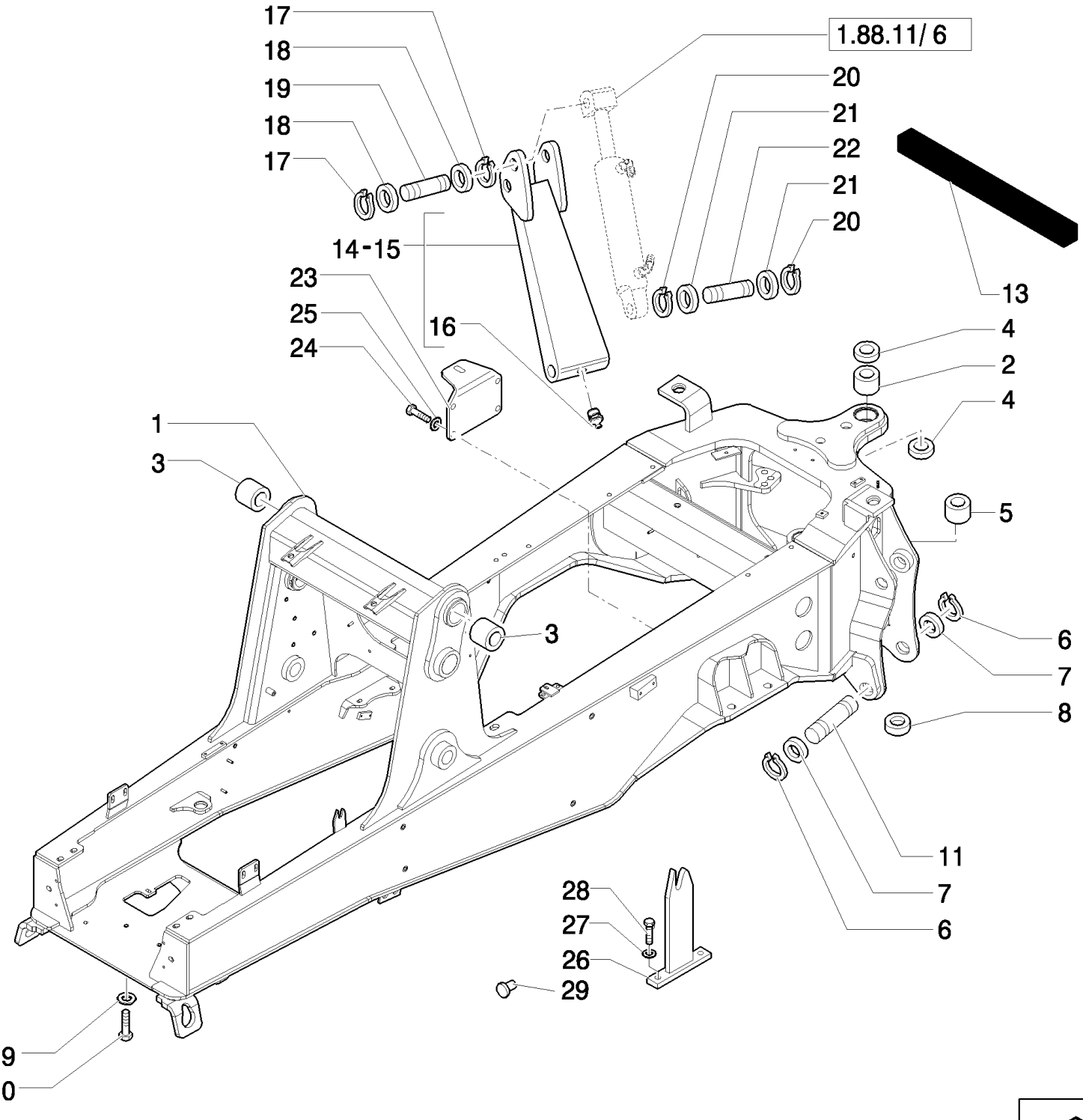

B95LR NA BACKHOE LOADER (1/06-)

1.21.5/ 1(01) FRAME (CENTER PIVOT)

Ref	Numero de Pieza	Ctd	Descripción
1	87303096	1	FRAME, , Includes 2, 3, 5, UP TO S/N 031056941
1	87573088	1	FRAME, , FROM TO S/N XXX, Includes 2, 3, 5
2	85700728	2	BUSHING,
3	85801110	2	BUSHING,
4	F2NNC513AA	4	SEAL,
5	83910645	2	BUSHING,
6	N800272S36M	4	RING, SNAP,
7	290885	4	WASHER,
8	85802903	1	INSULATOR,
9	10520431	6	WASHER, 20x35
10	15989134	6	BOLT, Hex, M20 x 100, 10.9,
11	D7NNC669A	2	PIN,
13	85802338	1	STRIP-GASKET,
14	85803959	1	STABILIZER, LH, Includes 16
15	85803960	1	STABILIZER, RH, Includes 16
16	87916S8	2	NIPPLE, LUBE,
17	N800270S36M	4	RING, SNAP,
18	D7NNC622A	4	SPACER,
19	E8NNC667AA	2	PIN,
20	N800271S36M	4	RING, SNAP,
21	D7NNC622C	4	SPACER,
22	85801262	2	PIN,
23	85804171	1	SUPPORT,
24	15540534	4	BOLT, Hex, M12 x 1.25 x 35, 10.9, Full Thd,
25	11198679	4	WASHER, SPRING, Belleville, M13,
26	87302151	1	SUPPORT, RH
27	11193874	2	WASHER, SPRING, Belleville, M8.4,
28	16043421	2	SCREW, Hex, M8 x 20, 8.8,
29	85808422	2	PLUG,

1.28.0(01) GEARING SPEED GEAR

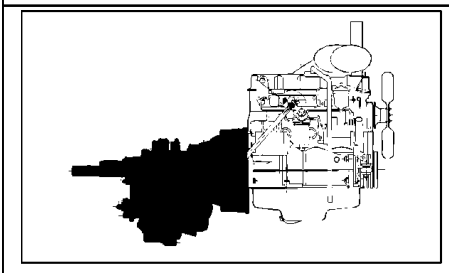

KIT = 16

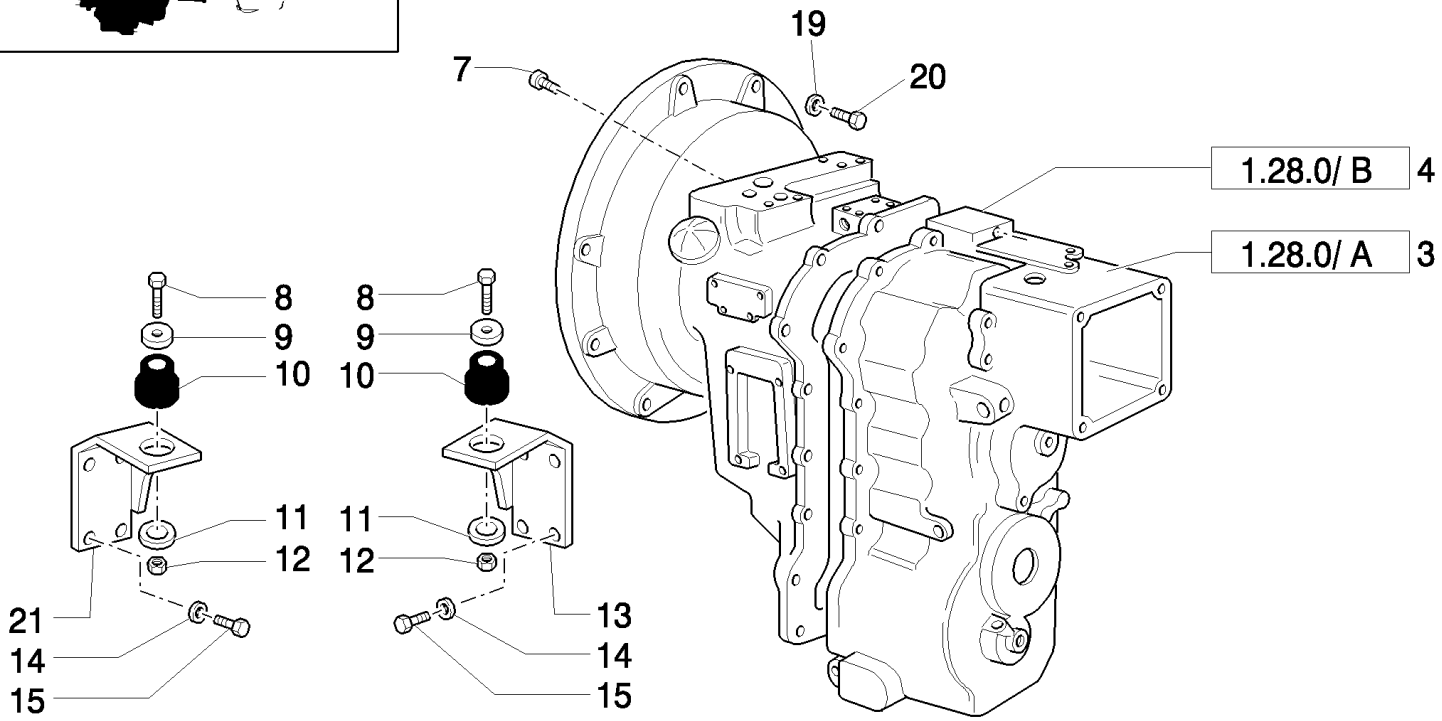

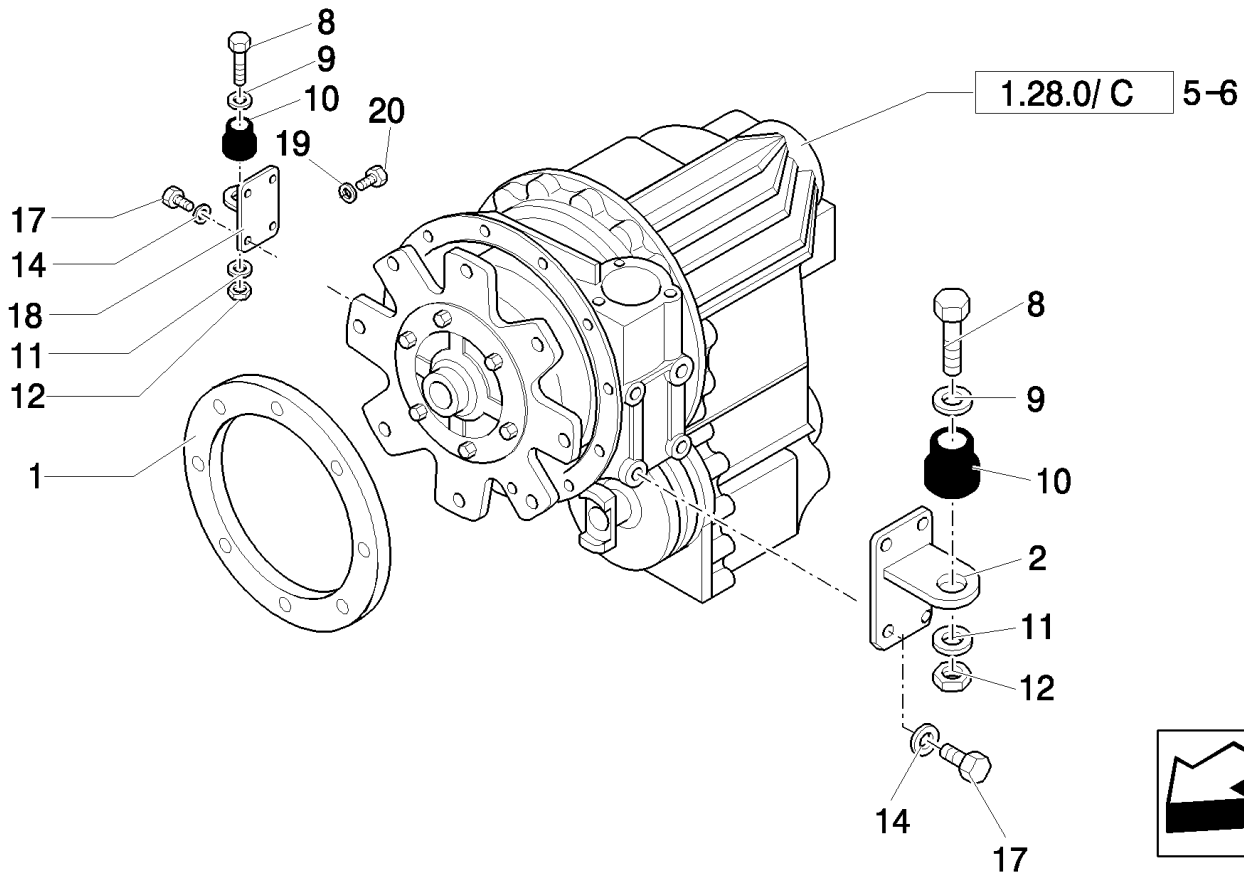

B95LR NA BACKHOE LOADER (1/06-)

1.28.0(01) GEARING SPEED GEAR

Ref	Numero de Pieza	Ctd	Descripción
1	87407758	1	RING,
2	85804276	1	SUPPORT, LH
3	86990712	1	TRANSMISSION, , Only for 2WD, Power Shuttle Up To S/N xxx
4	86990713	1	TRANSMISSION, , Repair and exchange component available - call Avatar Components, 1-800-453-3544, ext. 122, Only for 4WD, Power Shuttle Up To S/N xxx
5	86990714	1	TRANSMISSION, 2 WS, Only for LB110.B, B110 4WD, Power Shift
5	87571324	1	TRANSMISSION, , From To S/N xxx
6	86990715	1	TRANSMISSION, 4 WS, Only for LB115.B, B115 4WD, Power Shift
6	87571330	1	TRANSMISSION, , From To S/N xxx
7	88352	8	SCREW, Hex, 3/8"-16 x 2 1/2", G5,
8	87410647	2	SCREW, M12x1.25x90
9	85801585	2	WASHER, SEALING, 65mm OD
10	87416967	2	SUPPORT,
11	85802618	2	WASHER, SEALING,
12	16105011	2	NUT, LOCK, M12x1.75x1.25
13	87405629	1	SUPPORT, LH
13	87405628	1	SUPPORT, RH
14	11198679	8	WASHER, SPRING, Belleville, M13,
15	11112634	8	SCREW, M12x35
16	85806019	AR	KIT, O-RING, O-Ring, for under Directional Control Valve, Kit o-ring for directional control valve
17	11112434	8	BOLT, Hex, M12 x 30, 10.9, Full Thd,
18	85804275	1	SUPPORT, RH
19	47049372	12	WASHER,
20	11106434	12	BOLT, Hex, M10 x 30, 10.9, Full Thd,
21	87405628	1	SUPPORT, RH

1.28.0/ A(01) TRANSMISSIONGEARING SPEED GEAR (2WD POWER-SHUTTLE)

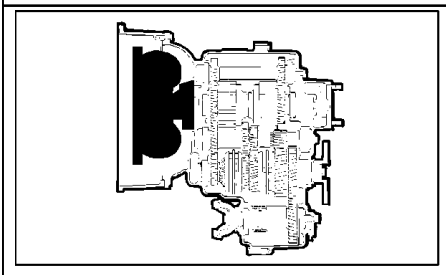

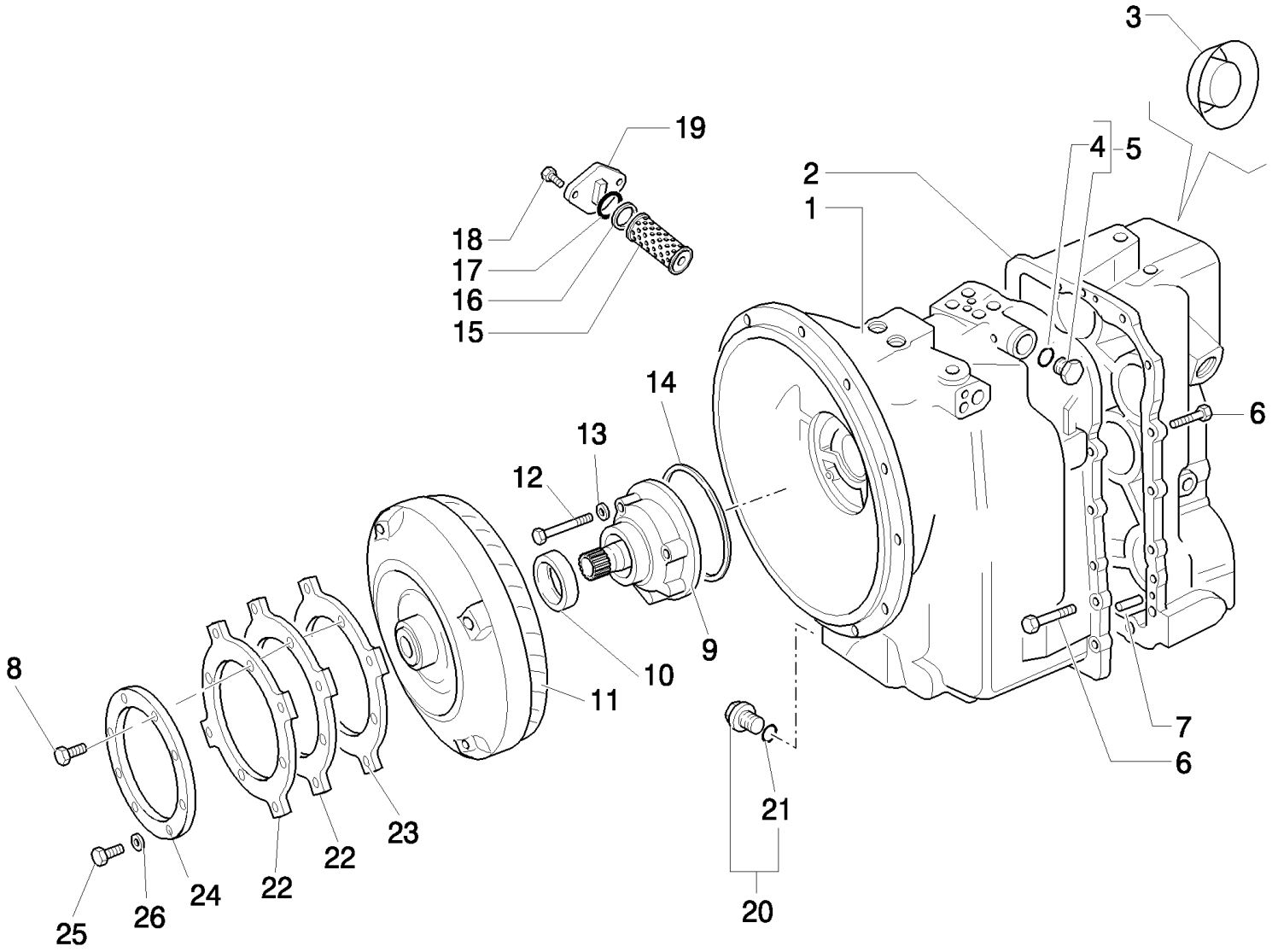

B95LR NA BACKHOE LOADER (1/06-)

1.28.0/ A(01) TRANSMISSIONGEARING SPEED GEAR (2WD POWER-SHUTTLE)

Ref	Numero de Pieza	Ctd	Descripción
1	85827769	1	TRANSMISSION HOUSING,
2	85827770	1	TRANSMISSION HOUSING,
3	85812096	1	PLUG,
4	9968218	1	O-RING, 9/16"
5	9968219	1	PLUG, 9/16" UNF, 2, Includes 4
6	85817164	17	SCREW,
7	9968356	2	DOWEL,
8	87019767	4	SCREW, 12 Pt Hd, M10 x 1.25 x 30, 12.9, M10x1.25x90
9	9968311	1	PUMP, M10x30, Includes 10
10	9968312	1	SEAL,
11	87400114	1	TORQUE CONVERTER,
12	85817163	7	SCREW,
13	85817001	4	WASHER,
14	9968313	1	SEALRING,
15	9968359	1	FILTER,
16	9968361	1	WASHER,
17	9968360	1	O-RING,
18	85817169	2	SCREW,
19	9968362	1	BELL HOUSING,
20	9968339	1	PLUG, , Includes 21
21	9968365	1	O-RING,
22	86993546	1	PLATE,
23	87406934	1	PLATE,
24	87409201	1	Plate, Backing,
25	11106021	4	BOLT, Hex, M10 x 20, 8.8, Full Thd,
26	47049372	4	WASHER,

1.28.0/ A(02) TRANSMISSIONGEARING SPEED GEAR (2WD POWER-SHUTTLE)

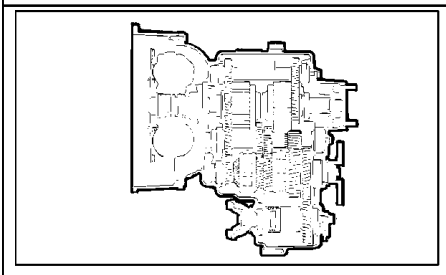

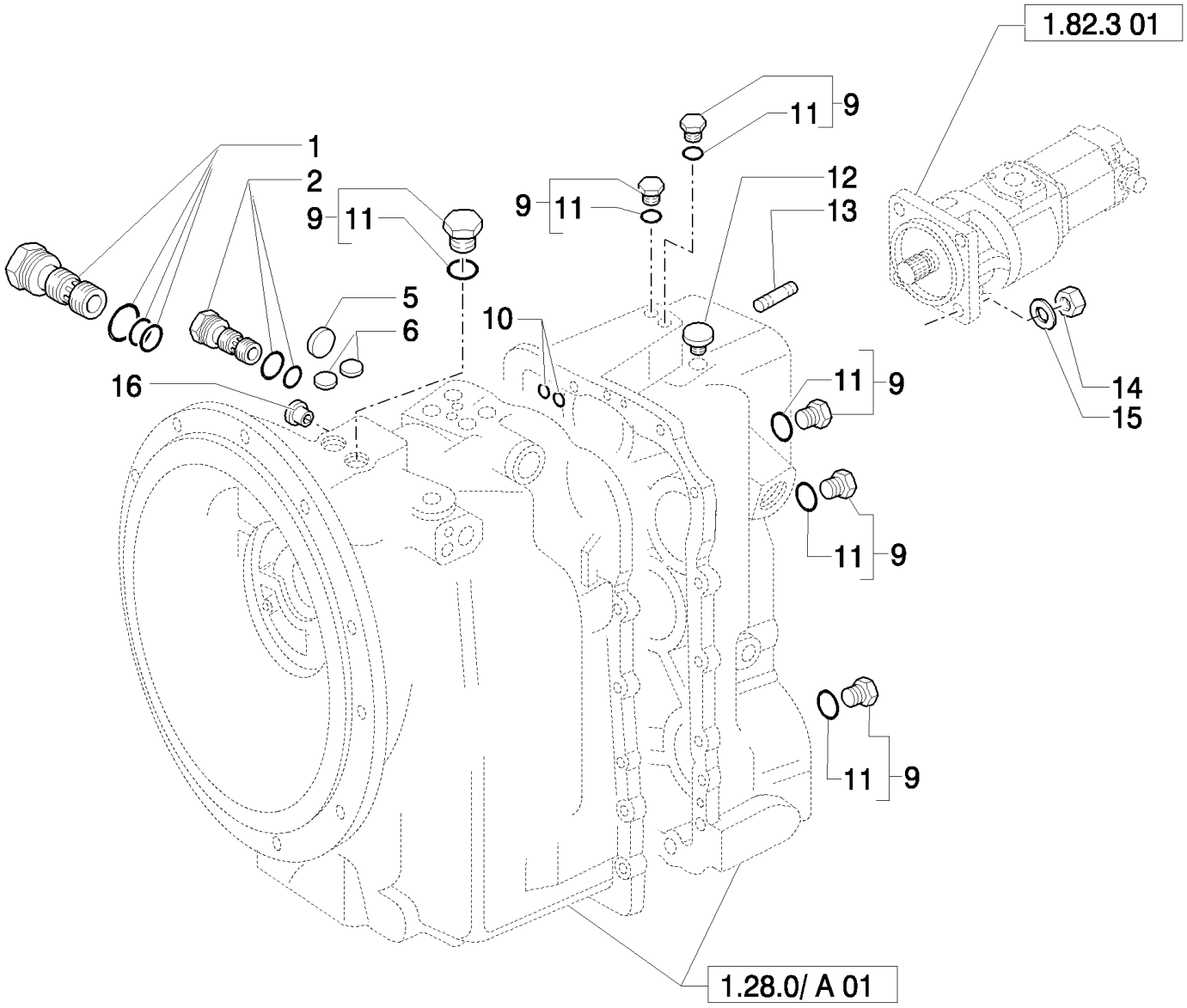

B95LR NA BACKHOE LOADER (1/06-)

1.28.0/ A(02) TRANSMISSIONGEARING SPEED GEAR (2WD POWER-SHUTTLE)

Ref	Numero de Pieza	Ctd	Descripción
1	9968350	1	VALVE, CONTROL, Hydraulic Pressure Regulator
2	9968334	1	VALVE, PRESSURE RELIEF, Hydraulic Converter Relief
5	9968371	1	PLUG, Expansion, 1"
6	9968333	2	PLUG, Tyers, .5"
9	9968219	AR	PLUG, 9/16" UNF
10	9968368	3	O-RING, .512" ID x .094" Thk
11	9968218	AR	O-RING, 9/16"
12	9968364	1	BREATHER,
13	85802683	4	STUD, 1/2"
14	85802684	4	NUT,
15	11190779	4	WASHER, SPRING, Belleville, M13,
16	85812094	2	PLUG,

1.28.0/ A(03) TRANSMISSIONGEARING SPEED GEAR (2WD POWER-SHUTTLE)

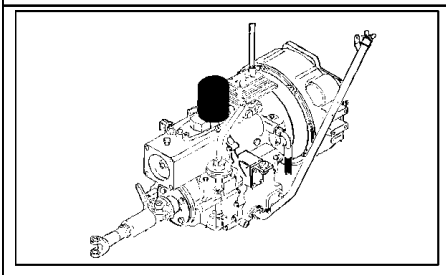

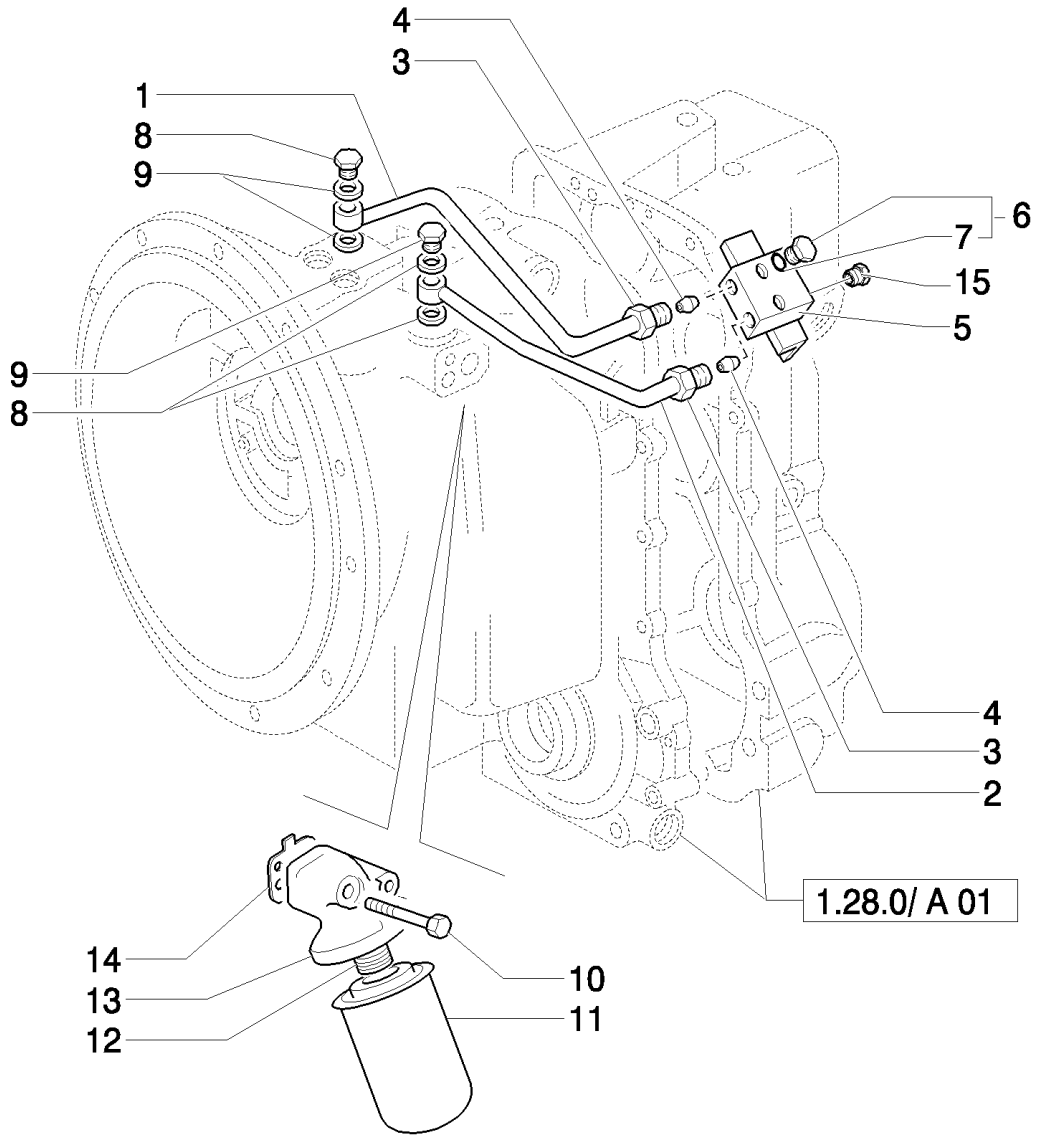

B95LR NA BACKHOE LOADER (1/06-)

1.28.0/ A(03) TRANSMISSIONGEARING SPEED GEAR (2WD POWER-SHUTTLE)

Ref	Numero de Pieza	Ctd	Descripción
1	85812087	1	TUBE,
2	85812086	1	TUBE,
3	9968336	2	NUT,
4	9969449	4	CONNECTOR, HYD.,
5	85812085	1	BLOCK, CONNECTING,
6	9968219	2	PLUG, 9/16" UNF
7	9968218	2	O-RING, 9/16"
8	9968676	2	BOLT, BANJO,
9	85817002	4	WASHER,
10	85817165	2	SCREW,
11	85817004	1	FILTER,
12	9968354	1	ADAPTER,
13	9968374	1	Head, Filter,
14	9968375	1	GASKET,
15	85812091	1	PLUG,

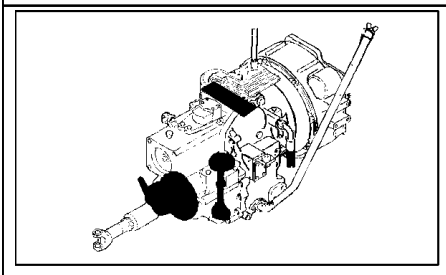

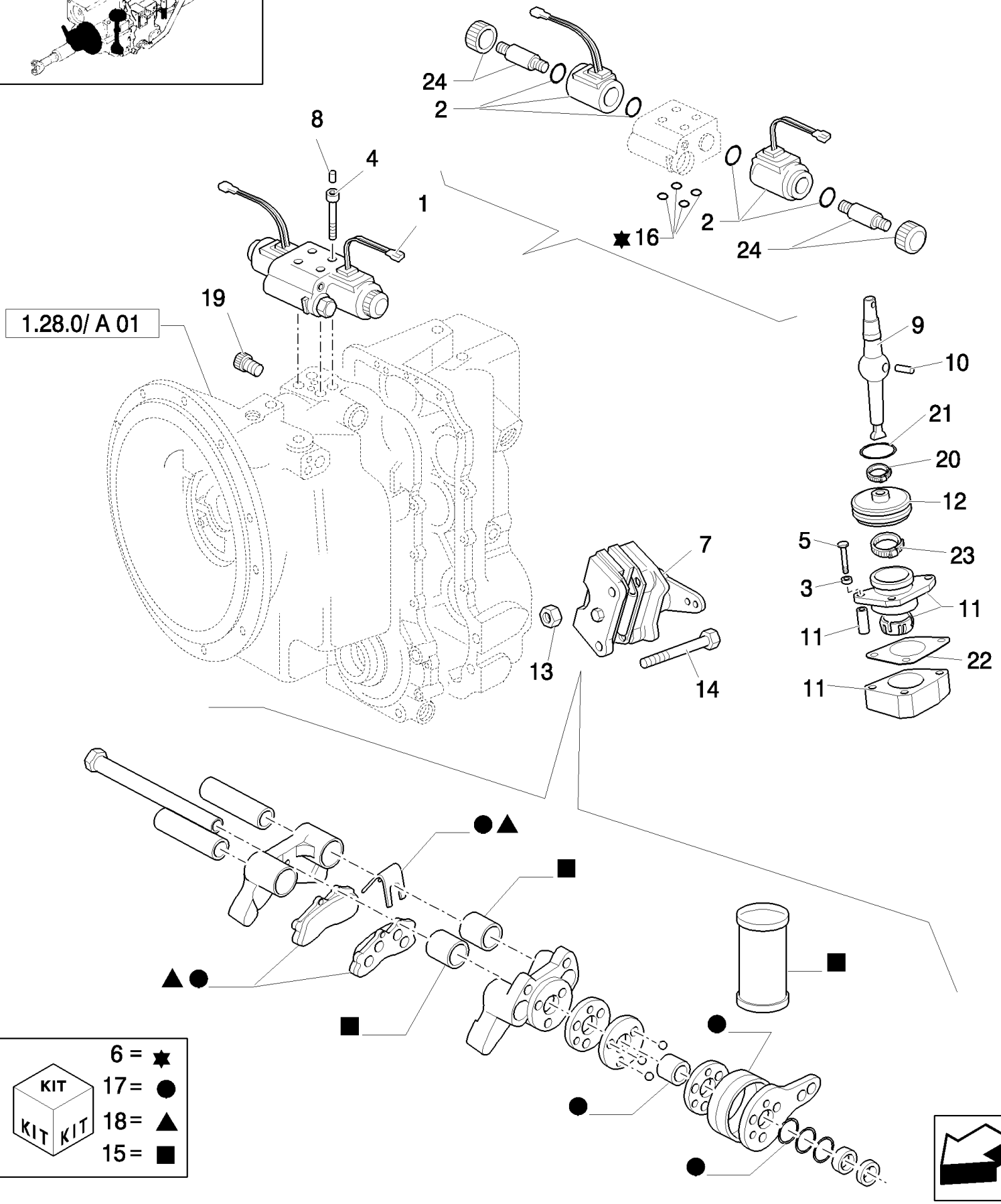
24
2
8
4
1
16
2
24
19
1.28.0/ A 01
9
10
21
20
12
5
23
3
11
11
22
11
7
13
14
6 =
17 =
18 =
15 =
KIT
KIT
KIT

B95LR NA BACKHOE LOADER (1/06-)

1.28.0/ A(04) TRANSMISSIONGEARING SPEED GEAR (2WD POWER-SHUTTLE)

Ref	Numero de Pieza	Ctd	Descripción
1	85827764	1	VALVE, HYDRAULIC, , Includes 2, 16, 24
2	85827798	2	COIL,
3	85812092	3	WASHER,
4	9969445	4	SCREW,
5	85817163	3	SCREW,
6	85827797	1	KIT, REPAIR,
7	85813300	1	BRAKE, PARKING, , Includes 15, 17, 18
8	85827779	4	PLUG,
9	9968324	1	LEVER,
10	9968327	1	PIN,
11	9968326	1	SUPPORT,
12	9968328	1	BOOT,
13	9969281	2	NUT,
14	9968299	2	BOLT,
15	85813318	2	KIT, REPAIR,
16	85806019	4	KIT, O-RING,
17	9968926	1	KIT,
18	9968927	1	KIT,
19	9968370	2	PLUG,
20	85827777	1	STRAP, CABLE,
21	85817006	1	O-RING,
22	85817007	1	GASKET,
23	85827776	1	STRAP, CABLE,
24	85827799	1	KIT,

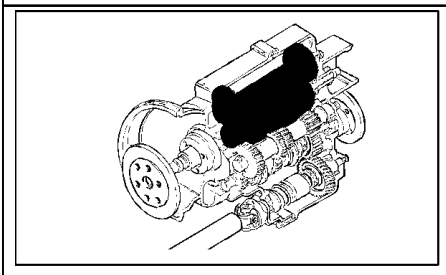

27
26
24
25
24
23
22
4
19
20
6
1
2
3
8
14
6
5
7
1
9
10
11
12
13
18
28
16
15
12
11
10
9
29
7
6
1
8
14
3
2
30
31
21
4

B95LR NA BACKHOE LOADER (1/06-)

1.28.0/ A(05) TRANSMISSIONGEARING SPEED GEAR (2WD POWER-SHUTTLE)

Ref	Numero de Pieza	Ctd	Descripción
1	9968279	3	WASHER,
2	9968228	2	BEARING, THRUST,
3	9968304	4	BEARING, NEEDLE, 50x5x17
4	9968302	2	SPACER,
5	9968286	1	GEAR, 30T
6	9968291	3	RING, SNAP,
7	85827771	2	SPRING-CHECK,
8	85827772	2	SPRING,
9	9968287	2	CIRCLIP,
10	9968288	2	PLATE, BACK,
11	9968290	12	CLUTCH PLATE,
12	9968289	12	CLUTCH, PLATE,
13	85827773	2	PISTON,
14	85827774	2	SPRING,
15	85821452	1	SHAFT,
16	85821454	1	SLEEVE, 2.234" IDx.139" Thk
18	9968226	4	GASKET,
19	9968341	1	O-RING, M80 x 70 x 2
20	9968342	AR	SHIM, 24T-25T
20	9968343	AR	SHIM, M80 x 70 x .076
20	9968344	AR	SHIM, M80 x 70 x .178
20	9968345	AR	SHIM, M80 x 70 x .599
21	9968285	1	GEAR, 24T
22	9968305	1	BEARING, ROLLER, TAPERED,
23	9968347	1	SHAFT,
24	9968268	2	BEARING, ROLLER, TAPERED,
25	9968281	1	GEAR, 24T-25T
26	9968262	AR	SHIM, 0.002mm Thk,
26	9968263	AR	SHIM, 0.003mm Thk,
26	9968264	AR	SHIM, 0.003mm Thk,
26	9968265	AR	SHIM, 0.007mm Thk,
26	9968266	AR	SHIM, 0.015mm Thk,
26	9968267	AR	SHIM, 0.020mm Thk,
27	9968261	1	SPACER,
28	9968282	1	SHAFT,
29	9968314	1	SEALRING, 40 mm
30	9968230	1	WASHER, M40 x 70 x 4
31	9968276	1	BEARING, ROLLER, TAPERED,

1.28.0/ A(06) TRANSMISSIONGEARING SPEED GEAR (2WD POWER-SHUTTLE)

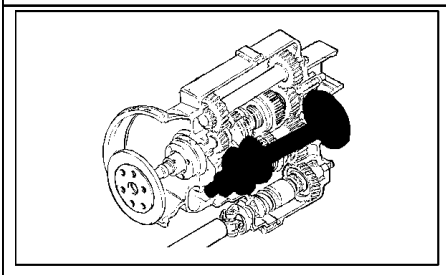

B95LR NA BACKHOE LOADER (1/06-)

1.28.0/ A(06) TRANSMISSIONGEARING SPEED GEAR (2WD POWER-SHUTTLE)

Ref	Numero de Pieza	Ctd	Descripción
1	9968308	1	SCREW,
2	9968306	1	WASHER,
3	9968309	1	O-RING, 1.29" IDx.139" Thk
4	85820909	1	FLANGE,
5	85825506	1	SEAL, M48x62x8
6	9968271	1	SPACER,
7	9968272	AR	SHIM, 0.051mm Thk,
7	9968273	AR	SHIM, 0.076mm Thk,
7	9968274	AR	SHIM, 0.178mm Thk,
7	9968275	AR	SHIM, 0.559mm Thk,
8	9968270	1	BEARING, BALL,
10	9968252	1	SPACER,
11	9968250	2	BEARING, NEEDLE,
12	9968251	1	SPACER,
13	9968248	1	GEAR, 43T, 1ST
14	9968307	2	SYNCHRONIZER,
15	9968223	2	SLEEVE,
16	9968247	1	GEAR, 37T, 2ND
17	9968269	1	SHAFT,
18	9968246	1	GEAR, 28T, 3RD
19	9968396	1	SPACER,
20	9968358	1	CAP, Sealing Cap, 2.25"
21	9968253	1	RING, SNAP,
22	9968278	1	BEARING, ROLLER, TAPERED,
23	9968260	1	WASHER, 55x4
24	85827803	1	GEAR, 4th Output Shaft 19T

1.28.0/ A(07) TRANSMISSIONGEARING SPEED GEAR (2WD POWER-SHUTTLE)

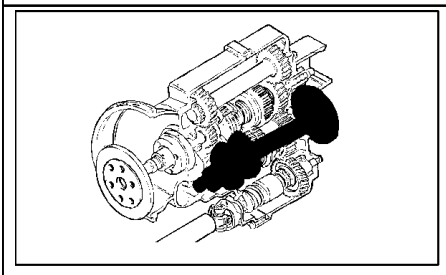

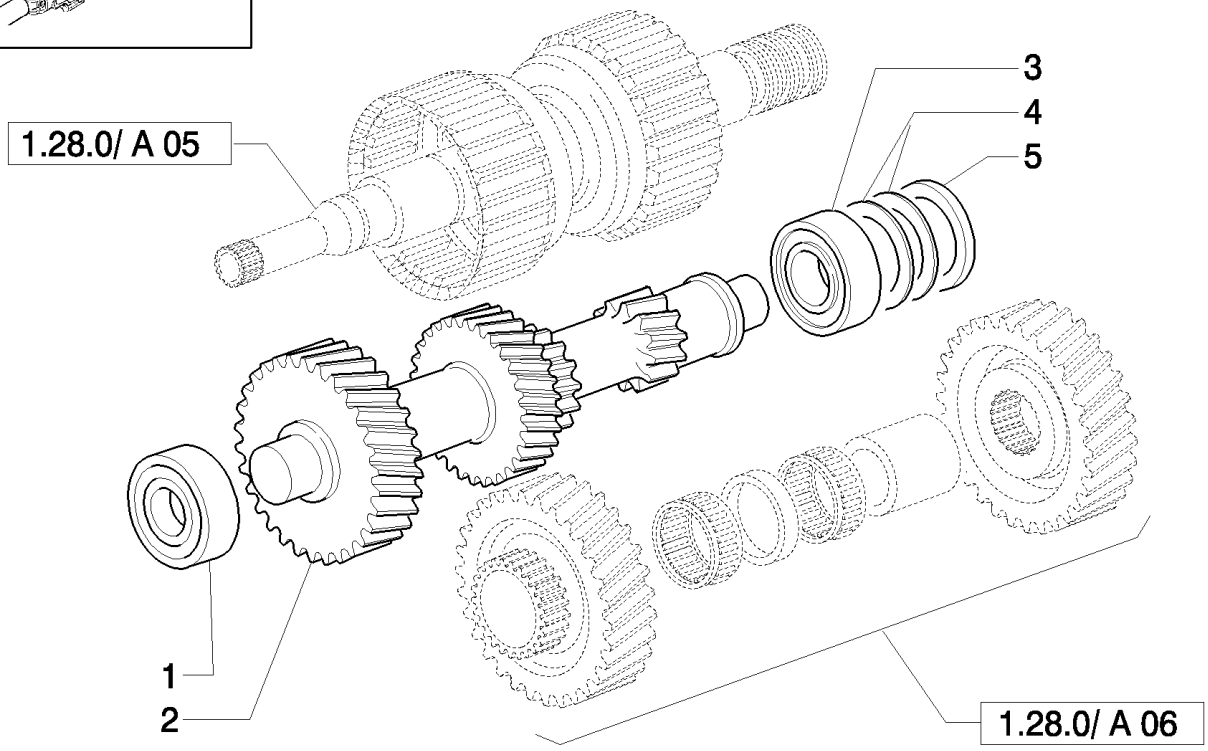

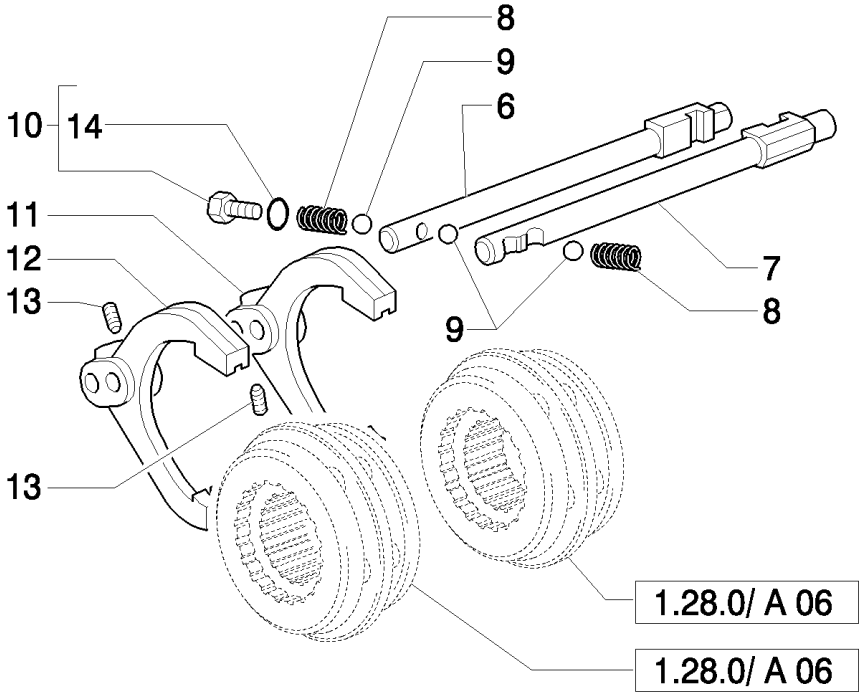

B95LR NA BACKHOE LOADER (1/06-)

1.28.0/ A(07) TRANSMISSIONGEARING SPEED GEAR (2WD POWER-SHUTTLE)

Ref	Numero de Pieza	Ctd	Descripción
1	9968277	1	BEARING, ROLLER, TAPERED,
2	9968280	1	SHAFT, 35T-29T-20T-13T
3	9968270	1	BEARING, BALL,
4	9968272	AR	SHIM, 0.051mm Thk,
4	9968273	AR	SHIM, 0.076mm Thk,
4	9968274	AR	SHIM, 0.178mm Thk,
4	9968275	AR	SHIM, 0.559mm Thk,
5	9968271	1	SPACER,
6	9968319	1	SHIFT RAIL, 1st-2nd
7	9968322	1	SHIFT RAIL, 3rd-4th
8	9968316	2	SPRING,
9	9968315	3	BALL,
10	9968219	AR	PLUG, 9/16" UNF
11	9968317	1	FORK, SHIFTER, 1st-2nd
12	9968318	1	FORK, SHIFTER, 3rd-4th
13	9968323	2	SCREW,
14	9968218	AR	O-RING, 9/16"

1.28.0/ B(01) TRANSMISSIONGEARING SPEED GEAR (4WD POWER-SHUTTLE)

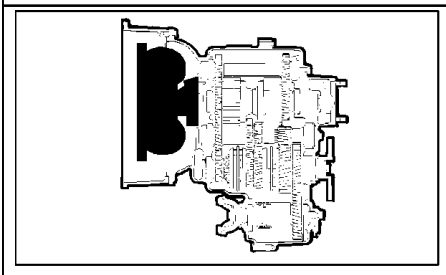

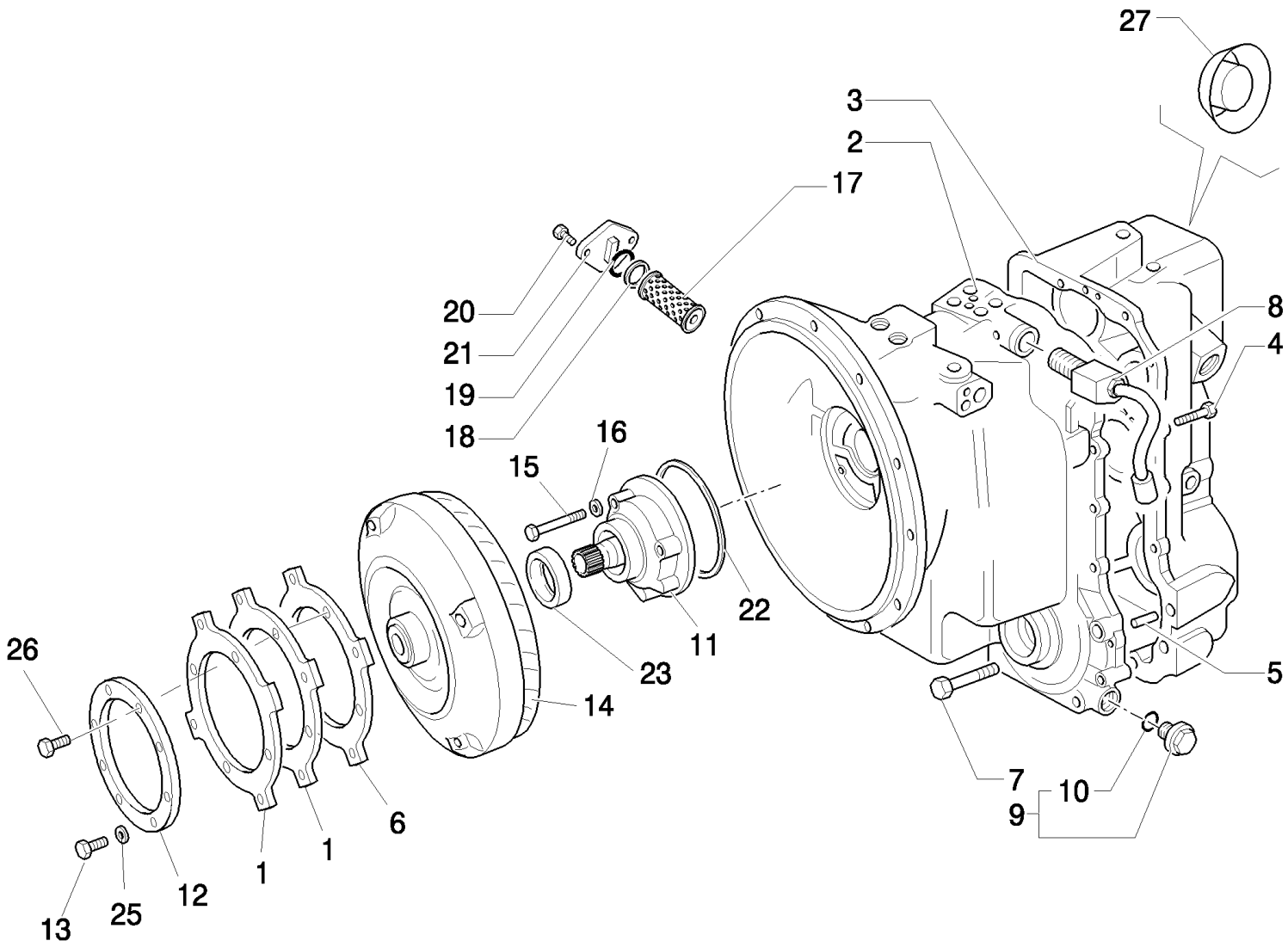

B95LR NA BACKHOE LOADER (1/06-)

1.28.0/ B(01) TRANSMISSIONGEARING SPEED GEAR (4WD POWER-SHUTTLE)

Ref	Numero de Pieza	Ctd	Descripción
1	86993546	2	PLATE,
2	85827783	1	TRANSMISSION HOUSING,
3	85827784	1	TRANSMISSION HOUSING,
4	85817164	14	SCREW,
5	9968356	2	DOWEL,
6	87406934	1	PLATE,
7	85817190	4	SCREW,
8	9968351	1	VALVE, SOLENOID, 4WD Solenoid
9	9968339	1	PLUG,
10	9968365	1	O-RING,
11	9968311	1	PUMP,
12	87409201	1	Plate, Backing,
13	11106021	4	BOLT, Hex, M10 x 20, 8.8, Full Thd,
14	87400114	1	TORQUE CONVERTER,
15	85817163	7	SCREW,
16	85817001	4	WASHER,
17	9968359	1	FILTER,
18	9968361	1	WASHER,
19	9968360	1	O-RING,
20	85817169	2	SCREW,
21	9968362	1	BELL HOUSING,
22	9968313	1	SEALRING,
23	9968312	1	SEAL,
25	47049372	4	WASHER,
26	87019767	4	SCREW, 12 Pt Hd, M10 x 1.25 x 30, 12.9, M10x1.25x90
27	85812096	1	PLUG,

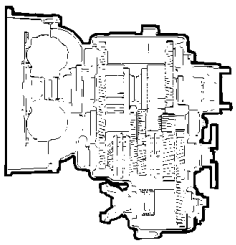

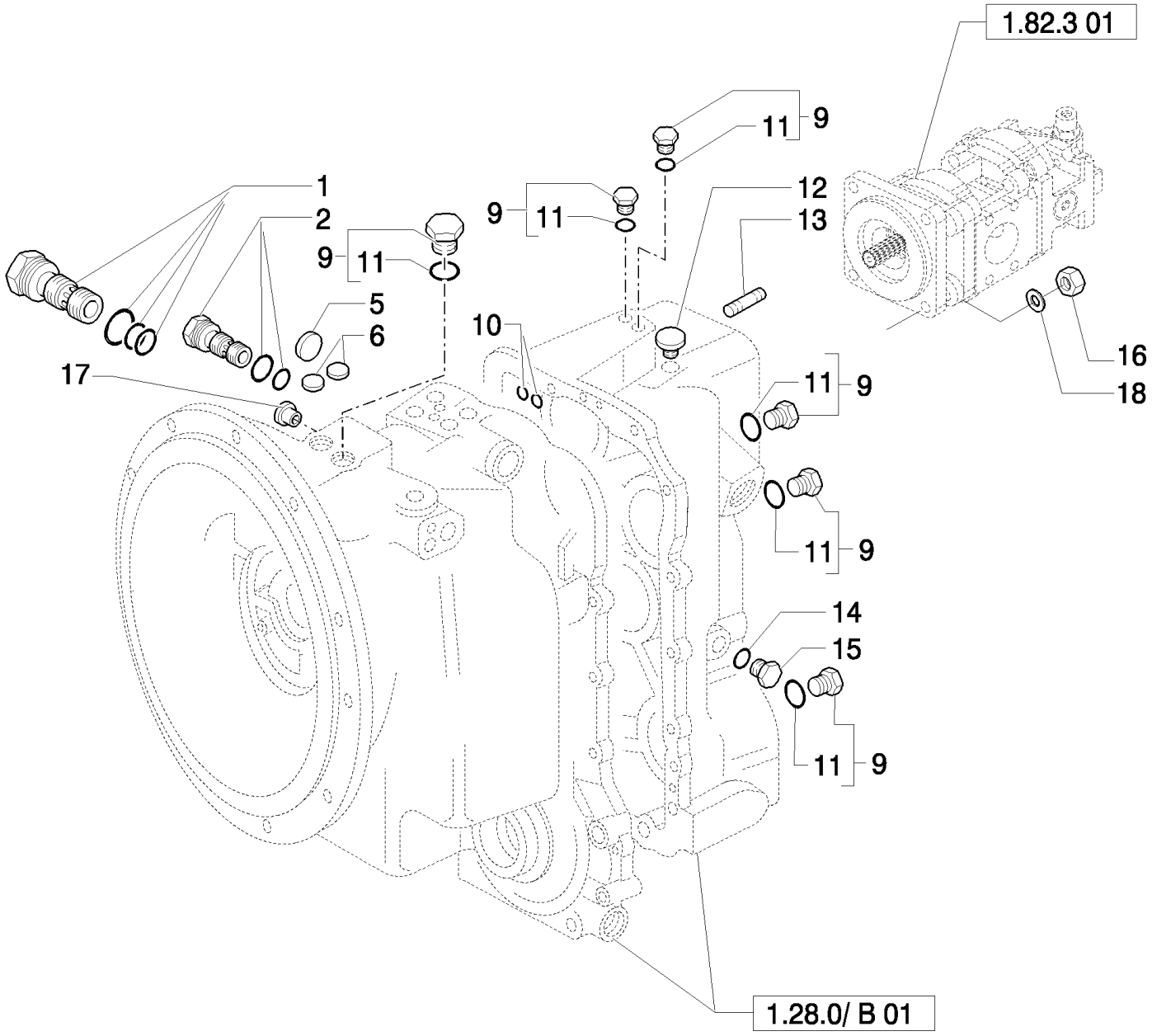
1.82.3 01
1
2
9
11
5
6
17
10
12
13
16
18
14
15
1.28.0/ B 01

B95LR NA BACKHOE LOADER (1/06-)

1.28.0/ B(02) TRANSMISSIONGEARING SPEED GEAR (4WD POWER-SHUTTLE)

Ref	Numero de Pieza	Ctd	Descripción
1	9968350	1	VALVE, CONTROL, Hydraulic Pressure Regulator
2	9968334	1	VALVE, PRESSURE RELIEF, Hydraulic Converter Relief
5	9968371	1	PLUG, Expansion, 1"
6	9968333	2	PLUG, Tyers, .5"
9	9968219	AR	PLUG, 9/16" UNF
10	9968368	4	O-RING, .512" IDx.094"Thk
11	9968218	AR	O-RING, 9/16"
12	9968364	1	BREATHER,
13	85802683	4	STUD, 1/2"
14	9968383	1	WASHER,
15	9968382	1	PLUG,
16	85802684	4	NUT,
17	85812094	2	PLUG,
18	11190779	4	WASHER, SPRING, Belleville, M13,

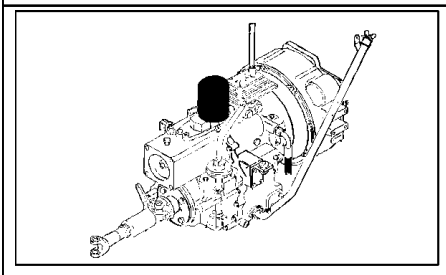

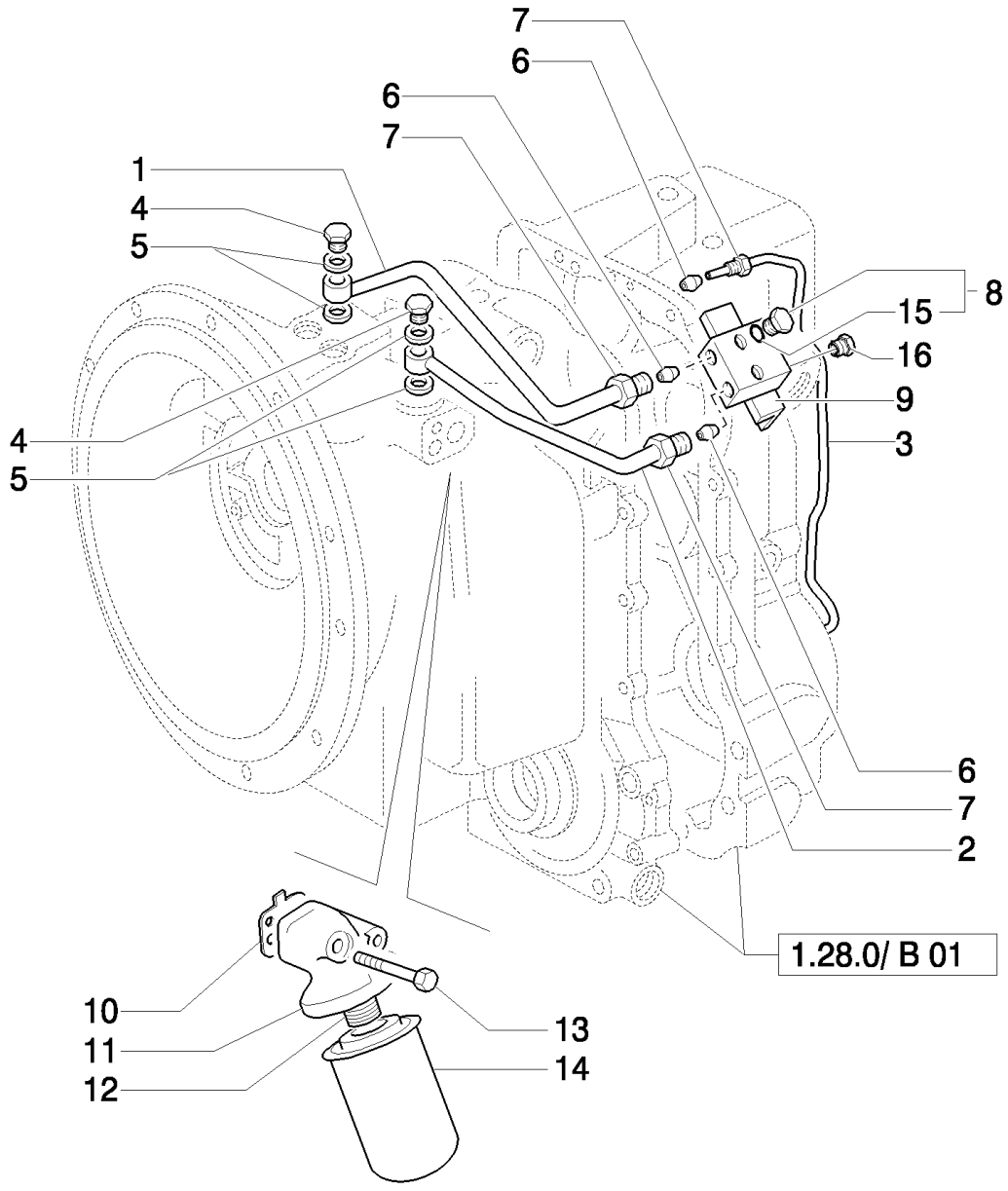
7
6
6
7
1
4
5
8
15
16
9
3
4
5
6
7
2
1.28.0/ B 01
10
11
12
13
14

B95LR NA BACKHOE LOADER (1/06-)

1.28.0/ B(03) TRANSMISSIONGEARING SPEED GEAR (4WD POWER-SHUTTLE)

Ref	Numero de Pieza	Ctd	Descripción
1	85812086	1	TUBE,
2	85812087	1	TUBE,
3	9968337	1	TUBE, 4WD
4	9968676	2	BOLT, BANJO,
5	85817002	4	WASHER,
6	9968340	AR	CONNECTOR, HYD.,
7	9968336	AR	NUT,
8	9968219	2	PLUG, 9/16" UNF
9	85812085	1	BLOCK, CONNECTING,
10	9968375	1	GASKET,
11	9968374	1	Head, Filter,
12	9968354	1	ADAPTER,
13	85817165	2	SCREW,
14	85817004	1	FILTER,
15	9968218	AR	O-RING, 9/16"
16	85812091	1	PLUG,

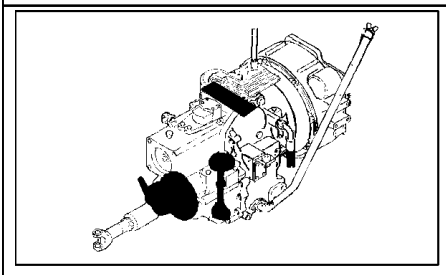

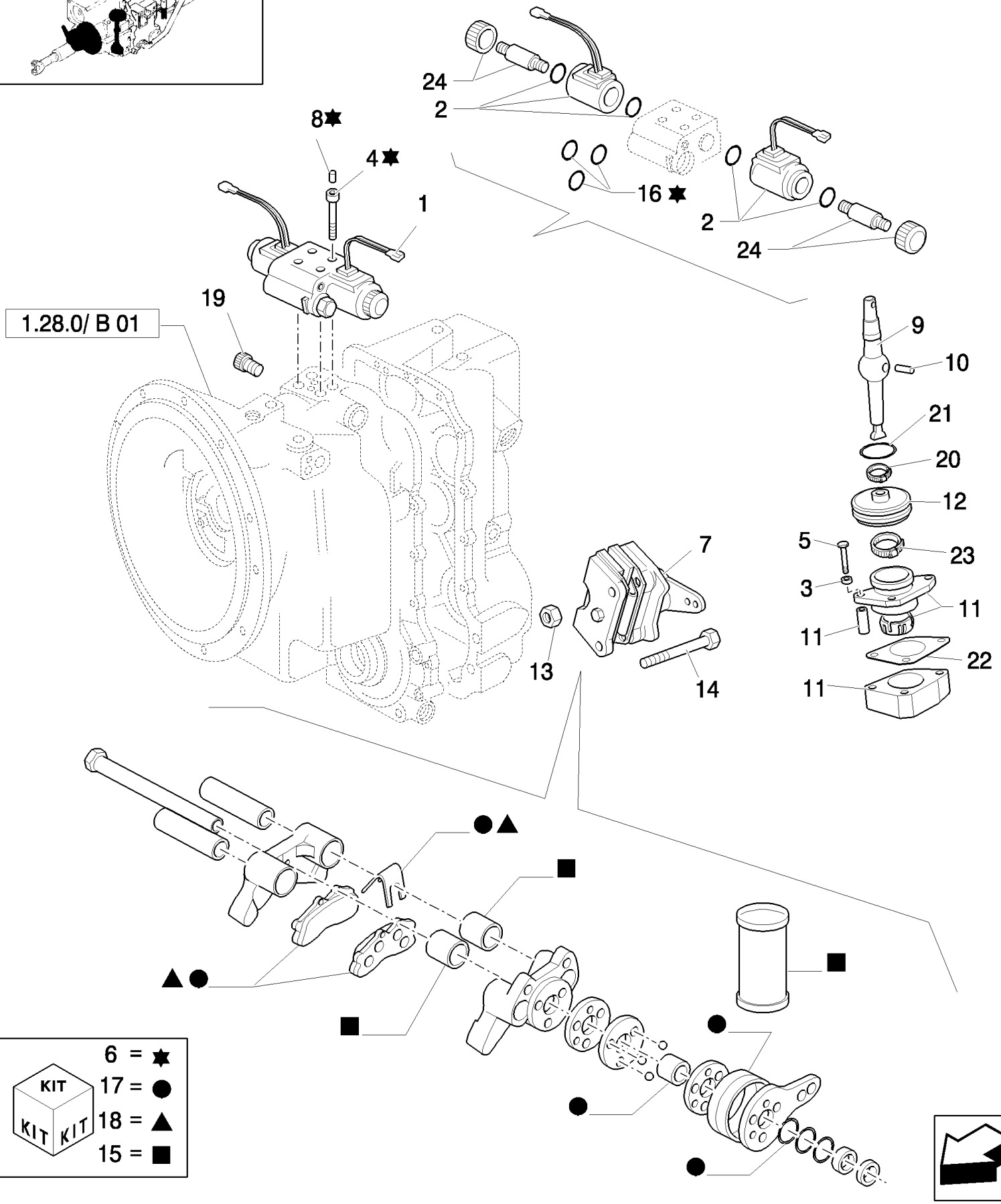
24
2
8✸
4✸
1
16✸
2
24
19
1.28.0/ B 01
9
10
21
20
12
5
23
3
11
11
22
11
7
13
14
6 = ✸
17 = ●
18 = ▲
15 = ■
KIT
KIT
KIT

B95LR NA BACKHOE LOADER (1/06-)

1.28.0/ B(04) TRANSMISSIONGEARING SPEED GEAR (4WD POWER-SHUTTLE)

Ref	Numero de Pieza	Ctd	Descripción
1	85827764	1	VALVE, HYDRAULIC, , Includes 24 To 28
2	85827798	2	COIL,
3	85812092	3	WASHER,
4	9969445	4	SCREW,
5	85817163	3	SCREW,
6	85827797	1	KIT, REPAIR,
7	85813300	1	BRAKE, PARKING, , Includes 17, 18
8	85827779	4	PLUG, 2WD
9	9968324	1	LEVER,
10	9968327	1	PIN,
11	9968326	1	SUPPORT,
12	9968328	1	BOOT,
13	9969281	2	NUT,
14	9968299	2	BOLT,
15	85813318	1	KIT, REPAIR,
16	85806019	1	KIT, O-RING,
17	9968926	1	KIT,
18	9968927	1	KIT,
19	9968370	2	PLUG, Plastic, .25"
20	85827777	1	STRAP, CABLE,
21	85817006	1	O-RING,
22	85817007	1	GASKET,
23	85827776	1	STRAP, CABLE,
24	85827799	1	KIT,

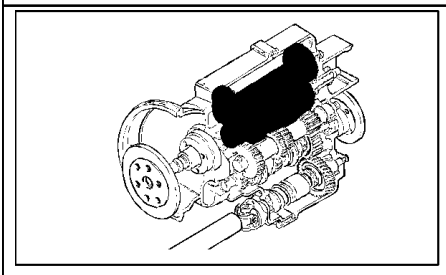

27
26
24
25
24
23
22
4
19
20
6
1
2
3
8
14
6
5
7
1
9
10
11
12
13
18
28
16
15
12
11
10
9
29
7
6
1
8
14
3
2
30
31
21
4

B95LR NA BACKHOE LOADER (1/06-)

1.28.0/ B(05) TRANSMISSIONGEARING SPEED GEAR (4WD POWER-SHUTTLE)

Ref	Numero de Pieza	Ctd	Descripción
1	9968279	3	WASHER, 50x70x4
2	9968228	2	BEARING, THRUST,
3	9968304	4	BEARING, NEEDLE, 50x5x17
4	9968302	2	SPACER,
5	9968286	1	GEAR, 30T
6	9968291	3	RING, SNAP,
7	85827771	2	SPRING-CHECK,
8	85827772	2	SPRING,
9	9968287	2	CIRCLIP,
10	9968288	2	PLATE, BACK,
11	9968290	12	CLUTCH PLATE,
12	9968289	12	CLUTCH, PLATE,
13	85827773	2	PISTON,
14	85827774	2	SPRING,
15	85821452	1	SHAFT,
16	85821454	1	SLEEVE,
18	9968226	4	GASKET,
19	9968341	1	O-RING, M80 x 70 x 2
20	9968342	AR	SHIM, 24T-25T
20	9968343	AR	SHIM, M80 x 70 x .076
20	9968344	AR	SHIM, M80 x 70 x .178
20	9968345	AR	SHIM, M80 x 70 x .599
21	9968285	1	GEAR, 24T
22	9968305	1	BEARING, ROLLER, TAPERED,
23	9968347	1	SHAFT,
24	9968268	2	BEARING, ROLLER, TAPERED,
25	9968281	1	GEAR, 24T-25T
26	9968262	AR	SHIM, 0.002mm Thk,
26	9968263	AR	SHIM, 0.003mm Thk,
26	9968264	AR	SHIM, 0.003mm Thk,
26	9968265	AR	SHIM, 0.007mm Thk,
26	9968266	AR	SHIM, 0.015mm Thk,
26	9968267	AR	SHIM, 0.020mm Thk,
27	9968261	1	SPACER,
28	9968282	1	SHAFT,
29	9968314	1	SEALRING, 40 mm
30	9968230	1	WASHER, M40 x 70 x 4
31	9968276	1	BEARING, ROLLER, TAPERED,

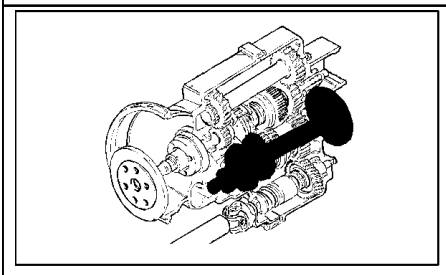

1
2
3
4
5
6
7
8
9
10
11
12
11
13
14
15
16
17
18
14
15
21
22
23
19
20

B95LR NA BACKHOE LOADER (1/06-)

1.28.0/ B(06) TRANSMISSIONGEARING SPEED GEAR (4WD POWER-SHUTTLE)

Ref	Numero de Pieza	Ctd	Descripción
1	9968308	1	SCREW,
2	9968306	1	WASHER,
3	9968309	1	O-RING, 1.29"IDx.139"Thk
4	85820909	1	FLANGE,
5	85825506	1	SEAL, M48x62x8
6	9968271	1	SPACER,
7	9968272	AR	SHIM, 0.051mm Thk,
7	9968273	AR	SHIM, 0.076mm Thk,
7	9968274	AR	SHIM, 0.178mm Thk,
7	9968275	AR	SHIM, 0.559mm Thk,
8	9968270	1	BEARING, BALL,
9	9968249	1	GEAR, 4WD
10	9968252	1	SPACER,
11	9968250	2	BEARING, NEEDLE,
12	9968251	1	SPACER,
13	9968248	1	GEAR, 43T, 1ST
14	9968307	2	SYNCHRONIZER,
15	9968223	2	SLEEVE,
16	9968247	1	GEAR, 37T, 2ND
17	9968269	1	SHAFT,
18	9968246	1	GEAR, 28T, 3RD
19	9968278	1	BEARING, ROLLER, TAPERED,
20	9968358	1	CAP, Sealing Cap, 2.25"
21	9968253	1	RING, SNAP,
22	85827803	1	GEAR, 4th Output Shaft 19T
23	9968260	1	WASHER, 55x35x4

1.28.0/ B(07) TRANSMISSIONGEARING SPEED GEAR (4WD POWER-SHUTTLE)

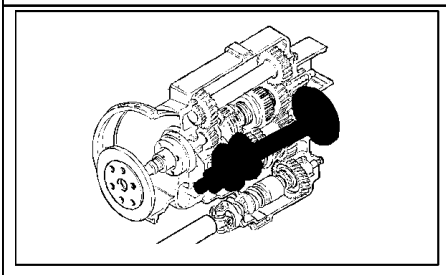

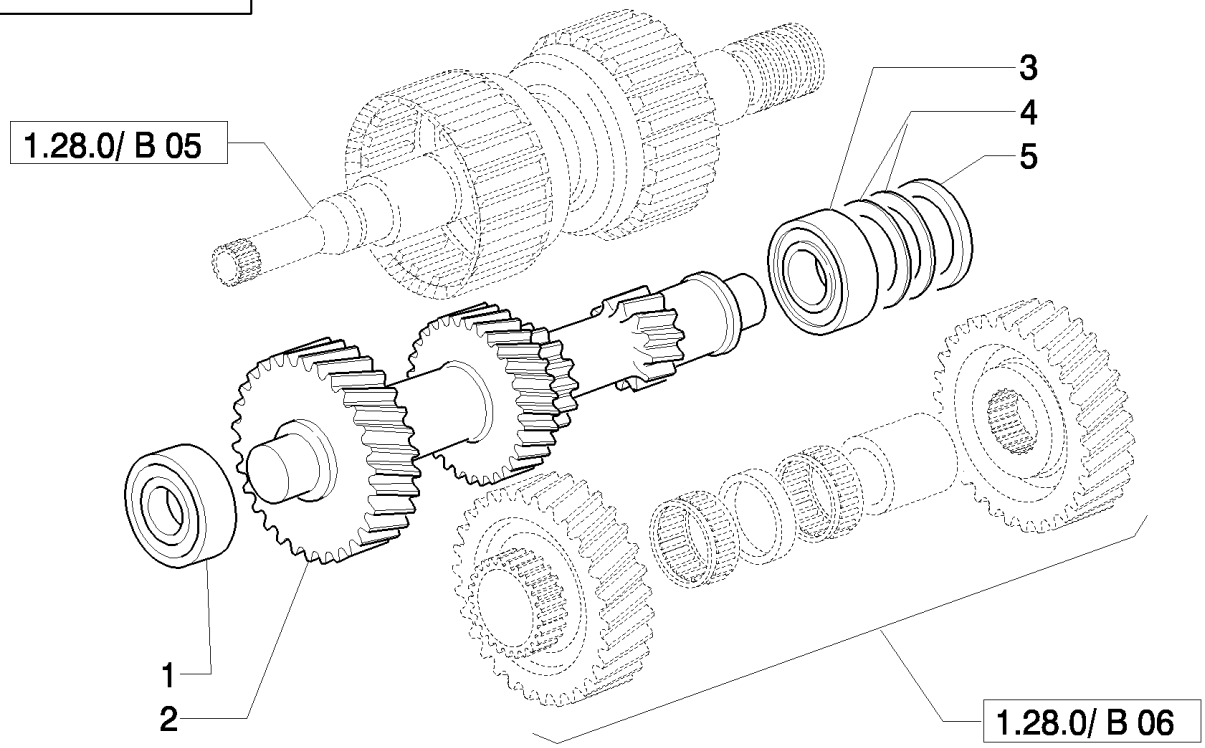

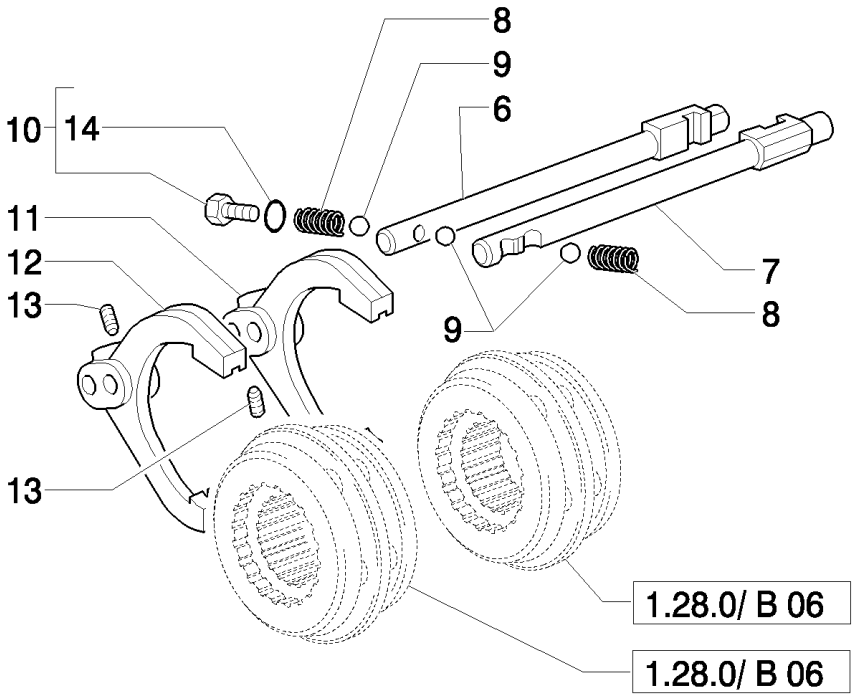

B95LR NA BACKHOE LOADER (1/06-)

1.28.0/ B(07) TRANSMISSIONGEARING SPEED GEAR (4WD POWER-SHUTTLE)

Ref	Numero de Pieza	Ctd	Descripción
1	9968277	1	BEARING, ROLLER, TAPERED,
2	9968280	1	SHAFT, 35T-29T-20T-13T
3	9968270	1	BEARING, BALL,
4	9968272	AR	SHIM, 0.051mm Thk,
4	9968273	AR	SHIM, 0.076mm Thk,
4	9968274	AR	SHIM, 0.178mm Thk,
4	9968275	AR	SHIM, 0.559mm Thk,
5	9968271	1	SPACER,
6	9968319	1	SHIFT RAIL, 1st-2nd
7	9968322	1	SHIFT RAIL, 3rd-4th
8	9968316	2	SPRING,
9	9968315	3	BALL,
10	9968219	AR	PLUG, 9/16" UNF
11	9968317	1	FORK, SHIFTER, 1st-2nd
12	9968318	1	FORK, SHIFTER, 3rd-4th
13	9968323	2	SCREW,
14	9968218	AR	O-RING, 9/16"

1.28.0/ B(08) TRANSMISSIONGEARING SPEED GEAR (4WD POWER-SHUTTLE)

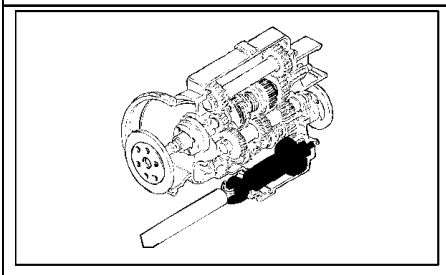

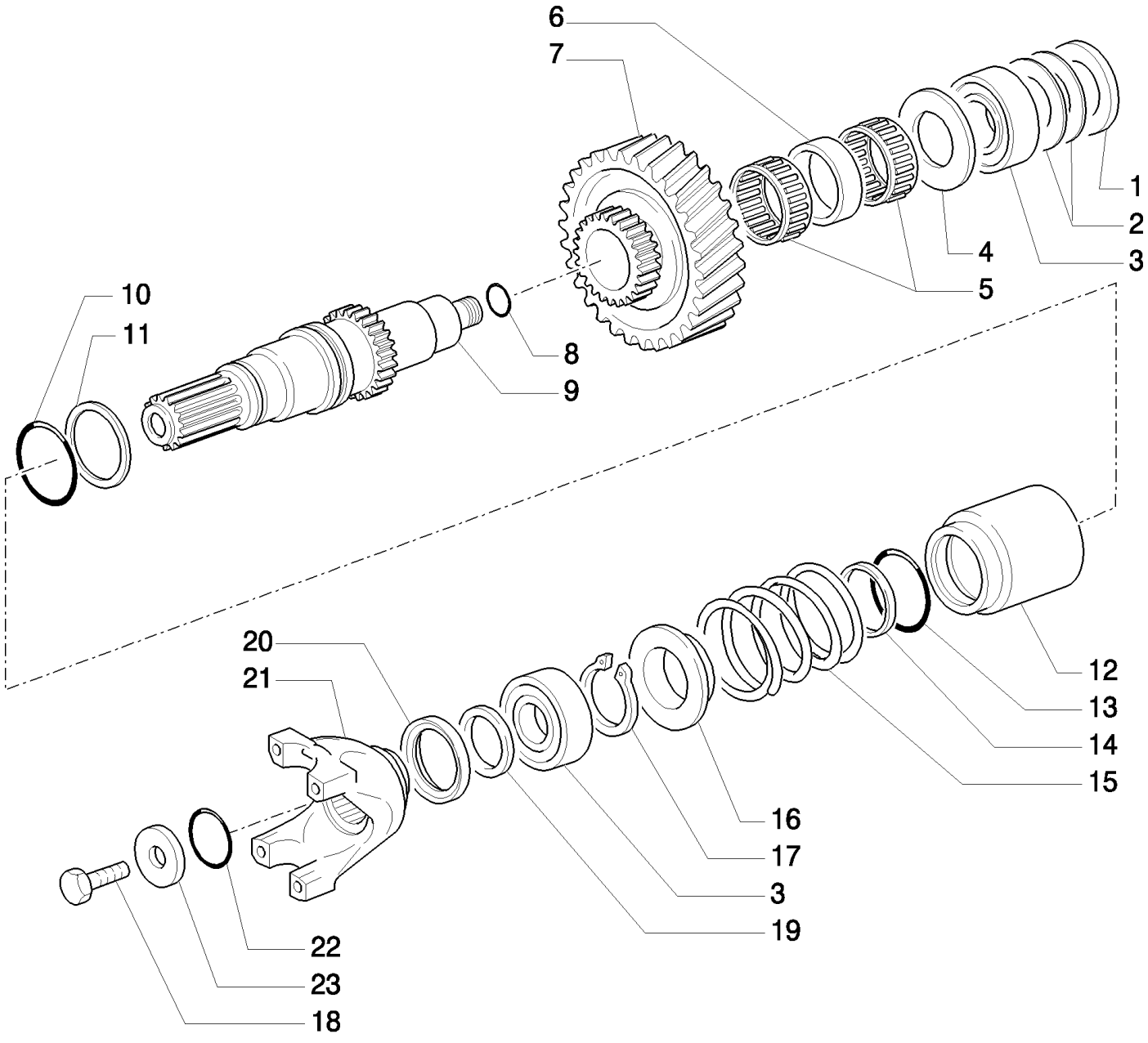

B95LR NA BACKHOE LOADER (1/06-)

1.28.0/ B(08) TRANSMISSIONGEARING SPEED GEAR (4WD POWER-SHUTTLE)

Ref	Numero de Pieza	Ctd	Descripción
1	9968255	1	SPACER,
2	9968256	AR	SHIM, 67.5 x 58 x 0.051 mm
2	9968257	AR	SHIM, 67.5 x 58 x 0.076 mm
2	9968258	AR	SHIM, 67.5 x 58 x 0.178 mm
2	9968259	AR	SHIM, 67.5 x 58 x 0.599 mm
3	9968276	2	BEARING, ROLLER, TAPERED,
4	9968244	1	WASHER, THRUST, 65 x 40.5 x 4
5	85827782	2	BEARING, NEEDLE,
6	9968393	1	SPACER,
7	9968240	1	GEAR, 35T
8	9968254	1	O-RING,
9	9968239	1	SHAFT,
10	9968232	1	O-RING, 1.859"IDx.139"Thk
11	9968229	1	GASKET,
12	9968234	1	CLUTCH,
13	9968298	1	O-RING, 2.234"IDx.139"Thk
14	9968297	1	O-RING,
15	9968235	1	SPRING,
16	9968236	1	SUPPORT,
17	9968233	1	RING, SNAP,
18	9968308	1	SCREW,
19	9968301	1	SPACER,
20	85825506	1	SEAL, M48x62x8
21	9968300	1	YOKE,
22	9968309	1	O-RING, 1.29"IDx.139"Thk
23	9968306	1	WASHER,

1.28.6(01) GEAR FILTER PIPES (POWER-SHUTTLE)

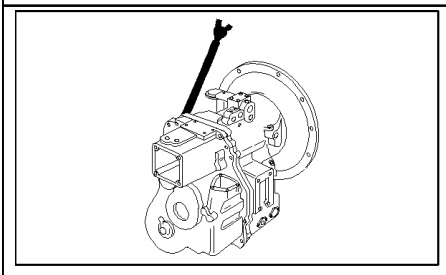

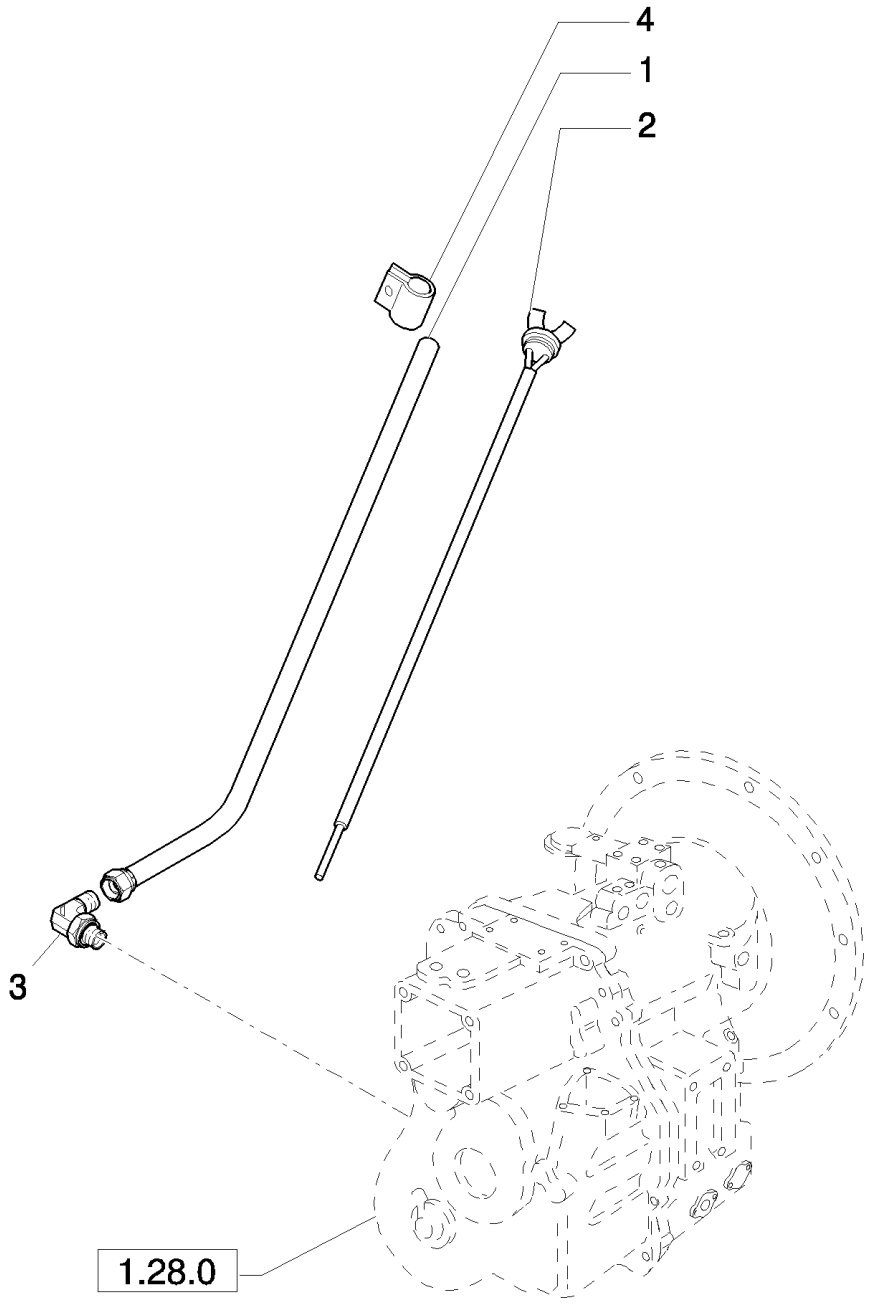

B95LR NA BACKHOE LOADER (1/06-)

1.28.6(01) GEAR FILTER PIPES (POWER-SHUTTLE)

Ref	Numero de Pieza	Ctd	Descripción
1	87408479	1	TUBE,
2	87408557	1	DIPSTICK,
3	47050658	1	ELBOW,
4	47049176	1	CLAMP,

1.29.1(01) TRANSMISSION ESTERNALSHIFTING CONTROLS (POWER-SHUTTLE)

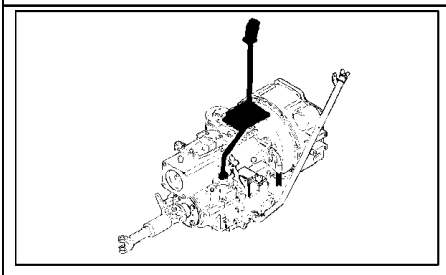

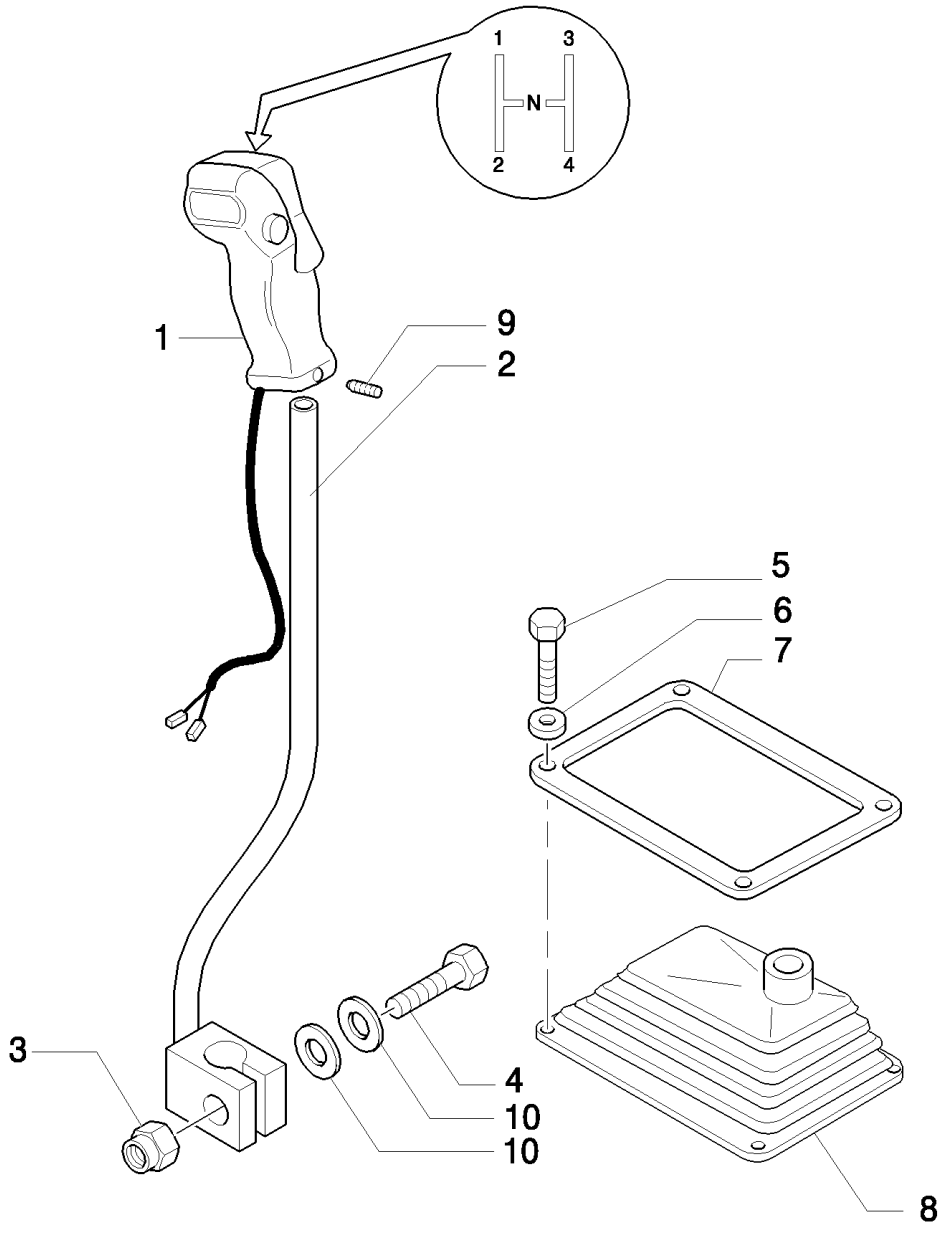

B95LR NA BACKHOE LOADER (1/06-)

1.29.1(01) TRANSMISSION ESTERNALSHIFTING CONTROLS (POWER-SHUTTLE)

Ref	Numero de Pieza	Ctd	Descripción
1	85802947	1	KNOB, Assy
2	85826943	1	LEVER,
3	16105011	1	NUT, LOCK, M12x1.25
4	15540821	1	BOLT, Hex, M12 x 1.25 x 50, 8.8,
5	10903021	4	BOLT, Hex, M6 x 35, 8.8,
6	11197779	4	WASHER, SPRING, Belleville, M6.4,
7	85824187	1	RETAINER,
8	85802847	1	BOOT,
9	13736611	1	DOWEL, M5x14
10	14496721	2	WASHER, M12 x 24 x 2.5,

1.38.1(01) FRONT & REAR DRIVESHAFT (POWER-SHUTTLE)

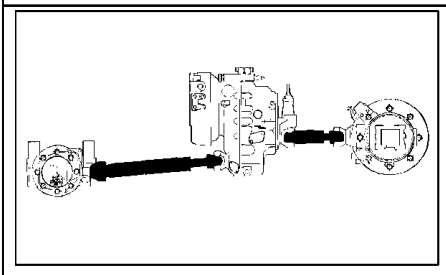

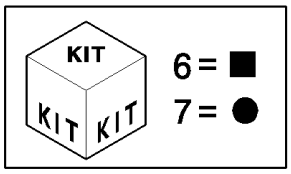

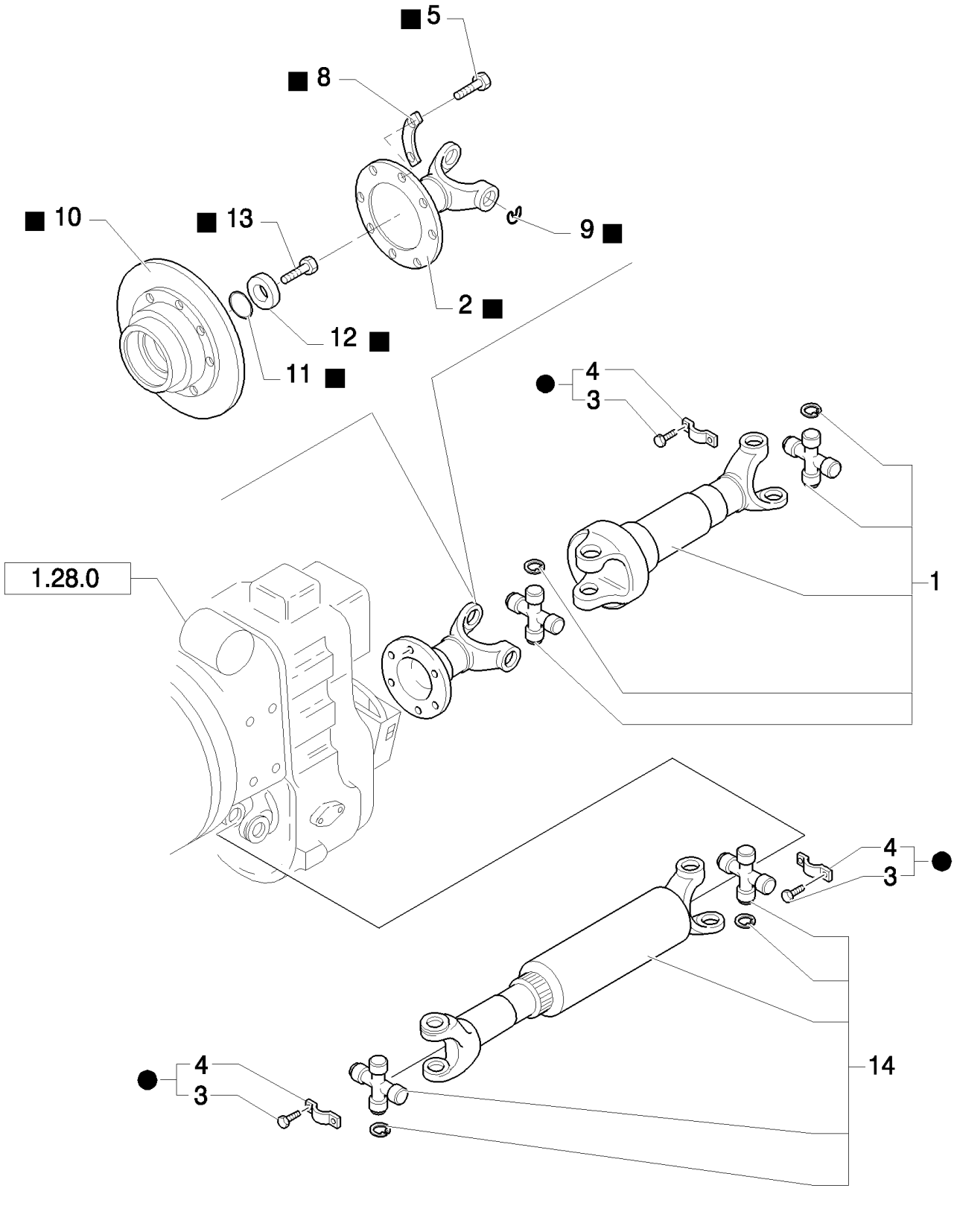

B95LR NA BACKHOE LOADER (1/06-)

1.38.1(01) FRONT & REAR DRIVESHAFT (POWER-SHUTTLE)

Ref	Numero de Pieza	Ctd	Descripción
1	87552418	1	PROPELLER SHAFT,
2	85820157	1	FLANGE,
3	87311153	4	SCREW, Bolt; Not Serviced Seperately; Order Kit 87311154
4	87311152	AR	BRACKET, Bearing Strap; Not Serviced Seperately; Order Kit 87311154
5	85820154	8	SCREW, M10 x 1.5
6	85820908	1	KIT, SERVICE, Incl. 2, 5, 6, 8 - 13, Trasformation Kit from DIN100 ti DIN120
7	87311154	4	BRACKET, Kit, Incl. 3, 4; Kit Incl. (1) Strap And (2) Bolts
8	85819186	4	COVER,
9	85820914	2	CIRCLIP,
10	85820909	1	FLANGE,
11	9968309	1	O-RING, 1.29"IDx.139"Thk
12	9968306	1	WASHER,
13	9968308	1	SCREW,
14	87552416	1	PROPELLER SHAFT,

1.39.8(01) TRANSMISSION OIL COOLING PIPES (POWER-SHUTTLE)

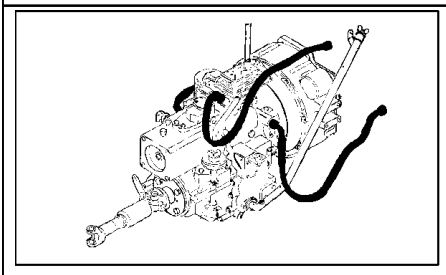

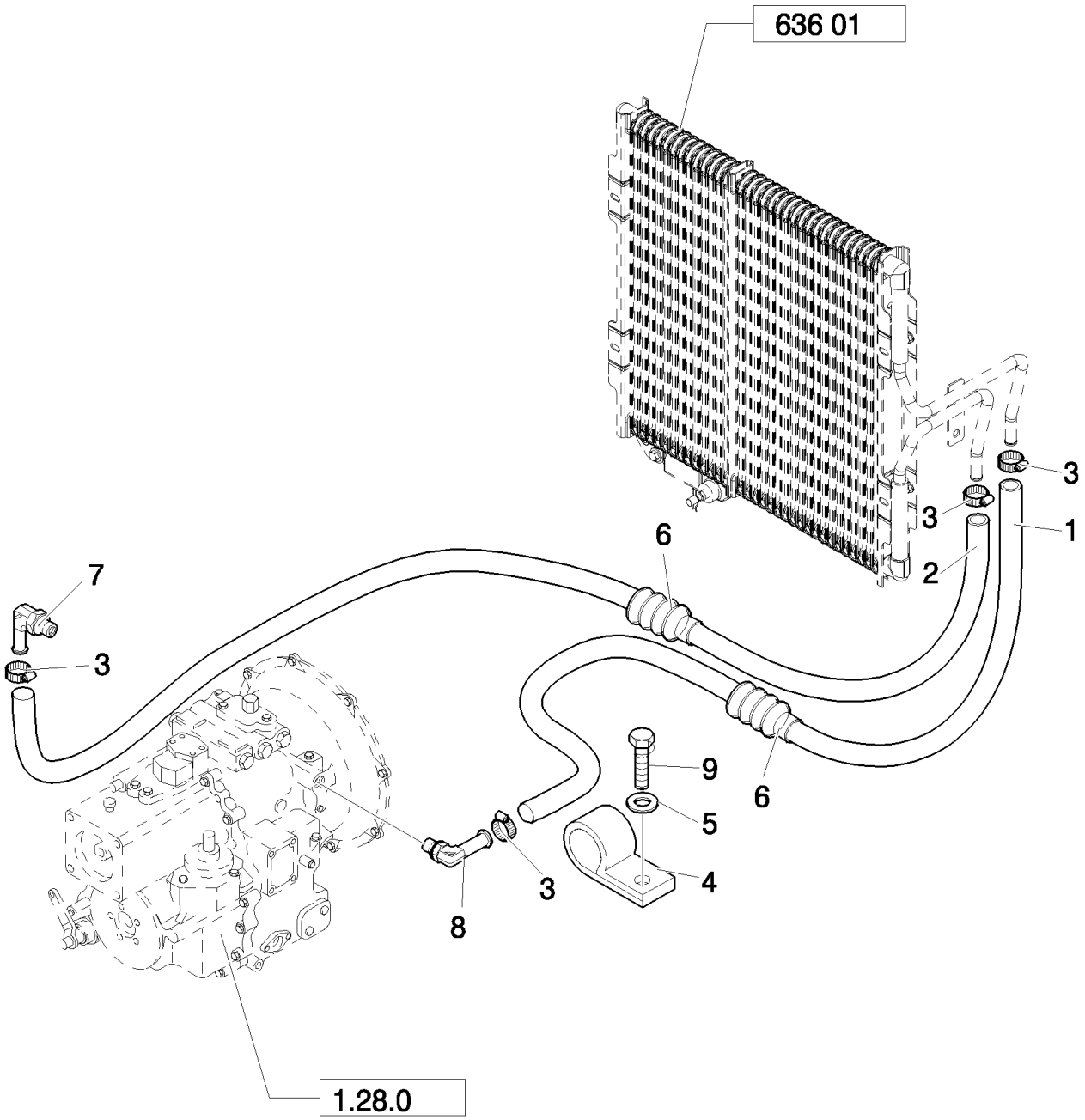

B95LR NA BACKHOE LOADER (1/06-)

1.39.8(01) TRANSMISSION OIL COOLING PIPES (POWER-SHUTTLE)

Ref	Numero de Pieza	Ctd	Descripción
1	87302506	1	HOSE, FLEXIBLE,
2	87302507	1	HOSE, FLEXIBLE,
3	87314076	4	COLLAR,
4	47048664	1	CLAMP,
5	47048964	1	WASHER,
6	87345955	2	SHIELD,
7	87017744	1	FITTING, 90º, 5/8" Hose x 1 5/16"-12 ORB Beaded,
8	87017743	1	FITTING, 45º, 5/8" Hose x 1 5/16"-12 ORB Beaded,
9	47042364	1	BOLT,

1.40.0(01) FRONT AXLE (2WD)

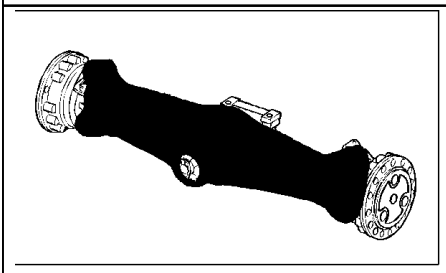

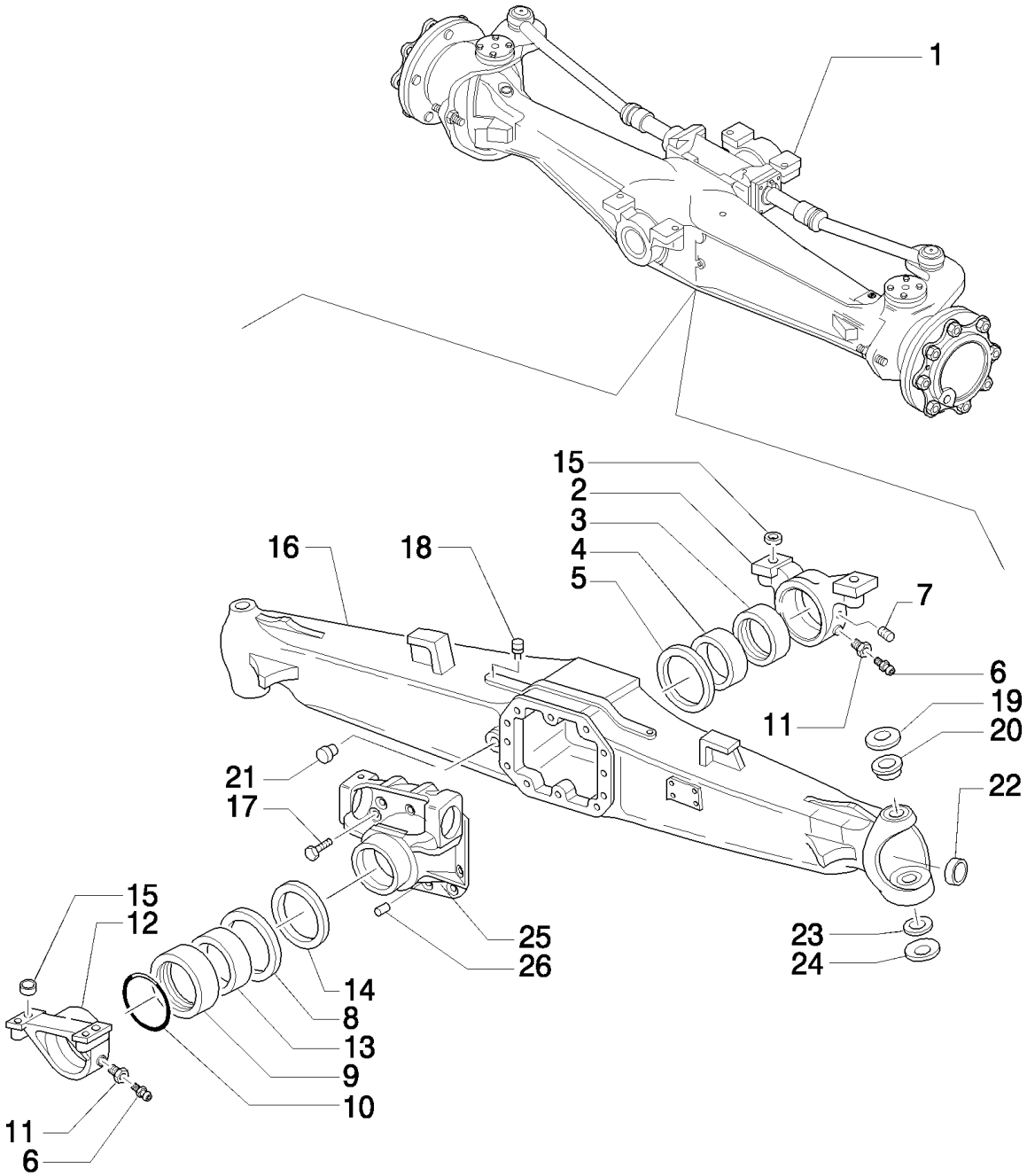

B95LR NA BACKHOE LOADER (1/06-)

1.40.0(01) FRONT AXLE (2WD)

Ref	Numero de Pieza	Ctd	Descripción
1	85824339	1	AXLE, FRONT, LIVE,
2	9967991	1	SUPPORT,
3	9967992	1	BUSHING, 125x115x5
4	9967993	1	BUSHING, 115x105x44
5	9967994	1	WASHER, THRUST,
6	321204	2	NIPPLE, LUBE, M6 x 1, 16mm lg,
7	85805973	1	SCREW, M8x1
8	9968006	1	WASHER, THRUST,
9	9968007	1	RING, 135x125x5
10	9968008	1	O-RING,
11	9967995	2	SCREW,
12	9968009	1	SUPPORT,
13	9968010	1	BUSHING,
14	85805706	1	PLUG, DIA=92x12
15	9967990	4	BUSHING, 30x21x16.5
16	85824347	1	HOUSING, AXLE,
17	9967769	10	SCREW, M12x1.75x33
18	85805703	1	PLUG, M10 x 1
19	9967673	2	WASHER,
20	85824469	2	BUSHING,
21	85805707	1	PLUG, M22 x 1.5,
22	85805704	2	PLUG,
23	9967678	2	RACE,
24	9967679	2	WASHER,
25	85805705	1	SUPPORT,
26	9967683	2	PIN, ROLL, 15x35

1.40.0(02) FRONT AXLE (2WD)

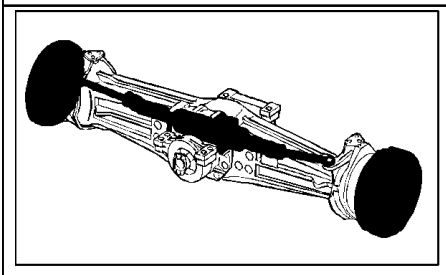

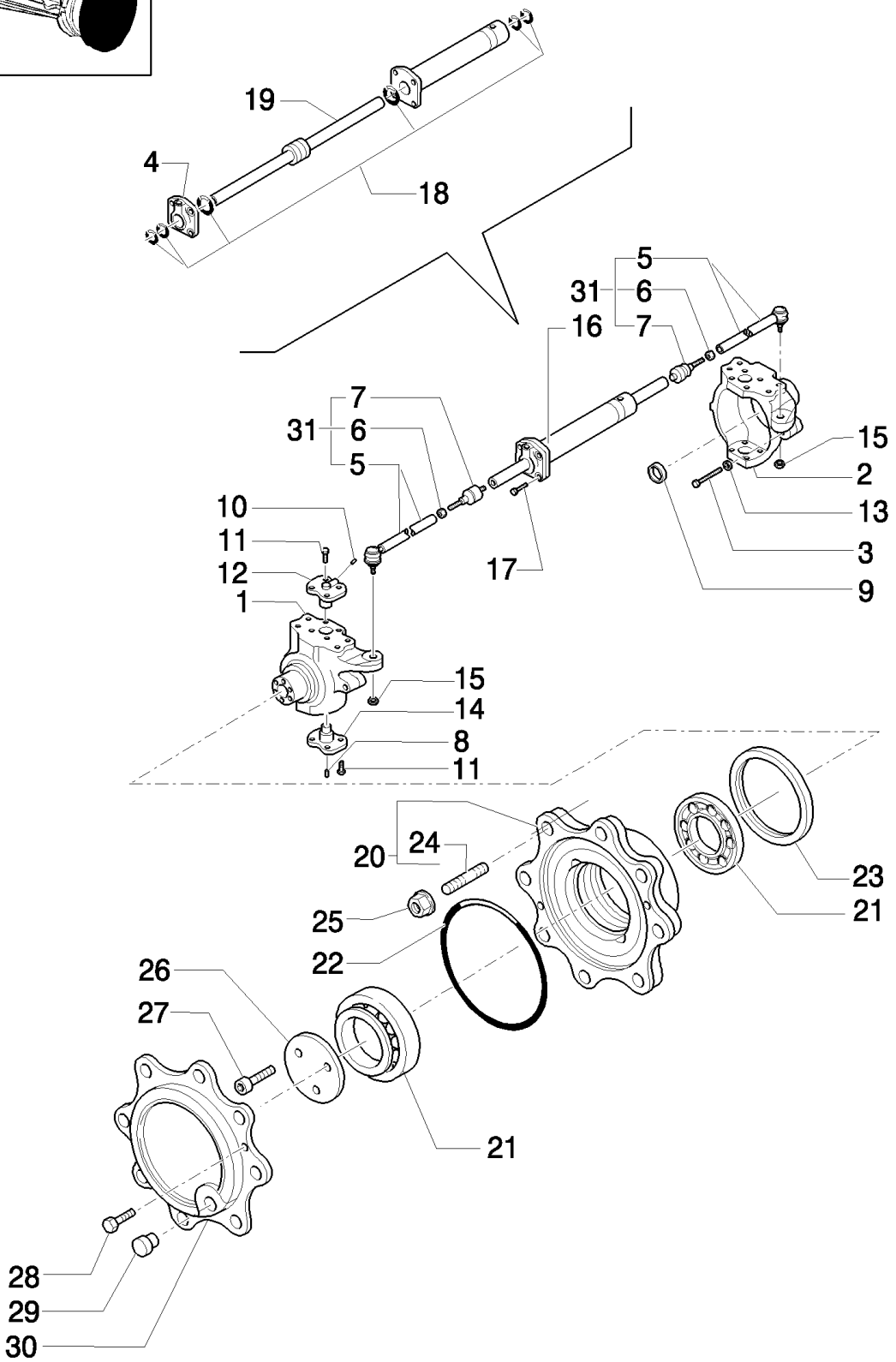

B95LR NA BACKHOE LOADER (1/06-)

1.40.0(02) FRONT AXLE (2WD)

Ref	Numero de Pieza	Ctd	Descripción
1	85824351	1	KNOTTER, LH; 8 Bolt Holes
2	85824350	1	KNUCKLE, STEERING, RH; 8 Bolt Holes
3	85805987	2	SCREW, M16x100
4	85805989	1	CYLINDER HEAD,
5	85805977	2	TIE-ROD,
6	85805976	2	NUT, M18x1.5
7	85805975	2	BALL JOINT,
8	85805984	2	NIPPLE, LUBE, M6x1
9	85824352	2	PLUG,
10	9968021	2	NIPPLE, LUBE, M6x2
11	85805979	16	SCREW, M12x1.75x30
12	85805980	2	PIN,
13	85805986	2	NUT, M16,
14	85805983	2	PIN,
15	85805982	2	NUT, M18x1,5
16	85805978	1	CYLINDER STEERING, Assy
17	9968028	4	SCREW, M12x45
18	85805990	1	KIT, SEALS,
19	85805992	1	ROD,
20	85806003	2	KIT, , Includes 24
21	9967687	4	BEARING ASSY,
22	85805711	2	O-RING,
23	85827067	2	SEAL, OIL,
24	9968070	16	STUD,
25	9968071	16	NUT, Wheel, M18 x 1.5,
26	85813054	2	WASHER, THRUST,
27	85806010	6	SCREW, M10x4.5
28	85805709	4	SCREW, M8x20
29	85805707	2	PLUG, M22 x 1.5,
30	85805710	2	COVER,
31	85805974	2	TIE-ROD, , Includes 5, 6, 7

1.44.0E(01) REAR AXLE (POWER-SHUTTLE) (CENTER PIVOT)

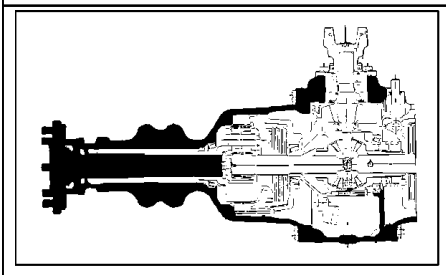

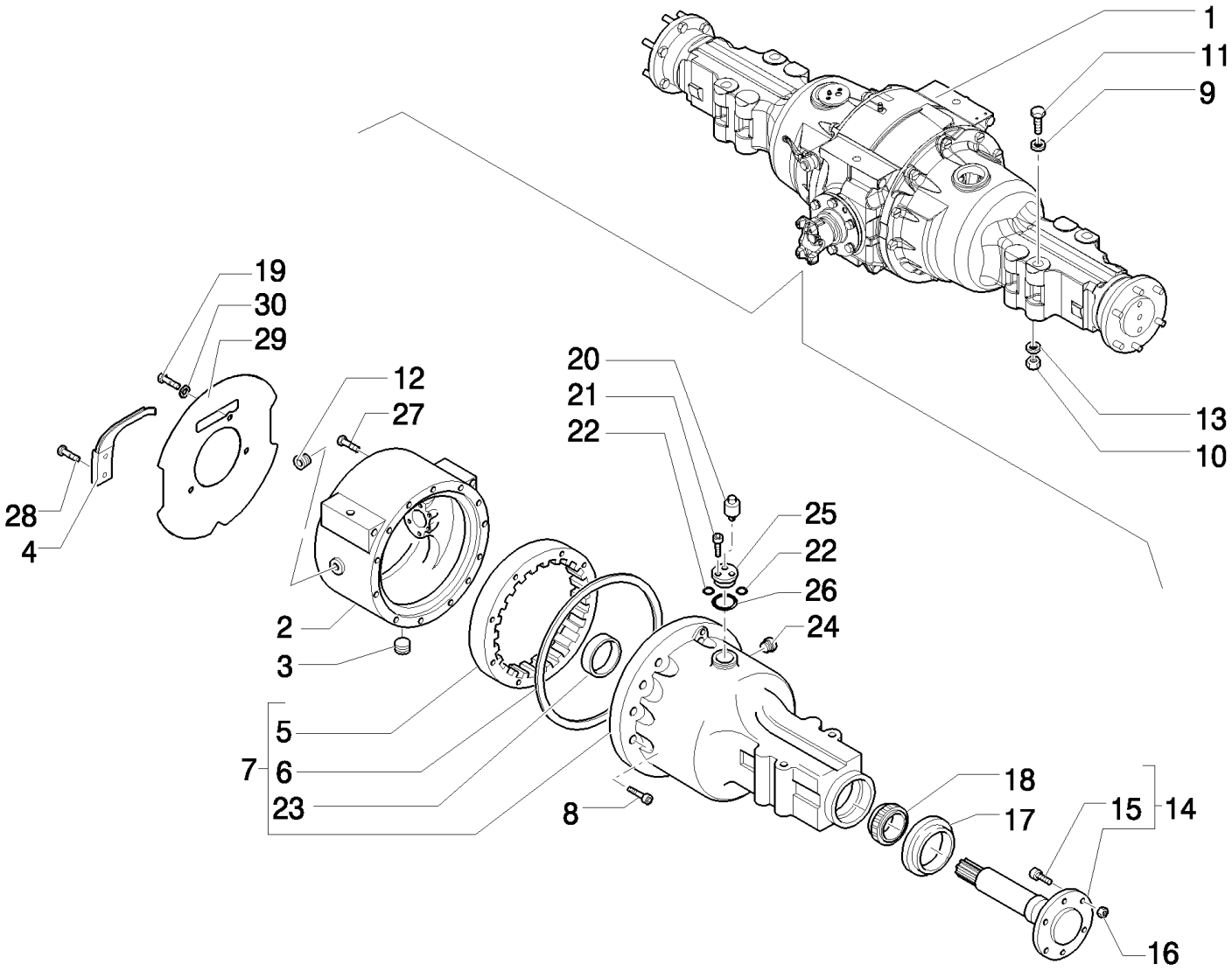

From S/N XXX

B95LR NA BACKHOE LOADER (1/06-)

1.44.0E(01) REAR AXLE (POWER-SHUTTLE) (CENTER PIVOT)

Ref	Numero de Pieza	Ctd	Descripción
1	87542398	1	AXLE, 4,62, Consists Of 2 to 26, Also Page 1.44.0E 02, 1.44.0E 03, 1.44.0E 04
2	E2NN4024AA	1	HOUSING,
3	263136	1	PLUG, MAGNETIC, Hex Soc, 3/4"-14 NPTF,
4	87314211	4	BLOCK, 9/16"-12-18 x 7.88"
5	86536749	2	GEAR, PLANETARY,
6	83417133	2	O-RING,
7	86552793	1	HOUSING, AXLE, LH
7	86552794	1	HOUSING, AXLE, RH
8	86505999	25	BOLT, Hex, 5/8"-11 x 2", G5,
8	304909S8	1	BOLT,
9	14497331	4	WASHER,
10	12575321	4	NUT, LOCK, M24 x 2, Cl 10,
11	15999434	4	SCREW, M24 x 2 x 220
12	87811S36	1	PLUG,
13	11200679	4	WASHER, LOCK,
14	86511646	2	AXLE,
15	E4NN1N118AA	16	BOLT,
16	87348000	16	NUT,
17	E9NN4N297AB	2	SEAL,
18	C5NN4N221B	2	BEARING, CONE,
19	87313966	2	BOLT,
20	C7NN2N033A	2	SCREW,
21	82895716	4	SCREW, 1/4-20X1,75
22	87031S95	4	O-RING, 90 Duro, .375" ID x .103" Thk
23	82959373	2	CUP,
24	21T4022	1	PLUG, 1/2"-11 x 1/2"
25	F0NN2B280AB	2	MANIFOLD,
26	87111S95	2	O-RING,
27	86597537	2	BOLT,
28	9706729	2	BOLT, Hex, 7/16"-14 x 1", G5, Full Thd,
29	87334836	1	PLATE, RETAINING,
30	86632588	3	WASHER, 13/32" x 13/16" x .065", HDN,

From S/N XXX

1.44.0E(02) REAR AXLE (POWER-SHUTTLE) (CENTER PIVOT)

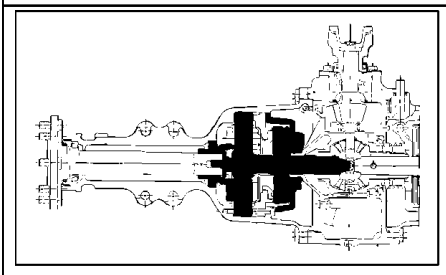

KIT KIT KIT 38 = ●

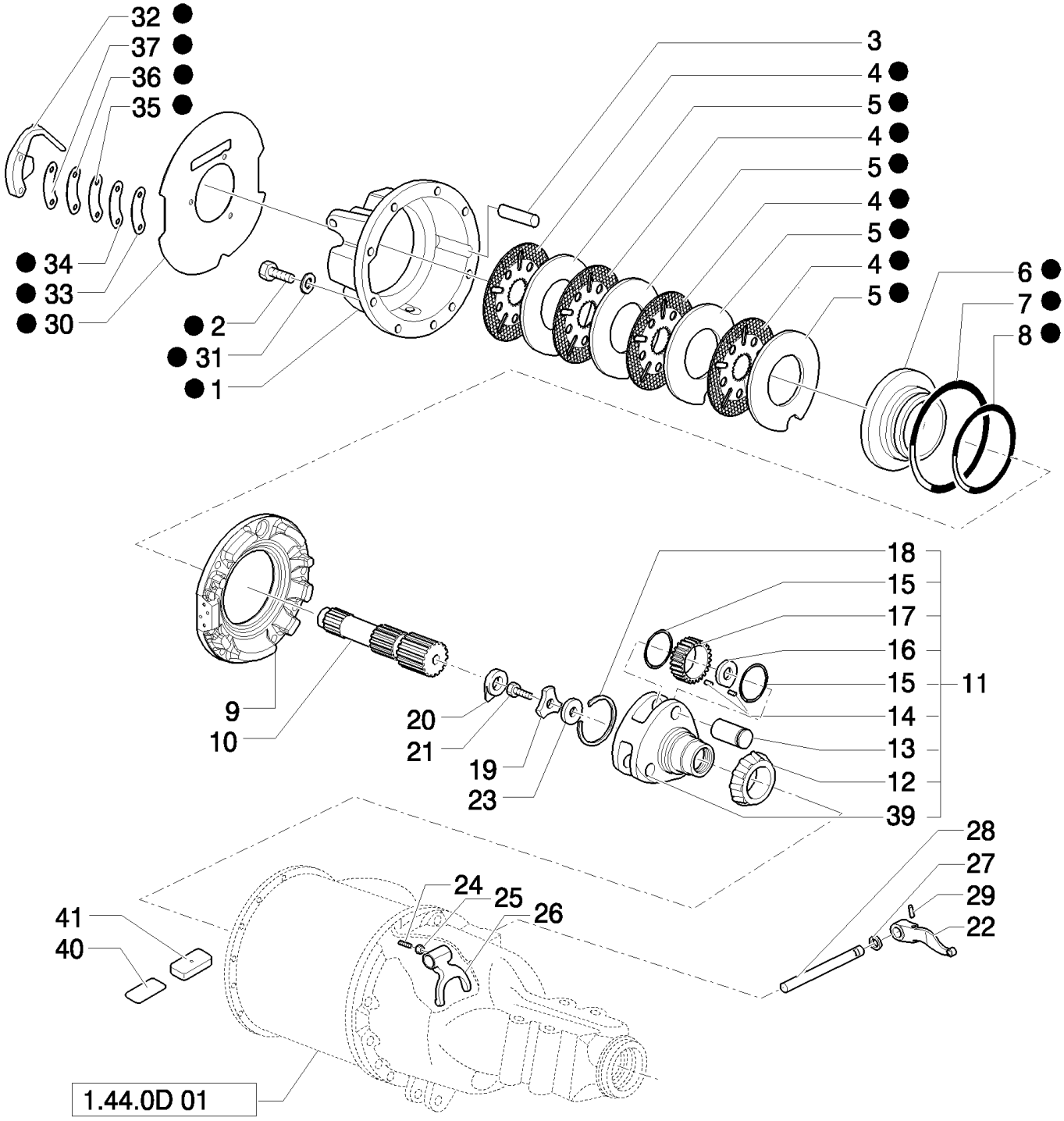

From S/N XXX

B95LR NA BACKHOE LOADER (1/06-)

1.44.0E(02) REAR AXLE (POWER-SHUTTLE) (CENTER PIVOT)

Ref	Numero de Pieza	Ctd	Descripción
1	87304345	1	HOUSING, RH
1	87304344	1	HOUSING, LH
2	87313966	3	BOLT, Cap, HH, G8, 9/16"-12 x 5"
3	C5NN2N333B	4	PIN, G8, 9/16"-18
4	87308018	8	BRAKE DISC,
5	87305713	8	BRAKE DISC,
6	87542345	2	PISTON,
7	87302760	2	O-RING, -253, 5.359" ID x .139" Thk,
8	87302761	2	O-RING, -253, 7.484" ID x .139" Thk,
9	87542348	1	HOUSING, RH
9	87542350	1	HOUSING, LH
10	C5NN4049B	2	SUN GEAR,
11	86584273	2	CARRIER,
12	E1ADDN4221	2	BEARING, CONE,
13	C7NN4048E	6	SHAFT,
14	C5NN4A012B	AR	BEARING, NEEDLE,
15	81803273	12	WASHER, THRUST,
16	C5NN4A008B	6	SPACER,
17	86584272	6	GEAR, PLANETARY,
18	C7NN4N031B	2	RETAINER,
19	87326170	2	WASHER,
20	83949811	2	PLATE, LOCKING,
21	304792S36	2	BOLT, HH, 7/8"-14 x 1-5/8"
22	C5NN2N439A	1	LEVER,
23	C5NN4374AB	1	SPACER, .050/.049" Thk,
23	C5NN4374L	AR	SPACER, .054/.053" Thk, (1.372/1.346 mm)
23	81803503	AR	SPACER, .058/.057" Thk, (1.473/1.448 mm)
23	C5NN4374N	AR	SPACER, .062/.061" Thk, (1.575/1.549 mm)
23	C5NN4374R	AR	SPACER, .066/.065" Thk, (1.676/1.651 mm)
23	C5NN4374S	AR	SPACER, .070/.069" Thk, (1.778/1.753 mm)
23	C5NN4374T	AR	SPACER, .074/.073" Thk, (1.880/1.854 mm)
23	C5NN4374U	AR	SPACER, .078/.077" Thk, (1.981/1.956 mm)
23	C5NN4374V	AR	SPACER, .082/.081" Thk, (2.083/2.057 mm)
23	C5NN4374Y	AR	SPACER, .086/.085" Thk, (2.184/2.159 mm)
23	C5NN4374Z	AR	SPACER, .090/.089" Thk, (2.286/2.261 mm)
24	957E7245	1	SCREW, Set, 3/8"-24 x 7/16"
25	87308	1	NUT, Jam, 3/8"-24, G2,
26	C5NN4N050B	1	FORK,
27	E196EB9	1	SEAL,
28	C5NN4N079A	1	SHAFT,
29	82958118	1	PIN, ROLL,
30	87334836	1	PLATE, RETAINING,
31	86632588	1	WASHER, 13/32" x 13/16" x .065", HDN,

From S/N XXX

B95LR NA BACKHOE LOADER (1/06-)

1.44.0E(02) REAR AXLE (POWER-SHUTTLE) (CENTER PIVOT)

Ref	Numero de Pieza	Ctd	Descripción
32	87314211	1	BLOCK,
33	87346228	1	PLATE,
34	87346229	1	PLATE,
35	87346231	1	PLATE,
36	87346232	1	PLATE,
37	87346427	1	PLATE,
38	87308019	1	KIT,
39	86576091	1	CARRIER,
40	86615927	2	
41	328955A1	2	

From S/N XXX

1.44.0E(03) REAR AXLE (POWER-SHUTTLE) (CENTER PIVOT)

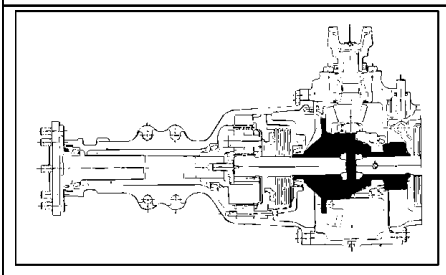

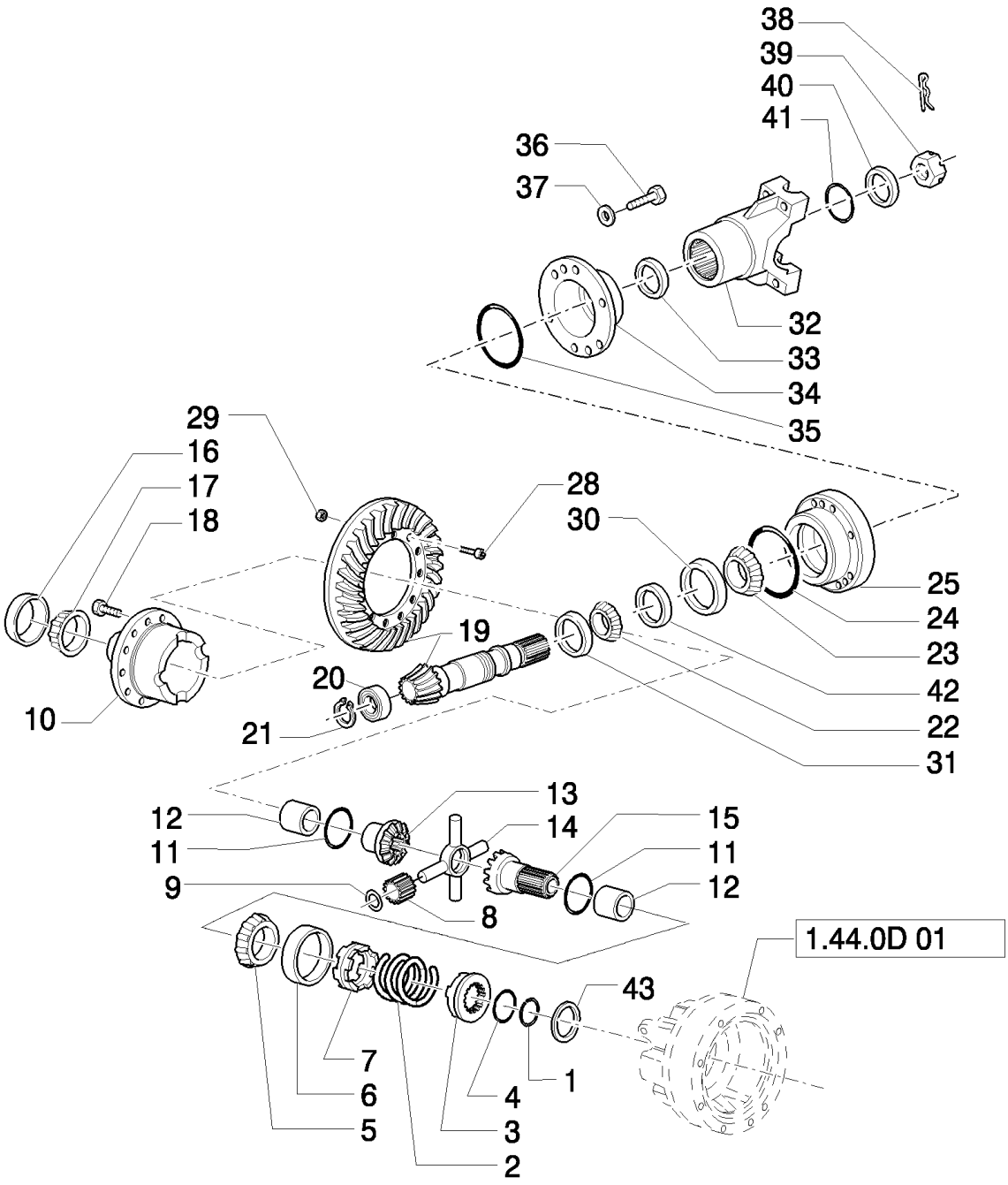

From S/N XXX

B95LR NA BACKHOE LOADER (1/06-)

1.44.0E(03) REAR AXLE (POWER-SHUTTLE) (CENTER PIVOT)

Ref	Numero de Pieza	Ctd	Descripción
1	E1ADDN4286	1	RING,
2	E188EB9	1	SPRING, Differential Lock Coupler
3	C5NN4N064A	1	COUPLING,
4	E189EB9	1	WASHER, Differential Lock, Coupler Stop
5	957E4221	1	BEARING, CONE,
6	510892	1	BEARING, CUP, RH
7	E186EB9	1	ADAPTER, Differential Lock Gear Case
8	957E4292B	4	PINION, DRIVE,
9	D9NN4230AA	4	WASHER, THRUST,
10	81816246	1	HOUSING,
11	957E4228	2	WASHER, RH
12	E185EB9	2	BUSHING, RH
13	81803445	1	GEAR,
14	81876885	1	SPIDER,
15	C5NN4239A	1	GEAR, RH
16	82959375	1	BEARING, CUP,
17	510884	1	BEARING, CONE,
18	43104S	8	BOLT, Cap, HH, G8, Self-Locking, 1/2"-13 x 2-7/8"
19	E2NN4209DA	1	GEAR SET, 4,62
20	81824478	1	BEARING, ROLLER,
21	960E4627	1	RING, SNAP,
22	82958961	1	BEARING, ROLLER, TAPERED,
23	81845711	1	BEARING, CONE,
24	87090S94	1	O-RING, 4.625" ID x .139" Thk
25	81847146	1	RETAINER,
28	83957533	12	BOLT, HH, G8, 1/2"-20 x 1-5/8"
29	380135S43	12	NUT, LOCK, 1/2"-20, GA,
30	52491	1	BEARING, CUP,
31	D8NN4616AA	1	BEARING, CUP,
32	83949810	1	FLANGE,
33	D3NN4676A	1	SEAL,
34	D4NN4668A	1	RETAINER,
35	81845713	1	SEAL,
36	304766S36	6	BOLT, Hex, 9/16"-12 x 1 1/2", G5, Full Thd, 9/16-12X1,50
37	280248	6	WASHER, LOCK, 9/16",
38	3947107	1	PIN, Cotter, 3/16" x 2.125"
39	384909S2	1	NUT, Slotted, 1-1/4"-18
40	D3NN4N118A	1	WASHER,
41	D1NN4N116A	1	SEAL,
42	D1NN4662A	AR	SPACER, 1.2545/1.2540" Lg, (31.864/31.852 mm)
42	D1NN4662B	AR	SPACER, 1.2565/1.2560" Lg, (31.915/31.902 mm)
42	D1NN4662C	AR	SPACER, 1.2585/1.2580" Lg, (31.966/31.953 mm)
42	D1NN4662D	AR	SPACER, 1.2605/1.2600" Lg, (32.017/32.004 mm)

From S/N XXX

B95LR NA BACKHOE LOADER (1/06-)

1.44.0E(03) REAR AXLE (POWER-SHUTTLE) (CENTER PIVOT)

Ref	Numero de Pieza	Ctd	Descripción
42	D1NN4662E	AR	SPACER, 1.2625/1.2620" Lg, (32.068/32.055 mm)
42	D1NN4662F	AR	SPACER, 1.2645/1.2640" Lg, (32.118/32.106 mm)
42	D1NN4662G	AR	SPACER, 1.2665/1.2660" Lg, (32.169/32.156 mm)
42	D1NN4662H	AR	SPACER, 1.2685/1.2680" Lg, (32.220/32.207 mm)
42	D1NN4662J	AR	SPACER, 1.2705/1.2700" Lg, (32.271/32.258 mm)
42	D1NN4662K	AR	SPACER, 1.2725/1.2720" Lg, (32.322/32.309 mm)
42	D1NN4662L	AR	SPACER, 1.2745/1.2740" Lg, (32.372/32.360 mm)
42	D1NN4662M	AR	SPACER, 1.2765/1.2760" Lg, (32.423/32.410 mm)
42	D1NN4662N	AR	SPACER, 1.2785/1.2780" Lg, (32.474/32.461 mm)
42	D1NN4662R	AR	SPACER, 1.2805/1.2800" Lg, (32.525/32.512 mm)
42	D1NN4662S	AR	SPACER, 1.2825/1.2820" Lg, (32.576/32.563 mm)
43	81803515	AR	SHIM, 0,965/1,016
43	C5NN4548B	AR	SHIM, .046/.044" Thk, (1.168/1.118 mm)
43	81803517	AR	SHIM, .052/.050" Thk, (1.321/1.270 mm)
43	C5NN4548D	AR	SHIM, .058/.056" Thk, (1.473/1.422 mm)
43	C5NN4548E	AR	SHIM, .064/.062" Thk, (1.626/1.575 mm)
43	C5NN4548F	AR	SHIM, .070/.068" Thk, (1.778/1.727 mm)
43	C5NN4548G	AR	SHIM, .076/.074" Thk, (1.930/1.880 mm)
43	C5NN4548H	AR	SHIM, .082/.080" Thk, (2.083/2.032 mm)

From S/N XXX

1.44.0E(04) REAR AXLE (POWER-SHUTTLE) (CENTER PIVOT)

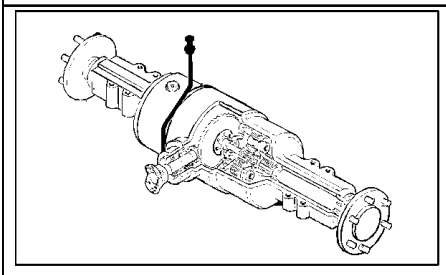

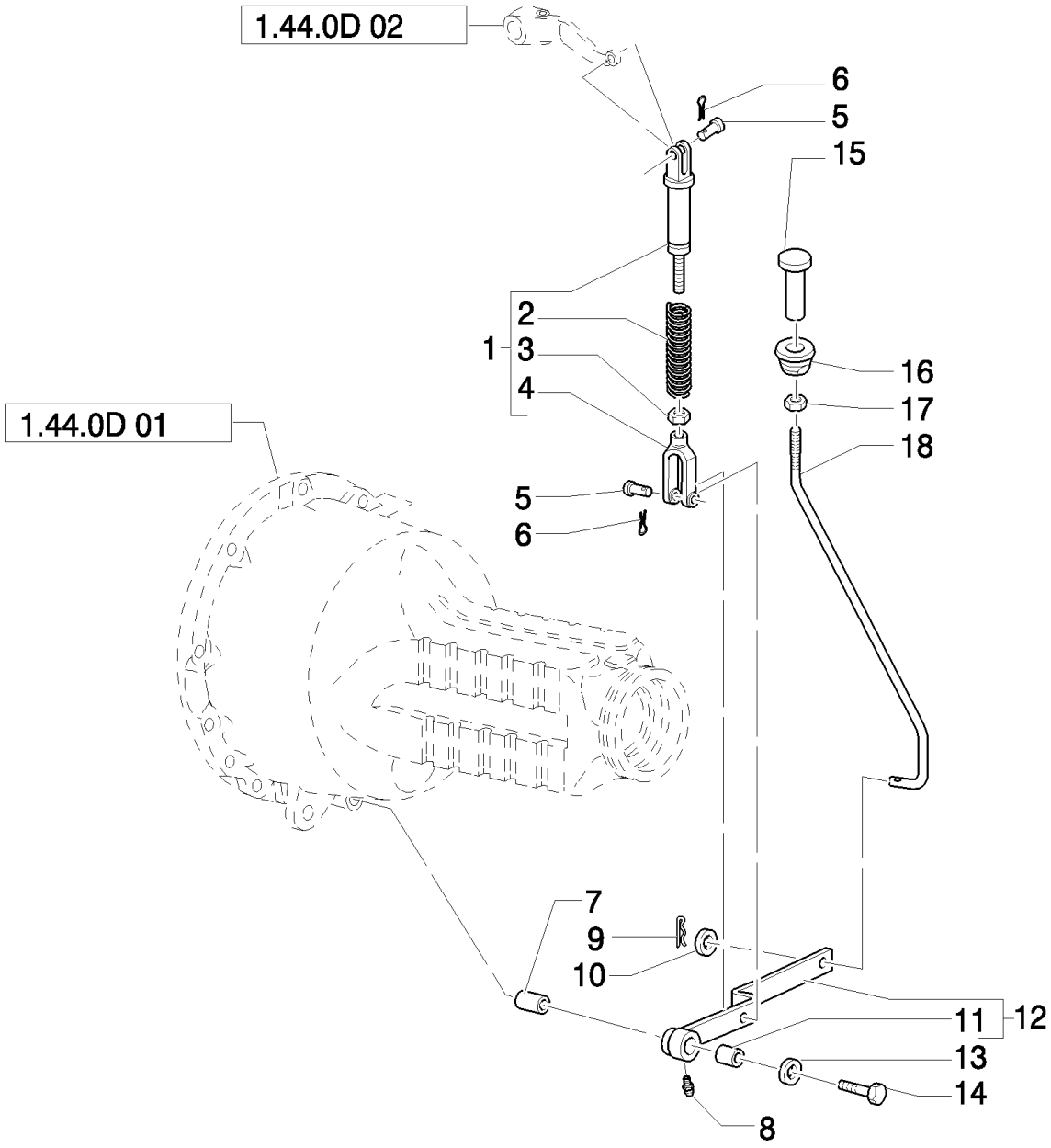

From To S/N XXX

B95LR NA BACKHOE LOADER (1/06-)

1.44.0E(04) REAR AXLE (POWER-SHUTTLE) (CENTER PIVOT)

Ref	Numero de Pieza	Ctd	Descripción
1	83949838	1	ROD,
2	E209EB9	1	SPRING, Inside Rod Tube
3	33923S36	1	NUT, Jam, 5/16"-24, G2,
4	390256S36	1	CLEVIS,
5	76009S36	2	PIN,
6	10802801	2	PIN, SPLIT (COTTER), M2.5 x 25,
7	E212EB9	1	SLEEVE,
8	13406911	1	NIPPLE, LUBE, 1/4"-28,
9	10766901	1	PIN, SPLIT (COTTER), M3.2 x 25,
10	12644921	1	WASHER, M14 x 32 x 4,
11	81805231	1	BUSHING,
12	85802513	1	LEVER,
13	14497121	1	WASHER, M20 x 37 x 3,
14	304911S36	1	BOLT, Hex, 3/4"-10 x 2 3/4", G5,
15	E8NN4N191AA	1	PEDAL,
16	D5NN4N186C	1	BUSHING,
17	33943S36	1	NUT, Jam, 1/2"-20, G2,
18	85802515	1	ROD,

From To S/N XXX

1.63.0(01) POWER STEERING HYDRAULIC SYSTEM

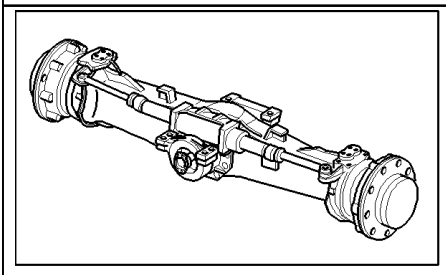

B95LR NA BACKHOE LOADER (1/06-)

1.63.0(01) POWER STEERING HYDRAULIC SYSTEM

Ref	Numero de Pieza	Ctd	Descripción
1	85805232	1	VALVE, HYDRAULIC, , Only for LB115.B - B115, See Page 1.63.0/A
2	11193879	2	WASHER, SPRING, Belleville, M8.4, , Only for LB115.B - B115
3	16043421	2	SCREW, Hex, M8 x 20, 8.8, , Only for LB115.B - B115
4	390951S36	4	CONNECTOR, HYD., , Only for LB115.B - B115
5	85805318	2	ELBOW, 90º, 9/16"-18, 37º x 9/16"-18, O-Ring, , Only for LB115.B - B115
6	85815615	2	HOSE, FLEXIBLE, , Only for LB115.B - B115
7	85813377	2	HOSE, FLEXIBLE, , Only for LB115.B - B115
8	85812202	1	HOSE, FLEXIBLE, , Only for LB115.B - B115
9	85815614	2	CONNECTOR, HYD., 11/16"-16 ORS x 9/16"-18, O-Ring, , Only for LB115.B - B115
10	85803332	1	STRAP, CABLE, M4.8 x 180, , Not for LB115.B - B115
11	85812212	2	HOSE, FLEXIBLE, 1050mm lg, , Not for LB115.B - B115
12	83985067	1	CONNECTOR, HYD., , Not for LB115.B - B115
13	83983763	1	CONNECTOR, HYD., , Not for LB115.B - B115
14	85826080	1	HOSE, FLEXIBLE, L=MM.1200, Only for LB115.B - B115
15	85805231	1	HOSE, FLEXIBLE, L=2100 mm, Only for LB115.B - B115
16	9993141	1	O-RING, -012, 90 Duro, .364" ID x .070" Thk, , Only for LB115.B - B115
17	9617873	1	O-RING, 6-1, 90 Duro, .468" ID x .078" Thk, , Only for LB115.B - B115

B95LR NA BACKHOE LOADER (1/06-)

1.75.2/ 3(01) CHASSIS HARNESS & GROUND WIRE (POWER SHUTTLE)

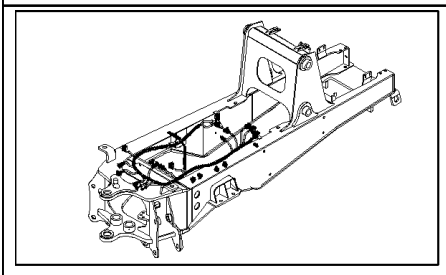

B95LR NA BACKHOE LOADER (1/06-)

1.75.2/ 3(01) CHASSIS HARNESS & GROUND WIRE (POWER SHUTTLE)

Ref	Numero de Pieza	Ctd	Descripción
1	87544169	1	HARNESS,
2	85805686	4	CLIP, HOSE,
3	85805685	2	CLIP, HOSE,
4	14560187	55	STRAP, CABLE, 178mm lg, L=203.2 mm
5	85803884	1	Strap, Ground,
6	16043021	1	BOLT, Hex, M8 x 12, 8.8, Full Thd,
7	11193879	1	WASHER, SPRING, Belleville, M8.4,
8	14048211	1	NUT, LOCK, M8 x 1.25, Cl 8,
9	12647121	1	WASHER, M8 x 20 x 3,

B95LR NA BACKHOE LOADER (1/06-)

1.75.2/ 3(02) BATTERY LOCK-OUT SWITCH & GROUND WIRE (POWER SHUTTLE)

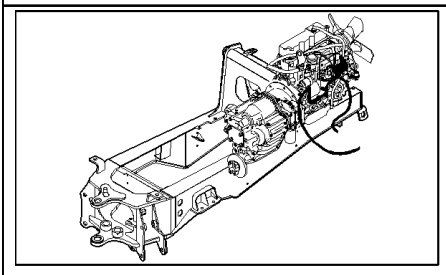

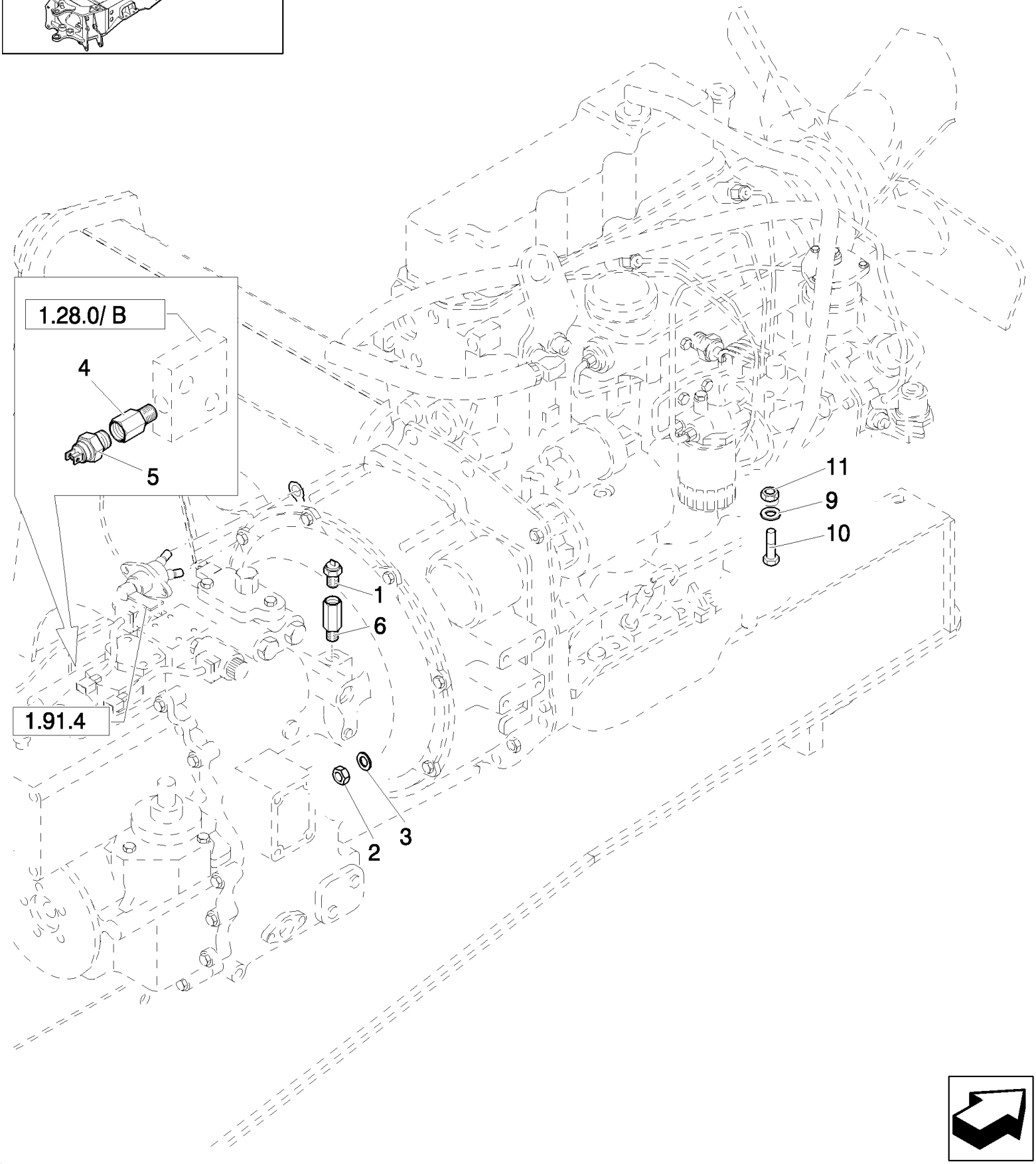

B95LR NA BACKHOE LOADER (1/06-)

1.75.2/ 3(02) BATTERY LOCK-OUT SWITCH & GROUND WIRE (POWER SHUTTLE)

Ref	Numero de Pieza	Ctd	Descripción
1	85803879	1	SENDER UNIT, Transmission Oil Temperature
2	16104111	1	NUT, LOCK, M8 x 1.25, Cl 8,
3	12647121	1	WASHER, M8 x 20 x 3,
4	85820156	1	ADAPTER,
5	85817672	1	SWITCH, PRESSURE, Trans. Oil Pressure
6	85803524	1	ADAPTER,
9	47048993	1	WASHER,
10	47049010	1	SCREW, M10x20
11	47049031	1	NUT, M10

1.75.2/ 3(03) ENGINE HARNESS (POWER SHUTTLE)

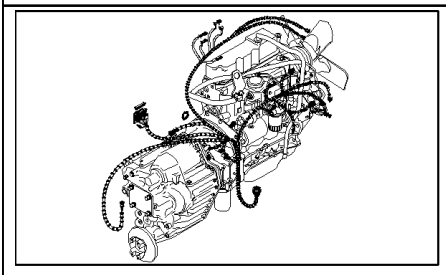

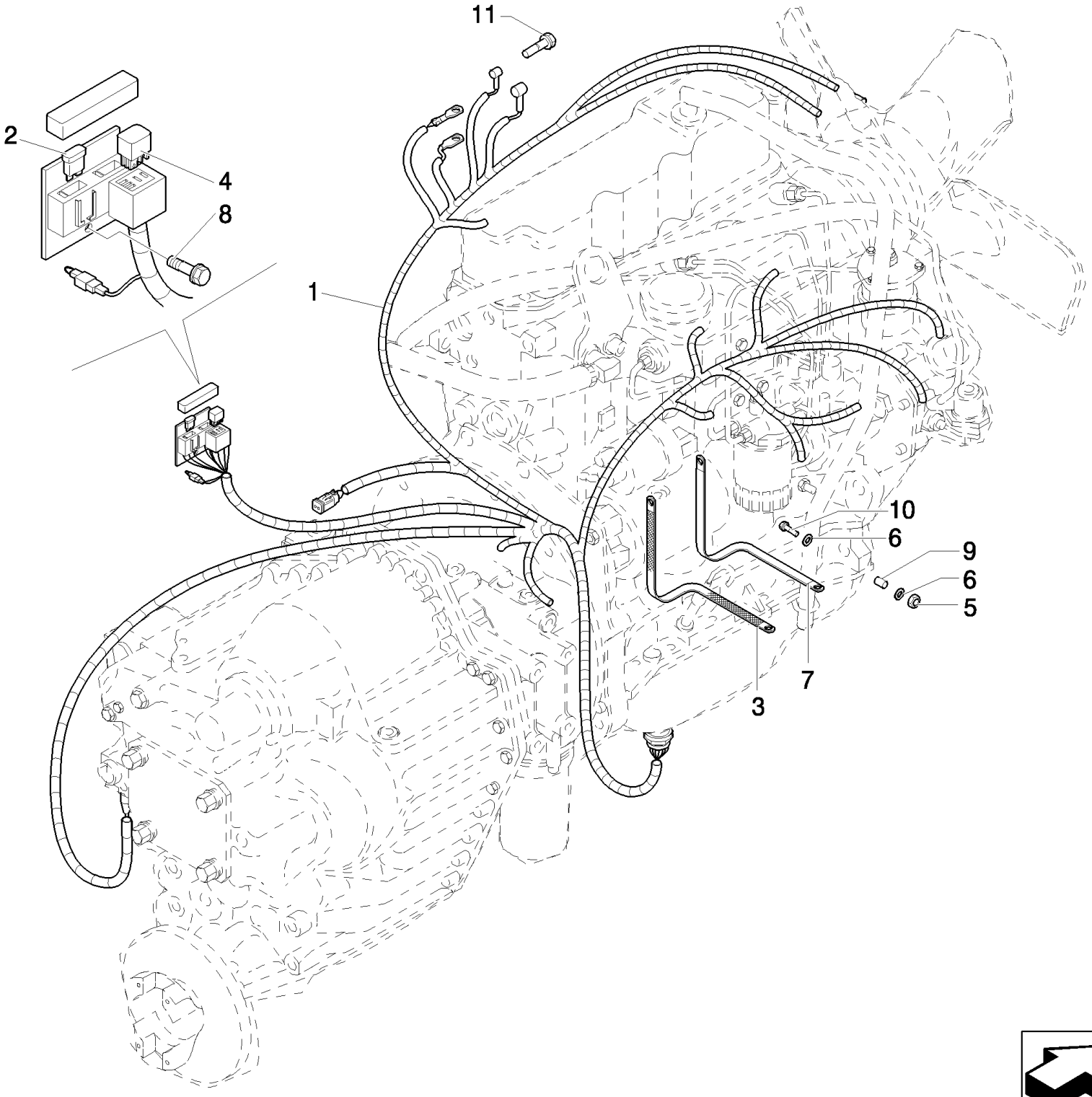

B95LR NA BACKHOE LOADER (1/06-)

1.75.2/ 3(03) ENGINE HARNESS (POWER SHUTTLE)

Ref	Numero de Pieza	Ctd	Descripción
1	87406398	1	HARNESS, WIRE, Includes 87431470 3 amp diode, Includes 2, 4
2	11055890	1	FUSE, 80A
3	87407206	1	Strap, Ground,
4	85805162	1	RELAY, 12V-70A
5	14048211	1	NUT, LOCK, M8 x 1.25, Cl 8,
6	12638511	2	WASHER, M8 x 15 x 1.5, 8x15
7	87410268	1	Strap, Ground,
8	16043824	1	BOLT, Hex, M8 x 30, 8.8, Full Thd,
9	87415208	1	SPACER,
10	16044421	2	BOLT, Hex, M8 x 60, 8.8,
11	47049186	1	BOLT, Hex, M10 x 30, 8.8,

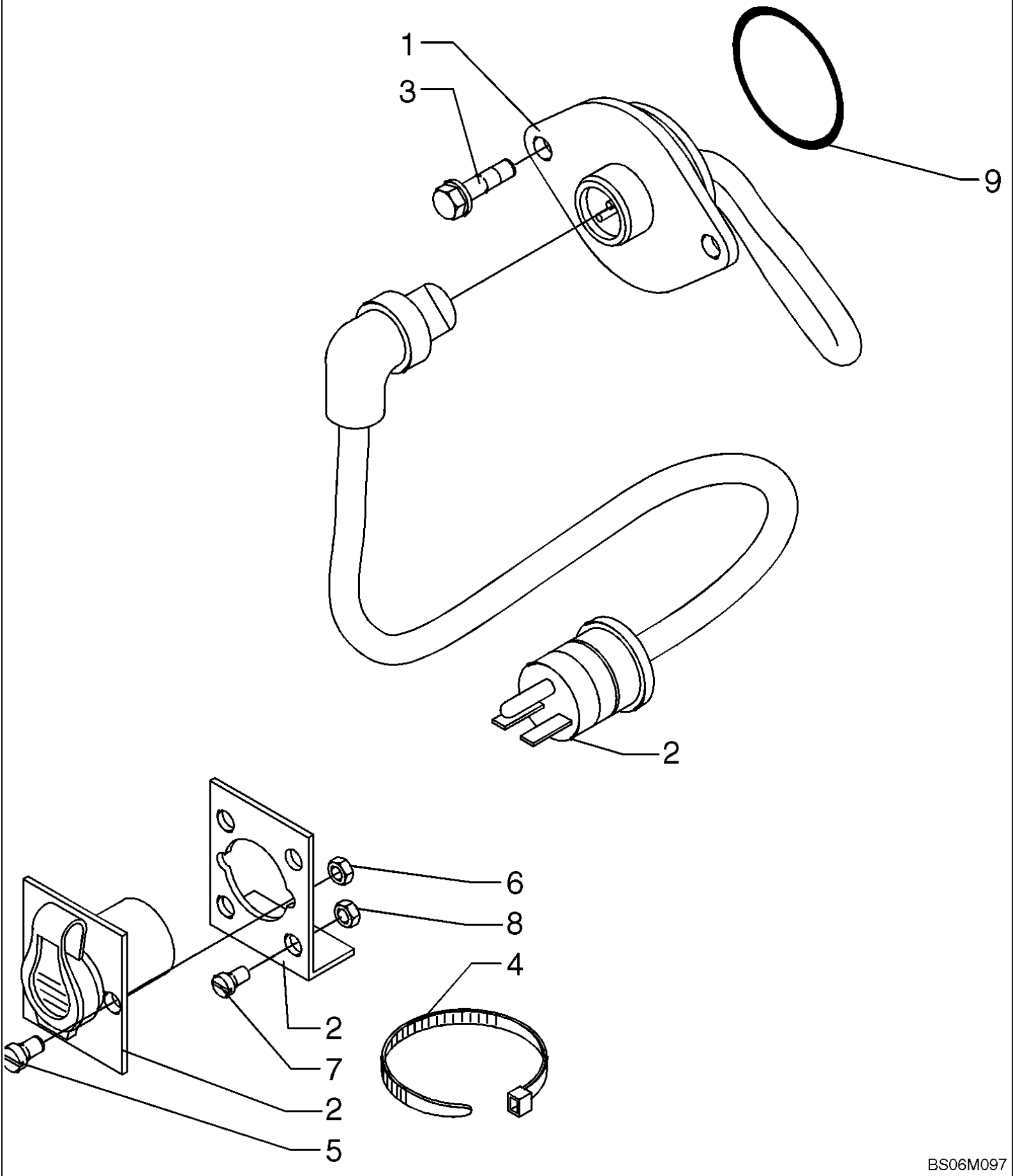
1
3
9
2
6
8
4
2
7
2
5
BS06M097

B95LR NA BACKHOE LOADER (1/06-)

1.75.4/ 6(01) ENGINE - BLOCK HEATER

Ref	Numero de Pieza	Ctd	Descripción
	710206034	1	DIA KIT, TRACTOR, ENGINE COOLANT HEATER, 110V; Engine Block Heater; North American Models; Includes Ref 1 - 9 Plus Instructions
1	4891287	1	HEATER, Incl. Ref 9
2	82030481	1	CABLE, ELECTRIC, 60 inch Cord
3	4899068	2	SCREW, Hex Flg , M8 x 1.25 x 16,
4	82001041	2	STRAP, CABLE, .190" x 7", Tie Strap
5	13276414	2	SCREW, Cross Pan Hd, M6 x 20,
6	86619800	2	NUT, LOCK, M6 x 1, Flg, Cl 8,
7	13271914	4	SCREW, Cross Pan Hd, M4 x 10,
8	10794011	4	NUT, M4, Cl 8,
9	4891258	1	O-RING, O-RING; 50.39 ID x 3.53 mm wide

1.80.99(01) SWING POST ASSEMBLY, BUSHINGS & PINS

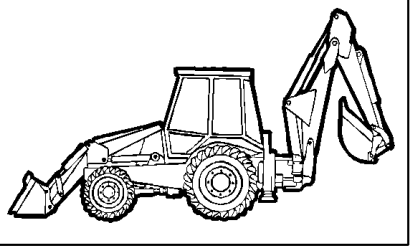

KIT 18 = ●

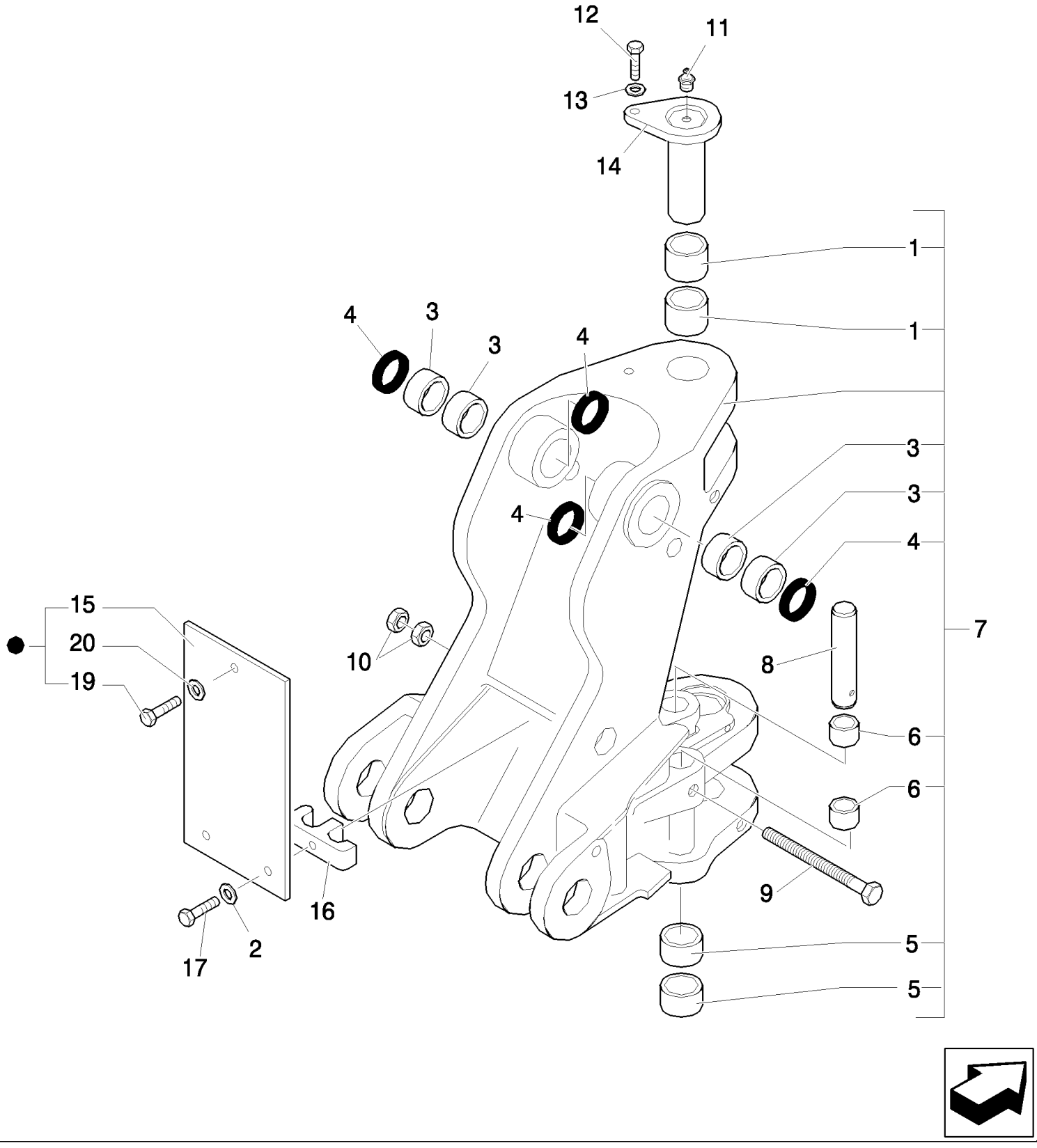

B95LR NA BACKHOE LOADER (1/06-)

1.80.99(01) SWING POST ASSEMBLY, BUSHINGS & PINS

Ref	Numero de Pieza	Ctd	Descripción
1	85803196	2	BUSHING,
2	11190579	2	WASHER, SPRING, Belleville, M10.5,
3	85801029	4	BUSHING,
4	85801025	4	SEAL, HYD-CYLINDER,
5	85803197	2	BUSHING,
6	85803193	4	BUSHING,
7	85803623	1	SUPPORT, P/N 85801028 in Primer colour, Includes 1, 3 To 6
8	85803192	2	PIN, Swing Cylinder
9	87363478	2	SCREW, M10x270
10	10717421	2	NUT, Thin, M14 x 2, Cl 05, M14
11	83416242	AR	NIPPLE, LUBE, 1/8"-27
12	85802397	1	SCREW, M16X40
13	85802396	1	WASHER,
14	85801076	1	PIN,
15	85805137	1	PLATE,
16	87310285	1	CLAMP,
17	11107321	2	BOLT, Hex, M10 x 55, 8.8,
18	85805648	1	KIT,
19	16043621	1	BOLT, Hex, M8 x 25, 8.8,
20	11193979	1	WASHER, SPRING, Belleville, M8.4,

1.80.99(02) SWING POST PINS & TRANSPORT LOCK HOOK

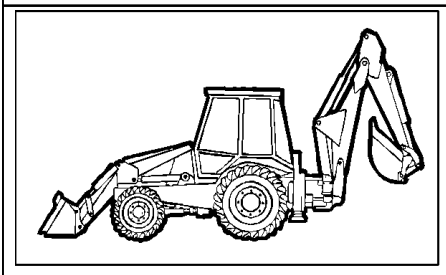

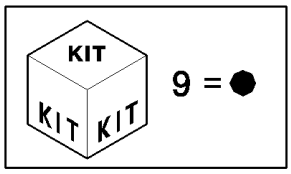

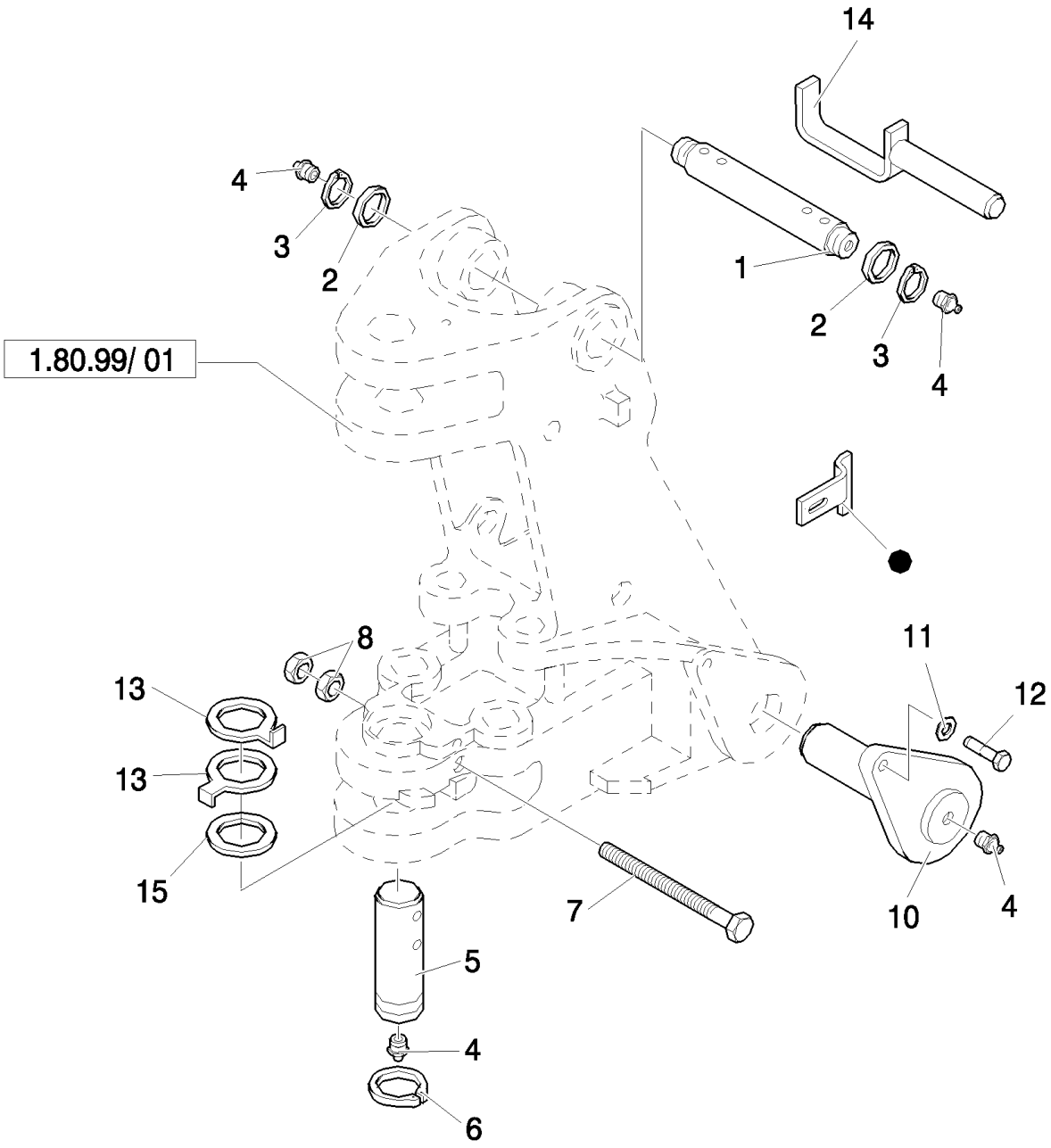

B95LR NA BACKHOE LOADER (1/06-)

1.80.99(02) SWING POST PINS & TRANSPORT LOCK HOOK

Ref	Numero de Pieza	Ctd	Descripción
1	85801026	1	PIN,
2	83910977	2	SPACER, M45X66X3
3	83911019	2	RING, SNAP,
4	83416242	AR	NIPPLE, LUBE, 1/8"-27
5	85801079	1	PIN,
6	85803198	1	RING, SNAP,
7	15201934	2	BOLT, Hex, M14 x 170, 10.9, M14x170
8	10717421	2	NUT, Thin, M14 x 2, Cl 05, M14
9	85816776	1	KIT,
10	85802872	2	PIN,
11	85802396	2	WASHER,
12	85802397	2	SCREW, M16X40
13	85801191	2	SPACER,
14	85819613	1	PIN, , Only for LB 90.B - LB95.B - LB110.B
15	8274447	1	SHIM,

B95LR NA BACKHOE LOADER (1/06-)

1.81.9/2(01) TRANSPORT LOCK" REAR LOCKING" (CENTER PIVOT) - NA

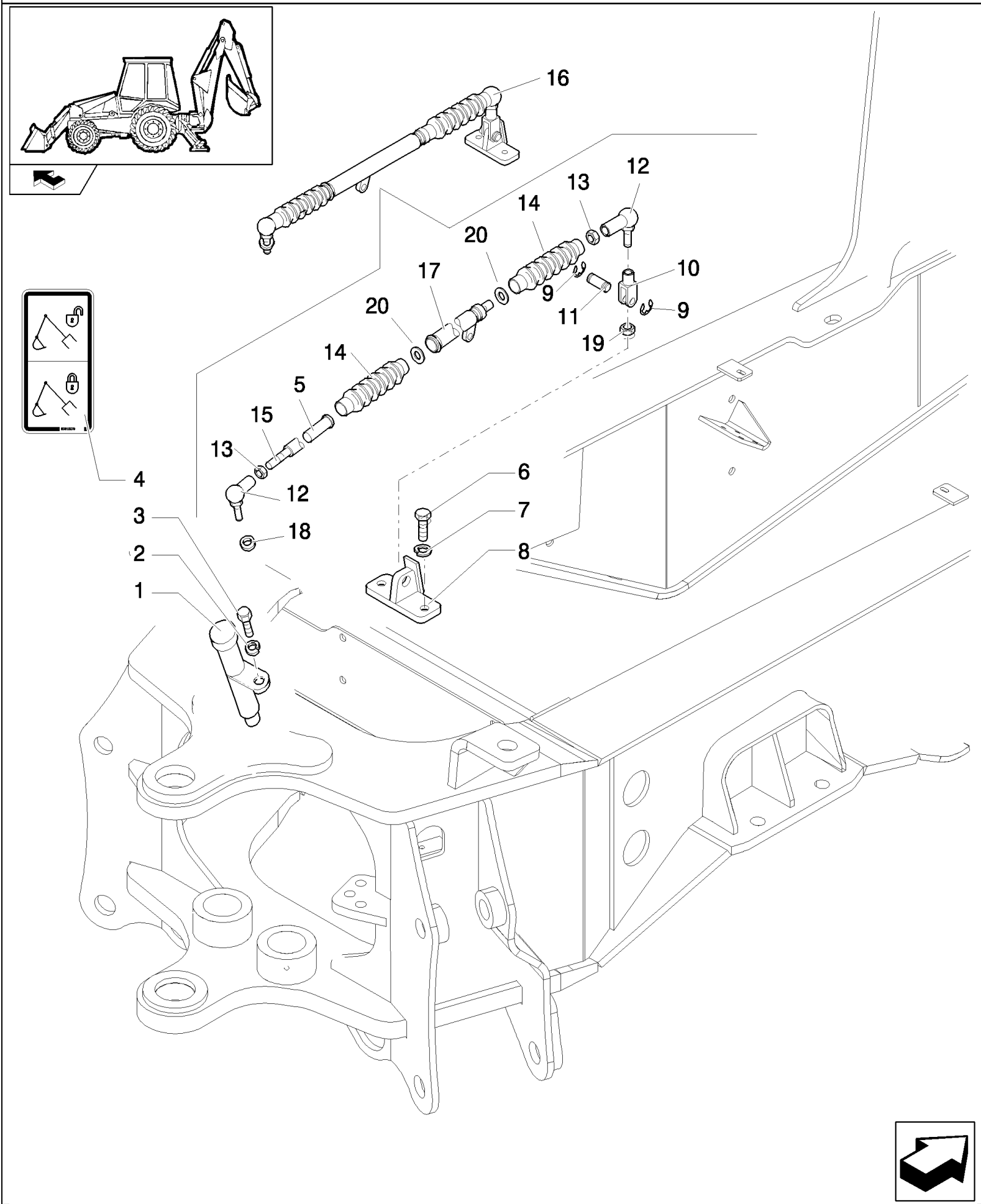

B95LR NA BACKHOE LOADER (1/06-)

1.81.9/2(01) TRANSPORT LOCK" REAR LOCKING" (CENTER PIVOT) - NA

Ref	Numero de Pieza	Ctd	Descripción
1	85821268	1	SHOCK ABSORBER,
2	11193879	1	WASHER, SPRING, Belleville, M8.4,
3	16043621	1	BOLT, Hex, M8 x 25, 8.8,
4	85812278	1	DECAL,
5	85819482	1	BUSHING,
6	11106221	2	BOLT, Hex, M10 x 25, 8.8, Full Thd,
7	11190579	2	WASHER, SPRING, Belleville, M10.5,
8	85819488	1	SUPPORT,
9	85813407	2	RING,
10	85819468	1	CLEVIS,
11	87302958	1	PIN, CLEVIS,
12	85819477	2	BALL JOINT,
13	85819478	1	NUT, M10
14	85819479	2	BELLOWS,
15	85819481	1	ROD,
16	87302965	1	TIE-ROD,
17	85819480	1	TUBE,
18	85821270	1	WASHER,
19	85821271	1	NUT, M16
20	85824227	2	CLAMP,

1.81.9/2(02) TRANSPORT LOCK" REAR LOCKING" (CENTER PIVOT) - NA

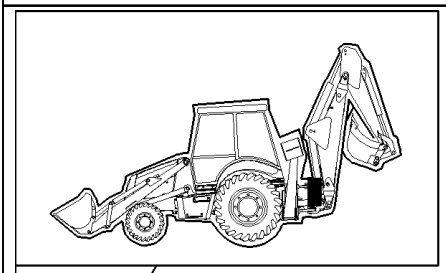

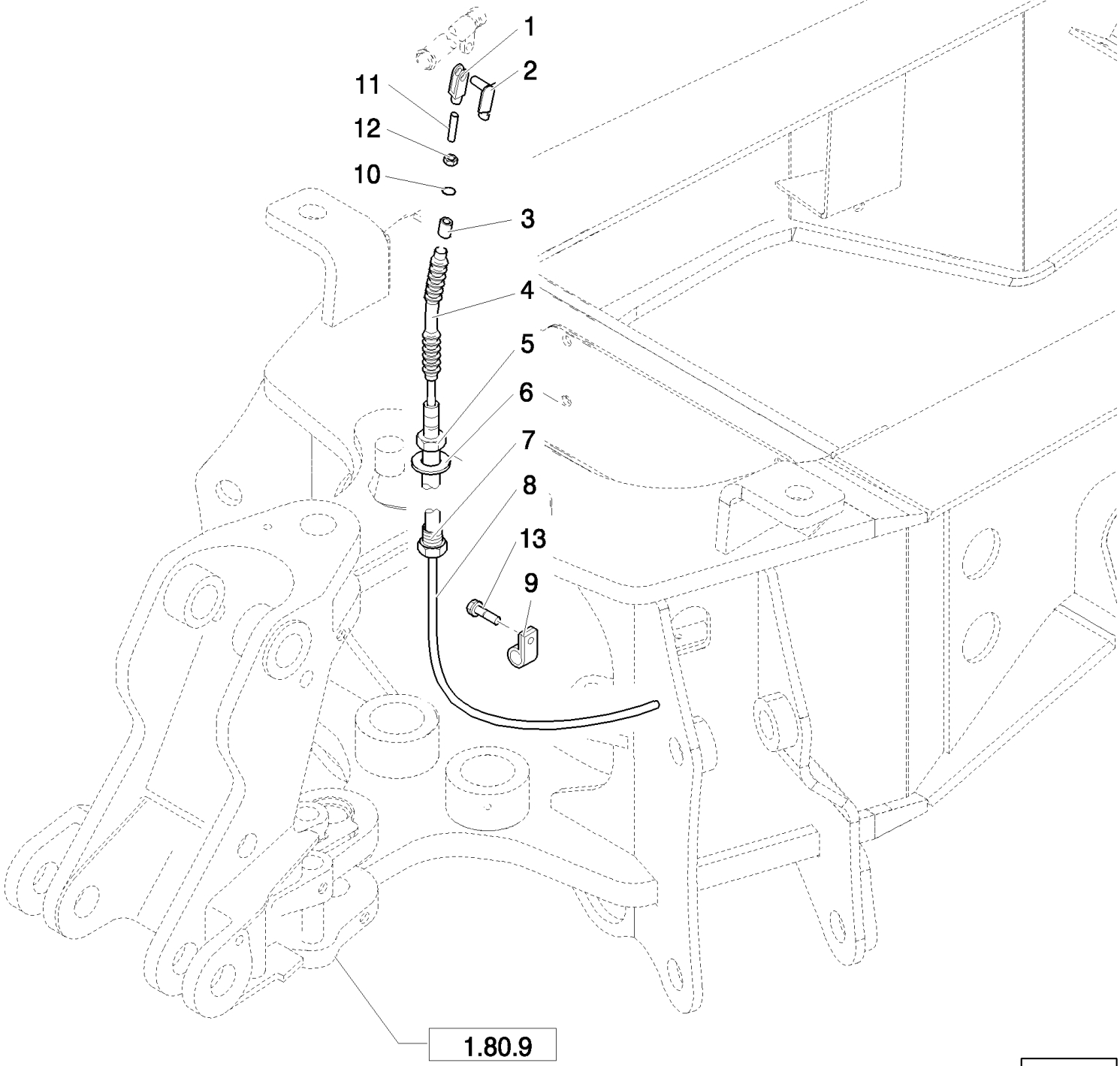

B95LR NA BACKHOE LOADER (1/06-)

1.81.9/2(02) TRANSPORT LOCK" REAR LOCKING" (CENTER PIVOT) - NA

Ref	Numero de Pieza	Ctd	Descripción
1	85819467	1	CLEVIS,
2	85819469	1	CLIP,
3	85819471	1	RING,
4	85821278	1	BELLOWS,
5	87302960	2	NUT,
6	87302959	1	WASHER,
7	87302961	1	REGULATOR,
8	87302967	1	CABLE,
9	10450190	1	CLAMP,
10	85821277	1	RING, RUBBER,
11	85821279	1	ROD,
12	85821273	1	NUT, M8 x 1.25
13	16043021	1	BOLT, Hex, M8 x 12, 8.8, Full Thd,

1.82.0(01) HYDRAULIC OIL RESERVOIR

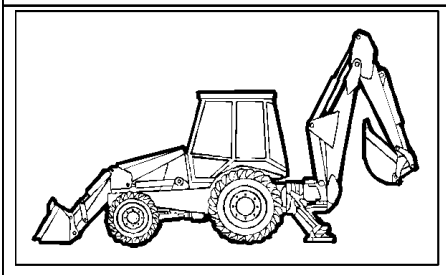

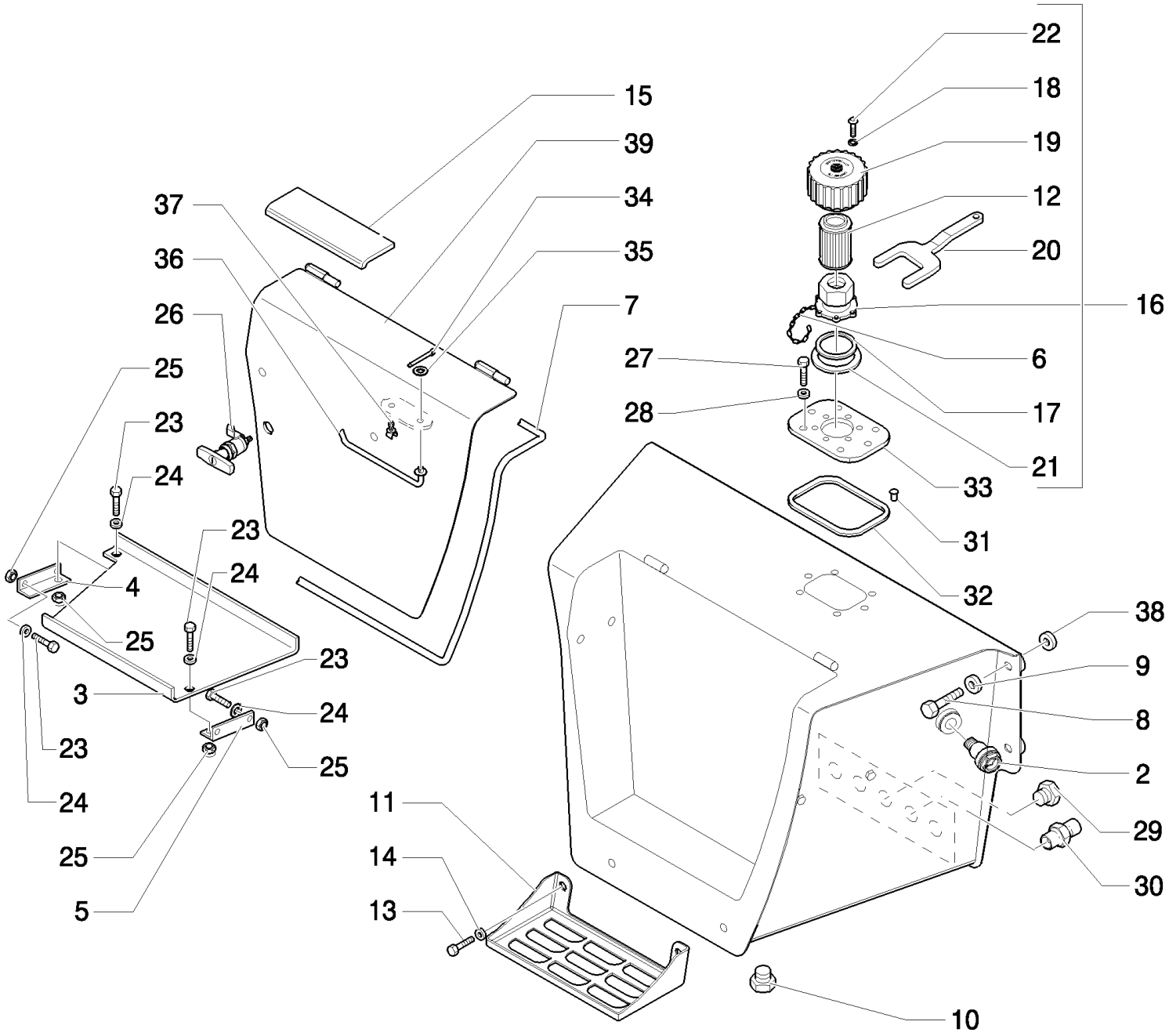

B95LR NA BACKHOE LOADER (1/06-)

1.82.0(01) HYDRAULIC OIL RESERVOIR

Ref	Numero de Pieza	Ctd	Descripción
	87577246	1	TANK, , Includes 2 To 38
2	85801249	1	GAUGE, LEVEL,
3	87407463	1	TRAY,
4	87407464	1	BRACKET,
5	87407465	1	BRACKET, M6x22
6	85813352	1	FLANGE,
7	87417207	1	SEAL, RUBBER,
8	15540721	4	BOLT, Hex, M12 x 1.25 x 45, 8.8, Full Thd,
9	47048976	4	WASHER,
10	47050671	2	PLUG, M33x2
11	85801218	2	PLATE, STEP,
12	87407928	1	FILTER,
13	11112421	4	BOLT, Hex, M12 x 30, 8.8,
14	47048973	4	WASHER,
15	87404910	1	STRIP, ANTI-SKID,
16	87403241	1	CAP, FILLER, ASSY
17	85813351	1	O-RING, 39.35 x 2.62
18	85813354	6	O-RING, 6 x 1.5
19	85813350	1	PLUG,
20	85802580	1	WRENCH, SPECIAL,
21	9969380	1	GASKET,
22	85813353	6	SCREW, M5 x 16
23	47049185	4	SCREW, M10x25
24	47048972	4	WASHER,
25	47049041	4	NUT, M10
26	87574189	1	HANDLE,
27	16043421	6	SCREW, Hex, M8 x 20, 8.8,
28	47048962	6	WASHER, 9x16x1.6
29	85825154	3	PLUG,
30	85825155	1	CONNECTOR, HYD.,
31	85826382	7	NUT, M8
32	85826383	1	GASKET,
33	85828107	1	PLATE,
34	47042074	1	PIN,
35	47044758	1	WASHER,
36	85828017	1	LEVER,
37	72273491	1	CLAMP,
38	87353741	4	SPACER,
39	85828112	1	COVER, , Includes 34, 35, 36, 37

B95LR NA BACKHOE LOADER (1/06-)

1.82.3(01) HYDRAULIC PUMP (35+35-154L/MM)

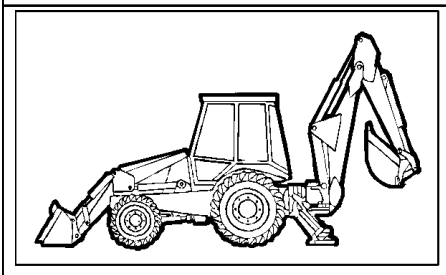

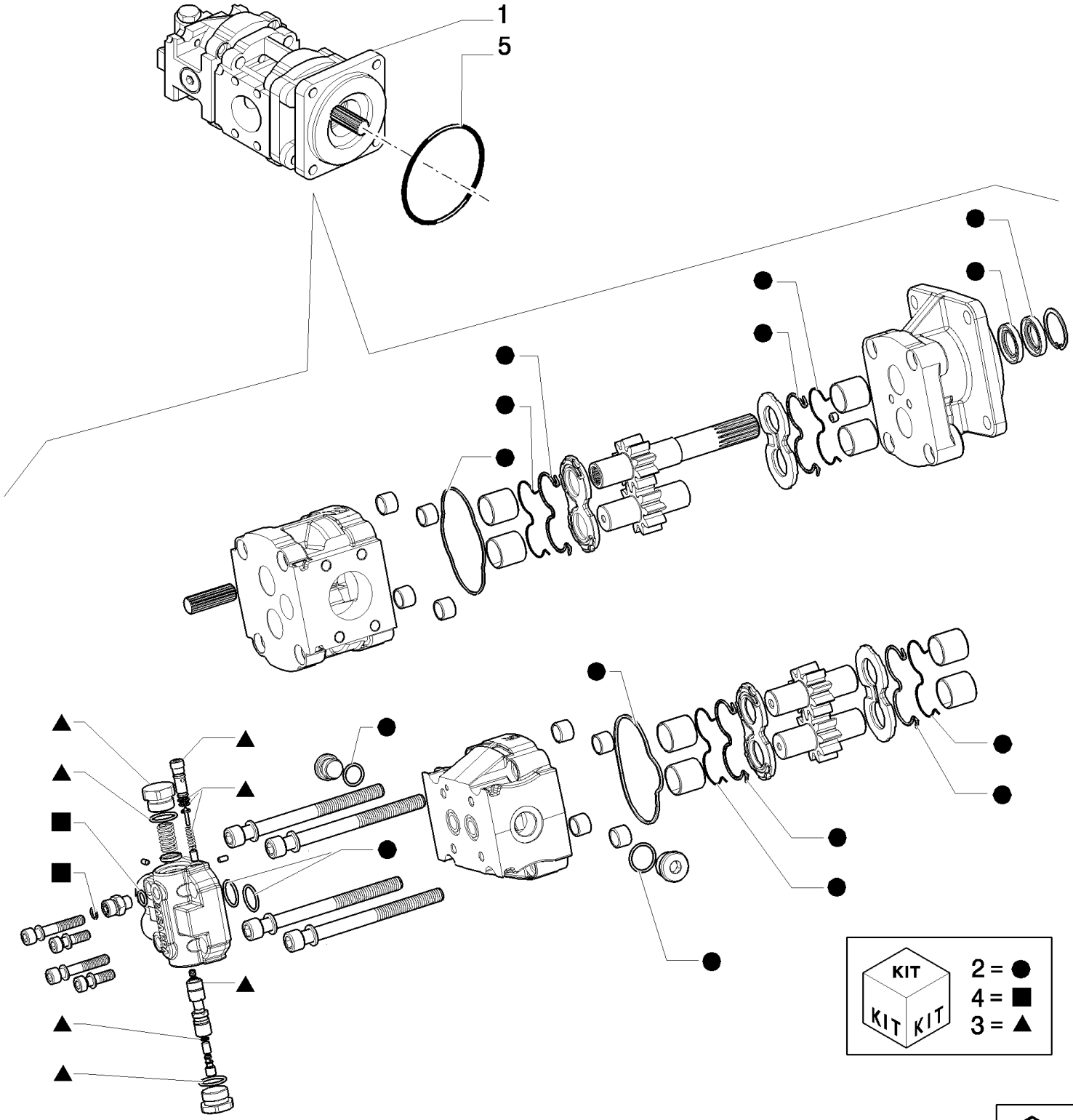

B95LR NA BACKHOE LOADER (1/06-)

1.82.3(01) HYDRAULIC PUMP (35+35-154L/MM)

Ref	Numero de Pieza	Ctd	Descripción
1	85826147	1	PUMP, HYDRAULIC, , UP TO S/N 031056941, Includes 2, 3, 4
1	87362336	1	PUMP, HYDRAULIC, Power Shuttle Models, Includes 2, 3, 4, FROM TO S/N 031056942
2	85813244	1	KIT, SEALS, Seal
3	85819027	1	VALVE, Kit, UP TO S/N 031056941
3	87530241	1	COVER, , FROM S/N 031056942
4	85824196	1	CONNECTOR, HYD.,
5	14466880	1	O-RING, -250, 70 Duro, 4.984" ID x .139" Thk,

B95LR NA BACKHOE LOADER (1/06-)

1.82.3/ 1(01) HYDRAULIC PUMP (40+35-165L/MM)

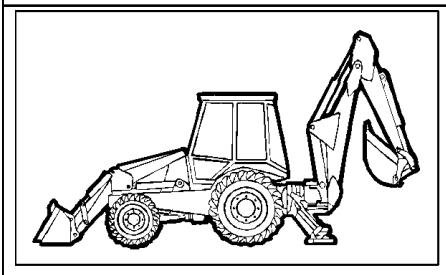

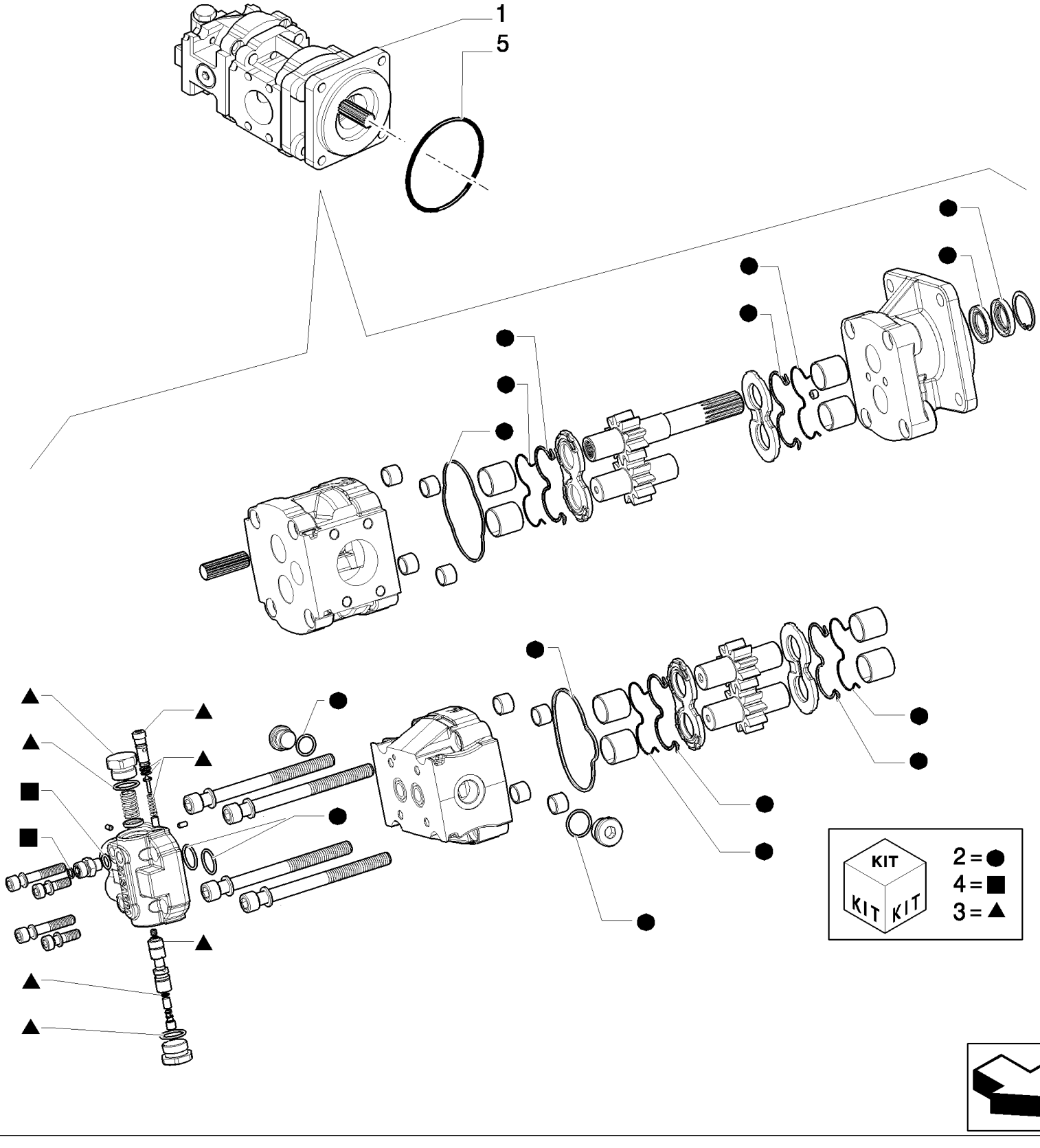

B95LR NA BACKHOE LOADER (1/06-)

1.82.3/ 1(01) HYDRAULIC PUMP (40+35-165L/MM)

Ref	Numero de Pieza	Ctd	Descripción
1	85826148	1	PUMP, HYDRAULIC, , UP TO S/N 031056941, Only for LB90 - B95 - LB110.B - B110, Includes 2, 3, 4
1	85826149	1	PUMP, HYDRAULIC, , Includes 2, 3, 4, Only for LB115.B - B115, UP TO S/N 031056941
1	87362337	1	PUMP, HYDRAULIC, , FROM S/N 031056942, Includes 2, 3, 4, For All Model
2	85813244	1	KIT, SEALS, Seal
3	85819027	1	VALVE, Kit, UP TO S/N 031056941
3	87530241	1	COVER, , FROM S/N 031056942
4	85824196	1	CONNECTOR, HYD.,
5	14466880	1	O-RING, -250, 70 Duro, 4.984" ID x .139" Thk,

1.82.6(01) HYDRAULIC SYSTEM PIPING

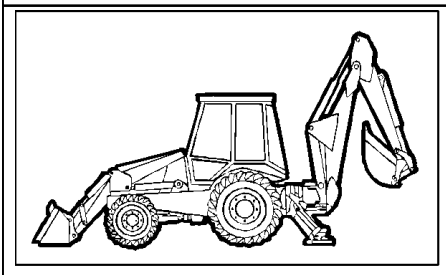

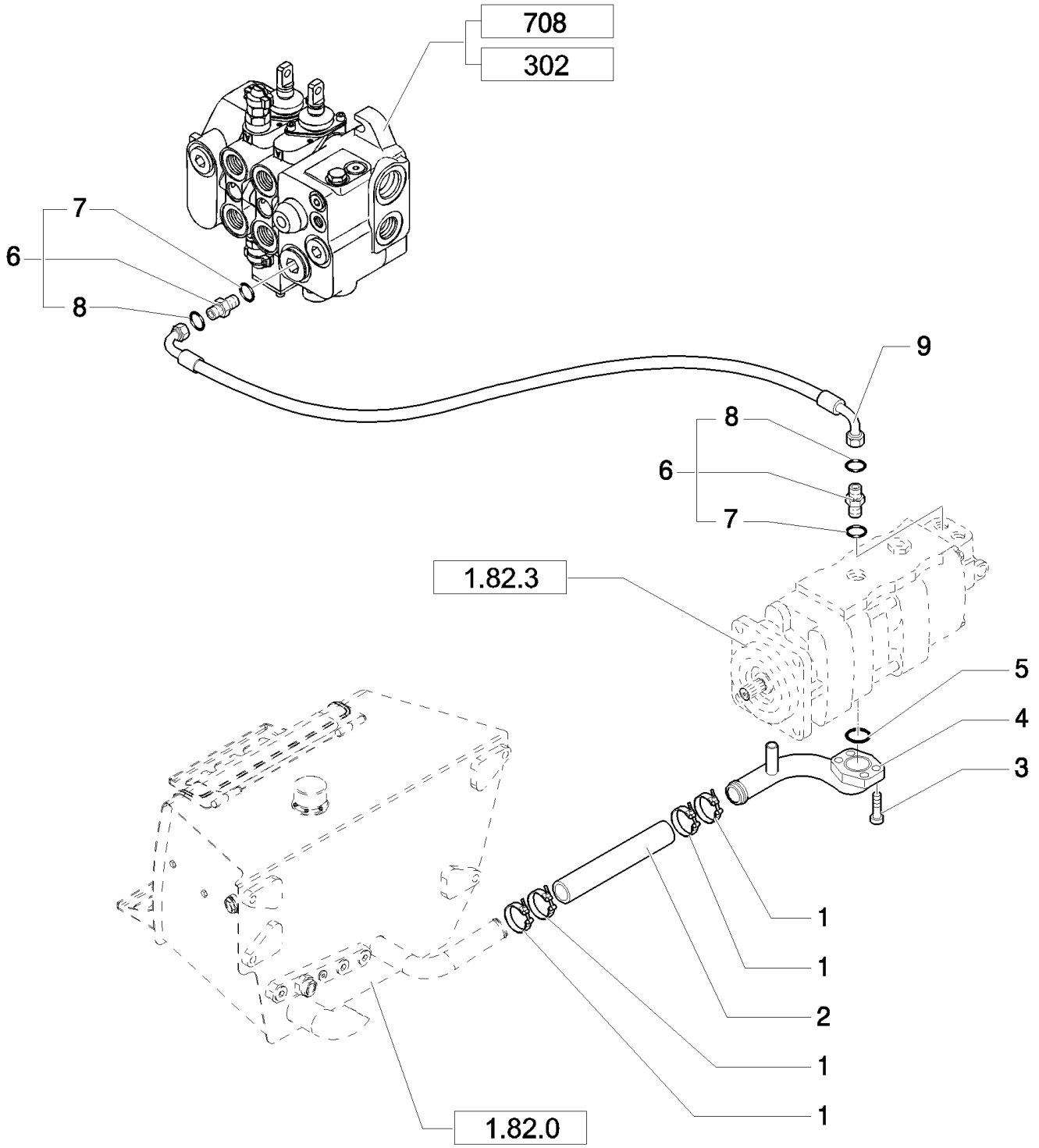

All version except: LB110.B (Center Pivot, Mechanical) and Nord America Mechanical Version

B95LR NA BACKHOE LOADER (1/06-)

1.82.6(01) HYDRAULIC SYSTEM PIPING

Ref	Numero de Pieza	Ctd	Descripción
1	85803012	4	CLAMP, HOSE,
2	85811870	1	HOSE,
3	14422021	3	SCREW, Hex Soc Hd, M12 x 30, 8.8,
4	85827041	1	TUBE,
5	14464680	1	O-RING, -228, 70 Duro, 2.234" ID x .139" Thk,
6	390937S36	2	CONNECTOR, HYD., 1-3/16"-12 ORS x 1-1/16"-12 SAE O-Ring, , Includes 7, 8
7	167266	2	O-RING, 12-1, 90 Duro, .924 ID x .116" Thk,
8	9991976	2	O-RING, -018, 90 Duro, .739" ID x .070" Thk,
9	87360332	1	HOSE, FLEXIBLE,

All version except: LB110.B (Center Pivot, Mechanical) and Nord America Mechanical Version

1.82.6(01A) FRONT HYDRAULIC PUMP INTAKE & OUTLET HOSES (CENTER PIVOT)

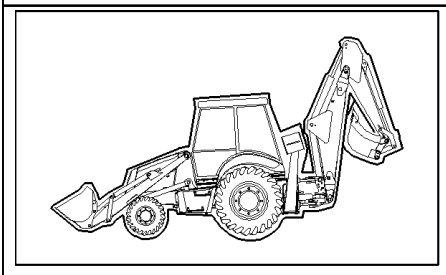

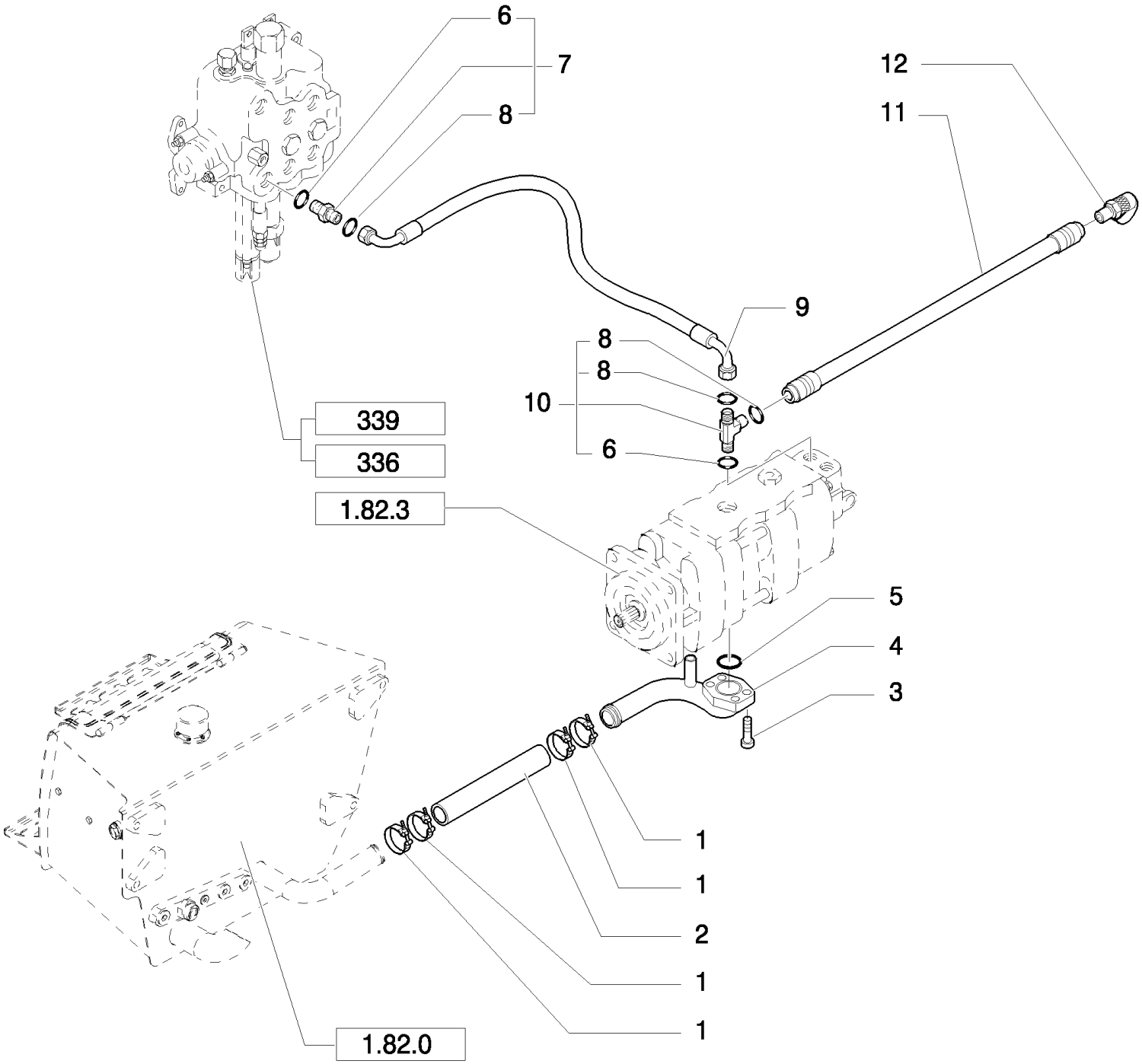

B95LR NA BACKHOE LOADER (1/06-)

1.82.6(01A) FRONT HYDRAULIC PUMP INTAKE & OUTLET HOSES (CENTER PIVOT)

Ref	Numero de Pieza	Ctd	Descripción
1	85803012	4	CLAMP, HOSE,
2	85811870	1	HOSE,
3	14422021	3	SCREW, Hex Soc Hd, M12 x 30, 8.8,
4	85827041	1	TUBE,
5	14464680	1	O-RING, -228, 70 Duro, 2.234" ID x .139" Thk,
6	167266	2	O-RING, 12-1, 90 Duro, .924 ID x .116" Thk,
7	390937S36	1	CONNECTOR, HYD., 1-3/16"-12 ORS x 1-1/16"-12 SAE O-Ring, , Includes 6, 8
8	9991976	3	O-RING, -018, 90 Duro, .739" ID x .070" Thk,
9	85824378	1	HOSE, FLEXIBLE,
10	85815581	1	TEE, , Includes 6, 8
11	85815568	1	HOSE, FLEXIBLE,
12	85817596	1	COUPLING, QUICK, MALE,

Mechanical Version

1.82.6(02) HYDRAULIC SYSTEM PIPING

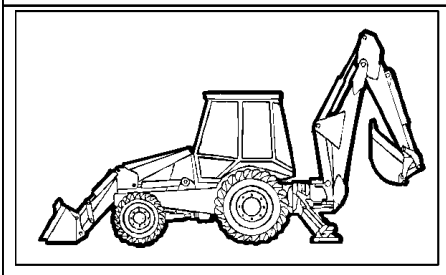

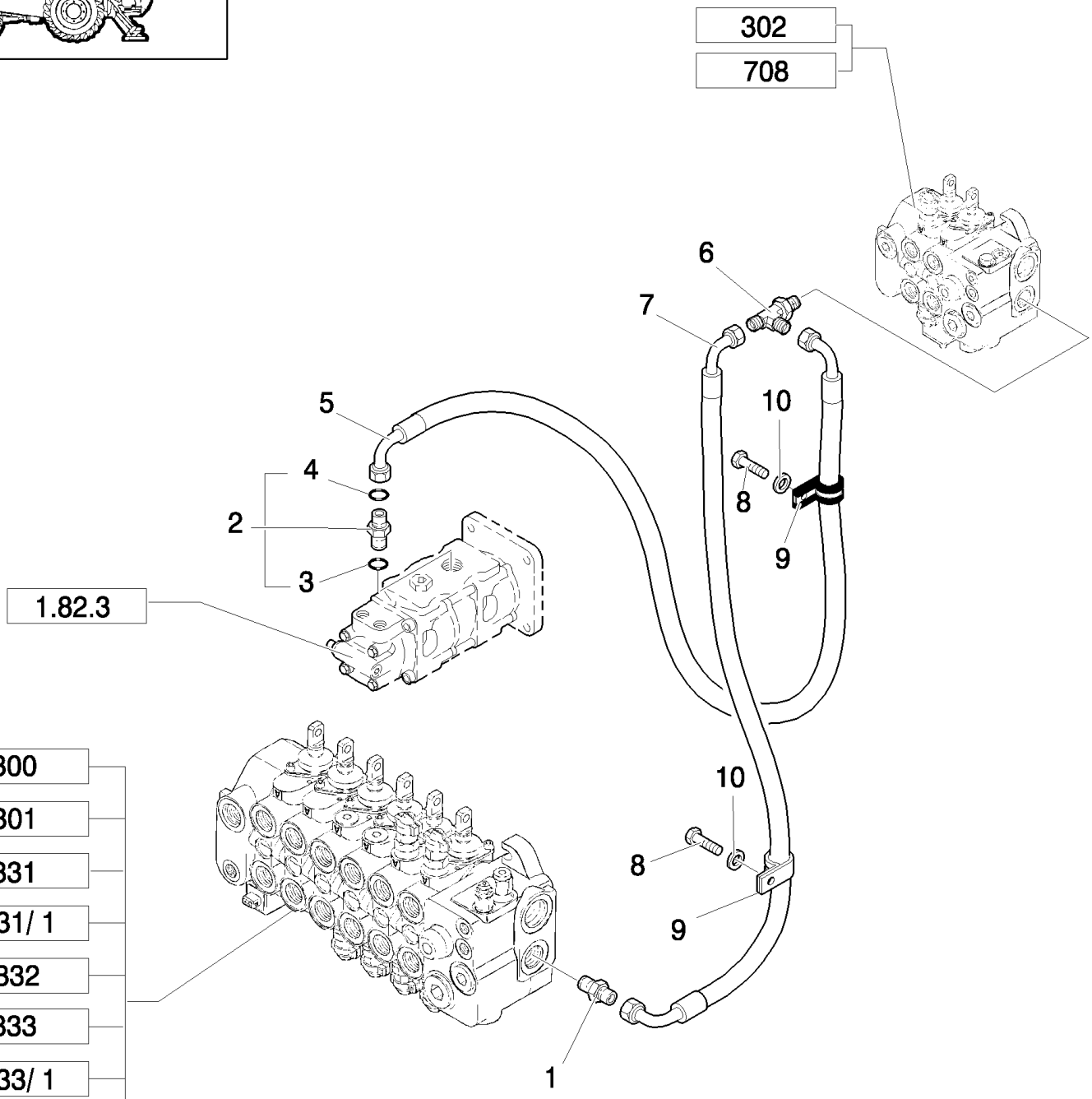

All version except: LB110.B (Center Pivot, Mechanical) and Nord America Mechanical Version

B95LR NA BACKHOE LOADER (1/06-)

1.82.6(02) HYDRAULIC SYSTEM PIPING

Ref	Numero de Pieza	Ctd	Descripción
1	85803486	1	CONNECTOR, HYD.,
2	83963000	1	CONNECTOR, HYD., , Includes 3, 4
3	167269	1	O-RING, 10-1, 90 Duro, .755" ID x .097" Thk,
4	83901443	1	O-RING,
5	87360331	1	HOSE, FLEXIBLE,
6	85805838	1	CONNECTION, 3 WAY, , Only for Mechanical Version
6	85826093	1	TEE, , Only for Pilot Version
7	87516888	1	HOSE, FLEXIBLE, L=MM.1080
8	15541621	2	BOLT, Hex, M12 x 1.25 x 100, 8.8,
9	85802890	2	CLAMP,
10	11190779	2	WASHER, SPRING, Belleville, M13,

All version except: LB110.B (Center Pivot, Mechanical) and Nord America Mechanical Version

1.82.6(02A) REAR HYDRAULIC PUMP STABILIZER, LOADER & BACKHOE VALVE HOSES (CENTER PIVOT)

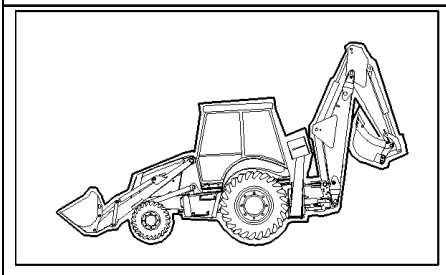

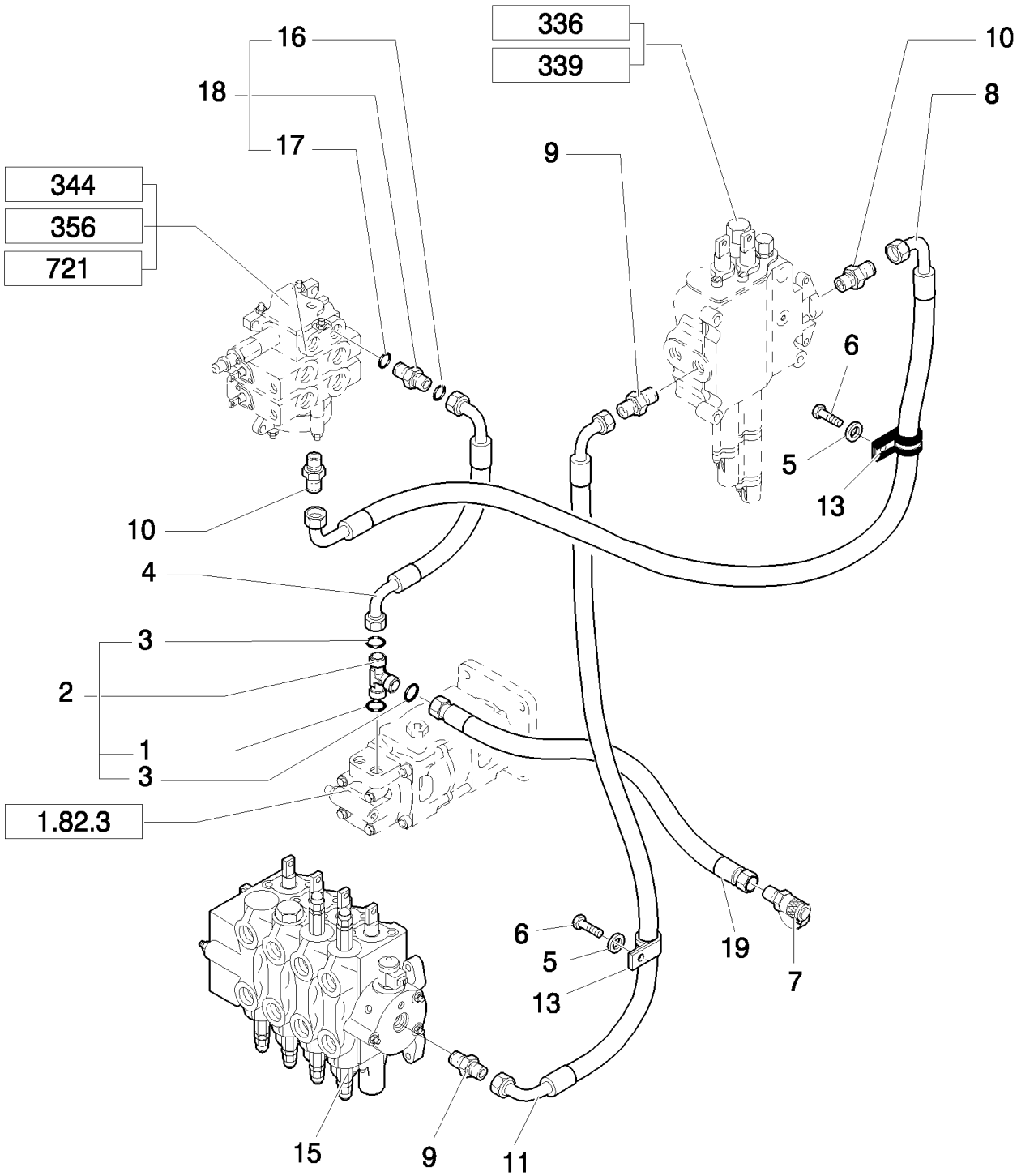

B95LR NA BACKHOE LOADER (1/06-)

1.82.6(02A) REAR HYDRAULIC PUMP STABILIZER, LOADER & BACKHOE VALVE HOSES (CENTER PIVOT)

Ref	Numero de Pieza	Ctd	Descripción
1	167269	1	O-RING, 10-1, 90 Duro, .755" ID x .097" Thk,
2	85815580	1	CONNECTOR, HYD., , Includes 1, 3
3	9992069	2	O-RING, -016, 90 Duro, .614" ID x .070" Thk,
4	85825187	1	HOSE, FLEXIBLE,
5	11190779	2	WASHER, SPRING, Belleville, M13,
6	15541621	2	BOLT, Hex, M12 x 1.25 x 100, 8.8,
7	85817596	1	COUPLING, QUICK, MALE,
8	85812161	1	HOSE, FLEXIBLE, 1250mm lg,
9	85802958	2	CONNECTOR, HYD.,
10	85802642	2	CONNECTOR, HYD., 1-3/16"-12 ORS x 7/8"-14 SAE O-Ring
11	85802776	1	HOSE, FLEXIBLE, 1150mm lg,
13	85802890	2	CLAMP,
15	85827100	1	VALVE, CONTROL,
16	167269	1	O-RING, 10-1, 90 Duro, .755" ID x .097" Thk,
17	9992069	1	O-RING, -016, 90 Duro, .614" ID x .070" Thk,
18	83963000	1	CONNECTOR, HYD., , Includes 16, 17
19	85815567	1	HOSE, FLEXIBLE,

Mechanical Version

1.82.6(03) HYDRAULIC SYSTEM PIPING

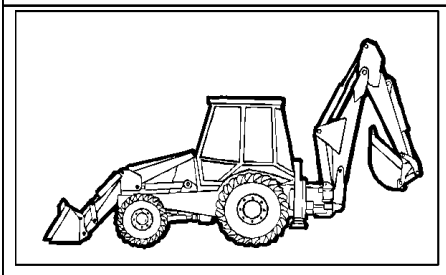

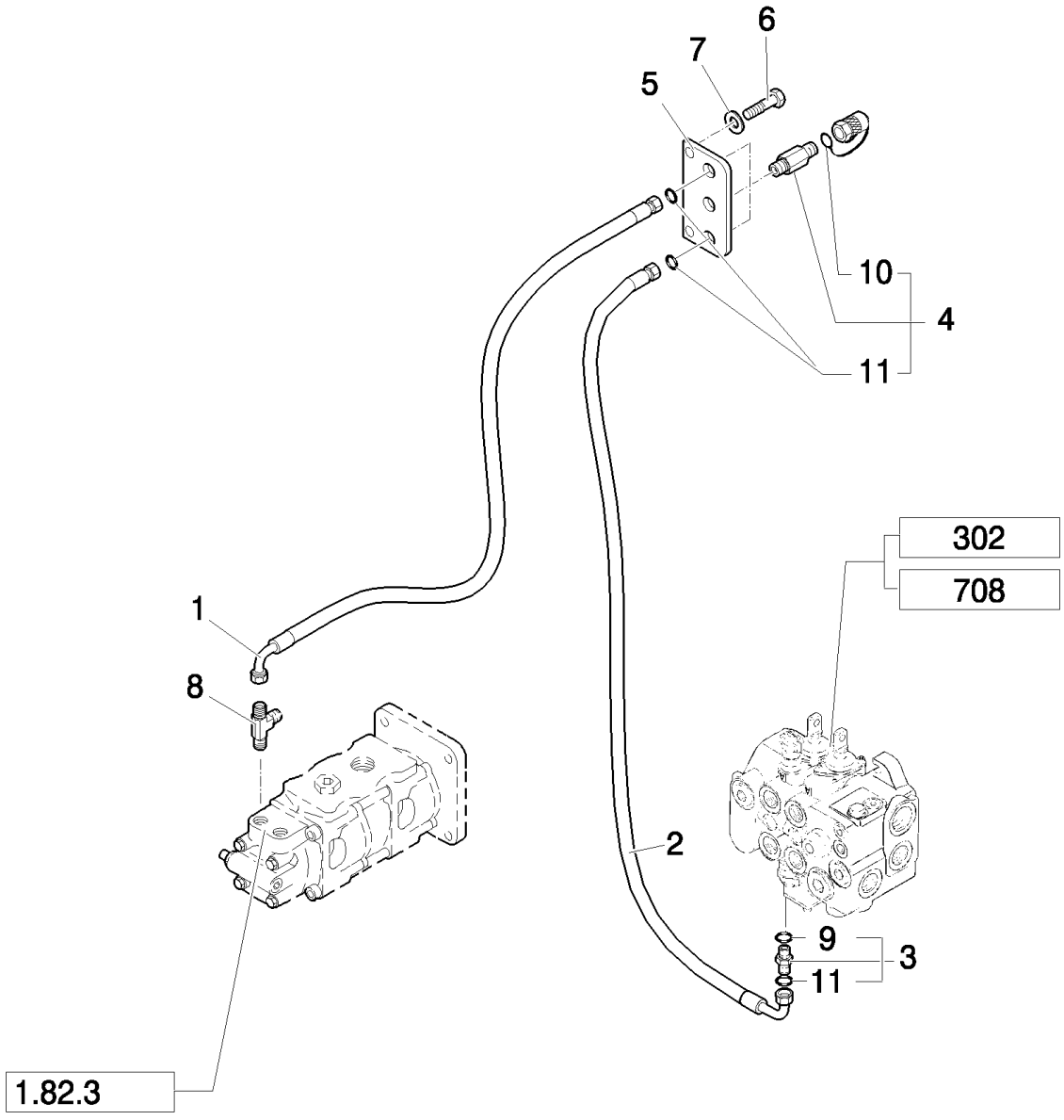

All version except: LB110.B (Center Pivot, Mechanical) and Nord America Mechanical Version

B95LR NA BACKHOE LOADER (1/06-)

1.82.6(03) HYDRAULIC SYSTEM PIPING

Ref	Numero de Pieza	Ctd	Descripción
1	85812171	1	HOSE, FLEXIBLE, 1450mm lg,
2	85812173	1	HOSE, FLEXIBLE,
3	83963371	1	CONNECTOR, HYD., , Includes 9, 11
4	85817226	2	COUPLING, QUICK, MALE, , Includes 10, 11
5	85802846	1	PLATE,
6	16043221	2	SCREW, Hex, M8 x 16, 8.8,
7	12647121	2	WASHER, M8 x 20 x 3,
8	85805502	1	TEE,
9	81845037	1	O-RING,
10	9968791	2	PLUG,
11	81844851	3	O-RING, 90 Duro, .375" ID x .070" Thk

All version except: LB110.B (Center Pivot, Mechanical) and Nord America Mechanical Version

1.82.6(03A) HYDRAULIC SYSTEM PIPING(CENTER PIVOT)

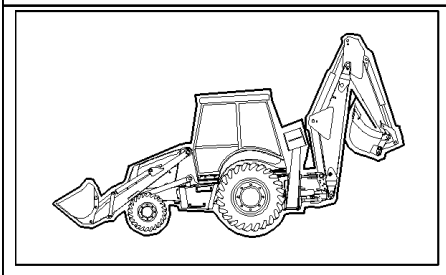

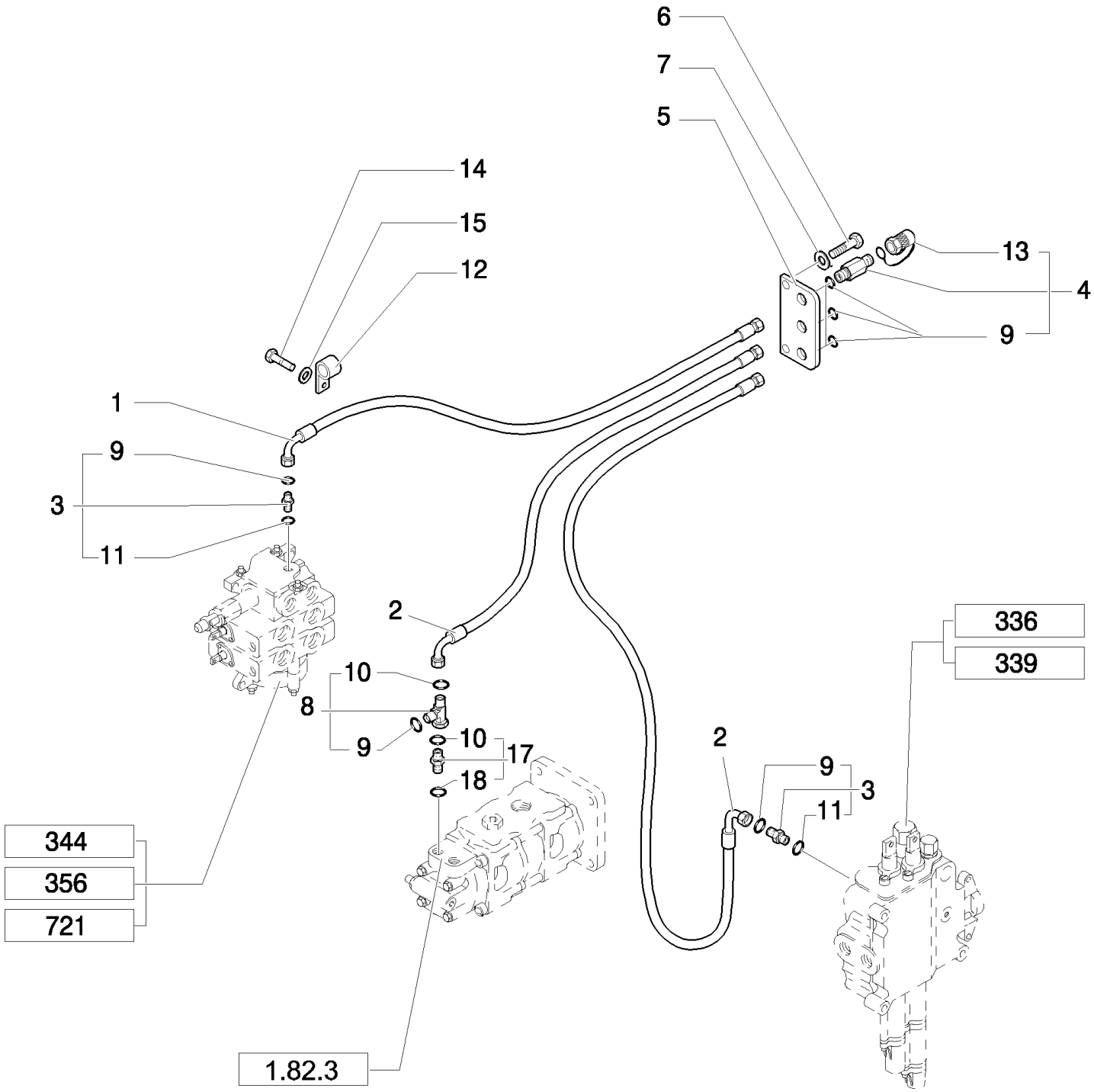

B95LR NA BACKHOE LOADER (1/06-)

1.82.6(03A) HYDRAULIC SYSTEM PIPING(CENTER PIVOT)

Ref	Numero de Pieza	Ctd	Descripción
1	85812170	1	HOSE, FLEXIBLE, 1250mm lg,
2	85812171	2	HOSE, FLEXIBLE, 1450mm lg,
3	83963371	2	CONNECTOR, HYD., , Includes 11,12
4	85817226	3	COUPLING, QUICK, MALE, , Includes 9, 13
5	85802846	1	PLATE,
6	16043221	2	SCREW, Hex, M8 x 16, 8.8,
7	12647121	2	WASHER, M8 x 20 x 3,
8	85815582	1	TEE, , Includes 9, 10
9	81845037	5	O-RING, 90 Duro, .468" ID x .078" Thk
10	89992298	1	O-RING,
11	81844851	5	O-RING, 90 Duro, .375" ID x .070" Thk
12	85802890	2	CLAMP,
13	9968791	3	PLUG,
14	15540821	2	BOLT, Hex, M12 x 1.25 x 50, 8.8,
15	11190779	2	WASHER, SPRING, Belleville, M13,
17	83963374	1	CONNECTOR, HYD., , Includes 10, 18
18	80128825	2	O-RING,

Mechanical Version

B95LR NA BACKHOE LOADER (1/06-)

1.82.6(04) HYDRAULIC SYSTEM PIPING

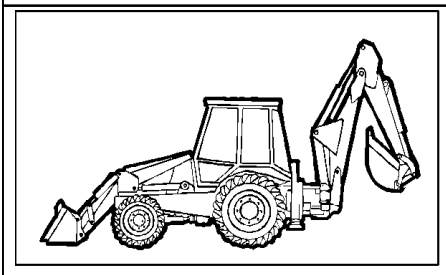

All version except: LB110.B (Center Pivot, Mechanical) and Nord America Mechanical Version

B95LR NA BACKHOE LOADER (1/06-)

1.82.6(04) HYDRAULIC SYSTEM PIPING

Ref	Numero de Pieza	Ctd	Descripción
1	390954S36	3	CONNECTOR, HYD., 1 7/16"-12 ORFS x 1 5/16"-12 ORB, , FROM S/N 031059911, Includes 2, 3
2	167268	3	O-RING, 16-1, 90 Duro, 1.171" ID x .116" Thk,
3	9824050	3	O-RING, -021, 90 Duro, .926" ID x .070" Thk,
4	85818909	1	HOSE, FLEXIBLE,
5	85805167	1	HOSE, FLEXIBLE, , Mechanical Control Version Europe
5	85827823	1	HOSE, FLEXIBLE, , Only for Pilot Control Version Europe an NA version
6	85802955	1	PLUG,
7	85805168	1	CONNECTOR, HYD.,
8	85805166	1	BLOCK,
9	11190779	2	WASHER, SPRING, Belleville, M13, 12x24x2.8
10	15541621	2	BOLT, Hex, M12 x 1.25 x 100, 8.8,
11	390951S36	2	CONNECTOR, HYD., , Includes 14, 15
12	85812174	1	HOSE, FLEXIBLE,
13	79072960	1	STRAP, CABLE,
14	81844851	2	O-RING, 90 Duro, .375" ID x .070" Thk
15	81845037	2	O-RING, 90 Duro, .468" ID x .078" Thk
16	83962179	1	ELBOW, 90°, Only for NA Pilot Control Version

All version except: LB110.B (Center Pivot, Mechanical) and Nord America Mechanical Version

1.82.6(04A) RETURN MANIFOLD HOSES

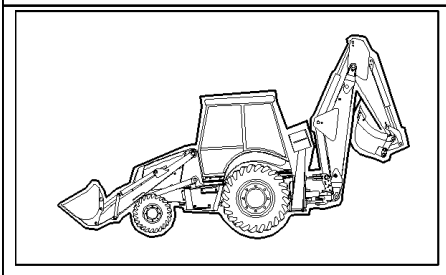

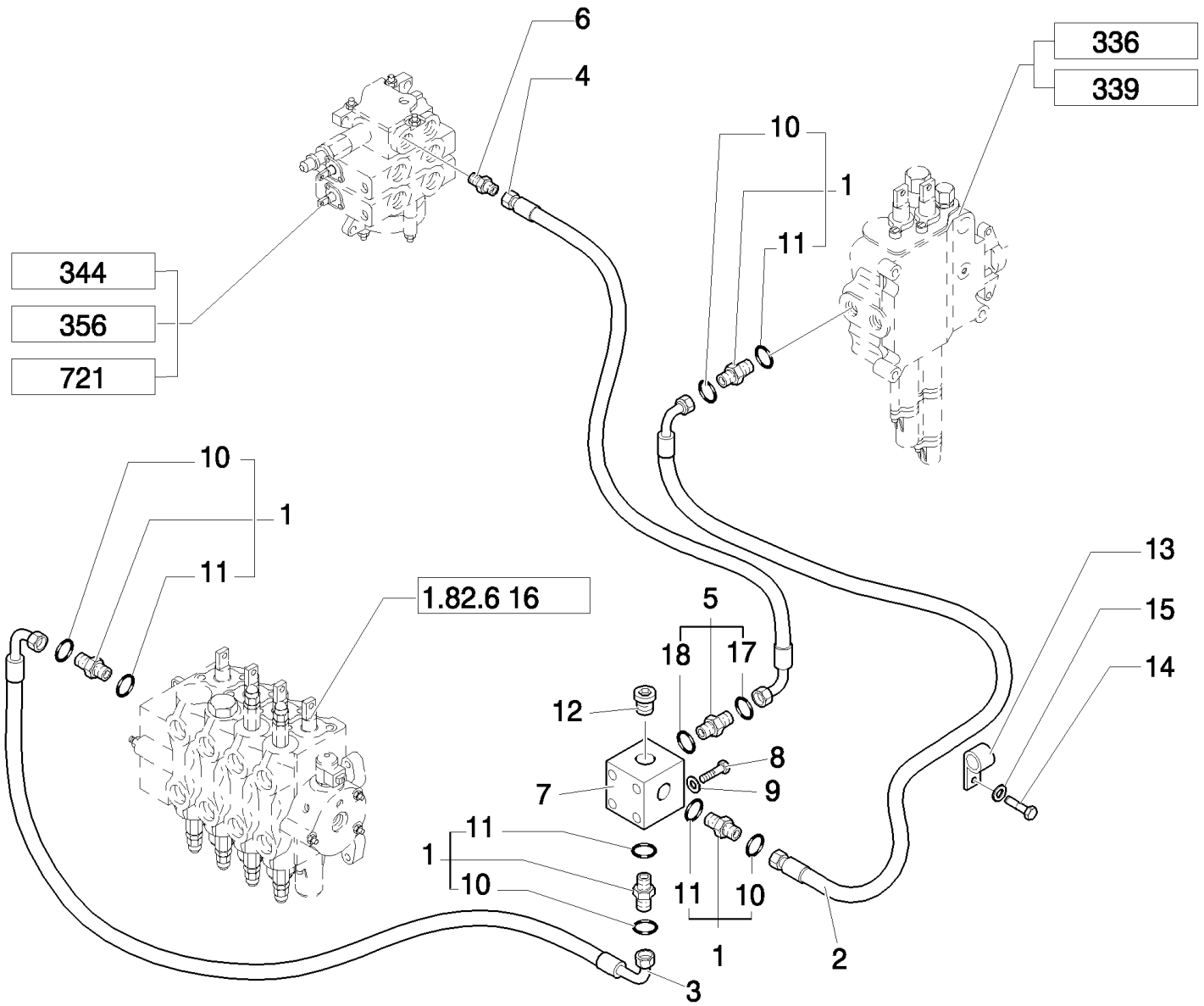

B95LR NA BACKHOE LOADER (1/06-)

1.82.6(04A) RETURN MANIFOLD HOSES

Ref	Numero de Pieza	Ctd	Descripción
1	390954S36	4	CONNECTOR, HYD., 1 7/16"-12 ORFS x 1 5/16"-12 ORB, , Includes 10, 11
2	85802777	1	HOSE, FLEXIBLE, 1100mm lg,
3	87574479	1	HOSE,
4	85802838	1	HOSE, FLEXIBLE, 700mm lg,
5	390937S36	1	CONNECTOR, HYD., 1-3/16"-12 ORS x 1-1/16"-12 SAE O-Ring, , Includes 17, 18
6	85802642	1	CONNECTOR, HYD., 1-3/16"-12 ORS x 7/8"-14 SAE O-Ring
7	85802799	1	BLOCK, CONNECTING,
8	15541621	2	BOLT, Hex, M12 x 1.25 x 100, 8.8,
9	11190779	2	WASHER, SPRING, Belleville, M13,
10	9824050	4	O-RING, -021, 90 Duro, .926" ID x .070" Thk,
11	167268	4	O-RING, 16-1, 90 Duro, 1.171" ID x .116" Thk,
12	85802955	1	PLUG,
13	85802890	1	CLAMP,
14	15540821	1	BOLT, Hex, M12 x 1.25 x 50, 8.8,
15	12646921	1	WASHER, M12 x 28 x 3,
17	9991976	1	O-RING, -018, 90 Duro, .739" ID x .070" Thk,
18	167266	1	O-RING, 12-1, 90 Duro, .924 ID x .116" Thk,

Mechanical Version

1.82.6(05) HYDRAULIC SYSTEM PIPING

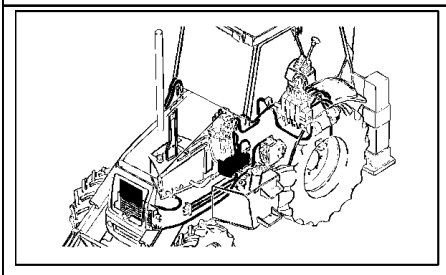

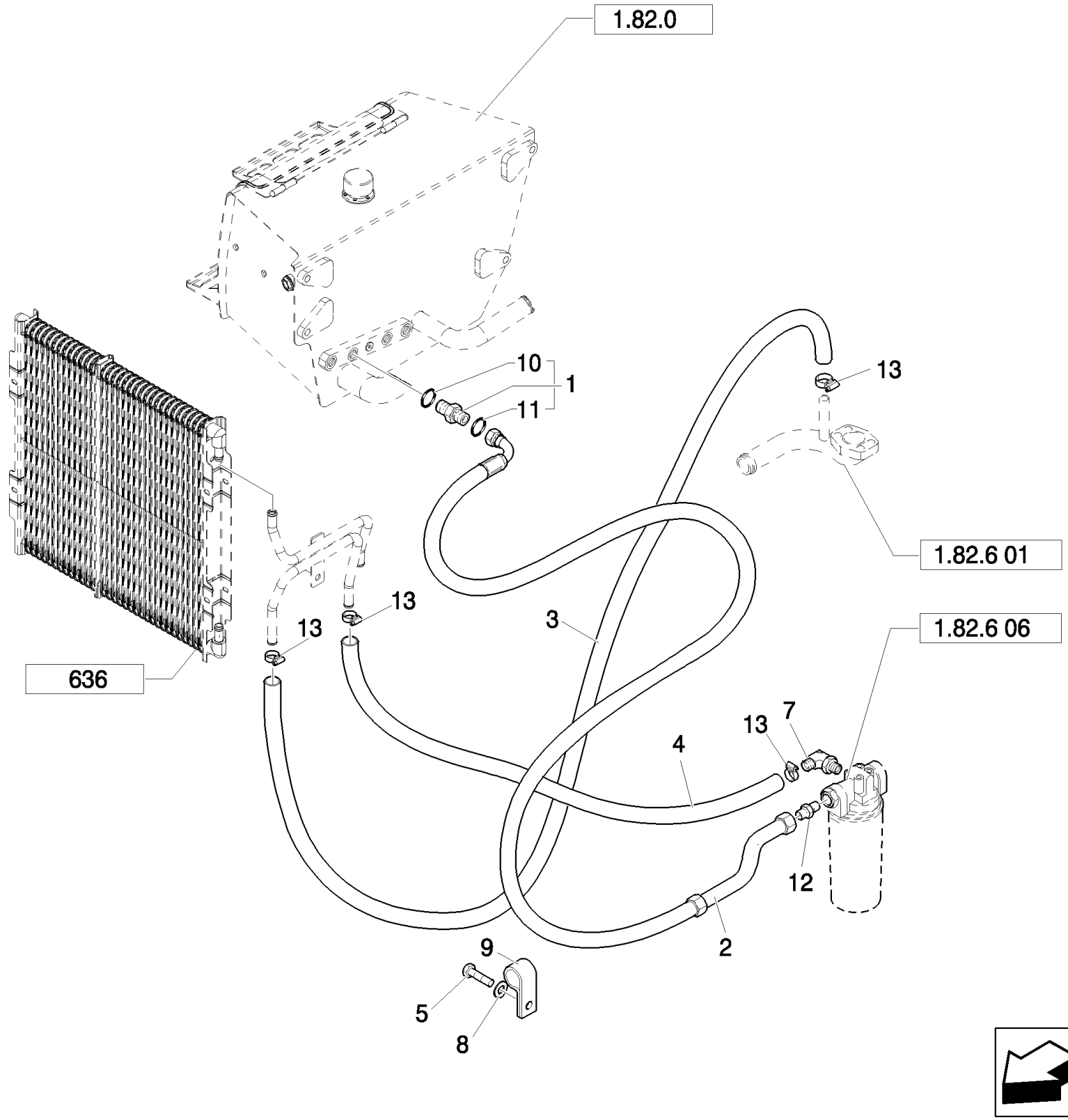

B95LR NA BACKHOE LOADER (1/06-)

1.82.6(05) HYDRAULIC SYSTEM PIPING

Ref	Numero de Pieza	Ctd	Descripción
1	85802801	1	CONNECTOR, HYD., 1-11/16"-12 ORS x 1-5/16"-12 SAE O-ring, Includes 10, 11
2	85827824	1	HOSE, FLEXIBLE,
3	87326810	1	HOSE, FLEXIBLE, , Only for POWER SHIFT
3	87326809	1	HOSE, FLEXIBLE, , Only for POWER SHUTTLE
4	87326808	1	HOSE, FLEXIBLE,
5	47042364	1	BOLT, M12x25
7	85824060	1	ELBOW,
8	47048964	1	WASHER,
9	47048664	1	CLAMP,
10	80167268	1	O-RING,
11	89824051	1	O-RING,
12	85802960	1	CONNECTOR, HYD.,
13	87314076	4	COLLAR,

1.82.6(06A) FILTER ASSEMBLY & HOSE TO RETURN MANIFOLD (CENTER PIVOT)

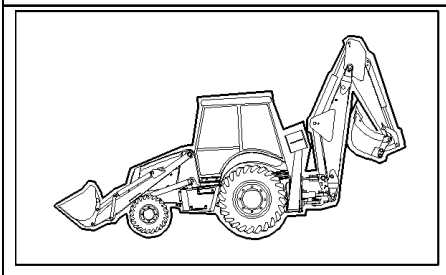

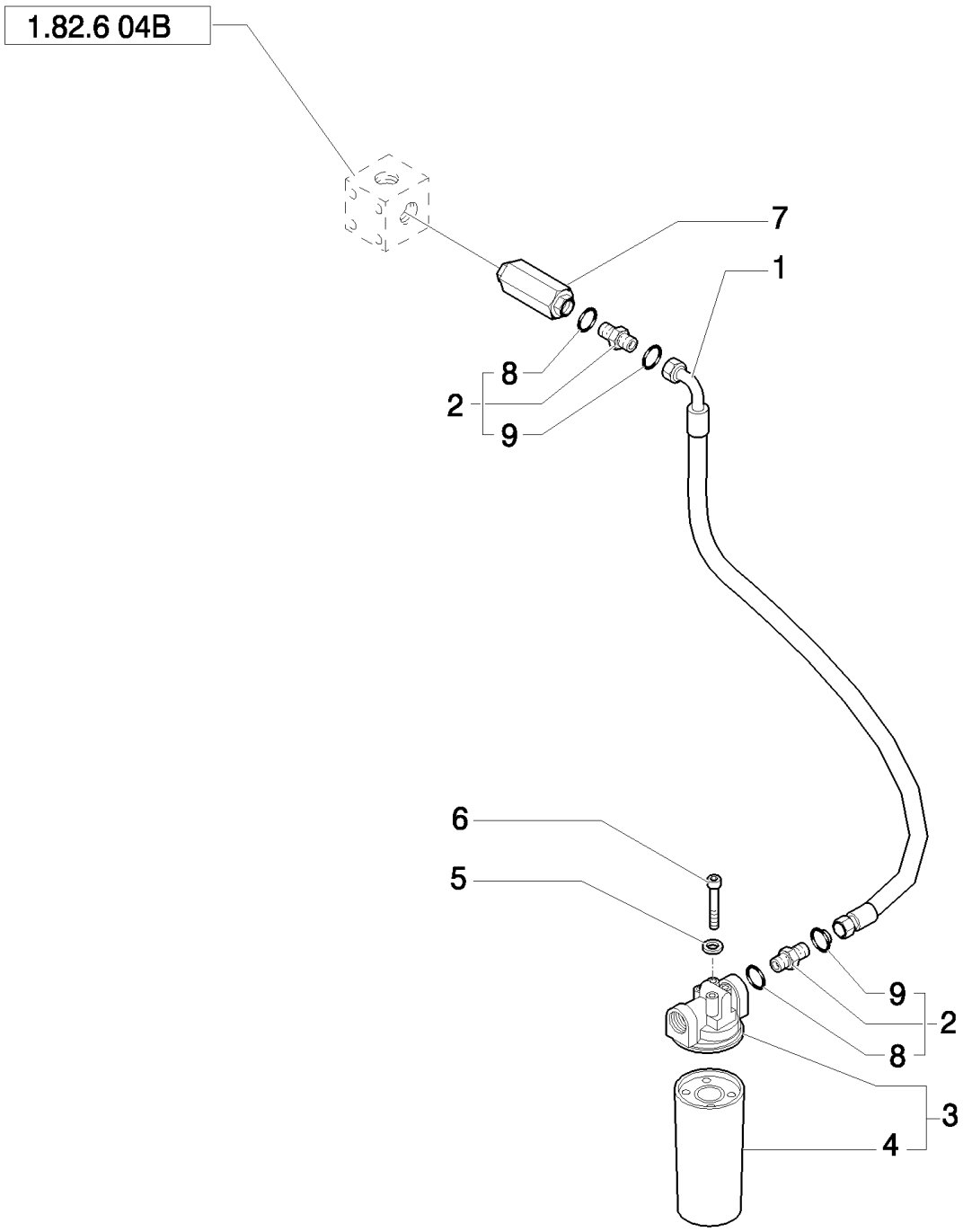

B95LR NA BACKHOE LOADER (1/06-)

1.82.6(06A) FILTER ASSEMBLY & HOSE TO RETURN MANIFOLD (CENTER PIVOT)

Ref	Numero de Pieza	Ctd	Descripción
1	85805840	1	HOSE, FLEXIBLE, , FROM S/N 031059911
1	87414983	1	HOSE, FLEXIBLE, , Only for NA Pilot Control Version
2	85802801	2	CONNECTOR, HYD., , Includes 8, 9
3	87315438	1	FILTER ASSY, , Includes 4
4	86989733	1	FILTER, HYDRAULIC OIL,
5	11190579	4	WASHER, SPRING, Belleville, M10.5,
6	11106221	4	BOLT, Hex, M10 x 25, 8.8, Full Thd,
7	85805824	1	VALVE, CHECK,
8	80167268	2	O-RING,
9	89824051	2	O-RING,

B95LR NA BACKHOE LOADER (1/06-)

1.82.6(07) HYDRAULIC SYSTEM PIPING

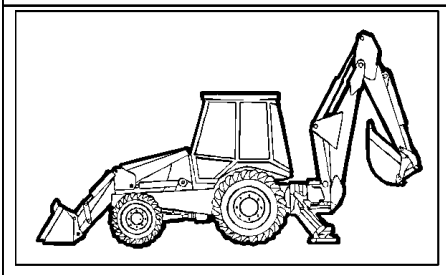

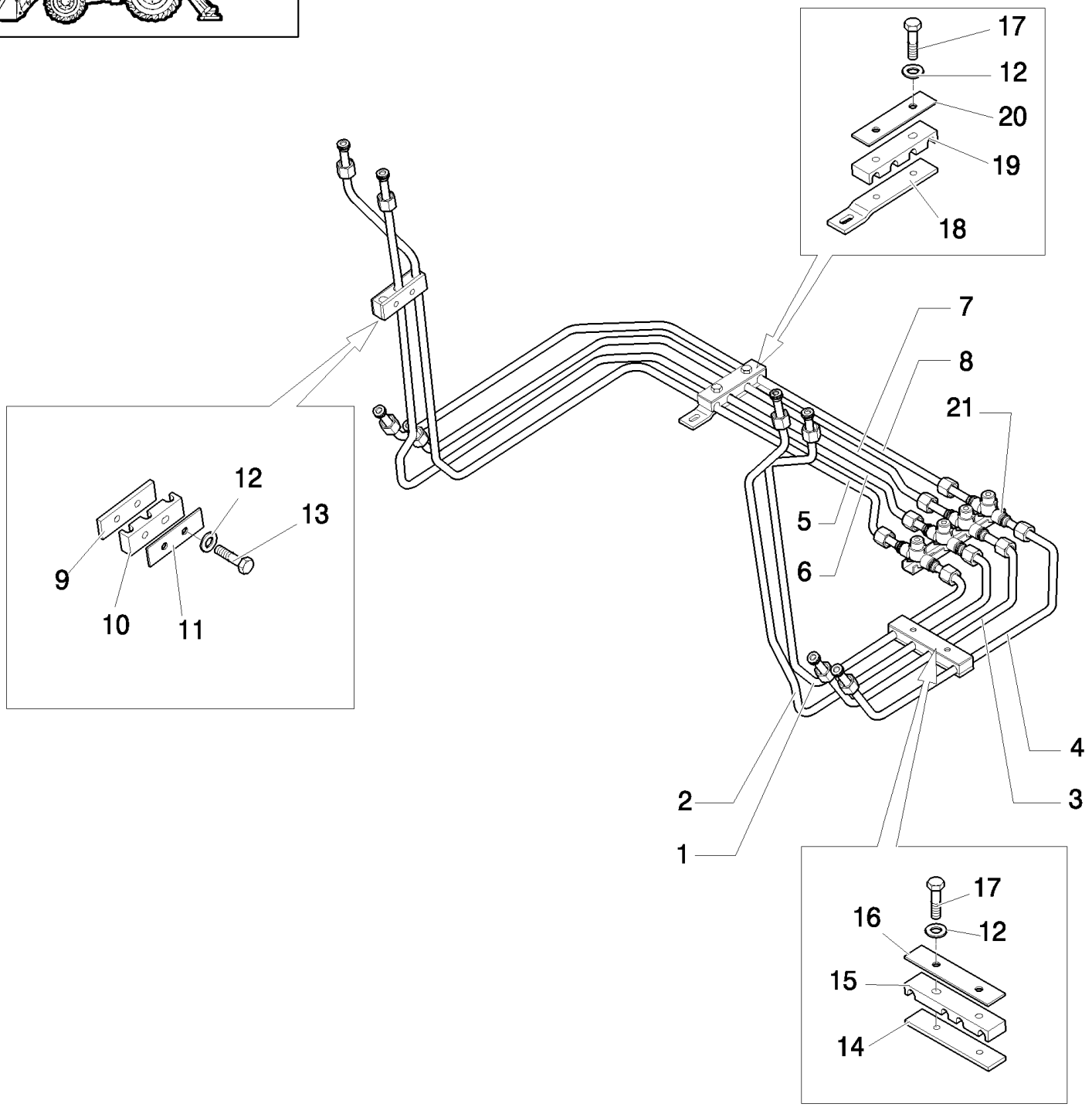

B95LR NA BACKHOE LOADER (1/06-)

1.82.6(07) HYDRAULIC SYSTEM PIPING

Ref	Numero de Pieza	Ctd	Descripción
1	85805854	1	TUBE, HYD, LH
2	85805855	1	TUBE, HYD, LH
3	85805858	1	TUBE, HYD, LH
4	85805859	1	TUBE, HYD, LH
5	85805856	1	TUBE, HYD, RH
6	85805857	1	TUBE, HYD, RH
7	85805860	1	TUBE, HYD, RH
8	85805861	1	TUBE, HYD, RH
9	85805870	2	PLATE,
10	85805872	2	CLAMP,
11	85805869	2	PLATE,
12	11193979	8	WASHER, SPRING, Belleville, M8.4,
13	16043621	2	BOLT, Hex, M8 x 25, 8.8,
14	85805210	2	PLATE,
15	85805211	2	CLAMP,
16	85805209	2	PLATE,
17	16043821	6	BOLT, Hex, M8 x 30, 8.8,
18	85805206	1	BRACKET,
19	85805208	1	CLAMP,
20	85805207	1	PLATE,
21	85805203	1	MANIFOLD,

1.82.6(08) HYDRAULIC SYSTEM PIPING

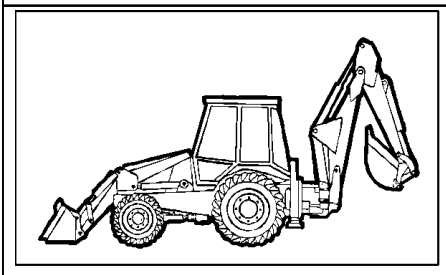

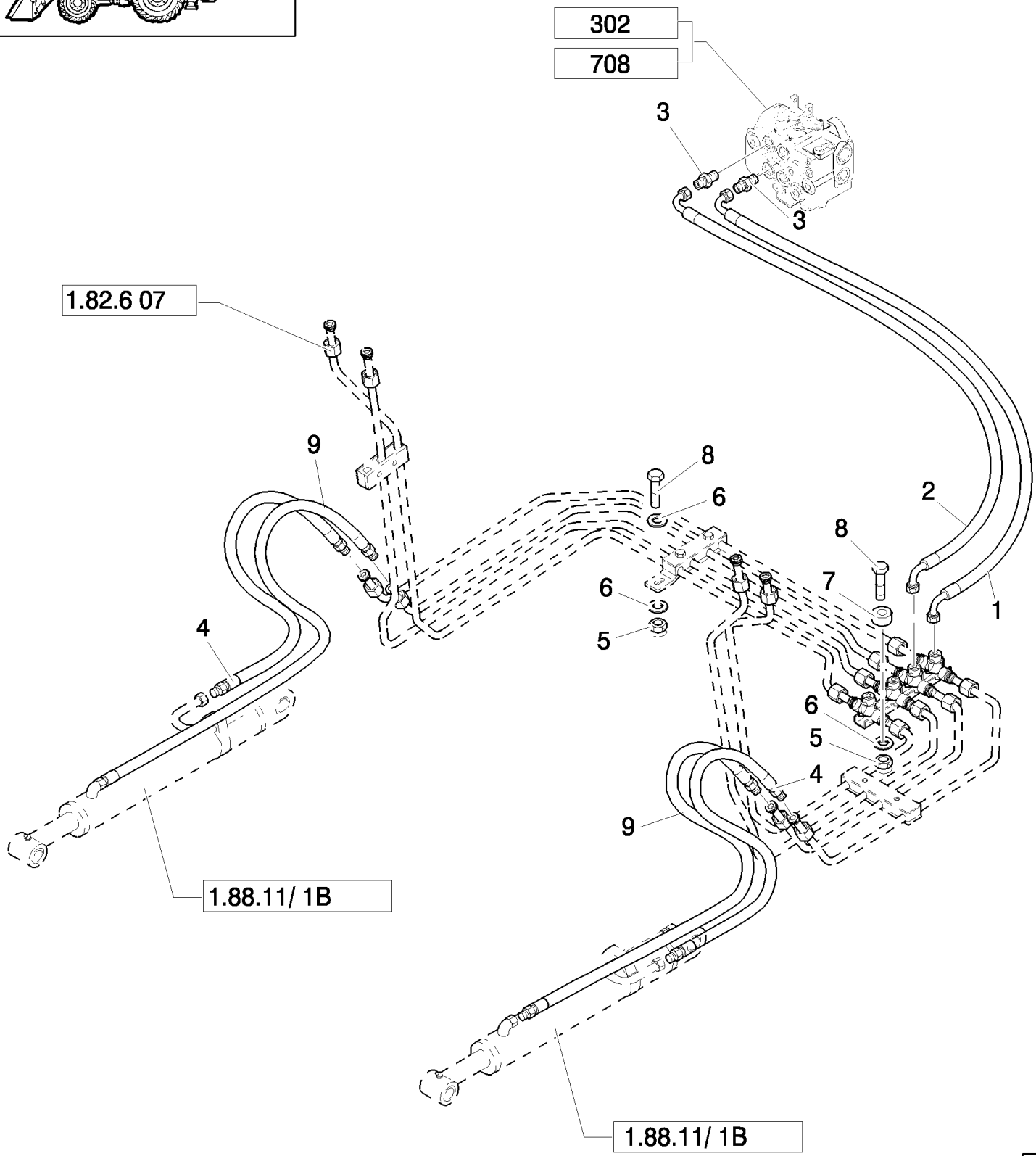

All version except: LB110.B (Center Pivot, Mechanical) and Nord America Mechanical Version

B95LR NA BACKHOE LOADER (1/06-)

1.82.6(08) HYDRAULIC SYSTEM PIPING

Ref	Numero de Pieza	Ctd	Descripción
1	85826087	1	HOSE, FLEXIBLE,
2	85826089	1	HOSE, FLEXIBLE,
3	390938S36	2	CONNECTOR, HYD., 1-1/16-12 ORB x 1-14 ORFS; Incl. 167266, 9992069 O-Rings
4	85813363	2	HOSE, FLEXIBLE, 550mm lg,
5	14048211	2	NUT, LOCK, M8 x 1.25, Cl 8,
6	12647121	3	WASHER, M8 x 20 x 3,
7	85802891	2	SPACER,
8	16044021	2	BOLT, Hex, M8 x 40, 8.8,
9	85813380	2	HOSE, FLEXIBLE,

All version except: LB110.B (Center Pivot, Mechanical) and Nord America Mechanical Version

1.82.6(08A) LOADER LIFT CYLINDER HOSES (CENTER PIVOT)

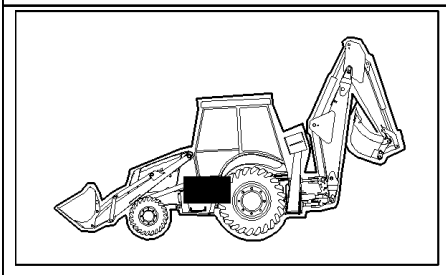

B95LR NA BACKHOE LOADER (1/06-)

1.82.6(08A) LOADER LIFT CYLINDER HOSES (CENTER PIVOT)

Ref	Numero de Pieza	Ctd	Descripción
1	85812186	1	HOSE, FLEXIBLE, 620mm lg,
2	85812185	1	HOSE, FLEXIBLE, 660mm lg,
3	9992069	2	O-RING, -016, 90 Duro, .614" ID x .070" Thk,
4	83963000	2	CONNECTOR, HYD., , Includes 3, 5
5	167269	2	O-RING, 10-1, 90 Duro, .755" ID x .097" Thk,
6	85813363	2	HOSE, FLEXIBLE, 550mm lg,
7	14048211	2	NUT, LOCK, M8 x 1.25, Cl 8,
8	16044021	2	BOLT, Hex, M8 x 40, 8.8,
9	85802891	1	SPACER,
10	12647121	3	WASHER, M8 x 20 x 3,
11	85813380	2	HOSE, FLEXIBLE,

Mechanical Version

1.82.6(09) HYDRAULIC SYSTEM PIPING

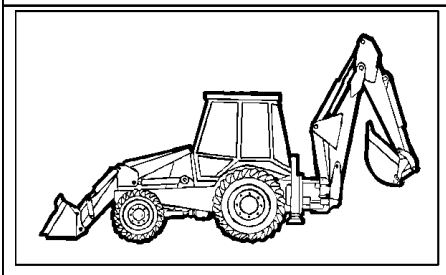

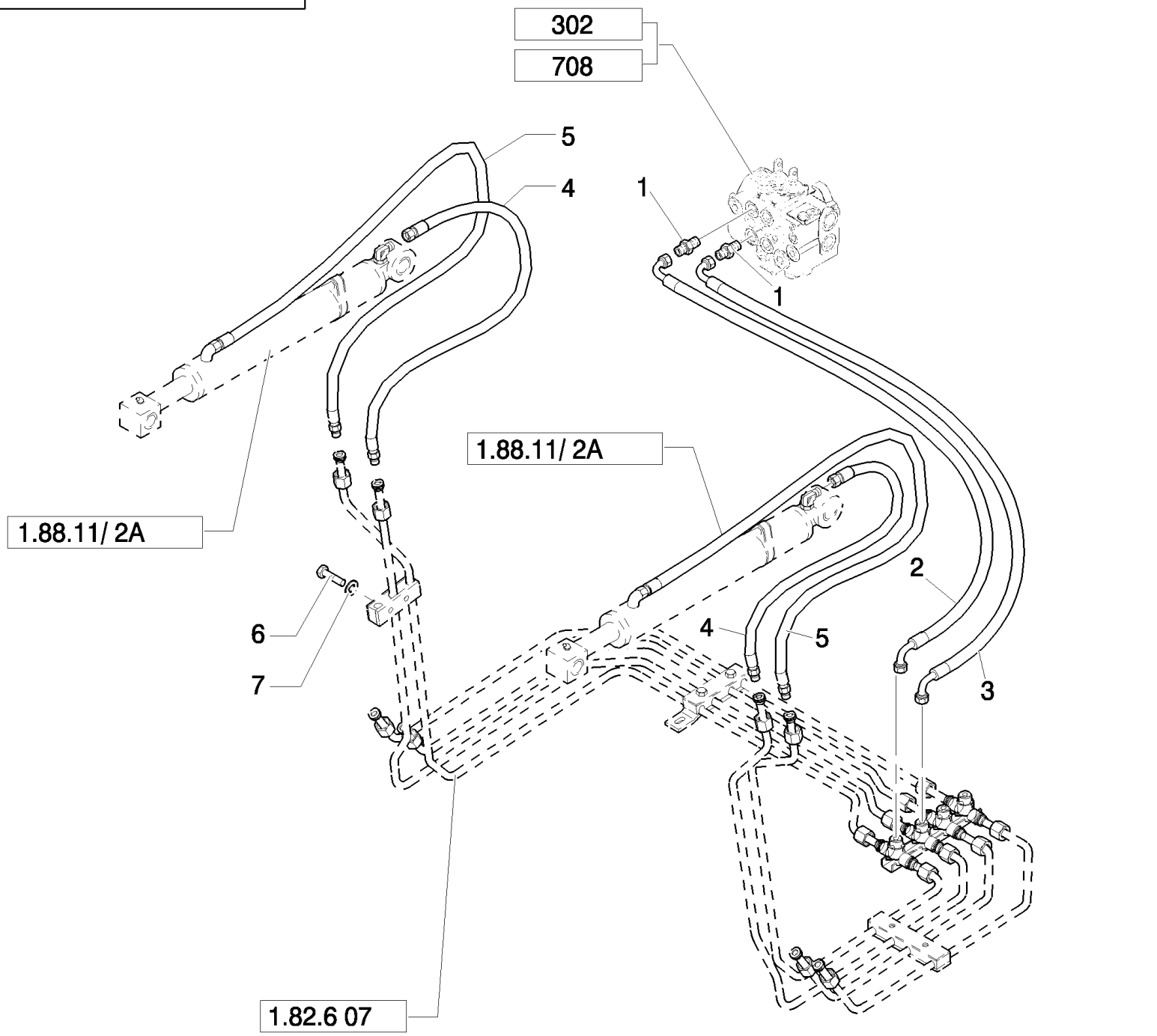

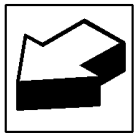

All version except: LB110.B (Center Pivot, Mechanical) and Nord America Mechanical Version

B95LR NA BACKHOE LOADER (1/06-)

1.82.6(09) HYDRAULIC SYSTEM PIPING

Ref	Numero de Pieza	Ctd	Descripción
1	390938S36	2	CONNECTOR, HYD., 1-1/16-12 ORB x 1-14 ORFS; Incl. 167266, 9992069 O-Rings
2	85826088	1	HOSE, FLEXIBLE,
3	85826086	1	HOSE, FLEXIBLE, , Only for EUROPE Mechanical Version
4	85813362	2	HOSE, FLEXIBLE, 1130mm lg,
3	85826087	1	HOSE, FLEXIBLE, , Only for EUROPE and NA Pilot Version
5	85813379	2	HOSE, FLEXIBLE,
6	16044021	2	BOLT, Hex, M8 x 40, 8.8,
7	11193979	2	WASHER, SPRING, Belleville, M8.4,

All version except: LB110.B (Center Pivot, Mechanical) and Nord America Mechanical Version

1.82.6(09A) LOADER BUCKET CYLINDER HOSES (CENTER PIVOT)

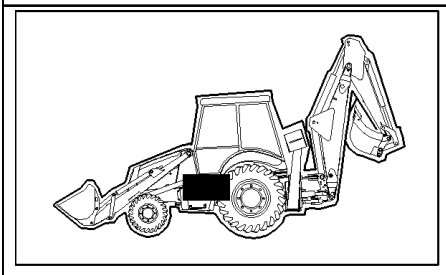

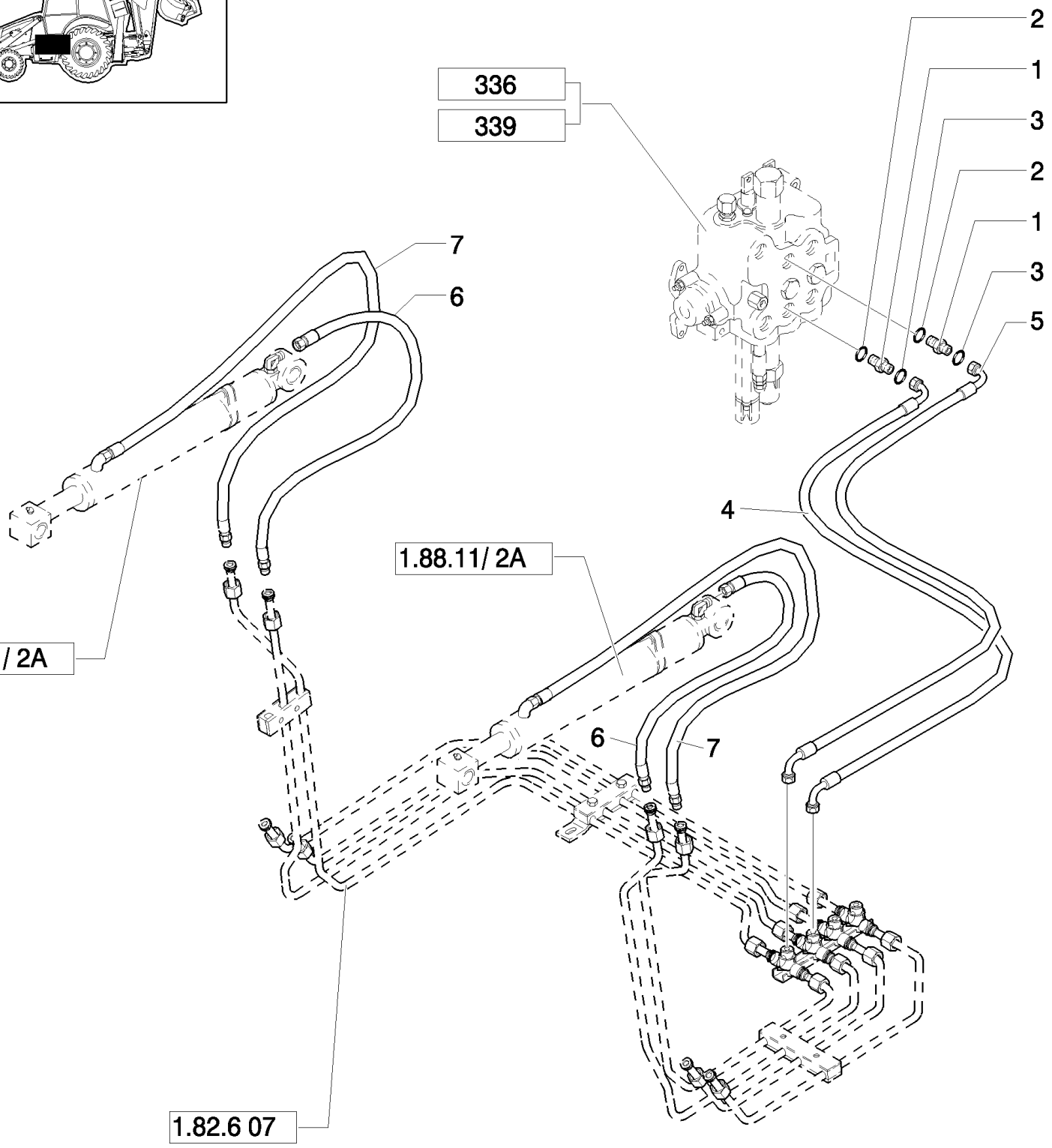

B95LR NA BACKHOE LOADER (1/06-)

1.82.6(09A) LOADER BUCKET CYLINDER HOSES (CENTER PIVOT)

Ref	Numero de Pieza	Ctd	Descripción
1	83963000	2	CONNECTOR, HYD., , Includes 2, 3
2	167269	2	O-RING, 10-1, 90 Duro, .755" ID x .097" Thk,
3	9992069	2	O-RING, -016, 90 Duro, .614" ID x .070" Thk,
4	85812185	1	HOSE, FLEXIBLE, 660mm lg,
5	85812186	1	HOSE, FLEXIBLE, 620mm lg,
6	85813362	2	HOSE, FLEXIBLE, 1130mm lg,
7	85813379	2	HOSE, FLEXIBLE,

Mechanical Version

1.82.6(09B) BACKHOE SWING CYLINDER HOSES (CENTER PIVOT)

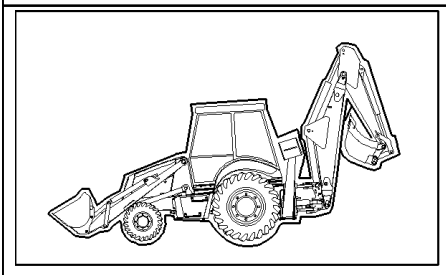

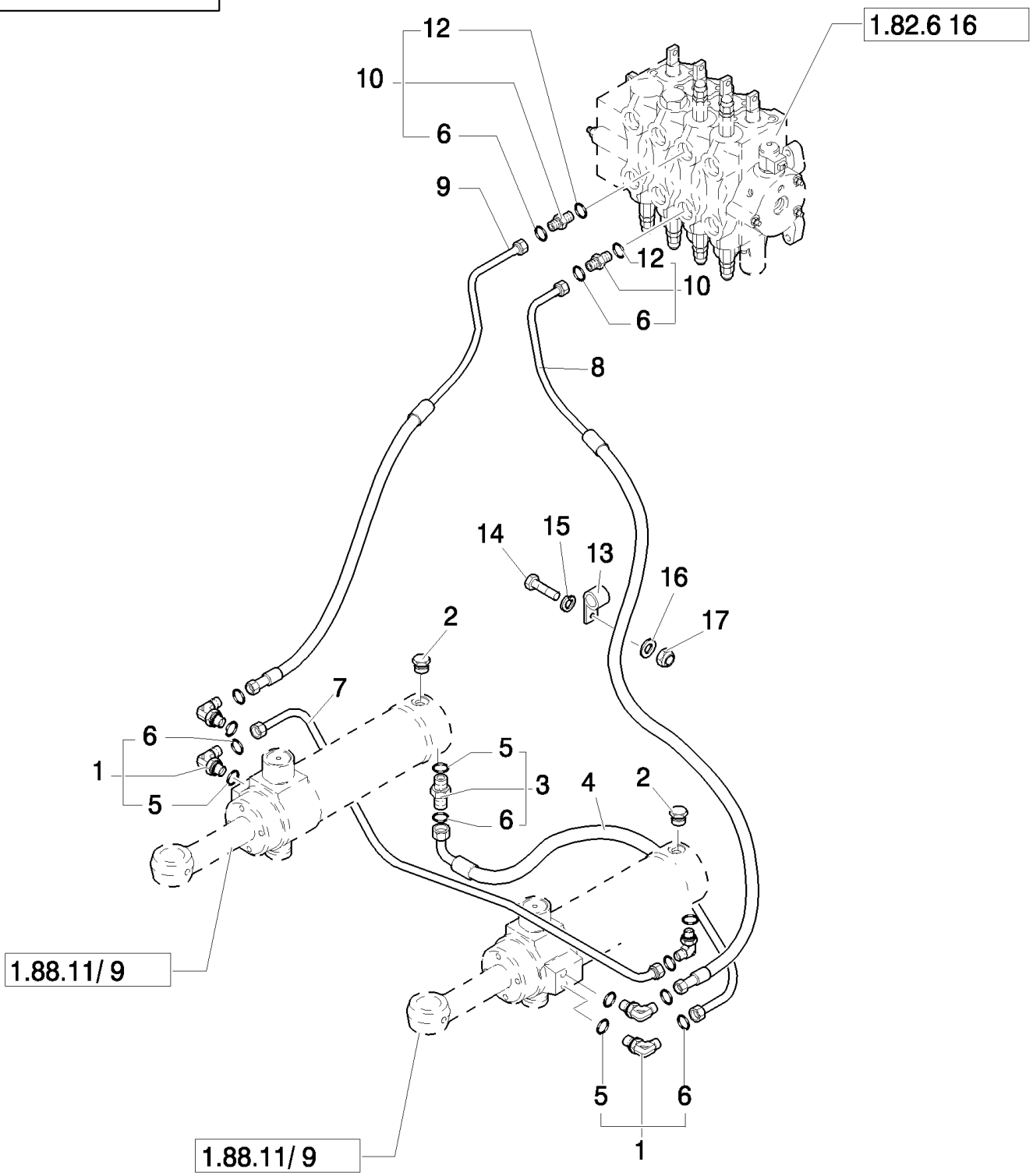

B95LR NA BACKHOE LOADER (1/06-)

1.82.6(09B) BACKHOE SWING CYLINDER HOSES (CENTER PIVOT)

Ref	Numero de Pieza	Ctd	Descripción
1	390967S36	5	ELBOW, , Includes 5, 6
2	85802955	2	PLUG,
3	390953S36	1	CONNECTOR, HYD., , Includes 5, 6
4	85819727	1	HOSE, FLEXIBLE, 415mm lg,
5	128825	6	O-RING, 8-1, 90 Duro, .644" ID x .087" Thk,
6	89992298	6	O-RING,
7	85819729	1	HOSE, FLEXIBLE,
8	85819730	1	HOSE, FLEXIBLE,
9	85819728	1	HOSE, FLEXIBLE,
10	390955S36	2	CONNECTOR, HYD., , Includes 6,12
12	167269	2	O-RING, 10-1, 90 Duro, .755" ID x .097" Thk,
13	85802954	1	CLAMP,
14	15540821	1	BOLT, Hex, M12 x 1.25 x 50, 8.8,
15	11190779	1	WASHER, SPRING, Belleville, M13,
16	12646921	1	WASHER, M12 x 28 x 3,
17	16101511	1	NUT, M12 x 1.25, Cl 8,

Mechanical Version

1.82.6(09C) HYDRAULIC SYSTEM PIPING

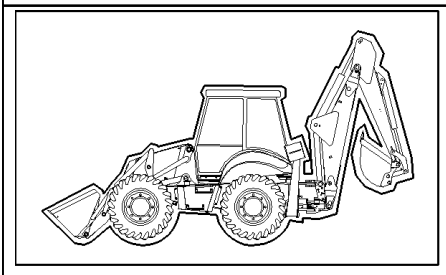

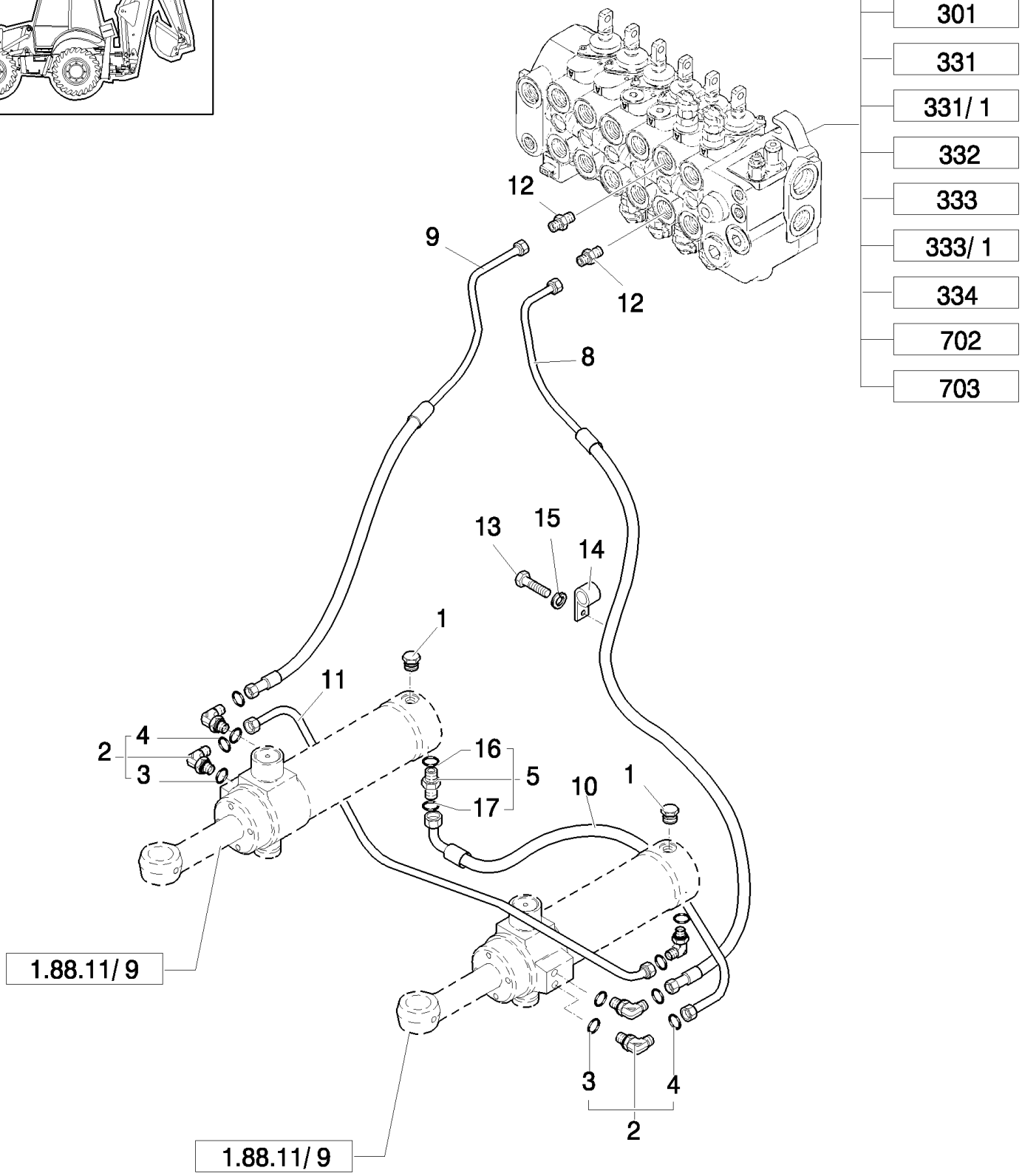

All version except: LB110.B (Center Pivot, Mechanical)

B95LR NA BACKHOE LOADER (1/06-)

1.82.6(09C) HYDRAULIC SYSTEM PIPING

Ref	Numero de Pieza	Ctd	Descripción
1	85802955	2	PLUG,
2	83971549	5	ELBOW, , Includes 3, 4
3	80128825	5	O-RING,
4	89992298	6	O-RING,
5	83963374	1	CONNECTOR, HYD., , Includes 16, 17
8	85819730	1	HOSE, FLEXIBLE, , Only for LB110.B - LB115.B
8	85819060	1	TUBE, HYD,
9	85819728	1	HOSE, FLEXIBLE, , Only for LB110.B - LB115.B
9	85819061	1	HOSE, FLEXIBLE,
10	85819727	1	HOSE, FLEXIBLE, 415mm lg, , Only for LB110.B - LB115.B
10	85820109	1	TUBE, HYD,
11	85819729	1	HOSE, FLEXIBLE,
12	85805258	2	CONNECTOR, HYD., 9/16"-16 ORS x 1 1/16"-12, O-Ring,
13	16044221	2	BOLT, Hex, M8 x 50, 8.8,
14	14560187	2	STRAP, CABLE, 178mm lg, L=203.2 mm
15	11193879	2	WASHER, SPRING, Belleville, M8.4,
16	81332258	1	
17	81845038	1	O-RING, -014, 90 Duro, .489" ID x .070" Thk,

All version except: LB110.B (Center Pivot, Mechanical)

1.82.6(09D) HYDRAULIC SYSTEM PIPING

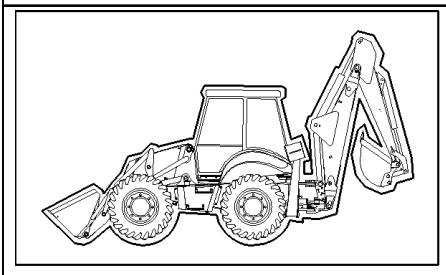

B95LR NA BACKHOE LOADER (1/06-)

1.82.6(09D) HYDRAULIC SYSTEM PIPING

Ref	Numero de Pieza	Ctd	Descripción
1	85802955	2	PLUG,
2	390967S36	5	ELBOW, , Includes 3, 4
3	128825	5	O-RING, 8-1, 90 Duro, .644" ID x .087" Thk,
4	9992298	6	O-RING, -014, 90 Duro, .489" ID x .070" Thk,
5	390953S36	1	CONNECTOR, HYD., , Includes 4, 6
8	85819060	1	TUBE, HYD,
9	85819061	1	HOSE, FLEXIBLE,
10	85820109	1	TUBE, HYD,
11	85819729	1	HOSE, FLEXIBLE,
12	85805258	2	CONNECTOR, HYD., 9/16"-16 ORS x 1 1/16"-12, O-Ring,

Mechanical Version

1.82.6(10A) HYDRAULIC SYSTEM PIPING NA (CENTER PIVOT)

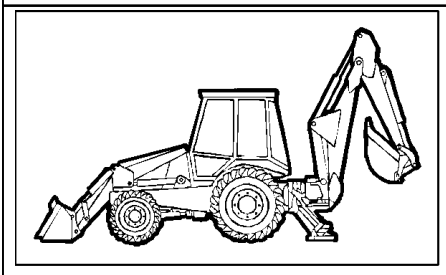

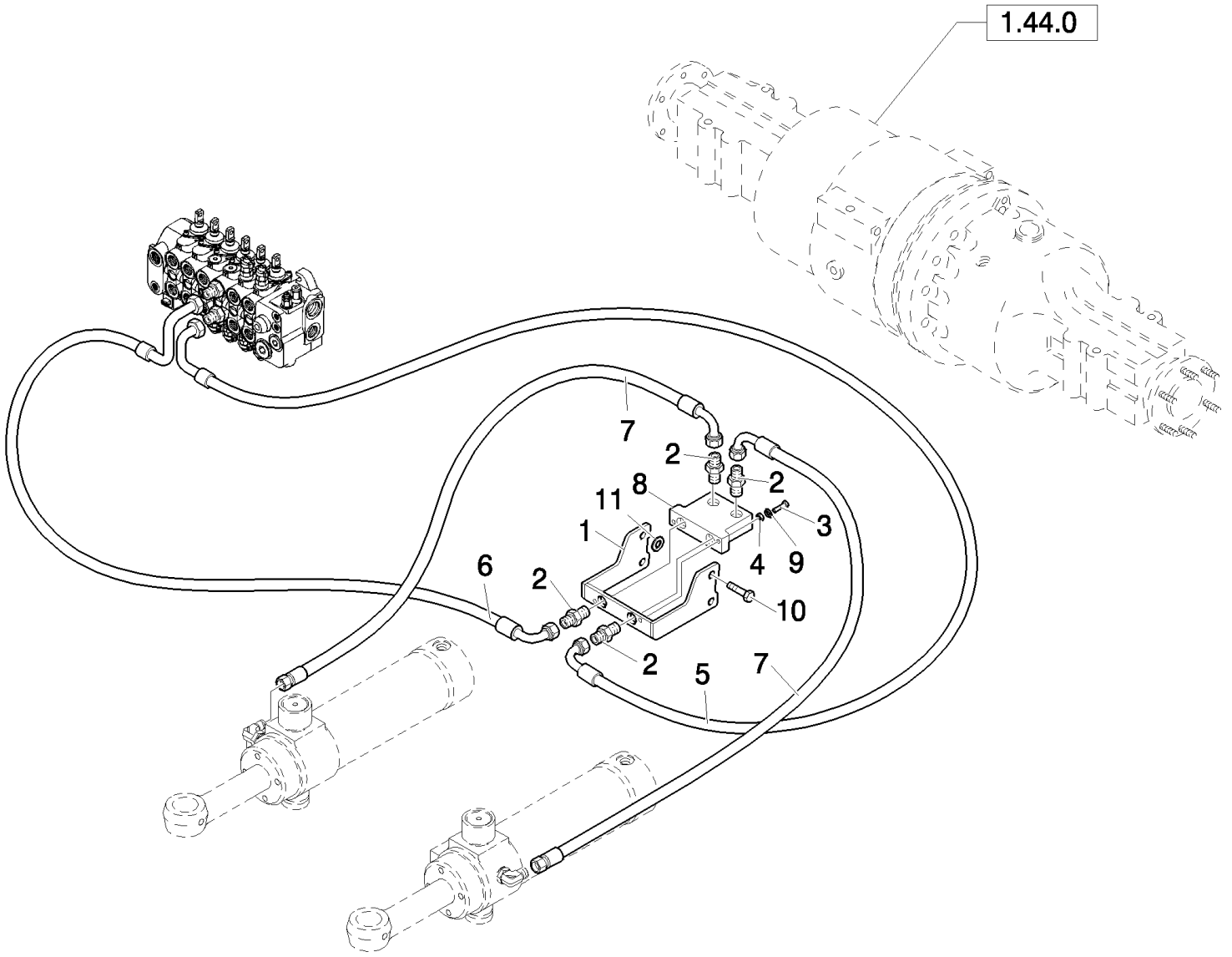

Mechanical Control Version

B95LR NA BACKHOE LOADER (1/06-)

1.82.6(10A) HYDRAULIC SYSTEM PIPING NA (CENTER PIVOT)

Ref	Numero de Pieza	Ctd	Descripción
1	87350477	1	BRACKET, , Power Shuttle
1	87351460	1	BRACKET, , Power Shift
2	201-112	4	CONNECTOR, HYD., 13/16"-16 ORFS x 7/8"-14 ORB,
3	614-10040	2	BOLT, Hex, M10 x 40, 8.8, Full Thd, M10x40
4	829-1410	2	NUT, M10, Cl 10,
5	87356499	1	HOSE, FLEXIBLE,
6	87356501	1	HOSE, FLEXIBLE,
7	87361461	2	HOSE, FLEXIBLE,
8	87449373	1	VALVE, HYDRAULIC,
9	895-11010	4	WASHER, M10 x 20 x 2, 11 x 21 x 2
10	413-1036	4	BOLT, Hex, 5/8"-11 x 2 1/4", G5,
11	14496931	1	WASHER, M16 x 30 x 3, , Power Shift

Mechanical Control Version

1.82.6(11A) BACKHOE CONTROL VALVE HOSES (CENTER PIVOT)

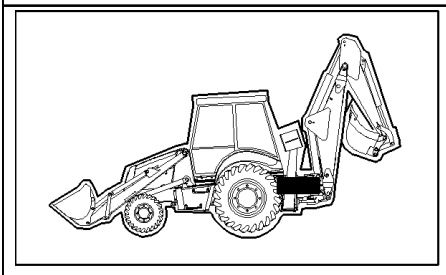

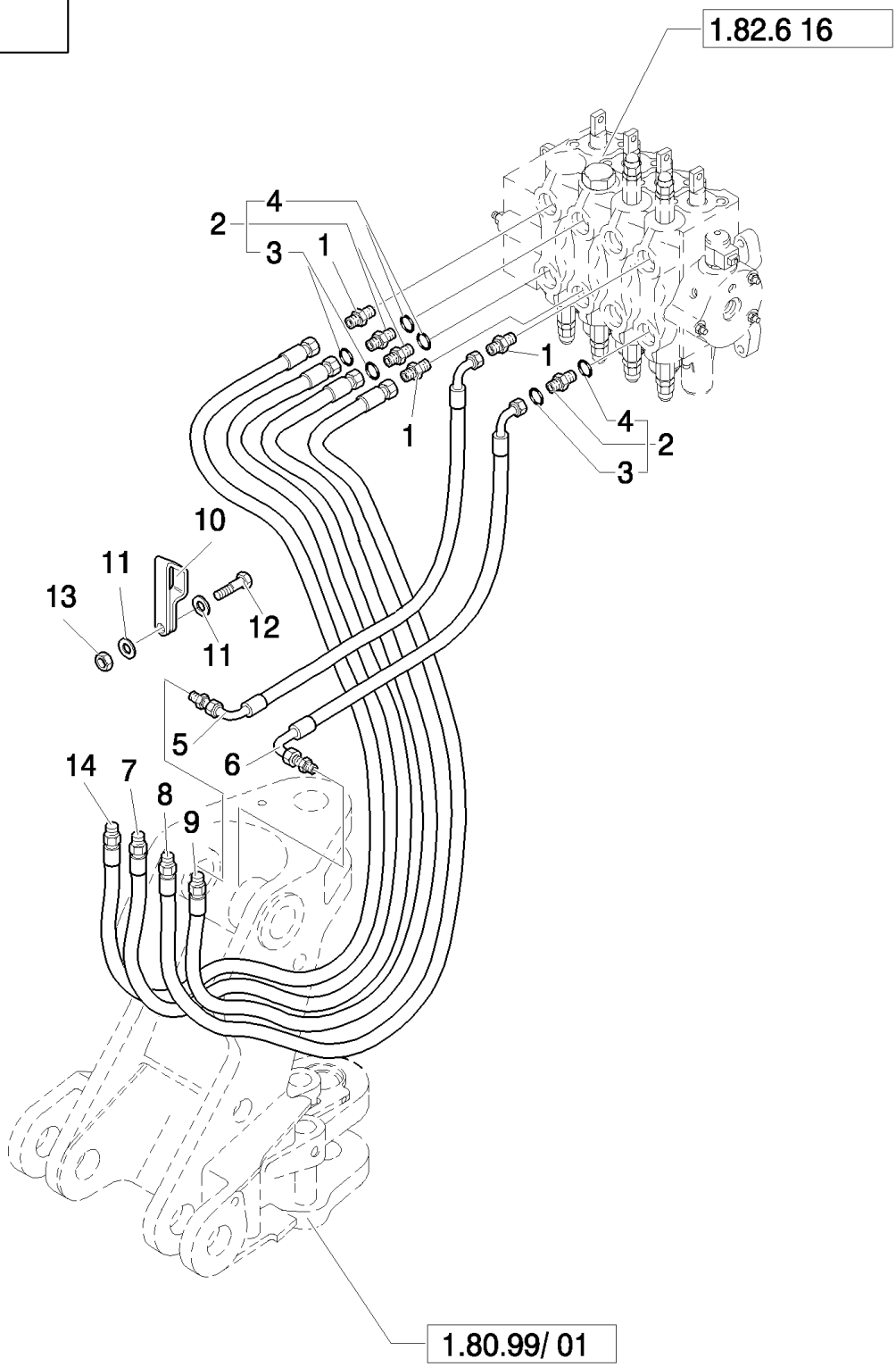

B95LR NA BACKHOE LOADER (1/06-)

1.82.6(11A) BACKHOE CONTROL VALVE HOSES (CENTER PIVOT)

Ref	Numero de Pieza	Ctd	Descripción
1	85802642	3	CONNECTOR, HYD., 1-3/16"-12 ORS x 7/8"-14 SAE O-Ring
2	83963000	3	CONNECTOR, HYD., , Includes 3, 4
3	9992069	3	O-RING, -016, 90 Duro, .614" ID x .070" Thk,
4	167269	3	O-RING, 10-1, 90 Duro, .755" ID x .097" Thk,
5	85812151	1	HOSE, FLEXIBLE, 590mm lg ,
6	85812143	1	HOSE, FLEXIBLE, 590mm lg ,
7	85812177	1	HOSE, FLEXIBLE, 1200mm lg,
8	85812153	1	HOSE, FLEXIBLE, 1240mm lg,
9	85812152	1	HOSE, FLEXIBLE, 1200mm lg,
10	85804947	1	CLAMP,
11	10519411	2	WASHER, M6 x 11.95 x 1.6,
12	10902221	1	BOLT, Hex, M6 x 16, 8.8,
13	12574211	1	NUT, LOCK, M6 x 1, Cl 8,
14	85812176	1	HOSE, FLEXIBLE, 1250mm lg,

Mechanical Version

1.82.6(11B) HYDRAULIC SYSTEM PIPING

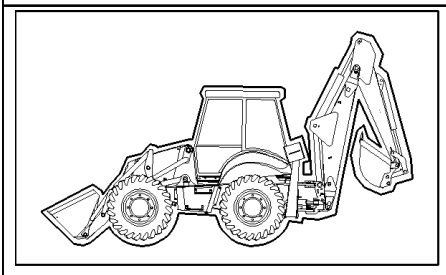

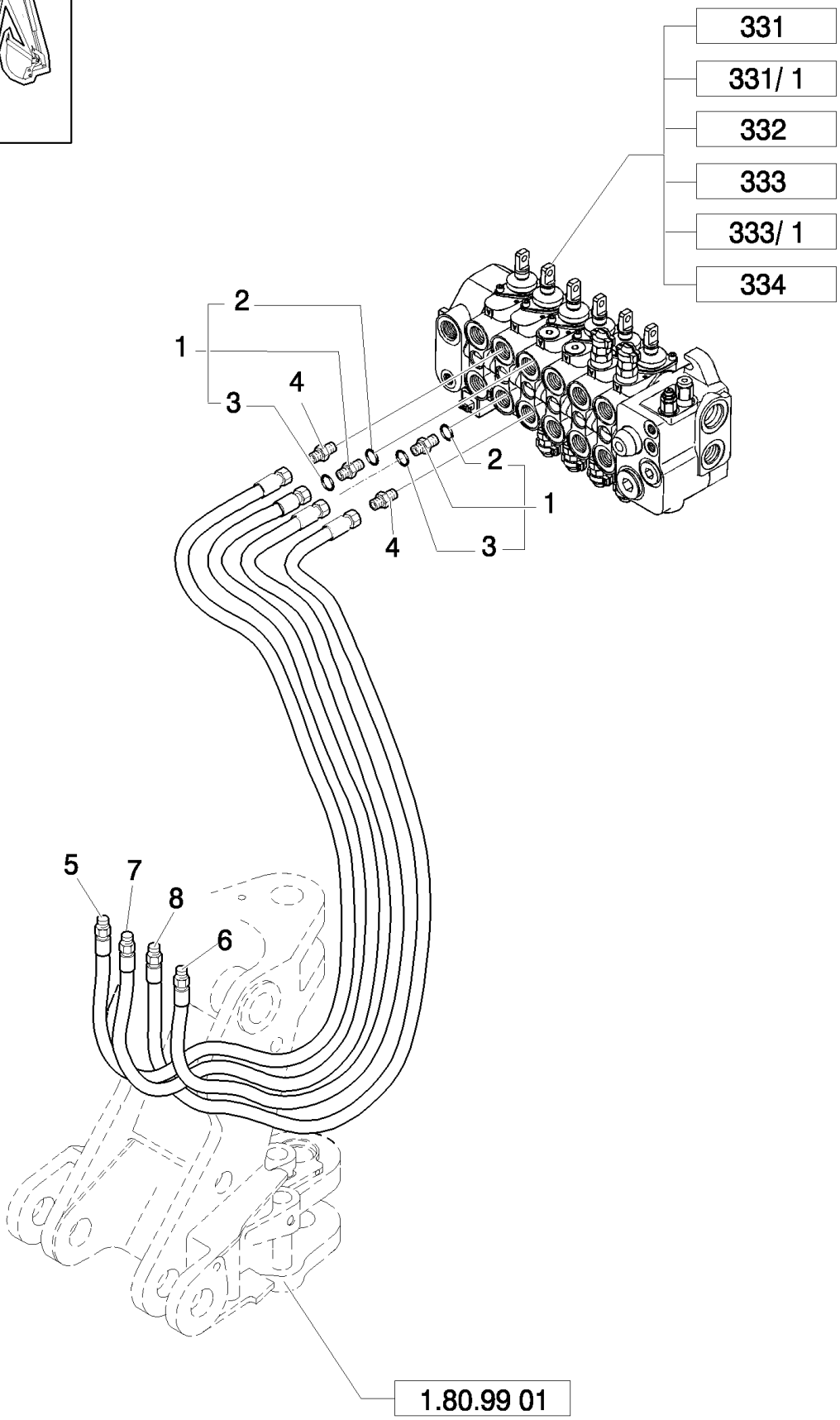

Pilot Control Version

B95LR NA BACKHOE LOADER (1/06-)

1.82.6(11B) HYDRAULIC SYSTEM PIPING

Ref	Numero de Pieza	Ctd	Descripción
1	390937S36	2	CONNECTOR, HYD., 1-3/16"-12 ORS x 1-1/16"-12 SAE O-Ring, , Includes 2, 3
2	167266	2	O-RING, 12-1, 90 Duro, .924 ID x .116" Thk,
3	9991976	2	O-RING, -018, 90 Duro, .739" ID x .070" Thk,
4	390938S36	2	CONNECTOR, HYD., 1-1/16-12 ORB x 1-14 ORFS; Incl. 167266, 9992069 O-Rings
5	85812176	1	HOSE, FLEXIBLE, 1250mm lg,
6	85812152	1	HOSE, FLEXIBLE, 1200mm lg,
7	85812177	1	HOSE, FLEXIBLE, 1200mm lg,
8	87621920	1	HOSE, FLEXIBLE,

Pilot Control Version

1.82.6(13A) ROTATION PLATE HOSE CLAMPS

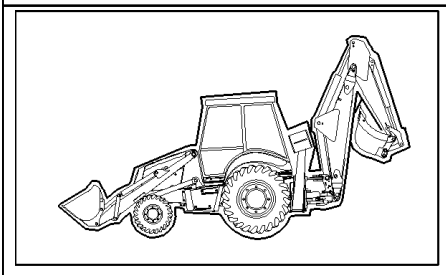

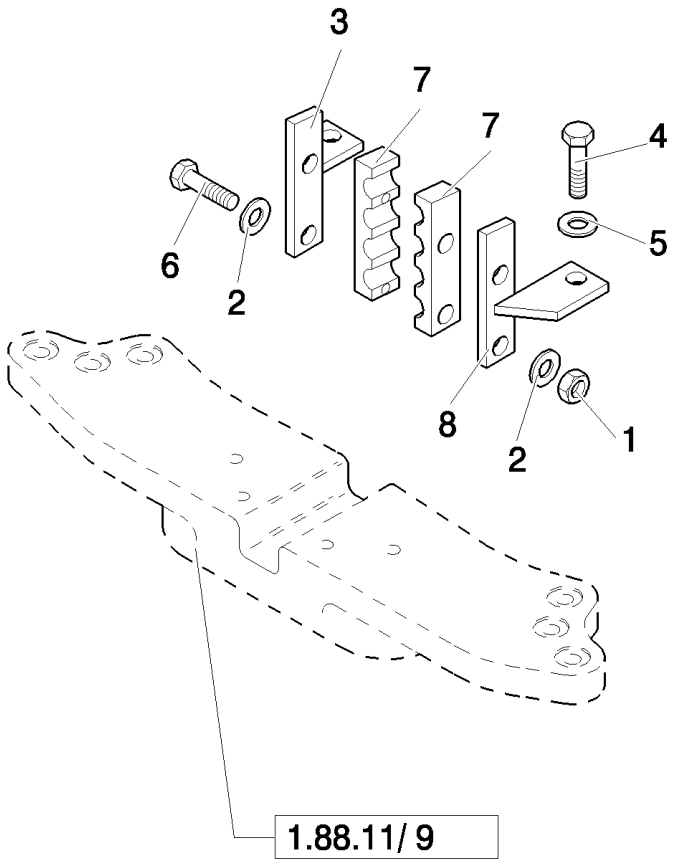

B95LR NA BACKHOE LOADER (1/06-)

1.82.6(13A) ROTATION PLATE HOSE CLAMPS

Ref	Numero de Pieza	Ctd	Descripción
1	14048221	1	NUT, LOCK, M8 x 1.25, Cl 10,
2	12647121	3	WASHER, M8 x 20 x 3,
3	85804573	1	SUPPORT,
4	11106221	2	BOLT, Hex, M10 x 25, 8.8, Full Thd,
5	11190579	2	WASHER, SPRING, Belleville, M10.5,
6	16044421	2	BOLT, Hex, M8 x 60, 8.8,
7	85802731	2	CLAMP,
8	85804574	1	SUPPORT,

1.82.6(16) BACKHOE CONTROL VALVE(CENTER PIVOT)

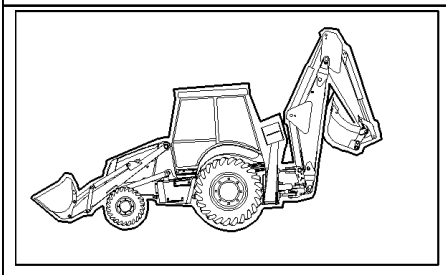

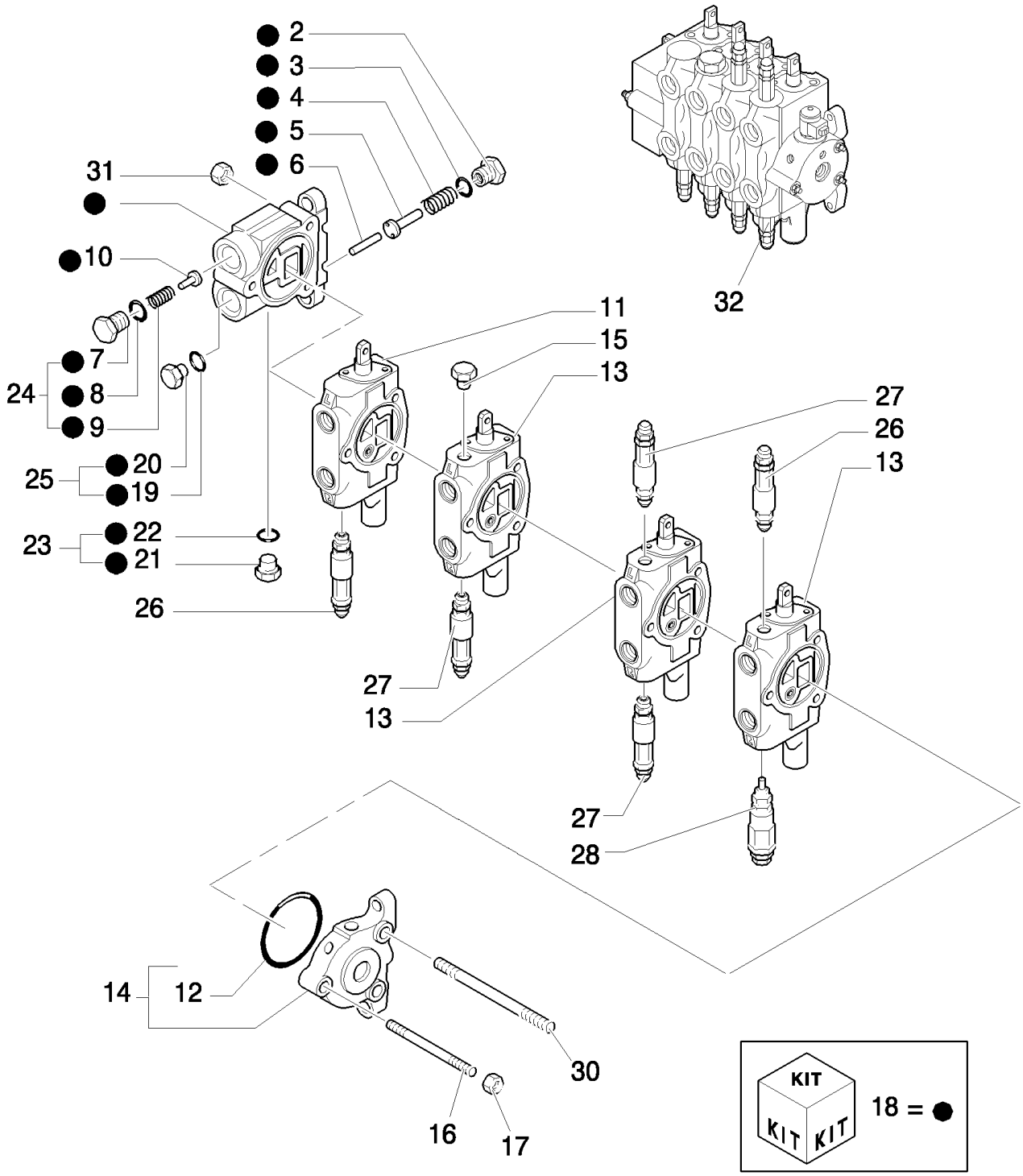

B95LR NA BACKHOE LOADER (1/06-)

1.82.6(16) BACKHOE CONTROL VALVE(CENTER PIVOT)

Ref	Numero de Pieza	Ctd	Descripción
2	9968501	1	PLUG,
3	9968502	1	O-RING,
4	9968500	1	SPRING,
5	9968503	1	PLUNGER,
6	9968497	1	PIN,
7	9968498	1	PLUG,
8	9968468	1	O-RING,
9	9968448	1	SPRING,
10	9968447	1	PLUNGER,
11	85827102	1	VALVE SECTION, HYD, , See Page 1.82.6 17
12	9968495	1	O-RING,
13	85827101	3	VALVE SECTION, HYD, , See Page 1.82.6 18
14	9968494	1	VALVE SECTION, HYD,
15	85807832	1	PLUG,
16	9968506	1	ROD, THREADED,
17	9968507	1	NUT,
18	85807827	1	VALVE SECTION, HYD,
19	85807830	1	O-RING,
20	85807831	1	PLUG,
21	85807828	1	PLUG,
22	85807829	1	O-RING,
23	9968523	1	PLUG,
24	85807834	1	PLUG,
25	85807833	1	PLUG,
26	9968595	2	VALVE, PRESSURE RELIEF,
27	9968596	3	VALVE, PRESSURE RELIEF,
28	9968508	1	VALVE, PRESSURE RELIEF,
30	9968505	1	ROD, THREADED,
31	9968504	1	NUT,
32	85827100	1	VALVE, CONTROL,

Mechanical Version

1.82.6(17) DIPPER VALVE SECTION (CENTER PIVOT)

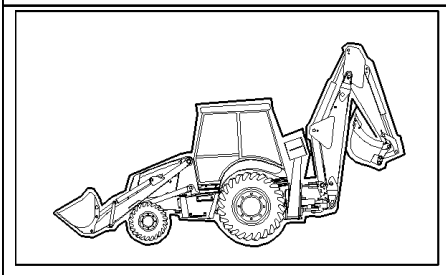

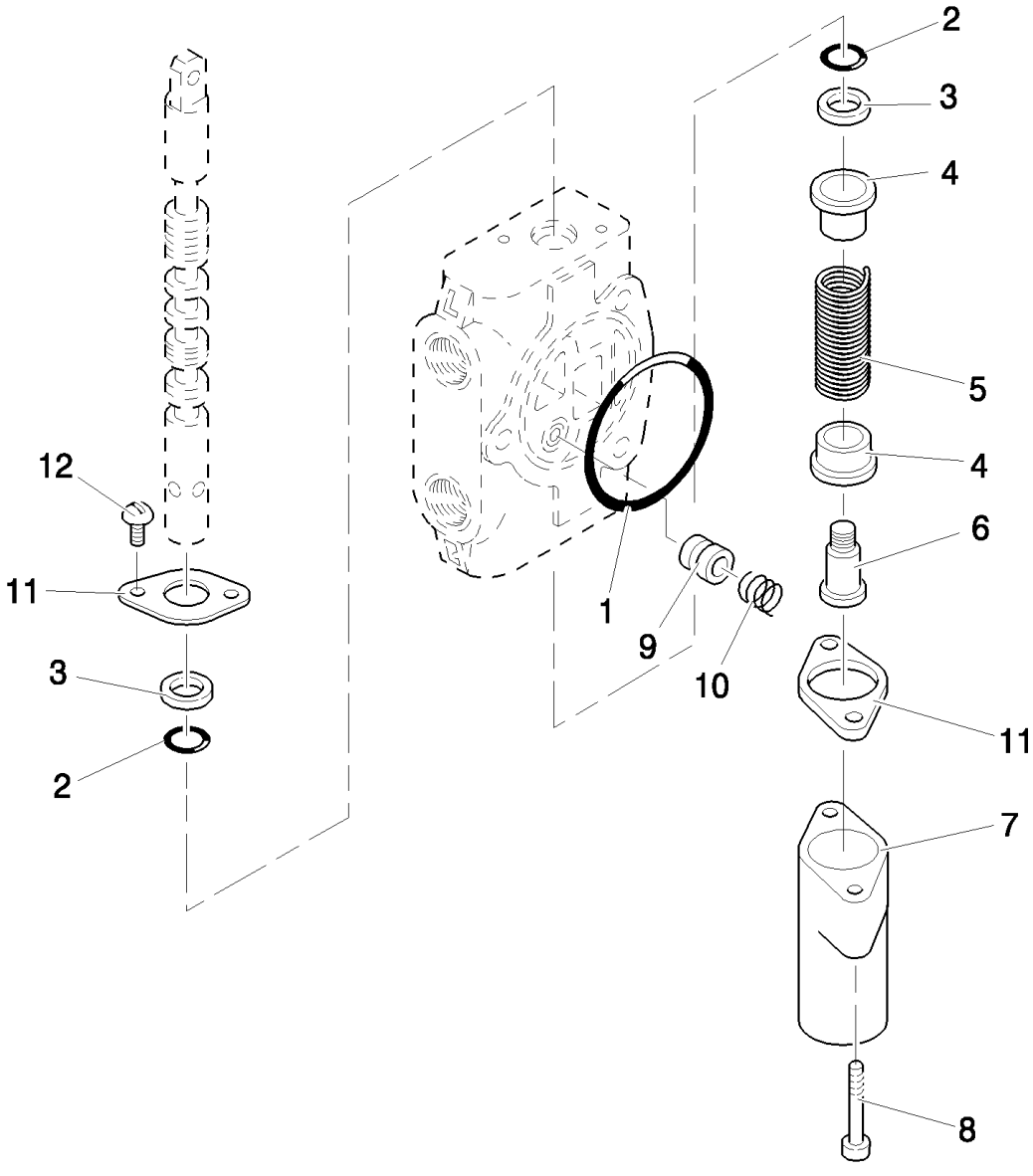

B95LR NA BACKHOE LOADER (1/06-)

1.82.6(17) DIPPER VALVE SECTION (CENTER PIVOT)

Ref	Numero de Pieza	Ctd	Descripción
1	9968495	1	O-RING,
2	9968489	1	SEAL,
3	9968490	1	WIPER,
4	9968512	1	SEAT/SLOT,
5	9968514	1	SPRING,
6	9968515	1	SPOOL,
7	9968513	1	COVER,
8	9968516	1	SCREW,
9	9968510	2	PLUNGER,
10	9968511	1	SPRING,
11	9968458	2	FLANGE,
12	9968460	1	SCREW,

Mechanical Version

1.82.6(18) BUCKET, SWING, & BOOM VALVE SECTION (CENTER PIVOT)

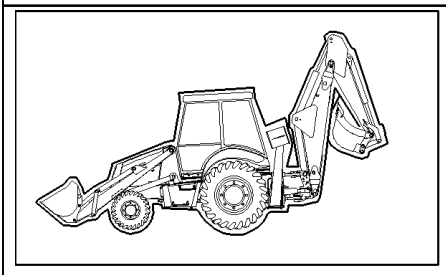

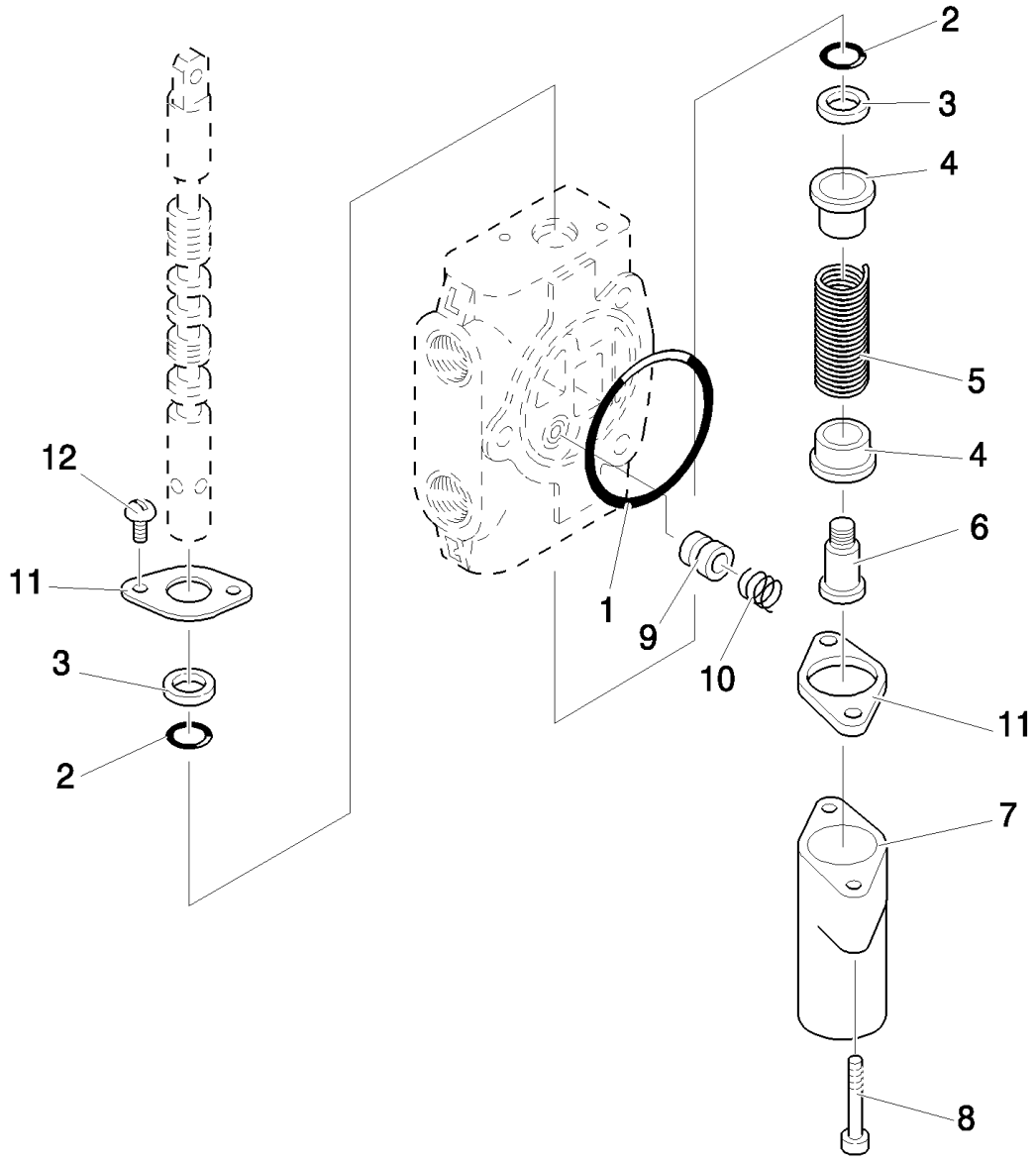

B95LR NA BACKHOE LOADER (1/06-)

1.82.6(18) BUCKET, SWING, & BOOM VALVE SECTION (CENTER PIVOT)

Ref	Numero de Pieza	Ctd	Descripción
1	9968495	1	O-RING,
2	9968489	1	SEAL,
3	9968490	1	WIPER,
4	9968512	2	SEAT/SLOT,
5	9968514	1	SPRING,
6	9968515	1	SPOOL,
7	9968513	1	COVER,
8	9968516	1	SCREW,
9	9968510	1	PLUNGER,
10	9968511	1	SPRING,
11	9968458	2	FLANGE,
12	9968460	1	SCREW,

Mechanical Version

1.83.0(01) HOOD, GRILLE & RELATED PARTS

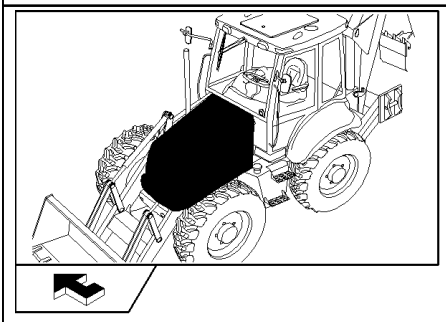

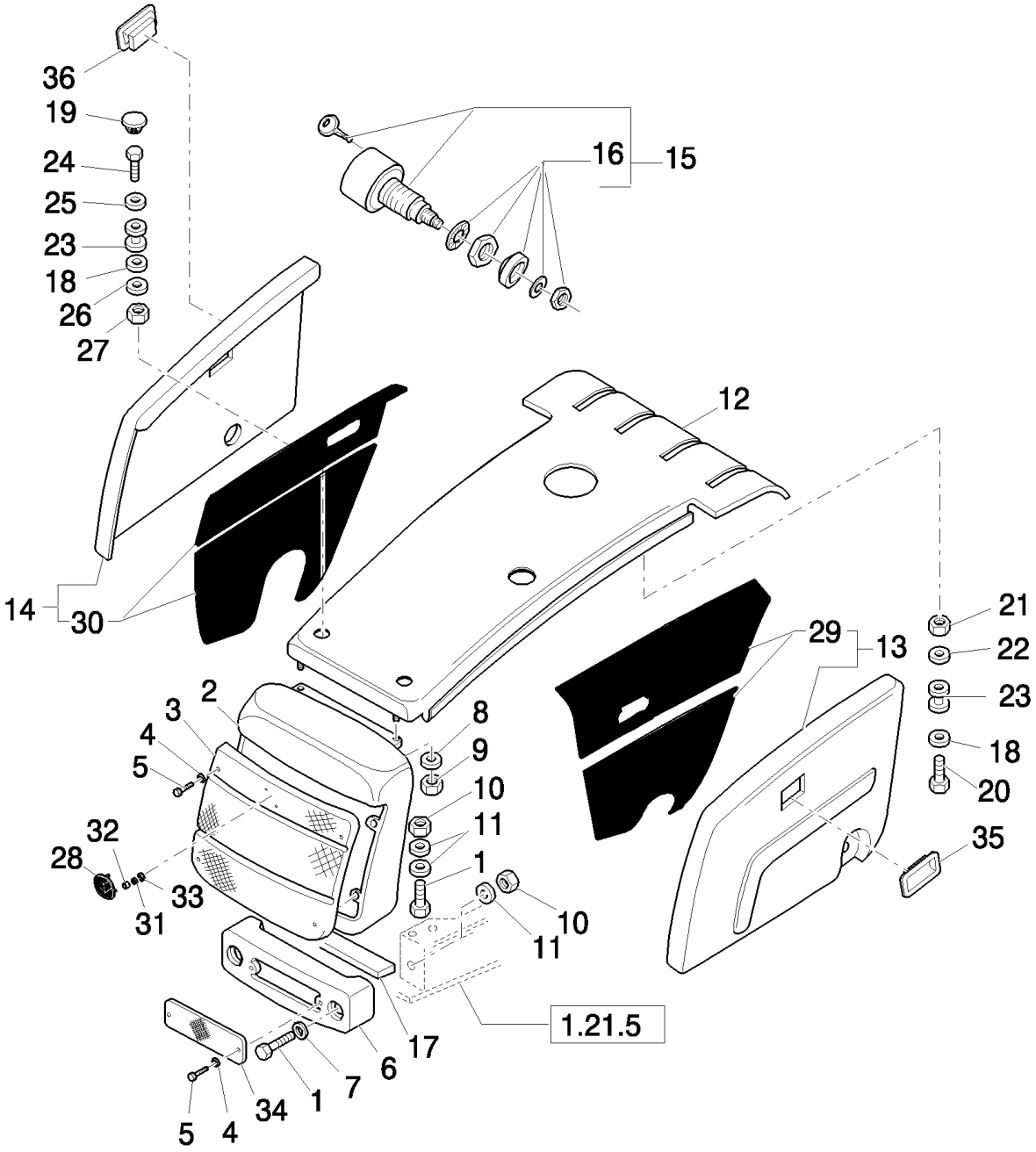

B95LR NA BACKHOE LOADER (1/06-)

1.83.0(01) HOOD, GRILLE & RELATED PARTS

Ref	Numero de Pieza	Ctd	Descripción
1	15981221	6	BOLT, Hex, M16 x 65, 8.8,
2	87325160	1	HOOD,
2	85825070	1	HOOD, Replaces 87325160
3	87571893	1	GRILLE,
4	11193979	4	WASHER, SPRING, Belleville, M8.4,
5	16043421	4	SCREW, Hex, M8 x 20, 8.8,
6	85803625	1	PANEL,
7	13580001	3	WASHER,
8	11190879	2	WASHER, SPRING, Belleville, M13,
9	86981462	2	NUT, M10 x 1.5, Flg, Cl 10, M12x1.25
10	12164111	6	NUT, M16x1.5
11	11191579	10	WASHER, SPRING, Belleville, M17,
12	85826084	1	PANEL, ENGINE HOOD,
13	87341210	1	PANEL, ENGINE HOOD, LH
14	87341215	1	PANEL, ENGINE HOOD, Acoustic, RH
15	87302234	2	KNOB, L = 101 mm, UP TO S/N 031053231
15	87303089	2	KNOB, L = 104,5 mm, FROM TO S/N 031053232
16	85806128	AR	KIT,
17	85817795	1	STRIP, SEALING,
18	86592700	4	WASHER, M10 x 28 x 4, HT, 10.5x28x4
19	85827683	2	PLUG,
20	11107021	2	BOLT, Hex, M10 x 45, 8.8,
21	86625071	2	NUT, M10, U,
22	13578621	2	WASHER, 10x30x2
23	47048668	4	GASKET,
24	85826361	2	SCREW,
25	47054521	2	WASHER,
26	47048972	2	WASHER, M10
27	12577211	2	NUT, LOCK, M10 x 1.5, Cl 8,
28	85820107	1	EMBLEM,
29	87341208	1	PANEL, ENGINE HOOD, Acoustic, LH
30	87341206	1	PANEL, RH
31	47352075	1	
32	5138360	2	RING,
33	5135069	2	CLIP,
34	12643721	2	WASHER, M6 x 18 x 1.5,
35	83962571	1	HANDLE,
36	83962571	1	HANDLE,

1.87.2(01) CAB SCREEN

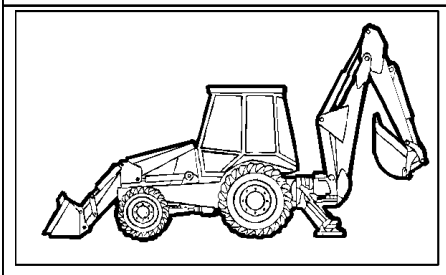

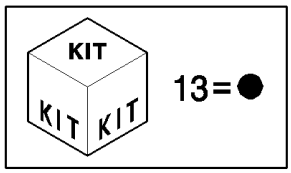

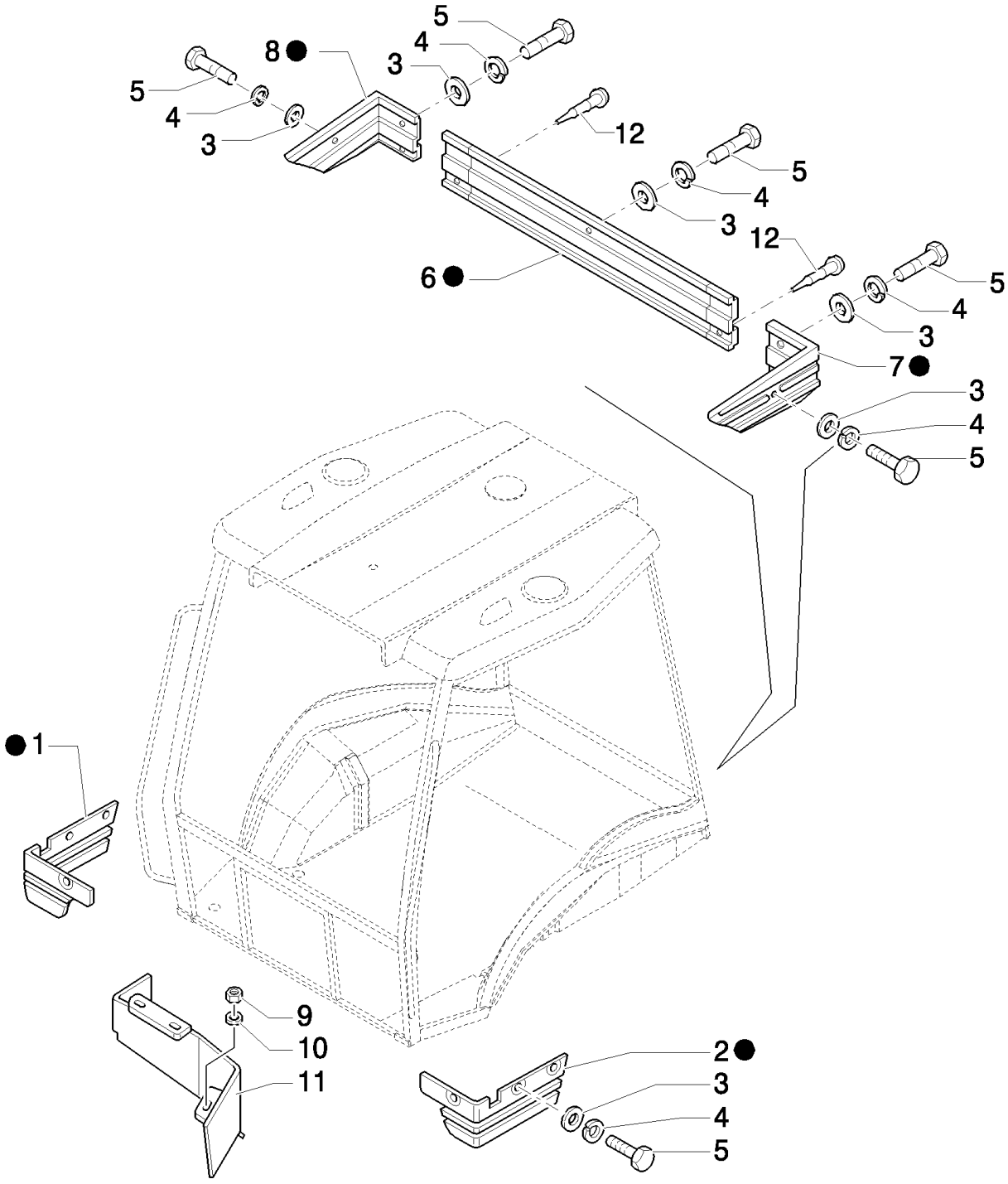

B95LR NA BACKHOE LOADER (1/06-)

1.87.2(01) CAB SCREEN

Ref	Numero de Pieza	Ctd	Descripción
1	87315641	1	COVER, RH
2	87315643	1	COVER, LH
3	12643721	11	WASHER, M6 x 18 x 1.5,
4	11194679	11	WASHER, SPRING, Belleville, M6.4,
5	10902421	11	BOLT, Hex, M6 x 20, 8.8,
6	85805303	1	COVER,
7	85805304	1	COVER, LH
8	85805305	1	COVER, RH
9	16104111	3	NUT, LOCK, M8 x 1.25, Cl 8,
10	11193979	3	WASHER, SPRING, Belleville, M8.4,
11	85805142	1	PANEL,
12	85808422	2	PLUG,
13	87315628	1	KIT,

1.87.8(01) CAB FASTENERS

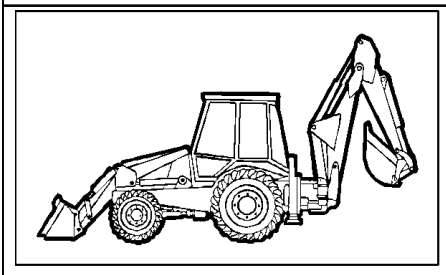

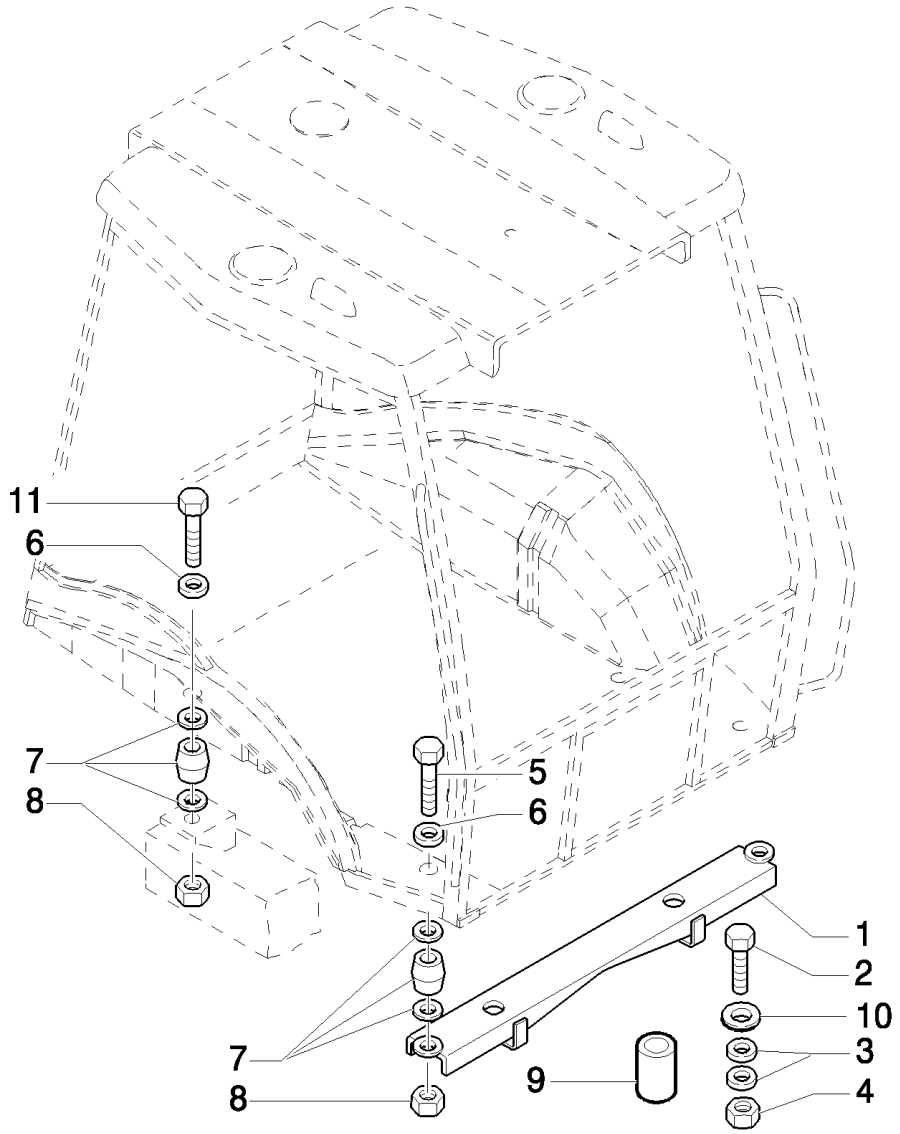

B95LR NA BACKHOE LOADER (1/06-)

1.87.8(01) CAB FASTENERS

Ref	Numero de Pieza	Ctd	Descripción
1	85801319	1	SUPPORT, , Only For LB110.B - B110
1	87303780	1	SUPPORT, , Only for LB115.B - B115
2	15989334	2	BOLT, Hex, M20 x 1.5 x 110, 10.9,
3	10520431	4	WASHER,
4	12575121	2	NUT, LOCK, M20 x 1.5, Cl 10,
5	15982134	2	BOLT, Hex, M16 x 140, 10.9,
6	14496931	4	WASHER, M16 x 30 x 3,
7	87569589	4	SILENTBLOC,
8	12574921	4	NUT, LOCK, M16 x 1.5, Cl 10,
9	85801324	2	SPACER,
10	85804493	2	WASHER, 21 x 40 x 6
11	15981834	2	BOLT, Hex, M16 x 1.5 x 120, 10.9,

B95LR NA BACKHOE LOADER (1/06-)

1.88.01/ 2(01) "TRANSPORT LOCK" ON/OFF SWITCH, VALVE & HOSES (POWER SHIFT, SIDE SHIFT, CENTER PIVOT)

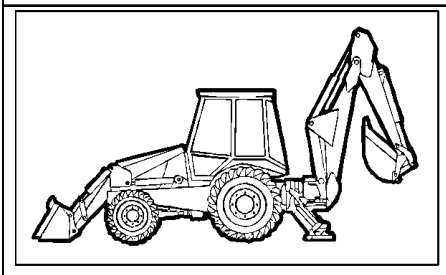

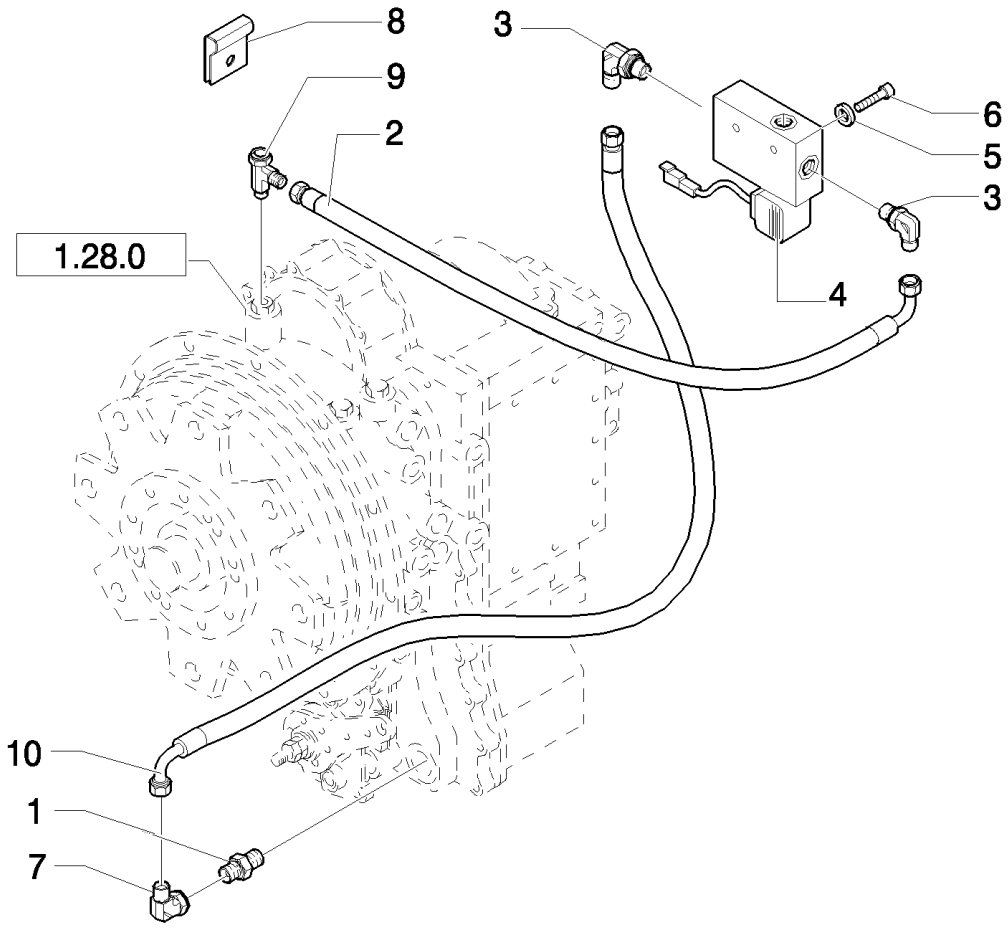

B95LR NA BACKHOE LOADER (1/06-)

1.88.01/ 2(01) "TRANSPORT LOCK" ON/OFF SWITCH, VALVE & HOSES (POWER SHIFT, SIDE SHIFT, CENTER PIVOT)

Ref	Numero de Pieza	Ctd	Descripción
1	87403805	1	CONNECTOR, HYD.,
2	85805260	1	HOSE, FLEXIBLE,
3	85802234	2	ELBOW,
4	85817265	1	VALVE, SOLENOID,
5	11197779	2	WASHER, SPRING, Belleville, M6.4,
6	10903221	2	BOLT, Hex, M6 x 40, 8.8, M6x1x85
7	47050634	1	ELBOW,
8	14560187	2	STRAP, CABLE, 178mm lg, L=203.2 mm
9	85826962	1	CONNECTOR, HYD.,
10	85819068	1	HOSE, FLEXIBLE,

1.88.01/ 2(02) TRANSPORT LOCK HOOK, CYLINDER & HOSE (SIDE SHIFT,CENTER PIVOT, POWER SHIFT)

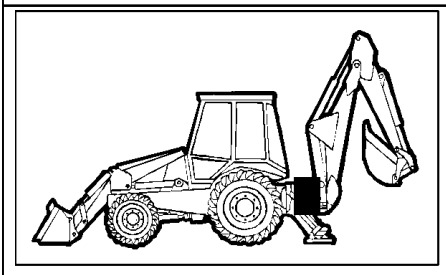

KIT KIT KIT 9 = ✸

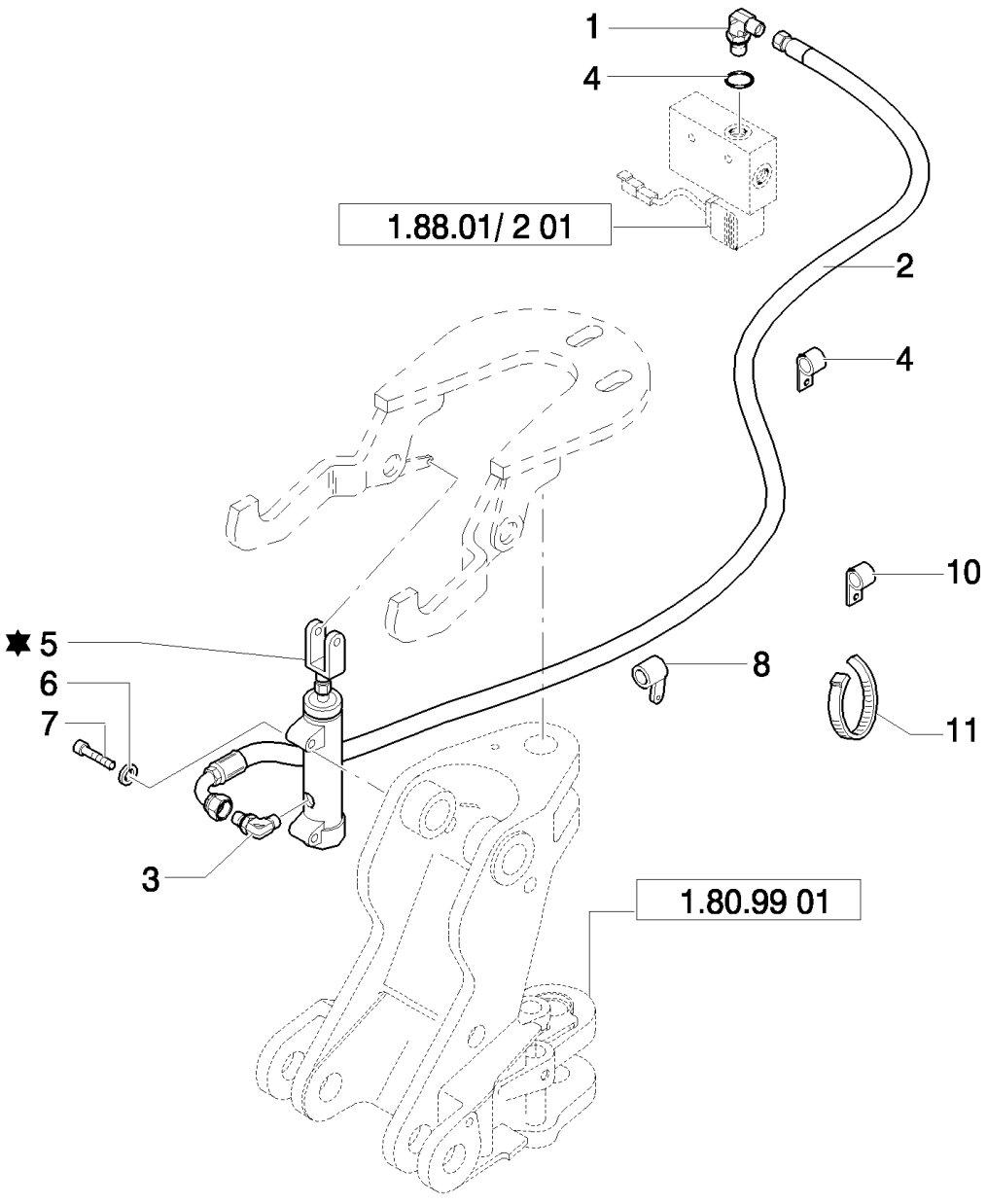

B95LR NA BACKHOE LOADER (1/06-)

1.88.01/ 2(02) TRANSPORT LOCK HOOK, CYLINDER & HOSE (SIDE SHIFT,CENTER PIVOT, POWER SHIFT)

Ref	Numero de Pieza	Ctd	Descripción
1	85802234	1	ELBOW,
2	85819068	1	HOSE, FLEXIBLE, , Only for Side Shift
2	85827681	1	HOSE, FLEXIBLE, , Only for Center Pivot
3	85824089	1	ELBOW,
4	79072960	1	STRAP, CABLE,
5	87362349	1	CYLINDER,
6	11193879	2	WASHER, SPRING, Belleville, M8.4,
7	16044221	2	BOLT, Hex, M8 x 50, 8.8,
8	85802890	1	CLAMP,
9	87337354	2	KIT,
10	85802336	1	CLAMP,
11	85803332	4	STRAP, CABLE, M4.8 x 180,

B95LR NA BACKHOE LOADER (1/06-)

1.88.01/ 3(01) HYDRAULIC SYSTEM FOR "TRANSPORT LOCK" REAR LOCKING (POWER SHUTTLE)

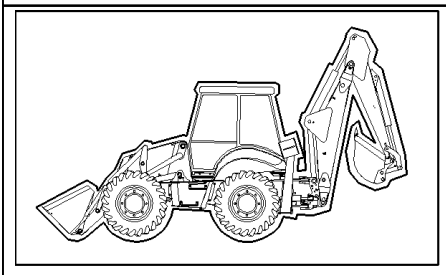

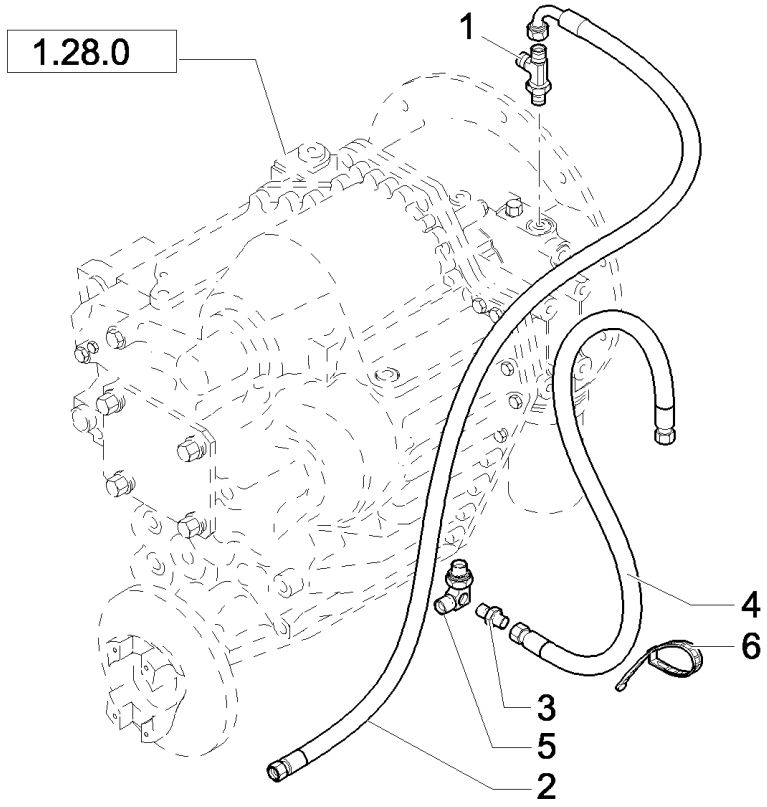

B95LR NA BACKHOE LOADER (1/06-)

1.88.01/ 3(01) HYDRAULIC SYSTEM FOR "TRANSPORT LOCK" REAR LOCKING (POWER SHUTTLE)

Ref	Numero de Pieza	Ctd	Descripción
1	85806170	1	TEE,
2	87542236	1	HOSE, FLEXIBLE,
3	47050685	1	CONNECTOR, HYD.,
4	87552395	1	HOSE, FLEXIBLE,
5	87378609	1	ADAPTER,
6	79072960	1	STRAP, CABLE,

1.88.01/ 3(02) HYDRAULIC SYSTEM FOR "TRANSPORT LOCK" REAR LOCKING (POWER SHUTTLE)

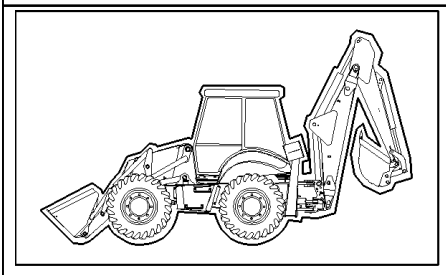

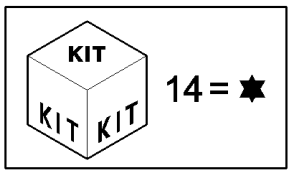

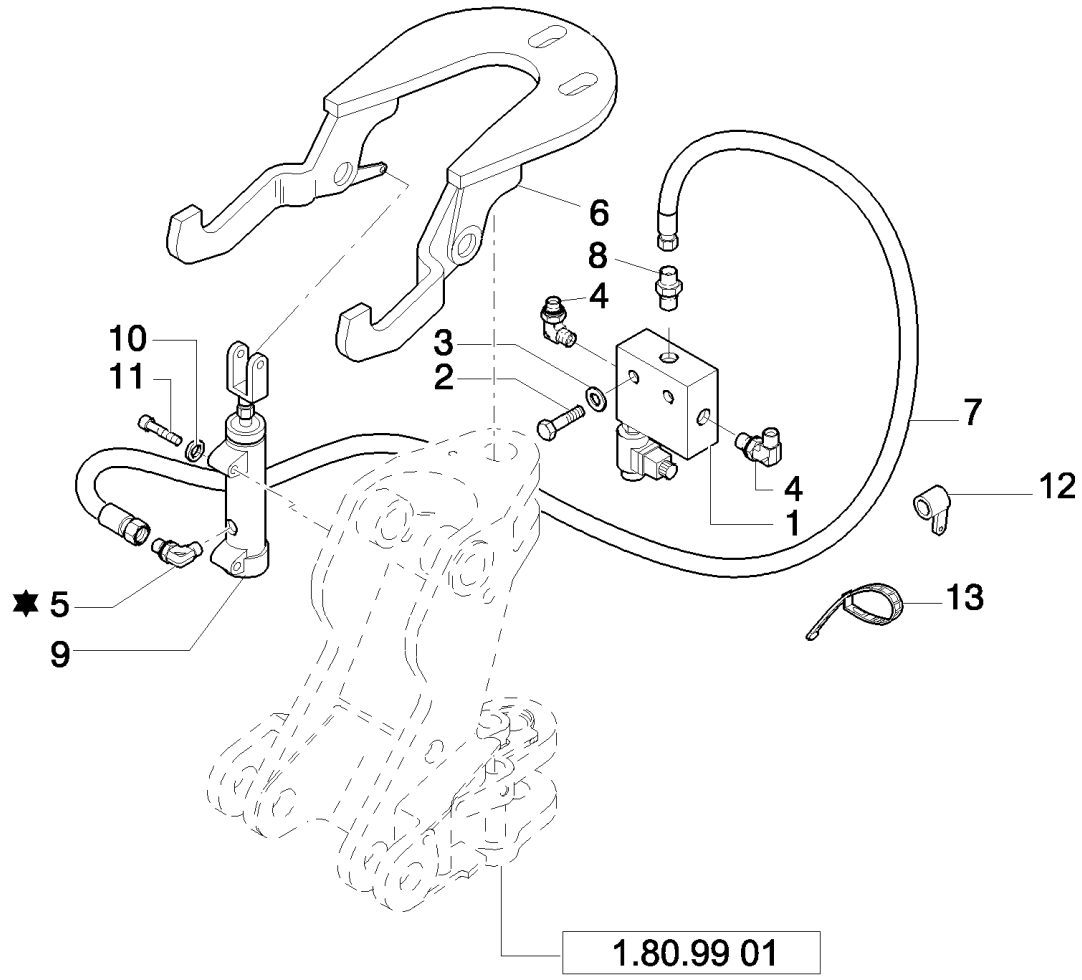

B95LR NA BACKHOE LOADER (1/06-)

1.88.01/ 3(02) HYDRAULIC SYSTEM FOR "TRANSPORT LOCK" REAR LOCKING (POWER SHUTTLE)

Ref	Numero de Pieza	Ctd	Descripción
1	85817265	1	VALVE, SOLENOID,
2	10903221	2	BOLT, Hex, M6 x 40, 8.8,
3	11197779	2	WASHER, SPRING, Belleville, M6.4,
4	85802234	2	ELBOW,
5	85824089	1	ELBOW,
6	85803637	2	HOOK,
7	87552396	1	HOSE, FLEXIBLE,
8	85803312	1	CONNECTOR, HYD.,
9	87337288	1	CYLINDER, , UP TO S/N 031056559
9	87362349	1	CYLINDER, , FROM S/N 031056560
10	11193879	2	WASHER, SPRING, Belleville, M8.4,
11	16044221	2	BOLT, Hex, M8 x 50, 8.8,
12	14560187	1	STRAP, CABLE, 178mm lg, L=203.2 mm
13	85803332	4	STRAP, CABLE, M4.8 x 180,
14	87337354	1	KIT,

1.88.09(01) DISTRIBUTOR VALVE SUPPORT (CENTER PIVOT)

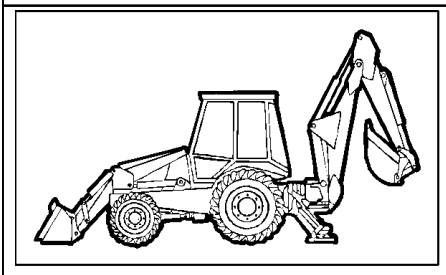

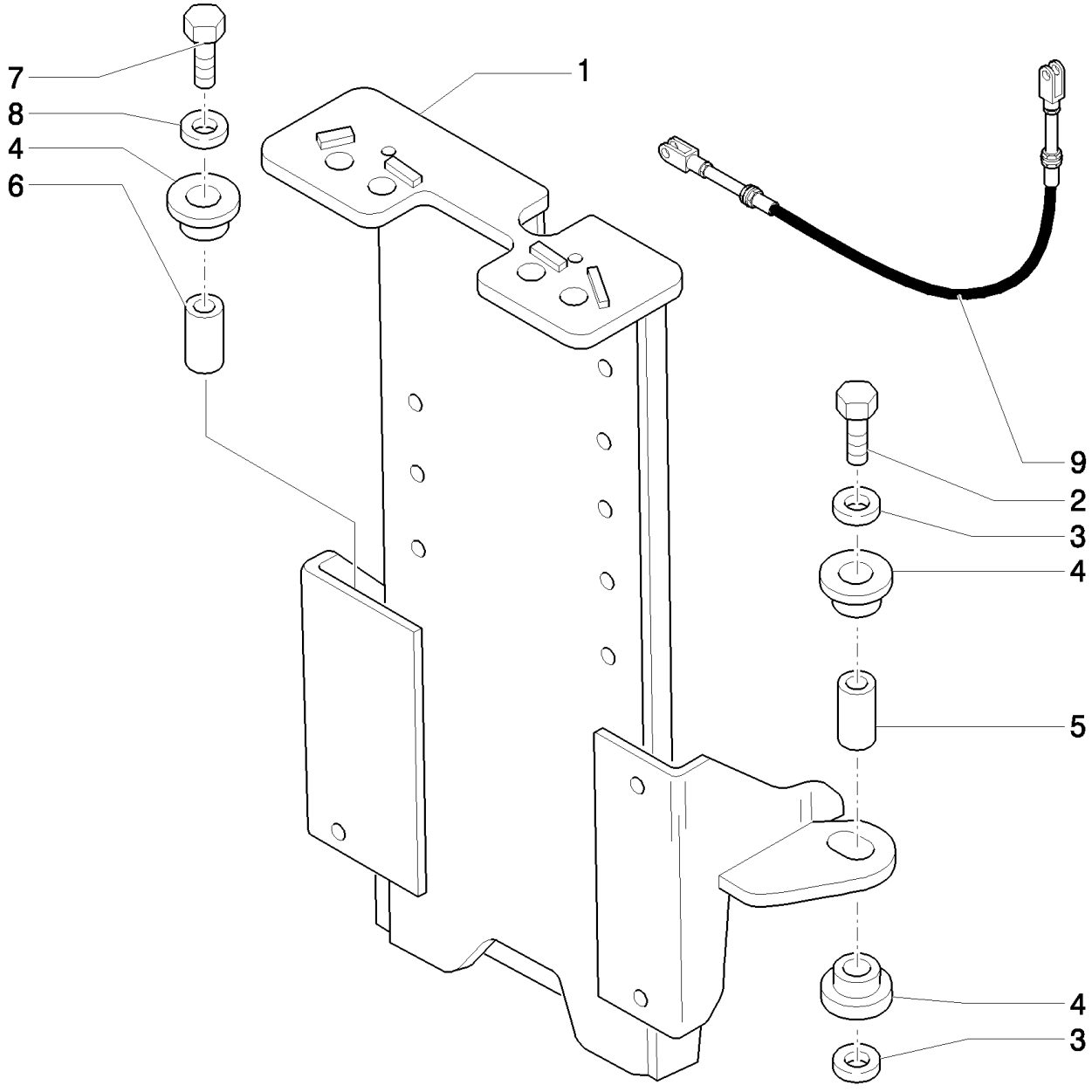

B95LR NA BACKHOE LOADER (1/06-)

1.88.09(01) DISTRIBUTOR VALVE SUPPORT (CENTER PIVOT)

Ref	Numero de Pieza	Ctd	Descripción
1	85820167	1	SUPPORT,
2	15215821	2	BOLT, Hex, M12 x 60, 8.8, Full Thd,
3	85802618	5	WASHER, SEALING, 13x41x3
4	87348165	6	ISOLATOR,
5	85817252	2	BUSHING, 12.5 x 16.5 x 24
6	85820172	1	BUSHING, 12.5 x 16.5 x 22
7	15216421	1	BOLT, Hex, M12 x 90, 8.8, Full Thd,
8	85820170	1	SPACER,
9	85805409	2	CABLE, , Valid also for SIDE SHIFT version

Mechanical Version

1.88.11(01) ARMS AND JOINTS

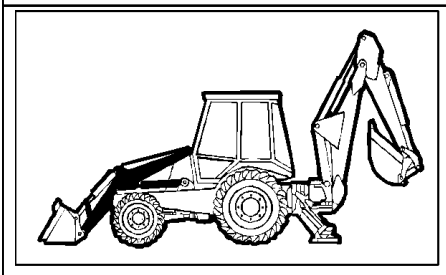

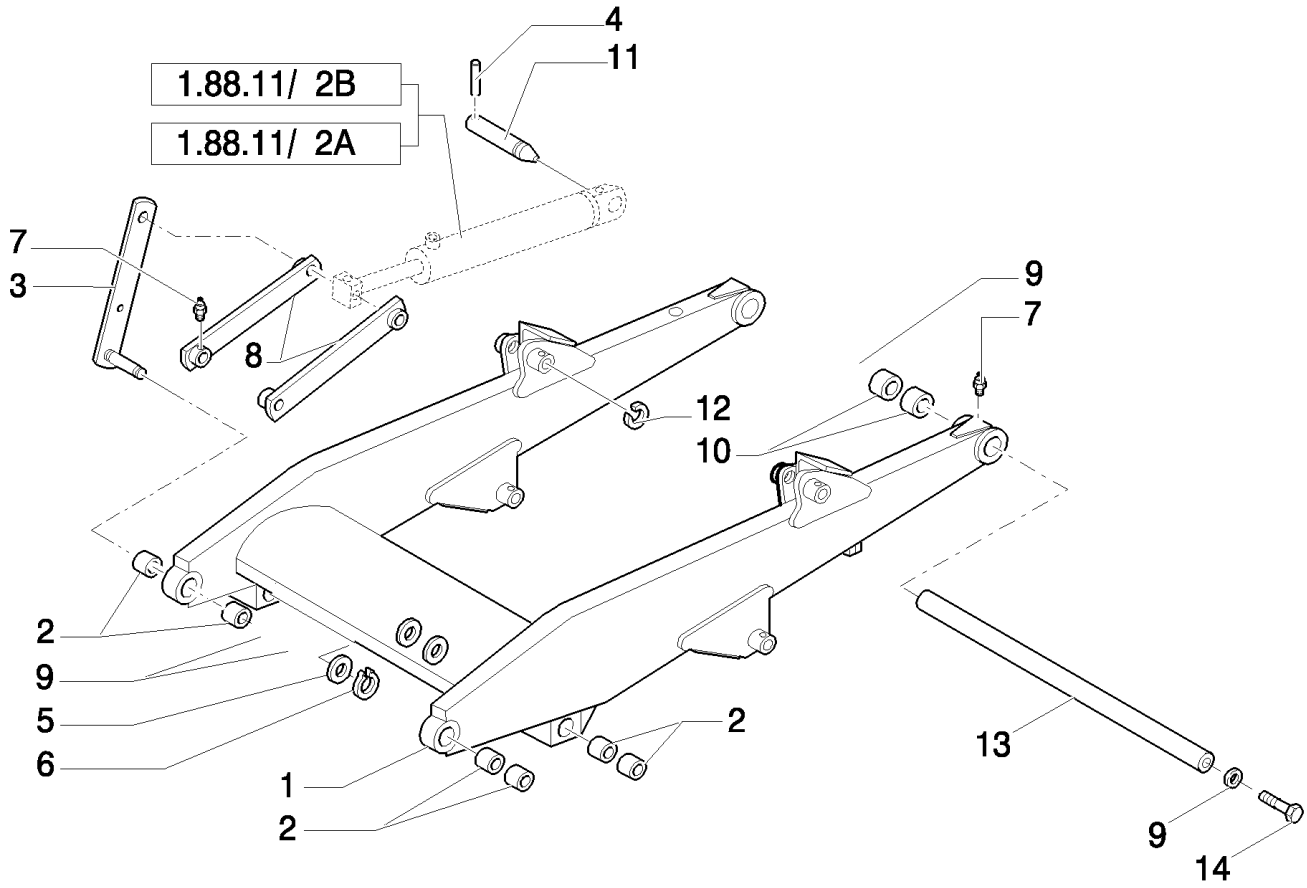

B95LR NA BACKHOE LOADER (1/06-)

1.88.11(01) ARMS AND JOINTS

Ref	Numero de Pieza	Ctd	Descripción
1	85801011	1	ARM, LIFT, Also See Figure 1.11.0(01) For Arm
2	290621	8	BUSHING,
3	85801052	1	LINK, RH
3	85801053	1	LINK, LH
4	85802993	6	PIN,
5	191823	2	WASHER,
6	293312	2	RING, SNAP,
7	87901S8	10	NIPPLE, LUBE, 1/8"-27 X .66" lg,
8	85801057	4	LINK,
9	85828254	2	SHIM,
10	291549	4	BUSHING,
11	85801051	2	PIN, M8X23
12	85802992	1	RING,
13	85801087	1	PIN, Ø50 L= 1057
14	11383634	1	BOLT, Hex, M20 x 1.5 x 50, 10.9, Full Thd,

1.88.11/ 1B(01) LIFT CYLINDER

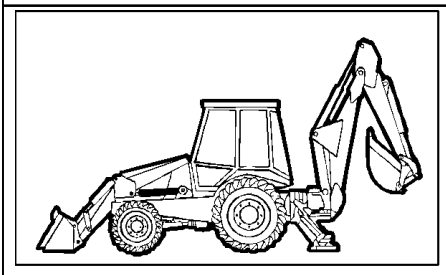

KIT

25 = ●

4 = ■

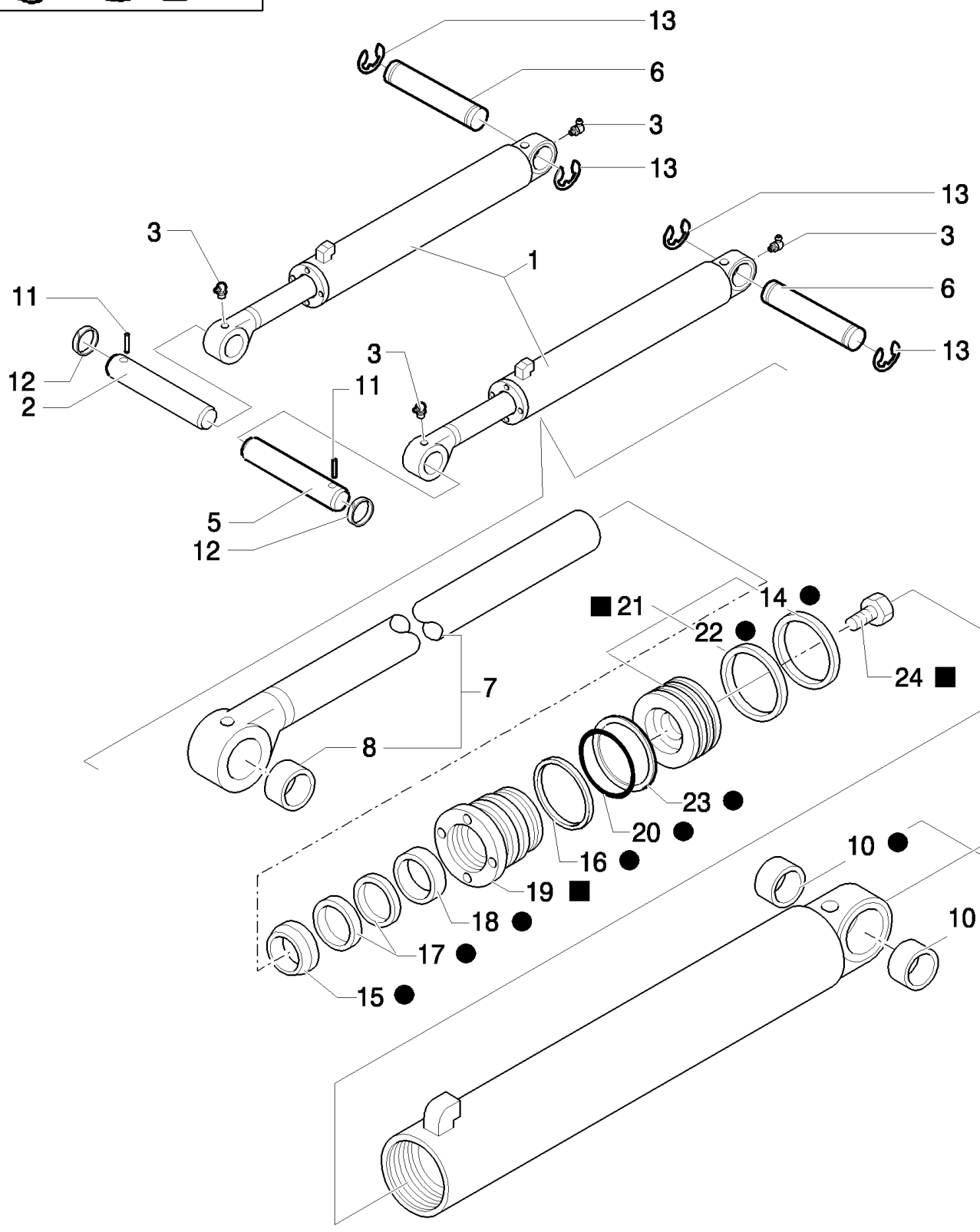

B95LR NA BACKHOE LOADER (1/06-)

1.88.11/ 1B(01) LIFT CYLINDER

Ref	Numero de Pieza	Ctd	Descripción
1	87315525	2	HYDRAULIC CYLINDER, ASSY,LOADER
2	85801049	1	PIN, 38mm x 159mm
3	81818824	4	NIPPLE, LUBE, 90º, 1/8"-27 NPT,
4	87424196	1	KIT, REPAIR,
5	85801050	1	PIN, 38mm x 183mm
6	87402742	2	PIN,
7	85800103	2	ROD, , Includes 8
8	81902174	4	BUSHING,
9	85800105	2	TUBE,
10	81901897	4	BUSHING,
11	85802993	2	PIN,
12	85802992	2	RING,
13	47049094	4	CIRCLIP,
14	87408634	2	Ring, Wear,
15	87414969	2	SEAL,
16	87440401	2	BACK-UP RING,
17	87414970	2	KIT, SEALS,
18	87414966	2	BEARING, NYLON,
19	87415116	2	GLAND,
20	87421144	2	O-RING, 5/8x0.097
21	87405859	2	PISTON, , Includes 14, 22, 23
22	87414333	2	SEAL,
23	87414341	2	RING,
24	87428020	2	SCREW,
25	87428628	1	KIT, SEALS,

1.88.11/ 2(02) LOADER BUCKET CONTROL CYLINDER

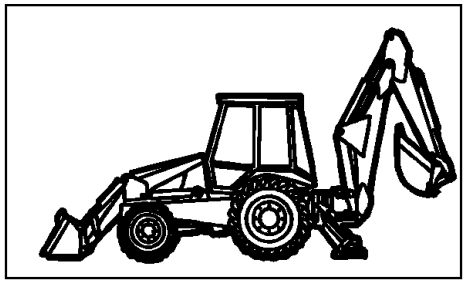

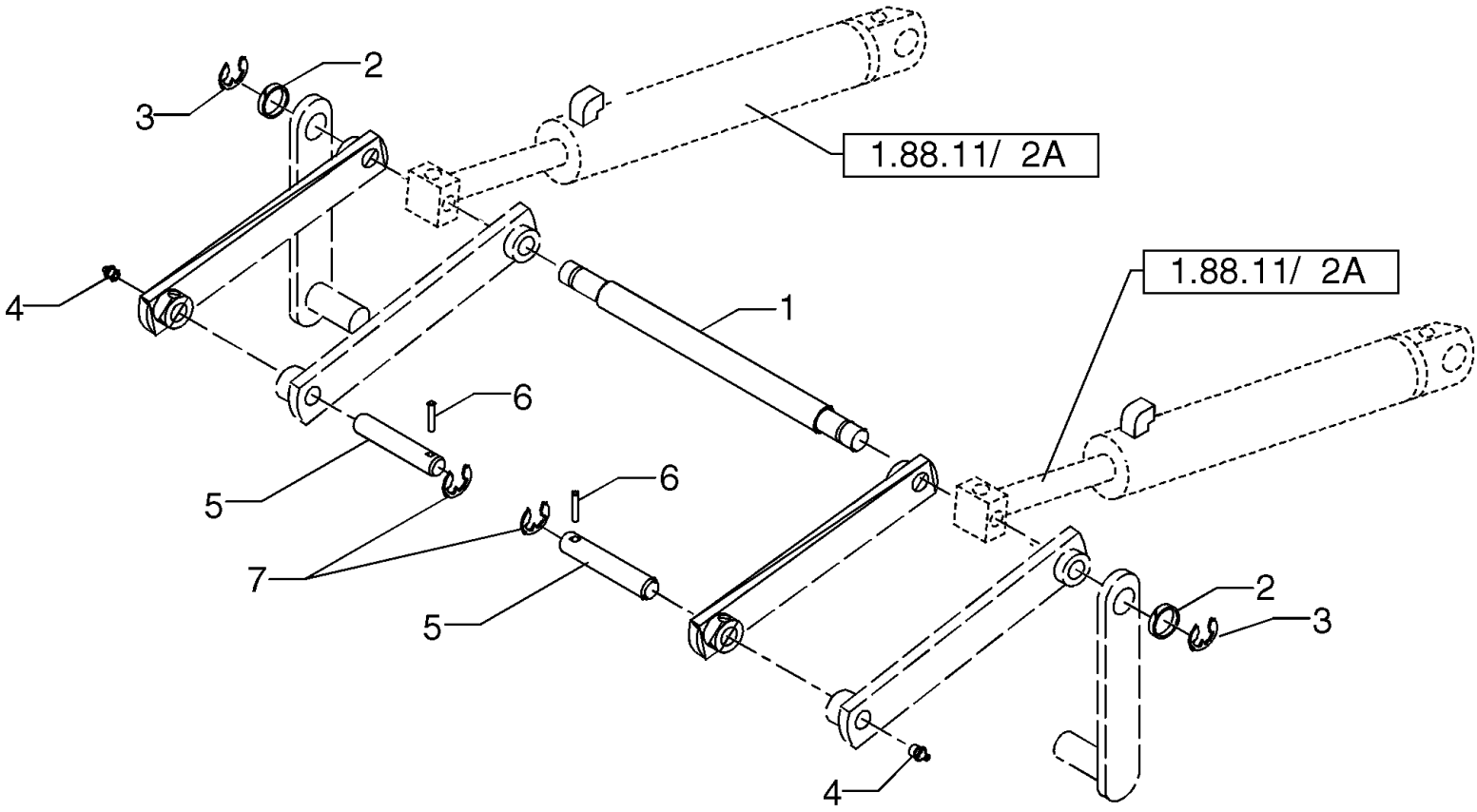

BS06K627

B95LR NA BACKHOE LOADER (1/06-)

1.88.11/ 2(02) LOADER BUCKET CONTROL CYLINDER

Ref	Numero de Pieza	Ctd	Descripción
1	85803635	1	SPACER,
2	191823	2	WASHER, 1/8-27-90GR
3	293312	2	RING, SNAP,
4	87901S8	2	NIPPLE, LUBE, 1/8"-27 X .66" lg,
5	85801049	2	PIN, 38mm x 159mm
6	85802993	2	PIN,
7	85802992	2	RING,

1.88.11/ 2A(01) LOADER BUCKET CONTROL CYLINDER

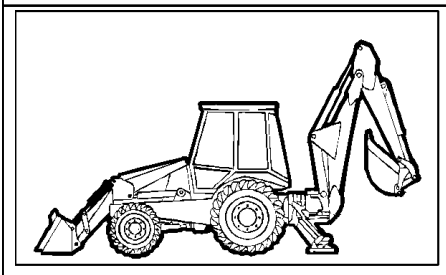

KIT
KIT KIT
13 = ●
19 = ■

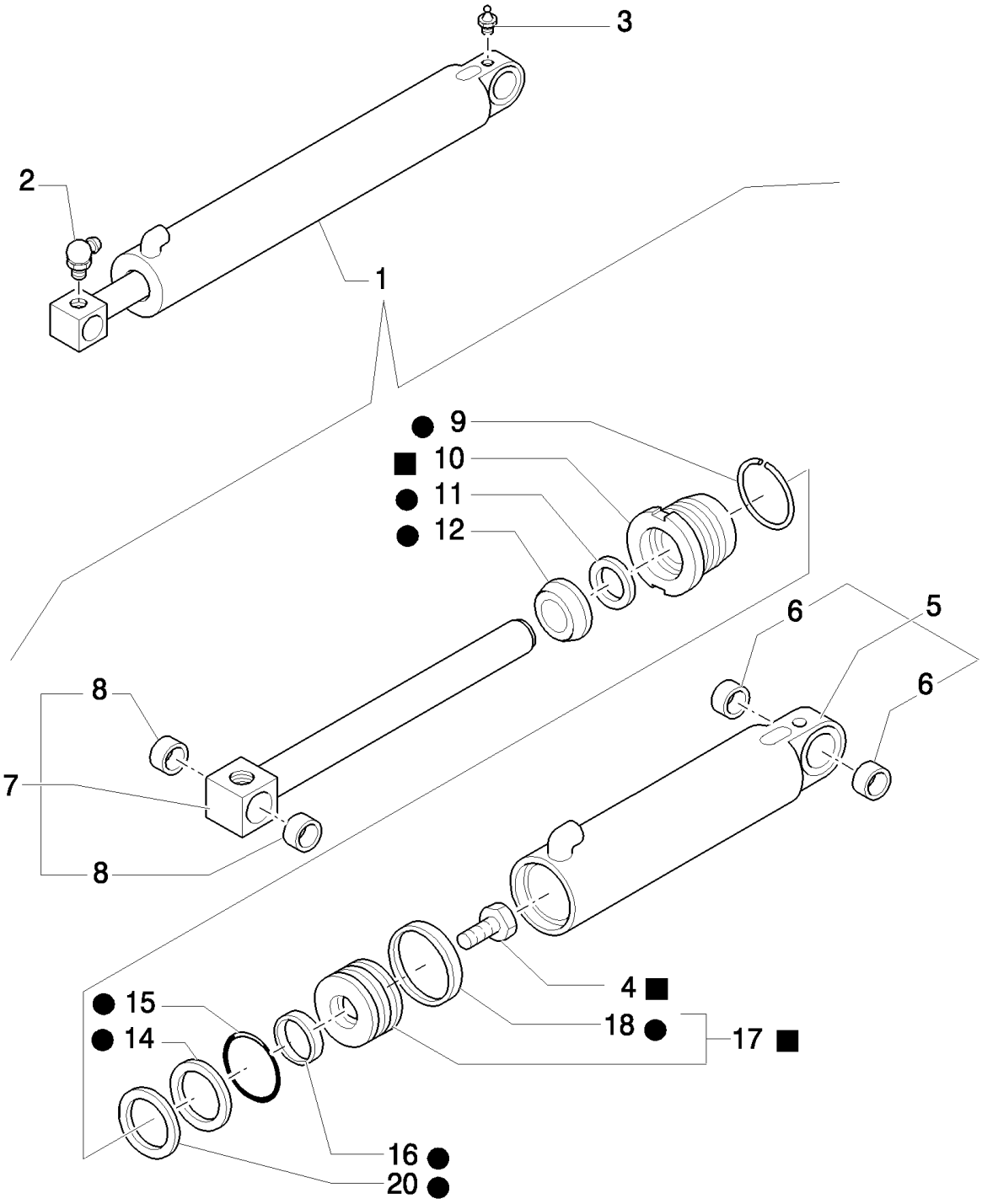

B95LR NA BACKHOE LOADER (1/06-)

1.88.11/ 2A(01) LOADER BUCKET CONTROL CYLINDER

Ref	Numero de Pieza	Ctd	Descripción
1	87315521	2	HYDRAULIC CYLINDER, ASSY,LOADER BUCKET
2	81818824	2	NIPPLE, LUBE, 90º, 1/8"-27 NPT, 1/8-27-90GR
3	83416242	2	NIPPLE, LUBE, 1/8"-27
4	87428020	2	SCREW,
5	85800504	2	TUBE,
6	81902174	2	BUSHING,
7	83962811	2	ROD, , Includes 8
8	83902710	4	BUSHING,
9	83937315	2	WIRE, RETAINING,
10	87415115	2	GLAND,
11	87414965	2	KIT, SEALS,
12	87414964	2	WIPER,
13	87428627	1	KIT, SEALS,
14	87414340	2	RING,
15	87421143	2	O-RING,
16	87414332	2	SEAL,
17	87406750	2	PISTON, , Includes 14, 16, 18
18	87408633	2	Ring, Wear,
19	87424195	1	KIT, REPAIR,
20	87440396	1	BACK-UP RING,

1.88.11/ 3(01) LIFT CYLINDER AND BUCKET PIPES

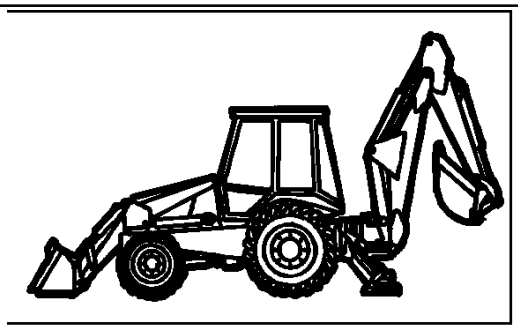

BS07A051

B95LR NA BACKHOE LOADER (1/06-)

1.88.11/ 3(01) LIFT CYLINDER AND BUCKET PIPES

Ref	Numero de Pieza	Ctd	Descripción
1	16044321	2	BOLT, Hex, M8 x 55, 8.8,
2	87390514	2	PLATE,
3	87390511	4	CLAMP,
4	85802961	4	ELBOW,
5	390955S36	4	CONNECTOR, HYD., , Includes 7, 10
6	85802743	2	CLAMP, HOSE,
7	9992298	8	O-RING, -014, 90 Duro, .489" ID x .070" Thk,
8	85803008	2	CLAMP, HOSE,
9	85805567	2	BLOCK,
10	167269	10	O-RING, 10-1, 90 Duro, .755" ID x .097" Thk,
11	85801596	2	TUBE,
12	87303909	2	BLOCK,
13	14560187	2	STRAP, CABLE, 178mm lg, L=203.2 mm

1.88.11/ 6(02) STABILIZER CYLINDERS (CENTER PIVOT)

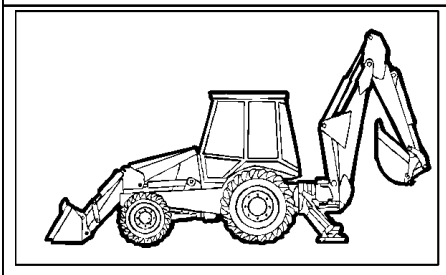

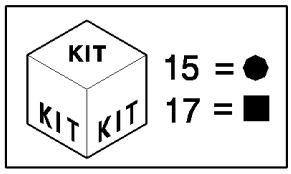

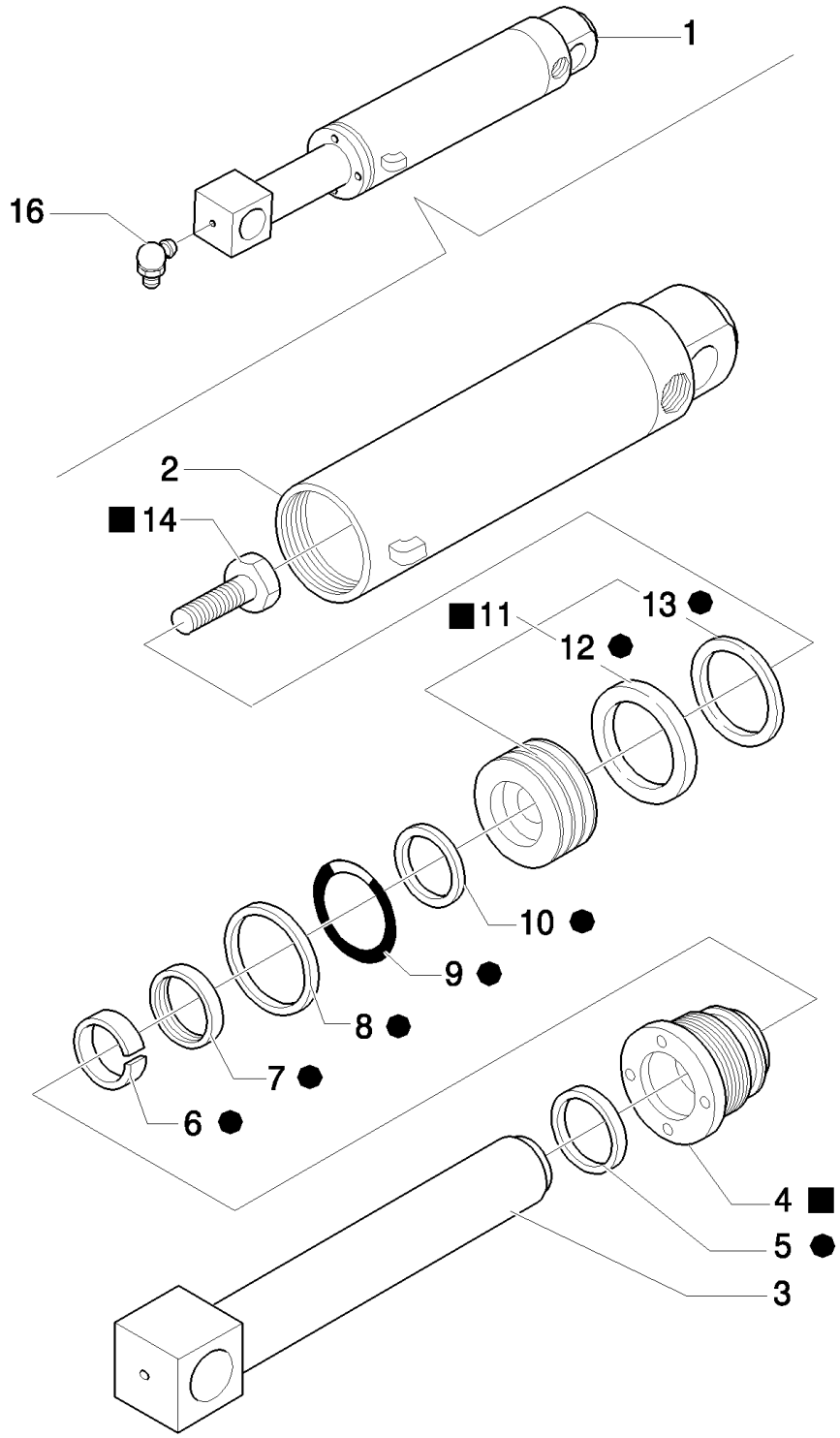

B95LR NA BACKHOE LOADER (1/06-)

1.88.11/ 6(02) STABILIZER CYLINDERS (CENTER PIVOT)

Ref	Numero de Pieza	Ctd	Descripción
1	87315528	2	HYDRAULIC CYLINDER,
2	85800604	2	BARREL,
3	85800603	2	ROD,
4	87412400	2	CYLINDER HEAD,
5	87414974	2	WIPER,
6	87414971	2	BUSHING,
7	87414975	2	KIT, SEALS,
8	87440410	2	BACK-UP RING,
9	87421145	2	O-RING,
10	87414342	2	RING,
11	87406921	2	PISTON, , Includes 12, 13
12	87414334	2	SEAL,
13	87408635	2	Ring, Wear,
14	87428011	2	BOLT,
15	87428630	1	KIT, SEALS,
16	87916S8	2	NIPPLE, LUBE,
17	87424198	2	KIT, 1/8"-27

1.88.11/ 7D(01) PIPES FOR STABILIZER CYLINDERS (CENTER PIVOT PILOT)

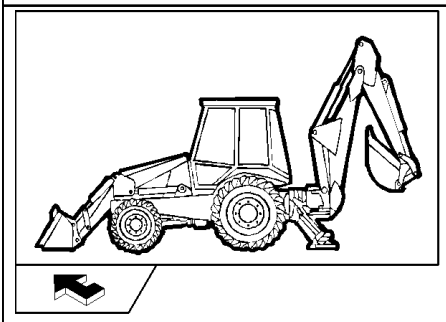

KIT 20 = ●

B95LR NA BACKHOE LOADER (1/06-)

1.88.11/ 7D(01) PIPES FOR STABILIZER CYLINDERS (CENTER PIVOT PILOT)

Ref	Numero de Pieza	Ctd	Descripción
1	83963374	2	CONNECTOR, HYD., , Includes 2, 3
2	89992298	6	O-RING,
3	80128825	6	O-RING,
4	83985067	6	CONNECTOR, HYD.,
5	85802820	2	VALVE, CHECK, , Includes 20 To 23
6	85807873	4	HOSE, FLEXIBLE, 946mm lg,
7	85802965	2	CONNECTOR, HYD.,
8	85803008	2	CLAMP, HOSE,
9	87303912	2	BLOCK,
10	87390514	2	PLATE,
11	15213621	2	SCREW, Hex, M8 x 55, 8.8, Full Thd,
12	14048211	2	NUT, LOCK, M8 x 1.25, Cl 8,
13	11193879	6	WASHER, SPRING, Belleville, M8.4,
14	87390534	2	PLATE,
15	85807874	4	HOSE, FLEXIBLE, 1676mm lg,
16	87390511	4	CLAMP,
17	85802620	2	TUBE, HYD,
18	16044421	4	BOLT, Hex, M8 x 60, 8.8,
19	85803517	2	BUSHING, RUBBER,
20	85821126	2	KIT,
21	85805258	4	CONNECTOR, HYD., 9/16"-16 ORS x 1 1/16"-12, O-Ring,
22	85820159	1	PLUNGER,
23	85820160	2	VALVE, HYDRAULIC,
24	83983763	2	CONNECTOR, HYD.,
25	86511208	2	ELBOW,

1.88.11/ 7F(01) PIPES FOR STABILIZER CYLINDERS (CENTER PIVOT MECHANIC) - NA

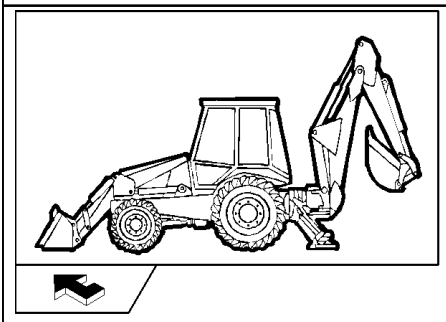

KIT 22 = ●

B95LR NA BACKHOE LOADER (1/06-)

1.88.11/ 7F(01) PIPES FOR STABILIZER CYLINDERS (CENTER PIVOT MECHANIC) - NA

Ref	Numero de Pieza	Ctd	Descripción
1	83963374	6	CONNECTOR, HYD., , Includes 2, 3
2	89992298	6	O-RING,
3	80128825	6	O-RING,
4	83985067	8	CONNECTOR, HYD.,
5	85802820	2	VALVE, CHECK, , Includes 20 To 22
6	85807873	4	HOSE, FLEXIBLE, 946mm lg,
7	85802965	2	CONNECTOR, HYD.,
8	85803008	2	CLAMP, HOSE,
9	87303912	2	BLOCK,
10	87390514	2	PLATE,
11	15213621	2	SCREW, Hex, M8 x 55, 8.8, Full Thd,
12	14048211	2	NUT, LOCK, M8 x 1.25, Cl 8,
13	11193879	6	WASHER, SPRING, Belleville, M8.4,
14	87390534	2	PLATE,
15	85807874	4	HOSE, FLEXIBLE, 1676mm lg,
16	87390511	4	CLAMP,
17	85802620	2	TUBE, HYD,
18	16044421	4	BOLT, Hex, M8 x 60, 8.8,
19	85803517	2	BUSHING, RUBBER,
20	85821126	2	KIT,
21	85820160	2	VALVE, HYDRAULIC,
22	85820159	1	PLUNGER,

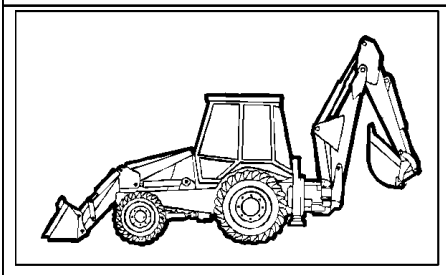

LB90.B-LB95.B-LB110.B

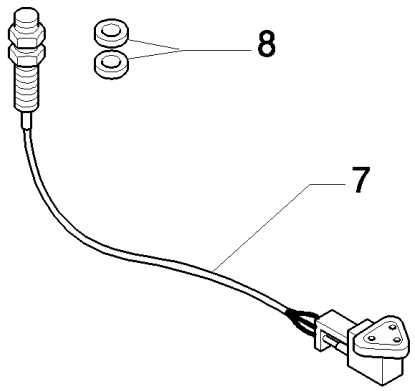

LB115.B

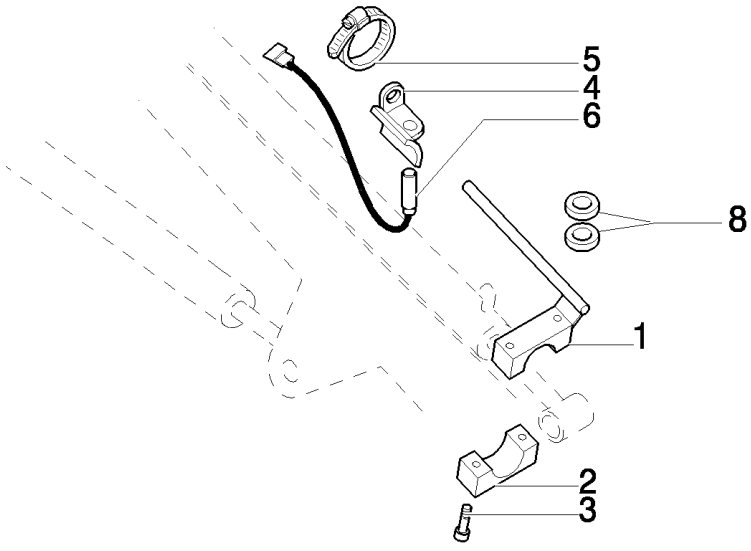

B95LR NA BACKHOE LOADER (1/06-)

1.88.11/ 8(01) RETURN TO DIG SENSOR

Ref	Numero de Pieza	Ctd	Descripción
1	85805108	1	ROD,
2	85805111	1	BLOCK,
3	14305621	2	SCREW, Hex Soc Hd, M6 x 35, 8.8,
4	85805113	1	SUPPORT,
5	85803010	2	CLAMP, HOSE,
6	85805619	1	SENSOR, Pigtail Length = 2600mm
7	85802950	1	SENSOR, Pigtail Length = 400mm
8	14497001	4	WASHER, LOCK, 19X34X3

1.88.11/ 9A(01) CYLINDERS AND ROTATION PLATE

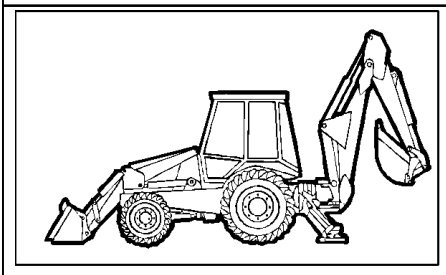

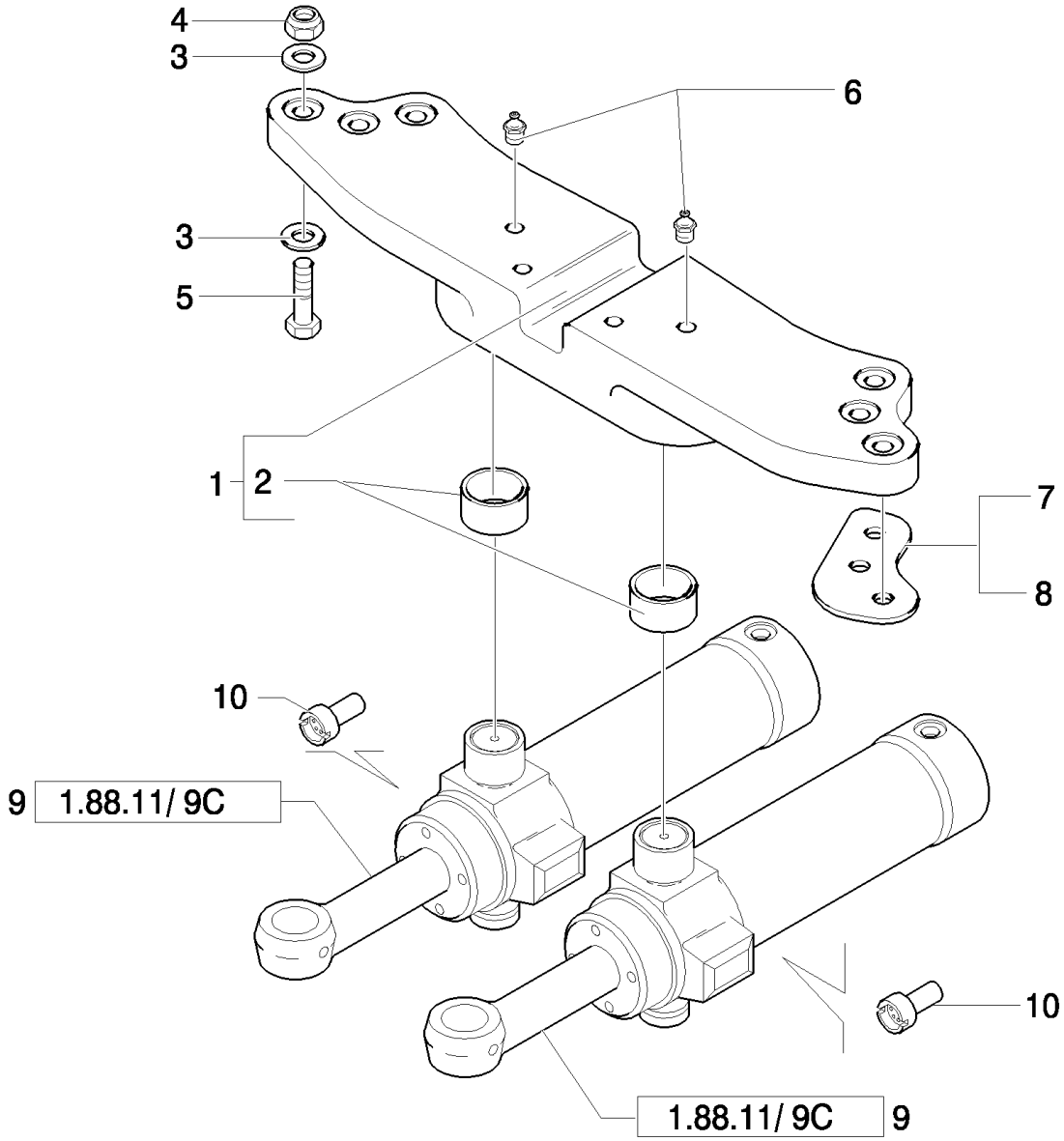

B95LR NA BACKHOE LOADER (1/06-)

1.88.11/ 9A(01) CYLINDERS AND ROTATION PLATE

Ref	Numero de Pieza	Ctd	Descripción
1	85803617	1	PLATE, RETAINING,
2	83910645	2	BUSHING,
3	10520431	12	WASHER,
4	12575121	6	NUT, LOCK, M20 x 1.5, Cl 10,
5	15988934	6	BOLT, Hex, M20 x 90, 10.9,
6	87901S8	4	NIPPLE, LUBE, 1/8"-27 X .66" lg,
7	85801153	4	SHIM,
8	85803039	2	SHIM,
9	87315529	2	HYDRAULIC CYLINDER,
10	85800965	2	REDUCER,

1.88.11/ 9C(01) SWING CYLINDERS BACKHOE

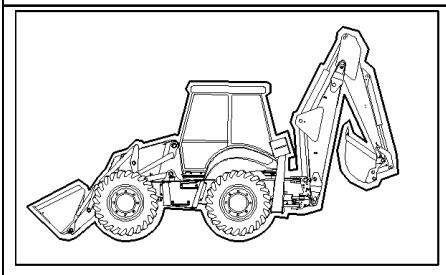

KIT KIT KIT 11 = ●

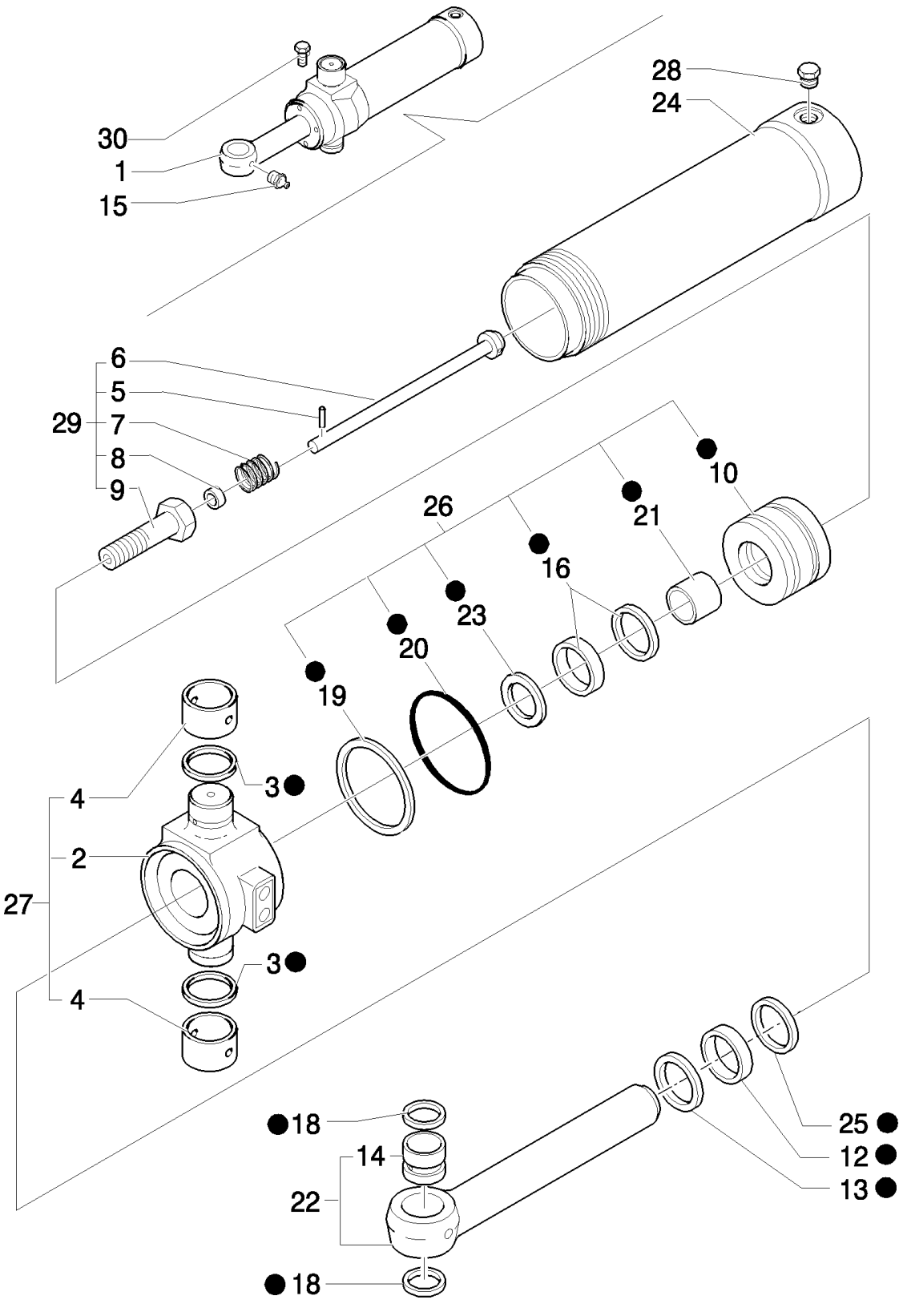

B95LR NA BACKHOE LOADER (1/06-)

1.88.11/ 9C(01) SWING CYLINDERS BACKHOE

Ref	Numero de Pieza	Ctd	Descripción
1	87315529	1	HYDRAULIC CYLINDER,
2	87422783	1	TRUNNION,
3	D7NNC513E	2	SEAL, Seal
4	83912378	2	BUSHING,
5	D7NNC511A	1	PIN,
6	85800990	1	ROD,
7	E0NNB543AA	1	SPRING,
8	E9NNE602AA	1	RING,
9	87428014	1	SCREW, M30x2x100
10	87424838	1	PISTON,
11	87428631	1	KIT, SEALS,
12	87408636	1	RING,
13	87414335	1	SEAL, HYD-CYLINDER,
14	85800303	1	BUSHING,
15	87901S8	2	NIPPLE, LUBE, 1/8"-27 X .66" lg,
16	87414970	1	KIT, SEALS, 50 mm Rod
18	D9NNC513BA	2	SEAL,
19	85800007	1	BACK-UP RING, Back-up
20	87421149	1	O-RING, 4.734" ID x .139" Thk
21	87414966	1	BEARING, NYLON, 50 mm Rod
22	87433032	1	ROD,
23	87414969	1	SEAL, 50 mm Rod
24	87455335	1	CYLINDER HEAD,
25	87414343	1	RING,
26	87445307	1	KIT, SEALS,
27	87445758	1	TRUNNION,
28	353-779	1	3/4-16
29	87424935	1	BOLT,
30	276-2456	1	SCREW, SELF TAPPING, 10-24x3/8

1.88.12/ 3(01) FRONT CONTROL VALVE SUPPORT AND TRANSMISSIONS (CENTER PIVOT)

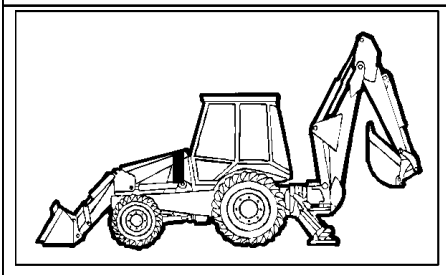

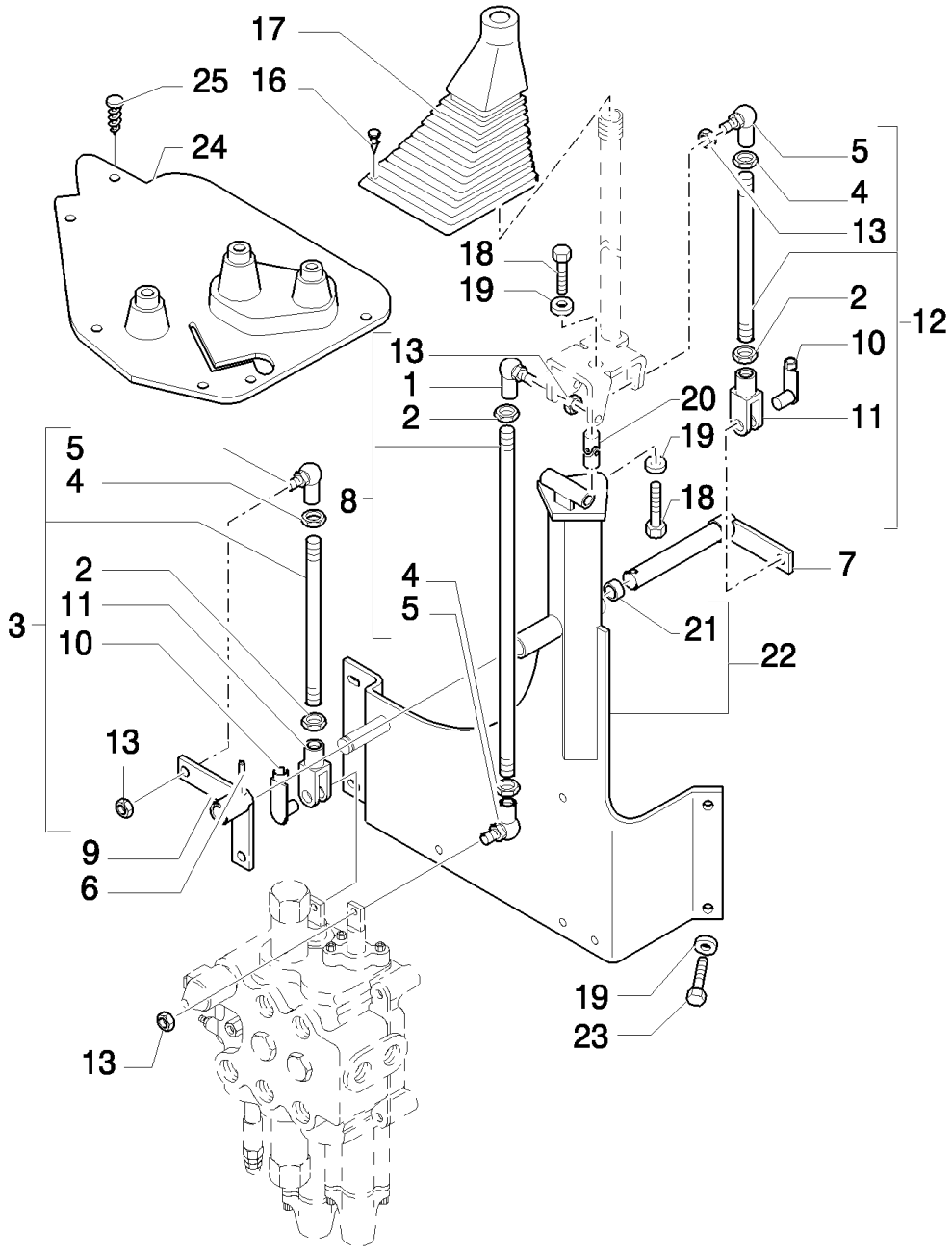

B95LR NA BACKHOE LOADER (1/06-)

1.88.12/ 3(01) FRONT CONTROL VALVE SUPPORT AND TRANSMISSIONS (CENTER PIVOT)

Ref	Numero de Pieza	Ctd	Descripción
1	85804376	1	BALL JOINT,
2	16102311	3	NUT, Thin, M8 x 1.25, Cl 04,
3	85801564	1	TIE-ROD,
4	16102911	3	NUT, Thin, M8 x 1.25, Cl 04, LH,
5	85804375	3	BALL JOINT,
6	85805616	1	PIN,
7	85805692	1	PIN,
8	85801566	1	TIE-ROD,
9	85805690	1	LEVER,
10	85802738	2	RETAINER,
11	11991971	2	CLEVIS,
12	85801562	1	TIE-ROD,
13	14048211	4	NUT, LOCK, M8 x 1.25, Cl 8,
16	14568887	AR	FASTENER,
17	85802842	1	BOOT,
18	15540321	2	BOLT, Hex, M12 x 1.25 x 25, 8.8, Full Thd,
19	11190779	6	WASHER, SPRING, Belleville, M13,
20	85801518	1	JOINT, UNIVERSAL,
21	85802494	2	BUSHING,
22	85817789	1	SUPPORT, , UP TO S/N 031056905
22	87312027	1	SUPPORT, , FROM TO S/N 031056906
23	11112821	4	BOLT, Hex, M12 x 40, 8.8, Full Thd,
24	85804539	1	COVER, w/Cab
25	85808422	6	PLUG, w/Cab

1.91.1(01) CAB / CEILING LIGHT

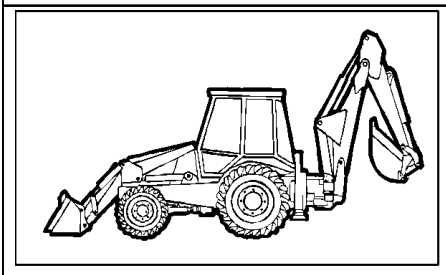

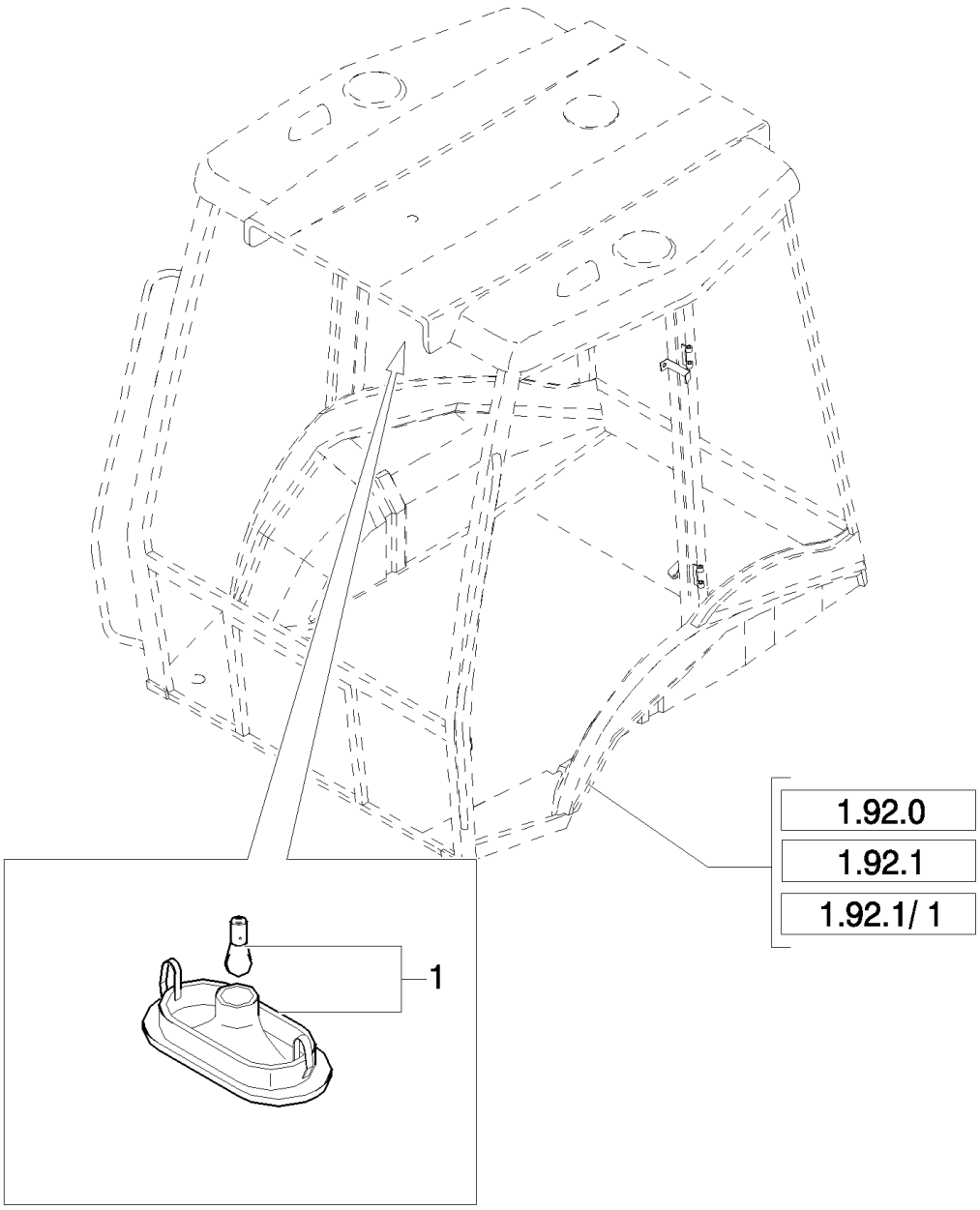

B95LR NA BACKHOE LOADER (1/06-)

1.91.1(01) CAB / CEILING LIGHT

Ref	Numero de Pieza	Ctd	Descripción
1	82022833	1	LAMP, CEILING,

1.91.1/ 1(01) SAFETY FRAME- INSTRUMENTS AND GAUGES

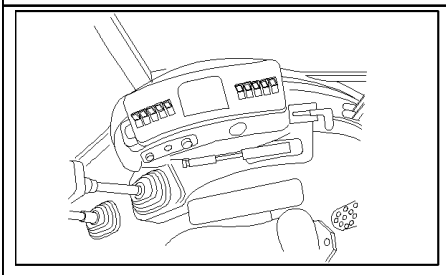

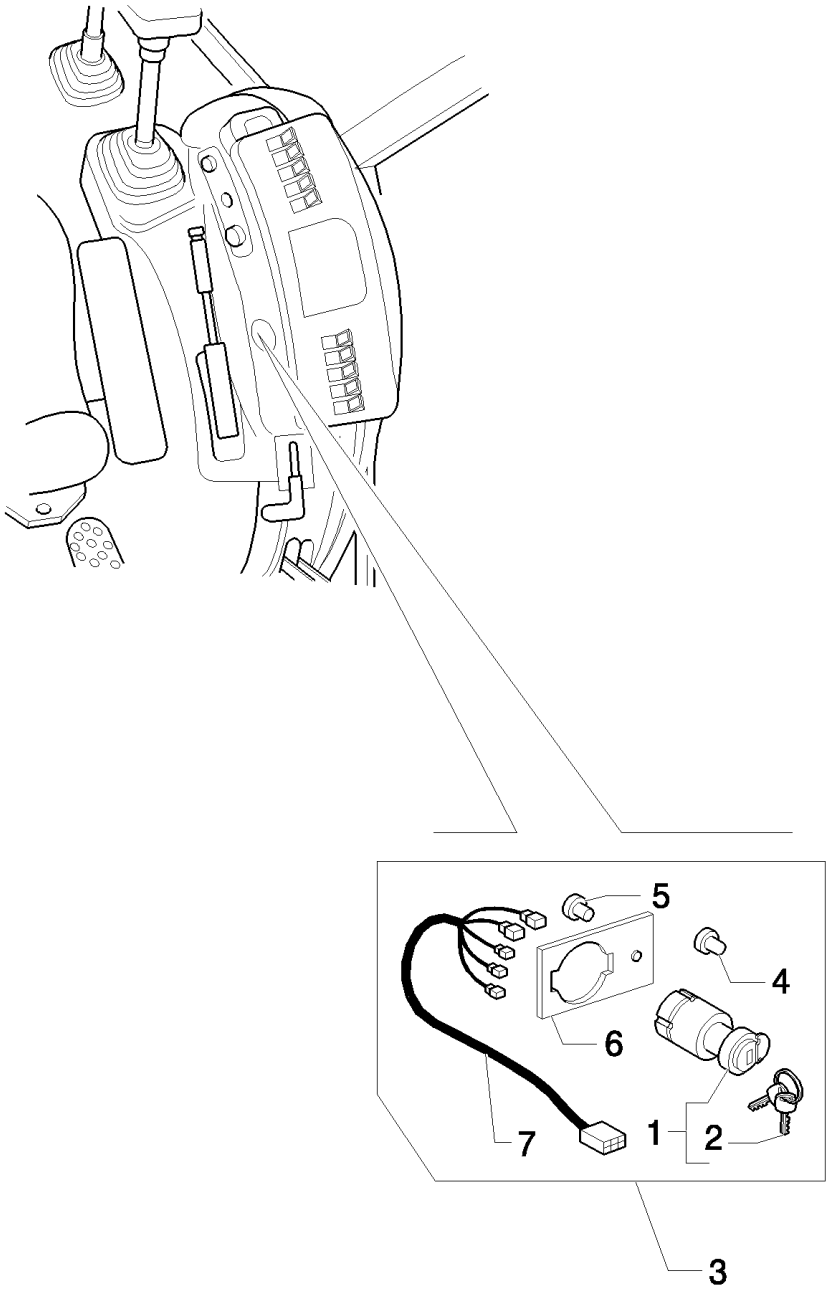

B95LR NA BACKHOE LOADER (1/06-)

1.91.1/ 1(01) SAFETY FRAME- INSTRUMENTS AND GAUGES

Ref	Numero de Pieza	Ctd	Descripción
1	87431469	1	SWITCH, IGNITION,
2	85804675	2	KEY, IGNITION,
3	85807866	1	KIT, CONVERSION,
4	784122	1	PLUG,
5	10427200	1	RIVET, Flat Hd, M4 x 5,
6	85827548	1	PLATE,
7	85807855	1	HARNESS, WIRE,

1.91.3(01) BACK-UP ALARM

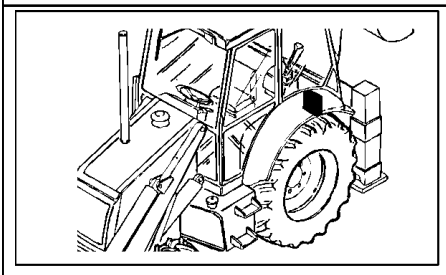

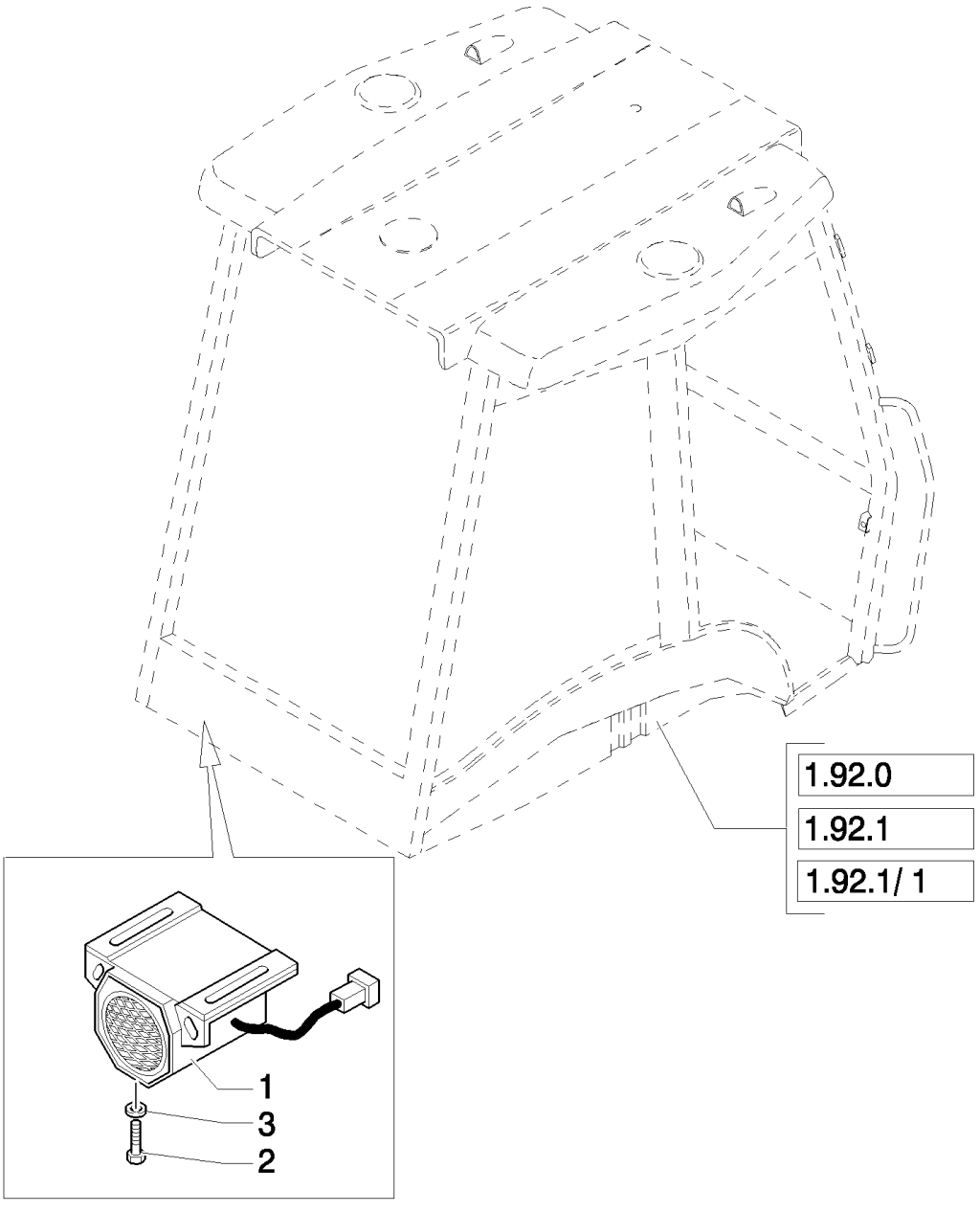

B95LR NA BACKHOE LOADER (1/06-)

1.91.3(01) BACK-UP ALARM

Ref	Numero de Pieza	Ctd	Descripción
1	87303261	1	ALARM,
2	13276424	2	SCREW, Pan Hd, M6 x 20, 8.8,
3	11197774	2	WASHER, SPRING, Belleville, M6.4,

1.91.4(01) IGNITON SWITCH, POWER POINT, FUSE PANEL & SIDE CONSOLE HARNESS (ROPS CP POWER SHUTTLE)

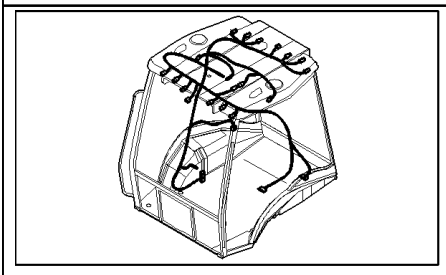

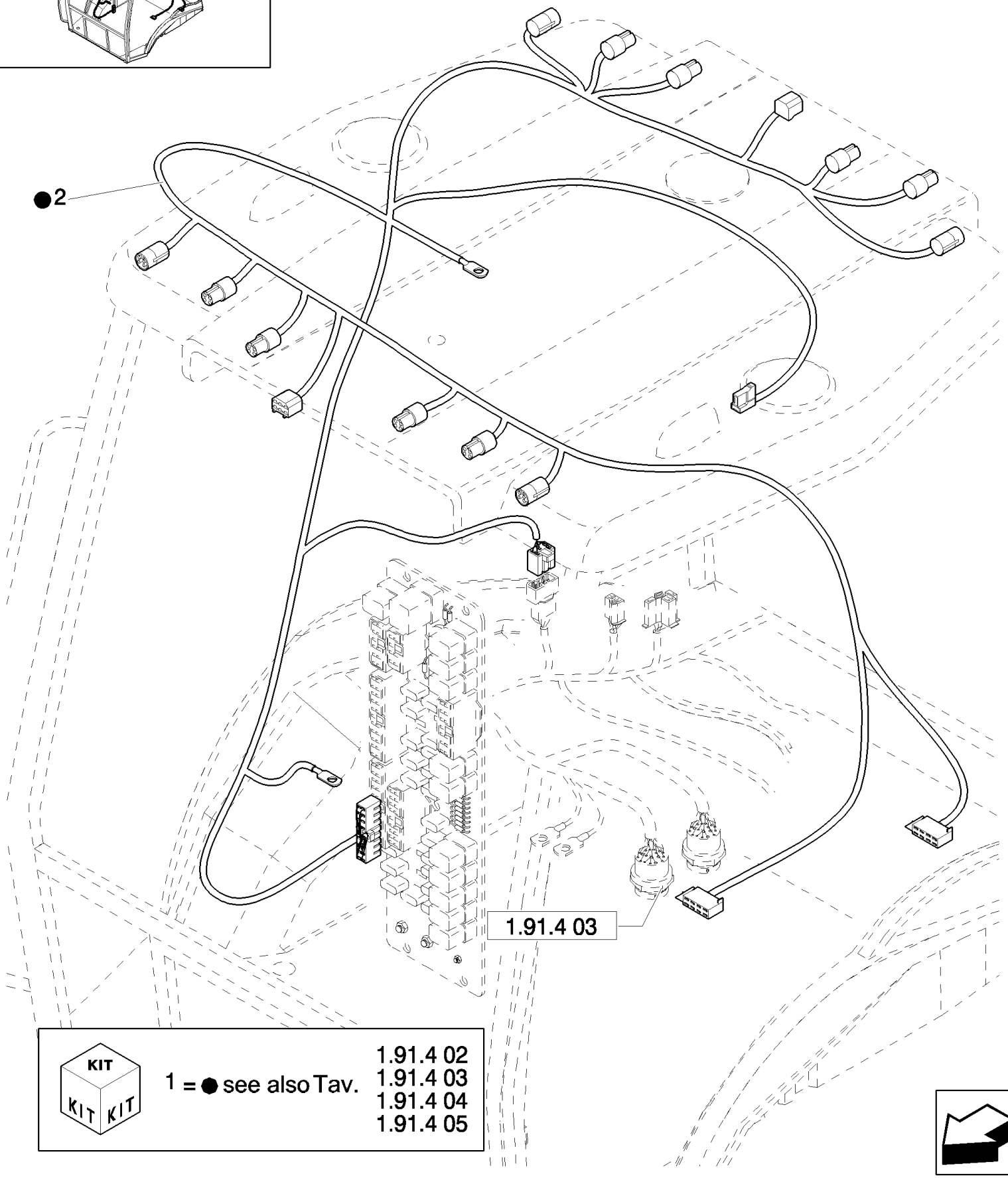

KIT

1 = ● see also Tav. 1.91.4 02, 1.91.4 03, 1.91.4 04, 1.91.4 05

B95LR NA BACKHOE LOADER (1/06-)

1.91.4(01) IGNITON SWITCH, POWER POINT, FUSE PANEL & SIDE CONSOLE HARNESS (ROPS CP POWER SHUTTLE)

Ref	Numero de Pieza	Ctd	Descripción
1	87431460	1	, See Page 1.91.4.02, 1.91.4.03, 1.91.4.04, 1.91.4.05
2	85819724	1	HARNESS, WIRE,

1.91.4(02) IGNITON SWITCH, POWER POINT, FUSE PANEL & SIDE CONSOLE HARNESS (ROPS CP POWER SHUTTLE)

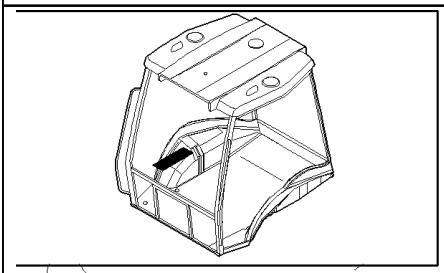

KIT
KIT KIT

1 = ● see also Tav. 1.91.4 01, 1.91.4 03, 1.91.4 04, 1.91.4 05

B95LR NA BACKHOE LOADER (1/06-)

1.91.4(02) IGNITON SWITCH, POWER POINT, FUSE PANEL & SIDE CONSOLE HARNESS (ROPS CP POWER SHUTTLE)

Ref	Numero de Pieza	Ctd	Descripción
1	87431460	1	
2	87431459	1	ELECTRONIC UNIT, CONTROL, , Includes 3 To 9 and 11 To 14
3	11054790	1	FUSE, 5A
4	10519204	1	WASHER, M4 x 9 x .8,
5	11054590	2	FUSE, 3A
6	85806135	1	ISOLATOR,
7	11054890	4	FUSE, 7,5A
8	11054990	6	FUSE, 10 Amp
9	11055090	7	FUSE, 15A
10	85802250	1	DECAL,
11	12574011	1	NUT, LOCK, M4 x .7, Cl 8,
12	85803986	1	RELAY, Flasher
13	85825197	1	BOARD, PRINTED CIRCUIT,
14	85825198	11	RELAY,
15	85826012	1	KIT,
16	85826013	1	
17	85826014	1	HARNESS, WIRE,
18	85826017	1	

1.91.4(03) IGNITON SWITCH, POWER POINT, FUSE PANEL & SIDE CONSOLE HARNESS (ROPS CP POWER SHUTTLE)

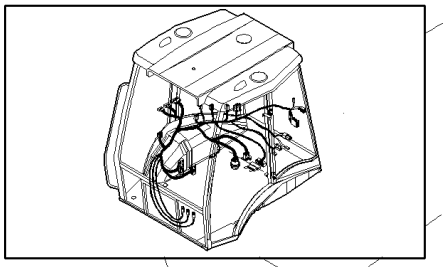

KIT KIT KIT 1 = ● see also Tav.

1.91.4 01
1.91.4 02
1.91.4 04
1.91.4 05

B95LR NA BACKHOE LOADER (1/06-)

1.91.4(03) IGNITON SWITCH, POWER POINT, FUSE PANEL & SIDE CONSOLE HARNESS (ROPS CP POWER SHUTTLE)

Ref	Numero de Pieza	Ctd	Descripción
1	87431460	1	, See Page 1.91.4.01, 1.91.4.02, 1.91.4.04, 1.91.4.05
2	87431461	1	HARNESS, WIRE, , Includes 3
3	85821410	1	BLOCK,
4	85804675	2	KEY, IGNITION,
5	87431469	1	SWITCH, IGNITION, , Includes 4
6	87433891	1	ADAPTER,

1.91.4(04) IGNITON SWITCH, POWER POINT, FUSE PANEL & SIDE CONSOLE HARNESS (ROPS CP POWER SHUTTLE)

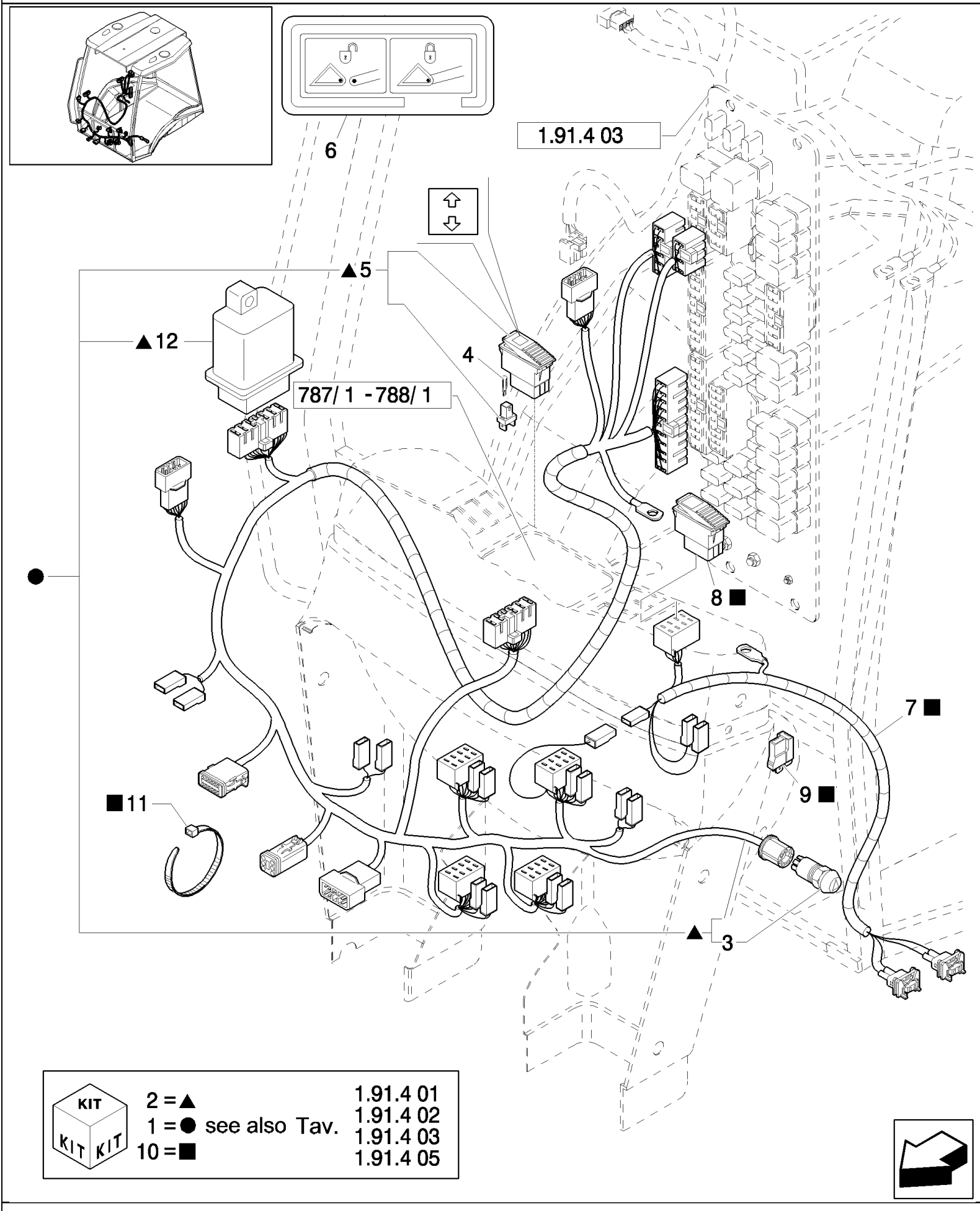

KIT

2 = ▲
1 = ● see also Tav.
10 = ■

1.91.4 01
1.91.4 02
1.91.4 03
1.91.4 05

B95LR NA BACKHOE LOADER (1/06-)

1.91.4(04) IGNITON SWITCH, POWER POINT, FUSE PANEL & SIDE CONSOLE HARNESS (ROPS CP POWER SHUTTLE)

Ref	Numero de Pieza	Ctd	Descripción
1	87431460	1	, See Page 1.91.4.01, 1.91.4.02, 1.91.4.03, 1.91.4.05
2	85819586	1	HARNESS, WIRE, , Includes 3, 5, 12
3	85806133	1	SWITCH, FLASHER, Hazard
4	14143790	1	BULB,
5	85819144	1	SWITCH, Turn Indicator, Includes 4
6	87371904	1	DECAL, , Only for B95TC
7	87371907	1	HARNESS, , Only for B95TC
8	87371905	1	SWITCH, , Only for B95TC
9	87371906	2	DIODE, , Only for B95TC
10	87371903	1	KIT, , Only for B95TC
11	14560087	10	STRAP, CABLE, , Only for B95TC
12	85806132	1	FLASHER UNIT, Circuit Board

1.91.4(05) RH SIDE CONSOLE TRIM, INSTRUMENT CLUSTER & SWITCHES (ROPS CP POWER SHUTTLE)

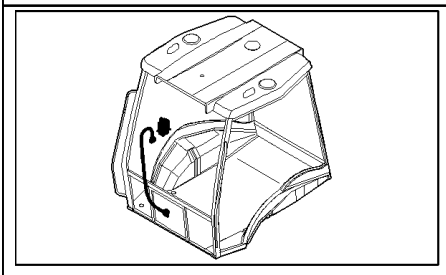

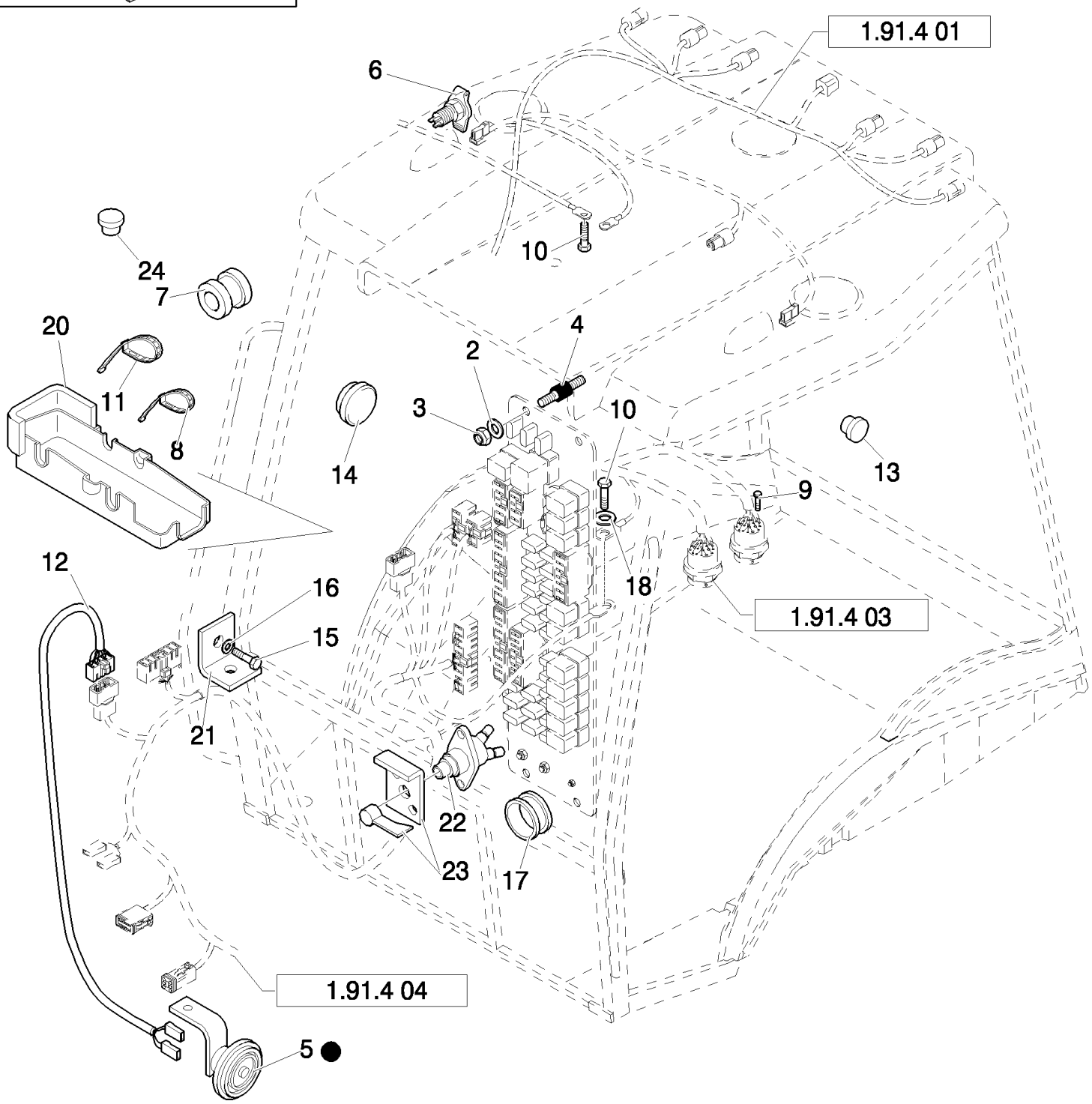

KIT KIT KIT

1 = ● see also Tav.

1.91.4 01
1.91.4 02
1.91.4 03
1.91.4 04

B95LR NA BACKHOE LOADER (1/06-)

1.91.4(05) RH SIDE CONSOLE TRIM, INSTRUMENT CLUSTER & SWITCHES (ROPS CP POWER SHUTTLE)

Ref	Numero de Pieza	Ctd	Descripción
1	87431460	1	, See Page 1.91.4.01, 1.91.4.02, 1.91.4.03, 1.91.4.04
2	10615274	4	WASHER, LOCK, Ext Tooth, M4,
3	12574011	4	NUT, LOCK, M4 x .7, Cl 8,
4	85825129	4	ISOLATOR,
5	47133992	1	HORN,
6	87546419	1	SOCKET, mating part is the plug 86508819
7	10398980	2	GROMMET,
8	5112712	5	CLIP, HOSE, M4.8 x 283,
9	13272214	2	SCREW, Cross Pan Hd, M4 x 16,
10	16043121	2	BOLT, Hex, M8 x 14, 8.8, Full Thd,
11	85805383	26	STRAP, CABLE,
12	87410259	1	HARNESS, WIRE,
13	85802310	1	PLUG,
14	85808460	1	PLUG,
15	10902624	1	BOLT, Hex, M6 x 25, 8.8, Full Thd,
16	11193274	1	WASHER, SPRING, Belleville, M6.4,
17	10398680	6	GROMMET,
18	11193879	2	WASHER, SPRING, Belleville, M8.4,
20	85825136	1	COVER,
21	85821326	1	SUPPORT,
22	87409316	1	SWITCH, Master Disconnect, Only for B110
23	87409315	1	KIT, , Only for B110
24	85825254	1	PLUG,

1.91.4/ 2(01) IGNITON SWITCH, POWER POINT, FUSE PANEL & SIDE CONSOLE HARNESS (CAB CP POWER SHUTTLE)

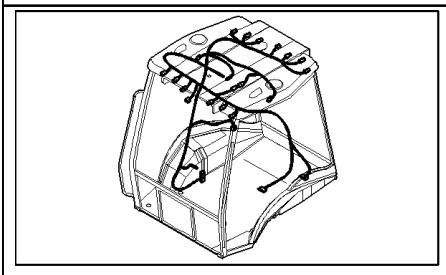

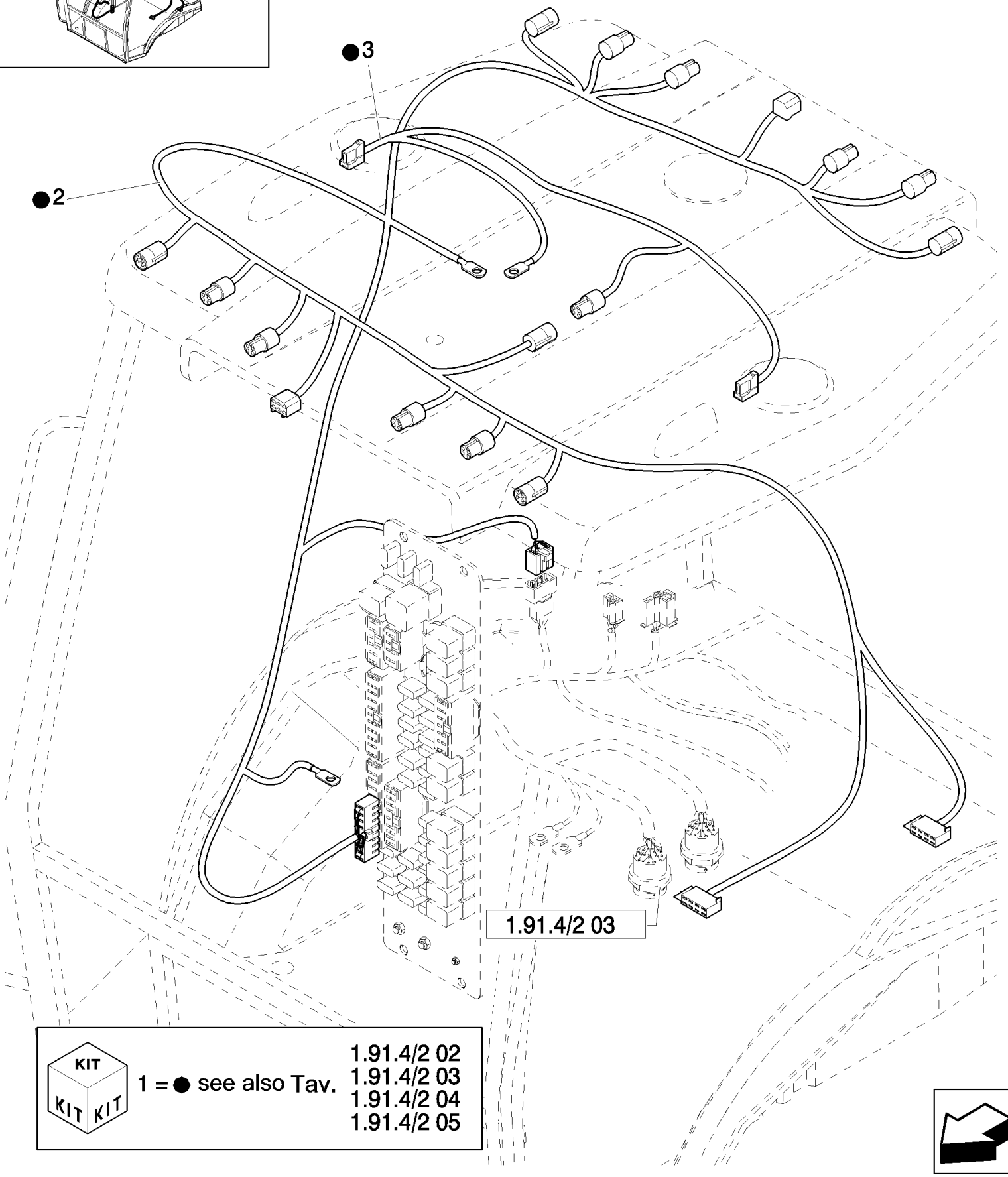

KIT KIT KIT

1 = ● see also Tav. 1.91.4/2 02 1.91.4/2 03 1.91.4/2 04 1.91.4/2 05

B95LR NA BACKHOE LOADER (1/06-)

1.91.4/ 2(01) IGNITON SWITCH, POWER POINT, FUSE PANEL & SIDE CONSOLE HARNESS (CAB CP POWER SHUTTLE)

Ref	Numero de Pieza	Ctd	Descripción
1	87318748	1	HARNESS, , See Page 1.91.4/2.02, 1.91.4/2.03, 1.91.4/2.04, 1.91.4/2.05
2	85825330	1	HARNESS, WIRE,
3	85819568	1	HARNESS, WIRE, Rotary Beacon

1.91.4/ 2(02) IGNITON SWITCH, POWER POINT, FUSE PANEL & SIDE CONSOLE HARNESS (CAB CP POWER SHUTTLE)

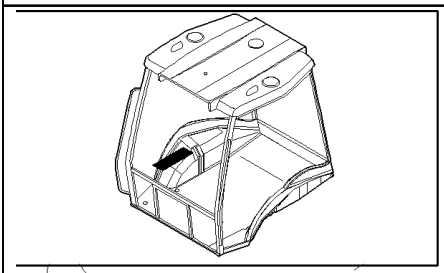

KIT
KIT KIT
1 = ● see also Tav.

1.91.4/2 01
1.91.4/2 03
1.91.4/2 04
1.91.4/2 05

B95LR NA BACKHOE LOADER (1/06-)

1.91.4/ 2(02) IGNITON SWITCH, POWER POINT, FUSE PANEL & SIDE CONSOLE HARNESS (CAB CP POWER SHUTTLE)

Ref	Numero de Pieza	Ctd	Descripción
1	87318748	1	HARNESS, , See Page 1.91.4/2.01, 1.91.4/2.03, 1.91.4/2.04, 1.91.4/2.05
2	87431451	1	ELECTRONIC UNIT, CONTROL,
3	85806135	1	ISOLATOR,
4	10519204	1	WASHER, M4 x 9 x .8,
5	11054590	2	FUSE, 3A
6	11054790	1	FUSE, 5A
7	11054890	4	FUSE, 7,5A
8	11054990	7	FUSE, 10 Amp
9	11055090	9	FUSE, 15A
10	85802250	1	DECAL,
11	12574011	1	NUT, LOCK, M4 x .7, Cl 8,
12	85803986	1	RELAY, Flasher
13	85825197	1	BOARD, PRINTED CIRCUIT,
14	85825198	11	RELAY,
15	85806134	1	FUSE,
17	85826012	1	KIT,
18	NSS	1	NOT SERVICED SEPARATELY,
19	85826014	1	HARNESS, WIRE,
20	NSS	1	NOT SERVICED SEPARATELY,

1.91.4/ 2(03) IGNITON SWITCH, POWER POINT, FUSE PANEL & SIDE CONSOLE HARNESS (CAB CP POWER SHUTTLE)

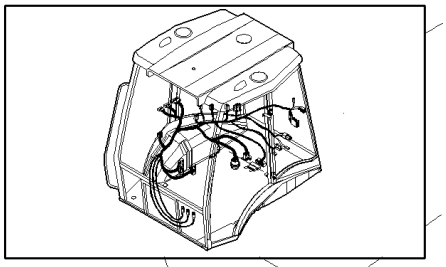

KIT KIT KIT

1 = ● see also Tav.

1.91.4/2 01
1.91.4/2 02
1.91.4/2 04
1.91.4/2 05

B95LR NA BACKHOE LOADER (1/06-)

1.91.4/ 2(03) IGNITON SWITCH, POWER POINT, FUSE PANEL & SIDE CONSOLE HARNESS (CAB CP POWER SHUTTLE)

Ref	Numero de Pieza	Ctd	Descripción
1	87318748	1	HARNESS, , See Page 1.91.4/2.01, 1.91.4/2.02, 1.91.4/2.04, 1.91.4/2.05
2	87318749	1	HARNESS, WIRE, , See Page 1.91.4/2.01, 1.91.4/2.02, 1.91.4/2.04, 1.91.4/2.05
3	85821410	1	BLOCK,
4	85804675	2	KEY, IGNITION,
5	87431469	1	SWITCH, IGNITION,

1.91.4/ 2(04) IGNITON SWITCH, POWER POINT, FUSE PANEL & SIDE CONSOLE HARNESS (CAB CP POWER SHUTTLE)

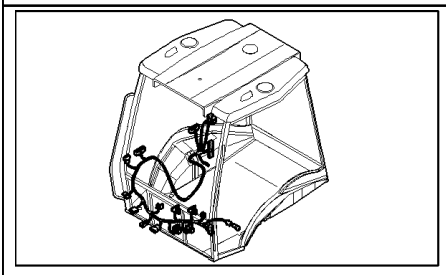

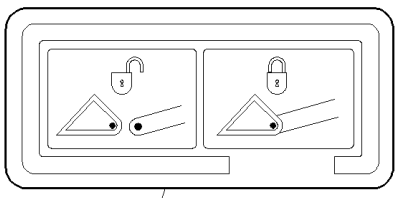

4

1.91.4/ 2 03

787/ 1 -788/ 1

● 2

6 ■

5 ■

7 ■

● 3

KIT 1 = ●

KIT KIT 8 = ■

B95LR NA BACKHOE LOADER (1/06-)

1.91.4/ 2(04) IGNITON SWITCH, POWER POINT, FUSE PANEL & SIDE CONSOLE HARNESS (CAB CP POWER SHUTTLE)

Ref	Numero de Pieza	Ctd	Descripción
1	87318748	1	HARNESS, , See Page 1.91.4/2.01, 1.91.4/2.03, 1.91.4/2.04, 1.91.4/2.05
2	85818820	1	HARNESS, WIRE,
3	85806133	1	SWITCH, FLASHER, Hazard
4	87371904	1	DECAL, , Only for B95TC
5	87371907	1	HARNESS, , Only for B95TC
6	87371905	1	SWITCH, , Only for B95TC
7	87371906	2	DIODE, , Only for B95TC
8	87371903	1	KIT, , Only for B95TC

1.91.4/ 2(05) IGNITON SWITCH, POWER POINT, FUSE PANEL & SIDE CONSOLE HARNESS (CAB CP POWER SHUTTLE)

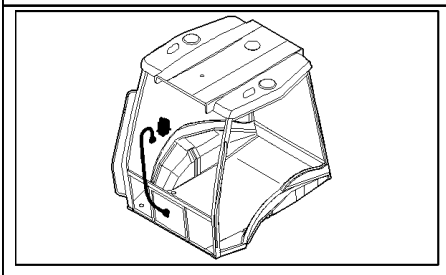

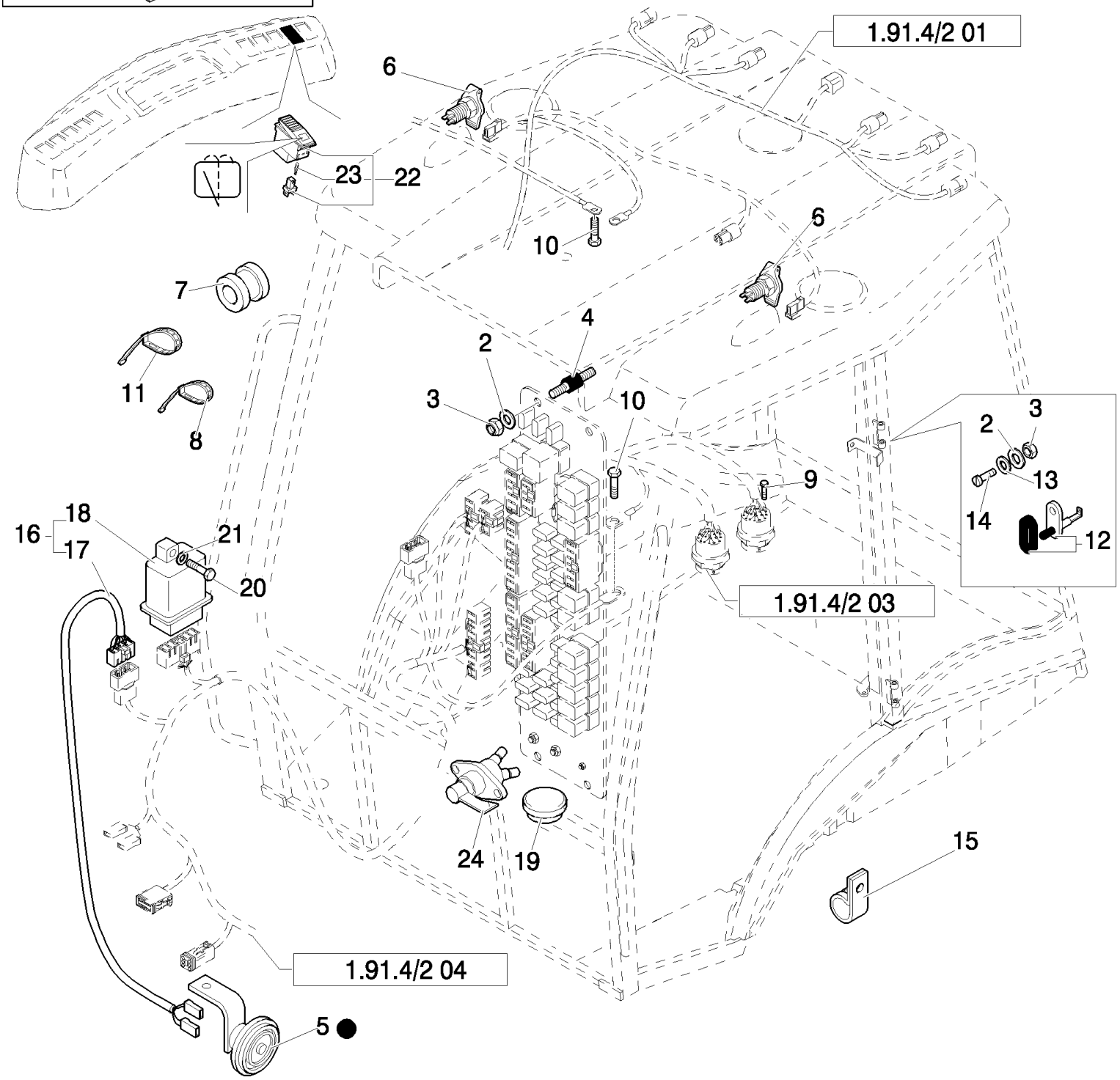

KIT KIT KIT

1 = ● see also Tav. 1.91.4/2 01, 1.91.4/2 02, 1.91.4/2 03, 1.91.4/2 04

B95LR NA BACKHOE LOADER (1/06-)

1.91.4/ 2(05) IGNITON SWITCH, POWER POINT, FUSE PANEL & SIDE CONSOLE HARNESS (CAB CP POWER SHUTTLE)

Ref	Numero de Pieza	Ctd	Descripción
1	87318748	1	HARNESS,
2	10615274	6	WASHER, LOCK, Ext Tooth, M4,
3	12574011	6	NUT, LOCK, M4 x .7, Cl 8,
4	85802478	4	ISOLATOR,
5	47133992	1	HORN,
6	87546419	2	SOCKET, Mating Part is 86508819 Plug
7	10398980	1	GROMMET,
8	5112712	5	CLIP, HOSE, M4.8 x 283,
9	13272214	2	SCREW, Cross Pan Hd, M4 x 16,
10	16042924	2	BOLT, Hex, M8 x 10, 8.8, Full Thd,
11	85805383	30	STRAP, CABLE,
12	83961521	2	SWITCH, Interior Lamp
13	10519204	2	WASHER, M4 x 9 x .8,
14	13309417	2	SCREW, Cross Oval Hd, M4 x 20,
15	10450090	1	CLAMP,
16	NSS	1	NOT SERVICED SEPARATELY, , Includes 17, 18
17	87410259	1	HARNESS, WIRE,
18	85806132	1	FLASHER UNIT, Circuit Board
19	85808460	1	PLUG,
20	10398680	1	GROMMET,
21	11193274	1	WASHER, SPRING, Belleville, M6.4,
22	85818823	1	SWITCH, WINDSHIELD WIPER,
23	14143790	1	BULB,
24	87409316	1	SWITCH, Master Disconnect
25	10398680	1	GROMMET,

1.91.5(01) FRONT AND REAR WINDSCREEN WIPERS

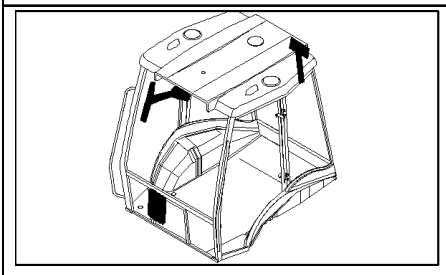

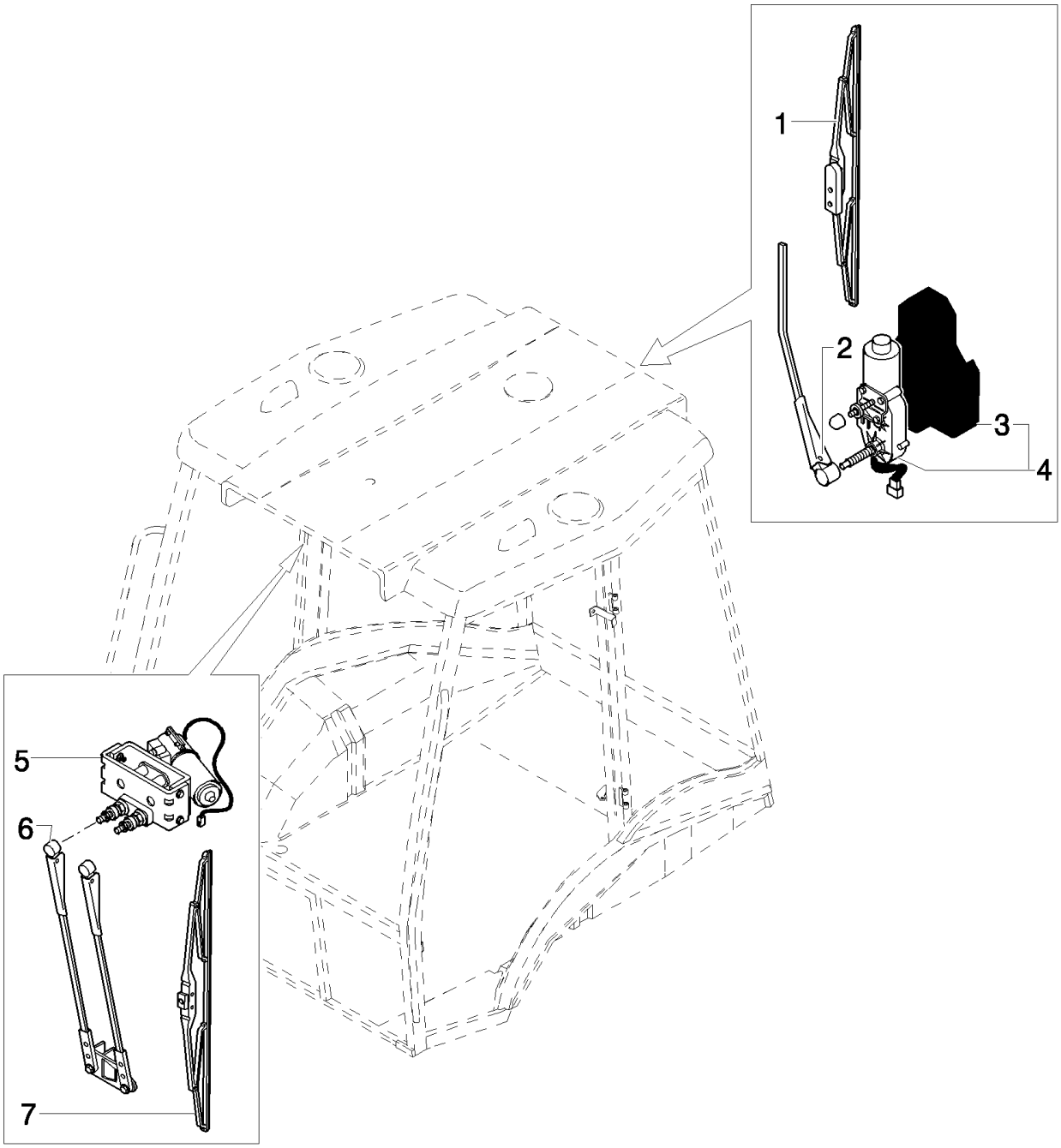

B95LR NA BACKHOE LOADER (1/06-)

1.91.5(01) FRONT AND REAR WINDSCREEN WIPERS

Ref	Numero de Pieza	Ctd	Descripción
1	85819827	1	WIPER BLADE, Rear
2	85806098	1	WIPER ARM, Rear
3	85806095	1	COVER, Rear
4	85806097	1	WIPER MOTOR, Rear, Includes 3
5	85806184	1	WIPER MOTOR, Front
6	85806185	1	WIPER ARM, Front
7	85819826	1	WIPER BLADE, Front

1.91.5(02) WINDSCREEN WIPERS RESERVOIR & NOZZLES

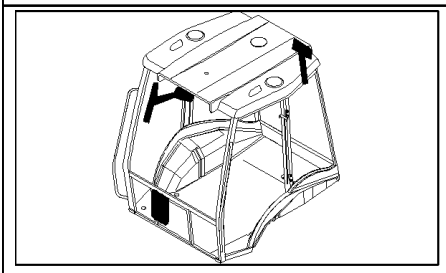

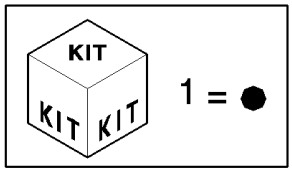

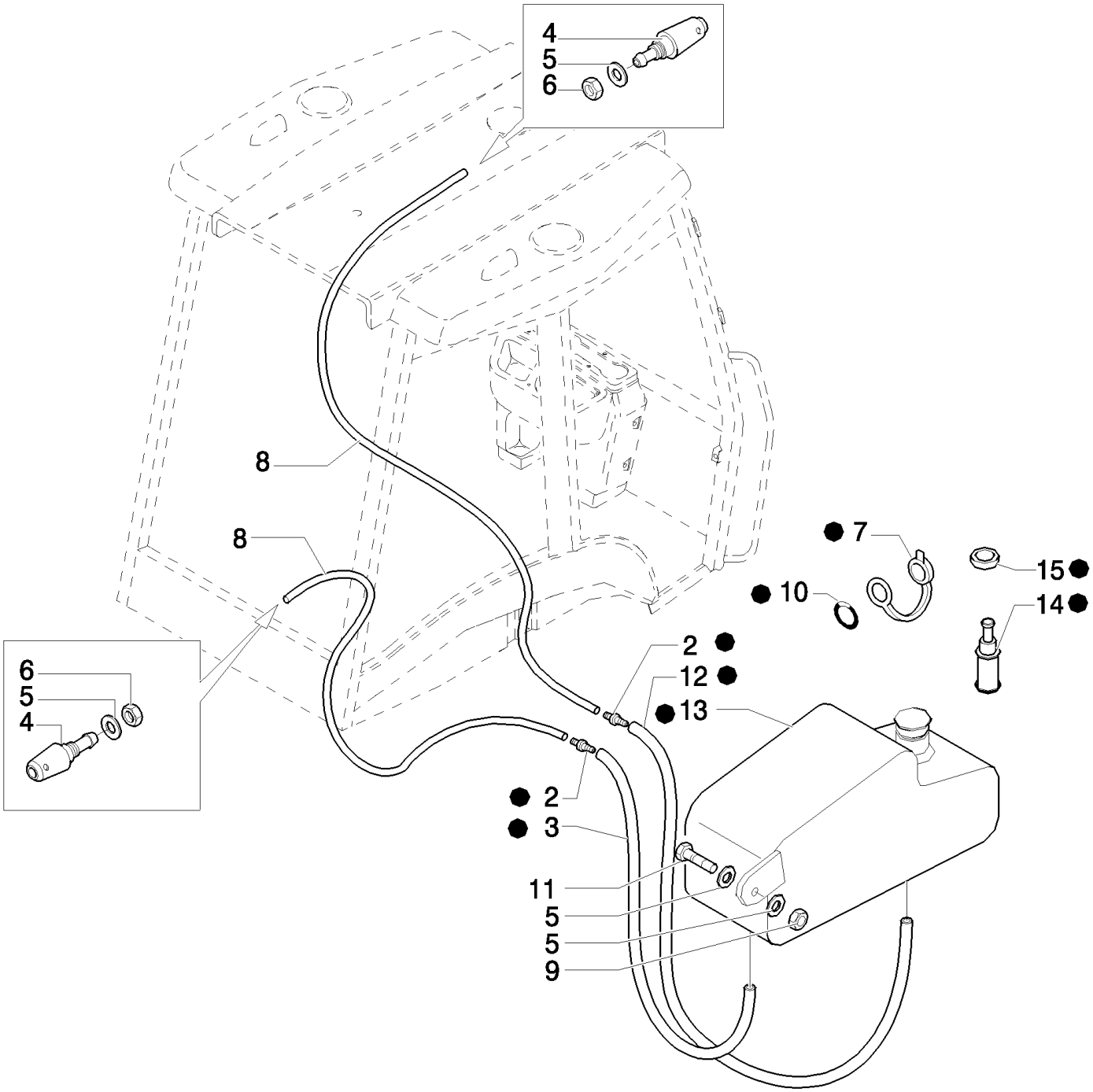

B95LR NA BACKHOE LOADER (1/06-)

1.91.5(02) WINDSCREEN WIPERS RESERVOIR & NOZZLES

Ref	Numero de Pieza	Ctd	Descripción
1	85821153	1	PAN,
2	85821337	2	VALVE, CHECK,
3	85821335	2	HOSE, FLEXIBLE,
4	85802398	2	NOZZLE,
5	12646704	4	WASHER, M8 x 20 x 2,
6	16102411	2	NUT, Thin, M8 x 1, Cl 04,
7	5175736	1	CAP,
8	85821338	2	HOSE, FLEXIBLE,
9	12574211	1	NUT, LOCK, M6 x 1, Cl 8,
10	85820237	1	O-RING,
11	13313417	1	SCREW, Cross Oval Hd, M6 x 25,
12	85824450	1	HOSE, FLEXIBLE,
13	85821334	1	RESERVOIR, WINDSH. WASH,
14	85821333	2	PUMP,
15	85821336	2	SEALRING,

1.91.6(01) RADIO ANTENNA & SPEAKER COVER

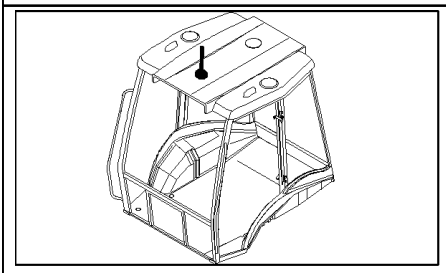

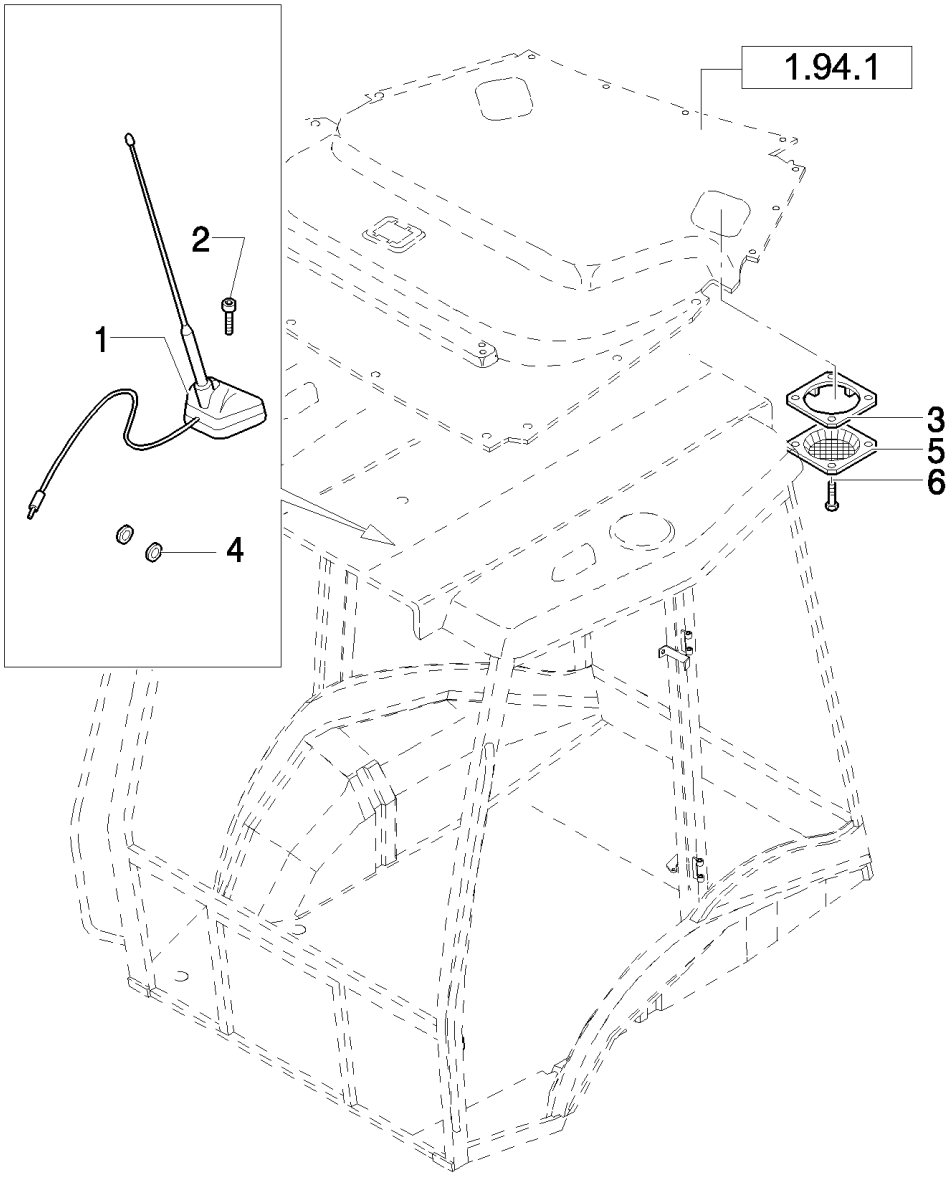

B95LR NA BACKHOE LOADER (1/06-)

1.91.6(01) RADIO ANTENNA & SPEAKER COVER

Ref	Numero de Pieza	Ctd	Descripción
1	85819569	1	ANTENNA,
2	13311817	1	SCREW, Cross Oval Hd, M5 x 40,
3	85802107	2	PLATE, MOUNTING,
4	10399580	1	GROMMET,
5	85804362	2	GRILLE,
6	13297842	8	SCREW,

1.91.7/ 1(01) LAMPS & LIGHTS - CAB (USA)

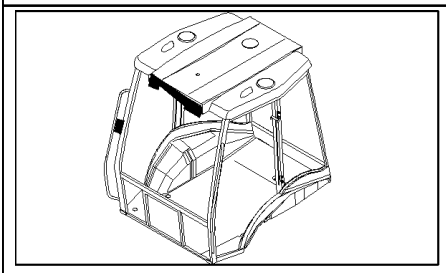

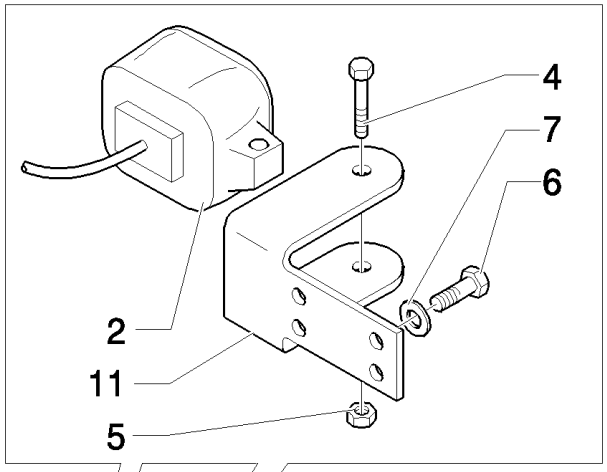

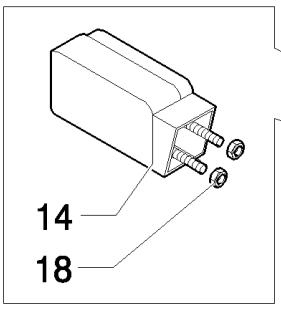

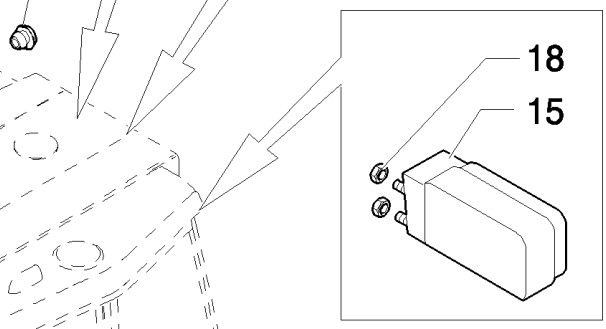

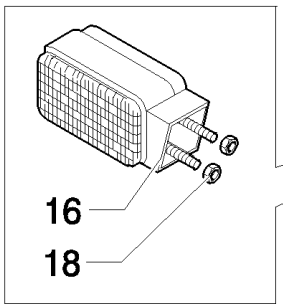

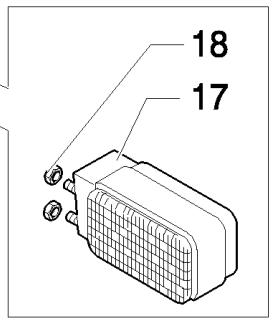

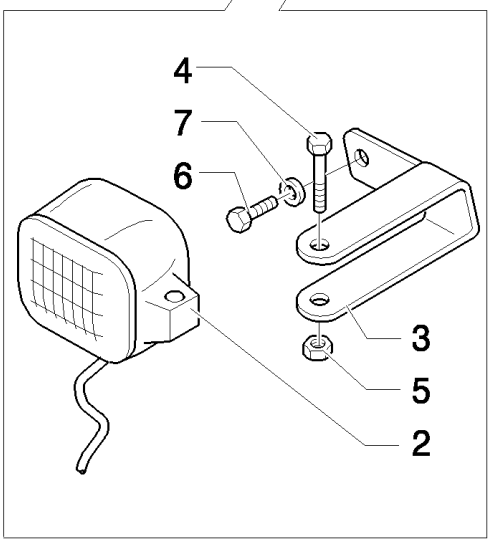

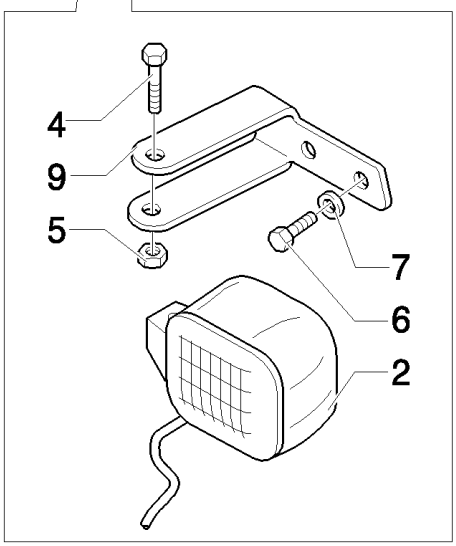



B95LR NA BACKHOE LOADER (1/06-)

1.91.7/ 1(01) LAMPS & LIGHTS - CAB (USA)

Ref	Numero de Pieza	Ctd	Descripción
2	85819200	8	HEADLAMP, Includes H3 12V 55W Bulb, Order 9703399 For Bulb
3	85819190	1	BRACKET, RH
4	16044324	8	BOLT, Hex, M8 x 55, 8.8,
5	16104111	8	NUT, LOCK, M8 x 1.25, Cl 8,
6	10902124	24	BOLT, Hex, M6 x 14, 8.8, Full Thd,
7	11197774	24	WASHER, SPRING, Belleville, M6.4,
9	85819191	1	BRACKET, LH
11	85819194	2	BRACKET,
12	83994150	1	PLUG,
13	5118658	1	PLUG,
14	85819198	1	LAMP, TAIL, RH; Red/Amber Lens
15	85819199	1	LAMP, TAIL, LH; Red/Amber Lens
16	85819196	2	LAMP, FRONT, RH; Solid Amber Lens
17	85819197	2	LAMP, FRONT, LH; Solid Amber Lens
18	14084111	1	NUT, M5 x .8, Flg,

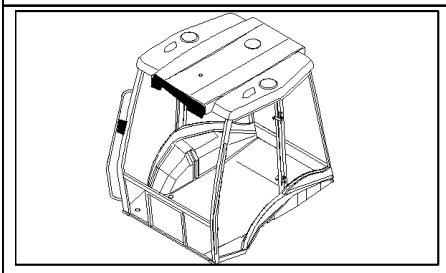

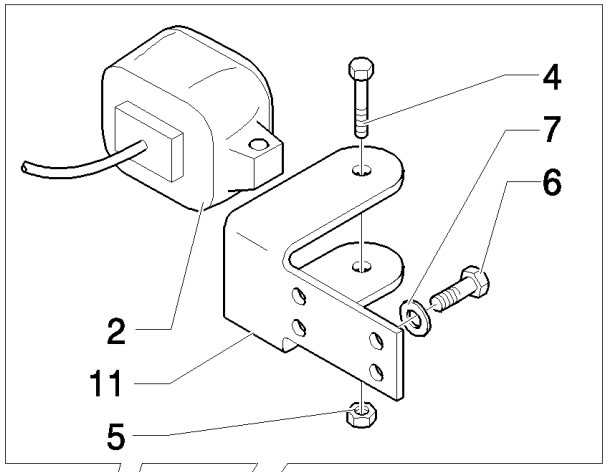
4
7
6
2
11
5

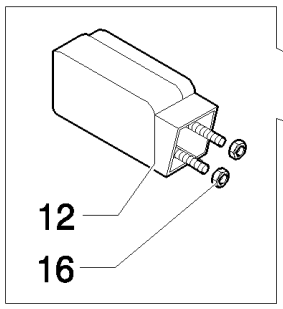
12
16

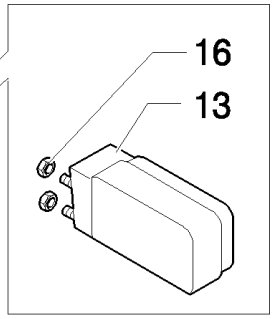
16
13

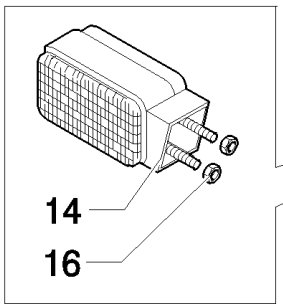
14
16

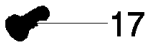
17

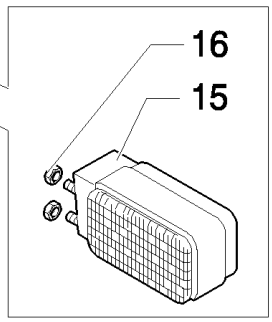
16
15

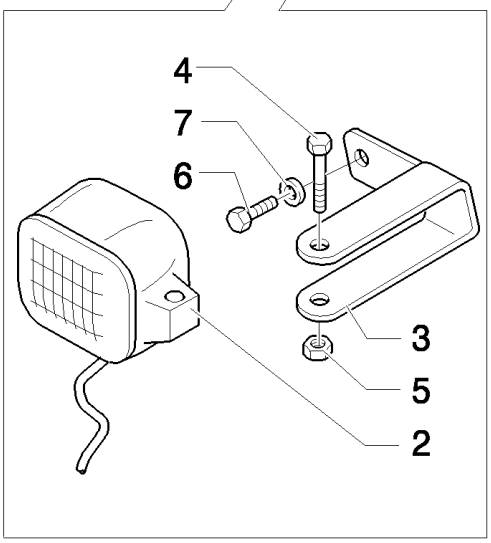
4
7
6
3
5
2

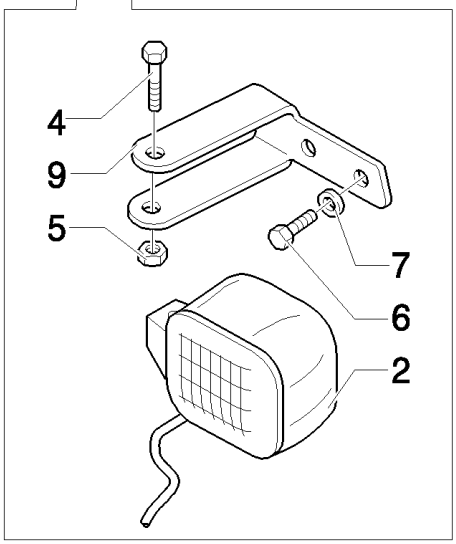
4
9
5
7
6
2



B95LR NA BACKHOE LOADER (1/06-)

1.91.7/ 3(01) LAMPS & LIGHTS - ROPS (USA)

Ref	Numero de Pieza	Ctd	Descripción
2	85819200	4	HEADLAMP, Includes H3 12V 55W Bulb, Order 9703399 For Bulb
3	85819190	1	BRACKET, RH
4	16044324	4	BOLT, Hex, M8 x 55, 8.8,
5	16104111	4	NUT, LOCK, M8 x 1.25, Cl 8,
6	10902124	12	BOLT, Hex, M6 x 14, 8.8, Full Thd,
7	11197774	12	WASHER, SPRING, Belleville, M6.4,
9	85819191	1	BRACKET, LH
11	85819194	2	BRACKET,
12	85819198	1	LAMP, TAIL, RH; Red/Amber Lens
13	85819199	1	LAMP, TAIL, LH; Red/Amber Lens
14	85819196	1	LAMP, FRONT, RH; Solid Amber Lens
15	85819197	1	LAMP, FRONT, LH; Solid Amber Lens
16	14084111	8	NUT, M5 x .8, Flg,
17	14591687	1	BUTTON,

B95LR NA BACKHOE LOADER (1/06-)

1.91.8(01) CAB-SAFETY FRAME / EXTINGUISHER

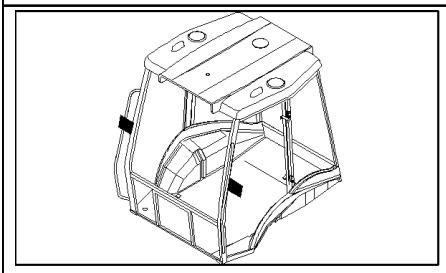

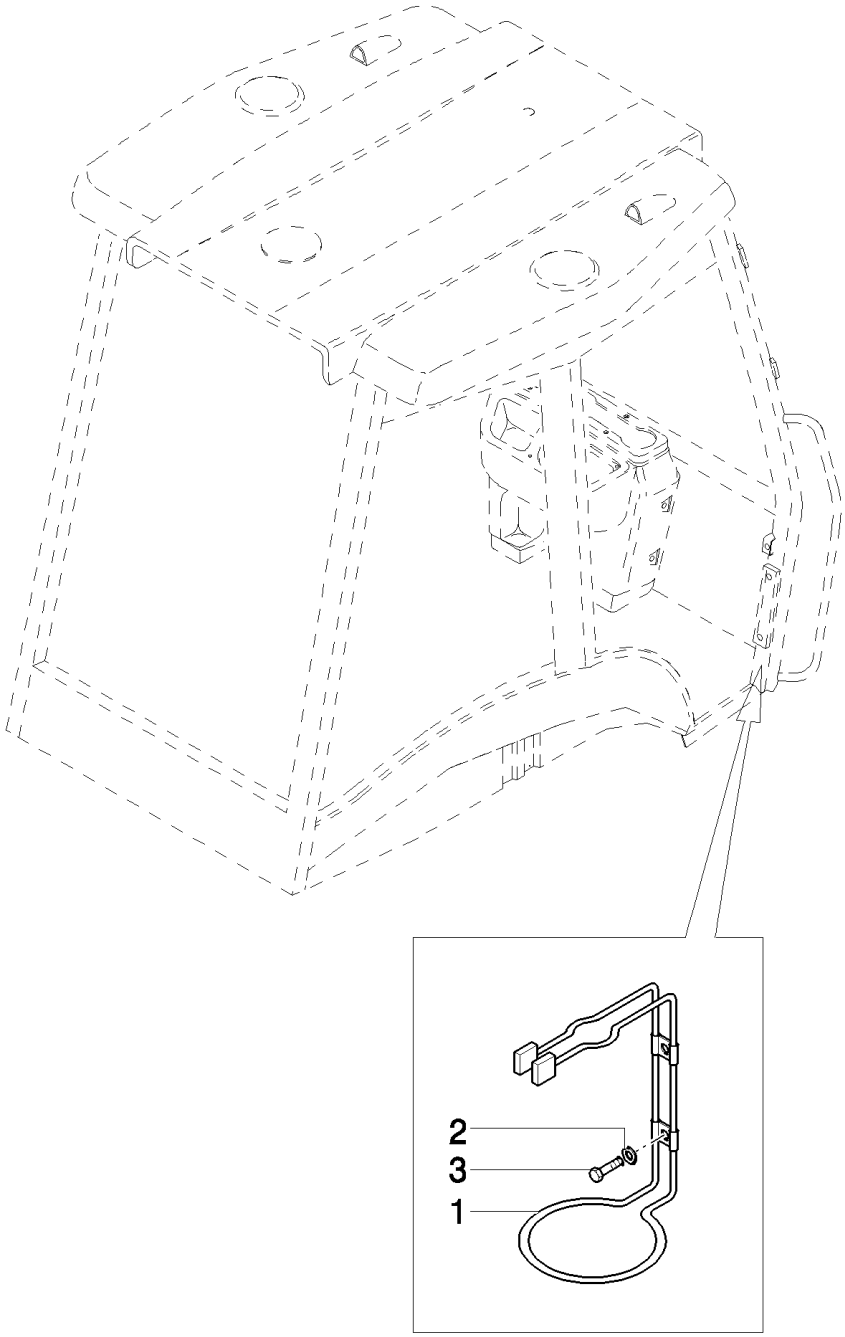

B95LR NA BACKHOE LOADER (1/06-)

1.91.8(01) CAB-SAFETY FRAME / EXTINGUISHER

Ref	Numero de Pieza	Ctd	Descripción
1	85802276	1	SUPPORT,
2	11193274	2	WASHER, SPRING, Belleville, M6.4,
3	13275914	2	SCREW, Pan Hd, M6 x 10, 5.8,

1.92.1(01) CAB - FRAME-DOOR

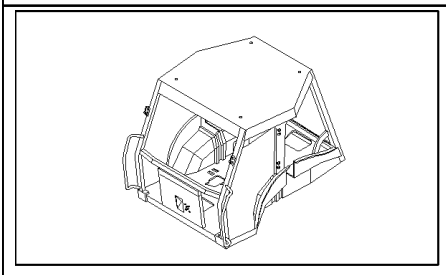

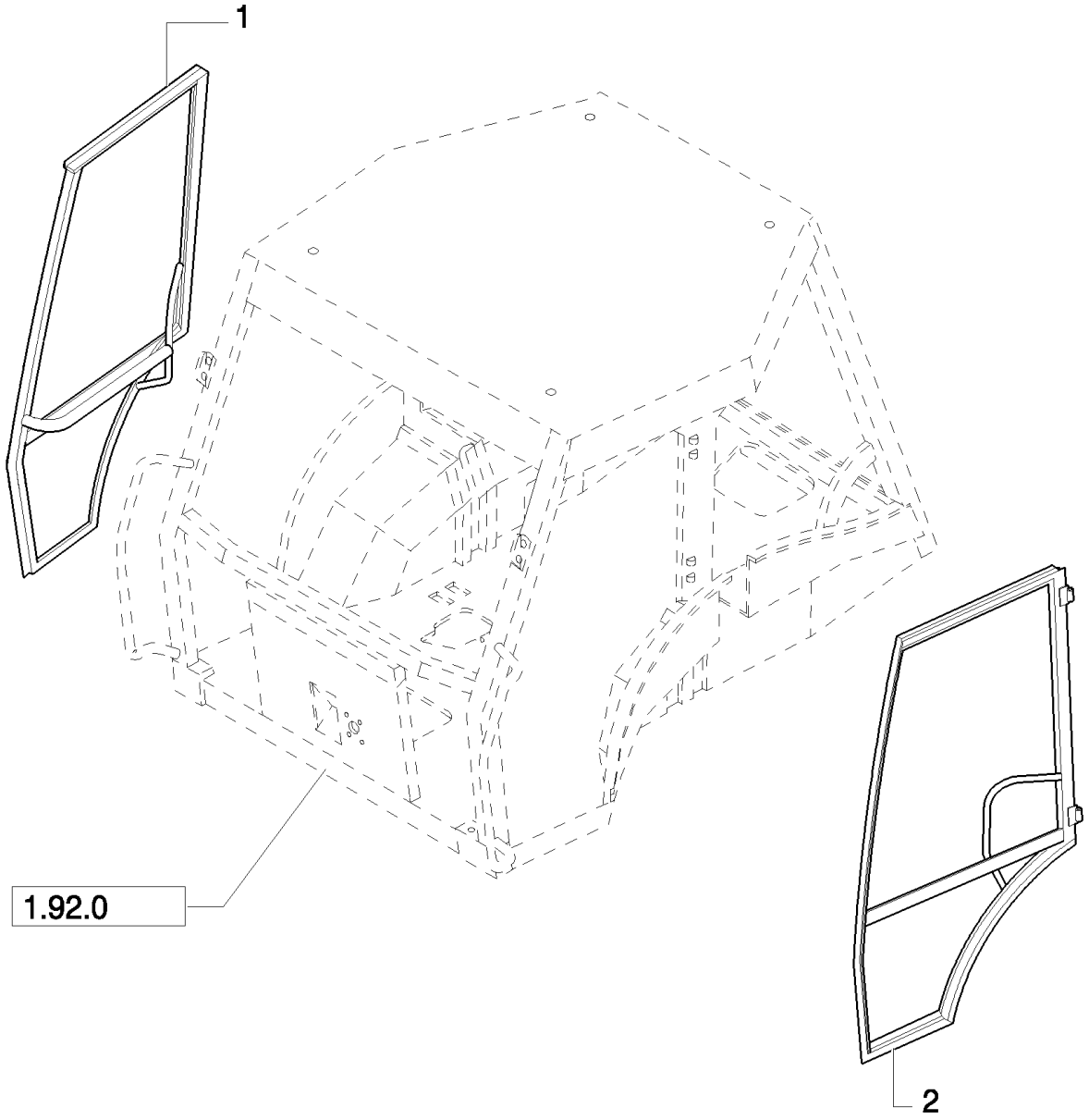

B95LR NA BACKHOE LOADER (1/06-)

1.92.1(01) CAB - FRAME-DOOR

Ref	Numero de Pieza	Ctd	Descripción
1	85801654	1	DOOR, RH; Frame Only; Glass Serviced Separately
1	87354650	1	FRAME, RH, From S/N 031056900 LB 115 Pilot Version, From S/N 031056894 LB 115 Mechanical Version, From S/N 031056917 LB 110 Mechanical Version, From S/N 031056896 LB 110 Pilot Version, Power shift, From S/N 031056893 LB 110 - LB 90 - LB 95 Mechanical Version, From S/N 031056892 LB 110 - LB 90 - LB 95 Pilot Version, Power shuttle
2	85801655	1	DOOR, LH; Frame Only; Glass Serviced Separately
2	87354652	1	FRAME, LH, From S/N 031056894 LB 115 Mechanical Version, From S/N 031056892 LB 110 - LB 90 - LB 95 Pilot Version, Power shuttle, From S/N 031056917 LB 110 Mechanical Version, From S/N 031056896 LB 110 Pilot Version, Power shift, From S/N 031056900 LB 115 Pilot Version, From S/N 031056893 LB 110 - LB 90 - LB 95 Mechanical Version

Mechanical Version

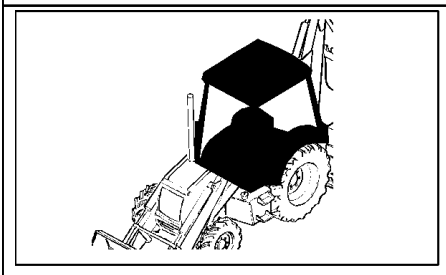

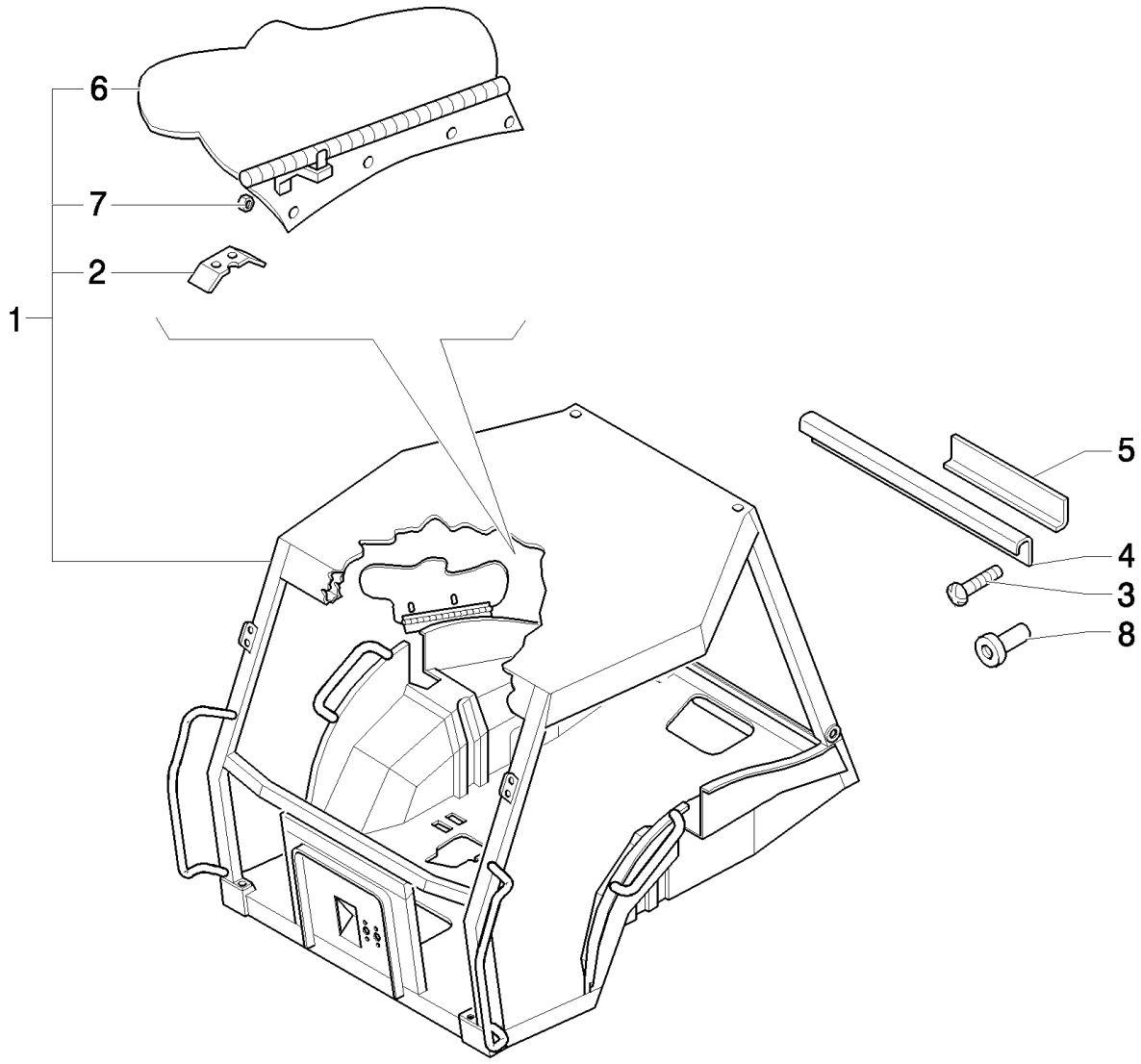
6
7
2
1
5
4
3
8

B95LR NA BACKHOE LOADER (1/06-)

1.92.1/ 1(01) ROPS - SAFETY FRAME

Ref	Numero de Pieza	Ctd	Descripción
1	85826047	1	FRAME, CAB, ASSY, Includes 2, 6, 7
2	85801863	1	BRACKET,
3	13271824	3	
4	85805067	2	COVER,
5	85807880	8	PLATE,
6	85806187	1	SHIELD,
7	15896219	4	NUT, M6x1
8	15627011	2	RIVET,

Mechanical Version

1.92.1/ 2(01) CAB - FRAME-DOOR

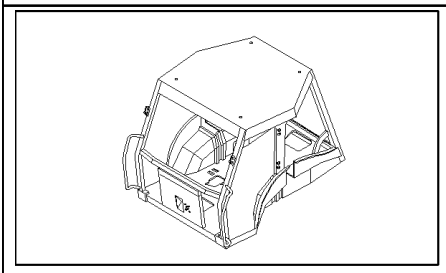

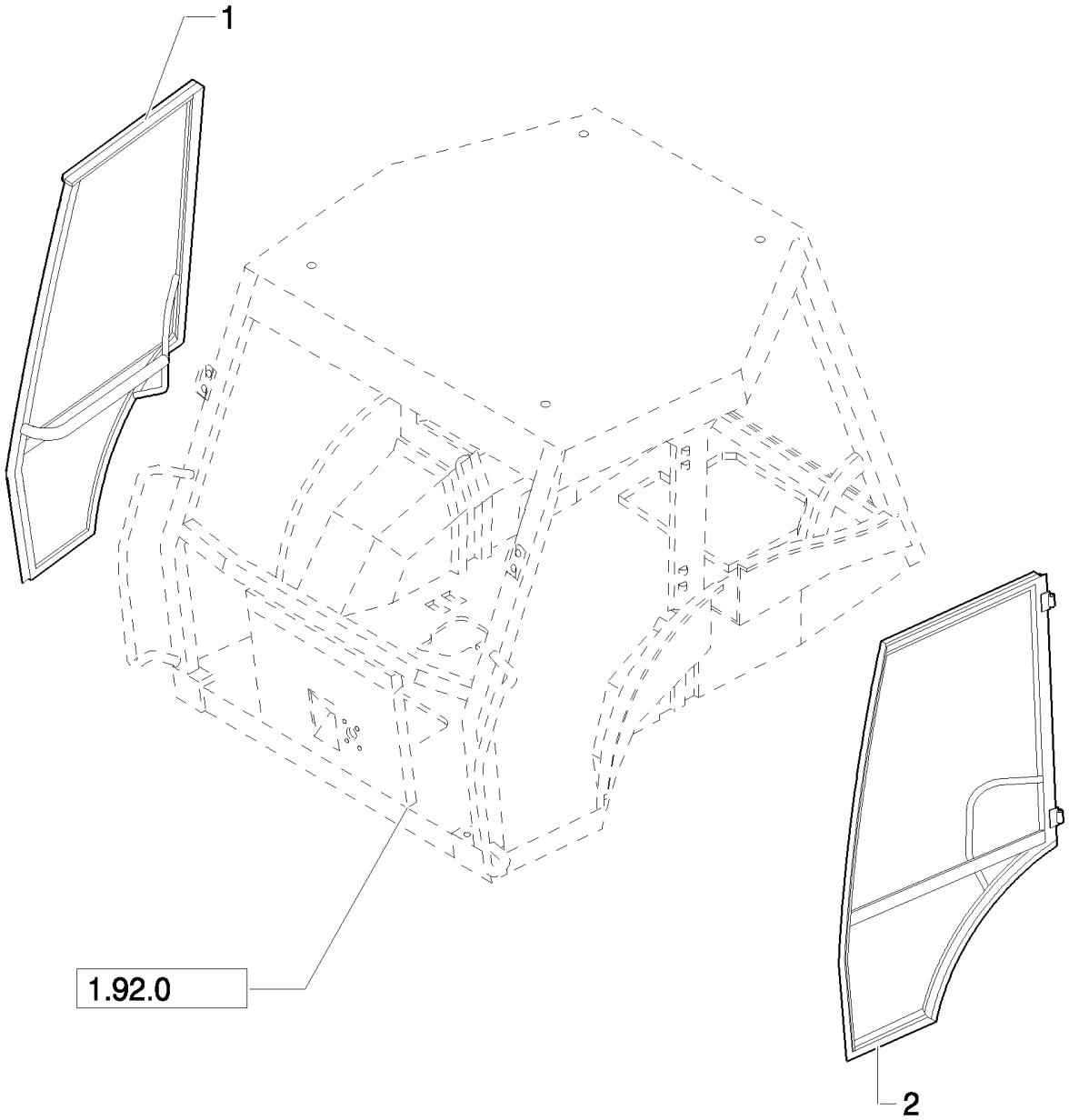

B95LR NA BACKHOE LOADER (1/06-)

1.92.1/ 2(01) CAB - FRAME-DOOR

Ref	Numero de Pieza	Ctd	Descripción
1	85801654	1	DOOR, RH; Frame Only; Glass Serviced Separately, UP TO S/N 031056941
1	87354650	1	FRAME, RH, FROM S/N 031056942
2	85801655	1	DOOR, LH; Frame Only; Glass Serviced Separately, UP TO S/N 031056941
2	87354652	1	FRAME, LH, FROM S/N 031056942

Pilot Control Version

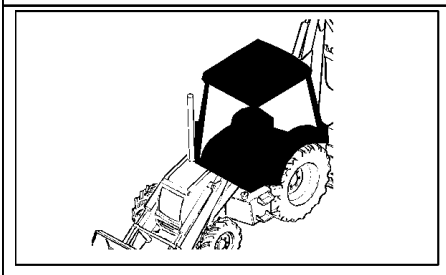

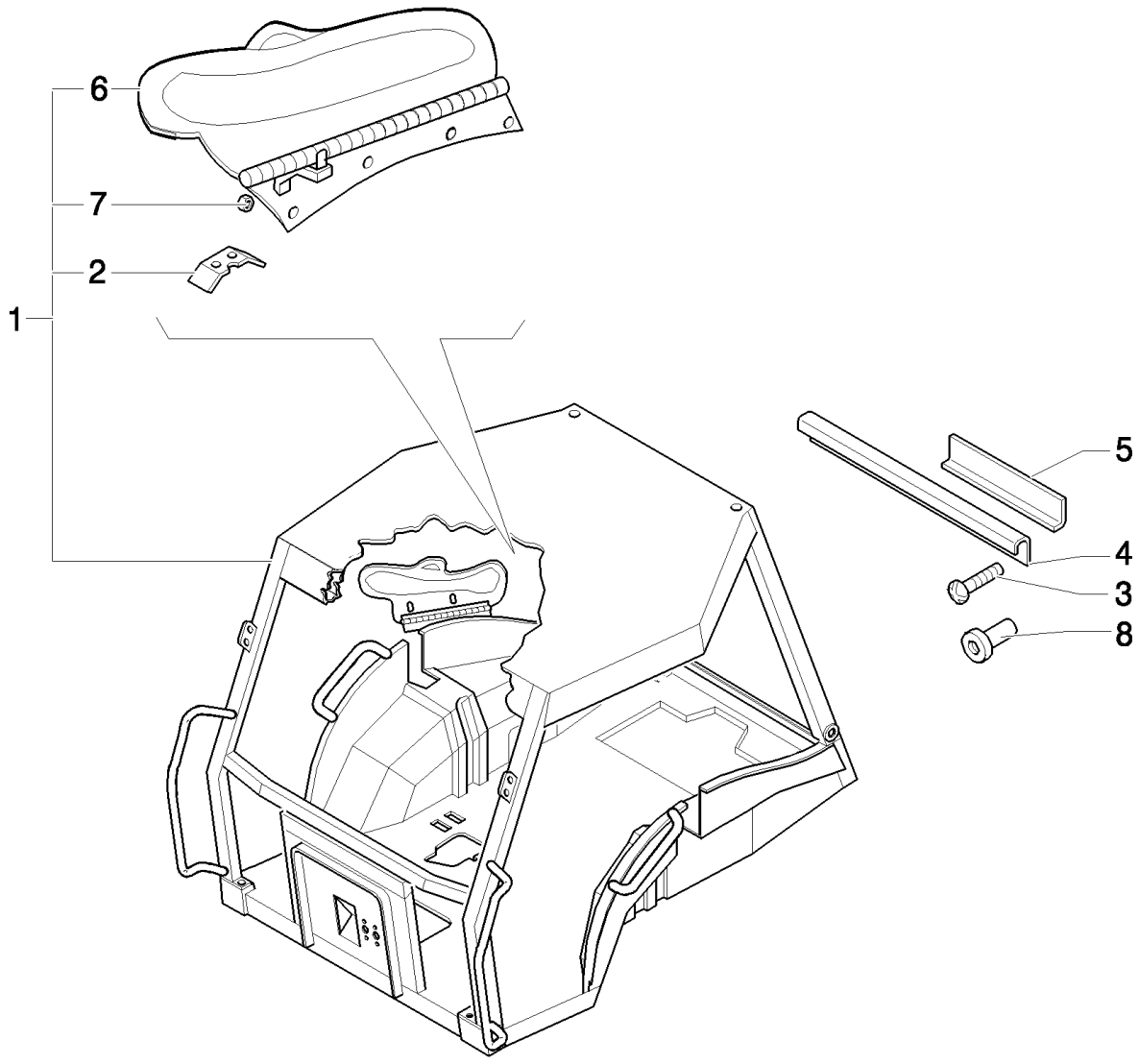
6
7
2
1
5
4
3
8

B95LR NA BACKHOE LOADER (1/06-)

1.92.1/ 3(01) ROPS - SAFETY FRAME

Ref	Numero de Pieza	Ctd	Descripción
1	87410409	1	FRAME, ASSY, Includes 2, 6, 7
2	85801863	1	BRACKET,
3	13271814	6	SCREW, Cross Pan Hd, M4 x 8,
4	85805067	2	COVER,
5	85807880	8	PLATE,
6	85806187	1	SHIELD,
7	15896219	4	NUT, M6
8	15627011	2	RIVET,

Pilot Control Version

1.92.3(01) WINDOWS

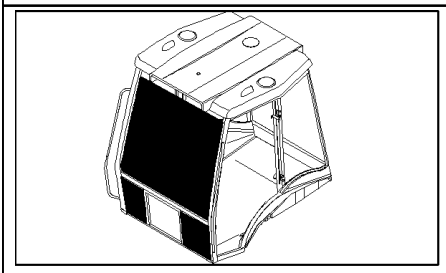

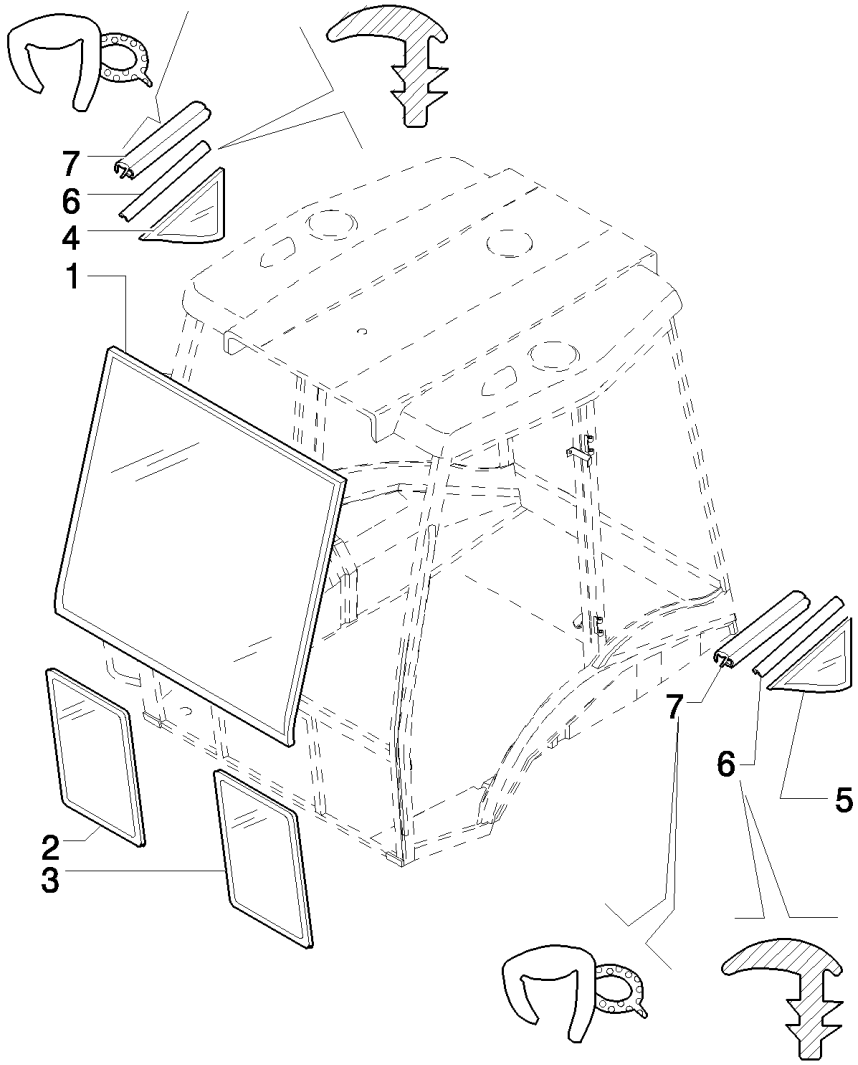

B95LR NA BACKHOE LOADER (1/06-)

1.92.3(01) WINDOWS

Ref	Numero de Pieza	Ctd	Descripción
1	85801621	1	GLASS,
2	85801622	1	GLASS, CAB, RH
3	85801623	1	GLASS, CAB, LH
4	85801630	1	GLASS, CAB, RH
5	85801631	1	GLASS, CAB, LH
6	85802334	M	GASKET,
7	85805065	2	GASKET,

1.92.4(01) WINDOWS

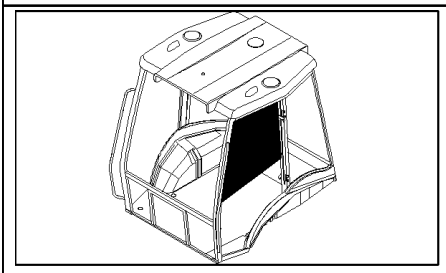

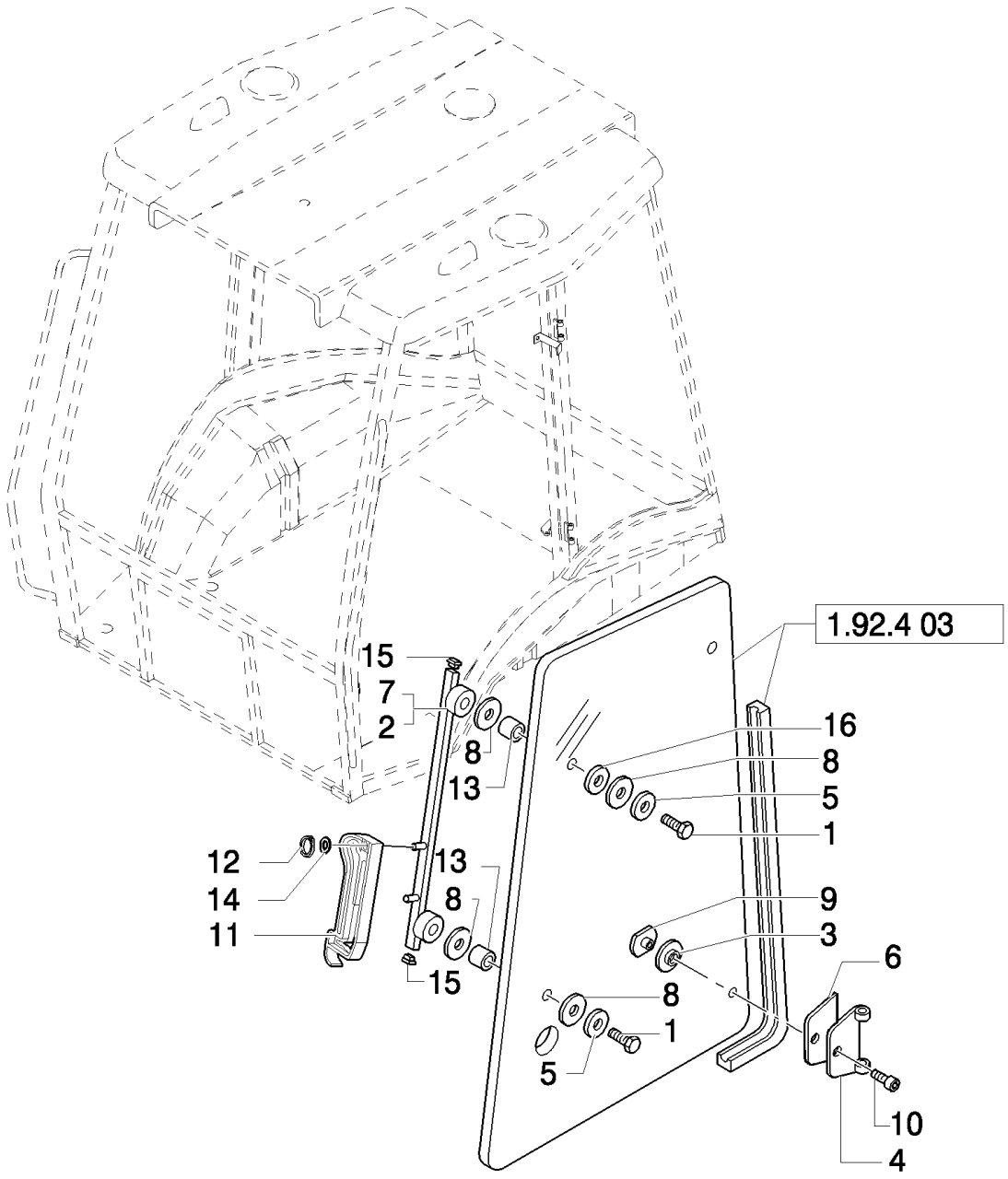

B95LR NA BACKHOE LOADER (1/06-)

1.92.4(01) WINDOWS

Ref	Numero de Pieza	Ctd	Descripción
1	82859922	4	BOLT,
2	87396515	1	SUPPORT, RH
3	83961985	4	SPACER,
4	85804869	4	HINGE,
5	83963153	4	SPACER,
6	81872036	4	SEAL, RUBBER,
7	87396492	1	SUPPORT, LH
8	83962050	12	WASHER, SEALING,
9	85805448	4	NUT, RING,
10	81871864	4	SCREW, Socket Drive, M8x1.25x16
11	87353724	4	HANDLE,
12	11087776	4	CIRCLIP, M6,
13	83961987	4	SPACER,
14	10519404	2	WASHER, M6 x 11.95 x 1.6,
15	81871439	8	CAP,
16	12638504	4	WASHER, M8 x 15 x 1.5,

1.92.4(02) WINDOWS

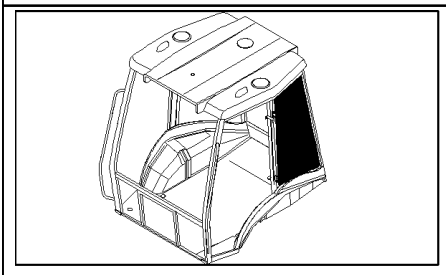

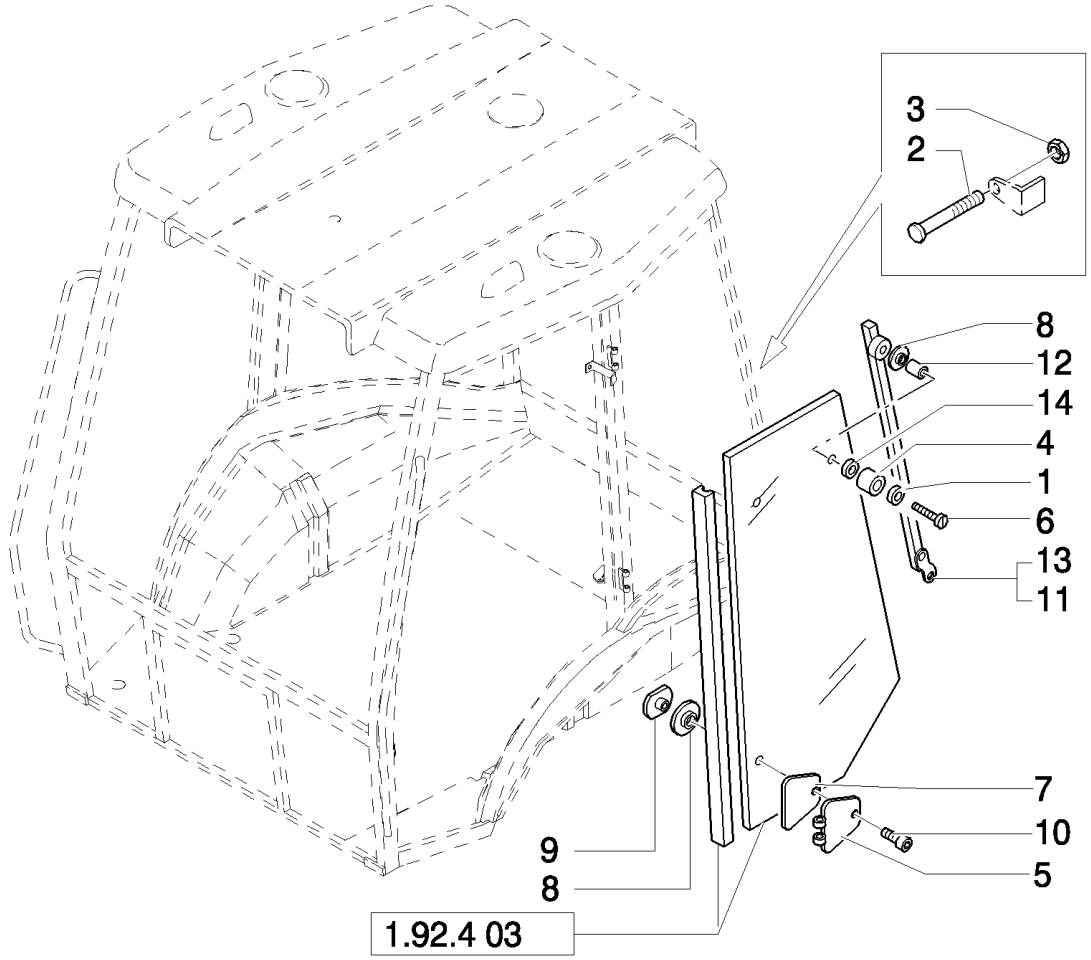

B95LR NA BACKHOE LOADER (1/06-)

1.92.4(02) WINDOWS

Ref	Numero de Pieza	Ctd	Descripción
1	10519404	2	WASHER, M6 x 11.95 x 1.6,
2	87313813	4	PIN,
3	10702711	8	NUT,
4	83976357	2	BUMPER,
5	85804870	4	HINGE,
6	10903224	2	VALVE, HYDRAULIC, Hex, M6 x 40, 8.8,
7	81872028	4	SPACER,
8	83961985	4	SPACER,
9	85805448	4	NUT, RING,
10	81871864	4	SCREW, Socket Drive, M8 x 1.25 x 16
11	87396525	1	SUPPORT, RH
12	83961987	2	SPACER,
13	87396528	1	SUPPORT, LH
14	11193979	2	WASHER, SPRING, Belleville, M8.4,

1.92.4(03) WINDOWS

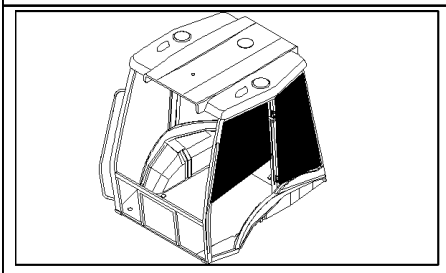

KIT KIT KIT 1 = ●

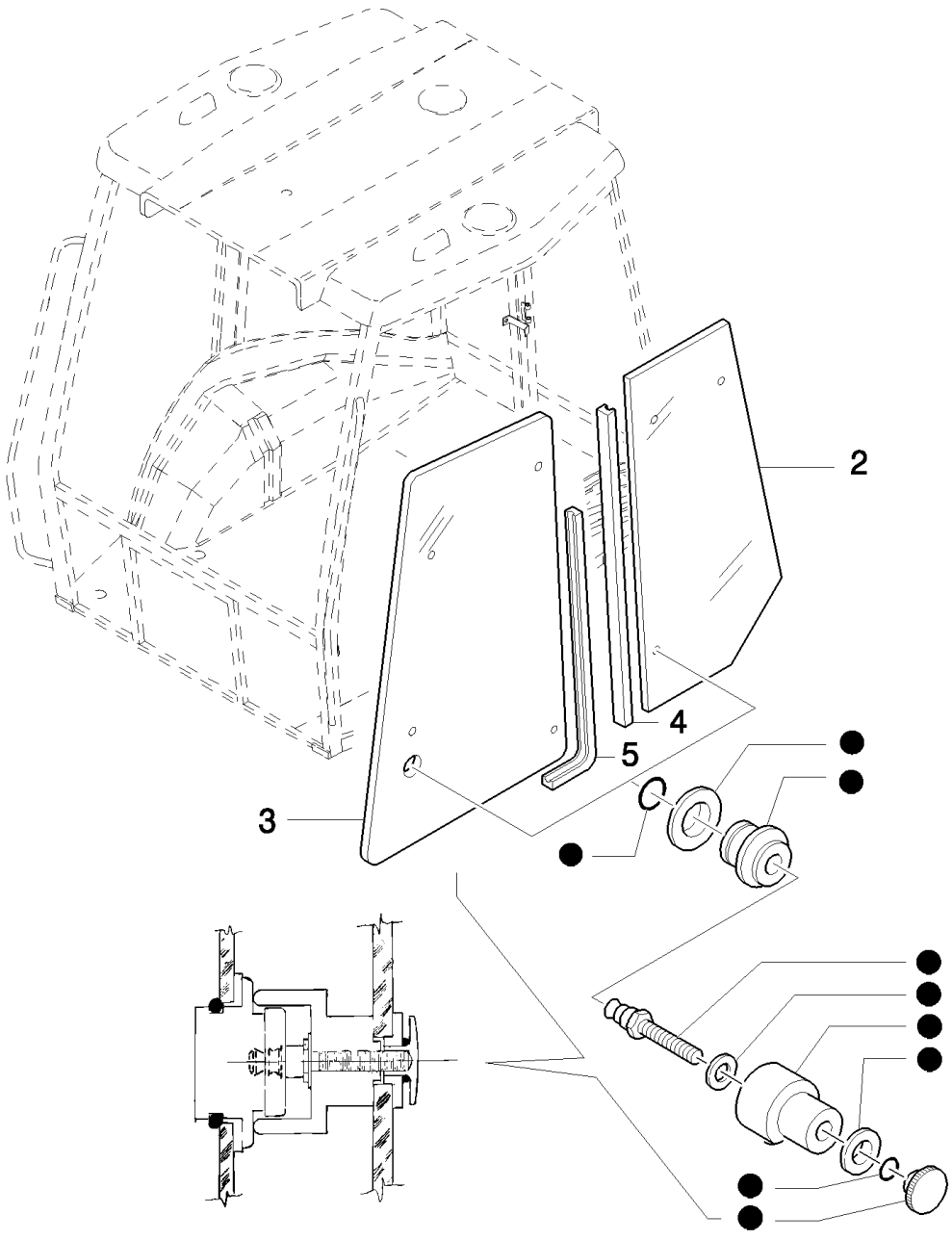

B95LR NA BACKHOE LOADER (1/06-)

1.92.4(03) WINDOWS

Ref	Numero de Pieza	Ctd	Descripción
1	85804617	2	KIT,
2	85801628	2	GLASS, CAB,
3	85801626	2	GLASS, CAB,
4	85812254	2	STRIP, RUBBER, 3150 mm lg
5	85812255	2	STRIP, RUBBER, 3315 mm lg

1.92.5(01) FENDERS, REAR

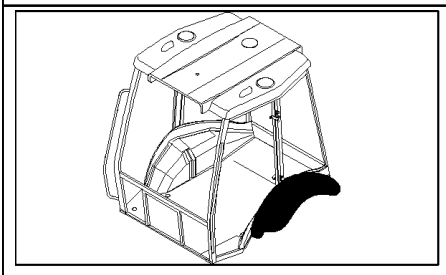

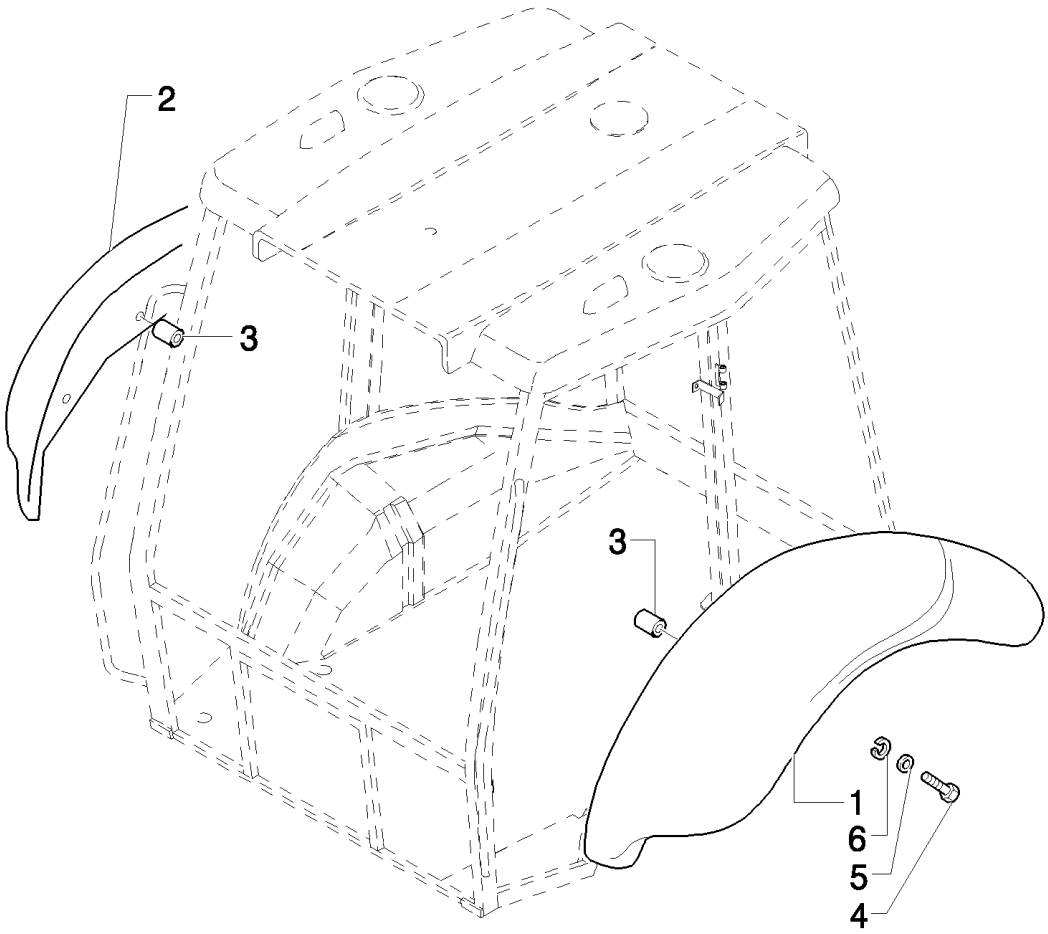

B95LR NA BACKHOE LOADER (1/06-)

1.92.5(01) FENDERS, REAR

Ref	Numero de Pieza	Ctd	Descripción
1	85817211	1	FENDER, REAR, LH, Only for LB90.B - LB95.B - LB110.B
1	85817213	1	FENDER, REAR, LH, Only for LB115.B 4WS
2	85817210	1	FENDER, REAR, RH, Only for LB90.B - LB95.B - LB110.B
2	85817212	1	FENDER, REAR, RH, Only for LB115.B 4WS
3	85812338	12	INSERT, THREADED,
4	16044124	10	BOLT, Hex, M8 x 45, 8.8,
5	12646204	10	WASHER, M8 x 35 x 3,
6	11193874	10	WASHER, SPRING, Belleville, M8.4,

B95LR NA BACKHOE LOADER (1/06-)

1.92.6(01) DOOR COMPONENTS

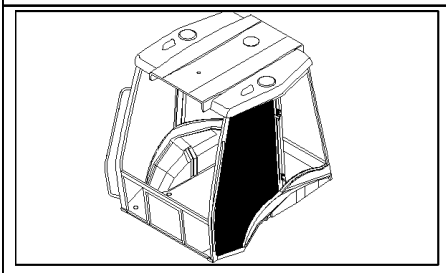

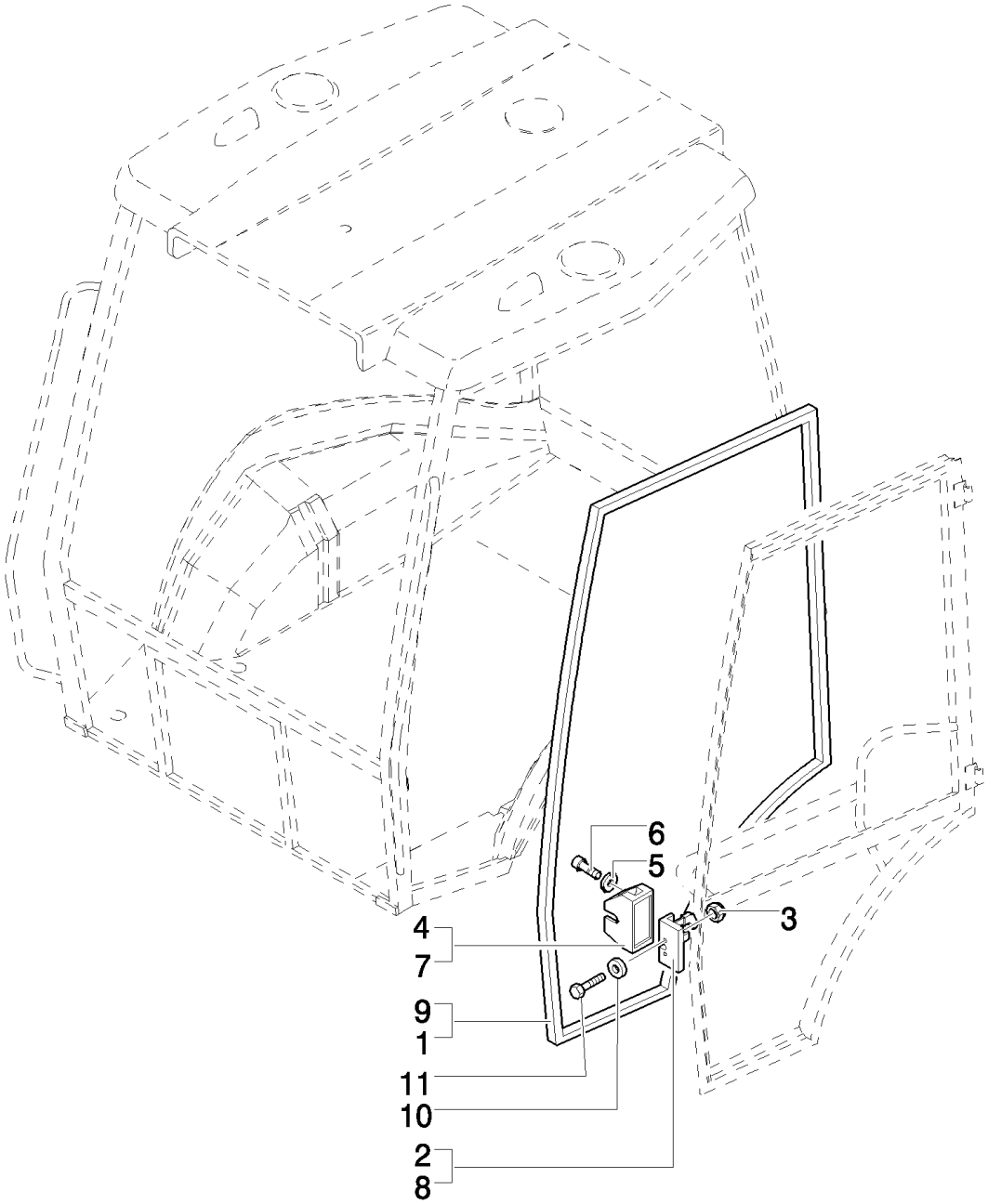

B95LR NA BACKHOE LOADER (1/06-)

1.92.6(01) DOOR COMPONENTS

Ref	Numero de Pieza	Ctd	Descripción
1	85812252	1	SEAL, DOOR, RH
2	44910052	1	LOCK, DOOR, LH, LH
3	14048214	4	NUT, LOCK, M8 x 1.25,
4	85805771	1	COVER, LH
5	12643701	4	WASHER, M6 x 18 x 1.5,
6	13273911	4	SCREW, Cross Pan Hd, M5 x 10,
7	85805770	1	COVER, RH
8	44910053	1	LOCK, DOOR, RH, RH
9	85812253	1	SEAL, DOOR, LH
10	10519604	2	WASHER, M8 x 17 x 2,
11	14442421	2	SCREW, Hex Soc Flat Hd, M8 x 40, 8.8,

B95LR NA BACKHOE LOADER (1/06-)

1.92.6(02) DOOR COMPONENTS

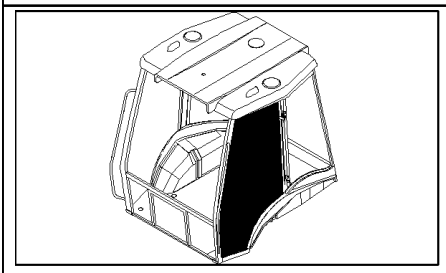

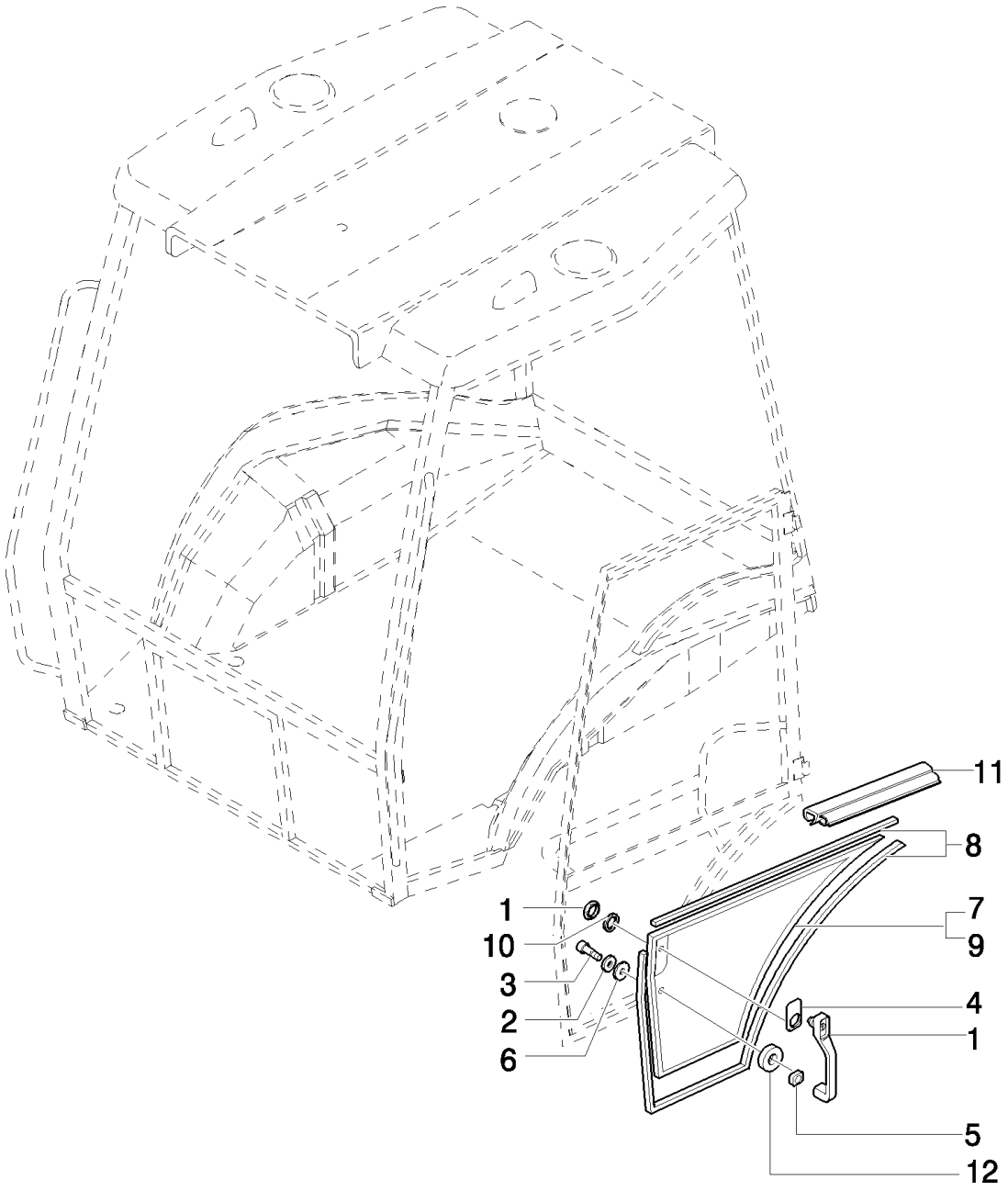

B95LR NA BACKHOE LOADER (1/06-)

1.92.6(02) DOOR COMPONENTS

Ref	Numero de Pieza	Ctd	Descripción
1	85805659	2	HANDLE,
2	12640601	2	WASHER, M6 x 25 x 2,
3	13276621	2	SCREW, Cross Pan Hd, M6 x 25, 8.8,
4	85801799	2	GASKET,
5	85801800	2	SEAL, RUBBER,
6	83961987	4	SPACER,
7	85801624	1	GLASS, CAB, RH
8	85802334	MT	GASKET,
9	85801625	1	GLASS, CAB, LH
10	85802307	2	SEALRING,
11	85805065	2	GASKET,
12	85801801	2	SEALRING, 24X6X2

1.92.6(03) DOOR COMPONENTS

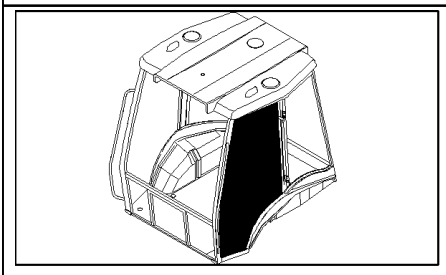

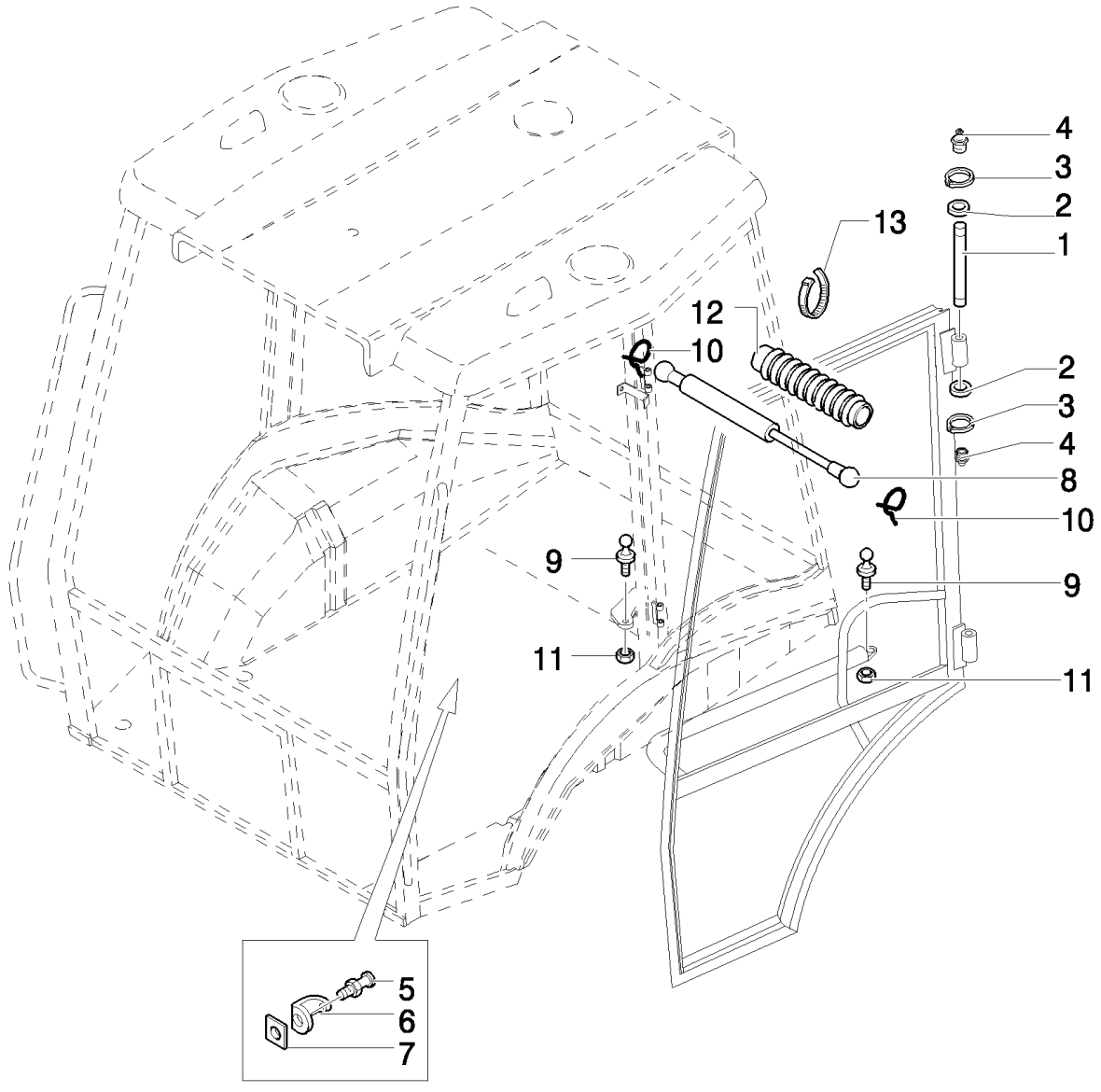

B95LR NA BACKHOE LOADER (1/06-)

1.92.6(03) DOOR COMPONENTS

Ref	Numero de Pieza	Ctd	Descripción
1	87304810	4	PIN,
2	E8NN16N647AA	8	WASHER,
3	11088076	8	CIRCLIP, M10, D.9
4	13406911	4	NIPPLE, LUBE, 1/4"-28,
5	E9NN9422196AA	2	PLATE, STRIKER,
6	E9NN94218N45AA	2	COVER,
7	83994378	2	NUT, M12 x 1
8	5183854	2	GAS STRUT,
9	82000409	4	PIN, BALL,
10	81869714	4	CLIP,
11	16104511	4	NUT, LOCK, M8 x 1.25, Cl 8.8,
12	E9NN94231N12AB	2	BODY,
13	5112712	4	CLIP, HOSE, M4.8 x 283,

B95LR NA BACKHOE LOADER (1/06-)

1.92.8(01) FIREWALL SEAL, ROPS

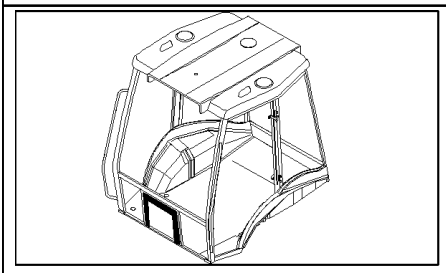

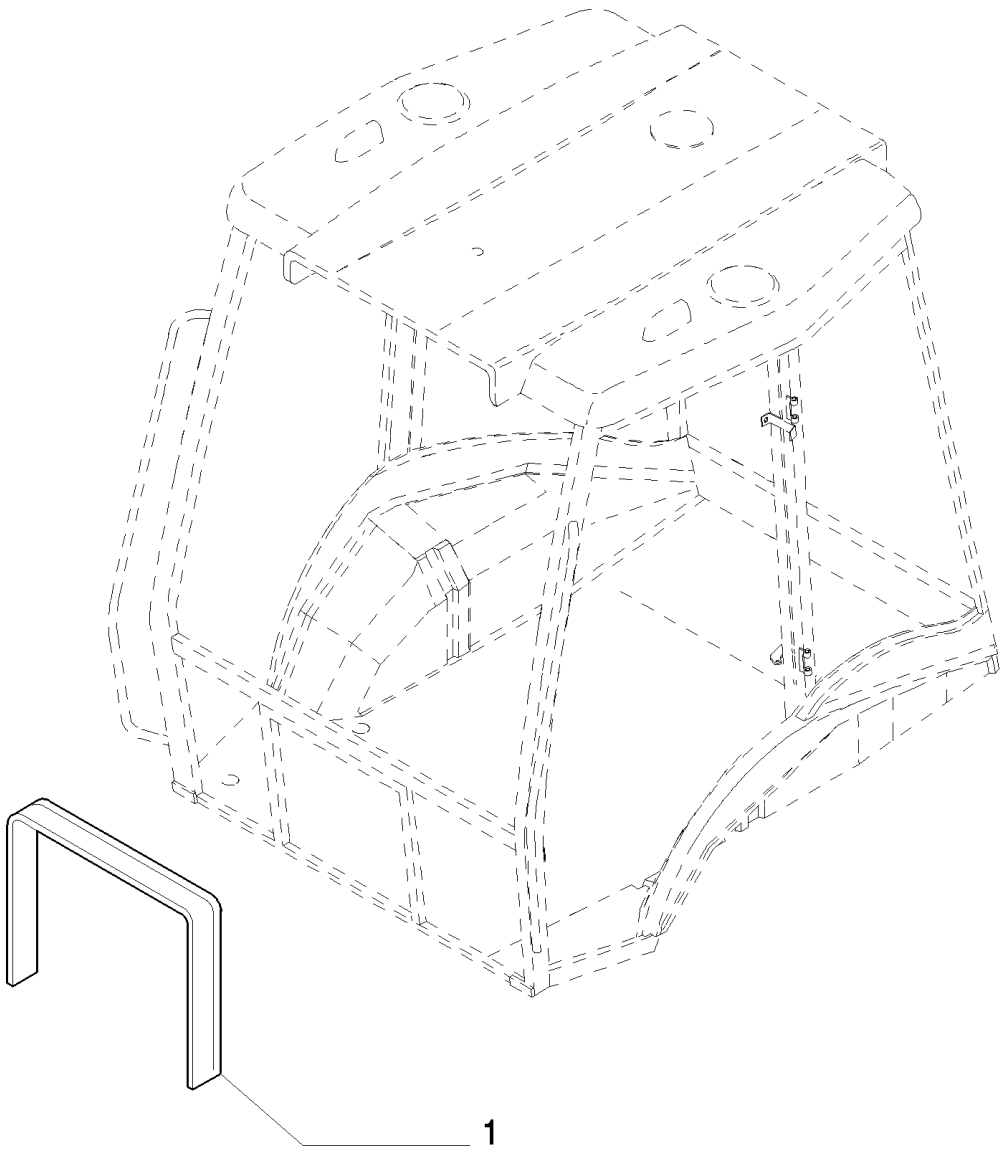

B95LR NA BACKHOE LOADER (1/06-)

1.92.8(01) FIREWALL SEAL, ROPS

Ref	Numero de Pieza	Ctd	Descripción
1	85805571	1	STRIP, RUBBER,

1.92.9(01) REAR WINDOWS

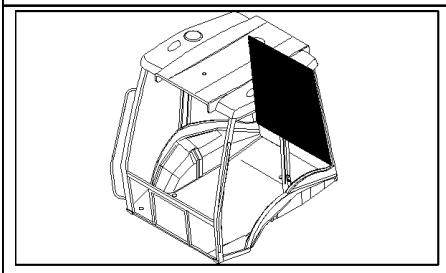

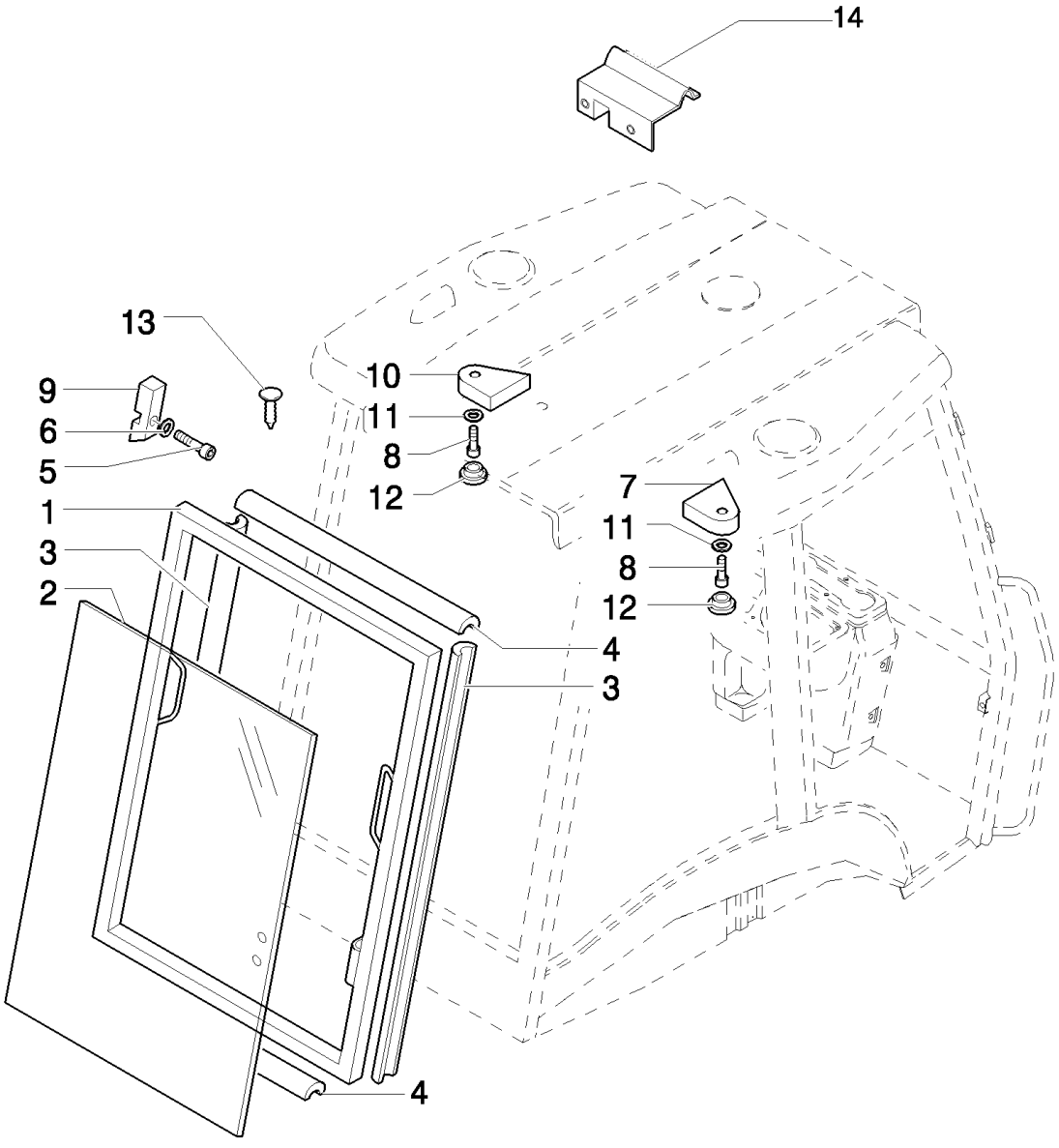

B95LR NA BACKHOE LOADER (1/06-)

1.92.9(01) REAR WINDOWS

Ref	Numero de Pieza	Ctd	Descripción
1	85801739	1	DOOR,
2	85801632	1	GLASS, CAB,
3	85801811	2	EXTRUSION,
4	85819017	1	STRIP, RUBBER, L=1010
4	85819018	1	STRIP, RUBBER, L=965
6	12646704	6	WASHER, M8 x 20 x 2,
7	85801828	1	PAD, RH
8	13313417	2	SCREW, Cross Oval Hd, M6 x 25,
9	85801826	2	STOP,
10	85801829	1	PAD, LH
11	85801991	2	WASHER,
12	79111978	2	PLUG,
13	83994150	2	PLUG,
14	85812365	1	COLLAR, RETAINER,
5	16043324	6	BOLT, Hex, M8 x 18, 8.8, Full Thd,

1.92.9(02) REAR WINDOWS

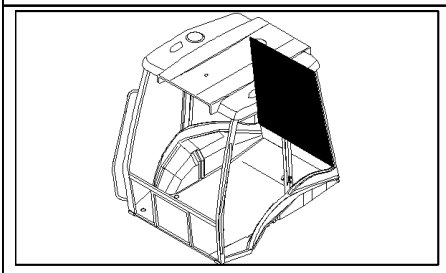

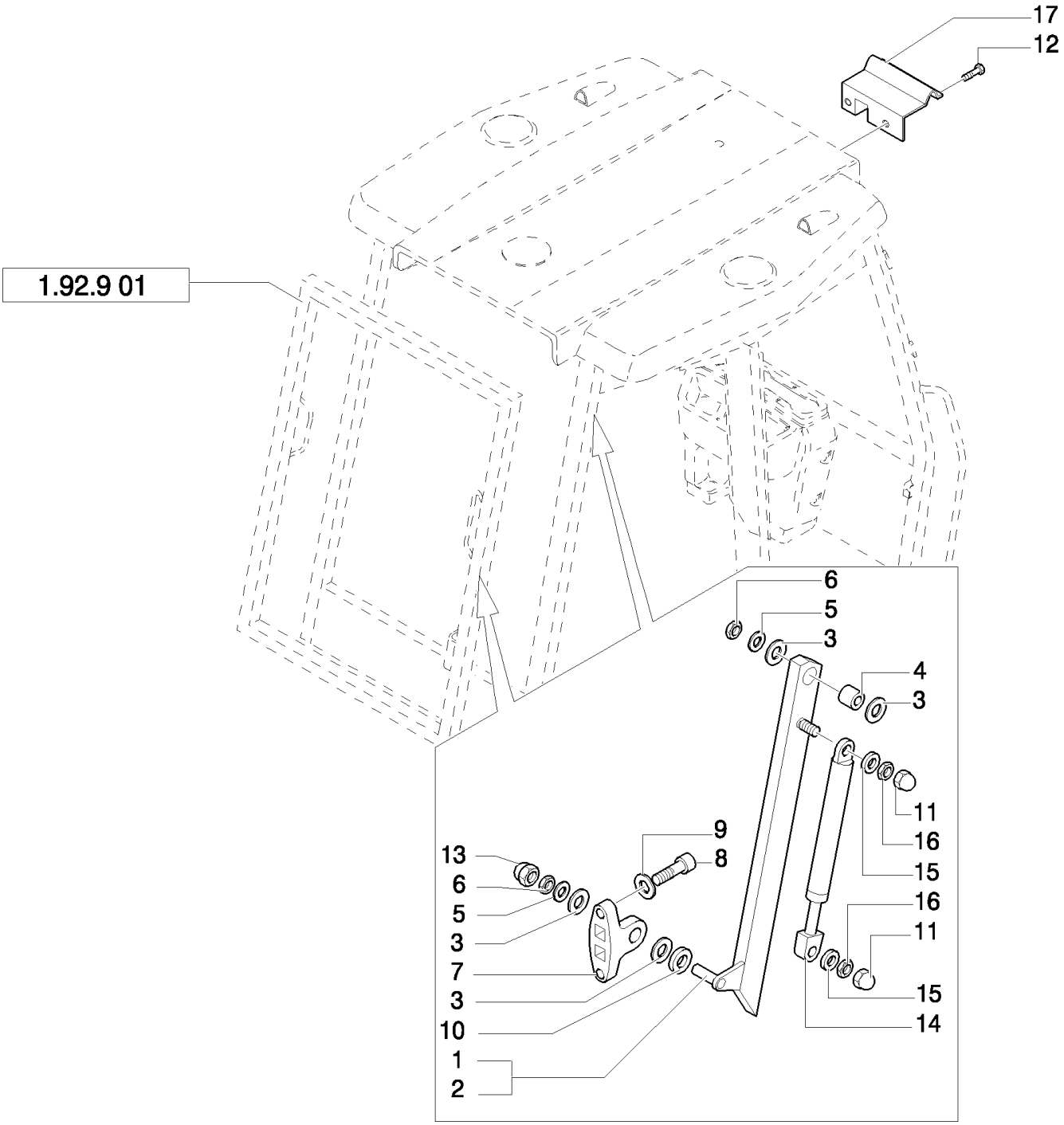

B95LR NA BACKHOE LOADER (1/06-)

1.92.9(02) REAR WINDOWS

Ref	Numero de Pieza	Ctd	Descripción
1	85801812	1	SUPPORT, RH
2	85801813	1	SUPPORT, LH
3	85801814	12	SPACER,
4	85801815	2	BUSHING,
5	12646904	4	WASHER, M12 x 28 x 3,
6	16104111	4	NUT, LOCK, M8 x 1.25, Cl 8,
7	85801816	2	SUPPORT,
8	12638501	4	WASHER, M8 x 15 x 1.5,
9	14306424	4	SCREW, Hex Soc Hd, M8 x 25, 8.8,
10	12647004	2	WASHER, M8 x 25 x 2.5,
11	15811387	4	CAP,
12	13276217	2	SCREW, Cross Pan Hd, M6 x 16,
13	5132136	2	COVER, CAP,
14	85801827	2	GAS STRUT,
15	14496407	4	WASHER,
16	12574215	4	NUT, LOCK, M6 x 1, Cl 8,
17	85812364	1	RETAINER,

1.92.9(03) REAR WINDOWS

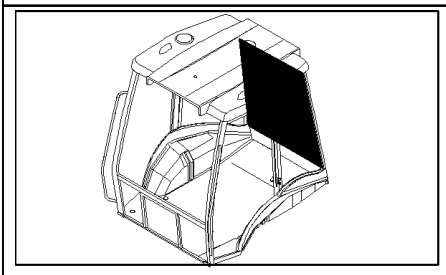

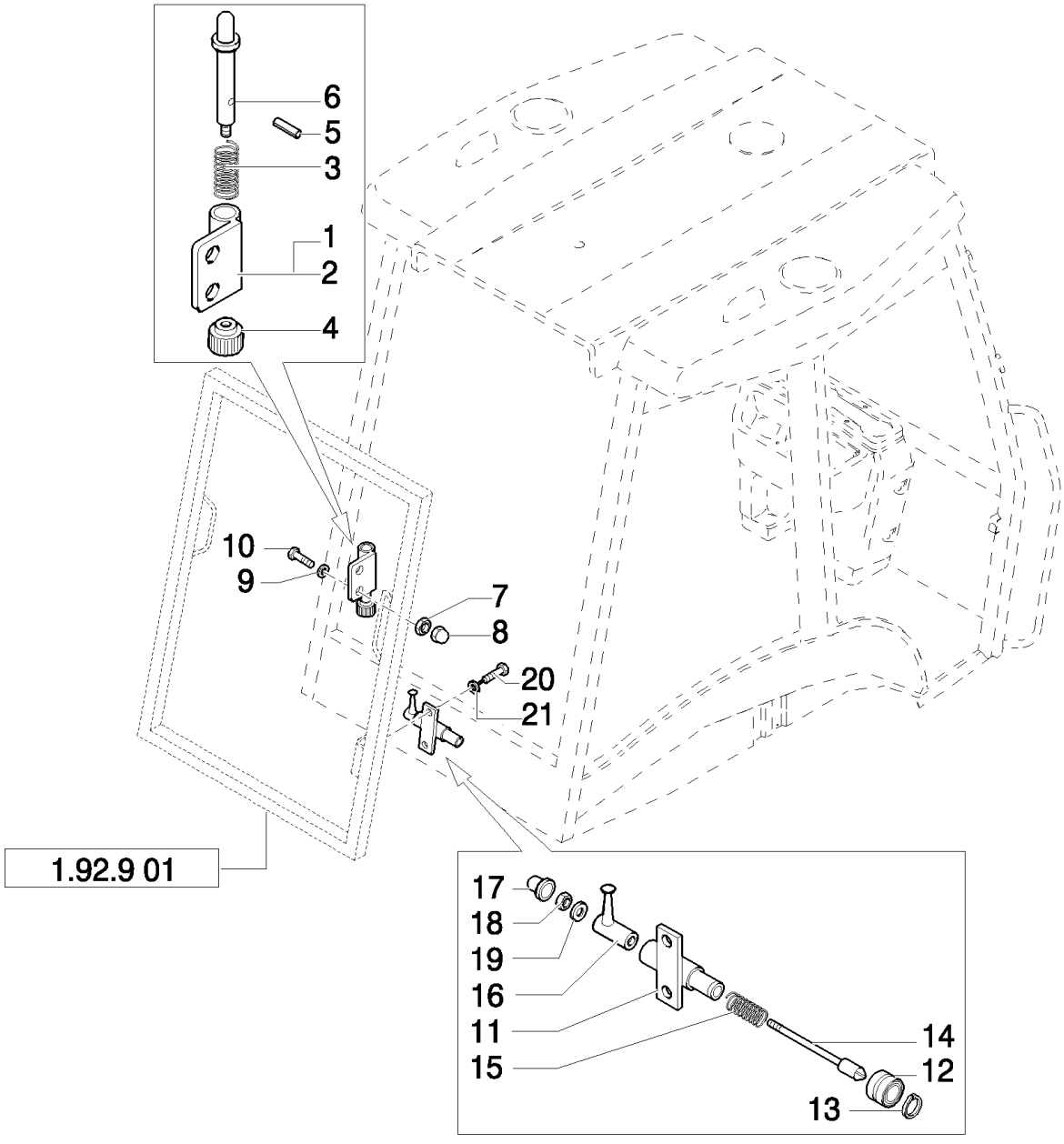

B95LR NA BACKHOE LOADER (1/06-)

1.92.9(03) REAR WINDOWS

Ref	Numero de Pieza	Ctd	Descripción
1	85801831	1	BLOCK, LH
2	85801830	1	BLOCK, RH
3	85801832	2	SPRING,
4	85801833	2	KNOB,
5	14161771	2	PIN, LOCK, M3 x 16, Slotted,
6	85801834	2	PIN,
7	16104111	4	NUT, LOCK, M8 x 1.25, Cl 8,
8	5132136	4	COVER, CAP,
9	11198074	4	WASHER, SPRING, Belleville, M8.4,
10	85827836	4	SCREW, Cap, HH, CL 8.8, M8 x 1.25 x 25
11	85801820	1	PIN, RH
11	85801821	2	PIN, LH
12	85802018	2	BEARING, ROLLER,
13	85802351	2	RING, LOCKING,
14	85801823	2	PIN,
15	85801824	2	SPRING,
16	85801825	2	LATCH,
17	15811387	2	CAP,
19	12637821	4	WASHER, M5 x 11 x 1,
20	14306424	4	SCREW, Hex Soc Hd, M8 x 25, 8.8,
21	11198074	4	WASHER, SPRING, Belleville, M8.4,
18	12574111	4	NUT, LOCK, M5 x .8, Cl 8,

1.93.0(01) CAB / SOFT TRIM

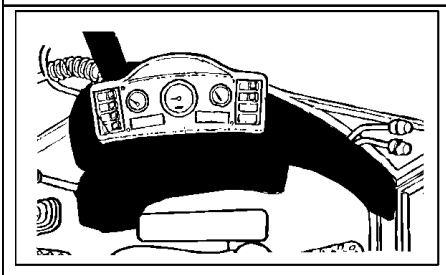

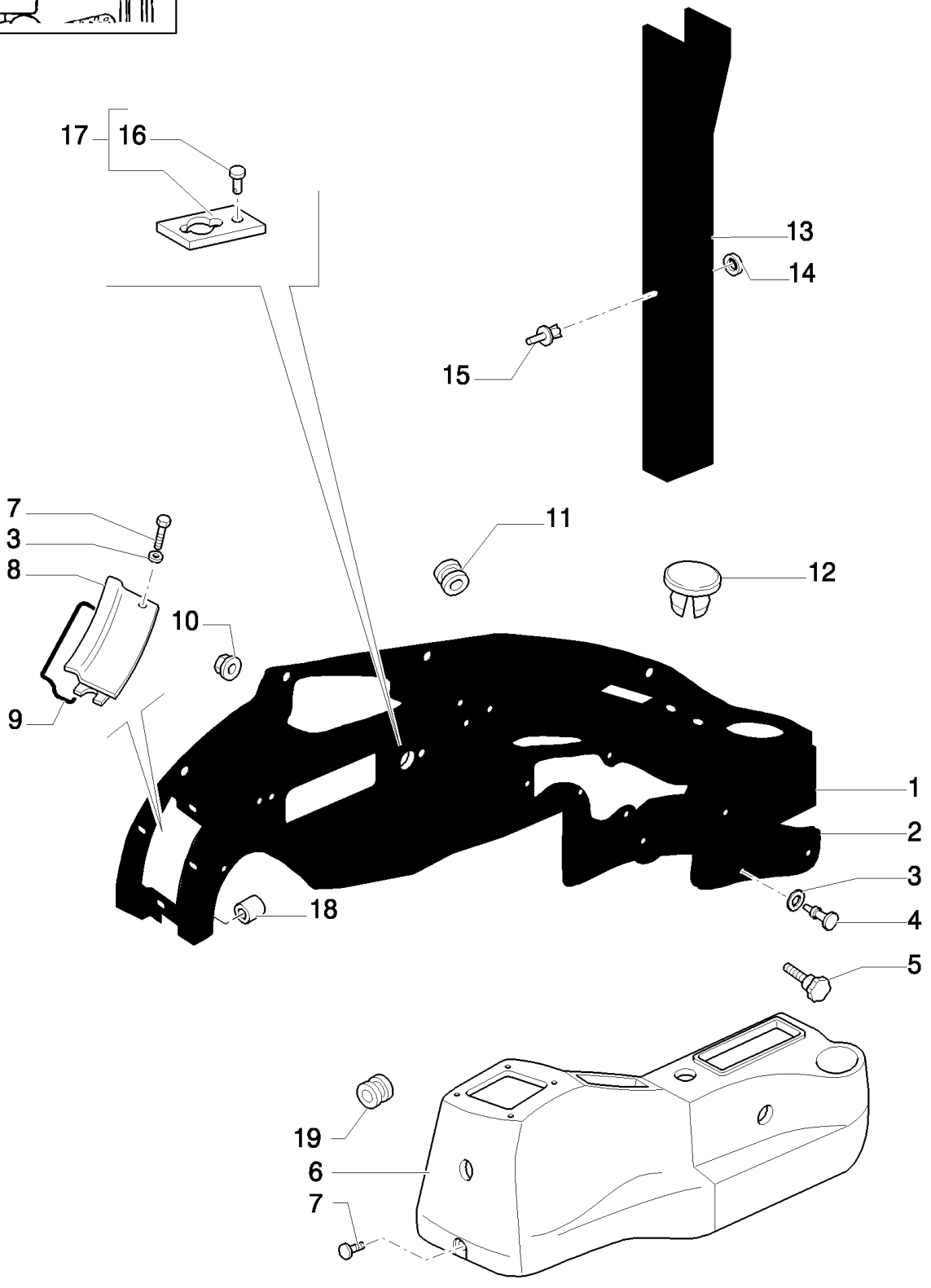

B95LR NA BACKHOE LOADER (1/06-)

1.93.0(01) CAB / SOFT TRIM

Ref	Numero de Pieza	Ctd	Descripción
1	85821318	1	SOFT TRIM, RH, Includes 2, 8, 9, 18, UP TO S/N 031060679
1	87362096	1	SOFT TRIM, , Includes 2, 8, 9, 18, FROM S/N 031060680
2	85801649	1	SOFT TRIM,
3	85801991	AR	WASHER,
4	13311217	5	SCREW, Cross Oval Hd, M5 x 20,
5	85805323	1	KNOB,
6	87319785	1	SOFT TRIM,
7	13311017	AR	SCREW, Cross Oval Hd, M5 x 16,
8	85825191	1	COVER,
9	85806023	1	STRIP, SEALING,
10	14084814	5	NUT, M8 x 1.25, Flg,
11	10398980	1	GROMMET, 46X5
12	79111815	1	PLUG,
13	85819285	1	SOFT TRIM, RH
14	85801991	4	WASHER,
15	F1NN94000Z36AA	6	DRAWBAR, SWINGING,
16	10427200	1	RIVET, Flat Hd, M4 x 5,
17	85827548	1	PLATE,
18	85805819	6	BUSHING, THREADED,
19	87517471	1	RING, INSULATING,

1.93.0(02) CAB / SOFT TRIM (POWER SHUTTLE)

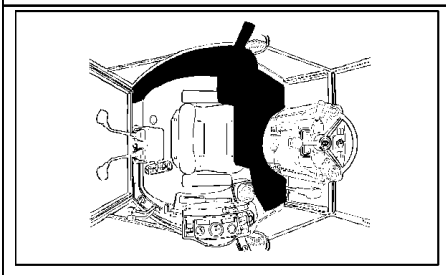

B95LR NA BACKHOE LOADER (1/06-)

1.93.0(02) CAB / SOFT TRIM (POWER SHUTTLE)

Ref	Numero de Pieza	Ctd	Descripción
1	85819277	1	SOFT TRIM, LH, UP TO S/N 031060679
1	87362098	1	SOFT TRIM, , FROM S/N 031060680
2	79089592	6	WASHER, D=24
3	13313417	6	SCREW, Cross Oval Hd, M6 x 25,
4	85819287	1	SOFT TRIM, LH
5	5178468	1	COAT HOOK,
6	14084011	1	NUT, M4 x .7, Flg,
7	14084814	4	NUT, M8 x 1.25, Flg,
8	85801991	4	WASHER,
9	15627011	12	RIVET,
10	E7NN94290N06AA	1	STRAP,
11	12638107	1	SPACER, 5X14
12	85806154	1	RIVET,
13	79111978	1	PLUG,
14	5148132	1	NUT, LOCK,
15	14143790	1	BULB, 1,2W
16	F1NN94000Z36AA	6	DRAWBAR, SWINGING,
17	5148131	1	HOUSING,
18	79111978	1	PLUG, D=23
19	85808460	1	PLUG,

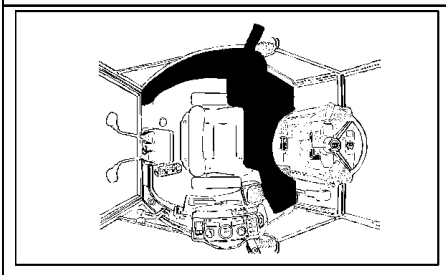

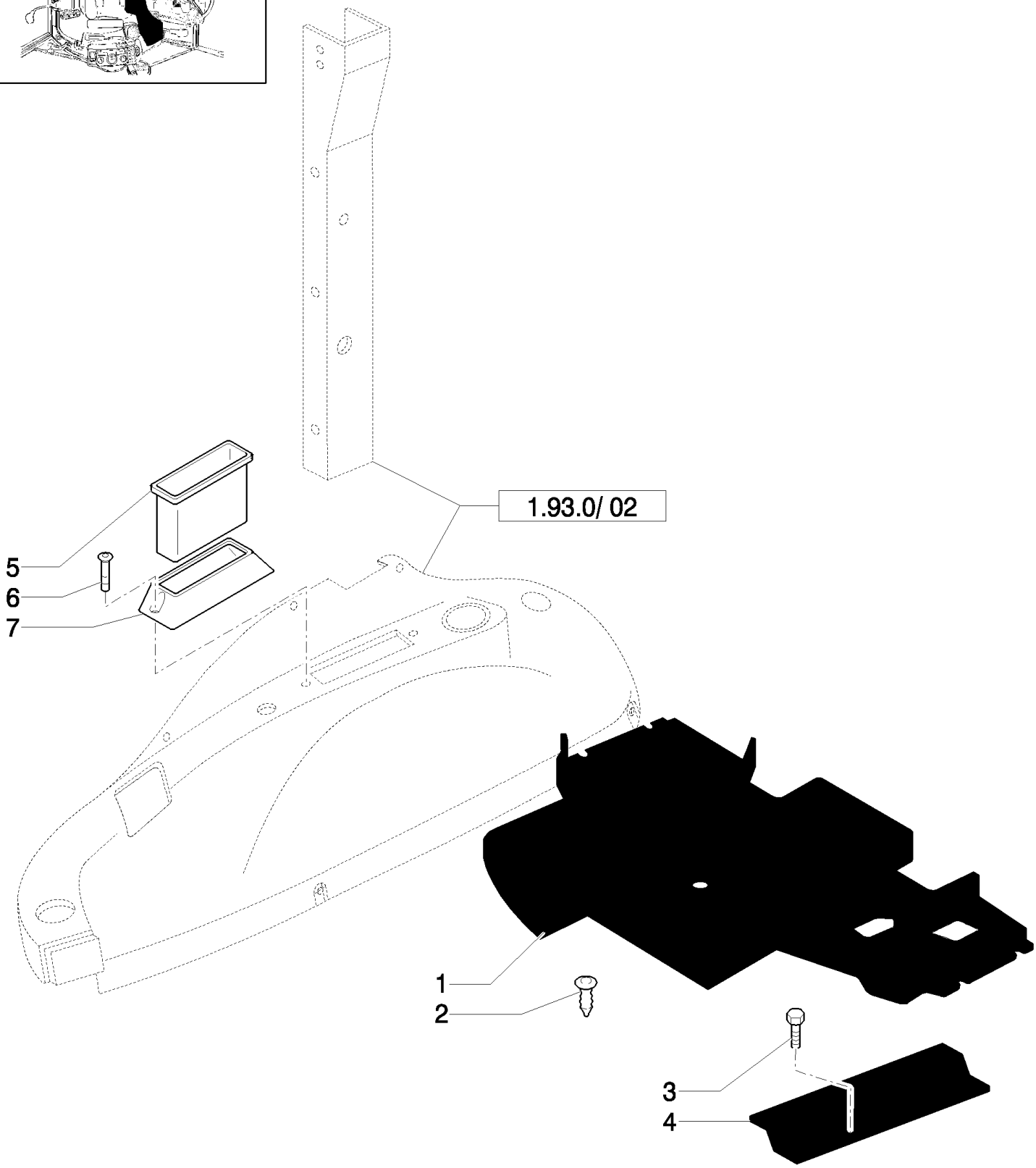
1.93.0/ 02
5
6
7
1
2
3
4

B95LR NA BACKHOE LOADER (1/06-)

1.93.0(03) CAB / SOFT TRIM

Ref	Numero de Pieza	Ctd	Descripción
1	85804865	1	MAT, FLOOR,
2	14568887	2	FASTENER,
3	14441521	5	BOLT, Hex Soc Flat Hd, M6 x 25, 8.8,
4	85805591	2	MOULDING, DOOR SILL,
5	85801979	1	CONTAINER,
6	13276617	2	SCREW, Cross Pan Hd, M6 x 25,
7	85801651	1	HOUSING,

B95LR NA BACKHOE LOADER (1/06-)

1.93.0(04) CAB / SOFT TRIM

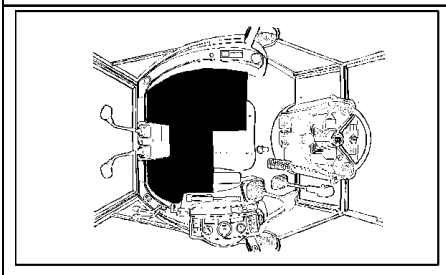

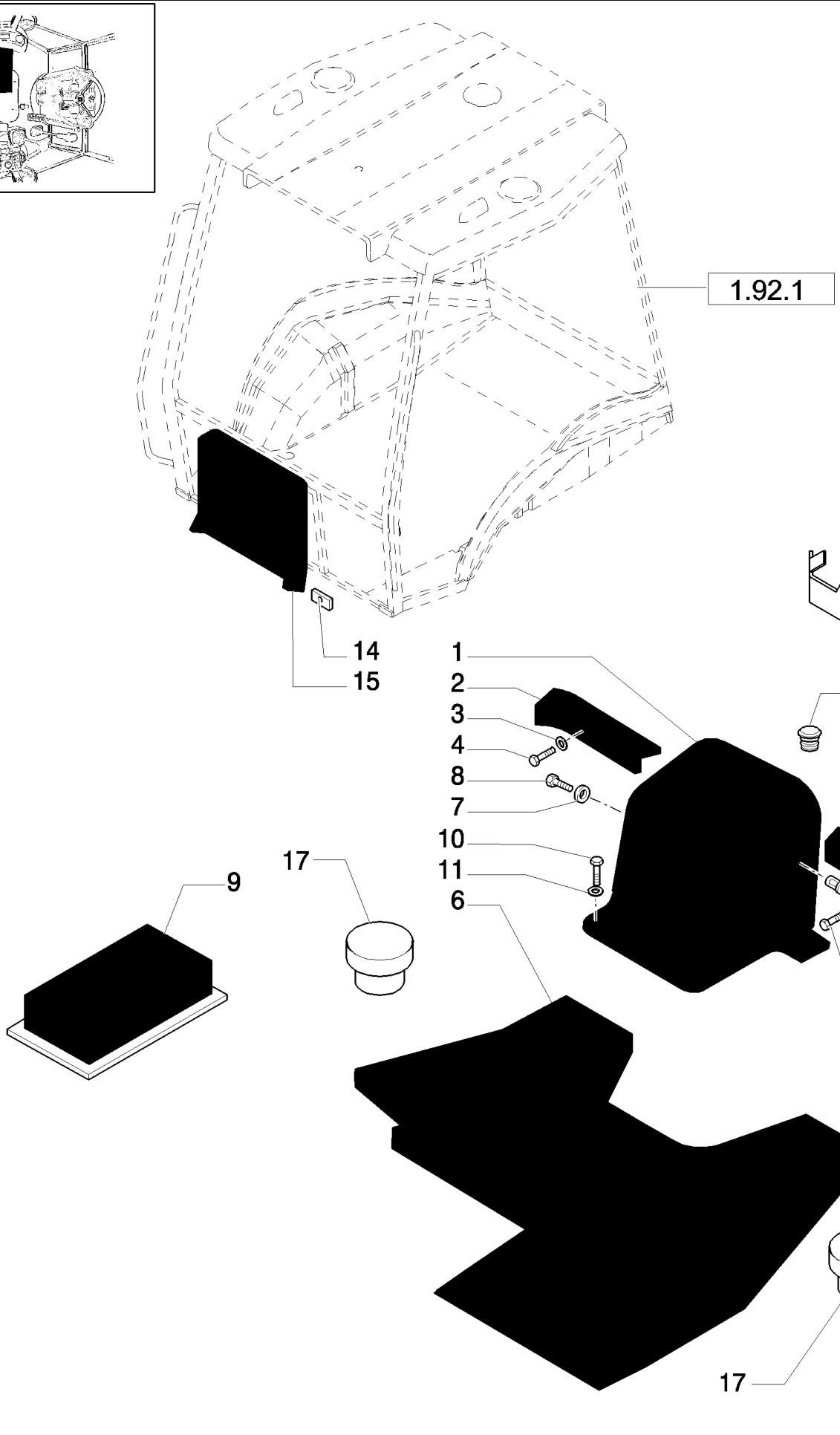

B95LR NA BACKHOE LOADER (1/06-)

1.93.0(04) CAB / SOFT TRIM

Ref	Numero de Pieza	Ctd	Descripción
1	87319801	1	CONSOLE,
2	85804863	1	FOOT REST,
3	10519604	4	WASHER, M8 x 17 x 2,
4	16043824	4	BOLT, Hex, M8 x 30, 8.8, Full Thd,
5	85804864	1	FOOT REST,
6	85804866	1	MAT, FLOOR,
7	79089592	1	WASHER,
8	79105220	1	SCREW, LOCK, Cross Oval Csk Hd, M6 x 20,
9	4999021	1	GASKET,
11	12640621	4	WASHER, M6 x 25 x 2,
12	85802259	2	BUSHING, THREADED,
13	82001909	1	GROMMET,
14	85812080	4	NUT,
15	87408893	1	PANEL,
16	87323749	1	BRACKET,
17	87319803	2	PLUG,
10	10902624	4	BOLT, Hex, M6 x 25, 8.8, Full Thd,

B95LR NA BACKHOE LOADER (1/06-)

1.93.0/ 2(01) RH & BACKHOE CONSOLE TRIM, ROPS (CENTER PIVOT)

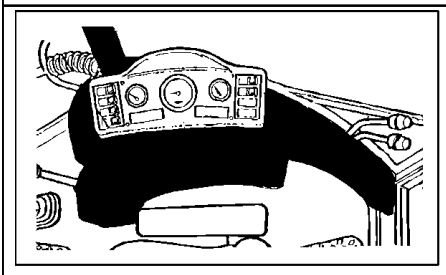

Mechanical Version

B95LR NA BACKHOE LOADER (1/06-)

1.93.0/ 2(01) RH & BACKHOE CONSOLE TRIM, ROPS (CENTER PIVOT)

Ref	Numero de Pieza	Ctd	Descripción
1	85821320	1	SOFT TRIM, , Includes 2, 8, 9, 18
2	85801649	1	SOFT TRIM,
3	85801991	AR	WASHER,
4	13311217	5	SCREW, Cross Oval Hd, M5 x 20,
5	85805323	1	KNOB,
6	85805803	1	UTILITY HOLDER,
7	16043424	2	SCREW, Hex, M8 x 20, 8.8, Full Thd,
8	85825191	1	COVER, Fuse Panel
9	85806023	1	STRIP, SEALING,
10	14084814	5	NUT, M8 x 1.25, Flg,
11	85805308	1	SEAL,
12	79111815	1	PLUG,
13	79089592	2	WASHER, D=24
14	13311017	4	SCREW, Cross Oval Hd, M5 x 16,
15	85812081	1	STRIP, RUBBER,
16	10427200	1	RIVET, Flat Hd, M4 x 5,
17	85827548	1	PLATE,
18	85804750	6	BUSHING, THREADED,
19	85816763	1	BLISTER, , Includes 20
20	85802259	2	BUSHING, THREADED,
22	11193974	4	WASHER, SPRING, Belleville, M8.4,
23	79111978	1	PLUG,
24	82001909	1	GROMMET,
25	4999021	1	GASKET,
21	10902624	4	BOLT, Hex, M6 x 25, 8.8, Full Thd,

Mechanical Version

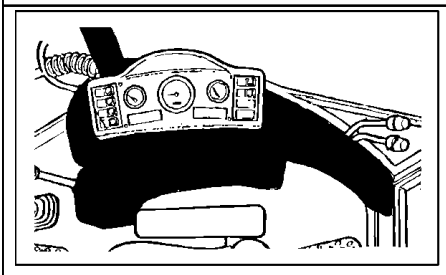

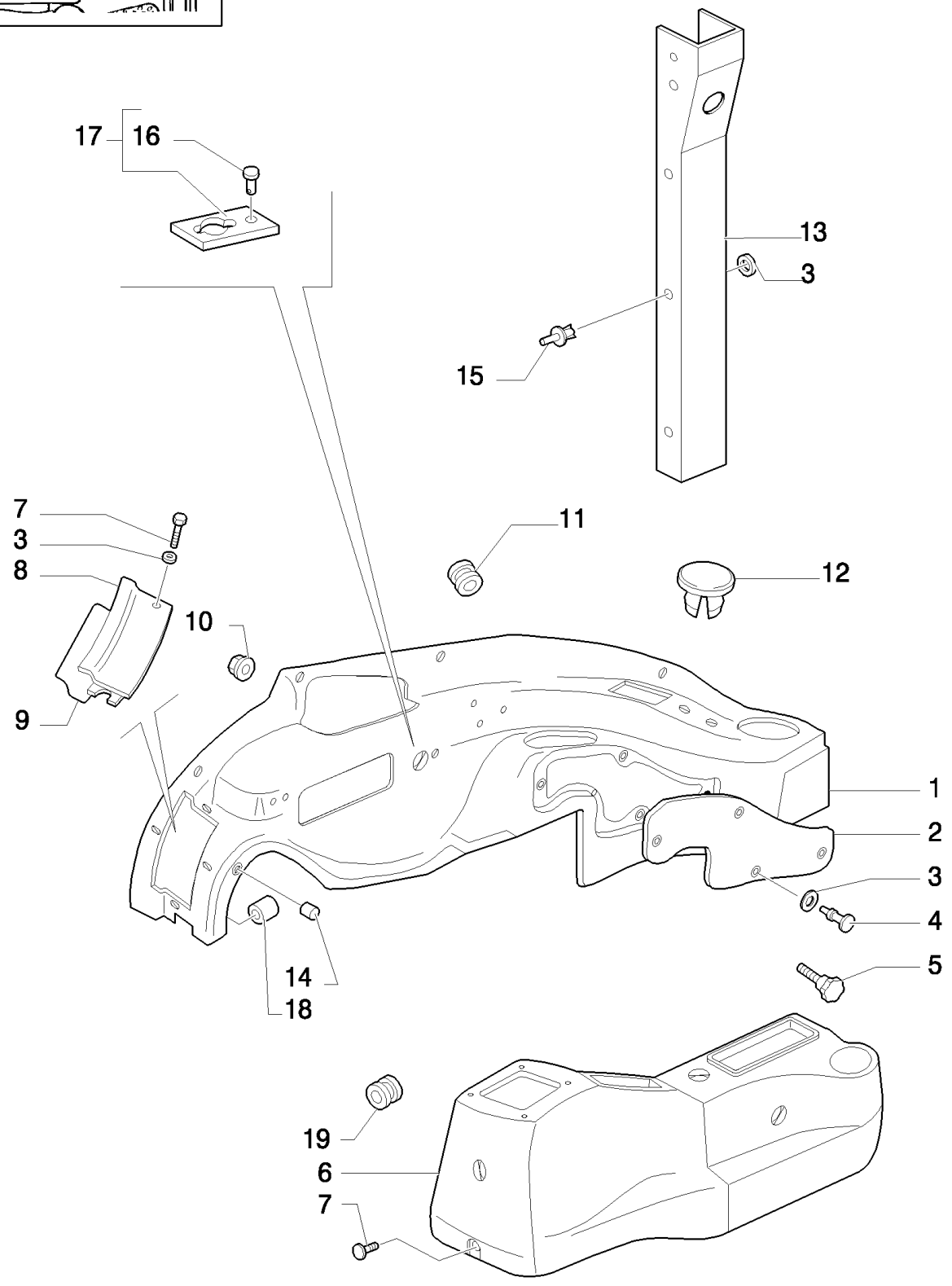
17
16
13
3
15
7
3
8
11
12
10
9
1
2
3
4
5
14
18
19
6
7

B95LR NA BACKHOE LOADER (1/06-)

1.93.0/ 3(01) CAB / SOFT TRIM

Ref	Numero de Pieza	Ctd	Descripción
1	85825277	1	SOFT TRIM, RH, Includes 2, 8, 9, 14, 18, UP TO S/N 031060679
1	87362092	1	SOFT TRIM, , FROM S/N 031060680, Includes 2, 8, 9, 14, 18
2	85801649	1	SOFT TRIM,
3	85801991	AR	WASHER,
4	13311217	5	SCREW, Cross Oval Hd, M5 x 20,
5	85805323	1	KNOB,
6	87319785	1	SOFT TRIM,
7	13311017	AR	SCREW, Cross Oval Hd, M5 x 16,
8	85825191	1	COVER,
9	85806023	1	STRIP, SEALING,
10	14084814	5	NUT, M8 x 1.25, Flg,
11	10398980	1	GROMMET, 46X5
12	79111815	1	PLUG,
13	85819285	1	SOFT TRIM, RH
14	85805819	4	BUSHING, THREADED,
15	F1NN94000Z36AA	6	DRAWBAR, SWINGING,
16	10427200	1	RIVET, Flat Hd, M4 x 5,
17	85827548	1	PLATE,
18	85804750	6	BUSHING, THREADED,
19	87517471	1	RING, INSULATING,

Pilot Control Version

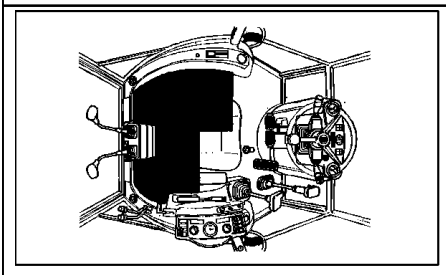

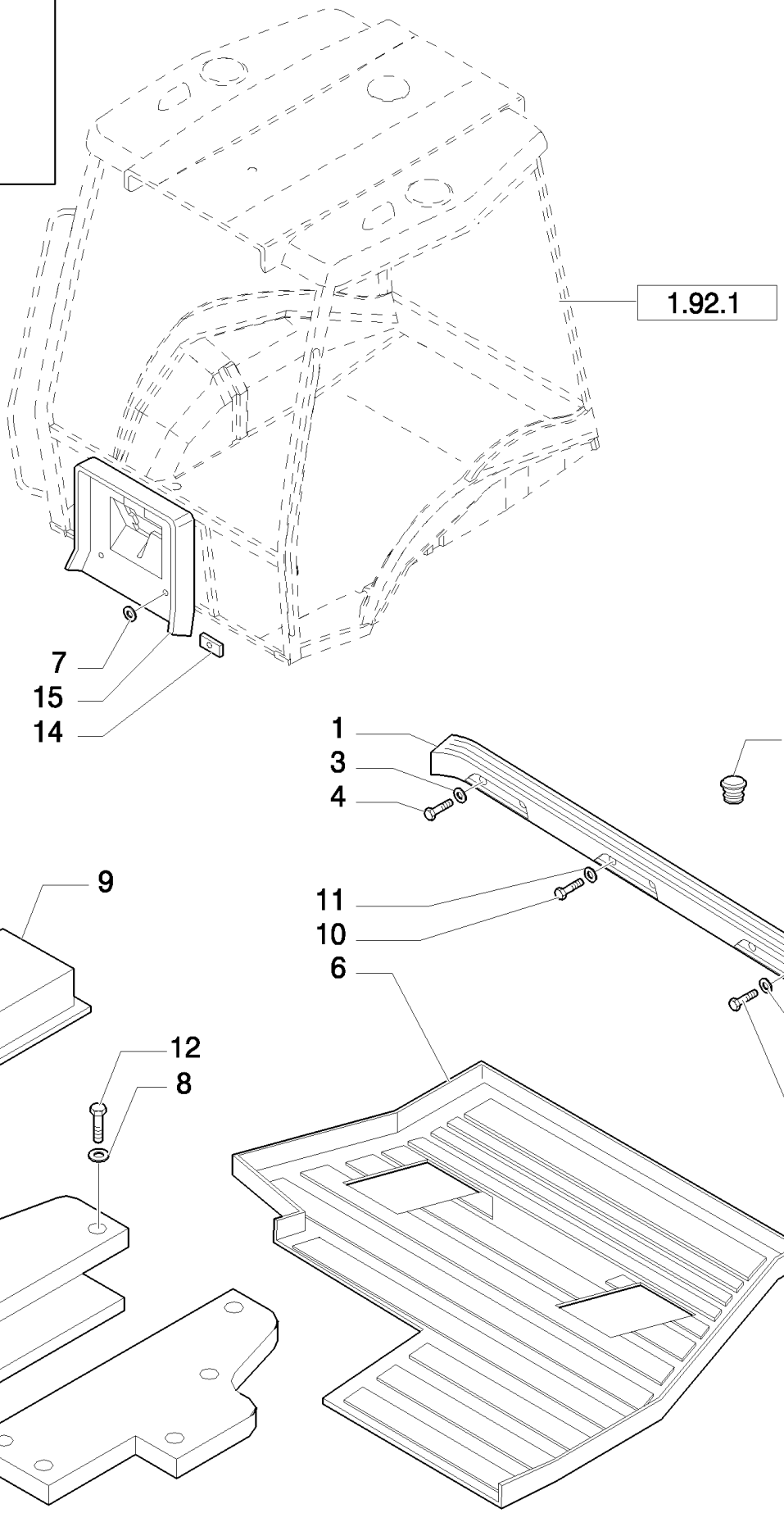
1.92.1
7
15
14
1
3
4
13
11
10
6
3
4
9
12
8
2
5

B95LR NA BACKHOE LOADER (1/06-)

1.93.0/ 3(04) CAB / SOFT TRIM

Ref	Numero de Pieza	Ctd	Descripción
1	87410385	1	PANEL,
2	87426550	1	COVER, TOP,
3	10519604	4	WASHER, M8 x 17 x 2,
4	16043824	4	BOLT, Hex, M8 x 30, 8.8, Full Thd,
5	87426546	1	COVER, TOP,
6	87410108	1	MAT,
7	79089592	1	WASHER,
8	11193274	10	WASHER, SPRING, Belleville, M6.4,
9	4999021	1	GASKET,
11	12640621	4	WASHER, M6 x 25 x 2,
12	10902524	10	BOLT, Hex, M6 x 22, 8.8, Full Thd,
13	82001909	1	GROMMET,
14	85812080	4	NUT,
15	87408893	1	PANEL,
10	10902624	4	BOLT, Hex, M6 x 25, 8.8, Full Thd,

1.93.0/ 5(01) RH & BACKHOE CONSOLE TRIM, ROPS (CENTER PIVOT)

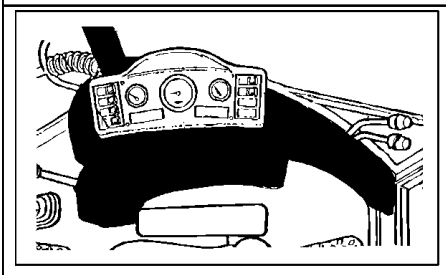

Pilot Control Version

B95LR NA BACKHOE LOADER (1/06-)

1.93.0/ 5(01) RH & BACKHOE CONSOLE TRIM, ROPS (CENTER PIVOT)

Ref	Numero de Pieza	Ctd	Descripción
1	85825272	1	SOFT TRIM, , Includes 2, 8, 9, 18
2	85801649	1	SOFT TRIM,
3	85801991	AR	WASHER,
4	13311217	5	SCREW, Cross Oval Hd, M5 x 20,
5	85805323	1	KNOB,
6	85805803	1	UTILITY HOLDER,
7	16043424	2	SCREW, Hex, M8 x 20, 8.8, Full Thd,
8	85825191	1	COVER, Fuse Panel
9	85806023	1	STRIP, SEALING,
10	14084814	5	NUT, M8 x 1.25, Flg,
11	85805308	1	SEAL,
12	79111815	1	PLUG,
13	79089592	2	WASHER, D=24
14	13311017	4	SCREW, Cross Oval Hd, M5 x 16,
15	85812081	1	STRIP, RUBBER,
16	10427200	1	RIVET, Flat Hd, M4 x 5,
17	85827548	1	PLATE,
18	85804750	6	BUSHING, THREADED,
19	85819016	1	STRIP, RUBBER,
20	85808460	1	PLUG,
21	87426550	1	COVER, TOP,
22	11193974	4	WASHER, SPRING, Belleville, M8.4,
23	79111978	1	PLUG,
24	82001909	1	GROMMET,
25	4999021	1	GASKET,

Pilot Control Version

B95LR NA BACKHOE LOADER (1/06-)

1.93.0/ 6(01) ROOF, ROPS

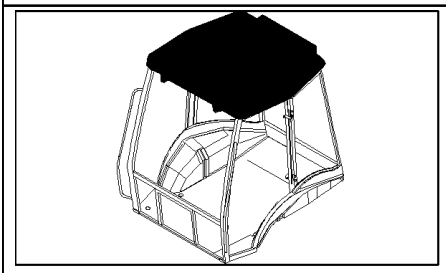

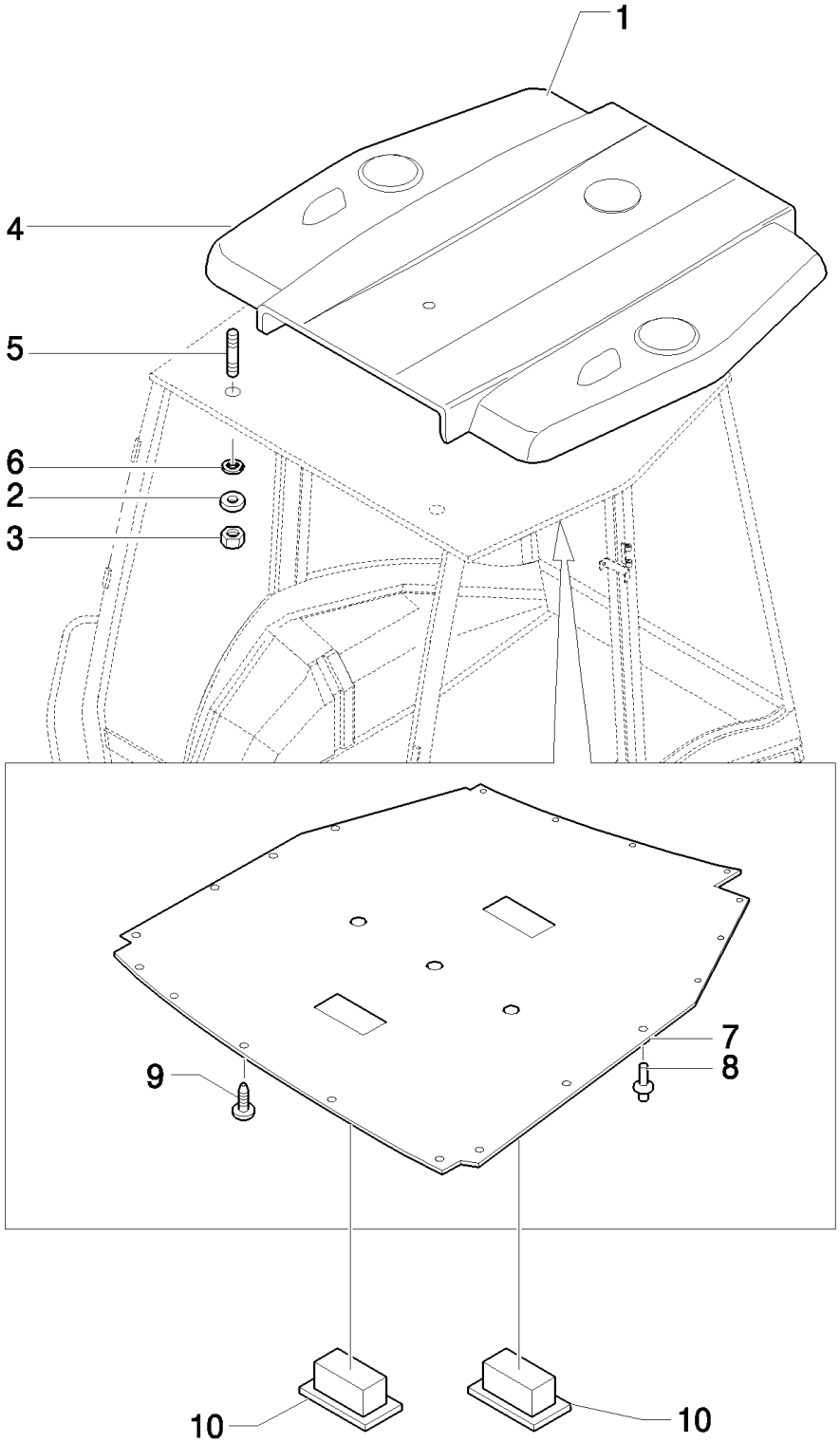

B95LR NA BACKHOE LOADER (1/06-)

1.93.0/ 6(01) ROOF, ROPS

Ref	Numero de Pieza	Ctd	Descripción
1	87315646	1	ROOF, Gray, Includes 5, Only for CAB
1	87315647	1	ROOF, Gray, Includes 5, Only for ROPS
2	12647004	8	WASHER, M8 x 25 x 2.5,
3	16104111	8	NUT, LOCK, M8 x 1.25, Cl 8,
4	85819549	8	PLUG,
5	13517021	8	STUD,
6	85801801	8	SEALRING,
7	87319727	1	SOFT TRIM,
8	5162852	21	FASTENER,
9	85805777	1	PLUG,
10	87318763	2	PLUG,

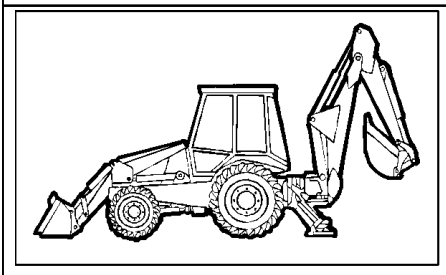

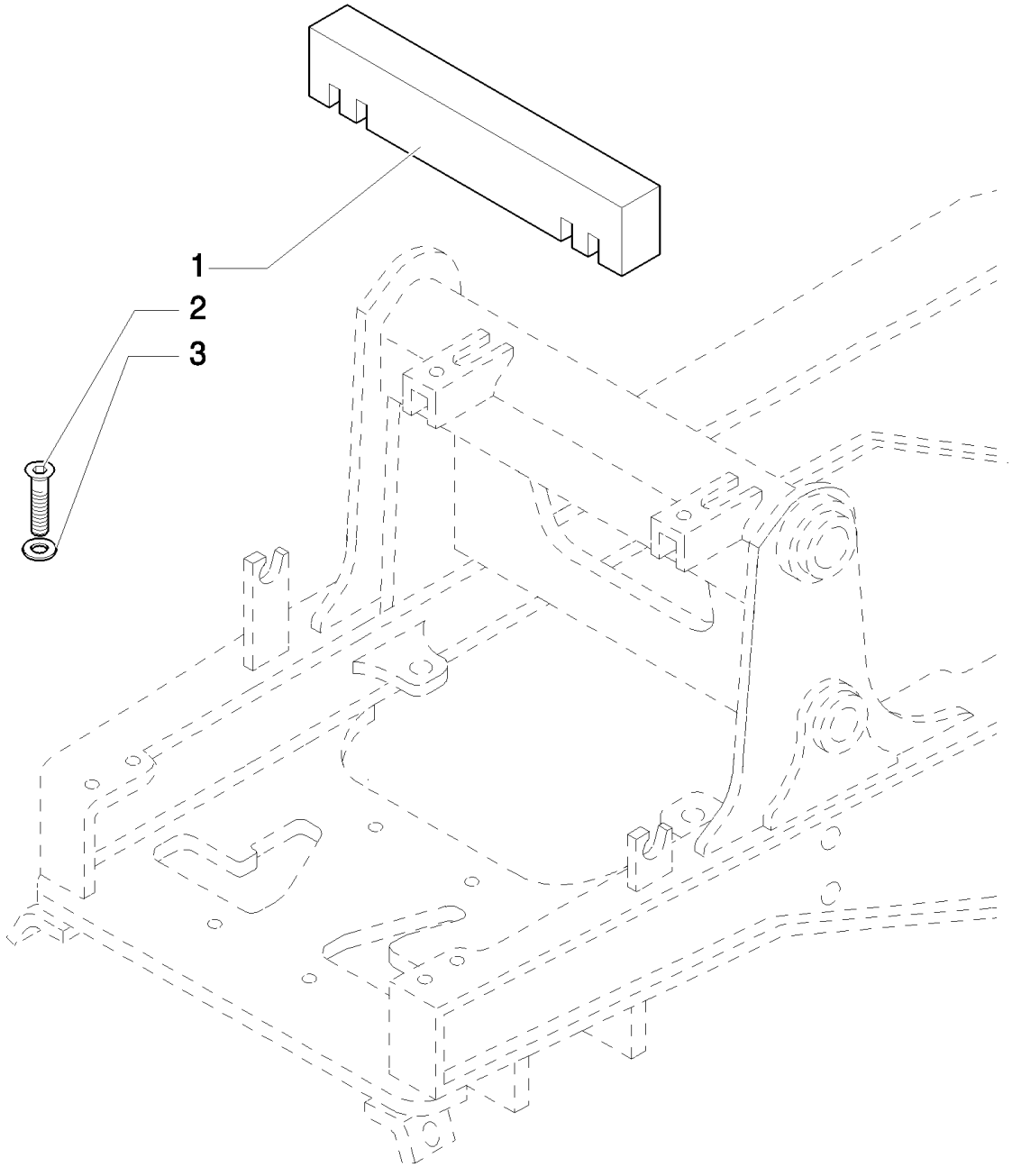
1
2
3

B95LR NA BACKHOE LOADER (1/06-)

1.93.0/ 6A(01) ROOF, ROPS

Ref	Numero de Pieza	Ctd	Descripción
1	85817287	1	SEAL,
2	13311217	5	SCREW, Cross Oval Hd, M5 x 20,
3	85801991	5	WASHER,

1.93.4(01) REAR MIRROR- SUN SCREEN

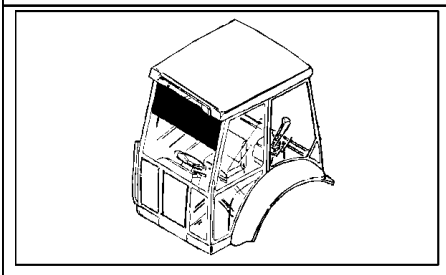

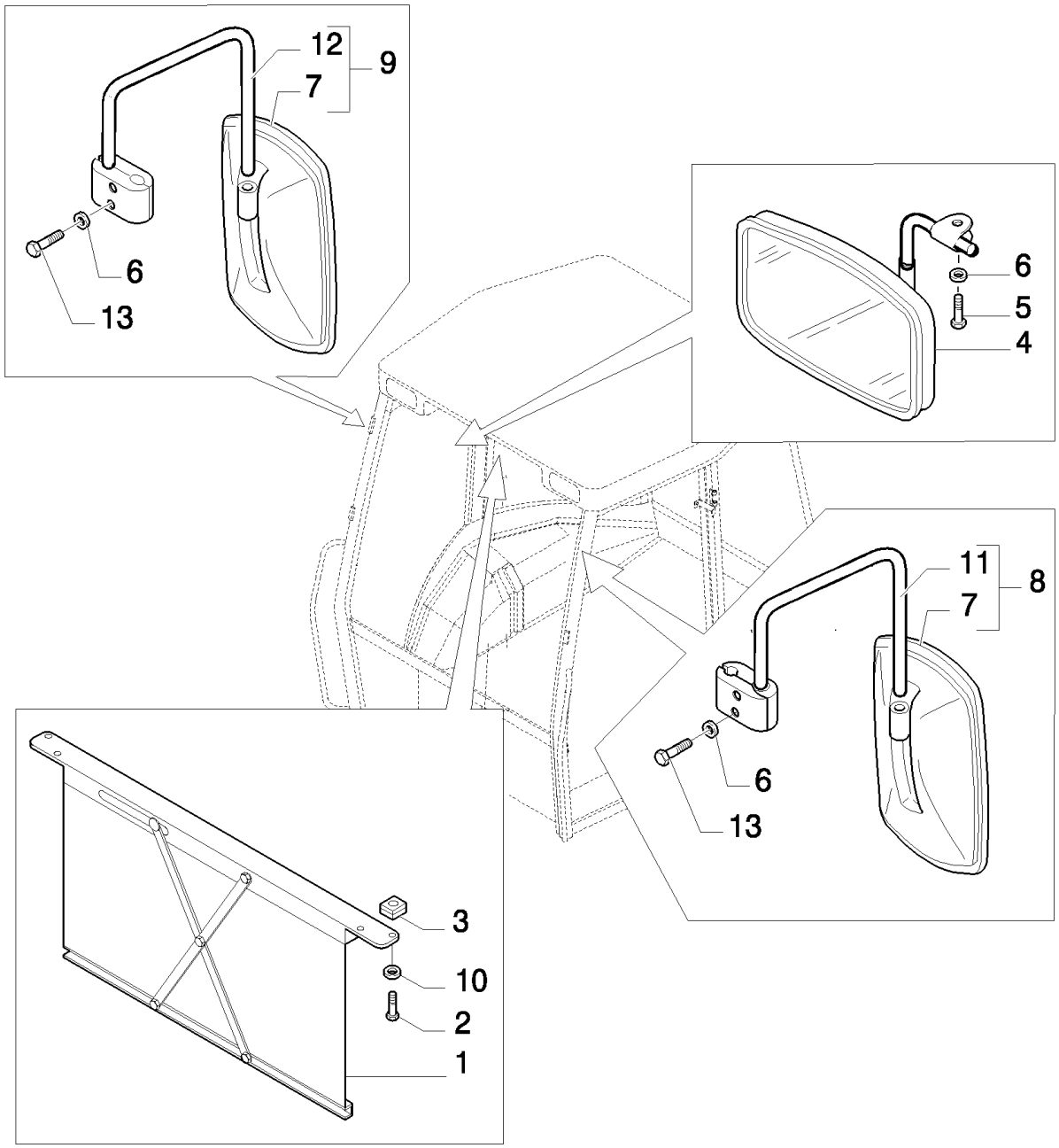

B95LR NA BACKHOE LOADER (1/06-)

1.93.4(01) REAR MIRROR- SUN SCREEN

Ref	Numero de Pieza	Ctd	Descripción
1	5176441	1	SUN CURTAIN,
2	14303324	4	SCREW, Hex Soc Hd, M4 x 20, 8.8, Full Thd,
3	14197790	4	NUT, M4 x .7, Cage,
4	83995298	1	MIRROR, REAR-VIEW, (CAB)
5	13313417	1	SCREW, Cross Oval Hd, M6 x 25, (CAB)
6	11193274	4	WASHER, SPRING, Belleville, M6.4, (ROPS)
7	85820138	2	MIRROR, REAR-VIEW,
8	85820139	1	MIRROR, LH,
9	85820136	1	MIRROR, RH,
10	12642821	4	WASHER, M4 x 12 x 1,
11	NSS	1	NOT SERVICED SEPARATELY, LH
12	NSS	1	NOT SERVICED SEPARATELY, RH
13	10902127	4	SCREW,

1.93.5(01) FRONT CONSOLE - ROPS (POWER SHUTTLE)

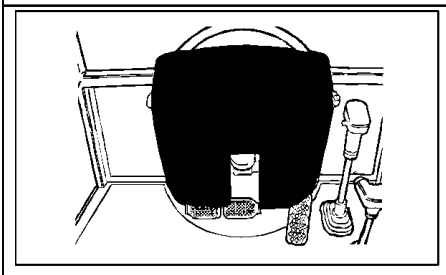

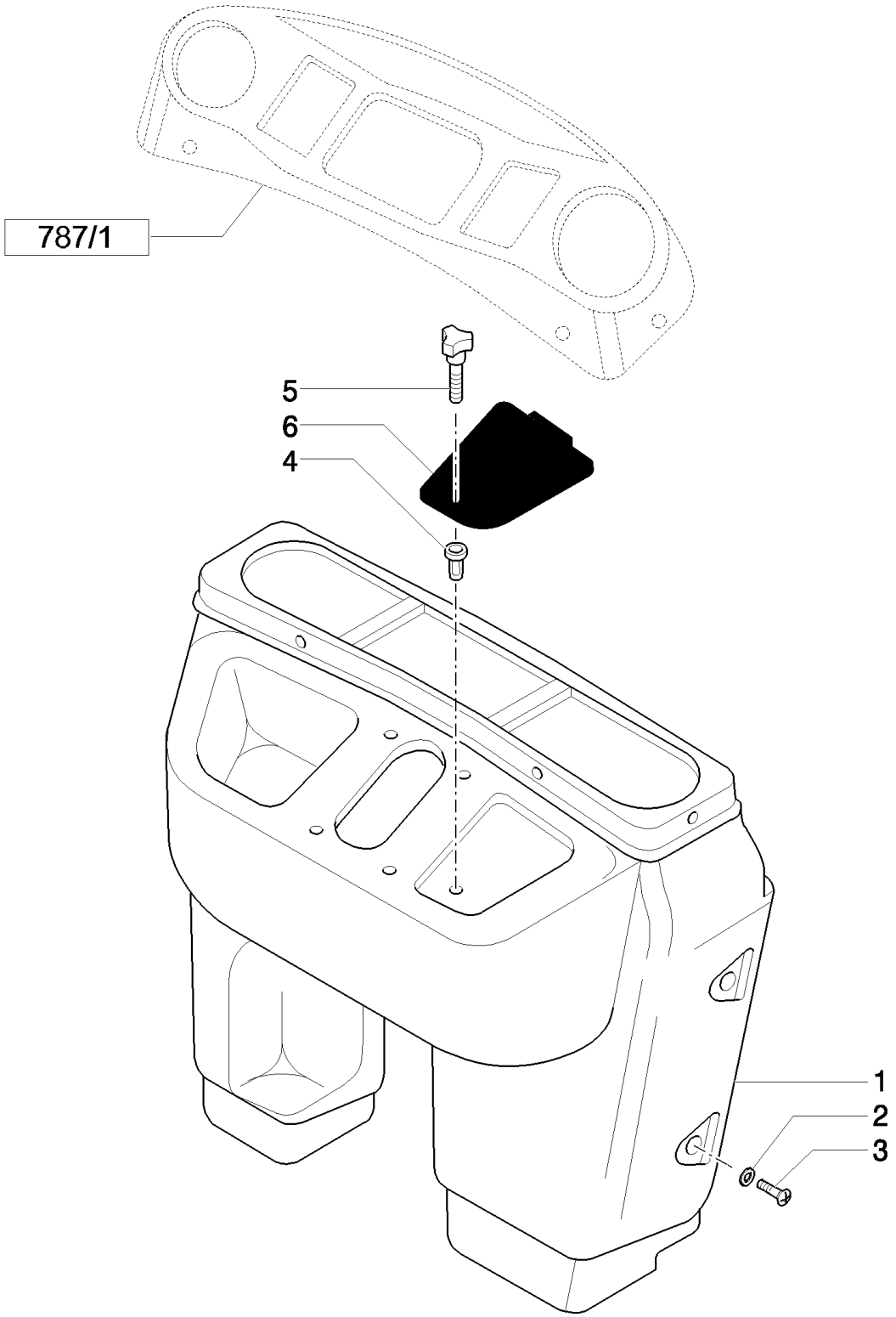

B95LR NA BACKHOE LOADER (1/06-)

1.93.5(01) FRONT CONSOLE - ROPS (POWER SHUTTLE)

Ref	Numero de Pieza	Ctd	Descripción
1	85819407	1	PANEL, DASH, Assy, ROPS, Includes 4 to 6
2	79089592	2	WASHER, D=24
3	79105220	2	SCREW, LOCK, Cross Oval Csk Hd, M6 x 20,
4	85804750	4	BUSHING, THREADED, M5
5	85805323	1	KNOB, M5
6	85806089	1	COVER,

1.93.5(02) RH SIDE CONSOLE SEAL & CLIPS - ROPS (POWER SHUTTLE)

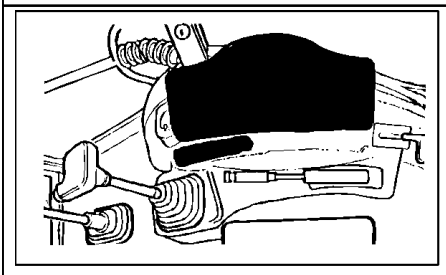

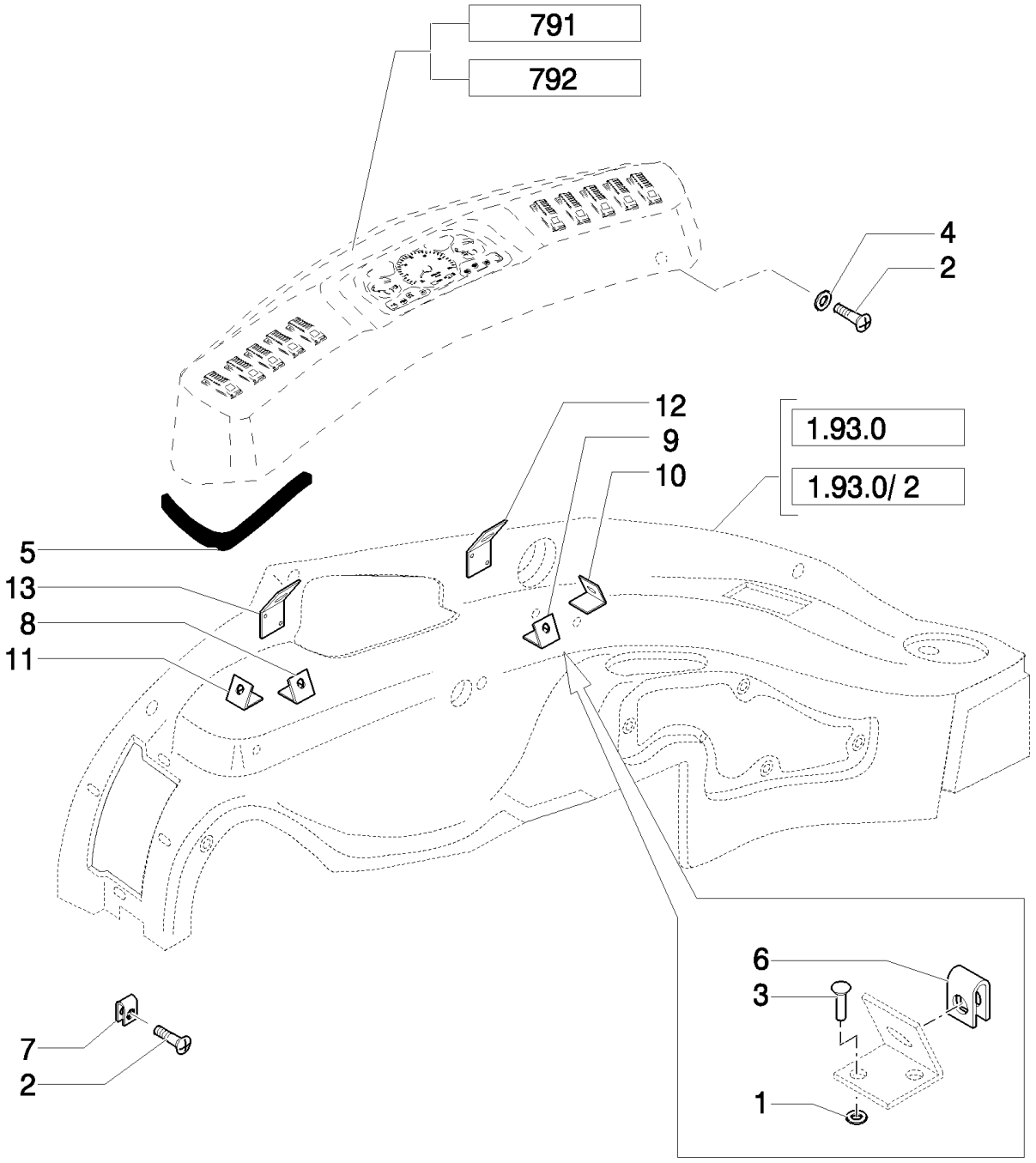

B95LR NA BACKHOE LOADER (1/06-)

1.93.5(02) RH SIDE CONSOLE SEAL & CLIPS - ROPS (POWER SHUTTLE)

Ref	Numero de Pieza	Ctd	Descripción
1	12642804	12	WASHER, M4 x 12 x 1,
2	15693507	AR	SCREW, SELF TAPPING, Cross Oval Hd, M4.8 x 22,
3		12	
4	85801991	AR	WASHER,
5	85824393	1	SEAL, RUBBER,
6	14189176	6	NUT, J, #10,
7	14372671	2	NUT, M4.2, U, 12.4mm long,
8	85802141	1	BRACKET,
9	85802142	1	BRACKET,
10	85802143	1	BRACKET,
11	85802144	1	BRACKET,
12	85802145	1	BRACKET,
13	85802146	1	BRACKET,

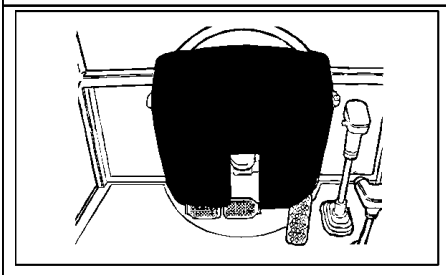

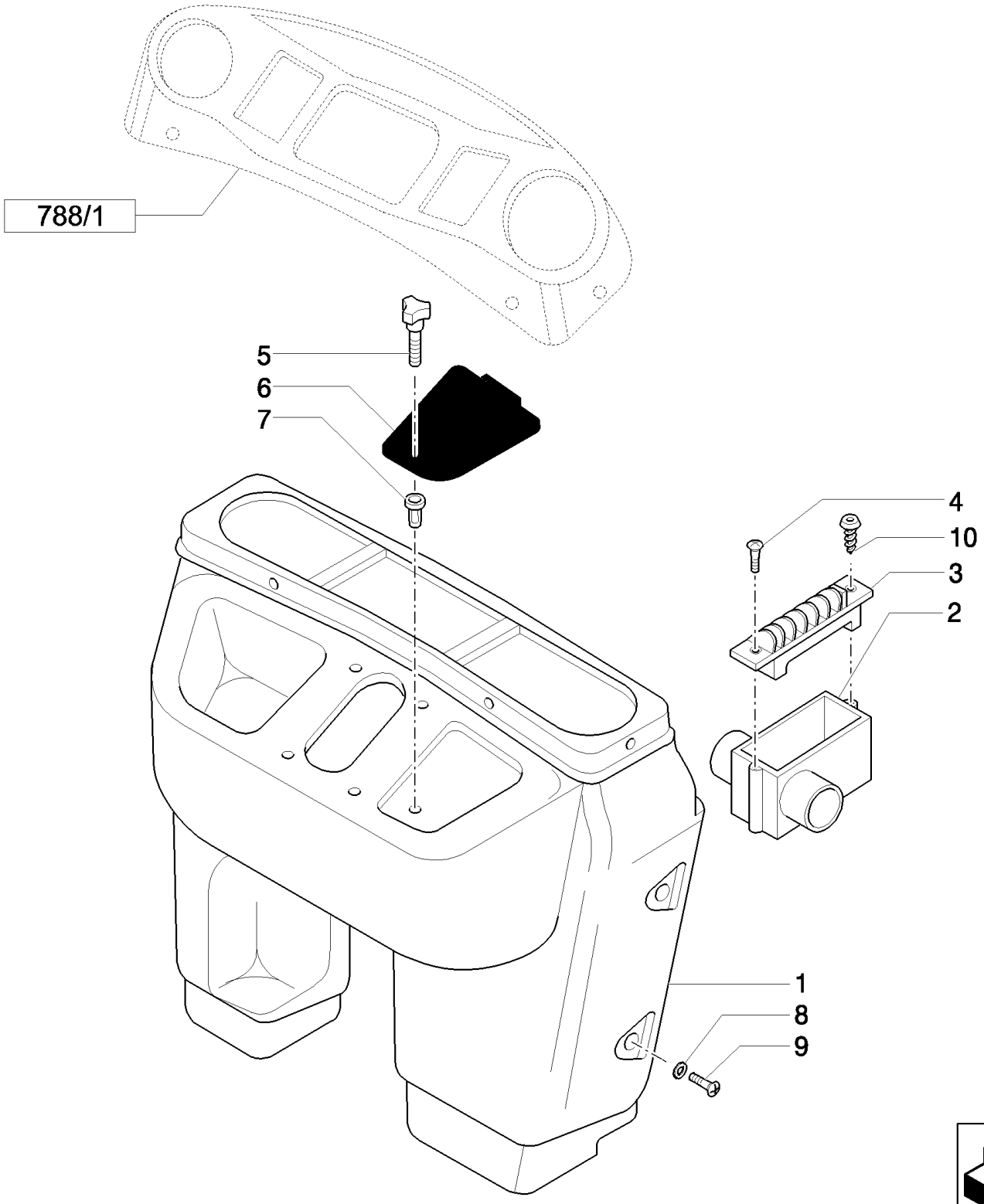
788/1
5
6
7
4
10
3
2
1
8
9

B95LR NA BACKHOE LOADER (1/06-)

1.93.5/ 1(01) CAB / PANEL DASH

Ref	Numero de Pieza	Ctd	Descripción
1	85819289	1	PANEL, DASH, Assy, Cab, Includes 2 To 6
2	85819567	2	DUCT, AIR, Cab
3	85819454	2	DIFFUSER, Cab
4	14440327	4	SCREW, Hex Soc Flat Hd, M4 x 20, 8.8, Cab
5	85805323	1	KNOB, M5
6	85806089	1	COVER,
7	85804750	5	BUSHING, THREADED, M5
8	79089592	AR	WASHER, D=24
9	79105220	AR	SCREW, LOCK, Cross Oval Csk Hd, M6 x 20,
10	14568887	4	FASTENER, CAB 8X20

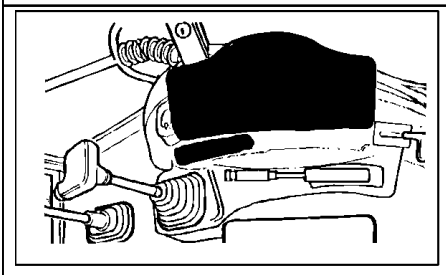

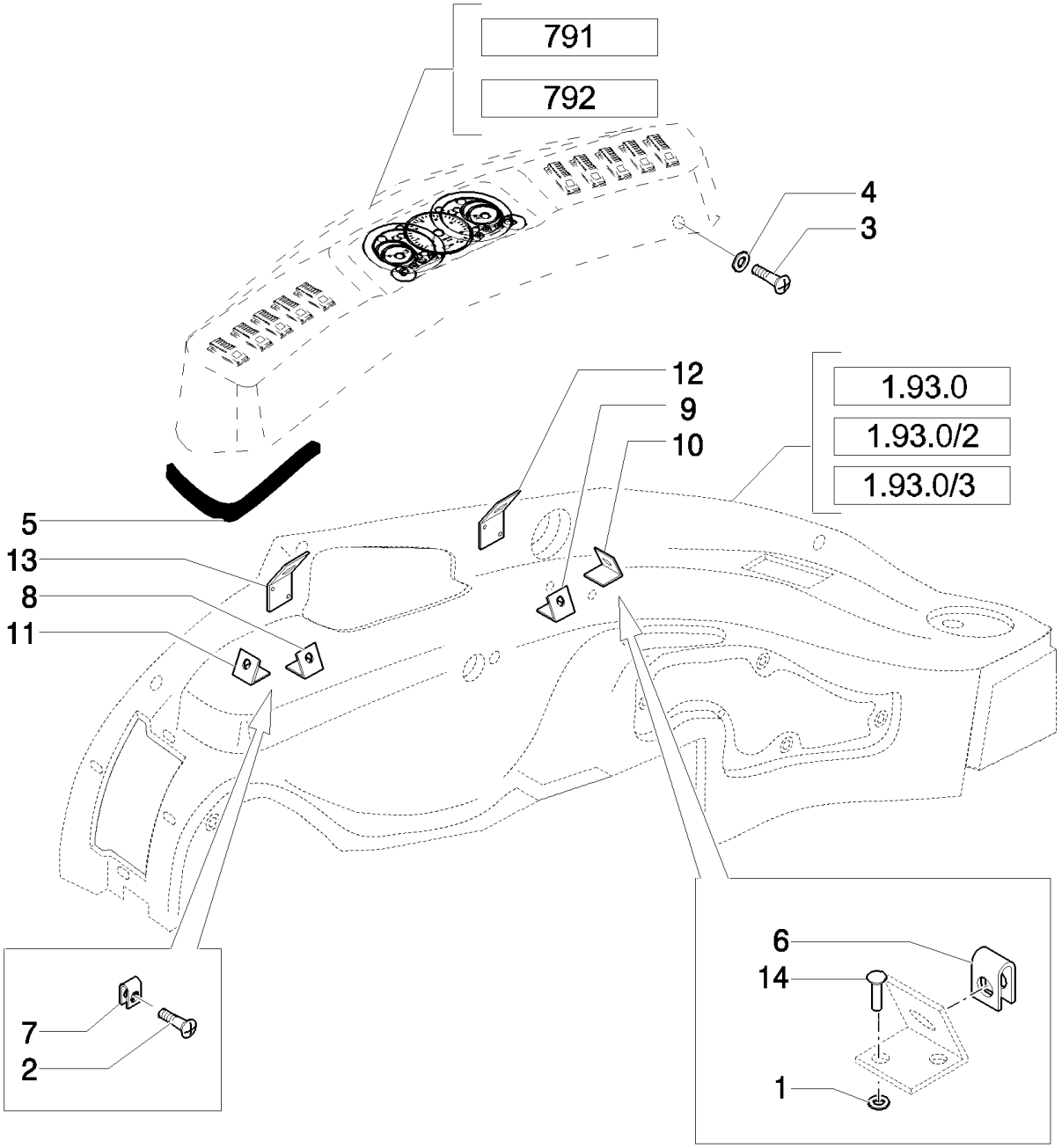
791
792
4
3
12
9
10
1.93.0
1.93.0/2
1.93.0/3
5
13
8
11
7
2
6
14
1

B95LR NA BACKHOE LOADER (1/06-)

1.93.5/ 1(02) CAB / PANEL DASH

Ref	Numero de Pieza	Ctd	Descripción
1	12642804	1	WASHER, M4 x 12 x 1,
2	15693301	2	SCREW, SELF TAPPING, Cross Oval Hd, M4.8 x 19, Cab
3	15693507	AR	SCREW, SELF TAPPING, Cross Oval Hd, M4.8 x 22,
4	85801991	AR	WASHER,
5	85824393	1	SEAL, RUBBER,
6	14189176	6	NUT, J, #10,
7	14372671	2	NUT, M4.2, U, 12.4mm long, CAB
8	85802141	1	BRACKET,
9	85802142	1	BRACKET,
10	85802143	1	BRACKET,
11	85802144	1	BRACKET,
12	85802145	1	BRACKET,
13	85802146	1	BRACKET,
14	14642192	12	RIVET,

1.93.5/ 3(01) CAB / PANEL DASH

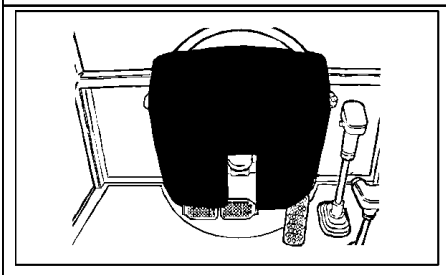

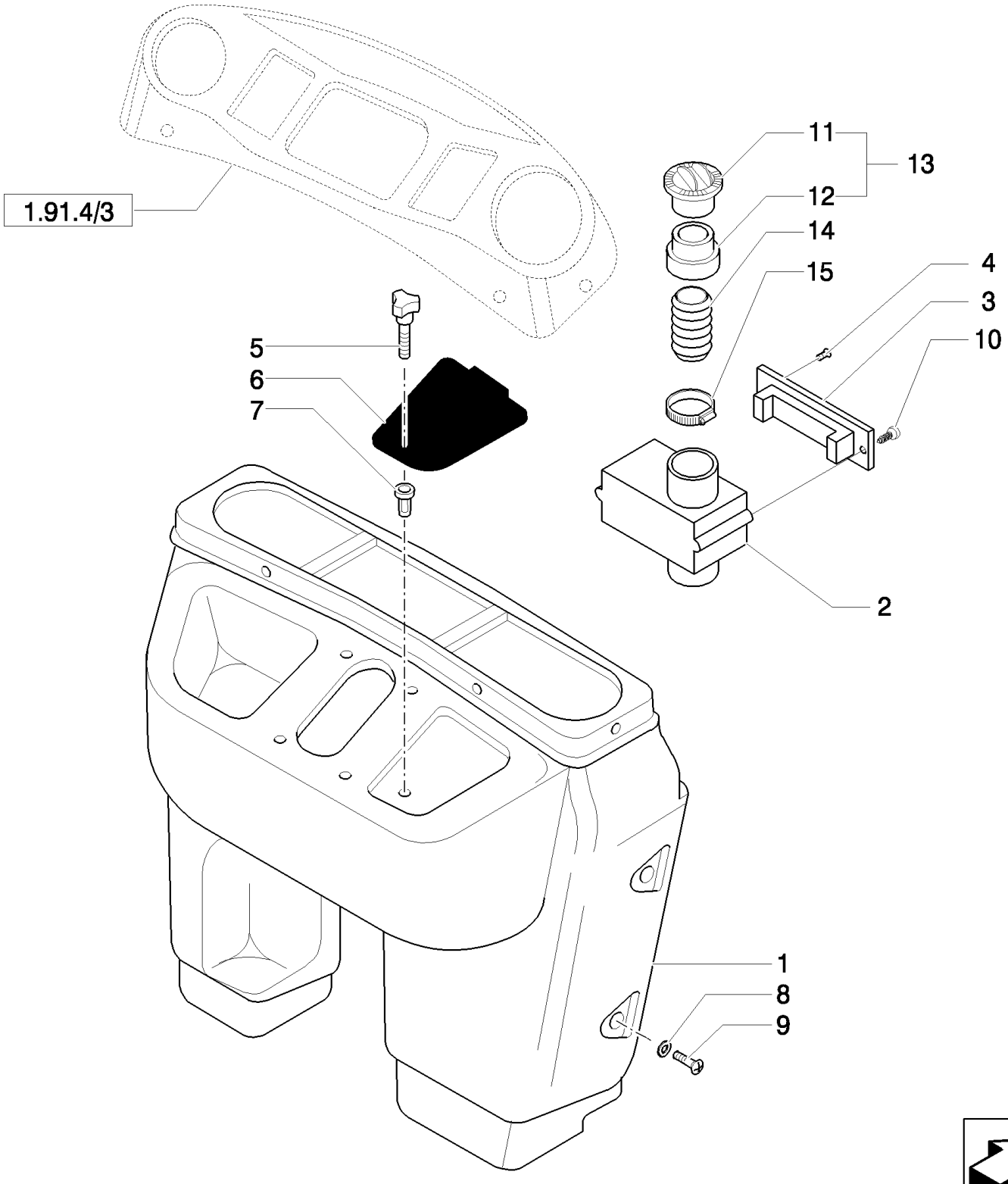

B95LR NA BACKHOE LOADER (1/06-)

1.93.5/ 3(01) CAB / PANEL DASH

Ref	Numero de Pieza	Ctd	Descripción
1	85819291	1	PANEL, DASH, Assy, Includes 2 To 7
2	85819567	2	DUCT, AIR,
3	85819454	2	DIFFUSER,
4	14440327	4	SCREW, Hex Soc Flat Hd, M4 x 20, 8.8,
5	85805323	1	KNOB, M5
6	85806089	1	COVER,
7	85804750	5	BUSHING, THREADED, M5
8	79089592	AR	WASHER, D=24
9	79105220	AR	SCREW, LOCK, Cross Oval Csk Hd, M6 x 20,
10	14568887	4	FASTENER, 8X20
11	85819544	2	DIFFUSER,
12	85819545	2	REDUCER, , UP TO S/N 031056941
12	87358811	2	REDUCER, , UP TO S/N 031056941
13	85819543	2	DIFFUSER, , FROM S/N 031056942
13	87358807	2	DIFFUSER, , FROM S/N 031056942
14	85819592	2	SLEEVE,
15	13000990	2	CLAMP, HOSE,

1.93.7(01) INTERIOR REAR-VIEW MIRROR (POWER SHUTTLE) - ROPS

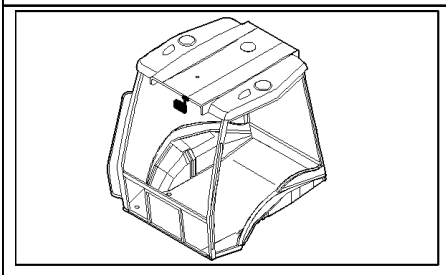

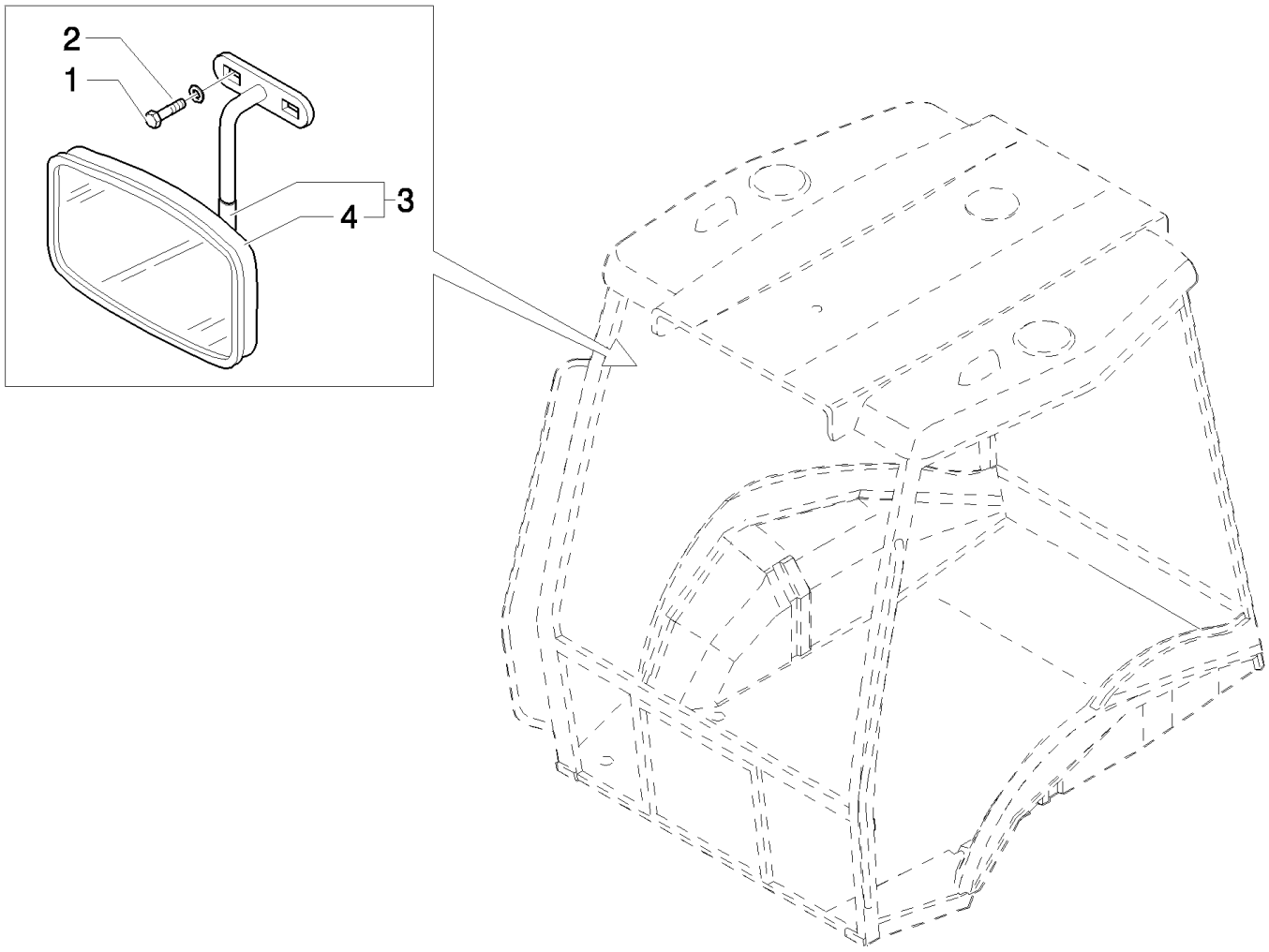

B95LR NA BACKHOE LOADER (1/06-)

1.93.7(01) INTERIOR REAR-VIEW MIRROR (POWER SHUTTLE) - ROPS

Ref	Numero de Pieza	Ctd	Descripción
1	11193274	2	WASHER, SPRING, Belleville, M6.4,
2	10902424	2	BOLT, Hex, M6 x 20, 8.8, Full Thd,
3	85817685	1	MIRROR, REAR-VIEW,
4	85817686	1	MIRROR, REAR-VIEW, w/Cab

B95LR NA BACKHOE LOADER (1/06-)

1.94.0(01) CAB/ CANOPY

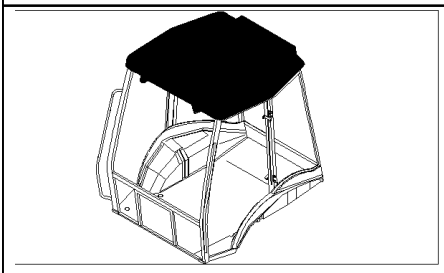

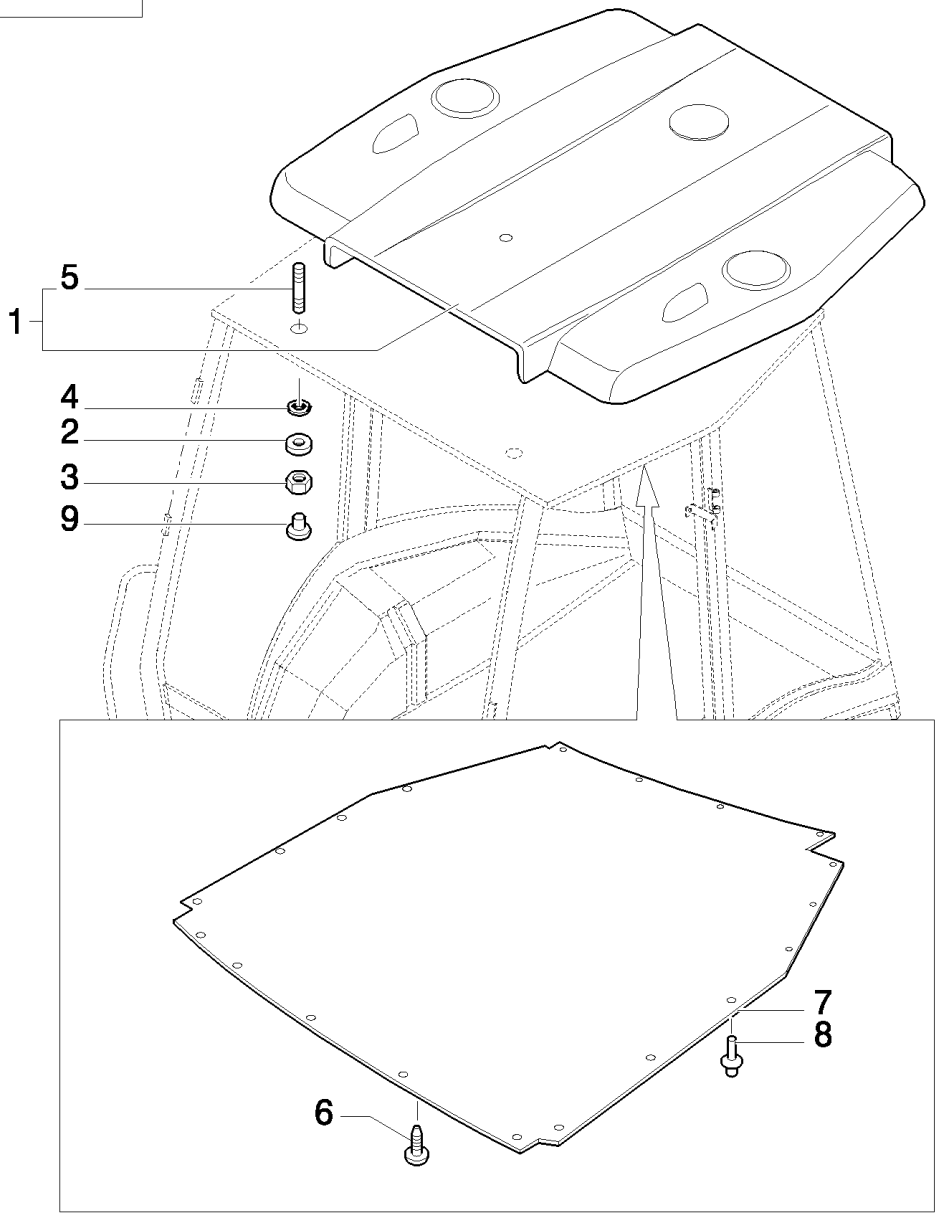

B95LR NA BACKHOE LOADER (1/06-)

1.94.0(01) CAB/ CANOPY

Ref	Numero de Pieza	Ctd	Descripción
1	87315646	1	ROOF,
1	87349055	1	ROOF, , Only for NA Version
2	12647004	8	WASHER, M8 x 25 x 2.5,
3	16104111	8	NUT, LOCK, M8 x 1.25, Cl 8,
4	85801801	8	SEALRING,
5	13517021	8	STUD,
6	85805777	1	PLUG,
7	87319727	1	SOFT TRIM,
8	5162852	21	FASTENER,
9	87350247	8	PLUG, , Only for EUROPE Version

B95LR NA BACKHOE LOADER (1/06-)

1.94.2(01) HEATER HOUSING, COIL, BLOWER & VALVE

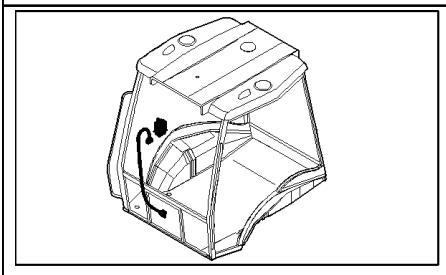

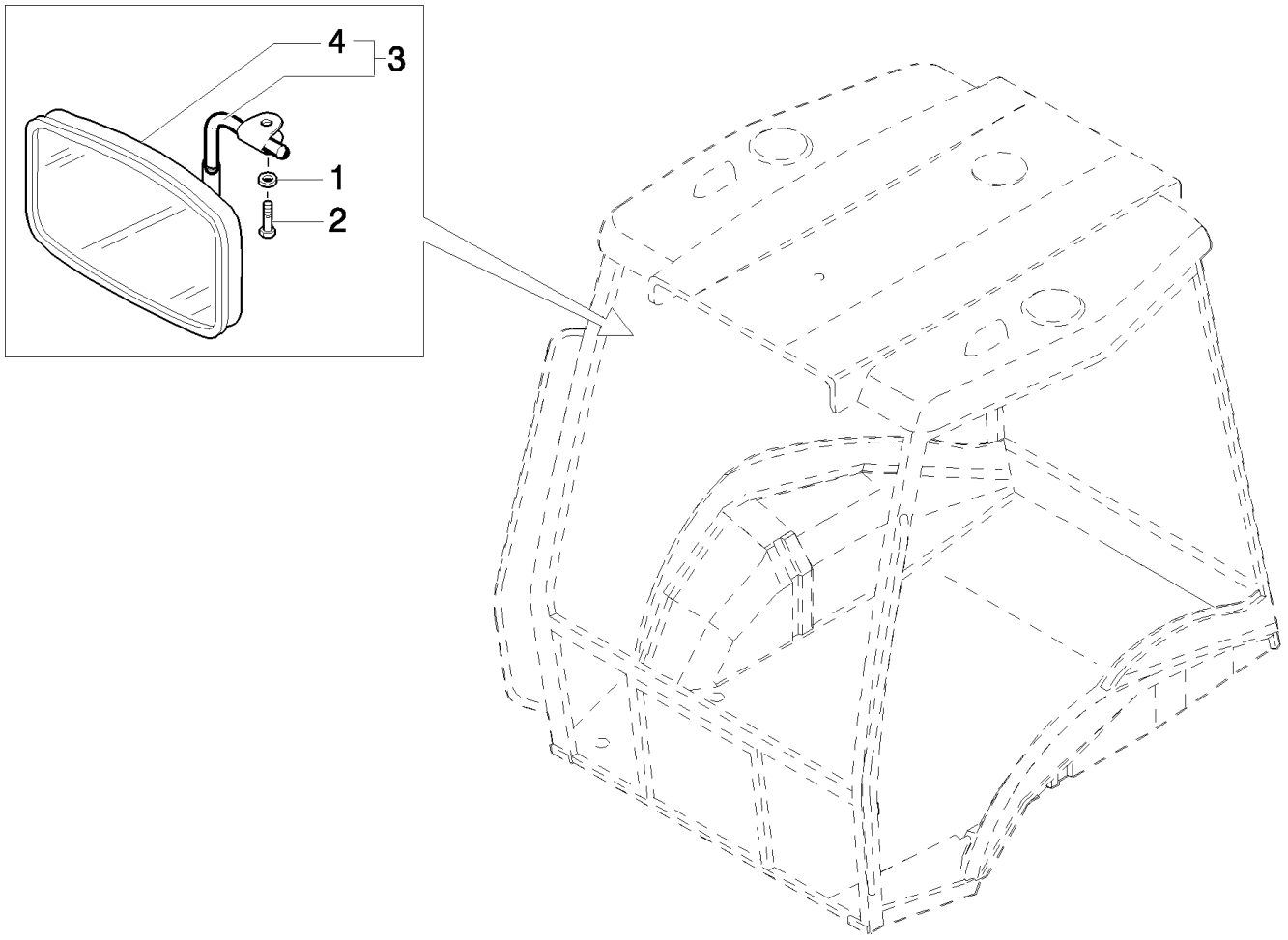

Mechanical Version, Up To S/N XXX

B95LR NA BACKHOE LOADER (1/06-)

1.94.2(01) HEATER HOUSING, COIL, BLOWER & VALVE

Ref	Numero de Pieza	Ctd	Descripción
1	85826283	1	HEATER, , Includes 2 To 19 And Figure 1.94.2 02 Ref. 1 To 4, 6
2	85821348	1	HEAT EXCHANGER,
3	85804412	2	GROMMET,
4	85820883	1	BLOWER, ELECTRIC,
5	85804044	2	DIFFUSER,
6	85820885	1	GASKET,
7	85820884	1	DRAINCOCK/TAP, SUPPLY,
8	85820887	2	SCREW,
9	85820886	2	NUT,
10	85820889	1	SPRING,
11	85820890	1	CABLE,
12	85820893	4	SCREW,
13	85820894	4	WASHER,
14	85820895	1	CABLE, ELECTRIC,
15	85821347	1	HEATER,
16	85820899	8	SCREW,
17	85820900	1	CLAMP, HOSE,
18	85821345	1	SEAL, RUBBER,
19	85821346	1	SEAL, RUBBER,

Mechanical Version, Up To S/N XXX

1.94.2(02) HEATER ASSEMBLY & FILTERS

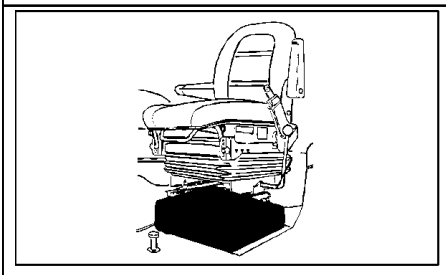

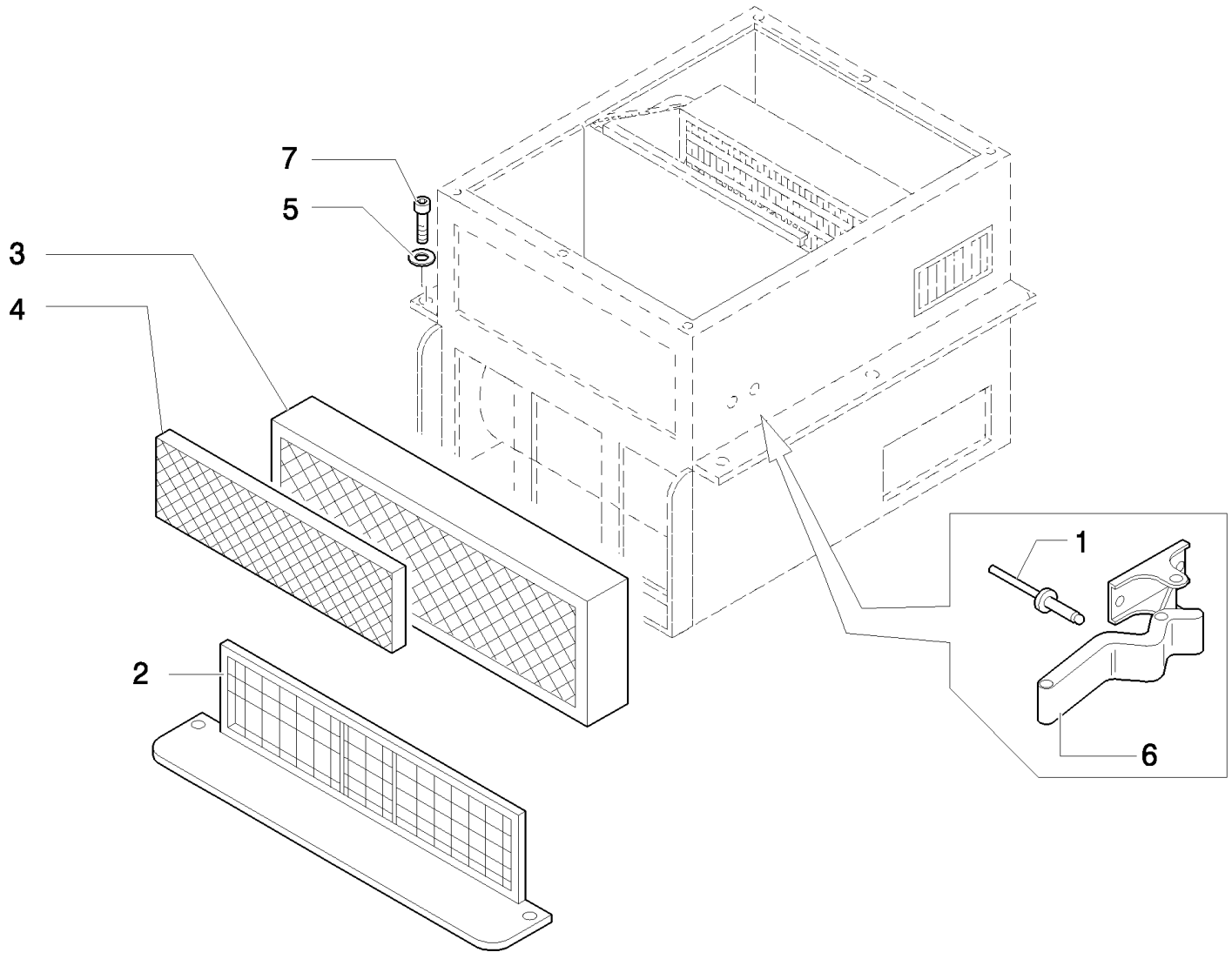

B95LR NA BACKHOE LOADER (1/06-)

1.94.2(02) HEATER ASSEMBLY & FILTERS

Ref	Numero de Pieza	Ctd	Descripción
1	85820896	4	RIVET,
2	85820897	1	CONTAINER,
3	85826032	1	FILTER, CAB, VARANI
3	85826026	1	FILTER, CAB, PANCLEAN
4	85820898	1	FILTER, CAB,
5	11193874	6	WASHER, SPRING, Belleville, M8.4,
6	85812043	2	LATCH,
7	16043424	6	SCREW, Hex, M8 x 20, 8.8, Full Thd,

1.94.2(03) HEATER WATER HOSES

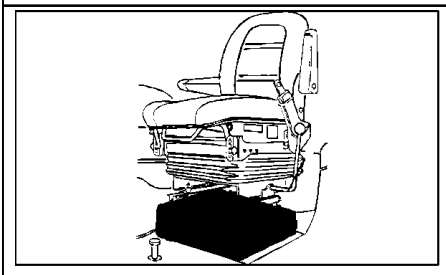

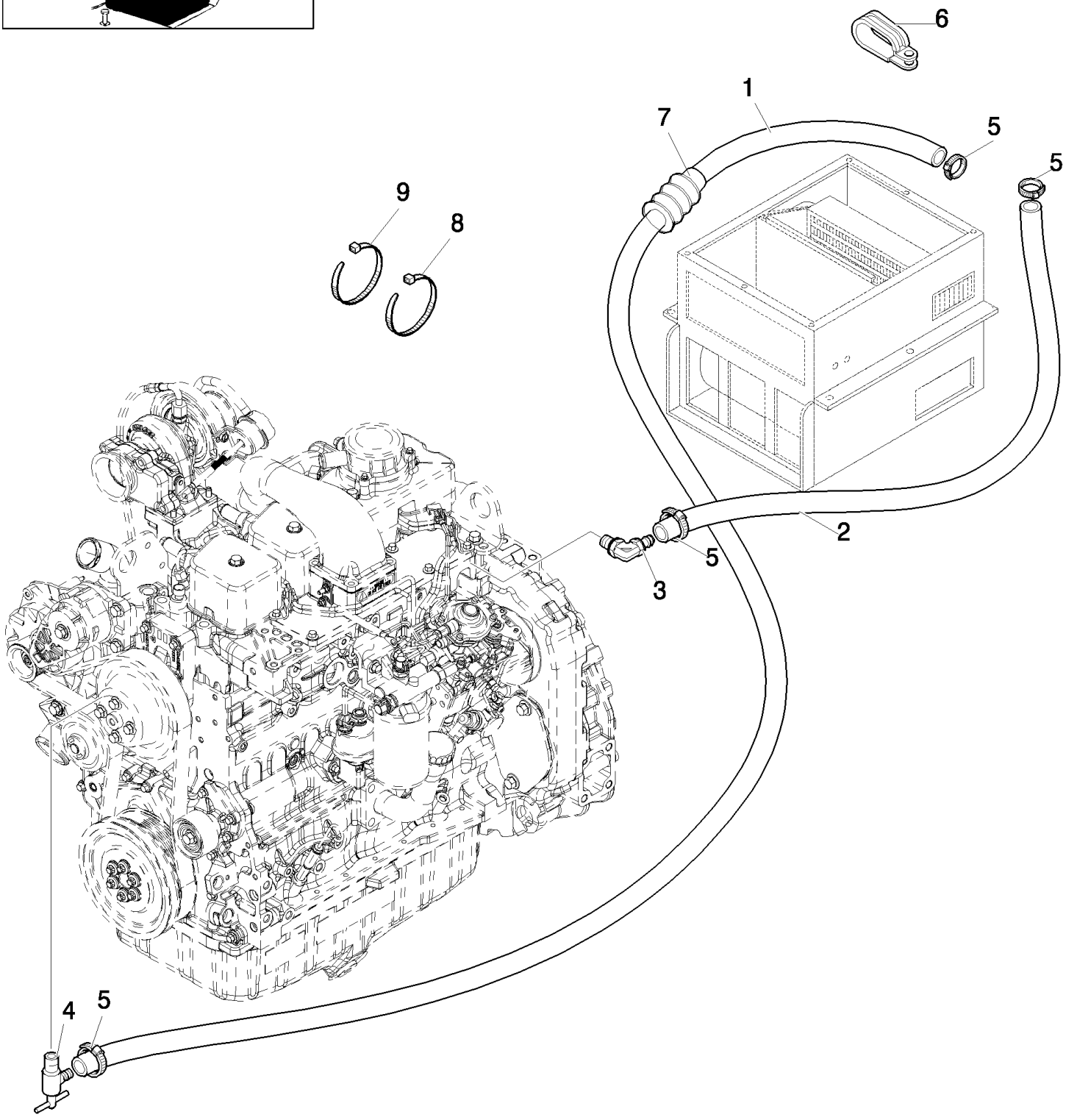

Up To S/N XXX

B95LR NA BACKHOE LOADER (1/06-)

1.94.2(03) HEATER WATER HOSES

Ref	Numero de Pieza	Ctd	Descripción
1	87403646	1	HOSE, FLEXIBLE,
2	87403647	1	HOSE, FLEXIBLE,
3	87550745	1	CONNECTOR, HYD.,
4	47048896	1	VALVE, HYDRAULIC,
5	85803079	4	CLAMP, HOSE,
6	47048653	2	COLLAR,
7	87345955	3	SHIELD,
8	47048448	1	COLLAR,
9	47048451	3	STRAP, CABLE, M8 x 384,

Up To S/N XXX

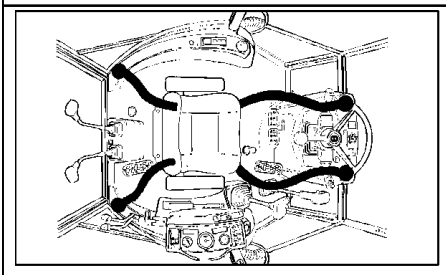

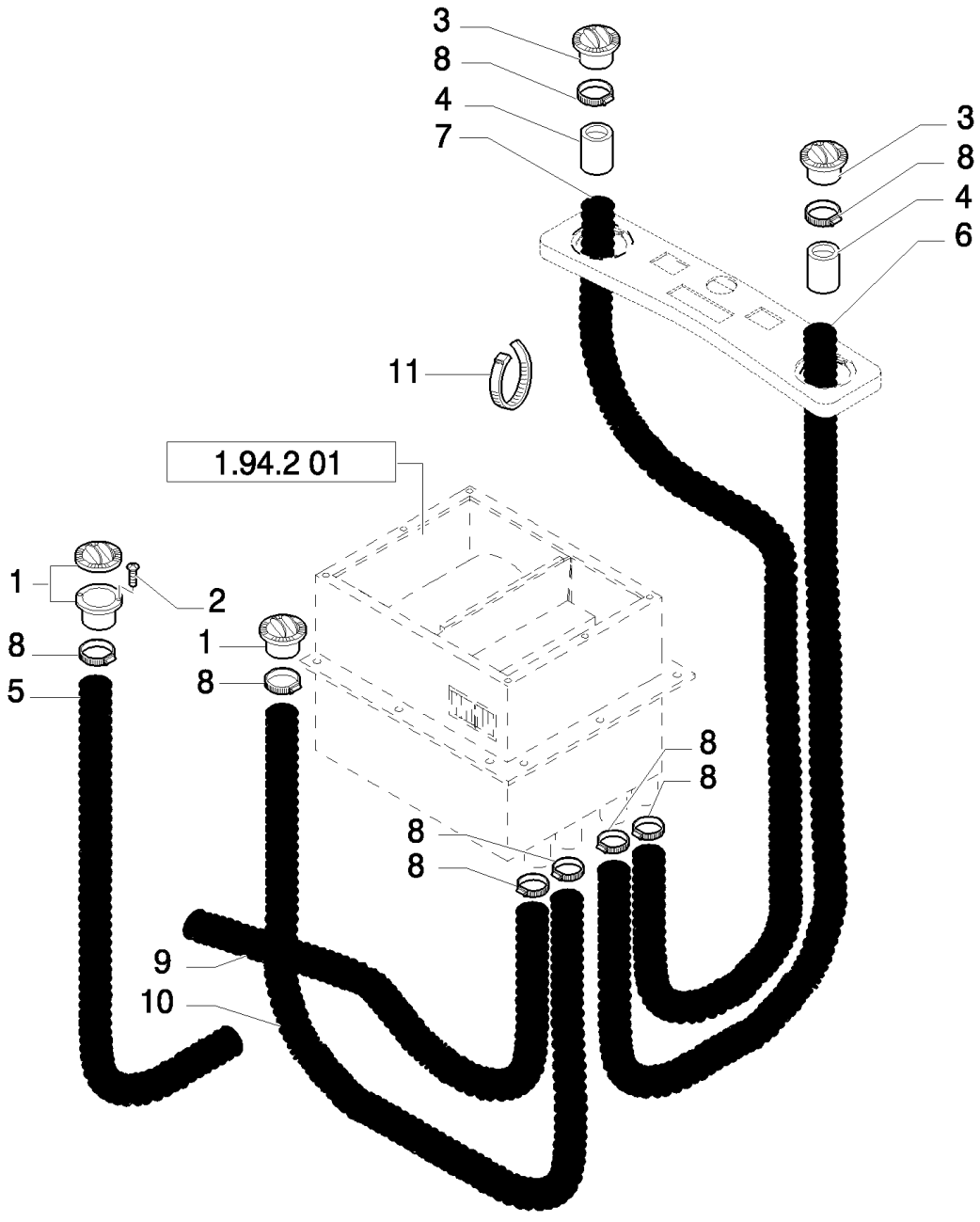
3
8
4
7
3
8
4
6
11
1.94.2 01
1
2
8
5
1
8
8
8
8
8
9
10

B95LR NA BACKHOE LOADER (1/06-)

1.94.2(04) AIR DUCTS & VENTS

Ref	Numero de Pieza	Ctd	Descripción
1	70741298	2	DIFFUSER,
2	15915901	4	6x16
3	85819543	2	DIFFUSER,
4	85819592	2	SLEEVE,
5	85820905	1	DUCT, AIR,
6	85820901	1	DUCT, AIR, Front, LH
7	85820902	1	DUCT, AIR, Front, RH
8	13000990	10	CLAMP, HOSE,
9	85820904	1	DUCT, AIR, Rear, RH
10	85820903	1	DUCT, AIR, Rear, LH
11	5112712	11	CLIP, HOSE, M4.8 x 283,

Mechanical Version, Up To S/N XXX

1.94.2/ 1(03) HEATER WATER HOSES

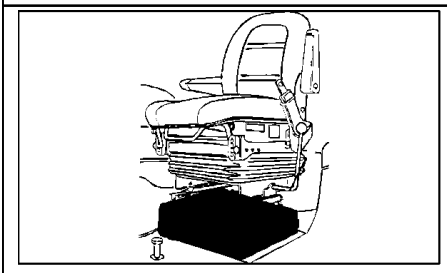

Pilot Control Version, From S/N XXX

B95LR NA BACKHOE LOADER (1/06-)

1.94.2/ 1(03) HEATER WATER HOSES

Ref	Numero de Pieza	Ctd	Descripción
1	87324991	1	HOSE, FLEXIBLE,
2	87324999	1	HOSE, FLEXIBLE,
3	87550745	1	CONNECTOR, HYD.,
4	47048896	1	VALVE, HYDRAULIC,
5	85803079	4	CLAMP, HOSE,
6	85802336	2	CLAMP,
7	87345955	3	SHIELD,
8	47044673	2	WASHER,
9	47048451	3	STRAP, CABLE, M8 x 384,
10	11112221	2	BOLT, Hex, M12 x 25, 8.8, Full Thd,

Pilot Control Version, From S/N XXX

1.95.0(01) CAB-SAFETY FRAME / BRAKE PEDAL

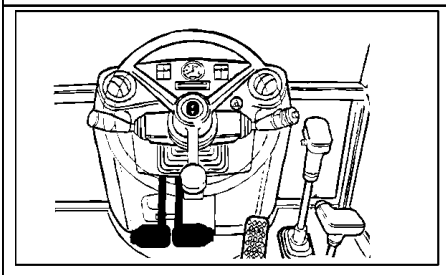

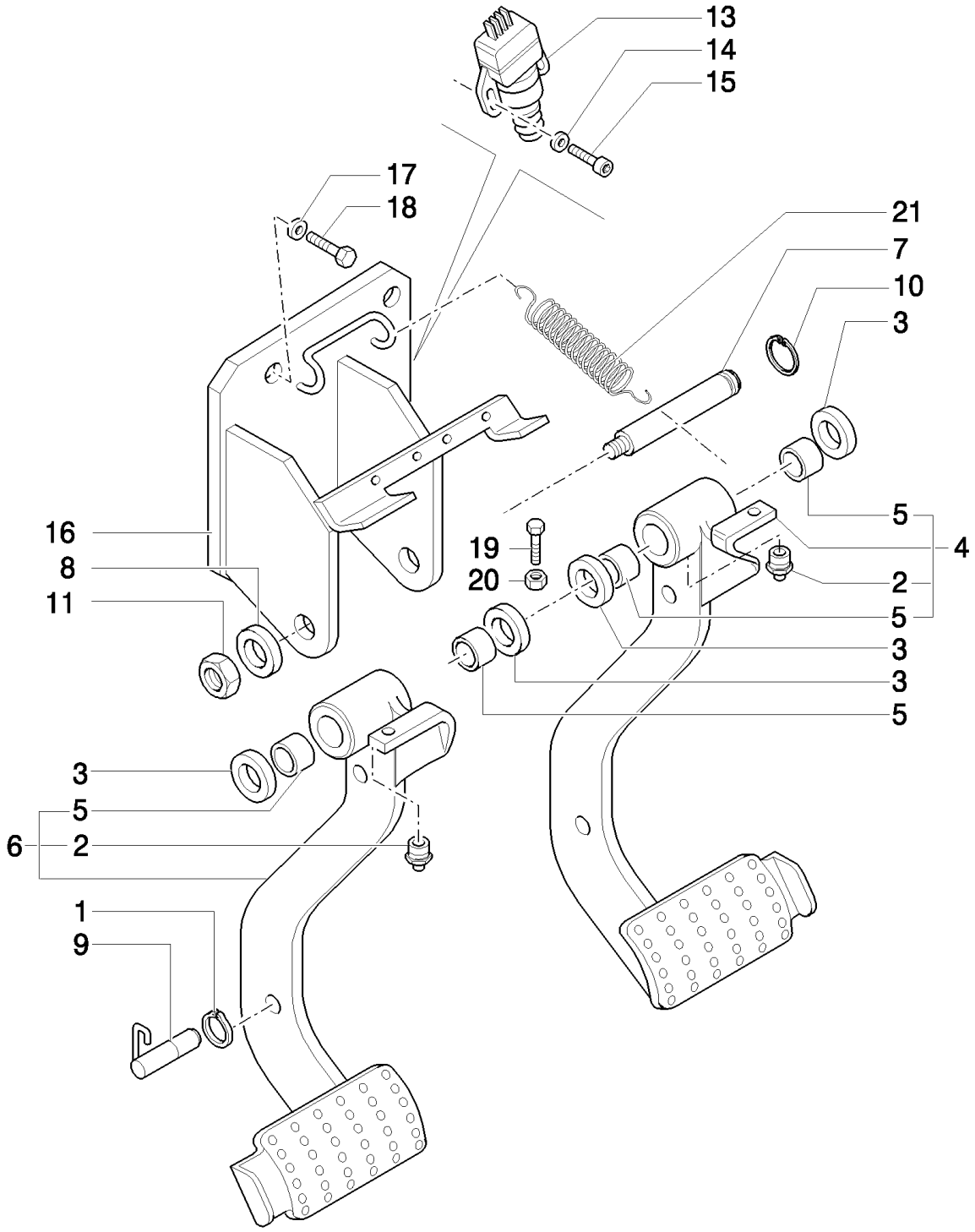

B95LR NA BACKHOE LOADER (1/06-)

1.95.0(01) CAB-SAFETY FRAME / BRAKE PEDAL

Ref	Numero de Pieza	Ctd	Descripción
1	11088176	1	CIRCLIP, M11,
2	13407214	2	NIPPLE, LUBE,
3	5148062	4	WASHER,
4	85805285	1	PEDAL, RH
5	4983992	4	BEARING, NEEDLE,
6	85805283	1	PEDAL, LH
7	85801860	1	PIN,
8	10517274	1	WASHER, LOCK,
9	87517988	1	BLOCK,
10	11067376	1	RING, SNAP, M25, Ext,
11	12164114	1	NUT, M16 x 1.5
13	82026949	2	SWITCH, Brake
14	12642821	4	WASHER, M4 x 12 x 1, W/Cab
15	14303324	4	SCREW, Hex Soc Hd, M4 x 20, 8.8, Full Thd, W/Cab
16	85805277	1	SUPPORT,
17	11190574	4	WASHER, SPRING, Belleville, M10.5,
18	15970524	4	SCREW, Hex, M10 x 1.25 x 20, 8.8, Full Thd,
19	16043921	2	SCREW, M8 x 1,25 x 35
20	11701621	2	NUT, M8, Cl 10,
21	5153180	1	SPRING,

1.95.0(02) CAB-SAFETY FRAME / BRAKE PEDAL

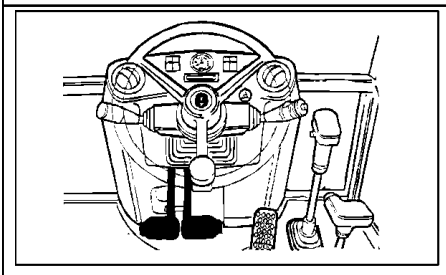

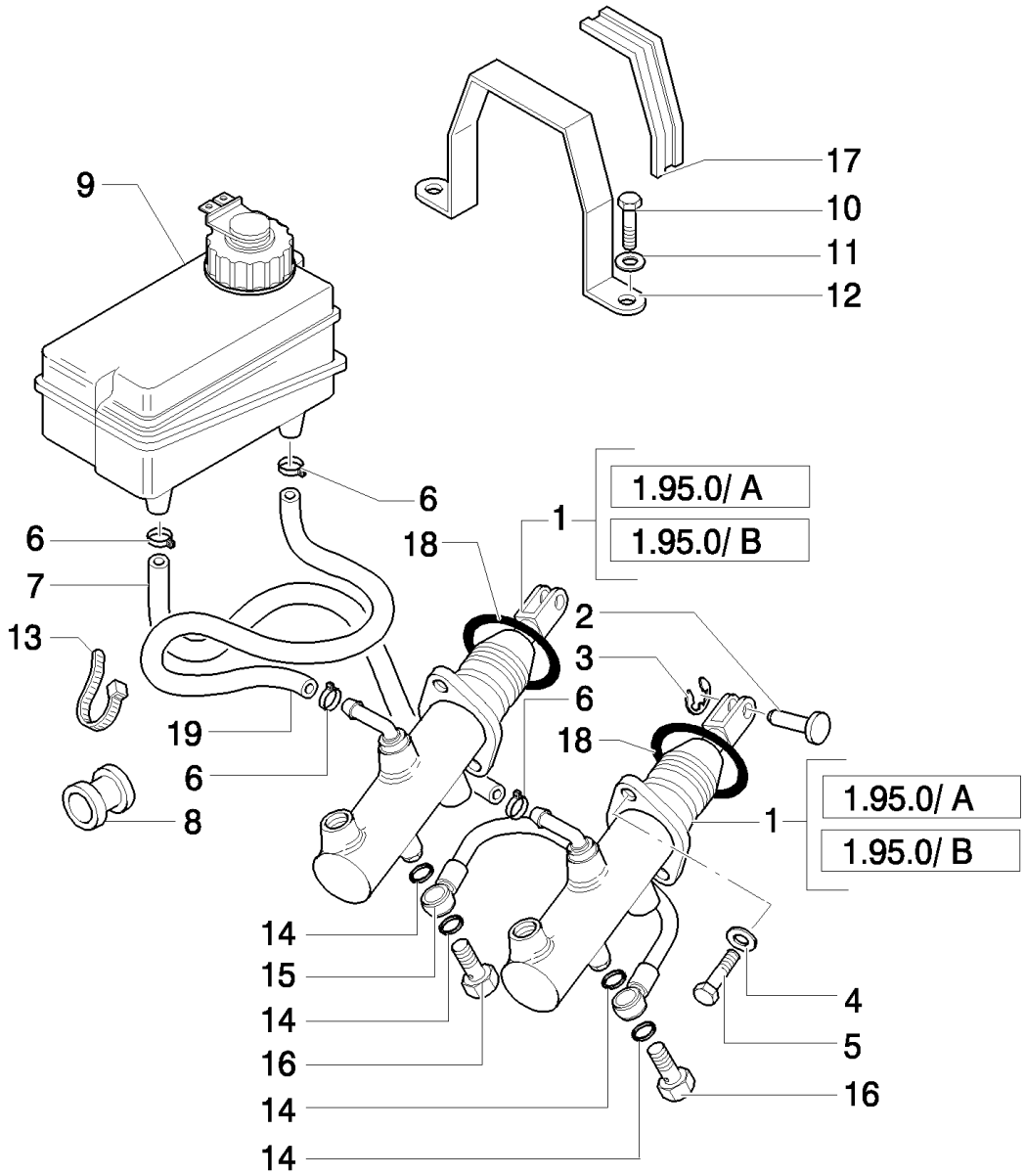

B95LR NA BACKHOE LOADER (1/06-)

1.95.0(02) CAB-SAFETY FRAME / BRAKE PEDAL

Ref	Numero de Pieza	Ctd	Descripción
1	85805257	2	MASTER CYLINDER, , Only for LB90.B - LB95.B - LB110.B, UP TO S/N 031056941
1	87398198	2	BRAKE CYLINDER, , FROM S/N 031056942
1	85824114	2	PUMP, HYDRAULIC, , Only for LB115.B - B115
2	5155381	2	PIN,
3	11064176	2	CLIP,
4	11193874	4	WASHER, SPRING, Belleville, M8.4,
5	14306324	4	SCREW, Hex Soc Hd, M8 x 20, 8.8,
6	13423271	4	CLIP, HOSE,
7	85819914	1	TUBE,
8	85801941	2	GROMMET,
9	82003369	1	RESERVOIR, BRAKE FLUID, , Brake Fluid, Cap is P/N 85806176
10	10902624	2	BOLT, Hex, M6 x 25, 8.8, Full Thd,
11	11193274	2	WASHER, SPRING, Belleville, M6.4,
12	85801092	1	BRACKET,
13	14560187	1	STRAP, CABLE, 178mm lg, L=203.2 mm
14	2854292	8	SEAL WASHER,
15	5155701	1	TUBE,
16	5155703	2	BOLT, BANJO, M12x1.25x22
17	85801093	1	STRIP-GASKET,
18	13399076	2	RING, , Only for CAB
19	85819915	1	TUBE,

1.95.0(03) CAB-SAFETY FRAME / BRAKE PEDAL

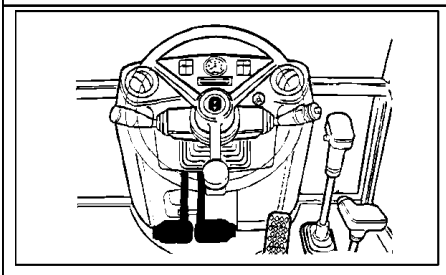

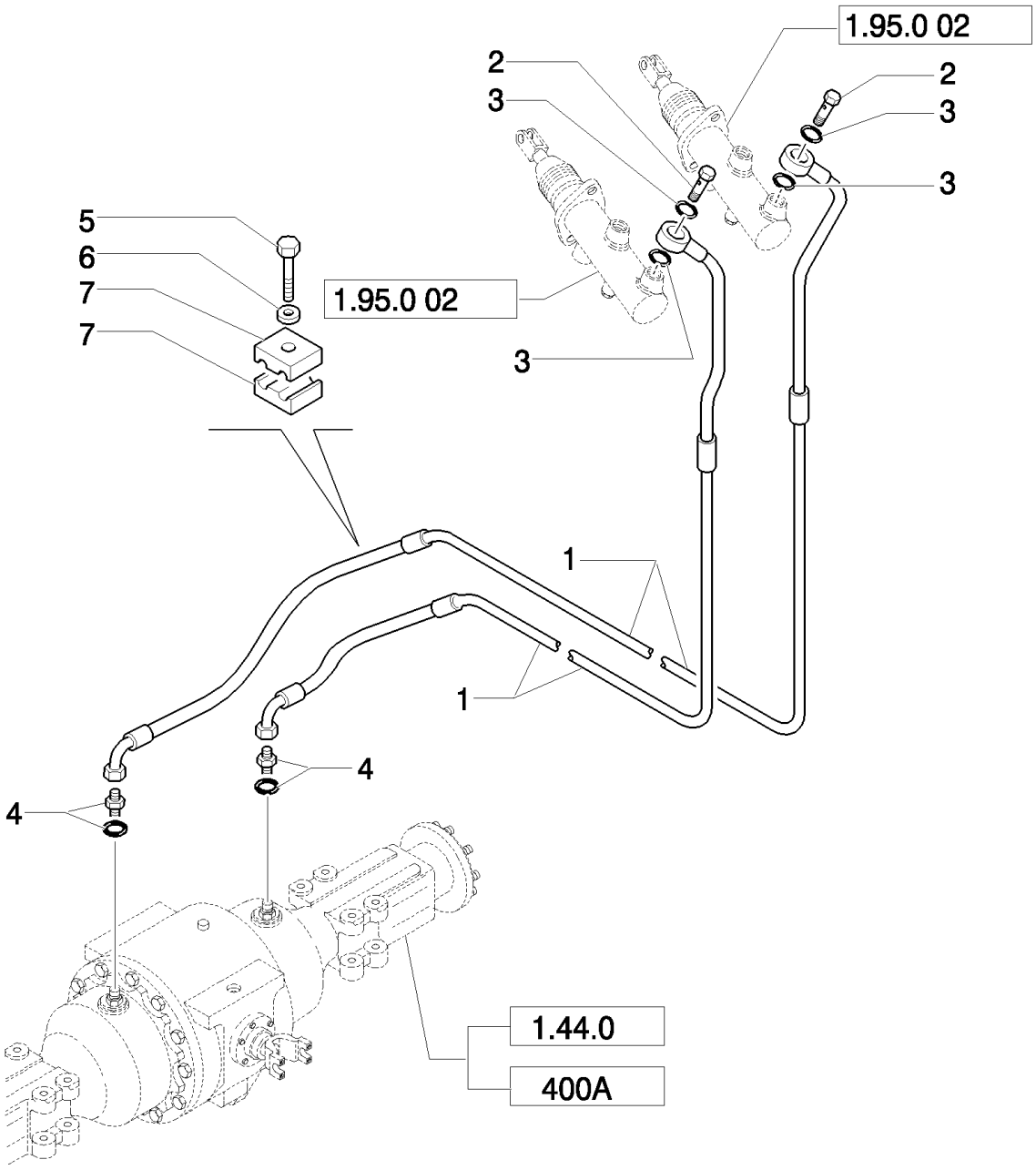

B95LR NA BACKHOE LOADER (1/06-)

1.95.0(03) CAB-SAFETY FRAME / BRAKE PEDAL

Ref	Numero de Pieza	Ctd	Descripción
1	85819177	2	BRAKE LINE,
2	5155703	2	BOLT, BANJO,
3	2854292	4	SEAL WASHER,
4	85803312	2	CONNECTOR, HYD.,
4	85805655	2	ELBOW, , Only for LB115.B - B115
5	15212721	2	BOLT, Hex, M6 x 40, 8.8, Full Thd,
6	14447021	2	WASHER, M5 x 15 x 1,
7	85805548	4	CLIP,

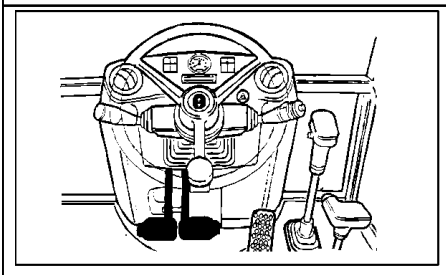

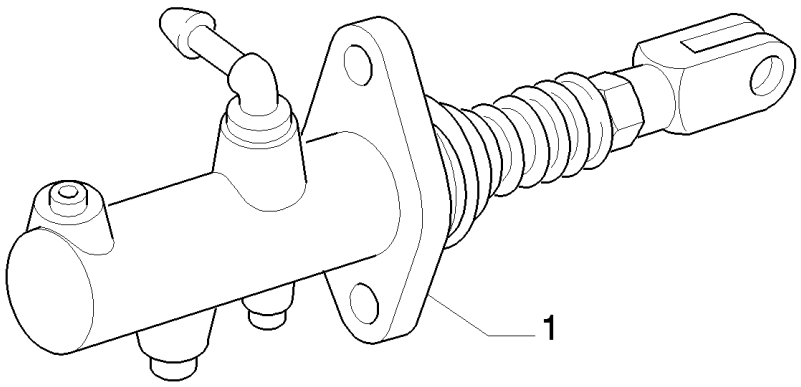
1

B95LR NA BACKHOE LOADER (1/06-)

1.95.0/ A(01) CAB-SAFETY FRAME / BRAKE PEDAL

Ref	Numero de Pieza	Ctd	Descripción
1	85805257	1	MASTER CYLINDER, Assy, UP TO S/N 031056941
1	87398198	1	BRAKE CYLINDER, , FROM S/N 031056942

1.95.1(01) CAB-SAFETY FRAME / HAND BRAKE

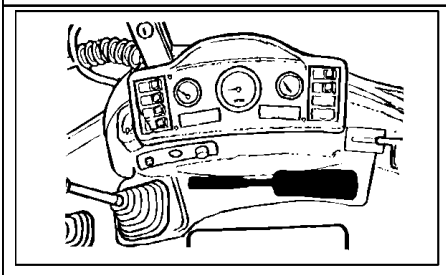

KIT KIT KIT 19 = ●

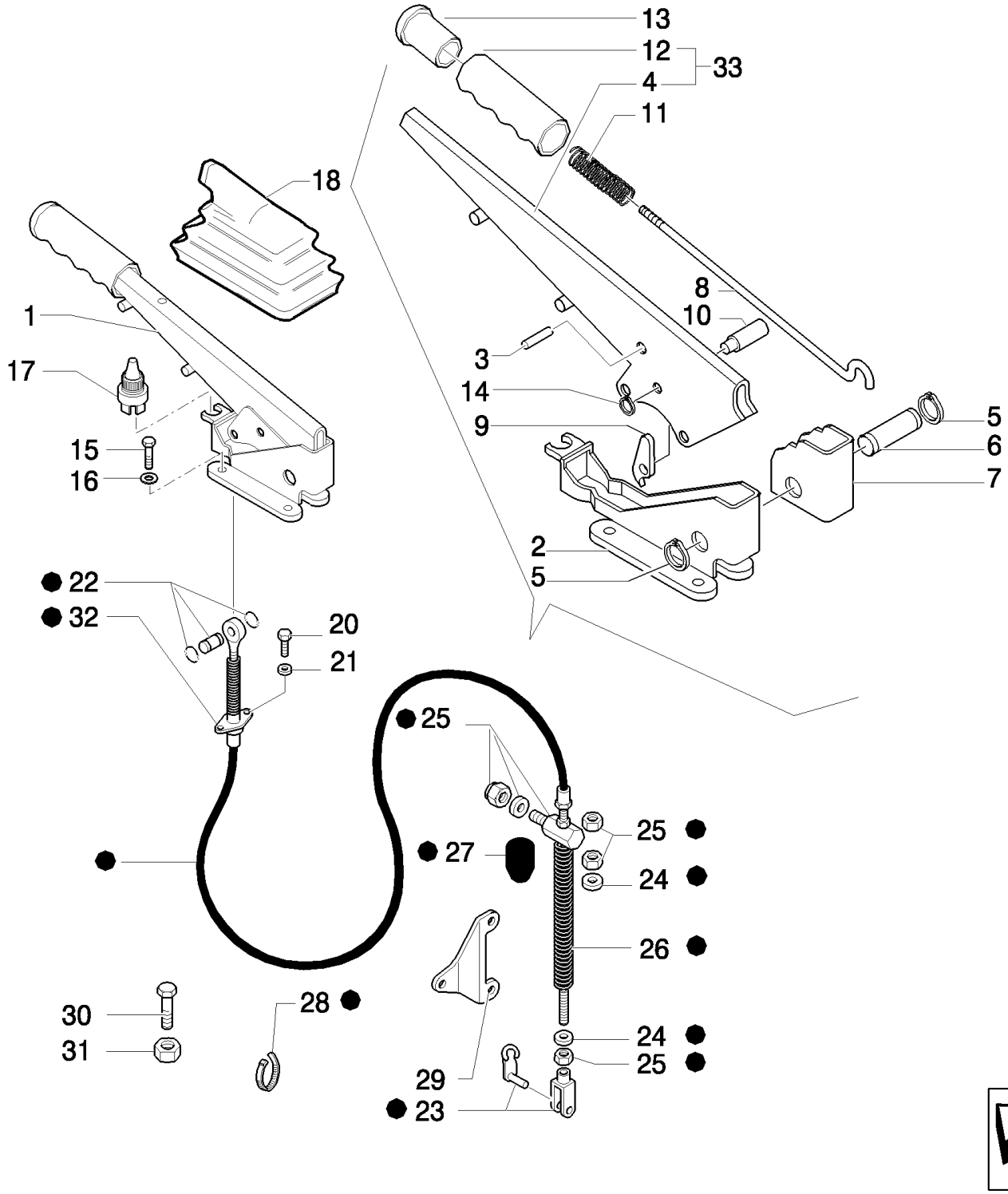

B95LR NA BACKHOE LOADER (1/06-)

1.95.1(01) CAB-SAFETY FRAME / HAND BRAKE

Ref	Numero de Pieza	Ctd	Descripción
1	85827832	1	LEVER, , Includes 2 To 14, 30, 31, 33
2	85805441	1	SUPPORT,
3	4985127	1	RIVET,
4	85805440	1	LEVER,
5	13400776	2	RING, LOCKING,
6	4988275	1	PIN,
7	5110153	1	RATCHET,
8	85827833	1	DIPSTICK,
9	5110155	1	PAWL,
10	5131437	1	PIN,
11	5105729	1	SPRING,
12	86021837	1	HANDLE GRIP,
13	4985122	1	BUTTON,
14	11065476	1	RING, SNAP, M6, Ext,
15	14306424	4	SCREW, Hex Soc Hd, M8 x 25, 8.8,
16	11193874	4	WASHER, SPRING, Belleville, M8.4,
17	85816770	1	SWITCH ASSY,
18	5106733	1	BOOT,
19	85815536	1	CABLE, , Includes 22 To 28, 32
20	10978024	2	BOLT, Hex, M5 x 20, 8.8, Full Thd,
21	10615374	2	WASHER,
22	85815550	1	BALL JOINT,
23	85815556	1	CLEVIS,
24	85815555	1	WASHER, 22 x 10.2 x 2
25	85815552	1	CONNECTION, SWIVEL,
26	85815554	1	SPRING,
27	85821172	1	GASKET,
28	85815549	1	STRAP, CABLE,
29	85826099	1	SUPPORT,
30	13272319	1	SCREW,
31	10794011	1	NUT, M4, Cl 8,
32	85815551	1	
33	85827834	1	LEVER, , Includes 4, 12

1.95.3(01) HAND-OPERATED AND PEDAL-OPERATED ACCELERATOR CONTROL

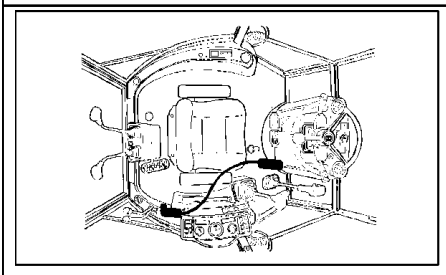

KIT KIT KIT 23 = ●

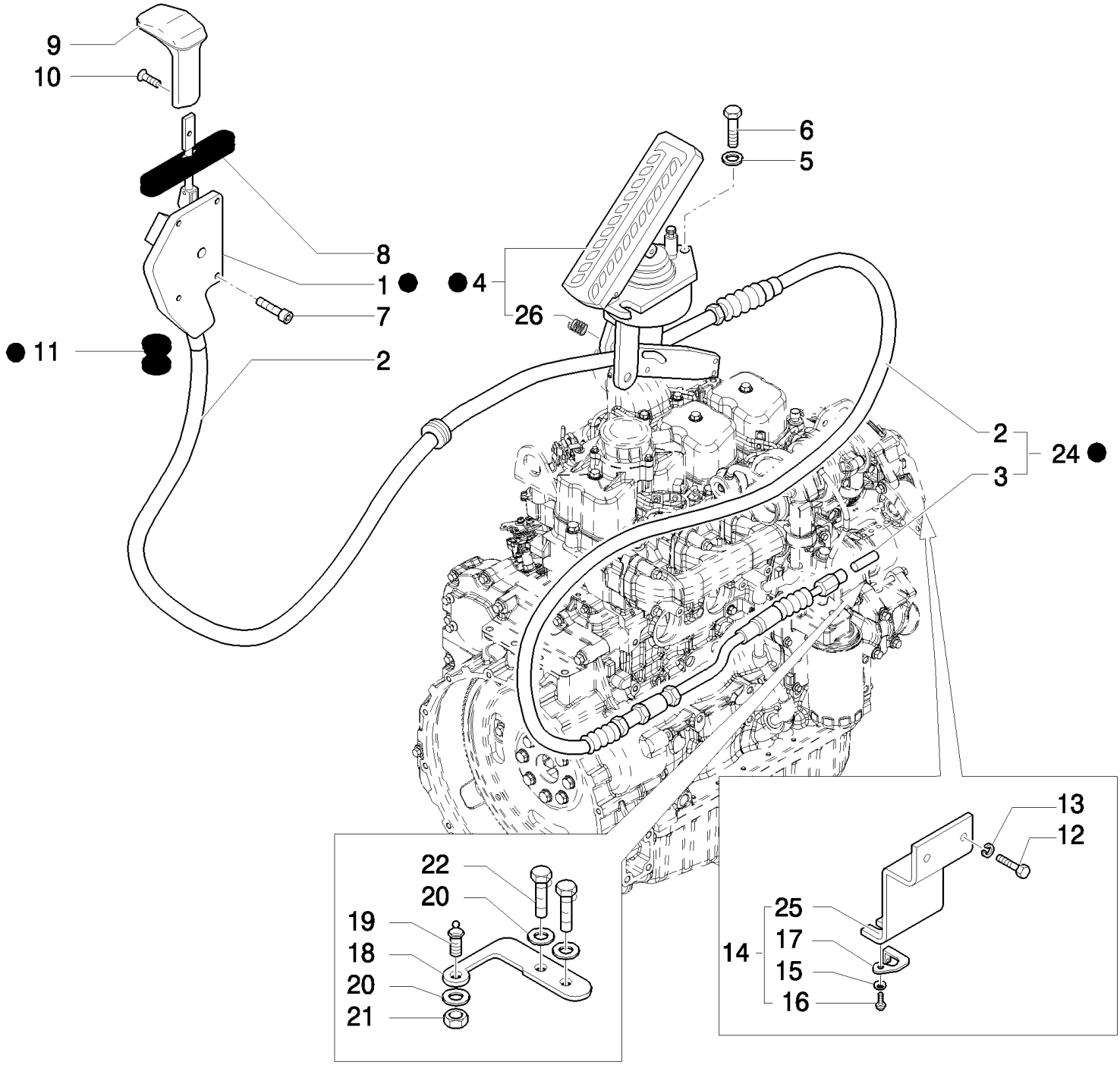

B95LR NA BACKHOE LOADER (1/06-)

1.95.3(01) HAND-OPERATED AND PEDAL-OPERATED ACCELERATOR CONTROL

Ref	Numero de Pieza	Ctd	Descripción
1	85821328	1	LEVER, ASSY
2	85827699	1	CABLE, ASSY,
3	85813140	1	BALL JOINT, HEAD,
4	85813096	1	PEDAL, Includes 87348419 Spring, 16100811 M8 Nut, 16044321 M8 x 55 Screw, Includes 26
5	11193274	3	WASHER, SPRING, Belleville, M6.4,
6	10902424	3	BOLT, Hex, M6 x 20, 8.8, Full Thd,
7	13311217	4	SCREW, Cross Oval Hd, M5 x 20,
8	85803380	1	BOOT, w/Cab
9	13312721	1	SCREW, Cross Oval Hd, M6 x 10,
10	82002692	1	KNOB,
11	10398280	1	RING,
12	47049149	2	SCREW, M12X25
13	47048994	2	WASHER,
14	86988396	1	BRACKET, , Only For LB110.B - LB115.B - B110 - B115
15	12604179	1	WASHER,
16	13769401	1	RIVET,
17	85803040	1	RETAINER,
18	87420814	1	LEVER,
19	85813311	1	PIN,
20	47048991	3	WASHER,
21	47049029	1	NUT,
22	86977726	2	BOLT, Hex, M6 x 12, 8.8,
23	87571708	1	ACCELERATOR, , Only for LB 90.B - LB95.B - B95 - B95TC - B95LR
23	85827825	1	, Only For LB110.B - LB115.B - B110 - B115
24	85827699	1	CABLE, , Includes 2, 3
25	86988395	1	
26	87348419	1	SPRING,

1.95.5(01) POWER STEERING MOTOR, WHEEL & COLUMN TRIM (NA)

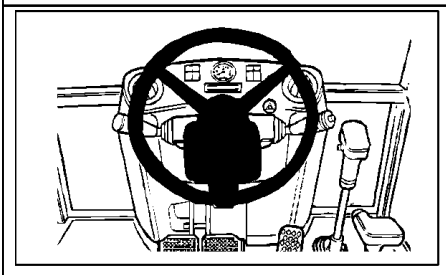

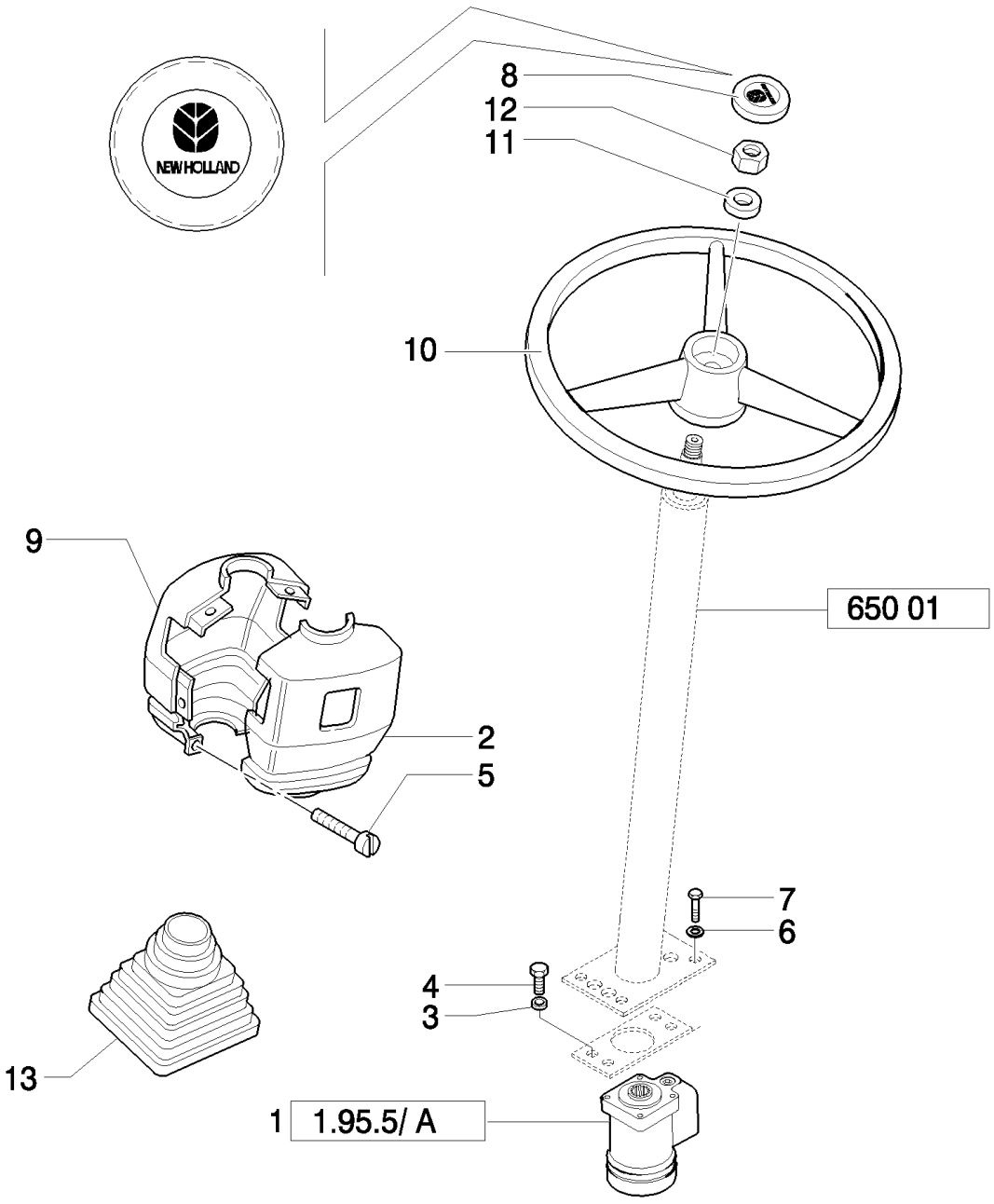

B95LR NA BACKHOE LOADER (1/06-)

1.95.5(01) POWER STEERING MOTOR, WHEEL & COLUMN TRIM (NA)

Ref	Numero de Pieza	Ctd	Descripción
1	85805624	1	STEERING HYDRAULIC, , UP TO S/N XXX
1	87360424	1	STEERING HYDRAULIC, , FROM S/N XXX
2	85805775	1	COVER, Upper
3	10615774	4	WASHER, LOCK,
4	14432334	4	SCREW, Hex Soc Hd, M10 x 22, 10.9, , UP TO S/N XXX
4	85804705	4	SCREW, , FROM S/N XXX
5	14303324	4	SCREW, Hex Soc Hd, M4 x 20, 8.8, Full Thd,
6	11190574	4	WASHER, SPRING, Belleville, M10.5,
7	15970724	4	SCREW, Hex, M10 x 1.25 x 25, 8.8, Full Thd,
8	85820105	1	CAP,
9	85805772	1	COVER, LOWER
10	5148946	1	STEERING WHEEL,
11	4998760	1	WASHER,
12	10791414	1	NUT, M16X1,5
13	85801976	1	BOOT,

1.95.5(02) POWER STEERING MOTOR HOSES

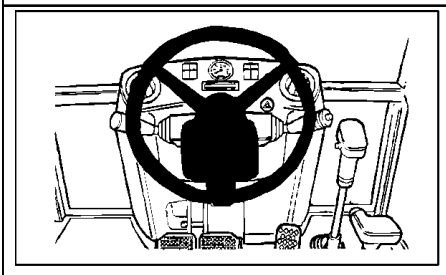

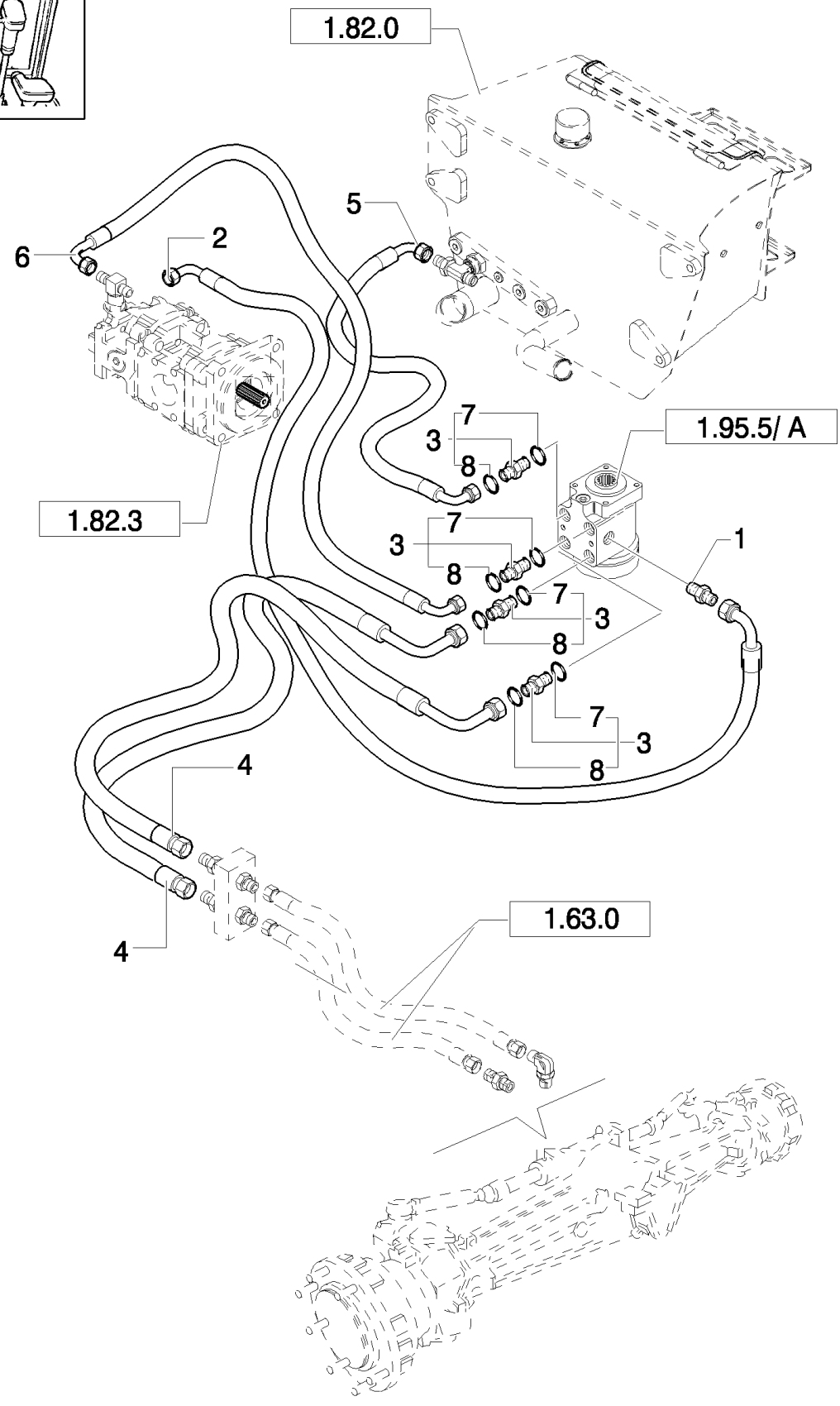

B95LR NA BACKHOE LOADER (1/06-)

1.95.5(02) POWER STEERING MOTOR HOSES

Ref	Numero de Pieza	Ctd	Descripción
1	85802640	1	CONNECTOR, HYD.,
2	85819041	1	HOSE, FLEXIBLE,
3	390953S36	4	CONNECTOR, HYD., , Includes 7, 8
4	85826080	2	HOSE, FLEXIBLE, RH CYLINDER
5	85802761	1	HOSE, FLEXIBLE, 1100mm lg,
6	85820282	1	HOSE, FLEXIBLE,
7	128825	4	O-RING, 8-1, 90 Duro, .644" ID x .087" Thk,
8	9992298	4	O-RING, -014, 90 Duro, .489" ID x .070" Thk,

1.95.5/ A(01) POWER STEERING MOTOR

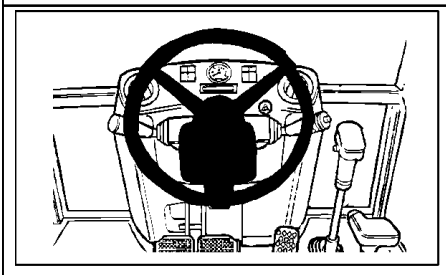

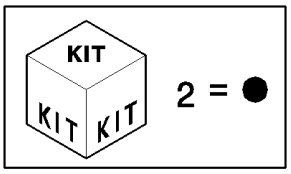

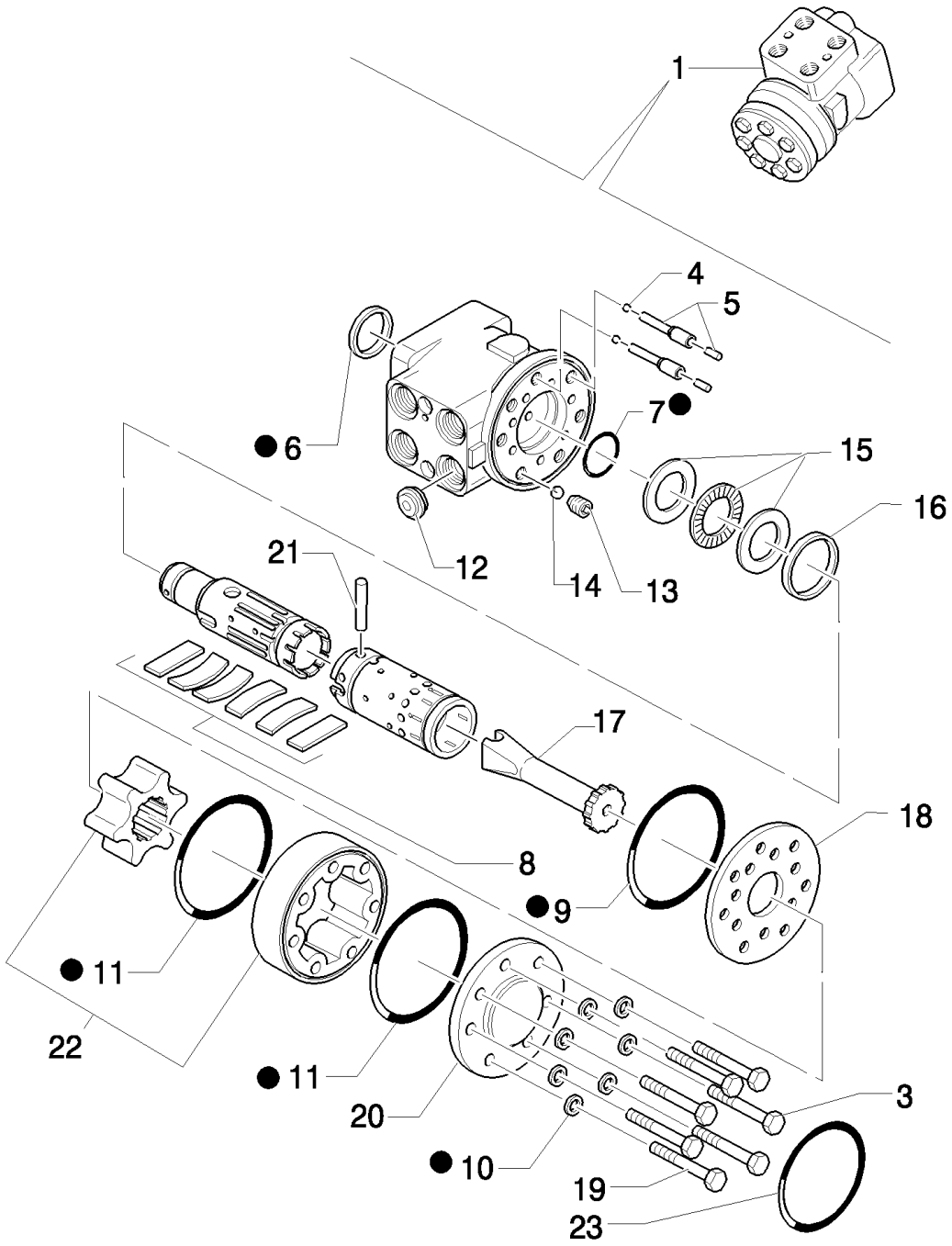

B95LR NA BACKHOE LOADER (1/06-)

1.95.5/ A(01) POWER STEERING MOTOR

Ref	Numero de Pieza	Ctd	Descripción
1	85805624	1	STEERING HYDRAULIC,
2	85808390	1	KIT, SEALS,
3	85812135	6	SCREW,
4	85808385	2	BALL,
5	9961829	2	PIN,
6	85812109	1	O-RING,
7	85808380	1	O-RING,
8	9960181	1	SET,
9	85812110	1	O-RING,
10	85812112	7	WASHER,
11	85812111	2	O-RING,
12	85808386	1	VALVE, CHECK,
13	85812132	1	BUSHING, THREADED,
14	85812131	1	BALL,
15	9961810	1	BEARING ASSY,
16	85812133	1	RING,
17	85808381	1	SHAFT,
18	85808382	1	PLATE,
19	85808383	1	SET SCREW, w/Pin
20	85812134	1	COVER,
21	9932887	1	PIN,
22	9967908	1	GEAR,
23	85808384	1	PLAQUE, DATA,

Up To S/N XXX

1.95.5/ A(02) POWER STEERING MOTOR

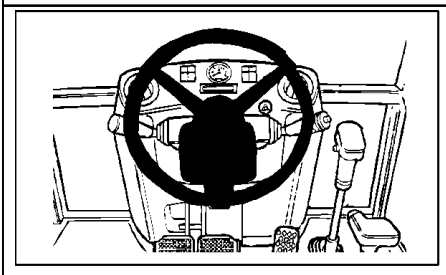

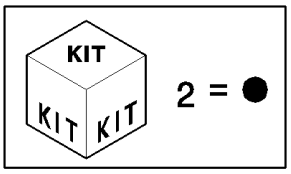

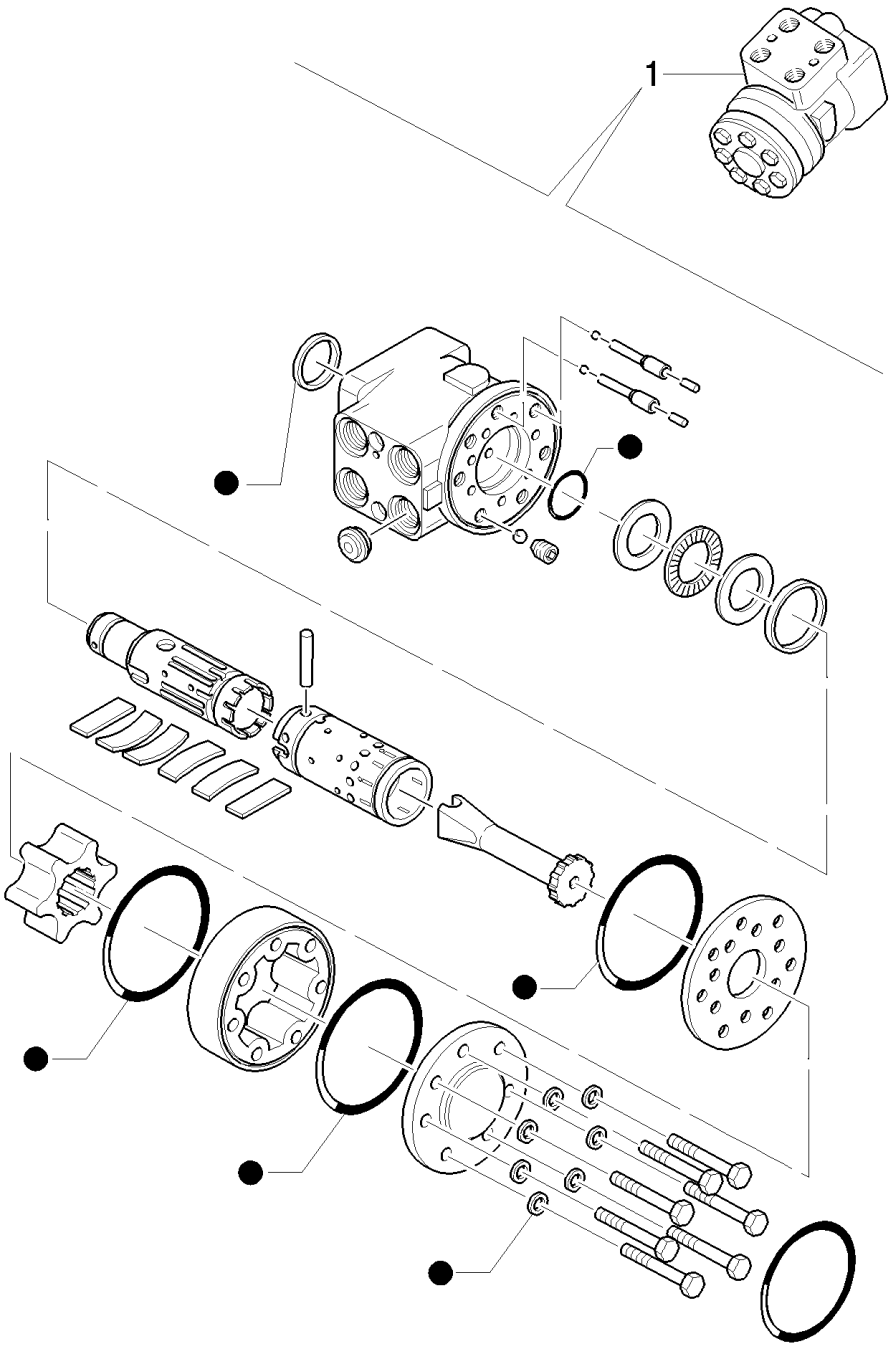

B95LR NA BACKHOE LOADER (1/06-)

1.95.5/ A(02) POWER STEERING MOTOR

Ref	Numero de Pieza	Ctd	Descripción
1	87360424	1	STEERING HYDRAULIC,
2	85808390	1	KIT, SEALS,

From To S/N XXX

1.95.5/ 3(01) POWER STEERING MOTOR, WHEEL & COLUMN (NA)

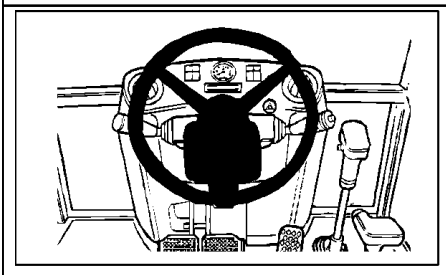

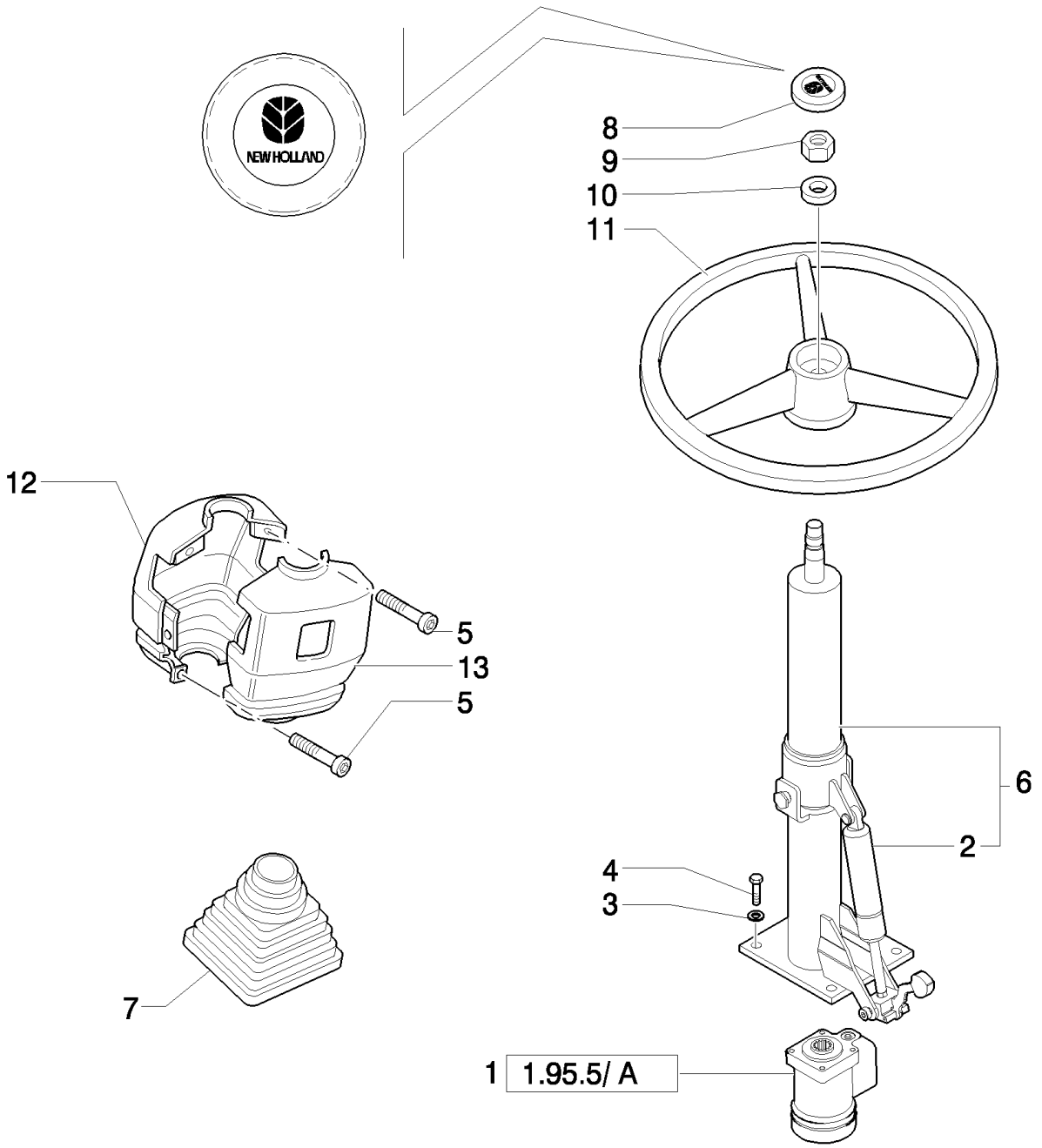

B95LR NA BACKHOE LOADER (1/06-)

1.95.5/ 3(01) POWER STEERING MOTOR, WHEEL & COLUMN (NA)

Ref	Numero de Pieza	Ctd	Descripción
1	85805624	1	STEERING HYDRAULIC, , UP TO S/N 031056941
1	87360424	1	STEERING HYDRAULIC, , FROM S/N 031056942
2	85824197	1	GAS STRUT, SIDE SHIFT, UP TO S/N 031056941, Only for 85805545
2	87328134	1	BLOCK, , FROM S/N 031056942
3	10615774	4	WASHER, LOCK, 10X18X2
4	85804705	4	SCREW, 3/8"-16 x 7/8", UP TO S/N 031056941
4	14432334	4	SCREW, Hex Soc Hd, M10 x 22, 10.9, , FROM S/N 031056942
5	14303324	4	SCREW, Hex Soc Hd, M4 x 20, 8.8, Full Thd,
6	85805545	1	STEERING COLUMN, , UP TO S/N 031056941
6	87560586	1	STEERING COLUMN, , FROM S/N 031056942
7	85801976	1	BOOT,
8	85820105	1	CAP,
9	10791414	1	NUT, M16X1,5
10	4998760	1	WASHER,
11	5148946	1	STEERING WHEEL,
12	85805774	1	COVER, Lower
13	85805773	1	COVER, Upper
14	14303324	4	SCREW, Hex Soc Hd, M4 x 20, 8.8, Full Thd,

1.96.0(01) FOWARD/REVERSE & MULTI-PURPOSE LEVER (POWER-SHUTTLE - CENTER PIVOT)

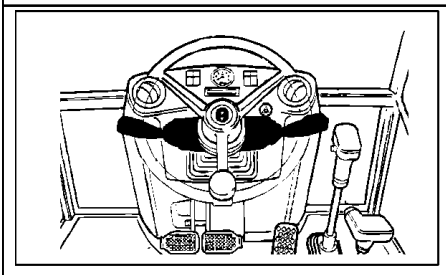

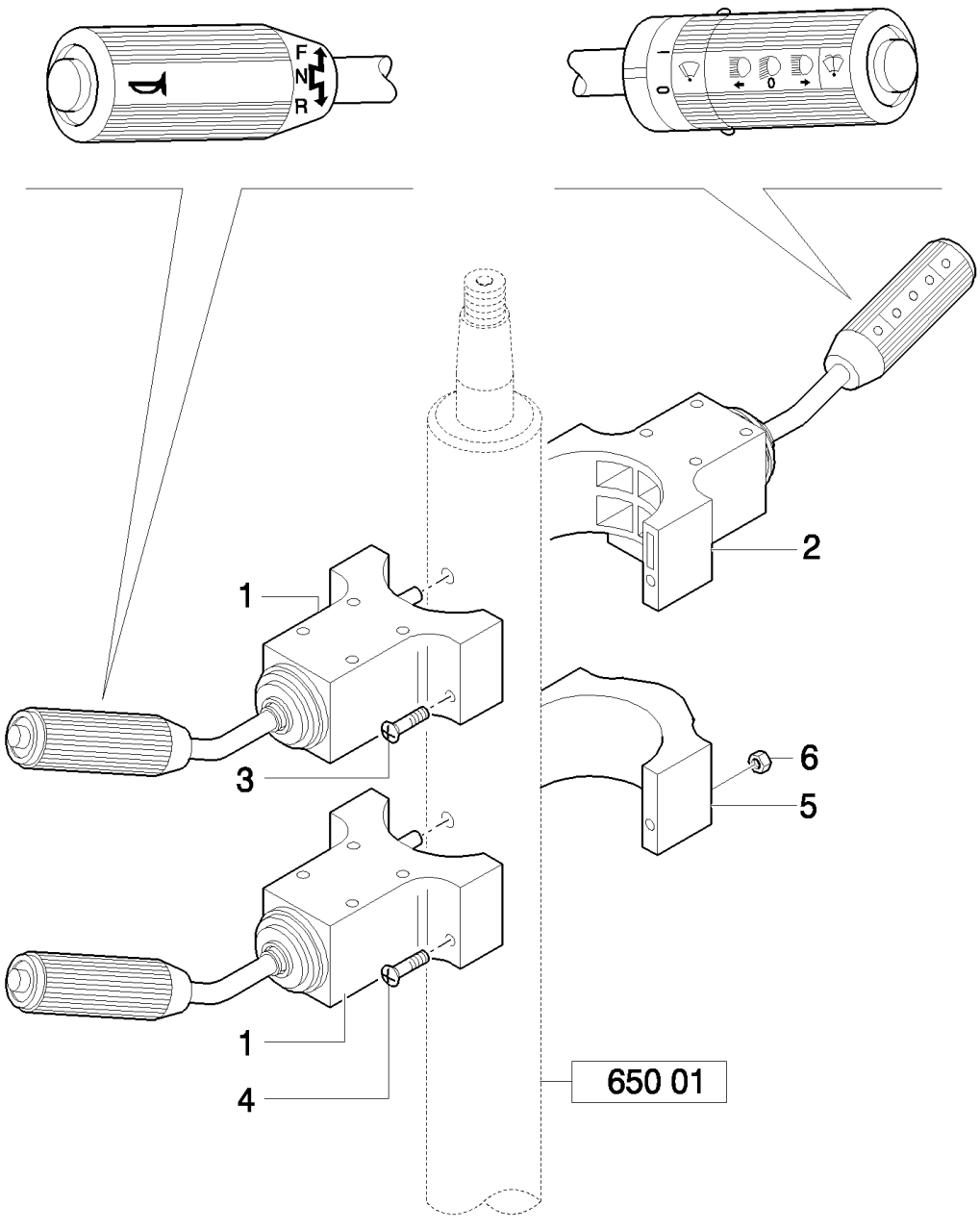

B95LR NA BACKHOE LOADER (1/06-)

1.96.0(01) FOWARD/REVERSE & MULTI-PURPOSE LEVER (POWER-SHUTTLE - CENTER PIVOT)

Ref	Numero de Pieza	Ctd	Descripción
1	85801938	1	LEVER, CONTROL,
2	85801939	1	SWITCH, Cab
	85819144	1	SWITCH, Rocker Type, Direction Indicator; ROPS Canopy Models
3	14304724	2	SCREW, Hex Soc Hd, M5 x 50, 8.8, Full Thd, Cab
4	14301521	2	SCREW, Hex Soc Hd, M5 x 60, 8.8, ROPS
5	85804676	1	CLAMP, ROPS
6	12574111	2	NUT, LOCK, M5 x .8, Cl 8, ROPS

1.96.2(01) STABILIZER CONTROL

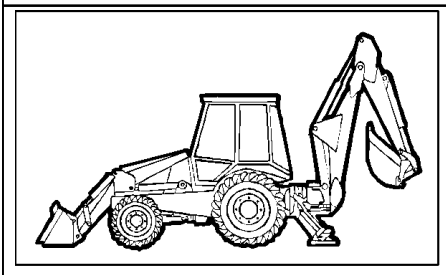

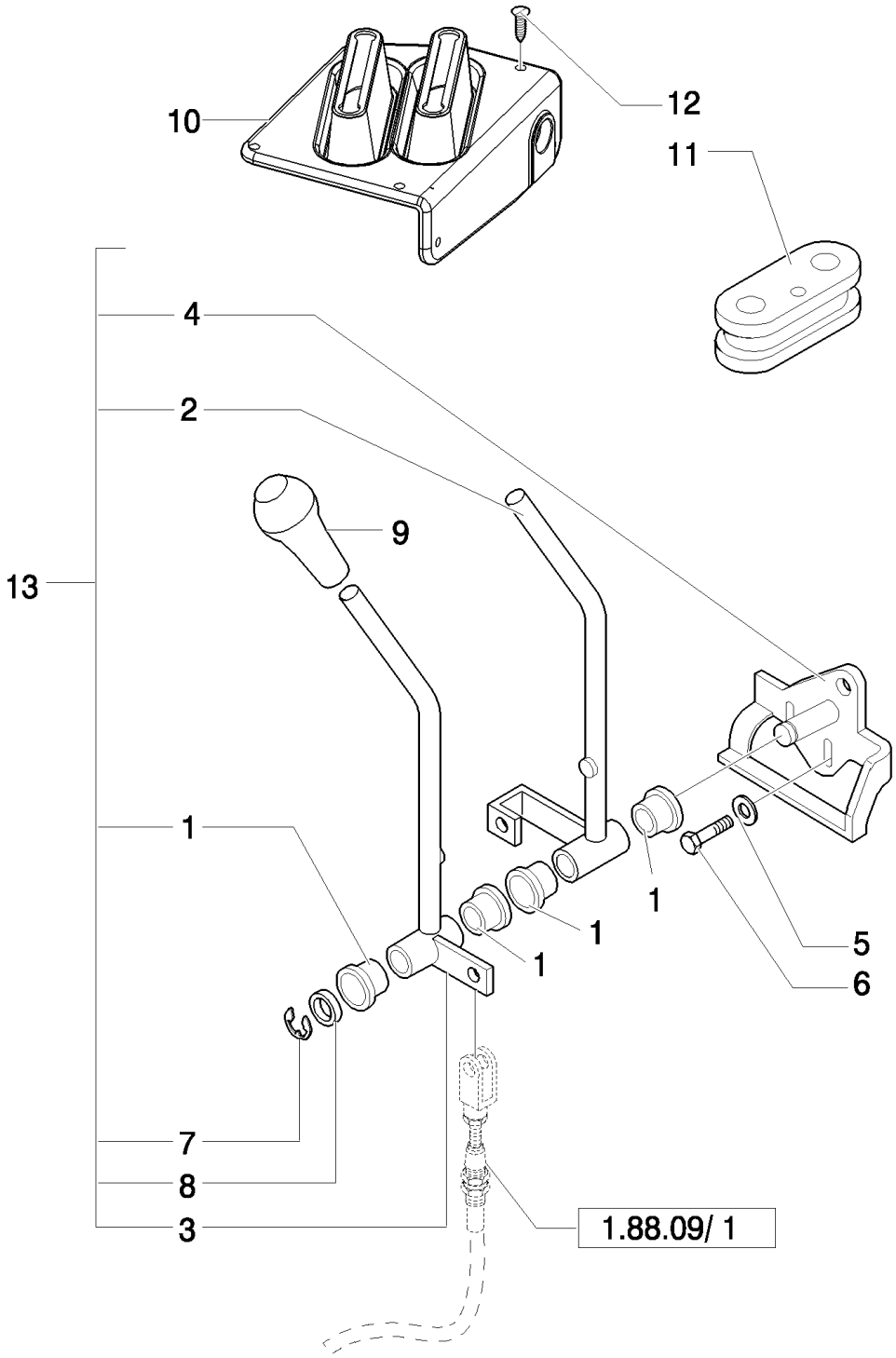

Mechanical Version

B95LR NA BACKHOE LOADER (1/06-)

1.96.2(01) STABILIZER CONTROL

Ref	Numero de Pieza	Ctd	Descripción
1	85813136	4	BUSHING,
2	85813134	1	LEVER, RH
3	85813135	1	LEVER, LH
4	85813133	1	SUPPORT,
5	11193874	2	WASHER, SPRING, Belleville, M8.4,
6	16043624	2	BOLT, Hex, M8 x 25, 8.8, Full Thd,
7	85813138	1	CIRCLIP,
8	85813137	1	WASHER,
9	85802763	2	KNOB,
10	85821316	1	BOOT,
11	87407927	1	INSULATOR BLOCK,
12	85827850	6	PLUG,
13	85813100	1	ARM, TRIP, , Includes 1 To 4, 7, 8

Mechanical Version

1.96.2(02) STABILIZER CONTROL

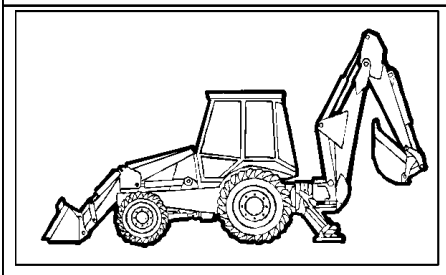

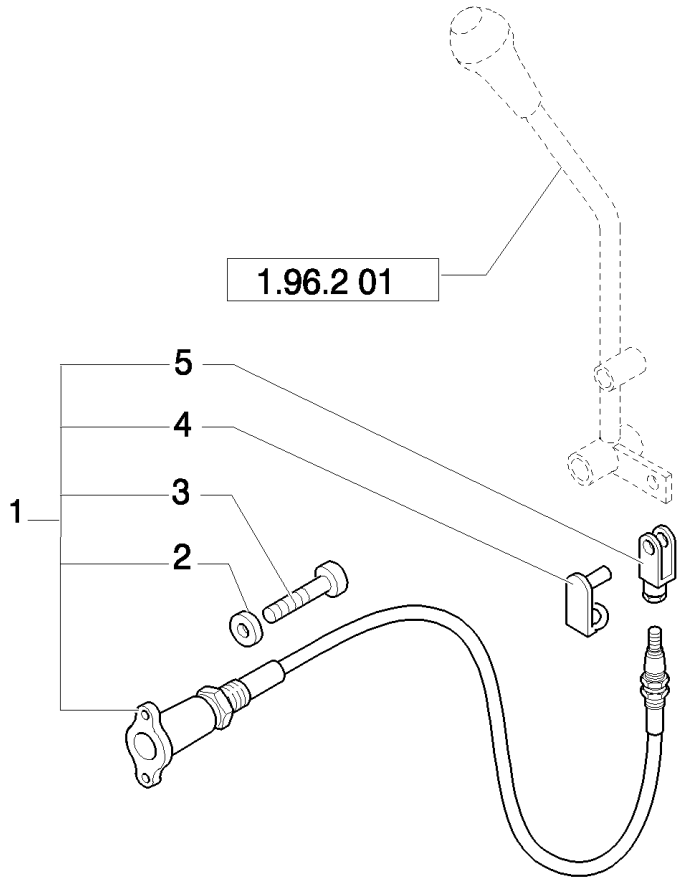

B95LR NA BACKHOE LOADER (1/06-)

1.96.2(02) STABILIZER CONTROL

Ref	Numero de Pieza	Ctd	Descripción
1	85813104	2	CABLE,
2	85813201	4	WASHER,
3	85813200	4	SCREW, M6 x 15
4	85813186	2	CLIP,
5	85813187	2	CLEVIS,

Mechanical Version

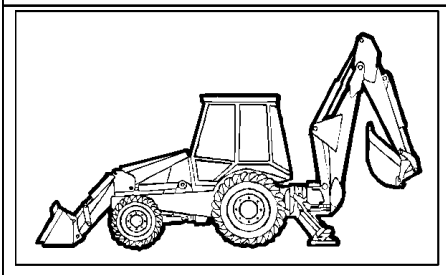

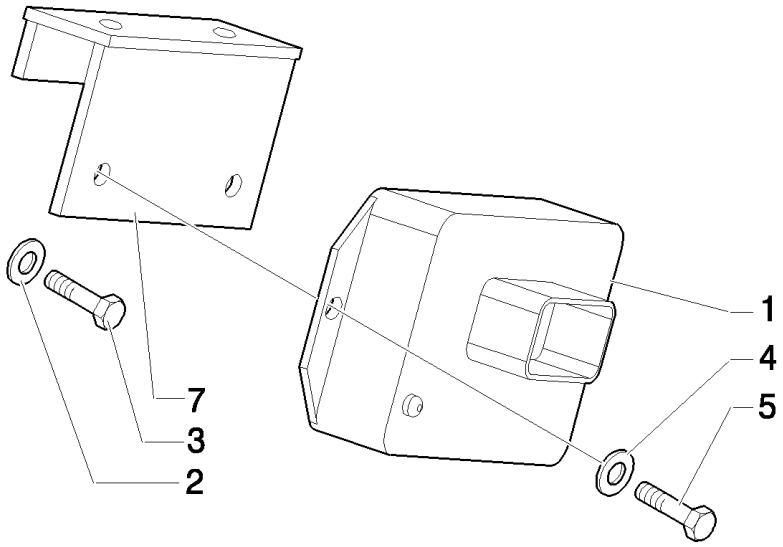

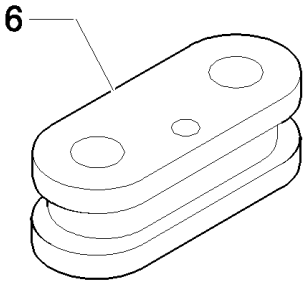

Pilot Control Version 87419454 Black Box Controller for Machines W/O Bi-Directional Auxiliary Hydraulics; 87419455 White Box Controller for Machines W/Bi-Directional Auxiliary Hydraulics. 87419455 Can Service All Machines Equipped With or Without Bi-Directional Auxiliary Hydraulics.

B95LR NA BACKHOE LOADER (1/06-)

1.96.2/ 1(01) PILOT CONTROL DIAGNOSTICS

Ref	Numero de Pieza	Ctd	Descripción
1	87419454	1	MODULE, , 6 function black color
1	87419455	1	CONTROL UNIT, , 8 function white color
2	11193874	2	WASHER, SPRING, Belleville, M8.4,
3	16043624	2	BOLT, Hex, M8 x 25, 8.8, Full Thd,
4	47048959	2	WASHER,
5	85824079	2	SCREW, M4x20
6	87407927	1	INSULATOR BLOCK,
7	85828213	1	SUPPORT,

Pilot Control Version 87419454 Black Box Controller for Machines W/O Bi-Directional Auxiliary Hydraulics; 87419455 White Box Controller for Machines W/Bi-Directional Auxiliary Hydraulics. 87419455 Can Service All Machines Equipped With or Without Bi-Directional Auxiliary Hydraulics.

1.96.7(01) CAB PLUGS, FLOOR PLATES & AIR CONVEYER, CENTER PIVOT

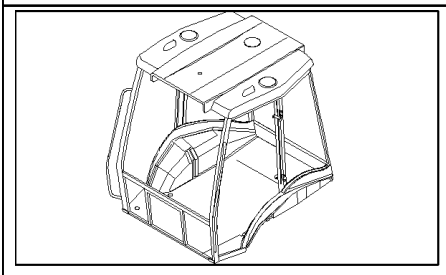

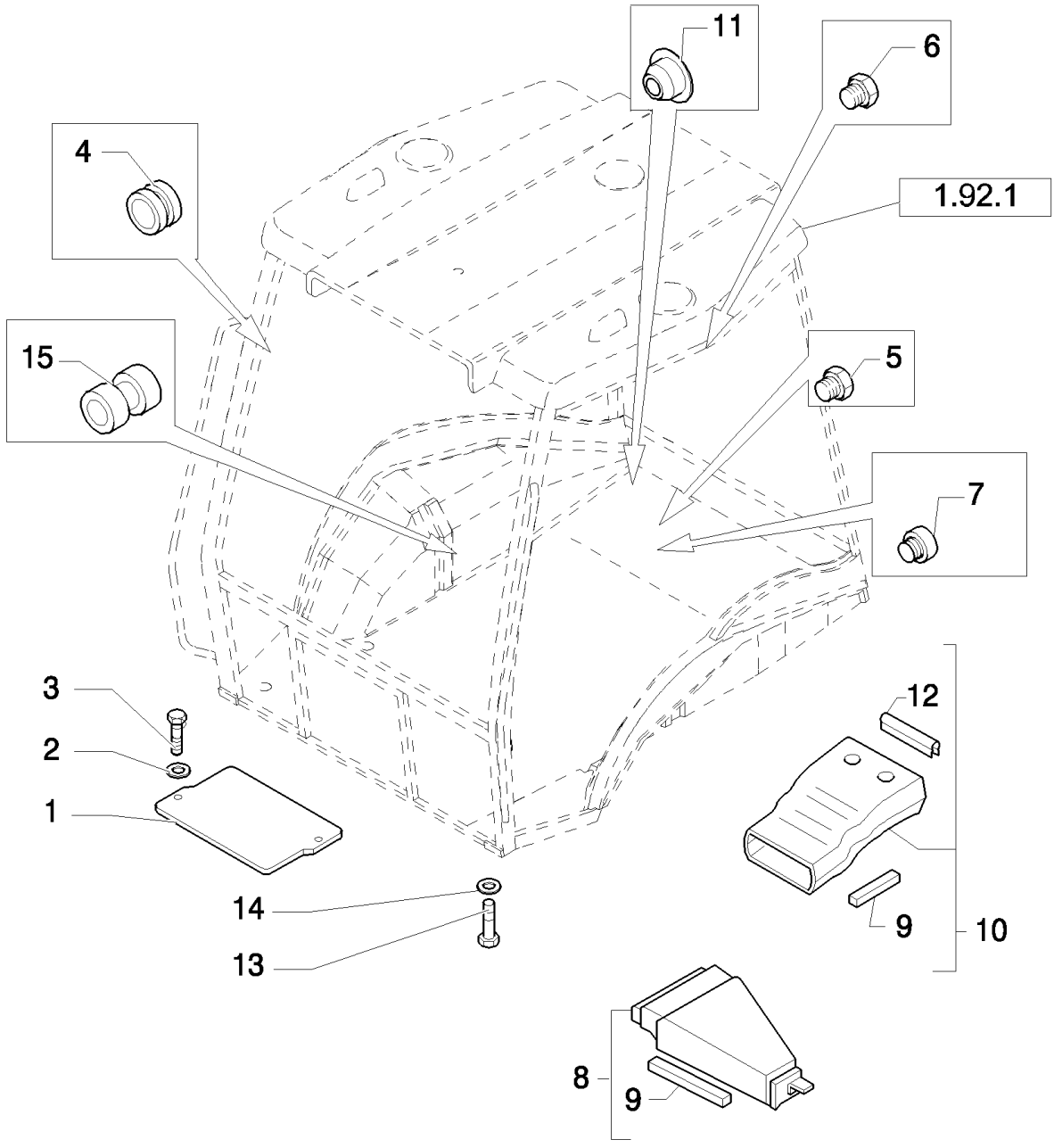

B95LR NA BACKHOE LOADER (1/06-)

1.96.7(01) CAB PLUGS, FLOOR PLATES & AIR CONVEYER, CENTER PIVOT

Ref	Numero de Pieza	Ctd	Descripción
1	85801968	1	PLATE,
2	11198074	2	WASHER, SPRING, Belleville, M8.4,
3	16043424	2	SCREW, Hex, M8 x 20, 8.8, Full Thd,
4	85801953	2	RIVET,
5	79111978	5	PLUG,
6	83994150	2	PLUG,
7	85802309	4	PLUG,
8	85805200	1	DUCT, AIR, FRONT
9	85806023	11	STRIP, SEALING,
10	85820141	1	DUCT, AIR, REAR
11	85802310	4	PLUG,
12	85812021	1	STRIP, SEALING,
13	10902224	5	BOLT, Hex, M6 x 16, 8.8, Full Thd,
14	11193274	5	WASHER, SPRING, Belleville, M6.4,
15	10398580	2	GROMMET,

Mechanical Version

1.96.7/ 4(01) ROPS PLUGS & FLOOR PLATE (CENTER PIVOT)

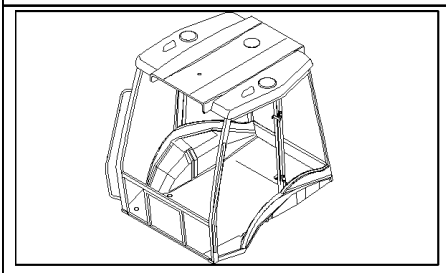

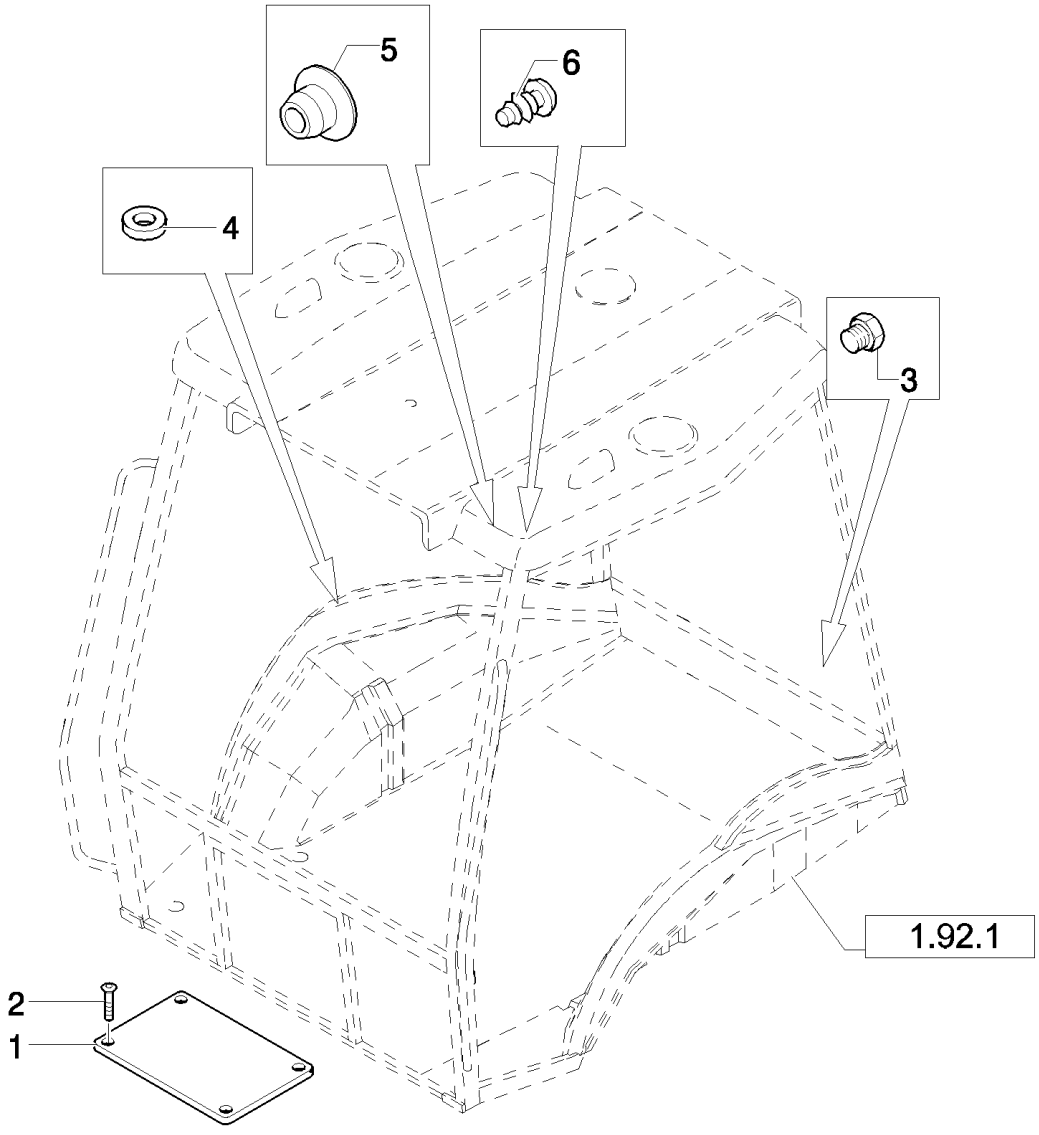

B95LR NA BACKHOE LOADER (1/06-)

1.96.7/ 4(01) ROPS PLUGS & FLOOR PLATE (CENTER PIVOT)

Ref	Numero de Pieza	Ctd	Descripción
1	85804688	1	COVER,
2	13313417	4	SCREW, Cross Oval Hd, M6 x 25,
3	85802309	4	PLUG,
4	85804734	5	WASHER, RUBBER,
5	82003283	4	PLUG,
6	85802310	4	PLUG,

Mechanical Version

B95LR NA BACKHOE LOADER (1/06-)

1.96.7/ 6(01) CAB PLUGS, FLOOR PLATES & AIR CONVEYER, CENTER PIVOT

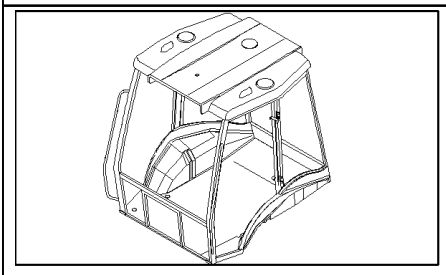

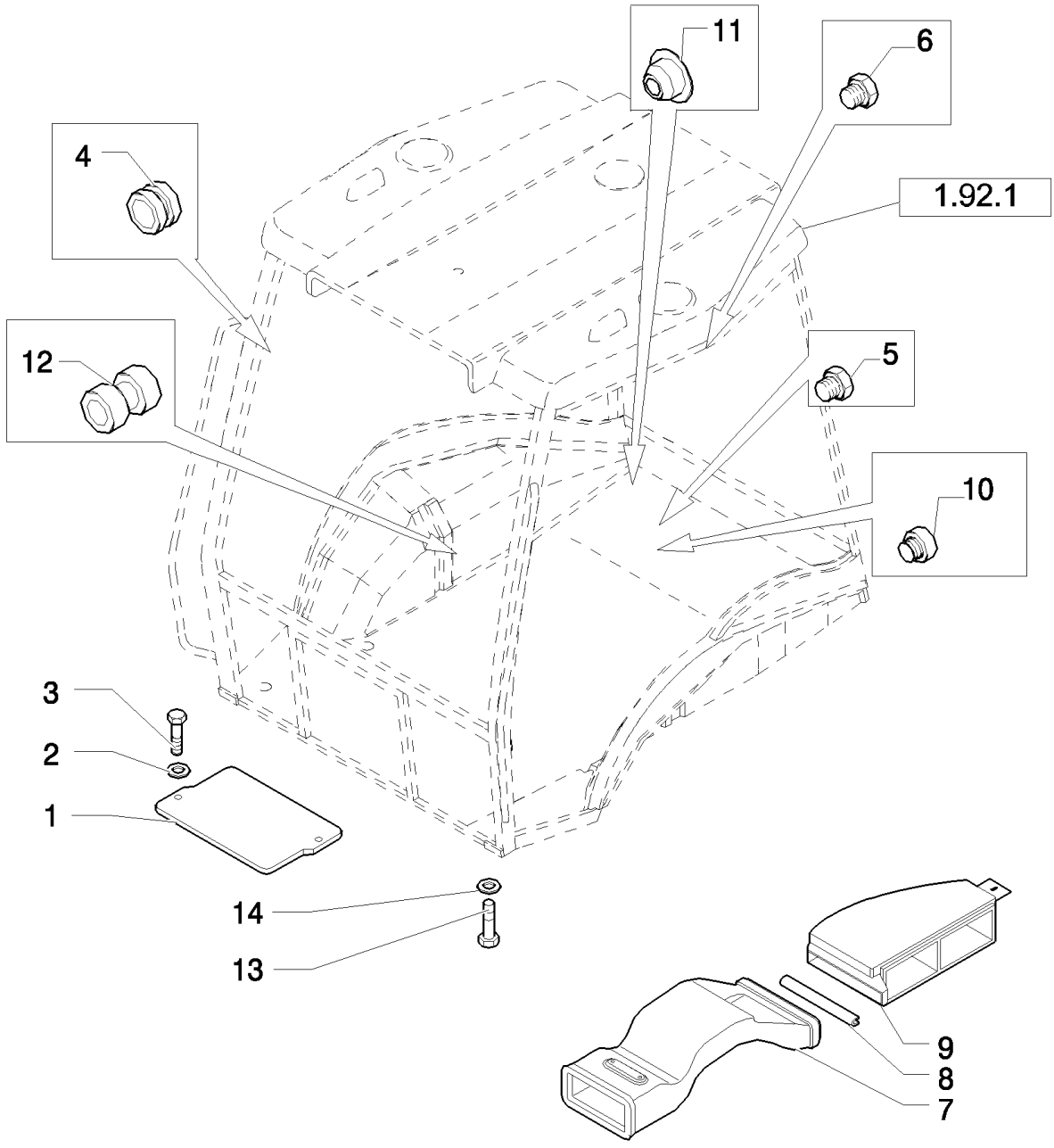

Pilot Control Version

B95LR NA BACKHOE LOADER (1/06-)

1.96.7/ 6(01) CAB PLUGS, FLOOR PLATES & AIR CONVEYER, CENTER PIVOT

Ref	Numero de Pieza	Ctd	Descripción
1	85801968	1	PLATE,
2	11198074	2	WASHER, SPRING, Belleville, M8.4,
3	16043424	2	SCREW, Hex, M8 x 20, 8.8, Full Thd,
4	85801953	2	RIVET,
5	79111978	5	PLUG,
6	83994150	2	PLUG,
7	87408277	1	DUCT, AIR,
8	87812021	1	
9	87319754	1	DUCT, AIR,
10	85802309	4	PLUG, REAR
11	85802310	4	PLUG,
12	10398580	2	GROMMET,
13	10902224	5	BOLT, Hex, M6 x 16, 8.8, Full Thd,
14	11193274	5	WASHER, SPRING, Belleville, M6.4,

Pilot Control Version

1.96.7/10(01) ROPS PLUGS & FLOOR PLATE (CENTER PIVOT)

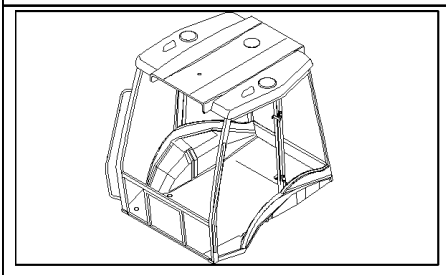

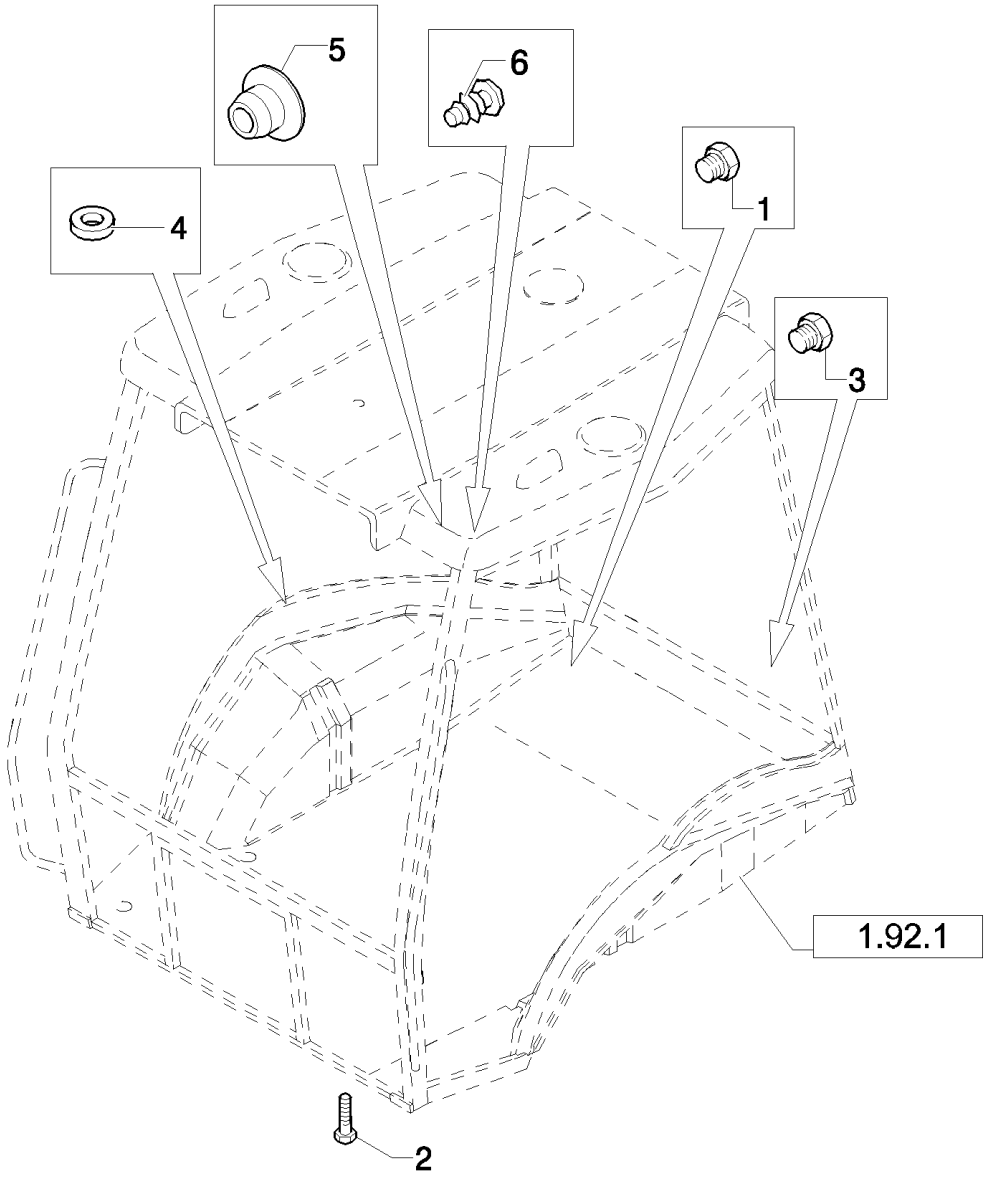

B95LR NA BACKHOE LOADER (1/06-)

1.96.7/10(01) ROPS PLUGS & FLOOR PLATE (CENTER PIVOT)

Ref	Numero de Pieza	Ctd	Descripción
1	85802309	2	PLUG,
2	13313417	4	SCREW, Cross Oval Hd, M6 x 25,
3	85802309	4	PLUG,
4	85804734	5	WASHER, RUBBER,
5	82003283	4	PLUG,
6	85802310	4	PLUG,

Pilot Control Version

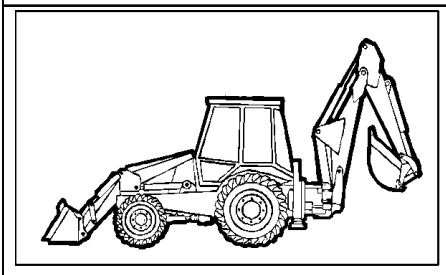

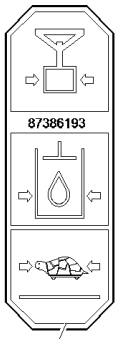

1

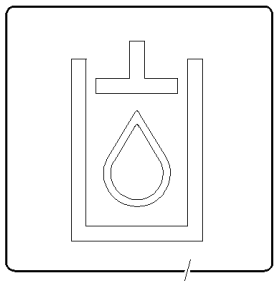

2

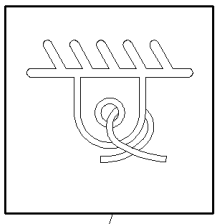

3

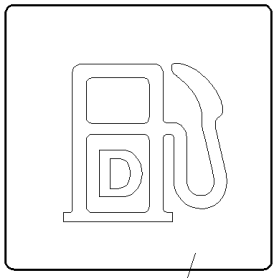

4

5

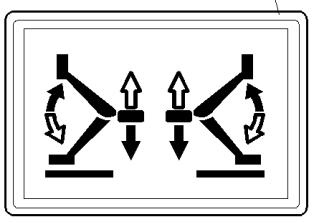

6

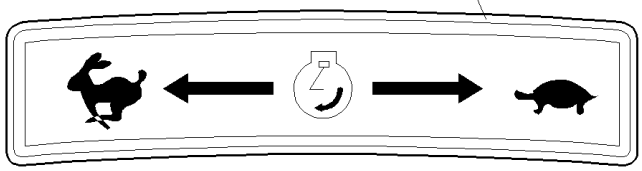

8



7

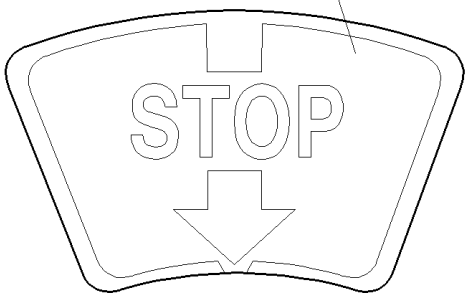

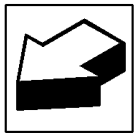

B95LR NA BACKHOE LOADER (1/06-)

1.98.0/ 1(01) INFORMATION SYMBOL DECALS - NA

Ref	Numero de Pieza	Ctd	Descripción
1	85804395	1	DECAL, , Only for B110 Mechanical Version
1	87386193	1	DECAL, , Only for NA Pilot Control Version
2	85804341	1	DECAL,
3	86500514	1	DECAL,
4	85804338	1	DECAL,
5	85803788	1	DECAL,
6	85803789	1	DECAL,
7	85802441	1	DECAL,
8	87387139	1	DECAL, , Only for B110 Mechanical Version

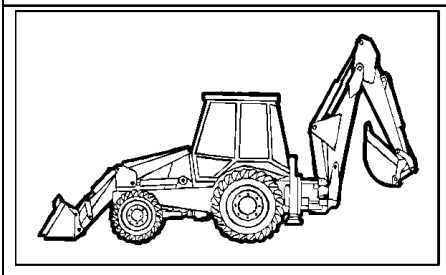

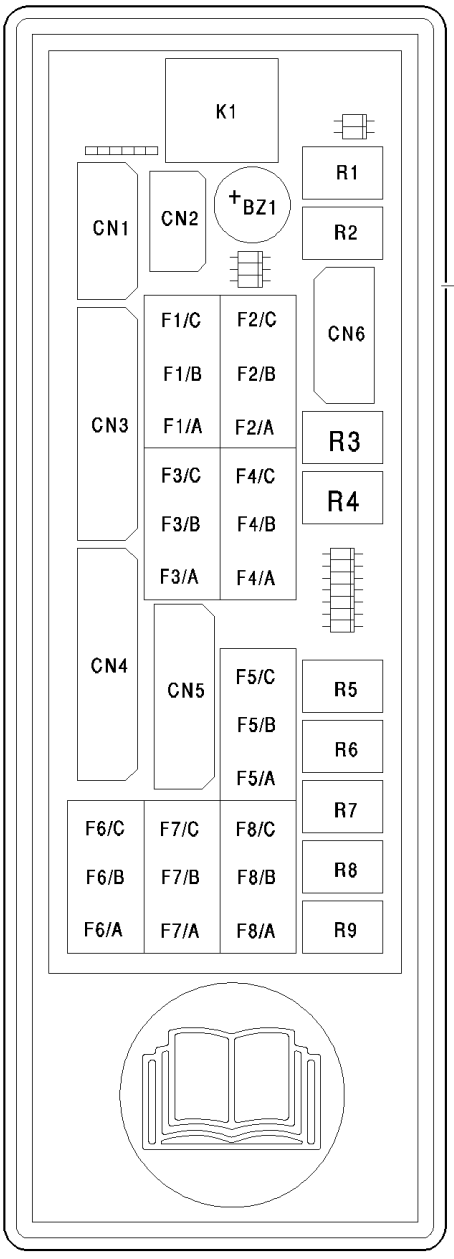
K1
R1
CN1
CN2
+BZ1
R2
CN6
F1/C
F2/C
F1/B
F2/B
F1/A
F2/A
CN3
R3
F3/C
F4/C
F3/B
F4/B
R4
F3/A
F4/A
CN4
CN5
F5/C
R5
F5/B
R6
F5/A
R7
F6/C
F7/C
F8/C
F6/B
F7/B
F8/B
R8
F6/A
F7/A
F8/A
R9

2

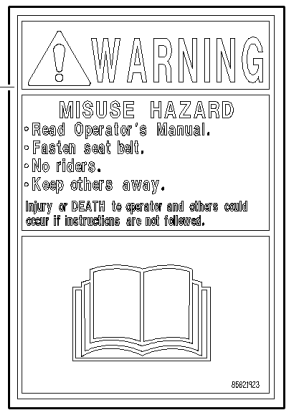
WARNING
MISUSE HAZARD
◦Read Operator's Manual.
◦Fasten seat belt.
◦No riders.
◦Keep others away.
Injury or DEATH to operator and others could occur if instructions are not followed.
8582R23

3

1

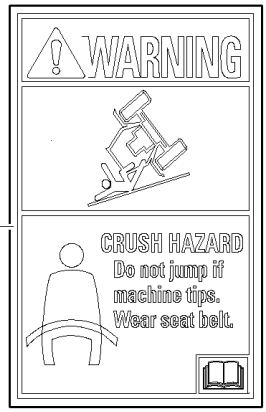
WARNING
CRUSH HAZARD
Do not jump if machine tips.
Wear seat belt.

4

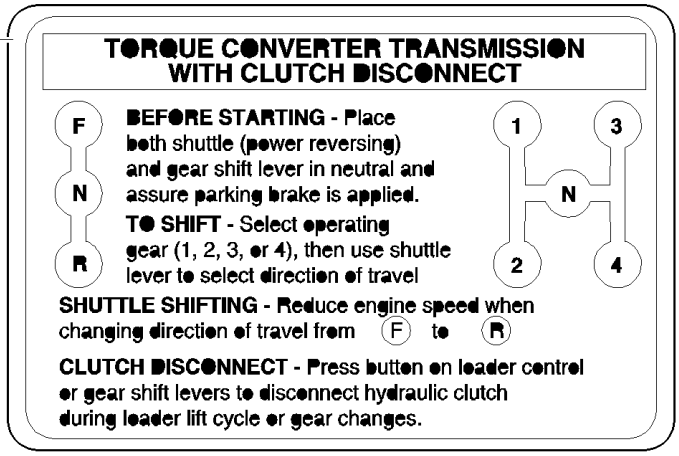
TORQUE CONVERTER TRANSMISSION
WITH CLUTCH DISCONNECT
F
N
R
BEFORE STARTING - Place both shuttle (power reversing) and gear shift lever in neutral and assure parking brake is applied.
TO SHIFT - Select operating gear (1, 2, 3, or 4), then use shuttle lever to select direction of travel
1
3
N
2
4
SHUTTLE SHIFTING - Reduce engine speed when changing direction of travel from (F) to (R)
CLUTCH DISCONNECT - Press button on loader control or gear shift levers to disconnect hydraulic clutch during loader lift cycle or gear changes.



B95LR NA BACKHOE LOADER (1/06-)

1.98.0/ 1(02) BACKHOE, LOADER & ENGINE WARNING DECALS - NA

Ref	Numero de Pieza	Ctd	Descripción
1	85821920	1	DECAL, ENGLISH
1	85828063	1	DECAL, FRENCH
1	85828064	1	DECAL, SPANISH
2	85821923	1	DECAL, ENGLISH
2	85828065	1	DECAL, FRENCH
2	85828066	1	DECAL, SPANISH
3	85802250	1	DECAL, ENGLISH
4	85804091	2	DECAL, FRENCH, Only for B95, B95LR, B95TC, B110

1.98.1(06) B95 B95LR MODEL IDENTIFICATION

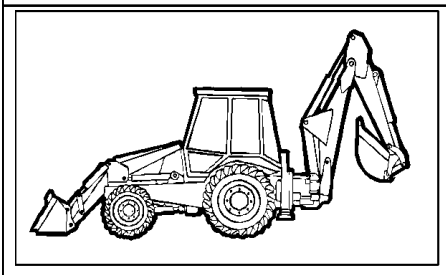

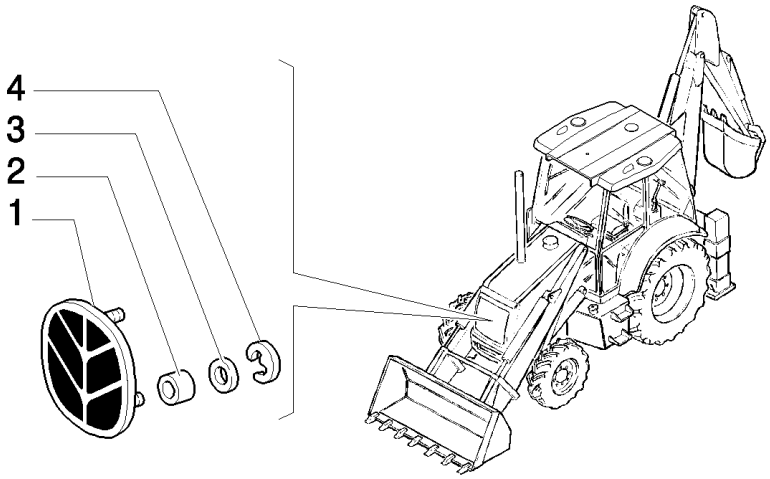

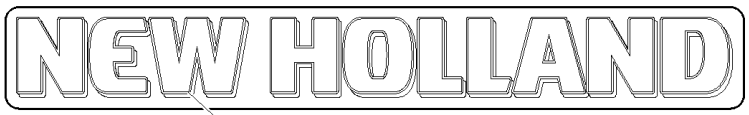

5

9

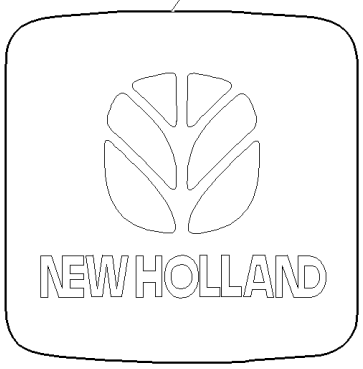



6

7

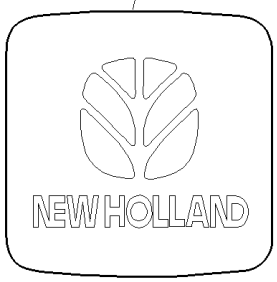

8



B95LR NA BACKHOE LOADER (1/06-)

1.98.1(06) B95 B95LR MODEL IDENTIFICATION

Ref	Numero de Pieza	Ctd	Descripción
1	85820107	1	EMBLEM,
2	12643711	2	WASHER,
3	5138360	2	RING,
4	5135069	2	CLIP,
5	87319147	2	DECAL, L=MM.1100
6	87319145	2	DECAL, L=MM.650
7	87802964	1	DECAL,
8	87319148	1	DECAL, L=MM.580
9	87415930	3	DECAL,

B95LR NA BACKHOE LOADER (1/06-)

120(01) SILENT HAMMER CB65S

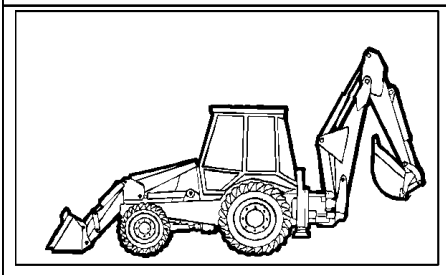

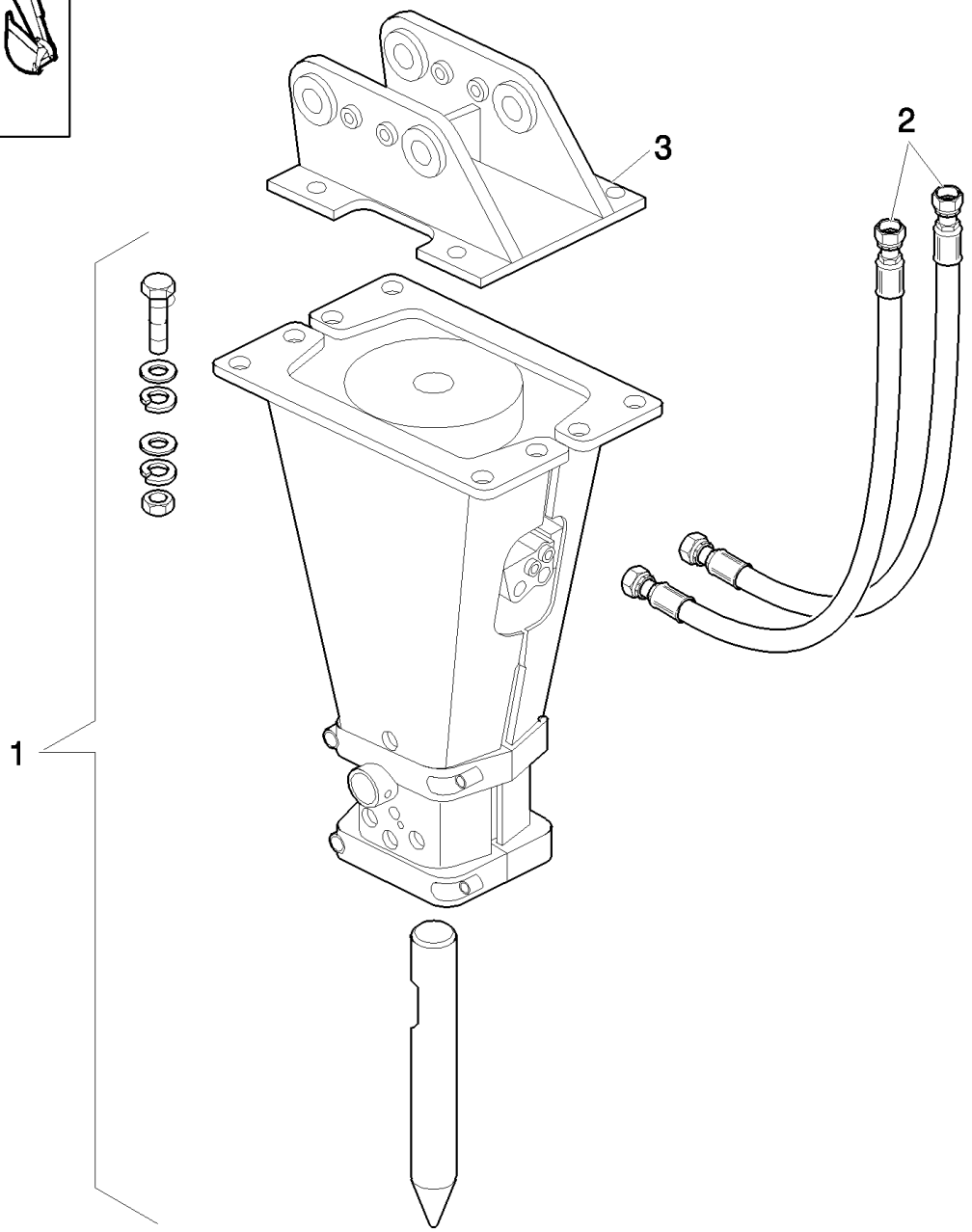

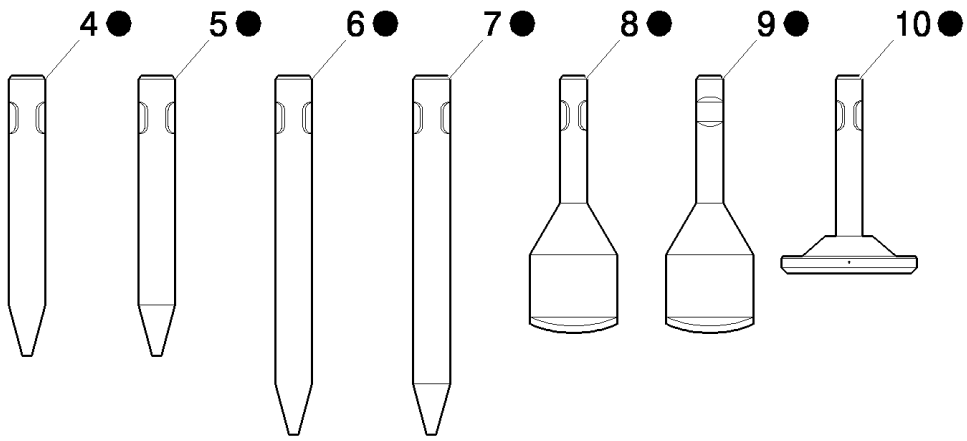

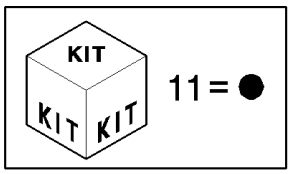

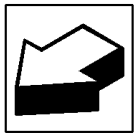

B95LR NA BACKHOE LOADER (1/06-)

120(01) SILENT HAMMER CB65S

Ref	Numero de Pieza	Ctd	Descripción
1	82848120	1	HAMMER, -ASSY
2	82848343	1	HOSE KIT, L=2380
3	87335337	1	BRACKET, LB
4	87779459	1	POINT,
5	87779461	1	POINT,
6	87779460	1	POINT,
7	85848133	1	
8	87779462	1	TOOL,
9	87779444	1	TOOL, GENERAL,
10	87779474	1	TOOL,
11	87335146	1	

B95LR NA BACKHOE LOADER (1/06-)

120/ 1(01) HAMMER CB65B

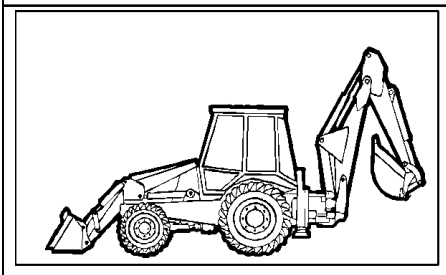

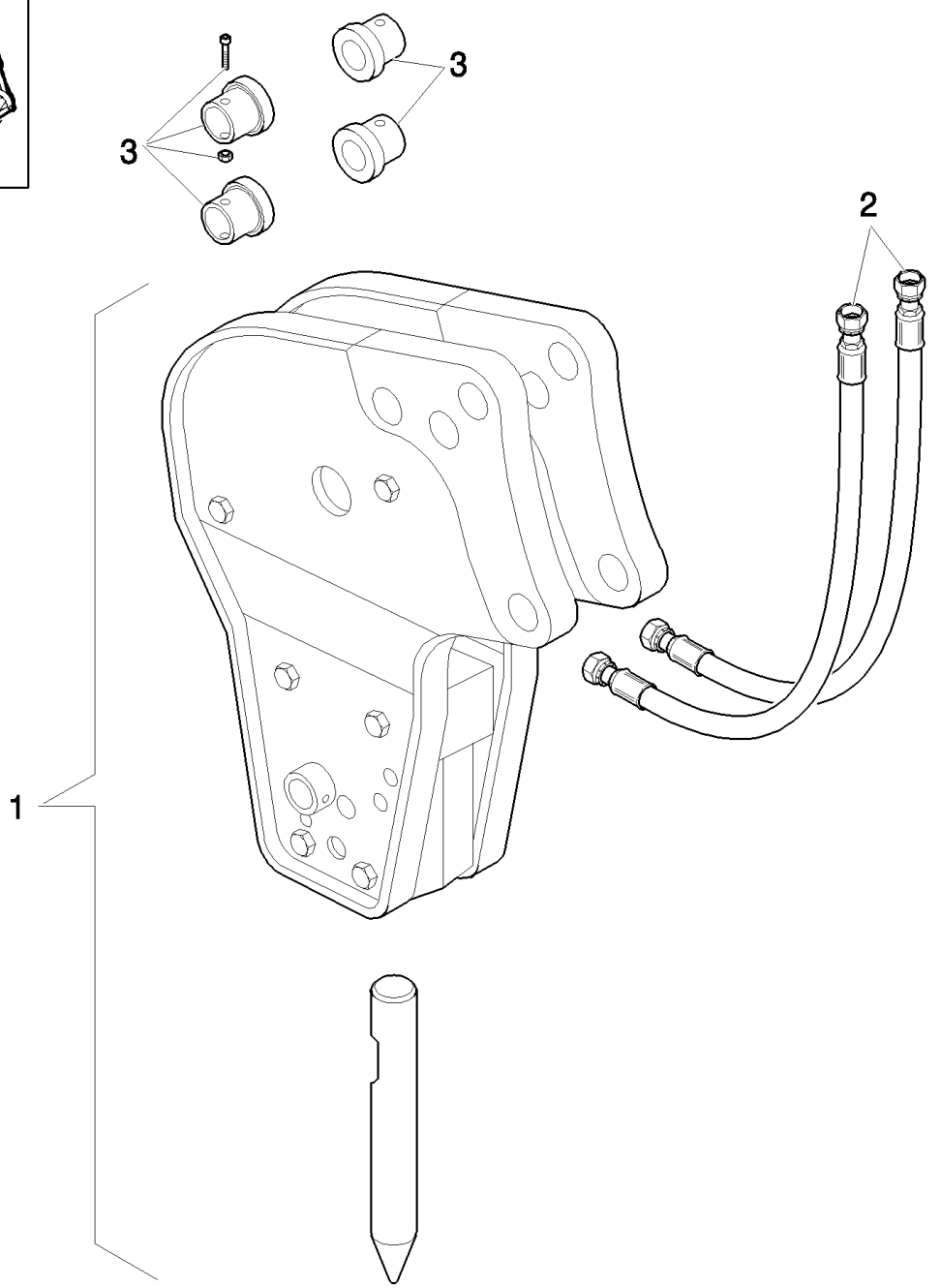

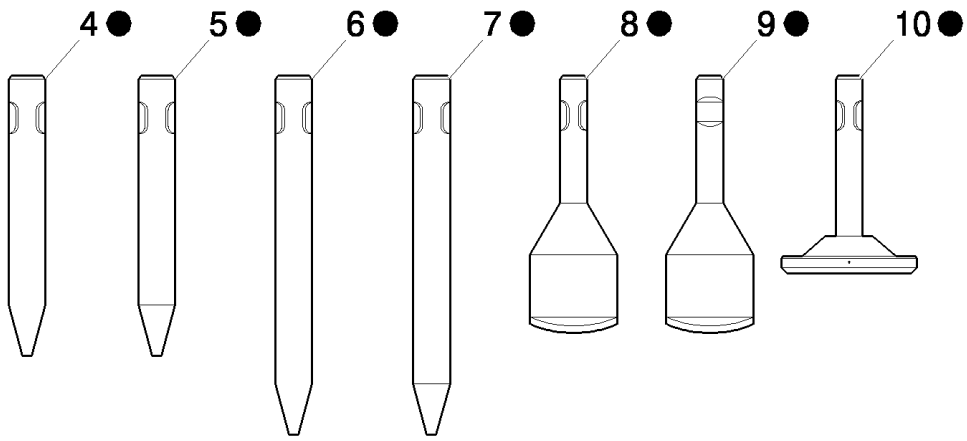

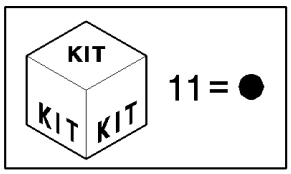

B95LR NA BACKHOE LOADER (1/06-)

120/ 1(01) HAMMER CB65B

Ref	Numero de Pieza	Ctd	Descripción
1	82848118	1	HAMMER, -ASSY
2	82848343	1	HOSE KIT, L=2380
3	82848344	1	SET, BRUSHES, LB
4	87779459	1	POINT,
5	87779461	1	POINT,
6	87779460	1	POINT,
7	85848133	1	
8	87779462	1	TOOL,
9	87779444	1	TOOL, GENERAL,
10	87779474	1	TOOL,
11	87335146	1	

131(01) SINGLE BATTERY

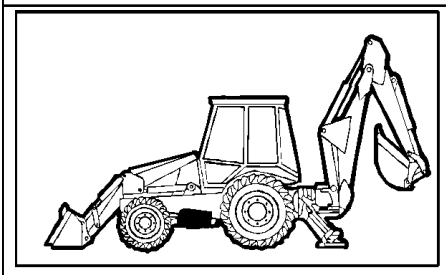

B95LR NA BACKHOE LOADER (1/06-)

131(01) SINGLE BATTERY

Ref	Numero de Pieza	Ctd	Descripción
1	85825440	1	BATTERY, WET, U.S.
1	85826206	1	BATTERY, WET, CANADIAN.
1	9673604DS	1	BATTERY, DRY, Canadian
2	87416929	1	BRACKET,
3	412005	2	BOLT, Hex, M10 x 220, 8.8, M10x220
4	47048963	2	WASHER,
5	47049041	2	NUT, M10
6	47048788	2	ANGLE,
7	47049590	1	DECAL,
8	87404127	1	DECAL,
9	87567413	1	CABLE, Positive Cable; 1440 mm (56-29/32 in), Red Cable
10	87311611	1	CABLE, GROUND, 2240 m (88 in), Black Cable

B95LR NA BACKHOE LOADER (1/06-)

175(01) AIR INTAKE CAP & PRE-CLEANER

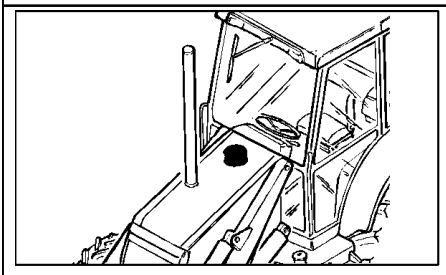

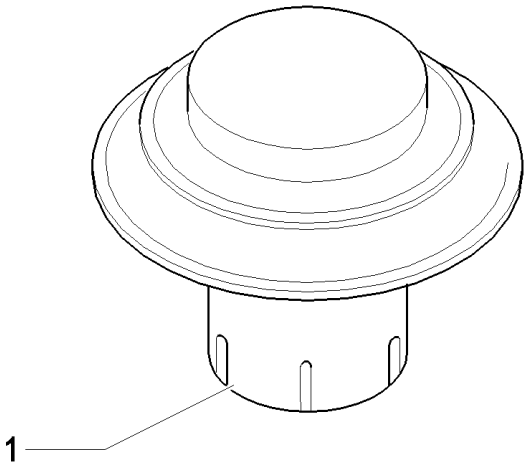

Standard

B95LR NA BACKHOE LOADER (1/06-)

175(01) AIR INTAKE CAP & PRE-CLEANER

Ref	Numero de Pieza	Ctd	Descripción
1	85804602	1	CAP,

Standard

176(01) AIR INTAKE CAP & PRE-CLEANER

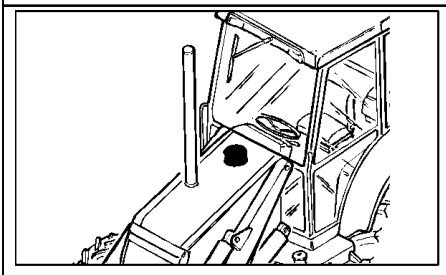

EQUIP. 176

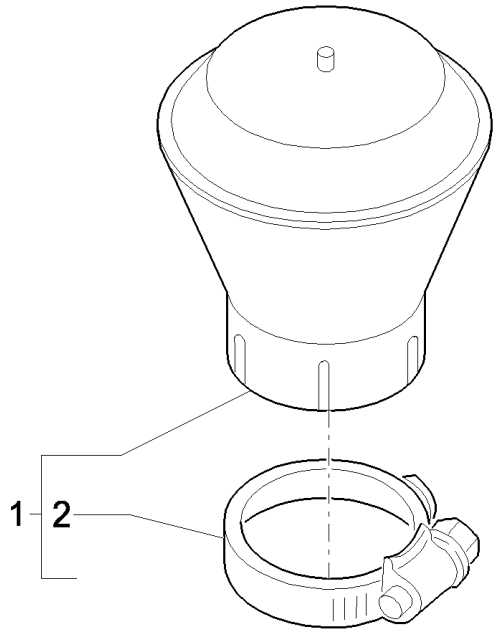

EQUIP. 197

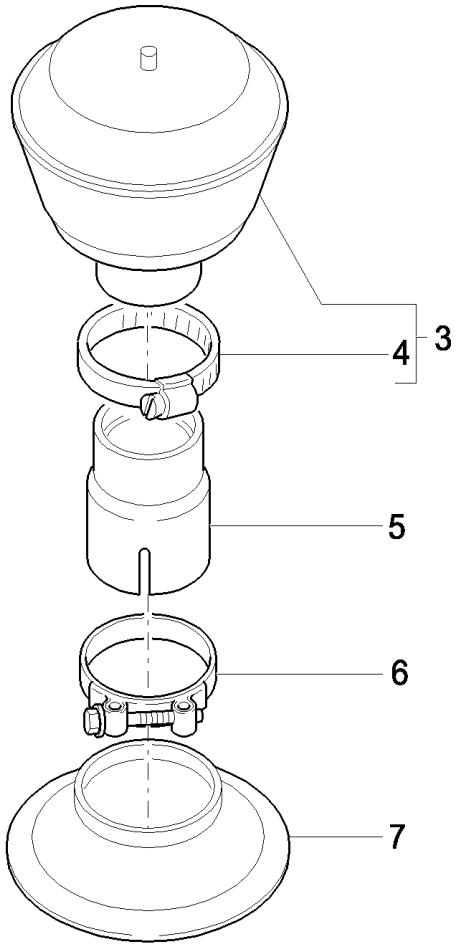

Centrifugal Pre-cleaner

B95LR NA BACKHOE LOADER (1/06-)

176(01) AIR INTAKE CAP & PRE-CLEANER

Ref	Numero de Pieza	Ctd	Descripción
1	85804347	1	PRESCREENER,
2	85802743	1	CLAMP, HOSE,
3	85804347	1	PRESCREENER,
4	85802743	1	CLAMP, HOSE,
5	85804349	1	EXTENSION,
6	85811975	1	CLAMP,
7	85802829	1	GUARD,

Centrifugal Pre-cleaner

ART NOT AVAILABLE

B95LR NA BACKHOE LOADER (1/06-)

18.DIA.01/B-BL(01) DIA KITS FOR B-SERIES BACKHOE LOADERS

Ref	Numero de Pieza	Ctd	Descripción
1	718718039	1	DIA KIT, BHL,BACKHOE CONT, LOADER 4X1 AUXILIARY HYDRAULICS FOR MECHANICAL BACKHOE CONTROL UNITS
2	718718049	1	DIA KIT, BHL,BACKHOE CONT, LOADER 4X1 AUXILIARY HYDRAULICS FOR MECHANICAL BACKHOE CONTROL UNITS
3	718724039	1	DIA KIT, BHL,HAMMER CIRC., UNI-DIRECTIONAL BACKHOE AUXILIARY (HAMMER) HYDRAULIC SYSTEM FOR MECHANICAL BACKHOE CONTROL UNITS
4	718724049	1	DIA KIT, BHL,HAMMER CIRC., UNIDIRECTIONAL BACKHOE AUXILIARY HYDRAULIC (HAMMER) SYSTEM FOR PILOT BACKHOE CONTROL UNITS
5	718727029	1	DIA KIT, BHL,HAMMER CIRC., UNIDIRECTIONAL AUXILIARY BOOM TO DIPPER PLUMBING
6	741343019	1	DIA KIT, ADDITIONAL PROD., BI-DIRECTIONAL AUXILIARY HYDRAULIC KIT FOR PILOT CONTROL UNITS WITH TELESCOPIC DIPPER (HED) (CENTER PIVOT)
7	741430019	1	DIA KIT, ADDITIONAL PROD., PRECISION SWING CONTROL FOR MECHANICAL BACKHOE CONTROL
8	741437049	1	DIA KIT, ADDITIONAL PROD., GLIDE RIDE CONTROL HYDRAULIC SYSTEM
9	741741049	1	DIA KIT, BHL,BACKHOE CONT, LOADER AUXILIARY (4X1) HYDRAULICS FOR PILOT BACKHOE CONTROL UNITS
10	741741059	1	DIA KIT, BHL,BACKHOE CONT, LOADER AUXILIARY (4X1) HYDRAULICS FOR PILOT BACKHOE CONTROL UNITS
11	741741069	1	DIA KIT, BHL,BACKHOE CONT, LOADER AUXILIARY (4X1) HYDRAULICS FOR PILOT BACKHOE CONTROL UNITS

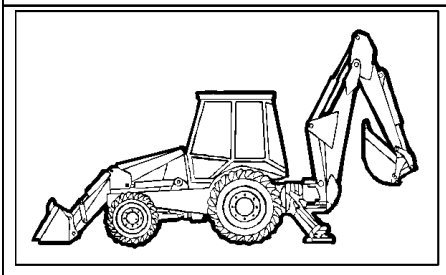

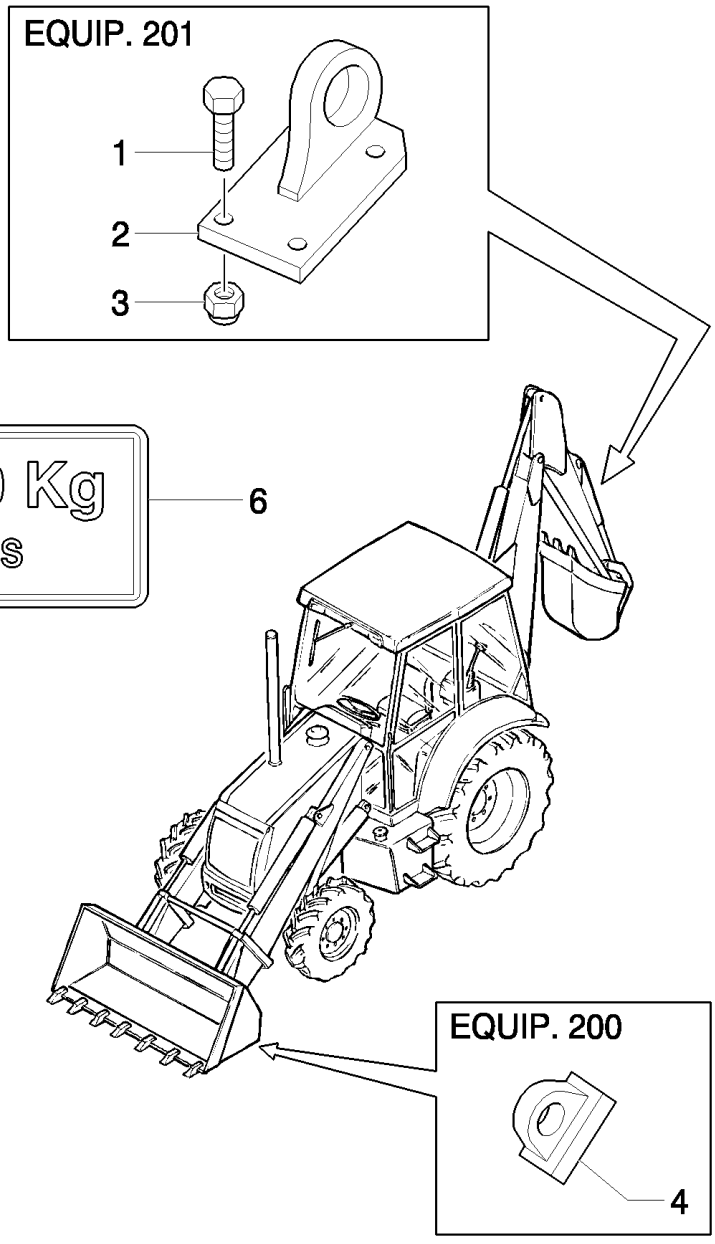

SWL=1000 Kg

5

B95LR NA BACKHOE LOADER (1/06-)

200(01) SHOVEL AND REAR LIFTING HOOKS

Ref	Numero de Pieza	Ctd	Descripción
1	11394334	4	BOLT, Hex, M14 x 1.5 x 45, 8.8, Full Thd, (Equip.201)
2	85802599	1	EYE, LIFTING, (EQUIP.201)
3	12574825	4	NUT, LOCK, M14 x 1.5, Cl 10, (EQUIP.201)
4	85805807	1	EYE, LIFTING, (Equip.200)
5	85805663	1	DECAL, (EQUIP.200)
6	85805664	1	DECAL, (EQUIP.201)

Mechanical Version

203(01) FRONT WEIGHTS

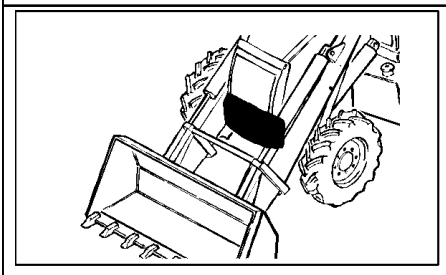

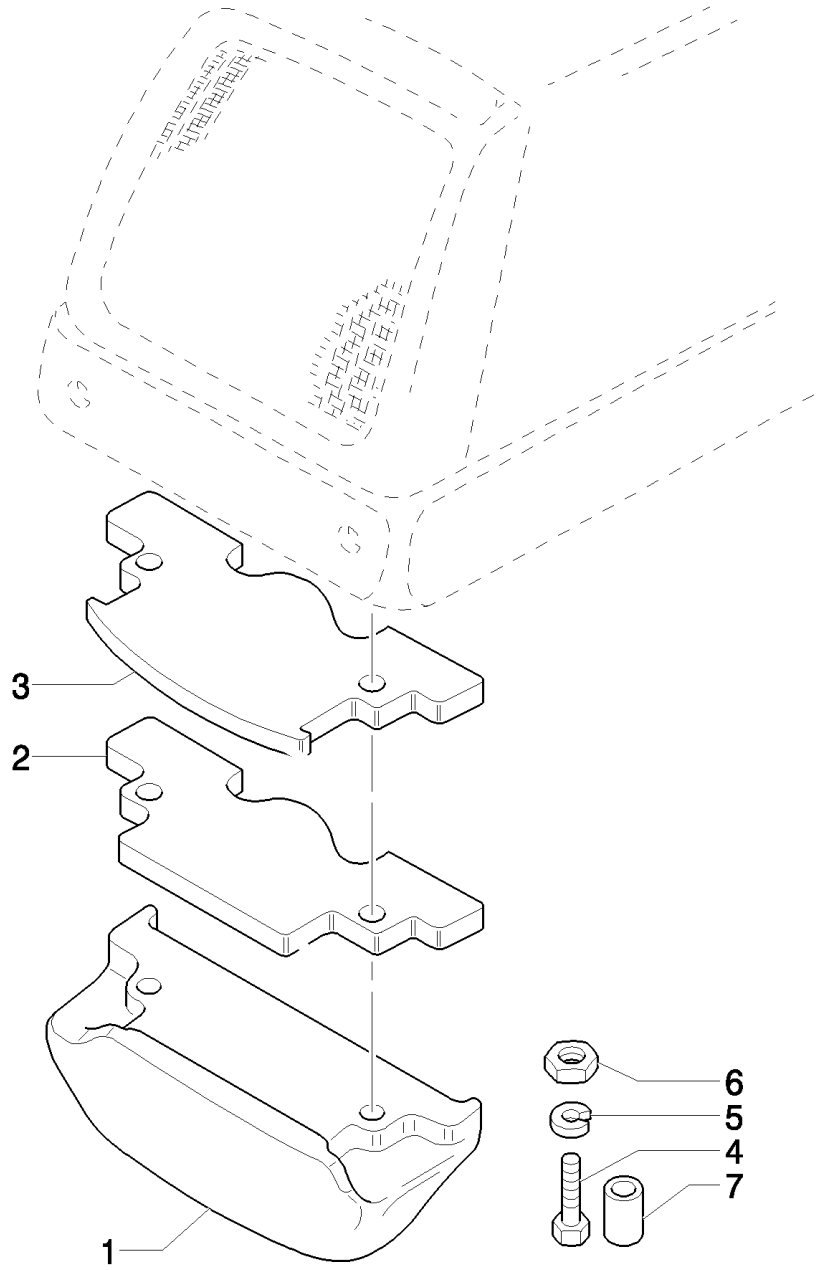

B95LR NA BACKHOE LOADER (1/06-)

203(01) FRONT WEIGHTS

Ref	Numero de Pieza	Ctd	Descripción
1	85804838	1	WEIGHT,
2	85805071	1	WEIGHT,
3	85805069	1	WEIGHT,
4	85805300	2	SCREW, M20 x 1.5 x 300
5	10520431	4	WASHER,
6	12575121	2	NUT, LOCK, M20 x 1.5, Cl 10,
7	85801324	2	SPACER, 21 x 30 x 50

B95LR NA BACKHOE LOADER (1/06-)

207(01) REAR WEIGHT (CENTER PIVOT)

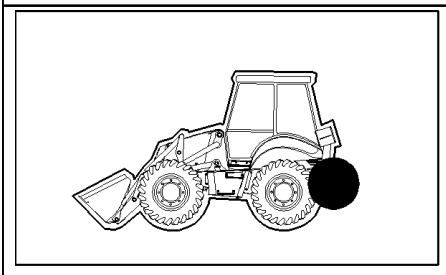

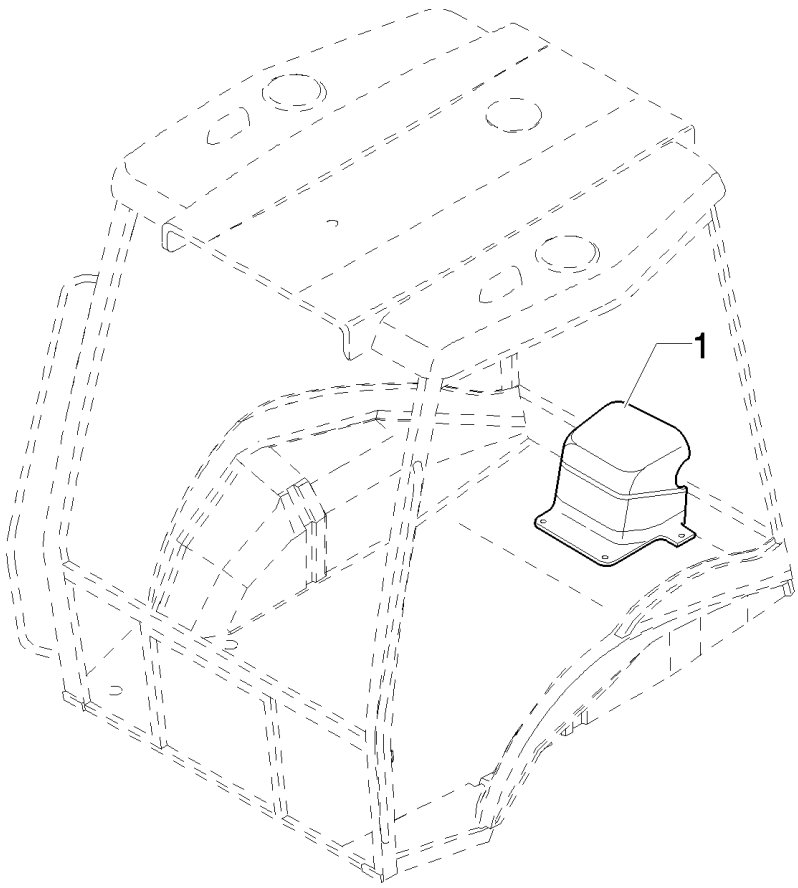

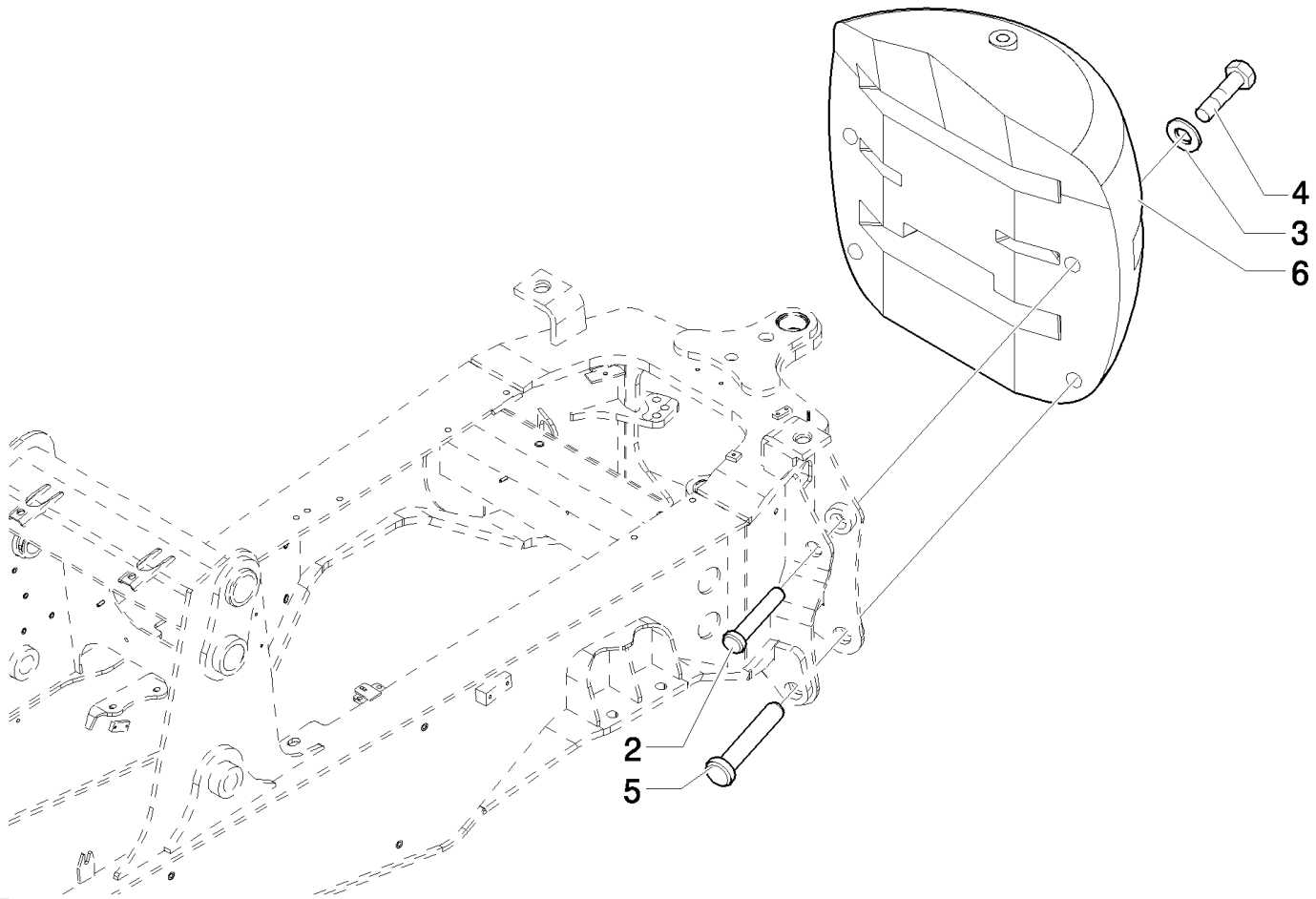

B95LR NA BACKHOE LOADER (1/06-)

207(01) REAR WEIGHT (CENTER PIVOT)

Ref	Numero de Pieza	Ctd	Descripción
1	87387648	1	SOFT TRIM,
2	85807935	2	PIN,
3	85807951	4	WASHER, LOCK,
4	15998731	4	BOLT, Hex, M24 x 2 x 180, 10.9, M24x180
5	85807934	2	PIN,
6	87388774	1	WEIGHT, COUNTER,

215(01) FRONT WEIGHTS

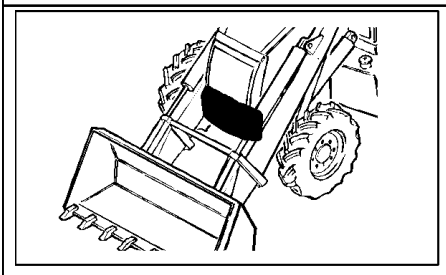

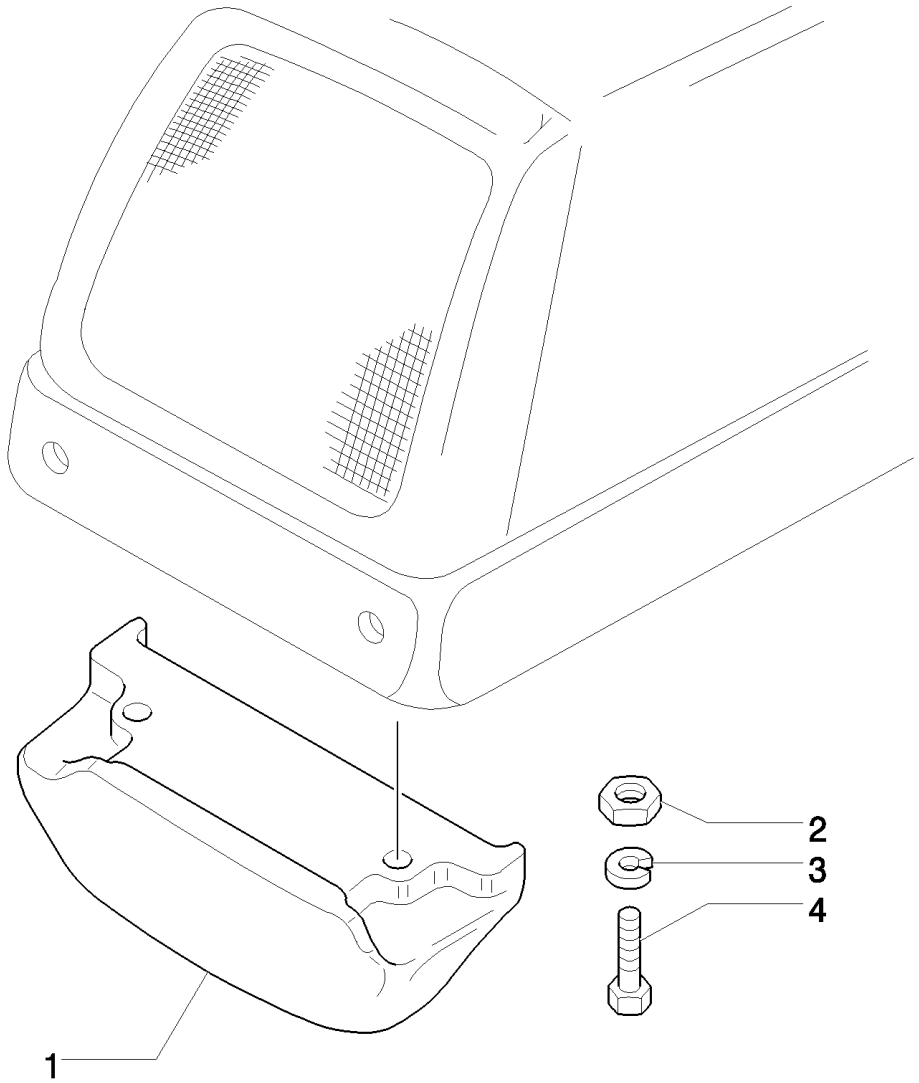

B95LR NA BACKHOE LOADER (1/06-)

215(01) FRONT WEIGHTS

Ref	Numero de Pieza	Ctd	Descripción
1	85804838	1	WEIGHT,
2	12575121	2	NUT, LOCK, M20 x 1.5, Cl 10,
3	10520431	4	WASHER,
4	15991134	2	BOLT, Hex, M20 x 1.5 x 200, 10.9,

272(02) B95LR MODEL IDENTIFICATION

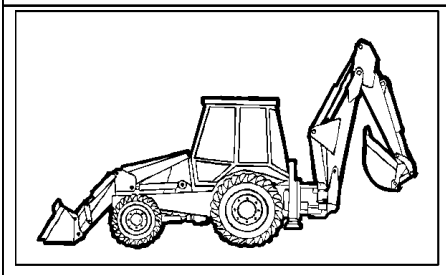

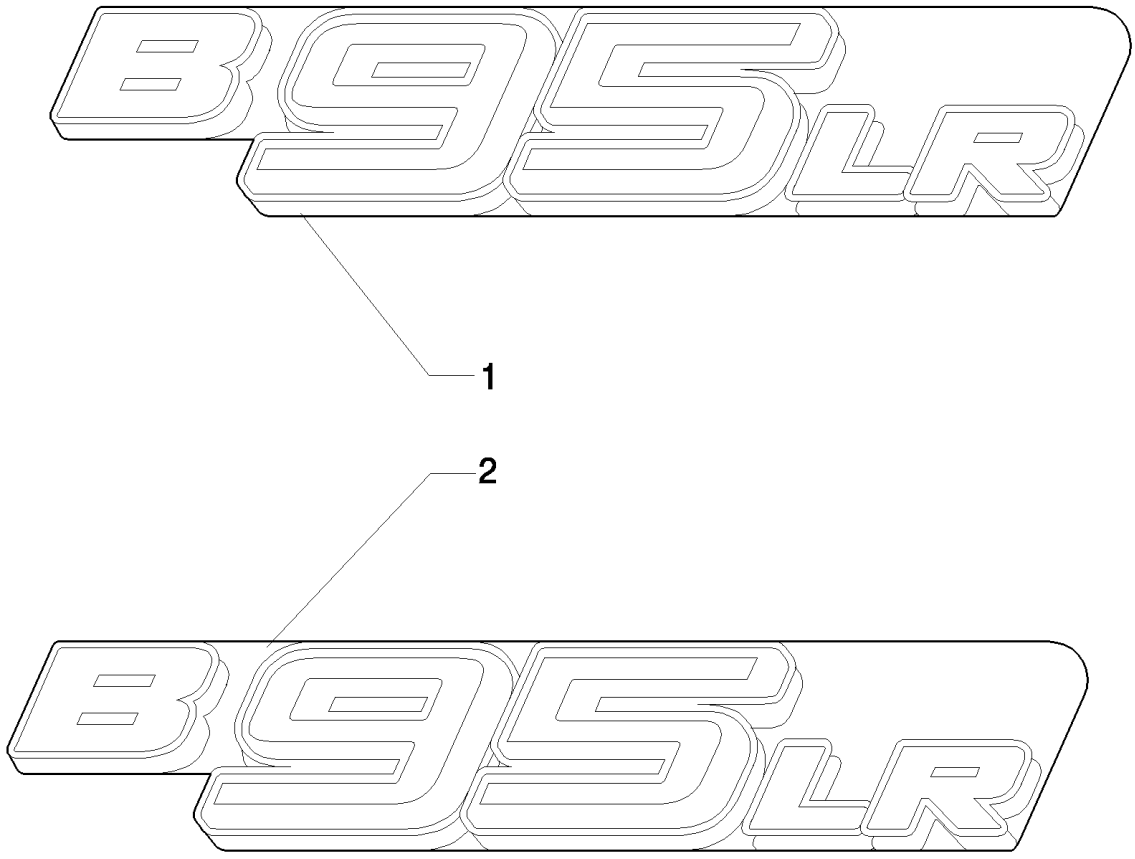

B95LR NA BACKHOE LOADER (1/06-)

272(02) B95LR MODEL IDENTIFICATION

Ref	Numero de Pieza	Ctd	Descripción
1	87360025	2	DECAL, Dipper
2	87360169	2	DECAL, Hood

302(01) TWO-SECTION CONTROL VALVE FOR LOADER

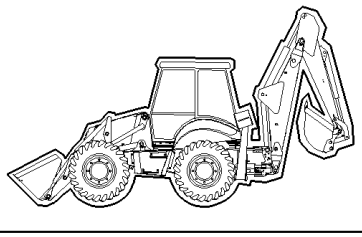

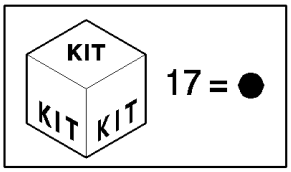

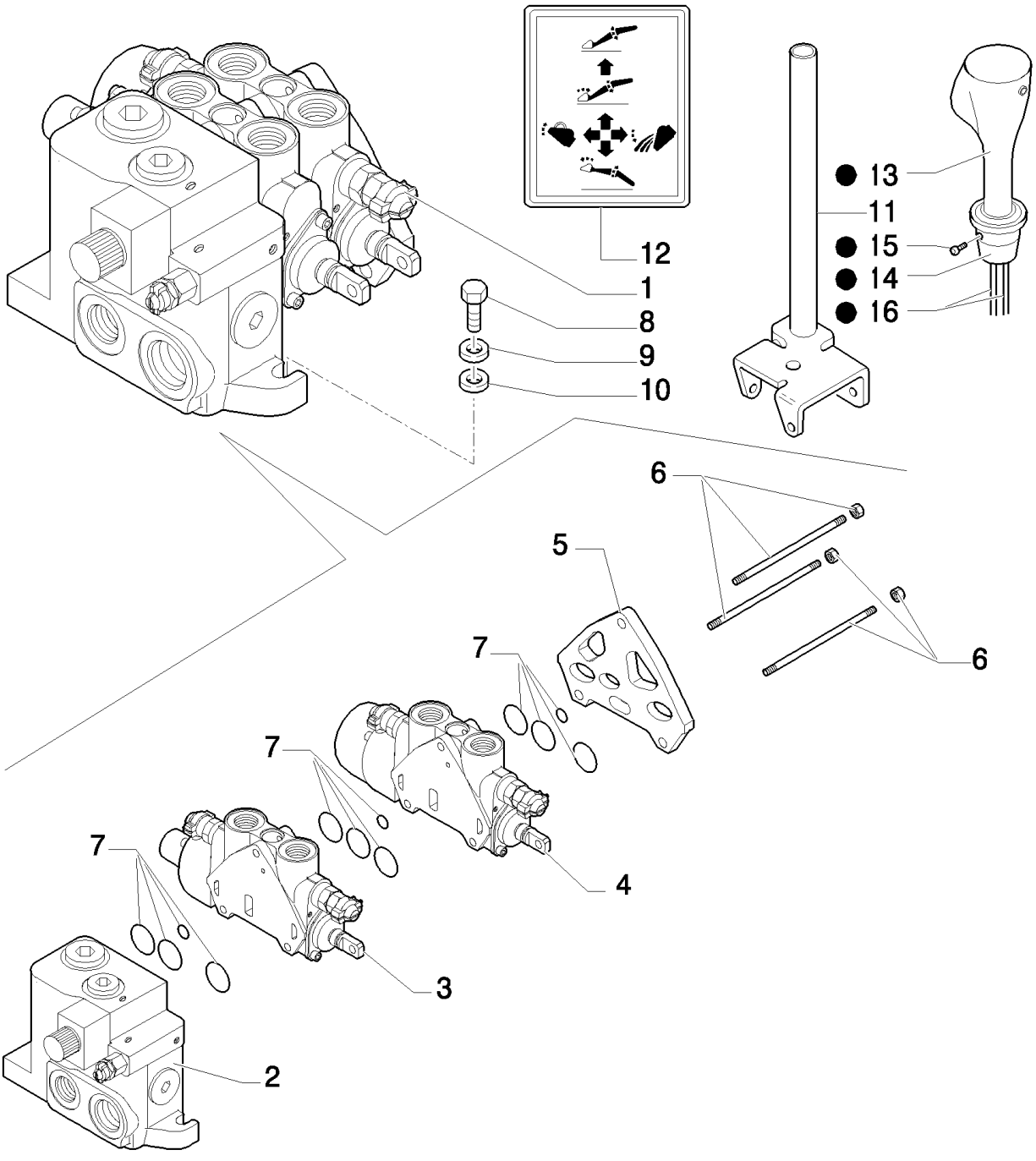

B95LR NA BACKHOE LOADER (1/06-)

302(01) TWO-SECTION CONTROL VALVE FOR LOADER

Ref	Numero de Pieza	Ctd	Descripción
1	85825188	1	VALVE, CONTROL, ASSY
2	85825468	1	VALVE SECTION, HYD, ASSY, See Page 302 02
3	87558567	1	SECTOR, , LOADER, See Page 302 03
4	85825469	1	VALVE SECTION, HYD, , Bucket, See Page 302 04
5	85826924	1	SECTOR, TOOTHED, ASSY
6	85825475	1	TIE-ROD, THREADED, TIE RODS
7	85825473	3	KIT, SEALS, Seal
8	11234721	3	BOLT, Hex, M10 x 1.25 x 45, 8.8,
9	13578621	3	WASHER, 10x30x2
10	11190679	3	WASHER, SPRING, Belleville, M10.5,
11	85805813	1	LEVER, , Only for LB90.B - LB95.B - LB110.B
11	87304793	1	LEVER, , Only for LB110.B - LB115.B
12	85804346	1	DECAL,
13	87304800	1	JOYSTICK, , Only for LB90.B - LB95.B - LB110.B
13	87304799	1	JOYSTICK, , Only for LB110.B - LB115.B
13	87311302	1	HANDLE GRIP, , Only for POWER SHIFT
13	87311306	1	HANDLE GRIP, , Only for POWER SHUTTLE
14	87311303	1	HUB,
15	13789621	2	SET SCREW, Hex Soc, M8 x 10, Flat Pt,
16	87311836	1	HARNESS, WIRE,
16	87311838	1	HARNESS, WIRE, Includes Switch
17	87304799	1	JOYSTICK,
17	87311102	1	JOYSTICK, , Only for POWER SHIFT
17	87311103	1	JOYSTICK, , Only for POWER SHUTTLE

302(02) TWO-SECTION CONTROL VALVE FOR LOADER

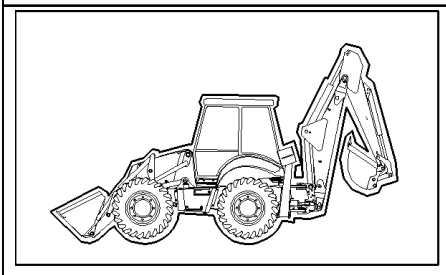

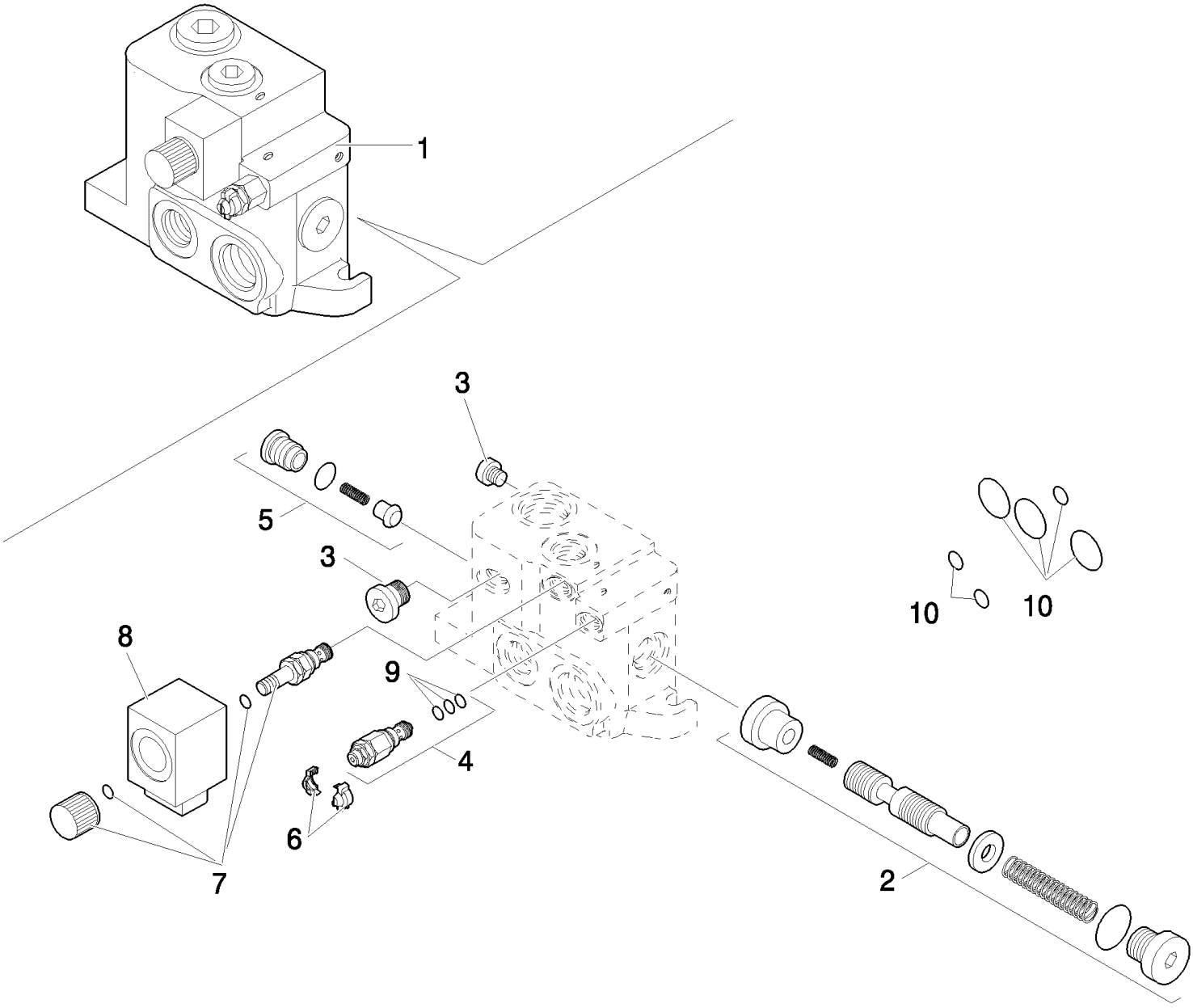

B95LR NA BACKHOE LOADER (1/06-)

302(02) TWO-SECTION CONTROL VALVE FOR LOADER

Ref	Numero de Pieza	Ctd	Descripción
1	85825468	1	VALVE SECTION, HYD, ASSY
2	85825472	1	KIT, Spool Assy
3	85811923	2	PLUG,
4	85811946	1	VALVE, PRESSURE RELIEF,
5	85811938	1	VALVE, CHECK, Valve
6	85811934	1	KIT, Cover
7	85811954	1	KIT, 1" 1/16-12 UNF 2A
8	87734721	1	SOLENOID, 9/16-18 UNF
9	85821236	1	KIT, SEALS, Seal, LS Pressure Relief
10	85819148	1	KIT, SEALS, Seal

302(03) TWO-SECTION CONTROL VALVE FOR LOADER

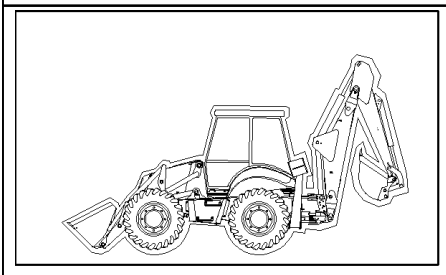

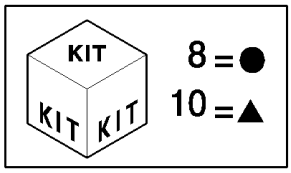

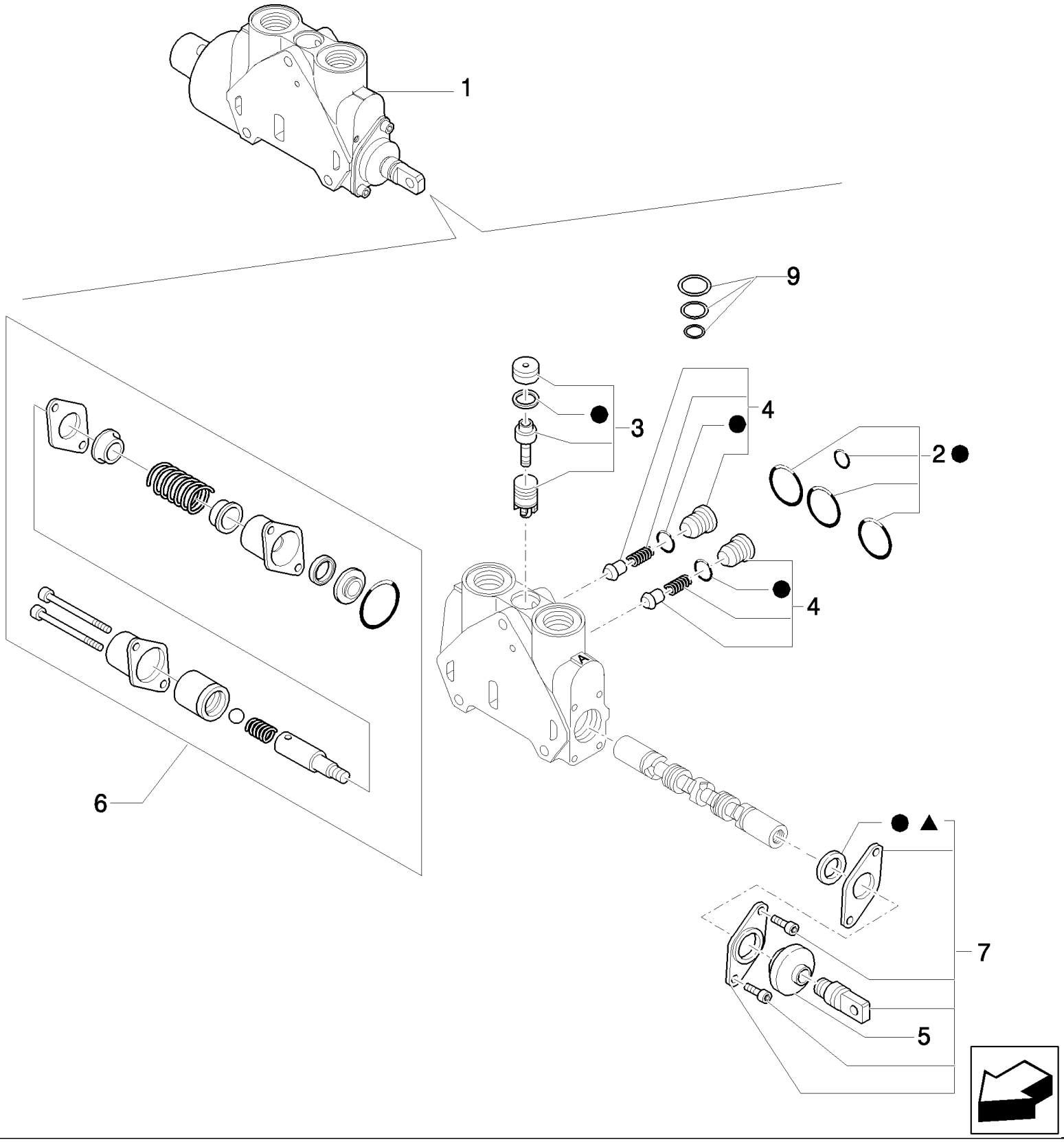

B95LR NA BACKHOE LOADER (1/06-)

302(03) TWO-SECTION CONTROL VALVE FOR LOADER

Ref	Numero de Pieza	Ctd	Descripción
1	87558567	1	SECTOR, ASSY
2	85819148	1	KIT, SEALS, Seals
3	85819378	1	KIT, SEALS, Valve
4	85811938	2	VALVE, CHECK, Valve
5	85820130	1	BOOT,
6	87558870	1	KIT, Cover Assy
7	87735363	1	KIT, REPAIR, Working Assy
8	85824282	1	KIT, Seals
9	85819040	1	KIT, SEALS, Compensator Seal
10	85824283	1	KIT, SEALS, Spool Seal

302(04) TWO-SECTION CONTROL VALVE FOR LOADER

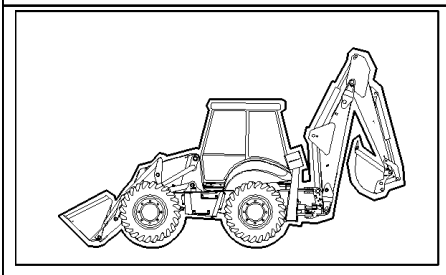

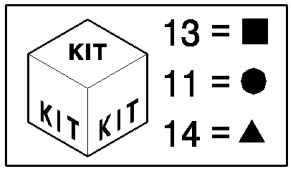

B95LR NA BACKHOE LOADER (1/06-)

302(04) TWO-SECTION CONTROL VALVE FOR LOADER

Ref	Numero de Pieza	Ctd	Descripción
1	85825469	1	VALVE SECTION, HYD, ASSY
2	85819148	1	KIT, SEALS, Seals
3	85819378	1	KIT, SEALS, Valve
4	85811938	2	VALVE, CHECK, Valve
5	85820130	1	BOOT,
6	85825471	1	KIT, Cover Assy
7	87735363	1	KIT, REPAIR, Working Assy
8	85812116	1	VALVE, PRESSURE RELIEF, , Includes 9, 10, 230 BAR
9	85811933	2	KIT, SEALS, Valve Seals
10	85811934	2	KIT, Cover
11	85824281	1	KIT, SEALS, Seals
12	85812113	1	VALVE, HYDRAULIC, , Includes 9, 10, 160 BAR
13	85819040	1	KIT, SEALS, Compensator Seal
14	85824283	1	KIT, SEALS, Spool Seal

321(01) DOUBLE BATTERY

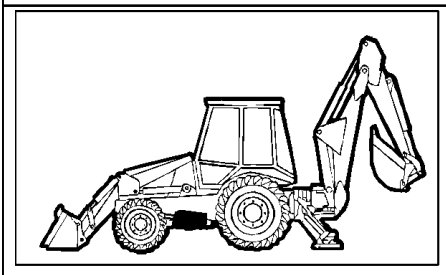

KIT KIT KIT 15 = ●

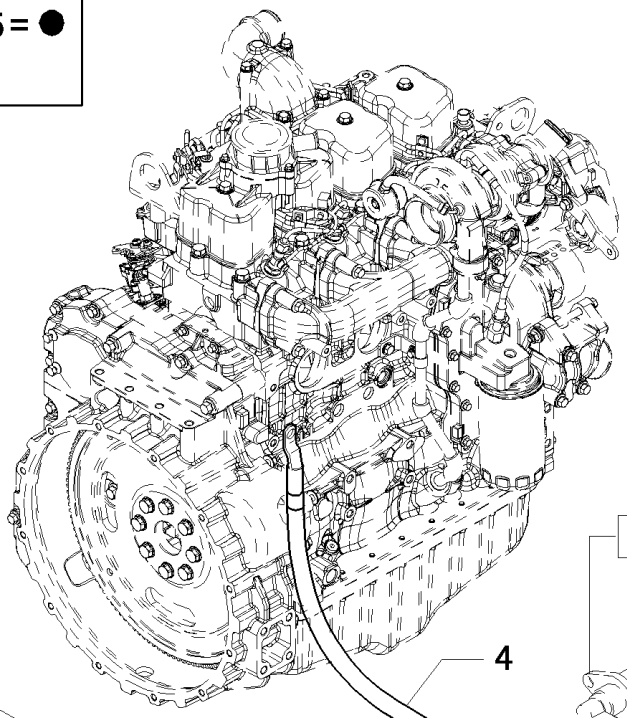

1.91.4

4

1.82.0

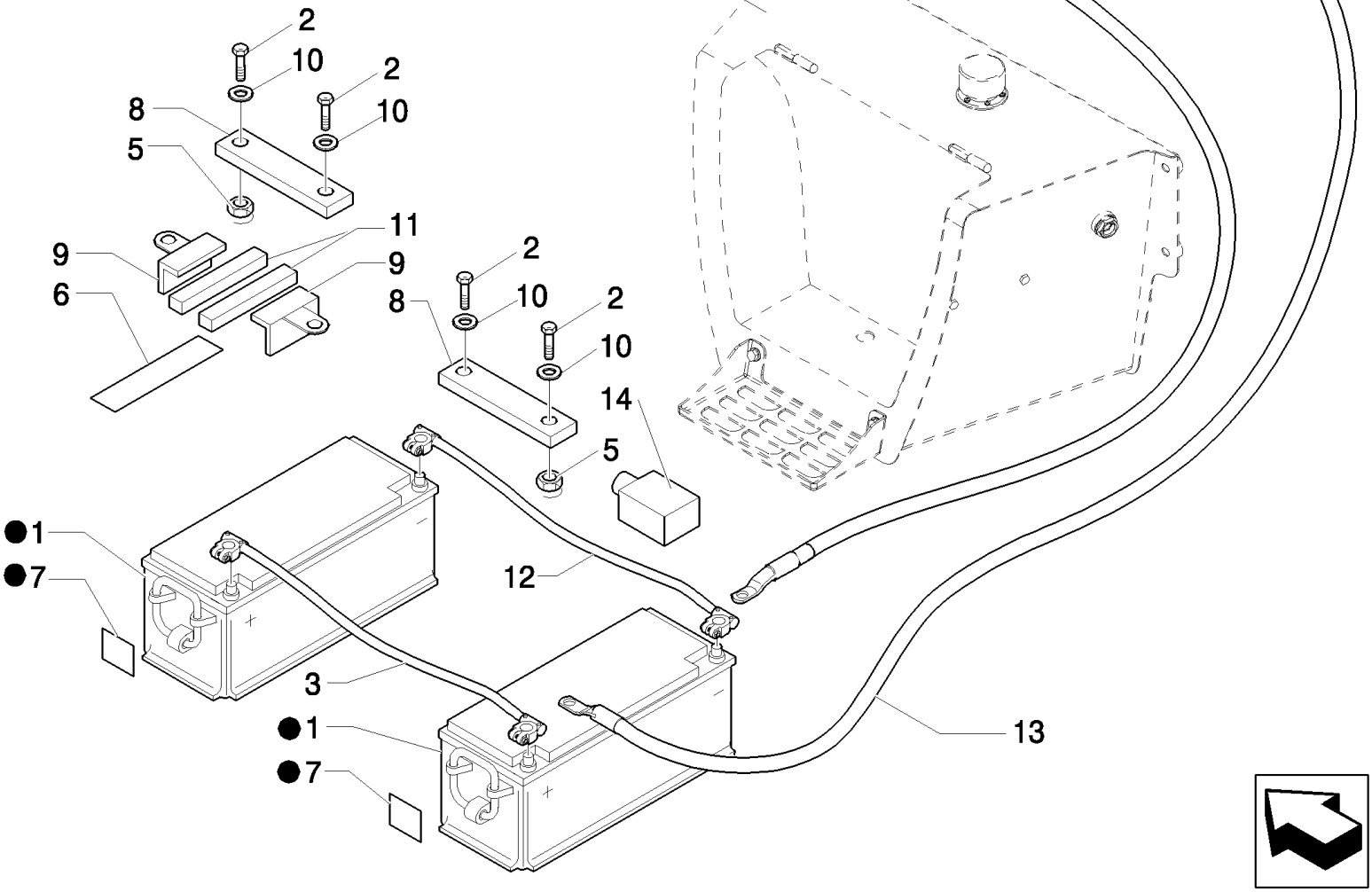

B95LR NA BACKHOE LOADER (1/06-)

321(01) DOUBLE BATTERY

Ref	Numero de Pieza	Ctd	Descripción
1	87422014	2	BATTERY, WET, U.S.
1	CF960DSW	2	Battery, Dry; Canada
2	412005	4	BOLT, Hex, M10 x 220, 8.8, M10x220
3	85827072	1	CABLE, ELECTRIC,
4	87568472	1	CABLE,
5	47049041	4	NUT, M10
6	47049590	AR	DECAL,
7	87404127	2	DECAL,
8	87415781	2	BRACKET,
9	47048788	4	ANGLE,
10	47048963	4	WASHER,
11	87303506	4	PLATE, RETAINING, , UP TO S/N 031056941
11	87529531	4	PLATE, RETAINING, , FROM S/N 031056942
12	85827416	1	CABLE, GROUND,
13	87427925	1	CABLE,
14	85826906	2	GUARD,
15	85826208	AR	BATTERY, WET,

B95LR NA BACKHOE LOADER (1/06-)

331(01) BACKHOE CONTROL VALVE, 6 SECTIONS (CENTER PIVOT) NORTH AMERICA

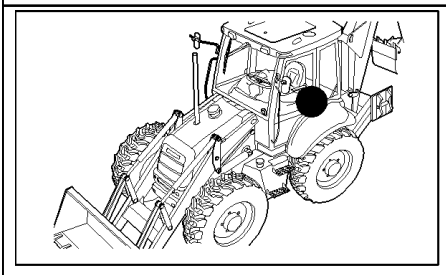

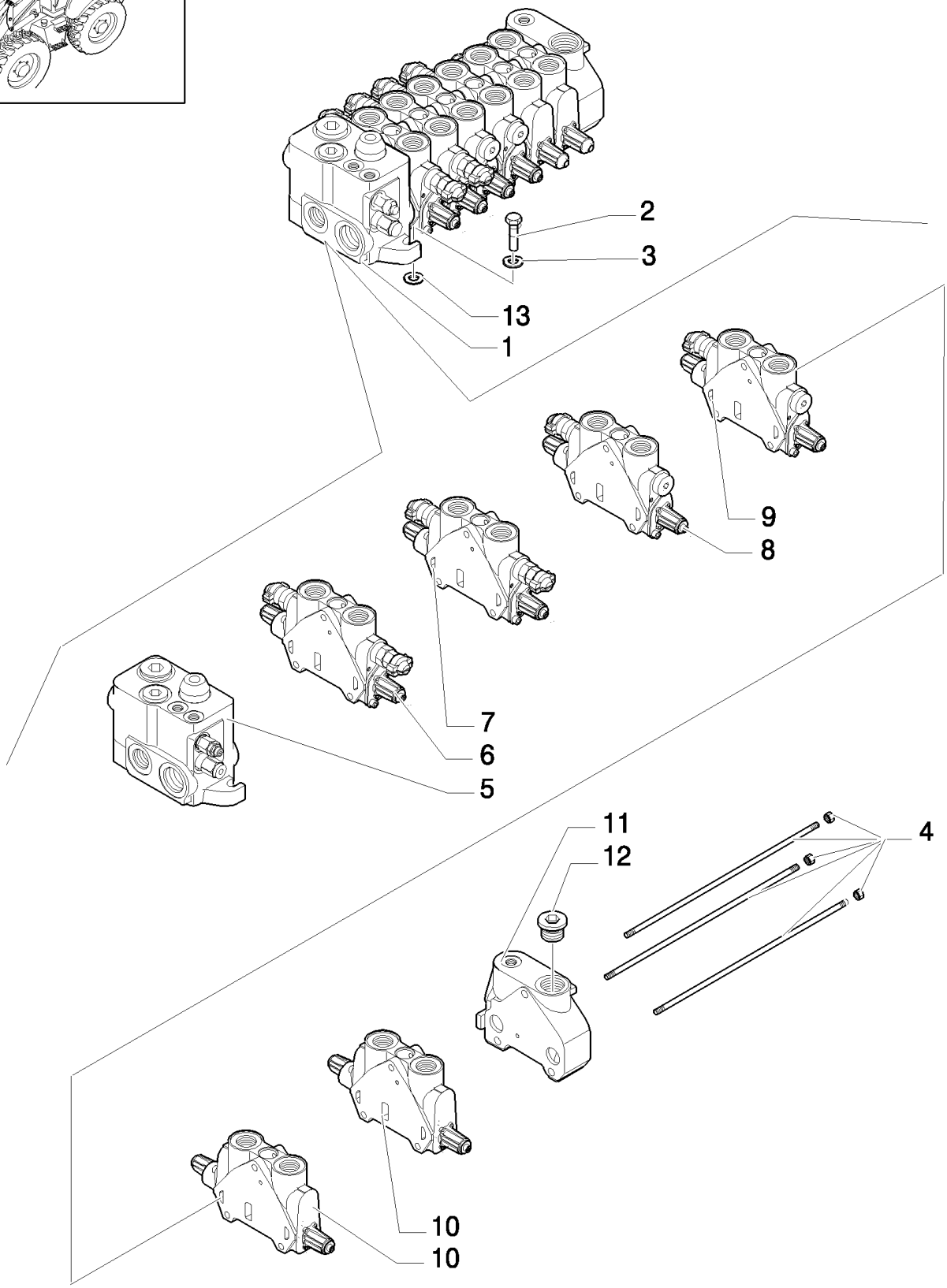

Pilot Control Version

B95LR NA BACKHOE LOADER (1/06-)

331(01) BACKHOE CONTROL VALVE, 6 SECTIONS (CENTER PIVOT) NORTH AMERICA

Ref	Numero de Pieza	Ctd	Descripción
1	87302745	1	VALVE, CONTROL,
2	11234721	3	BOLT, Hex, M10 x 1.25 x 45, 8.8,
3	11190679	3	WASHER, SPRING, Belleville, M10.5,
4	85811958	1	KIT,
5	87308747	1	VALVE SECTION, HYD, , See Page 331/1 02
6	85826901	1	VALVE SECTION, HYD, , Boom Cylinder, See Page 333/1 03
7	85826339	1	VALVE SECTION, HYD, , See Page 333/1 04, Swing Cylinder
8	85826903	1	SECTOR, TOOTHED, , Bucket Cylinder, See Page 333/1 05
9	85826902	1	VALVE SECTION, HYD, , See Page 333/1 06, Arm Cylinder
10	85826340	2	VALVE SECTION, HYD, , See Page 333/1 07, Stabilizer Cylinder
11	85826250	1	VALVE SECTION, HYD, , Includes 12
12	85811921	1	PLUG, 1-1/16"-12 UNF 2A
13	13578621	3	WASHER,

Pilot Control Version

331/ A(01) 6 SECTION PILOT CONTROL VALVE SUPPORT, COMPLETE

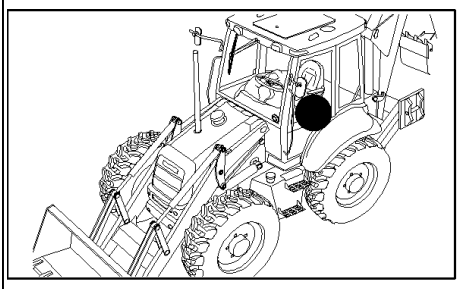

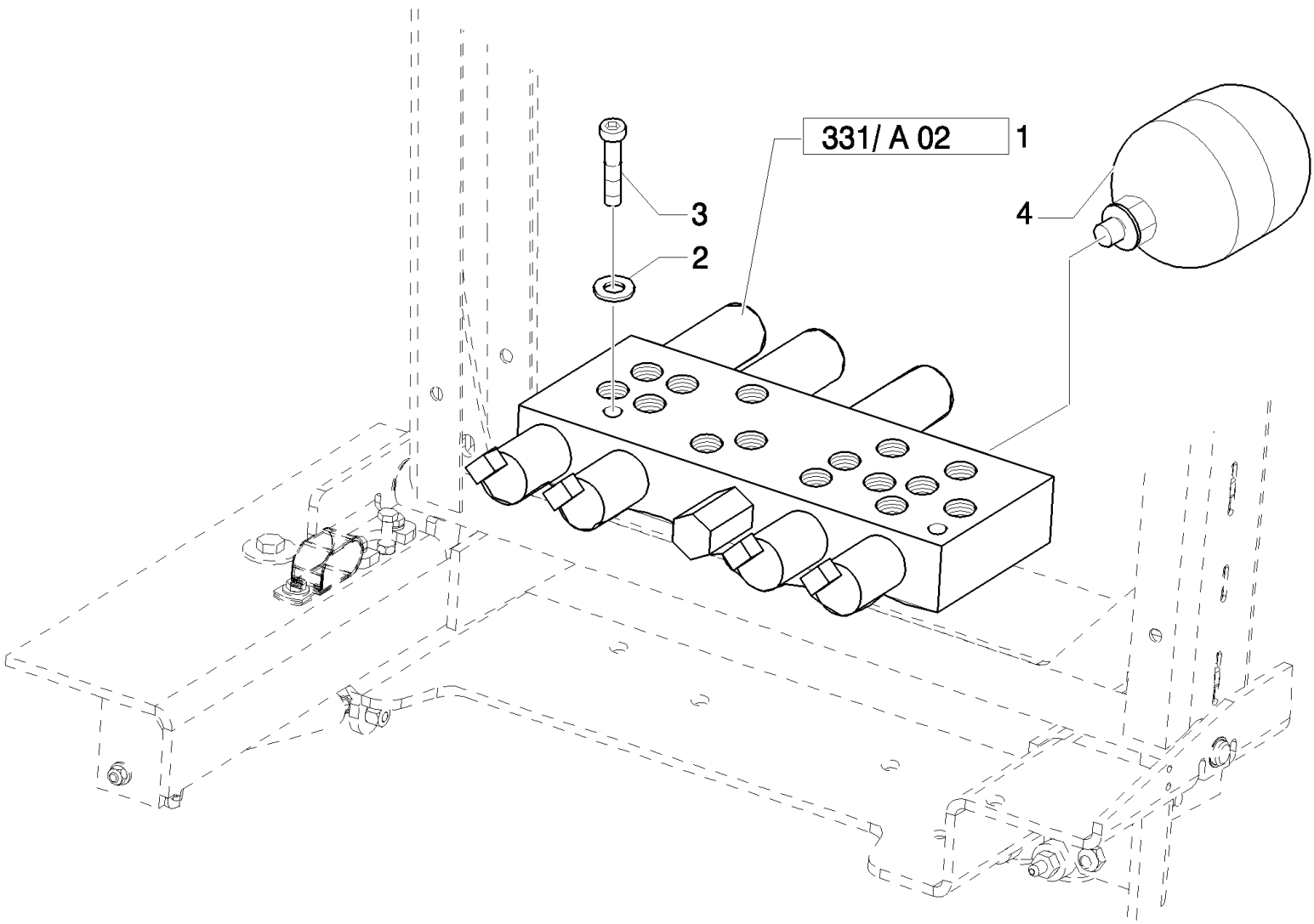

Pilot Control Version

B95LR NA BACKHOE LOADER (1/06-)

331/ A(01) 6 SECTION PILOT CONTROL VALVE SUPPORT, COMPLETE

Ref	Numero de Pieza	Ctd	Descripción
1	85827472	1	VALVE, HYDRAULIC,
2	47048961	2	WASHER,
3	47049078	2	SCREW, M6x60
4	87425225	1	ACCUMULATOR,

Pilot Control Version

331/ A(02) 2 SECTION PILOT CONTROL VALVE SUPPORT, COMPLETE

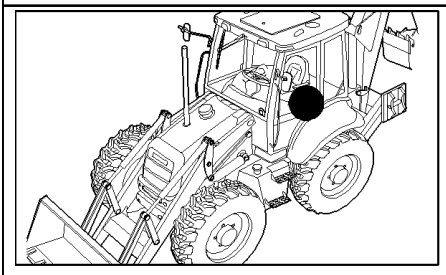

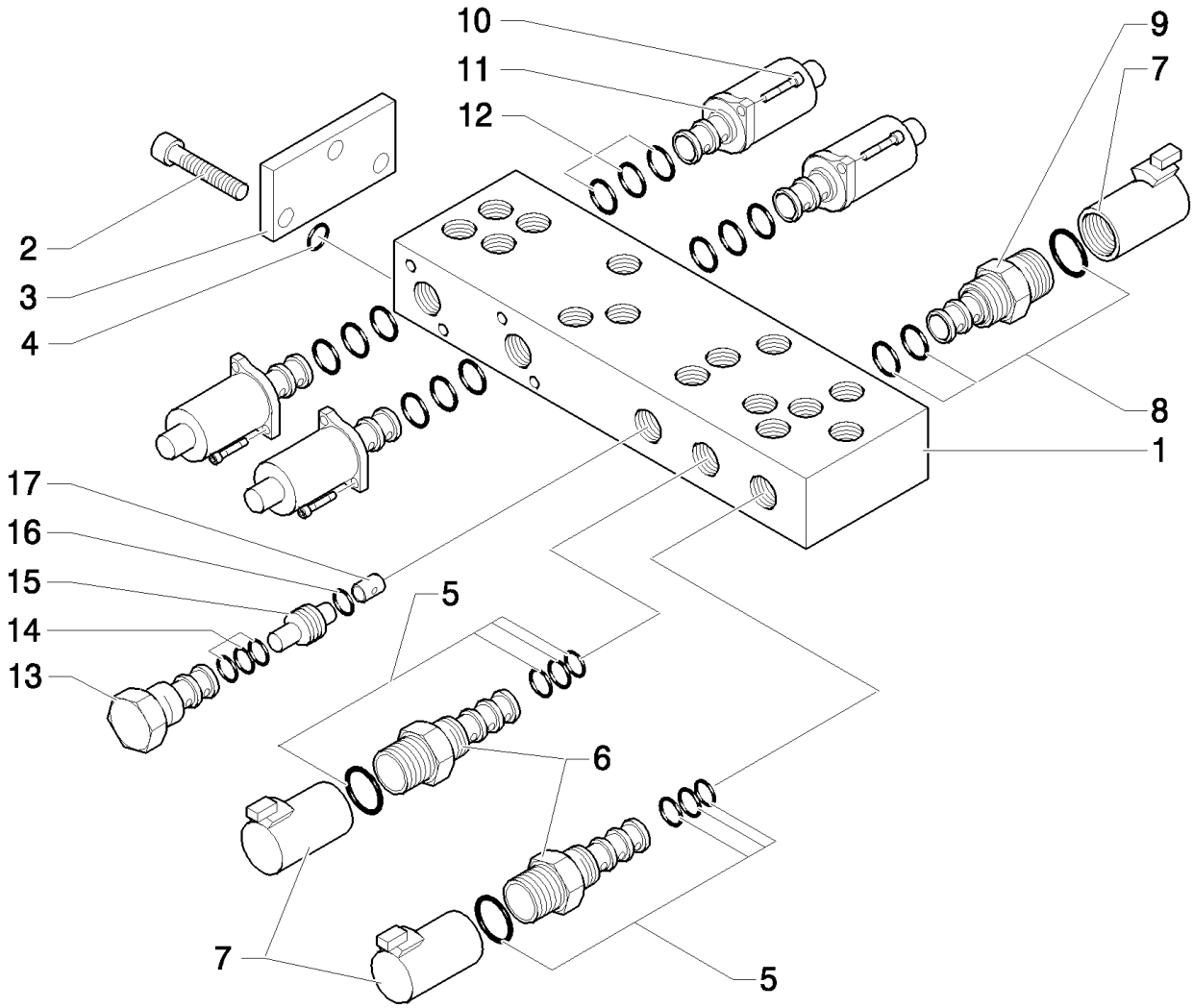

Pilot Control Version

B95LR NA BACKHOE LOADER (1/06-)

331/ A(02) 2 SECTION PILOT CONTROL VALVE SUPPORT, COMPLETE

Ref	Numero de Pieza	Ctd	Descripción
1	85828013	1	BODY,
2	14304021	3	SCREW, Hex Soc Hd, M5 x 10, 8.8,
3	85827991	1	PLATE,
4	85827999	1	KIT, SEALS,
5	85828002	2	KIT, SEALS,
6	85827996	2	VALVE, SOLENOID, , Includes 5, 7
7	85827995	3	COIL,
8	85827998	1	KIT, SEALS,
9	85827994	1	VALVE, SOLENOID, , Includes 7, 8
10	14302921	8	BOLT, Hex, M4 x 10, 8.8, Full Thd,
11	85827993	4	SOLENOID,
12	85828000	4	KIT, SEALS,
13	85827997	1	VALVE, CARTRIDGE, HYDRAULIC PRESSURE REDUCING VALVE
14	85828001	1	KIT, SEALS,
15	85827992	1	VALVE, CHECK,
16	85828003	1	O-RING,
17	85828005	1	ORIFICE,

Pilot Control Version

B95LR NA BACKHOE LOADER (1/06-)

331/ B(01) PILOT CONTROL VALVE SUPPORT, COMPLETE

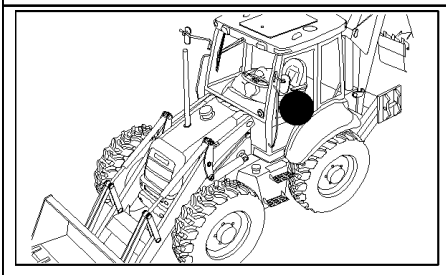

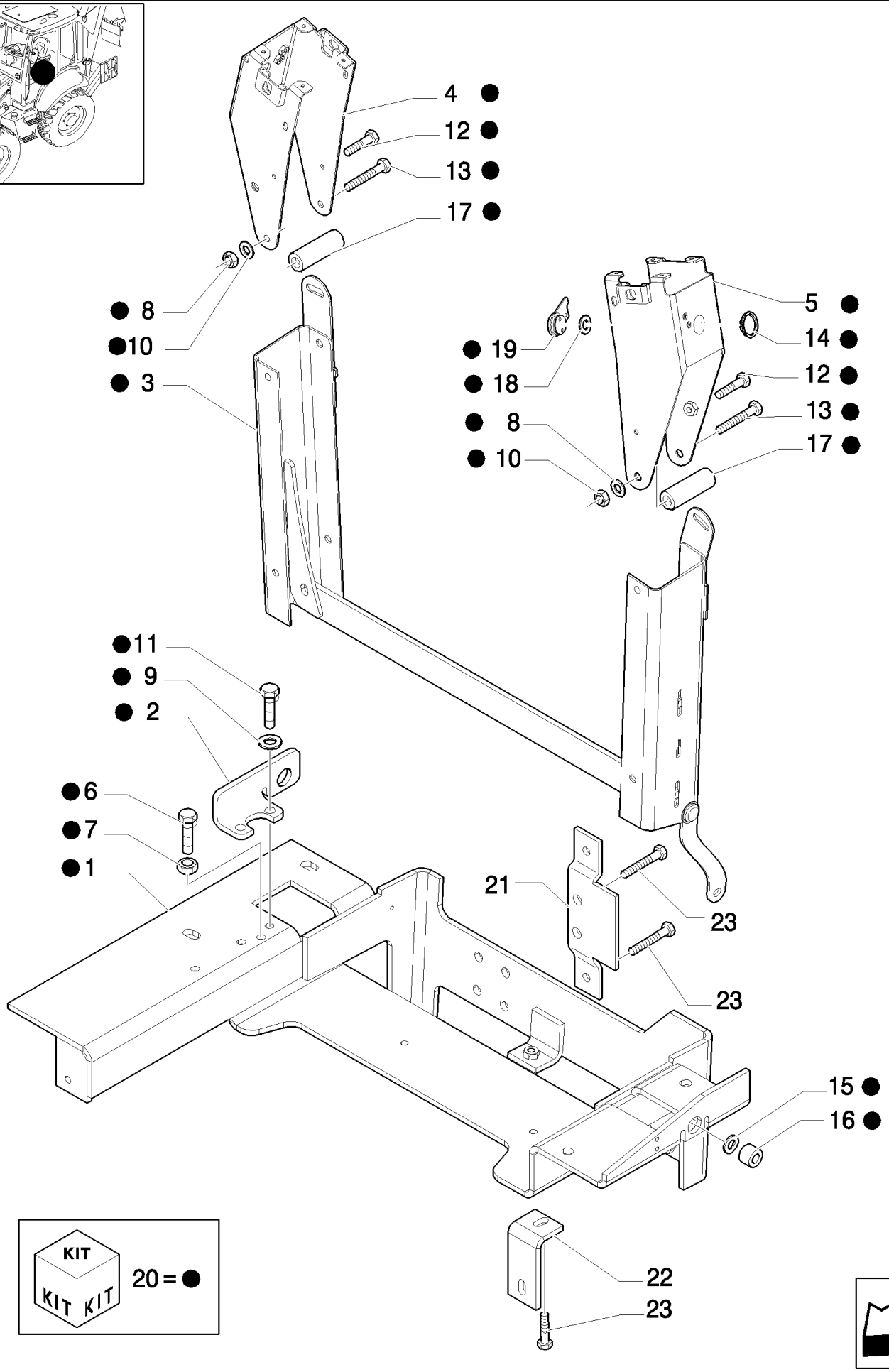

Pilot Control Version

B95LR NA BACKHOE LOADER (1/06-)

331/ B(01) PILOT CONTROL VALVE SUPPORT, COMPLETE

Ref	Numero de Pieza	Ctd	Descripción
1	87434992	1	SUPPORT,
2	87427004	1	SUPPORT,
3	87453109	1	
4	87453116	1	SUPPORT,
5	87453117	1	SUPPORT,
6	15213721	1	BOLT, Hex, M8 x 60, 8.8, Full Thd,
7	16100811	1	NUT, M8, Cl 8,
8	47048969	6	WASHER, M11 x 24
9	47048992	2	WASHER, M8
10	47049041	2	NUT, M10
11	47049082	2	BOLT, M8 x 35
12	47049184	2	SCREW, M8 x 20
13	84058418	2	BOLT, Hex, M10 x 125, 8.8,
14	85824053	1	O-RING,
15	85824054	4	WASHER,
16	85824059	2	BUSHING,
17	87453110	2	SPACER,
18	87405706	1	WASHER,
19	87453118	1	LEVER,
20	NSS	1	NOT SERVICED SEPARATELY, , Includes 1 To 19
21	86990460	1	PLATE, MOUNTING,
22	87402306	1	BRACKET,
23	16040821	3	BOLT, Hex, M10 x 40, 8.8, Full Thd,

Pilot Control Version

B95LR NA BACKHOE LOADER (1/06-)

331/ C(01) 6 SECTION PILOT CONTROL VALVE SUPPORT, COMPLETE

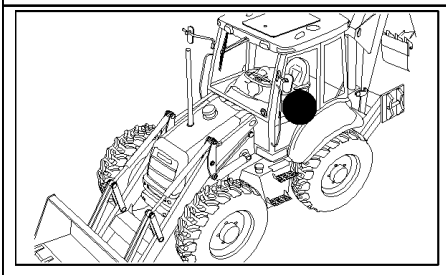

Pilot Control Version

B95LR NA BACKHOE LOADER (1/06-)

331/ C(01) 6 SECTION PILOT CONTROL VALVE SUPPORT, COMPLETE

Ref	Numero de Pieza	Ctd	Descripción
1	87309923	1	BOOT, , UP TO S/N 031056941
1	87449734	1	, FROM S/N 031056942
2	87309924	1	BOOT, , UP TO S/N 031056941
2	87449735	1	, FROM S/N 031056942
3	87437689	2	KNOB,
4	87437688	2	KNOB,
5	87437366	1	ARMREST,
6	87437369	1	ARMREST,
7	87423802	1	SWITCH,
8	87410105	1	SWITCH,
9	87435372	2	PLATE, RETAINING, , UP TO S/N 031056941
9	87410723	2	PLATE, RETAINING, , FROM S/N 031056942
10	10902834	8	SCREW,
11	87436396	1	GUARD, , UP TO S/N 031057640
11	87307656	1	GUARD, , FROM S/N 031057641
12	87388704	1	JOYSTICK, , See Page 333/C 07
13	47050686	7	CONNECTOR, HYD.,
14	87431301	1	SHIELD, , Only for Center Pivot
14	87427962	1	SHIELD, , Only for Side Shift
15	87016552	8	SCREW, SELF TAPPING, Hex Hd, M6.3 x 19,
16	87022296	8	SCREW, Cross Pan Hd, M3 x 8,
17	87310085	2	SCREW, SELF TAPPING,
18	10902321	3	BOLT, Hex, M6 x 18, 8.8, Full Thd,
19	87388706	1	JOYSTICK, , FROM TO S/N 031058208, See Page 331/C 08
20	87418368	1	ROD,
21	87418369	1	ROD,
22	87310098	4	BOLT, M6 x 20
23	87424301	1	SEAL, RUBBER,
24	87427991	1	SEAL, RUBBER,
25	87427989	1	SEAL, RUBBER,
26	87427993	1	SEAL, RUBBER,
27	87425696	2	SEAL, RUBBER,
28	87414205		DECAL,
29	87431300	1	GUARD, , Only for Center Pivot
29	87427963	1	PLATE, , Only for Side Shift
30	85803312	21	CONNECTOR, HYD.,
31	87306512	2	GASKET,
32	87310186	2	WASHER,
33	87423812	1	DECAL,
34	87310085	2	SCREW, SELF TAPPING,
35	87452511	2	NUT,
36	87423401	1	FITTING,
37	11197779	8	WASHER, SPRING, Belleville, M6.4,

Pilot Control Version

331/ C(02) 6 SECTION PILOT CONTROL VALVE SUPPORT, COMPLETE

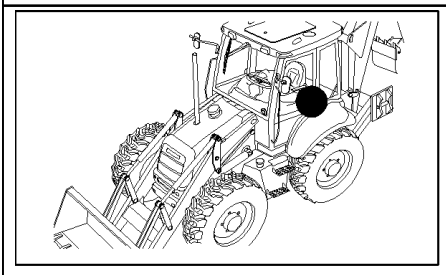

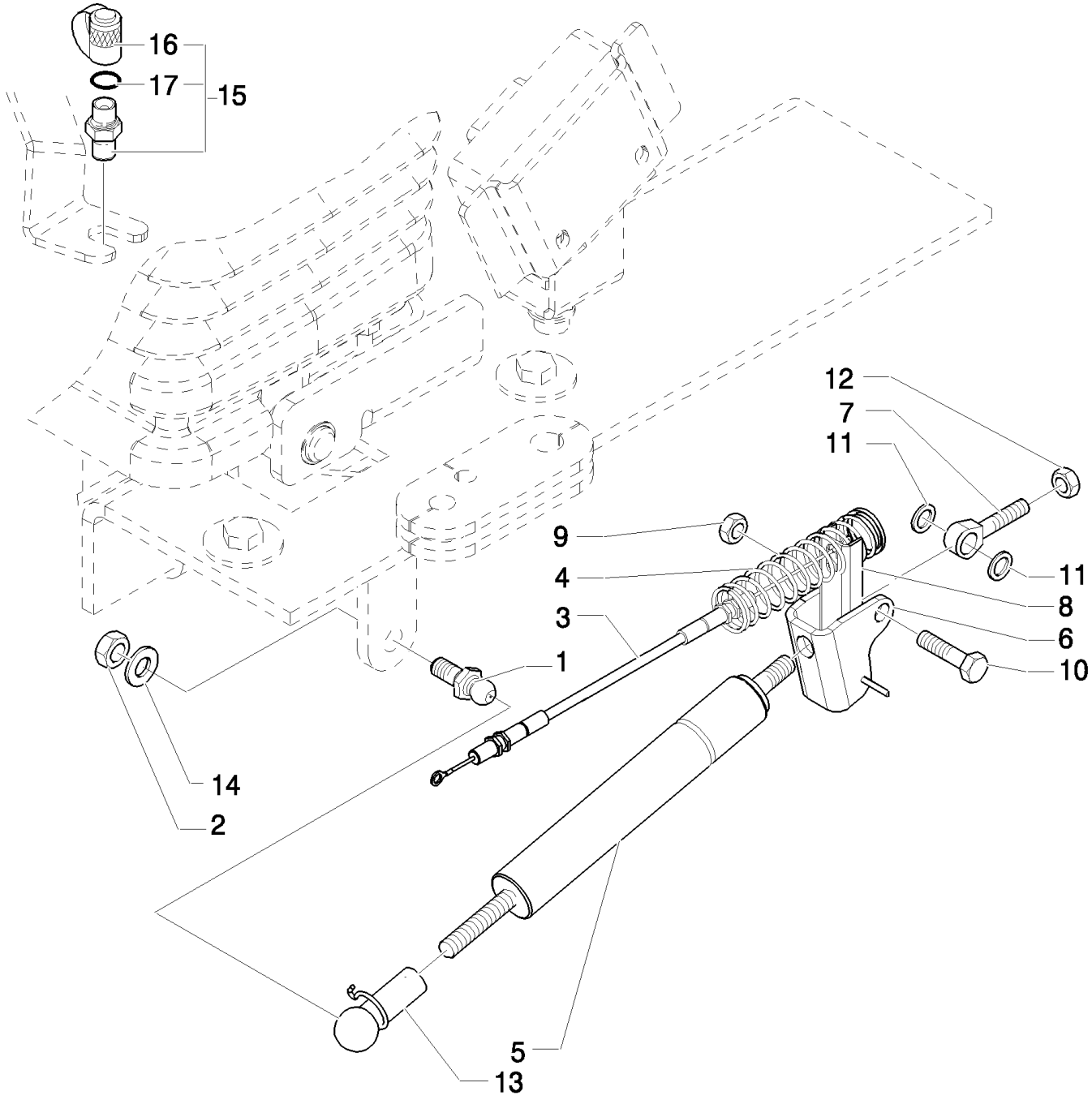

Pilot Control Version

B95LR NA BACKHOE LOADER (1/06-)

331/ C(02) 6 SECTION PILOT CONTROL VALVE SUPPORT, COMPLETE

Ref	Numero de Pieza	Ctd	Descripción
1	85824067	1	PIN, BALL,
2	47049041	1	NUT, M10
3	87430028	1	CABLE,
4	87443692	1	SPRING,
5	86989616	1	GAS STRUT,
6	85824080	1	BRACKET,
7	85821514	2	PIN,
7	85824081	1	BALL JOINT,
8	86984549	1	CHANNEL,
9	85821516	1	NUT,
10	85821515	1	BOLT,
11	85821520	2	SPACER,
12	47049442	2	NUT,
13	86999310	1	CLIP,
14	47049404	1	WASHER,
15	85817226	1	COUPLING, QUICK, MALE, , Includes 16, 17
16	9968791	1	PLUG,
17	9993141	1	O-RING, -012, 90 Duro, .364" ID x .070" Thk,

Pilot Control Version

B95LR NA BACKHOE LOADER (1/06-)

331/ C(03) 6 SECTION PILOT CONTROL VALVE SUPPORT, COMPLETE

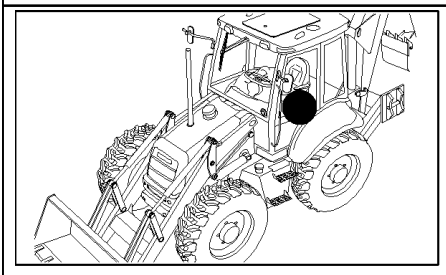

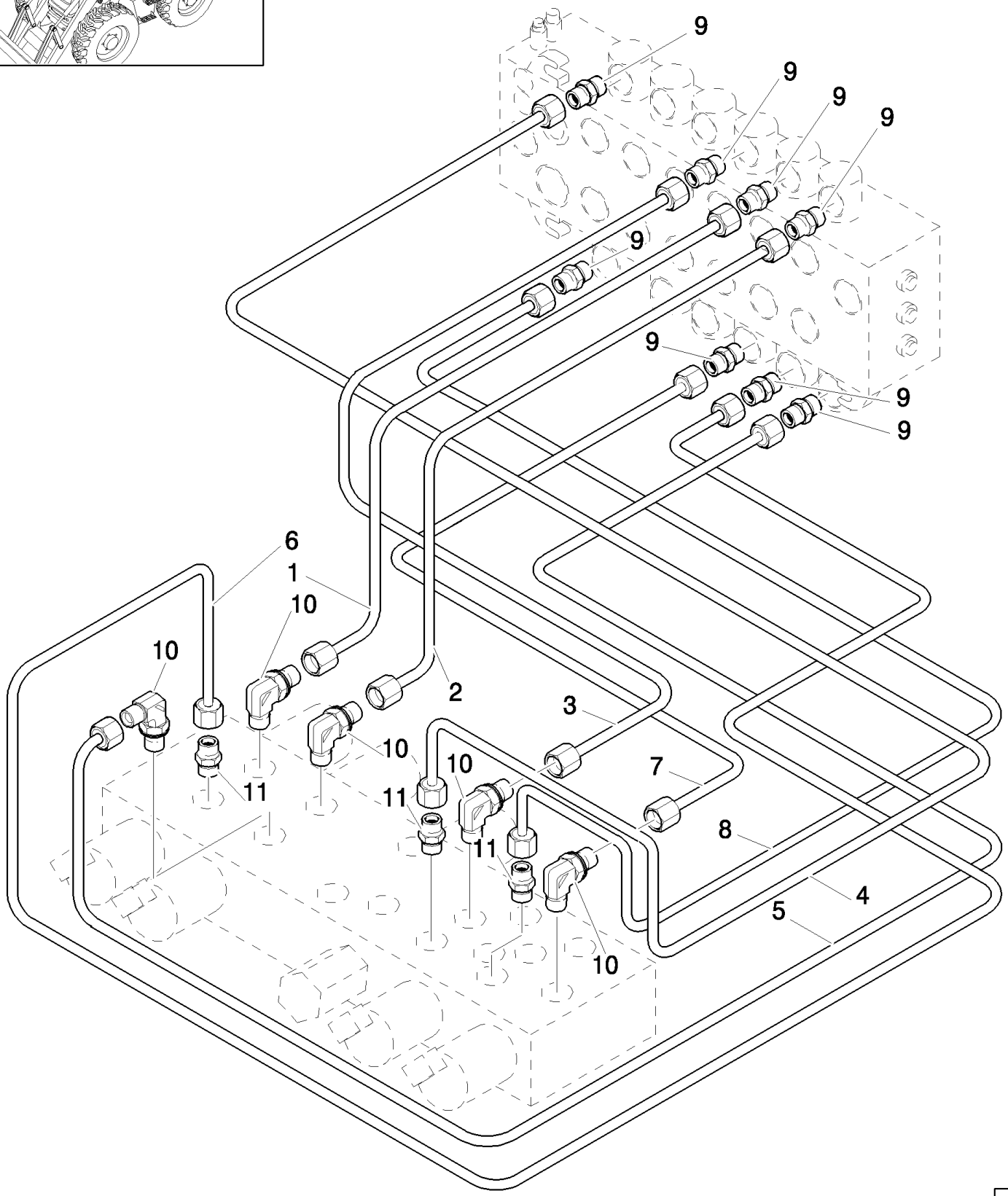

Pilot Control Version

B95LR NA BACKHOE LOADER (1/06-)

331/ C(03) 6 SECTION PILOT CONTROL VALVE SUPPORT, COMPLETE

Ref	Numero de Pieza	Ctd	Descripción
1	85827093	1	TUBE, HYD,
2	85827094	1	TUBE, HYD,
3	85827091	1	TUBE, HYD,
4	85827089	1	TUBE, HYD,
5	85827092	1	TUBE, HYD,
6	85827095	1	TUBE, HYD,
7	85827090	1	TUBE, HYD,
8	85827088	1	TUBE, HYD,
9	85803312	8	CONNECTOR, HYD.,
10	47050653	5	ELBOW,
11	47050685	3	CONNECTOR, HYD.,

Pilot Control Version

331/ C(04) 6 SECTION PILOT CONTROL VALVE SUPPORT, COMPLETE

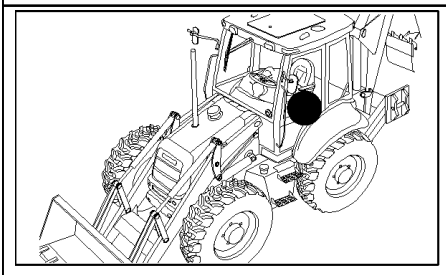

Pilot Control Version

B95LR NA BACKHOE LOADER (1/06-)

331/ C(04) 6 SECTION PILOT CONTROL VALVE SUPPORT, COMPLETE

Ref	Numero de Pieza	Ctd	Descripción
1	85827084	1	HOSE, FLEXIBLE,
2	85827085	1	HOSE, FLEXIBLE,
3	85827086	1	HOSE, FLEXIBLE,
4	85827077	1	HOSE, FLEXIBLE,
5	85827087	1	HOSE, FLEXIBLE,
6	85827082	2	HOSE, FLEXIBLE,
7	85827467	1	ELBOW,
8	85827466	2	TEE,
9	85827076	2	HOSE, FLEXIBLE,
10	85827080	2	HOSE, FLEXIBLE,
11	85827078	2	HOSE, FLEXIBLE,
12	47120173	2	TEE,
13	47050686	3	CONNECTOR, HYD.,
14	47050653	3	ELBOW,
15	85803312	3	CONNECTOR, HYD.,
16	87423401	1	FITTING,

Pilot Control Version

B95LR NA BACKHOE LOADER (1/06-)

331/ C(05) 6 SECTION PILOT CONTROL VALVE SUPPORT, COMPLETE

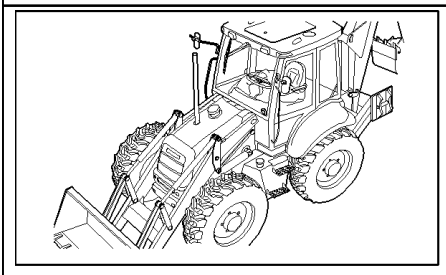

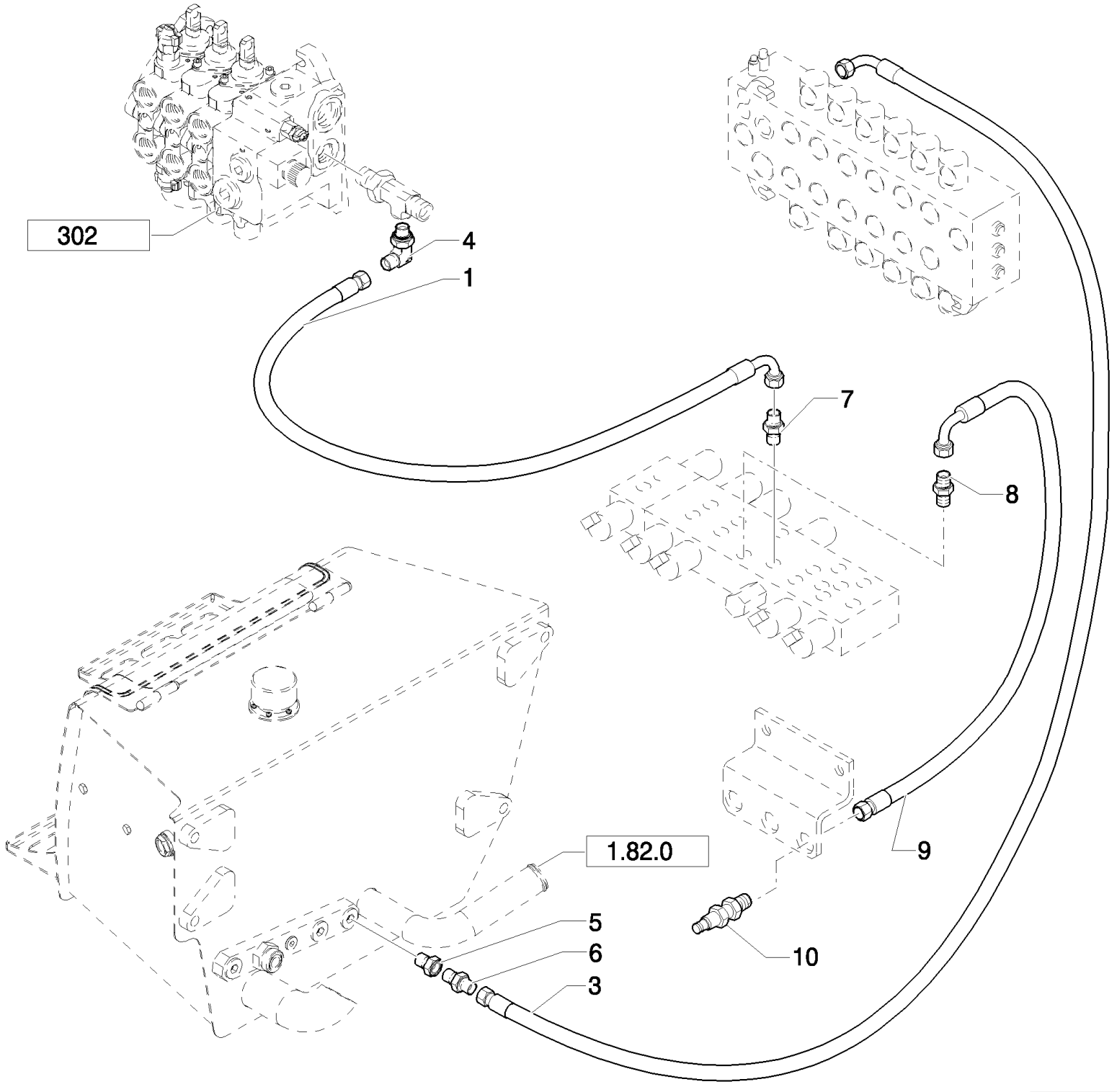

Pilot Control Version

B95LR NA BACKHOE LOADER (1/06-)

331/ C(05) 6 SECTION PILOT CONTROL VALVE SUPPORT, COMPLETE

Ref	Numero de Pieza	Ctd	Descripción
1	85827476	1	HOSE, FLEXIBLE,
3	85827475	1	HOSE, FLEXIBLE,
4	85805318	1	ELBOW, 90º, 9/16"-18, 37º x 9/16"-18, O-Ring,
5	85826100	1	REDUCER,
6	47050686	1	CONNECTOR, HYD.,
7	47050653	1	ELBOW,
8	83963371	1	CONNECTOR, HYD.,
9	85812173	1	HOSE, FLEXIBLE,
10	85817226	1	COUPLING, QUICK, MALE,

Pilot Control Version

331/ C(06) 6 SECTION PILOT CONTROL VALVE SUPPORT, COMPLETE (CENTER PIVOT)

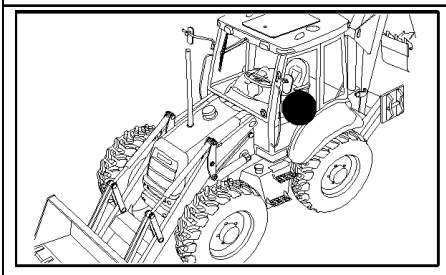

KIT KIT KIT 3 = ●

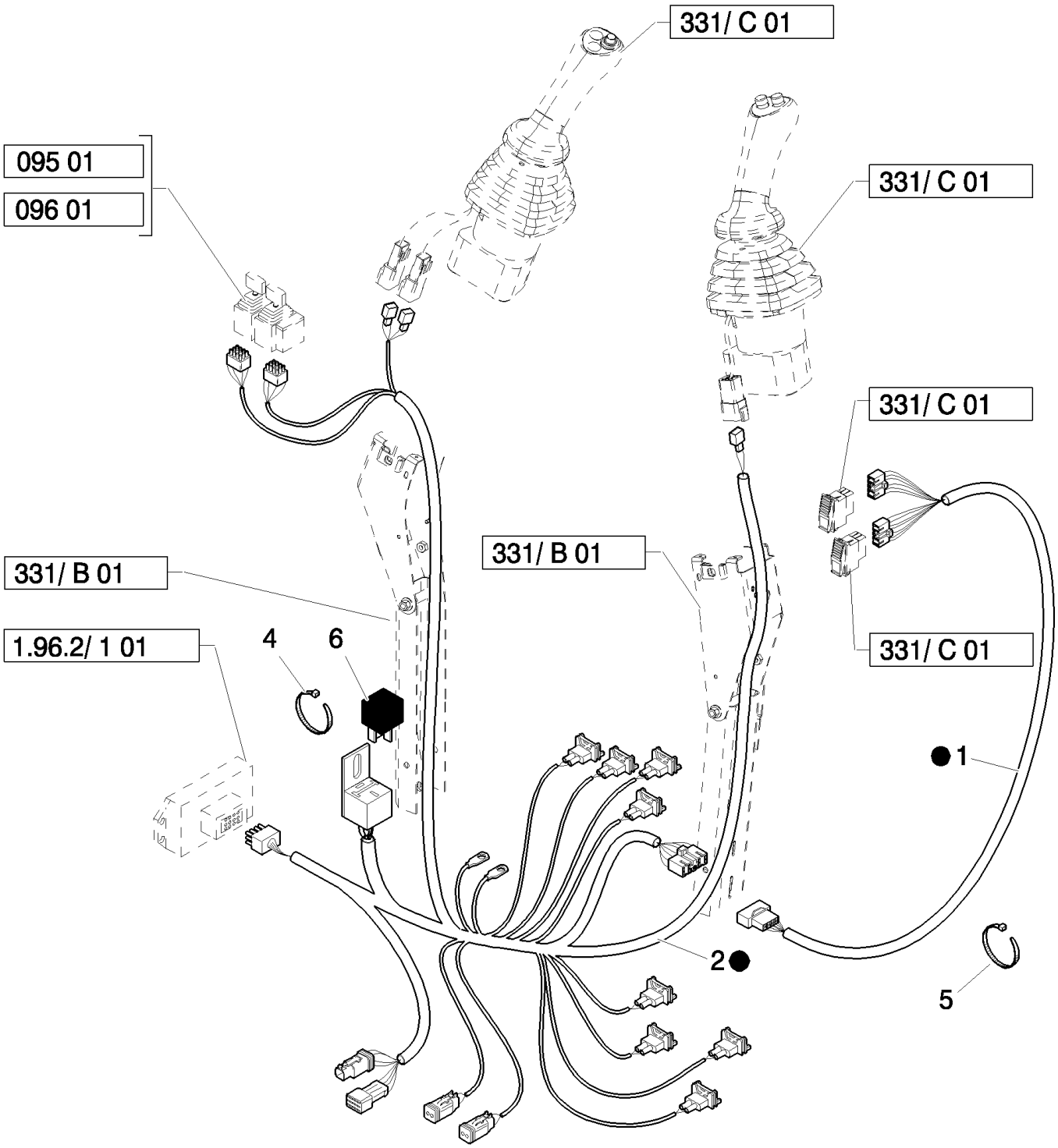

Pilot Control Version

B95LR NA BACKHOE LOADER (1/06-)

331/ C(06) 6 SECTION PILOT CONTROL VALVE SUPPORT, COMPLETE (CENTER PIVOT)

Ref	Numero de Pieza	Ctd	Descripción
1	85828216	1	HARNESS, WIRE,
2	87305611	1	HARNESS, WIRE,
3	87305604	1	HARNESS, WIRE, , Includes 1, 2, 6
4	14560187	6	STRAP, CABLE, 178mm lg, L=203.2 mm
5	386170C1	4	STRAP, CABLE, .30" x 27 1/2",
6	85821537	1	RELAY,

Pilot Control Version

B95LR NA BACKHOE LOADER (1/06-)

331/ C(07) VALVE, JOYSTICK PILOT CONTROLS (LEFT HAND)

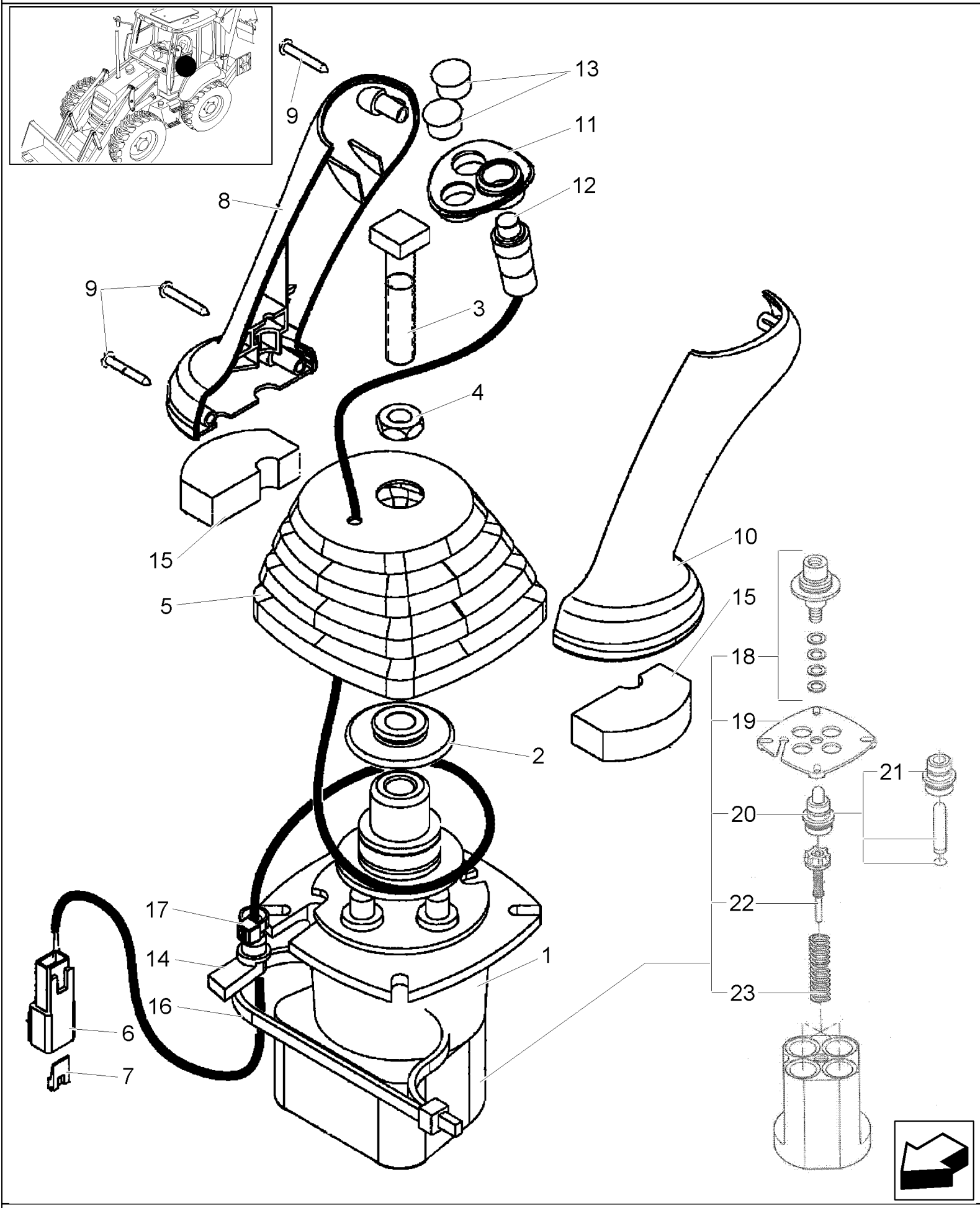

B95LR NA BACKHOE LOADER (1/06-)

331/ C(07) VALVE, JOYSTICK PILOT CONTROLS (LEFT HAND)

Ref	Numero de Pieza	Ctd	Descripción
	87388704	1	JOYSTICK, , Includes 1 To 23
1	87398960	1	VALVE, PILOT,
2	87436225	1	RETAINER,
3	87428023	1	BOLT,
4	87037944	1	NUT, Thin, M12 x 1.75, Cl 05,
5	87443721	1	BOOT,
6	225315C1	1	CONNECTOR, ELEC,
7	225318C1	1	WEDGE,
8	87308838	1	HANDLE GRIP,
9	15687475	3	SCREW, SELF TAPPING, Pan Hd, M3.5 x 25, Stainless,
10	87308839	1	HANDLE GRIP,
11	87435243	1	BEZEL,
12	87437372	1	SWITCH,
13	86625128	2	PLUG, Dome, .562" hole, Nylon,
14	87424267	1	GROMMET,
15	87435506	2	SEAL,
16	87438046	1	STRAP, CABLE,
17	87000312	1	STRAP, CABLE,
18	87586731	4	KIT,
19	87586758	1	PLATE, RETAINING,
20	87586760	4	PLUNGER,
21	87586764	1	PLUNGER,
22	87586772	4	REGULATOR,
23	87586773	1	KIT,

B95LR NA BACKHOE LOADER (1/06-)

331/ C(08) VALVE, JOYSTICK PILOT CONTROLS (RIGHT HAND) - STANDARD VERSION

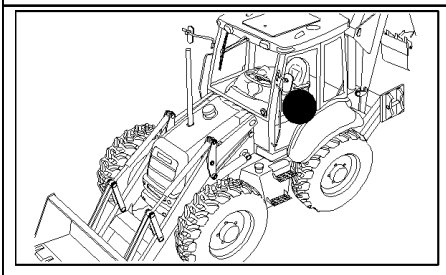

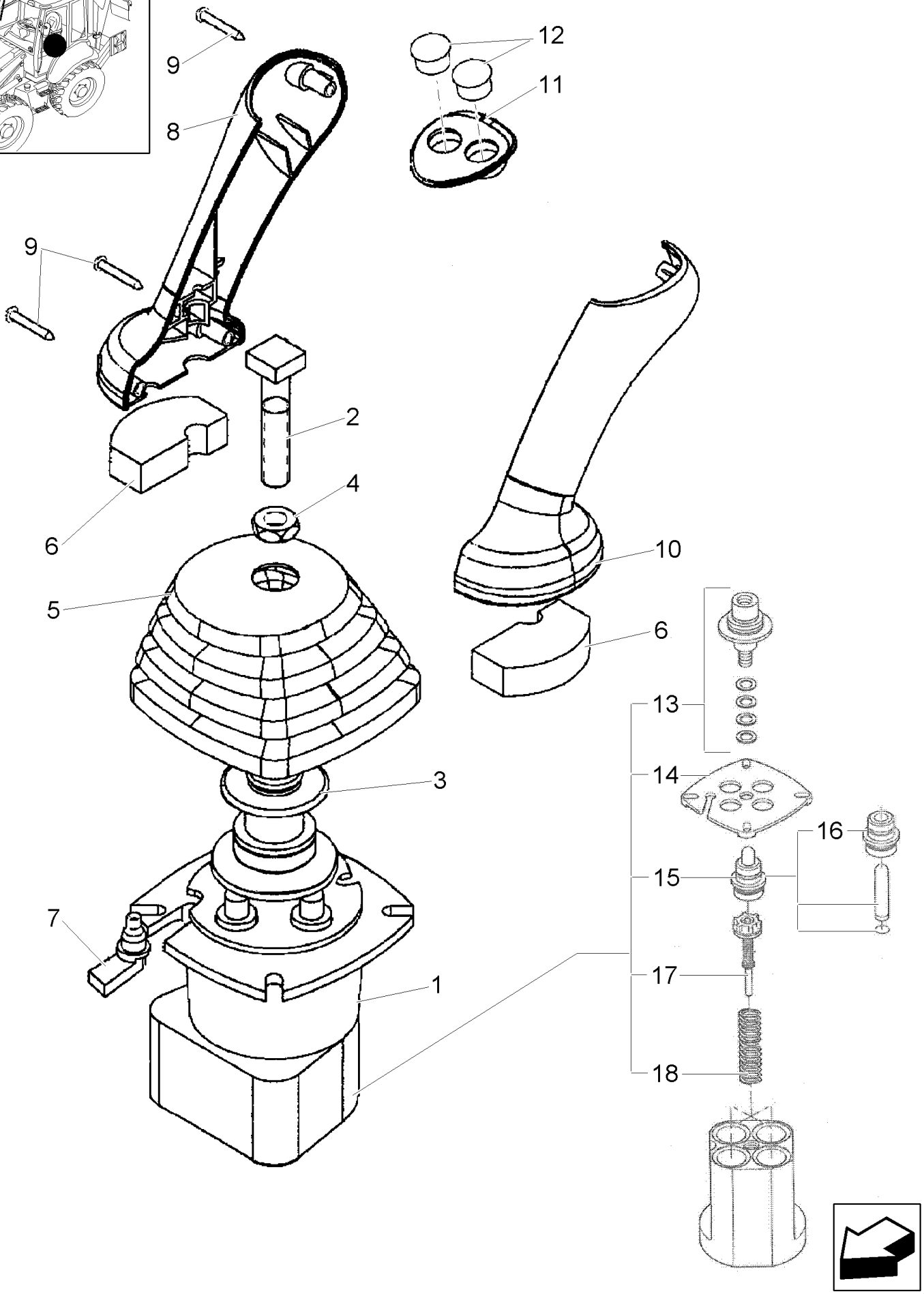

B95LR NA BACKHOE LOADER (1/06-)

331/ C(08) VALVE, JOYSTICK PILOT CONTROLS (RIGHT HAND) - STANDARD VERSION

Ref	Numero de Pieza	Ctd	Descripción
	87388706	1	JOYSTICK, , Includes 1 To 18
1	87398960	1	VALVE, PILOT,
2	87428023	1	BOLT,
3	87436225	1	RETAINER,
4	87037944	1	NUT, Thin, M12 x 1.75, Cl 05,
5	87443722	1	BOOT,
6	87435506	1	SEAL,
7	87451448	1	GROMMET,
8	87308838	1	HANDLE GRIP,
9	15687475	3	SCREW, SELF TAPPING, Pan Hd, M3.5 x 25, Stainless,
10	87308839	1	HANDLE GRIP,
11	87435242	1	BEZEL,
12	86625128	2	PLUG, Dome, .562" hole, Nylon,
12	87437371	2	SWITCH ASSY, Retract and Extend
13	87586731	4	KIT,
14	87586758	1	PLATE, RETAINING,
15	87586760	4	PLUNGER,
16	87586764	1	PLUNGER,
17	87586772	4	REGULATOR,
18	87586773	1	KIT,

B95LR NA BACKHOE LOADER (1/06-)

333/ A(01) 7 SECTION PILOT CONTROL VALVE SUPPORT, COMPLETE

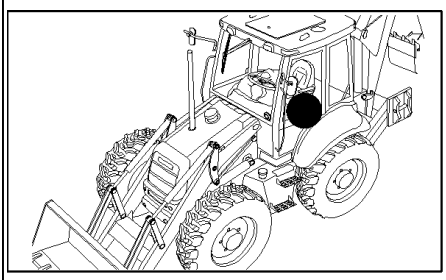

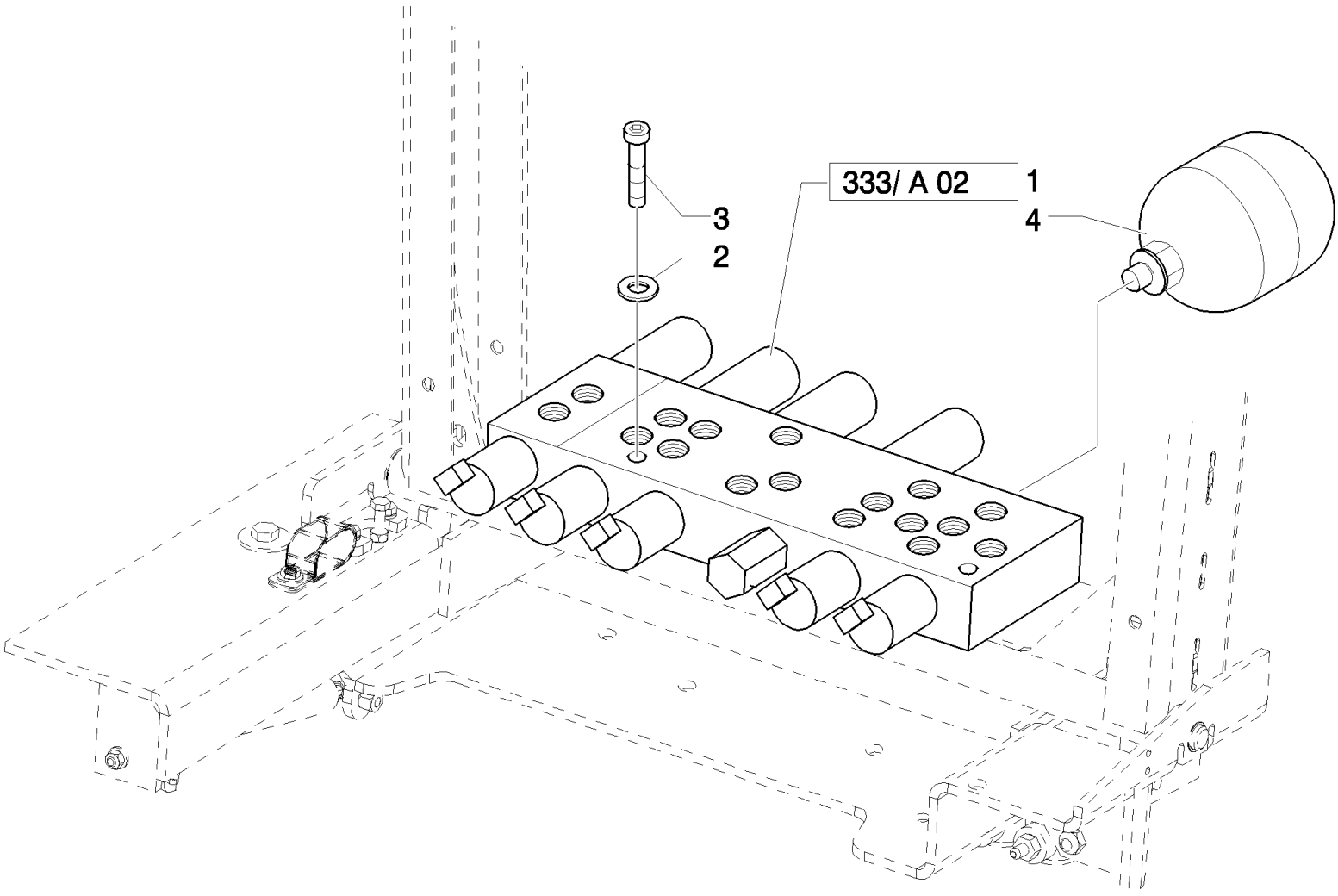

Pilot Control Version

B95LR NA BACKHOE LOADER (1/06-)

333/ A(01) 7 SECTION PILOT CONTROL VALVE SUPPORT, COMPLETE

Ref	Numero de Pieza	Ctd	Descripción
1	85827471	1	VALVE, HYDRAULIC,
2	47048961	2	WASHER,
3	47049078	2	SCREW, M6x60
4	87425225	1	ACCUMULATOR,

Pilot Control Version

333/ A(02) 7 SECTION PILOT CONTROL VALVE SUPPORT, COMPLETE

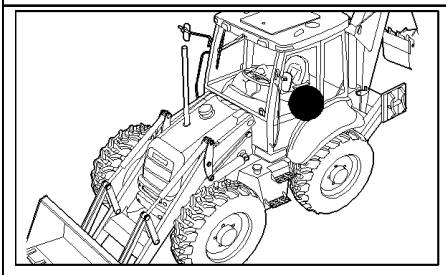

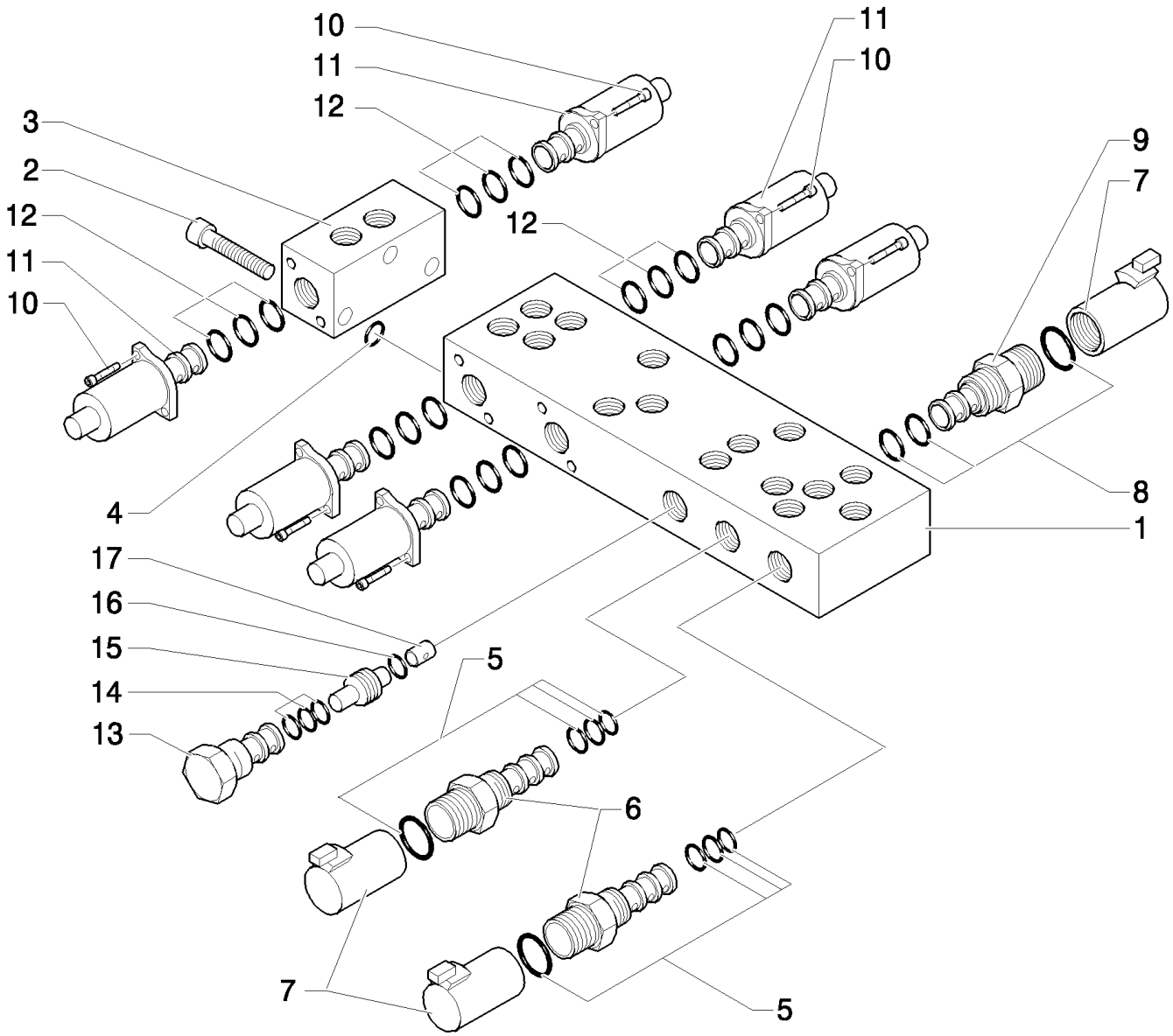

Pilot Control Version

B95LR NA BACKHOE LOADER (1/06-)

333/ A(02) 7 SECTION PILOT CONTROL VALVE SUPPORT, COMPLETE

Ref	Numero de Pieza	Ctd	Descripción
1	85828015	1	BODY,
2	14358921	3	SCREW, Hex Soc Hd, M5 x 45, 10.9,
3	85828004	1	BODY, M6x60
4	85827999	1	KIT, SEALS,
5	85828002	2	KIT, SEALS,
6	85827996	2	VALVE, SOLENOID, , Includes 5, 7
7	85827995	3	COIL,
8	85827998	1	KIT, SEALS,
9	85827994	1	VALVE, SOLENOID, , Includes 7, 8
10	14302921	12	BOLT, Hex, M4 x 10, 8.8, Full Thd,
11	85827993	6	SOLENOID,
12	85828000	6	KIT, SEALS,
13	85827997	1	VALVE, CARTRIDGE, HYDRAULIC PRESSURE REDUCING VALVE
14	85828001	1	KIT, SEALS,
15	85827992	1	VALVE, CHECK,
16	85828003	1	O-RING,
17	85828005	1	ORIFICE,

Pilot Control Version

333/ A(03) 7 SECTION PILOT CONTROL VALVE SUPPORT, COMPLETE

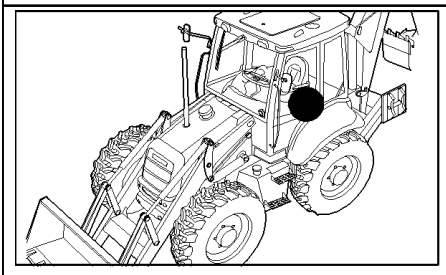

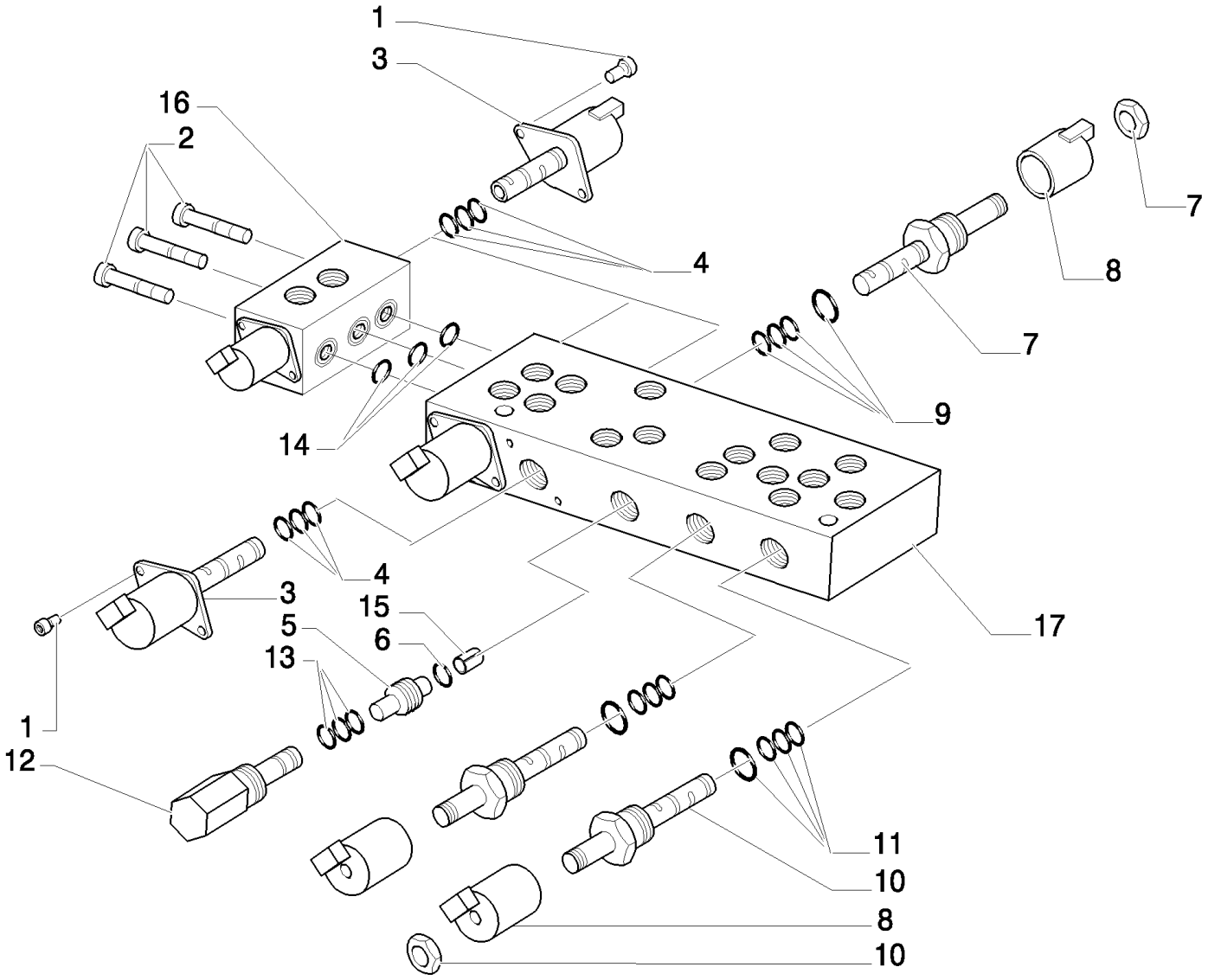

Pilot Control Version

B95LR NA BACKHOE LOADER (1/06-)

333/ A(03) 7 SECTION PILOT CONTROL VALVE SUPPORT, COMPLETE

Ref	Numero de Pieza	Ctd	Descripción
1	14302921	12	BOLT, Hex, M4 x 10, 8.8, Full Thd,
2	14358921	3	SCREW, Hex Soc Hd, M5 x 45, 10.9,
3	85827993	6	SOLENOID,
4	85828000	1	KIT, SEALS,
5	85827992	1	VALVE, CHECK,
6	85828003	1	O-RING,
7	85827994	1	VALVE, SOLENOID, , Includes 8, 9
8	85827995	3	COIL,
9	85827998	0	KIT, SEALS,
10	85827996	2	VALVE, SOLENOID, , Includes 8, 11
11	85828002	0	KIT, SEALS,
12	85827997	1	VALVE, CARTRIDGE, HYDRAULIC PRESSURE REDUCING VALVE
13	85828001	0	KIT, SEALS,
14	85827999	0	KIT, SEALS,
15	85828005	1	ORIFICE,
16	85828014		
17	85828013	1	BODY,

Pilot Control Version

333/ B(01) 7 SECTION PILOT CONTROL VALVE SUPPORT, COMPLETE

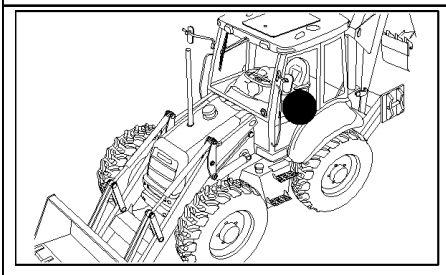

Pilot Control Version

B95LR NA BACKHOE LOADER (1/06-)

333/ B(01) 7 SECTION PILOT CONTROL VALVE SUPPORT, COMPLETE

Ref	Numero de Pieza	Ctd	Descripción
1	87309923	1	BOOT,
2	87309924	1	BOOT,
3	87437689	2	KNOB,
4	87437688	2	KNOB,
5	87437366	1	ARMREST,
6	87437369	1	ARMREST,
7	87423802	1	SWITCH,
8	87410105	1	SWITCH,
9	87435372	2	PLATE, RETAINING,
10	10902834	8	SCREW,
11	87436396	1	GUARD, , UP TO S/N 031057640
11	87307656	1	GUARD, , FROM S/N 031057641
12	87443740	1	JOYSTICK,
13	47050686	7	CONNECTOR, HYD.,
14	87431301	1	SHIELD,
15	87016552	8	SCREW, SELF TAPPING, Hex Hd, M6.3 x 19, M6x13
16	87022296	8	SCREW, Cross Pan Hd, M3 x 8,
17	87310085	2	SCREW, SELF TAPPING,
18	10902321	3	BOLT, Hex, M6 x 18, 8.8, Full Thd,
19	87443743	1	JOYSTICK, , See Page 331/C 08
20	87418368	1	ROD,
21	87418369	1	ROD,
22	87310098	4	BOLT, M6 x 20
23	87424301	1	SEAL, RUBBER,
24	87427991	1	SEAL, RUBBER,
25	87427989	1	SEAL, RUBBER,
26	87427993	1	SEAL, RUBBER,
27	87425696	2	SEAL, RUBBER,
28	87414205	1	DECAL,
29	87431300	1	GUARD,
30	85803312	21	CONNECTOR, HYD.,
31	87306512	2	GASKET,
32	87310186	2	WASHER,
33	87423812	1	DECAL,
34	87310085	2	SCREW, SELF TAPPING,
35	87452511	2	NUT,
36	87423401	1	FITTING,
37	11197779	8	WASHER, SPRING, Belleville, M6.4,

Pilot Control Version

333/ B(02) 7 SECTION PILOT CONTROL VALVE SUPPORT, COMPLETE (CENTER PIVOT) EUROPE

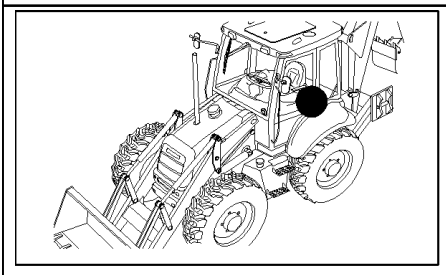

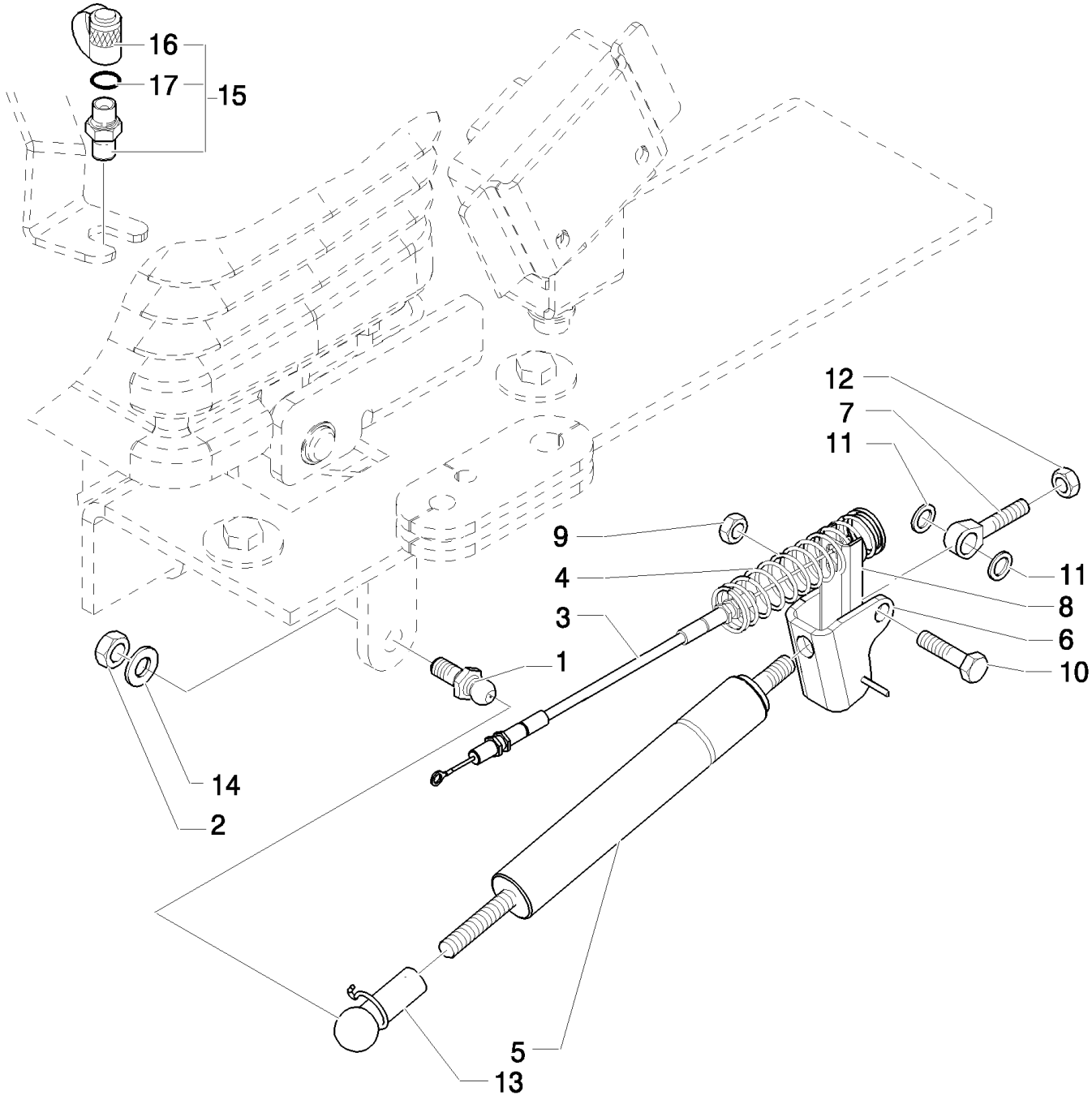

Pilot Control Version

B95LR NA BACKHOE LOADER (1/06-)

333/ B(02) 7 SECTION PILOT CONTROL VALVE SUPPORT, COMPLETE (CENTER PIVOT) EUROPE

Ref	Numero de Pieza	Ctd	Descripción
1	85824067	1	PIN, BALL,
2	47049041	1	NUT, M10
3	87430028	1	CABLE,
4	87443692	1	SPRING,
5	86989616	1	GAS STRUT,
6	85824080	1	BRACKET,
7	85821514	2	PIN,
7	85824081	1	BALL JOINT,
8	86984549	1	CHANNEL,
9	85821516	1	NUT,
10	85821515	1	BOLT,
11	85821520	2	SPACER,
12	47049442	2	NUT,
13	86999310	1	CLIP,
14	47049404	1	WASHER,
15	85817226	1	COUPLING, QUICK, MALE,
16	9968791	1	PLUG,
17	9993141	1	O-RING, -012, 90 Duro, .364" ID x .070" Thk,

Pilot Control Version

B95LR NA BACKHOE LOADER (1/06-)

333/ B(03) 7 SECTION PILOT CONTROL VALVE SUPPORT, COMPLETE

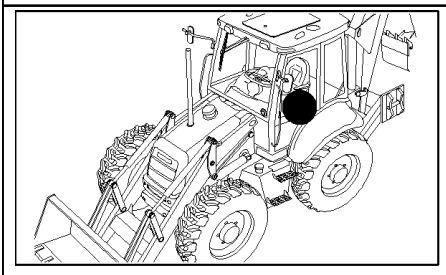

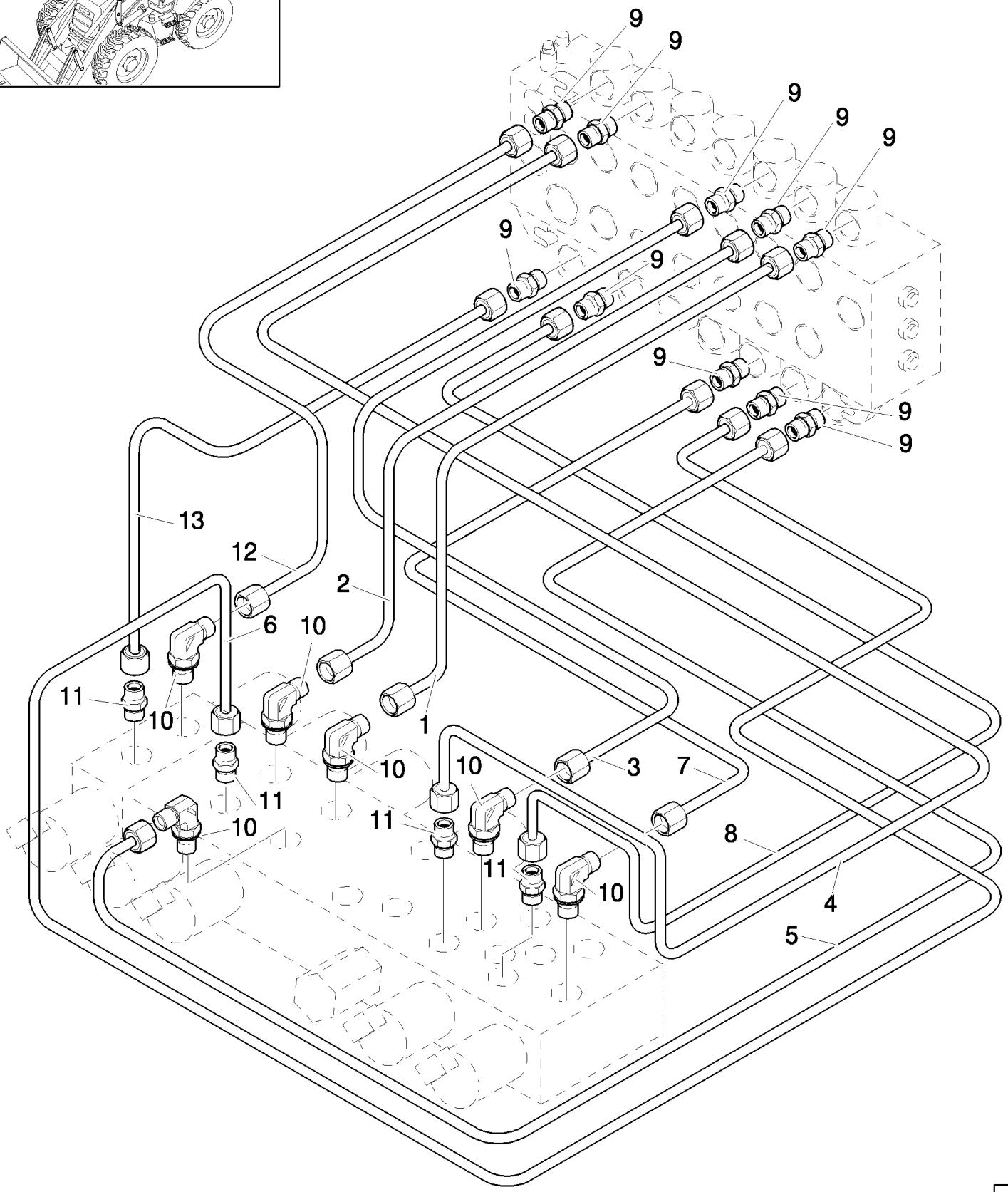

Pilot Control Version

B95LR NA BACKHOE LOADER (1/06-)

333/ B(03) 7 SECTION PILOT CONTROL VALVE SUPPORT, COMPLETE

Ref	Numero de Pieza	Ctd	Descripción
1	85827093	1	TUBE, HYD,
2	85827094	1	TUBE, HYD,
3	85827091	1	TUBE, HYD,
4	85827089	1	TUBE, HYD,
5	85827092	1	TUBE, HYD,
6	85827095	1	TUBE, HYD,
7	85827090	1	TUBE, HYD,
8	85827088	1	TUBE, HYD,
9	85803312	10	CONNECTOR, HYD.,
10	47050653	6	ELBOW,
11	47050685	4	CONNECTOR, HYD.,
12	85827097	1	TUBE, HYD,
13	87306186	1	TUBE, HYD,

Pilot Control Version

B95LR NA BACKHOE LOADER (1/06-)

333/ B(04) 7 SECTION PILOT CONTROL VALVE SUPPORT, COMPLETE

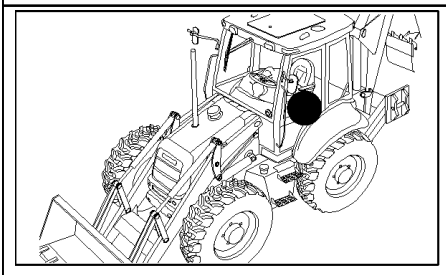

Pilot Control Version

B95LR NA BACKHOE LOADER (1/06-)

333/ B(04) 7 SECTION PILOT CONTROL VALVE SUPPORT, COMPLETE

Ref	Numero de Pieza	Ctd	Descripción
1	85827084	1	HOSE, FLEXIBLE,
2	85827085	1	HOSE, FLEXIBLE,
3	85827086	2	HOSE, FLEXIBLE,
4	85827077	1	HOSE, FLEXIBLE,
5	85827087	1	HOSE, FLEXIBLE,
6	85827082	2	HOSE, FLEXIBLE,
7	85827467	1	ELBOW,
8	85827466	2	TEE,
9	85827076	2	HOSE, FLEXIBLE,
10	85827080	2	HOSE, FLEXIBLE,
11	85827078	1	HOSE, FLEXIBLE,
12	47120173	2	TEE,
13	47050686	3	CONNECTOR, HYD.,
14	47050653	3	ELBOW,
15	85803312	3	CONNECTOR, HYD.,
16	87423401	1	FITTING,

Pilot Control Version

333/ B(05) 7 SECTION PILOT CONTROL VALVE SUPPORT, COMPLETE

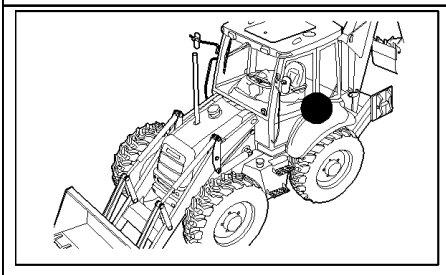

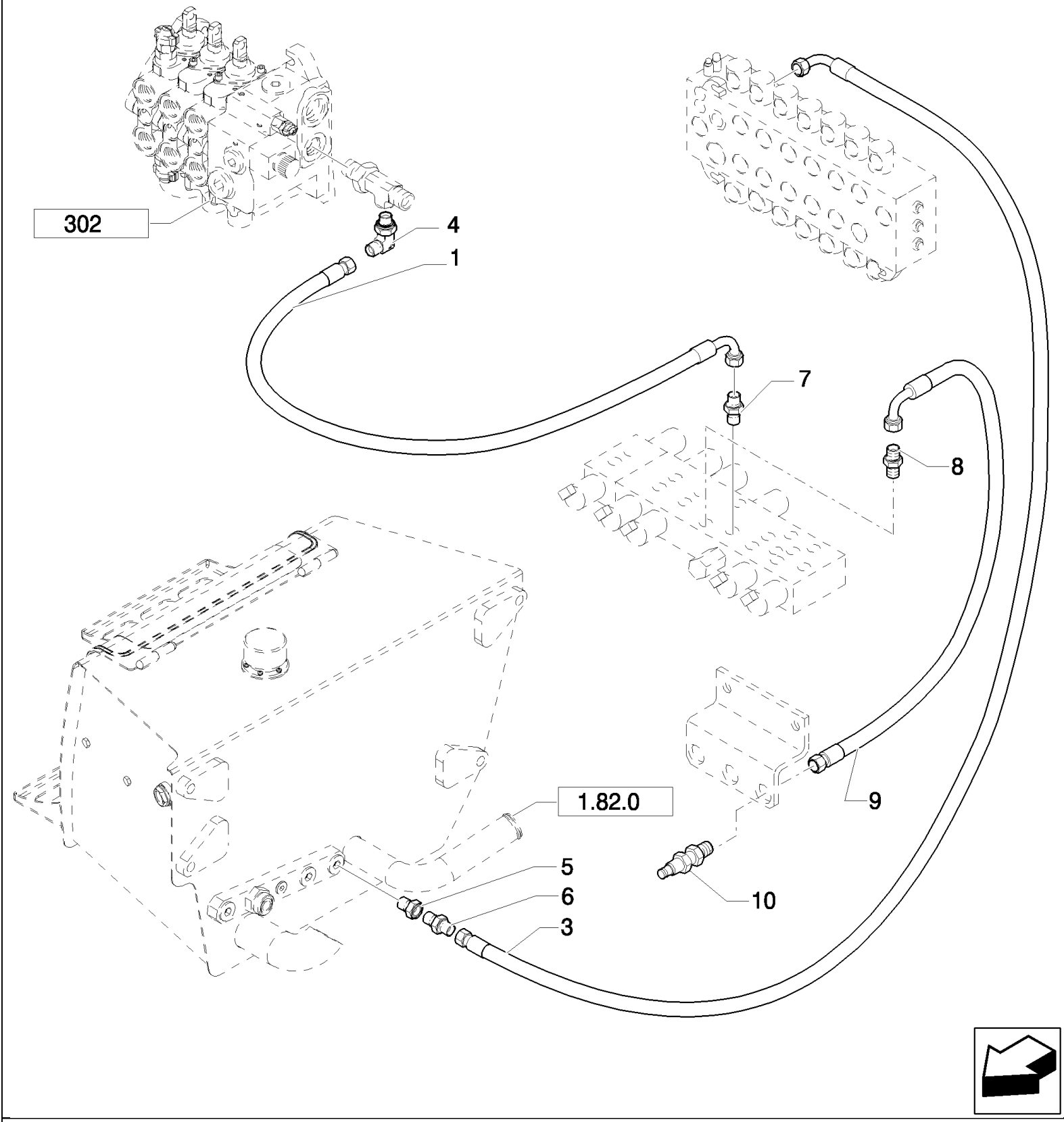

Pilot Control Version

B95LR NA BACKHOE LOADER (1/06-)

333/ B(05) 7 SECTION PILOT CONTROL VALVE SUPPORT, COMPLETE

Ref	Numero de Pieza	Ctd	Descripción
1	85827476	1	HOSE, FLEXIBLE,
3	85827475	1	HOSE, FLEXIBLE,
4	85805318	1	ELBOW, 90º, 9/16"-18, 37º x 9/16"-18, O-Ring,
5	85826100	1	REDUCER,
6	47050686	1	CONNECTOR, HYD.,
7	47050653	1	ELBOW,
8	83963371	1	CONNECTOR, HYD.,
9	85812173	1	HOSE, FLEXIBLE,
10	85817226	1	COUPLING, QUICK, MALE,

Pilot Control Version

333/ B(06) 7 SECTION PILOT CONTROL VALVE SUPPORT, COMPLETE (CENTER PIVOT) EUROPE

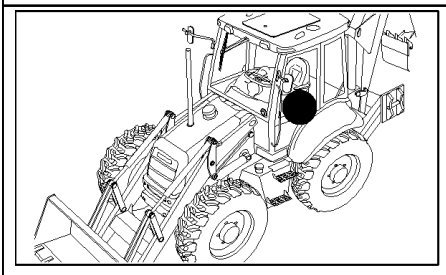

KIT KIT KIT 3 = ●

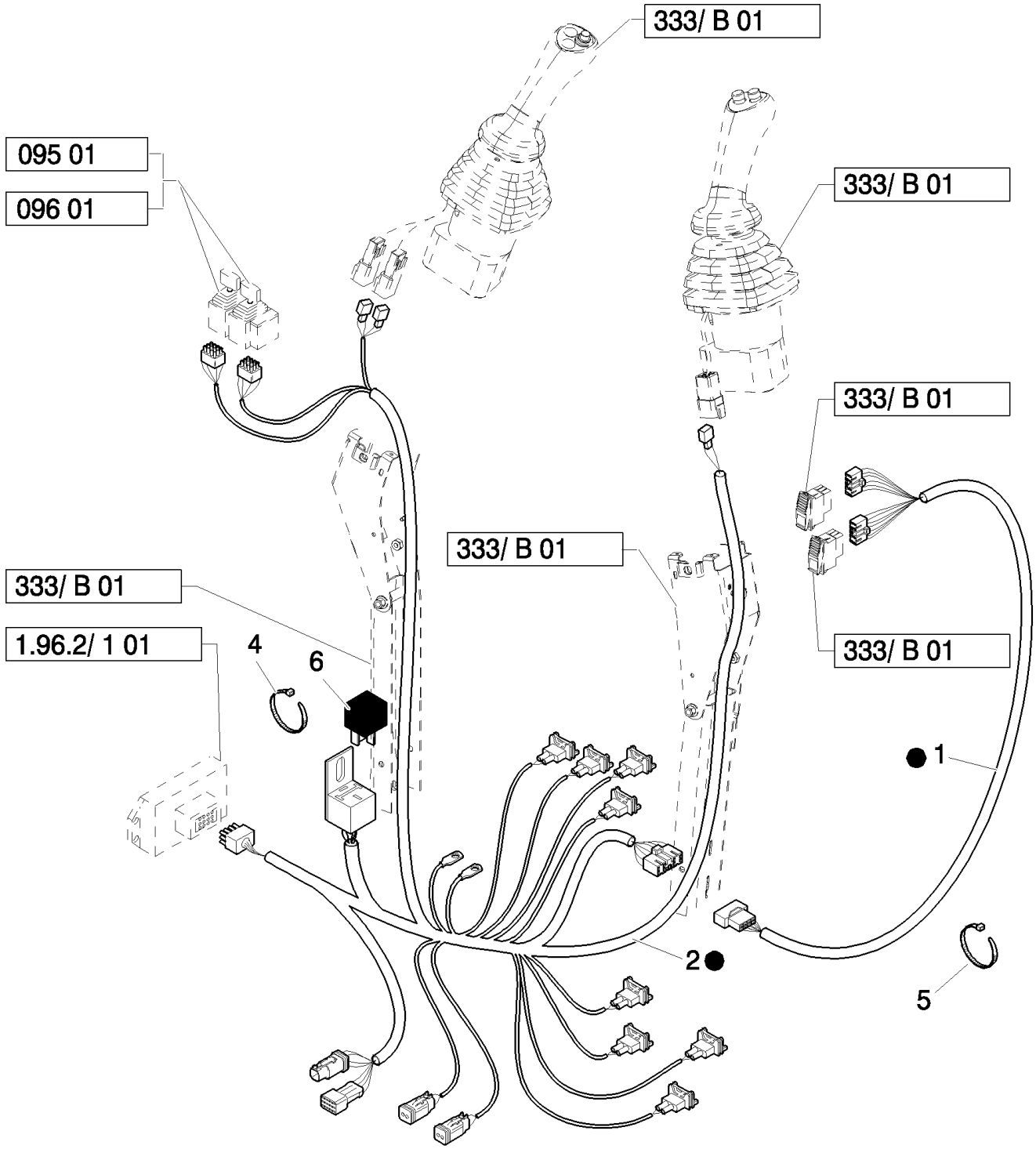

Pilot Control Version

B95LR NA BACKHOE LOADER (1/06-)

333/ B(06) 7 SECTION PILOT CONTROL VALVE SUPPORT, COMPLETE (CENTER PIVOT) EUROPE

Ref	Numero de Pieza	Ctd	Descripción
1	85828216	1	HARNESS, WIRE,
2	87305611	1	HARNESS, WIRE,
3	87305604	1	HARNESS, WIRE, , Includes 1, 2, 6
4	14560187	6	STRAP, CABLE, 178mm lg, L=203.2 mm
5	386170C1	4	STRAP, CABLE, .30" x 27 1/2",
6	85821537	1	RELAY,

Pilot Control Version

B95LR NA BACKHOE LOADER (1/06-)

333/ B(07) 7 SECTION PILOT CONTROL VALVE SUPPORT, COMPLETE (CENTER PIVOT) EUROPE

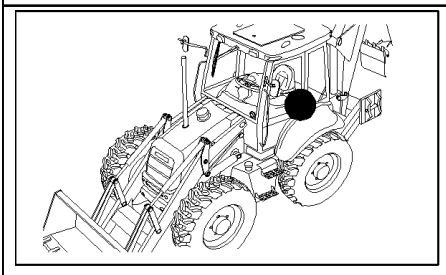

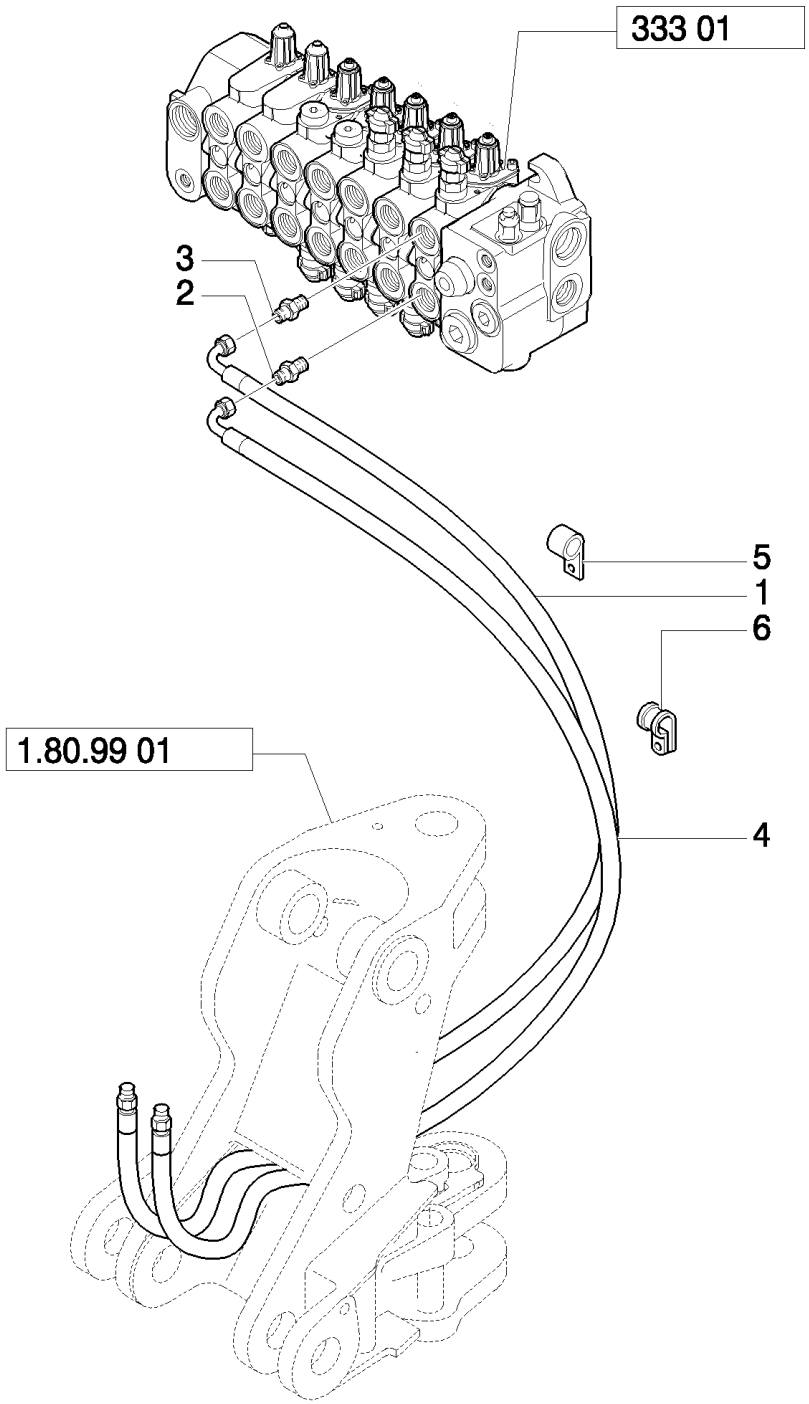

Pilot Control Version

B95LR NA BACKHOE LOADER (1/06-)

333/ B(07) 7 SECTION PILOT CONTROL VALVE SUPPORT, COMPLETE (CENTER PIVOT) EUROPE

Ref	Numero de Pieza	Ctd	Descripción
1	85812192	1	HOSE, FLEXIBLE,
2	85805258	1	CONNECTOR, HYD., 9/16"-16 ORS x 1 1/16"-12, O-Ring,
3	390938S36	1	CONNECTOR, HYD., 1-1/16-12 ORB x 1-14 ORFS; Incl. 167266, 9992069 O-Rings
4	85812211	1	HOSE, FLEXIBLE,
5	85803393	2	CLAMP,
6	85812029	4	CLAMP,

Pilot Control Version

333/ B(08) 7 SECTION PILOT CONTROL VALVE SUPPORT, COMPLETE

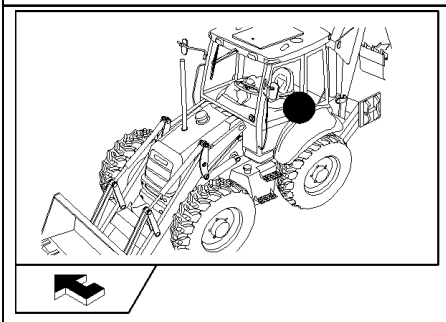

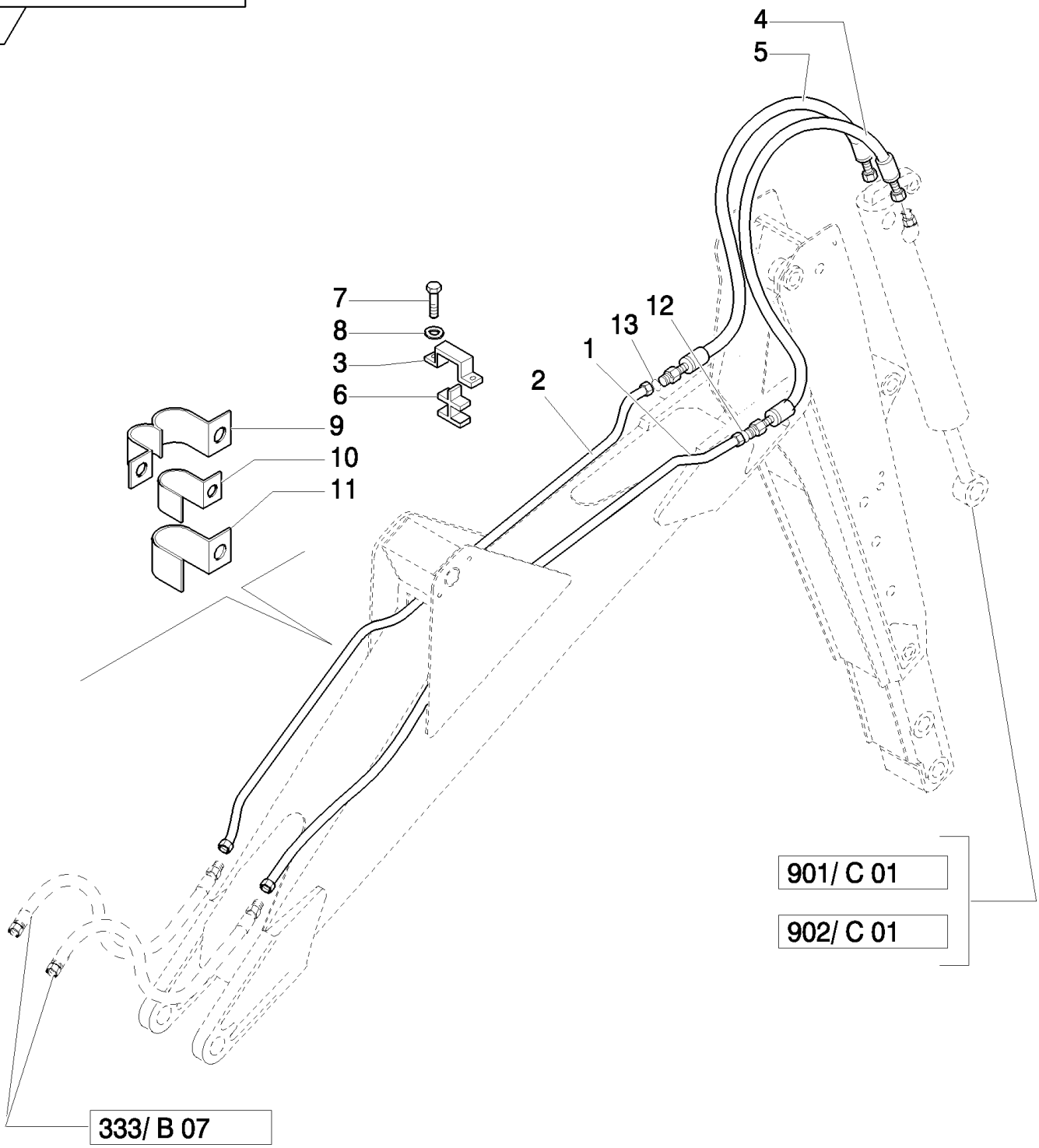

B95LR NA BACKHOE LOADER (1/06-)

333/ B(08) 7 SECTION PILOT CONTROL VALVE SUPPORT, COMPLETE

Ref	Numero de Pieza	Ctd	Descripción
1	85815642	1	TUBE, HYD, 16 mm OD Tube
2	85815640	1	TUBE, HYD, 12 mm OD Tube
3	85803402	1	PLATE,
4	87619506	1	HOSE, FLEXIBLE, , Includes 12
5	85817108	1	HOSE, FLEXIBLE, , Includes 13
6	85802532	1	CLIP, HOSE,
7	16043621	2	BOLT, Hex, M8 x 25, 8.8,
8	11193879	2	WASHER, SPRING, Belleville, M8.4,
9	85802529	2	CLAMP,
10	85802527	2	CLAMP,
11	85802528	2	CLAMP,
12	9992069	1	O-RING, -016, 90 Duro, .614" ID x .070" Thk,
13	9992298	1	O-RING, -014, 90 Duro, .489" ID x .070" Thk,

Pilot Control Version

B95LR NA BACKHOE LOADER (1/06-)

333/ B(09) 7 SECTION PILOT CONTROL VALVE SUPPORT, COMPLETE (CENTER PIVOT) EUROPE

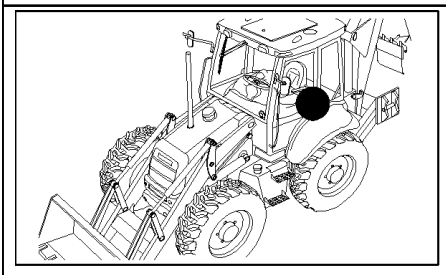

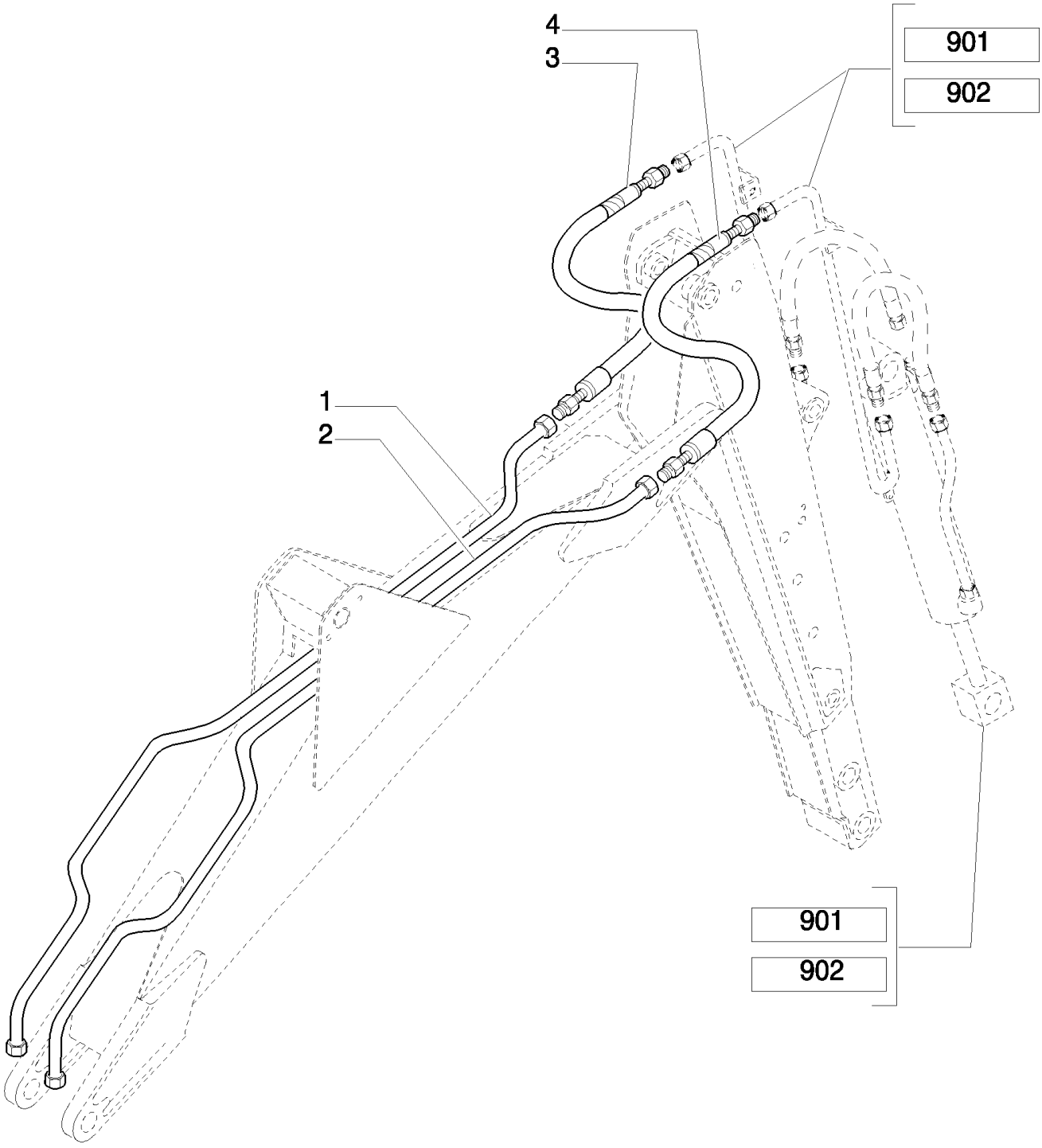

Pilot Control Version

B95LR NA BACKHOE LOADER (1/06-)

333/ B(09) 7 SECTION PILOT CONTROL VALVE SUPPORT, COMPLETE (CENTER PIVOT) EUROPE

Ref	Numero de Pieza	Ctd	Descripción
1	85815674	1	TUBE, HYD, 20 mm OD Tube
2	85815676	1	TUBE, HYD, 16 mm OD Tube
3	85817106	1	HOSE, FLEXIBLE,
4	85817107	1	HOSE, FLEXIBLE,

Pilot Control Version

B95LR NA BACKHOE LOADER (1/06-)

333/ 1(01) 7-SECTIONS EXCAVATOR CONTROL VALVE (CENTER PIVOT) NORTH AMERICA

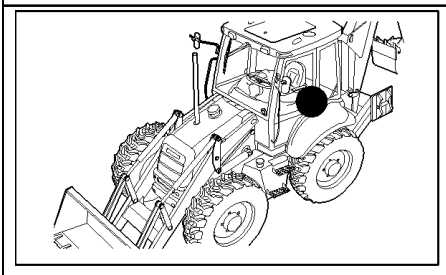

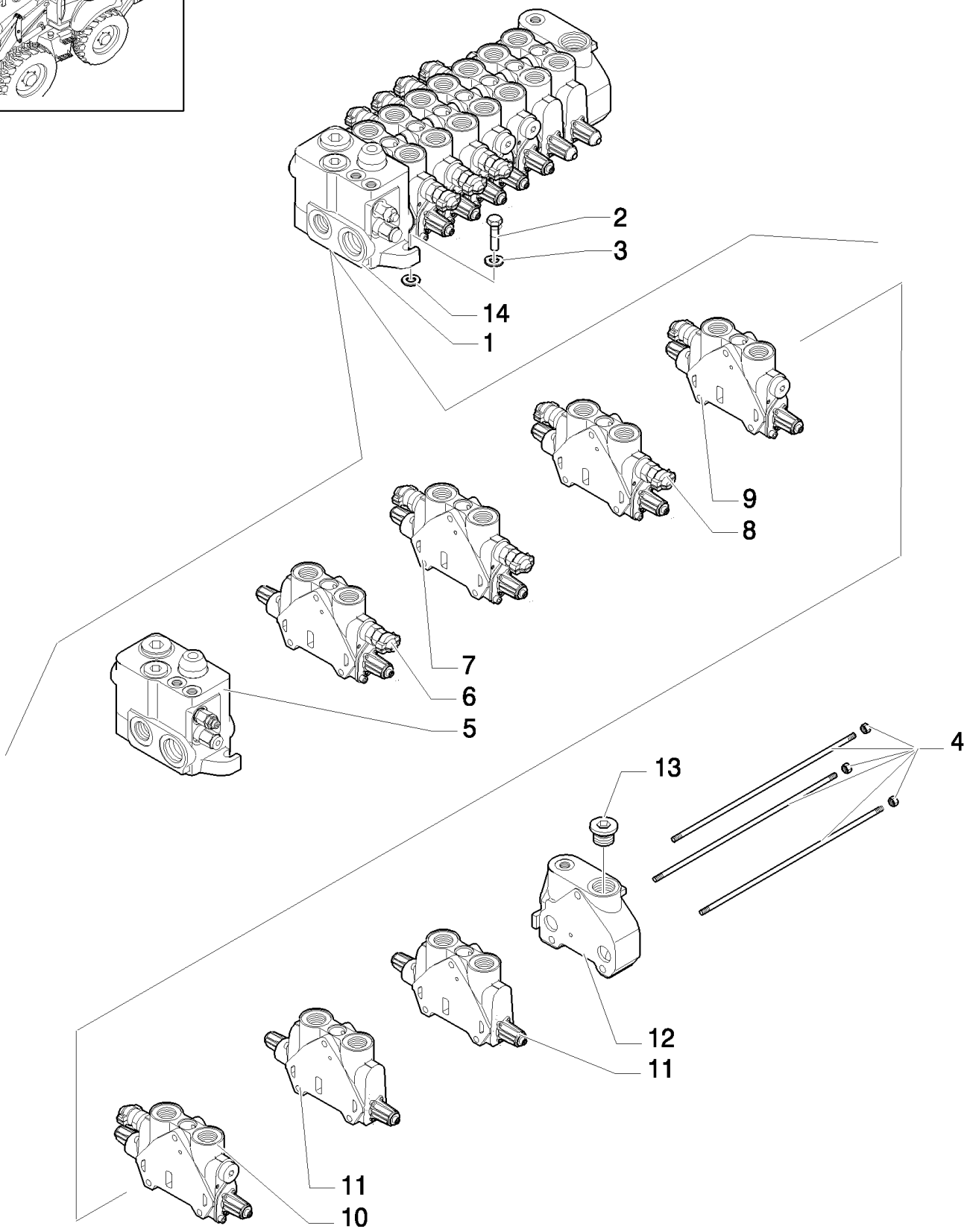

Pilot Control Version

B95LR NA BACKHOE LOADER (1/06-)

333/ 1(01) 7-SECTIONS EXCAVATOR CONTROL VALVE (CENTER PIVOT) NORTH AMERICA

Ref	Numero de Pieza	Ctd	Descripción
1	87327768	1	VALVE, CONTROL,
2	11234721	3	BOLT, Hex, M10 x 1.25 x 45, 8.8,
3	11190679	3	WASHER, SPRING, Belleville, M10.5,
4	85811959	1	KIT,
5	87308747	1	VALVE SECTION, HYD, , See Page 331/1 02
6	87558574	1	SECTOR, , Telescopic Cylinder, See Page 333/1 08
7	85826901	1	VALVE SECTION, HYD, , See Page 333/1 03, Boom Cylinder
8	85826339	1	VALVE SECTION, HYD, , Swing Cylinder, See Page 333/1 04
9	85826903	1	SECTOR, TOOTHED, , See Page 333/1 05, Bucket Cylinder
10	85826902	1	VALVE SECTION, HYD, , See Page 333/1 06, Arm Cylinder
11	85826340	2	VALVE SECTION, HYD, , See Page 333/1 07, Stabilizer Cylinder
12	85826250	1	VALVE SECTION, HYD, , Includes 13
13	85811921	1	PLUG, 1-1/16"-12 UNF 2A
14	13578621	3	WASHER,

Pilot Control Version

333/ 1(02) 7-SECTIONS EXCAVATOR CONTROL VALVE (CENTER PIVOT) NORTH AMERICA

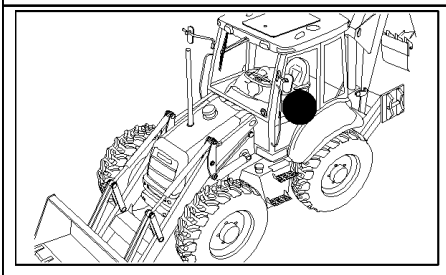

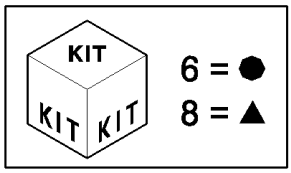

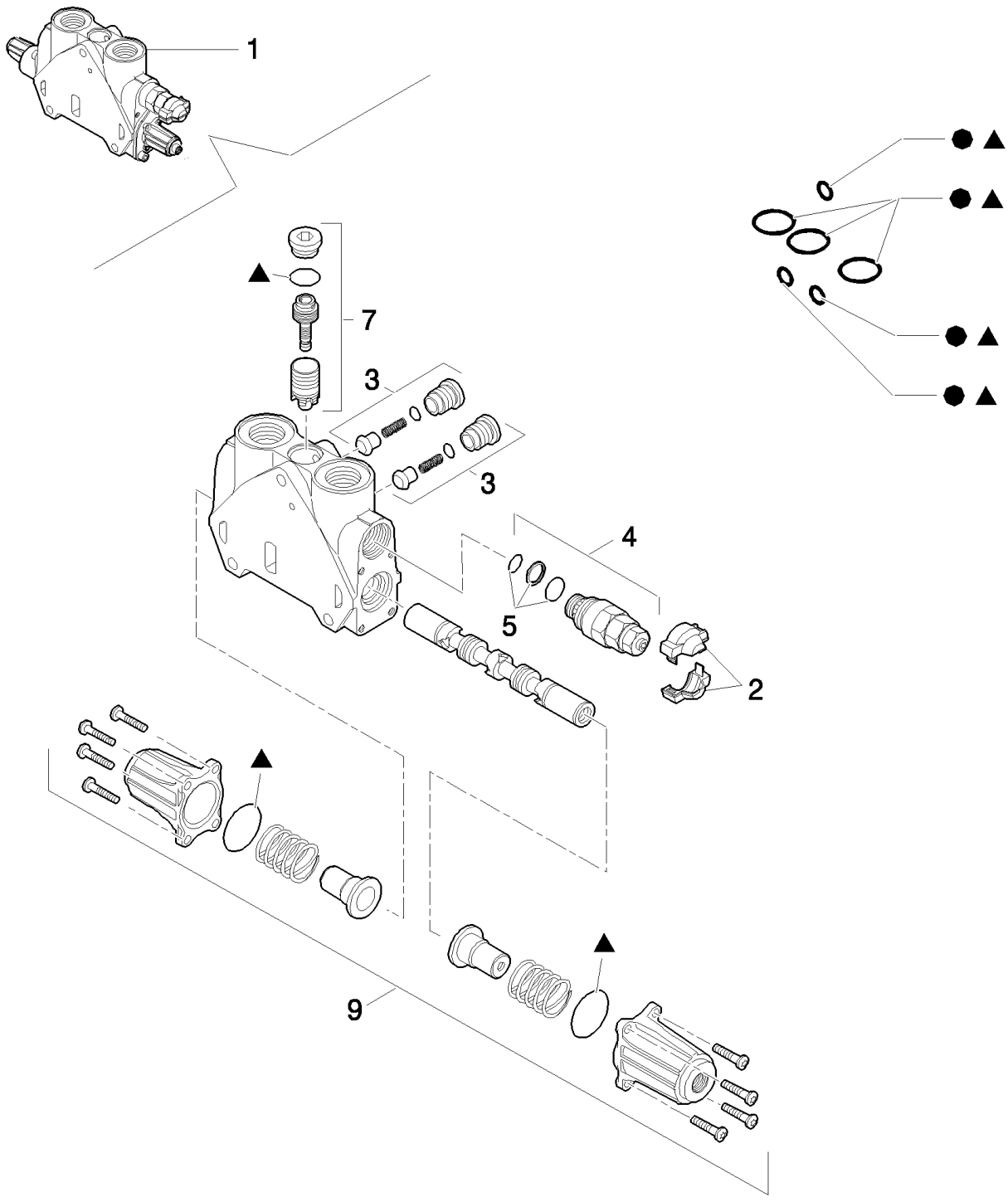

Pilot Control Version

B95LR NA BACKHOE LOADER (1/06-)

333/ 1(02) 7-SECTIONS EXCAVATOR CONTROL VALVE (CENTER PIVOT) NORTH AMERICA

Ref	Numero de Pieza	Ctd	Descripción
1	85826904	1	VALVE SECTION, HYD,
2	85811934	2	KIT, Cover
3	85811938	2	VALVE, CHECK, Valve
4	85812113	2	VALVE, HYDRAULIC, , 165 BAR, Includes 4
5	85811933	1	KIT, SEALS, Valve Seals
6	85819148	1	KIT, SEALS, Seals
7	85819378	1	KIT, SEALS, Valve
8	85824281	1	KIT, SEALS, Seals
9	85826344	1	KIT, Cover Assy

Pilot Control Version

333/ 1(03) 7-SECTIONS EXCAVATOR CONTROL VALVE (CENTER PIVOT) NORTH AMERICA

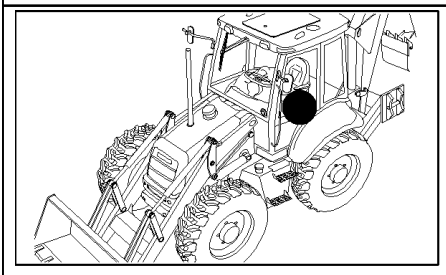

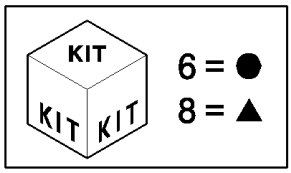

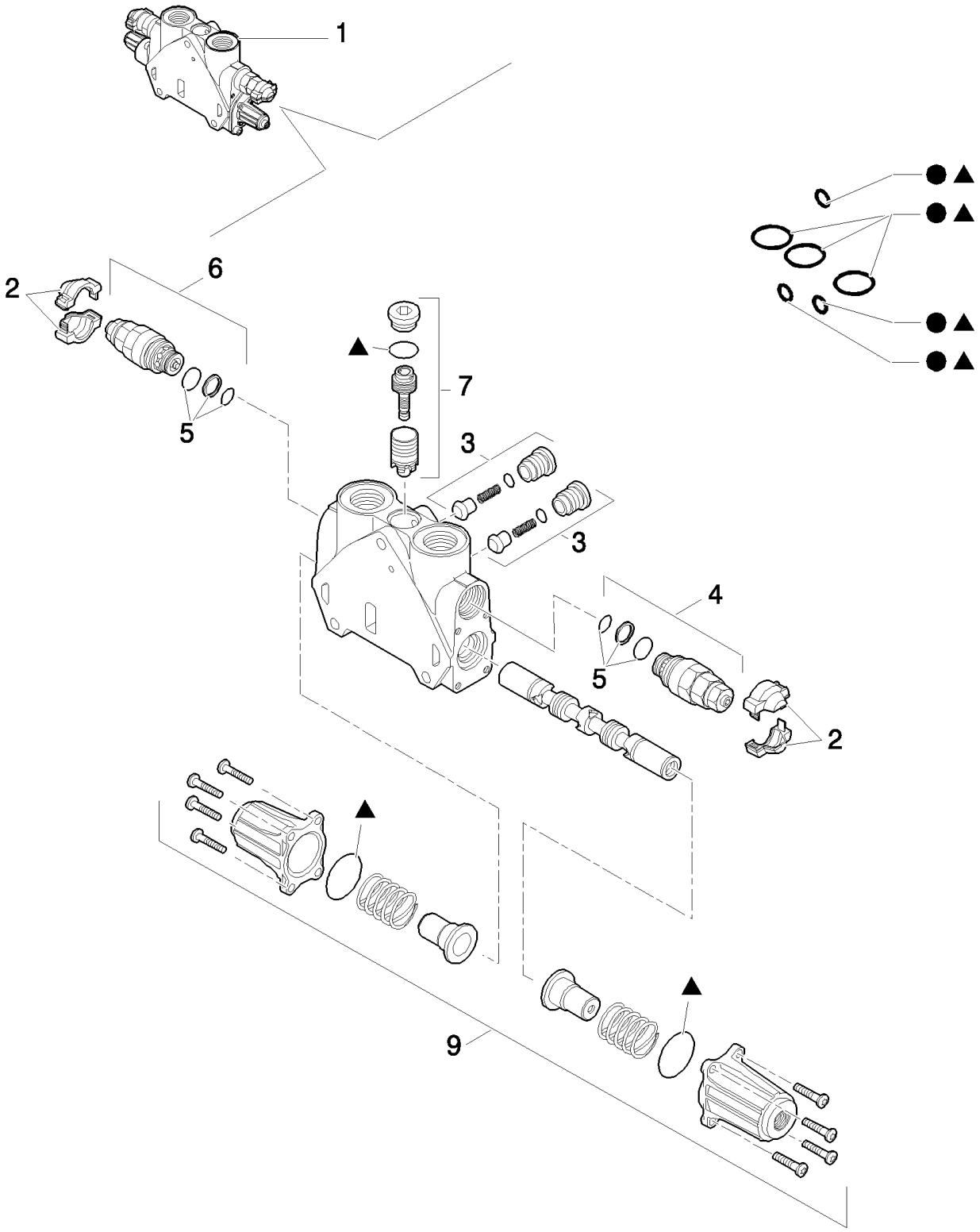

Pilot Control Version

B95LR NA BACKHOE LOADER (1/06-)

333/ 1(03) 7-SECTIONS EXCAVATOR CONTROL VALVE (CENTER PIVOT) NORTH AMERICA

Ref	Numero de Pieza	Ctd	Descripción
1	85826901	1	VALVE SECTION, HYD,
2	85811934	2	KIT, Cover
3	85811938	2	VALVE, CHECK, Valve
4	85812116	1	VALVE, PRESSURE RELIEF, , Includes 5, 240 BAR
5	85811933	1	KIT, SEALS,
6	85812117	1	VALVE, HYDRAULIC, , Includes 5, 315 BAR
6	85819148	1	KIT, SEALS, Seals
7	85819378	1	KIT, SEALS, Valve
8	85824281	1	KIT, SEALS, Seals
9	85826344	1	KIT, Cover Assy

Pilot Control Version

333/ 1(04) 7-SECTIONS EXCAVATOR CONTROL VALVE (CENTER PIVOT) NORTH AMERICA

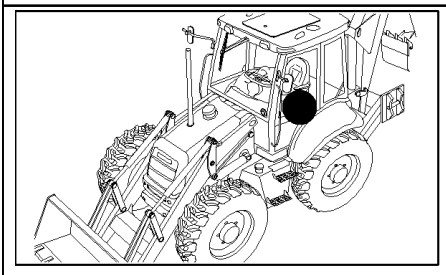

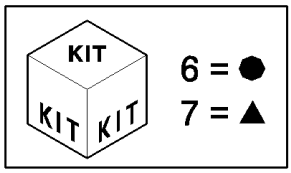

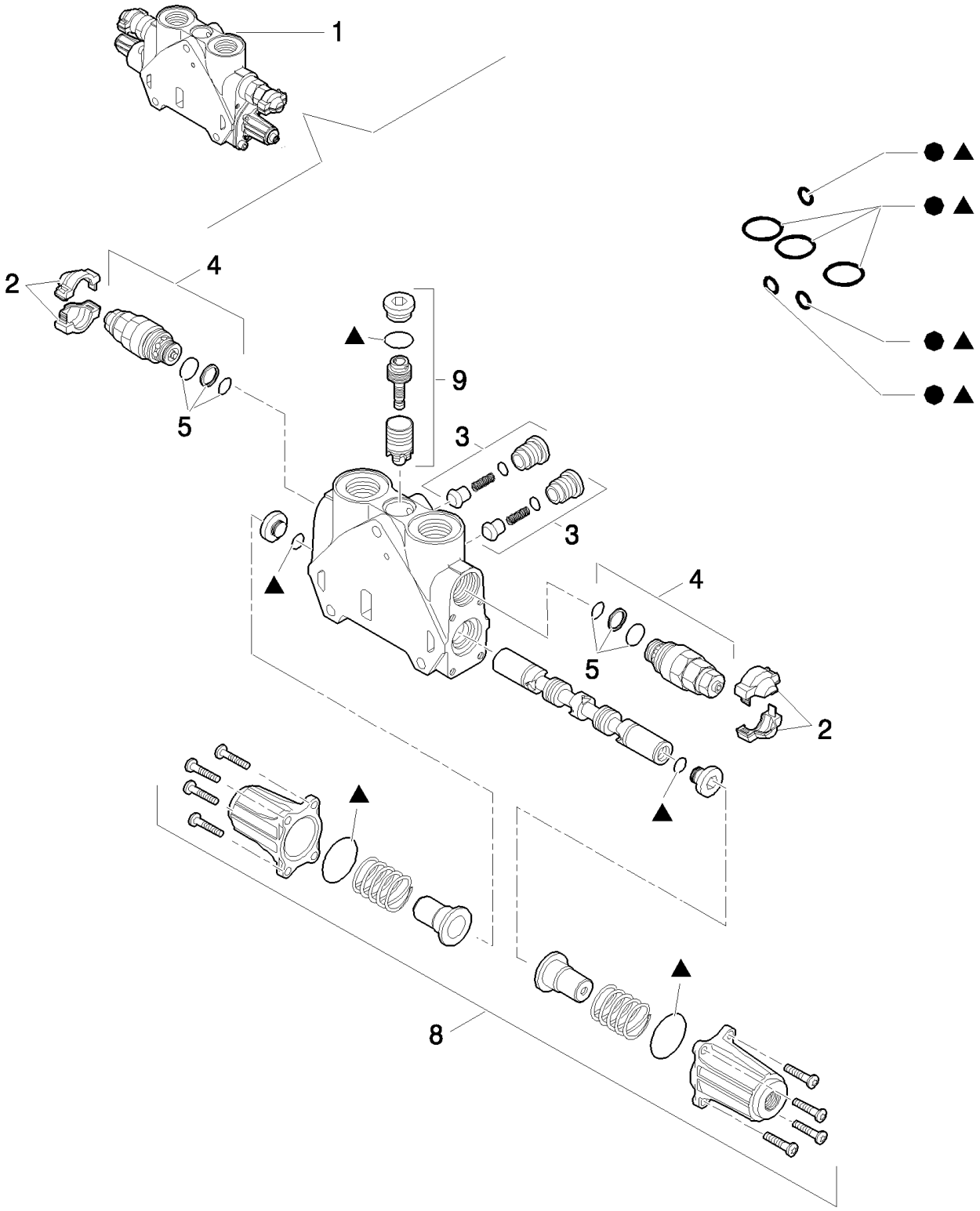

Pilot Control Version

B95LR NA BACKHOE LOADER (1/06-)

333/ 1(04) 7-SECTIONS EXCAVATOR CONTROL VALVE (CENTER PIVOT) NORTH AMERICA

Ref	Numero de Pieza	Ctd	Descripción
1	85826339	1	VALVE SECTION, HYD,
2	85811934	2	KIT, Cover
3	85811938	2	VALVE, CHECK, Valve
4	85812114	2	VALVE, HYDRAULIC, , Includes 5, 205 BAR
5	85811933	2	KIT, SEALS, Valve Seals
6	85819148	1	KIT, SEALS, Seals
7	85824282	1	KIT, Seals
8	85826344	1	KIT, Cover Assy
9	85826345	1	KIT, Valve

Pilot Control Version

333/ 1(05) 7-SECTIONS EXCAVATOR CONTROL VALVE (CENTER PIVOT) NORTH AMERICA

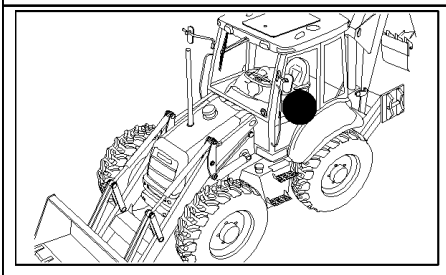

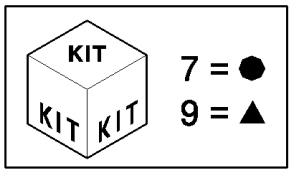

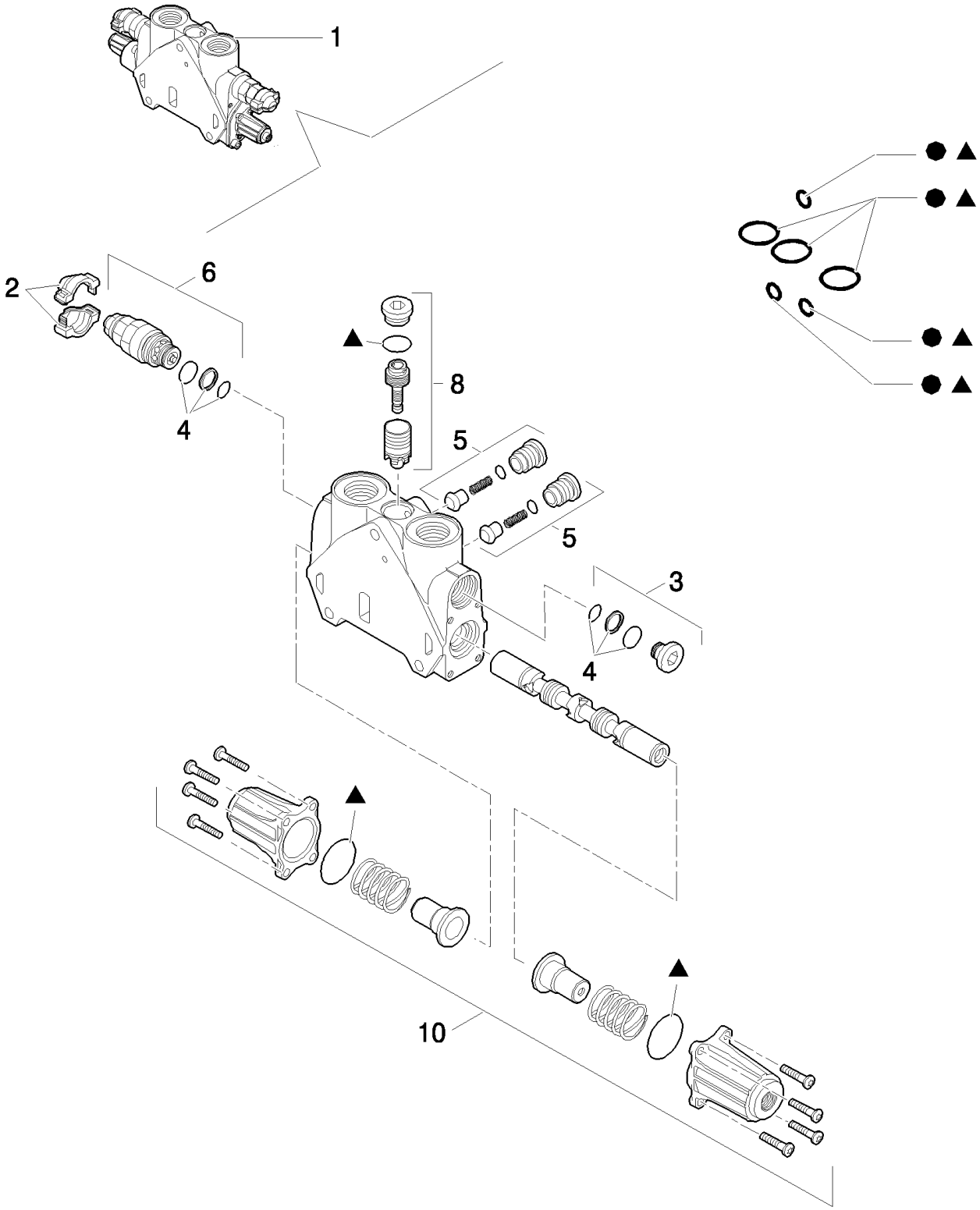

Pilot Control Version

B95LR NA BACKHOE LOADER (1/06-)

333/ 1(05) 7-SECTIONS EXCAVATOR CONTROL VALVE (CENTER PIVOT) NORTH AMERICA

Ref	Numero de Pieza	Ctd	Descripción
1	85826903	1	SECTOR, TOOTHED,
2	85811934	1	KIT, Cover
3	85811937	1	PLUG, , 220 BAR, Includes 4
4	85811933	1	KIT, SEALS, Valve Seals
5	85811938	2	VALVE, CHECK, Valve
6	85812115	1	VALVE, HYDRAULIC, , Includes 4, 220 BAR
7	85819148	1	KIT, SEALS, Seals
8	85819378	1	KIT, SEALS, Valve
9	85824281	1	KIT, SEALS, Seals
10	85826344	1	KIT, Cover Assy

Pilot Control Version

B95LR NA BACKHOE LOADER (1/06-)

333/ 1(06) 7-SECTIONS EXCAVATOR CONTROL VALVE (CENTER PIVOT) NORTH AMERICA

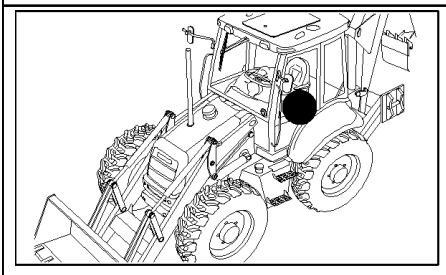

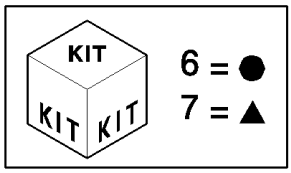

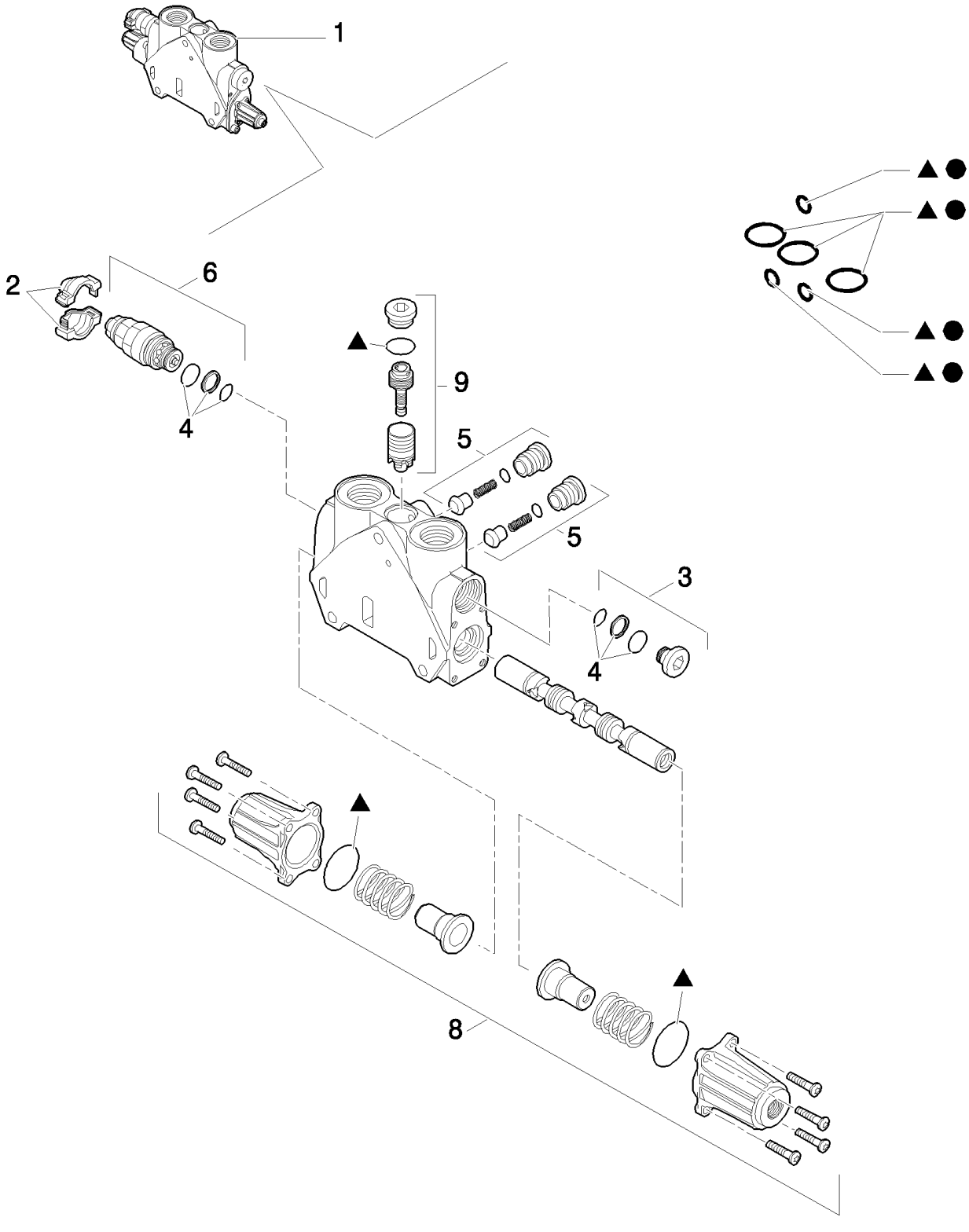

Pilot Control Version

B95LR NA BACKHOE LOADER (1/06-)

333/ 1(06) 7-SECTIONS EXCAVATOR CONTROL VALVE (CENTER PIVOT) NORTH AMERICA

Ref	Numero de Pieza	Ctd	Descripción
1	85826902	1	VALVE SECTION, HYD,
2	85811934	1	KIT, Cover
3	85811937	1	PLUG, , 240 BAR, Includes 4
4	85811933	1	KIT, SEALS, Valve Seals
5	85811938	2	VALVE, CHECK, Valve
6	85812116	1	VALVE, PRESSURE RELIEF, , Includes 4, 240 BAR
6	85819148	1	KIT, SEALS, Valve
7	85824281	1	KIT, SEALS, Seals
8	85826344	1	KIT, Cover Assy
9	85826345	1	KIT, Valve

Pilot Control Version

B95LR NA BACKHOE LOADER (1/06-)

333/ 1(07) 7-SECTIONS EXCAVATOR CONTROL VALVE (CENTER PIVOT) NORTH AMERICA

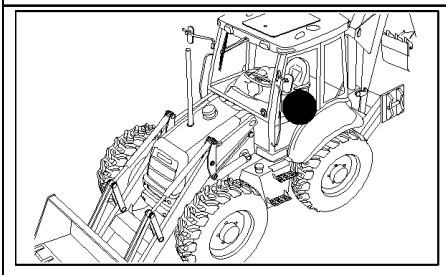

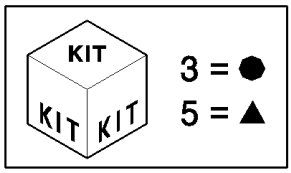

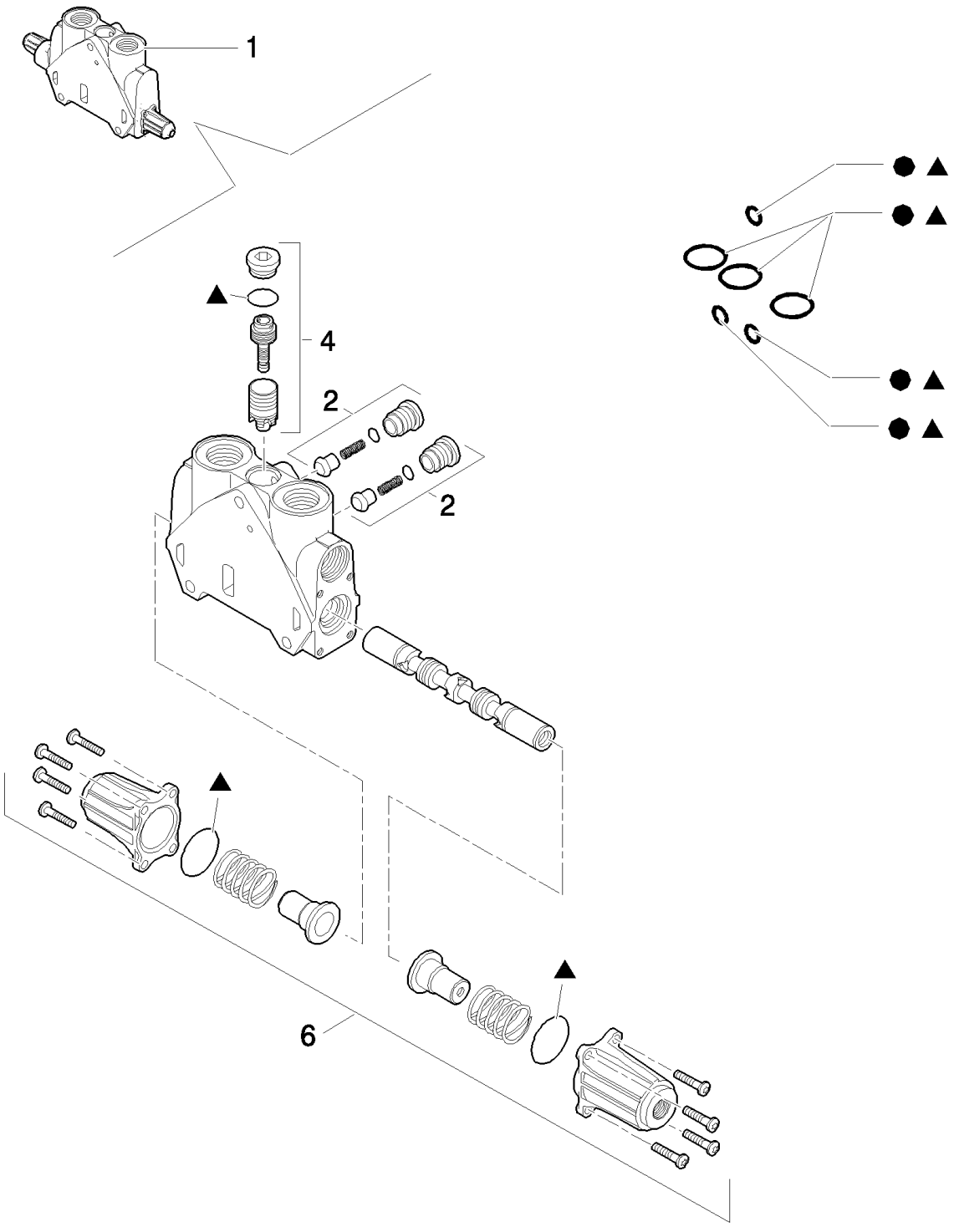

Pilot Control Version

B95LR NA BACKHOE LOADER (1/06-)

333/ 1(07) 7-SECTIONS EXCAVATOR CONTROL VALVE (CENTER PIVOT) NORTH AMERICA

Ref	Numero de Pieza	Ctd	Descripción
1	85826340	2	VALVE SECTION, HYD,
2	85811938	2	VALVE, CHECK, Valve
3	85819148	1	KIT, SEALS, Seals
4	85819378	1	KIT, SEALS, Valve
5	85824281	1	KIT, SEALS, Seals
6	85826344	1	KIT, Cover Assy

Pilot Control Version

333/ 1(08) 7-SECTIONS EXCAVATOR CONTROL VALVE (CENTER PIVOT) NORTH AMERICA

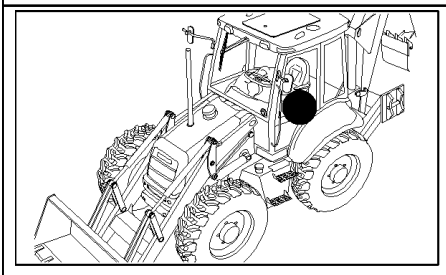

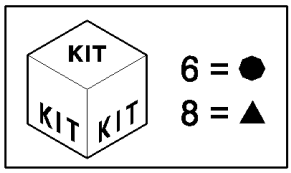

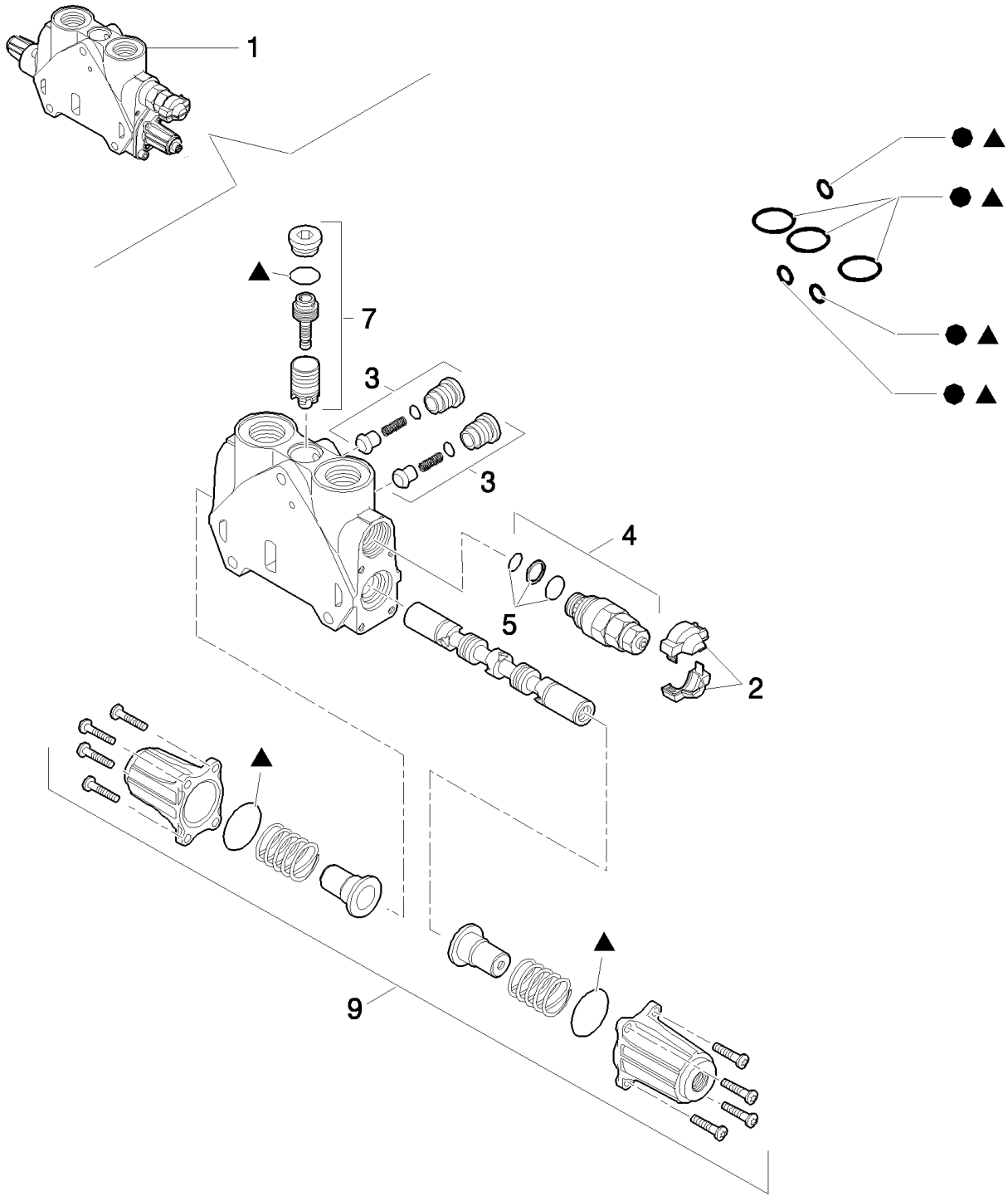

Pilot Control Version

B95LR NA BACKHOE LOADER (1/06-)

333/ 1(08) 7-SECTIONS EXCAVATOR CONTROL VALVE (CENTER PIVOT) NORTH AMERICA

Ref	Numero de Pieza	Ctd	Descripción
1	87558574	1	SECTOR,
2	85811934	2	KIT, Cover
3	85811938	2	VALVE, CHECK, Valve
4	87341088	2	VALVE, HYDRAULIC, , 124 BAR, Includes 4
5	85811933	1	KIT, SEALS, Valve Seals
6	85819148	1	KIT, SEALS, Seals
7	85819378	1	KIT, SEALS, Valve
8	85824281	1	KIT, SEALS, Seals
9	85826344	1	KIT, Cover Assy

Pilot Control Version

334(09) 7-SECTIONS EXCAVATOR CONTROL VALVE

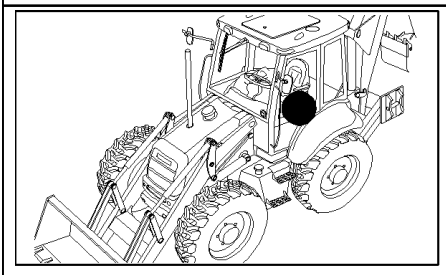

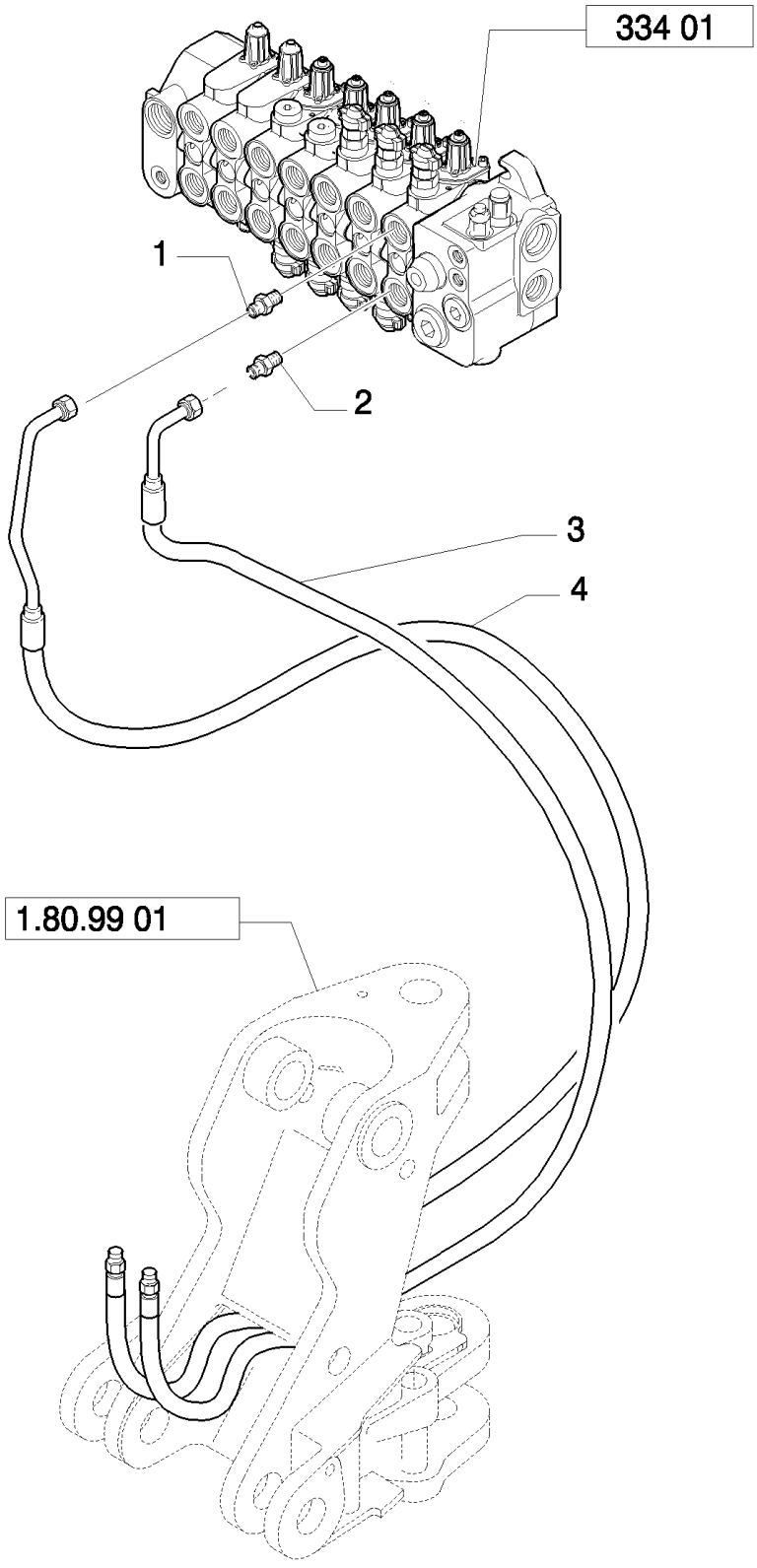

B95LR NA BACKHOE LOADER (1/06-)

334(09) 7-SECTIONS EXCAVATOR CONTROL VALVE

Ref	Numero de Pieza	Ctd	Descripción
1	390938S36	1	CONNECTOR, HYD., 1-1/16-12 ORB x 1-14 ORFS; Incl. 167266, 9992069 O-Rings
2	85805258	1	CONNECTOR, HYD., 9/16"-16 ORS x 1 1/16"-12, O-Ring,
3	85819067	1	HOSE, FLEXIBLE,
4	85819066	1	HOSE, FLEXIBLE,

B95LR NA BACKHOE LOADER (1/06-)

334(11) 7-SECTIONS EXCAVATOR CONTROL VALVE

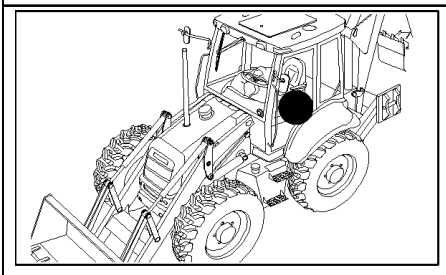

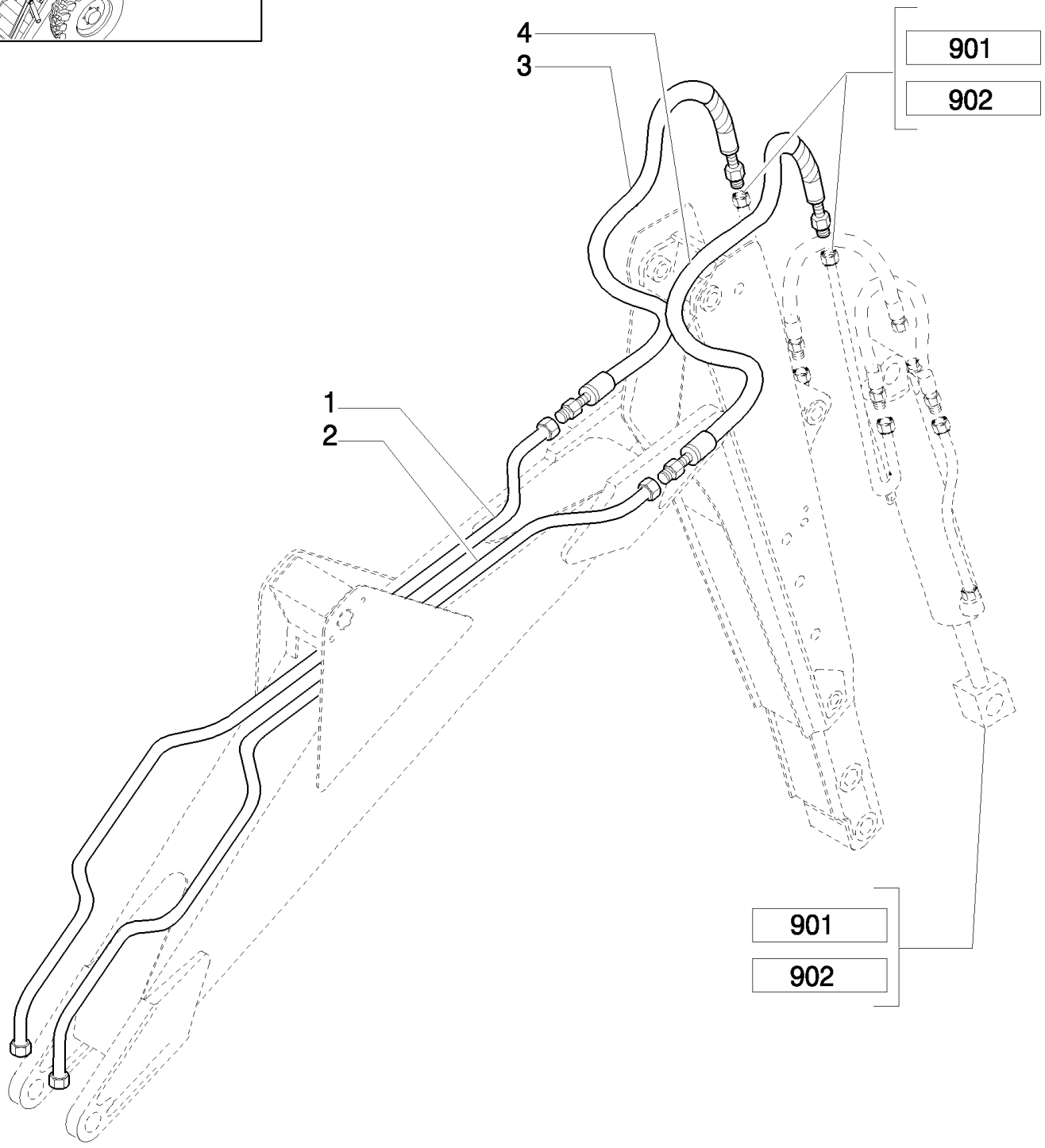

B95LR NA BACKHOE LOADER (1/06-)

334(11) 7-SECTIONS EXCAVATOR CONTROL VALVE

Ref	Numero de Pieza	Ctd	Descripción
1	85815674	1	TUBE, HYD, 20 mm OD Tube
2	85815676	1	TUBE, HYD, 16 mm OD Tube
3	85817106	1	HOSE, FLEXIBLE, , Includes 3A
3A	9991976	2	O-RING, -018, 90 Duro, .739" ID x .070" Thk,
4	85817107	1	HOSE, FLEXIBLE, , Includes 4A
4A	9992069	2	O-RING, -016, 90 Duro, .614" ID x .070" Thk,

336(01) TWO SECTION LOADER CONTROL VALVE (CENTER PIVOT)

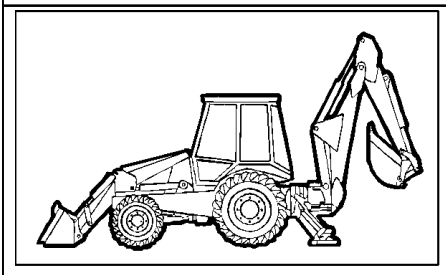

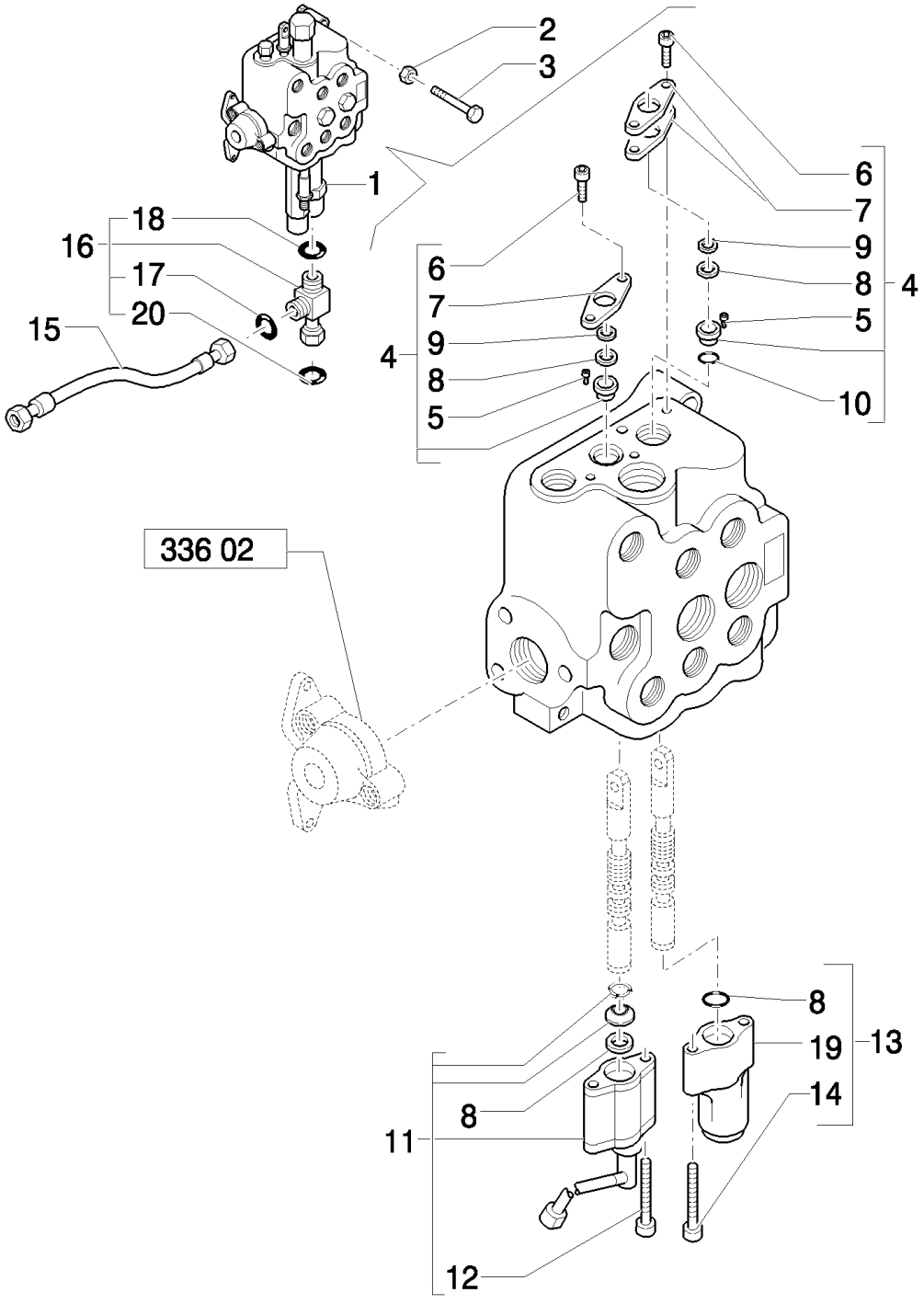

B95LR NA BACKHOE LOADER (1/06-)

336(01) TWO SECTION LOADER CONTROL VALVE (CENTER PIVOT)

Ref	Numero de Pieza	Ctd	Descripción
1	85819649	1	VALVE, CONTROL, Assy
2	11190579	3	WASHER, SPRING, Belleville, M10.5,
3	14308221	3	SCREW, Hex Soc Hd, M10 x 1.25 x 65, 8.8,
4	9968455	1	KIT,
5	9968457	1	SPACER,
6	9968456	2	SCREW,
7	9968458	3	FLANGE,
8	9968489	4	SEAL,
9	9968490	1	WIPER,
10	87327076	1	O-RING,
11	85808403	1	STOP, Magnetic Detent
12	9968451	2	SCREW,
13	85817025	1	SPOOL,
14	9968454	2	SCREW,
15	85816804	1	HOSE, FLEXIBLE, 550mm lg,
16	85817531	1	TEE, , Includes 17, 18, 20
17	89825770	1	O-RING,
18	89824050	1	O-RING,
19	9968513	1	COVER,
20	89626929	1	O-RING, 90 Duro, 1.048" ID x .116" Thk

Mechanical Version

336(02) LOADER CONTROL VALVE, TWO SECTION, CAP & UNLOAD VALVE (CENTER PIVOT)

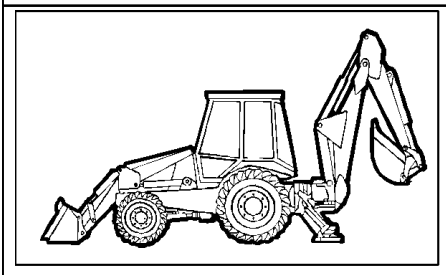

KIT KIT KIT 16 = ●

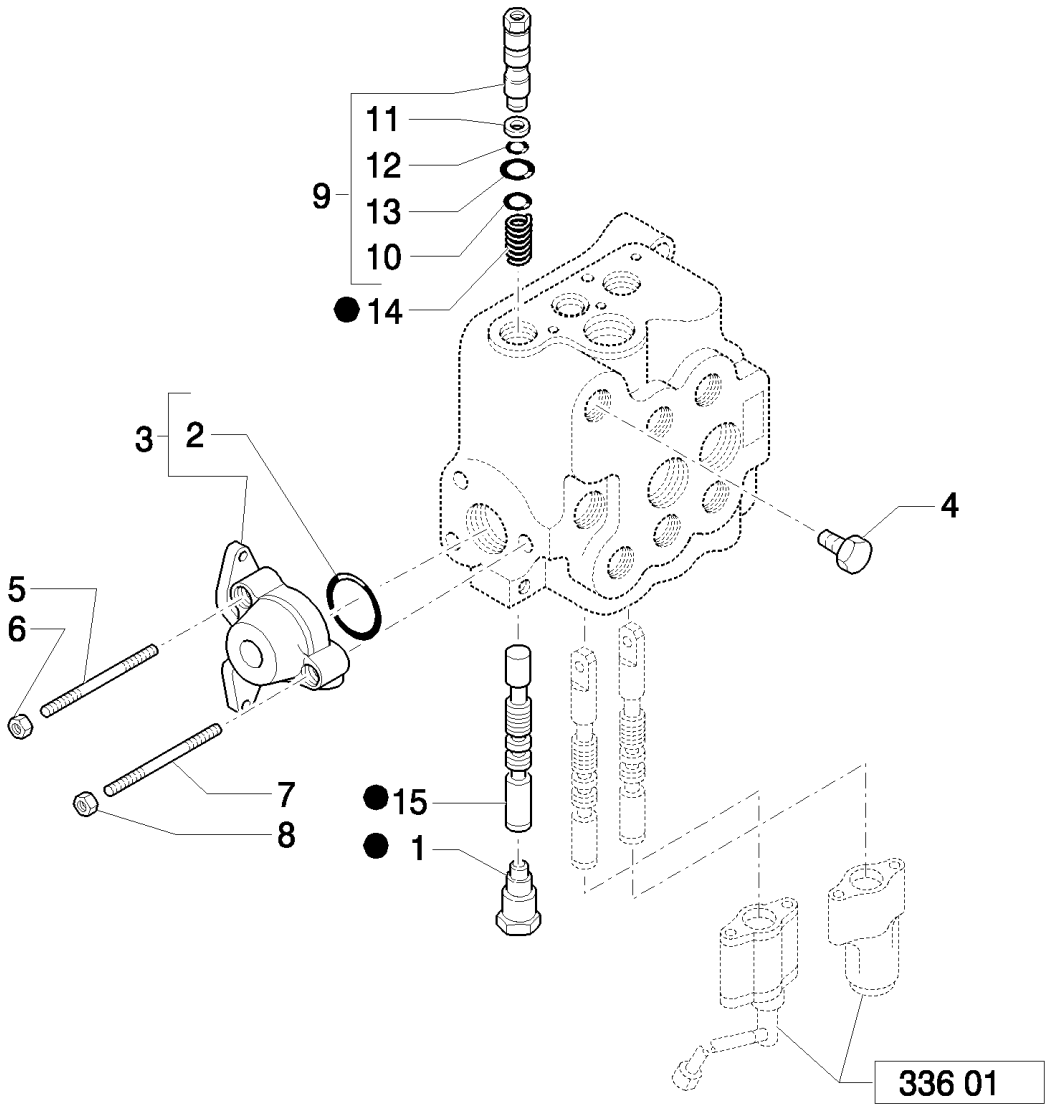

B95LR NA BACKHOE LOADER (1/06-)

336(02) LOADER CONTROL VALVE, TWO SECTION, CAP & UNLOAD VALVE (CENTER PIVOT)

Ref	Numero de Pieza	Ctd	Descripción
1	9968464	1	PLUG, ASSY
2	9968476	1	O-RING,
3	9968443	1	VALVE SECTION, HYD,
4	85807857	1	PLUG,
5	9968521	2	STUD,
6	9968441	2	NUT,
7	9968520	1	STUD,
8	9968440	1	NUT,
9	85815667	1	VALVE, BY-PASS,
10	85815668	1	O-RING,
11	9968467	1	RING, BACK-UP,
12	9968466	1	O-RING,
13	9968468	1	O-RING,
14	9968488	1	SPRING,
15	85807858	1	SPOOL,
16	87327632	1	SPOOL,

Mechanical Version

336(03) LOADER CONTROL VALVE, TWO SECTION, RELIEF & CHECK VALVES (CENTER PIVOT)

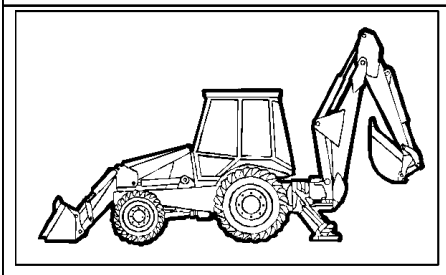

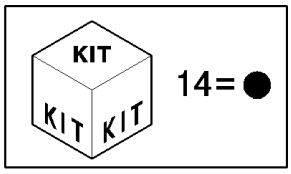

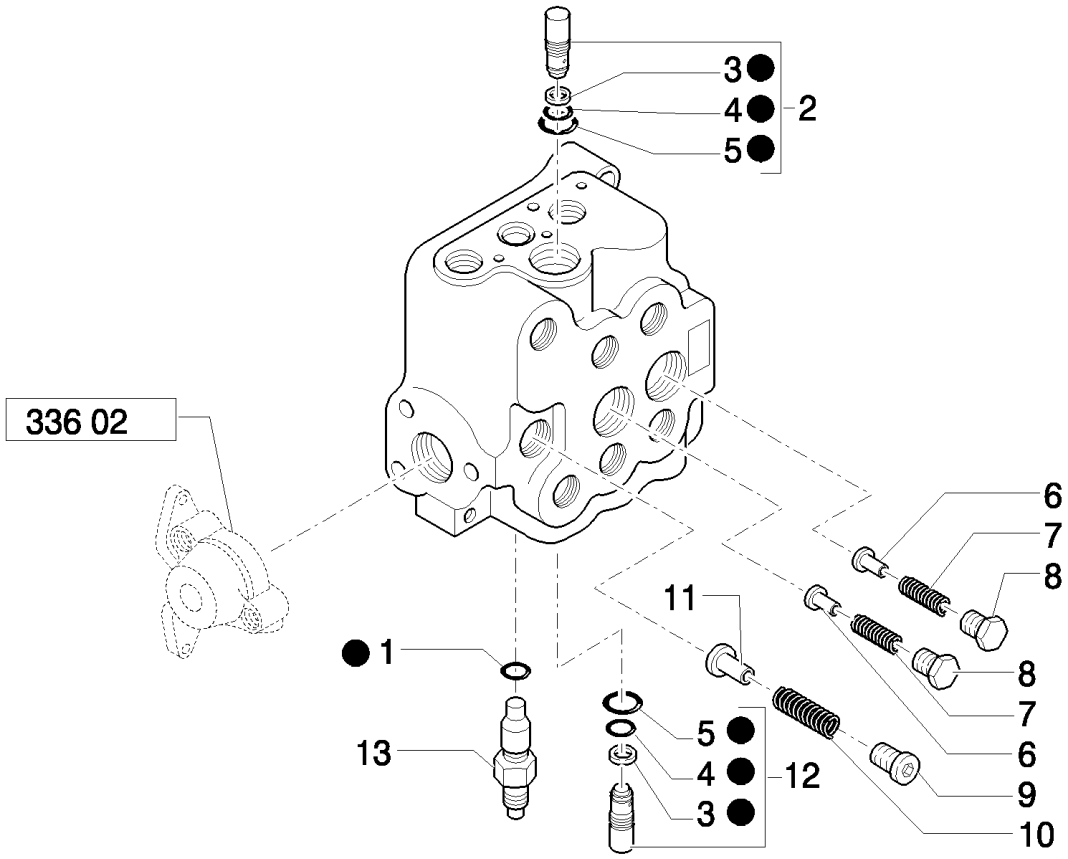

B95LR NA BACKHOE LOADER (1/06-)

336(03) LOADER CONTROL VALVE, TWO SECTION, RELIEF & CHECK VALVES (CENTER PIVOT)

Ref	Numero de Pieza	Ctd	Descripción
1	85819945	1	O-RING, ASSY
2	87302609	1	VALVE, PRESSURE RELIEF,
3	87302608	2	BACK-UP RING,
4	9968471	2	O-RING,
5	9968470	2	O-RING,
6	9968444	2	PLUNGER,
7	9968445	2	SPRING,
8	9968446	2	PLUG,
9	9968449	1	PLUG,
10	9968448	1	SPRING,
11	9968447	1	PLUNGER,
12	87302611	1	VALVE, PRESSURE RELIEF,
13	85819722	1	VALVE, HYDRAULIC,
14	87302607	1	KIT, SEALS,

Mechanical Version

336(04) LOADER CONTROL VALVE, TWO SECTION, BY-PASS KIT (CENTER PIVOT)

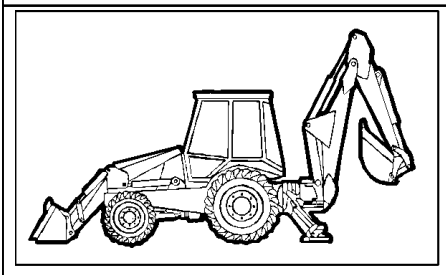

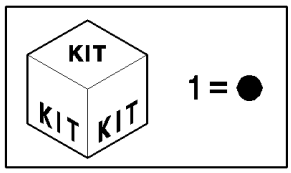

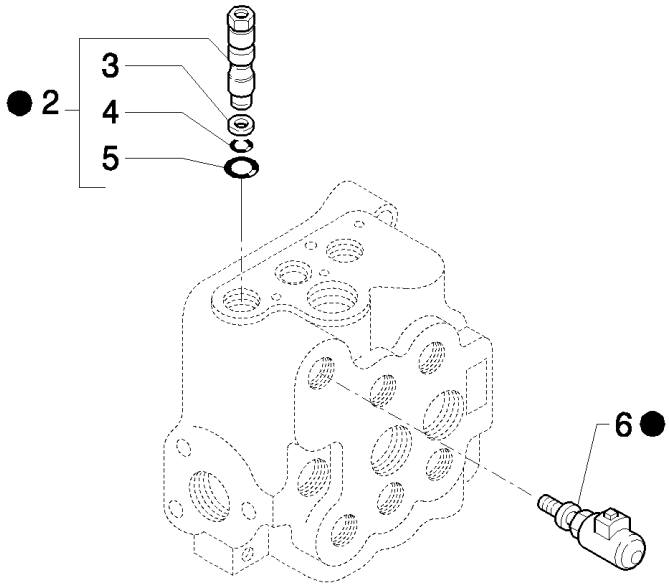

B95LR NA BACKHOE LOADER (1/06-)

336(04) LOADER CONTROL VALVE, TWO SECTION, BY-PASS KIT (CENTER PIVOT)

Ref	Numero de Pieza	Ctd	Descripción
1	85817201	1	KIT, CONVERSION,
2	9968465	1	VALVE, PILOT,
3	9968467	1	RING, BACK-UP,
4	9968466	1	O-RING,
5	9968468	1	O-RING,
6	9968461	1	SOLENOID,

Mechanical Version

336(05) LOADER CONTROL VALVE, TWO SECTION, UNLOAD KIT OR DUMP VALVE (CENTER PIVOT)

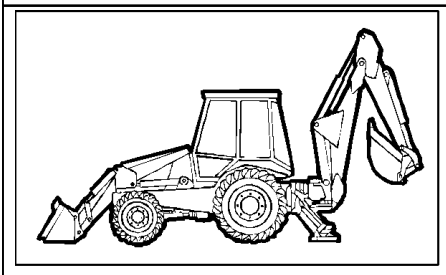

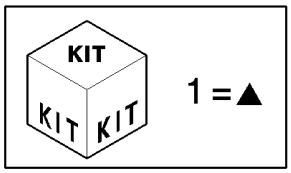

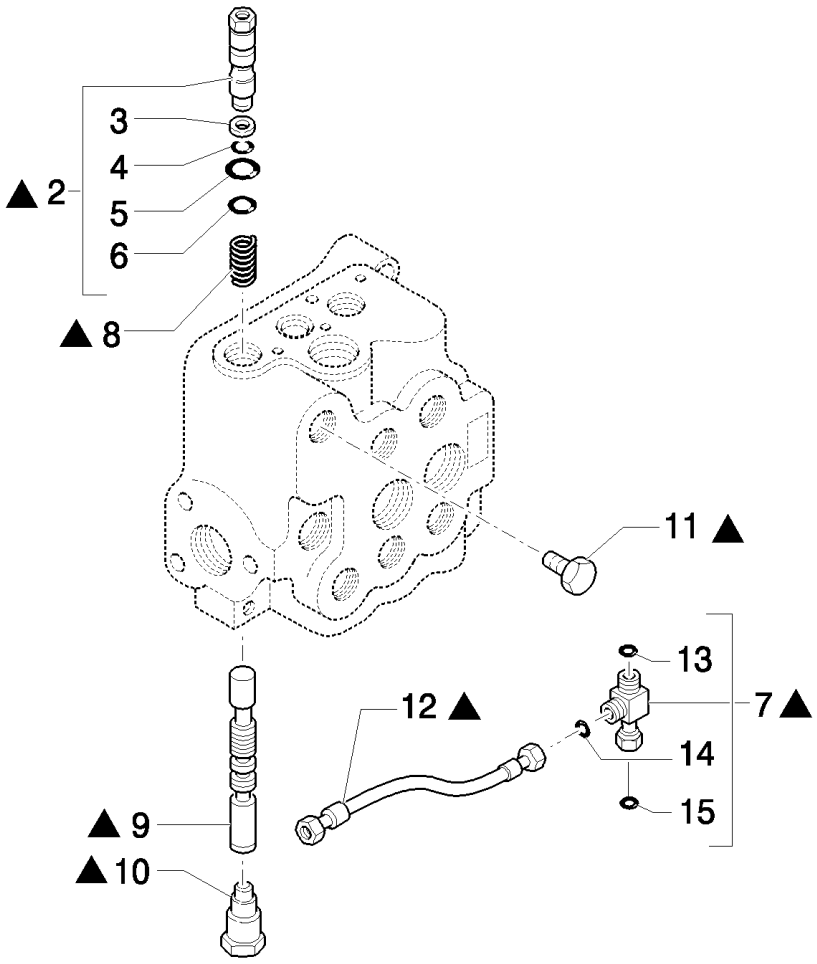

B95LR NA BACKHOE LOADER (1/06-)

336(05) LOADER CONTROL VALVE, TWO SECTION, UNLOAD KIT OR DUMP VALVE (CENTER PIVOT)

Ref	Numero de Pieza	Ctd	Descripción
1	85816793	1	KIT,
2	85815667	1	VALVE, BY-PASS,
3	9968467	1	RING, BACK-UP,
4	9968466	1	O-RING,
5	9968468	1	O-RING,
6	85815668	1	O-RING,
7	85817531	1	TEE,
8	9968488	1	SPRING,
9	85807858	1	SPOOL,
10	9968464	1	PLUG,
11	85807857	1	PLUG,
12	85816804	1	HOSE, FLEXIBLE, 550mm lg,
13	89824050	1	O-RING,
14	89825770	1	O-RING,
15	89626929	1	O-RING, 90 Duro, 1.048" ID x .116" Thk

Mechanical Version

339(01) LOADER CONTROL VALVE, THREE SECTION (CENTER PIVOT)

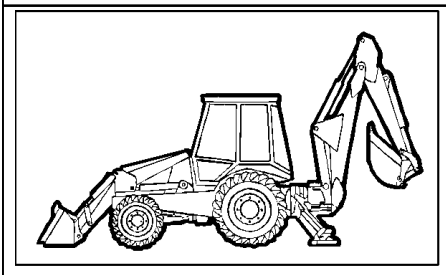

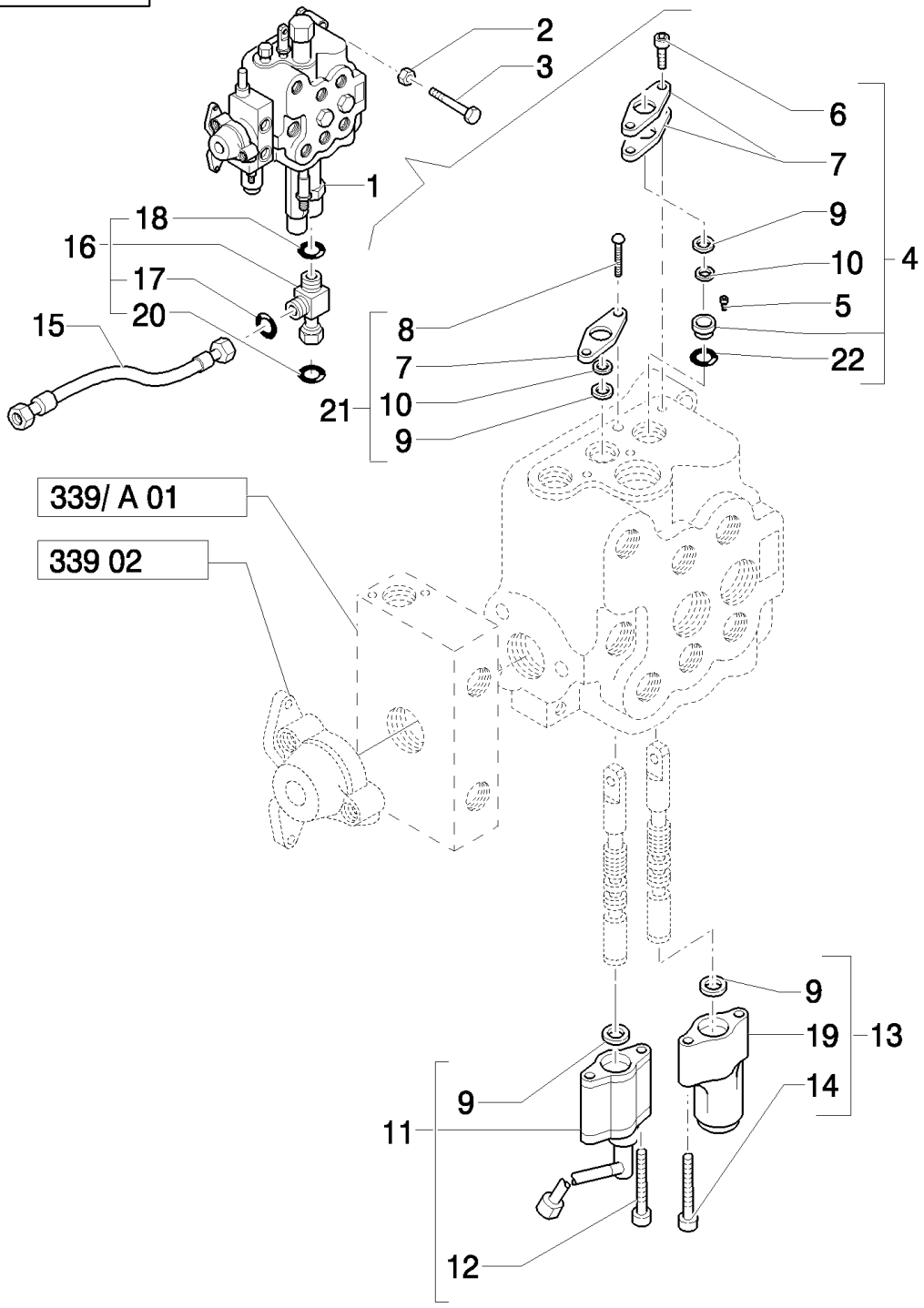

B95LR NA BACKHOE LOADER (1/06-)

339(01) LOADER CONTROL VALVE, THREE SECTION (CENTER PIVOT)

Ref	Numero de Pieza	Ctd	Descripción
1	87326256	1	VALVE SECTION, HYD, ASSY
2	11190579	3	WASHER, SPRING, Belleville, M10.5,
3	14308221	3	SCREW, Hex Soc Hd, M10 x 1.25 x 65, 8.8,
4	9968455	1	KIT,
5	9968457	1	SPACER,
6	9968456	2	SCREW,
7	9968458	3	FLANGE,
8	9968460	2	SCREW,
9	9968489	4	SEAL,
10	9968490	2	WIPER,
11	85808403	1	STOP, Magnetic Detent
12	9968451	2	SCREW,
13	85817025	1	SPOOL,
14	9968454	2	SCREW,
15	85816804	1	HOSE, FLEXIBLE, 550mm lg,
16	85817531	1	TEE, , Includes 17, 18, 20
17	9825770	1	O-RING, -011, 90 Duro, .301" ID x .070" Thk,
18	9824050	1	O-RING, -021, 90 Duro, .926" ID x .070" Thk,
19	9968513	1	COVER,
20	89626929	1	O-RING, 90 Duro, 1.048" ID x .116" Thk
21	87319445	1	EYEBOLT,
22	87327076	1	O-RING,

Mechanical Version

339(02) LOADER CONTROL VALVE, THREE SECTION, CAP & UNLOAD VALVE (CENTER PIVOT)

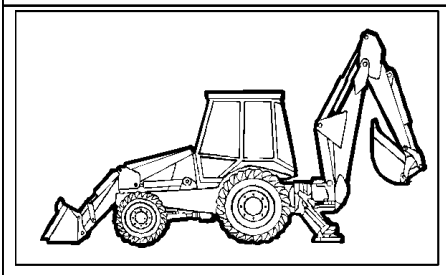

KIT KIT KIT 17 = ●

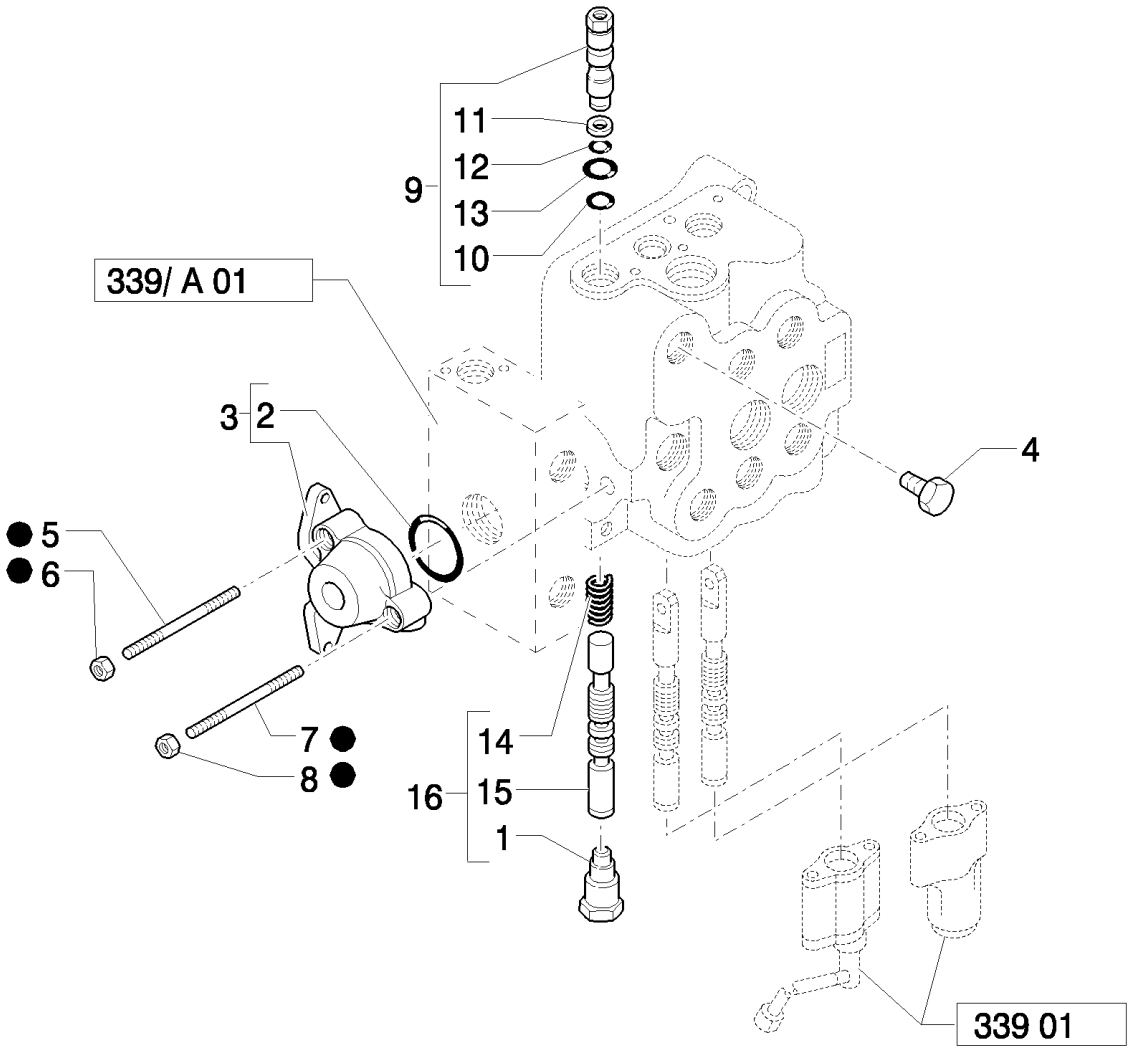

B95LR NA BACKHOE LOADER (1/06-)

339(02) LOADER CONTROL VALVE, THREE SECTION, CAP & UNLOAD VALVE (CENTER PIVOT)

Ref	Numero de Pieza	Ctd	Descripción
1	9968464	1	PLUG, ASSY
2	9968476	1	O-RING,
3	9968443	1	VALVE SECTION, HYD,
4	85807857	1	PLUG,
5	9968439	2	STUD, , Included also in kit 87326258
6	9968441	2	NUT, , Included also in kit 87326258
7	9968438	1	TIE-ROD, THREADED, , Included also in kit 87326258
8	9968440	1	NUT, , Included also in kit 87326258
9	85815667	1	VALVE, BY-PASS,
10	85815668	1	O-RING,
11	9968467	1	RING, BACK-UP,
12	9968466	1	O-RING,
13	9968468	1	O-RING,
14	9968488	1	SPRING,
15	85807858	1	SPOOL,
16	87327632	1	SPOOL,
17	87326258	1	KIT, CONVERSION,

Mechanical Version

339(03) LOADER CONTROL VALVE, THREE SECTION, RELIEF & CHECK VALVES (CENTER PIVOT)

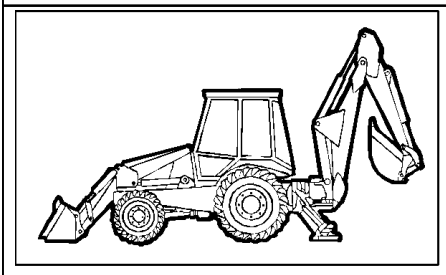

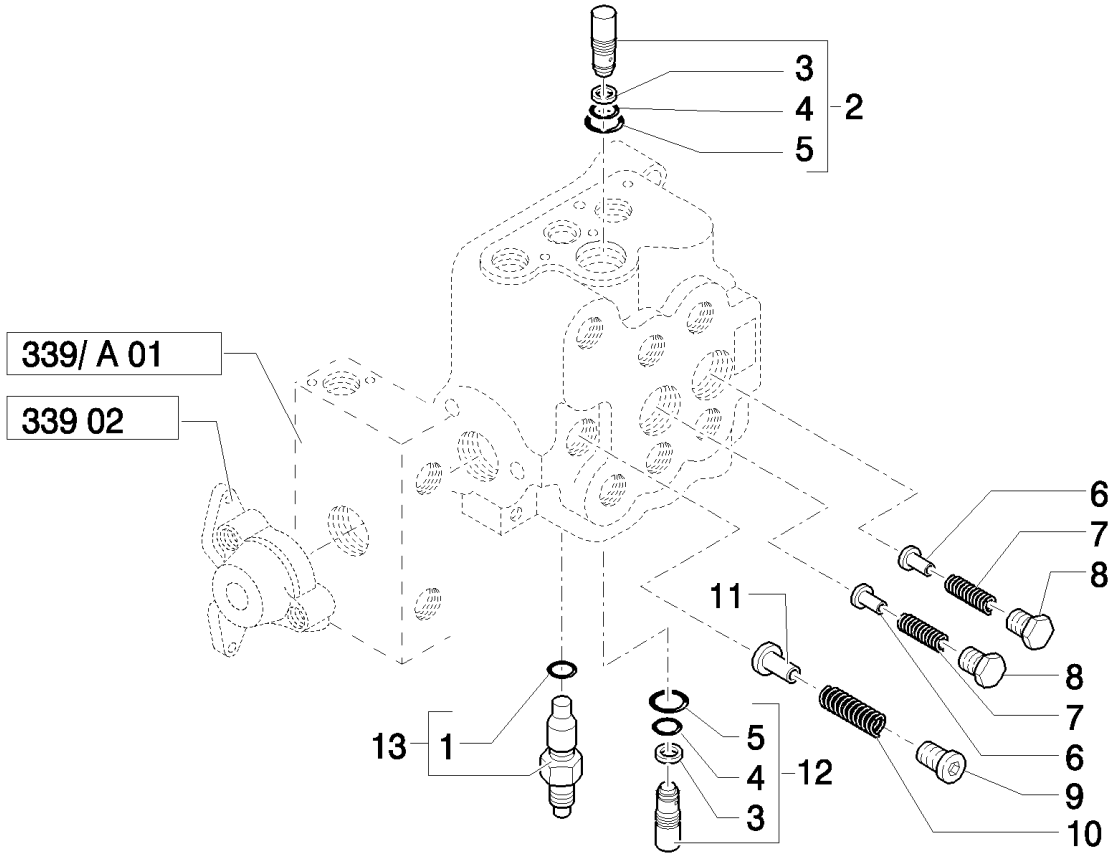

B95LR NA BACKHOE LOADER (1/06-)

339(03) LOADER CONTROL VALVE, THREE SECTION, RELIEF & CHECK VALVES (CENTER PIVOT)

Ref	Numero de Pieza	Ctd	Descripción
1	85819945	1	O-RING, ASSY
2	87302609	1	VALVE, PRESSURE RELIEF,
3	87302608	2	BACK-UP RING,
4	9968471	2	O-RING,
5	9968470	2	O-RING,
6	9968444	2	PLUNGER,
7	9968445	2	SPRING,
8	9968446	2	PLUG,
9	9968449	1	PLUG,
10	9968448	1	SPRING,
11	9968447	1	PLUNGER,
12	87302611	1	VALVE, PRESSURE RELIEF,
13	85819722	1	VALVE, HYDRAULIC,

344(01) STABILIZER CONTROL VALVE, TWO SECTION (CENTER PIVOT)

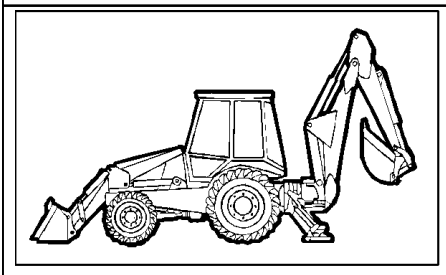

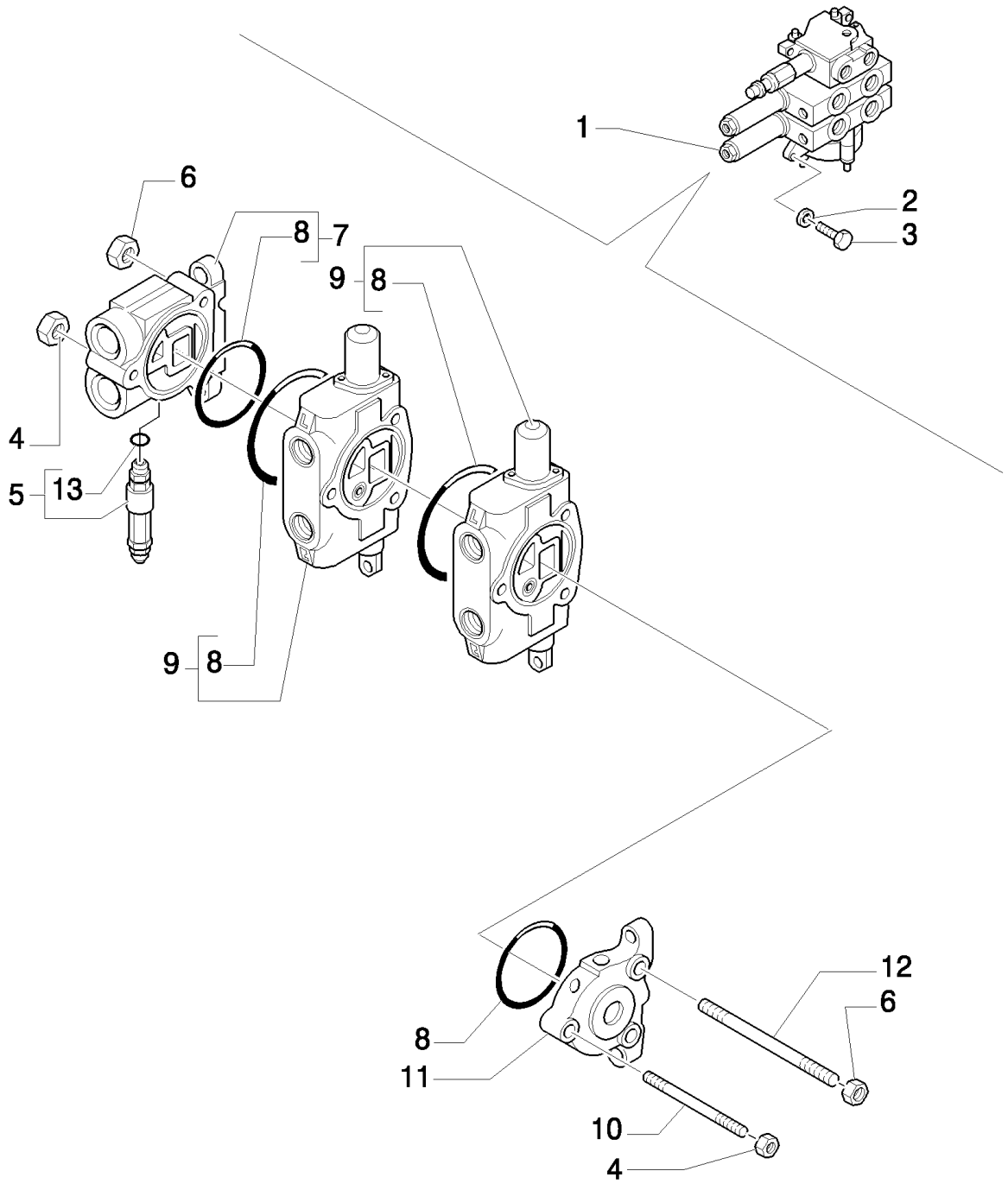

B95LR NA BACKHOE LOADER (1/06-)

344(01) STABILIZER CONTROL VALVE, TWO SECTION (CENTER PIVOT)

Ref	Numero de Pieza	Ctd	Descripción
1	85819684	1	VALVE, CONTROL, Assy
2	11193879	3	WASHER, SPRING, Belleville, M8.4,
3	16043921	3	SCREW, M8x1.25x35
4	9968440	2	NUT,
5	85819721	1	VALVE, HYDRAULIC,
6	9968441	4	NUT,
7	9968524	1	VALVE SECTION, HYD,
8	9968476	4	O-RING,
9	9970107	2	VALVE SECTION, HYD, , See Page 344 02
10	9968533	1	STUD,
11	9968527	1	VALVE SECTION, HYD,
12	9968532	2	STUD,
13	85819945	1	O-RING,

Mechanical Version

344(02) STABILIZER CONTROL VALVE, LH & RH SECTION (CENTER PIVOT)

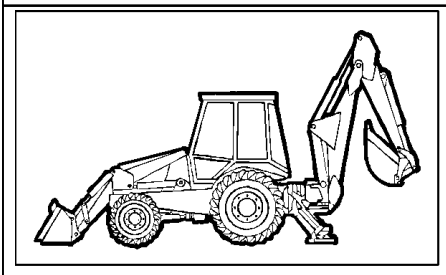

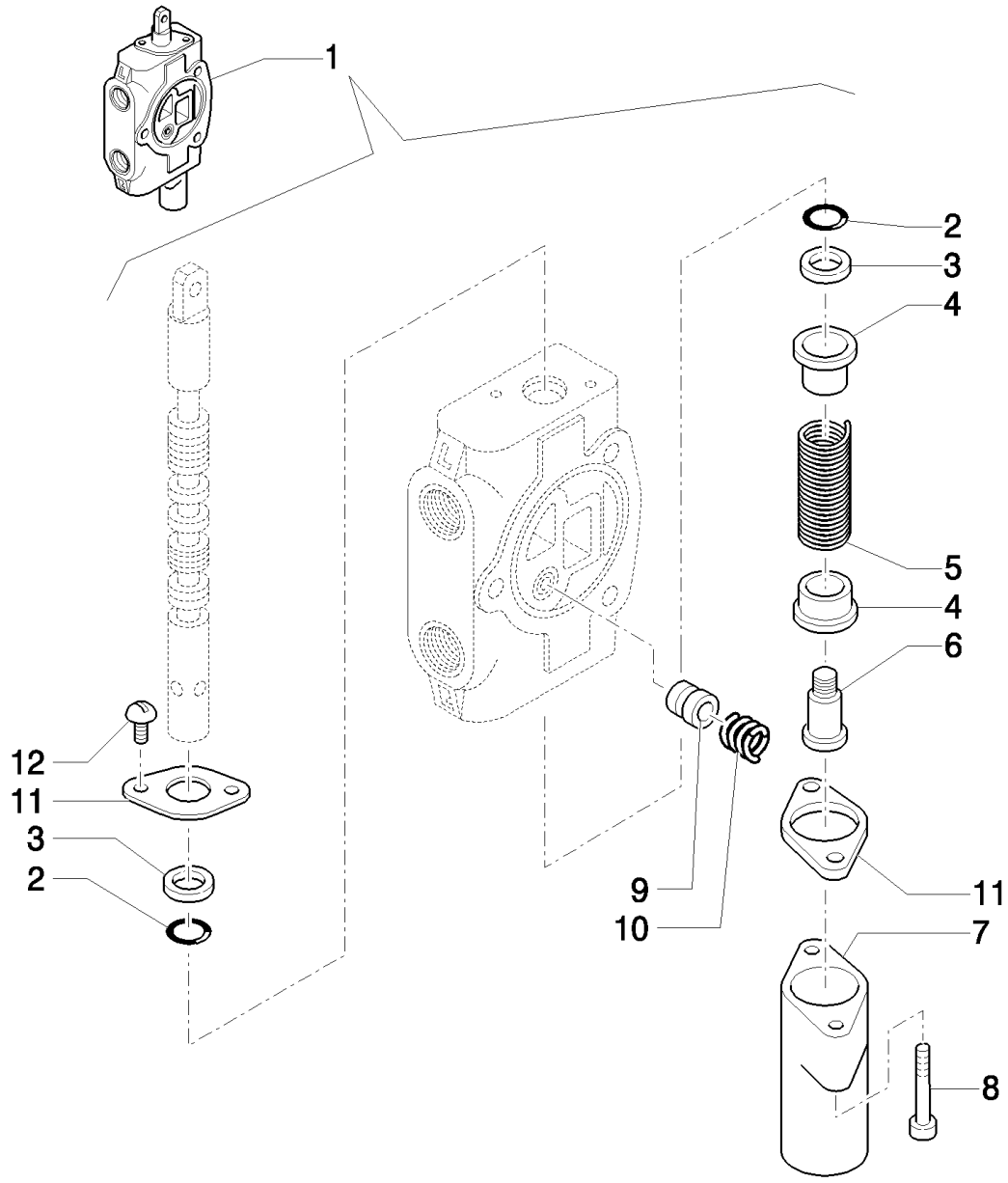

Mechanical Version

B95LR NA BACKHOE LOADER (1/06-)

344(02) STABILIZER CONTROL VALVE, LH & RH SECTION (CENTER PIVOT)

Ref	Numero de Pieza	Ctd	Descripción
1	9970107	1	VALVE SECTION, HYD, ASSY
2	85813418	2	O-RING,
3	85813419	2	WIPER,
4	9968481	2	SEAT,
5	9968531	1	SPRING,
6	9968483	1	SCREW,
7	9968484	1	COVER,
8	9968486	2	SCREW,
9	9968477	1	POPPET,
10	9968478	1	SPRING,
11	9968480	2	FLANGE,
12	9968460	2	SCREW,

Mechanical Version

B95LR NA BACKHOE LOADER (1/06-)

346(01) A/C HOUSING & FILTERS

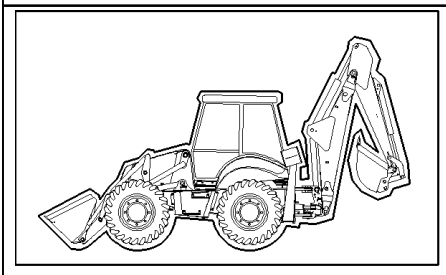

KIT KIT KIT = 16

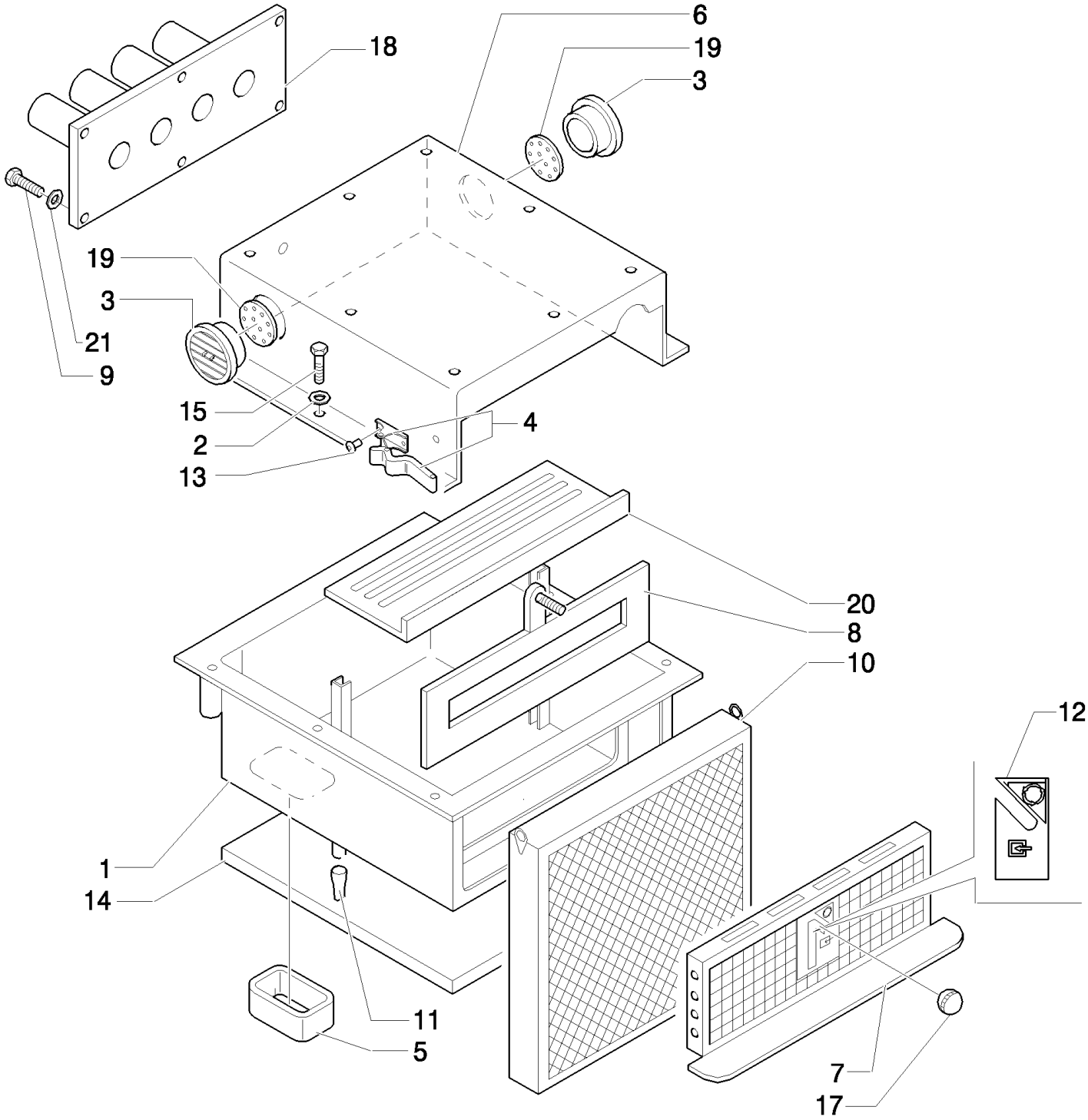

Mechanical Version, From To S/N XXX

B95LR NA BACKHOE LOADER (1/06-)

346(01) A/C HOUSING & FILTERS

Ref	Numero de Pieza	Ctd	Descripción
1	87314323	1	HOUSING,
2	11193974	6	WASHER, SPRING, Belleville, M8.4,
3	87314728	2	INTAKE, AIR,
4	87358140	2	HANDLE GRIP,
5	87314730	1	INSULATION, FOAM,
6	87314328	1	INTAKE, AIR,
7	87314330	1	GRILLE,
8	87314350	1	LID,
9	85819184	6	SCREW,
10	87314367	1	FILTER, CAB,
11	87315029	2	VALVE, DUST,
12	87314351	1	DECAL,
13	87358141	4	RIVET,
14	87314520	1	INSULATION, FOAM,
15	16043624	6	BOLT, Hex, M8 x 25, 8.8, Full Thd,
16	87314518	1	INSULATION, FOAM, - KIT
17	87314353	1	KNOB,
18	87314357	1	DUCT, AIR,
19	87314362	2	BULKHEAD,
20	87314355	1	BOTTOM,
21	11193974	6	WASHER, SPRING, Belleville, M8.4,

Mechanical Version, From To S/N XXX

346(02) A/C BLOWER & COILS

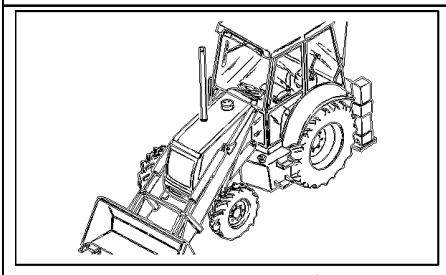

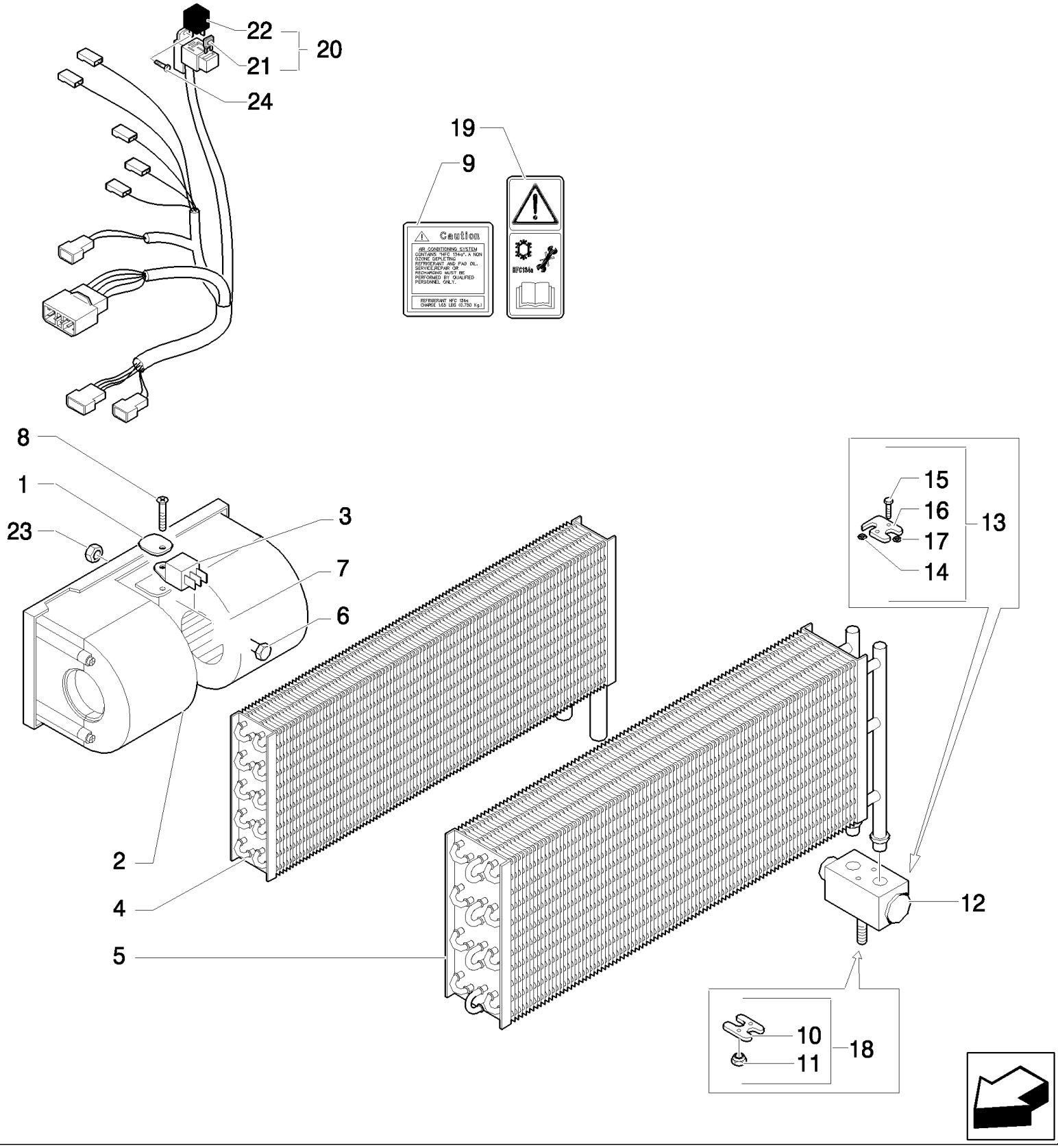

B95LR NA BACKHOE LOADER (1/06-)

346(02) A/C BLOWER & COILS

Ref	Numero de Pieza	Ctd	Descripción
1	85817289	1	PLATE, RETAINING,
2	85813079	1	BLOWER, ELECTRIC,
3	85804041	1	RESISTOR,
4	87314527	1	HEATER,
5	87314369	1	EVAPORATOR,
6	10902424	1	BOLT, Hex, M6 x 20, 8.8, Full Thd,
7	11197774	1	WASHER, SPRING, Belleville, M6.4,
8	85817189	1	SCREW,
9	87324469	1	DECAL,
10	85805008	1	FLANGE,
11	14040611	1	NUT,
12	87314524	1	VALVE, CONTROL,
13	85804038	1	FLANGE,
14	85805003	1	O-RING,
15	85805004	2	SCREW,
16	85805005	1	FLANGE,
17	85805006	1	O-RING,
18	85821131	1	FLANGE,
19	85804441	1	DECAL,
20	87314517	1	HARNESS, WIRE,
21	11055290	1	FUSE,
22	85805144	1	RELAY,
23	12574211	1	NUT, LOCK, M6 x 1, Cl 8,
24	85819184	1	SCREW,

Mechanical Version, From To S/N XXX

346(03) HEATER COIL HOSES

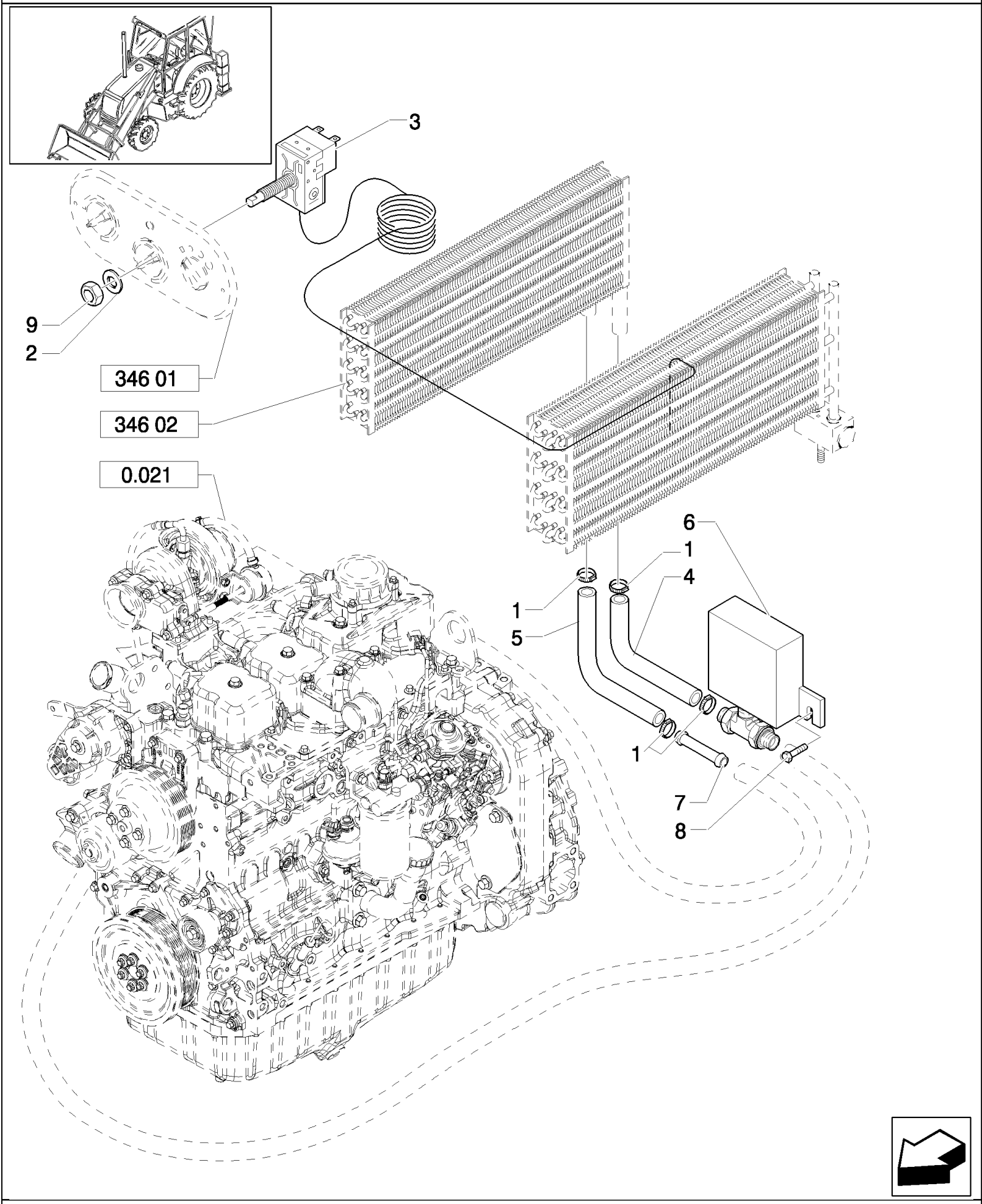

Mechanical Version, From To S/N XXX

B95LR NA BACKHOE LOADER (1/06-)

346(03) HEATER COIL HOSES

Ref	Numero de Pieza	Ctd	Descripción
1	87314726	4	CLAMP, HOSE,
2	85817295	1	NUT,
3	87314526	1	THERMOSTAT,
4	87318747	1	HOSE, FLEXIBLE,
5	87318750	1	HOSE, FLEXIBLE,
6	87314554	1	DRAINCOCK/TAP, SUPPLY,
7	85804051	1	TUBE,
8	85819184	2	SCREW,
9	87358348	1	WASHER,

Mechanical Version, From To S/N XXX

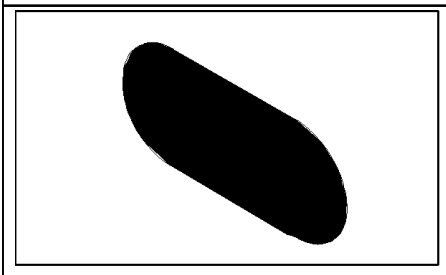

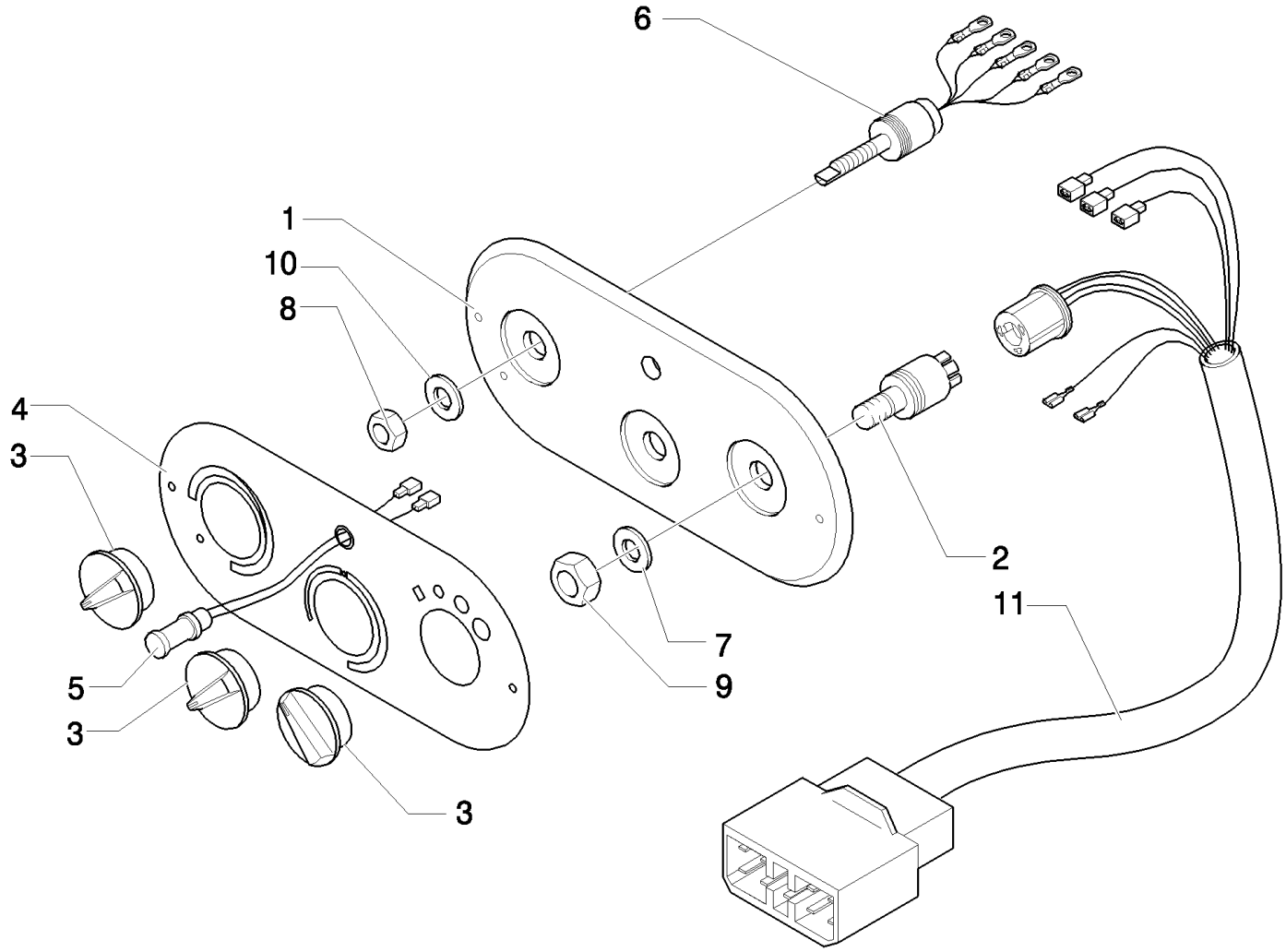
6
1
10
8
4
3
5
3
3
7
9
2
11

B95LR NA BACKHOE LOADER (1/06-)

346(04) A/C & HEATER CONTROL PANEL

Ref	Numero de Pieza	Ctd	Descripción
1	87314743	1	DASHBOARD,
2	87314747	1	SWITCH,
3	87314749	3	KNOB,
4	87314750	1	DECAL,
5	87314751	1	BULB,
6	87314753	1	POTENTIOMETER,
7	87358348	1	WASHER, 13X20
8	87334860	1	NUT,
9	87334861	1	NUT, 12,5X18X1,5
10	87358349	1	WASHER, 10,5X16X1,5
11	87314522	1	HARNESS, WIRE,

Mechanical Version, From To S/N XXX

B95LR NA BACKHOE LOADER (1/06-)

346(05) A/C & HEATER CONSOLE DUCTS

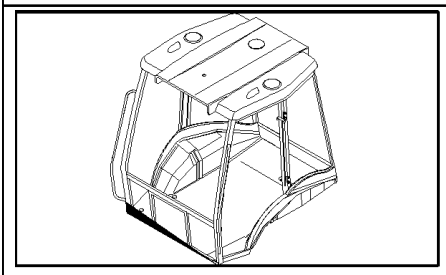

B95LR NA BACKHOE LOADER (1/06-)

346(05) A/C & HEATER CONSOLE DUCTS

Ref	Numero de Pieza	Ctd	Descripción
1	85819452	5	HOSE,
2	85819451	1	HOSE,
3	87314771	1	DUCT, AIR,
4	87314772	2	DUCT, AIR,
5	87314773	1	DUCT, AIR,
6	87319448	1	DUCT, AIR,
7	85819454	2	DIFFUSER,
8	87314946	1	DISTRIBUTOR,
9	87314947	1	DISTRIBUTOR,
10	87314948	1	ELBOW,
11	85819453	1	ELBOW,
12	14440327	4	SCREW, Hex Soc Flat Hd, M4 x 20, 8.8,
13	87362065	4	DIFFUSER, , Includes 14
14	87362071	4	REDUCER,
15	87319437	1	DUCT, AIR,
16	85818891	1	ELBOW,
17	87314767	2	DUCT, AIR,
18	87314769	2	DUCT, AIR,
19	85813324	6	CLAMP, HOSE,
20	13000990	2	CLAMP, HOSE,
21	87319443	1	DUCT, AIR,
22	5112712	12	CLIP, HOSE, M4.8 x 283,
23	87319453	1	ELBOW,

346/1(01) TRANSFORMATION SET FROM HEATING TO AIR CONDITIONING

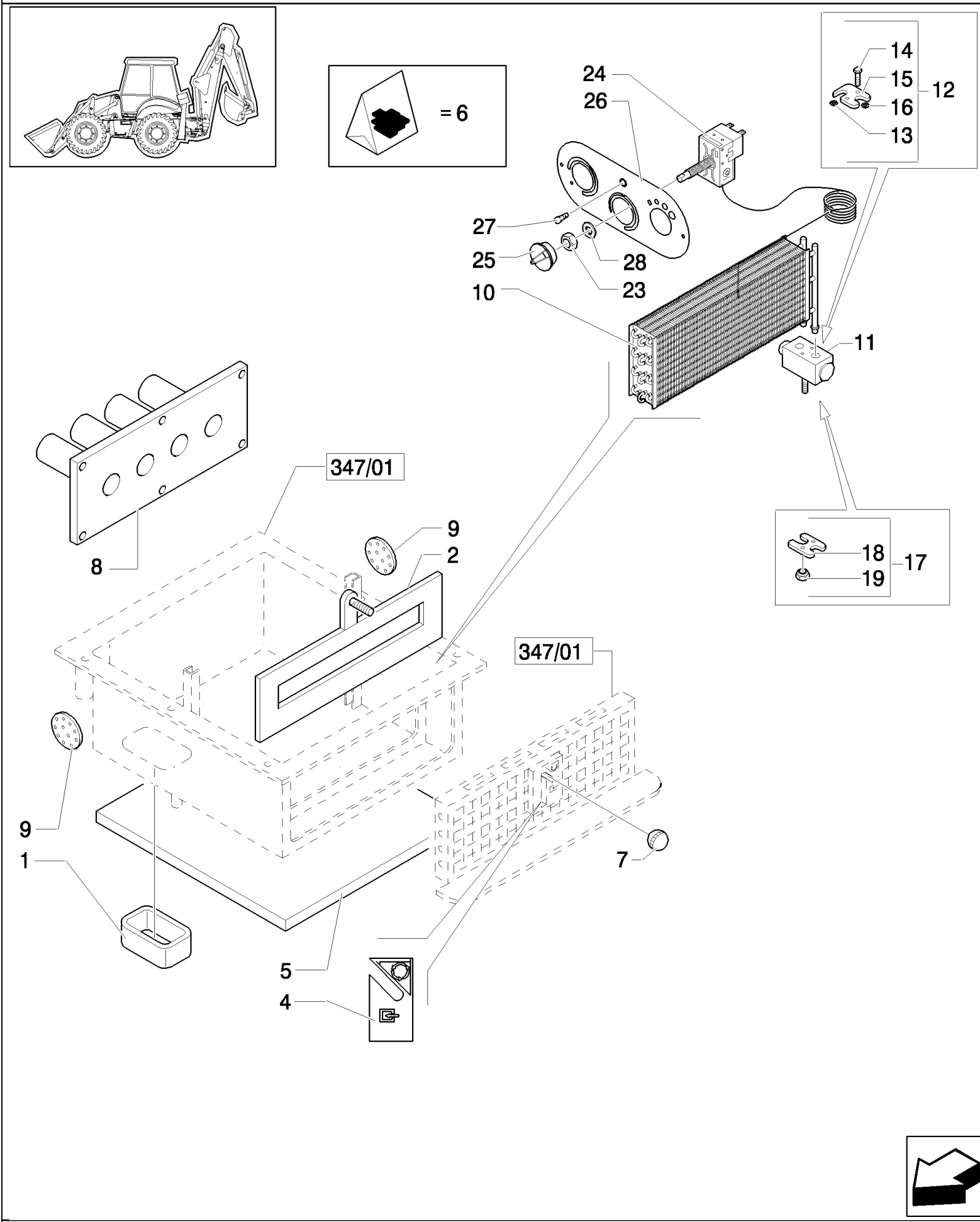

B95LR NA BACKHOE LOADER (1/06-)

346/1(01) TRANSFORMATION SET FROM HEATING TO AIR CONDITIONING

Ref	Numero de Pieza	Ctd	Descripción
1	87314730	1	INSULATION, FOAM,
2	87314350	1	LID,
4	87314351	1	DECAL,
5	87314520	1	INSULATION, FOAM,
6	87314518	1	INSULATION, FOAM,
7	87314353	1	KNOB,
8	87314357	1	DUCT, AIR,
9	87314362	2	BULKHEAD,
10	87314369	1	EVAPORATOR,
11	87314524	1	VALVE, CONTROL,
12	85804038	1	FLANGE,
13	85805003	1	O-RING,
14	85805004	2	SCREW,
15	85805005	1	FLANGE,
16	85805006	1	O-RING,
17	85821131	1	FLANGE,
18	85805008	1	FLANGE,
19	14040611	1	NUT,
23	85817295	1	NUT,
24	87314526	1	THERMOSTAT,
25	87314749	1	KNOB,
26	87314750	1	DECAL,
27	87314751	1	BULB,
28	87314757	1	WASHER, SEALING,

Mechanical Version, From To S/N XXX

346/1(02) TRANSFORMATION SET FROM HEATING TO AIR CONDITIONING

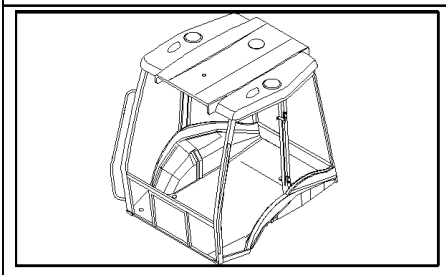

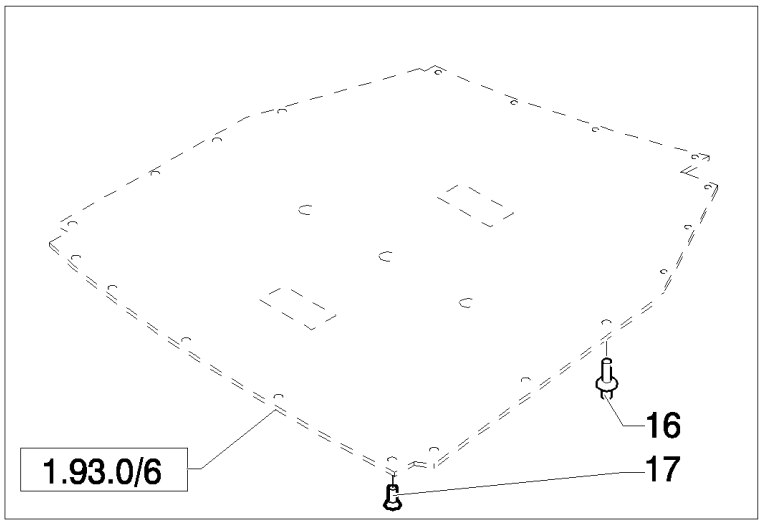

Mechanical Version, From To S/N XXX

B95LR NA BACKHOE LOADER (1/06-)

346/1(02) TRANSFORMATION SET FROM HEATING TO AIR CONDITIONING

Ref	Numero de Pieza	Ctd	Descripción
1	85819452	3	HOSE,
2	85819451	1	HOSE,
3	87314771	1	DUCT, AIR,
4	87314772	2	DUCT, AIR,
5	87314773	1	DUCT, AIR,
6	87319448	1	DUCT, AIR,
7	85819454	2	DIFFUSER,
8	87314946	1	DISTRIBUTOR,
9	87314947	1	DISTRIBUTOR,
10	87314948	1	ELBOW,
11	85819453	2	ELBOW,
12	85819544	2	DIFFUSER, , UP TO S/N 031056941
12	87362068	4	OUTLET, , FROM S/N 031056942
13	5112712	3	CLIP, HOSE, M4.8 x 283,
14	13000690	4	CLAMP, HOSE,
15	14440327	4	SCREW, Hex Soc Flat Hd, M4 x 20, 8.8,
16	5162852	21	FASTENER,
17	85805777	1	PLUG,
18	F1NN94000Z36AA	12	DRAWBAR, SWINGING,

Mechanical Version, From To S/N XXX

B95LR NA BACKHOE LOADER (1/06-)

347(01) HOUSING & FILTERS

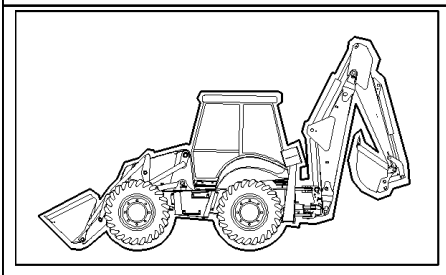

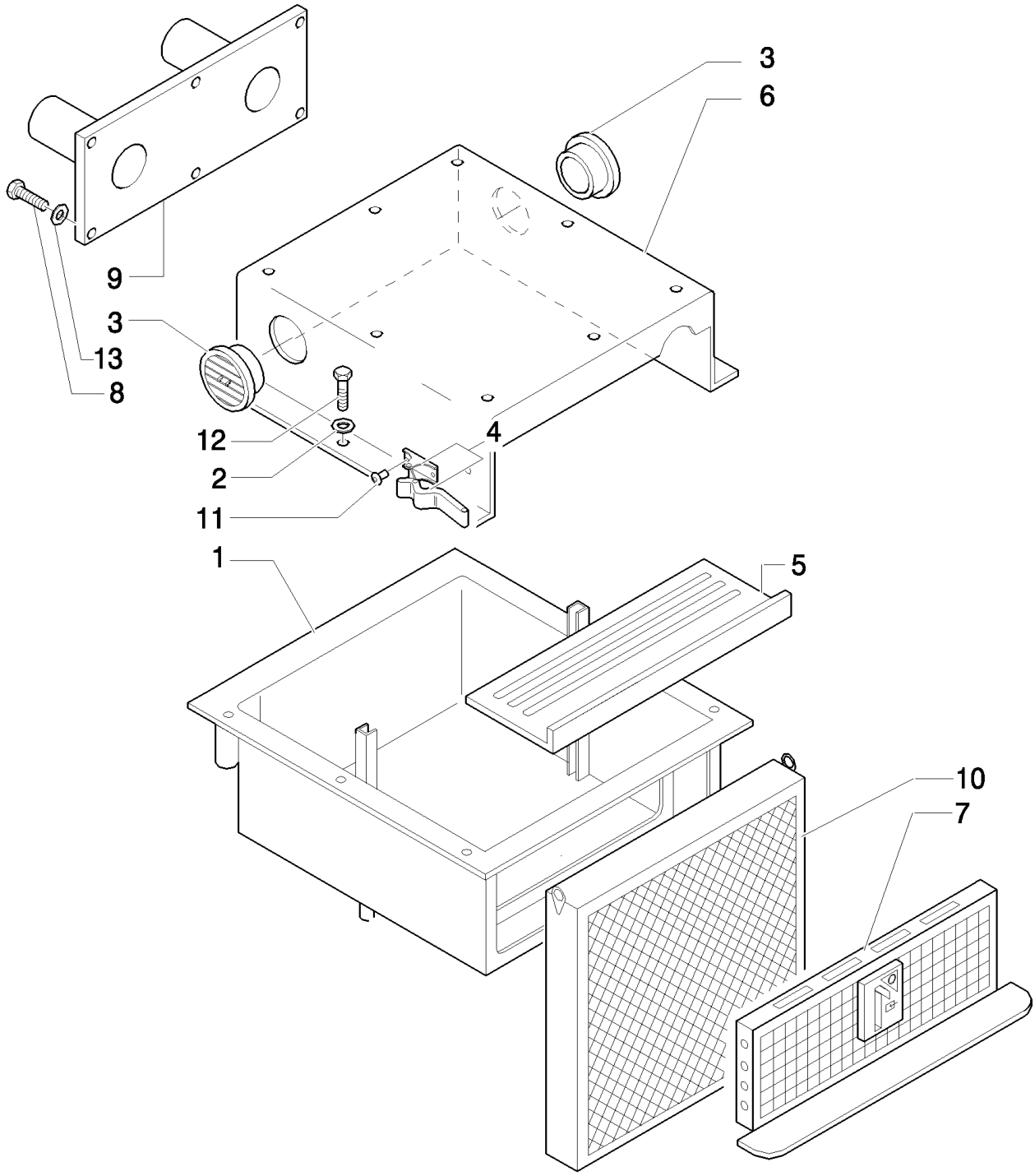

Mechanical Version, From To S/N XXX

B95LR NA BACKHOE LOADER (1/06-)

347(01) HOUSING & FILTERS

Ref	Numero de Pieza	Ctd	Descripción
1	87314323	1	HOUSING,
2	11193974	6	WASHER, SPRING, Belleville, M8.4,
3	87314728	2	INTAKE, AIR,
4	87358140	2	HANDLE GRIP,
5	87314355	1	BOTTOM,
6	87314328	1	INTAKE, AIR,
7	87314330	1	GRILLE,
8	85819184	6	SCREW,
9	87316439	1	DUCT, AIR,
10	87314367	1	FILTER, CAB,
11	87358141	4	RIVET,
12	16043624	6	BOLT, Hex, M8 x 25, 8.8, Full Thd,
13	11193974	1	WASHER, SPRING, Belleville, M8.4,

Mechanical Version, From To S/N XXX

B95LR NA BACKHOE LOADER (1/06-)

347(02) HEATER BLOWER & COILS

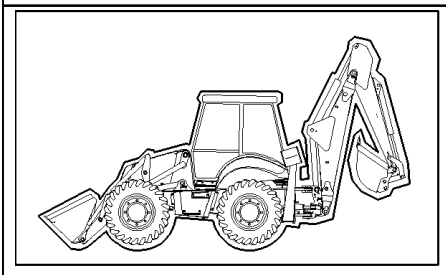

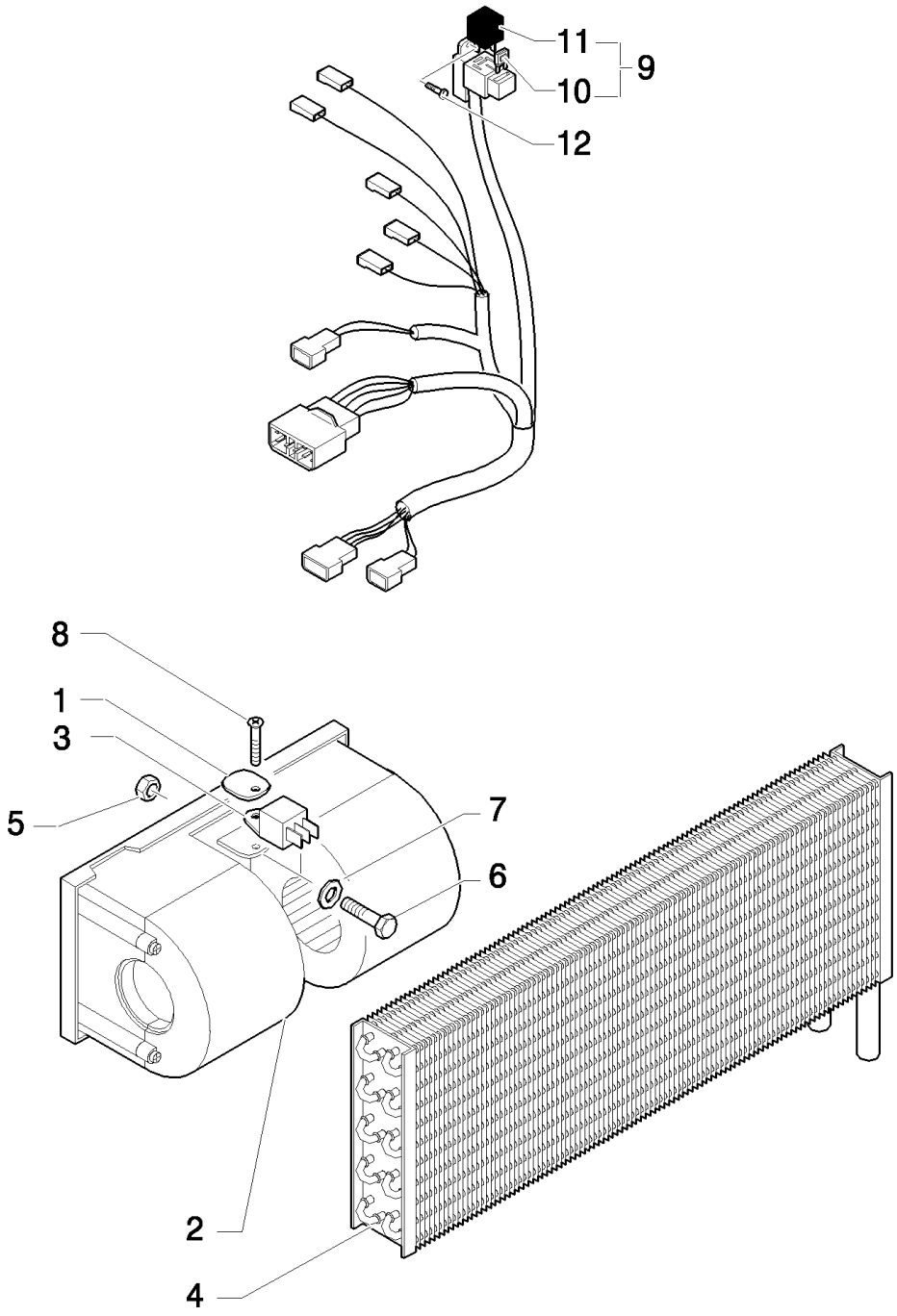

Mechanical Version, From To S/N XXX

B95LR NA BACKHOE LOADER (1/06-)

347(02) HEATER BLOWER & COILS

Ref	Numero de Pieza	Ctd	Descripción
1	85817289	1	PLATE, RETAINING,
2	85813079	1	BLOWER, ELECTRIC,
3	85804041	1	RESISTOR,
4	87314527	1	HEATER,
5	12574211	1	NUT, LOCK, M6 x 1, Cl 8,
6	10902424	1	BOLT, Hex, M6 x 20, 8.8, Full Thd,
7	11197774	1	WASHER, SPRING, Belleville, M6.4,
8	85817189	1	SCREW,
9	87314517	1	HARNESS, WIRE,
10	11054990	1	FUSE, 10 Amp
11	85821537	1	RELAY,
12	85819184	1	SCREW,

Mechanical Version, From To S/N XXX

B95LR NA BACKHOE LOADER (1/06-)

347(03) HEATER COIL HOSES

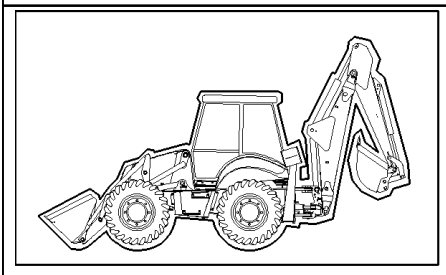

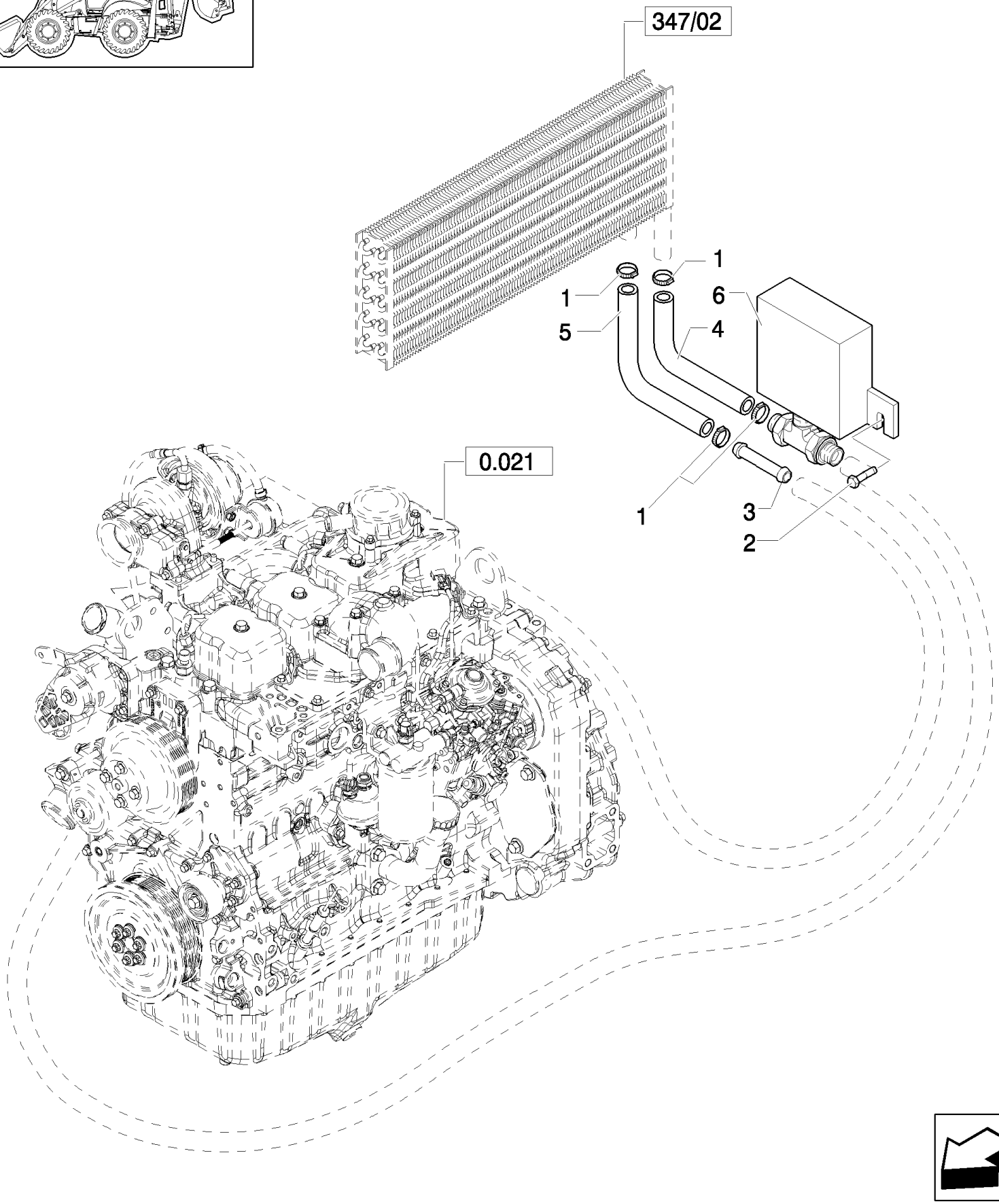

Mechanical Version, From To S/N XXX

B95LR NA BACKHOE LOADER (1/06-)

347(03) HEATER COIL HOSES

Ref	Numero de Pieza	Ctd	Descripción
1	87314726	4	CLAMP, HOSE,
2	85819184	2	SCREW,
3	85804051	1	TUBE,
4	87318747	1	HOSE, FLEXIBLE,
5	87318750	1	HOSE, FLEXIBLE,
6	87314554	1	DRAINCOCK/TAP, SUPPLY,

Mechanical Version, From To S/N XXX

B95LR NA BACKHOE LOADER (1/06-)

347(04) HEATER CONTROL PANEL

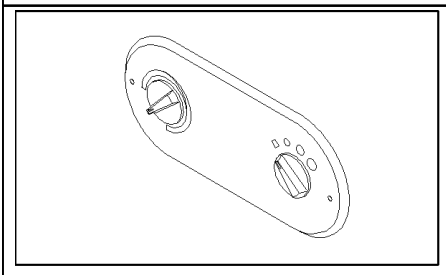

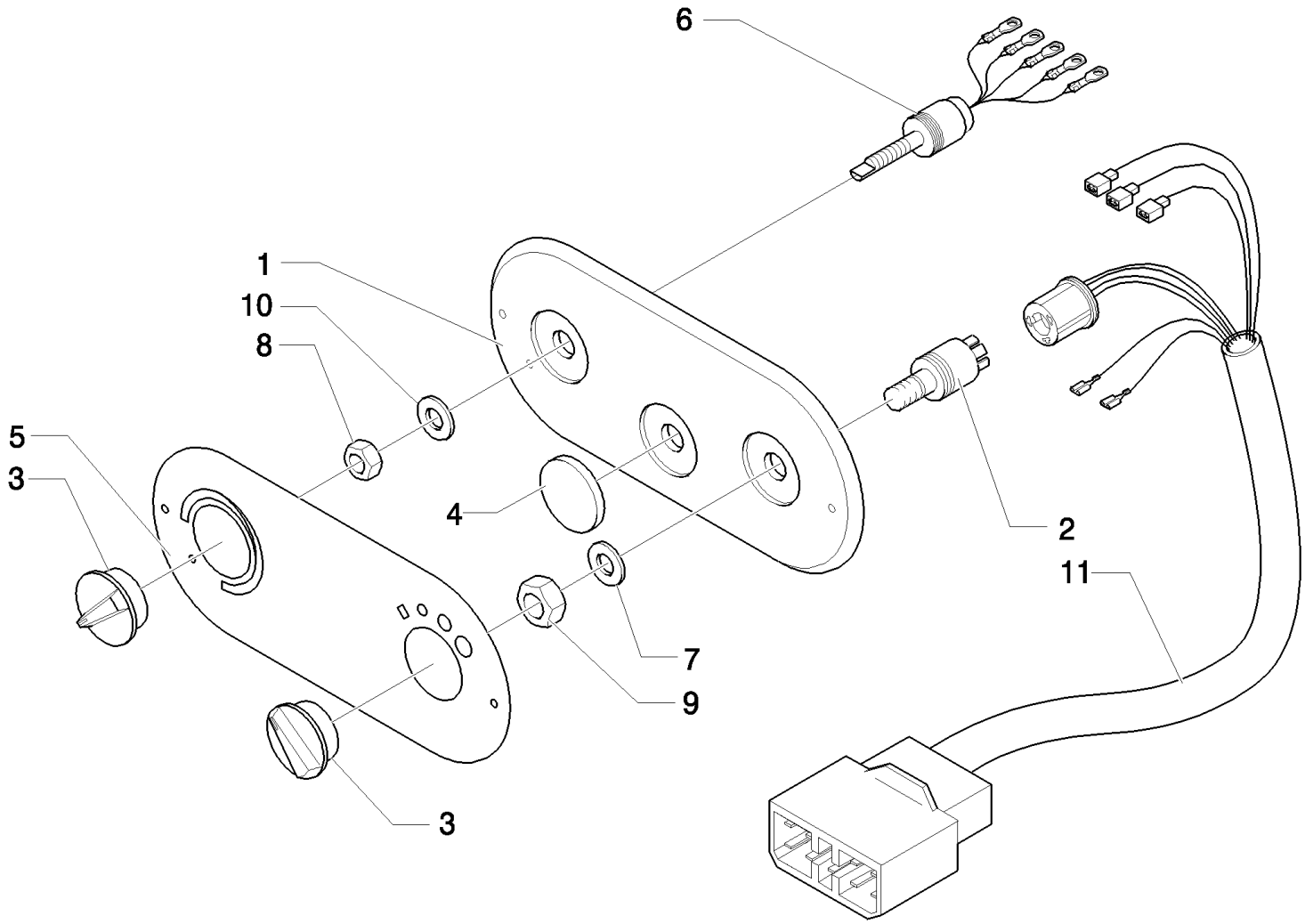

Mechanical Version, From To S/N XXX

B95LR NA BACKHOE LOADER (1/06-)

347(04) HEATER CONTROL PANEL

Ref	Numero de Pieza	Ctd	Descripción
1	87314743	1	DASHBOARD,
2	87314747	1	SWITCH,
3	87314749	2	KNOB,
4	87316442	1	PLUG,
5	87316443	2	DECAL, 13X20
6	87314753	1	POTENTIOMETER,
7	87358348	1	WASHER, 12,5X18X1,5
8	87334860	1	NUT,
9	87334861	1	NUT,
10	87358349	1	WASHER, 10,5X16X1,5
11	87314522	1	HARNESS, WIRE,

Mechanical Version, From To S/N XXX

347(05) HEATER CONSOLE DUCTS

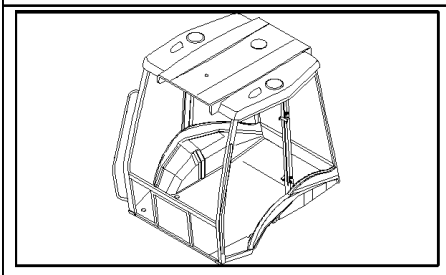

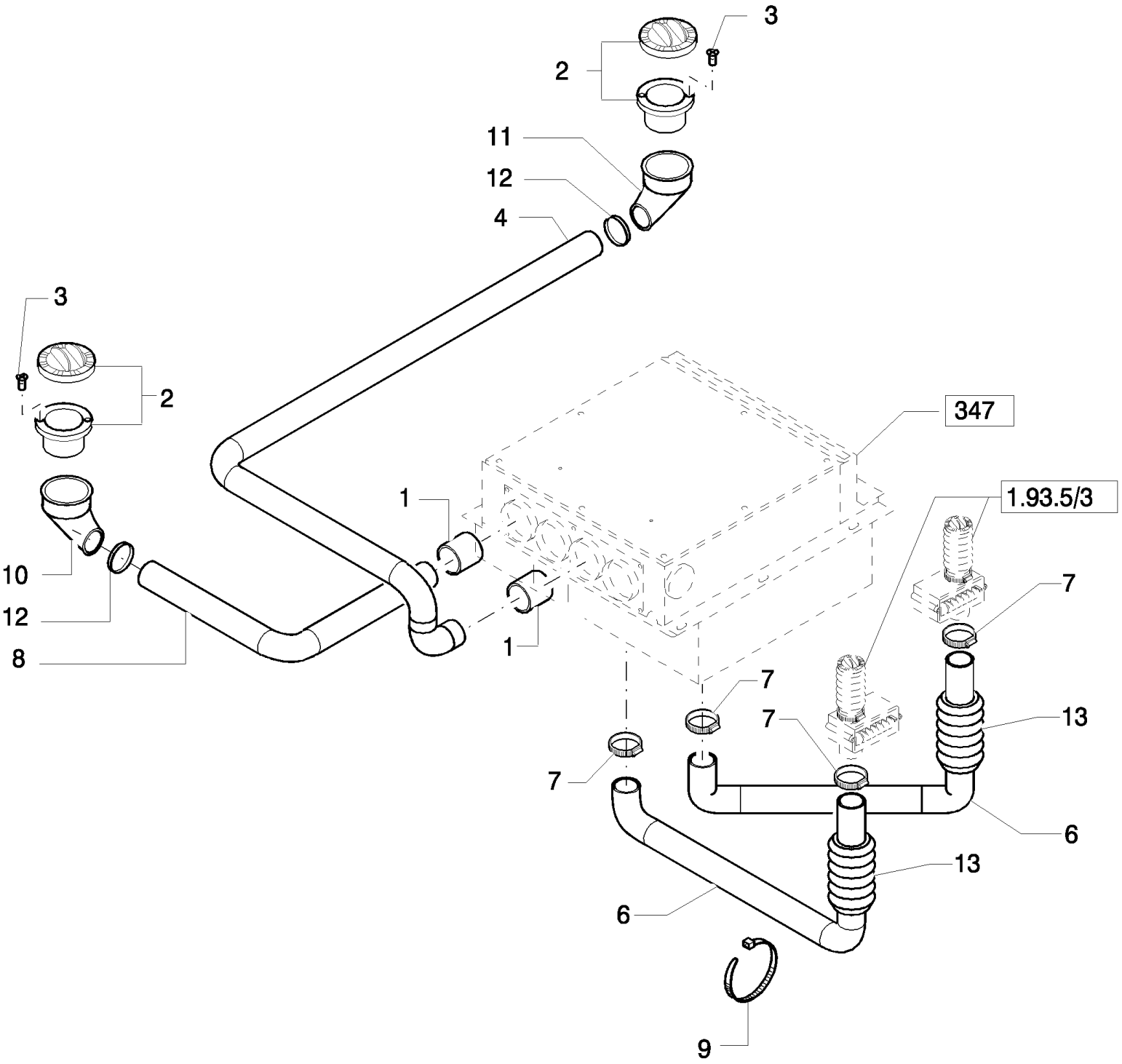

B95LR NA BACKHOE LOADER (1/06-)

347(05) HEATER CONSOLE DUCTS

Ref	Numero de Pieza	Ctd	Descripción
1	85819452	2	HOSE,
2	70741298	2	DIFFUSER, , UP TO S/N 031056941
2	87362068	2	OUTLET, , FROM S/N 031056942
3	15915901	4	
4	87319437	1	DUCT, AIR,
6	87314767	2	DUCT, AIR,
7	13000990	4	CLAMP, HOSE,
8	87319443	1	DUCT, AIR,
9	5112712	12	CLIP, HOSE, M4.8 x 283,
10	87319453	2	ELBOW,
11	85818891	1	ELBOW, , UP TO S/N 031056941
12	85813324	2	CLAMP, HOSE,
13	87314769	2	DUCT, AIR,

Mechanical Version, From To S/N XXX

347(06) CAB HEATING COATING PLUG

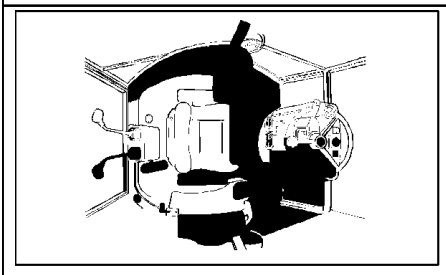

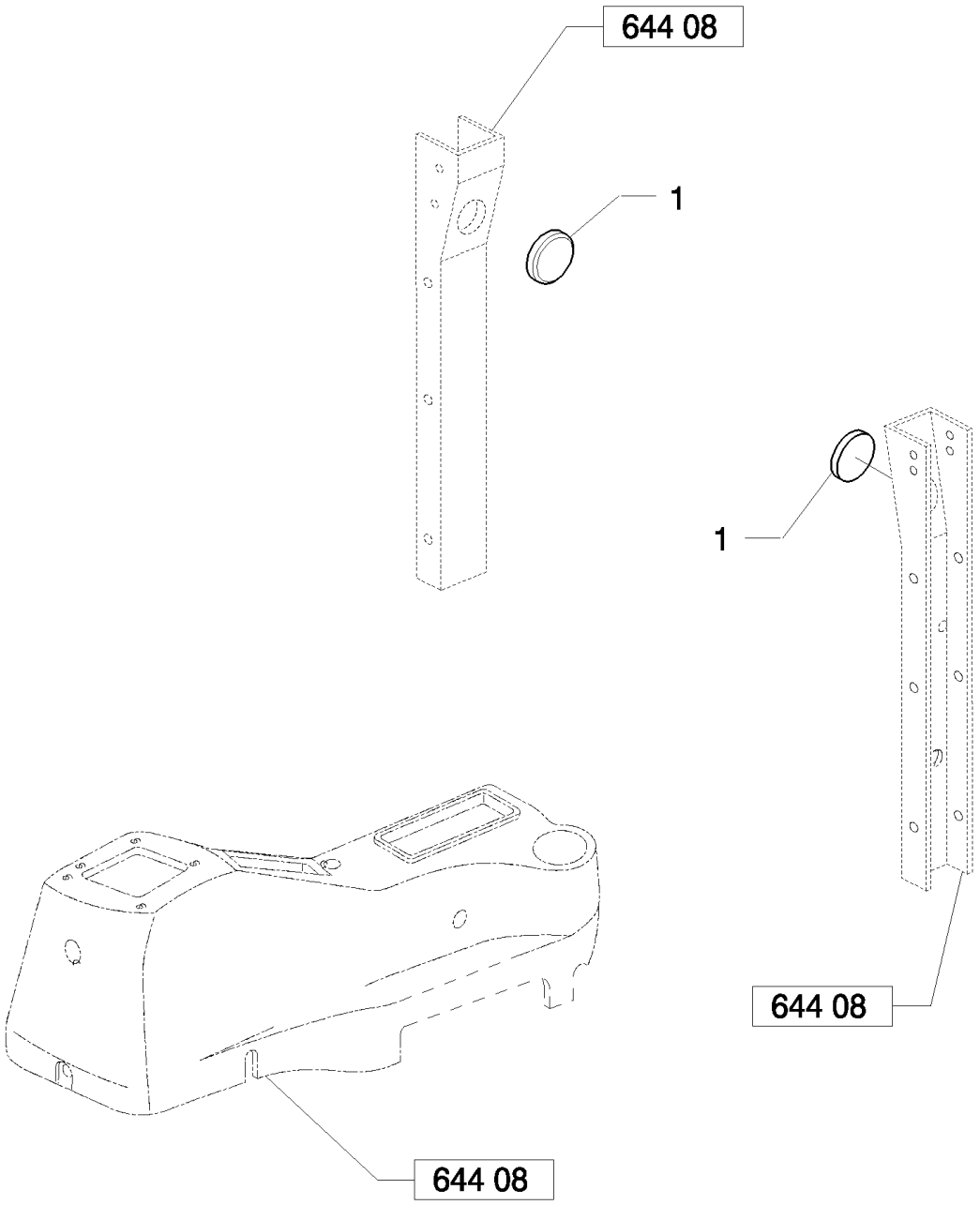

B95LR NA BACKHOE LOADER (1/06-)

347(06) CAB HEATING COATING PLUG

Ref	Numero de Pieza	Ctd	Descripción
1	87319018	2	PLUG,

Mechanical Version, From To S/N XXX

351(04) CASE 3 LEVER BACKHOE CONTROLS, CONSOLE & LEVERS

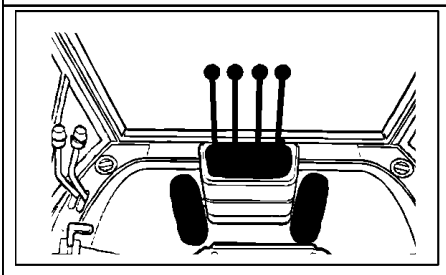

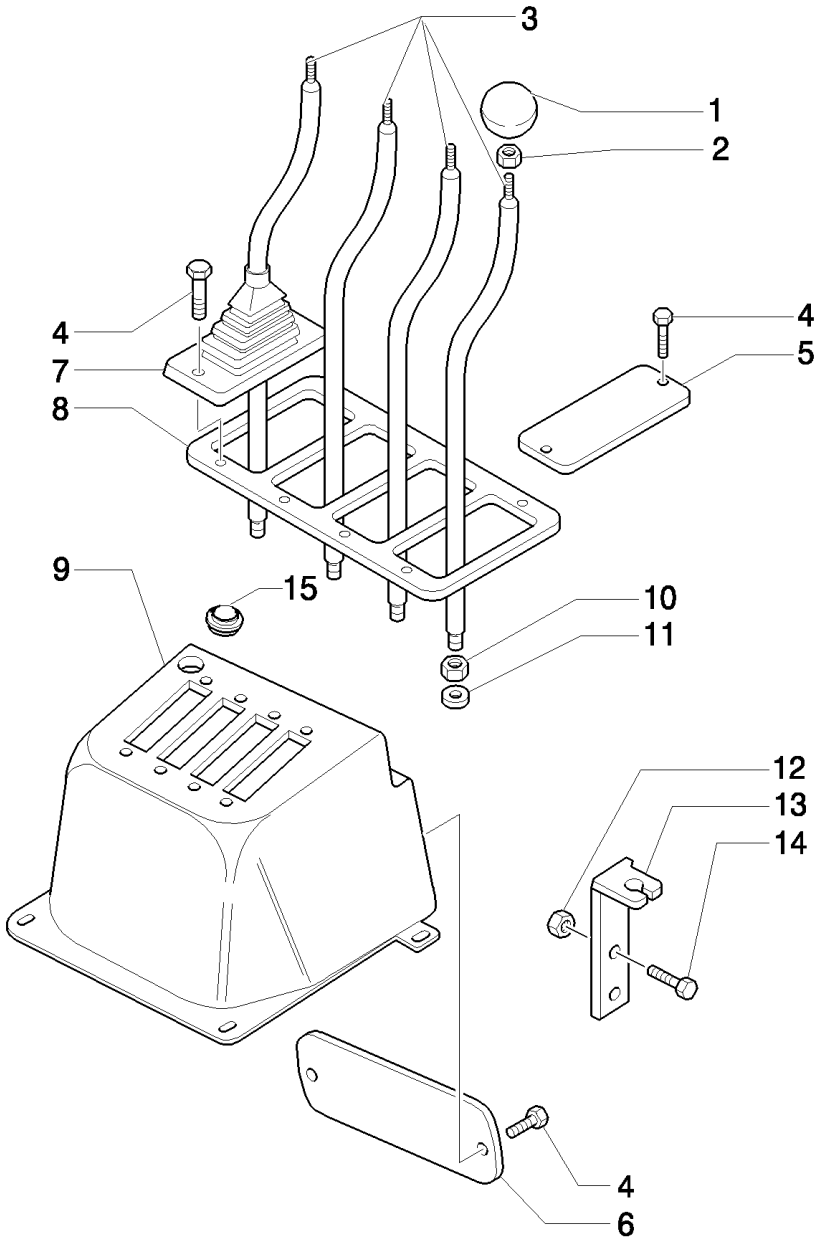

B95LR NA BACKHOE LOADER (1/06-)

351(04) CASE 3 LEVER BACKHOE CONTROLS, CONSOLE & LEVERS

Ref	Numero de Pieza	Ctd	Descripción
1	85805242	4	KNOB,
2	15500111	4	NUT, M10 x 1.5
3	85804780	4	LEVER,
4	13272477	10	SCREW, Cross Pan Hd, M4 x 20, 12.9,
5	85804159	1	PLATE,
6	85804781	1	COVER,
7	85803382	4	BOOT,
8	85803540	1	PLATE,
9	85805239	1	CONSOLE,
10	16101511	4	NUT, M12 x 1.25, Cl 8,
11	11190779	4	WASHER, SPRING, Belleville, M13,
12	16104111	2	NUT, LOCK, M8 x 1.25, Cl 8, w/Cab
13	85805635	1	SUPPORT, w/Cab
14	16043621	2	BOLT, Hex, M8 x 25, 8.8, w/Cab
15	85802227	1	PLUG,

Mechanical Version

351(05) CASE 3 LEVER BACKHOE CONTROLS, BELLCRANK & SUPPORT

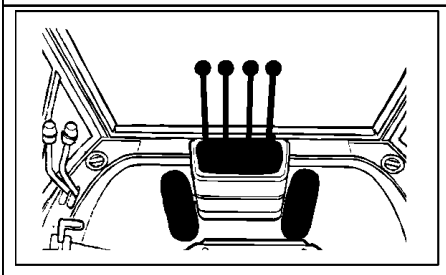

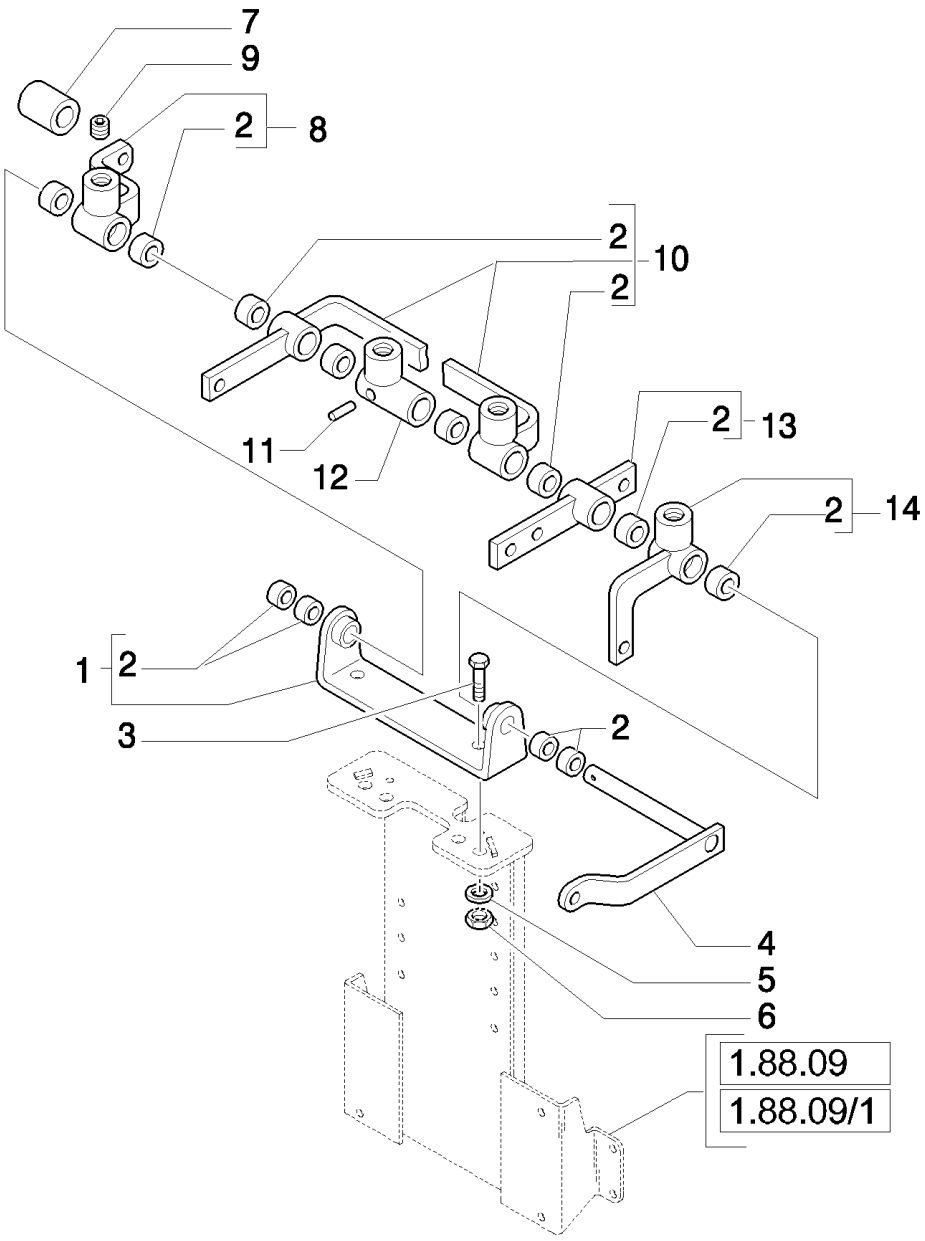

B95LR NA BACKHOE LOADER (1/06-)

351(05) CASE 3 LEVER BACKHOE CONTROLS, BELLCRANK & SUPPORT

Ref	Numero de Pieza	Ctd	Descripción
1	85802647	1	SUPPORT,
2	85802494	AR	BUSHING, 16X19X8
3	15540421	2	BOLT, Hex, M12 x 1.25 x 30, 8.8, Full Thd,
4	85805059	1	PIN,
5	11190779	2	WASHER, SPRING, Belleville, M13,
6	16101511	2	NUT, M12 x 1.25, Cl 8,
7	85805056	1	SPACER,
8	85805632	1	BELLCRANK, W/CAB
8	85805250	1	BELLCRANK, w/ROPS
9	13812631	1	SET SCREW, Hex Soc, M12 x 12, Flat Pt,
10	85805047	1	BELLCRANK, Assy
11	13940370	1	PIN, ROLL, M5 x 26, Coiled,
12	85805057	1	BELLCRANK,
13	85805049	1	BELLCRANK, Assy
14	85805053	1	BELLCRANK, Assy

Mechanical Version

351(06) CASE 3 LEVER BACKHOE CONTROLS, BUCKET TIE-ROD ASSEMBLY

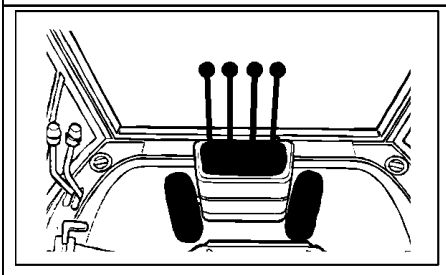

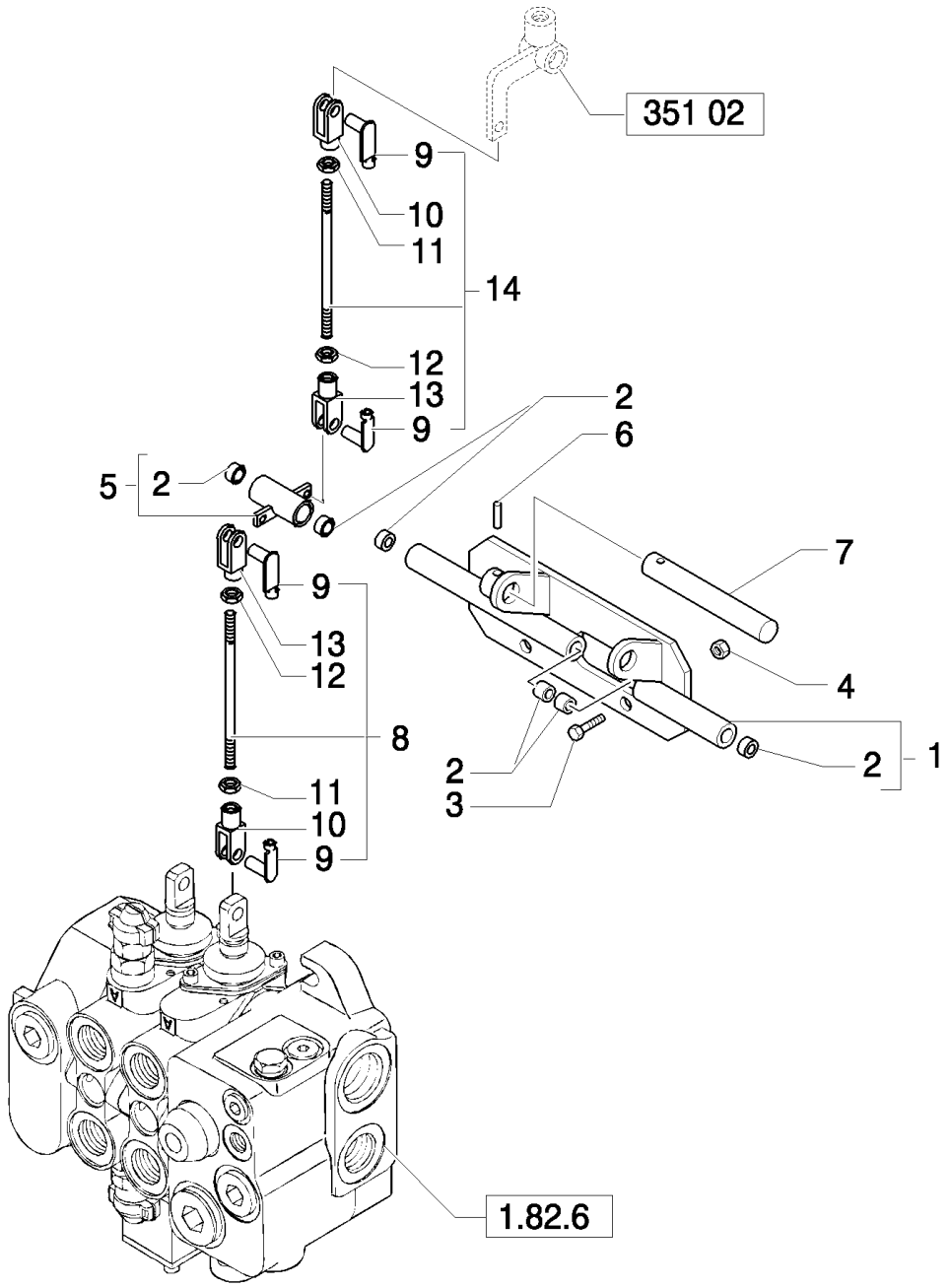

B95LR NA BACKHOE LOADER (1/06-)

351(06) CASE 3 LEVER BACKHOE CONTROLS, BUCKET TIE-ROD ASSEMBLY

Ref	Numero de Pieza	Ctd	Descripción
1	85805625	1	SUPPORT, w/Cab
1	85805040	1	SUPPORT, W/ROPS
2	85802494	AR	BUSHING, 16X19X8
3	16043621	4	BOLT, Hex, M8 x 25, 8.8,
4	16104111	4	NUT, LOCK, M8 x 1.25, Cl 8,
5	85805043	1	BELLCRANK,
6	13940370	1	PIN, ROLL, M5 x 26, Coiled,
7	85805042	1	PIN,
8	85803447	1	TIE-ROD,
9	85802738	4	RETAINER,
10	10007871	2	YOKE, RH
11	16102311	2	NUT, Thin, M8 x 1.25, Cl 04,
12	16102911	2	NUT, Thin, M8 x 1.25, Cl 04, LH,
13	11991971	2	CLEVIS, LH
14	85805046	1	TIE-ROD,

Mechanical Version

351(07) CASE 3 LEVER BACKHOE CONTROLS, UPPER SWING TIE-ROD ASSEMBLY

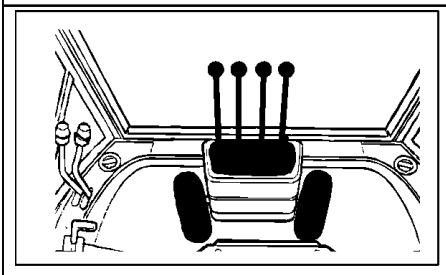

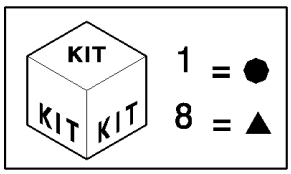

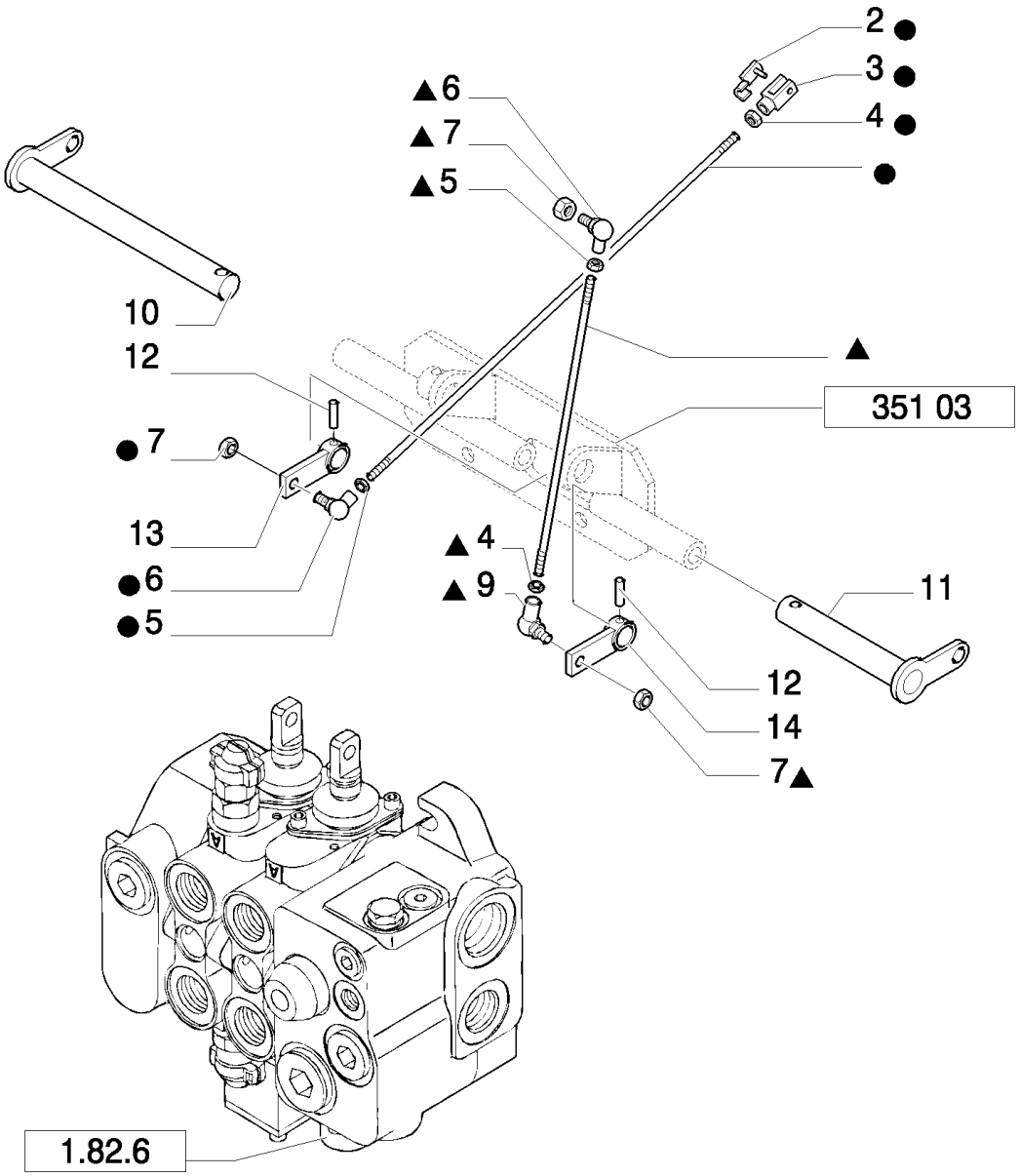

B95LR NA BACKHOE LOADER (1/06-)

351(07) CASE 3 LEVER BACKHOE CONTROLS, UPPER SWING TIE-ROD ASSEMBLY

Ref	Numero de Pieza	Ctd	Descripción
1	85805033	1	TIE-ROD,
2	85802738	1	RETAINER,
3	11991971	1	CLEVIS, LH
4	16102911	2	NUT, Thin, M8 x 1.25, Cl 04, LH,
5	16102311	2	NUT, Thin, M8 x 1.25, Cl 04,
6	85804375	2	BALL JOINT, RH
7	14048211	3	NUT, LOCK, M8 x 1.25, Cl 8,
8	85805035	1	TIE-ROD,
9	85804376	1	BALL JOINT, LH
10	85805629	1	PIN, LH w/Cab
10	85805039	1	PIN, LH w/ROPS
11	85805038	1	PIN, RH
12	13940370	2	PIN, ROLL, M5 x 26, Coiled,
13	85803492	1	ARM,
14	85805037	1	ARM,

Mechanical Version

351(08) CASE 3 LEVER BACKHOE CONTROLS, DIPPER, SWING & BOOM LINKAGE

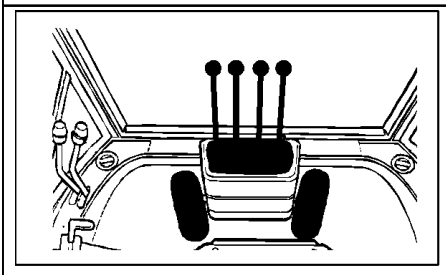

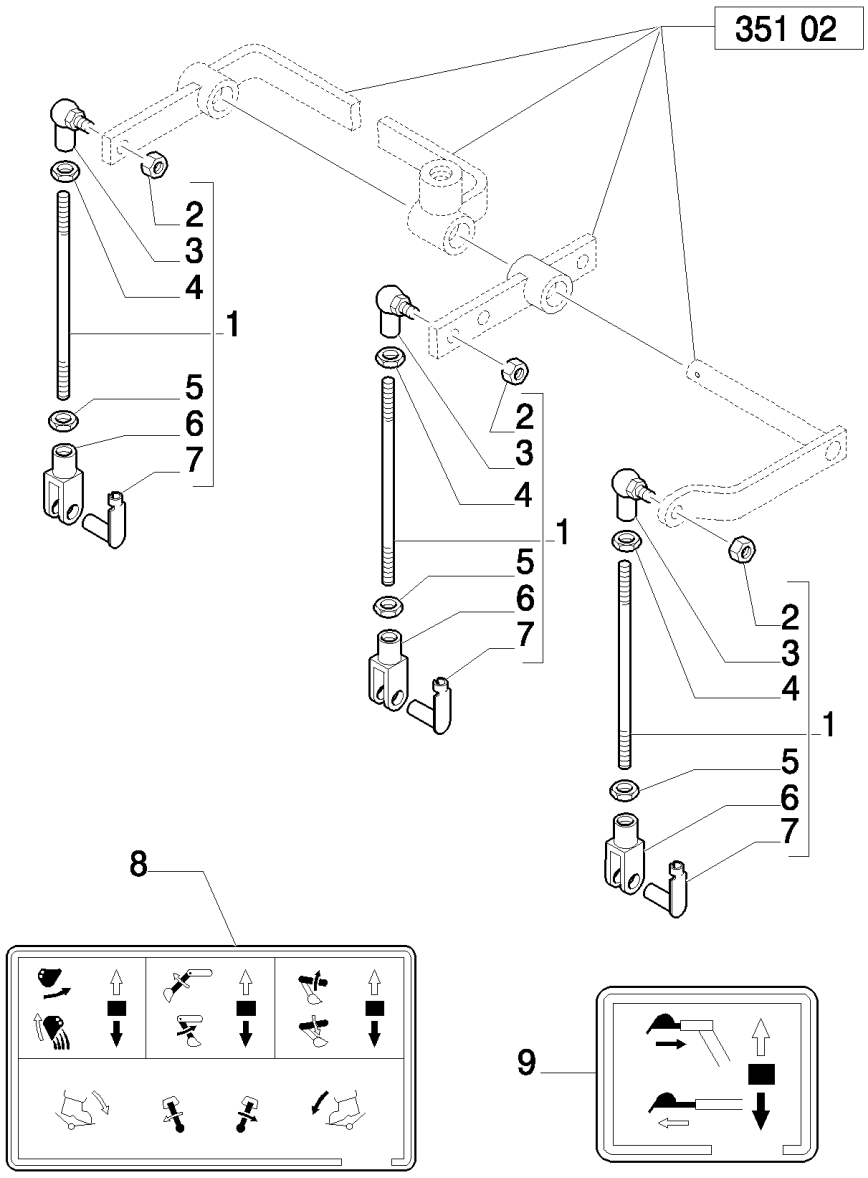

B95LR NA BACKHOE LOADER (1/06-)

351(08) CASE 3 LEVER BACKHOE CONTROLS, DIPPER, SWING & BOOM LINKAGE

Ref	Numero de Pieza	Ctd	Descripción
1	85804803	3	TIE-ROD,
2	14048211	3	NUT, LOCK, M8 x 1.25, Cl 8,
3	85804375	3	BALL JOINT,
4	16102311	3	NUT, Thin, M8 x 1.25, Cl 04,
5	16102911	3	NUT, Thin, M8 x 1.25, Cl 04, LH,
6	11991971	3	CLEVIS, LH
7	85802738	3	RETAINER,
8	85803916	1	DECAL,
9	85803787	1	DECAL,

Mechanical Version

351(09) CASE 3 LEVER BACKHOE CONTROLS, SWING CONTROL PEDAL

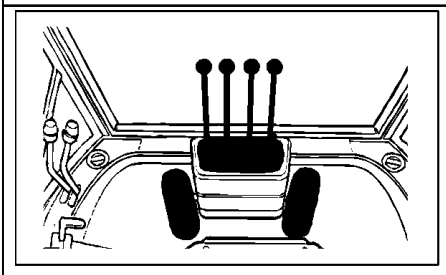

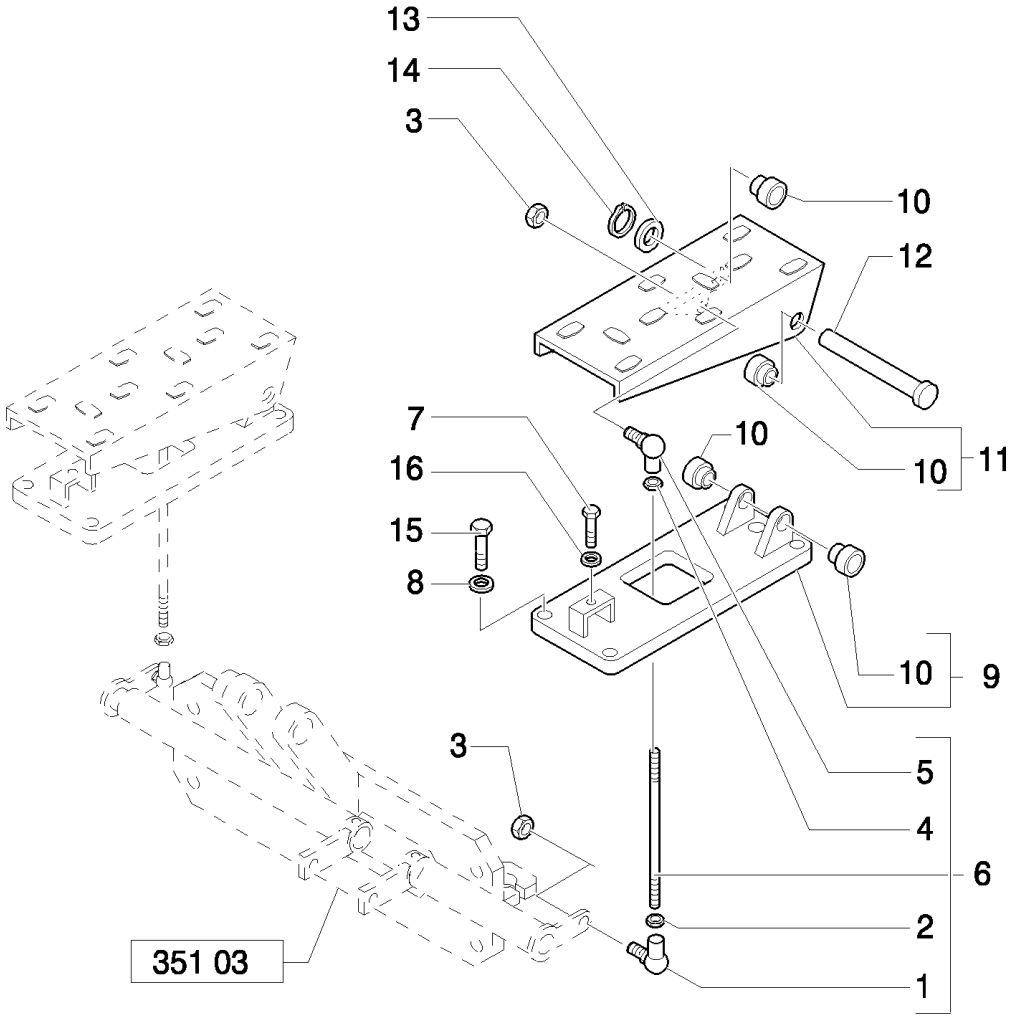

B95LR NA BACKHOE LOADER (1/06-)

351(09) CASE 3 LEVER BACKHOE CONTROLS, SWING CONTROL PEDAL

Ref	Numero de Pieza	Ctd	Descripción
1	85804375	2	BALL JOINT,
2	16102311	2	NUT, Thin, M8 x 1.25, Cl 04,
3	16102311	4	NUT, Thin, M8 x 1.25, Cl 04,
4	16102911	2	NUT, Thin, M8 x 1.25, Cl 04, LH,
5	85804376	2	BALL JOINT, LH
6	85804151	2	TIE-ROD, , Includes 1, 2, 4, 5
7	16043621	2	BOLT, Hex, M8 x 25, 8.8,
8	11190679	6	WASHER, SPRING, Belleville, M10.5,
9	85804141	2	SUPPORT,
10	85803587	8	BUSHING,
11	85804136	2	PEDAL,
12	85804153	2	PIN,
13	14499521	2	WASHER,
14	N663109S2	2	RING, SNAP,
15	15970721	6	BOLT, Hex, M10 x 1.25 x 25, 8.8, Full Thd,
16	16100811	2	NUT, M8, Cl 8,

Mechanical Version

356(01) STABILIZER CONTROL VALVE, TREE SECTION (CENTER PIVOT)

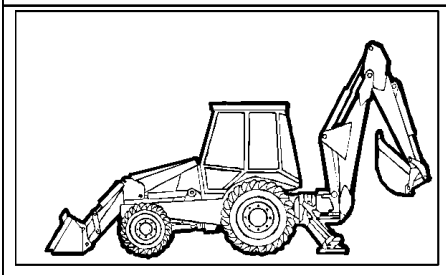

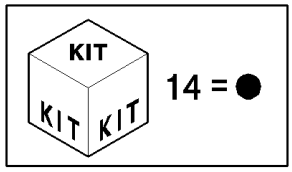

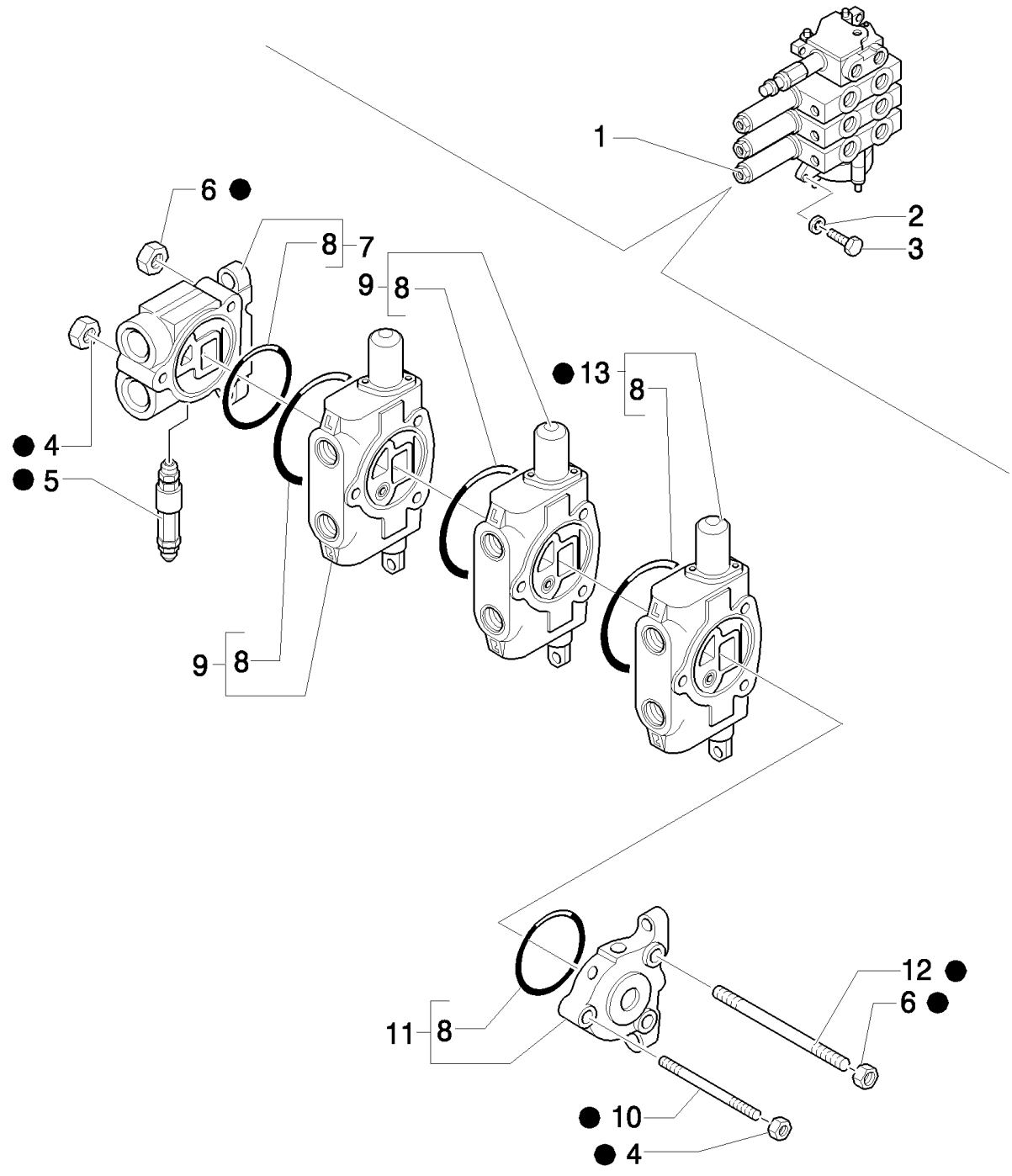

B95LR NA BACKHOE LOADER (1/06-)

356(01) STABILIZER CONTROL VALVE, TREE SECTION (CENTER PIVOT)

Ref	Numero de Pieza	Ctd	Descripción
1	87331094	1	DISTRIBUTOR, ASSY
2	11193879	3	WASHER, SPRING, Belleville, M8.4,
3	16043921	3	SCREW,
4	9968440	1	NUT,
5	87331276	1	VALVE, HYDRAULIC,
6	9968441	2	NUT,
7	9968524	1	VALVE SECTION, HYD,
8	9968476	4	O-RING,
9	9970107	2	VALVE SECTION, HYD, , See Page 344 02
10	9968528	1	STUD,
11	9968527	1	VALVE SECTION, HYD,
12	9968529	2	STUD,
13	9968526	1	VALVE SECTION, HYD, , See Page 356 02
14	87353252	1	

Mechanical Version

356(02) STABILIZER CONTROL VALVE, THIRD SECTION (CENTER PIVOT)

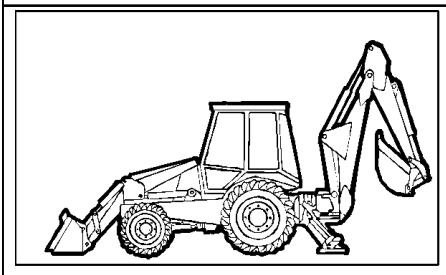

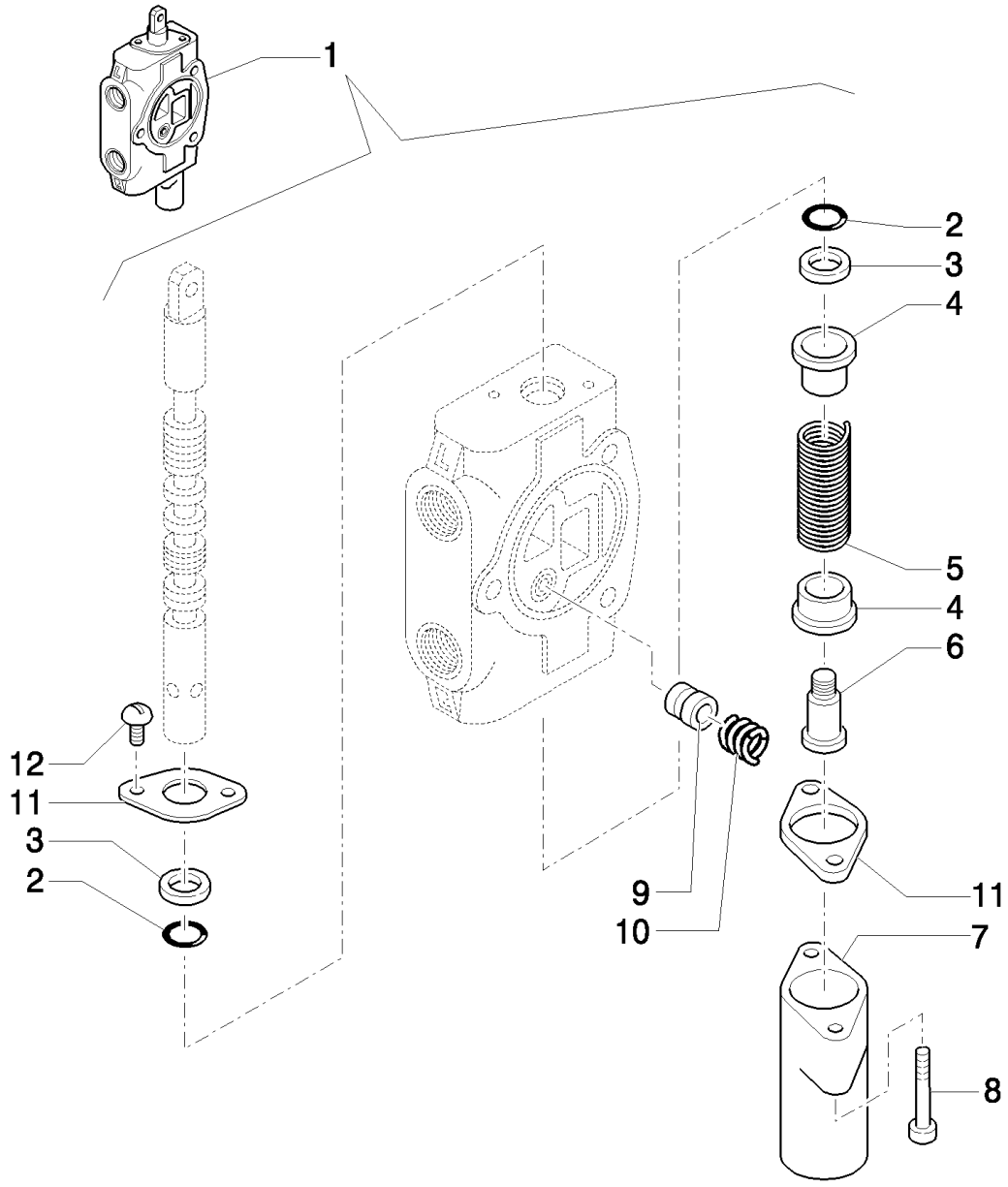

Mechanical Version

B95LR NA BACKHOE LOADER (1/06-)

356(02) STABILIZER CONTROL VALVE, THIRD SECTION (CENTER PIVOT)

Ref	Numero de Pieza	Ctd	Descripción
1	9968526	1	VALVE SECTION, HYD, Assy
2	85813418	2	O-RING,
3	85813419	2	WIPER,
4	9968481	2	SEAT,
5	9968531	1	SPRING,
6	9968483	1	SCREW,
7	9968484	1	COVER,
8	9968486	2	SCREW,
9	9968477	1	POPPET,
10	9968478	1	SPRING,
11	9968480	2	FLANGE,
12	9968460	2	SCREW,

Mechanical Version

380(01) TRANSPORT LOCK CONTROL (CAB)

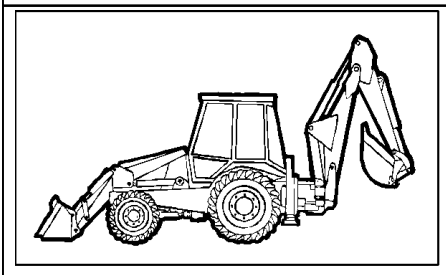

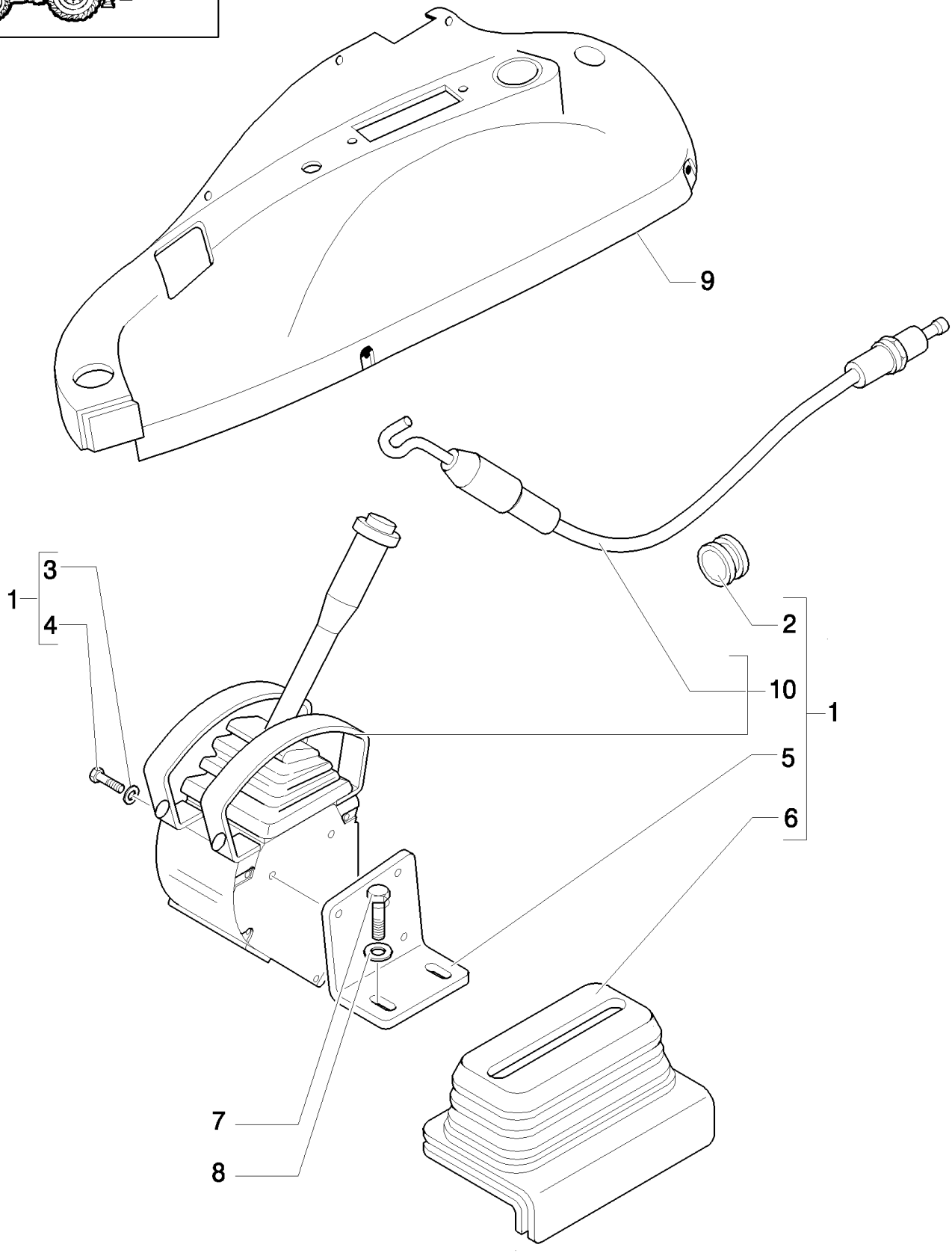

B95LR NA BACKHOE LOADER (1/06-)

380(01) TRANSPORT LOCK CONTROL (CAB)

Ref	Numero de Pieza	Ctd	Descripción
1	87324490	1	LEVER, LEVER ASSEMBLY, TRANSPORT LOCK; Not Serviced As An Assembly, Order Components; Incl. Ref 2 - 6, 10
2	10398680	1	GROMMET,
3	11193274	3	WASHER, SPRING, Belleville, M6.4,
4	15212921	3	BOLT, Hex, M6 x 50, 8.8, Full Thd,
5	85808419	1	SUPPORT,
6	85813132	1	BOOT,
7	16043624	2	BOLT, Hex, M8 x 25, 8.8, Full Thd,
8	11193874	2	WASHER, SPRING, Belleville, M8.4,
9	87362098	1	SOFT TRIM,
10	87324496	1	LEVER, Includes 87325156 Cable
	87325156	1	CABLE,

381(01) TRANSPORT LOCK CONTROL (ROPS)

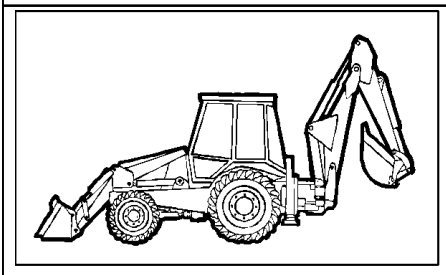

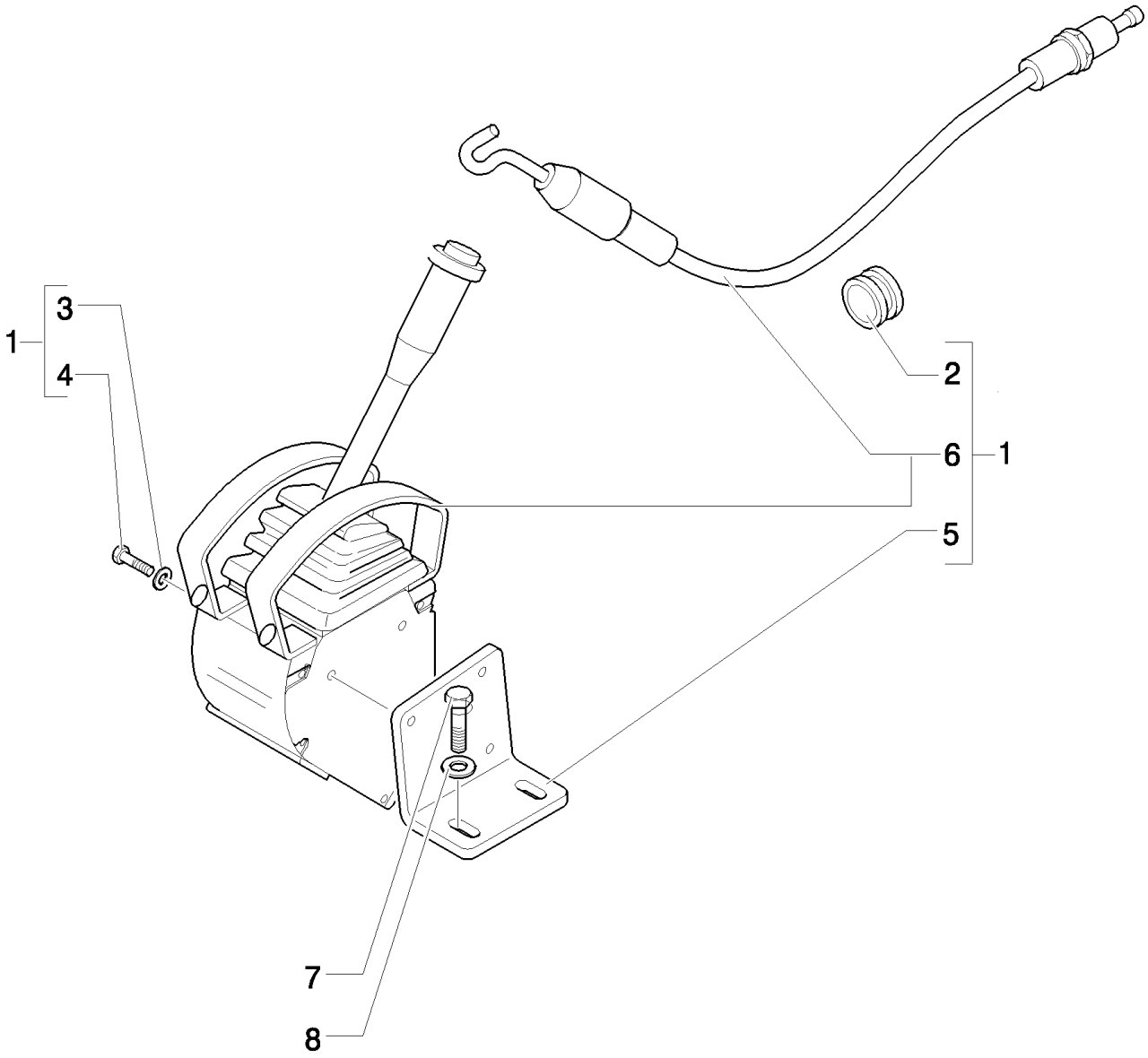

B95LR NA BACKHOE LOADER (1/06-)

381(01) TRANSPORT LOCK CONTROL (ROPS)

Ref	Numero de Pieza	Ctd	Descripción
1	87324535	1	LEVER, Incl. Ref 2 - 6
2	10398680	1	GROMMET,
3	11193274	3	WASHER, SPRING, Belleville, M6.4,
4	15212921	3	BOLT, Hex, M6 x 50, 8.8, Full Thd,
5	85808419	1	SUPPORT,
6	87324496	1	LEVER, Includes 87325156 Cable
	87325156	1	CABLE,
7	16043624	2	BOLT, Hex, M8 x 25, 8.8, Full Thd,
8	11193874	2	WASHER, SPRING, Belleville, M8.4,

390(01) LOADER CONTROL VALVE, TWO SECTION, LEVER & DECAL

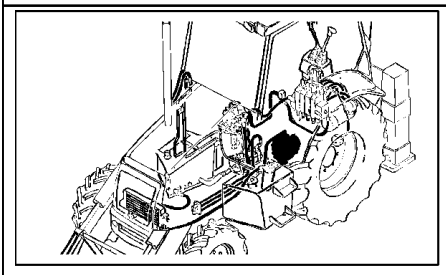

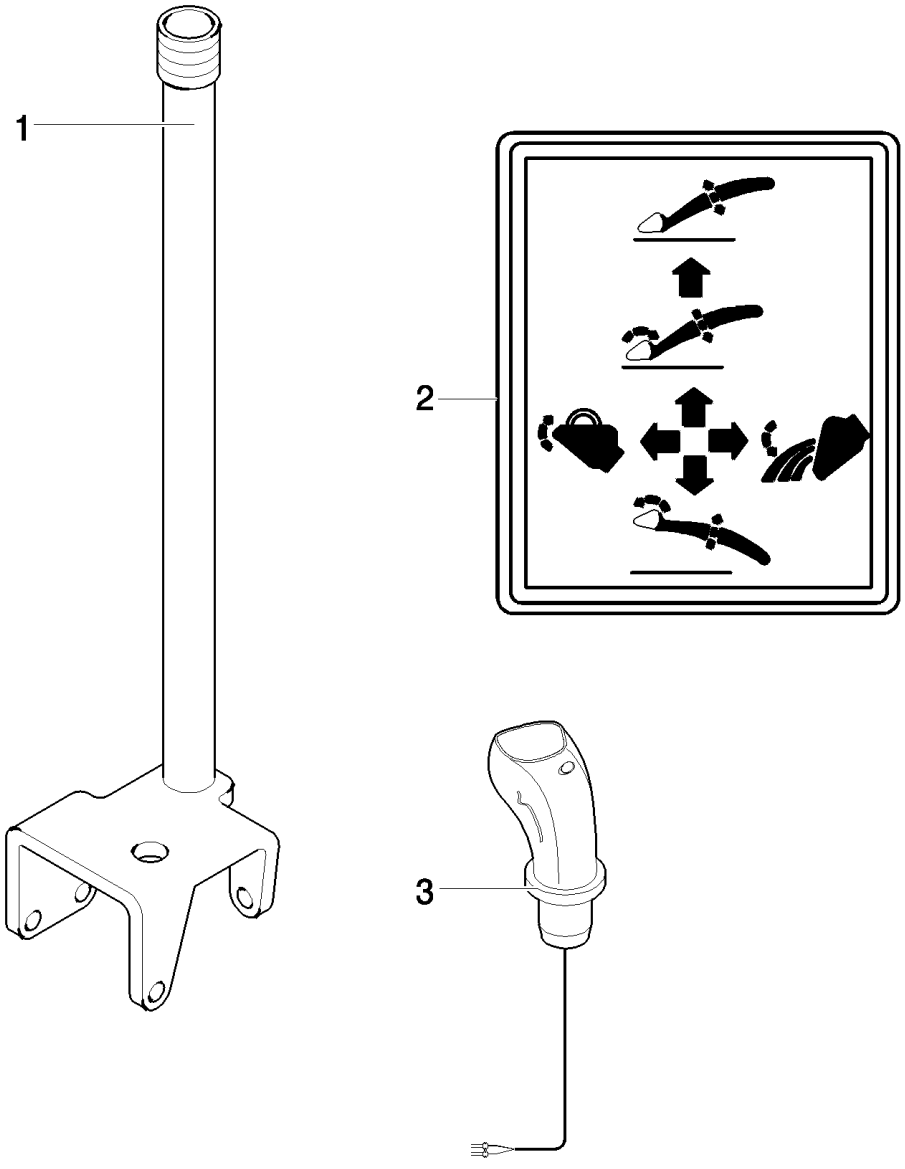

B95LR NA BACKHOE LOADER (1/06-)

390(01) LOADER CONTROL VALVE, TWO SECTION, LEVER & DECAL

Ref	Numero de Pieza	Ctd	Descripción
1	85802617	1	LEVER, , UP TO S/N 031056905
1	87312049	1	LEVER, , FROM TO S/N 031056906
2	85804346	1	DECAL,
3	87311102	1	JOYSTICK, , Only for POWER SHIFT
3	87311103	1	JOYSTICK, , Only for POWER SHUTTLE

390/ 1(01) 2 LEVER BACKHOE CONTROLS, LEVER, BOOT & DECALS (CENTER PIVOT)

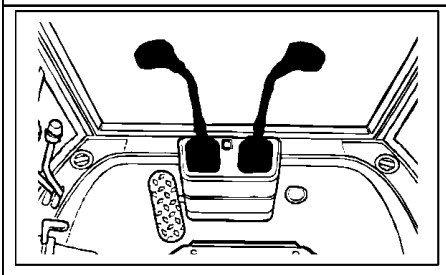

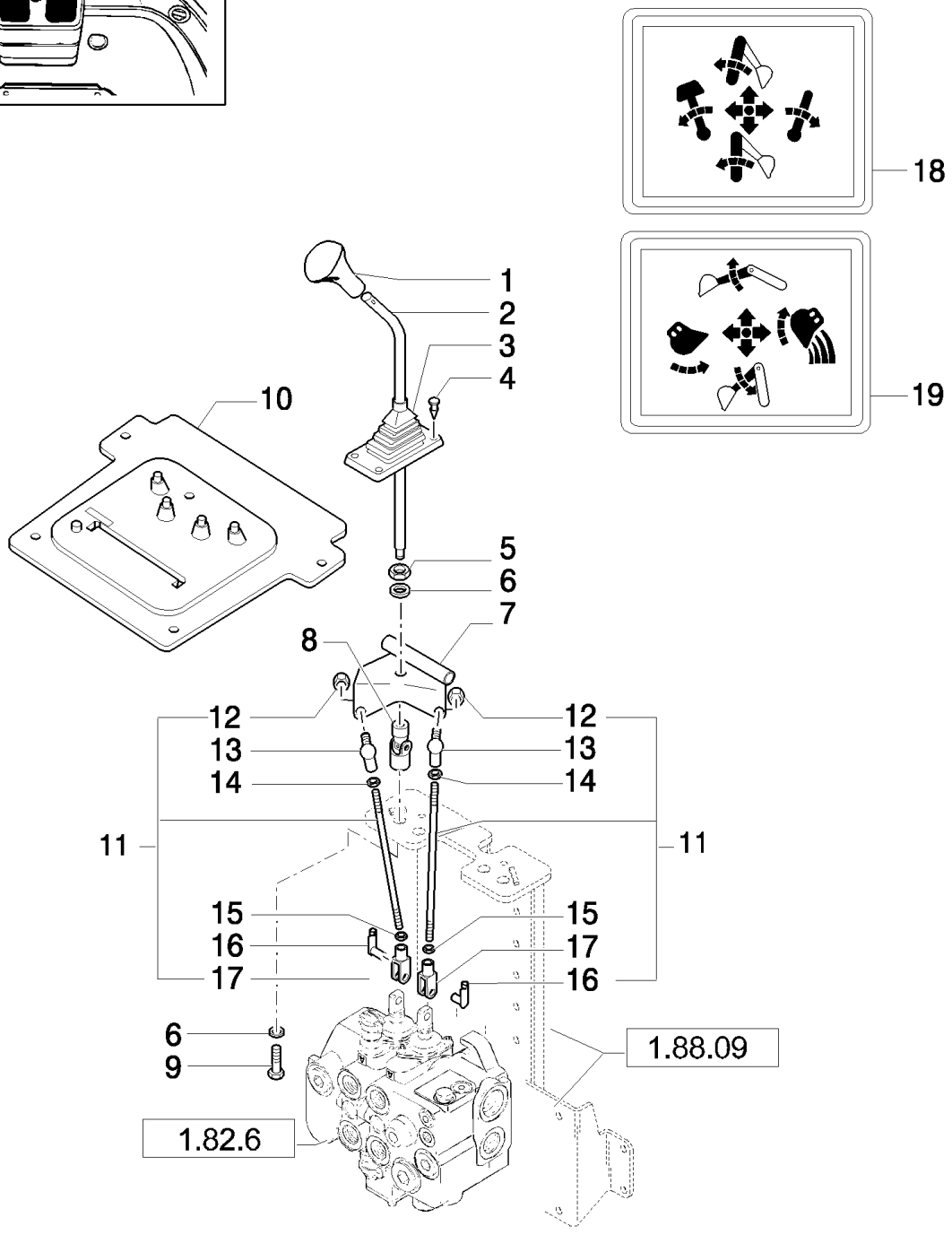

B95LR NA BACKHOE LOADER (1/06-)

390/ 1(01) 2 LEVER BACKHOE CONTROLS, LEVER, BOOT & DECALS (CENTER PIVOT)

Ref	Numero de Pieza	Ctd	Descripción
1	85801502	1	KNOB, Without Horn Switch
1	85802682	1	KNOB, Includes 13796621 M5 x 8mm long Setscrew; With 87448432 Horn Switch
	87448432	1	SWITCH ASSY, Horn
2	85801488	2	LEVER,
3	85802843	1	BOOT,
4	14568887	4	FASTENER,
5	16101511	2	NUT, M12 x 1.25, Cl 8,
6	11190779	4	WASHER, SPRING, Belleville, M13,
7	85803107	1	BRACKET, RH
7	85803124	1	BRACKET, LH
8	85801518	2	JOINT, UNIVERSAL,
9	15540321	2	BOLT, Hex, M12 x 1.25 x 25, 8.8, Full Thd,
10	85804540	1	BOOT, w/Cab
11	85801514	4	TIE-ROD,
11	85805237	1	TIE-ROD, , Only for LB 90.B
12	14048211	4	NUT, LOCK, M8 x 1.25, Cl 8,
13	85804375	4	BALL JOINT,
14	16102311	4	NUT, Thin, M8 x 1.25, Cl 04,
15	16102911	4	NUT, Thin, M8 x 1.25, Cl 04, LH,
16	85802738	4	RETAINER,
17	11991971	4	CLEVIS,
18	85804345	1	DECAL,
19	85804344	1	DECAL,

Mechanical Version

B95LR NA BACKHOE LOADER (1/06-)

391(01) LOCK VALVE FOR BUCKET 4X1 / 6X1

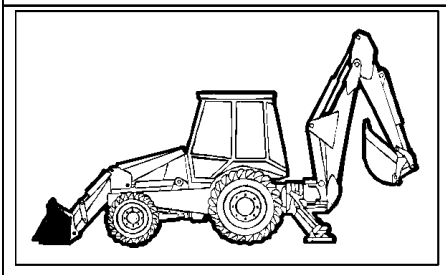

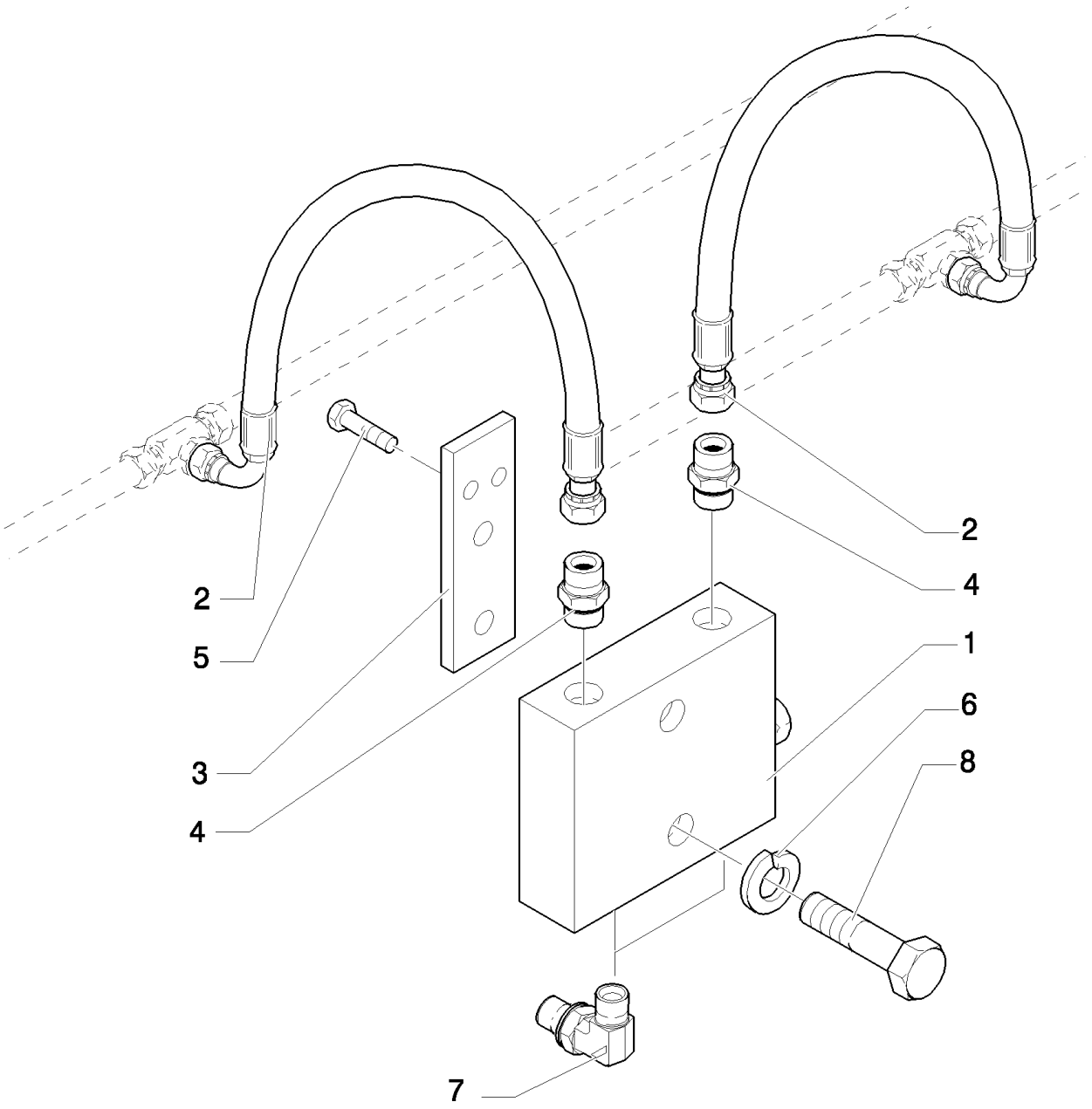

B95LR NA BACKHOE LOADER (1/06-)

391(01) LOCK VALVE FOR BUCKET 4X1 / 6X1

Ref	Numero de Pieza	Ctd	Descripción
1	85820844	1	VALVE, HYDRAULIC,
2	85821127	2	HOSE, FLEXIBLE,
3	87316861	1	PLATE,
4	390953S36	4	CONNECTOR, HYD.,
5	16044321	4	BOLT, Hex, M8 x 55, 8.8,
6	11193874	2	WASHER, SPRING, Belleville, M8.4,
7	390967S36	2	ELBOW,
8	16044121	2	BOLT, Hex, M8 x 45, 8.8,

391/ 1(01) LOCK VALVE ON LOADER TILTING CYLINDERS

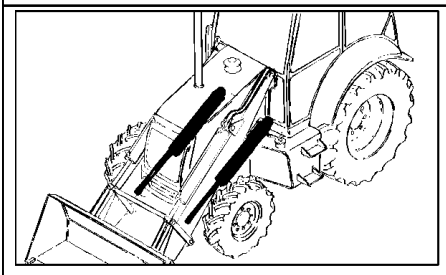

KIT KIT KIT 20 = ●

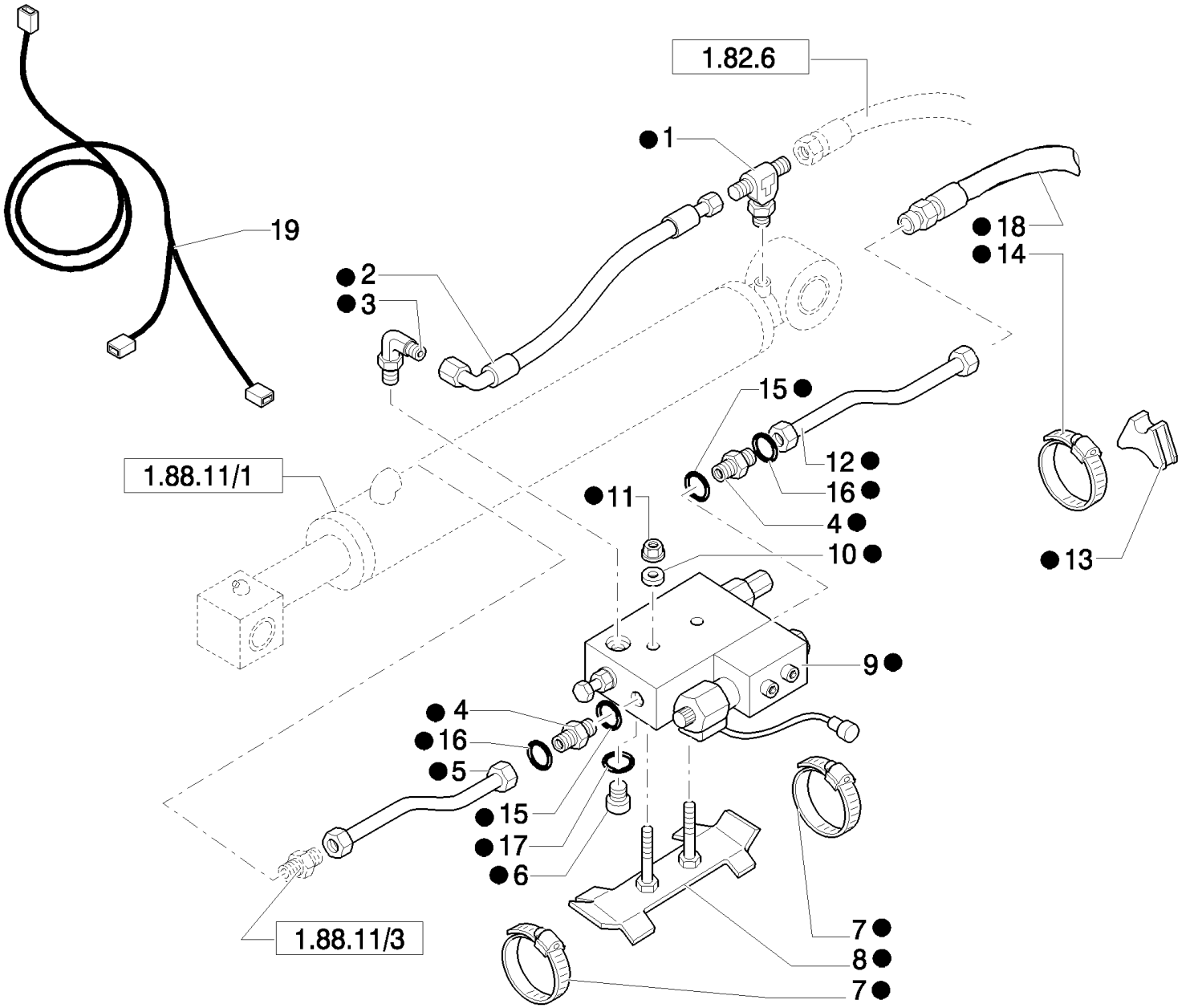

B95LR NA BACKHOE LOADER (1/06-)

391/ 1(01) LOCK VALVE ON LOADER TILTING CYLINDERS

Ref	Numero de Pieza	Ctd	Descripción
1	85805218	2	TEE,
2	85815506	2	HOSE, FLEXIBLE,
3	85805220	2	ELBOW,
4	390953S36	4	CONNECTOR, HYD., , Includes 15, 16
5	85805262	2	TUBE, HYD,
6	85802805	2	PLUG, , Includes 17
7	85803010	4	CLAMP, HOSE,
8	85805221	2	SUPPORT,
9	85805224	2	VALVE, HYDRAULIC, Assy
10	11193879	4	WASHER, SPRING, Belleville, M8.4,
11	14048221	4	NUT, LOCK, M8 x 1.25, Cl 10,
12	85805264	2	TUBE, HYD,
13	87303910	2	SPACER,
14	85802743	2	CLAMP, HOSE,
15	128825	2	O-RING, 8-1, 90 Duro, .644" ID x .087" Thk,
17	9825770	1	O-RING, -011, 90 Duro, .301" ID x .070" Thk,
18	85813361	1	HOSE, FLEXIBLE, 1130mm lg,
19	85826276	1	HARNESS, WIRE,
20	NSS	1	NOT SERVICED SEPARATELY, , Includes 1 To 18 Also Page 391/1 02, 391/1 03
16	9992298	2	O-RING, -014, 90 Duro, .489" ID x .070" Thk,

391/ 1(02) LOCK VALVE ON LOADER LIFT CYLINDERS

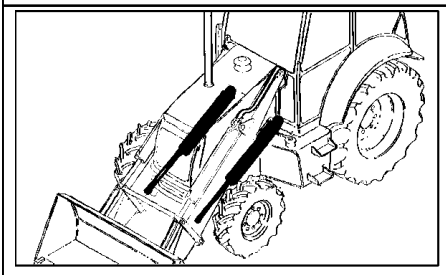

KIT KIT KIT 19 = ●

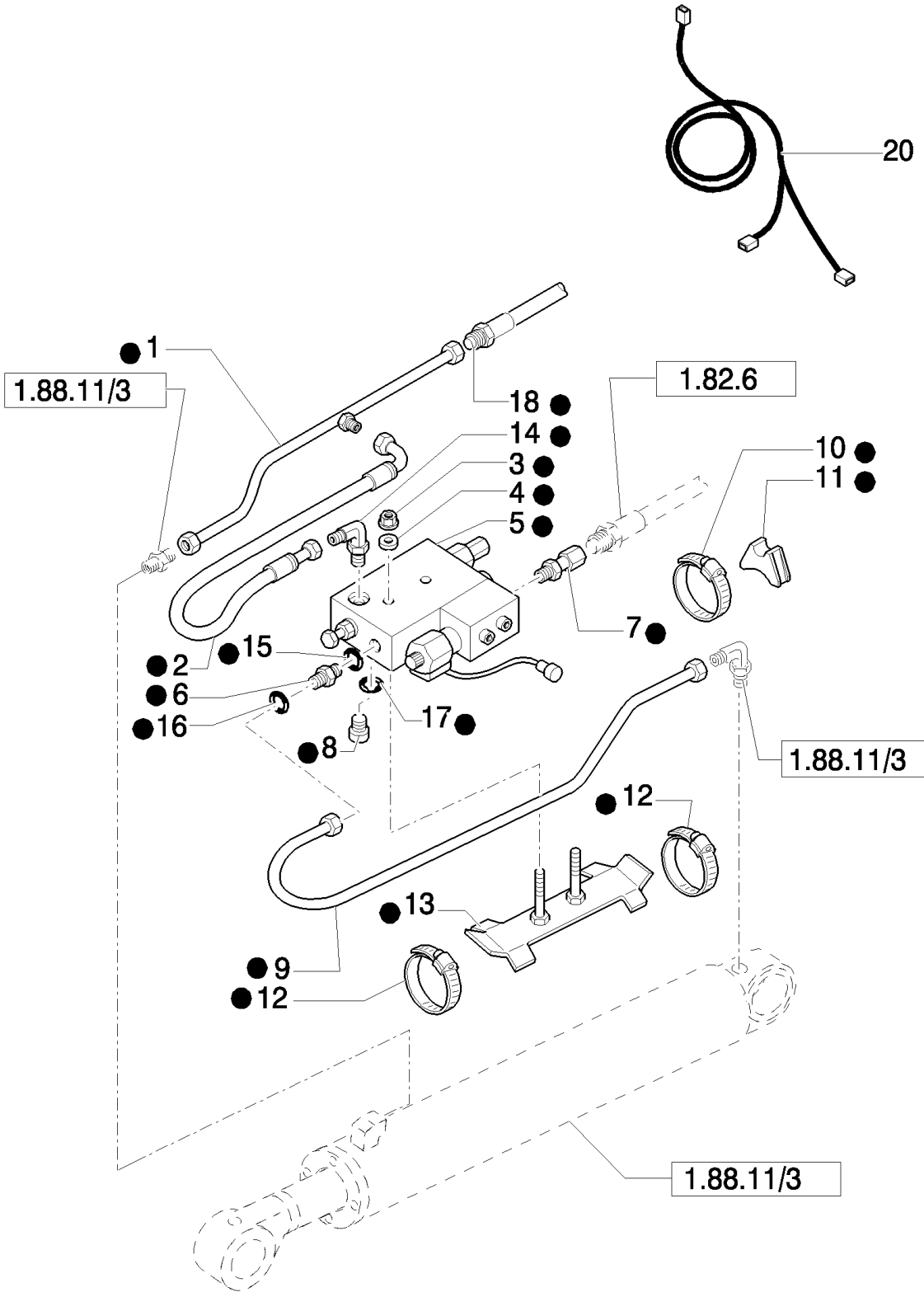

B95LR NA BACKHOE LOADER (1/06-)

391/ 1(02) LOCK VALVE ON LOADER LIFT CYLINDERS

Ref	Numero de Pieza	Ctd	Descripción
1	85805266	2	TUBE, HYD,
2	85815506	2	HOSE, FLEXIBLE,
3	14048221	4	NUT, LOCK, M8 x 1.25, Cl 10,
4	11193879	4	WASHER, SPRING, Belleville, M8.4,
5	85805223	2	VALVE, HYDRAULIC, Assy
6	390953S36	2	CONNECTOR, HYD., , Includes 15, 16
7	85805217	2	CONNECTOR, HYD.,
8	85802805	2	PLUG, , Includes 17
9	85805271	1	TUBE, HYD, LH
9	85805273	1	TUBE, HYD, RH
10	85803008	2	CLAMP, HOSE,
11	E7NNB165AA	2	SPACER,
11	87303910	2	SPACER,
12	85802743	4	CLAMP, HOSE,
13	85805221	1	SUPPORT,
14	85805220	2	ELBOW,
15	128825	2	O-RING, 8-1, 90 Duro, .644" ID x .087" Thk,
17	9825770	2	O-RING, -011, 90 Duro, .301" ID x .070" Thk,
18	85813363	2	HOSE, FLEXIBLE, 550mm lg,
19	NSS	1	NOT SERVICED SEPARATELY, , Includes 1 To 18 Also Page 391/1 01, 391/1 03
20	85826275	1	HARNESS, WIRE,
16	9992298	2	O-RING, -014, 90 Duro, .489" ID x .070" Thk,

391/ 1(03) LOCK VALVE ON LOADER LIFT CYLINDERS

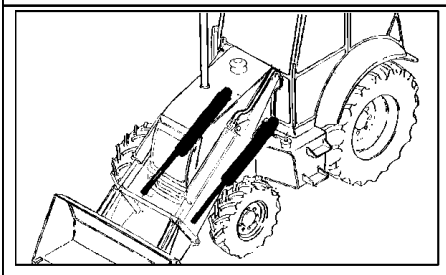

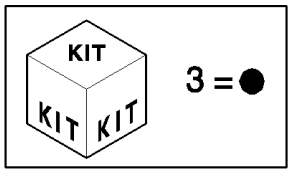

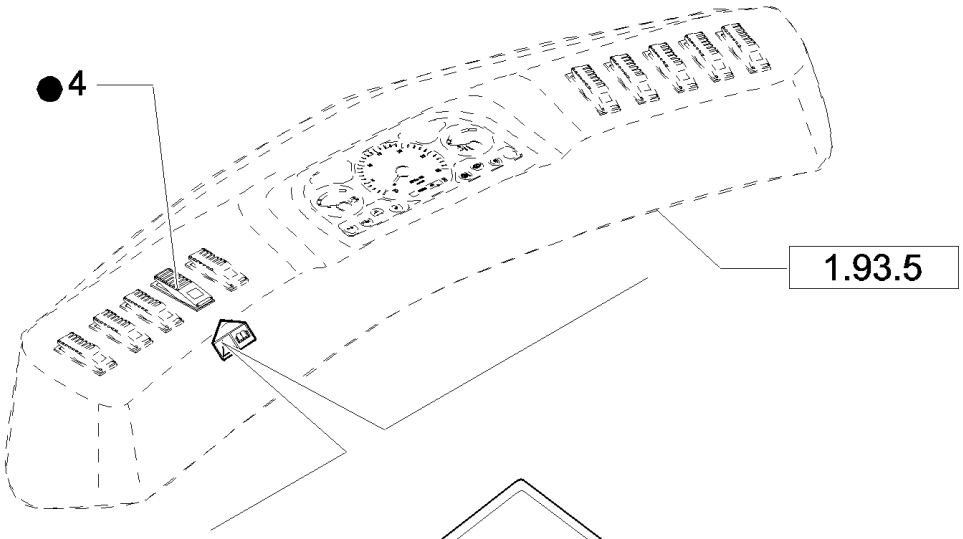

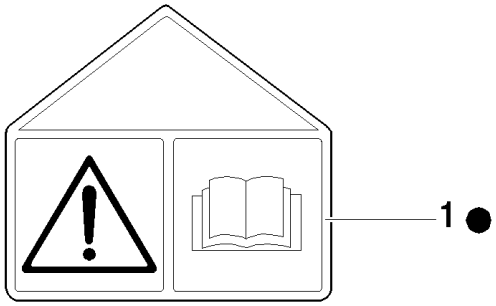

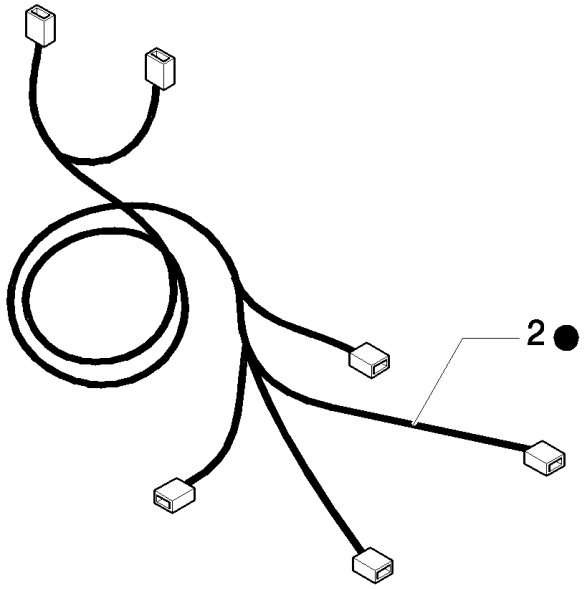

B95LR NA BACKHOE LOADER (1/06-)

391/ 1(03) LOCK VALVE ON LOADER LIFT CYLINDERS

Ref	Numero de Pieza	Ctd	Descripción
1	85805228	1	DECAL,
2	85826274	1	HARNESS,
3	NSS	1	NOT SERVICED SEPARATELY, , Includes 1, 2, 4 Also page 391/1 01, 391/1 02
4	85819074	1	SWITCH,

392(01) LOCKING VALVE ON BACKHOE LIFT AND DIPP. CYLINDER

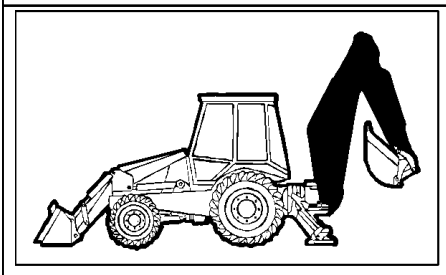

KIT KIT KIT 15 = ●

SEE ALSO 392 02

KIT KIT KIT 16 = ▲

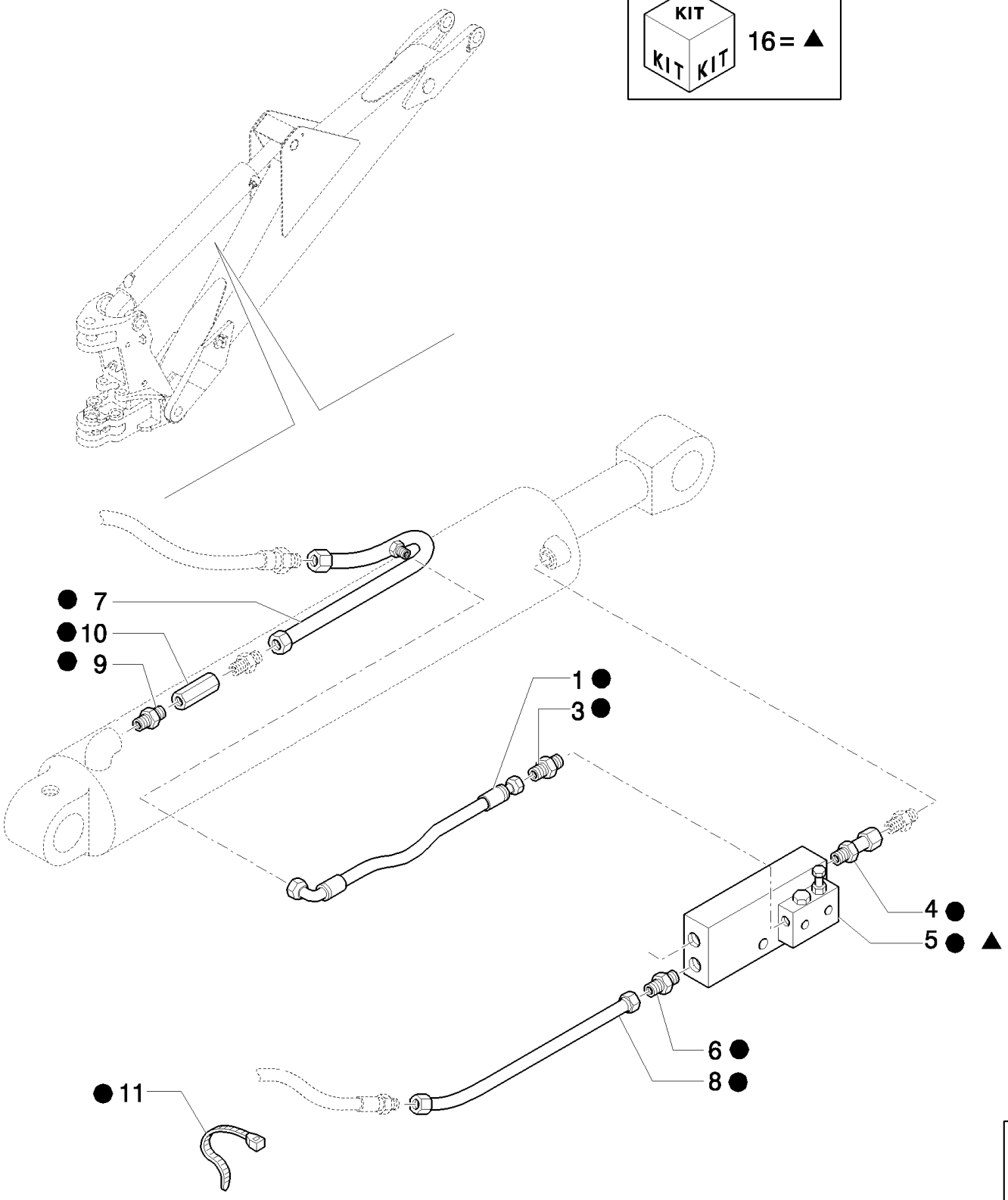

B95LR NA BACKHOE LOADER (1/06-)

392(01) LOCKING VALVE ON BACKHOE LIFT AND DIPP. CYLINDER

Ref	Numero de Pieza	Ctd	Descripción
1	85815505	2	HOSE, FLEXIBLE, 600mm lg,
3	85802803	3	CONNECTOR, HYD.,
4	85805124	2	CONNECTOR, HYD.,
5	87353316	1	VALVE, SAFETY, ASSY, Includes 16
6	83963000	2	CONNECTOR, HYD.,
7	85820835	1	TUBE, HYD,
8	85820836	1	TUBE, HYD,
9	85804879	1	CONNECTOR, HYD.,
10	85824308	1	VALVE, HYDRAULIC,
11	79072960	4	STRAP, CABLE,
15	87356232	1	KIT,
16	85820912	1	KIT,

392(02) BACKHOE LIFT & DIPPERSTICK CYLINDER LOCK VALVE

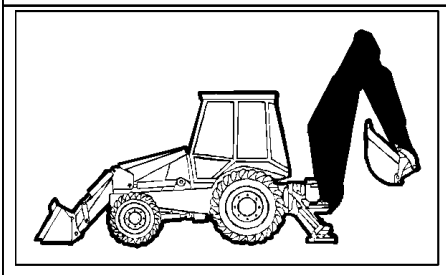

KIT KIT KIT 15= ●
SEE ALSO 392 01

KIT KIT KIT 14 = ▲

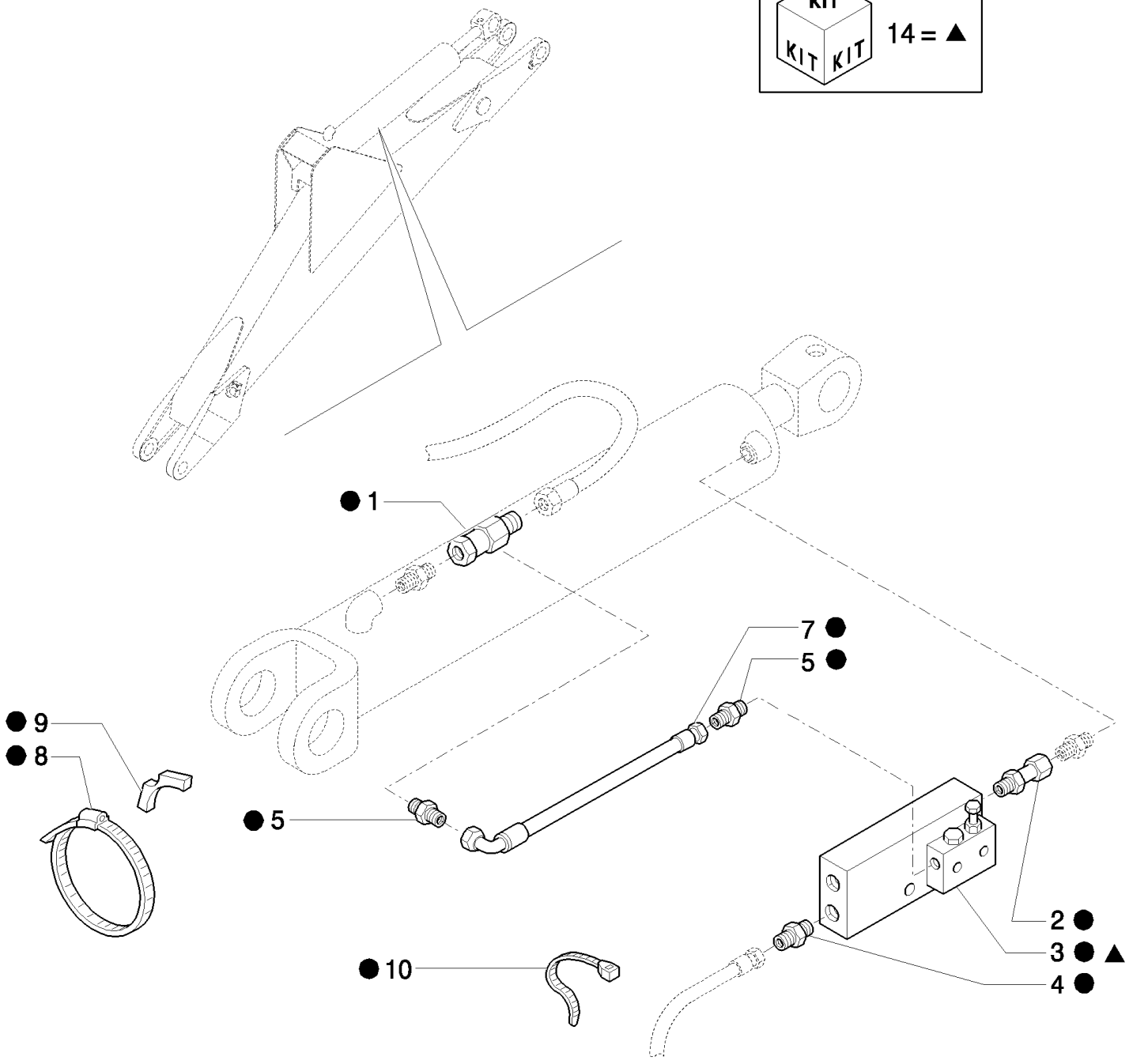

B95LR NA BACKHOE LOADER (1/06-)

392(02) BACKHOE LIFT & DIPPERSTICK CYLINDER LOCK VALVE

Ref	Numero de Pieza	Ctd	Descripción
1	85805115	1	CONNECTOR, HYD.,
2	85805124	2	CONNECTOR, HYD.,
3	87353314	1	VALVE, SAFETY, ASSY, Includes 14
4	83963000	2	CONNECTOR, HYD.,
5	85802803	3	CONNECTOR, HYD.,
7	85815505	2	HOSE, FLEXIBLE, 600mm lg,
8	85805126	1	CLAMP, HOSE,
9	85805123	1	SPACER,
10	79072960	4	STRAP, CABLE,
14	85820913	1	KIT,
15	87356232	1	KIT,

393(01) 2 LEVER BACKHOE CONTROLS, LEVER, BOOT & DECALS

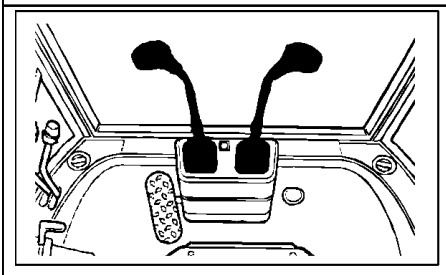

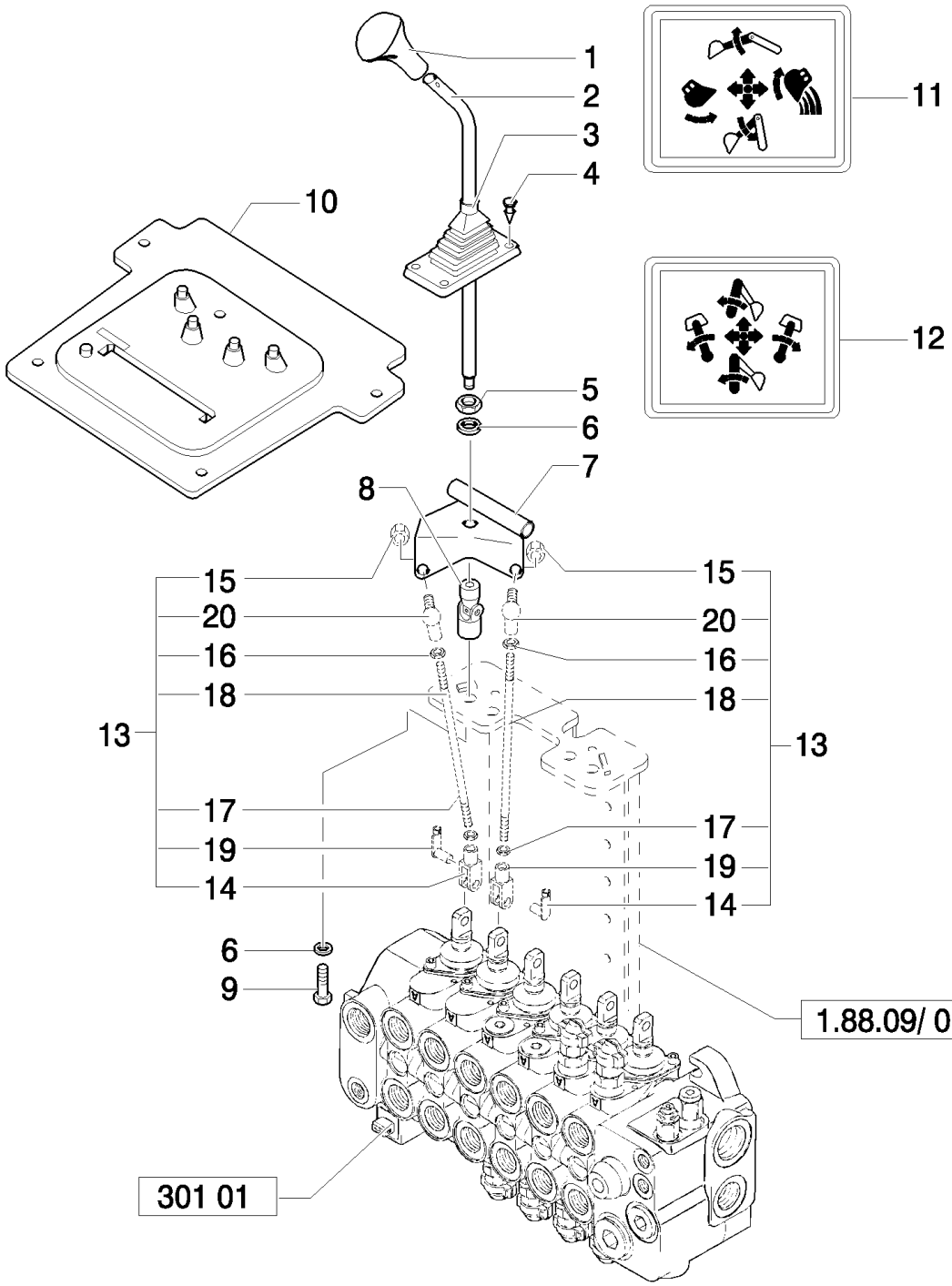

Mechanical Version

B95LR NA BACKHOE LOADER (1/06-)

393(01) 2 LEVER BACKHOE CONTROLS, LEVER, BOOT & DECALS

Ref	Numero de Pieza	Ctd	Descripción
1	85801502	1	KNOB, Without Horn Switch, Rear Control
1	85802682	1	KNOB, Includes 13796621 M5 x 8mm long Setscrew; With 87448432 Horn Switch, Rear Control
	87448432	1	SWITCH ASSY, Horn
2	85801488	2	LEVER,
3	85802843	2	BOOT,
4	14568887	8	FASTENER,
5	16101511	2	NUT, M12 x 1.25, Cl 8,
6	11190779	4	WASHER, SPRING, Belleville, M13,
7	85803124	1	BRACKET, LH
7	85803107	1	BRACKET, RH
8	85801518	2	JOINT, UNIVERSAL,
9	15540321	2	BOLT, Hex, M12 x 1.25 x 25, 8.8, Full Thd,
10	85804540	1	BOOT,
11	85804344	1	DECAL,
12	85804345	1	DECAL,
13	85801514	4	TIE-ROD,
14	11991971	1	CLEVIS,
15	14048211	1	NUT, LOCK, M8 x 1.25, Cl 8,
16	16102311	1	NUT, Thin, M8 x 1.25, Cl 04,
17	16102911	1	NUT, Thin, M8 x 1.25, Cl 04, LH,
18	85801515	1	TIE-ROD,
19	85802738	1	RETAINER,
20	85804375	1	BALL JOINT,

Mechanical Version

394(01) ISO 2 LEVER BACKHOE CONTROLS, LEVERS, BOOT & DECALS (CENTER PIVOT)

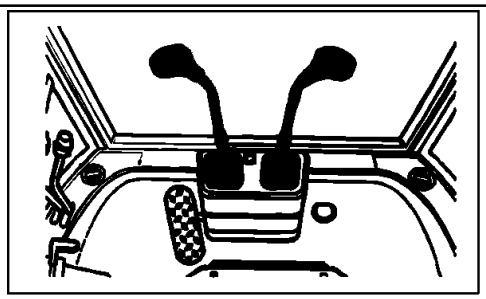

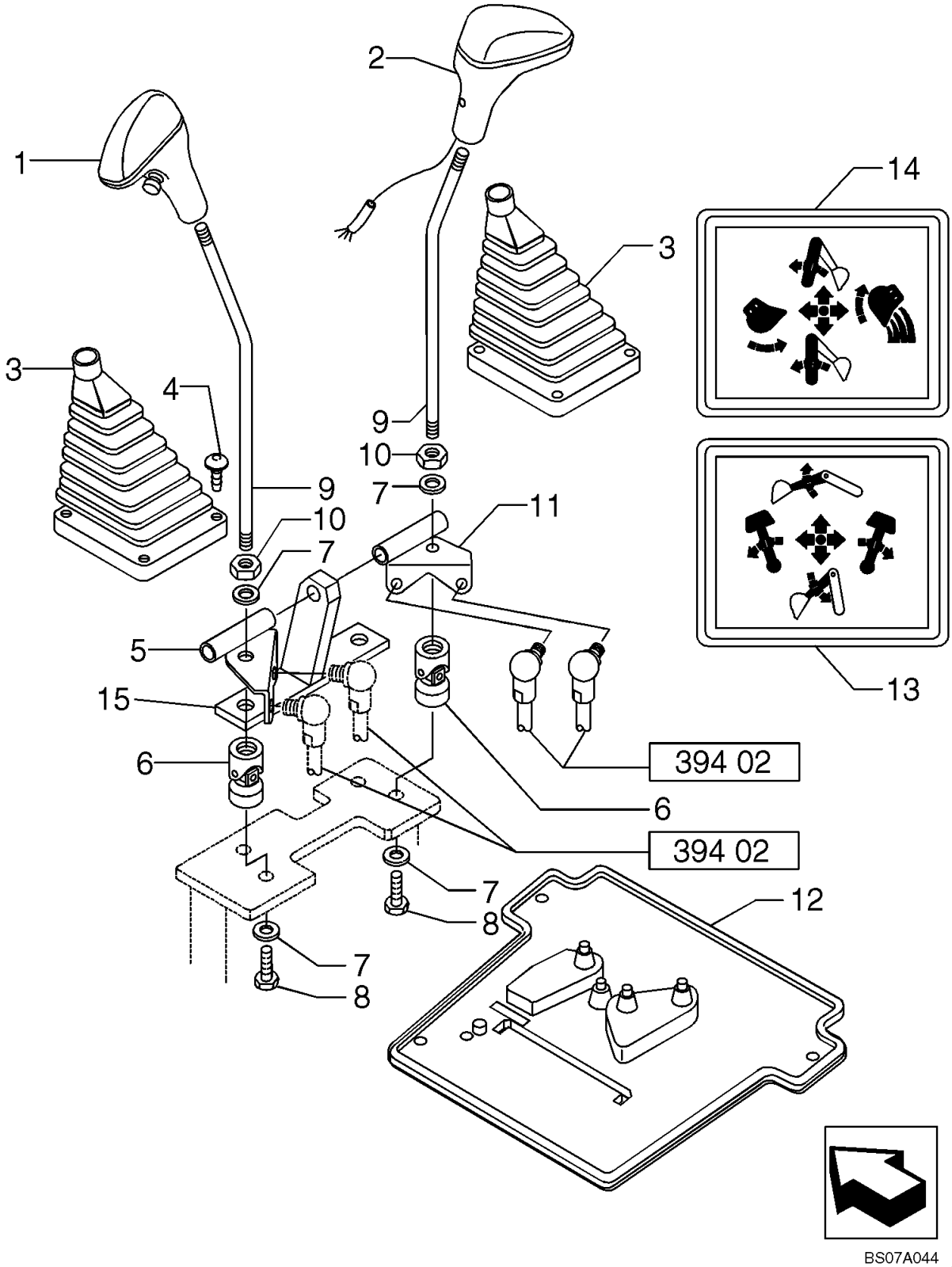

Mechanical Version

B95LR NA BACKHOE LOADER (1/06-)

394(01) ISO 2 LEVER BACKHOE CONTROLS, LEVERS, BOOT & DECALS (CENTER PIVOT)

Ref	Numero de Pieza	Ctd	Descripción
1	85801502	1	KNOB, Without Horn Switch
2	85802682	1	KNOB, Includes 13796621 M5 x 8mm long Setscrew; With 87448432 Horn Switch
	87448432	1	SWITCH ASSY, Horn
3	85802843	2	BOOT,
4	14568887	8	FASTENER, 8X20
5	85803124	1	BRACKET, L.H.
6	85801518	2	JOINT, UNIVERSAL,
7	11190779	4	WASHER, SPRING, Belleville, M13,
8	15540321	2	BOLT, Hex, M12 x 1.25 x 25, 8.8, Full Thd,
9	85801488	2	LEVER,
10	16101511	2	NUT, M12 x 1.25, Cl 8,
11	85803107	1	BRACKET, R.H.
12	85804541	1	BOOT, w/Cab
13	85803782	1	DECAL,
14	85803783	1	DECAL,
15	85803125	1	STOP, Support

Mechanical Version

394(02) ISO 2 LEVER BACKHOE CONTROLS, TIE-ROD ASSEMBLY (CENTER PIVOT)

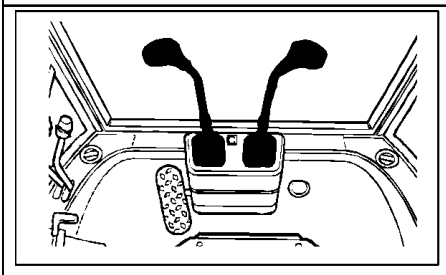

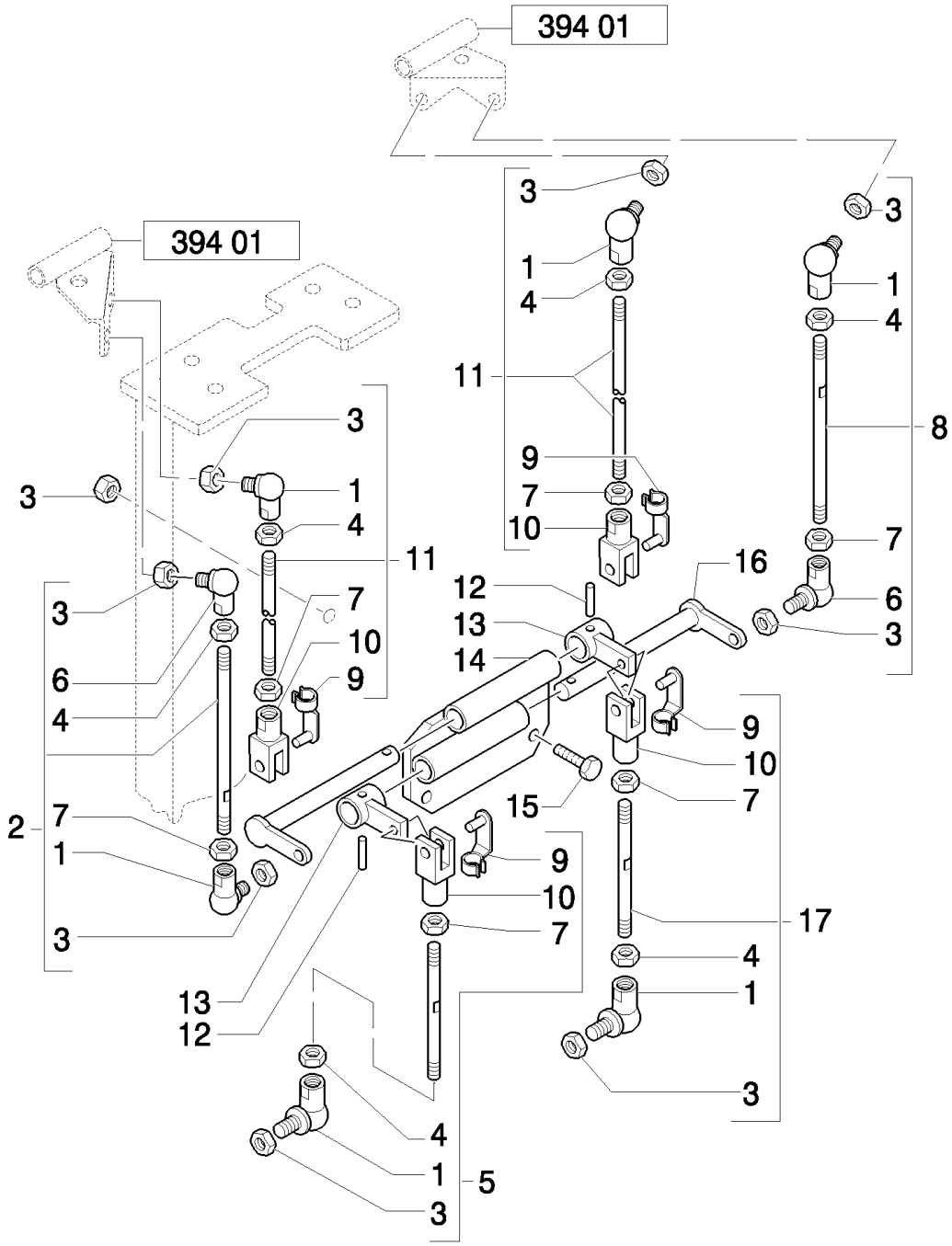

B95LR NA BACKHOE LOADER (1/06-)

394(02) ISO 2 LEVER BACKHOE CONTROLS, TIE-ROD ASSEMBLY (CENTER PIVOT)

Ref	Numero de Pieza	Ctd	Descripción
1	85804375	6	BALL JOINT,
2	85803474	1	TIE-ROD,
3	14048211	9	NUT, LOCK, M8 x 1.25, Cl 8,
4	16102311	6	NUT, Thin, M8 x 1.25, Cl 04,
5	85803479	1	TIE-ROD,
5	85805806	1	TIE-ROD, , Only for LB115 - B115
6	85804376	2	BALL JOINT,
7	16102911	6	NUT, Thin, M8 x 1.25, Cl 04, LH,
8	85803477	1	TIE-ROD,
9	85802738	4	RETAINER,
10	11991971	4	CLEVIS, L.H.
11	85801514	2	TIE-ROD,
12	13940370	2	PIN, ROLL, M5 x 26, Coiled,
13	85803492	2	ARM,
13	85805866	2	LEVER, IDLER, , Only for LB115 - B115
14	85803493	1	SUPPORT,
15	16043621	3	BOLT, Hex, M8 x 25, 8.8,
16	85803489	2	PIN,
17	85803476	1	TIE-ROD,
17	85805867	1	TIE-ROD, , Only for LB115 - B115

Mechanical Version

394/ 1(01) 4 LEVER BACKHOE CONTROLS, CONSOLE, LEVERS & BELLCRANK (CENTER PIVOT)

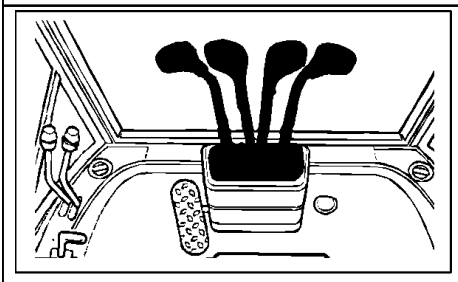

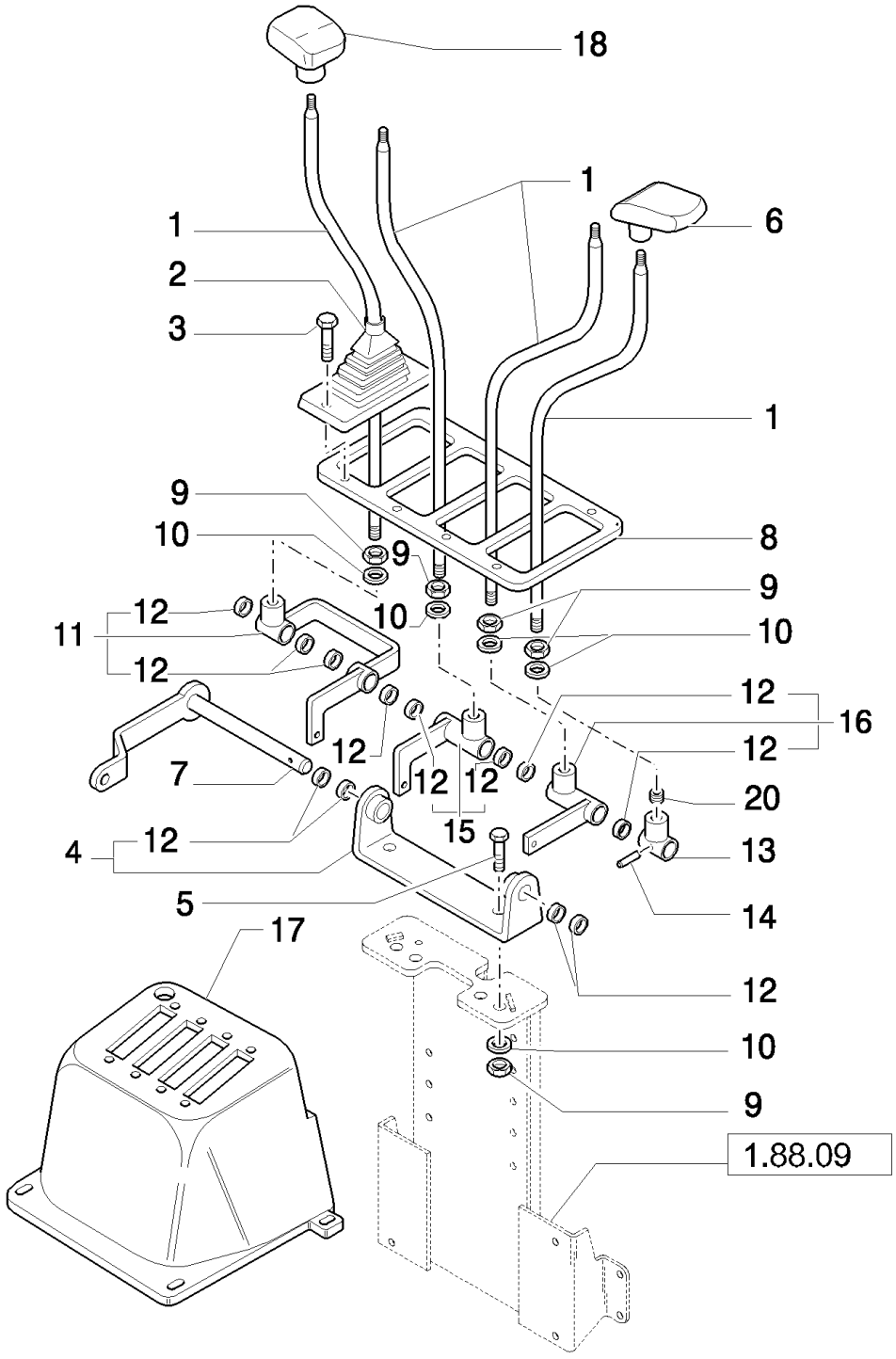

B95LR NA BACKHOE LOADER (1/06-)

394/ 1(01) 4 LEVER BACKHOE CONTROLS, CONSOLE, LEVERS & BELLCRANK (CENTER PIVOT)

Ref	Numero de Pieza	Ctd	Descripción
	741353019		KIT, CONVERSION, Converts a 2 levers TLB to 4 levers - all Ref are included
	718394019		KIT, CONVERSION, Converts a 2 or 3 levers TLB to 4 levers - all Ref are included
1	85804780	4	LEVER,
2	85803382	4	BOOT,
3	13272477	8	SCREW, Cross Pan Hd, M4 x 20, 12.9,
4	85802647	1	SUPPORT,
5	15540421	2	BOLT, Hex, M12 x 1.25 x 30, 8.8, Full Thd,
6	83962918	2	HANDLE, LH
7	85804782	1	PIN,
8	85803540	1	PLATE,
9	16101511	6	NUT, M12 x 1.25, Cl 8,
10	11190779	6	WASHER, SPRING, Belleville, M13,
11	85804801	1	BELLCRANK,
12	85802494	12	BUSHING,
13	85804787	1	BELLCRANK,
14	13940370	1	PIN, ROLL, M5 x 26, Coiled,
15	85804794	1	BELLCRANK,
16	85804791	1	BELLCRANK,
17	87319744	1	DASHBOARD,
18	83962919	2	HANDLE, RH
20	13812631	1	SET SCREW, Hex Soc, M12 x 12, Flat Pt,

Mechanical Version

394/ 1(02) 4 LEVER BACKHOE CONTROLS, UPPER TIE-ROD ASSEMBLY, CENTER PIVOT

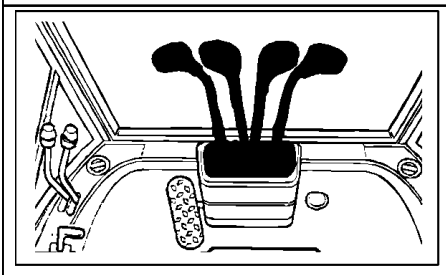

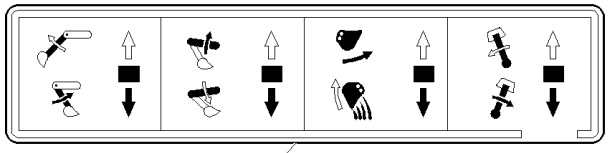

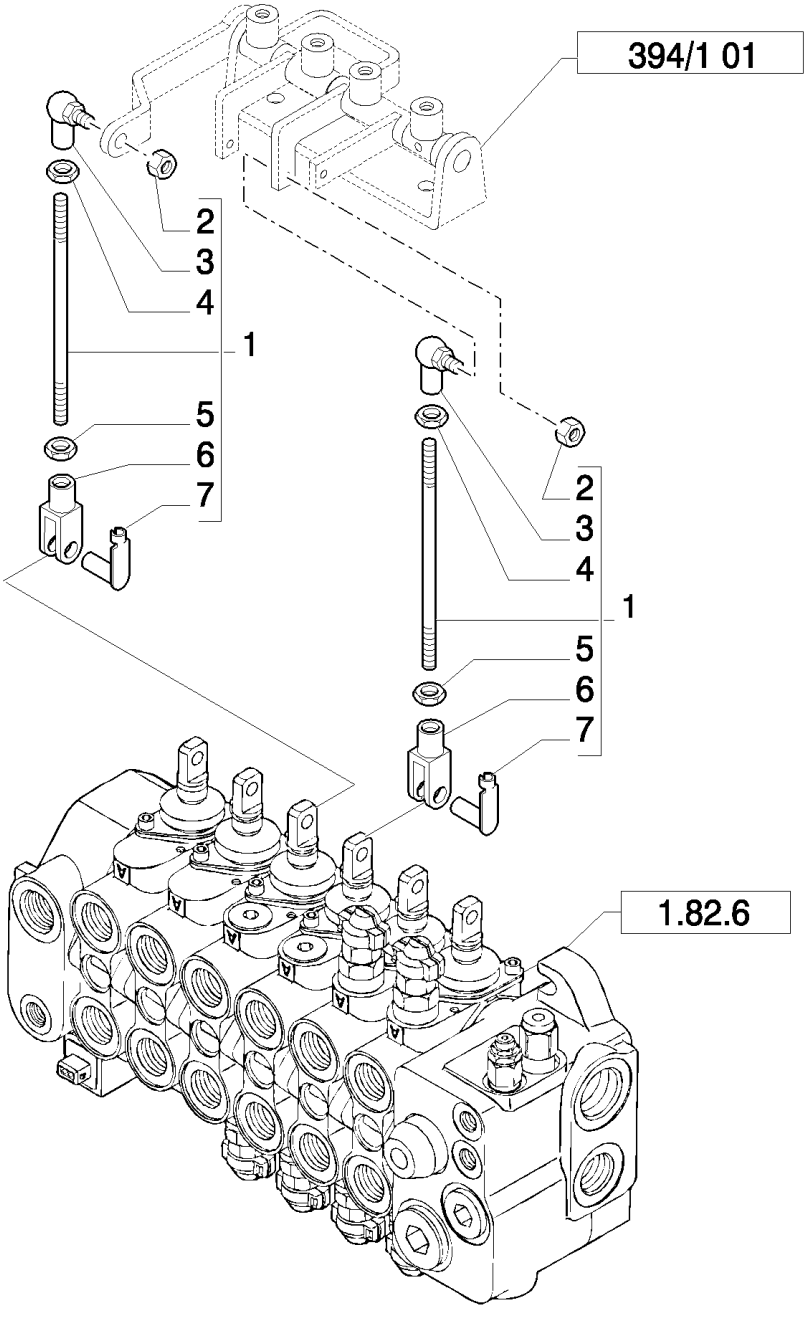

B95LR NA BACKHOE LOADER (1/06-)

394/ 1(02) 4 LEVER BACKHOE CONTROLS, UPPER TIE-ROD ASSEMBLY, CENTER PIVOT

Ref	Numero de Pieza	Ctd	Descripción
1	85804803	3	TIE-ROD,
2	14048211	3	NUT, LOCK, M8 x 1.25, Cl 8,
3	85804375	3	BALL JOINT,
4	16102311	3	NUT, Thin, M8 x 1.25, Cl 04,
5	16102911	3	NUT, Thin, M8 x 1.25, Cl 04, LH,
6	11991971	3	CLEVIS,
7	85802738	3	RETAINER,
8	85803917	1	DECAL,

Mechanical Version

394/ 1(03) 4 LEVER BACKHOE CONTROLS, LOWER TIE-ROD ASSEMBLY (CENTER PIVOT)

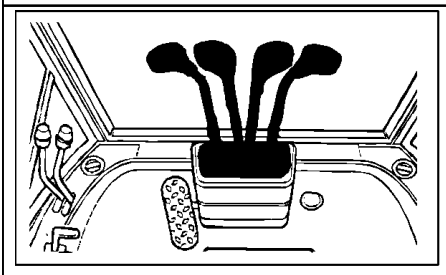

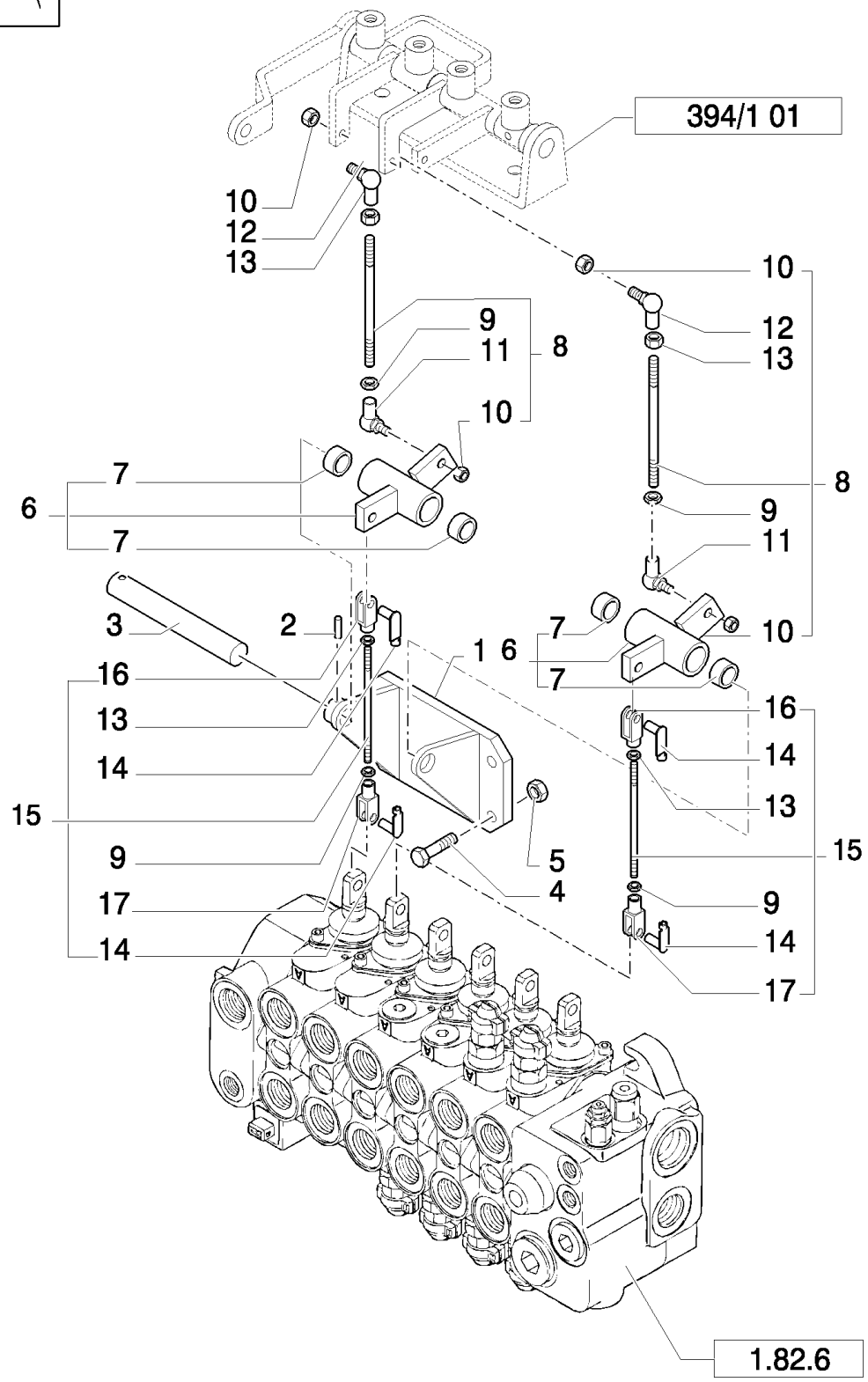

B95LR NA BACKHOE LOADER (1/06-)

394/ 1(03) 4 LEVER BACKHOE CONTROLS, LOWER TIE-ROD ASSEMBLY (CENTER PIVOT)

Ref	Numero de Pieza	Ctd	Descripción
1	85803360	1	SUPPORT,
2	13940370	1	PIN, ROLL, M5 x 26, Coiled,
3	85803364	1	PIN,
4	16043621	4	BOLT, Hex, M8 x 25, 8.8,
5	16104111	4	NUT, LOCK, M8 x 1.25, Cl 8,
6	85807926	2	BELLCRANK,
7	85802494	4	BUSHING,
8	85804736	2	TIE-ROD,
9	16102911	4	NUT, Thin, M8 x 1.25, Cl 04, LH,
10	14048211	4	NUT, LOCK, M8 x 1.25, Cl 8,
11	85804376	2	BALL JOINT,
12	85804375	2	BALL JOINT,
13	16102311	6	NUT, Thin, M8 x 1.25, Cl 04,
14	85802738	4	RETAINER,
15	85803447	2	TIE-ROD,
16	10007871	2	YOKE,
17	11991971	2	CLEVIS,

Mechanical Version

402(01) 4WD FRONT AXLE, HOUSING, BUSHINGS & SUPPORTS

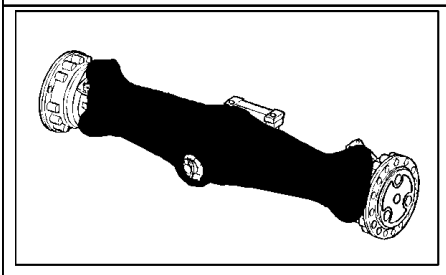

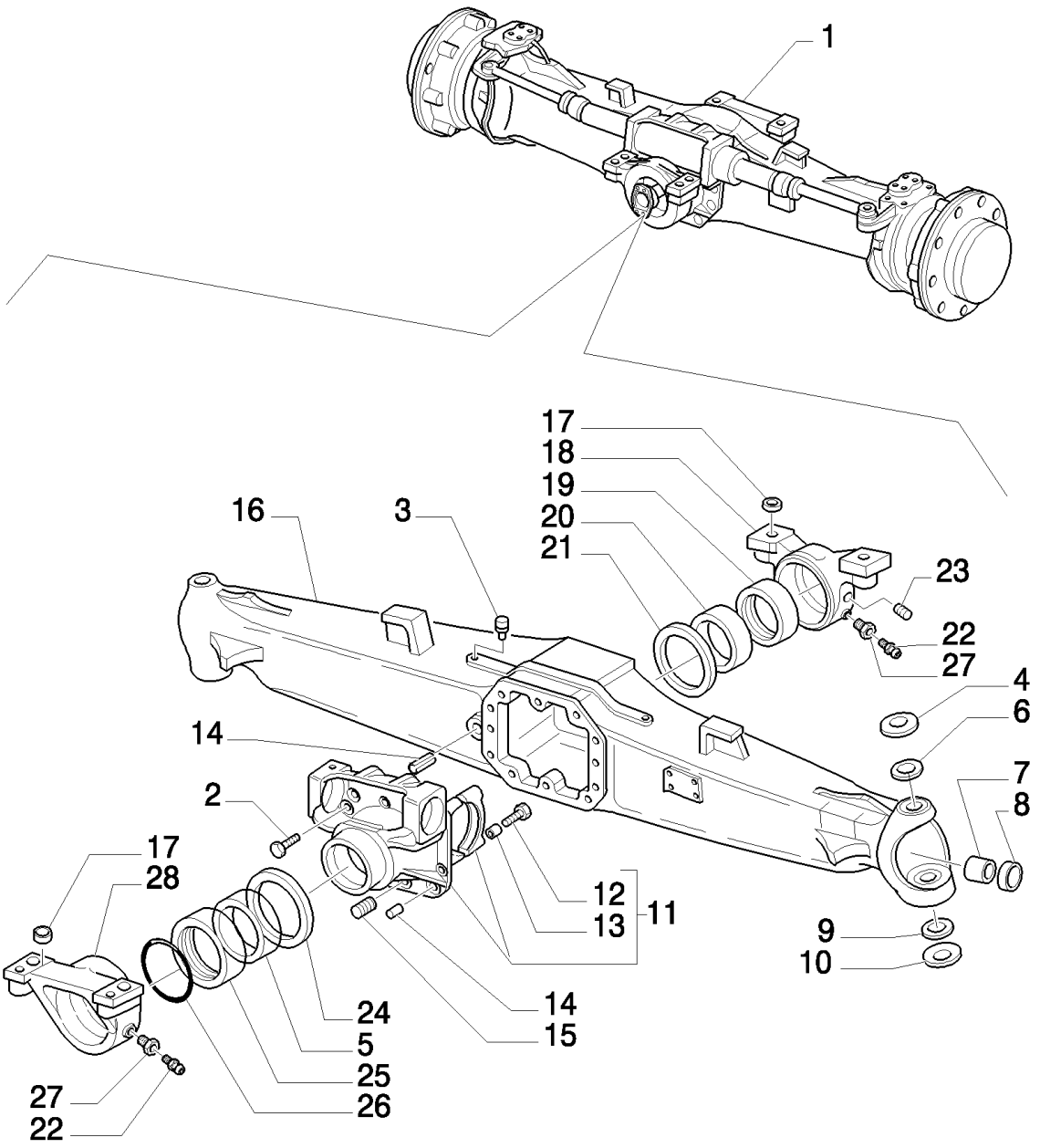

B95LR NA BACKHOE LOADER (1/06-)

402(01) 4WD FRONT AXLE, HOUSING, BUSHINGS & SUPPORTS

Ref	Numero de Pieza	Ctd	Descripción
1	85824329	1	AXLE ASSY, 4WD, , Ratio 14.308, Up to S/N 031054301
1	85824331	1	AXLE ASSY, 4WD, , Ratio 13.714, Up to S/N 031054263
1	85827726	1	AXLE ASSY, 4WD, , Power Shuttle 13.714, From To S/N 031054264
1	85827725	1	AXLE ASSY, 4WD, , Power Shuttle 14.308, From To S/N 031054302
2	9967769	10	SCREW, Cap, HH, M12X1.75X33
3	9967672	1	PLUG, M10X1
4	9967673	2	WASHER, , Axle 85824329 Up to S/N 031054301, Axle 85824331 Up to S/N 031054263
4	9967997	2	WASHER, , Axle 85827725 From to S/N 031054302, Axle 85824326 From to S/N 031054264
5	9968010	1	BUSHING,
6	85824469	2	BUSHING, , Assy See Page 2
6	87306932	2	BUSHING, , Axle 85827725 From to S/N 031054302, Axle 85824326 From to S/N 031054264
7	85805969	2	BUSHING, , Assy See Page 2
7	9968019	2	BUSHING, , Axle 85827725 From to S/N 031054302, Axle 85824326 From to S/N 031054264
8	85824343	2	SEAL, , Assy See Page 2
8	85824346	2	SEAL, , Axle 85827725 From To S/N 031054302, Axle 85827726 From To S/N 031054264
9	9967678	2	RACE, , Assy See Page 2
9	9968002	2	BEARING, 2 piece, Axle 85827725 From To S/N 031054302, Axle 85827726 From To S/N 031054264
10	9967679	2	WASHER, , Assy See Page 2
10	9968003	2	WASHER, , Axle 85827725 From To S/N 031054302, Axle 85827726 From To S/N 031054264
11	9968004	1	SUPPORT, , Includes 12, 13
12	9967681	4	SCREW,
13	9967682	4	BUSHING,
14	9968005	2	PLUG, DRAIN,
15	9967683	2	PIN, ROLL,
16	85824347	1	HOUSING, AXLE, , Axle 85824329 Up To S/N 031054301, Axle 85824331 Up To S/N 031054263
16	85827738	1	HOUSING, AXLE,
17	9967990	4	BUSHING,
18	9967991	1	SUPPORT, Front
19	9967992	1	BUSHING,
20	9967993	1	BUSHING,
21	9967994	1	WASHER, THRUST,
22	321204	2	NIPPLE, LUBE, M6 x 1, 16mm lg,
23	85805973	1	SCREW, M8X1
24	9968006	1	WASHER, THRUST,
25	9968007	1	RING,
26	9968008	1	O-RING,
27	9967995	2	SCREW,
28	9968009	1	SUPPORT, Rear

402(02) 4WD FRONT AXLE, SWIVEL HOUSING & STEERING CYLINDER

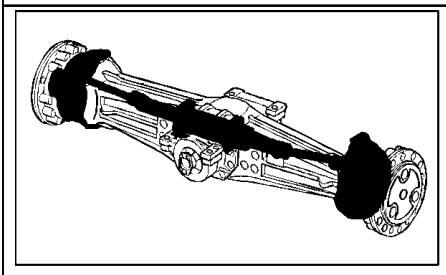

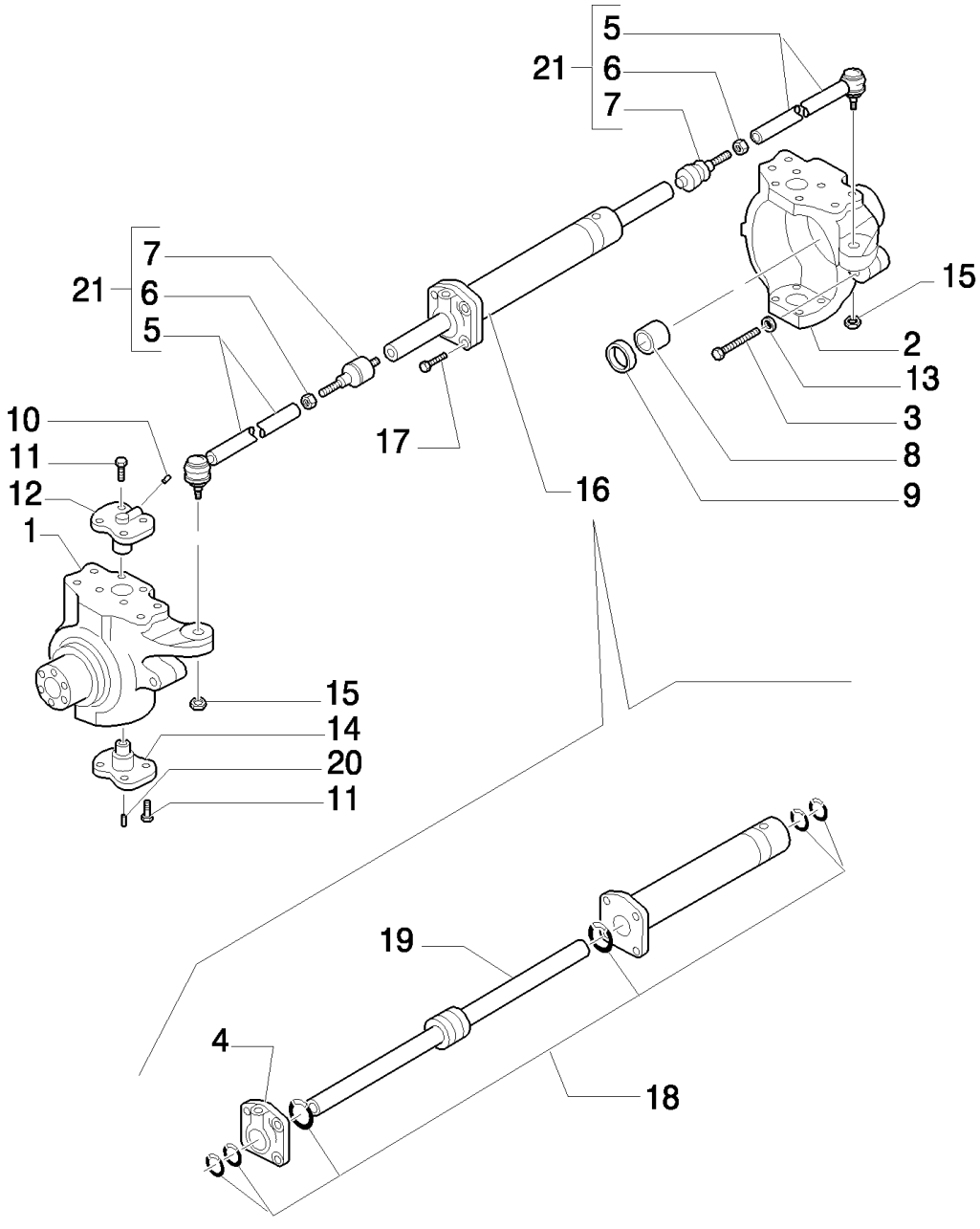

B95LR NA BACKHOE LOADER (1/06-)

402(02) 4WD FRONT AXLE, SWIVEL HOUSING & STEERING CYLINDER

Ref	Numero de Pieza	Ctd	Descripción
1	85824349	1	KNUCKLE, STEERING, LH; 8 Bolt Holes, Axle 85824329 Up To S/N 031054301, Axle 85824331 Up To S/N 031054263
1	85827740	1	KNOTTER, LH; 8 Bolt Holes, Axle 85827725 From To S/N 031054302, Axle 85827726 From To S/N 031054264
2	85824348	1	KNUCKLE, STEERING, RH; 8 Bolt Holes, Axle 85824329 Up To S/N 031054301, Axle 85824331 Up To S/N 031054263
2	85827739	1	KNOTTER, RH; 8 Bolt Holes, Axle 85827725 From To S/N 031054302, Axle 85827726 From To S/N 031054264
3	85805987	2	SCREW, M16x100
4	85805989	1	CYLINDER HEAD,
5	85805977	2	TIE-ROD, , Axle 85824329 Up To S/N 031054301, Axle 85824331 Up To S/N 031054263
5	87306927	2	TIE-ROD, , Axle 85827725 From To S/N 031054302, Axle 85827726 From To S/N 031054264
6	85805976	2	NUT, M18x1.5
7	85805975	2	BALL JOINT,
8	85805988	2	BUSHING, BRONZE,
9	85824345	2	SEAL, 45 x 60 x 16
10	9968021	2	NIPPLE, LUBE, M6x2
11	85805979	16	SCREW, M12x1.75x30, Axle 85824329 Up To S/N 031054301, Axle 85824331 Up To S/N 031054263
11	9968022	16	SCREW, M14 x 2 x 35, Axle 85827725 From To S/N 031054302, Axle 85827726 From To S/N 031054264
12	85805980	2	PIN, , Axle 85824329 Up To S/N 031054301, Axle 85824331 Up To S/N 031054263
12	9968023	2	PIVOT, , Axle 85827725 From To S/N 031054302, Axle 85827726 From To S/N 031054264
13	85805986	2	NUT, M16,
14	85805983	2	PIN, , Axle 85824329 Up To S/N 031054301, Axle 85824331 Up To S/N 031054263
14	9968025	2	PIN, , Axle 85827725 From To S/N 031054302, Axle 85827726 From To S/N 031054264
15	85805982	2	NUT, M18x1.5
16	85805978	1	CYLINDER STEERING, Assy
17	9968028	4	SCREW, M12x45
18	85805990	1	KIT, SEALS,
19	85805992	1	ROD,
20	85805984	2	NIPPLE, LUBE, M6x1
21	85805974	2	TIE-ROD, , Axle 85824329 Up To S/N 031054301, Axle 85824331 Up To S/N 031054263
21	87306934	2	TIE-ROD, , Axle 85827725 From To S/N 031054302, Axle 85827726 From To S/N 031054264

402(03) 4WD FRONT AXLE, HUBS

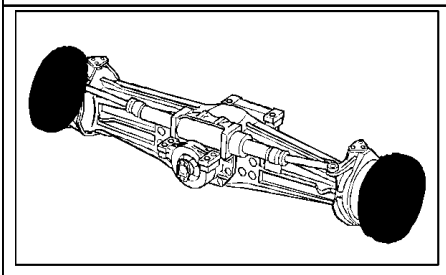

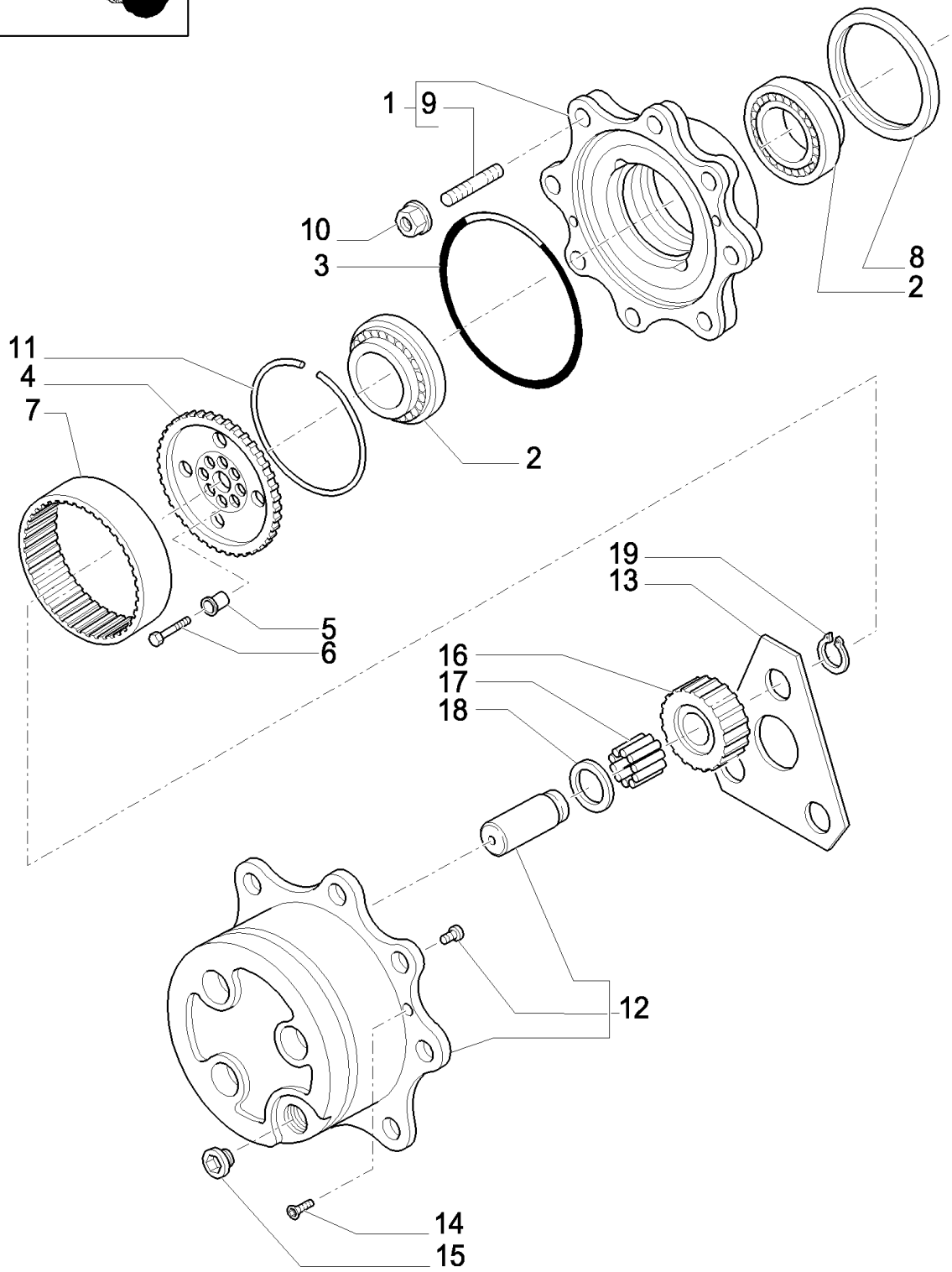

B95LR NA BACKHOE LOADER (1/06-)

402(03) 4WD FRONT AXLE, HUBS

Ref	Numero de Pieza	Ctd	Descripción
1	85806003	2	KIT,
2	9967687	4	BEARING ASSY,
3	85805711	2	O-RING,
4	85817698	2	HUB,
5	85806009	16	BUSHING,
6	85806010	16	SCREW, M10 x 45
7	85806008	2	GEAR, RING,
8	85827067	2	SEAL, OIL, Seal, Oil
9	9968070	16	STUD,
10	9968071	16	NUT, Wheel, M18 x 1.5,
11	85806006	2	RING,
12	85806011	2	KIT,
13	85806016	2	WASHER, THRUST,
14	85805709	4	SCREW, M8 x 20
15	85806012	2	PLUG, M30 x 2
16	85806014	6	GEAR, PLANETARY, T23
17	85806015	AR	KIT OF 10 NEEDLE BRG, (Qty 1=10 Pieces)
18	9968084	6	WASHER, THRUST, M55 x 34.6 x 1.5
19	9968083	6	RING, SNAP,

402(04) 4WD FRONT AXLE, RING GEAR & PINION ASSEMBLY

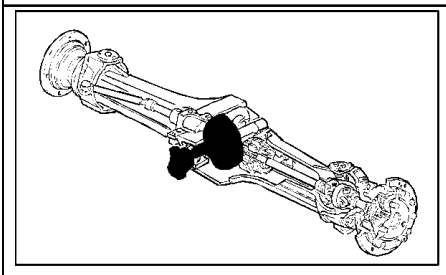

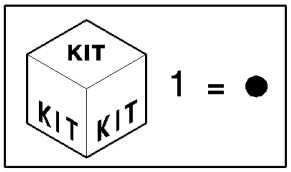

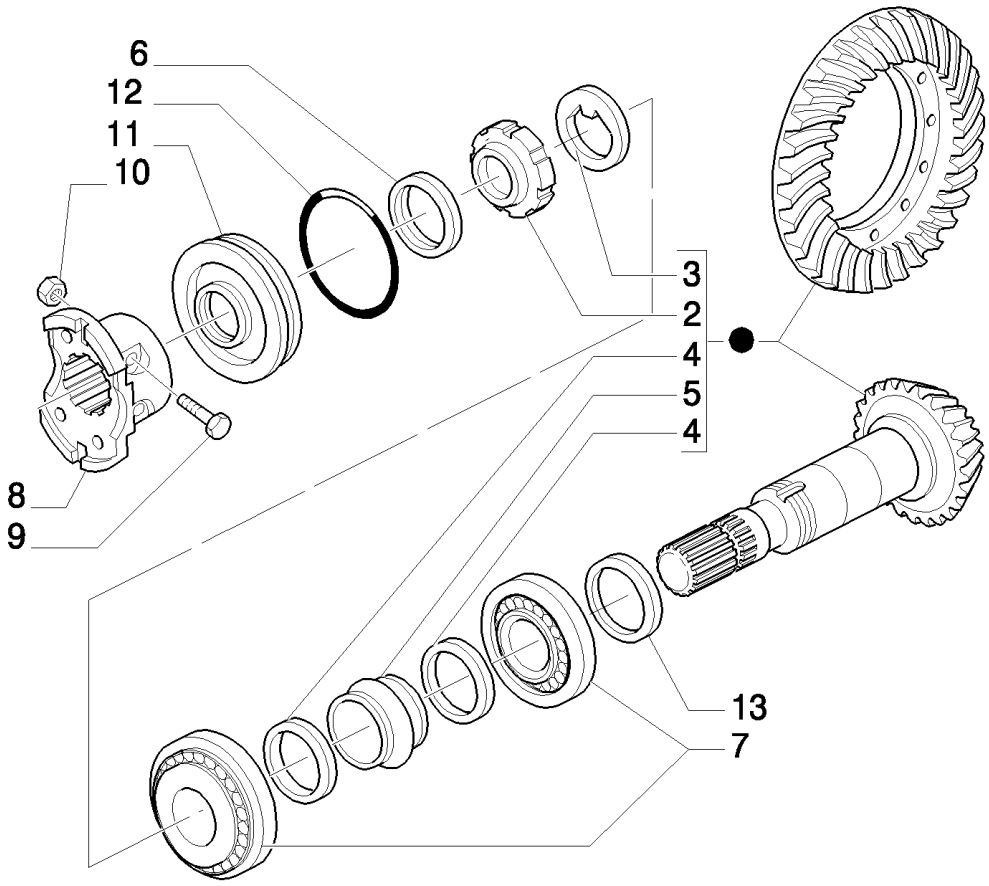

B95LR NA BACKHOE LOADER (1/06-)

402(04) 4WD FRONT AXLE, RING GEAR & PINION ASSEMBLY

Ref	Numero de Pieza	Ctd	Descripción
1	85813060	1	GEAR SET, Z= 13/31, Consist Ref. Number : 2 To 5, Ratio=14.308 Axles 85824329 And 85827725
1	85813059	1	GEAR SET, Z= 14/32, Consist Ref. Number : 2 To 5, Ratio=13.174 Axles 85824331 And 85827726
2	9968032	1	NUT, RING, M40 x 1.5
3	9968031	1	WASHER, LOCK,
4	9968033	2	WASHER, 50 x 40.5 x
5	9968034	1	SPACER,
6	85824346	1	SEAL, Seal, Oil, M35 x 52 x 16
7	9968047	2	BEARING, ROLLER, TAPERED,
8	9968049	1	FLANGE,
9	9968048	2	SCREW, M10 x 60
10	9968050	2	NUT, M10 x 1.25,
11	9968051	1	COVER,
12	9968052	1	O-RING,
13	9968037	AR	SHIM, 2.5 mm
13	9968038	AR	SHIM, 2.6 mm
13	9968039	AR	SHIM, 2.7 mm
13	9968040	AR	SHIM, 2.8 mm
13	9968041	AR	SHIM, 2.9 mm
13	9968042	AR	SHIM, 3.0 mm
13	9968043	AR	SHIM, 3.1 mm
13	9968044	AR	SHIM, 3.2 mm
13	9968045	AR	SHIM, 3.3 mm
13	9968046	AR	SHIM, 3.4 mm

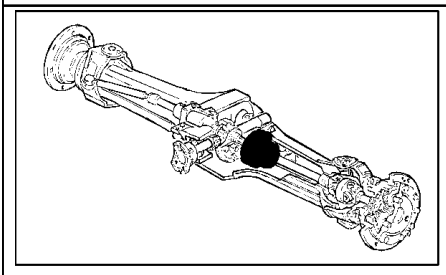

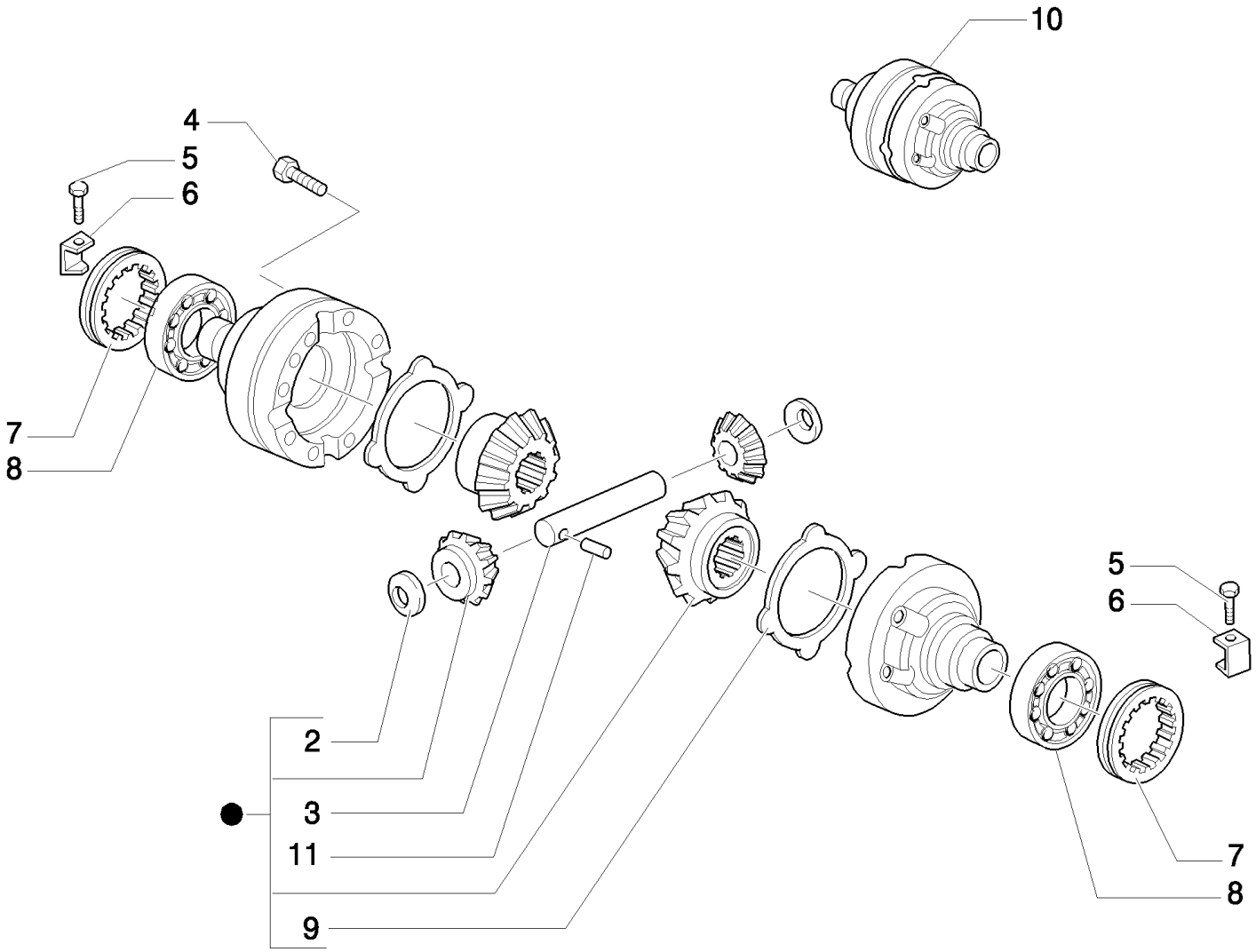

KIT 1 = ●

B95LR NA BACKHOE LOADER (1/06-)

402(05) 4WD FRONT AXLE, DIFFERENTIAL

Ref	Numero de Pieza	Ctd	Descripción
1	85806004	1	KIT,
2	9966352	2	WASHER, THRUST,
3	9966354	1	PIN,
4	9967736	12	SCREW, M10 x 1.5 x 75
5	9967739	2	SCREW, M6 x 10
6	9967740	2	CLIP,
7	9967741	2	NUT, RING,
8	9968054	2	BEARING, ROLLER, TAPERED,
9	9967734	2	PLATE, DRIVE,
10	85827068	1	HOUSING,
11	9966356	1	PIN, ROLL, 7 x 40

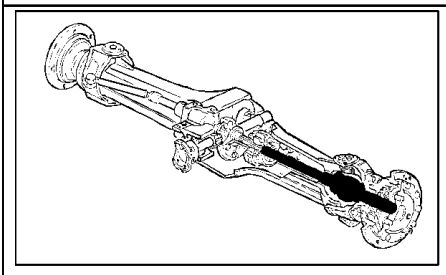

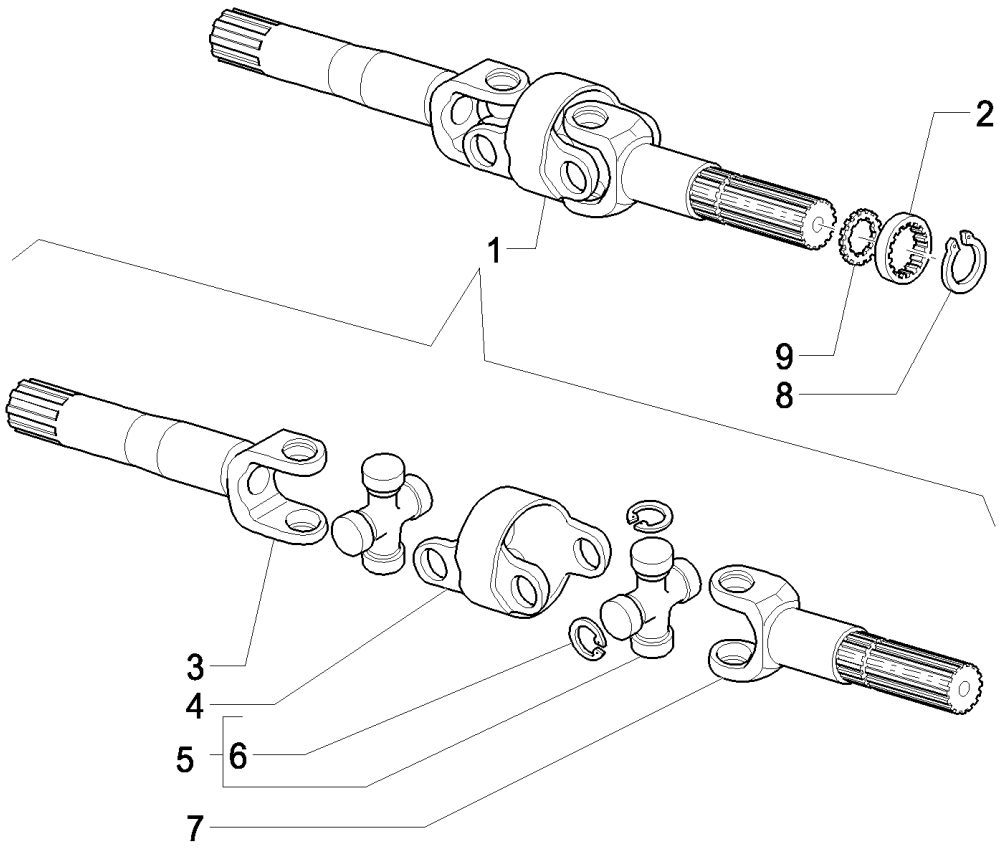
1
2
3
4
5
6
7
8
9

B95LR NA BACKHOE LOADER (1/06-)

402(06) 4WD FRONT AXLE, DRIVE SHAFT

Ref	Numero de Pieza	Ctd	Descripción
1	85805993	2	SHAFT, ARTICULATED, , Axle 85824329 Up To S/N 031054301, Axle 85824331 Up To S/N 031054263
1	85827741	2	SHAFT, ARTICULATED, , Axle 85827725 From to S/N 031054302, Axle 85824326 From to S/N 031054264
2	85805999	2	WASHER, THRUST,
3	85827069	2	SHAFT, , Axle 85824329 Up To S/N 031054301, Axle 85824331 Up To S/N 031054263
3	87306929	1	SHAFT, , Axle 85827725 From To S/N 031054302, Axle 85827726 From To S/N 031054264
4	85827070	2	BODY,
5	85807283	2	SPIDER, , Axle 85824329 Up To S/N 031054301, Axle 85824331 Up To S/N 031054263
5	85805996	2	SPIDER, , Axle 85827725 From To S/N 031054302, Axle 85827726 From To S/N 031054264
6	85807284	1	RING, SNAP, , Axle 85824329 Up To S/N 031054301, Axle 85824331 Up To S/N 031054263
6	9968060	4	RING, SNAP, , Axle 85827725 From To S/N 031054302, Axle 85827726 From To S/N 031054264
7	85805997	2	SHAFT, , Axle 85824329 Up To S/N 031054301, Axle 85824331 Up To S/N 031054263
7	87306930	2	SHAFT, , Axle 85827725 From To S/N 031054302, Axle 85827726 From To S/N 031054264
8	85806000	2	RING, SNAP, , Axle 85824329 Up To S/N 031054301, Axle 85824331 Up To S/N 031054263
8	87306933	2	RING, SNAP, , Axle 85827725 From To S/N 031054302, Axle 85827726 From To S/N 031054264
9	85817697	2	WASHER, THRUST,

415(01) FRONT AXLE - (4WD) W/GEAR,BEVEL

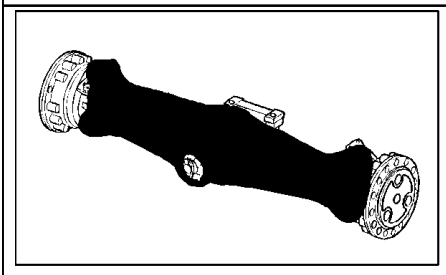

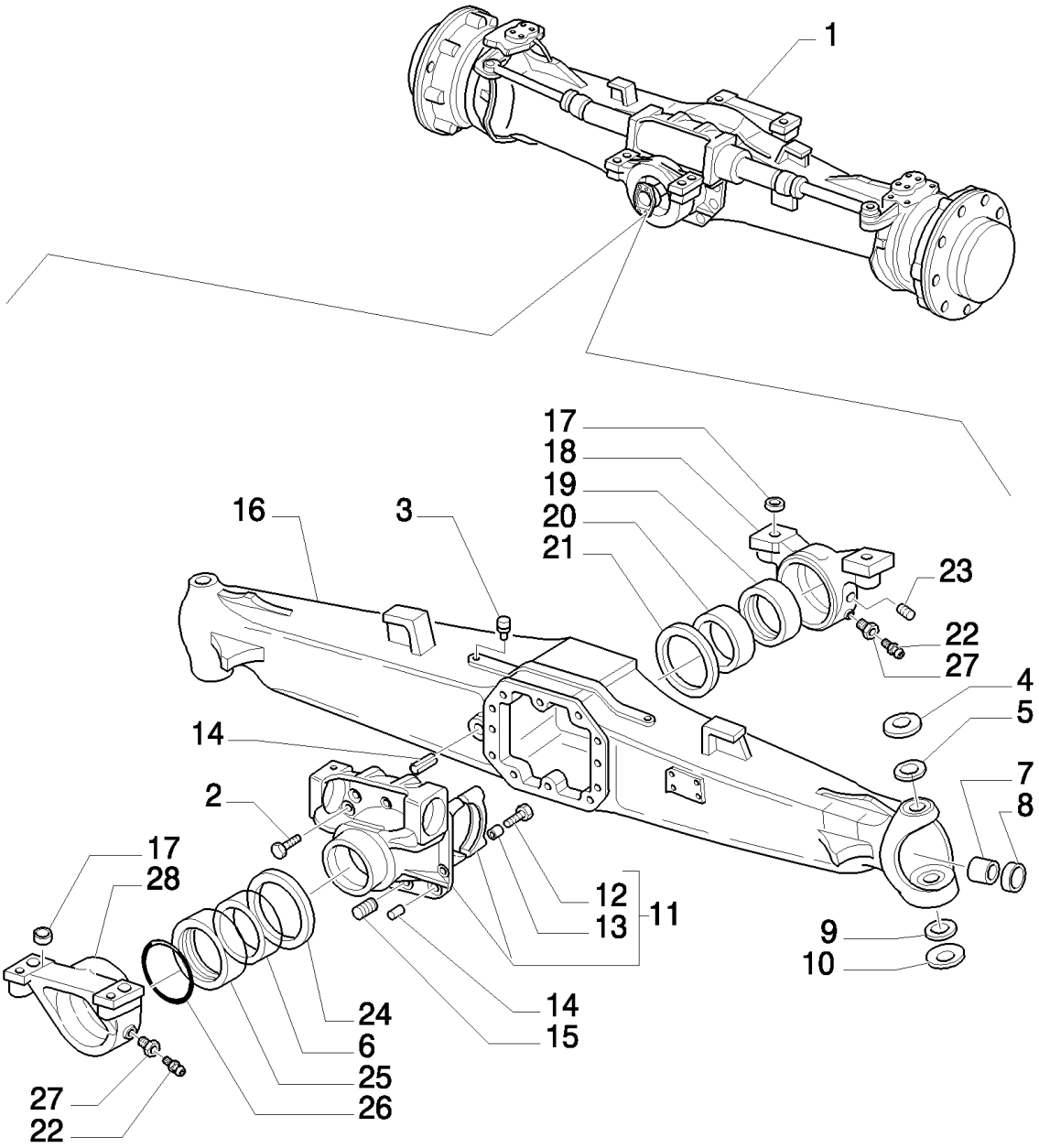

B95LR NA BACKHOE LOADER (1/06-)

415(01) FRONT AXLE - (4WD) W/GEAR,BEVEL

Ref	Numero de Pieza	Ctd	Descripción
1	85824337	1	AXLE ASSY, 4WD, , UP TO S/N 031054241, Consists Of 2 to 28, Also Pages 415 02 to 415 06, Only for POWER SHUTTLE, RATIO=12,8
1	85824335	1	AXLE ASSY, 4WD, , UP TO S/N 031054286, Only For Power Shift, Ratio=12.8, Consists Of 2 to 28, Also Pages 415 02 to 415 06
1	85824333	1	AXLE ASSY, 4WD, , UP TO S/N 031055429, Only For Power Shuttle, Ratio=12,333, Consists Of 2 to 28, Also Pages 415 02 to 415 06
1	85824341	1	AXLE ASSY, 4WD, , UP TO S/N XXX, Only For Power Shift, Ratio=12,333, Consists Of 2 to 28, Also Pages 415 02 to 415 06
1	85827731	1	AXLE ASSY, 4WD, , FROM TO S/N 031054242, Only For Power Shuttle, Ratio=12,8
1	85827727	1	AXLE ASSY, 4WD, , FROM TO S/N 031055429, Only For Power Shuttle, Ratio=12,333
1	85827729	1	AXLE ASSY, 4WD, , FROM TO S/N 031054287, Only For Power Shift, Ratio=12,8
1	85827733	1	AXLE ASSY, 4WD, , FROM TO S/N XXX, Only For Power Shift, Ratio=12,333
2	9967769	10	SCREW, M12X1,75X33
3	9967672	1	PLUG, M10X1
4	9967673	2	WASHER, , Axle 85824337 Up to S/N 031054241, Axle 85824335 Up To S/N 031054286, Axle 85824333 Up to S/N 031055429, Axle 85824341 Up to S/N XXX
4	9967997	2	WASHER, , Axle 85827731 From to S/N 031054242, Axle 85827729 From to S/N 031054287 Axle 85827727 From to S/N 031055429, Axle 85827733 From to S/N XXX
5	85824469	2	BUSHING, , Axle 85824337 Up to S/N 031054241, Axle 85824335 Up To S/N 031054286, Axle 85824333 Up to S/N 031055429, Axle 85824341 Up to S/N XXX
5	87306932	2	BUSHING, , Axle 85827731 From to S/N 031054242, Axle 85827729 From to S/N 031054287 Axle 85827727 From to S/N 031055429, Axle 85827733 From to S/N XXX
6	9968010	1	BUSHING,
7	85805969	2	BUSHING, , Axle 85824337 Up to S/N 031054241, Axle 85824335 Up To S/N 031054286, Axle 85824333 Up to S/N 031055429, Axle 85824341 Up to S/N XXX
7	9968019	2	BUSHING, , Axle 85827731 From to S/N 031054242, Axle 85827729 From to S/N 031054287 Axle 85827727 From to S/N 031055429, Axle 85827733 From to S/N XXX
8	85824343	2	SEAL, , Axle 85824337 Up to S/N 031054241, Axle 85824335 Up To S/N 031054286, Axle 85824333 Up to S/N 031055429, Axle 85824341 Up to S/N XXX
8	85824346	2	SEAL, , Axle 85827731 From to S/N 031054242, Axle 85827729 From to S/N 031054287 Axle 85827727 From to S/N 031055429, Axle 85827733 From to S/N XXX
9	9967678	2	RACE, , Axle 85824337 Up to S/N 031054241, Axle 85824335 Up To S/N 031054286, Axle 85824333 Up to S/N 031055429, Axle 85824341 Up to S/N XXX
9	9968002	2	BEARING, 2 piece, Axle 85827731 From to S/N 031054242, Axle 85827729 From to S/N 031054287 Axle 85827727 From to S/N 031055429, Axle 85827733 From to S/N XXX
10	9967679	2	WASHER, , Axle 85824337 Up to S/N 031054241, Axle 85824335 Up To S/N 031054286, Axle 85824333 Up to S/N 031055429, Axle 85824341 Up to S/N XXX
10	9968003	2	WASHER, , Axle 85827731 From to S/N 031054242, Axle 85827729 From to S/N 031054287 Axle 85827727 From to S/N 031055429, Axle 85827733 From to S/N XXX
11	9968004	1	SUPPORT,
12	9967681	4	SCREW,
13	9967682	4	BUSHING,
14	9968005	2	PLUG, DRAIN, 15X35

B95LR NA BACKHOE LOADER (1/06-)

415(01) FRONT AXLE - (4WD) W/GEAR,BEVEL

Ref	Numero de Pieza	Ctd	Descripción
15	9967683	2	PIN, ROLL,
16	85824347	1	HOUSING, AXLE, , Axle 85824337 Up to S/N 031054241, Axle 85824335 Up To S/N 031054286, Axle 85824333 Up to S/N 031055429, Axle 85824341 Up to S/N XXX
16	85827738	1	HOUSING, AXLE, , Axle 85827731 From to S/N 031054242, Axle 85827729 From to S/N 031054287 Axle 85827727 From to S/N 031055429, Axle 85827733 From to S/N XXX
17	9967990	4	BUSHING,
18	9967991	1	SUPPORT,
19	9967992	1	BUSHING,
20	9967993	1	BUSHING,
21	9967994	1	WASHER, THRUST,
22	321204	2	NIPPLE, LUBE, M6 x 1, 16mm lg,
23	85805973	1	SCREW, M8x1
24	9968006	1	WASHER, THRUST,
25	9968007	1	RING,
26	9968008	1	O-RING,
27	9967995	2	SCREW,
28	9968009	1	SUPPORT,

415(02) FRONT AXLE - (4WD) W/GEAR,BEVEL

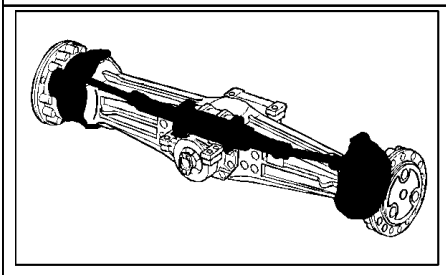

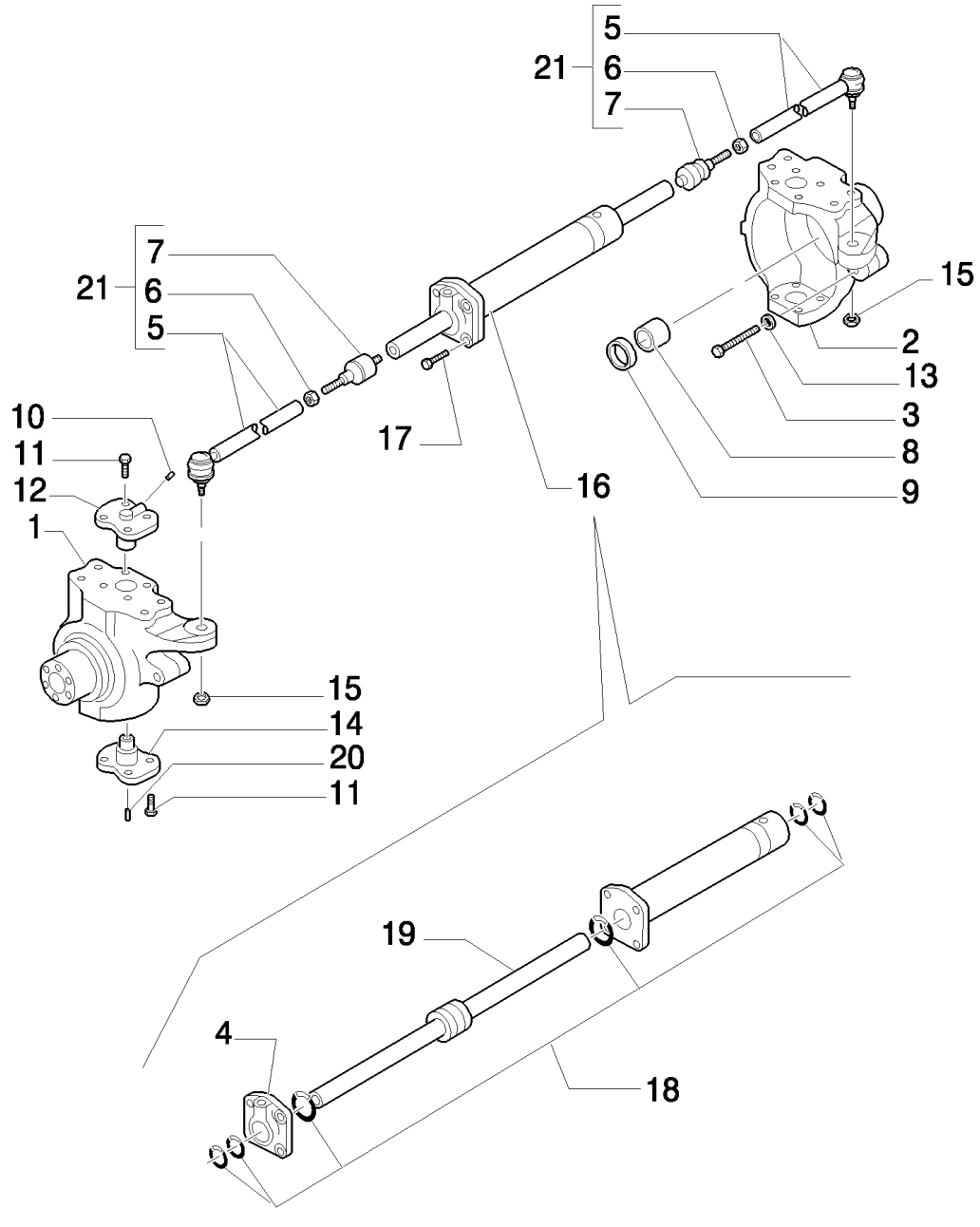

B95LR NA BACKHOE LOADER (1/06-)

415(02) FRONT AXLE - (4WD) W/GEAR,BEVEL

Ref	Numero de Pieza	Ctd	Descripción
1	85824349	1	KNUCKLE, STEERING, LH; 8 Bolt Holes, Axle 85824337 Up to S/N 031054241, Axle 85824335 Up To S/N 031054286, Axle 85824333 Up to S/N 031055429, Axle 85824341 Up to S/N XXX
1	85827740	1	KNOTTER, LH; 8 Bolt Holes, Axle 85827731 From to S/N 031054242, Axle 85827729 From to S/N 031054287 Axle 85827727 From to S/N 031055429, Axle 85827733 From to S/N XXX
2	85824348	1	KNUCKLE, STEERING, RH; 8 Bolt Holes, Axle 85824337 Up to S/N 031054241, Axle 85824335 Up To S/N 031054286, Axle 85824333 Up to S/N 031055429, Axle 85824341 Up to S/N XXX
2	85827739	2	KNOTTER, RH; 8 Bolt Holes, Axle 85827731 From to S/N 031054242, Axle 85827729 From to S/N 031054287 Axle 85827727 From to S/N 031055429, Axle 85827733 From to S/N XXX
3	85805987	2	SCREW, M16x100
4	85805989	1	CYLINDER HEAD,
5	85805977	2	TIE-ROD, , Axle 85824337 Up to S/N 031054241, Axle 85824335 Up To S/N 031054286, Axle 85824333 Up to S/N 031055429, Axle 85824341 Up to S/N XXX
5	87306927	2	TIE-ROD, , Axle 85827731 From to S/N 031054242, Axle 85827729 From to S/N 031054287 Axle 85827727 From to S/N 031055429, Axle 85827733 From to S/N XXX
6	85805976	2	NUT, M18 x 1.5
7	85805975	2	BALL JOINT,
8	85805988	2	BUSHING, BRONZE,
9	85824345	2	SEAL, 45 x 60 x 16
10	9968021	2	NIPPLE, LUBE, M6 x 2
11	85805979	16	SCREW, M12 x 1.75 x 30, Axle 85824337 Up to S/N 031054241, Axle 85824335 Up To S/N 031054286, Axle 85824333 Up to S/N 031055429, Axle 85824341 Up to S/N XXX
11	9968022	16	SCREW, M14 x 2 x 35, Axle 85827731 From to S/N 031054242, Axle 85827729 From to S/N 031054287 Axle 85827727 From to S/N 031055429, Axle 85827733 From to S/N XXX
12	85805980	2	PIN,
12	9968023	2	PIVOT,
13	85805986	2	NUT, M16,
14	85805983	2	PIN, , Axle 85824337 Up to S/N 031054241, Axle 85824335 Up To S/N 031054286, Axle 85824333 Up to S/N 031055429, Axle 85824341 Up to S/N XXX
14	9968025	2	PIN, , Axle 85827731 From to S/N 031054242, Axle 85827729 From to S/N 031054287 Axle 85827727 From to S/N 031055429, Axle 85827733 From to S/N XXX
15	85805982	2	NUT, M18 x 1.5
16	85805978	1	CYLINDER STEERING, Assy
17	9968028	4	SCREW, M12x5
18	85805990	1	KIT, SEALS,
19	85805992	1	ROD,
20	85805984	2	NIPPLE, LUBE, M6 x 1
21	85805974	2	TIE-ROD, , Axle 85824337 Up to S/N 031054241, Axle 85824335 Up To S/N 031054286, Axle 85824333 Up to S/N 031055429, Axle 85824341 Up to S/N XXX
21	87306934	2	TIE-ROD, , Axle 85827731 From to S/N 031054242, Axle 85827729 From to S/N 031054287 Axle 85827727 From to S/N 031055429, Axle 85827733 From to S/N XXX

415(03) FRONT AXLE - (4WD) W/GEAR,BEVEL

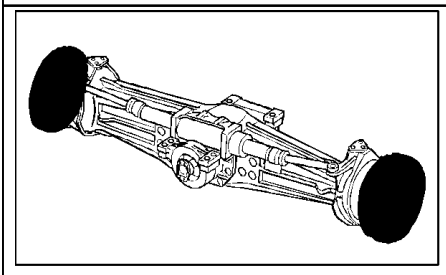

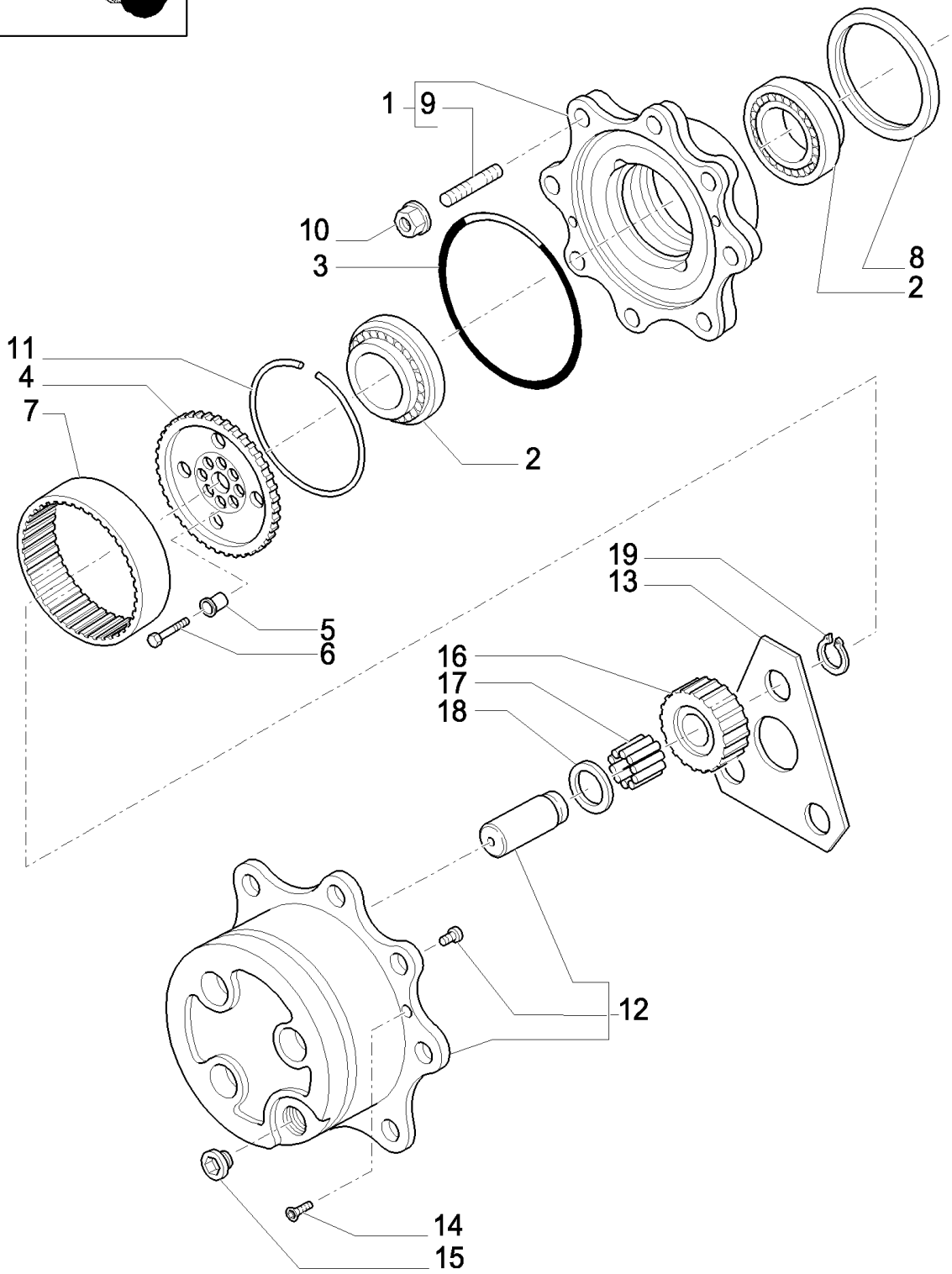

B95LR NA BACKHOE LOADER (1/06-)

415(03) FRONT AXLE - (4WD) W/GEAR,BEVEL

Ref	Numero de Pieza	Ctd	Descripción
1	85806003	2	KIT,
2	9967687	4	BEARING ASSY,
3	85805711	2	O-RING,
4	85817698	2	HUB,
5	85806009	16	BUSHING,
6	85806010	16	SCREW, M10 x 45
7	85806008	2	GEAR, RING,
8	85827067	2	SEAL, OIL,
9	9968070	16	STUD,
10	9968071	16	NUT, Wheel, M18 x 1.5,
11	85806006	2	RING,
12	85806011	2	KIT,
13	85806016	2	WASHER, THRUST,
14	85805709	4	SCREW, M8 x 20
15	85806012	2	PLUG,
16	85806014	6	GEAR, PLANETARY, T23
17	85806015	AR	KIT OF 10 NEEDLE BRG, (Qty 1=10 Pieces)
18	9968084	6	WASHER, THRUST, 55 x 34.6 x 1.5
19	9968083	6	RING, SNAP,

415(04) FRONT AXLE - (4WD) W/GEAR,BEVEL

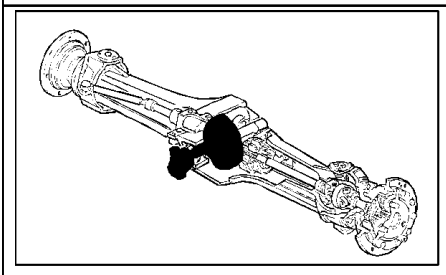

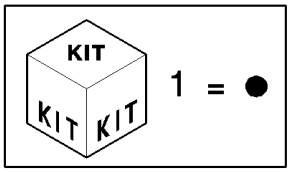

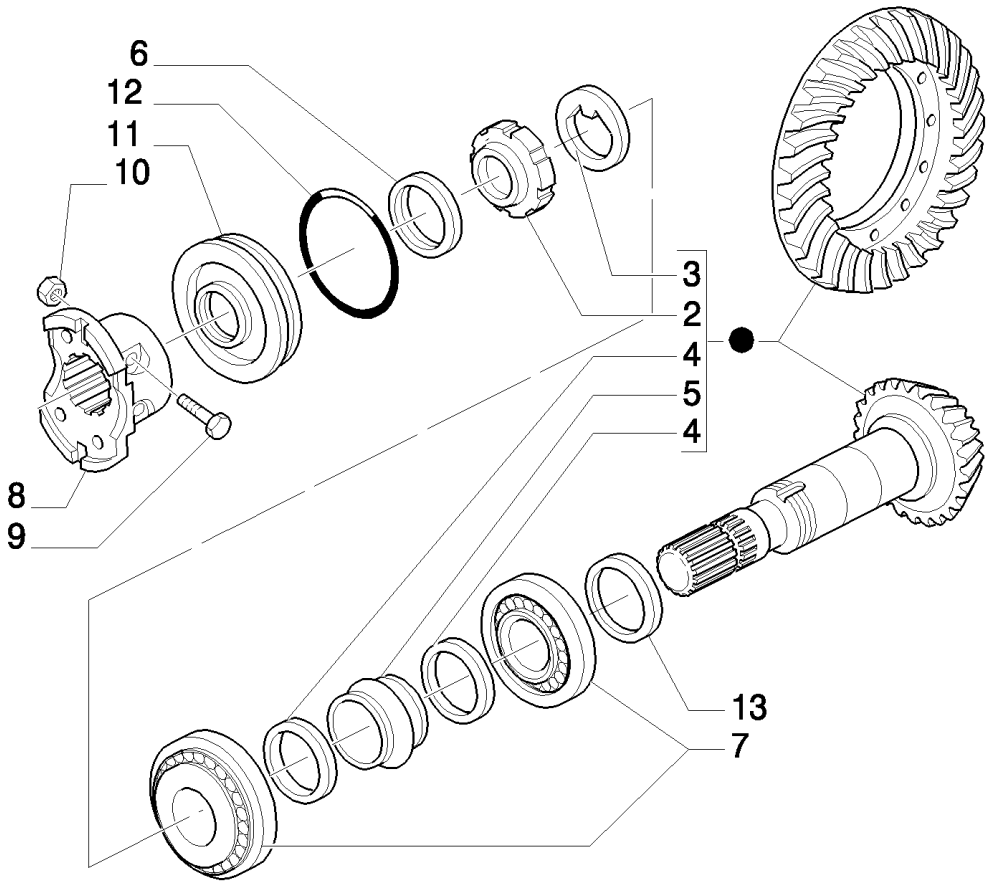

B95LR NA BACKHOE LOADER (1/06-)

415(04) FRONT AXLE - (4WD) W/GEAR,BEVEL

Ref	Numero de Pieza	Ctd	Descripción
1	9968035	1	GEAR SET, , Consist Ref. Number : 2 To 5, Ratio=12,8 Only Power Shuttle, Axles 85824337, 85827731
1	9968925	1	GEAR SET, , Consist Ref. Number : 2 To 5, Ratio =12,8 Only Power Shift, Axles 85824335, 85827729
1	9968036	1	GEAR SET, , Consist Ref. Number : 2 To 5, Ratio=12,333 Only Axles 85824333, 85824341, 85827733
2	9968032	1	NUT, RING, M40 x 1.5
3	9968031	1	WASHER, LOCK,
4	9968033	2	WASHER, 50 x 40.5 x 2
5	9968034	1	SPACER,
6	85824346	1	SEAL, 32 x 52 x 16
7	9968047	2	BEARING, ROLLER, TAPERED,
8	9968049	1	FLANGE,
9	9968048	2	SCREW, M10 x 60
10	9968050	2	NUT, M10 x 1.25,
11	9968051	1	COVER,
12	9968052	1	O-RING,
13	9968037	AR	SHIM, 2.5 mm
13	9968038	AR	SHIM, 2.6 mm
13	9968039	AR	SHIM, 2.7 mm
13	9968040	AR	SHIM, 2.8 mm
13	9968041	AR	SHIM, 2.9 mm
13	9968042	AR	SHIM, 3.0 mm
13	9968043	AR	SHIM, 3.1 mm
13	9968044	AR	SHIM, 3.2 mm
13	9968045	AR	SHIM, 3.3 mm
13	9968046	AR	SHIM, 3.4 mm

415(05) FRONT AXLE - (4WD) W/GEAR,BEVEL

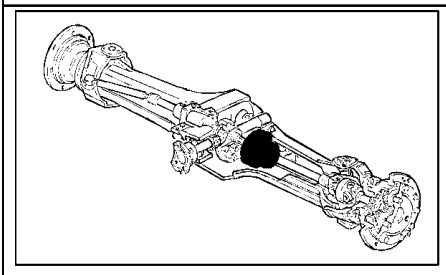

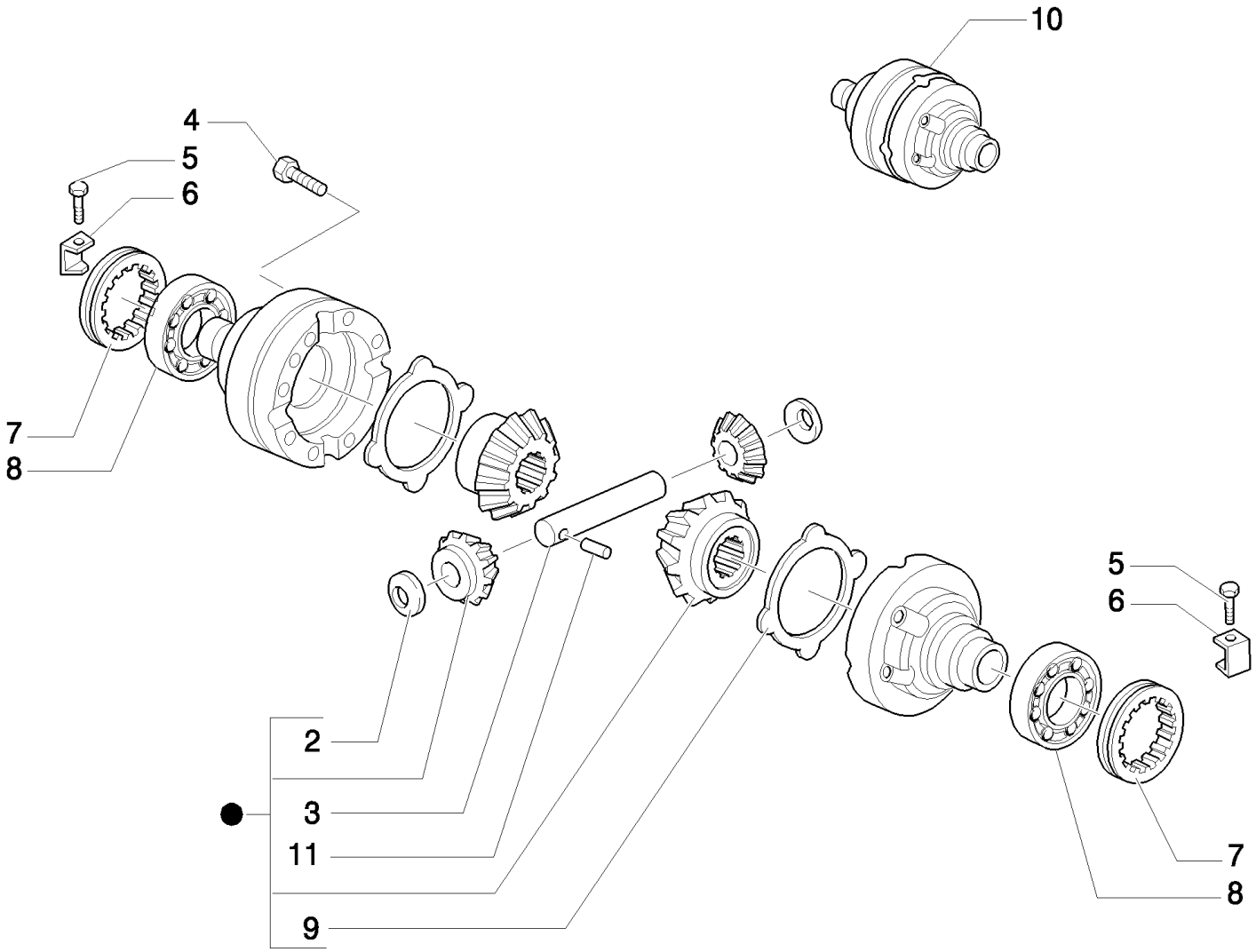

KIT 1 = ●

B95LR NA BACKHOE LOADER (1/06-)

415(05) FRONT AXLE - (4WD) W/GEAR,BEVEL

Ref	Numero de Pieza	Ctd	Descripción
1	85806004	1	KIT,
2	9966352	2	WASHER, THRUST,
3	9966354	1	PIN,
4	9967736	12	SCREW, M10 x 1.5 x 75
5	9967739	2	SCREW, M6 x 10
6	9967740	2	CLIP,
7	9967741	2	NUT, RING,
8	9968054	2	BEARING, ROLLER, TAPERED,
9	9967734	2	PLATE, DRIVE,
10	85827068	1	HOUSING,
11	9966356	1	PIN, ROLL, 7 x 40

415(06) FRONT AXLE - (4WD) W/GEAR,BEVEL

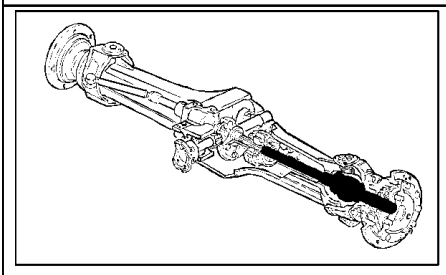

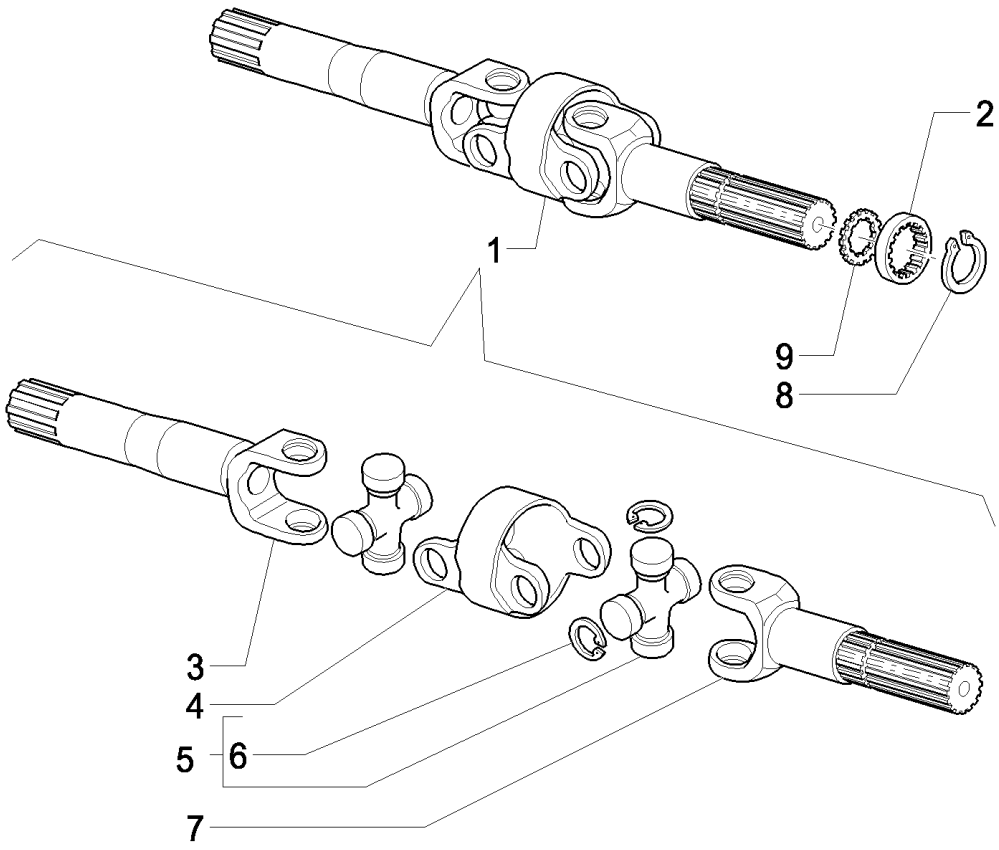

B95LR NA BACKHOE LOADER (1/06-)

415(06) FRONT AXLE - (4WD) W/GEAR,BEVEL

Ref	Numero de Pieza	Ctd	Descripción
1	85805993	2	SHAFT, ARTICULATED, , Axle 85824337 Up to S/N 031054241, Axle 85824335 Up To S/N 031054286, Axle 85824333 Up to S/N 031055429, Axle 85824341 Up to S/N XXX
1	85827741	2	SHAFT, ARTICULATED, , Axle 85827731 From to S/N 031054242, Axle 85827729 From to S/N 031054287 Axle 85827727 From to S/N 031055429, Axle 85827733 From to S/N XXX
2	85805999	2	WASHER, THRUST,
3	85827069	2	SHAFT, , Axle 85824337 Up to S/N 031054241, Axle 85824335 Up To S/N 031054286, Axle 85824333 Up to S/N 031055429, Axle 85824341 Up to S/N XXX
3	87306930	2	SHAFT, , Axle 85827731 From to S/N 031054242, Axle 85827729 From to S/N 031054287 Axle 85827727 From to S/N 031055429, Axle 85827733 From to S/N XXX
4	85827070	2	BODY,
5	85807283	2	SPIDER, , Axle 85824337 Up to S/N 031054241, Axle 85824335 Up To S/N 031054286, Axle 85824333 Up to S/N 031055429, Axle 85824341 Up to S/N XXX
5	85805996	2	SPIDER, , Axle 85827731 From to S/N 031054242, Axle 85827729 From to S/N 031054287 Axle 85827727 From to S/N 031055429, Axle 85827733 From to S/N XXX
6	85807284	2	RING, SNAP, , Axle 85824337 Up to S/N 031054241, Axle 85824335 Up To S/N 031054286, Axle 85824333 Up to S/N 031055429, Axle 85824341 Up to S/N XXX
6	9968060	4	RING, SNAP, , Axle 85827731 From to S/N 031054242, Axle 85827729 From to S/N 031054287 Axle 85827727 From to S/N 031055429, Axle 85827733 From to S/N XXX
7	85805997	2	SHAFT, , Axle 85824337 Up to S/N 031054241, Axle 85824335 Up To S/N 031054286, Axle 85824333 Up to S/N 031055429, Axle 85824341 Up to S/N XXX
7	87306929	1	SHAFT, , Axle 85827731 From to S/N 031054242, Axle 85827729 From to S/N 031054287 Axle 85827727 From to S/N 031055429, Axle 85827733 From to S/N XXX
8	85806000	2	RING, SNAP, , Axle 85824337 Up to S/N 031054241, Axle 85824335 Up To S/N 031054286, Axle 85824333 Up to S/N 031055429, Axle 85824341 Up to S/N XXX
8	87306933	2	RING, SNAP, , Axle 85827731 From to S/N 031054242, Axle 85827729 From to S/N 031054287 Axle 85827727 From to S/N 031055429, Axle 85827733 From to S/N XXX
9	85817697	2	WASHER, THRUST,

416-417(01) SYSTEM HAMMER COMPONENTS (CAB)

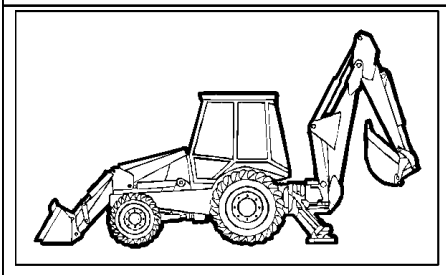

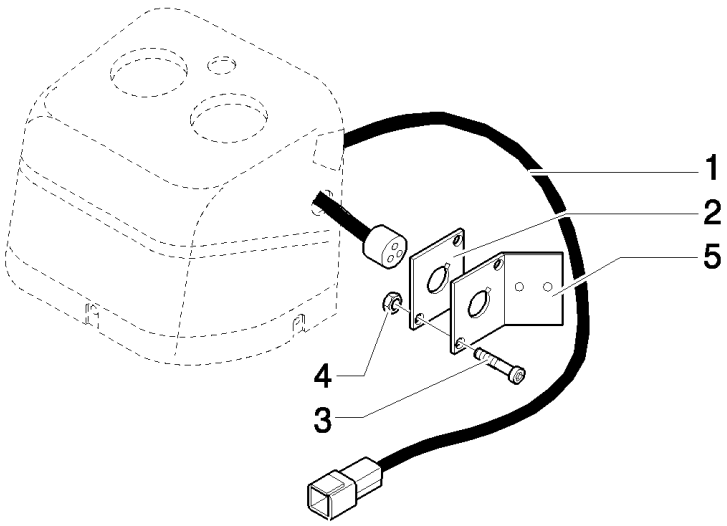

B95LR NA BACKHOE LOADER (1/06-)

416-417(01) SYSTEM HAMMER COMPONENTS (CAB)

Ref	Numero de Pieza	Ctd	Descripción
1	85819237	1	HARNESS, WIRE,
2	85816760	1	PLATE,
3	13272477	2	SCREW, Cross Pan Hd, M4 x 20, 12.9,
4	12574011	2	NUT, LOCK, M4 x .7, Cl 8,
5	85827822	1	PLATE, MOUNTING, , Only for ROPS

B95LR NA BACKHOE LOADER (1/06-)

437/ 1(01) GLIDE RIDE VALVE,HYDRAULIC SYSTEM FOR MACHINE FRAME LEVELLING

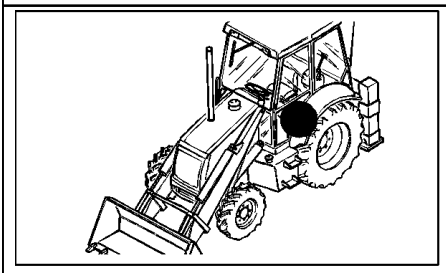

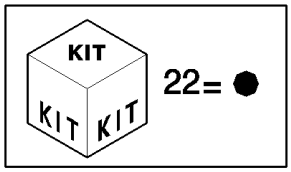

B95LR NA BACKHOE LOADER (1/06-)

437/ 1(01) GLIDE RIDE VALVE,HYDRAULIC SYSTEM FOR MACHINE FRAME LEVELLING

Ref	Numero de Pieza	Ctd	Descripción
1	87358815	2	HOSE, FLEXIBLE,
2	85815620	1	HOSE, FLEXIBLE,
3	85817222	1	HOSE, FLEXIBLE,
4	83971549	4	ELBOW,
5	83963374	2	CONNECTOR, HYD.,
8	87358817	1	VALVE, HYDRAULIC,
9	87342882	1	ACCUMULATOR, , UP TO S/N 031058026, Only for EUROPE Version
9	87358818	1	ACCUMULATOR, , FROM TO S/N 031058027
10	87386551	1	PIPE,
11	11106421	2	BOLT, Hex, M10 x 30, 8.8,
12	85817223	1	HOSE, FLEXIBLE,
13	11190579	5	WASHER, SPRING, Belleville, M10.5,
14	85815583	2	TEE,
15	9992069	1	O-RING, -016, 90 Duro, .614" ID x .070" Thk,
16	9992298	2	O-RING, -014, 90 Duro, .489" ID x .070" Thk,
18	128825	2	O-RING, 8-1, 90 Duro, .644" ID x .087" Thk,
20	11106421	1	BOLT, Hex, M10 x 30, 8.8,
21	87358808	1	BRACKET,
22	85824211	1	CABLE, ELECTRIC,
23	15971321	1	BOLT, Hex, M10 x 75, 8.8,

469/ A(01) HYDRAULIC CYLINDER (BUCKET 4X1-6X1)

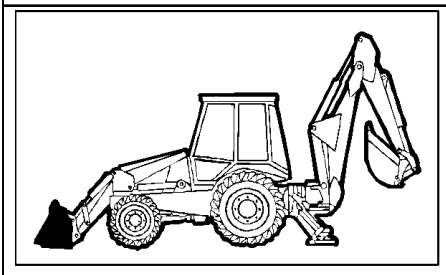

KIT KIT KIT 9 = ●

B95LR NA BACKHOE LOADER (1/06-)

469/ A(01) HYDRAULIC CYLINDER (BUCKET 4X1-6X1)

Ref	Numero de Pieza	Ctd	Descripción
1	87573861	1	CYLINDER,
2	85820051	1	BARREL, , Up To S/N XXX
2	87574523	1	LINER, , From To S/N XXX
3	87574080	1	SCRAPER,
4	87574092	1	SEAL,
5	85820053	1	CAP CYLINDER END, , Up To S/N XXX
5	87574524	1	BOTTOM, , From To S/N XXX
6	87574099	1	SEAL,
7	87574097	1	SEAL,
8	87574098	1	O-RING,
9	87573868	1	PACKAGE, SEALS, , Insludes Ref. 3, 4, 6, 7, 8
10	85820054	1	PISTON, Part May or May Not Have Hole For 85820055 Roll Pin; If Part Does Not Have Hole, The Piston Is Fixed To The Rod With Loctite 243
11	85820052	1	ROD, Part May or May Not Have Hole For 85820055 Roll Pin; If Part Does Not Have Hole, The Piston Is Fixed To The Rod With Loctite 243
12	85820056	1	BUSHING,

B95LR NA BACKHOE LOADER (1/06-)

471(01) BUCKET 4X1 (1 M3) WITH BLADE

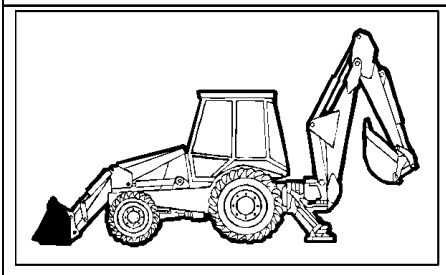

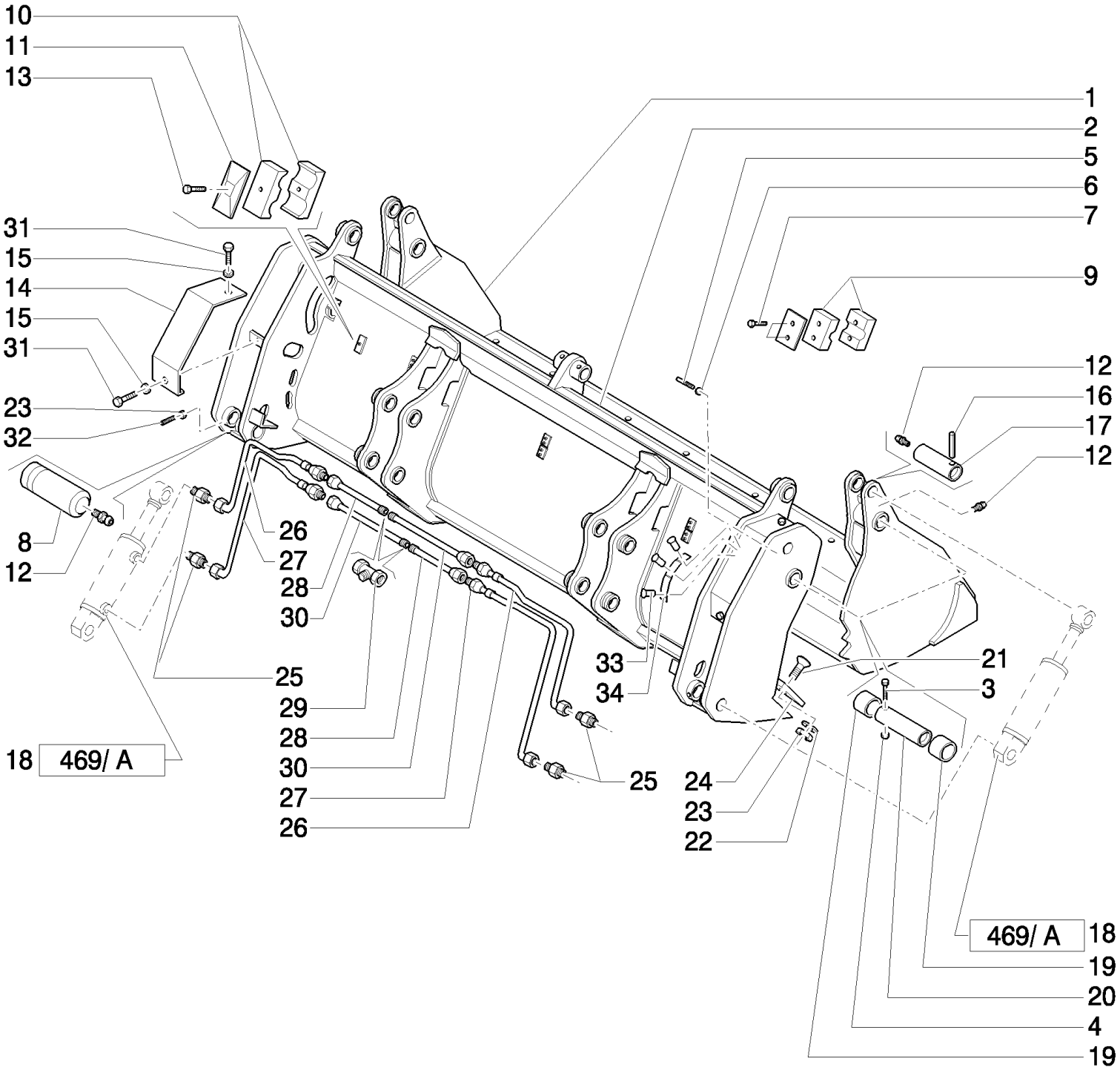

B95LR NA BACKHOE LOADER (1/06-)

471(01) BUCKET 4X1 (1 M3) WITH BLADE

Ref	Numero de Pieza	Ctd	Descripción
1	85820032	1	BUCKET,
2	85820033	1	BUCKET,
3	85820018	2	SCREW, M10 x 90
4	85820035	2	NUT, M10X1,5
5	85820021	1	SCREW, M8 x 120
6	85820031	1	NUT, M8
7	85820034	12	SCREW, M6 x 30
8	85820019	2	PIN,
9	85820028	12	CLAMP,
10	85820027	2	CLAMP,
11	85820026	2	PLATE,
12	85820014	6	NIPPLE, LUBE, M10 x 1,
13	85820030	2	SCREW,
14	85820010	2	GUARD,
15	85820012	4	WASHER, SEALING,
16	85820016	2	PIN, ROLL, 10 x 80
17	85820017	2	PIN,
18	87573861	2	CYLINDER,
19	85820013	4	BUSHING,
20	85820015	2	PIN,
21	85820007	8	SCREW, M14 x 35
22	85820009	8	WASHER, SEALING,
23	85820008	10	NUT, M14 x 2
24	85820006	1	EDGE, CUTTING,
25	85820025	4	CONNECTOR, HYD.,
26	85824364	2	HOSE, FLEXIBLE,
27	85824363	2	HOSE, FLEXIBLE,
28	85820039	2	TUBE, HYD,
29	85820040	2	TEE,
30	85820038	2	TUBE, HYD,
31	85820011	2	SCREW, M8x16
32	85820020	2	SCREW,
33	NSS	3	NOT SERVICED SEPARATELY,
34	NSS	1	NOT SERVICED SEPARATELY,

B95LR NA BACKHOE LOADER (1/06-)

471(02) BUCKET 4X1 (1 M3) WITH BLADE

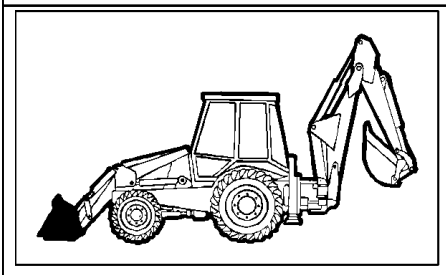

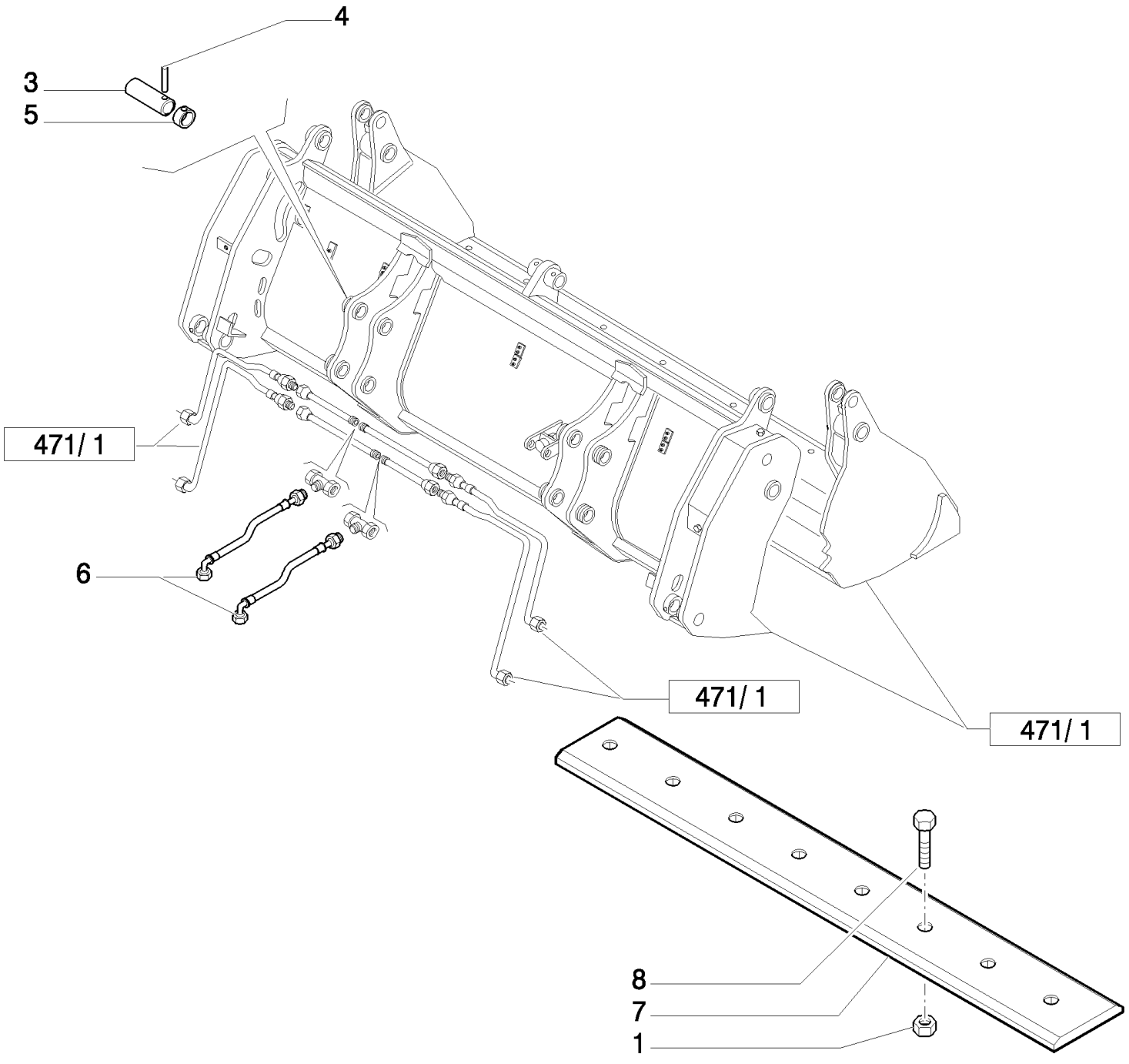

B95LR NA BACKHOE LOADER (1/06-)

471(02) BUCKET 4X1 (1 M3) WITH BLADE

Ref	Numero de Pieza	Ctd	Descripción
1	85801470	8	NUT, 5/8"-11, G8,
3	85801051	4	PIN,
4	85802993	4	PIN,
5	85802992	4	RING,
6	85820819	2	HOSE, FLEXIBLE, L=800 mm
7	85801161	1	EDGE, CUTTING, 35 Deg. cutting edge, Reversible bolt on
8	85801371	8	BOLT, PLOW, 5/8"-11 x 2 1/4",

B95LR NA BACKHOE LOADER (1/06-)

471/ 1(01) BUCKET 4X1 (1 M3) WITH BLADE "COMMON GREY"

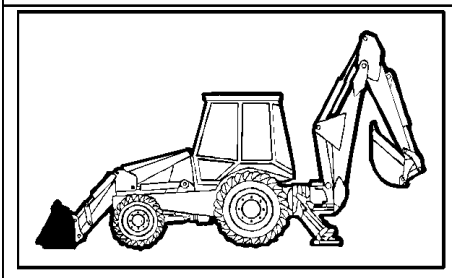

KIT KIT KIT 7 = ●

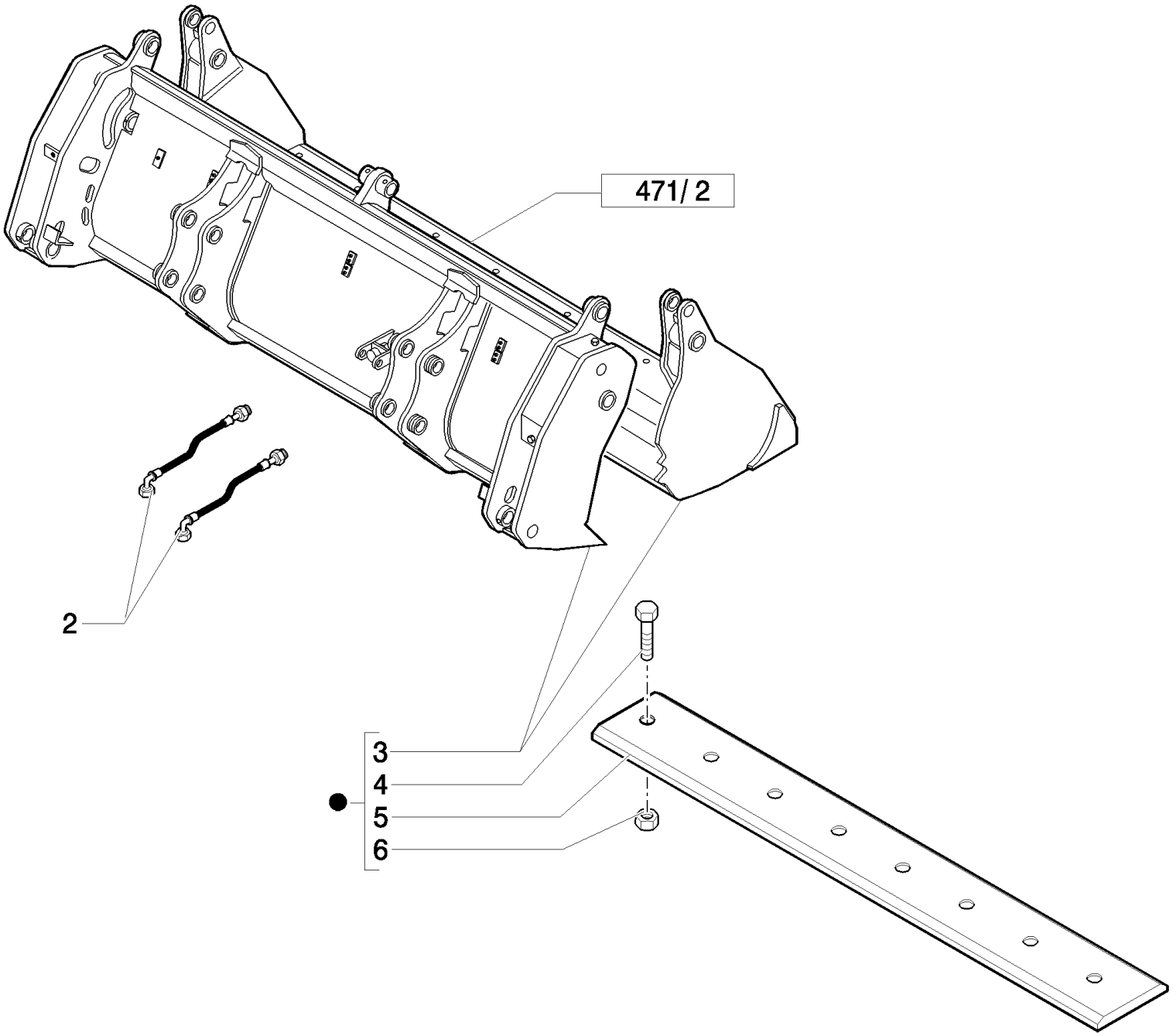

B95LR NA BACKHOE LOADER (1/06-)

471/ 1(01) BUCKET 4X1 (1 M3) WITH BLADE "COMMON GREY"

Ref	Numero de Pieza	Ctd	Descripción
2	85820819	2	HOSE, FLEXIBLE, L=800 mm
3	87573550	1	BUCKET, 4 IN 1, 4x1
4	85801371	8	BOLT, PLOW, 5/8"-11 x 2 1/4",
5	85801161	1	EDGE, CUTTING,
6	85801470	8	NUT, 5/8"-11, G8,
7	47334800	1	

B95LR NA BACKHOE LOADER (1/06-)

471/ 2(01) BUCKET 4X1 (1 M3) WITH BLADE "COMMON GREY"

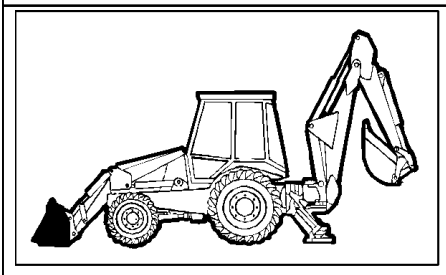

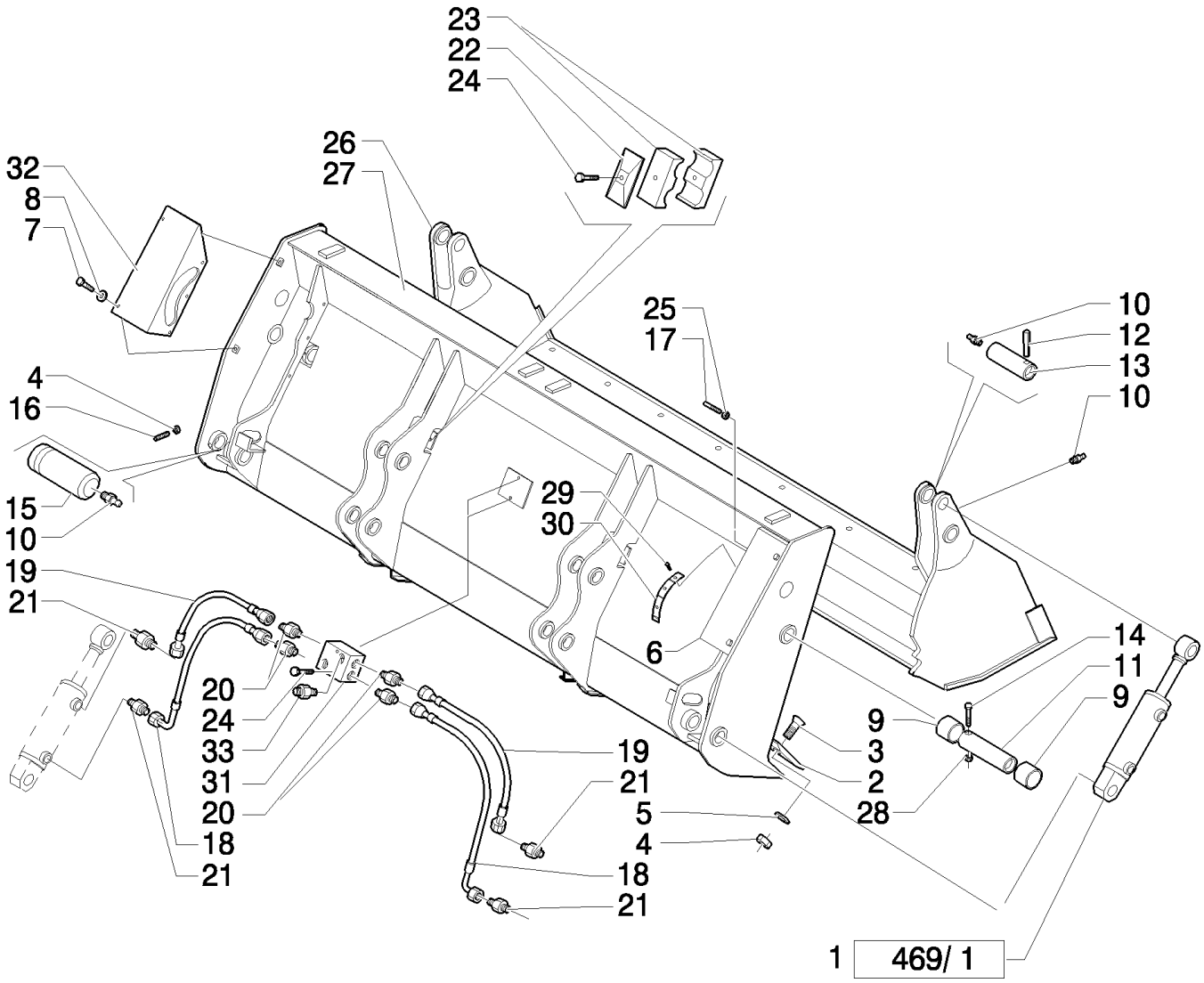

B95LR NA BACKHOE LOADER (1/06-)

471/ 2(01) BUCKET 4X1 (1 M3) WITH BLADE "COMMON GREY"

Ref	Numero de Pieza	Ctd	Descripción
1	87573861	2	CYLINDER,
2	87308614	1	BLADE, KNIFE,
3	87312328	8	SCREW, M14 x 40
4	85820008	10	NUT, M14 x 2
5	85820009	8	WASHER, SEALING,
6	87312330	1	GUARD, RH
7	85820011	10	SCREW,
8	85820012	10	WASHER, SEALING,
9	85820013	4	BUSHING,
10	85820014	6	NIPPLE, LUBE, M10 x 1,
11	85820015	2	PIN,
12	85820016	2	PIN, ROLL, 10 x 80
13	85820017	2	PIN,
14	85820018	4	SCREW, M10 x 90
15	87310286	2	PIN,
16	85820020	2	SCREW, M14 x 30
17	87312331	1	SCREW, M8 x 120
18	87312340	2	HOSE, FLEXIBLE,
19	87312342	2	HOSE, FLEXIBLE,
20	87312343	4	CONNECTOR, HYD.,
21	87312333	2	CONNECTOR, HYD.,
22	85820026	2	PLATE,
23	85820027	4	CLAMP,
24	85820030	4	SCREW, M8 x 45
25	85820031	5	NUT, M8
26	87310434	1	BUCKET,
27	87310354	1	BUCKET,
28	85820035	4	NUT, M10x1,5
29	85820036	3	4x10
30	85820037	1	
31	87312335	1	FITTING,
32	87395481	1	GUARD,
33	87395482	2	CONNECTOR, HYD.,

B95LR NA BACKHOE LOADER (1/06-)

472(01) BUCKET 4X1 (1 M3) WITH TINE

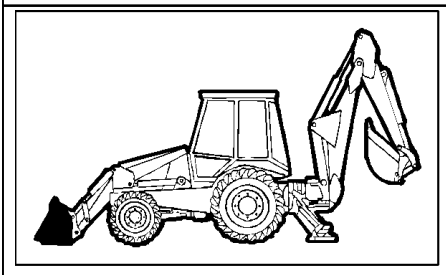

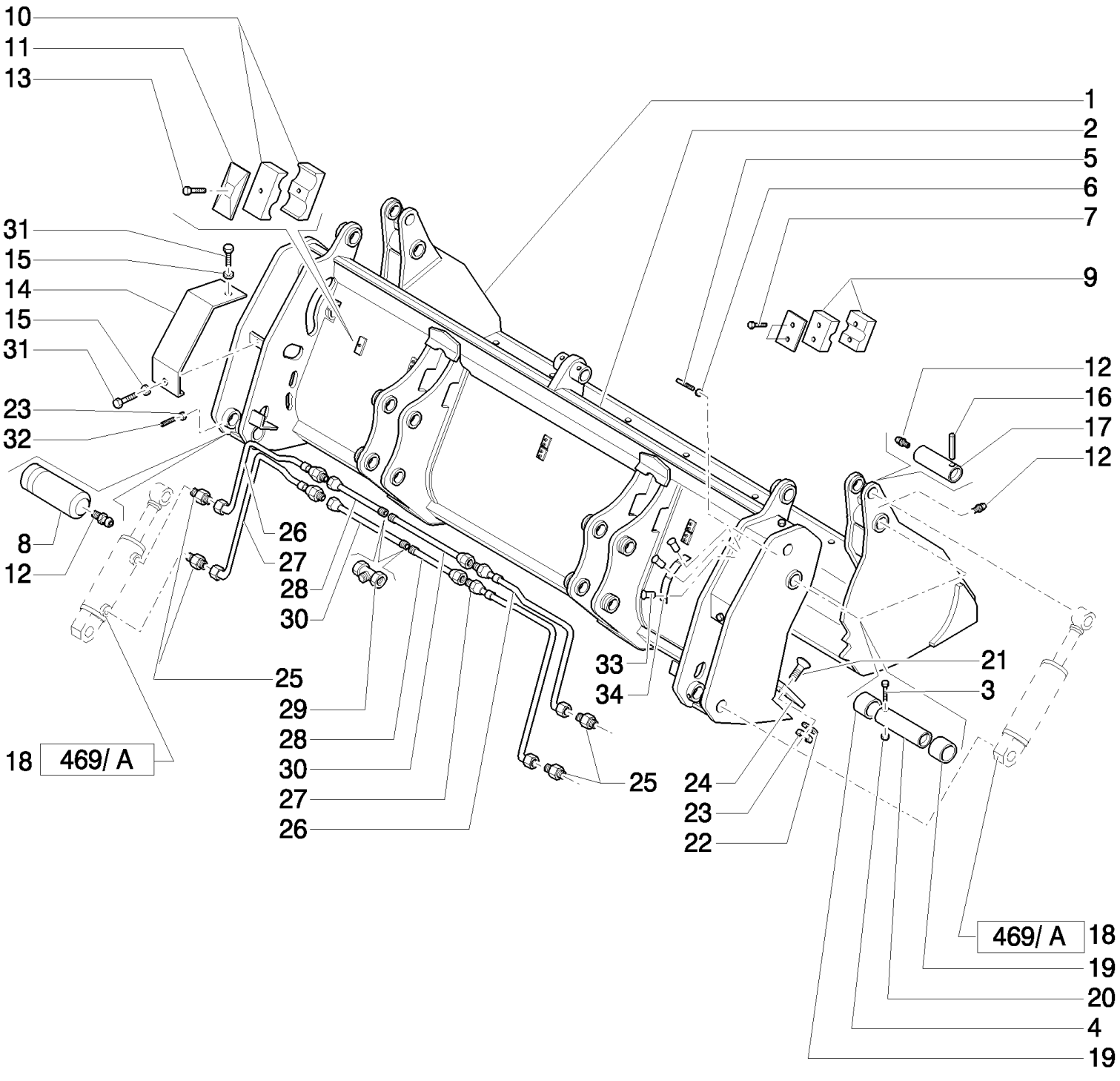

B95LR NA BACKHOE LOADER (1/06-)

472(01) BUCKET 4X1 (1 M3) WITH TINE

Ref	Numero de Pieza	Ctd	Descripción
1	85820032	1	BUCKET,
2	85820033	1	BUCKET,
3	85820018	2	SCREW, M10 x 90
4	85820035	2	NUT, M10X1,5
5	85820021	1	SCREW, M8 x 120
6	85820031	1	NUT, M8
7	85820034	12	SCREW, M6 x 30
8	85820019	2	PIN,
9	85820028	12	CLAMP,
10	85820027	2	CLAMP,
11	85820026	2	PLATE,
12	85820014	6	NIPPLE, LUBE, M10 x 1,
13	85820030	2	SCREW,
14	85820010	2	GUARD,
15	85820012	4	WASHER, SEALING,
16	85820016	2	PIN, ROLL, 10 x 80
17	85820017	2	PIN,
18	87573861	2	CYLINDER,
19	85820013	4	BUSHING,
20	85820015	2	PIN,
21	85820007	8	SCREW, M14 x 35
22	85820009	8	WASHER, SEALING,
23	85820008	10	NUT, M14 x 2
24	85820006	1	EDGE, CUTTING,
25	85820025	4	CONNECTOR, HYD.,
26	85824364	2	HOSE, FLEXIBLE,
27	85824363	2	HOSE, FLEXIBLE,
28	85820039	2	TUBE, HYD,
29	85820040	2	TEE,
30	85820038	2	TUBE, HYD,
31	85820011	2	SCREW,
32	85820020	2	SCREW,
33	NSS	3	NOT SERVICED SEPARATELY,
34	NSS	1	NOT SERVICED SEPARATELY,

B95LR NA BACKHOE LOADER (1/06-)

472(02) BUCKET 4X1 (1 M3) WITH TINE

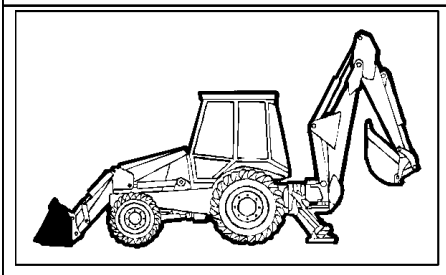

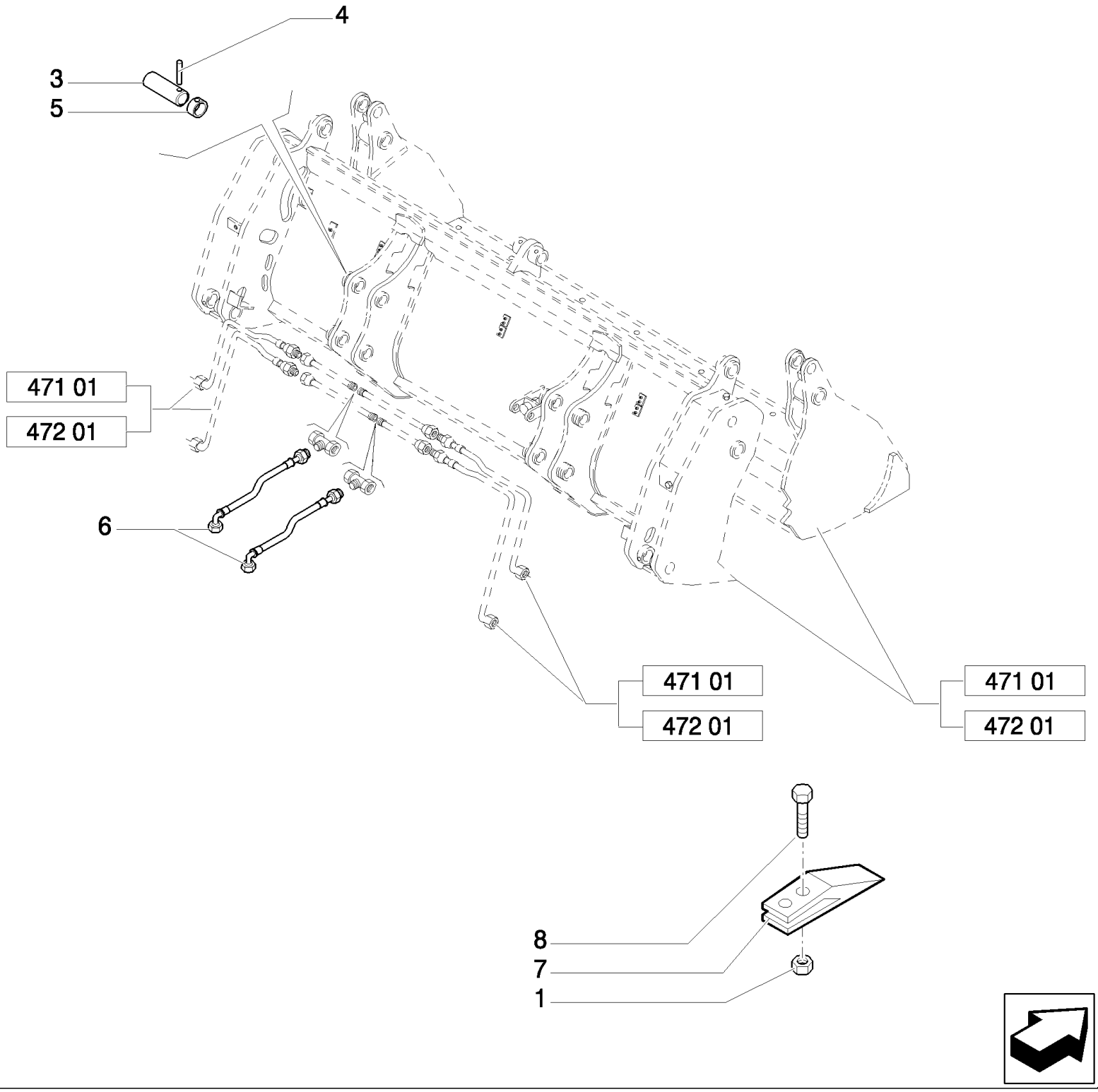

B95LR NA BACKHOE LOADER (1/06-)

472(02) BUCKET 4X1 (1 M3) WITH TINE

Ref	Numero de Pieza	Ctd	Descripción
1	85801470	16	NUT, 5/8"-11, G8,
3	85801051	4	PIN,
4	85802993	4	PIN,
5	85802992	4	RING,
6	85820819	2	HOSE, FLEXIBLE, L=800 mm
7	85811440	8	SHANK, BUCKET TOOTH,
8	85801371	16	BOLT, PLOW, 5/8"-11 x 2 1/4",

472/ 1(01) BUCKET 4X1 (1 M3) WITH TINE "COMMON GREY"

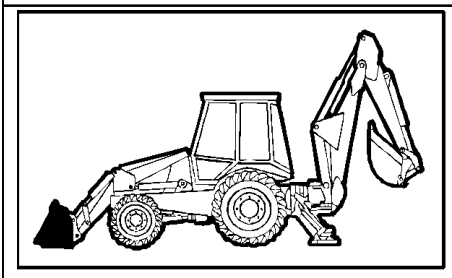

KIT KIT KIT 7 = ●

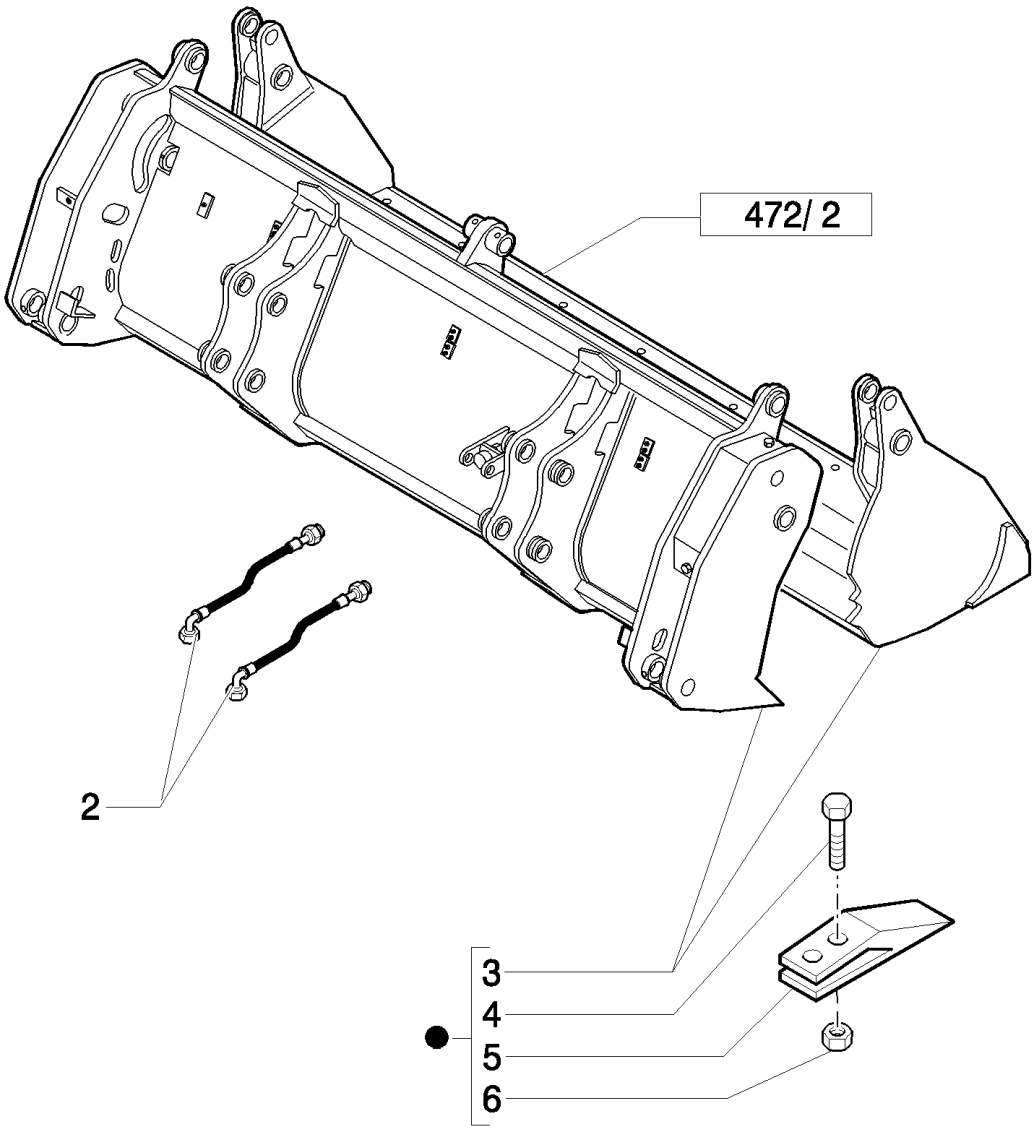

B95LR NA BACKHOE LOADER (1/06-)

472/ 1(01) BUCKET 4X1 (1 M3) WITH TINE "COMMON GREY"

Ref	Numero de Pieza	Ctd	Descripción
2	85820819	2	HOSE, FLEXIBLE, L=800 mm
3	87573550	1	BUCKET, 4 IN 1,
4	85801371	16	BOLT, PLOW, 5/8"-11 x 2 1/4",
5	85811440	8	SHANK, BUCKET TOOTH,
6	85801470	16	NUT, 5/8"-11, G8,
7	47334790	1	

B95LR NA BACKHOE LOADER (1/06-)

472/ 2(01) BUCKET 4X1 (1 M3) WITH TINE "COMMON GREY"

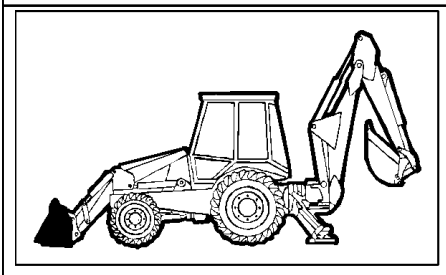

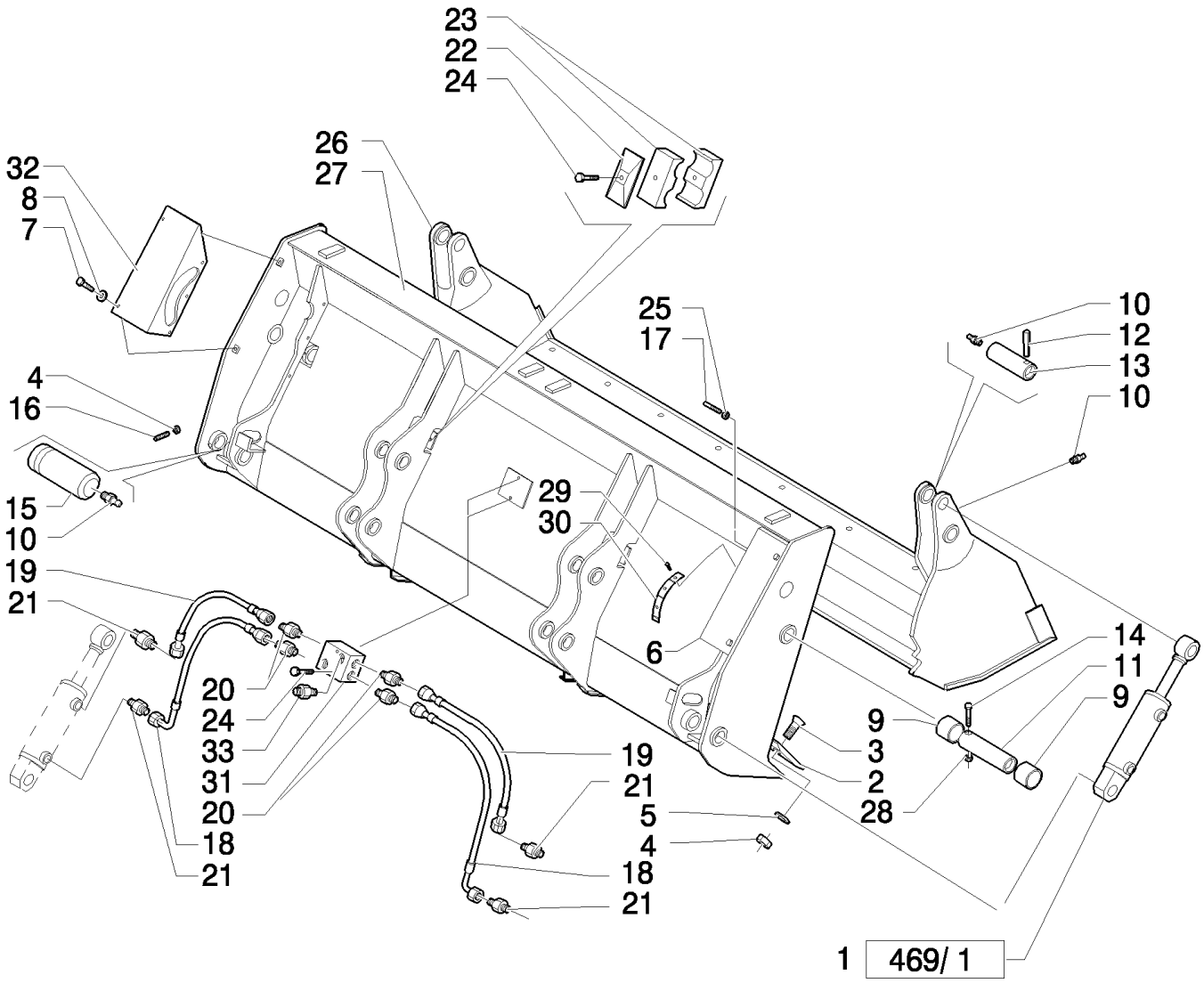

B95LR NA BACKHOE LOADER (1/06-)

472/ 2(01) BUCKET 4X1 (1 M3) WITH TINE "COMMON GREY"

Ref	Numero de Pieza	Ctd	Descripción
1	87573861	2	CYLINDER,
2	87308614	1	BLADE, KNIFE,
3	87312328	8	SCREW, M14 x 40
4	85820008	10	NUT, M14 x 2
5	85820009	8	WASHER, SEALING,
6	87312330	1	GUARD, RH
7	85820011	10	SCREW,
8	85820012	10	WASHER, SEALING,
9	85820013	4	BUSHING,
10	85820014	6	NIPPLE, LUBE, M10 x 1,
11	85820015	2	PIN,
12	85820016	2	PIN, ROLL, 10 x 80
13	85820017	2	PIN,
14	85820018	4	SCREW, M10 x 90
15	87310286	2	PIN,
16	85820020	2	SCREW, M14 x 30
17	87312331	1	SCREW, M8 x 120
18	87312340	2	HOSE, FLEXIBLE,
19	87312342	2	HOSE, FLEXIBLE,
20	87312343	4	CONNECTOR, HYD.,
21	87312333	2	CONNECTOR, HYD.,
22	85820026	2	PLATE,
23	85820027	4	CLAMP,
24	85820030	4	SCREW, M8 x 45
25	85820031	5	NUT, M8
26	87310434	1	BUCKET,
27	87310354	1	BUCKET,
28	85820035	4	NUT, M10x1,5
29	85820036	3	4x10
30	85820037	1	
31	87312335	1	FITTING,
32	87395481	1	GUARD,
33	87395482	2	CONNECTOR, HYD.,

473(01) BUCKET 6X1 (1 M3) WITH BLADE

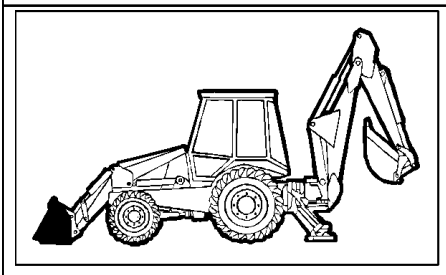

B95LR NA BACKHOE LOADER (1/06-)

473(01) BUCKET 6X1 (1 M3) WITH BLADE

Ref	Numero de Pieza	Ctd	Descripción
1	85820032	1	BUCKET,
2	85820033	1	BUCKET,
3	85820018	4	SCREW, M10 x 90
4	85820035	4	NUT, M10X1,5
5	85820021	1	SCREW, M8 x 120
6	85820031	5	NUT, M8
7	85820034	12	SCREW, M6 x 30
8	85820026	2	PLATE,
9	85820028	12	CLAMP,
10	85820066	2	PIN, 1.96" OD x 40.75" lg
11	85820063	2	SUPPORT,
11	85827785	2	SUPPORT,
12	85820014	8	NIPPLE, LUBE, M10 x 1,
13	85820062	2	FORK, BUCKET,
14	85820067	2	PIN,
15	85820068	2	PIN, LOCK,
16	85820016	2	PIN, ROLL, 10 x 80
17	85820017	2	PIN,
18	87573861	2	CYLINDER,
19	85820013	4	BUSHING,
20	85820015	2	PIN,
21	85820007	8	SCREW, M14 x 35
22	85820009	8	WASHER, SEALING,
23	85820008	10	NUT, M14 x 2
24	85820006	1	EDGE, CUTTING,
25	85820025	4	CONNECTOR, HYD.,
26	85825177	2	PIN, LOCK,
27	85824364	2	HOSE, FLEXIBLE,
28	85824363	2	HOSE, FLEXIBLE,
29	85820039	2	TUBE, HYD,
30	85820040	2	TEE,
31	85820038	2	TUBE, HYD,
32	85820064	2	PIN,
33	85820069	2	PLUG,
34	85820065	2	BRACKET,
34	85827786	2	BRACKET,
35	85820027	4	CLAMP,
36	85820019	2	PIN,
37	85820020	2	SCREW, M14 x 30
38	85820011	4	SCREW, M8X16
39	85820012	4	WASHER, SEALING,
40	85820010	2	GUARD,
41	85820030	2	SCREW, M8 x 45

B95LR NA BACKHOE LOADER (1/06-)

473(01) BUCKET 6X1 (1 M3) WITH BLADE

Ref	Numero de Pieza	Ctd	Descripción
42	NSS	3	NOT SERVICED SEPARATELY,
43	NSS	1	NOT SERVICED SEPARATELY,

B95LR NA BACKHOE LOADER (1/06-)

473(02) BUCKET 6X1 (1 M3) WITH BLADE

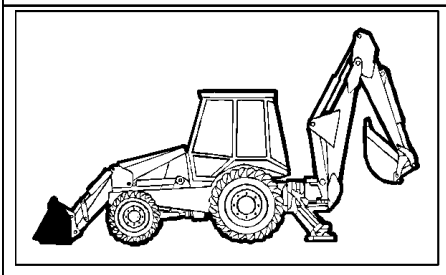

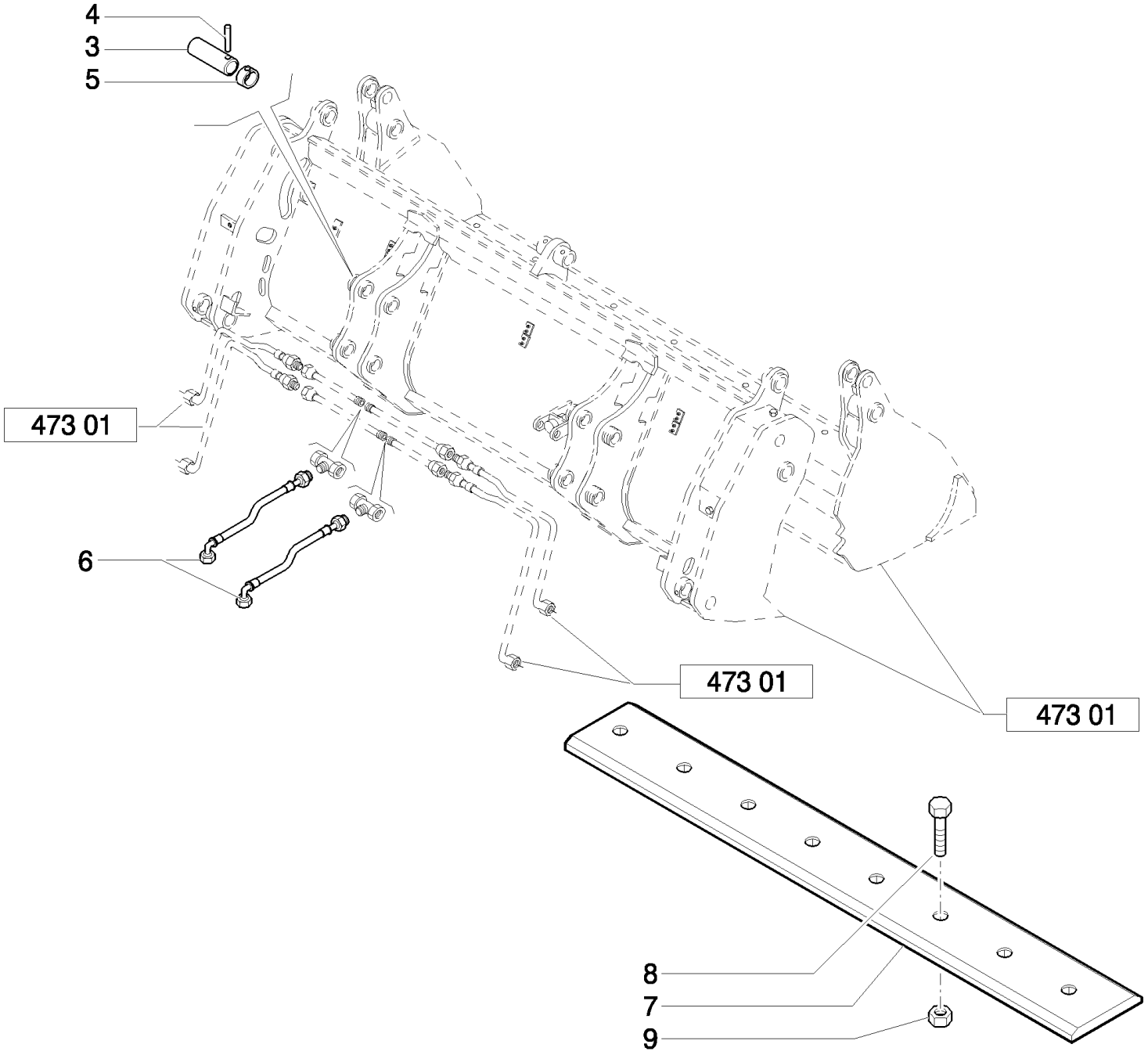

B95LR NA BACKHOE LOADER (1/06-)

473(02) BUCKET 6X1 (1 M3) WITH BLADE

Ref	Numero de Pieza	Ctd	Descripción
3	85801051	4	PIN,
4	85802993	4	PIN,
5	85802992	4	RING,
6	85820819	2	HOSE, FLEXIBLE, L=800 mm
7	85801161	1	EDGE, CUTTING, 35 Deg. cutting edge, Reversible bolt on
8	85801371	8	BOLT, PLOW, 5/8"-11 x 2 1/4",
9	85801470	8	NUT, 5/8"-11, G8,

B95LR NA BACKHOE LOADER (1/06-)

473/ 1(01) BUCKET 6X1 (1 M3) WITH BLADE "COMMON GREY"

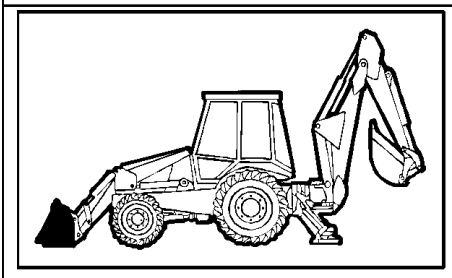

KIT KIT KIT 7 = ●

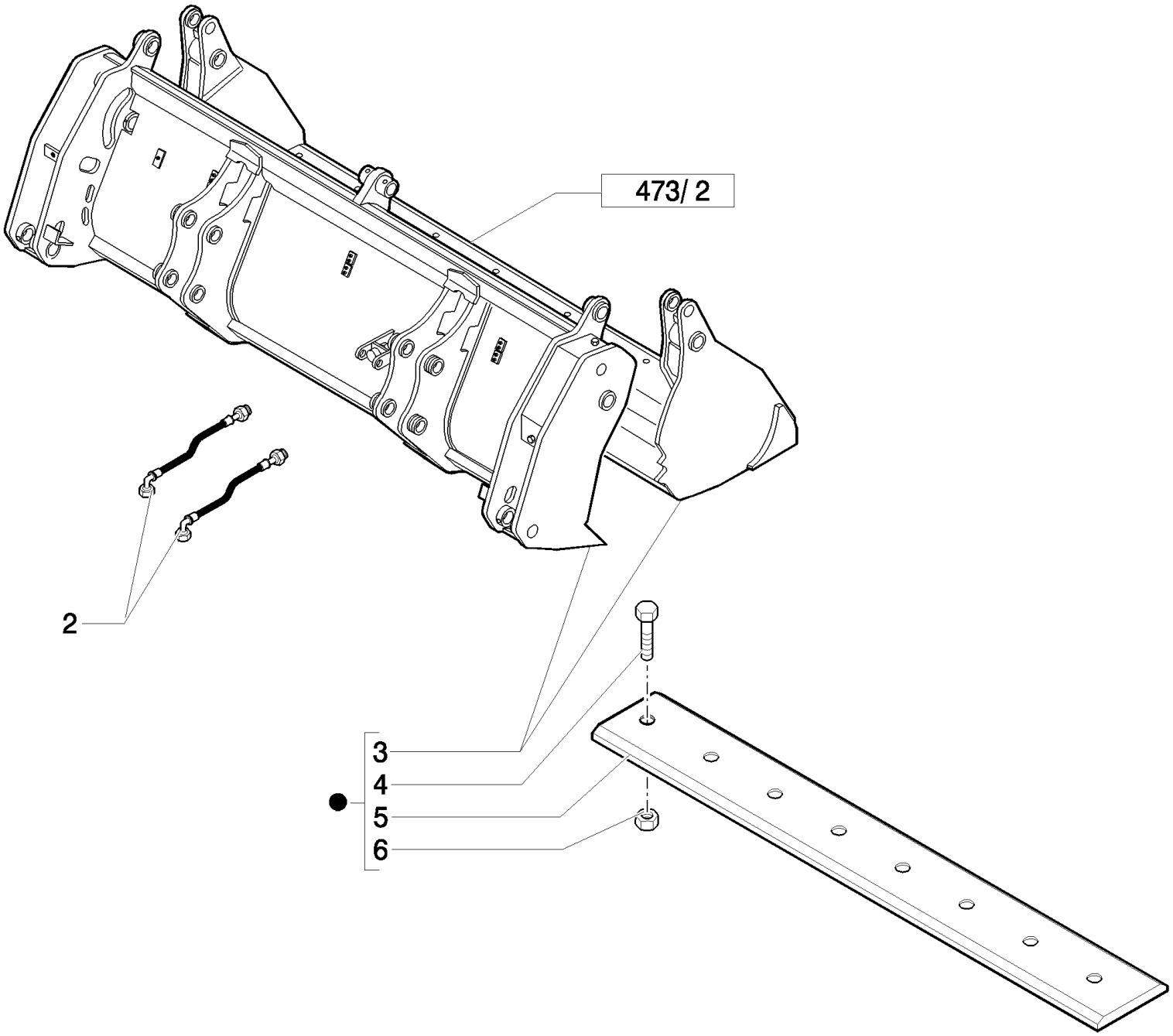

B95LR NA BACKHOE LOADER (1/06-)

473/ 1(01) BUCKET 6X1 (1 M3) WITH BLADE "COMMON GREY"

Ref	Numero de Pieza	Ctd	Descripción
2	85820819	2	HOSE, FLEXIBLE, L=800 mm
3	87573552	1	BUCKET,
4	85801371	8	BOLT, PLOW, 5/8"-11 x 2 1/4",
5	85801161	1	EDGE, CUTTING,
6	85801470	8	NUT, 5/8"-11, G8,
7	47334770	1	

B95LR NA BACKHOE LOADER (1/06-)

473/ 2(01) BUCKET 6X1 (1 M3) WITH BLADE "COMMON GREY"

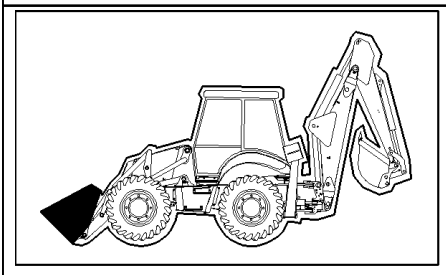

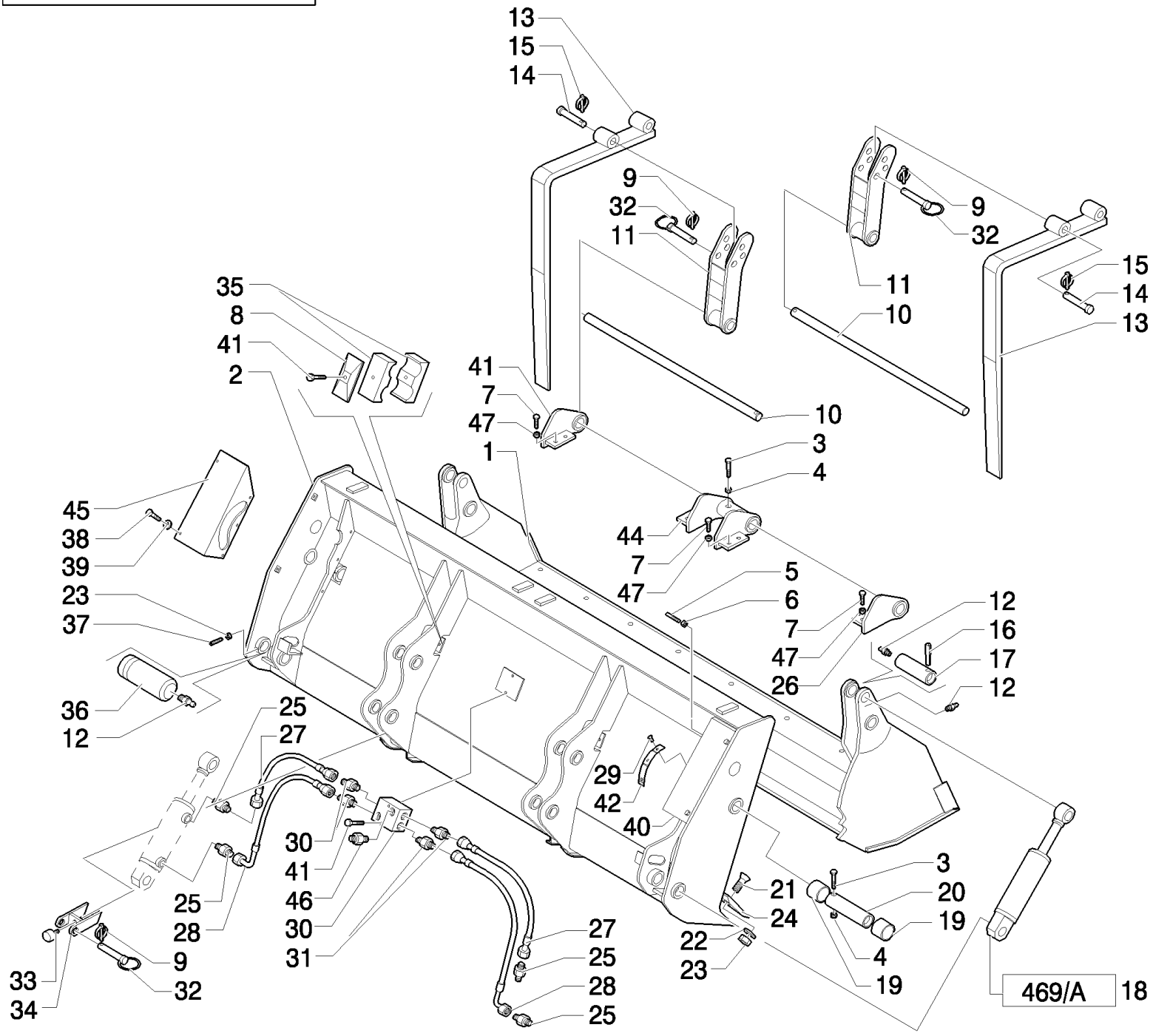

B95LR NA BACKHOE LOADER (1/06-)

473/ 2(01) BUCKET 6X1 (1 M3) WITH BLADE "COMMON GREY"

Ref	Numero de Pieza	Ctd	Descripción
1	87310434	1	BUCKET,
2	87310354	1	BUCKET,
3	85820018	4	SCREW, M10 x 90
4	85820035	4	NUT, M10x1,5
5	87312331	1	SCREW, M8 x 120
6	85820031	1	NUT, M8
7	87557215	8	SCREW, M16x35
8	85820026	2	PLATE,
9	85820068	4	PIN, LOCK, D=11
10	87310372	2	SHAFT,
11	87310368	2	SUPPORT,
12	85820014	6	NIPPLE, LUBE, M10 x 1,
13	87310367	2	FORK, BUCKET,
14	87310369	2	PIN,
15	85825177	2	PIN, LOCK, D=8
16	85820016	2	PIN, ROLL, 10 x 80
17	85820017	2	PIN,
18	87573861	2	CYLINDER,
19	85820013	4	BUSHING,
20	85820015	2	PIN,
21	87312328	8	SCREW, M14 x 40
22	85820009	8	WASHER, SEALING,
23	85820008	10	NUT, M14 x 2
24	87308614	1	BLADE, KNIFE,
25	87312333	4	CONNECTOR, HYD.,
26	87310375	1	HINGE, RH
27	87312342	2	HOSE, FLEXIBLE,
28	87312340	2	HOSE, FLEXIBLE,
29	85820036	3	4x10
30	87312335	4	FITTING,
31	87312343	1	CONNECTOR, HYD.,
32	85820064	2	PIN,
33	85820069	2	PLUG,
34	87310370	2	BRACKET,
35	85820027	4	CLAMP,
36	87310286	2	PIN,
37	85820020	2	SCREW, M14 x 30
38	85820011	10	SCREW, M8x16
39	85820012	10	WASHER, SEALING,
40	87312330	1	GUARD, RH
41	85820030	4	SCREW, M8 x 45
42	85820037	1	
43	87310373	1	HINGE, LH

B95LR NA BACKHOE LOADER (1/06-)

473/ 2(01) BUCKET 6X1 (1 M3) WITH BLADE "COMMON GREY"

Ref	Numero de Pieza	Ctd	Descripción
44	87310374	1	HINGE,
45	87395481	1	GUARD,
46	87395482	2	CONNECTOR, HYD.,
47	87395486	8	WASHER,

B95LR NA BACKHOE LOADER (1/06-)

474(01) BUCKET 6X1 (1 M3) WITH TINE

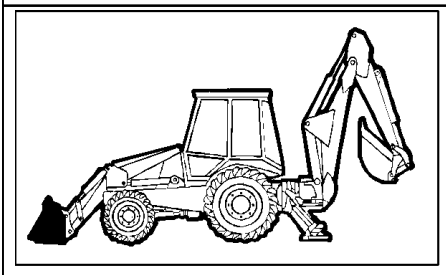

B95LR NA BACKHOE LOADER (1/06-)

474(01) BUCKET 6X1 (1 M3) WITH TINE

Ref	Numero de Pieza	Ctd	Descripción
1	85820032	1	BUCKET,
2	85820033	1	BUCKET,
3	85820018	4	SCREW, M10 x 90
4	85820035	4	NUT, M10X1,5
5	85820021	1	SCREW, M8 x 120
6	85820031	1	NUT, M8
7	85820034	12	SCREW, M6 x 30
8	85820026	2	PLATE,
9	85820028	12	CLAMP,
10	85820066	2	PIN, 1.96" OD x 40.75" lg
11	85820063	2	SUPPORT,
11	85827785	2	SUPPORT,
12	85820014	8	NIPPLE, LUBE, M10 x 1,
13	85820062	2	FORK, BUCKET,
14	85820067	2	PIN,
15	85820068	2	PIN, LOCK,
16	85820016	2	PIN, ROLL, 10 x 80
17	85820017	2	PIN,
18	87573861	2	CYLINDER,
19	85820013	4	BUSHING,
20	85820015	2	PIN,
21	85820007	8	SCREW, M14 x 35
22	85820009	8	WASHER, SEALING,
23	85820008	10	NUT, M14 x 2
24	85820006	1	EDGE, CUTTING,
25	85820025	4	CONNECTOR, HYD.,
26	85825177	2	PIN, LOCK,
27	85824364	2	HOSE, FLEXIBLE,
28	85824363	2	HOSE, FLEXIBLE,
29	85820039	2	TUBE, HYD,
30	85820040	2	TEE,
31	85820038	2	TUBE, HYD,
32	85820064	2	PIN,
33	85820069	2	PLUG,
34	85820065	2	BRACKET,
34	85827786	2	BRACKET,
35	85820027	4	CLAMP,
36	85820019	2	PIN,
37	85820020	2	SCREW, M14 x 30
38	85820011	4	SCREW, M8X16
39	85820012	4	WASHER, SEALING,
40	85820010	2	GUARD,
41	85820030	2	SCREW, M8 x 45

B95LR NA BACKHOE LOADER (1/06-)

474(01) BUCKET 6X1 (1 M3) WITH TINE

Ref	Numero de Pieza	Ctd	Descripción
42	NSS	3	NOT SERVICED SEPARATELY,

B95LR NA BACKHOE LOADER (1/06-)

474(02) BUCKET 6X1 (1 M3) WITH TINE

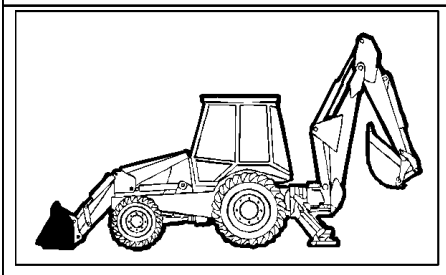

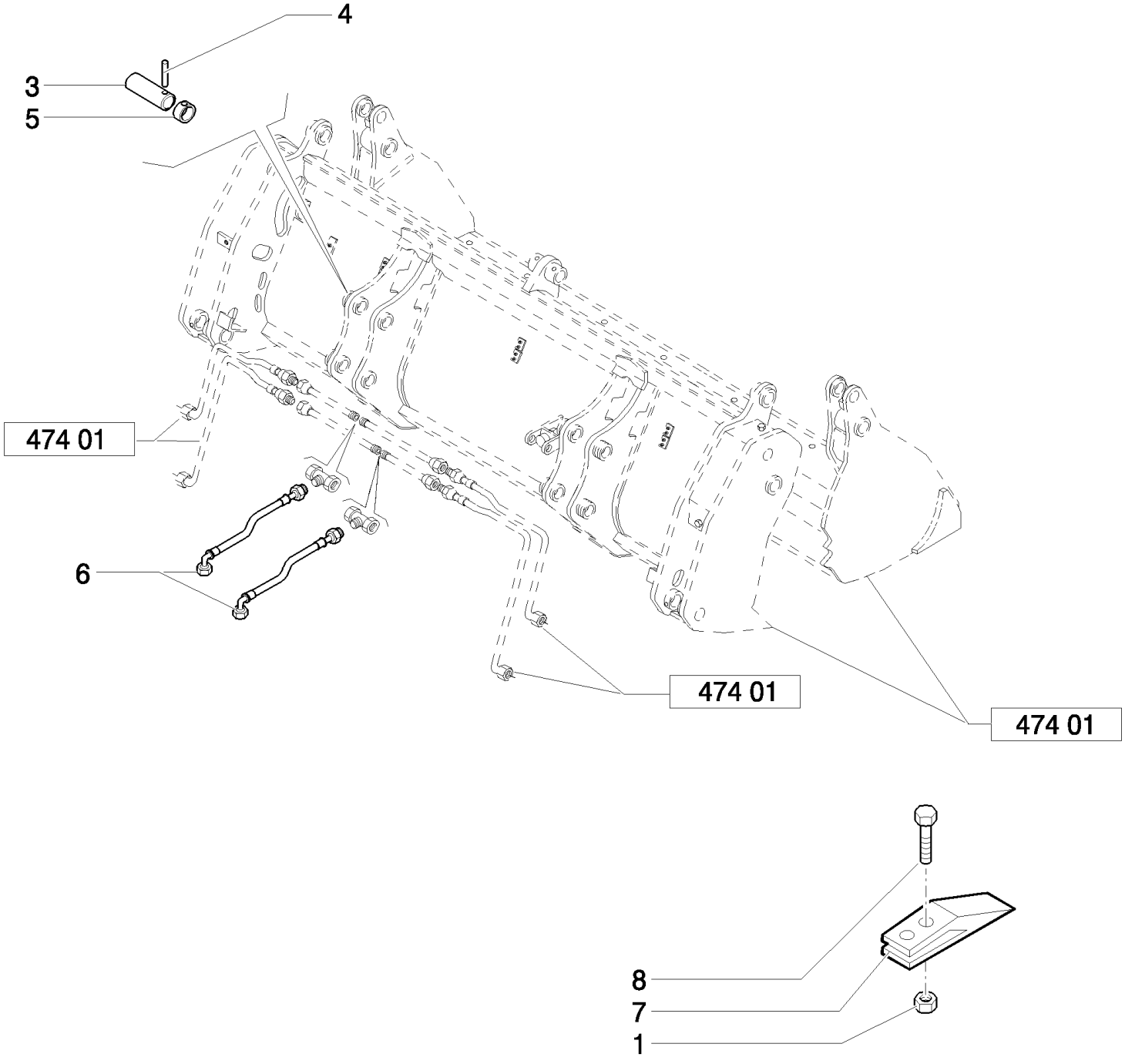

B95LR NA BACKHOE LOADER (1/06-)

474(02) BUCKET 6X1 (1 M3) WITH TINE

Ref	Numero de Pieza	Ctd	Descripción
1	85801470	16	NUT, 5/8"-11, G8,
3	85801051	4	PIN,
4	85802993	4	PIN,
5	85802992	4	RING,
6	85820819	2	HOSE, FLEXIBLE, L=800 mm
7	85811440	8	SHANK, BUCKET TOOTH,
8	85801371	8	BOLT, PLOW, 5/8"-11 x 2 1/4",

474/ 1(01) BUCKET 6X1 (1 M3) WITH TINE "COMMON GREY"

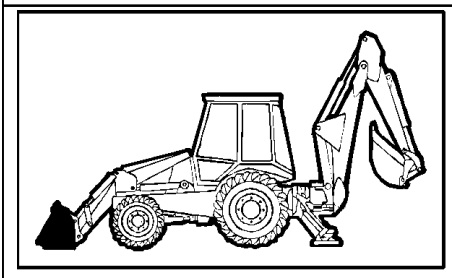

KIT KIT KIT 7 = ●

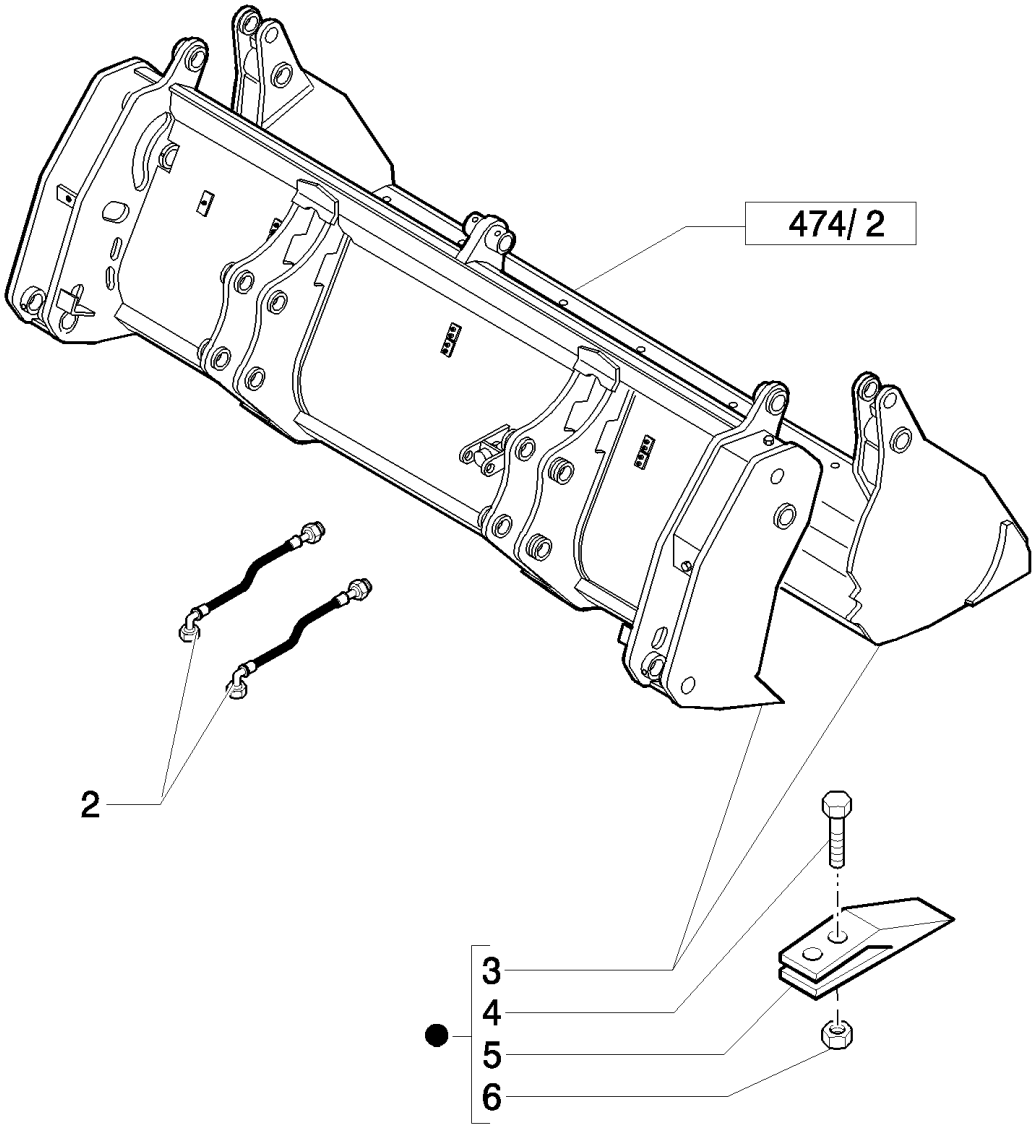

B95LR NA BACKHOE LOADER (1/06-)

474/ 1(01) BUCKET 6X1 (1 M3) WITH TINE "COMMON GREY"

Ref	Numero de Pieza	Ctd	Descripción
2	85820819	2	HOSE, FLEXIBLE, L=800 mm
3	87573552	1	BUCKET, 6x1
4	85801371	16	BOLT, PLOW, 5/8"-11 x 2 1/4",
5	85811440	8	SHANK, BUCKET TOOTH,
6	85801470	16	NUT, 5/8"-11, G8,
7	47334780	1	

B95LR NA BACKHOE LOADER (1/06-)

474/ 2(01) BUCKET 6X1 (1 M3) WITH TINE "COMMON GREY"

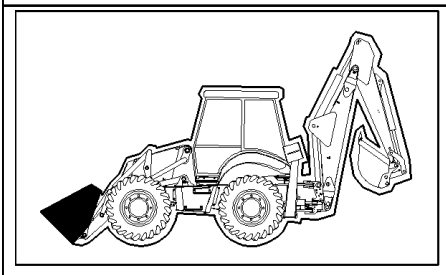

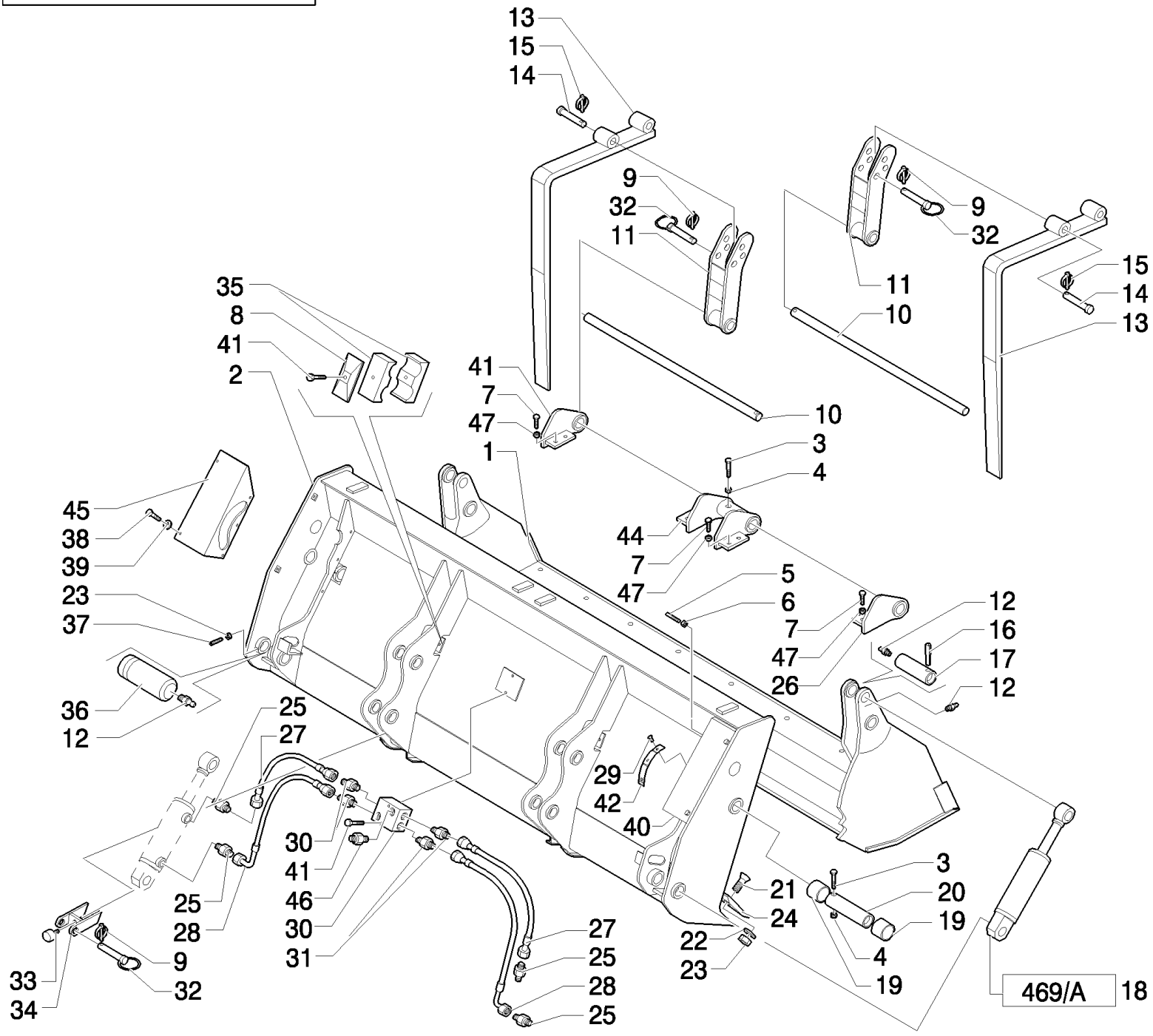

B95LR NA BACKHOE LOADER (1/06-)

474/ 2(01) BUCKET 6X1 (1 M3) WITH TINE "COMMON GREY"

Ref	Numero de Pieza	Ctd	Descripción
1	87310434	1	BUCKET,
2	87310354	1	BUCKET,
3	85820018	4	SCREW, M10 x 90
4	85820035	4	NUT, M10x1,5
5	87312331	1	SCREW, M8 x 120
6	85820031	1	NUT, M8
7	87557215	8	SCREW, M16x35
8	85820026	2	PLATE,
9	85820068	4	PIN, LOCK, D=11
10	87310372	2	SHAFT,
11	87310368	2	SUPPORT,
12	85820014	6	NIPPLE, LUBE, M10 x 1,
13	87310367	2	FORK, BUCKET,
14	87310369	2	PIN,
15	85825177	2	PIN, LOCK, D=8
16	85820016	2	PIN, ROLL, 10 x 80
17	85820017	2	PIN,
18	87573861	2	CYLINDER,
19	85820013	4	BUSHING,
20	85820015	2	PIN,
21	87312328	8	SCREW, M14 x 40
22	85820009	8	WASHER, SEALING,
23	85820008	10	NUT, M14 x 2
24	87308614	1	BLADE, KNIFE,
25	87312333	4	CONNECTOR, HYD.,
26	87310375	1	HINGE, RH
27	87312342	2	HOSE, FLEXIBLE,
28	87312340	2	HOSE, FLEXIBLE,
29	85820036	3	4x10
30	87312335	4	FITTING,
31	87312343	1	CONNECTOR, HYD.,
32	85820064	2	PIN,
33	85820069	2	PLUG,
34	87310370	2	BRACKET,
35	85820027	4	CLAMP,
36	87310286	2	PIN,
37	85820020	2	SCREW, M14 x 30
38	85820011	10	SCREW, M8x16
39	85820012	10	WASHER, SEALING,
40	87312330	1	GUARD,
41	85820030	4	SCREW, M8 x 45
42	85820037	1	
43	87310373	1	HINGE, LH

B95LR NA BACKHOE LOADER (1/06-)

474/ 2(01) BUCKET 6X1 (1 M3) WITH TINE "COMMON GREY"

Ref	Numero de Pieza	Ctd	Descripción
44	87310374	1	HINGE,
45	87395481	1	GUARD,
46	87395482	2	CONNECTOR, HYD.,
47	87395486	8	WASHER,

514(01) BOOM - DIPPER SHORT

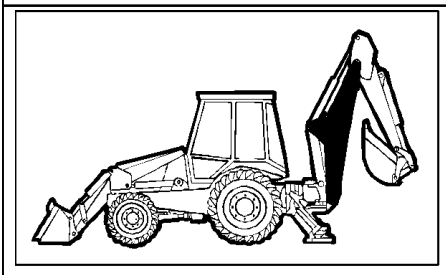

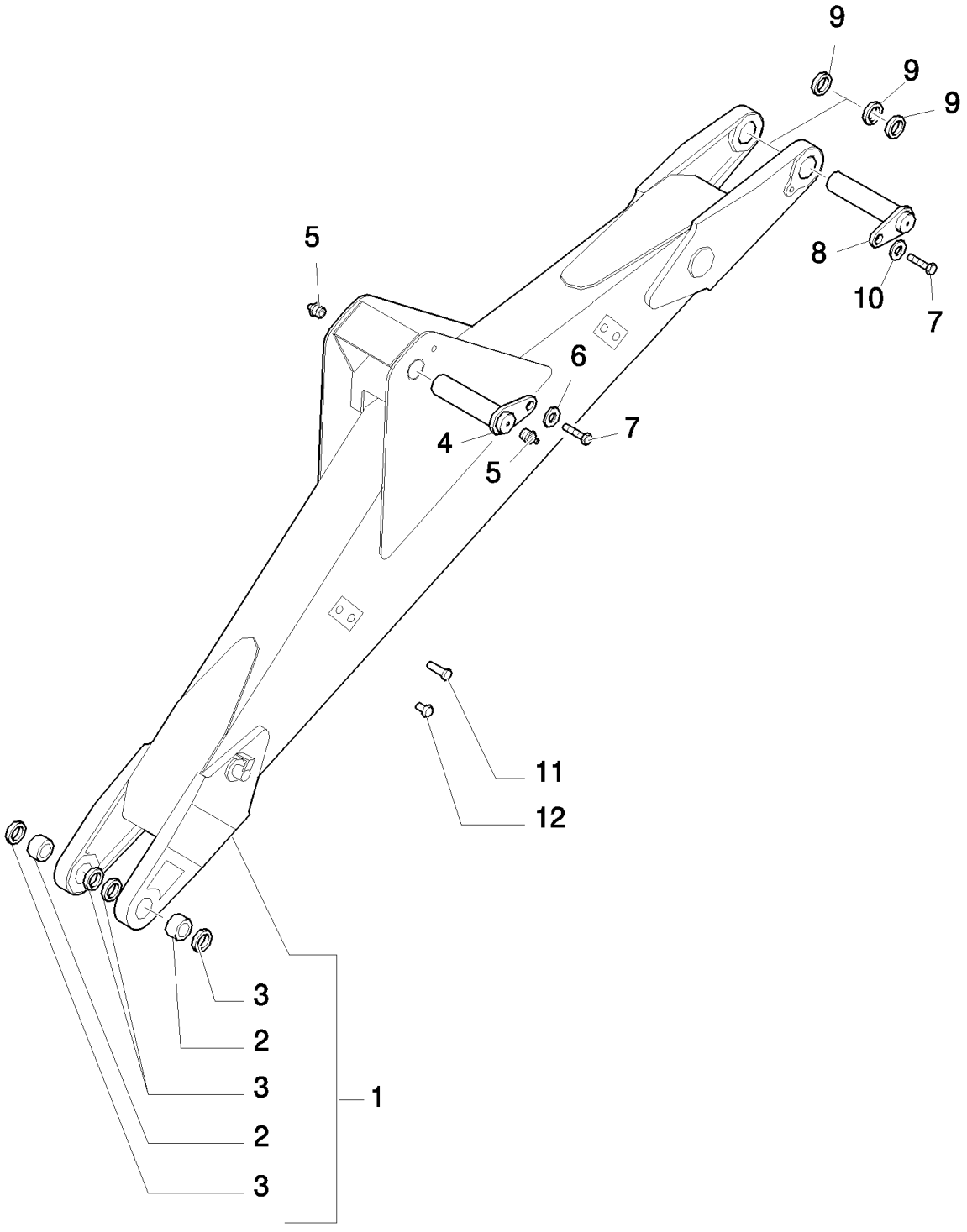

B95LR NA BACKHOE LOADER (1/06-)

514(01) BOOM - DIPPER SHORT

Ref	Numero de Pieza	Ctd	Descripción
1	87372186	1	BOOM, Replaces 87311190 Boom, Includes 2, 3
2	83910557	2	RING,
3	83931281	4	SEAL,
4	85815698	1	PIN,
5	83416242	2	NIPPLE, LUBE, 1/8"-27
6	85802396	1	WASHER,
7	85802397	2	SCREW,
8	85815607	1	PIN,
9	85805296	3	SHIM,
10	85815609	1	WASHER,
11	85870039	3	
12	87310961	8	PLUG,

514(02) SHORT DIPPER

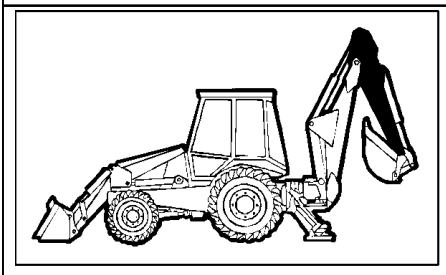

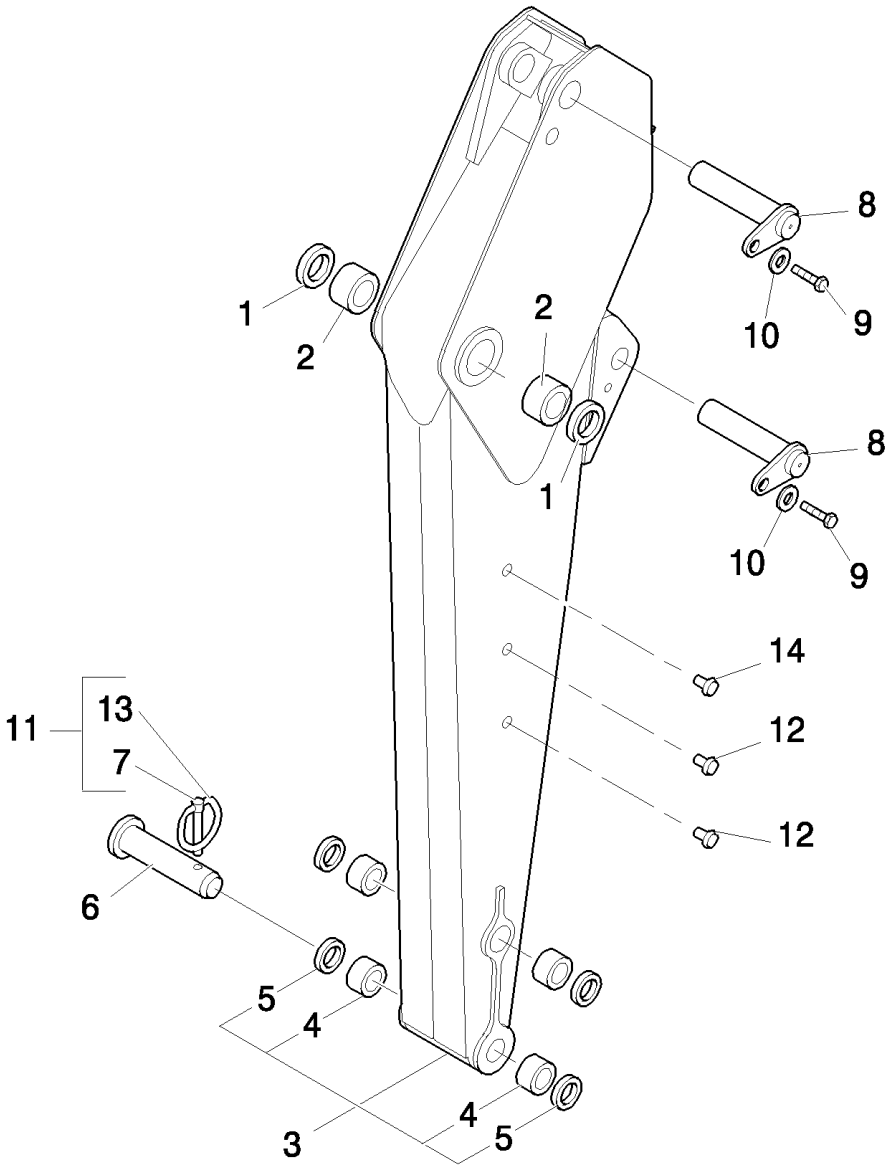

B95LR NA BACKHOE LOADER (1/06-)

514(02) SHORT DIPPER

Ref	Numero de Pieza	Ctd	Descripción
1	83931281	2	SEAL,
2	83910546	2	BUSHING, 2.175" ID x 2.80" OD x 1.969"
3	85817068	1	DIPPER, , Includes 1, 2, 4, 5
4	83910548	4	BUSHING,
5	83931289	4	SEAL, HYD-CYLINDER,
6	85803005	1	PIN,
7	85802976	2	PIN,
8	85803002	2	PIN,
9	85802397	2	SCREW,
10	85802396	2	WASHER,
11	85802975	2	PIN, LOCK,
12	85804447	4	PLUG,
13	85802974	2	RING,
14	81870039	4	FASTENER,

514(03) SHORT DIPPER - BUCKET MOTION

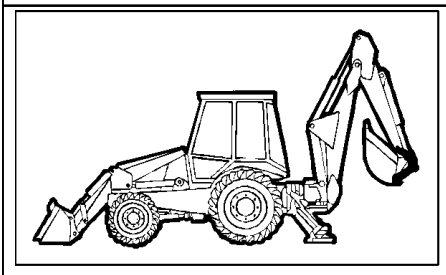

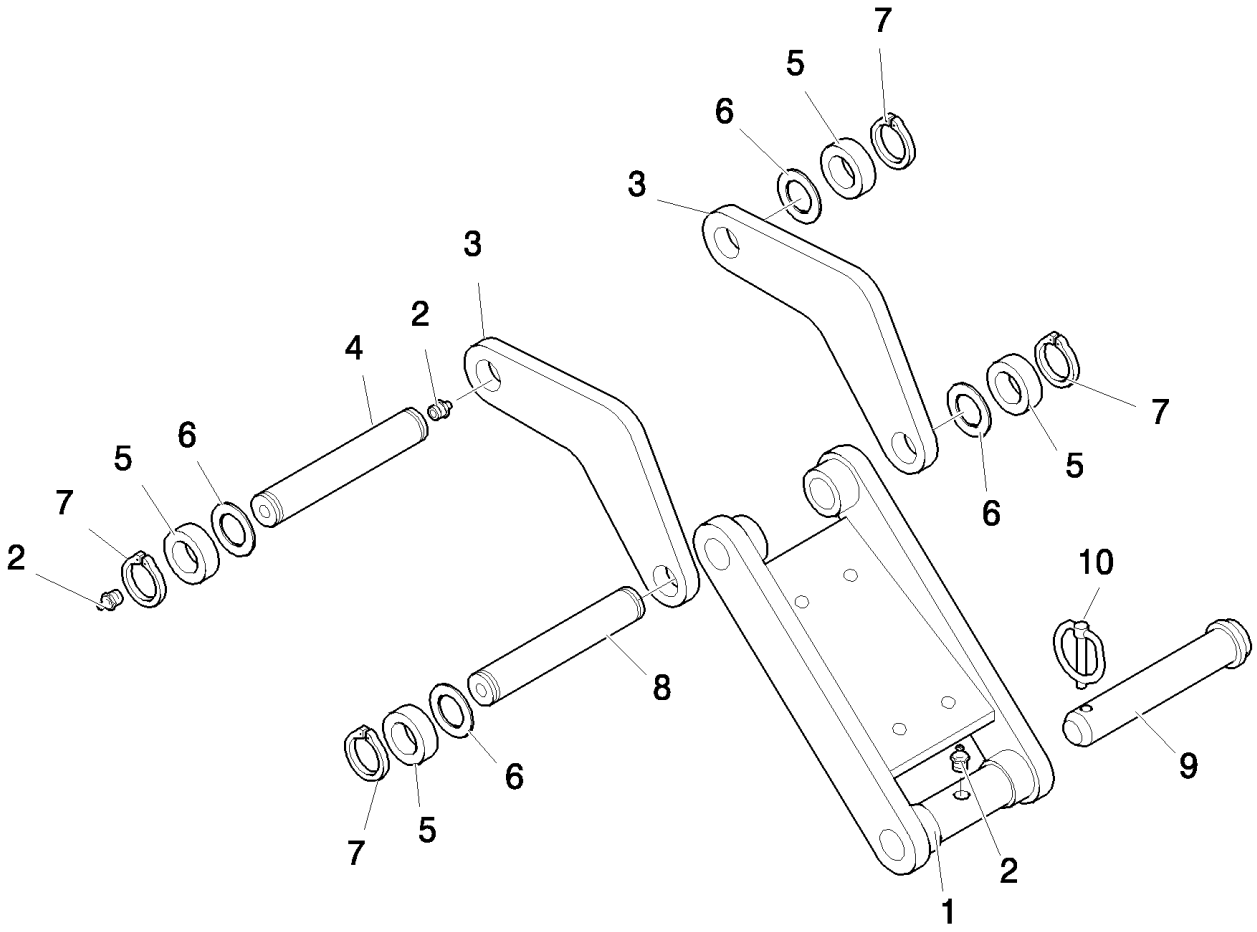

B95LR NA BACKHOE LOADER (1/06-)

514(03) SHORT DIPPER - BUCKET MOTION

Ref	Numero de Pieza	Ctd	Descripción
1	85803613	1	LINK,
2	83416242	5	NIPPLE, LUBE, 1/8"-27
3	85817133	2	LINK CONROD,
4	85815517	1	PIN,
5	83910977	4	SPACER,
6	85816916	4	
7	11069071	4	RING, SNAP, M45, Ext,
8	85813469	1	PIN,
9	85803005	1	PIN,
10	85802975	1	PIN, LOCK,

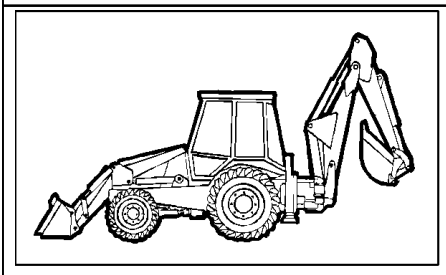

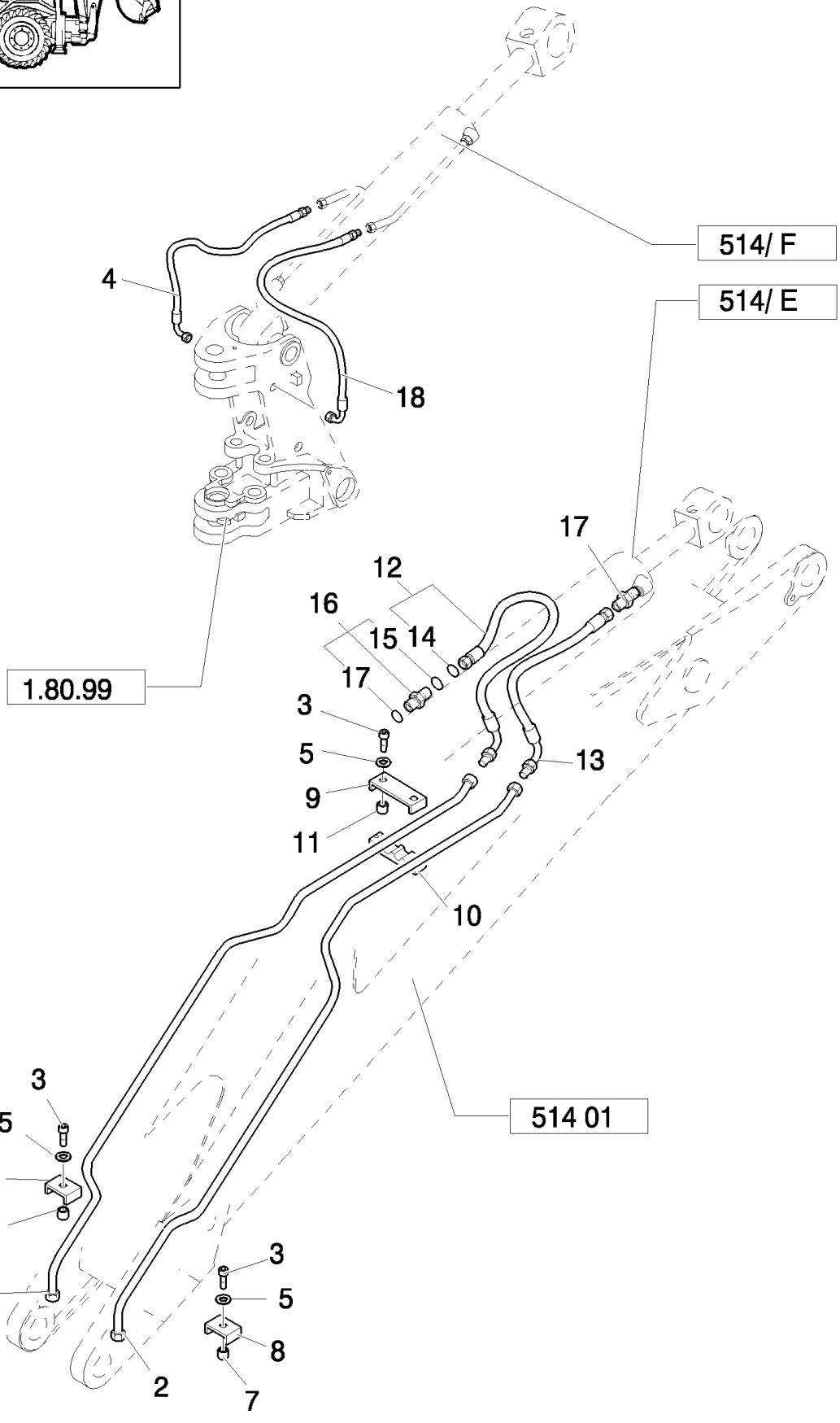
514/ F
514/ E
4
18
17
12
16
15
14
17
1.80.99
3
5
9
11
13
10
514 01
3
5
6
7
1
2
3
5
8
7

B95LR NA BACKHOE LOADER (1/06-)

514(04) SHORT DIPPER - HYDRAULIC SYSTEM

Ref	Numero de Pieza	Ctd	Descripción
1	85815632	1	TUBE, HYD,
2	85815630	1	TUBE, HYD,
3	16044221	4	BOLT, Hex, M8 x 50, 8.8, M8x1.25x60
4	85826212	1	HOSE, FLEXIBLE,
5	11193979	4	WASHER, SPRING, Belleville, M8.4,
6	85802899	1	CLAMP,
7	85802902	1	SPACER,
8	85802900	1	CLAMP,
9	85802894	1	U-BRACKET,
10	85802895	1	CLAMP,
11	85802893	2	SPACER,
12	85812154	1	HOSE, FLEXIBLE, 600mm lg, , Includes 14
13	85812178	1	HOSE, FLEXIBLE, 600mm lg,
14	9991976	1	O-RING, -018, 90 Duro, .739" ID x .070" Thk,
15	167266	1	O-RING, 12-1, 90 Duro, .924 ID x .116" Thk,
16	83962538	2	CONNECTOR, HYD., 1-3/16"-12 ORS x 1-1/16"-12 SAE O-Ring, Includes 15, 17
17	80167266	1	O-RING,
18	85826213	1	HOSE, FLEXIBLE,

514(05) SHORT DIPPER - HYDRAULIC SYSTEM

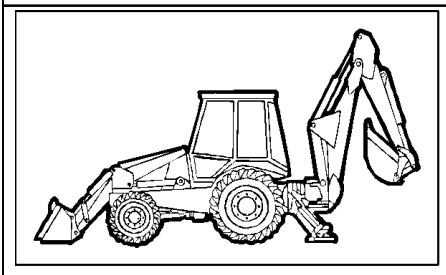

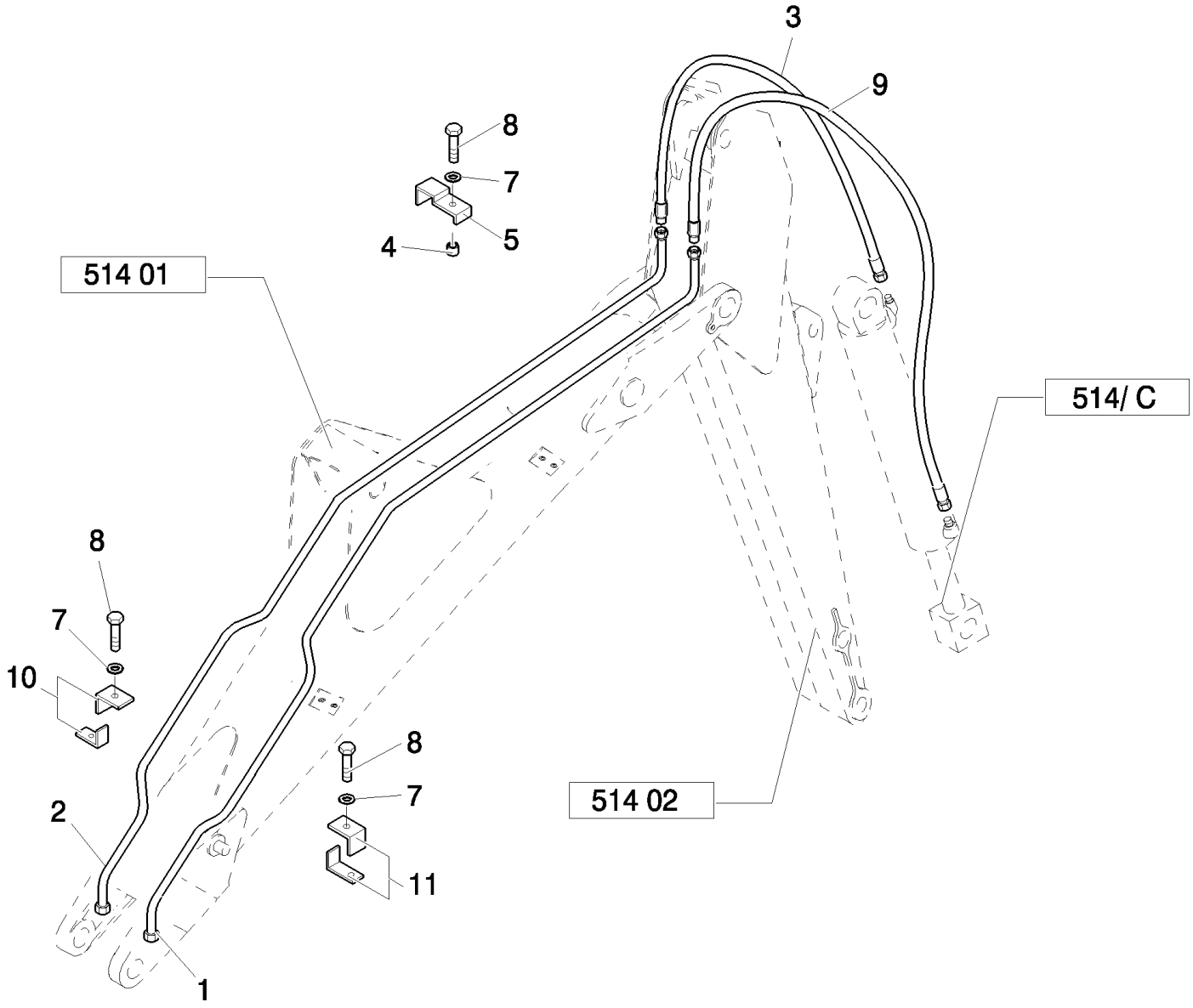

B95LR NA BACKHOE LOADER (1/06-)

514(05) SHORT DIPPER - HYDRAULIC SYSTEM

Ref	Numero de Pieza	Ctd	Descripción
1	85815636	1	TUBE, HYD,
2	85815634	1	TUBE, HYD,
3	85826223	1	HOSE, FLEXIBLE,
4	85802901	1	SPACER,
5	85802909	1	CLAMP,
7	11193979	3	WASHER, SPRING, Belleville, M8.4,
8	16044221	3	BOLT, Hex, M8 x 50, 8.8,
9	85826225	1	HOSE, FLEXIBLE, 1800 mm (70-7/8")
10	85815628	2	CLAMP,
11	85815627	2	CLAMP, ASSY

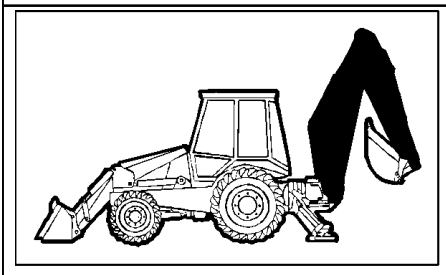

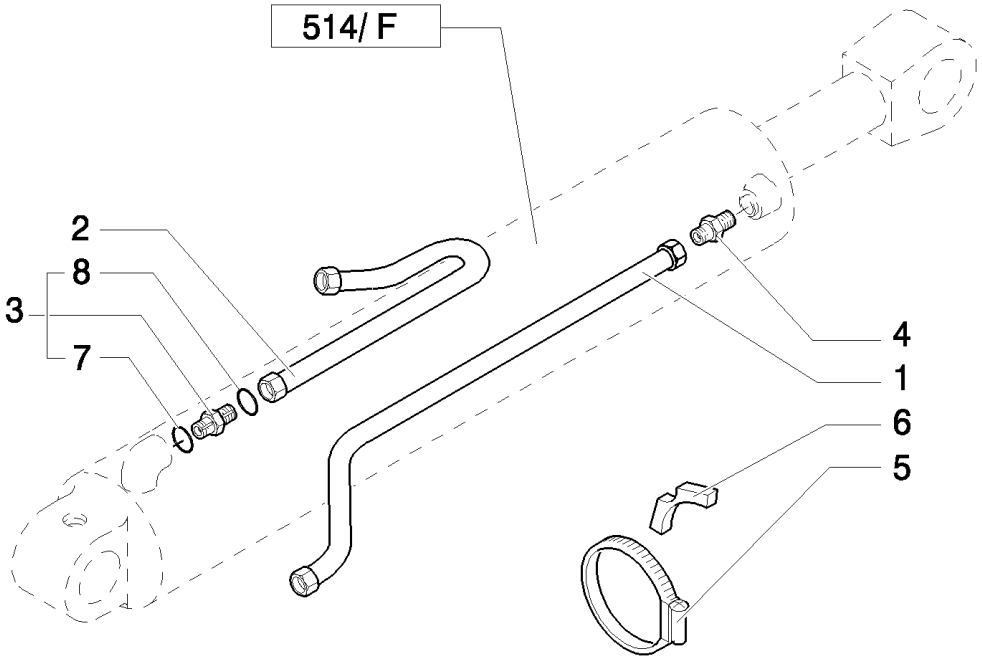
514/ F
2
8
3
7
4
1
6
5

B95LR NA BACKHOE LOADER (1/06-)

514(06) SHORT DIPPER - HYDRAULIC SYSTEM

Ref	Numero de Pieza	Ctd	Descripción
1	85815683	1	TUBE, HYD,
2	85816813	1	TUBE, HYD,
3	83962538	1	CONNECTOR, HYD., 1-3/16"-12 ORS x 1-1/16"-12 SAE O-Ring, Includes 7, 8
4	83962539	1	CONNECTOR, HYD.,
5	85802744	1	CLAMP, HOSE,
6	87303912	2	BLOCK,
7	80167266	1	O-RING, 90 Duro, .924" ID x .116" Thk
8	89991976	1	O-RING, 90 Duro, .739" ID x .070" Thk

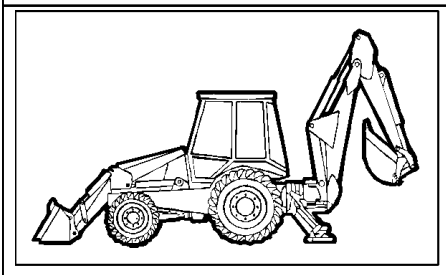

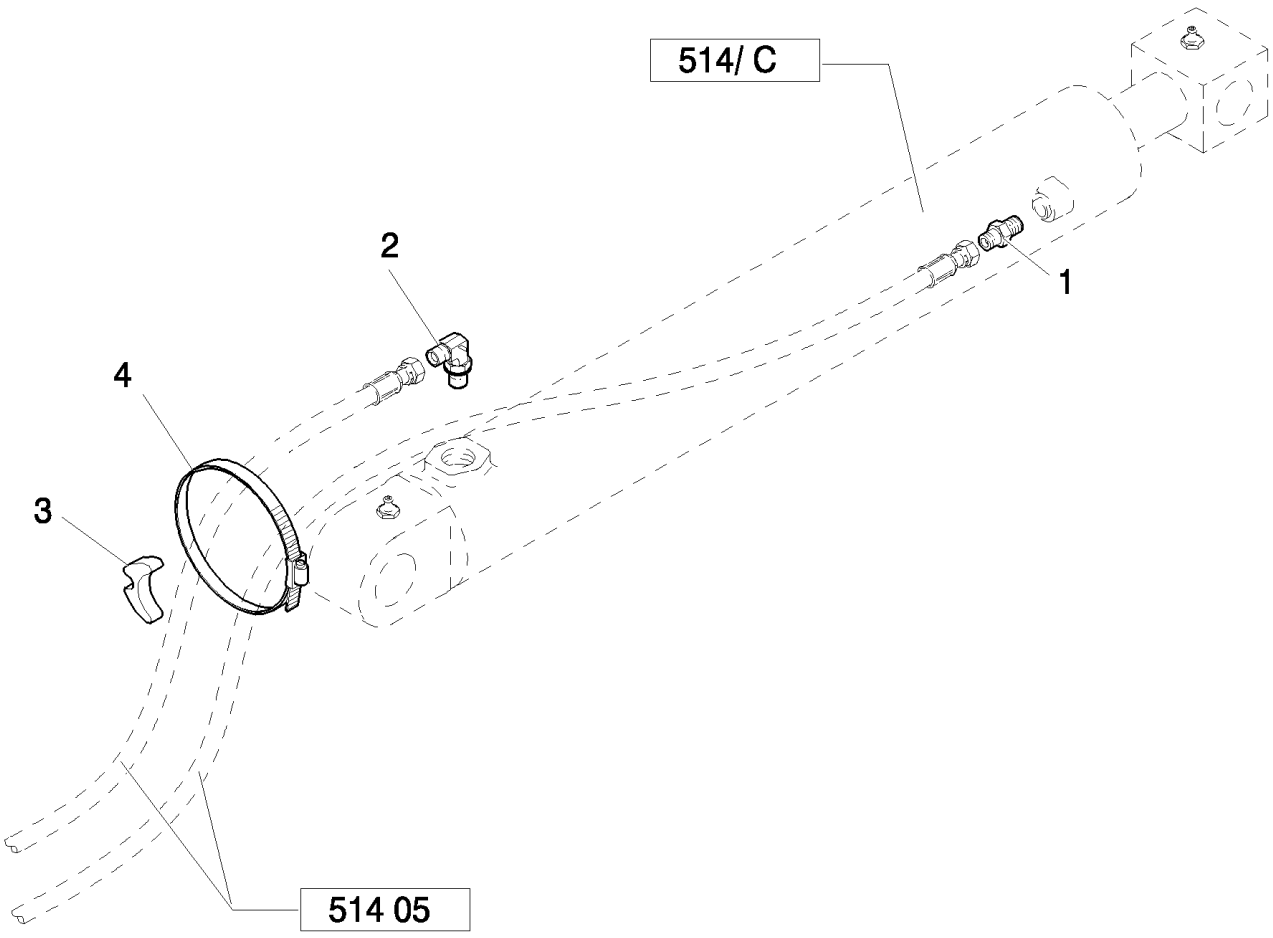
514/ C
2
1
4
3
514 05

B95LR NA BACKHOE LOADER (1/06-)

514(07) SHORT DIPPER - HYDRAULIC SYSTEM

Ref	Numero de Pieza	Ctd	Descripción
1	83962539	1	CONNECTOR, HYD.,
2	85802957	1	ELBOW, 90º, 1 3/16"-12 ORS x 1 1/16"-12 SAE O-Ring,
3	87565305	1	ANCHOR,
4	85817474	1	STRAP, CABLE,

514/ C(01) HYDRAULIC BUCKET CYLINDER

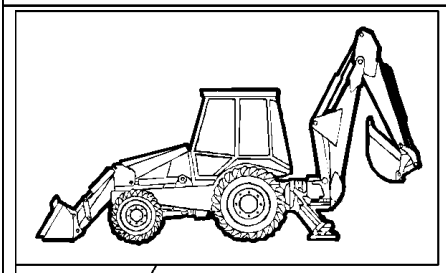

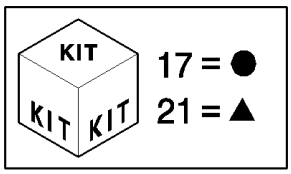

B95LR NA BACKHOE LOADER (1/06-)

514/ C(01) HYDRAULIC BUCKET CYLINDER

Ref	Numero de Pieza	Ctd	Descripción
1	87414976	1	BEARING, NYLON,
2	87414506	1	GLAND,
3	87427999	1	SCREW,
4	87421144	1	O-RING,
5	87408120	1	PISTON, , Includes 9, 15, 16
6	83963252	1	ROD, , Includes 7
7	83910547	4	BUSHING,
8	87440401	1	BACK-UP RING,
9	87408634	1	Ring, Wear,
10	83963280	1	LINER, ENGINE CYLINDER, , Includes 7
11	87414980	1	KIT, SEALS,
12	83416242	2	NIPPLE, LUBE, 1/8"-27
13	87414979	1	WIPER,
14	83931289	4	SEAL, HYD-CYLINDER,
15	87414333	1	SEAL,
16	87414341	1	RING,
17	87424197	1	KIT,
18	87315527	1	HYDRAULIC CYLINDER,
19	87415117	1	GLAND, , Includes 1, 2, 4, 8, 11, 13
20	85827128	1	SCREW,
21	87428629	1	KIT, SEALS,

514/ E(01) HYDRAULIC DITCHING CYLINDER

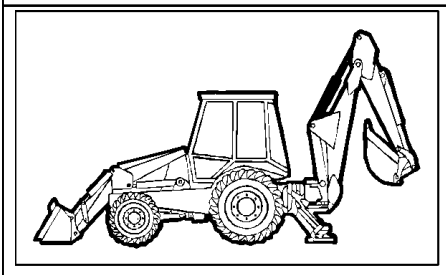

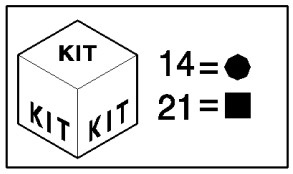

B95LR NA BACKHOE LOADER (1/06-)

514/ E(01) HYDRAULIC DITCHING CYLINDER

Ref	Numero de Pieza	Ctd	Descripción
1	87315531	1	HYDRAULIC CYLINDER,
2	86982444	1	BOLT, SPECIAL,
3	87415119	1	GLAND, , Includes 8 to 13
4	87425174	1	PLUNGER, , Includes 5, 6
5	87414336	1	SEAL, HYD-CYLINDER,
6	87414344	1	RING,
7	83931281	1	SEAL,
8	87414976	1	BEARING, NYLON,
9	87421147	1	O-RING,
10	87440411	1	BACK-UP RING,
11	87414508	1	GLAND,
12	87414980	1	KIT, SEALS,
13	87414979	1	WIPER,
14	87428632	1	KIT, SEALS,
15	87425131	1	ROD, , Includes 16
16	83910547	2	BUSHING,
17	83416242	1	NIPPLE, LUBE, 1/8"-27
18	83931289	2	SEAL, HYD-CYLINDER,
19	87425142	1	BARREL, , Includes 20
20	83910558	2	RING,
21	87424199	1	KIT, REPAIR,

514/ F(01) HYDRAULIC LIFTING CYLINDER

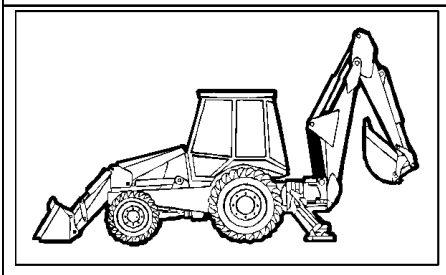

KIT

16= ●
24= ■

B95LR NA BACKHOE LOADER (1/06-)

514/ F(01) HYDRAULIC LIFTING CYLINDER

Ref	Numero de Pieza	Ctd	Descripción
1	85800211	1	RING, PISTON,
2	87415121	1	GLAND, , Includes 3, 8, 9, 10, 11, 26
3	87414979	1	WIPER,
4	83910551	2	BUSHING,
5	83962145	1	ROD, , Includes 4
6	83931281	2	SEAL,
7	83416242	2	NIPPLE, LUBE, 1/8"-27
8	87414976	1	BEARING, NYLON,
9	87440412	1	BACK-UP RING,
10	87421148	1	O-RING,
11	87414980	1	KIT, SEALS,
13	87409319	1	PISTON, , Includes 14, 15
14	87414337	1	SEAL,
15	87414345	1	RING,
16	87428633	1	KIT, SEALS,
17	85800210	1	BARREL, , Includes 19
18	87401159	1	Ring, Wear,
19	85800202	2	BUSHING,
20	E8NN337AA	1	WASHER,
21	87428018	1	SCREW, M33x2x50
22	85801025	2	SEAL, HYD-CYLINDER,
23	87315532	1	HYDRAULIC CYLINDER,
24	87424200	1	GLAND,
25	87403202	1	PISTON,
26	87414510	1	GLAND,

B95LR NA BACKHOE LOADER (1/06-)

515(01) 12" (305MM) BACKHOE BUCKET WITH PIN TEETH

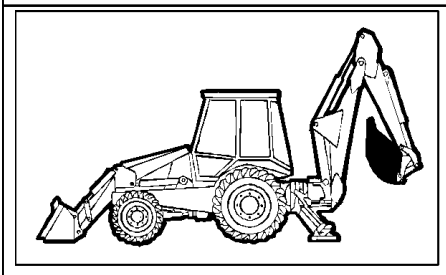

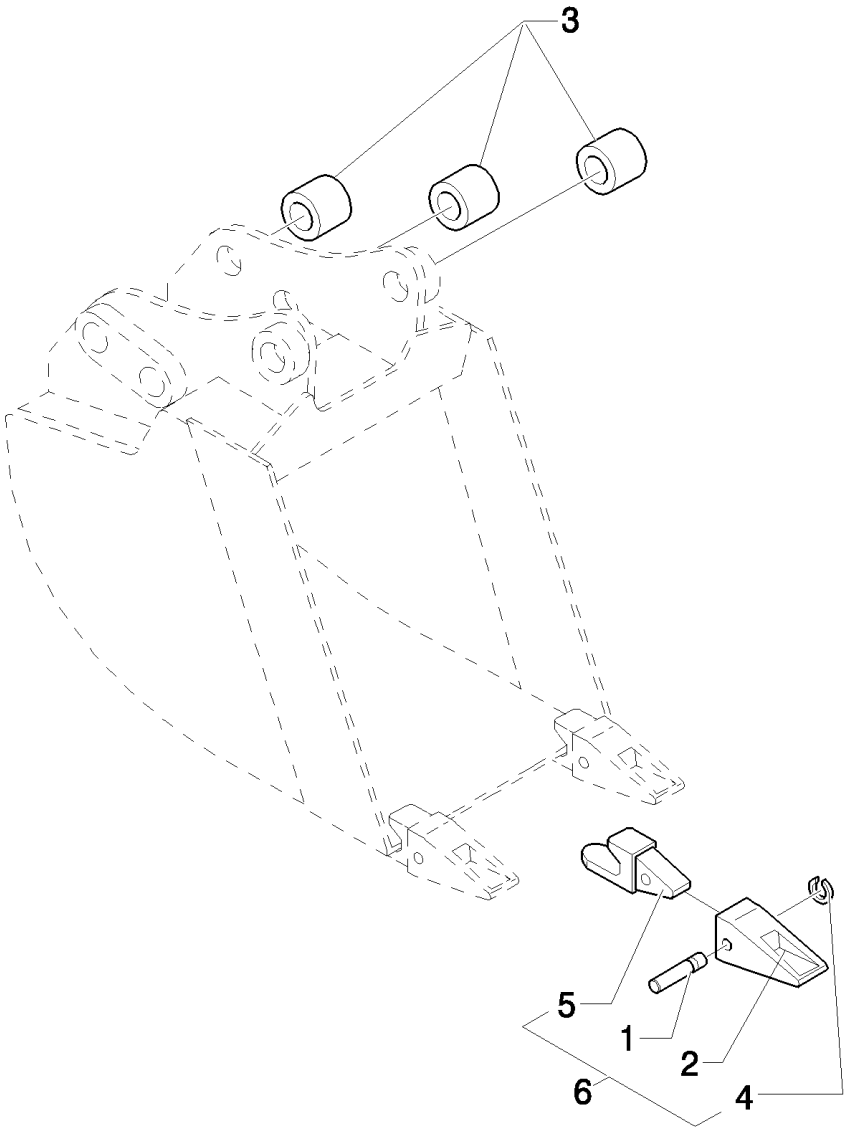

B95LR NA BACKHOE LOADER (1/06-)

515(01) 12" (305MM) BACKHOE BUCKET WITH PIN TEETH

Ref	Numero de Pieza	Ctd	Descripción
1	85801097	3	PIN,
2	85811432	3	TOOTH, BUCKET,
3	D7NNC584A	6	BUSHING,
4	85801098	3	RING,
5	85821788	3	SHANK, BUCKET TOOTH,
6	NSS	3	NOT SERVICED SEPARATELY, , Includes 1 To 5

B95LR NA BACKHOE LOADER (1/06-)

515(02) 12" (305MM) BACKHOE BUCKET WITH BOLT-ON TEETH

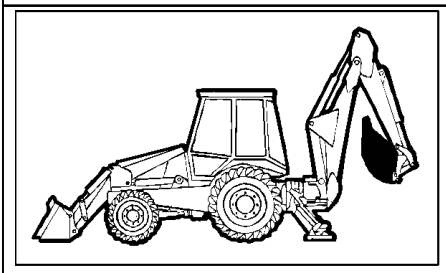

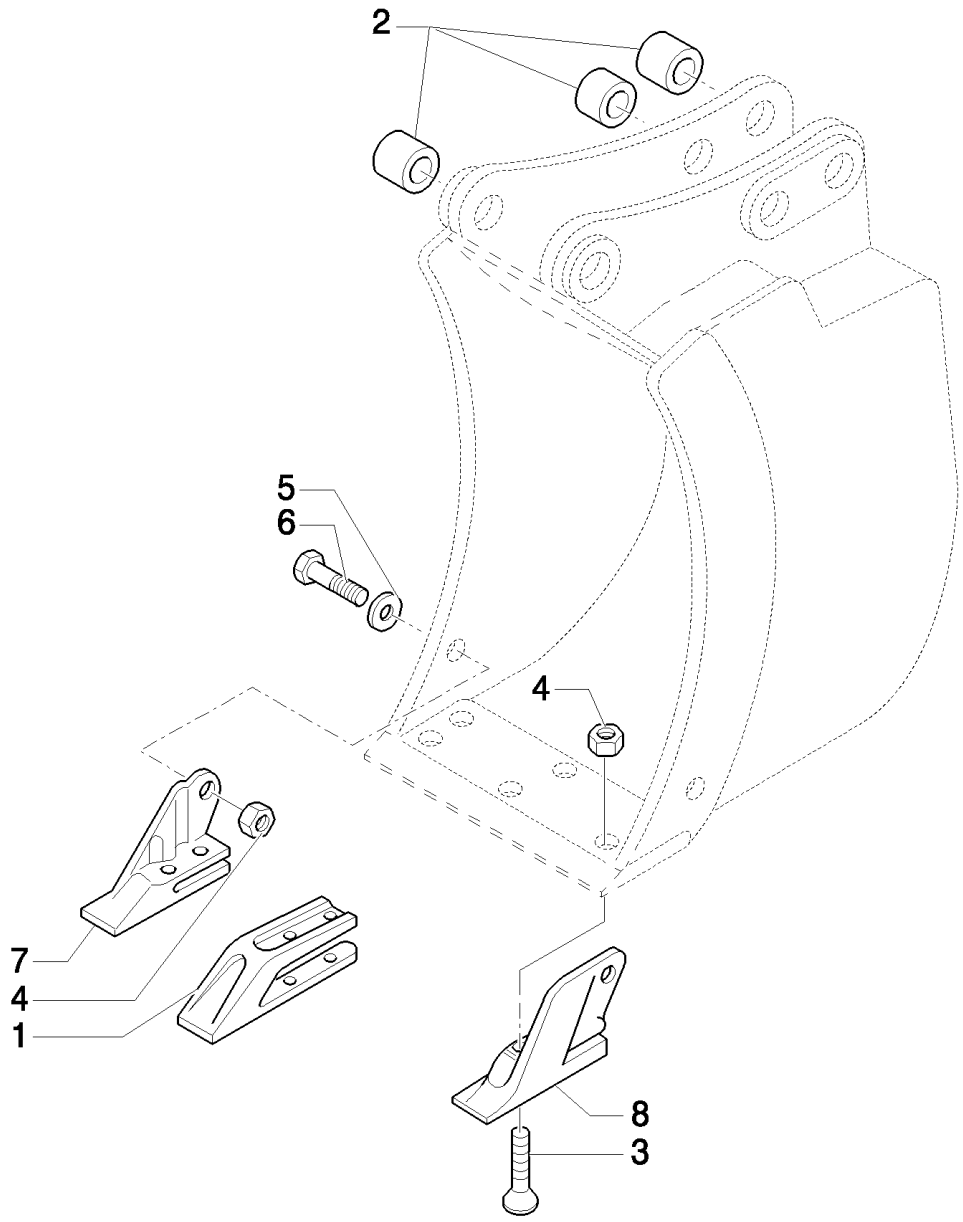

B95LR NA BACKHOE LOADER (1/06-)

515(02) 12" (305MM) BACKHOE BUCKET WITH BOLT-ON TEETH

Ref	Numero de Pieza	Ctd	Descripción
1	85811440	1	SHANK, BUCKET TOOTH,
2	D7NNC584A	6	BUSHING,
3	85801371	6	BOLT, PLOW, 5/8"-11 x 2 1/4",
4	85801470	8	NUT, 5/8"-11, G8,
5	10520211	2	WASHER,
6	D5NN94420N02B	2	WEATHERSTRIP, 5/8"-11X1.75
7	85801377	1	TOOTH, BUCKET, RH
8	85801376	1	TOOTH, BUCKET, LH

B95LR NA BACKHOE LOADER (1/06-)

516(01) 18" (457MM) BACKHOE BUCKET WITH PIN TEETH

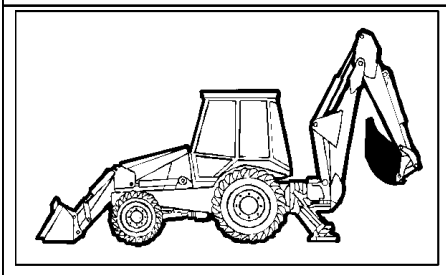

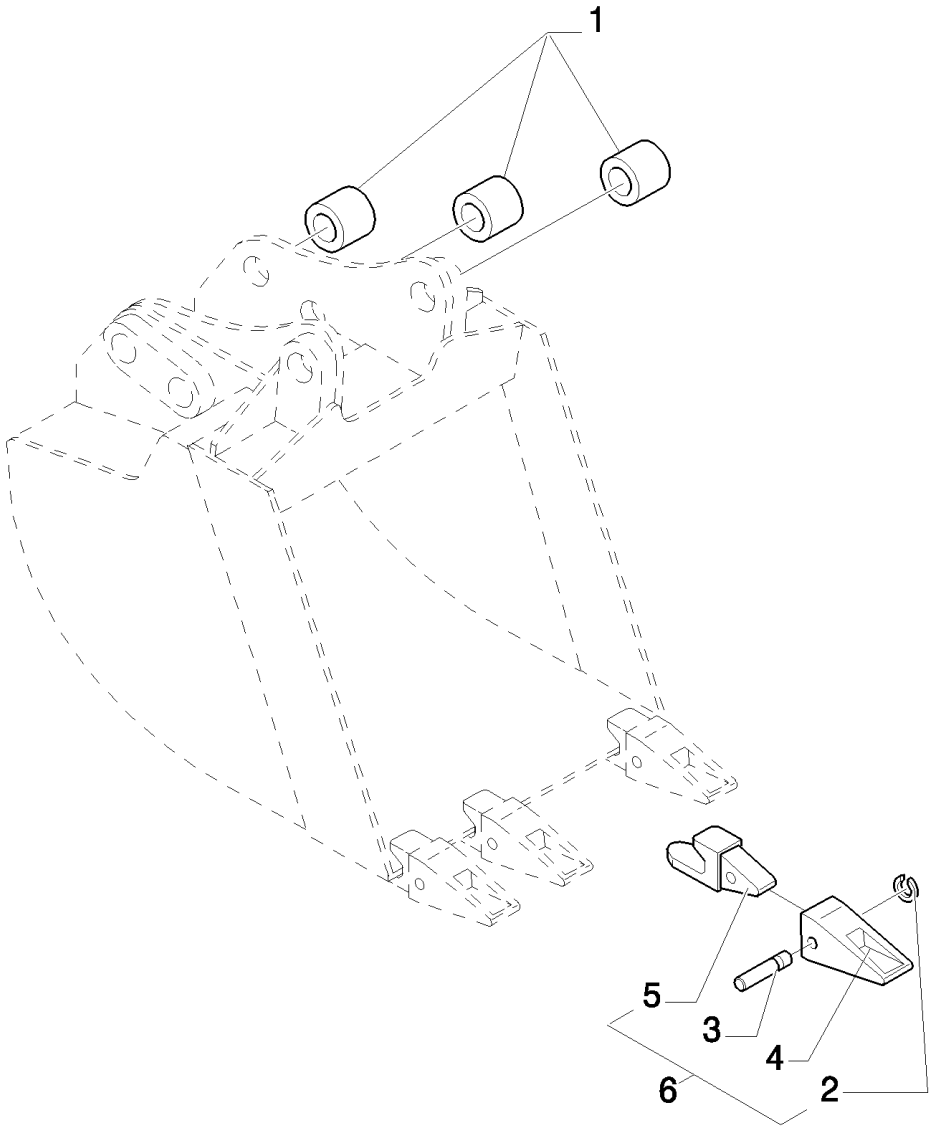

B95LR NA BACKHOE LOADER (1/06-)

516(01) 18" (457MM) BACKHOE BUCKET WITH PIN TEETH

Ref	Numero de Pieza	Ctd	Descripción
1	D7NNC584A	6	BUSHING,
2	85801098	4	RING,
3	85801097	4	PIN,
4	85811432	4	TOOTH, BUCKET,
5	85821788	4	SHANK, BUCKET TOOTH,
6	NSS	4	NOT SERVICED SEPARATELY, , Includes 1 To 5

B95LR NA BACKHOE LOADER (1/06-)

516(02) 18" (457MM) BACKHOE BUCKET WITH BOLT-ON TEETH

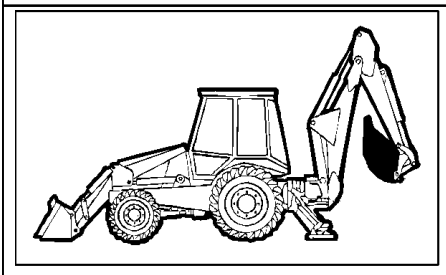

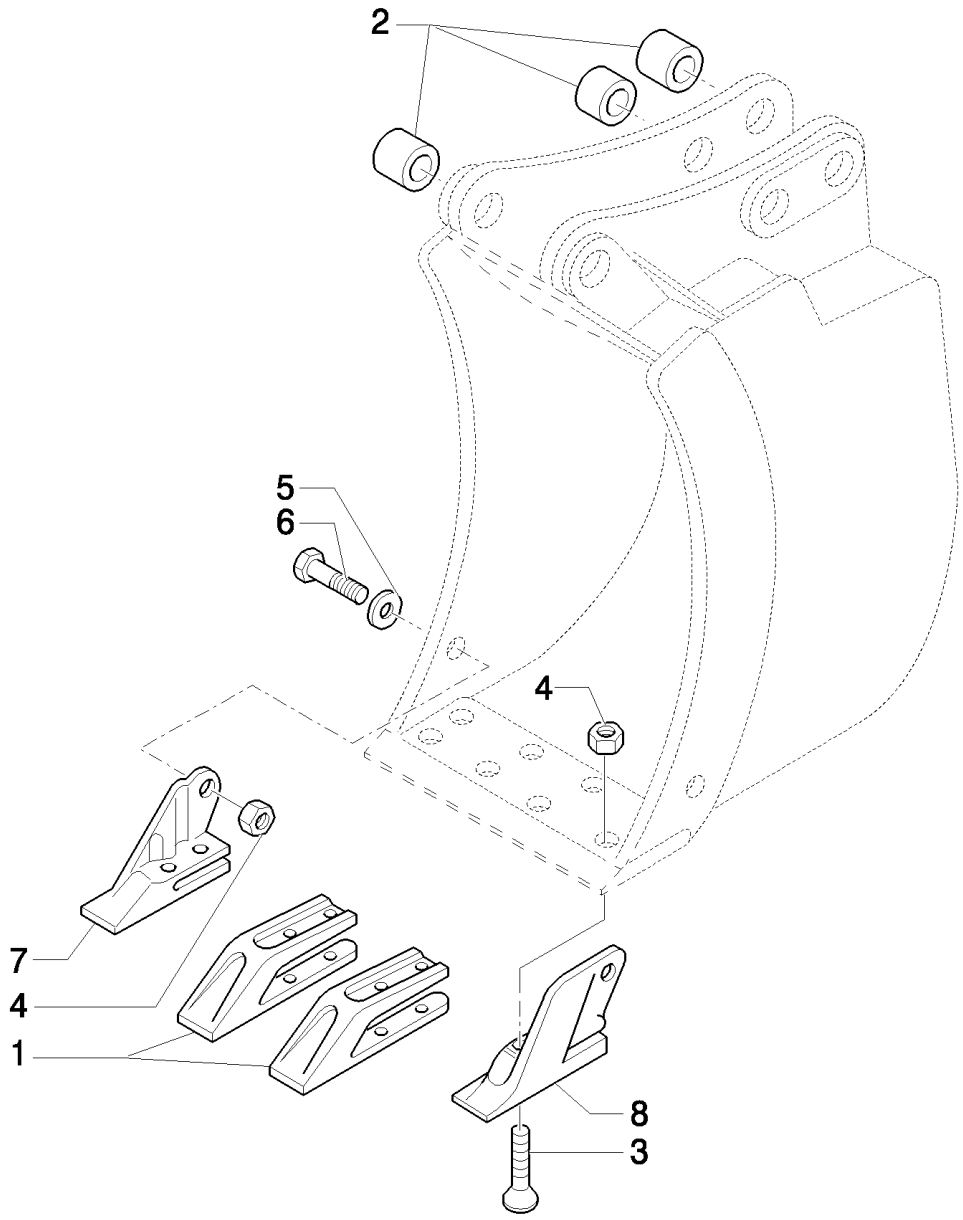

B95LR NA BACKHOE LOADER (1/06-)

516(02) 18" (457MM) BACKHOE BUCKET WITH BOLT-ON TEETH

Ref	Numero de Pieza	Ctd	Descripción
1	85811440	2	SHANK, BUCKET TOOTH,
2	D7NNC584A	6	BUSHING,
3	85801371	8	BOLT, PLOW, 5/8"-11 x 2 1/4",
4	85801470	10	NUT, 5/8"-11, G8,
5	10520211	2	WASHER,
6	D5NN94420N02B	2	WEATHERSTRIP, 5/8"-11X1.75
7	85801377	1	TOOTH, BUCKET, RH
8	85801376	1	TOOTH, BUCKET, LH

B95LR NA BACKHOE LOADER (1/06-)

517(01) 24" (610MM) BACKHOE BUCKET WITH PIN TEETH

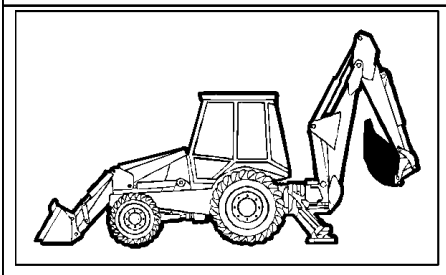

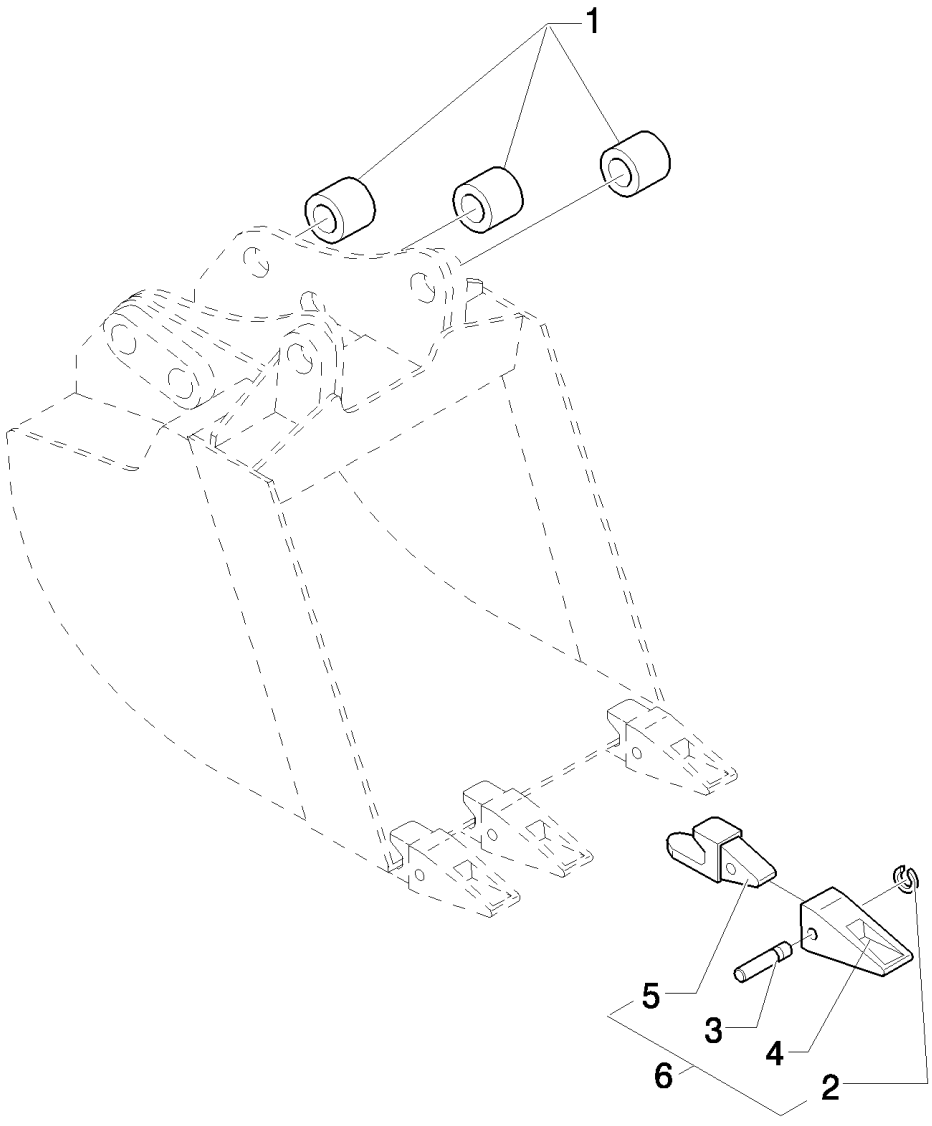

B95LR NA BACKHOE LOADER (1/06-)

517(01) 24" (610MM) BACKHOE BUCKET WITH PIN TEETH

Ref	Numero de Pieza	Ctd	Descripción
1	D7NNC584A	6	BUSHING,
2	85801098	4	RING,
3	85801097	4	PIN,
4	85811432	4	TOOTH, BUCKET,
5	85821788	4	SHANK, BUCKET TOOTH,
6	NSS	4	NOT SERVICED SEPARATELY, , Includes 1 To 5

B95LR NA BACKHOE LOADER (1/06-)

517(02) 24" (610MM) BACKHOE BUCKET WITH BOLT-ON TEETH

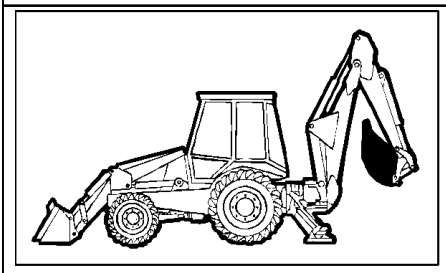

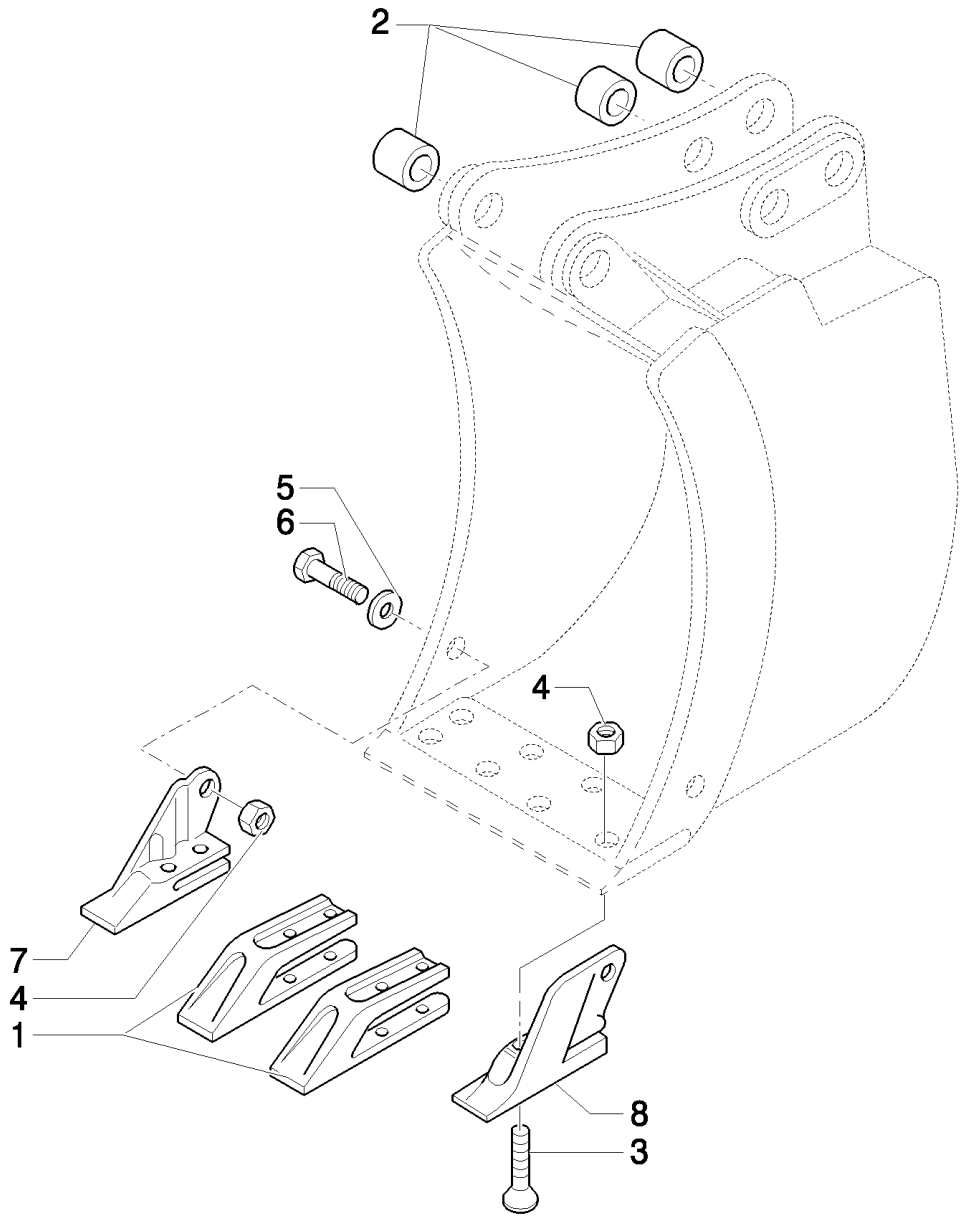

B95LR NA BACKHOE LOADER (1/06-)

517(02) 24" (610MM) BACKHOE BUCKET WITH BOLT-ON TEETH

Ref	Numero de Pieza	Ctd	Descripción
1	85811440	2	SHANK, BUCKET TOOTH,
2	D7NNC584A	6	BUSHING,
3	85801371	8	BOLT, PLOW, 5/8"-11 x 2 1/4",
4	85801470	10	NUT, 5/8"-11, G8,
5	10520211	2	WASHER,
6	88706	2	BOLT, Hex, 5/8"-11 x 1 3/4", G8, Full Thd,
7	85801377	1	TOOTH, BUCKET, RH
8	85801376	1	TOOTH, BUCKET, LH

B95LR NA BACKHOE LOADER (1/06-)

518(01) 30" (762MM) BACKHOE BUCKET WITH PIN TEETH

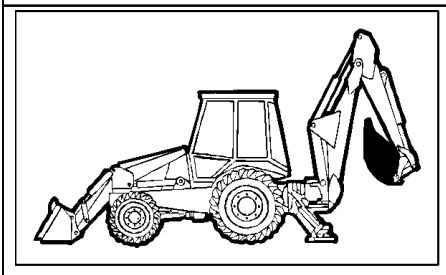

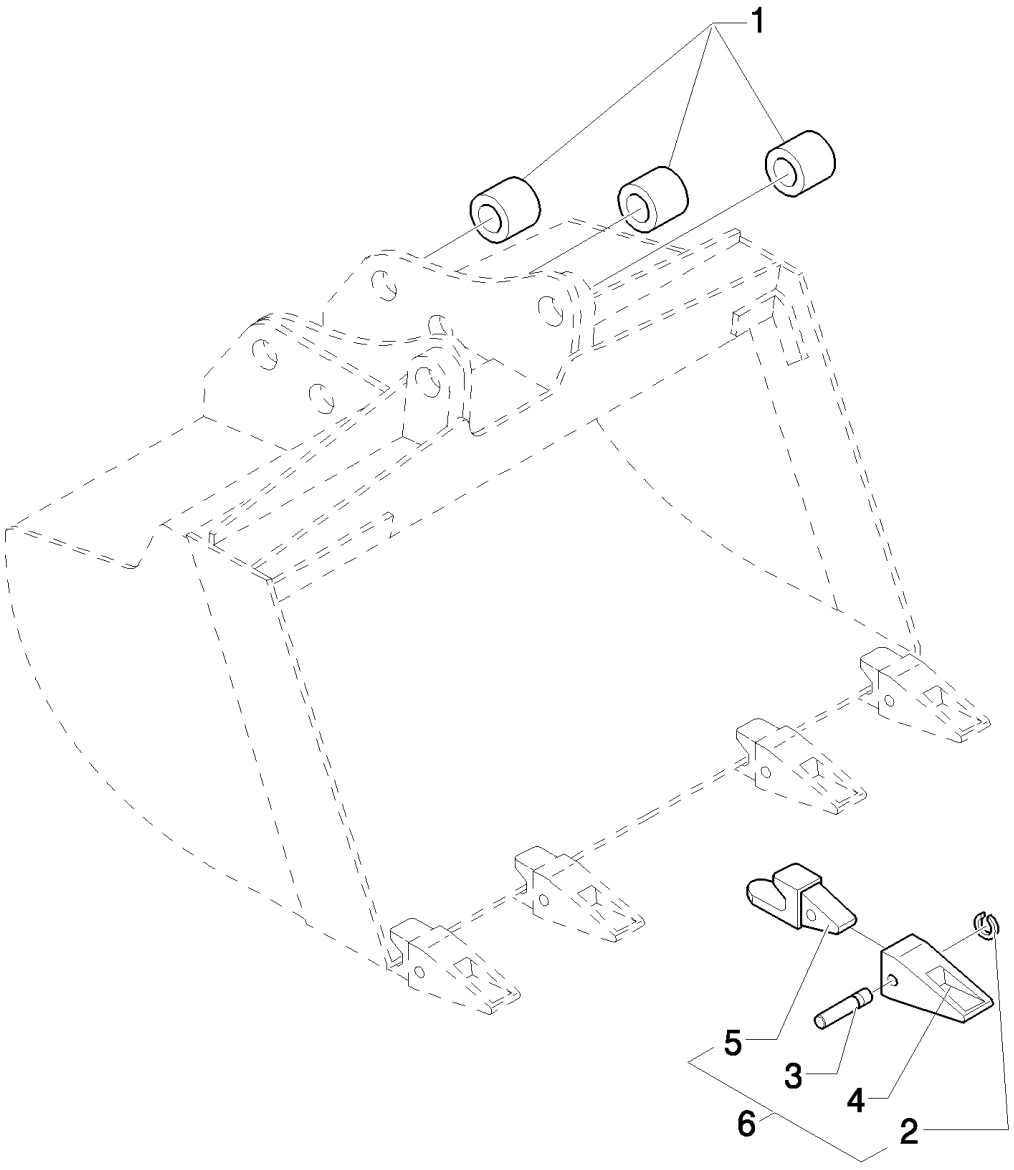

B95LR NA BACKHOE LOADER (1/06-)

518(01) 30" (762MM) BACKHOE BUCKET WITH PIN TEETH

Ref	Numero de Pieza	Ctd	Descripción
1	D7NNC584A	6	BUSHING,
2	85801098	5	RING,
3	85801097	5	PIN,
4	85811432	5	TOOTH, BUCKET,
5	85821788	5	SHANK, BUCKET TOOTH,
6	85824018	5	Shank and Tooth Assembly; Not Available As An Assembly, Order Components

B95LR NA BACKHOE LOADER (1/06-)

518(02) 30" (762MM) BACKHOE BUCKET WITH BOLT-ON TEETH

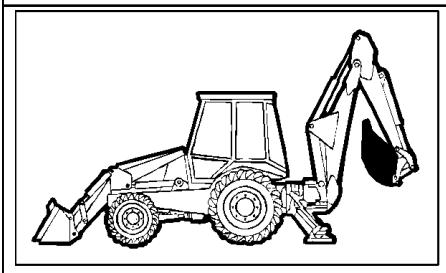

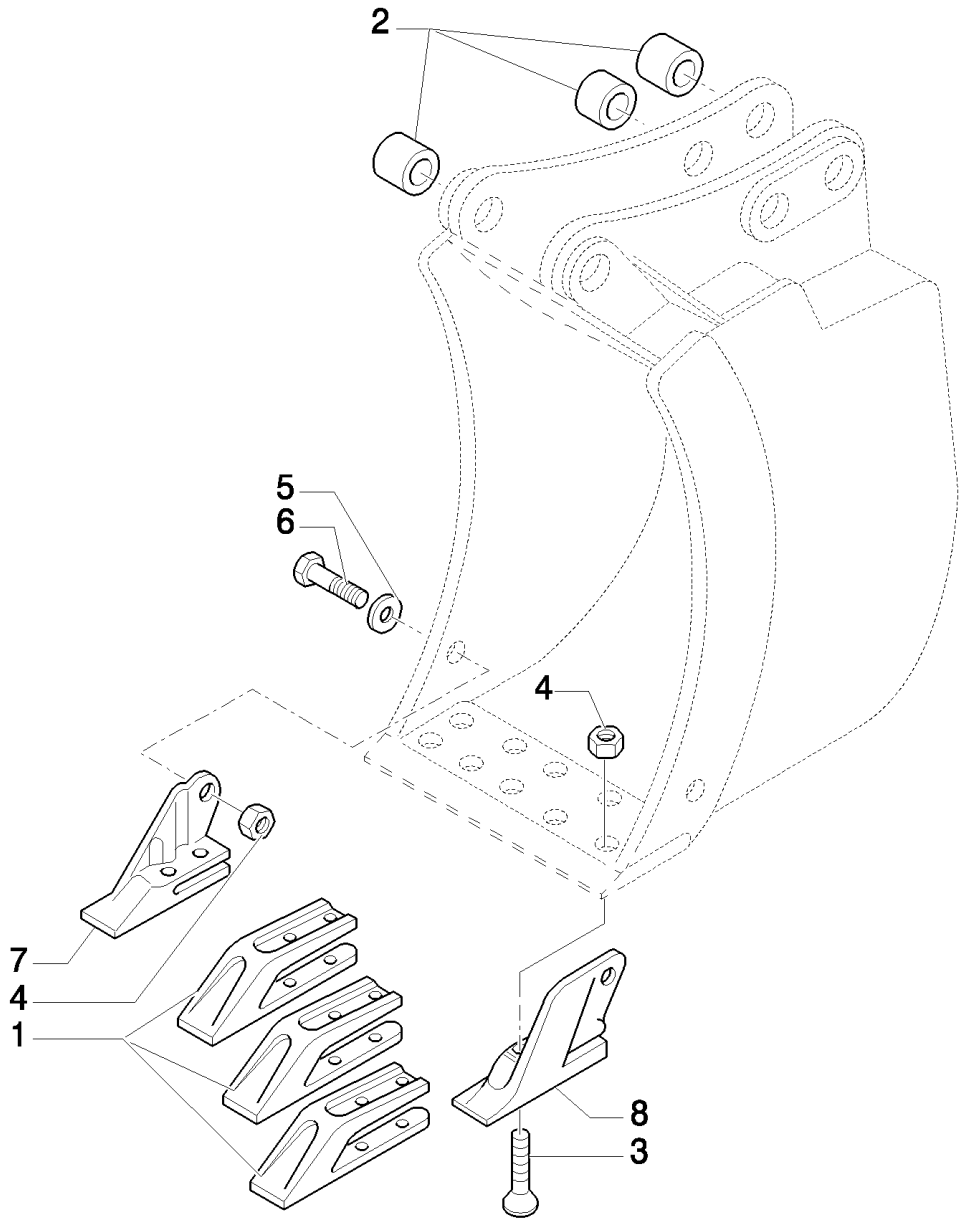

B95LR NA BACKHOE LOADER (1/06-)

518(02) 30" (762MM) BACKHOE BUCKET WITH BOLT-ON TEETH

Ref	Numero de Pieza	Ctd	Descripción
1	85811440	3	SHANK, BUCKET TOOTH,
2	D7NNC584A	6	BUSHING,
3	85801371	10	BOLT, PLOW, 5/8"-11 x 2 1/4",
4	85801470	12	NUT, 5/8"-11, G8,
5	10520211	2	WASHER,
6	88706	2	BOLT, Hex, 5/8"-11 x 1 3/4", G8, Full Thd,
7	85801377	1	TOOTH, BUCKET, RH
8	85801376	1	TOOTH, BUCKET, LH

B95LR NA BACKHOE LOADER (1/06-)

519(01) 36" (914MM) BACKHOE BUCKET WITH PIN TEETH

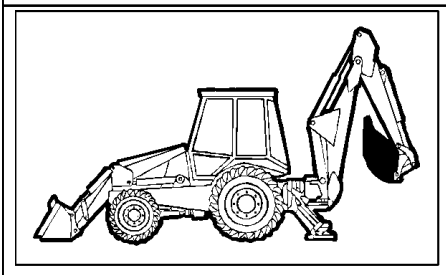

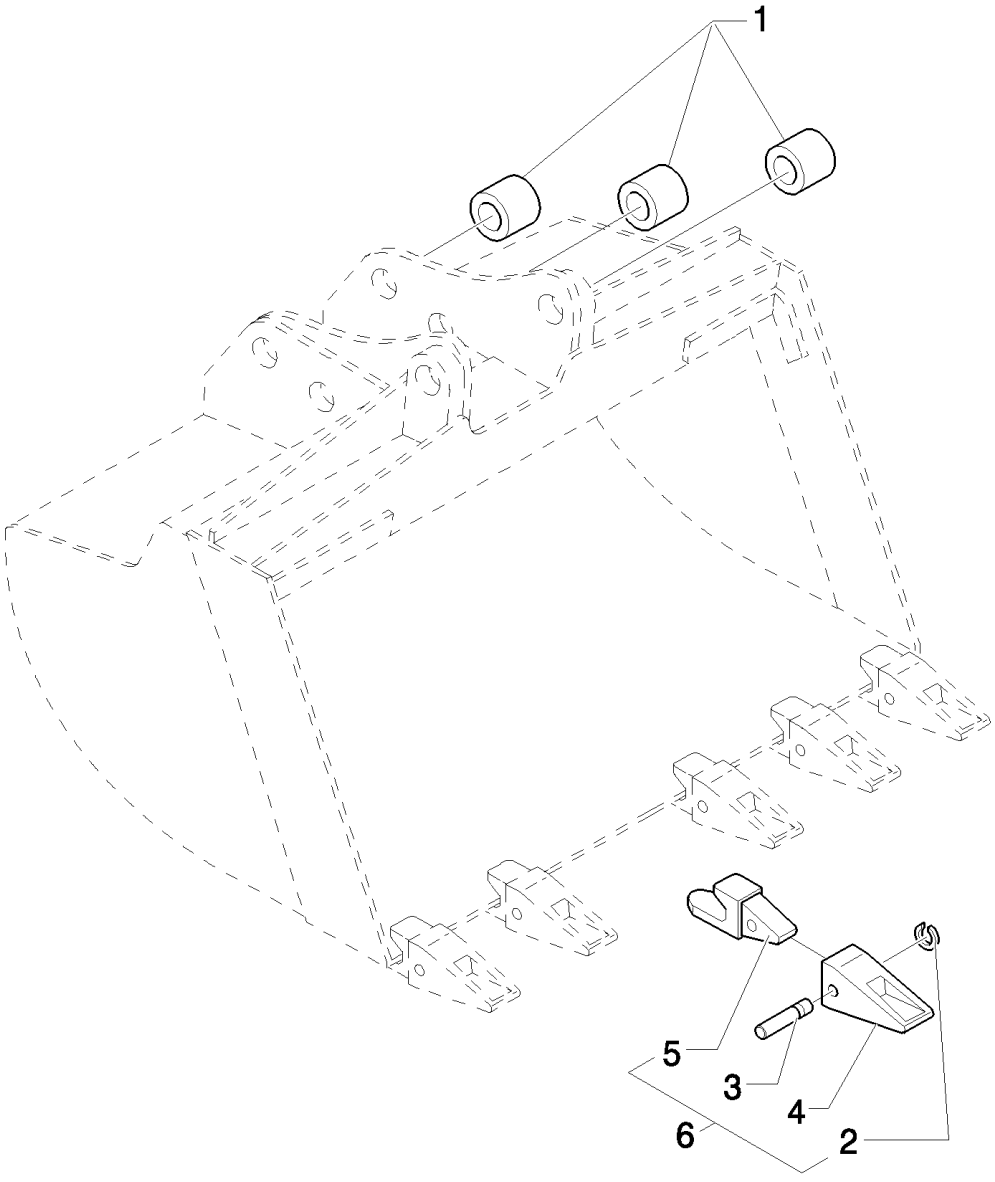

B95LR NA BACKHOE LOADER (1/06-)

519(01) 36" (914MM) BACKHOE BUCKET WITH PIN TEETH

Ref	Numero de Pieza	Ctd	Descripción
1	D7NNC584A	6	BUSHING,
2	85801098	6	RING,
3	85801097	6	PIN,
4	85811432	6	TOOTH, BUCKET,
5	85821788	6	SHANK, BUCKET TOOTH,
6	NSS	6	NOT SERVICED SEPARATELY, , Includes 1 To 5

B95LR NA BACKHOE LOADER (1/06-)

519(02) 36" (914MM) BACKHOE BUCKET WITH BOLT-ON TEETH

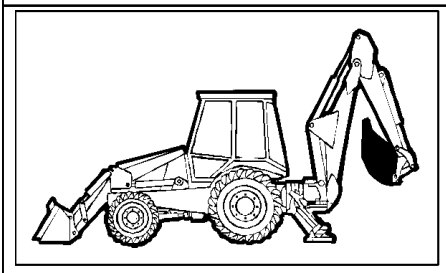

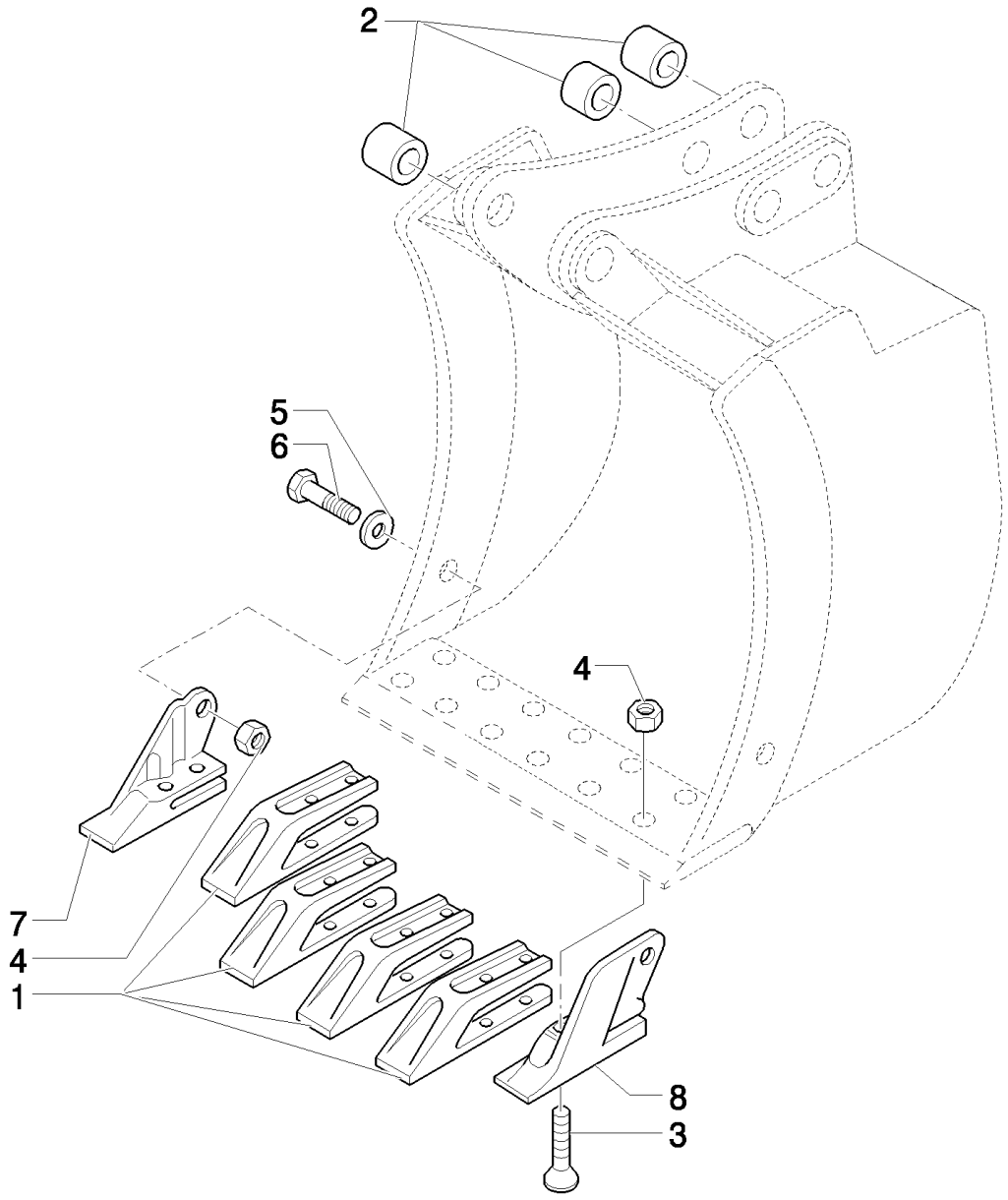

B95LR NA BACKHOE LOADER (1/06-)

519(02) 36" (914MM) BACKHOE BUCKET WITH BOLT-ON TEETH

Ref	Numero de Pieza	Ctd	Descripción
1	85811440	4	SHANK, BUCKET TOOTH,
2	D7NNC584A	6	BUSHING,
3	85801371	12	BOLT, PLOW, 5/8"-11 x 2 1/4",
4	85801470	14	NUT, 5/8"-11, G8,
5	10520211	2	WASHER,
6	88706	2	BOLT, Hex, 5/8"-11 x 1 3/4", G8, Full Thd,
7	85801377	1	TOOTH, BUCKET, RH
8	85801376	1	TOOTH, BUCKET, LH

B95LR NA BACKHOE LOADER (1/06-)

520(01) 0.88 M3 BUCKET WITHOUT TINES

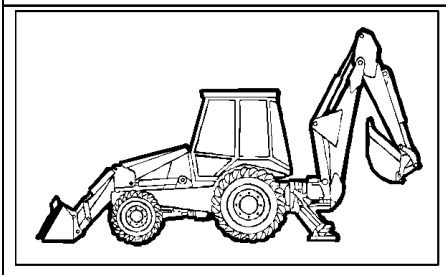

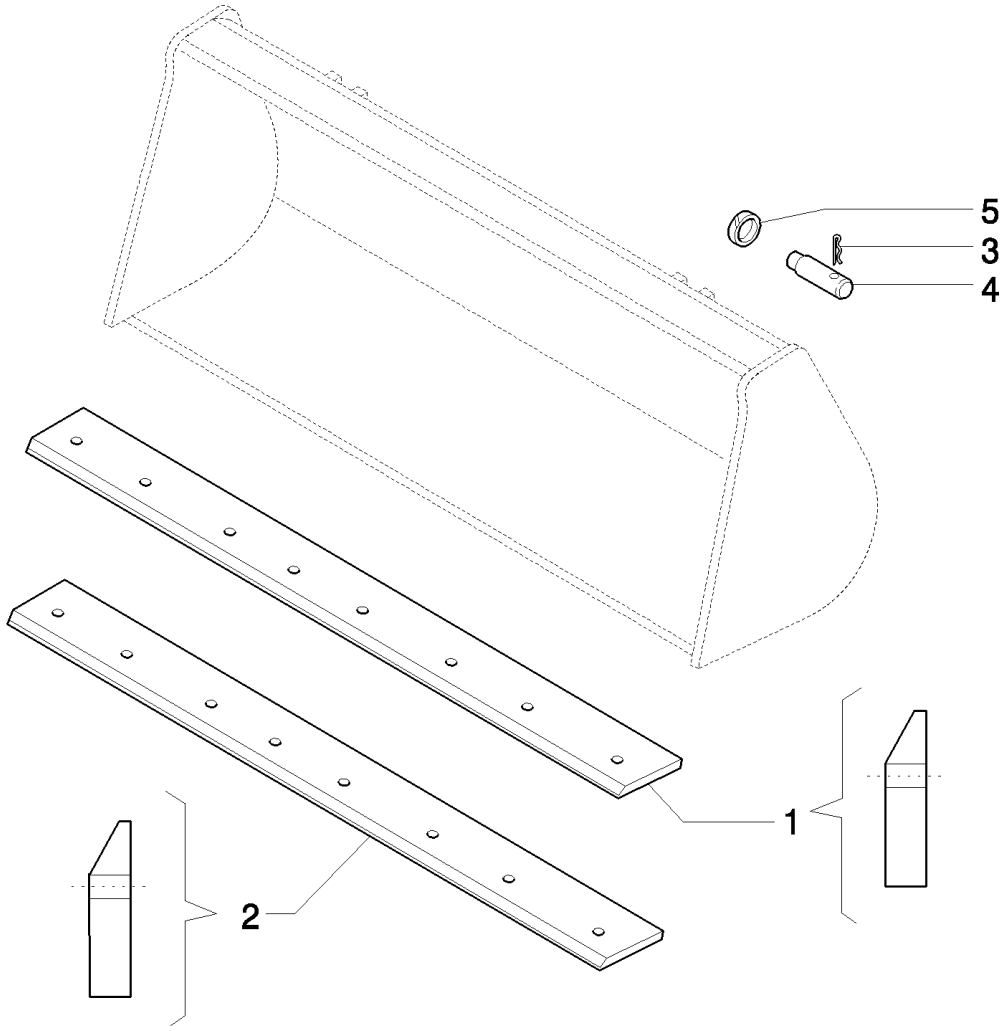

B95LR NA BACKHOE LOADER (1/06-)

520(01) 0.88 M3 BUCKET WITHOUT TINES

Ref	Numero de Pieza	Ctd	Descripción
1	85801044	1	EDGE, CUTTING, 27 Deg. cutting edge, Non-reversible weld on
2	85807868	1	EDGE, CUTTING,
3	85802993	4	PIN,
4	85801051	4	PIN,
5	85802992	4	RING,

522/ B(01) 1 M3 BUCKET

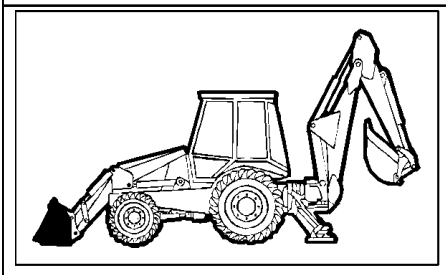

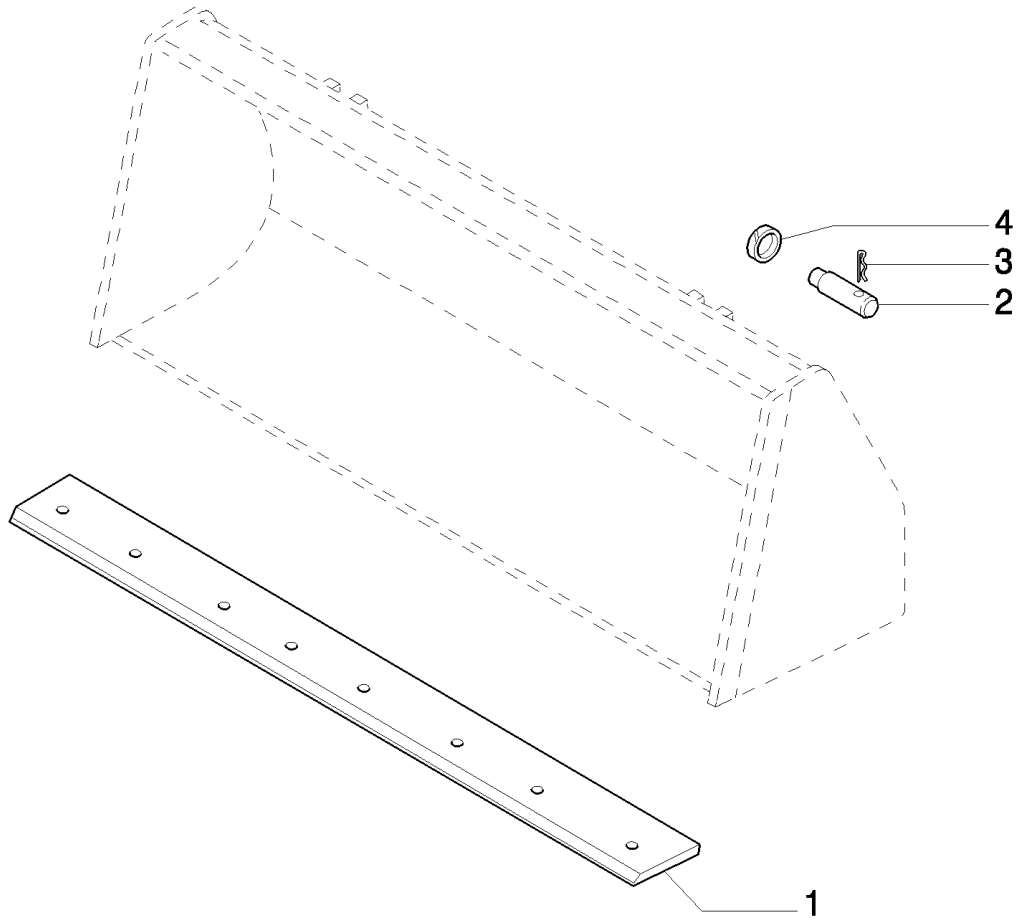

B95LR NA BACKHOE LOADER (1/06-)

522/ B(01) 1 M3 BUCKET

Ref	Numero de Pieza	Ctd	Descripción
1	85801034	1	EDGE, CUTTING, , Only for Side Shift
1	85807867	1	EDGE, CUTTING, 200mm W x 2250 L, Only for Center Pivot
2	85801051	4	PIN,
3	85802993	4	PIN,
4	85802992	4	RING,

522/ C(01) STANDARD 1MC BUCKET WITH FORKS

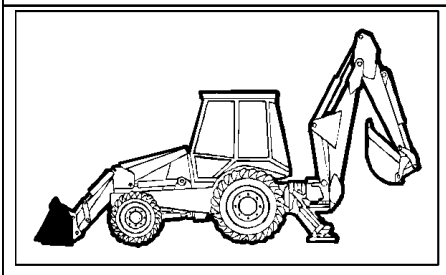

KIT

14 = ●

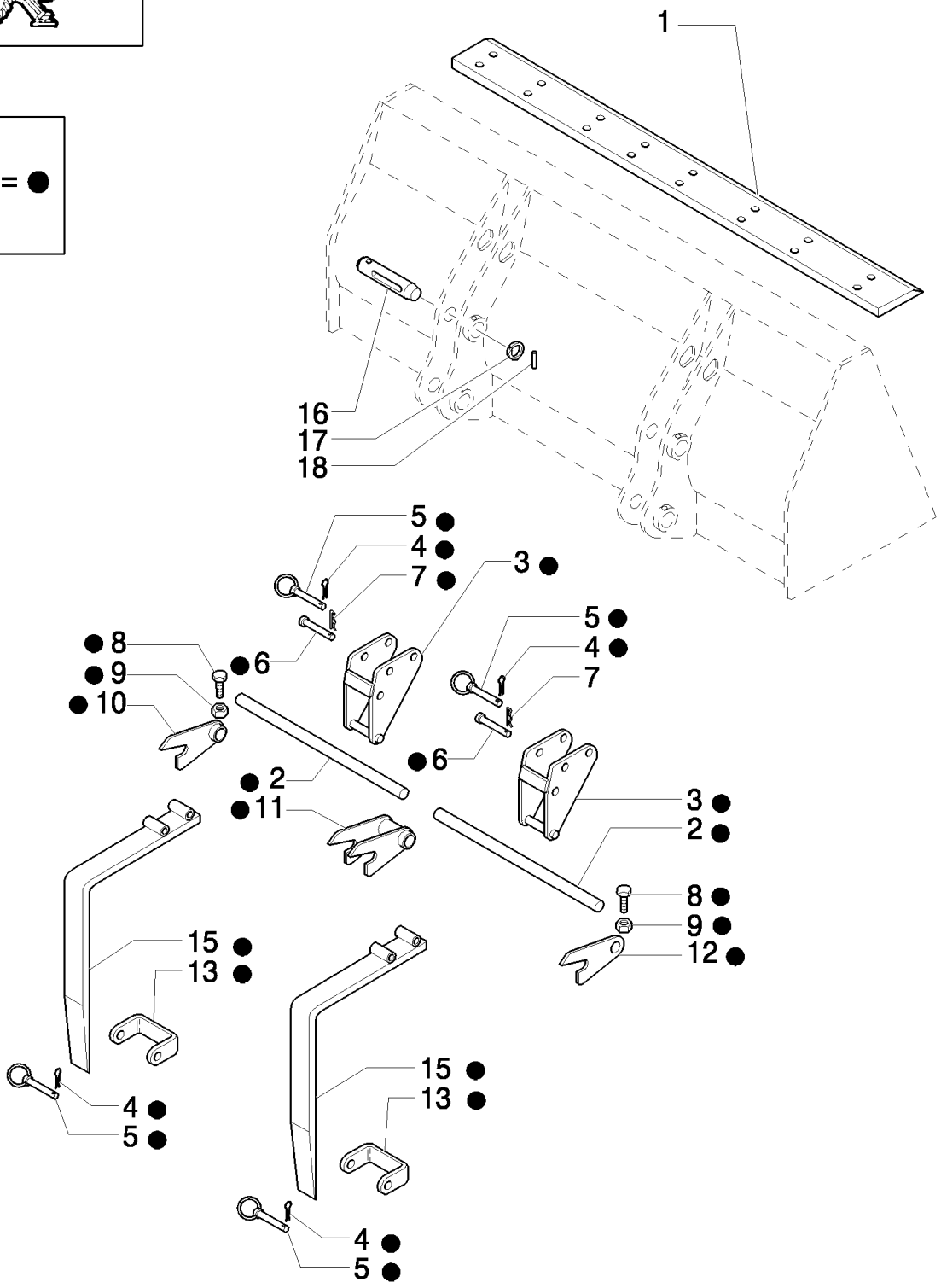

B95LR NA BACKHOE LOADER (1/06-)

522/ C(01) STANDARD 1MC BUCKET WITH FORKS

Ref	Numero de Pieza	Ctd	Descripción
1	85801034	1	EDGE, CUTTING,
2	9969170	2	ROD,
3	9968146	2	SUPPORT,
4	9968147	4	PIN, ROLL,
5	9968148	4	PIN, LOCK,
6	9968149	2	PIN,
7	9968150	2	PIN, SPLIT (COTTER),
8	9968151	2	SCREW,
9	9968152	4	NUT, M10
10	9968153	1	HINGE,
11	9968154	1	HINGE,
12	9968155	1	HINGE,
13	9968156	2	U-BRACKET,
14	85801486	1	KIT, CONVERSION, FORKS
15	9968144	2	FORK,
16	85801051	4	PIN,
17	85802992	4	RING,
18	85802993	4	PIN,

525(01) STANDARD 1M3 BUCKET WITH FORKS AND EXTRA REVERSIBLE BLADE

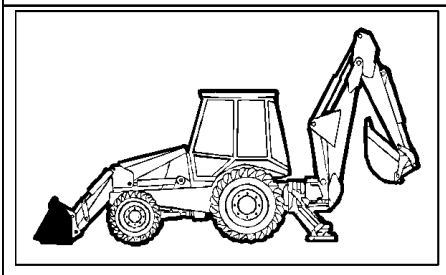

KIT KIT KIT 14 = ●

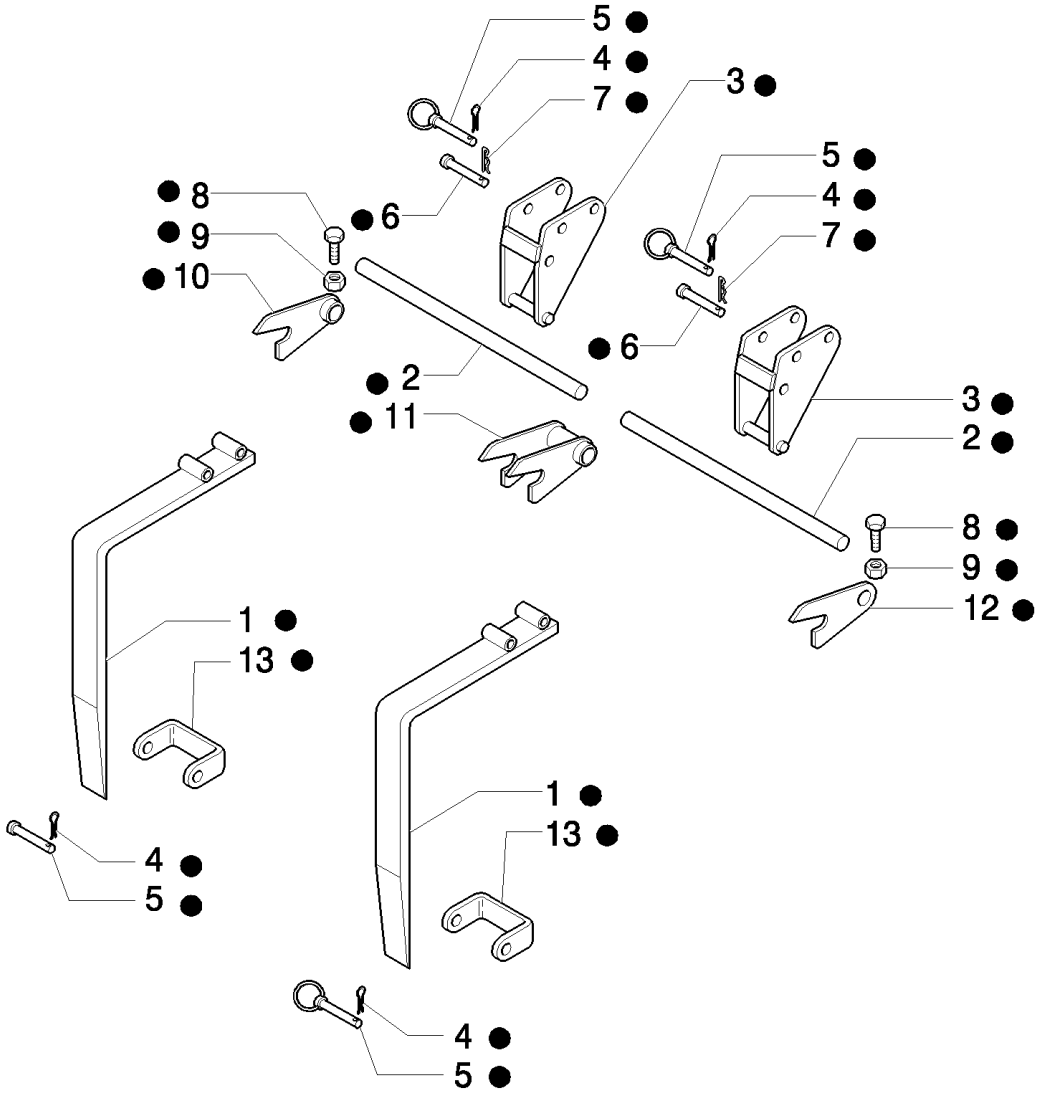

B95LR NA BACKHOE LOADER (1/06-)

525(01) STANDARD 1M3 BUCKET WITH FORKS AND EXTRA REVERSIBLE BLADE

Ref	Numero de Pieza	Ctd	Descripción
1	9968144	2	FORK,
2	9969170	2	ROD,
3	9968146	2	SUPPORT,
4	9968147	4	PIN, ROLL,
5	9968148	4	PIN, LOCK,
6	9968149	2	PIN,
7	9968150	2	PIN, SPLIT (COTTER),
8	9968151	2	SCREW, M10X90
9	9968152	2	NUT, M10
10	9968153	1	HINGE,
11	9968154	1	HINGE,
12	9968155	1	HINGE,
13	9968156	2	U-BRACKET,
14	85801486	1	KIT, CONVERSION, FORKS

B95LR NA BACKHOE LOADER (1/06-)

525(02) STANDARD 1M3 BUCKET WITH FORKS AND EXTRA REVERSIBLE BLADE

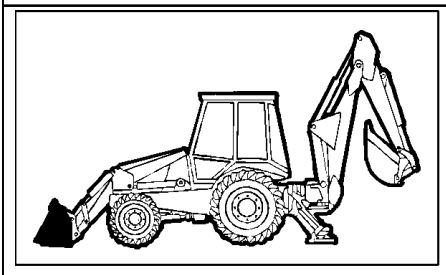

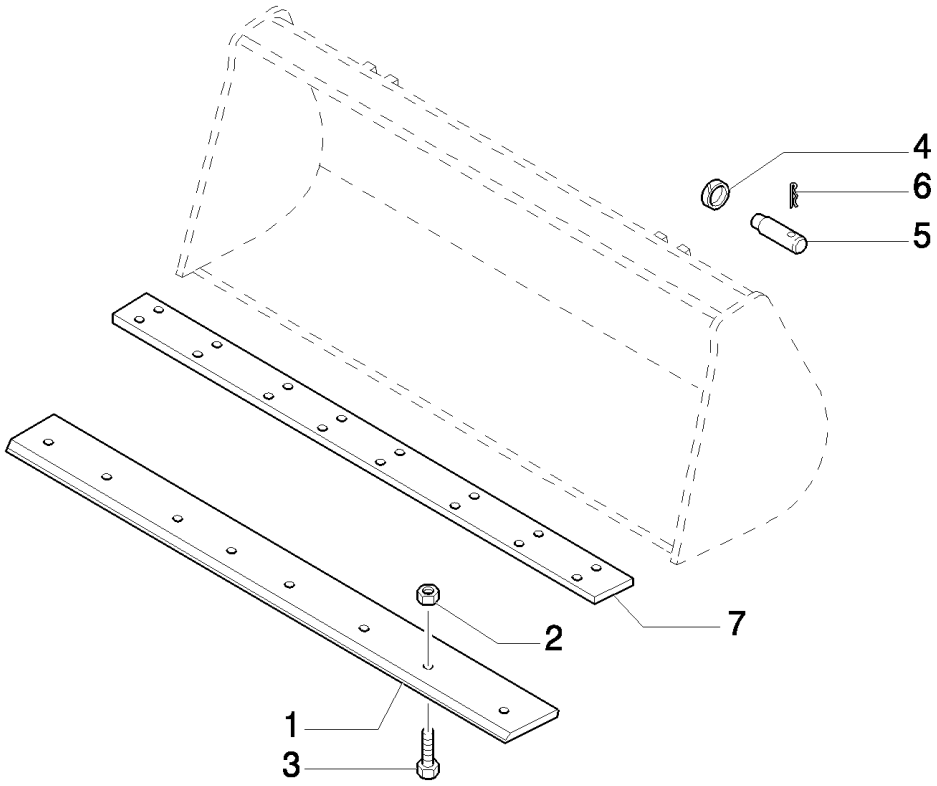

B95LR NA BACKHOE LOADER (1/06-)

525(02) STANDARD 1M3 BUCKET WITH FORKS AND EXTRA REVERSIBLE BLADE

Ref	Numero de Pieza	Ctd	Descripción
1	85801161	1	EDGE, CUTTING, 35 Deg. cutting edge, Reversible bolt on
2	85801470	8	NUT, 5/8"-11, G8,
3	85801371	8	BOLT, PLOW, 5/8"-11 x 2 1/4",
4	85802992	4	RING,
5	85802993	4	PIN,
6	85801051	4	PIN,
7	85801034	1	EDGE, CUTTING, , PART WELDED TO BUCKET

B95LR NA BACKHOE LOADER (1/06-)

526(01) BOLT-ON TOOTH KIT, 12" (305MM) BACKHOE BUCKET

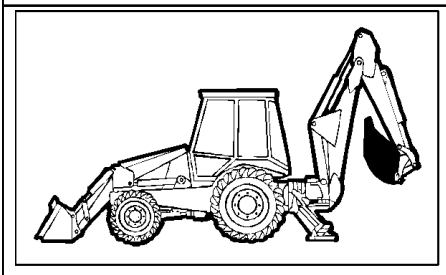

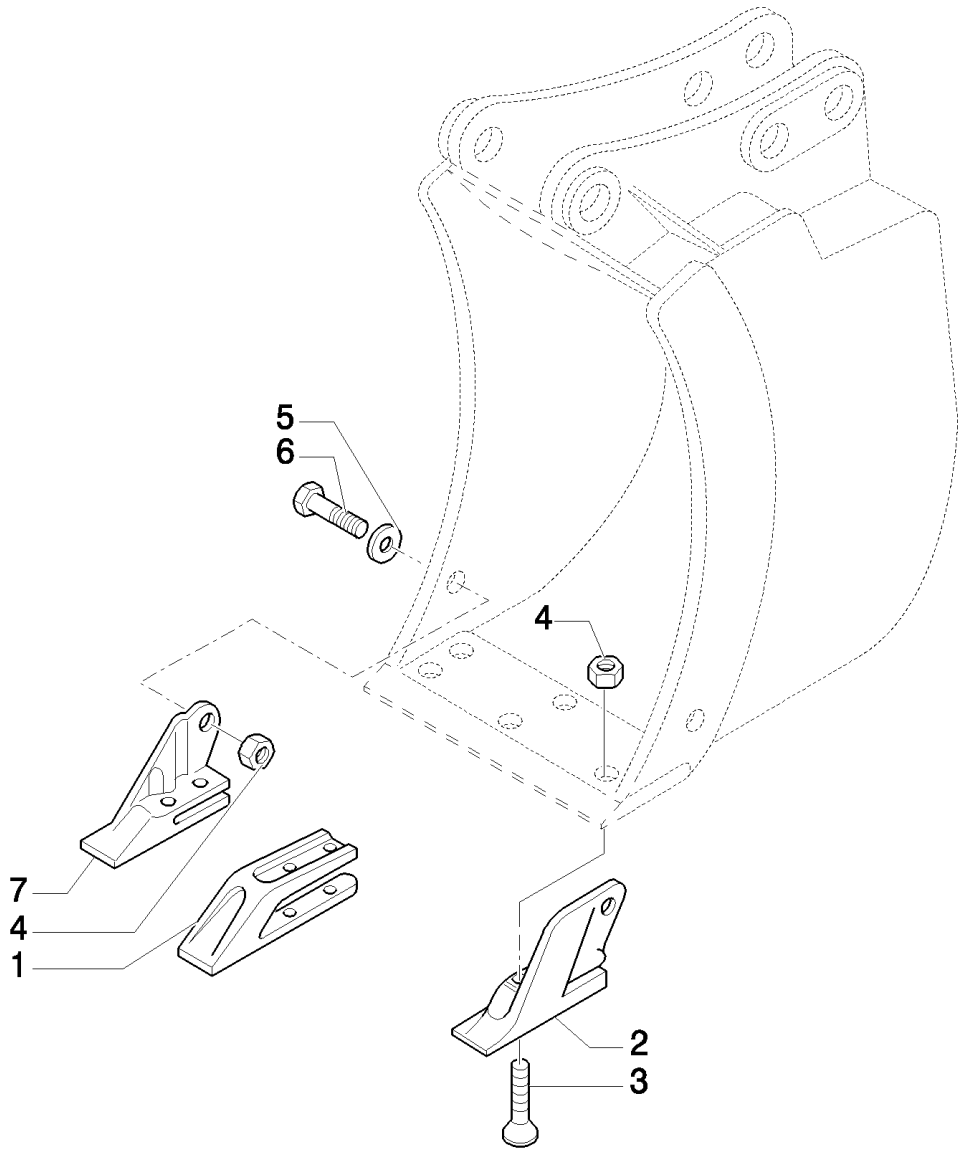

B95LR NA BACKHOE LOADER (1/06-)

526(01) BOLT-ON TOOTH KIT, 12" (305MM) BACKHOE BUCKET

Ref	Numero de Pieza	Ctd	Descripción
1	85811440	1	SHANK, BUCKET TOOTH,
2	85801376	1	TOOTH, BUCKET, LH
3	85801371	6	BOLT, PLOW, 5/8"-11 x 2 1/4",
4	85801470	8	NUT, 5/8"-11, G8,
5	10520211	2	WASHER,
6	88706	2	BOLT, Hex, 5/8"-11 x 1 3/4", G8, Full Thd,
7	85801377	1	TOOTH, BUCKET, RH

526/ 1(01) STANDARD 1M3 BUCKET WITH FORKS AND TINE

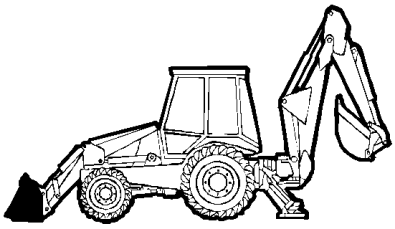

KIT KIT KIT 14 = ●

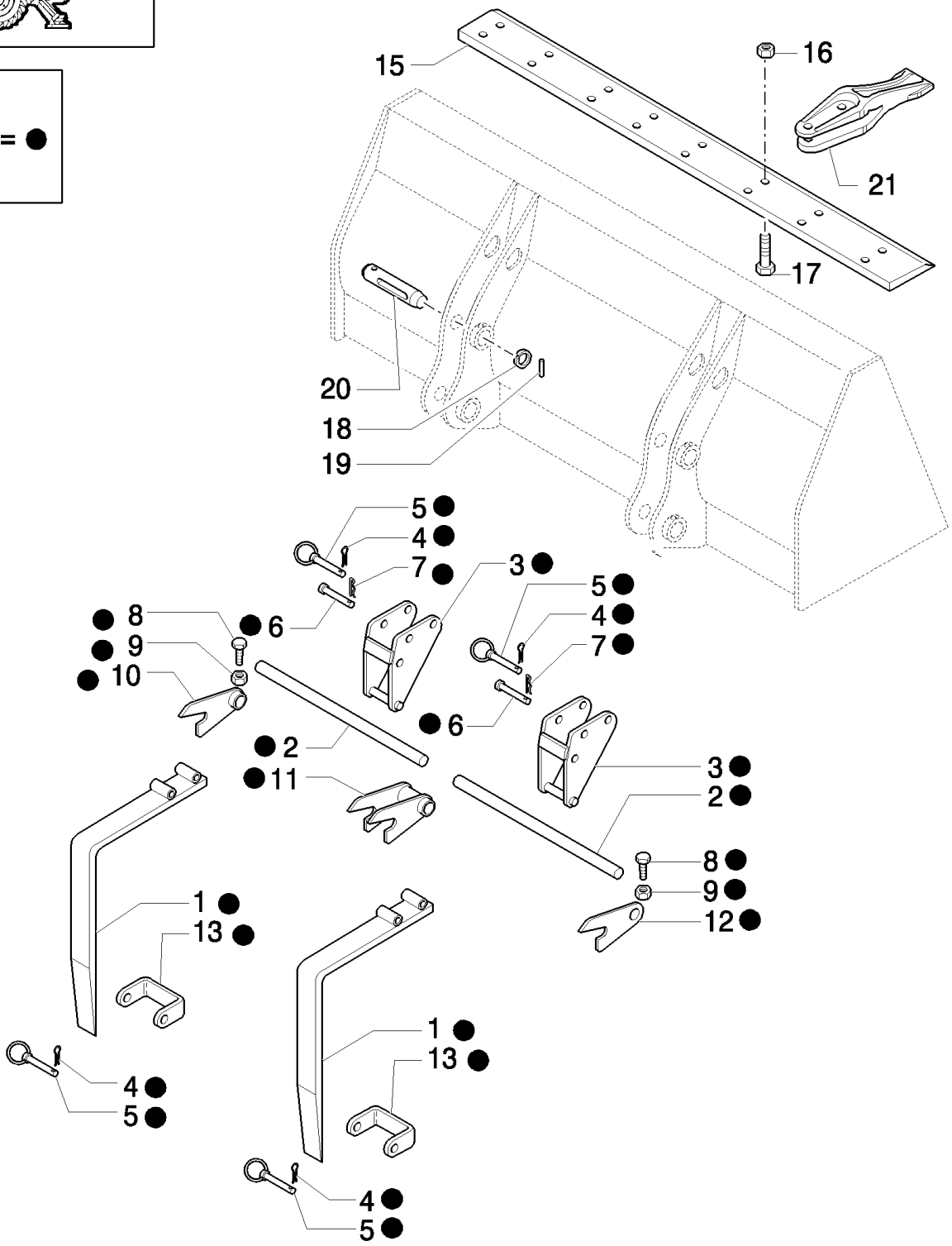

B95LR NA BACKHOE LOADER (1/06-)

526/ 1(01) STANDARD 1M3 BUCKET WITH FORKS AND TINE

Ref	Numero de Pieza	Ctd	Descripción
1	9968144	2	FORK,
2	9969170	2	ROD,
3	9968146	2	SUPPORT,
4	9968147	4	PIN, ROLL,
5	9968148	4	PIN, LOCK,
6	9968149	2	PIN,
7	9968150	2	PIN, SPLIT (COTTER),
8	9968151	2	SCREW, M10X90
9	9968152	2	NUT, M10
10	9968153	1	HINGE,
11	9968154	1	HINGE,
12	9968155	1	HINGE,
13	9968156	2	U-BRACKET,
14	85801486	1	KIT, CONVERSION, FORKS
15	85801034	1	EDGE, CUTTING,
16	85801470	16	NUT, 5/8"-11, G8,
17	85801371	16	BOLT, PLOW, 5/8"-11 x 2 1/4",
18	85802992	4	RING,
19	85802993	4	PIN,
20	85801051	4	PIN,
21	85811440	8	SHANK, BUCKET TOOTH,

B95LR NA BACKHOE LOADER (1/06-)

527(01) BOLT-ON TOOTH KIT, 18" (457MM) & 24" (610MM) BACKHOE BUCKETS

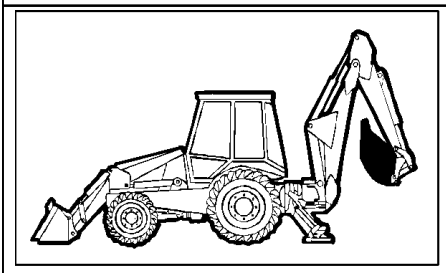

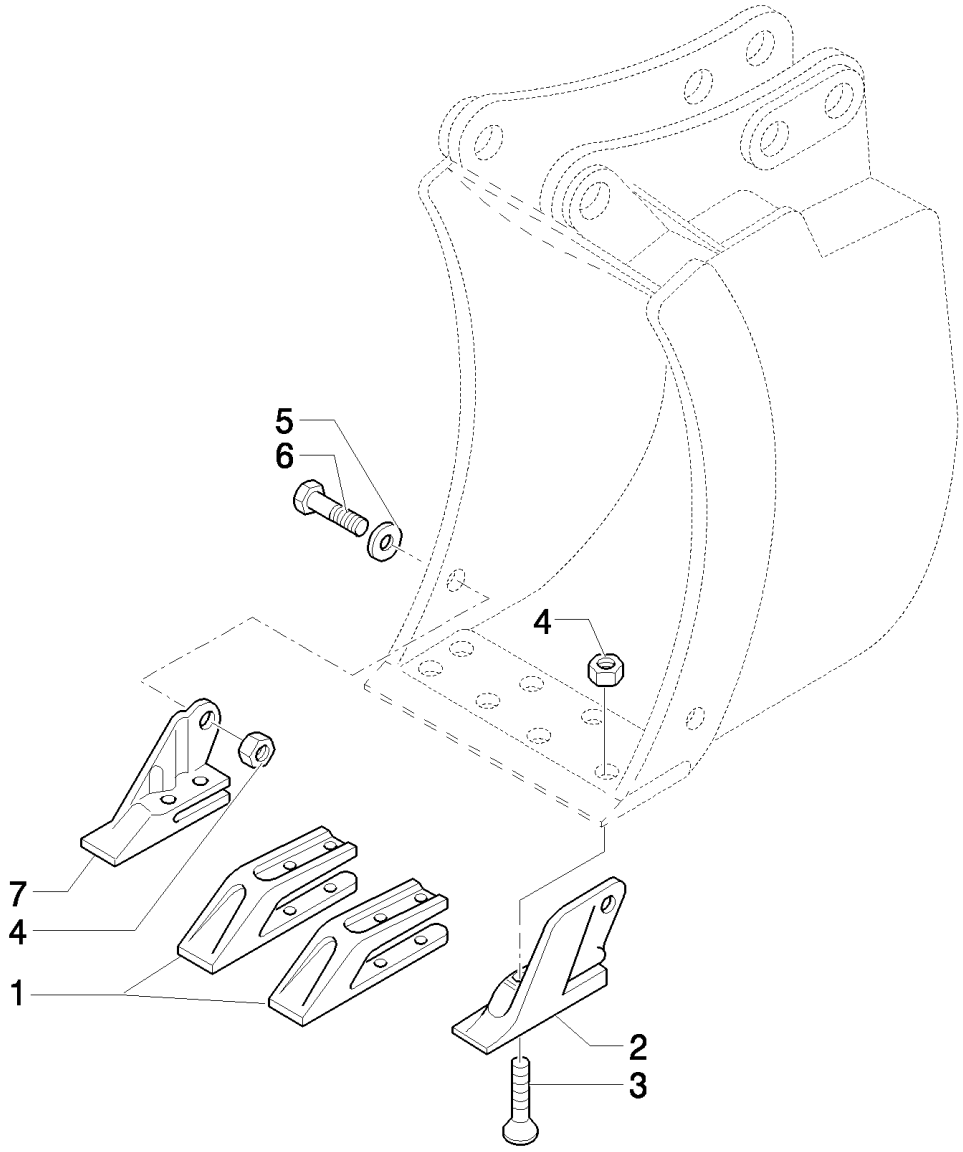

B95LR NA BACKHOE LOADER (1/06-)

527(01) BOLT-ON TOOTH KIT, 18" (457MM) & 24" (610MM) BACKHOE BUCKETS

Ref	Numero de Pieza	Ctd	Descripción
1	85811440	2	SHANK, BUCKET TOOTH,
2	85801376	1	TOOTH, BUCKET, LH
3	85801371	8	BOLT, PLOW, 5/8"-11 x 2 1/4",
4	85801470	10	NUT, 5/8"-11, G8,
5	10520211	2	WASHER,
6	88706	2	BOLT, Hex, 5/8"-11 x 1 3/4", G8, Full Thd,
7	85801377	1	TOOTH, BUCKET, RH

B95LR NA BACKHOE LOADER (1/06-)

527/ 1(01) 0.88 M3 BUCKET AND EXTRA REVERSIBLE BLADE

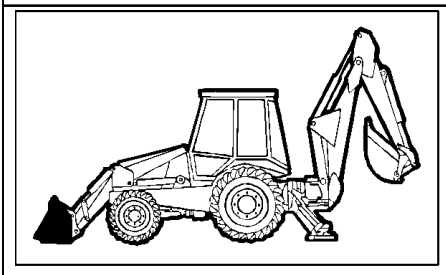

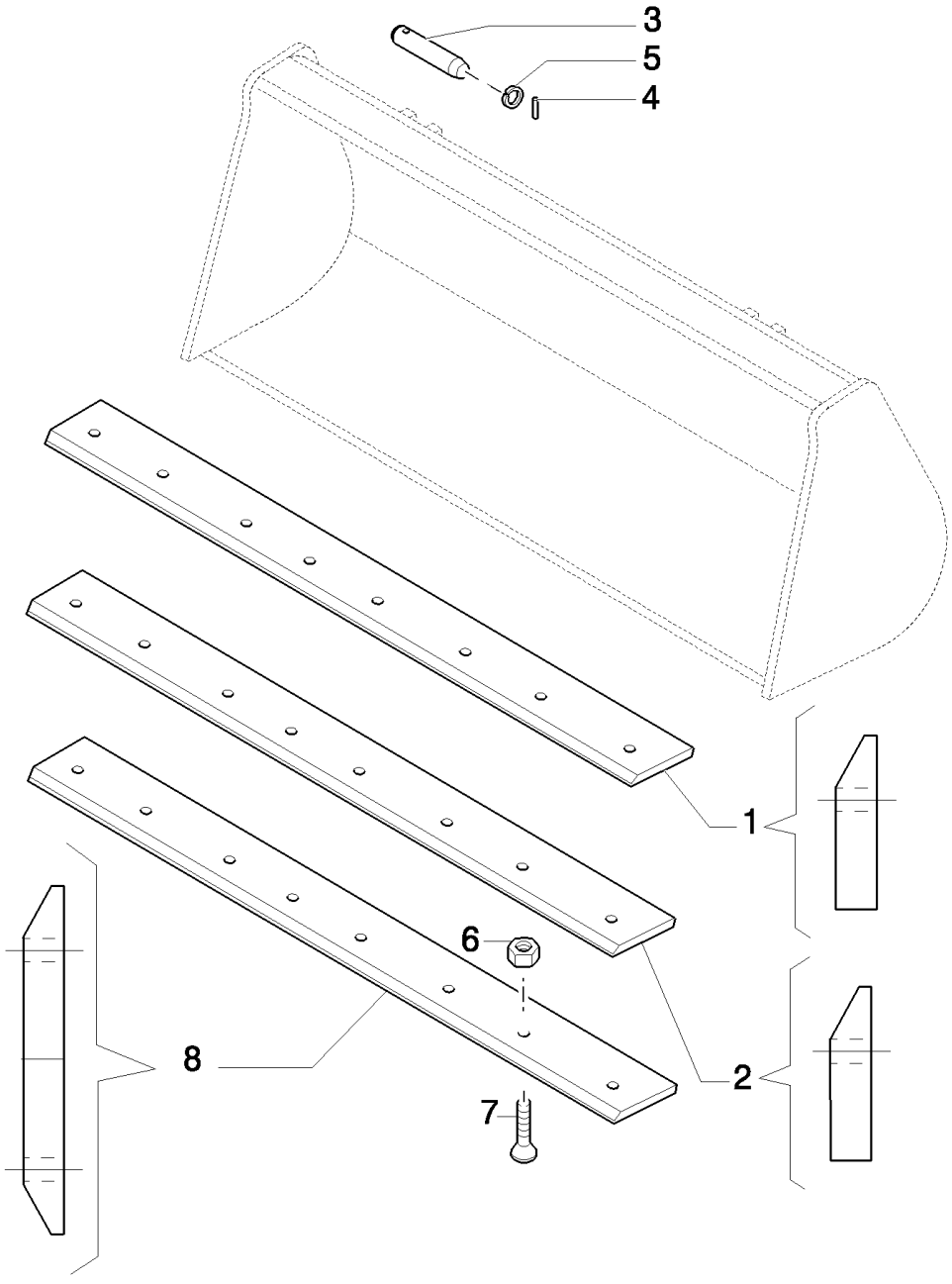

B95LR NA BACKHOE LOADER (1/06-)

527/ 1(01) 0.88 M3 BUCKET AND EXTRA REVERSIBLE BLADE

Ref	Numero de Pieza	Ctd	Descripción
1	85801044	1	EDGE, CUTTING, 27 Deg. cutting edge, Non-reversible weld on
2	85807868	1	EDGE, CUTTING, N.A. ONLY
3	85801051	4	PIN,
4	85802993	4	PIN,
5	85802992	4	RING,
6	85801470	8	NUT, 5/8"-11, G8,
7	85801371	8	BOLT, PLOW, 5/8"-11 x 2 1/4",
8	85801161	1	EDGE, CUTTING, 35 Deg. cutting edge, Reversible bolt on

B95LR NA BACKHOE LOADER (1/06-)

528(01) BOLT-ON TOOTH KIT, 30" (762MM) BACKHOE BUCKET

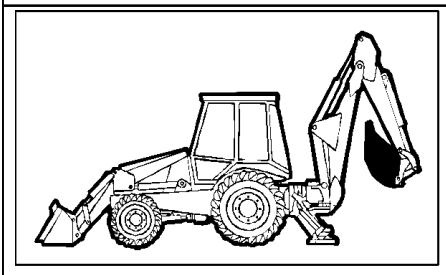

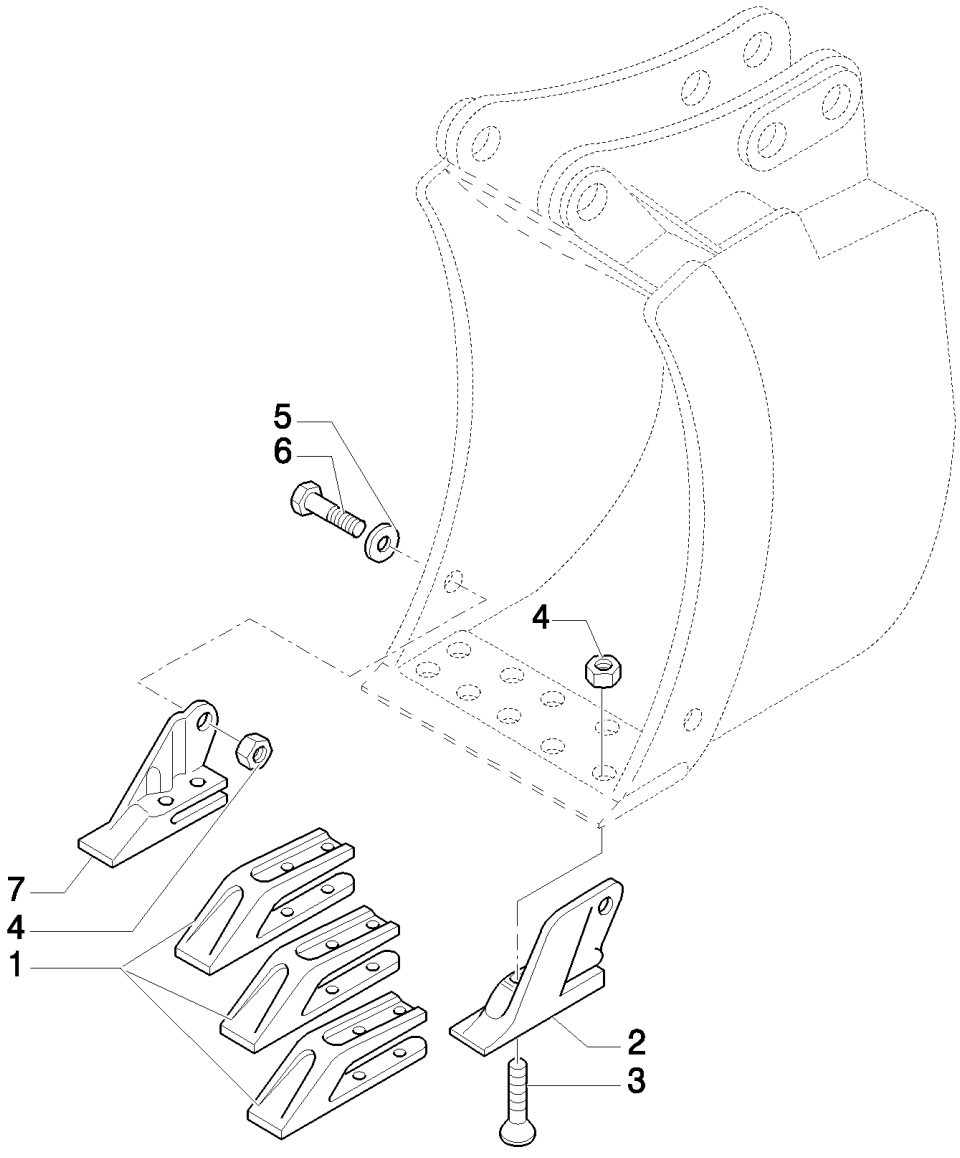

B95LR NA BACKHOE LOADER (1/06-)

528(01) BOLT-ON TOOTH KIT, 30" (762MM) BACKHOE BUCKET

Ref	Numero de Pieza	Ctd	Descripción
1	85811440	3	SHANK, BUCKET TOOTH,
2	85801376	1	TOOTH, BUCKET, LH
3	85801371	10	BOLT, PLOW, 5/8"-11 x 2 1/4",
4	85801470	12	NUT, 5/8"-11, G8,
5	10520211	2	WASHER,
6	88706	2	BOLT, Hex, 5/8"-11 x 1 3/4", G8, Full Thd,
7	85801377	1	TOOTH, BUCKET, RH

B95LR NA BACKHOE LOADER (1/06-)

529(01) BOLT-ON TOOTH KIT, 36" (914MM) BACKHOE BUCKET

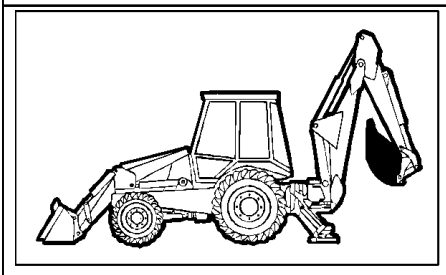

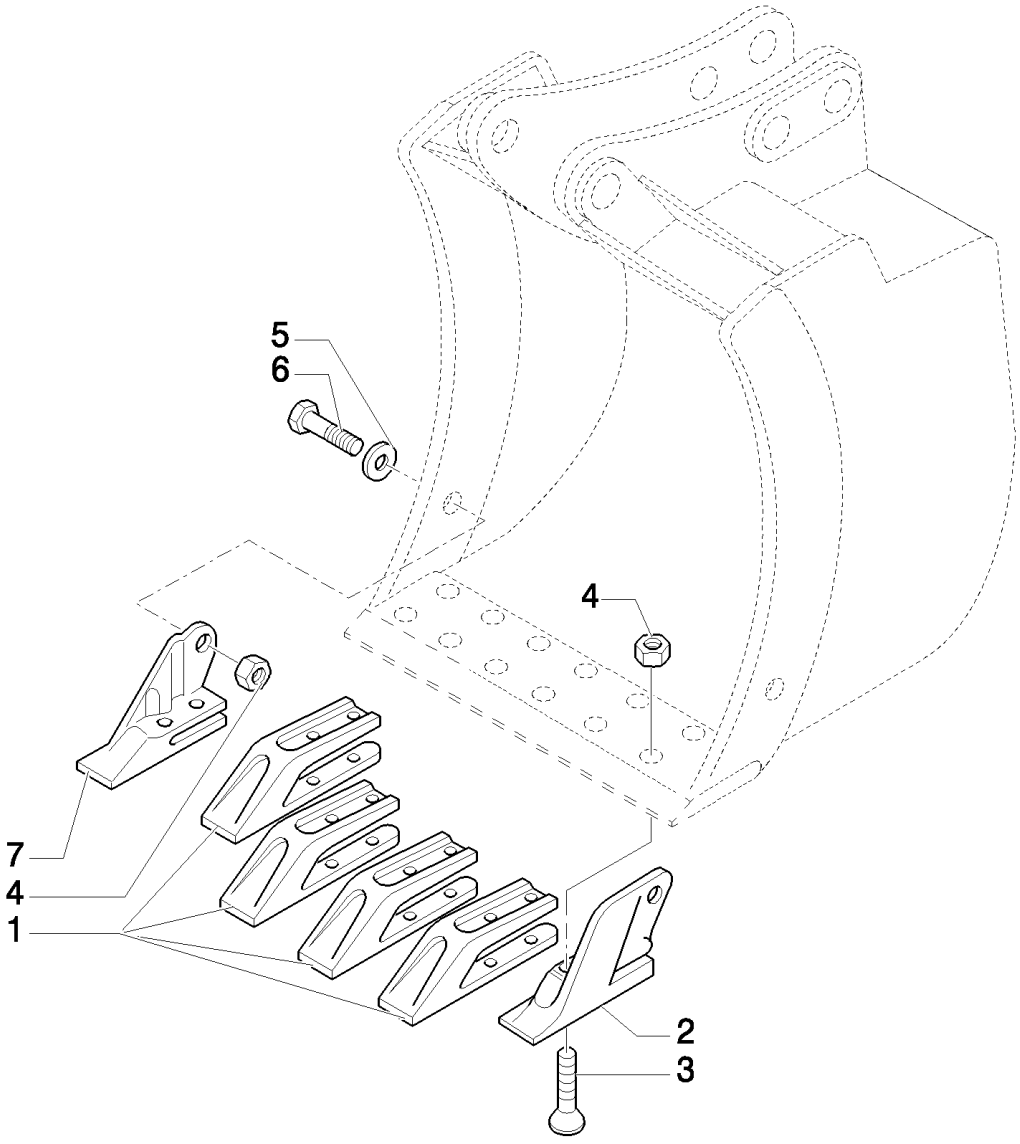

B95LR NA BACKHOE LOADER (1/06-)

529(01) BOLT-ON TOOTH KIT, 36" (914MM) BACKHOE BUCKET

Ref	Numero de Pieza	Ctd	Descripción
1	85811440	4	SHANK, BUCKET TOOTH,
2	85801376	1	TOOTH, BUCKET, LH
3	85801371	12	BOLT, PLOW, 5/8"-11 x 2 1/4",
4	85801470	14	NUT, 5/8"-11, G8,
5	10520211	2	WASHER,
6	88706	2	BOLT, Hex, 5/8"-11 x 1 3/4", G8, Full Thd,
7	85801377	1	TOOTH, BUCKET, RH

B95LR NA BACKHOE LOADER (1/06-)

530(01) PIN TOOTH KIT, 12" (305MM) BACKHOE BUCKET

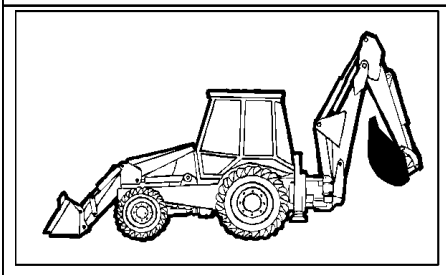

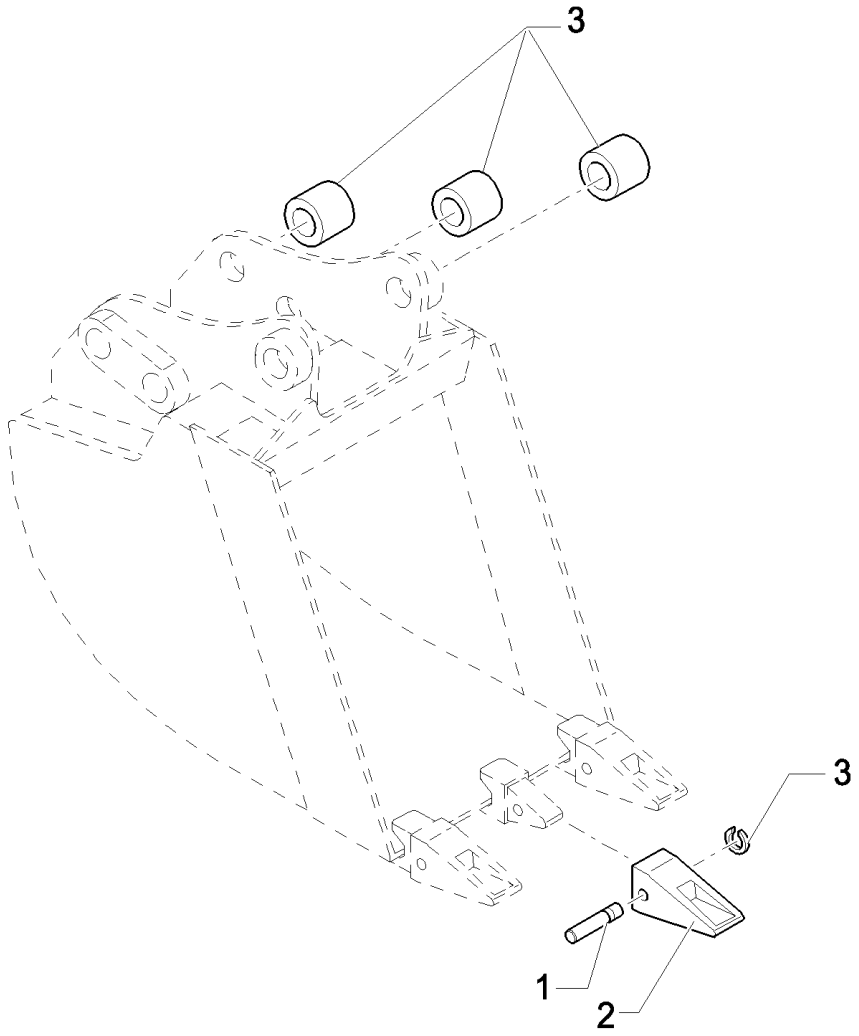

B95LR NA BACKHOE LOADER (1/06-)

530(01) PIN TOOTH KIT, 12" (305MM) BACKHOE BUCKET

Ref	Numero de Pieza	Ctd	Descripción
1	85801097	3	PIN,
2	85811432	3	TOOTH, BUCKET,
3	85801098	3	RING,

B95LR NA BACKHOE LOADER (1/06-)

532(01) PIN TOOTH KIT, 30" (762MM) BACKHOE BUCKET

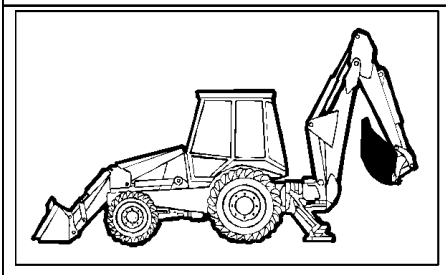

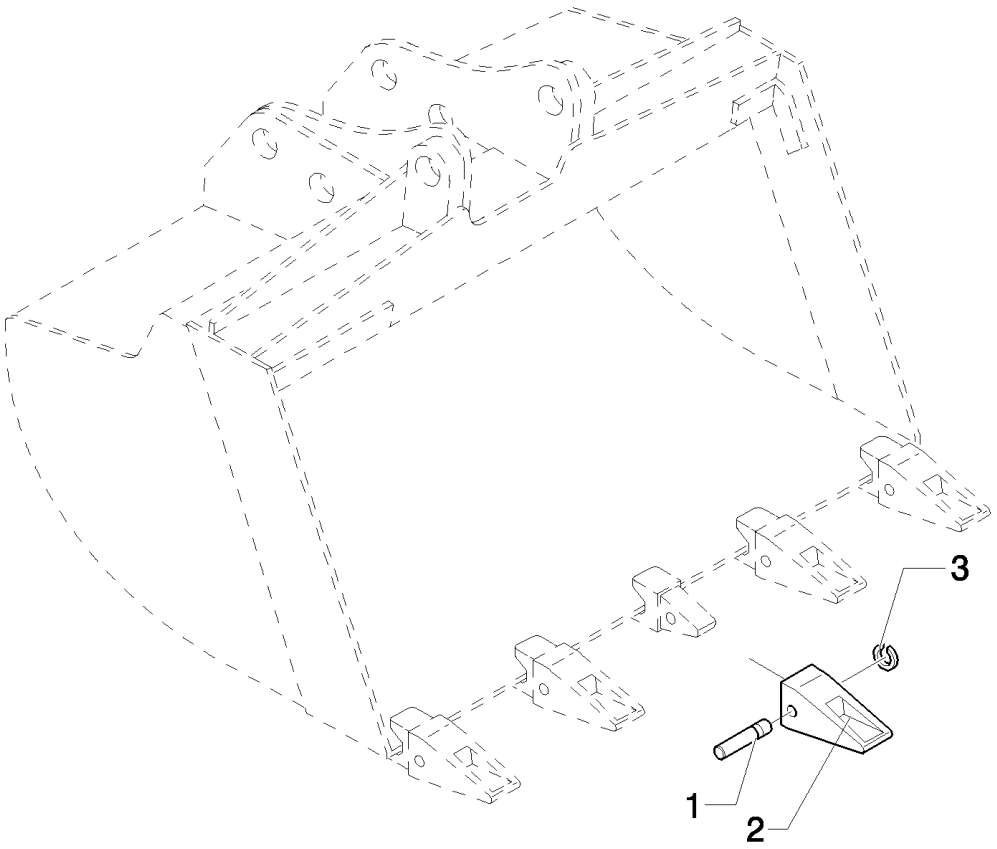

B95LR NA BACKHOE LOADER (1/06-)

532(01) PIN TOOTH KIT, 30" (762MM) BACKHOE BUCKET

Ref	Numero de Pieza	Ctd	Descripción
1	85801097	5	PIN,
2	85811432	5	TOOTH, BUCKET,
3	85801098	5	RING,

533(01) PIN TOOTH KIT, 36" (914MM) BACKHOE BUCKET

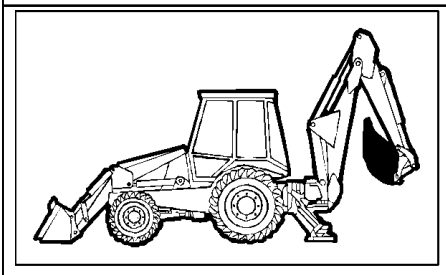

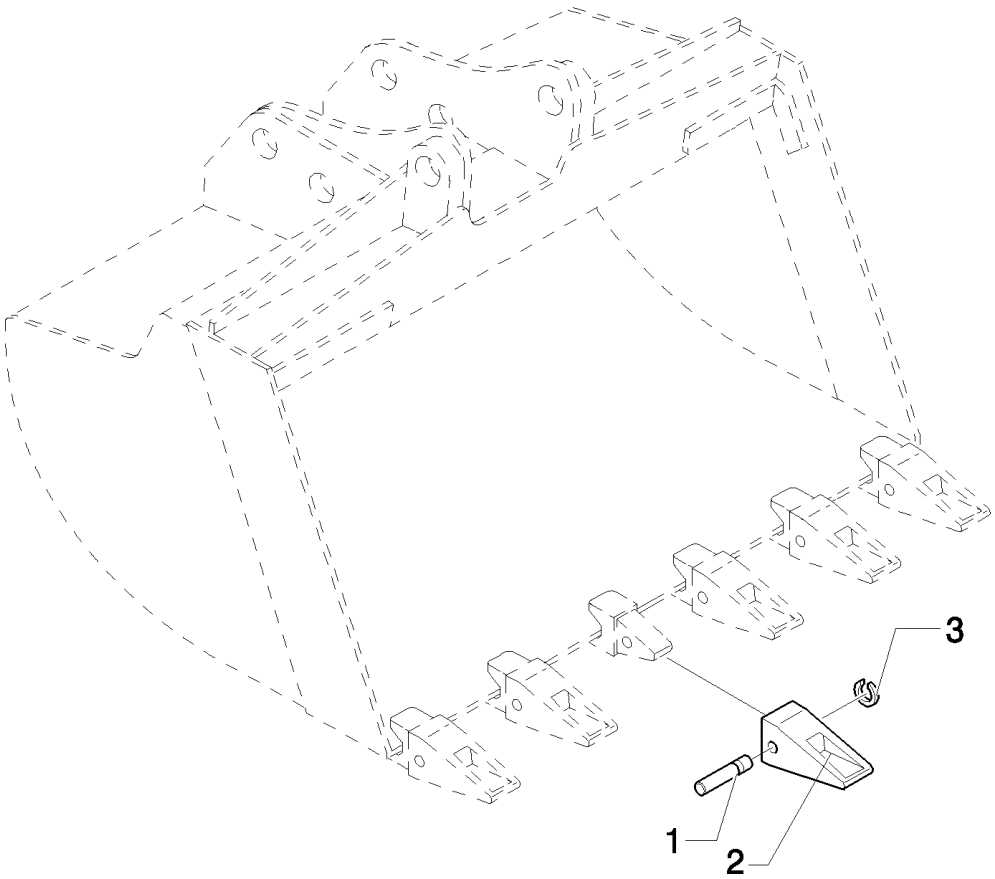

B95LR NA BACKHOE LOADER (1/06-)

533(01) PIN TOOTH KIT, 36" (914MM) BACKHOE BUCKET

Ref	Numero de Pieza	Ctd	Descripción
1	85801097	6	PIN,
2	85811432	6	TOOTH, BUCKET,
3	85801098	6	RING,

B95LR NA BACKHOE LOADER (1/06-)

535(01) STABILIZER FOOT GROUND (CENTER PIVOT)

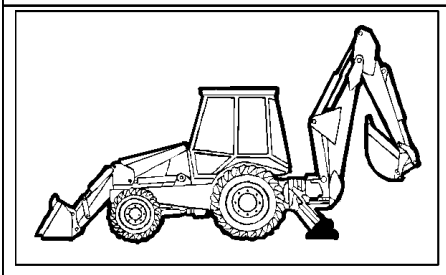

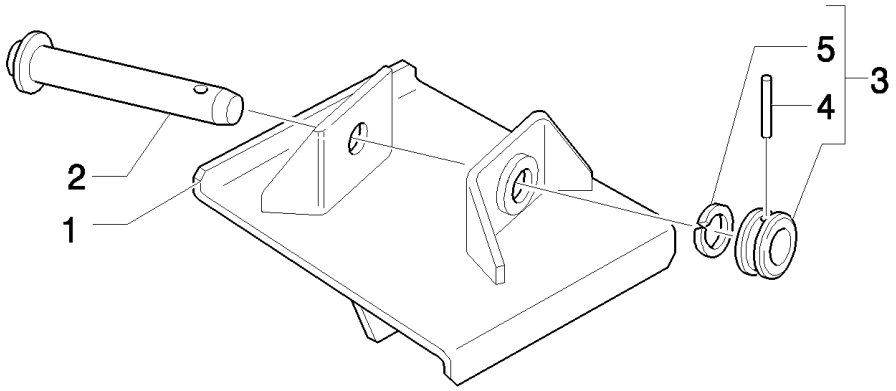

B95LR NA BACKHOE LOADER (1/06-)

535(01) STABILIZER FOOT GROUND (CENTER PIVOT)

Ref	Numero de Pieza	Ctd	Descripción
1	85804847	1	PAD, RH
1	85804848	1	PAD, LH
2	85803141	2	PIN,
3	85803139	2	PIN, LOCK, Assy, Includes 4, 5
4	85802992	2	RING,
5	85802993	2	PIN,

535/ 1(01) STABILIZER FOOT STREET PAD (CENTER PIVOT)

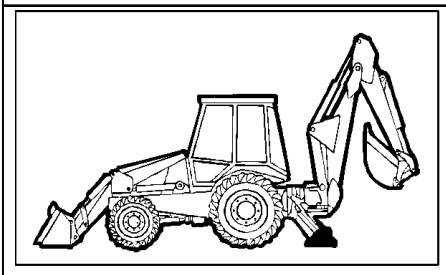

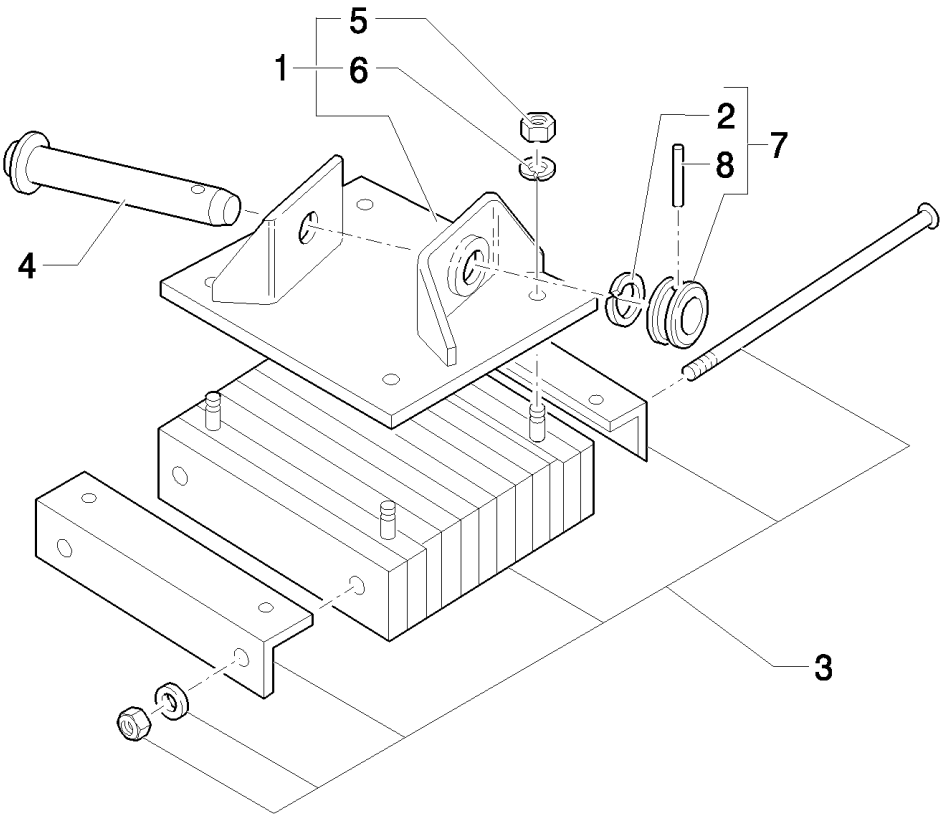

B95LR NA BACKHOE LOADER (1/06-)

535/ 1(01) STABILIZER FOOT STREET PAD (CENTER PIVOT)

Ref	Numero de Pieza	Ctd	Descripción
1	85804845	1	PAD, RH, Includes 3, 5, 6
1	85804846	1	PAD, LH, Includes 3, 5, 6
2	85802992	2	RING,
3	D7NNB694A12Z	2	PAD, RUBBER, ASSY
4	85803141	2	PIN,
5	N620017S36	8	NUT, M20, Cl 8,
6	N630177S36	8	WASHER, LOCK, M20,
7	85803139	2	PIN, LOCK, Assy, Includes 2, 8
8	85802993	2	PIN,

536(01) REVERSIBLE STABILIZER FOOT (CENTER PIVOT)

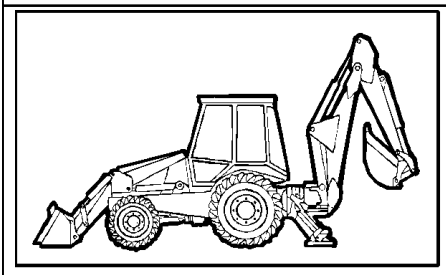

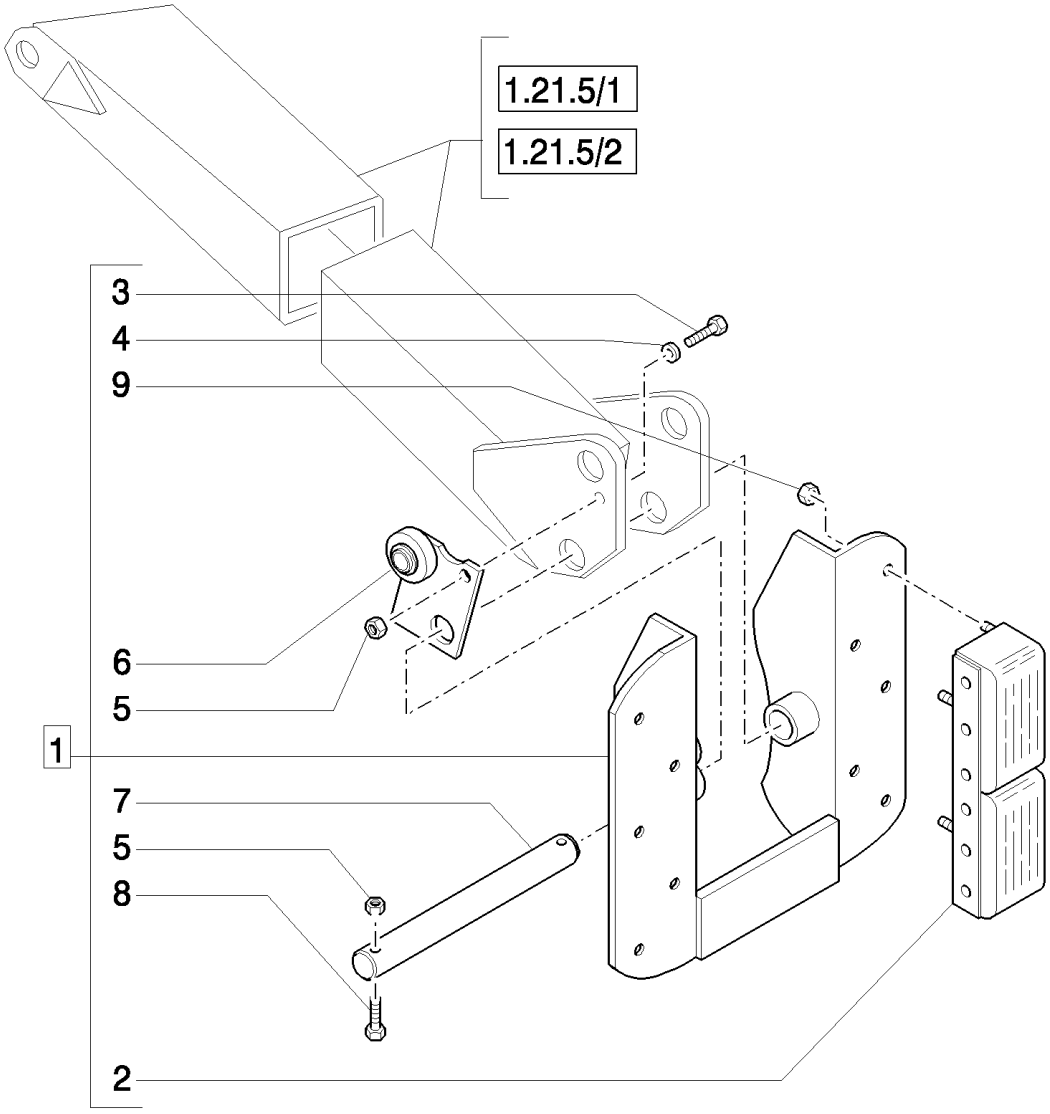

B95LR NA BACKHOE LOADER (1/06-)

536(01) REVERSIBLE STABILIZER FOOT (CENTER PIVOT)

Ref	Numero de Pieza	Ctd	Descripción
1	85811985	1	FOOT, LH
1	85811986	1	FOOT, RH
2	85811992	4	PAD, RUBBER,
3	88044	2	BOLT, Hex, 3/8"-16 x 1 1/2", G5,
4	12641004	2	WASHER, M10 x 20 x 3,
5	33799S36	6	NUT, 3/8"-16, G5,
6	85811990	1	BRACKET, LH
6	85811991	1	BRACKET, RH; Shown in Illustration
7	85811989	2	PIN,
8	85804878	2	SCREW,
9	34670S36	20	NUT, 7/16"-14, G5,

B95LR NA BACKHOE LOADER (1/06-)

536/ 1(01) STANDARD 1MC BUCKET WITH TINE

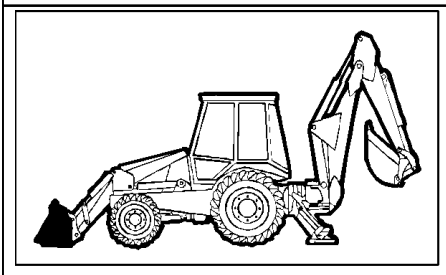

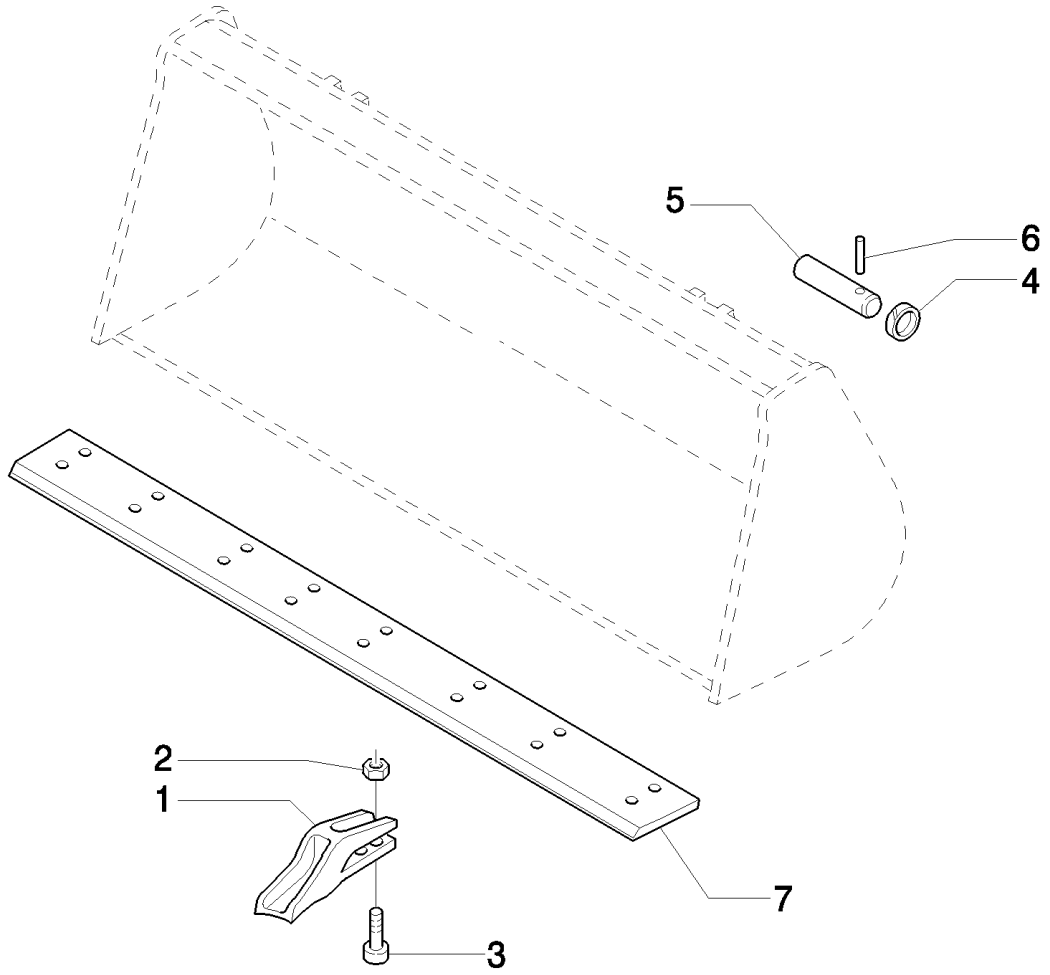

B95LR NA BACKHOE LOADER (1/06-)

536/ 1(01) STANDARD 1MC BUCKET WITH TINE

Ref	Numero de Pieza	Ctd	Descripción
1	85811440	8	SHANK, BUCKET TOOTH,
2	85801470	16	NUT, 5/8"-11, G8,
3	85801371	16	BOLT, PLOW, 5/8"-11 x 2 1/4",
4	85802992	4	RING,
5	85802993	4	PIN,
6	85801051	4	PIN,
7	85801034	1	EDGE, CUTTING, , PART WELDED TO BUCKET
7	85807867	1	EDGE, CUTTING, 200mm W x 2250 L

537(01) STABILIZER FOOT STREET PAD (CENTER PIVOT)

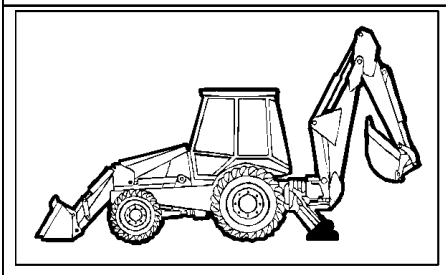

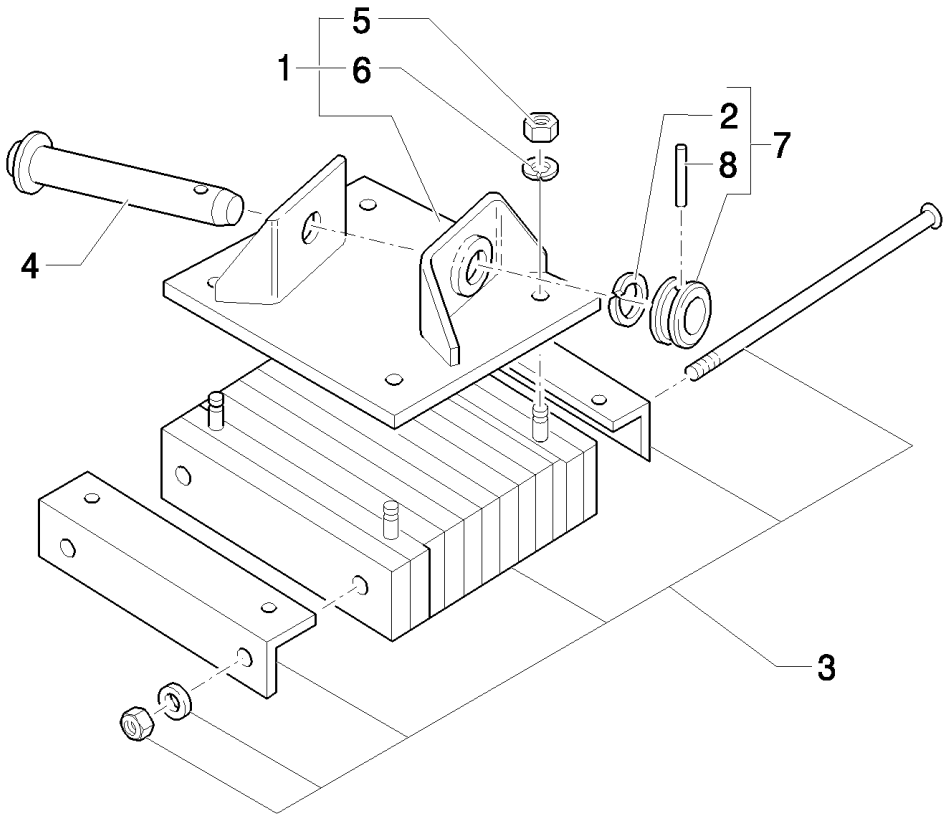

B95LR NA BACKHOE LOADER (1/06-)

537(01) STABILIZER FOOT STREET PAD (CENTER PIVOT)

Ref	Numero de Pieza	Ctd	Descripción
1	85824095	1	PAD, RH, Includes 3, 5, 6
1	85825000	1	PAD, LH, Includes 3, 5, 6
2	85802992	2	RING,
3	D7NNB694A12Z	2	PAD, RUBBER, ASSY
4	85825003	2	PIN,
5	N620017S36	8	NUT, M20, Cl 8,
6	N630177S36	8	WASHER, LOCK, M20,
7	85803139	2	PIN, LOCK, Assy, Includes 2, 8
8	85802993	2	PIN,

B95LR NA BACKHOE LOADER (1/06-)

537/ 1(01) STANDARD 1MC BUCKET WITH EXTRA REVERSIBLE BLADE

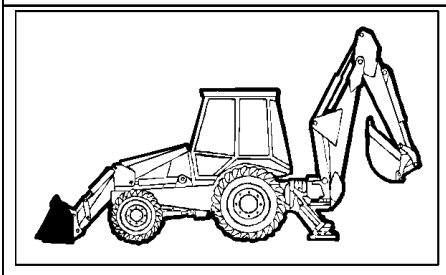

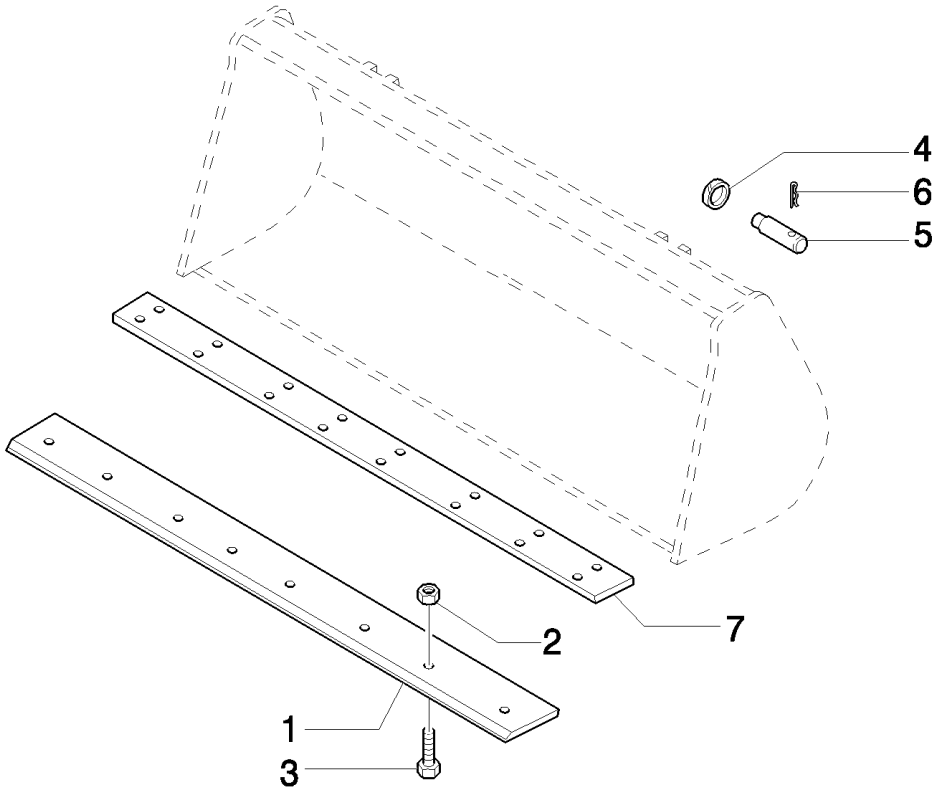

B95LR NA BACKHOE LOADER (1/06-)

537/ 1(01) STANDARD 1MC BUCKET WITH EXTRA REVERSIBLE BLADE

Ref	Numero de Pieza	Ctd	Descripción
1	85801161	1	EDGE, CUTTING, 35 Deg. cutting edge, Reversible bolt on
2	85801470	8	NUT, 5/8"-11, G8,
3	85801371	8	BOLT, PLOW, 5/8"-11 x 2 1/4",
4	85802992	4	RING,
5	85802993	4	PIN,
6	85801051	4	PIN,
7	85801034	1	EDGE, CUTTING, , PART WELDED TO BUCKET
7	85807867	1	EDGE, CUTTING, 200mm W x 2250 L

B95LR NA BACKHOE LOADER (1/06-)

548(01) DITCH CLEANING BUCKET

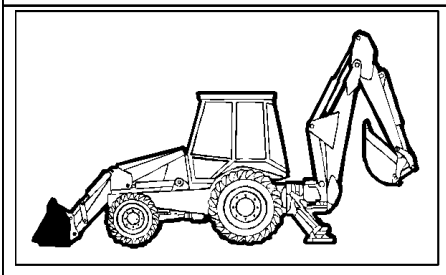

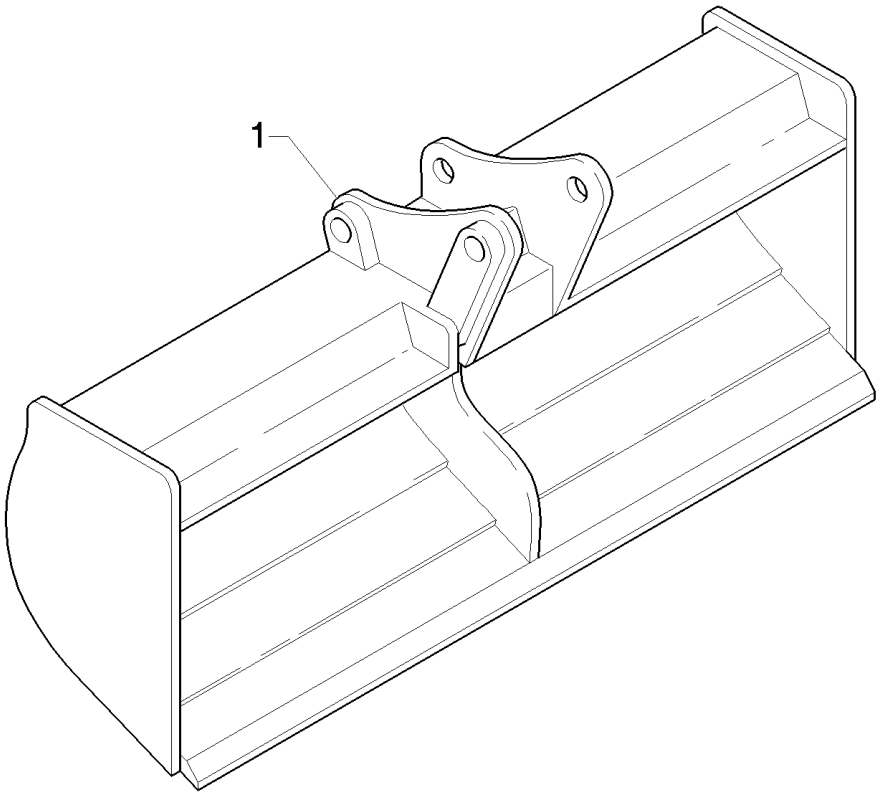

B95LR NA BACKHOE LOADER (1/06-)

548(01) DITCH CLEANING BUCKET

Ref	Numero de Pieza	Ctd	Descripción
1	85824356	1	BUCKET,

555(01) FRONT BUCKET TEETH

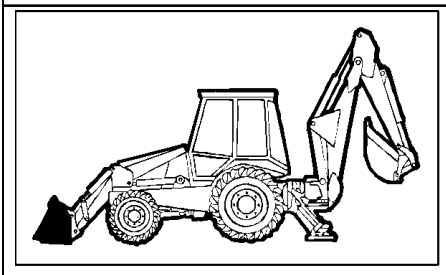

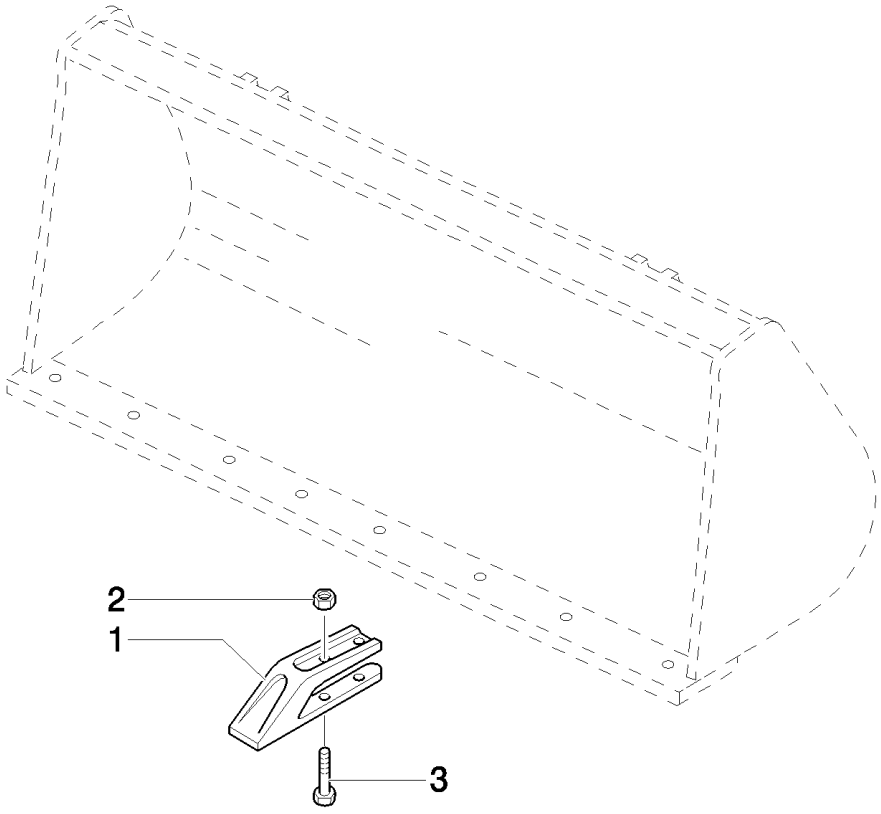

B95LR NA BACKHOE LOADER (1/06-)

555(01) FRONT BUCKET TEETH

Ref	Numero de Pieza	Ctd	Descripción
1	85811440	8	SHANK, BUCKET TOOTH,
2	85801470	16	NUT, 5/8"-11, G8,
3	85801371	16	BOLT, PLOW, 5/8"-11 x 2 1/4",

B95LR NA BACKHOE LOADER (1/06-)

556(01) LOADER BUCKET REVERSIBLE BLADE

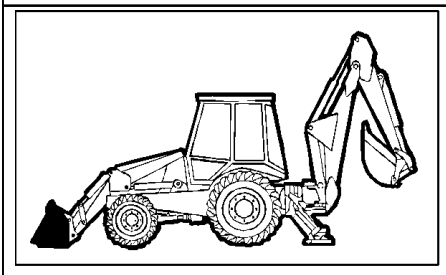

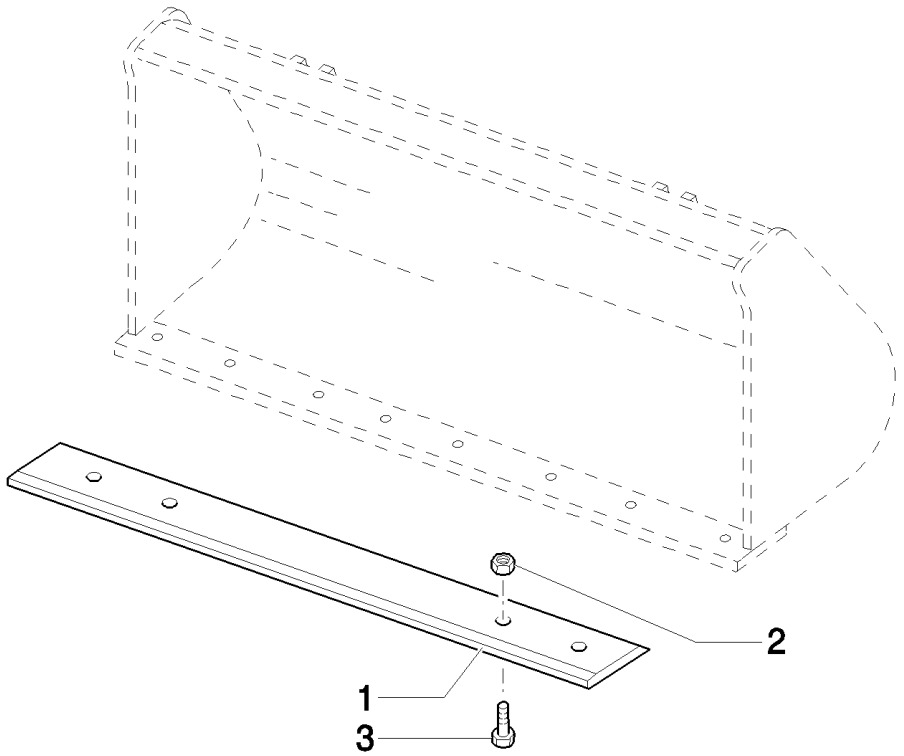

B95LR NA BACKHOE LOADER (1/06-)

556(01) LOADER BUCKET REVERSIBLE BLADE

Ref	Numero de Pieza	Ctd	Descripción
1	85801161	1	EDGE, CUTTING, 35 Deg. cutting edge, Reversible bolt on
2	85801470	8	NUT, 5/8"-11, G8,
3	85801371	8	BOLT, PLOW, 5/8"-11 x 2 1/4",

622(01) INTERNAL FAN

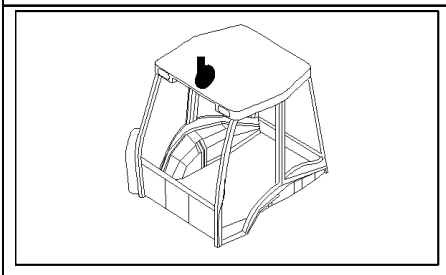

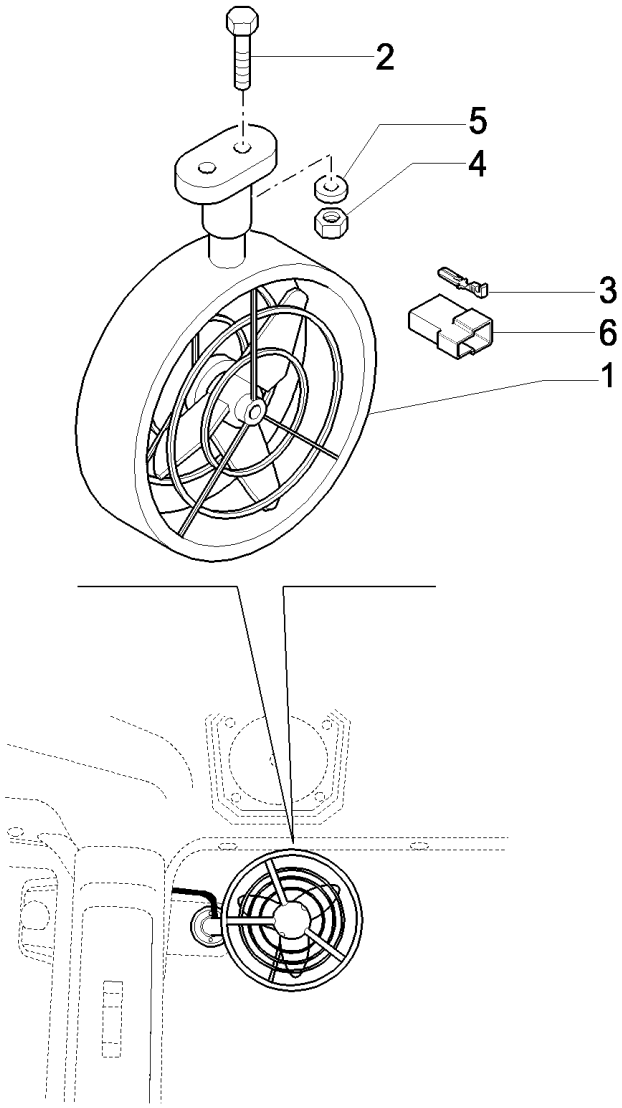

B95LR NA BACKHOE LOADER (1/06-)

622(01) INTERNAL FAN

Ref	Numero de Pieza	Ctd	Descripción
1	85804323	1	FAN,
2	14303324	2	SCREW, Hex Soc Hd, M4 x 20, 8.8, Full Thd,
3	10250644	2	CABLE TERMINAL,
4	12574011	2	NUT, LOCK, M4 x .7, Cl 8,
5	12642804	2	WASHER, M4 x 12 x 1,
6	12059980	1	CONNECTOR, ELEC,

B95LR NA BACKHOE LOADER (1/06-)

626(01) SCRAB GRAB

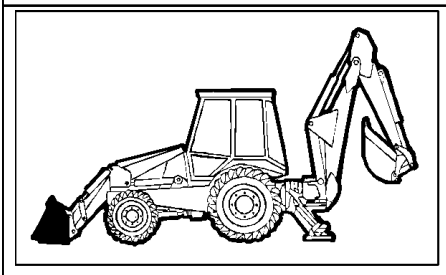

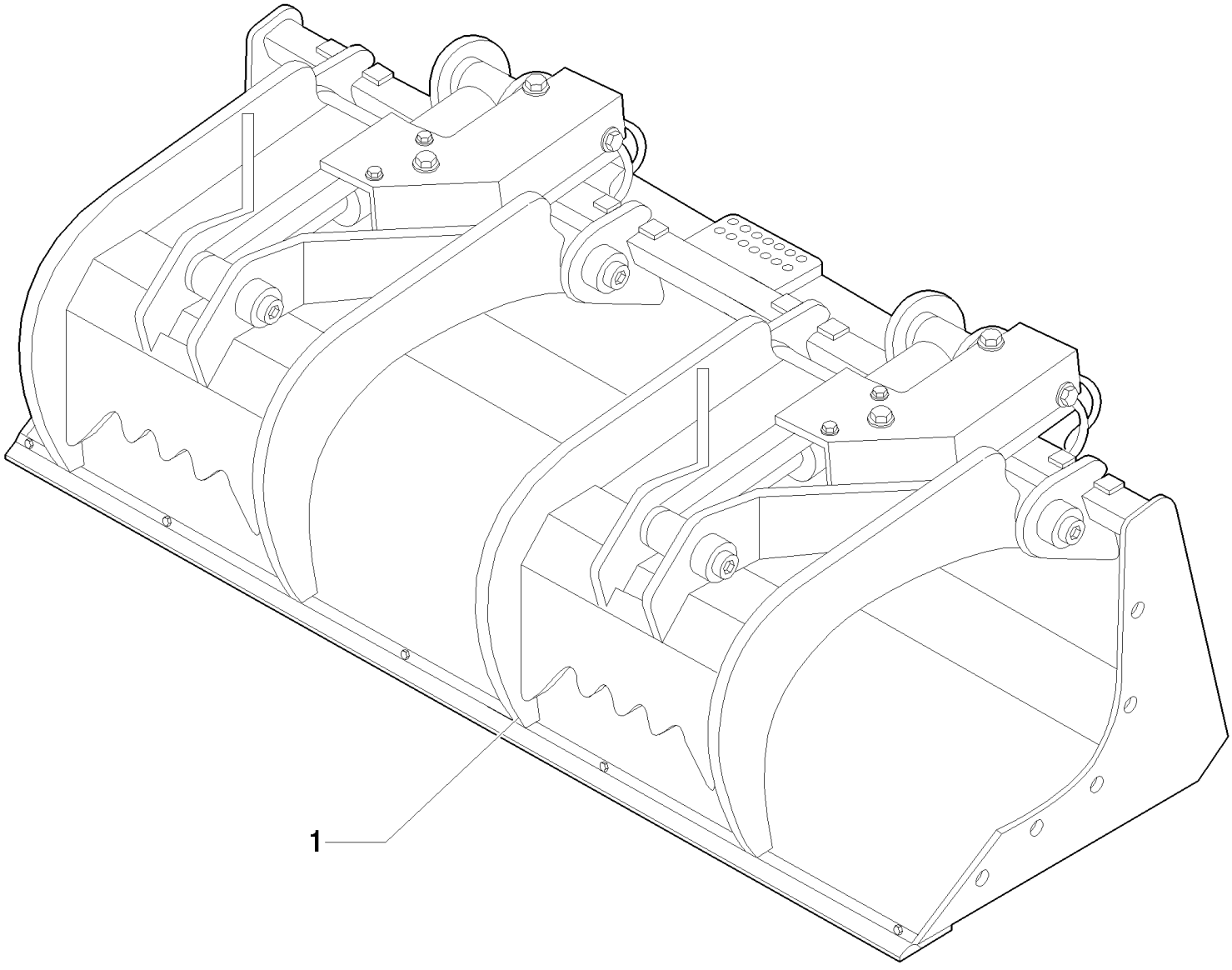

B95LR NA BACKHOE LOADER (1/06-)

626(01) SCRAB GRAB

Ref	Numero de Pieza	Ctd	Descripción
1	85819330	1	BUCKET, CLAMSHELL,

B95LR NA BACKHOE LOADER (1/06-)

628(01) 4WD STEERING LOCK

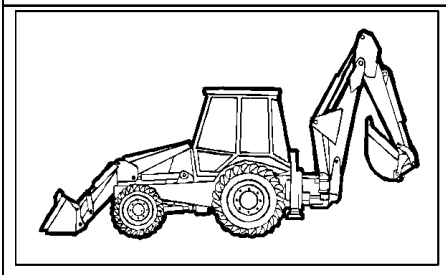

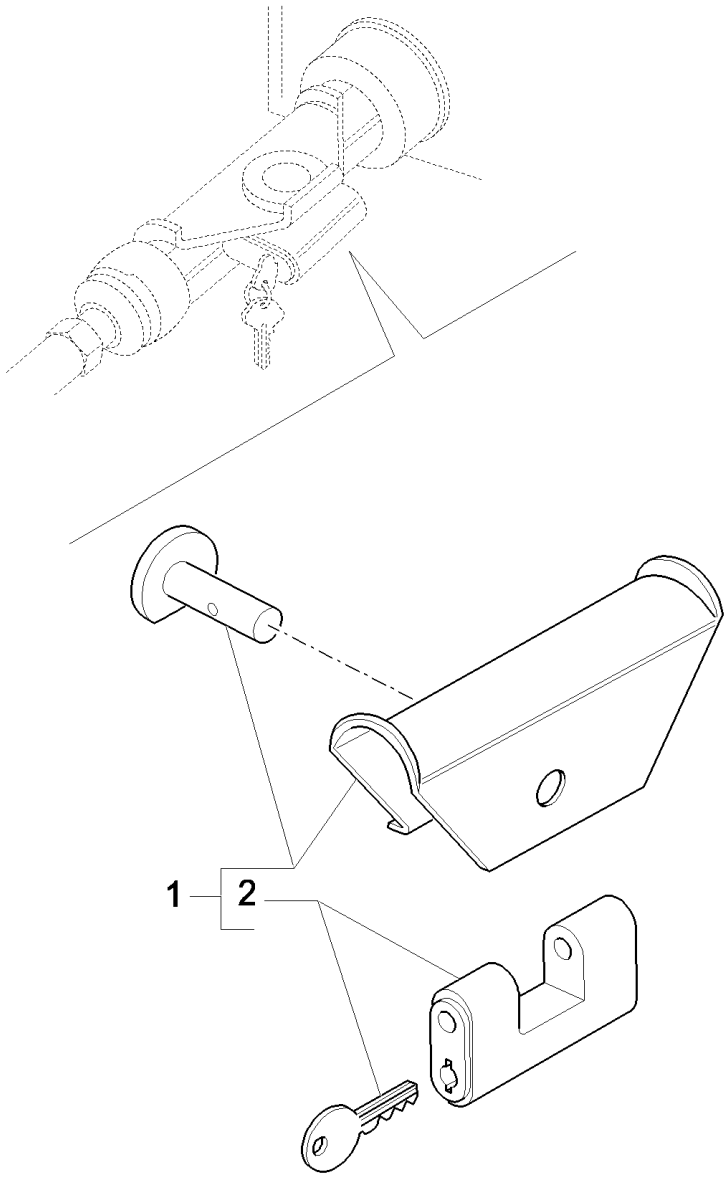

B95LR NA BACKHOE LOADER (1/06-)

628(01) 4WD STEERING LOCK

Ref	Numero de Pieza	Ctd	Descripción
1	85816802	1	LOCK,
2	85803372	1	LOCK,

B95LR NA BACKHOE LOADER (1/06-)

636(01) RADIATOR

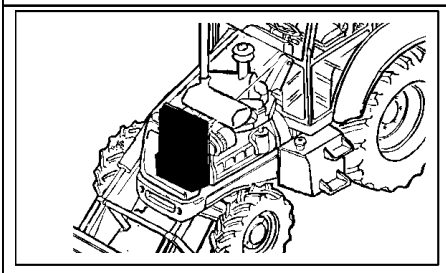

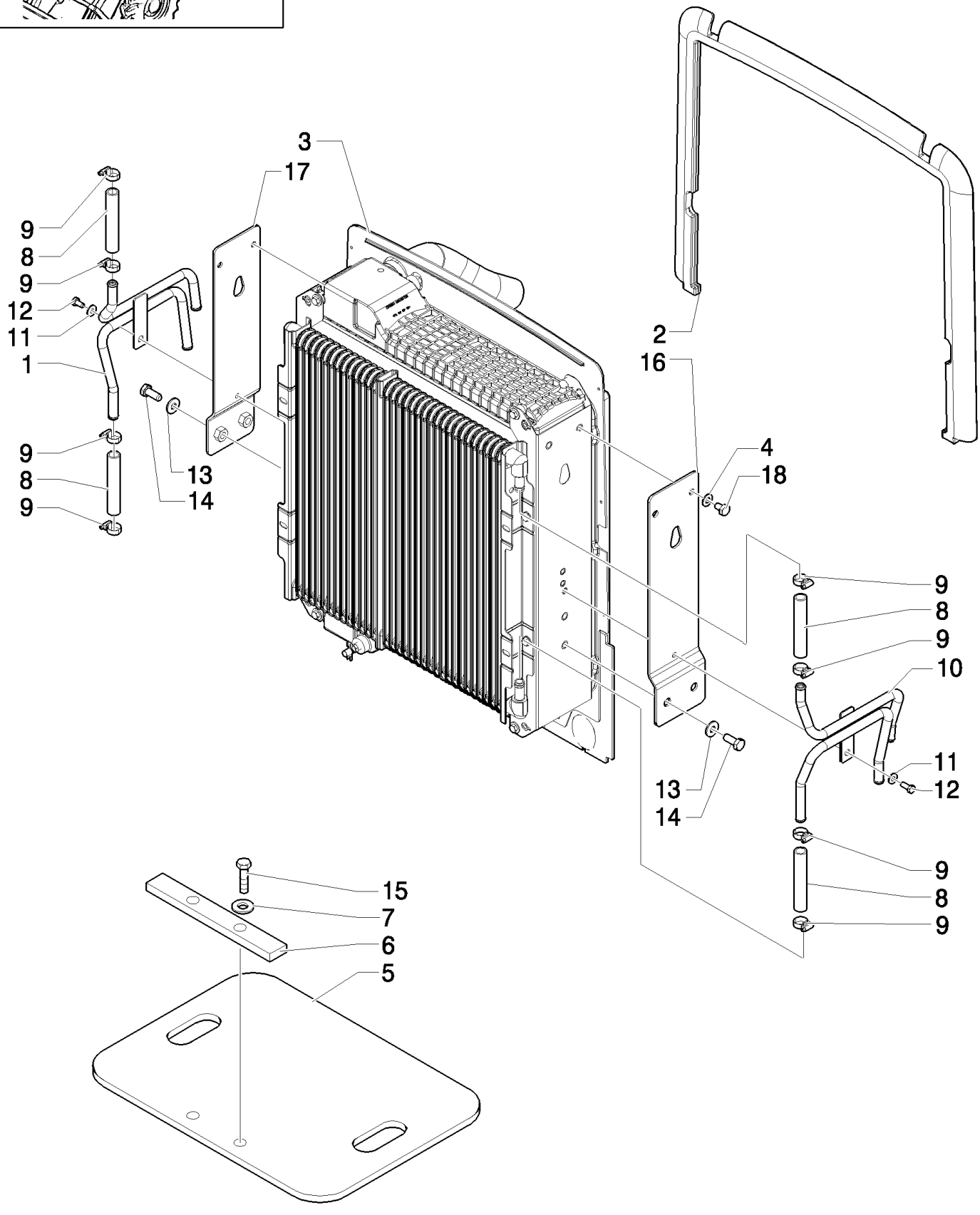

Without Air Conditioner

B95LR NA BACKHOE LOADER (1/06-)

636(01) RADIATOR

Ref	Numero de Pieza	Ctd	Descripción
1	87302280	1	TUBE,
2	87303120	1	SEAL, , See Page 363 02
2	87583716	1	SEAL, , From To S/N 031062230
3	REF	1	INSTRUCTION, , See Page 636 02
4	87306886	4	WASHER,
5	85827830	1	SEAL, RUBBER,
6	85827831	1	PLATE,
7	11193879	2	WASHER, SPRING, Belleville, M8.4,
8	87302508	4	HOSE, FLEXIBLE,
9	87314076	8	COLLAR,
10	87302279	1	TUBE,
11	12646701	2	WASHER, M8 x 20 x 2,
12	16043221	2	SCREW, Hex, M8 x 16, 8.8,
13	12646901	4	WASHER, 12x28x3
14	11112421	4	BOLT, Hex, M12 x 30, 8.8,
15	16043821	2	BOLT, Hex, M8 x 30, 8.8,
16	85828168	1	BRACKET,
17	87302922	1	BRACKET,
18	87306887	4	SCREW,

Without Air Conditioner

B95LR NA BACKHOE LOADER (1/06-)

636(02) RADIATOR

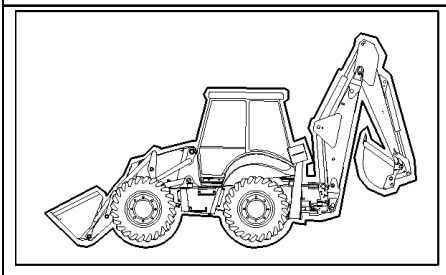

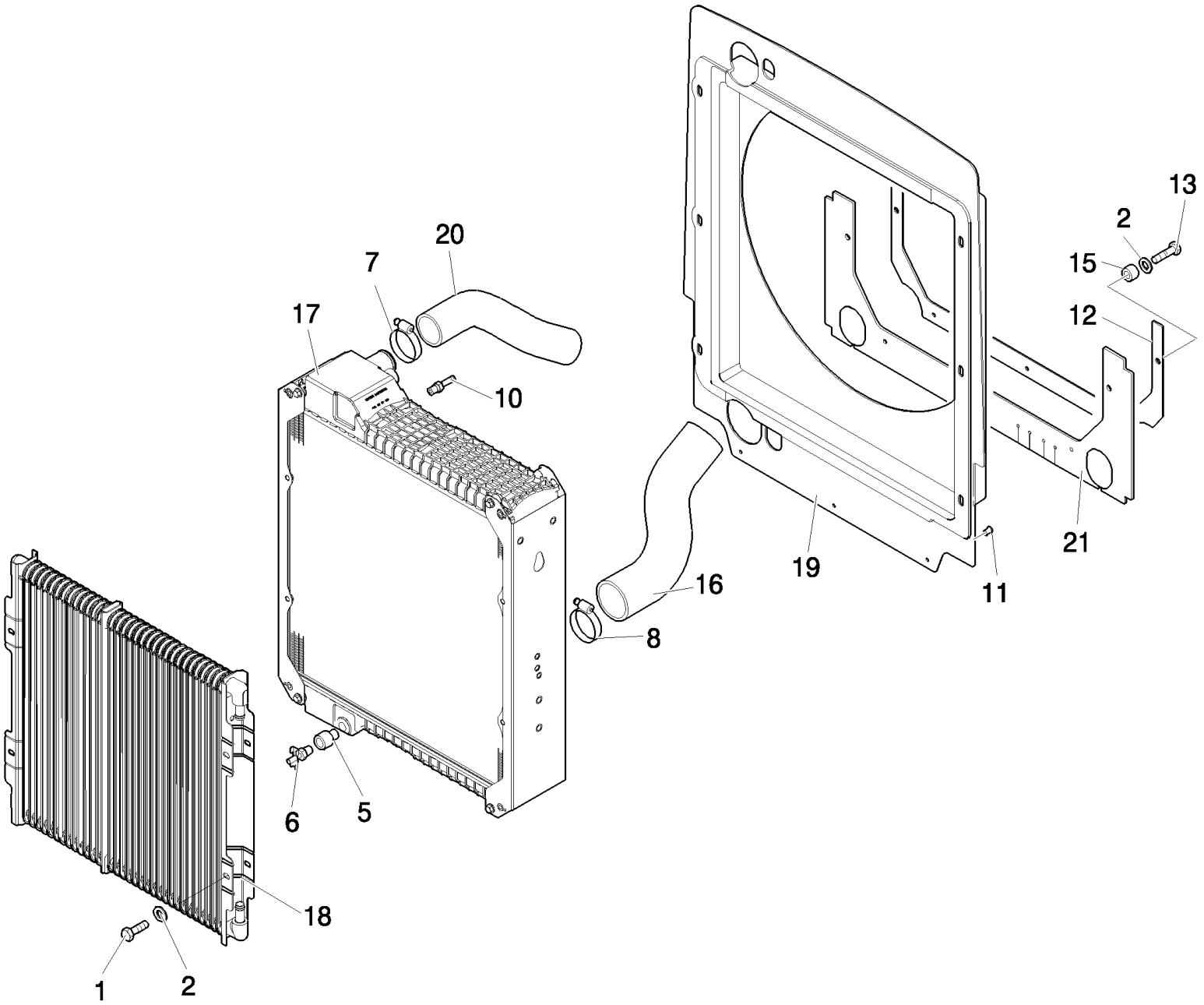

Without Air Conditioner

B95LR NA BACKHOE LOADER (1/06-)

636(02) RADIATOR

Ref	Numero de Pieza	Ctd	Descripción
1	16043021	8	BOLT, Hex, M8 x 12, 8.8, Full Thd,
2	47048962	10	WASHER,
5	47049581	1	SEALANT,
6	47050674	1	DRAINCOCK/TAP, SUPPLY,
7	47050733	1	CLAMP, HOSE,
8	47050734	1	CLAMP, HOSE,
10	87419240	1	FITTING,
11	85825170	3	BUTTON,
12	86983070	1	SEAL,
13	87026277	2	BOLT, Hex, Lock, M8 x 30, Cl 10.9,
15	85825169	1	SPACER,
16	87407272	1	HOSE,
17	87410096	1	RADIATOR, , Water
18	87410099	1	COOLER, OIL, , Oil Cooler
19	87410916	1	SHROUD,
20	87413237	1	HOSE,
21	87416637	1	SEAL,

Without Air Conditioner

636/ 1(01) RADIATOR

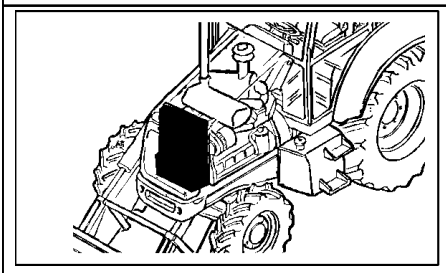

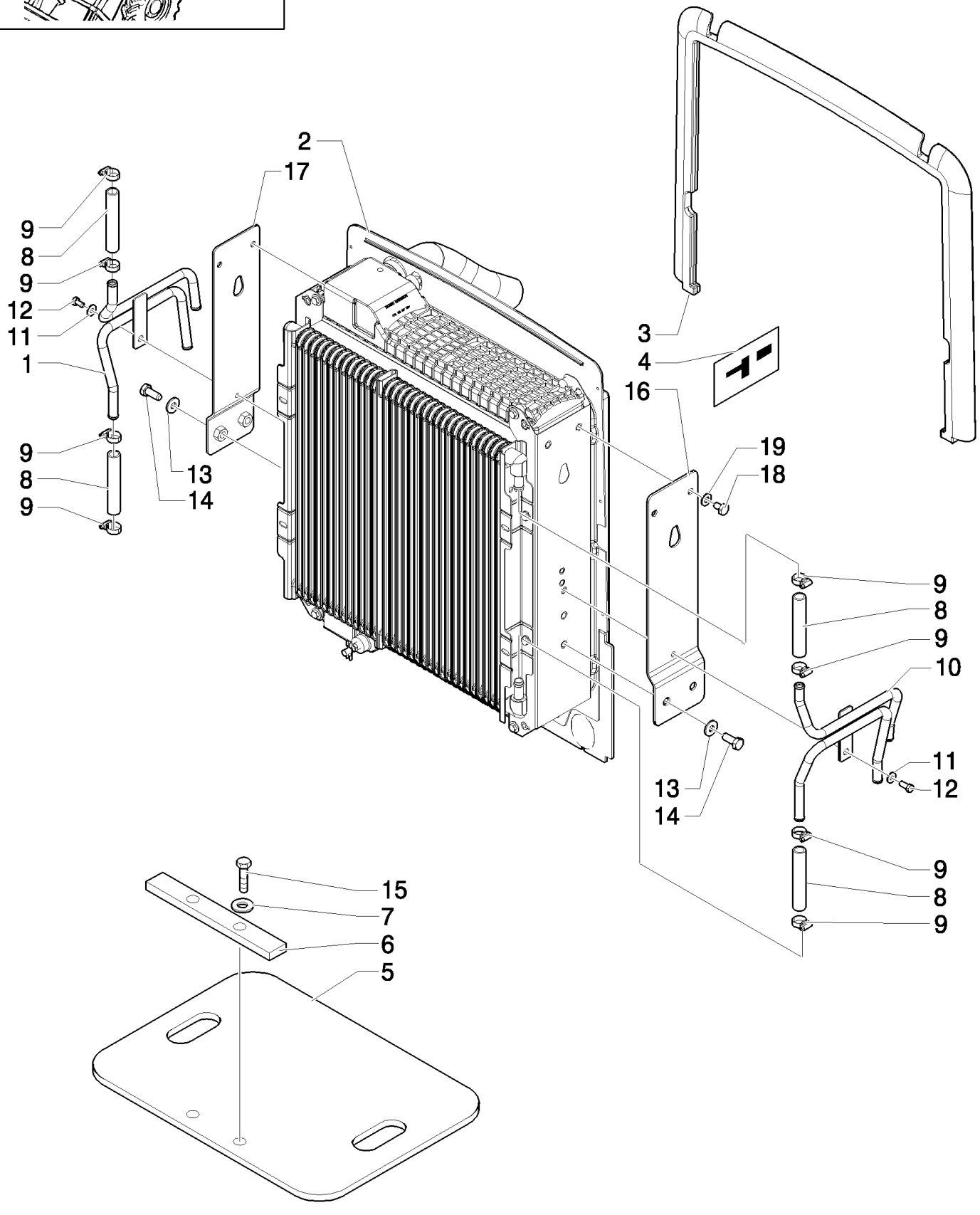

Without Air Conditioner

B95LR NA BACKHOE LOADER (1/06-)

636/ 1(01) RADIATOR

Ref	Numero de Pieza	Ctd	Descripción
1	87302280	1	TUBE,
2	REF	1	INSTRUCTION, , See Page 636/1 02
3	87303120	1	SEAL, , Up To S/N 031062229
3	87583716	1	SEAL, , From To S/N 031062230
4	87415930	2	DECAL,
5	85827830	1	SEAL, RUBBER,
6	85827831	1	PLATE,
7	11193879	2	WASHER, SPRING, Belleville, M8.4,
8	87302508	4	HOSE, FLEXIBLE,
9	13000390	8	CLAMP, HOSE,
10	87302279	1	TUBE,
11	12646701	2	WASHER, M8 x 20 x 2,
12	16043221	2	SCREW, Hex, M8 x 16, 8.8,
13	12646901	4	WASHER, 12x28x3
14	11112421	4	BOLT, Hex, M12 x 30, 8.8,
15	16043821	2	BOLT, Hex, M8 x 30, 8.8,
16	85828168	1	BRACKET,
17	87302922	1	BRACKET,
18	87306887	4	SCREW,
19	87306886	4	WASHER,

Without Air Conditioner

B95LR NA BACKHOE LOADER (1/06-)

636/ 2(02) RADIATOR

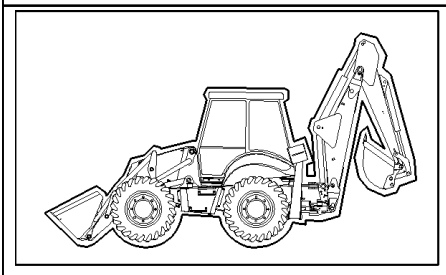

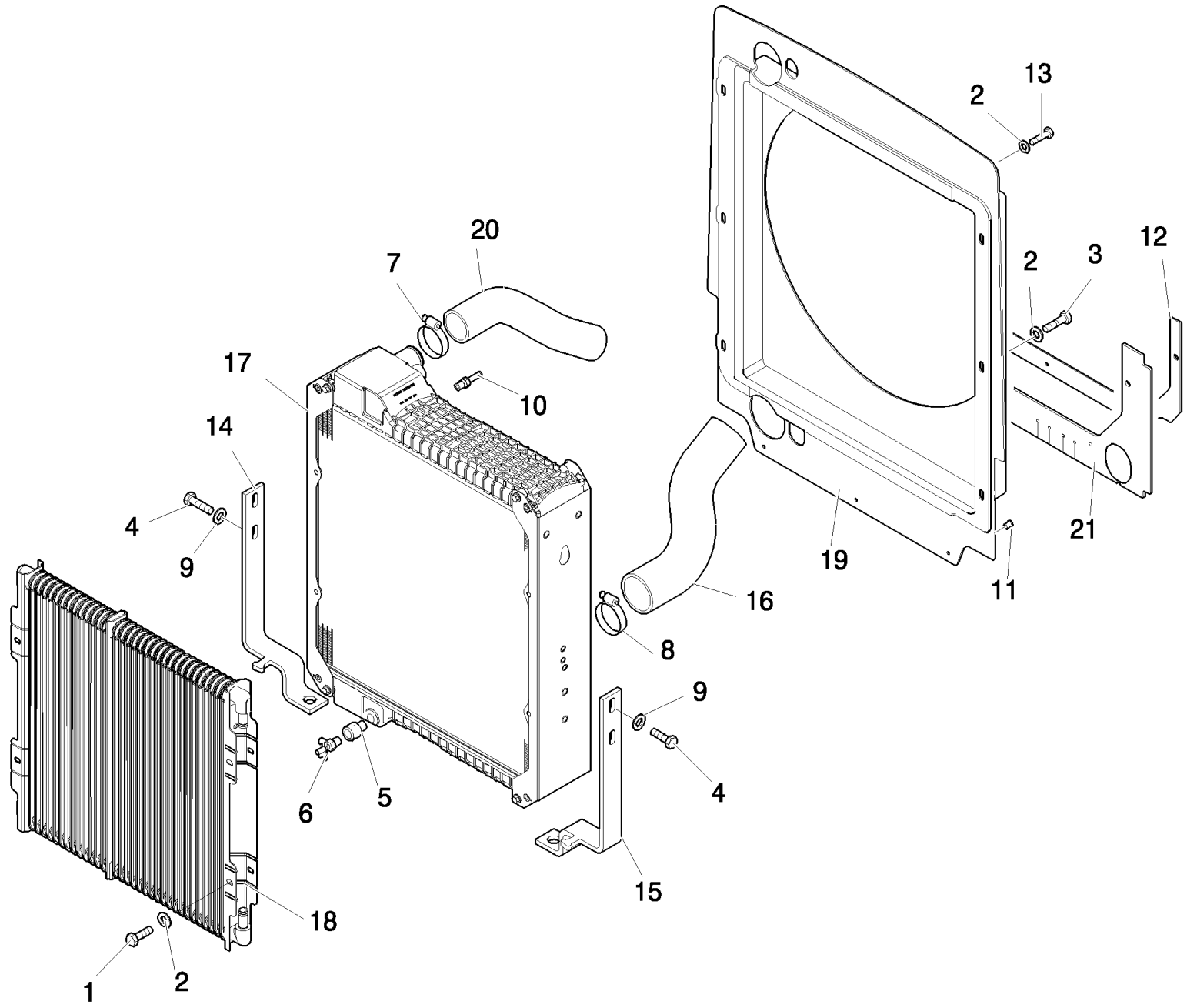

From first machine

B95LR NA BACKHOE LOADER (1/06-)

636/ 2(02) RADIATOR

Ref	Numero de Pieza	Ctd	Descripción
1	16043021	4	BOLT, Hex, M8 x 12, 8.8, Full Thd,
2	47048962	6	WASHER,
3	16043221	2	SCREW, Hex, M8 x 16, 8.8,
4	47049184	4	SCREW,
5	47049581	1	SEALANT,
6	47050674	1	DRAINCOCK/TAP, SUPPLY,
7	47050733	1	CLAMP, HOSE,
8	47050734	1	CLAMP, HOSE,
9	47120179	4	WASHER,
10	87419240	1	FITTING,
11	85825170	3	BUTTON,
12	86983070	1	SEAL,
13	87026277	2	BOLT, Hex, Lock, M8 x 30, Cl 10.9,
14	87404557	1	BRACKET,
15	87404628	1	BRACKET,
16	87407272	1	HOSE,
17	87410096	1	RADIATOR, , Water
18	87410099	1	COOLER, OIL, , Oil Cooler
19	87410916	1	SHROUD,
20	87413237	1	HOSE,
21	87416637	1	SEAL,

From first machine

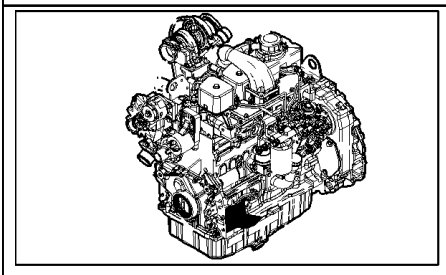

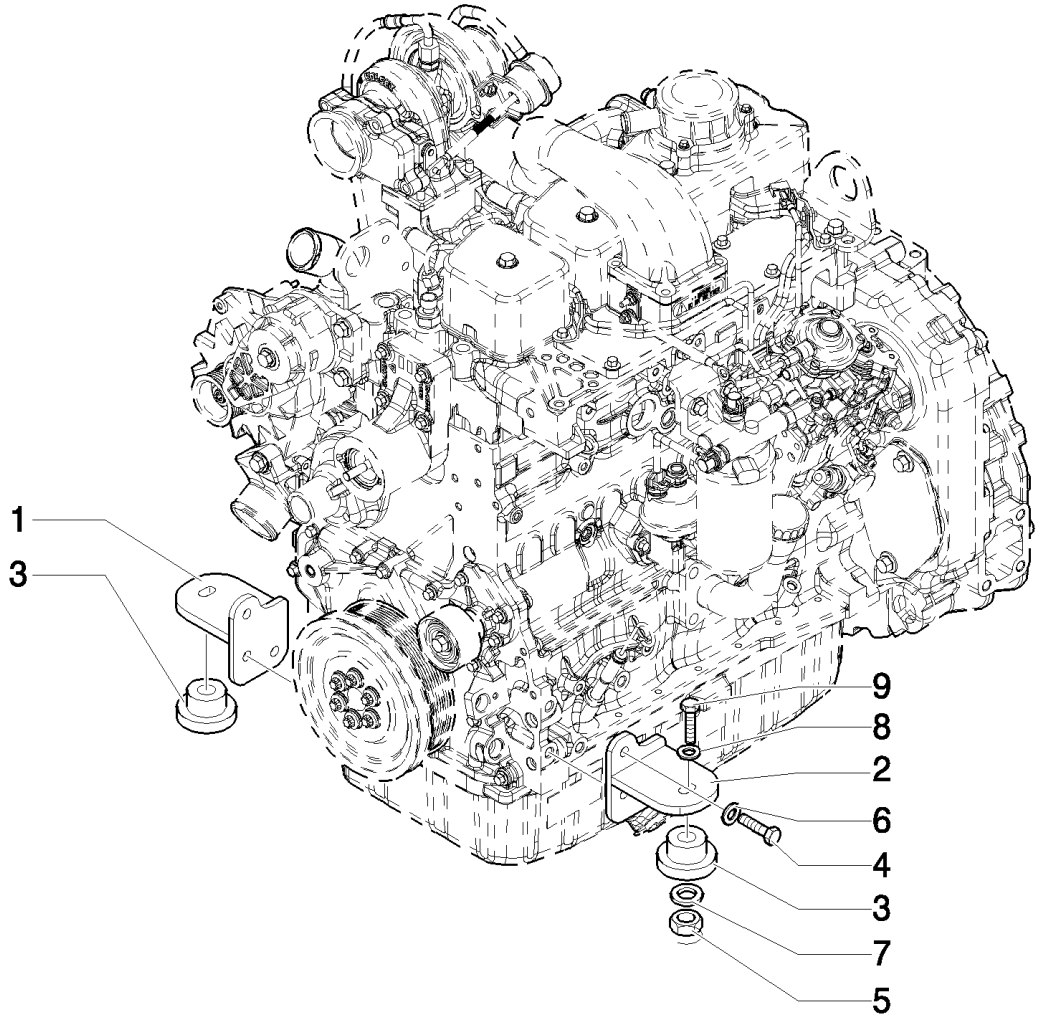
1
3
9
8
2
6
4
3
7
5

B95LR NA BACKHOE LOADER (1/06-)

636A(01) ACCESSORY ENGINE

Ref	Numero de Pieza	Ctd	Descripción
1	87407275	1	MOUNT, ENGINE,
2	87407276	1	MOUNT, ENGINE,
3	87416966	2	ISOLATOR,
4	11112421	6	BOLT, Hex, M12 x 30, 8.8,
5	16105011	2	NUT, LOCK,
6	47048976	6	WASHER,
7	85801585	2	WASHER, SEALING, 65mm OD
8	85802618	2	WASHER, SEALING,
9	87410647	2	SCREW,

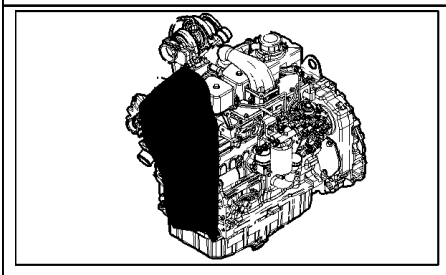

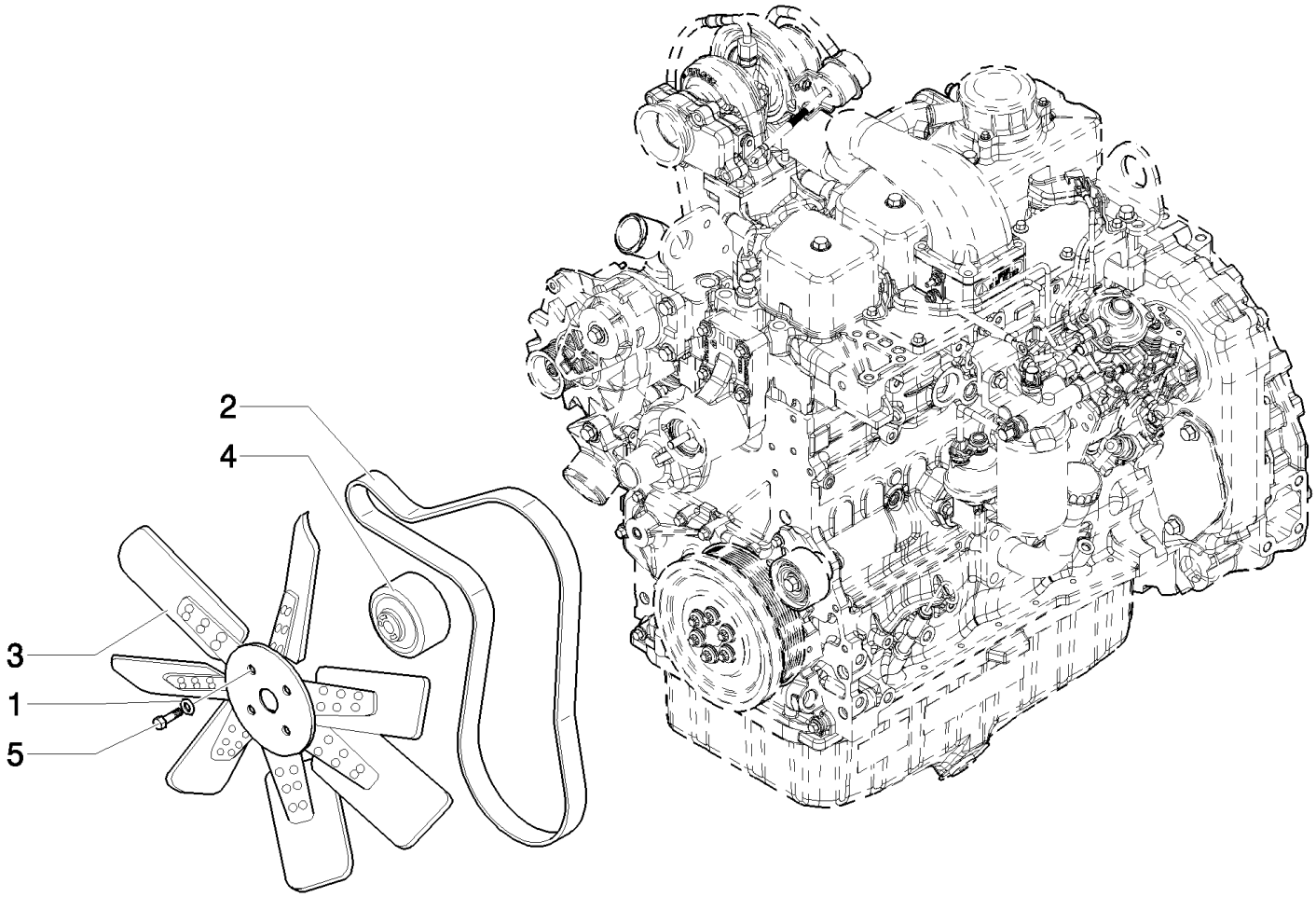

Without Ari Conditioner

B95LR NA BACKHOE LOADER (1/06-)

636A(02) ACCESSORY ENGINE - VENTILATOR

Ref	Numero de Pieza	Ctd	Descripción
1	47049372	1	WASHER,
2	85826230	1	BELT, , LB90.B And LB95.B With And Without Air Conditioner / LB110.B And LB115.B Without Air Conditioner
3	85825164	1	FAN,
4	85826229	1	SPACER,
5	47049101	4	SCREW,

Without Ari Conditioner

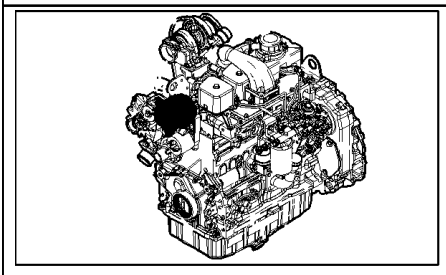

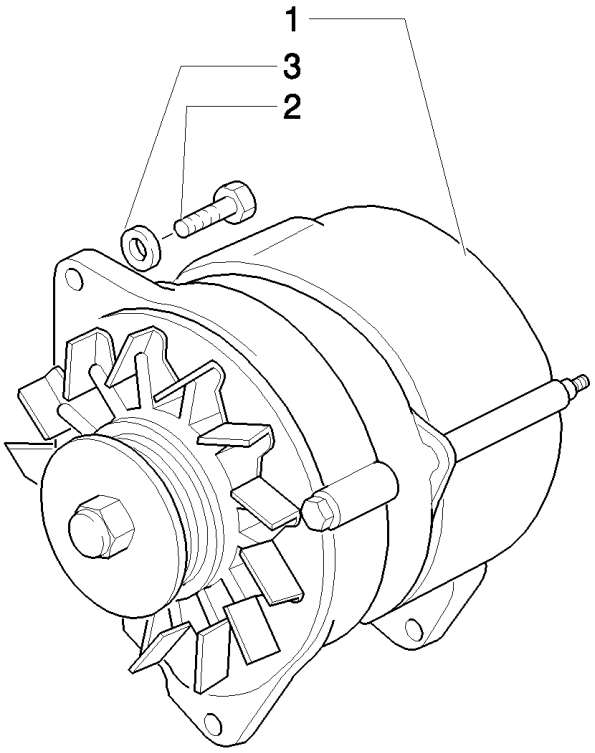
1
3
2

B95LR NA BACKHOE LOADER (1/06-)

636A(04) ACCESSORY ENGINE- ALTERNATOR

Ref	Numero de Pieza	Ctd	Descripción
1	87422777	1	ALTERNATOR,
2	47049160	1	BOLT, Hex, M8 x 20, 8.8,
2	16043621	1	BOLT, Hex, M8 x 25, 8.8,
3	47048992	1	WASHER,

B95LR NA BACKHOE LOADER (1/06-)

636A(05) ACCESSORY ENGINE - BRACKET MUFFLER

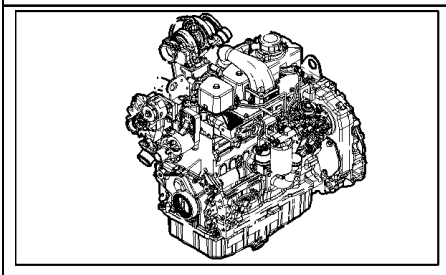

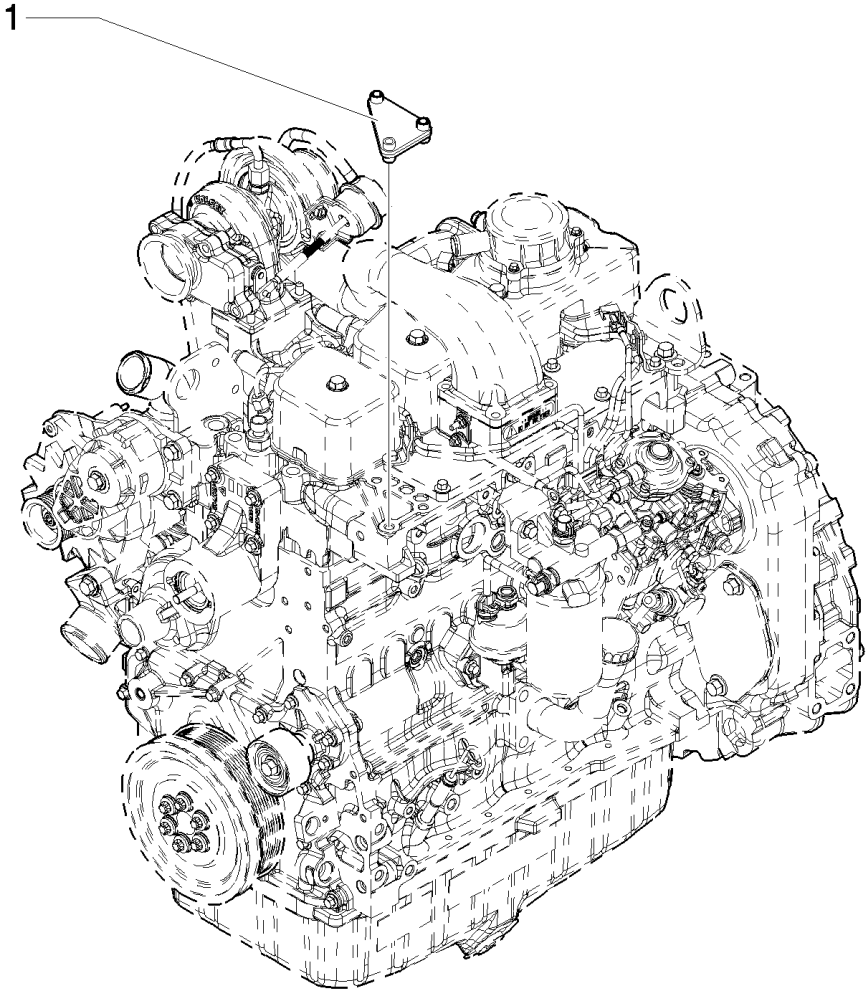

Without Air Conditioner

B95LR NA BACKHOE LOADER (1/06-)

636A(05) ACCESSORY ENGINE - BRACKET MUFFLER

Ref	Numero de Pieza	Ctd	Descripción
1	87437661	1	

Without Air Conditioner

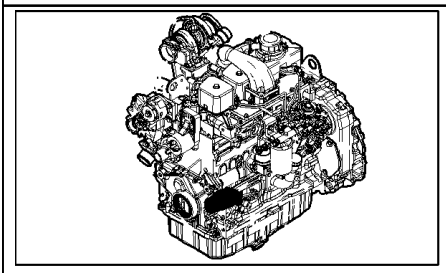

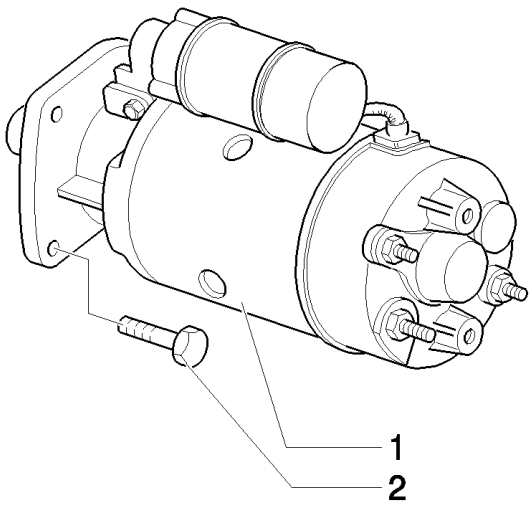
1
2

B95LR NA BACKHOE LOADER (1/06-)

636A(06) ACCESSORY ENGINE - STARTER

Ref	Numero de Pieza	Ctd	Descripción
1	86992395	1	MOTOR, STARTER,
2	86511845	1	BOLT, Hex Flg, M10 x 35, 8.8,

B95LR NA BACKHOE LOADER (1/06-)

637(01) RADIATOR

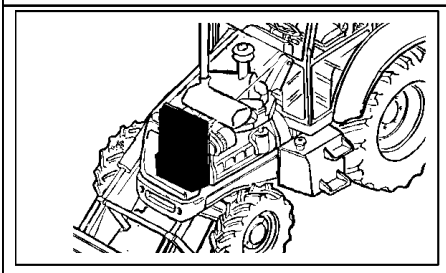

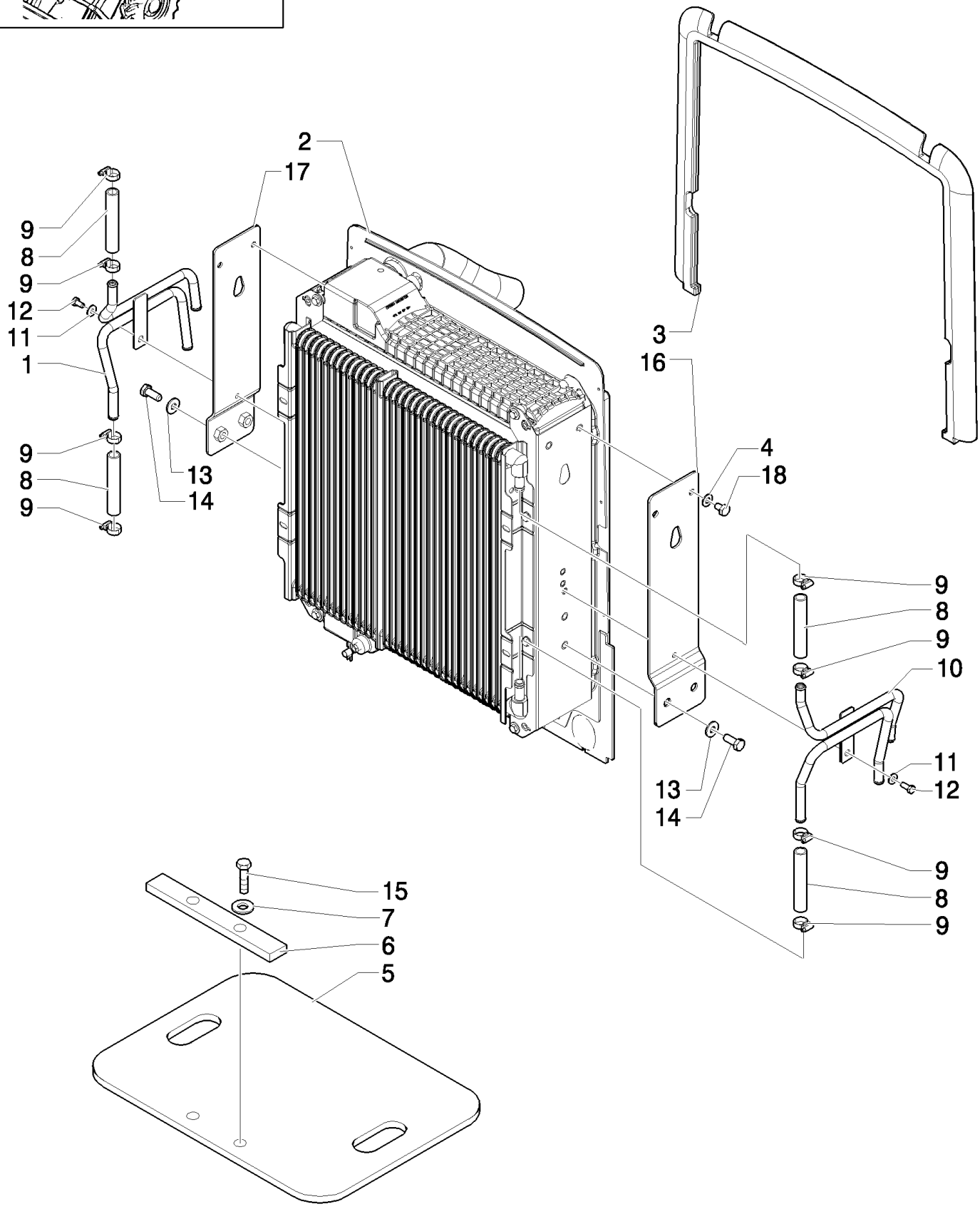

With Air Conditioner

B95LR NA BACKHOE LOADER (1/06-)

637(01) RADIATOR

Ref	Numero de Pieza	Ctd	Descripción
1	87302280	1	TUBE,
2	REF	1	INSTRUCTION, , See Page 637 02
3	87303120	1	SEAL, , Up To S/N 031062229
3	87583716	1	SEAL, , From To S/N 031062230
4	87306886	4	WASHER,
5	85827830	1	SEAL, RUBBER,
6	85827831	1	PLATE,
7	11193879	2	WASHER, SPRING, Belleville, M8.4,
8	87302508	4	HOSE, FLEXIBLE,
9	87314076	8	COLLAR,
10	87302279	1	TUBE,
11	12646701	2	WASHER, M8 x 20 x 2,
12	16043221	2	SCREW, Hex, M8 x 16, 8.8,
13	12646901	4	WASHER, 12x28x3
14	11112421	4	BOLT, Hex, M12 x 30, 8.8,
15	16043821	2	BOLT, Hex, M8 x 30, 8.8,
16	85828168	1	BRACKET,
17	87302922	1	BRACKET,
18	87306887	4	SCREW,

With Air Conditioner

B95LR NA BACKHOE LOADER (1/06-)

637(02) RADIATOR

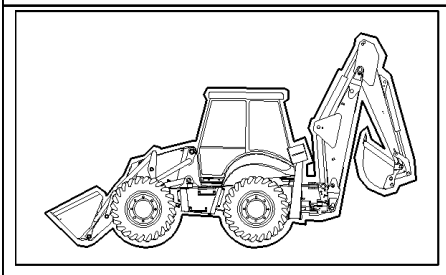

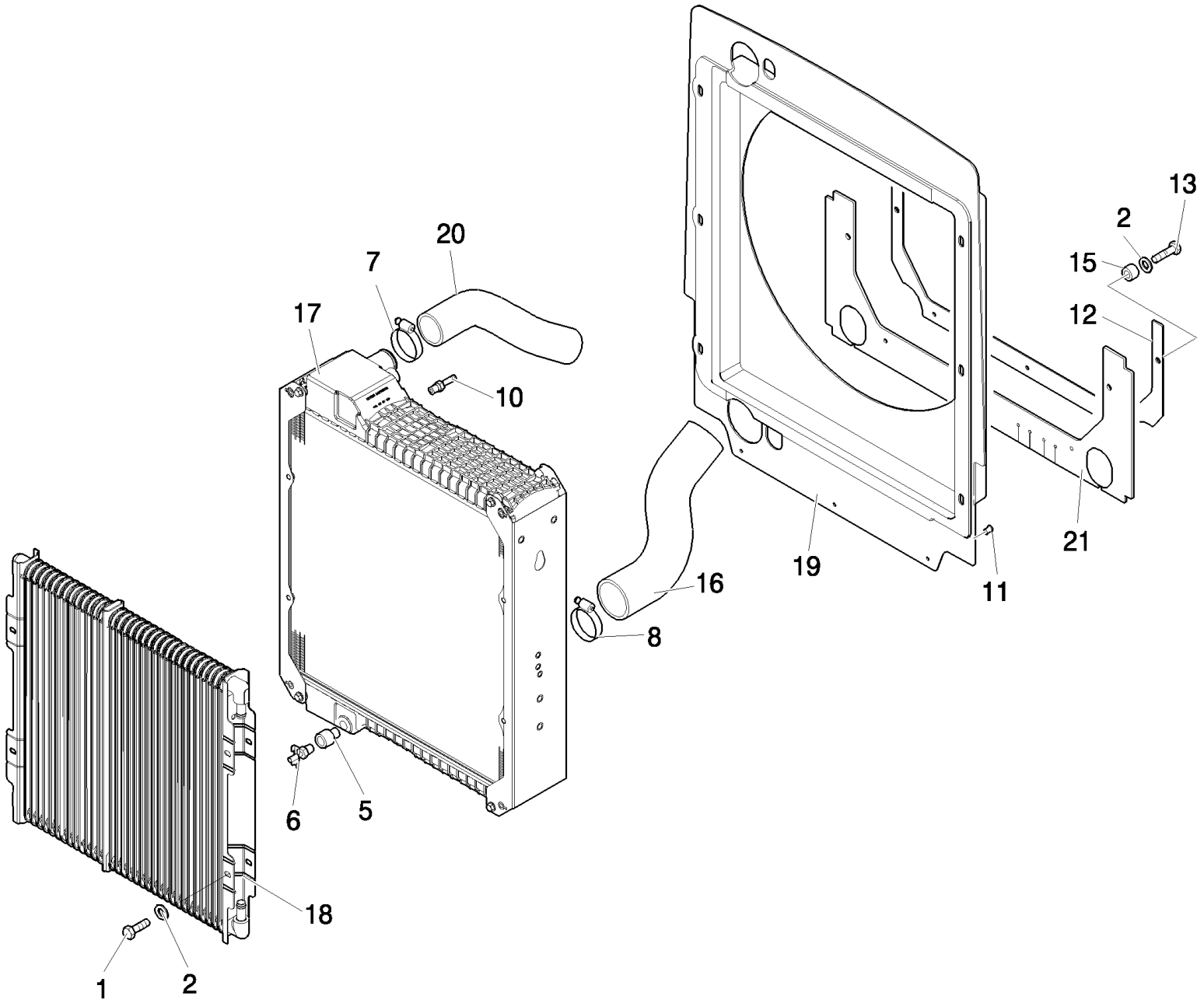

With Air Conditioner

B95LR NA BACKHOE LOADER (1/06-)

637(02) RADIATOR

Ref	Numero de Pieza	Ctd	Descripción
1	16043021	8	BOLT, Hex, M8 x 12, 8.8, Full Thd,
2	47048962	10	WASHER,
5	47049581	1	SEALANT,
6	47050674	1	DRAINCOCK/TAP, SUPPLY,
7	47050733	1	CLAMP, HOSE,
8	47050734	1	CLAMP, HOSE,
10	87419240	1	FITTING,
11	85825170	3	BUTTON,
12	86983070	1	SEAL,
13	87026277	2	BOLT, Hex, Lock, M8 x 30, Cl 10.9,
15	85825169	1	SPACER,
16	87407272	1	HOSE,
17	87410098	1	RADIATOR, , Water
18	87410099	1	COOLER, OIL, , Oil Cooler
19	87410916	1	SHROUD,
20	87413237	1	HOSE,
21	87416637	1	SEAL,

With Air Conditioner

B95LR NA BACKHOE LOADER (1/06-)

637/ 1(01) RADIATOR

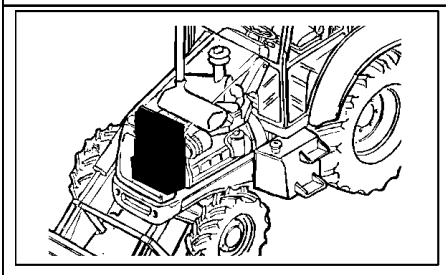

With Air Conditioner, Up To S/N XXX

B95LR NA BACKHOE LOADER (1/06-)

637/ 1(01) RADIATOR

Ref	Numero de Pieza	Ctd	Descripción
1	85825164	1	FAN,
2	87302921	1	9x16
3	9511008	4	PUBLICATIONS,
4	614-8016	4	BOLT, Hex, M8 x 16, 8.8,
5	87410101	1	CONDENSER,

With Air Conditioner, Up To S/N XXX

B95LR NA BACKHOE LOADER (1/06-)

637/ 2(01) RADIATOR

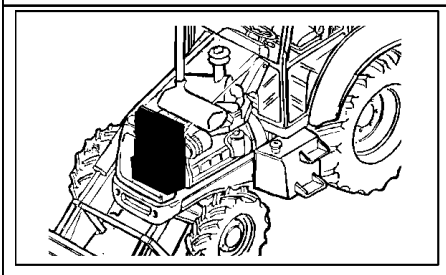

With Air Conditioner, From To S/N XXX

B95LR NA BACKHOE LOADER (1/06-)

637/ 2(01) RADIATOR

Ref	Numero de Pieza	Ctd	Descripción
1	86982972	2	PLATE,
2	47049086	2	SCREW, M10x50
3	47048759	2	GROMMET,
4	47049187	2	SCREW, M10x35
5	47048440	6	WASHER,
6	47048646	2	SPACER,
7	47048963	4	WASHER,
8	47048668	2	GASKET,
9	86625071	2	NUT, M10, U,
10	47049041	2	NUT, M10
11	47049088	2	SCREW, M10x50
12	86983077	1	SEAL,
13	87415930	2	DECAL,
14	85825164	1	FAN,
15	85827830	1	SEAL, RUBBER,
16	85827831	1	PLATE,
17	11193879	2	WASHER, SPRING, Belleville, M8.4,
18	16043821	2	BOLT, Hex, M8 x 30, 8.8,

With Air Conditioner, From To S/N XXX

B95LR NA BACKHOE LOADER (1/06-)

637/ 3(01) RADIATOR

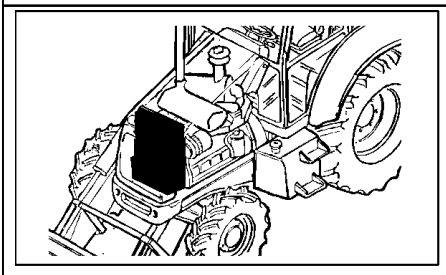

With Air Conditioner, From To S/N XXX

B95LR NA BACKHOE LOADER (1/06-)

637/ 3(01) RADIATOR

Ref	Numero de Pieza	Ctd	Descripción
1	85825164	1	FAN,
2	87302921	1	9x16

With Air Conditioner, From To S/N XXX

B95LR NA BACKHOE LOADER (1/06-)

646/1(01) MACHINE PART AIR CONDITIONING SET

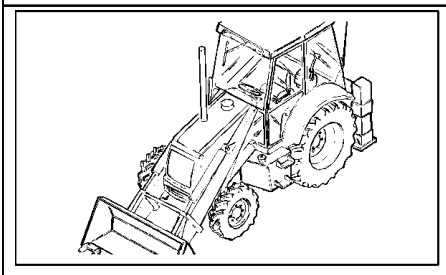

From To S/N XXX

B95LR NA BACKHOE LOADER (1/06-)

646/1(01) MACHINE PART AIR CONDITIONING SET

Ref	Numero de Pieza	Ctd	Descripción
1	87315364	1	HOSE, FLEXIBLE, , Includes 8 in q.ty 2
2	87315368	1	HOSE, FLEXIBLE, , Includes 8 in q.ty 2
3	87315371	1	HOSE, FLEXIBLE, , Includes 9, 10 in q.ty 1
4	87315381	1	HOSE, FLEXIBLE, , Includes 10 in q.ty 1, 11
5	85817287	1	SEAL,
6	14560187	2	STRAP, CABLE, 178mm lg, L=203.2 mm
7	47048451	4	STRAP, CABLE, M8 x 384,
8	85805013	4	O-RING,
9	85805006	1	O-RING,
10	85817186	2	O-RING,
11	85805014	1	O-RING,

From To S/N XXX

646/1(02) A/C COMPRESSOR ATTACHING GROUP

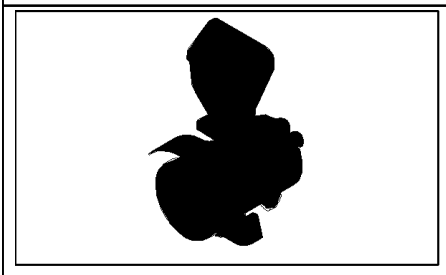

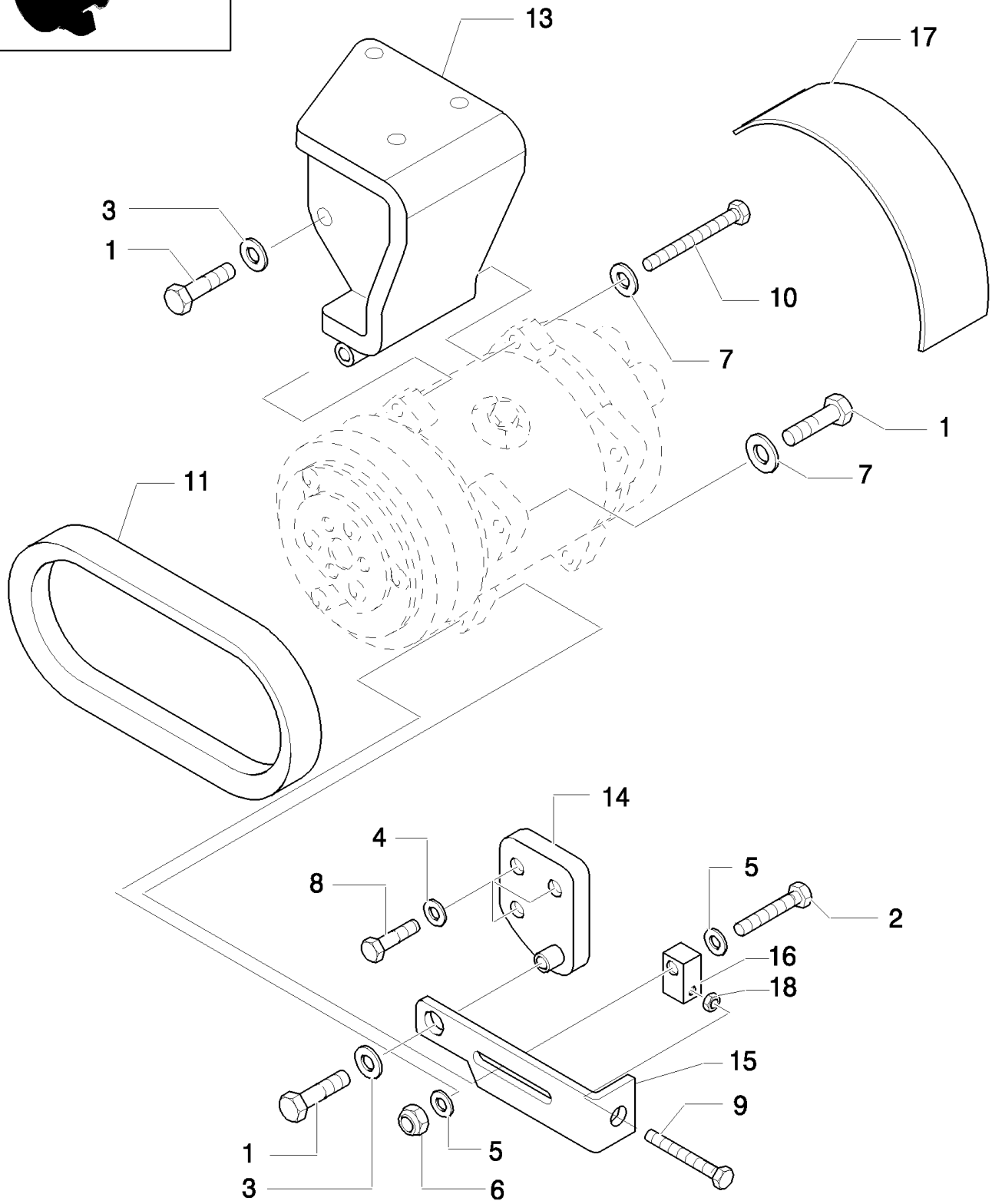

B95LR NA BACKHOE LOADER (1/06-)

646/1(02) A/C COMPRESSOR ATTACHING GROUP

Ref	Numero de Pieza	Ctd	Descripción
1	11106421	3	BOLT, Hex, M10 x 30, 8.8,
2	11107421	1	BOLT, Hex, M10 x 60, 8.8,
3	11190574	2	WASHER, SPRING, Belleville, M10.5,
4	11193874	3	WASHER, SPRING, Belleville, M8.4,
5	14496601	2	WASHER, M10 x 20 x 2,
6	12577211	1	NUT, LOCK, M10 x 1.5, Cl 8,
7	12601474	2	WASHER, Wave, M10.5,
8	16043621	3	BOLT, Hex, M8 x 25, 8.8,
9	15214521	1	SCREW,
10	11108821	1	BOLT, Hex, M10 x 130, 8.8,
11	87304910	1	BELT,
12	85817170	1	COMPRESSOR, AIRCOND., , See page 646/1 03
13	87315441	1	SUPPORT,
14	87315446	1	SUPPORT,
15	87315457	1	TENSIONER, BELT,
16	87315459	1	BLOCK,
17	87315460	1	GUARD,
18	16102211	1	NUT, M8, Cl 10,

From S/N 031055083

646/1(03) A/C COMPRESSOR

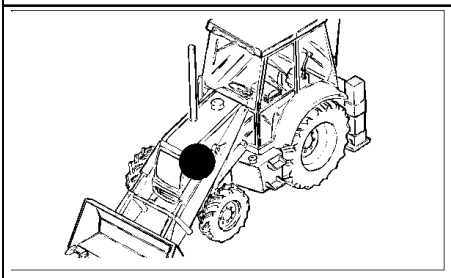

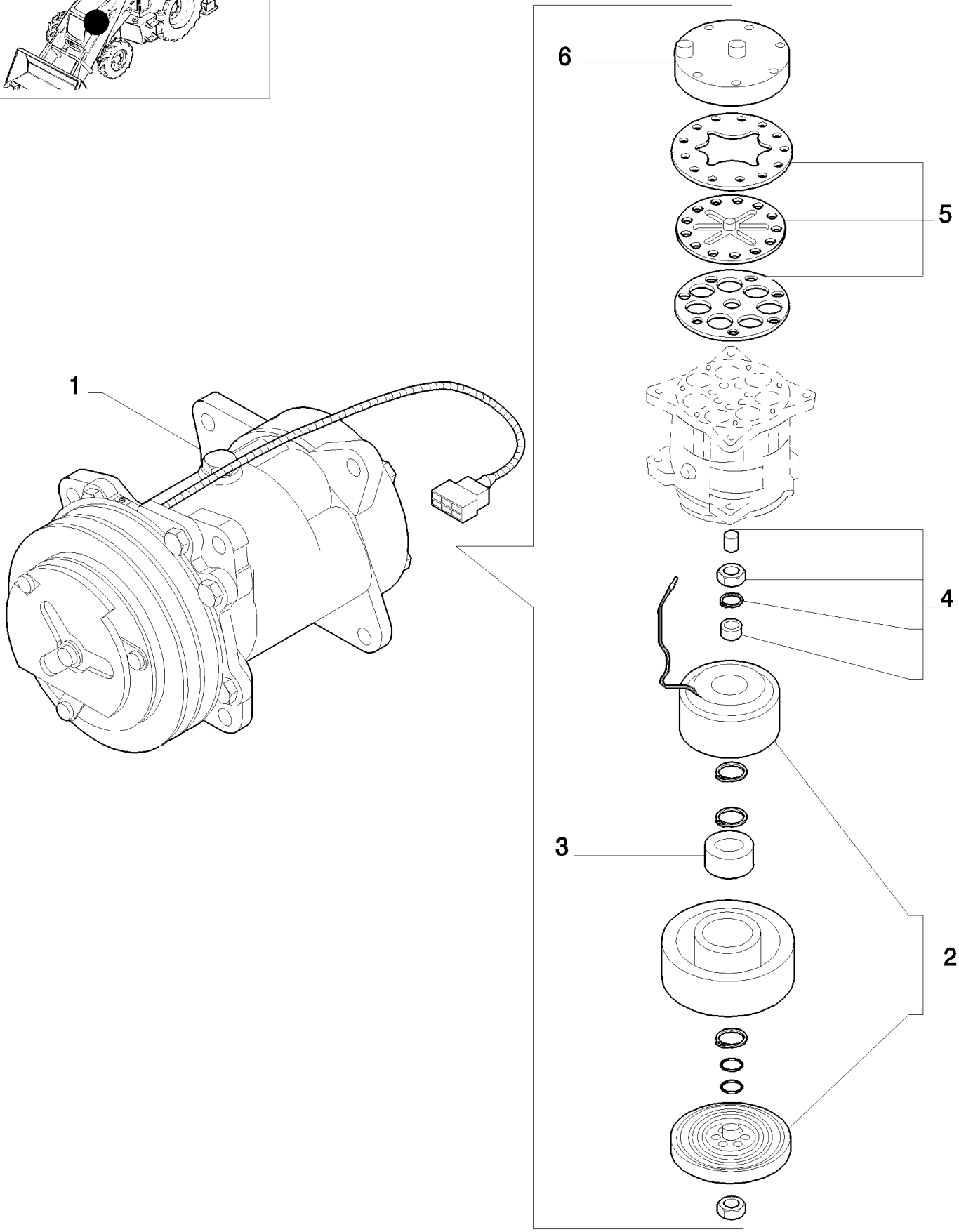

B95LR NA BACKHOE LOADER (1/06-)

646/1(03) A/C COMPRESSOR

Ref	Numero de Pieza	Ctd	Descripción
1	85817170	1	COMPRESSOR, AIRCOND., (SD7H15) Assy
2	85817171	1	KIT,
3	85817172	3	BEARING ASSY,
4	85817173	1	KIT,
5	85817174	1	KIT,
6	85817175	1	KIT,

646/1(04) A/C FILTER & CONDENSER ATTACHING GROUP

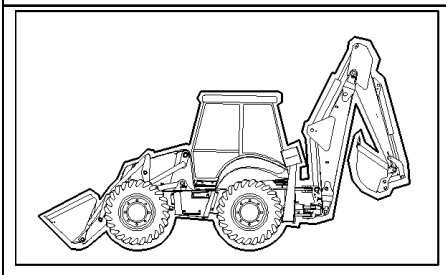

B95LR NA BACKHOE LOADER (1/06-)

646/1(04) A/C FILTER & CONDENSER ATTACHING GROUP

Ref	Numero de Pieza	Ctd	Descripción
1	14496534	4	WASHER,
2	16043421	2	SCREW, Hex, M8 x 20, 8.8,
3	16104111	2	NUT, LOCK, M8 x 1.25, Cl 8,
4	87315252	1	BRACKET,
5	85819184	7	SCREW,
6	85804065	1	SENDER UNIT, , Includes 20
7	87315214	1	BRACKET,
8	87315219	1	BRACKET,
9	87315221	1	BRACKET, RH
10	87315225	1	BRACKET, LH
11	87315236	1	BRACKET,
12	87315239	2	CLAMP, HOSE,
13	87314566	1	CONDENSER,
14	87315241	1	FILTER, CAB,
15	16043621	4	BOLT, Hex, M8 x 25, 8.8,
16	85819185	1	GASKET,
17	87319438	1	SUPPORT, , Only For Version Without Intercooler
18	14040711	8	WASHER, , Only For Version Without Intercooler
19	87319441	1	SUPPORT, , Only For Version Without Intercooler

B95LR NA BACKHOE LOADER (1/06-)

646A(01) A/C COMPRESSOR ATTACHING GROUP

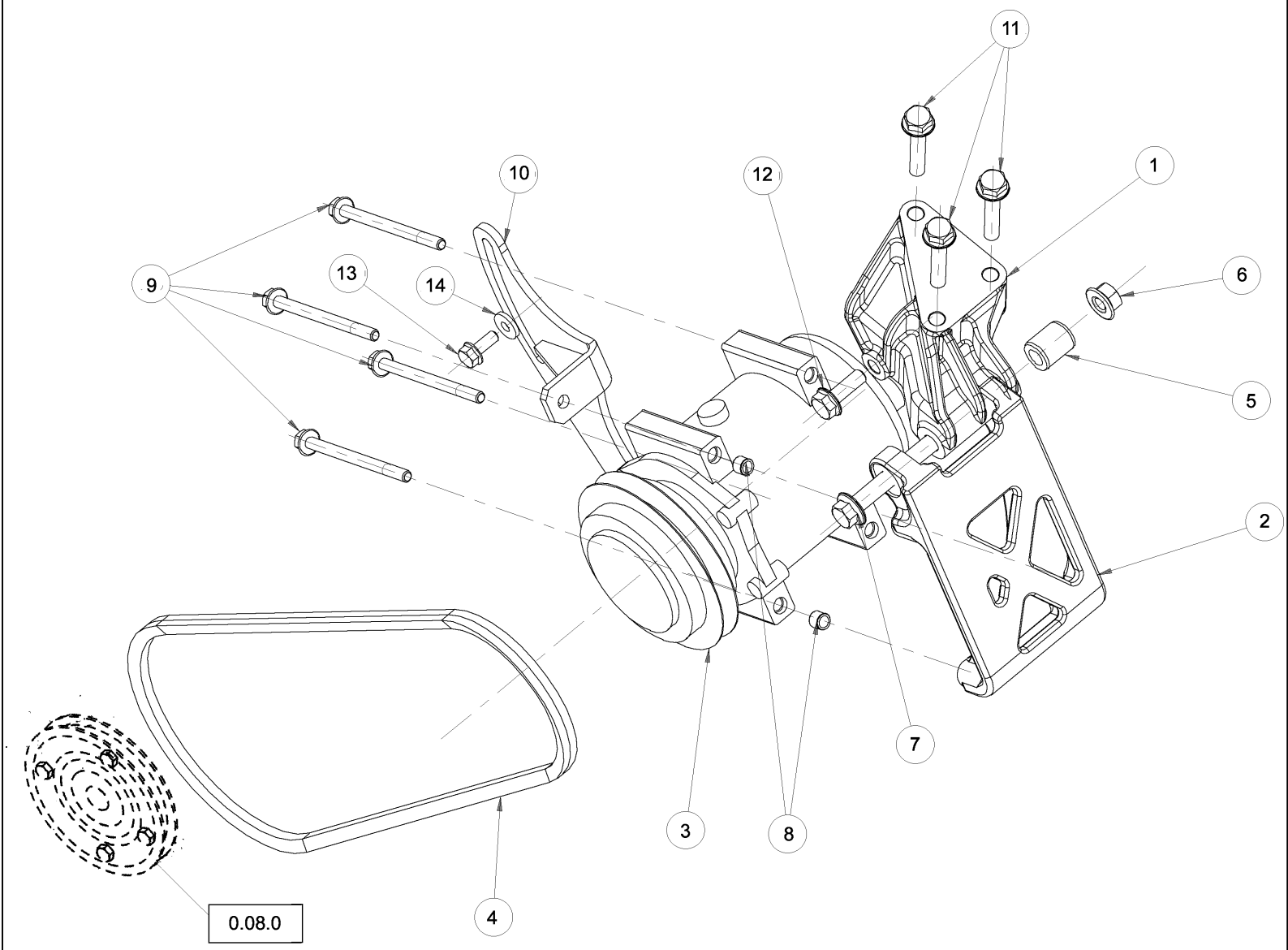

Up To S/N 031055082

B95LR NA BACKHOE LOADER (1/06-)

646A(01) A/C COMPRESSOR ATTACHING GROUP

Ref	Numero de Pieza	Ctd	Descripción
1	2852622	1	SUPPORT,
2	2852623	1	SUPPORT,
3	87430122	1	COMPRESSOR, AIRCOND.,
4	2852625	1	BELT,
5	98433179	1	SPACER,
6	2852627	1	NUT, M12
7	2852925	1	SCREW,
8	4895227	2	RING, GUIDE,
9	2852628	4	SCREW,
10	2852629	1	TENSIONER,
11	2852630	3	SCREW,
12	16675834	1	SCREW,
13	87803136	1	SCREW,
14	12647121	1	WASHER, M8 x 20 x 3,

Up To S/N 031055082

B95LR NA BACKHOE LOADER (1/06-)

648(01) FORK KIT, CONVERTS4X1 BUCKET TO 6X1

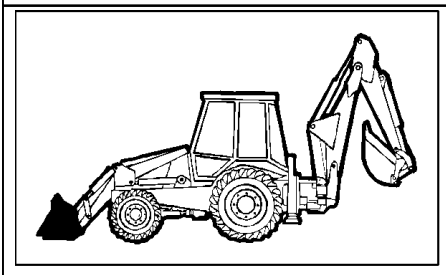

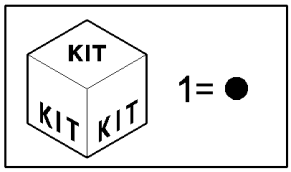

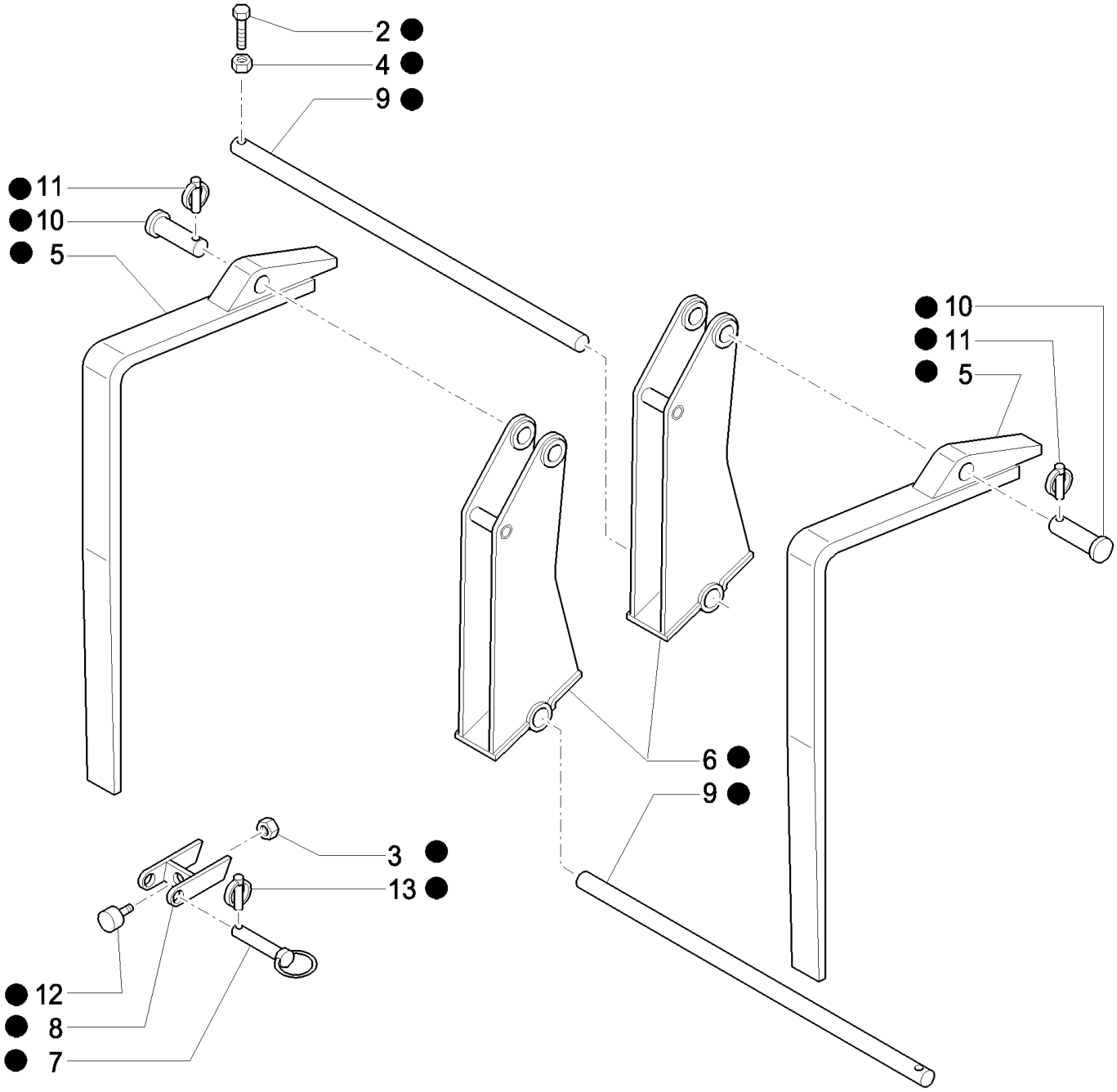

B95LR NA BACKHOE LOADER (1/06-)

648(01) FORK KIT, CONVERTS4X1 BUCKET TO 6X1

Ref	Numero de Pieza	Ctd	Descripción
1	85820906	1	KIT, CONVERSION,
2	85820018	2	SCREW, M10 x 90
3	85820031	2	NUT, M8
4	85820035	2	NUT, M10
5	85820062	2	FORK, BUCKET,
6	85820063	2	SUPPORT,
7	85820064	2	PIN,
8	85820065	2	BRACKET,
9	85820066	2	PIN, 1.96" OD x 40.75" lg
10	85820067	2	PIN,
11	85820068	2	PIN, LOCK,
12	85820069	2	PLUG,
13	85825177	2	PIN, LOCK,

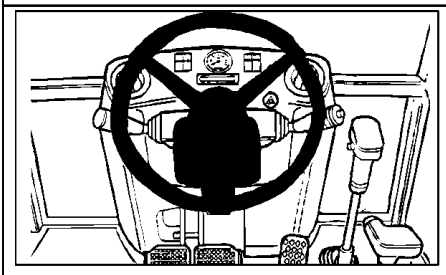

EQUIP.650

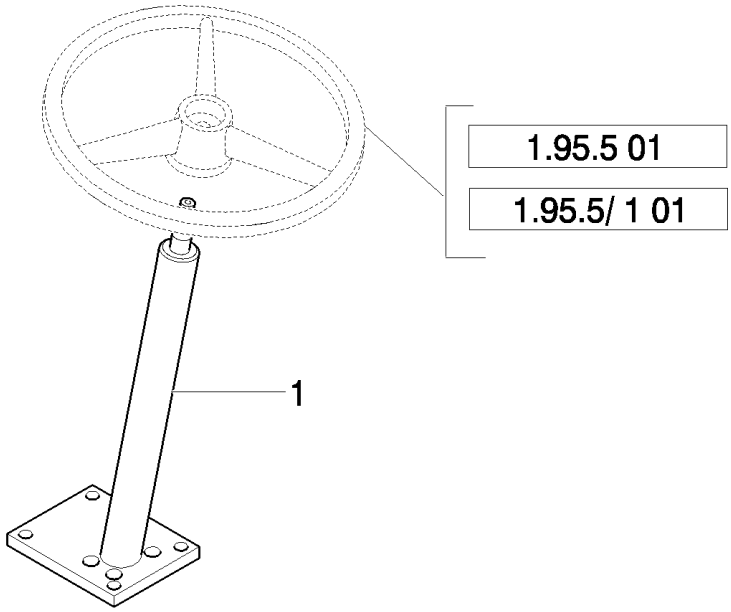

EQUIP.651

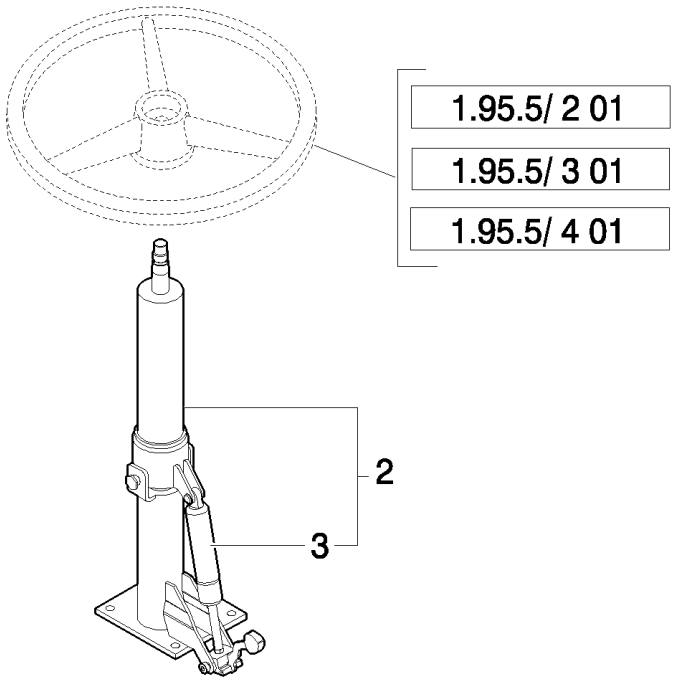

B95LR NA BACKHOE LOADER (1/06-)

650(01) STEERING COLUMN, FIXED & ADJUSTABLE

Ref	Numero de Pieza	Ctd	Descripción
1	85804706	1	STEERING COLUMN, , UP TO S/N 031056941, All Version Except L115, B115
1	87324864	1	STEERING COLUMN, , All Version Except L115, B115, FROM S/N 031056942
2	85805545	1	STEERING COLUMN, , UP TO S/N 031056941
2	87324867	1	STEERING COLUMN, , FROM S/N 031056942
3	85824197	1	GAS STRUT, , UP TO S/N 031056941
3	87328136	1	SHOCK ABSORBER, , FROM S/N 031056942

B95LR NA BACKHOE LOADER (1/06-)

698(01) GLIDE RIDE VALVE,HYDRAULIC SYSTEM FOR MACHINE FRAME LEVELLING & ON/OFF SWITCH

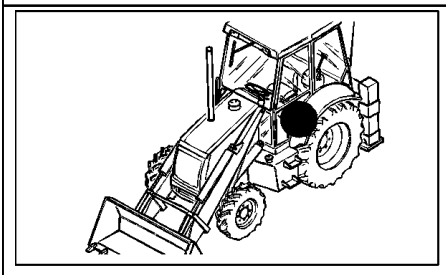

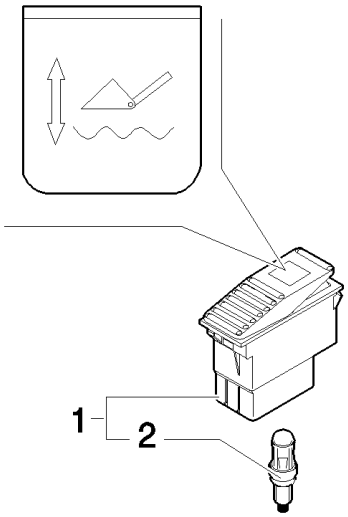

B95LR NA BACKHOE LOADER (1/06-)

698(01) GLIDE RIDE VALVE,HYDRAULIC SYSTEM FOR MACHINE FRAME LEVELLING & ON/OFF SWITCH

Ref	Numero de Pieza	Ctd	Descripción
1	85817674	1	SWITCH,
2	14143790	1	BULB,

B95LR NA BACKHOE LOADER (1/06-)

699(01) HAND HAMMER SWITCH

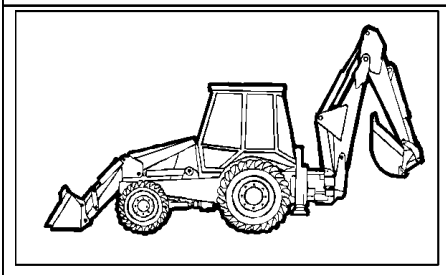

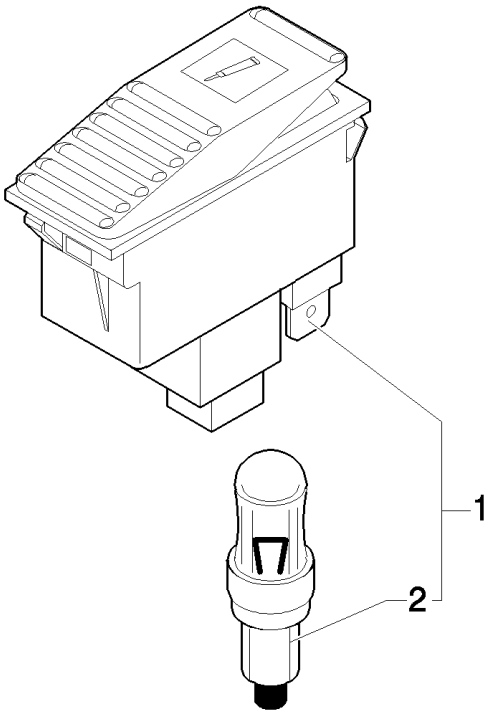

B95LR NA BACKHOE LOADER (1/06-)

699(01) HAND HAMMER SWITCH

Ref	Numero de Pieza	Ctd	Descripción
1	85819072	1	SWITCH,
2	14143790	1	BULB,

700/ 2(01) 4X1 & 6X1 BUCKET HYDRAULIC LINES (P. SHUTTLE)

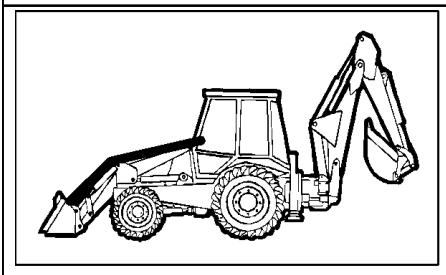

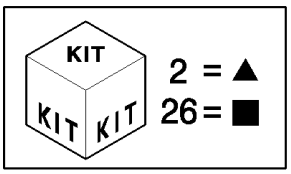

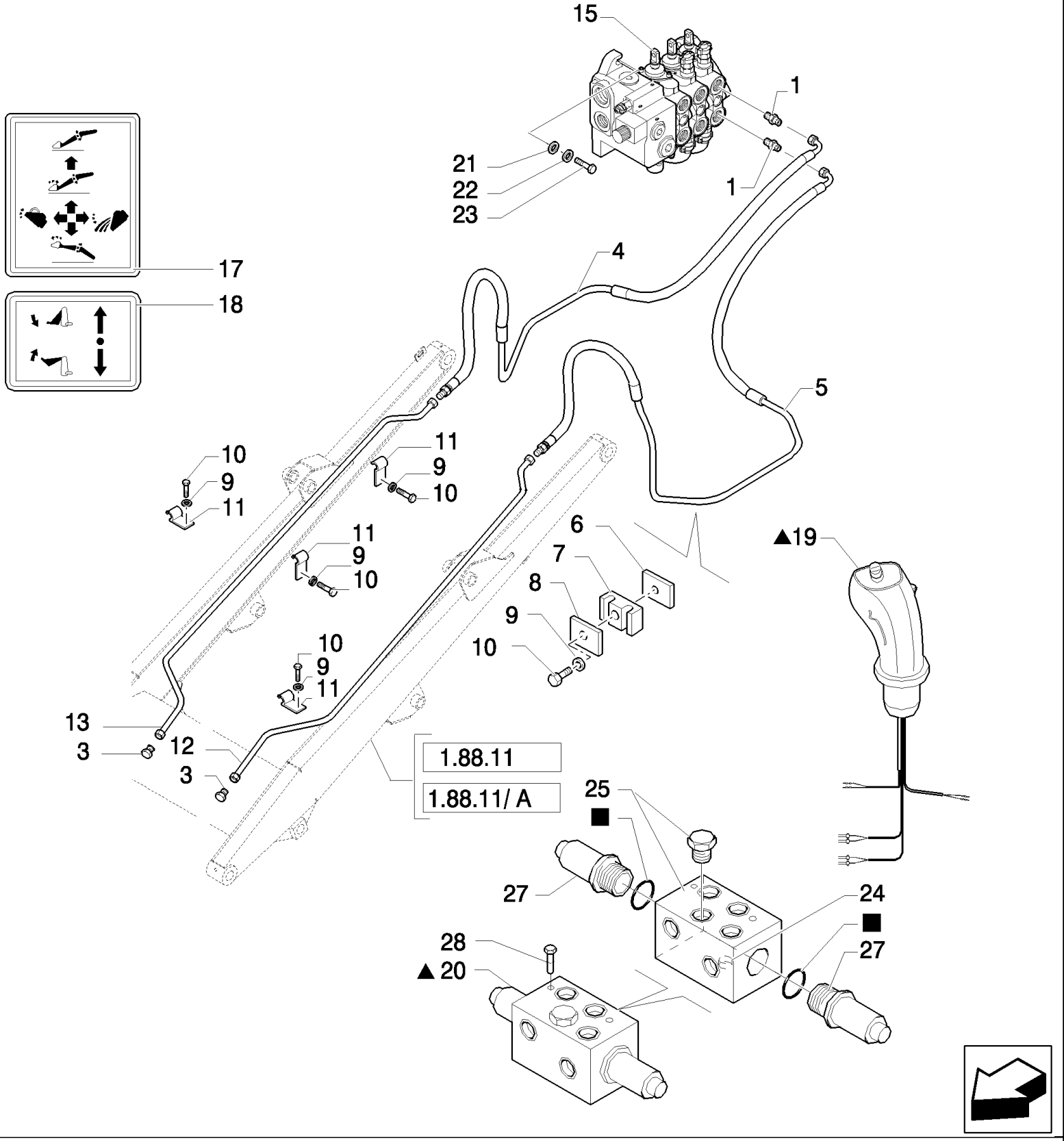

B95LR NA BACKHOE LOADER (1/06-)

700/ 2(01) 4X1 & 6X1 BUCKET HYDRAULIC LINES (P. SHUTTLE)

Ref	Numero de Pieza	Ctd	Descripción
1	85805258	2	CONNECTOR, HYD., 9/16"-16 ORS x 1 1/16"-12, O-Ring,
2	87384365	1	JOYSTICK,
3	85803408	2	PLUG,
4	85819572	1	TUBE, HYD,
5	85819571	1	TUBE, HYD, LH
6	85805340	2	PLATE,
7	85805193	2	CLAMP,
8	85805195	2	PLATE,
9	11193979	8	WASHER, SPRING, Belleville, M8.4,
10	16043821	8	BOLT, Hex, M8 x 30, 8.8,
11	85805247	6	CLAMP,
12	85805864	1	TUBE, HYD, LH
13	85805865	1	TUBE, HYD, RH
15	87305111	1	VALVE, CONTROL,
17	85804346	1	DECAL,
18	87305209	1	DECAL,
19	87382112	1	HANDLE, Loader, Powershuttle, W/Detent, Declutch; Includes 87387751 Grip W/1 Button; 87387703 Prop Roller W/Detented Position; 87387754 Transmission Button Harness; 87387722 Bi-Directional PWM Driver Harness
	87387751	1	HANDLE GRIP, Grip W/1 Button
	87387703	1	PUSH BUTTON, Prop Roller W/Detented Position
	87387754	1	CABLE, ELECTRIC, Transmission Button Harness
	87387722	1	CABLE, ELECTRIC, Bi-Directional PWM Driver Harness
20	87304801	1	VALVE, CONTROL, , Includes 24 To 27
21	11190679	3	WASHER, SPRING, Belleville, M10.5,
22	13578621	3	WASHER, 10x30x2
23	11234721	3	BOLT, Hex, M10 x 1.25 x 45, 8.8,
24	87311363	1	ORIFICE,
25	85827997	1	VALVE,
26	85828001	1	KIT, SEALS,
27	85827993	2	SOLENOID,
28	14300521	2	SCREW, Hex Soc Hd, M6 x 75, 8.8, M6x75

Pilot Control Version

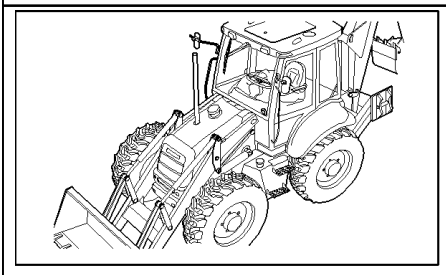

Pilot Control Version

B95LR NA BACKHOE LOADER (1/06-)

700/ 2(02) 4X1 & 6X1 BUCKET HYDRAULIC LINES (P. SHUTTLE)

Ref	Numero de Pieza	Ctd	Descripción
1	85802234	1	ELBOW,
2	85803312	1	CONNECTOR, HYD.,
3	47050685	2	CONNECTOR, HYD.,
4	47050686	3	CONNECTOR, HYD., , UP TO S/N 031054045
4	47050686	4	CONNECTOR, HYD., , FROM TO S/N 031054046
5	85826100	1	REDUCER,
6	85828211	1	COUPLING, QUICK, MALE,
7	87305211	1	HOSE, FLEXIBLE,
8	87303401	1	HOSE, FLEXIBLE,
9	87303400	2	HOSE, FLEXIBLE,

Pilot Control Version

705(01) SEAT BELTS, 2" & 3"

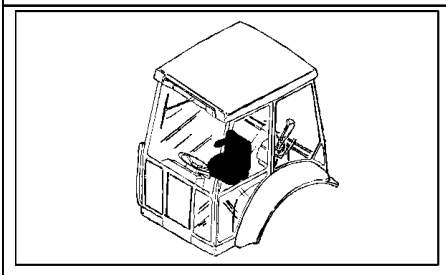

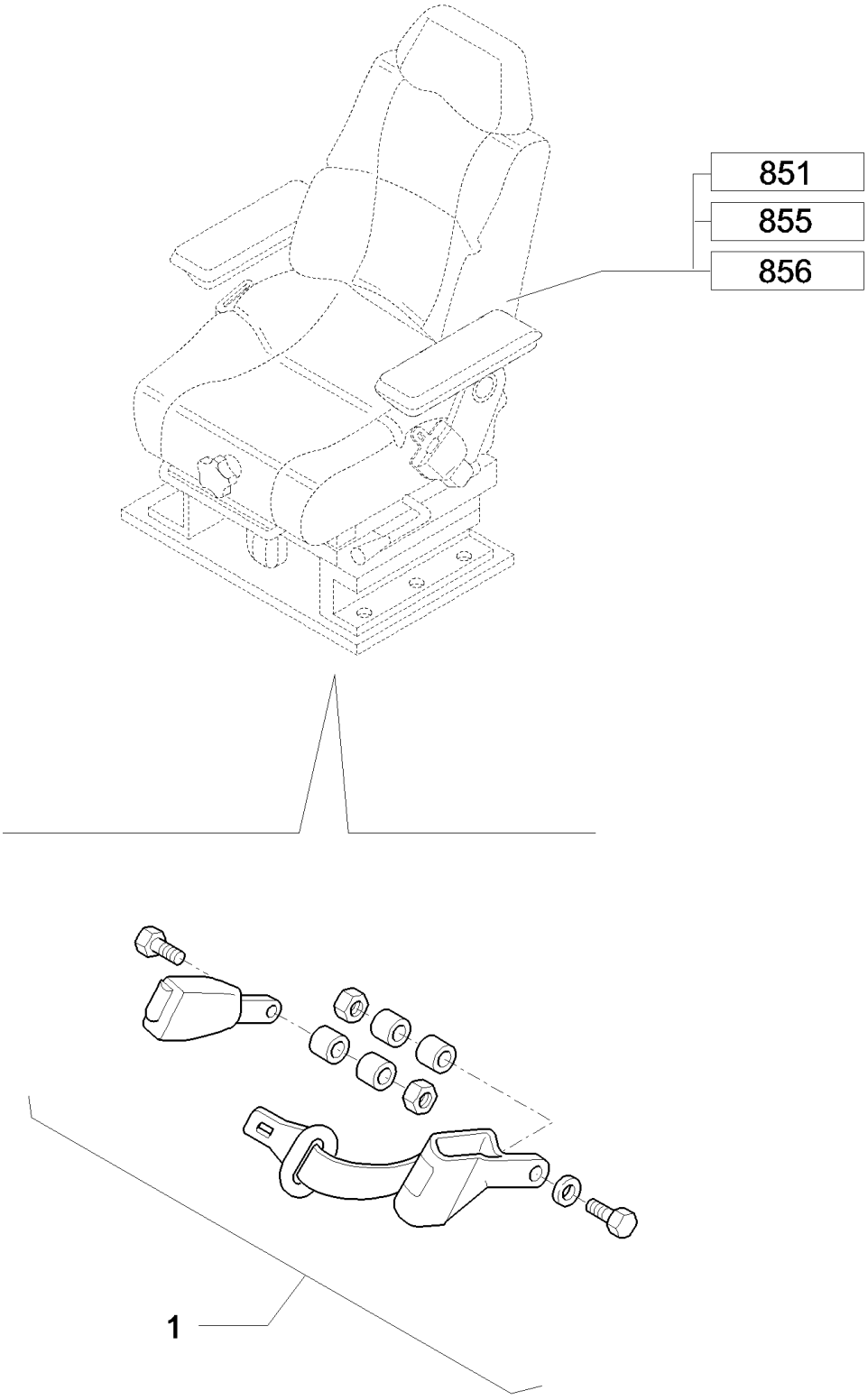

B95LR NA BACKHOE LOADER (1/06-)

705(01) SEAT BELTS, 2" & 3"

Ref	Numero de Pieza	Ctd	Descripción
1	85815578	1	SEAT BELT, 2" (Equip.705)
1	85815579	1	SEAT BELT, 3" (Equip.706)

708(01) THREE-SECTION CONTROL VALVE FOR LOADER

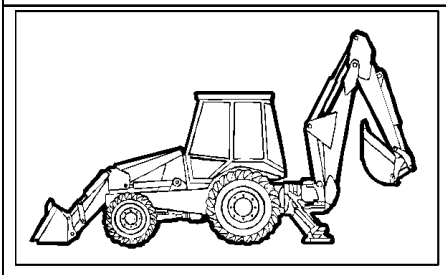

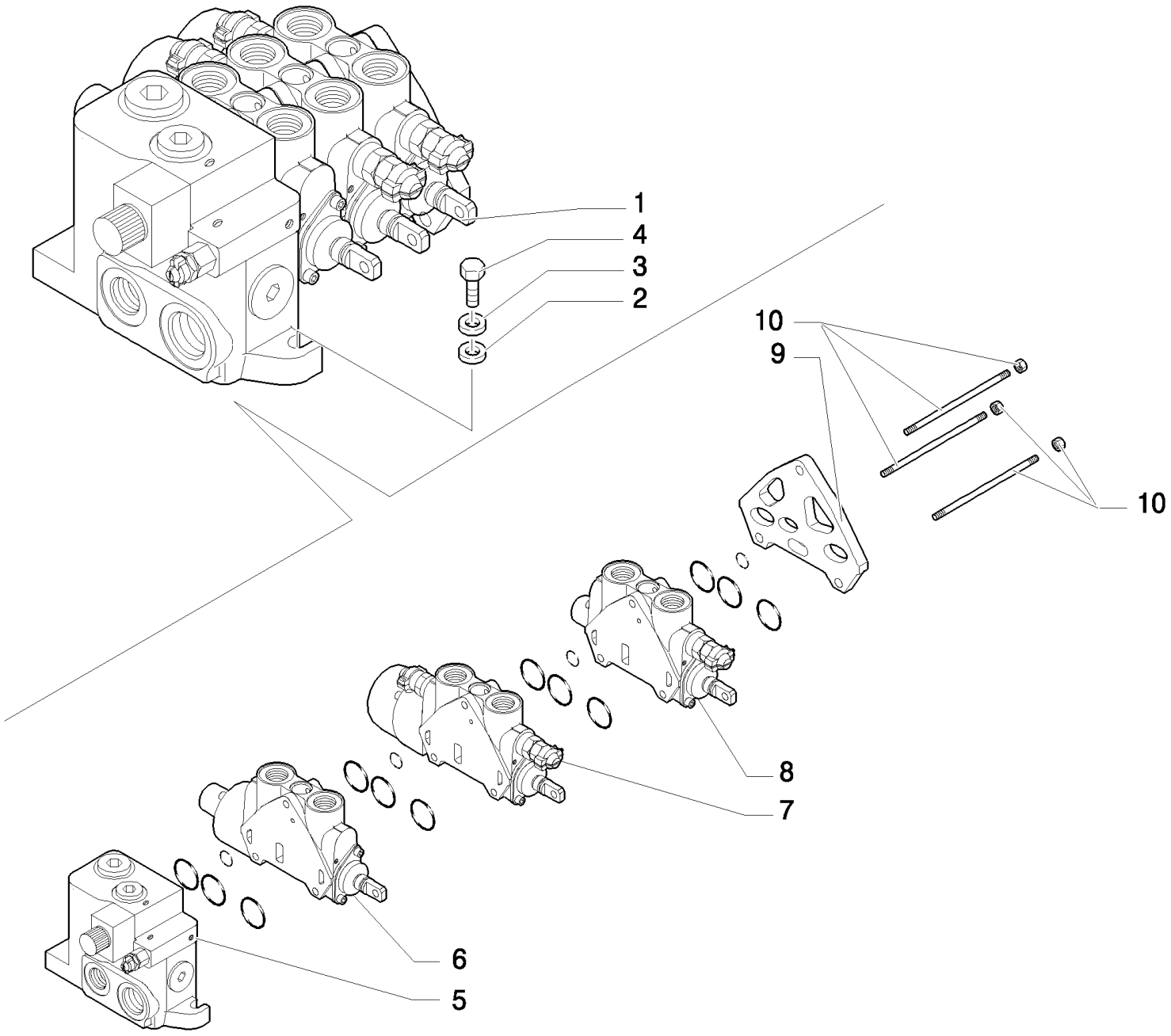

B95LR NA BACKHOE LOADER (1/06-)

708(01) THREE-SECTION CONTROL VALVE FOR LOADER

Ref	Numero de Pieza	Ctd	Descripción
1	87305111	1	VALVE, CONTROL, Rexroth 08 402 312
2	11190679	3	WASHER, SPRING, Belleville, M10.5,
3	13578621	3	WASHER, 10x30x2
4	11234721	3	BOLT, Hex, M10 x 1.25 x 45, 8.8,
5	85825468	1	VALVE SECTION, HYD, , See Page 302 02
6	87558567	1	SECTOR, , See Page 302 03
7	85825469	1	VALVE SECTION, HYD, , See Page 302 04
8	87346911	1	ELEMENT, JOINING, , See Page 708 02
9	85826924	1	SECTOR, TOOTHED,
10	85825474	1	TIE-ROD, THREADED,

708(02) THREE-SECTION CONTROL VALVE FOR LOADER

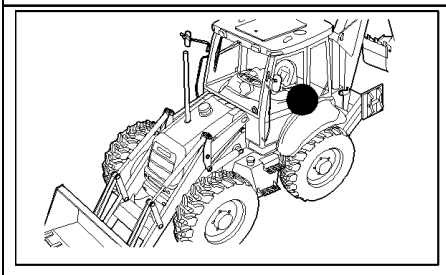

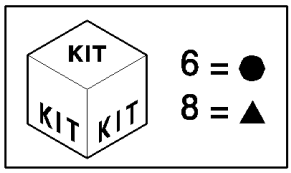

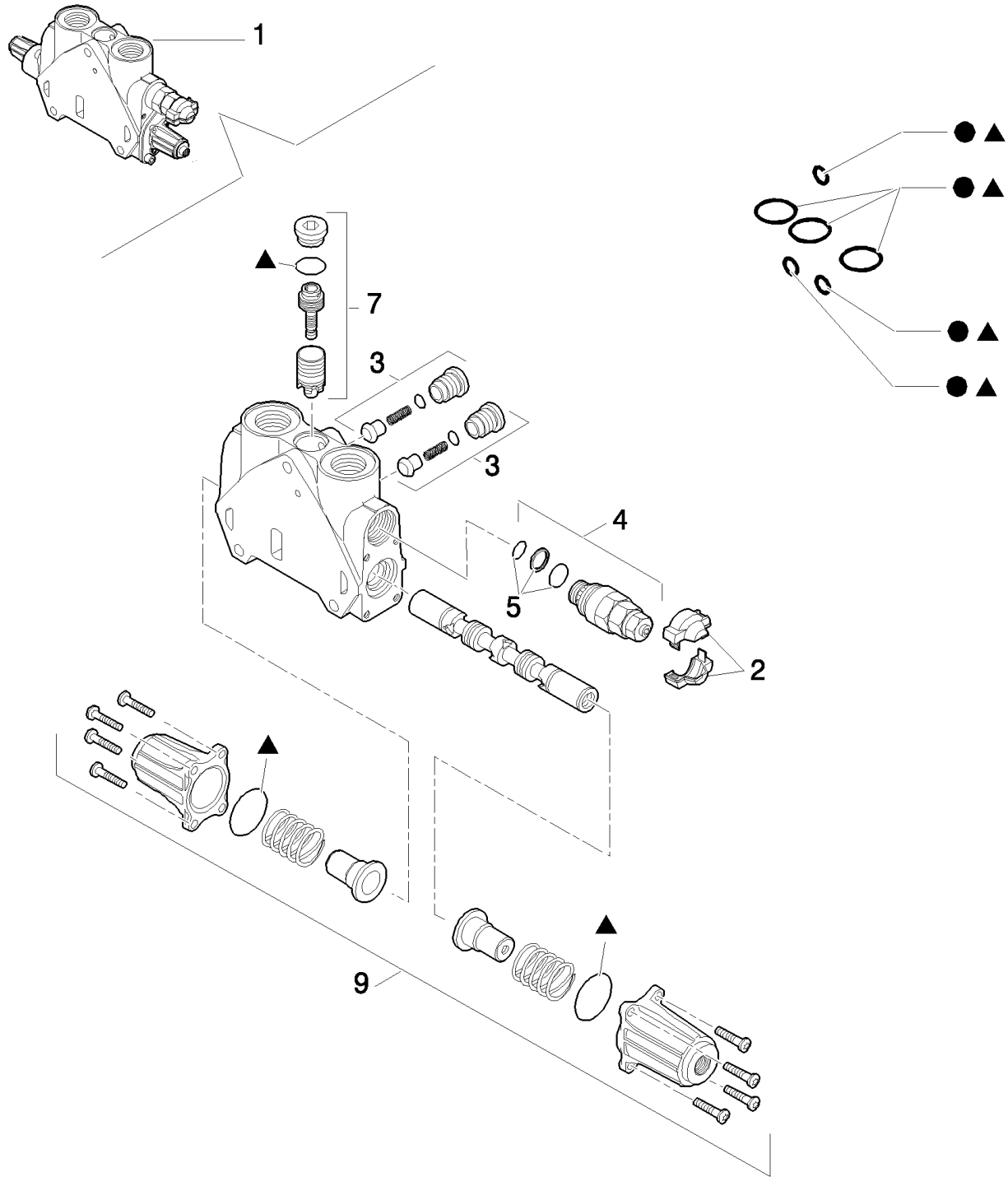

Pilot Control Version

B95LR NA BACKHOE LOADER (1/06-)

708(02) THREE-SECTION CONTROL VALVE FOR LOADER

Ref	Numero de Pieza	Ctd	Descripción
1	87346911	1	ELEMENT, JOINING,
2	85811934	1	KIT, Cover
3	85811938	2	VALVE, CHECK, Valve
4	85812116	1	VALVE, PRESSURE RELIEF, , 124 BAR, Includes 5
5	85811933	1	KIT, SEALS, Valve Seals
6	85819148	1	KIT, SEALS, Seals
7	85819378	1	KIT, SEALS, Valve
8	85824281	1	KIT, SEALS, Seals
9	87346914	1	KIT, Cover Assy

Pilot Control Version

708/ 1(01) KIT OF CONVERSION FROM 2 TO 3 SPOOLS

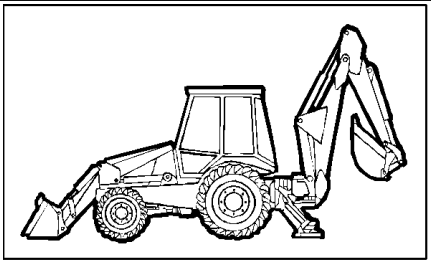

KIT KIT KIT 3= ●

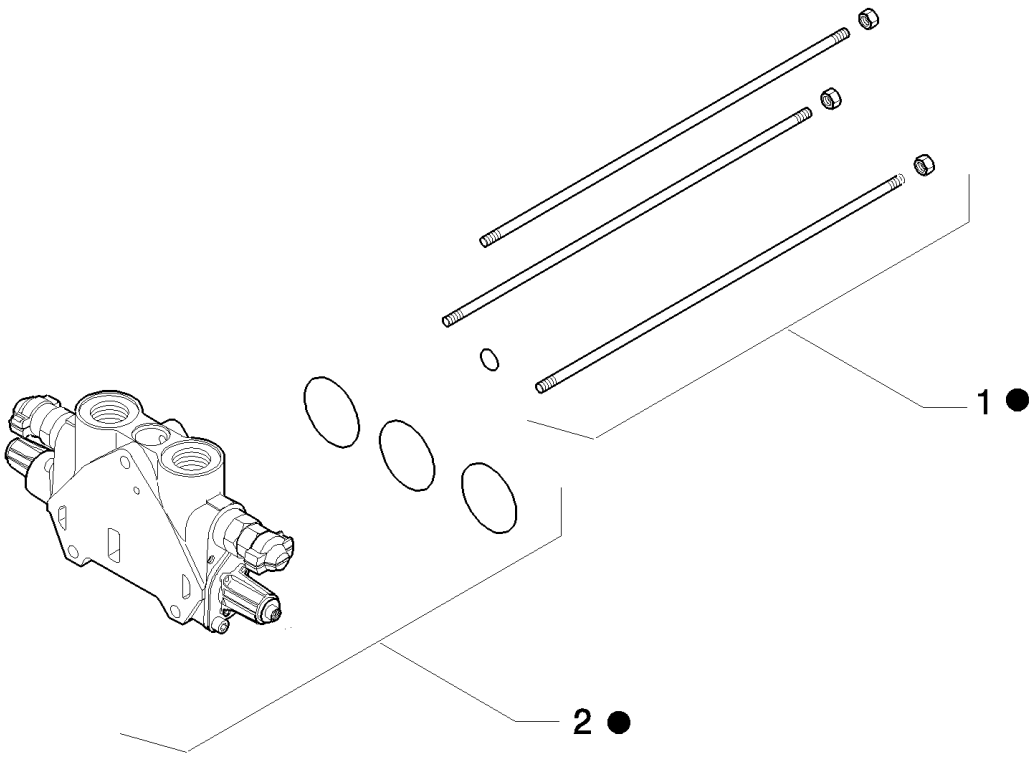

B95LR NA BACKHOE LOADER (1/06-)

708/ 1(01) KIT OF CONVERSION FROM 2 TO 3 SPOOLS

Ref	Numero de Pieza	Ctd	Descripción
1	85811916	1	KIT,
2	87306000	1	KIT,
3	87305999	1	KIT, CONVERSION,

721(01) TELESCOPIC CONTROL VALVE, 3 SECTIONS(CENTER PIVOT)

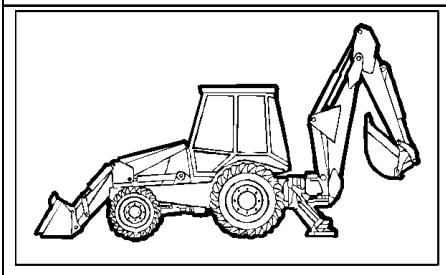

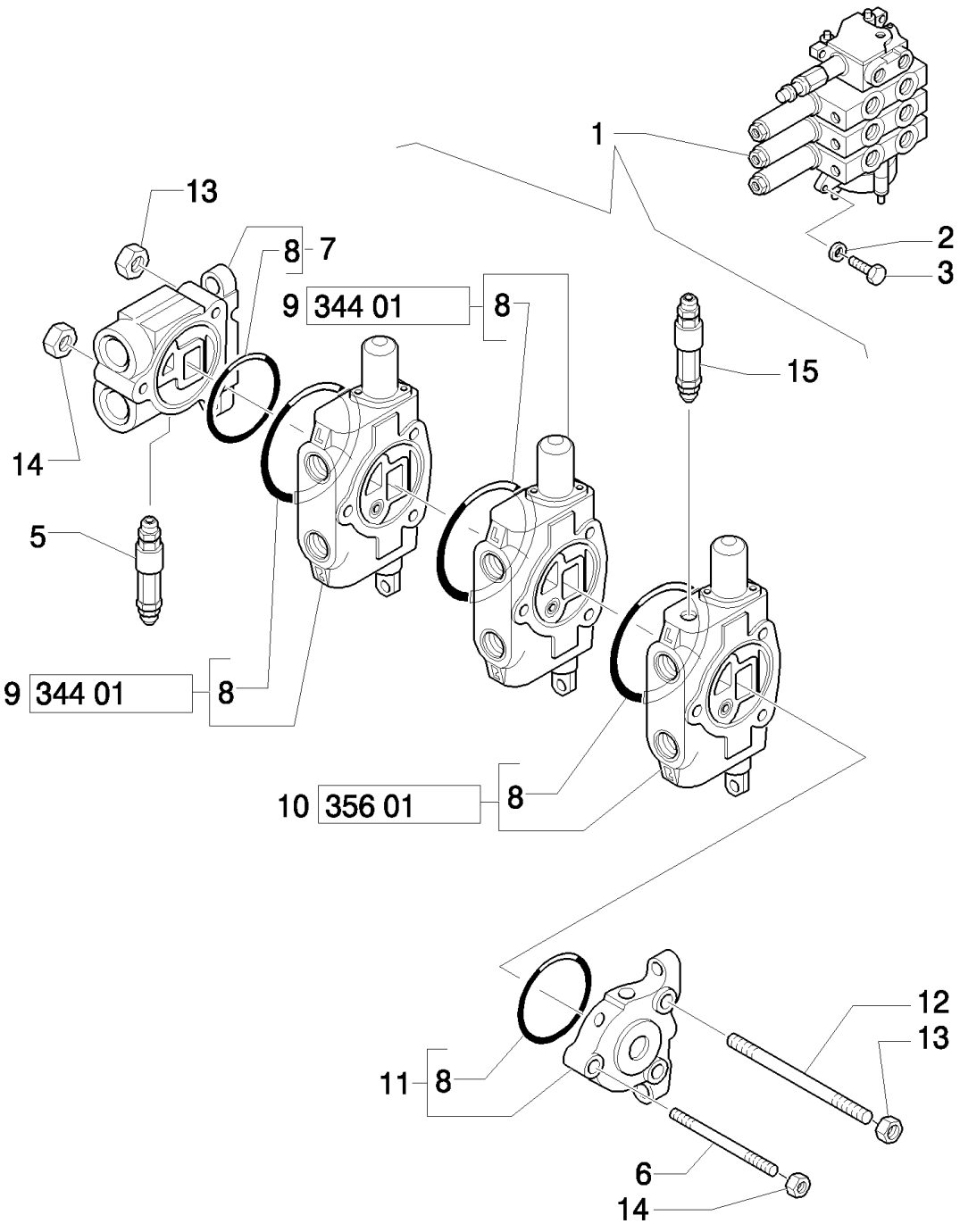

B95LR NA BACKHOE LOADER (1/06-)

721(01) TELESCOPIC CONTROL VALVE, 3 SECTIONS(CENTER PIVOT)

Ref	Numero de Pieza	Ctd	Descripción
1	85819685	1	VALVE, CONTROL, Assy, UP TO S/N 031057761
1	87331094	1	DISTRIBUTOR, , FROM TO S/N 031057762
2	11193879	3	WASHER, SPRING, Belleville, M8.4,
3	16043921	3	SCREW, M8x1,25x35
5	85819721	1	VALVE, HYDRAULIC,
6	9968528	1	STUD,
7	9968524	1	VALVE SECTION, HYD,
8	9968476	5	O-RING,
9	9970107	2	VALVE SECTION, HYD, , See Page 344
10	9968526	1	VALVE SECTION, HYD, , See Page 356
11	9968527	1	VALVE SECTION, HYD,
12	9968529	2	STUD,
13	9968441	4	NUT,
14	9968440	2	NUT,
15	9968594	1	VALVE, PRESSURE RELIEF, , UP TO S/N 031056941
15	87331276	1	VALVE, HYDRAULIC, , FROM S/N 031056942

Mechanical Version

721(02) HED TELESCOPIC CONTORL VALVE, SECTION HOSES(CENTER PIVOT)

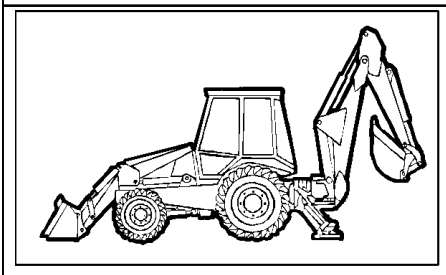

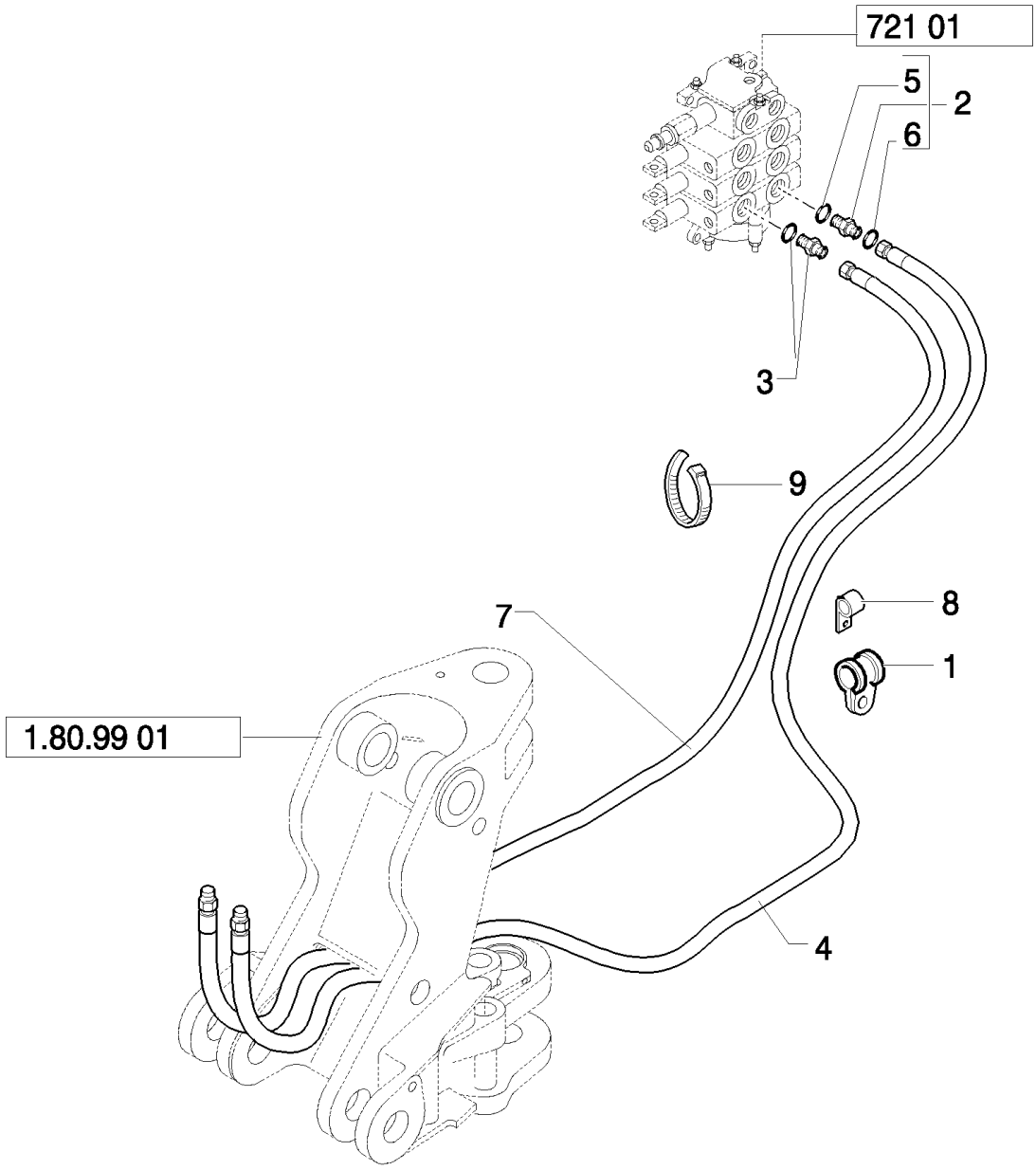

B95LR NA BACKHOE LOADER (1/06-)

721(02) HED TELESCOPIC CONTORL VALVE, SECTION HOSES(CENTER PIVOT)

Ref	Numero de Pieza	Ctd	Descripción
1	85812029	1	CLAMP,
2	390953S36	1	CONNECTOR, HYD.,
3	85803234	1	CONNECTOR, HYD.,
4	85812214	1	HOSE, FLEXIBLE, 2700mm lg,
5	128825	3	O-RING, 8-1, 90 Duro, .644" ID x .087" Thk,
6	9992298	3	O-RING, -014, 90 Duro, .489" ID x .070" Thk,
7	85812193	1	HOSE, FLEXIBLE, 2700mm lg,
8	85803393	1	CLAMP,
9	85803332	4	STRAP, CABLE, M4.8 x 180,

Mechanical Version

721(03) HED CYLINDER PISTON END HYDRAULIC LINES(CENTER PIVOT)

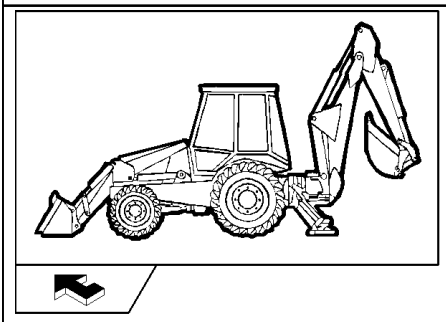

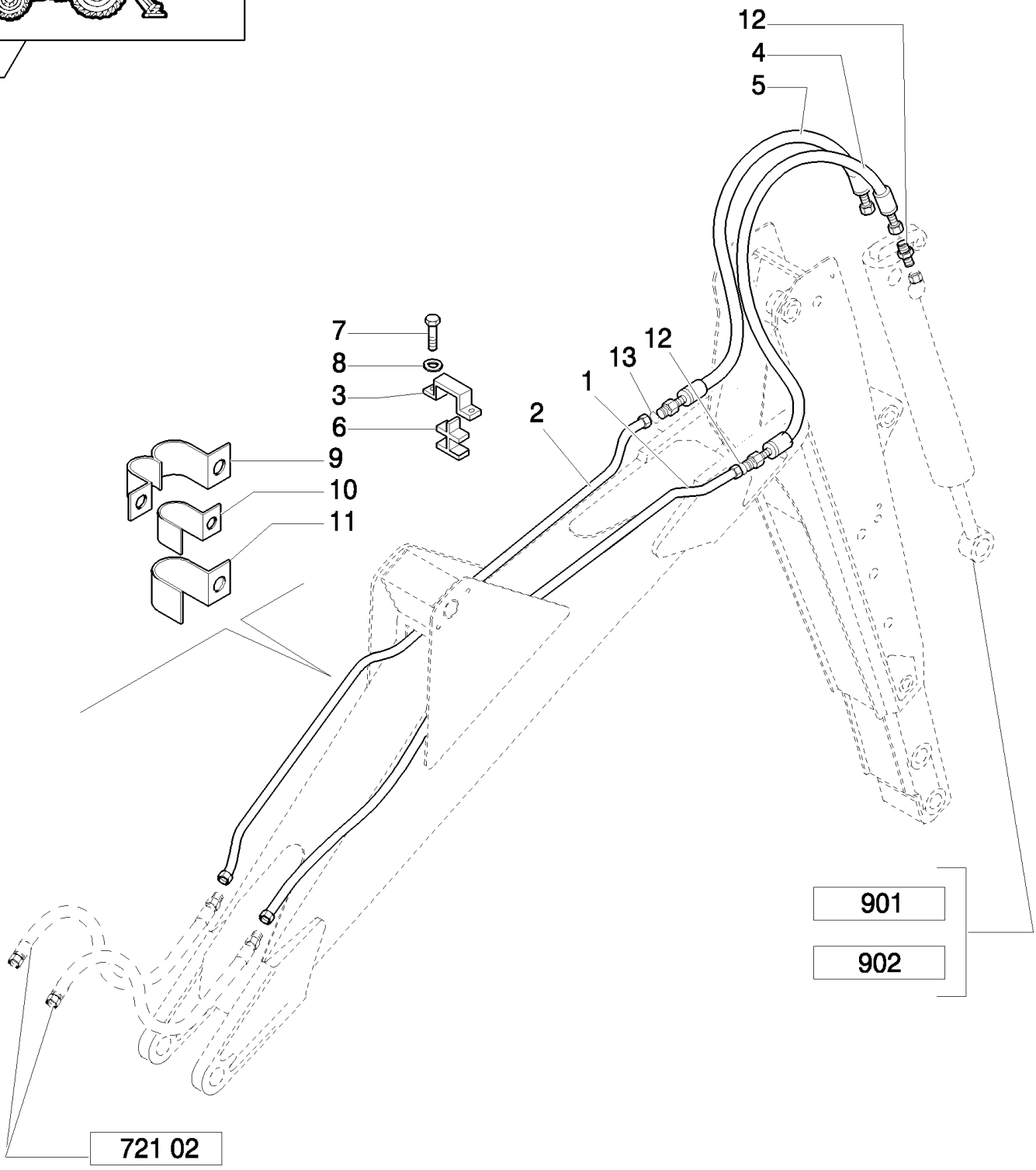

B95LR NA BACKHOE LOADER (1/06-)

721(03) HED CYLINDER PISTON END HYDRAULIC LINES(CENTER PIVOT)

Ref	Numero de Pieza	Ctd	Descripción
1	85815642	1	TUBE, HYD, 16 mm OD Tube
2	85815640	1	TUBE, HYD, 12 mm OD Tube
3	85803402	1	PLATE,
4	87619506	1	HOSE, FLEXIBLE, , Includes 13
5	85817108	1	HOSE, FLEXIBLE, , Includes 14
6	85802532	1	CLIP, HOSE,
7	16043621	2	BOLT, Hex, M8 x 25, 8.8,
8	11193879	2	WASHER, SPRING, Belleville, M8.4,
9	85802529	2	CLAMP,
10	85802527	2	CLAMP,
11	85802528	2	CLAMP,
12	83962539	1	CONNECTOR, HYD.,
13	9992069	1	O-RING, -016, 90 Duro, .614" ID x .070" Thk,
14	9992298	1	O-RING, -014, 90 Duro, .489" ID x .070" Thk,

Mechanical Version

B95LR NA BACKHOE LOADER (1/06-)

721(04) HED CYLINDER ROD END HYDRAULIC LINES(CENTER PIVOT)

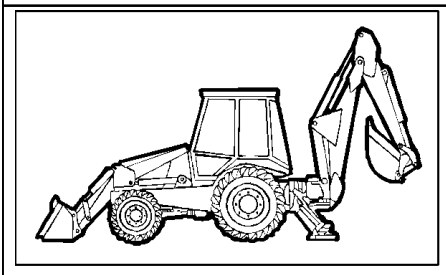

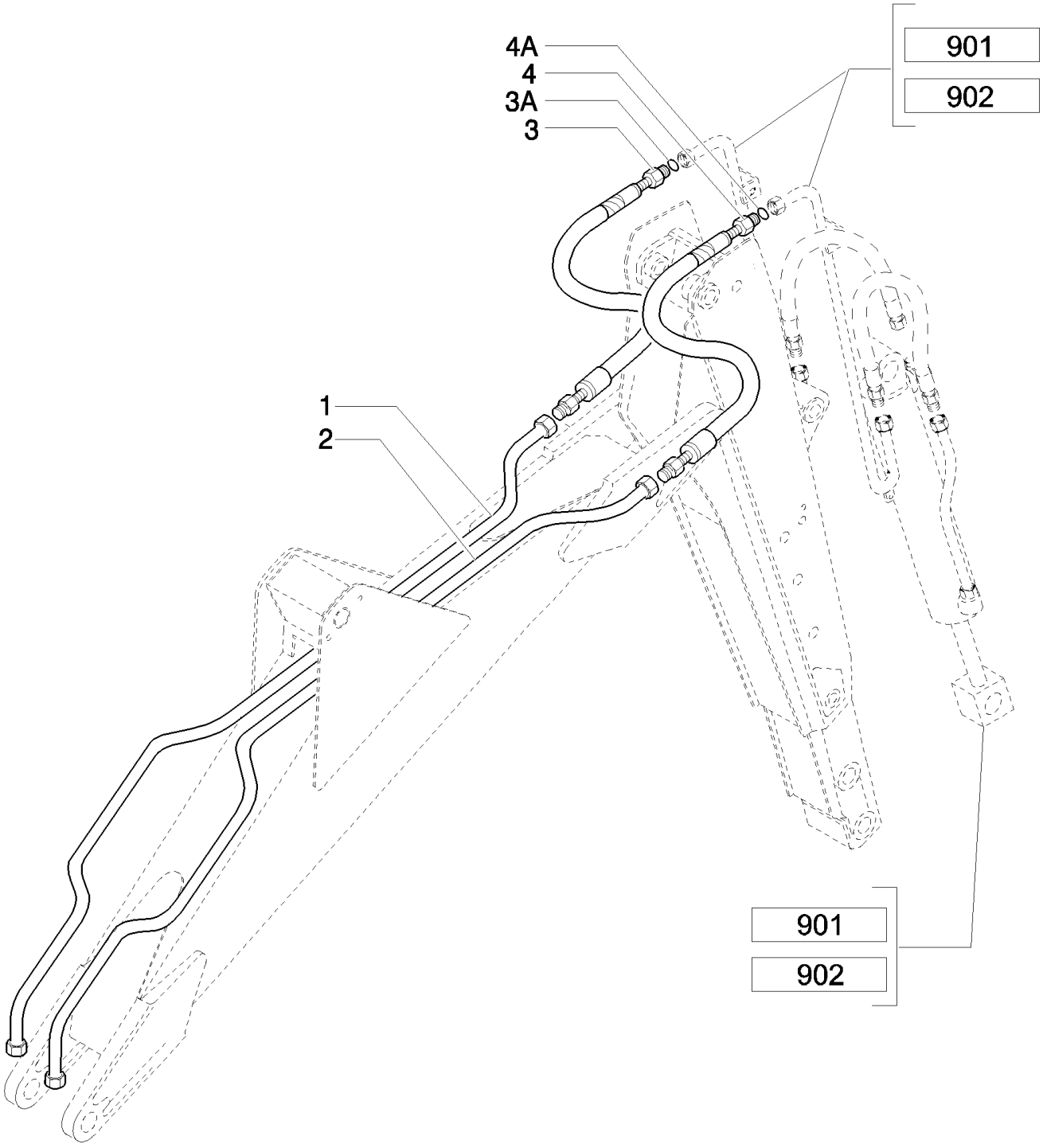

Mechanical Version

B95LR NA BACKHOE LOADER (1/06-)

721(04) HED CYLINDER ROD END HYDRAULIC LINES(CENTER PIVOT)

Ref	Numero de Pieza	Ctd	Descripción
1	85815674	1	TUBE, HYD, 20 mm OD Tube
2	85815676	1	TUBE, HYD, 16 mm OD Tube
3	85817106	1	HOSE, FLEXIBLE, , Includes 3A
3A	9991976	2	O-RING, -018, 90 Duro, .739" ID x .070" Thk,
4	85817107	1	HOSE, FLEXIBLE, , Includes 4A
4A	9992069	2	O-RING, -016, 90 Duro, .614" ID x .070" Thk,

Mechanical Version

721(05) HED FOOT PEDAL, CABLE & DECALS(CENTER PIVOT)

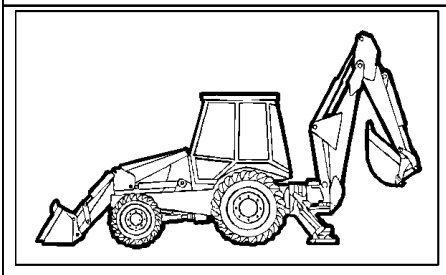

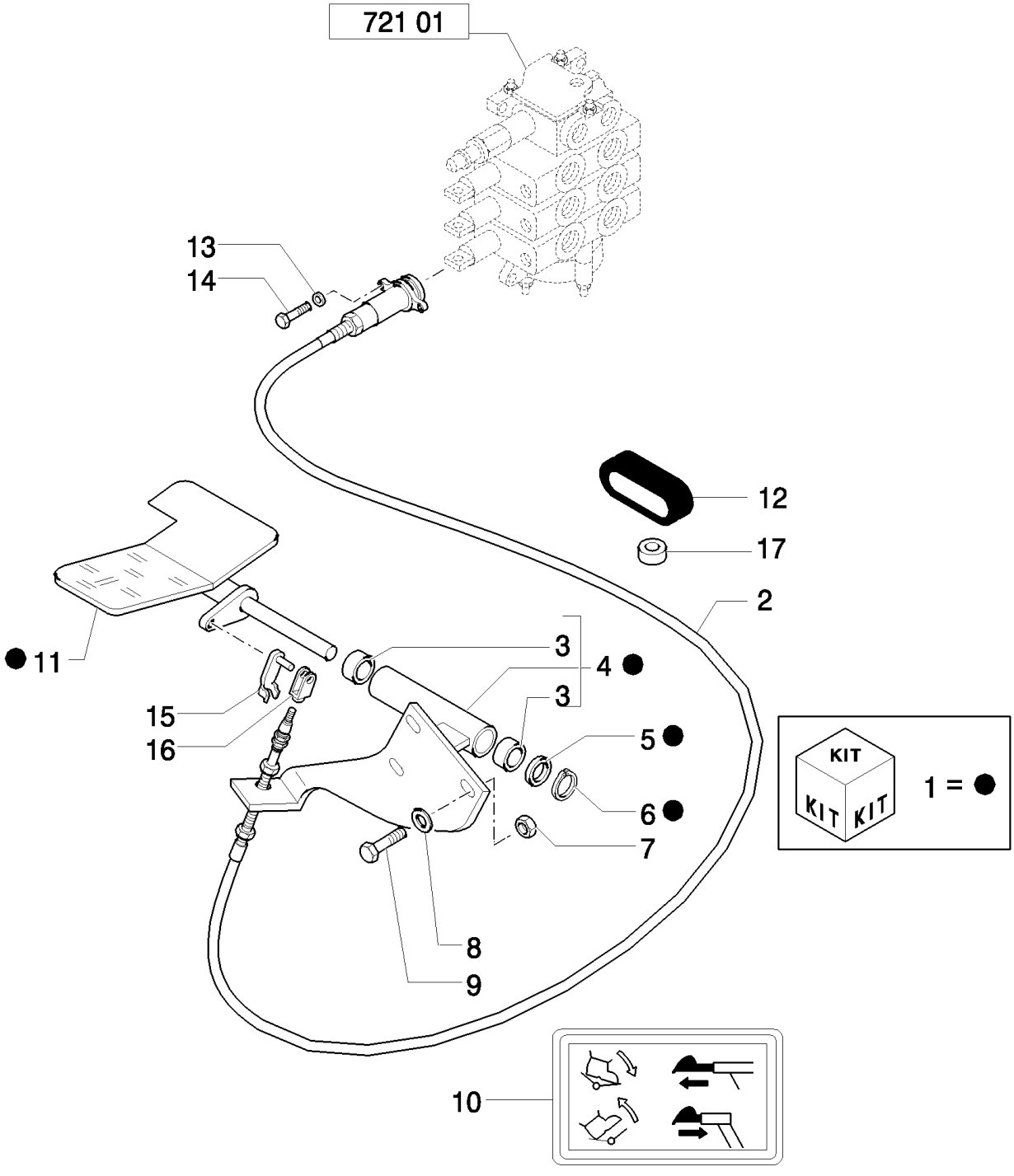

B95LR NA BACKHOE LOADER (1/06-)

721(05) HED FOOT PEDAL, CABLE & DECALS(CENTER PIVOT)

Ref	Numero de Pieza	Ctd	Descripción
1	85802509	1	PEDAL, Assy
2	85813103	1	CABLE, , Includes 13 To16
3	85802494	2	BUSHING,
4	85801599	1	PLATE,
5	14496901	1	WASHER, M16 x 30 x 3,
6	N663114S36	1	RING, SNAP,
7	16104111	3	NUT, LOCK, M8 x 1.25, Cl 8,
8	16043621	3	BOLT, Hex, M8 x 25, 8.8,
9	11193879	3	WASHER, SPRING, Belleville, M8.4,
10	85803786	1	DECAL,
11	85802510	1	PEDAL,
12	85803517	2	BUSHING, RUBBER,
13	85813201	4	WASHER,
14	85813200	4	SCREW,
15	85813186	2	CLIP,
16	85813187	2	CLEVIS,
17	85802903	1	INSULATOR,

Mechanical Version

724(01) HYDRAULIC SYSTEM FOR HAMMER (CENTER PIVOT)

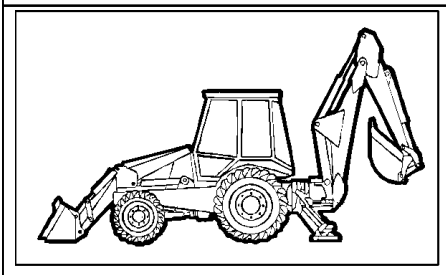

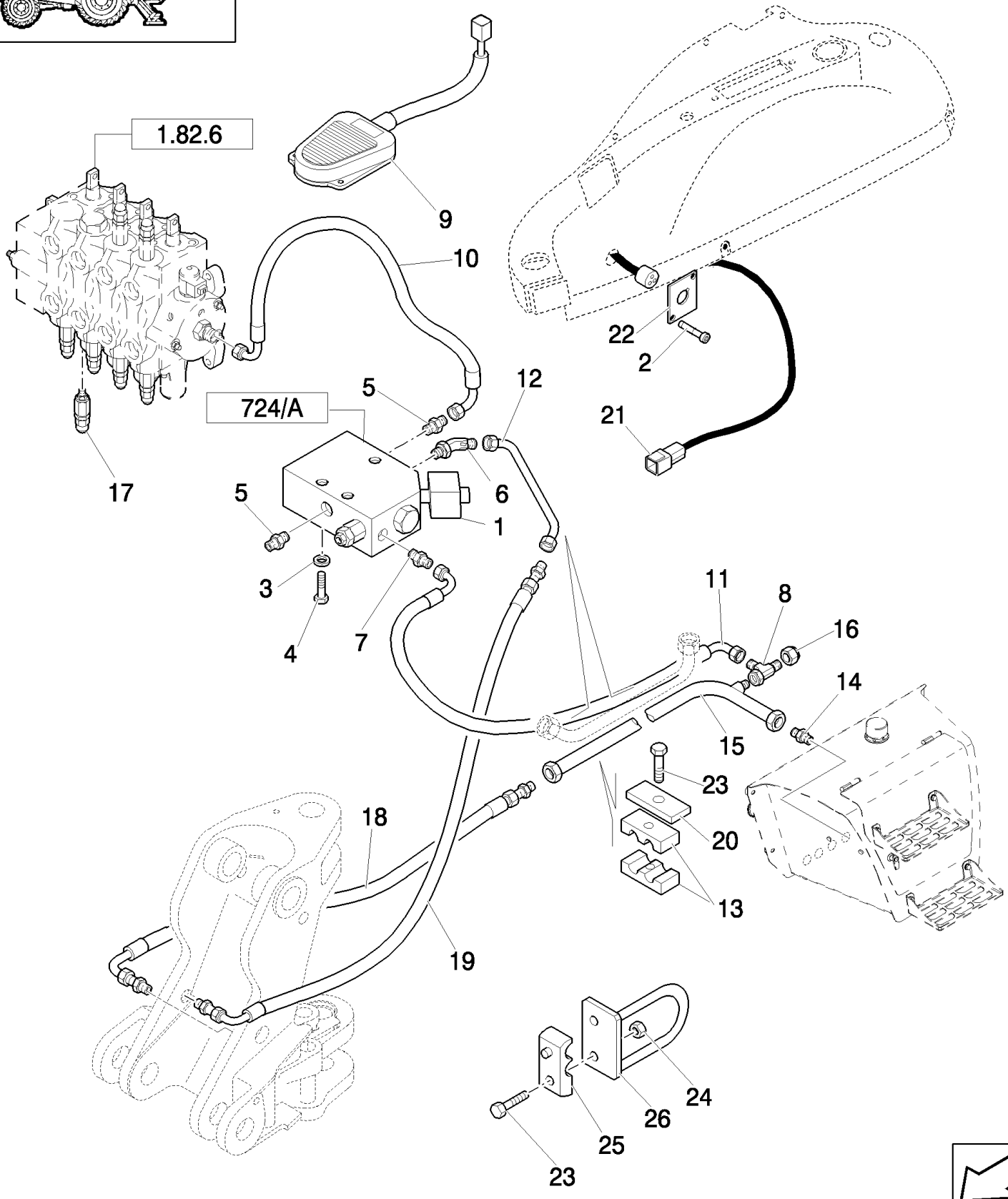

B95LR NA BACKHOE LOADER (1/06-)

724(01) HYDRAULIC SYSTEM FOR HAMMER (CENTER PIVOT)

Ref	Numero de Pieza	Ctd	Descripción
1	87358199	1	VALVE, HYDRAULIC,
2	13272477	2	SCREW, Cross Pan Hd, M4 x 20, 12.9,
3	11193879	3	WASHER, SPRING, Belleville, M8.4,
4	16044821	3	BOLT, Hex, M8 x 80, 8.8,
5	85803486	2	CONNECTOR, HYD.,
6	85803487	1	ELBOW,
7	83963371	1	CONNECTOR, HYD.,
8	85807876	1	TEE,
9	85826123	1	SWITCH ASSY,
10	85803428	1	HOSE, FLEXIBLE, 850mm lg,
11	85817633	1	HOSE, FLEXIBLE,
12	85817629	1	TUBE, HYD,
13	87390530	1	CLAMP,
14	85802801	1	CONNECTOR, HYD.,
15	85826987	1	TUBE, HYD,
16	83987627	1	CAP,
17	9968595	1	VALVE, PRESSURE RELIEF,
18	85817635	1	HOSE, FLEXIBLE,
19	85817634	1	HOSE, FLEXIBLE,
20	87390531	1	PLATE,
21	85819237	1	HARNESS, WIRE,
22	85816760	1	PLATE,
23	16044221	2	BOLT, Hex, M8 x 50, 8.8,
24	16104111	1	NUT, LOCK, M8 x 1.25, Cl 8,
25	85804442	2	BRACKET,
26	85802214	2	SUPPORT,

724(02) HYDRAULIC SYSTEM FOR HAMMER (CENTER PIVOT)

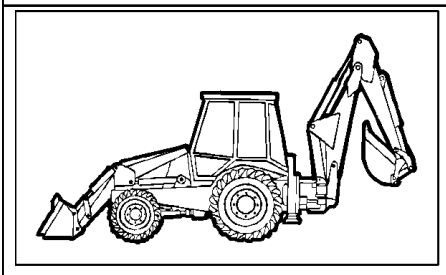

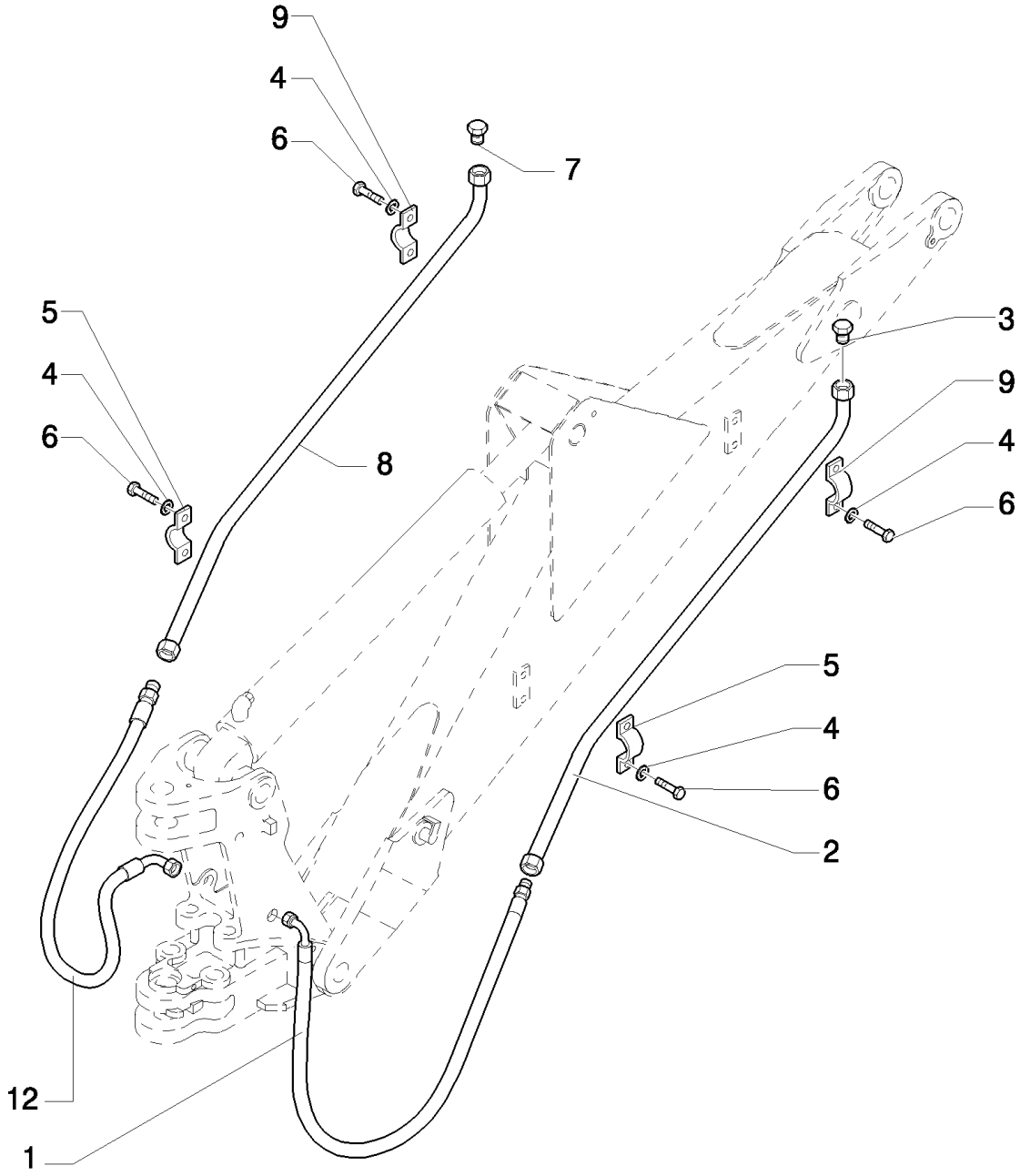

B95LR NA BACKHOE LOADER (1/06-)

724(02) HYDRAULIC SYSTEM FOR HAMMER (CENTER PIVOT)

Ref	Numero de Pieza	Ctd	Descripción
1	85819619	1	HOSE, FLEXIBLE,
2	85802454	1	TUBE, HYD,
3	85801397	1	PLUG,
4	11190579	8	WASHER, SPRING, Belleville, M10.5,
5	87310951	2	CLAMP,
6	10979221	8	BOLT, Hex, M10 x 16, 8.8, Full Thd, M6x16
7	85801452	1	PLUG,
8	85803184	1	TUBE, HYD,
9	87310952	2	CLAMP,
12	85819618	1	HOSE, FLEXIBLE,

724/ A(01) REAR HAMMER CONTROL VALVE

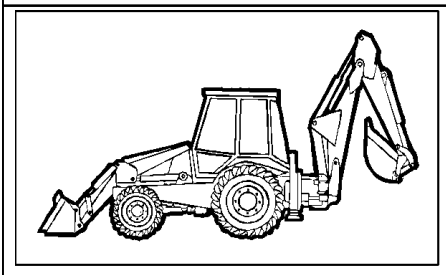

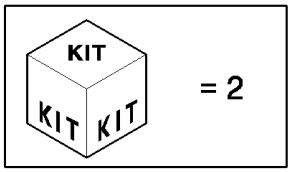

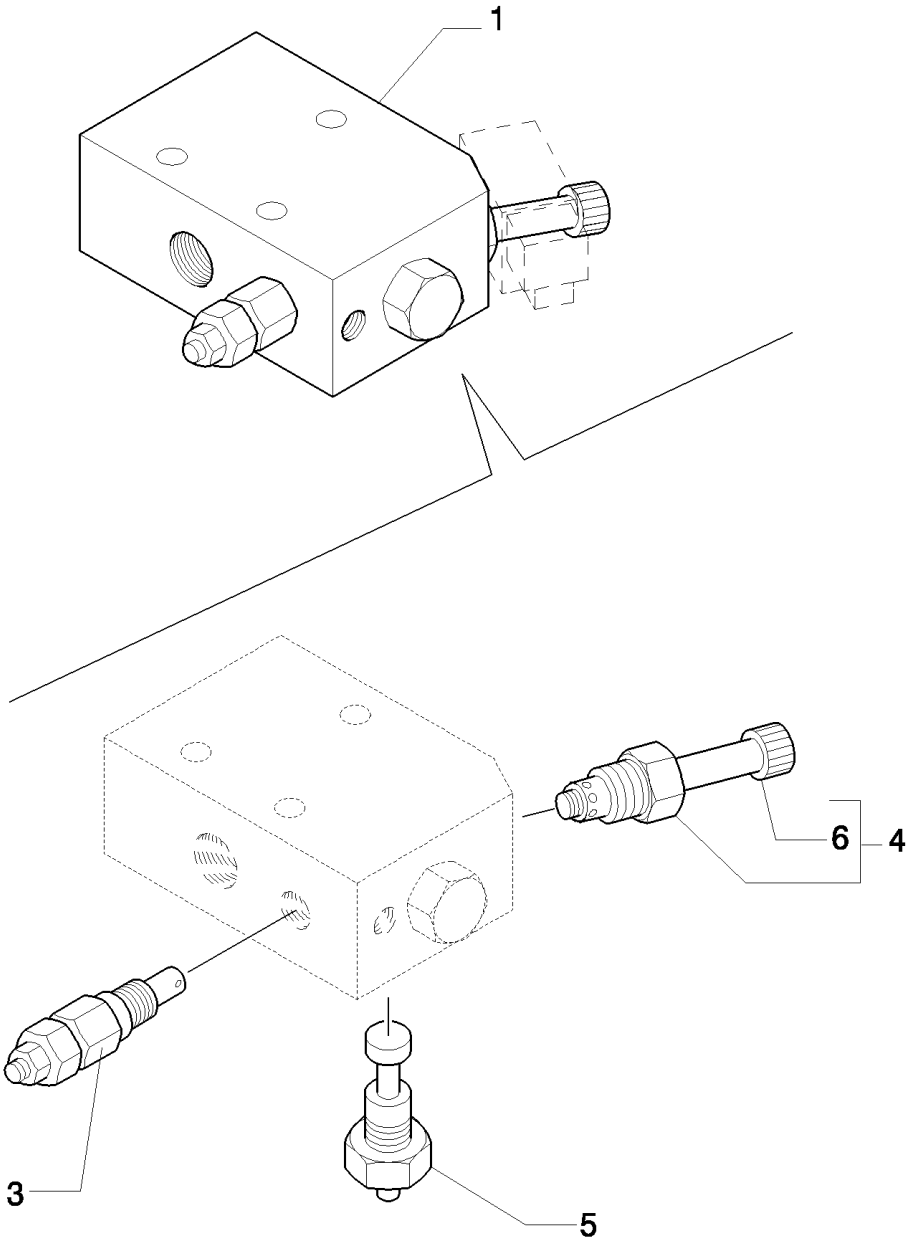

B95LR NA BACKHOE LOADER (1/06-)

724/ A(01) REAR HAMMER CONTROL VALVE

Ref	Numero de Pieza	Ctd	Descripción
1	87358199	1	VALVE, HYDRAULIC, ASSY
2	9970181	1	KIT, SEALS, Gaskets
3	9970178	1	VALVE, PRESSURE RELIEF, Assy
4	9970180	1	VALVE, SOLENOID, Assy
5	9970179	1	REGULATOR, Assy
6	9970384	1	NUT,

724/ 3(01) HYDRAULIC SYSTEM FOR HAMMER (CENTER PIVOT)

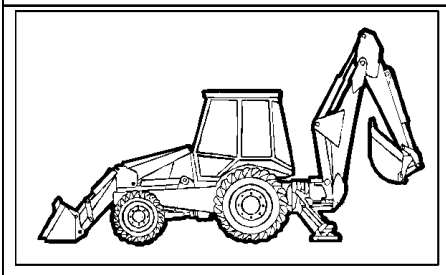

Pilot Control Version

B95LR NA BACKHOE LOADER (1/06-)

724/ 3(01) HYDRAULIC SYSTEM FOR HAMMER (CENTER PIVOT)

Ref	Numero de Pieza	Ctd	Descripción
1	87358199	1	VALVE, HYDRAULIC,
2	87357715	1	SENDER UNIT,
3	11193879	3	WASHER, SPRING, Belleville, M8.4,
4	16044821	3	BOLT, Hex, M8 x 80, 8.8,
5	85803486	2	CONNECTOR, HYD.,
6	85803487	1	ELBOW,
7	390951S36	1	CONNECTOR, HYD.,
8	85807876	1	TEE,
9	85826123	1	SWITCH ASSY,
10	85802776	1	HOSE, FLEXIBLE, 1150mm lg,
11	85803428	1	HOSE, FLEXIBLE, 850mm lg,
12	85819237	1	HARNESS, WIRE,
13	85816760	1	PLATE,
14	13272477	2	SCREW, Cross Pan Hd, M4 x 20, 12.9,
15	85817633	1	HOSE, FLEXIBLE,
16	85817629	1	TUBE, HYD,
17	87390530	1	CLAMP,
18	85802214	2	SUPPORT,
19	16104111	1	NUT, LOCK, M8 x 1.25, Cl 8,
20	85804442	2	BRACKET,
21	16044221	1	BOLT, Hex, M8 x 50, 8.8,
22	85802801	1	CONNECTOR, HYD., 1-11/16"-12 ORSx1-5/16"-12 SAE O-ring
23	85826987	1	TUBE, HYD, , Only for LB 90.B - LB95.B - LB110.B - LB115.B
24	83987627	1	CAP,
25	85812116	1	VALVE, PRESSURE RELIEF,
26	85817635	1	HOSE, FLEXIBLE, 1400 mm (55-1/8 in)
27	85817634	1	HOSE, FLEXIBLE, 1750 mm (68-29/32 in)
28	87390531	1	PLATE,

Pilot Control Version

724/ 3(02) HYDRAULIC SYSTEM FOR HAMMER (CENTER PIVOT)

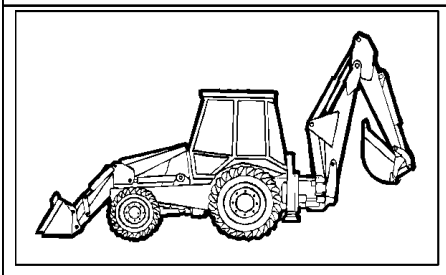

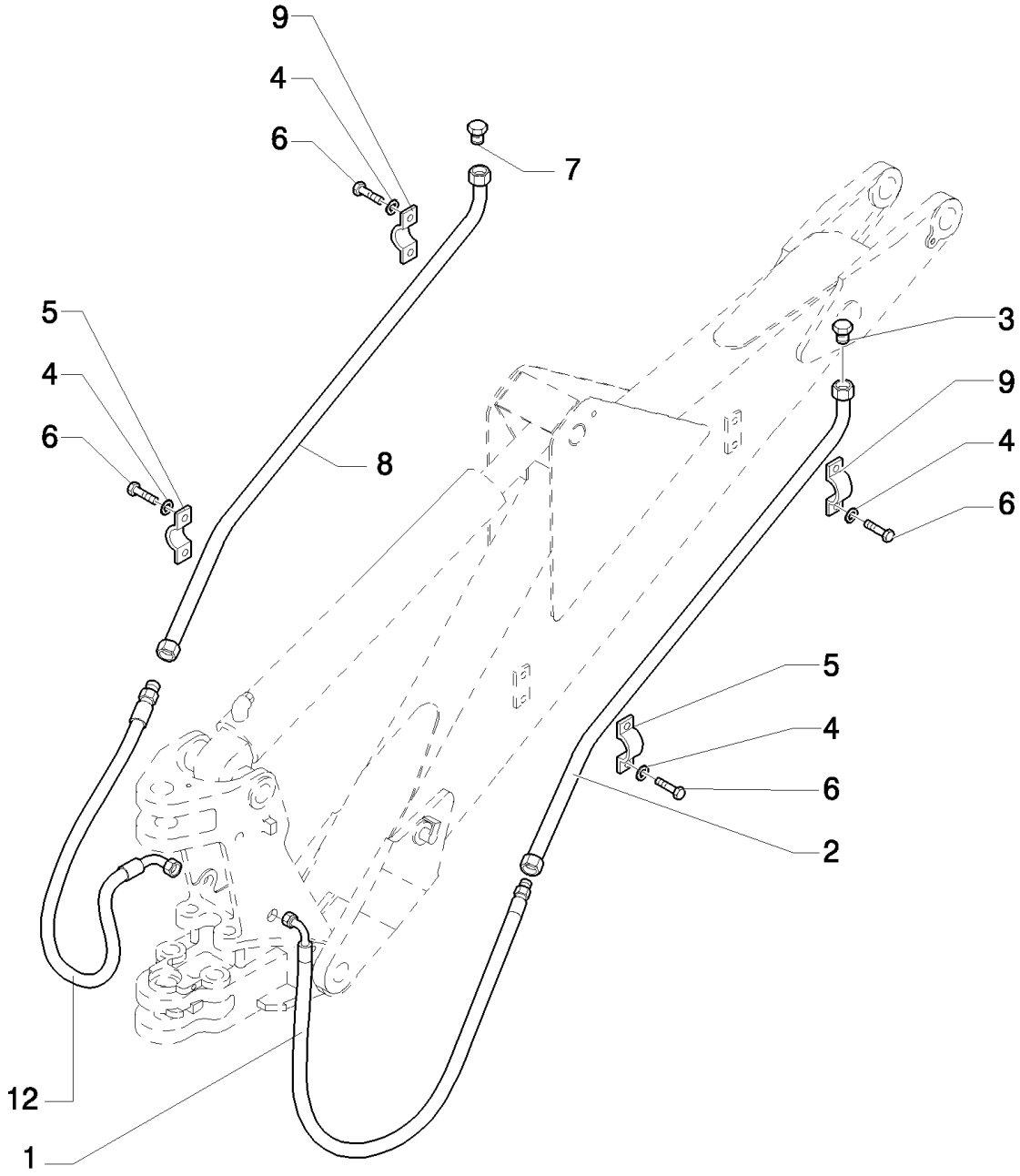

Pilot Control Version

B95LR NA BACKHOE LOADER (1/06-)

724/ 3(02) HYDRAULIC SYSTEM FOR HAMMER (CENTER PIVOT)

Ref	Numero de Pieza	Ctd	Descripción
1	85819619	1	HOSE, FLEXIBLE,
2	85802454	1	TUBE, HYD,
3	85801397	1	PLUG,
4	11190579	8	WASHER, SPRING, Belleville, M10.5,
5	87310951	2	CLAMP,
6	10979221	4	BOLT, Hex, M10 x 16, 8.8, Full Thd, M6x16
7	85801452	1	PLUG,
8	85803184	1	TUBE, HYD,
9	87310952	2	CLAMP,
12	85819618	1	HOSE, FLEXIBLE,

Pilot Control Version

724/ 5(01) HYDRAULIC SYSTEM FOR HAMMER (4WS)

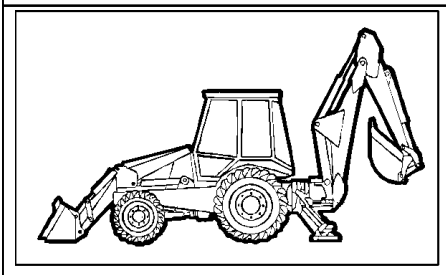

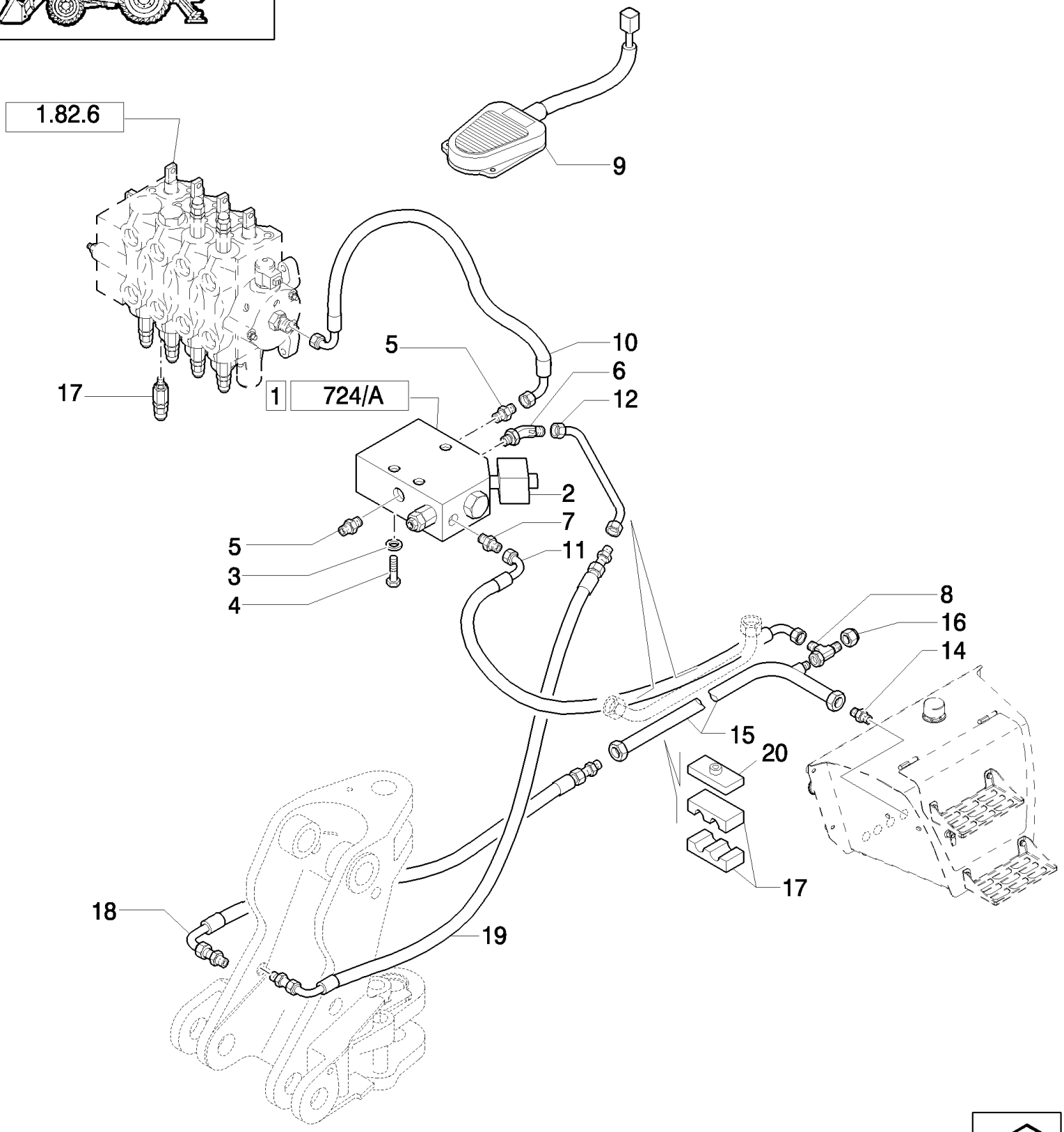

B95LR NA BACKHOE LOADER (1/06-)

724/ 5(01) HYDRAULIC SYSTEM FOR HAMMER (4WS)

Ref	Numero de Pieza	Ctd	Descripción
1	87358199	1	VALVE, HYDRAULIC,
2	87357715	1	SENDER UNIT,
3	11193879	3	WASHER, SPRING, Belleville, M8.4,
4	16044821	3	BOLT, Hex, M8 x 80, 8.8,
5	85803486	2	CONNECTOR, HYD.,
6	85803487	1	ELBOW,
7	390951S36	1	CONNECTOR, HYD.,
8	85807876	1	TEE,
9	85826123	1	SWITCH ASSY,
10	85803428	1	HOSE, FLEXIBLE, 850mm lg,
11	85817633	1	HOSE, FLEXIBLE,
12	85817629	1	TUBE, HYD,
13	87390530	1	CLAMP,
14	85802801	1	CONNECTOR, HYD., 1-11/16"-12 ORSx1-5/16"-12 SAE O-ring
15	85826987	1	TUBE, HYD, , BSN XXX
16	83987627	1	CAP, , ASN XXX
17	85812116	1	VALVE, PRESSURE RELIEF,
18	85817635	1	HOSE, FLEXIBLE, 1400 mm (55-1/8 in)
19	85817634	1	HOSE, FLEXIBLE, 1750 mm (68-29/32 in)
20	87390531	1	PLATE,

724/ 6(01) HYDRAULIC SYSTEM FOR HAMMER (SIDE SHIFT EUROPA)

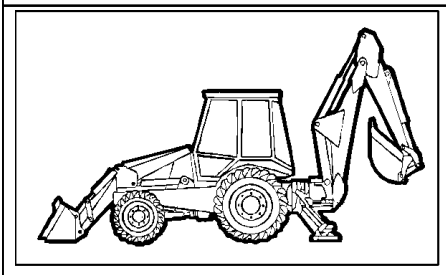

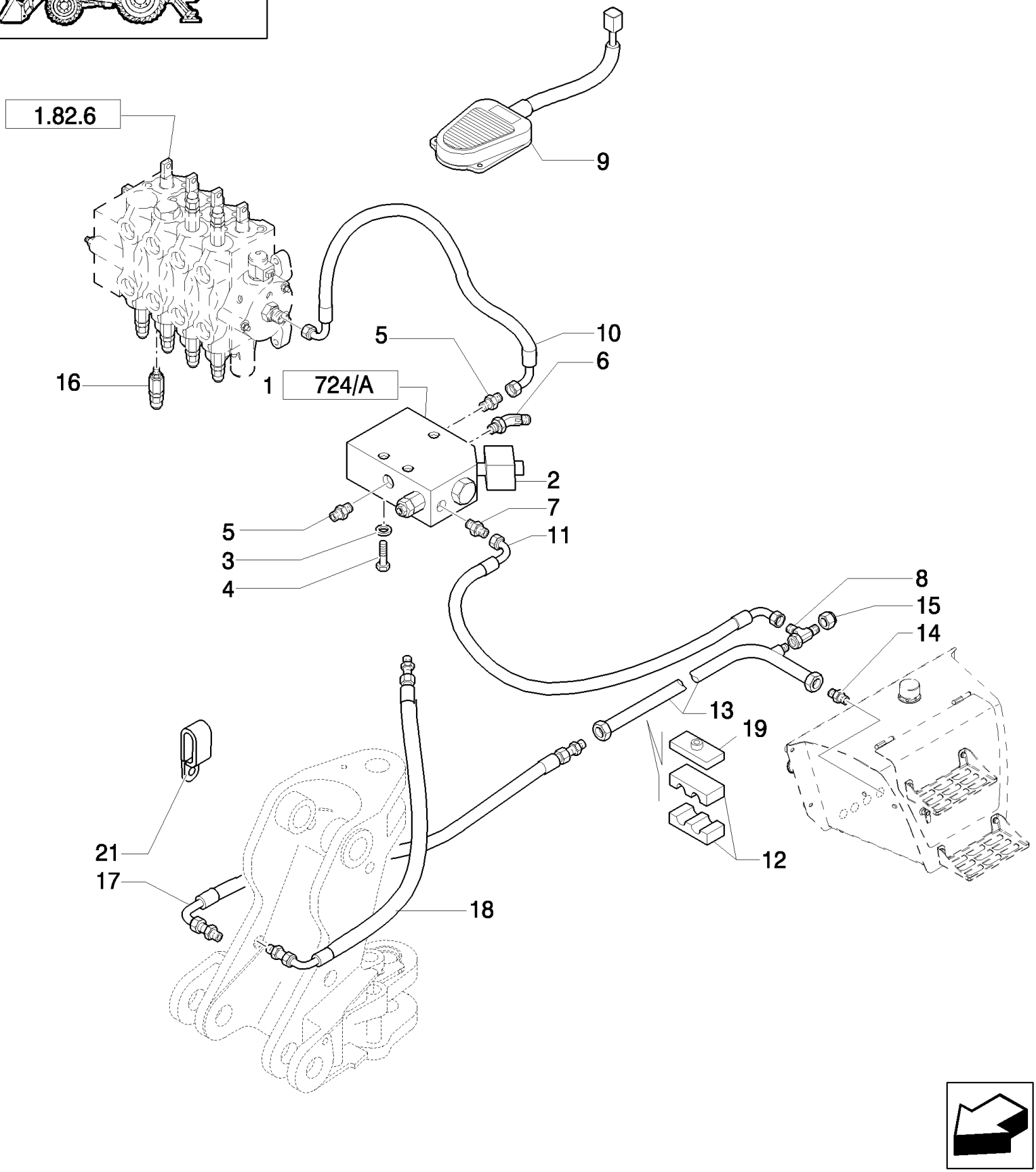

B95LR NA BACKHOE LOADER (1/06-)

724/ 6(01) HYDRAULIC SYSTEM FOR HAMMER (SIDE SHIFT EUROPA)

Ref	Numero de Pieza	Ctd	Descripción
1	87358199	1	VALVE, HYDRAULIC,
2	87357715	1	SENDER UNIT,
3	11193879	3	WASHER, SPRING, Belleville, M8.4,
4	16044821	3	BOLT, Hex, M8 x 80, 8.8,
5	85803486	2	CONNECTOR, HYD.,
6	85803487	1	ELBOW,
7	390951S36	1	CONNECTOR, HYD.,
8	85807876	2	TEE,
9	85826123	1	SWITCH ASSY,
10	85803428	1	HOSE, FLEXIBLE, 850mm lg,
11	85817633	1	HOSE, FLEXIBLE,
12	87390530	1	CLAMP,
13	85802801	1	CONNECTOR, HYD., 1-11/16"-12 ORSx1-5/16"-12 SAE O-ring
14	85827926	1	TUBE, HYD, , BSN XXX
15	83987627	1	CAP,
16	85812116	1	VALVE, PRESSURE RELIEF,
17	85820122	1	HOSE, FLEXIBLE,
18	85820123	1	HOSE, FLEXIBLE,
19	87390531	1	PLATE,
21	85803346	2	BRACKET,

725(01) HAMMER KIT FROM LIFTING ARM TO DEMOLITION ARM

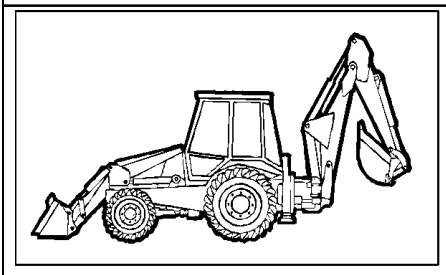

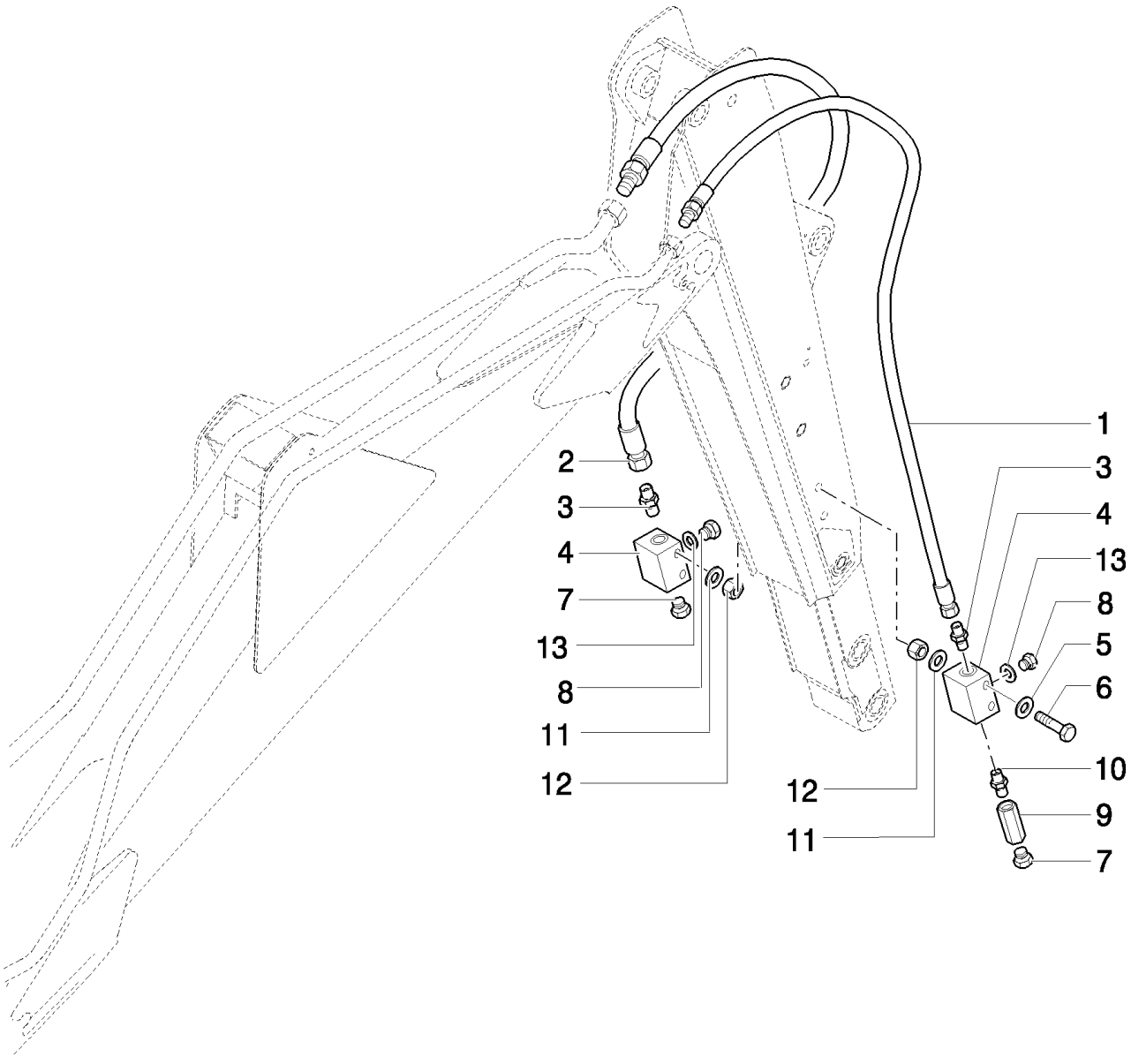

B95LR NA BACKHOE LOADER (1/06-)

725(01) HAMMER KIT FROM LIFTING ARM TO DEMOLITION ARM

Ref	Numero de Pieza	Ctd	Descripción
1	85819621	1	HOSE, FLEXIBLE,
2	85819620	1	HOSE, FLEXIBLE,
3	85803486	2	CONNECTOR, HYD.,
4	85802247	2	BLOCK,
5	11193879	4	WASHER, SPRING, Belleville, M8.4,
6	16045021	4	BOLT, Hex, M8 x 90, 8.8,
7	85802457	2	PLUG,
8	85803409	2	PLUG,
9	85802372	1	VALVE, CHECK, 10 Bar
10	85804879	1	CONNECTOR, HYD.,
11	12647121	6	WASHER, M8 x 20 x 3,
12	14048211	2	NUT, LOCK, M8 x 1.25, Cl 8,
13	167269	2	O-RING, 10-1, 90 Duro, .755" ID x .097" Thk,

Mechanical Version

725/ 1(01) 4X1 & 6X1 BUCKET HYDRAULIC LINES

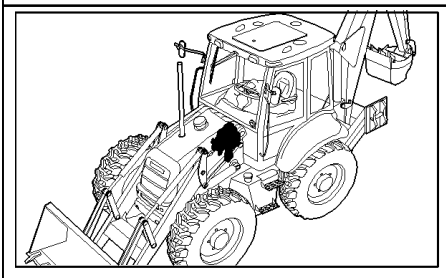

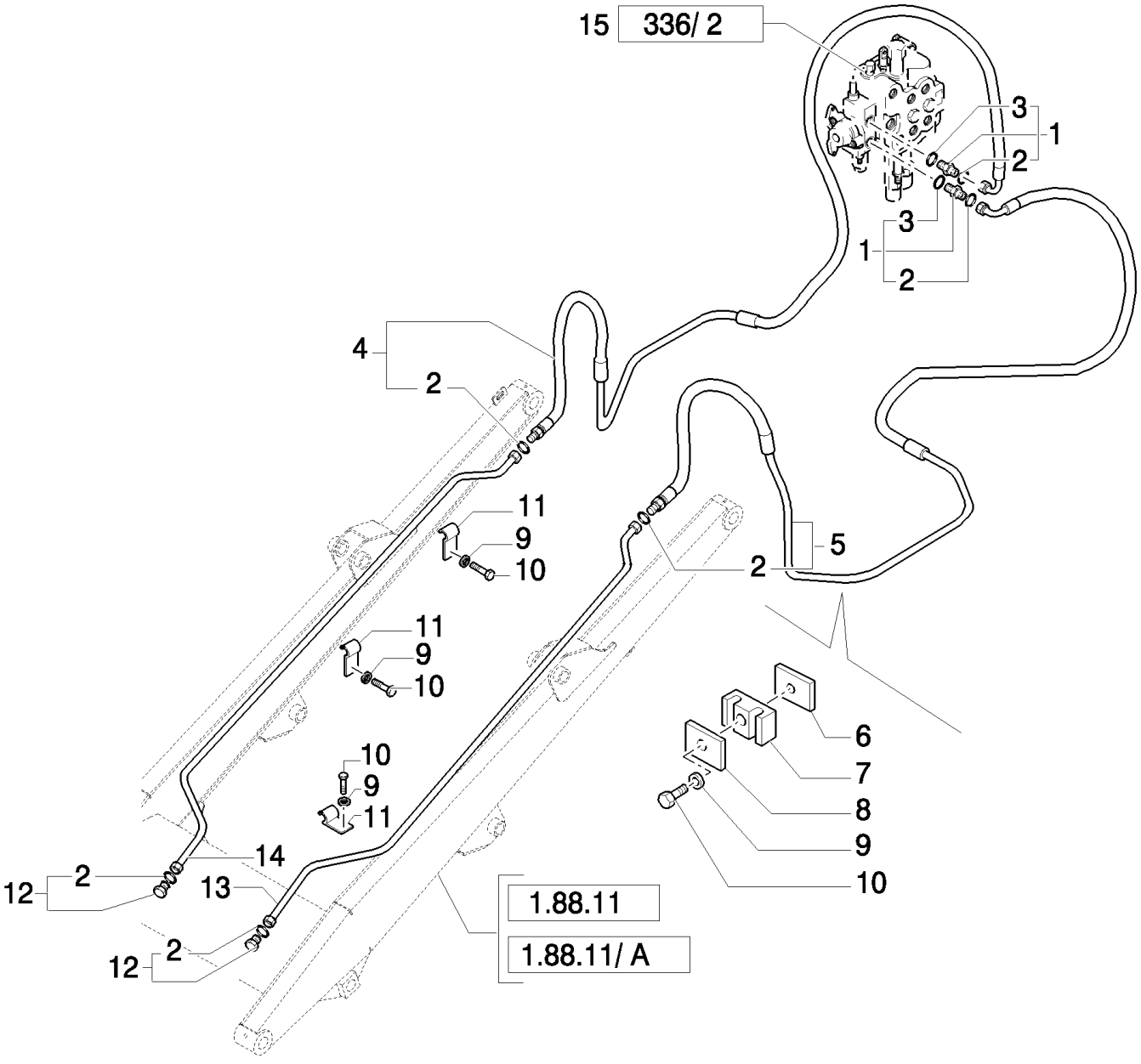

Mechanical Version

B95LR NA BACKHOE LOADER (1/06-)

725/ 1(01) 4X1 & 6X1 BUCKET HYDRAULIC LINES

Ref	Numero de Pieza	Ctd	Descripción
1	390955S36	2	CONNECTOR, HYD.,
2	9992298	6	O-RING, -014, 90 Duro, .489" ID x .070" Thk,
3	167269	2	O-RING, 10-1, 90 Duro, .755" ID x .097" Thk,
4	85805863	1	HOSE, FLEXIBLE, RH, Includes 2
5	85805862	1	HOSE, FLEXIBLE, LH, Includes 2
6	85805340	2	PLATE,
7	85805193	2	CLAMP,
8	85805195	2	PLATE,
9	11193979	8	WASHER, SPRING, Belleville, M8.4,
10	16043821	8	BOLT, Hex, M8 x 30, 8.8,
11	85805247	6	CLAMP,
12	85803408	2	PLUG, , Includes 2
13	85805864	1	TUBE, HYD, LH
14	85805865	1	TUBE, HYD, RH
15	85819650	1	VALVE, CONTROL, , UP TO S/N 031057047
15	87326256	1	VALVE SECTION, HYD, , FROM TO S/N 031057048

Mechanical Version

B95LR NA BACKHOE LOADER (1/06-)

725/ 1(02) 4X1 & 6X1 BUCKET HYDRAULIC LINES (P. SHUTTLE)

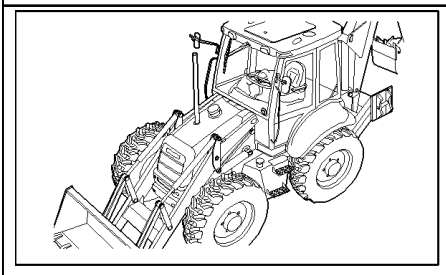

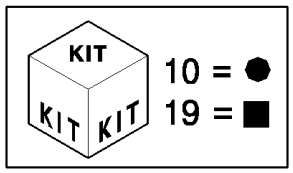

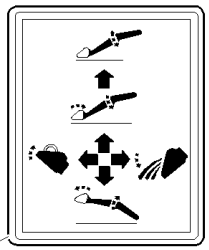

12

13

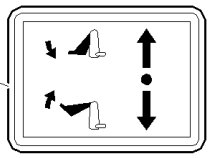

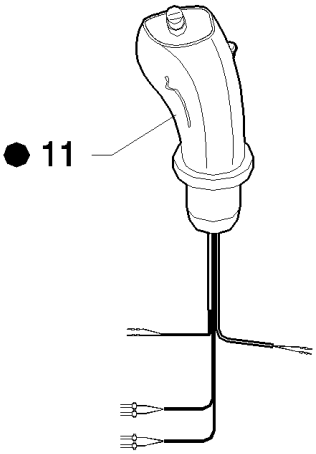

● 11

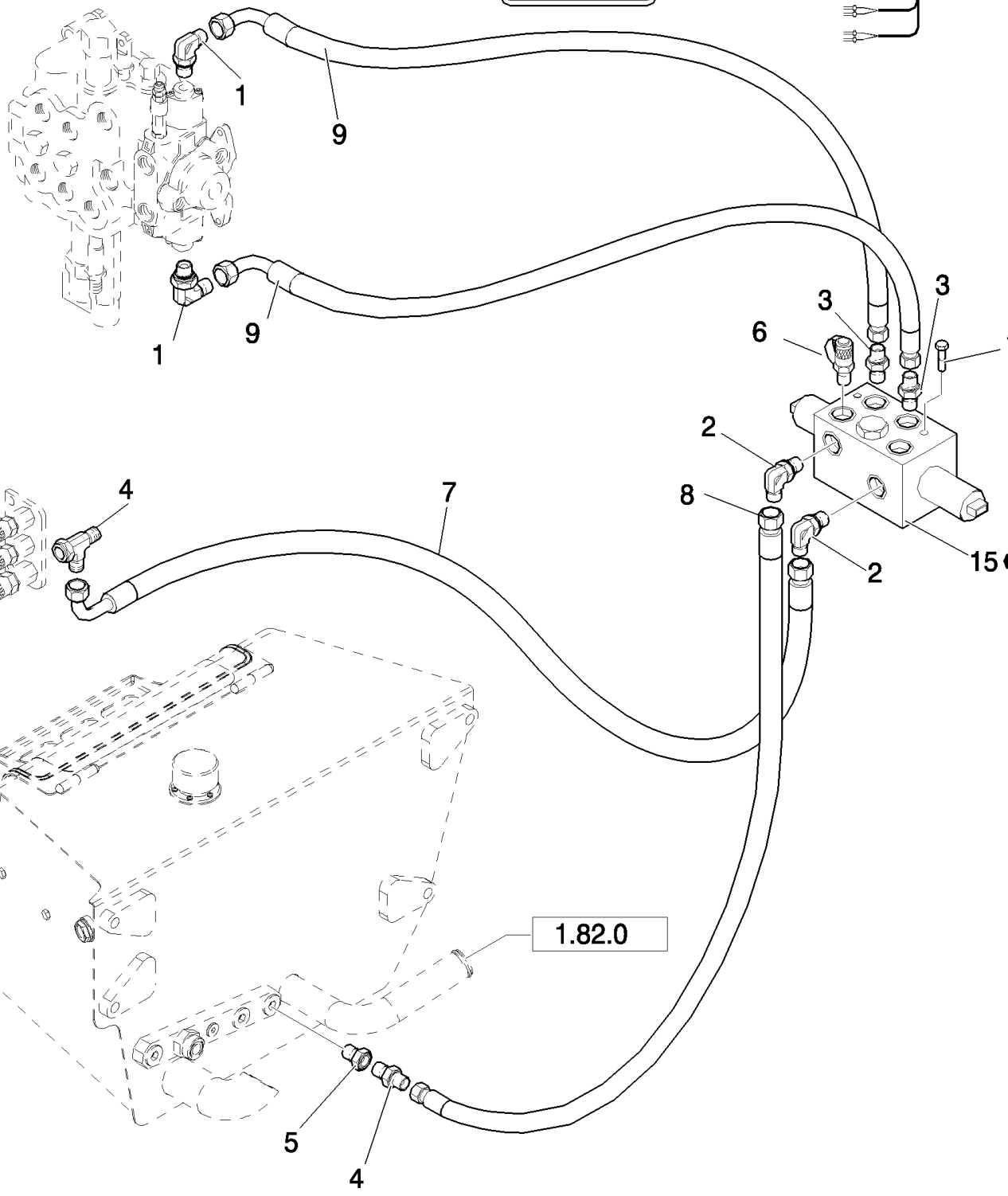

Mechanical Control Version

B95LR NA BACKHOE LOADER (1/06-)

725/ 1(02) 4X1 & 6X1 BUCKET HYDRAULIC LINES (P. SHUTTLE)

Ref	Numero de Pieza	Ctd	Descripción
1	85802234	2	ELBOW,
2	85805318	2	ELBOW, 90º, 9/16"-18, 37º x 9/16"-18, O-Ring,
3	47050685	2	CONNECTOR, HYD.,
4	47050686	1	CONNECTOR, HYD.,
5	85826100	1	REDUCER,
6	85828211	1	COUPLING, QUICK, MALE,
7	87316092	1	HOSE, FLEXIBLE,
8	87316096	1	HOSE, FLEXIBLE,
9	87316091	2	HOSE, FLEXIBLE,
10	87384365	1	JOYSTICK,
11	87382112	1	HANDLE, Loader, Powershuttle, W/Detent, Declutch; Includes 87387751 Grip W/1 Button; 87387703 Prop Roller W/Detented Position; 87387754 Transmission Button Harness; 87387722 Bi-Directional PWM Driver Harness
	87387751	1	HANDLE GRIP, Grip W/1 Button
	87387703	1	PUSH BUTTON, Prop Roller W/Detented Position
	87387754	1	CABLE, ELECTRIC, Transmission Button Harness
	87387722	1	CABLE, ELECTRIC, Bi-Directional PWM Driver Harness
12	85804346	1	DECAL,
13	87305209	4	DECAL,
14	201-422	4	TEE, 11/16"-16 ORFS x 11/16"-16 Fem Sw Run,
15	87304801	1	VALVE, CONTROL, , Includes 17 To 20
16	14300521	1	SCREW, Hex Soc Hd, M6 x 75, 8.8, M6x75
17	87311363	1	ORIFICE,
18	85827997	1	VALVE,
19	85828001	1	KIT, SEALS,
20	85827993	2	SOLENOID,
21	85817531	1	TEE,

Mechanical Control Version

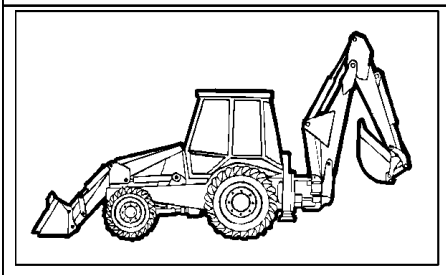

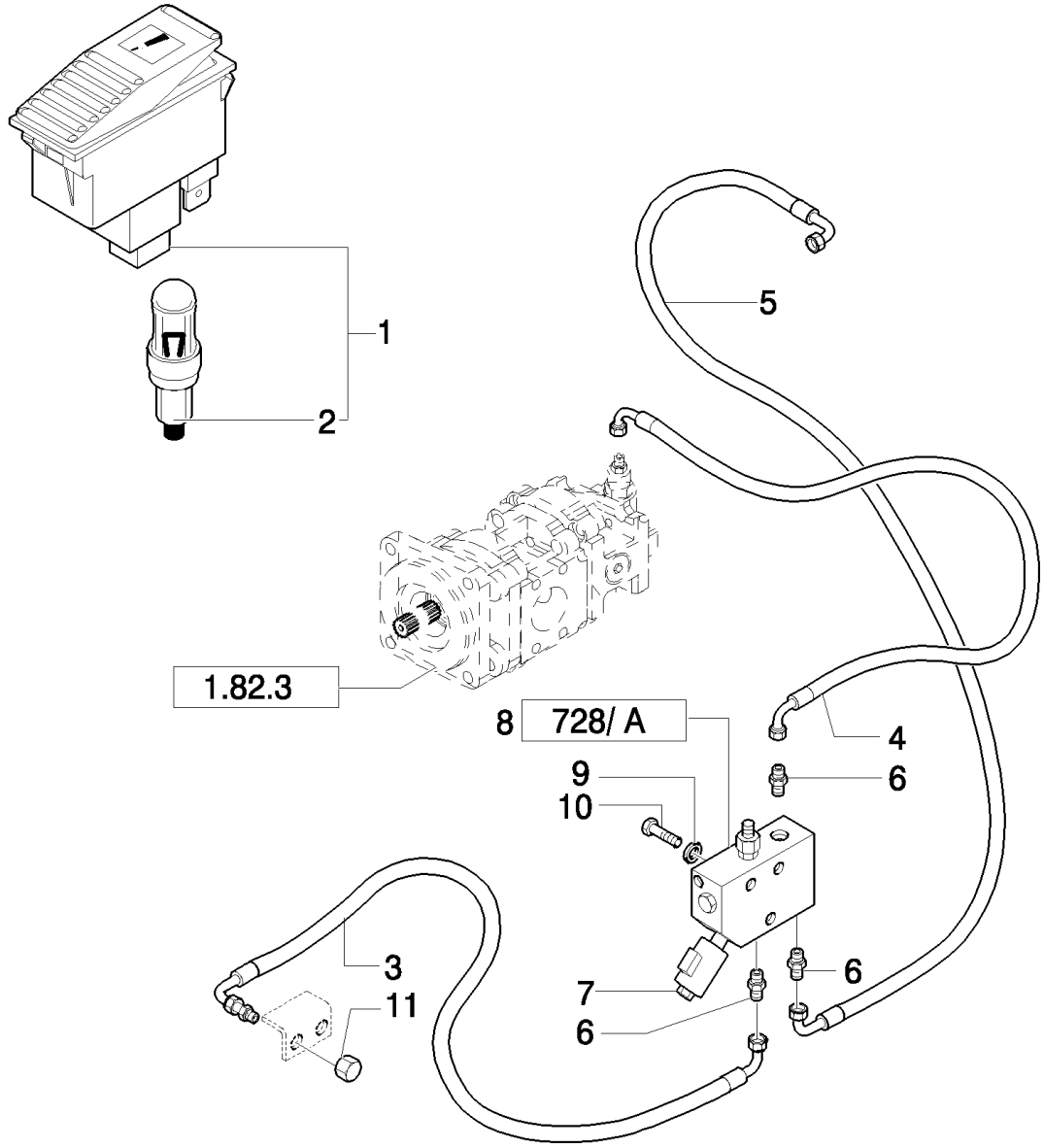
1
2
5
1.82.3
8
728/ A
4
9
6
10
3
11
7
6
6

B95LR NA BACKHOE LOADER (1/06-)

728(01) MANUAL HAMMER SYSTEM

Ref	Numero de Pieza	Ctd	Descripción
1	85819072	1	SWITCH,
2	14143790	1	BULB, 12V - 1,2W
3	85812184	1	HOSE, FLEXIBLE, L=1230 mm
4	85825187	1	HOSE, FLEXIBLE, 680 MM.
5	85826092	1	HOSE, FLEXIBLE,
6	85803234	3	CONNECTOR, HYD.,
7	87357715	1	SENDER UNIT, , Includes 7
8	87358190	1	VALVE, HYDRAULIC,
9	11193879	3	WASHER, SPRING, Belleville, M8.4,
10	16044521	3	BOLT, Hex, M8 x 65, 8.8,
11	83987627	1	CAP,

728(02) MANUAL HAMMER SYSTEM

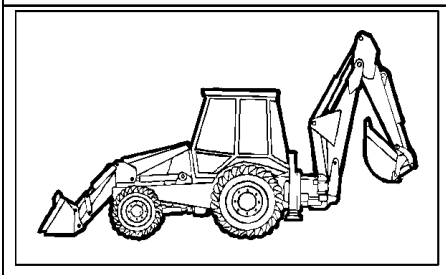

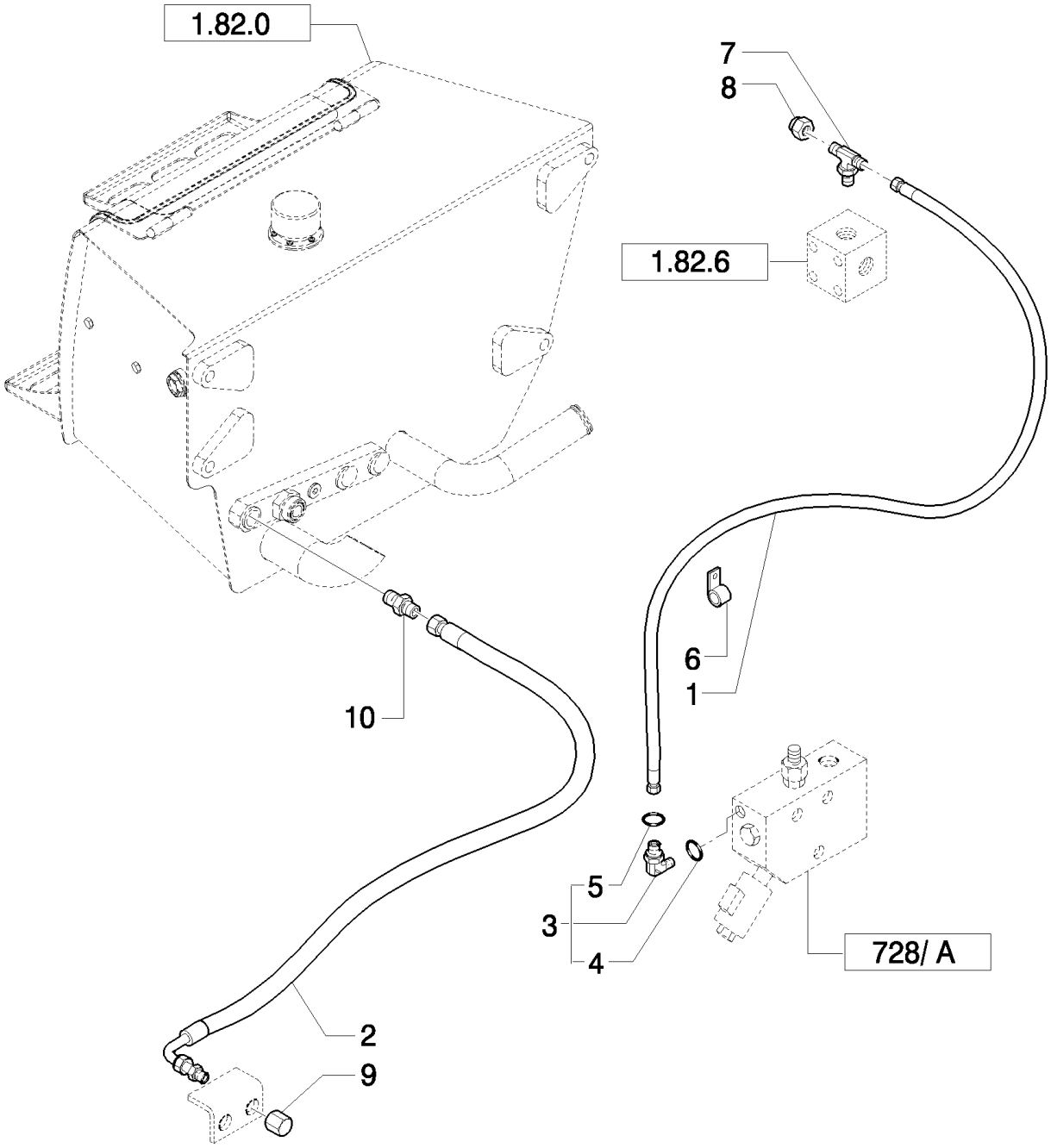

B95LR NA BACKHOE LOADER (1/06-)

728(02) MANUAL HAMMER SYSTEM

Ref	Numero de Pieza	Ctd	Descripción
1	85803230	1	HOSE, FLEXIBLE, 1050mm lg,
2	85803231	1	HOSE, FLEXIBLE, 900mm lg,
3	83961741	1	ELBOW, , Includes 4, 5
4	81844851	1	O-RING,
5	81845037	1	O-RING,
6	85803393	1	CLAMP,
7	85802780	1	TEE,
8	81871325	1	COVER,
9	83987627	1	CAP,
10	85803241	1	CONNECTOR, HYD.,

728/ A(01) MANUAL HAMMER VALVE

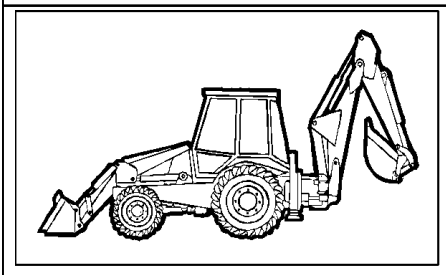

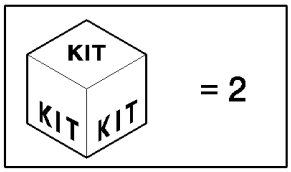

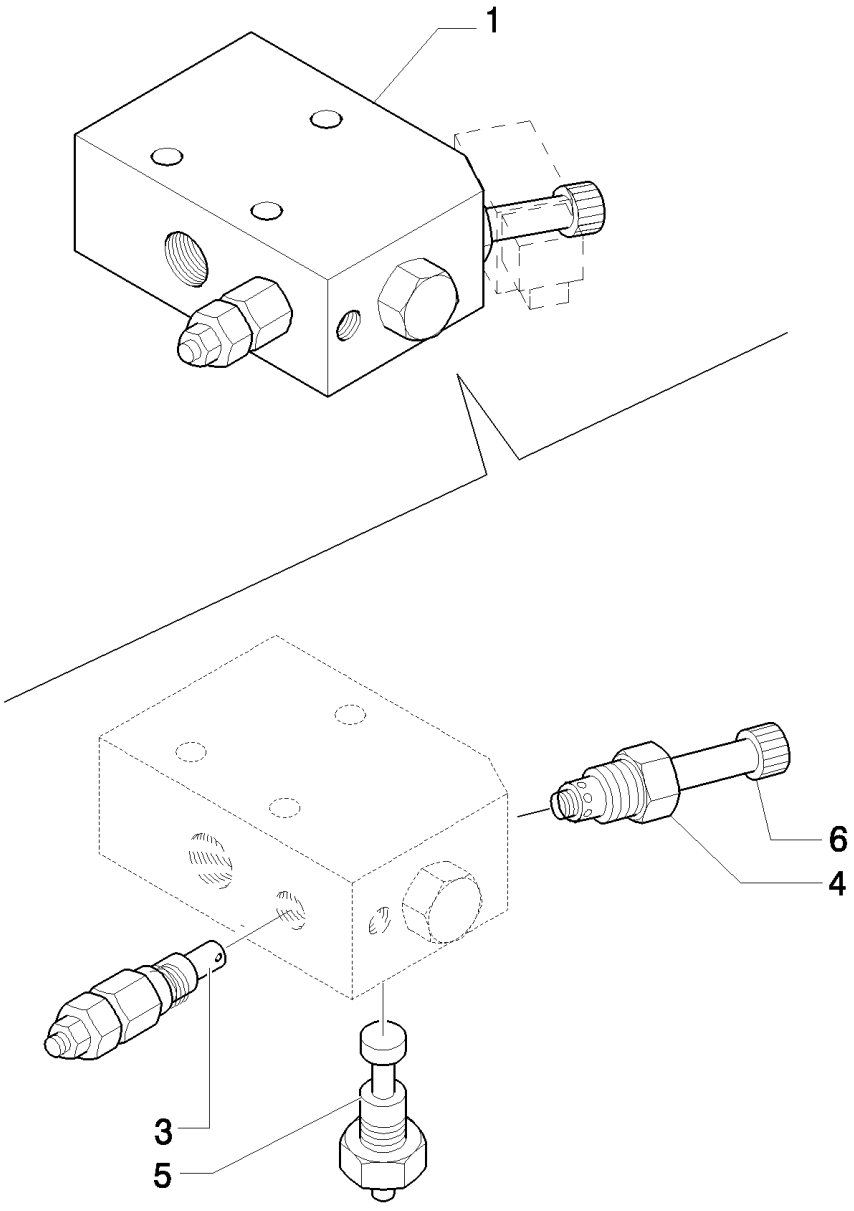

B95LR NA BACKHOE LOADER (1/06-)

728/ A(01) MANUAL HAMMER VALVE

Ref	Numero de Pieza	Ctd	Descripción
1	87358190	1	VALVE, HYDRAULIC,
2	87358193	1	KIT, GASKETS
3	87358196	1	VALVE, HYDRAULIC,
4	87358194	1	VALVE, HYDRAULIC,
5	9970383	1	VALVE, SOLENOID,
6	9970384	1	NUT,

B95LR NA BACKHOE LOADER (1/06-)

732(01) REAR MECHANICAL QUICK-COUPLING

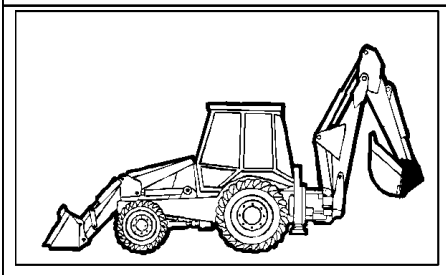

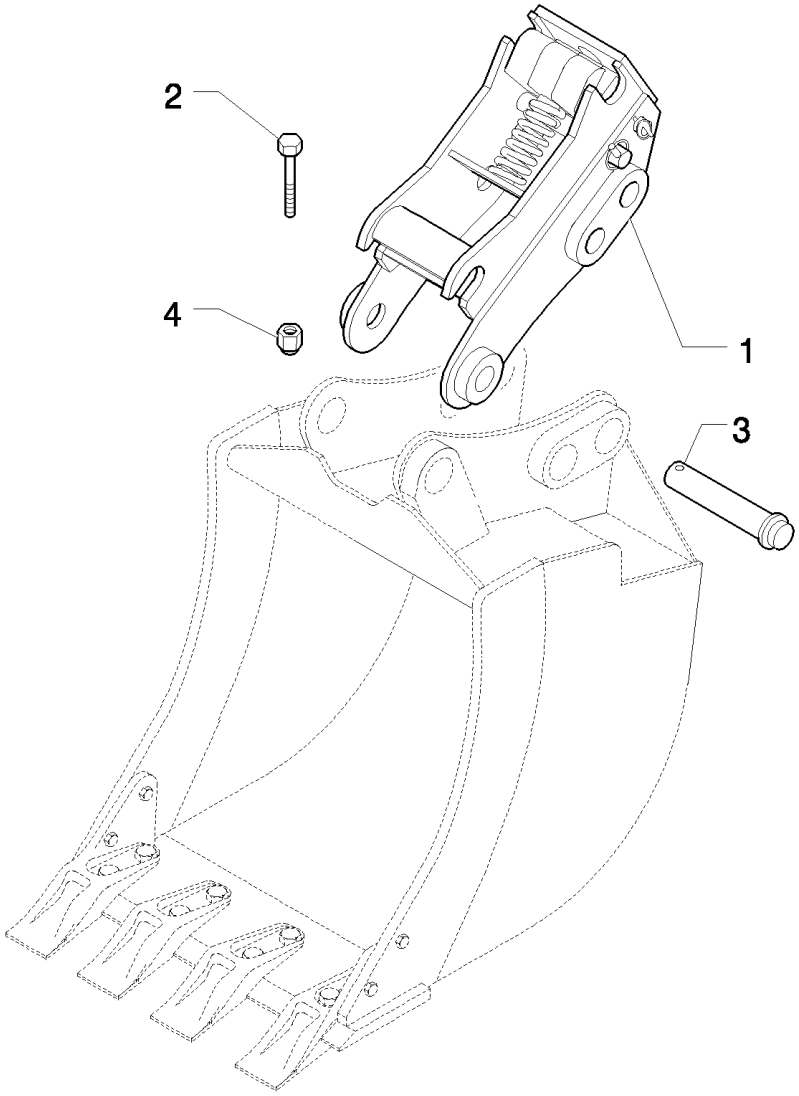

Mechanical Version

B95LR NA BACKHOE LOADER (1/06-)

732(01) REAR MECHANICAL QUICK-COUPLING

Ref	Numero de Pieza	Ctd	Descripción
1	85801542	1	COUPLING,
2	15972034	2	BOLT, Hex, M10 x 110, 10.9,
3	85803005	2	PIN,
4	12574511	2	NUT, LOCK, M10 x 1.25, Cl 8,

Mechanical Version

732/ A(01) REAR MECHANICAL QUICK-COUPLING

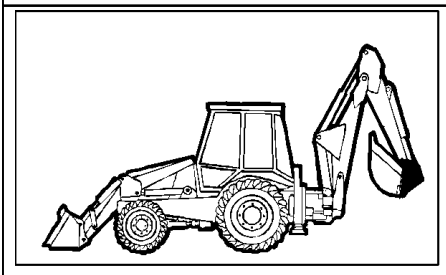

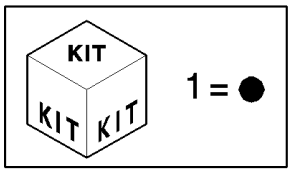

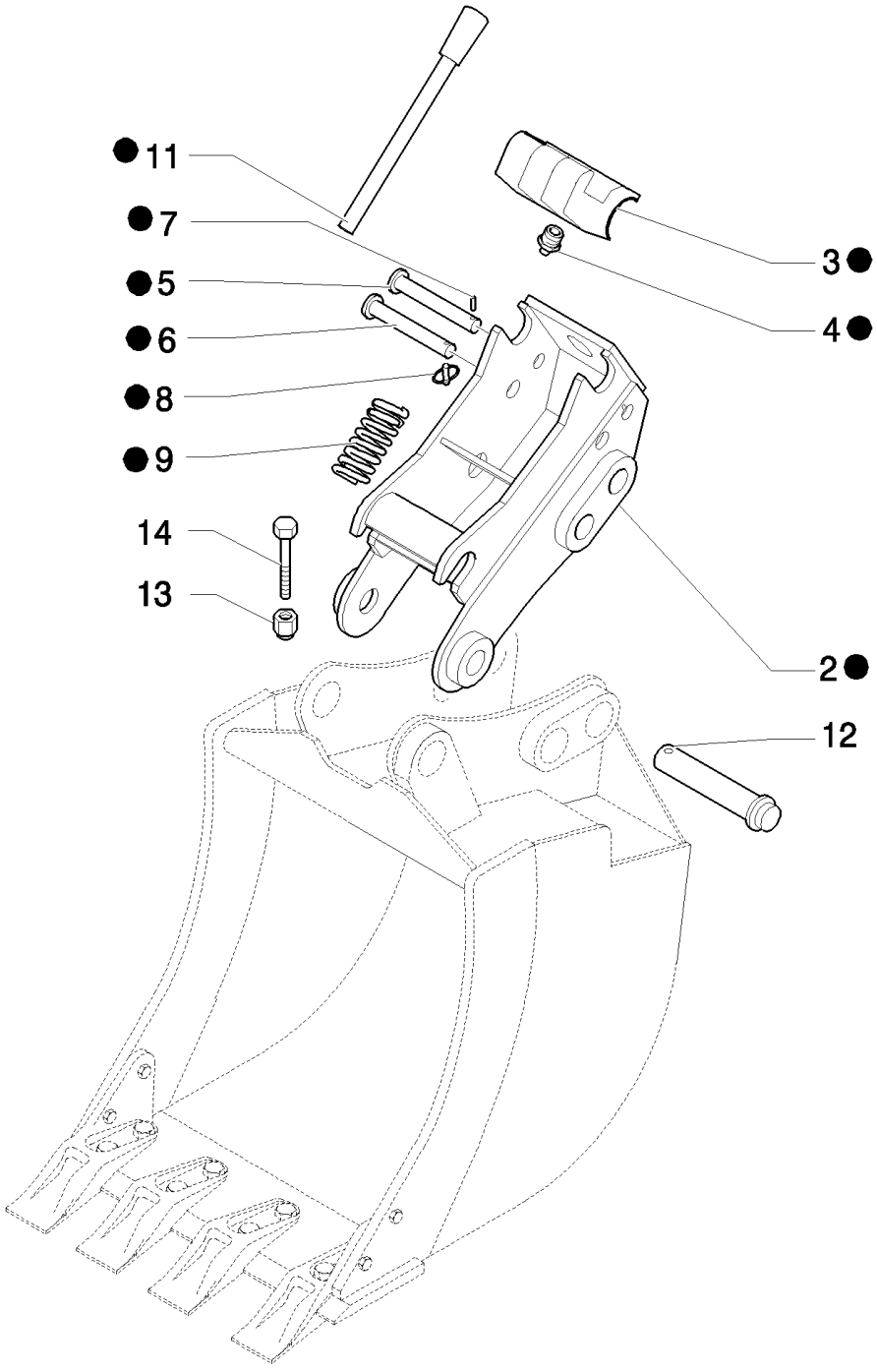

B95LR NA BACKHOE LOADER (1/06-)

732/ A(01) REAR MECHANICAL QUICK-COUPLING

Ref	Numero de Pieza	Ctd	Descripción
1	85801542	1	COUPLING,
2	85827551	1	
3	85827552	1	HOOK,
4	85824266	1	NIPPLE, LUBE,
5	85827553	1	HOOK, 1.26" dia x 10.3" lg
6	85827554	1	PIN,
7	85825285	1	PIN,
8	85824265	1	PIN,
9	85824268	1	SPRING,
11	85824267	1	HANDLE,
12	85803005	2	PIN,
13	12574511	2	NUT, LOCK, M10 x 1.25, Cl 8,
14	15972034	2	BOLT, Hex, M10 x 110, 10.9,

B95LR NA BACKHOE LOADER (1/06-)

734(01) FRONT MECHANICAL QUICK-COUPLING

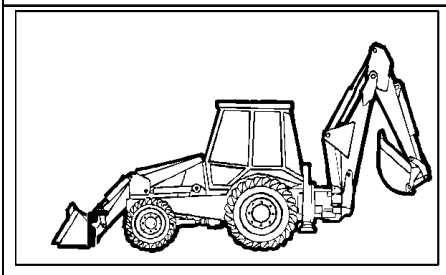

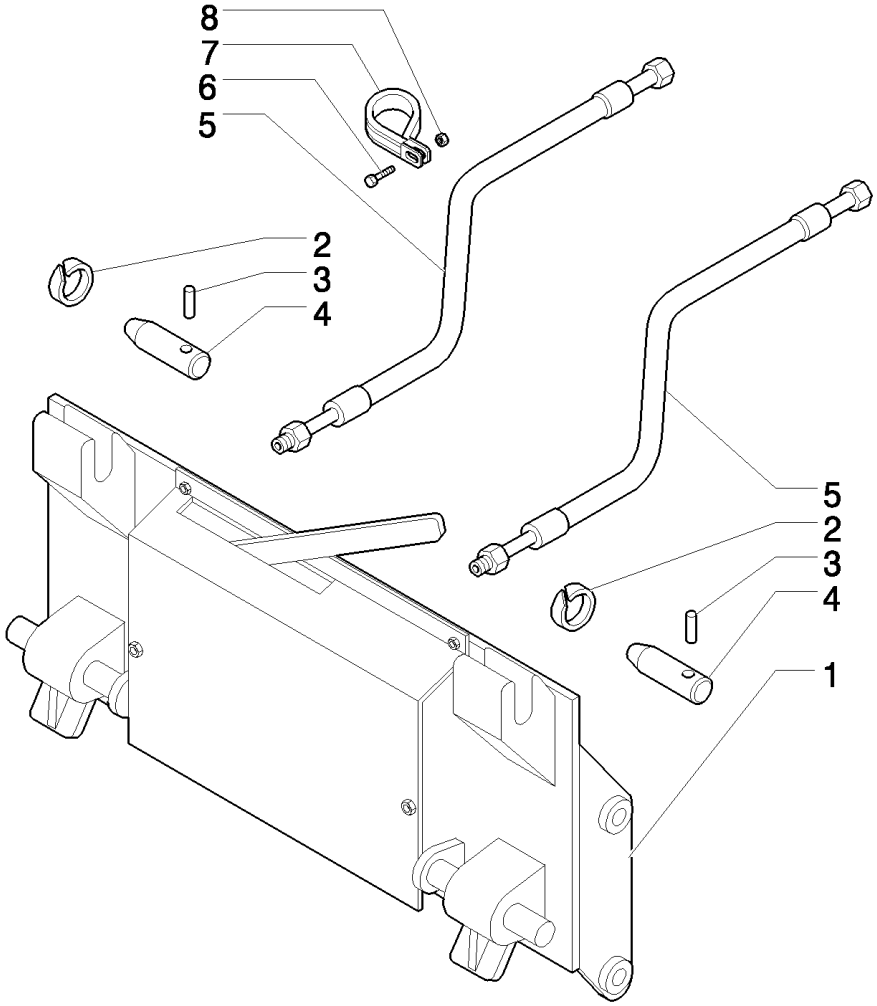

B95LR NA BACKHOE LOADER (1/06-)

734(01) FRONT MECHANICAL QUICK-COUPLING

Ref	Numero de Pieza	Ctd	Descripción
1	85824397	1	PLATE, RETAINING, Mechanical Quick Front Bucket Attachment
2	85802992	2	RING,
3	85802993	2	PIN,
4	85801051	2	PIN,
5	85813378	2	HOSE, FLEXIBLE, 1000mm lg, Attaches to Bucket Tilt Cylinders
6	16043921	2	SCREW, M8x1.25x35
7	85803393	2	CLAMP,
8	16104111	2	NUT, LOCK, M8 x 1.25, Cl 8,

B95LR NA BACKHOE LOADER (1/06-)

758(01) ROTATING BEACON

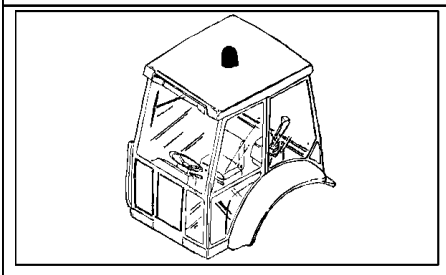

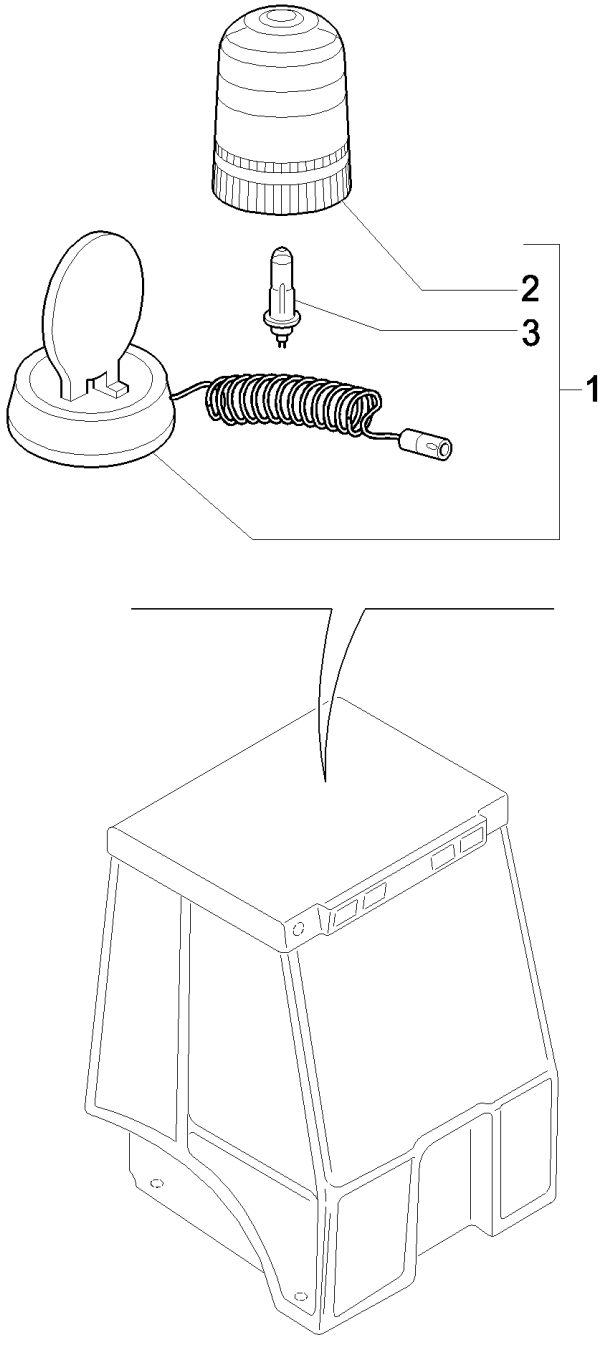

B95LR NA BACKHOE LOADER (1/06-)

758(01) ROTATING BEACON

Ref	Numero de Pieza	Ctd	Descripción
1	85817129	1	BEACON,
2	85817131	1	LENS,
3	85817130	1	BULB,

B95LR NA BACKHOE LOADER (1/06-)

782(01) FRONT CONSOLE WITH SPEEDOMETER, 4WD

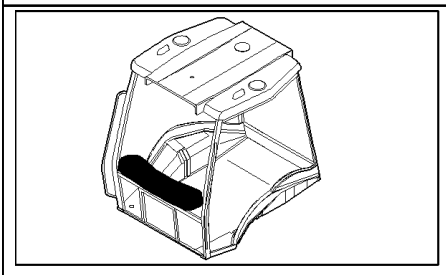

B95LR NA BACKHOE LOADER (1/06-)

782(01) FRONT CONSOLE WITH SPEEDOMETER, 4WD

Ref	Numero de Pieza	Ctd	Descripción
1	85817587	1	INSTRUMENT CLUSTER,
2	85804156	1	SENSOR,

B95LR NA BACKHOE LOADER (1/06-)

787/ 1(01) FRONT CONSOLE WITHOUT SPEEDOMETER (CAB)

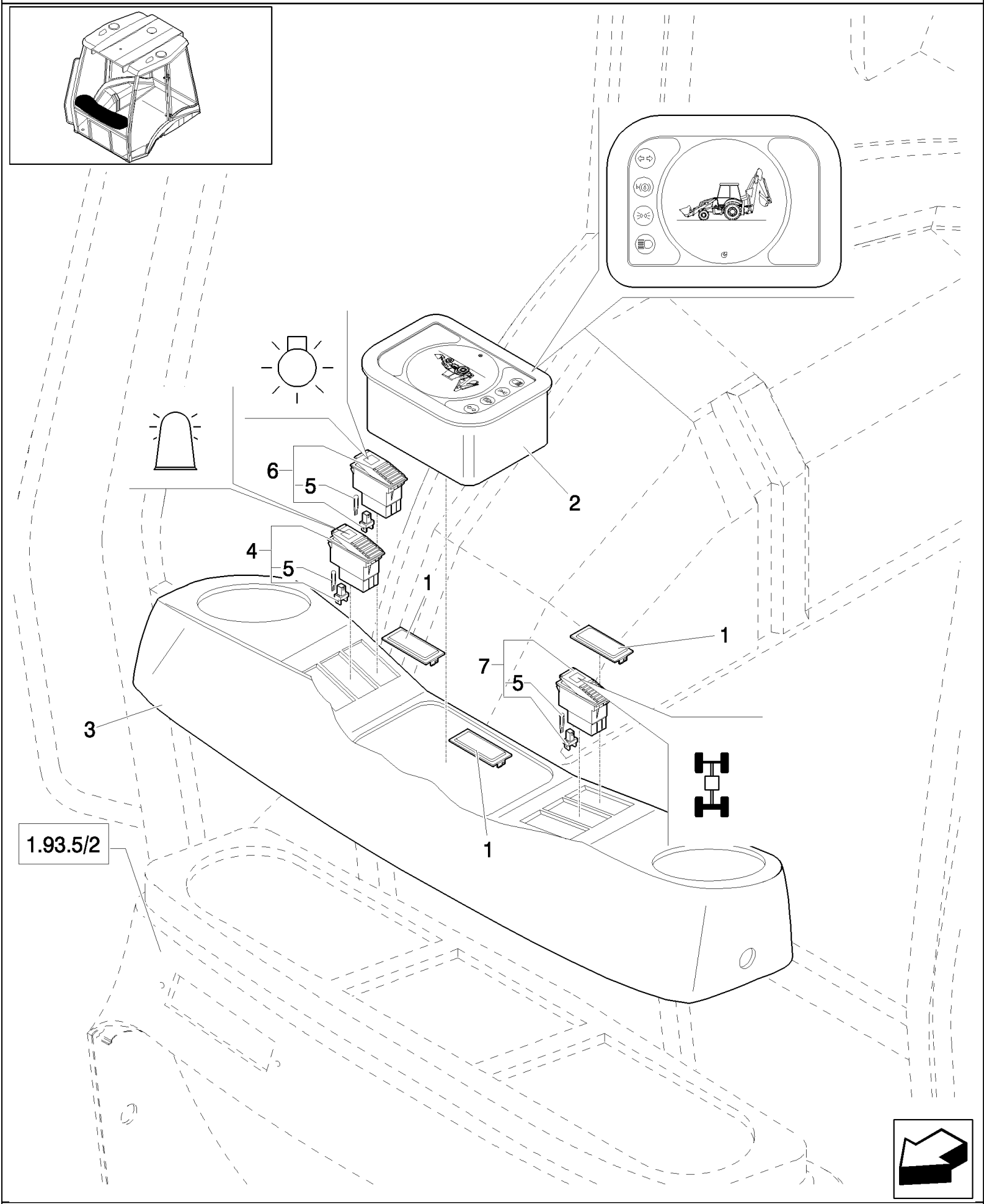

B95LR NA BACKHOE LOADER (1/06-)

787/ 1(01) FRONT CONSOLE WITHOUT SPEEDOMETER (CAB)

Ref	Numero de Pieza	Ctd	Descripción
1	85825254	4	PLUG,
2	85817586	1	INSTRUMENT CLUSTER,
3	85818826	1	DASHBOARD,
4	85818827	1	SWITCH,
5	14143790	4	BULB,
6	85818828	1	SWITCH, LIGHTS,
7	85819134	1	SWITCH, Fwd

B95LR NA BACKHOE LOADER (1/06-)

787/ 2(01) FRONT CONSOLE WITHOUT SPEEDOMETER (CAB)

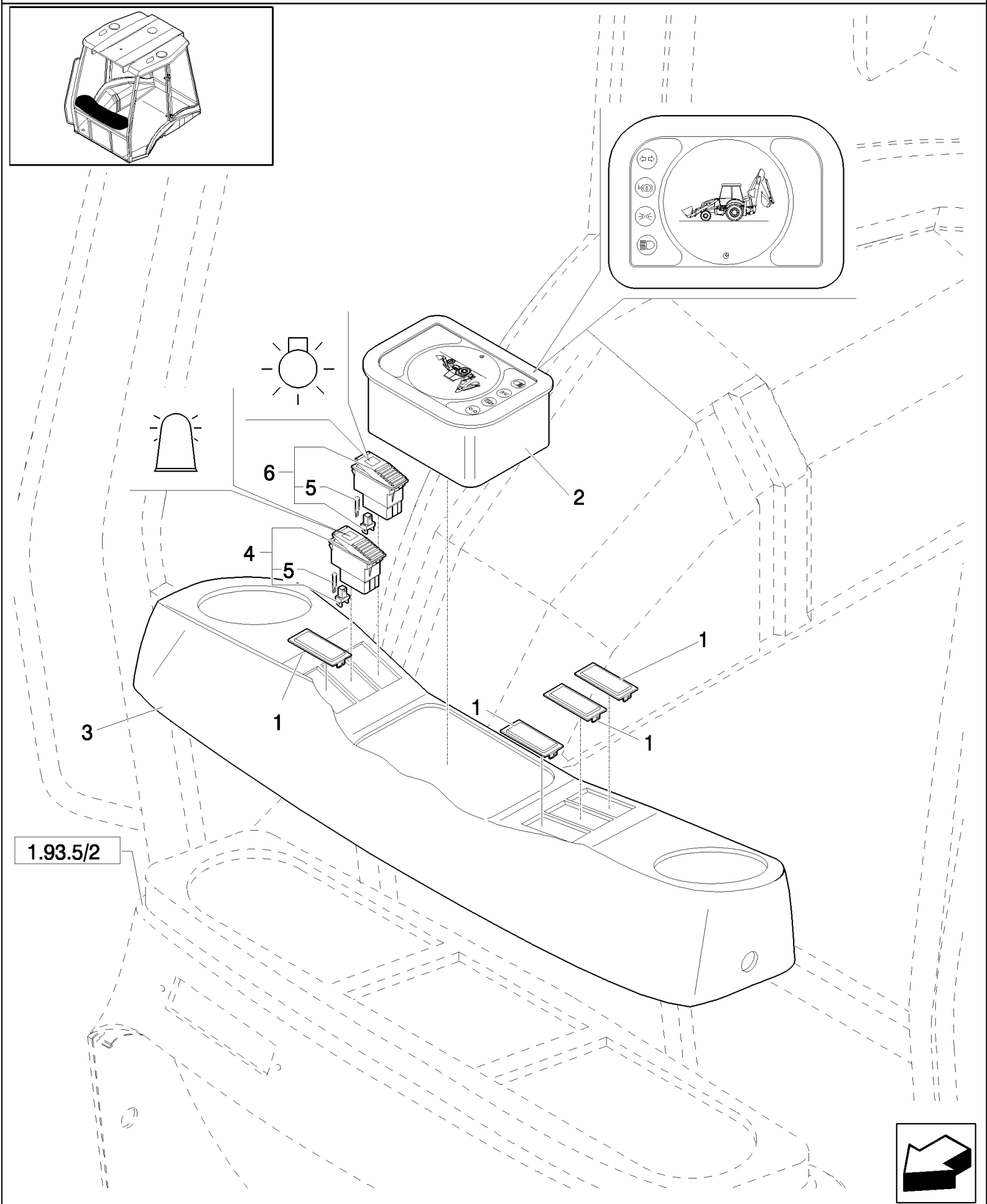

B95LR NA BACKHOE LOADER (1/06-)

787/ 2(01) FRONT CONSOLE WITHOUT SPEEDOMETER (CAB)

Ref	Numero de Pieza	Ctd	Descripción
1	85825254	4	PLUG,
2	85817586	1	INSTRUMENT CLUSTER,
3	85818827	1	SWITCH,
4	14143790	2	BULB,
5	85818828	1	SWITCH, LIGHTS,
6	85818940	1	DASHBOARD,

B95LR NA BACKHOE LOADER (1/06-)

788/ 1(01) FRONT CONSOLE WITH SPEEDOMETER, 4WD

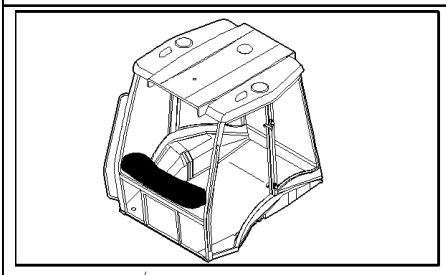

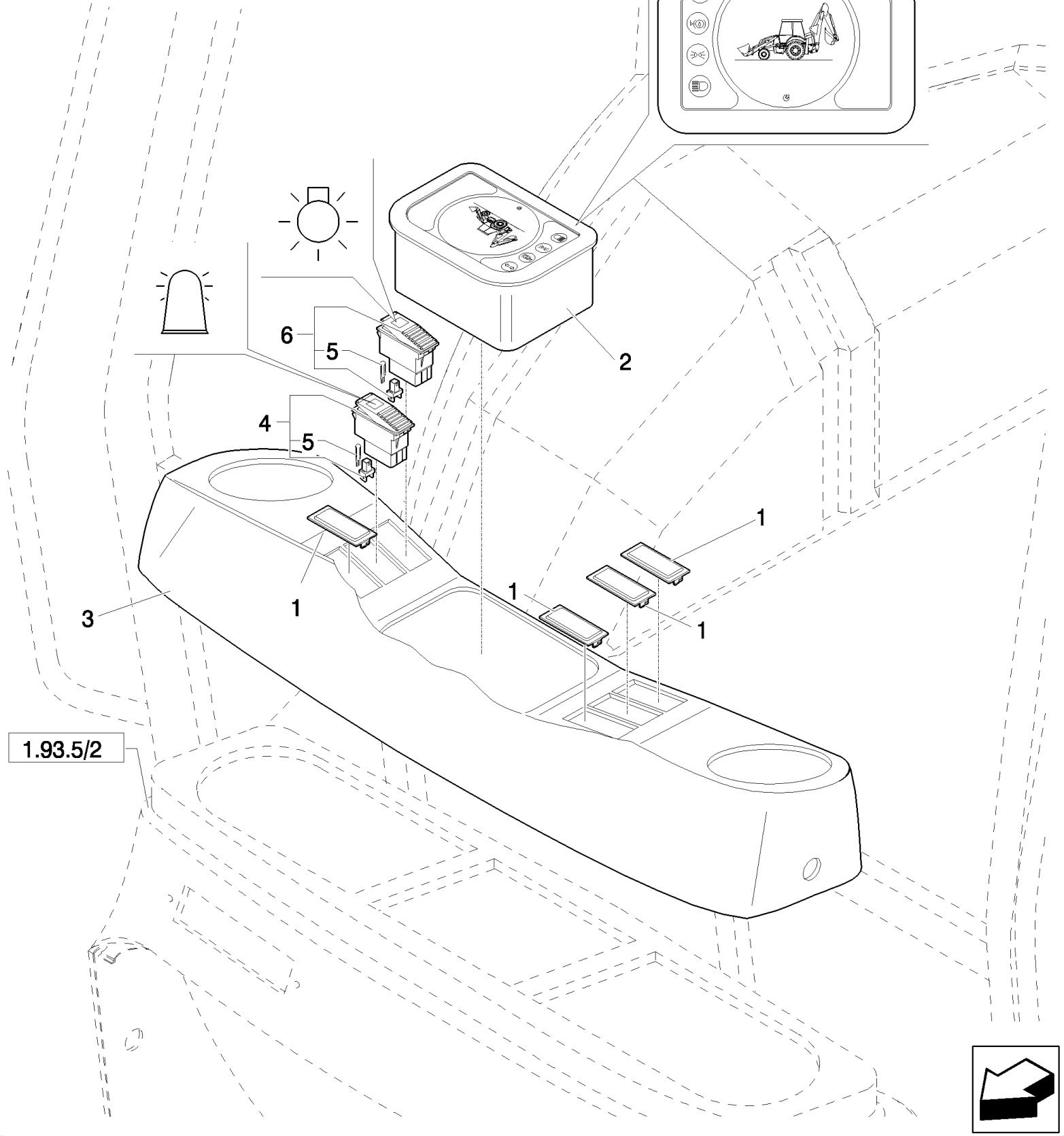

B95LR NA BACKHOE LOADER (1/06-)

788/ 1(01) FRONT CONSOLE WITH SPEEDOMETER, 4WD

Ref	Numero de Pieza	Ctd	Descripción
1	85825254	4	PLUG,
2	85817587	1	INSTRUMENT CLUSTER,
3	85818826	1	DASHBOARD,
4	85818827	1	SWITCH,
5	14143790	2	BULB,
6	85818828	1	SWITCH, LIGHTS,

B95LR NA BACKHOE LOADER (1/06-)

788/ 2(01) FRONT CONSOLE WITH SPEEDOMETER, 4WD

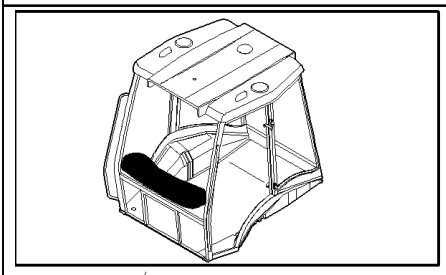

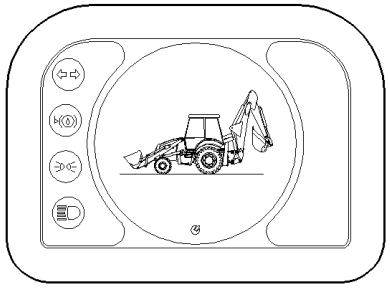

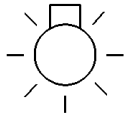

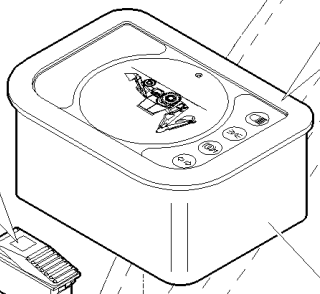



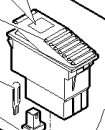

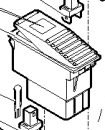

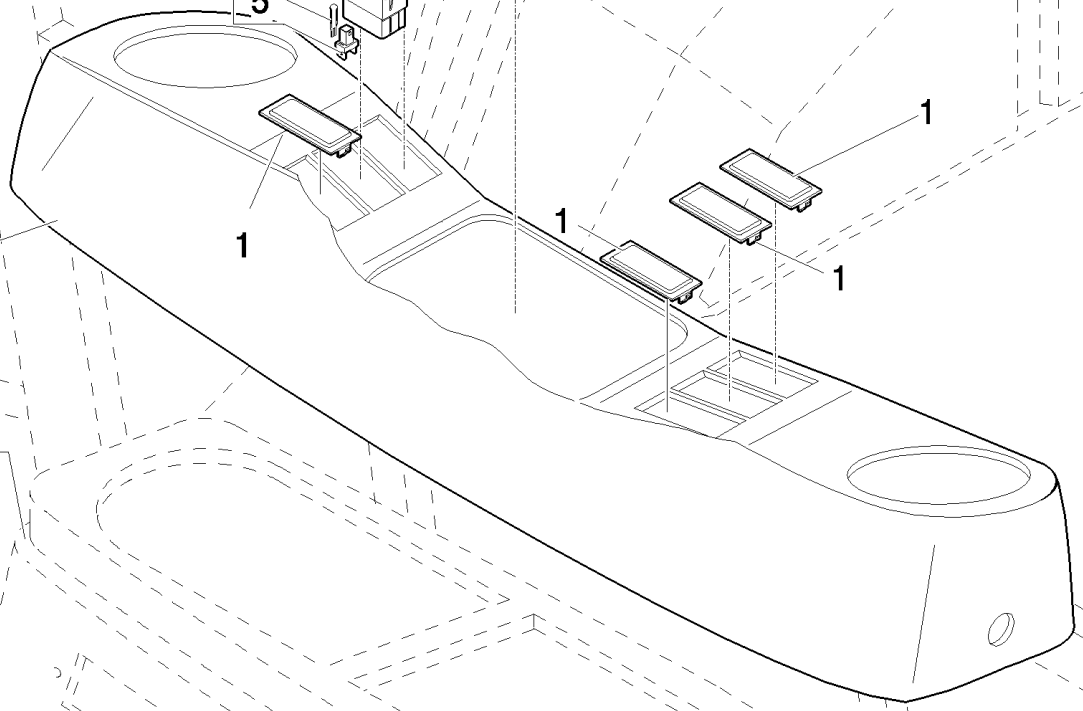

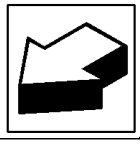

1.93.5/2

B95LR NA BACKHOE LOADER (1/06-)

788/ 2(01) FRONT CONSOLE WITH SPEEDOMETER, 4WD

Ref	Numero de Pieza	Ctd	Descripción
1	85825254	4	PLUG,
2	85817587	1	INSTRUMENT CLUSTER,
3	85818827	1	SWITCH,
4	14143790	2	BULB,
5	85818828	1	SWITCH, LIGHTS,
6	85818940	1	DASHBOARD,

B95LR NA BACKHOE LOADER (1/06-)

789(01) SPEED SENSOR(P.SHUTTLE)

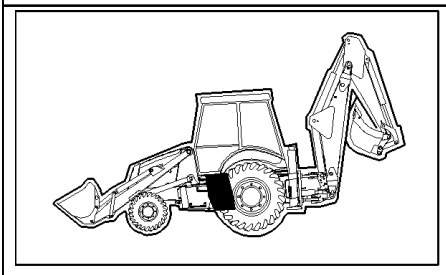

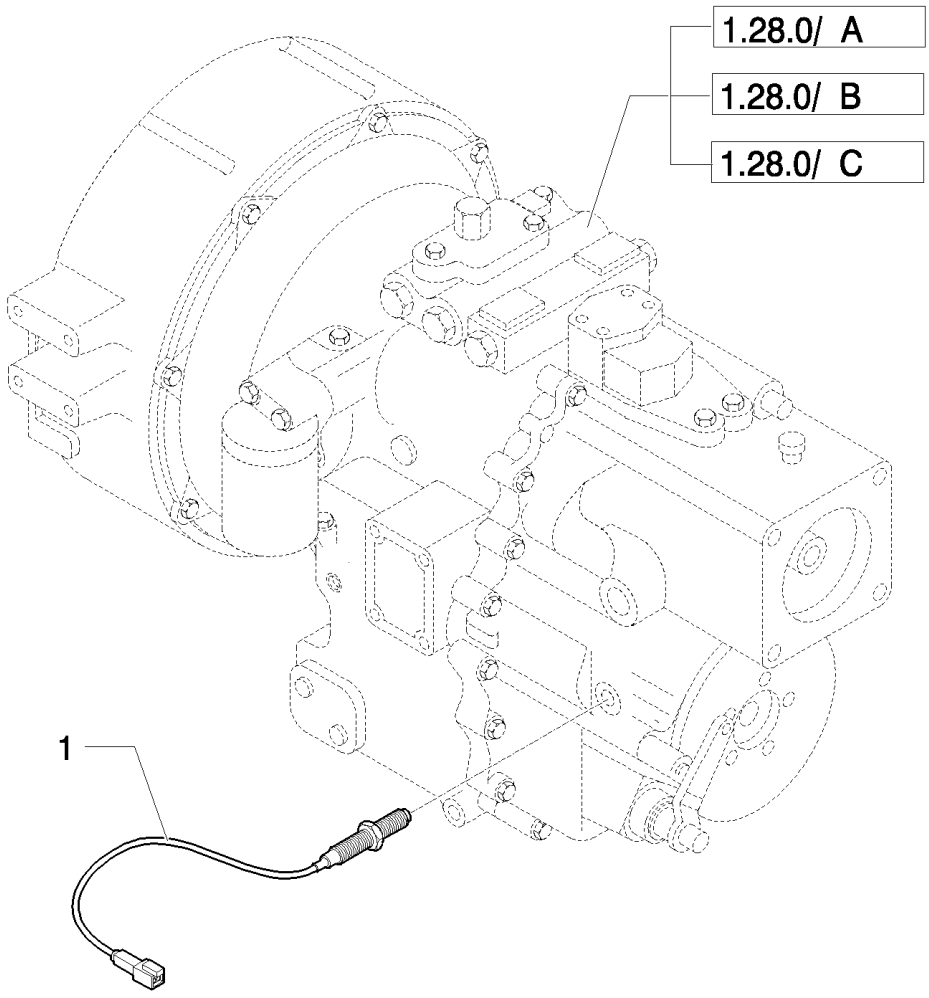

B95LR NA BACKHOE LOADER (1/06-)

789(01) SPEED SENSOR(P.SHUTTLE)

Ref	Numero de Pieza	Ctd	Descripción
1	85804156	1	SENSOR,

B95LR NA BACKHOE LOADER (1/06-)

791(01) RH CONSOLE WITH INSTRUMENTS

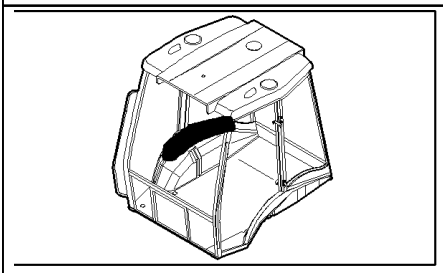

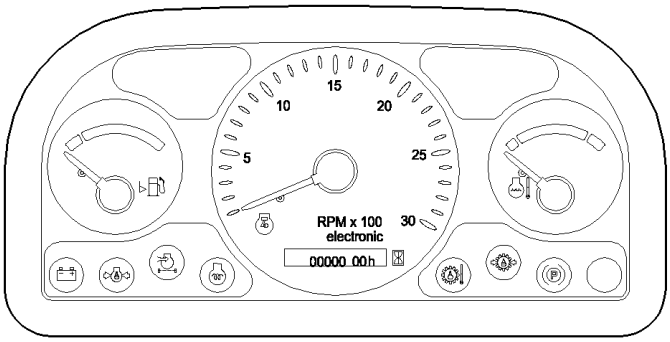

B95LR NA BACKHOE LOADER (1/06-)

791(01) RH CONSOLE WITH INSTRUMENTS

Ref	Numero de Pieza	Ctd	Descripción
1	85825254	7	PLUG,
2	87412250	1	INSTRUMENT CLUSTER,
3	85818817	1	DASHBOARD,
4	85818818	1	SWITCH, LIGHTS,
5	14143790	2	BULB,
6	85818819	1	SWITCH,
7	87431463	1	HARNESS, WIRE,

B95LR NA BACKHOE LOADER (1/06-)

792(01) RH CONSOLE WITH INSTRUMENTS AND DIAGNOSTICS

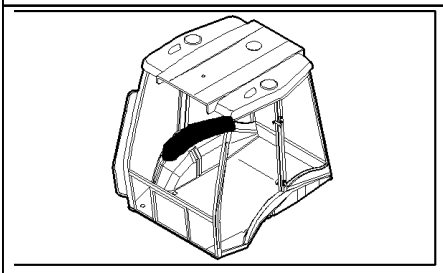

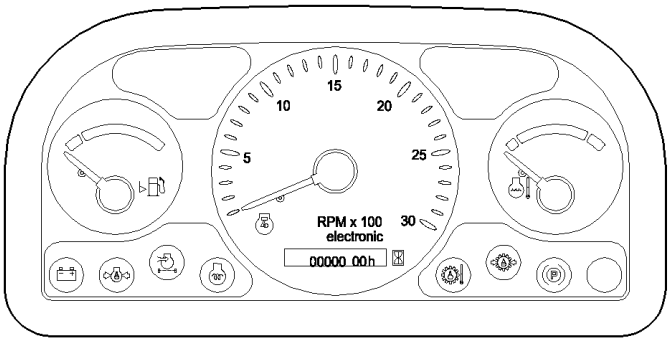

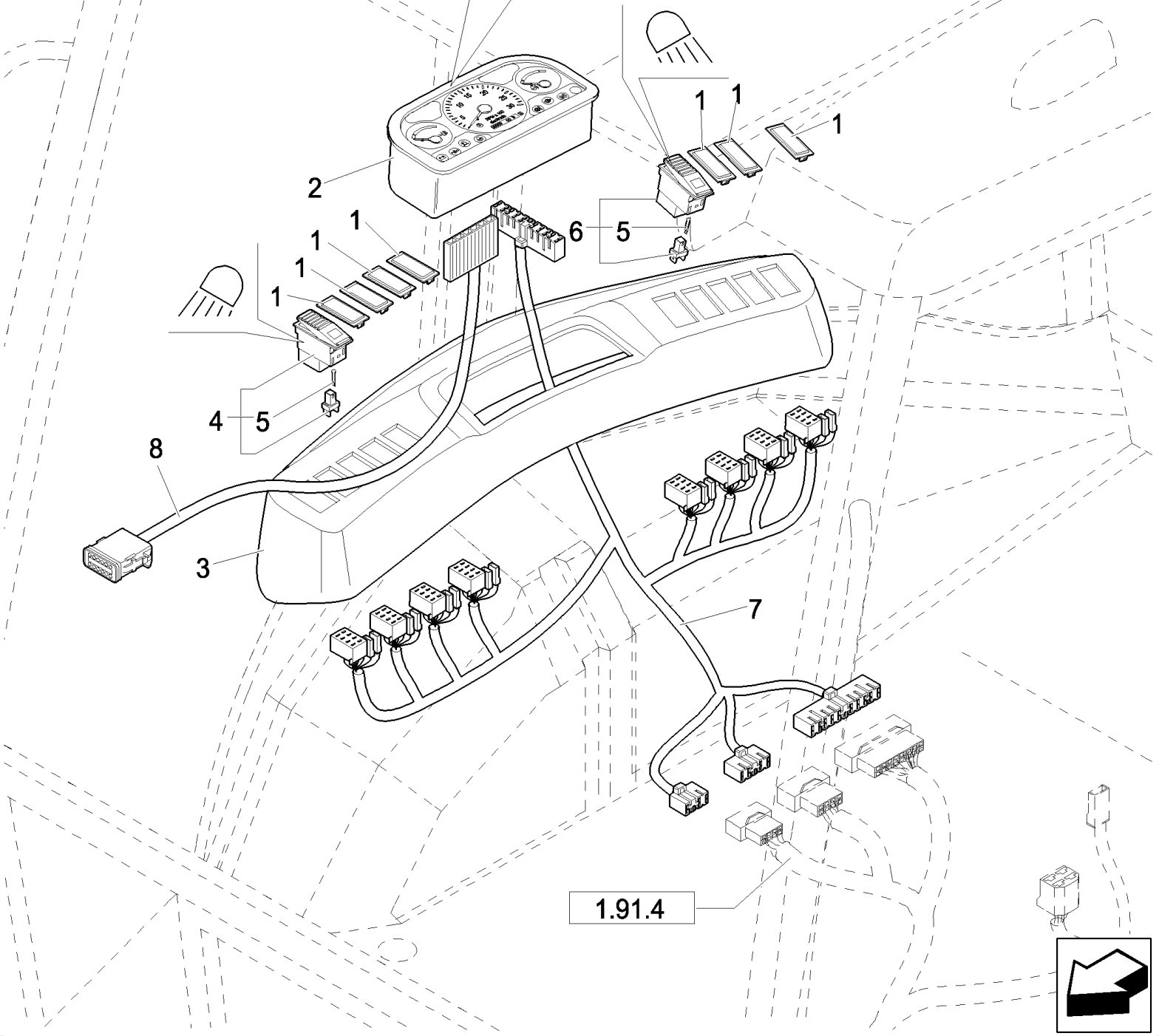

B95LR NA BACKHOE LOADER (1/06-)

792(01) RH CONSOLE WITH INSTRUMENTS AND DIAGNOSTICS

Ref	Numero de Pieza	Ctd	Descripción
1	85825254	7	PLUG,
2	87412252	1	INSTRUMENT CLUSTER,
3	85818817	1	DASHBOARD,
4	85818818	1	SWITCH, LIGHTS,
5	14143790	2	BULB,
6	85818819	1	SWITCH,
7	87431463	1	HARNESS, WIRE,
8	85819214	1	HARNESS, WIRE,

B95LR NA BACKHOE LOADER (1/06-)

795(01) RH CONSOLE WITH INSTRUMENTS AND DIAGNOSTICS

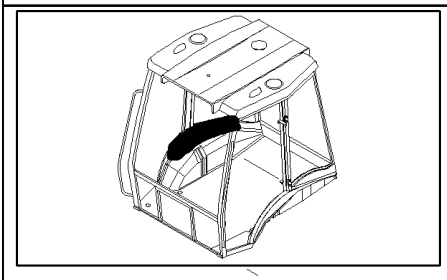

B95LR NA BACKHOE LOADER (1/06-)

795(01) RH CONSOLE WITH INSTRUMENTS AND DIAGNOSTICS

Ref	Numero de Pieza	Ctd	Descripción
1	85819758	1	SWITCH,
2	297449	1	HARNESS, WIRE,
3	NSS	1	NOT SERVICED SEPARATELY,
4	NSS	1	NOT SERVICED SEPARATELY,

B95LR NA BACKHOE LOADER (1/06-)

796(01) ANTITHEFT

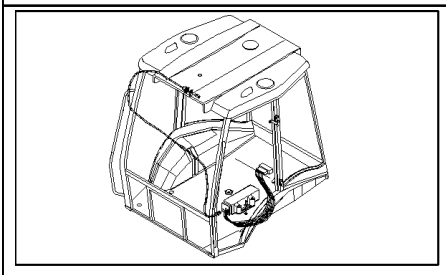

B95LR NA BACKHOE LOADER (1/06-)

796(01) ANTITHEFT

Ref	Numero de Pieza	Ctd	Descripción
1	85819765	1	KIT,
2	12574011	2	NUT, LOCK, M4 x .7, Cl 8,
3	12642821	2	WASHER, M4 x 12 x 1,
4	14303324	2	SCREW, Hex Soc Hd, M4 x 20, 8.8, Full Thd,
5	85819766	1	COVER,
6	NSS	1	NOT SERVICED SEPARATELY,

803(01) FENDERS, FRONT

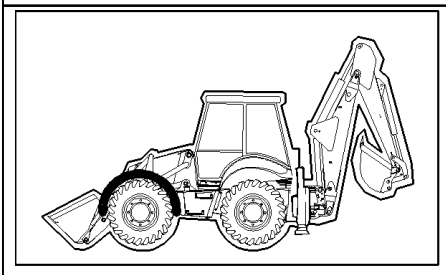

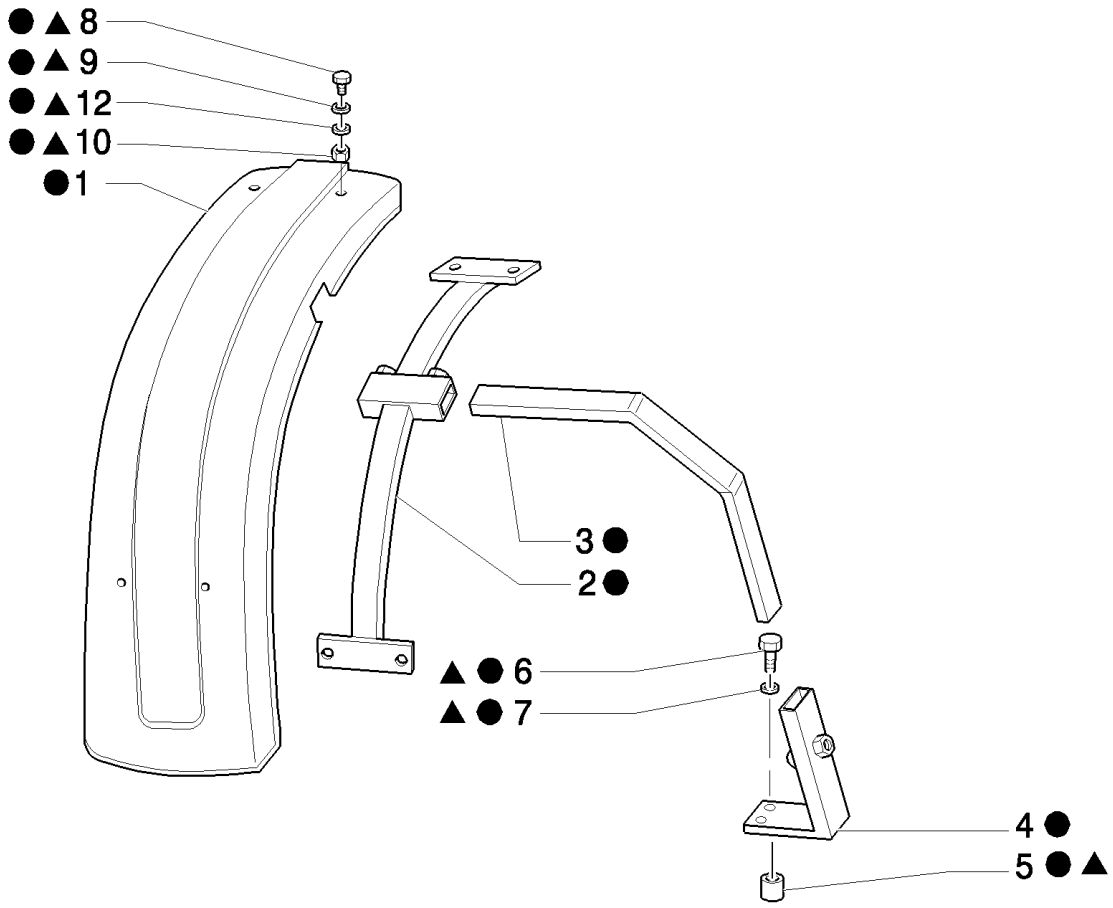

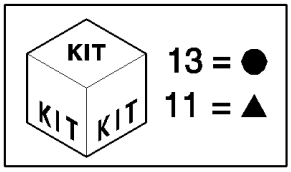

B95LR NA BACKHOE LOADER (1/06-)

803(01) FENDERS, FRONT

Ref	Numero de Pieza	Ctd	Descripción
1	9968885	1	FENDER, FRONT, LH
1	9968886	1	FENDER, FRONT, RH
2	9968884	2	SUPPORT,
3	85826132	2	SUPPORT,
4	85826134	1	SUPPORT, RH
4	85826133	1	SUPPORT, LH
5	87348002	6	SPACER,
6	11119121	6	BOLT, Hex, M16 x 60, 8.8,
7	14496901	6	WASHER, M16 x 30 x 3,
8	87302831	8	SCREW, M6 x 20
9	11194779	8	WASHER, SPRING, Belleville, M6.4, 6.5x18x1.5
10	12574211	8	NUT, LOCK, M6 x 1, Cl 8,
11	87302715	1	KIT,
12	11193279	8	WASHER, SPRING, Belleville, M6.4, 6.5x15x1.5
13	85826131	1	KIT, , Includes 1 To 12

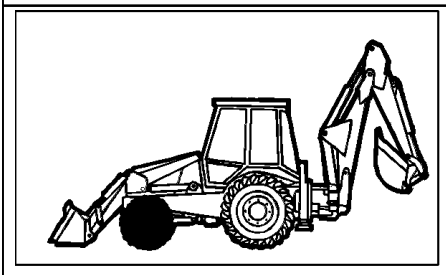

EQUIP	TIRE SIZE	RIM
81.35	11L-16F3-10PR	W8LX 16
81.38	11L-16SL F3-10PR	W8LX 16

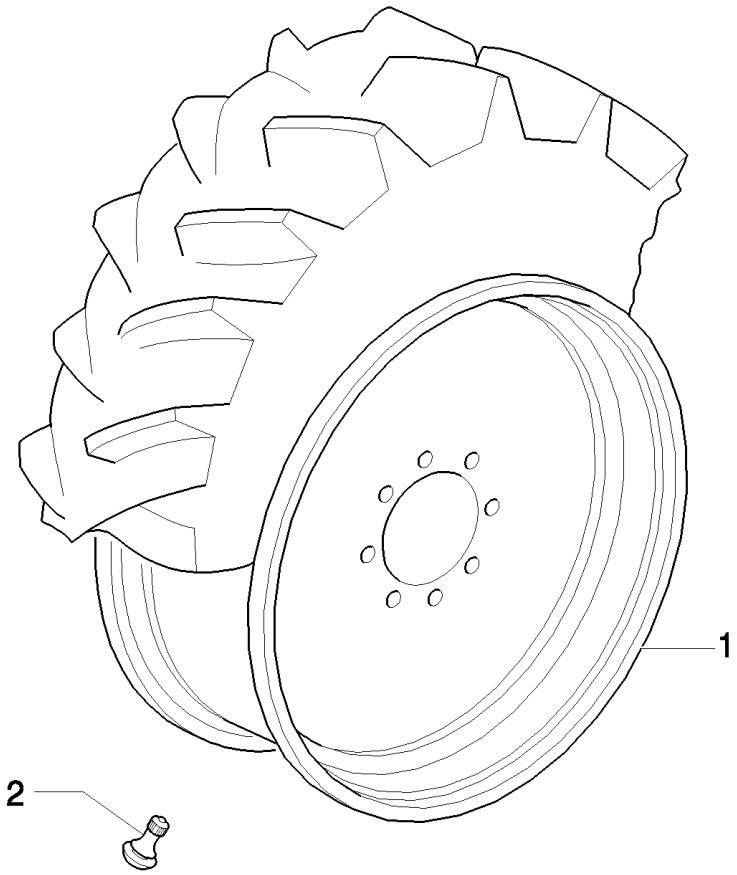

B95LR NA BACKHOE LOADER (1/06-)

81.00(01) FRONT WHEELS (2WD)

Ref	Numero de Pieza	Ctd	Descripción
1	85812260	2	WHEEL, W8Lx16, Only for LB90.B - B95 - B95LR
2	85700224	2	VALVE STEM,

Mechanical Version

82.00(01) DRIVING WHEELS(4WD)

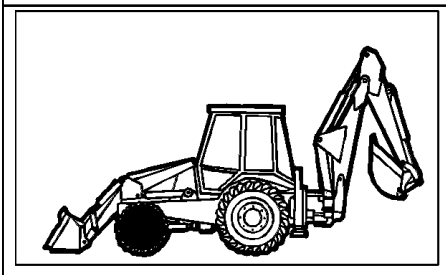

EQUIP	TIRE SIZE	RIM
82.75	14-17.5NHS-8PR	10.5X17.5
82.76	12-16.5NHS-8PR	9.75x16.5

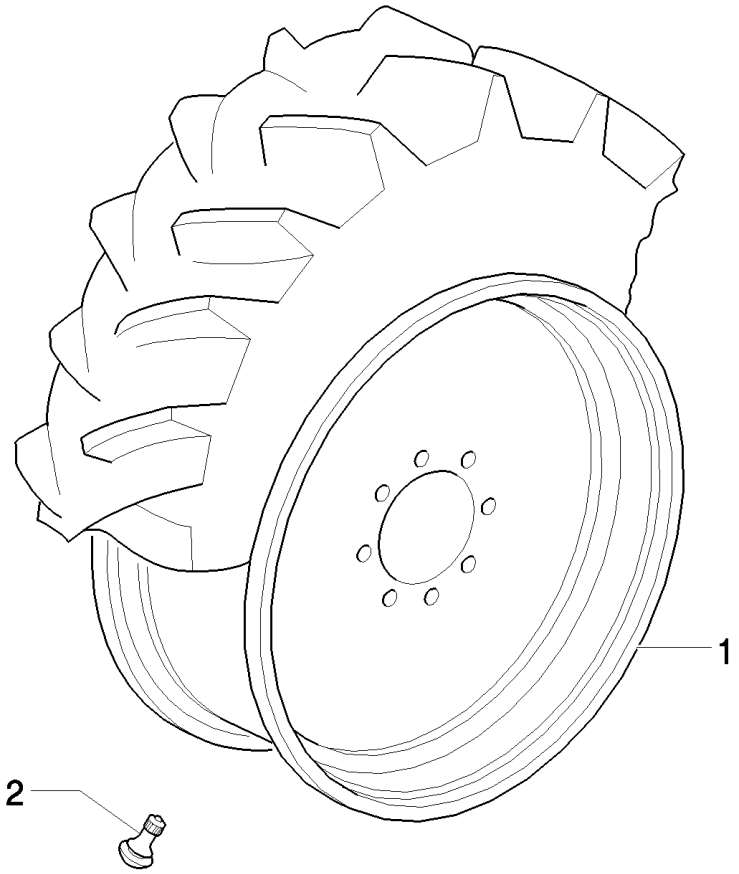

B95LR NA BACKHOE LOADER (1/06-)

82.00(01) DRIVING WHEELS(4WD)

Ref	Numero de Pieza	Ctd	Descripción
1	85803673	2	WHEEL, 10.5 x 17.5
1	85803675	2	WHEEL, 9.75x16.5
2	85700224	2	VALVE STEM,

83.00(01) REAR WHEELS

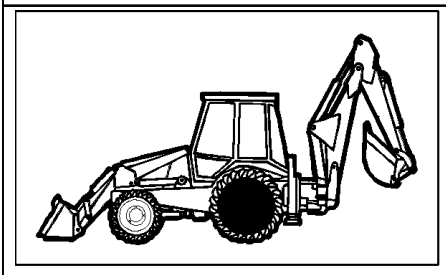

EQUIP	TIRE SIZE	RIM
83.52	16.9-28 R4-10 PLY TITAN	W15LX28Z
83.64	16.9-24R4-10R	W15LX24
83.65	17.5L24 R4-10PR	W15LX24
83.91	19.5L24 R4-10PR	W16LX24
83.92	21L24 R4 - 10PR	W18LX24
83.93	13,5 x 24 "JUMBO NJLK"	W16LX24

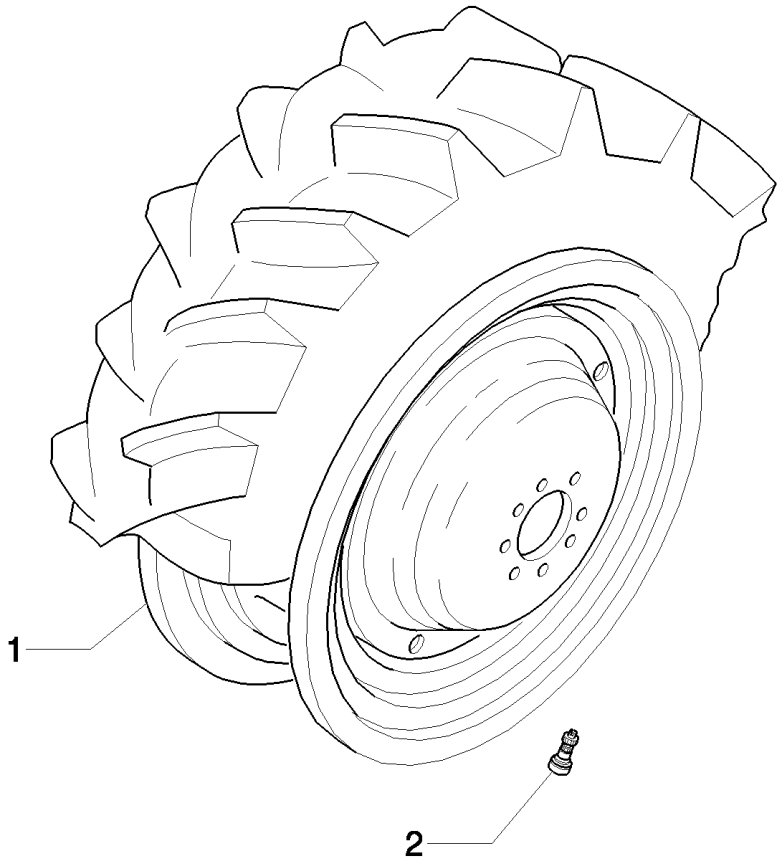

B95LR NA BACKHOE LOADER (1/06-)

83.00(01) REAR WHEELS

Ref	Numero de Pieza	Ctd	Descripción
1	85803679	2	WHEEL, W15L x 28
1	85803681	2	WHEEL, W16Lx24
1	85816850	2	WHEEL, W15L x 24
1	85824195	2	WHEEL, W18L x 24
1	87305240	2	WHEEL, W14Lx28Z, Only for LB 90.B - LB95.B - LB110.B
2	85700224	2	VALVE STEM,

848(01) BATTERY CONNECTION

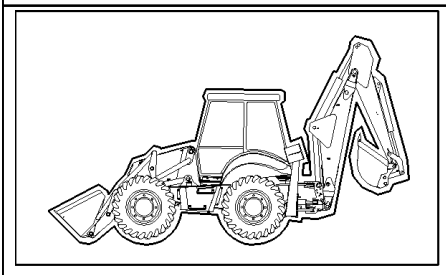

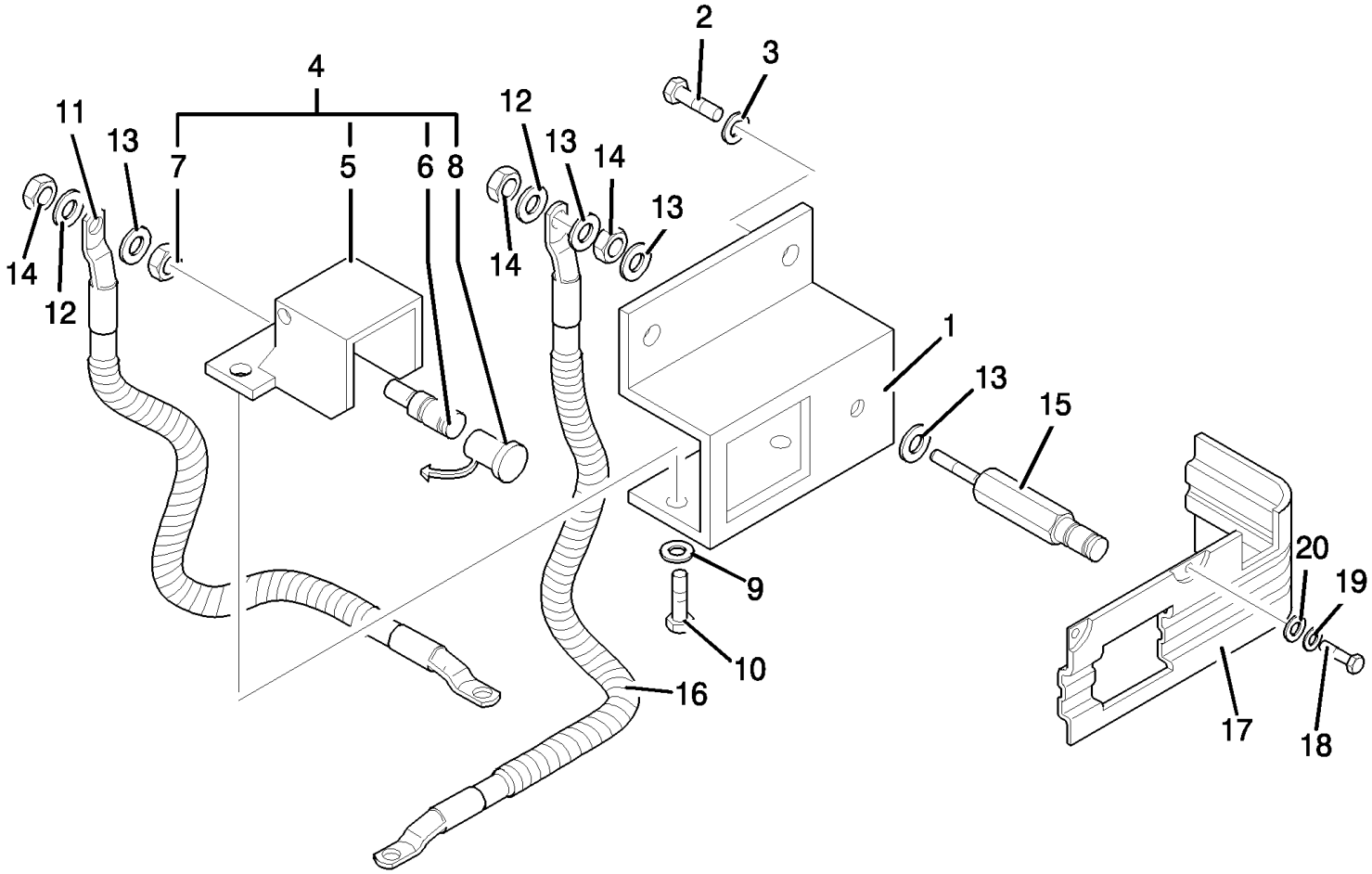

B95LR NA BACKHOE LOADER (1/06-)

848(01) BATTERY CONNECTION

Ref	Numero de Pieza	Ctd	Descripción
1	85821205	1	SUPPORT,
2	10902424	2	BOLT, Hex, M6 x 20, 8.8, Full Thd,
3	11197774	2	WASHER, SPRING, Belleville, M6.4,
4	82013379	1	BRACKET,
5	82013446	1	
6	82014590	1	TERMINAL,
7	10717511	1	NUT, Thin, M16 x 2, Cl 04,
8	82013445	1	COVER,
9	10571474	2	WASHER, LOCK,
10	13274214	2	SCREW, Cross Pan Hd, M5 x 16,
11	85827743	1	CABLE, GROUND,
12	11190579	2	WASHER, SPRING, Belleville, M10.5,
13	14496601	4	WASHER, M10 x 20 x 2,
14	15500111	3	NUT, M10 x 1.5
15	82012402	1	TERMINAL,
16	85827744	1	CABLE, GROUND,
17	85824113	1	GUARD,
18	10902421	3	BOLT, Hex, M6 x 20, 8.8,
19	11194679	3	WASHER, SPRING, Belleville, M6.4,
20	12643721	3	WASHER, M6 x 18 x 1.5,

851/ 2(01) CLOTH SEAT & ATTACHING HARDWARE - CABINE

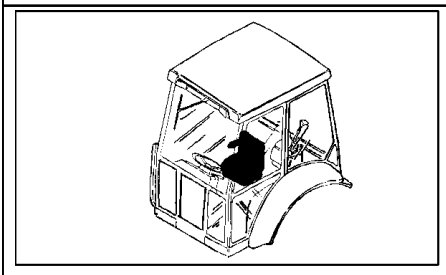

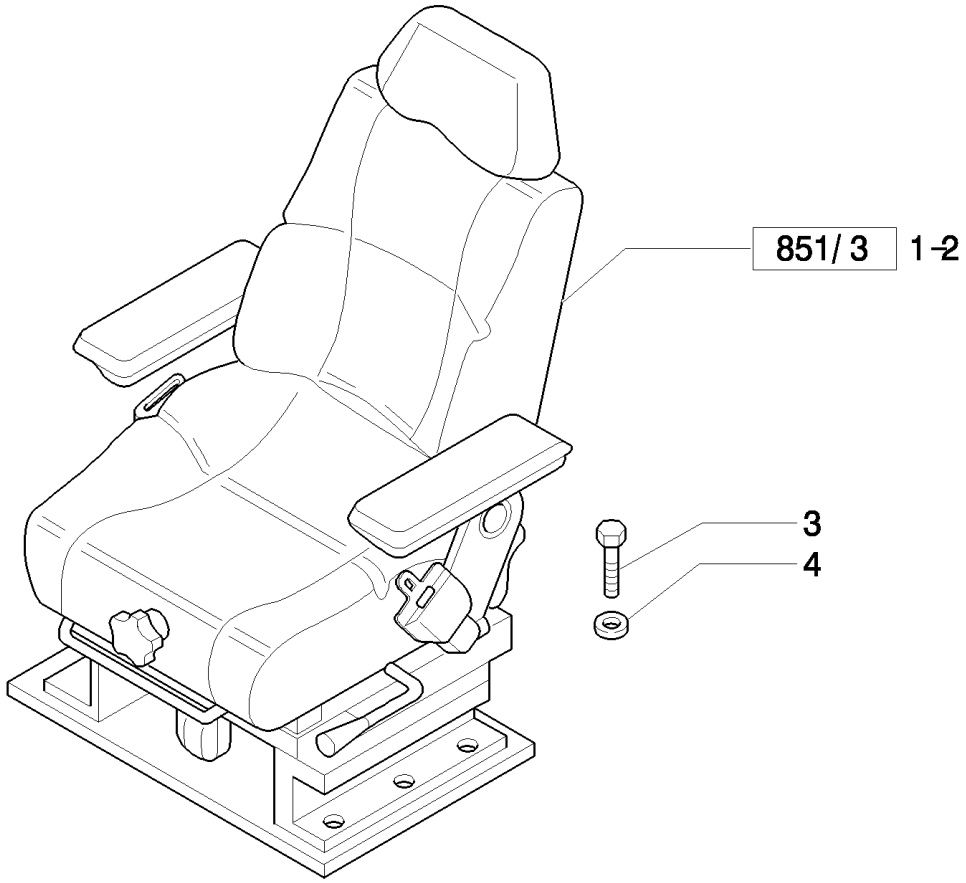

B95LR NA BACKHOE LOADER (1/06-)

851/ 2(01) CLOTH SEAT & ATTACHING HARDWARE - CABINE

Ref	Numero de Pieza	Ctd	Descripción
1	87576858	1	SEAT, , Mechanical Control Version, Consists Of Page 851/3 01 to 851/3 04, 3" Seat Belt
1	87576859	1	SEAT, , Only for EUROPE Version, Consists Of Page 851/3 01 to 851/3 04, Mechanical Control Version, 2" Seat Belt
2	87576866	1	SEAT, , Only for NA Pilot Control Version, Consists Of Page 851/3 01 to 851/3 04, 3" Seat Belt
2	87576867	1	SEAT, , Only for EUROPE Version, Consists Of Page 851/3 01 to 851/3 04, Only for NA Pilot Control Version, 2" Seat Belt
3	16043424	8	SCREW, Hex, M8 x 20, 8.8, Full Thd,
4	11198074	8	WASHER, SPRING, Belleville, M8.4,

851/ 3(01) CLOTH SEAT CUSHIONS, ARMRESTS & RELATED PARTS

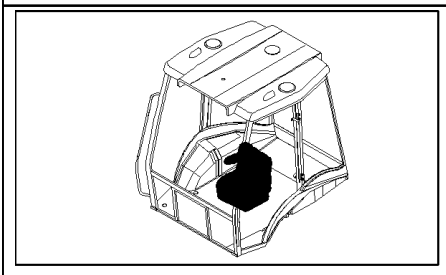

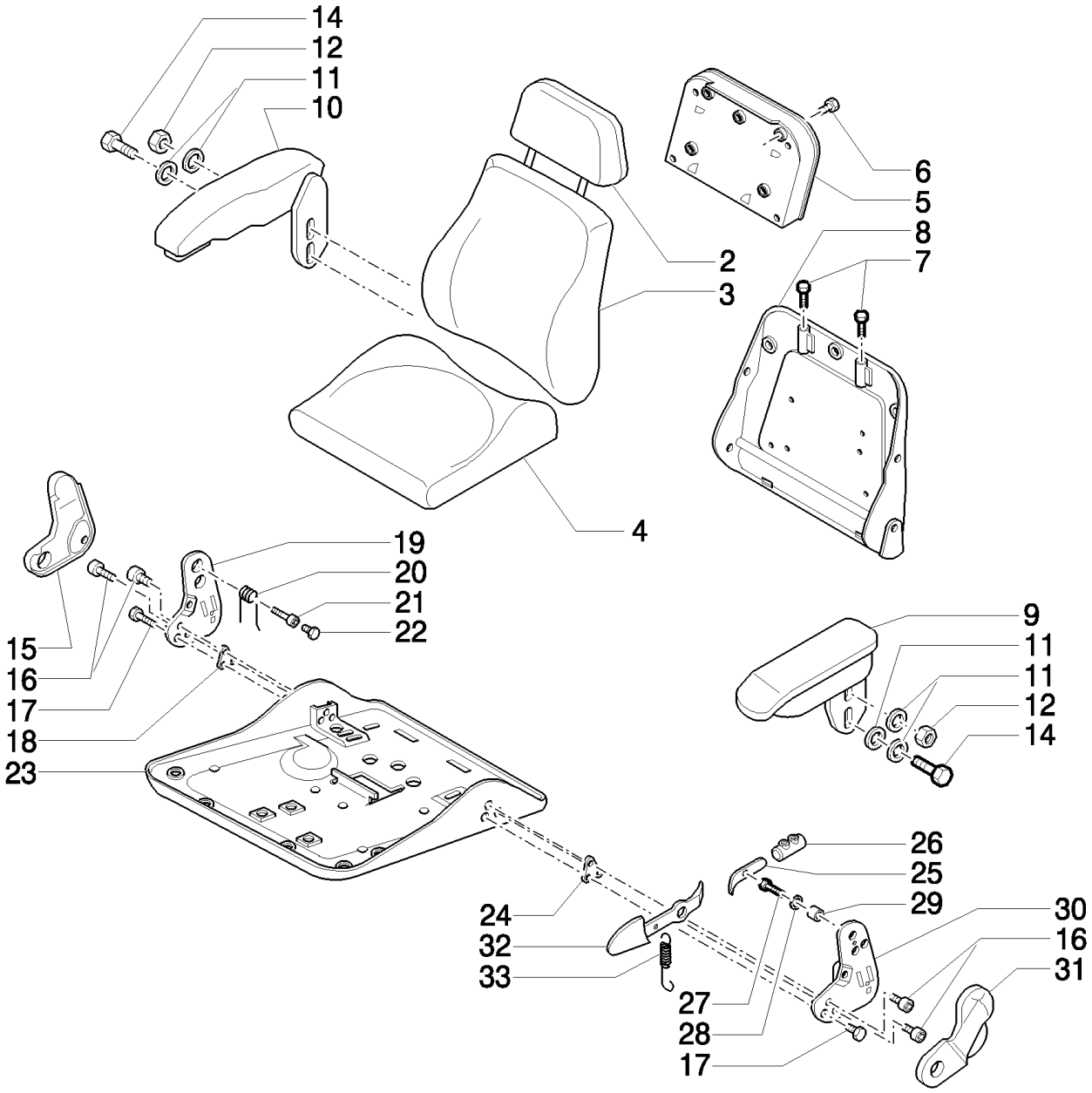

B95LR NA BACKHOE LOADER (1/06-)

851/ 3(01) CLOTH SEAT CUSHIONS, ARMRESTS & RELATED PARTS

Ref	Numero de Pieza	Ctd	Descripción
2	85817452	1	HEADREST, SEAT,
3	85817454	1	SEAT, BACK,
4	85817455	1	CUSHION, SEAT,
5	85817481	1	HOLDER, , Includes 6
6	82034863	4	SCREW,
7	47335213	2	BUSHING,
8	85817485	1	SEAT, BACK, , Includes 7
9	85817453	1	ARMREST, LH, Includes 11, 12, 14, Only for Mechanical Control Version
9	85828196	1	ARMREST, LH, Only for Pilot Control Version, Includes 11, 12, 14
10	85827918	1	ARMREST, RH, Includes 11, 12, 14
11	82034881	AR	WASHER,
12	85817459	2	NUT,
14	83984666	1	SCREW,
15	85817466	1	COVER, RH
16	9972160	AR	SCREW, M8x25
17	87395582	2	BOLT, 7/16"-20UNF x 60.0
18	85817470	1	PLATE,
19	9960795	1	PLATE, RH
20	9960793	1	SPRING,
21	85817469	1	BUSHING,
22	85817471	1	SCREW, M8 x 40
23	85821419	1	PLATE, RETAINING,
24	85817476	1	PLATE,
25	85817460	1	LEVER,
26	85821418	1	STOP DEVICE,
27	82035038	1	SCREW,
28	9960692	AR	SPACER,
29	85817477	1	SPACER,
30	9960803	1	PLATE, LH
31	85817479	1	COVER, RH
32	85817478	1	LEVER,
33	9960797	1	SPRING,

851/ 3(02) CLOTH SEAT MOUNTING PLATE, ADJUSTING RAILS & SEAT BELT

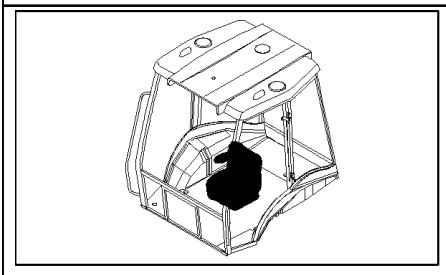

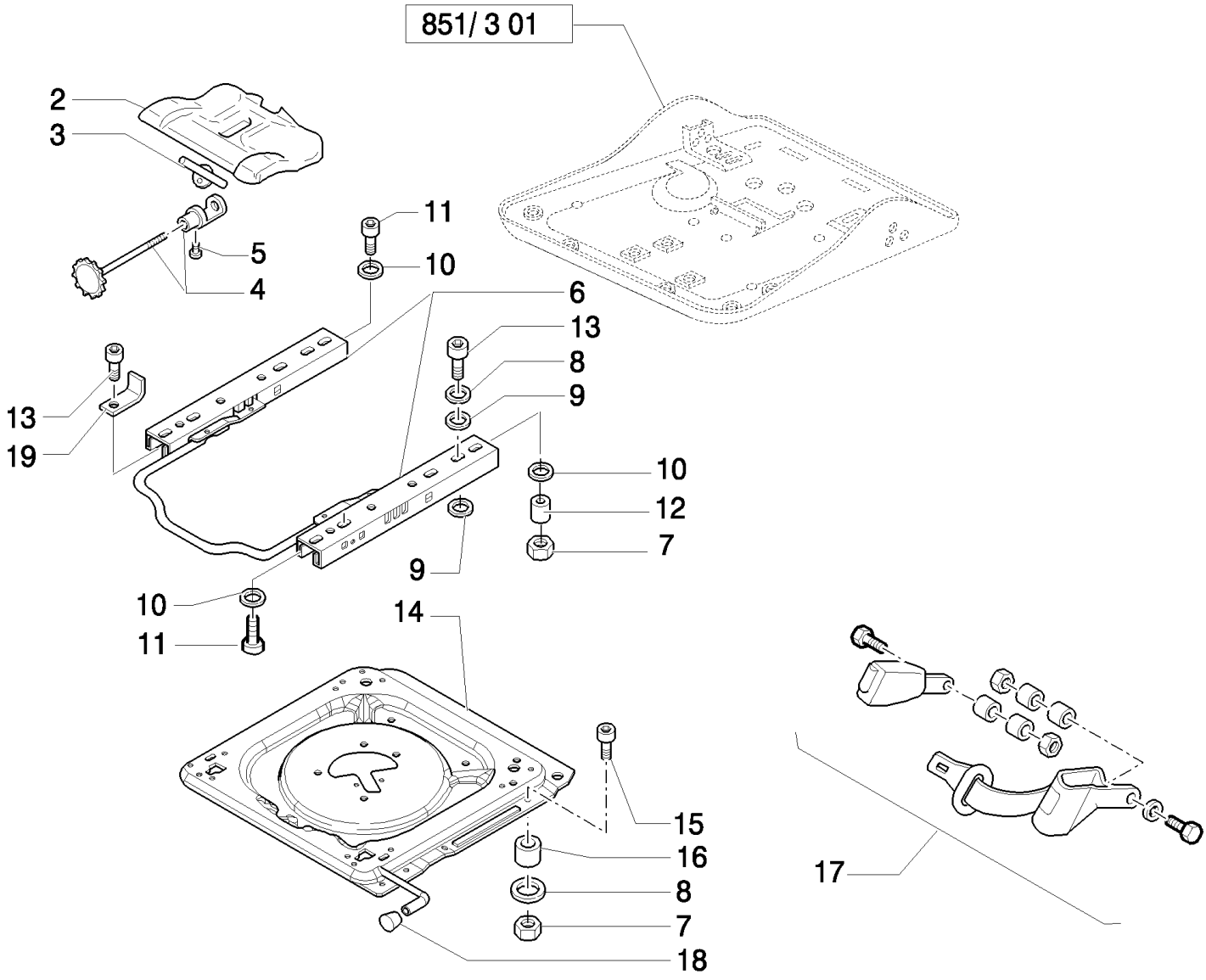

B95LR NA BACKHOE LOADER (1/06-)

851/ 3(02) CLOTH SEAT MOUNTING PLATE, ADJUSTING RAILS & SEAT BELT

Ref	Numero de Pieza	Ctd	Descripción
2	71485488	1	CONTROL, , Includes 3 to 5
3	85817463	1	PLATE,
4	85817464	1	SCREW, ADJUSTMENT, , Includes 3, 5
5	9962962	1	SCREW, M5 x 10
6	85817484	1	KIT,
7	85817458	9	NUT,
8	9960692	AR	SPACER,
9	9958776	9	SPACER,
10	82034881	AR	WASHER,
11	82034893	4	SCREW,
12	85819813	1	BUSHING,
13	9972160	AR	SCREW, M8x25
14	87395588	1	PLATE, , Includes 18
15	85817465	4	SCREW, M8 x 40
16	85817456	4	SPACER,
17	87364220	1	SEAT BELT, , 2" Seat Belt
17	87364221	1	SEAT BELT, , 3" Seat Belt
18	85817482	1	KNOB,
19	85824204	2	BRACKET,

851/ 3(03) CLOTH SEAT UPPER SUSPENSION PARTS

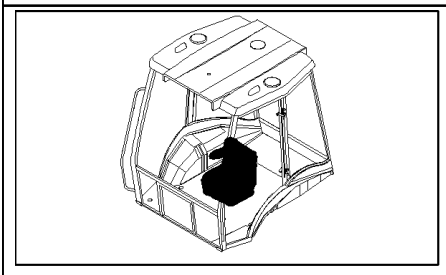

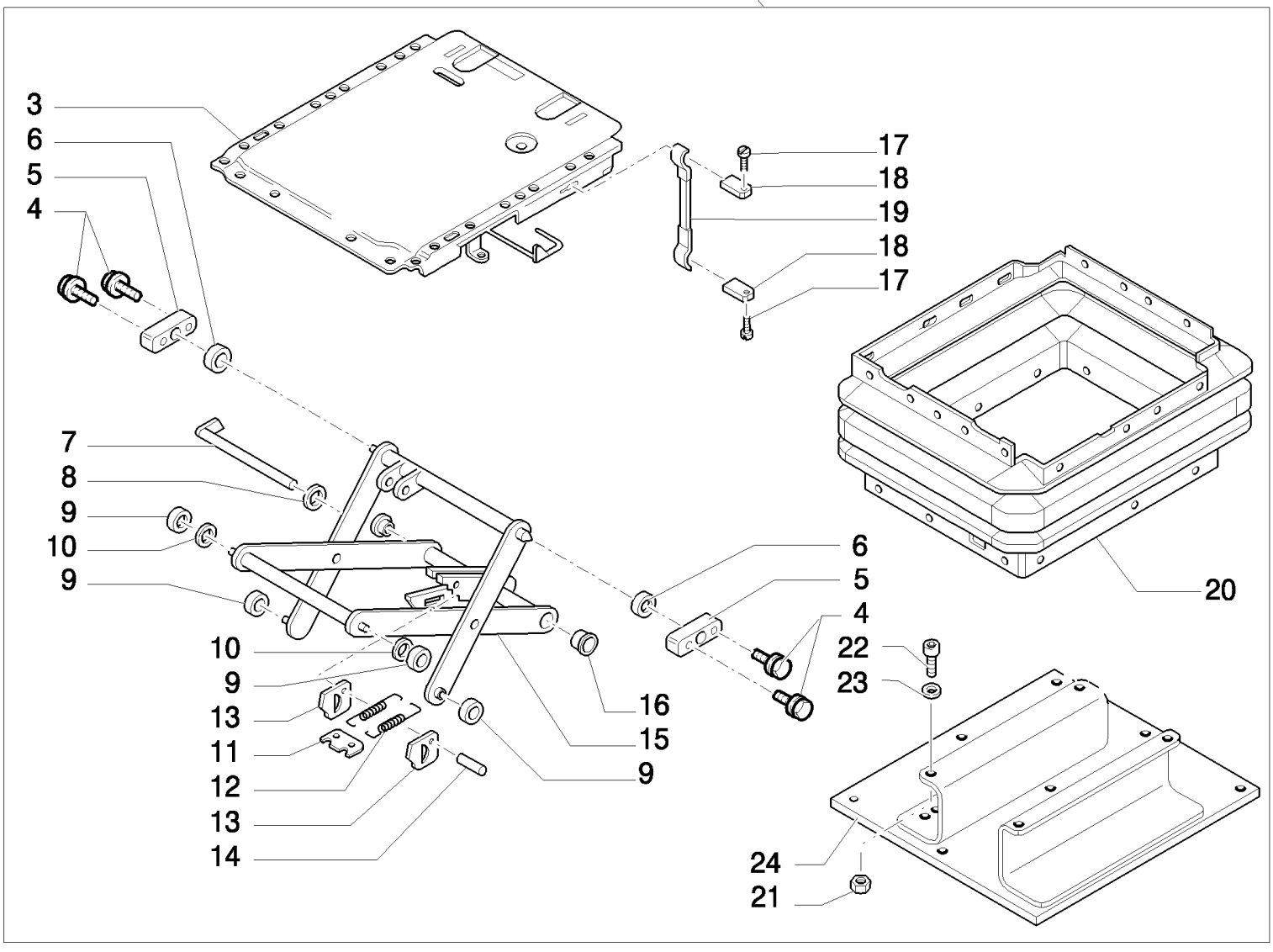

B95LR NA BACKHOE LOADER (1/06-)

851/ 3(03) CLOTH SEAT UPPER SUSPENSION PARTS

Ref	Numero de Pieza	Ctd	Descripción
2	85817426	1	SUSPENSION,
3	85817450	1	PLATE,
4	85817444	4	SCREW, M6 x 16
5	82035094	2	BEARING, , Includes 4, 6
6	85817445	2	BUSHING,
7	85817429	1	BOLT,
8	82035127	1	WASHER,
9	82035031	4	ROLLER,
10	85817442	2	BUSHING,
11	82035030	1	PLATE,
12	85817430	2	SPRING,
13	9958792	2	PLATE,
14	82035036	1	BOLT,
15	85817446	1	SUSPENSION, , Includes 7, 9 to 14, 16
16	9960755	2	BUSHING,
17	85817448	2	RIVET,
18	85817449	2	PLATE,
19	85817447	1	HANDLE, , Includes 17, 18
20	85817428	1	BELLOWS,
21	85817458	4	NUT, M8
22	82034893	4	SCREW,
23	82034881	4	WASHER,
24	85817427	1	PLATE, RETAINING,

851/ 3(04) CLOTH SEAT LOWER SUSPENSION PARTS

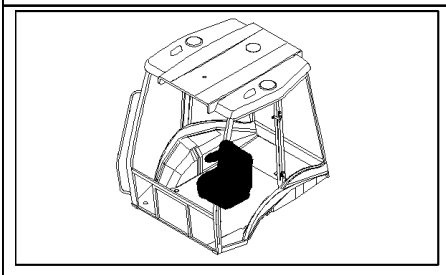

2 SEE ALSO TAV. 851/ 3 03

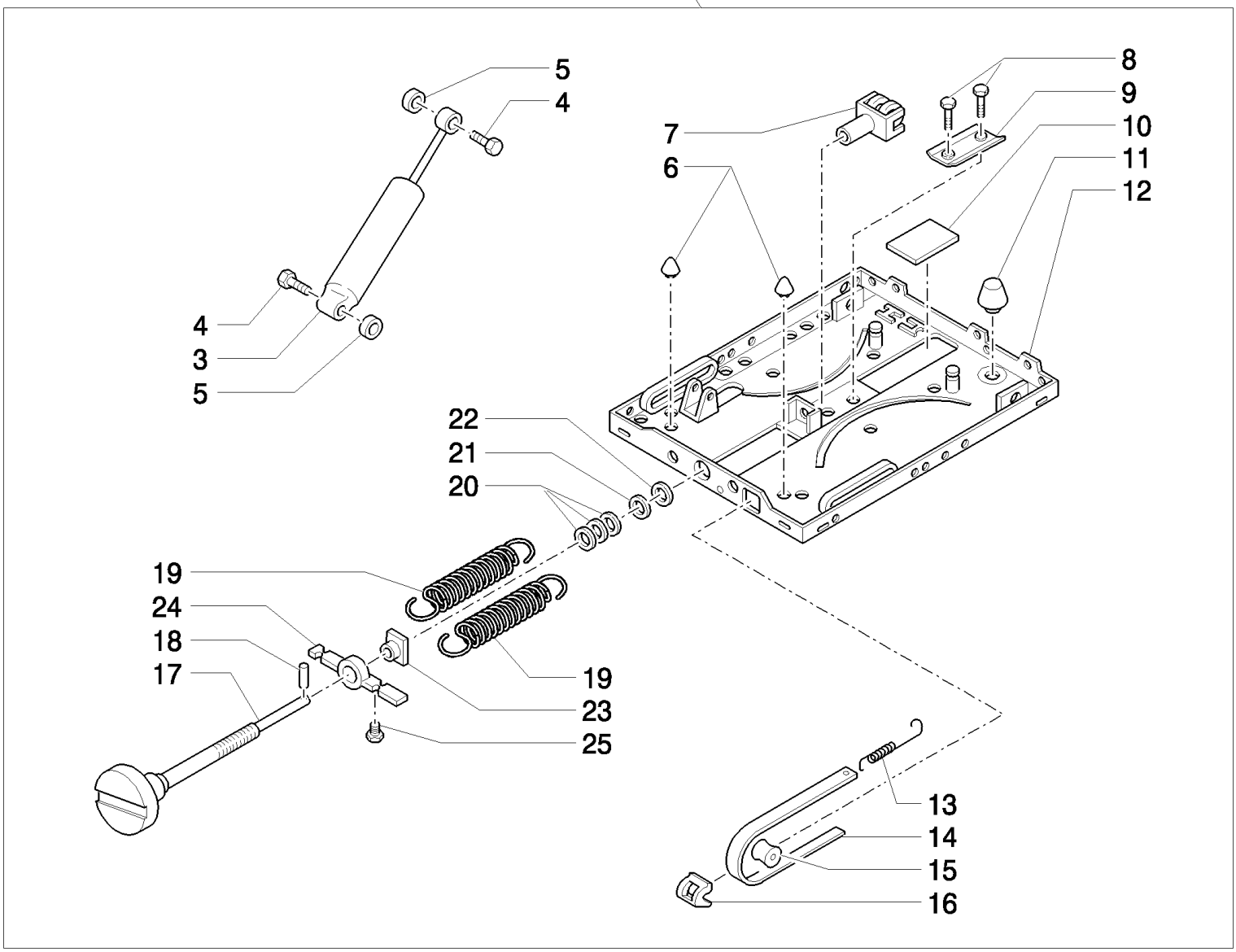

B95LR NA BACKHOE LOADER (1/06-)

851/ 3(04) CLOTH SEAT LOWER SUSPENSION PARTS

Ref	Numero de Pieza	Ctd	Descripción
2	85817426	1	SUSPENSION,
3	85817431	1	SHOCK ABSORBER, , Includes 4, 5
4	82035040	2	BOLT,
5	82035128	2	WASHER,
6	85817440	2	BUMPER, RUBBER,
7	82035043	1	FORK,
8	82035037	2	RIVET,
9	82035054	1	PROFILE,
10	82035032	1	PLATE,
11	85817441	1	BUMPER, RUBBER,
12	85817436	1	SUSPENSION, , Includes 6, 8 to 11
13	82035039	1	SPRING,
14	85817443	1	INDICATOR, , Includes 13, 15, 16, 25
15	82035029	1	ROLLER,
16	82035025	1	GUIDE,
17	85817451	1	SCREW, ADJUSTMENT, , Includes 18
18	85817433	1	DOWEL,
19	85817434	2	SPRING,
20	82035035	1	SET OF WASHERS,
21	82035028	1	WASHER,
22	85817435	1	BUSHING,
23	82035034	1	NUT,
24	82035027	1	BRACKET,
25	82035033	1	RETAINER,

855/ 2(01) AIR RIDE CLOTH SEAT & ATTACHING HARDWARE - CABINE

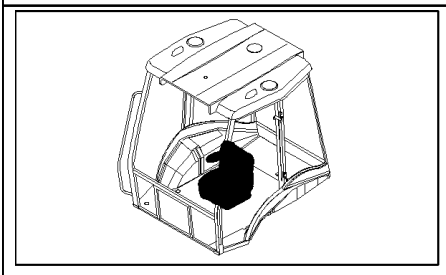

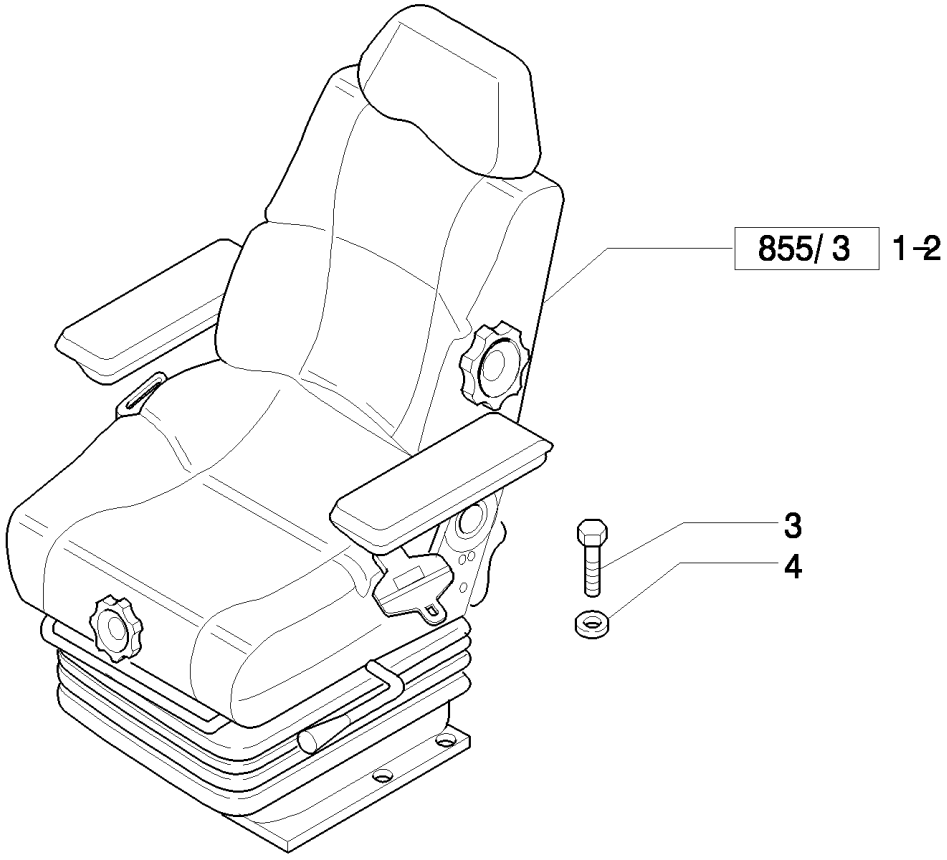

B95LR NA BACKHOE LOADER (1/06-)

855/ 2(01) AIR RIDE CLOTH SEAT & ATTACHING HARDWARE - CABINE

Ref	Numero de Pieza	Ctd	Descripción
1	87576861	1	SEAT, , 2" Seat Belt, Mechanical Control Version, Only for EUROPE Version, Consists Of Page 855/3 01 to 855/3 05
1	87576862	1	SEAT, , Consists Of Page 855/3 01 to 855/3 05, 3" Seat Belt, Mechanical Control Version
2	87576868	1	SEAT, , Only for NA Pilot Control Version, 2" Seat Belt, Only for EUROPE Version, Consists Of Page 855/3 01 to 855/3 05
2	57576869	1	, Consists Of Page 855/3 01 to 855/3 05, 3" Seat Belt, Only for NA Pilot Control Version
3	16043424	8	SCREW, Hex, M8 x 20, 8.8, Full Thd,
4	11198074	8	WASHER, SPRING, Belleville, M8.4,

855/ 3(01) AIR RIDE CLOTH SEAT CUSHIONS, ARMRESTS & RELATED PARTS

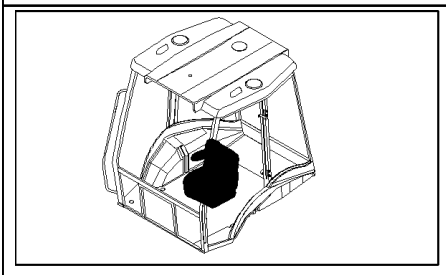

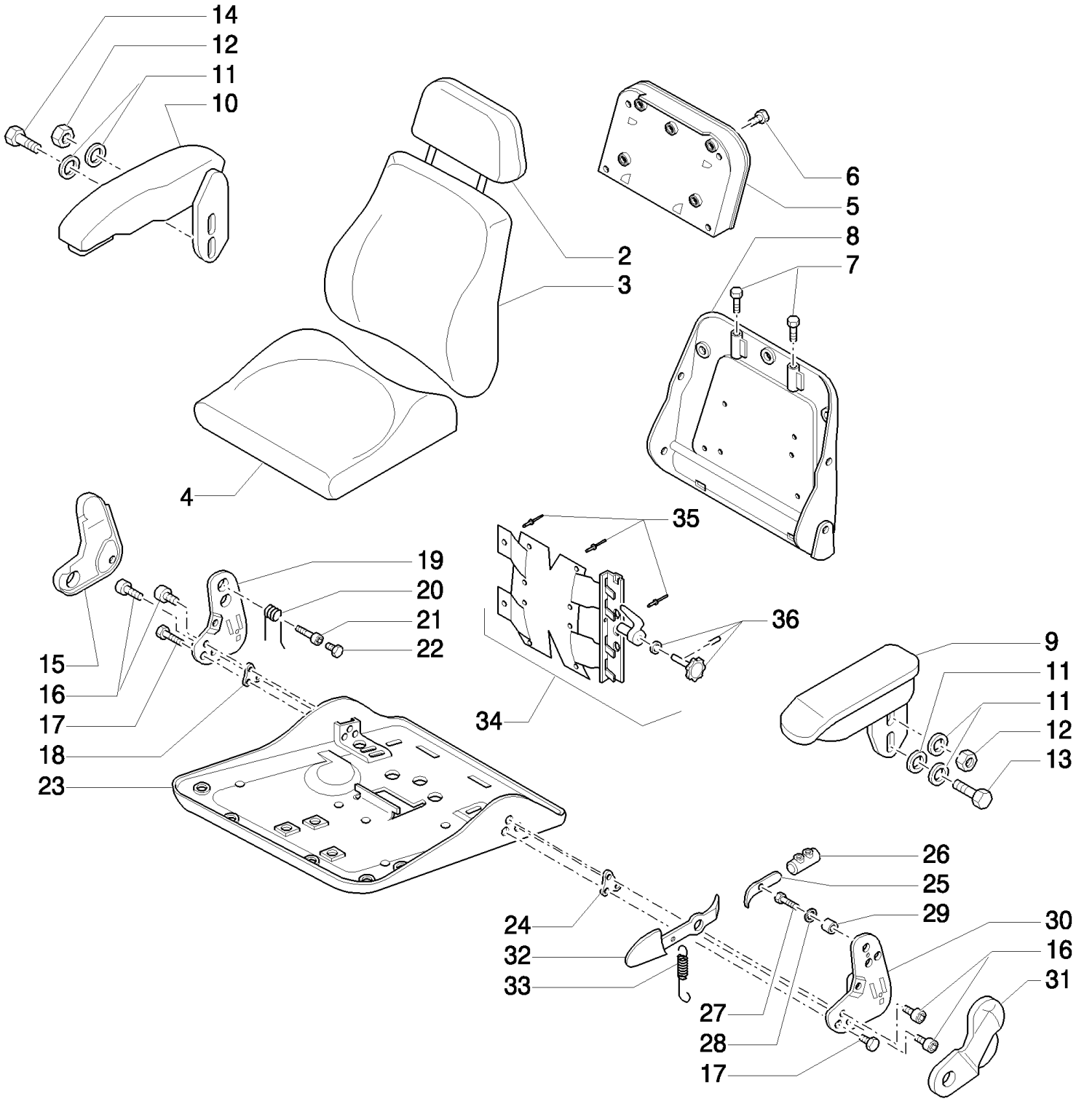

B95LR NA BACKHOE LOADER (1/06-)

855/ 3(01) AIR RIDE CLOTH SEAT CUSHIONS, ARMRESTS & RELATED PARTS

Ref	Numero de Pieza	Ctd	Descripción
2	85817452	1	HEADREST, SEAT,
3	85817535	1	SEAT, BACK,
4	85817455	1	CUSHION, SEAT,
5	85817481	1	HOLDER, , Includes 6
6	82034863	4	SCREW,
7	47335213	2	BUSHING,
8	85817532	1	HEADREST, SEAT, , Includes 7, 34
9	85817453	1	ARMREST, LH, Includes 11 To 13, Mechanical Control Version
9	85828196	7	ARMREST, , Includes 11 To 13, Only for Pilot Control Version
10	85827918	1	ARMREST, RH, Includes 11, 12, 14
11	82034881	AR	WASHER,
12	85817459	2	NUT, M8
13	83984666	1	SCREW,
14	13838071	2	BOLT, Hex Serr Flg, M8 x 20,
15	85817466	1	COVER, RH
16	9972160	8	SCREW,
17	87395582	2	BOLT, 7/16"-20UNF x 60.0
18	85817470	1	PLATE,
19	9960795	1	PLATE, RH
20	9960793	1	SPRING,
21	85817469	1	BUSHING,
22	85817471	1	SCREW,
23	85821419	1	PLATE, RETAINING,
24	85817476	1	PLATE,
25	85817460	1	LEVER,
26	85821418	1	STOP DEVICE,
27	82035038	1	SCREW,
28	9960692	AR	SPACER,
29	85817477	1	SPACER,
30	9960803	1	PLATE, LH
31	85817479	1	COVER, LH
32	85817478	1	LEVER,
33	9960797	1	SPRING,
34	9967970	1	KIT,
35	82034897	3	RIVET,
36	85817534	1	SCREW, ADJUSTMENT,

855/ 3(02) AIR RIDE CLOTH SEAT MOUNTING PLATE, ADJUSTING RAILS & SEAT BELT

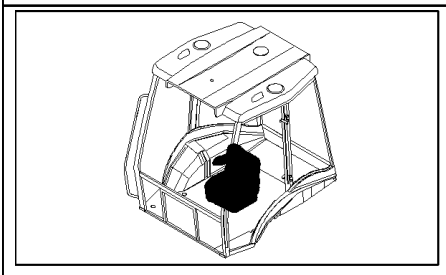

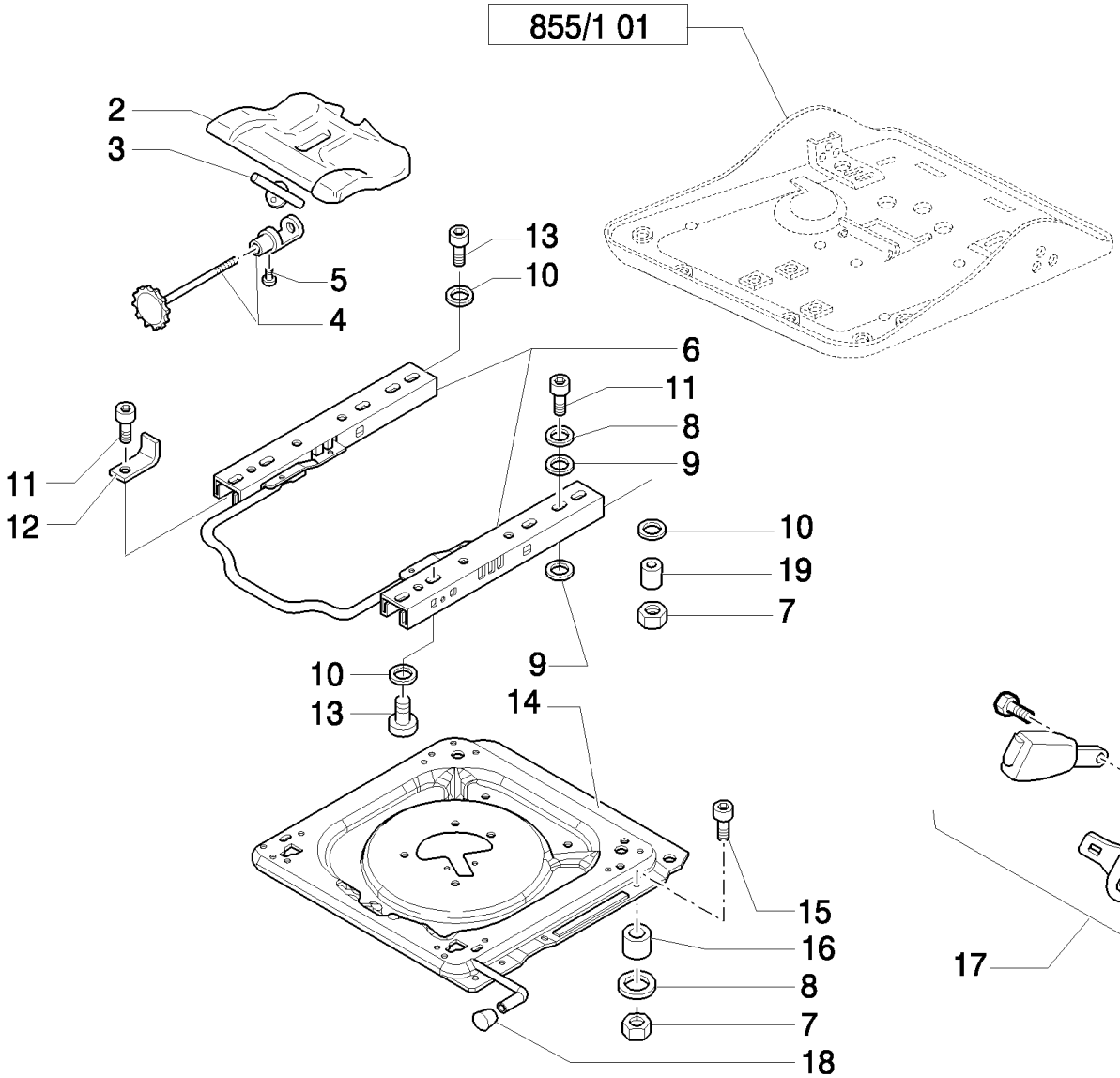

B95LR NA BACKHOE LOADER (1/06-)

855/ 3(02) AIR RIDE CLOTH SEAT MOUNTING PLATE, ADJUSTING RAILS & SEAT BELT

Ref	Numero de Pieza	Ctd	Descripción
2	71485488	1	CONTROL, , Includes 3, 4
3	85817463	1	PLATE,
4	85817464	1	SCREW, ADJUSTMENT, , Includes 3, 5
5	9962962	1	SCREW, M5 x 10
6	85817484	1	KIT,
7	85817458	8	NUT,
8	9960692	AR	SPACER,
9	9958776	8	SPACER,
10	82034881	AR	WASHER,
11	9972160	AR	SCREW, M8x25
12	85824204	1	BRACKET,
13	82034893	AR	SCREW,
14	87395588	1	PLATE, , Includes 18
15	85817536	4	SCREW,
16	85817456	4	SPACER,
17	87364220	1	SEAT BELT, , 2" Seat Belt
17	87364221	1	SEAT BELT, , 3" Seat Belt
18	85817482	1	KNOB,
19	85819813	1	BUSHING,

855/ 3(03) AIR RIDE CLOTH SEAT UPPER SUSPENSION PARTS

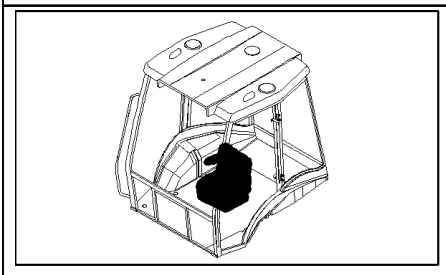

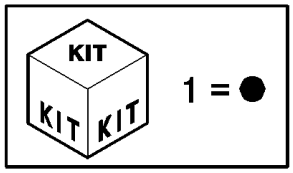

2 SEE ALSO TAV. 855/ 3 04
SEE ALSO TAV. 855/ 3 05

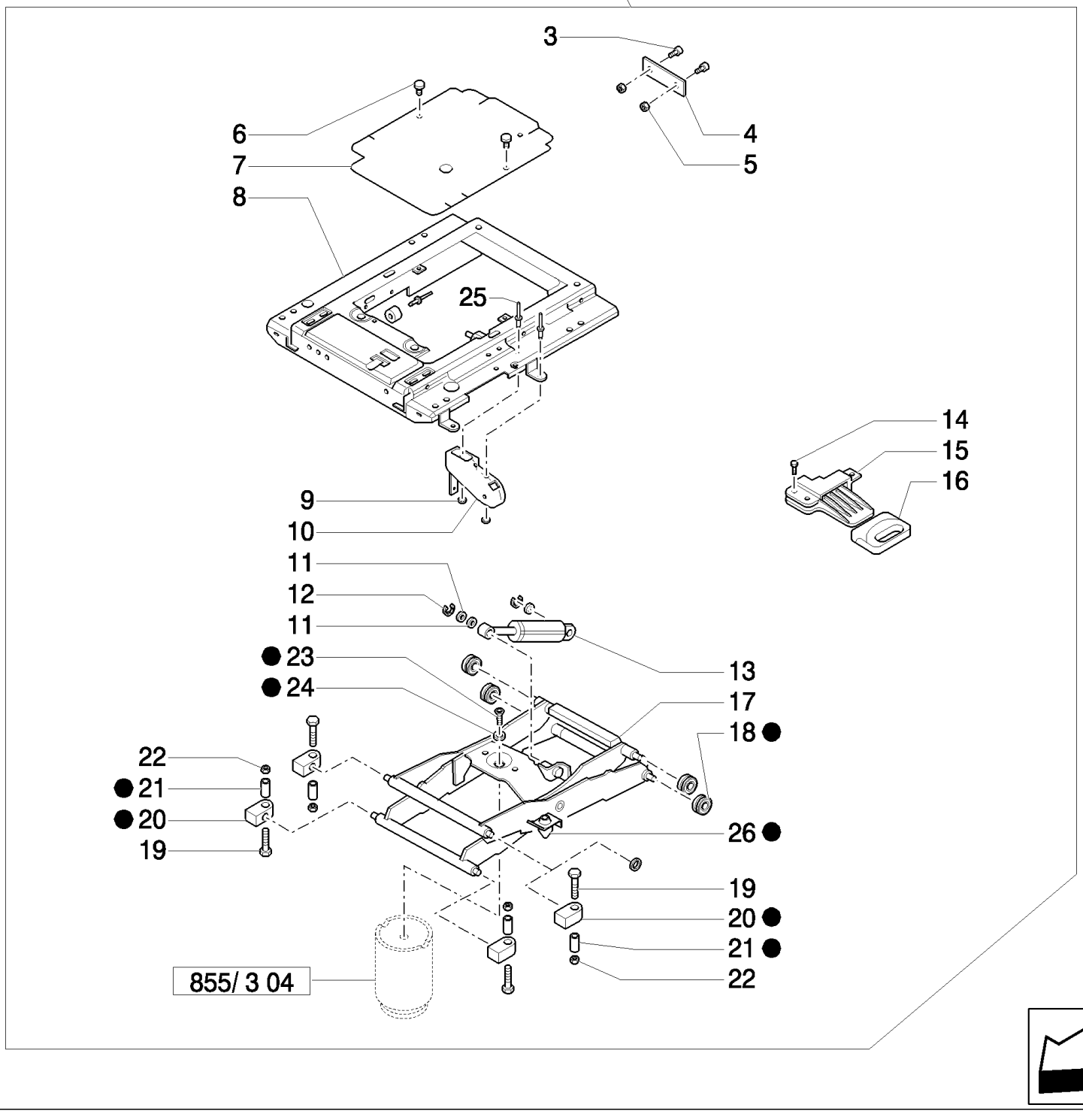

B95LR NA BACKHOE LOADER (1/06-)

855/ 3(03) AIR RIDE CLOTH SEAT UPPER SUSPENSION PARTS

Ref	Numero de Pieza	Ctd	Descripción
1	82848105	1	KIT,
2	85817529	1	SUSPENSION,
3	82034894	2	SCREW,
4	85817494	1	PLATE,
5	85817458	2	NUT,
6	NS	AR	NOT SERVICED,
7	85817486	1	COVER, , Includes 6
8	85824436	1	SHOCK ABSORBER, , Includes 9, 10, 18
9	85817489	2	WASHER,
10	85817490	1	LEVER, CONTROL, , Includes 6, 9, 25
11	NS	3	NOT SERVICED,
12	85817496	2	WASHER,
13	85824434	1	SHOCK ABSORBER, , Includes 6, 11, 12
14	85819815	3	SCREW,
15	85817493	1	CONTROL, , Includes 6, 14, 16
16	85817492	1	HANDLE,
17	87396449	1	SUSPENSION, , Includes 6, 18, 20 to 24 And 5, 6, 10 Page 855/ 3 05
18	82035057	4	ROLLER,
19	NS	4	NOT SERVICED,
20	85817498	AR	BEARING,
21	82035053	AR	TUBE,
22	NS	AR	NOT SERVICED,
23	NS	AR	NOT SERVICED,
24	NS	AR	NOT SERVICED,
25	85817488	2	RIVET,
26	82035126	2	BUMPER,

855/ 3(04) AIR RIDE CLOTH SEAT LOWER SUSPENSION PARTS

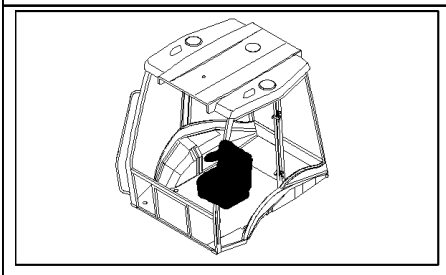

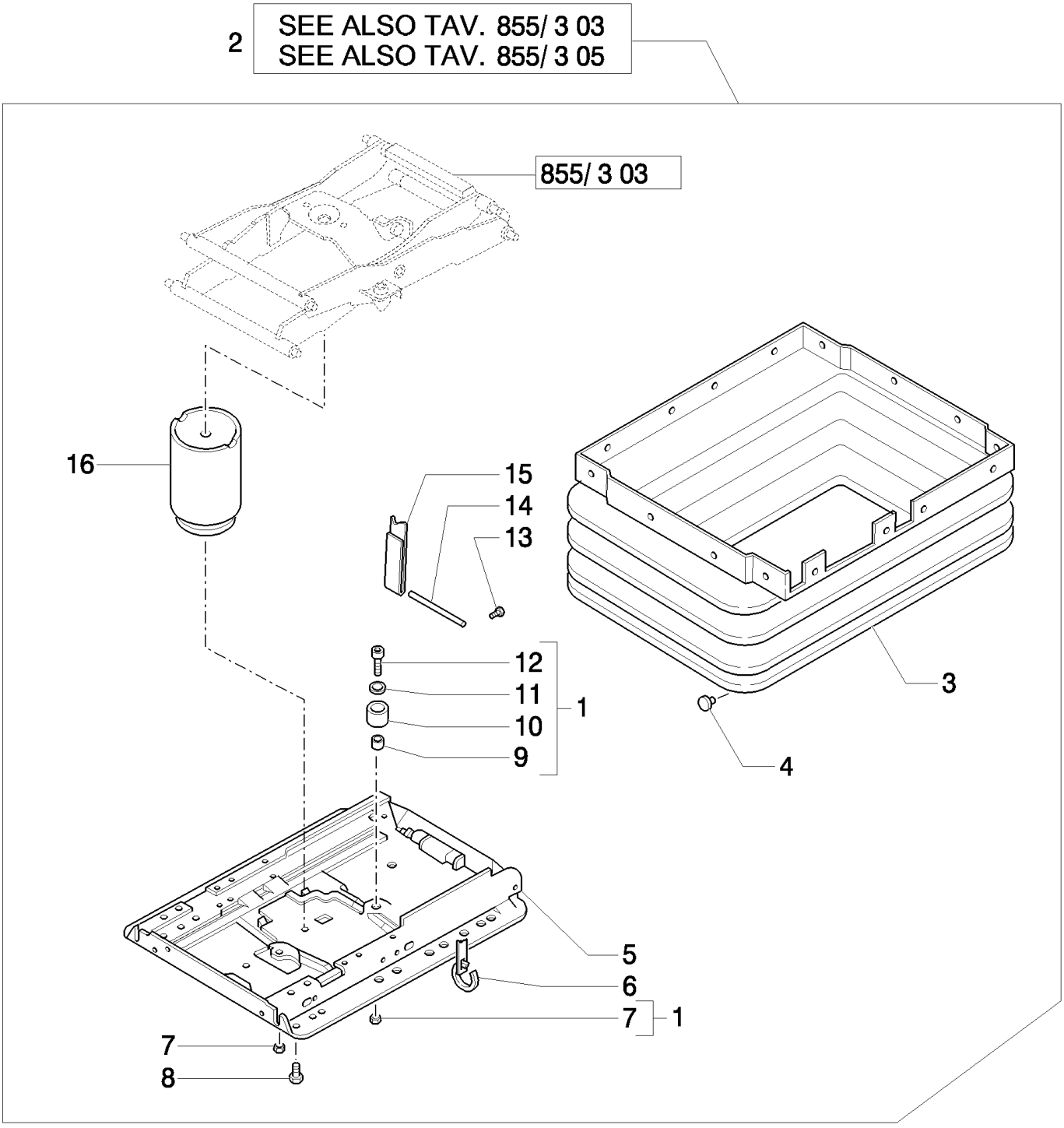

B95LR NA BACKHOE LOADER (1/06-)

855/ 3(04) AIR RIDE CLOTH SEAT LOWER SUSPENSION PARTS

Ref	Numero de Pieza	Ctd	Descripción
1	85817523	1	GUARD,
2	85817529	1	SUSPENSION,
3	85827920	1	BELLOWS, , Includes 4
4	NS	AR	NOT SERVICED,
5	87396451	1	SUSPENSION, , Includes 4, 7, 10 And 18, 23 Page 855/3 03 And 10 Page 855/3 05
6	NS	AR	NOT SERVICED,
7	NS	AR	NOT SERVICED,
8	NS	1	NOT SERVICED, M8x20
9	NS	1	NOT SERVICED,
10	NS	1	NOT SERVICED, , Includes 4, 7, 9, 11, 12
11	NS	1	NOT SERVICED,
12	NS	1	NOT SERVICED, M8x20
13	9962962	1	SCREW,
14	85817513	1	PIN,
15	85817512	1	SOFT TRIM,
16	87396450	1	SPRING, , Includes 4, 8, 11 And 4, 9 Page 855/3 05

855/ 3(05) AIR RIDE CLOTH SEAT COMPRESSOR & TUBING

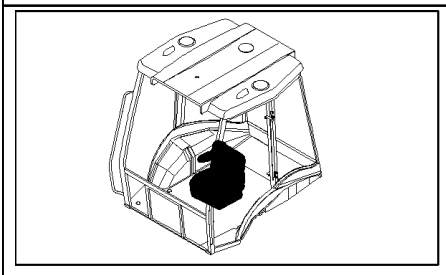

KIT 1 = ●

2 SEE ALSO TAV. 855/ 3 03
SEE ALSO TAV. 855/ 3 04

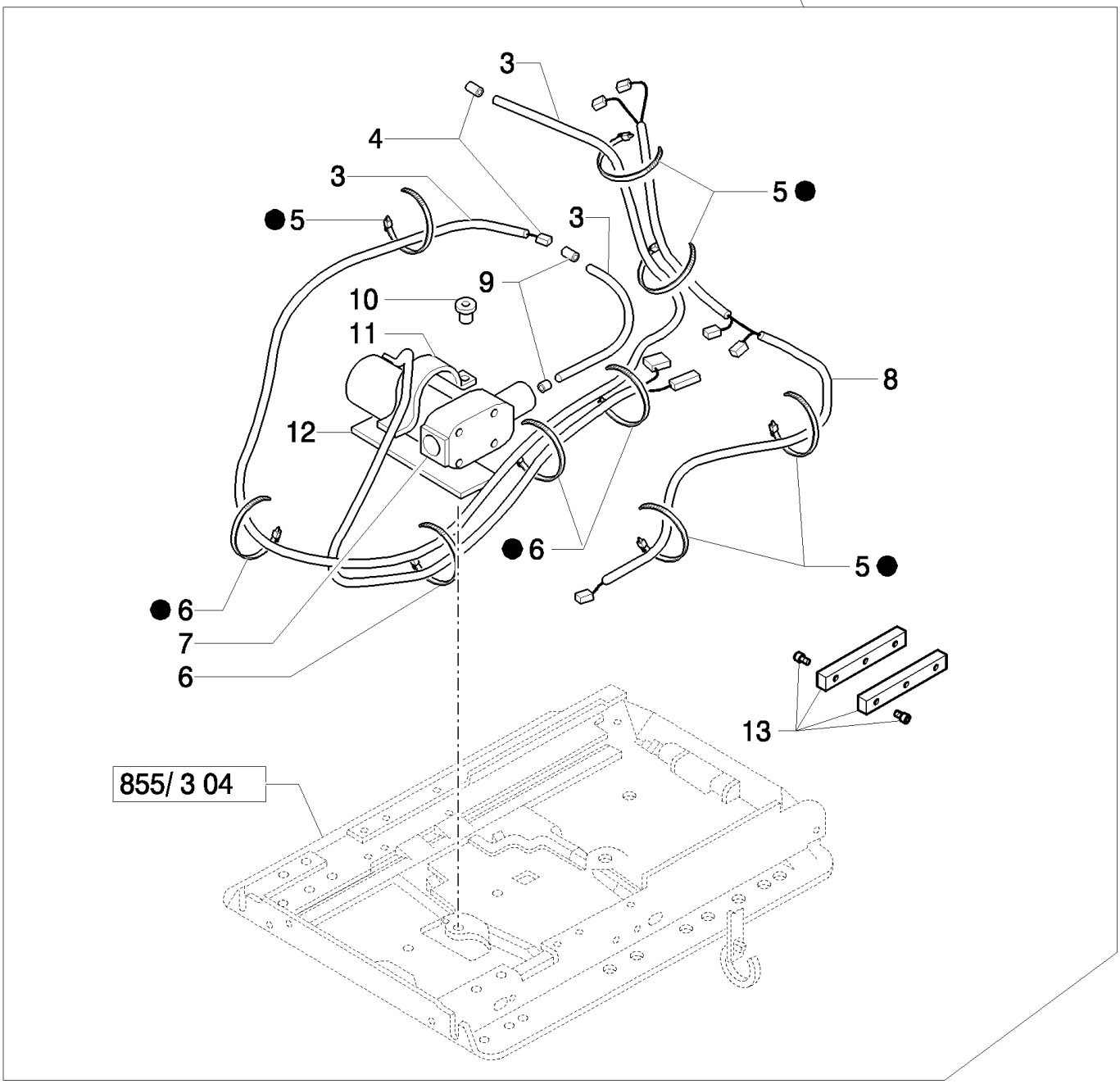

B95LR NA BACKHOE LOADER (1/06-)

855/ 3(05) AIR RIDE CLOTH SEAT COMPRESSOR & TUBING

Ref	Numero de Pieza	Ctd	Descripción
1	82848105	1	KIT,
2	85817529	1	SUSPENSION,
3	87313729	1	KIT, REPAIR, , Includes 4 to 6, 9
4	NS	2	NOT SERVICED,
5	NS	AR	NOT SERVICED,
6	NS	4	NOT SERVICED,
7	82035076	1	COMPRESSOR, , Includes 5, 6, 9 to 12
8	85819814	1	HARNESS, WIRE, , Includes 5, 6
9	NS	2	NOT SERVICED,
10	NS	1	NOT SERVICED,
11	NS	1	NOT SERVICED,
12	NS	1	NOT SERVICED,
13	47335175	1	STOP,

B95LR NA BACKHOE LOADER (1/06-)

856/ 1(01) VINYL SEAT WITH ARMRESTS & MOUNTING HARDWARE (ROPS)

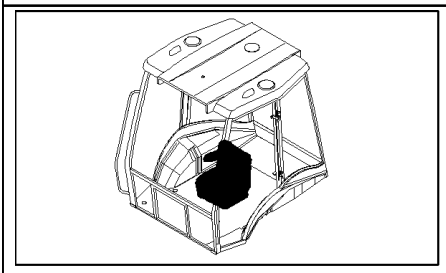

B95LR NA BACKHOE LOADER (1/06-)

856/ 1(01) VINYL SEAT WITH ARMRESTS & MOUNTING HARDWARE (ROPS)

Ref	Numero de Pieza	Ctd	Descripción
1	85826262	1	SEAT, DRIVER, , Mechanical Control Version, 2" Seat Belt, Consists Of Page 863/1-864/1 01 To 863/1-864/1 04
1	85826263	1	SEAT, DRIVER, , Consists Of Page 863/1-864/1 01 To 863/1-864/1 04, Mechanical Control Version, 3" Seat Belt
1	85827703	1	SEAT, DRIVER, , Only for NA Pilot Control Version, 2" Seat Belt, Consists Of Page 863/1-864/1 01 To 863/1-864/1 04
1	85827704	1	SEAT, DRIVER, , Consists Of Page 863/1-864/1 01 To 863/1-864/1 04, Only for NA Pilot Control Version, 3" Seat Belt
2	85817562	1	HEADREST, SEAT,
3	85817563	1	SEAT, BACK, Cap, HH, CL 8.8, M8x1.25x20
4	85817564	1	CUSHION, SEAT,
5	85817481	1	HOLDER, , Includes 6
6	85817480	4	SCREW,
7	9958845	2	BUSHING,
8	85817485	1	SEAT, BACK, , Includes 7, 21
9	85817453	1	ARMREST, , Includes 11 To 13, Mechanical Control Version
9	85828196	1	ARMREST, , Only for NA Pilot Control Version, Includes 11 To 13
10	85827918	1	ARMREST, , Includes 11, 12, 14
11	10519601	AR	WASHER, M8 x 17 x 2,
12	85817459	2	NUT,
13	13838071	1	BOLT, Hex Serr Flg, M8 x 20,
14	13838071	1	BOLT, Hex Serr Flg, M8 x 20,
15	85817466	1	COVER,
16	85817467	AR	SCREW,
17	85817468	2	SCREW, 7/16"-20UNFx60.0
18	85817470	1	PLATE,
19	9960795	1	PLATE,
20	9960793	1	SPRING,
21	85817469	1	BUSHING,
22	85817471	1	SCREW,
23	85821419	1	PLATE, RETAINING,
24	85817476	1	PLATE,
25	85817460	1	LEVER,
26	85821418	1	STOP DEVICE,
27	15213321	1	BOLT, Hex, M8 x 35, 8.8,
28	9960692	AR	SPACER,
29	85817477	1	SPACER,
30	9960803	1	PLATE,
31	85817479	1	COVER,
32	85817478	1	LEVER,
33	9960797	1	SPRING,

B95LR NA BACKHOE LOADER (1/06-)

856/ 1(02) VINYL SEAT MOUNTING PLATE, ADJUSTING RAILS & SEAT BELT (ROPS)

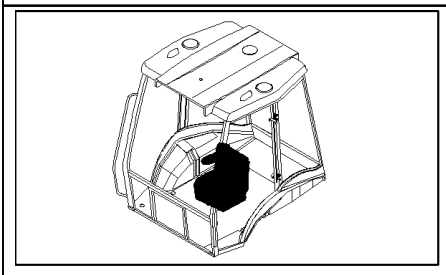

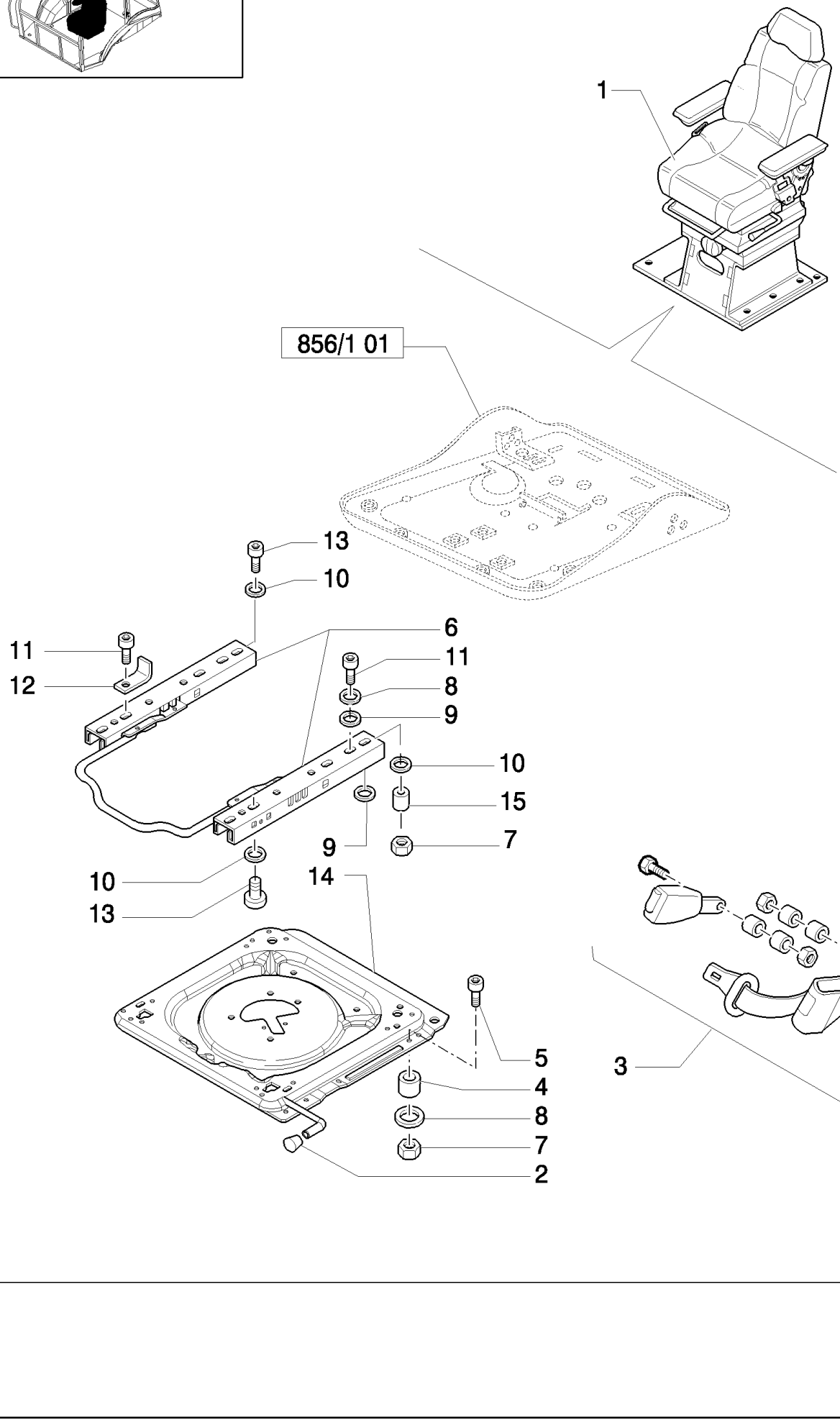

B95LR NA BACKHOE LOADER (1/06-)

856/ 1(02) VINYL SEAT MOUNTING PLATE, ADJUSTING RAILS & SEAT BELT (ROPS)

Ref	Numero de Pieza	Ctd	Descripción
1	85826262	1	SEAT, DRIVER, , Mechanical Control Version, 2" Seat Belt, Consists Of Page 863/1-864/1 01 To 863/1-864/1 04
1	85827703	1	SEAT, DRIVER, , Consists Of Page 863/1-864/1 01 To 863/1-864/1 04, 2" Seat Belt, Only for NA Pilot Control Version
1	85826263	1	SEAT, DRIVER, , Mechanical Control Version, Consists Of Page 863/1-864/1 01 To 863/1-864/1 04, 3" Seat Belt
1	85827704	1	SEAT, DRIVER, , 3" Seat Belt, Consists Of Page 863/1-864/1 01 To 863/1-864/1 04, Only for NA Pilot Control Version
2	85817482	1	KNOB,
3	85815578	1	SEAT BELT, , 2" Seat Belt
3	85815519	1	CABLE, ELECTRIC, , 3" Seat Belt
4	85817456	4	SPACER,
5	85817465	4	SCREW, M8 x 40
6	85817484	1	KIT,
7	85817458	8	NUT,
8	9960692	AR	SPACER,
9	9958776	8	SPACER,
10	10519601	AR	WASHER, M8 x 17 x 2,
11	85817467	8	SCREW, M8x20
12	85824204	1	BRACKET,
13	14306321	4	SCREW, Hex Soc Hd, M8 x 20, 8.8,
14	85817483	1	PLATE, ADJUSTING, , Includes 2
15	85819813	1	BUSHING,

856/ 1(03) VINYL SEAT UPPER SUSPENSION PARTS (ROPS)

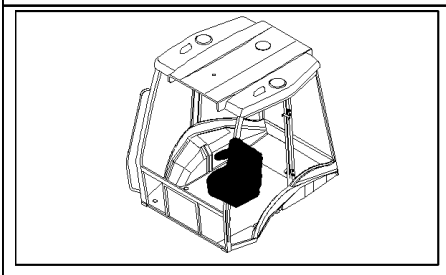

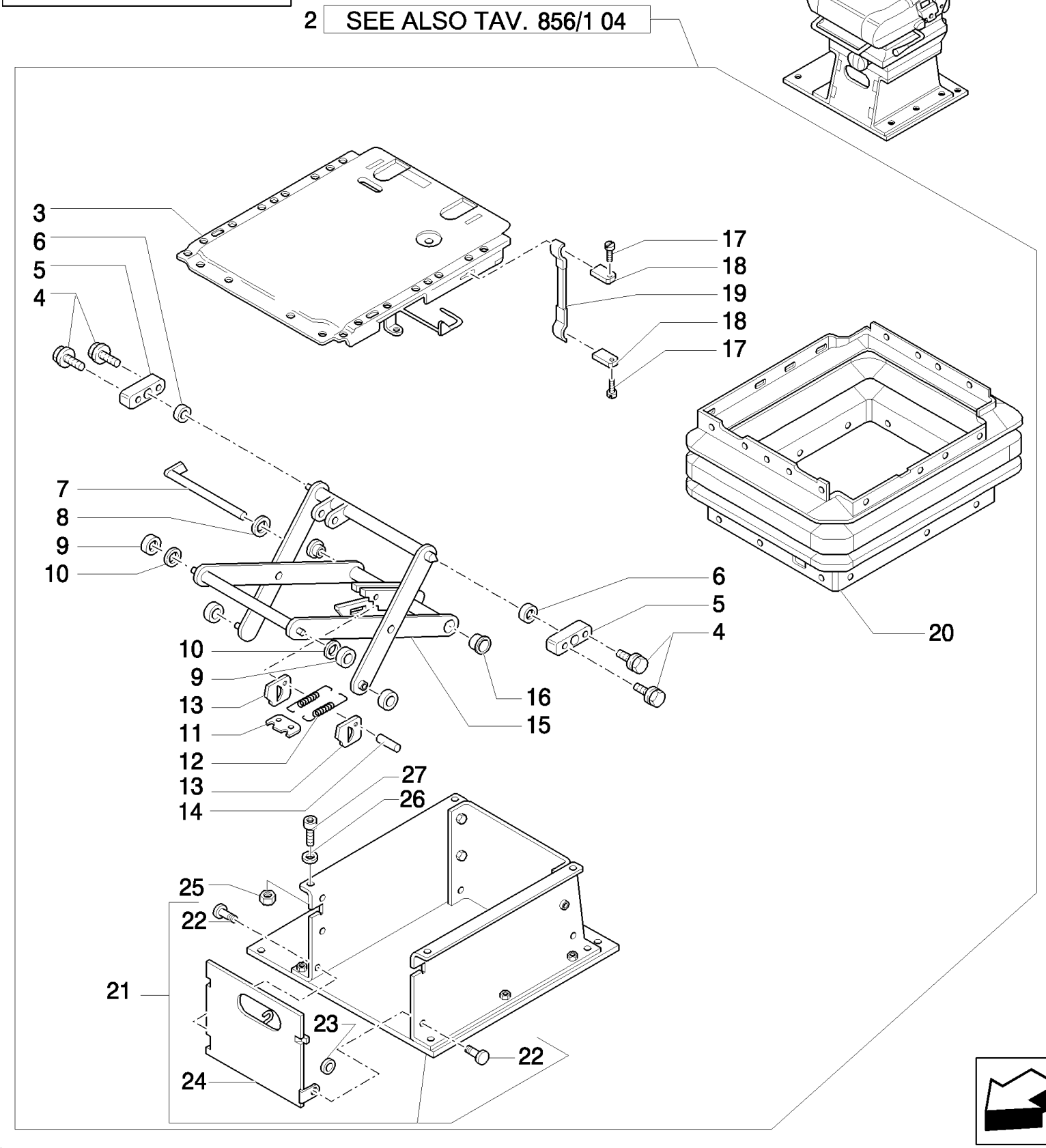

B95LR NA BACKHOE LOADER (1/06-)

856/ 1(03) VINYL SEAT UPPER SUSPENSION PARTS (ROPS)

Ref	Numero de Pieza	Ctd	Descripción
1	85826262	1	SEAT, DRIVER, , Mechanical Control Version, 2" Seat Belt, Consists Of Page 863/1-864/1 01 To 863/1-864/1 04
1	85826263	1	SEAT, DRIVER, , Consists Of Page 863/1-864/1 01 To 863/1-864/1 04, Mechanical Control Version, 3" Seat Belt
1	85827703	1	SEAT, DRIVER, , Only for NA Pilot Control Version, 2" Seat Belt, Consists Of Page 863/1-864/1 01 To 863/1-864/1 04
1	85827704	1	SEAT, DRIVER, , Consists Of Page 863/1-864/1 01 To 863/1-864/1 04, Only for NA Pilot Control Version, 3" Seat Belt
2	85817556	1	SUSPENSION,
3	85817450	1	PLATE,
4	85817444	4	SCREW, M6 x 16
5	9967960	2	BEARING, , Includes 16, 17
6	85817445	2	BUSHING,
7	85817429	1	BOLT,
8	11088076	1	CIRCLIP, M10,
9	9958784	4	SPACER,
10	85817442	2	BUSHING,
11	9958782	1	PLATE,
12	85817430	2	SPRING,
13	9958792	2	PLATE,
14	9958793	1	BOLT,
15	85817446	1	SUSPENSION, , Includes 7, 9 to 14, 16
16	9960755	2	BUSHING,
17	85817448	2	RIVET,
18	85817449	2	PLATE,
19	85817447	1	HANDLE, , Includes 17, 18
20	85817428	1	BELLOWS,
21	85817561	1	BASE, , Includes 22 To 24
22	85817559	2	BOLT,
23	85817560	2	WASHER,
24	85817558	1	DOOR,
25	85817458	4	NUT, M8
26	10519601	4	WASHER, M8 x 17 x 2,
27	14306321	4	SCREW, Hex Soc Hd, M8 x 20, 8.8,

856/ 1(04) VINYL SEAT LOWER SUSPENSION PARTS (ROPS)

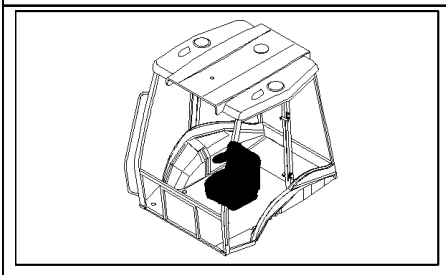

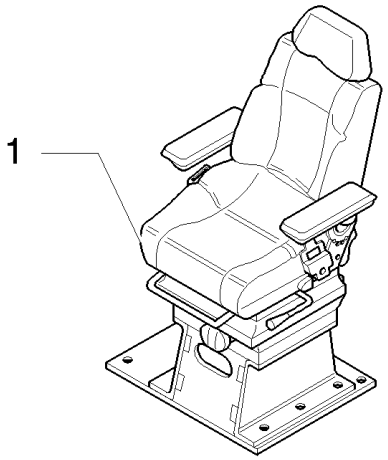

2 SEE ALSO TAV. 856/1 03

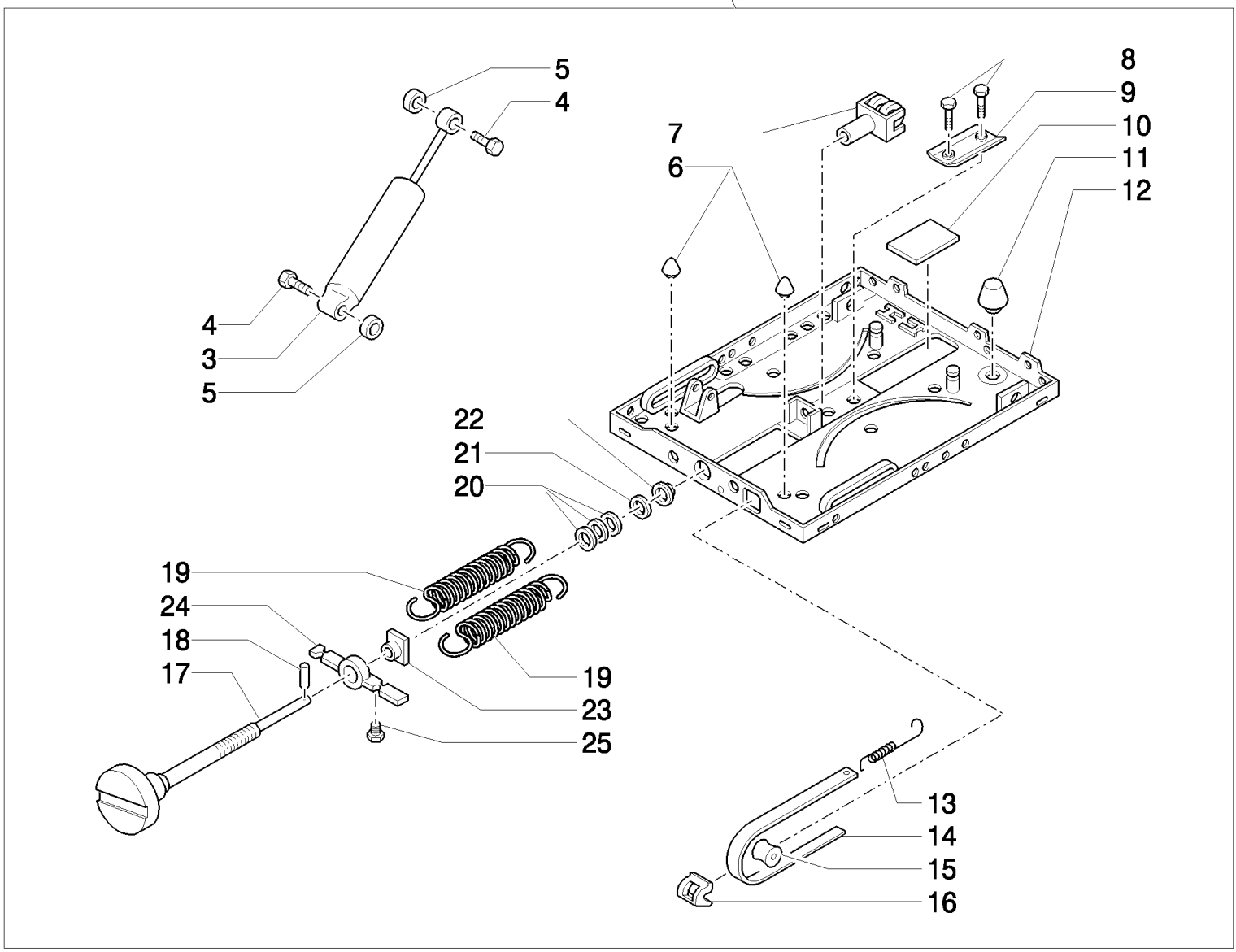

B95LR NA BACKHOE LOADER (1/06-)

856/ 1(04) VINYL SEAT LOWER SUSPENSION PARTS (ROPS)

Ref	Numero de Pieza	Ctd	Descripción
1	85826262	1	SEAT, DRIVER, , Consists Of Page 863/1-864/1 01 To 863/1-864/1 04, Mechanical Control Version, 2" Seat Belt
1	85826263	1	SEAT, DRIVER, , Mechanical Control Version, Consists Of Page 863/1-864/1 01 To 863/1-864/1 04, 3" Seat Belt
1	85827703	1	SEAT, DRIVER, , Consists Of Page 863/1-864/1 01 To 863/1-864/1 04, Only for NA Pilot Control Version, 2" Seat Belt
1	85827704	1	SEAT, DRIVER, , Only for NA Pilot Control Version, Consists Of Page 863/1-864/1 01 To 863/1-864/1 04, 3" Seat Belt
2	85817556	1	SUSPENSION,
3	85817431	1	SHOCK ABSORBER, , Includes 4, 5
4	9959588	2	BOLT,
5	85817432	2	WASHER,
6	85817440	2	BUMPER, RUBBER,
7	9960736	1	FORK,
8	9959585	2	PLUG,
9	9960767	1	CLIP,
10	9959580	1	COVER,
11	85817441	1	BUMPER, RUBBER,
12	85817436	1	SUSPENSION, , Includes 6, 8 to 11
13	9958790	1	SPRING,
14	85817443	1	INDICATOR, , Includes 13, 15, 16, 25
15	9958785	1	ROLLER,
16	9958786	1	GUIDE,
17	85817451	1	SCREW, ADJUSTMENT, , Includes 18
18	85817433	1	DOWEL,
19	85817434	2	SPRING,
20	9958800	1	WASHER,
21	9958788	1	O-RING,
22	85817435	1	BUSHING,
23	9959583	1	NUT,
24	9959577	1	BRACKET,
25	9958789	1	PLUG,

B95LR NA BACKHOE LOADER (1/06-)

856/ 2(01) VINYL SEAT CUSHIONS, ARMRESTS & RELATED PARTS (ROPS)

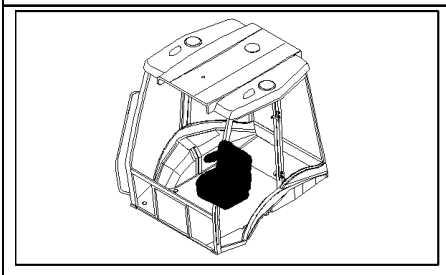

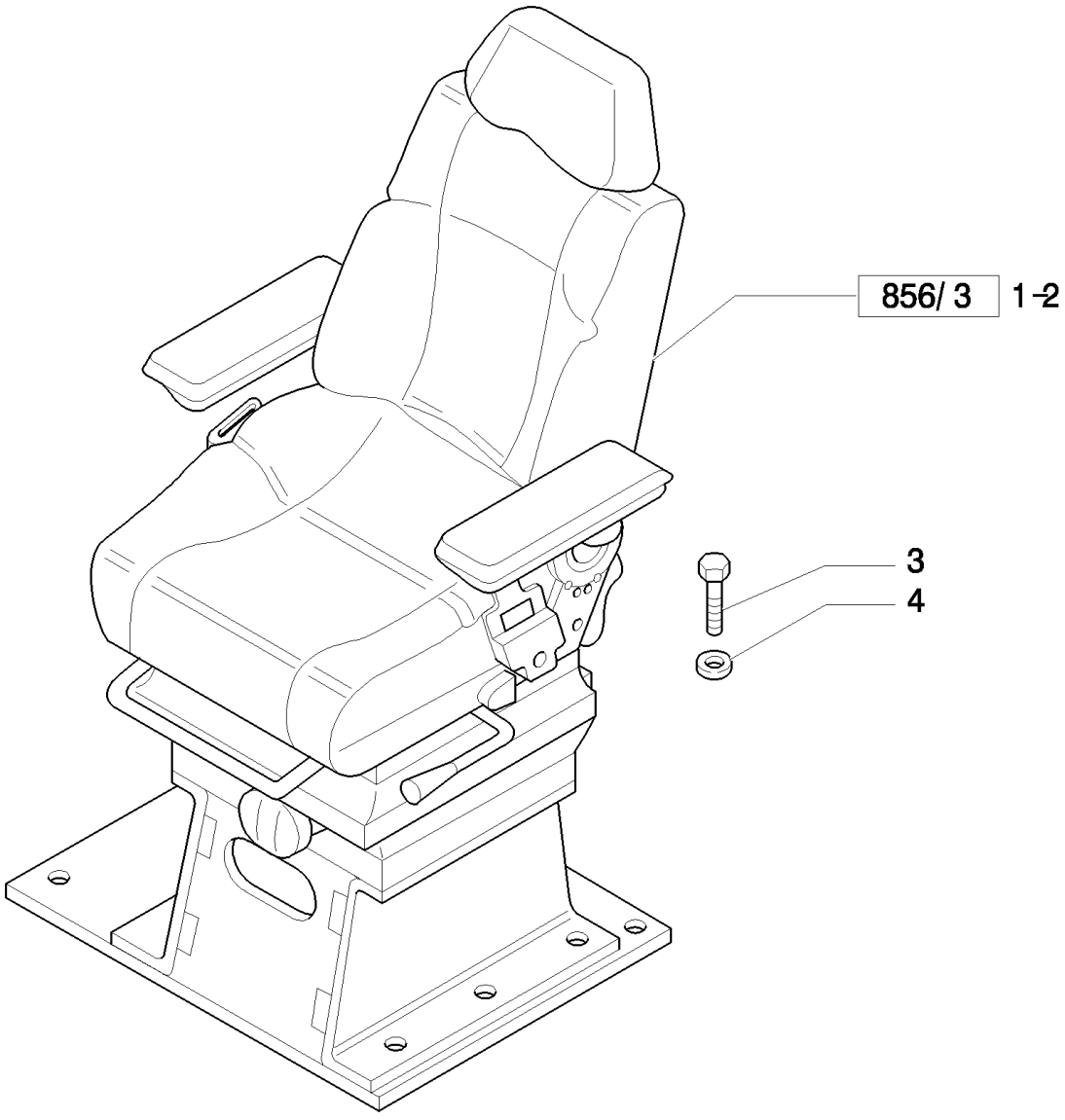

B95LR NA BACKHOE LOADER (1/06-)

856/ 2(01) VINYL SEAT CUSHIONS, ARMRESTS & RELATED PARTS (ROPS)

Ref	Numero de Pieza	Ctd	Descripción
1	87576855	1	SEAT, , Mechanical Control Version, 2" Seat Belt, Consists Of Page 856/3 01 To 856/3 04
1	87576856	1	SEAT, , Mechanical Control Version, 3" Seat Belt
2	87576863	1	SEAT, , Only for NA Pilot Control Version, 2" Seat Belt
2	87576865	1	SEAT, , Only for NA Pilot Control Version, 3" Seat Belt
3	16043424	8	SCREW, Hex, M8 x 20, 8.8, Full Thd,
4	11198074	8	WASHER, SPRING, Belleville, M8.4,

B95LR NA BACKHOE LOADER (1/06-)

856/ 3(01) VINYL SEAT WITH ARMRESTS & MOUNTING HARDWARE (ROPS)

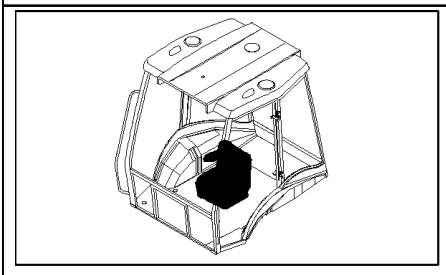

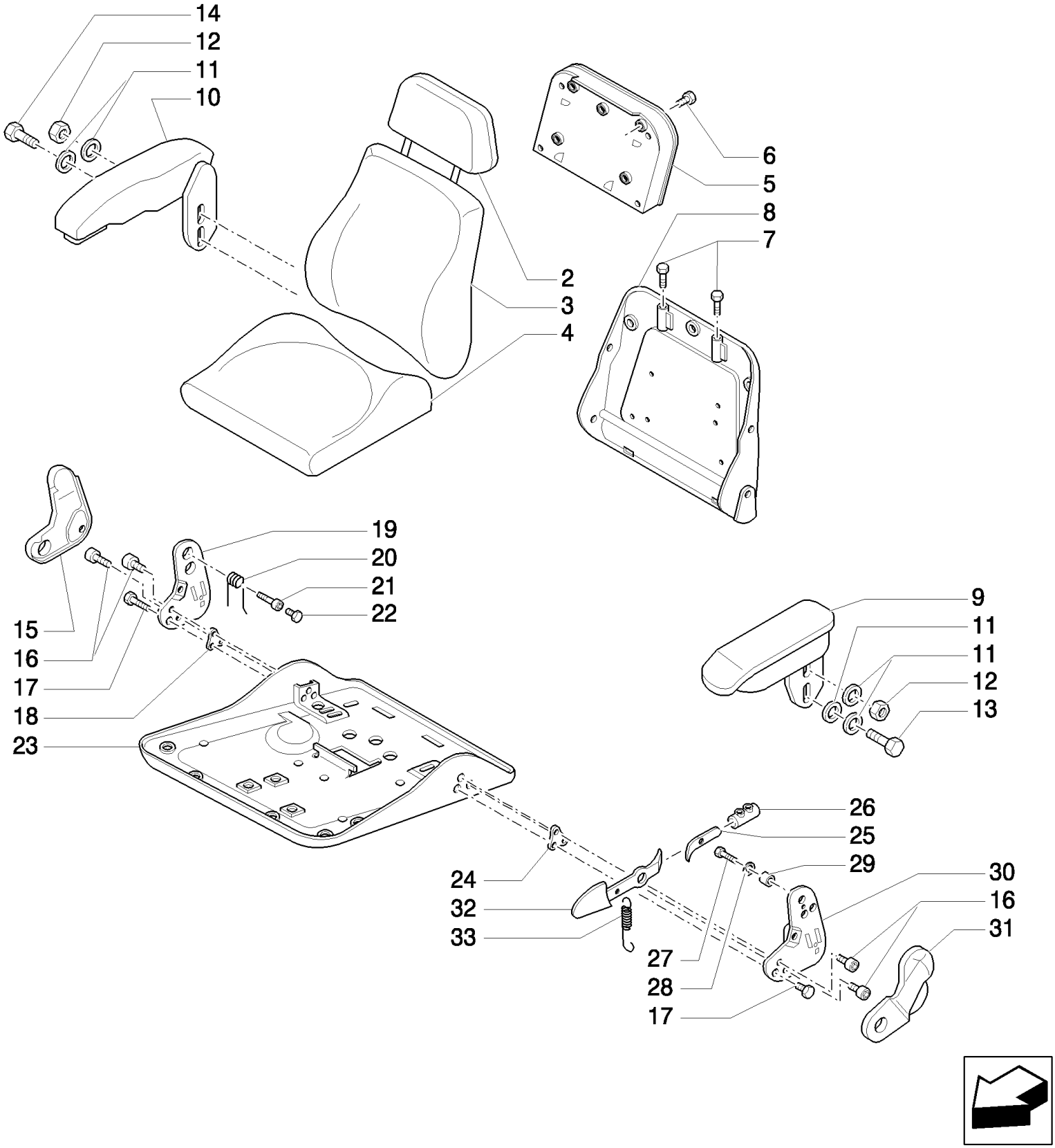

B95LR NA BACKHOE LOADER (1/06-)

856/ 3(01) VINYL SEAT WITH ARMRESTS & MOUNTING HARDWARE (ROPS)

Ref	Numero de Pieza	Ctd	Descripción
2	85817562	1	HEADREST, SEAT,
3	85817563	1	SEAT, BACK, Cap, HH, CL 8.8, M8x1.25x20
4	85817564	1	CUSHION, SEAT,
5	85817481	1	HOLDER, , Includes 6
6	82034863	4	SCREW,
7	47335213	2	BUSHING,
8	85817485	1	SEAT, BACK, , Includes 7, 21
9	85817453	1	ARMREST, , Includes 11 To 13, Mechanical Control Version
9	85828196	1	ARMREST, , Includes 11 To 13, Only for Pilot Control Version
10	85827918	1	ARMREST, , Includes 11, 12, 14
11	82034881	AR	WASHER,
12	85817459	2	NUT,
13	83984666	1	SCREW,
14	13838074	1	
15	85817466	1	COVER,
16	9972160	AR	SCREW,
17	87395582	2	BOLT, 7/16"-20UNFx60.0
18	85817470	1	PLATE,
19	9960795	1	PLATE,
20	9960793	1	SPRING,
21	85817469	1	BUSHING,
22	85817471	1	SCREW,
23	85821419	1	PLATE, RETAINING,
24	85817476	1	PLATE,
25	85817460	1	LEVER,
26	85821418	1	STOP DEVICE,
27	82035038	1	SCREW,
28	9960692	AR	SPACER,
29	85817477	1	SPACER,
30	9960803	1	PLATE,
31	85817479	1	COVER,
32	85817478	1	LEVER,
33	9960797	1	SPRING,

B95LR NA BACKHOE LOADER (1/06-)

856/ 3(02) VINYL SEAT MOUNTING PLATE, ADJUSTING RAILS & SEAT BELT (ROPS)

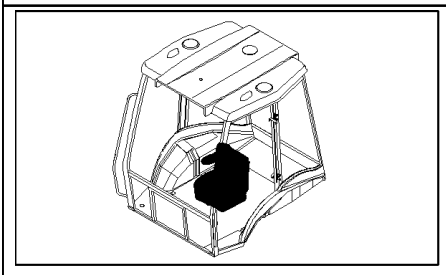

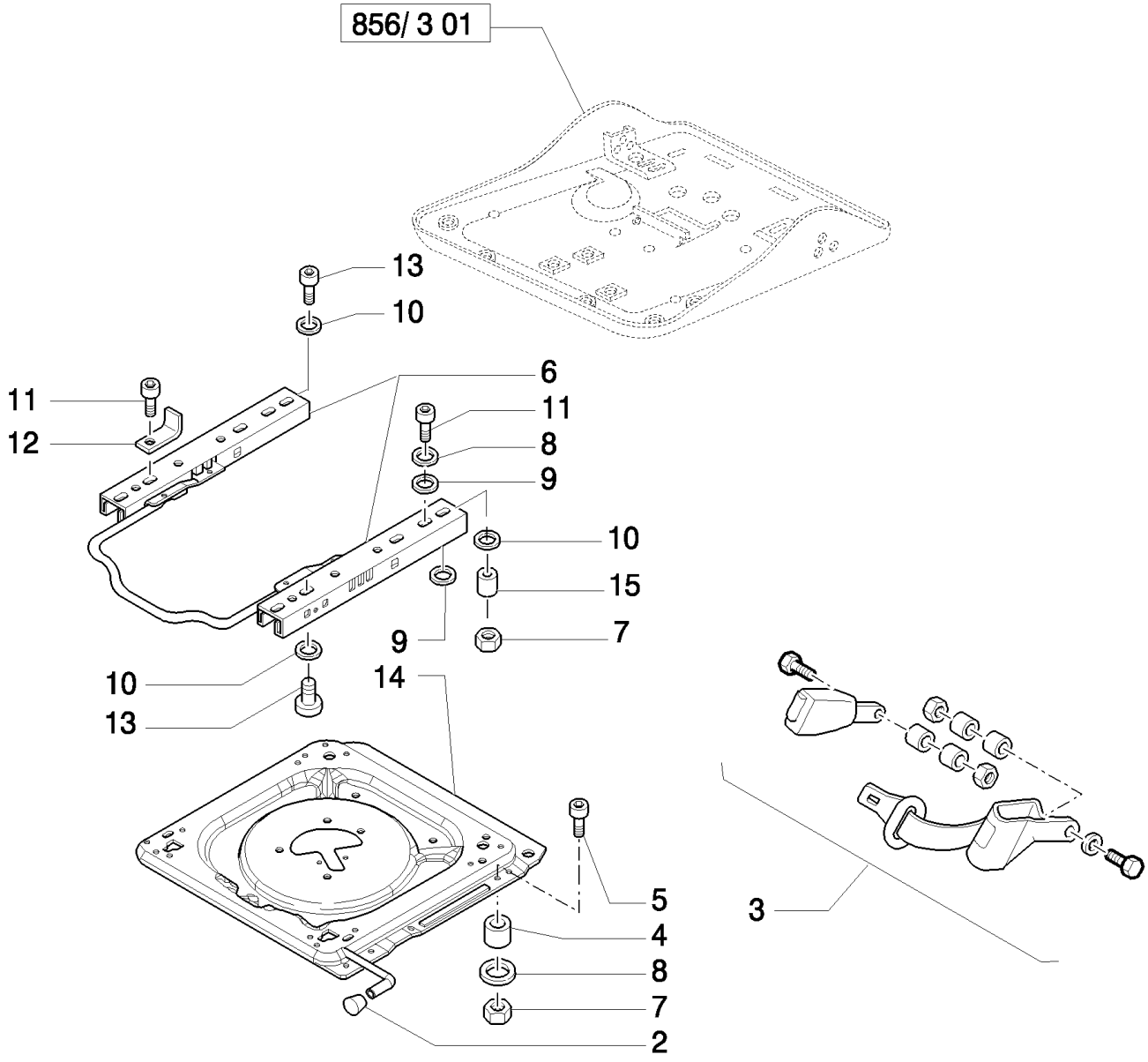

B95LR NA BACKHOE LOADER (1/06-)

856/ 3(02) VINYL SEAT MOUNTING PLATE, ADJUSTING RAILS & SEAT BELT (ROPS)

Ref	Numero de Pieza	Ctd	Descripción
2	85817482	1	KNOB,
3	87364220	1	SEAT BELT, , 2" Seat Belt
3	87364221	1	SEAT BELT, , 3" Seat Belt
4	85817456	4	SPACER,
5	85817465	4	SCREW, M8 x 40
6	85817484	1	KIT,
7	85817458	8	NUT,
8	9960692	AR	SPACER,
9	9958776	8	SPACER,
10	82034881	AR	WASHER,
11	9972160	8	SCREW, M8x25
12	85824204	1	BRACKET,
13	82034893	4	SCREW, M8x20
14	87395588	1	PLATE, , Includes 2
15	85819813	1	BUSHING,

856/ 3(03) VINYL SEAT UPPER SUSPENSION PARTS (ROPS)

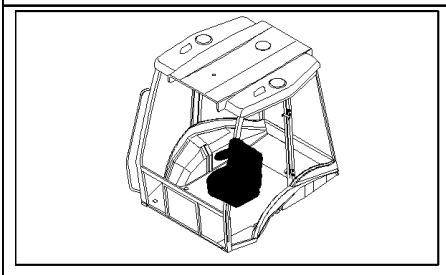

2 SEE ALSO TAV. 856/ 3 04

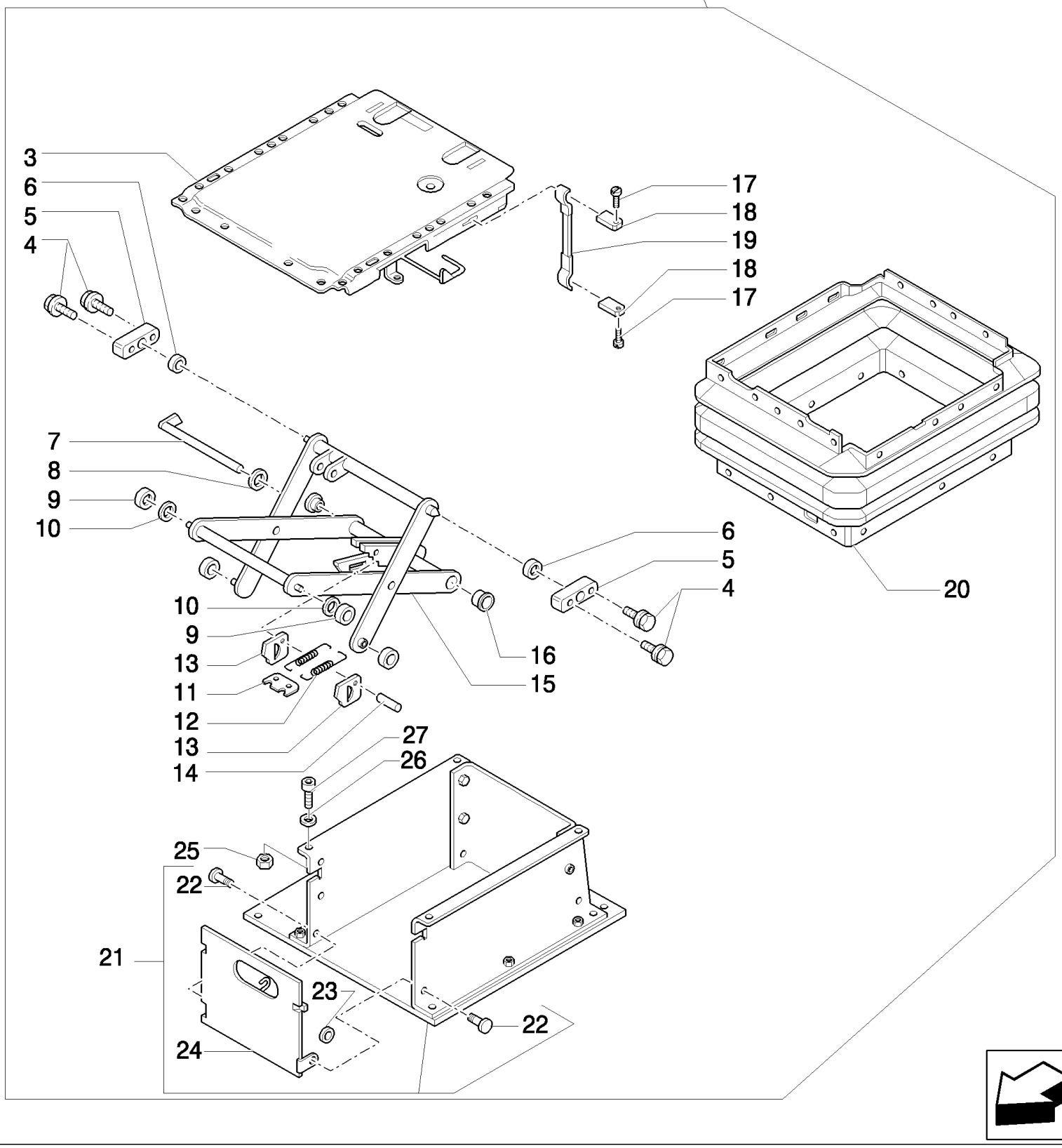

B95LR NA BACKHOE LOADER (1/06-)

856/ 3(03) VINYL SEAT UPPER SUSPENSION PARTS (ROPS)

Ref	Numero de Pieza	Ctd	Descripción
2	85817556	1	SUSPENSION,
3	85817450	1	PLATE,
4	85817444	4	SCREW, M6 x 16
5	82035094	2	BEARING, , Includes 4, 6
6	85817445	2	BUSHING,
7	85817429	1	BOLT,
8	82035127	1	WASHER,
9	82035031	4	ROLLER,
10	85817442	2	BUSHING,
11	82035030	1	PLATE,
12	85817430	2	SPRING,
13	9958792	2	PLATE,
14	82035036	1	BOLT,
15	85817446	1	SUSPENSION, , Includes 7, 9 to 14, 16
16	9960755	2	BUSHING,
17	85817448	2	RIVET,
18	85817449	2	PLATE,
19	85817447	1	HANDLE, , Includes 17, 18
20	85817428	1	BELLOWS,
21	85817561	1	BASE, , Includes 22 To 24
22	85817559	2	BOLT,
23	85817560	2	WASHER,
24	85817558	1	DOOR,
25	85817458	4	NUT, M8
26	82034881	4	WASHER,
27	82034893	4	SCREW,

856/ 3(04) VINYL SEAT LOWER SUSPENSION PARTS (ROPS)

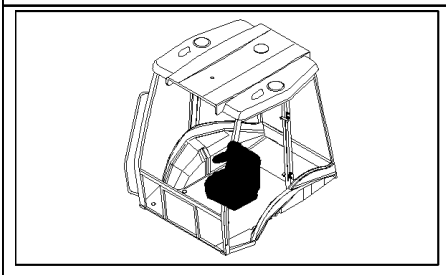

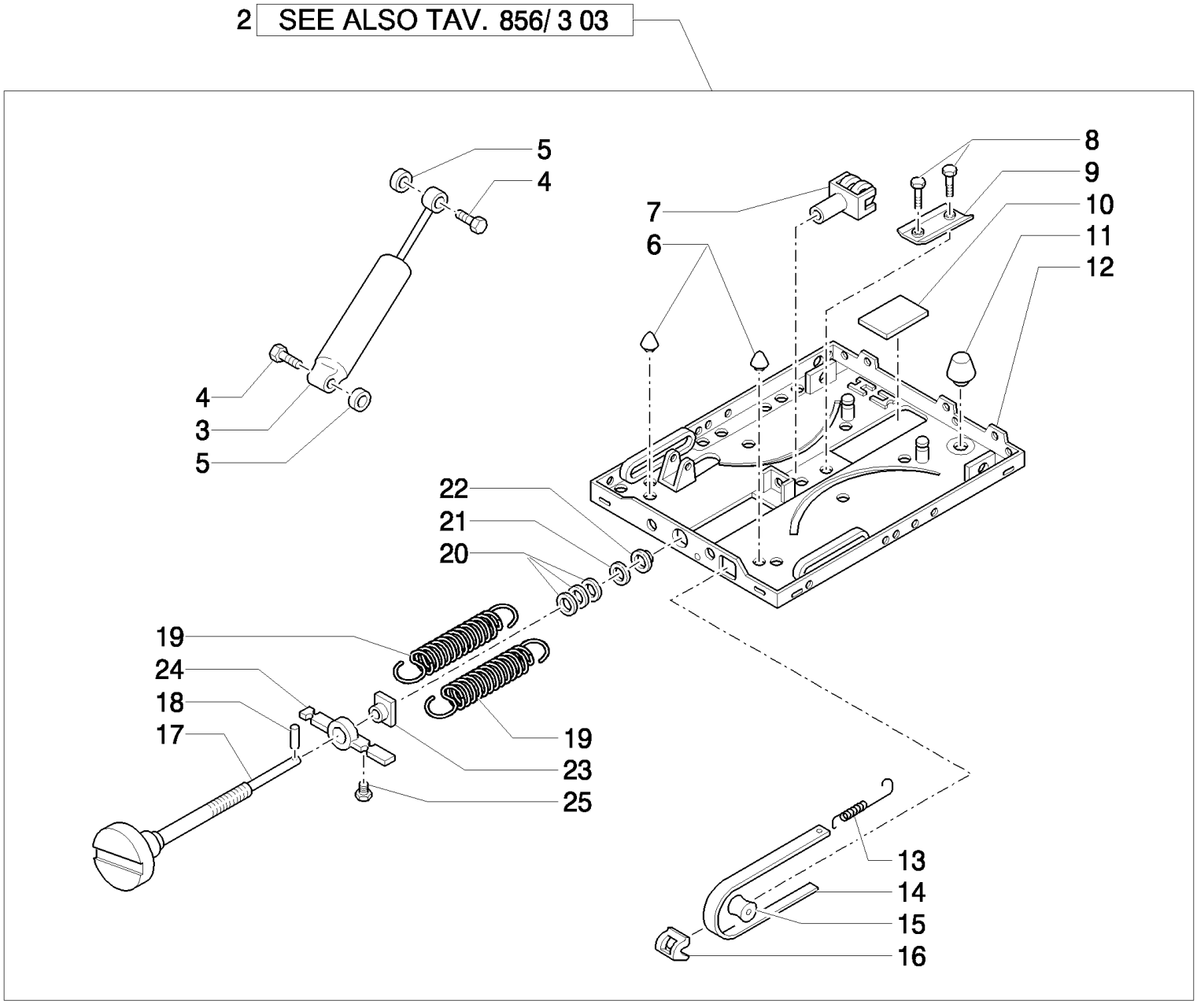

B95LR NA BACKHOE LOADER (1/06-)

856/ 3(04) VINYL SEAT LOWER SUSPENSION PARTS (ROPS)

Ref	Numero de Pieza	Ctd	Descripción
2	85817556	1	SUSPENSION,
3	85817431	1	SHOCK ABSORBER, , Includes 4, 5
4	82035040	2	BOLT,
5	82035128	2	WASHER,
6	85817440	2	BUMPER, RUBBER,
7	82035043	1	FORK,
8	82035037	2	RIVET,
9	82035054	1	PROFILE,
10	82035032	1	PLATE,
11	85817441	1	BUMPER, RUBBER,
12	85817436	1	SUSPENSION, , Includes 6, 8 to 11
13	82035039	1	SPRING,
14	85817443	1	INDICATOR, , Includes 13, 15, 16, 25
15	82035029	1	ROLLER,
16	82035025	1	GUIDE,
17	85817451	1	SCREW, ADJUSTMENT, , Includes 18
18	85817433	1	DOWEL,
19	85817434	2	SPRING,
20	82035035	1	SET OF WASHERS,
21	82035028	1	WASHER,
22	85817435	1	BUSHING,
23	82035034	1	NUT,
24	82035027	1	BRACKET,
25	82035033	1	RETAINER,

900(01) BOOM - LONG DIPPER

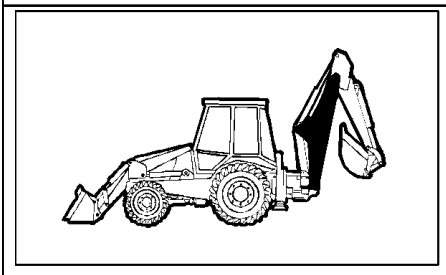

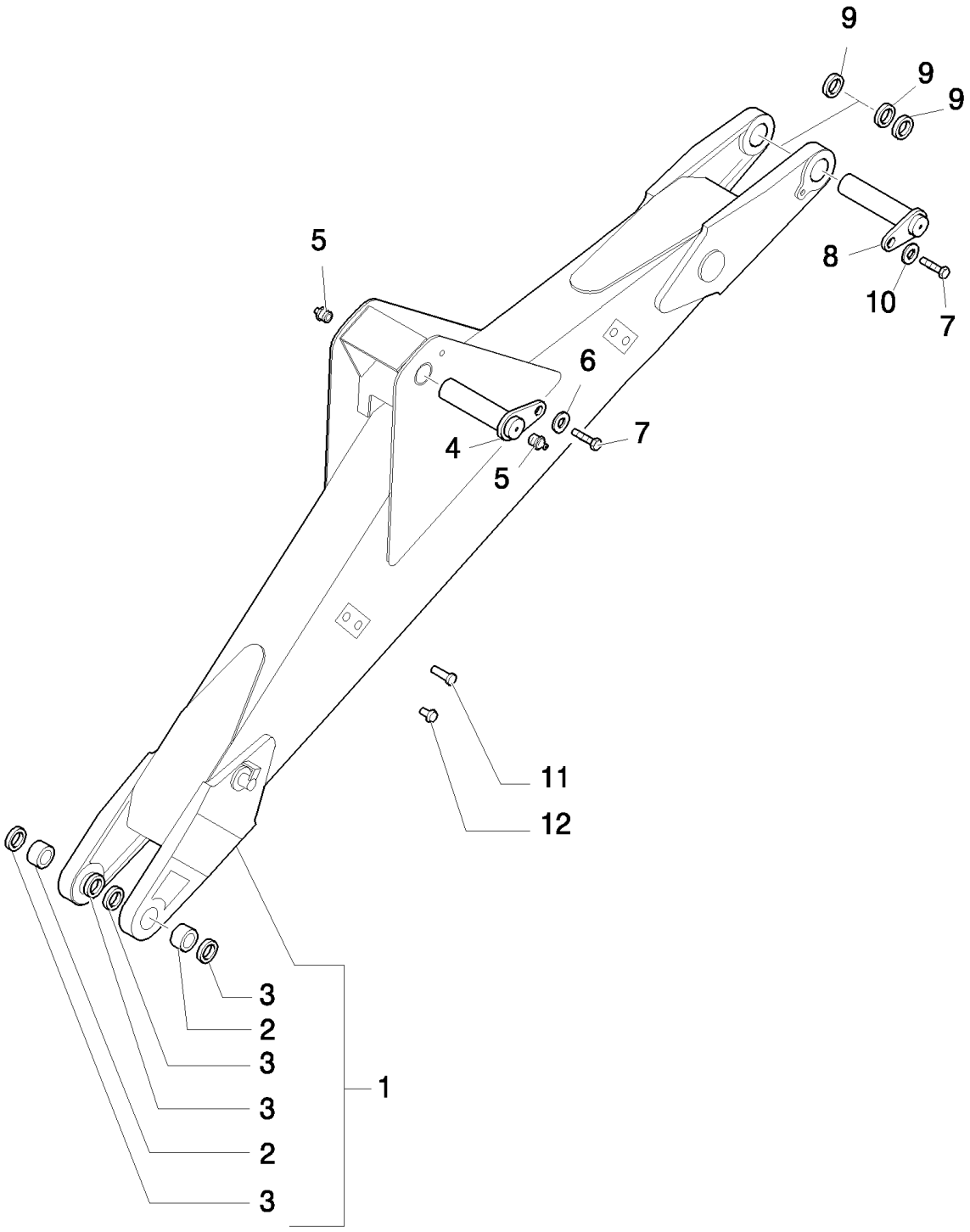

B95LR NA BACKHOE LOADER (1/06-)

900(01) BOOM - LONG DIPPER

Ref	Numero de Pieza	Ctd	Descripción
1	87372186	1	BOOM, Replaces 87311190 Boom, Includes 2, 3
2	83910557	2	RING,
3	83931281	4	SEAL,
4	85815698	1	PIN,
5	83416242	2	NIPPLE, LUBE, 1/8"-27
6	85802396	1	WASHER,
7	85802397	2	SCREW,
8	85815607	1	PIN,
9	85805296	3	SHIM,
10	85815609	1	WASHER,
11	81870039	3	FASTENER,
12	87310961	8	PLUG,

900(02) LONG DIPPER

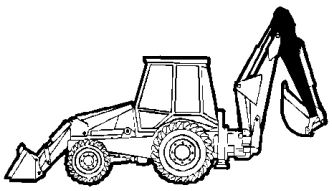

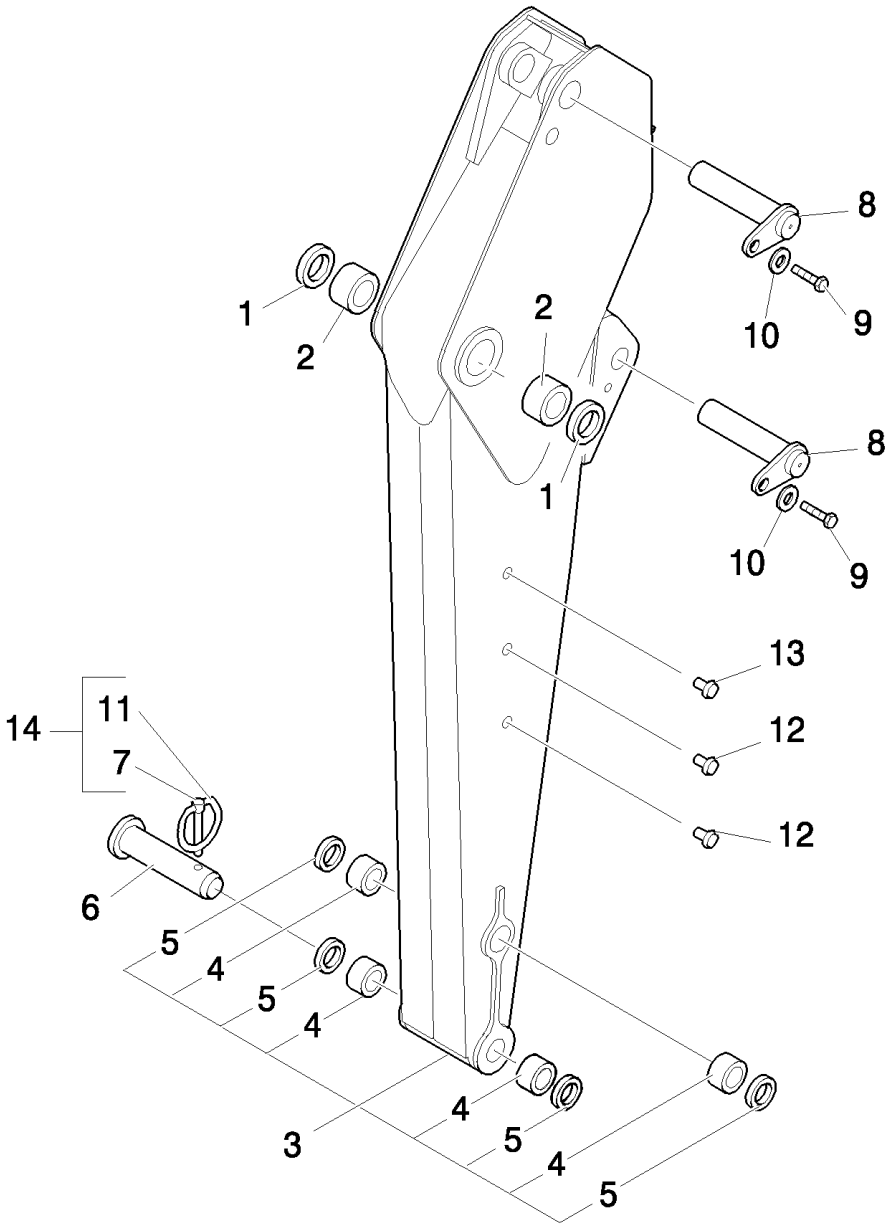

B95LR NA BACKHOE LOADER (1/06-)

900(02) LONG DIPPER

Ref	Numero de Pieza	Ctd	Descripción
1	83931281	2	SEAL,
2	83910546	2	BUSHING, 2.175" ID x 2.80" OD x 1.969"
3	85817039	1	DIPPER, , Includes 1, 2, 4, 5
4	83910548	4	BUSHING,
5	83931289	4	SEAL, HYD-CYLINDER,
6	85803005	1	PIN,
7	85802976	1	PIN,
8	85803002	2	PIN,
9	85802397	2	SCREW, M16x40
10	85802396	2	WASHER,
11	85802974	1	RING,
12	85804447	4	PLUG,
13	F1NN94000Z36AA	4	DRAWBAR, SWINGING,
14	85802975	1	PIN, LOCK,

900(03) LONG/SHORT DIPPER - BUCKET MOTION

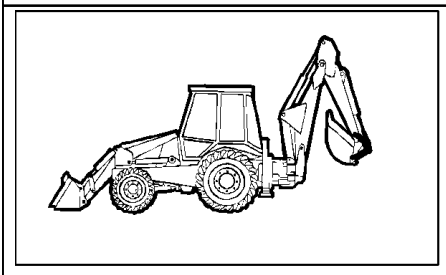

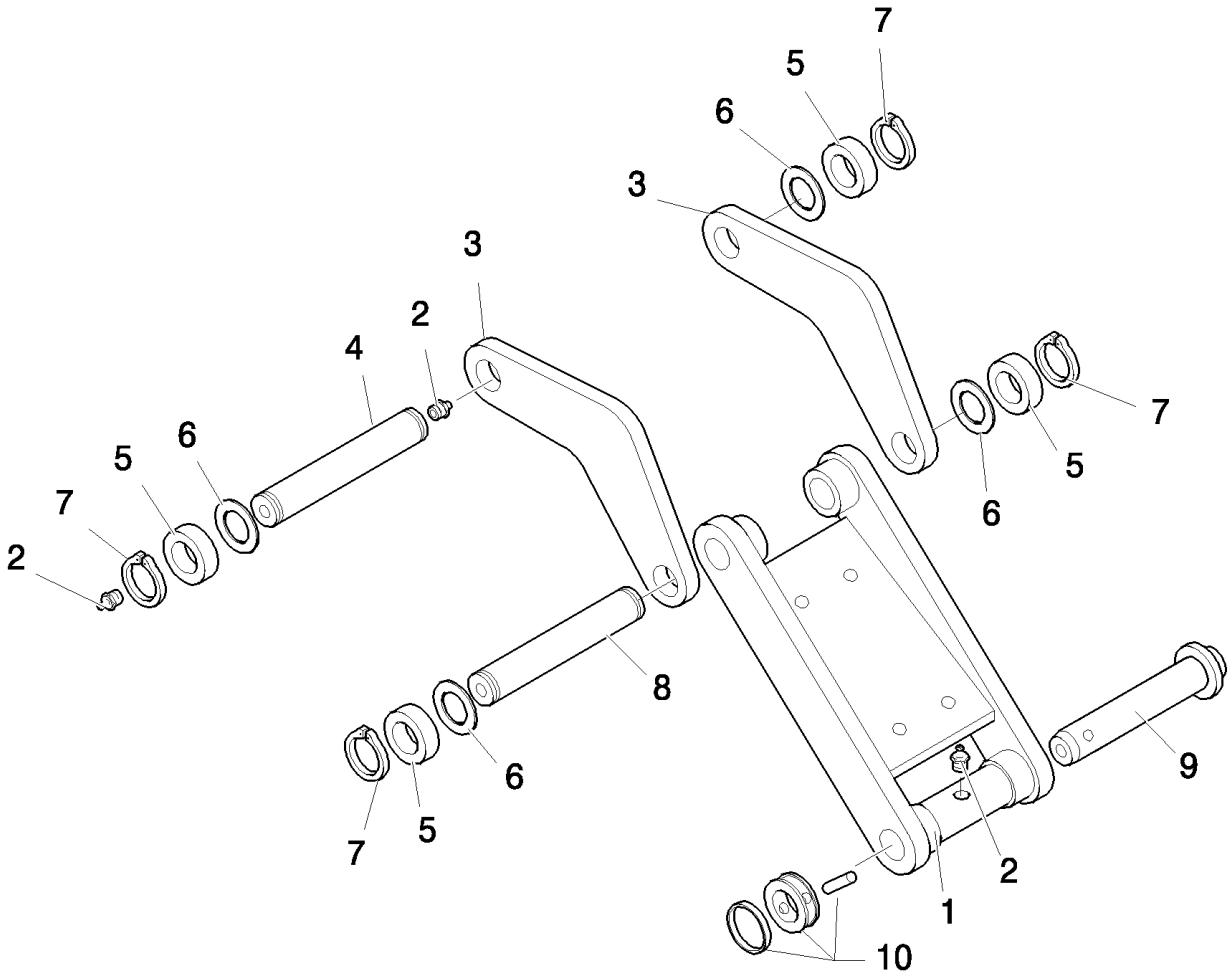

B95LR NA BACKHOE LOADER (1/06-)

900(03) LONG/SHORT DIPPER - BUCKET MOTION

Ref	Numero de Pieza	Ctd	Descripción
1	85803613	1	LINK,
2	83416242	5	NIPPLE, LUBE, 1/8"-27
3	85817133	2	LINK CONROD,
4	85815517	1	PIN,
5	85802396	4	WASHER,
6	83910977	4	SPACER,
7	11069071	4	RING, SNAP, M45, Ext,
8	85813469	1	PIN,
9	85803005	1	PIN,
10	85802975	1	PIN, LOCK,

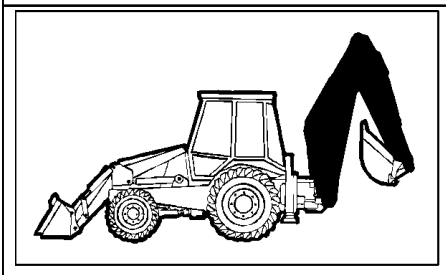

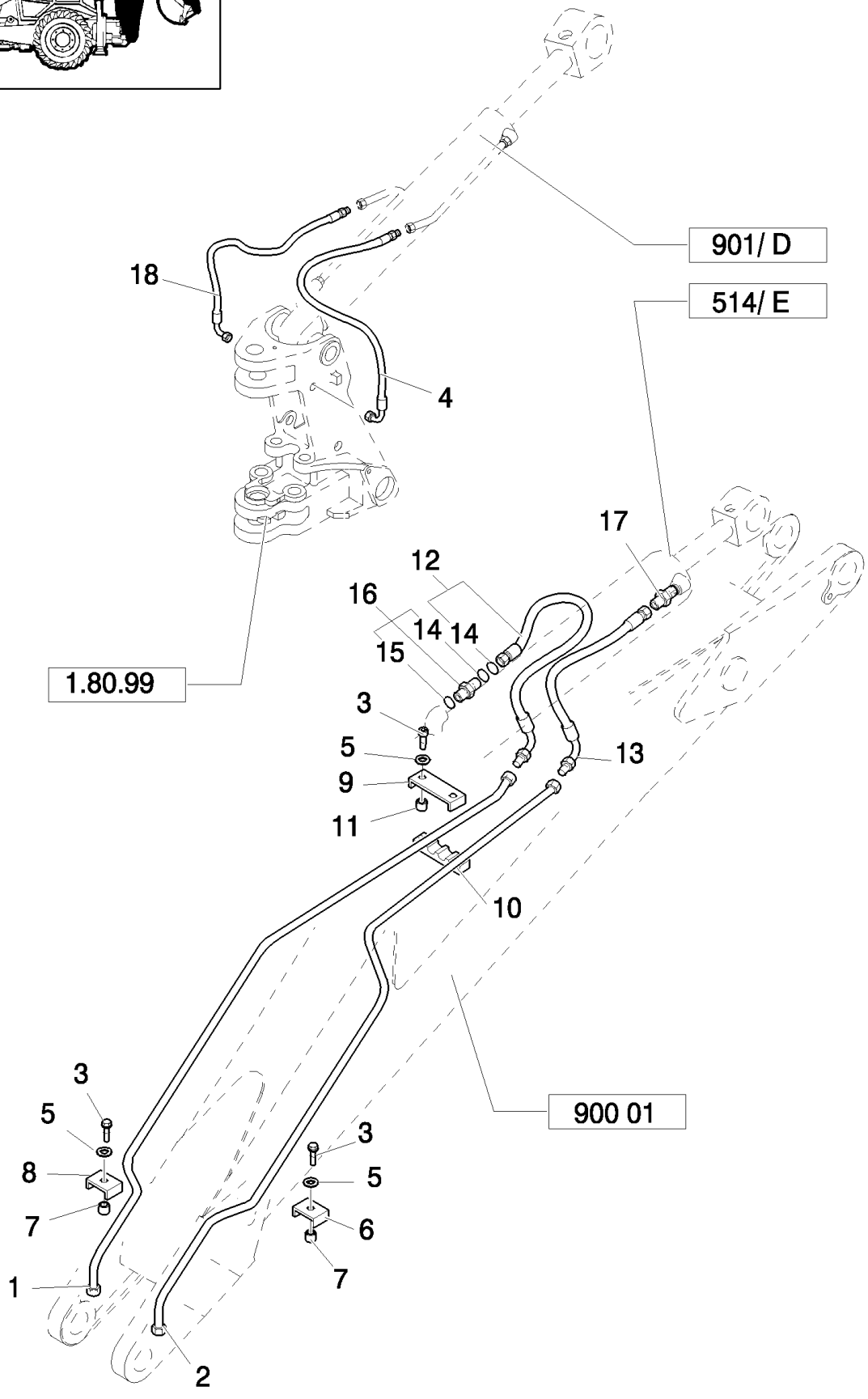
901/ D
514/ E
18
4
17
12
16
14
14
15
1.80.99
3
5
9
11
13
10
900 01
3
5
8
7
1
2
3
5
6
7

B95LR NA BACKHOE LOADER (1/06-)

900(04) LONG DIPPÊR - HYDRAULIC SYSTEM

Ref	Numero de Pieza	Ctd	Descripción
1	85815632	1	TUBE, HYD,
2	85815630	1	TUBE, HYD,
3	16044421	4	BOLT, Hex, M8 x 60, 8.8,
4	85826212	1	HOSE, FLEXIBLE,
5	11193979	4	WASHER, SPRING, Belleville, M8.4,
6	85802899	1	CLAMP, M8x50
7	85802902	1	SPACER,
8	85802900	1	CLAMP,
9	85802894	1	U-BRACKET,
10	85802895	1	CLAMP,
11	85802893	2	SPACER,
12	85812154	1	HOSE, FLEXIBLE, 600mm lg, , Includes 14
13	85812178	1	HOSE, FLEXIBLE, 600mm lg,
14	9991976	1	O-RING, -018, 90 Duro, .739" ID x .070" Thk,
15	80167266	1	O-RING, 90 Duro, .924" ID x .116" Thk
16	83962538	1	CONNECTOR, HYD., 1-3/16"-12 ORS x 1-1/16"-12 SAE O-Ring, Includes 14, 15
17	83962539	1	CONNECTOR, HYD.,
18	85816213	1	

900(05) LONG DIPPER - HYDRAULIC SYSTEM

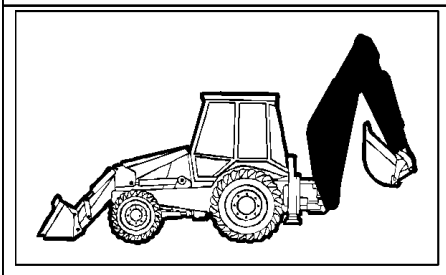

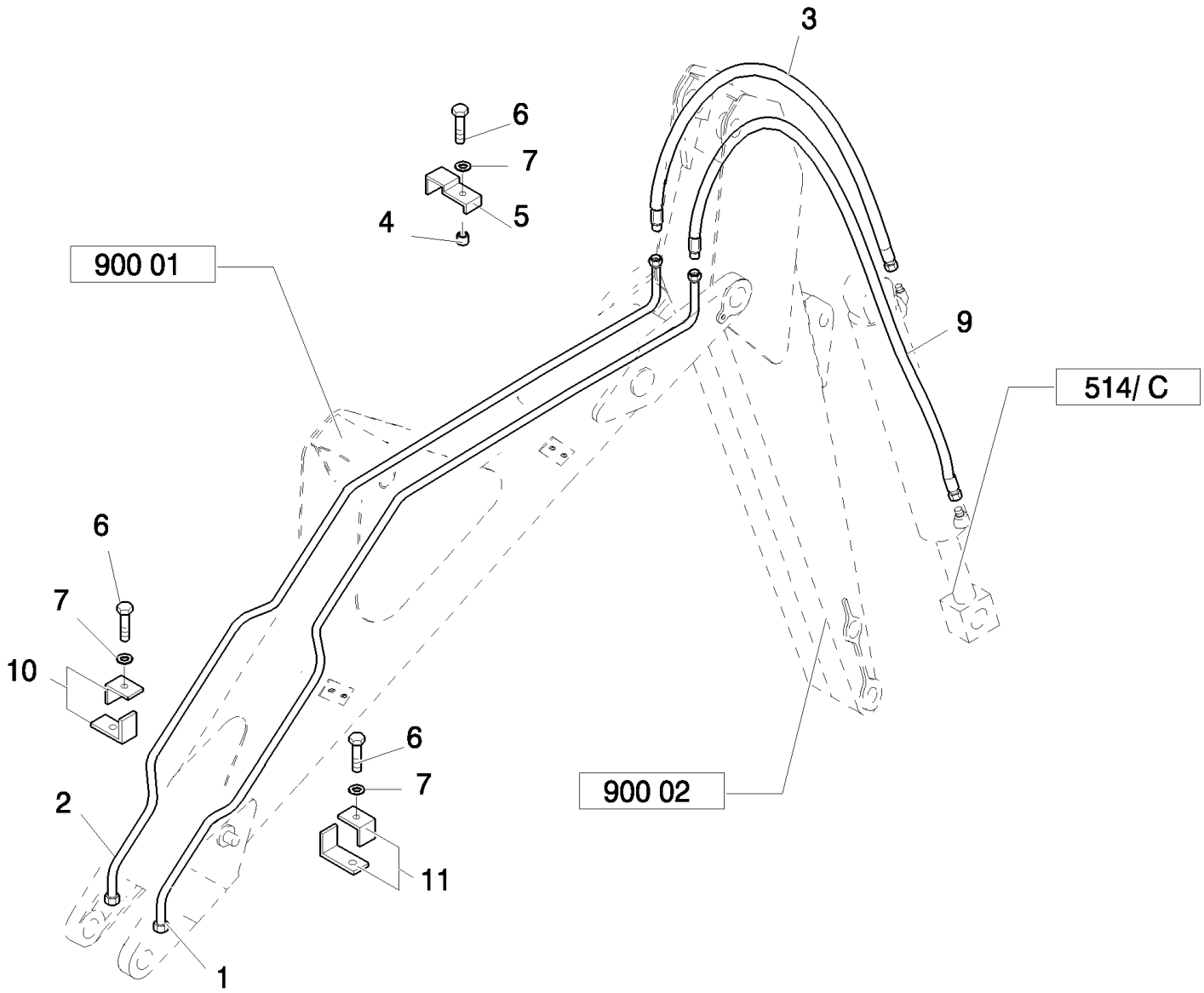

B95LR NA BACKHOE LOADER (1/06-)

900(05) LONG DIPPER - HYDRAULIC SYSTEM

Ref	Numero de Pieza	Ctd	Descripción
1	85815636	1	TUBE, HYD,
2	85815634	1	TUBE, HYD,
3	85826222	1	HOSE, FLEXIBLE,
4	85802901	1	SPACER,
5	85802909	1	CLAMP,
6	16044221	3	BOLT, Hex, M8 x 50, 8.8,
7	11193979	3	WASHER, SPRING, Belleville, M8.4,
9	85826224	1	HOSE, FLEXIBLE,
10	85815628	2	CLAMP,
11	85815627	2	CLAMP,

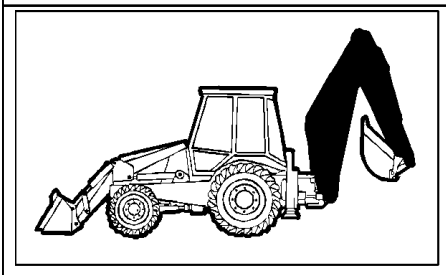

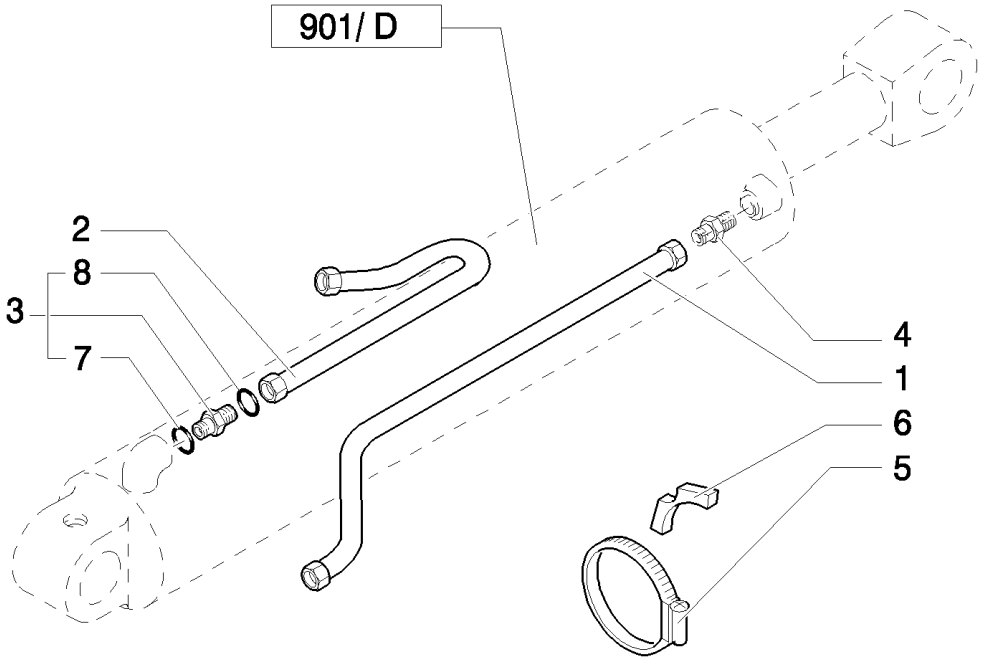
901/ D
2
8
3
7
4
1
6
5

B95LR NA BACKHOE LOADER (1/06-)

900(06) LONG DIPPER - HYDRAULIC SYSTEM

Ref	Numero de Pieza	Ctd	Descripción
1	85815683	1	TUBE, HYD,
2	85816813	1	TUBE, HYD,
3	83962538	1	CONNECTOR, HYD., 1-3/16"-12 ORS x 1-1/16"-12 SAE O-Ring, Includes 7, 8
4	83962539	1	CONNECTOR, HYD.,
5	85802744	1	CLAMP, HOSE,
6	87303912	2	BLOCK,
7	80167266	1	O-RING, 90 Duro, .924" ID x .116" Thk
8	89991976	1	O-RING, 90 Duro, .739" ID x .070" Thk

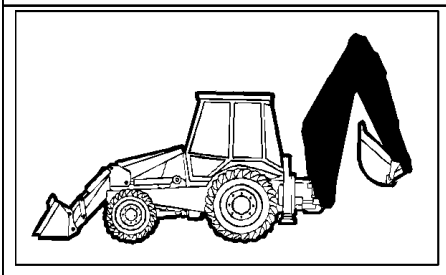

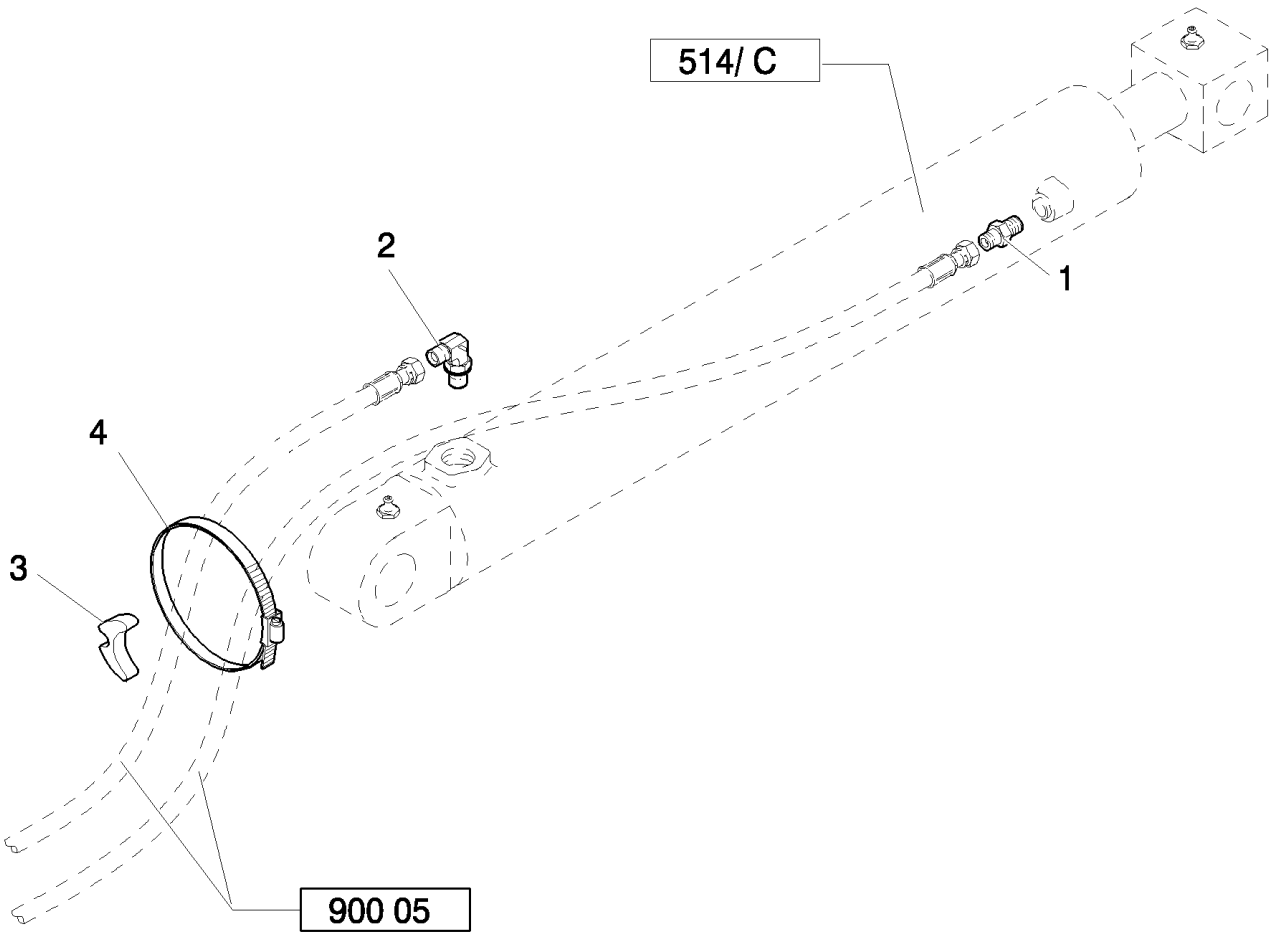
514/ C
2
1
4
3
900 05

B95LR NA BACKHOE LOADER (1/06-)

900(07) LONG DIPPER - HYDRAULIC SYSTEM

Ref	Numero de Pieza	Ctd	Descripción
1	83962539	1	CONNECTOR, HYD.,
2	85802957	1	ELBOW, 90º, 1 3/16"-12 ORS x 1 1/16"-12 SAE O-Ring,
3	87565305	1	ANCHOR,
4	85817474	1	STRAP, CABLE,

901(01) TELESCOPIC DIPPER LONG - HYDRAULIC SYSTEM

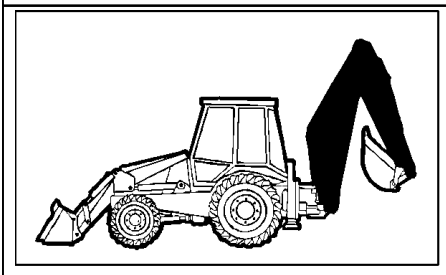

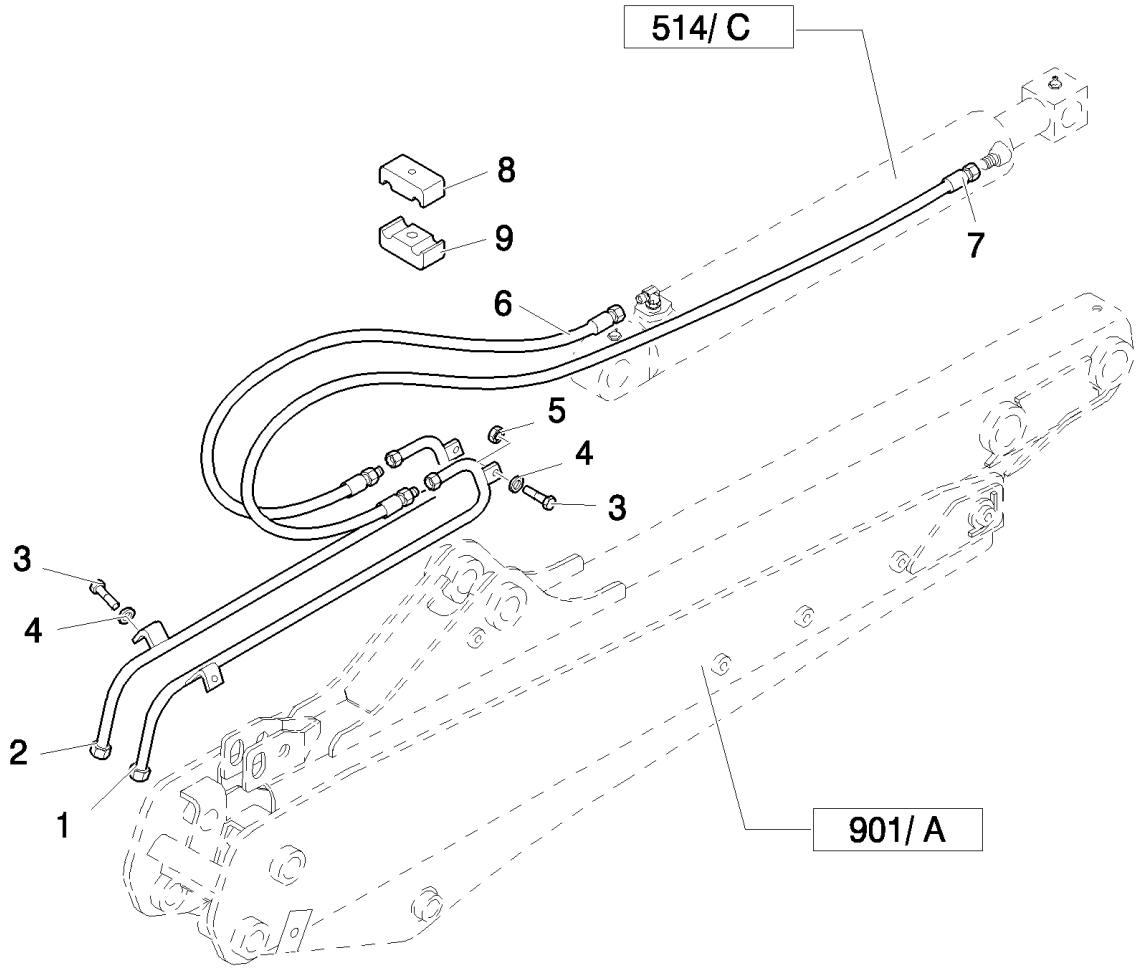

B95LR NA BACKHOE LOADER (1/06-)

901(01) TELESCOPIC DIPPER LONG - HYDRAULIC SYSTEM

Ref	Numero de Pieza	Ctd	Descripción
1	85816815	1	TUBE, HYD,
2	85816817	1	TUBE, HYD,
3	16043621	4	BOLT, Hex, M8 x 25, 8.8,
4	11193979	4	WASHER, SPRING, Belleville, M8.4,
5	14048211	2	NUT, LOCK, M8 x 1.25, Cl 8,
6	85812165	1	HOSE, FLEXIBLE, 1350mm lg,
7	85826110	1	HOSE, FLEXIBLE,
8	85825441	1	CLAMP,
9	85825442	1	CLAMP,

901/ A(01) TELESCOPIC DIPPER LONG

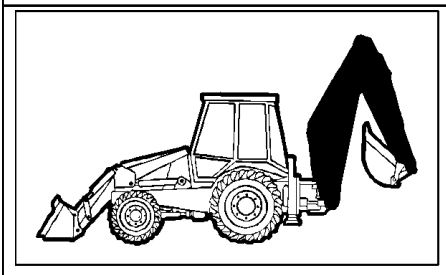

KIT
KIT KIT
25 = ●
26 = ▲

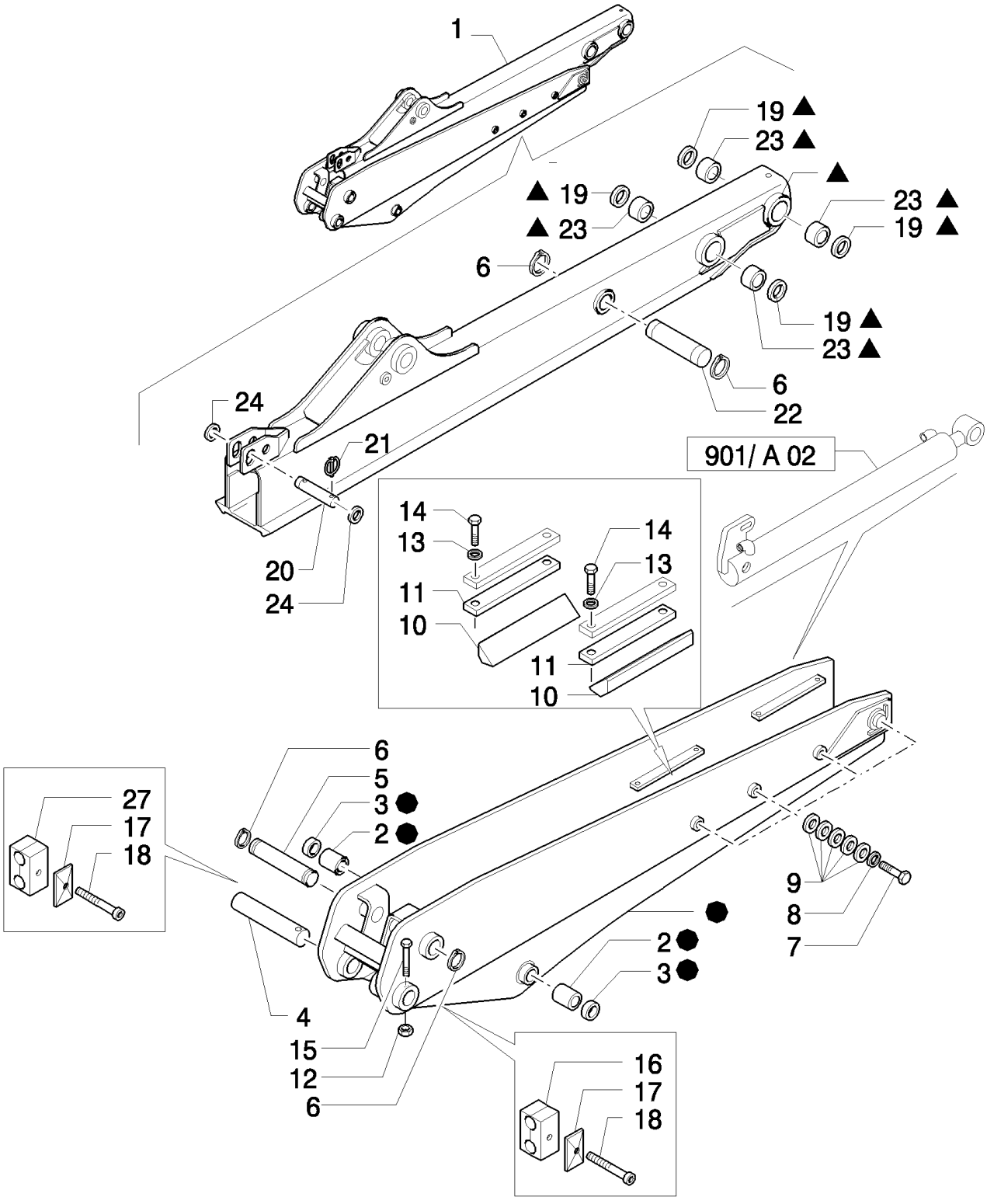

B95LR NA BACKHOE LOADER (1/06-)

901/ A(01) TELESCOPIC DIPPER LONG

Ref	Numero de Pieza	Ctd	Descripción
1	85817137	1	ARM, LIFT,
2	83910546	2	BUSHING,
3	83931281	2	SEAL,
4	85801310	1	PIN,
5	85801309	1	PIN,
6	83911019	4	RING, SNAP,
7	11124421	8	BOLT, Hex, M20 x 40, 8.8,
8	14497121	8	WASHER, M20 x 37 x 3,
9	85801307	40	WASHER,
10	85808473	4	PAD, SLIDING,
11	85808472	4	PAD, SLIDING,
12	16105011	1	NUT, LOCK,
13	11190579	8	WASHER, SPRING, Belleville, M10.5,
14	11106721	8	BOLT, Hex, M10 x 38, 8.8, Full Thd,
15	14332521	1	SCREW, Hex Soc Hd, M12 x 1.25 x 100, 8.8,
16	87392513	2	CLAMP,
17	87392509	2	PLATE,
18	16044121	2	BOLT, Hex, M8 x 45, 8.8,
19	83931289	4	SEAL, HYD-CYLINDER,
20	85801314	1	PIN,
21	83902702	2	PIN, SPLIT (COTTER),
22	85801308	1	PIN,
23	83910548	4	BUSHING,
24	14497401	2	WASHER, LOCK,
25	85817138	1	DIPPER, , Includes 2, 3
26	85802750	1	DIPPER, , Includes 19, 23
27	87392516	2	CLAMP,

901/ B(01) TELESCOPIC DIPPER LONG- HYDRAULIC LIFTING CYLINDER

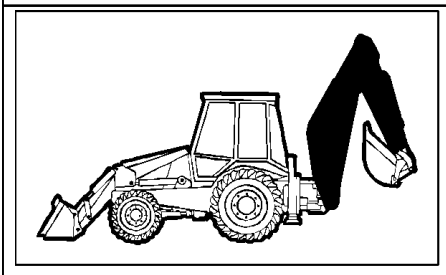

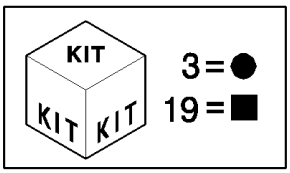

From to S/N 031052799

B95LR NA BACKHOE LOADER (1/06-)

901/ B(01) TELESCOPIC DIPPER LONG- HYDRAULIC LIFTING CYLINDER

Ref	Numero de Pieza	Ctd	Descripción
1	87411473	1	HYDRAULIC CYLINDER,
2	85815681	1	TUBE, HYD,
3	87428620	1	KIT, SEALS,
5	E9NN3R862AA	2	CONNECTOR, HYD., 13/16"-16 ORS x 9/16"-18, O-Ring,
4	87414339	1	RING,
6	87303910	1	SPACER,
7	87414331	1	SEAL,
8	85800705	1	ROD,
9	87414969	1	SEAL,
10	87415113	1	GLAND,
11	87414970	1	KIT, SEALS,
12	D8NNA233AB	1	WIRE, RETAINING,
13	85800706	1	BARREL,
14	87428020	1	SCREW,
15	87405560	1	PISTON, , Includes 7
16	87421142	1	O-RING,
17	87440399	1	BACK-UP RING,
18	85803010	1	CLAMP, HOSE,
19	87424184	1	KIT,
20	9617873	2	O-RING, 6-1, 90 Duro, .468" ID x .078" Thk,

From to S/N 031052799

901/ C(01) TELESCOPIC DIPPER LONG - HYDRAULIC LIFTING CYLINDER

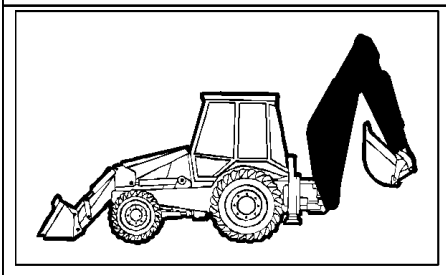

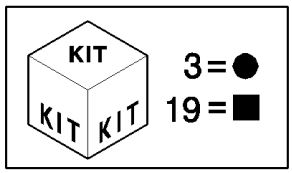

From To S/N 031057762

B95LR NA BACKHOE LOADER (1/06-)

901/ C(01) TELESCOPIC DIPPER LONG - HYDRAULIC LIFTING CYLINDER

Ref	Numero de Pieza	Ctd	Descripción
1	87327256	1	HYDRAULIC CYLINDER, , Only for NA Version B110, B115
1	87327259	1	HYDRAULIC CYLINDER, , Only for EUROPE Version
2	87327251	1	TUBE, RIGID, , Includes 5, 9 to 12, 21
3	87342131	1	KIT,
4	83963374	1	CONNECTOR, HYD., , Includes 7, 15 to 17
5	1542875C1	1	KIT, SEALS,
6	238-5231	1	O-RING, -231, 70 Duro, 2.609" ID x .139" Thk,
7	G100444	1	SEAL,
8	87313722	1	ROD,
9	D95143	1	SEAL,
10	297281A1	1	CAP CYLINDER END,
11	G102425	1	BUSHING,
12	G109298	1	RING,
13	87313720	1	LINER, ENGINE CYLINDER,
14	86982435	1	BOLT, SPECIAL,
15	G107277	1	PISTON,
16	G100443	1	GASKET,
17	G100449	1	Ring, Wear,
18	85803010	1	CLAMP, HOSE,
19	110692A4	1	PISTON,
20	83971549	1	ELBOW,
21	238-5231	1	O-RING, -231, 70 Duro, 2.609" ID x .139" Thk,
22	86642312	1	SCREW, SELF TAPPING, Hex Hd, #8 x 3/8",

From To S/N 031057762

901/ D(01) HYDRAULIC LIFTING CYLINDER - TELESCOPIC DIPPER LONG

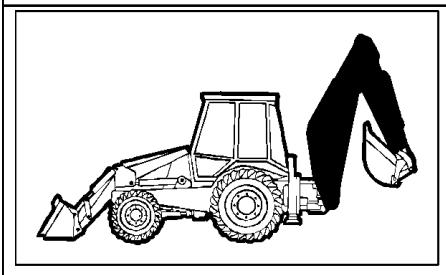

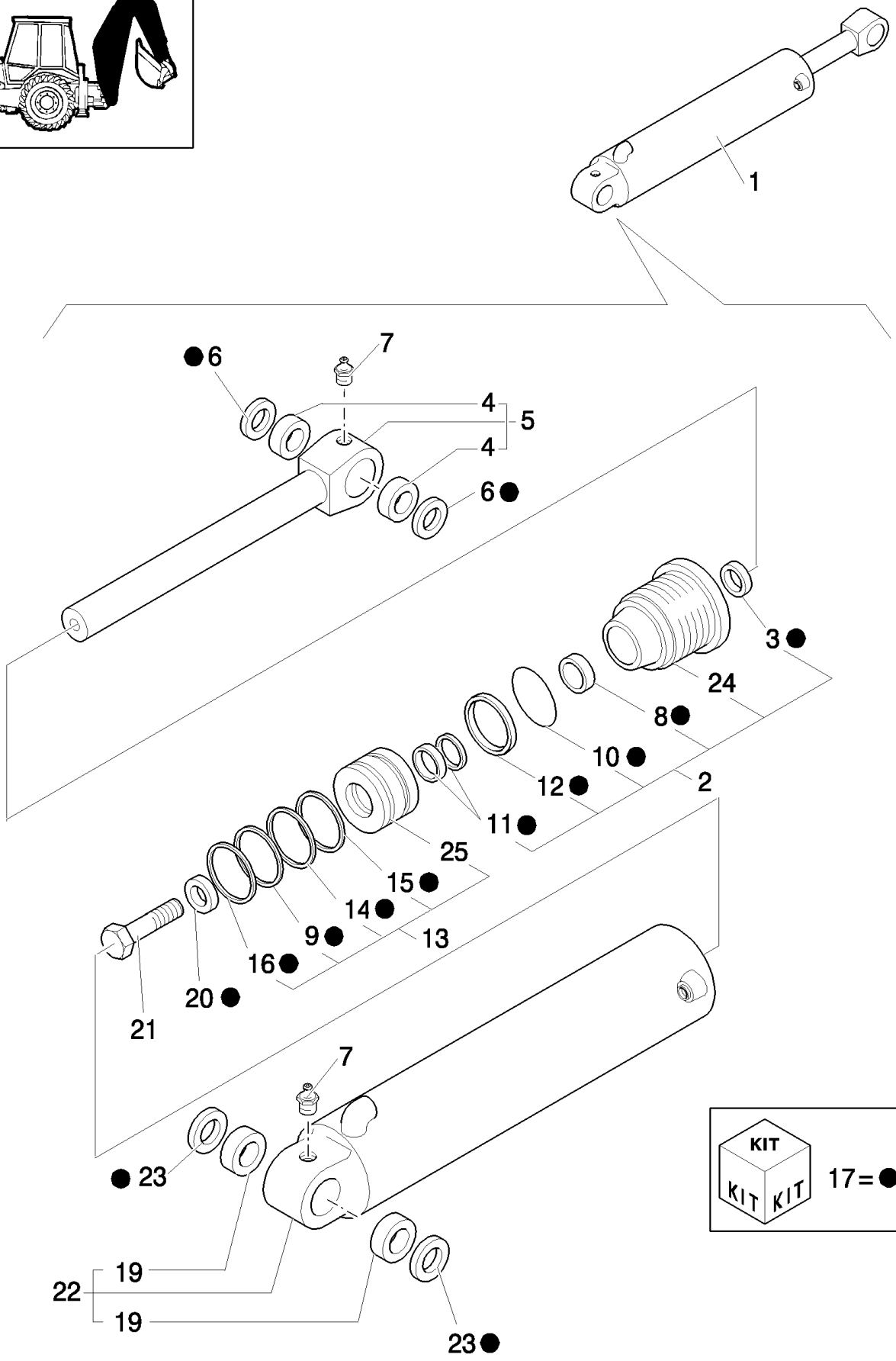

B95LR NA BACKHOE LOADER (1/06-)

901/ D(01) HYDRAULIC LIFTING CYLINDER - TELESCOPIC DIPPER LONG

Ref	Numero de Pieza	Ctd	Descripción
1	87315535	1	HYDRAULIC CYLINDER, ASSY
2	87415120	1	GLAND, , Includes 3, 8, 10, 11, 12, 24
3	87414979	1	WIPER,
4	83910551	2	BUSHING,
5	83962145	1	ROD, , Includes 4
6	83931281	2	SEAL,
7	83416242	2	NIPPLE, LUBE, 1/8"-27
8	87414976	1	BEARING, NYLON,
9	87414346	1	RING,
10	87421149	1	O-RING, 4.734" ID x .139" Thk
11	87414980	1	KIT, SEALS,
12	87441149	1	BACK-UP RING,
13	87407249	1	PISTON, , Includes 9, 14 to 16, 25
14	87401160	1	Ring, Wear,
15	87414338	1	SEAL, HYD-CYLINDER,
16	85800823	1	RING, PISTON,
17	87428634	1	KIT, SEALS,
19	85800202	2	BUSHING,
20	83964188	1	WASHER,
21	87428018	1	SCREW, M33x2x90
22	85800824	1	BARREL, , Includes 19
23	85801025	2	SEAL, HYD-CYLINDER,
24	87414509	1	CAP CYLINDER END,
25	87403203	1	PISTON,

B95LR NA BACKHOE LOADER (1/06-)

990(01) TOOL KIT

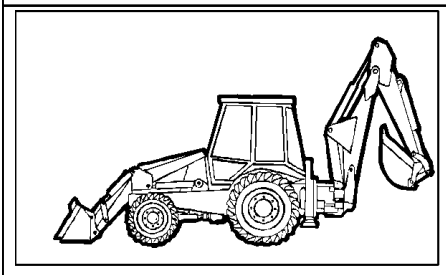

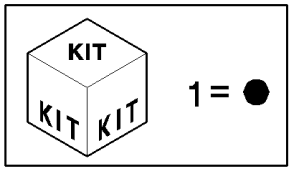

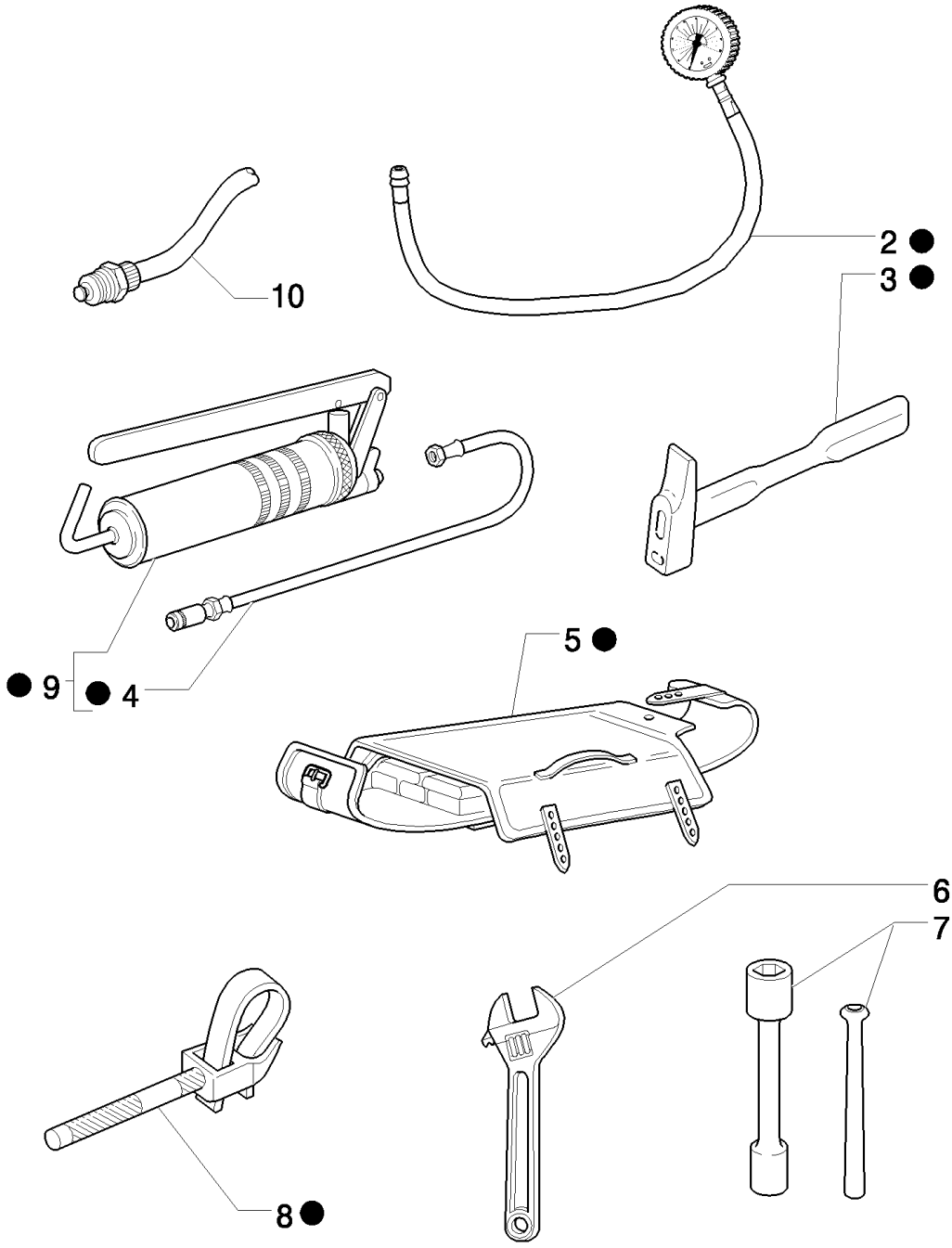

B95LR NA BACKHOE LOADER (1/06-)

990(01) TOOL KIT

Ref	Numero de Pieza	Ctd	Descripción
1	85803394	1	TOOL KIT,
2	85803396	1	GAUGE,
3	14582790	1	HAMMER,
4	79028981	1	HOSE, FLEXIBLE, For greasing
5	79062734	1	TOOL BAG,
6	71431438	1	WRENCH, ADJUSTING,
7	85803395	1	SOCKET WRENCH,
8	71304923	1	WRENCH, SPECIAL,
9	79028977	1	GUN, GREASE,
10	85826260	1	VALVE, DRAIN,

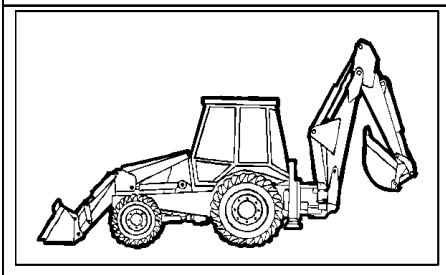

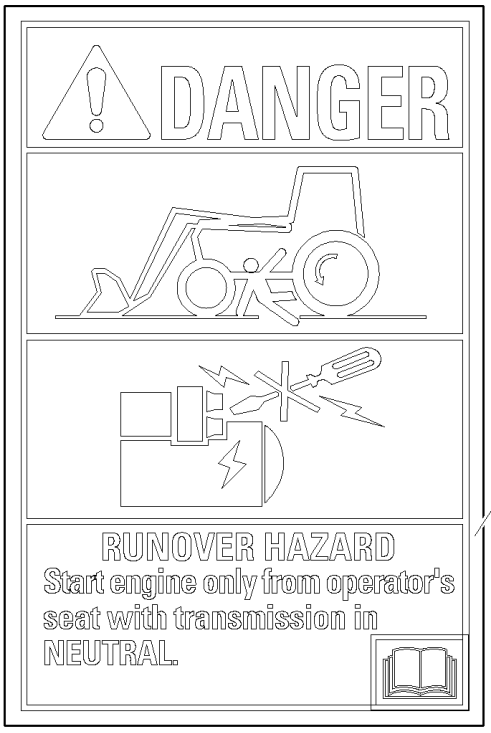
DANGER
RUNOVER HAZARD
Start engine only from operator's seat with transmission in NEUTRAL.

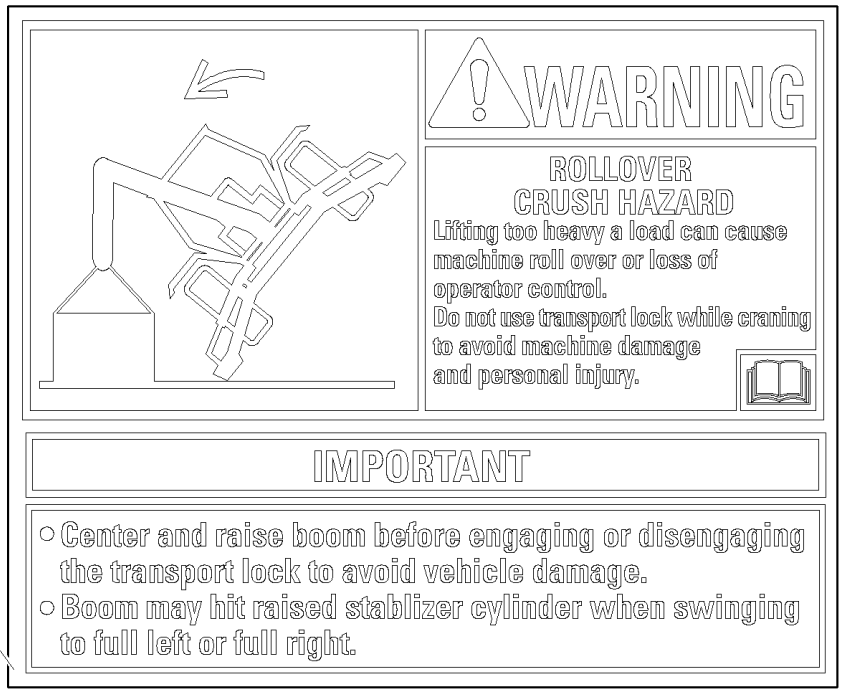
WARNING
ROLLOVER
CRUSH HAZARD
Lifting too heavy a load can cause machine roll over or loss of operator control.
Do not use transport lock while craning to avoid machine damage and personal injury.
IMPORTANT
Center and raise boom before engaging or disengaging the transport lock to avoid vehicle damage.
Boom may hit raised stablizer cylinder when swinging to full left or full right.

1

7

4


WARNING
CRUSH HAZARD
Use lift arm support device when servicing machine with raised loader.
1. Empty loader bucket, raise loader lift arms to maximum height. Stop engine.
2. Remove both strut fixing clips
Unlock elastic belt.
Place strut onto upper side of cylinder rod.
3. Fasten strut to cylinder rod with elastic belt.
4. Slowly lower lift arms onto support device.
Injury or DEATH could occur IF THIS PROCEDURE is not followed and loader lift arms are lowered by accident.
87530041


WARNING
ENTANGLEMENT HAZARD
Keep clear or stop engine before servicing.

6

5


WARNING
CRUSH HAZARD
Use lift arm support device when servicing machine with raised loader.
1. Empty loader bucket, raise loader lift arms to maximum height. Stop engine.
2. Remove rear pin in support device.
Lower support device onto cylinder rod.
3. Install rear pin in support device.
4. Slowly lower lift arms onto support device.
Injury or DEATH could occur IF THIS PROCEDURE is not followed and loader lift arms are lowered by accident.

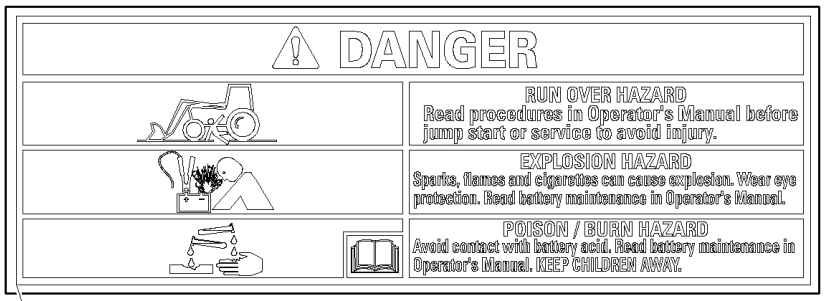
DANGER
RUN OVER HAZARD
Read procedures in Operator's Manual before jump start or service to avoid injury.
EXPLOSION HAZARD
Sparks, flames and cigarettes can cause explosion. Wear eye protection. Read battery maintenance in Operator's Manual.
POISON / BURN HAZARD
Avoid contact with battery acid. Read battery maintenance in Operator's Manual. KEEP CHILDREN AWAY.

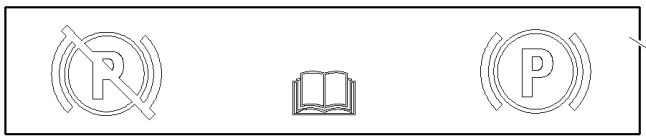
R
P

2

3

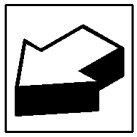

B95LR NA BACKHOE LOADER (1/06-)

993(01) PLATES - NA

Ref	Numero de Pieza	Ctd	Descripción
1	85821924	1	DECAL, ENGLISH
1	85828069	1	DECAL, FRENCH
1	85828070	1	DECAL, SPANISH
2	85821917	1	DECAL, ENGLISH
2	85828088	1	DECAL, FRENCH
2	85828089	1	DECAL, SPANISH
3	85821925	1	DECAL,
4	85821918	1	DECAL, FRENCH
4	85828086	1	DECAL, SPANISH
4	85828087	1	DECAL, ENGLISH
5	85821919	1	DECAL, ENGLISH
5	85828090	1	DECAL, FRENCH
5	85828091	1	DECAL, SPANISH
6	85821921	1	DECAL, ENGLISH, Only for B95, B95LR, B110
6	85828084	1	DECAL, FRENCH
6	85828085	1	DECAL, SPANISH
7	87530041	1	DECAL, ENGLISH, Only for B95TC, B115

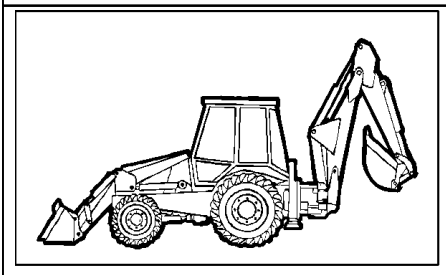

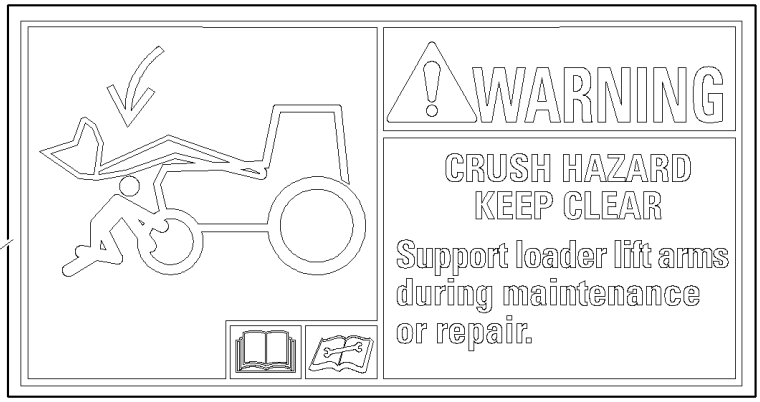
WARNING
CRUSH HAZARD
KEEP CLEAR
Support loader lift arms during maintenance or repair.

2

1

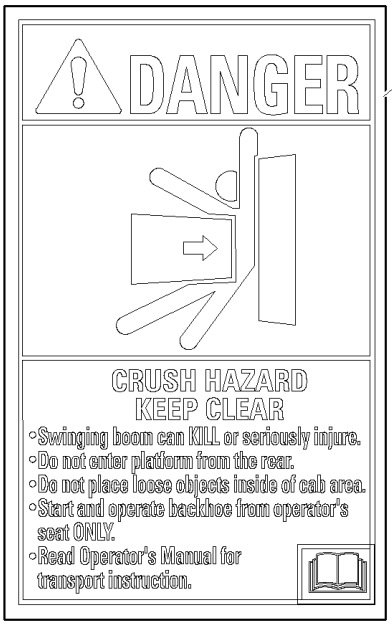
DANGER
CRUSH HAZARD
KEEP CLEAR
◦Swinging boom can KILL or seriously injure.
◦Do not enter platform from the rear.
◦Do not place loose objects inside of cab area.
◦Start and operate backhoe from operator's seat ONLY.
◦Read Operator's Manual for transport instruction.

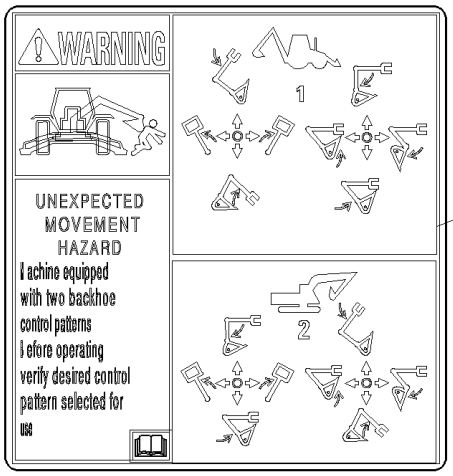
WARNING
UNEXPECTED MOVEMENT HAZARD
Machine equipped with two backhoe control patterns
Before operating verify desired control pattern selected for use
1
2

5

6


WARNING
PINCH POINT HAZARD
Keep clear.

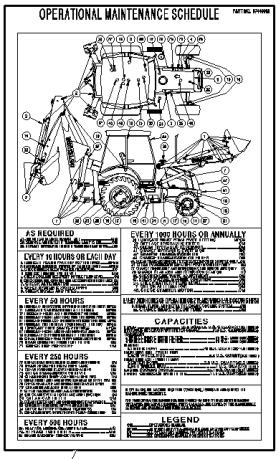
OPERATIONAL MAINTENANCE SCHEDULE

8

7

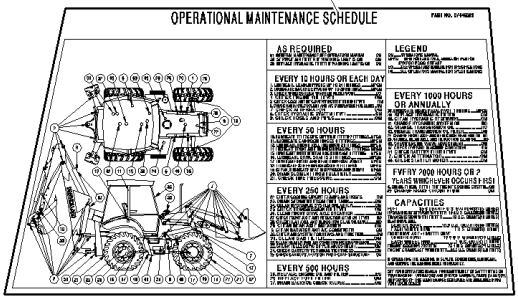
OPERATIONAL MAINTENANCE SCHEDULE
AS REQUIRED
EVERY 10 HOURS OR EACH DAY
EVERY 50 HOURS
EVERY 250 HOURS
EVERY 500 HOURS
EVERY 1000 HOURS OR ANNUALLY
EVERY 2000 HOURS OR 2 YEARS WHICHEVER OCCURS FIRST
CAPACITIES
LEGEND

4

3

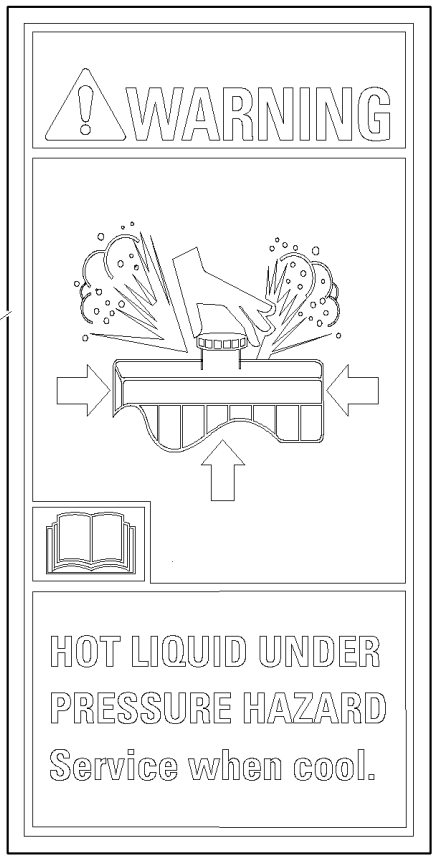
WARNING
HOT LIQUID UNDER PRESSURE HAZARD
Service when cool.

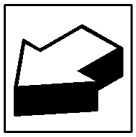

B95LR NA BACKHOE LOADER (1/06-)

993(02) PLATES - NA

Ref	Numero de Pieza	Ctd	Descripción
1	85821922	1	DECAL, ENGLISH
1	85828080	1	DECAL, FRENCH
1	85828081	1	DECAL, SPANISH
2	85821946	1	DECAL, ENGLISH
2	85828082	1	DECAL, FRENCH
2	85828083	1	DECAL, SPANISH
3	86547781	1	DECAL,
4	85821916	1	DECAL, ENGLISH
4	85828094	1	DECAL, FRENCH
4	85828095	1	DECAL, SPANISH
5	87305413	1	DECAL, ENGLISH, Only for NA Pilot Control Version
6	85821927	1	DECAL,
6	85828097	1	DECAL,
6	85828098	1	DECAL,
7	87379329	1	DECAL, , Only for B115
7	87378873	1	DECAL, , Only for B115
7	87378872	1	DECAL, , Only for B115
7	87363280	1	DECAL, , Only for B95TC
7	87379330	1	DECAL, , Only for B95TC
7	87379331	1	DECAL, , Only for B95TC
8	87363002	1	DECAL, , Only for B95, B95LR, B110
8	87378869	1	DECAL, , Only for B95, B95LR, B110
8	87378871	1	DECAL, , Only for B95, B95LR, B110

995(01) COLD START

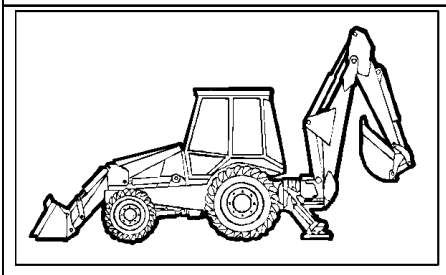

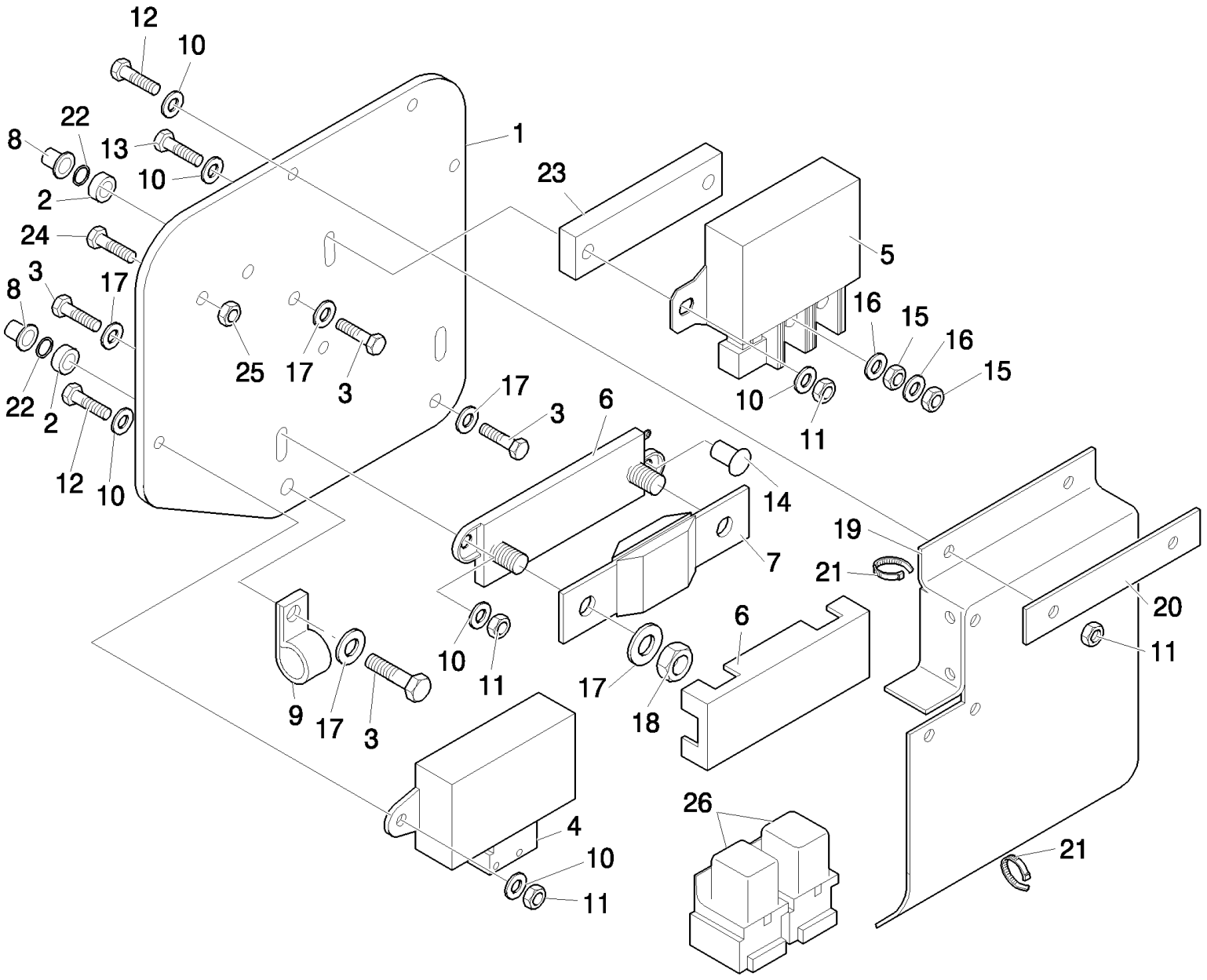

B95LR NA BACKHOE LOADER (1/06-)

995(01) COLD START

Ref	Numero de Pieza	Ctd	Descripción
1	87397601	1	BRACKET, SUPPORTING,
2	85825169	3	SPACER,
3	47049164	3	SCREW, THD TO HD M8x40 CL8.8 ZND
4	47132002	1	ELECTRONIC UNIT, CONTROL,
5	86619908	1	RELAY,
6	87302554	1	CONNECTOR, ELEC,
7	87410602	1	FUSE, 300 AMP
8	85801492	3	INSERT, THREADED,
9	47049195	1	COLLAR, M8
10	47048961	15	WASHER,
11	47054518	8	NUT, M6
12	47049157	5	BOLT, M6x20
13	47120207	2	SCREW, M6x35
14	85821538	1	SCREW, M6x16
15	47049029	4	NUT, M6
16	322357	2	WASHER, SPRING, Belleville, M6,
17	47048992	5	WASHER, 8mm Spring Lock
18	47049030	2	NUT, M8
19	87411092	1	COVER,
20	87411090	1	BAR,
21	47048702	5	STRAP, CABLE, M4.8 x 292,
22	85821539	3	O-RING,
23	87414237	1	PLATE,
24	87301687	2	SCREW, Hex Wash Hd, #10-32 x 1/2",
25	231-24409	2	NUT, LOCK, #10-32,
26	87436836	2	RELAY,

995(02) COLD START

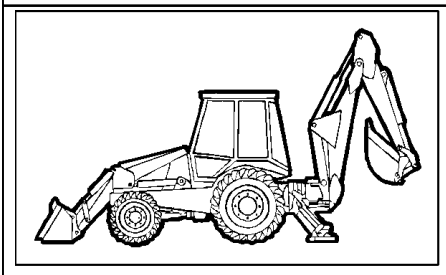

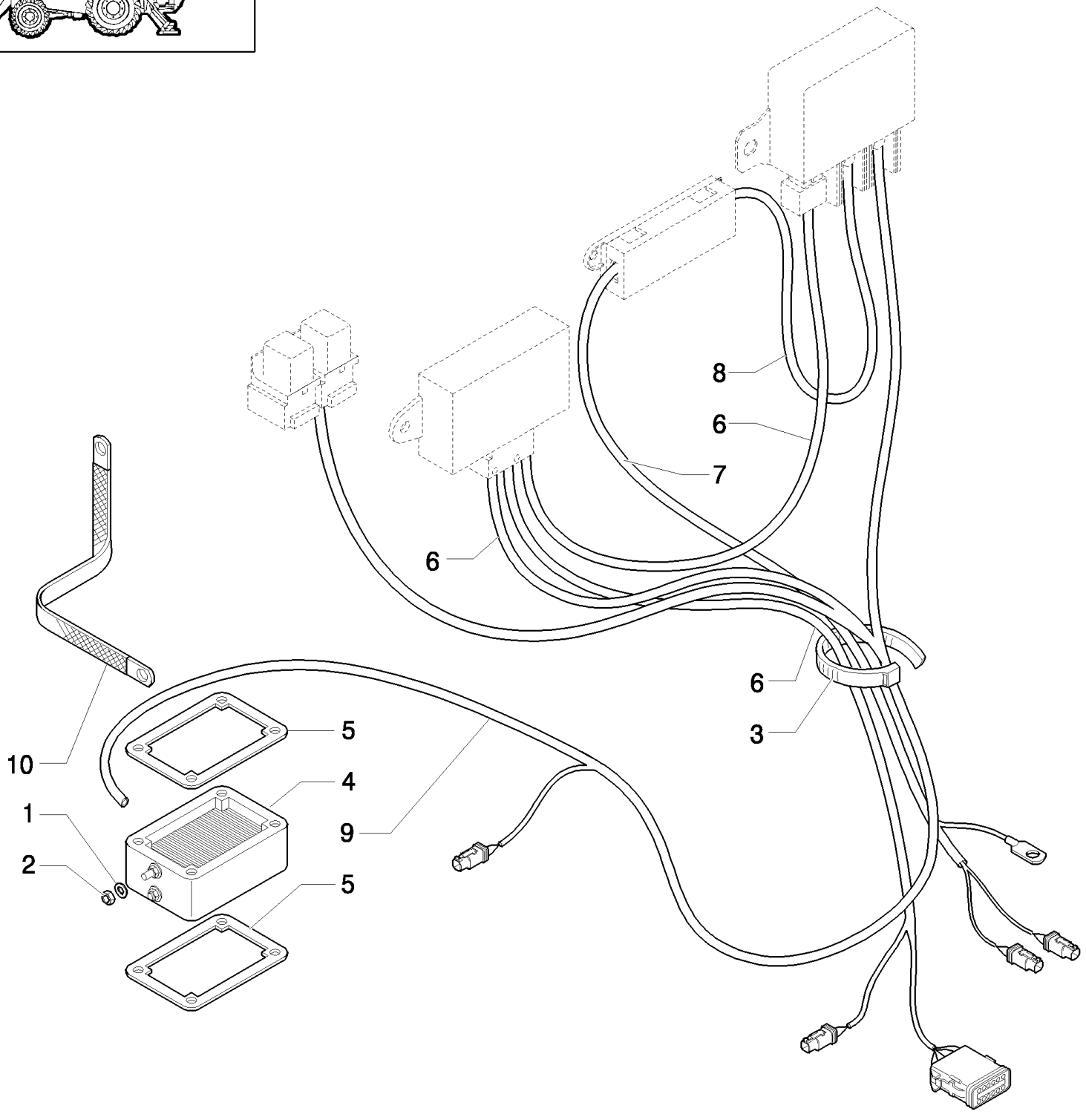

B95LR NA BACKHOE LOADER (1/06-)

995(02) COLD START

Ref	Numero de Pieza	Ctd	Descripción
1	47048961	15	WASHER,
2	47049029	4	NUT, M6
3	47048702	5	STRAP, CABLE, M4.8 x 292,
4	82017872	3	HEATER,
5	86014151	1	GASKET,
6	87380322	1	HARNESS,
7	87410264	1	HARNESS, WIRE,
8	87410265	1	RELAY,
9	87410266	1	HARNESS, WIRE,
10	87413162	1	Strap, Ground,