RUTHZIL TRATOR COMERCIAL DE PEÇAS LTDA 11 97083-6812 ROLANDO

NEW HOLLAND

PARTS CATALOG

LOADER BACKHOE

B95TC

Bur • Issued 02-2006
Printed in U.S.A. • Book/Form Number 87360667 NA
Copyright © 2005. CNH America, LLC. All Rights Reserved.

CNH America LLC reserves the right to make improvements in design or changes in specifications at any time without incurring any obligation to install them on units previously sold.

All data given in this publication is subject to production variations. Dimensions and weights are only approximate. Illustrations do not necessarily show products in standard condition. For exact information about any particular product, please consult your Dealer.

This unit first became available 03-2006			
REVISION HISTORY			
Issue	Issue Date	Applicable Machines	Remarks
First Edition	02-2006	B95TC	87360667

Any use of editorial or pictorial content is strictly prohibited without express written permission from
CNH America LLC. Carol Stream, IL 60188 U.S.A.

TABLE OF CONTENTS

MAIN	00	SECTIONS
MPARTS	00	MAINTENANCE PARTS
SEC. 01	00	ENGINE 1/2
SEC. 01	01	ENGINE 2/2
0.021	01	ENGINE
0.040	01	CYLINDER BLOCK
0.040	02	CYLINDER BLOCK
0.042	01	OIL PUMP, PAN
0.043	01	CYLINDER BLOCK - COVERS
0.043	02	CYLINDER BLOCK - COVERS
0.043	03	CYLINDER BLOCK - COVERS
0.045	01	BREATHER - ENGINE
0.060	01	CYLINDER HEAD
0.063	01	CYLINDER HEAD - COVERS
0.066	01	CYLINDER HEAD - VALVE MECHANISM
0.071	01	MANIFOLD - INTAKE
0.077	01	MANIFOLD - EXHAUST
0.080	01	CRANKSHAFT
0.081	01	PISTONS - CONNECTING ROD
0.082	01	PISTONS - CONNECTING ROD
0.083	01	FLYWHEEL - ENGINE
0.084	01	PULLEY - CRANKSHAFT
0.105	01	DYNAMIC BALANCER, GEARS & SHAFTS
0.105	02	DYNAMIC BALANCER, GEARS & SHAFTS (2831300)
0.120	01	CAMSHAFT
0.140	01	FUEL INJECTION PUMP
0.140	02	FUEL INJECTION SYSTEM
0.142	01	FUEL INJECTION SYSTEM
0.149	01	FUEL INJECTION SYSTEM
0.200	01	FUEL FILTER
0.201	01	FUEL PUMP
0.203	01	FUEL INJECTION SYSTEM
0.204	01	FUEL INJECTION SYSTEM
0.240	01	TURBOCHARGER
0.270	01	ENGINE, OIL
0.270/A	01	ENGINE, OIL
0.300	01	OIL PUMP - ENGINE
0.302	01	OIL FILTERS - ENGINE
0.305	01	PIPING - ENGINE OIL
0.315	01	OIL FILTER AND COOLER
0.320	01	WATER PUMP
0.323	01	COOLING SYSTEM - ENGINE
0.326	01	THERMOSTAT - ENGINE COOLING SYSTEM
0.340	01	WATER PUMP - CONTROL
0.345/A	01	FAN DRIVE
0.350	01	POWER TAKE-OFF
0.360	01	STARTER MOTOR
0.400	01	ALTERNATOR
0.450	01	ENGINE - LIFT HOOK
342	01	KIT VISCOUS FAN DRIVE
636A	01	ACCESSORY ENGINE
636A	02	ACCESSORY ENGINE - VENTILATOR

TABLE OF CONTENTS

636A	04	ACCESSORY ENGINE- ALTERNATOR
636A	05	ACCESSORY ENGINE - BRACKET MUFFLER
636A	06	ACCESSORY ENGINE - STARTER
SEC. 02	00	FUEL TANK - MUFFLER - RADIATOR - AIR CLEANER - CHASSIS
1.14.0	01	FUEL TANK & RELATED PARTS
1.15.0	01	MUFFLER & EXTENSIONS
1.15.0	02	MUFFLER & EXTENSIONS
1.17.2	01	EXPANSION TANK
1.19.1	01	AIR CLEANER & HOSES
1.21.5/ 5	01	FRAME (CENTER PIVOT)
175	01	AIR INTAKE CAP & PRE-CLEANER
176	01	AIR INTAKE CAP & PRE-CLEANER
203	01	FRONT WEIGHTS
215	01	FRONT WEIGHTS
636	01	RADIATOR
636	02	RADIATOR
636/ 1	01	RADIATOR
636/ 2	02	RADIATOR
637/ 1	01	RADIATOR
637/ 2	01	RADIATOR
637/ 3	01	RADIATOR
SEC. 03	00	TRANSMISSION 1/2
SEC. 03	01	TRANSMISSION 2/2
1.28.0/ A	01	TRANSMISSIONGEARING SPEED GEAR (2WD POWER-SHUTTLE)
1.28.0/ A	02	TRANSMISSIONGEARING SPEED GEAR (2WD POWER-SHUTTLE)
1.28.0/ A	03	TRANSMISSIONGEARING SPEED GEAR (2WD POWER-SHUTTLE)
1.28.0/ A	04	TRANSMISSIONGEARING SPEED GEAR (2WD POWER-SHUTTLE)
1.28.0/ A	05	TRANSMISSIONGEARING SPEED GEAR (2WD POWER-SHUTTLE)
1.28.0/ A	06	TRANSMISSIONGEARING SPEED GEAR (2WD POWER-SHUTTLE)
1.28.0/ A	07	TRANSMISSIONGEARING SPEED GEAR (2WD POWER-SHUTTLE)
1.28.0/ B	01	TRANSMISSIONGEARING SPEED GEAR (4WD POWER-SHUTTLE)
1.28.0/ B	02	TRANSMISSIONGEARING SPEED GEAR (4WD POWER-SHUTTLE)
1.28.0/ B	03	TRANSMISSIONGEARING SPEED GEAR (4WD POWER-SHUTTLE)
1.28.0/ B	04	TRANSMISSIONGEARING SPEED GEAR (4WD POWER-SHUTTLE)
1.28.0/ B	05	TRANSMISSIONGEARING SPEED GEAR (4WD POWER-SHUTTLE)
1.28.0/ B	06	TRANSMISSIONGEARING SPEED GEAR (4WD POWER-SHUTTLE)
1.28.0/ B	07	TRANSMISSIONGEARING SPEED GEAR (4WD POWER-SHUTTLE)
1.28.0/ B	08	TRANSMISSIONGEARING SPEED GEAR (4WD POWER-SHUTTLE)
1.28.6	01	GEAR FILTER PIPES (POWER-SHUTTLE)
1.29.1	01	TRANSMISSION ESTERNALSHIFTING CONTROLS (POWER-SHUTTLE)
1.38.1	01	FRONT & REAR DRIVESHAFT (POWER-SHUTTLE)
1.39.8	01	TRANSMISSION OIL COOLING PIPES (POWER-SHUTTLE)
SEC. 04	00	FRONT AXLE
1.40.0	01	FRONT AXLE (2WD)
1.40.0	02	FRONT AXLE (2WD)
402	01	4WD FRONT AXLE, HOUSING, BUSHINGS & SUPPORTS
402	02	4WD FRONT AXLE, SWIVEL HOUSING & STEERING CYLINDER
402	03	4WD FRONT AXLE, HUBS
402	04	4WD FRONT AXLE, RING GEAR & PINION ASSEMBLY
402	05	4WD FRONT AXLE, DIFFERENTIAL
402	06	4WD FRONT AXLE, DRIVE SHAFT
415	01	FRONT AXLE - (4WD) W/GEAR,BEVEL

TABLE OF CONTENTS

415	02	FRONT AXLE - (4WD) W/GEAR,BEVEL
415	03	FRONT AXLE - (4WD) W/GEAR,BEVEL
415	04	FRONT AXLE - (4WD) W/GEAR,BEVEL
415	05	FRONT AXLE - (4WD) W/GEAR,BEVEL
415	06	FRONT AXLE - (4WD) W/GEAR,BEVEL
SEC. 05	00	REAR AXLE
1.44.0E	01	REAR AXLE (POWER-SHUTTLE) (CENTER PIVOT)
1.44.0E	02	REAR AXLE (POWER-SHUTTLE) (CENTER PIVOT)
1.44.0E	03	REAR AXLE (POWER-SHUTTLE) (CENTER PIVOT)
1.44.0E	04	REAR AXLE (POWER-SHUTTLE) (CENTER PIVOT)
SEC. 06	00	ELECTRICAL
1.75.2/ 3	01	CHASSIS HARNESS & GROUND WIRE (POWER SHUTTLE)
1.75.2/ 3	02	BATTERY LOCK-OUT SWITCH & GROUND WIRE (POWER SHUTTLE)
1.75.2/ 3	03	ENGINE HARNESS (POWER SHUTTLE)
131	01	SINGLE BATTERY
321	01	DOUBLE BATTERY
995	01	COLD START
995	02	COLD START
SEC. 07	00	SLIDES VALVES
1.82.0	01	HYDRAULIC OIL RESERVOIR
1.82.3	01	HYDRAULIC PUMP (35+35-154L/MM)
1.82.3/ 1	01	HYDRAULIC PUMP (40+35-165L/MM)
1.82.3/ 2	01	HYDRAULIC PUMP (40+35-165L/MM)
1.82.6	01A	HYDRAULIC SYSTEM PIPING (CENTER PIVOT)
1.82.6	01B	FRONT HYDRAULIC PUMP INTAKE & OUTLET HOSES (CENTER PIVOT)
1.82.6	02A	HYDRAULIC SYSTEM PIPING(CENTER PIVOT)
1.82.6	02B	REAR HYDRAULIC PUMP STABILIZER, LOADER & BACKHOE VALVE HOSES (CENTER PIVOT)
1.82.6	03A	HYDRAULIC SYSTEM PIPING(CENTER PIVOT)
1.82.6	03B	QUICK RELEASE COUPLERS & HOSES (CENTER PIVOT)
1.82.6	04A	RETURN MANIFOLD HOSES (CENTER PIVOT)
1.82.6	04B	RETURN MANIFOLD HOSES (CENTER PIVOT)
1.82.6	05F	OIL COOLER & FILTER HOSES (CENTER PIVOT)
1.82.6	05G	HYDRAULIC SYSTEM PIPING (CENTER PIVOT)
1.82.6	06A	FILTER ASSEMBLY & HOSE TO RETURN MANIFOLD (CENTER PIVOT)
1.82.6	06B	FILTER ASSEMBLY & HOSE TO RETURN MANIFOLD (CENTER PIVOT)
1.82.6	07	HYDRAULIC SYSTEM PIPING
1.82.6	08A	LOADER LIFT CYLINDER HOSES (CENTER PIVOT)
1.82.6	08C	LOADER LIFT CYLINDER HOSES (CENTER PIVOT)
1.82.6	09A	LOADER BUCKET CYLINDER HOSES (CENTER PIVOT)
1.82.6	09B	LOADER BUCKET CYLINDER HOSES (CENTER PIVOT)
1.82.6	10A	HYDRAULIC SYSTEM PIPING NA (CENTER PIVOT)
1.82.6	11A	BACKHOE CONTROL VALVE HOSES (CENTER PIVOT)
1.82.6	11B	HYDRAULIC SYSTEM PIPING(CENTER PIVOT)
1.82.6	12B	HYDRAULIC SYSTEM PIPING(CENTER PIVOT)
1.82.6	13A	ROTATION PLATE HOSE CLAMPS (CENTER PIVOT)
1.82.6	16	BACKHOE CONTROL VALVE(CENTER PIVOT)
1.82.6	17	DIPPER VALVE SECTION (CENTER PIVOT)
1.82.6	18	BUCKET, SWING, & BOOM VALVE SECTION (CENTER PIVOT)
302	01	TWO-SECTION CONTROL VALVE FOR LOADER
302	02	TWO-SECTION CONTROL VALVE FOR LOADER
302	03	TWO-SECTION CONTROL VALVE FOR LOADER

TABLE OF CONTENTS

302	04	TWO-SECTION CONTROL VALVE FOR LOADER
331	01	BACKHOE CONTROL VALVE, 6 SECTIONS (CENTER PIVOT) NORTH AMERICA
331/ A	01	6 SECTION PILOT CONTROL VALVE SUPPORT, COMPLETE
331/ A	02	2 SECTION PILOT CONTROL VALVE SUPPORT, COMPLETE
331/ B	01	PILOT CONTROL VALVE SUPPORT, COMPLETE
331/ C	01	6 SECTION PILOT CONTROL VALVE SUPPORT, COMPLETE
331/ C	02	6 SECTION PILOT CONTROL VALVE SUPPORT, COMPLETE
331/ C	03	6 SECTION PILOT CONTROL VALVE SUPPORT, COMPLETE
331/ C	04	6 SECTION PILOT CONTROL VALVE SUPPORT, COMPLETE
331/ C	05	6 SECTION PILOT CONTROL VALVE SUPPORT, COMPLETE
331/ C	06	6 SECTION PILOT CONTROL VALVE SUPPORT, COMPLETE (CENTER PIVOT)
331/ D	03	VALVE, JOYSTICK PILOT CONTROLS - EXTENDED VERSION - (RIGTH HAND)
333/ A	01	7 SECTION PILOT CONTROL VALVE SUPPORT, COMPLETE
333/ A	02	7 SECTION PILOT CONTROL VALVE SUPPORT, COMPLETE
333/ A	03	7 SECTION PILOT CONTROL VALVE SUPPORT, COMPLETE
333/ B	01	7 SECTION PILOT CONTROL VALVE SUPPORT, COMPLETE
333/ B	02	7 SECTION PILOT CONTROL VALVE SUPPORT, COMPLETE (CENTER PIVOT) EUROPE
333/ B	03	7 SECTION PILOT CONTROL VALVE SUPPORT, COMPLETE
333/ B	04	7 SECTION PILOT CONTROL VALVE SUPPORT, COMPLETE
333/ B	05	7 SECTION PILOT CONTROL VALVE SUPPORT, COMPLETE
333/ B	06	7 SECTION PILOT CONTROL VALVE SUPPORT, COMPLETE (CENTER PIVOT) EUROPE
333/ B	07	7 SECTION PILOT CONTROL VALVE SUPPORT, COMPLETE (CENTER PIVOT) EUROPE
333/ B	08	7 SECTION PILOT CONTROL VALVE SUPPORT, COMPLETE
333/ B	09	7 SECTION PILOT CONTROL VALVE SUPPORT, COMPLETE (CENTER PIVOT) EUROPE
333/ B	10	6 SECTION PILOT CONTROL VALVE SUPPORT,COMPLETE
333/ C	01	VALVE, JOYSTICK PILOT CONTROLS (RIGHT HAND)
333/ C	02	VALVE, JOYSTICK PILOT CONTROLS (LEFT HAND)
333/ 1	01	7-SECTIONS EXCAVATOR CONTROL VALVE (CENTER PIVOT) NORTH AMERICA
333/ 1	02	7-SECTIONS EXCAVATOR CONTROL VALVE (CENTER PIVOT) NORTH AMERICA
333/ 1	03	7-SECTIONS EXCAVATOR CONTROL VALVE (CENTER PIVOT) NORTH AMERICA
333/ 1	04	7-SECTIONS EXCAVATOR CONTROL VALVE (CENTER PIVOT) NORTH AMERICA
333/ 1	05	7-SECTIONS EXCAVATOR CONTROL VALVE (CENTER PIVOT) NORTH AMERICA
333/ 1	06	7-SECTIONS EXCAVATOR CONTROL VALVE (CENTER PIVOT) NORTH AMERICA
333/ 1	07	7-SECTIONS EXCAVATOR CONTROL VALVE (CENTER PIVOT) NORTH AMERICA
333/ 1	08	7-SECTIONS EXCAVATOR CONTROL VALVE (CENTER PIVOT) NORTH AMERICA
334	09	7-SECTIONS EXCAVATOR CONTROL VALVE
334	11	7-SECTIONS EXCAVATOR CONTROL VALVE
336	01	LOADER CONTROL VALVE (CENTER PIVOT)
336	02	LOADER CONTROL VALVE, TWO SECTION, CAP & UNLOAD VALVE (CENTER PIVOT)
336	03	LOADER CONTROL VALVE, TWO SECTION, RELIEF & CHECK VALVES (CENTER PIVOT)
336	04	LOADER CONTROL VALVE, TWO SECTION, BY-PASS KIT (CENTER PIVOT)
336	05	LOADER CONTROL VALVE, TWO SECTION, UNLOAD KIT OR DUMP VALVE (CENTER PIVOT)
339	01	LOADER CONTROL VALVE, THREE SECTION (CENTER PIVOT)
339	02	LOADER CONTROL VALVE, THREE SECTION, CAP & UNLOAD VALVE (CENTER PIVOT)

TABLE OF CONTENTS

339	03	LOADER CONTROL VALVE, THREE SECTION, RELIEF & CHECK VALVES (CENTER PIVOT)
344	01	STABILIZER CONTROL VALVE, TWO SECTION (CENTER PIVOT)
344	02	STABILIZER CONTROL VALVE, LH & RH SECTION (CENTER PIVOT)
356	01	STABILIZER CONTROL VALVE, TREE SECTION (CENTER PIVOT)
356	02	STABILIZER CONTROL VALVE, THIRD SECTION (CENTER PIVOT)
391	01	LOCK VALVE FOR BUCKET 4X1 / 6X1
391/ 1	01	LOCK VALVE ON LOADER TILTING CYLINDERS
391/ 1	02	LOCK VALVE ON LOADER LIFT CYLINDERS
391/ 1	03	LOCK VALVE ON LOADER LIFT CYLINDERS
392	01	LOCKING VALVE ON BACKHOE LIFT AND DIPP. CYLINDER
392	02	BACKHOE LIFT & DIPPERSTICK CYLINDER LOCK VALVE
437/ 1	01	GLIDE RIDE VALVE,HYDRAULIC SYSTEM FOR MACHINE FRAME LEVELLING & ON/OFF SWITCH
698	01	GLIDE RIDE VALVE,HYDRAULIC SYSTEM FOR MACHINE FRAME LEVELLING & ON/OFF SWITCH
708	01	THREE-SECTION CONTROL VALVE FOR LOADER
708/ 1	01	KIT OF CONVERSION FROM 2 TO 3 SPOOLS
721	01	TELESCOPIC CONTROL VALVE, 3 SECTIONS(CENTER PIVOT)
721	02	HED TELESCOPIC CONTORL VALVE, SECTION HOSES(CENTER PIVOT)
721	03	HED CYLINDER PISTON END HYDRAULIC LINES(CENTER PIVOT)
721	04	HED CYLINDER ROD END HYDRAULIC LINES(CENTER PIVOT)
721	05	HED FOOT PEDAL, CABLE & DECALS(CENTER PIVOT)
SEC. 08	00	BODY & HOOD
1.87.2	01	CAB SCREEN
1.87.8	01	CAB FASTENERS
SEC. 09	00	LOADER 1/1
SEC. 09	01	BACKHOE 1/2
SEC. 09	02	BACKHOE 2/2
1.11.0	01	ARMS AND JOINTS
1.11.1	01	LOADER CYLINDER
1.11.2/ 01	01	LOADER BUCKET CONTROL CYLINDER
1.88.01	01	TRANSPORT LOCK" REAR LOCKING" (CENTER PIVOT)
1.88.01	02	TRANSPORT LOCK" REAR LOCKING" (CENTER PIVOT)
1.88.01/ 2	01	"TRANSPORT LOCK" ON/OFF SWITCH, VALVE & HOSES
1.88.01/ 2	02	TRANSPORT LOCK HOOK, CYLINDER & HOSE (SIDE SHIFT,CENTER PIVOT)
1.88.08	01	SWING POST ASSEMBLY, BUSHINGS & PINS
1.88.08	02	SWING POST PINS & TRANSPORT LOCK HOOK
1.88.09	01	DISTRIBUTOR VALVE SUPPORT (CENTER PIVOT)
1.88.11	01	ARMS AND JOINTS
1.88.11/ 1B	01	LIFT CYLINDER
1.88.11/ 2	02	LOADER BUCKET CONTROL CYLINDER
1.88.11/ 2A	01	LOADER BUCKET CONTROL CYLINDER
1.88.11/ 3	01	LIFT CYLINDER AND BUCKET PIPES
1.88.11/ 5	01	SELF-LEVELING LINKAGE, LOADER CONTROLS (CENTER PIVOT)
1.88.11/ 5	02	SELF-LEVELING LINKAGE, LOADER ARM (CENTER PIVOT)
1.88.11/ 6	02	STABILIZER CYLINDERS (CENTER PIVOT)
1.88.11/ 7	01	PIPES FOR STABILIZER CYLINDERS (CENTER PIVOT)
1.88.11/ 8	01	RETURN TO DIG SENSOR
1.88.11/ 9A	01	CYLINDERS AND ROTATION PLATE
1.88.11/ 9C	01	SWING CYLINDERS BACKHOE
1.88.12/ 3	01	FRONT CONTROL VALVE SUPPORT AND TRANSMISSIONS (CENTER PIVOT)

TABLE OF CONTENTS

120	01	SILENT HAMMER CB65S
120/ 1	01	HAMMER CB65B
200	01	SHOVEL AND REAR LIFTING HOOKS
340/ 1	01	4X1 & 6X1 BUCKET HYDRAULIC LINES (P. SHUTTLE)
416-417	01	SYSTEM HAMMER COMPONENTS (CAB)
431	01	STANDARD 1M3 BUCKET
432	01	STANDARD 1M3 BUCKET WITH TINE
433	01	BUCKET 4X1 (1 M3) WITH BLADE
434	01	BUCKET 4X1 (1 M3) WITH TINE
469/ A	01	HYDRAULIC CYLINDER (BUCKET 4X1-6X1)
471	02	BUCKET 4X1 (1 M3) WITH BLADE
514	01	BOOM - DIPPER SHORT
514	02	SHORT DIPPER
514	03	SHORT DIPPER - BUCKET MOTION
514	04	SHORT DIPPER - HYDRAULIC SYSTEM
514	05	SHORT DIPPER - HYDRAULIC SYSTEM
514	06	SHORT DIPPER - HYDRAULIC SYSTEM
514	07	SHORT DIPPER - HYDRAULIC SYSTEM
514	08	SHORT DIPPER - HYDRAULIC SYSTEM
514/ C	01	HYDRAULIC BUCKET CYLINDER
514/ E	01	HYDRAULIC DITCHING CYLINDER
514/ F	01	HYDRAULIC LIFTING CYLINDER
515	01	12" (305MM) BACKHOE BUCKET WITH PIN TEETH
515	02	12" (305MM) BACKHOE BUCKET WITH BOLT-ON TEETH
516	01	18" (457MM) BACKHOE BUCKET WITH PIN TEETH
516	02	18" (457MM) BACKHOE BUCKET WITH BOLT-ON TEETH
517	01	24" (610MM) BACKHOE BUCKET WITH PIN TEETH
517	02	24" (610MM) BACKHOE BUCKET WITH BOLT-ON TEETH
518	01	30" (762MM) BACKHOE BUCKET WITH PIN TEETH
518	02	30" (762MM) BACKHOE BUCKET WITH BOLT-ON TEETH
519	01	36" (914MM) BACKHOE BUCKET WITH PIN TEETH
519	02	36" (914MM) BACKHOE BUCKET WITH BOLT-ON TEETH
520	01	0.88 M3 BUCKET WITHOUT TINES
522/ B	01	1 M3 BUCKET
522/ C	01	STANDARD 1MC BUCKET WITH FORKS
525	01	STANDARD 1M3 BUCKET WITH FORKS AND EXTRA REVERSIBLE BLADE
525	02	STANDARD 1M3 BUCKET WITH FORKS AND EXTRA REVERSIBLE BLADE
526	01	BOLT-ON TOOTH KIT, 12" (305MM) BACKHOE BUCKET
526/ 1	01	STANDARD 1M3 BUCKET WITH FORKS AND TINE
527	01	BOLT-ON TOOTH KIT, 18" (457MM) & 24" (610MM) BACKHOE BUCKETS
527/ 1	01	0.88 M3 BUCKET AND EXTRA REVERSIBLE BLADE
528	01	BOLT-ON TOOTH KIT, 30" (762MM) BACKHOE BUCKET
529	01	BOLT-ON TOOTH KIT, 36" (914MM) BACKHOE BUCKET
530	01	PIN TOOTH KIT, 12" (305MM) BACKHOE BUCKET
532	01	PIN TOOTH KIT, 30" (762MM) BACKHOE BUCKET
533	01	PIN TOOTH KIT, 36" (914MM) BACKHOE BUCKET
536/ 1	01	STANDARD 1MC BUCKET WITH TINE
537/ 1	01	STANDARD 1MC BUCKET WITH EXTRA REVERSIBLE BLADE
548	01	DITCH CLEANING BUCKET
555	01	FRONT BUCKET TEETH
556	01	LOADER BUCKET REVERSIBLE BLADE
626	01	SCRAB GRAB

TABLE OF CONTENTS

699	01	HAND HAMMER SWITCH
700/ 2	01	4X1 & 6X1 BUCKET HYDRAULIC LINES (P. SHUTTLE)
700/ 2	02	4X1 & 6X1 BUCKET HYDRAULIC LINES (P. SHUTTLE)
704	01	MANUAL HAMMER SYSTEM
704	02	MANUAL HAMMER SYSTEM
704/ A	01	MANUAL HAMMER VALVE
724	01	HYDRAULIC SYSTEM FOR HAMMER (CENTER PIVOT)
724	02	HYDRAULIC SYSTEM FOR HAMMER (CENTER PIVOT)
724/ A	01	REAR HAMMER CONTROL VALVE
724/ 3	01	HYDRAULIC SYSTEM FOR HAMMER (CENTER PIVOT)
724/ 3	02	HYDRAULIC SYSTEM FOR HAMMER (CENTER PIVOT)
724/ 5	01	HYDRAULIC SYSTEM FOR HAMMER (4WS)
724/ 6	01	HYDRAULIC SYSTEM FOR HAMMER (SIDE SHIFT EUROPA)
725	01	HAMMER KIT FROM LIFTING ARM TO DEMOLITION ARM
725/ 1	01	4X1 & 6X1 BUCKET HYDRAULIC LINES
725/ 1	02	4X1 & 6X1 BUCKET HYDRAULIC LINES (P. SHUTTLE)
732	01	REAR MECHANICAL QUICK-COUPLING
732/ A	01	REAR MECHANICAL QUICK-COUPLING
734	01	FRONT MECHANICAL QUICK-COUPLING
900	01	BOOM - LONG DIPPER
900	02	LONG DIPPER
900	03	LONG DIPPER - BUCKET MOTION
900	04	LONG DIPPÊR - HYDRAULIC SYSTEM
900	05	LONG DIPPER - HYDRAULIC SYSTEM
900	06	LONG DIPPER - HYDRAULIC SYSTEM
900	07	LONG DIPPER - HYDRAULIC SYSTEM
900	08	LONG DIPPER - HYDRAULIC SYSTEM
902	01	BOOM - TELESCOPIC DIPPER SHORT
902	02	TELESCOPIC DIPPER SHORT - HYDRAULIC SYSTEM
902	03	TELESCOPIC DIPPER SHORT - HYDRAULIC SYSTEM
902	04	TELESCOPIC DIPPER SHORT- BUCKET MOTION
902	05	TELESCOPIC DIPPER SHORT - HYDRAULIC SYSTEM
902	06	TELESCOPIC DIPPER SHORT - HYDRAULIC SYSTEM
902	07	TELESCOPIC DIPPER SHORT - HYDRAULIC SYSTEM
902/ A	01	TELESCOPIC DIPPER SHORT
902/ A	02	TELESCOPIC DIPPER SHORT - HYDRAULIC SYSTEMM
902/ B	01	TELESCOPIC DIPPER SHORT - HYDRAULIC SYSTEMM
902/ C	01	TELESCOPIC DIPPER SHORT - HYDRAULIC SYSTEMM
SEC. 10	00	BODY, HOOD & DRIVER"S POST 1/3
SEC. 10	01	BODY, HOOD & DRIVER"S POST 2/3
SEC. 10	02	BODY, HOOD & DRIVER"S POST 3/3
095	01	STABILIZER CONTROL WITHOUT AUTO-UP (CENTER PIVOT)
096	01	STABILIZER CONTROL WITH AUTO-UP (CENTER PIVOT)
1.91.1	01	CAB / CEILING LIGHT
1.91.1/ 1	01	SAFETY FRAME- INSTRUMENTS AND GAUGES
1.91.3	01	BACK-UP ALARM
1.91.4	01	IGNITON SWITCH, POWER POINT, FUSE PANEL & SIDE CONSOLE HARNESS (ROPS CP POWER SHUTTLE)
1.91.4	02	IGNITON SWITCH, POWER POINT, FUSE PANEL & SIDE CONSOLE HARNESS (ROPS CP POWER SHUTTLE)
1.91.4	03	IGNITON SWITCH, POWER POINT, FUSE PANEL & SIDE CONSOLE HARNESS (ROPS CP POWER SHUTTLE)

TABLE OF CONTENTS

1.91.4	04	IGNITON SWITCH, POWER POINT, FUSE PANEL & SIDE CONSOLE HARNESS (ROPS CP POWER SHUTTLE)
1.91.4	05	RH SIDE CONSOLE TRIM, INSTRUMENT CLUSTER & SWITCHES (ROPS CP POWER SHUTTLE)
1.91.4/ 2	01	IGNITON SWITCH, POWER POINT, FUSE PANEL & SIDE CONSOLE HARNESS (CAB CP POWER SHUTTLE)
1.91.4/ 2	02	IGNITON SWITCH, POWER POINT, FUSE PANEL & SIDE CONSOLE HARNESS (CAB CP POWER SHUTTLE)
1.91.4/ 2	03	IGNITON SWITCH, POWER POINT, FUSE PANEL & SIDE CONSOLE HARNESS (CAB CP POWER SHUTTLE)
1.91.4/ 2	04	IGNITON SWITCH, POWER POINT, FUSE PANEL & SIDE CONSOLE HARNESS (CAB CP POWER SHUTTLE)
1.91.4/ 2	05	IGNITON SWITCH, POWER POINT, FUSE PANEL & SIDE CONSOLE HARNESS (CAB CP POWER SHUTTLE)
1.91.5	01	FRONT AND REAR WINDSCREEN WIPERS
1.91.5	02	WINDSCREEN WIPERS RESERVOIR & NOZZLES
1.91.6	01	RADIO ANTENNA & SPEAKER COVER
1.91.7/ 1	01	LAMPS & LIGHTS - CAB (USA)
1.91.7/ 3	01	LAMPS & LIGHTS - ROPS (USA)
1.91.8	01	CAB-SAFETY FRAME / EXTINGUISHER
1.92.1	01	CAB - FRAME-DOOR
1.92.1/ 1	01	ROPS - SAFETY FRAME
1.92.1/ 2	01	CAB - FRAME-DOOR
1.92.1/ 3	01	ROPS - SAFETY FRAME
1.92.3	01	WINDOWS
1.92.4	01	WINDOWS
1.92.4	02	WINDOWS
1.92.4	03	WINDOWS
1.92.5	01	FENDERS, REAR
1.92.6	01	DOOR COMPONENTS
1.92.6	02	DOOR COMPONENTS
1.92.6	03	DOOR COMPONENTS
1.92.8	01	FIREWALL SEAL, ROPS
1.92.9	01	REAR WINDOWS
1.92.9	02	REAR WINDOWS
1.92.9	03	REAR WINDOWS
1.93.0	01	CAB / SOFT TRIM
1.93.0	02	CAB / SOFT TRIM (POWER SHUTTLE)
1.93.0	03	CAB / SOFT TRIM
1.93.0	04	CAB / SOFT TRIM
1.93.0/ 2	01	RH & BACKHOE CONSOLE TRIM, ROPS (CENTER PIVOT)
1.93.0/ 3	01	CAB / SOFT TRIM
1.93.0/ 3	04	CAB / SOFT TRIM
1.93.0/ 5	01	RH & BACKHOE CONSOLE TRIM, ROPS (CENTER PIVOT)
1.93.0/ 6	01	ROOF, ROPS
1.93.0/ 6A	01	ROOF, ROPS
1.93.4	01	REAR MIRROR- SUN SCREEN
1.93.5	01	FRONT CONSOLE - ROPS (POWER SHUTTLE)
1.93.5	02	RH SIDE CONSOLE SEAL & CLIPS - ROPS (POWER SHUTTLE)
1.93.5/ 1	01	CAB / PANEL DASH
1.93.5/ 1	02	CAB / PANEL DASH
1.93.5/ 3	01	CAB / PANEL DASH

TABLE OF CONTENTS

1.94.0	01	CAB/ CANOPY
1.94.2	03	HEATER WATER HOSES
1.94.2/ 1	03	HEATER WATER HOSES
1.95.0	01	CAB-SAFETY FRAME / BRAKE PEDAL
1.95.0	02	CAB-SAFETY FRAME / BRAKE PEDAL
1.95.0	03	CAB-SAFETY FRAME / BRAKE PEDAL
1.95.0/ A	01	CAB-SAFETY FRAME / BRAKE PEDAL
1.95.1	01	CAB-SAFETY FRAME / HAND BRAKE
1.95.2	01	TRANSPORT LOCK CONTROL
1.95.3	01	HAND-OPERATED AND PEDAL-OPERATED ACCELERATOR CONTROL
1.95.5	01	POWER STEERING MOTOR, WHEEL & COLUMN TRIM (NA)
1.95.5	02	POWER STEERING MOTOR HOSES
1.95.5/ A	01	POWER STEERING MOTOR
1.95.5/ A	02	POWER STEERING MOTOR
1.95.5/ 3	01	POWER STEERING MOTOR, WHEEL & COLUMN (NA)
1.96.0	01	FOWARD/REVERSE & MULTI-PURPOSE LEVER (POWER-SHUTTLE - CENTER PIVOT)
1.96.2	01	STABILIZER CONTROL
1.96.2	02	STABILIZER CONTROL
1.96.2/ 1	01	PILOT CONTROL DIAGNOSTICS
1.96.7	01	CAB PLUGS, FLOOR PLATES & AIR CONVEYER, CENTER PIVOT
1.96.7/ 4	01	ROPS PLUGS & FLOOR PLATE (CENTER PIVOT)
1.96.7/ 6	01	CAB PLUGS, FLOOR PLATES & AIR CONVEYER, CENTER PIVOT
1.96.7/10	01	ROPS PLUGS & FLOOR PLATE (CENTER PIVOT)
1.98.0	01	INFORMATION SYMBOL DECALS - USA (POWER SHUTTLE)
1.98.0	02	CAB WARNING & INFORMATION DECALS (POWER SHUTTLE)
1.98.0	03	BACKHOE, LOADER & ENGINE WARNING DECALS (POWER SHUTTLE)
1.98.0	04	BACKHOE, LOADER & ENGINE WARNING DECALS (POWER SHUTTLE)
1.98.0	05	PLATES (POWER SHUTTLE)
1.98.0	06	PLATES (POWER SHUTTLE)
1.98.1	08	B95TC MODEL IDENTIFICATIO
346	01	A/C HOUSING & FILTERS
346	02	A/C BLOWER & COILS
346	03	HEATER COIL HOSES
346	04	A/C & HEATER CONTROL PANEL
346	05	A/C & HEATER CONSOLE DUCTS
346/1	01	TRANSFORMATION SET FROM HEATING TO AIR CONDITIONING
346/1	02	TRANSFORMATION SET FROM HEATING TO AIR CONDITIONING
347	01	HOUSING & FILTERS
347	02	HEATER BLOWER & COILS
347	03	HEATER COIL HOSES
347	04	A/C & HEATER CONTROL PANEL
347	05	A/C & HEATER CONSOLE DUCTS
347	06	CAB HEATING COATING PLUG
351	04	CASE 3 LEVER BACKHOE CONTROLS, CONSOLE & LEVERS
351	05	CASE 3 LEVER BACKHOE CONTROLS, BELLCRANK & SUPPORT
351	06	CASE 3 LEVER BACKHOE CONTROLS, BUCKET TIE-ROD ASSEMBLY
351	07	CASE 3 LEVER BACKHOE CONTROLS, UPPER SWING TIE-ROD ASSEMBLY
351	08	CASE 3 LEVER BACKHOE CONTROLS, DIPPER, SWING & BOOM LINKAGE
351	09	CASE 3 LEVER BACKHOE CONTROLS, SWING CONTROL PEDAL
390	01	LOADER CONTROL VALVE, TWO SECTION, LEVER & DECAL
390/ 1	01	2 LEVER BACKHOE CONTROLS, LEVER, BOOT & DECALS (CENTER PIVOT)

TABLE OF CONTENTS

393	01	2 LEVER BACKHOE CONTROLS, LEVER, BOOT & DECALS
393	03	LOCKING VALVE ON BACKHOE LIFT CYLINDER
394	01	ISO 2 LEVER BACKHOE CONTROLS, LEVERS, BOOT & DECALS (CENTER PIVOT)
394	02	ISO 2 LEVER BACKHOE CONTROLS, TIE-ROD ASSEMBLY (CENTER PIVOT)
394/ 1	01	4 LEVER BACKHOE CONTROLS, CONSOLE, LEVERS & BELLCRANK (CENTER PIVOT)
394/ 1	02	4 LEVER BACKHOE CONTROLS, UPPER TIE-ROD ASSEMBLY, CENTER PIVOT
394/ 1	03	4 LEVER BACKHOE CONTROLS, LOWER TIE-ROD ASSEMBLY (CENTER PIVOT)
622	01	INTERNAL FAN
646/1	01	MACHINE PART AIR CONDITIONING SET
646/1	02	A/C COMPRESSOR ATTACHING GROUP
646/1	03	A/C COMPRESSOR
646/1	04	A/C FILTER & CONDENSER ATTACHING GROUP
646A	01	A/C COMPRESSOR ATTACHING GROUP
650	01	STEERING COLUMN, FIXED & ADJUSTABLE
705	01	SEAT BELTS, 2" & 3"
758	01	ROTATING BEACON
782	01	FRONT CONSOLE WITH SPEEDOMETER, 4WD
787/ 1	01	FRONT CONSOLE WITHOUT SPEEDOMETER (CAB)
787/ 2	01	FRONT CONSOLE WITHOUT SPEEDOMETER (CAB)
788/ 1	01	FRONT CONSOLE WITH SPEEDOMETER, 4WD
788/ 2	01	FRONT CONSOLE WITH SPEEDOMETER, 4WD
789	01	SPEED SENSOR(P.SHUTTLE)
791	01	RH CONSOLE WITH INSTRUMENTS
792	01	RH CONSOLE WITH INSTRUMENTS AND DIAGNOSTICS
795	01	RH CONSOLE WITH INSTRUMENTS AND DIAGNOSTICS
796	01	ANTITHEFT
851/ 2	01	CLOTH SEAT & ATTACHING HARDWARE - CABINE
855/ 2	01	AIR RIDE CLOTH SEAT & ATTACHING HARDWARE - CABINE
856	01	VINYL SEAT CUSHIONS, ARMRESTS & RELATED PARTS (ROPS)
856/ 1	01	VINYL SEAT WITH ARMRESTS & MOUNTING HARDWARE (ROPS)
856/ 1	02	VINYL SEAT MOUNTING PLATE, ADJUSTING RAILS & SEAT BELT (ROPS)
856/ 1	03	VINYL SEAT UPPER SUSPENSION PARTS (ROPS)
856/ 1	04	VINYL SEAT LOWER SUSPENSION PARTS (ROPS)
856/ 2	01	VINYL SEAT CUSHIONS, ARMRESTS & RELATED PARTS (ROPS)
990	01	TOOL KIT
993	01	SAFETY PLATES - USA
SEC. 11	00	WHEELS
81.00	01	FRONT WHEELS, 2WD
82.00	01	DRIVING WHEELS(4WD)
83.00	01	DRIVE WHEELS
SEC. 18	00	VARIATION
535	01	STABILIZER FOOT GROUND (CENTER PIVOT)
535/ 1	01	STABILIZER FOOT STREET PAD (CENTER PIVOT)
536	01	REVERSIBLE STABILIZER FOOT (CENTER PIVOT)
537	01	STABILIZER FOOT STREET PAD (CENTER PIVOT)
628	01	4WD STEERING LOCK
803	01	FENDERS, FRONT
848	01	BATTERY CONNECTION

GENERAL INFORMATION

PROPRIETARY NOTICE

The contents of this manual are proprietary data of this company. Reproduction or use of any part for other than the operation and maintenance of our equipment is permissible only if expressly authorized in writing.

Additional copies may be obtained from your dealer. Address requests for copies to your Dealer and refer to the publication part number appearing on the bottom of the rear catalog cover or on the title page.

COMPANY POLICY

Company policy, which is one of continuous improvement, reserves the right to change prices and to make changes in design and specification at any time without notice and without obligation to modify units previously built.

All data given in this book is subject to production variations. Dimensions and weights are approximate only and the illustrations do not necessarily show machines in standard condition. For exact information about any particular machine please consult your dealer.

PARTS AND ACCESSORIES

Genuine parts and accessories have been specifically designed for these machines.

We would like to point out that “non-genuine” parts and accessories have NOT been examined and released by the Company. The installation and or use of such products could have negative effects upon the design characteristics of your machine and thereby affect its safety. The company is not liable for any damage caused by the use of “non-genuine” parts and accessories.

IMPROVEMENTS

We are continually striving to improve our products. We reserve the right to make improvements or changes when it becomes practical and possible to do so, without incurring any obligation to make changes or additions to the equipment sold previously.

MODEL CODES

The range of machines listed may not be available in all countries or markets therefore, for the latest information consult your local dealer.

OWNER ASSISTANCE

We want you to be completely satisfied with your investment. Normally any problems with your equipment will be handled by your dealer's Service Department; however, misunderstandings can occur. If your problem has not been handled to your satisfaction, we suggest the following:

1. Contact the owner or General Manager of the dealership, explain the problem, and request assistance. When additional assistance is needed, your dealer has direct access to our office.
2. Provide your dealer with:
   - Your Name, Address, and Telephone number
   - Machine Model and Serial Number
   - Dealership Name and Address
   - Machine purchase date and amount of use
   - Nature of problem

Be aware that your problem will likely be resolved in the dealership using the dealer's facilities, equipment, and personnel. So it is important that your initial contact be with the dealer.

SPARE PARTS

To maintain operating efficiency, use original spare parts.

When ordering parts, give the following information:

- Machine Model
- Machine and Engine Serial Numbers
- Part Number from the Parts Catalog

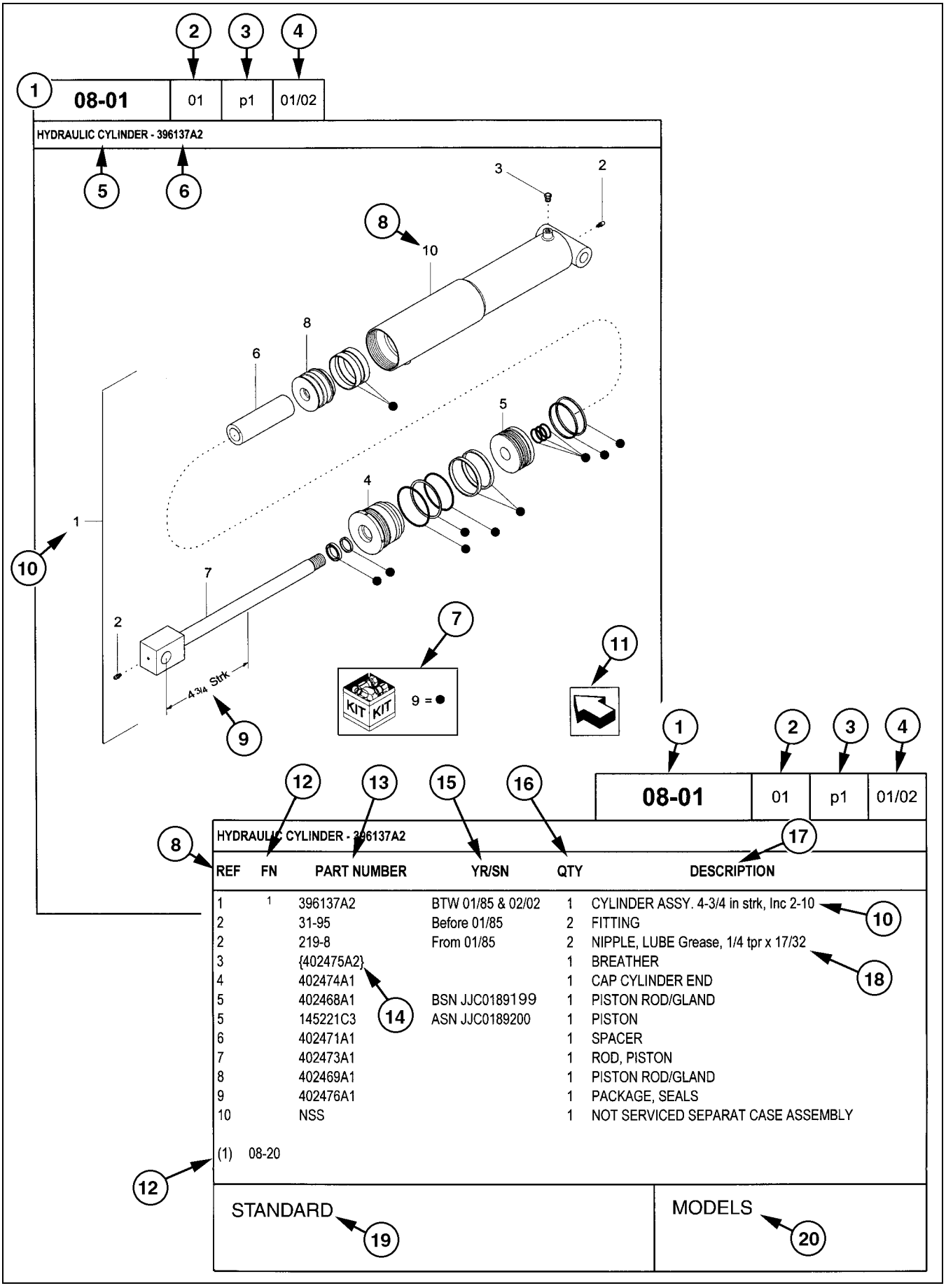

REF	FN	PART NUMBER	YR/SN	QTY	DESCRIPTION
1	1	396137A2	BTW 01/85 & 02/02	1	CYLINDER ASSY. 4-3/4 in strk, Inc 2-10
2		31-95	Before 01/85	2	FITTING
2		219-8	From 01/85	2	NIPPLE, LUBE Grease, 1/4 tpr x 17/32
3		{402475A2}		1	BREATHER
4		402474A1		1	CAP CYLINDER END
5		402468A1	BSN JJC0189199	1	PISTON ROD/GLAND
5		145221C3	ASN JJC0189200	1	PISTON
6		402471A1		1	SPACER
7		402473A1		1	ROD, PISTON
8		402469A1		1	PISTON ROD/GLAND
9		402476A1		1	PACKAGE, SEALS
10		NSS		1	NOT SERVICED SEPARAT CASE ASSEMBLY

(1) 08-20

STANDARD

MODELS

HOW TO USE YOUR PARTS CATALOG

1. Figure Number
2. Sequence Code within the Figure Number
3. Page Number within the Sequence Code
4. Date of Printing (month / year)
5. Figure Description
6. General information regarding the figure
7. Parts supplied in repair kits per symbol reference
8. Figure call-out of the part number (REF)
9. Technical specifications relating to the part indicated
10. Figure call-out includes bracketed items, the included items may also be listed in the additional description area
11. Orientation - Arrow indicates front of the machine
12. Footnote - Additional information relating to the part number. In this example, 08-20 equals another figure that this part is shown on
13. Part Number
    NSS = Not Serviced Separately (Non-serviced parts)
    Bracketed numbers = not available as service parts in this market
14. Not Available as service part in this market
15. YR/SN
    Year
    Before 01/85 = Part valid for production January 1985 and before
    From 01/85 = Part valid for production from January 1985 and after
    BTW 01/85 & 02/02 = Part valid for machines produced between January 1985 and February 2002.
    Serial Number (P.I.N.)
    BSN JJC0268800 = Part valid for serial number JJC0268800 and below
    ASN JJC0268800 = Part valid for serial number JJC0268800 and above
    BTW JJC0178000 & JJC0179000 = Part valid for serial numbers between JJC0178000 & JJC0179000
16. Total Quantity of the Part referred to in the page. The quantity can be replaced by the following indications:
    AR = As Required
    X = As required
17. Part Description
18. Additional description of the part to help confirm identification
19. Figure Notes
20. Model Number(s)

RIGHT-HAND AND LEFT-HAND

The reference to right-hand and left-hand in this catalog is identified by the operator standing at the rear of the basic unit (without rear attachment), looking toward the front of the machine (in normal forward travel).

For pages covering any machine attachments, right-hand and left-hand are defined by the operator sitting in the position for proper operation of the attachment.

DIMENSIONS

Metric and U.S. hardware dimensions do not show the numeric designations of standard coarse threads. A number following a semi colon (;) is the class or grade of hardware. A comma (,) represents the decimal point (.) used in U.S. dimensions.

EXPLANATION OF ABBREVIATIONS

AC	Alternating Current
adj	adjustable
amp	ampere
AR	As required
ASN	Serial number and after P.I.N. and after
blkhd	bulkhead
br	branch
BSN	before Serial number before P.I.N.
BTW	between
cc	cubic centimetre
cl	class
cmprsn	compression
cn pt	cone point
cp pt	cup point
CRS	Chrome Alloy Steel
CST	Carbon Steel
cu yd	cubic yard
DC	Direct Current
deg	degree
dg pt	dog point
dia	diameter
dr type	drive type
fc	face
fc sl	face seal
fem	female
fem PT	female pipe thread
fl	flare
flat pt	flat point
ft	feet or foot
ga	gauge
gal	gallon or gallons
gpm	gallons per minute
gr	grade
hd	head
hdg pt	half dog point
hp	horsepower
ID	inside diameter
in	inch or inches
Incl.	Includes
inv fl	inverted flare
K	kilo
kg	kilogram
km/h	kilometers per hour
L	litre
lb	pounds
lb-ft	pound-foot
lg	long
LH	left-hand
LH thd	left-hand thread
M	(prefix) metric thread size
m	metre
ml	milliliter
mm	millimetre
NF	National Fine
No.	number
NPT	National Pipe Thread
NS	National Super Fine
OD	outside diameter
ohm	electrical unit of resistance
Or	O-ring
ORB	O-ring boss
ORFS	O-ring face seal
ov cntr	over center
ov pt	oval point
oz	ounce
P	pitch
psi	pounds per square inch
pt	pint
PT	pipe thread
rd	round
rd holes	round holes
RH	right-hand
RH thd	right-hand thread
rpm	revolutions per minute
sl	self-locking
sq	square
SST	Stainless Steel
st	self-tapping
strk	stroke
sw	swivel
T	teeth
thk	thick
tpr	taper
tube OD	tube outside diameter
V	volt or volts
W	watt or watts
X	as required
yd	yard

SECTION INDEX

MAIN	00	SECTIONS
MPARTS	00	MAINTENANCE PARTS

MAIN	00	p1	02/05

SECTIONS

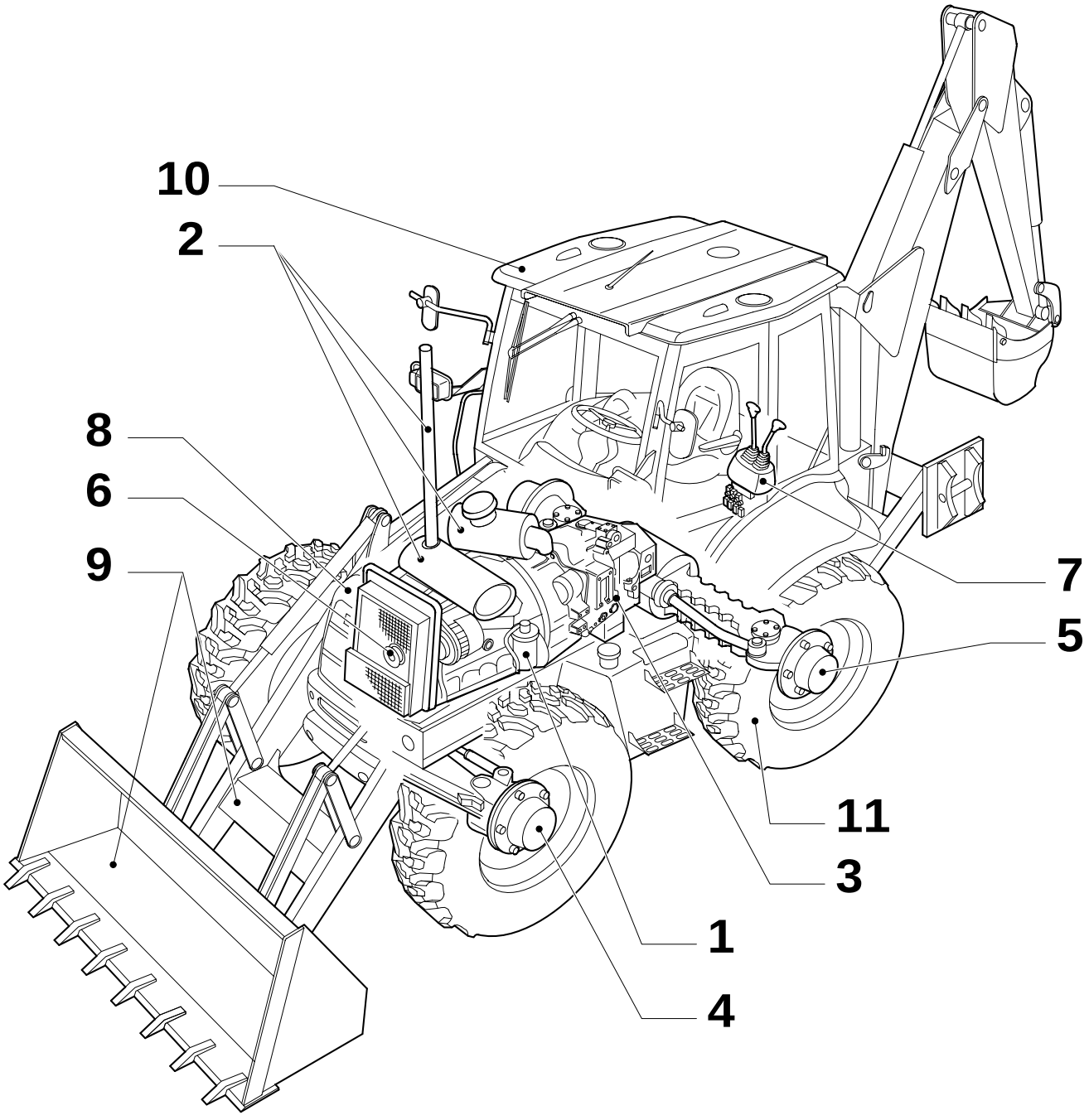

SECTIONS

REF	FN	PART NUMBER	YR/SN	QTY	DESCRIPTION

MAINTENANCE PARTS

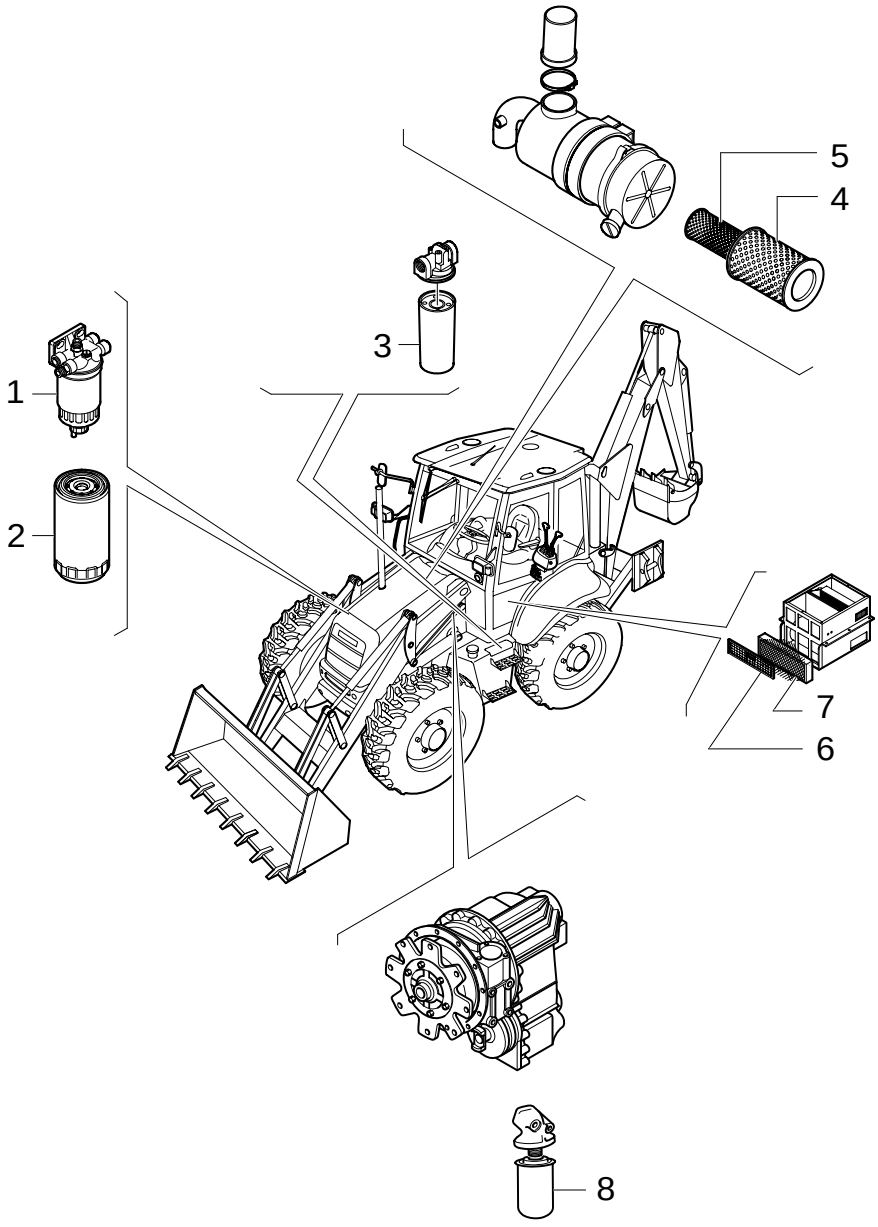

MAINTENANCE PARTS

REF	FN	PART NUMBER	YR/SN	QTY	DESCRIPTION
1	1	1930010		1	FILTER, FUEL
2	2	87803260		1	FILTER, ENGINE OIL
3	3	86989733		1	FILTER, ELEMENT
4	4	87438249		1	FILTER, ELEMENT
5	5	87438246		1	FILTER, ELEMENT
6	6	85826026		1	FILTER, AIR
7	7	85826032		1	FILTER, AIR
8	8	85817004		1	FILTER
8	9	9968988		1	FILTER, HYDRAULIC OIL

(1) See Page 0.200 Ref : 6
(2) See Page 0.302 Ref : 1
(3) See Page 1.821.6 Ref : 6
(4) See Page 1.19.1 Ref : 4
(5) See Page 1.19.1 Ref : 3
(6) See Page 1.94.2 Ref : 4
(7) See Page 1.94.2 Ref : 2
(8) Power Shuttle 2 WD See Page 1.28.0/ A Ref : 14 And 4 WD See Page 1.28.0/ B Ref : 14
(9) Power Shift See Page 1.28.0/ C Ref : 14

SECTION INDEX

SEC. 01	00	ENGINE 1/2
SEC. 01	01	ENGINE 2/2
0.021	01	ENGINE
0.040	01	CYLINDER BLOCK
0.040	02	CYLINDER BLOCK
0.042	01	OIL PUMP, PAN
0.043	01	CYLINDER BLOCK - COVERS
0.043	02	CYLINDER BLOCK - COVERS
0.043	03	CYLINDER BLOCK - COVERS
0.045	01	BREATHER - ENGINE
0.060	01	CYLINDER HEAD
0.063	01	CYLINDER HEAD - COVERS
0.066	01	CYLINDER HEAD - VALVE MECHANISM
0.071	01	MANIFOLD - INTAKE
0.077	01	MANIFOLD - EXHAUST
0.080	01	CRANKSHAFT
0.081	01	PISTONS - CONNECTING ROD
0.082	01	PISTONS - CONNECTING ROD
0.083	01	FLYWHEEL - ENGINE
0.084	01	PULLEY - CRANKSHAFT
0.105	01	DYNAMIC BALANCER, GEARS & SHAFTS
0.105	02	DYNAMIC BALANCER, GEARS & SHAFTS (2831300)
0.120	01	CAMSHAFT
0.140	01	FUEL INJECTION PUMP
0.140	02	FUEL INJECTION SYSTEM
0.142	01	FUEL INJECTION SYSTEM
0.149	01	FUEL INJECTION SYSTEM
0.200	01	FUEL FILTER
0.201	01	FUEL PUMP
0.203	01	FUEL INJECTION SYSTEM
0.204	01	FUEL INJECTION SYSTEM
0.240	01	TURBOCHARGER
0.270	01	ENGINE, OIL
0.270/A	01	ENGINE, OIL
0.300	01	OIL PUMP - ENGINE
0.302	01	OIL FILTERS - ENGINE
0.305	01	PIPING - ENGINE OIL
0.315	01	OIL FILTER AND COOLER
0.320	01	WATER PUMP
0.323	01	COOLING SYSTEM - ENGINE
0.326	01	THERMOSTAT - ENGINE COOLING SYSTEM
0.340	01	WATER PUMP - CONTROL
0.345/A	01	FAN DRIVE
0.350	01	POWER TAKE-OFF
0.360	01	STARTER MOTOR
0.400	01	ALTERNATOR
0.450	01	ENGINE - LIFT HOOK
342	01	KIT VISCOUS FAN DRIVE
636A	01	ACCESSORY ENGINE
636A	02	ACCESSORY ENGINE - VENTILATOR
636A	04	ACCESSORY ENGINE- ALTERNATOR
636A	05	ACCESSORY ENGINE - BRACKET MUFFLER

SECTION INDEX

636A 06 ACCESSORY ENGINE - STARTER

ENGINE 1/2

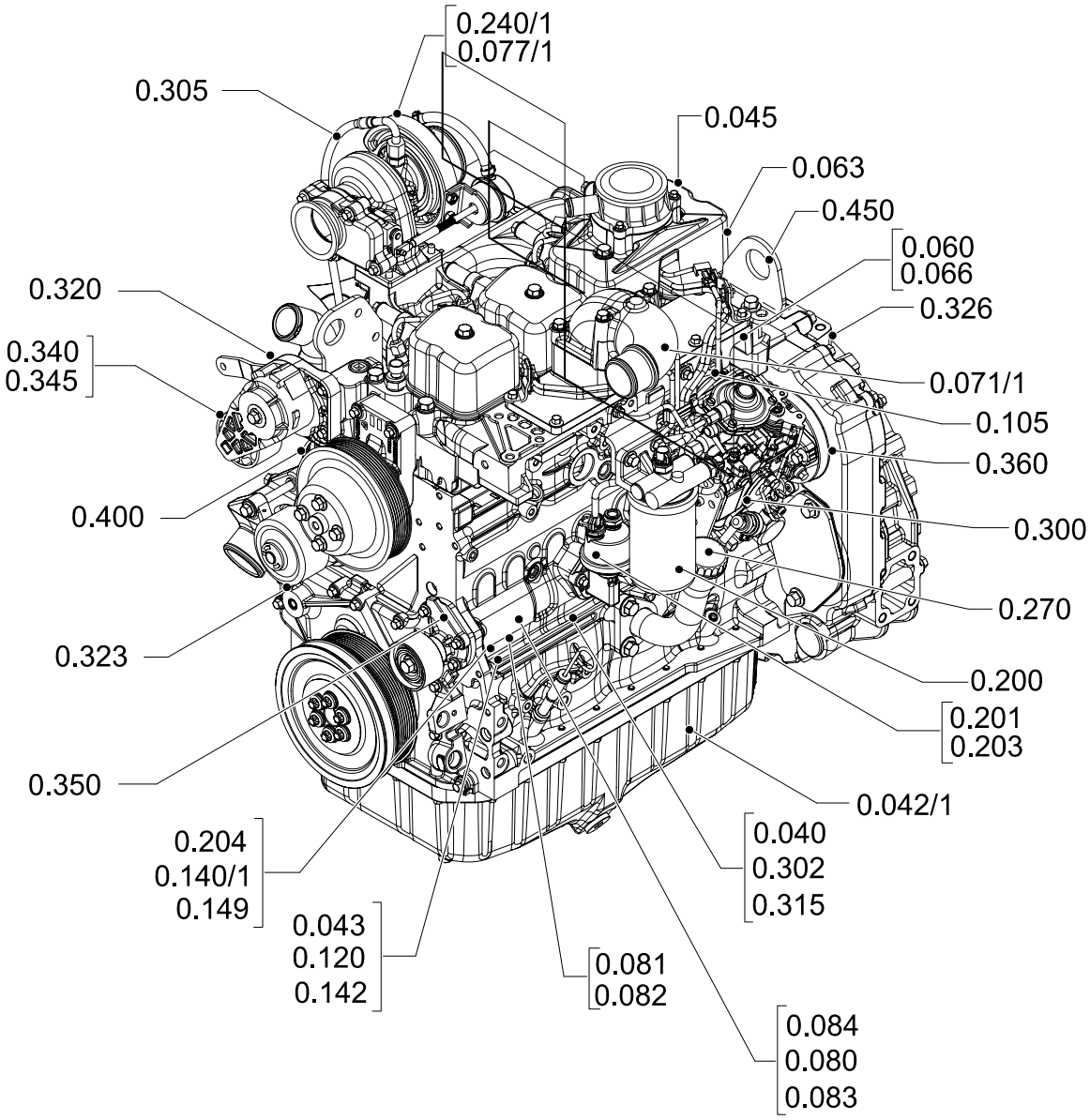
0.240/1
0.077/1
0.305
0.045
0.063
0.450
0.060
0.066
0.320
0.326
0.340
0.345
0.071/1
0.105
0.360
0.400
0.300
0.270
0.323
0.200
0.201
0.203
0.350
0.042/1
0.204
0.140/1
0.149
0.040
0.302
0.315
0.043
0.120
0.142
0.081
0.082
0.084
0.080
0.083

ENGINE 1/2

REF	FN	PART NUMBER	YR/SN	QTY	DESCRIPTION

ENGINE 2/2

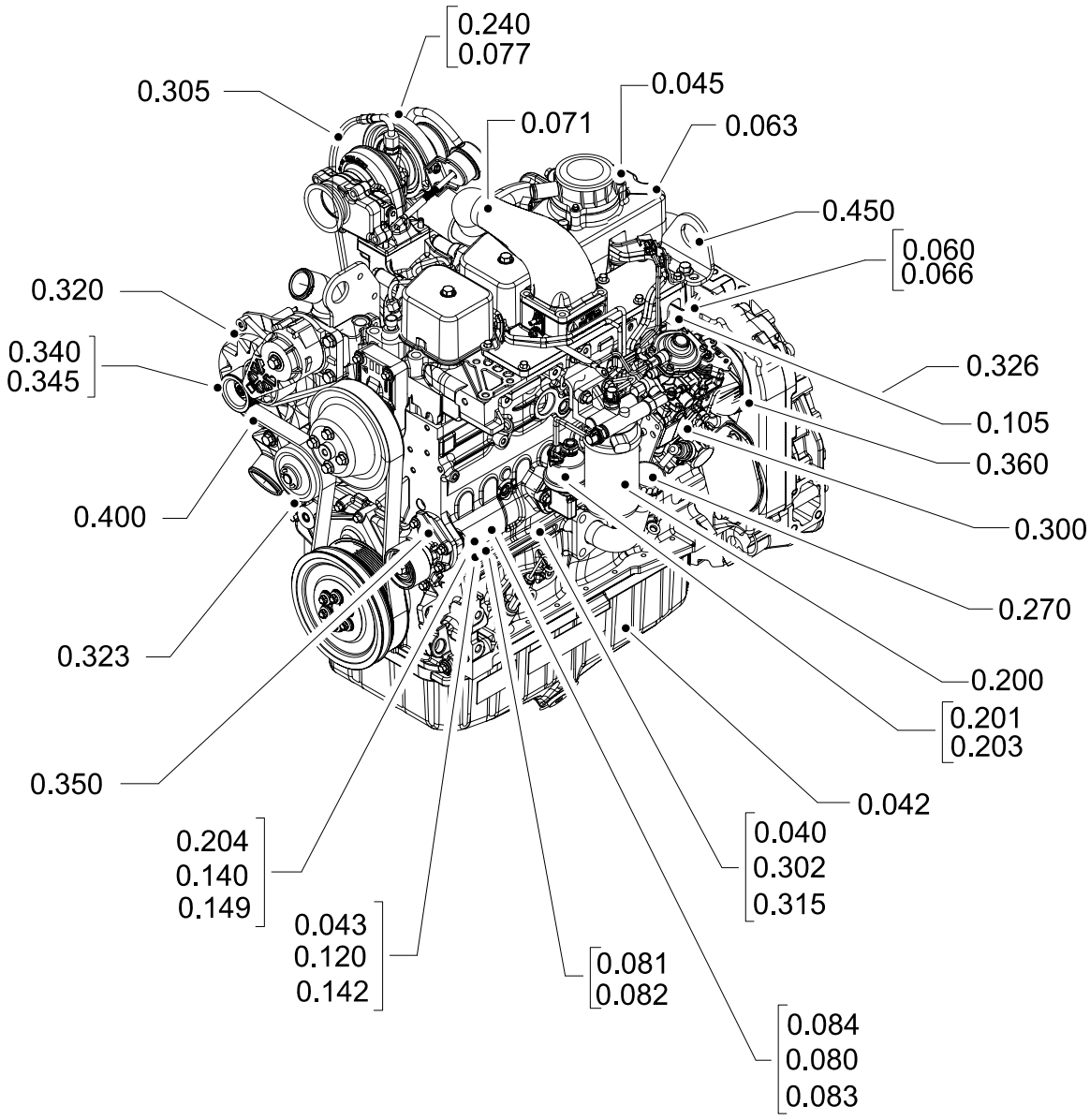
0.240
0.077
0.305
0.045
0.071
0.063
0.450
0.060
0.066
0.320
0.340
0.345
0.326
0.105
0.360
0.400
0.300
0.270
0.323
0.200
0.201
0.203
0.350
0.042
0.204
0.140
0.149
0.040
0.302
0.315
0.043
0.120
0.142
0.081
0.082
0.084
0.080
0.083

ENGINE 2/2

REF	FN	PART NUMBER	YR/SN	QTY	DESCRIPTION

ENGINE

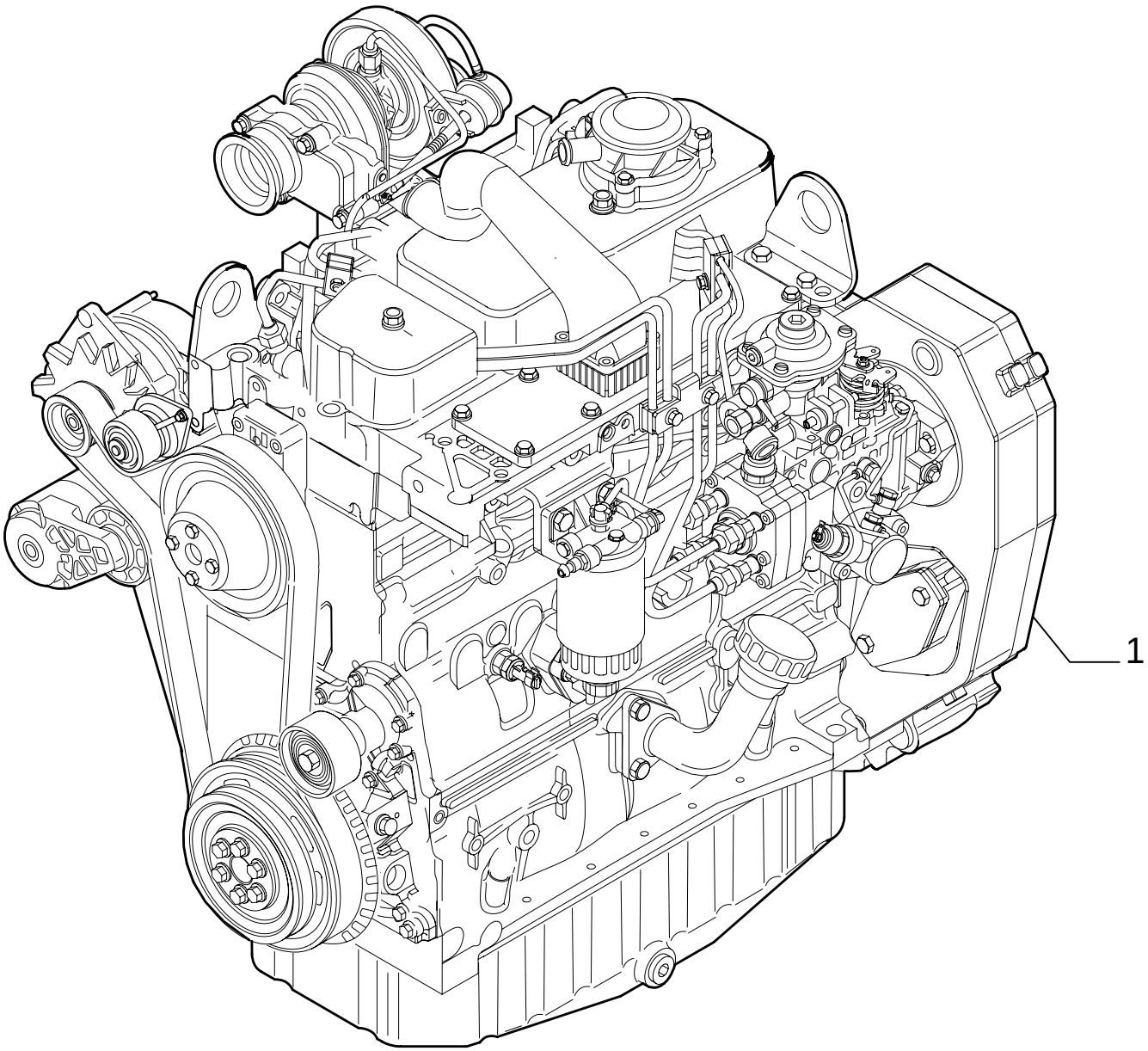

ENGINE

REF	FN	PART NUMBER	YR/SN	QTY	DESCRIPTION
1	1	86990710		1	ENGINE - ASSY
1		87342412		1	ENGINE - ASSY

(1) Only for B95, B95LR, B95TC

0.040	01	p1	12/05

CYLINDER BLOCK

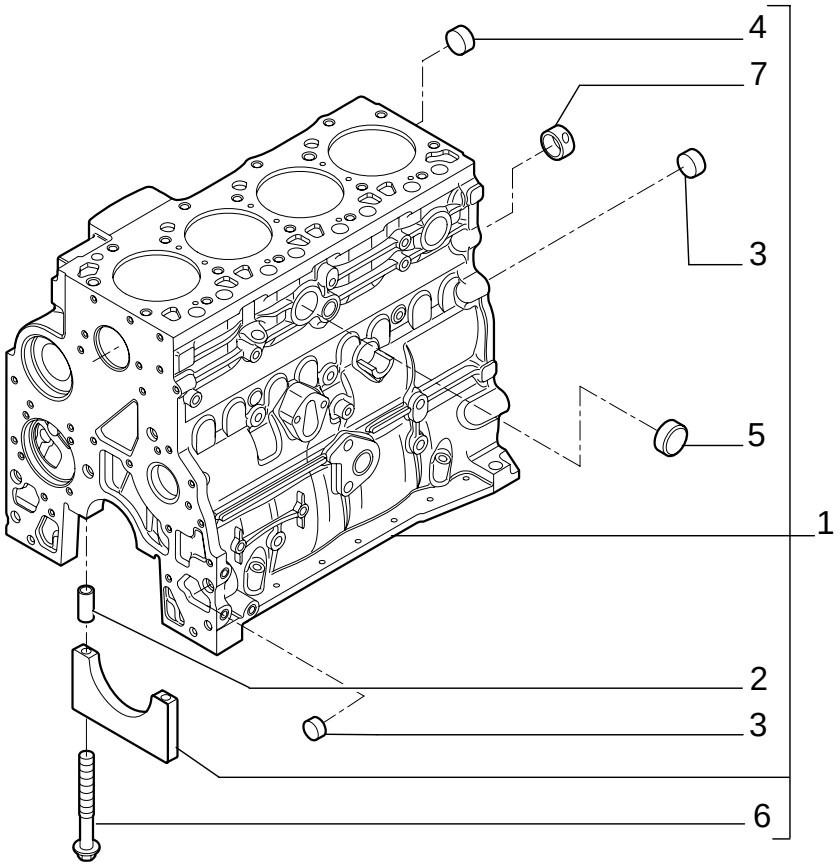

CYLINDER BLOCK

REF	FN	PART NUMBER	YR/SN	QTY	DESCRIPTION
1		2830082		1	CYLINDER BLOCK - ASSY
2		4899026		10	DOWEL
3		4895039		3	PLUG 17.73 mm OD
4		4895038		4	PLUG 58.06 mm OD
5		4895228		2	PLUG 35.23 mm OD
6		4891353		10	SCREW M12X120
7		4895040		1	BUSHING

0.040	02	p1	12/05

CYLINDER BLOCK

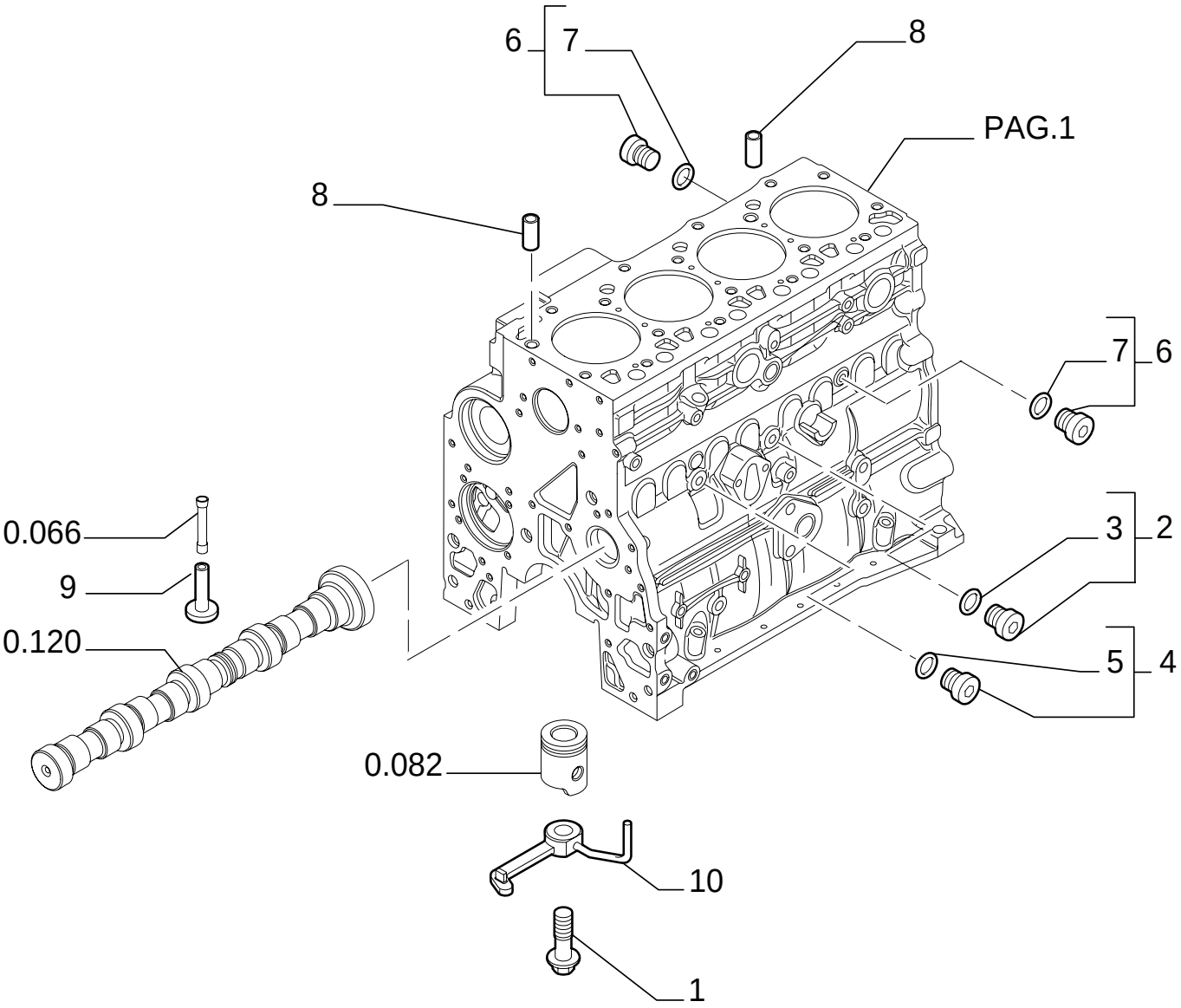

CYLINDER BLOCK

REF	FN	PART NUMBER	YR/SN	QTY	DESCRIPTION
1		4894218		4	SCREW
2		4895605		1	PLUG 14x1.5 - ASSY
3		4899115		1	O-RING
4		4899009		1	PLUG 10x1.5 - ASSY
5		4899072		1	O-RING
6		4895392		2	PLUG 18x1.5 - ASSY
7		4895393		1	O-RING
8		4895049		2	DOWEL
9		4895180		8	TAPPET
10		504047260		4	NOZZLE, LUB. OIL JET

0.042	01	p1	12/05

OIL PUMP, PAN

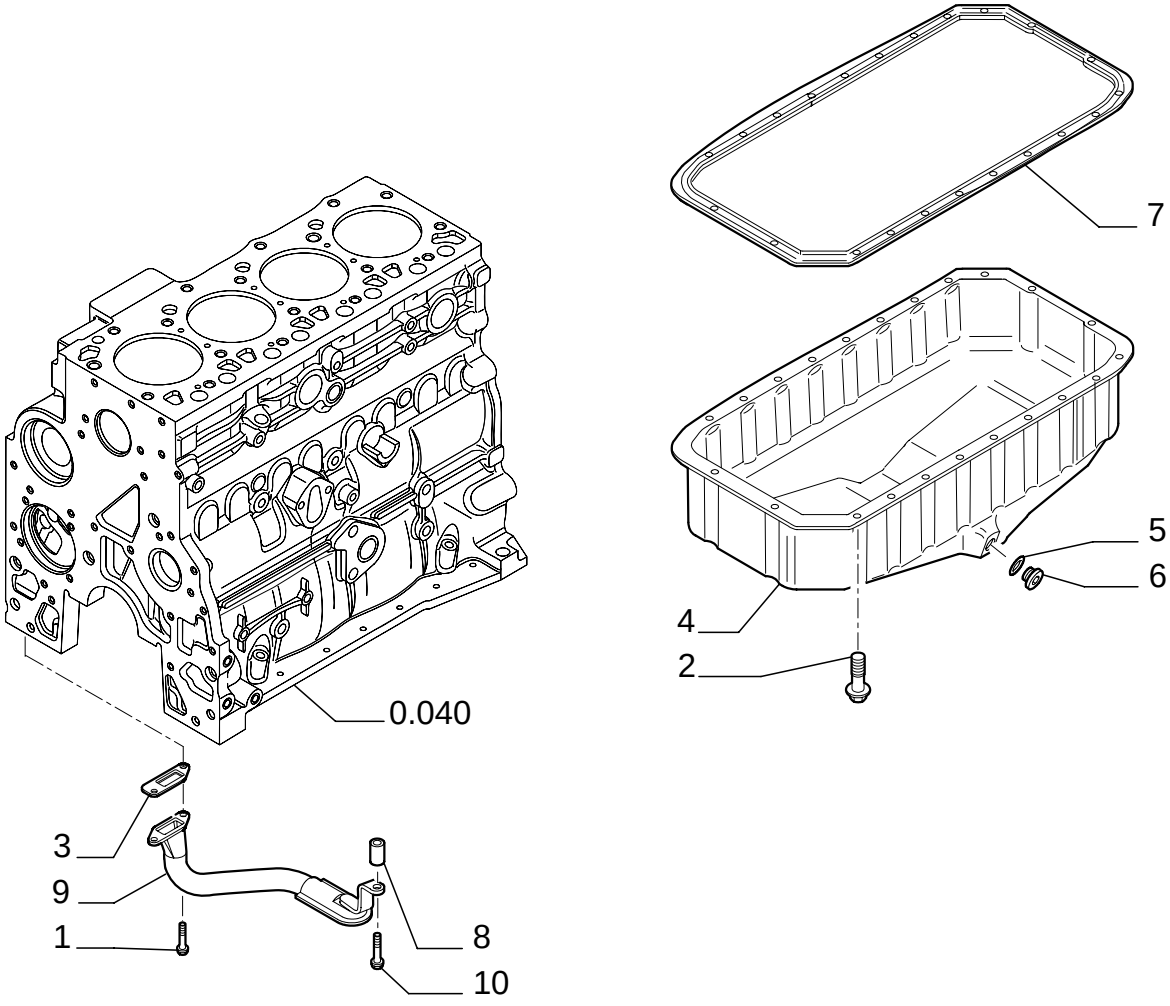

OIL PUMP, PAN

REF	FN	PART NUMBER	YR/SN	QTY	DESCRIPTION
1		4899020		2	SCREW M8X1.25X20
2		4899091		22	SCREW M8X1.25X40
2		4895489		2	SCREW M8X1.25X110
3		4898301		1	GASKET
4		504043550		1	PAN, ENGINE OIL
5		17282280		1	GASKET 23,4X2,6
6		4894139		1	PLUG 22X1.5
7		504069777		1	GASKET
8		504062812		1	SPACER
9		504042165		1	STRAINER, ELEMENT
10		4895538		1	SCREW M10X1.5X120

0.043	01	p1	12/05

CYLINDER BLOCK - COVERS

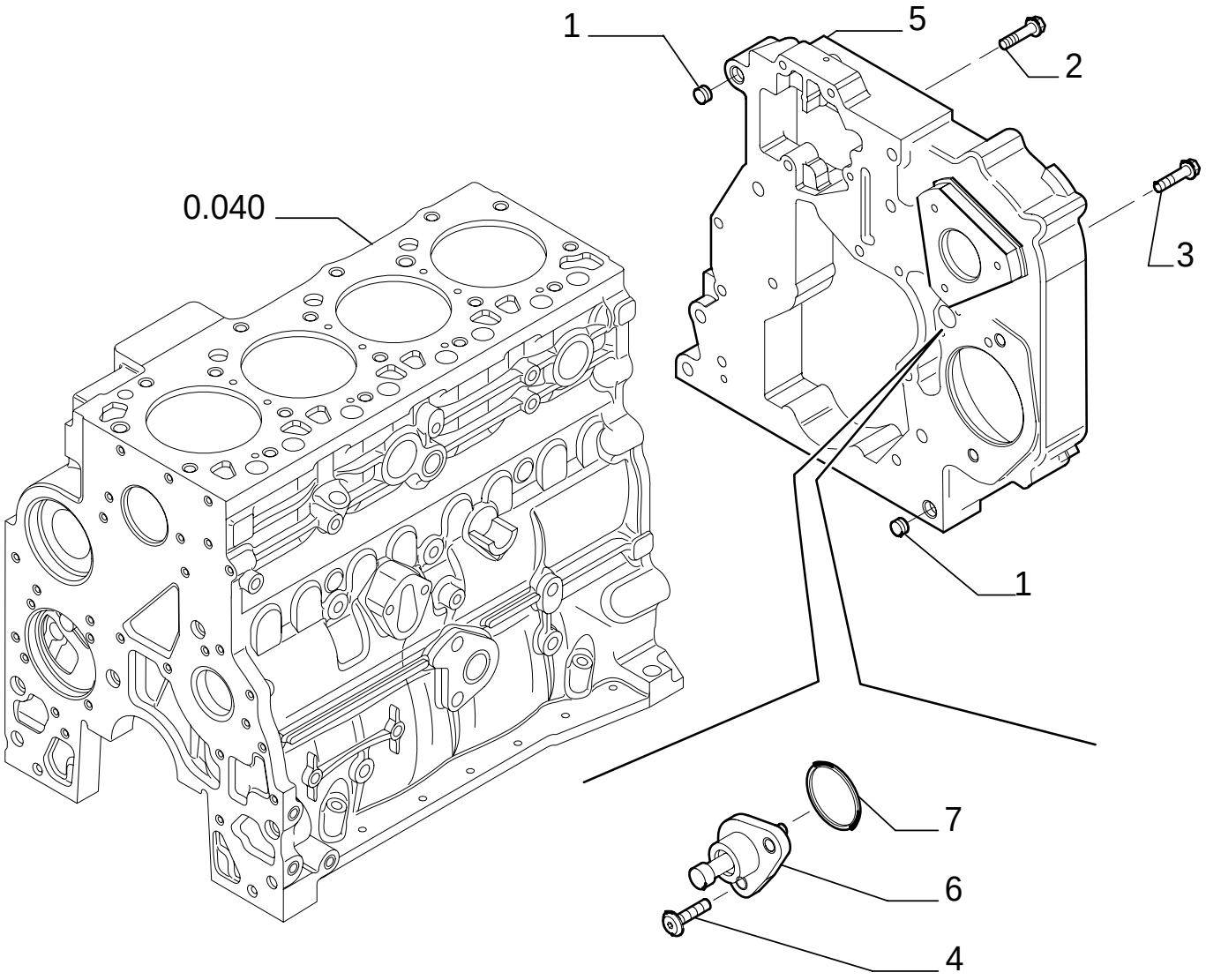

CYLINDER BLOCK - COVERS

REF	FN	PART NUMBER	YR/SN	QTY	DESCRIPTION
1		4899026		2	DOWEL
2		4899091		4	SCREW M8X1.25X40
3		4899093		5	SCREW M10X1.5X30
3		4899073		2	SCREW M12X1.75X30
4		4895355		2	SCREW M5X0.8X17
5		{504097164}		1	
6		504074001		1	COVER
7		17278780		1	O-RING

0.043	02	p1	12/05

CYLINDER BLOCK - COVERS

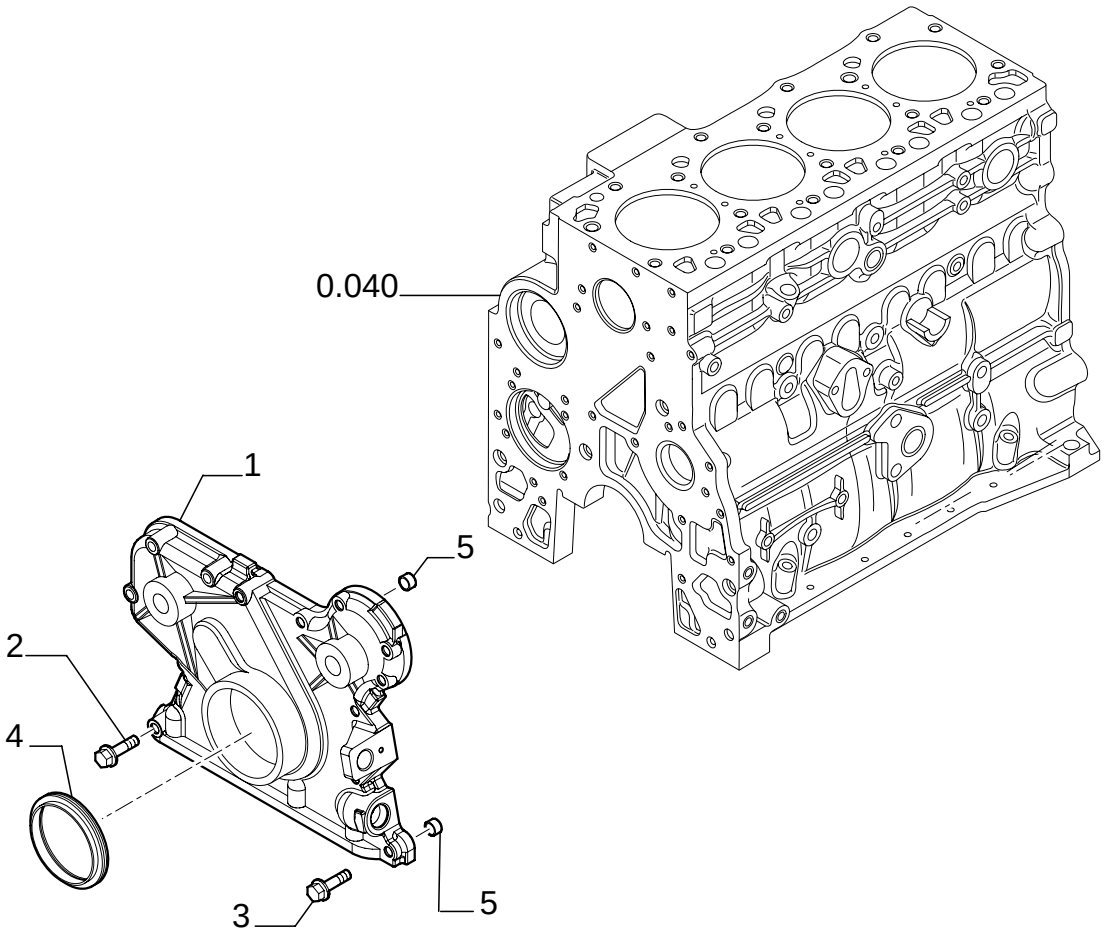

CYLINDER BLOCK - COVERS

REF	FN	PART NUMBER	YR/SN	QTY	DESCRIPTION
1		4897024		1	COVER
2		4899078		5	SCREW M8X1.25X45
3		4899063		8	SCREW M8X1.25X30
4		4890832		1	GASKET
5		4891209		2	DOWEL

0.043	03	p1	12/05

CYLINDER BLOCK - COVERS

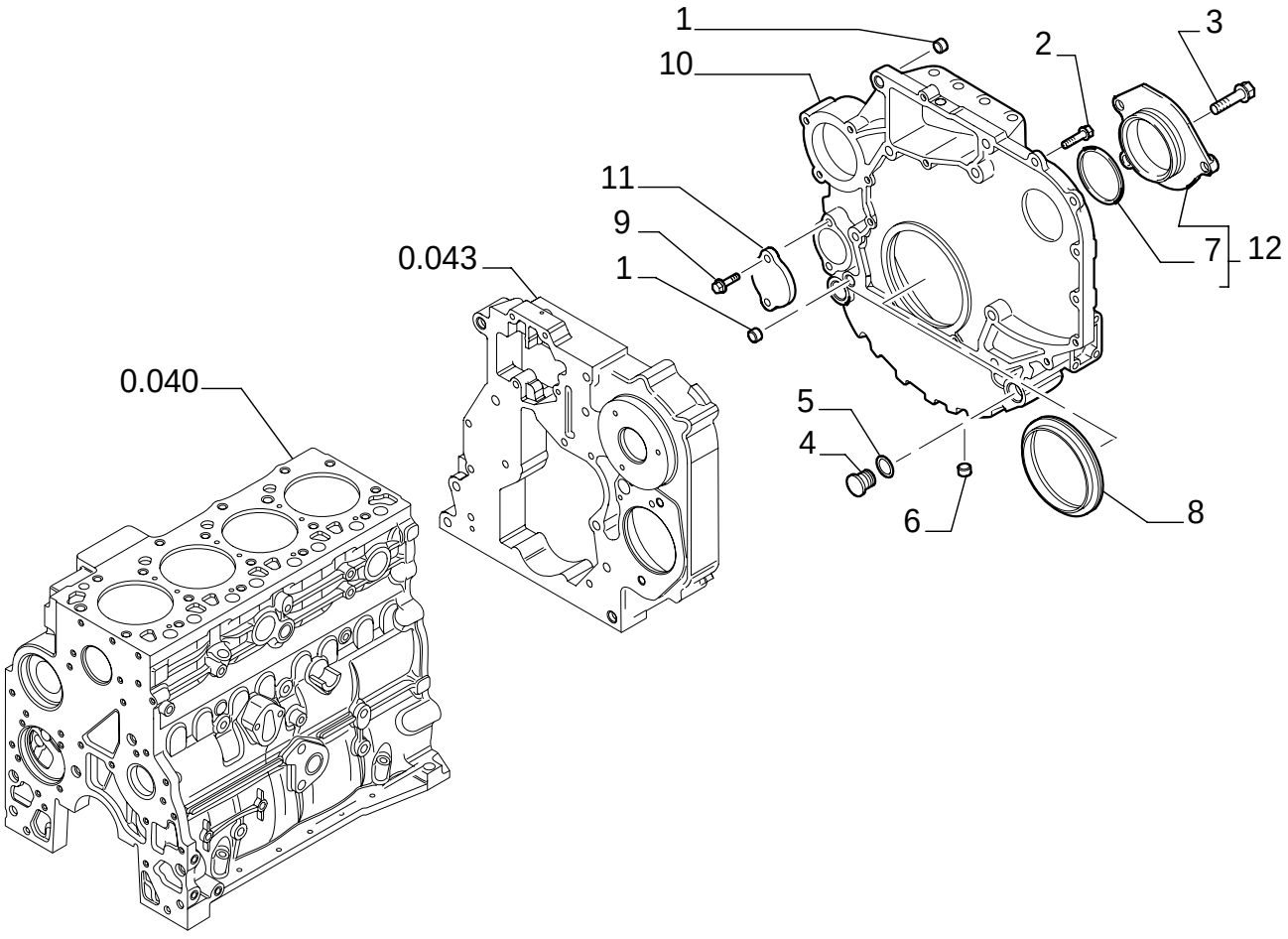

CYLINDER BLOCK - COVERS

REF	FN	PART NUMBER	YR/SN	QTY	DESCRIPTION
1		4899026		2	DOWEL
2		4899109		3	SCREW M10X1.5X80
2		4892915		8	SCREW M10X1.5X40
2		4899076		5	SCREW M12X80
2		4899074		2	SCREW M12X1,75X120
2		2852865		2	SCREW M10X35
2		4899143		1	SCREW M10X1,5X140
3		4899020		3	SCREW M8X20
4		4895378		2	PLUG
5		4895379		2	O-RING M21.82 ID x 3.53 Thk
6		4899079		1	SCREW
7		17285481		1	GASKET 75X87X2,62
8		4890833		1	GASKET
9		4899068		2	SCREW M8X1,25X16
10		504069775		1	COVER
11		4895155		1	COVER
12		2854073		1	COVER - ASSY

0.045	01	p1	12/05

BREATHER - ENGINE

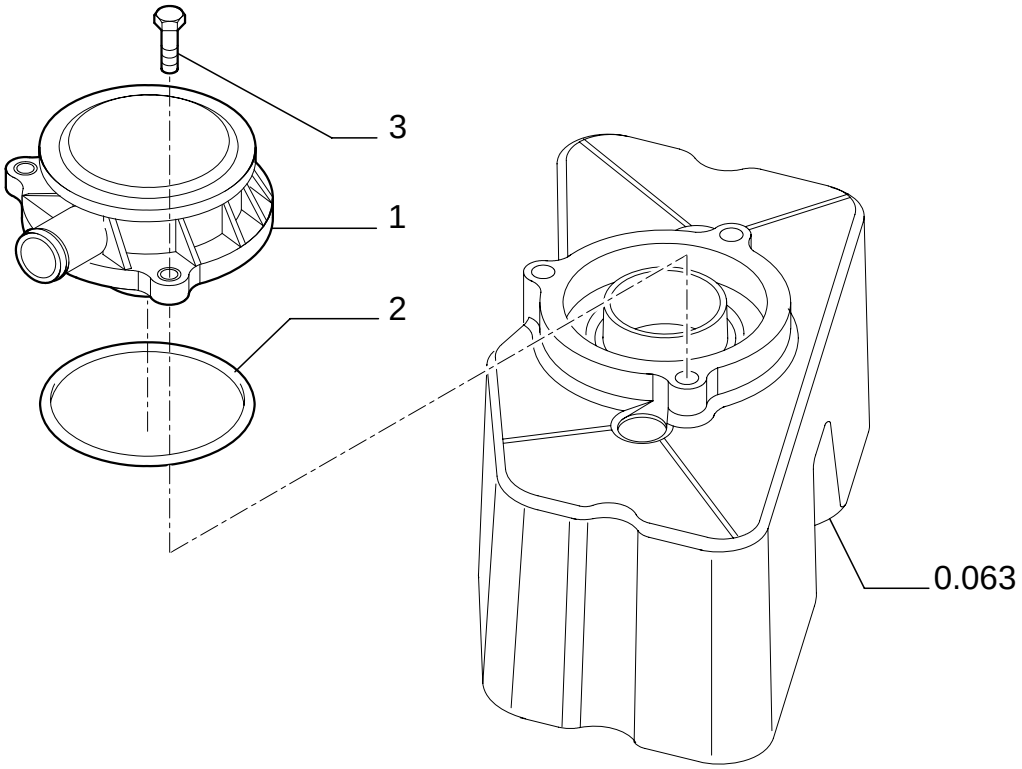

BREATHER - ENGINE

REF	FN	PART NUMBER	YR/SN	QTY	DESCRIPTION
1		500315794		1	BREATHER
2		500315795		1	GASKET
3		4899110		3	SCREW M6X1.0X20

0.060	01	p1	12/05

CYLINDER HEAD

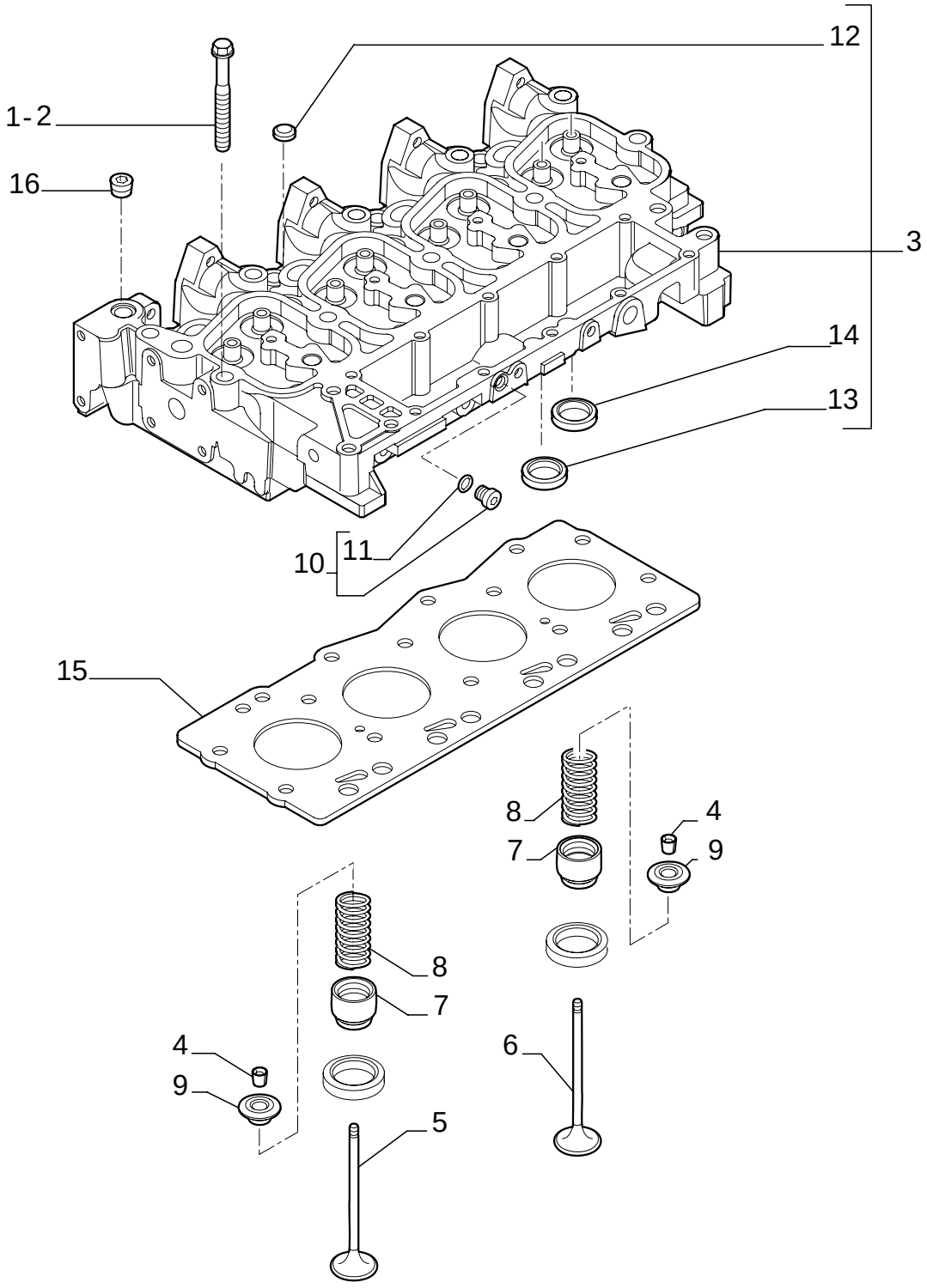

CYLINDER HEAD

REF	FN	PART NUMBER	YR/SN	QTY	DESCRIPTION
1		4892861		4	SCREW M12X1.75X73
2		4892859		10	SCREW M12X1.75X143
3		4895790		1	CYLINDER HEAD - ASSY
4		4895183		16	COTTER, ROCKER ARM
5		4895188		4	VALVE, ENG EXHAUST, STD
6		4895187		4	VALVE, ENGINE, INLET, STD
7		4895347		8	CUP
8		4895215		8	SPRING
9		4895184		8	CUP
10		4899009		1	PLUG - ASSY 10X1.5
11		4899072		1	O-RING
12		4895179		3	PLUG
13		4897178		4	VALVE SEAT
14		4897179		4	VALVE SEAT
15		2830919		1	GASKET, CYLINDER HEAD SP= 1.25
16		4895078		5	PLUG

0.063	01	p1	12/05

CYLINDER HEAD - COVERS

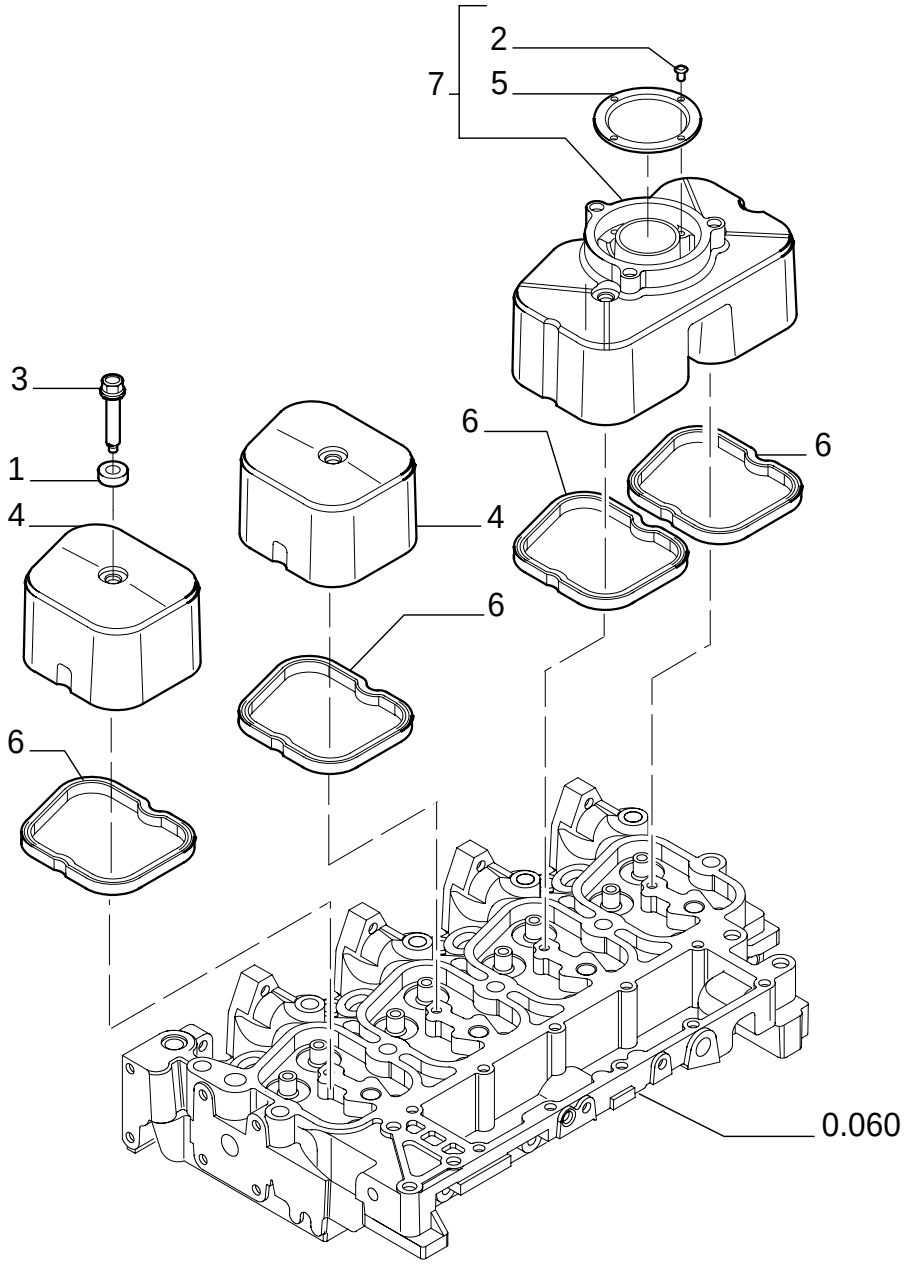

CYLINDER HEAD - COVERS

REF	FN	PART NUMBER	YR/SN	QTY	DESCRIPTION
1		4895360		4	BUSHING
2		16784504		4	SCREW
3		4895214		4	SCREW M8X1.25X33
4		504065040		2	COVER
5		2830775		1	BAFFLE
6		504053522		4	GASKET
7		2830784		1	COVER - ASSY

0.066	01	p1	12/05

CYLINDER HEAD - VALVE MECHANISM

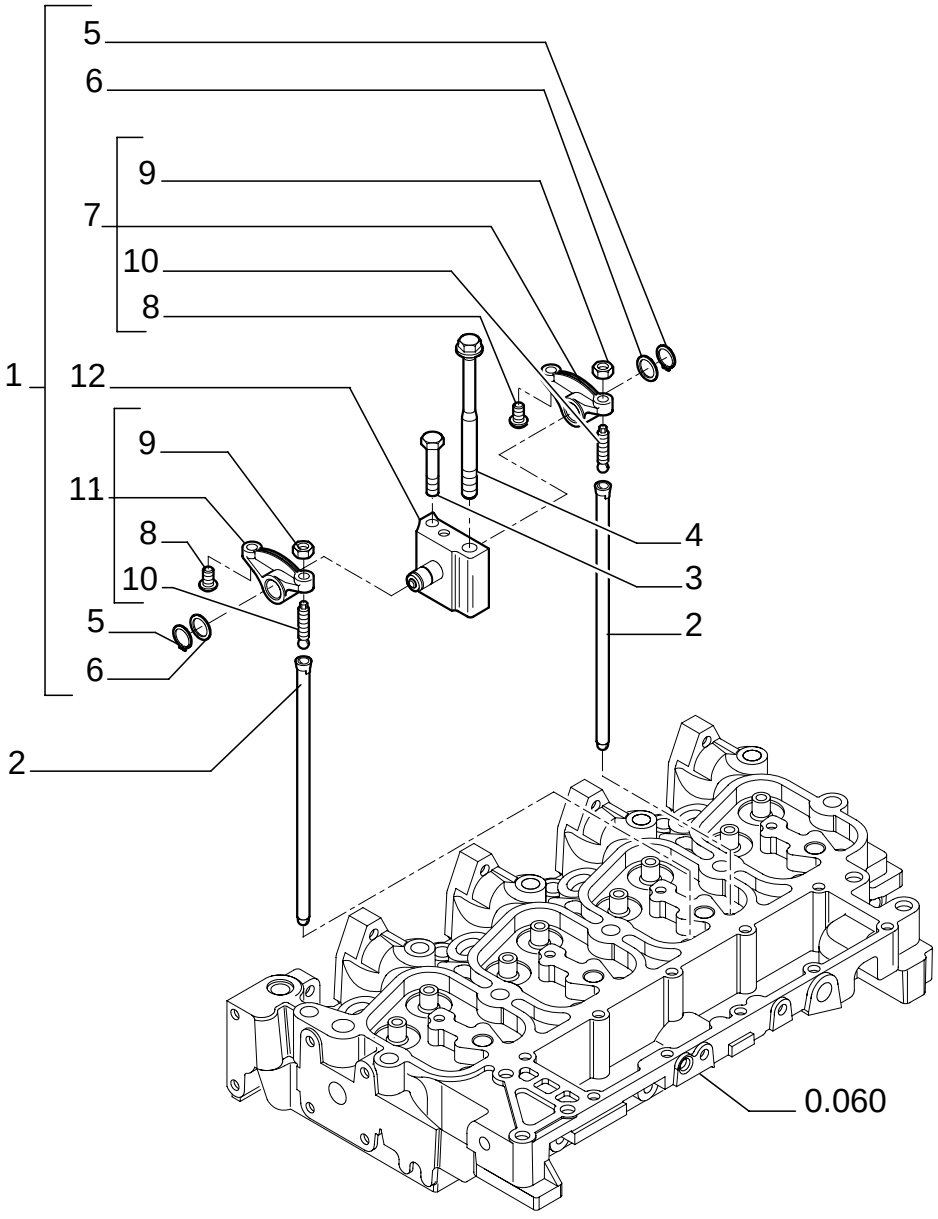

CYLINDER HEAD - VALVE MECHANISM

REF	FN	PART NUMBER	YR/SN	QTY	DESCRIPTION
1		4895195		4	ROCKER ARM - ASSY
2		4895361		8	ROD, PUSH
3		504067723		4	SCREW
4		4892860		4	SCREW M12X1.75X183
5		4895363		2	RING
6		4895364		2	WASHER
7		4895196		1	ROCKER ARM - ASSY
8		4895365		2	SPACER
9		4895198		2	NUT
10		4895199		2	SCREW
11		4895200		1	ROCKER ARM - ASSY
12		4895204		1	SUPPORT

0.071	01	p1	02/05

MANIFOLD - INTAKE

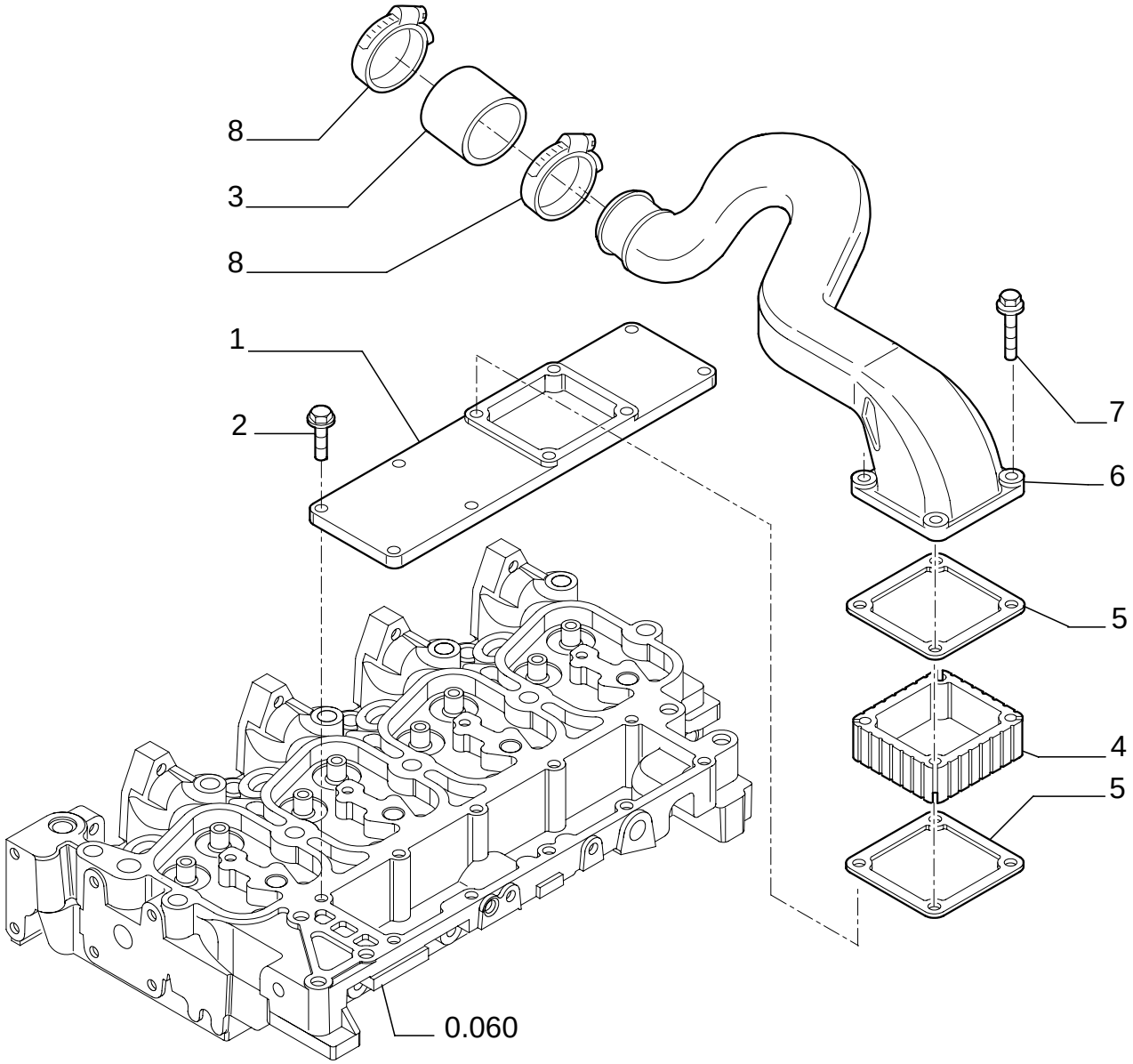

MANIFOLD - INTAKE

REF	FN	PART NUMBER	YR/SN	QTY	DESCRIPTION
1		504064865		1	COVER
2		4899039		6	SCREW 8X1.25X25
3		504063980		1	SLEEVE
4		4895648		1	SPACER
5		4899921		2	GASKET
6		504052006		1	HOSE
7		4895294		4	SCREW 8X140
8		4899629		2	COLLAR, RETAINER

0.077	01	p1	12/05

MANIFOLD - EXHAUST

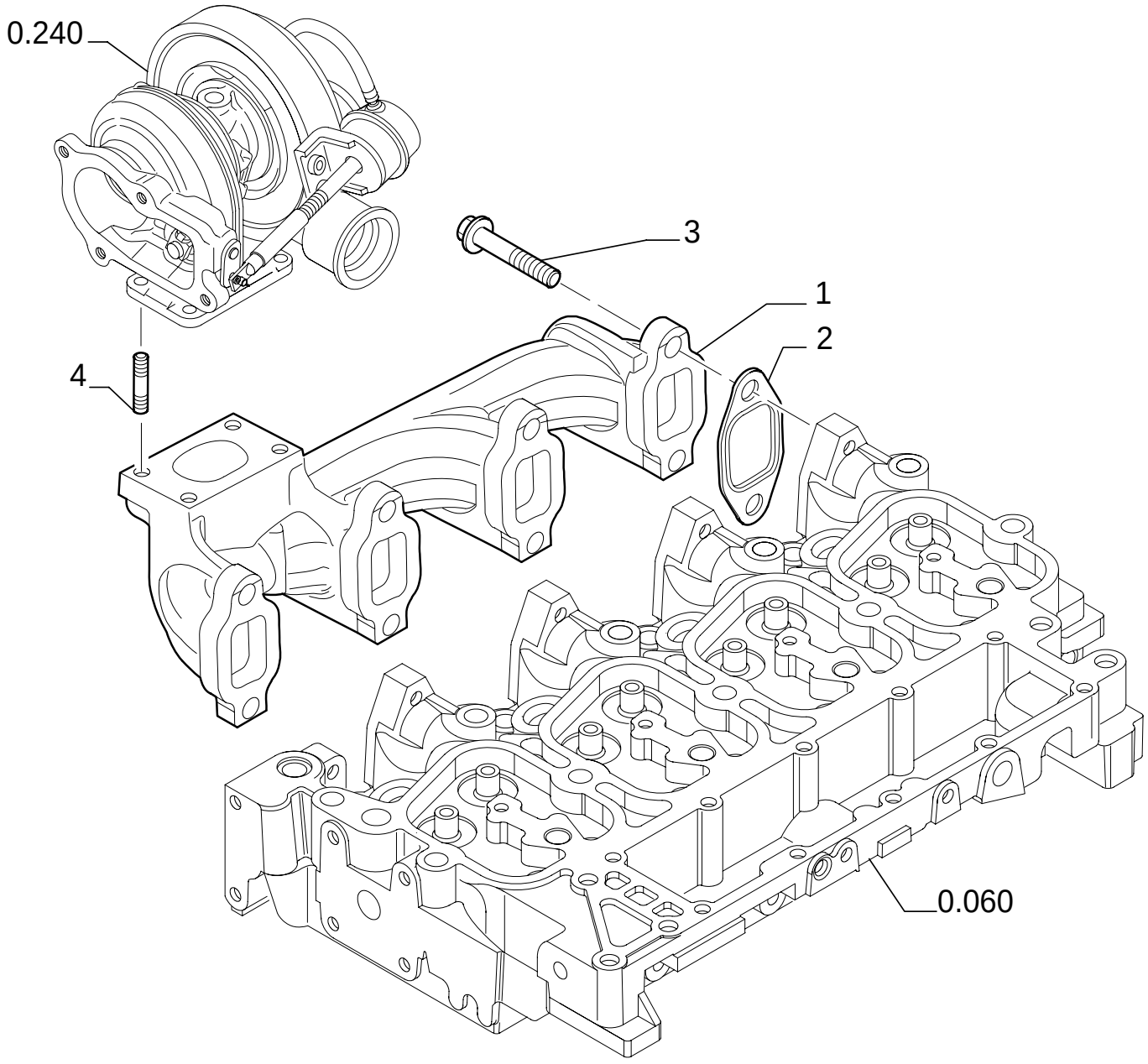

MANIFOLD - EXHAUST

REF	FN	PART NUMBER	YR/SN	QTY	DESCRIPTION
1		2831203		1	MANIFOLD, EXHAUST
2		504081248		4	GASKET
3		2852834		8	SCREW M10X1,5X40
4		4899119		4	STUD

CRANKSHAFT

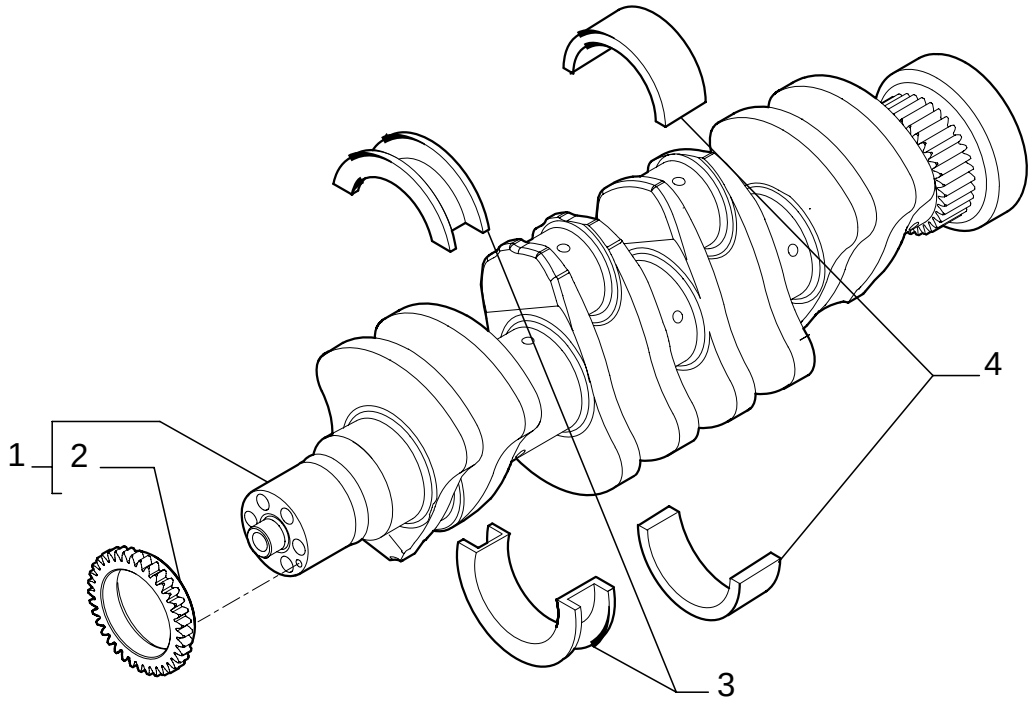

CRANKSHAFT

REF	FN	PART NUMBER	YR/SN	QTY	DESCRIPTION
1		{504095659}		1	- ASSY
2		4893386		1	GEAR
3		2992153		1	SET, CONN ROD BRGS (STD) (+ 0.000) (+ 0.000)
3		2992154		1	SET, CONN ROD BRGS (STD) (+ 0.254) (+ 0.250)
3		2992155		1	SET, CONN ROD BRGS (STD) (+ 0.508) (+ 0.500)
4		2992147		4	SET, CONN ROD BRGS (STD) (- 0.000) (- 0.000)
4		2992148		4	SET, CONN ROD BRGS (STD) (- 0.254) (- 0.250)
4		2992149		4	SET, CONN ROD BRGS (STD) (- 0.508) (- 0.500)

0.081	01	p1	12/05

PISTONS - CONNECTING ROD

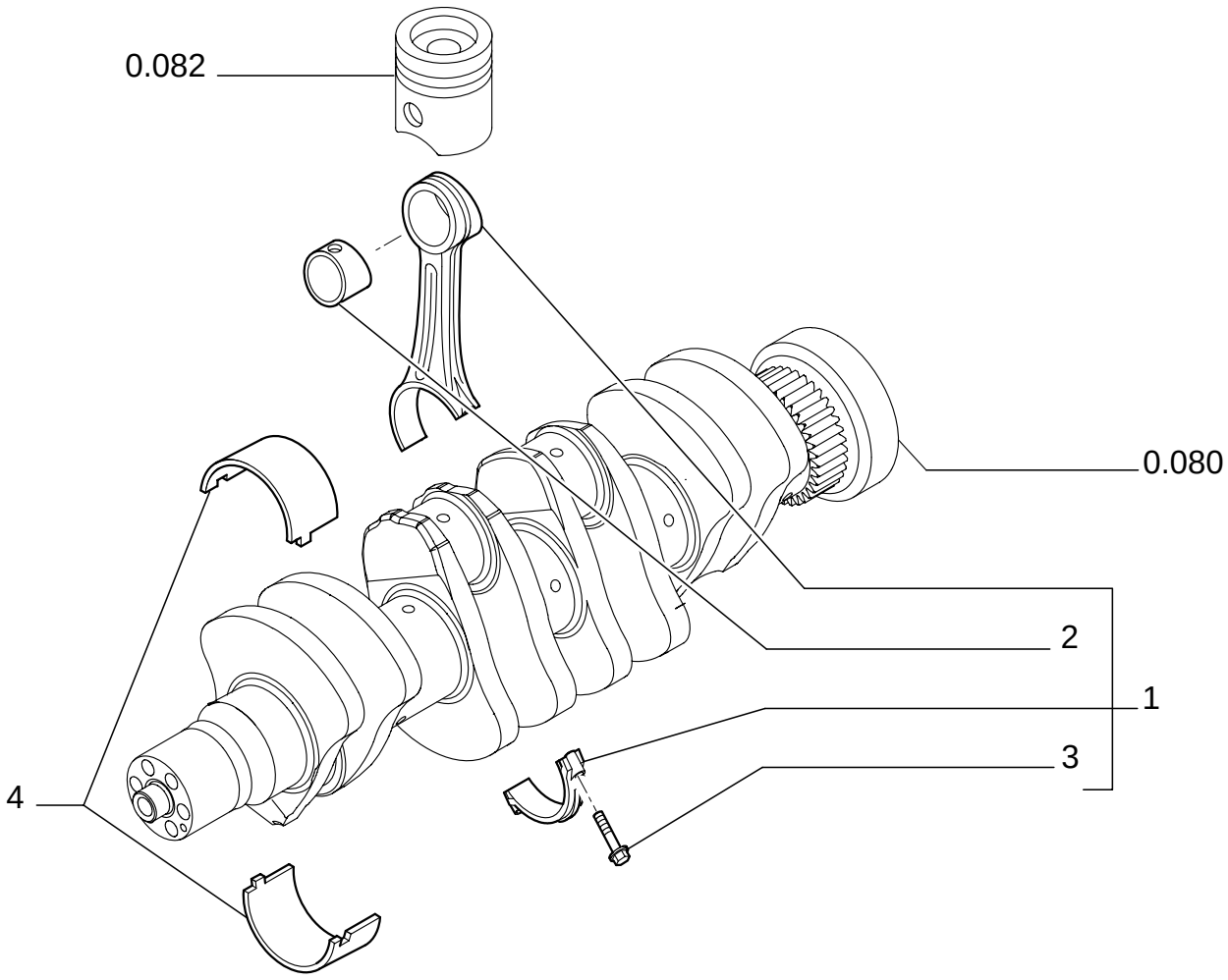

PISTONS - CONNECTING ROD

REF	FN	PART NUMBER	YR/SN	QTY	DESCRIPTION
1		2831298		4	ROD, CONNECTING - ASSY
2		4892708		1	BUSHING
3		2831297		2	SCREW
4		8093882		4	SET, CONN ROD BRGS (STD)

0.082	01	p1	12/05

PISTONS - CONNECTING ROD

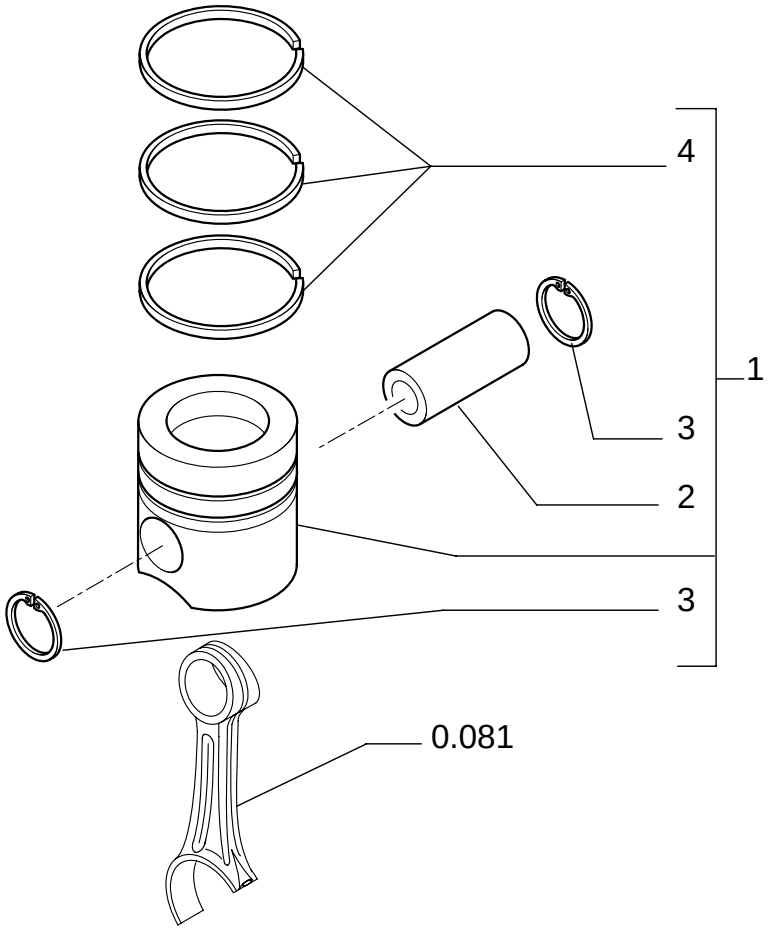

PISTONS - CONNECTING ROD

REF	FN	PART NUMBER	YR/SN	QTY	DESCRIPTION
1		{8094740}		4	STD
1		{8094753}		4	+ 0.4
2		4892712		1	PIN, PISTON
3		4892713		2	RING, LOCKING
4		{8094739}		1	STD
4		{8094752}		1	+ 0.4

0.083	01	p1	02/05

FLYWHEEL - ENGINE

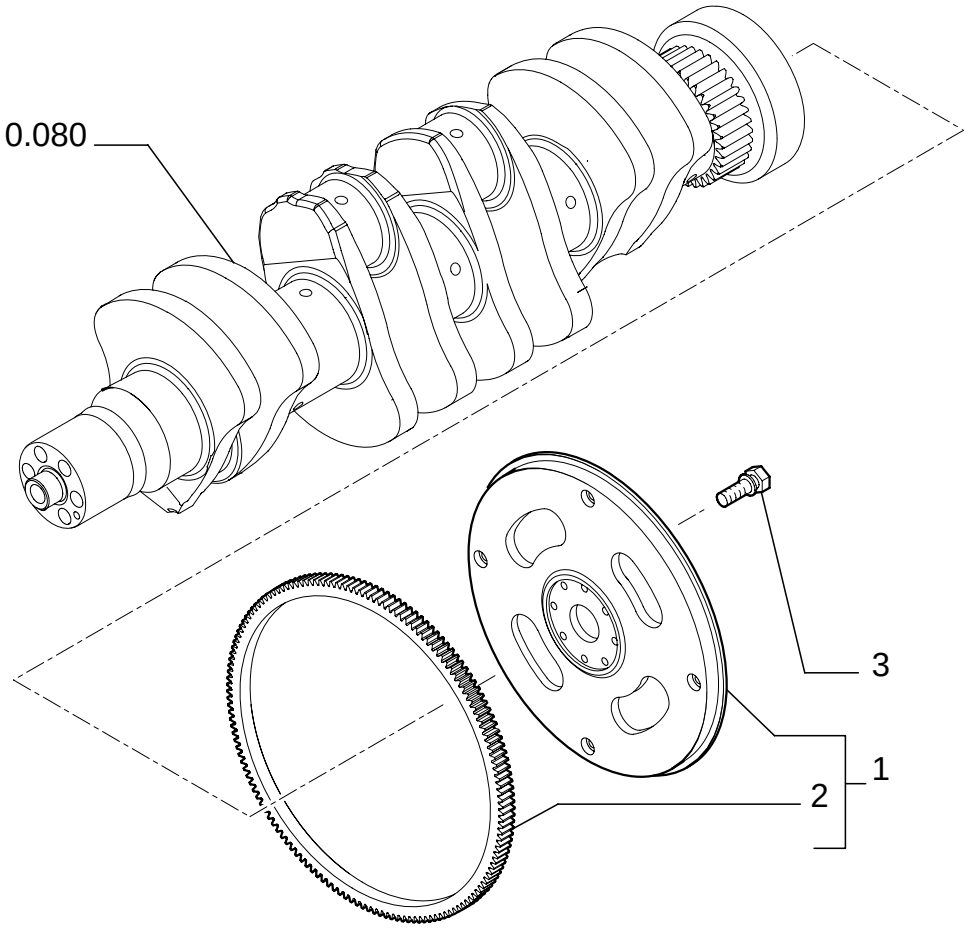

FLYWHEEL - ENGINE

REF	FN	PART NUMBER	YR/SN	QTY	DESCRIPTION
1		504057736		1	FLYWHEEL, ENGINE - ASSY
2		504062460		1	GEAR, RING
3		4894641		8	SCREW

0.084	01	p1	12/05

PULLEY - CRANKSHAFT

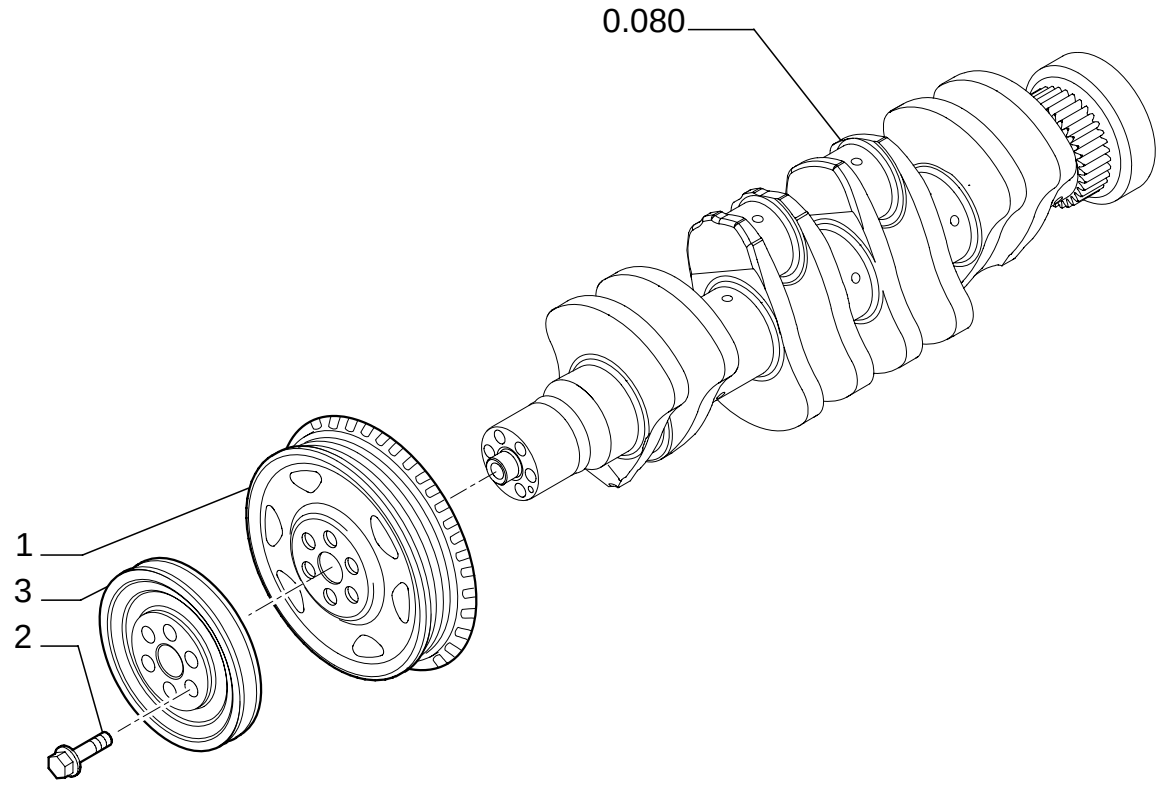

PULLEY - CRANKSHAFT

REF	FN	PART NUMBER	YR/SN	QTY	DESCRIPTION
1		4896773		1	PULLEY
2		4892867		6	SCREW M12X1.25X78.5
3		504061622		1	PULLEY

0.105	01	p1	12/05

DYNAMIC BALANCER, GEARS & SHAFTS

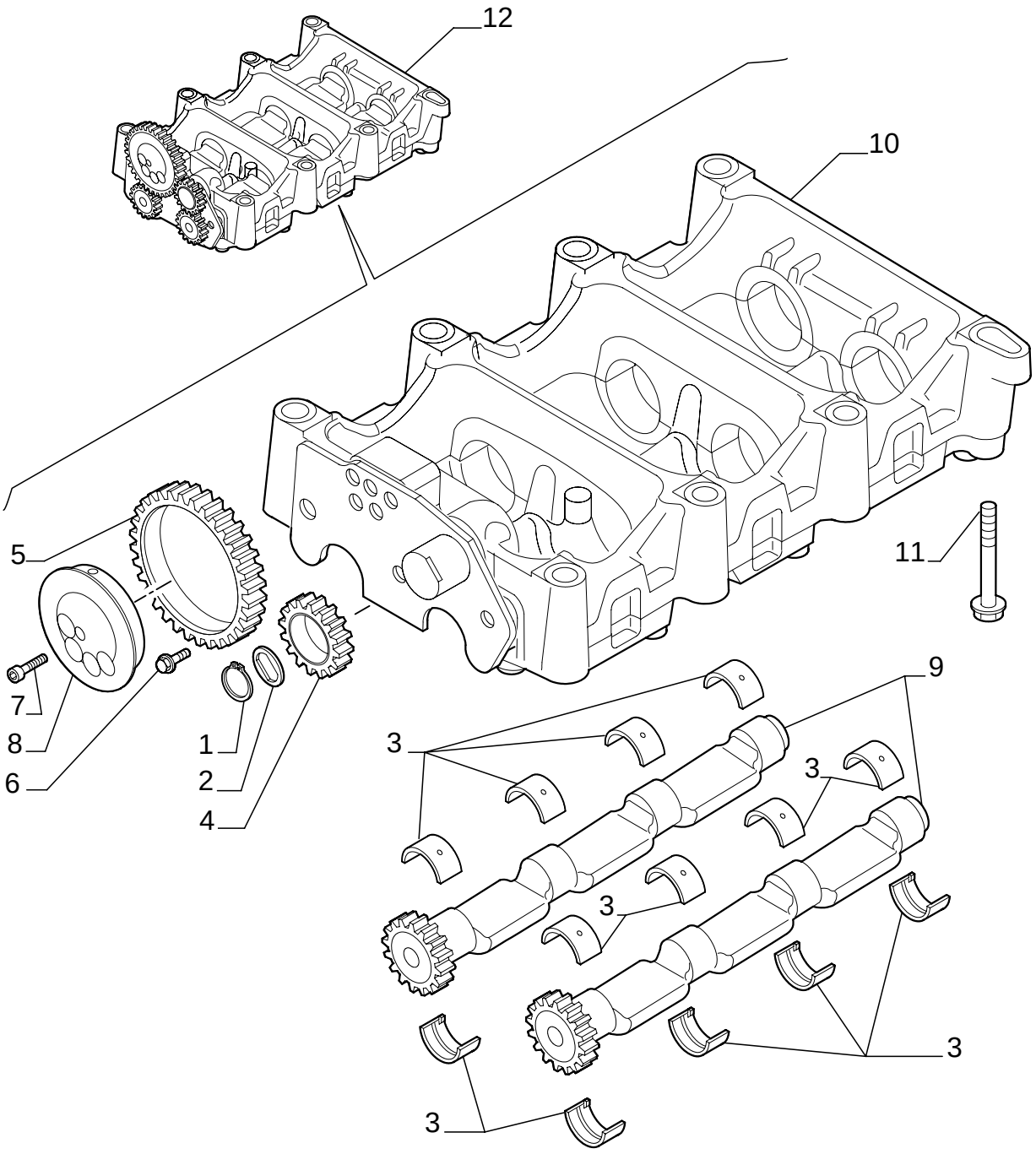

DYNAMIC BALANCER, GEARS & SHAFTS

REF	FN	PART NUMBER	YR/SN	QTY	DESCRIPTION
1		16866473		1	CIRCLIP
2		4897123		1	PLATE, THRUST
3		4897071		16	BUSHING
4		4897048		1	GEAR, DRIVEN
5		4896947		1	GEAR, DRIVEN
6		4895586		3	SCREW
7		2830433		4	SCREW
8		2831031		1	SHAFT, IDLE
9		504088119		2	SHAFT ASSY.
10	1	2831300		1	HOUSING - ASSY
11		4899109		7	SCREW
11		4897934		1	SCREW
12		504088120		1	BALANCER - ASSY

(1) Assy See Page 2

0.105	02	p1	12/05

DYNAMIC BALANCER, GEARS & SHAFTS (2831300)

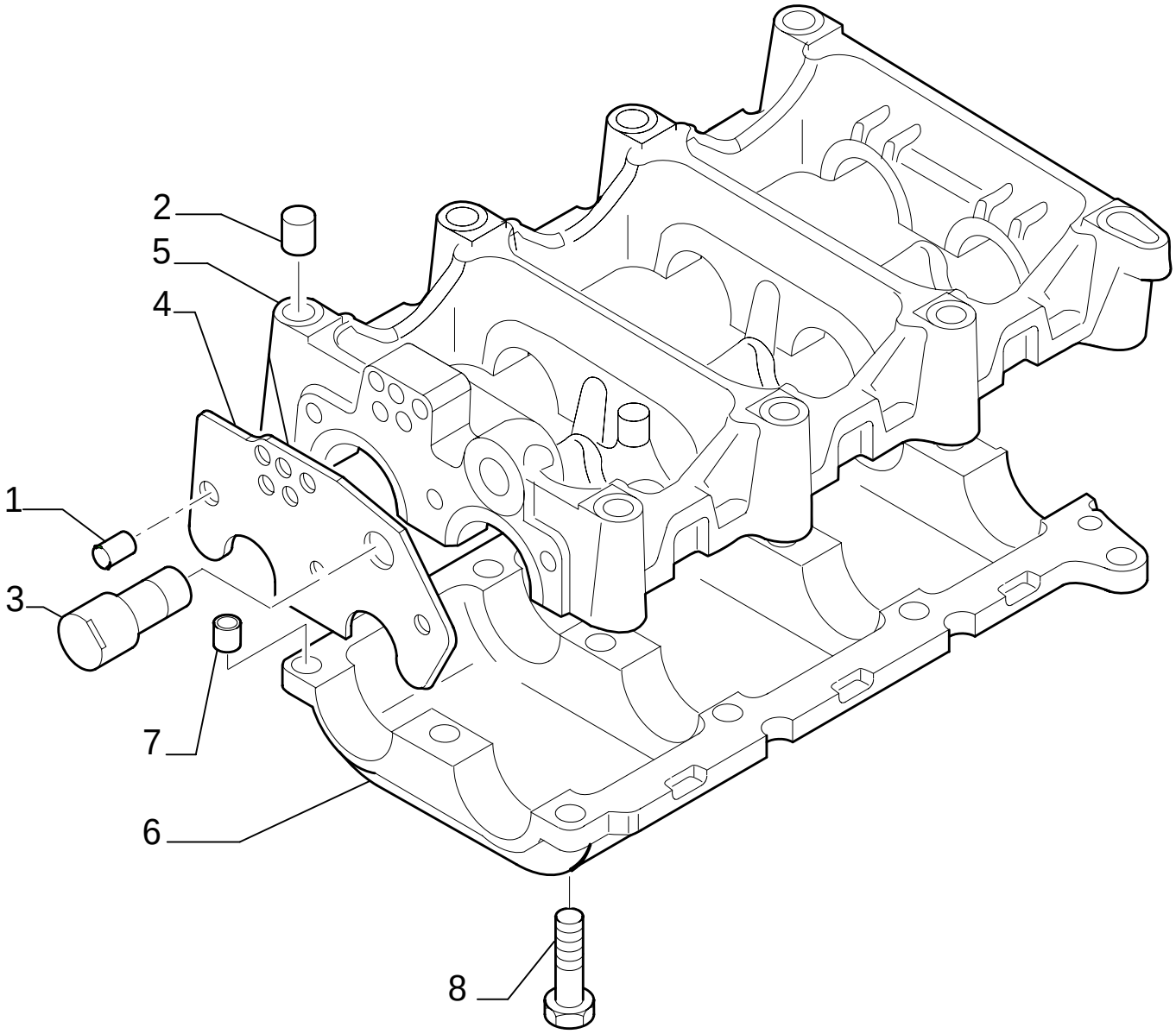

DYNAMIC BALANCER, GEARS & SHAFTS (2831300)

REF	FN	PART NUMBER	YR/SN	QTY	DESCRIPTION
1		2831305		1	DOWEL
2		4899027		2	DOWEL
3		2830948		1	SHAFT, IDLE
4		2830905		1	PLATE, THRUST
5		{2831303}		1	
6		{2831304}		1	
7		4891209		2	DOWEL
8		4895323		12	SCREW

0.120	01	p1	02/05

CAMSHAFT

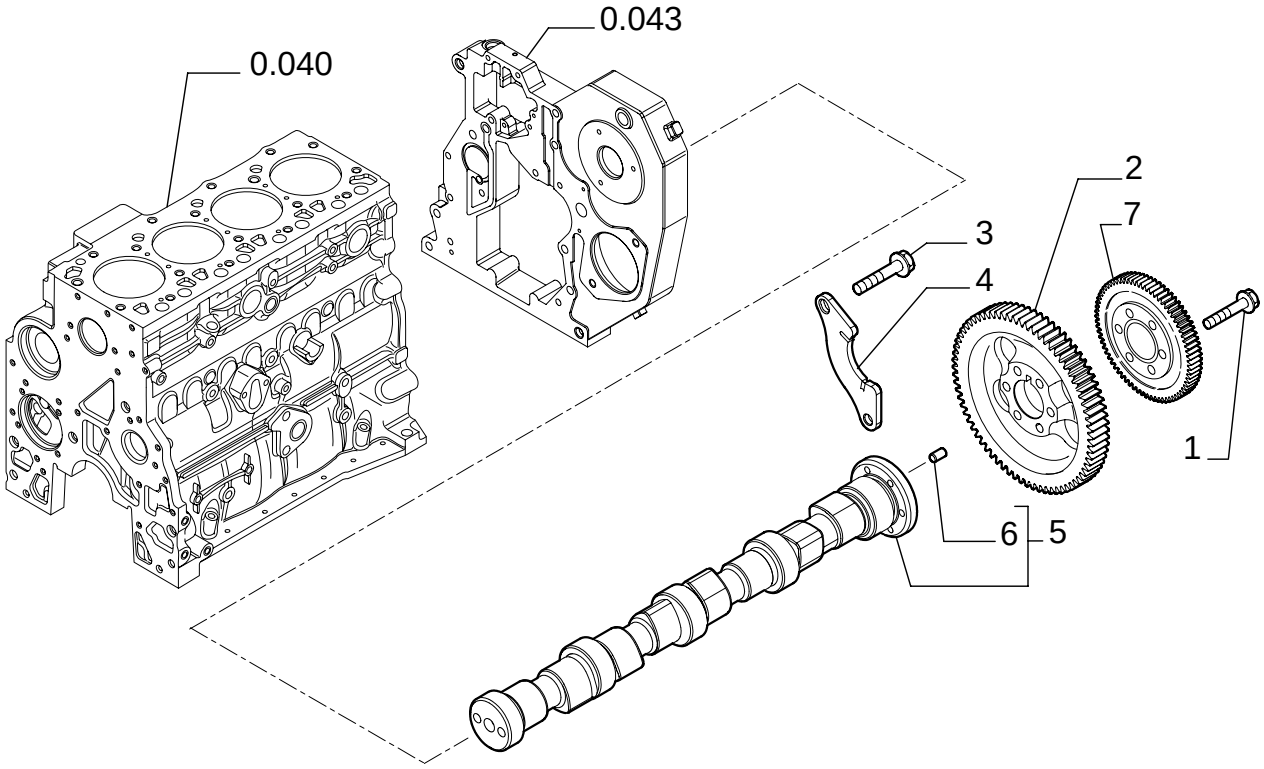

CAMSHAFT

REF	FN	PART NUMBER	YR/SN	QTY	DESCRIPTION
1		4895323		6	SCREW
2		504062752		1	GEAR
3		4899068		2	SCREW 8X17
4		4897457		1	FLANGE
5		4899610		1	CAMSHAFT - ASSY
6		4899080		1	DOWEL
7		504034954		1	GEAR, DRIVEN

0.140	01	p1	12/05

FUEL INJECTION PUMP

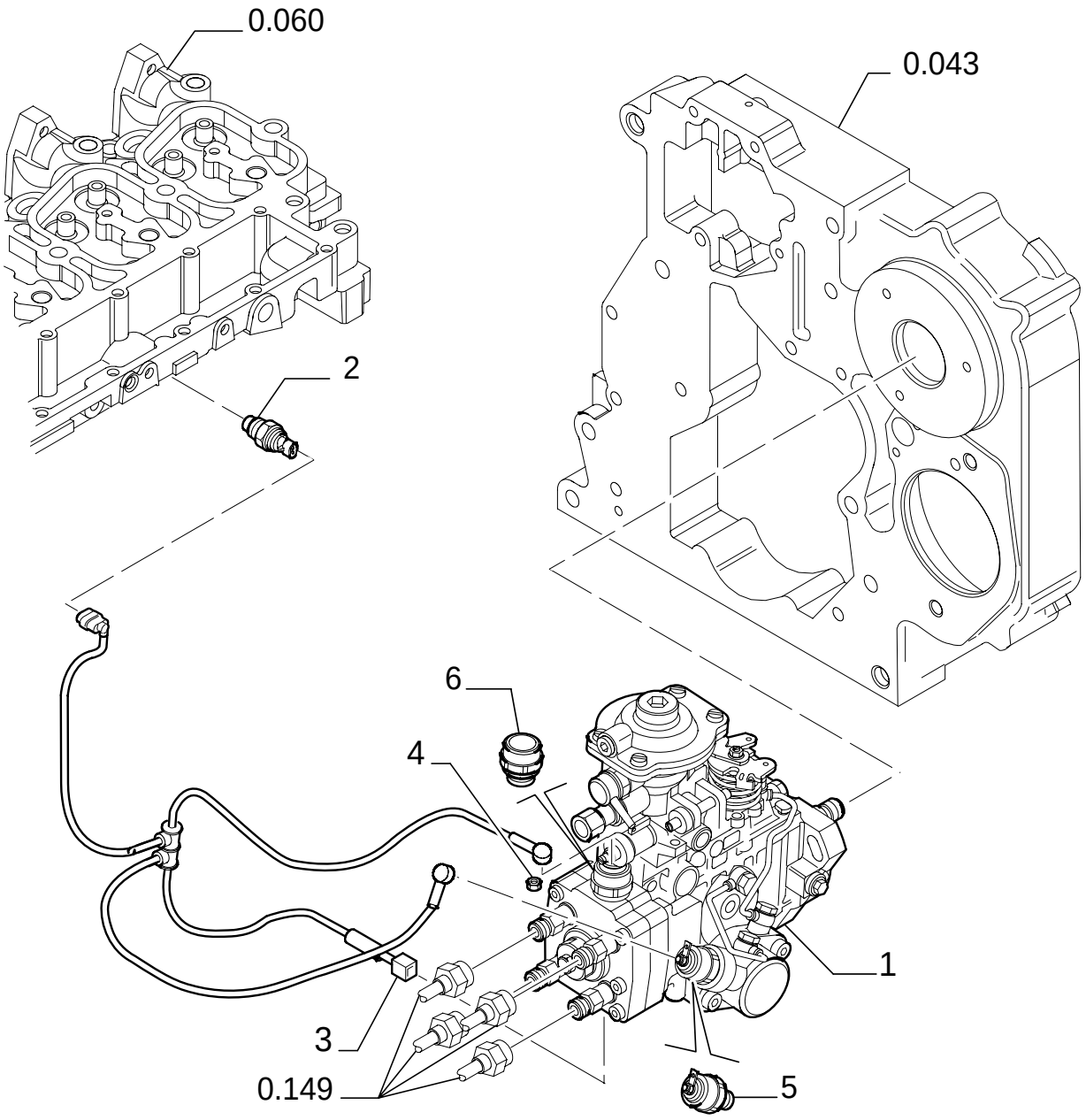

FUEL INJECTION PUMP

REF	FN	PART NUMBER	YR/SN	QTY	DESCRIPTION
1		504063450		1	PUMP, FUEL - ASSY; Includes 8190393 Fuel Injection Solennoid
2		504032877		1	SENDER UNIT Water Temperature
3		504060728		1	CONNECTOR, WIRE
4		16979231		2	NUT
5		8190393		1	STOP DEVICE Fuel Injection Solenoid
6		2852741		1	SOLENOID

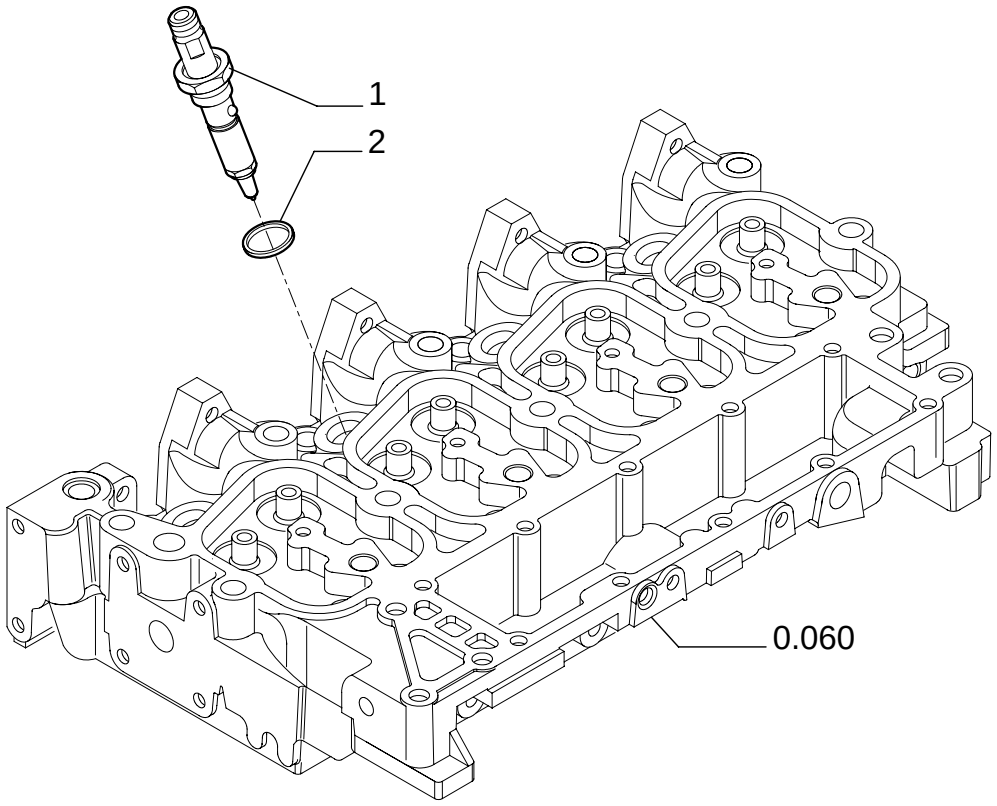
1
2
0.060

FUEL INJECTION SYSTEM

REF	FN	PART NUMBER	YR/SN	QTY	DESCRIPTION
1		2852869		4	INJECTOR, FUEL SYSTEM
2		4895297		4	GASKET

FUEL INJECTION SYSTEM

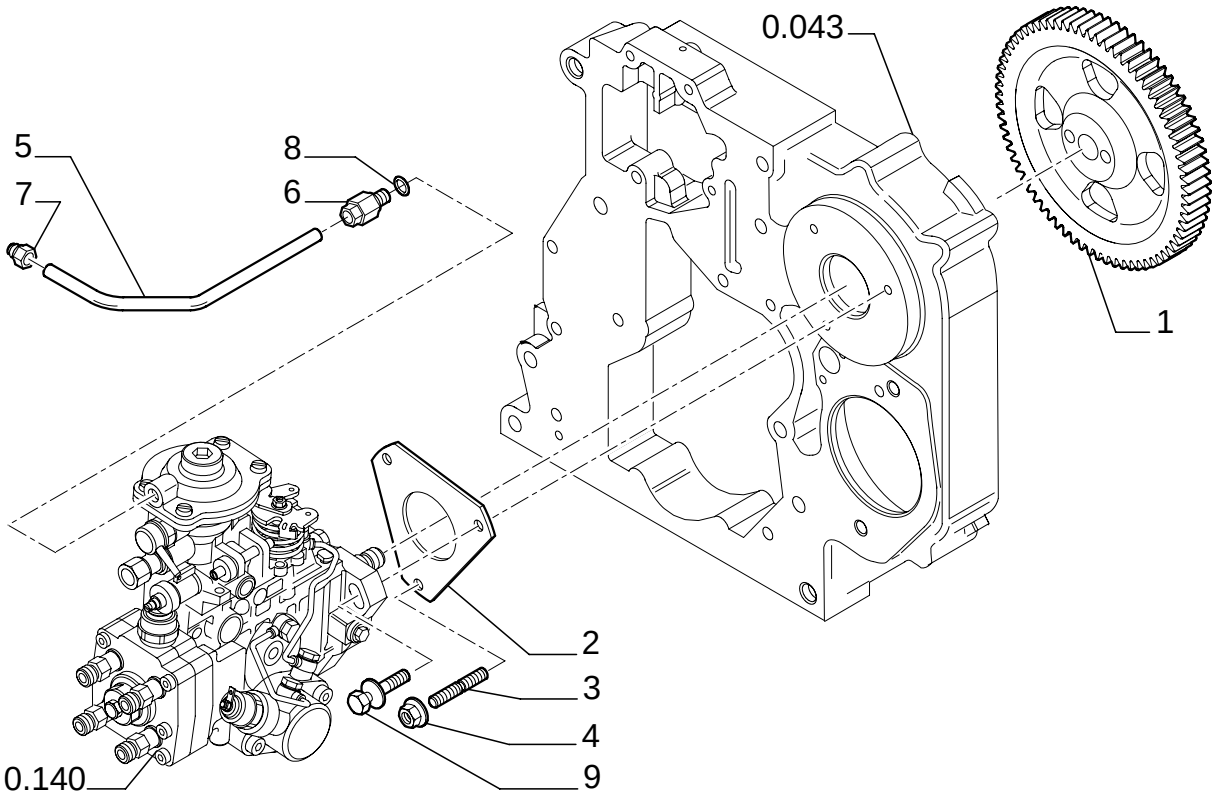

FUEL INJECTION SYSTEM

REF	FN	PART NUMBER	YR/SN	QTY	DESCRIPTION
1		504093385		1	GEAR
2		504083433		1	GASKET
3		16746824		3	STUD
4		4899003		3	NUT 8X1.25
5		504057292		1	TUBE, RIGID
6		4893518		1	CONNECTOR, HYD. 8X1
7		4896770		1	CONNECTOR, HYD. 10X1
8		4858605		1	GASKET

FUEL INJECTION SYSTEM

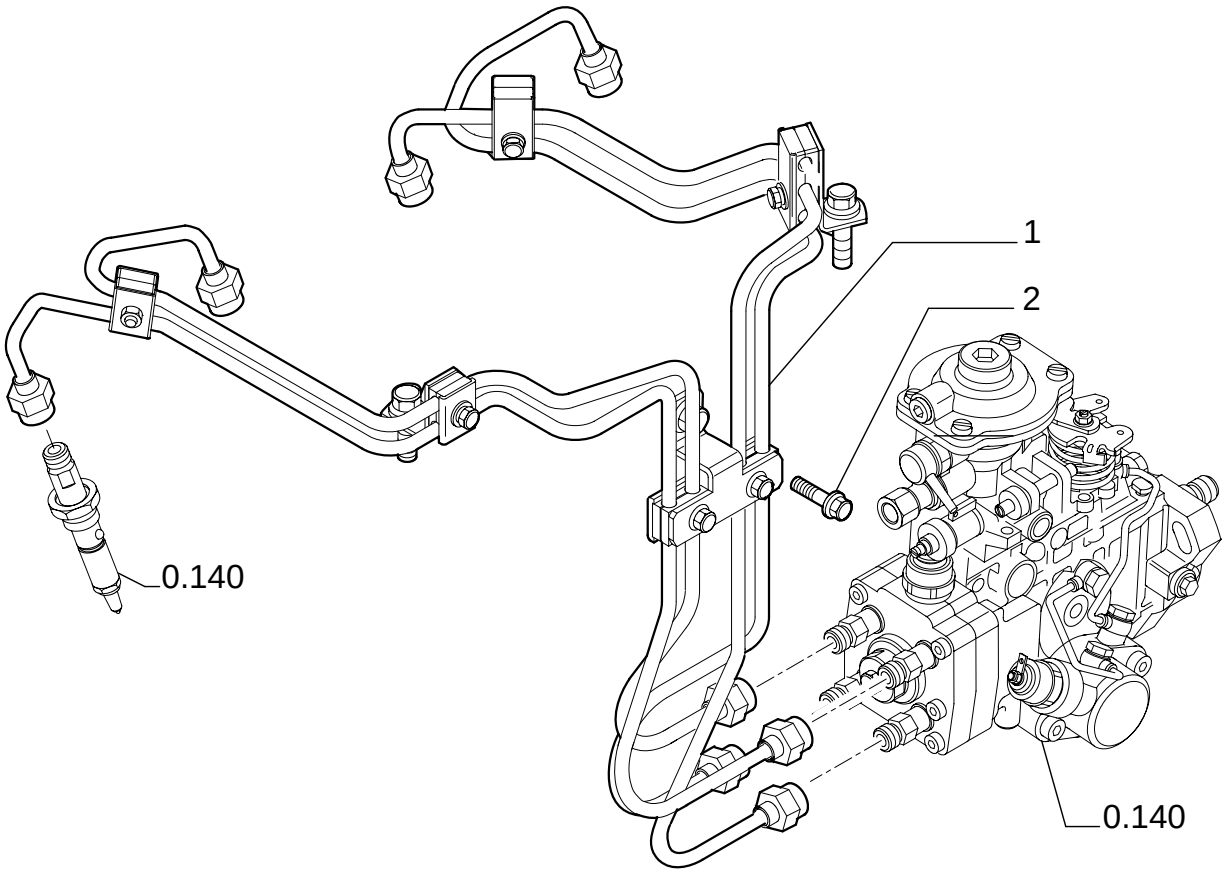

FUEL INJECTION SYSTEM

REF	FN	PART NUMBER	YR/SN	QTY	DESCRIPTION
1		504042116		1	KIT Fuel Injection Supply Tubes
2		4899068		1	SCREW

0.200	01	p1	12/05

FUEL FILTER

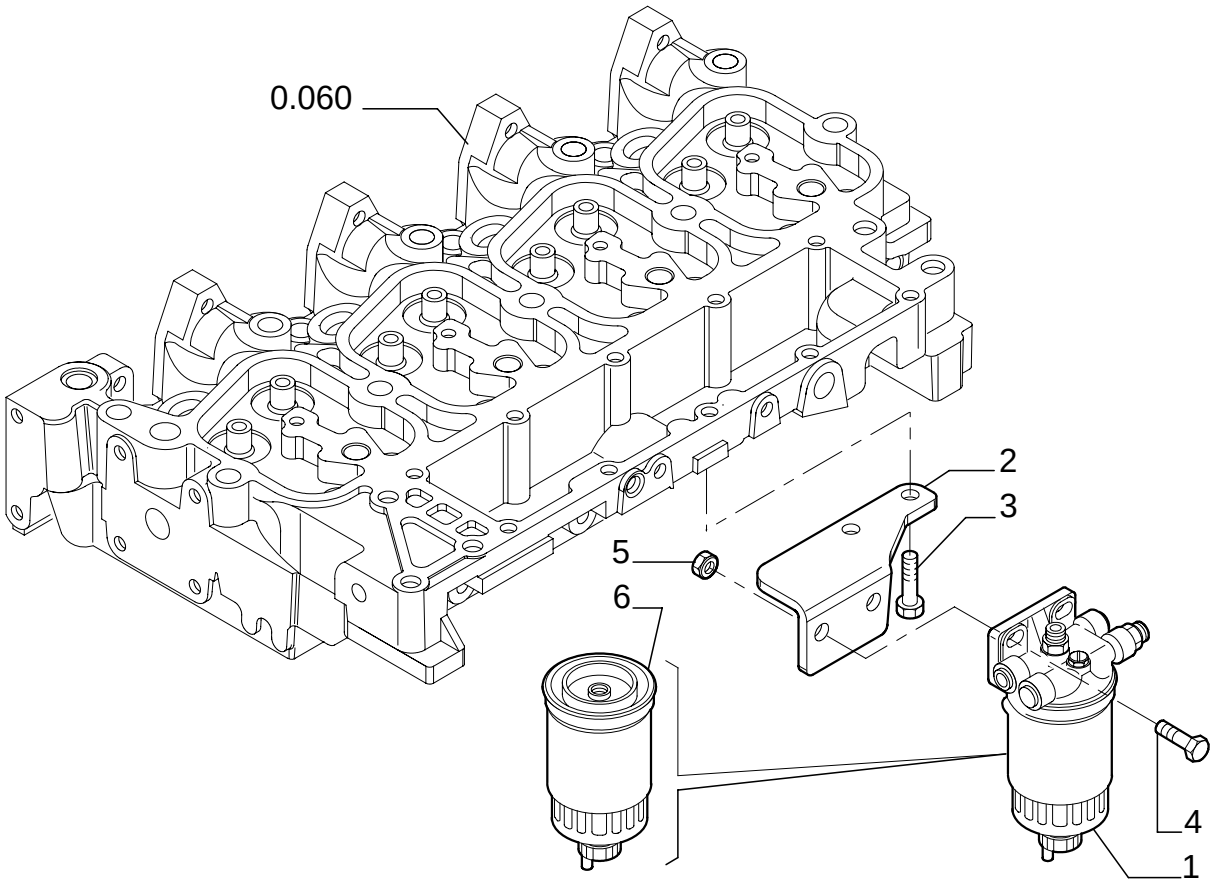

FUEL FILTER

REF	FN	PART NUMBER	YR/SN	QTY	DESCRIPTION
1		2852098		1	FILTER ASSY - ASSY
2		504001088		1	SUPPORT
3		4899020		2	SCREW M8X1,25X20
4		4899093		2	SCREW M10X1,5X30
5		4895166		2	NUT 10X1.5
6		1930010		1	FILTER, FUEL

FUEL PUMP

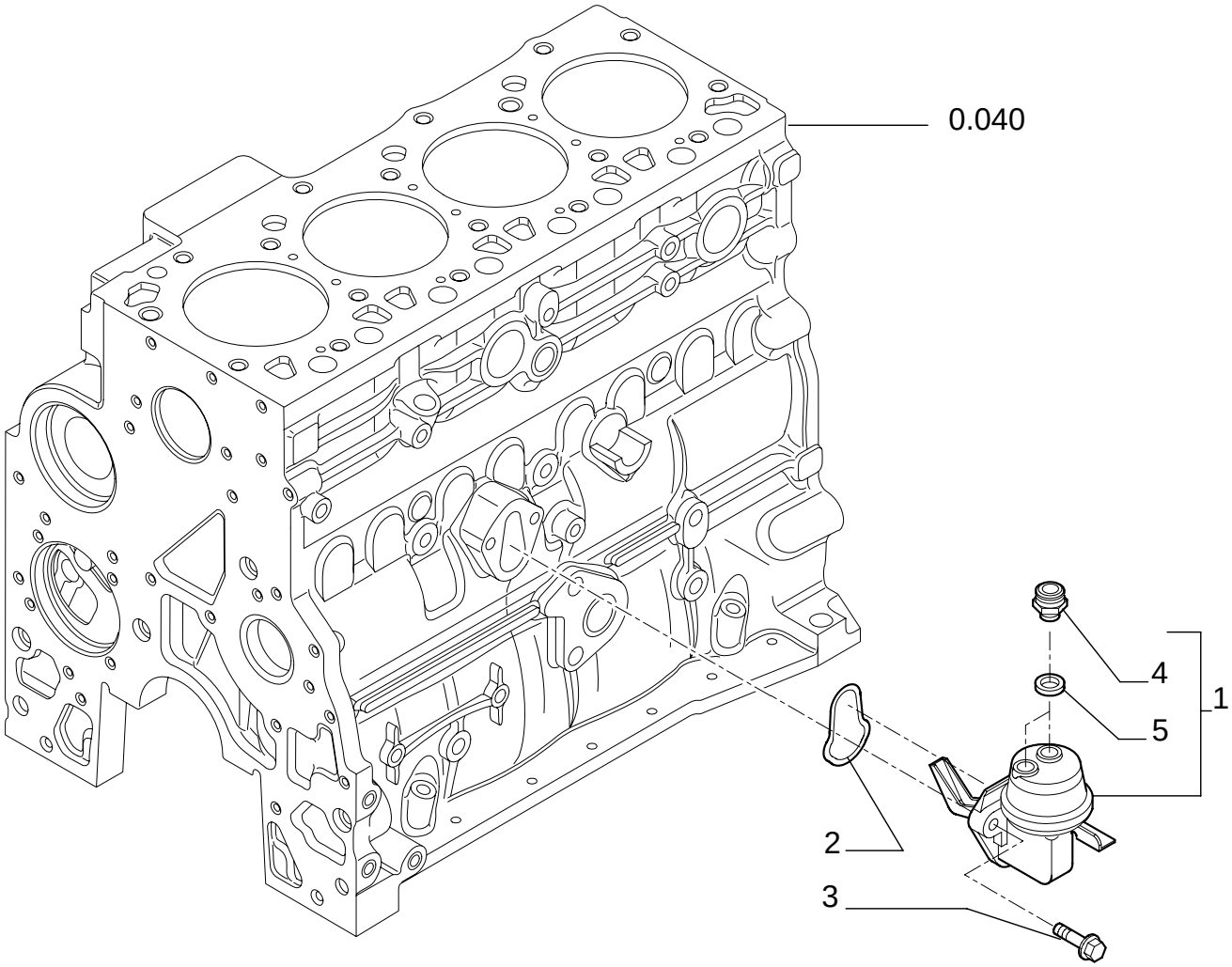

FUEL PUMP

REF	FN	PART NUMBER	YR/SN	QTY	DESCRIPTION
1		2830266		1	PUMP, FUEL - ASSY
2		2830156		1	GASKET
3		4899031		2	SCREW 8X25
4		4890964		2	CONNECTOR, HYD.
5		4894721		2	GASKET

0.203	01	p1	01/06

FUEL INJECTION SYSTEM

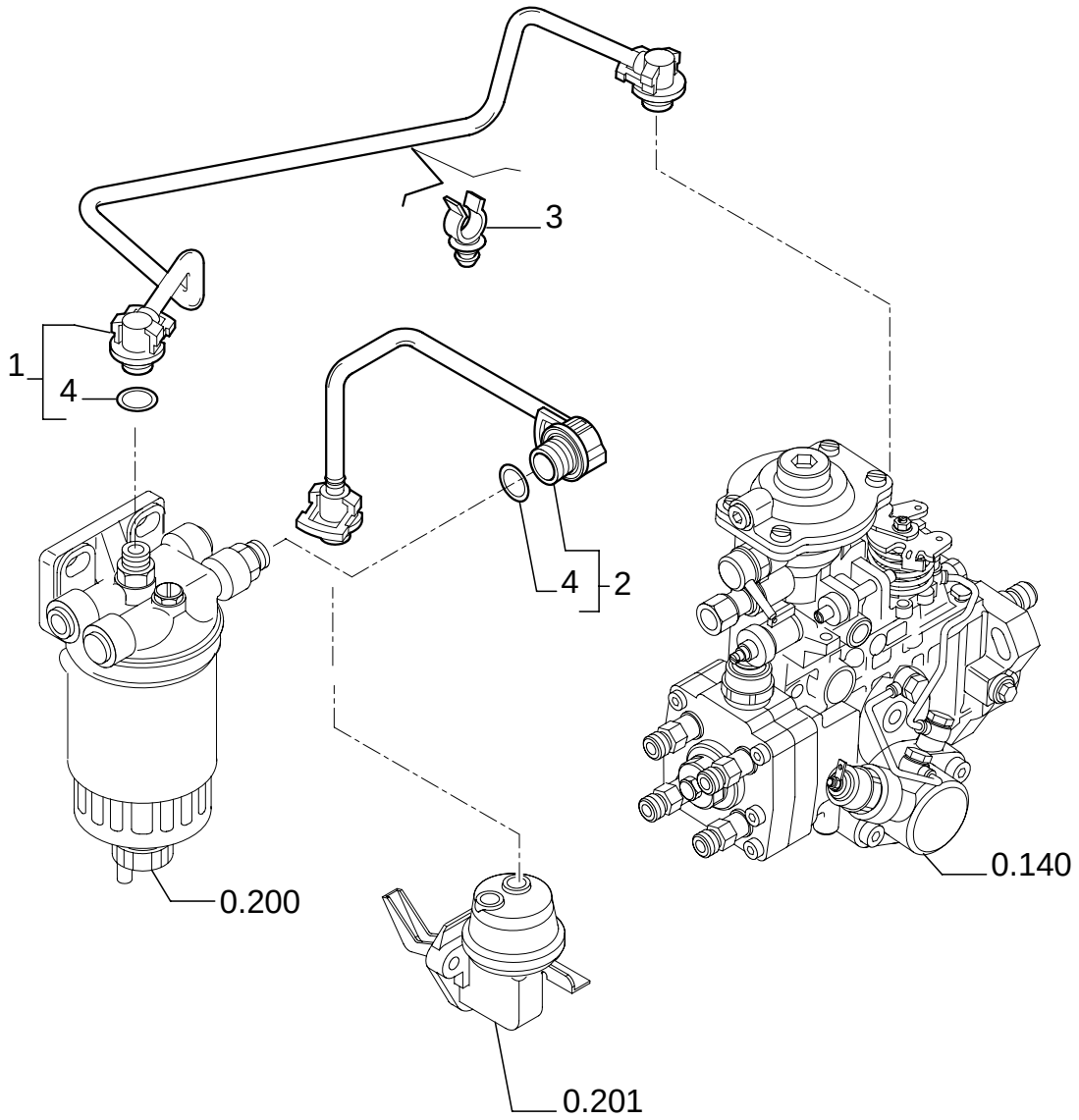

FUEL INJECTION SYSTEM

REF	FN	PART NUMBER	YR/SN	QTY	DESCRIPTION
1		2852105		1	TUBE - ASSY
2		2852594		1	TUBE, RIGID - ASSY
3		2852111		1	CLAMP
4		4894095		2	O-RING

FUEL INJECTION SYSTEM

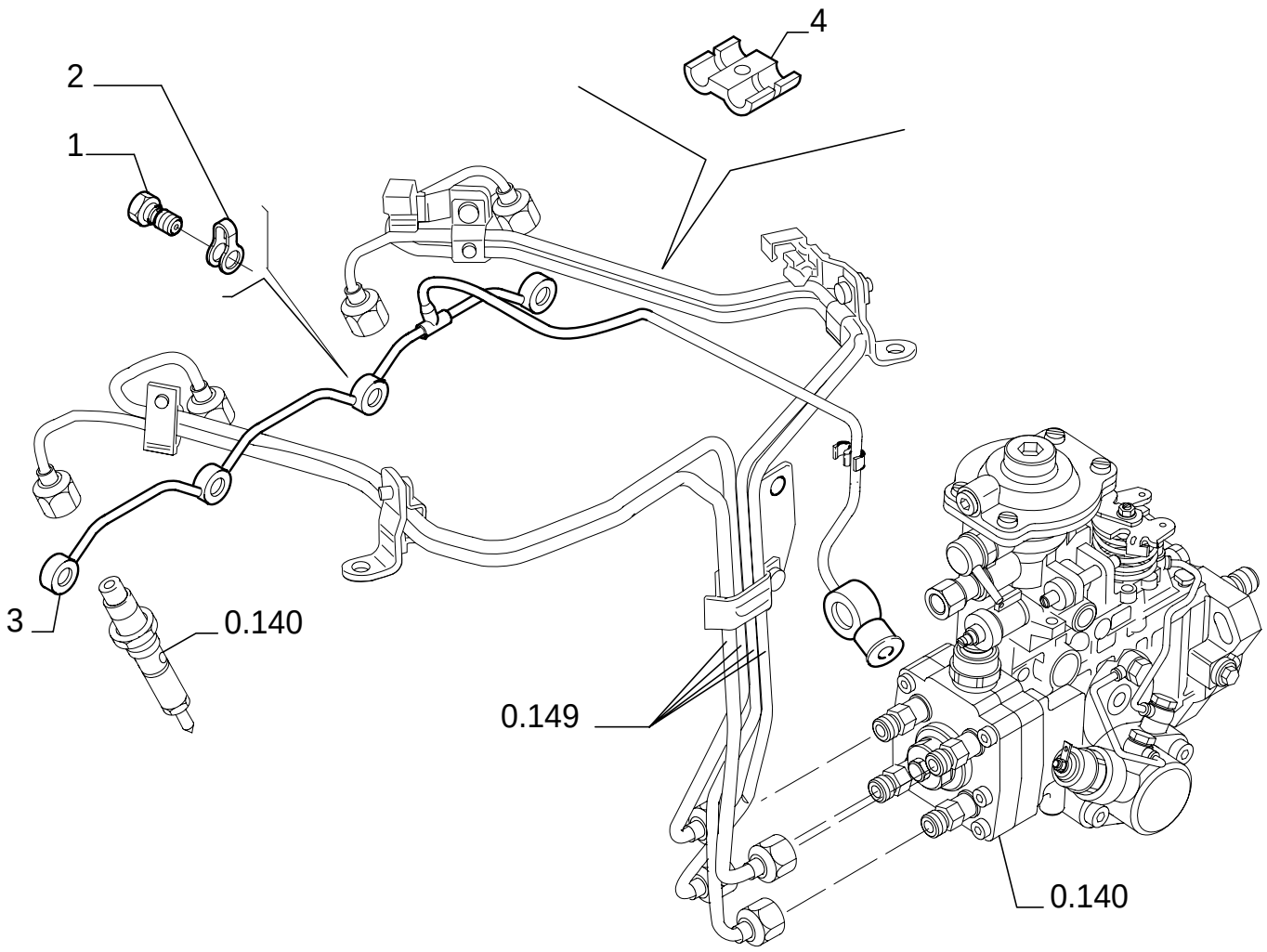

FUEL INJECTION SYSTEM

REF	FN	PART NUMBER	YR/SN	QTY	DESCRIPTION
1		4895244		4	JACK SCREW
2		4895305		4	GASKET
3		504051276		1	TUBE, RIGID
4		98429625		1	CLIP, SPRING

0.240	01	p1	02/05

TURBOCHARGER

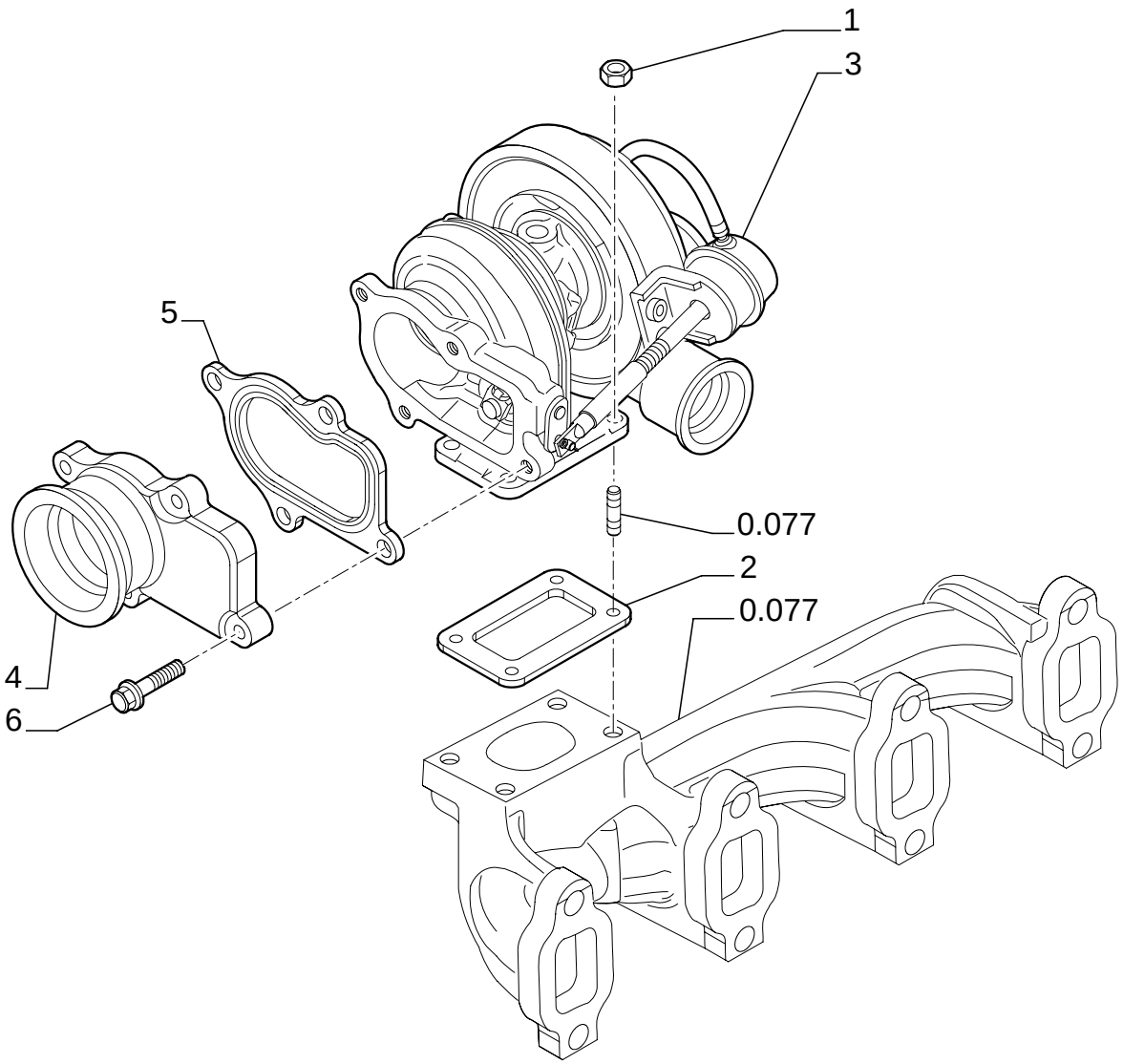

TURBOCHARGER

REF	FN	PART NUMBER	YR/SN	QTY	DESCRIPTION
1		4899118		4	NUT
2		4895133		1	GASKET
3		504061374		1	TURBOCHARGER
4		504010786		1	MANIFOLD, EXHAUST
5		504035094		1	GASKET
6		4898482		4	SCREW

0.270	01	p1	12/05

ENGINE, OIL

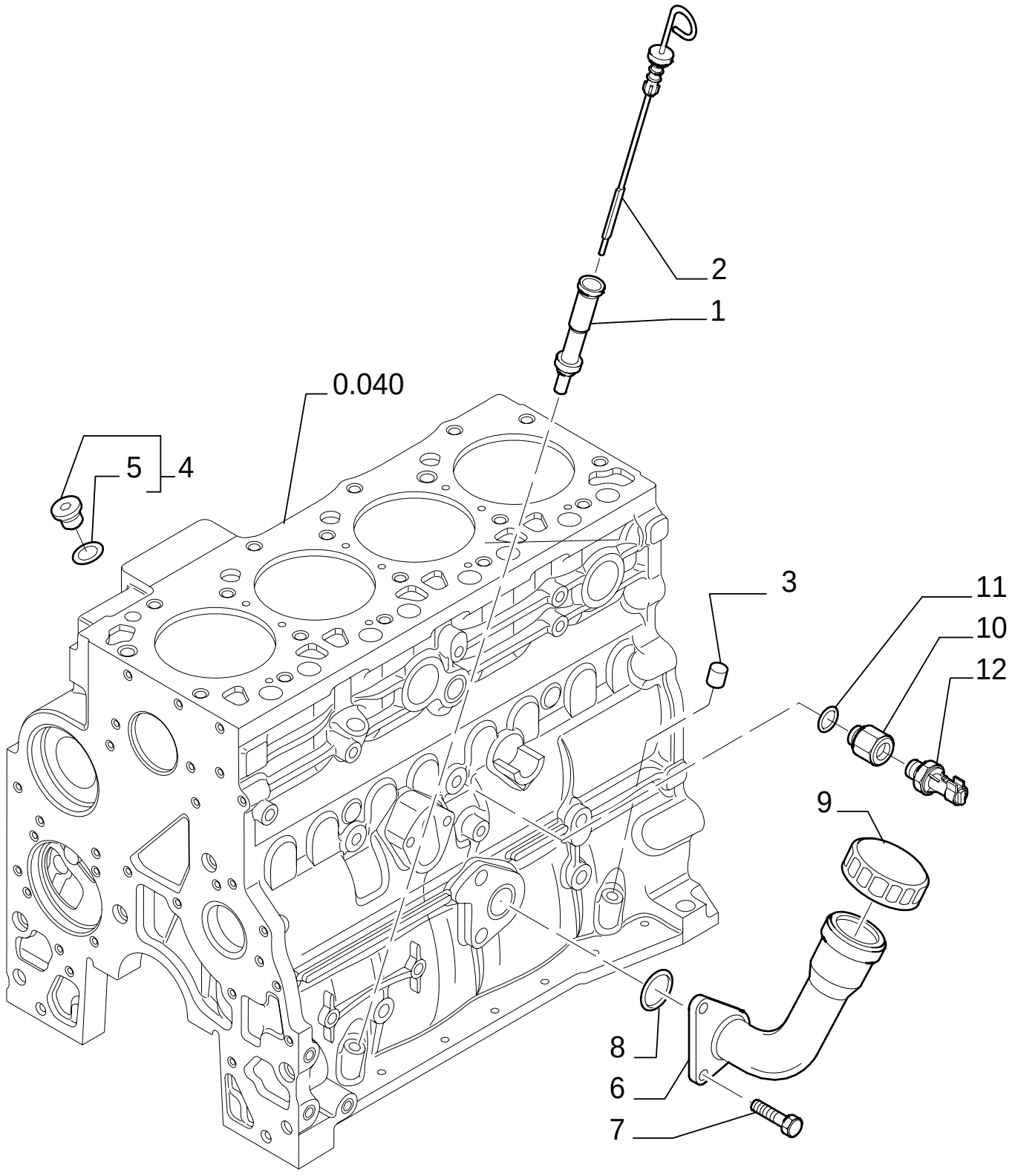

ENGINE, OIL

REF	FN	PART NUMBER	YR/SN	QTY	DESCRIPTION
1		504011329		1	TUBE, RIGID
2		504062795		1	DIPSTICK
3		4899036		1	PLUG
4		4897330		2	PLUG - ASSY
5		4895610		1	O-RING
6	1	504011338		1	TUBE, RIGID
7		16587924		2	SCREW
8		17283181		1	O-RING
9	1	98429552		1	CAP, INTRODUCTION
10		504036358		1	CONNECTOR, HYD.
11		4899115		1	O-RING
12	2	98442879		1	SWITCH
12	3	98445111		1	SWITCH

(1) UP TO S/N ENGINE 148474
(2) Version : SIPEA
(3) Version : BORLETTI

UP TO S/N ENGINE 148474

0.270/A	01	p1	12/05

ENGINE, OIL

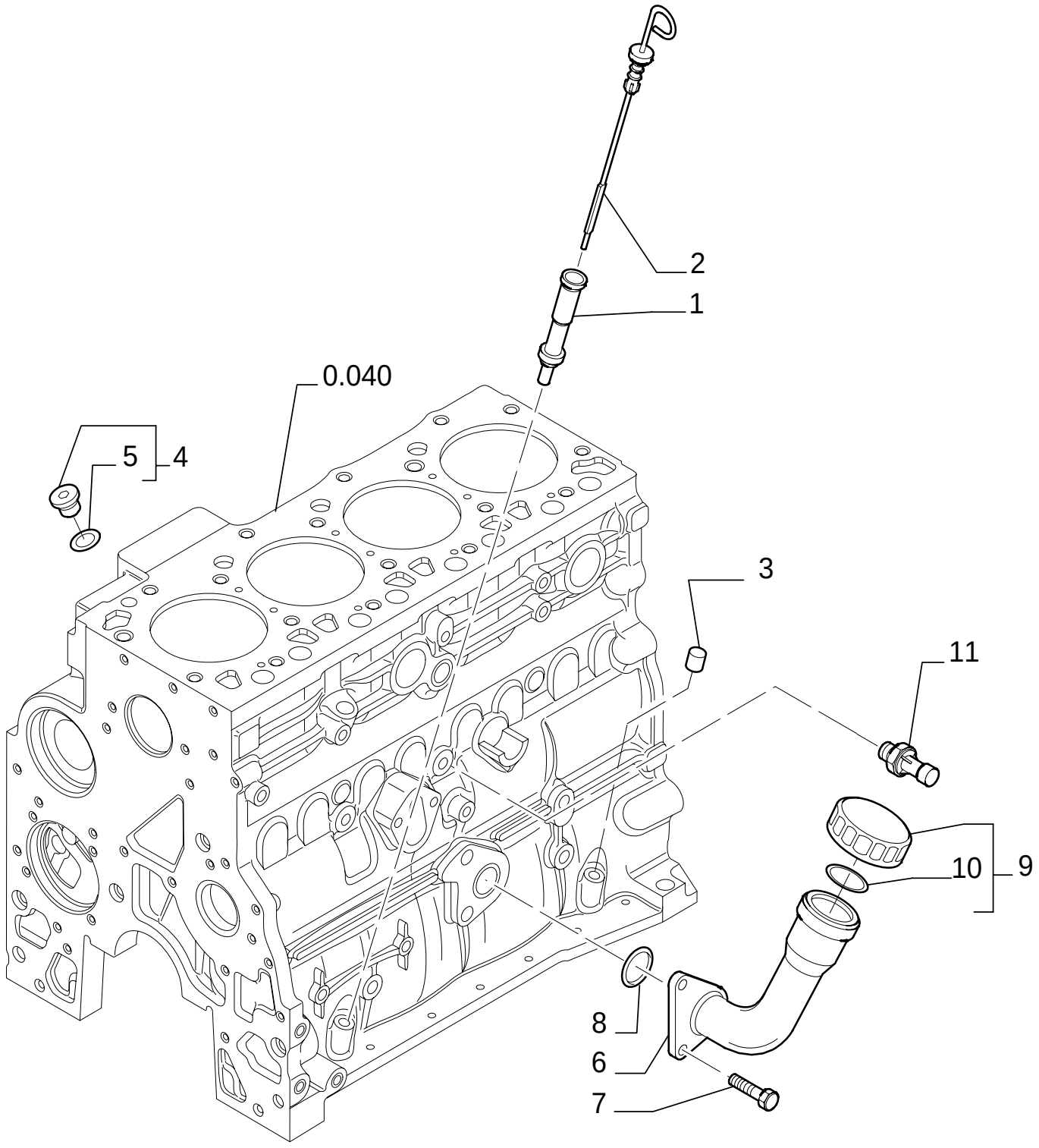

ENGINE, OIL

REF	FN	PART NUMBER	YR/SN	QTY	DESCRIPTION
1		504011329		1	TUBE, RIGID
2		504062795		1	DIPSTICK
3		4899036		1	PLUG
4		4897330		2	PLUG - ASSY
5		4895610		1	O-RING
6	1	{504087621}		1	
7		16587924		2	SCREW
8		17283181		1	O-RING
9	1	{500301568}		1	- ASSY
10	1	{17295480}		1	
11		504084983		1	SWITCH, PRESSURE

(1) FROM S/N ENGINE 148475

FROM S/N ENGINE 148475

0.300	01	p1	02/05

OIL PUMP - ENGINE

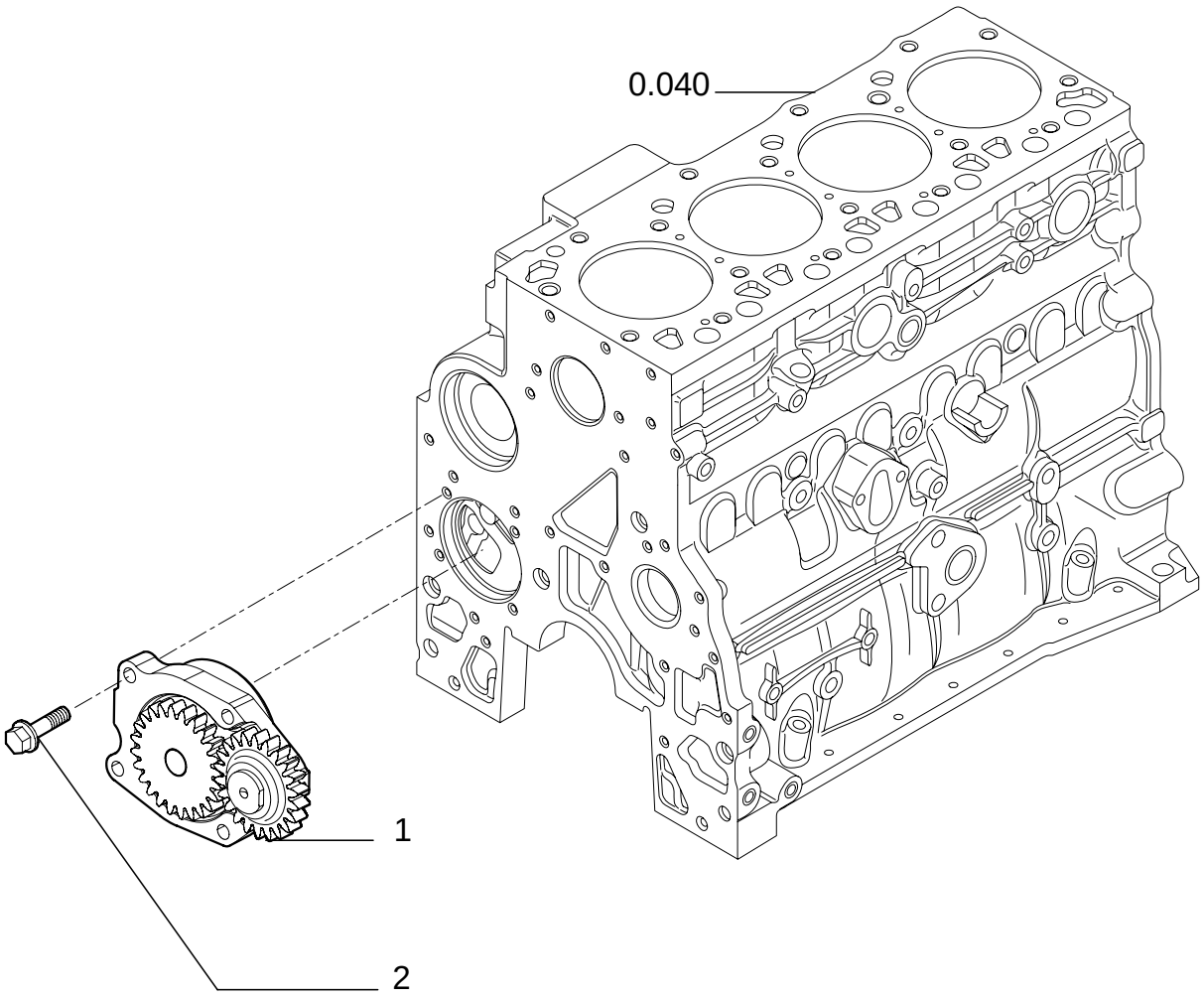

OIL PUMP - ENGINE

REF	FN	PART NUMBER	YR/SN	QTY	DESCRIPTION
1		4897480		1	PUMP, ENGINE OIL
2		4899090		4	SCREW

OIL FILTERS - ENGINE

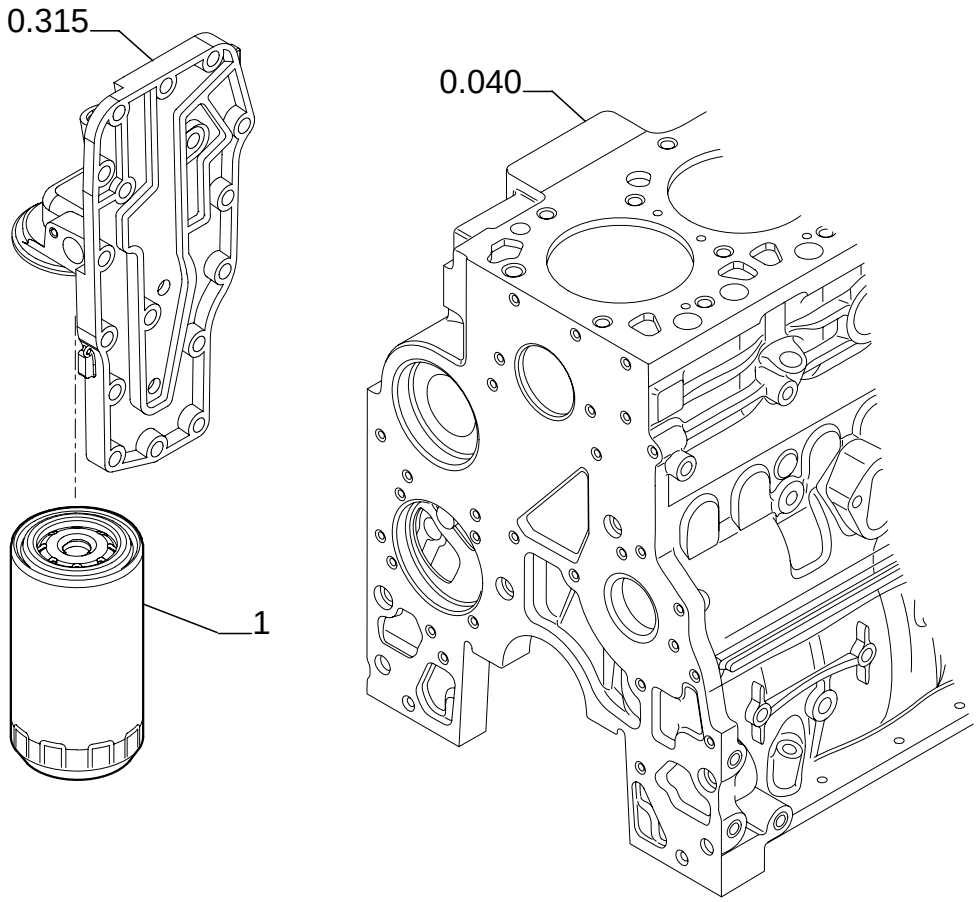

OIL FILTERS - ENGINE

REF	FN	PART NUMBER	YR/SN	QTY	DESCRIPTION
1		87803260		1	FILTER, ENGINE OIL

0.305	01	p1	12/05

PIPING - ENGINE OIL

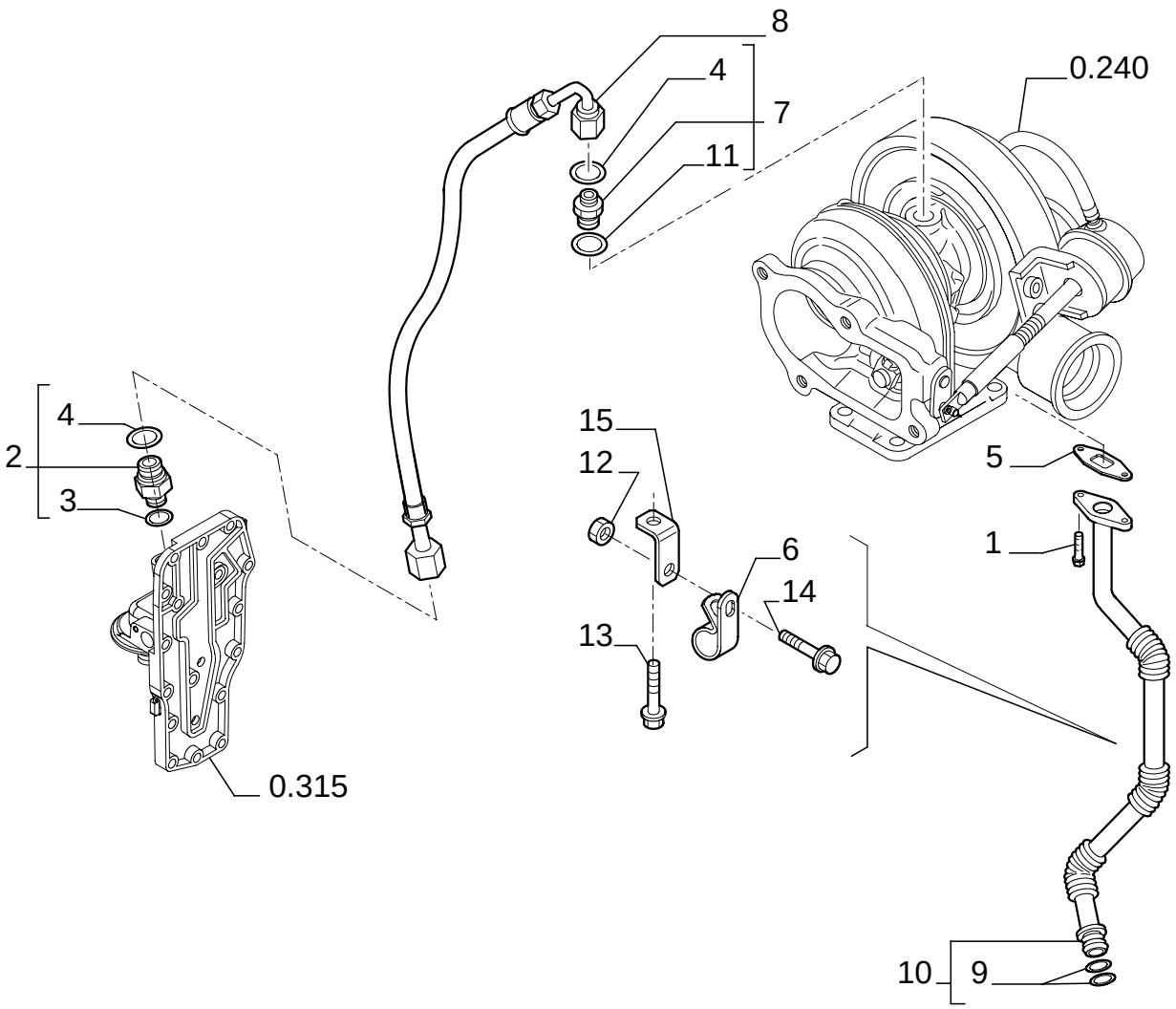

PIPING - ENGINE OIL

REF	FN	PART NUMBER	YR/SN	QTY	DESCRIPTION
1		4895164		2	SCREW M6X1X16
2		4895107		1	CONNECTOR, HYD. - ASSY
3		4899107		1	O-RING
4		4899108		2	O-RING
5		4899467		1	GASKET
6		4899519		1	BRACKET
7		4899106		1	CONNECTOR, HYD.
8		504053173		1	HOSE
9		4899058		2	O-RING M17.12 ID x 2.62 Thk
10		504053166		1	PIPE - ASSY
11		4899121		1	GASKET
12		17044625		1	NUT M6
13		18138324		1	SCREW M8X1.25X16
14		18137824		1	SCREW M8X16
15		504053894		1	BRACKET

0.315	01	p1	12/05

OIL FILTER AND COOLER

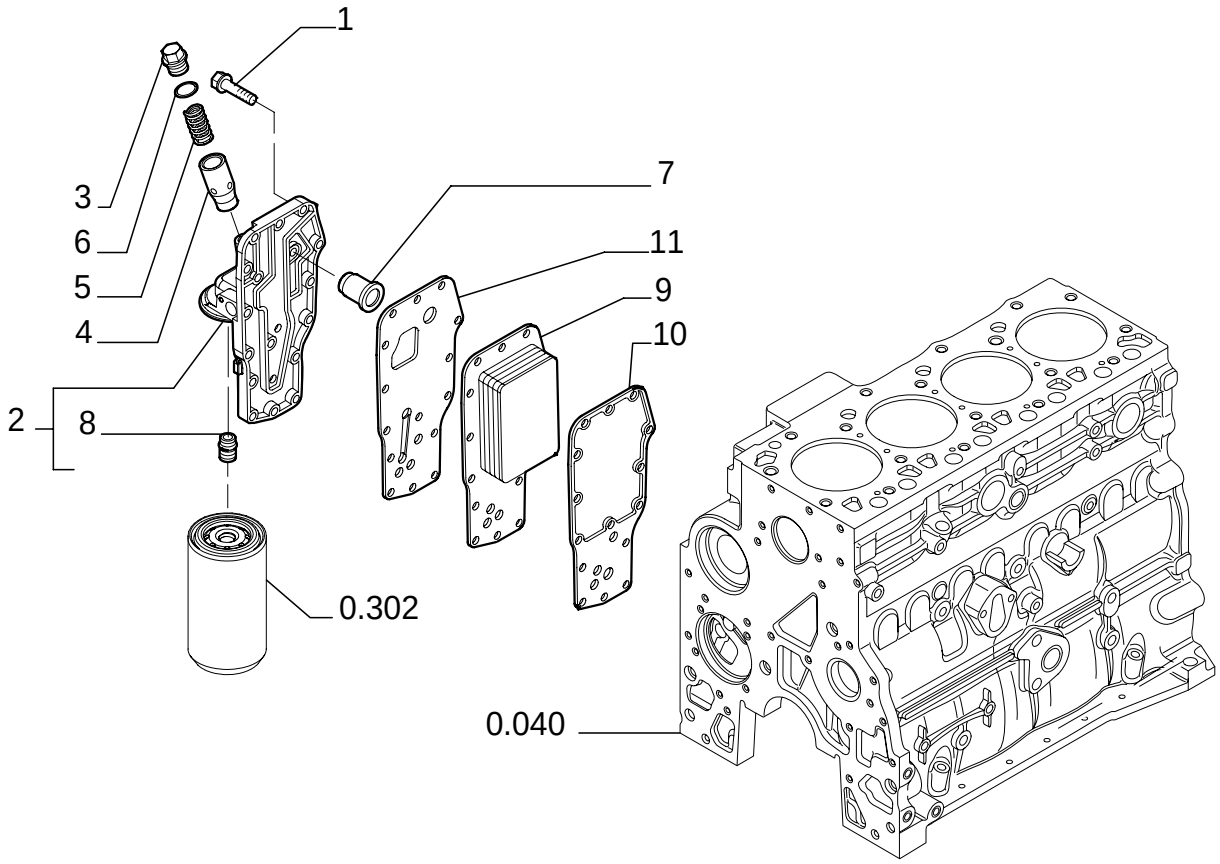

OIL FILTER AND COOLER

REF	FN	PART NUMBER	YR/SN	QTY	DESCRIPTION
1		4899019		15	SCREW 8X35
2		4899643		1	Head, Filter - ASSY
3		4895043		1	PLUG
4		4896404		1	HOUSING
5		4895045		1	SPRING, VALVE
6		4899035		1	O-RING M18.39 ID x 2.69 Thk
7		4896410		1	VALVE, HYDRAULIC
8		4893391		1	CONNECTOR, HYD.
9		4896406		1	RADIATOR
10		2830559		1	GASKET
11		4896409		1	GASKET

0.320	01	p1	12/05

WATER PUMP

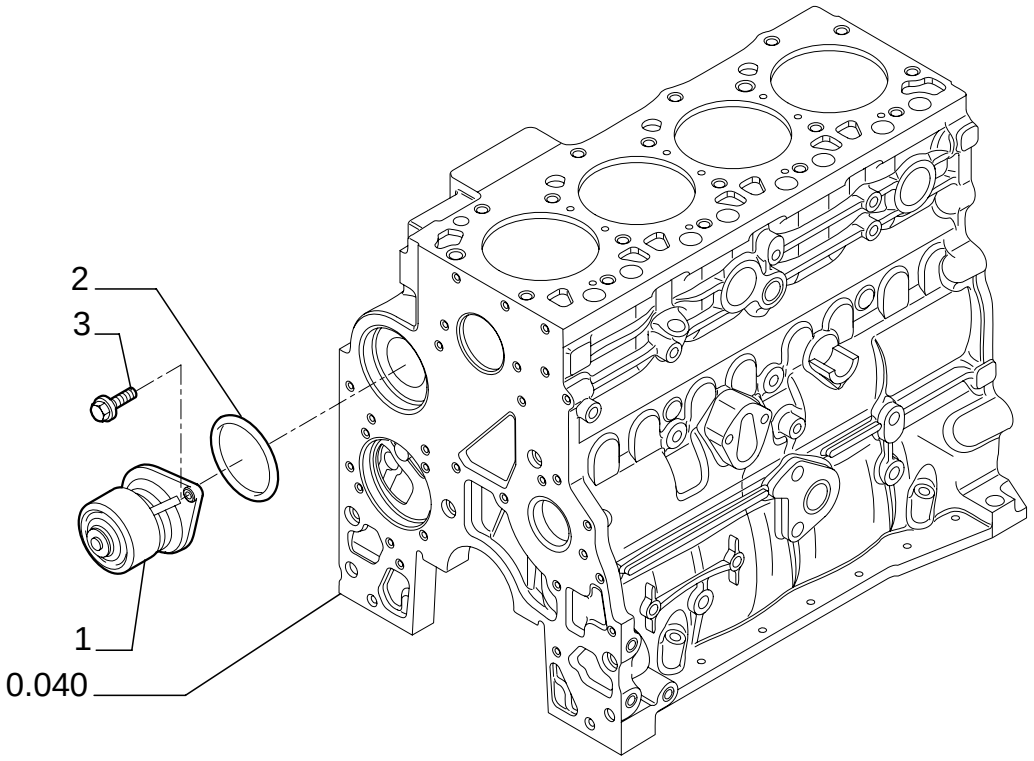

WATER PUMP

REF	FN	PART NUMBER	YR/SN	QTY	DESCRIPTION
1		4891252		1	PUMP, WATER
2		504062856		1	GASKET
3		4899079		2	SCREW M8X25

0.323	01	p1	12/05

COOLING SYSTEM - ENGINE

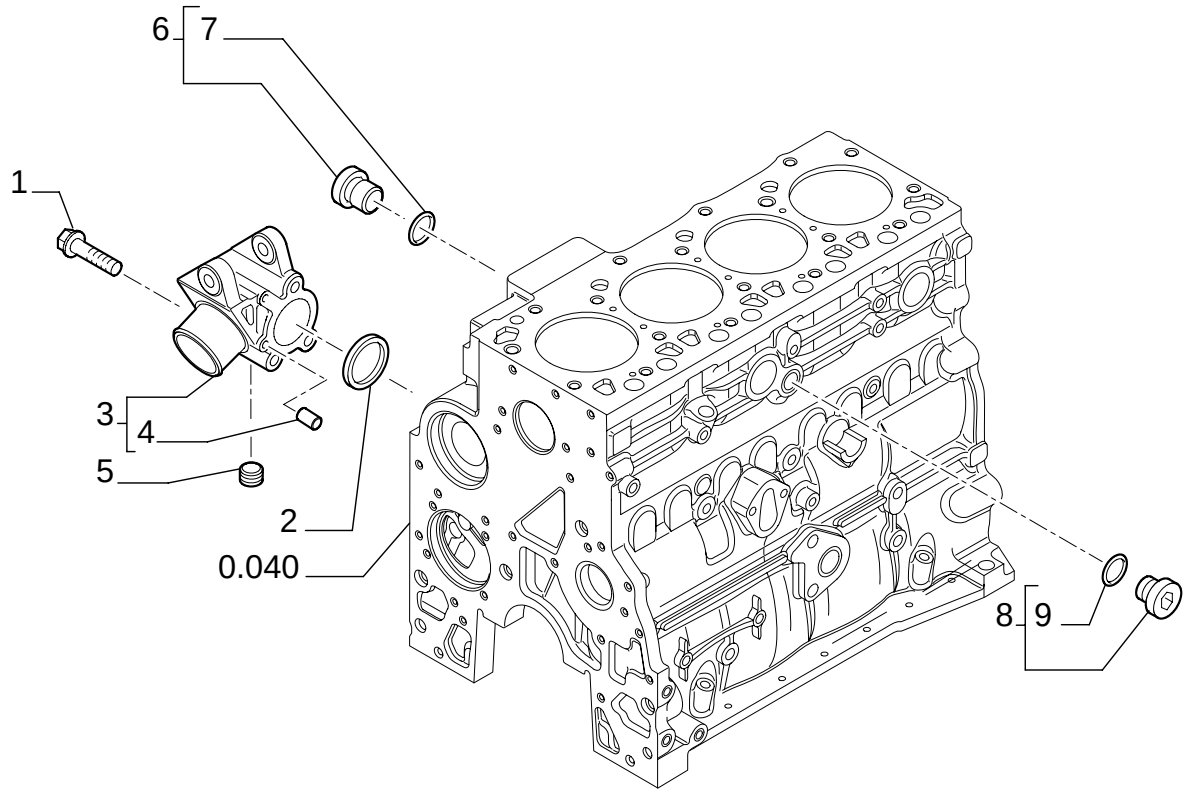

COOLING SYSTEM - ENGINE

REF	FN	PART NUMBER	YR/SN	QTY	DESCRIPTION
1		4899109		3	SCREW M10X1.5X80
2		504062710		1	O-RING
3		504064336		1	SUPPORT - ASSY
4		4895576		2	DOWEL
5		504074178		1	PLUG
6		4895392		1	PLUG - ASSY M18X1.5
7		4895393		1	O-RING
8		4895623		1	PLUG - ASSY
9		4895625		1	O-RING

0.326	01	p1	12/05

THERMOSTAT - ENGINE COOLING SYSTEM

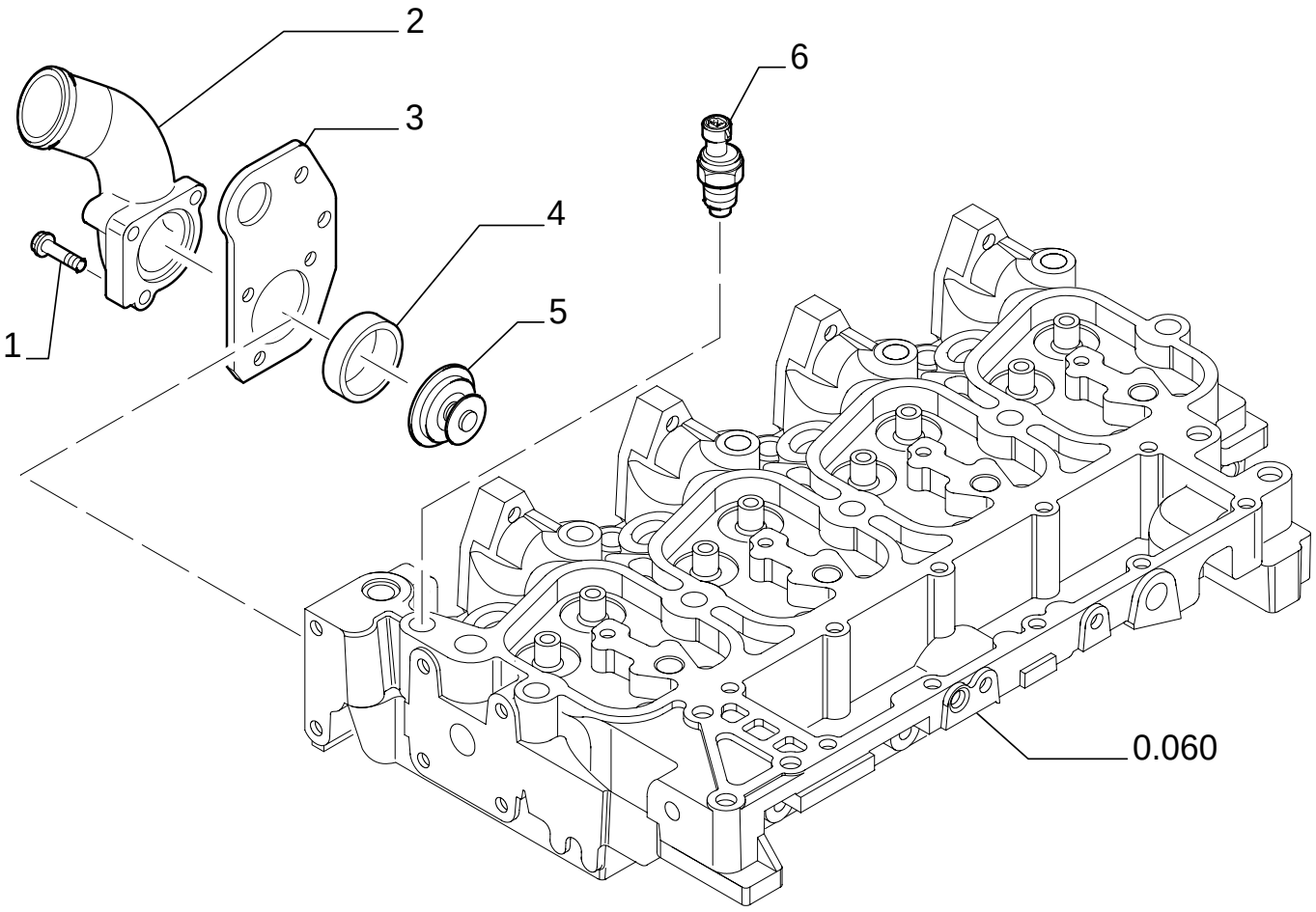

THERMOSTAT - ENGINE COOLING SYSTEM

REF	FN	PART NUMBER	YR/SN	QTY	DESCRIPTION
1		16586624		1	SCREW 8X35
1		16592624		2	SCREW 8X80
2		504051210		1	ELBOW
3		504052013		1	RING, LIFTING
4		504053512		1	GASKET
5		504038890		1	THERMOSTAT
6		504025599		1	SENDER, TEMPERATURE

0.340	01	p1	12/05

WATER PUMP - CONTROL

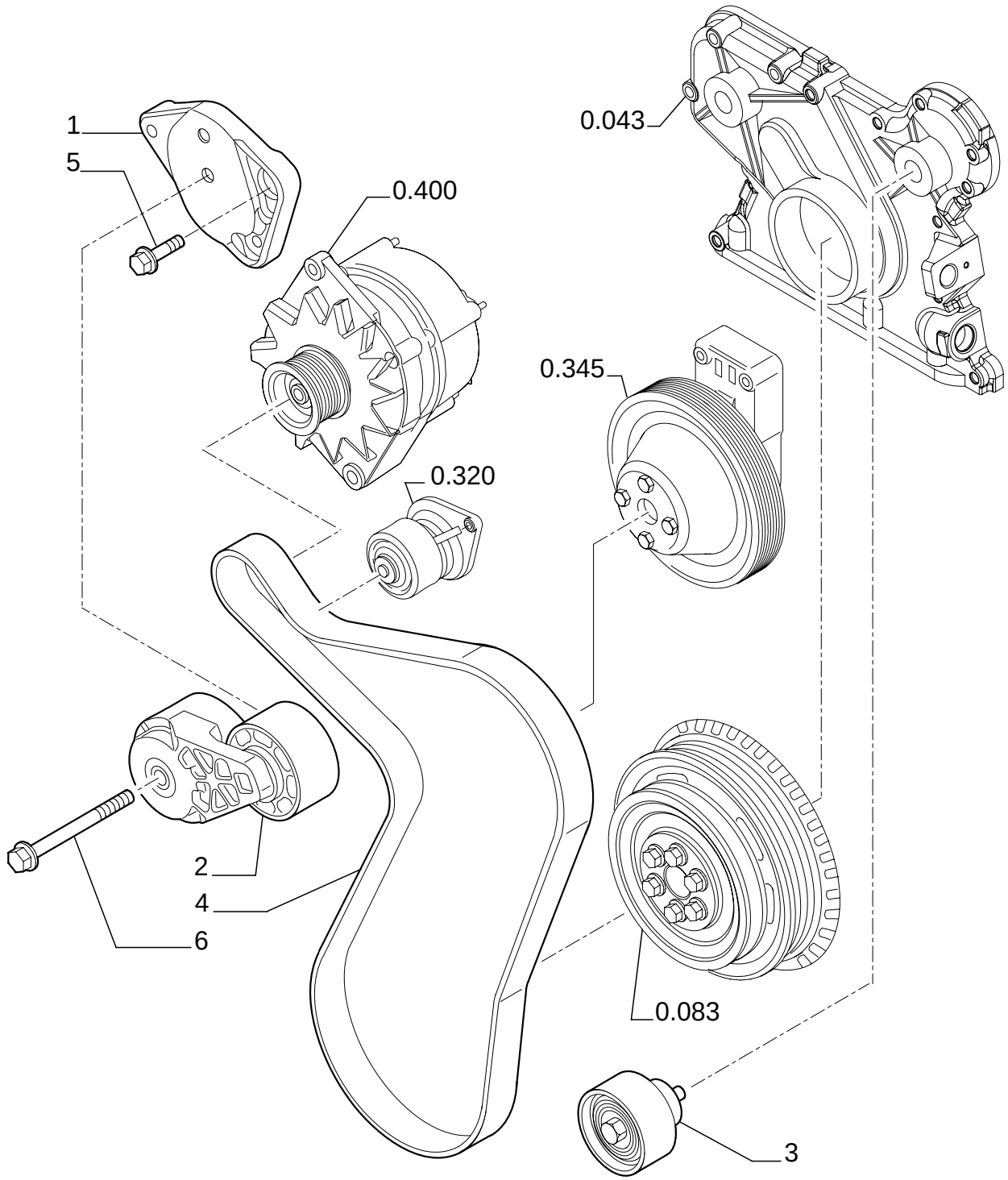

WATER PUMP - CONTROL

REF	FN	PART NUMBER	YR/SN	QTY	DESCRIPTION
1	1	504064340		1	BRACKET
2		504028028		1	TENSIONER, BELT
3		504065880		1	PULLEY
4	2, 1	REF		1	INSTRUCTION
5	1	4899079		2	SCREW M8X1,25X25
6	1	4899109		1	SCREW M10X1.5X80

(1) UP TO S/N 031056821
(2) See Page 636A 02

UP TO S/N 031056821

0.345/A	01	p1	12/05

FAN DRIVE

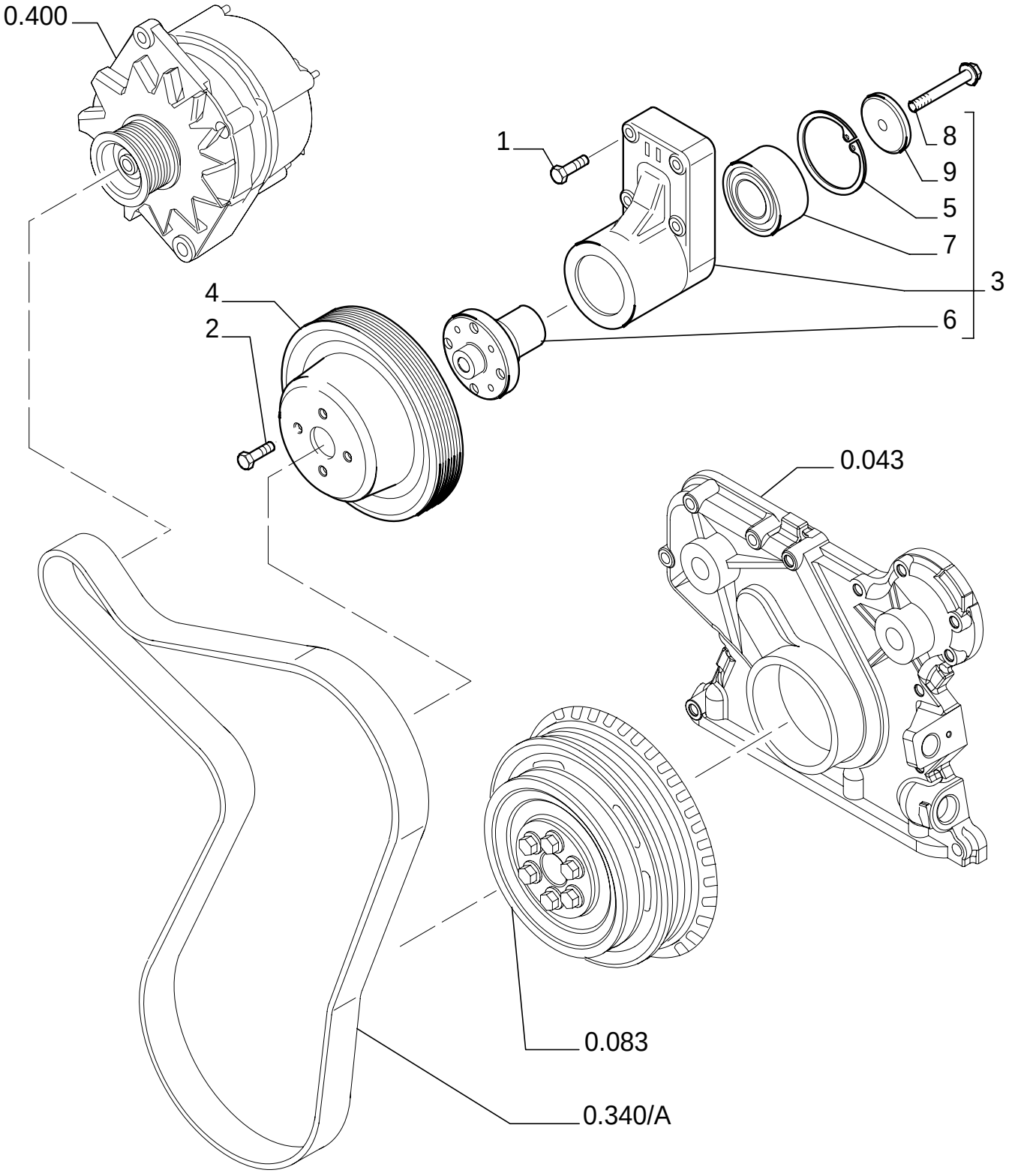

FAN DRIVE

REF	FN	PART NUMBER	YR/SN	QTY	DESCRIPTION
1		4899053		4	SCREW M8X1.25X45
2		4895291		4	SCREW M10X1.5X20
3		504035148		1	SUPPORT - ASSY
4	1	4890343		1	PULLEY
5		500395697		1	CIRCLIP
6		4892426		1	HUB
7		4892732		1	BEARING, BALL
8		16676834		1	SCREW M10X70
9		4890732		1	SPACER

(1) FROM S/N 031056822

FROM S/N 031056822 (12/01/2005)

0.350	01	p1	02/05

POWER TAKE-OFF

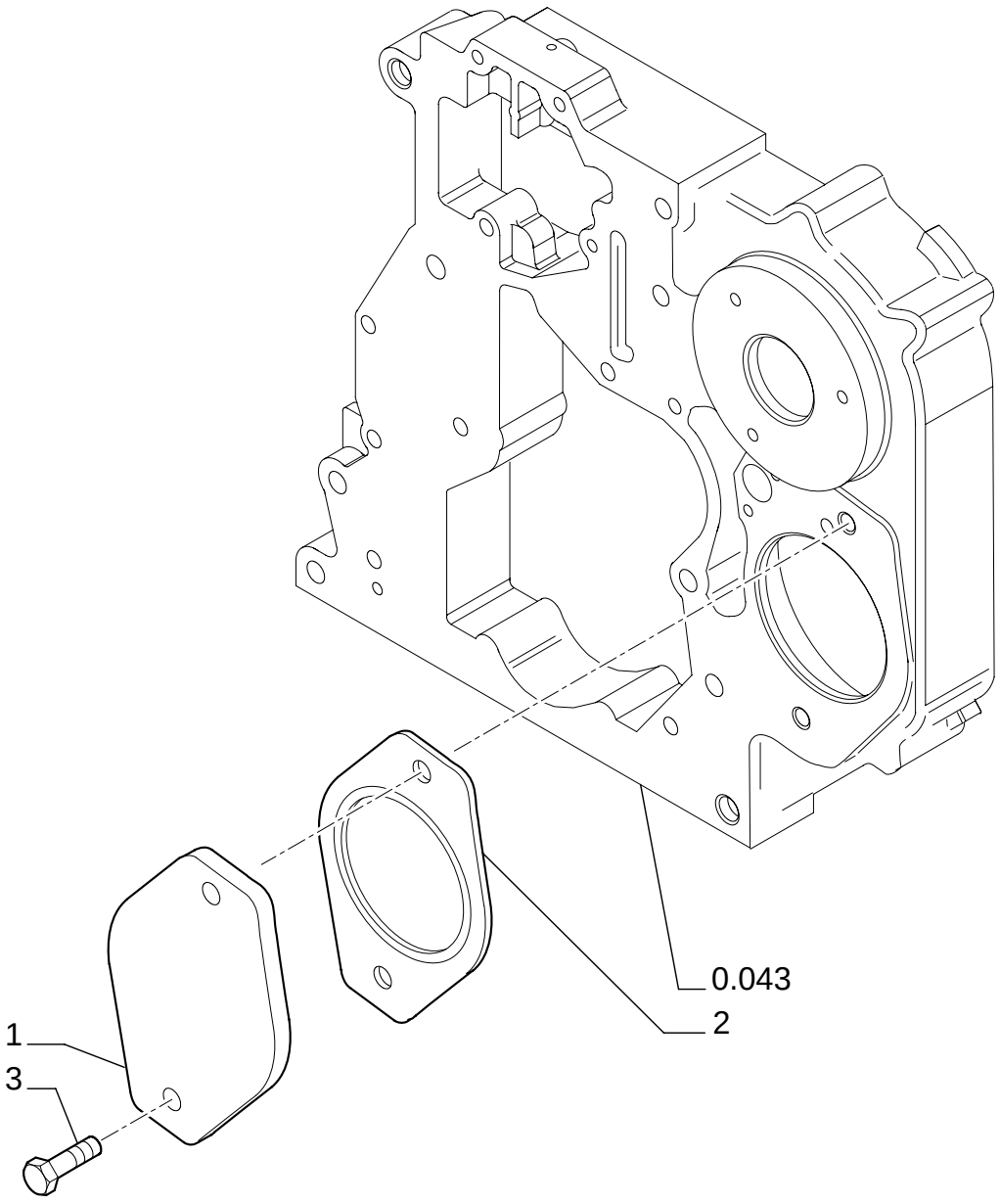

POWER TAKE-OFF

REF	FN	PART NUMBER	YR/SN	QTY	DESCRIPTION
1		504049033		1	COVER
2		4896897		1	GASKET
3		4895327		2	SCREW

0.360	01	p1	02/05

STARTER MOTOR

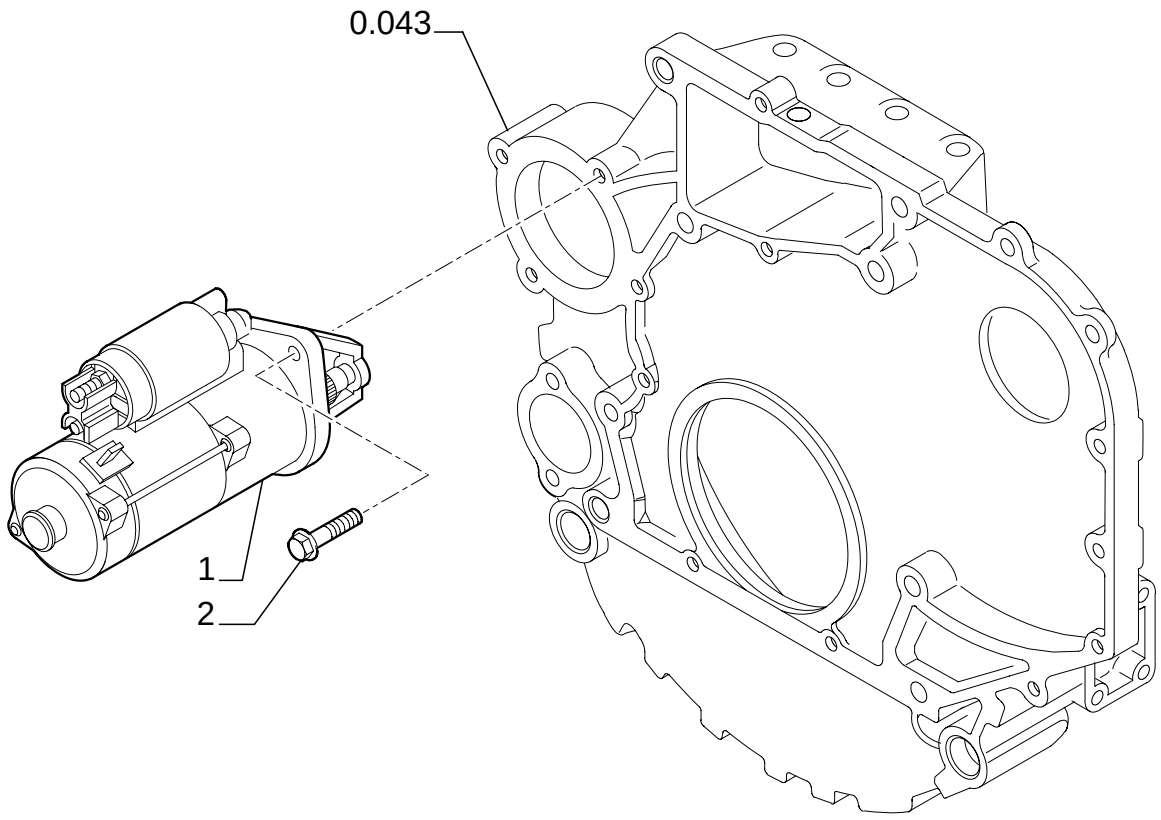

STARTER MOTOR

REF	FN	PART NUMBER	YR/SN	QTY	DESCRIPTION
1		504031929		1	MOTOR, STARTER
2		18139524		3	SCREW M10X1.5X30

0.400	01	p1	12/05

ALTERNATOR

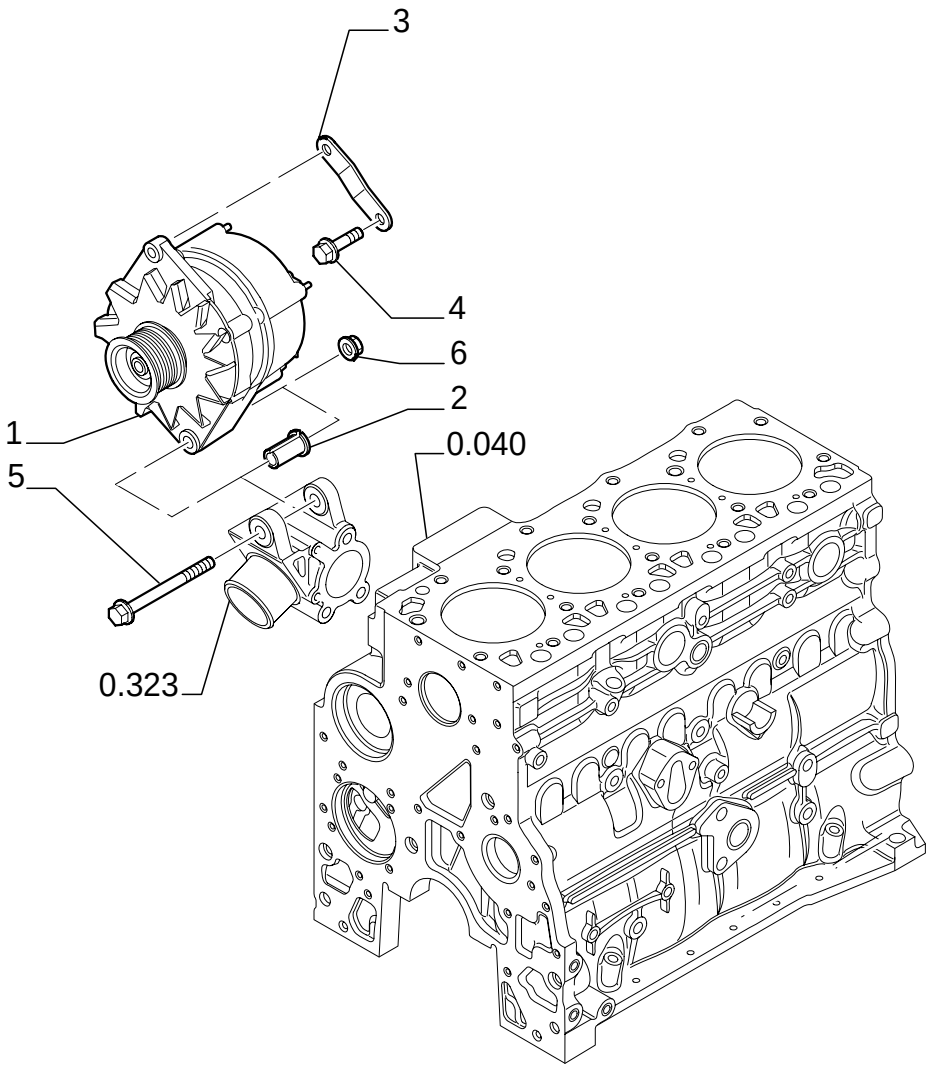

ALTERNATOR

REF	FN	PART NUMBER	YR/SN	QTY	DESCRIPTION
1	1	87422777		1	ALTERNATOR - ASSY
2		504060839		1	SPACER
3		504061464		1	BRACKET
4		4895291		1	SCREW M10X1.5X20
5		4895538		1	SCREW M10X1.5X120
6		4895166		1	NUT M10X1.5

(1) See Page 636A 04

0.450	01	p1	12/05

ENGINE - LIFT HOOK

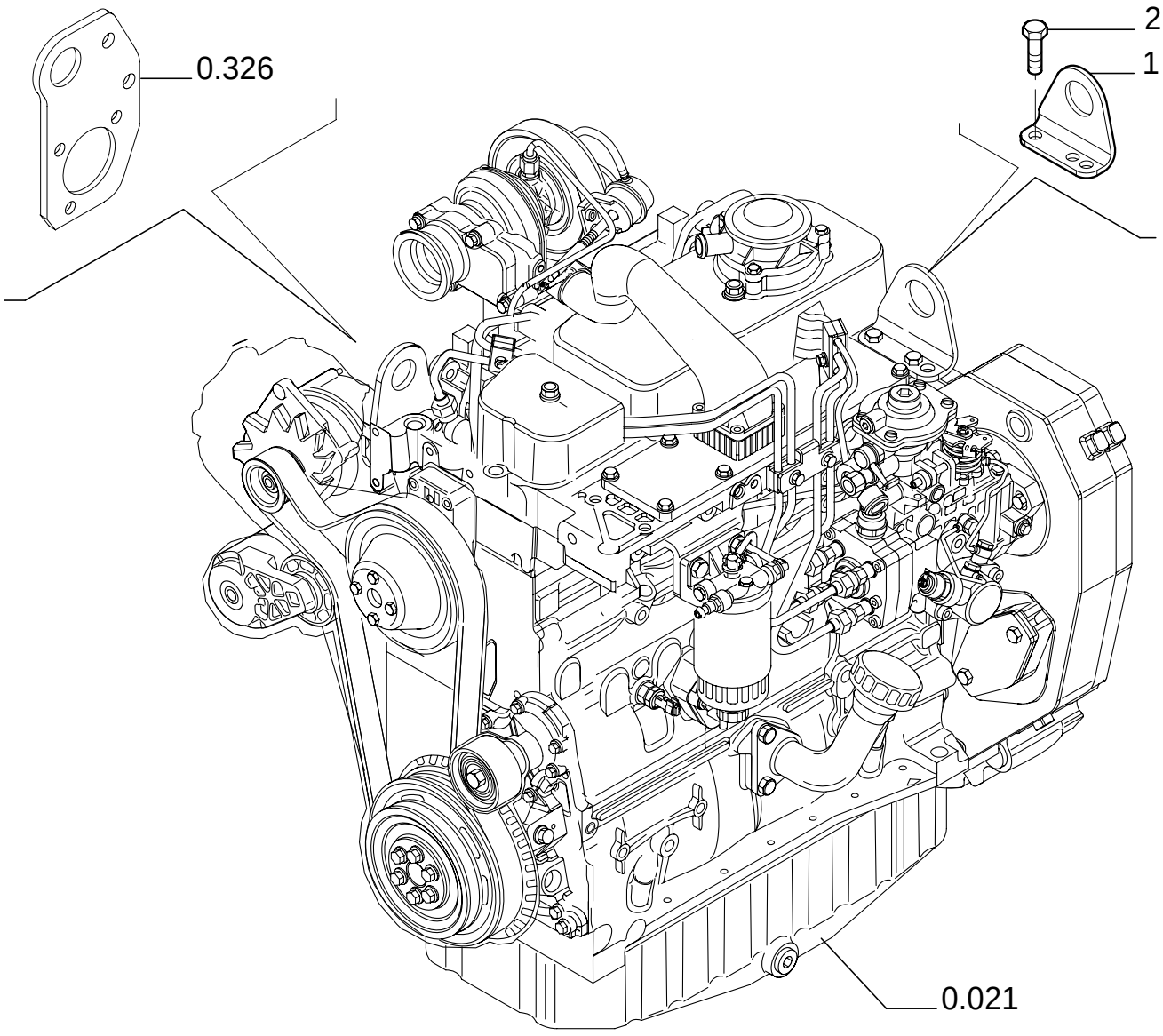

ENGINE - LIFT HOOK

REF	FN	PART NUMBER	YR/SN	QTY	DESCRIPTION
1		504026078		1	RING, LIFTING
2		4899073		2	SCREW M12X1.75X30

342	01	p1	11/05

KIT VISCOUS FAN DRIVE

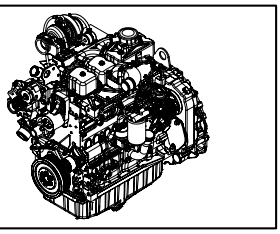

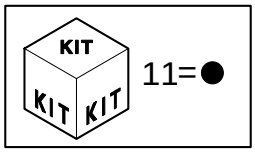

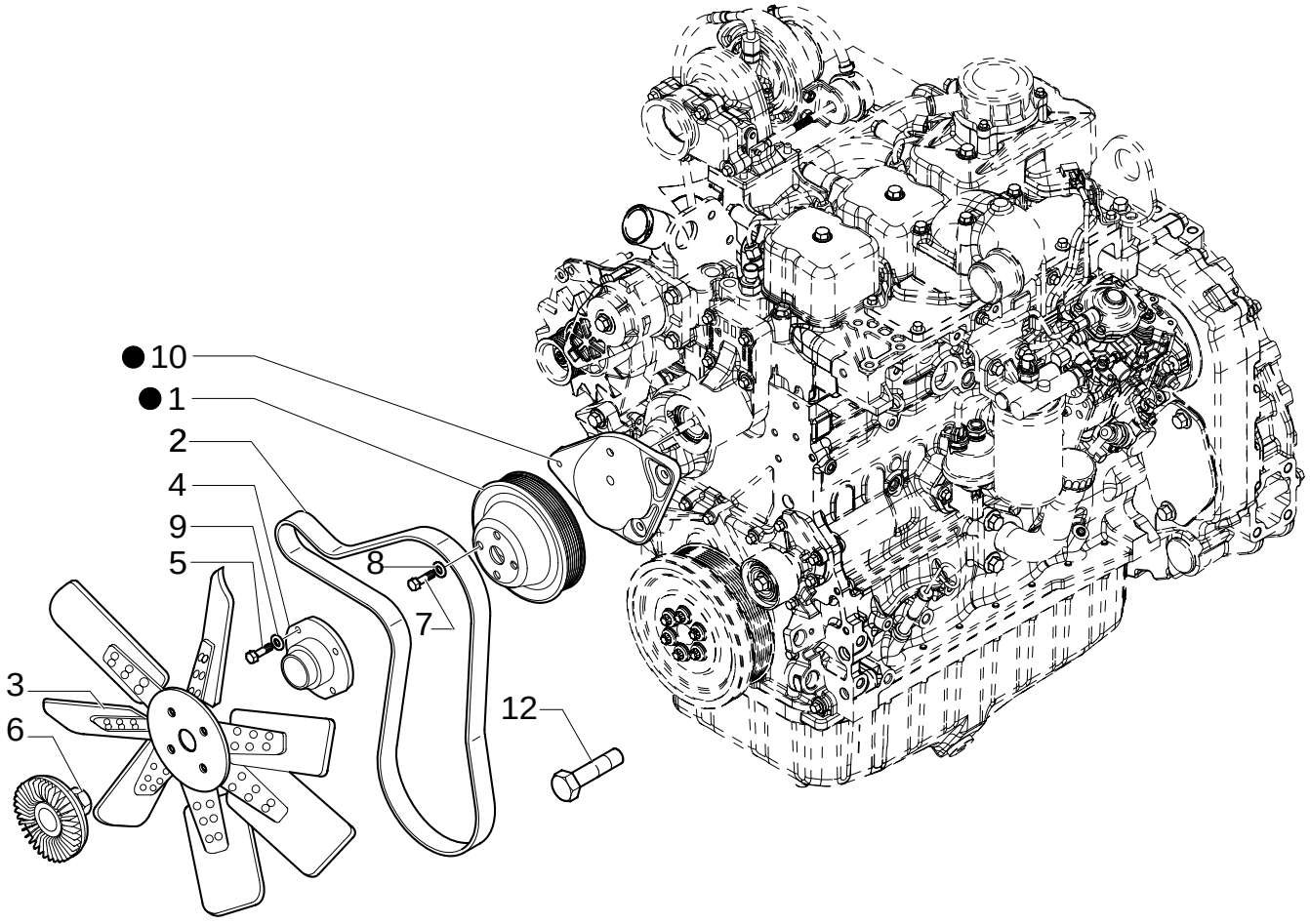

KIT VISCOUS FAN DRIVE

REF	FN	PART NUMBER	YR/SN	QTY	DESCRIPTION
1		4890343		1	PULLEY
2		87415774		1	BELT, TRANSMISSION
3		47049943		1	BLOWER
4		47049809		1	ADAPTER
5		47049186		4	BOLT M10x30
6		87340008		1	DRIVE ASSY.
7		47042342		4	SCREW M8x16
8		47048992		4	WASHER
9		47048972		4	WASHER
10		2852621		1	SUPPORT
11		87419385		1	BODY
12		16043221		6	SCREW M8x16

ACCESSORY ENGINE

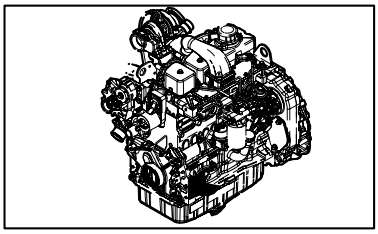

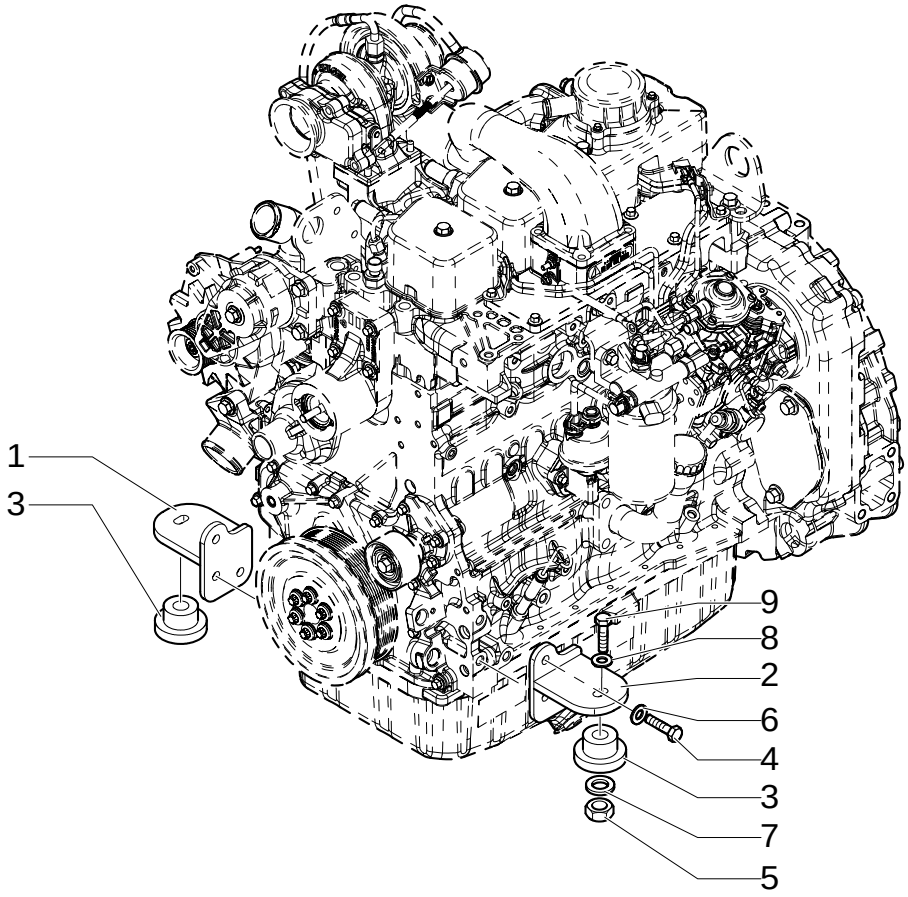

ACCESSORY ENGINE

REF	FN	PART NUMBER	YR/SN	QTY	DESCRIPTION
1		87407275		1	BRACKET
2		87407276		1	BRACKET
3		87416966		2	SUPPORT
4		11112421		6	SCREW
5		16105011		2	NUT
6		47048976		6	WASHER
7		85801585		2	WASHER, SEALING 65mm OD
8		85802618		2	WASHER, SEALING
9		87410647		2	SCREW

ACCESSORY ENGINE - VENTILATOR

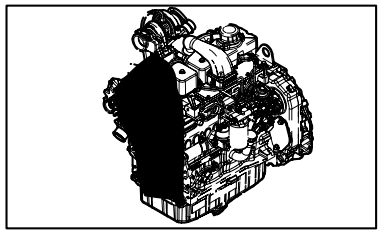

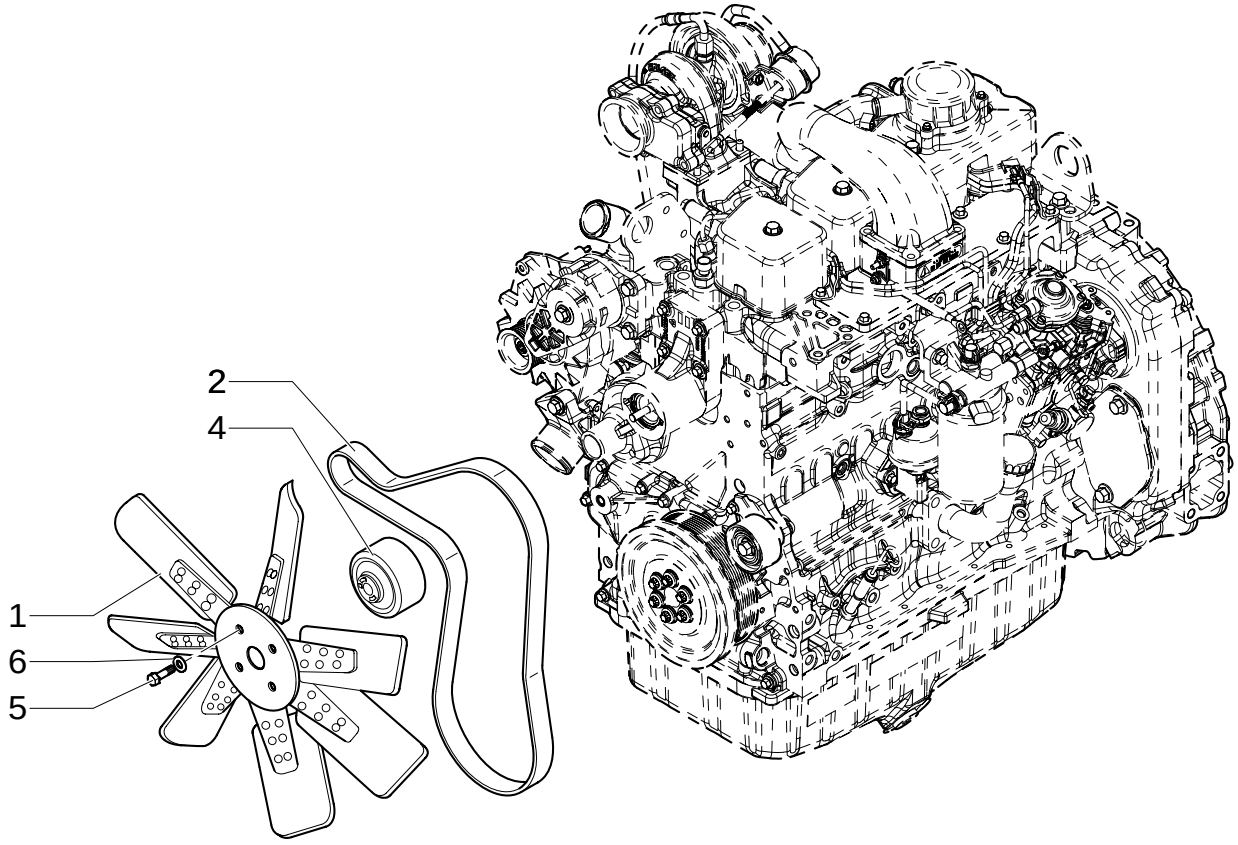

ACCESSORY ENGINE - VENTILATOR

REF	FN	PART NUMBER	YR/SN	QTY	DESCRIPTION
1		47049372		1	WASHER
2	1	85826230		1	BELT
3		85825164		1	FAN
4		85826229		1	SPACER
5		47049101		4	SCREW

(1) LB90.B And LB95.B With And Without Air Conditioner / LB110.B And LB115.B Without Air Conditioner

Without Ari Conditioner

ACCESSORY ENGINE- ALTERNATOR

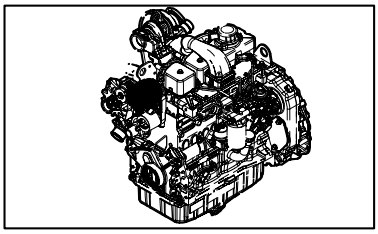

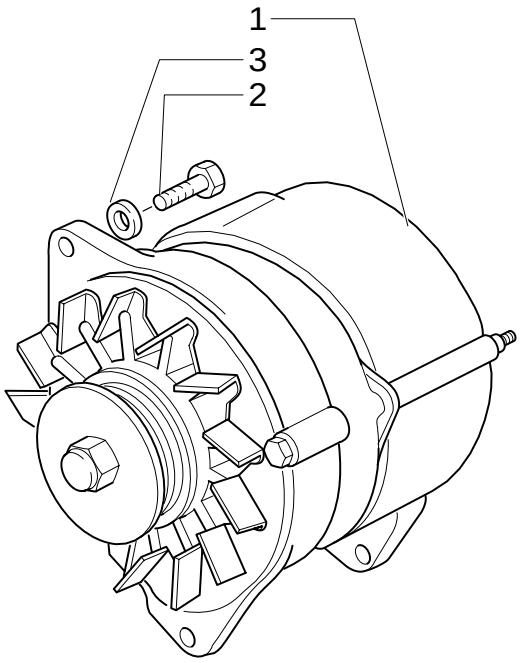

ACCESSORY ENGINE- ALTERNATOR

REF	FN	PART NUMBER	YR/SN	QTY	DESCRIPTION
1		87422777		1	ALTERNATOR
2		47049160		1	SCREW M8 x 20
2		16043621		1	SCREW M8 x 1.25 x 25
3		47048992		1	WASHER

636A	05	p1	12/05

ACCESSORY ENGINE - BRACKET MUFFLER

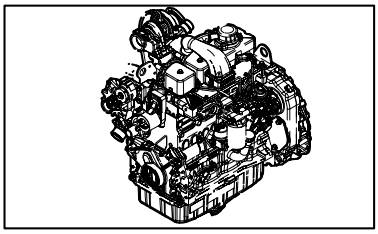

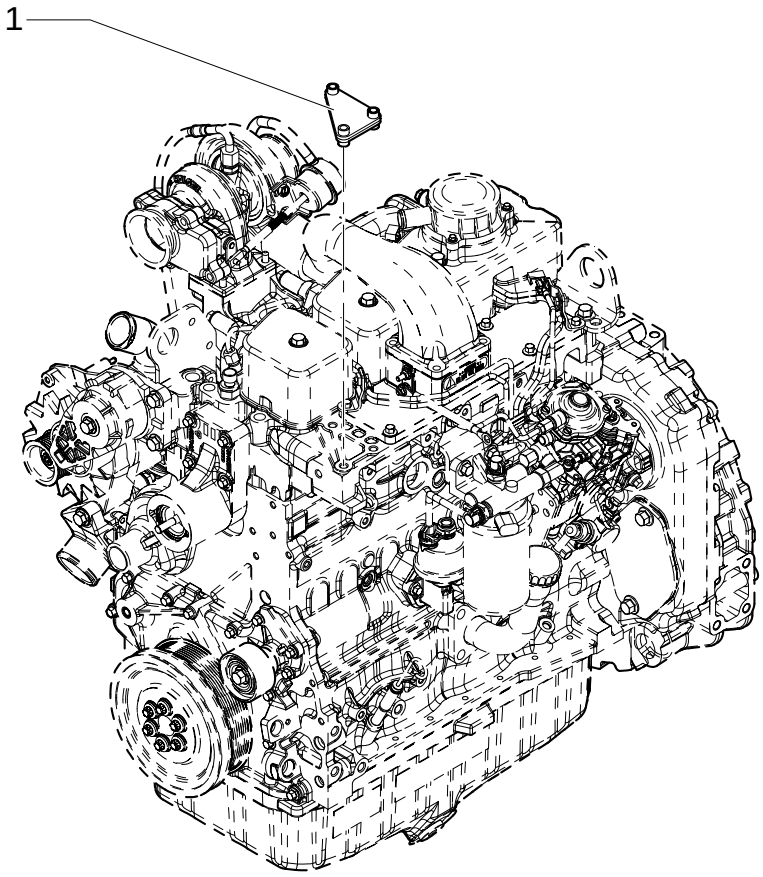

ACCESSORY ENGINE - BRACKET MUFFLER

REF	FN	PART NUMBER	YR/SN	QTY	DESCRIPTION
1		{87437661}		1	

Without Air Conditioner

ACCESSORY ENGINE - STARTER

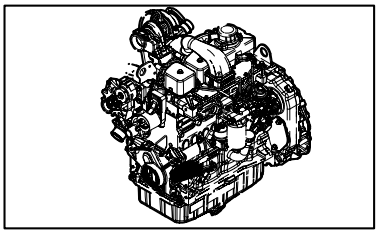

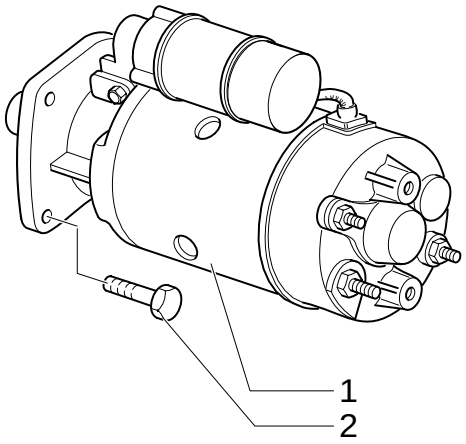

ACCESSORY ENGINE - STARTER

REF	FN	PART NUMBER	YR/SN	QTY	DESCRIPTION
1		86992395		1	MOTOR, STARTER
2		86511845		1	SCREW

NOTES

SECTION INDEX

SEC. 02	00	FUEL TANK - MUFFLER - RADIATOR - AIR CLEANER - CHASSIS
1.14.0	01	FUEL TANK & RELATED PARTS
1.15.0	01	MUFFLER & EXTENSIONS
1.15.0	02	MUFFLER & EXTENSIONS
1.17.2	01	EXPANSION TANK
1.19.1	01	AIR CLEANER & HOSES
1.21.5/ 5	01	FRAME (CENTER PIVOT)
175	01	AIR INTAKE CAP & PRE-CLEANER
176	01	AIR INTAKE CAP & PRE-CLEANER
203	01	FRONT WEIGHTS
215	01	FRONT WEIGHTS
636	01	RADIATOR
636	02	RADIATOR
636/ 1	01	RADIATOR
636/ 2	02	RADIATOR
637/ 1	01	RADIATOR
637/ 2	01	RADIATOR
637/ 3	01	RADIATOR

FUEL TANK - MUFFLER - RADIATOR - AIR CLEANER - CHASSIS

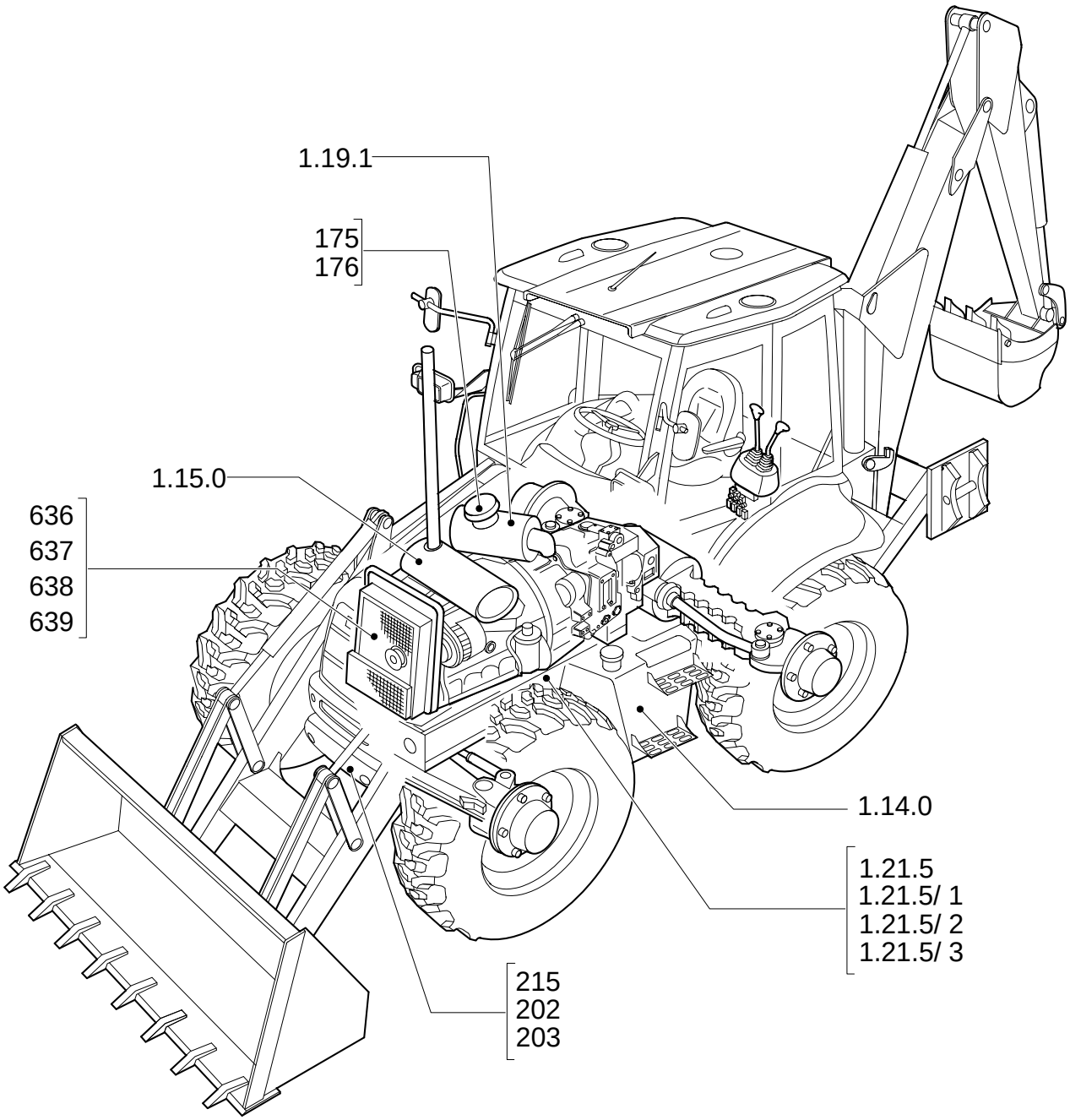

FUEL TANK - MUFFLER - RADIATOR - AIR CLEANER - CHASSIS

REF	FN	PART NUMBER	YR/SN	QTY	DESCRIPTION

1.14.0	01	p1	11/05

FUEL TANK & RELATED PARTS

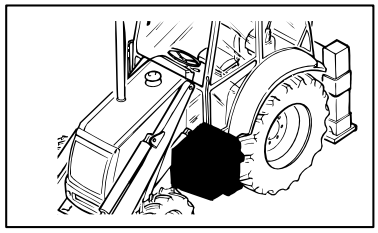

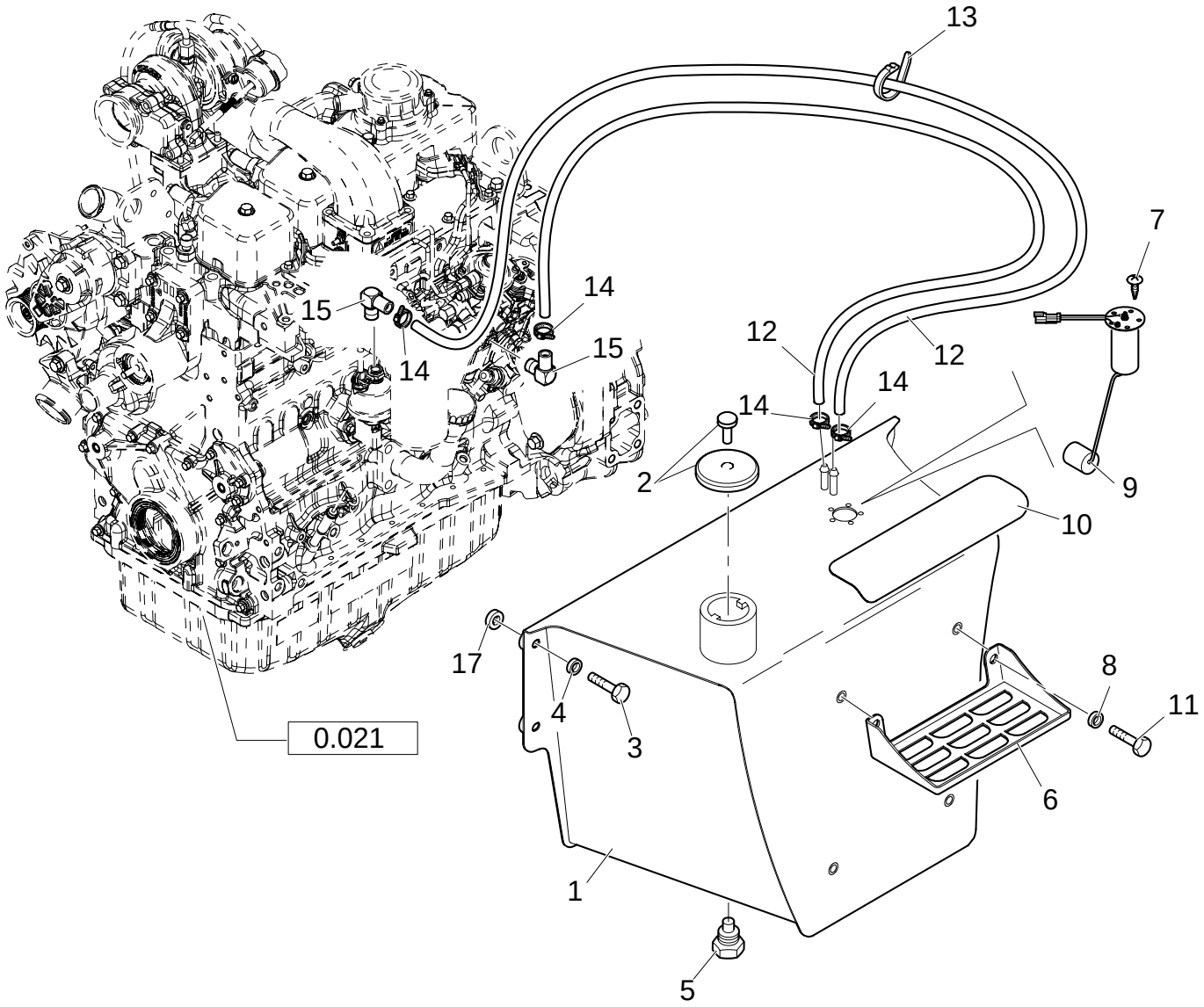

FUEL TANK & RELATED PARTS

REF	FN	PART NUMBER	YR/SN	QTY	DESCRIPTION
1		87355226		1	FUEL TANK
2		85825392		1	CAP Locking
3		15540721		4	SCREW M12x30
4		47048973		4	WASHER
5		47050671		1	PLUG
6		85801218		2	FOOT REST
7		85825158		5	SCREW M5x12
8		47048976		4	WASHER M12
9		86985587		1	SENSOR
10		87404910		1	FOOT BOARD
11		15540721		4	SCREW
12		87403672		2	HOSE, FLEXIBLE
13		14560187		4	COLLAR
14		85824381		4	COLLAR
15		87414560		2	CONNECTOR, HYD.
16		85804675		1	KEY, LOCK
17		87353741		4	SPACER

MUFFLER & EXTENSIONS

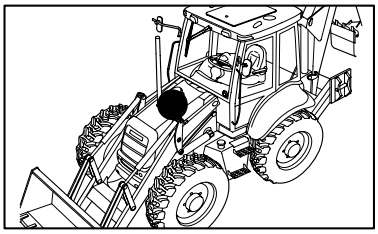

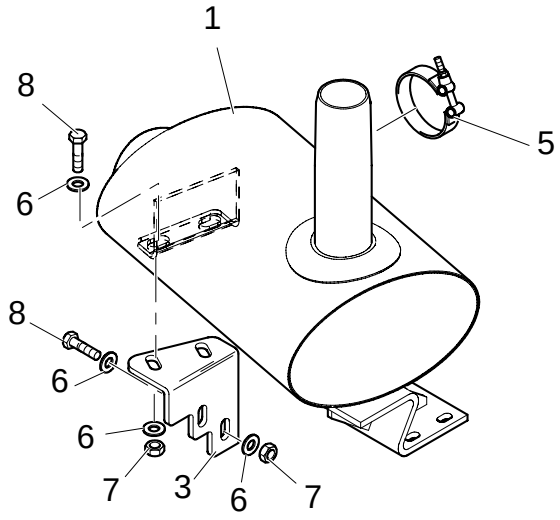

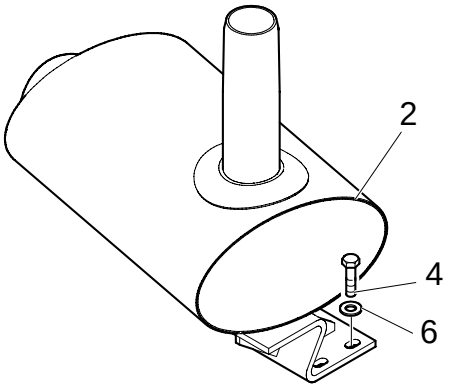

MUFFLER & EXTENSIONS

REF	FN	PART NUMBER	YR/SN	QTY	DESCRIPTION
1	1	87436824		1	MUFFLER
1	2	87347670		1	MUFFLER
2	3, 1	87436825		1	MUFFLER
2	2	87347671		1	MUFFLER
3		87412988		1	BRACKET
4		47049098		3	SCREW M10x60
5		47048898		1	COLLAR
6		47048972		11	WASHER M10
7		47049041		4	NUT M10
8		47049186		4	BOLT M10x30

(1) UP TO S/N XXX
(2) FROM TO S/N XXX
(3) With Spark Arrester

MUFFLER & EXTENSIONS

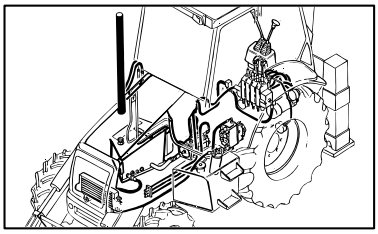

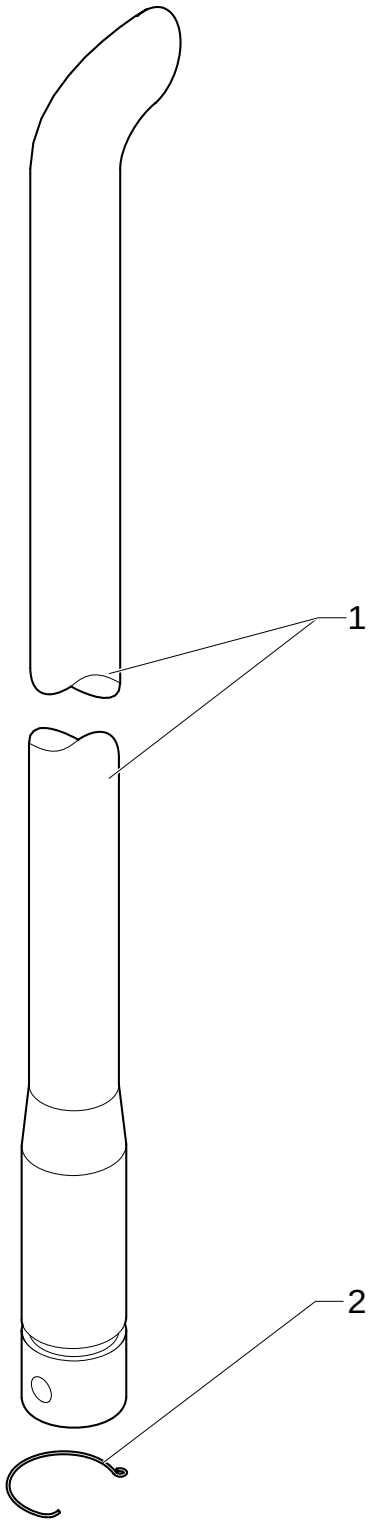

MUFFLER & EXTENSIONS

REF	FN	PART NUMBER	YR/SN	QTY	DESCRIPTION
1		47055750		1	TUBE, RIGID
2		87416643		1	SPRING

1.17.2	01	p1	12/05

EXPANSION TANK

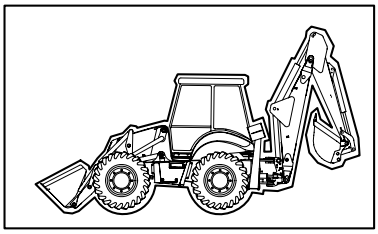

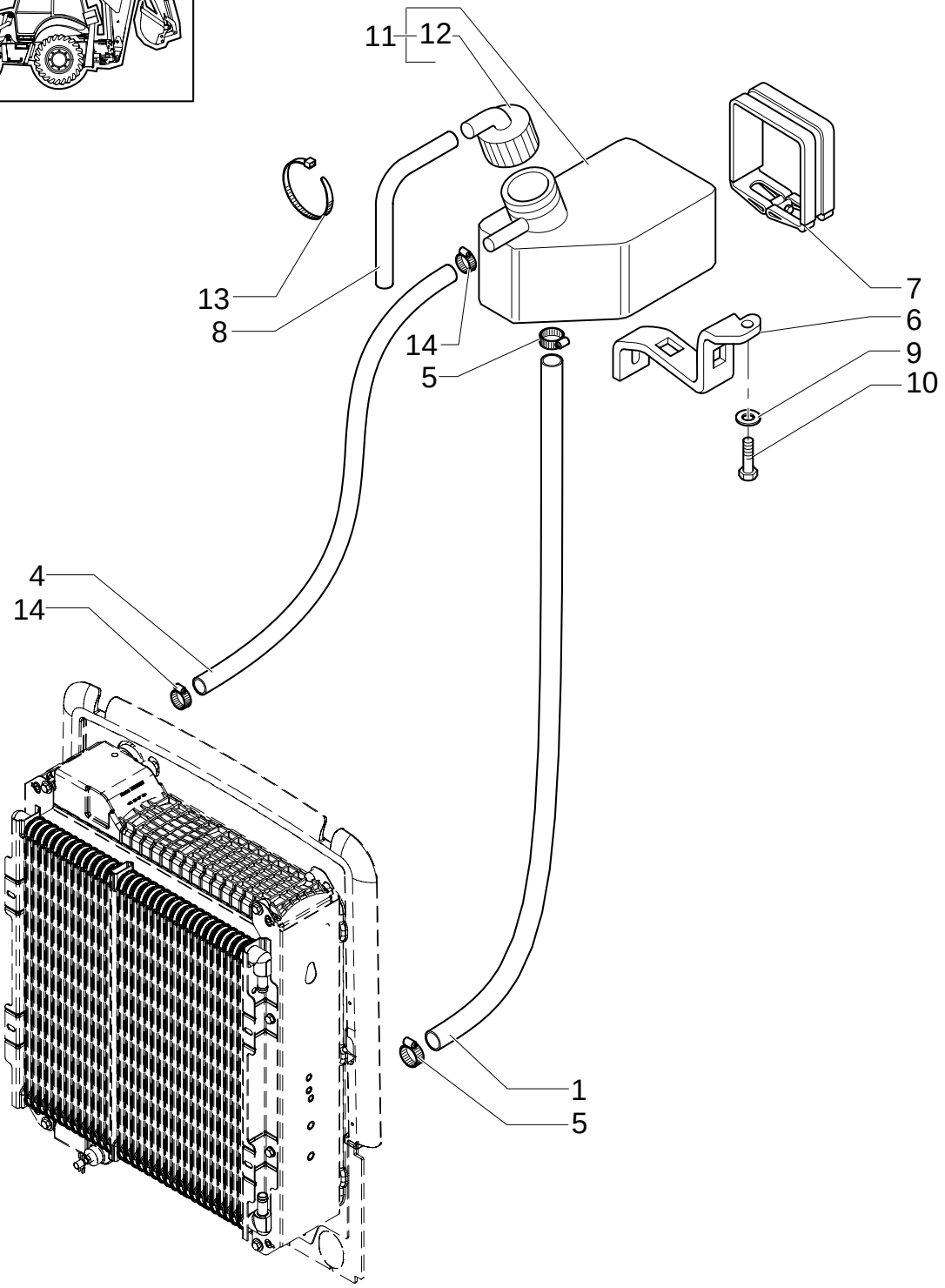

EXPANSION TANK

REF	FN	PART NUMBER	YR/SN	QTY	DESCRIPTION
1		87410546		1	TUBE, RIGID
4		87410547		1	TUBE, RIGID
5		85803013		2	CLAMP
6		85805256		1	PLATE
7		85804302		1	COLLAR
8		85803226		1	HOSE, FLEXIBLE
9		11193979		2	WASHER, LOCK 8x22x1.5
10		16043821		2	SCREW M8x30
11		85802804		1	PAN
12		85803019		1	PLUG
13		14560187		4	COLLAR
14		85824381		2	COLLAR

1.19.1	01	p1	12/05

AIR CLEANER & HOSES

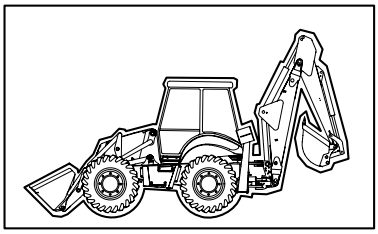

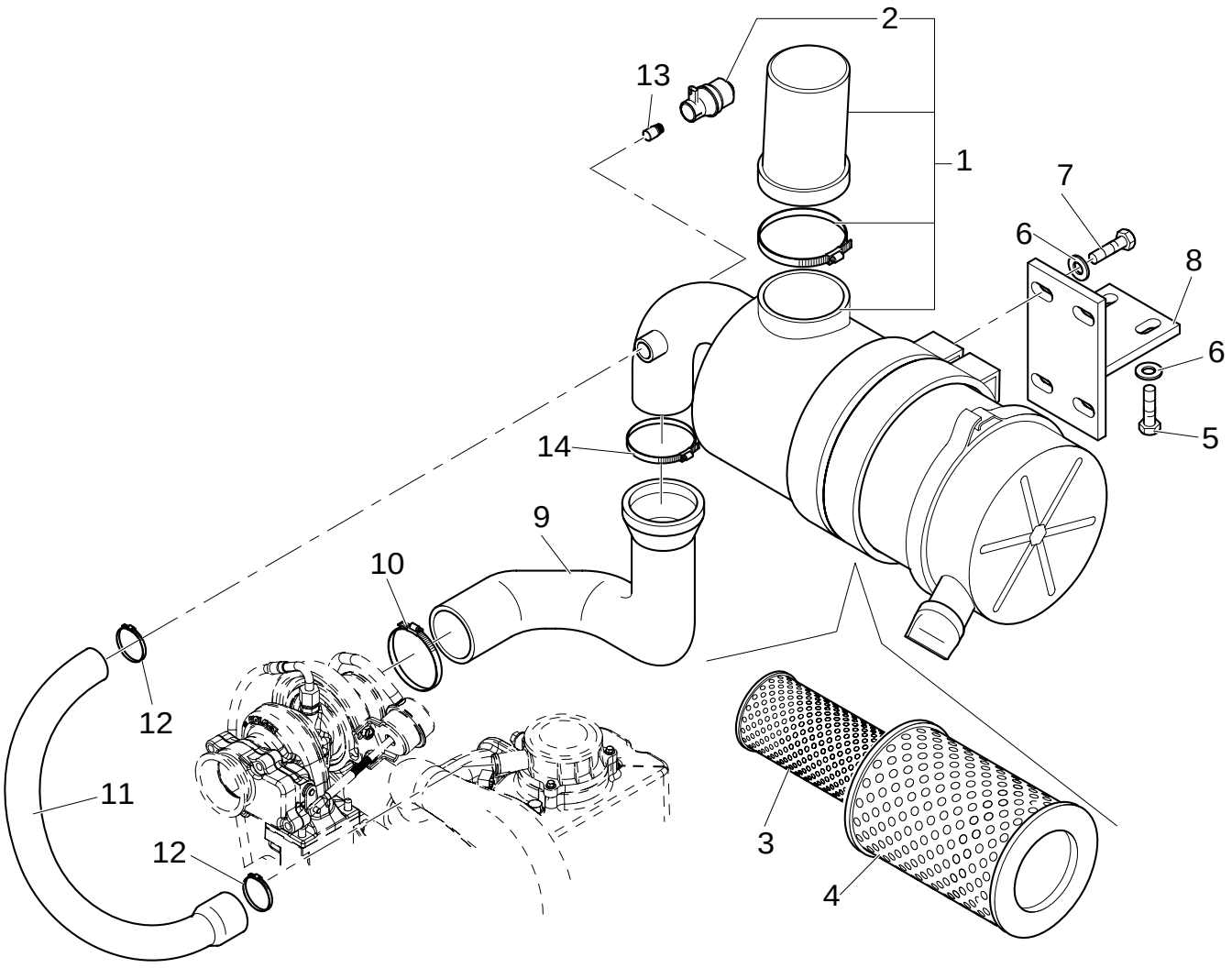

AIR CLEANER & HOSES

REF	FN	PART NUMBER	YR/SN	QTY	DESCRIPTION
1		87442705		1	FILTER, AIR ASSY
2		87442601		1	SWITCH
3	1	87418364		1	FILTER, ELEMENT
4	2	87418365		1	FILTER, ELEMENT
5		16043821		2	SCREW M8x30
6		47048962		6	WASHER 9x16x1.6
7		47049160		4	SCREW M8x20
8		87412754		1	BRACKET
9	3	87442309		1	HOSE
9	4	87335345		1	HOSE
10		85803010		1	CLAMP
11		87442310		1	HOSE, FLEXIBLE
12		85803013		2	CLAMP
13		47048450		1	CONNECTOR, HYD.
14		85802743		1	SEALING RING COLLAR

(1) Primary
(2) Secondary
(3) UP TO S/N XXX
(4) FROM TO S/N XXX

1.21.5/ 5	01	p1	12/05

FRAME (CENTER PIVOT)

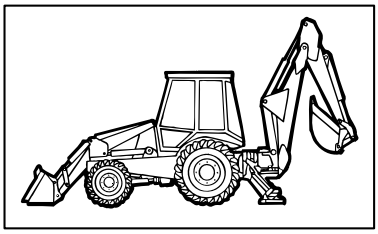

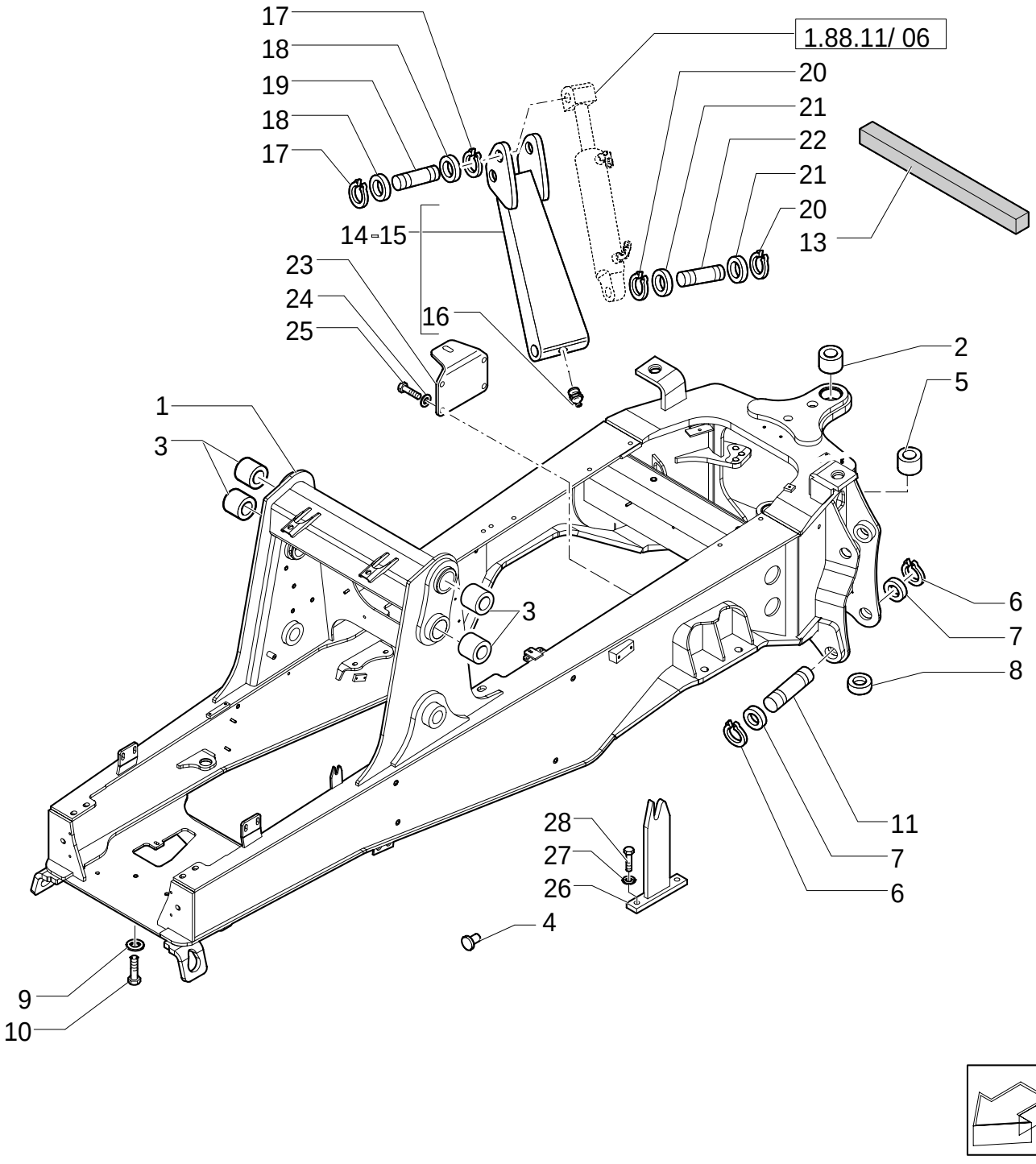

FRAME (CENTER PIVOT)

REF	FN	PART NUMBER	YR/SN	QTY	DESCRIPTION
1	1	87350828		1	FRAME
2		85700728		2	BUSHING
3		85804468		2	BUSHING
4		85804422		2	SPACER
5		83910645		2	BUSHING
6		N800272S36M		4	RING
7		290885		4	WASHER
8		85802903		1	INSULATOR
9		10520431		6	WASHER 20x35
10		15989134		6	SCREW M20x1.5x100
11		D7NNC669A		2	PIN
12		87901S8		1	NIPPLE, LUBE 1/8"-27
13		85802338		1	RUBBER BAND
14	2	{85803960}		1	RH
15	2	{85803959}		1	LH
16		87916S8		1	NIPPLE, LUBE
17		N800270S36M		4	RING
18		D7NNC622A		4	SPACER
19		E8NNC667AA		2	PIN
20		N800271S36M		4	RING
21		D7NNC622C		4	SPACER
22		85801262		2	PIN
23		85804171		1	SUPPORT
24		11198679		4	WASHER, LOCK 12x24x3.2
25		15540534		4	SCREW M12x1.25x35
26		87302151		1	SUPPORT RH
27		11193874		2	WASHER, LOCK 8x16x1.4
28		16043421		2	SCREW M8x1.25x20

(1) Includes 2, 3, 5
(2) Includes 16

175	01	p1	02/05

AIR INTAKE CAP & PRE-CLEANER

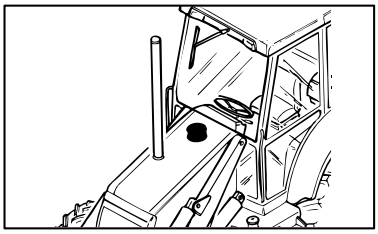

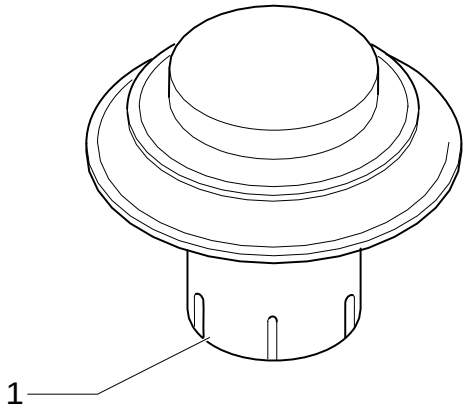

AIR INTAKE CAP & PRE-CLEANER

REF	FN	PART NUMBER	YR/SN	QTY	DESCRIPTION
1		85804602		1	INTAKE, AIR

Standard

AIR INTAKE CAP & PRE-CLEANER

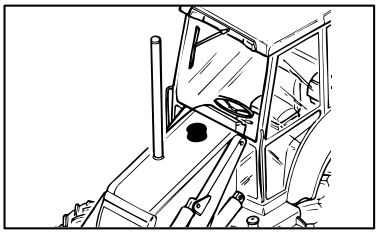

EQUIP. 176

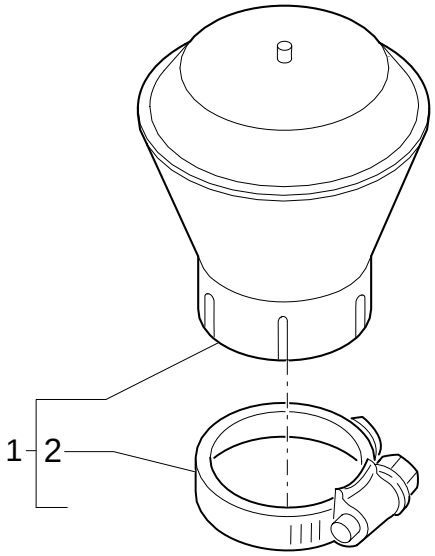

EQUIP. 197

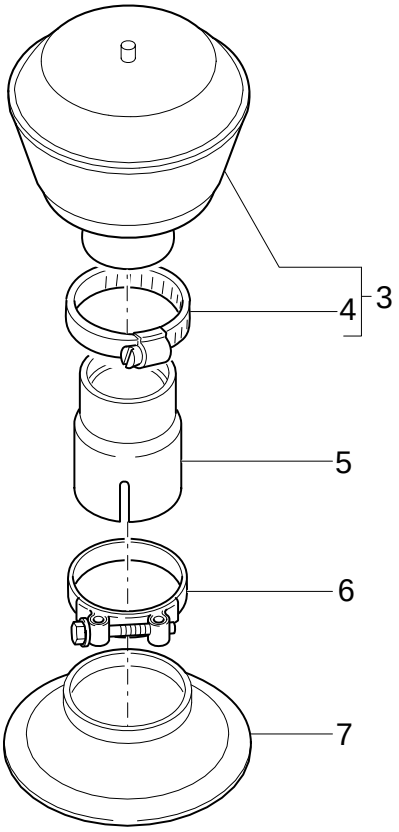

AIR INTAKE CAP & PRE-CLEANER

REF	FN	PART NUMBER	YR/SN	QTY	DESCRIPTION
1		85804347		1	PRE-CLEANER ASSY, AIR
2		85802743		1	SEALING RING COLLAR
3		85804347		1	PRE-CLEANER ASSY, AIR
4		85802743		1	SEALING RING COLLAR
5		85804349		1	EXTENSION
6		85811975		1	COLLAR
7		85802829		1	GUARD

Centrifugal Pre-cleaner

203	01	p1	02/05

FRONT WEIGHTS

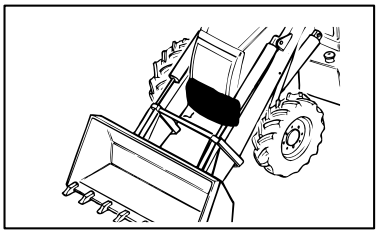

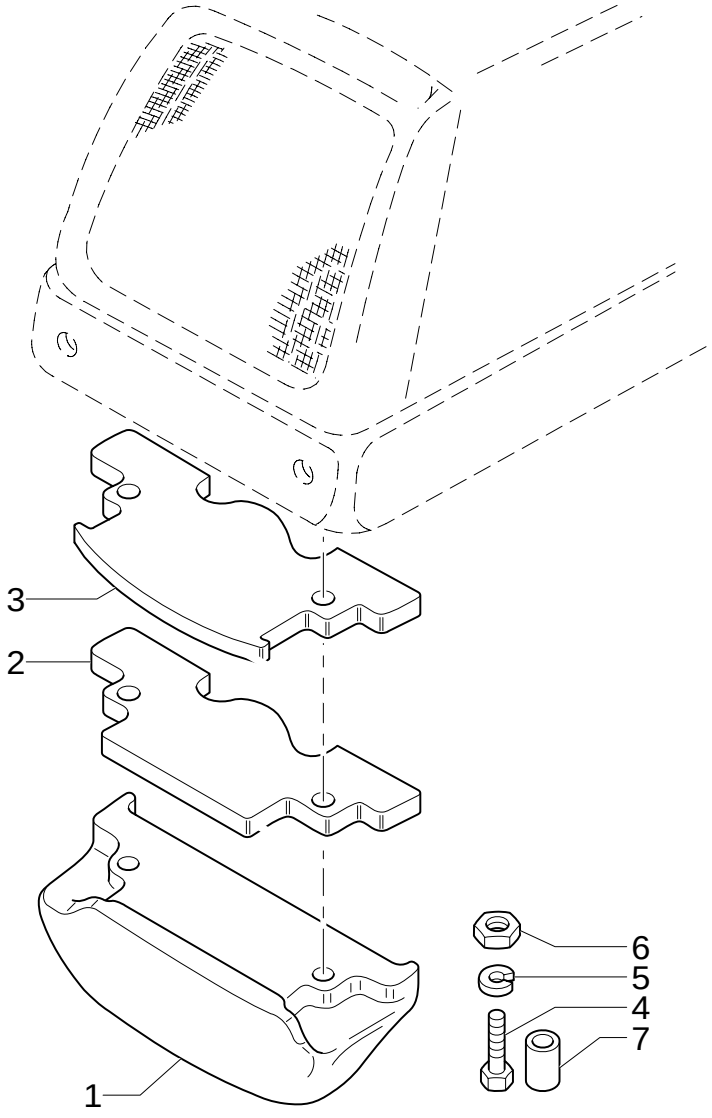

FRONT WEIGHTS

REF	FN	PART NUMBER	YR/SN	QTY	DESCRIPTION
1		85804838		1	WEIGHT
2		85805071		1	WEIGHT
3		85805069		1	WEIGHT
4		85805300		2	SCREW M20X1,5X300
5		10520431		4	WASHER
6		12575121		2	NUT M20X1,5
7		85801324		2	TUBE, RIGID 21X30X50

215	01	p1	09/05

FRONT WEIGHTS

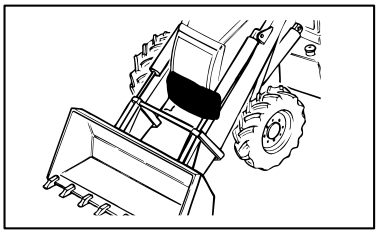

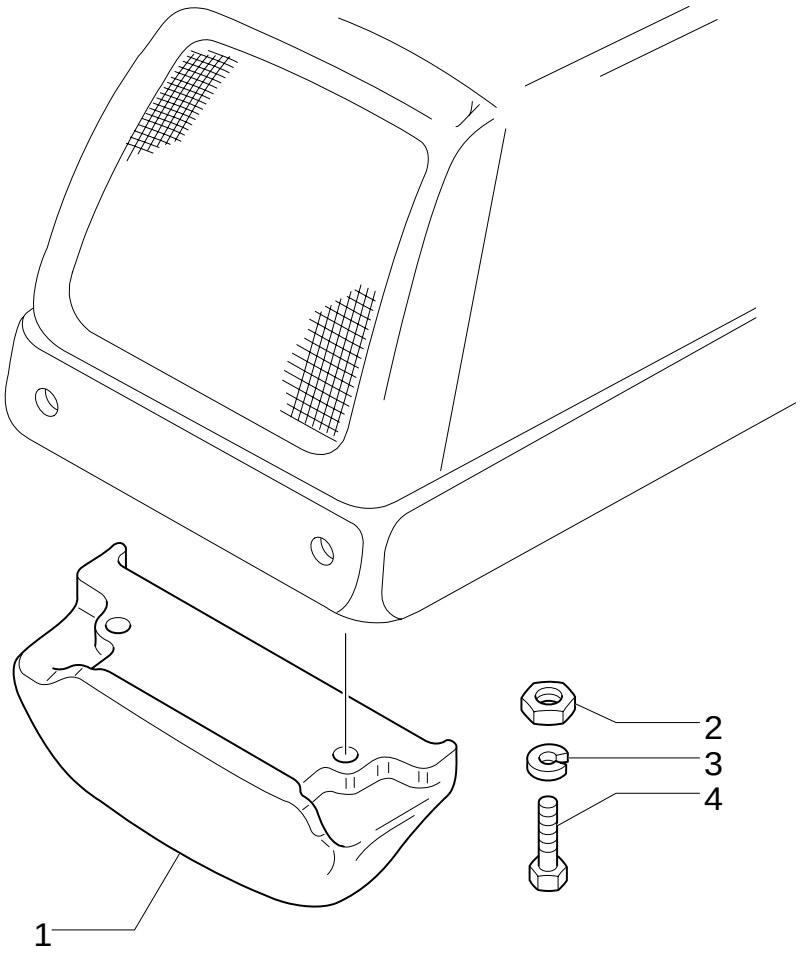

FRONT WEIGHTS

REF	FN	PART NUMBER	YR/SN	QTY	DESCRIPTION
1		85804838		1	WEIGHT
2		12575121		2	NUT M20X1,5
3		10520431		4	WASHER
4		15991134		2	SCREW M20X1,5X200

636	01	p1	12/05

RADIATOR

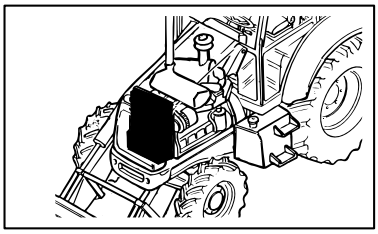

KIT KIT KIT

20= ●
21= ▲

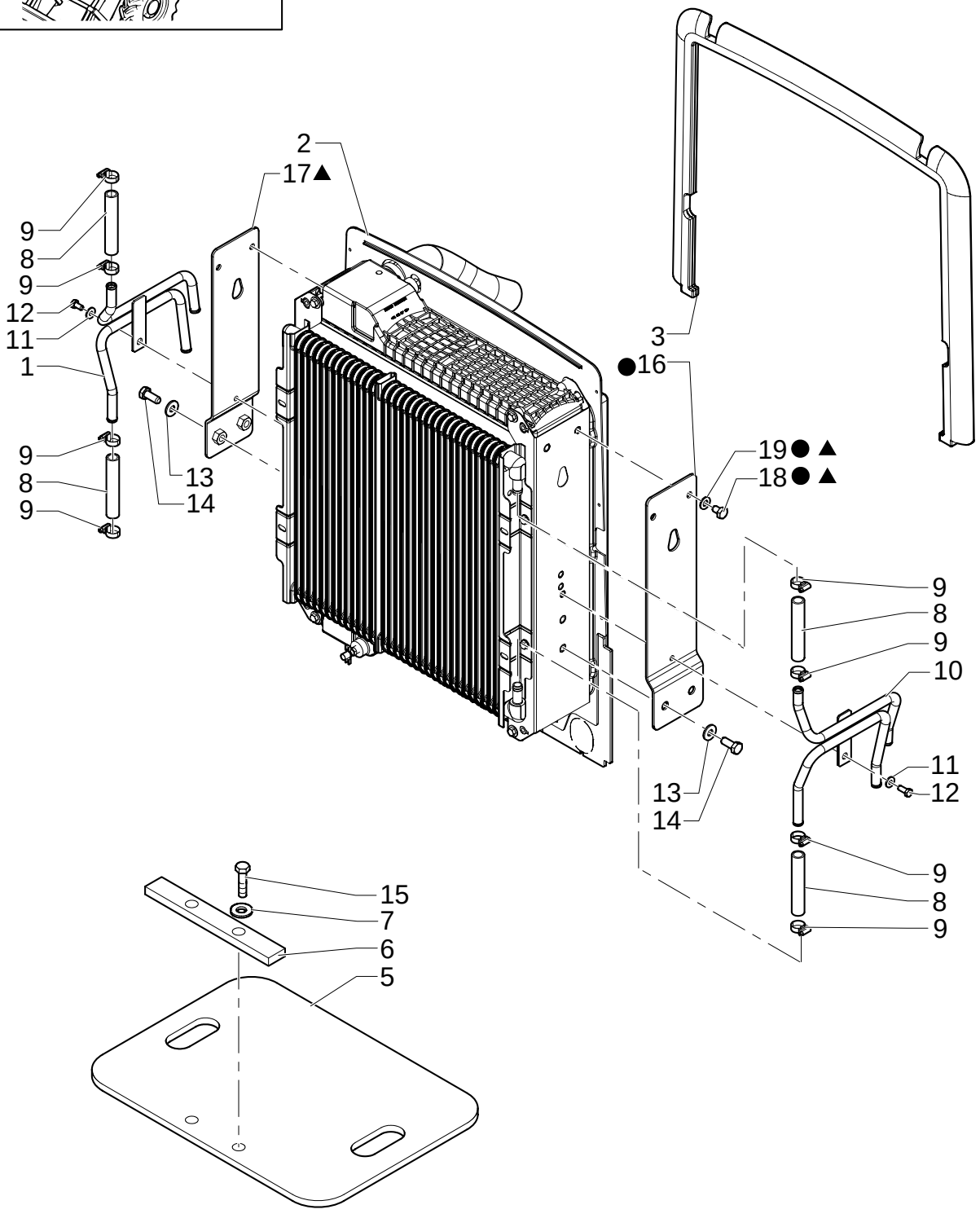

RADIATOR

REF	FN	PART NUMBER	YR/SN	QTY	DESCRIPTION
1		87302280		1	TUBE, HYD
2		{87302920}		1	
3		87303120		1	GASKET
5		85827830		1	SEAL, RUBBER
6		85827831		1	PLATE
7		11193879		2	WASHER, LOCK 8x16x1.4
8		87302508		4	HOSE, FLEXIBLE
9		87314076		8	COLLAR
10		87302279		1	TUBE, HYD
11		12646701		2	WASHER 8x20x2
12		16043221		2	SCREW M8x16
13		12646901		4	WASHER 12x28x3
14		11112421		4	SCREW M12x30
15		16043821		2	SCREW M8x30
16		85828168		1	BRACKET
17		87302922		1	BRACKET
18		87306887		4	SCREW
19		87306886		4	WASHER
20	1	{87345950}		AR	LH
21	2	{87345951}		AR	RH

(1) Includes 16, 18, 19
(2) Includes 17, 18, 19

Without Air Conditioner

636	02	p1	12/05

RADIATOR

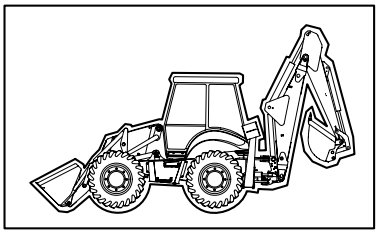

KIT KIT KIT 22= ●

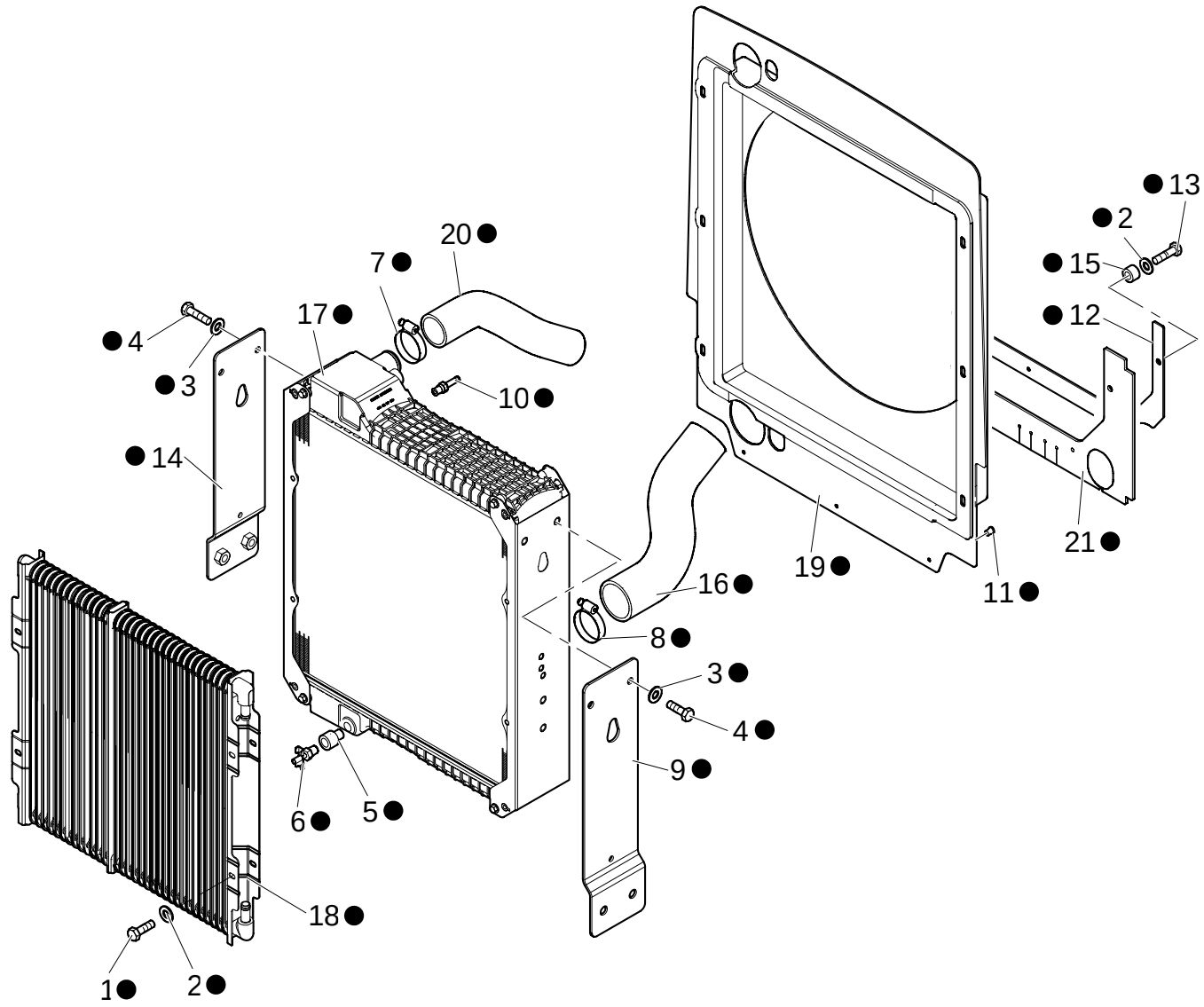

RADIATOR

REF	FN	PART NUMBER	YR/SN	QTY	DESCRIPTION
1		16043021		8	SCREW M8x12
2		47048962		10	WASHER
3		87306886		4	WASHER
4		87306887		4	SCREW M10x16
5		47049581		1	GASKET
6		47050674		1	VALVE, ENG EXHAUST, STD
7		47050733		1	COLLAR
8		47050734		1	COLLAR
9		85828168		4	BRACKET LH
10		87419240		1	CONNECTOR, HYD.
11		85825170		3	BUTTON
12		86983070		1	SEAL, RUBBER
13		87026277		2	SCREW
14		87302922		1	BRACKET RH
15		85825169		1	SPACER
16		87407272		1	HOSE, LARGE
17	1	87410096		1	RADIATOR
18	2	87410099		1	PLATE
19		87410916		1	CONVEYOR
20		87413237		1	HOSE, LARGE
21		87416637		1	GASKET
22		{87302920}		1	

(1) Water
(2) Oil Cooler

Without Air Conditioner

636/ 1	01	p1	12/05

RADIATOR

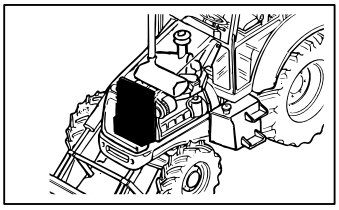

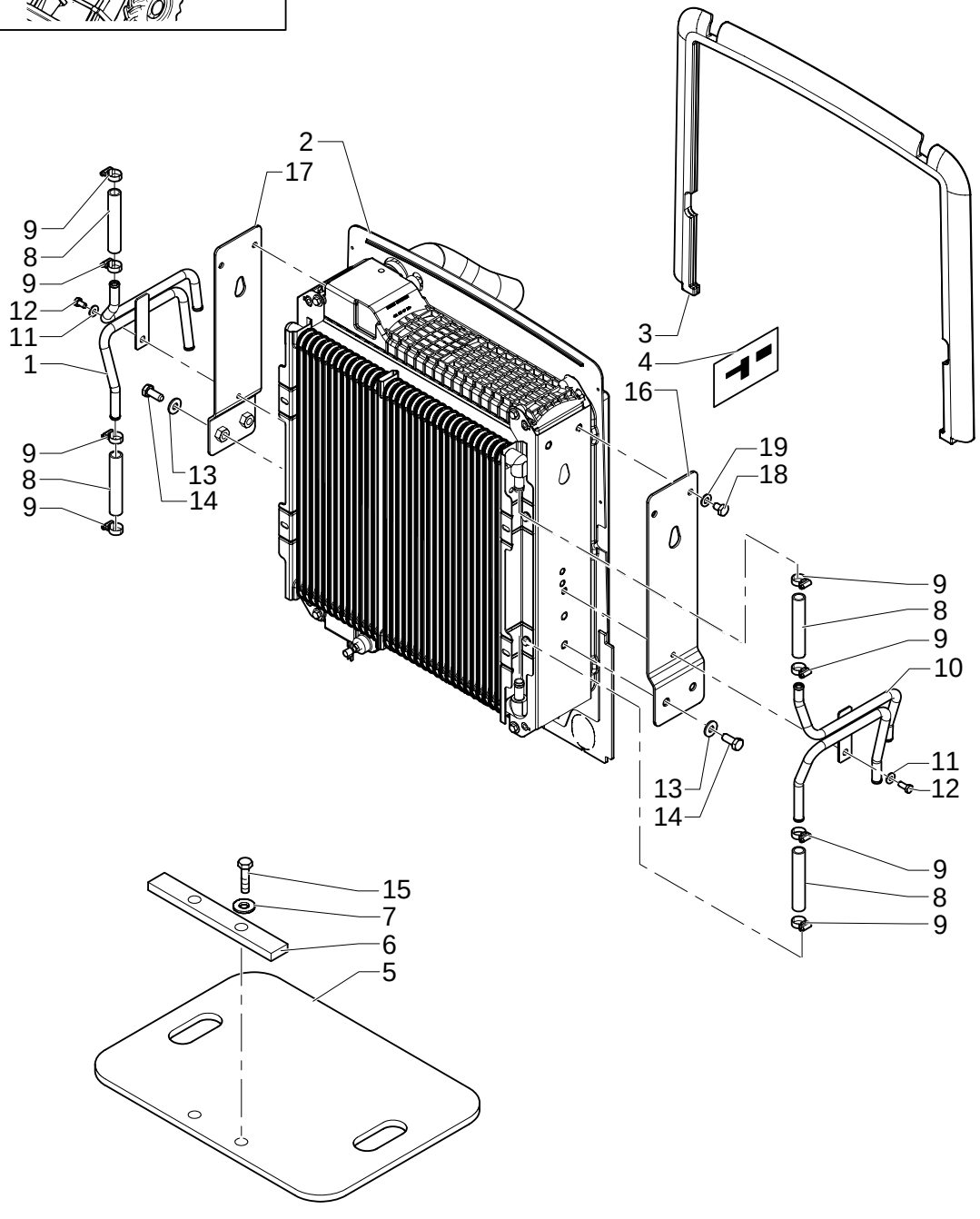

RADIATOR

REF	FN	PART NUMBER	YR/SN	QTY	DESCRIPTION
1		87302280		1	TUBE, HYD
2		{87302920}		1	
3		87303120		1	GASKET
4		87415930		2	DECAL
5		85827830		1	SEAL, RUBBER
6		85827831		1	PLATE
7		11193879		2	WASHER, LOCK
8		87302508		4	HOSE, FLEXIBLE
9		13000390		8	CLIP, HOSE
10		87302279		1	TUBE, HYD
11		12646701		2	WASHER 8x20x2
12		16043221		2	SCREW M8x16
13		12646901		4	WASHER 12x28x3
14		11112421		4	SCREW M12x30
15		16043821		2	SCREW
16		85828168		1	BRACKET
17		87302922		1	BRACKET
18		87306887		4	SCREW
19		87306886		4	WASHER

Without Air Conditioner

636/ 2	02	p1	08/05

RADIATOR

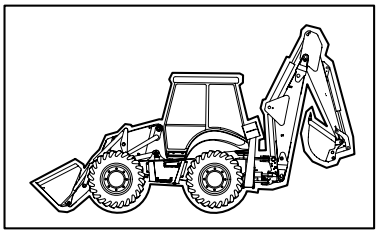

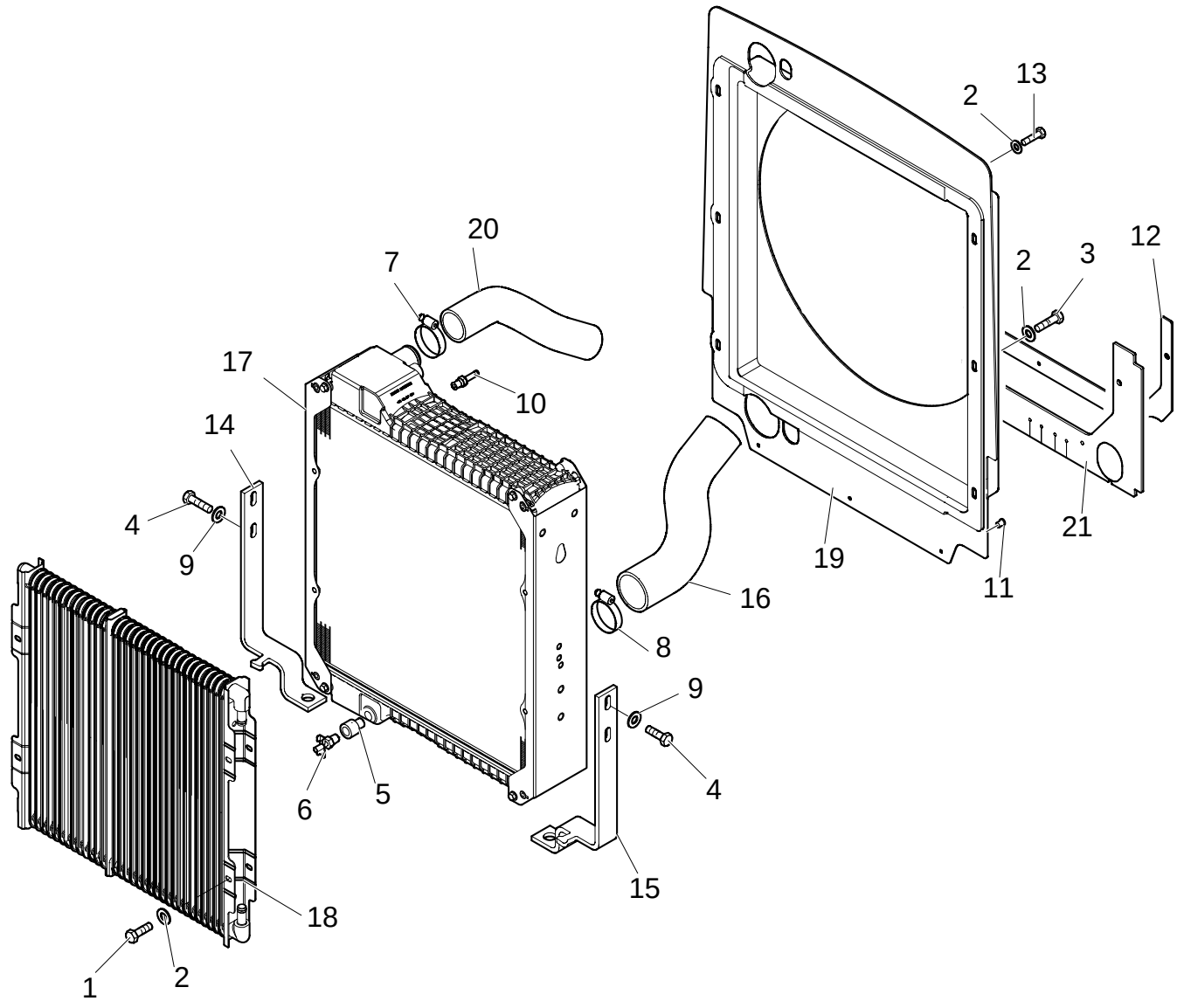

RADIATOR

REF	FN	PART NUMBER	YR/SN	QTY	DESCRIPTION
1		16043021		4	SCREW
2		47048962		6	WASHER
3		16043221		2	SCREW
4		47049184		4	SCREW
5		47049581		1	GASKET
6		47050674		1	VALVE, ENG EXHAUST, STD
7		47050733		1	COLLAR
8		47050734		1	COLLAR
9		47120179		4	WASHER
10		87419240		1	CONNECTOR, HYD.
11		85825170		3	BUTTON
12		86983070		1	SEAL, RUBBER
13		87026277		2	SCREW
14		87404557		1	BRACKET
15		87404628		1	BRACKET
16		87407272		1	HOSE, LARGE
17	1	87410096		1	RADIATOR
18	2	87410099		1	PLATE
19		87410916		1	CONVEYOR
20		87413237		1	HOSE, LARGE
21		87416637		1	GASKET

(1) Water
(2) Oil Cooler

From To S/N XXX

637/ 1	01	p1	02/05

RADIATOR

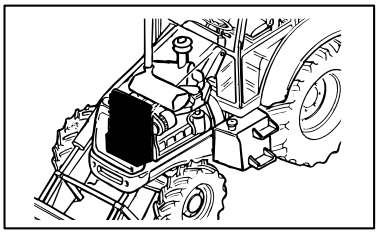

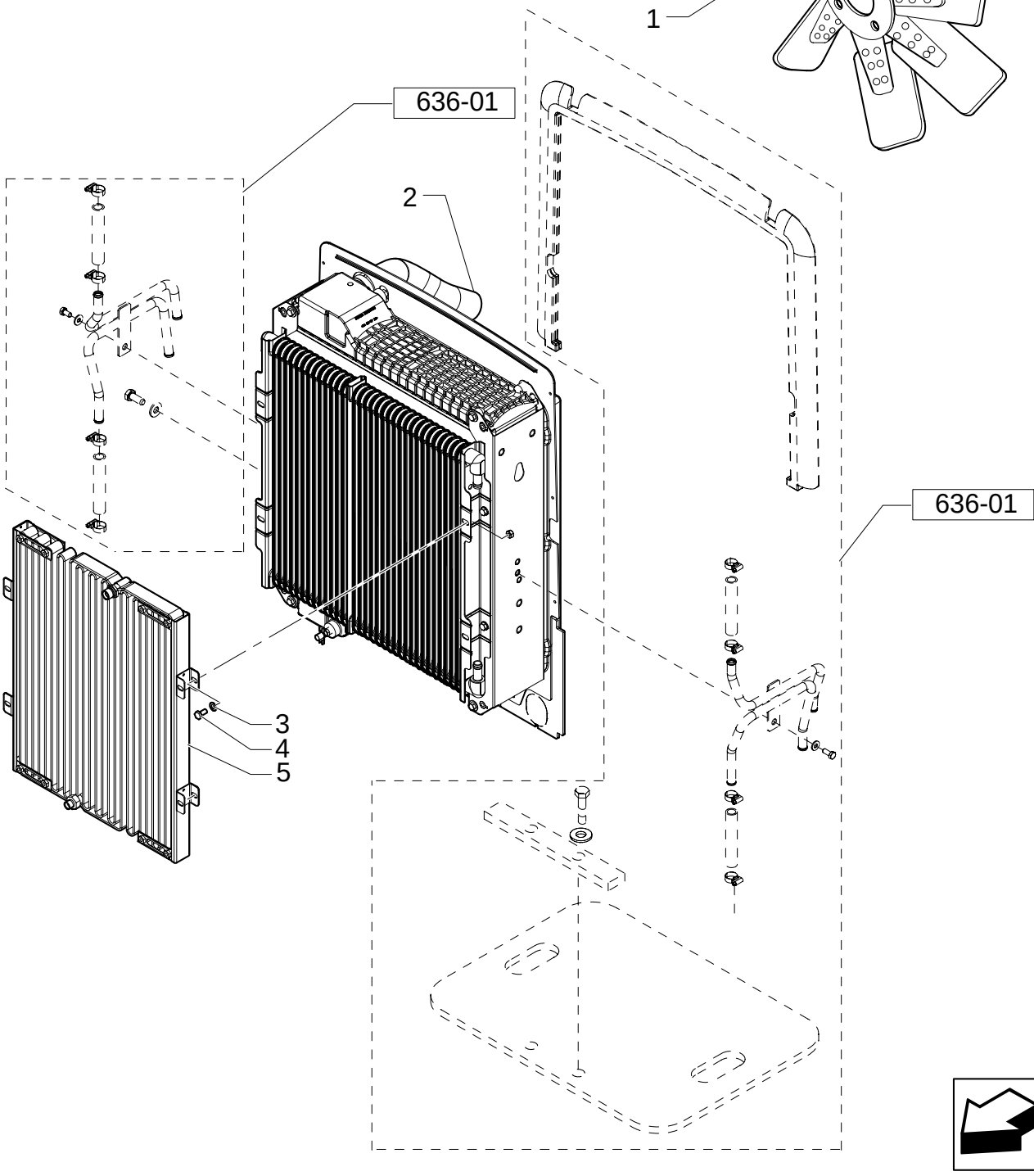

RADIATOR

REF	FN	PART NUMBER	YR/SN	QTY	DESCRIPTION
1		85825164		1	FAN
2		{87302921}		1	9x16
3		9511008		4	PUBLICATIONS
4		614-8016		4	BOLT M8x16
5		87410101		1	CONDENSER

With Air Conditioner, Up To S/N XXX

637/ 2	01	p1	10/05

RADIATOR

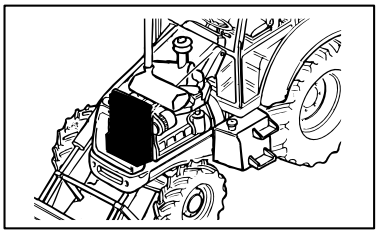

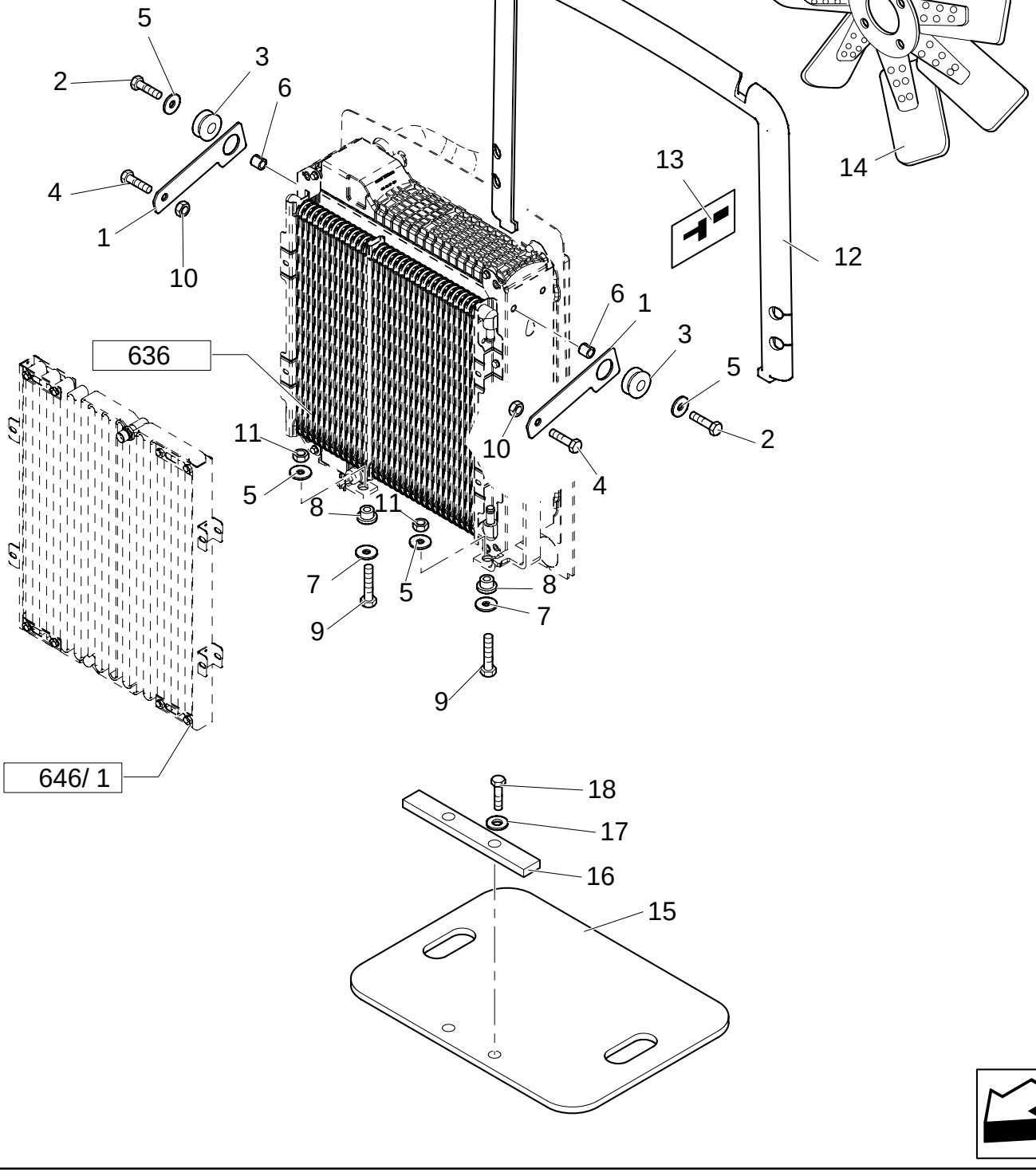

RADIATOR

REF	FN	PART NUMBER	YR/SN	QTY	DESCRIPTION
1		86982972		2	PLATE
2		47049086		2	SCREW M10x50
3		47048759		2	RING
4		47049187		2	SCREW M10x35
5		47048440		6	WASHER
6		47048646		2	SPACER
7		47048963		4	WASHER
8		47048668		2	GASKET
9		86625071		2	NUT
10		47049041		2	NUT M10
11		47049088		2	SCREW M10x50
12		86983077		1	GASKET
13		87415930		2	DECAL
14		85825164		1	FAN
15		85827830		1	SEAL, RUBBER
16		85827831		1	PLATE
17		11193879		2	WASHER, LOCK 8x16x1.4
18		16043821		2	SCREW M8x30

With Air Conditioner, From To S/N XXX

637/ 3	01	p1	05/05

RADIATOR

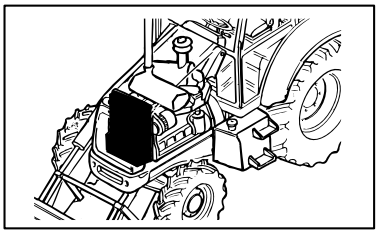

RADIATOR

REF	FN	PART NUMBER	YR/SN	QTY	DESCRIPTION
1		85825164		1	FAN
2		{87302921}		1	9x16

With Air Conditioner, From To S/N XXX

NOTES

SECTION INDEX

SEC. 03	00	TRANSMISSION 1/2
SEC. 03	01	TRANSMISSION 2/2
1.28.0/ A	01	TRANSMISSIONGEARING SPEED GEAR (2WD POWER-SHUTTLE)
1.28.0/ A	02	TRANSMISSIONGEARING SPEED GEAR (2WD POWER-SHUTTLE)
1.28.0/ A	03	TRANSMISSIONGEARING SPEED GEAR (2WD POWER-SHUTTLE)
1.28.0/ A	04	TRANSMISSIONGEARING SPEED GEAR (2WD POWER-SHUTTLE)
1.28.0/ A	05	TRANSMISSIONGEARING SPEED GEAR (2WD POWER-SHUTTLE)
1.28.0/ A	06	TRANSMISSIONGEARING SPEED GEAR (2WD POWER-SHUTTLE)
1.28.0/ A	07	TRANSMISSIONGEARING SPEED GEAR (2WD POWER-SHUTTLE)
1.28.0/ B	01	TRANSMISSIONGEARING SPEED GEAR (4WD POWER-SHUTTLE)
1.28.0/ B	02	TRANSMISSIONGEARING SPEED GEAR (4WD POWER-SHUTTLE)
1.28.0/ B	03	TRANSMISSIONGEARING SPEED GEAR (4WD POWER-SHUTTLE)
1.28.0/ B	04	TRANSMISSIONGEARING SPEED GEAR (4WD POWER-SHUTTLE)
1.28.0/ B	05	TRANSMISSIONGEARING SPEED GEAR (4WD POWER-SHUTTLE)
1.28.0/ B	06	TRANSMISSIONGEARING SPEED GEAR (4WD POWER-SHUTTLE)
1.28.0/ B	07	TRANSMISSIONGEARING SPEED GEAR (4WD POWER-SHUTTLE)
1.28.0/ B	08	TRANSMISSIONGEARING SPEED GEAR (4WD POWER-SHUTTLE)
1.28.6	01	GEAR FILTER PIPES (POWER-SHUTTLE)
1.29.1	01	TRANSMISSION ESTERNALSHIFTING CONTROLS (POWER-SHUTTLE)
1.38.1	01	FRONT & REAR DRIVESHAFT (POWER-SHUTTLE)
1.39.8	01	TRANSMISSION OIL COOLING PIPES (POWER-SHUTTLE)

TRANSMISSION 1/2

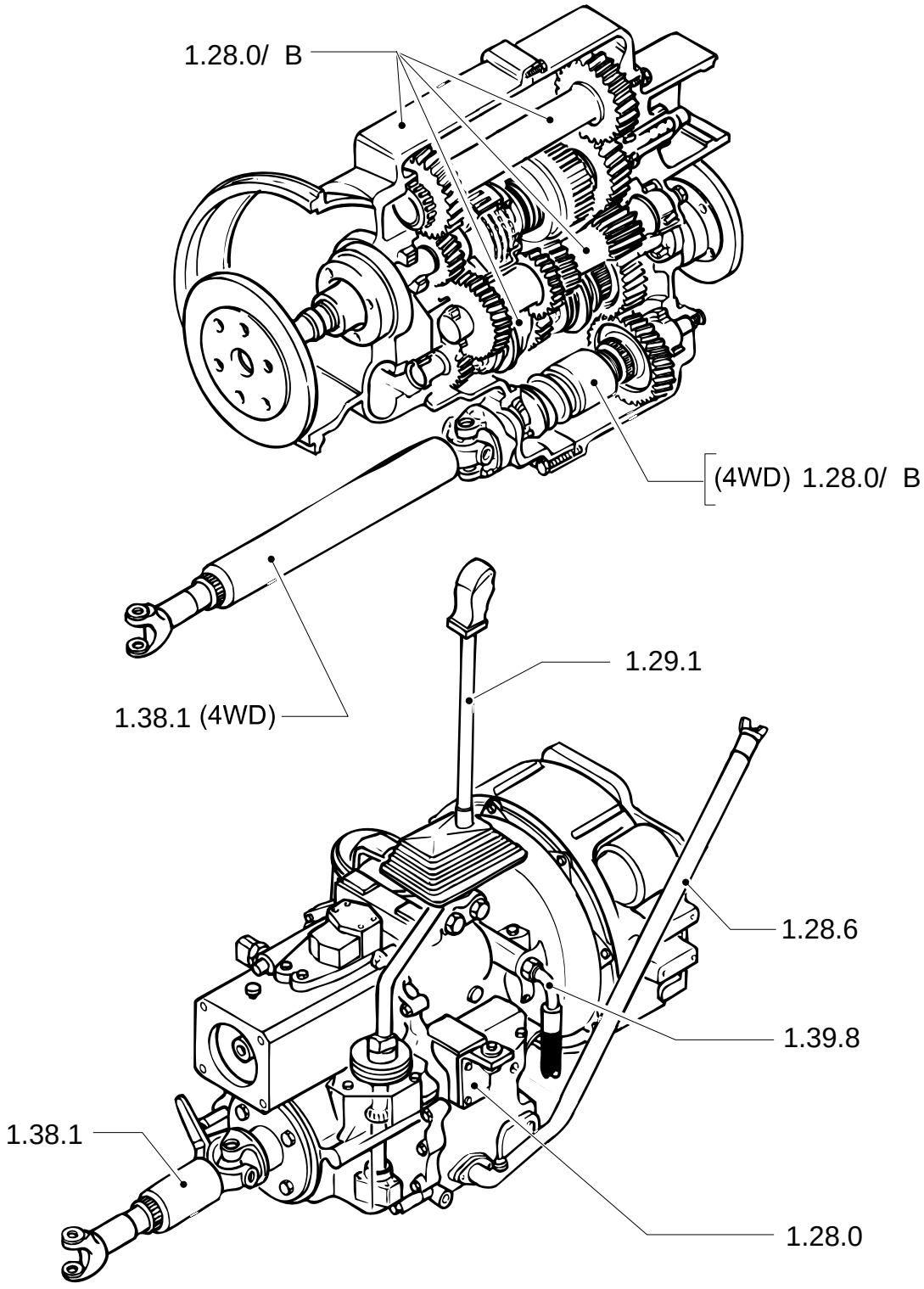

TRANSMISSION 1/2

REF	FN	PART NUMBER	YR/SN	QTY	DESCRIPTION

TRANSMISSION 2/2

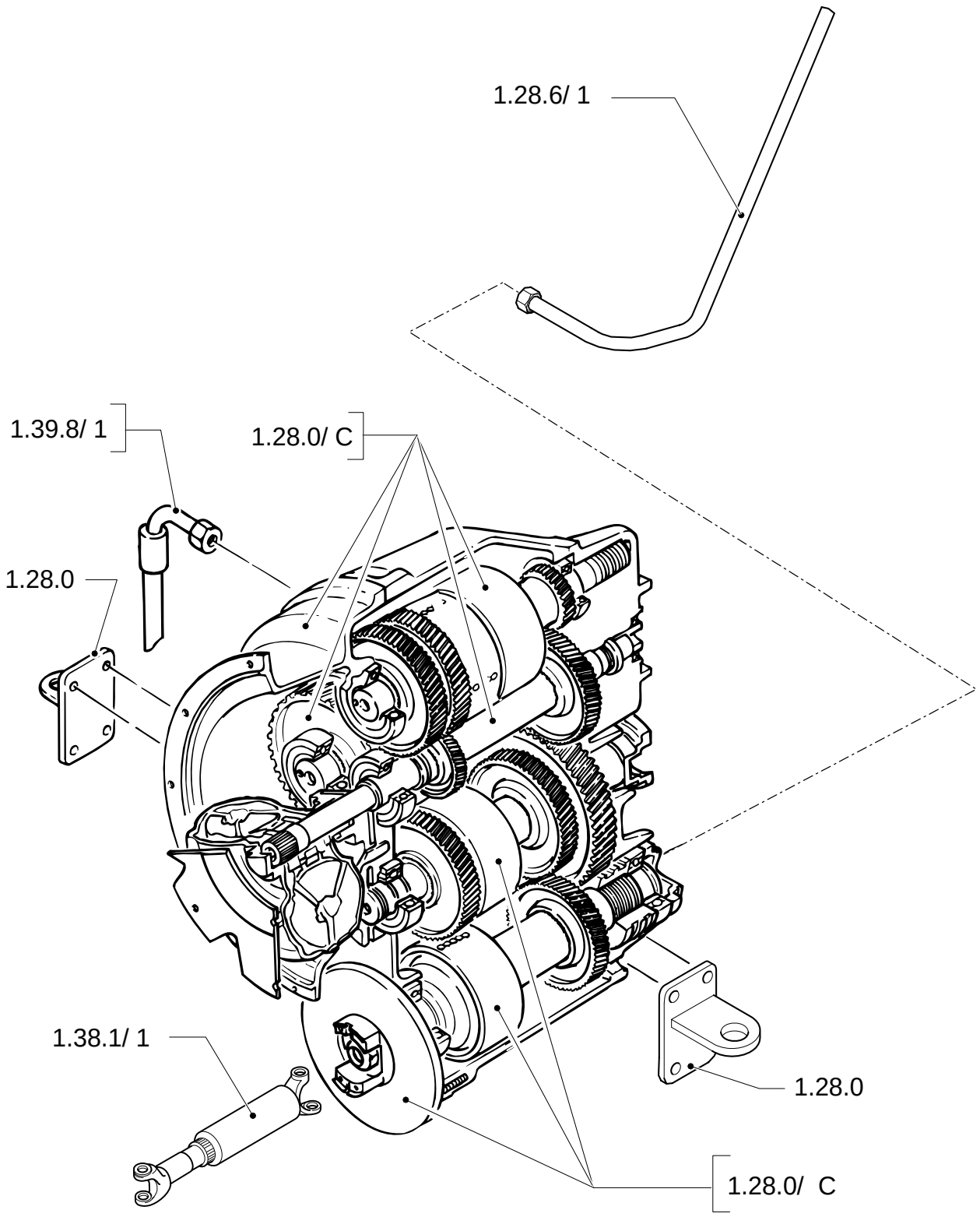

TRANSMISSION 2/2

REF	FN	PART NUMBER	YR/SN	QTY	DESCRIPTION

TRANSMISSIONGEARING SPEED GEAR (2WD POWER-SHUTTLE)

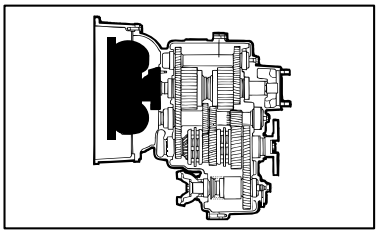

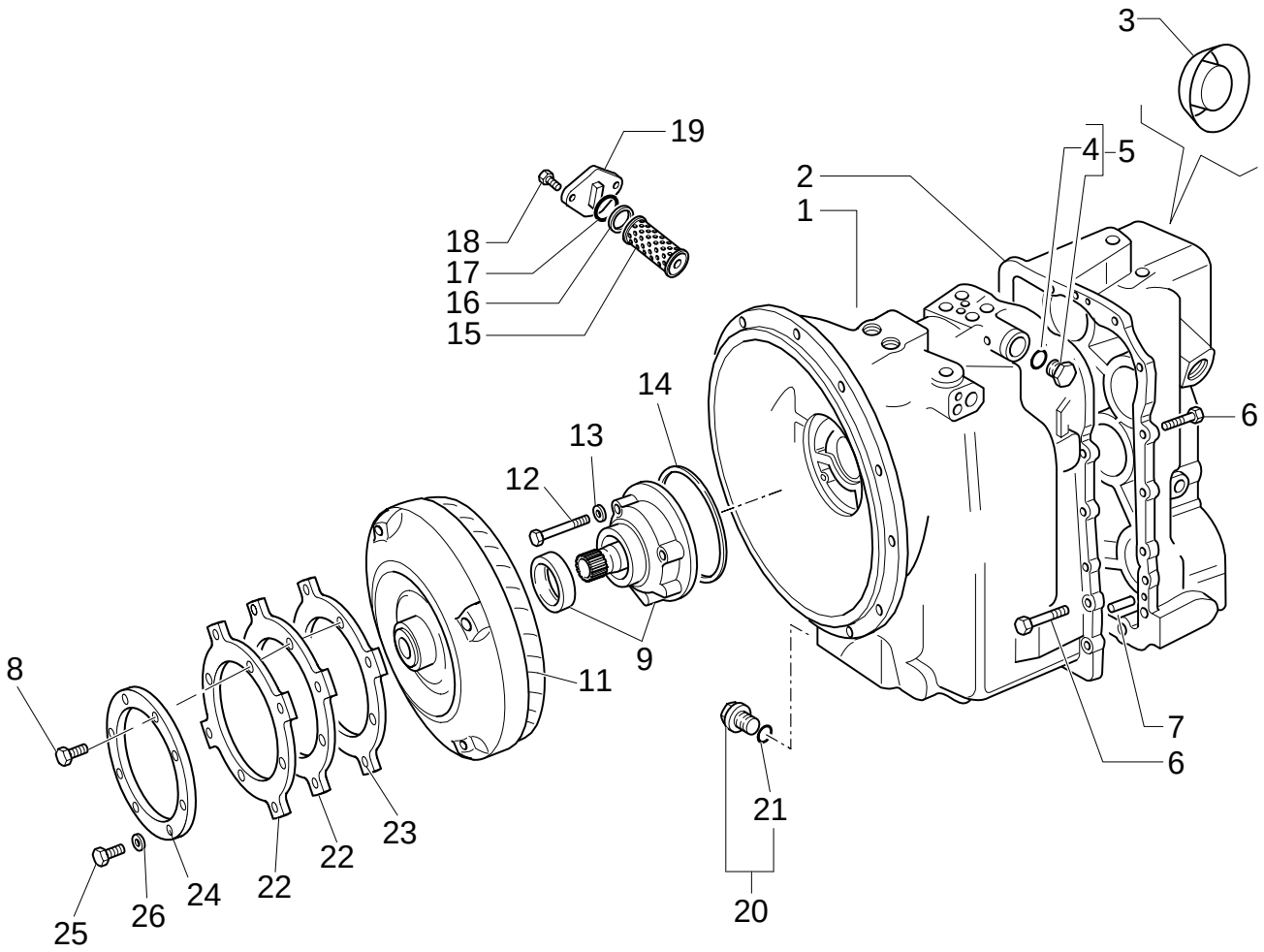

TRANSMISSIONGEARING SPEED GEAR (2WD POWER-SHUTTLE)

REF	FN	PART NUMBER	YR/SN	QTY	DESCRIPTION
1		85827769		1	TRANSMISSION HOUSING
2		85827770		1	TRANSMISSION HOUSING
3		85812096		1	PLUG
4		9968218		1	O-RING 9/16"
5	1	9968219		1	PLUG 9/16" UNF, 2
6		85817164		17	SCREW
7		9968356		2	DOWEL
8		87019767		4	SCREW M10x1.25x90
9	2	9968311		1	PUMP, ENGINE OIL M10x30
10		9968312		1	GASKET
11		87400114		1	TORQUE CONVERTER
12		85817163		7	SCREW
13		85817001		4	WASHER
14		9968313		1	GASKET
15		9968359		1	FILTER
16		9968361		1	WASHER
17		9968360		1	O-RING
18		85817169		2	SCREW
19		9968362		1	COVER
20	3	9968339		1	PLUG
21		9968365		1	O-RING
22		86993546		1	PLATE, RETAINING
23		87406934		1	PLATE, RETAINING
24		87409201		1	PLATE, RETAINING
25		11106021		4	SCREW M10x20
26		47049372		4	WASHER

(1) Includes 4
(2) Includes 10
(3) Includes 21

TRANSMISSIONGEARING SPEED GEAR (2WD POWER-SHUTTLE)

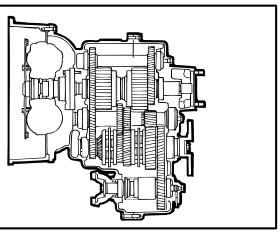

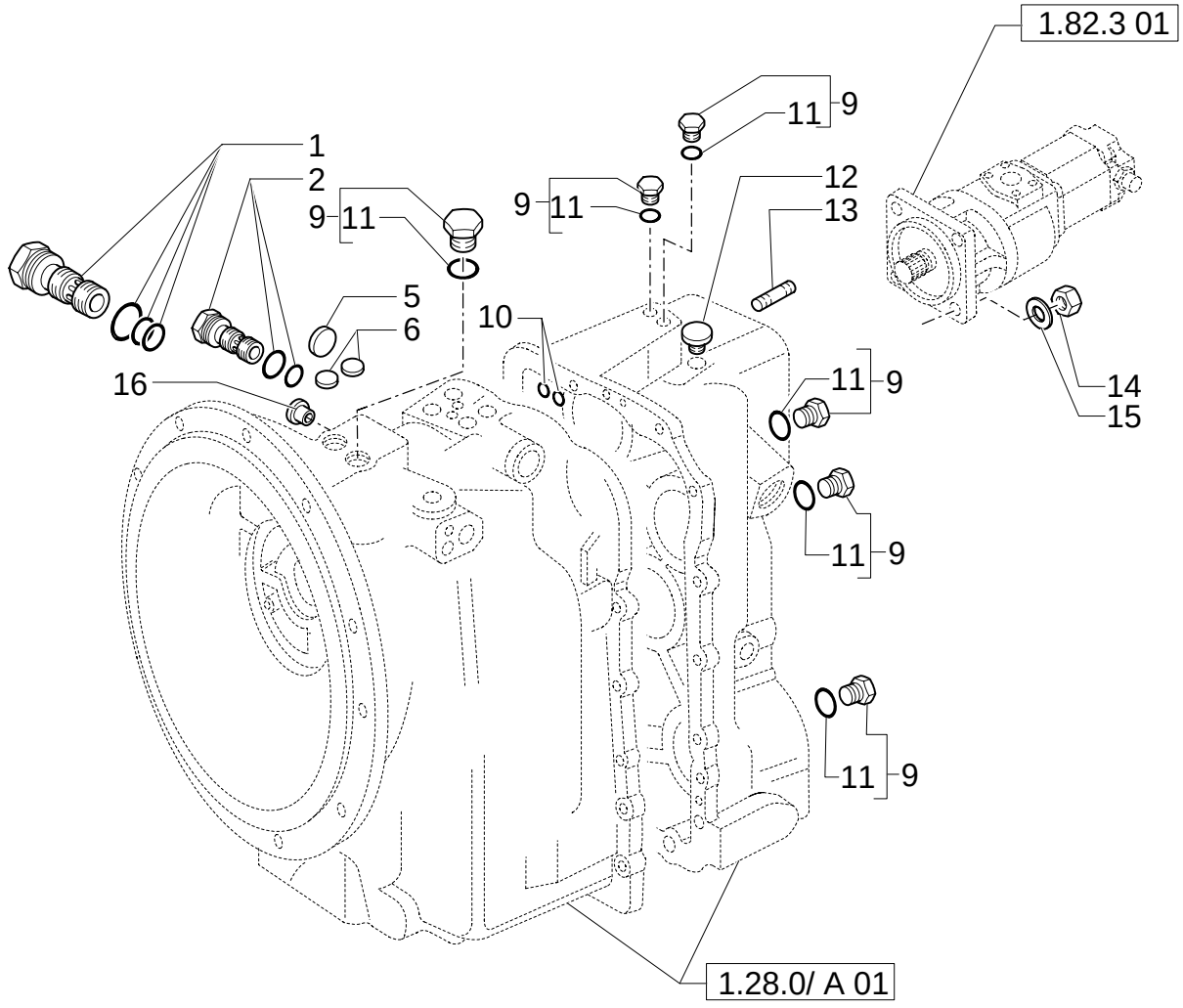

TRANSMISSIONGEARING SPEED GEAR (2WD POWER-SHUTTLE)

REF	FN	PART NUMBER	YR/SN	QTY	DESCRIPTION
1		9968350		1	VALVE, HYDRAULIC HYDR.PRESSURE REGULATOR
2		9968334		1	VALVE, HYDRAULIC HYDR.CONVERTER RELIEF
5		9968371		1	PLUG Expansion, 1"
6		9968333		2	PLUG Tyers, .5"
9		9968219		AR	PLUG 9/16" UNF
10		9968368		3	O-RING .512" ID x .094" Thk
11		9968218		AR	O-RING 9/16"
12		9968364		1	BREATHER
13		85802683		4	STUD 1/2"
14		85802684		4	NUT
15		11190779		4	WASHER, LOCK
16		85812094		2	SHIELD

TRANSMISSIONGEARING SPEED GEAR (2WD POWER-SHUTTLE)

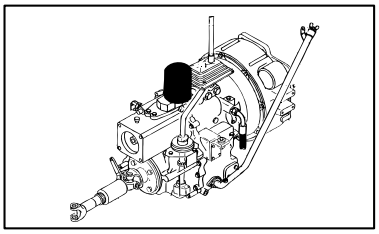

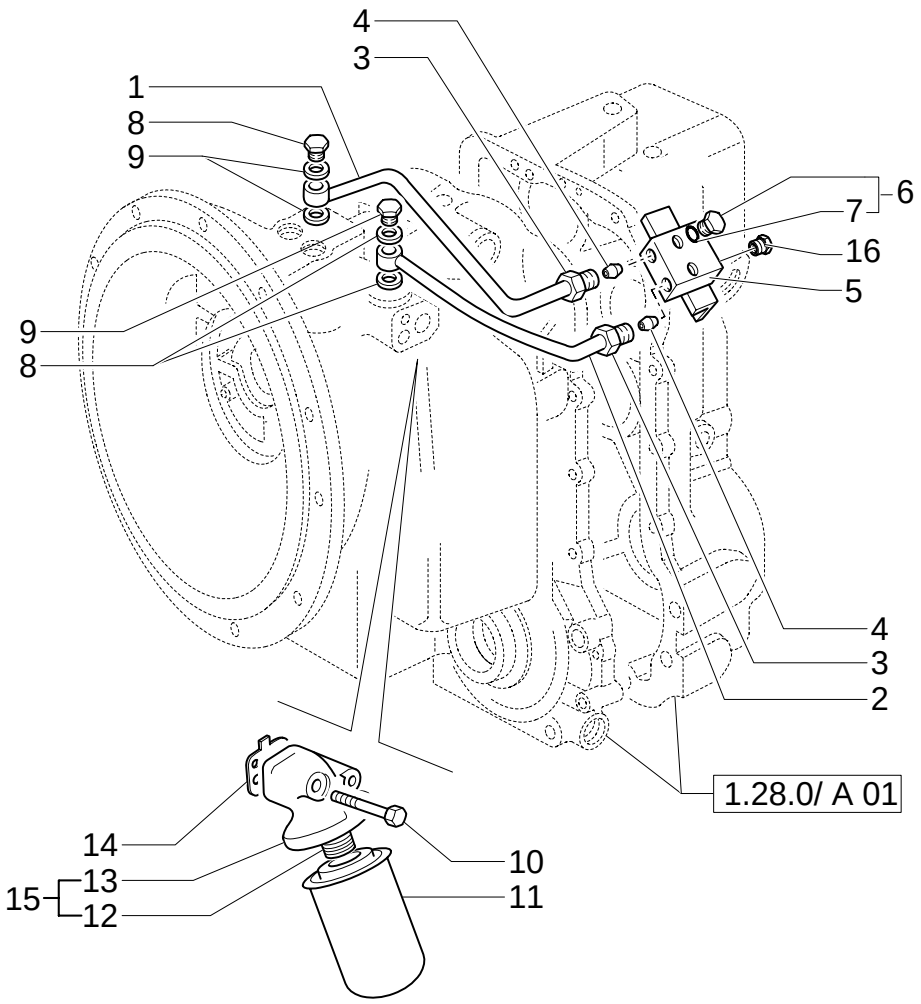

TRANSMISSIONGEARING SPEED GEAR (2WD POWER-SHUTTLE)

REF	FN	PART NUMBER	YR/SN	QTY	DESCRIPTION
1		85812087		1	TUBE, RIGID
2		85812086		1	TUBE, RIGID
3		9968336		2	NUT
4		9969449		4	CONNECTOR, HYD.
5		85812085		1	BLOCK
6		9968219		2	PLUG 9/16" UNF
7		9968218		2	O-RING 9/16"
8		9968676		2	BOLT, BANJO
9		85817002		4	WASHER
10		85817165		2	SCREW
11		85817004		1	FILTER
12		9968354		1	ADAPTER
13		9968374		1	HOUSING
14		9968375		1	GASKET
15		85812091		1	PLUG

TRANSMISSIONGEARING SPEED GEAR (2WD POWER-SHUTTLE)

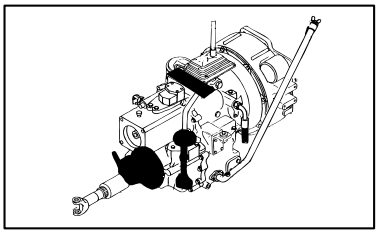

KIT KIT KIT
15 = ■
17 = ●
18 = ▲

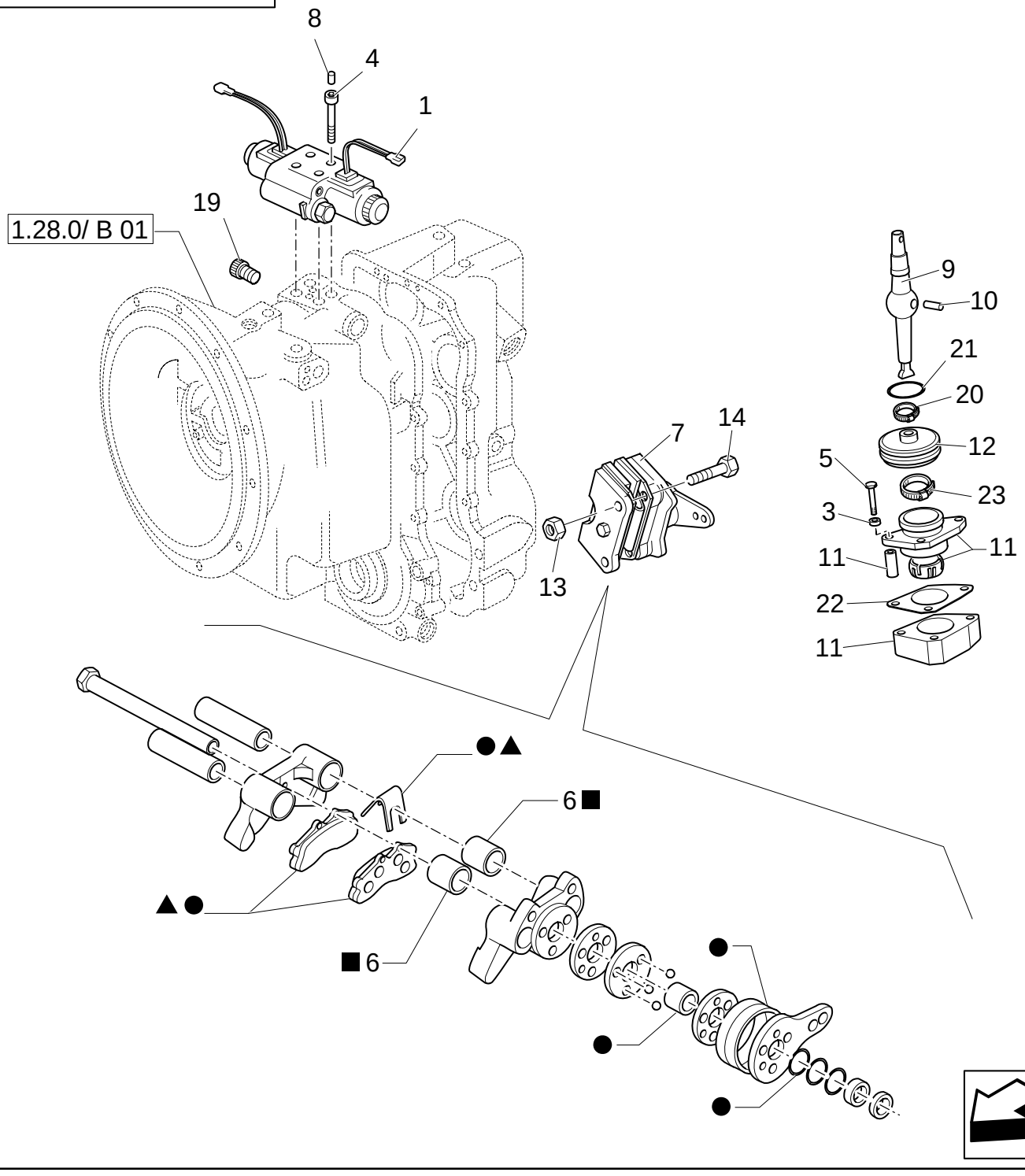

TRANSMISSIONGEARING SPEED GEAR (2WD POWER-SHUTTLE)

REF	FN	PART NUMBER	YR/SN	QTY	DESCRIPTION
1	1	85827764		1	VALVE, HYDRAULIC
3		85812092		3	WASHER
4		9969445		4	SCREW
5		85817163		3	SCREW
7	2	85813300		1	BRAKE CALIPER
8		85827779		1	PLUG
9		9968324		1	LEVER
10		9968327		1	PIN
11		9968326		1	SUPPORT
12		9968328		1	BOOT
13		9969281		2	NUT
14		9968299		2	BOLT
15		85813318		1	KIT, REPAIR
17		9968926		1	SET OF PARTS
18		9968927		1	KIT
19		9968370		2	PLUG
20		85827776		1	TIE-ROD
21		85817006		1	GASKET
22		85817007		1	GASKET
23		85827776		1	TIE-ROD
23		85827776		1	TIE-ROD

(1) Includes 2, 6
(2) Includes 17, 18

1.28.0/ A	05	p1	12/05

TRANSMISSIONGEARING SPEED GEAR (2WD POWER-SHUTTLE)

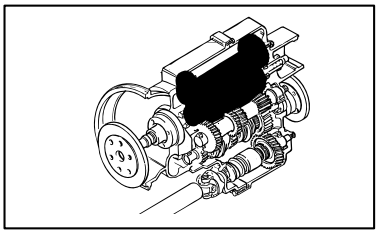

TRANSMISSIONGEARING SPEED GEAR (2WD POWER-SHUTTLE)

REF	FN	PART NUMBER	YR/SN	QTY	DESCRIPTION
1		9968279		3	WASHER
2		9968228		2	BEARING ASSY
3		9968304		4	BEARING ASSY 50x5x17
4		9968302		2	SPACER
5		9968286		1	GEAR 30T
6		9968291		3	RING, LOCKING
7		85827771		2	SPRING-CHECK
8		85827772		2	SPRING
9		9968287		2	CIRCLIP
10		9968288		2	PLATE
11		9968290		12	PLATE
12		9968289		12	PLATE
13		85827773		2	PISTON
14		85827774		2	SPRING
15		85821452		1	SHAFT, PROPELLOR
16		85821454		1	SLEEVE 2.234" IDx.139" Thk
18		9968226		4	GASKET
19		9968341		1	O-RING M80x70x2
20		9968342		AR	SHIM 24T-25T
20		9968343		AR	SHIM 80x70x0,076
20		9968344		AR	SHIM 80x70x0,178
20		9968345		AR	SHIM 80x70x0,599
21		9968285		1	GEAR 24T
22		9968305		1	BEARING ASSY
23		9968347		1	SHAFT
24		9968268		2	BEARING ASSY
25		9968281		1	GEAR 24T-25T
26		9968262		AR	SHIM MM.0,002
26		9968263		AR	SHIM MM.0,003
26		9968264		AR	SHIM MM.0,003
26		9968265		AR	SHIM MM.0,007
26		9968266		AR	SHIM MM.0,015
26		9968267		AR	SHIM MM.0,020
27		9968261		1	SPACER
28		9968282		1	SHAFT
29		9968314		1	GASKET MM.40
30		9968230		1	WASHER 40x70x4

1.28.0/ A	05	p2	12/05

TRANSMISSIONGEARING SPEED GEAR (2WD POWER-SHUTTLE)

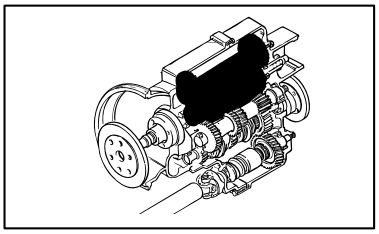

TRANSMISSIONGEARING SPEED GEAR (2WD POWER-SHUTTLE)

REF	FN	PART NUMBER	YR/SN	QTY	DESCRIPTION
31		9968276		1	BEARING ASSY

1.28.0/ A	06	p1	12/05

TRANSMISSIONGEARING SPEED GEAR (2WD POWER-SHUTTLE)

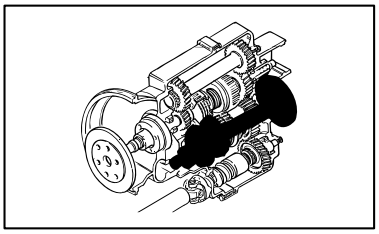

TRANSMISSIONGEARING SPEED GEAR (2WD POWER-SHUTTLE)

REF	FN	PART NUMBER	YR/SN	QTY	DESCRIPTION
1		9968308		1	SCREW
2		9968306		1	WASHER
3		9968309		1	O-RING 1.29" IDx.139" Thk
4		85820909		1	FLANGE
5		85825506		1	GASKET M48x62x8
6		9968271		1	SPACER
7		9968272		AR	SHIM 0.051mm
7		9968273		AR	SHIM 0.076mm
7		9968274		AR	SHIM 0.178mm
7		9968275		AR	SHIM 0.559mm
8		9968270		1	BEARING ASSY
10		9968252		1	HOSE
11		9968250		2	BEARING ASSY
12		9968251		1	SPACER
13		9968248		1	GEAR 43T 1ST
14		9968307		2	SYNCHRONIZER
15		9968223		2	RING
16		9968247		1	GEAR 37T 2ND
17		9968269		1	SHAFT
18		9968246		1	GEAR 28T 3RD
19		9968396		1	SPACER
20		9968358		1	RING Sealing Cap, 2.25"
21		9968253		1	RING, LOCKING
22		9968278		1	BEARING ASSY
23		9968260		1	WASHER 55x4
24		85827803		1	GEAR

1.28.0/ A	07	p1	10/05

TRANSMISSIONGEARING SPEED GEAR (2WD POWER-SHUTTLE)

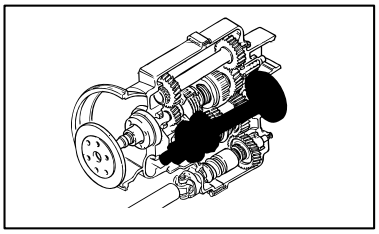

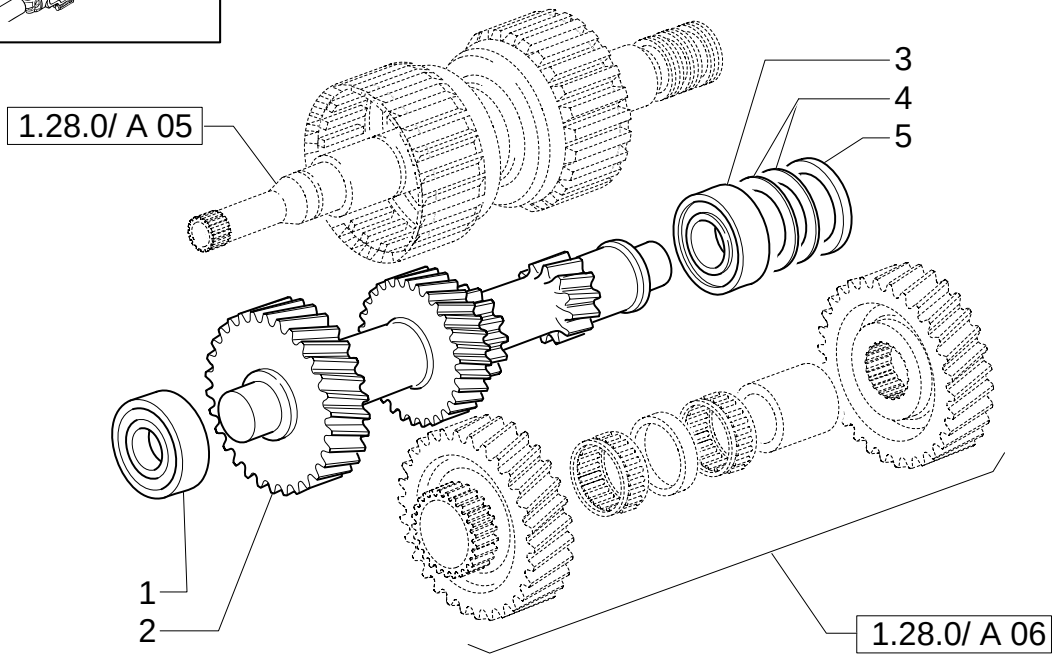

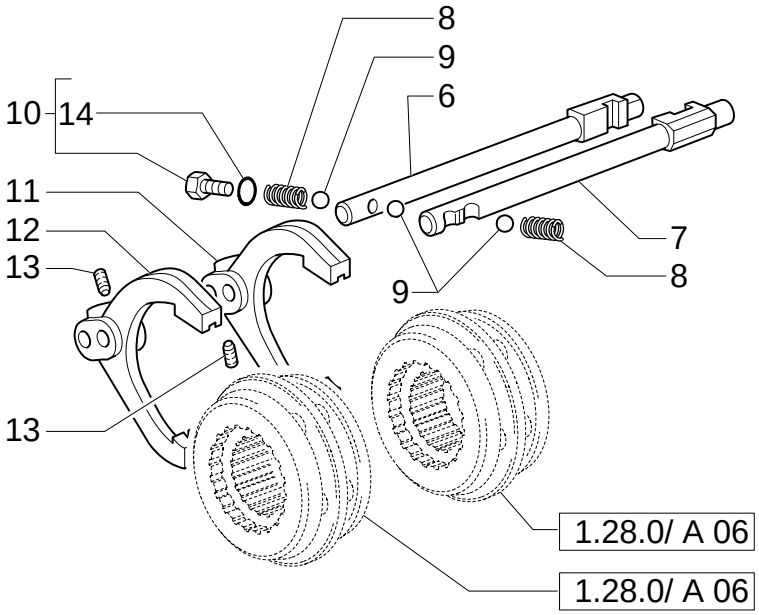

TRANSMISSIONGEARING SPEED GEAR (2WD POWER-SHUTTLE)

REF	FN	PART NUMBER	YR/SN	QTY	DESCRIPTION
1		9968277		1	BEARING ASSY
2		9968280		1	SHAFT 35T-29T-20T-13T
3		9968270		1	BEARING ASSY
4		9968272		AR	SHIM 0.051mm
4		9968273		AR	SHIM 0.076mm
4		9968274		AR	SHIM 0.178mm
4		9968275		AR	SHIM 0.559mm
5		9968271		1	SPACER
6		9968319		1	ROD 1ST-2ND
7		9968322		1	ROD 3RD-4TH
8		9968316		2	SPRING
9		9968315		3	BALL
10		9968219		AR	PLUG 9/16" UNF
11		9968317		1	YOKE 1ST-2ND
12		9968318		1	YOKE 3RD-4TH
13		9968323		2	SCREW
14		9968218		AR	O-RING 9/16"

TRANSMISSIONGEARING SPEED GEAR (4WD POWER-SHUTTLE)

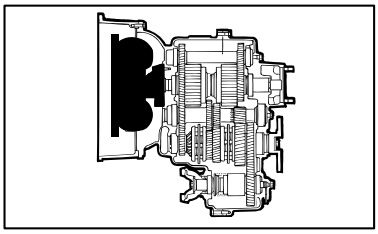

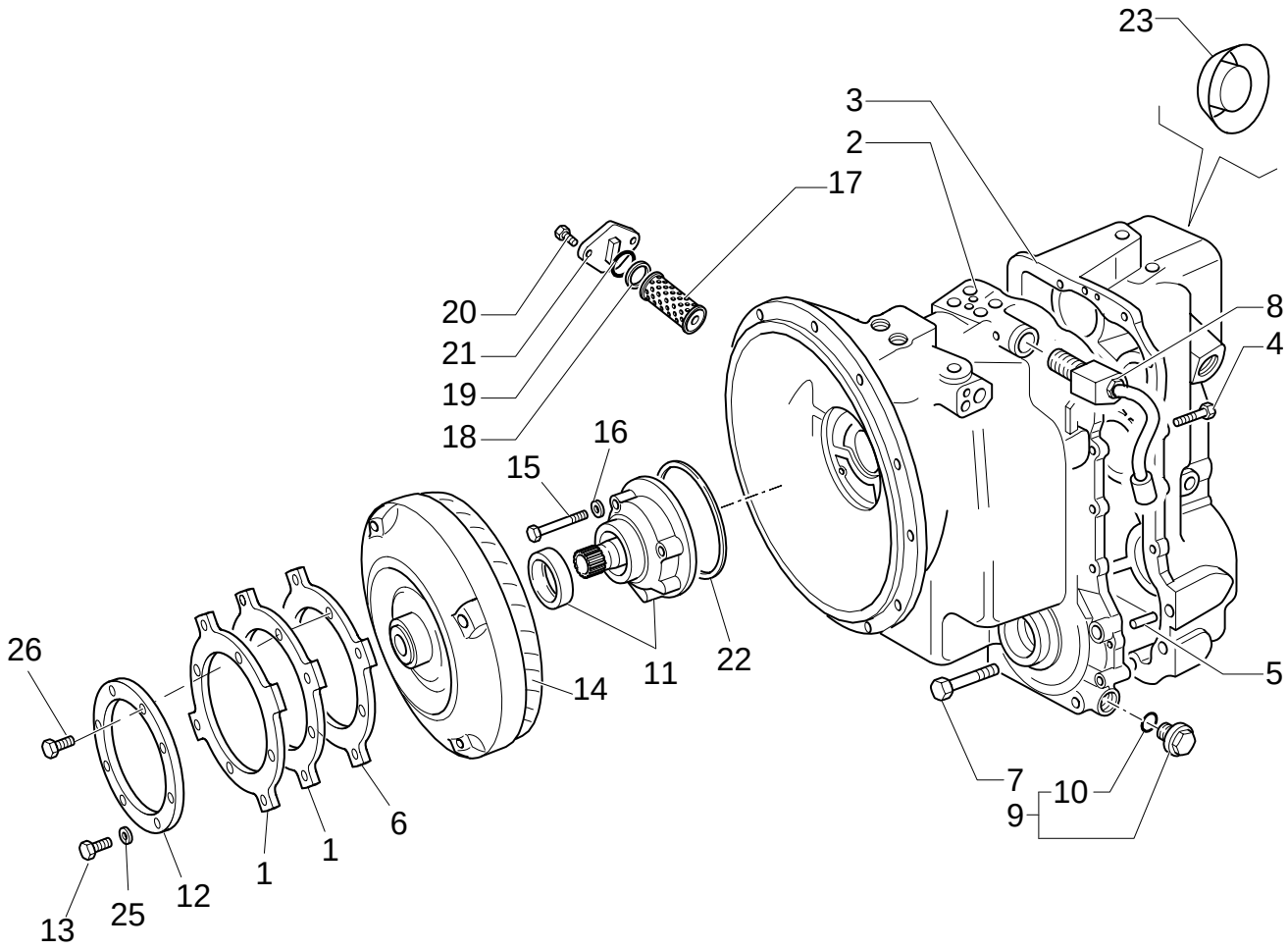

TRANSMISSIONGEARING SPEED GEAR (4WD POWER-SHUTTLE)

REF	FN	PART NUMBER	YR/SN	QTY	DESCRIPTION
1		86993546		2	PLATE, RETAINING
2		85827783		1	TRANSMISSION HOUSING
3		85827784		1	TRANSMISSION HOUSING
4		85817164		14	SCREW
5		9968356		2	DOWEL
6		87406934		1	PLATE, RETAINING
7		85817190		4	SCREW
8		9968351		1	VALVE, HYDRAULIC
9		9968339		1	PLUG
10		9968365		1	O-RING
11		9968311		1	PUMP, ENGINE OIL
12		87409201		1	PLATE, RETAINING
13		11106021		4	SCREW M10x20
14		87400114		1	TORQUE CONVERTER
15		85817163		7	SCREW
16		85817001		4	WASHER
17		9968359		1	FILTER
18		9968361		1	WASHER
19		9968360		1	O-RING
20		85817169		2	SCREW
21		9968362		1	COVER
22		9968313		1	GASKET
23		9968312		1	GASKET
25		47049372		4	WASHER
26		87019767		4	SCREW M10x1.25x90
27		85812096		1	PLUG

1.28.0/ B	02	p1	12/05

TRANSMISSIONGEARING SPEED GEAR (4WD POWER-SHUTTLE)

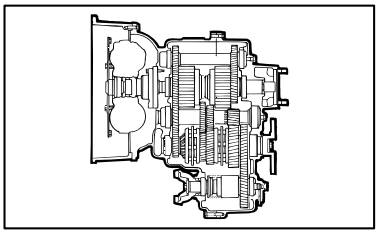

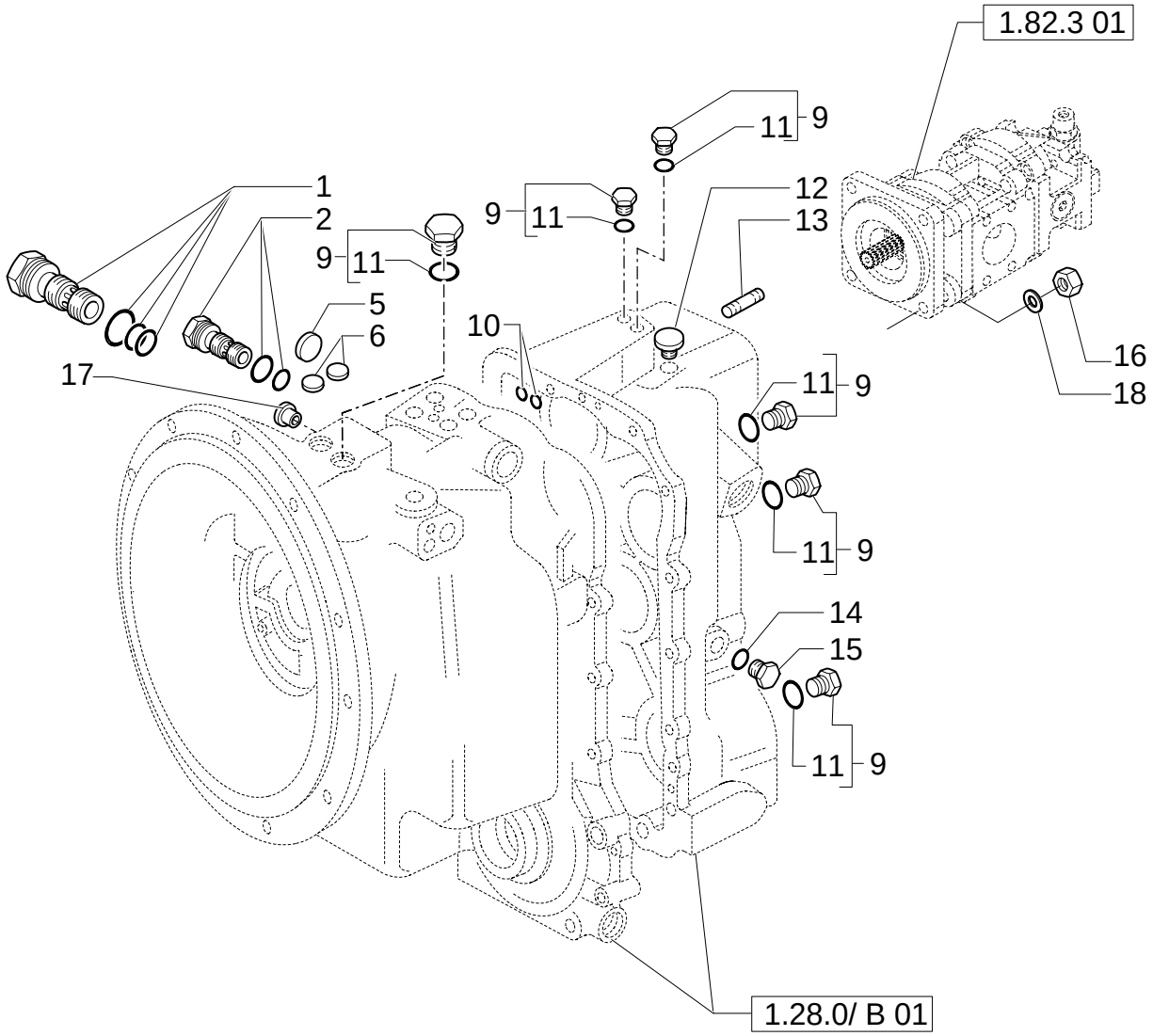

TRANSMISSIONGEARING SPEED GEAR (4WD POWER-SHUTTLE)

REF	FN	PART NUMBER	YR/SN	QTY	DESCRIPTION
1		9968350		1	VALVE, HYDRAULIC HYDR.PRESSURE REGULATOR
2		9968334		1	VALVE, HYDRAULIC HYDR.CONVERTER RELIEF
5		9968371		1	PLUG Expansion, 1"
6		9968333		2	PLUG Tyers, .5"
9		9968219		AR	PLUG 9/16" UNF
10		9968368		4	O-RING .512" IDx.094"Thk
11		9968218		AR	O-RING 9/16"
12		9968364		1	BREATHER
13		85802683		4	STUD 1/2"
14		9968383		1	WASHER
15		9968382		1	PLUG
16		85802684		4	NUT
17		85812094		2	SHIELD
18		11190779		4	WASHER, LOCK 12x24x2.8

TRANSMISSIONGEARING SPEED GEAR (4WD POWER-SHUTTLE)

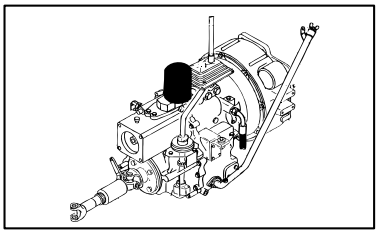

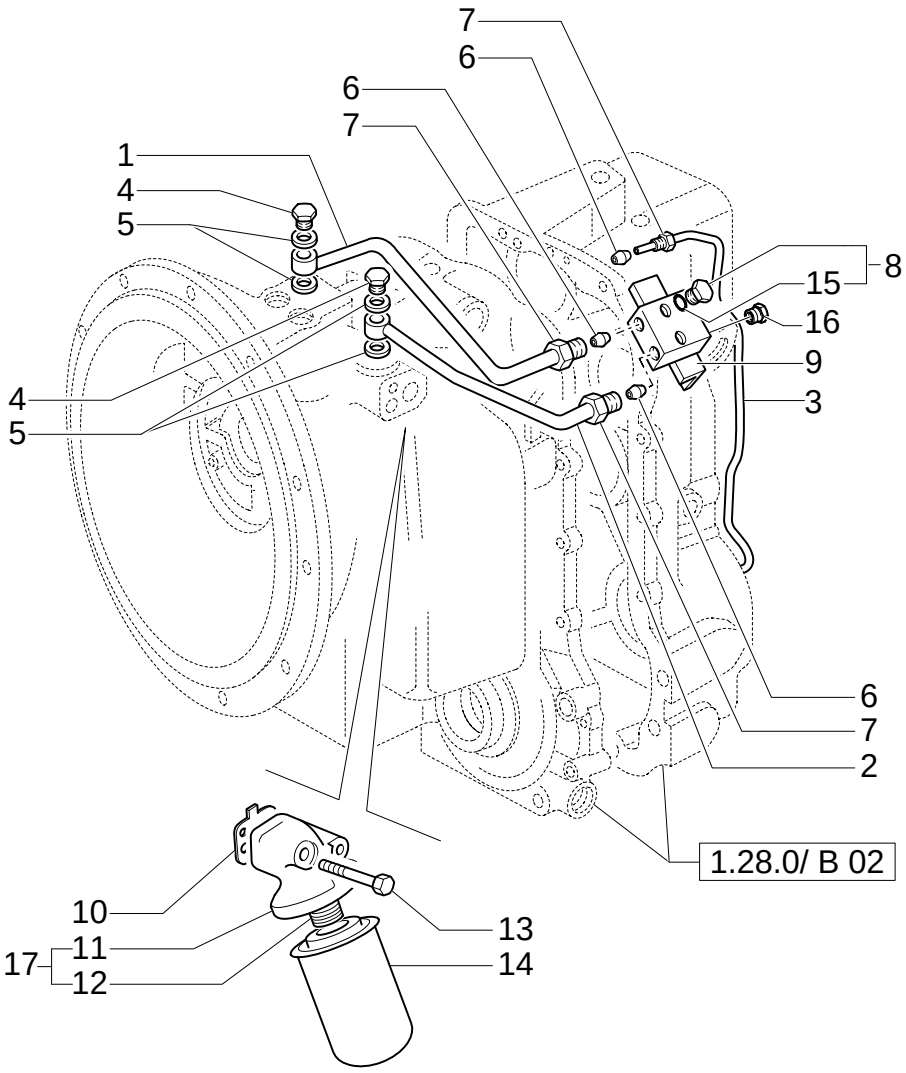

TRANSMISSIONGEARING SPEED GEAR (4WD POWER-SHUTTLE)

REF	FN	PART NUMBER	YR/SN	QTY	DESCRIPTION
1		85812086		1	TUBE, RIGID
2		85812087		1	TUBE, RIGID
3		9968337		1	TUBE, RIGID 4WD
4		9968676		2	BOLT, BANJO
5		85817002		4	WASHER
6		9968340		AR	CONNECTOR, HYD.
7		9968336		AR	NUT
8		9968219		2	PLUG 9/16" UNF
9		85812085		1	BLOCK
10		9968375		1	GASKET
11		9968374		1	HOUSING
12		9968354		1	ADAPTER
13		85817165		2	SCREW
14		85817004		1	FILTER
15		9968218		AR	O-RING 9/16"
16		85812091		1	PLUG

TRANSMISSIONGEARING SPEED GEAR (4WD POWER-SHUTTLE)

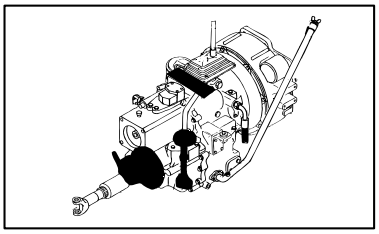

KIT KIT KIT
15 = ■
17 = ●
18 = ▲

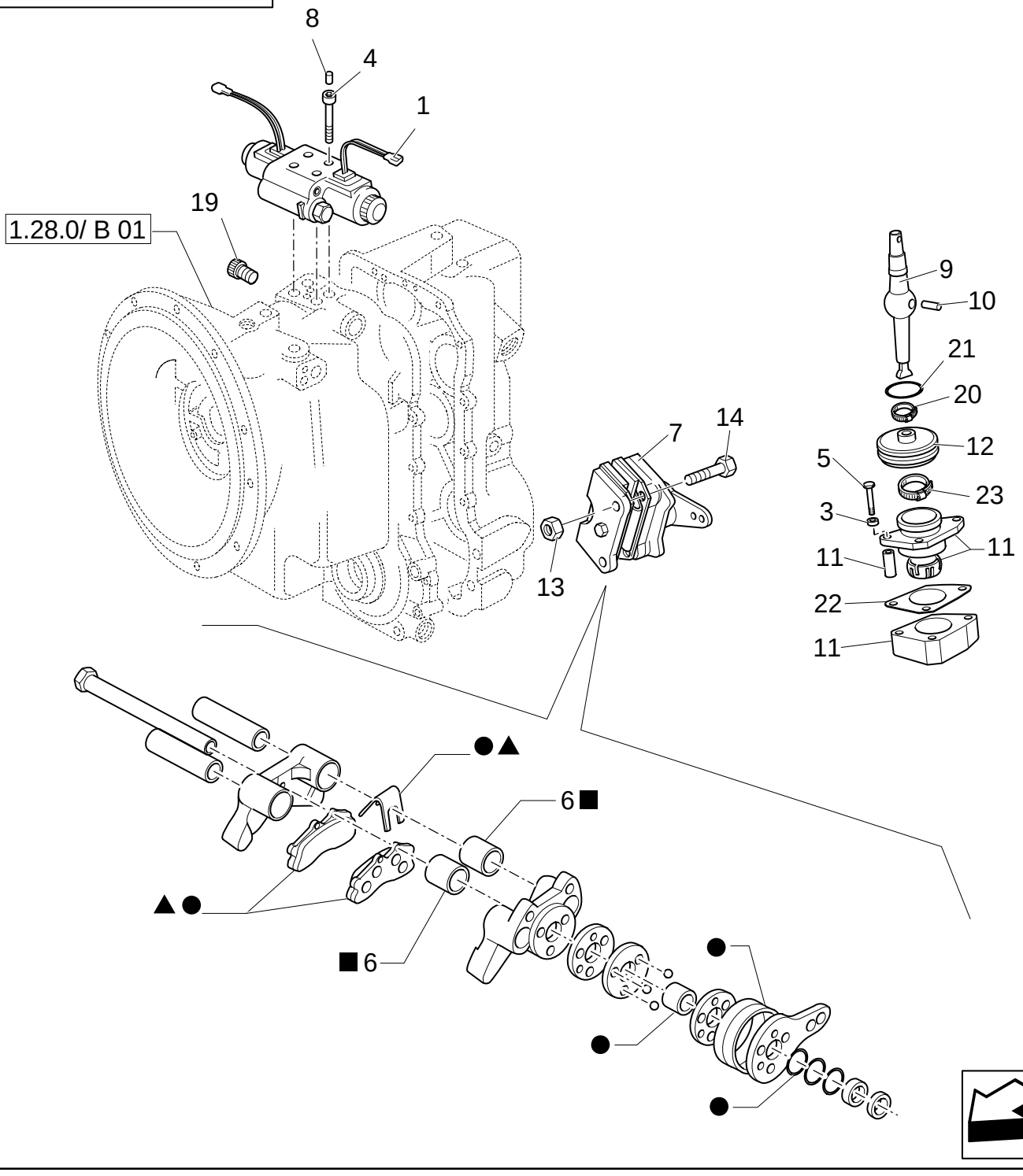

TRANSMISSIONGEARING SPEED GEAR (4WD POWER-SHUTTLE)

REF	FN	PART NUMBER	YR/SN	QTY	DESCRIPTION
1	1	85827764		1	VALVE, HYDRAULIC
2		9969344		2	KIT
3		85812092		3	WASHER
4		9969445		4	SCREW
5		85817163		3	SCREW
7	2	85813300		1	BRAKE CALIPER
8		85827779		4	PLUG 2WD
9		9968324		1	LEVER
10		9968327		1	PIN
11		9968326		1	SUPPORT
12		9968328		1	BOOT
13		9969281		2	NUT
14		9968299		2	BOLT
15		85813318		1	KIT, REPAIR
17		9968926		1	SET OF PARTS
18		9968927		1	KIT
19		9968370		2	PLUG Plastic, .25"
20		85827776		1	TIE-ROD
21		85817006		1	GASKET
22		85817007		1	GASKET
23		85827777		1	TIE-ROD

(1) Includes 2, 6
(2) Includes 17, 18

1.28.0/ B	05	p1	12/05

TRANSMISSIONGEARING SPEED GEAR (4WD POWER-SHUTTLE)

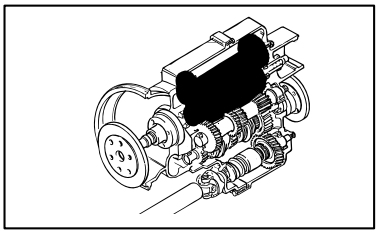

TRANSMISSIONGEARING SPEED GEAR (4WD POWER-SHUTTLE)

REF	FN	PART NUMBER	YR/SN	QTY	DESCRIPTION
1		9968279		3	WASHER 50x70x4
2		9968228		2	BEARING ASSY
3		9968304		4	BEARING ASSY 50x5x17
4		9968302		2	SPACER
5		9968286		1	GEAR 30T
6		9968291		3	RING, LOCKING
7		85827771		2	SPRING-CHECK
8		85827772		2	SPRING
9		9968287		2	CIRCLIP
10		9968288		2	PLATE
11		9968290		12	PLATE
12		9968289		12	PLATE
13		85827773		2	PISTON
14		85827774		2	SPRING
15		85821452		1	SHAFT, PROPELLOR
16		85821454		1	SLEEVE
18		9968226		4	GASKET
19		9968341		1	O-RING M80x70x2
20		9968342		AR	SHIM 24T-25T
20		9968343		AR	SHIM 80x70x0,076
20		9968344		AR	SHIM 80x70x0,178
20		9968345		AR	SHIM 80x70x0,599
21		9968285		1	GEAR 24T
22		9968305		1	BEARING ASSY
23		9968347		1	SHAFT
24		9968268		2	BEARING ASSY
25		9968281		1	GEAR 24T-25T
26		9968262		AR	SHIM MM.0,002
26		9968263		AR	SHIM MM.0,003
26		9968264		AR	SHIM MM.0,003
26		9968265		AR	SHIM MM.0,007
26		9968266		AR	SHIM MM.0,015
26		9968267		AR	SHIM MM.0,020
27		9968261		1	SPACER
28		9968282		1	SHAFT
29		9968314		1	GASKET MM.40
30		9968230		1	WASHER 40x70x4

1.28.0/ B	05	p2	12/05

TRANSMISSIONGEARING SPEED GEAR (4WD POWER-SHUTTLE)

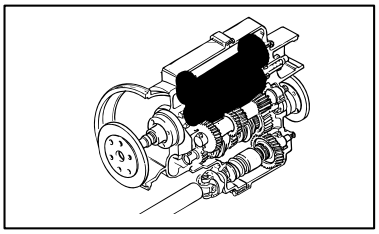

TRANSMISSIONGEARING SPEED GEAR (4WD POWER-SHUTTLE)

REF	FN	PART NUMBER	YR/SN	QTY	DESCRIPTION
31		9968276		1	BEARING ASSY

1.28.0/ B	06	p1	01/06

TRANSMISSIONGEARING SPEED GEAR (4WD POWER-SHUTTLE)

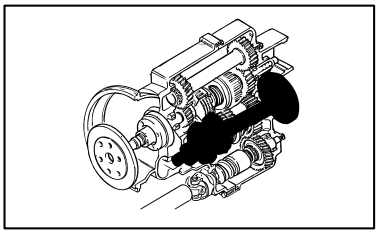

TRANSMISSIONGEARING SPEED GEAR (4WD POWER-SHUTTLE)

REF	FN	PART NUMBER	YR/SN	QTY	DESCRIPTION
1		9968308		1	SCREW
2		9968306		1	WASHER
3		9968309		1	O-RING 1.29"IDx.139"Thk
4		85820909		1	FLANGE
5		85825505		1	GASKET M48x62x8
6		9968271		1	SPACER
7		9968272		AR	SHIM 0.051mm
7		9968273		AR	SHIM 0.076mm
7		9968274		AR	SHIM 0.178mm
7		9968275		AR	SHIM 0.559mm
8		9968270		1	BEARING ASSY
9		9968249		1	GEAR 4WD
10		9968252		1	HOSE
11		9968250		2	BEARING ASSY
12		9968251		1	SPACER
13		9968248		1	GEAR 43T 1ST
14		9968307		2	SYNCHRONIZER
15		9968223		2	RING
16		9968247		1	GEAR 37T 2ND
17		9968269		1	SHAFT
18		9968246		1	GEAR 28T 3RD
19		9968278		1	BEARING ASSY
20		9968358		1	RING Sealing Cap, 2.25"
21		9968253		1	RING, LOCKING
22		85827803		1	GEAR
23		9968260		1	WASHER 55x35x4

TRANSMISSIONGEARING SPEED GEAR (4WD POWER-SHUTTLE)

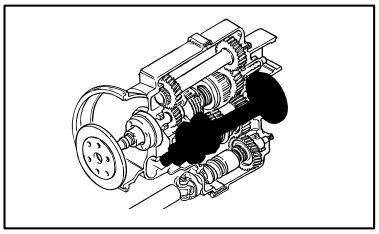

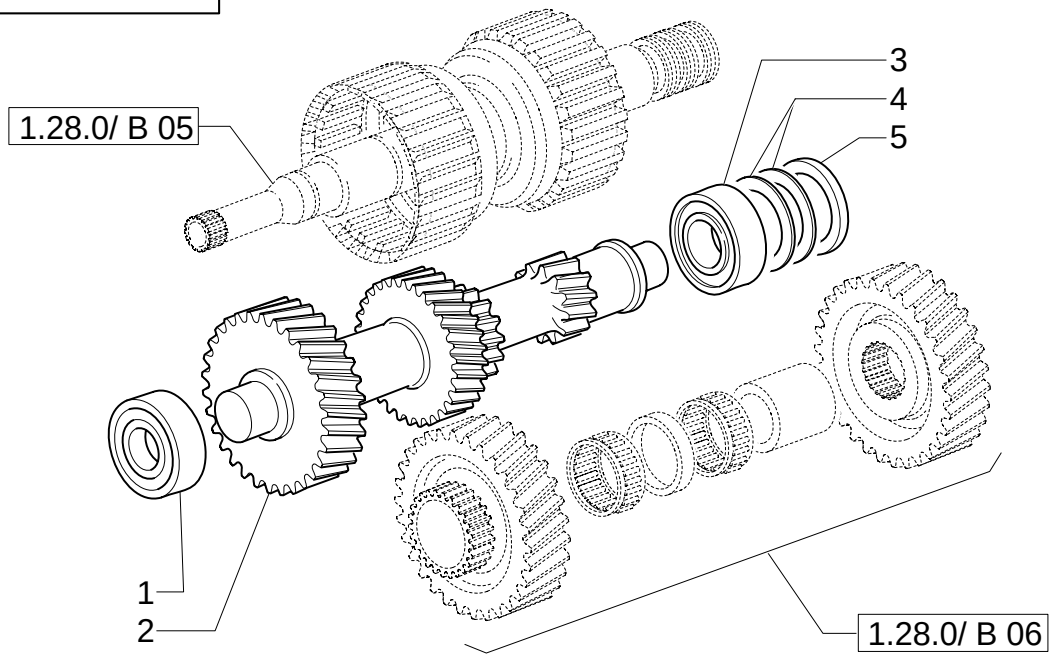

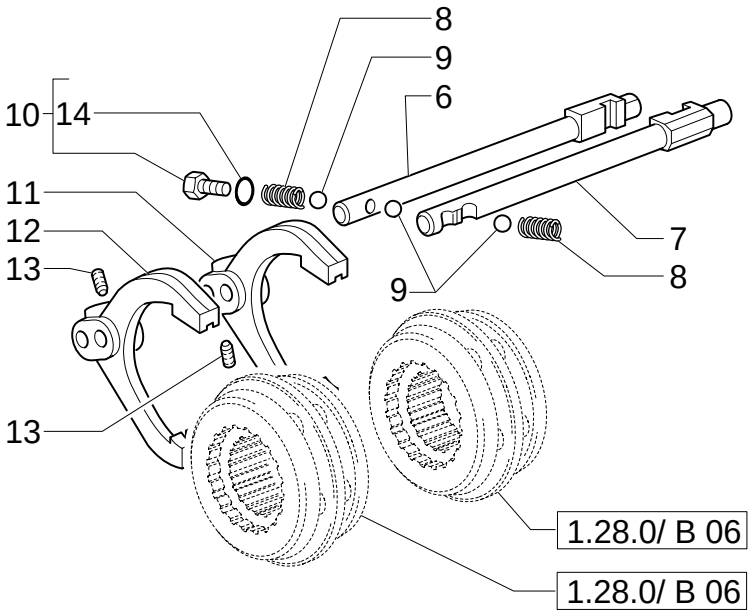

TRANSMISSIONGEARING SPEED GEAR (4WD POWER-SHUTTLE)

REF	FN	PART NUMBER	YR/SN	QTY	DESCRIPTION
1		9968277		1	BEARING ASSY
2		9968280		1	SHAFT 35T-29T-20T-13T
3		9968270		1	BEARING ASSY
4		9968272		AR	SHIM 0.051mm
4		9968273		AR	SHIM 0.076mm
4		9968274		AR	SHIM 0.178mm
4		9968275		AR	SHIM 0.559mm
5		9968271		1	SPACER
6		9968319		1	ROD 1ST-2ND
7		9968322		1	ROD 3RD-4TH
8		9968316		2	SPRING
9		9968315		3	BALL
10		9968219		AR	PLUG 9/16" UNF
11		9968317		1	YOKE 1ST-2ND
12		9968318		1	YOKE 3RD-4TH
13		9968323		2	SCREW
14		9968218		AR	O-RING 9/16"

1.28.0/ B	08	p1	12/05

TRANSMISSIONGEARING SPEED GEAR (4WD POWER-SHUTTLE)

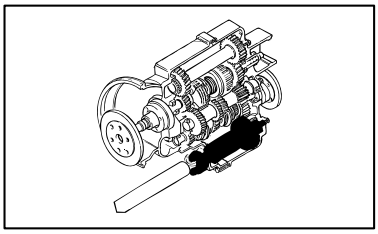

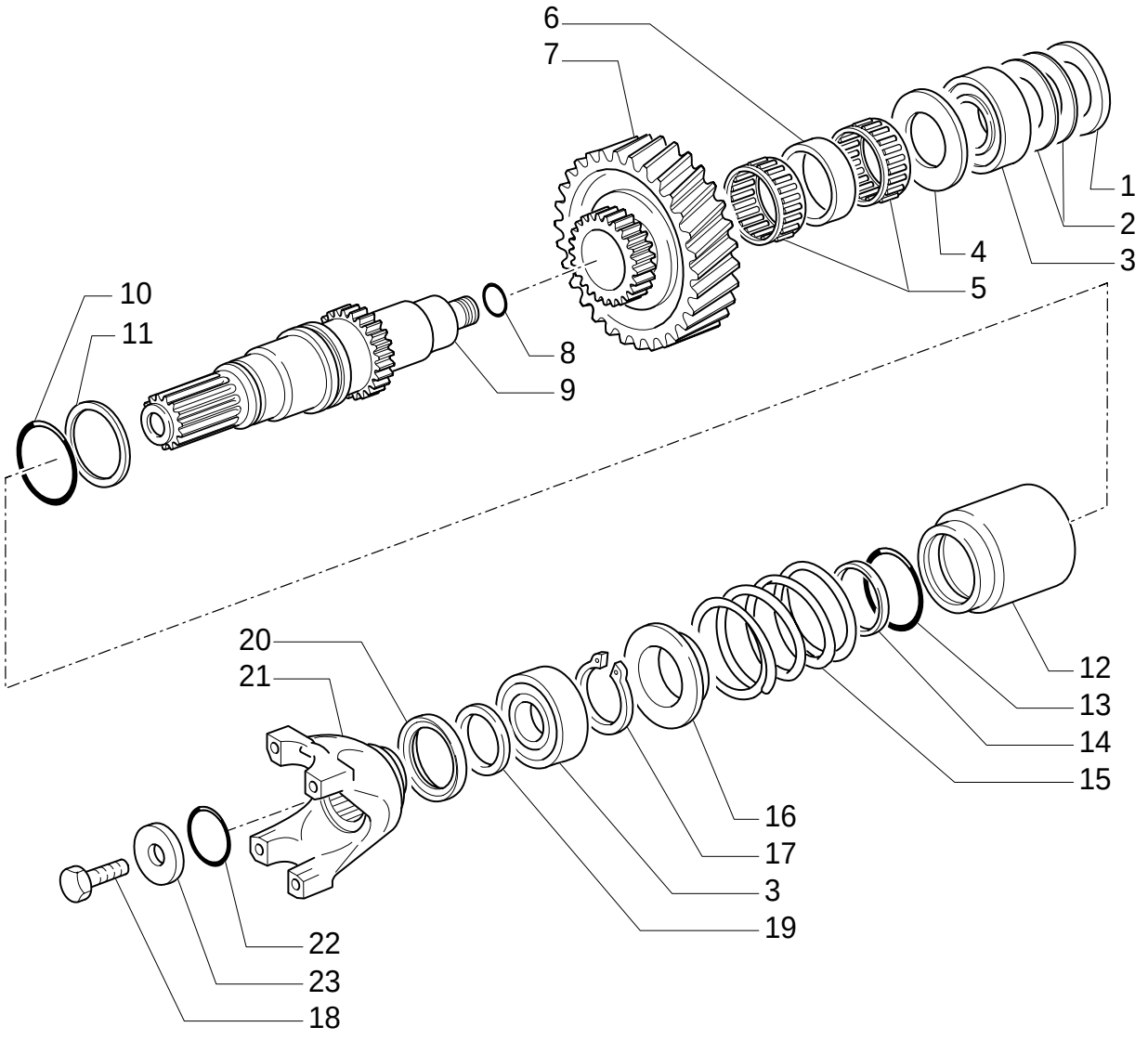

TRANSMISSIONGEARING SPEED GEAR (4WD POWER-SHUTTLE)

REF	FN	PART NUMBER	YR/SN	QTY	DESCRIPTION
1		9968255		1	SPACER
2		9968256		AR	SHIM 67.5x58x0.051
2		9968257		AR	SHIM 67.5x58x0.076
2		9968258		AR	SHIM 67.5x58x0.178
2		9968259		AR	SHIM 67.5x58x0.599mm
3		9968276		2	BEARING ASSY
4		9968244		1	WASHER, THRUST 65x40.5x4
5		85827782		2	BEARING ASSY
6		9968393		1	SPACER
7		9968240		1	GEAR 35T
8		9968254		1	GASKET
9		9968239		1	SHAFT
10		9968232		1	O-RING 1.859"IDx.139"Thk
11		9968229		1	GASKET
12		9968234		1	CLUTCH
13		9968298		1	O-RING 2.234"IDx.139"Thk
14		9968297		1	O-RING
15		9968235		1	SPRING
16		9968236		1	SUPPORT
17		9968233		1	RING, SNAP
18		9968308		1	SCREW
19		9968301		1	SPACER
20		85825506		1	GASKET M48x62x8
21		9968300		1	FLANGE
22		9968309		1	O-RING 1.29"IDx.139"Thk
23		9968306		1	WASHER

1.28.6	01	p1	02/05

GEAR FILTER PIPES (POWER-SHUTTLE)

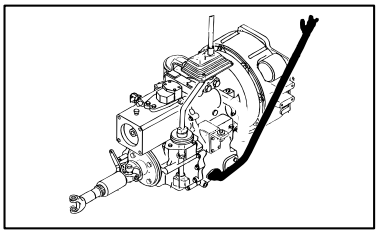

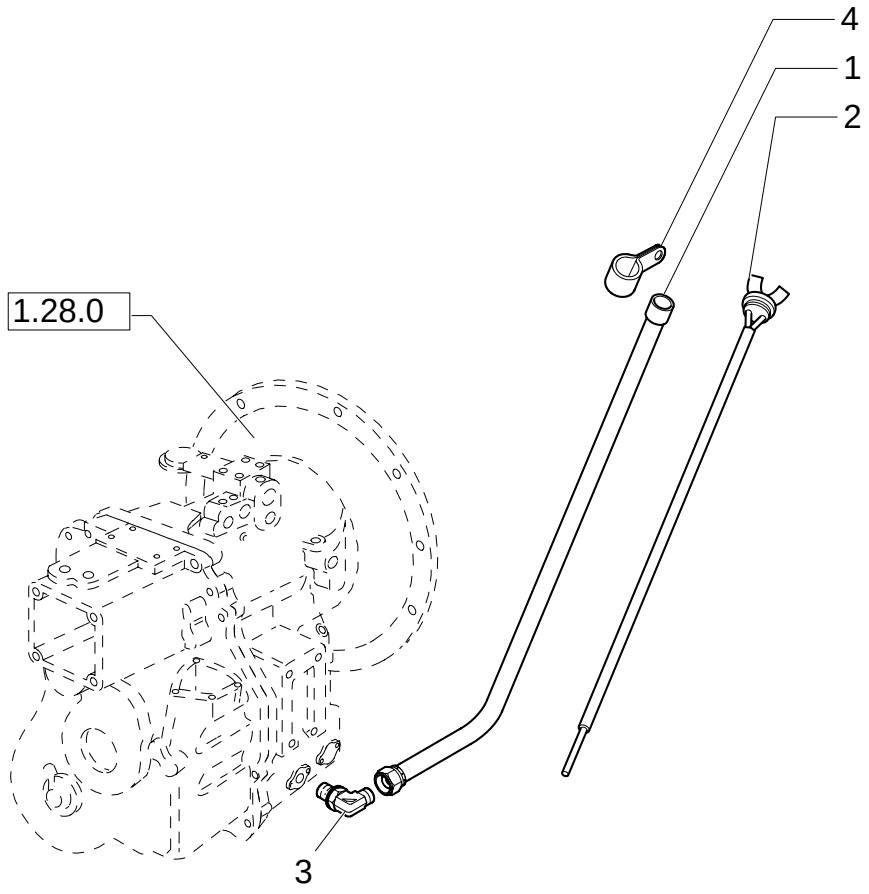

GEAR FILTER PIPES (POWER-SHUTTLE)

REF	FN	PART NUMBER	YR/SN	QTY	DESCRIPTION
1		87408479		1	TUBE, RIGID
2		87408557		1	DIPSTICK
3		47050658		1	CONNECTOR, HYD.
4		47049176		1	COLLAR

TRANSMISSION ESTERNALSHIFTING CONTROLS (POWER-SHUTTLE)

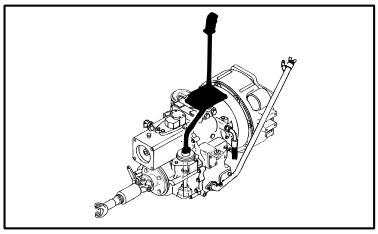

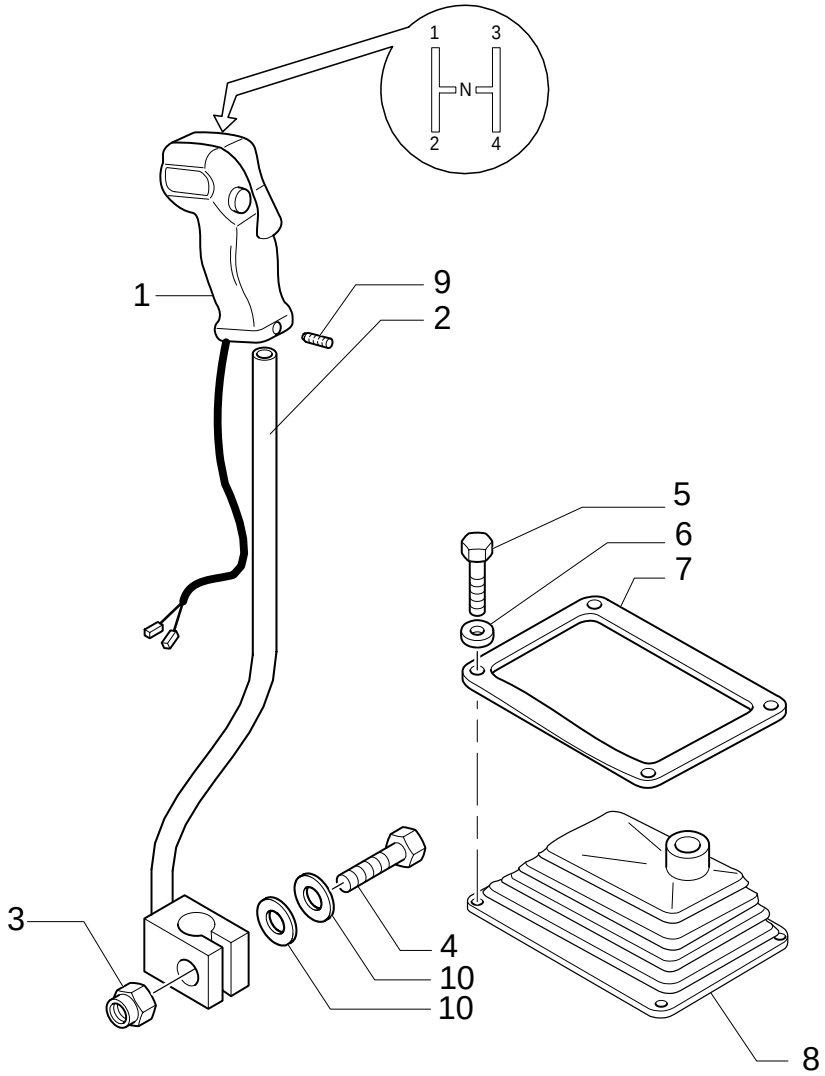

TRANSMISSION ESTERNALSHIFTING CONTROLS (POWER-SHUTTLE)

REF	FN	PART NUMBER	YR/SN	QTY	DESCRIPTION
1		85802947		1	KNOB ASSY
2		85826943		1	LEVER
3		16105011		1	NUT M12x1.25
4		15540821		1	SCREW M12x1.25x50
5		10903021		4	SCREW Hex,M6x35,8.8
6		11197779		4	WASHER, LOCK
7		85824187		1	DETECTOR
8		85802847		1	BOOT
9		13736611		1	DOWEL M5x14
10		14496721		2	WASHER

1.38.1	01	p1	11/05

FRONT & REAR DRIVESHAFT (POWER-SHUTTLE)

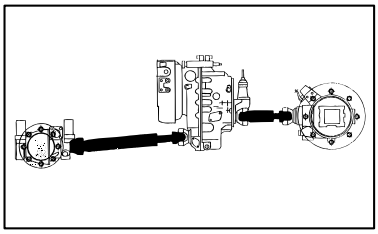

KIT
KIT KIT
6 = ■
7 = ●

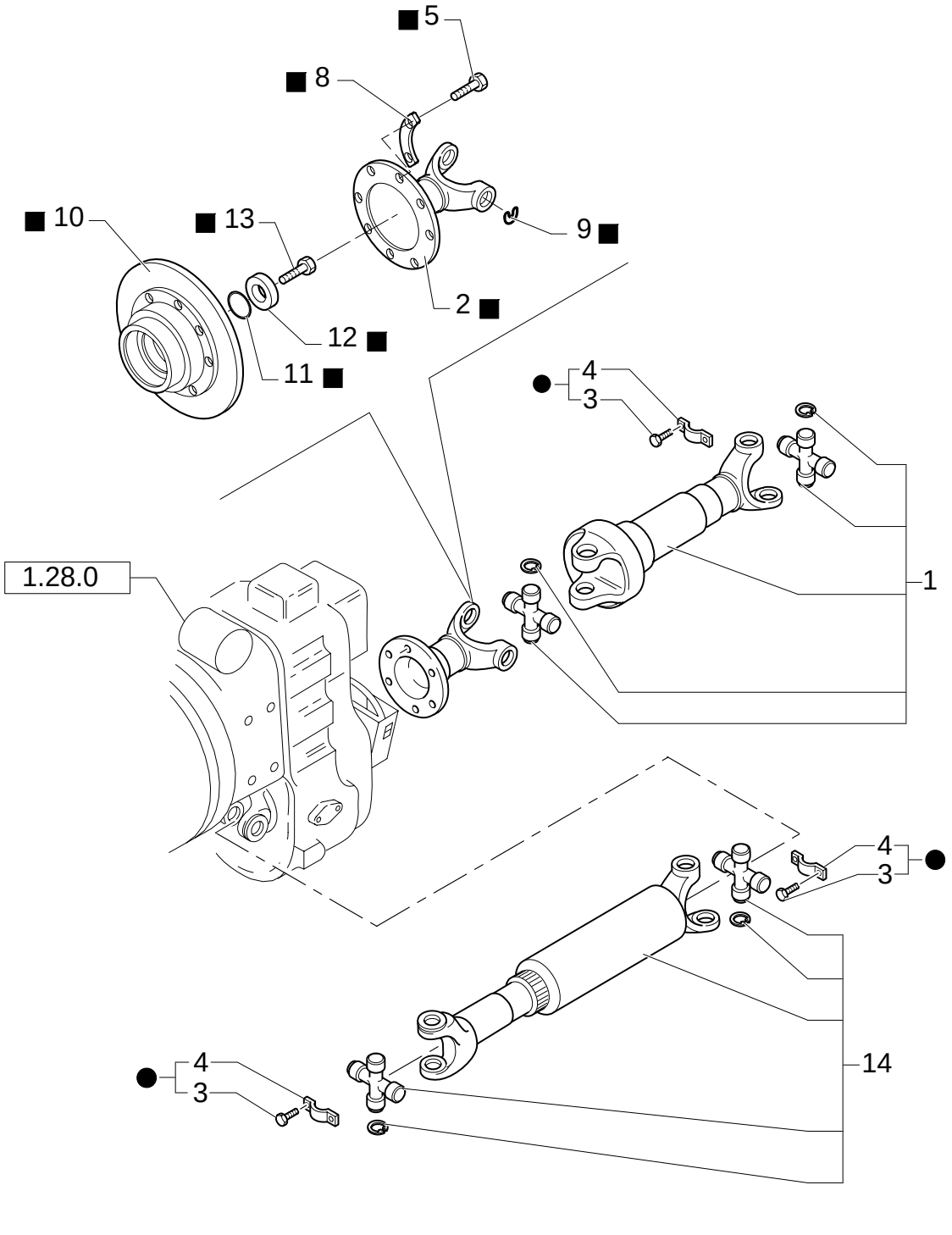

FRONT & REAR DRIVESHAFT (POWER-SHUTTLE)

REF	FN	PART NUMBER	YR/SN	QTY	DESCRIPTION
1		85827424		1	SHAFT
2		85820157		1	FLANGE
3		{87311153}		4	
4		{87311152}		AR	
5		85820154		8	SCREW M10x1.5
6	1	85820908		1	KIT
7	2	85827423		1	SHAFT, PROPELLOR Front
8		85819186		4	PLATE, COVER
9		85820914		2	CIRCLIP
10		85820909		1	FLANGE
11		9968309		1	O-RING 1.29"IDx.139"Thk
12		9968306		1	WASHER
13		9968308		1	SCREW
14		85827423		1	SHAFT, PROPELLOR

(1) Includes 2, 5, 8 To 13
(2) Includes 3

1.39.8	01	p1	11/05

TRANSMISSION OIL COOLING PIPES (POWER-SHUTTLE)

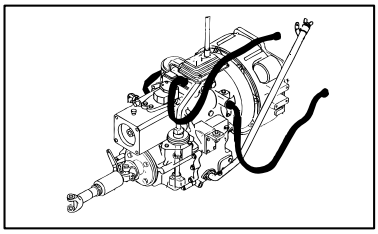

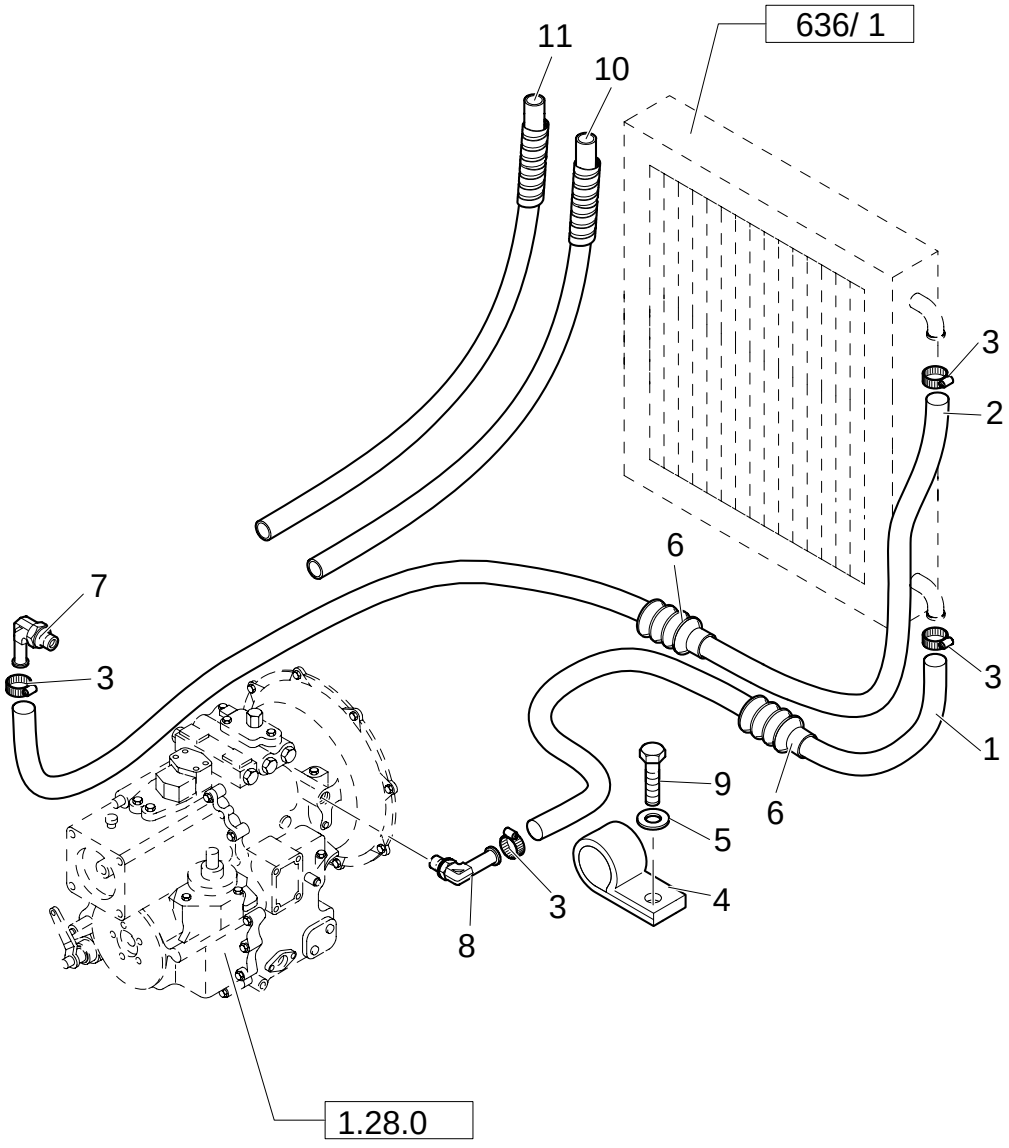

TRANSMISSION OIL COOLING PIPES (POWER-SHUTTLE)

REF	FN	PART NUMBER	YR/SN	QTY	DESCRIPTION
1		87302506		1	HOSE, FLEXIBLE
2		87302507		1	HOSE, FLEXIBLE
3		87314076		4	COLLAR
4		47048664		1	COLLAR
5		47048964		1	WASHER
6		87345955		2	SHIELD
7		87017744		1	CONNECTOR, HYD.
8		87017743		1	CONNECTOR, HYD.
9		47042364		1	SCREW
10		87326808		1	HOSE, FLEXIBLE
11		87326809		1	HOSE, FLEXIBLE

NOTES

SECTION INDEX

SEC. 04	00	FRONT AXLE
1.40.0	01	FRONT AXLE (2WD)
1.40.0	02	FRONT AXLE (2WD)
402	01	4WD FRONT AXLE, HOUSING, BUSHINGS & SUPPORTS
402	02	4WD FRONT AXLE, SWIVEL HOUSING & STEERING CYLINDER
402	03	4WD FRONT AXLE, HUBS
402	04	4WD FRONT AXLE, RING GEAR & PINION ASSEMBLY
402	05	4WD FRONT AXLE, DIFFERENTIAL
402	06	4WD FRONT AXLE, DRIVE SHAFT
415	01	FRONT AXLE - (4WD) W/GEAR,BEVEL
415	02	FRONT AXLE - (4WD) W/GEAR,BEVEL
415	03	FRONT AXLE - (4WD) W/GEAR,BEVEL
415	04	FRONT AXLE - (4WD) W/GEAR,BEVEL
415	05	FRONT AXLE - (4WD) W/GEAR,BEVEL
415	06	FRONT AXLE - (4WD) W/GEAR,BEVEL

FRONT AXLE

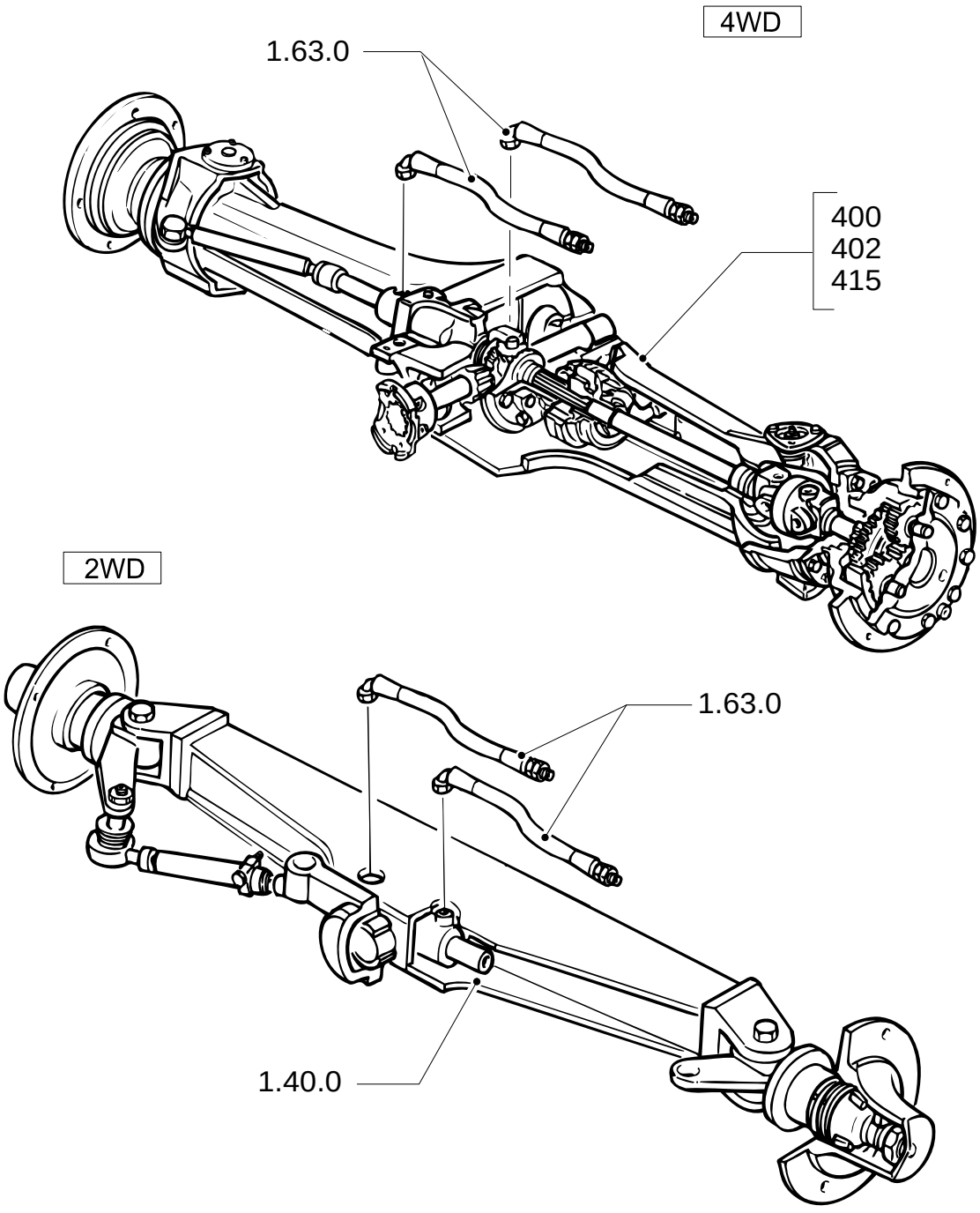

FRONT AXLE

REF	FN	PART NUMBER	YR/SN	QTY	DESCRIPTION

1.40.0	01	p1	11/05

FRONT AXLE (2WD)

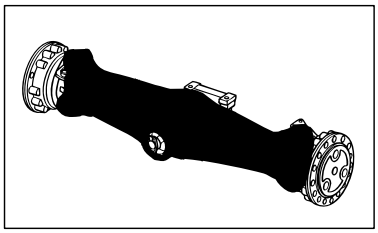

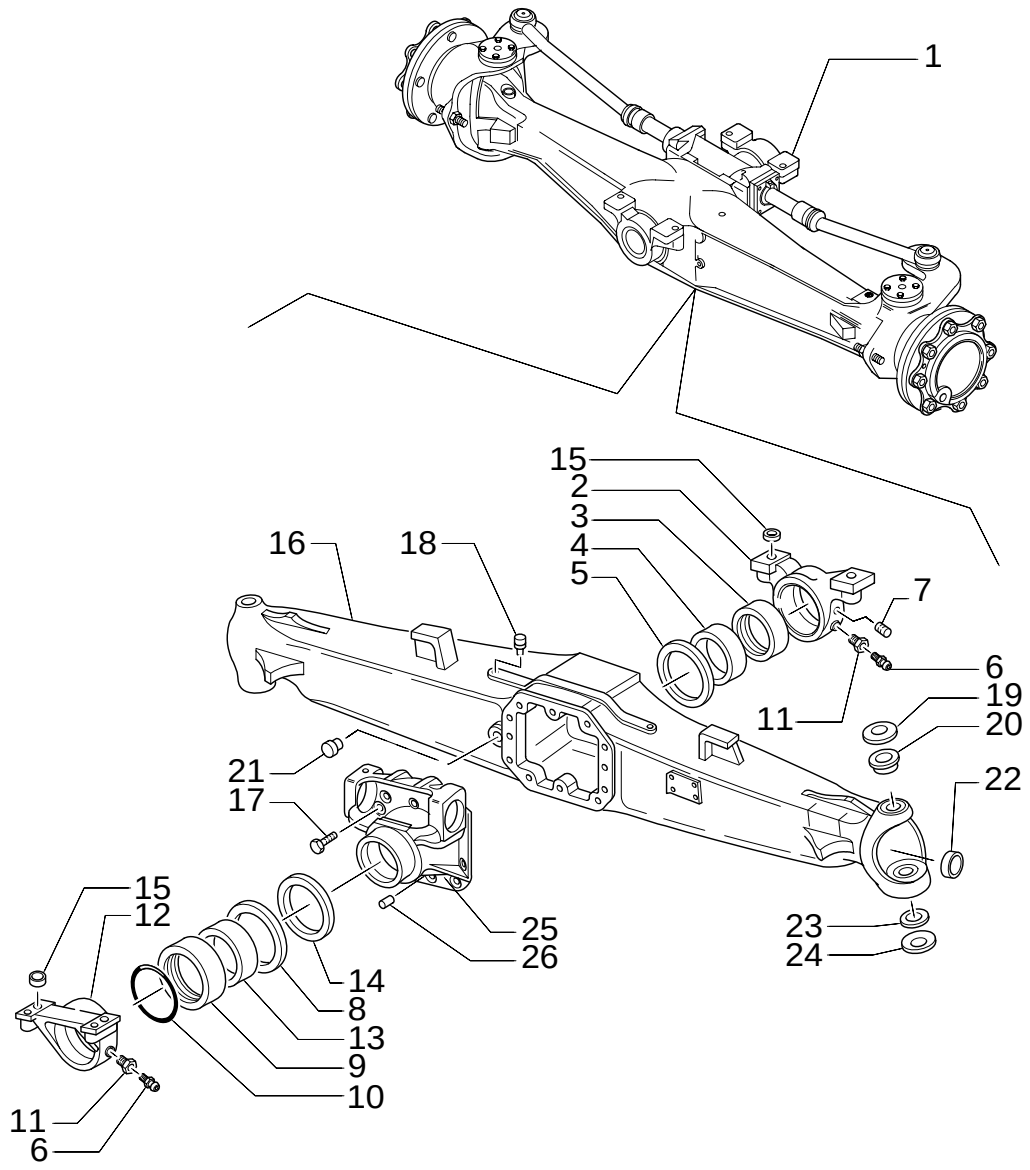

FRONT AXLE (2WD)

REF	FN	PART NUMBER	YR/SN	QTY	DESCRIPTION
1		85824339		1	AXLE, FRONT, LIVE
2		9967991		1	SUPPORT
3		9967992		1	BUSHING 125x115x5
4		9967993		1	BUSHING 115x105x44
5		9967994		1	WASHER, THRUST
6		9967996		2	NIPPLE, LUBE M8x1
7		85805973		1	PLUG M8x1
8		9968006		1	WASHER, THRUST
9		9968007		1	BUSHING 135x125x5
10		9968008		1	RING, RUBBER
11		9967995		2	SCREW
12		9968009		1	SUPPORT
13		9968010		1	BUSHING
14		85805706		1	PLUG DIA=92x12
15		9967990		4	BUSHING, DRIVE 30x21x16.5
16		85824347		1	BEAM
17		9967769		10	SCREW M12x1.75x33
18		85805703		1	PLUG M10x1
19		9967673		2	SPRING
20		85824469		2	BUSHING
21		85805707		1	PLUG
22		85805704		2	PLUG
23		9967678		2	ARTICULATION
24		9967679		2	SPRING
25		85805705		1	SUPPORT
26		9967683		2	PIN, ROLL 15x35

1.40.0	02	p1	11/05

FRONT AXLE (2WD)

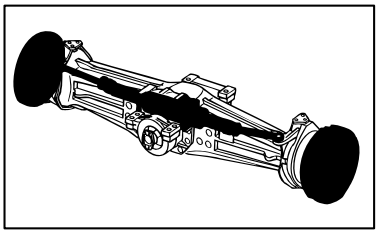

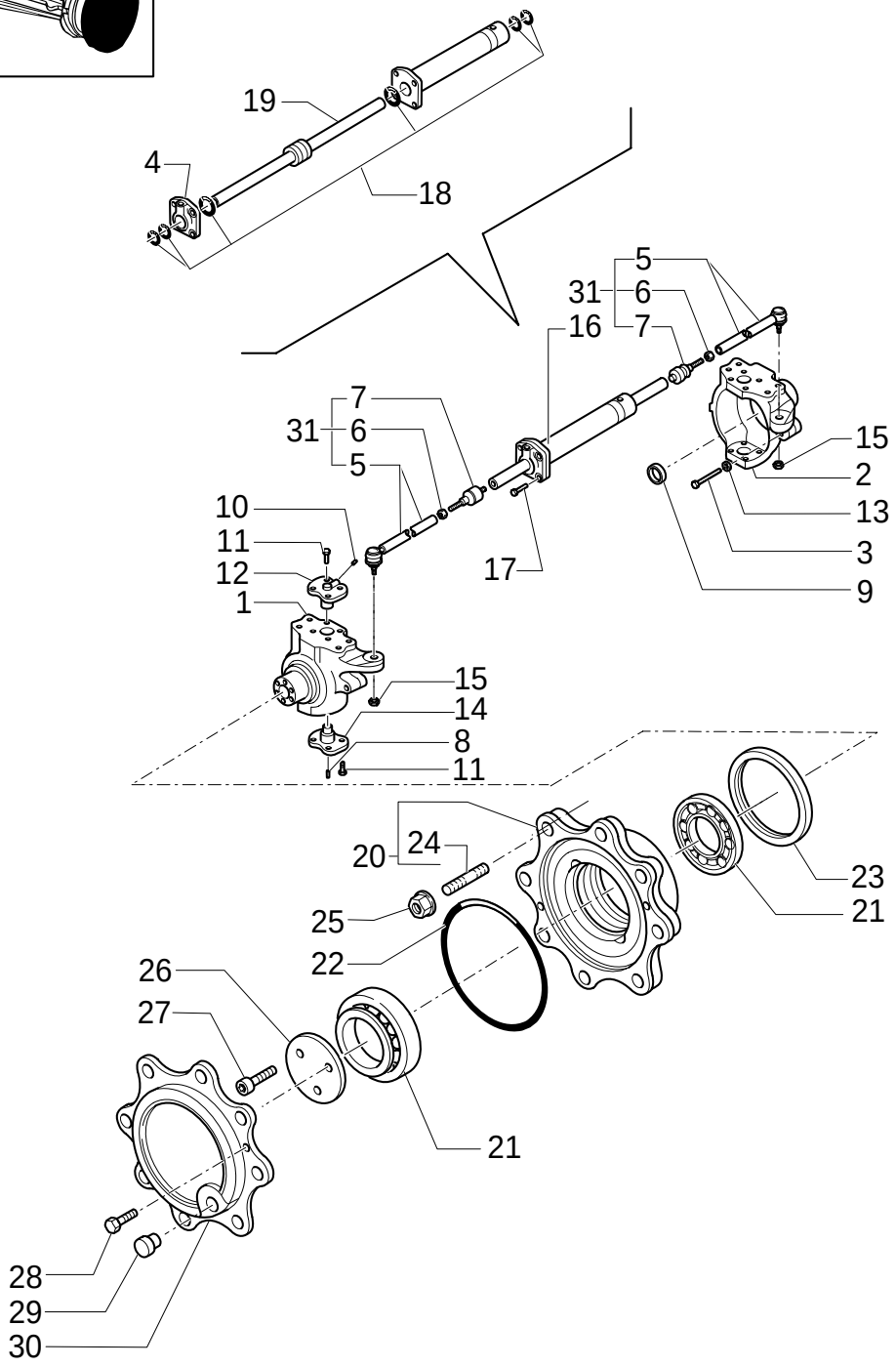

FRONT AXLE (2WD)

REF	FN	PART NUMBER	YR/SN	QTY	DESCRIPTION
1		85824351		1	CUP, COVER LH
2		85824350		1	CUP, COVER RH
3		85805987		2	SCREW M16x100
4		85805989		1	PISTON SWIVEL HEAD
5		85805977		2	TIE-ROD
6		85805976		2	NUT M18x1.5
7		85805975		2	ARTICULATION
8		85805984		2	NIPPLE, LUBE M6x1
9		85824352		2	PLUG
10		9968021		2	NIPPLE, LUBE M6x2
11		85805979		16	SCREW M12x1.75x30
12		85805980		2	PIN
13		85805986		2	NUT M16
14		85805983		2	PIN
15		85805982		2	NUT M18x1,5
16		85805978		1	CYLINDER ASSY
17		9968028		4	SCREW M12x45
18		85805990		1	KIT
19		85805992		1	ROD
20	1	85806003		2	KIT
21		85806002		4	BEARING ASSY
22		85805711		2	O-RING
23		85827067		2	SEAL
24		9968070		16	STUD
25		9968071		16	NUT M18x1.5
26		85813054		2	WASHER, THRUST
27		85806010		6	SCREW M10x4.5
28		85805709		4	SCREW M8x20
29		85805707		2	PLUG M22x1.5
30		85805710		2	COVER
31	2	85805974		2	ROD

(1) Includes 24
(2) Includes 5, 6, 7

4WD FRONT AXLE, HOUSING, BUSHINGS & SUPPORTS

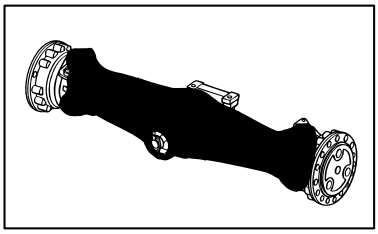

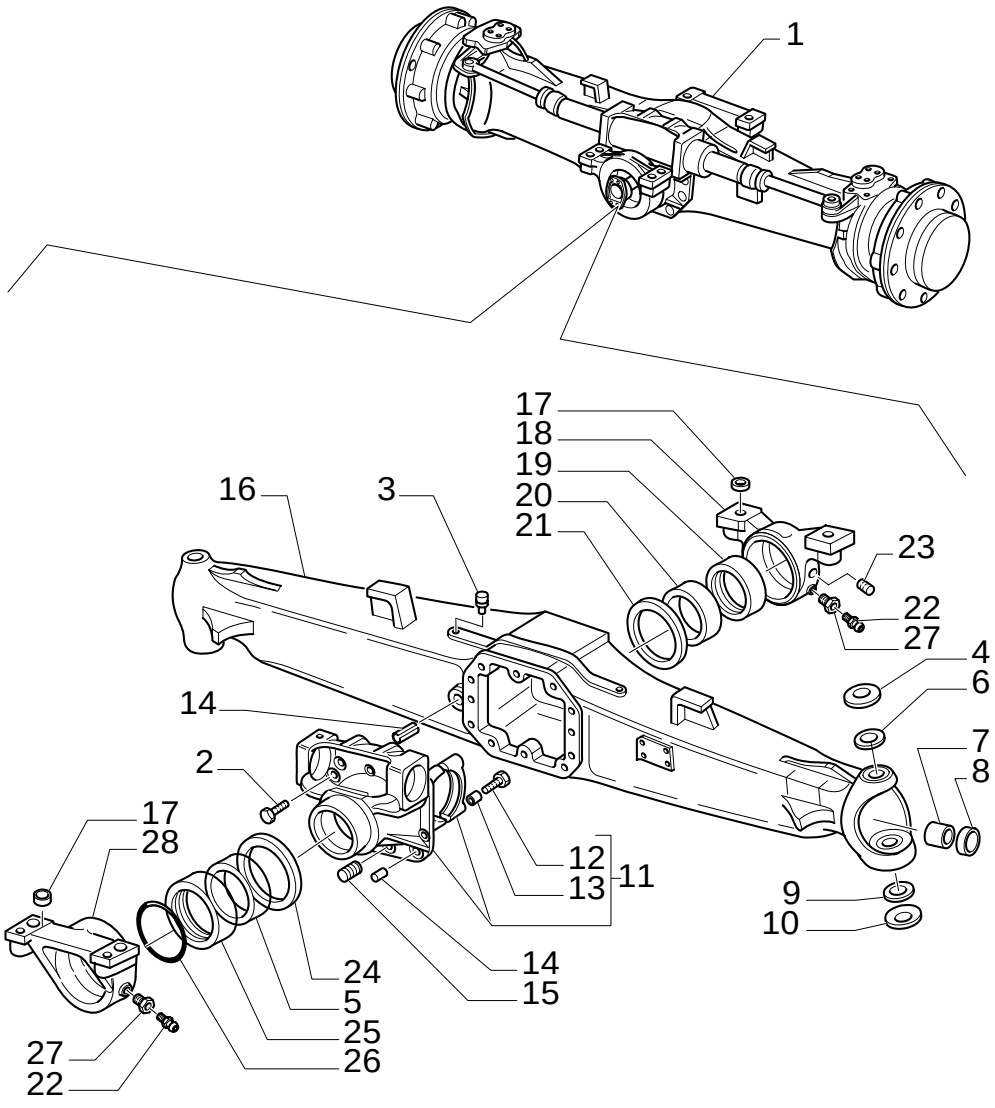

4WD FRONT AXLE, HOUSING, BUSHINGS & SUPPORTS

REF	FN	PART NUMBER	YR/SN	QTY	DESCRIPTION
1	1	85824329		1	AXLE, FRONT, LIVE
1	2	85824331		1	AXLE, FRONT, LIVE
1	3	85827726		1	AXLE
1	4	85827725		1	AXLE
2		9967769		10	SCREW Cap, HH, M12X1.75X33
3		9967672		1	PLUG M10X1
4	5	9967673		2	SPRING
4	6	9967997		2	WASHER
5		9968010		1	BUSHING
6	5	85824469		2	BUSHING
6	6	87306932		2	BUSHING
7	5	85805969		2	BUSHING
7	7	9968019		2	BUSHING
8	5	85824343		2	SEAL
8	6	{87824346}		2	
9	5	9967678		2	ARTICULATION
9	6	9968002		2	BUSHING, GUIDE
10	5	9967679		2	SPRING
10	6	9968003		2	WASHER
11	8	9968004		1	SUPPORT
12		9967681		4	SCREW
13		9967682		4	BUSHING
14		9968005		2	PLUG, DRAIN
15		9967683		2	PIN, ROLL
16	5	85824347		1	BEAM
16	9	85827738		1	BEAM
17		9967990		4	BUSHING, DRIVE
18		9967991		1	SUPPORT Front

(1) Ratio 12.8, Serial Number : Until 031054301
(2) Ratio 13.714, Serial Number : Until 031054263
(3) Power Shuttle 13.714, Serial Number : 031054264 And After
(4) Power Shuttle 12.8, Serial Number : 031054302 And After
(5) Serial Number Axle 85824329 Until 031054301, Axle 85824331 Until 031054263
(6) Serial Number Axle 85827725 031054302 And After, Axle 85824326 031054264 And After
(7) Serial Number Axle 85827725 031054302 And After, Axle 8582426 031054264 And After
(8) Includes 12, 13
(9) Serial Number Axle 85827725 031054302 And After, Axle 85824331 031054264 And After

4WD FRONT AXLE, HOUSING, BUSHINGS & SUPPORTS

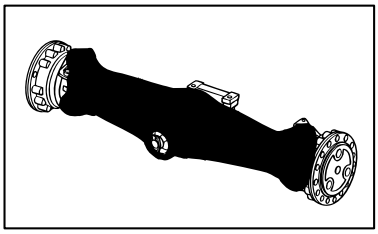

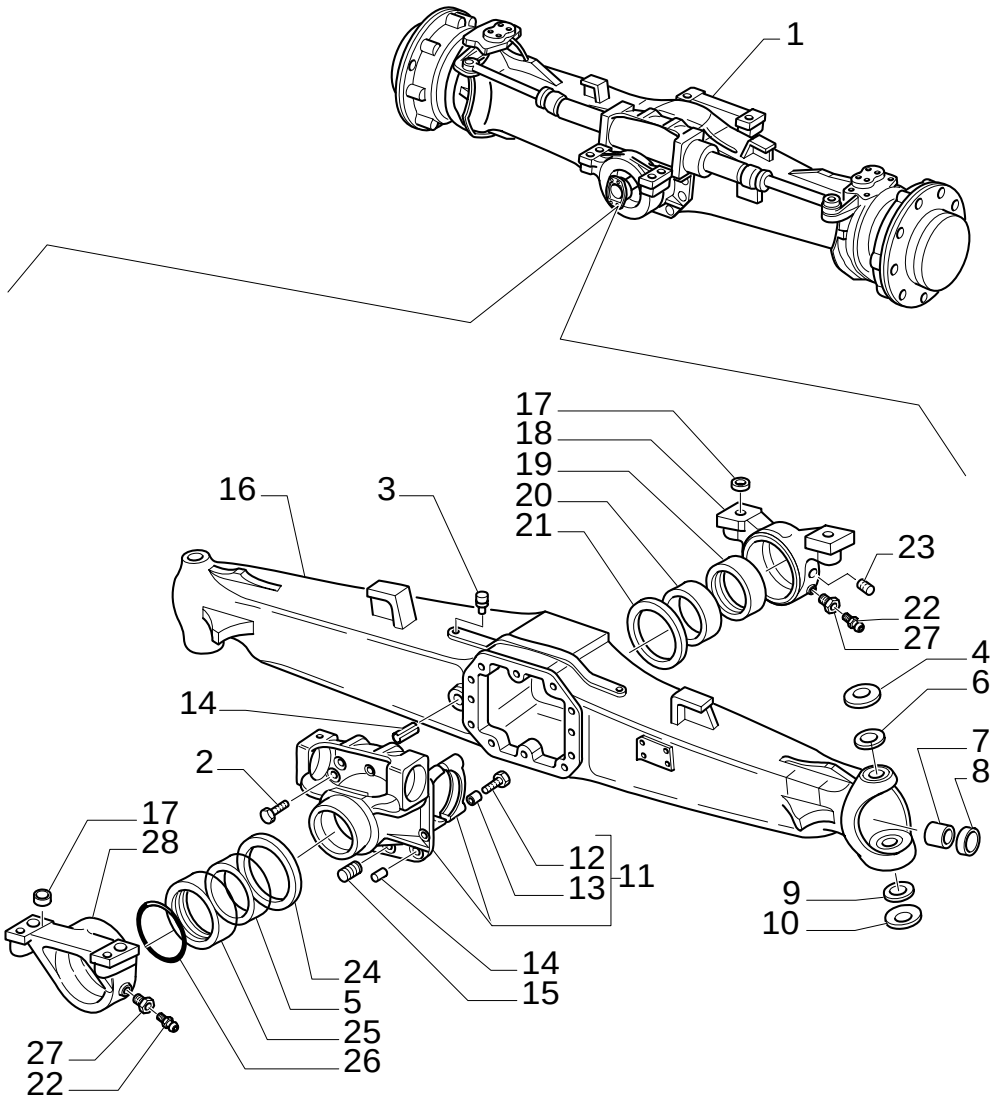

4WD FRONT AXLE, HOUSING, BUSHINGS & SUPPORTS

REF	FN	PART NUMBER	YR/SN	QTY	DESCRIPTION
19		9967992		1	BUSHING
20		9967993		1	BUSHING
21		9967994		1	WASHER, THRUST
22		9967996		2	NIPPLE, LUBE
23		85805973		1	PLUG M8X1
24		9968006		1	WASHER, THRUST
25		9968007		1	BUSHING
26		9968008		1	RING, RUBBER
27		9967995		2	SCREW
28		9968009		1	SUPPORT Rear

4WD FRONT AXLE, SWIVEL HOUSING & STEERING CYLINDER

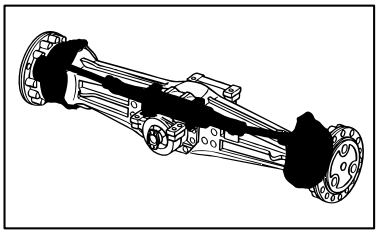

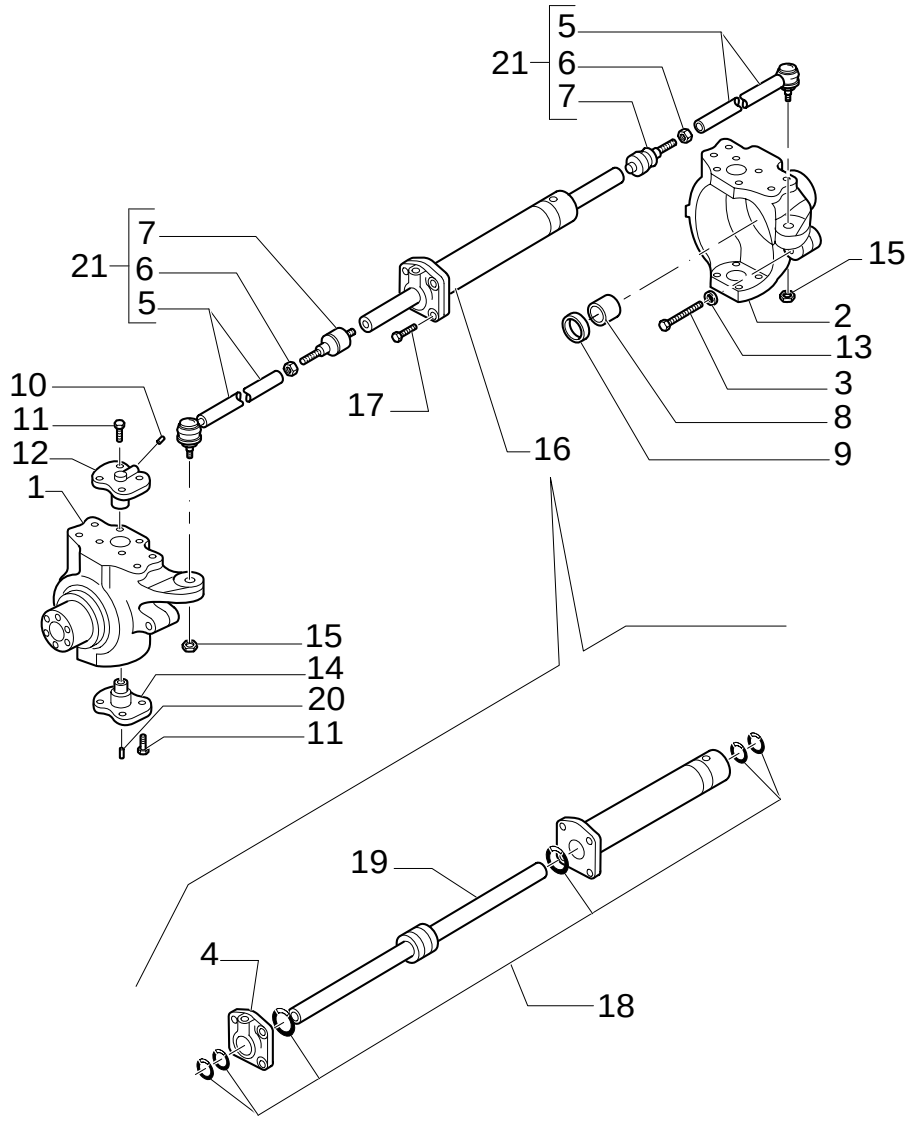

4WD FRONT AXLE, SWIVEL HOUSING & STEERING CYLINDER

REF	FN	PART NUMBER	YR/SN	QTY	DESCRIPTION
1	1	85824349		1	CUP, COVER LH
1	2	85827740		1	CUP, COVER LH
2	1	85824348		1	CUP, COVER RH
2	2	85827739		1	CUP, COVER RH
3		85805987		2	SCREW M16x100
4		85805989		1	PISTON SWIVEL HEAD
5	1	85805977		2	TIE-ROD
5	2	87306927		2	TIE-ROD
6		85805976		2	NUT M18x1.5
7		85805975		2	ARTICULATION
8		85805988		2	BUSHING
9		85824345		2	SEAL
10		9968021		2	NIPPLE, LUBE M6x2
11	1	85805979		16	SCREW M12x1.75x30
11	2	9968022		16	SCREW M14x2x35
12	1	85805980		2	PIN
12	2	9968023		2	PIN
13		85805986		2	NUT M16
14	1	85805983		2	PIN
14	2	{9668025}		2	
15		85805982		2	NUT M18x1.5
16		85805978		1	CYLINDER ASSY
17		9968028		4	SCREW M12x45
18		85805990		1	KIT
19		85805992		1	ROD
20		85805984		2	NIPPLE, LUBE M6x1
21		87306934		2	ROD

(1) Serial Number Axle 85824329 Until 031054301, Axle 85824331 Until 031054263
(2) Serial Number Axle 85827725 031054302 And After, Axle 85824326 031054264 And After

402	03	p1	02/05

4WD FRONT AXLE, HUBS

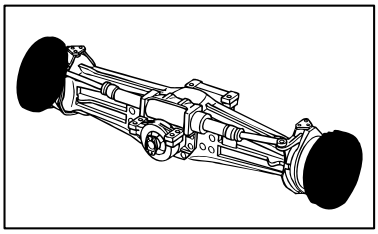

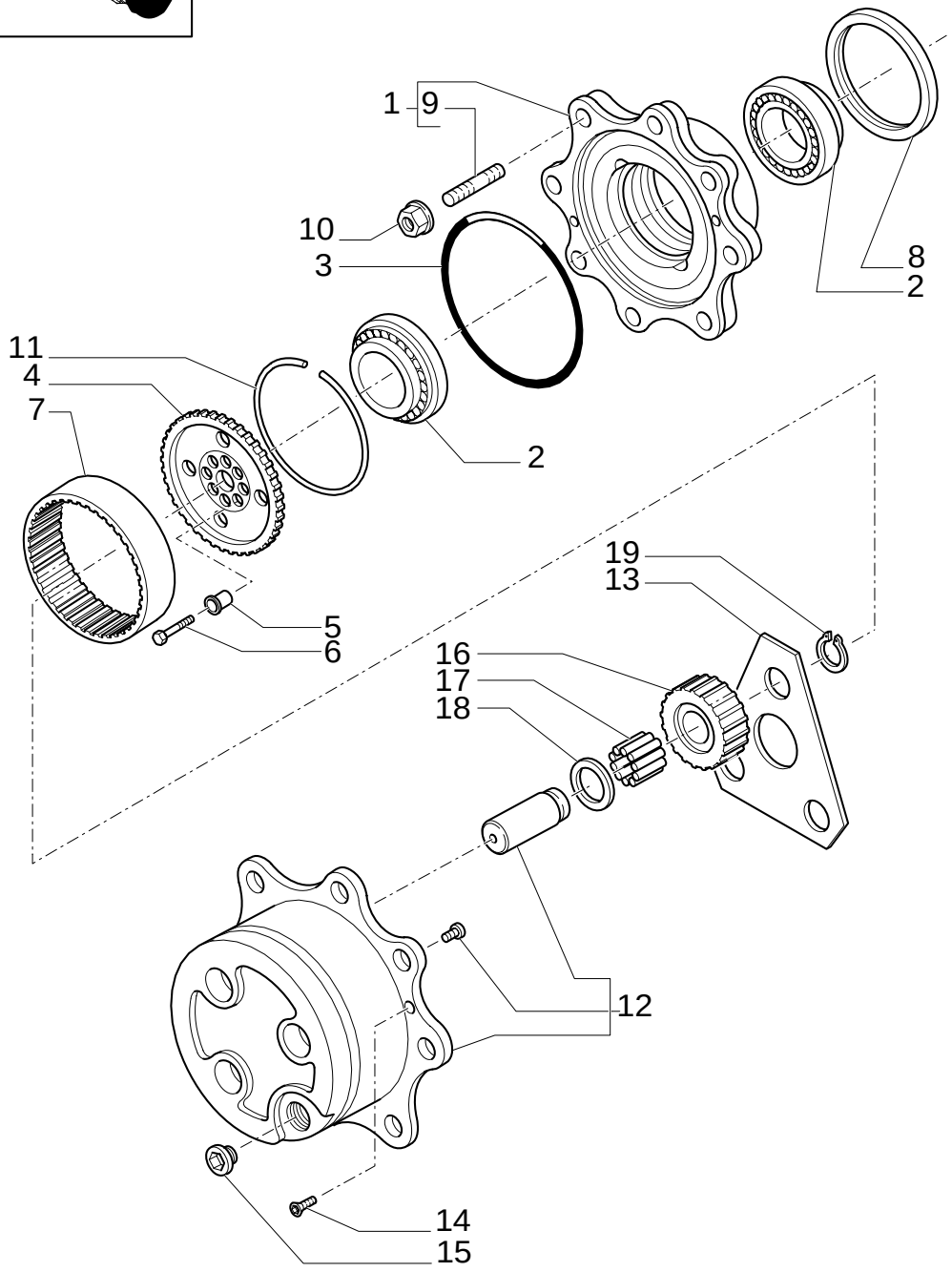

4WD FRONT AXLE, HUBS

REF	FN	PART NUMBER	YR/SN	QTY	DESCRIPTION
1		85806003		2	KIT
2		85806002		4	BEARING ASSY
3		85805711		2	O-RING
4		85817698		2	HUB
5		85806009		16	INSTALLER JIG
6		85806010		16	SCREW M10x45
7		85806008		2	GEAR, RING
8		85827067		2	SEAL Seal, Oil
9		9968070		16	STUD
10		9968071		16	NUT M18x1.5
11		85806006		2	RING
12		85806011		2	KIT
13		85806016		2	WASHER, THRUST
14		85805709		4	SCREW M8x20
15		85806012		2	PLUG M30x2
16		85806014		6	GEAR T23
17		85806015		AR	KIT OF 10 NEEDLE BRG (QTY 1=10 PIECES)
18		9968084		6	WASHER, THRUST M55x34.6x1.5
19		9968083		6	CIRCLIP

4WD FRONT AXLE, RING GEAR & PINION ASSEMBLY

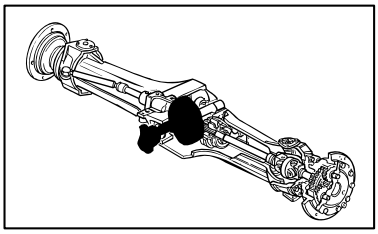

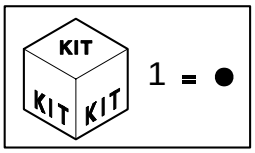

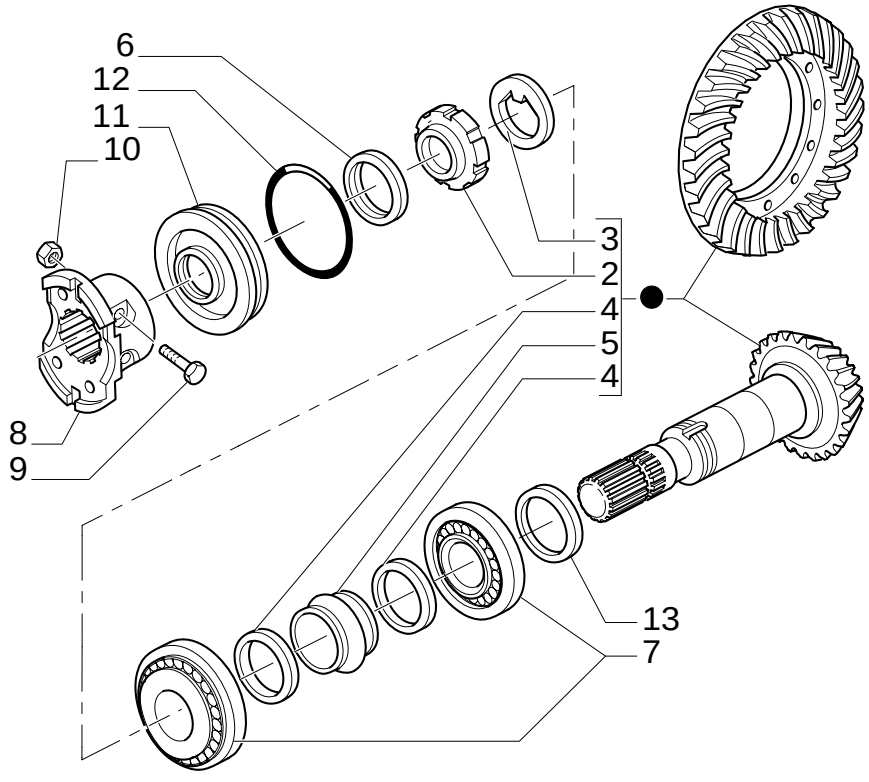

4WD FRONT AXLE, RING GEAR & PINION ASSEMBLY

REF	FN	PART NUMBER	YR/SN	QTY	DESCRIPTION
1	1	85813060		1	KIT
1	2	85813059		1	KIT
2		9968032		1	NUT, RING M40x1.5
3		9968031		1	WASHER, SEALING
4		9968033		2	WASHER 50x40.5x2
5		9968034		1	SPACER
6		85824346		1	RING Seal, Oil, M35x52x16
7		9968047		2	BEARING ASSY
8		9968049		1	FLANGE
9		9968048		2	SCREW M10x60
10		9968050		2	NUT M10x1.25
11		9968051		1	COVER
12		9968052		1	O-RING
13		9968037		AR	SHIM MM2.5
13		9968038		AR	SHIM MM2.6
13		9968039		AR	SHIM MM2.7
13		9968040		AR	SHIM MM2.8
13		9968041		AR	SHIM MM2.9
13		9968042		AR	SHIM MM3.0
13		9968043		AR	SHIM MM3.1
13		9968044		AR	SHIM MM3.2
13		9968045		AR	SHIM MM3.3
13		9968046		AR	SHIM MM3.4

(1) Ratio 14,308 - 75HP
(2) Ratio 14,714 - And Power Shuttle 13.714

4WD FRONT AXLE, DIFFERENTIAL

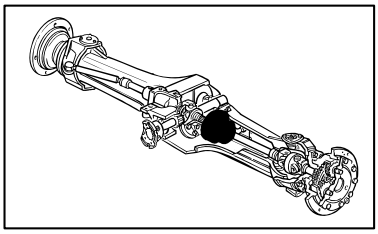

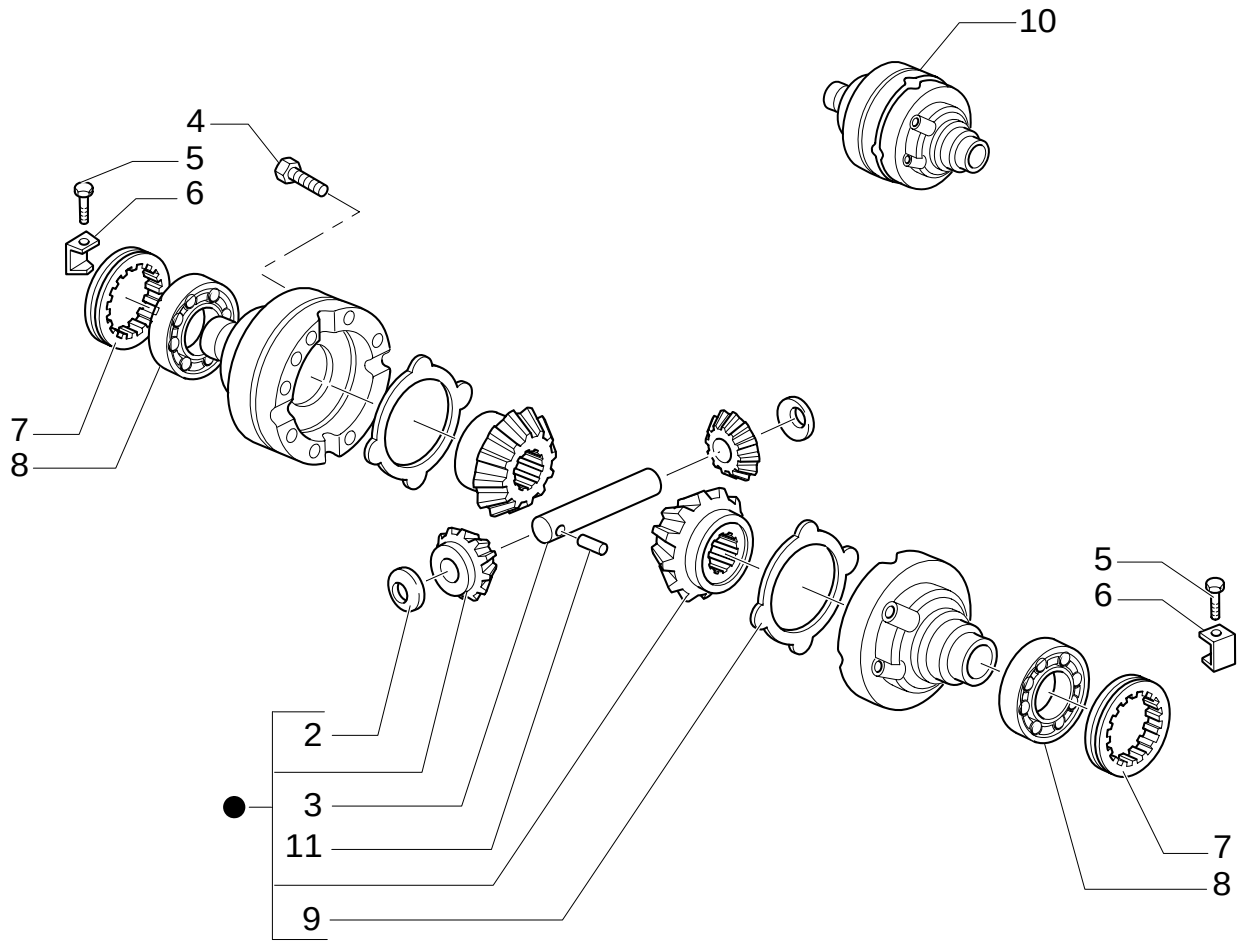

KIT 1 = ●

4WD FRONT AXLE, DIFFERENTIAL

REF	FN	PART NUMBER	YR/SN	QTY	DESCRIPTION
1		85806004		1	KIT
2		9966352		2	WASHER, THRUST
3		9966354		1	PIN
4		9967736		12	SCREW M10x1.5x75
5		9967739		2	SCREW M6x10
6		9967740		2	CLIP
7		9967741		2	NUT, RING
8		9968054		2	BEARING ASSY
9		9967734		2	DISC
10		85827068		1	DIFFERENTIAL GEAR
11		9966356		1	PIN, ROLL 7x40

402	06	p1	08/05

4WD FRONT AXLE, DRIVE SHAFT

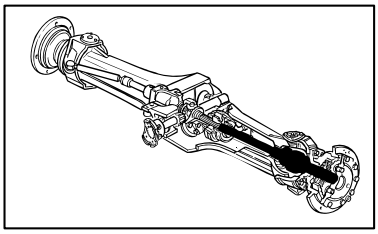

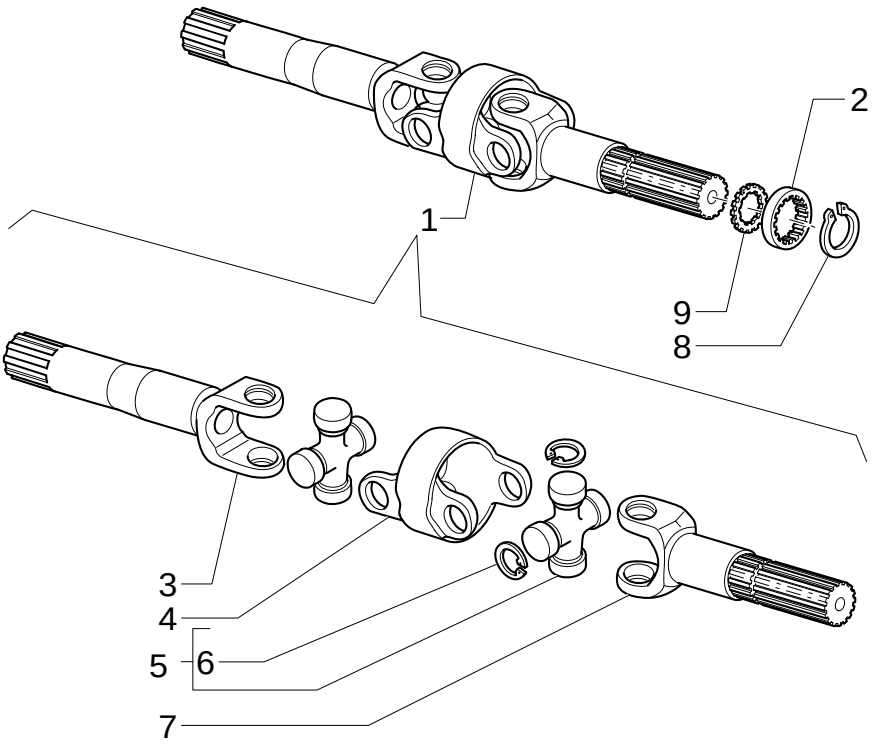

4WD FRONT AXLE, DRIVE SHAFT

REF	FN	PART NUMBER	YR/SN	QTY	DESCRIPTION
1	1	85805993		2	JOINT, UNIVERSAL ASSY
1	2	85827741		2	JOINT, UNIVERSAL
2		85805999		2	PLATE, ANTI-WRAP
3	1	85827069		2	YOKE (DIFF.)
3	3	87306929		1	FORK, SHIFTER
4		85827070		2	BODY
5	1	85807283		2	SPIDER WATER PROOF
5	3	85805996		2	SPIDER
6	1	85807284		1	KIT WATER PROOF
6	3	9968060		4	RING, LOCKING
7	1	85805997		2	YOKE (WHEEL)
7	3	87306930		2	FORK, SHIFTER
8	1	85806000		2	CIRCLIP
8	3	87306933		2	RING
9		85817697		2	WASHER

(1) Serial Number Axle 85824329 Until 031054301, Axle 85824331 Until 031054263

(2) Power Shuttle 12.8 And 13.714, Serial Number Axle 85827725 031054302 And After, Axle 85824326 031054264 And After

(3) Serial Number Axle 85827725 031054302 And After, Axle 85824326 031054264 And After

415	01	p1	10/05

FRONT AXLE - (4WD) W/GEAR,BEVEL

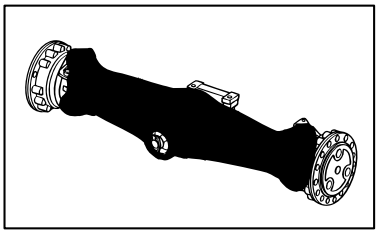

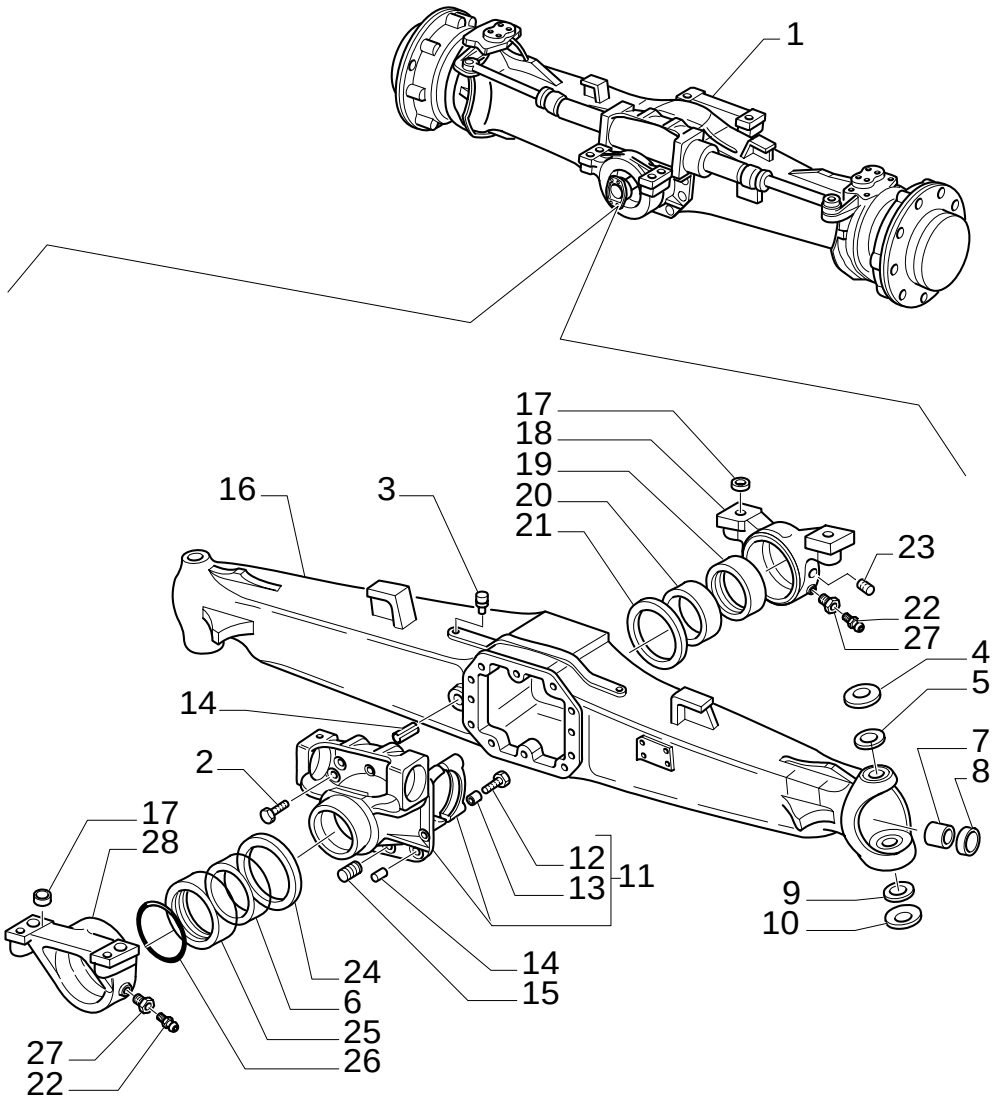

FRONT AXLE - (4WD) W/GEAR,BEVEL

REF	FN	PART NUMBER	YR/SN	QTY	DESCRIPTION
1	1, 2	85824337		1	AXLE, FRONT, LIVE
1	1, 3	85824335		1	AXLE, FRONT, LIVE
1	1, 4	85824333		1	AXLE, FRONT, LIVE
1	1, 5	85824341		1	AXLE, FRONT, LIVE
1	6	85827731		1	AXLE
1	7	85827727		1	AXLE
1	8	85827729		1	AXLE
1	9	85827733		1	AXLE
2		9967769		10	SCREW M12X1,75X33
3		9967672		1	PLUG M10X1
4	10	9967673		2	SPRING
4	11	9967997		2	WASHER
5	10	85824469		2	BUSHING
5	11	87306932		2	BUSHING
6		9968010		1	BUSHING
7	10	85805969		2	BUSHING
7	11	9968019		2	BUSHING
8	10	85824343		2	SEAL
8	11	85824346		2	RING
9	10	9967678		2	ARTICULATION

(1) UP TO S/N XXX
(2) Serial Number : Until 031054241, Only for POWER SHUTTLE, RATIO=12,8, Consists Of 2 to 28, Also Page 415 02 to 415 06
(3) Serial Number : Until 031054286, Only for POWER SHIFT, RATIO=12,8, Consists Of 2 to 28, Also Page 415 02 to 415 06
(4) Serial Number : Until 031055429, Only for POWER SHUTTLE, RATIO=12,333, Consists Of 2 to 28, Also Page 415 02 to 415 06
(5) Serial Number : Until XXXXXXXXX, Only for POWER SHIFT, RATIO=12,333, Consists Of 2 to 28, Also Page 415 02 to 415 06
(6) Serial Number : 031054242 And After, Only for POWER SHUTTLE, RATIO=12,8
(7) Serial Number : 031055429 And After, Only for POWER SHUTTLE, RATIO=12,333
(8) Serial Number : 031054287 And After, Only for POWER SHIFT, RATIO=12,8
(9) Serial Number : XXXXXXXXX And After, Only for POWER SHIFT, RATIO=12,333
(10) Serial Number : Axle 85824337 Until 031054241, Axle 85824335 Until 031O54286, Axle 85824333 Until 031055429, Axle 85824341 Until XXXXXXXXX
(11) Serial Number : Axle 85827731 031054242 And After, Axle 85827729 031O54287 And After, Axle 85827727 031055429 And After, Axle 85827733 XXXXXXXXX And After

FRONT AXLE - (4WD) W/GEAR,BEVEL

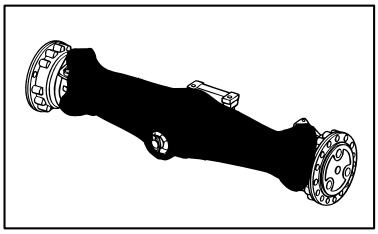

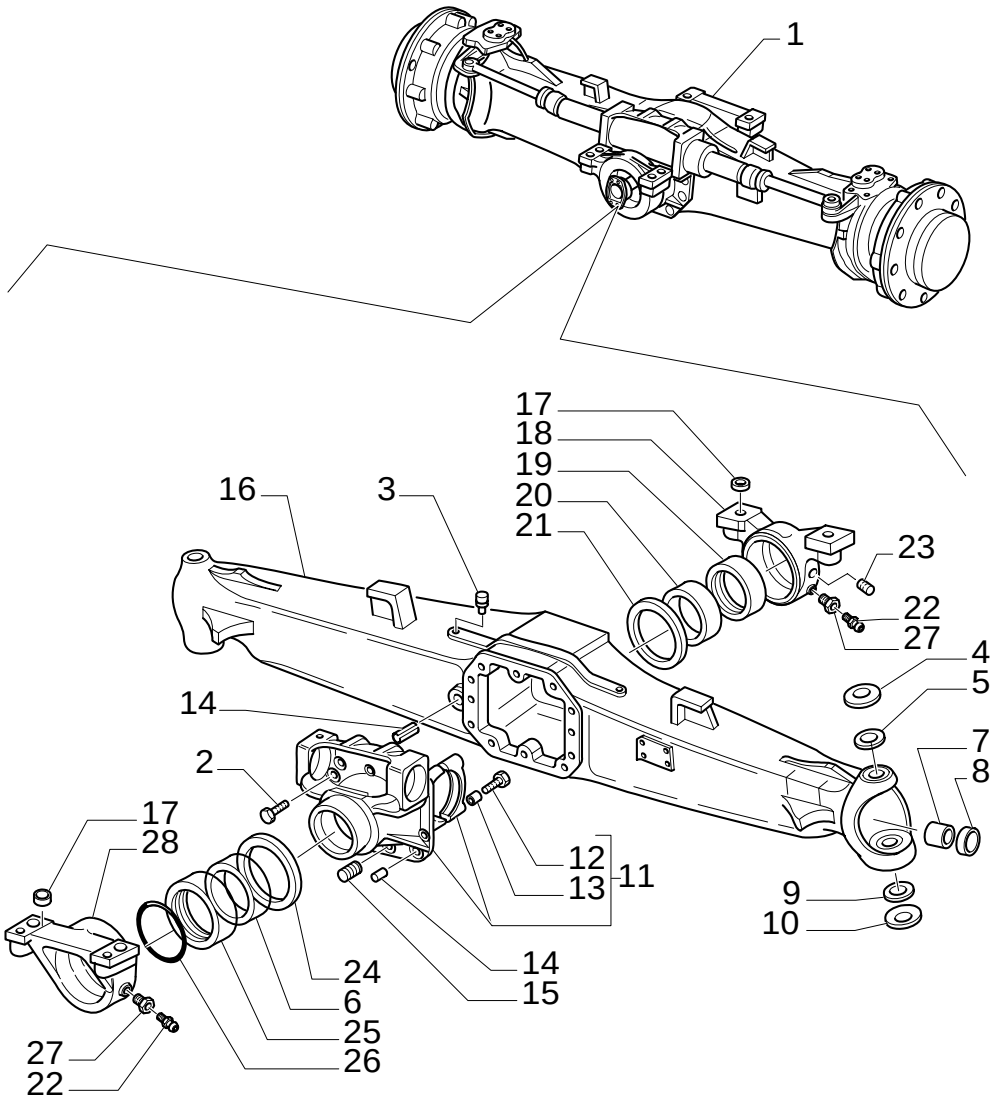

FRONT AXLE - (4WD) W/GEAR,BEVEL

REF	FN	PART NUMBER	YR/SN	QTY	DESCRIPTION
9	1	9968002		2	BUSHING, GUIDE
10	2	9967679		2	SPRING
10	1	9968003		2	WASHER
11		9968004		1	SUPPORT
12		9967681		4	SCREW
13		9967682		4	BUSHING
14		9968005		2	PLUG, DRAIN 15X35
15		9967683		2	PIN, ROLL
16	2	85824347		1	BEAM
16	1	85827738		1	BEAM
17		9967990		4	BUSHING, DRIVE
18		9967991		1	SUPPORT
19		9967992		1	BUSHING
20		9967993		1	BUSHING
21		9967994		1	WASHER, THRUST
22		9967996		2	NIPPLE, LUBE
23		85805973		1	PLUG M8X1
24		9968006		1	WASHER, THRUST
25		9968007		1	BUSHING
26		9968008		1	RING, RUBBER
27		9967995		2	SCREW
28		9968009		1	SUPPORT

(1) Serial Number : Axle 85827731 031054242 And After, Axle 85827729 031O54287 And After, Axle 85827727 031055429 And After, Axle 85827733 XXXXXXXXX And After

(2) Serial Number : Axle 85824337 Until 031054241, Axle 85824335 Until 031O54286, Axle 85824333 Until 031055429, Axle 85824341 Until XXXXXXXXX

FRONT AXLE - (4WD) W/GEAR,BEVEL

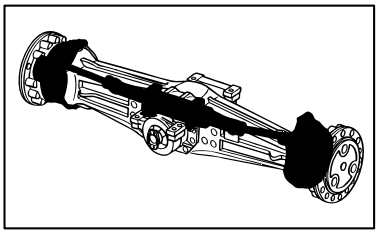

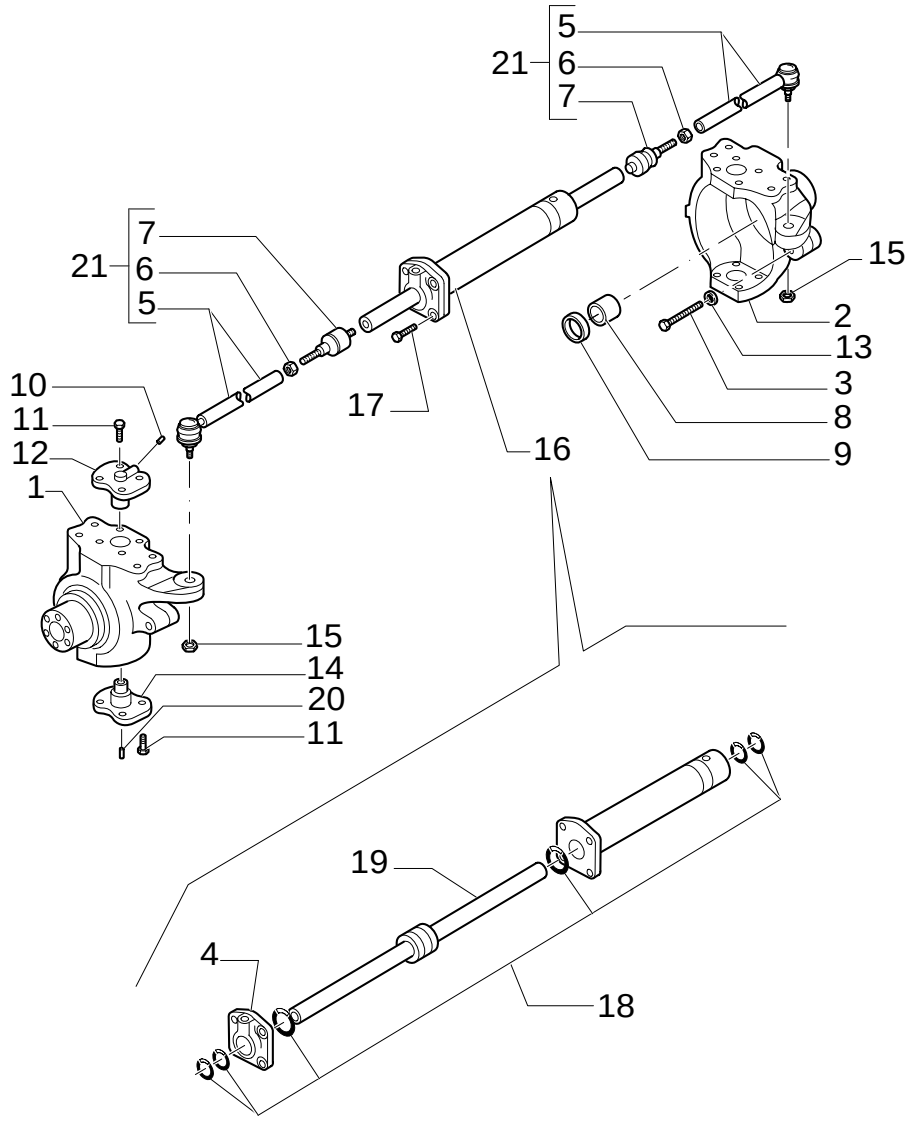

FRONT AXLE - (4WD) W/GEAR,BEVEL

REF	FN	PART NUMBER	YR/SN	QTY	DESCRIPTION
1	1	85824349		1	CUP, COVER LH
1	2	85827740		1	CUP, COVER LH
2	1	85824348		1	CUP, COVER RH
2	2	85827739		2	CUP, COVER RH
3		85805987		2	SCREW M16x100
4		85805989		1	PISTON SWIVEL HEAD
5	1	85805977		2	TIE-ROD
5	2	87306927		2	TIE-ROD
6		85805976		2	NUT M18x1.5
7		85805975		2	ARTICULATION
8		85805988		2	BUSHING
9		85824345		2	SEAL
10		9968021		2	NIPPLE, LUBE M6x2
11	1	85805979		16	SCREW M12x1.75x30
11	2	9968022		16	SCREW M14x2x35
12		85805980		2	PIN
12		9968023		2	PIN
13		85805986		2	NUT M16
14	1	85805983		2	PIN
14	2	9968025		2	PIN
15		85805982		2	NUT M18x1.5
16		85805978		1	CYLINDER ASSY
17		9968028		4	SCREW M12x5
18		85805990		1	KIT
19		85805992		1	ROD
20		85805984		2	NIPPLE, LUBE M6x1
21		87306934		2	ROD

(1) Serial Number : Axle 85824337 Until 031054241, Axle 85824335 Until 031O54286, Axle 85824333 Until 031055429, Axle 85824341 Until XXXXXXXXX

(2) Serial Number : Axle 85827731 031054242 And After, Axle 85827729 031O54287 And After, Axle 85827727 031055429 And After, Axle 85827733 XXXXXXXXX And After

415	03	p1	02/05

FRONT AXLE - (4WD) W/GEAR,BEVEL

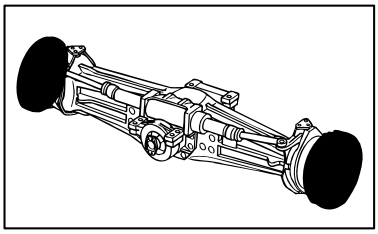

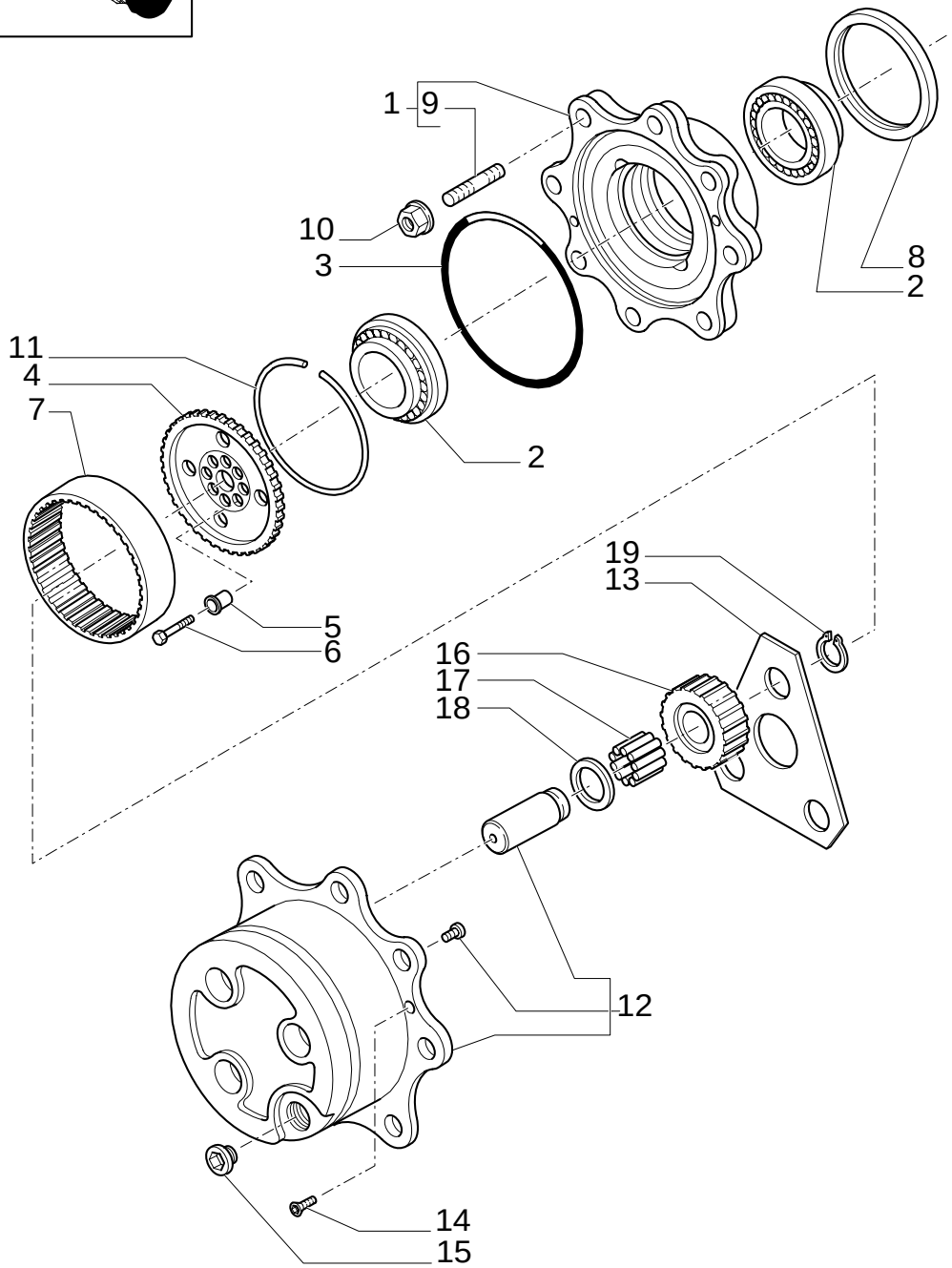

FRONT AXLE - (4WD) W/GEAR,BEVEL

REF	FN	PART NUMBER	YR/SN	QTY	DESCRIPTION
1		85806003		2	KIT
2		85806002		4	BEARING ASSY
3		85805711		2	O-RING
4		85817698		2	HUB
5		85806009		16	INSTALLER JIG
6		85806010		16	SCREW M10x45
7		85806008		2	GEAR, RING
8		85827067		2	SEAL
9		9968070		16	STUD
10		9968071		16	NUT M18x1.5
11		85806006		2	RING
12		85806011		2	KIT
13		85806016		2	WASHER, THRUST
14		85805709		4	SCREW M8x20
15		85806012		2	PLUG
16		85806014		6	GEAR T23
17		85806015		AR	KIT OF 10 NEEDLE BRG (QTY 1=10 PIECES)
18		9968084		6	WASHER, THRUST 55x34.6x1.5
19		9968083		6	CIRCLIP

FRONT AXLE - (4WD) W/GEAR,BEVEL

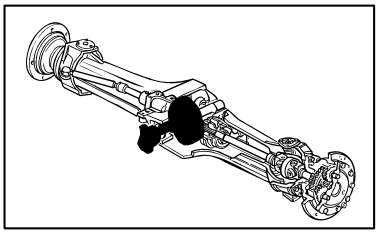

KIT KIT KIT 1 = ●

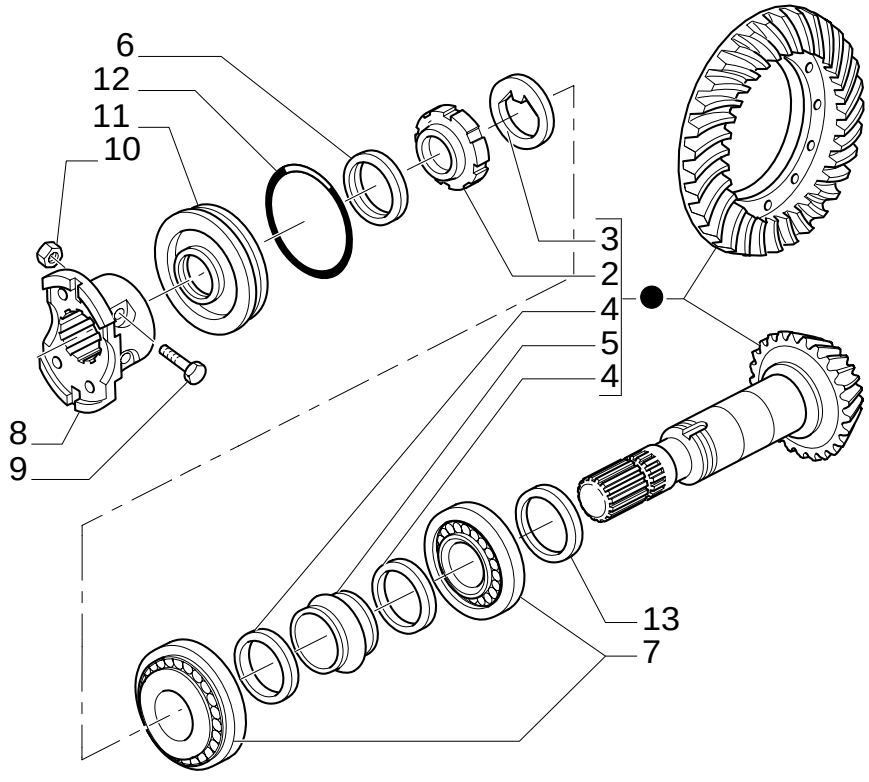

FRONT AXLE - (4WD) W/GEAR,BEVEL

REF	FN	PART NUMBER	YR/SN	QTY	DESCRIPTION
1	1, 2	9968035		1	GEAR, BEVEL
1	3, 2	9968925		1	GEAR, BEVEL
1	4	9968036		1	GEAR, BEVEL
2		9968032		1	NUT, RING M40x1.5
3		9968031		1	WASHER, SEALING
4		9968033		2	WASHER 50x40.5x2
5		9968034		1	SPACER
6		85824346		1	RING 32x52x16
7		9968047		2	BEARING ASSY
8		9968049		1	FLANGE
9		9968048		2	SCREW M10x60
10		9968050		2	NUT M10x1.25
11		9968051		1	COVER
12		9968052		1	O-RING
13		9968037		AR	SHIM MM2.5
13		9968038		AR	SHIM MM2.6
13		9968039		AR	SHIM MM2.7
13		9968040		AR	SHIM MM2.8
13		9968041		AR	SHIM MM2.9
13		9968042		AR	SHIM MM3.0
13		9968043		AR	SHIM MM3.1
13		9968044		AR	SHIM MM3.2
13		9968045		AR	SHIM MM3.3
13		9968046		AR	SHIM MM3.4

(1) Only for POWER SHUTTLE
(2) Ratio 12,8
(3) Only for POWER SHIFT
(4) Ratio 12,333

FRONT AXLE - (4WD) W/GEAR,BEVEL

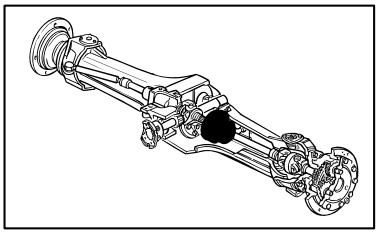

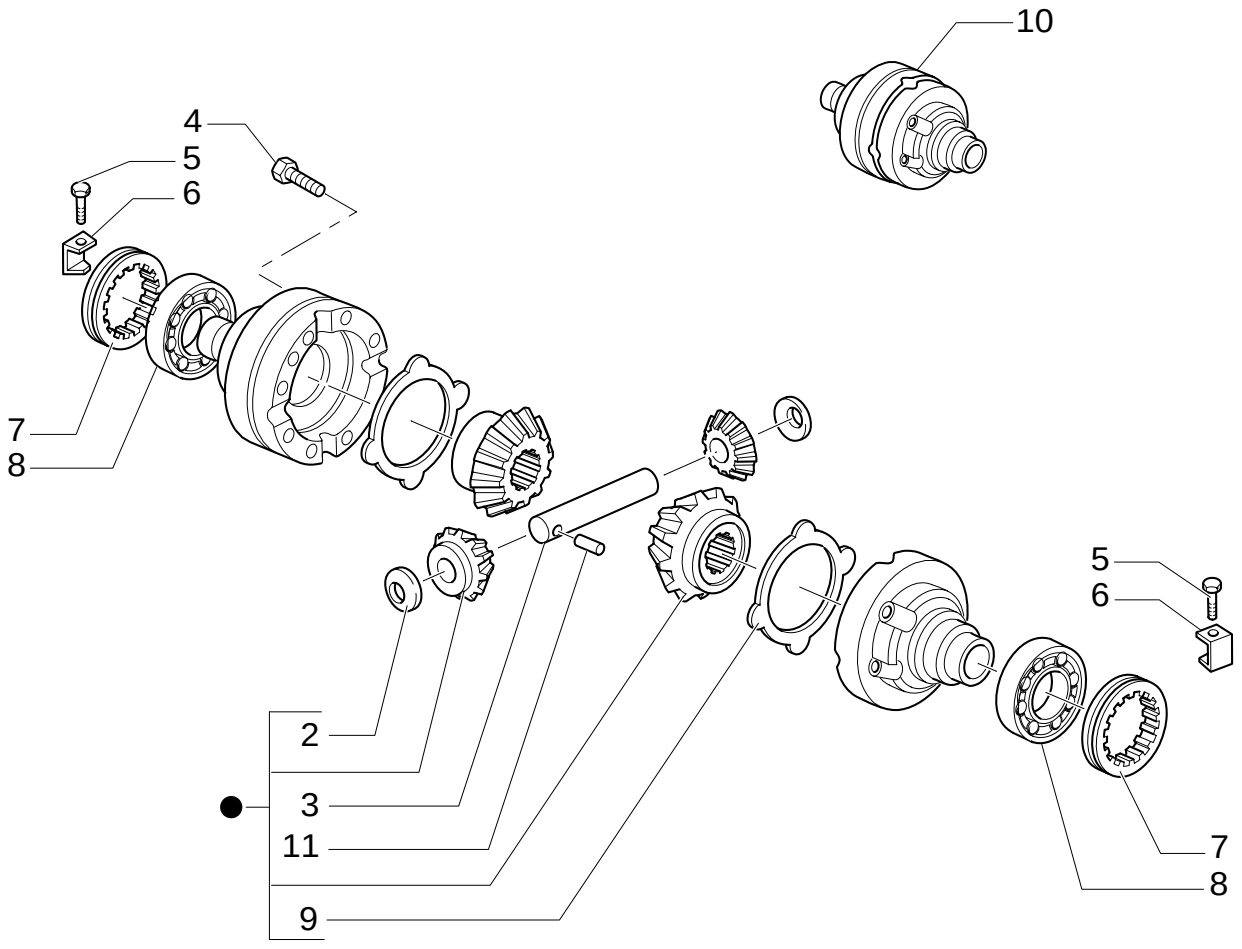

KIT 1 = ●

FRONT AXLE - (4WD) W/GEAR,BEVEL

REF	FN	PART NUMBER	YR/SN	QTY	DESCRIPTION
1		85806004		1	KIT
2		9966352		2	WASHER, THRUST
3		9966354		1	PIN
4		9967736		12	SCREW M10x1.5x75
5		9967739		2	SCREW M6x10
6		9967740		2	CLIP
7		9967741		2	NUT, RING
8		9968054		2	BEARING ASSY
9		9967734		2	DISC
10		85827068		1	DIFFERENTIAL GEAR
11		9966356		1	PIN, ROLL 7x40

415	06	p1	08/05

FRONT AXLE - (4WD) W/GEAR,BEVEL

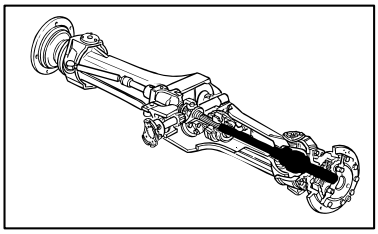

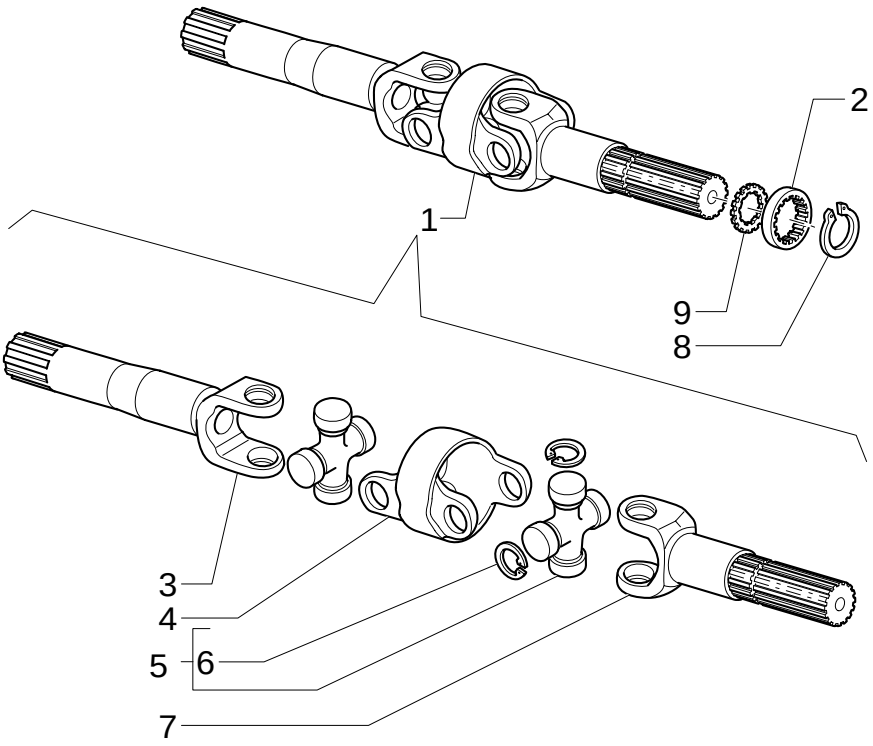

FRONT AXLE - (4WD) W/GEAR,BEVEL

REF	FN	PART NUMBER	YR/SN	QTY	DESCRIPTION
1	1	85805993		2	JOINT, UNIVERSAL ASSY
1	2	85827741		2	JOINT, UNIVERSAL
2		85805999		2	PLATE, ANTI-WRAP
3	1	85827069		2	YOKE (DIFF.)
3	2	87306930		2	FORK, SHIFTER
4		85827070		2	BODY
5	1	85807283		2	SPIDER WATER PROOF
5	2	85805996		2	SPIDER
6	1	85807284		1	KIT WATER PROOF
6	2	9968060		4	RING, LOCKING
7	1	85805997		2	YOKE (WHEEL)
7	2	87306929		1	FORK, SHIFTER
8	1	85806000		2	CIRCLIP
8	2	87306933		2	RING
9		85817697		2	WASHER

(1) Serial Number : Axle 85824337 Until 031054241, Axle 85824335 Until 031O54286, Axle 85824333 Until 031055429, Axle 85824341 Until XXXXXXXXX

(2) Serial Number : Axle 85827731 031054242 And After, Axle 85827729 031O54287 And After, Axle 85827727 031055429 And After, Axle 85827733 XXXXXXXXX And After

NOTES

SECTION INDEX

SEC. 05	00	REAR AXLE
1.44.0E	01	REAR AXLE (POWER-SHUTTLE) (CENTER PIVOT)
1.44.0E	02	REAR AXLE (POWER-SHUTTLE) (CENTER PIVOT)
1.44.0E	03	REAR AXLE (POWER-SHUTTLE) (CENTER PIVOT)
1.44.0E	04	REAR AXLE (POWER-SHUTTLE) (CENTER PIVOT)

REAR AXLE

4WS

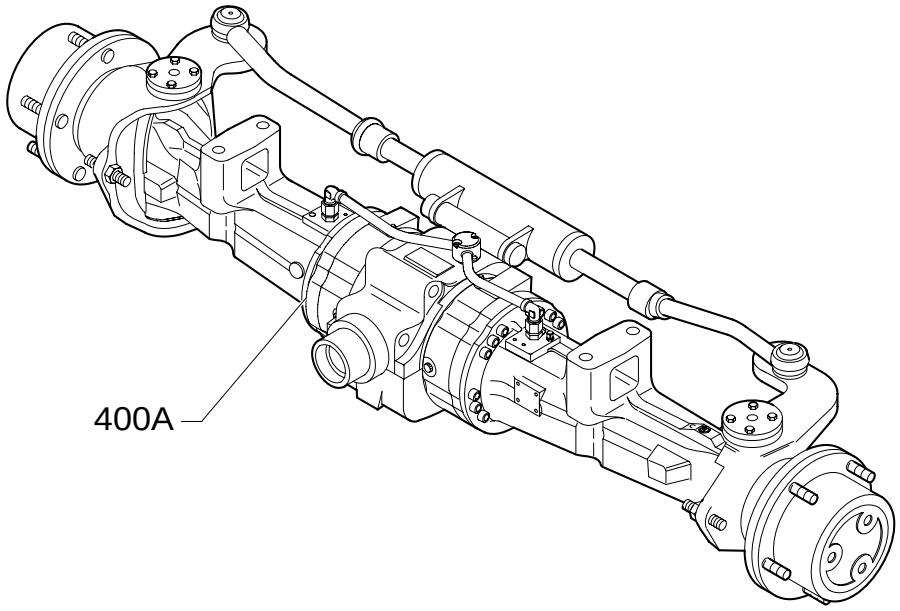

2WS

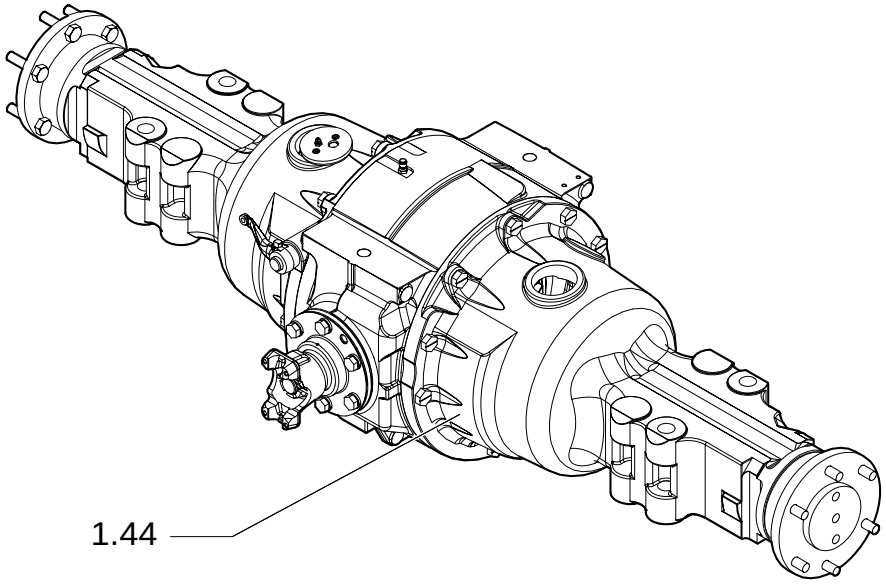

REAR AXLE

REF	FN	PART NUMBER	YR/SN	QTY	DESCRIPTION

1.44.0E	01	p1	10/05

REAR AXLE (POWER-SHUTTLE) (CENTER PIVOT)

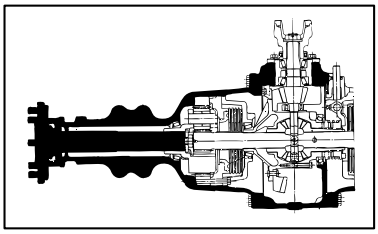

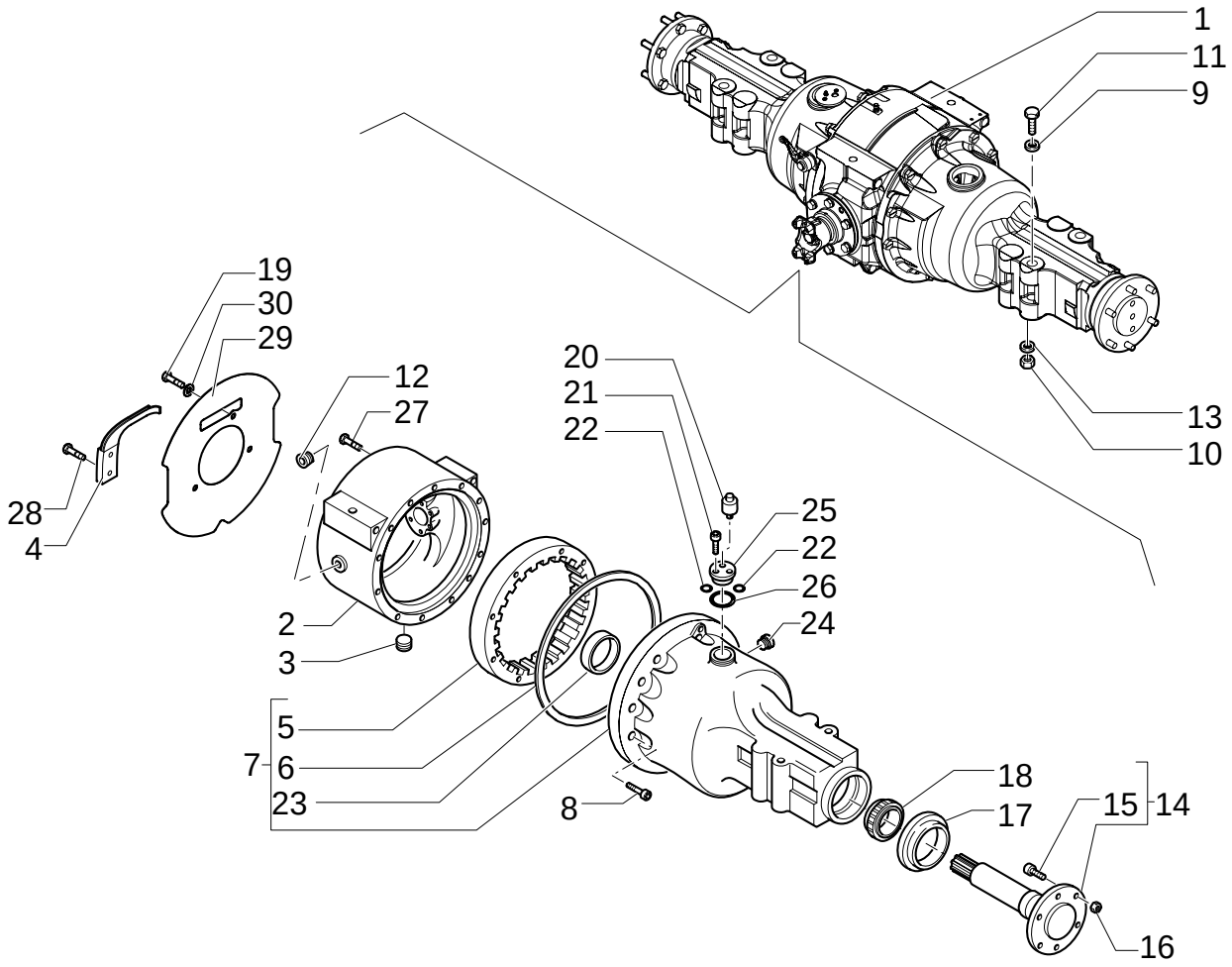

REAR AXLE (POWER-SHUTTLE) (CENTER PIVOT)

REF	FN	PART NUMBER	YR/SN	QTY	DESCRIPTION
1	1	87309556		1	AXLE 4,62
2		E2NN4024AA		1	SUPPORT
3		263136		1	PLUG, MAGNETIC
4		87314211		4	BLOCK 9/16"-12-18 x 7.88"
5		86536749		2	GEAR, PLANETARY
6		83417133		2	O-RING
7		86552793		1	HOUSING LH
7		86552794		1	HOUSING RH
8		86505999		25	BOLT Cap, HH, G5, 5/8"-11 x 2"
8		304909S8		1	BOLT
9		14497331		4	WASHER
10		12575321		4	NUT M24X2
11		15999434		4	SCREW M24X2X220
12		87811S36		1	PLUG
13		11200679		4	WASHER, LOCK
14		86511646		2	SHAFT
15		E4NN1N118AA		16	BOLT
16		87348000		16	NUT
17		E9NN4N297AB		2	GASKET
18		C5NN4N221B		2	BEARING, CONE
19		87313966		2	BOLT
20		C7NN2N033A		2	SCREW
21		82895716		4	SCREW 1/4-20X1,75
22		87031S95		4	O-RING 90 Duro, .375" ID x .103" Thk
23		82959373		2	CUP
24		21T4022		1	PLUG 1/2"-11 x 1/2"
25		F0NN2B280AB		2	MANIFOLD
26		87111S95		2	O-RING
27		86597537		2	BOLT
28		9706729		2	SCREW
29		87334836		1	PLATE, RETAINING
30		86632588		3	WASHER

(1) Consists Of 2 to 26, Also Page 1.44.0E 02, 1.44.0E 03, 1.44.0E 04

From To S/N XXX

REAR AXLE (POWER-SHUTTLE) (CENTER PIVOT)

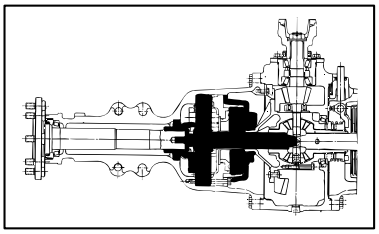

KIT
KIT KIT
38= ●

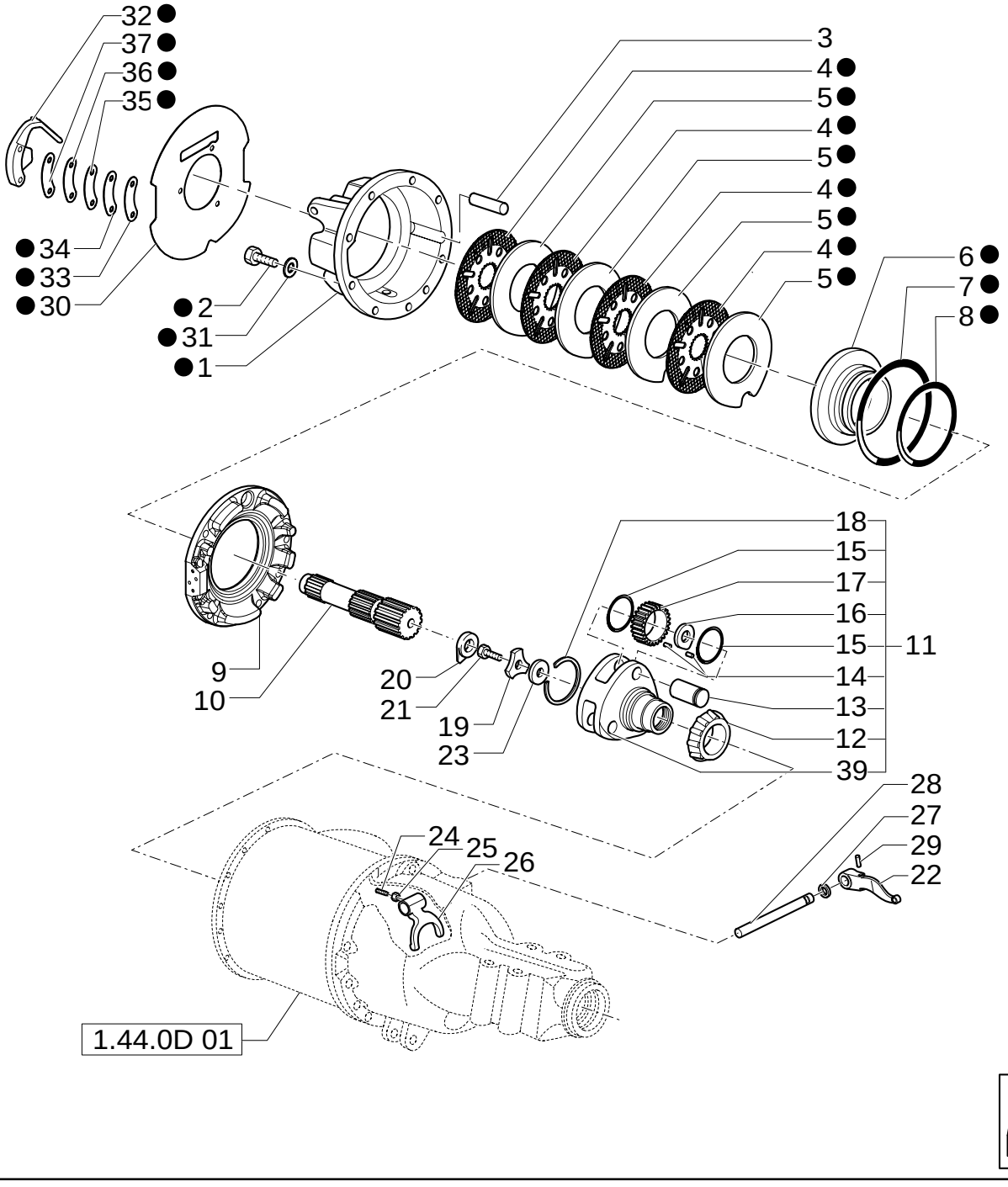

REAR AXLE (POWER-SHUTTLE) (CENTER PIVOT)

REF	FN	PART NUMBER	YR/SN	QTY	DESCRIPTION
1		87304345		1	BOX RH
1		87304344		1	BOX LH
2		87313966		3	BOLT Cap, HH, G8, 9/16"-12 x 5"
3		C5NN2N333B		4	PIN G8, 9/16"-18
4		87308018		8	BRAKE DISC
5		87305713		8	BRAKE DISC
6		87308017		2	PISTON
7		87302760		2	O-RING
8		87302761		2	O-RING
9		87308014		1	BOX RH
9		87308016		1	BOX LH
10		C5NN4049B		2	GEAR
11		86584273		2	CARRIER
12		E1ADDN4221		2	BEARING, CONE
13		C7NN4048E		6	SHAFT
14		C5NN4A012B		AR	BEARING, NEEDLE
15		C5NN4A007B		12	WASHER, THRUST
16		C5NN4A008B		6	SPACER
17		86584272		6	GEAR, PLANETARY
18		C7NN4N031B		2	RETAINER
19		87326170		2	WASHER
20		83949811		2	PLATE, LOCKING
21		304792S36		2	BOLT HH, 7/8"-14 x 1-5/8"
22		C5NN2N439A		1	LEVER
23		C5NN4374AB		1	SPACER
23		C5NN4374L		AR	SPACER 1,346/1,372
23		81803503		AR	SPACER 1,448/1,473
23		C5NN4374N		AR	SPACER 1,549/1,575
23		C5NN4374R		AR	SPACER 1,651/1,676
23		C5NN4374S		AR	SPACER 1,753/1,778
23		C5NN4374T		AR	SPACER 1,854/1,880
23		C5NN4374U		AR	SPACER 1,956/1,981
23		C5NN4374V		AR	SPACER 2,057/2,083
23		C5NN4374Y		AR	SPACER 2,159/2,184
23		C5NN4374Z		AR	SPACER 2,261/2,286
24		957E7245		1	SCREW Set, 3/8"-24 x 7/16"
25		87308		1	NUT Jam, G2, 3/8"-24

From To S/N XXX

REAR AXLE (POWER-SHUTTLE) (CENTER PIVOT)

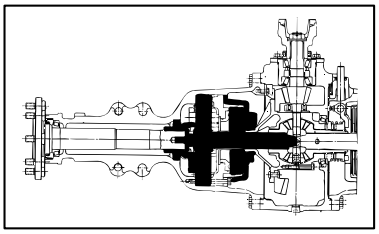

KIT KIT KIT 38= ●

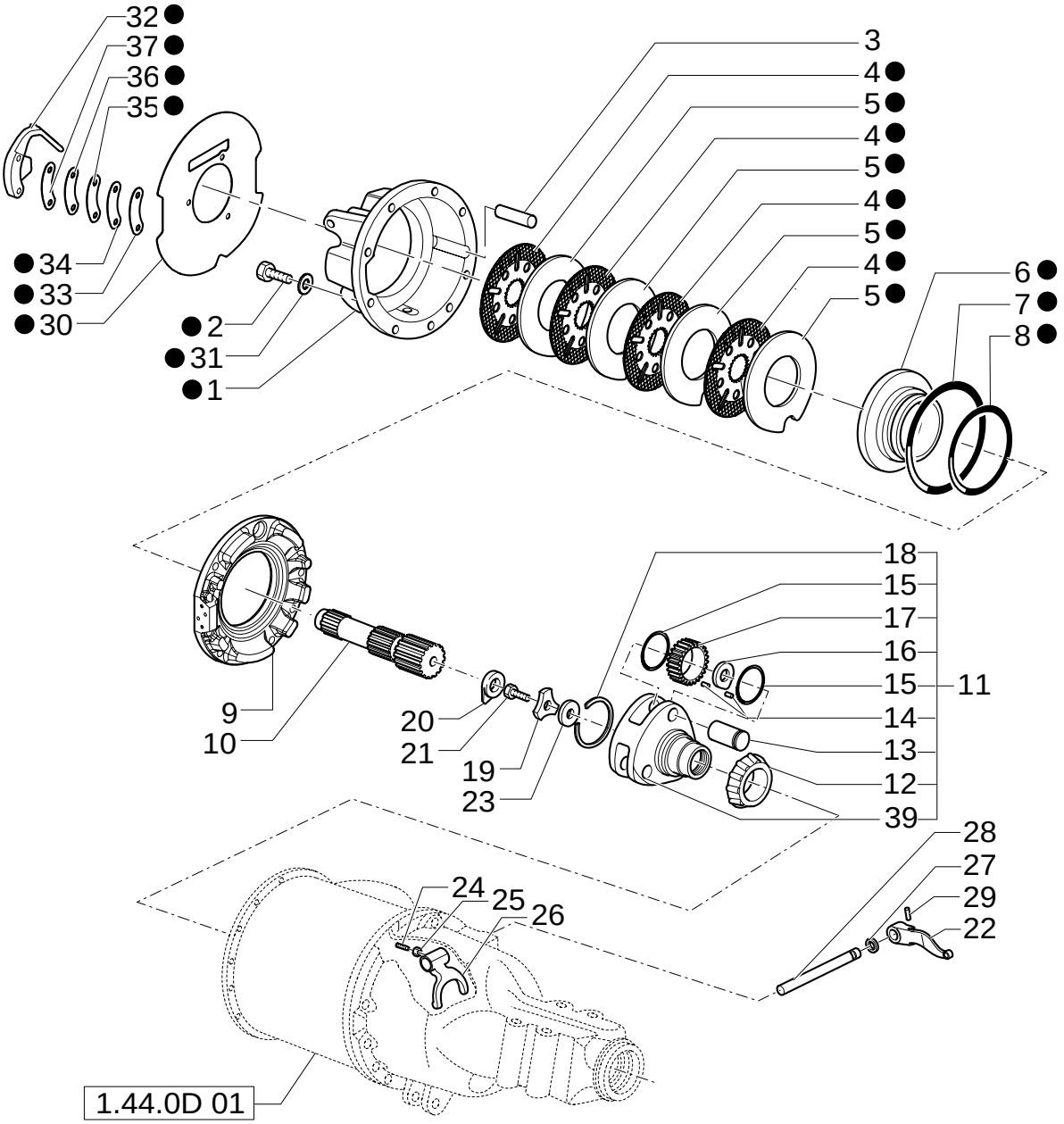

REAR AXLE (POWER-SHUTTLE) (CENTER PIVOT)

REF	FN	PART NUMBER	YR/SN	QTY	DESCRIPTION
26		C5NN4N050B		1	FORK
27		E196EB9		1	SEAL PROTECTION
28		C5NN4N079A		1	SHAFT
29		82958118		1	PIN, ROLL
30		87334836		1	PLATE, RETAINING
31		86632588		1	WASHER
32		87314211		1	BLOCK
33		87346228		1	PLATE
34		87346229		1	PLATE
35		87346231		1	PLATE
36		87346232		1	PLATE
37		87346427		1	PLATE
38		87308019		1	KIT
39		{86576091}		1	

From To S/N XXX

REAR AXLE (POWER-SHUTTLE) (CENTER PIVOT)

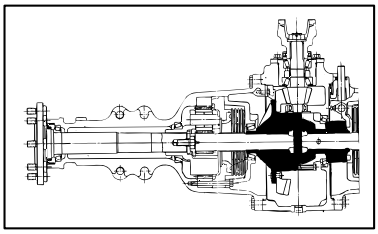

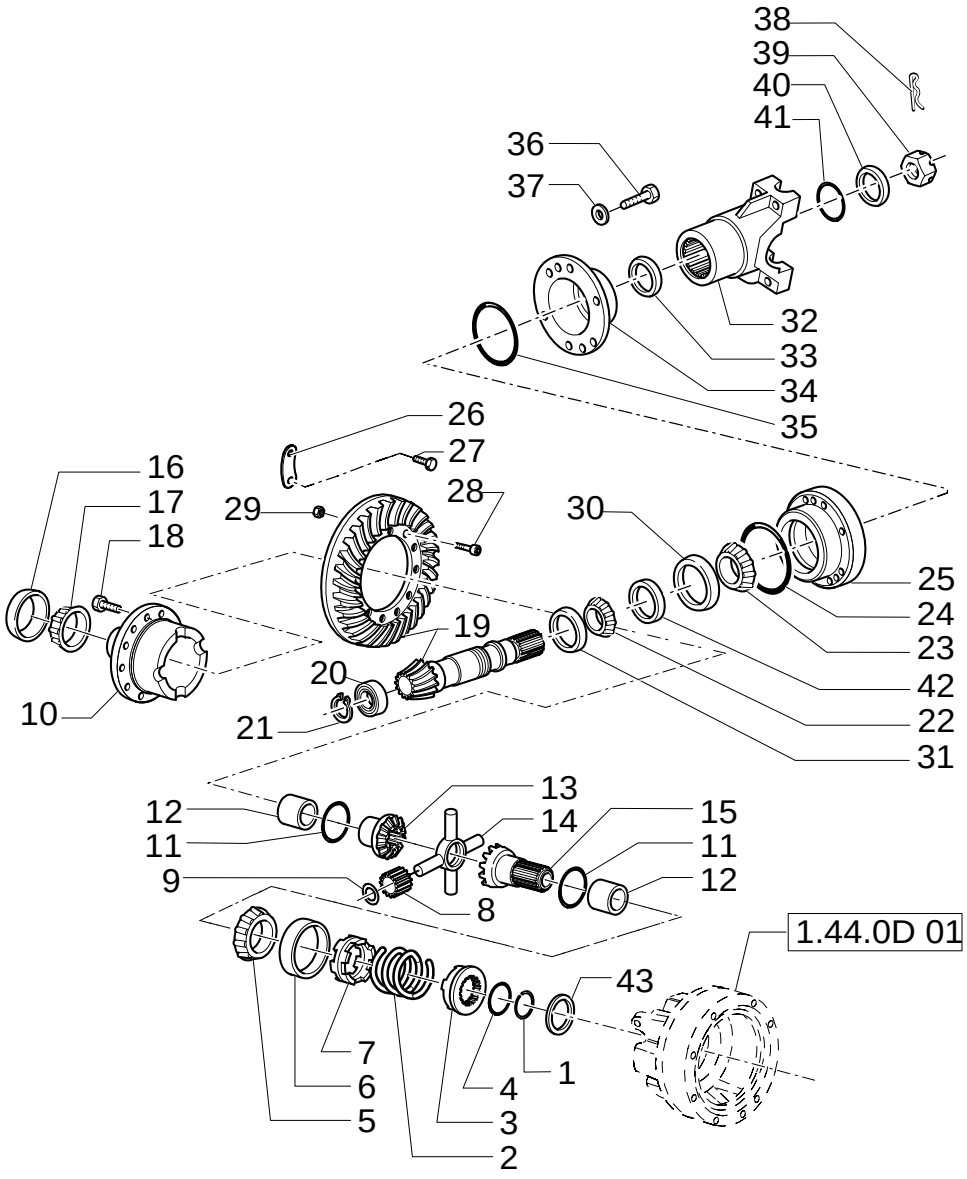

REAR AXLE (POWER-SHUTTLE) (CENTER PIVOT)

REF	FN	PART NUMBER	YR/SN	QTY	DESCRIPTION
1		E1ADDN4286		1	RING
2		E188EB9		1	SPRING Differential Lock Coupler
3		C5NN4N064A		1	COUPLING
4		E189EB9		1	WASHER Differential Lock, Coupler Stop
5		957E4221		1	BEARING, CONE
6		510892		1	BEARING, CUP RH
7		E186EB9		1	ADAPTER Differential Lock Gear Case
8		957E4292B		4	PINION, DRIVE
9		D9NN4230AA		4	CARRIER
10		81816246		1	HOUSING
11		957E4228		2	WASHER RH
12		E185EB9		2	BUSHING RH
13		81803445		1	GEAR
14		81876885		1	SPIDER
15		C5NN4239A		1	GEAR RH
16		82959375		1	BEARING, CUP
17		510884		1	BEARING, CONE
18		43104S		8	BOLT Cap, HH, G8, Self-Locking, 1/2"-13 x 2-7/8"
19		E2NN4209DA		1	GEAR SET 4,62
20		81824478		1	BEARING ASSY
21		960E4627		1	RING, SNAP
22		82958961		1	BEARING ASSY
23		81845711		1	BEARING, CONE
24		87090S94		1	O-RING 4.625" ID x .139" Thk
25		81847146		1	RETAINER
26		87346427		AR	PLATE
26		87346228		AR	PLATE
26		87346229		AR	PLATE
26		87346231		AR	PLATE
26		87346232		AR	PLATE
27		9706729		2	SCREW Cap, HH, G5, 7/16"-14 x 1"
28		83957533		12	BOLT HH, G8, 1/2"-20 x 1-5/8"
29		380135S43		12	NUT Lock, G2, 1/2"-20
30		52491		1	CUP
31		D8NN4616AA		1	CUP
32		83949810		1	FLANGE
33		D3NN4676A		1	SEAL PROTECTION

From To S/N XXX

REAR AXLE (POWER-SHUTTLE) (CENTER PIVOT)

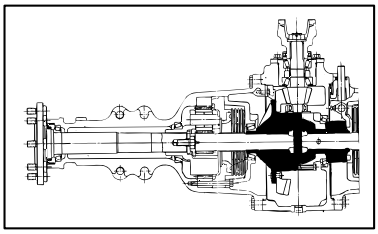

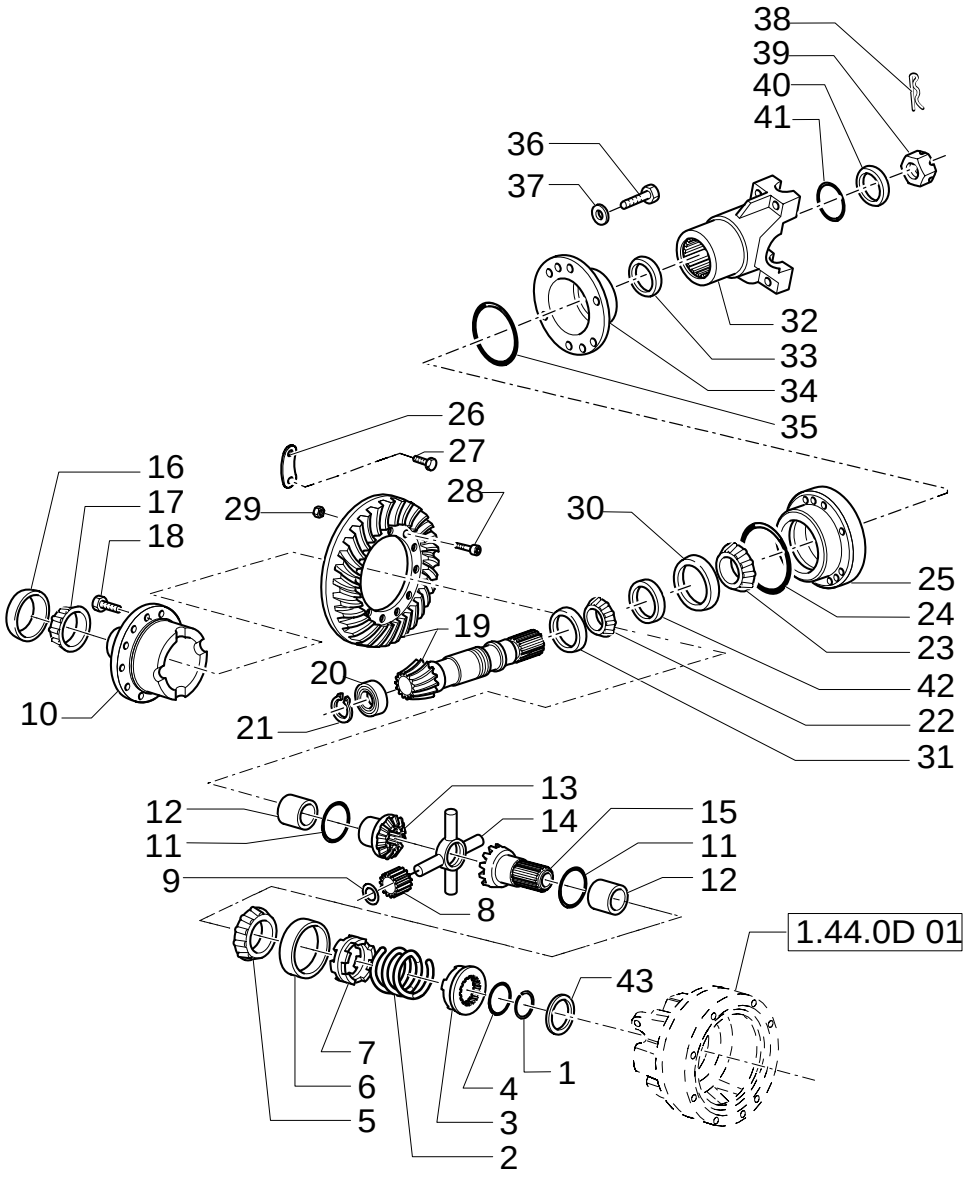

REAR AXLE (POWER-SHUTTLE) (CENTER PIVOT)

REF	FN	PART NUMBER	YR/SN	QTY	DESCRIPTION
34		D4NN4668A		1	RETAINER
35		81845713		1	SEAL
36		304766S36		6	BOLT 9/16-12X1,50
37		280248		6	WASHER, LOCK 9/16"
38		3947107		1	PIN Cotter, 3/16" x 2.125"
39		384909S2		1	NUT Slotted, 1-1/4"-18
40		D3NN4N118A		1	WASHER
41		D1NN4N116A		1	SEAL PROTECTION
42		D1NN4662A		AR	SPACER 31,852/31,864
42		D1NN4662B		AR	SPACER 31,902/31,915
42		D1NN4662C		AR	SPACER 31,953/31,966
42		D1NN4662D		AR	RING 32,004/32,017
42		D1NN4662E		AR	SPACER 32,055/32,068
42		D1NN4662F		AR	SPACER 32,106/32,118
42		D1NN4662G		AR	SPACER 32,156/32,169
42		D1NN4662H		AR	SPACER 32,207/32,220
42		D1NN4662J		AR	SPACER 32,258/32,271
42		D1NN4662K		AR	SPACER 32,309/32,322
42		D1NN4662L		AR	SPACER 32,360/32,372
42		D1NN4662M		AR	SPACER 32,410/32,423
42		D1NN4662N		AR	SPACER 32,461/32,474
42		D1NN4662R		AR	SPACER 32,512/32,525
42		D1NN4662S		AR	SPACER 32,563/32,576
43		C5NN4548A		AR	SHIM 0,965/1,016
43		C5NN4548B		AR	SHIM 1,118/1,168
43		81803517		AR	SHIM 1,270/1,321
43		C5NN4548D		AR	SHIM 1,422/1,473
43		C5NN4548E		AR	SHIM 1,575/1,626
43		C5NN4548F		AR	SHIM 1,727/1,778
43		C5NN4548G		AR	SHIM 1/880/1,930
43		C5NN4548H		AR	SHIM 2,032/2,083

From To S/N XXX

REAR AXLE (POWER-SHUTTLE) (CENTER PIVOT)

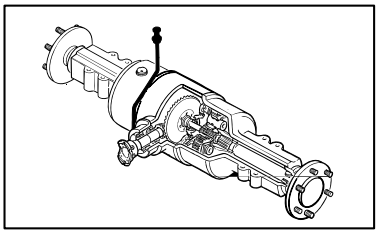

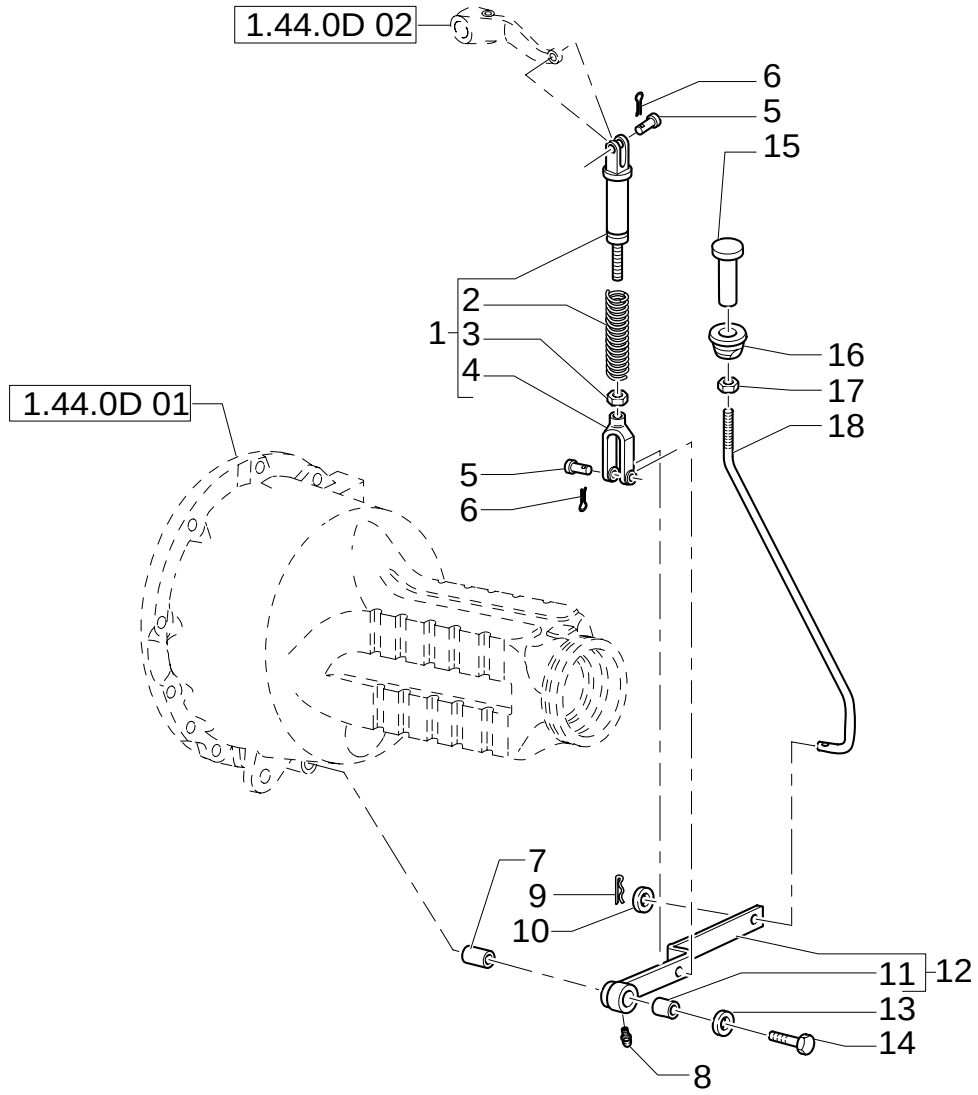

REAR AXLE (POWER-SHUTTLE) (CENTER PIVOT)

REF	FN	PART NUMBER	YR/SN	QTY	DESCRIPTION
1		83949838		1	ROD
2		E209EB9		1	SPRING
3		33923S36		1	NUT
4		390256S36		1	CLEVIS
5		76009S36		2	PIN
6		10802801		2	PIN, SPLIT (COTTER)
7		E212EB9		1	SLEEVE
8		13406911		1	NIPPLE, LUBE
9		10766901		1	PIN, SPLIT (COTTER)
10		12644921		1	WASHER
11		81805231		1	BUSHING
12		85802513		1	LEVER
13		14497121		1	WASHER
14		304911S36		1	BOLT
15		E8NN4N191AA		1	PEDAL
16		D5NN4N186C		1	BUSHING
17		33943S36		1	NUT
18		85802515		1	TIE-ROD, THREADED

From To S/N XXX

NOTES

SECTION INDEX

SEC. 06	00	ELECTRICAL
1.75.2/ 3	01	CHASSIS HARNESS & GROUND WIRE (POWER SHUTTLE)
1.75.2/ 3	02	BATTERY LOCK-OUT SWITCH & GROUND WIRE (POWER SHUTTLE)
1.75.2/ 3	03	ENGINE HARNESS (POWER SHUTTLE)
131	01	SINGLE BATTERY
321	01	DOUBLE BATTERY
995	01	COLD START
995	02	COLD START

ELECTRICAL

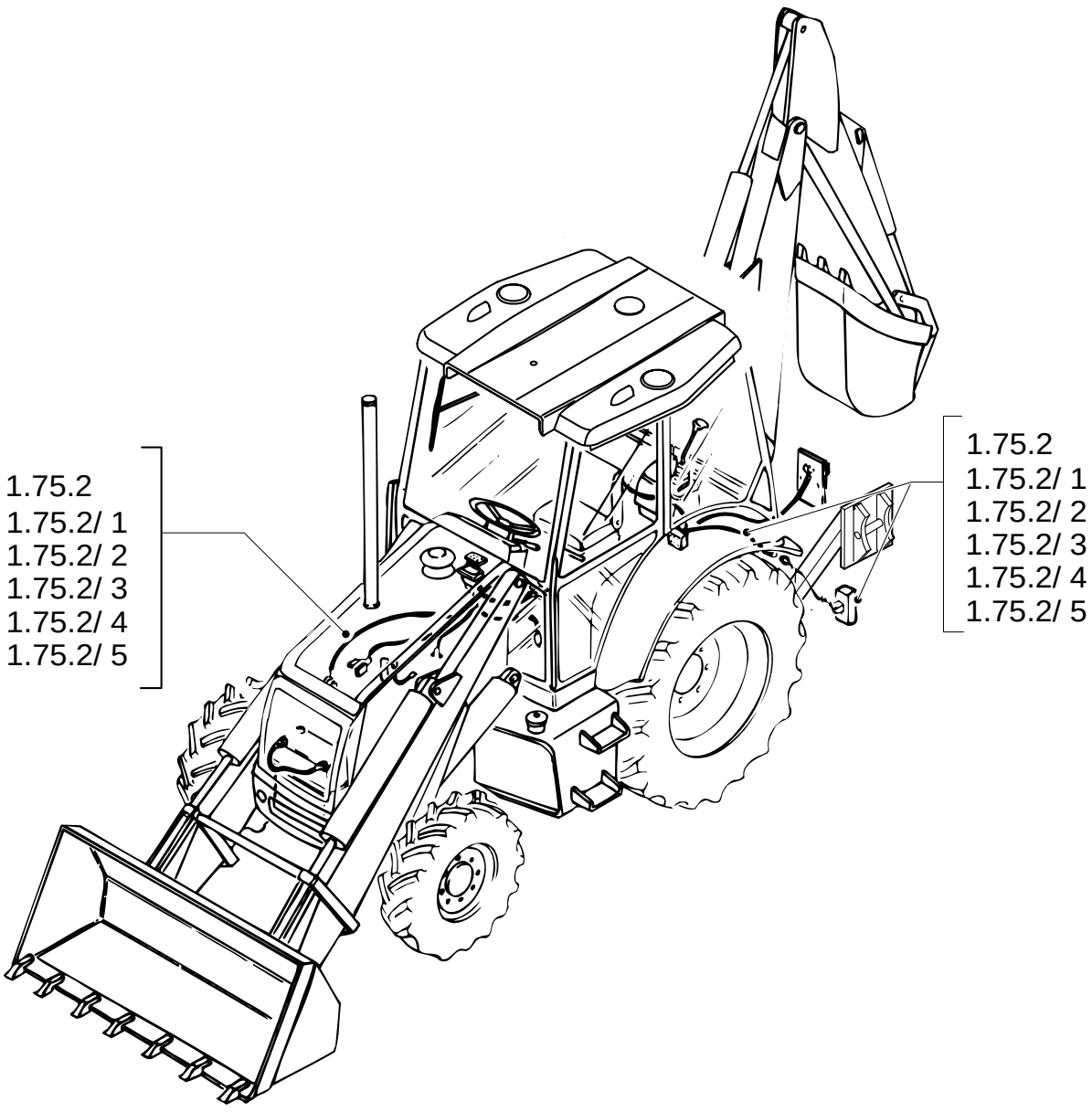
1.75.2
1.75.2/ 1
1.75.2/ 2
1.75.2/ 3
1.75.2/ 4
1.75.2/ 5
1.75.2
1.75.2/ 1
1.75.2/ 2
1.75.2/ 3
1.75.2/ 4
1.75.2/ 5

ELECTRICAL

REF	FN	PART NUMBER	YR/SN	QTY	DESCRIPTION

1.75.2/ 3	01	p1	02/05

CHASSIS HARNESS & GROUND WIRE (POWER SHUTTLE)

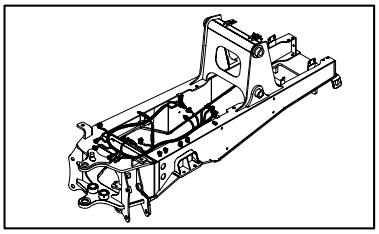

KIT KIT KIT =10

CHASSIS HARNESS & GROUND WIRE (POWER SHUTTLE)

REF	FN	PART NUMBER	YR/SN	QTY	DESCRIPTION
1		87406399		1	CABLE, ELECTRIC
2		85805686		4	CLIP, HOSE
3		85805685		2	CLIP, HOSE
4		14560187		55	COLLAR
5		85803884		1	CABLE, ELECTRIC
6		16043021		1	SCREW M8X12
7		11193879		1	WASHER, LOCK
8		14048211		1	NUT
9		12647121		1	WASHER M8
10	1	87406389		1	CABLE, ELECTRIC
10	2	87406398		1	CABLE, ELECTRIC

(1) Only for EUROPE Version
(2) Only for NA Version

1.75.2/ 3	02	p1	02/05

BATTERY LOCK-OUT SWITCH & GROUND WIRE (POWER SHUTTLE)

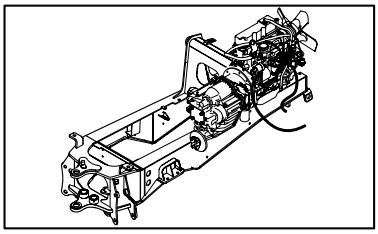

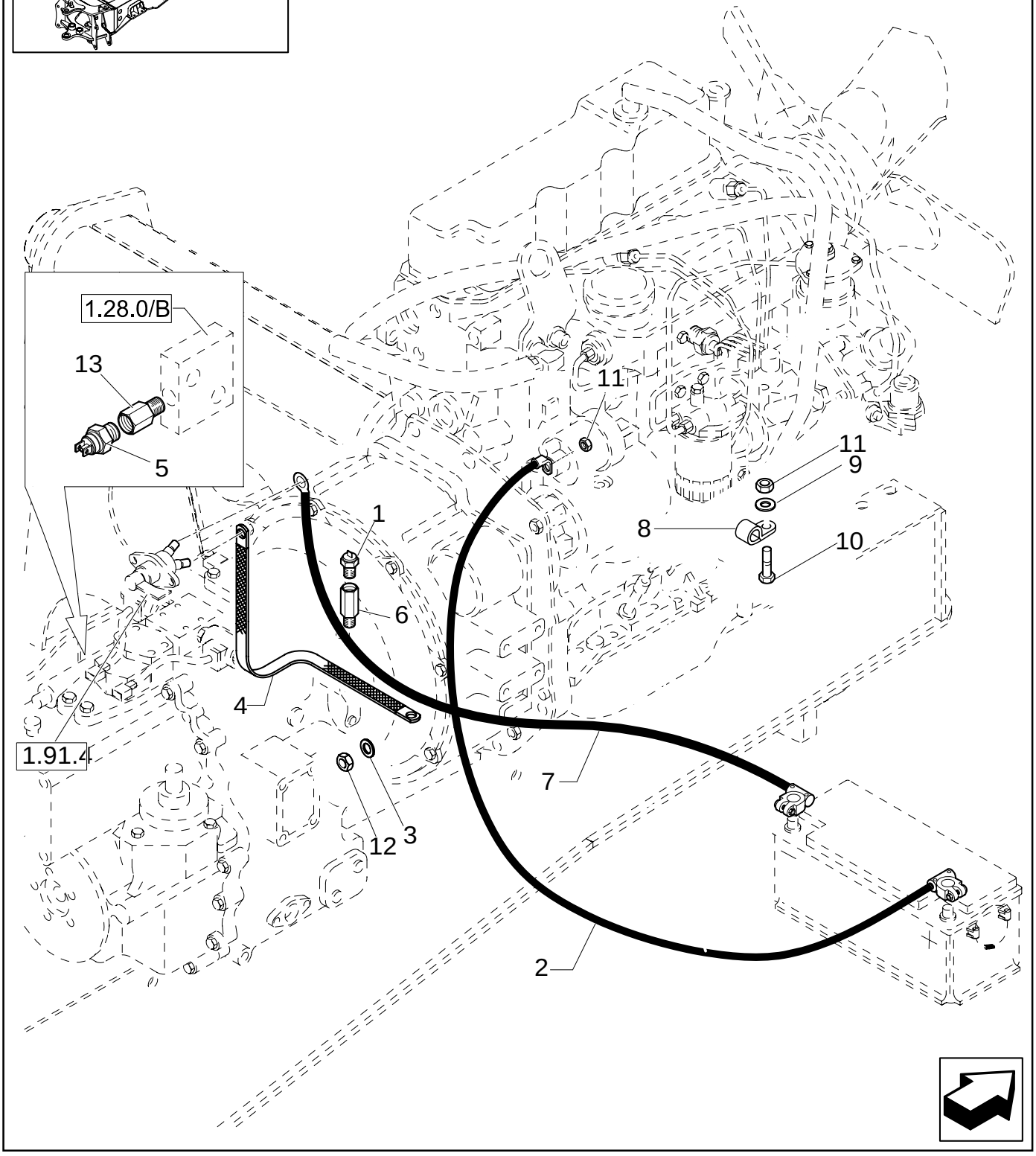

BATTERY LOCK-OUT SWITCH & GROUND WIRE (POWER SHUTTLE)

REF	FN	PART NUMBER	YR/SN	QTY	DESCRIPTION
1		85803879		1	SENDER UNIT
2		87424795		1	CABLE, GROUND
3		12647121		1	WASHER M8
4		87405018		1	CABLE, GROUND
5		85817672		1	SENDER UNIT
6		85803524		1	CONNECTOR, HYD.
7		87404248		1	CABLE, GROUND
8		47050861		2	COLLAR
9		47048993		1	WASHER
10		47049010		1	SCREW
11		47049031		3	NUT
12		16104111		1	NUT
13		85820156		1	CONNECTOR, HYD.

1.75.2/ 3	03	p1	11/05

ENGINE HARNESS (POWER SHUTTLE)

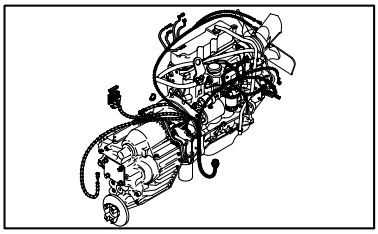

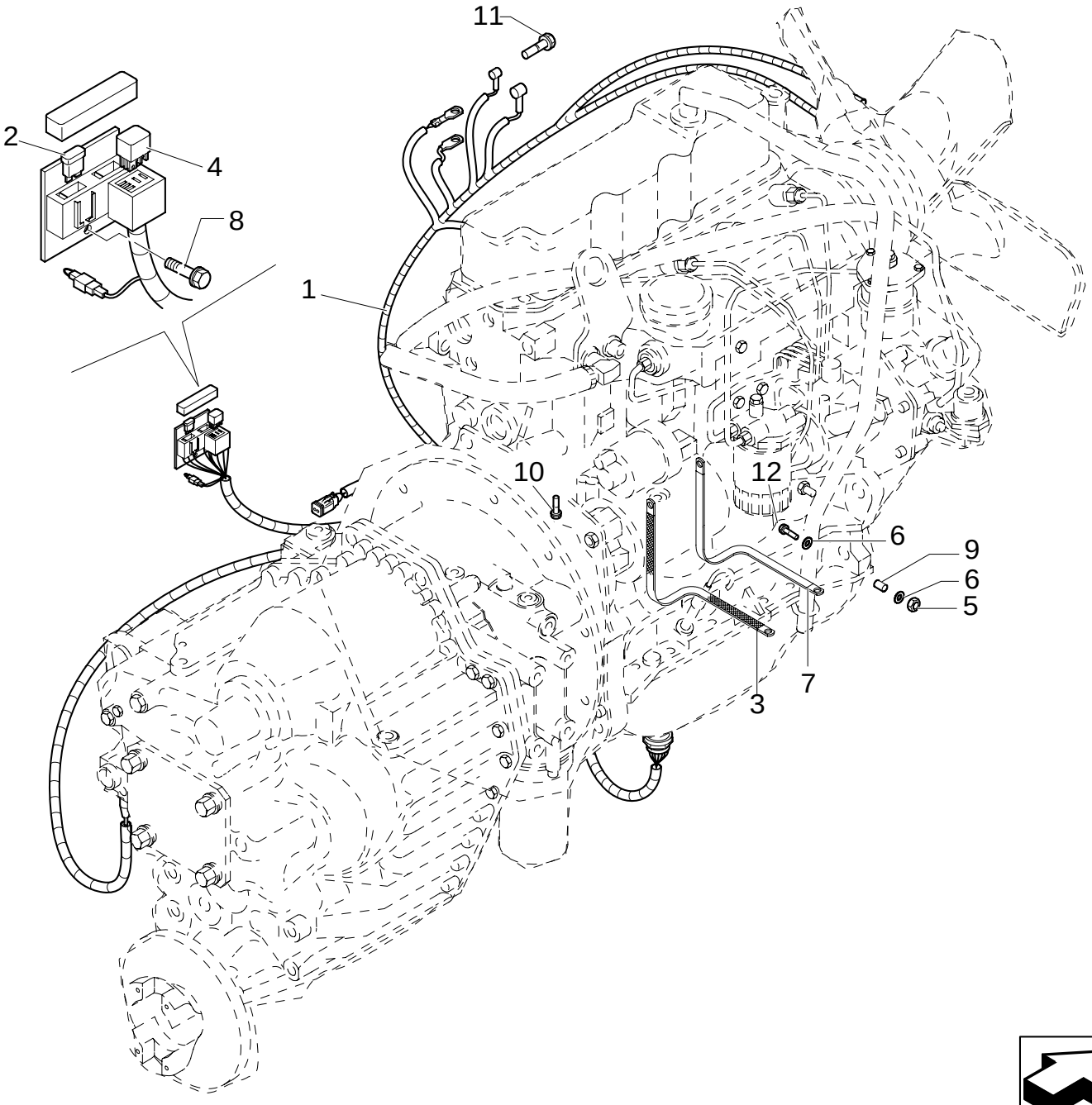

ENGINE HARNESS (POWER SHUTTLE)

REF	FN	PART NUMBER	YR/SN	QTY	DESCRIPTION
1	1	87406398		1	CABLE, ELECTRIC
2		11055890		1	FUSE 80A
3		87407206		1	CABLE, GROUND
4		85805162		1	RELAY 12V-70A
5		14048211		1	NUT
6		12638511		2	WASHER
7		87410268		1	CABLE, GROUND
8		16043824		1	SCREW
9		87415208		1	SPACER
10		47049185		2	SCREW
11		47049186		1	BOLT
12		16044421		1	SCREW

(1) Includes 2, 3, 4

131	01	p1	08/05

SINGLE BATTERY

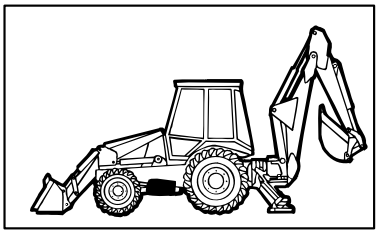

SINGLE BATTERY

REF	FN	PART NUMBER	YR/SN	QTY	DESCRIPTION
1		F910DSW		1	BATTERY, WET U.S.
1		9673604DS		1	BATTERY, DRY CANADIAN.
2		87416929		1	BRACKET
3		412005		2	BOLT
4		47048963		2	WASHER
5		47049041		2	NUT
6		47048788		2	ANGLE BAR
7		47049590		1	DECAL
8		87407281		1	DECAL
9		87311592		1	CABLE, GROUND
10		87311611		1	CABLE, GROUND

321	01	p1	05/05

DOUBLE BATTERY

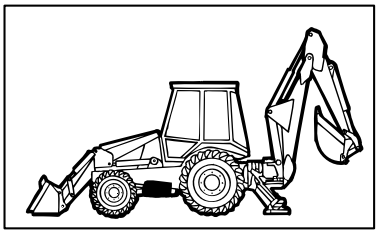

DOUBLE BATTERY

REF	FN	PART NUMBER	YR/SN	QTY	DESCRIPTION
1		F960DS		1	BATTERY, WET U.S.
1		CF960WDS		1	BATTERY, WET CAN.
2		412005		4	BOLT
3		85827072		1	CABLE, ELECTRIC
4		87427922		1	CABLE, GROUND
5		47049041		4	NUT M10
6		47049590		0,5	DECAL
7		87404127		2	DECAL
8		87415781		2	BRACKET
9		47048788		4	ANGLE BAR
10		47048963		4	WASHER
11		87303506		4	PLATE, RETAINING
12		85827416		1	CABLE, GROUND
13		87427925		1	CABLE, GROUND
14		85826906		1	GUARD

995	01	p1	03/05

COLD START

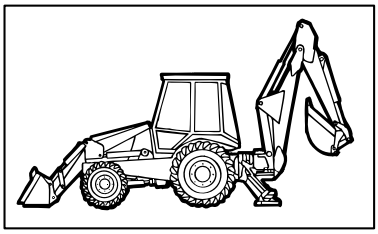

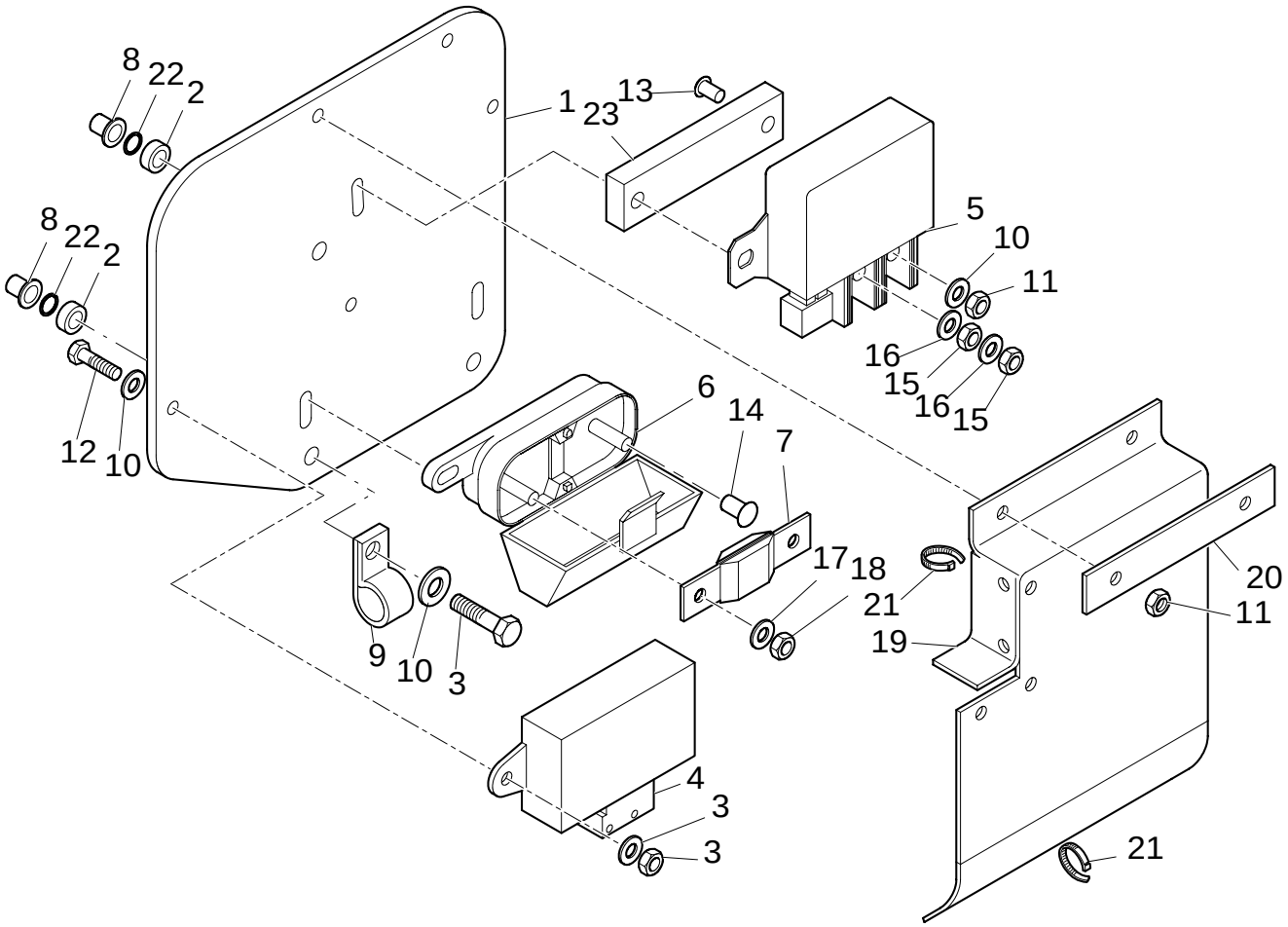

COLD START

REF	FN	PART NUMBER	YR/SN	QTY	DESCRIPTION
1		87410603		1	PLATE
2		85825169		3	SPACER
3		47049164		3	SCREW THD TO HD M8x40 CL8.8 ZND
4		87409046		1	ELECTRONIC UNIT, CONTROL
5		86619908		1	RELAY
6		76088638		1	CONNECTOR
7		87410602		1	FUSE 300 AMP
8		85801492		3	INSERT, THREADED
9		47049195		1	COLLAR M8
10		47048961		15	WASHER
11		47054518		8	NUT M6
12		47049157		5	BOLT M6x20
13		47120207		2	SCREW M6x35
14		85821538		1	SCREW M6x16
15		47049029		4	NUT M6
16		322357		2	WASHER, LOCK Belleville, M6
17		47048992		5	WASHER 8mm Spring Lock
18		47049030		2	NUT M8
19		87411092		1	COVER
20		87411090		1	PLATE, COVER
21		47048702		5	COLLAR, RETAINER
22		85821539		3	O-RING
23		87414237		1	PLATE M14

995	02	p1	02/05

COLD START

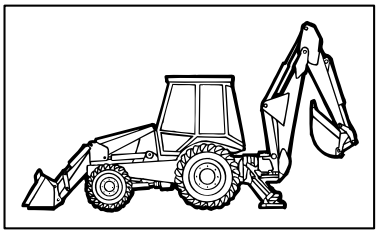

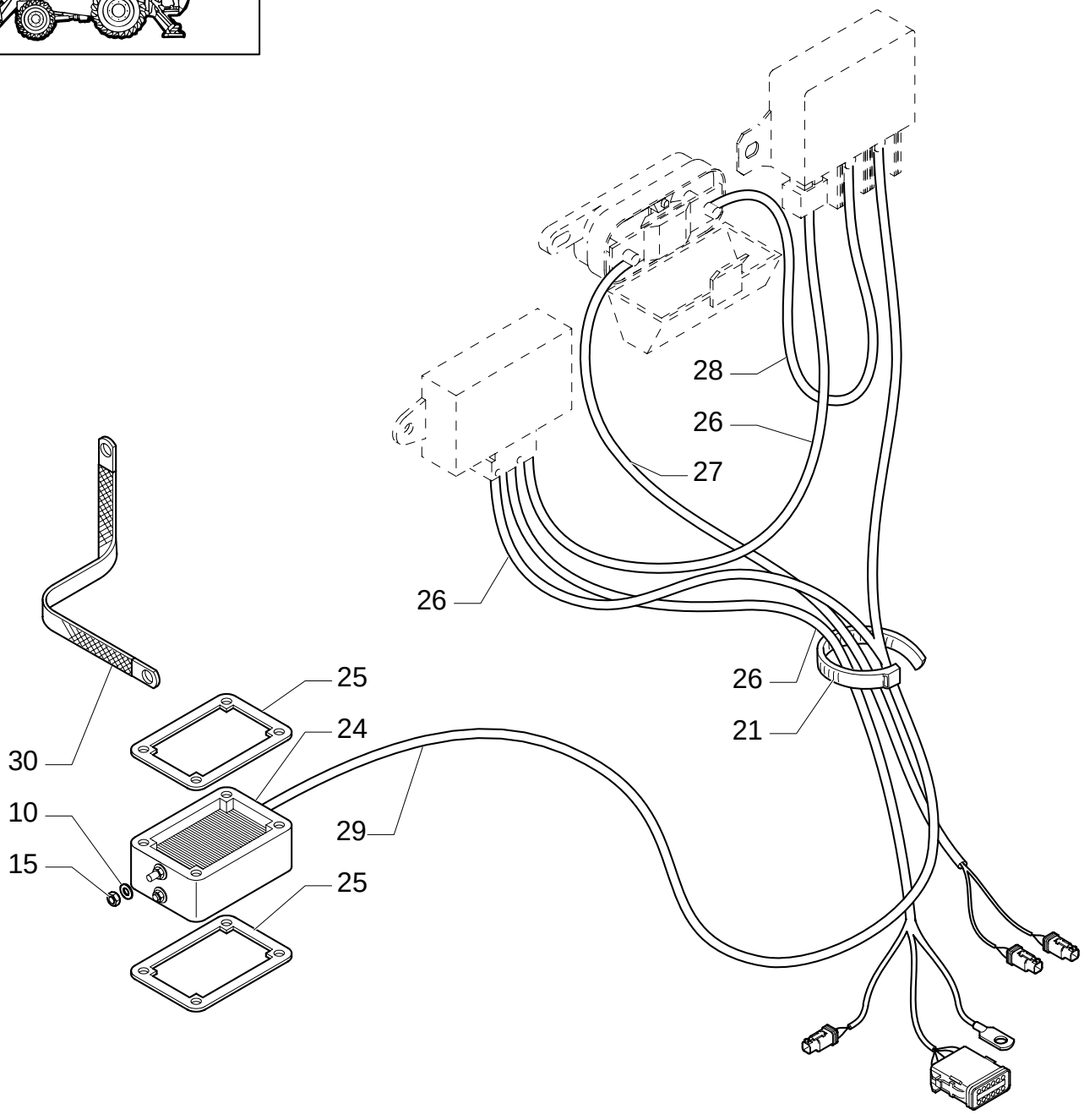

COLD START

REF	FN	PART NUMBER	YR/SN	QTY	DESCRIPTION
10		47048961		15	WASHER
15		47049029		4	NUT M6
21		47048702		5	COLLAR, RETAINER
24		82017872		3	HEATER
25		86014151		1	GASKET
26		87410263		1	CABLE, ELECTRIC
27		87410264		1	CABLE, GROUND
28		87410265		1	CABLE
29		87410266		1	CABLE, GROUND
30		87413162		1	CABLE, GROUND

NOTES

SECTION INDEX

SEC. 07	00	SLIDES VALVES
1.82.0	01	HYDRAULIC OIL RESERVOIR
1.82.3	01	HYDRAULIC PUMP (35+35-154L/MM)
1.82.3/ 1	01	HYDRAULIC PUMP (40+35-165L/MM)
1.82.3/ 2	01	HYDRAULIC PUMP (40+35-165L/MM)
1.82.6	01A	HYDRAULIC SYSTEM PIPING (CENTER PIVOT)
1.82.6	01B	FRONT HYDRAULIC PUMP INTAKE & OUTLET HOSES (CENTER PIVOT)
1.82.6	02A	HYDRAULIC SYSTEM PIPING(CENTER PIVOT)
1.82.6	02B	REAR HYDRAULIC PUMP STABILIZER, LOADER & BACKHOE VALVE HOSES (CENTER PIVOT)
1.82.6	03A	HYDRAULIC SYSTEM PIPING(CENTER PIVOT)
1.82.6	03B	QUICK RELEASE COUPLERS & HOSES (CENTER PIVOT)
1.82.6	04A	RETURN MANIFOLD HOSES (CENTER PIVOT)
1.82.6	04B	RETURN MANIFOLD HOSES (CENTER PIVOT)
1.82.6	05F	OIL COOLER & FILTER HOSES (CENTER PIVOT)
1.82.6	05G	HYDRAULIC SYSTEM PIPING (CENTER PIVOT)
1.82.6	06A	FILTER ASSEMBLY & HOSE TO RETURN MANIFOLD (CENTER PIVOT)
1.82.6	06B	FILTER ASSEMBLY & HOSE TO RETURN MANIFOLD (CENTER PIVOT)
1.82.6	07	HYDRAULIC SYSTEM PIPING
1.82.6	08A	LOADER LIFT CYLINDER HOSES (CENTER PIVOT)
1.82.6	08C	LOADER LIFT CYLINDER HOSES (CENTER PIVOT)
1.82.6	09A	LOADER BUCKET CYLINDER HOSES (CENTER PIVOT)
1.82.6	09B	LOADER BUCKET CYLINDER HOSES (CENTER PIVOT)
1.82.6	10A	HYDRAULIC SYSTEM PIPING NA (CENTER PIVOT)
1.82.6	11A	BACKHOE CONTROL VALVE HOSES (CENTER PIVOT)
1.82.6	11B	HYDRAULIC SYSTEM PIPING(CENTER PIVOT)
1.82.6	12B	HYDRAULIC SYSTEM PIPING(CENTER PIVOT)
1.82.6	13A	ROTATION PLATE HOSE CLAMPS (CENTER PIVOT)
1.82.6	16	BACKHOE CONTROL VALVE(CENTER PIVOT)
1.82.6	17	DIPPER VALVE SECTION (CENTER PIVOT)
1.82.6	18	BUCKET, SWING, & BOOM VALVE SECTION (CENTER PIVOT)
302	01	TWO-SECTION CONTROL VALVE FOR LOADER
302	02	TWO-SECTION CONTROL VALVE FOR LOADER
302	03	TWO-SECTION CONTROL VALVE FOR LOADER
302	04	TWO-SECTION CONTROL VALVE FOR LOADER
331	01	BACKHOE CONTROL VALVE, 6 SECTIONS (CENTER PIVOT) NORTH AMERICA
331/ A	01	6 SECTION PILOT CONTROL VALVE SUPPORT, COMPLETE
331/ A	02	2 SECTION PILOT CONTROL VALVE SUPPORT, COMPLETE
331/ B	01	PILOT CONTROL VALVE SUPPORT, COMPLETE
331/ C	01	6 SECTION PILOT CONTROL VALVE SUPPORT, COMPLETE
331/ C	02	6 SECTION PILOT CONTROL VALVE SUPPORT, COMPLETE
331/ C	03	6 SECTION PILOT CONTROL VALVE SUPPORT, COMPLETE
331/ C	04	6 SECTION PILOT CONTROL VALVE SUPPORT, COMPLETE
331/ C	05	6 SECTION PILOT CONTROL VALVE SUPPORT, COMPLETE
331/ C	06	6 SECTION PILOT CONTROL VALVE SUPPORT, COMPLETE (CENTER PIVOT)
331/ D	03	VALVE, JOYSTICK PILOT CONTROLS - EXTENDED VERSION - (RIGTH HAND)
333/ A	01	7 SECTION PILOT CONTROL VALVE SUPPORT, COMPLETE
333/ A	02	7 SECTION PILOT CONTROL VALVE SUPPORT, COMPLETE
333/ A	03	7 SECTION PILOT CONTROL VALVE SUPPORT, COMPLETE
333/ B	01	7 SECTION PILOT CONTROL VALVE SUPPORT, COMPLETE
333/ B	02	7 SECTION PILOT CONTROL VALVE SUPPORT, COMPLETE (CENTER PIVOT) EUROPE

SECTION INDEX

333/ B	03	7 SECTION PILOT CONTROL VALVE SUPPORT, COMPLETE
333/ B	04	7 SECTION PILOT CONTROL VALVE SUPPORT, COMPLETE
333/ B	05	7 SECTION PILOT CONTROL VALVE SUPPORT, COMPLETE
333/ B	06	7 SECTION PILOT CONTROL VALVE SUPPORT, COMPLETE (CENTER PIVOT) EUROPE
333/ B	07	7 SECTION PILOT CONTROL VALVE SUPPORT, COMPLETE (CENTER PIVOT) EUROPE
333/ B	08	7 SECTION PILOT CONTROL VALVE SUPPORT, COMPLETE
333/ B	09	7 SECTION PILOT CONTROL VALVE SUPPORT, COMPLETE (CENTER PIVOT) EUROPE
333/ B	10	6 SECTION PILOT CONTROL VALVE SUPPORT,COMPLETE
333/ C	01	VALVE, JOYSTICK PILOT CONTROLS (RIGHT HAND)
333/ C	02	VALVE, JOYSTICK PILOT CONTROLS (LEFT HAND)
333/ 1	01	7-SECTIONS EXCAVATOR CONTROL VALVE (CENTER PIVOT) NORTH AMERICA
333/ 1	02	7-SECTIONS EXCAVATOR CONTROL VALVE (CENTER PIVOT) NORTH AMERICA
333/ 1	03	7-SECTIONS EXCAVATOR CONTROL VALVE (CENTER PIVOT) NORTH AMERICA
333/ 1	04	7-SECTIONS EXCAVATOR CONTROL VALVE (CENTER PIVOT) NORTH AMERICA
333/ 1	05	7-SECTIONS EXCAVATOR CONTROL VALVE (CENTER PIVOT) NORTH AMERICA
333/ 1	06	7-SECTIONS EXCAVATOR CONTROL VALVE (CENTER PIVOT) NORTH AMERICA
333/ 1	07	7-SECTIONS EXCAVATOR CONTROL VALVE (CENTER PIVOT) NORTH AMERICA
333/ 1	08	7-SECTIONS EXCAVATOR CONTROL VALVE (CENTER PIVOT) NORTH AMERICA
334	09	7-SECTIONS EXCAVATOR CONTROL VALVE
334	11	7-SECTIONS EXCAVATOR CONTROL VALVE
336	01	LOADER CONTROL VALVE (CENTER PIVOT)
336	02	LOADER CONTROL VALVE, TWO SECTION, CAP & UNLOAD VALVE (CENTER PIVOT)
336	03	LOADER CONTROL VALVE, TWO SECTION, RELIEF & CHECK VALVES (CENTER PIVOT)
336	04	LOADER CONTROL VALVE, TWO SECTION, BY-PASS KIT (CENTER PIVOT)
336	05	LOADER CONTROL VALVE, TWO SECTION, UNLOAD KIT OR DUMP VALVE (CENTER PIVOT)
339	01	LOADER CONTROL VALVE, THREE SECTION (CENTER PIVOT)
339	02	LOADER CONTROL VALVE, THREE SECTION, CAP & UNLOAD VALVE (CENTER PIVOT)
339	03	LOADER CONTROL VALVE, THREE SECTION, RELIEF & CHECK VALVES (CENTER PIVOT)
344	01	STABILIZER CONTROL VALVE, TWO SECTION (CENTER PIVOT)
344	02	STABILIZER CONTROL VALVE, LH & RH SECTION (CENTER PIVOT)
356	01	STABILIZER CONTROL VALVE, TREE SECTION (CENTER PIVOT)
356	02	STABILIZER CONTROL VALVE, THIRD SECTION (CENTER PIVOT)
391	01	LOCK VALVE FOR BUCKET 4X1 / 6X1
391/ 1	01	LOCK VALVE ON LOADER TILTING CYLINDERS
391/ 1	02	LOCK VALVE ON LOADER LIFT CYLINDERS
391/ 1	03	LOCK VALVE ON LOADER LIFT CYLINDERS
392	01	LOCKING VALVE ON BACKHOE LIFT AND DIPP. CYLINDER
392	02	BACKHOE LIFT & DIPPERSTICK CYLINDER LOCK VALVE
437/ 1	01	GLIDE RIDE VALVE,HYDRAULIC SYSTEM FOR MACHINE FRAME LEVELLING & ON/OFF SWITCH
698	01	GLIDE RIDE VALVE,HYDRAULIC SYSTEM FOR MACHINE FRAME LEVELLING & ON/OFF SWITCH
708	01	THREE-SECTION CONTROL VALVE FOR LOADER
708/ 1	01	KIT OF CONVERSION FROM 2 TO 3 SPOOLS
721	01	TELESCOPIC CONTROL VALVE, 3 SECTIONS(CENTER PIVOT)

SECTION INDEX

721	02	HED TELESCOPIC CONTORL VALVE, SECTION HOSES(CENTER PIVOT)
721	03	HED CYLINDER PISTON END HYDRAULIC LINES(CENTER PIVOT)
721	04	HED CYLINDER ROD END HYDRAULIC LINES(CENTER PIVOT)
721	05	HED FOOT PEDAL, CABLE & DECALS(CENTER PIVOT)

SLIDES VALVES

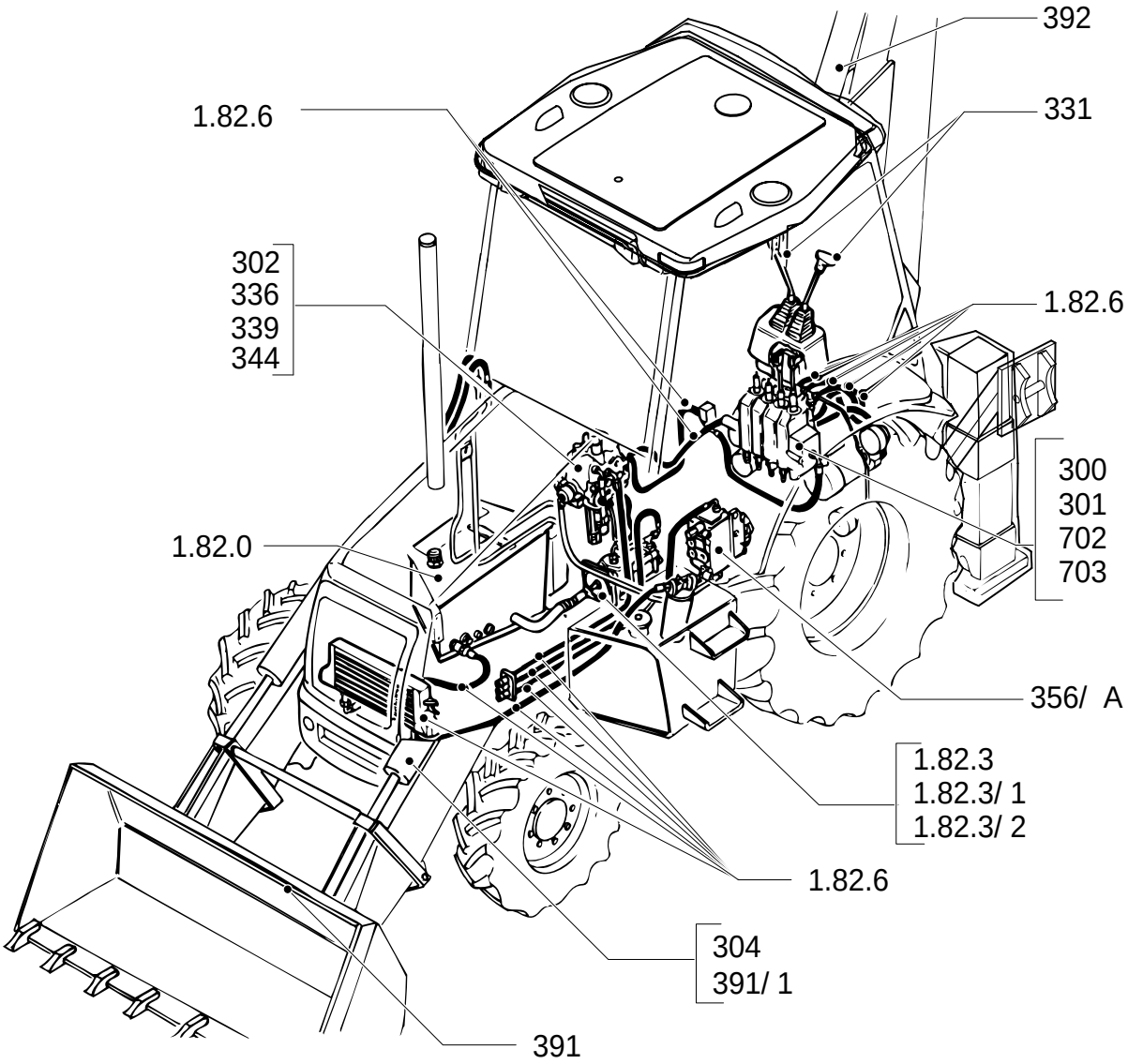

SLIDES VALVES

REF	FN	PART NUMBER	YR/SN	QTY	DESCRIPTION

1.82.0	01	p1	01/06

HYDRAULIC OIL RESERVOIR

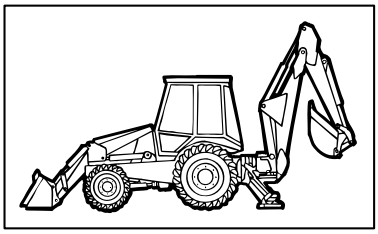

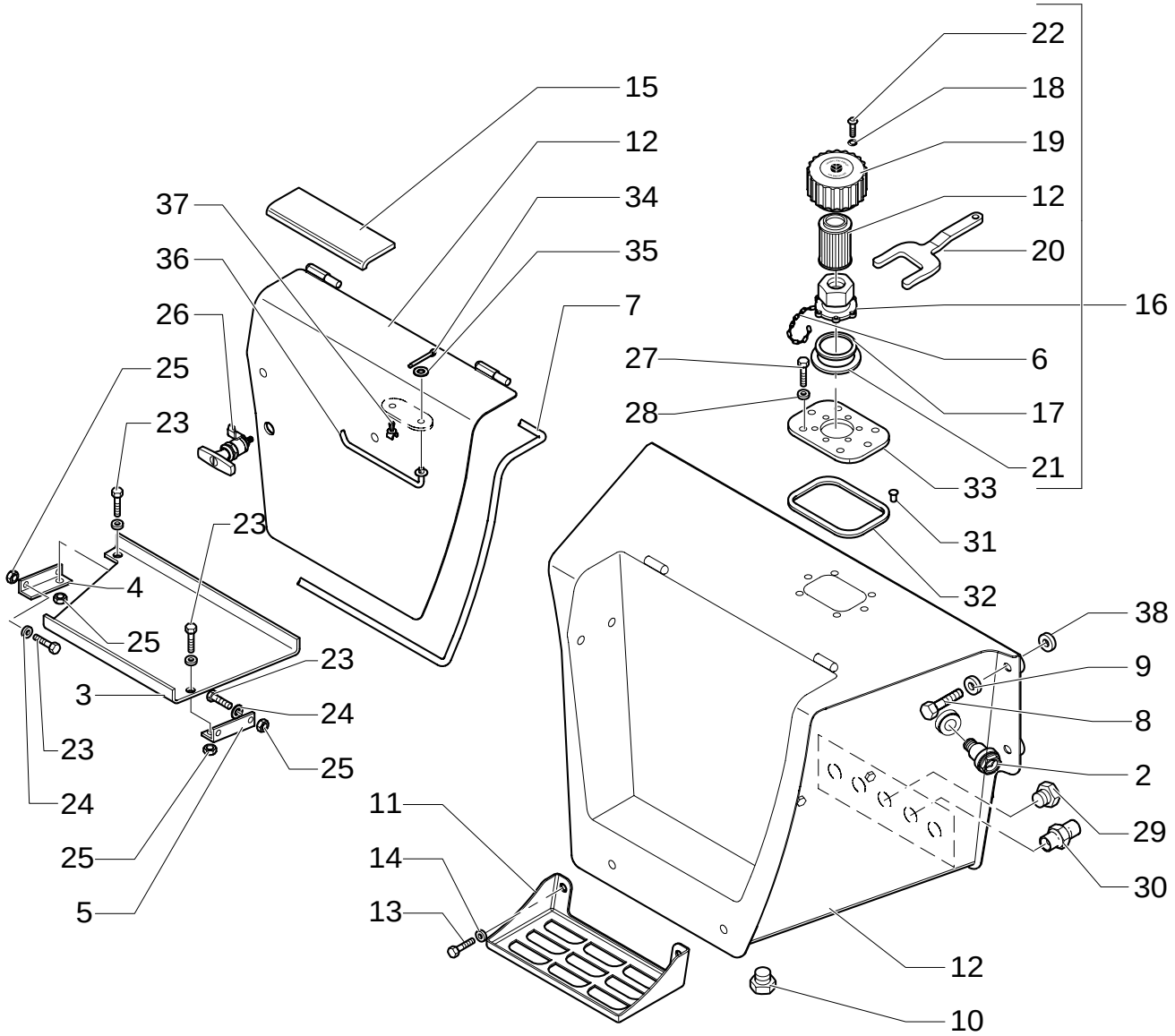

HYDRAULIC OIL RESERVOIR

REF	FN	PART NUMBER	YR/SN	QTY	DESCRIPTION
	1			1	
2		85801249		1	GAUGE, LEVEL
3		87407463		1	BOX, TOOL
4		87407464		1	BRACKET
5		87407465		1	BRACKET M6x22
6		85813352		1	FLANGE
7		87417207		1	GASKET
8		15540721		4	SCREW M12x1,25x45
9		47048976		4	WASHER
10		47050671		2	PLUG M33x2
11		85801218		2	FOOT REST
12				1	
13		15540721		4	SCREW M12x30
14		47048973		4	WASHER
15		87404910		1	FOOT BOARD
16		87403241		1	VALVE, HYDRAULIC ASSY
17		85813351		1	O-RING 39,35x2,62
18		85813354		6	O-RING 6x1.5
19		85813350		1	PLUG
20		85802580		1	KEY, LOCK
21		9969380		1	GASKET
22		85813353		6	SCREW M5x16
23		47049185		4	SCREW M10x25
24		47048972		4	WASHER
25		47049041		4	NUT M10
26		87406289		1	LOCK
27		16043421		6	SCREW
28		47048962		6	WASHER
29		85825154		3	PLUG
30		85825155		1	CONNECTOR, HYD.
31		85826382		7	NUT M8
32		85826383		1	GASKET
33		85828107		1	PLATE
34		47042074		1	PIN
35		47044758		1	WASHER
36		85828017		1	LEVER

(1) Includes 2 To 37

1.82.0	01	p2	01/06

HYDRAULIC OIL RESERVOIR

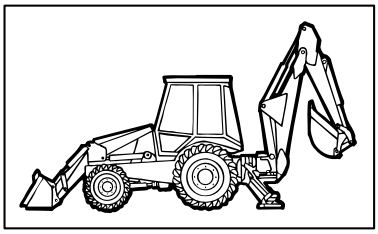

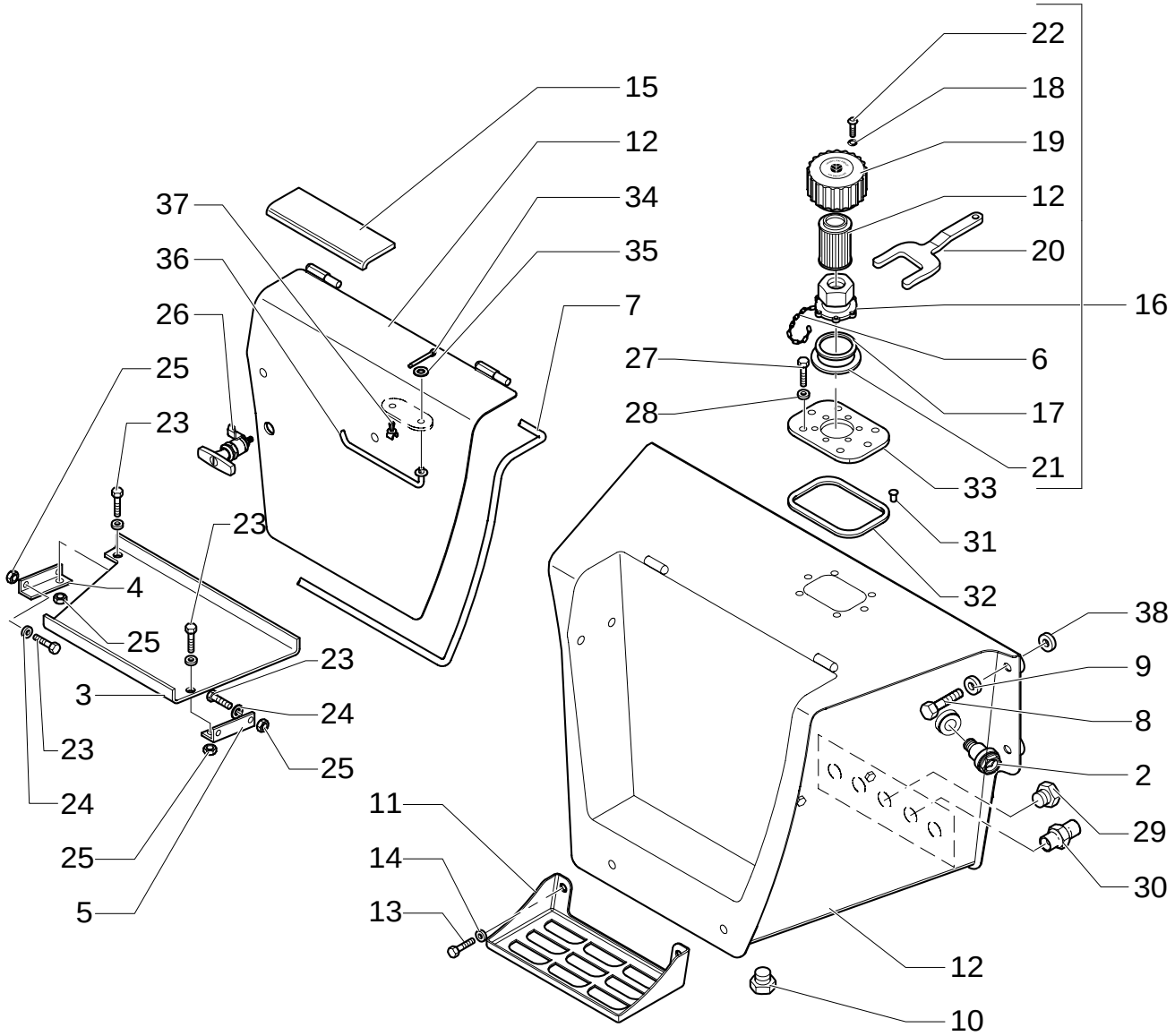

HYDRAULIC OIL RESERVOIR

REF	FN	PART NUMBER	YR/SN	QTY	DESCRIPTION
37		47043563		1	CLIP
38		87353741		4	SPACER

1.82.3	01	p1	11/05

HYDRAULIC PUMP (35+35-154L/MM)

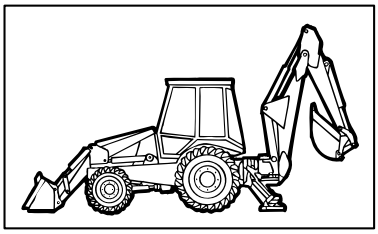

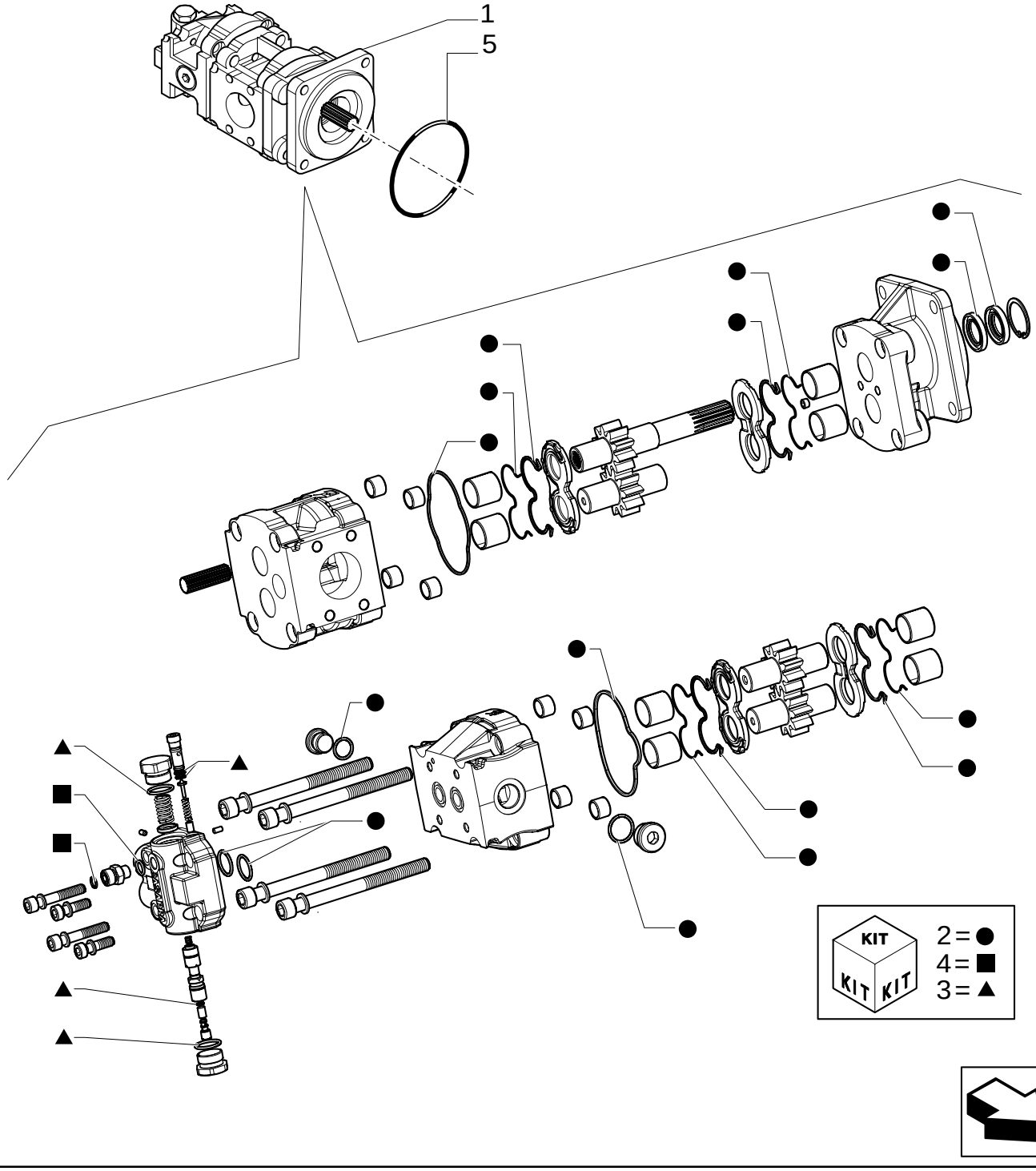

HYDRAULIC PUMP (35+35-154L/MM)

REF	FN	PART NUMBER	YR/SN	QTY	DESCRIPTION
1	1, 2	85826147		1	PUMP, HYDRAULIC
1	1, 3	87362336		1	PUMP, HYDRAULIC
2		85813244		1	KIT Seal
3	2	85819027		1	VALVE, HYDRAULIC Kit
3	3	87373943		1	COVER
4		85824196		1	CONNECTOR, HYD.
5		14466880		1	O-RING

(1) Includes 2, 3, 4
(2) UP TO S/N XXX
(3) FROM TO S/N XXX

1.82.3/ 1	01	p1	11/05

HYDRAULIC PUMP (40+35-165L/MM)

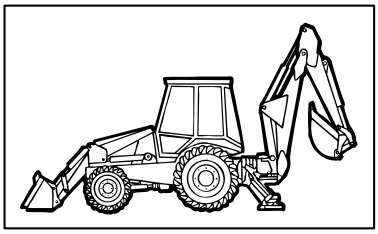

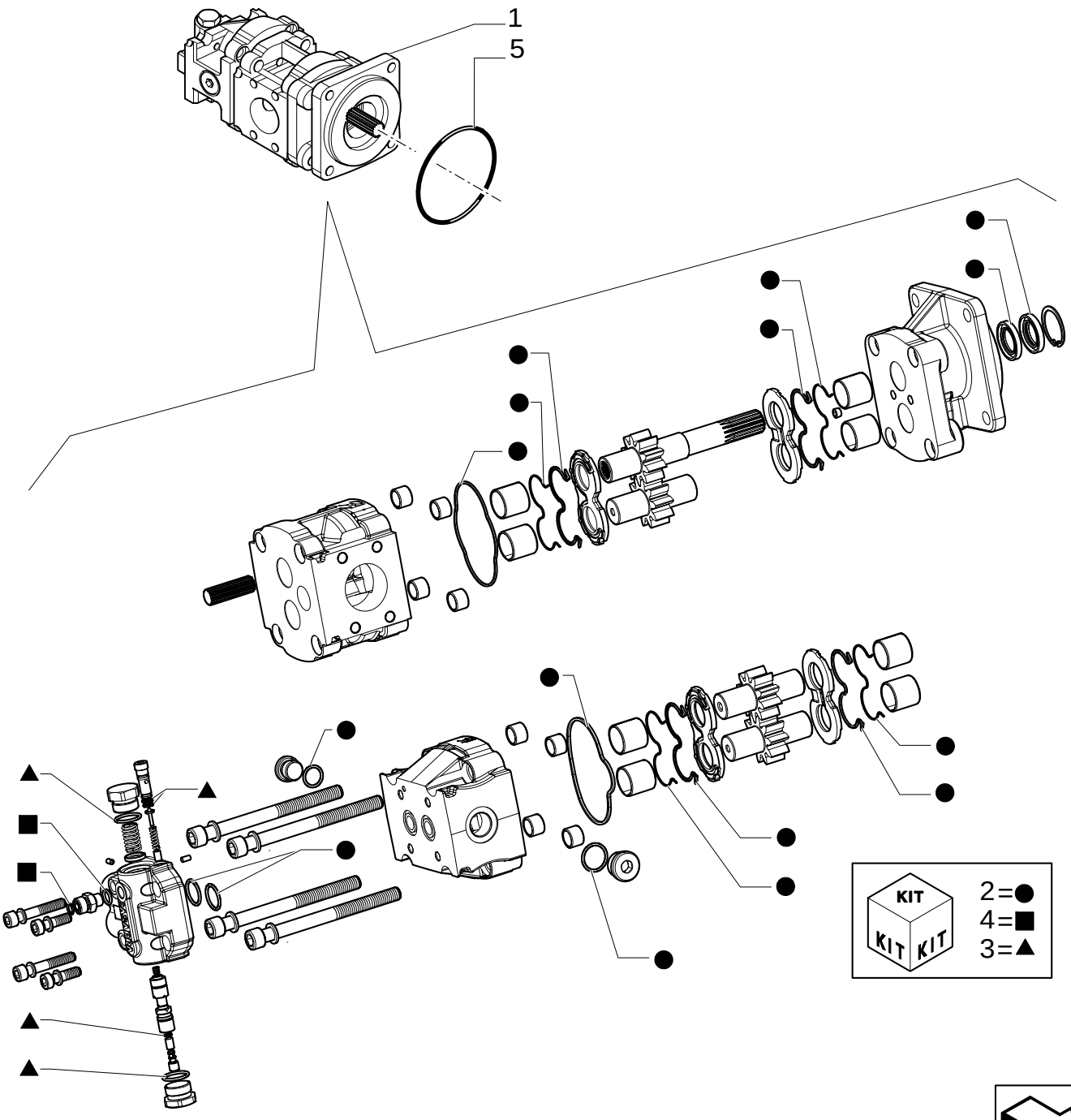

HYDRAULIC PUMP (40+35-165L/MM)

REF	FN	PART NUMBER	YR/SN	QTY	DESCRIPTION
1	1, 2	85826148		1	PUMP, HYDRAULIC
1	1, 3	87362337		1	PUMP, HYDRAULIC
2		85813244		1	KIT Seal
3	2	85819027		1	VALVE, HYDRAULIC Kit
3	3	87373943		1	COVER
4		85824196		1	CONNECTOR, HYD.
5		14466880		1	O-RING

(1) Includes 2, 3, 4
(2) UP TO S/N XXX
(3) FROM TO S/N XXX

1.82.3/ 2	01	p1	02/05

HYDRAULIC PUMP (40+35-165L/MM)

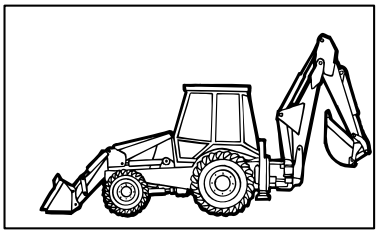

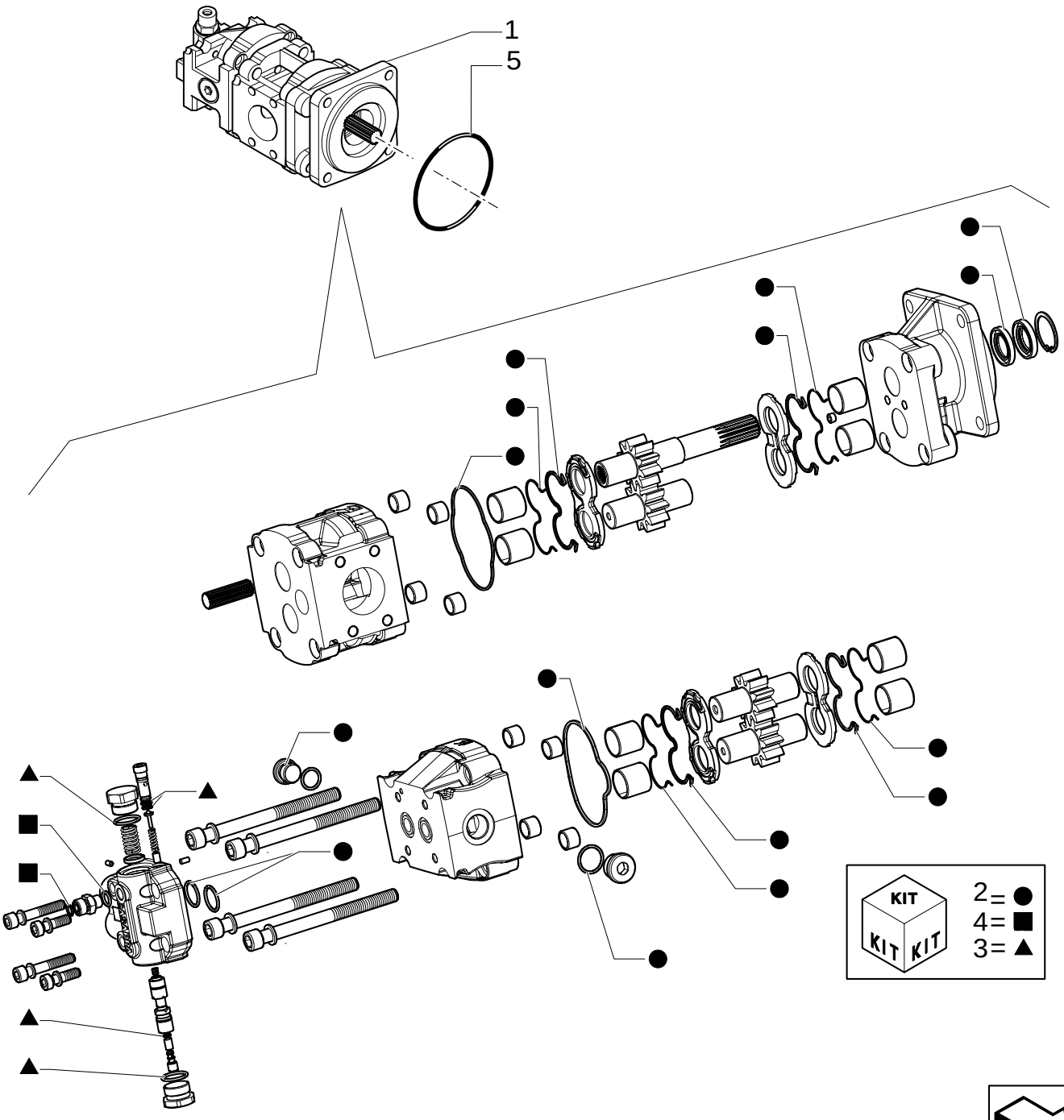

HYDRAULIC PUMP (40+35-165L/MM)

REF	FN	PART NUMBER	YR/SN	QTY	DESCRIPTION
1	1	85826149		1	PUMP, HYDRAULIC
2		85813244		1	KIT Seal
3		85819027		1	VALVE, HYDRAULIC Kit
4		85824196		1	CONNECTOR, HYD.
5		14466880		1	O-RING

(1) Includes 2, 3, 4

Up To S/N XXX

1.82.6	01A	p1	11/05

HYDRAULIC SYSTEM PIPING (CENTER PIVOT)

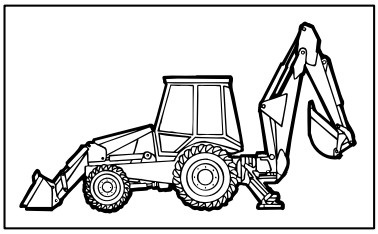

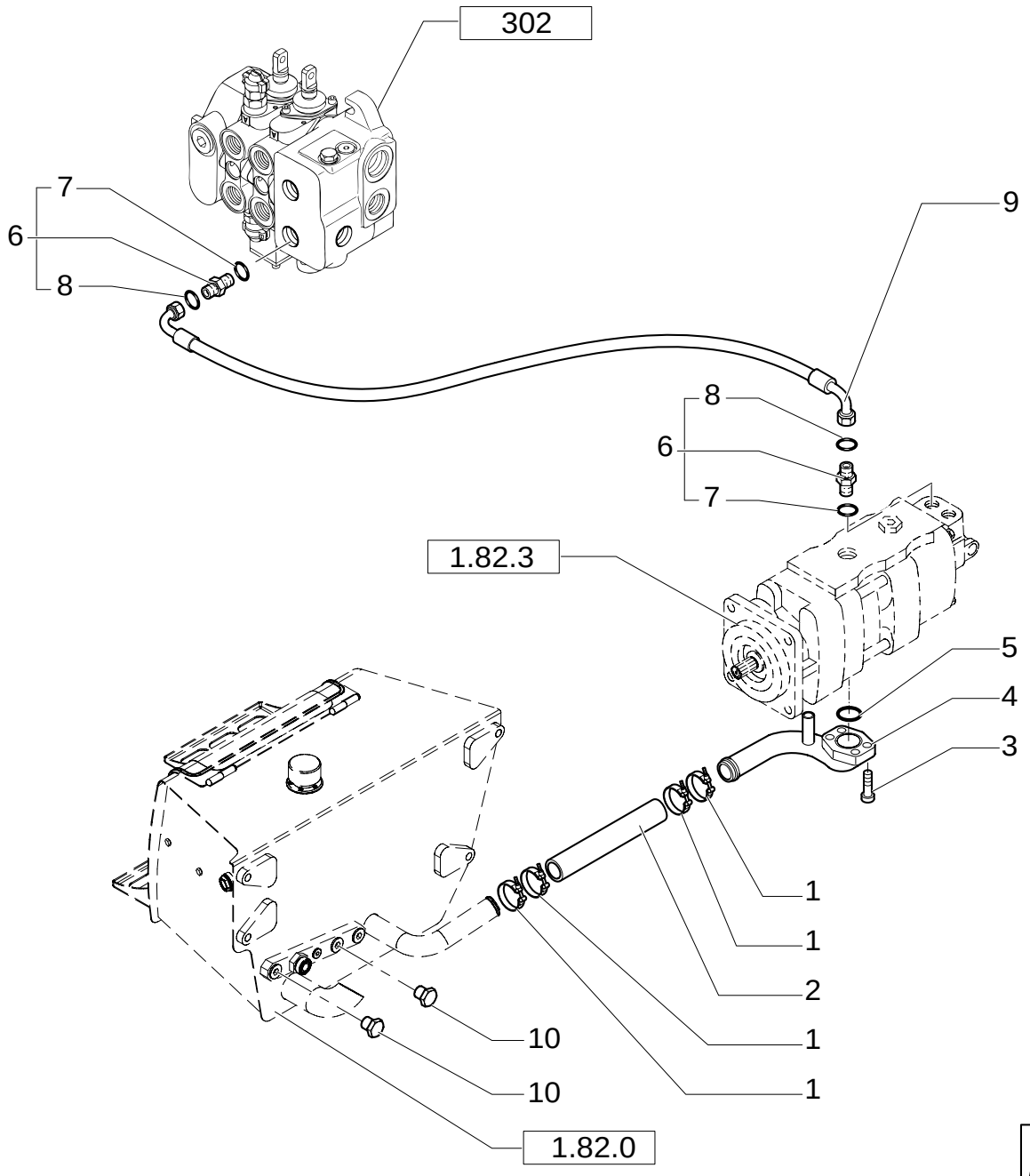

HYDRAULIC SYSTEM PIPING (CENTER PIVOT)

REF	FN	PART NUMBER	YR/SN	QTY	DESCRIPTION
1		85803012		4	CLAMP
2		85811870		1	HOSE
3		14422021		3	SCREW M12X30
4		85827041		1	TUBE, RIGID
5		14464680		1	GASKET
6	1	390937S36		2	CONNECTOR, HYD.
7		167266		2	O-RING 90 Duro, .924" ID x .116" Thk
8		9991976		2	O-RING 90 Duro, .739" ID x .070" Thk
9		87360332		1	HOSE, FLEXIBLE
10		85802800		2	PLUG

(1) Includes 7, 8

Pilot Control Version

1.82.6	01B	p1	11/05

FRONT HYDRAULIC PUMP INTAKE & OUTLET HOSES (CENTER PIVOT)

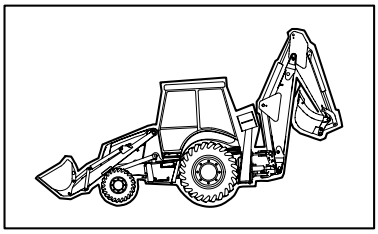

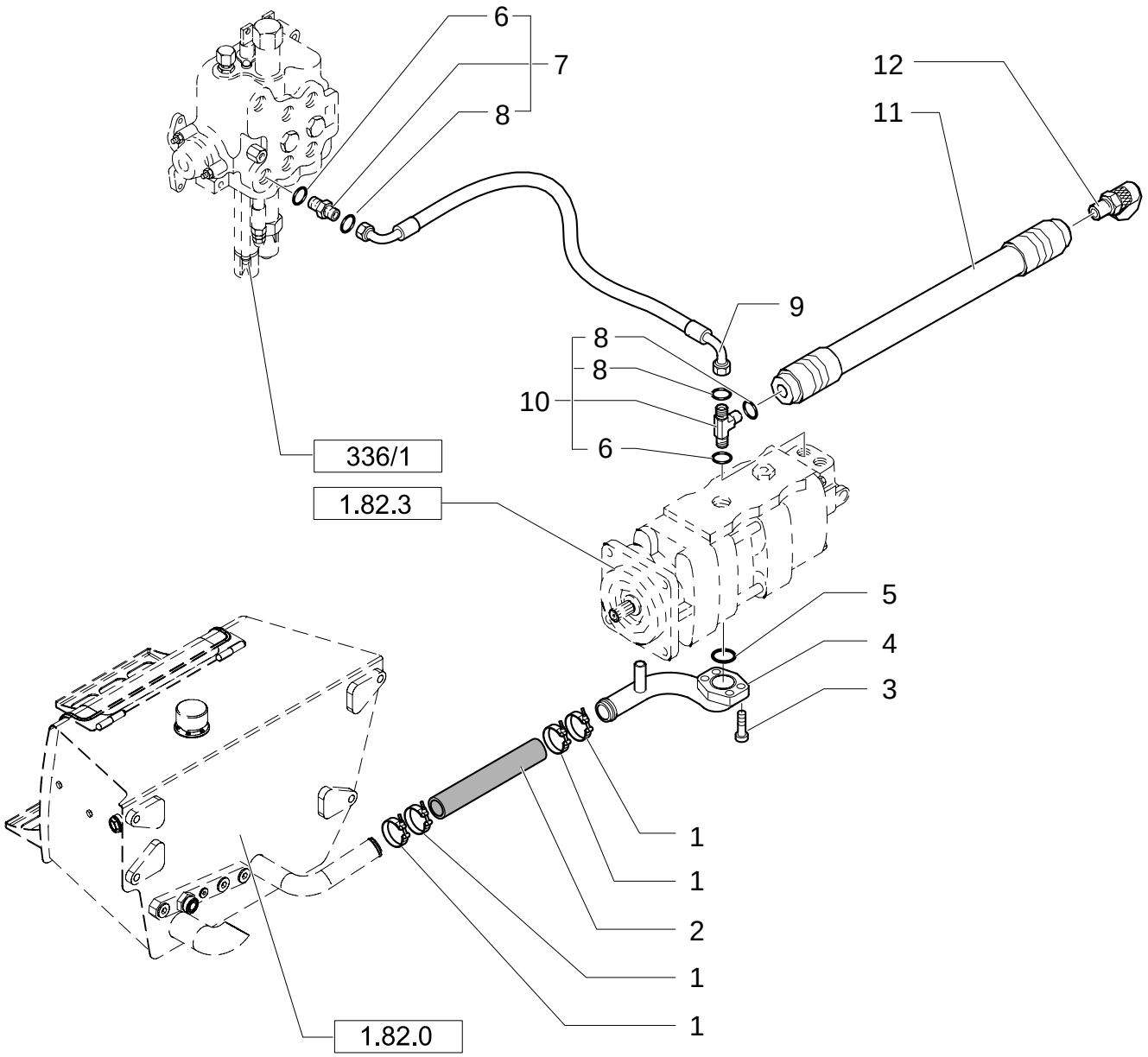

FRONT HYDRAULIC PUMP INTAKE & OUTLET HOSES (CENTER PIVOT)

REF	FN	PART NUMBER	YR/SN	QTY	DESCRIPTION
1		85803012		4	CLAMP
2		85811870		1	HOSE
3		14422021		3	SCREW M12X30
4		87409515		1	TUBE, RIGID
5		14464680		1	GASKET
6		167266		2	O-RING 90 Duro, .924" ID x .116" Thk
7	1	390937S36		1	CONNECTOR, HYD. 1-3/16"-12 ORS x 1-1/16"-12 SAE O-Ring
8		9991976		3	O-RING 90 Duro, .739" ID x .070" Thk
9		85825187		1	HOSE, FLEXIBLE
10	2	85815581		1	CONNECTOR, HYD.
11		85815568		1	HOSE, FLEXIBLE
12		85817596		1	COUPLING, QUICK, MALE

(1) Includes 7, 8
(2) Includes 6, 8

Mechanical Version

1.82.6	02A	p1	11/05

HYDRAULIC SYSTEM PIPING(CENTER PIVOT)

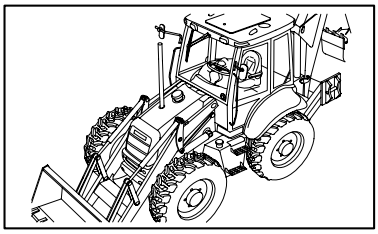

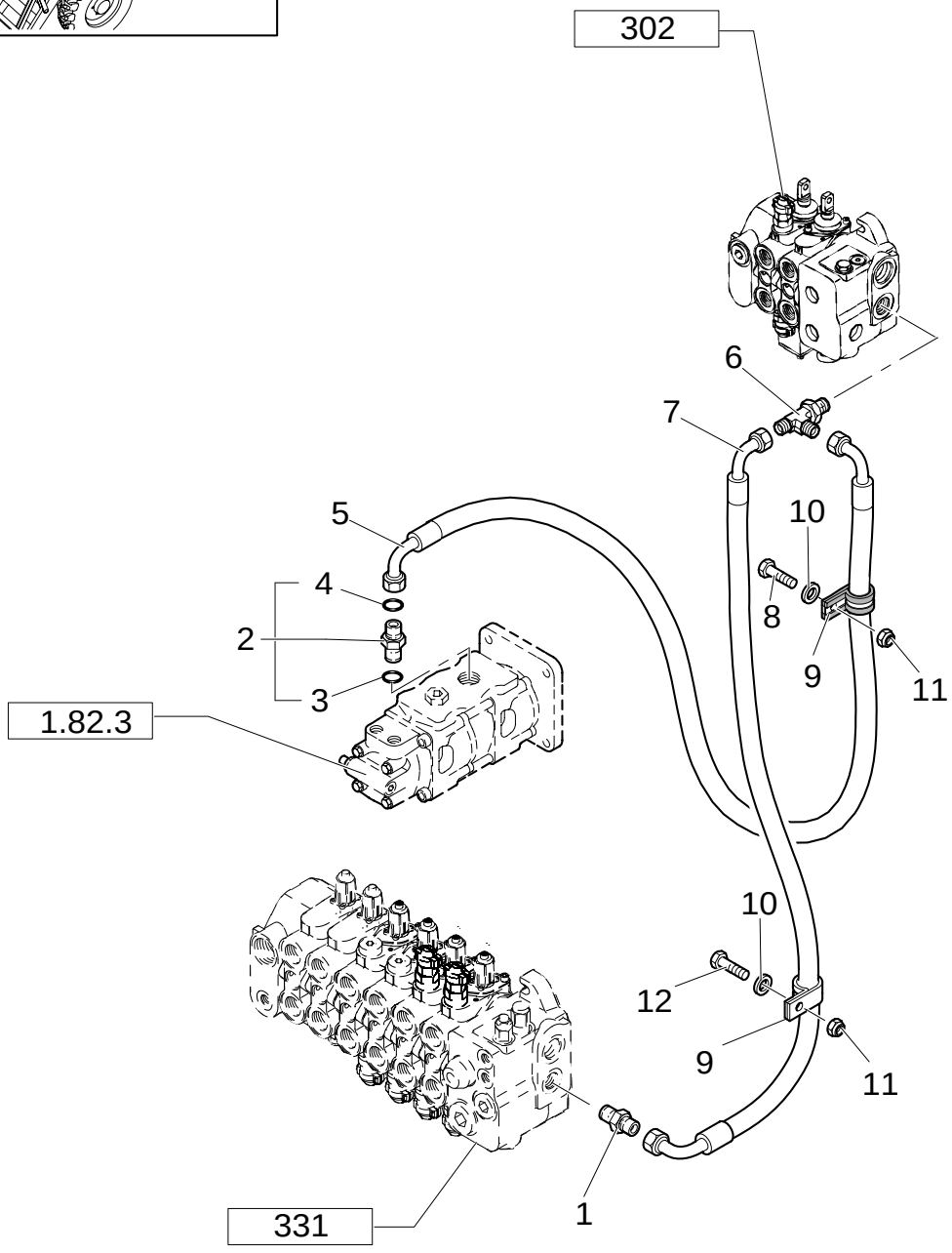

HYDRAULIC SYSTEM PIPING(CENTER PIVOT)

REF	FN	PART NUMBER	YR/SN	QTY	DESCRIPTION
1		85803486		1	CONNECTOR, HYD.
2	1	390828S36		1	CONNECTOR, HYD.
3		167269		1	O-RING 90 Duro, .755" ID x .097" Thk
4		87016S95		1	O-RING 90 Duro, .625" ID x .070" Thk
5		87360331		1	HOSE, FLEXIBLE
6		85826093		1	CONNECTOR, HYD.
7		85817220		1	HOSE, FLEXIBLE L=MM.1080
8		47049082		1	SCREW
9		85802890		2	COLLAR, RETAINER
10		11193979		2	WASHER, LOCK
11		14048211		2	NUT
12		47049161		1	SCREW

(1) Includes 3, 4

Pilot Control Version

1.82.6	02B	p1	11/05

REAR HYDRAULIC PUMP STABILIZER, LOADER & BACKHOE VALVE HOSES (CENTER PIVOT)

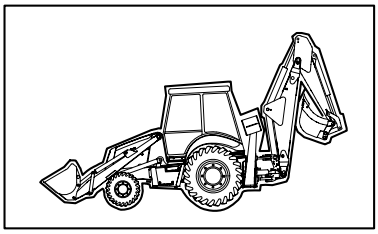

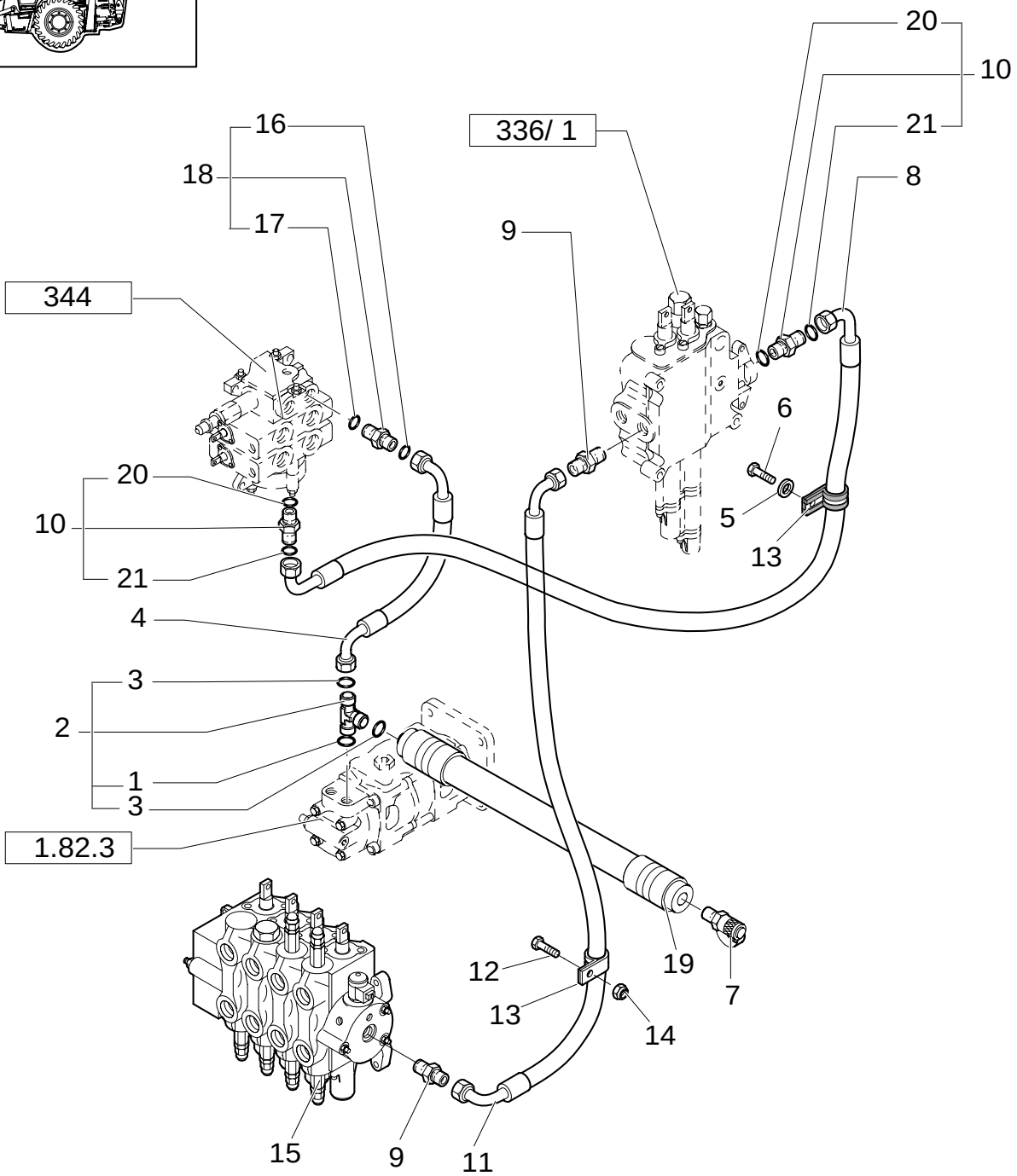

REAR HYDRAULIC PUMP STABILIZER, LOADER & BACKHOE VALVE HOSES (CENTER PIVOT)

REF	FN	PART NUMBER	YR/SN	QTY	DESCRIPTION
1		167269		1	O-RING 90 Duro, .755" ID x .097" Thk
2	1	85815580		1	CONNECTOR, HYD.
3		87016S95		2	O-RING 90 Duro, .625" ID x .070" Thk
4		85825187		1	HOSE, FLEXIBLE
5		11190579		2	WASHER, LOCK
6		15970921		1	SCREW
7		85817596		1	COUPLING, QUICK, MALE
8		85812161		1	HOSE, FLEXIBLE
9		85802958		2	CONNECTOR, HYD.
10		85802642		2	CONNECTOR, HYD. 1-3/16"-12 ORS x 7/8"-14 SAE O-Ring
11		85802776		1	HOSE, FLEXIBLE
12		15970721		2	SCREW M10X1.25X25
13		85802890		2	COLLAR, RETAINER
14		12574511		1	NUT
15		85827100		1	VALVE, CONTROL
16		167269		1	O-RING 90 Duro, .755" ID x .097" Thk
17		87016S95		1	O-RING 90 Duro, .625" ID x .070" Thk
18	2	390828S36		1	CONNECTOR, HYD.
19		85815567		1	HOSE, FLEXIBLE

(1) Includes 1, 3
(2) Includes 16, 17

Mechanical Version

1.82.6	03A	p1	11/05

HYDRAULIC SYSTEM PIPING(CENTER PIVOT)

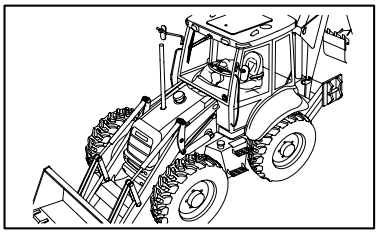

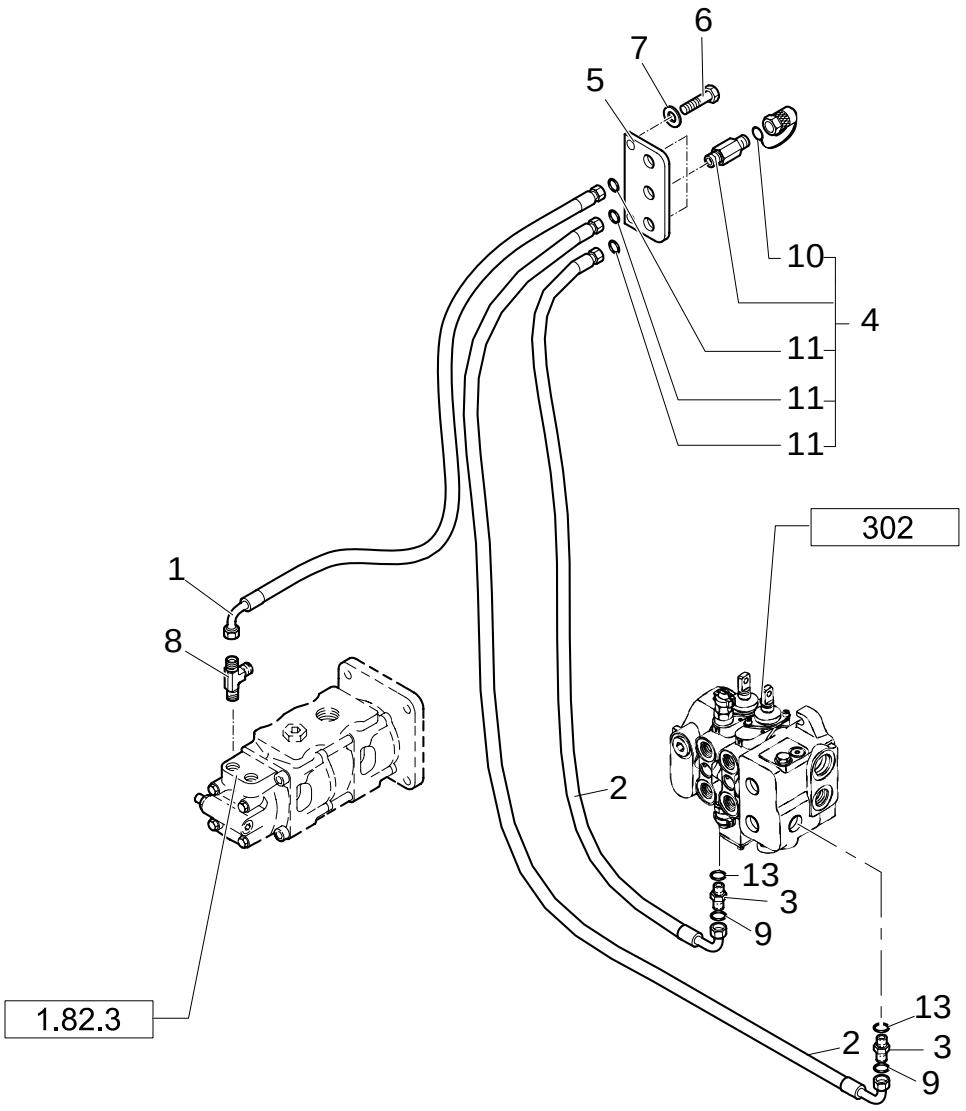

HYDRAULIC SYSTEM PIPING(CENTER PIVOT)

REF	FN	PART NUMBER	YR/SN	QTY	DESCRIPTION
1		85812171		1	HOSE, FLEXIBLE
2		85812173		2	HOSE, FLEXIBLE
3	1	390951S36		2	CONNECTOR, HYD.
4		85828211		3	INSERT
5		85802846		1	PLATE
6		16043221		2	SCREW
7		12647121		2	WASHER M8
8		85805502		1	CONNECTION, 3 WAY
9		86482S95		1	O-RING 90 Duro, .468" ID x .078" Thk
10		9968791		3	PLUG
11		87008S95		5	O-RING 90 Duro, .375" ID x .070" Thk

(1) Includes 11,12

Pilot Control Version

1.82.6	03B	p1	11/05

QUICK RELEASE COUPLERS & HOSES (CENTER PIVOT)

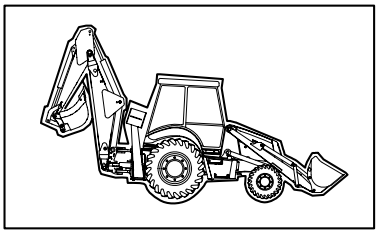

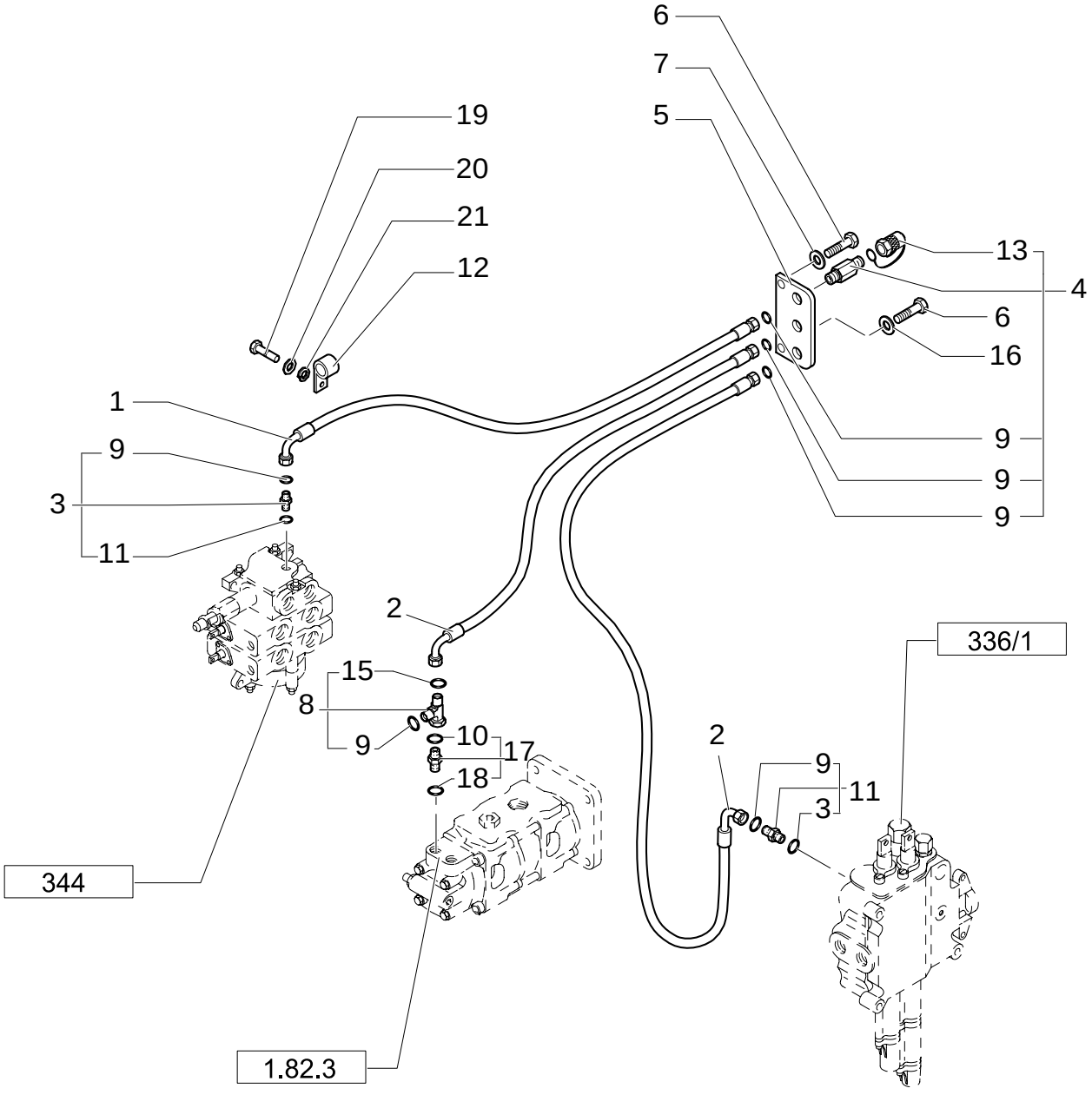

QUICK RELEASE COUPLERS & HOSES (CENTER PIVOT)

REF	FN	PART NUMBER	YR/SN	QTY	DESCRIPTION
1		85812170		1	HOSE, FLEXIBLE
2		85812171		2	HOSE, FLEXIBLE
3	1	390951S36		2	CONNECTOR, HYD.
4		85817226		3	CONNECTOR, HYD.
5		85802846		1	PLATE
6		16043221		2	SCREW
7		11193879		2	WASHER, LOCK
8	2	85815582		1	CONNECTOR, HYD.
9		87008S95		6	O-RING 90 Duro, .375" ID x .070" Thk
11		86482S95		2	O-RING 90 Duro, .468" ID x .078" Thk
12		85802890		1	COLLAR, RETAINER
13		9968791		3	PLUG
16		12647121		1	WASHER M8
17	3	390953S36		1	CONNECTOR, HYD.
18		128825		1	O-RING 8-1, 90 Duro, .644" ID x .087" Thk
19		15540821		1	SCREW
20		12646921		1	WASHER, LOCK
21		11190779		1	WASHER, LOCK
10		9992298		1	O-RING 90 Duro, .489" ID x .070" Thk
15		9992298		1	O-RING 90 Duro, .489" ID x .070" Thk

(1) Includes 9, 11
(2) Includes 9, 15
(3) Includes 10, 18

Mechanical Version

1.82.6	04A	p1	02/05

RETURN MANIFOLD HOSES (CENTER PIVOT)

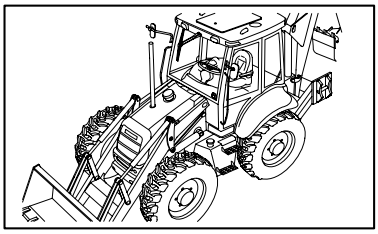

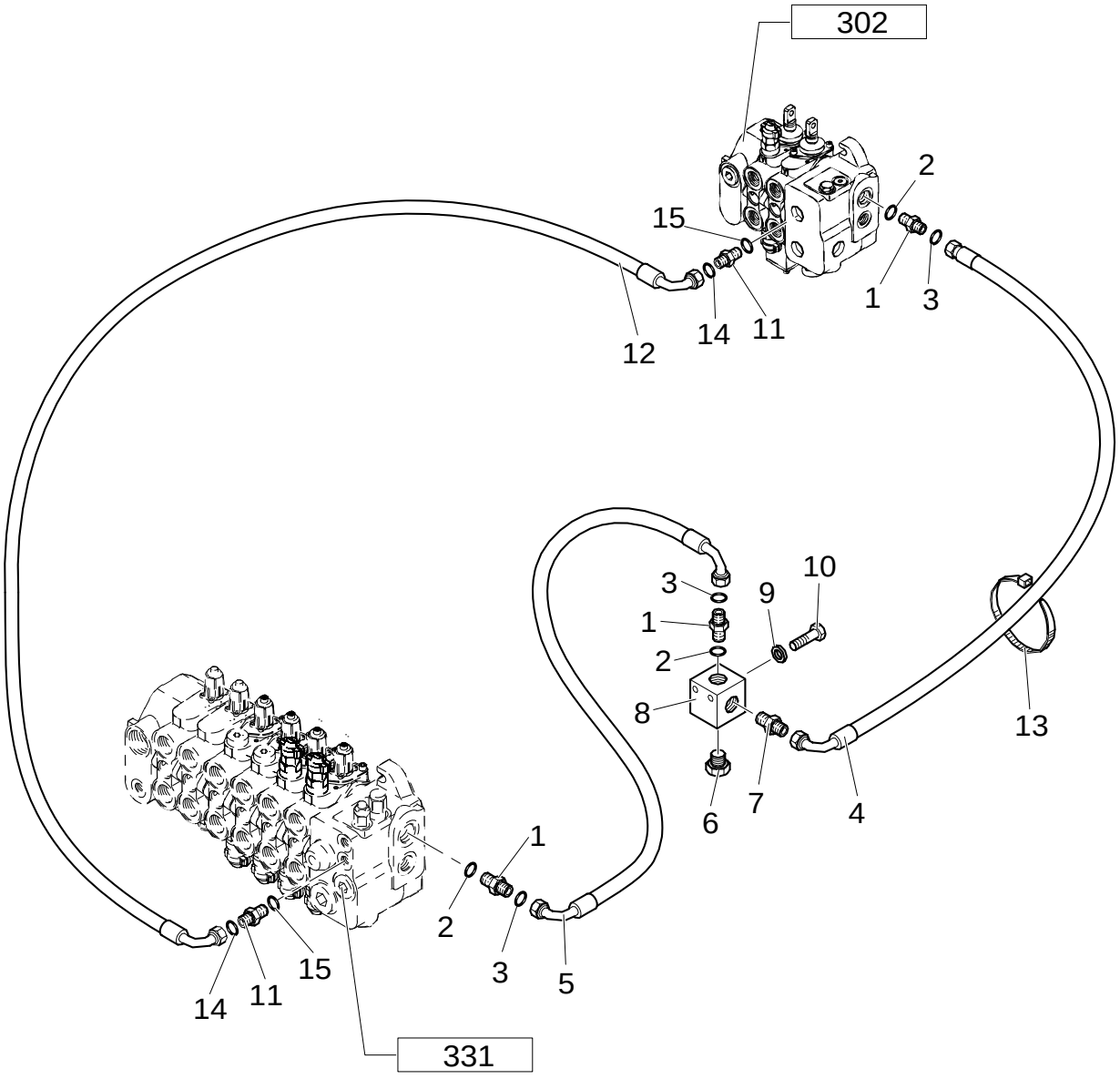

RETURN MANIFOLD HOSES (CENTER PIVOT)

REF	FN	PART NUMBER	YR/SN	QTY	DESCRIPTION
1	1	390954S36		3	CONNECTOR, HYD.
2		167268		3	O-RING
3		9824050		3	O-RING 90 Duro, .926 IDx0.70 Thk
4		85818909		1	HOSE, FLEXIBLE L=MM 1150
5		85827823		1	HOSE, FLEXIBLE
6		85802955		1	PLUG
7		85805168		1	CONNECTOR, HYD.
8		85805166		1	BLOCK
9		11190779		2	WASHER, LOCK
10		15541621		2	SCREW
11	2	390951S36		2	CONNECTOR, HYD.
12		85812174		1	HOSE, FLEXIBLE
13		85802954		1	COLLAR, RETAINER
14		10519411		1	WASHER
15		10902221		1	SCREW
16		12574211		1	NUT
17		86482S95		1	O-RING 90 Duro, .468" ID x .078" Thk
18		87008S95		1	O-RING 90 Duro, .375" ID x .070" Thk

(1) Includes 2, 3
(2) Includes 17, 18

Pilot Control Version

1.82.6	04B	p1	02/05

RETURN MANIFOLD HOSES (CENTER PIVOT)

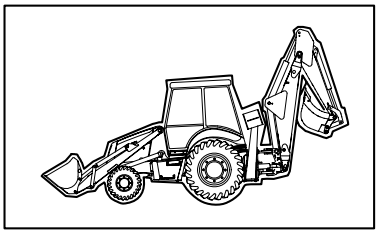

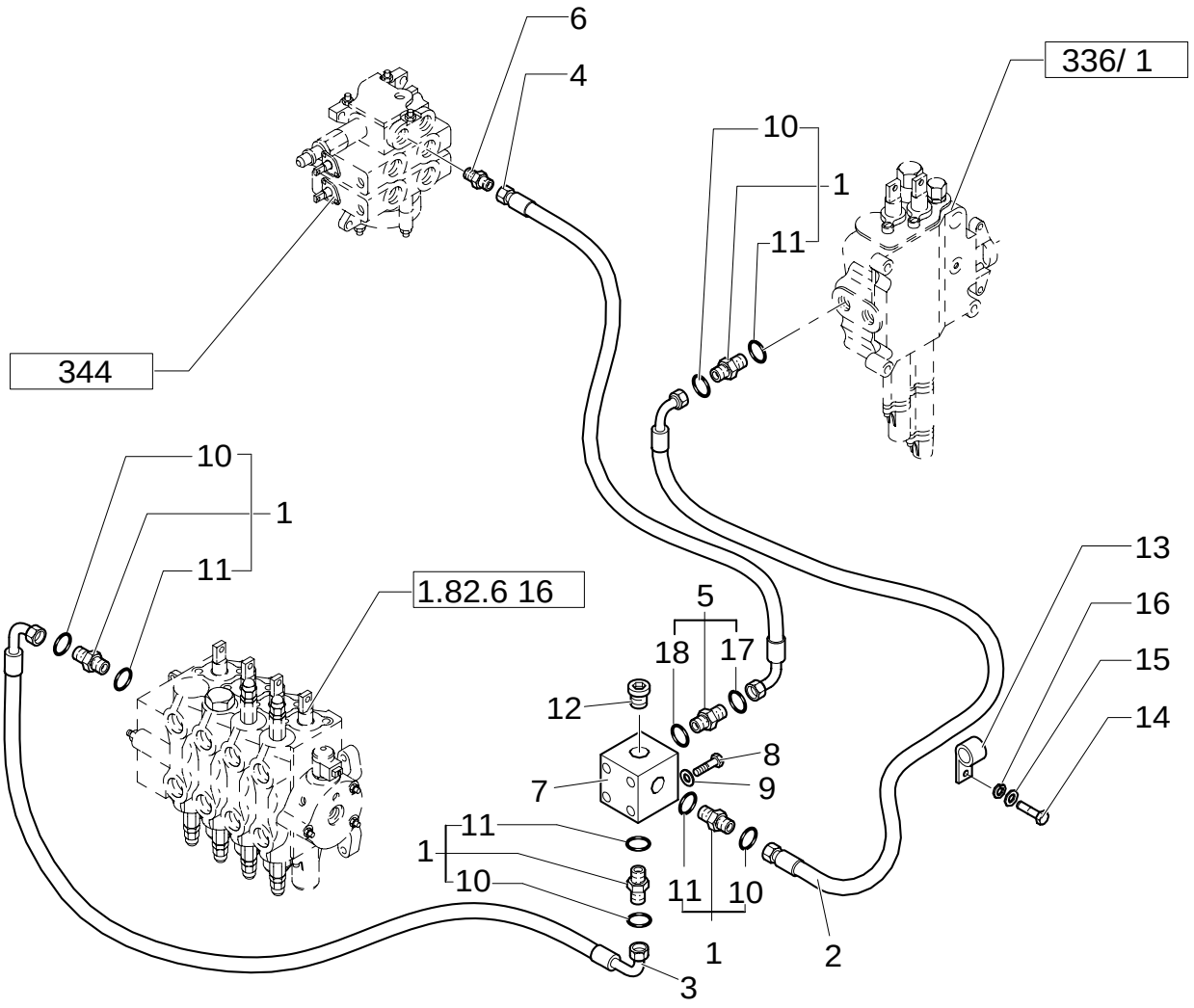

RETURN MANIFOLD HOSES (CENTER PIVOT)

REF	FN	PART NUMBER	YR/SN	QTY	DESCRIPTION
1	1	390954S36		4	CONNECTOR, HYD.
2		85802777		1	HOSE, FLEXIBLE
3		85802839		1	HOSE, FLEXIBLE
4		85802838		1	HOSE, FLEXIBLE
5	2	390937S36		1	CONNECTOR, HYD. 1-3/16"-12 ORS x 1-1/16"-12 SAE O-Ring
6		85802642		1	CONNECTOR, HYD. 1-3/16"-12 ORS x 7/8"-14 SAE O-Ring
7		85802799		1	BLOCK
8		15541621		2	SCREW M12X1.25X100
9		11190779		2	WASHER, LOCK
10		9824050		4	O-RING 90 Duro, .926" ID x .070" Thk
11		167268		4	O-RING 90 Duro, 1.171" ID x .116" Thk
12		85802955		1	PLUG
13		85802890		1	COLLAR, RETAINER
14		15540821		1	SCREW
15		12646921		1	WASHER, LOCK
16		11190779		1	WASHER, LOCK
17		9991976		1	O-RING 90 Duro, .739" ID x .070" Thk
18		167266		1	O-RING 90 Duro, .924" ID x .116" Thk

(1) Includes 10, 11
(2) Includes 17, 18

Mechanical Version

1.82.6	05F	p1	11/05

OIL COOLER & FILTER HOSES (CENTER PIVOT)

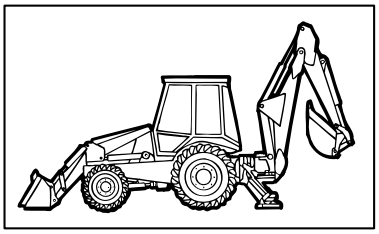

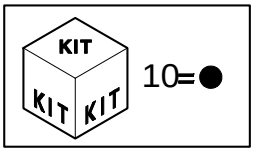

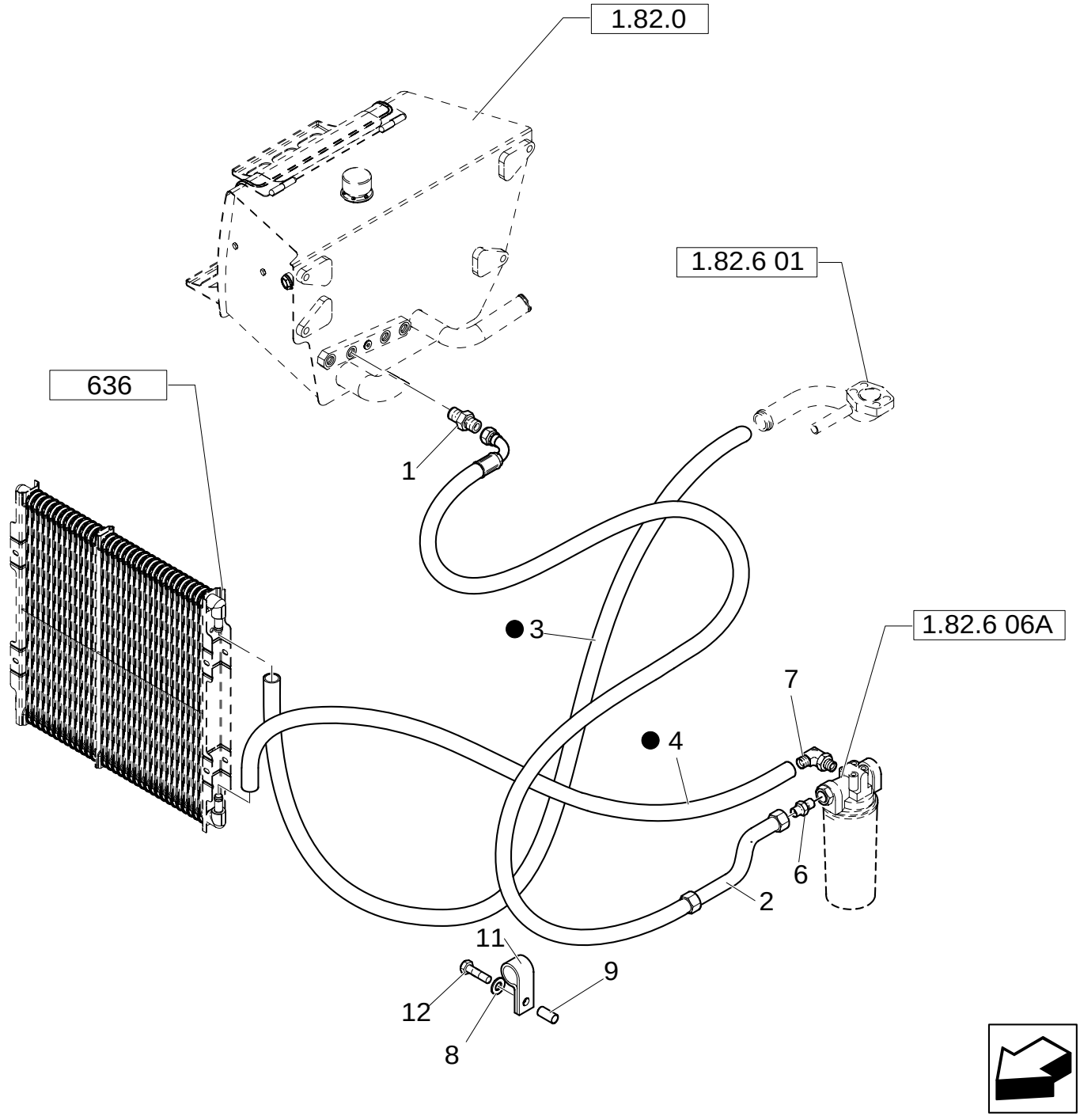

OIL COOLER & FILTER HOSES (CENTER PIVOT)

REF	FN	PART NUMBER	YR/SN	QTY	DESCRIPTION
1		85802801		1	CONNECTOR, HYD. 1-11/16"-12 ORS x 1-5/16"-12 SAE O-ring
2		85827824		1	TUBE, RIGID
3	1	87326809		1	HOSE, FLEXIBLE
3	2	87416576		1	TUBE, RIGID
4		87326808		1	HOSE, FLEXIBLE
6		85802960		1	CONNECTOR, HYD.
7		85824060		1	CONNECTOR, HYD.
8		47048964		1	WASHER
9		85825169		1	SPACER
10		{47334140}		1	
11		47048664		1	COLLAR
12		47049161		1	SCREW

(1) Only for POWER SHUTTLE
(2) Only for POWER SHIFT

Mechanical Version

1.82.6	05G	p1	01/06

HYDRAULIC SYSTEM PIPING (CENTER PIVOT)

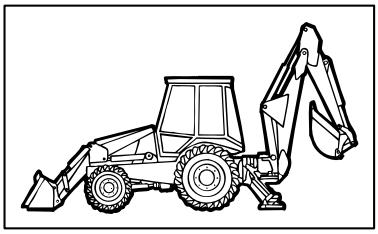

KIT KIT KIT 10=●

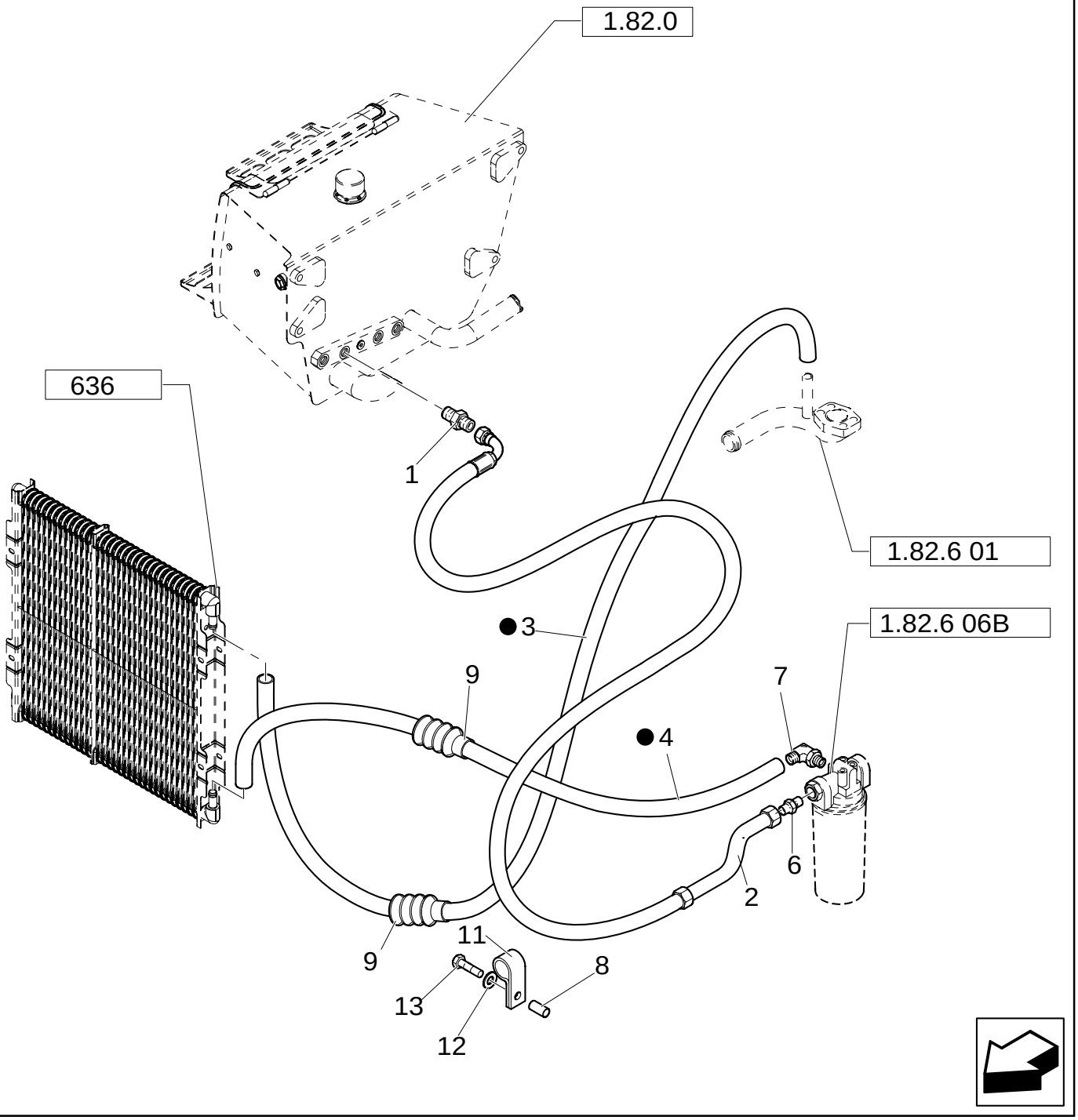

HYDRAULIC SYSTEM PIPING (CENTER PIVOT)

REF	FN	PART NUMBER	YR/SN	QTY	DESCRIPTION
1		85802801		1	CONNECTOR, HYD. 1-11/16"-12 ORSx1-5/16"-12 SAE O-ring
2		85827824		1	TUBE, RIGID
3	1	87410548		1	HOSE, FLEXIBLE
3	2	87416576		1	TUBE, RIGID
4		87426808		1	HOUSING, AXLE
6		85802960		1	CONNECTOR, HYD.
7		85824060		1	CONNECTOR, HYD.
8		47048328		1	SPACER
9		47048760		1	SHIELD
10		{47334140}		1	
11		47048664		1	COLLAR
12		47048964		1	WASHER
13		47049161		1	SCREW M8x25

(1) Only for POWER SHUTTLE
(2) Only for POWER SHIFT

Pilot Control Version

1.82.6	06A	p1	11/05

FILTER ASSEMBLY & HOSE TO RETURN MANIFOLD (CENTER PIVOT)

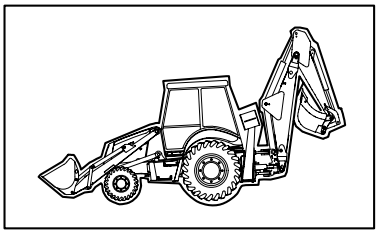

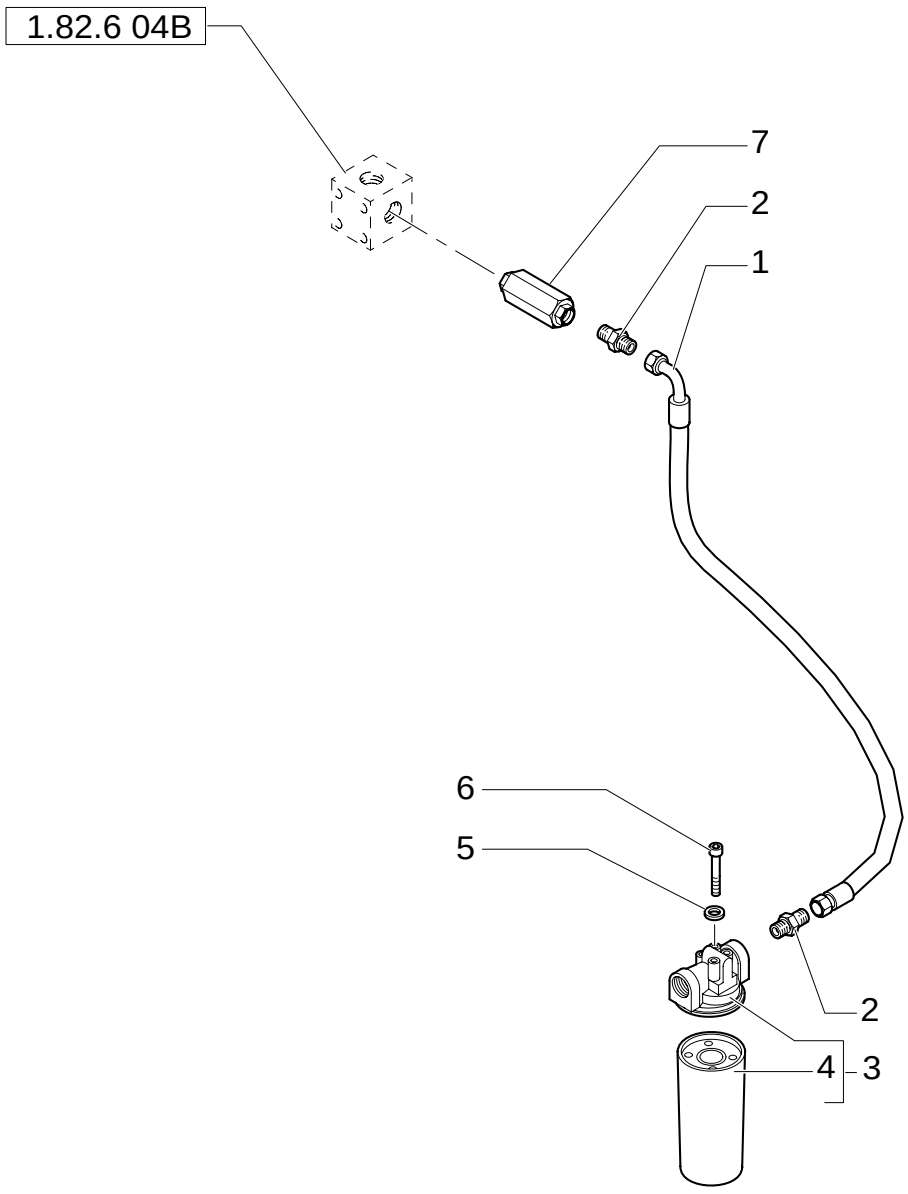

FILTER ASSEMBLY & HOSE TO RETURN MANIFOLD (CENTER PIVOT)

REF	FN	PART NUMBER	YR/SN	QTY	DESCRIPTION
1		85805840		1	HOSE, FLEXIBLE
2		85802801		2	CONNECTOR, HYD.
3		87315438		1	FILTER, HYDRAULIC OIL
4		86989733		1	FILTER, ELEMENT
5		11190579		4	WASHER, LOCK
7		85805824		1	VALVE, HYDRAULIC
6		11106221		4	SCREW

Mechanical Version

1.82.6	06B	p1	11/05

FILTER ASSEMBLY & HOSE TO RETURN MANIFOLD (CENTER PIVOT)

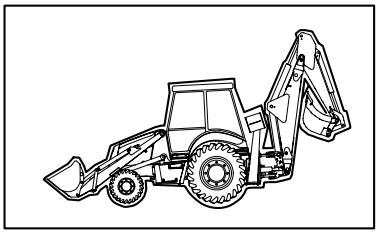

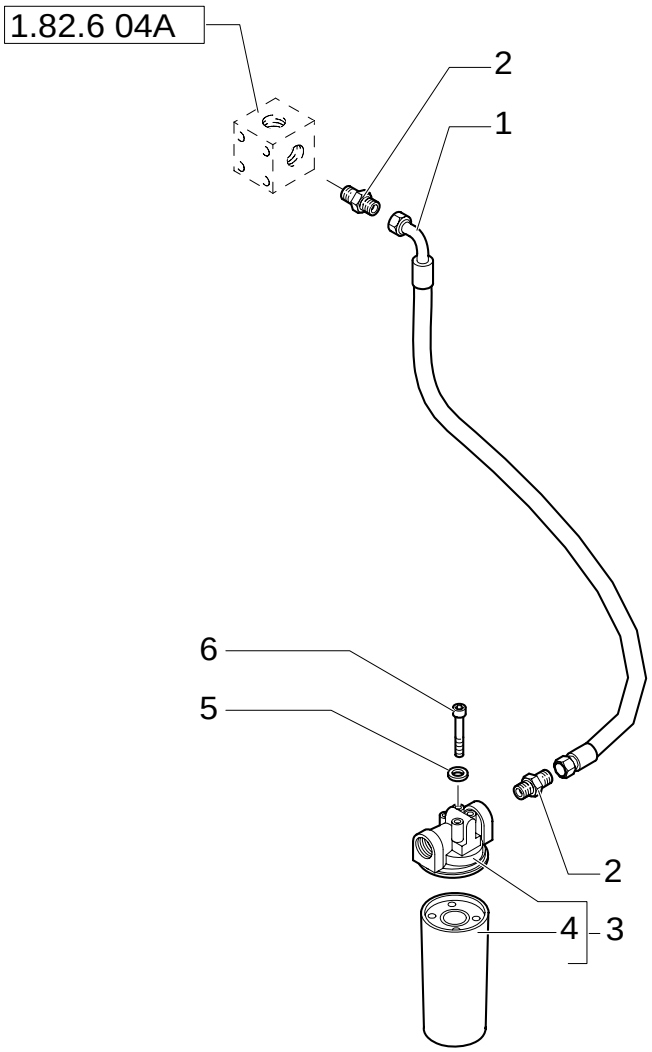

FILTER ASSEMBLY & HOSE TO RETURN MANIFOLD (CENTER PIVOT)

REF	FN	PART NUMBER	YR/SN	QTY	DESCRIPTION
1		87414983		1	HOSE, FLEXIBLE
2		85802960		2	CONNECTOR, HYD.
3		87315438		1	FILTER, HYDRAULIC OIL
4		86989733		1	FILTER, ELEMENT
5		11190579		4	WASHER, LOCK
6		11106221		4	SCREW

Pilot Control Version

1.82.6	07	p1	02/05

HYDRAULIC SYSTEM PIPING

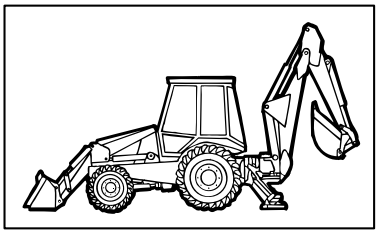

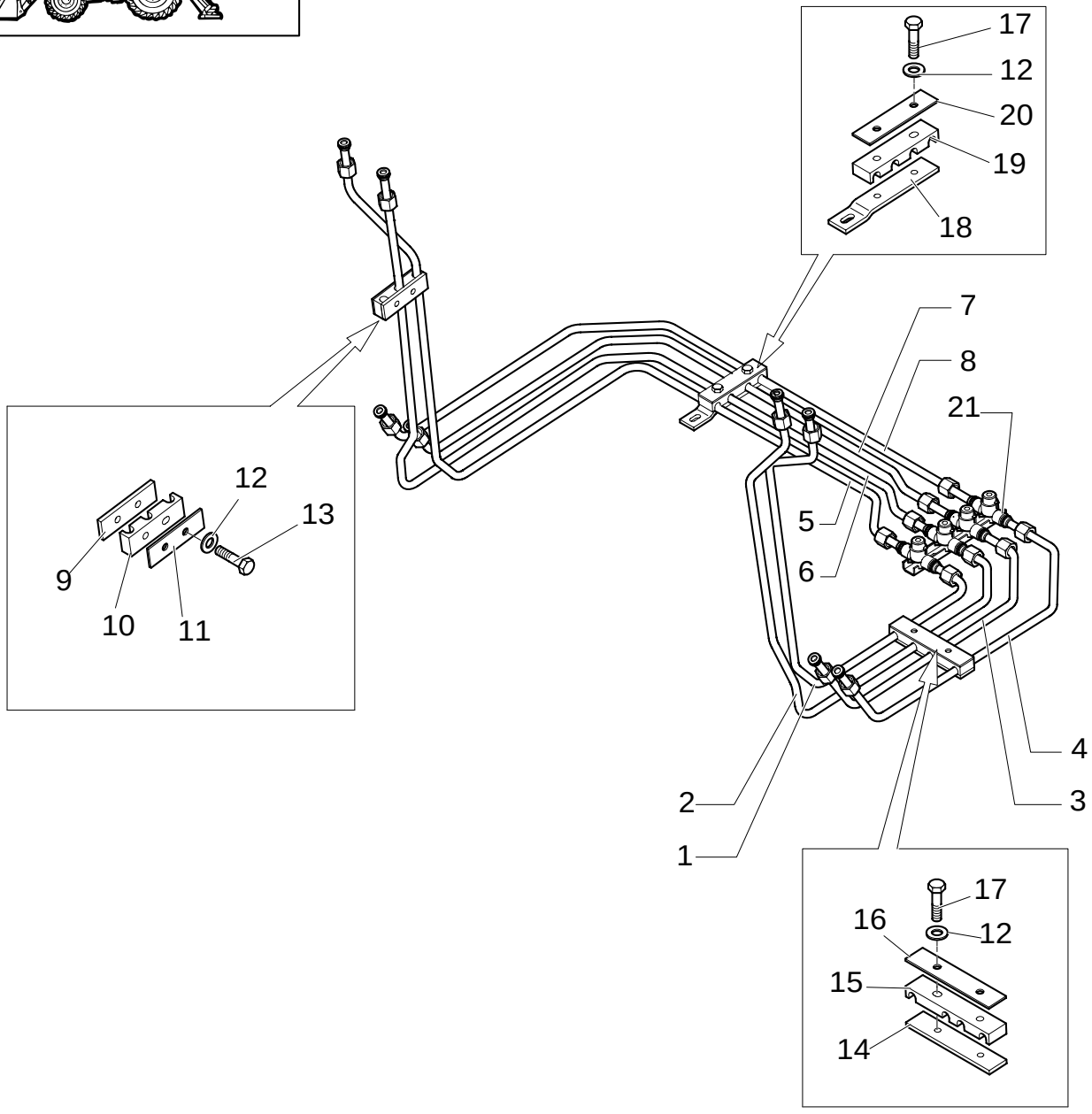

HYDRAULIC SYSTEM PIPING

REF	FN	PART NUMBER	YR/SN	QTY	DESCRIPTION
1		85805854		1	TUBE, RIGID LH
2		85805855		1	TUBE, RIGID LH
3		85805858		1	TUBE, RIGID LH
4		85805859		1	TUBE, RIGID LH
5		85805856		1	TUBE, RIGID RH
6		85805857		1	TUBE, RIGID RH
7		85805860		1	TUBE, RIGID RH
8		85805861		1	TUBE, RIGID RH
9		85805870		2	PLATE
10		85805872		2	PLATE, FIXING
11		85805869		2	HALF-DISC
12		11193979		10	WASHER, LOCK
13		16043621		4	SCREW
14		85805210		2	PLATE
15		85805211		2	CLAMP
16		85805209		2	PLATE
17		16043821		6	SCREW
18		85805206		1	PLATE
19		85805208		1	CLAMP
20		85805207		1	PLATE
21		85805203		1	CONNECTOR, HYD.

1.82.6	08A	p1	02/05

LOADER LIFT CYLINDER HOSES (CENTER PIVOT)

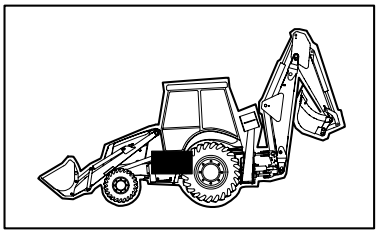

LOADER LIFT CYLINDER HOSES (CENTER PIVOT)

REF	FN	PART NUMBER	YR/SN	QTY	DESCRIPTION
1		85812186		1	HOSE, FLEXIBLE
2		85812185		1	HOSE, FLEXIBLE
3		87016S95		2	O-RING 90 Duro, .625" ID x .070" Thk
4	1	390828S36		2	CONNECTOR, HYD.
5		167269		2	O-RING 90 Duro, .755" ID x .097" Thk
6		85813363		2	HOSE, FLEXIBLE
7		14048211		2	NUT
8		16044021		2	SCREW Hex, M8 x 40, 8.8
9		85802891		1	SPACER
10		12647121		3	WASHER M8
11		85813380		2	HOSE, FLEXIBLE

(1) Includes 3, 5

1.82.6	08C	p1	02/05

LOADER LIFT CYLINDER HOSES (CENTER PIVOT)

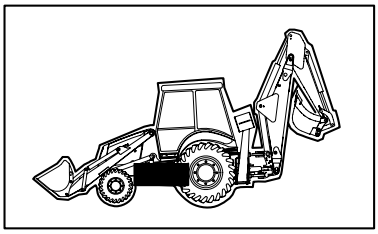

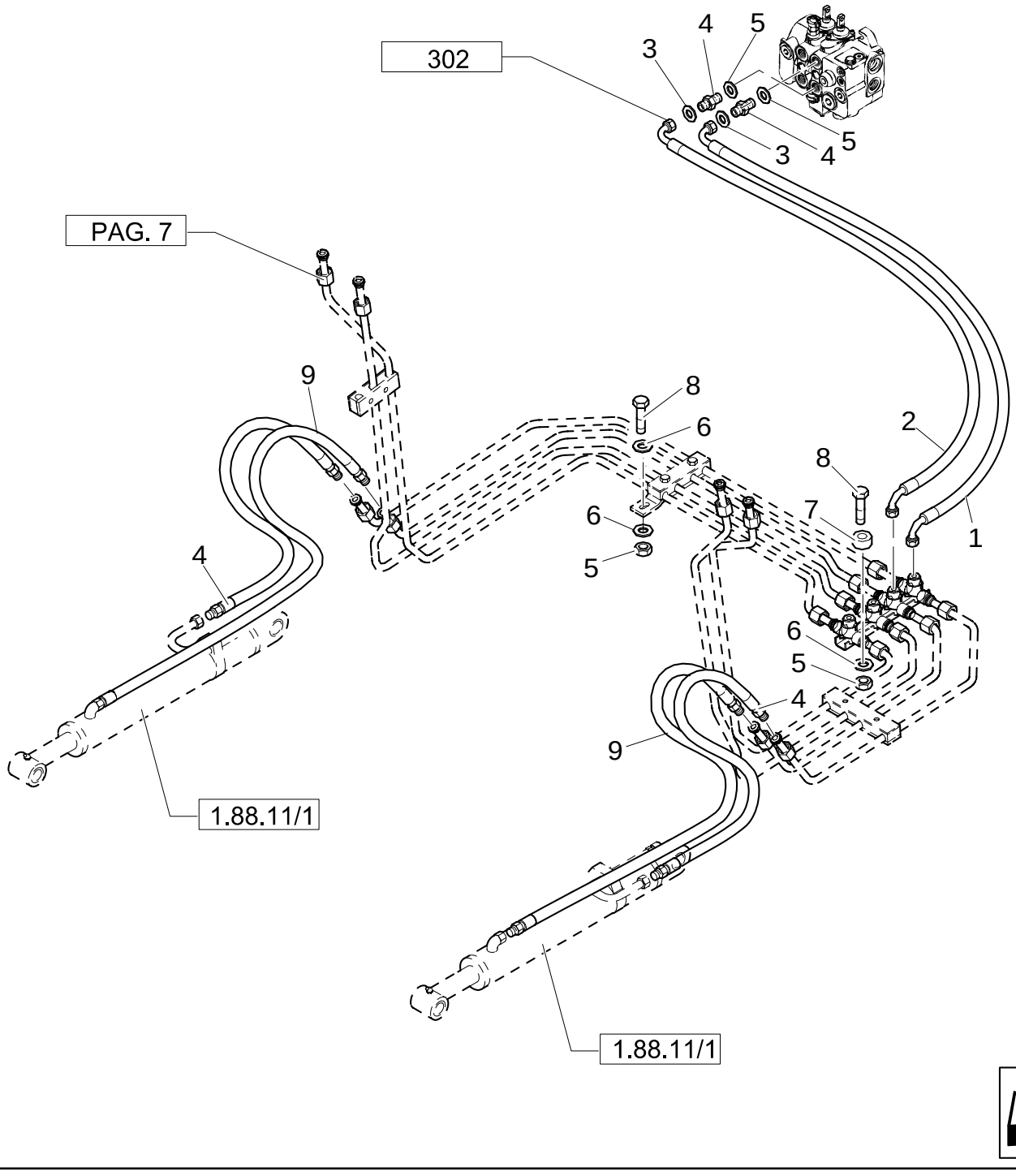

LOADER LIFT CYLINDER HOSES (CENTER PIVOT)

REF	FN	PART NUMBER	YR/SN	QTY	DESCRIPTION
1		85826089		1	HOSE, FLEXIBLE
2		85826086		1	HOSE, FLEXIBLE
3		87016S95		2	O-RING 90 Duro, .625" ID x .070" Thk
4	1	390828S36		2	CONNECTOR, HYD.
5		167269		2	O-RING 90 Duro, .755" ID x .097" Thk
6		85813363		2	HOSE, FLEXIBLE
7		14048211		2	NUT
8		16044021		2	SCREW Hex, M8 x 40, 8.8
9		85802891		1	SPACER
10		12647121		3	WASHER M8
11		85813380		2	HOSE, FLEXIBLE

(1) Includes 3, 5

Pilot Control Version

1.82.6	09A	p1	02/05

LOADER BUCKET CYLINDER HOSES (CENTER PIVOT)

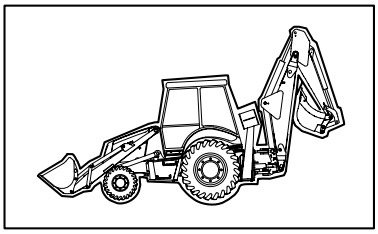

LOADER BUCKET CYLINDER HOSES (CENTER PIVOT)

REF	FN	PART NUMBER	YR/SN	QTY	DESCRIPTION
1	1	390828S36		2	CONNECTOR, HYD.
2		167269		2	O-RING 90 Duro, .755" ID x .097" Thk
3		87016S95		2	O-RING 90 Duro, .625" ID x .070" Thk
4		85812185		1	HOSE, FLEXIBLE
5		85812186		1	HOSE, FLEXIBLE
6		85813362		2	HOSE, FLEXIBLE
7		11193979		2	WASHER, LOCK
8		16044021		2	SCREW Hex, M8 x 40, 8.8
9		85813379		2	HOSE, FLEXIBLE

(1) Includes 2, 3

Mechanical Version

1.82.6	09B	p1	02/05

LOADER BUCKET CYLINDER HOSES (CENTER PIVOT)

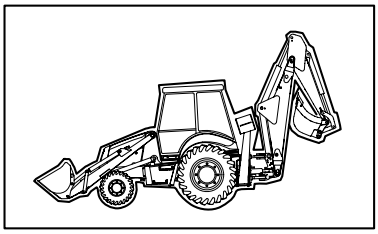

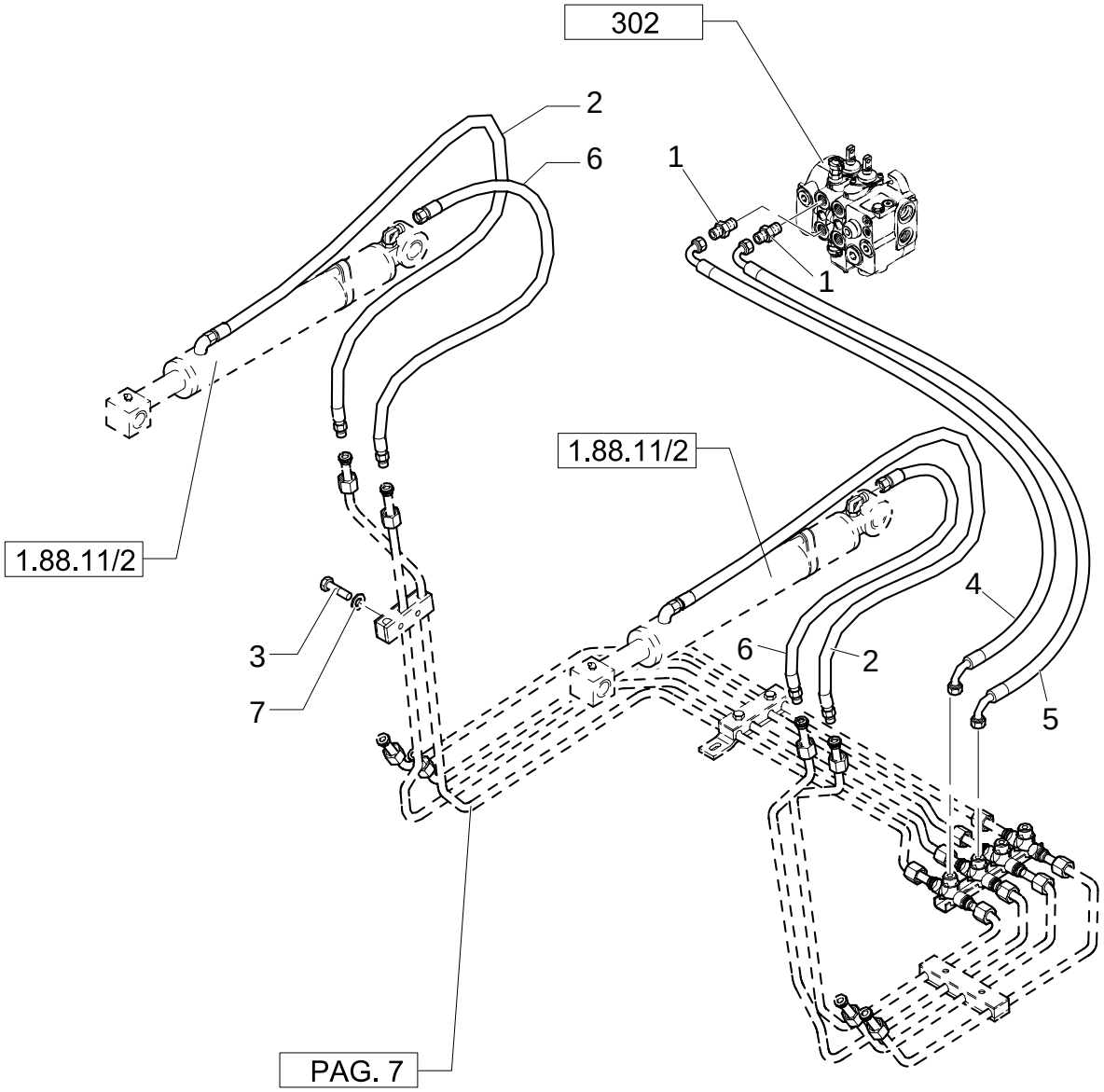

LOADER BUCKET CYLINDER HOSES (CENTER PIVOT)

REF	FN	PART NUMBER	YR/SN	QTY	DESCRIPTION
1	1	390938S36		2	CONNECTOR, HYD.
2		85813379		2	HOSE, FLEXIBLE
3		16044021		2	SCREW Hex, M8 x 40, 8.8
4		85826088		1	HOSE, FLEXIBLE
5		85826087		1	HOSE, FLEXIBLE
6		85813362		2	HOSE, FLEXIBLE
7		11193979		2	WASHER, LOCK

(1) Includes 2, 3

Pilot Control Version

1.82.6	10A	p1	12/05

HYDRAULIC SYSTEM PIPING NA (CENTER PIVOT)

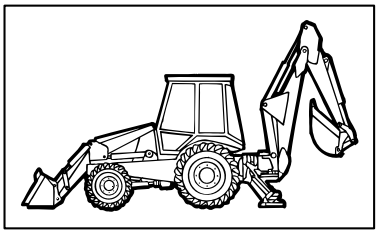

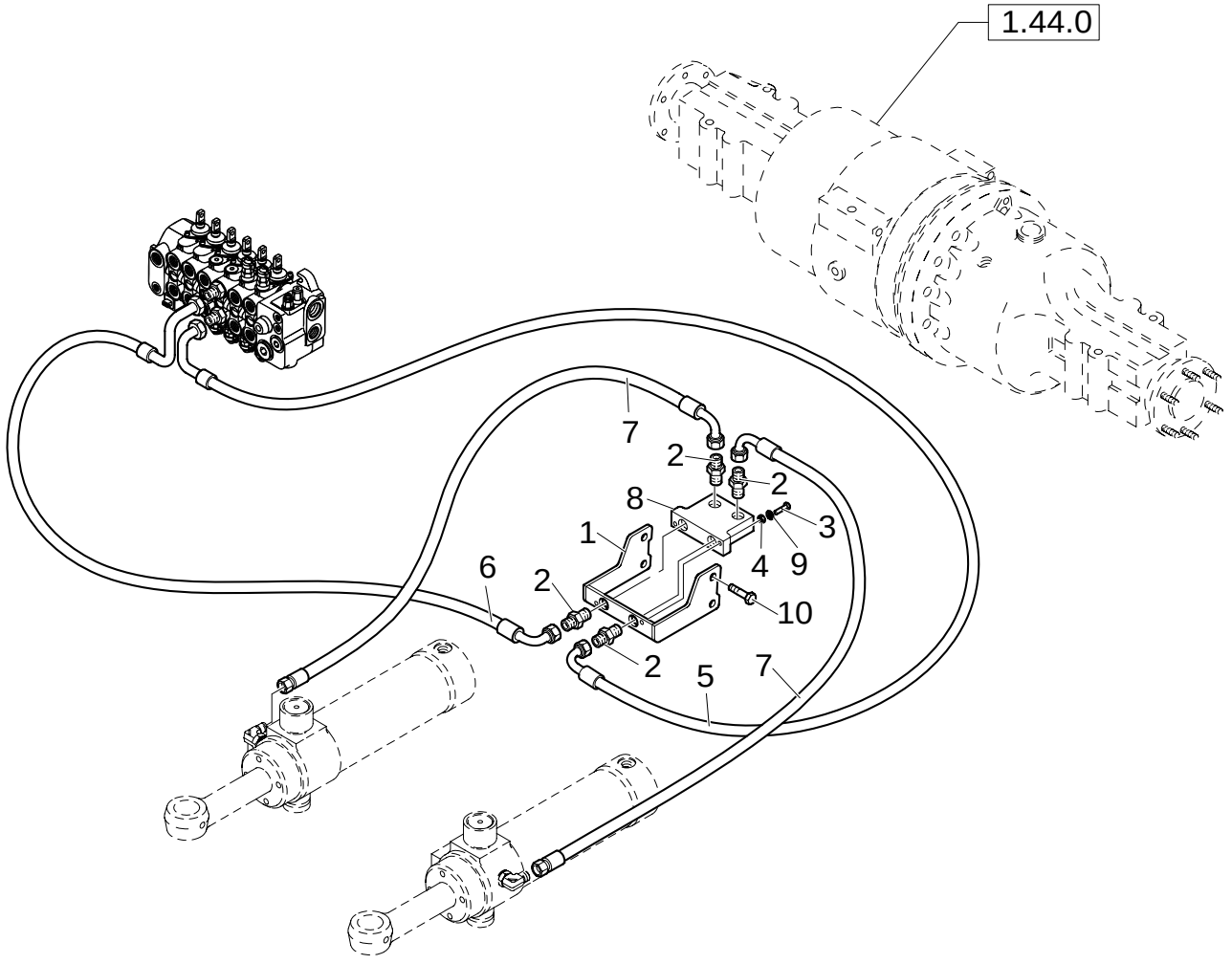

HYDRAULIC SYSTEM PIPING NA (CENTER PIVOT)

REF	FN	PART NUMBER	YR/SN	QTY	DESCRIPTION
1		87350477		1	BRACKET
2		201-112		4	CONNECTOR
3		614-10040		2	BOLT M10x40
4		829-1410		2	NUT
5		87356499		1	HOSE, FLEXIBLE
6		87356501		1	HOSE, FLEXIBLE
7		87361461		2	HOSE, FLEXIBLE
8		87449373		1	VALVE, DAMPING
9		895-11010		4	WASHER 11x21x2
10		413-1036		4	BOLT

Pilot Control Version

1.82.6	11A	p1	02/05

BACKHOE CONTROL VALVE HOSES (CENTER PIVOT)

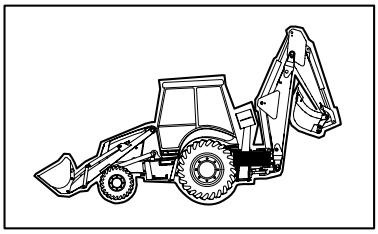

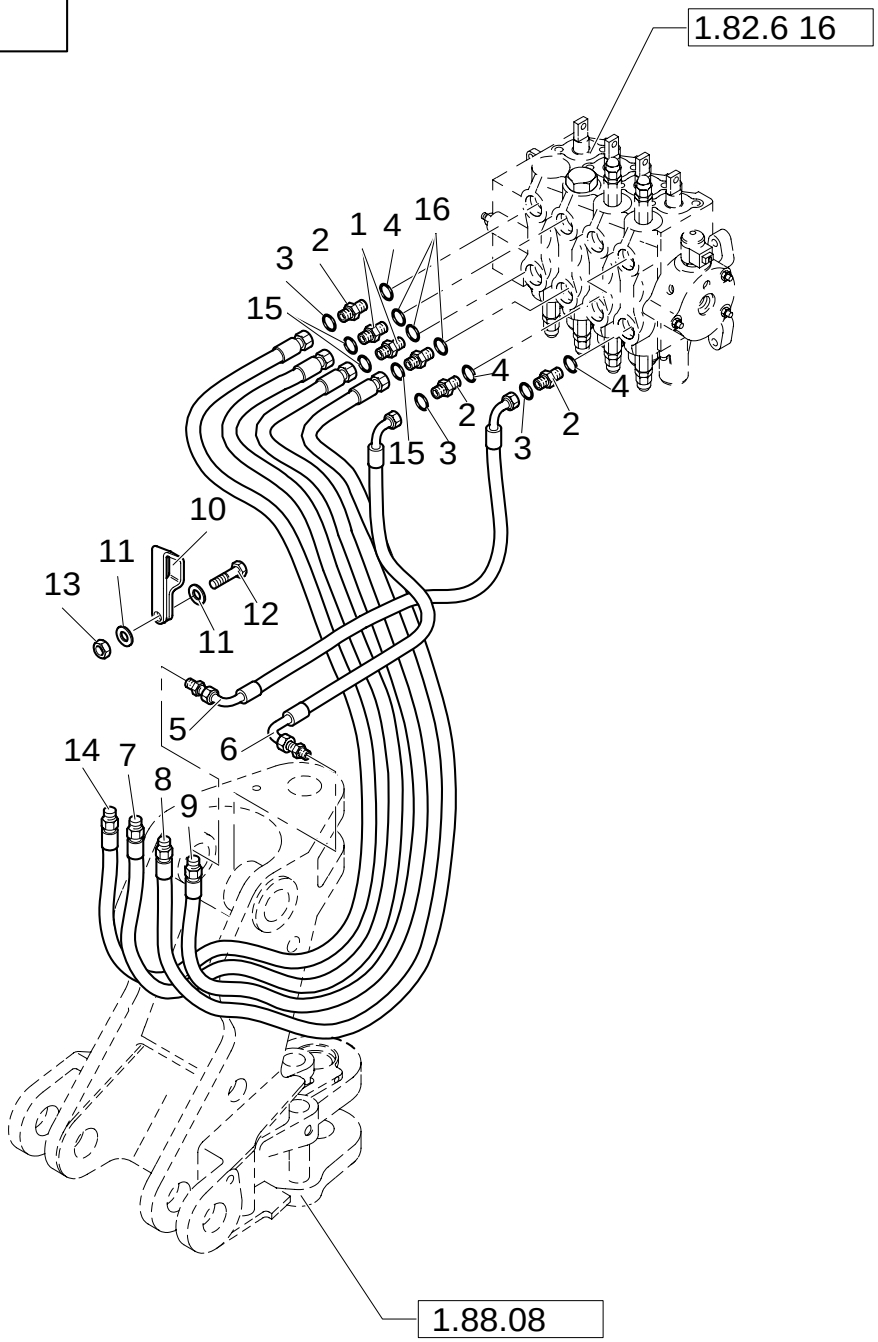

BACKHOE CONTROL VALVE HOSES (CENTER PIVOT)

REF	FN	PART NUMBER	YR/SN	QTY	DESCRIPTION
1		85802642		3	CONNECTOR, HYD. 1-3/16"-12 ORS x 7/8"-14 SAE O-Ring
2	1	390828S36		3	CONNECTOR, HYD.
3		87016S95		3	O-RING 90 Duro, .625" ID x .070" Thk
4		167269		3	O-RING 90 Duro, .755" ID x .097" Thk
5		85812151		1	HOSE, FLEXIBLE
6		85812143		1	HOSE, FLEXIBLE
7		85812176		1	HOSE, FLEXIBLE
8		85812153		1	HOSE, FLEXIBLE
9		85812177		1	HOSE, FLEXIBLE
10		85804947		1	COLLAR, RETAINER
11		10519411		2	WASHER
12		10902221		1	SCREW
13		12574211		1	NUT
14		85812152		1	HOSE, FLEXIBLE
15		9991976		3	O-RING 90 Duro, .739" ID x .070" Thk
16		167269		3	O-RING 90 Duro, .755" ID x .097" Thk

(1) Includes 3, 4

Pilot Control Version

1.82.6	11B	p1	02/05

HYDRAULIC SYSTEM PIPING(CENTER PIVOT)

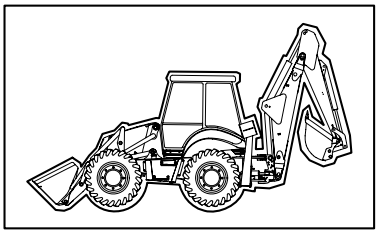

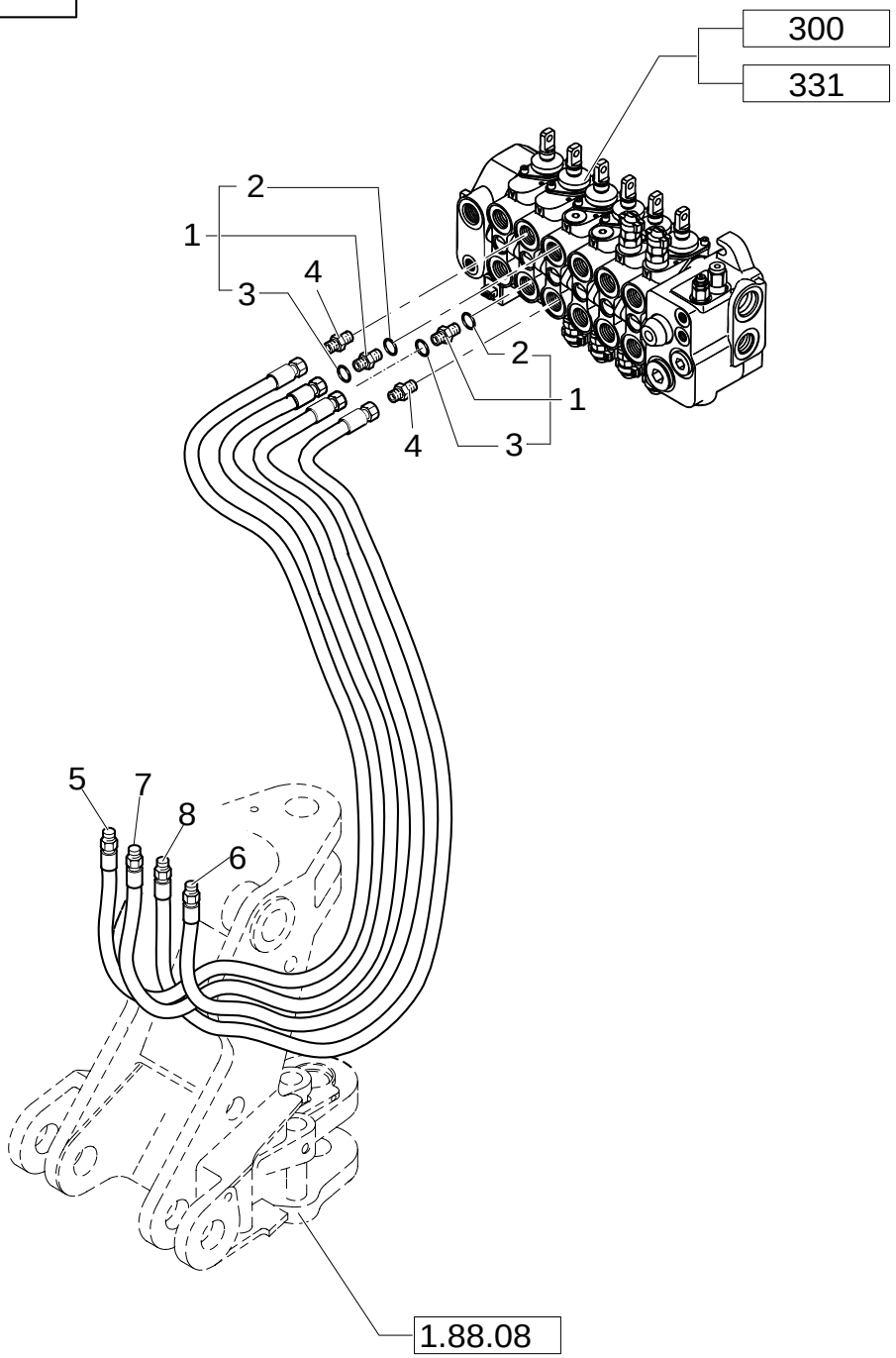

HYDRAULIC SYSTEM PIPING(CENTER PIVOT)

REF	FN	PART NUMBER	YR/SN	QTY	DESCRIPTION
1	1	390937S36		2	CONNECTOR, HYD. 1-3/16"-12 ORS x 1-1/16"-12 SAE O-Ring
2		167266		2	O-RING 90 Duro, .924" ID x .116" Thk
3		9991976		2	O-RING 90 Duro, .739" ID x .070" Thk
4		390938S36		2	CONNECTOR, HYD.
5		85812176		1	HOSE, FLEXIBLE
6		85812152		1	HOSE, FLEXIBLE
7		85812177		1	HOSE, FLEXIBLE
8	2	85812155		1	HOSE, FLEXIBLE
8	3	85826222		1	HOSE, FLEXIBLE

(1) Includes 2, 3
(2) Mechanical Control Version
(3) Pilot Control Version

1.82.6	12B	p1	02/05

HYDRAULIC SYSTEM PIPING(CENTER PIVOT)

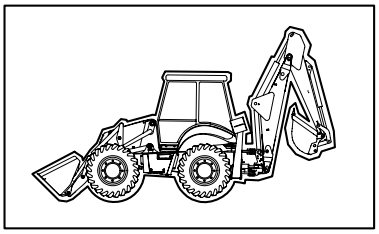

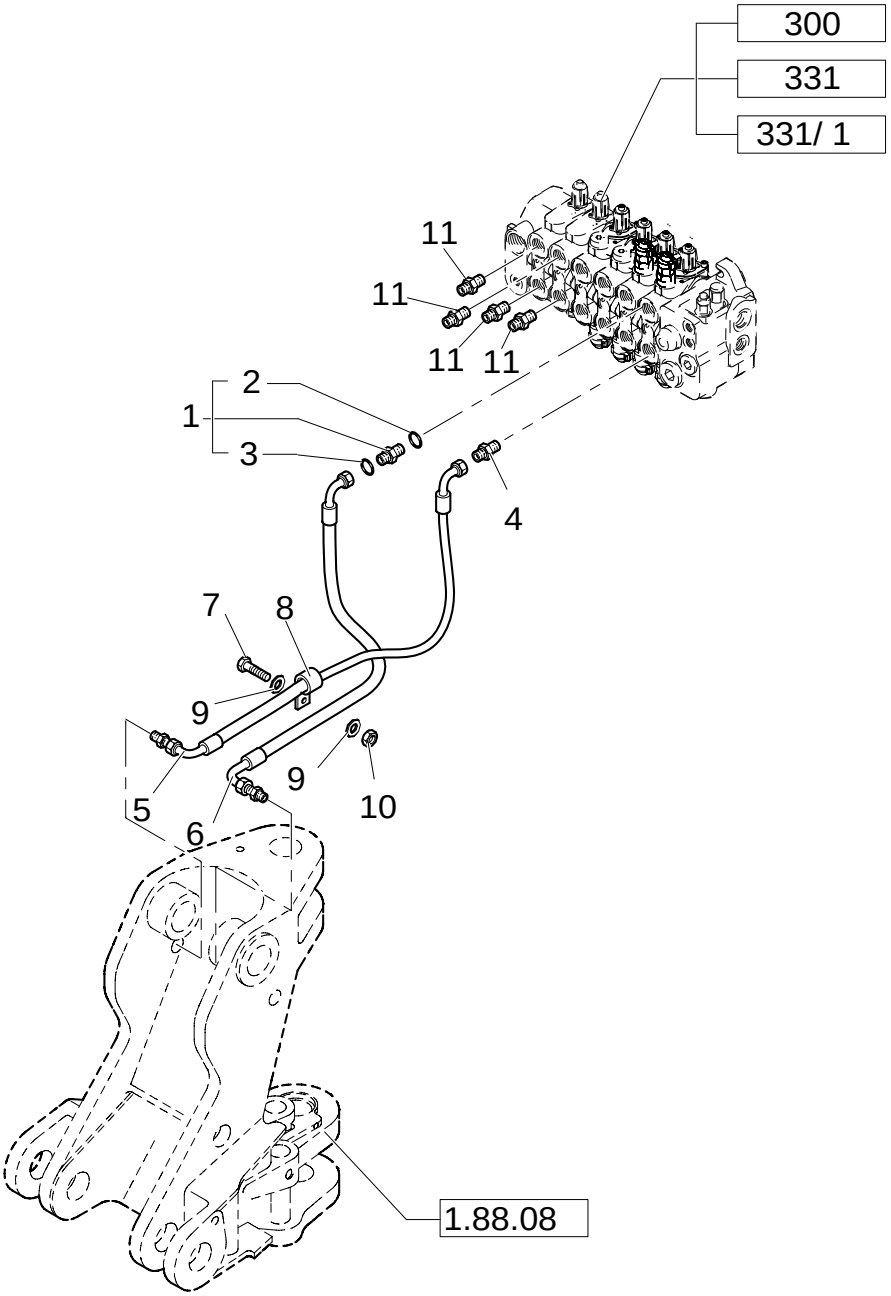

HYDRAULIC SYSTEM PIPING(CENTER PIVOT)

REF	FN	PART NUMBER	YR/SN	QTY	DESCRIPTION
1	1	390937S36		1	CONNECTOR, HYD. 1-3/16"-12 ORS x 1-1/16"-12 SAE O-Ring
2		167266		1	O-RING 90 Duro, .924" ID x .116" Thk
3		9991976		1	O-RING 90 Duro, .739" ID x .070" Thk
4		390938S36		1	CONNECTOR, HYD.
5		85812143		1	HOSE, FLEXIBLE
6		85812151		1	HOSE, FLEXIBLE
7		10902221		1	SCREW
8		85804947		1	COLLAR, RETAINER
9		10519411		2	WASHER
10		12574211		1	NUT
11	2	85805258		4	CONNECTOR, HYD.

(1) Includes 2, 3
(2) Pilot Control Version

1.82.6	13A	p1	11/05

ROTATION PLATE HOSE CLAMPS (CENTER PIVOT)

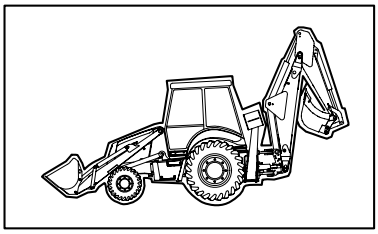

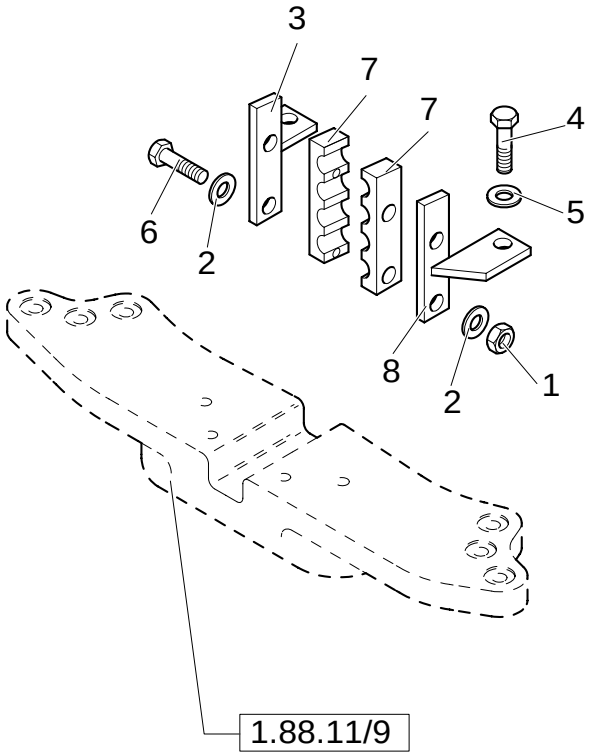

ROTATION PLATE HOSE CLAMPS (CENTER PIVOT)

REF	FN	PART NUMBER	YR/SN	QTY	DESCRIPTION
1		14048221		1	NUT
2		12647121		3	WASHER M8
3		85804573		1	SUPPORT
5		11190574		2	WASHER, LOCK
6		16044421		2	SCREW
7		85802731		2	BRACKET
8		85804574		1	SUPPORT
4		11106221		2	SCREW

1.82.6	16	p1	02/05

BACKHOE CONTROL VALVE(CENTER PIVOT)

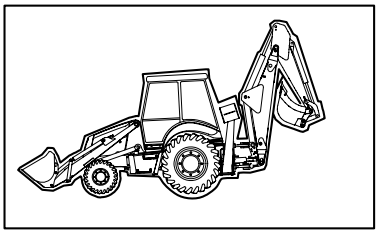

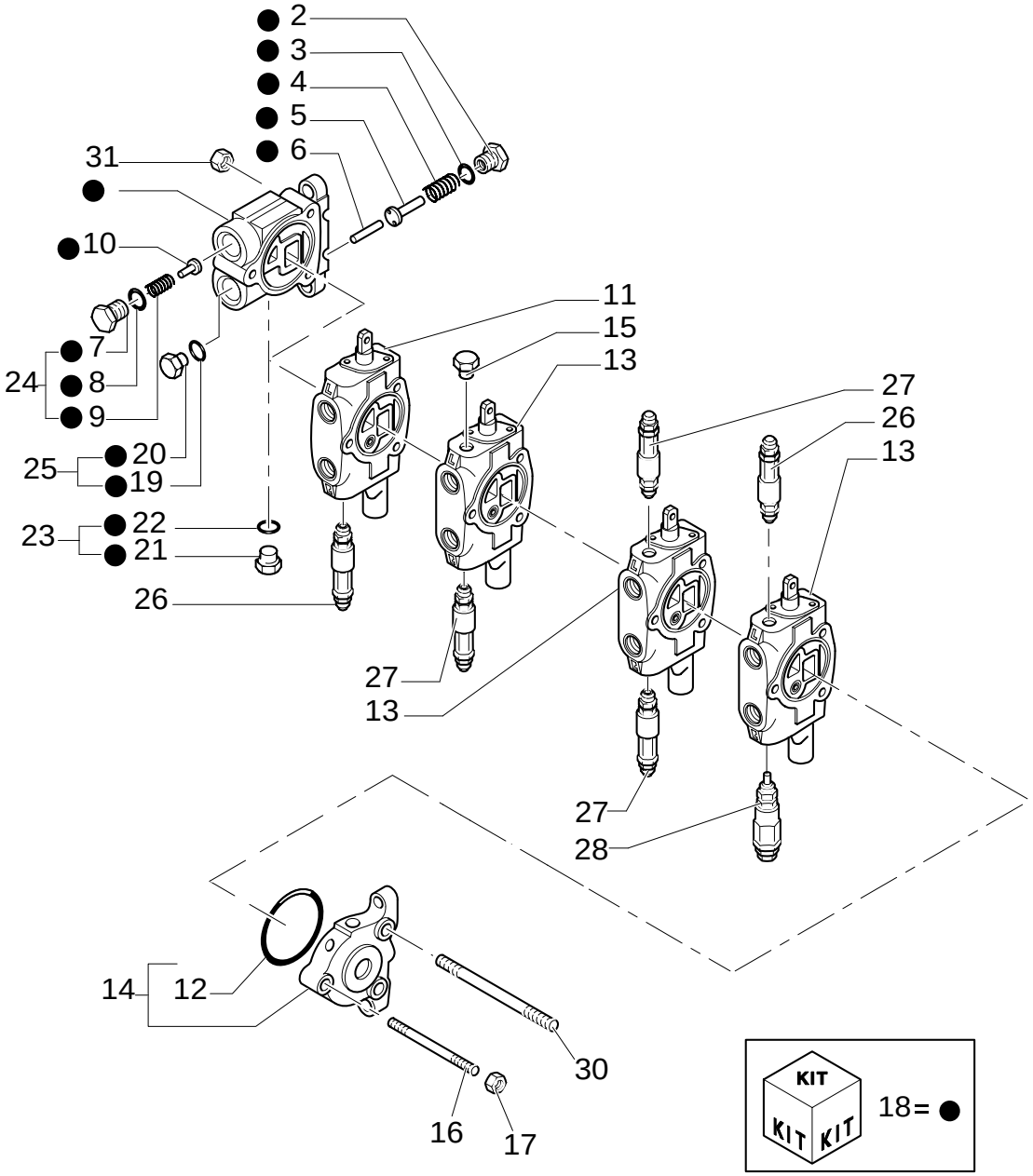

BACKHOE CONTROL VALVE(CENTER PIVOT)

REF	FN	PART NUMBER	YR/SN	QTY	DESCRIPTION
1		9968466		1	O-RING
2		9968501		1	PLUG
3		9968502		1	O-RING
4		9968500		1	SPRING
5		9968503		1	PLUNGER
6		9968497		1	PIN
7		9968498		1	PLUG
8		9968468		1	O-RING
9		9968448		1	SPRING
10		9968447		1	PLUNGER
11	1	85827102		1	ELEMENT, JOINING
12		9968495		1	O-RING
13	2	85827101		3	ELEMENT, JOINING
14		9968494		1	PANEL, SIDE
15		85807832		1	PLUG
16		9968506		1	STUD
17		9968507		1	NUT
18		85807827		1	VALVE, CONTROL
19		85807830		1	O-RING
20		85807831		1	PLUG
21		85807828		1	PLUG
22		85807829		1	O-RING
23		9968523		1	PLUG
24		85807834		1	PLUG
25		85807833		1	PLUG
26		9968595		2	VALVE, HYDRAULIC
27		9968596		3	VALVE, HYDRAULIC
28		9968508		1	VALVE, HYDRAULIC
30		9968505		1	STUD
31		9968504		1	NUT

(1) See Page 1.82.6 17
(2) See Page 1.82.6 18

Mechanical Version

1.82.6	17	p1	02/05

DIPPER VALVE SECTION (CENTER PIVOT)

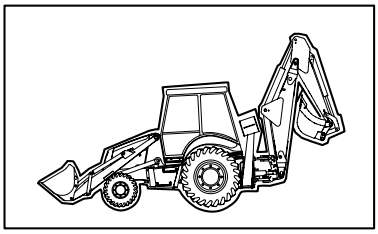

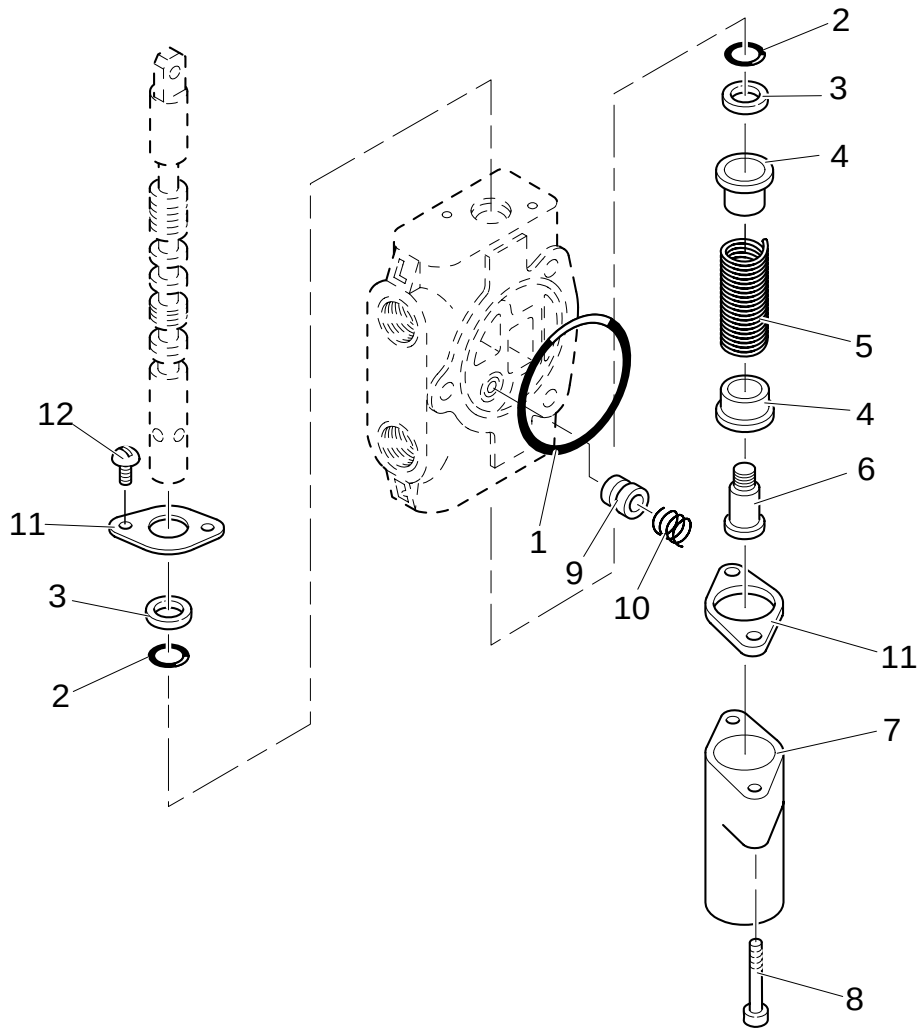

DIPPER VALVE SECTION (CENTER PIVOT)

REF	FN	PART NUMBER	YR/SN	QTY	DESCRIPTION
1		9968495		1	O-RING
2		9968489		1	GASKET
3		9968490		1	RING, OIL SCRAPER
4		9968512		1	SEAT/SLOT
5		9968514		1	SPRING
6		9968515		1	SCREW
7		9968513		1	COVER
8		9968516		1	SCREW
9		9968510		2	PLUNGER
10		9968511		1	SPRING
11		9968458		2	PLATE, COVER
12		9968460		1	SCREW

Mechanical Version

1.82.6	18	p1	02/05

BUCKET, SWING, & BOOM VALVE SECTION (CENTER PIVOT)

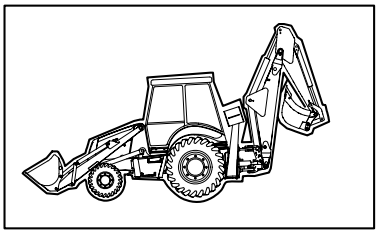

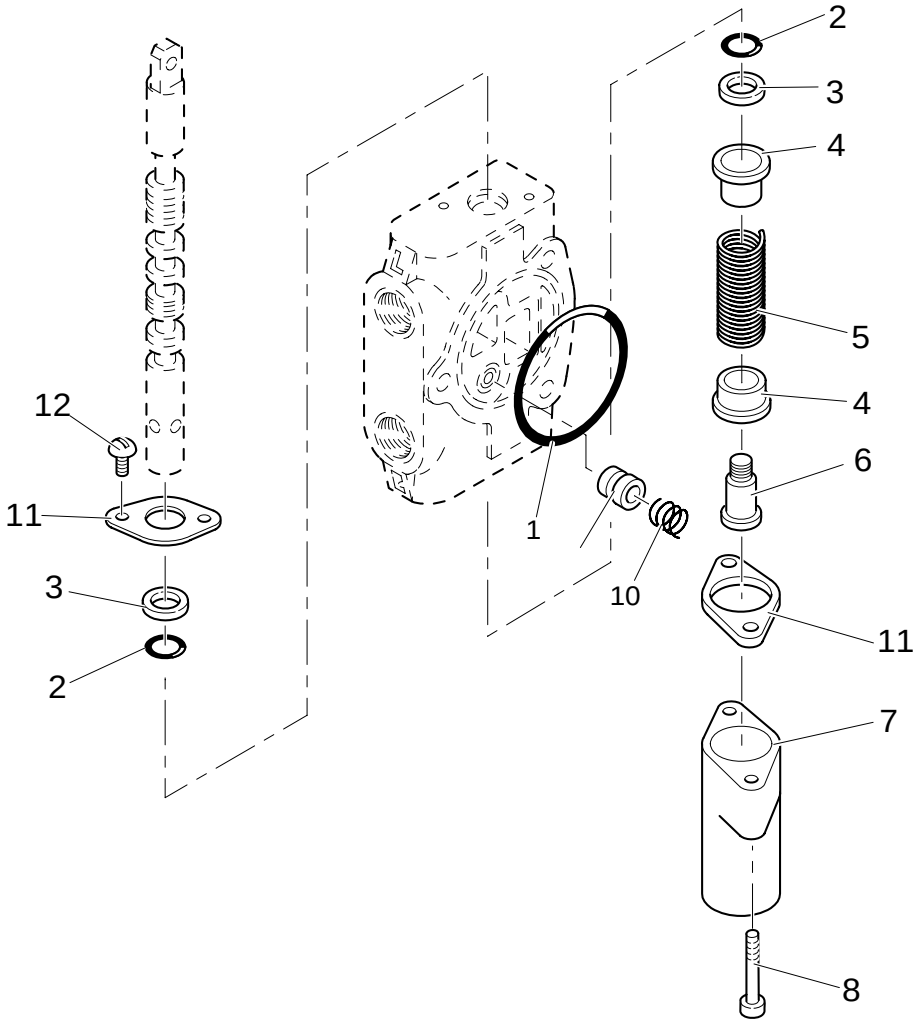

BUCKET, SWING, & BOOM VALVE SECTION (CENTER PIVOT)

REF	FN	PART NUMBER	YR/SN	QTY	DESCRIPTION
1		9968495		1	O-RING
2		9968489		1	GASKET
3		9968490		1	RING, OIL SCRAPER
4		9968512		2	SEAT/SLOT
5		9968514		1	SPRING
6		9968515		1	SCREW
7		9968513		1	COVER
8		9968516		1	SCREW
9		9968510		1	PLUNGER
10		9968511		1	SPRING
11		9968458		2	PLATE, COVER
12		9968460		1	SCREW

Mechanical Version

302	01	p1	06/05

TWO-SECTION CONTROL VALVE FOR LOADER

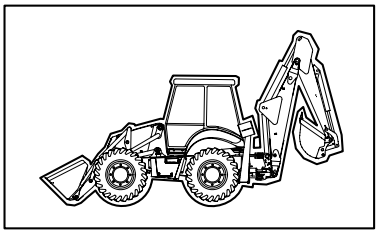

KIT KIT KIT 17= ●

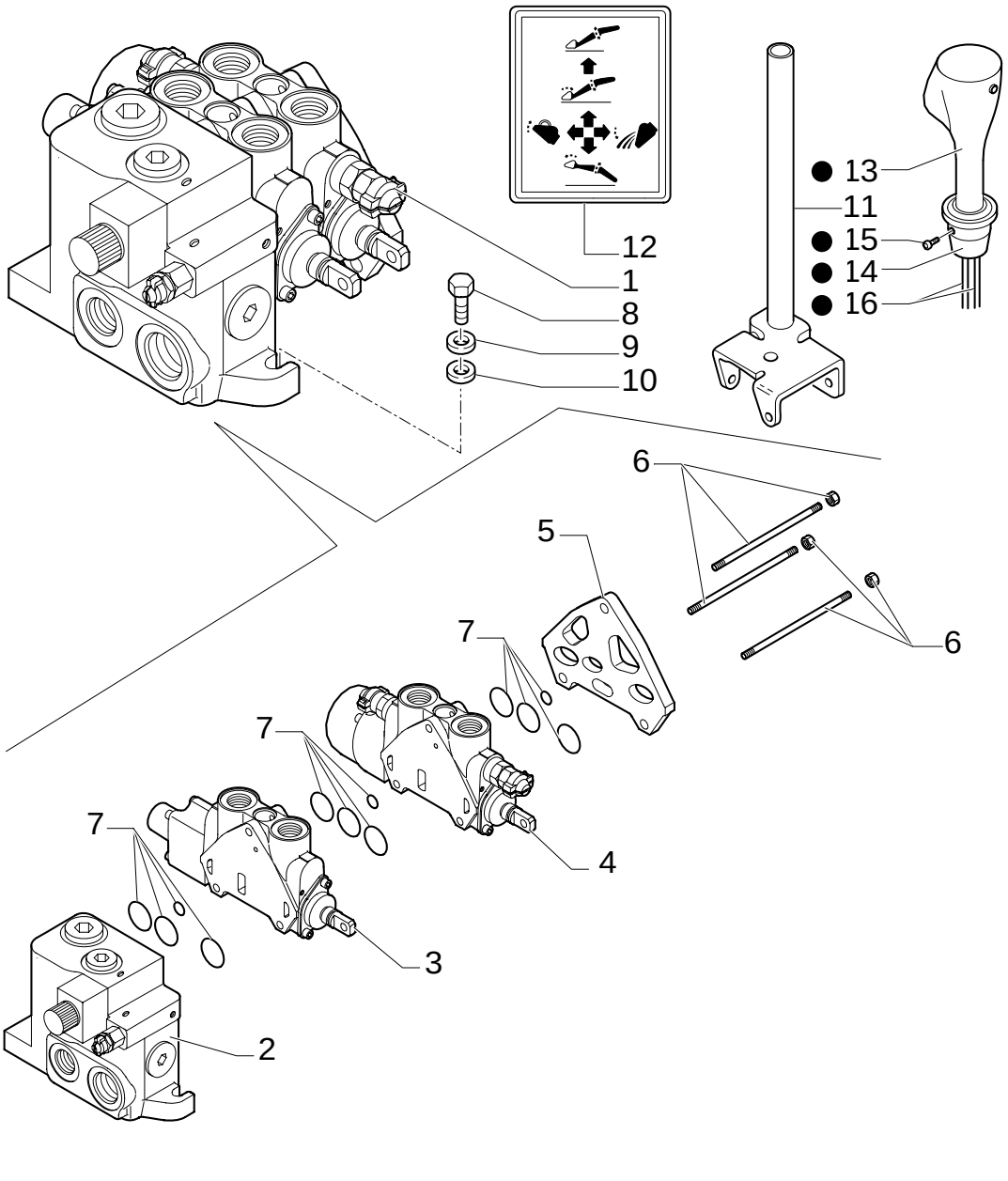

TWO-SECTION CONTROL VALVE FOR LOADER

REF	FN	PART NUMBER	YR/SN	QTY	DESCRIPTION
1		85825188		1	VALVE, CONTROL ASSY
2	1	85825468		1	SECTOR, TOOTHED ASSY
3	2, 3	85813484		1	SECTOR, TOOTHED
4	4, 5	85825469		1	SECTOR, TOOTHED
5		85825470		1	SECTOR, TOOTHED ASSY
6		85825475		1	TIE-ROD, THREADED TIE RODS
7		85825473		3	KIT Seal
8		11234721		3	SCREW M10x45
9		13578621		3	WASHER 10x30x2
10		11190679		3	WASHER, LOCK
11	6	85805813		1	LEVER
11	7	87304793		1	LEVER
12		85804346		1	DECAL
13	6	87304800		1	CONTROL UNIT
13	7	87304799		1	CONTROL UNIT
13	8	87311302		1	HANDLE GRIP
13	9	87311306		1	HANDLE GRIP
14		87311303		1	HUB
15		13789621		2	PLUG M8x10
16		87311836		1	CABLE, ELECTRIC
16		87311838		1	CABLE, ELECTRIC
17		87304799		1	CONTROL UNIT
17	8	87311102		1	MANIPULATOR
17	9	87311103		1	MANIPULATOR

(1) See Page 332 02
(2) LOADER
(3) See Page 332 03
(4) Bucket
(5) See Page 332 04
(6) Only for LB90.B - LB95.B - LB110.B
(7) Only for LB110.B - LB115.B
(8) Only for POWER SHIFT
(9) Only for POWER SHUTTLE

302	02	p1	02/05

TWO-SECTION CONTROL VALVE FOR LOADER

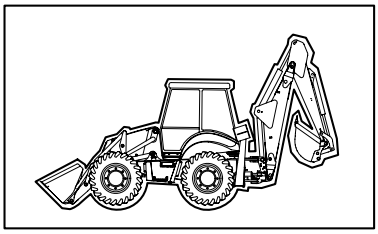

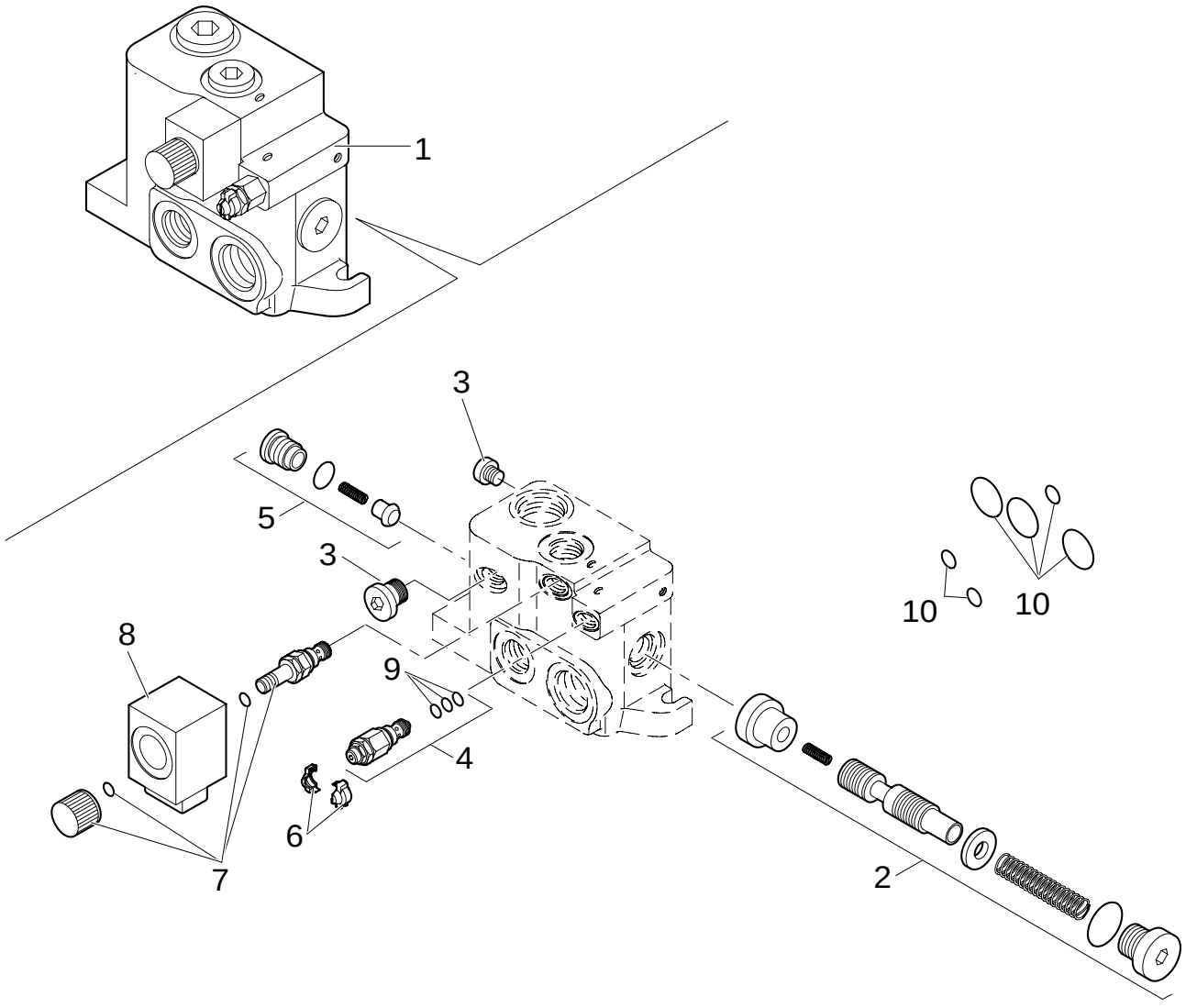

TWO-SECTION CONTROL VALVE FOR LOADER

REF	FN	PART NUMBER	YR/SN	QTY	DESCRIPTION
1		85825468		1	SECTOR, TOOTHED ASSY
2		85825472		1	KIT Spool Assy
3		85811923		2	PLUG
4		85811946		1	VALVE, HYDRAULIC
5		85811938		1	KIT Valve
6		85811934		1	KIT Cover
7		85811954		1	KIT 1" 1/16-12 UNF 2A
8		85811953		1	COIL 9/16-18 UNF
9		85821236		1	KIT Seal, LS Pressure Relief
10		85819148		1	KIT Seal

302	03	p1	02/05

TWO-SECTION CONTROL VALVE FOR LOADER

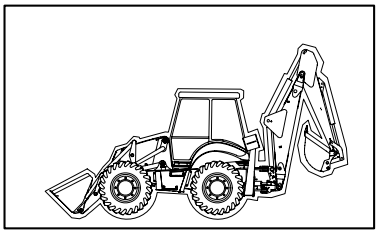

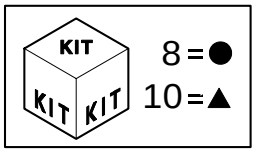

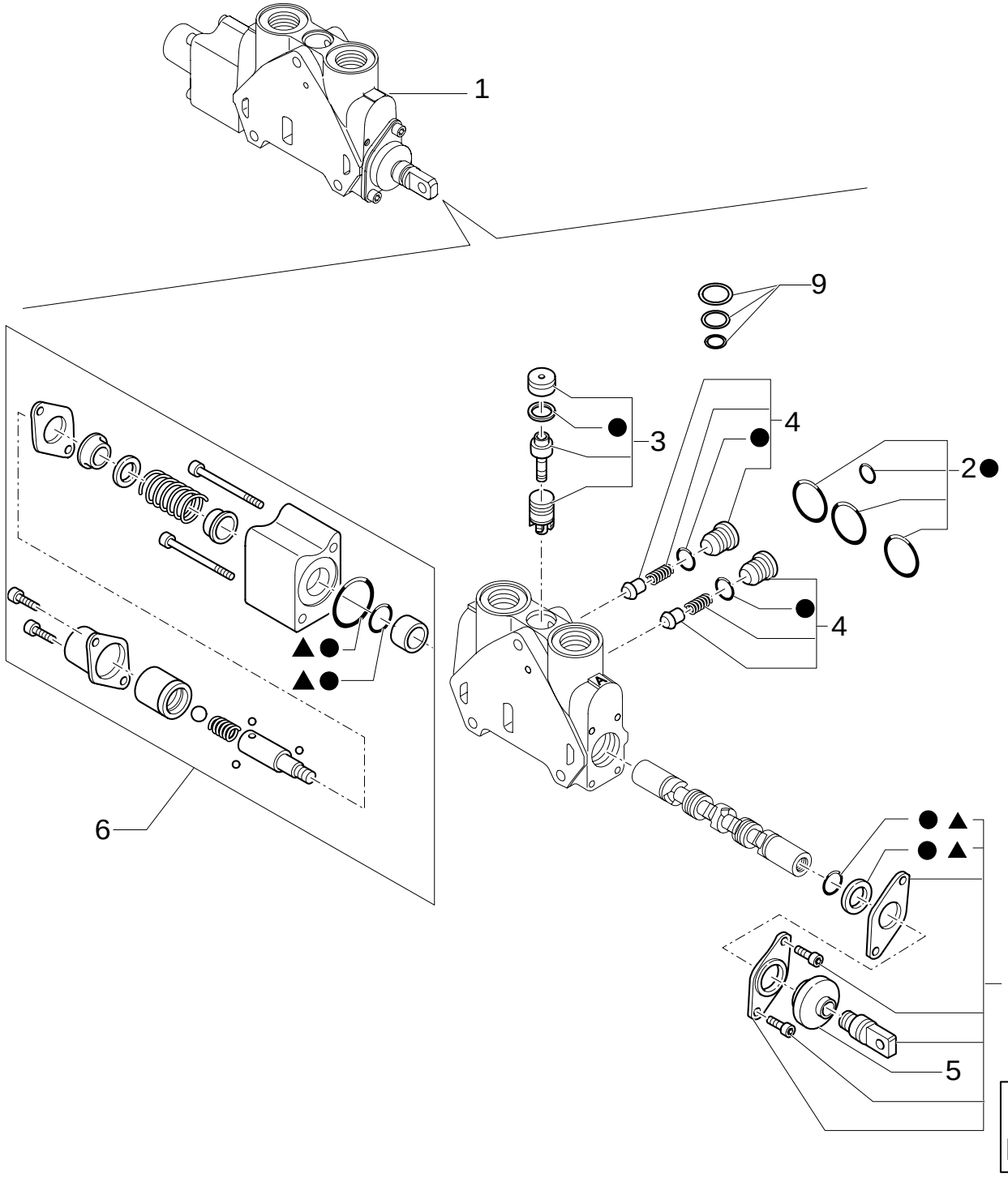

TWO-SECTION CONTROL VALVE FOR LOADER

REF	FN	PART NUMBER	YR/SN	QTY	DESCRIPTION
1		85813484		1	SECTOR, TOOTHED ASSY
2		85819148		1	KIT Seals
3		85819378		1	KIT Valve
4		85811938		2	KIT Valve
5		85820130		1	BELLOWS
6		85824280		1	KIT Cover Assy
7		85824278		1	KIT Working Assy
8		85824281		1	KIT Seals
9		85819040		1	KIT Compensator Seal
10		85824283		1	KIT Spool Seal

302	04	p1	02/05

TWO-SECTION CONTROL VALVE FOR LOADER

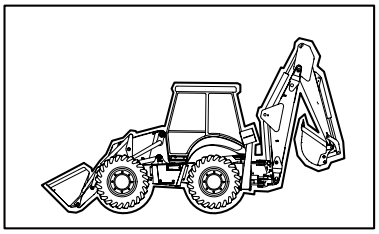

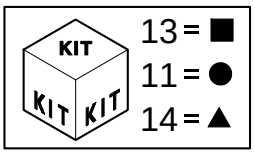

TWO-SECTION CONTROL VALVE FOR LOADER

REF	FN	PART NUMBER	YR/SN	QTY	DESCRIPTION
1		85825469		1	SECTOR, TOOTHED ASSY
2		85819148		1	KIT Seals
3		85819378		1	KIT Valve
4		85811938		2	KIT Valve
5		85820130		1	BELLOWS
6		85825471		1	KIT Cover Assy
7		85824278		1	KIT Working Assy
8	1, 2	85812116		1	VALVE, HYDRAULIC
9		85811933		2	KIT Valve Seals
10		85811934		2	KIT Cover
11		85824281		1	KIT Seals
12	1, 3	85812113		1	VALVE, HYDRAULIC
13		85819040		1	KIT Compensator Seal
14		85824283		1	KIT Spool Seal

(1) Includes 9, 10
(2) 230 BAR
(3) 160 BAR

331	01	p1	11/05

BACKHOE CONTROL VALVE, 6 SECTIONS (CENTER PIVOT) NORTH AMERICA

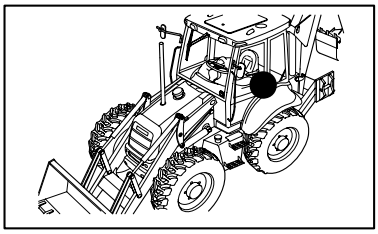

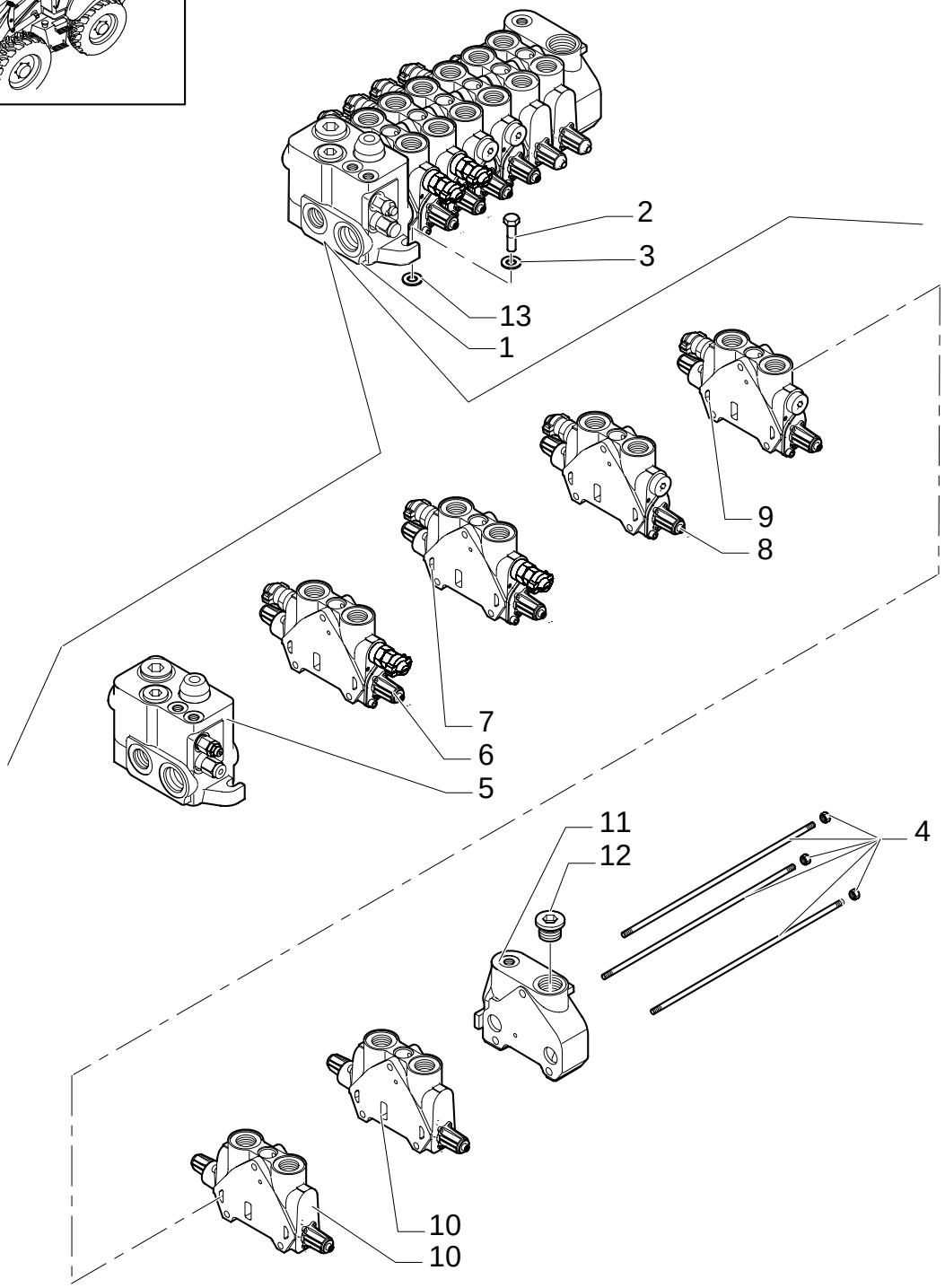

BACKHOE CONTROL VALVE, 6 SECTIONS (CENTER PIVOT) NORTH AMERICA

REF	FN	PART NUMBER	YR/SN	QTY	DESCRIPTION
1		87302745		1	VALVE, CONTROL
2		614-10045		3	SCREW M10x45
3		11190679		5	WASHER, LOCK M10
4		85811958		1	KIT
5	1	87308747		1	VALVE SECTION, HYD
6	2, 3	85826901		1	SECTOR, TOOTHED
7	4, 5	85826339		1	VALVE SECTION, HYD
8	6, 7	85826903		1	SECTOR, TOOTHED
9	8, 9	85826902		1	SECTOR, TOOTHED
10	10, 11	85826340		2	VALVE SECTION, HYD
11	12	85826250		1	SECTOR, TOOTHED
12		85811921		1	PLUG 1-1/16"-12 UNF 2A
13		13578621		3	WASHER

(1) See Page 331/1 02
(2) Boom Cylinder
(3) See Page 333/1 03
(4) Swing Cylinder
(5) See Page 333/1 04
(6) Bucket Cylinder
(7) See Page 333/1 05
(8) Arm Cylinder
(9) See Page 333/1 06
(10) Stabilizer Cylinder
(11) See Page 333/1 07
(12) Includes 12

Pilot Control Version

331/ A	01	p1	02/05

6 SECTION PILOT CONTROL VALVE SUPPORT, COMPLETE

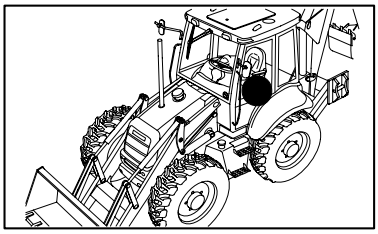

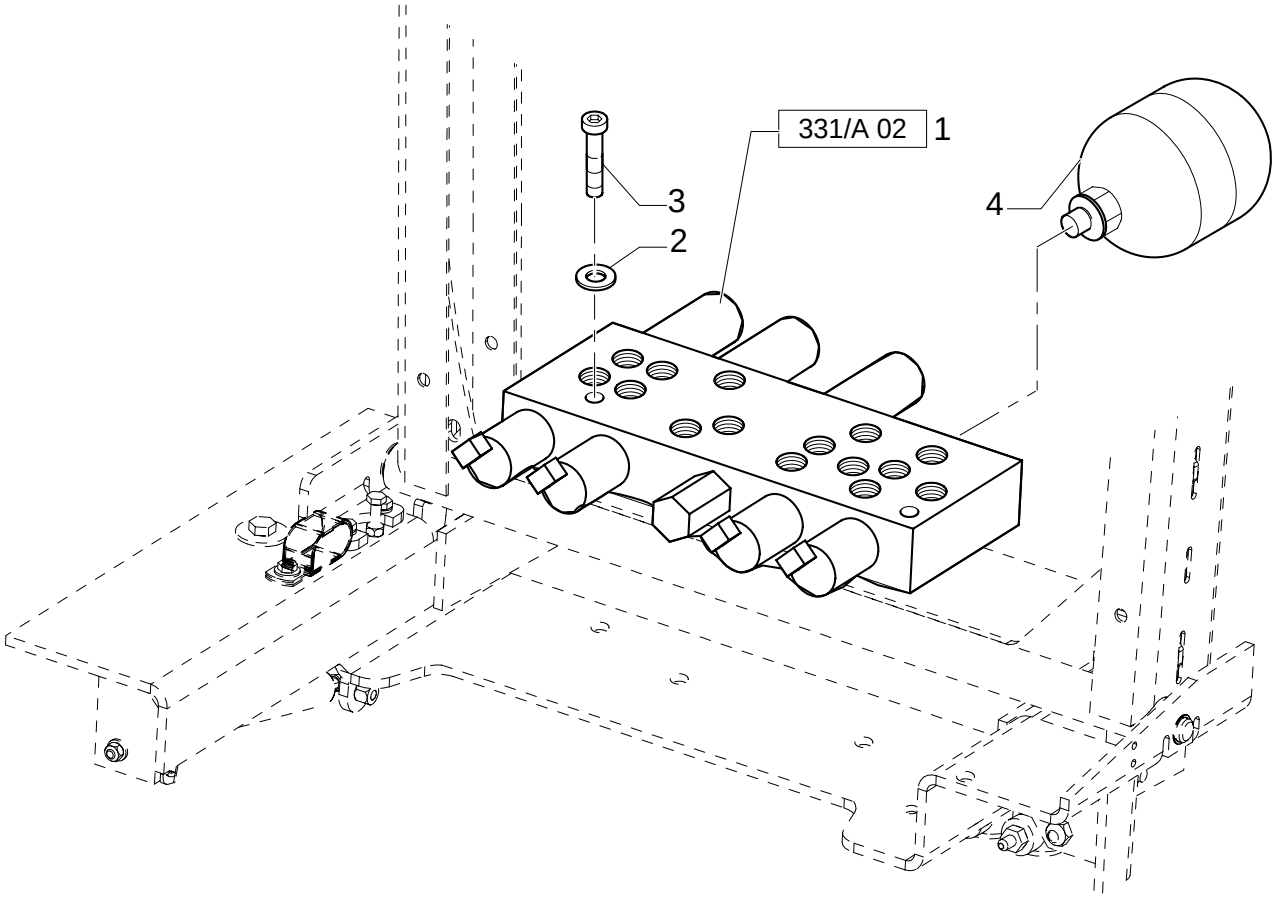

6 SECTION PILOT CONTROL VALVE SUPPORT, COMPLETE

REF	FN	PART NUMBER	YR/SN	QTY	DESCRIPTION
1		85827472		1	VALVE, HYDRAULIC
2		47048961		2	WASHER
3		47049078		2	SCREW M6x60
4		87425225		1	ACCUMULATOR

Pilot Control Version

331/ A	02	p1	02/05

2 SECTION PILOT CONTROL VALVE SUPPORT, COMPLETE

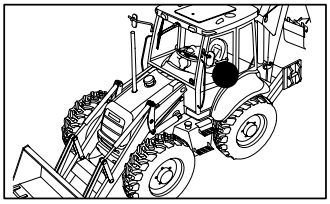

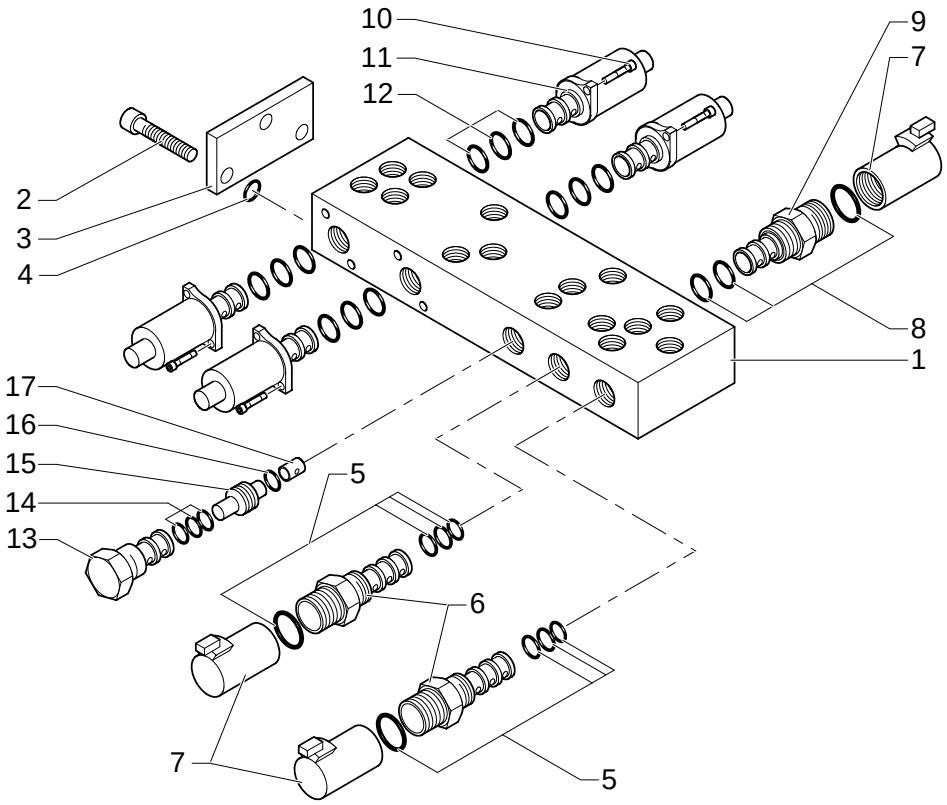

2 SECTION PILOT CONTROL VALVE SUPPORT, COMPLETE

REF	FN	PART NUMBER	YR/SN	QTY	DESCRIPTION
1		85828013		1	BODY
2		14304021		3	SCREW
3		85827991		1	PLATE
4		85827999		1	KIT
5		85828002		2	KIT
6	1	85827996		2	SOLENOID
7		85827995		3	COIL
8		85827998		1	KIT
9	2	85827994		1	SOLENOID
10		14302921		8	BOLT M4x10
11		85827993		4	ELECTRO-VALVE
12		85828000		4	KIT
13		85827997		1	GEAR REDUCTION UNIT CARTRIDGE, HYDRAULIC PRESSURE REDUCING VALVE
14		85828001		1	KIT
15		85827992		1	VALVE, HYDRAULIC
16		85828003		1	O-RING
17		85828005		1	ORIFICE

(1) Includes 5, 7
(2) Includes 7, 8

Pilot Control Version

331/ B	01	p1	08/05

PILOT CONTROL VALVE SUPPORT, COMPLETE

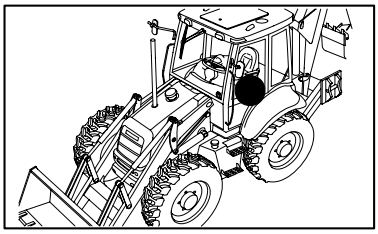

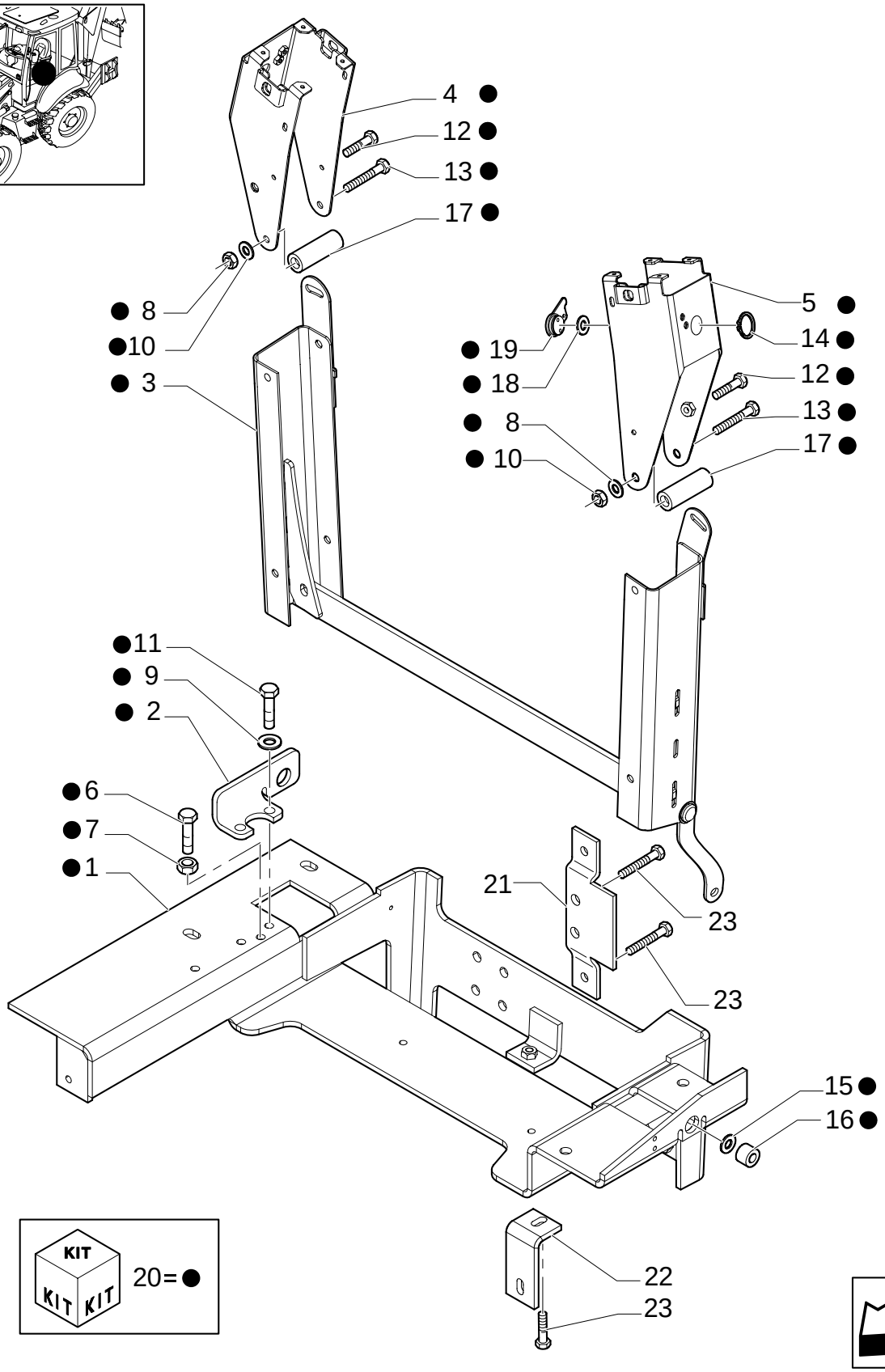

PILOT CONTROL VALVE SUPPORT, COMPLETE

REF	FN	PART NUMBER	YR/SN	QTY	DESCRIPTION
1		87434992		1	SUPPORT
2		87427004		1	SUPPORT
3		{87453109}		1	
4		87453116		1	SUPPORT
5		87453117		1	SUPPORT
6		15213721		1	SCREW M8 x 60
7		16100811		1	NUT M8
8		47048969		6	WASHER M11 x 24
9		47048992		2	WASHER M8
10		47049041		2	NUT M10
11		47049082		2	SCREW M8 x 35
12		47049184		2	SCREW M8 x 20
13		84058418		2	SCREW
14		85824053		1	RING
15		85824054		4	WASHER
16		85824059		2	BUSHING
17		87453110		2	SPACER
18		87405706		1	WASHER
19		87453118		1	LEVER
20	1	NSS		1	NOT SERVICED SEPARATELY
21		86990460		1	PLATE, MOUNTING
22		87402306		1	BRACKET
23		16040821		3	BOLT M10 x 40

(1) Includes 1 To 19

Pilot Control Version

331/ C	01	p1	12/05

6 SECTION PILOT CONTROL VALVE SUPPORT, COMPLETE

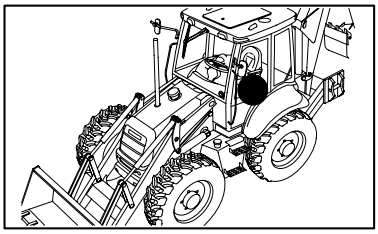

6 SECTION PILOT CONTROL VALVE SUPPORT, COMPLETE

REF	FN	PART NUMBER	YR/SN	QTY	DESCRIPTION
1	1	87309923		1	
1	2	{87449734}		1	
2	1	87309924		1	
2	2	{87449735}		1	
3		87437689		2	KNOB
4		87437688		2	KNOB
5		87437366		1	ARMREST
6		87437369		1	SUPPORT
7		87423802		1	SWITCH
8		87410105		1	SWITCH
9	1	87435372		2	BRACKET
9	2	87410723		2	PLATE
10		85821519		8	PIN, ROLL
11	1	87307656		1	BRACKET
11	2	87436396		1	GUARD
12	1, 3	87308844		1	VALVE, CONTROL
12	2, 4	87443740		1	MANIPULATOR
13		47050686		7	CONNECTOR, HYD.
14	5	87431301		1	GUARD
14	6	87427962		1	PLATE
15		87016552		8	SCREW
16		87022296		8	SCREW M3x8
17		87310085		2	SCREW, SELF TAPPING
18		10902321		3	SCREW 11x24x3
19	1, 7	87443743		1	MANIPULATOR
19	2, 8	87308840		1	VALVE, CONTROL
20		87418368		1	ROD
21		87418369		1	ROD
22		87310098		4	BOLT M6 x 20

(1) UP TO S/N XXX
(2) FROM TO S/N XXX
(3) See Page 333/ C 02
(4) See Page 333/C 03
(5) Only for Center Pivot
(6) Only for Side Shift
(7) See Page 331/ D 03
(8) See Page 331/ C03

Pilot Control Version

331/ C	01	p2	12/05

6 SECTION PILOT CONTROL VALVE SUPPORT, COMPLETE

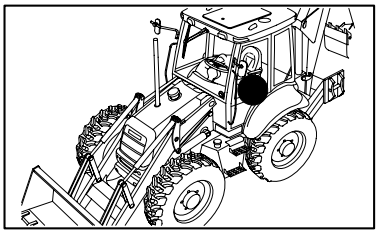

6 SECTION PILOT CONTROL VALVE SUPPORT, COMPLETE

REF	FN	PART NUMBER	YR/SN	QTY	DESCRIPTION
23		87424301		1	SEAL, RUBBER
24		87427991		1	SEAL, RUBBER
25		87427989		1	SEAL, RUBBER
26		87427993		1	SEAL, RUBBER
27		87425696		2	SEAL, RUBBER
28		87414205			DECAL
29	1	87431300		1	GUARD
29	2	87427963		1	PLATE
30		85803312		21	CONNECTOR, HYD.
31		87306512		2	GASKET
32		87310186		2	WASHER
33		87423812		1	DECAL
34		87310085		2	SCREW, SELF TAPPING
35		87452511		2	NUT
36		87423401		1	FITTING

(1) Only for Center Pivot
(2) Only for Side Shift

Pilot Control Version

331/ C	02	p1	12/05

6 SECTION PILOT CONTROL VALVE SUPPORT, COMPLETE

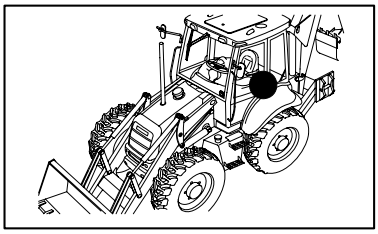

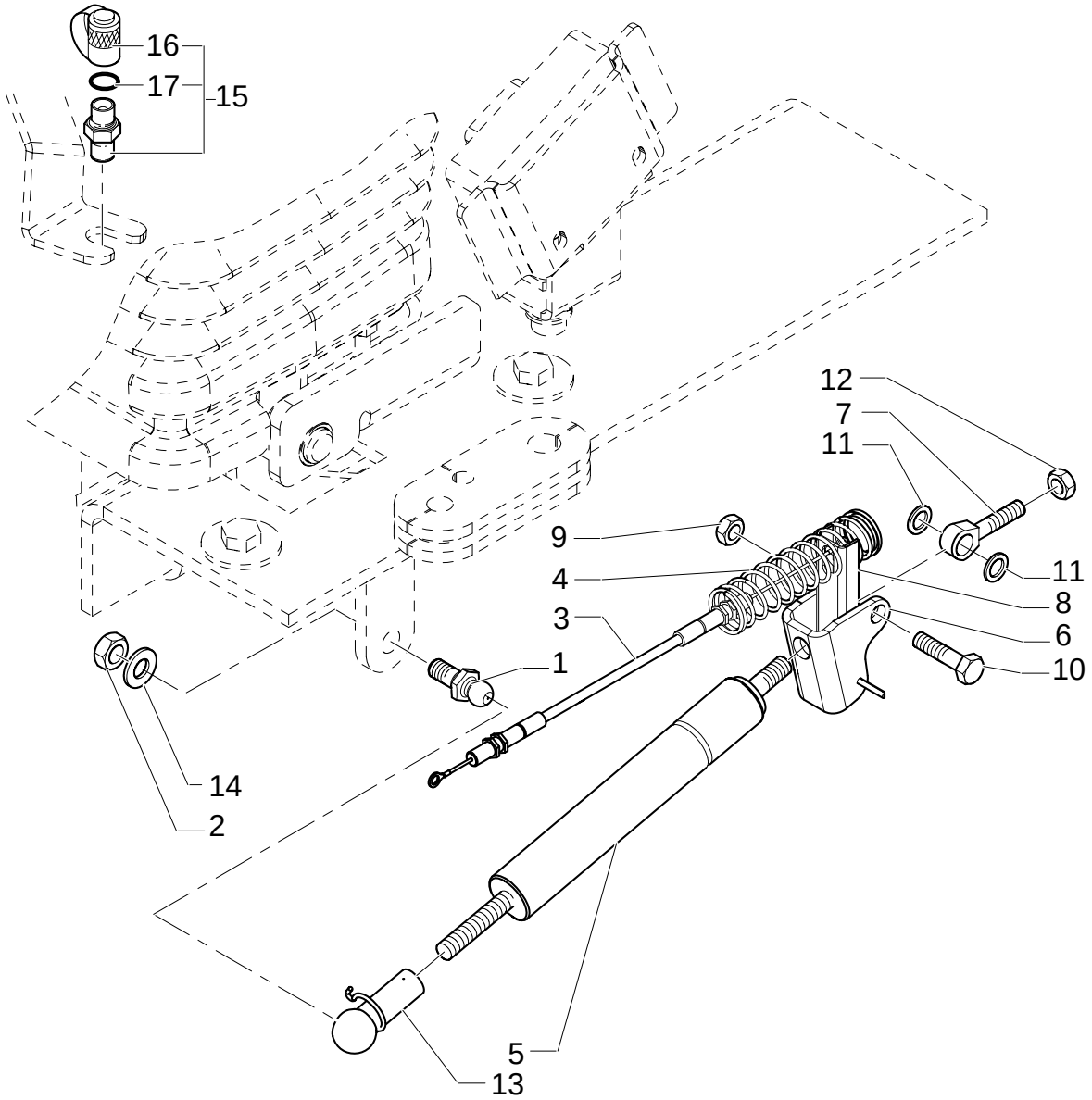

6 SECTION PILOT CONTROL VALVE SUPPORT, COMPLETE

REF	FN	PART NUMBER	YR/SN	QTY	DESCRIPTION
1		85824067		1	TRACK ROD END
2		47049041		1	NUT M10
3		87430028		1	CABLE
4		87443692		1	SPRING, TENSION
5		86989616		1	GAS STRUT
6		85824080		1	BRACKET
7		85821514		2	PIN
7		85824081		1	BALL JOINT
8		86984549		1	EXTRUSION
9		85821516		1	NUT
10		85821515		1	BOLT
11		85821520		2	SPACER
12		47049442		2	NUT
13		86999310		1	CLIP
14		47049404		1	WASHER
15	1	85817226		1	CONNECTOR, HYD.
16		9968791		1	PLUG
17		87008S95		1	O-RING 90 Duro, .375" ID x .070" Thk

(1) Includes 16, 17

Pilot Control Version

331/ C	03	p1	02/05

6 SECTION PILOT CONTROL VALVE SUPPORT, COMPLETE

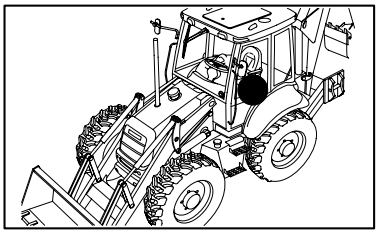

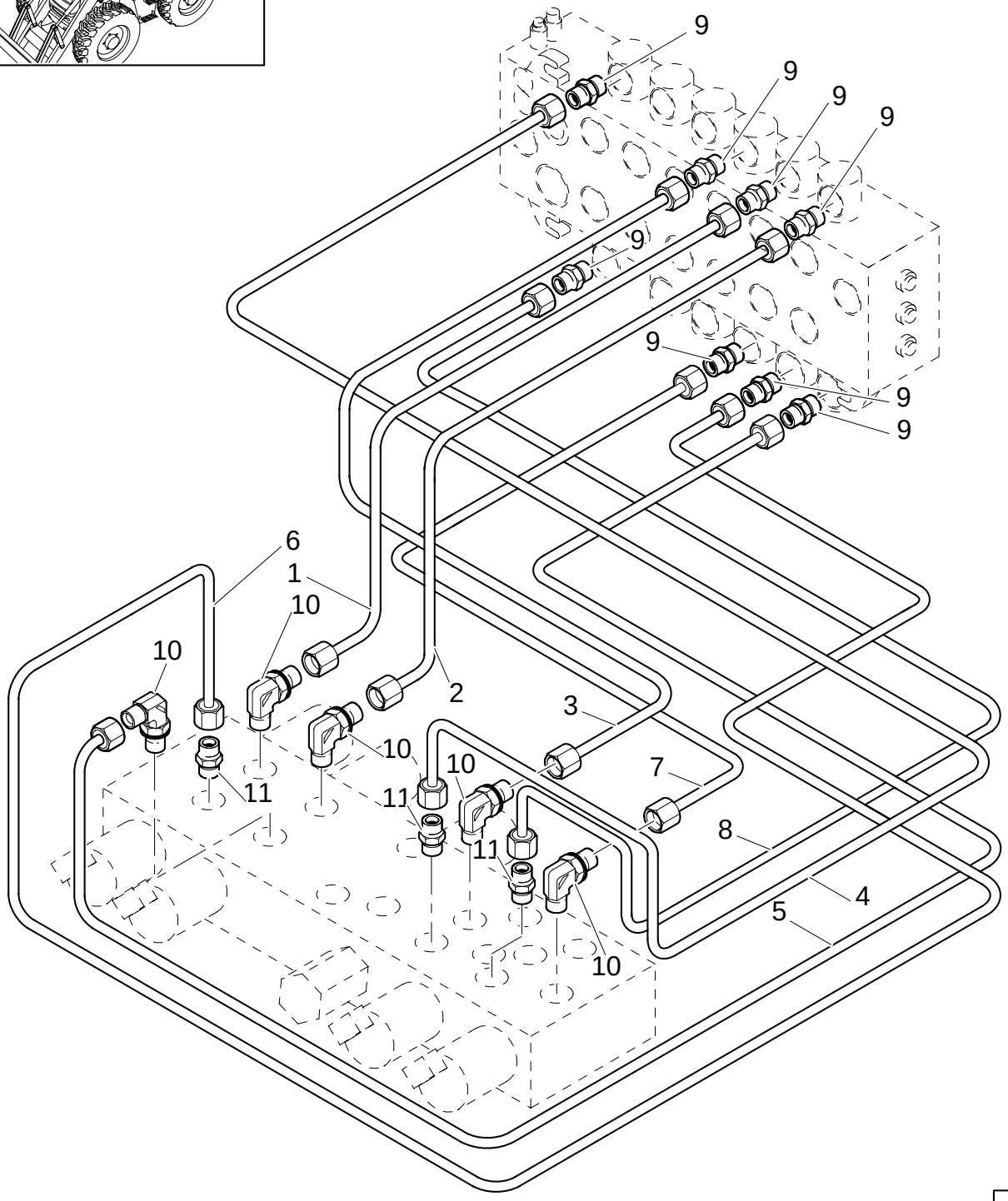

6 SECTION PILOT CONTROL VALVE SUPPORT, COMPLETE

REF	FN	PART NUMBER	YR/SN	QTY	DESCRIPTION
1		85827093		1	TUBE, RIGID
2		85827094		1	TUBE, RIGID
3		85827091		1	TUBE, RIGID
4		85827089		1	TUBE, RIGID
5		85827092		1	TUBE, RIGID
6		85827095		1	TUBE, RIGID
7		85827090		1	TUBE, RIGID
8		85827088		1	TUBE, RIGID
9		85803312		8	CONNECTOR, HYD.
10		47050653		5	CONNECTOR, HYD.
11		47050685		3	CONNECTOR, HYD.

Pilot Control Version

331/ C	04	p1	02/05

6 SECTION PILOT CONTROL VALVE SUPPORT, COMPLETE

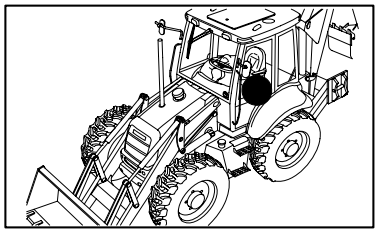

6 SECTION PILOT CONTROL VALVE SUPPORT, COMPLETE

REF	FN	PART NUMBER	YR/SN	QTY	DESCRIPTION
1		85827084		1	HOSE, FLEXIBLE
2		85827085		1	HOSE, FLEXIBLE
3		85827086		1	HOSE, FLEXIBLE
4		85827077		1	HOSE, FLEXIBLE
5		85827087		1	HOSE, FLEXIBLE
6		85827082		2	HOSE, FLEXIBLE
7		85827467		1	CONNECTOR, HYD.
8		85827466		2	CONNECTOR, HYD.
9		85827076		2	HOSE, FLEXIBLE
10		85827080		2	HOSE, FLEXIBLE
11		85827078		2	HOSE, FLEXIBLE
12		47120173		2	CONNECTOR, HYD.
13		47050686		3	CONNECTOR, HYD.
14		47050653		3	CONNECTOR, HYD.
15		85803312		3	CONNECTOR, HYD.
16		87423401		1	FITTING

Pilot Control Version

331/ C	05	p1	02/05

6 SECTION PILOT CONTROL VALVE SUPPORT, COMPLETE

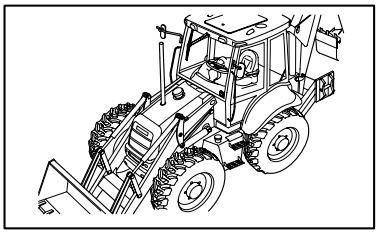

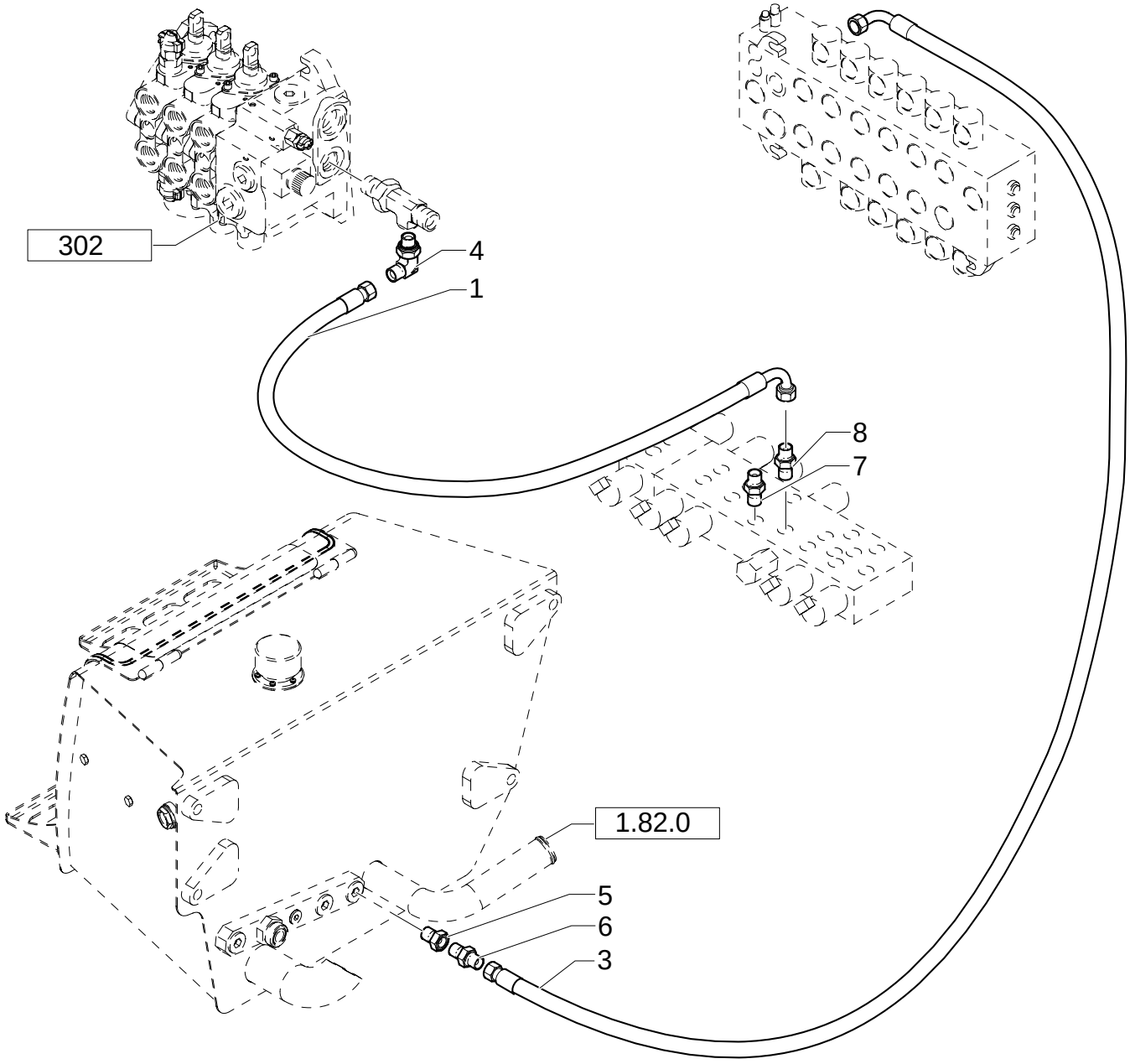

6 SECTION PILOT CONTROL VALVE SUPPORT, COMPLETE

REF	FN	PART NUMBER	YR/SN	QTY	DESCRIPTION
1		85827476		1	HOSE, FLEXIBLE
3		85827475		1	HOSE, FLEXIBLE
4		85805318		1	ELBOW
5		85826100		1	GEAR REDUCTION UNIT
6		47050686		1	CONNECTOR, HYD.
7		47050653		1	CONNECTOR, HYD.
8		85828212		1	ADAPTER

Pilot Control Version

331/ C	06	p1	03/05

6 SECTION PILOT CONTROL VALVE SUPPORT, COMPLETE (CENTER PIVOT)

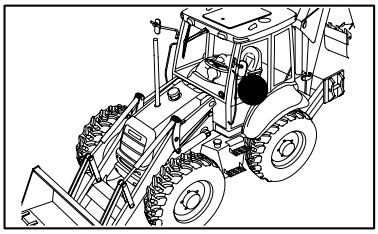

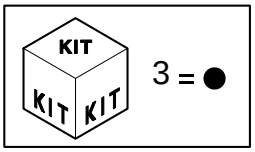

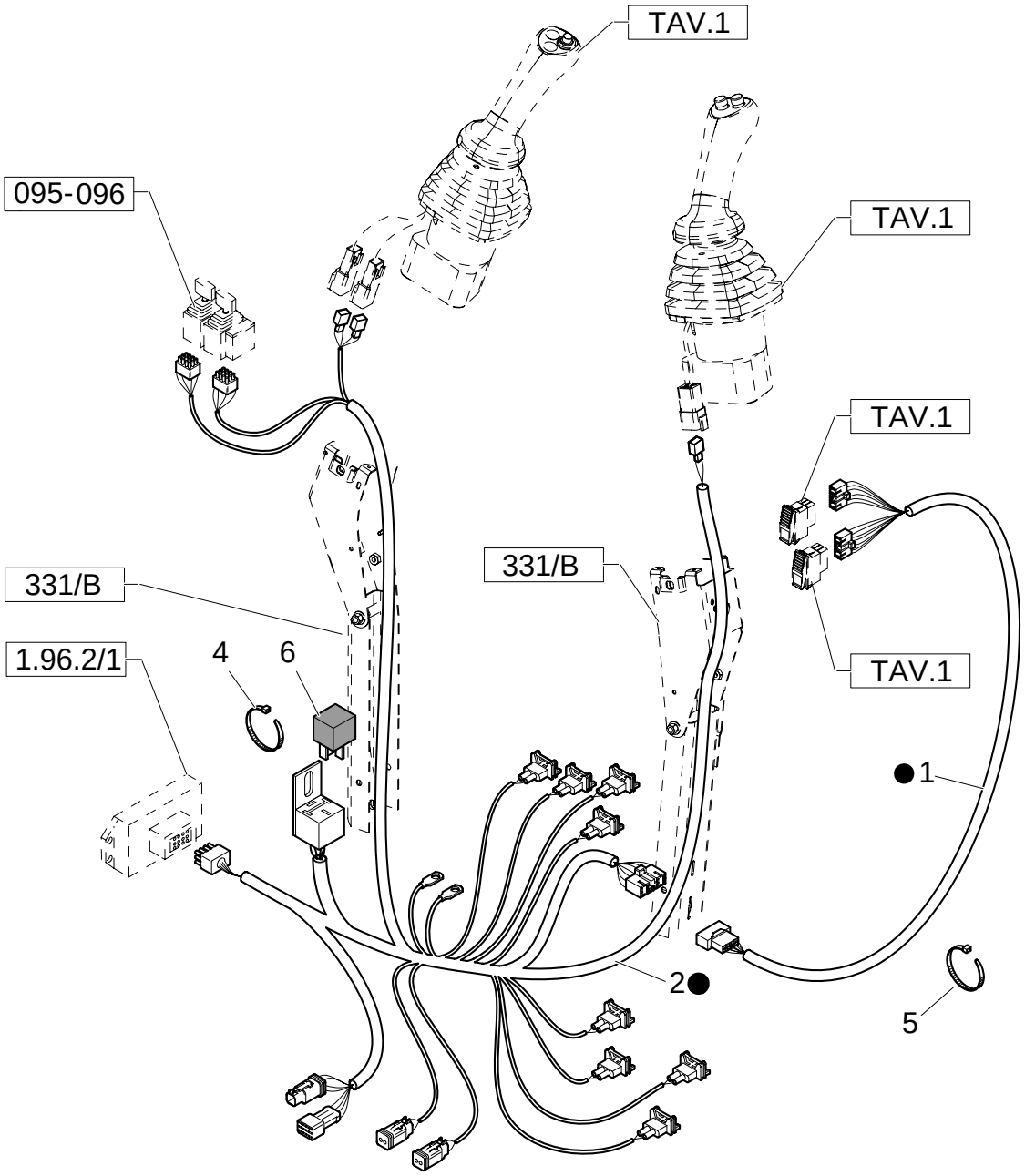

6 SECTION PILOT CONTROL VALVE SUPPORT, COMPLETE (CENTER PIVOT)

REF	FN	PART NUMBER	YR/SN	QTY	DESCRIPTION
1		85828216		1	CABLE, ELECTRIC
2		87305611		1	CABLE, ELECTRIC
3	1	87305604		1	CABLE, ELECTRIC
4		14560187		6	COLLAR
5		386170C1		4	STRAP
6		85821537		1	RELAY

(1) Includes 1, 2, 6

Pilot Control Version

331/ D	03	p1	11/05

VALVE, JOYSTICK PILOT CONTROLS - EXTENDED VERSION - (RIGTH HAND)

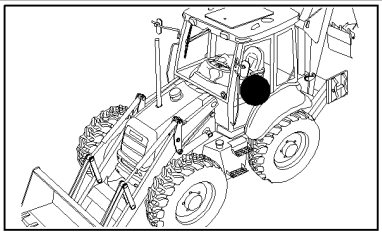

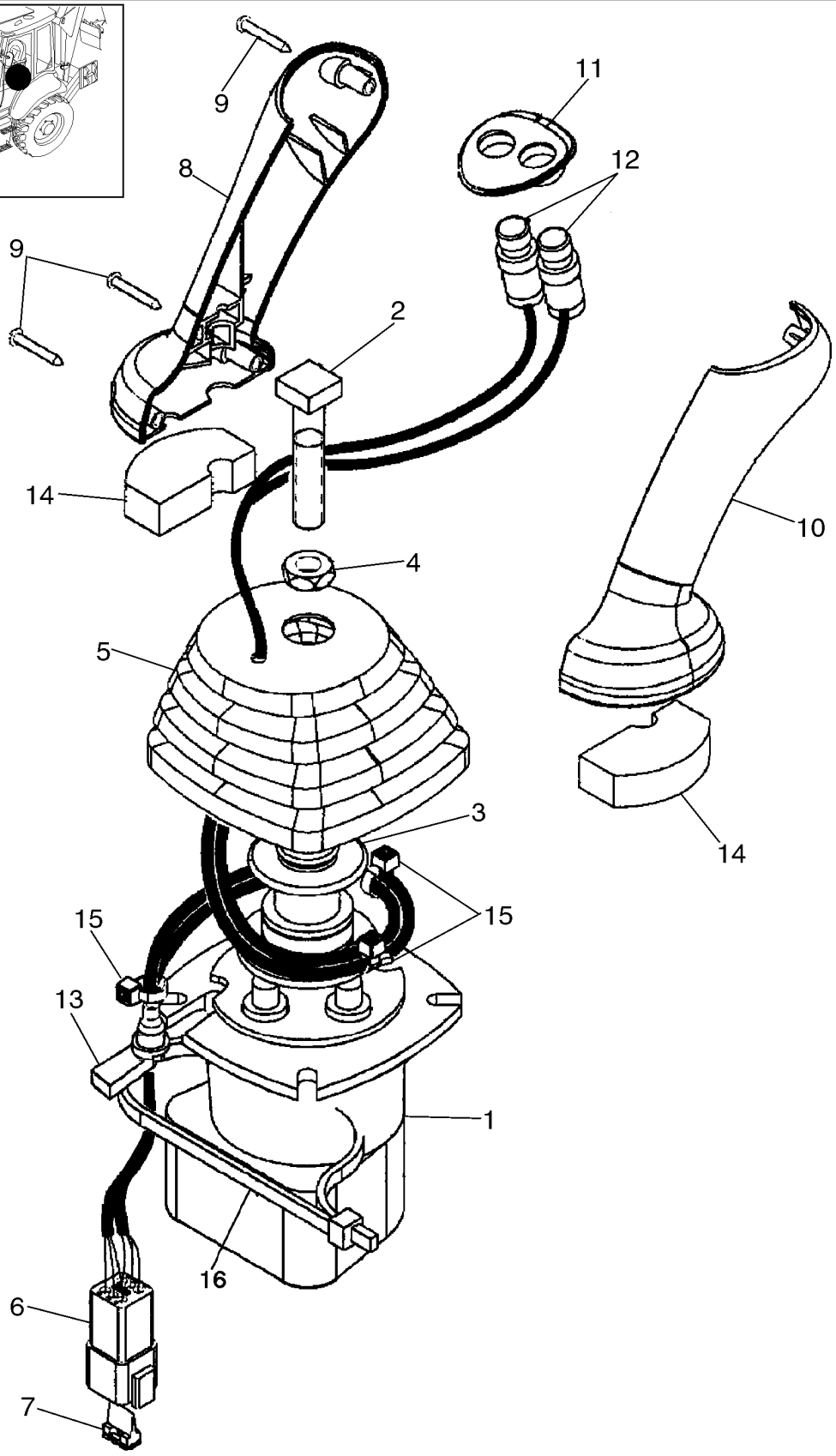

VALVE, JOYSTICK PILOT CONTROLS - EXTENDED VERSION - (RIGTH HAND)

REF	FN	PART NUMBER	YR/SN	QTY	DESCRIPTION
1	1	87443743		1	MANIPULATOR
1		86983311		1	VALVE, CONTROL
2		87428023		1	BOLT
3		87436225		1	RETAINER
4		87037944		1	NUT
5		87443721		1	
6		225350C1		1	CONNECTOR
7		225353C1		1	WEDGE
8		87428164		1	HANDLE GRIP
9		15687475		3	SCREW, SELF TAPPING 3.5x25
10		87428165		1	HANDLE GRIP
11		87435242		1	BEZEL
12		87437371		2	SWITCH, ASSY
13		87424267		1	GROMMET
14		87435506		2	GASKET
15		87000312		3	RETAINER
16		87438046		1	STRAP

(1) Includes 1 To 16

Pilot Control Version, Up To S/N XXX

333/ A	01	p1	02/05

7 SECTION PILOT CONTROL VALVE SUPPORT, COMPLETE

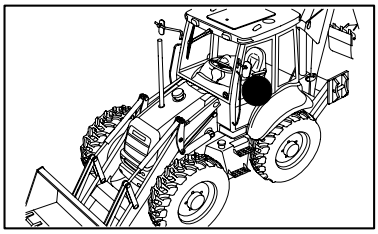

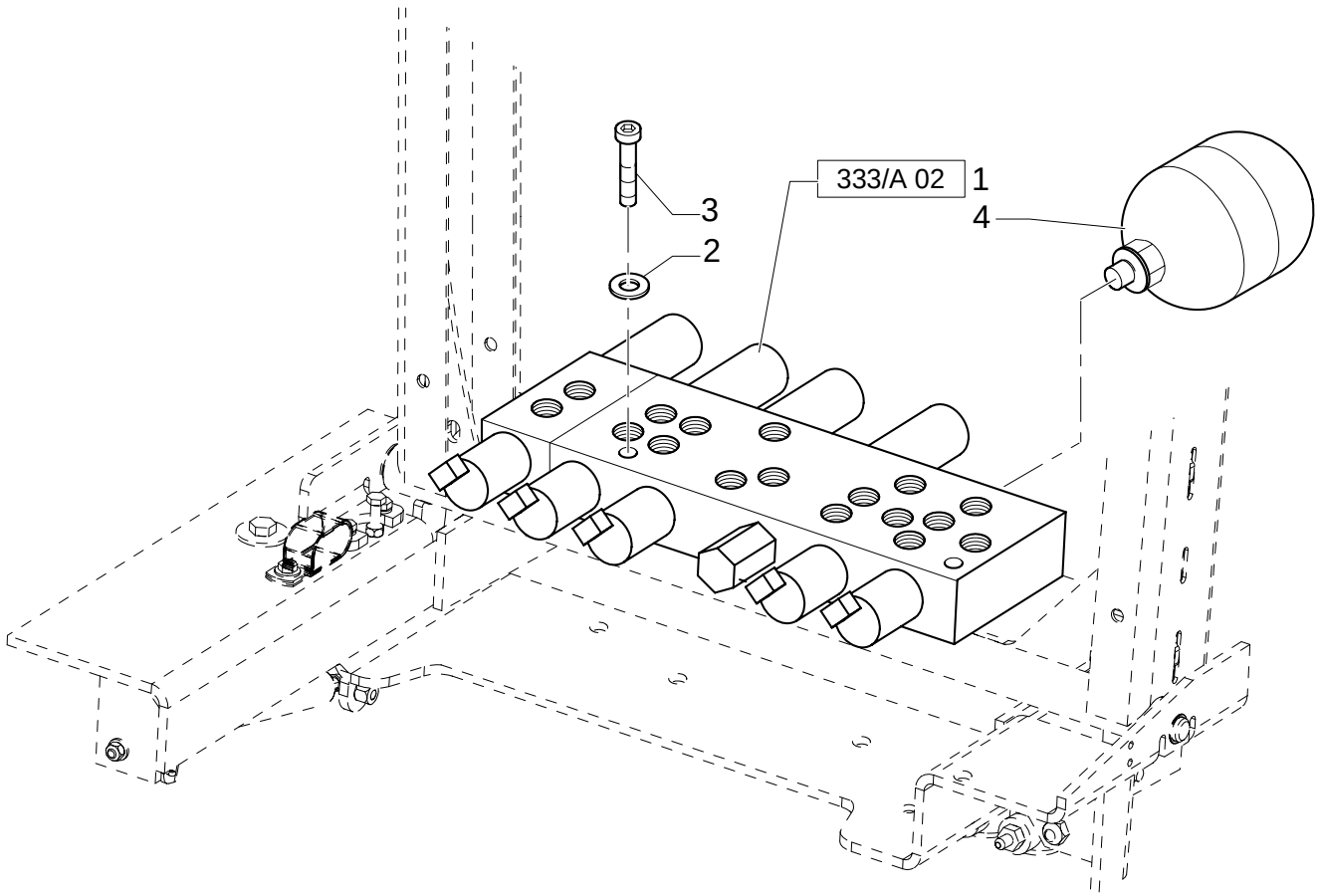

7 SECTION PILOT CONTROL VALVE SUPPORT, COMPLETE

REF	FN	PART NUMBER	YR/SN	QTY	DESCRIPTION
1		85827471		1	VALVE, HYDRAULIC
2		47048961		2	WASHER
3		47049078		2	SCREW M6x60
4		87425225		1	ACCUMULATOR

Pilot Control Version

333/ A	02	p1	02/05

7 SECTION PILOT CONTROL VALVE SUPPORT, COMPLETE

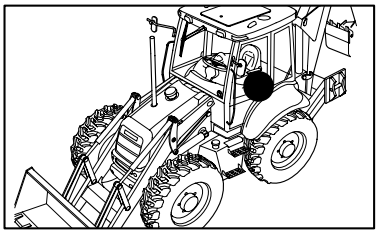

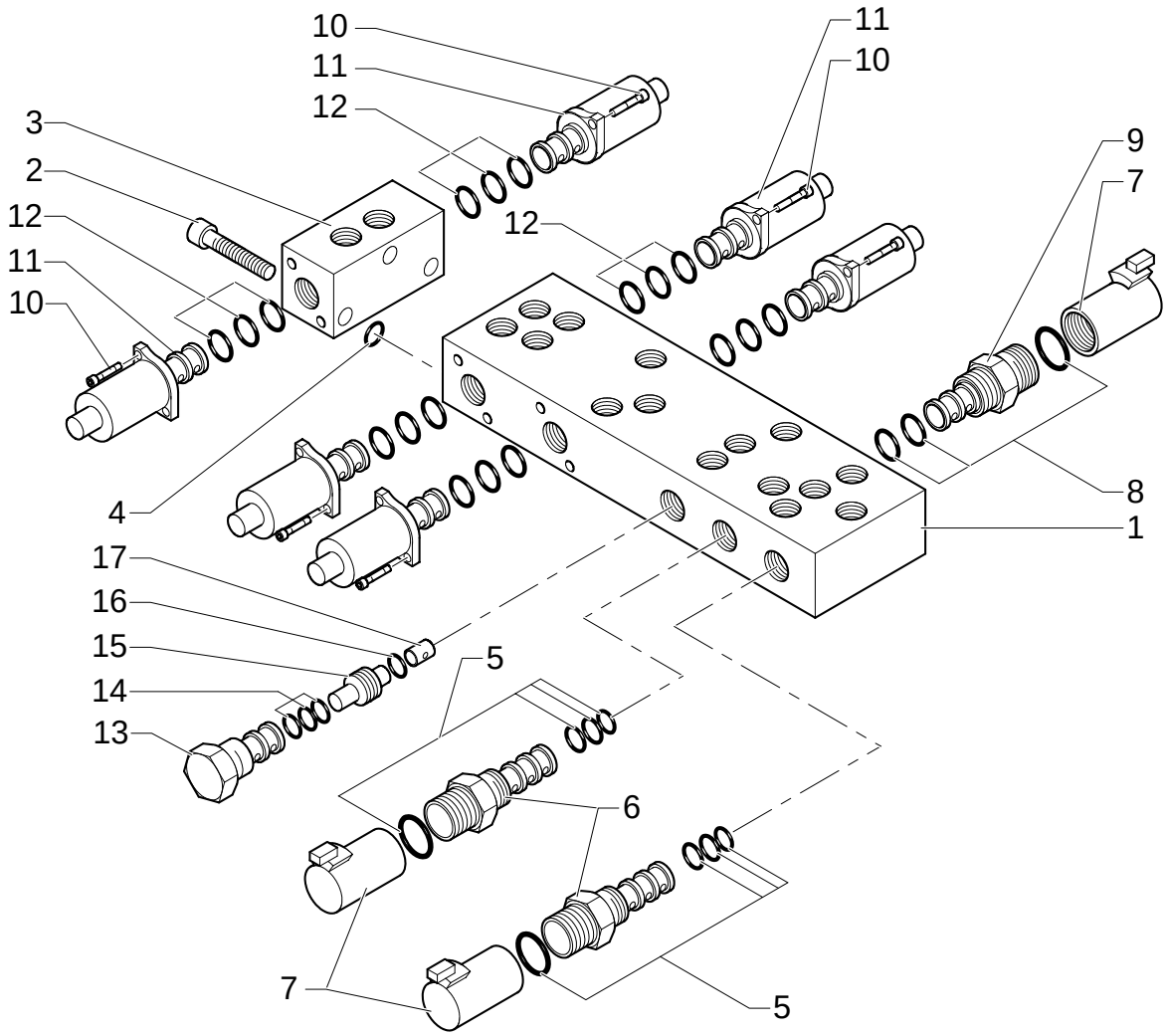

7 SECTION PILOT CONTROL VALVE SUPPORT, COMPLETE

REF	FN	PART NUMBER	YR/SN	QTY	DESCRIPTION
1		85828015		1	BODY
2		14358921		3	SCREW
3		85828004		1	BODY M6x60
4		85827999		1	KIT
5		85828002		2	KIT
6	1	85827996		2	SOLENOID
7		85827995		3	COIL
8		85827998		1	KIT
9	2	85827994		1	SOLENOID
10		14302921		12	BOLT
11		85827993		6	ELECTRO-VALVE
12		85828000		6	KIT
13		85827997		1	GEAR REDUCTION UNIT CARTRIDGE, HYDRAULIC PRESSURE REDUCING VALVE
14		85828001		1	KIT
15		85827992		1	VALVE, HYDRAULIC
16		85828003		1	O-RING
17		85828005		1	ORIFICE

(1) Includes 5, 7
(2) Includes 7, 8

Pilot Control Version

333/ A	03	p1	02/05

7 SECTION PILOT CONTROL VALVE SUPPORT, COMPLETE

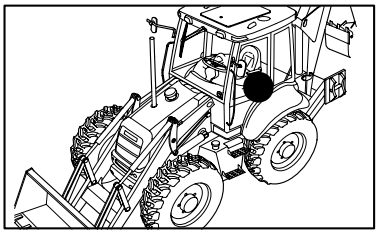

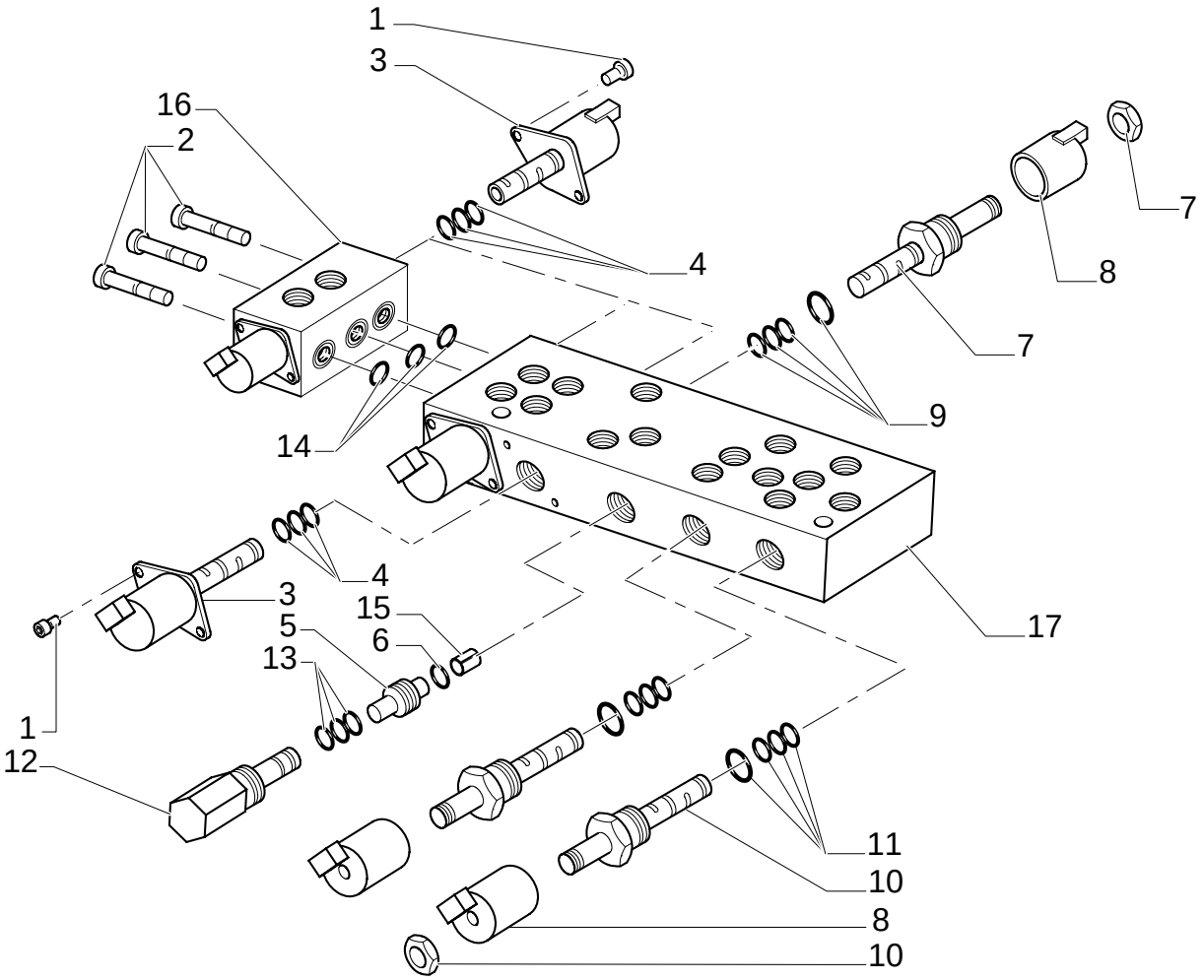

7 SECTION PILOT CONTROL VALVE SUPPORT, COMPLETE

REF	FN	PART NUMBER	YR/SN	QTY	DESCRIPTION
1		14302921		12	BOLT M4x10
2		14358921		3	SCREW M5x45
3		85827993		6	ELECTRO-VALVE
4		85828000		1	KIT
5		85827992		1	VALVE, HYDRAULIC
6		85828003		1	O-RING
7	1	85827994		1	SOLENOID
8		85827995		3	COIL
9		85827998		0	KIT
10	2	85827996		2	SOLENOID
11		85828002		0	KIT
12		85827997		1	GEAR REDUCTION UNIT CARTRIDGE, HYDRAULIC PRESSURE REDUCING VALVE
13		85828001		0	KIT
14		85827999		0	KIT
15		85828005		1	ORIFICE
16		{85828014}			
17		85828013		1	BODY

(1) Includes 8, 9
(2) Includes 8, 11

Pilot Control Version

333/ B	01	p1	11/05

7 SECTION PILOT CONTROL VALVE SUPPORT, COMPLETE

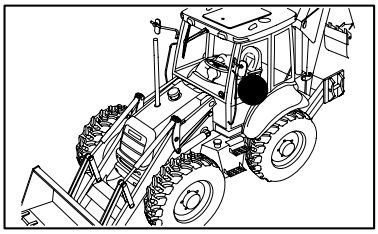

7 SECTION PILOT CONTROL VALVE SUPPORT, COMPLETE

REF	FN	PART NUMBER	YR/SN	QTY	DESCRIPTION
1	1	87309923		1	
1	2	{87449734}		1	
2	1	87309924		1	
2	2	{87449735}		1	
3		87437689		2	KNOB
4		87437688		2	KNOB
5		87437366		1	ARMREST
6		87437369		1	SUPPORT
7		87423802		1	SWITCH
8		87410105		1	SWITCH
9		87435372		2	BRACKET
10		85821519		8	PIN, ROLL
11	1	87307656		1	BRACKET
11	2	87436396		1	GUARD
12	1, 3	87308844		1	VALVE, CONTROL
12	2	87443740		1	MANIPULATOR
13		47050686		7	CONNECTOR, HYD.
14		87431301		1	GUARD
15		87016552		8	SCREW M6x13
16		87022296		8	SCREW M3x8
17		87310085		2	SCREW, SELF TAPPING
18		10902321		3	SCREW M10
19	1, 4	87308840		1	VALVE, CONTROL
19	2, 5	87443743		1	MANIPULATOR
20		87418368		1	ROD
21		87418369		1	ROD
22		87310098		4	BOLT M6 x 20
23		87424301		1	SEAL, RUBBER
24		87427991		1	SEAL, RUBBER
25		87427989		1	SEAL, RUBBER
26		87427993		1	SEAL, RUBBER
27		87425696		2	SEAL, RUBBER

(1) UP TO S/N XXX
(2) FROM TO S/N XXX
(3) See Page 333/ C 03
(4) See Page 331/D 02
(5) See Page 331/D 03

Pilot Control Version

333/ B	01	p2	11/05

7 SECTION PILOT CONTROL VALVE SUPPORT, COMPLETE

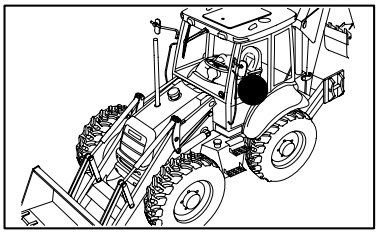

7 SECTION PILOT CONTROL VALVE SUPPORT, COMPLETE

REF	FN	PART NUMBER	YR/SN	QTY	DESCRIPTION
28		87414205		1	DECAL
29		87431300		1	GUARD
30		85803312		21	CONNECTOR, HYD.
31		87306512		2	GASKET
32		87310186		2	WASHER
33		87423812		1	DECAL
34		87310085		2	SCREW, SELF TAPPING
35		87452511		2	NUT
36		87423401		1	FITTING

Pilot Control Version

333/ B	02	p1	05/05

7 SECTION PILOT CONTROL VALVE SUPPORT, COMPLETE (CENTER PIVOT) EUROPE

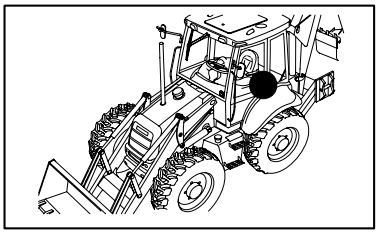

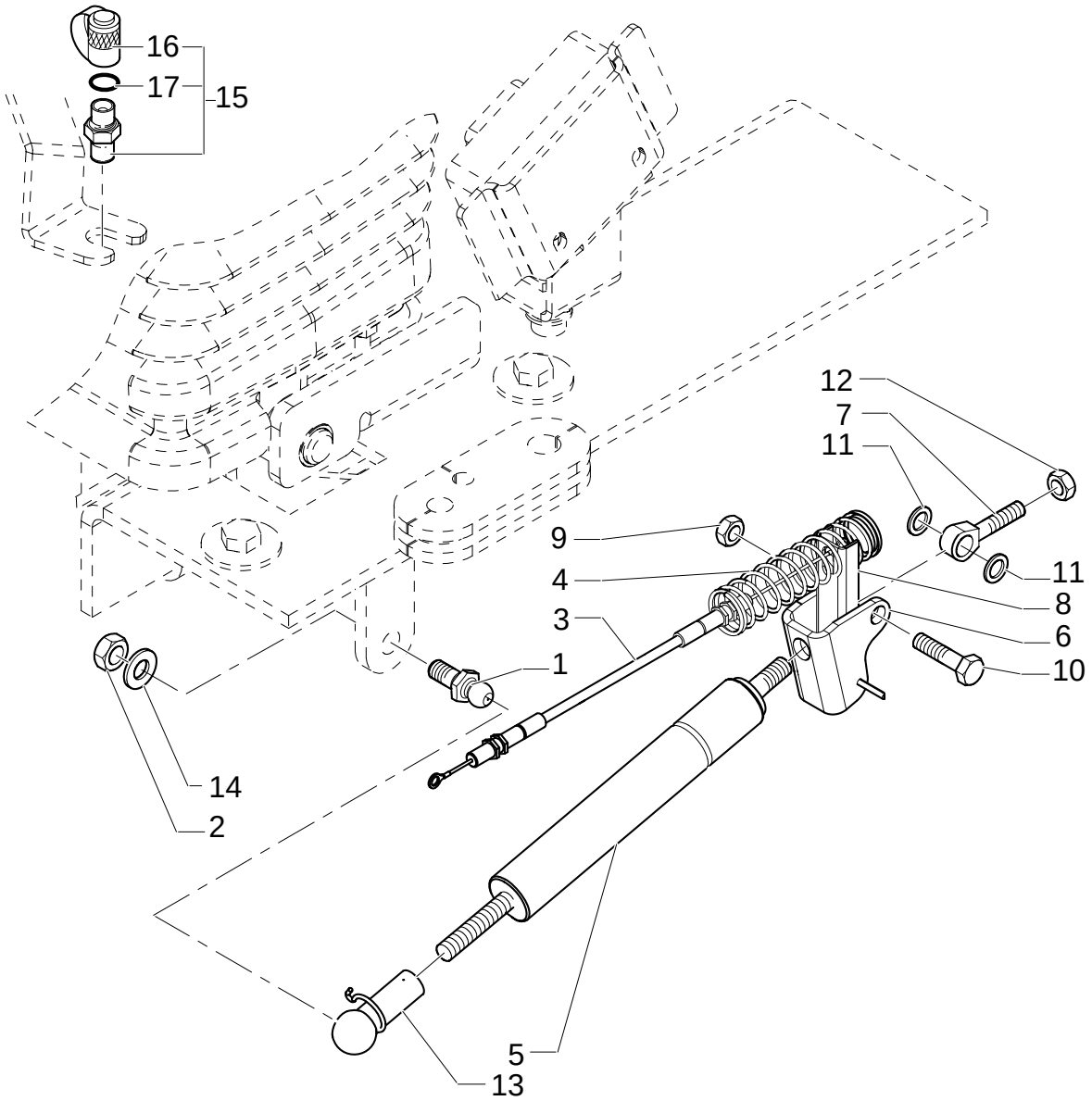

7 SECTION PILOT CONTROL VALVE SUPPORT, COMPLETE (CENTER PIVOT) EUROPE

REF	FN	PART NUMBER	YR/SN	QTY	DESCRIPTION
1		85824067		1	TRACK ROD END
2		47049041		1	NUT M10
3		87430028		1	CABLE
4		87443692		1	SPRING, TENSION
5		86989616		1	GAS STRUT
6		85824080		1	BRACKET
7		85821514		2	PIN
7		85824081		1	BALL JOINT
8		86984549		1	EXTRUSION
9		85821516		1	NUT
10		85821515		1	BOLT
11		85821520		2	SPACER
12		47049442		2	NUT
13		86999310		1	CLIP
14		47049404		1	WASHER
15		85817226		1	CONNECTOR, HYD.
16		9968791		1	PLUG
17		87008S95		1	O-RING 90 Duro, .375" ID x .070" Thk

Pilot Control Version

333/ B	03	p1	02/05

7 SECTION PILOT CONTROL VALVE SUPPORT, COMPLETE

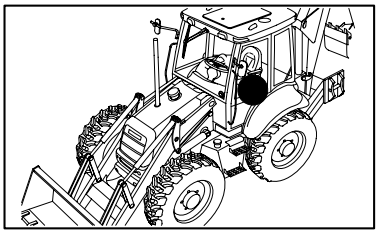

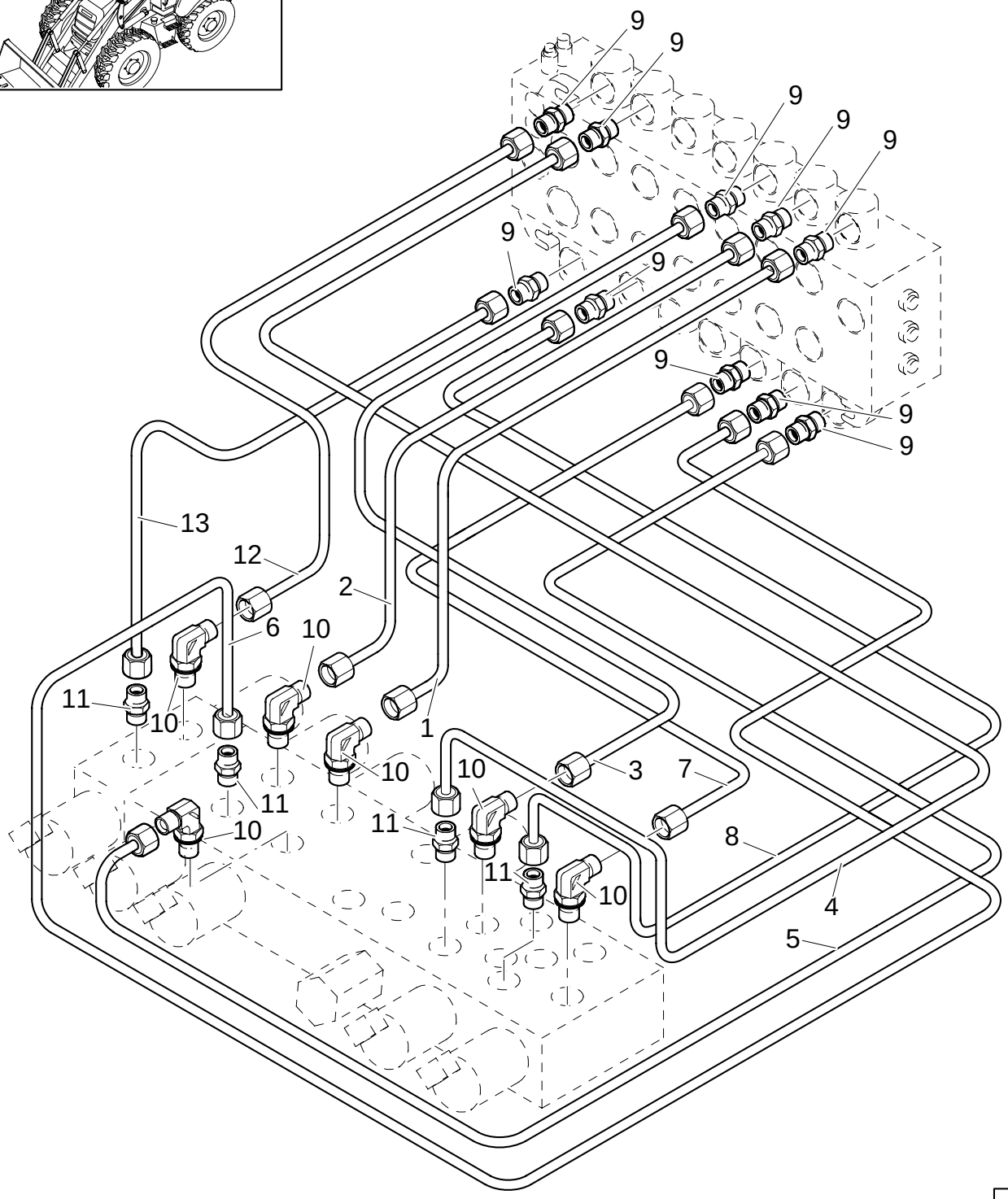

7 SECTION PILOT CONTROL VALVE SUPPORT, COMPLETE

REF	FN	PART NUMBER	YR/SN	QTY	DESCRIPTION
1		85827093		1	TUBE, RIGID
2		85827094		1	TUBE, RIGID
3		85827091		1	TUBE, RIGID
4		85827089		1	TUBE, RIGID
5		85827092		1	TUBE, RIGID
6		85827095		1	TUBE, RIGID
7		85827090		1	TUBE, RIGID
8		85827088		1	TUBE, RIGID
9		85803312		10	CONNECTOR, HYD.
10		47050653		6	CONNECTOR, HYD.
11		47050685		4	CONNECTOR, HYD.
12		85827097		1	TUBE, RIGID
13		87306186		1	TUBE, RIGID

Pilot Control Version

333/ B	04	p1	02/05

7 SECTION PILOT CONTROL VALVE SUPPORT, COMPLETE

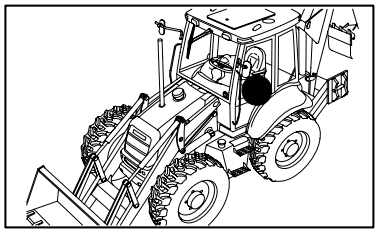

7 SECTION PILOT CONTROL VALVE SUPPORT, COMPLETE

REF	FN	PART NUMBER	YR/SN	QTY	DESCRIPTION
1		85827084		1	HOSE, FLEXIBLE
2		85827085		1	HOSE, FLEXIBLE
3		85827086		2	HOSE, FLEXIBLE
4		85827077		1	HOSE, FLEXIBLE
5		85827087		1	HOSE, FLEXIBLE
6		85827082		2	HOSE, FLEXIBLE
7		85827467		1	CONNECTOR, HYD.
8		85827466		2	CONNECTOR, HYD.
9		85827076		2	HOSE, FLEXIBLE
10		85827080		2	HOSE, FLEXIBLE
11		85827078		1	HOSE, FLEXIBLE
12		47120173		2	CONNECTOR, HYD.
13		47050686		3	CONNECTOR, HYD.
14		47050653		3	CONNECTOR, HYD.
15		85803312		3	CONNECTOR, HYD.
16		87423401		1	FITTING

Pilot Control Version

333/ B	05	p1	02/05

7 SECTION PILOT CONTROL VALVE SUPPORT, COMPLETE

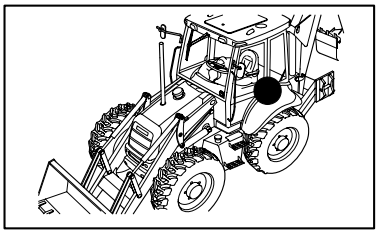

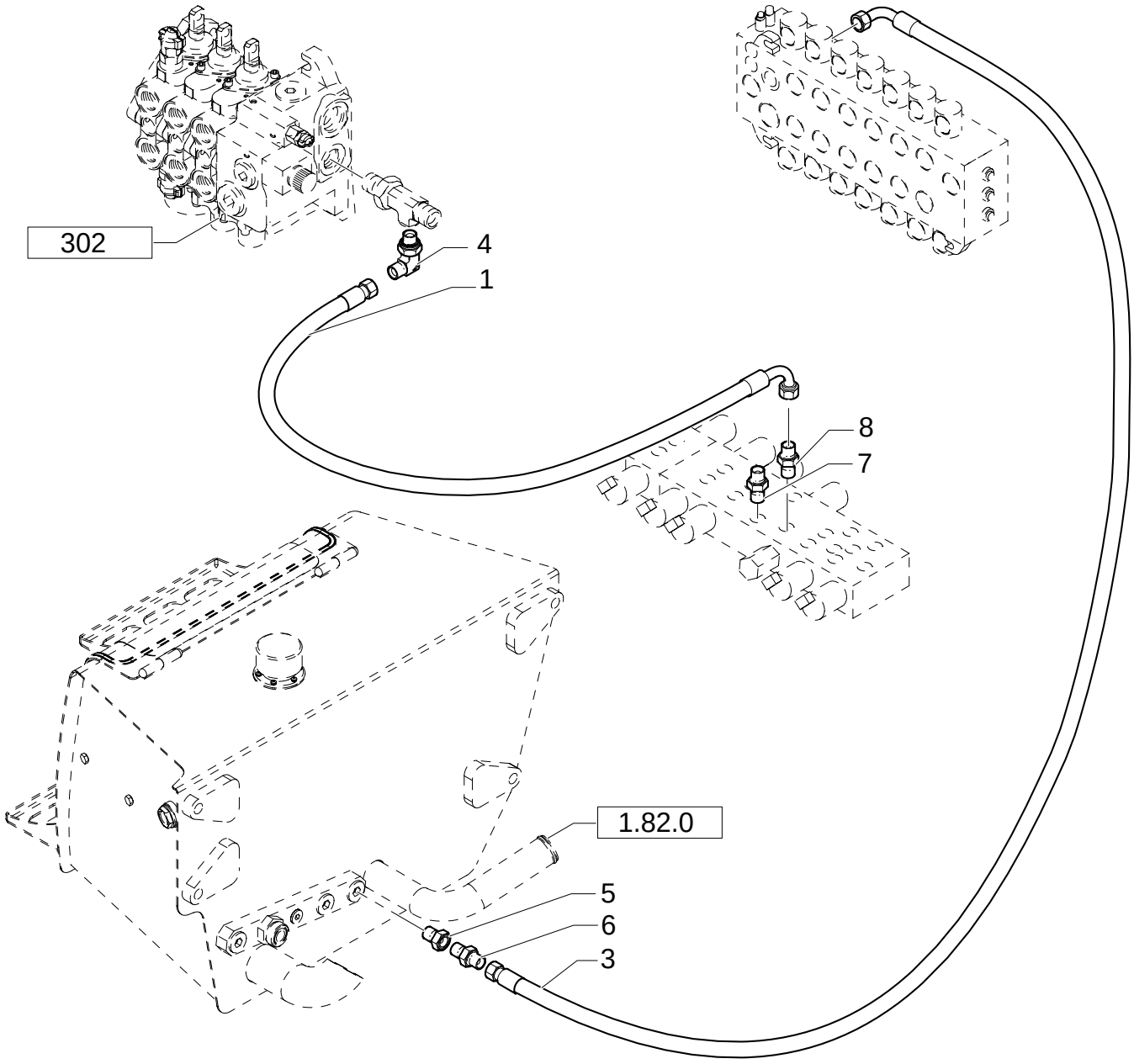

7 SECTION PILOT CONTROL VALVE SUPPORT, COMPLETE

REF	FN	PART NUMBER	YR/SN	QTY	DESCRIPTION
1		85827476		1	HOSE, FLEXIBLE
2		85827477		1	HOSE, FLEXIBLE
3		85827475		1	HOSE, FLEXIBLE
4		85805318		1	ELBOW
5		85826100		1	GEAR REDUCTION UNIT
6		47050686		1	CONNECTOR, HYD.
7		47050653		1	CONNECTOR, HYD.
8		85828212		1	ADAPTER

Pilot Control Version

333/ B	06	p1	03/05

7 SECTION PILOT CONTROL VALVE SUPPORT, COMPLETE (CENTER PIVOT) EUROPE

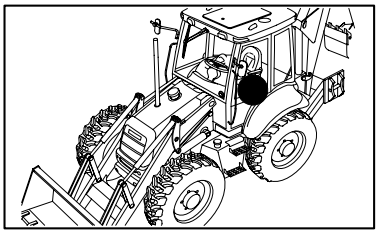

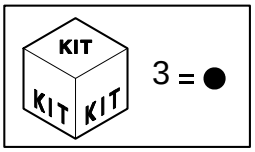

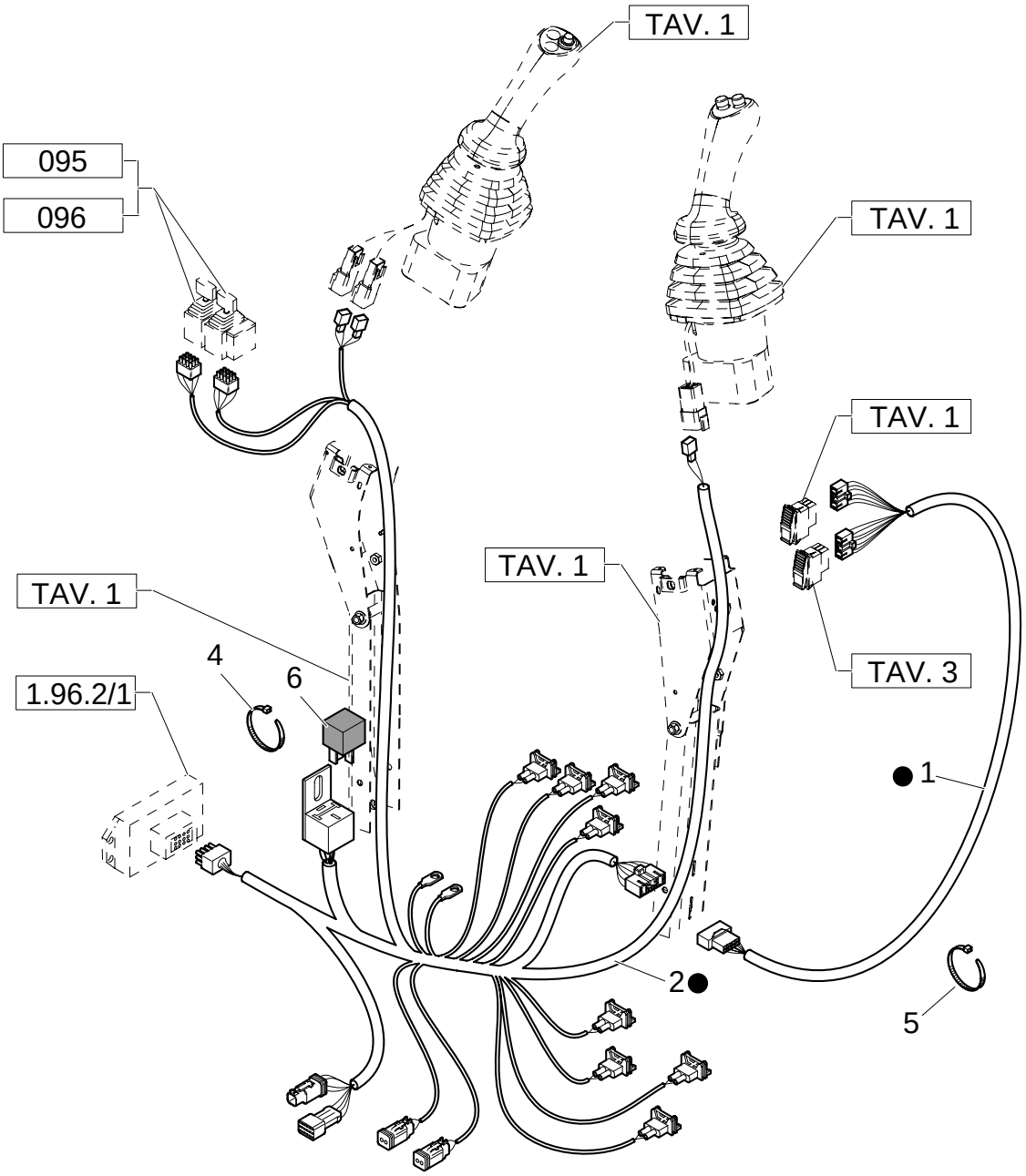

7 SECTION PILOT CONTROL VALVE SUPPORT, COMPLETE (CENTER PIVOT) EUROPE

REF	FN	PART NUMBER	YR/SN	QTY	DESCRIPTION
1		85828216		1	CABLE, ELECTRIC
2		87305611		1	CABLE, ELECTRIC
3	1	87305604		1	CABLE, ELECTRIC
4		14560187		6	COLLAR
5		386170C1		4	STRAP
6		85821537		1	RELAY

(1) Includes 1, 2, 6

Pilot Control Version

333/ B	07	p1	02/05

7 SECTION PILOT CONTROL VALVE SUPPORT, COMPLETE (CENTER PIVOT) EUROPE

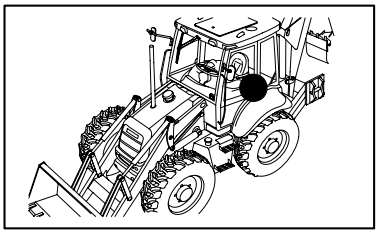

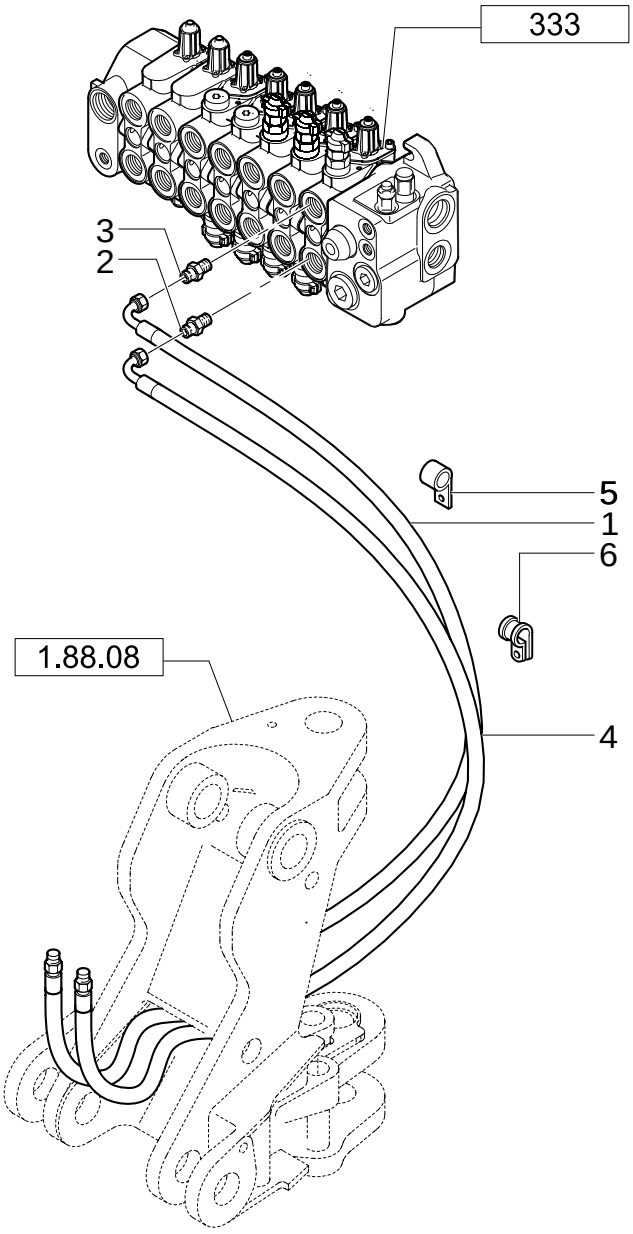

7 SECTION PILOT CONTROL VALVE SUPPORT, COMPLETE (CENTER PIVOT) EUROPE

REF	FN	PART NUMBER	YR/SN	QTY	DESCRIPTION
1		85812192		1	HOSE, FLEXIBLE
2		85805258		1	CONNECTOR, HYD.
3		390938S36		1	CONNECTOR, HYD.
4		85812211		1	HOSE, FLEXIBLE
5		85803393		2	COLLAR, RETAINER
6		85812029		4	COLLAR, RETAINER

Pilot Control Version

333/ B	08	p1	02/05

7 SECTION PILOT CONTROL VALVE SUPPORT, COMPLETE

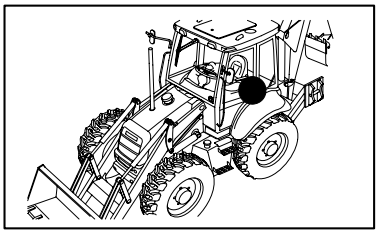

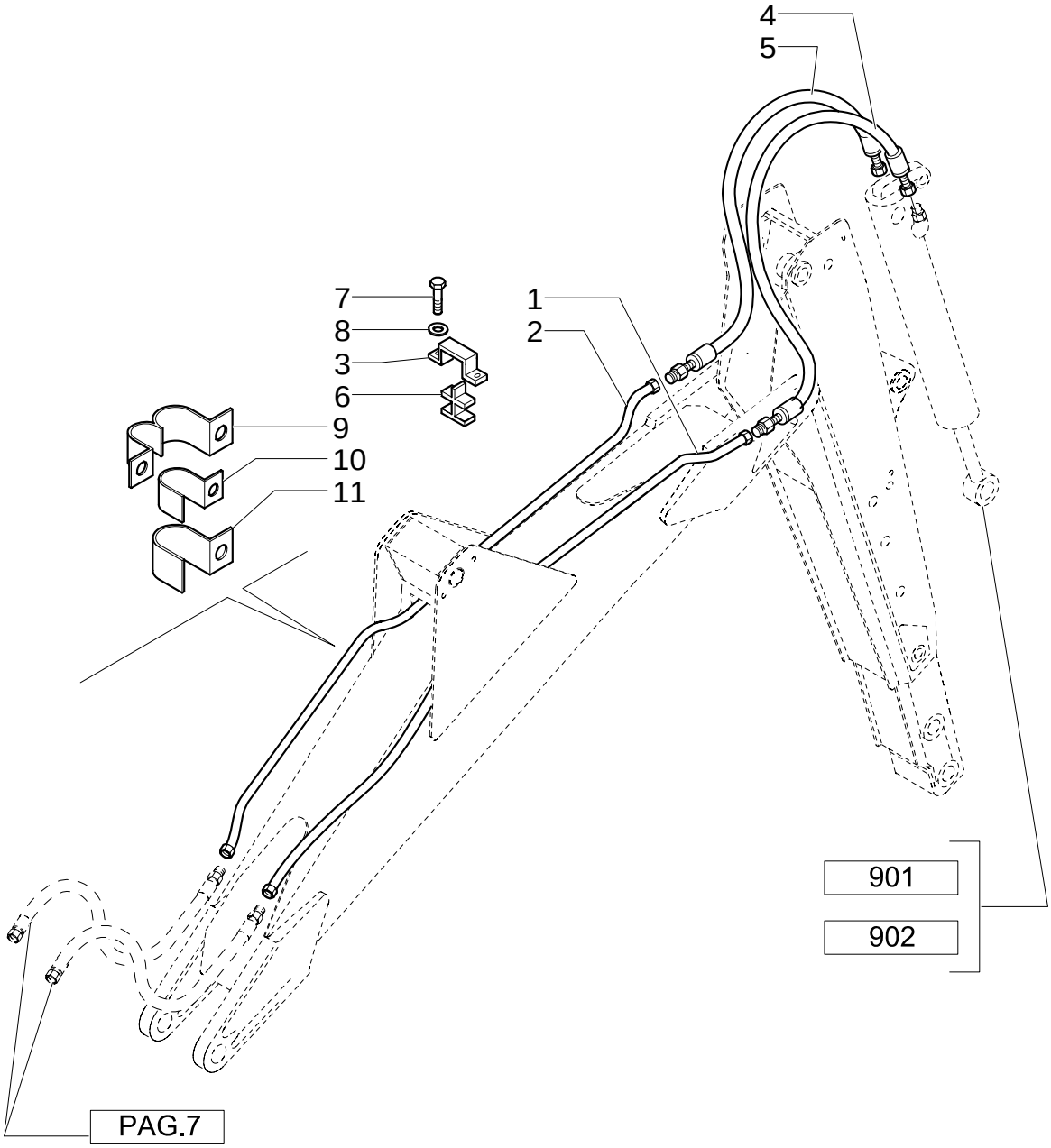

7 SECTION PILOT CONTROL VALVE SUPPORT, COMPLETE

REF	FN	PART NUMBER	YR/SN	QTY	DESCRIPTION
1		85815642		1	TUBE, RIGID
2		85815640		1	TUBE, RIGID
3		85803402		1	PLATE
4		85817109		1	HOSE, FLEXIBLE
5		85817108		1	HOSE, FLEXIBLE
6		85802532		1	CLIP, HOSE
7		16043621		2	SCREW
8		11193879		2	WASHER, LOCK
9		85802529		2	CLIP
10		85802527		2	CLIP
11		85802528		2	CLIP

Pilot Control Version

333/ B	09	p1	02/05

7 SECTION PILOT CONTROL VALVE SUPPORT, COMPLETE (CENTER PIVOT) EUROPE

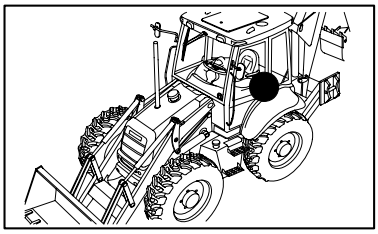

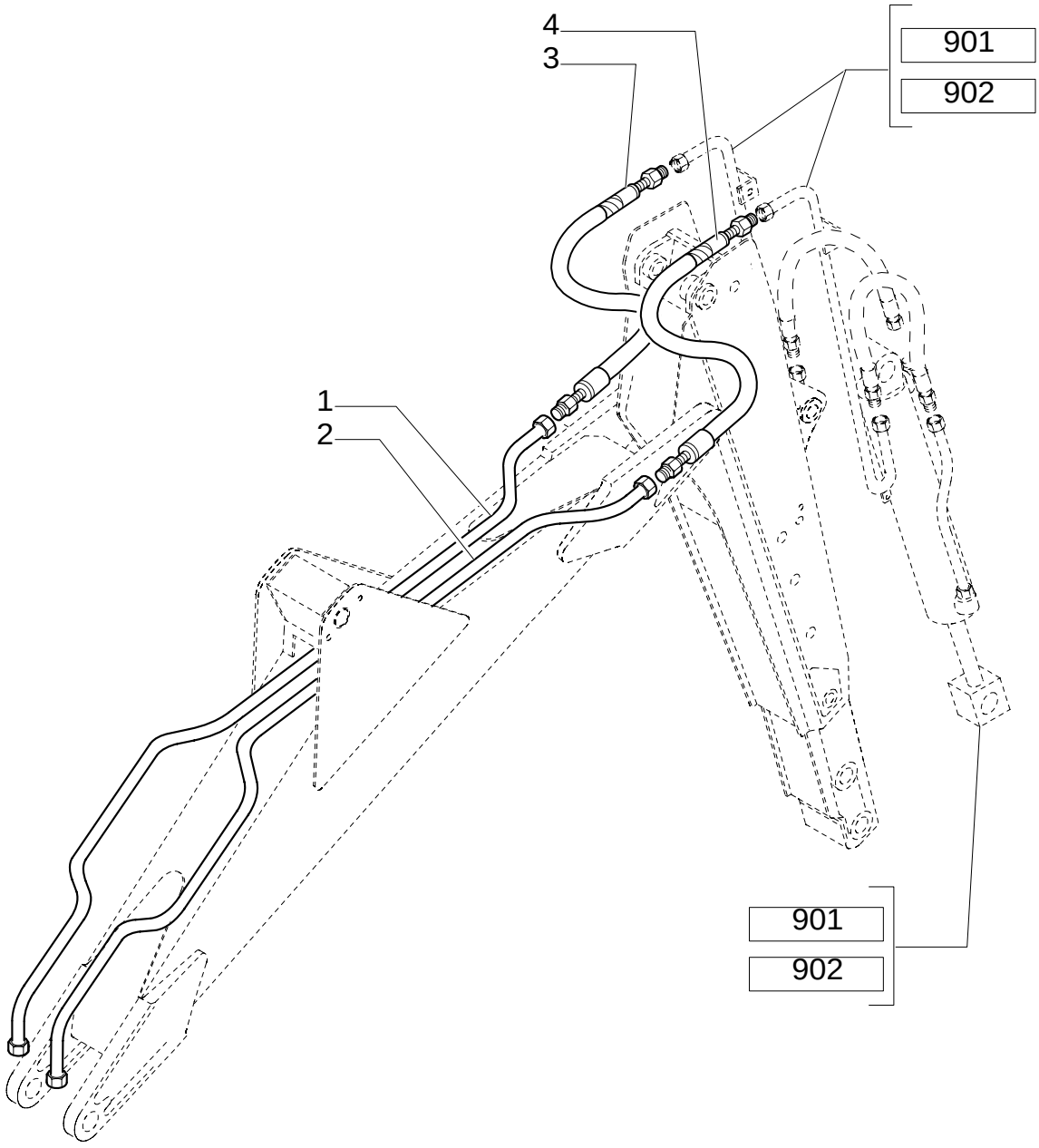

7 SECTION PILOT CONTROL VALVE SUPPORT, COMPLETE (CENTER PIVOT) EUROPE

REF	FN	PART NUMBER	YR/SN	QTY	DESCRIPTION
1		85815674		1	TUBE, RIGID
2		85815676		1	TUBE, RIGID
3		85817106		1	HOSE, FLEXIBLE
4		85817107		1	HOSE, FLEXIBLE

Pilot Control Version

333/ B	10	p1	11/05

6 SECTION PILOT CONTROL VALVE SUPPORT,COMPLETE

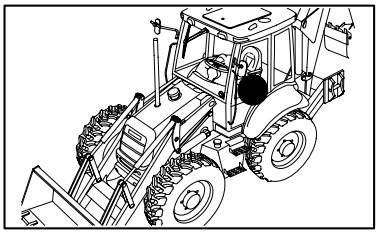

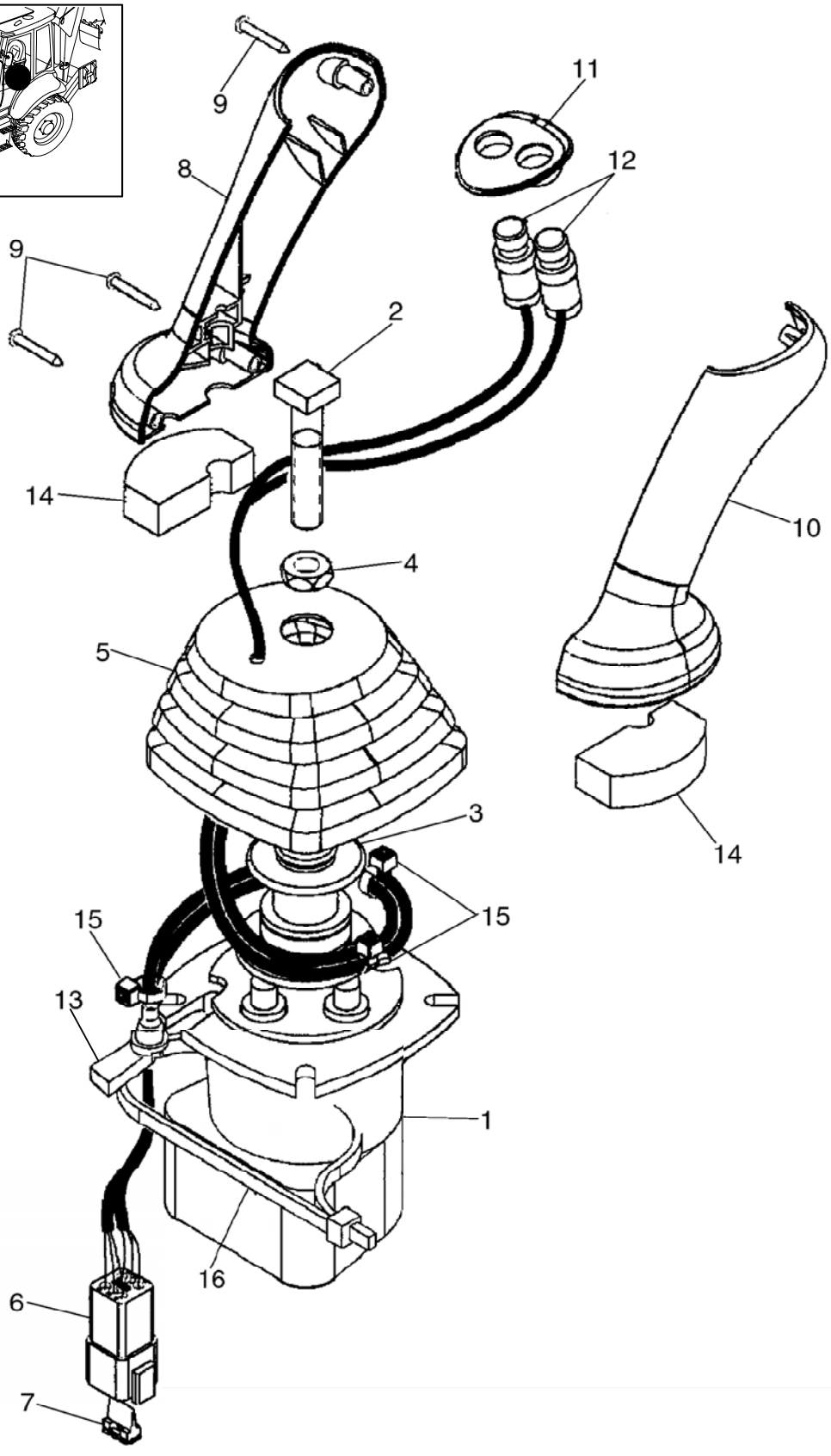

6 SECTION PILOT CONTROL VALVE SUPPORT,COMPLETE

REF	FN	PART NUMBER	YR/SN	QTY	DESCRIPTION
	1	87443743		1	MANIPULATOR
1		86983311		1	VALVE, CONTROL
2		87428023		1	BOLT
3		87436225		1	RETAINER
4		87037944		1	NUT
5		87443721		1	
6		225350C1		1	CONNECTOR
7		225353C1		1	WEDGE
8		87428164		1	HANDLE GRIP
9		15687475		3	SCREW, SELF TAPPING
10		87428165		1	HANDLE GRIP
11		87435242		1	BEZEL
12		87437371		1	SWITCH, ASSY
13		87424267		1	GROMMET
14		87435506		2	GASKET
15		87000312		1	RETAINER
16		87438046		1	STRAP

(1) Includes 1 To 15

Pilot Control Version, Up To S/N XXX

333/ C	01	p1	11/05

VALVE, JOYSTICK PILOT CONTROLS (RIGHT HAND)

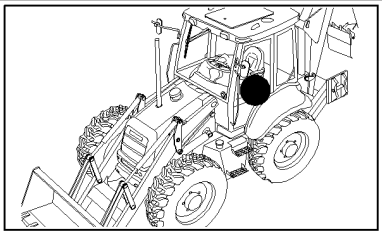

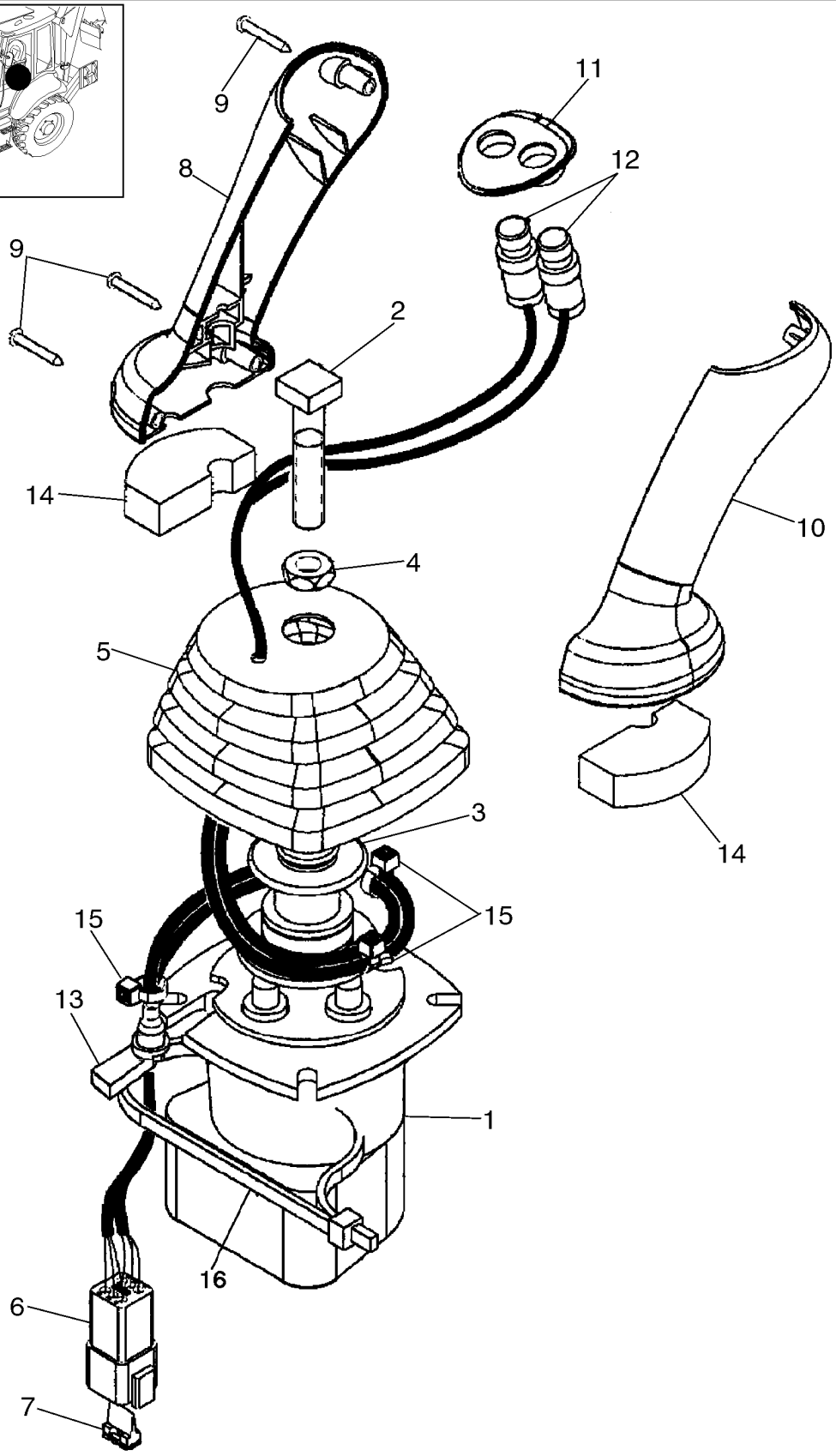

VALVE, JOYSTICK PILOT CONTROLS (RIGHT HAND)

REF	FN	PART NUMBER	YR/SN	QTY	DESCRIPTION
1	[1]	87443743		1	MANIPULATOR
1		86983311		1	VALVE, CONTROL
2		87428023		1	BOLT
3		87436225		1	RETAINER
4		87037944		1	NUT
5		87443721		1	
6		225350C1		1	CONNECTOR
7		225353C1		1	WEDGE
8		87428164		1	HANDLE GRIP
9		15687475		3	SCREW, SELF TAPPING 3.5x25
10		87428165		1	HANDLE GRIP
11		87435242		1	BEZEL
12		87437371		2	SWITCH, ASSY
13		87424267		1	GROMMET
14		87435506		2	GASKET
15		87000312		3	RETAINER
16		87438046		1	STRAP

(1) Includes 1 To 16

Pilot Control Version

333/ C	02	p1	11/05

VALVE, JOYSTICK PILOT CONTROLS (LEFT HAND)

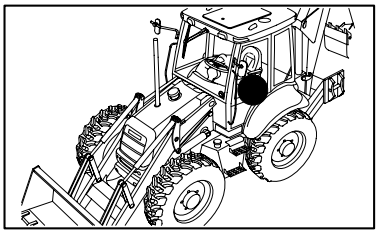

VALVE, JOYSTICK PILOT CONTROLS (LEFT HAND)

REF	FN	PART NUMBER	YR/SN	QTY	DESCRIPTION
1	1	87443740		1	MANIPULATOR
1		86983311		1	VALVE, CONTROL
2		87436225		1	RETAINER
3		87428023		1	BOLT
4		87037944		1	NUT
5		87443721		1	
6		225315C1		1	CONNECTOR
7		225318C1		1	WEDGE
8		87428164		1	HANDLE GRIP
9		15687475		3	SCREW, SELF TAPPING 3.5x25
10		87428165		1	HANDLE GRIP
11		87435243		1	BEZEL
12		87437372		2	SWITCH
13		86625128		1	PLUG
14		87424267		2	GROMMET
15		87435506		3	GASKET
16		87438046		1	STRAP
17		87000312		1	RETAINER

(1) Includes 1 To 17

Pilot Control Version, Up To S/N XXX

333/ 1	01	p1	11/05

7-SECTIONS EXCAVATOR CONTROL VALVE (CENTER PIVOT) NORTH AMERICA

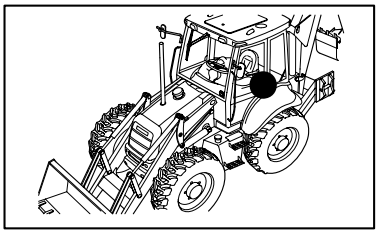

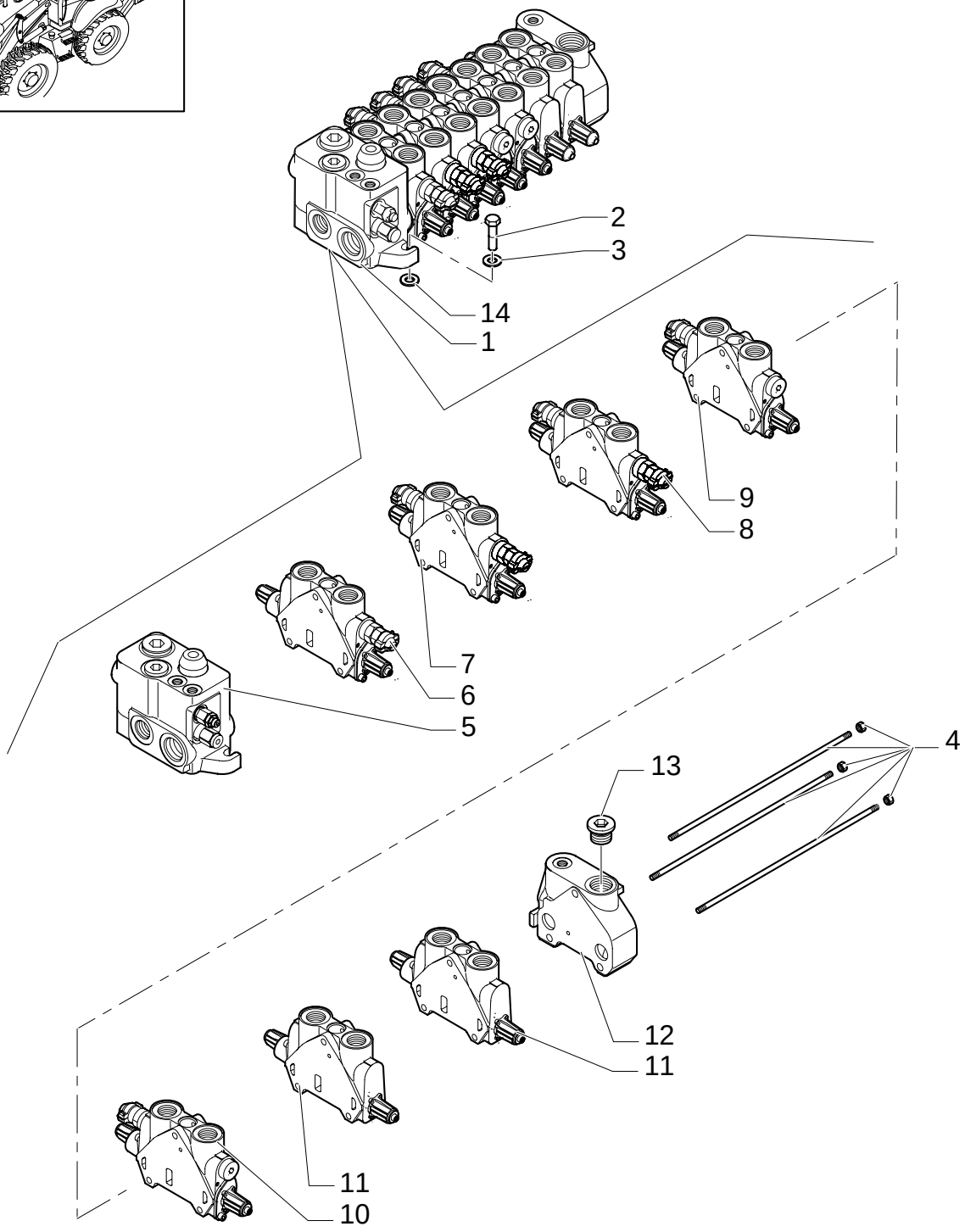

7-SECTIONS EXCAVATOR CONTROL VALVE (CENTER PIVOT) NORTH AMERICA

REF	FN	PART NUMBER	YR/SN	QTY	DESCRIPTION
1	1	87302744		1	VALVE, CONTROL
1	2	87327768		1	VALVE, CONTROL
2		614-10045		3	SCREW M10x45
3		11190679		5	WASHER, LOCK M10
4		85811959		1	KIT
5	3	87308747		1	VALVE SECTION, HYD
6	1, 4, 5	85826904		1	SECTOR, TOOTHED
6	2, 4, 6	87343616		1	DISTRIBUTOR
7	7, 8	85826901		1	SECTOR, TOOTHED
8	9, 10	85826339		1	VALVE SECTION, HYD
9	11, 12	85826903		1	SECTOR, TOOTHED
10	13, 14	85826902		1	SECTOR, TOOTHED
11	15, 16	85826340		2	VALVE SECTION, HYD
12	17	85826250		1	SECTOR, TOOTHED
13		85811921		1	PLUG 1-1/16"-12 UNF 2A
14		13578621		3	WASHER

(1) UP TO S/N XXX
(2) FROM TO S/N XXX
(3) See Page 331/1 02
(4) Telescopic Cylinder
(5) See Page 333/1 02
(6) See Page 333/1 08
(7) Boom Cylinder
(8) See Page 333/1 03
(9) Swing Cylinder
(10) See Page 333/1 04
(11) Bucket Cylinder
(12) See Page 333/1 05
(13) Arm Cylinder
(14) See Page 333/1 06
(15) Stabilizer Cylinder
(16) See Page 333/1 07
(17) Includes 13

Pilot Control Version

333/ 1	02	p1	11/05

7-SECTIONS EXCAVATOR CONTROL VALVE (CENTER PIVOT) NORTH AMERICA

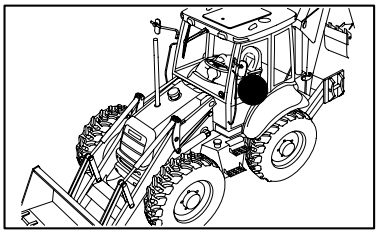

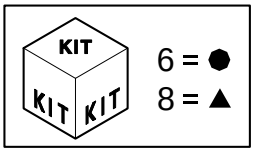

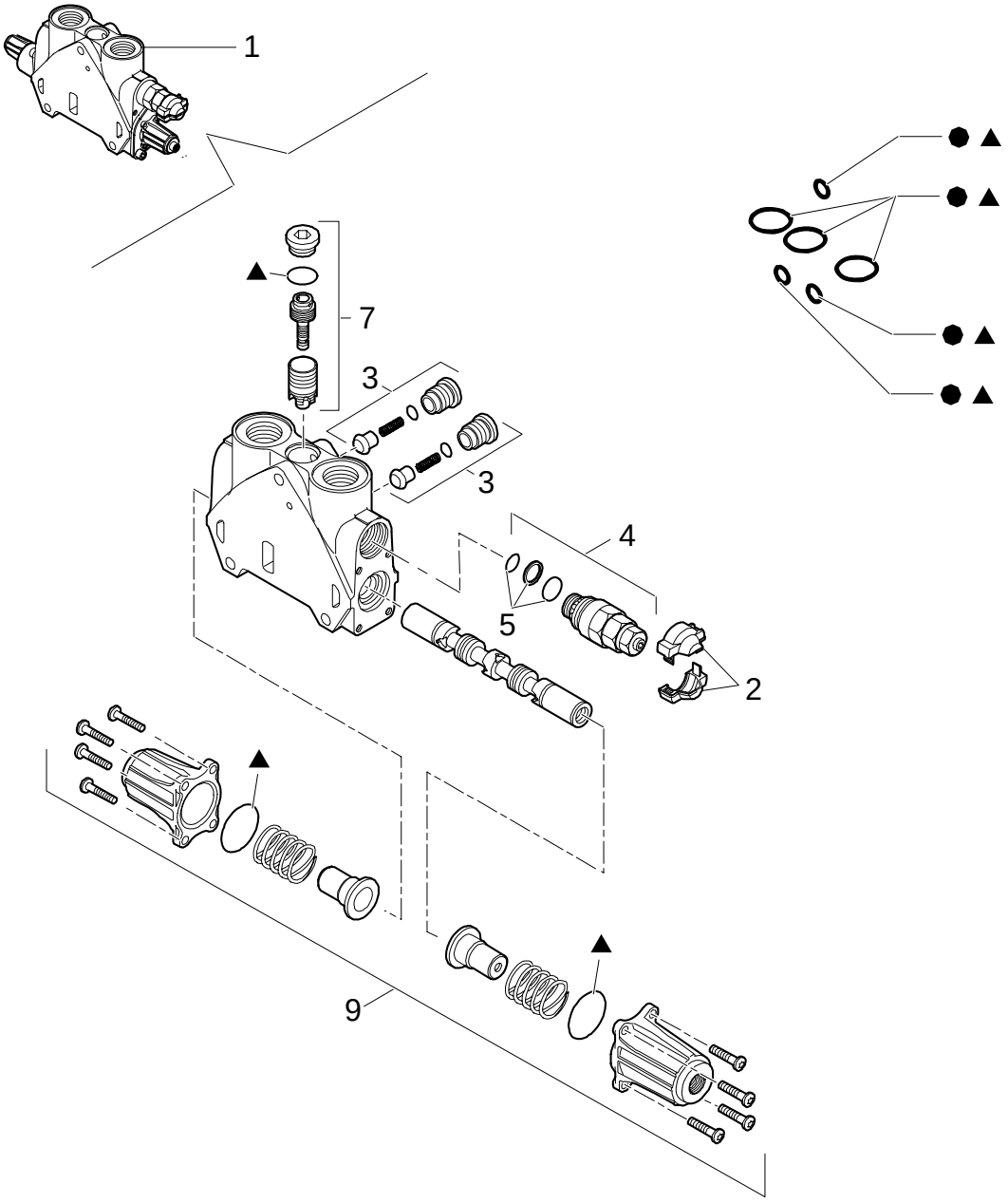

7-SECTIONS EXCAVATOR CONTROL VALVE (CENTER PIVOT) NORTH AMERICA

REF	FN	PART NUMBER	YR/SN	QTY	DESCRIPTION
1		85826904		1	SECTOR, TOOTHED
2		85811934		2	KIT Cover
3		85811938		2	KIT Valve
4	1, 2	85812113		2	VALVE, HYDRAULIC
5		85811933		1	KIT Valve Seals
6		85819148		1	KIT Seals
7		85819378		1	KIT Valve
8		85824281		1	KIT Seals
9		85826344		1	KIT Cover Assy

(1) Includes 4
(2) 165 BAR

Pilot Control Version

333/ 1	03	p1	11/05

7-SECTIONS EXCAVATOR CONTROL VALVE (CENTER PIVOT) NORTH AMERICA

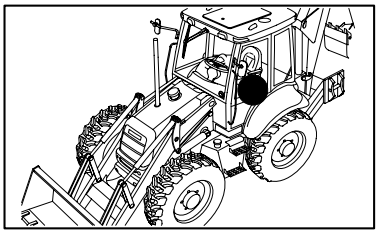

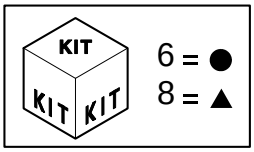

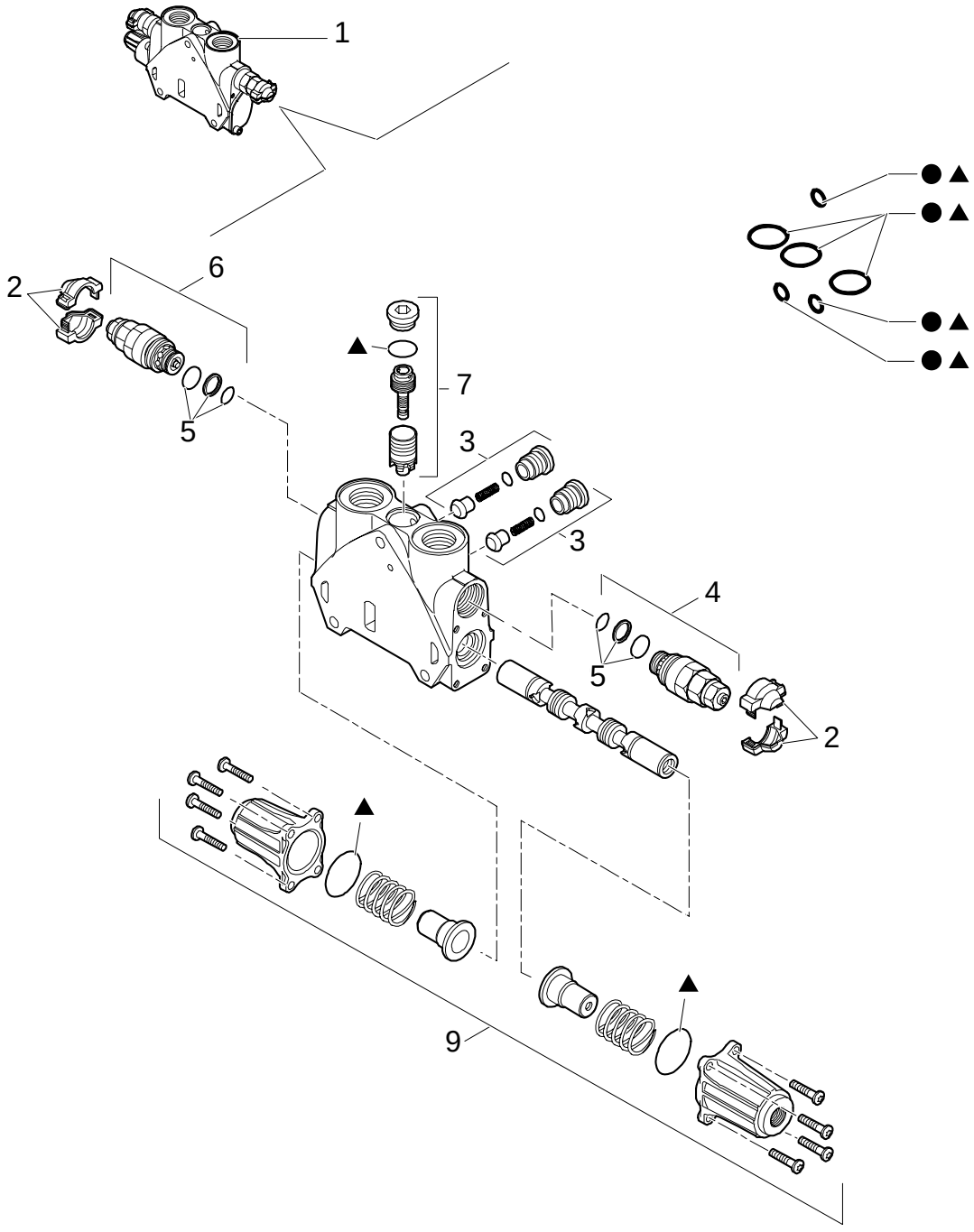

7-SECTIONS EXCAVATOR CONTROL VALVE (CENTER PIVOT) NORTH AMERICA

REF	FN	PART NUMBER	YR/SN	QTY	DESCRIPTION
1		85826901		1	SECTOR, TOOTHED
2		85811934		2	KIT Cover
3		85811938		2	KIT Valve
4	1, 2	85812116		1	VALVE, HYDRAULIC
5		85811933		1	KIT
6	1, 3	85812117		1	VALVE, HYDRAULIC
6		85819148		1	KIT Seals
7		85819378		1	KIT Valve
8		85824281		1	KIT Seals
9		85826344		1	KIT Cover Assy

(1) Includes 5
(2) 240 BAR
(3) 315 BAR

Pilot Control Version

333/ 1	04	p1	11/05

7-SECTIONS EXCAVATOR CONTROL VALVE (CENTER PIVOT) NORTH AMERICA

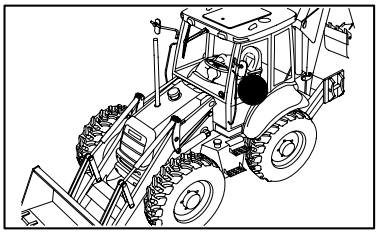

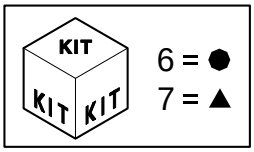

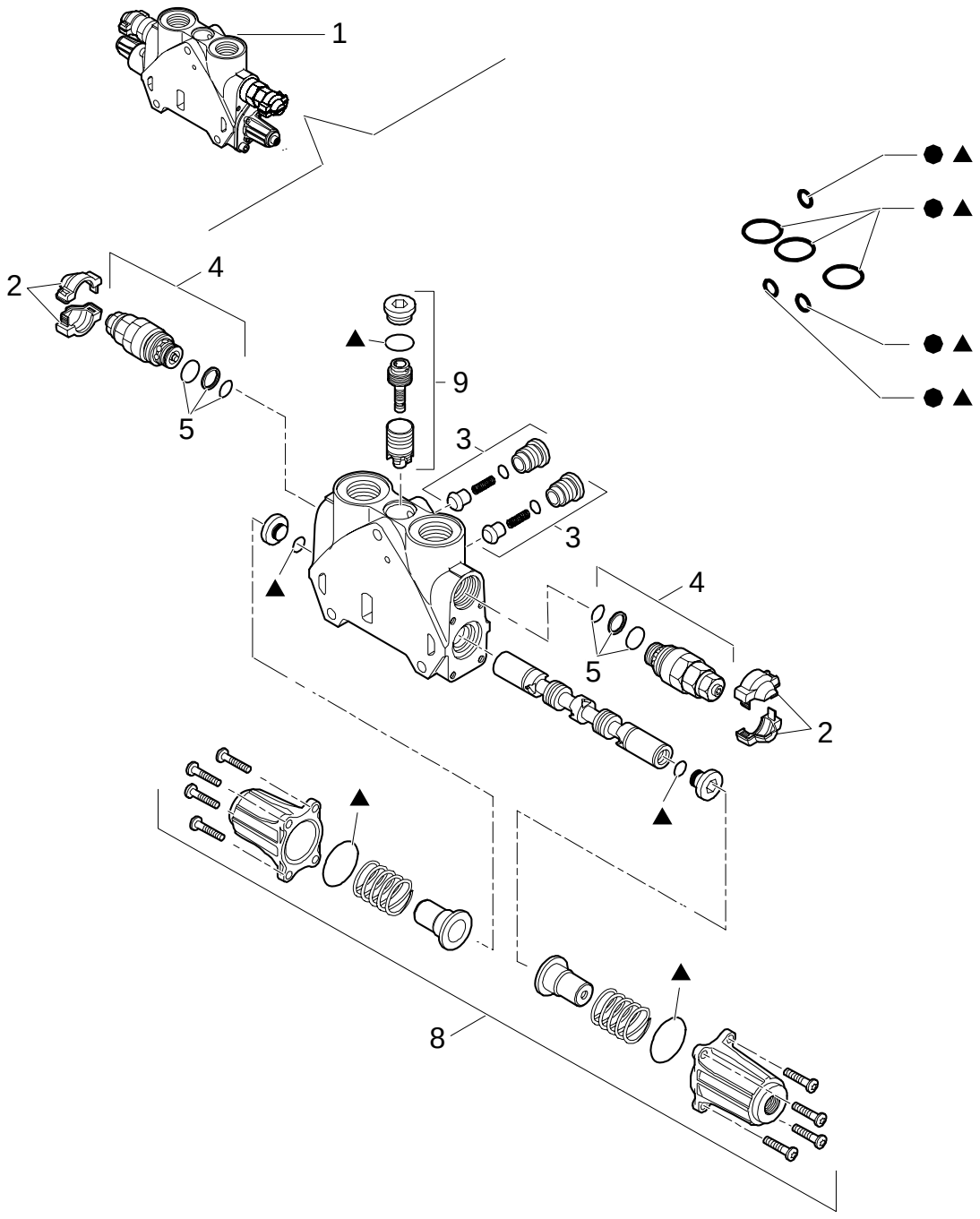

7-SECTIONS EXCAVATOR CONTROL VALVE (CENTER PIVOT) NORTH AMERICA

REF	FN	PART NUMBER	YR/SN	QTY	DESCRIPTION
1		85826339		1	VALVE SECTION, HYD
2		85811934		2	KIT Cover
3		85811938		2	KIT Valve
4	1, 2	85812114		2	VALVE, HYDRAULIC
5		85811933		2	KIT Valve Seals
6		85819148		1	KIT Seals
7		85824282		1	KIT Seals
8		85826344		1	KIT Cover Assy
9		85826345		1	KIT Valve

(1) Includes 5
(2) 205 BAR

Pilot Control Version

333/ 1	05	p1	11/05

7-SECTIONS EXCAVATOR CONTROL VALVE (CENTER PIVOT) NORTH AMERICA

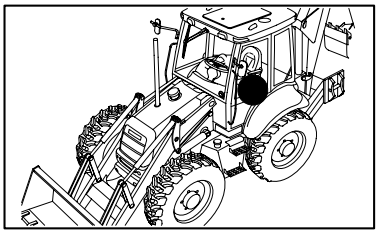

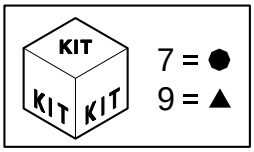

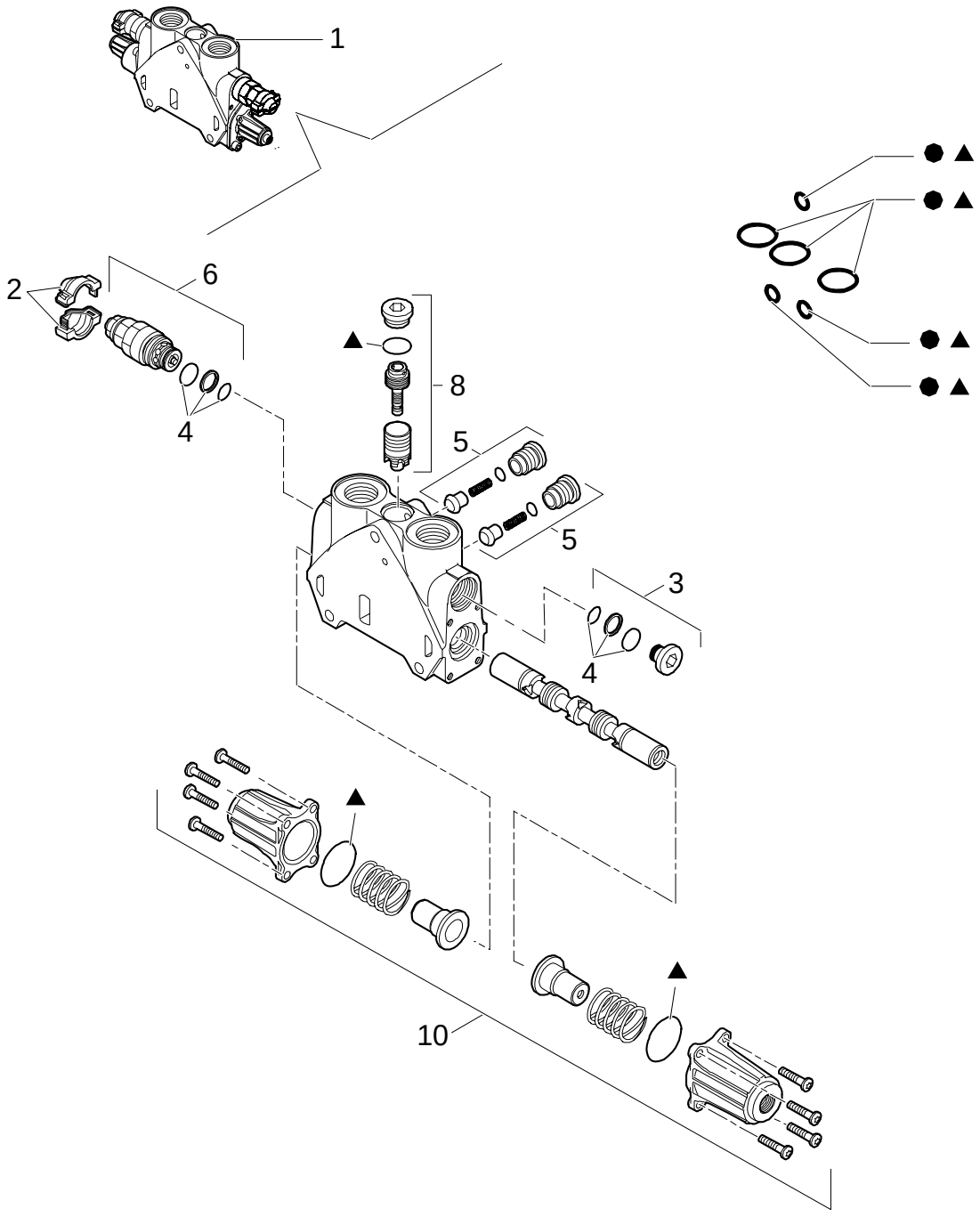

7-SECTIONS EXCAVATOR CONTROL VALVE (CENTER PIVOT) NORTH AMERICA

REF	FN	PART NUMBER	YR/SN	QTY	DESCRIPTION
1		85826903		1	SECTOR, TOOTHED
2		85811934		1	KIT Cover
3	1, 2	85811937		1	PLUG
4		85811933		1	KIT Valve Seals
5		85811938		2	KIT Valve
6	1, 2	85812115		1	VALVE, HYDRAULIC
7		85819148		1	KIT Seals
8		85819378		1	KIT Valve
9		85824281		1	KIT Seals
10		85826344		1	KIT Cover Assy

(1) 220 BAR
(2) Includes 4

Pilot Control Version

333/ 1	06	p1	11/05

7-SECTIONS EXCAVATOR CONTROL VALVE (CENTER PIVOT) NORTH AMERICA

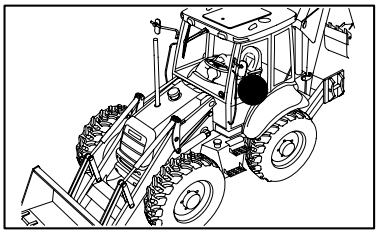

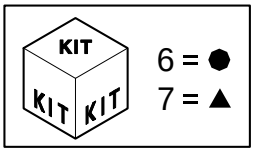

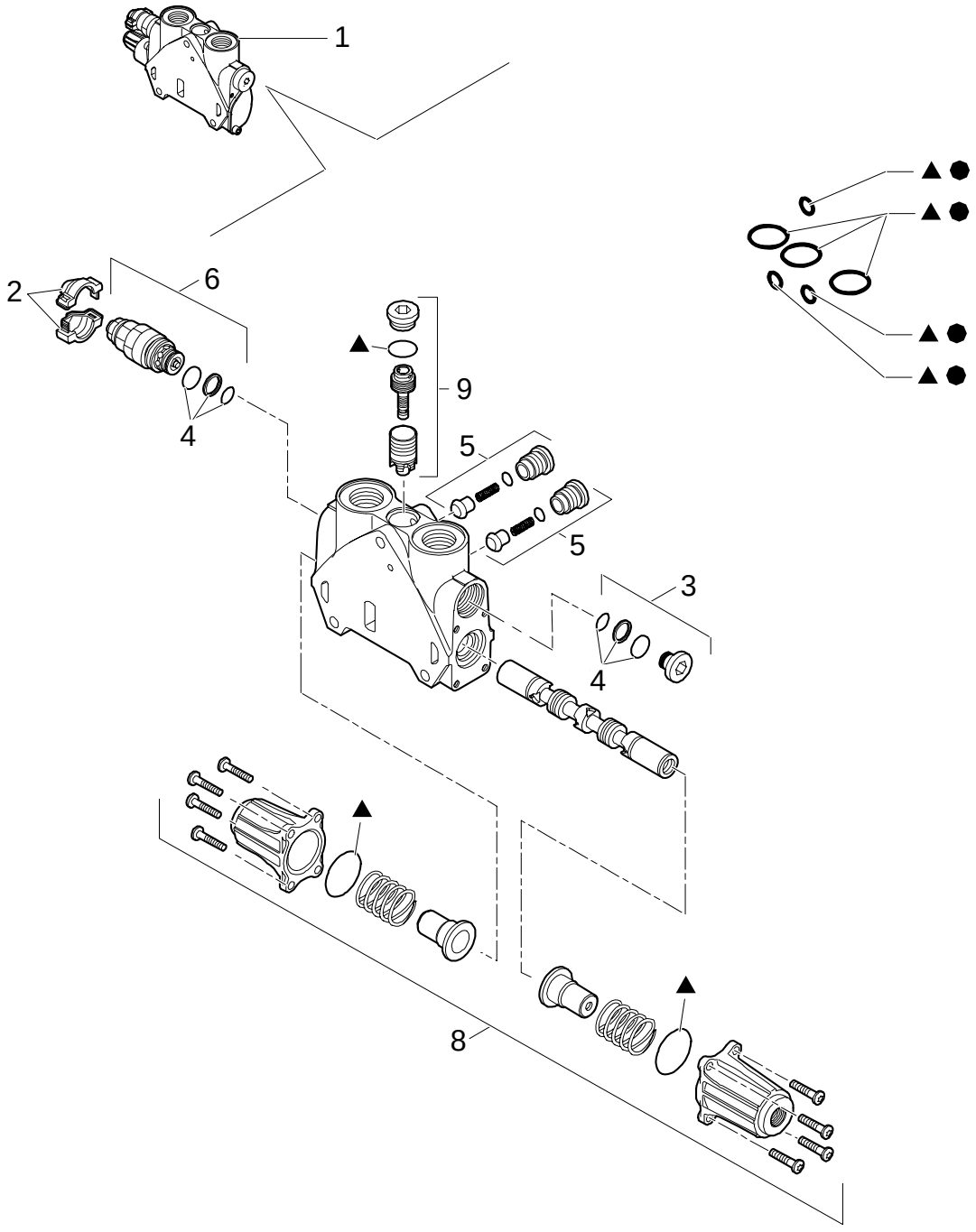

7-SECTIONS EXCAVATOR CONTROL VALVE (CENTER PIVOT) NORTH AMERICA

REF	FN	PART NUMBER	YR/SN	QTY	DESCRIPTION
1		85826902		1	SECTOR, TOOTHED
2		85811934		1	KIT Cover
3	1, 2	85811937		1	PLUG
4		85811933		1	KIT Valve Seals
5		85811938		2	KIT Valve
6	1, 2	85812116		1	VALVE, HYDRAULIC
6		85819148		1	KIT Valve
7		85824281		1	KIT Seals
8		85826344		1	KIT Cover Assy
9		85826345		1	KIT Valve

(1) 240 BAR
(2) Includes 4

Pilot Control Version

333/ 1	07	p1	11/05

7-SECTIONS EXCAVATOR CONTROL VALVE (CENTER PIVOT) NORTH AMERICA

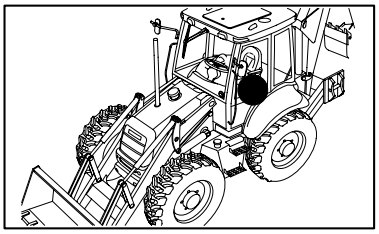

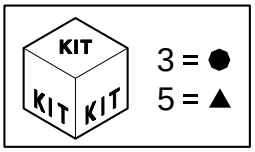

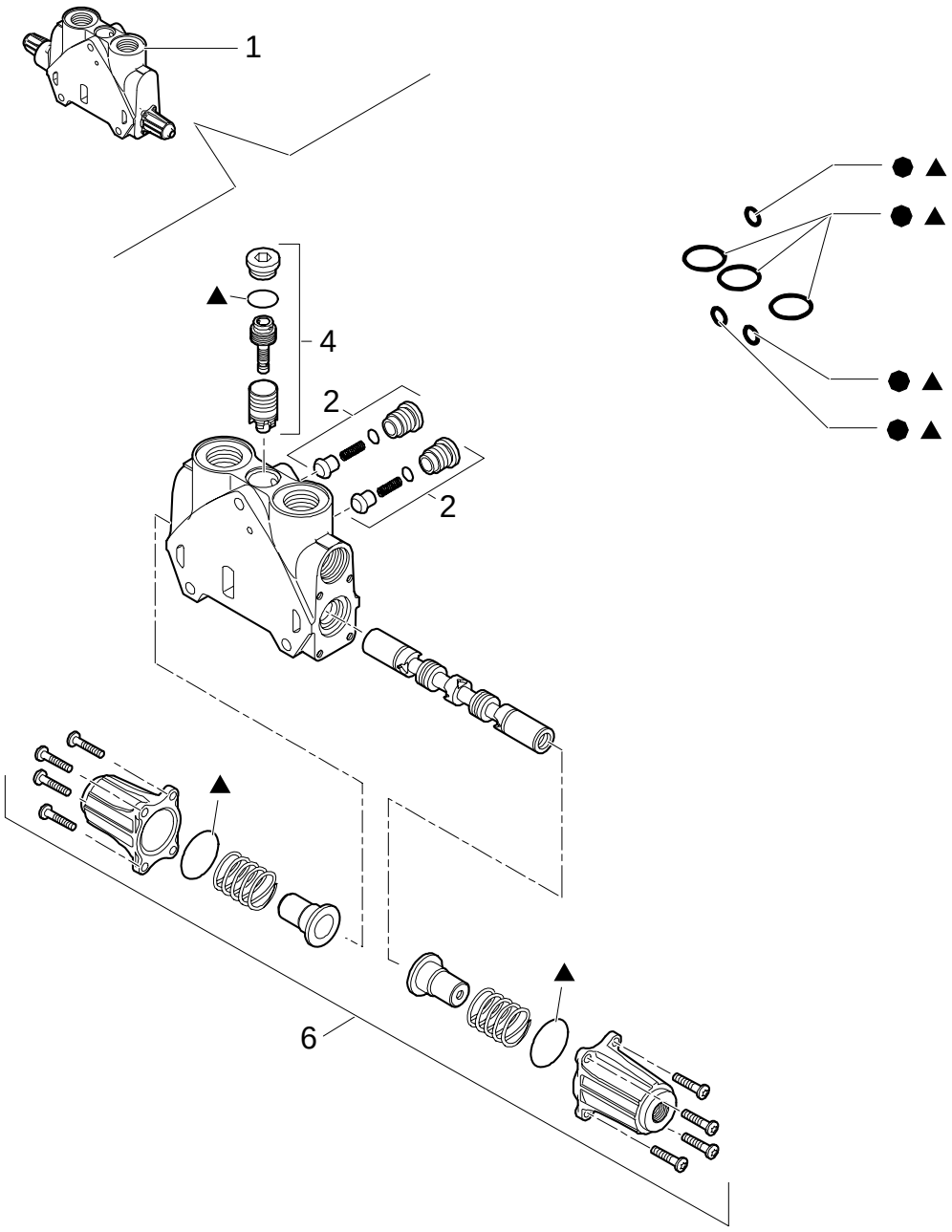

7-SECTIONS EXCAVATOR CONTROL VALVE (CENTER PIVOT) NORTH AMERICA

REF	FN	PART NUMBER	YR/SN	QTY	DESCRIPTION
1		85826340		2	VALVE SECTION, HYD
2		85811938		2	KIT Valve
3		85819148		1	KIT Seals
4		85819378		1	KIT Valve
5		85824281		1	KIT Seals
6		85826344		1	KIT Cover Assy

Pilot Control Version

333/ 1	08	p1	11/05

7-SECTIONS EXCAVATOR CONTROL VALVE (CENTER PIVOT) NORTH AMERICA

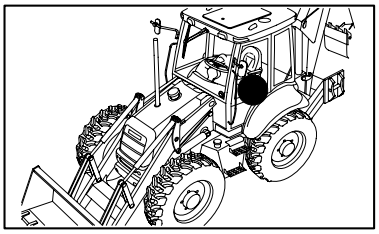

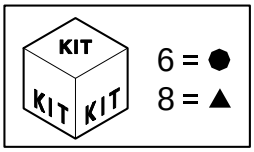

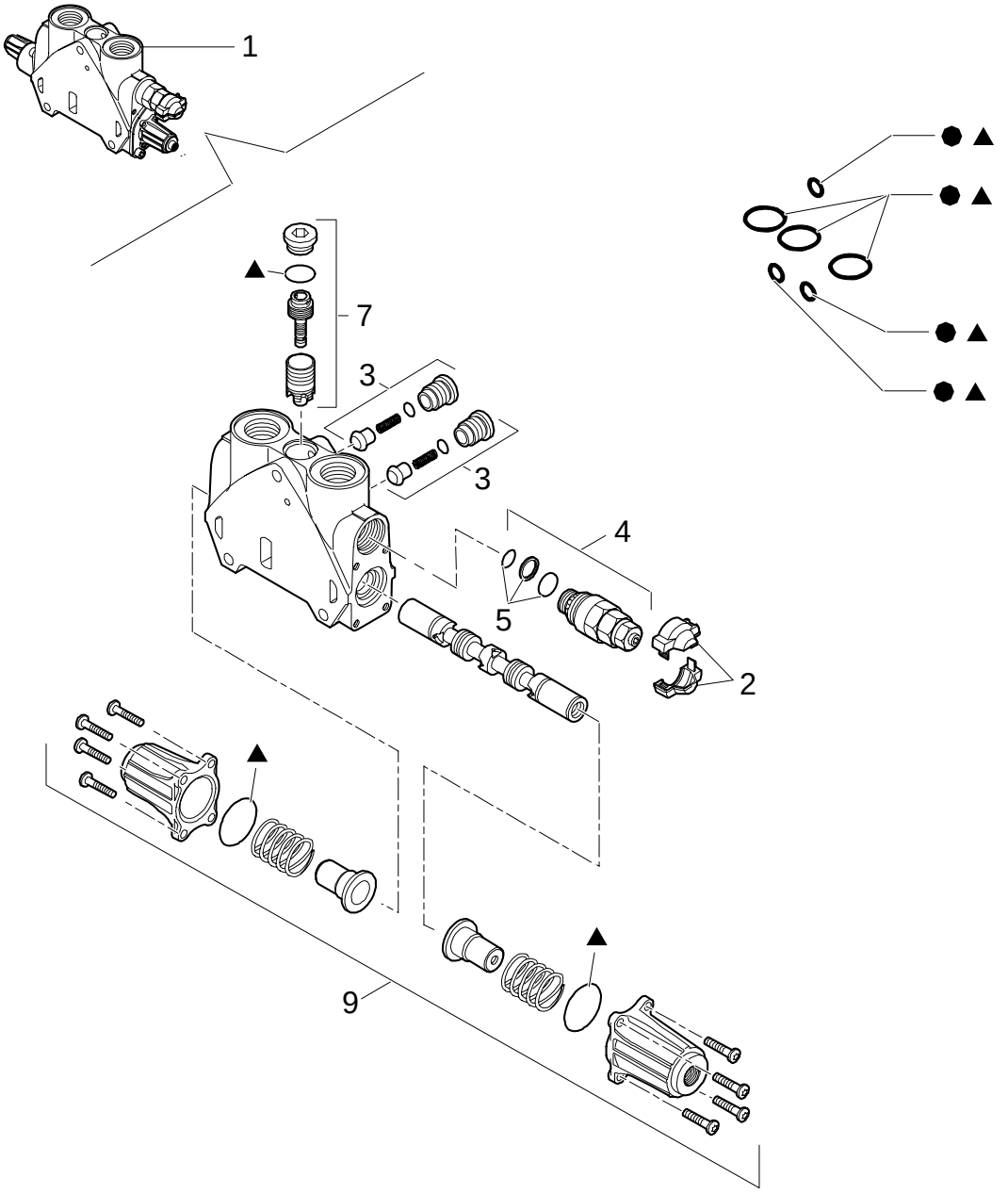

7-SECTIONS EXCAVATOR CONTROL VALVE (CENTER PIVOT) NORTH AMERICA

REF	FN	PART NUMBER	YR/SN	QTY	DESCRIPTION
1		87343616		1	DISTRIBUTOR
2		85811934		2	KIT Cover
3		85811938		2	KIT Valve
4	1, 2	87341088		2	VALVE, HYDRAULIC
5		85811933		1	KIT Valve Seals
6		85819148		1	KIT Seals
7		85819378		1	KIT Valve
8		85824281		1	KIT Seals
9		85826344		1	KIT Cover Assy

(1) Includes 4
(2) 124 BAR

Pilot Control Version

334	09	p1	02/05

7-SECTIONS EXCAVATOR CONTROL VALVE

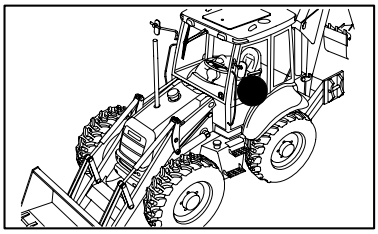

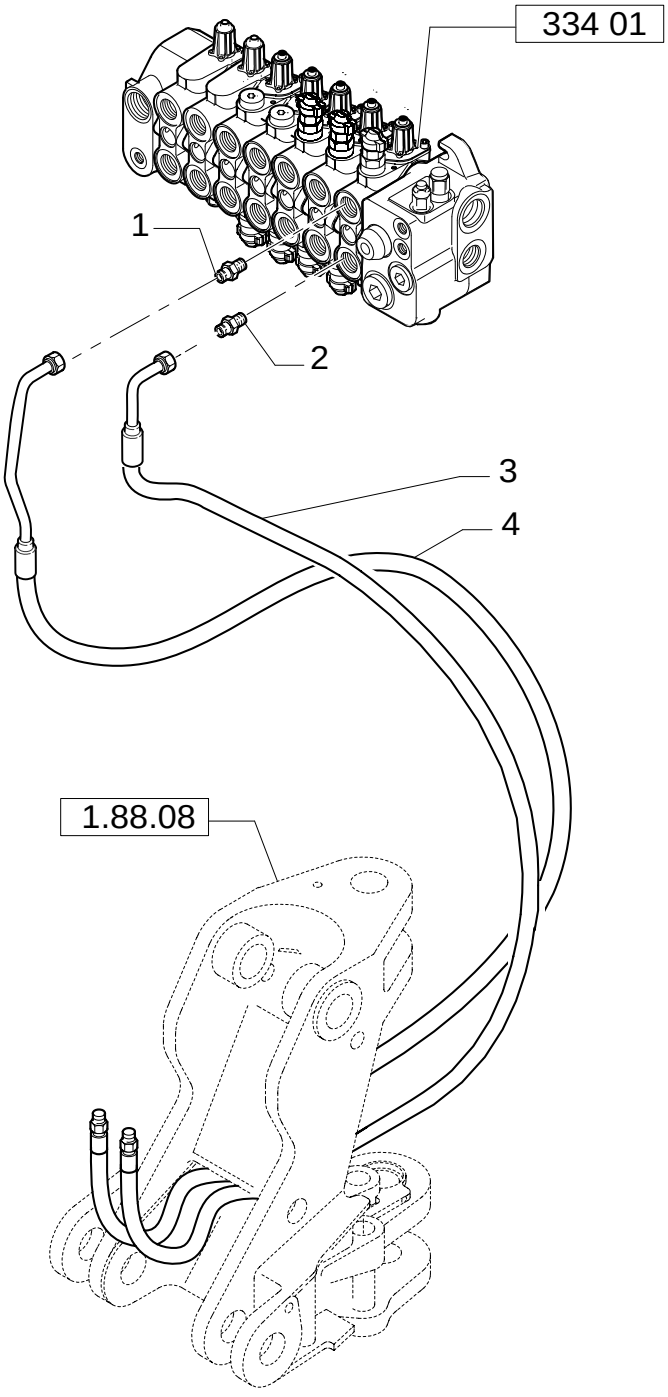

7-SECTIONS EXCAVATOR CONTROL VALVE

REF	FN	PART NUMBER	YR/SN	QTY	DESCRIPTION
1		390938S36		1	CONNECTOR, HYD.
2		85805258		1	CONNECTOR, HYD.
3		85819067		1	HOSE, FLEXIBLE
4		85819066		1	HOSE, FLEXIBLE

334	11	p1	02/05

7-SECTIONS EXCAVATOR CONTROL VALVE

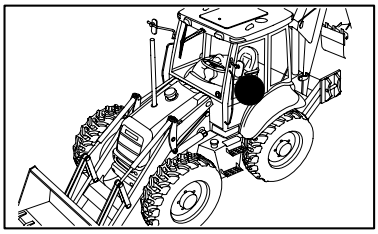

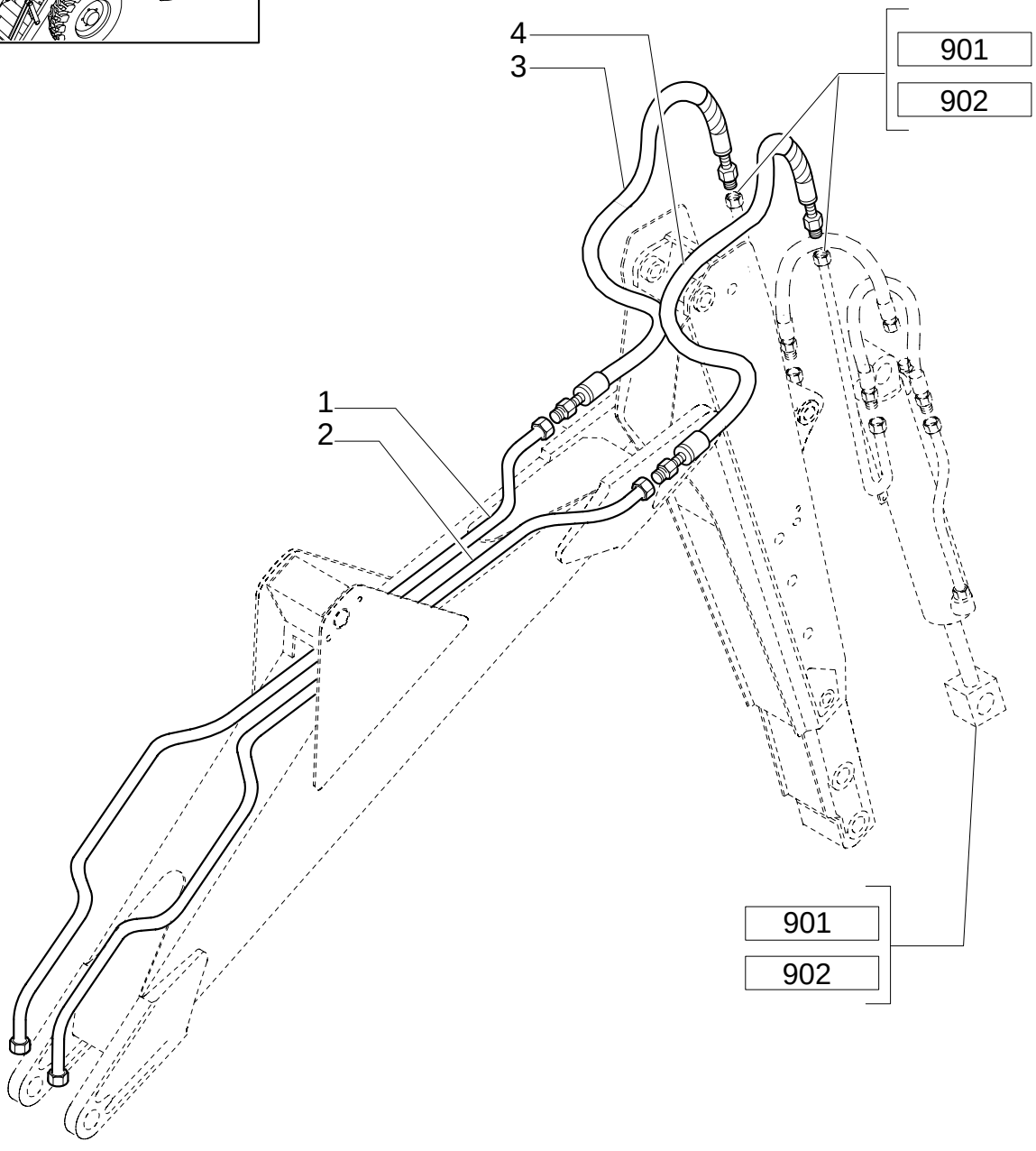

7-SECTIONS EXCAVATOR CONTROL VALVE

REF	FN	PART NUMBER	YR/SN	QTY	DESCRIPTION
1		85815674		1	TUBE, RIGID
2		85815676		1	TUBE, RIGID
3	1	85817106		1	HOSE, FLEXIBLE
3A		9991976		2	O-RING 90 Duro, .739" ID x .070" Thk
4	2	85817107		1	HOSE, FLEXIBLE
4A		9992069		2	O-RING

(1) Includes 3A
(2) Includes 4A

336	01	p1	12/05

LOADER CONTROL VALVE (CENTER PIVOT)

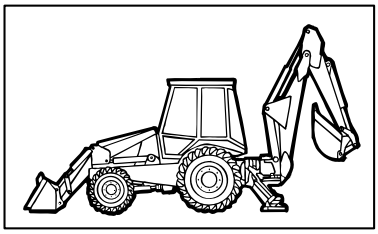

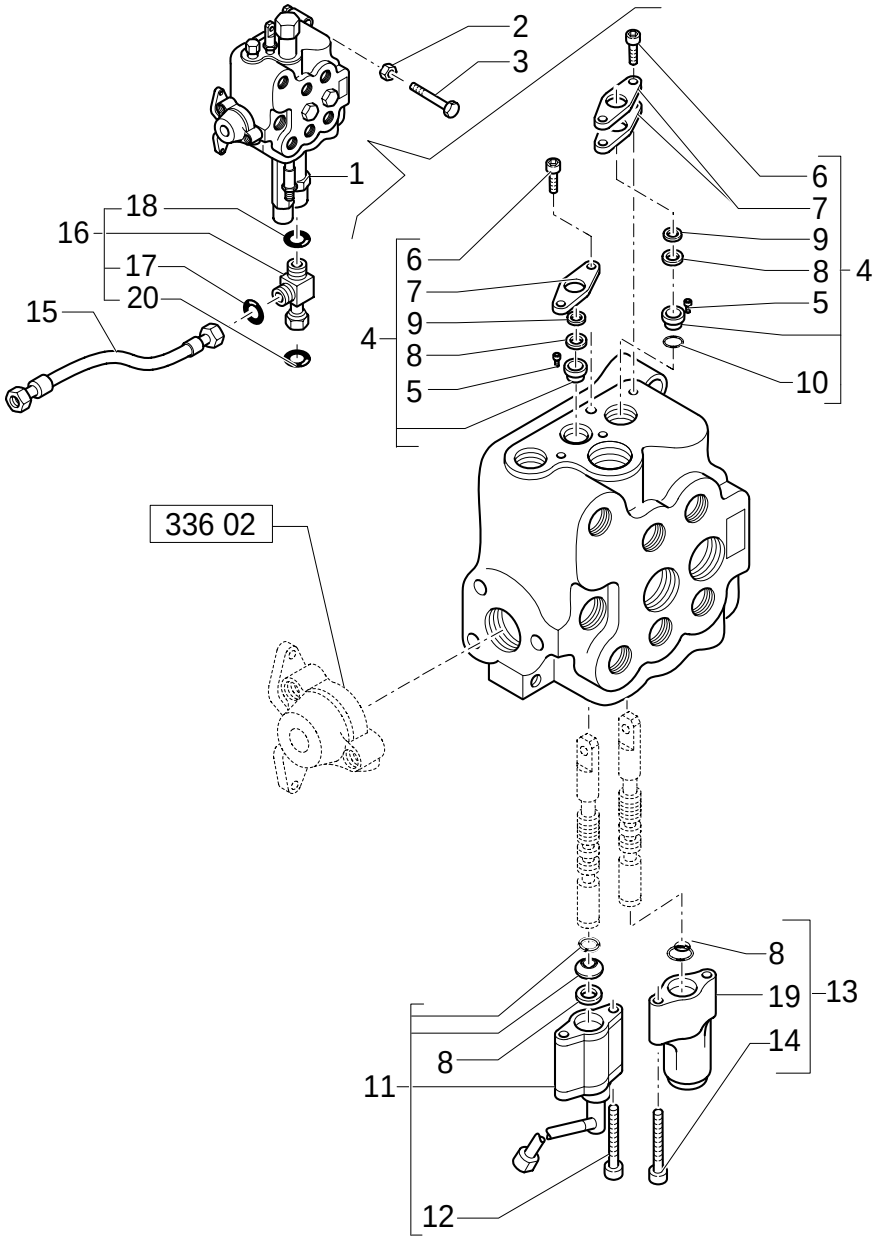

LOADER CONTROL VALVE (CENTER PIVOT)

REF	FN	PART NUMBER	YR/SN	QTY	DESCRIPTION
1		85819649		1	DISTRIBUTOR ASSY
2		11190579		3	WASHER, LOCK
3		14308221		3	SCREW M10X1,25X65
4		9968455		1	SET OF PARTS
5		9968457		1	SPACER
6		9968456		2	SCREW
7		9968458		3	PLATE, COVER
8		9968489		4	GASKET
9		9968490		1	RING, OIL SCRAPER
10		87327076		1	WASHER
11		85808403		1	STOP
12		9968451		2	SCREW
13		85817025		1	VALVE, FLOAT
14		9968454		2	SCREW
15		85816804		1	HOSE, FLEXIBLE
16	1	85817531		1	CONNECTOR, HYD.
17		9825770		1	O-RING 90 Duro, .301" ID x .070" Thk
18		9824050		1	O-RING 90 Duro, .926" ID x .070" Thk
19		9968513		1	COVER
20		89626929		1	O-RING 90 Duro, 1.048" ID x .116" Thk

(1) Includes 17, 18, 20

Mechanical Version

LOADER CONTROL VALVE, TWO SECTION, CAP & UNLOAD VALVE (CENTER PIVOT)

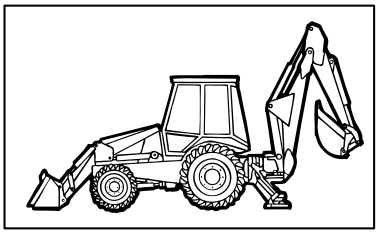

KIT 16 = ●

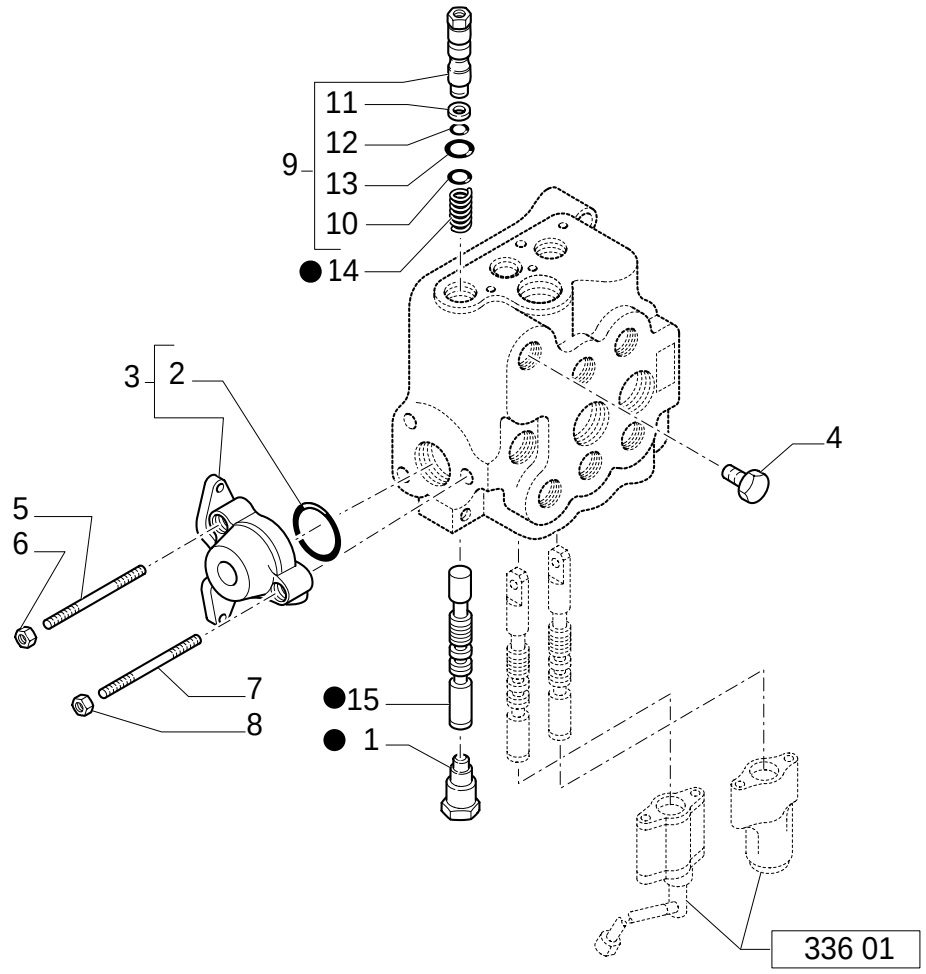

LOADER CONTROL VALVE, TWO SECTION, CAP & UNLOAD VALVE (CENTER PIVOT)

REF	FN	PART NUMBER	YR/SN	QTY	DESCRIPTION
1		9968464		1	PLUG ASSY
2		9968476		1	O-RING
3		9968443		1	PANEL, SIDE
4		85807857		1	PLUG
5		9968521		2	STUD
6		9968441		2	NUT
7		9968520		1	STUD
8		9968440		1	NUT
9		85815667		1	VALVE, HYDRAULIC
10		85815668		1	RING
11		9968467		1	RING
12		9968466		1	O-RING
13		9968468		1	O-RING
14		9968488		1	SPRING
15		85807858		1	PLUNGER AND VALVE
16		{87327632}		1	

Mechanical Version

LOADER CONTROL VALVE, TWO SECTION, RELIEF & CHECK VALVES (CENTER PIVOT)

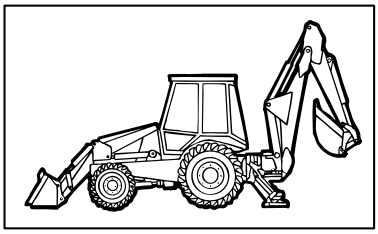

KIT KIT KIT 14≡ ●

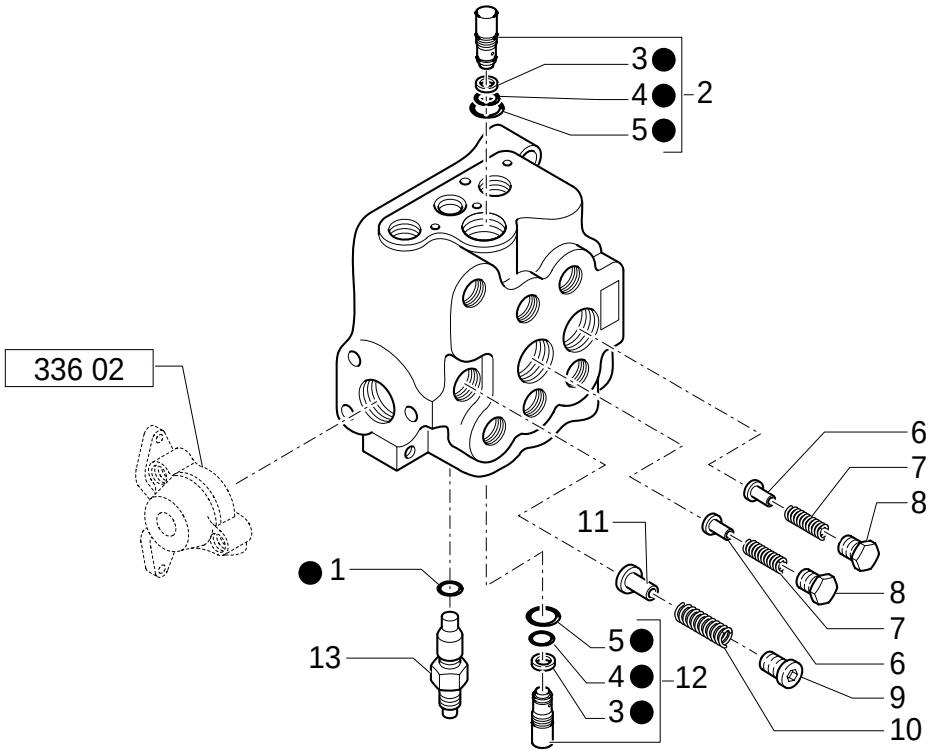

LOADER CONTROL VALVE, TWO SECTION, RELIEF & CHECK VALVES (CENTER PIVOT)

REF	FN	PART NUMBER	YR/SN	QTY	DESCRIPTION
1		85819945		1	RING ASSY
2		87302609		1	VALVE, HYDRAULIC
3		87302608		2	RING
4		9968471		2	O-RING
5		9968470		2	O-RING
6		9968444		2	PLUNGER
7		9968445		2	SPRING
8		9968446		2	PLUG
9		9968449		1	PLUG
10		9968448		1	SPRING
11		9968447		1	PLUNGER
12		87302611		1	VALVE, HYDRAULIC
13		85819722		1	VALVE, HYDRAULIC
14		87302607		1	KIT, SEALS

Mechanical Version

LOADER CONTROL VALVE, TWO SECTION, BY-PASS KIT (CENTER PIVOT)

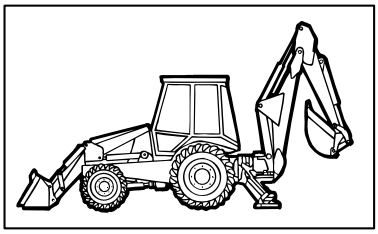

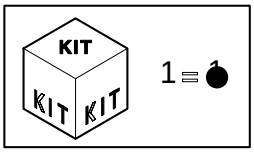

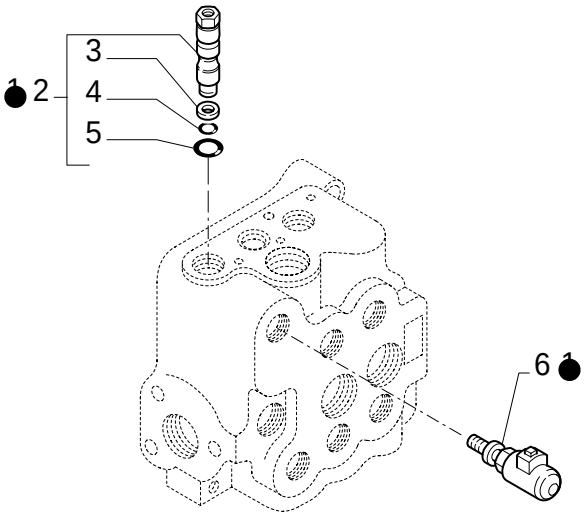

LOADER CONTROL VALVE, TWO SECTION, BY-PASS KIT (CENTER PIVOT)

REF	FN	PART NUMBER	YR/SN	QTY	DESCRIPTION
1		85817201		1	KIT
2		9968465		1	VALVE, HYDRAULIC
3		9968467		1	RING
4		9968466		1	O-RING
5		9968468		1	O-RING
6		9968461		1	SENDER UNIT

Mechanical Version

LOADER CONTROL VALVE, TWO SECTION, UNLOAD KIT OR DUMP VALVE (CENTER PIVOT)

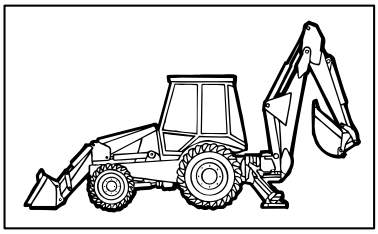

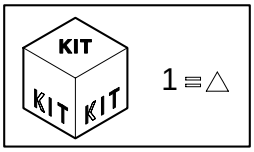

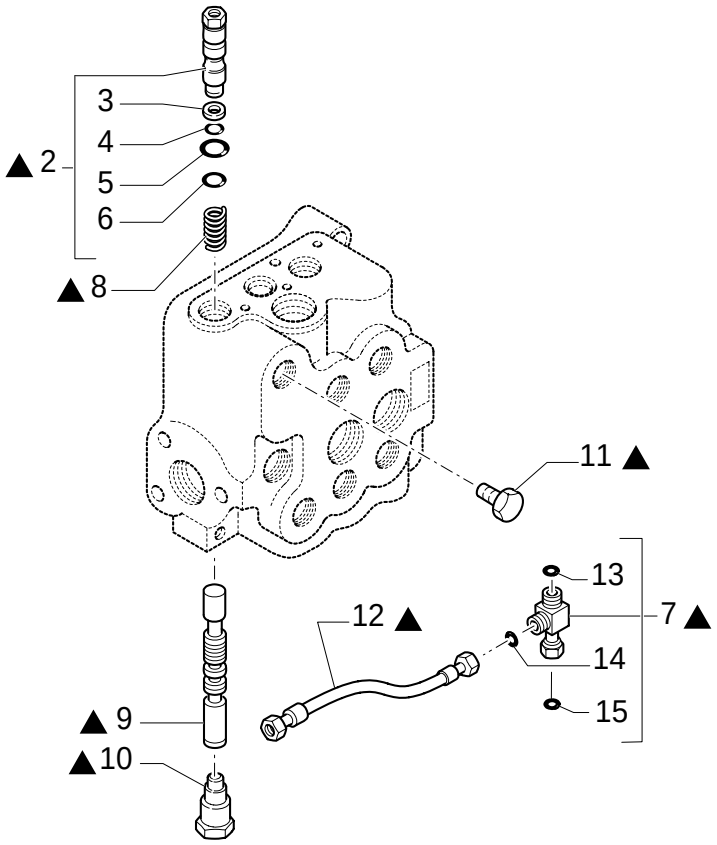

LOADER CONTROL VALVE, TWO SECTION, UNLOAD KIT OR DUMP VALVE (CENTER PIVOT)

REF	FN	PART NUMBER	YR/SN	QTY	DESCRIPTION
1		85816793		1	KIT
2		85815667		1	VALVE, HYDRAULIC
3		9968467		1	RING
4		9968466		1	O-RING
5		9968468		1	O-RING
6		85815668		1	RING
7		85817531		1	CONNECTOR, HYD.
8		9968488		1	SPRING
9		85807858		1	PLUNGER AND VALVE
10		9968464		1	PLUG
11		85807857		1	PLUG
12		85816804		1	HOSE, FLEXIBLE
13		9824050		1	O-RING 90 Duro, .926" ID x .070" Thk
14		9825770		1	O-RING 90 Duro, .301" ID x .070" Thk
15		89626929		1	O-RING 90 Duro, 1.048" ID x .116" Thk

Mechanical Version

339	01	p1	12/05

LOADER CONTROL VALVE, THREE SECTION (CENTER PIVOT)

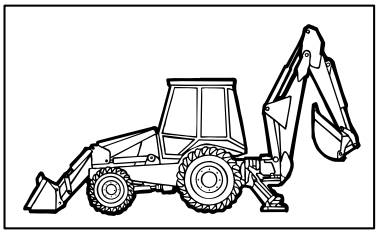

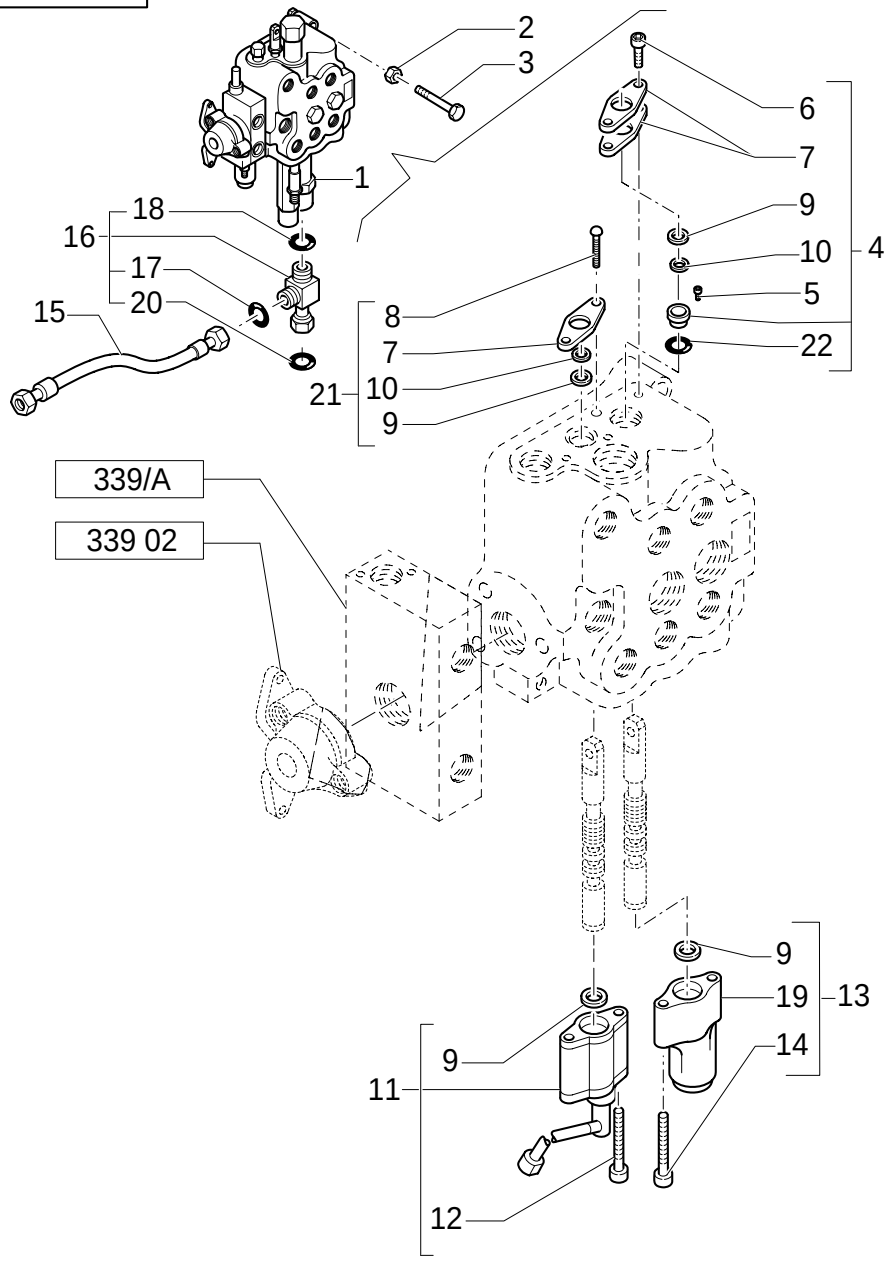

LOADER CONTROL VALVE, THREE SECTION (CENTER PIVOT)

REF	FN	PART NUMBER	YR/SN	QTY	DESCRIPTION
1		87326256		1	DISTRIBUTOR ASSY
2		11190579		3	WASHER, LOCK
3		14308221		3	SCREW M10X1,25X65
4		9968455		1	SET OF PARTS
5		9968457		1	SPACER
6		9968456		2	SCREW
7		9968458		3	PLATE, COVER
8		9968460		2	SCREW
9		9968489		4	GASKET
10		9968490		2	RING, OIL SCRAPER
11		85808403		1	STOP
12		9968451		2	SCREW
13		85817025		1	VALVE, FLOAT
14		9968454		2	SCREW
15		85816804		1	HOSE, FLEXIBLE
16	1	85817531		1	CONNECTOR, HYD.
17		9825770		1	O-RING 90 Duro, .301" ID x .070" Thk
18		9824050		1	O-RING 90 Duro, .926" ID x .070" Thk
19		9968513		1	COVER
20		89626929		1	O-RING 90 Duro, 1.048" ID x .116" Thk
21		{87319445}		1	
22		87327076		1	WASHER

(1) Includes 17, 18, 20

Mechanical Version

LOADER CONTROL VALVE, THREE SECTION, CAP & UNLOAD VALVE (CENTER PIVOT)

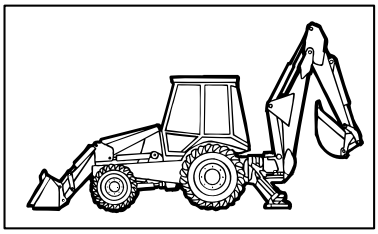

KIT 17 = ●

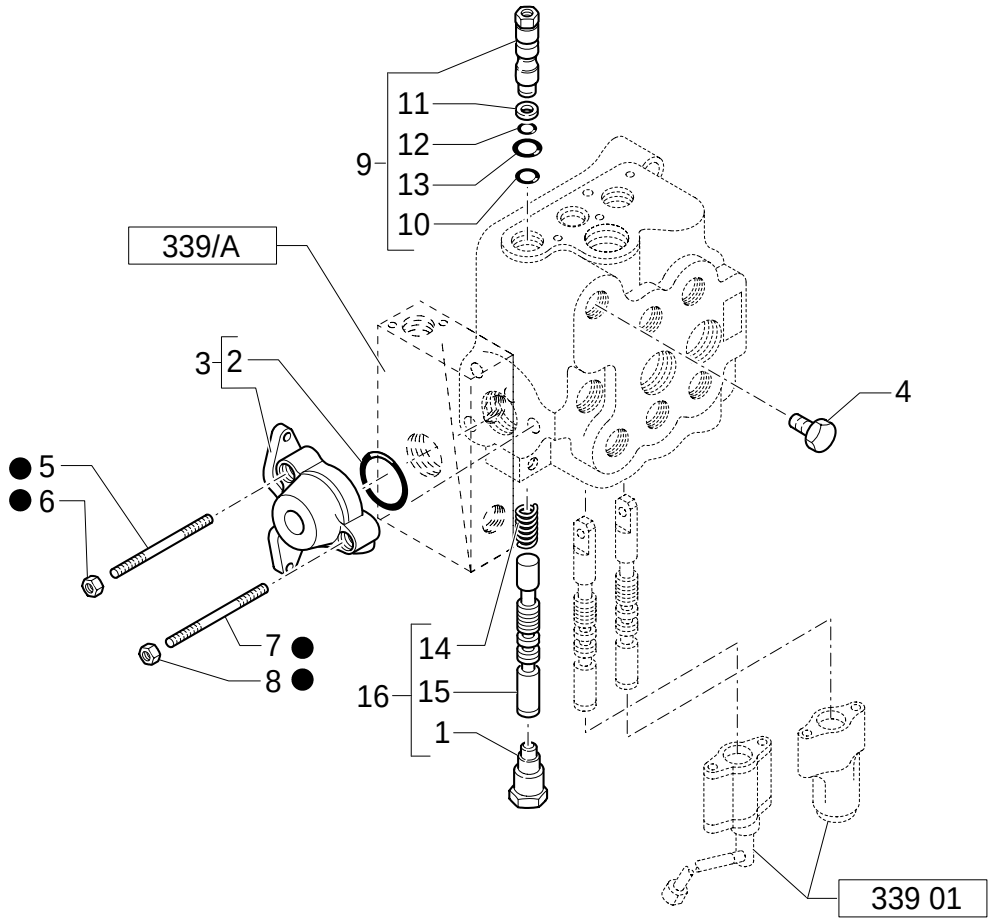

LOADER CONTROL VALVE, THREE SECTION, CAP & UNLOAD VALVE (CENTER PIVOT)

REF	FN	PART NUMBER	YR/SN	QTY	DESCRIPTION
1		9968464		1	PLUG ASSY
2		9968476		1	O-RING
3		9968443		1	PANEL, SIDE
4		85807857		1	PLUG
5	1	9968439		2	STUD
6	1	9968441		2	NUT
7	1	9968438		1	TIE-ROD, THREADED
8	1	9968440		1	NUT
9		85815667		1	VALVE, HYDRAULIC
10		85815668		1	RING
11		9968467		1	RING
12		9968466		1	O-RING
13		9968468		1	O-RING
14		9968488		1	SPRING
15		85807858		1	PLUNGER AND VALVE
16		{87327632}		1	
17		{87326258}		1	

(1) Included also in kit 87326258

Mechanical Version

339	03	p1	12/05

LOADER CONTROL VALVE, THREE SECTION, RELIEF & CHECK VALVES (CENTER PIVOT)

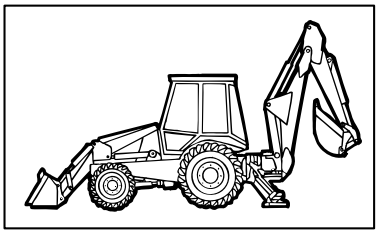

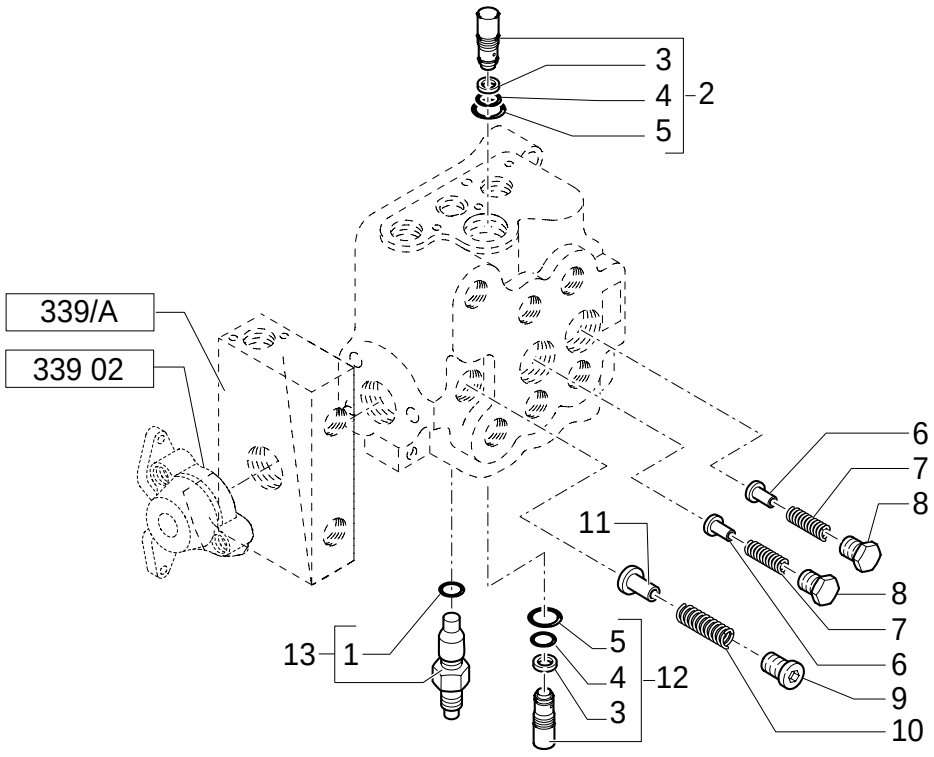

LOADER CONTROL VALVE, THREE SECTION, RELIEF & CHECK VALVES (CENTER PIVOT)

REF	FN	PART NUMBER	YR/SN	QTY	DESCRIPTION
1		85819945		1	RING ASSY
2		87302609		1	VALVE, HYDRAULIC
3		87302608		2	RING
4		9968471		2	O-RING
5		9968470		2	O-RING
6		9968444		2	PLUNGER
7		9968445		2	SPRING
8		9968446		2	PLUG
9		9968449		1	PLUG
10		9968448		1	SPRING
11		9968447		1	PLUNGER
12		87302611		1	VALVE, HYDRAULIC
13		85819722		1	VALVE, HYDRAULIC

344	01	p1	12/05

STABILIZER CONTROL VALVE, TWO SECTION (CENTER PIVOT)

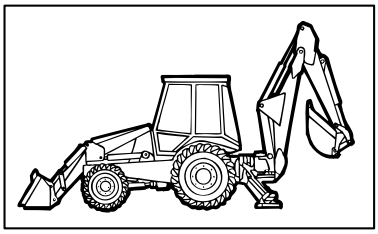

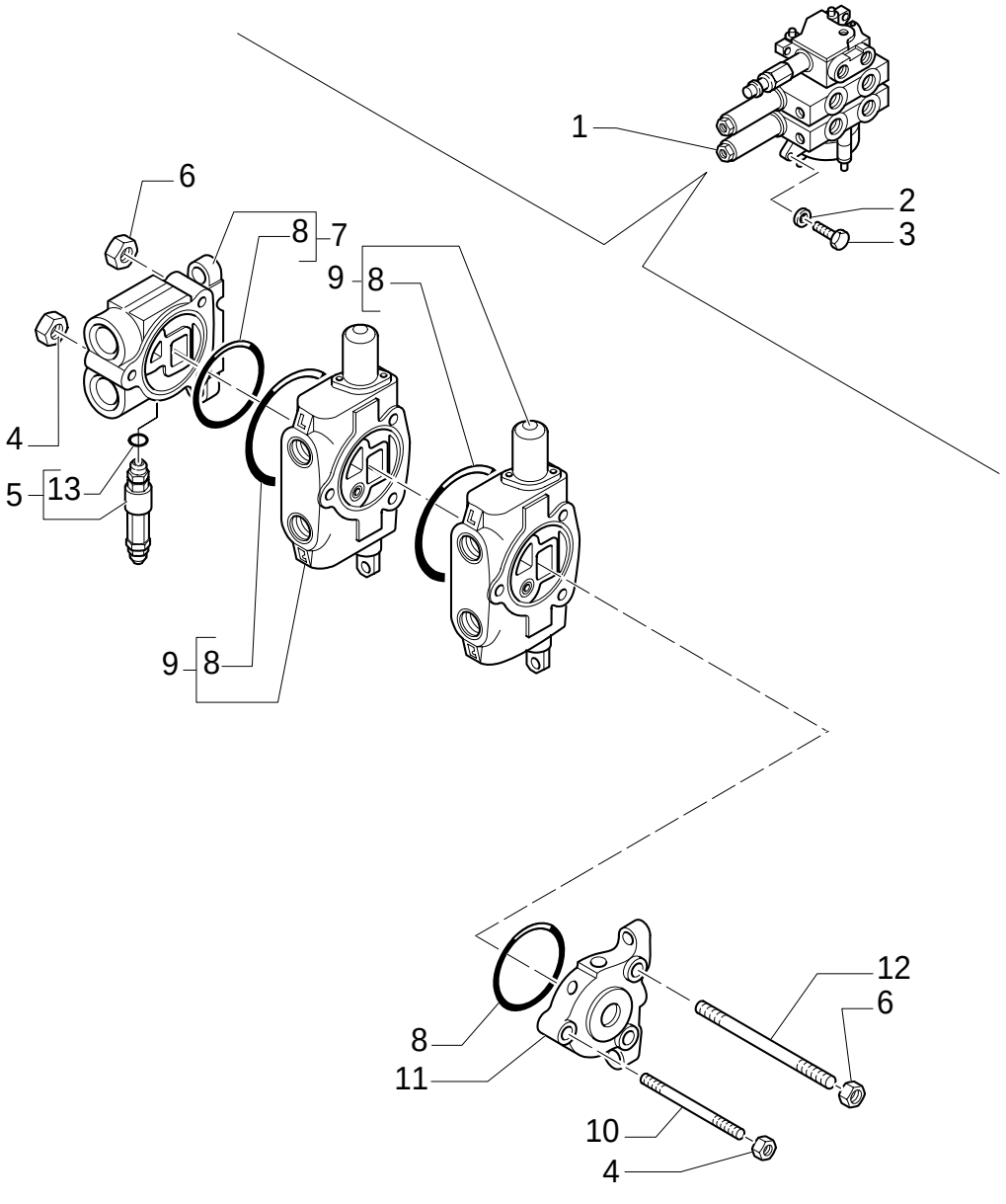

STABILIZER CONTROL VALVE, TWO SECTION (CENTER PIVOT)

REF	FN	PART NUMBER	YR/SN	QTY	DESCRIPTION
1		85819684		1	DISTRIBUTOR ASSY
2		11193879		3	WASHER, LOCK 8x16x1.4
3		16043921		3	SCREW M8x1.25x35
4		9968440		2	NUT
5		85819721		1	VALVE, HYDRAULIC
6		9968441		4	NUT
7		9968524		1	PANEL, SIDE
8		9968476		4	O-RING
9	1	9970107		2	ELEMENT, JOINING
10		9968533		1	STUD
11		9968527		1	PANEL, SIDE
12		9968532		2	STUD
13		85819945		1	RING

(1) See Page 344 02

Mechanical Version

344	02	p1	12/05

STABILIZER CONTROL VALVE, LH & RH SECTION (CENTER PIVOT)

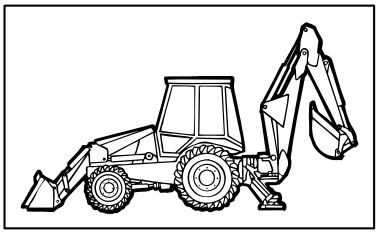

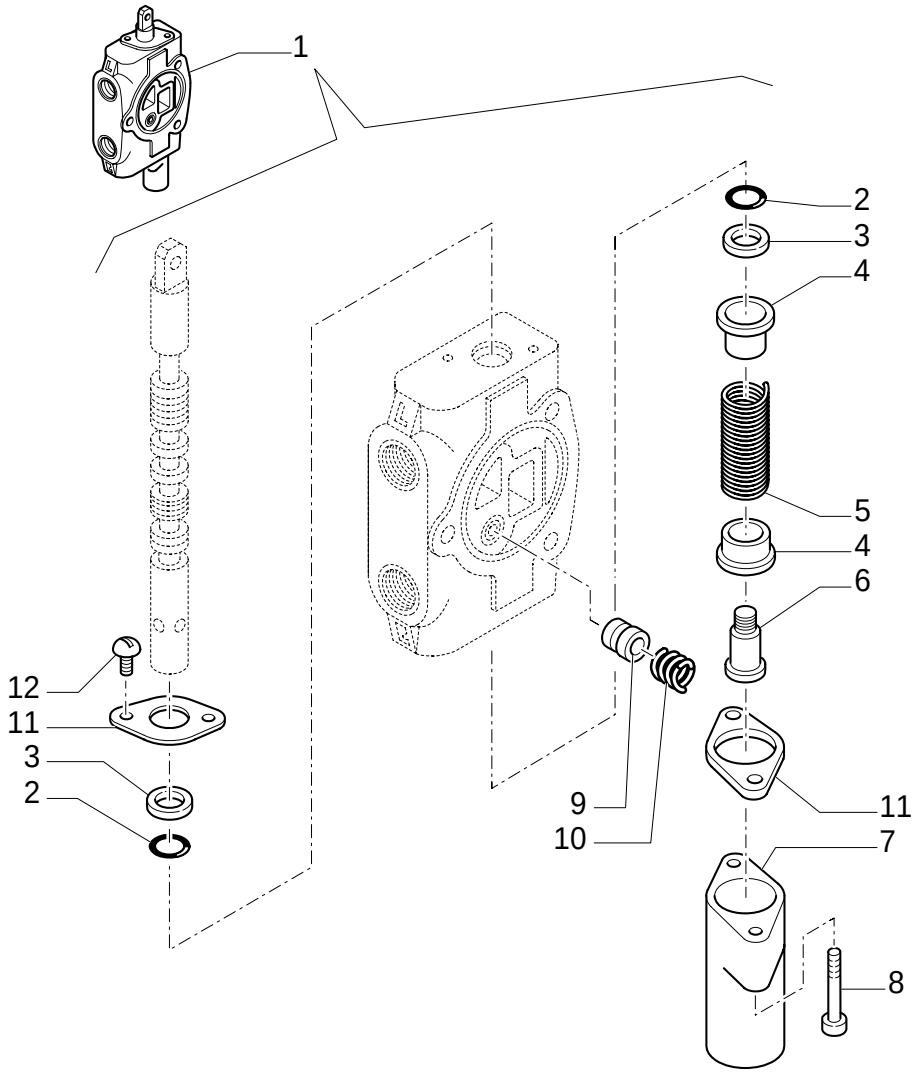

STABILIZER CONTROL VALVE, LH & RH SECTION (CENTER PIVOT)

REF	FN	PART NUMBER	YR/SN	QTY	DESCRIPTION
1		9970107		1	ELEMENT, JOINING ASSY
2		85813418		2	GASKET
3		85813419		2	RING, OIL SCRAPER
4		9968481		2	SEAT/SLOT
5		9968531		1	SPRING
6		9968483		1	SCREW
7		9968484		1	COVER
8		9968486		2	SCREW
9		9968477		1	PLUNGER
10		9968478		1	SPRING
11		9968480		2	PLATE, COVER
12		9968460		2	SCREW

Mechanical Version

356	01	p1	12/05

STABILIZER CONTROL VALVE, TREE SECTION (CENTER PIVOT)

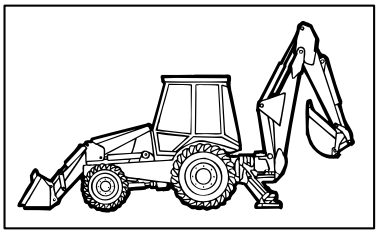

KIT 14= ●

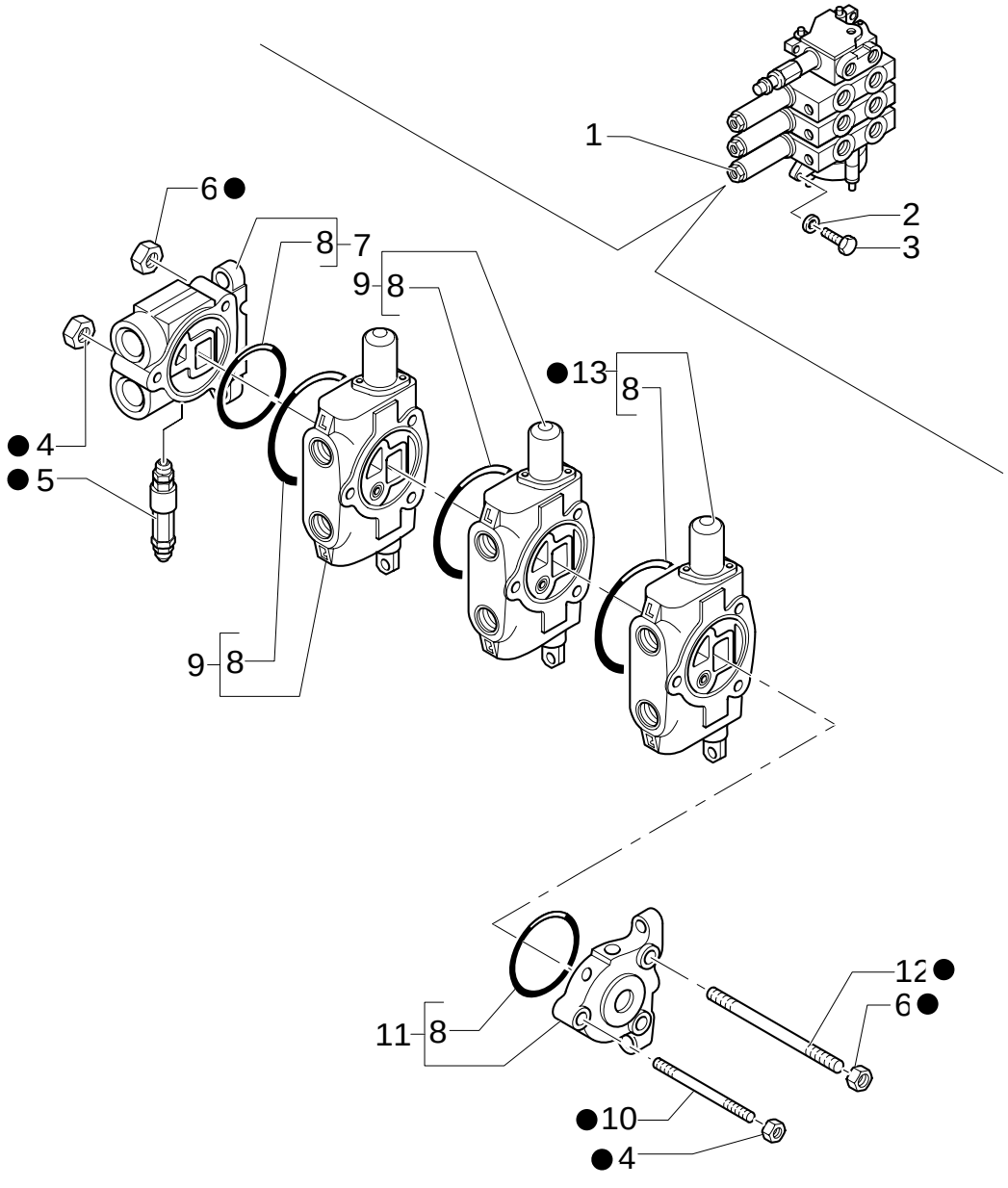

STABILIZER CONTROL VALVE, TREE SECTION (CENTER PIVOT)

REF	FN	PART NUMBER	YR/SN	QTY	DESCRIPTION
1		87331094		1	DISTRIBUTOR ASSY
2		11193879		3	WASHER, LOCK
3		16043921		3	SCREW
4		9968440		1	NUT
5		87331276		1	VALVE, HYDRAULIC
6		9968441		2	NUT
7		9968524		1	PANEL, SIDE
8		9968476		4	O-RING
9	1	9970107		2	ELEMENT, JOINING
10		9968528		1	STUD
11		9968527		1	PANEL, SIDE
12		9968529		2	STUD
13	2	9968526		1	ELEMENT, JOINING
14		{87353252}		1	

(1) See Page 344A
(2) See Page 356A

Mechanical Version

356	02	p1	01/06

STABILIZER CONTROL VALVE, THIRD SECTION (CENTER PIVOT)

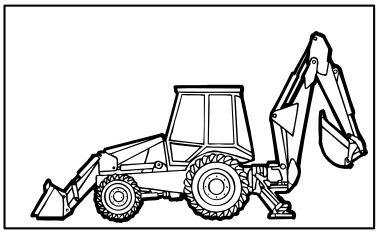

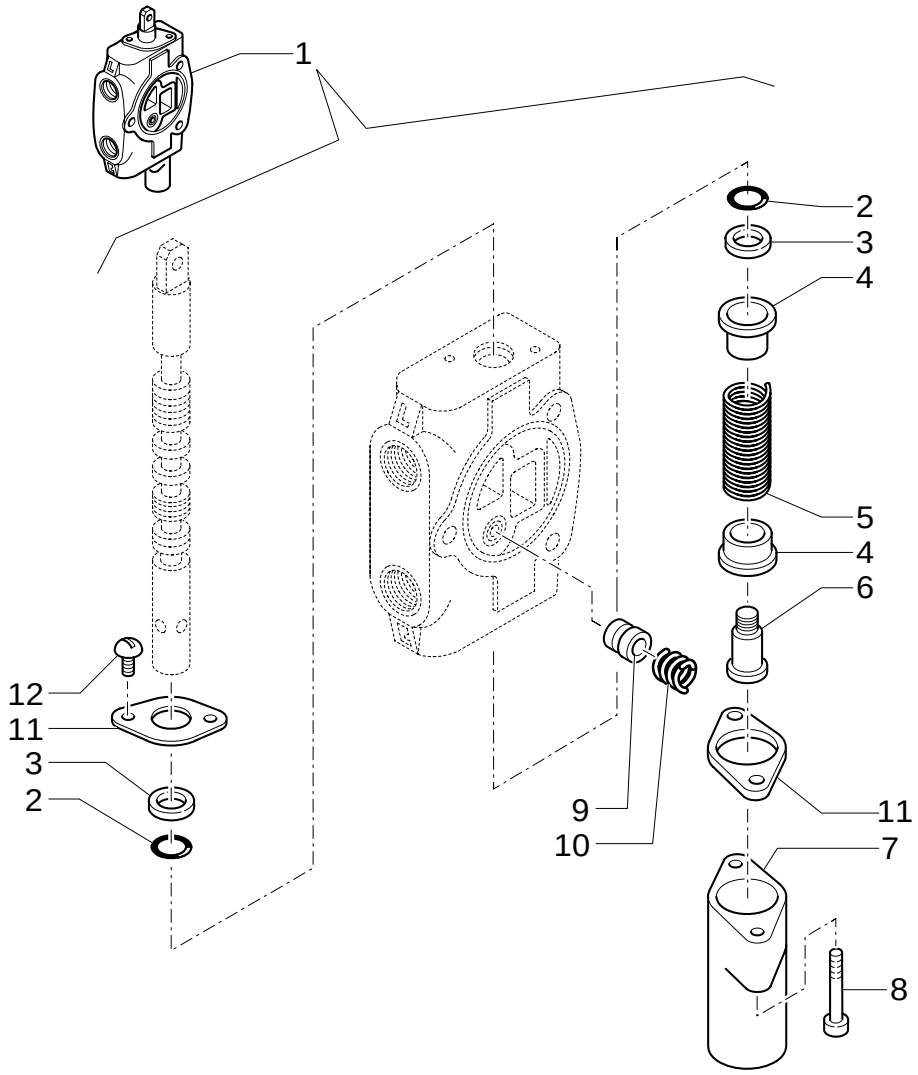

STABILIZER CONTROL VALVE, THIRD SECTION (CENTER PIVOT)

REF	FN	PART NUMBER	YR/SN	QTY	DESCRIPTION
1		9968526		1	ELEMENT, JOINING ASSY
2		85813418		2	GASKET
3		85813419		2	RING, OIL SCRAPER
4		9968481		2	SEAT/SLOT
5		9968531		1	SPRING
6		9968483		1	SCREW
7		9968484		1	COVER
8		9968486		2	SCREW
9		9968477		1	PLUNGER
10		9968478		1	SPRING
11		9968480		2	PLATE, COVER
12		9968460		2	SCREW

Mechanical Version

391	01	p1	11/05

LOCK VALVE FOR BUCKET 4X1 / 6X1

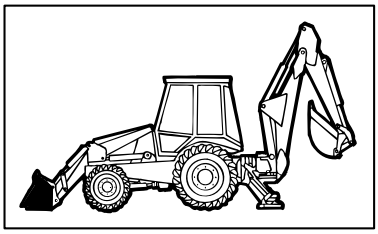

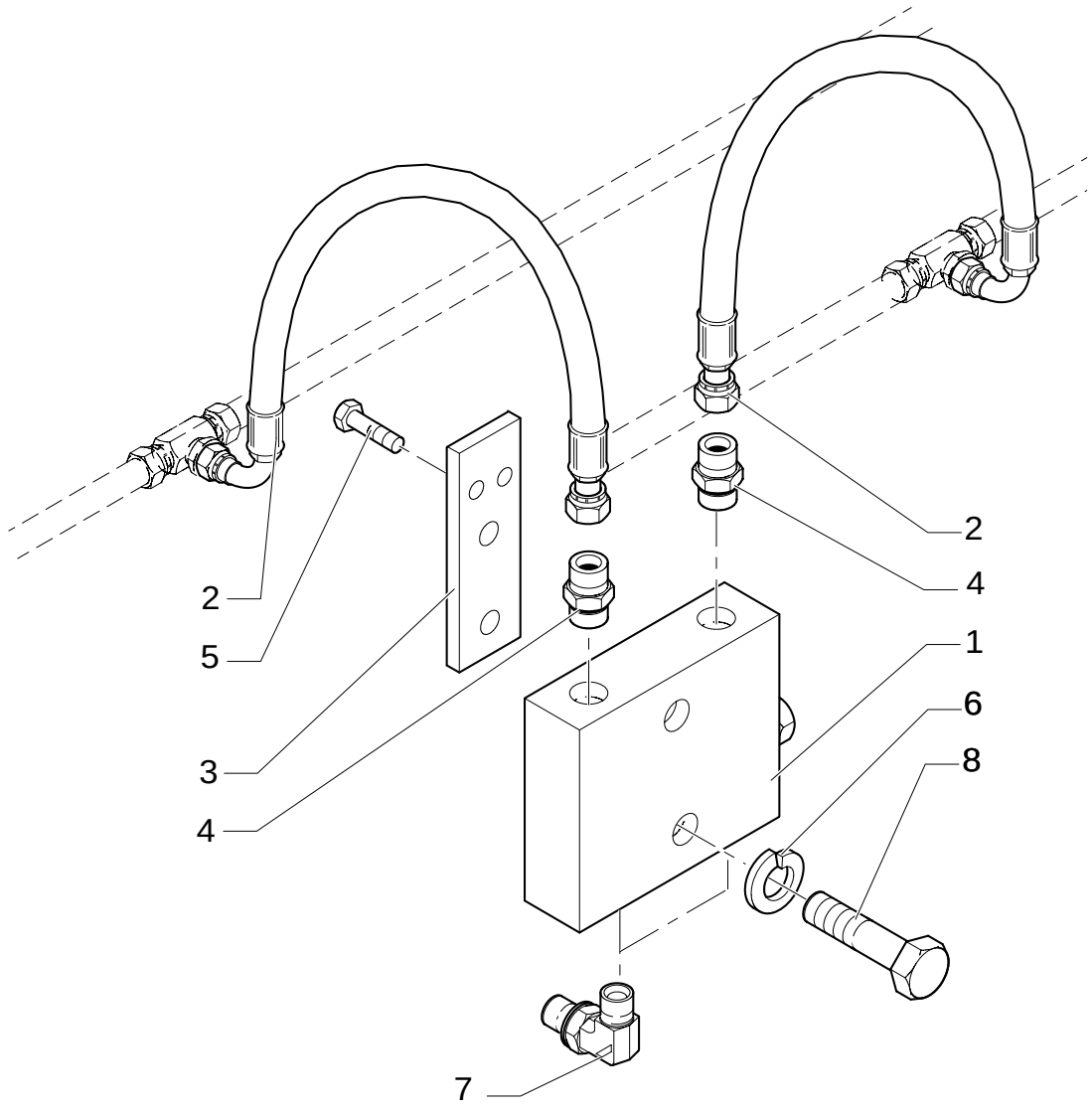

LOCK VALVE FOR BUCKET 4X1 / 6X1

REF	FN	PART NUMBER	YR/SN	QTY	DESCRIPTION
1		85820844		1	VALVE, HYDRAULIC
2		85821127		2	HOSE, FLEXIBLE
3		87316861		1	PLATE
4		390953S36		4	CONNECTOR, HYD.
6		11193874		2	WASHER, LOCK
7		390967S36		2	ELBOW
8		16044121		2	SCREW
5		16044321		4	SCREW

391/ 1	01	p1	11/05

LOCK VALVE ON LOADER TILTING CYLINDERS

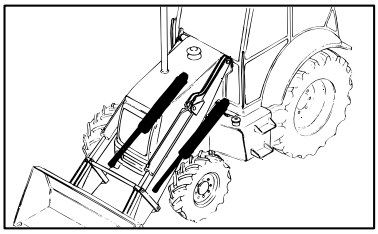

KIT KIT KIT 20=●

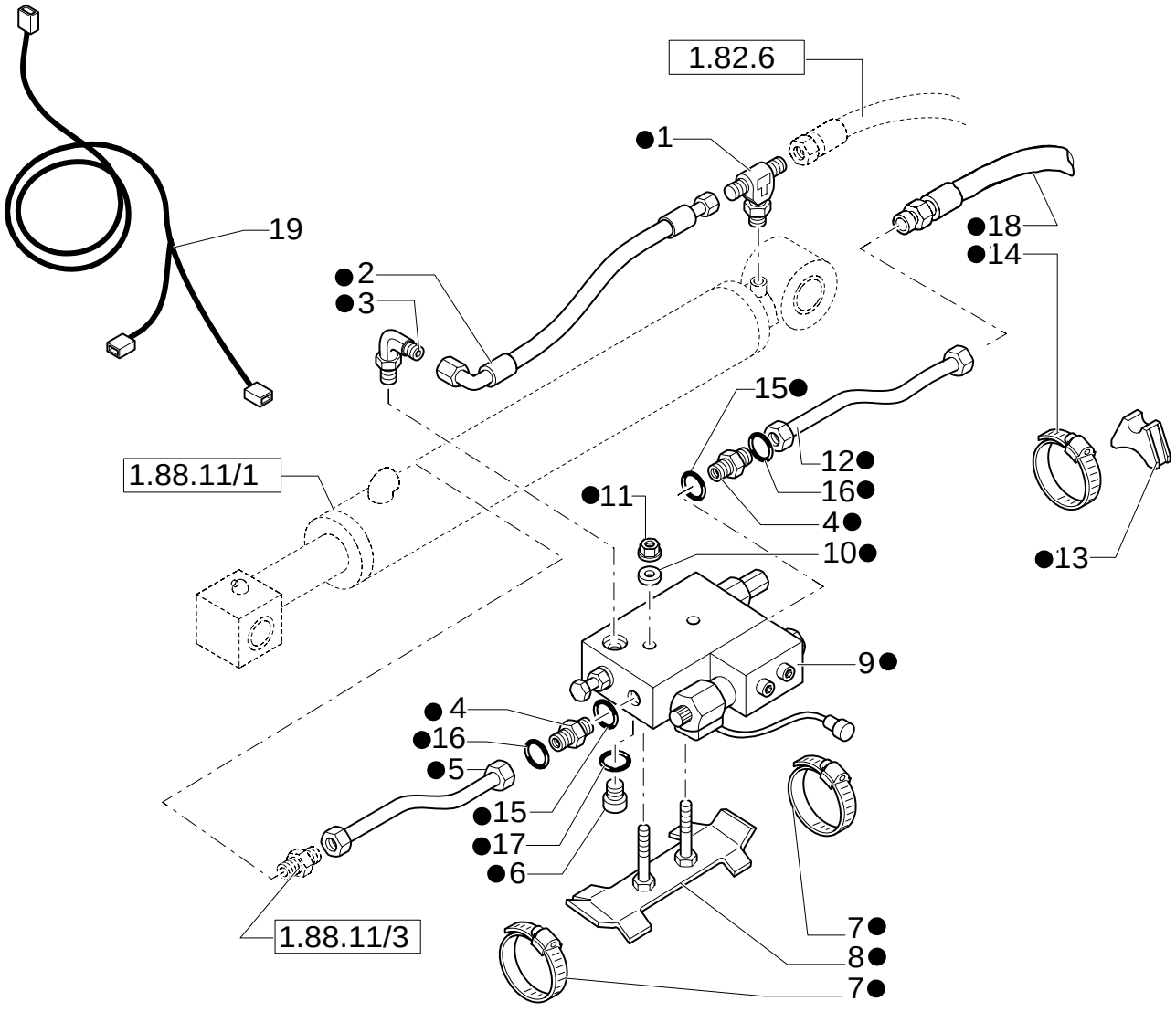

LOCK VALVE ON LOADER TILTING CYLINDERS

REF	FN	PART NUMBER	YR/SN	QTY	DESCRIPTION
1		85805218		2	CONNECTOR, HYD.
2		85815506		2	HOSE, FLEXIBLE
3		85805220		2	CONNECTOR, HYD.
4	1	390953S36		4	CONNECTOR, HYD.
5		85805262		2	TUBE, RIGID
6	2	85802805		2	PLUG
7		85803010		4	CLAMP
8		85805221		2	SUPPORT
9		85805224		2	VALVE, HYDRAULIC ASSY
10		11193879		4	WASHER, LOCK M8
11		14048221		4	NUT M8
12		85805264		2	TUBE, RIGID
13		87303910		2	SPACER
14		85802743		2	SEALING RING COLLAR
15		128825		2	O-RING 8-1, 90 Duro, .644" ID x .087" Thk
17		9825770		1	O-RING 90 Duro, .301" ID x .070" Thk
18		85813361		1	HOSE, FLEXIBLE
19		85826276		1	CABLE, ELECTRIC
20	3	NSS		1	NOT SERVICED SEPARATELY
16		9992298		2	O-RING 90 Duro, .489" ID x .070" Thk

(1) Includes 15, 16
(2) Includes 17
(3) Includes 1 To 18 Also Page 391/1 02, 391/1 03

391/ 1	02	p1	11/05

LOCK VALVE ON LOADER LIFT CYLINDERS

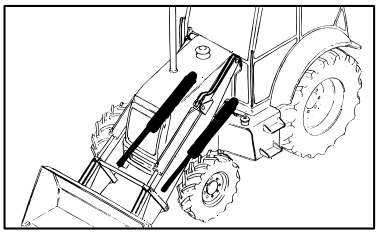

KIT KIT KIT 19 = ●

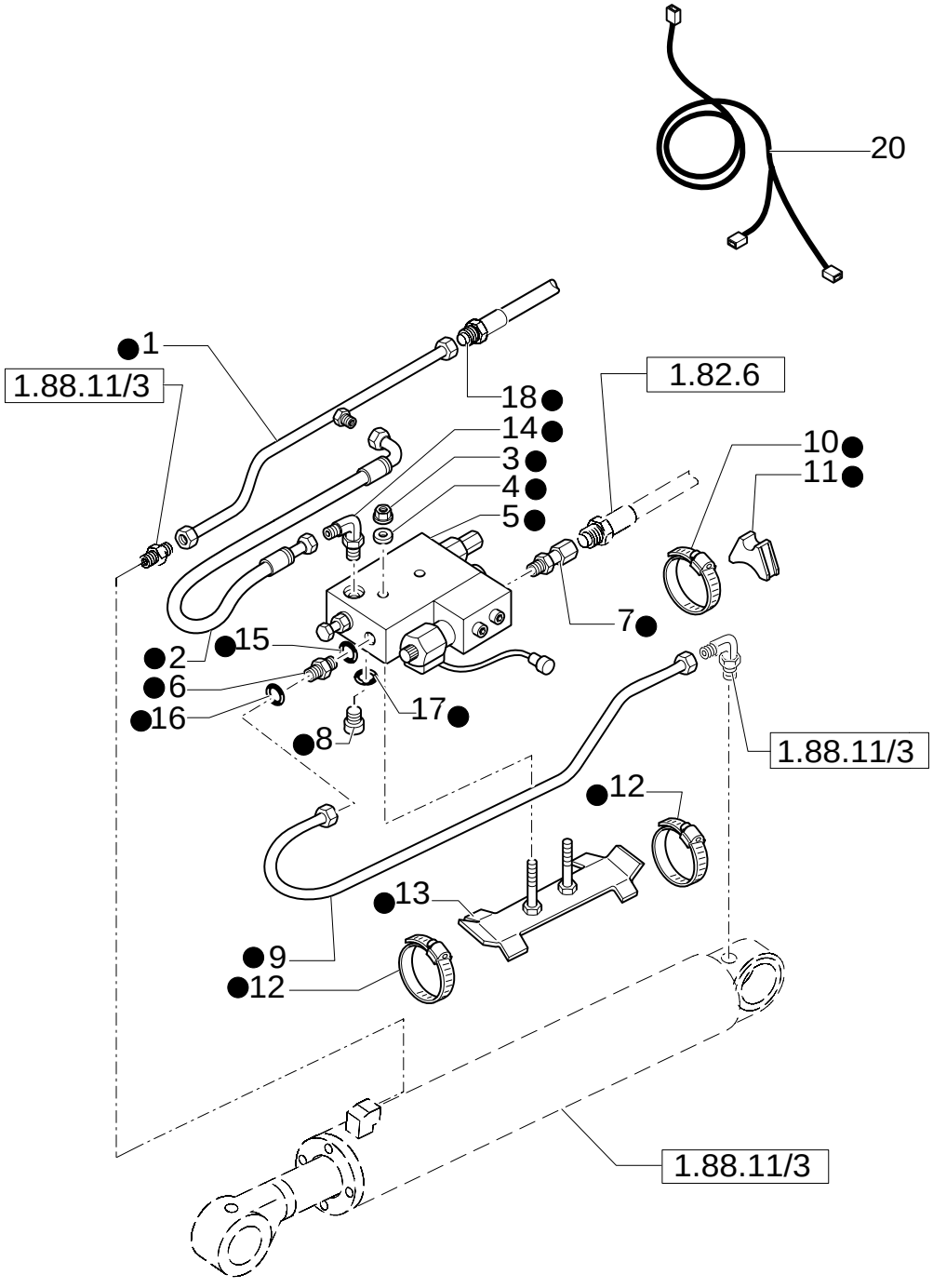

LOCK VALVE ON LOADER LIFT CYLINDERS

REF	FN	PART NUMBER	YR/SN	QTY	DESCRIPTION
1		85805266		2	TUBE, RIGID
2		85815506		2	HOSE, FLEXIBLE
3		14048221		4	NUT M8X1,25
4		11193879		4	WASHER, LOCK
5		85805223		2	VALVE, HYDRAULIC ASSY
6	1	390953S36		2	CONNECTOR, HYD.
7		85805217		2	CONNECTOR, HYD.
8	2	85802805		2	PLUG
9		85805271		1	TUBE, RIGID LH
9		85805273		1	TUBE, RIGID RH
10		85803008		2	COLLAR
11		E7NNB165AA		2	SPACER
11		87303910		2	SPACER
12		85802743		4	SEALING RING COLLAR
13		85805221		1	SUPPORT
14		85805220		2	CONNECTOR, HYD.
15		128825		2	O-RING 8-1, 90 Duro, .644" ID x .087" Thk
17		9825770		2	O-RING 90 Duro, .301" ID x .070" Thk
18		85813363		2	HOSE, FLEXIBLE
19	3	NSS		1	NOT SERVICED SEPARATELY
20		85826275		1	CABLE, ELECTRIC
16		9992298		2	O-RING 90 Duro, .489" ID x .070" Thk

(1) Includes 15, 16
(2) Includes 17
(3) Includes 1 To 18 Also Page 391/1 01, 391/1 03

391/ 1	03	p1	02/05

LOCK VALVE ON LOADER LIFT CYLINDERS

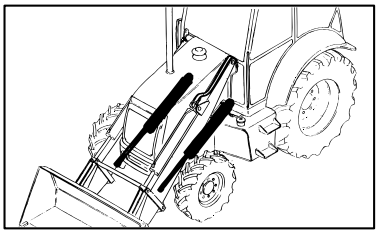

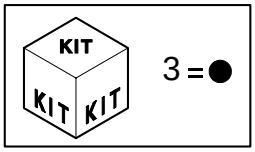

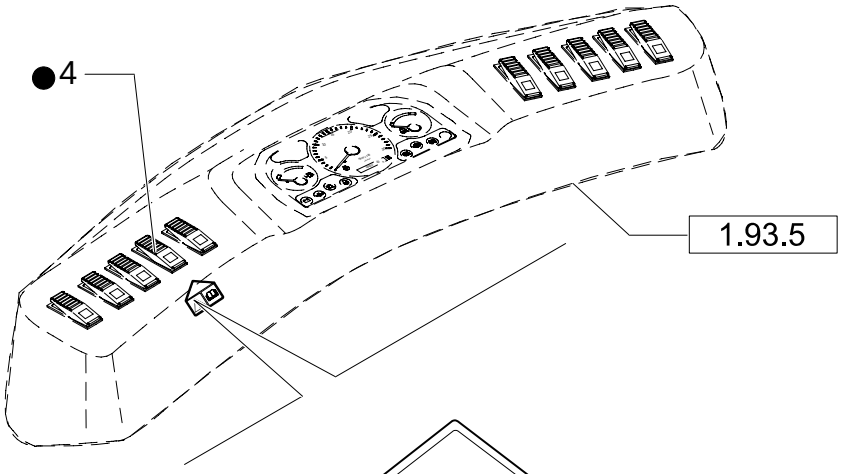

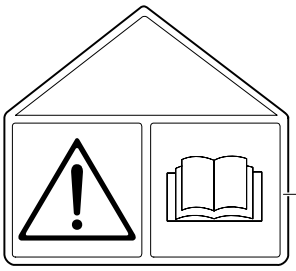

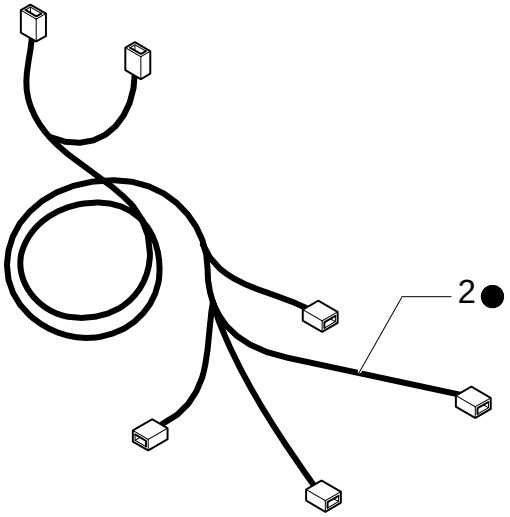

LOCK VALVE ON LOADER LIFT CYLINDERS

REF	FN	PART NUMBER	YR/SN	QTY	DESCRIPTION
1		85805228		1	DECAL
2		{85826274}		1	
3	1	NSS		1	NOT SERVICED SEPARATELY
4		85819074		1	SWITCH

(1) Includes 1, 2, 4 Also page 391/1 01, 391/1 02

392	01	p1	11/05

LOCKING VALVE ON BACKHOE LIFT AND DIPP. CYLINDER

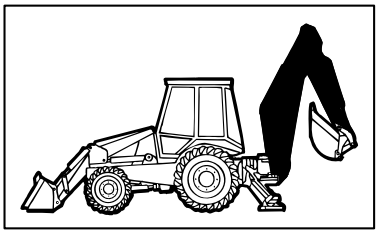

KIT 15= ●

SEE ALSO PAG.2

KIT 16= ▲

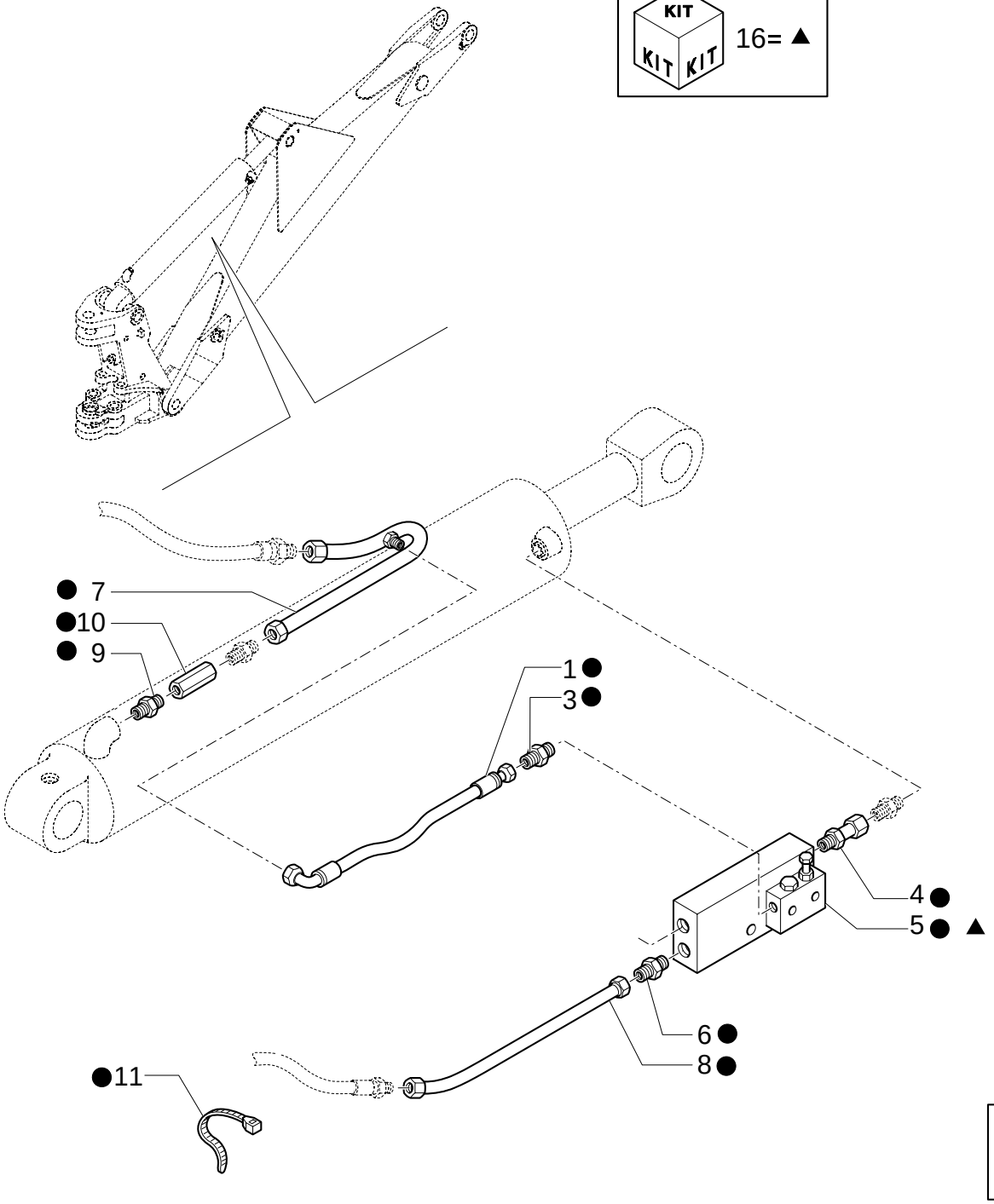

LOCKING VALVE ON BACKHOE LIFT AND DIPP. CYLINDER

REF	FN	PART NUMBER	YR/SN	QTY	DESCRIPTION
1		85815505		2	HOSE, FLEXIBLE
3		85802803		3	CONNECTOR, HYD.
4		85805124		2	CONNECTOR, HYD.
5	1	87353316		1	VALVE, SAFETY ASSY
6		390828S36		2	CONNECTOR, HYD.
7		85820835		1	TUBE, RIGID
8		85820836		1	TUBE, RIGID
9		85804879		1	CONNECTOR, HYD.
10		85824308		1	VALVE, HYDRAULIC
11		79072960		4	COLLAR
15		{87325632}		1	
16		85820912		1	KIT

(1) Includes 16

392	02	p1	11/05

BACKHOE LIFT & DIPPERSTICK CYLINDER LOCK VALVE

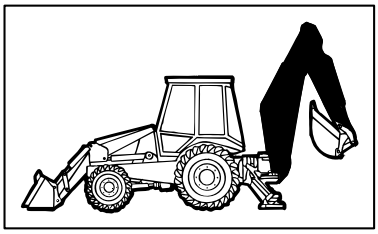

KIT KIT KIT 15= ●
SEE ALSO PAG.1

KIT KIT KIT 14= ▲

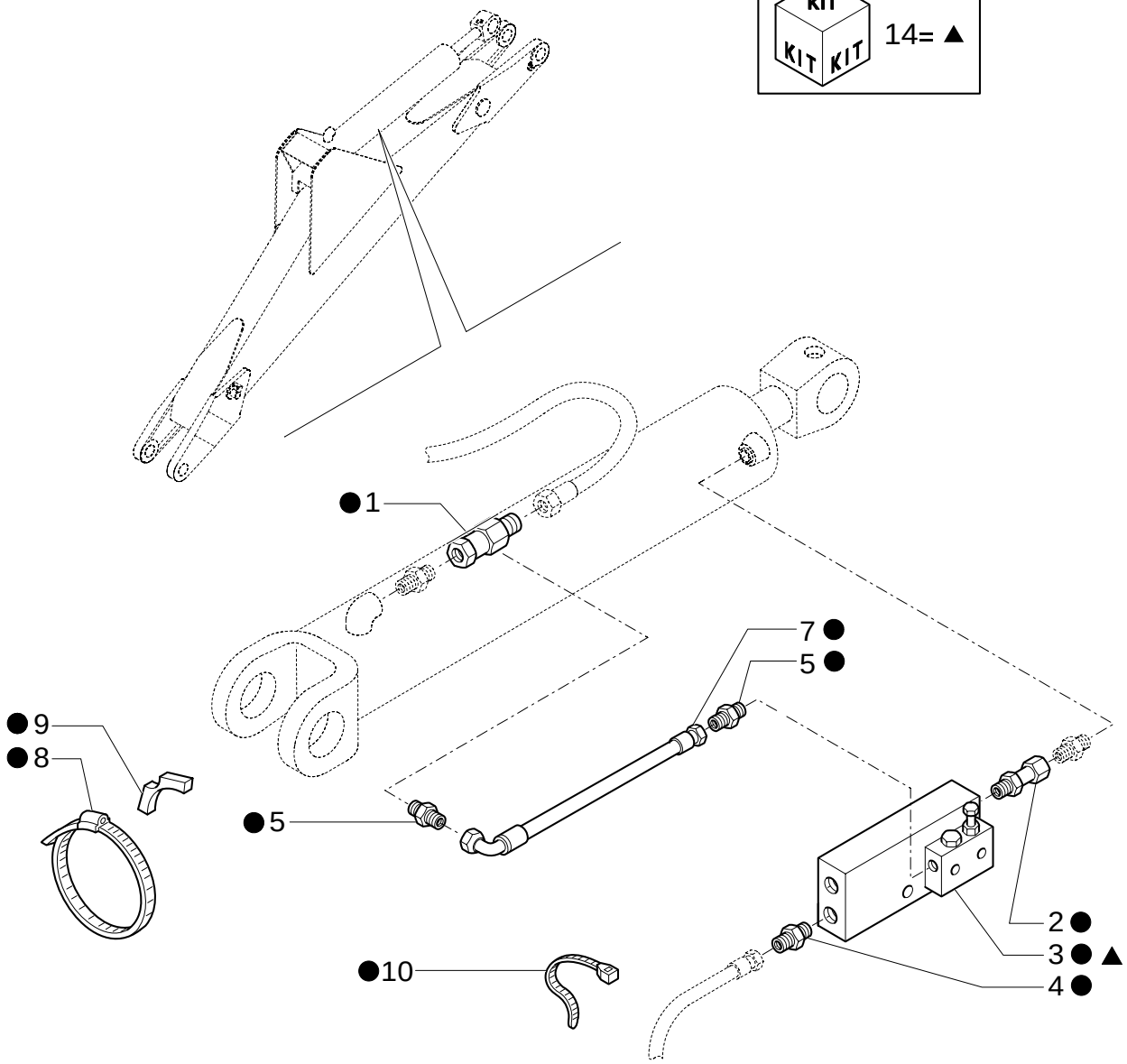

BACKHOE LIFT & DIPPERSTICK CYLINDER LOCK VALVE

REF	FN	PART NUMBER	YR/SN	QTY	DESCRIPTION
1		85805115		1	CONNECTOR, HYD.
2		85805124		2	CONNECTOR, HYD.
3	1	87353314		1	VALVE, SAFETY ASSY
4		390828S36		2	CONNECTOR, HYD.
5		85802803		3	CONNECTOR, HYD.
7		85815505		2	HOSE, FLEXIBLE
8		85805126		1	COLLAR
9		85805123		1	PLATE, FIXING
10		79072960		4	COLLAR
14		85820913		1	KIT
15		{87325632}		1	

(1) Includes 14

437/ 1	01	p1	11/05

GLIDE RIDE VALVE,HYDRAULIC SYSTEM FOR MACHINE FRAME LEVELLING & ON/OFF SWITCH

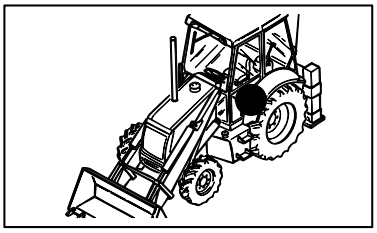

KIT KIT KIT 22= ●

GLIDE RIDE VALVE,HYDRAULIC SYSTEM FOR MACHINE FRAME LEVELLING & ON/OFF SWITCH

REF	FN	PART NUMBER	YR/SN	QTY	DESCRIPTION
1		87358815		2	HOSE, FLEXIBLE
2		85815620		1	HOSE, FLEXIBLE
3		85817222		1	HOSE, FLEXIBLE
4	1	390967S36		4	ELBOW
5	2	390953S36		2	CONNECTOR, HYD.
8		87358817		1	VALVE, HYDRAULIC
9	3, 4	87342882		1	ACCUMULATOR
9	5	87358818		1	ACCUMULATOR
10		87358816		1	HOSE, FLEXIBLE
11		11106421		2	SCREW M10x30
12		85817223		1	HOSE, FLEXIBLE
13		11190579		5	WASHER, LOCK
14	6	85815583		2	CONNECTOR, HYD. 13x20x2.3
15		87016S95		1	O-RING 90 Duro, .625" ID x .070" Thk
16		9992298		2	O-RING 90 Duro, .489" ID x .070" Thk
18		128825		1	O-RING 8-1, 90 Duro, .644" ID x .087" Thk
20		86982600		2	DECAL
21		87358808		1	BRACKET
22		85824211		1	CABLE, ELECTRIC M10
23		15971321		1	SCREW M10x1.25x75
24		11106221		2	SCREW M10x25

(1) Includes 16, 18
(2) Includes 6, 7
(3) Only for EUROPE Version
(4) UP TO S/N xxx
(5) FROM TO S/N XXX
(6) Includes 15, 16

From To S/N XXX

698	01	p1	11/05

GLIDE RIDE VALVE,HYDRAULIC SYSTEM FOR MACHINE FRAME LEVELLING & ON/OFF SWITCH

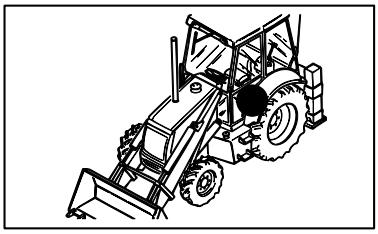

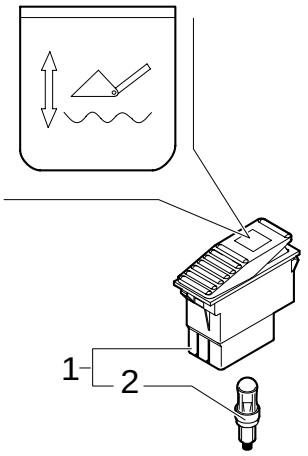

GLIDE RIDE VALVE,HYDRAULIC SYSTEM FOR MACHINE FRAME LEVELLING & ON/OFF SWITCH

REF	FN	PART NUMBER	YR/SN	QTY	DESCRIPTION
1		85817674		1	SWITCH
2		14143790		1	BULB

708	01	p1	10/05

THREE-SECTION CONTROL VALVE FOR LOADER

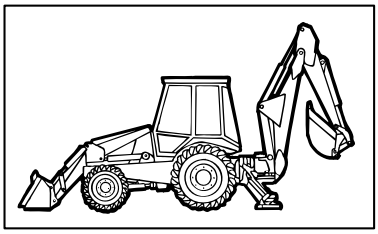

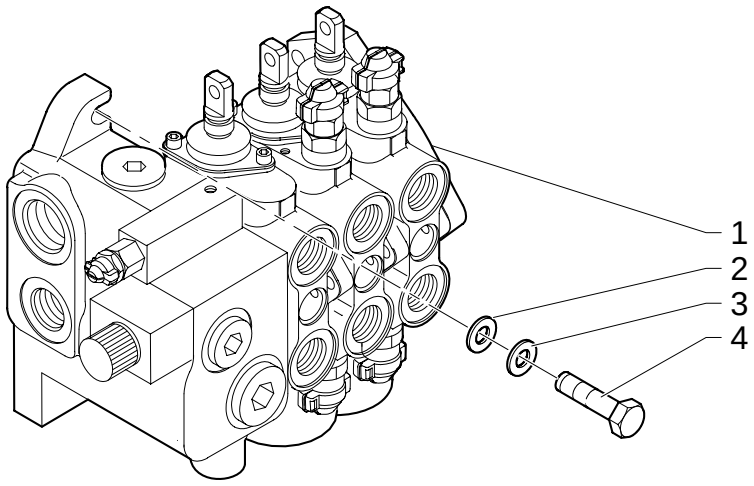

THREE-SECTION CONTROL VALVE FOR LOADER

REF	FN	PART NUMBER	YR/SN	QTY	DESCRIPTION
1		87305111		1	VALVE, CONTROL
2		11190679		3	WASHER, LOCK
3		13578621		3	WASHER M10x45
4		11234721		3	SCREW 10x30x2

708/ 1	01	p1	06/05

KIT OF CONVERSION FROM 2 TO 3 SPOOLS

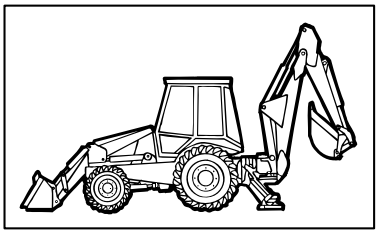

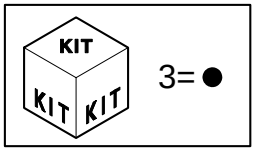

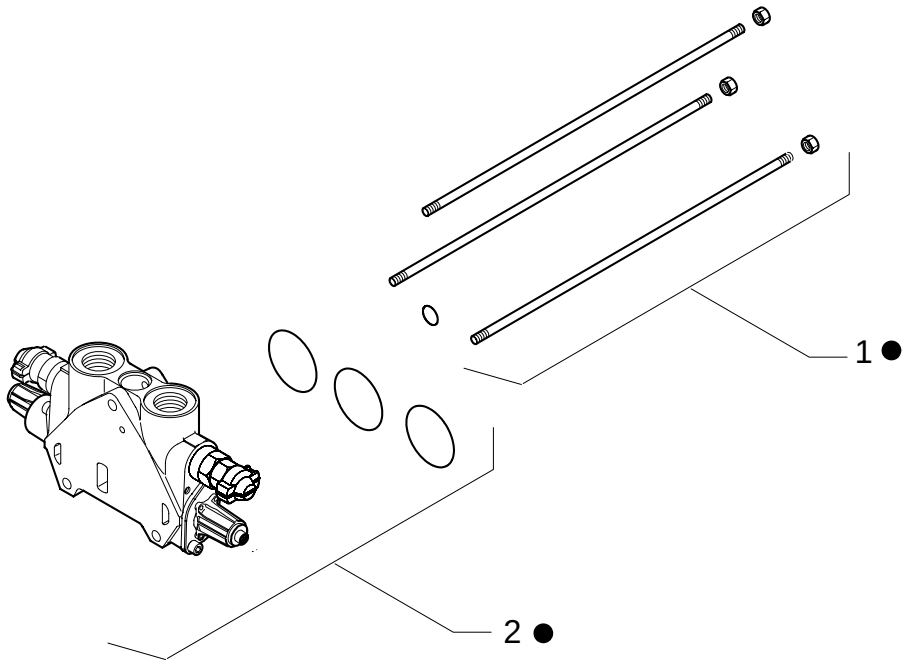

KIT OF CONVERSION FROM 2 TO 3 SPOOLS

REF	FN	PART NUMBER	YR/SN	QTY		DESCRIPTION
1		85811916		1	KIT	
2		87306000		1	KIT	
3		87305999		1	KIT	

721	01	p1	12/05

TELESCOPIC CONTROL VALVE, 3 SECTIONS(CENTER PIVOT)

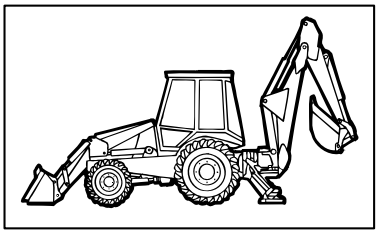

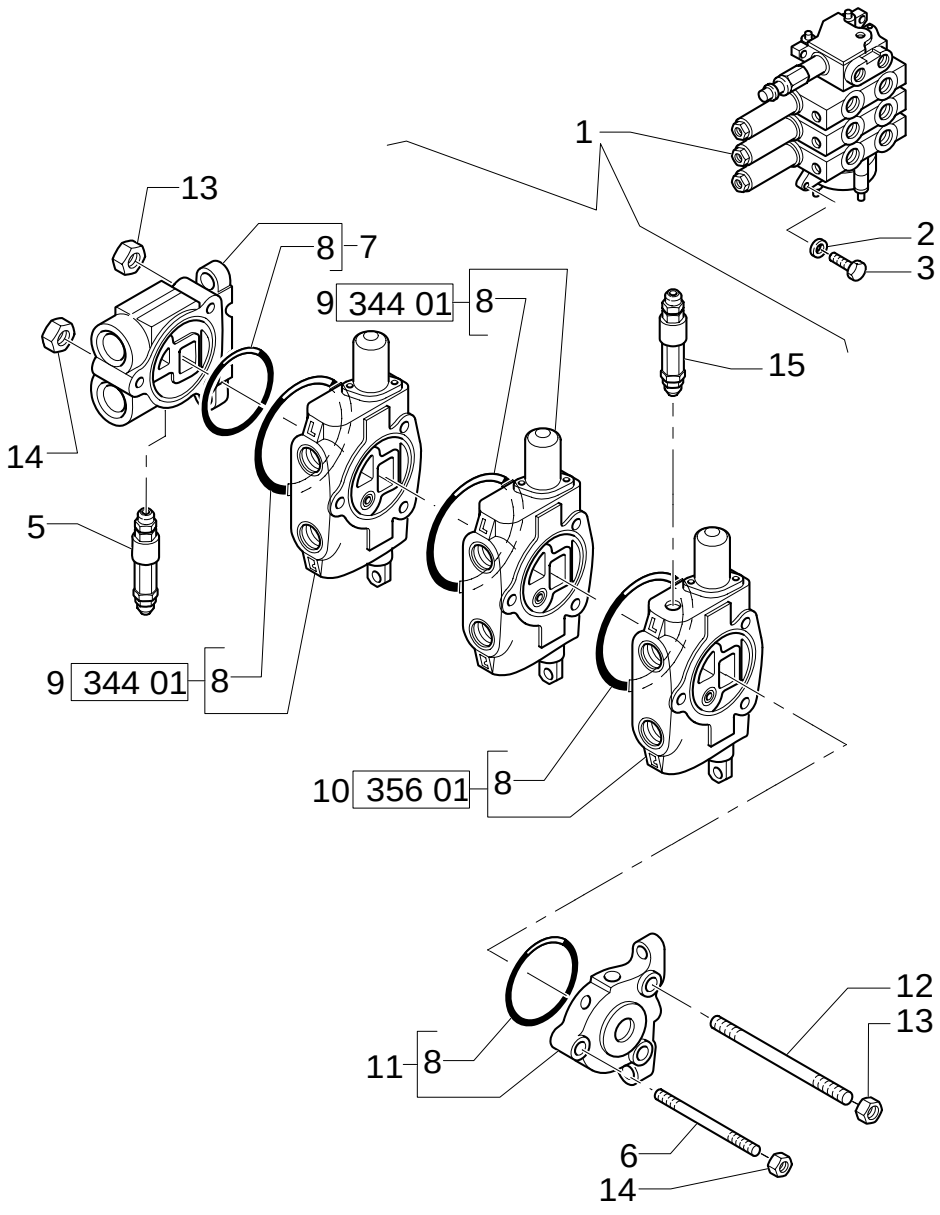

TELESCOPIC CONTROL VALVE, 3 SECTIONS(CENTER PIVOT)

REF	FN	PART NUMBER	YR/SN	QTY	DESCRIPTION
1	1	85819685		1	DISTRIBUTOR ASSY
1	2	87331094		1	DISTRIBUTOR
2		11193879		3	WASHER, LOCK
3		16043921		3	SCREW M8x1,25x35
5		85819721		1	VALVE, HYDRAULIC
6		9968528		1	STUD
7		9968524		1	PANEL, SIDE
8		9968476		5	O-RING
9	3	9970107		2	ELEMENT, JOINING
10	4	9968526		1	ELEMENT, JOINING
11		9968527		1	PANEL, SIDE
12		9968529		2	STUD
13		9968441		4	NUT
14		9968440		2	NUT
15	1	9968594		1	VALVE, HYDRAULIC
15	2	87331276		1	VALVE, HYDRAULIC

(1) UP TO S/N XXX
(2) FROM TO S/N XXX
(3) See Page 344
(4) See Page 356

Mechanical Version

721	02	p1	11/05

HED TELESCOPIC CONTORL VALVE, SECTION HOSES(CENTER PIVOT)

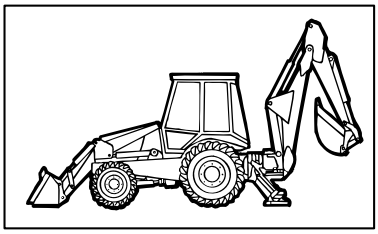

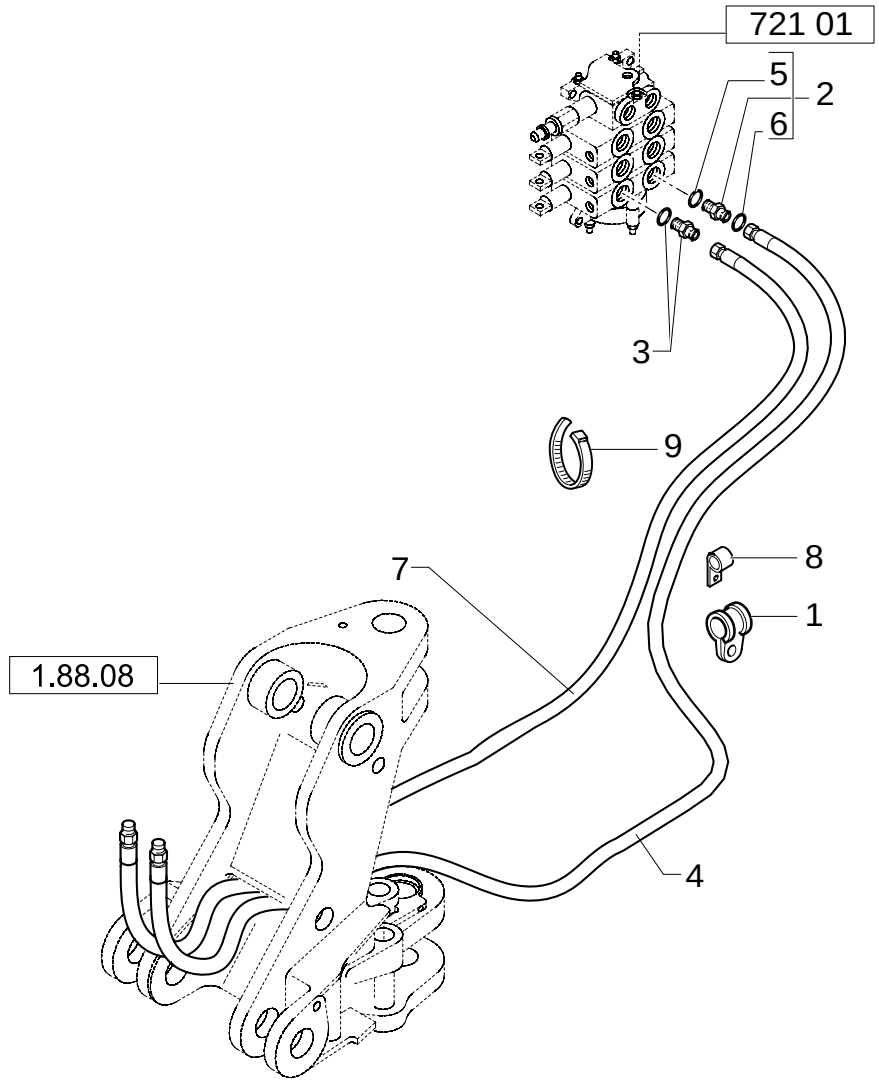

HED TELESCOPIC CONTORL VALVE, SECTION HOSES(CENTER PIVOT)

REF	FN	PART NUMBER	YR/SN	QTY	DESCRIPTION
1		85812029		1	COLLAR, RETAINER
2		390953S36		1	CONNECTOR, HYD.
3		85803234		1	CONNECTOR, HYD.
4		85812214		1	HOSE, FLEXIBLE
5		128825		3	O-RING 8-1, 90 Duro, .644" ID x .087" Thk
7		85812193		1	HOSE, FLEXIBLE
8		85803393		1	COLLAR, RETAINER
9		85803332		4	COLLAR
6		9992298		3	O-RING 90 Duro, .489" ID x .070" Thk

Mechanical Version

721	03	p1	02/05

HED CYLINDER PISTON END HYDRAULIC LINES(CENTER PIVOT)

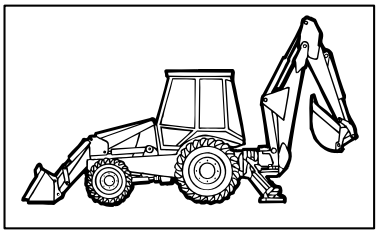

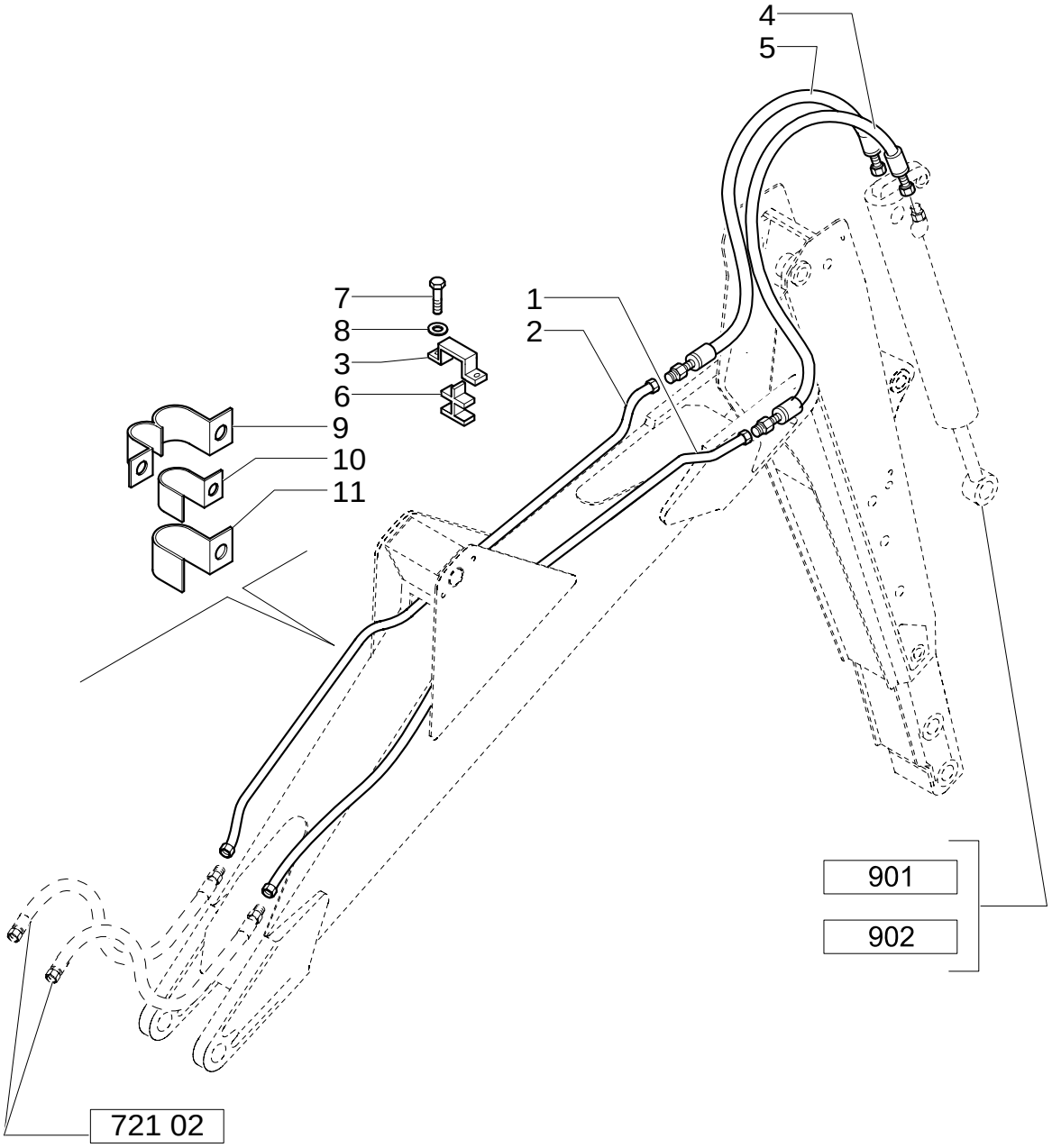

HED CYLINDER PISTON END HYDRAULIC LINES(CENTER PIVOT)

REF	FN	PART NUMBER	YR/SN	QTY	DESCRIPTION
1		85815642		1	TUBE, RIGID
2		85815640		1	TUBE, RIGID
3		85803402		1	PLATE
4		85817109		1	HOSE, FLEXIBLE
5		85817108		1	HOSE, FLEXIBLE
6		85802532		1	CLIP, HOSE
7		16043621		2	SCREW
8		11193879		2	WASHER, LOCK
9		85802529		2	CLIP
10		85802527		2	CLIP
11		85802528		2	CLIP

Mechanical Version

721	04	p1	02/05

HED CYLINDER ROD END HYDRAULIC LINES(CENTER PIVOT)

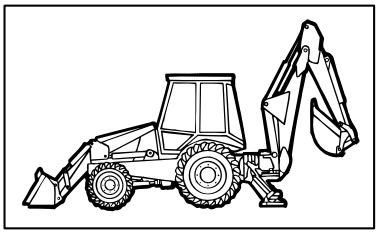

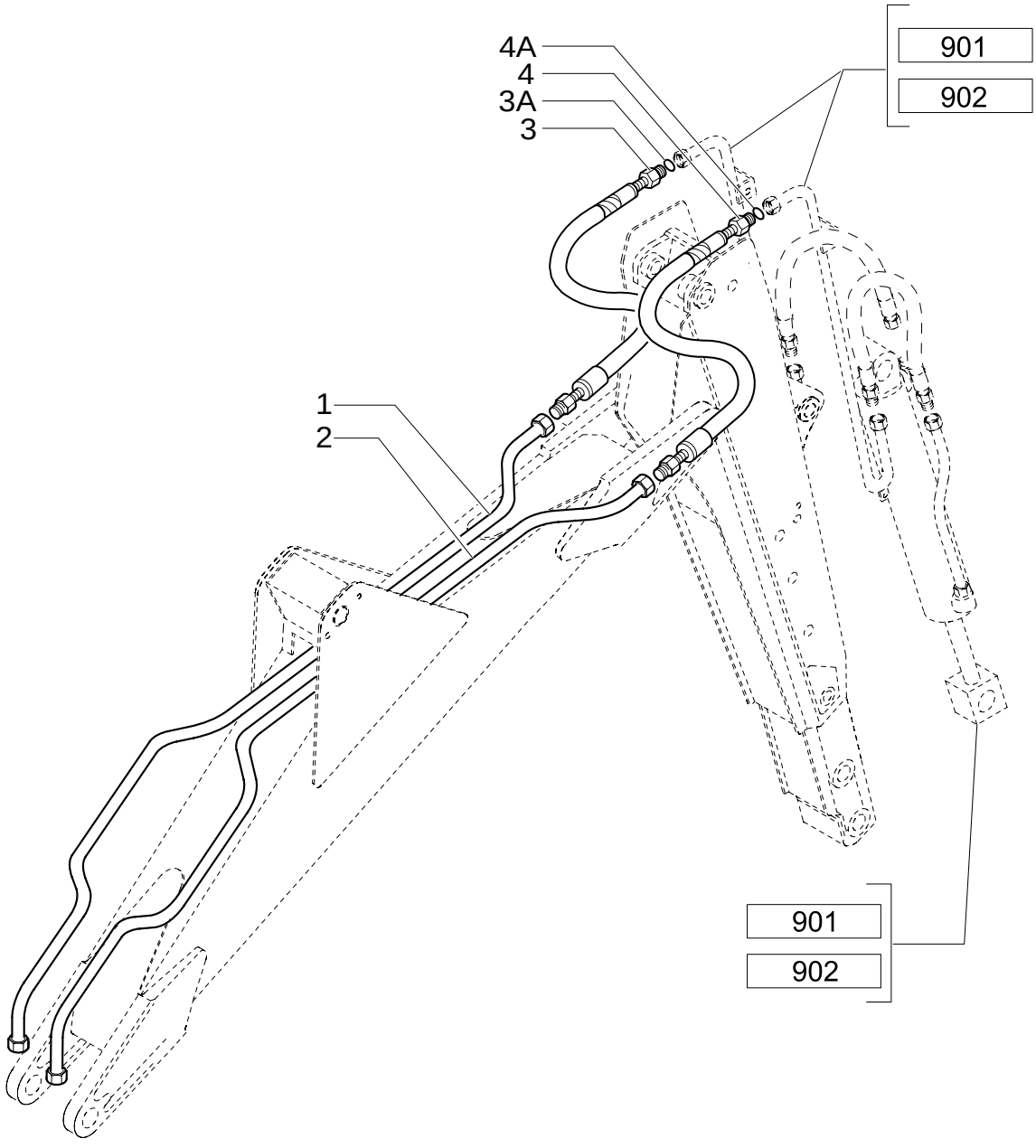

HED CYLINDER ROD END HYDRAULIC LINES(CENTER PIVOT)

REF	FN	PART NUMBER	YR/SN	QTY	DESCRIPTION
1		85815674		1	TUBE, RIGID
2		85815676		1	TUBE, RIGID
3	1	85817106		1	HOSE, FLEXIBLE
3A		9991976		2	O-RING 90 Duro, .739" ID x .070" Thk
4	2	85817107		1	HOSE, FLEXIBLE
4A		9992069		2	O-RING 90 Duro, .614" ID x .070" Thk

(1) Includes 3A
(2) Includes 4A

Mechanical Version

721	05	p1	12/05

HED FOOT PEDAL, CABLE & DECALS(CENTER PIVOT)

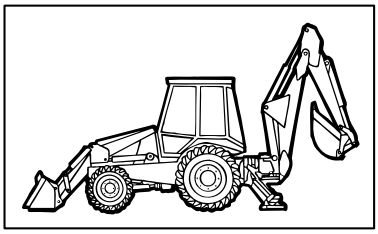

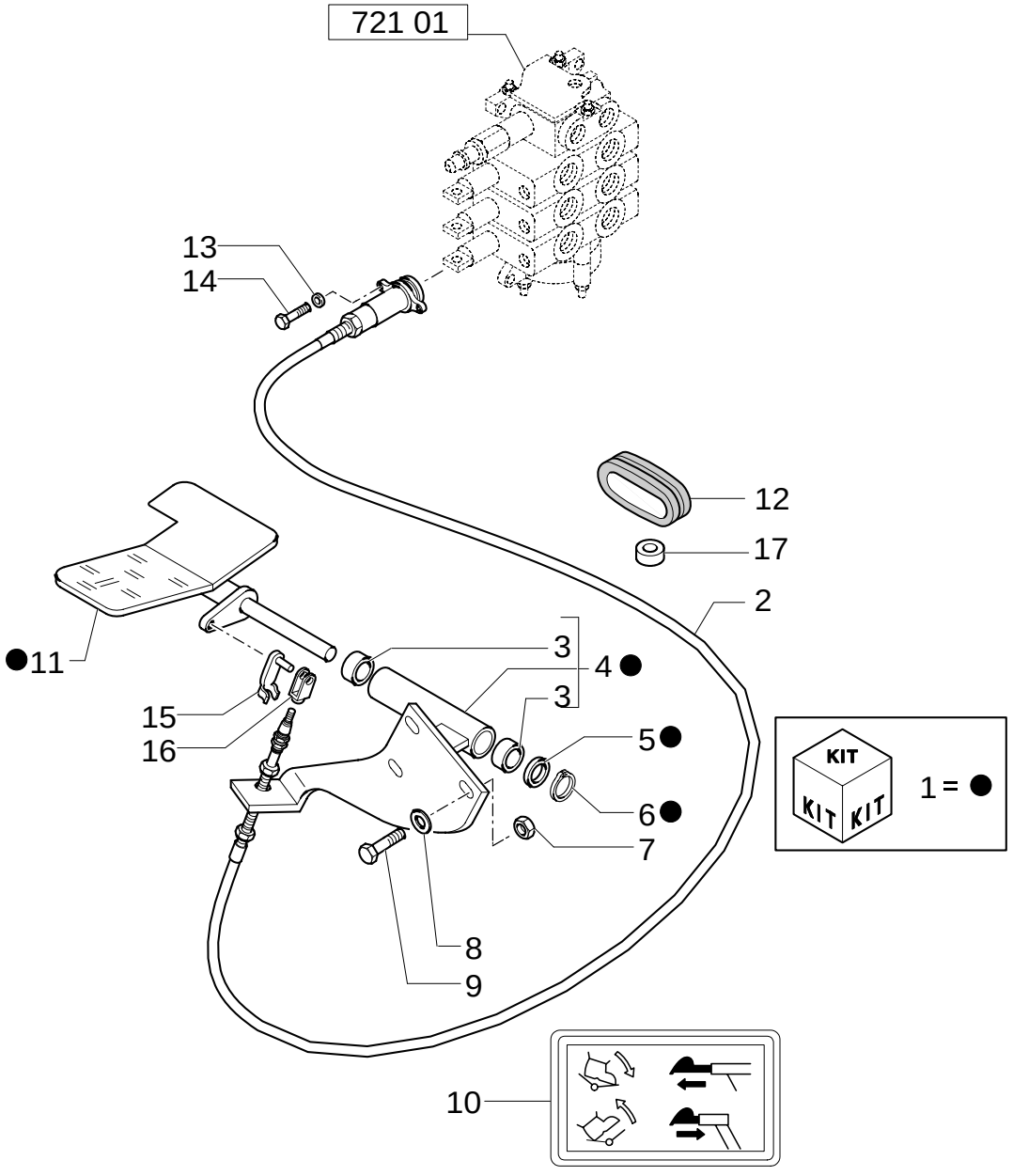

HED FOOT PEDAL, CABLE & DECALS(CENTER PIVOT)

REF	FN	PART NUMBER	YR/SN	QTY	DESCRIPTION
1		85802509		1	PEDAL ASSY
2	1	85813103		1	CABLE
3		85802494		2	BUSHING
4		85801599		1	PLATE
5		14496901		1	WASHER
6		N663114S36		1	RING
7		16104111		3	NUT
8		16043621		3	SCREW M8x1.25x25
9		11193879		3	WASHER, LOCK
10		85803786		1	DECAL
11		85802510		1	PEDAL
12		85803517		2	BUSHING, RUBBER
13		85813201		4	WASHER
14		85813200		4	SCREW
15		85813186		2	CLIP
16		85813187		2	YOKE
17		85802903		1	INSULATOR

(1) Includes 13 To16

Mechanical Version

NOTES

SECTION INDEX

SEC. 08	00	BODY & HOOD
1.87.2	01	CAB SCREEN
1.87.8	01	CAB FASTENERS

BODY & HOOD

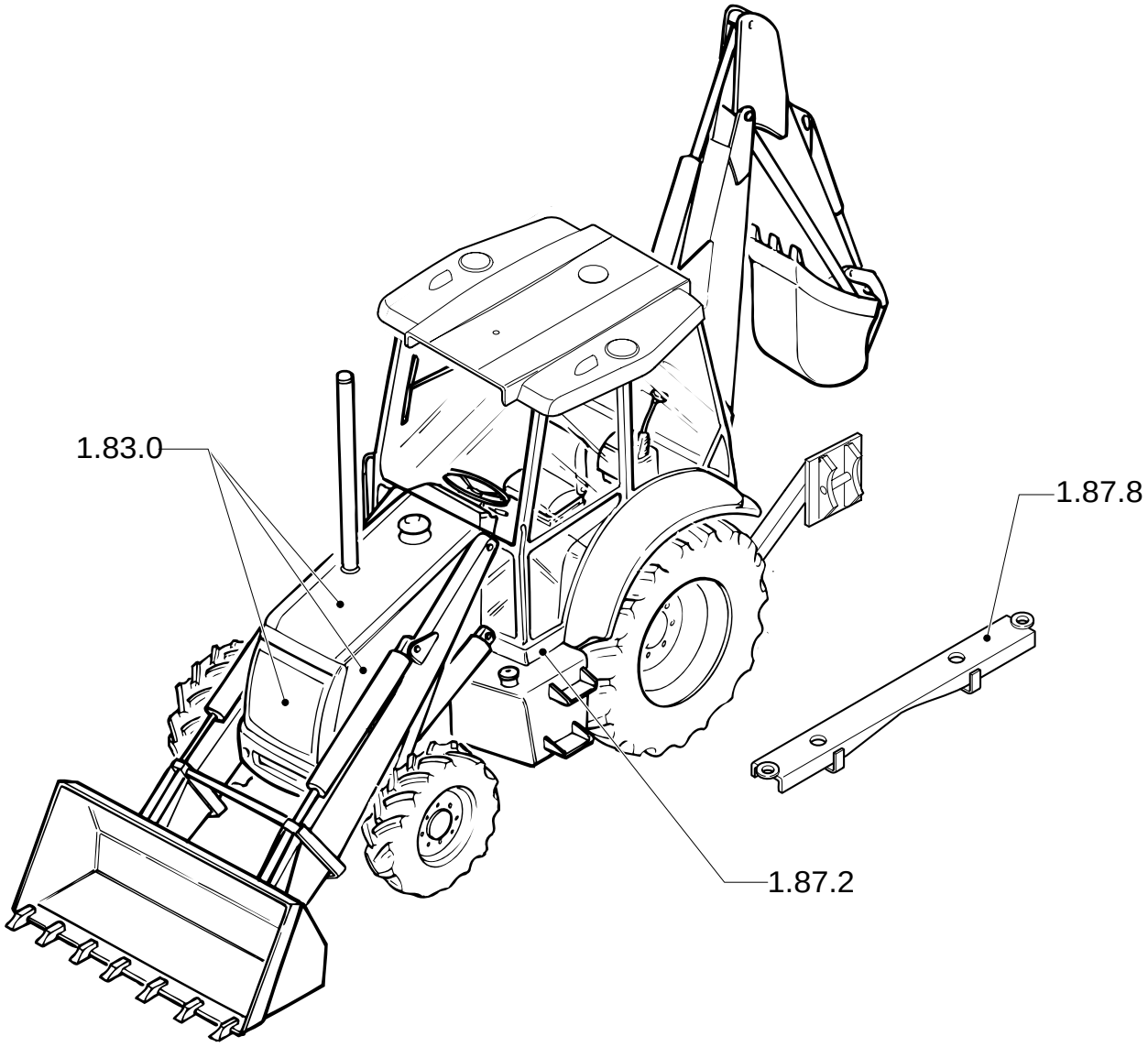

BODY & HOOD

REF	FN	PART NUMBER	YR/SN	QTY	DESCRIPTION

1.87.2	01	p1	06/05

CAB SCREEN

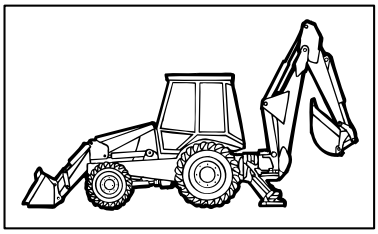

KIT 13=●

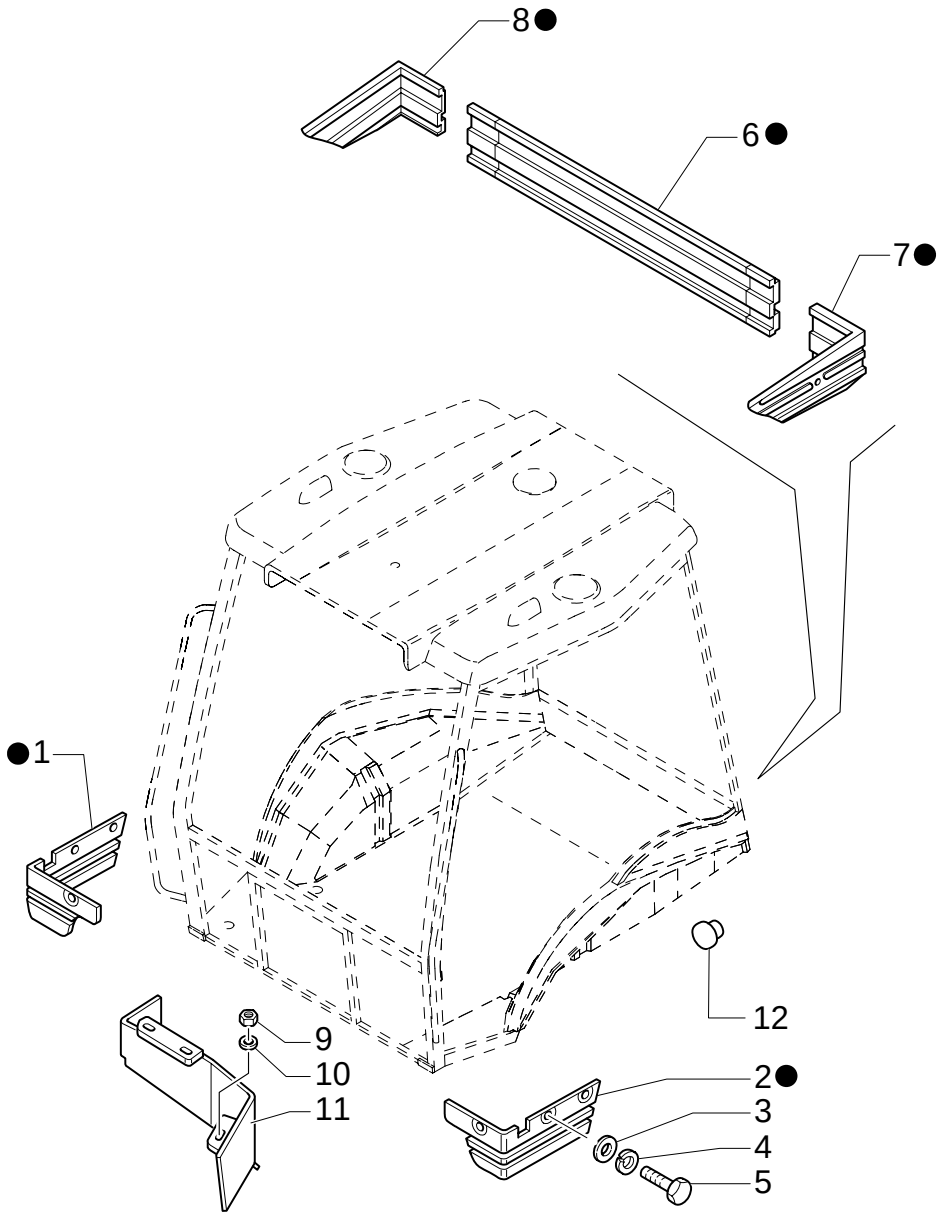

CAB SCREEN

REF	FN	PART NUMBER	YR/SN	QTY	DESCRIPTION
1		87315641		1	GUARD RH
2		87315643		1	GUARD LH
3		12643721		11	WASHER
4		11194679		11	WASHER
5		10902421		11	SCREW M6X20
6		85805303		1	GUARD
7		85805304		1	GUARD LH
8		85805305		1	GUARD RH
9		16104111		3	NUT M8
10		11193979		3	WASHER, LOCK 8X22X1,5
11		85805142		1	GUARD
12		85808422		2	PLUG
13		87315628		1	KIT
14		85805301		1	GUARD
15		85805302		1	GUARD
16	1	85825067		1	KIT

(1) Only for NA Version

1.87.8	01	p1	02/05

CAB FASTENERS

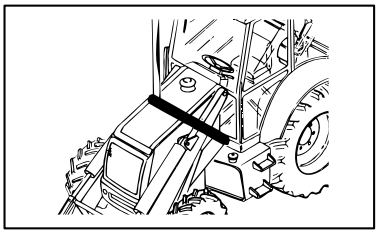

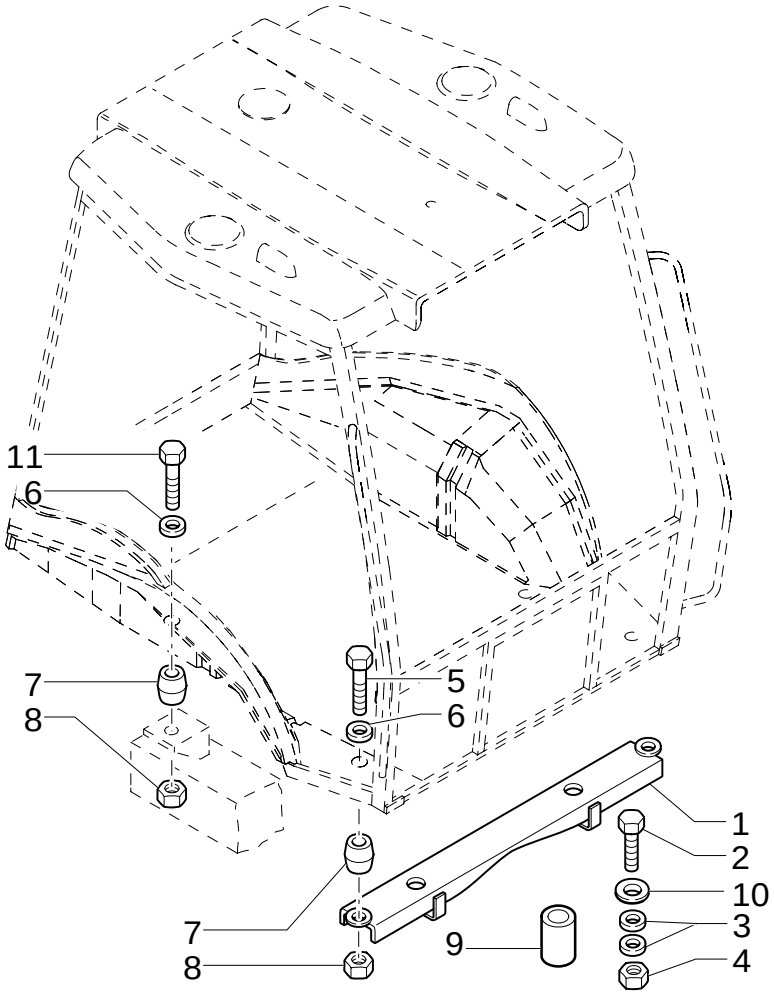

CAB FASTENERS

REF	FN	PART NUMBER	YR/SN	QTY	DESCRIPTION
1		85801319		1	CROSSRAIL
1		87303780		1	SUPPORT
2		15989334		2	SCREW M20X1,5X110
3		10520431		4	WASHER
4		12575121		2	NUT M20X1,5
5		15982134		2	SCREW M16X1,5X140
6		14496931		4	WASHER
7		85802970		4	SHOCK ABSORBER
8		12574921		4	NUT M16X1,5
9		85801324		2	TUBE, RIGID
10		85804493		2	WASHER 21X40X6
11		15981834		2	SCREW M16X1,5X120

NOTES

SECTION INDEX

SEC. 09	00	LOADER 1/1
SEC. 09	01	BACKHOE 1/2
SEC. 09	02	BACKHOE 2/2
1.11.0	01	ARMS AND JOINTS
1.11.1	01	LOADER CYLINDER
1.11.2/ 01	01	LOADER BUCKET CONTROL CYLINDER
1.88.01	01	TRANSPORT LOCK" REAR LOCKING" (CENTER PIVOT)
1.88.01	02	TRANSPORT LOCK" REAR LOCKING" (CENTER PIVOT)
1.88.01/ 2	01	"TRANSPORT LOCK" ON/OFF SWITCH, VALVE & HOSES
1.88.01/ 2	02	TRANSPORT LOCK HOOK, CYLINDER & HOSE (SIDE SHIFT,CENTER PIVOT)
1.88.08	01	SWING POST ASSEMBLY, BUSHINGS & PINS
1.88.08	02	SWING POST PINS & TRANSPORT LOCK HOOK
1.88.09	01	DISTRIBUTOR VALVE SUPPORT (CENTER PIVOT)
1.88.11	01	ARMS AND JOINTS
1.88.11/ 1B	01	LIFT CYLINDER
1.88.11/ 2	02	LOADER BUCKET CONTROL CYLINDER
1.88.11/ 2A	01	LOADER BUCKET CONTROL CYLINDER
1.88.11/ 3	01	LIFT CYLINDER AND BUCKET PIPES
1.88.11/ 5	01	SELF-LEVELING LINKAGE, LOADER CONTROLS (CENTER PIVOT)
1.88.11/ 5	02	SELF-LEVELING LINKAGE, LOADER ARM (CENTER PIVOT)
1.88.11/ 6	02	STABILIZER CYLINDERS (CENTER PIVOT)
1.88.11/ 7	01	PIPES FOR STABILIZER CYLINDERS (CENTER PIVOT)
1.88.11/ 8	01	RETURN TO DIG SENSOR
1.88.11/ 9A	01	CYLINDERS AND ROTATION PLATE
1.88.11/ 9C	01	SWING CYLINDERS BACKHOE
1.88.12/ 3	01	FRONT CONTROL VALVE SUPPORT AND TRANSMISSIONS (CENTER PIVOT)
120	01	SILENT HAMMER CB65S
120/ 1	01	HAMMER CB65B
200	01	SHOVEL AND REAR LIFTING HOOKS
340/ 1	01	4X1 & 6X1 BUCKET HYDRAULIC LINES (P. SHUTTLE)
416-417	01	SYSTEM HAMMER COMPONENTS (CAB)
431	01	STANDARD 1M3 BUCKET
432	01	STANDARD 1M3 BUCKET WITH TINE
433	01	BUCKET 4X1 (1 M3) WITH BLADE
434	01	BUCKET 4X1 (1 M3) WITH TINE
469/ A	01	HYDRAULIC CYLINDER (BUCKET 4X1-6X1)
471	02	BUCKET 4X1 (1 M3) WITH BLADE
514	01	BOOM - DIPPER SHORT
514	02	SHORT DIPPER
514	03	SHORT DIPPER - BUCKET MOTION
514	04	SHORT DIPPER - HYDRAULIC SYSTEM
514	05	SHORT DIPPER - HYDRAULIC SYSTEM
514	06	SHORT DIPPER - HYDRAULIC SYSTEM
514	07	SHORT DIPPER - HYDRAULIC SYSTEM
514	08	SHORT DIPPER - HYDRAULIC SYSTEM
514/ C	01	HYDRAULIC BUCKET CYLINDER
514/ E	01	HYDRAULIC DITCHING CYLINDER
514/ F	01	HYDRAULIC LIFTING CYLINDER
515	01	12" (305MM) BACKHOE BUCKET WITH PIN TEETH
515	02	12" (305MM) BACKHOE BUCKET WITH BOLT-ON TEETH
516	01	18" (457MM) BACKHOE BUCKET WITH PIN TEETH
516	02	18" (457MM) BACKHOE BUCKET WITH BOLT-ON TEETH

SECTION INDEX

517	01	24" (610MM) BACKHOE BUCKET WITH PIN TEETH
517	02	24" (610MM) BACKHOE BUCKET WITH BOLT-ON TEETH
518	01	30" (762MM) BACKHOE BUCKET WITH PIN TEETH
518	02	30" (762MM) BACKHOE BUCKET WITH BOLT-ON TEETH
519	01	36" (914MM) BACKHOE BUCKET WITH PIN TEETH
519	02	36" (914MM) BACKHOE BUCKET WITH BOLT-ON TEETH
520	01	0.88 M3 BUCKET WITHOUT TINES
522/ B	01	1 M3 BUCKET
522/ C	01	STANDARD 1MC BUCKET WITH FORKS
525	01	STANDARD 1M3 BUCKET WITH FORKS AND EXTRA REVERSIBLE BLADE
525	02	STANDARD 1M3 BUCKET WITH FORKS AND EXTRA REVERSIBLE BLADE
526	01	BOLT-ON TOOTH KIT, 12" (305MM) BACKHOE BUCKET
526/ 1	01	STANDARD 1M3 BUCKET WITH FORKS AND TINE
527	01	BOLT-ON TOOTH KIT, 18" (457MM) & 24" (610MM) BACKHOE BUCKETS
527/ 1	01	0.88 M3 BUCKET AND EXTRA REVERSIBLE BLADE
528	01	BOLT-ON TOOTH KIT, 30" (762MM) BACKHOE BUCKET
529	01	BOLT-ON TOOTH KIT, 36" (914MM) BACKHOE BUCKET
530	01	PIN TOOTH KIT, 12" (305MM) BACKHOE BUCKET
532	01	PIN TOOTH KIT, 30" (762MM) BACKHOE BUCKET
533	01	PIN TOOTH KIT, 36" (914MM) BACKHOE BUCKET
536/ 1	01	STANDARD 1MC BUCKET WITH TINE
537/ 1	01	STANDARD 1MC BUCKET WITH EXTRA REVERSIBLE BLADE
548	01	DITCH CLEANING BUCKET
555	01	FRONT BUCKET TEETH
556	01	LOADER BUCKET REVERSIBLE BLADE
626	01	SCRAB GRAB
699	01	HAND HAMMER SWITCH
700/ 2	01	4X1 & 6X1 BUCKET HYDRAULIC LINES (P. SHUTTLE)
700/ 2	02	4X1 & 6X1 BUCKET HYDRAULIC LINES (P. SHUTTLE)
704	01	MANUAL HAMMER SYSTEM
704	02	MANUAL HAMMER SYSTEM
704/ A	01	MANUAL HAMMER VALVE
724	01	HYDRAULIC SYSTEM FOR HAMMER (CENTER PIVOT)
724	02	HYDRAULIC SYSTEM FOR HAMMER (CENTER PIVOT)
724/ A	01	REAR HAMMER CONTROL VALVE
724/ 3	01	HYDRAULIC SYSTEM FOR HAMMER (CENTER PIVOT)
724/ 3	02	HYDRAULIC SYSTEM FOR HAMMER (CENTER PIVOT)
724/ 5	01	HYDRAULIC SYSTEM FOR HAMMER (4WS)
724/ 6	01	HYDRAULIC SYSTEM FOR HAMMER (SIDE SHIFT EUROPA)
725	01	HAMMER KIT FROM LIFTING ARM TO DEMOLITION ARM
725/ 1	01	4X1 & 6X1 BUCKET HYDRAULIC LINES
725/ 1	02	4X1 & 6X1 BUCKET HYDRAULIC LINES (P. SHUTTLE)
732	01	REAR MECHANICAL QUICK-COUPLING
732/ A	01	REAR MECHANICAL QUICK-COUPLING
734	01	FRONT MECHANICAL QUICK-COUPLING
900	01	BOOM - LONG DIPPER
900	02	LONG DIPPER
900	03	LONG DIPPER - BUCKET MOTION
900	04	LONG DIPPÊR - HYDRAULIC SYSTEM
900	05	LONG DIPPER - HYDRAULIC SYSTEM
900	06	LONG DIPPER - HYDRAULIC SYSTEM
900	07	LONG DIPPER - HYDRAULIC SYSTEM

SECTION INDEX

900	08	LONG DIPPER - HYDRAULIC SYSTEM
902	01	BOOM - TELESCOPIC DIPPER SHORT
902	02	TELESCOPIC DIPPER SHORT - HYDRAULIC SYSTEM
902	03	TELESCOPIC DIPPER SHORT - HYDRAULIC SYSTEM
902	04	TELESCOPIC DIPPER SHORT- BUCKET MOTION
902	05	TELESCOPIC DIPPER SHORT - HYDRAULIC SYSTEM
902	06	TELESCOPIC DIPPER SHORT - HYDRAULIC SYSTEM
902	07	TELESCOPIC DIPPER SHORT - HYDRAULIC SYSTEM
902/ A	01	TELESCOPIC DIPPER SHORT
902/ A	02	TELESCOPIC DIPPER SHORT - HYDRAULIC SYSTEMM
902/ B	01	TELESCOPIC DIPPER SHORT - HYDRAULIC SYSTEMM
902/ C	01	TELESCOPIC DIPPER SHORT - HYDRAULIC SYSTEMM

SEC. 09	00	p1	02/05

LOADER 1/1

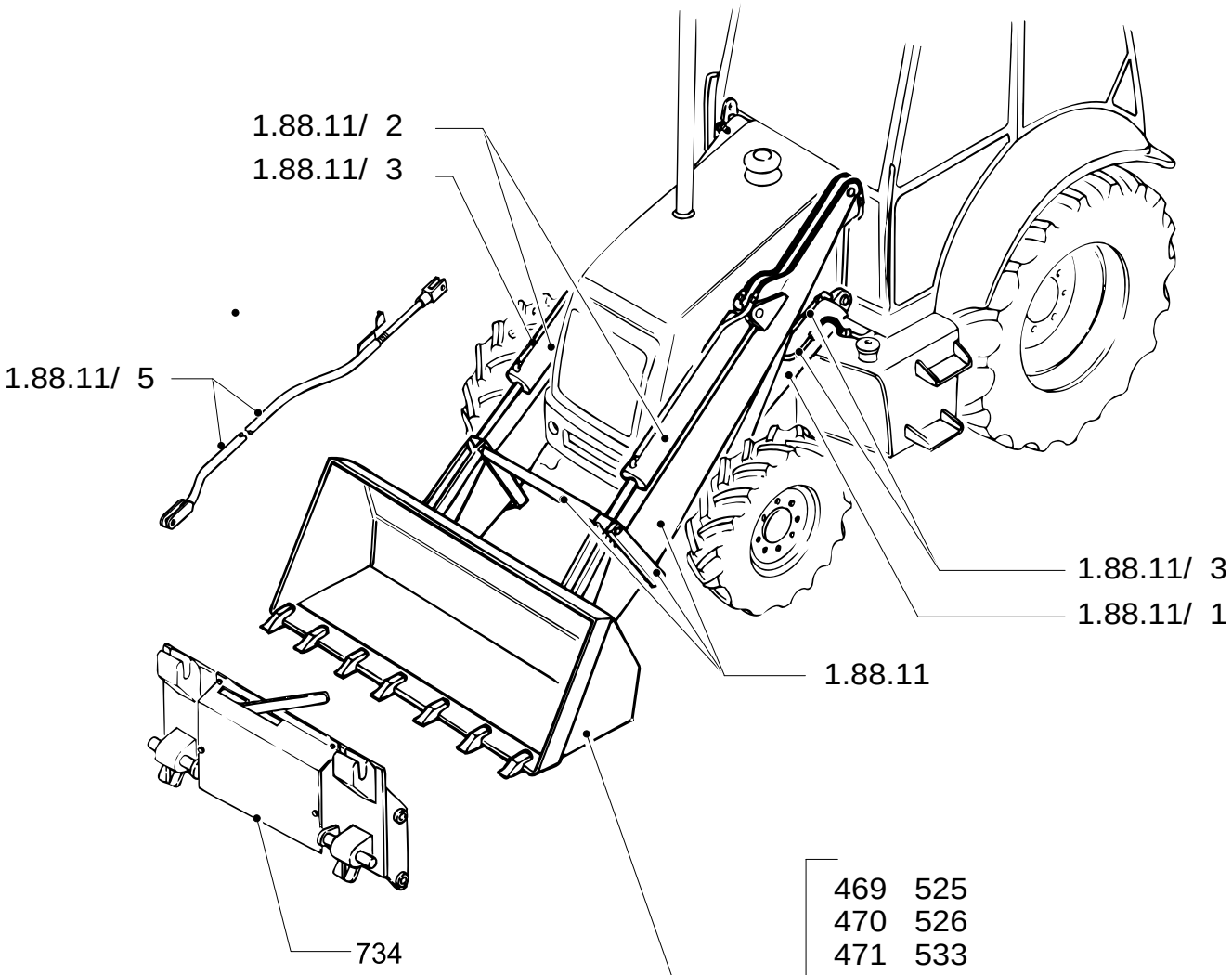

469 525
470 526
471 533
472 534
473 535/ 2
474 536/ 1
475 537/ 1
476 548
500 555
501 556
502

LOADER 1/1

REF	FN	PART NUMBER	YR/SN	QTY	DESCRIPTION

SIDE SHIFT

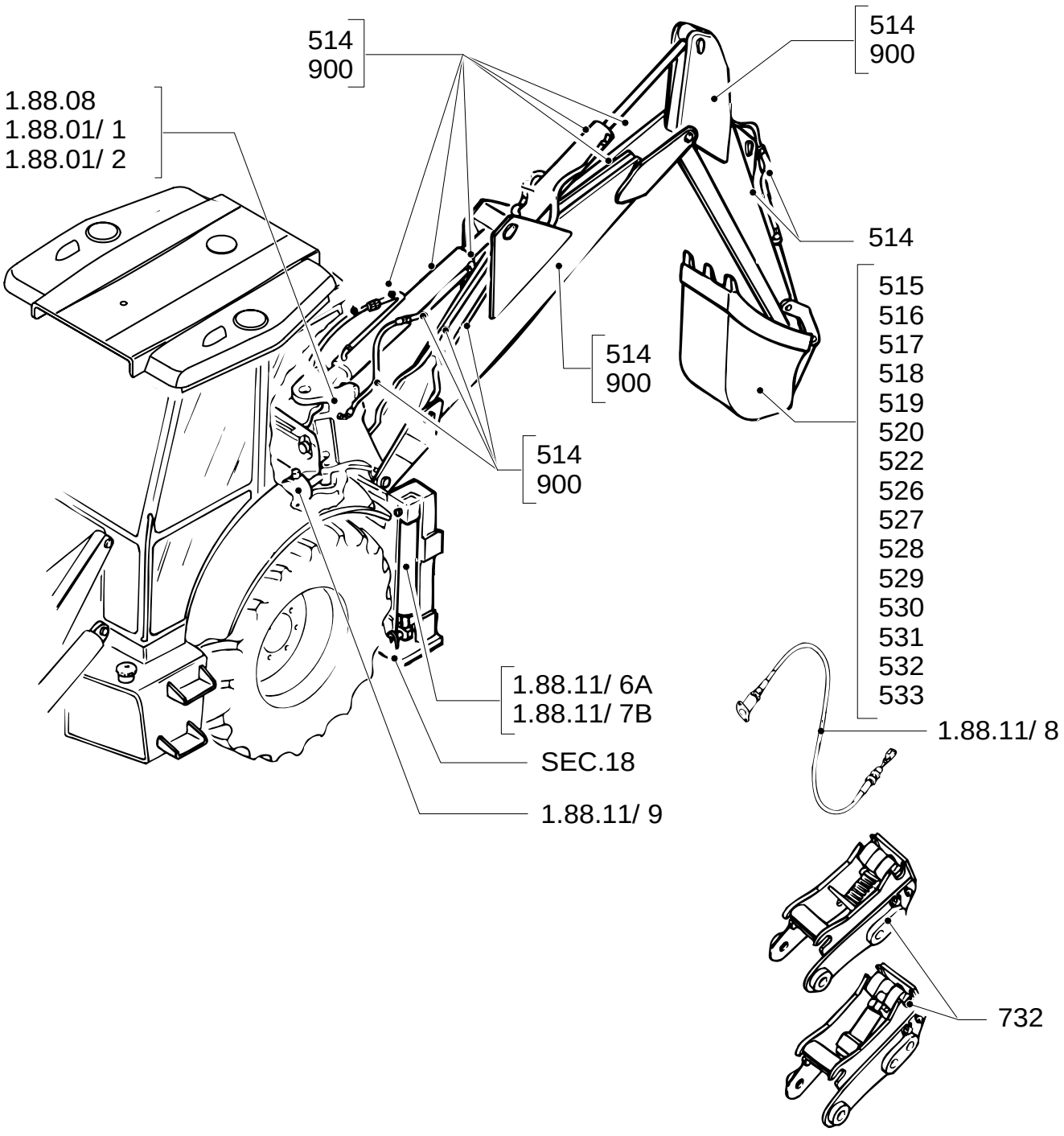
514
900
514
900
1.88.08
1.88.01/ 1
1.88.01/ 2
514
515
516
517
518
519
520
522
526
527
528
529
530
531
532
533
514
900
514
900
1.88.11/ 6A
1.88.11/ 7B
1.88.11/ 8
SEC.18
1.88.11/ 9
732

BACKHOE 1/2

REF	FN	PART NUMBER	YR/SN	QTY	DESCRIPTION

CENTER PIVOT

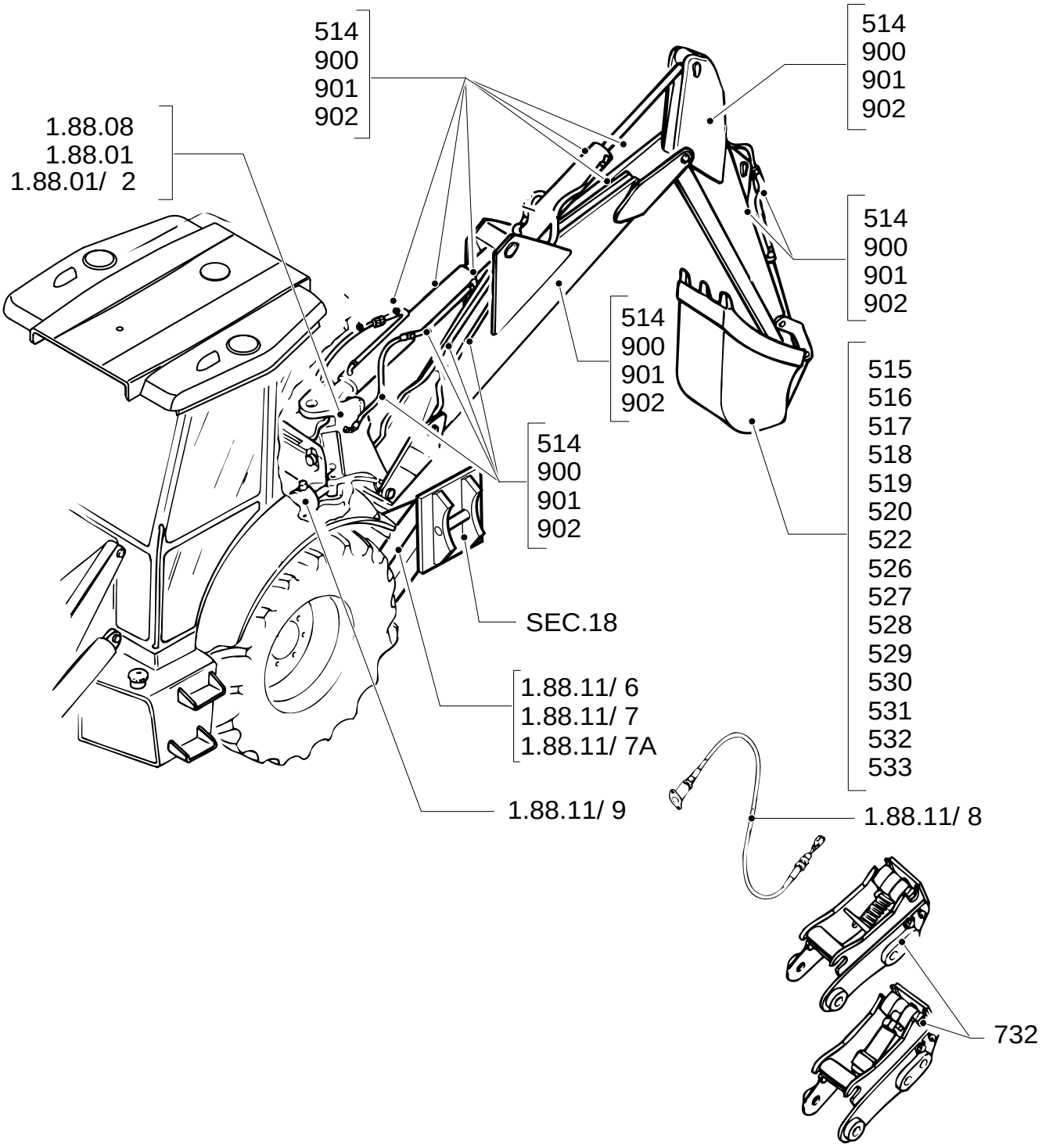

BACKHOE 2/2

REF	FN	PART NUMBER	YR/SN	QTY	DESCRIPTION

1.11.0	01	p1	11/05

ARMS AND JOINTS

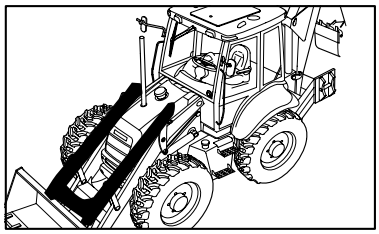

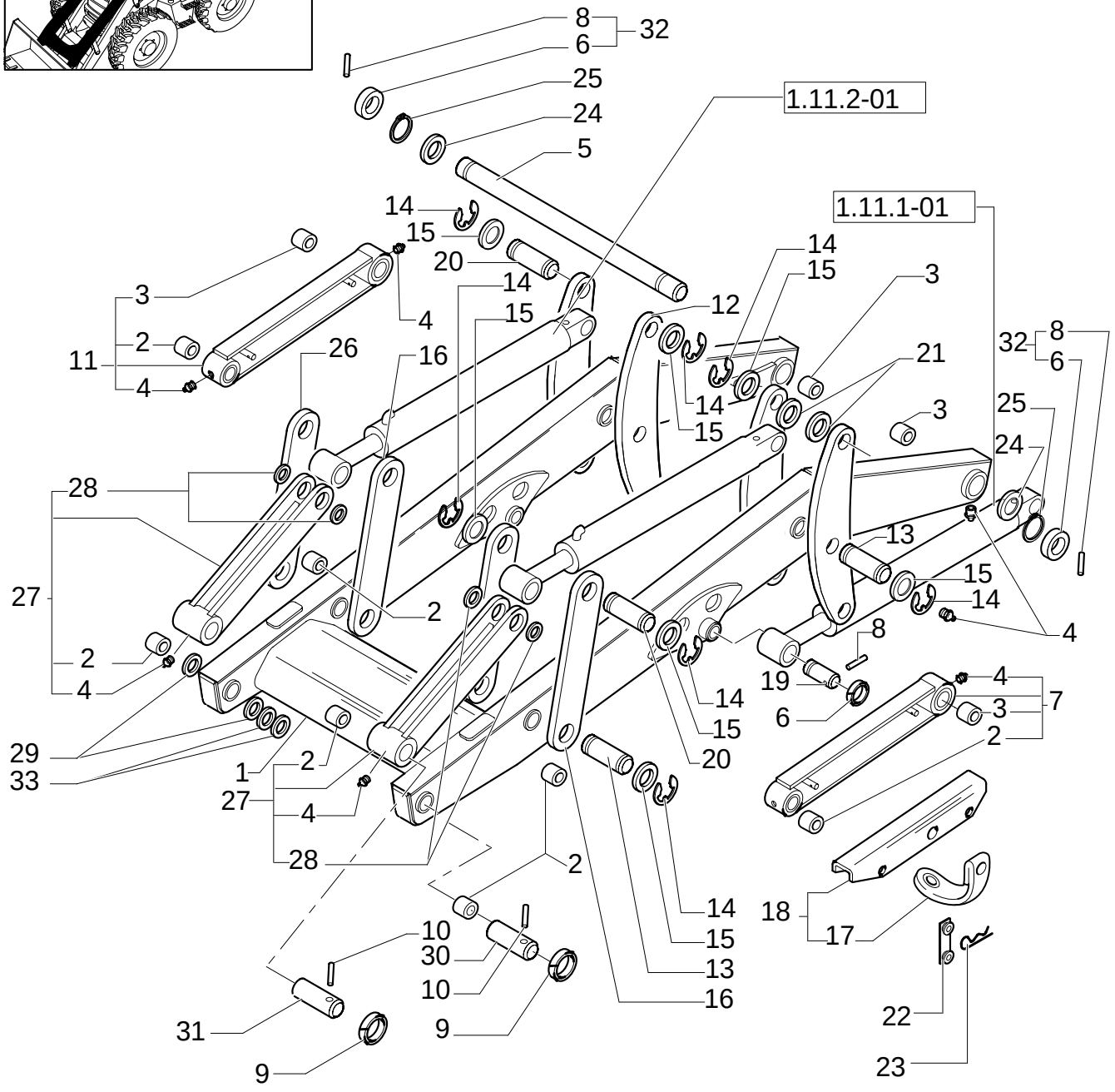

ARMS AND JOINTS

REF	FN	PART NUMBER	YR/SN	QTY	DESCRIPTION
1		87352045		1	ARM, LIFT
2		85804475		6	BUSHING
3		85804468		2	BUSHING
4		87901S8		4	NIPPLE, LUBE
5		85804467		1	PIN
6		85802991		2	O-RING
7	1	85804578		1	LINK CONROD LH
8		85802994		2	PIN
9		85802974		4	RING
10		85804534		4	PIN, ROLL
11	1	85804497		1	LINK CONROD RH
12		85804506		4	PANEL, SIDE
13		85804469		4	PIN, ROLL
14		85805654		20	RING, LOCKING
15		D7NNC622C		20	SPACER
16		85804510		3	PANEL, SIDE
17		85811977		1	BELT
18		85811995		1	KIT
19		87400400		2	PIN
20		85804508		6	PIN, ROLL
21		85804495		4	SPACER
22		85804587		2	INSULATOR BLOCK
23		85804588		2	PIN, SPLIT (COTTER)
24		87401079		2	WASHER 61x85x3.5
25		11069874		2	RING
26		87305181		1	PANEL, SIDE
27	2	85804513		2	LINK CONROD
28		85804515		4	BUSHING
29		85818916		8	SHIM
30		85804533		2	PIN, ROLL
31		85805306		2	PIN, ROLL
32	3	85804504		2	SUPPORT
33		85828253		2	SHIM

(1) Includes 2 To 4
(2) Includes 2, 4, 28
(3) Includes 6, 8

1.11.1	01	p1	11/05

LOADER CYLINDER

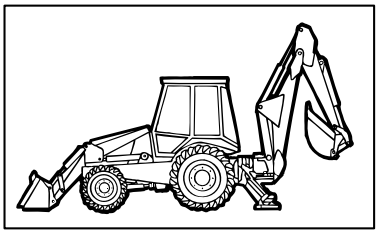

KIT KIT KIT 18 = ●

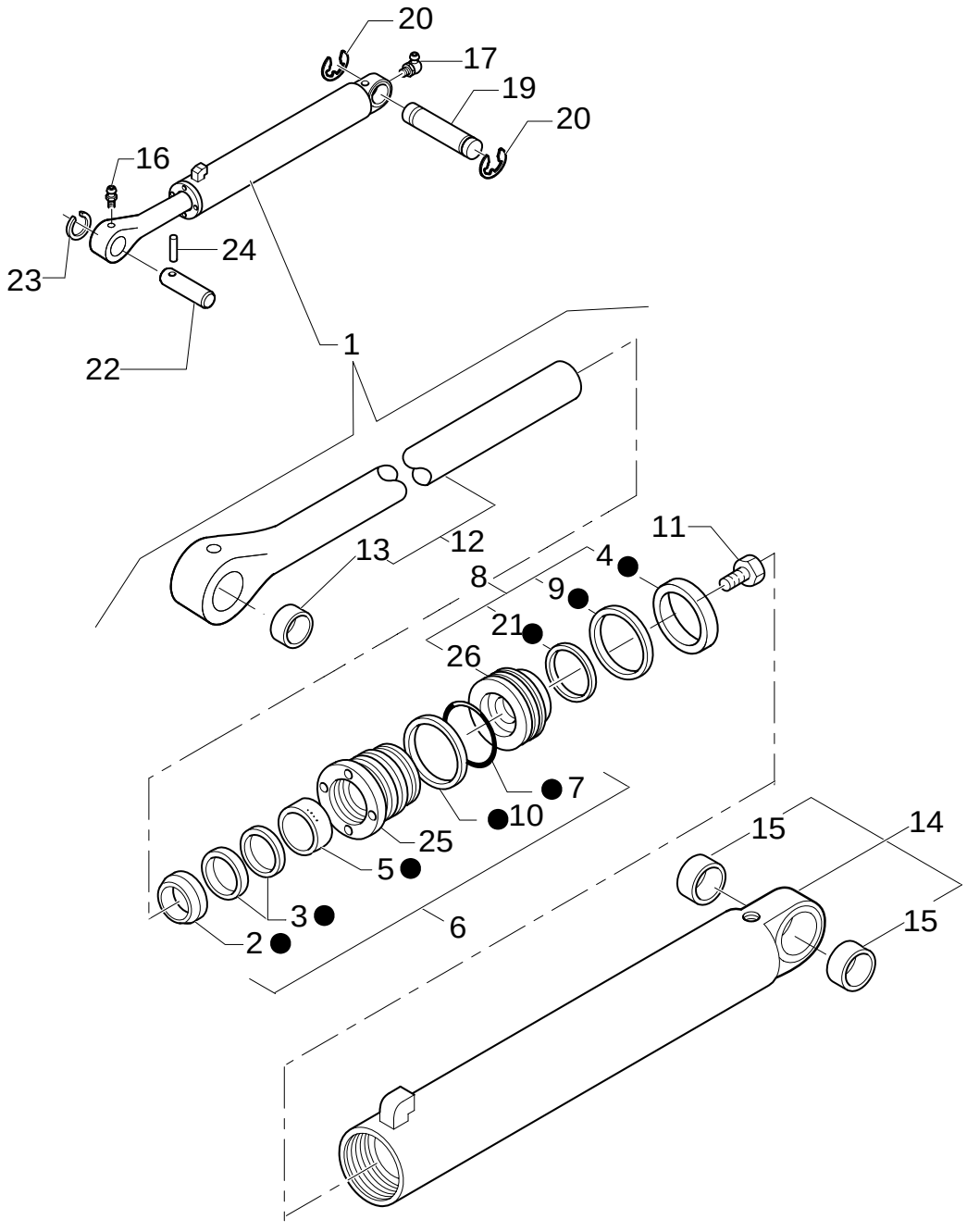

LOADER CYLINDER

REF	FN	PART NUMBER	YR/SN	QTY	DESCRIPTION
1		87324212		2	HYDRAULIC CYLINDER
2		85827198		1	SEAL
3		85827199		1	SEAL
4		{85827404}		1	
5		{85827401}		1	
6	1	{87429862}		1	
7		85827200		1	O-RING
8	2	{87429864}		1	
9		{85827403}		1	
10		85827197		1	O-RING
11		86982440		1	BOLT, SPECIAL
12	3	87307305		1	ROD
13		87450315		2	BUSHING
14	4	87307301		1	BARREL
15		291550		2	BUSHING
16		87901S8		1	NIPPLE, LUBE 1/8-27
17		87916S8		1	NIPPLE, LUBE 1/8-27-90GR
18		87432407		AR	KIT
19		87402741		1	PIN
20		47049094		2	CIRCLIP
21		{85827402}		1	
22		85804538		1	PIN, ROLL
23		85802974		1	RING
24		85804534		1	PIN, ROLL
25		87429863		1	PISTON
26		{87429865}		1	

(1) Includes 2, 3, 5, 7, 10, 25
(2) Includes 4, 9, 21, 26
(3) Includes 13
(4) Includes 15

1.11.2/ 01	01	p1	12/05

LOADER BUCKET CONTROL CYLINDER

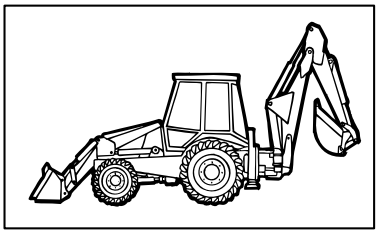

KIT 13 = ●

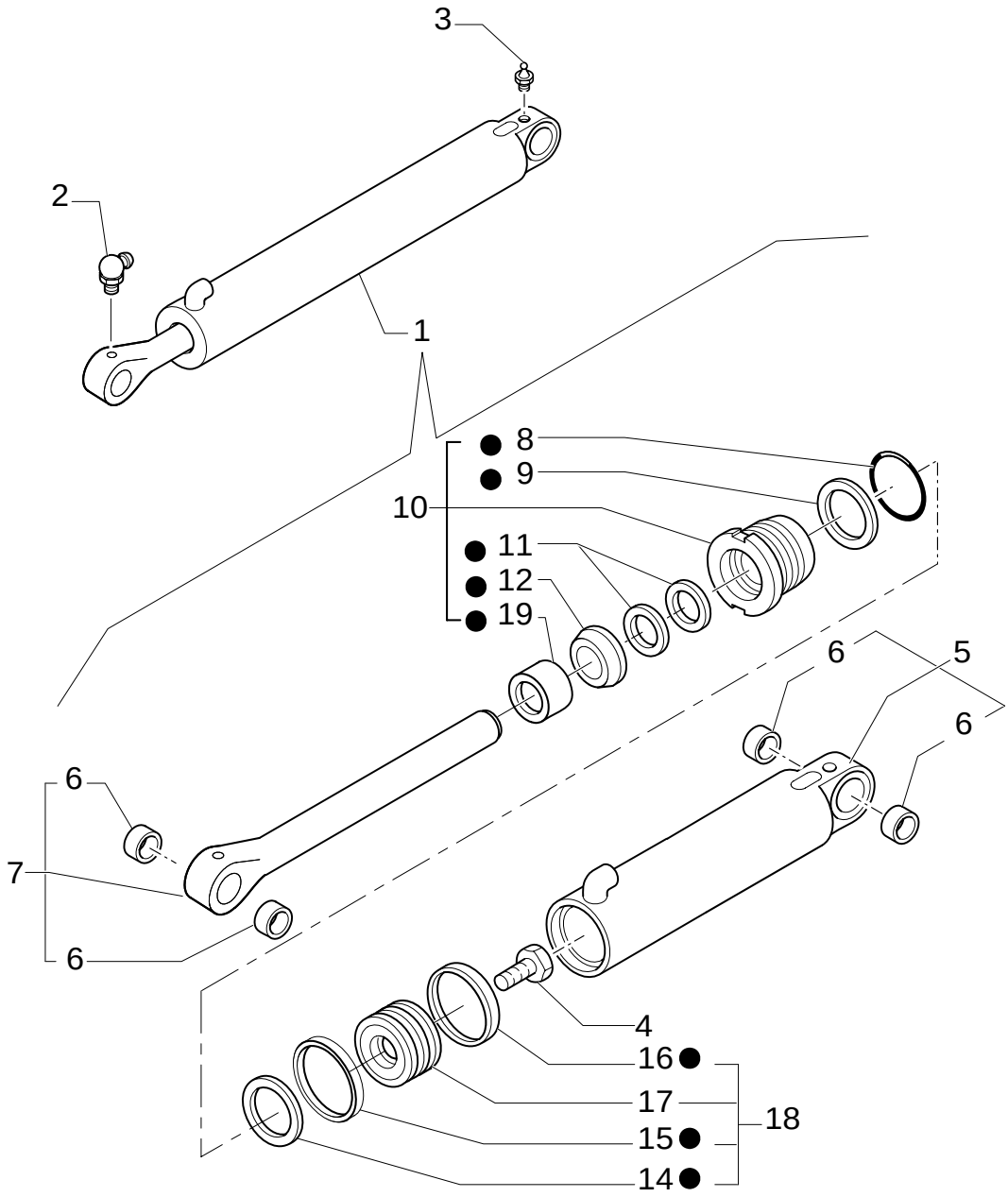

LOADER BUCKET CONTROL CYLINDER

REF	FN	PART NUMBER	YR/SN	QTY	DESCRIPTION
1		87324213		2	HYDRAULIC CYLINDER
2		87916S8		1	NIPPLE, LUBE 1/8-27-90GR
3		87901S8		1	NIPPLE, LUBE
4		86982437		1	BOLT, SPECIAL
5		87307302		1	BARREL
6		87450315		4	BUSHING
7	1	87307303		1	ROD
8		85827184		1	O-RING
9		85827181		1	O-RING
10	2	85827178		1	GLAND
11		85827183		1	KIT
12		85807182		1	HINGE
13		87432412		1	KIT
14		85827188		1	RING
15		85827187		1	GASKET
16		85827186		1	RING
17		{87429594}		1	
18		87429593		1	PISTON
19		{85827185}		1	

(1) Includes 6
(2) Includes 8, 9, 11, 12, 19

1.88.01	01	p1	11/05

TRANSPORT LOCK" REAR LOCKING" (CENTER PIVOT)

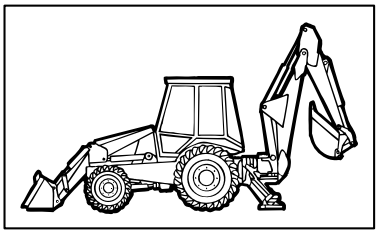

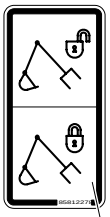

TRANSPORT LOCK" REAR LOCKING" (CENTER PIVOT)

REF	FN	PART NUMBER	YR/SN	QTY	DESCRIPTION
1	1	85821268		1	SHOCK ABSORBER
2		11193879		1	WASHER, LOCK
3		16043621		1	SCREW M8x1,25x25
4	1	85812278		1	DECAL
5		85819482		1	BUSHING
7		11190579		2	WASHER, LOCK
8	2	85819485		1	BASE
9		85813407		2	RING
10		85819468		1	YOKE
11		87302958		1	PIN
12		85819477		2	ARTICULATION
13		85819478		1	NUT M10
14		85819479		2	BELLOWS
15		85819481		1	ROD
17		85819480		1	TUBE, RIGID
18		85821270		1	WASHER
19		85821271		1	NUT M16
20		85824227		2	COLLAR
21	2, 1	87302956		1	TIE-ROD, STEERING
6		11106221		2	SCREW M10x25

(1) Only for LB90.B - LB95.B - LB115.B
(2) Only for EUROPE Version

1.88.01	02	p1	06/05

TRANSPORT LOCK" REAR LOCKING" (CENTER PIVOT)

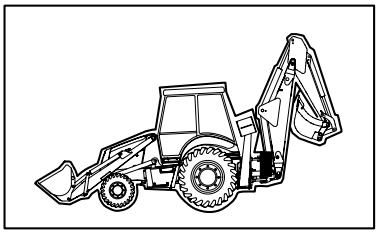

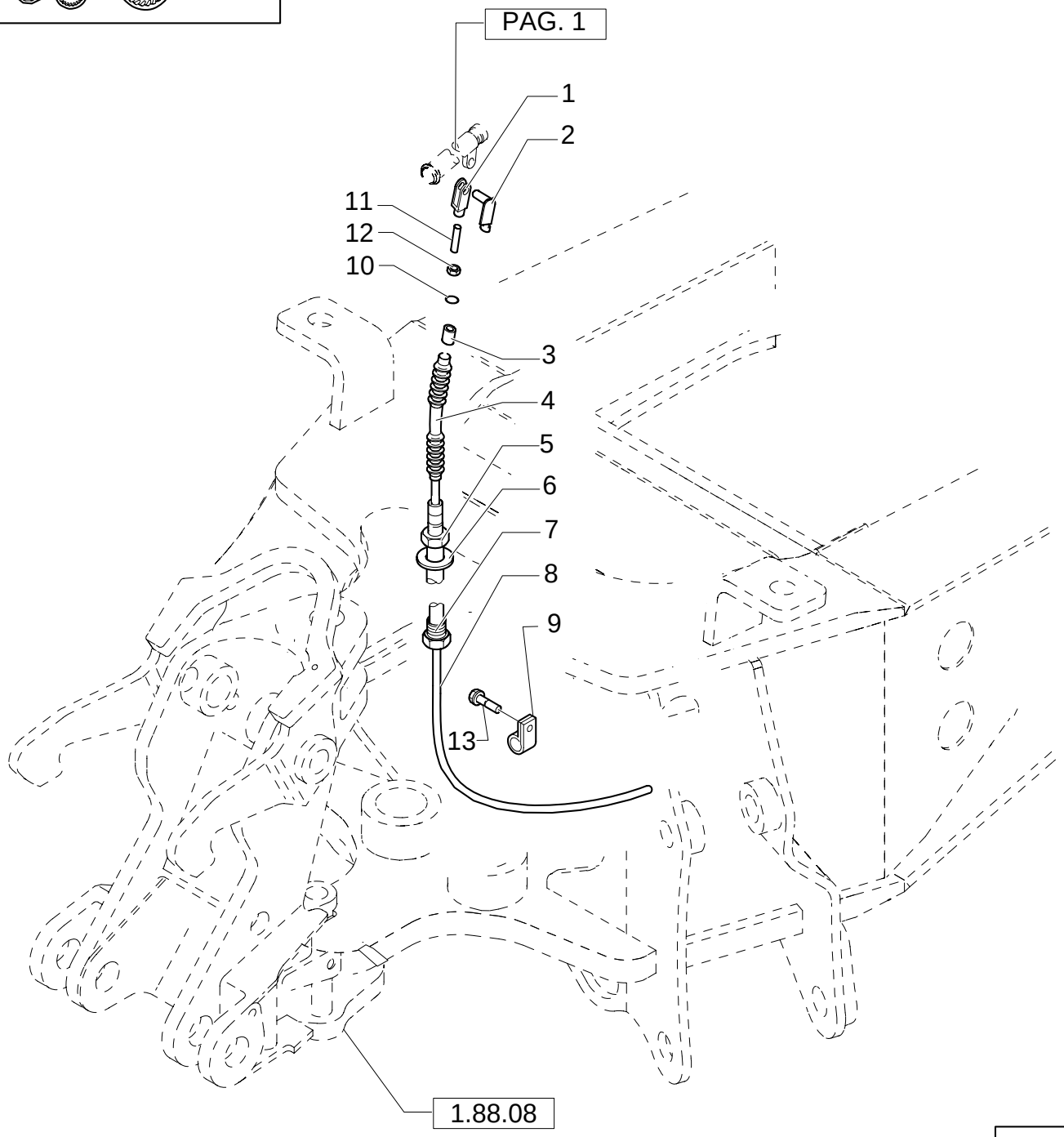

TRANSPORT LOCK" REAR LOCKING" (CENTER PIVOT)

REF	FN	PART NUMBER	YR/SN	QTY	DESCRIPTION
1		85819467		1	YOKE
2		85819469		1	CLIP
3		85819471		1	RING
4		85821278		1	BELLOWS
5		87302960		2	NUT
6		87302959		1	WASHER
7		85819486		1	NUT
8		87302967		1	CABLE
9		10450190		1	COLLAR, RETAINER
10		85821277		1	RING, RUBBER
11		85821279		1	ROD
12		85821273		1	NUT M8x1,25
13		16043021		1	SCREW M8x12

1.88.01/ 2	01	p1	12/05

"TRANSPORT LOCK" ON/OFF SWITCH, VALVE & HOSES

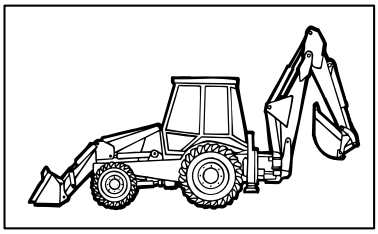

KIT KIT KIT 13=● 16=▲

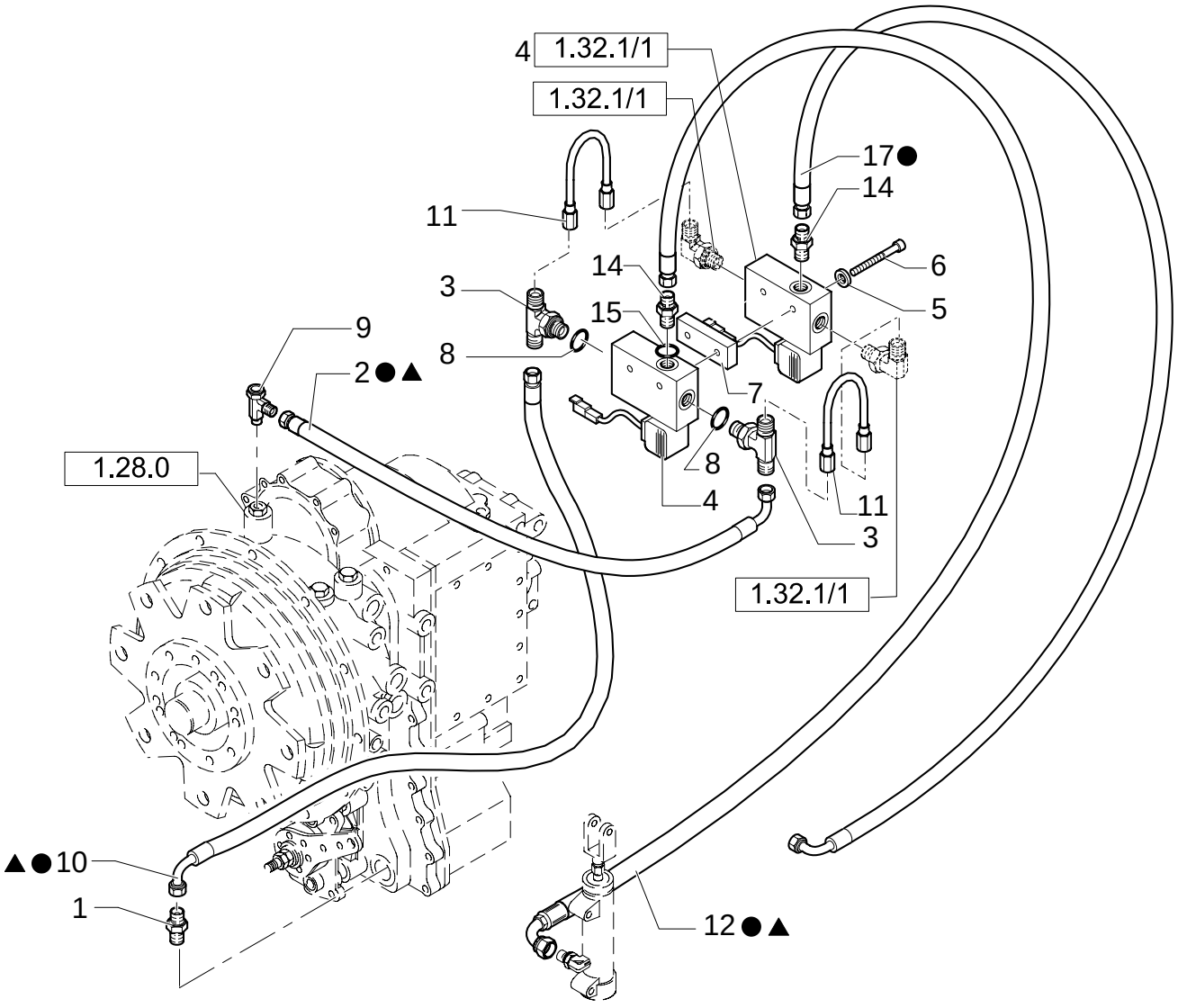

"TRANSPORT LOCK" ON/OFF SWITCH, VALVE & HOSES

REF	FN	PART NUMBER	YR/SN	QTY	DESCRIPTION
1		87403805		1	CONNECTOR, HYD.
2		85819069		1	HOSE, FLEXIBLE
3		85802231		2	CONNECTOR, HYD.
4		85817265		2	ELECTRO-VALVE
5		11197779		2	WASHER, LOCK
6		11030921		2	SCREW M6x1x85
7		85824110		1	PLATE, COVER
8		9617873		2	O-RING 6-1, 90 Duro, .468" ID x .078" Thk
9		85802233		1	CONNECTOR, HYD.
10		85819068		1	HOSE, FLEXIBLE
11		85819083		2	TUBE
12		85819071		1	HOSE, FLEXIBLE
13	1	{47352048}		1	
14		85803312		1	CONNECTOR, HYD.
15		9617873		1	O-RING 6-1, 90 Duro, .468" ID x .078" Thk
16	2	{47352049}		1	
17		87342832		1	HOSE, FLEXIBLE

(1) Only for EUROPE Version
(2) Only for Center Pivot

1.88.01/ 2	02	p1	11/05

TRANSPORT LOCK HOOK, CYLINDER & HOSE (SIDE SHIFT,CENTER PIVOT)

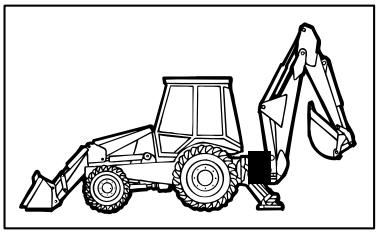

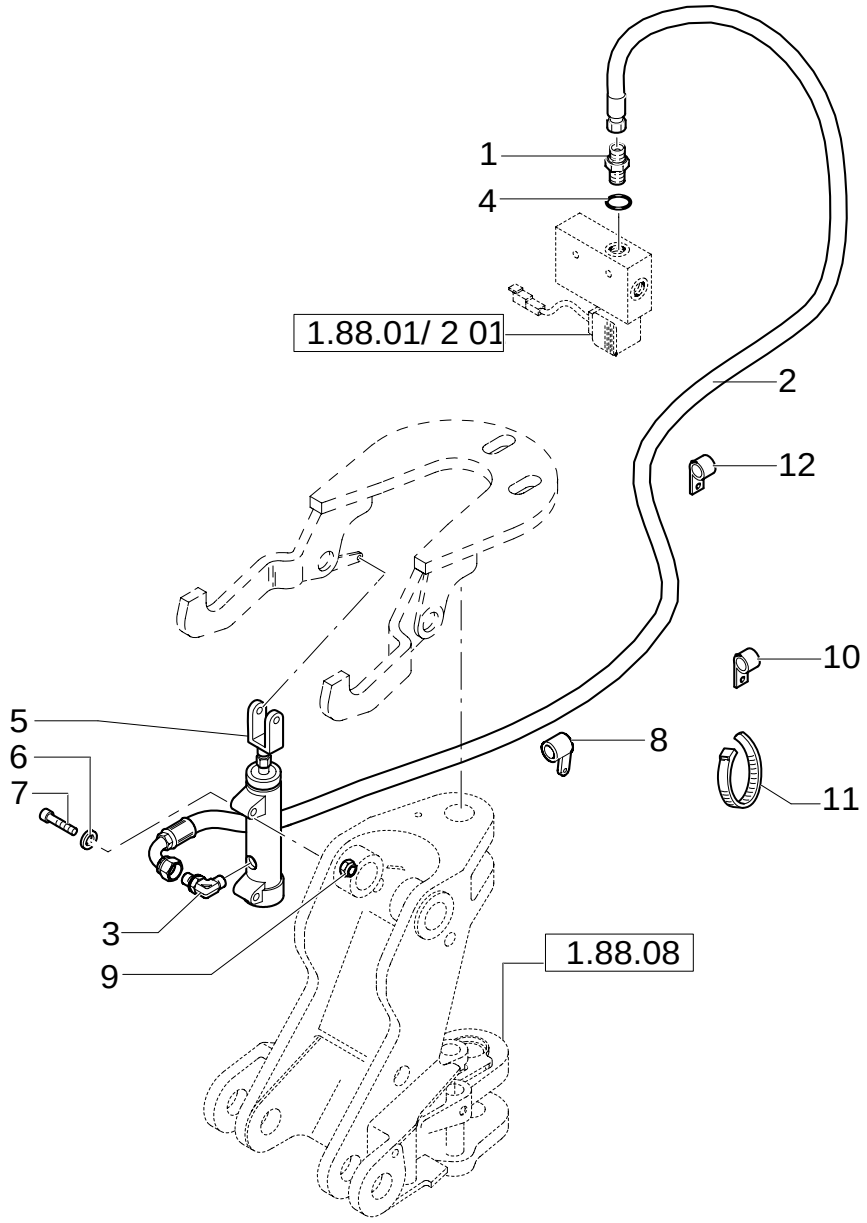

TRANSPORT LOCK HOOK, CYLINDER & HOSE (SIDE SHIFT,CENTER PIVOT)

REF	FN	PART NUMBER	YR/SN	QTY	DESCRIPTION
1		85803312		1	CONNECTOR, HYD.
2		85819071		1	HOSE, FLEXIBLE
3		85824089		1	CONNECTOR, HYD.
4		9617873		1	O-RING 6-1, 90 Duro, .468" ID x .078" Thk
5	1	87337288		1	CYLINDER
5	2	87362349		1	CYLINDER
6		11193879		2	WASHER, LOCK
7		16044221		2	SCREW M8x1,25x50
8		85802890		1	COLLAR, RETAINER
9		16100821		2	NUT M8
10		85802336		1	COLLAR, RETAINER
11		85803332		4	COLLAR
12		79072960		1	COLLAR

(1) UP TO S/N 031056559
(2) FROM TO S/N 031056560

1.88.08	01	p1	11/05

SWING POST ASSEMBLY, BUSHINGS & PINS

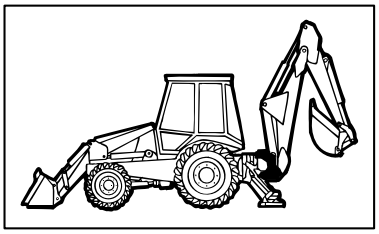

KIT 18=●

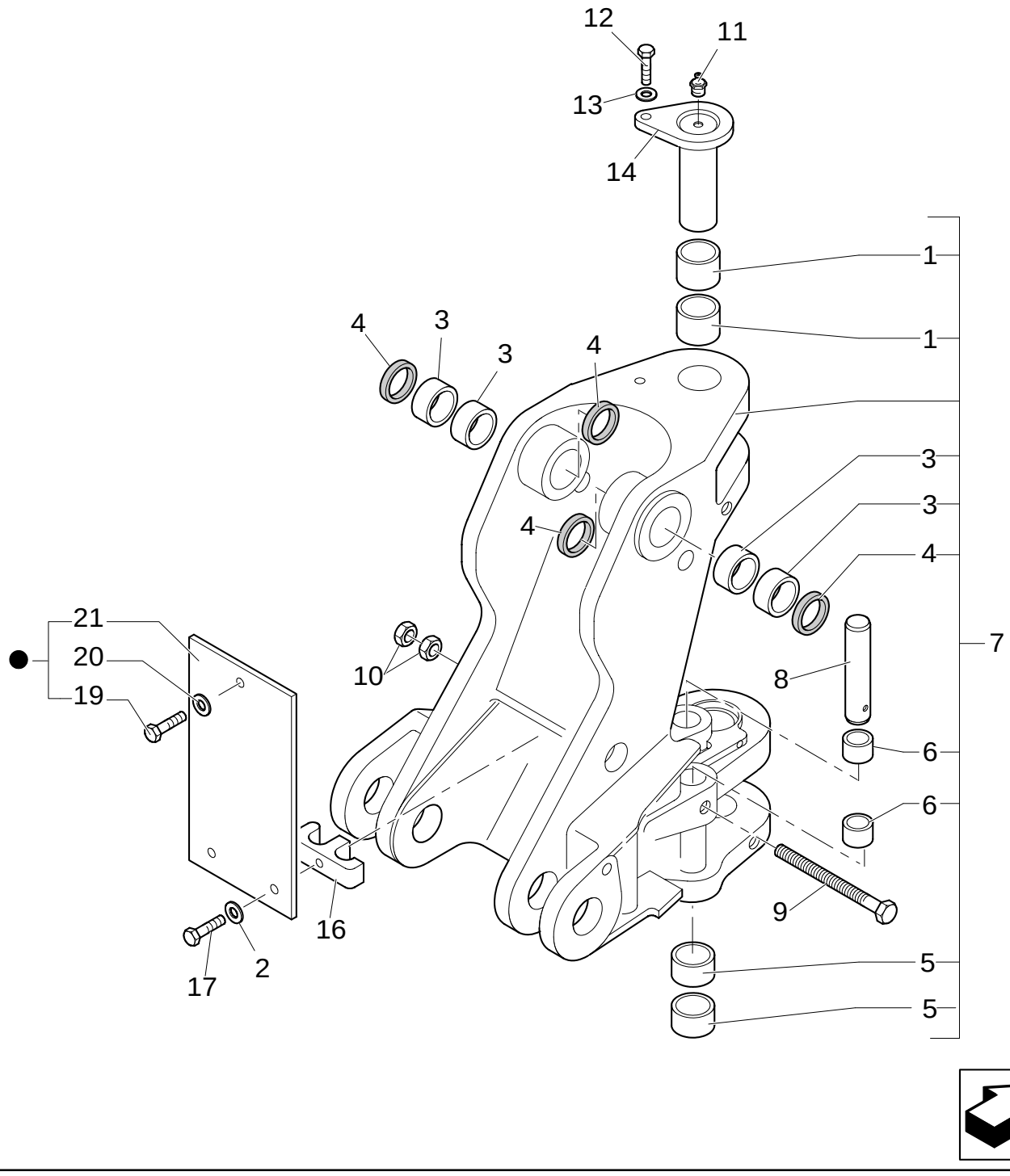

SWING POST ASSEMBLY, BUSHINGS & PINS

REF	FN	PART NUMBER	YR/SN	QTY	DESCRIPTION
1		85803196		2	BUSHING
2		11190579		2	WASHER, LOCK
3		85801029		4	BUSHING
4		85801025		4	SEAL
5		85803197		2	BUSHING
6		85803193		4	BUSHING
7	1	85803623		1	SUPPORT
8		85803192		2	PIN
9		87363478		2	SCREW M10x270
10		10717421		2	NUT M14
11		87901S8		AR	NIPPLE, LUBE 1/8"-27
12		85802397		1	SCREW M16X40
13		85802396		1	WASHER
14		85801076		1	PIN
15		85803194		1	PIN
16		87310285		1	CLAMP
17		11107321		2	SCREW M10X55
18		85805648		1	KIT
19		16043621		1	SCREW M8X25
20		11193979		1	WASHER, LOCK
21		85805137		1	PLATE

(1) Includes 1, 3 To 6

1.88.08	02	p1	11/05

SWING POST PINS & TRANSPORT LOCK HOOK

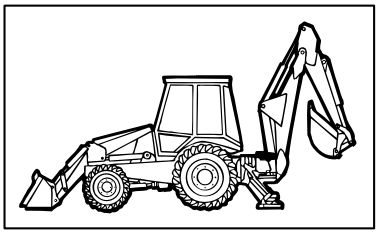

KIT KIT KIT 17=●

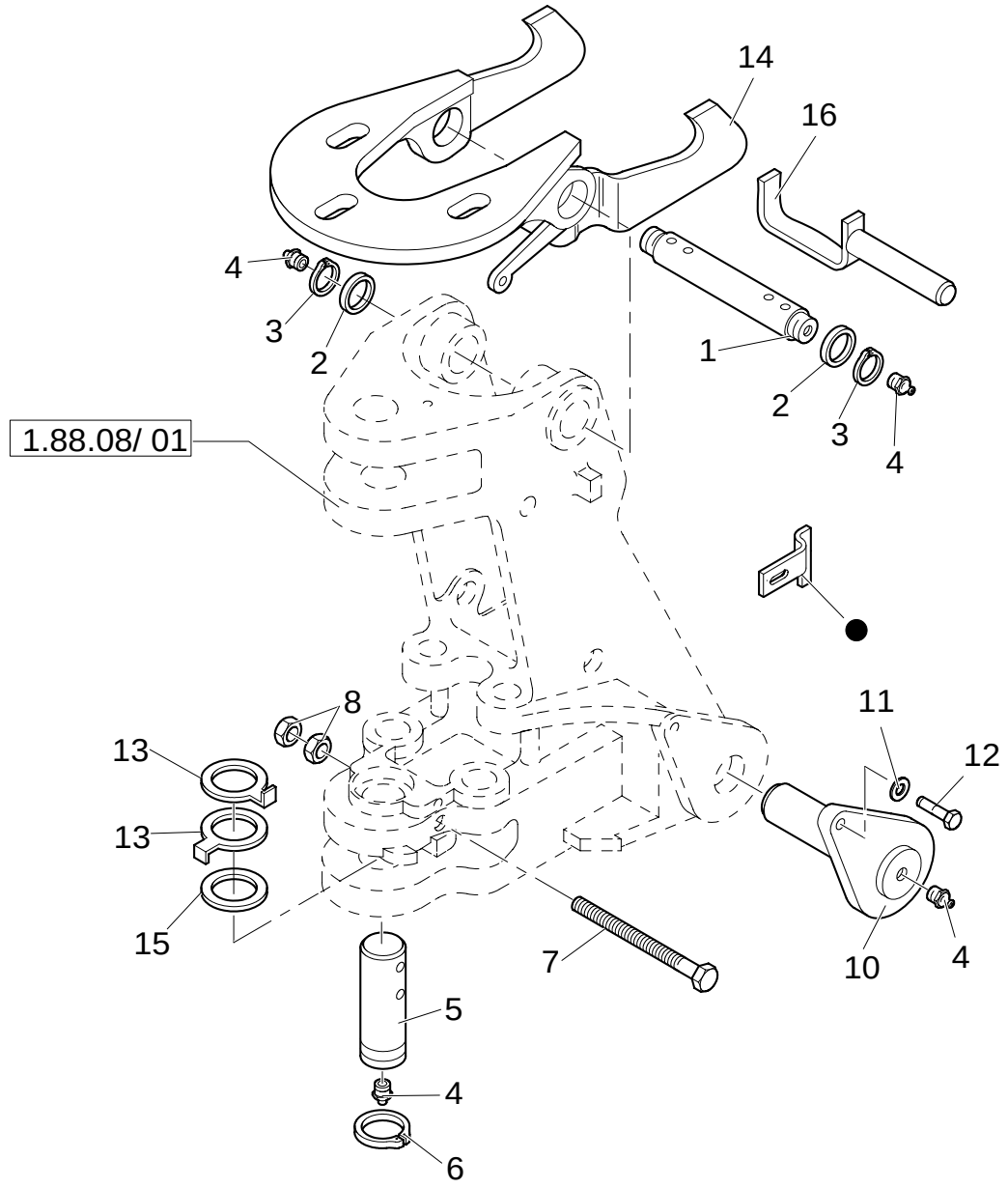

SWING POST PINS & TRANSPORT LOCK HOOK

REF	FN	PART NUMBER	YR/SN	QTY	DESCRIPTION
1		85801026		1	SPINDLE
2		D7NNC622C		2	SPACER M45X66X3
3		N800271S36M		2	RING
4		87901S8		AR	NIPPLE, LUBE 1/8"-27
5		85801079		1	PIN
6		85803198		1	RING, SNAP
7		15201934		2	SCREW M14x170
8		10717421		2	NUT M14
9		85803246		1	PIN
10		85802872		2	PIN
11		85802396		2	WASHER
12		85802397		2	SCREW M16X40
13		85801191		2	SPACER
14	1	85803637		1	HOOK
14	2	85819493		1	HOOK
15		8274447		1	SHIM
16	1	85819613		1	PIN
16	2	85819702		1	PIN
17	3	85816776		1	KIT

(1) Only for LB110.B - LB115.B - B115
(2) Only for LB90.B - LB95.B - LB110.B - B95 - B95LR - B95TC - B110 - B115
(3) Kit composed of N.4 LH retaining plate and N.4 RH retaining plate

1.88.09	01	p1	11/05

DISTRIBUTOR VALVE SUPPORT (CENTER PIVOT)

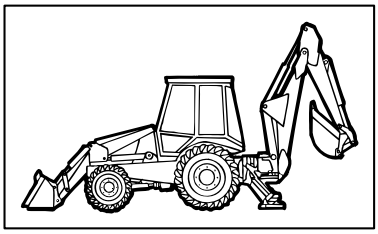

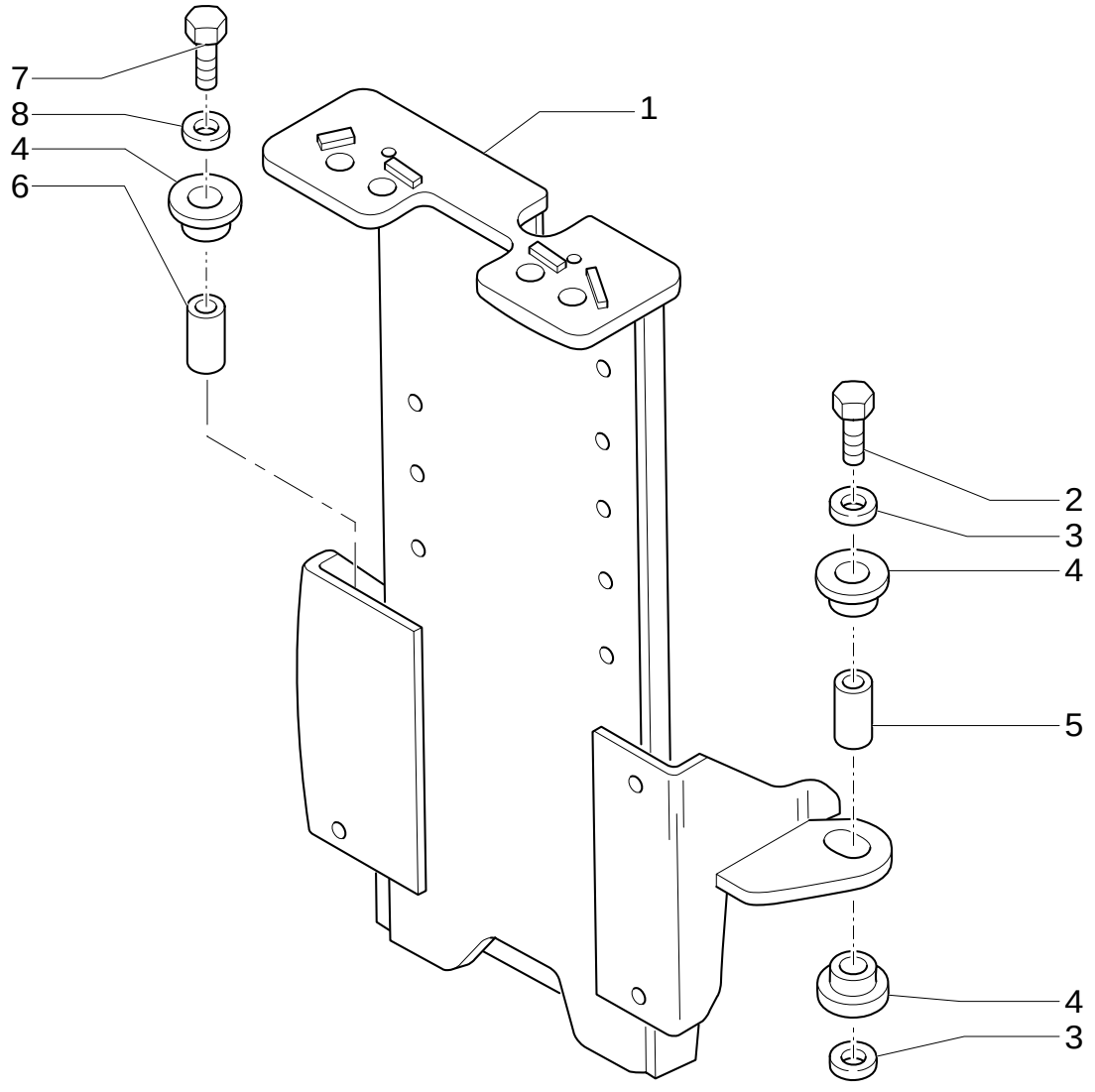

DISTRIBUTOR VALVE SUPPORT (CENTER PIVOT)

REF	FN	PART NUMBER	YR/SN	QTY	DESCRIPTION
1		85820167		1	SUPPORT
2		15215821		2	SCREW M12x60
3		85802618		5	WASHER, SEALING 13x41x3
4		87348165		6	BUSHING, SHEAR BOLT
5		85817252		2	BUSHING 12,5x16.5x24
6		85820172		1	BUSHING 12,5x16.5x22
7		15216421		1	SCREW M12x90
8		85820170		1	SPACER

Mechanical Version

1.88.11	01	p1	09/05

ARMS AND JOINTS

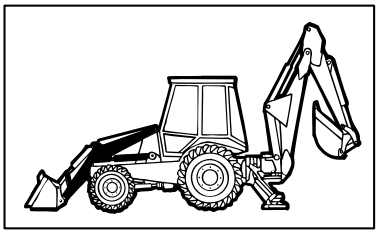

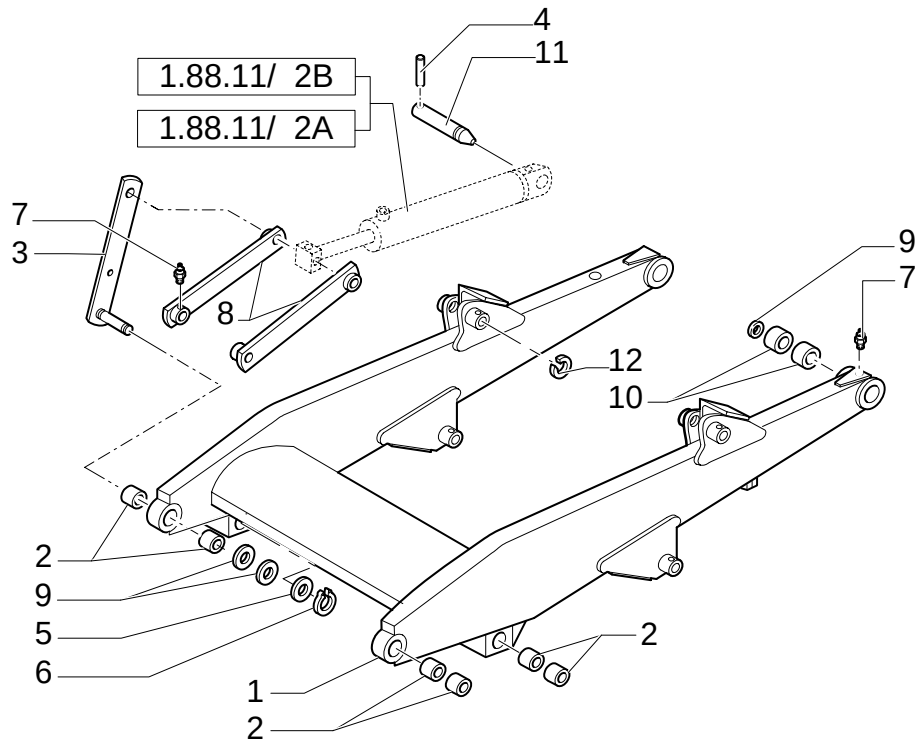

ARMS AND JOINTS

REF	FN	PART NUMBER	YR/SN	QTY	DESCRIPTION
1		85801011		1	ARM
2		290621		8	BUSHING
3		85801052		1	ROD RH
3		85801053		1	TIE-ROD LH
4		85802993		6	PIN
5		191823		2	WASHER
6		293312		2	RING, SNAP
7		87901S8		10	NIPPLE, LUBE 1/8"-27
8		85801057		4	LINK CONROD
9		85828254		2	SHIM
10		291549		4	BUSHING
11		85801051		2	PIN M8X23
12		85802992		1	O-RING

1.88.11/ 1B	01	p1	07/05

LIFT CYLINDER

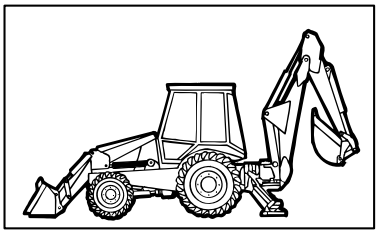

KIT KIT KIT

25= ●
26= ■

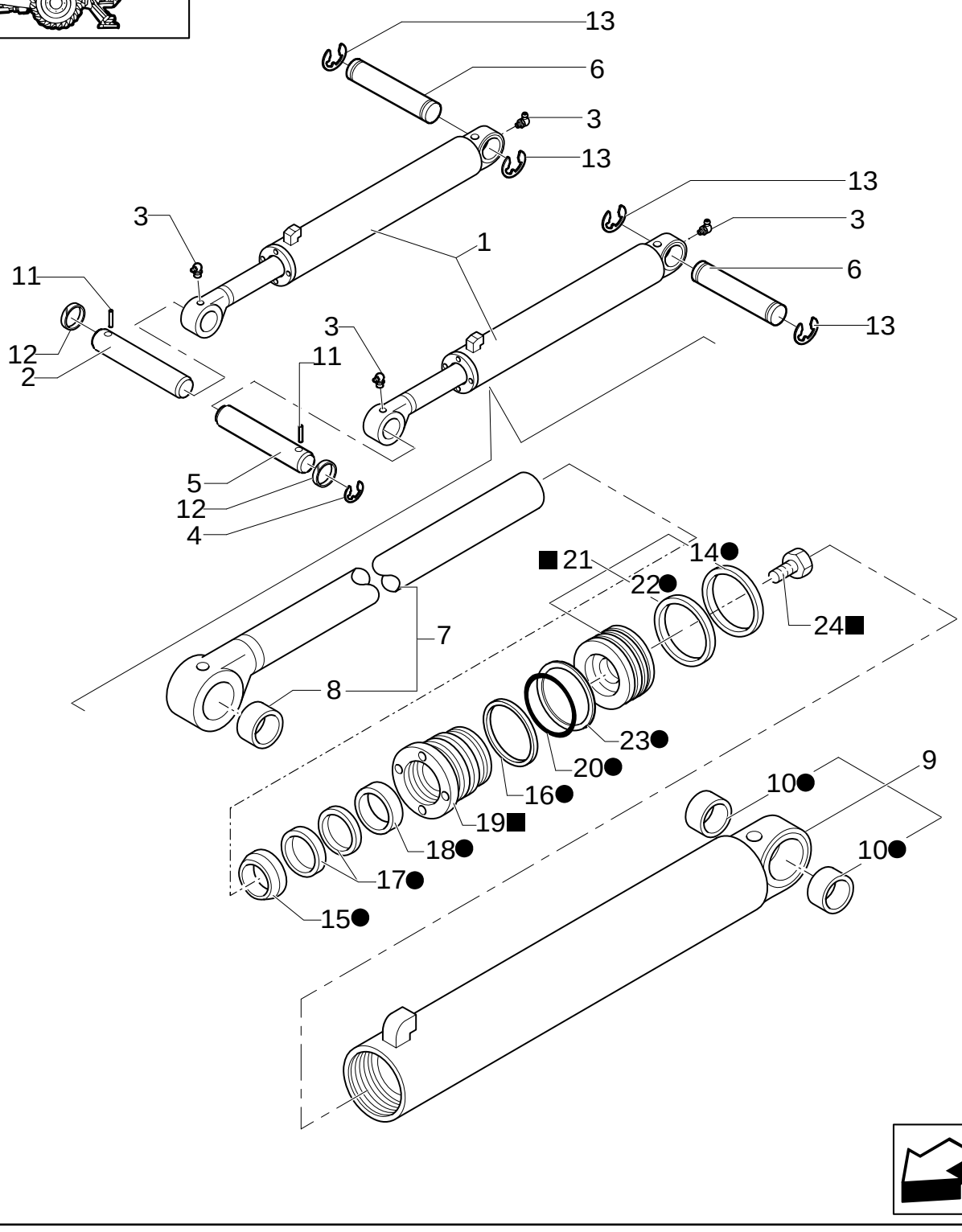

LIFT CYLINDER

REF	FN	PART NUMBER	YR/SN	QTY	DESCRIPTION
1		87315525		2	HYDRAULIC CYLINDER ASSY,LOADER
2		85801049		1	PIN 38mm x 159mm
3		87916S8		4	NIPPLE, LUBE
4		N800272S36M		1	RING
5		85801050		1	PIN 38mm x 183mm
6		87402742		2	PIN
7	1	85800103		2	ROD
8		290620		4	BUSHING
9		85800105		2	LINER, ENGINE CYLINDER
10		291550		4	BUSHING
11		85802993		2	PIN
12		85802992		2	O-RING
13		47049094		4	CIRCLIP
14		87408634		2	Ring, Wear
15		87414969		2	WIPER
16		87440401		2	BACK-UP RING
17		87414970		2	PACKAGE, SEALS
18		87414966		2	BEARING, NYLON
19		87415116		2	PISTON
20		87421144		2	O-RING 5/8x0.097
21	2	87405859		2	PLUNGER
22		87414333		2	SEAL, HYD-CYLINDER
23		87414341		2	RING
24		87428020		2	SCREW
25		87428628		1	KIT, SEALS
26		87424196		1	CYLINDER HEAD

(1) Includes 8
(2) Includes 14, 22

1.88.11/ 2	02	p1	03/05

LOADER BUCKET CONTROL CYLINDER

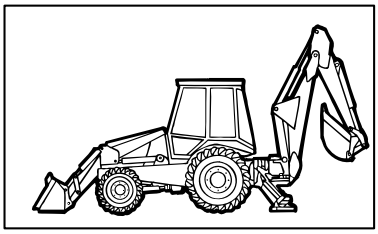

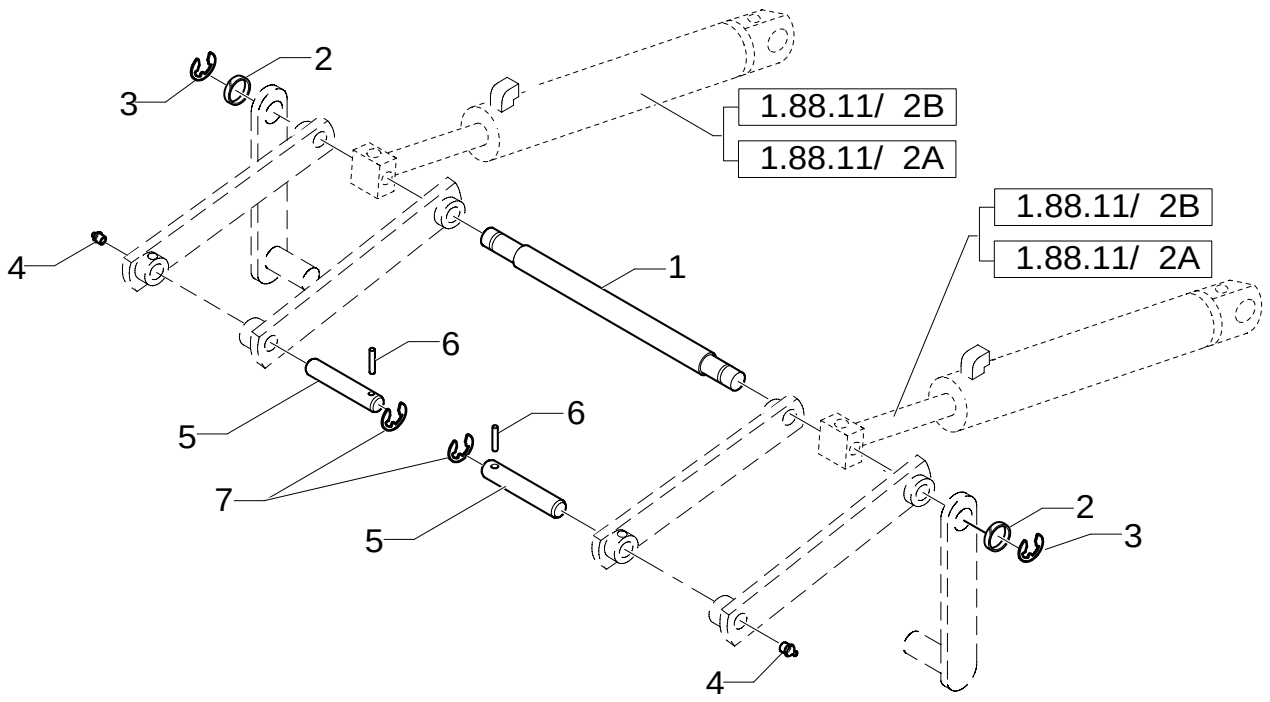

LOADER BUCKET CONTROL CYLINDER

REF	FN	PART NUMBER	YR/SN	QTY	DESCRIPTION
1		NSS		1	NOT SERVICED SEPARATELY ASSY,LOADER BUCKET
2		191823		2	WASHER 1/8-27-90GR
3		293312		2	RING, SNAP
4		87901S8		2	NIPPLE, LUBE 1/8"-27
5		85801049		2	PIN 38mm x 159mm
6		85802993		2	PIN
7		85802992		2	O-RING

1.88.11/ 2A	01	p1	11/05

LOADER BUCKET CONTROL CYLINDER

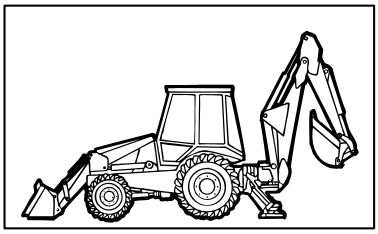

KIT
13 = ●
19 = ■

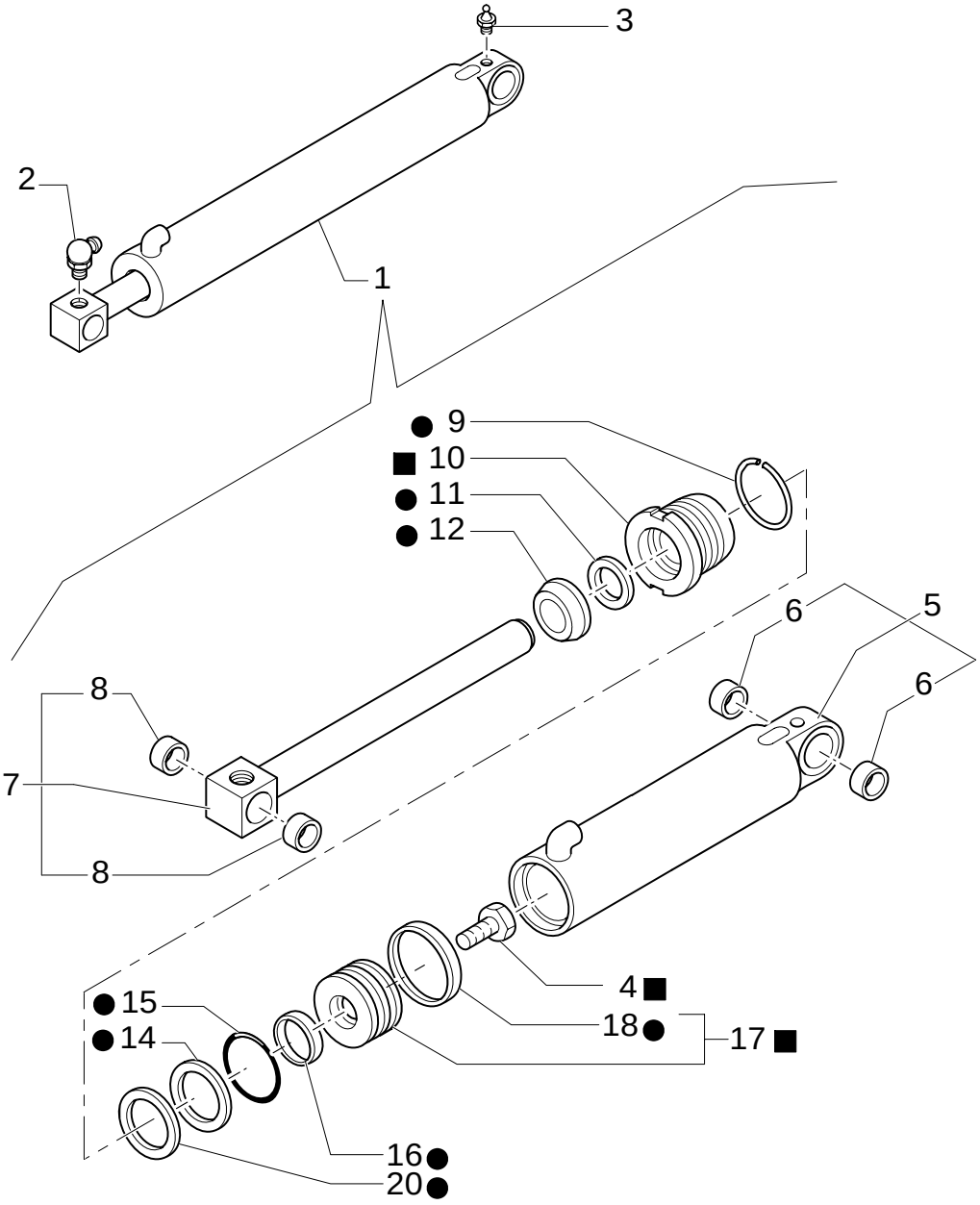

LOADER BUCKET CONTROL CYLINDER

REF	FN	PART NUMBER	YR/SN	QTY	DESCRIPTION
1		87315521		2	HYDRAULIC CYLINDER ASSY,LOADER BUCKET
2		87916S8		2	NIPPLE, LUBE 1/8-27-90GR
3		87901S8		2	NIPPLE, LUBE 1/8"-27
4		87428020		2	SCREW
5		85800504		2	LINER, ENGINE CYLINDER
6		290620		2	BUSHING
7	1	E7NNA362BA		2	ROD
8		292877		4	SUPPORT
9		83937315		2	WIRE, RETAINING
10		87415115		2	KIT
11		87414965		2	PACKAGE, SEALS
12		87414964		2	WIPER
13		87428627		1	KIT, SEALS
14		87414340		2	O-RING
15		87421143		2	GASKET
16		87414332		2	PACKAGE, SEALS
17	2	87406750		2	PISTON
18		87408633		2	RING
19		87424195		1	CYLINDER HEAD
20		87440396		1	BACK-UP RING

(1) Includes 8
(2) Includes 18

1.88.11/ 3	01	p1	11/05

LIFT CYLINDER AND BUCKET PIPES

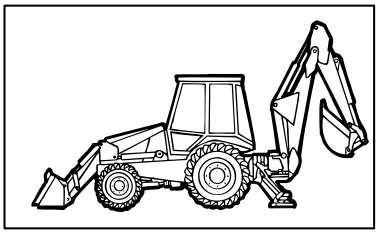

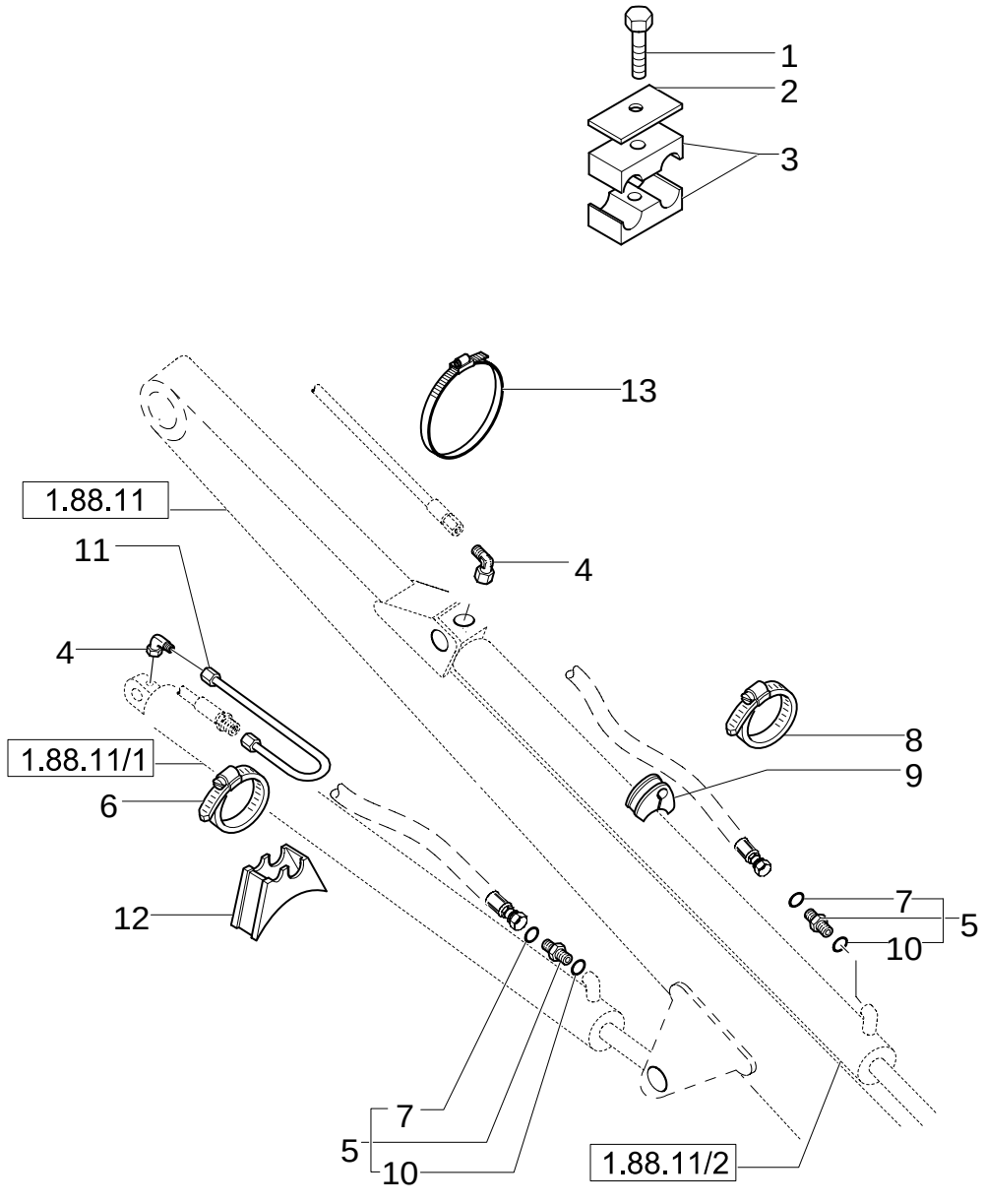

LIFT CYLINDER AND BUCKET PIPES

REF	FN	PART NUMBER	YR/SN	QTY	DESCRIPTION
2		85802911		2	PLATE, COVER
3		85802910		4	CLAMP
4		85802961		4	CONNECTOR, HYD.
5	1	390955S36		4	CONNECTOR, HYD.
6		85802743		2	SEALING RING COLLAR
8		85803008		2	COLLAR
9		85805567		2	PLATE, FIXING
10		167269		10	O-RING 90 Duro, .755" ID x .097" Thk
11		85801596		2	TUBE, RIGID
12		87303909		2	PLATE, FIXING
13		14560187		2	COLLAR 13/16"
1		16044321		2	SCREW M8X55
7		9992298		8	O-RING 90 Duro, .489" ID x .070" Thk

(1) Includes 7, 10

1.88.11/ 5	01	p1	11/05

SELF-LEVELING LINKAGE, LOADER CONTROLS (CENTER PIVOT)

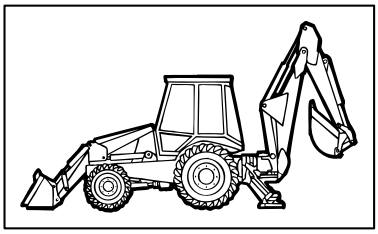

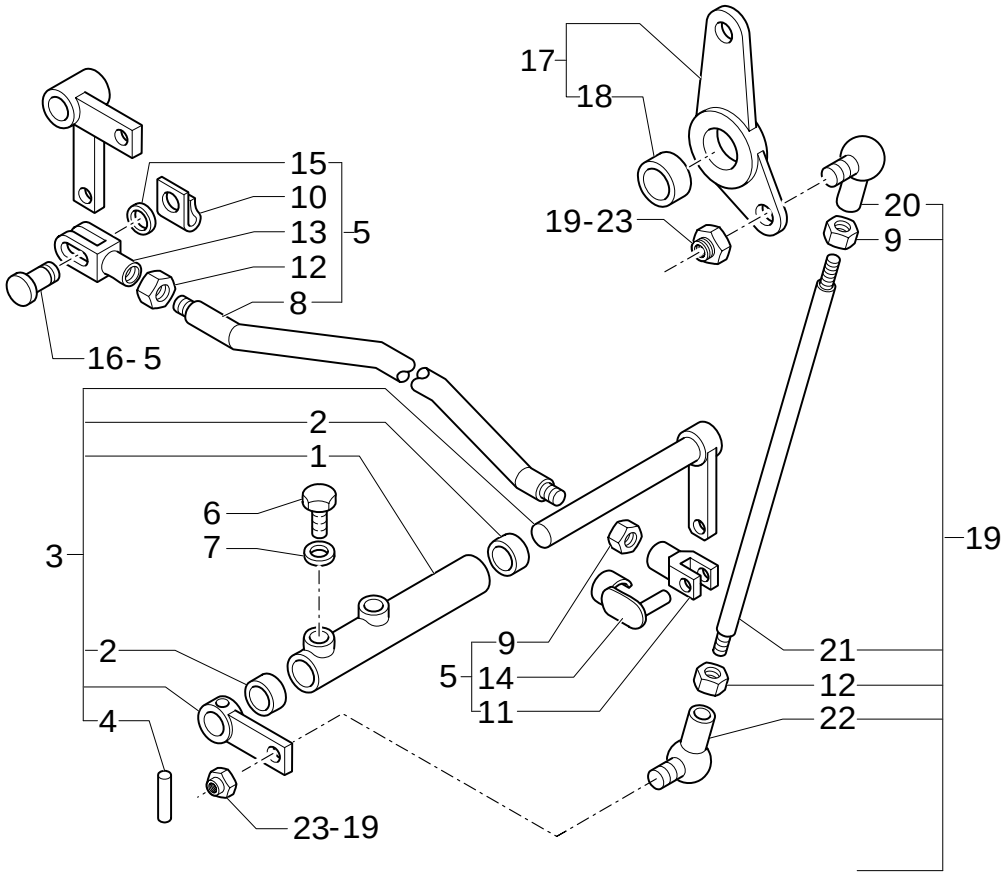

SELF-LEVELING LINKAGE, LOADER CONTROLS (CENTER PIVOT)

REF	FN	PART NUMBER	YR/SN	QTY	DESCRIPTION
1	1	85802724		1	LEVER, IDLER ASSY
2		85802494		2	BUSHING
3		85827787		1	LEVER, IDLER ASSY
4		85805616		1	PIN
5		85802734		1	TIE-ROD ASSY
7		11190679		2	WASHER, LOCK
8		85802736		1	TIE-ROD
9		16102311		2	NUT
10		11064071		1	CLIP
11		11991971		1	YOKE
12		16102911		2	NUT
13		85802735		1	YOKE
14		85802738		1	PIN
15		14496521		1	WASHER
16		85802737		2	PIN
17		85803215		1	LEVER, IDLER
18		D9NNA353AA		1	BUSHING, DRIVE
19		85802741		1	TIE-ROD
20		85804376		1	JOINT, UNIVERSAL
21		85802742		1	TIE-ROD
22		85804375		1	JOINT, UNIVERSAL
23		14048211		2	NUT
6		15970524		2	SCREW M10X20

(1) Includes 2

1.88.11/ 5	02	p1	05/05

SELF-LEVELING LINKAGE, LOADER ARM (CENTER PIVOT)

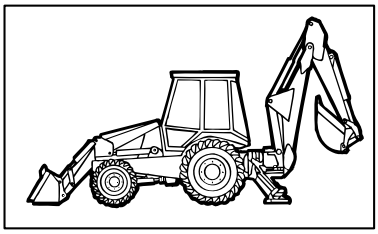

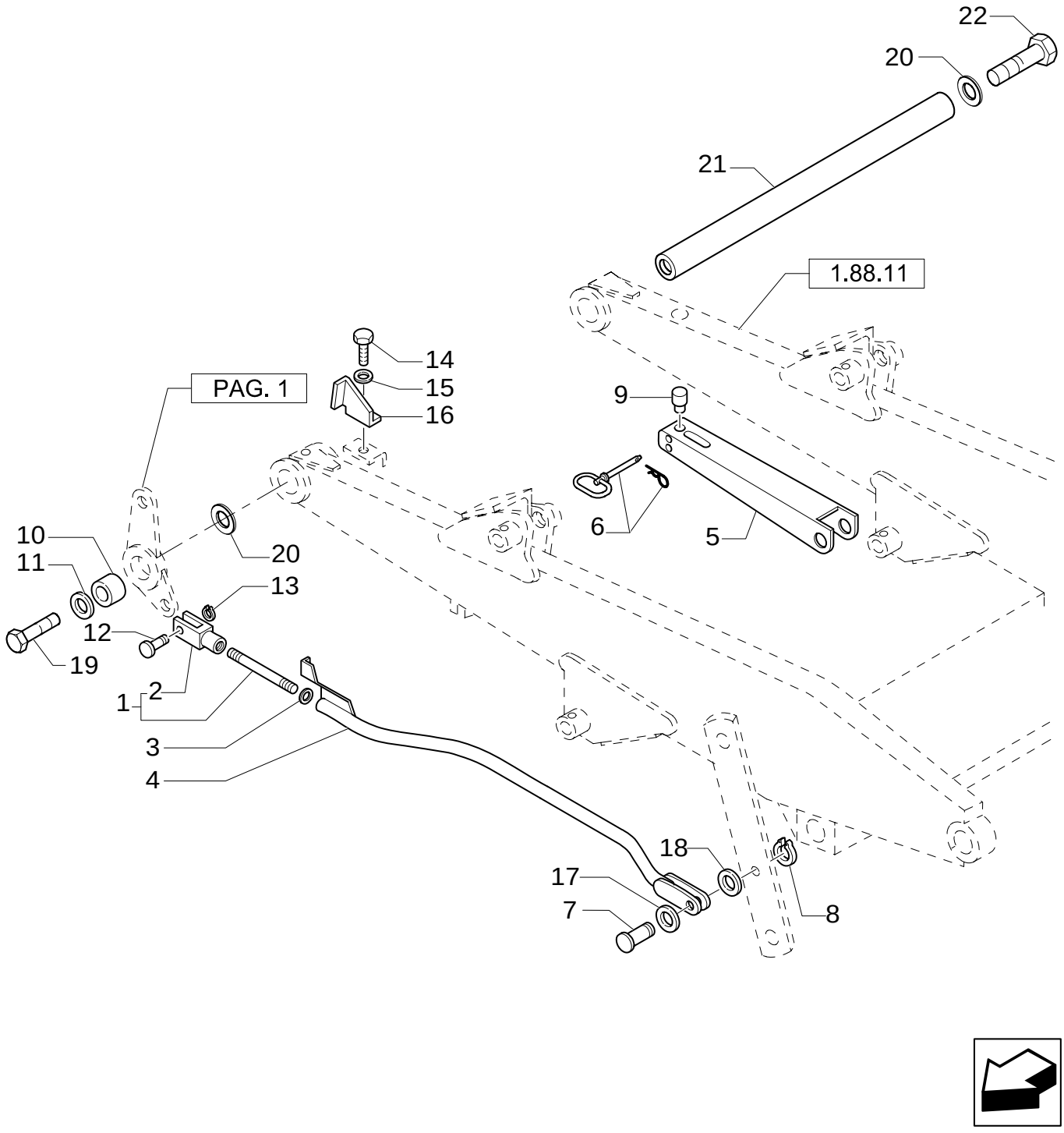

SELF-LEVELING LINKAGE, LOADER ARM (CENTER PIVOT)

REF	FN	PART NUMBER	YR/SN	QTY	DESCRIPTION
1		83963433		1	ROD, CONNECTING ASSY
2		E662341S72		1	CLEVIS
3		82879400		1	WASHER
4		85804026		1	DIPSTICK
5		85801048		1	PILLAR
6		86507337		1	PIN
7		85803297		1	PIN
8		N663114S36		1	RING
9		85802403		1	PLUG
10		E7NN194AA		1	SPACER
11		85804366		1	WASHER
12		85819179		1	PIN
13		85700341		1	CIRCLIP
14		10979421		1	SCREW M6X10
15		11193279		1	WASHER, LOCK
16		85803277		1	PLATE
17		85817622		AR	WASHER, SEALING
18		85817623		AR	WASHER, SEALING
19		{1598734}		1	
20		85700130		2	WASHER
21		85801087		1	SPINDLE
22		11383634		1	SCREW

1.88.11/ 6	02	p1	07/05

STABILIZER CYLINDERS (CENTER PIVOT)

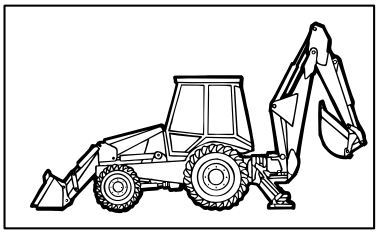

KIT
KIT KIT
15=●
17=■

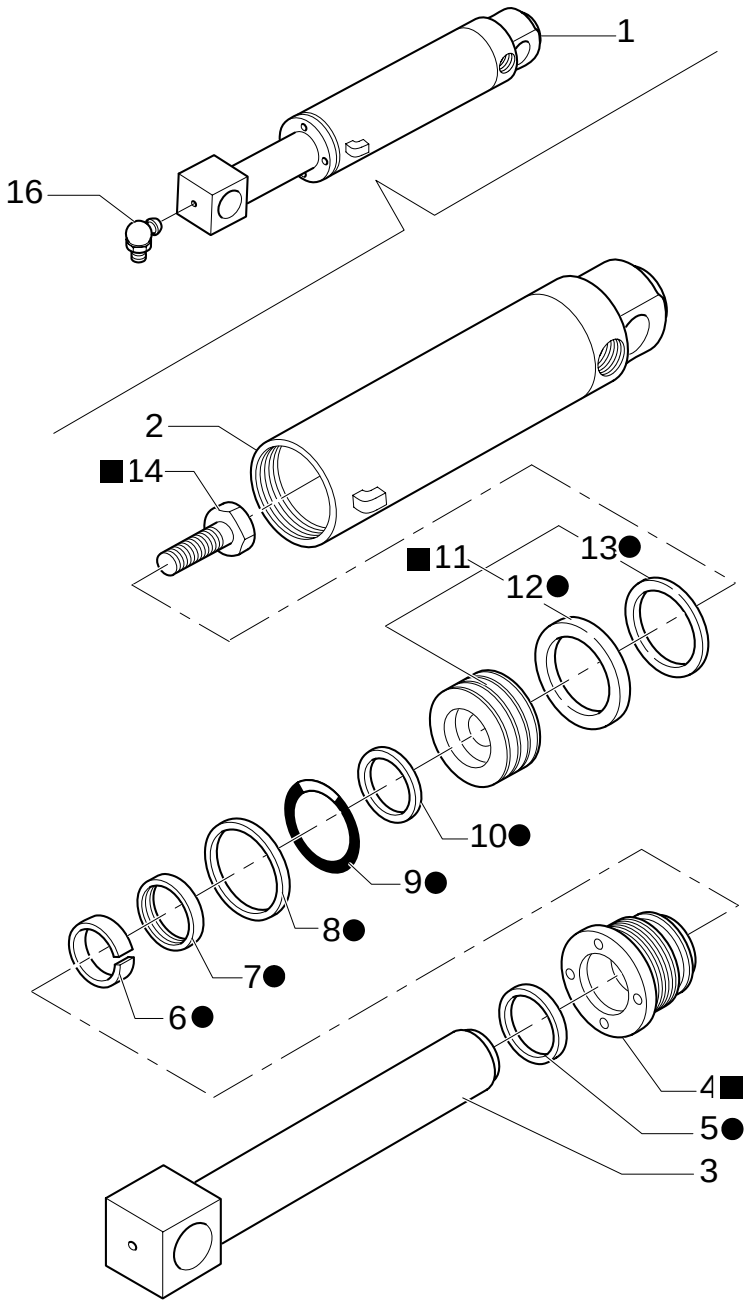

STABILIZER CYLINDERS (CENTER PIVOT)

REF	FN	PART NUMBER	YR/SN	QTY	DESCRIPTION
1		87315528		2	HYDRAULIC CYLINDER
2		85800604		2	LINER, ENGINE CYLINDER
3		85800603		2	ROD
4		87412400		2	PISTON
5		87414974		2	WIPER
6		87414971		2	O-RING
7		87414975		2	GASKET
8		87440410		2	BACK-UP RING
9		87421145		2	O-RING
10		87414342		2	GASKET
11	1	87406921		2	PLUNGER
12		87414334		2	GASKET
13		87408635		2	Ring, Wear
14		87428011		2	BOLT
15		87428630		1	KIT, SEALS
16		87916S8		2	NIPPLE, LUBE
17		87424198		2	CYLINDER HEAD 1/8"-27

(1) Includes 12, 13

1.88.11/ 7	01	p1	11/05

PIPES FOR STABILIZER CYLINDERS (CENTER PIVOT)

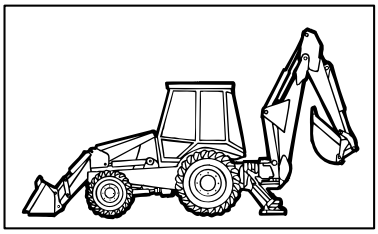

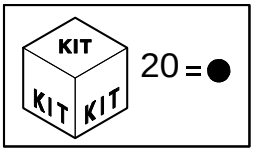

PIPES FOR STABILIZER CYLINDERS (CENTER PIVOT)

REF	FN	PART NUMBER	YR/SN	QTY	DESCRIPTION
1	1	390953S36		6	CONNECTOR, HYD.
3		128825		6	O-RING 8-1, 90 Duro, .644" ID x .087" Thk
4		E9NN3R862AA		8	CONNECTOR, HYD.
5	2	85802820		2	VALVE, HYDRAULIC
6		85807873		4	HOSE, FLEXIBLE
7		85802965		2	CONNECTOR, HYD.
8		85803008		2	COLLAR
9		87303912		2	SPACER
10		85802911		2	PLATE, COVER
11		15213621		2	SCREW M8X55
12		14048211		2	NUT M8X1,25
13		11193879		6	WASHER, LOCK
14		85802912		2	PLATE, COVER
15		85807874		4	HOSE, FLEXIBLE
16		85802910		4	CLAMP
17		85802620		2	TUBE, RIGID
18		16044421		4	SCREW M8X60
19		85803517		2	BUSHING, RUBBER
20		85821126		2	KIT
22		85820159		1	PLUNGER
23		85820160		2	VALVE, HYDRAULIC
2		9992298		6	O-RING 90 Duro, .489" ID x .070" Thk
21		9992298		4	O-RING

(1) Includes 2, 3
(2) Includes 20 To 23

1.88.11/ 8	01	p1	02/05

RETURN TO DIG SENSOR

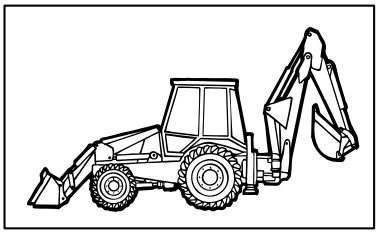

LB90.B-LB95.B-LB110.B

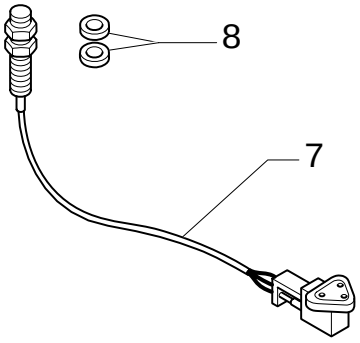

LB115.B

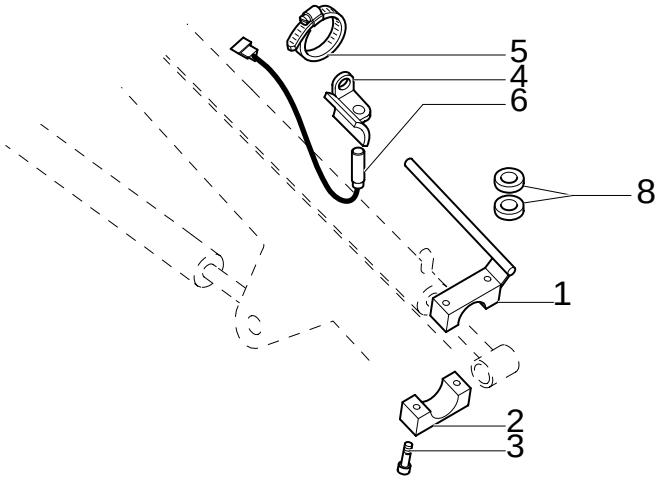

RETURN TO DIG SENSOR

REF	FN	PART NUMBER	YR/SN	QTY	DESCRIPTION
1		85805108		1	ROD
2		85805111		1	BLOCK
3		14305621		2	SCREW M6X35
4		85805113		1	SUPPORT
5		85803010		2	CLAMP
6		85805619		1	SENSOR
7		85802950		1	SENSOR
8		14497001		4	WASHER, LOCK 19X34X3

1.88.11/ 9A	01	p1	11/05

CYLINDERS AND ROTATION PLATE

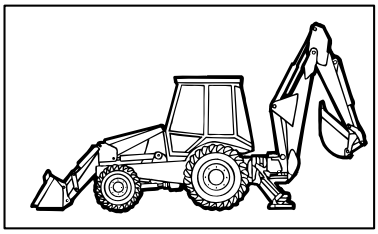

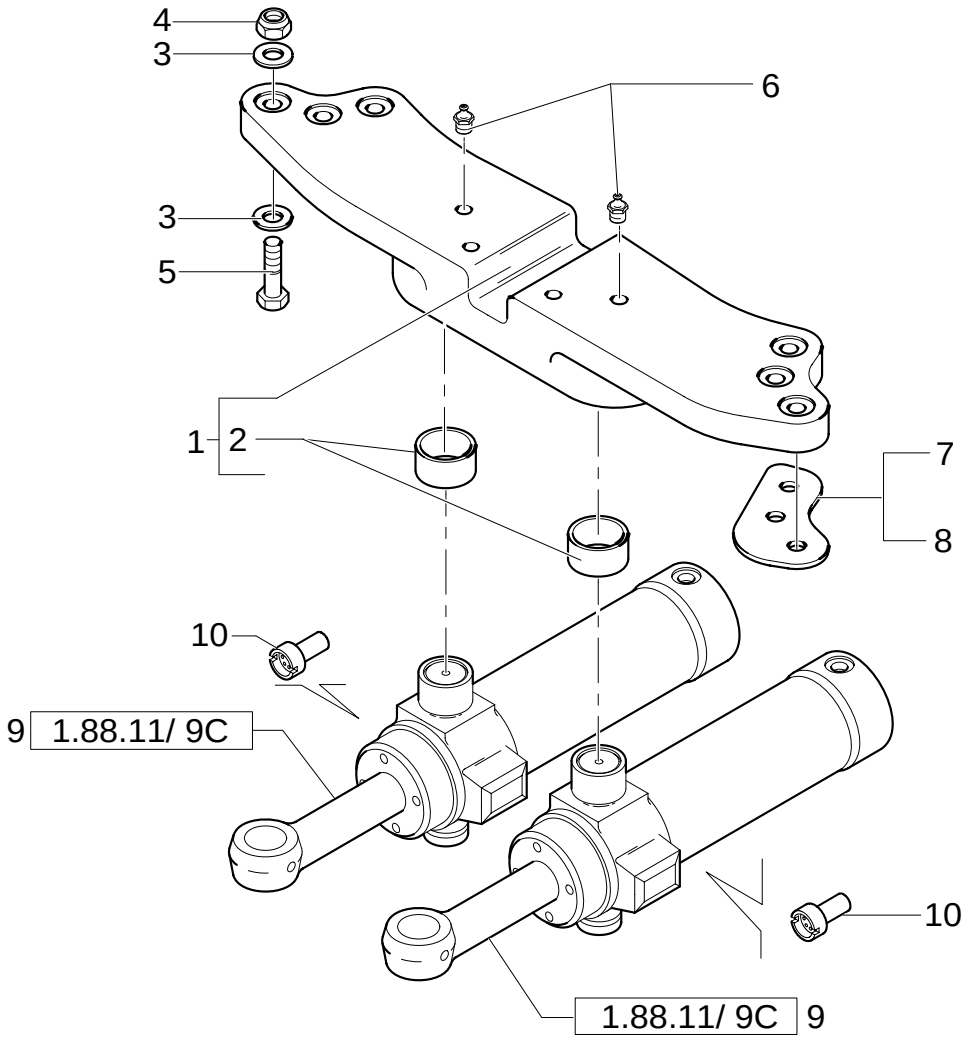

CYLINDERS AND ROTATION PLATE

REF	FN	PART NUMBER	YR/SN	QTY	DESCRIPTION
1		85803617		1	PLATE
2		83910645		2	BUSHING
3		10520431		12	WASHER
4		12575121		6	NUT M10x1.5
5		15988934		6	SCREW M20x1.5x90
6		87901S8		4	NIPPLE, LUBE 1/8"-27
7		85801153		4	SHIM
8		85803039		2	SHIM
9	1	87450926		2	HYDRAULIC CYLINDER
9	2	87315529		2	HYDRAULIC CYLINDER
10		85800965		2	REDUCER

(1) UP TO S/N XXX
(2) FROM TO S/N XXX

1.88.11/ 9C	01	p1	11/05

SWING CYLINDERS BACKHOE

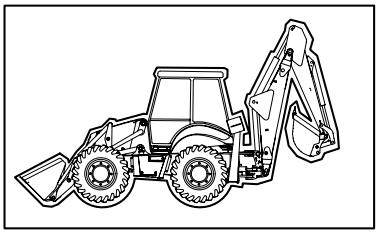

KIT
KIT KIT
30= ▲
11= ●

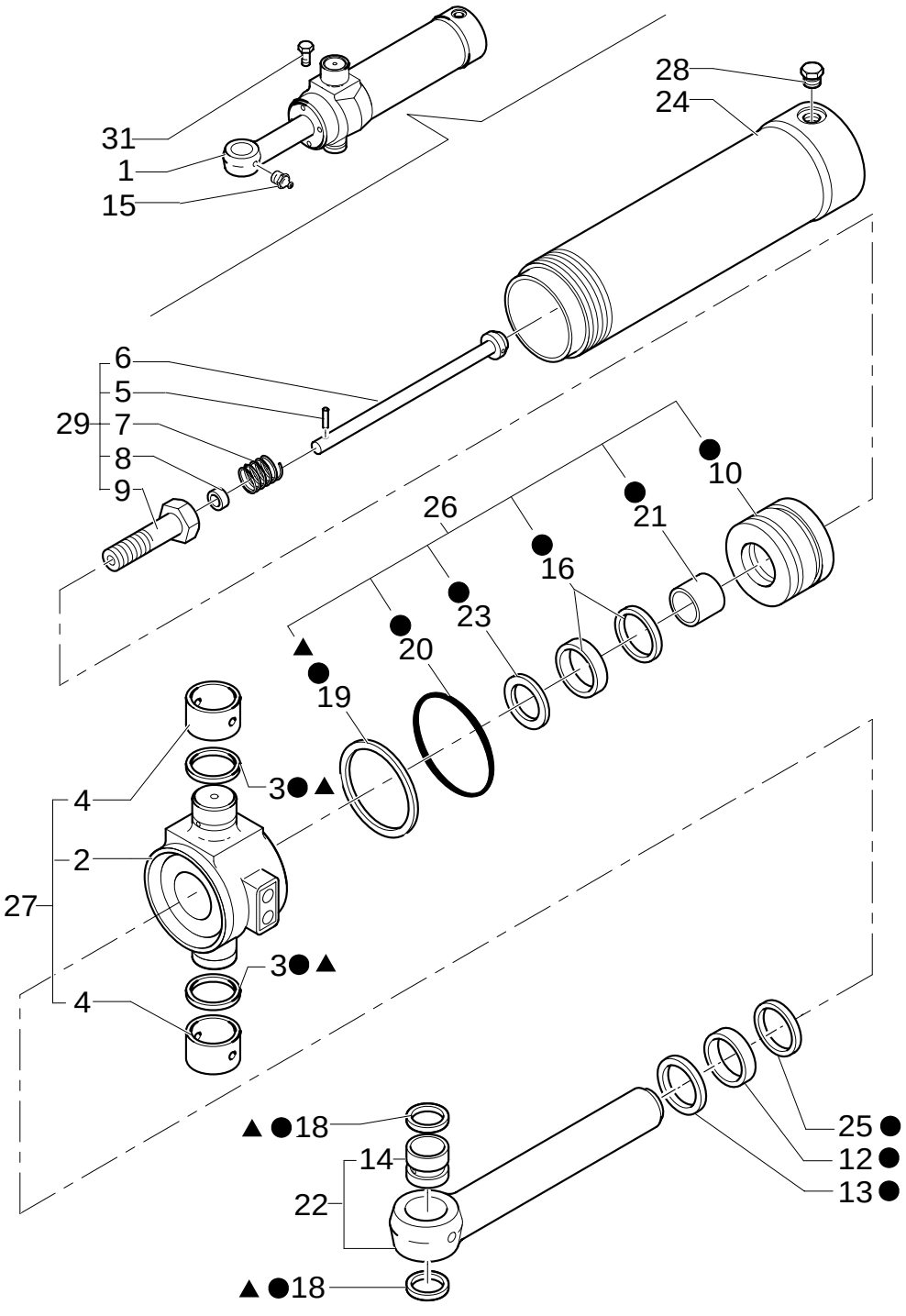

SWING CYLINDERS BACKHOE

REF	FN	PART NUMBER	YR/SN	QTY	DESCRIPTION
1		87315529		1	HYDRAULIC CYLINDER
2		87422783		1	TRUNNION
3		D7NNC513E		2	SEAL PROTECTION Seal
4		83912378		2	BUSHING
5		D7NNC511A		1	PIN
6		85800990		1	SPINDLE
7		E0NNB543AA		1	SPRING
8		E9NNE602AA		1	RING
9		87428014		1	SCREW M30x2x100
10		87424838		1	PISTON
11		87428631		1	KIT, SEALS
12		87408636		1	RING
13		87414335		1	SEAL, HYD-CYLINDER
14		85800303		1	BUSHING
15		87901S8		2	NIPPLE, LUBE 1/8"-27
16		87414970		1	PACKAGE, SEALS 50 MM ROD
18		D9NNC513BA		2	SEAL PROTECTION
19		85800007		1	RING Back-up
20		87421149		1	O-RING 0.139x4.734 Inch
21		87414966		1	BEARING, NYLON 50 MM ROD
22		87433032		1	ROD
23		87414969		1	WIPER 50 MM ROD
24		87455335		1	PIPE
25		87414343		1	RING
26		87445307		1	PISTON
27		87445758		1	TRUNNION
28		{353-779}		1	3/4-16
29		87424935		1	BOLT
30		85819353		1	KIT
31		85827130		1	SCREW 10-24x3/8

1.88.12/ 3	01	p1	10/05

FRONT CONTROL VALVE SUPPORT AND TRANSMISSIONS (CENTER PIVOT)

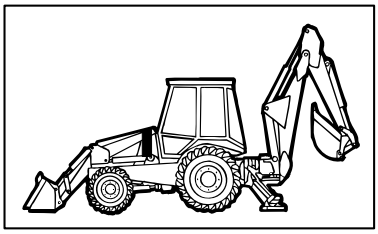

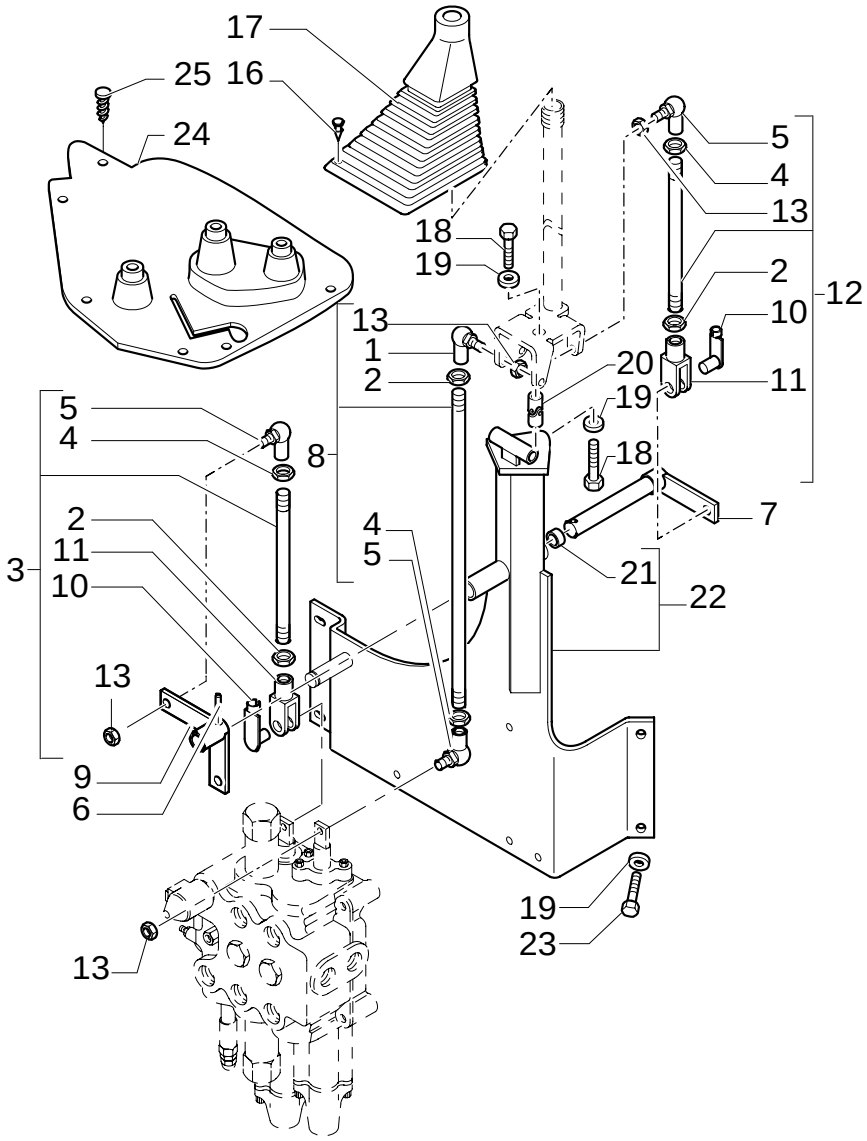

FRONT CONTROL VALVE SUPPORT AND TRANSMISSIONS (CENTER PIVOT)

REF	FN	PART NUMBER	YR/SN	QTY	DESCRIPTION
1		85804376		1	JOINT, UNIVERSAL
2		16102311		3	NUT
3		85801564		1	TIE-ROD
4		16102911		3	NUT LH
5		85804375		3	JOINT, UNIVERSAL
6		85805616		1	PIN
7		85805692		1	PIN
8		85801566		1	TIE-ROD
9		85805690		1	LEVER, IDLER
10		85802738		2	PIN
11		11991971		2	YOKE
12		85801562		1	TIE-ROD
13		14048211		4	NUT M8X1,25
16		14568887		AR	BUTTON
17		85802842		1	BOOT
18		15540321		2	SCREW Cap, HH, CL 8.8, M12 x 1.25 x 25
19		11190779		6	WASHER, LOCK
20		85801518		1	JOINT, UNIVERSAL
21		85802494		2	BUSHING
22	1	85817789		1	SUPPORT
22	2	87312027		1	SUPPORT
23		11112821		4	BOLT M12X40
24		85804539		1	BOOT W/CAB
25		85808422		6	PLUG W/CAB

(1) UP TO S/N XXX
(2) FROM TO S/N XXX

120	01	p1	11/05

SILENT HAMMER CB65S

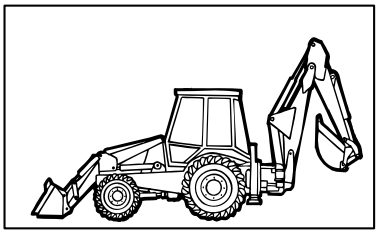

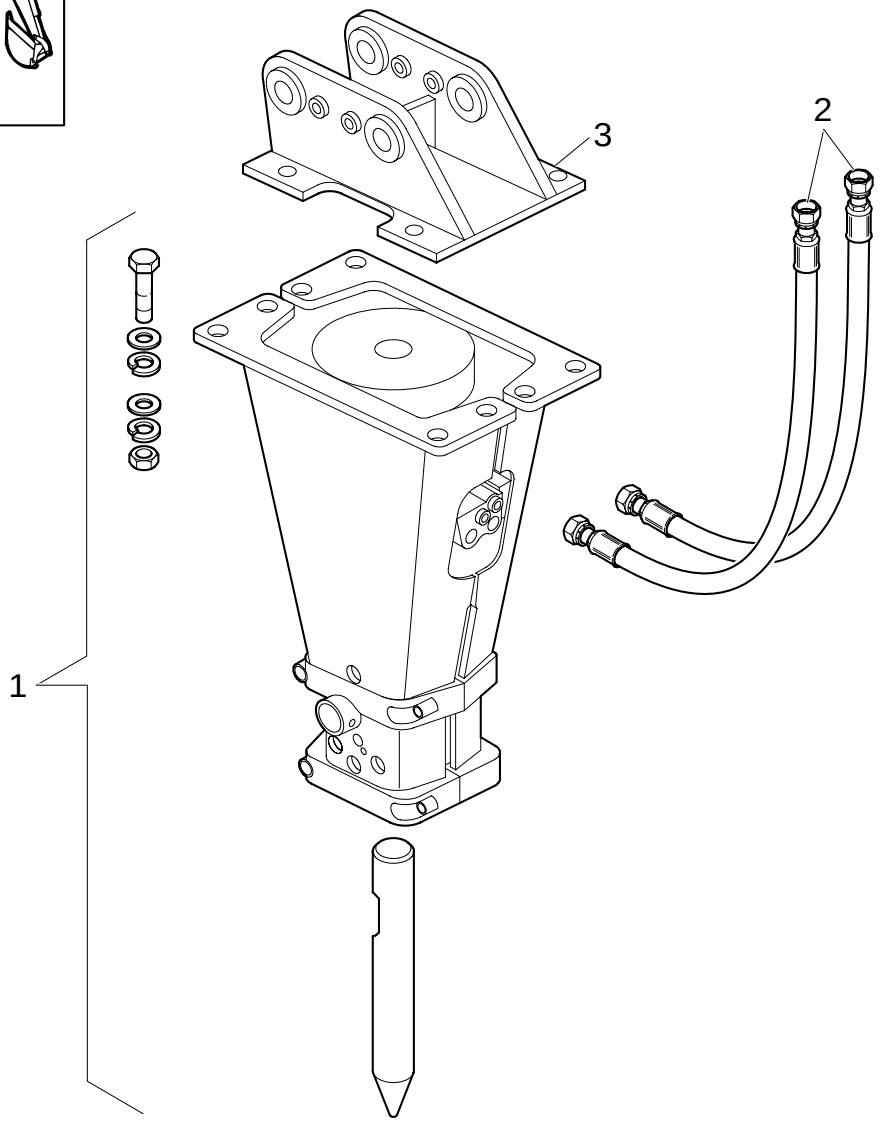

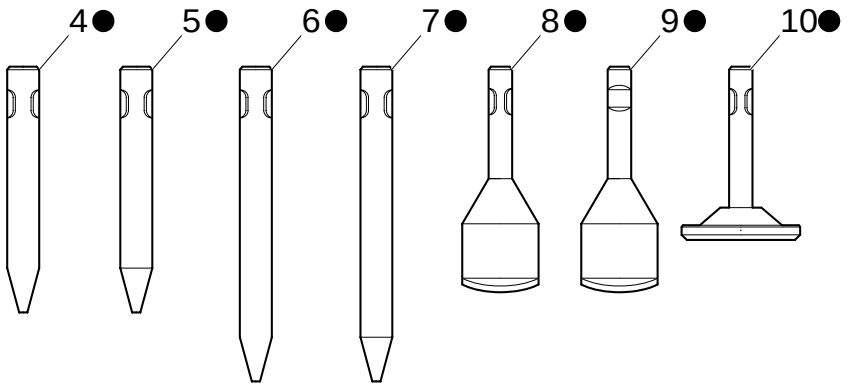

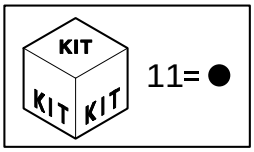

SILENT HAMMER CB65S

REF	FN	PART NUMBER	YR/SN	QTY	DESCRIPTION
1		82848120		1	HAMMER -ASSY
2		82848343		1	HOSE KIT L=2380
3		87335337		1	BRACKET LB
4		87779459		1	POINT
5		87779461		1	POINT
6		87779460		1	POINT
7		{85848133}		1	
8		87779462		1	TOOL
9		87779444		1	TOOL, GENERAL
10		87779474		1	TOOL
11		{87335146}		1	

120/ 1	01	p1	10/05

HAMMER CB65B

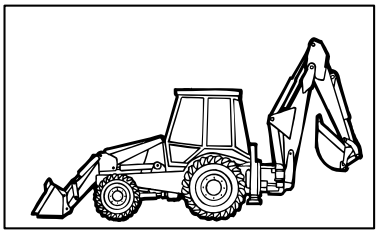

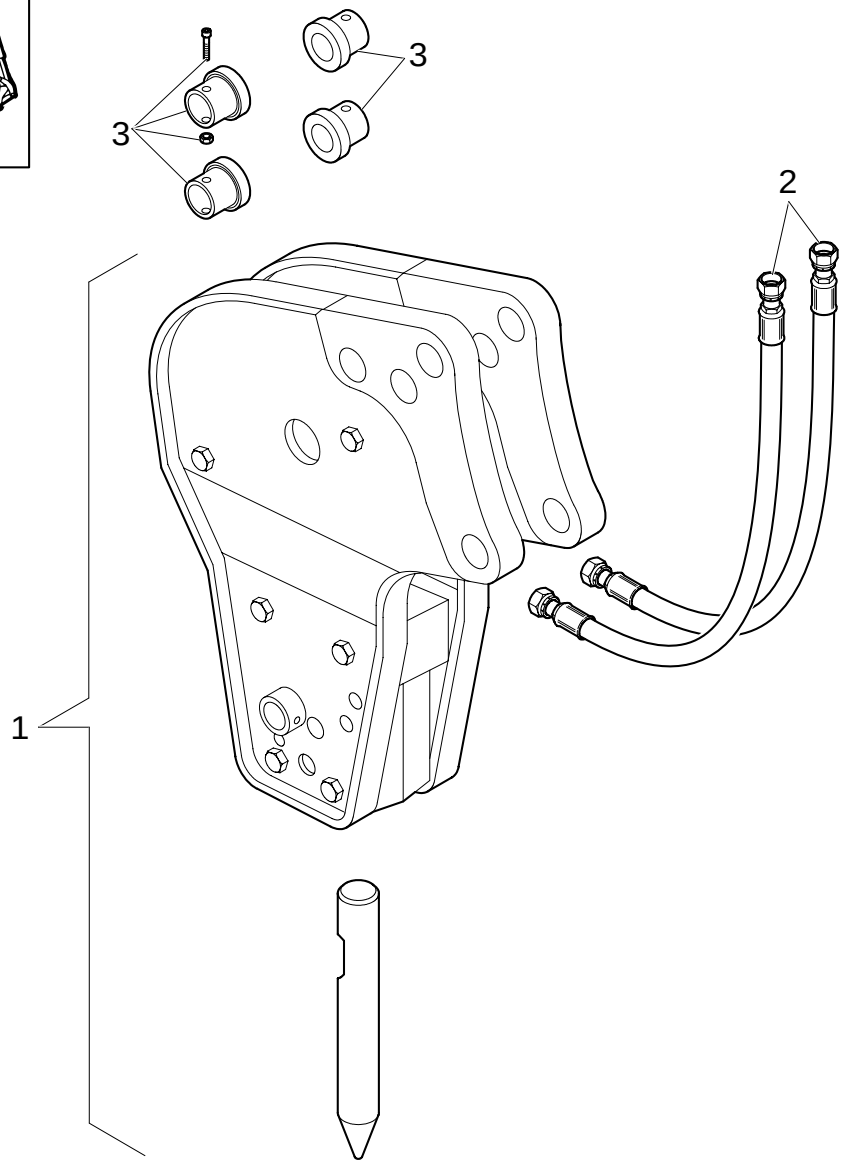

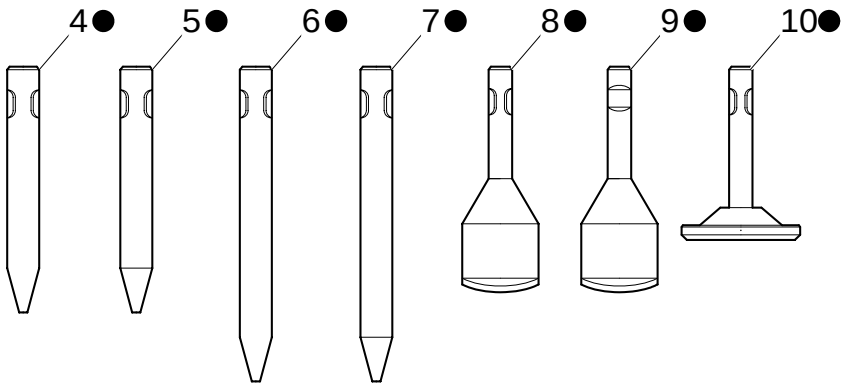

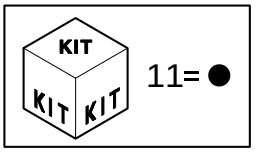

HAMMER CB65B

REF	FN	PART NUMBER	YR/SN	QTY	DESCRIPTION
1		82848118		1	HAMMER -ASSY
2		82848343		1	HOSE KIT L=2380
3		82848344		1	SET, BRUSHES LB
4		87779459		1	POINT
5		87779461		1	POINT
6		87779460		1	POINT
7		{85848133}		1	
8		87779462		1	TOOL
9		87779444		1	TOOL, GENERAL
10		87779474		1	TOOL
11		{87335146}		1	

SHOVEL AND REAR LIFTING HOOKS

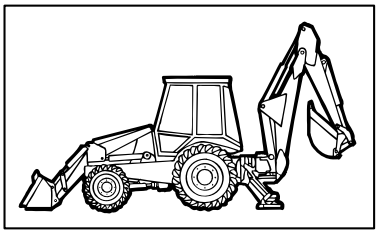

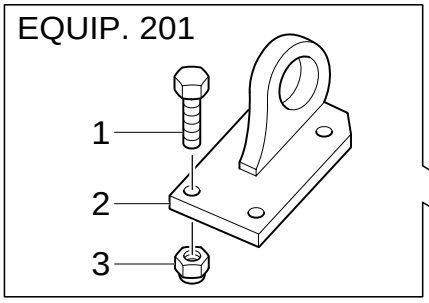

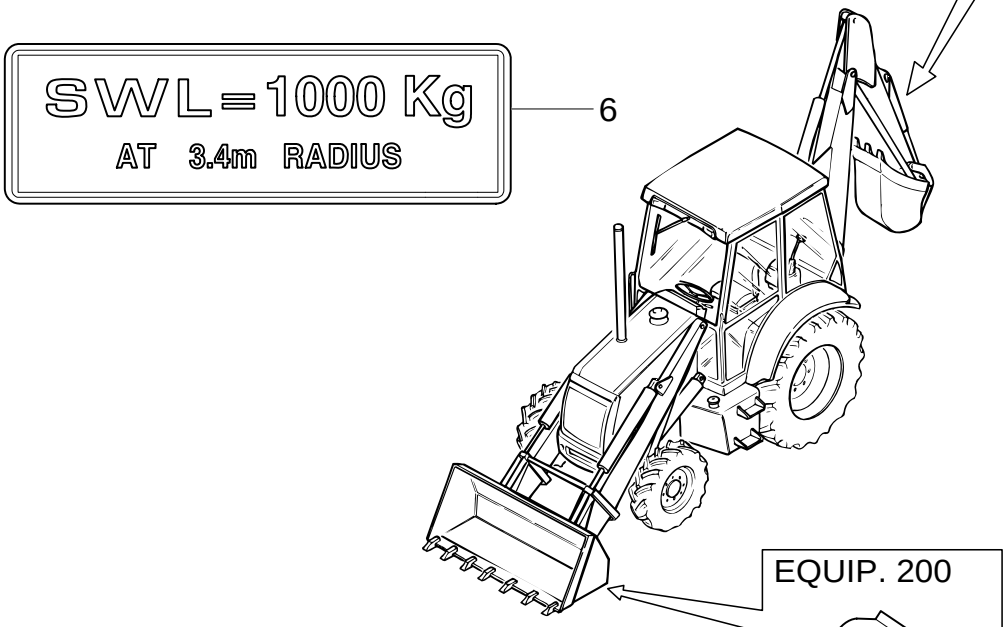

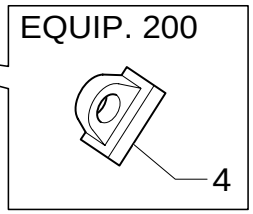

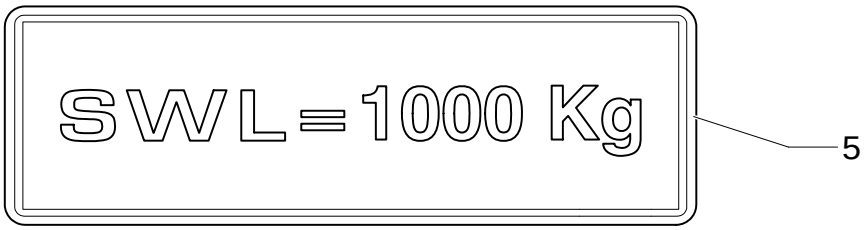

SHOVEL AND REAR LIFTING HOOKS

REF	FN	PART NUMBER	YR/SN	QTY	DESCRIPTION
1		11394334		4	SCREW M14X1,5X45(EQUIP.201)
2		85802599		1	HOOK (EQUIP.201)
3		12574825		4	NUT M14X1,5(EQUIP.201)
4		85805807		1	HOOK (EQUIP.200)
5		85805663		1	DECAL (EQUIP.200)
6		85805664		1	DECAL (EQUIP.201)

Mechanical Version

340/ 1	01	p1	10/05

4X1 & 6X1 BUCKET HYDRAULIC LINES (P. SHUTTLE)

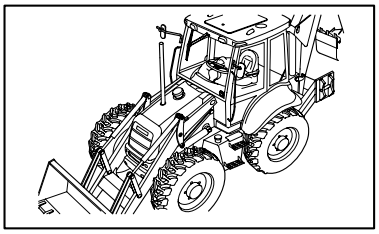

KIT
KIT KIT
10=●
17=▲

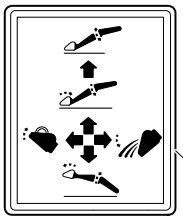

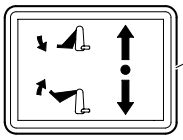

● 11
18 ▲
19 ▲

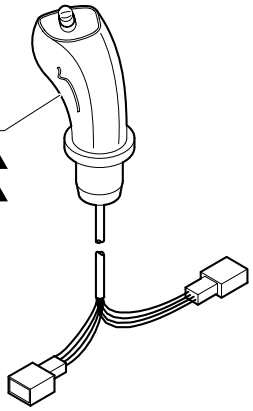

9
2
4
7
3
6
16
4
8
1
9
15 ●
4
1.82.0
5
4
3

4X1 & 6X1 BUCKET HYDRAULIC LINES (P. SHUTTLE)

REF	FN	PART NUMBER	YR/SN	QTY	DESCRIPTION
1		85802234		1	CONNECTOR, HYD.
2		85803312		1	CONNECTOR, HYD.
3		47050685		2	CONNECTOR, HYD.
4		47050686		4	CONNECTOR, HYD.
5		85826100		1	GEAR REDUCTION UNIT
6		85828211		1	INSERT
7		87305211		1	HOSE, FLEXIBLE
8		87303401		1	HOSE, FLEXIBLE
9		87303400		2	HOSE, FLEXIBLE
10		{87304798}		1	
10		87311105		1	KIT
11		{87304804}		1	
11		87311320		1	HANDLE GRIP
12		{87304802}		1	
13		{15210321}		2	
14		{13550035}		2	
15		87304801		1	VALVE, HYDRAULIC
16		14300521		2	SCREW
17		{47334530}		1	
18		85804346		1	DECAL
19		87305209		1	DECAL

416-417	01	p1	02/05

SYSTEM HAMMER COMPONENTS (CAB)

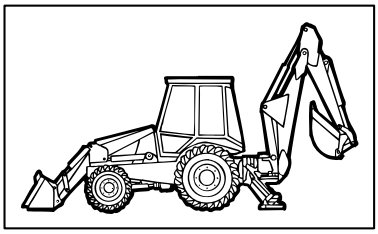

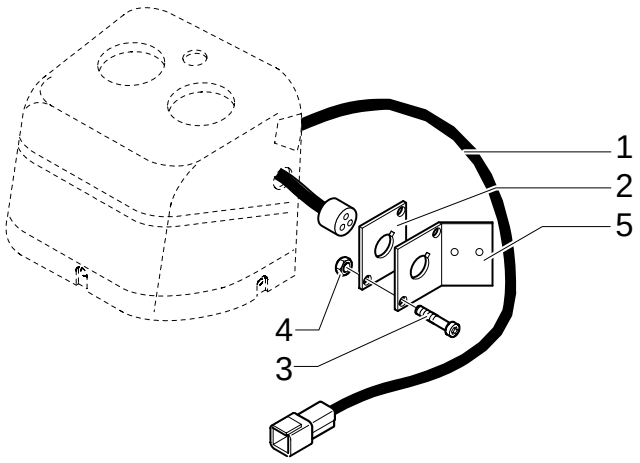

SYSTEM HAMMER COMPONENTS (CAB)

REF	FN	PART NUMBER	YR/SN	QTY	DESCRIPTION
1		85819237		1	CABLE, ELECTRIC
2		85816760		1	PLATE, COVER
3		13272477		2	SCREW
4		12574011		2	NUT M4
5	1	85827822		1	PLATE, MOUNTING

(1) Only for ROPS

431	01	p1	12/05

STANDARD 1M3 BUCKET

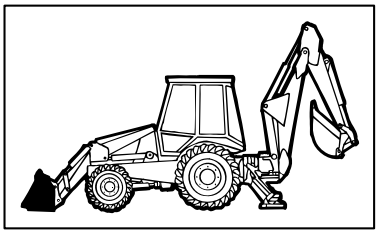

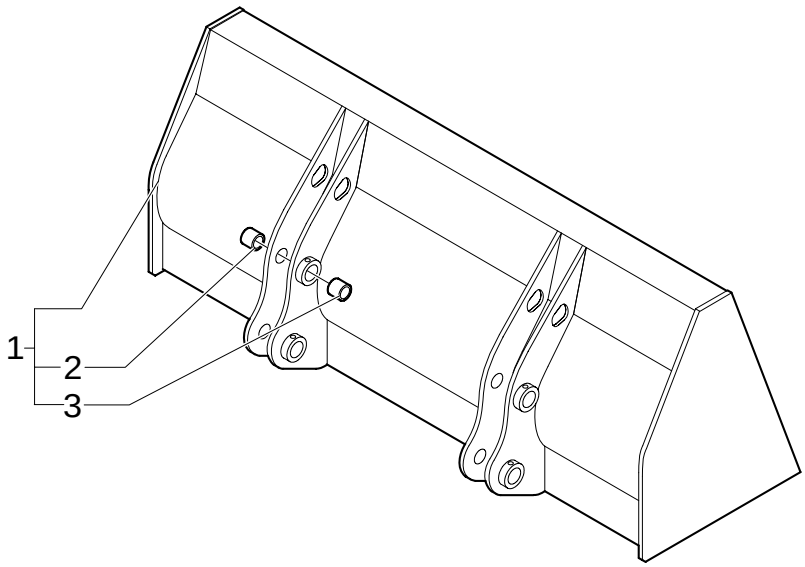

STANDARD 1M3 BUCKET

REF	FN	PART NUMBER	YR/SN	QTY	DESCRIPTION
1		87367627		1	BUCKET
2		85802986		4	BUSHING
3		85802987		4	BUSHING

432	01	p1	12/05

STANDARD 1M3 BUCKET WITH TINE

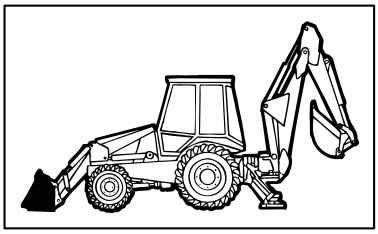

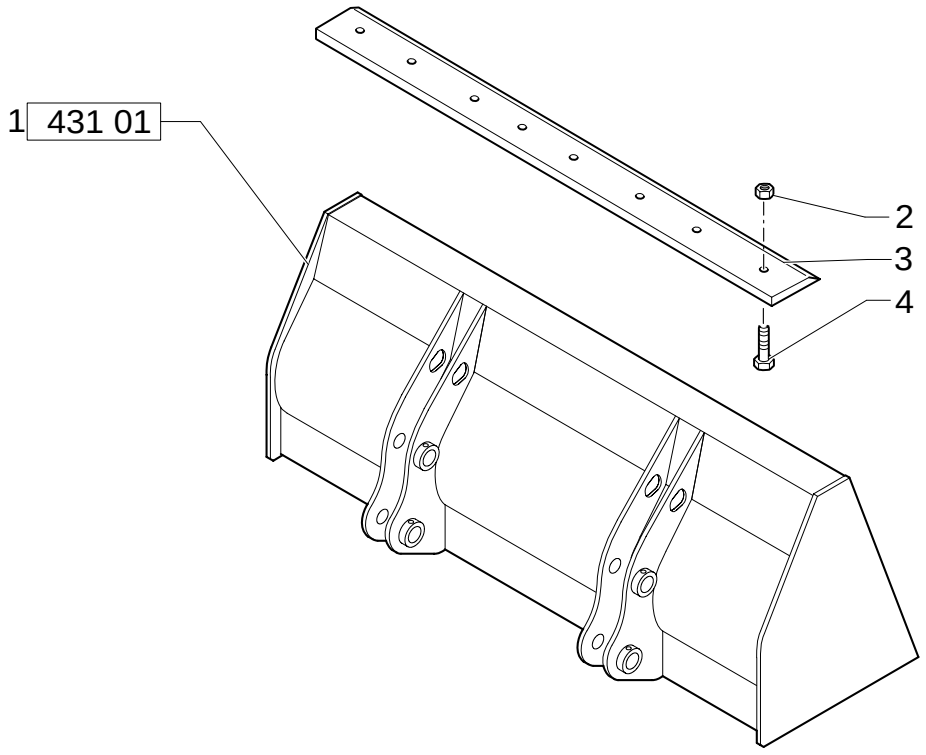

STANDARD 1M3 BUCKET WITH TINE

REF	FN	PART NUMBER	YR/SN	QTY	DESCRIPTION
1		87367627		1	BUCKET
2		85801470		8	NUT
3		85801161		1	EDGE, CUTTING
4		85801371		8	BOLT

433	01	p1	12/05

BUCKET 4X1 (1 M3) WITH BLADE

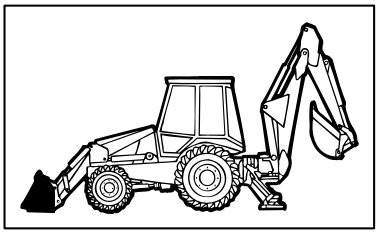

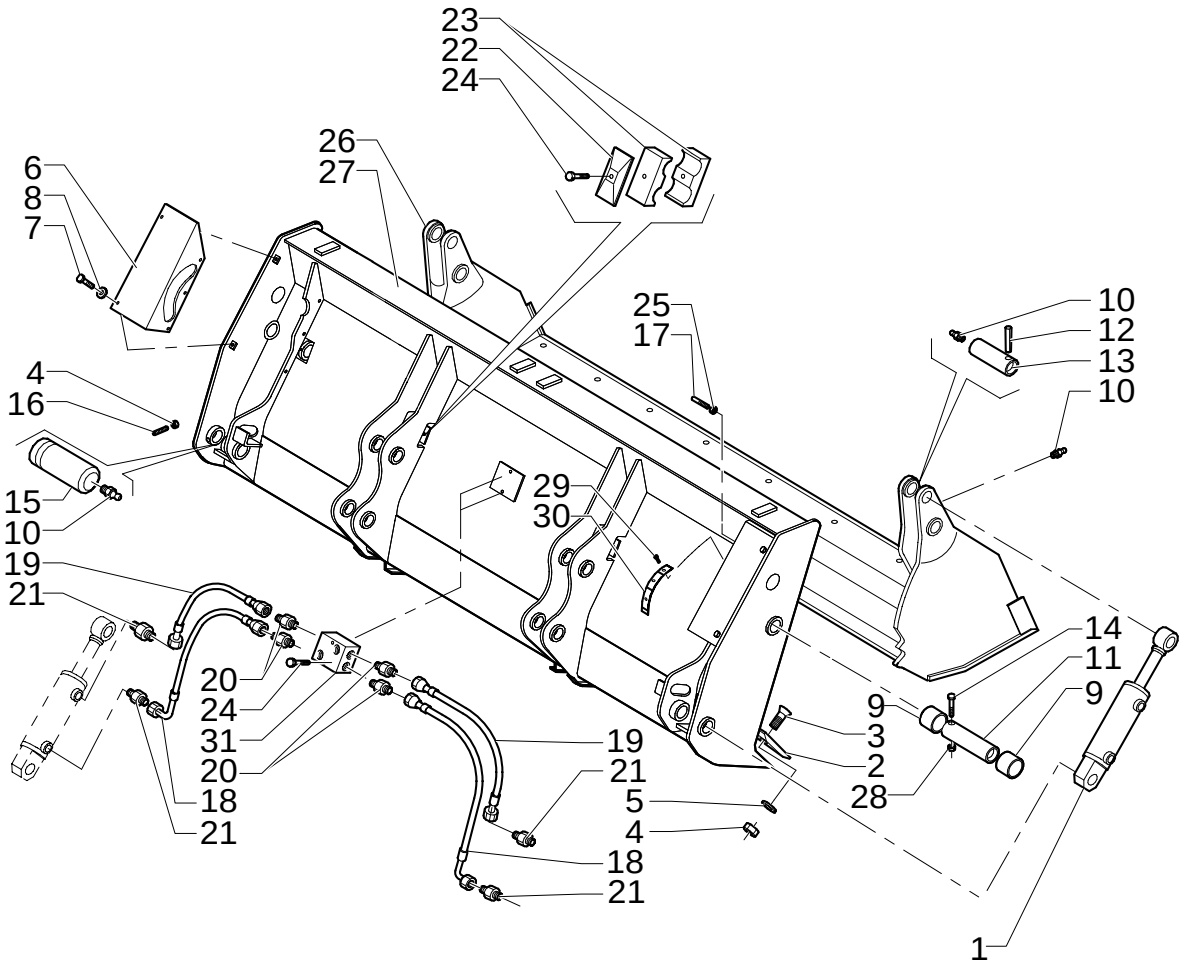

BUCKET 4X1 (1 M3) WITH BLADE

REF	FN	PART NUMBER	YR/SN	QTY	DESCRIPTION
1		85820005		2	CYLINDER
2		87308614		1	BLADE, KNIFE
3		87312328		8	SCREW M14x40
4		85820008		10	NUT M14x2
5		85820009		8	WASHER, SEALING
6		87312330		2	GUARD M8x16
7		85820011		10	SCREW
8		85820012		10	WASHER, SEALING
9		85820013		4	BUSHING
10		85820014		6	NIPPLE, LUBE M10x1
11		85820015		2	PIN
12		85820016		2	PIN, ROLL 10x80
13		85820017		2	PIN
14		85820018		4	SCREW M10x90
15		87310286		2	PIN
16		85820020		2	SCREW M14x30
17		87312331		1	SCREW M8x120
18		87312340		2	HOSE, FLEXIBLE
19		87312342		2	HOSE, FLEXIBLE
20		87312343		4	CONNECTOR, HYD.
21		87312333		2	CONNECTOR, HYD.
22		85820026		2	PLATE
23		85820027		4	CLAMP
24		85820030		4	SCREW M8x45
25		85820031		5	NUT M8
26		87310434		1	LOADER
27		87310354		1	LOADER
28		85820035		4	NUT M10x1,5
29		{85820036}		3	4x10
30		{85820037}		1	
31		87312335		1	VALVE, HYDRAULIC

434	01	p1	12/05

BUCKET 4X1 (1 M3) WITH TINE

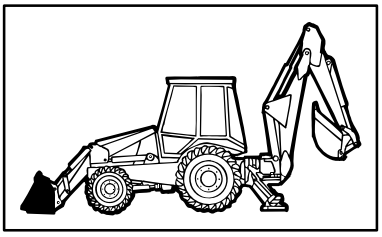

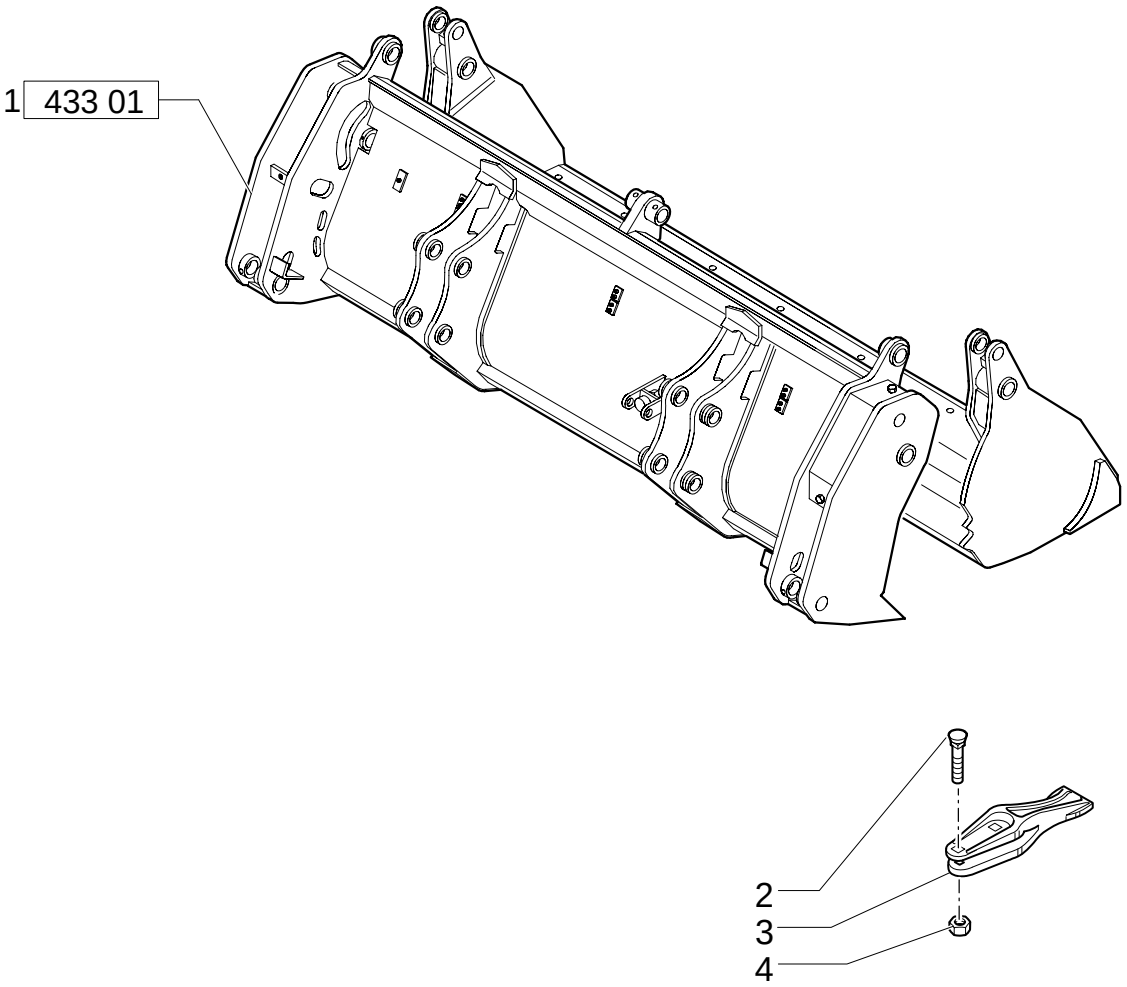

BUCKET 4X1 (1 M3) WITH TINE

REF	FN	PART NUMBER	YR/SN	QTY	DESCRIPTION
1		87367628		1	BUCKET
2		85801371		16	BOLT
3		85811440		8	LUG
4		85801470		16	NUT

469/ A	01	p1	11/05

HYDRAULIC CYLINDER (BUCKET 4X1-6X1)

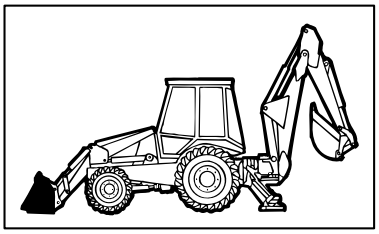

HYDRAULIC CYLINDER (BUCKET 4X1-6X1)

REF	FN	PART NUMBER	YR/SN	QTY	DESCRIPTION
1		85820005		1	CYLINDER
2		85820051		1	BARREL
3		85820057		1	RING, OIL SCRAPER
4		85820058		1	GASKET
5		85820053		1	PLATE, BASE
6		85820061		1	GASKET
7		85820059		1	GASKET
8		85820060		1	GASKET
9		85820055		1	PIN, ROLL
10		85820054		1	PISTON
11		85820052		1	ROD
12		85820056		1	BUSHING

471	02	p1	11/05

BUCKET 4X1 (1 M3) WITH BLADE

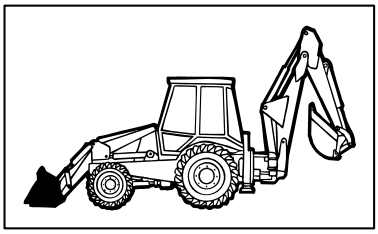

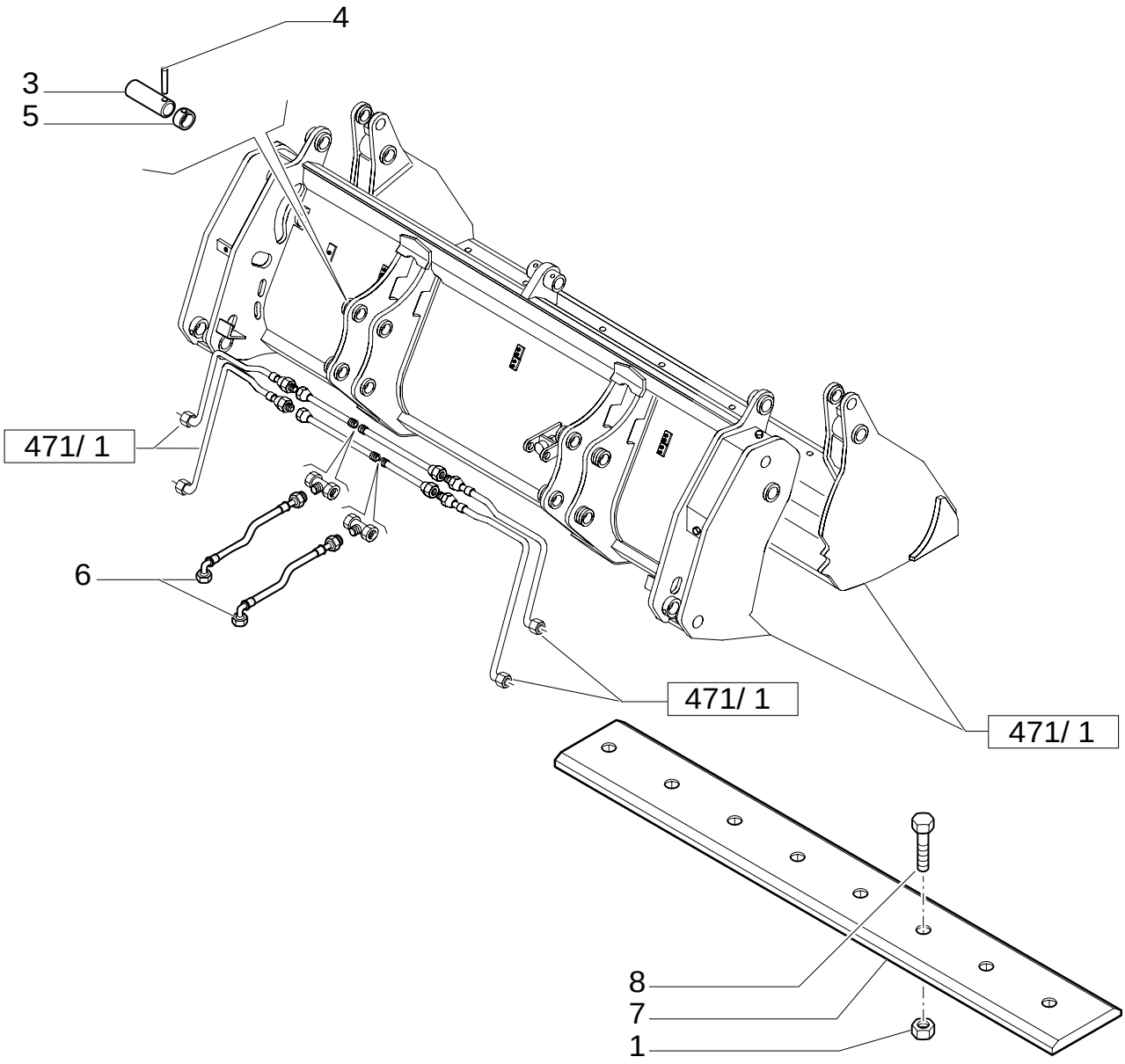

BUCKET 4X1 (1 M3) WITH BLADE

REF	FN	PART NUMBER	YR/SN	QTY	DESCRIPTION
1		85801470		8	NUT 5/8"-11
3		85801051		4	PIN
4		85802993		4	PIN
5		85802992		4	O-RING
6		85820819		2	HOSE, FLEXIBLE L=800 MM.
7	1	85801161		1	EDGE, CUTTING 35 Deg. cutting edge
8		85801371		8	BOLT

(1) Reversible bolt on

514	01	p1	12/05

BOOM - DIPPER SHORT

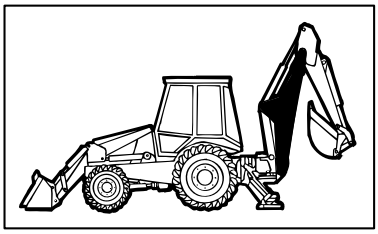

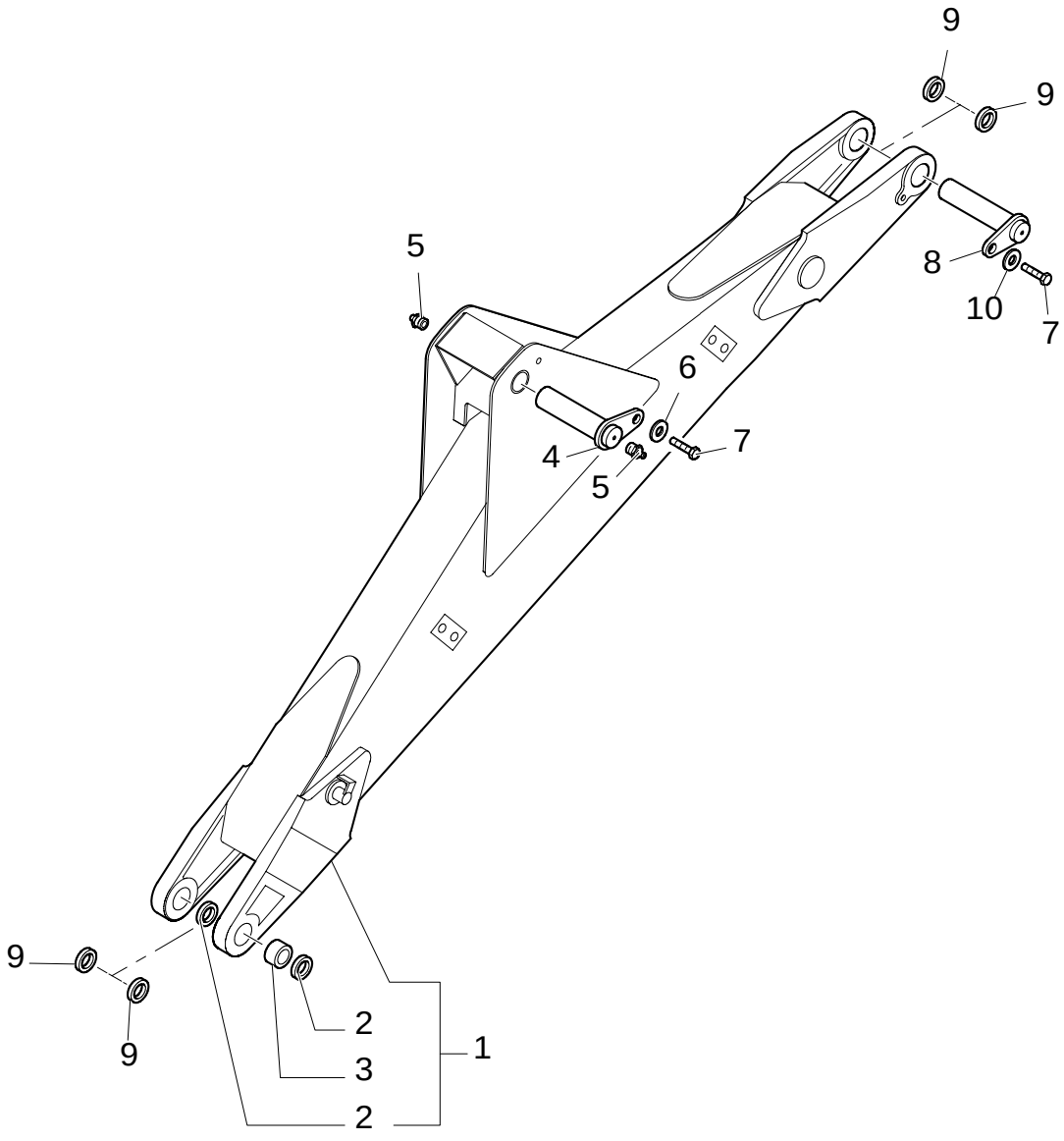

BOOM - DIPPER SHORT

REF	FN	PART NUMBER	YR/SN	QTY	DESCRIPTION
1	1, 2	87311190		1	ARM
1	1, 3	{87372186}		1	
2		D7NNC512C		2	BUSHING, DRIVE
3		D9NNC513CA		4	SEAL PROTECTION
4		85815698		1	PIN
5		87901S8		2	NIPPLE, LUBE 1/8"-27
6		85802396		1	WASHER
7		85802397		2	SCREW
8		85815607		1	PIN
9		85818916		4	SHIM
10		85815609		1	WASHER

(1) Includes 2, 3
(2) UP TO S/N 031056946
(3) FROM TO S/N 031056947

514	02	p1	08/05

SHORT DIPPER

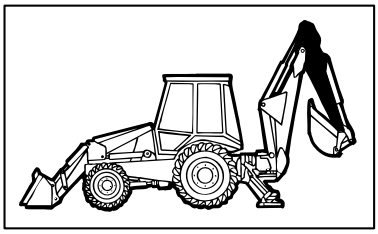

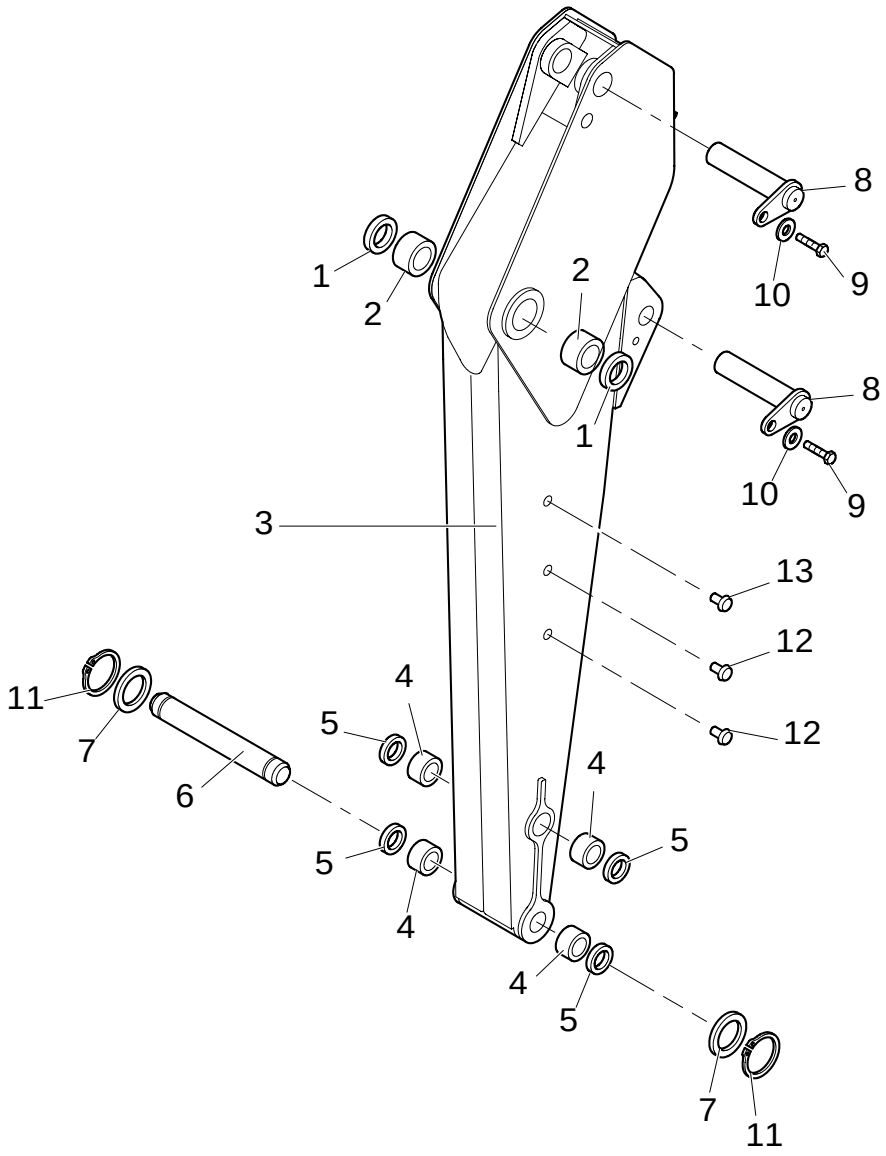

SHORT DIPPER

REF	FN	PART NUMBER	YR/SN	QTY	DESCRIPTION
1		D9NNC513CA		2	SEAL PROTECTION
2		D7NNC512F		2	BUSHING 2.175" ID x 2.80" OD x 1.969"
3	1	85817068		1	ARM
4		D7NNC512H		4	BUSHING
5		D9NNC513BA		4	SEAL PROTECTION
6		86992966		1	PIN
7		D7NNC622C		2	SPACER
8		85803002		2	PIN
9		85802397		2	SCREW
10		85802396		2	WASHER
11		11069071		2	RING, LOCKING
12		85804447		4	PLUG
13		F1NN94000Z36AA		3	STUD

(1) Includes 1, 2, 4, 5

514	03	p1	02/05

SHORT DIPPER - BUCKET MOTION

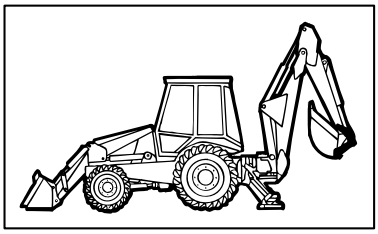

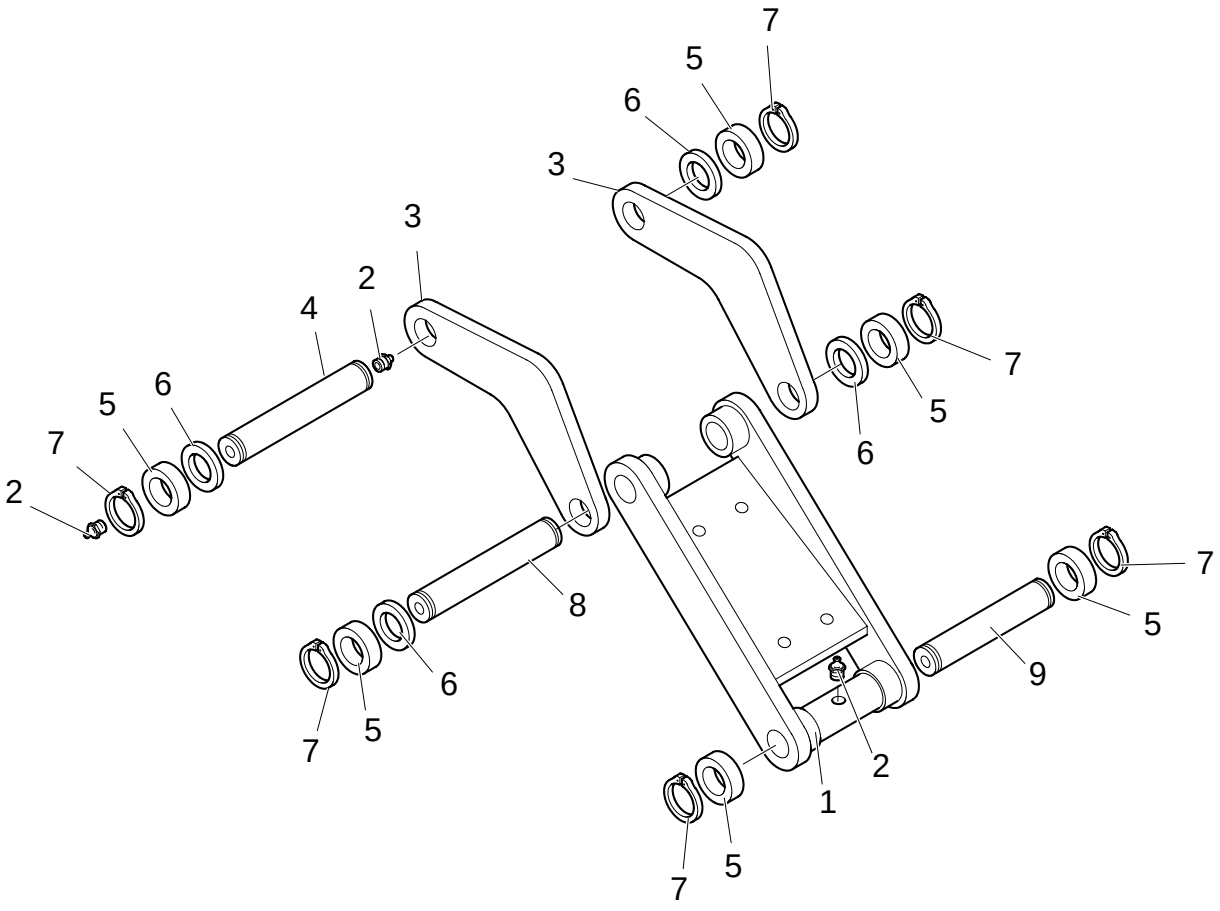

SHORT DIPPER - BUCKET MOTION

REF	FN	PART NUMBER	YR/SN	QTY	DESCRIPTION
1				1	
2		87901S8		5	NIPPLE, LUBE 1/8"-27
3		{85817133}		2	
4		85815517		1	PIN
5		D7NNC622C		6	SPACER
6		85818916		4	SHIM
7		11069071		6	RING, LOCKING
8		85813469		1	PIN
9		86992966		1	PIN

514	04	p1	11/05

SHORT DIPPER - HYDRAULIC SYSTEM

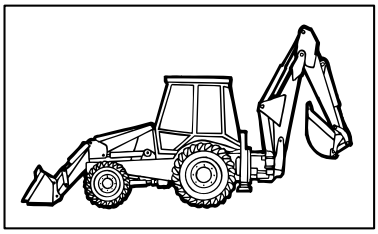

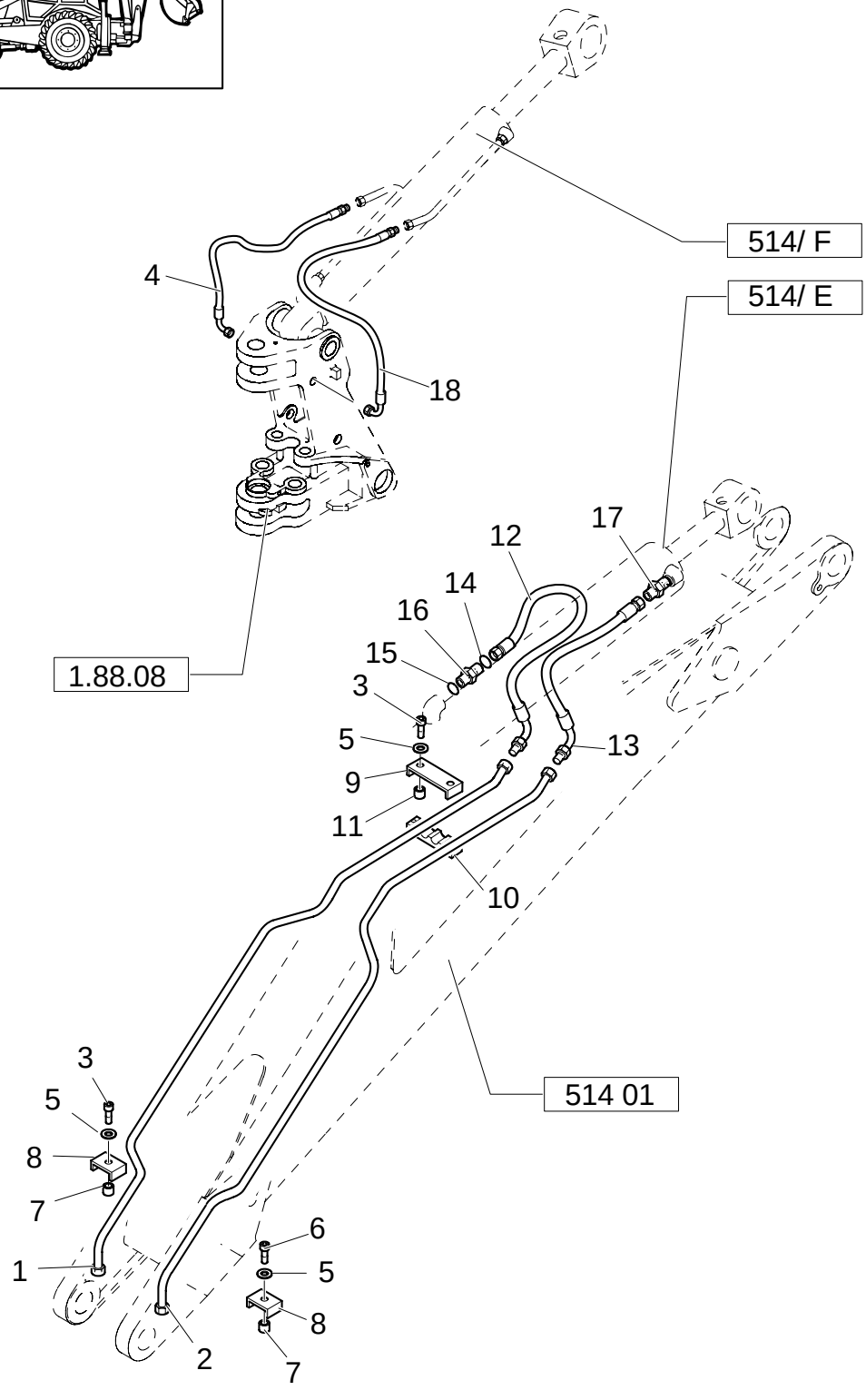

SHORT DIPPER - HYDRAULIC SYSTEM

REF	FN	PART NUMBER	YR/SN	QTY	DESCRIPTION
1		85815632		1	TUBE, RIGID
2		85815630		1	TUBE, RIGID
3		16044221		1	SCREW
4		85826212		1	HOSE, FLEXIBLE
5		11193979		4	WASHER, LOCK
6		16044221		1	SCREW
7		85802902		1	SPACER
8		85802900		1	CLAMP
9		85802894		1	U-BRACKET
10		85802895		1	CLAMP
11		85802893		2	SPACER
12		85812154		1	HOSE, FLEXIBLE
13		85812178		1	HOSE, FLEXIBLE
14		9991976		1	O-RING 90 Duro, .739" ID x .070" Thk
15		167266		1	O-RING 90 Duro, .924" ID x .116" Thk
16	1	390937S36		1	CONNECTOR, HYD. 1-3/16"-12 ORS x 1-1/16"-12 SAE O-Ring
17		390938S36		1	CONNECTOR, HYD.
18		85826213		1	HOSE, FLEXIBLE

(1) Includes 14, 15

514	05	p1	02/05

SHORT DIPPER - HYDRAULIC SYSTEM

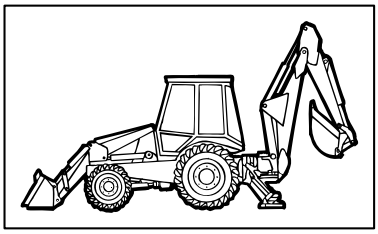

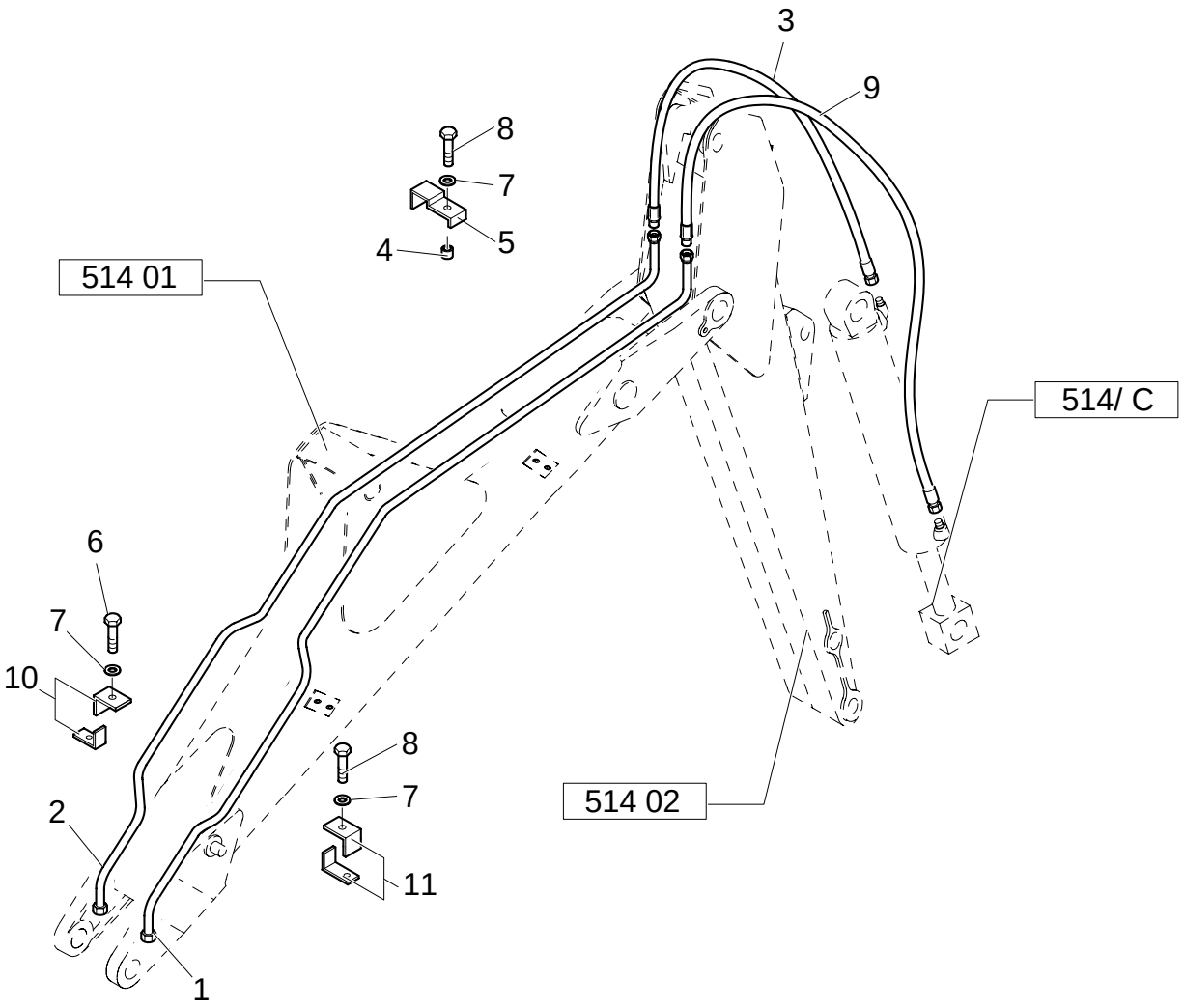

SHORT DIPPER - HYDRAULIC SYSTEM

REF	FN	PART NUMBER	YR/SN	QTY	DESCRIPTION
1		85815636		1	TUBE, RIGID
2		85815634		1	TUBE, RIGID
3		85812156	BSN 031045565	1	HOSE, FLEXIBLE
3		85826223	ASN 031045566	1	HOSE, FLEXIBLE
4		85802901		1	SPACER
5		85802909		1	CLAMP
6		16044421		1	SCREW
7		11193979		3	WASHER, LOCK
8		16044221		2	SCREW M8X50
9		85812180	BSN 031045565	1	HOSE, FLEXIBLE
9		85826225	ASN 031045566	1	HOSE, FLEXIBLE
10		85815628		2	HALF-CONNECTOR
11		85815627		2	HALF-CONNECTOR ASSY

SHORT DIPPER - HYDRAULIC SYSTEM

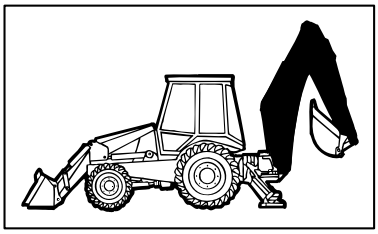

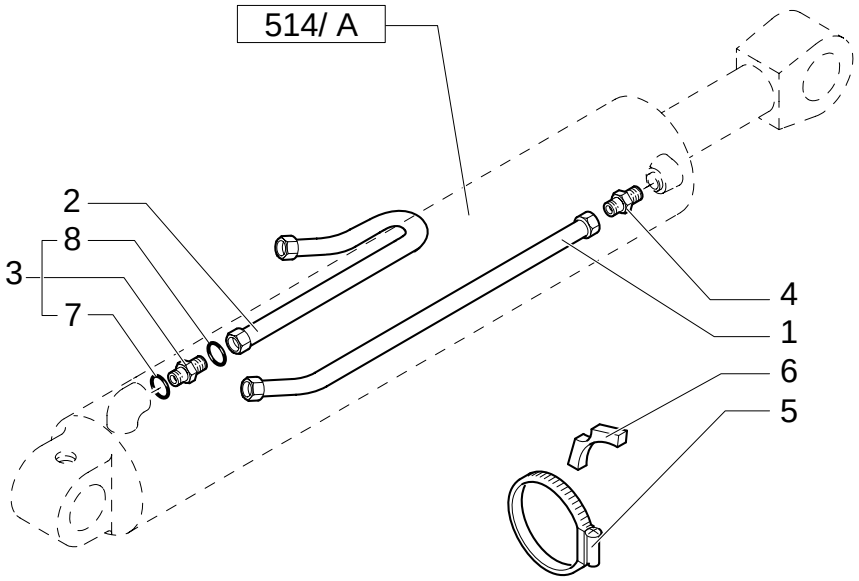

SHORT DIPPER - HYDRAULIC SYSTEM

REF	FN	PART NUMBER	YR/SN	QTY	DESCRIPTION
1		85815683		1	TUBE, RIGID
2		85816813		1	TUBE, RIGID
3	1	390937S36		1	CONNECTOR, HYD. 1-3/16"-12 ORS x 1-1/16"-12 SAE O-Ring
4		390938S36		1	CONNECTOR, HYD.
5		85802744		1	CLAMP
6		87303912		2	SPACER
7		167266		1	O-RING 90 Duro, .924" ID x .116" Thk
8		9991976		1	O-RING 90 Duro, .739" ID x .070" Thk

(1) Includes 7, 8

SHORT DIPPER - HYDRAULIC SYSTEM

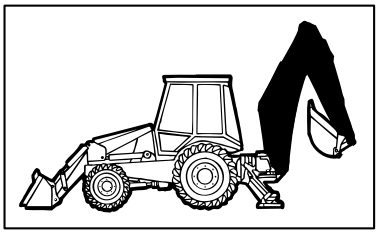

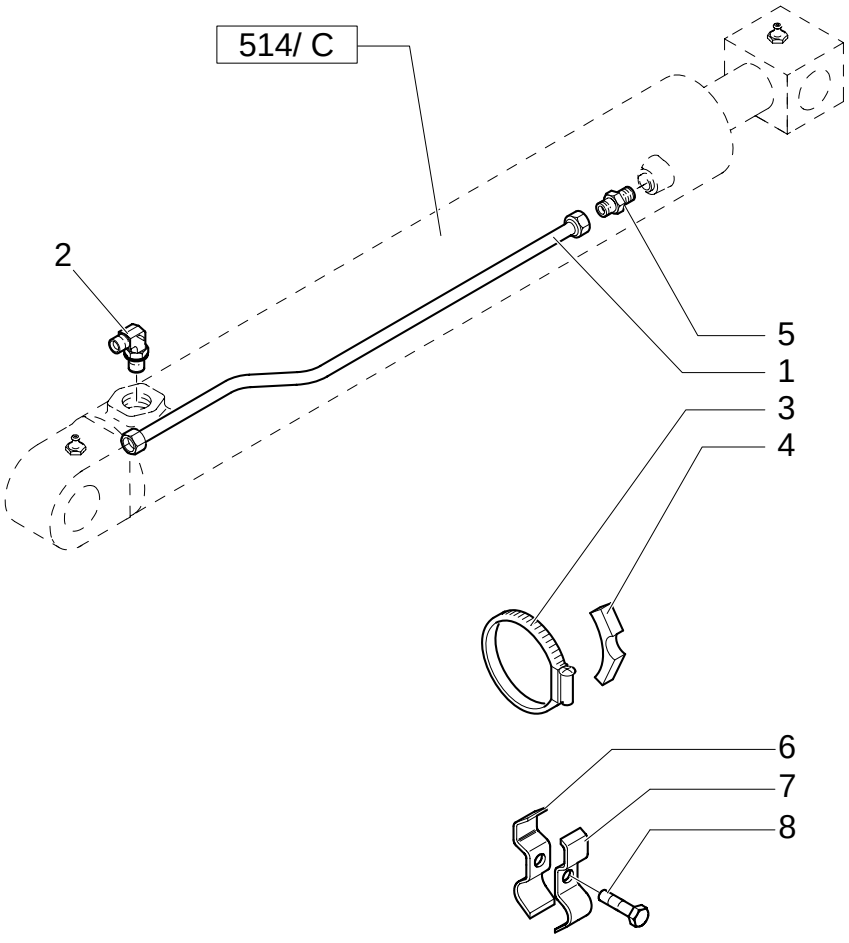

SHORT DIPPER - HYDRAULIC SYSTEM

REF	FN	PART NUMBER	YR/SN	QTY	DESCRIPTION
1		85815638		1	TUBE, RIGID
2		85802957		1	ELBOW
3		85803008		1	COLLAR
4		87303910		1	SPACER
5		390938S36		1	CONNECTOR, HYD.
6		85825442		1	COLLAR
7		85825441		1	CLIP
8		14305321		1	SCREW

514	08	p1	02/05

SHORT DIPPER - HYDRAULIC SYSTEM

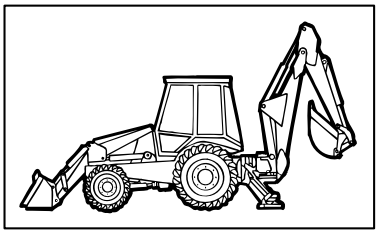

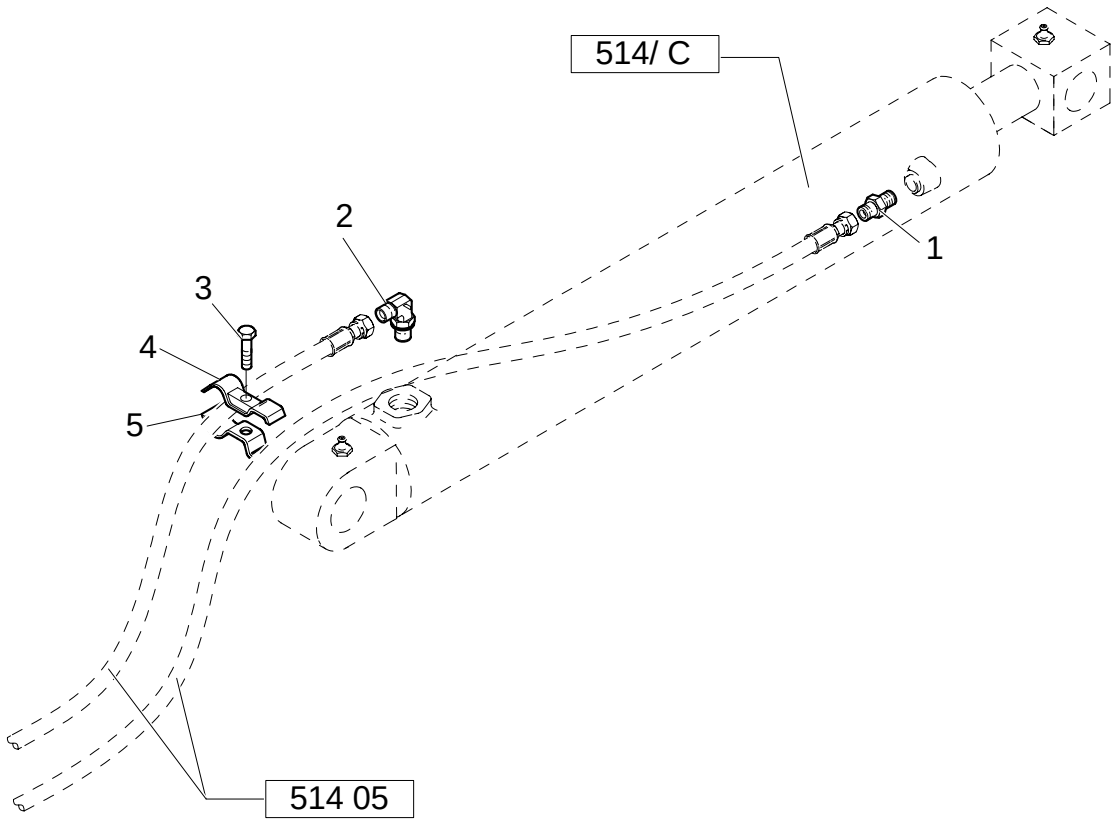

SHORT DIPPER - HYDRAULIC SYSTEM

REF	FN	PART NUMBER	YR/SN	QTY	DESCRIPTION
1		390938S36		1	CONNECTOR, HYD.
2		85802957		1	ELBOW
3		14305321		1	SCREW
4		85825441		1	CLIP
5		85825442		1	COLLAR

514/ C	01	p1	11/05

HYDRAULIC BUCKET CYLINDER

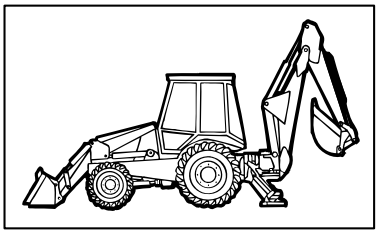

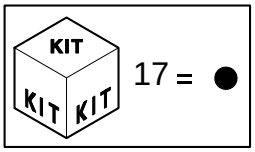

HYDRAULIC BUCKET CYLINDER

REF	FN	PART NUMBER	YR/SN	QTY	DESCRIPTION
1		87414976		1	BEARING, NYLON
2		87414506		1	GLAND
3		87427999		1	SCREW
4		87421144		1	O-RING
5	1	87408120		1	PLUNGER
6	2	83963252		1	ROD
7		D7NNC512G		4	BUSHING
8		87440401		1	BACK-UP RING
9		87408634		1	Ring, Wear
10	2	E7NNC501AA		1	BARREL
11		87414980		1	PACKAGE, SEALS
12		87901S8		2	NIPPLE, LUBE 1/8"-27
13		87414979		1	WIPER
14		D9NNC513BA		4	SEAL PROTECTION
15		87414333		1	SEAL, HYD-CYLINDER
16		87414341		1	RING
17		87424197		1	CYLINDER HEAD
18		87315527		1	HYDRAULIC CYLINDER

(1) Includes 9, 15, 16
(2) Includes 7

514/ E	01	p1	11/05

HYDRAULIC DITCHING CYLINDER

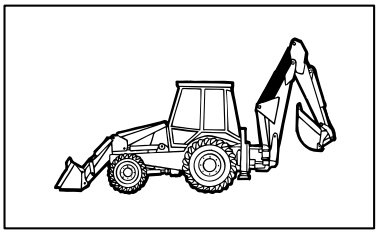

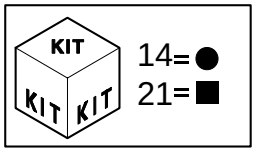

HYDRAULIC DITCHING CYLINDER

REF	FN	PART NUMBER	YR/SN	QTY	DESCRIPTION
1		87315531		1	HYDRAULIC CYLINDER
2		86982444		1	BOLT, SPECIAL
3		{86621058}		1	
4	1	87425174		1	PLUNGER
5		87414336		1	SEAL, HYD-CYLINDER
6		87414344		1	RING
7		D9NNC513BA		1	SEAL PROTECTION
8		87414976		1	BEARING, NYLON
9		87421147		1	O-RING
10		87440411		1	BACK-UP RING
11		87415119		1	KIT
12		87414980		1	PACKAGE, SEALS
13		87414979		1	WIPER
14		87428632		1	KIT, SEALS
15	2	87425131		1	ROD
16		D7NNC512G		2	BUSHING
17		87901S8		1	NIPPLE, LUBE 1/8"-27
18		D9NNC513CA		1	SEAL PROTECTION
19	3	87425142		1	LINER, ENGINE CYLINDER
20		D7NNC512D		2	BUSHING
21		87424199		1	CYLINDER HEAD

(1) Includes 5, 6
(2) Includes 16
(3) Includes 20

514/ F	01	p1	11/05

HYDRAULIC LIFTING CYLINDER

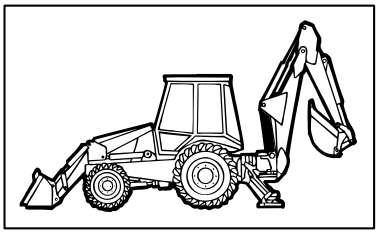

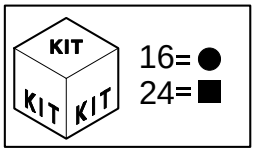

HYDRAULIC LIFTING CYLINDER

REF	FN	PART NUMBER	YR/SN	QTY	DESCRIPTION
1		85800211		1	GASKET
2		87415121		1	CYLINDER HEAD
3		87414979		1	WIPER
4		D7NNC512L		2	BUSHING
5	1	E7NN171DA		1	ROD
6		D9NNC513CA		2	SEAL PROTECTION
7		87901S8		2	NIPPLE, LUBE 1/8"-27
8		87414976		1	BEARING, NYLON
9		87440412		1	BACK-UP RING
10		87421148		1	O-RING
11		87414980		1	PACKAGE, SEALS
13	2	87409319		1	PISTON
14		87414337		1	SEAL, HYD-CYLINDER
15		87414345		1	RING
16		87428633		1	KIT, SEALS
17	3	85800210		1	LINER, ENGINE CYLINDER
18		87401159		1	Ring, Wear
19		85800202		1	BUSHING
20		E8NN337AA		1	WASHER
21		87428018		1	SCREW
22		85801025		2	SEAL
23		87315532		1	HYDRAULIC CYLINDER
24		87424200		1	CYLINDER HEAD

(1) Includes 4
(2) Includes 14, 15
(3) Includes 19

515	01	p1	02/05

12" (305MM) BACKHOE BUCKET WITH PIN TEETH

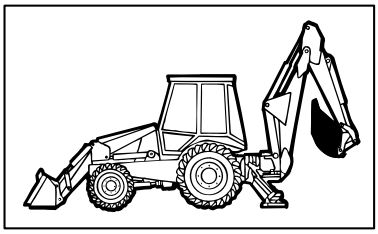

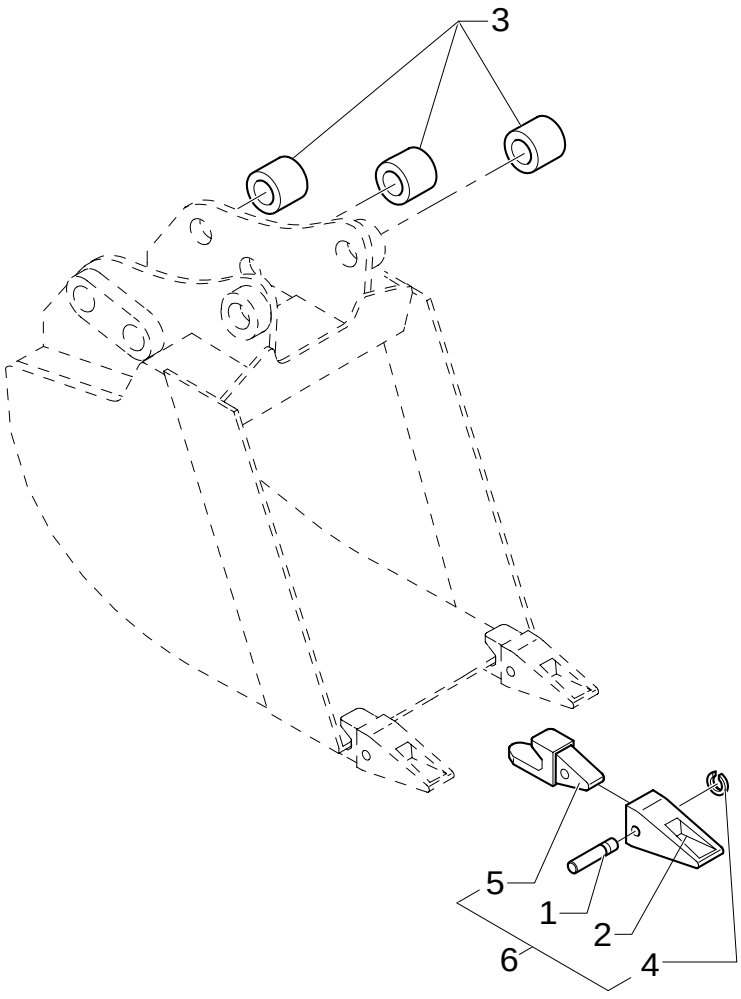

12" (305MM) BACKHOE BUCKET WITH PIN TEETH

REF	FN	PART NUMBER	YR/SN	QTY	DESCRIPTION
1		85801097		3	PIN
2		85811432		3	TOOTH, BUCKET
3		D7NNC584A		6	BUSHING
4		85801098		3	STOP
5		85821788		3	TOOTH, BUCKET
6	1	NSS		3	NOT SERVICED SEPARATELY

(1) Includes 1 To 5

12" (305MM) BACKHOE BUCKET WITH BOLT-ON TEETH

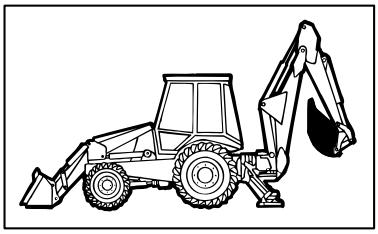

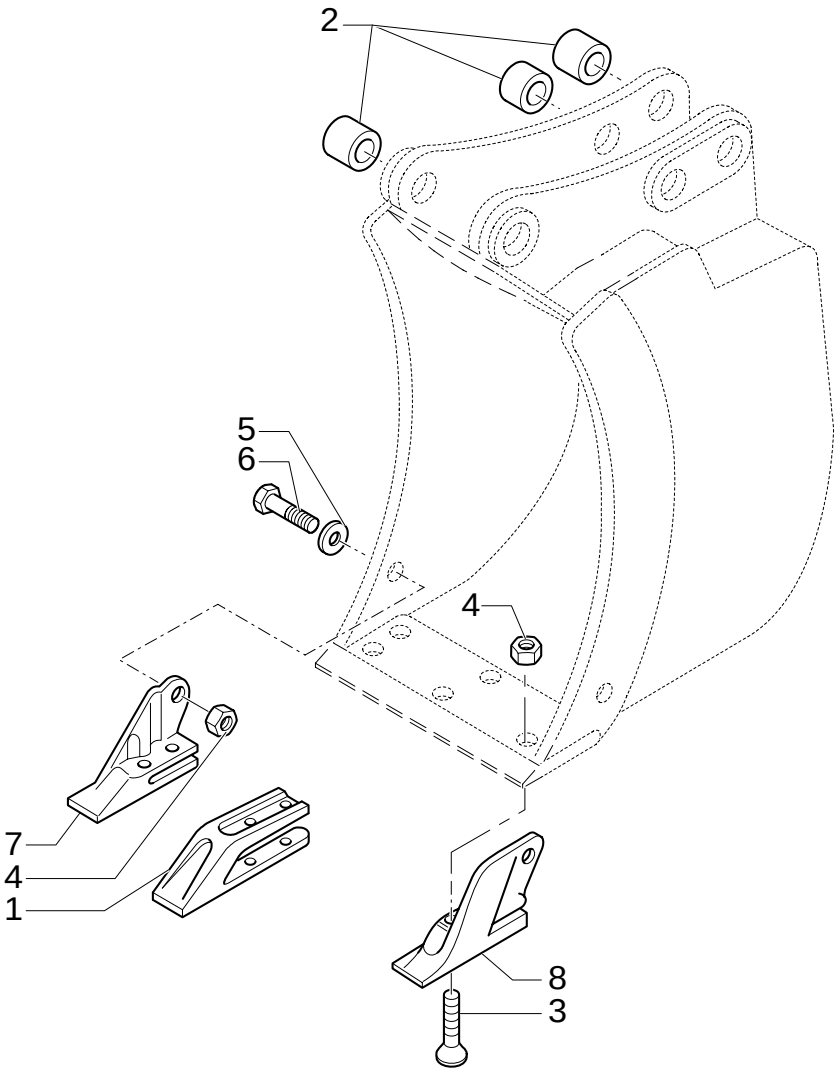

12" (305MM) BACKHOE BUCKET WITH BOLT-ON TEETH

REF	FN	PART NUMBER	YR/SN	QTY	DESCRIPTION
1		85811440		1	LUG
2		D7NNC584A		6	BUSHING
3		85801371		6	BOLT
4		85801470		8	NUT 5/8"-11
5		10520211		2	WASHER
6		D5NN94420N02B		2	WEATHERSTRIP 5/8"-11X1.75
7		85801377		1	LUG RH
8		85801376		1	LUG LH

516	01	p1	02/05

18" (457MM) BACKHOE BUCKET WITH PIN TEETH

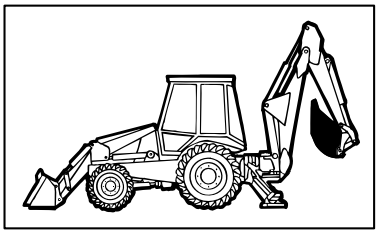

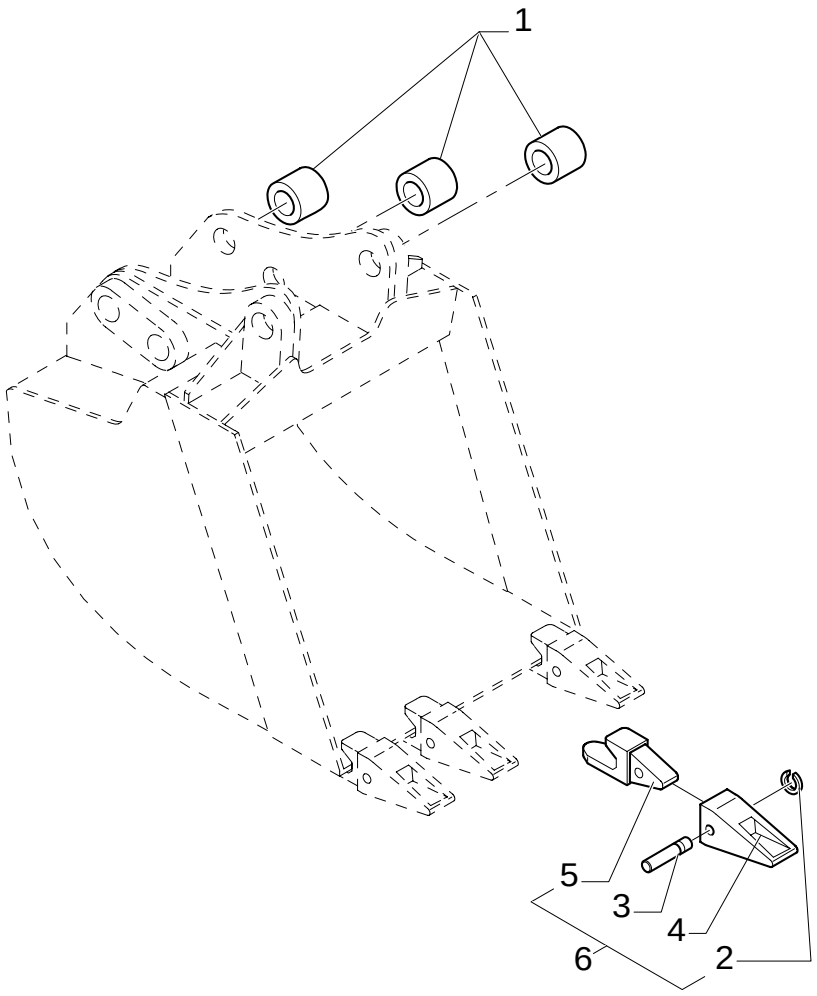

18" (457MM) BACKHOE BUCKET WITH PIN TEETH

REF	FN	PART NUMBER	YR/SN	QTY	DESCRIPTION
1		D7NNC584A		6	BUSHING
2		85801098		4	STOP
3		85801097		4	PIN
4		85811432		4	TOOTH, BUCKET
5		85821788		4	TOOTH, BUCKET
6	1	NSS		4	NOT SERVICED SEPARATELY

(1) Includes 1 To 5

516	02	p1	02/05

18" (457MM) BACKHOE BUCKET WITH BOLT-ON TEETH

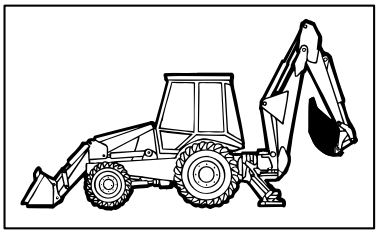

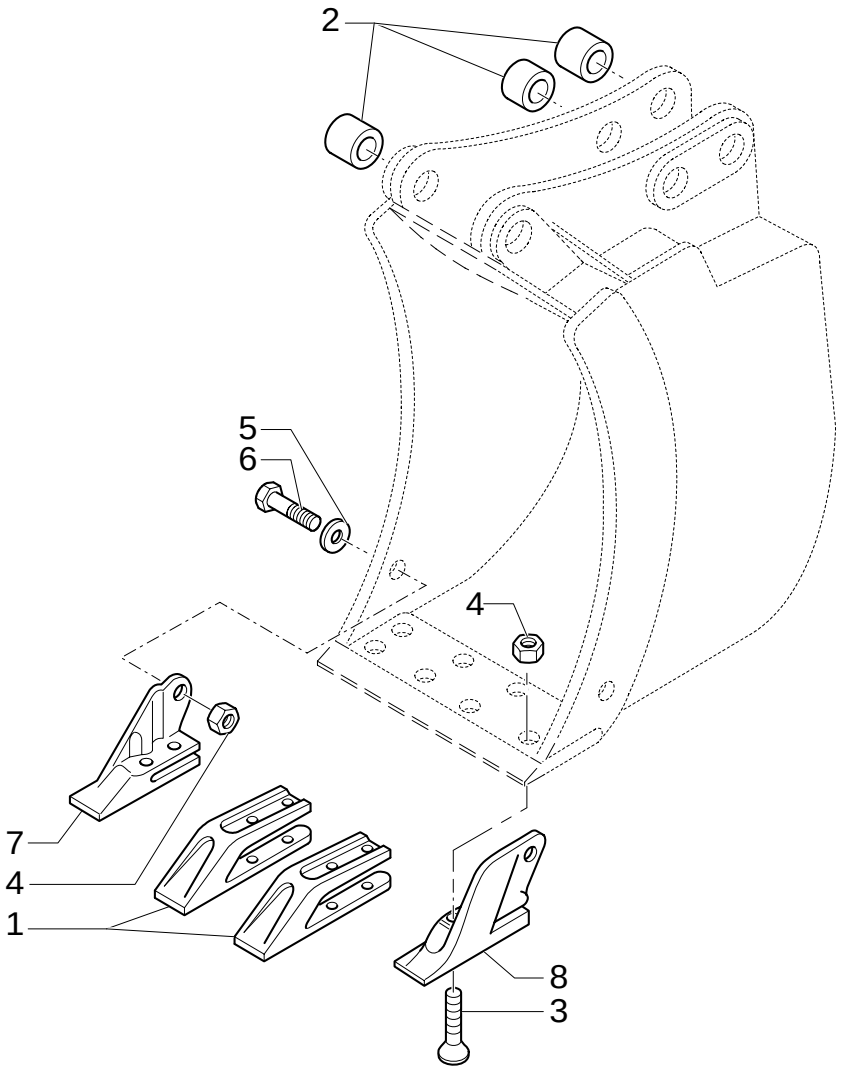

18" (457MM) BACKHOE BUCKET WITH BOLT-ON TEETH

REF	FN	PART NUMBER	YR/SN	QTY	DESCRIPTION
1		85811440		2	LUG
2		D7NNC584A		6	BUSHING
3		85801371		8	BOLT
4		85801470		10	NUT 5/8"-11
5		10520211		2	WASHER
6		D5NN94420N02B		2	WEATHERSTRIP 5/8"-11X1.75
7		85801377		1	LUG RH
8		85801376		1	LUG LH

517	01	p1	02/05

24" (610MM) BACKHOE BUCKET WITH PIN TEETH

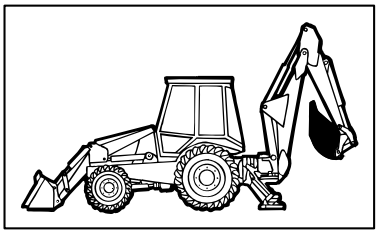

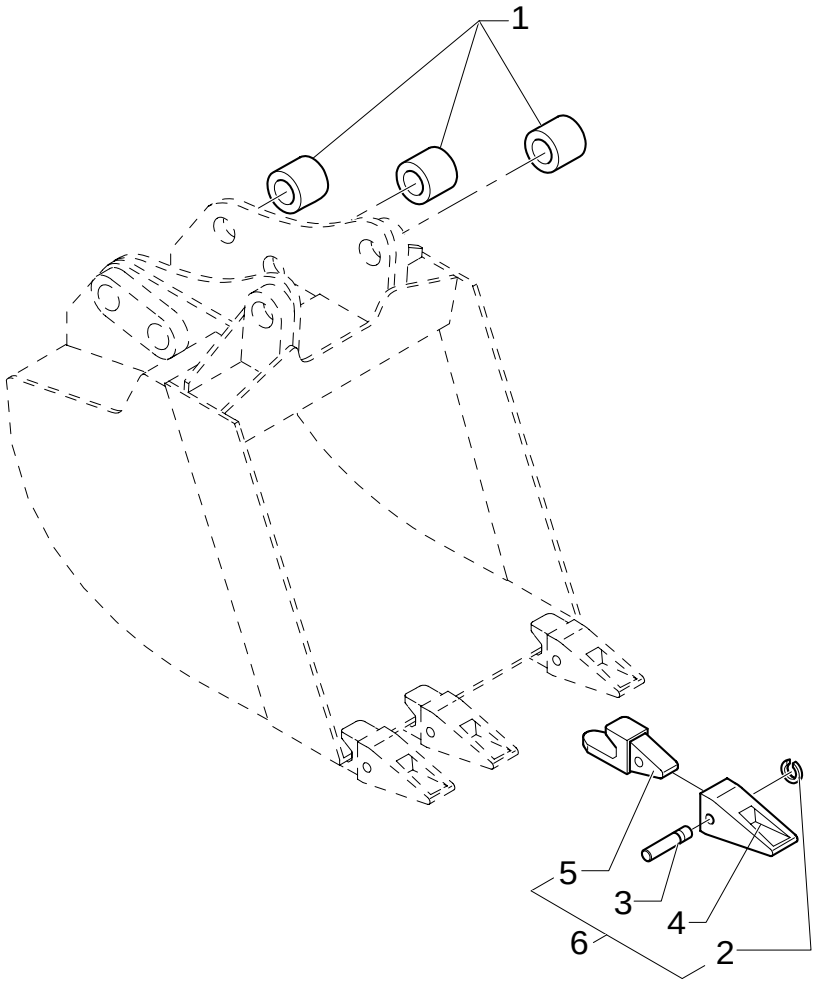

24" (610MM) BACKHOE BUCKET WITH PIN TEETH

REF	FN	PART NUMBER	YR/SN	QTY	DESCRIPTION
1		D7NNC584A		6	BUSHING
2		85801098		4	STOP
3		85801097		4	PIN
4		85811432		4	TOOTH, BUCKET
5		85821788		4	TOOTH, BUCKET
6	1	NSS		4	NOT SERVICED SEPARATELY

(1) Includes 1 To 5

517	02	p1	02/05

24" (610MM) BACKHOE BUCKET WITH BOLT-ON TEETH

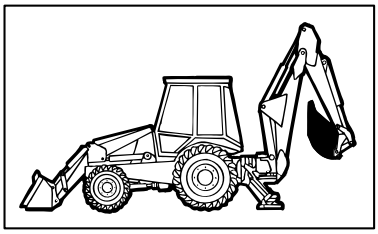

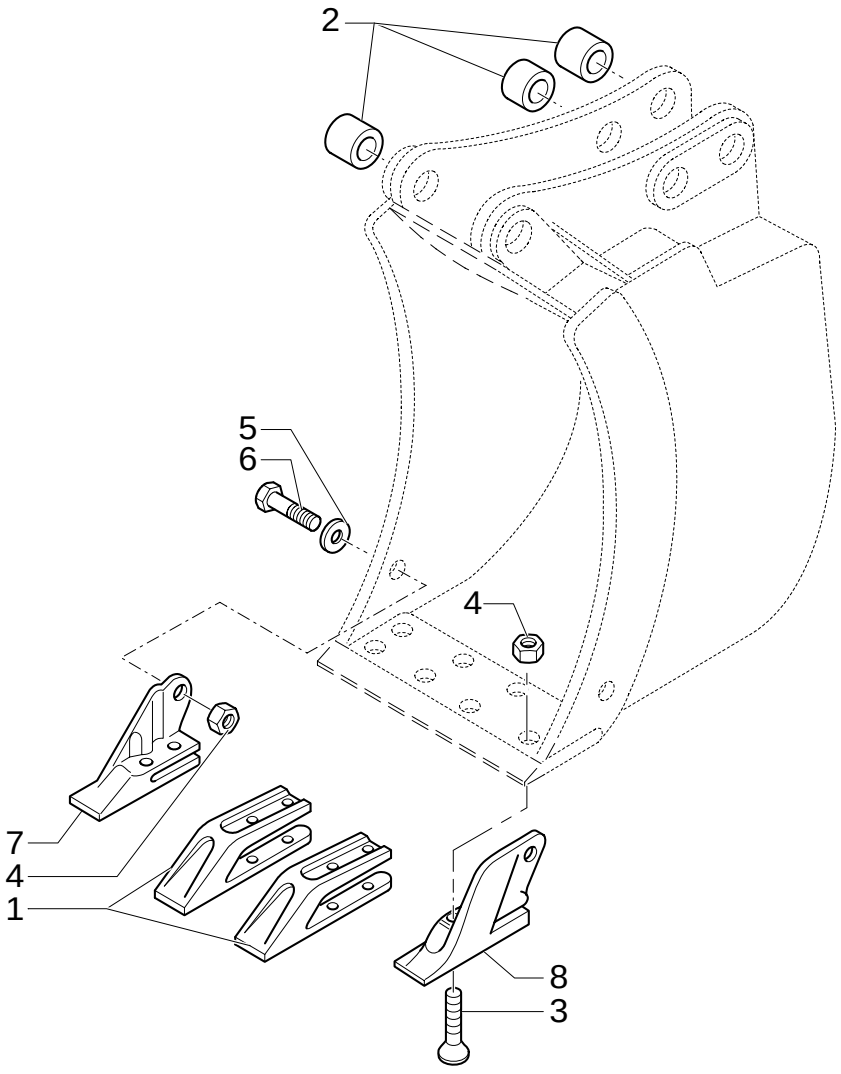

24" (610MM) BACKHOE BUCKET WITH BOLT-ON TEETH

REF	FN	PART NUMBER	YR/SN	QTY	DESCRIPTION
1		85811440		2	LUG
2		D7NNC584A		6	BUSHING
3		85801371		8	BOLT
4		85801470		10	NUT 5/8"-11
5		10520211		2	WASHER
6		88706		2	BOLT Cap, HH, G8, 5/8"-11 x 1-3/4"
7		85801377		1	LUG RH
8		85801376		1	LUG LH

518	01	p1	02/05

30" (762MM) BACKHOE BUCKET WITH PIN TEETH

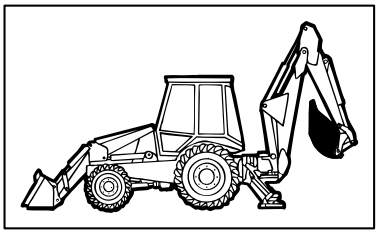

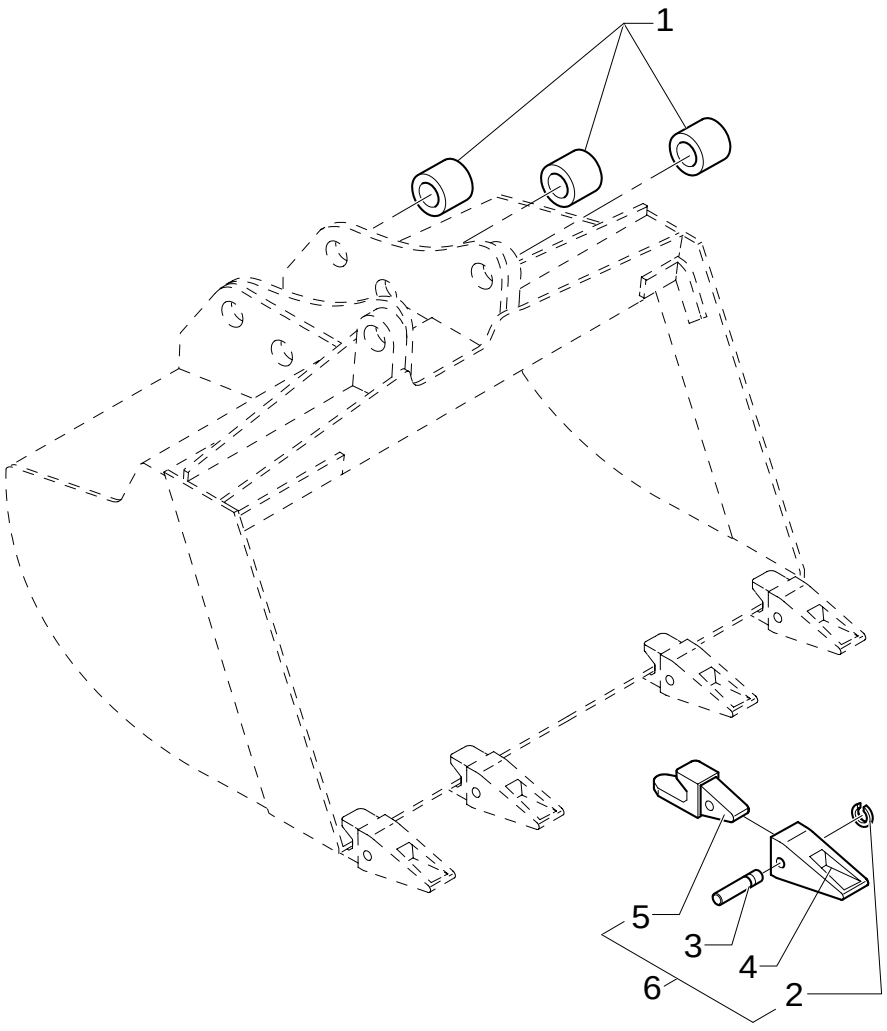

30" (762MM) BACKHOE BUCKET WITH PIN TEETH

REF	FN	PART NUMBER	YR/SN	QTY	DESCRIPTION
1		D7NNC584A		6	BUSHING
2		85801098		5	STOP
3		85801097		5	PIN
4		85811432		5	TOOTH, BUCKET
5		85821788		5	TOOTH, BUCKET
6		{85824018}		5	

518	02	p1	02/05

30" (762MM) BACKHOE BUCKET WITH BOLT-ON TEETH

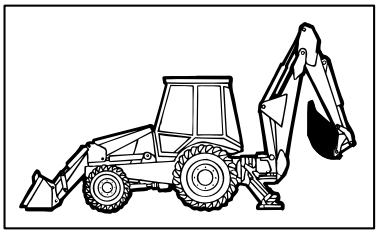

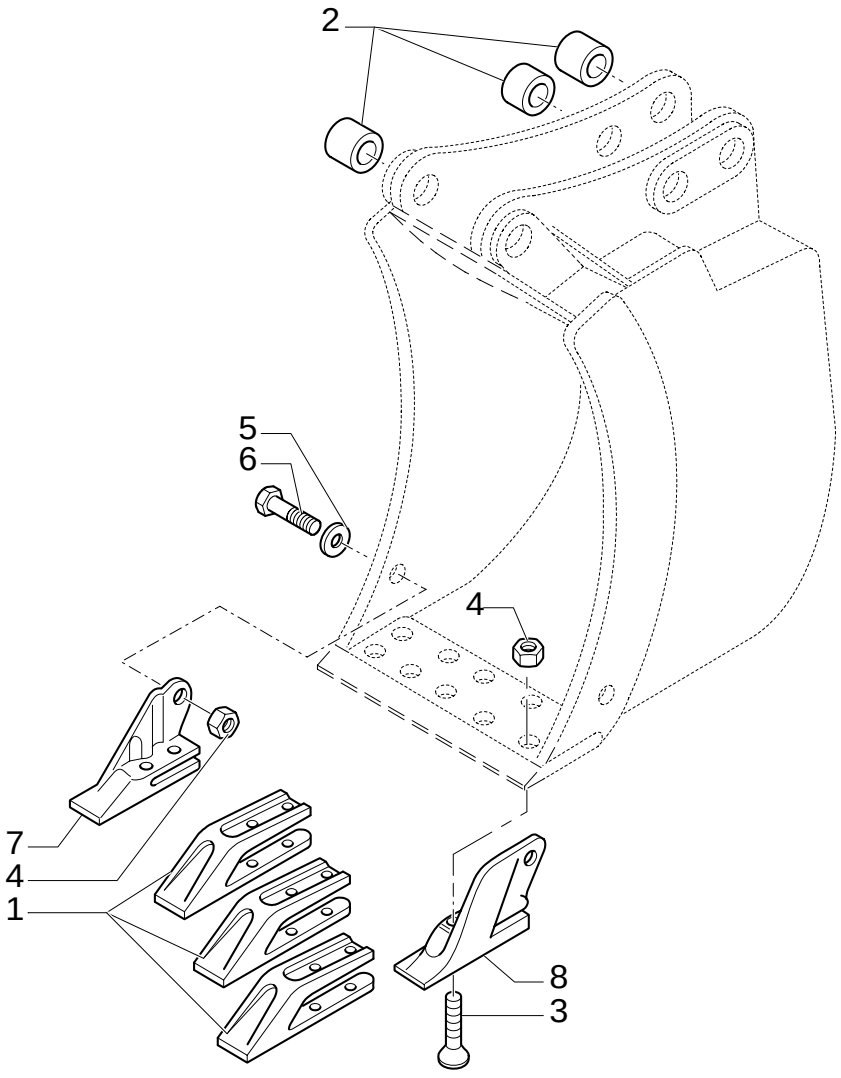

30" (762MM) BACKHOE BUCKET WITH BOLT-ON TEETH

REF	FN	PART NUMBER	YR/SN	QTY	DESCRIPTION
1		85811440		3	LUG
2		D7NNC584A		6	BUSHING
3		85801371		10	BOLT
4		85801470		12	NUT 5/8"-11
5		10520211		2	WASHER
6		88706		2	BOLT Cap, HH, G8, 5/8"-11 x 1-3/4"
7		85801377		1	LUG RH
8		85801376		1	LUG LH

519	01	p1	02/05

36" (914MM) BACKHOE BUCKET WITH PIN TEETH

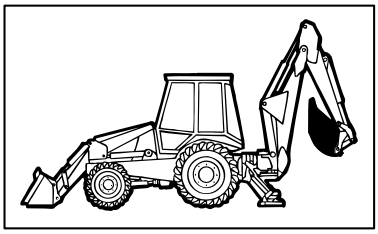

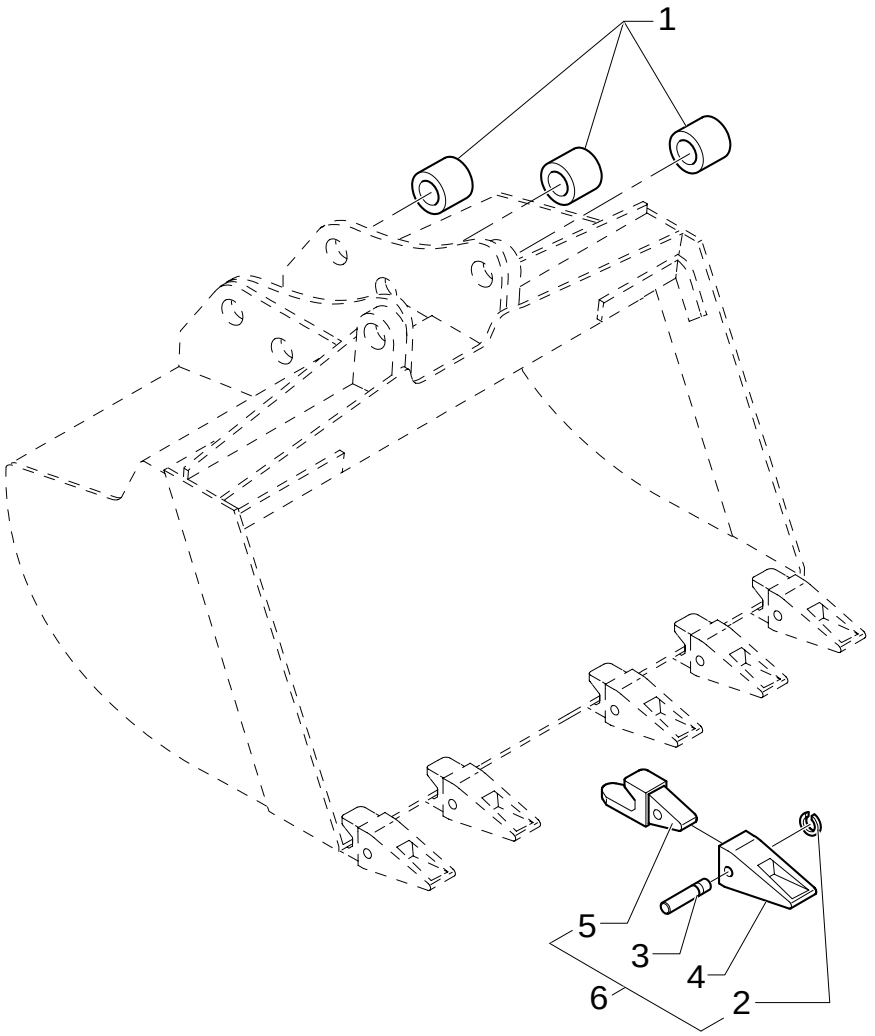

36" (914MM) BACKHOE BUCKET WITH PIN TEETH

REF	FN	PART NUMBER	YR/SN	QTY	DESCRIPTION
1		D7NNC584A		6	BUSHING
2		85801098		6	STOP
3		85801097		6	PIN
4		85811432		6	TOOTH, BUCKET
5		85821788		6	TOOTH, BUCKET
6	1	NSS		6	NOT SERVICED SEPARATELY

(1) Includes 1 To 5

519	02	p1	02/05

36" (914MM) BACKHOE BUCKET WITH BOLT-ON TEETH

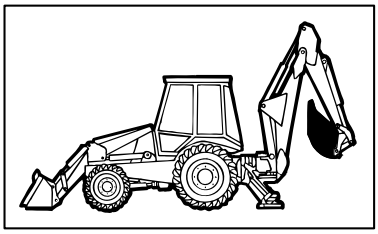

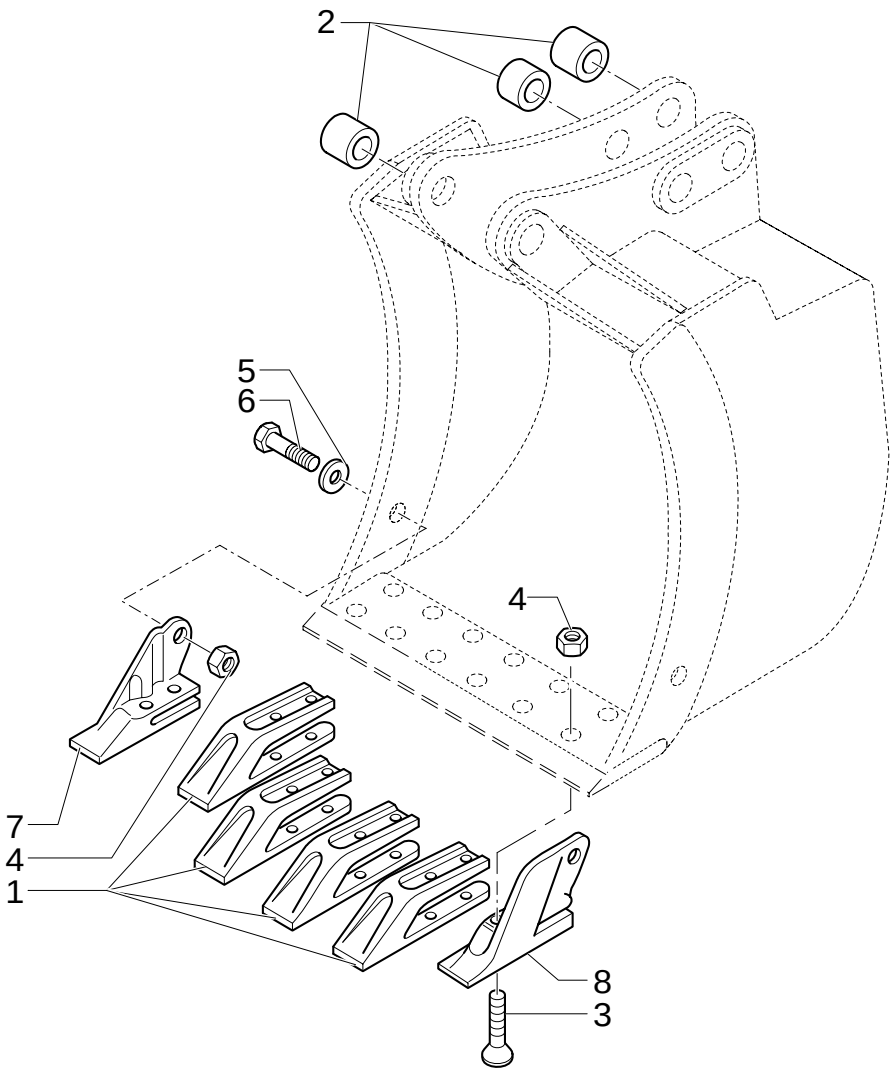

36" (914MM) BACKHOE BUCKET WITH BOLT-ON TEETH

REF	FN	PART NUMBER	YR/SN	QTY	DESCRIPTION
1		85811440		4	LUG
2		D7NNC584A		6	BUSHING
3		85801371		12	BOLT
4		85801470		14	NUT 5/8"-11
5		10520211		2	WASHER
6		88706		2	BOLT Cap, HH, G8, 5/8"-11 x 1-3/4"
7		85801377		1	LUG RH
8		85801376		1	LUG LH

520	01	p1	02/05

0.88 M3 BUCKET WITHOUT TINES

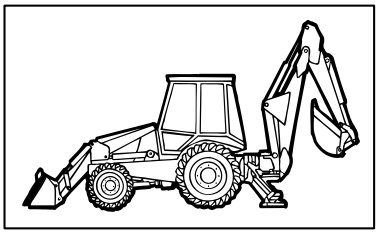

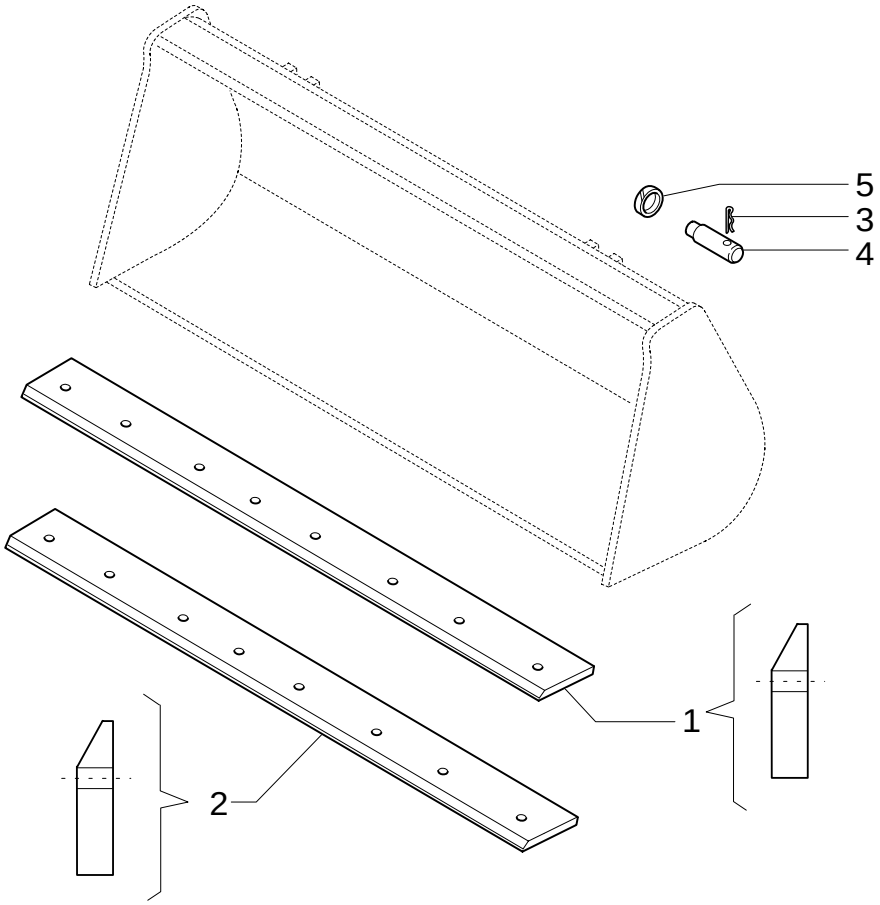

0.88 M3 BUCKET WITHOUT TINES

REF	FN	PART NUMBER	YR/SN	QTY	DESCRIPTION
1	1	85801044		1	BLADE, KNIFE 27 Deg. cutting edge
2		85807868		1	BLADE, KNIFE
3		85801051		4	PIN
4		85802993		4	PIN
5		85802992		4	O-RING

(1) Non-reversible weld on

522/ B	01	p1	02/05

1 M3 BUCKET

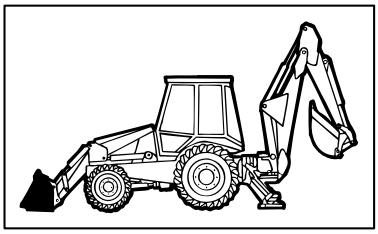

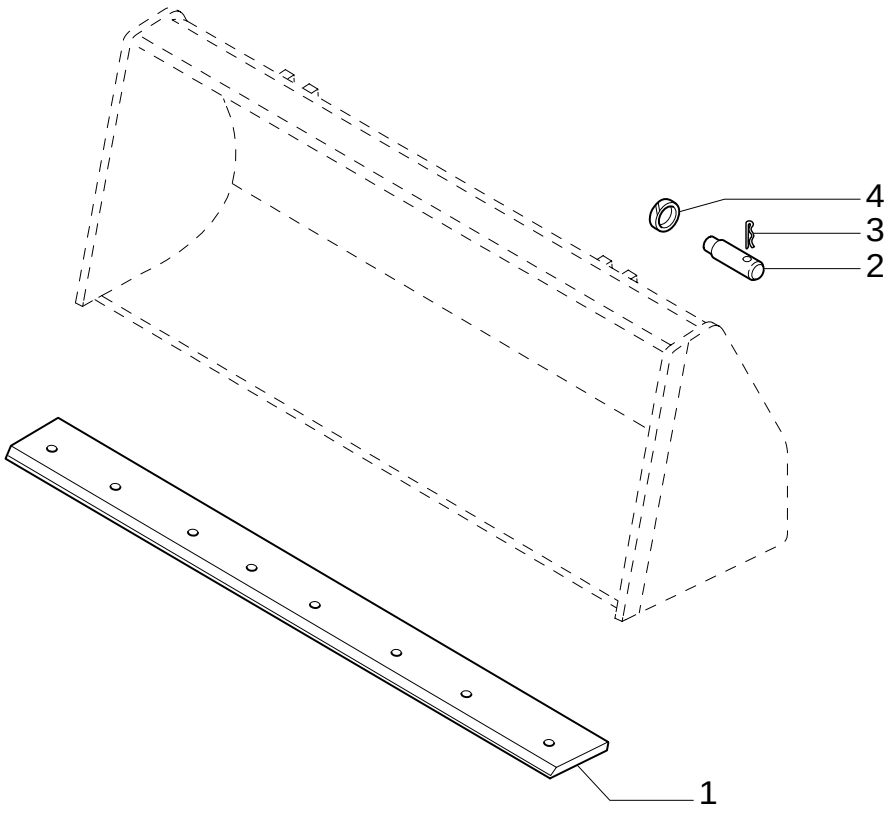

1 M3 BUCKET

REF	FN	PART NUMBER	YR/SN	QTY	DESCRIPTION
1	1	85801034		1	EDGE, CUTTING
1	2	85807867		1	BLADE, KNIFE
2		85801051		4	PIN
3		85802993		4	PIN
4		85802992		4	O-RING

(1) Only for Side Shift
(2) Only for Center Pivot

522/ C	01	p1	02/05

STANDARD 1MC BUCKET WITH FORKS

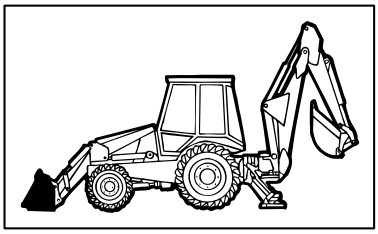

KIT 14= ●

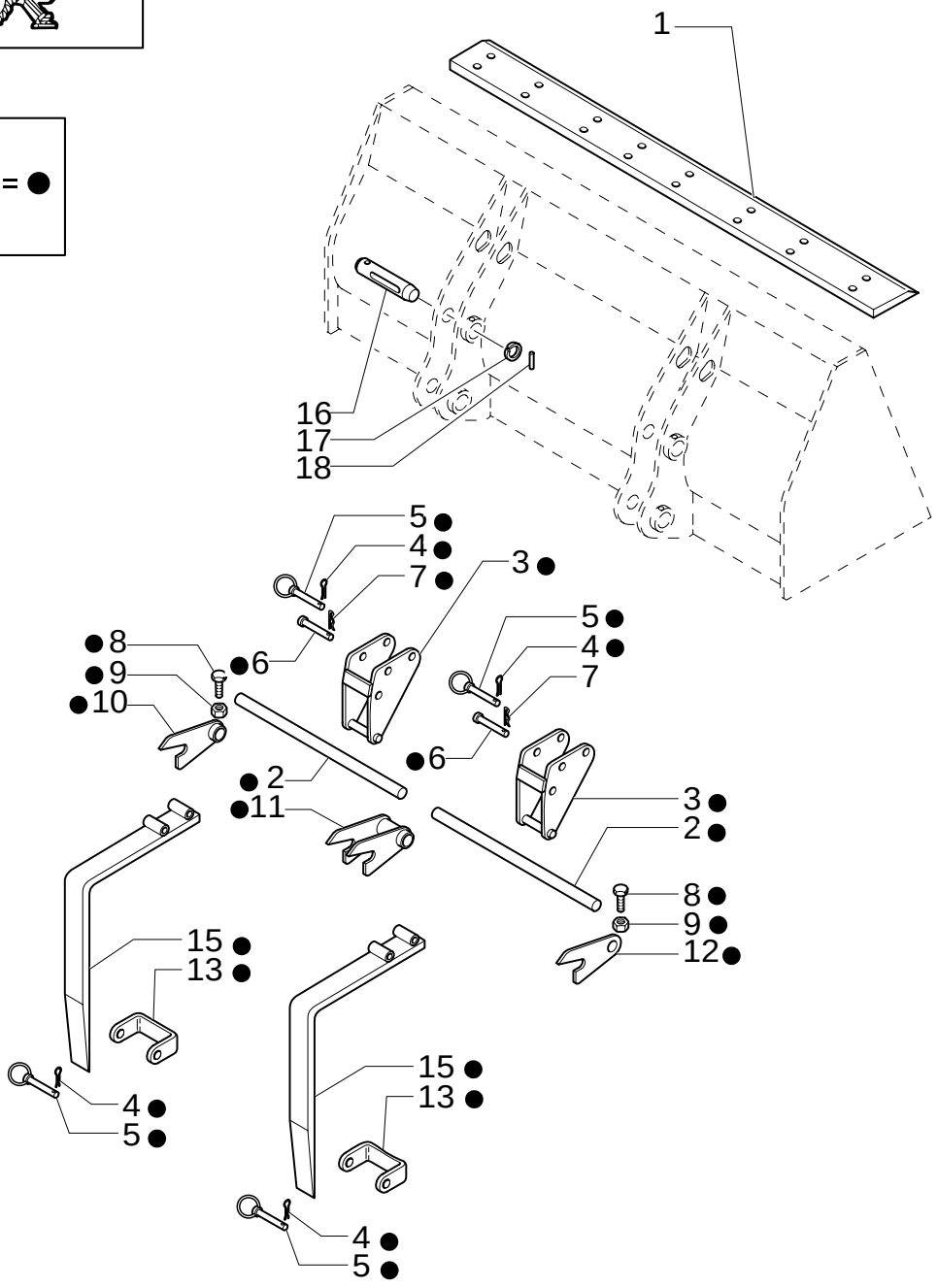

STANDARD 1MC BUCKET WITH FORKS

REF	FN	PART NUMBER	YR/SN	QTY	DESCRIPTION
1		85801034		1	EDGE, CUTTING
2		9969170		2	ROD
3		9968146		2	SUPPORT
4		9968147		4	PIN, ROLL
5		9968148		4	PIN
6		9968149		2	PIN
7		9968150		2	PIN, SPLIT (COTTER)
8		9968151		2	SCREW
9		9968152		4	NUT M10
10		9968153		1	SUPPORT
11		9968154		1	SUPPORT
12		9968155		1	SUPPORT
13		9968156		2	U-BRACKET
14		85801486		1	KIT FORKS
15		9968144		2	FORK
16		85801051		4	PIN
17		85802992		4	O-RING
18		85802993		4	PIN

525	01	p1	02/05

STANDARD 1M3 BUCKET WITH FORKS AND EXTRA REVERSIBLE BLADE

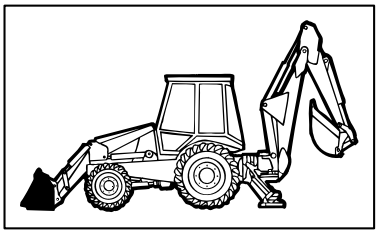

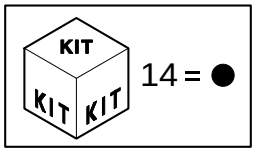

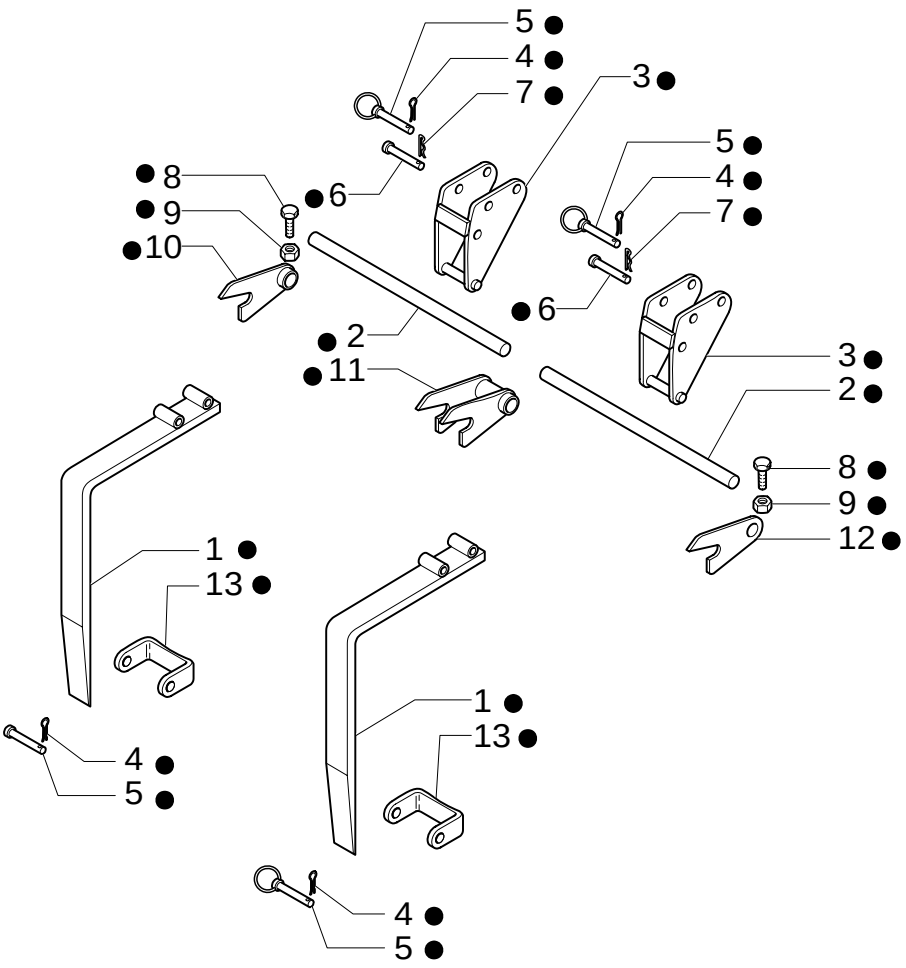

STANDARD 1M3 BUCKET WITH FORKS AND EXTRA REVERSIBLE BLADE

REF	FN	PART NUMBER	YR/SN	QTY	DESCRIPTION
1		9968144		2	FORK
2		9969170		2	ROD
3		9968146		2	SUPPORT
4		9968147		4	PIN, ROLL
5		9968148		4	PIN
6		9968149		2	PIN
7		9968150		2	PIN, SPLIT (COTTER)
8		9968151		2	SCREW M10X90
9		9968152		2	NUT M10
10		9968153		1	SUPPORT
11		9968154		1	SUPPORT
12		9968155		1	SUPPORT
13		9968156		2	U-BRACKET
14		85801486		1	KIT FORKS

525	02	p1	02/05

STANDARD 1M3 BUCKET WITH FORKS AND EXTRA REVERSIBLE BLADE

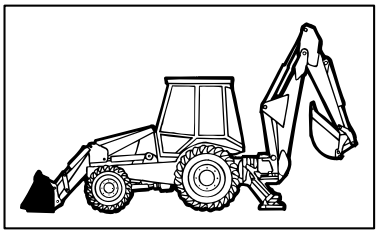

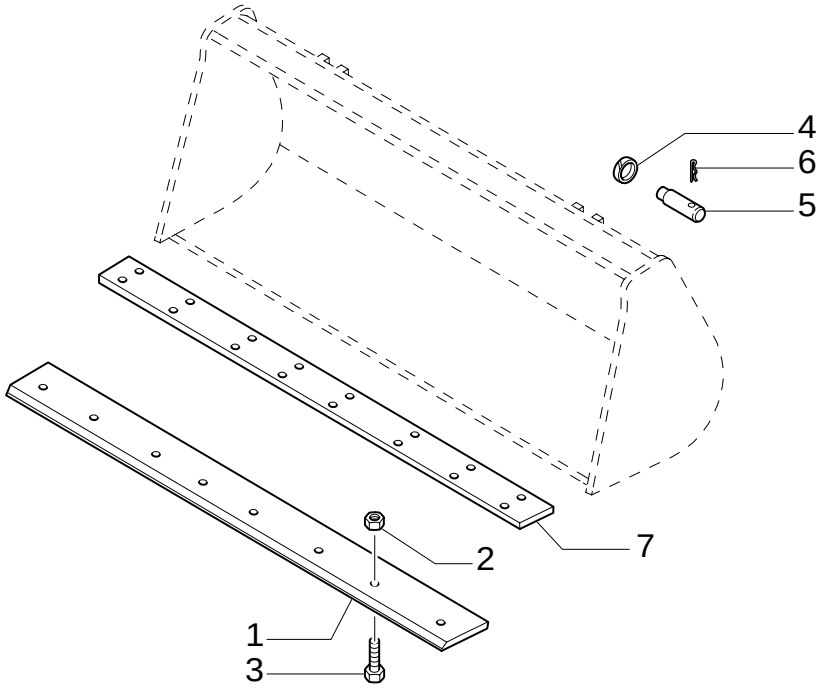

STANDARD 1M3 BUCKET WITH FORKS AND EXTRA REVERSIBLE BLADE

REF	FN	PART NUMBER	YR/SN	QTY	DESCRIPTION
1	1	85801161		1	EDGE, CUTTING 35 Deg. cutting edge
2		85801470		8	NUT 5/8"-11
3		85801371		8	BOLT
4		85802992		4	O-RING
5		85802993		4	PIN
6		85801051		4	PIN
7	2	85801034		1	EDGE, CUTTING

(1) Reversible bolt on
(2) PART WELDED TO BUCKET

526	01	p1	02/05

BOLT-ON TOOTH KIT, 12" (305MM) BACKHOE BUCKET

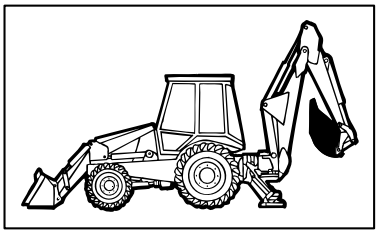

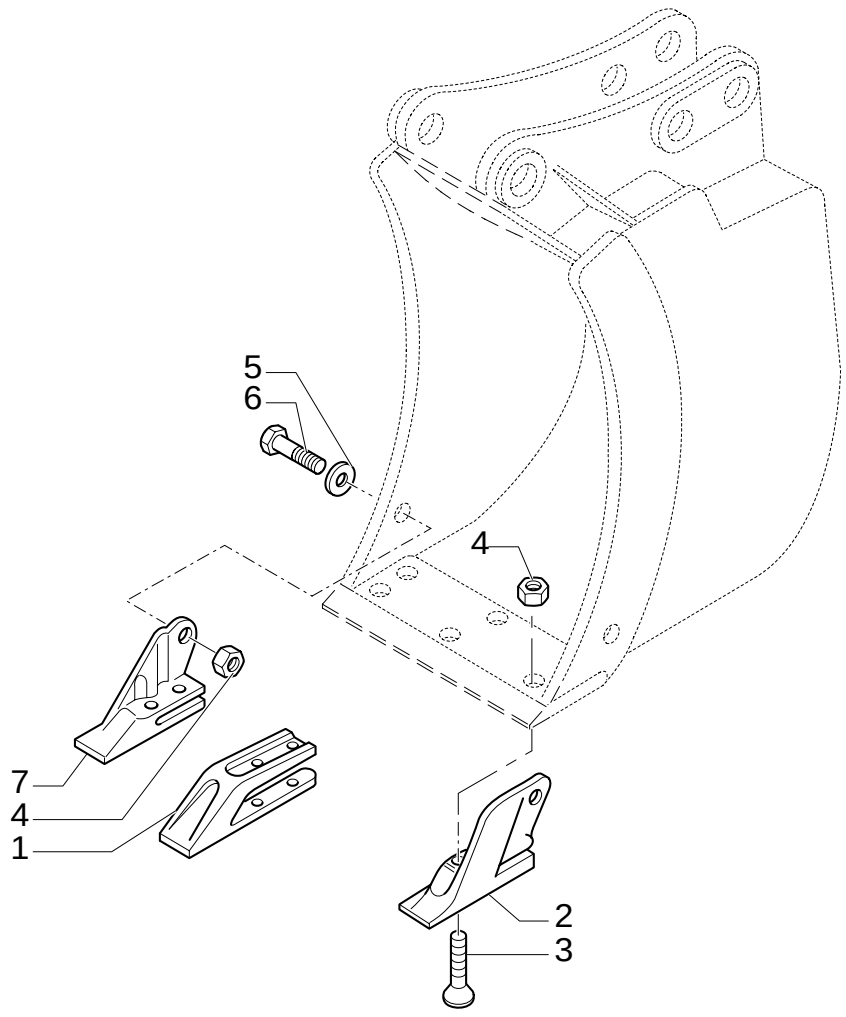

BOLT-ON TOOTH KIT, 12" (305MM) BACKHOE BUCKET

REF	FN	PART NUMBER	YR/SN	QTY	DESCRIPTION
1		85811440		1	LUG
2		85801376		1	LUG LH
3		85801371		6	BOLT
4		85801470		8	NUT 5/8"-11
5		10520211		2	WASHER
6		88706		2	BOLT Cap, HH, G8, 5/8"-11 x 1-3/4"
7		85801377		1	LUG RH

526/ 1	01	p1	02/05

STANDARD 1M3 BUCKET WITH FORKS AND TINE

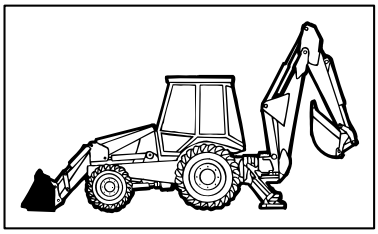

KIT 14 = ●

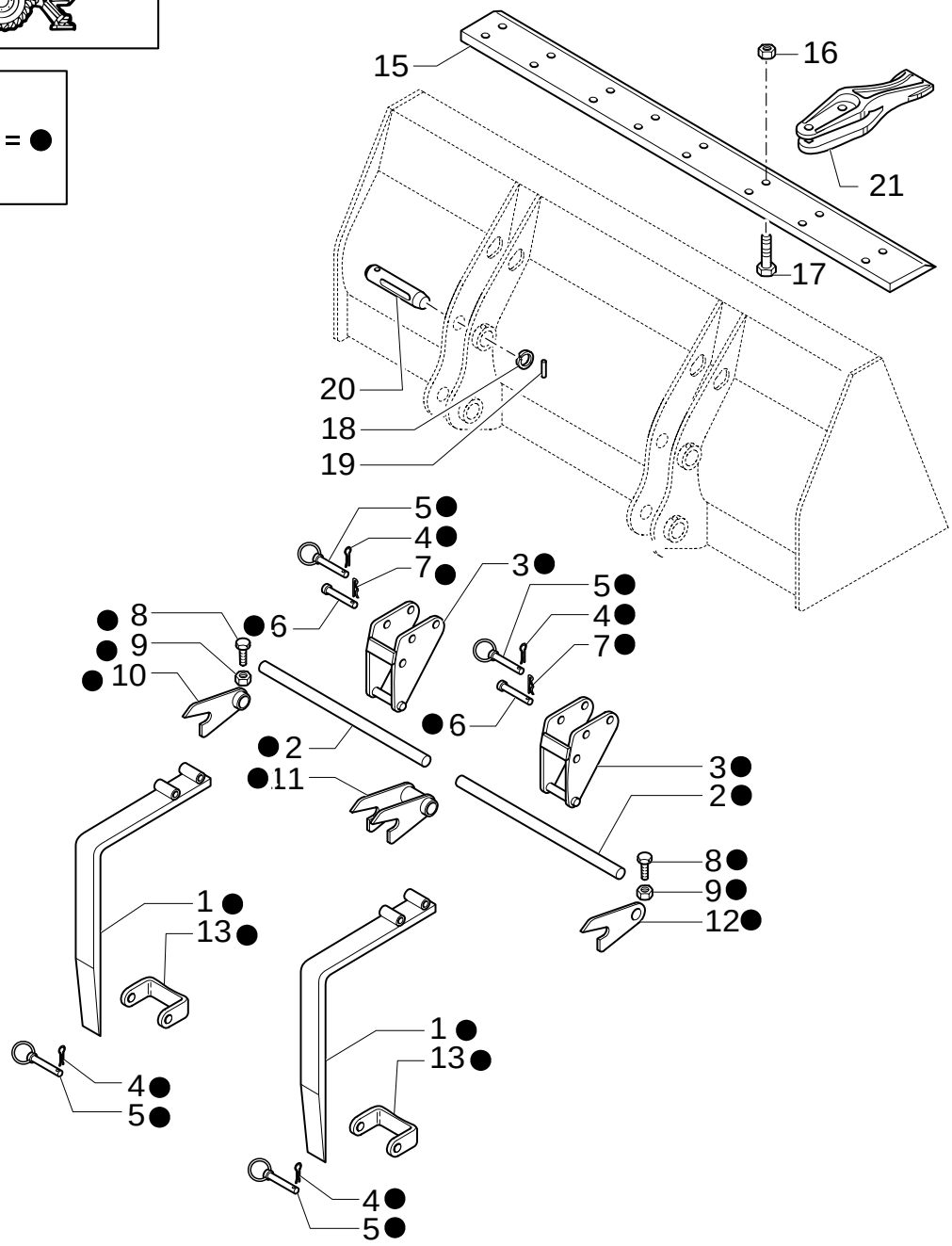

STANDARD 1M3 BUCKET WITH FORKS AND TINE

REF	FN	PART NUMBER	YR/SN	QTY	DESCRIPTION
1		9968144		2	FORK
2		9969170		2	ROD
3		9968146		2	SUPPORT
4		9968147		4	PIN, ROLL
5		9968148		4	PIN
6		9968149		2	PIN
7		9968150		2	PIN, SPLIT (COTTER)
8		9968151		2	SCREW M10X90
9		9968152		2	NUT M10
10		9968153		1	SUPPORT
11		9968154		1	SUPPORT
12		9968155		1	SUPPORT
13		9968156		2	U-BRACKET
14		85801486		1	KIT FORKS
15		85801034		1	EDGE, CUTTING
16		85801470		16	NUT 5/8"-11
17		85801371		16	BOLT
18		85802992		4	O-RING
19		85802993		4	PIN
20		85801051		4	PIN
21		85811440		8	LUG

527	01	p1	02/05

BOLT-ON TOOTH KIT, 18" (457MM) & 24" (610MM) BACKHOE BUCKETS

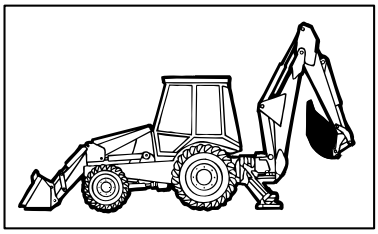

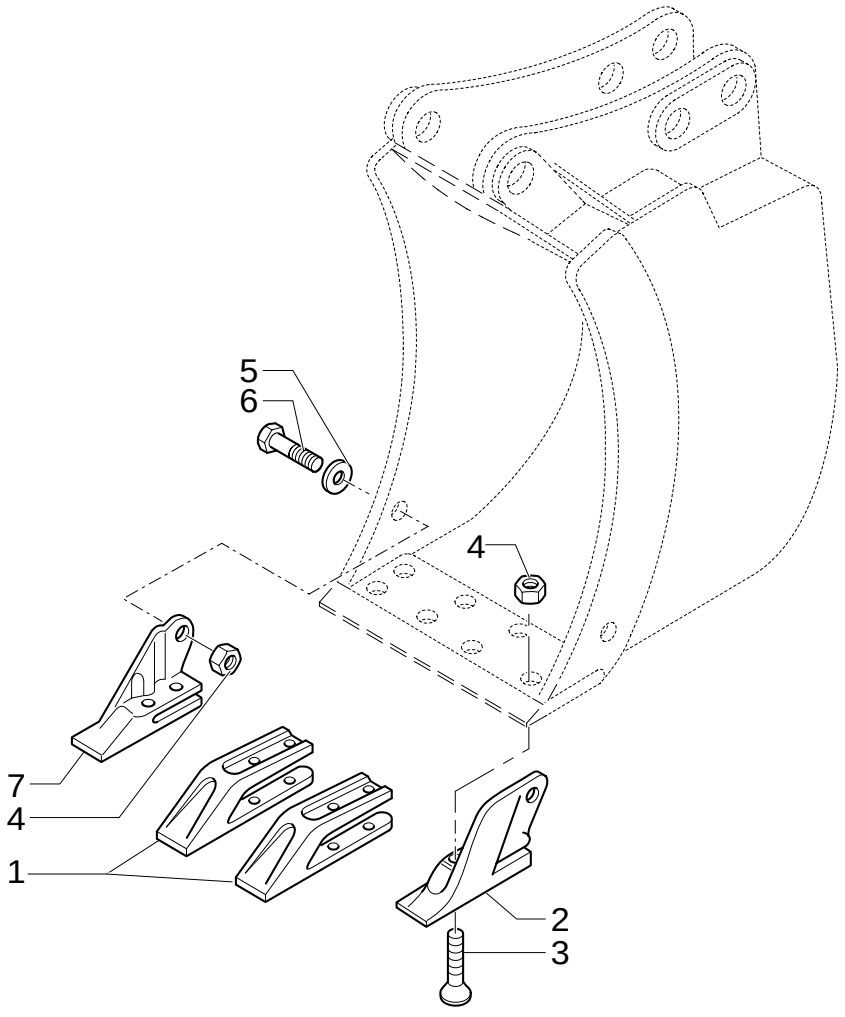

BOLT-ON TOOTH KIT, 18" (457MM) & 24" (610MM) BACKHOE BUCKETS

REF	FN	PART NUMBER	YR/SN	QTY	DESCRIPTION
1		85811440		2	LUG
2		85801376		1	LUG LH
3		85801371		8	BOLT
4		85801470		10	NUT 5/8"-11
5		10520211		2	WASHER
6		88706		2	BOLT Cap, HH, G8, 5/8"-11 x 1-3/4"
7		85801377		1	LUG RH

527/ 1	01	p1	02/05

0.88 M3 BUCKET AND EXTRA REVERSIBLE BLADE

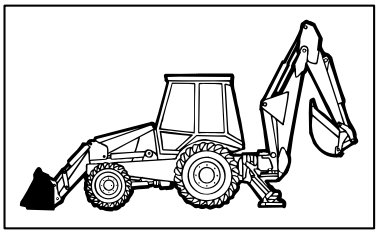

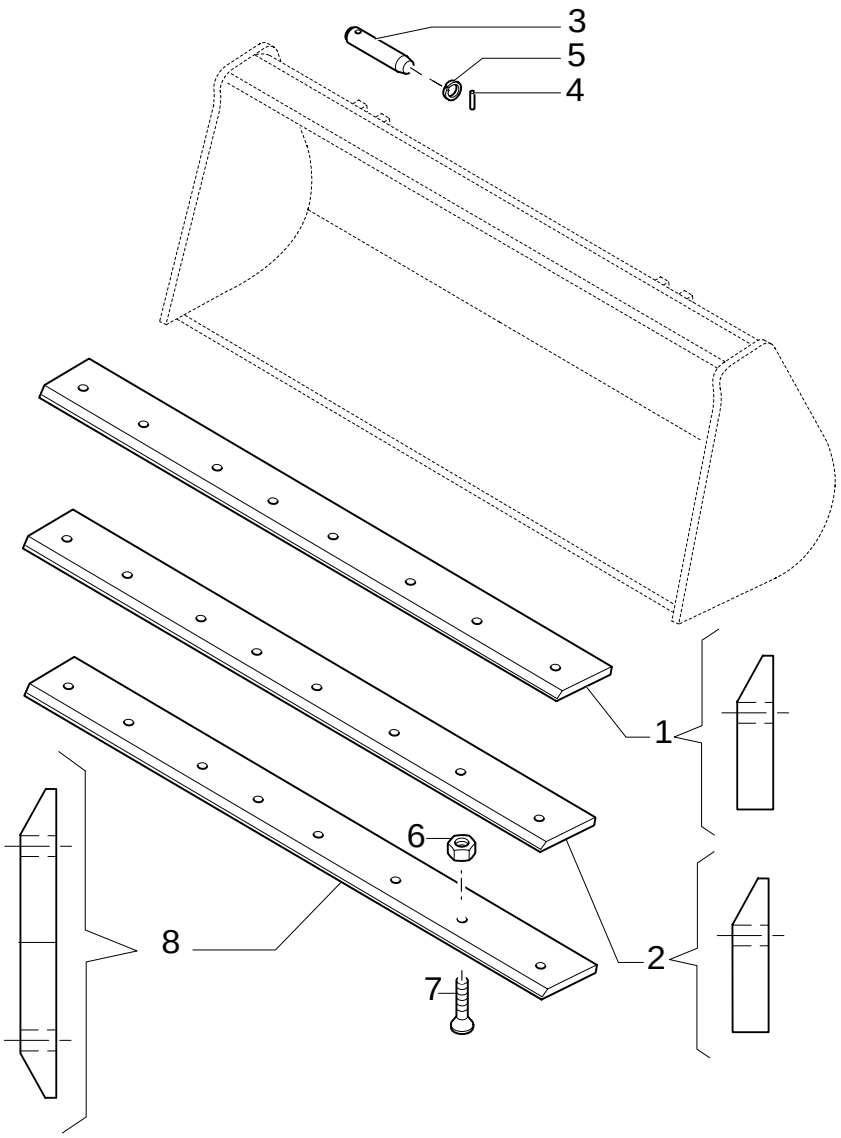

0.88 M3 BUCKET AND EXTRA REVERSIBLE BLADE

REF	FN	PART NUMBER	YR/SN	QTY	DESCRIPTION
1	1	85801044		1	BLADE, KNIFE 27 Deg. cutting edge
2		85807868		1	BLADE, KNIFE N.A. ONLY
3		85801051		4	PIN
4		85802993		4	PIN
5		85802992		4	O-RING
6		85801470		8	NUT 5/8"-11
7		85801371		8	BOLT
8	2	85801161		1	EDGE, CUTTING 35 Deg. cutting edge

(1) Non-reversible weld on
(2) Reversible bolt on

528	01	p1	02/05

BOLT-ON TOOTH KIT, 30" (762MM) BACKHOE BUCKET

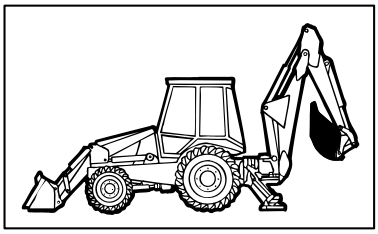

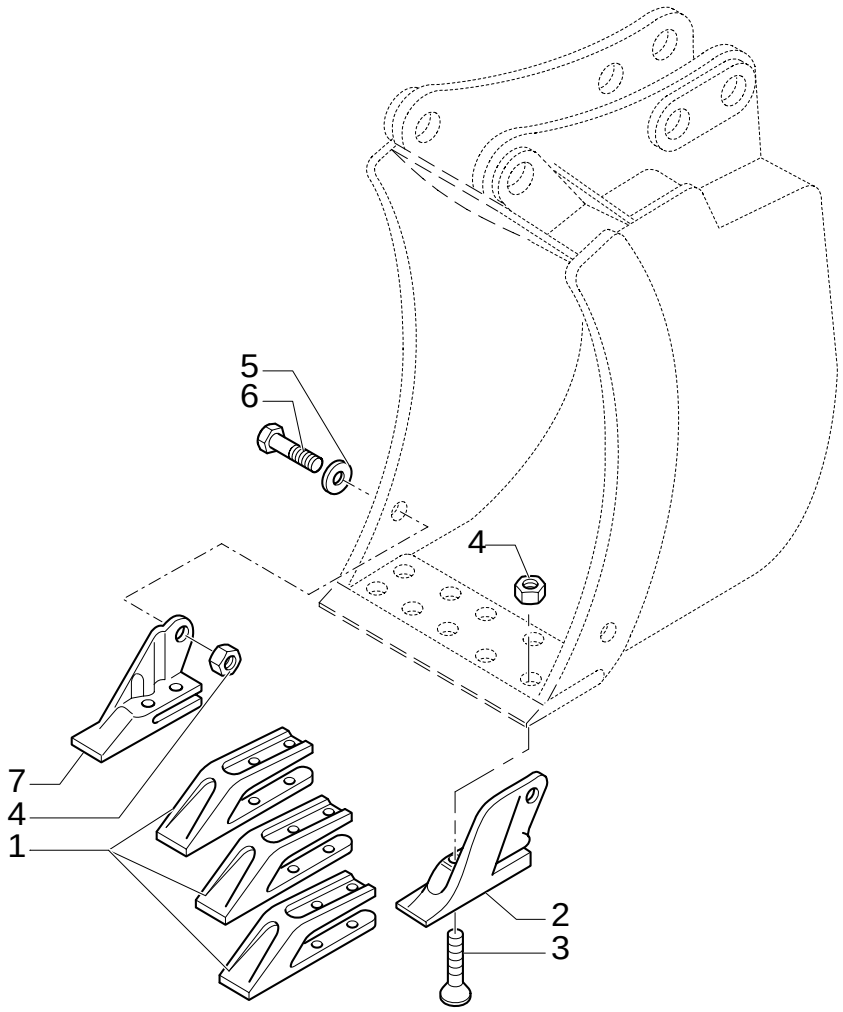

BOLT-ON TOOTH KIT, 30" (762MM) BACKHOE BUCKET

REF	FN	PART NUMBER	YR/SN	QTY	DESCRIPTION
1		85811440		3	LUG
2		85801376		1	LUG LH
3		85801371		10	BOLT
4		85801470		12	NUT 5/8"-11
5		10520211		2	WASHER
6		88706		2	BOLT Cap, HH, G8, 5/8"-11 x 1-3/4"
7		85801377		1	LUG RH

529	01	p1	02/05

BOLT-ON TOOTH KIT, 36" (914MM) BACKHOE BUCKET

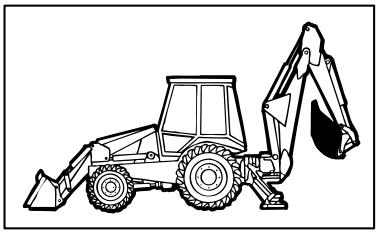

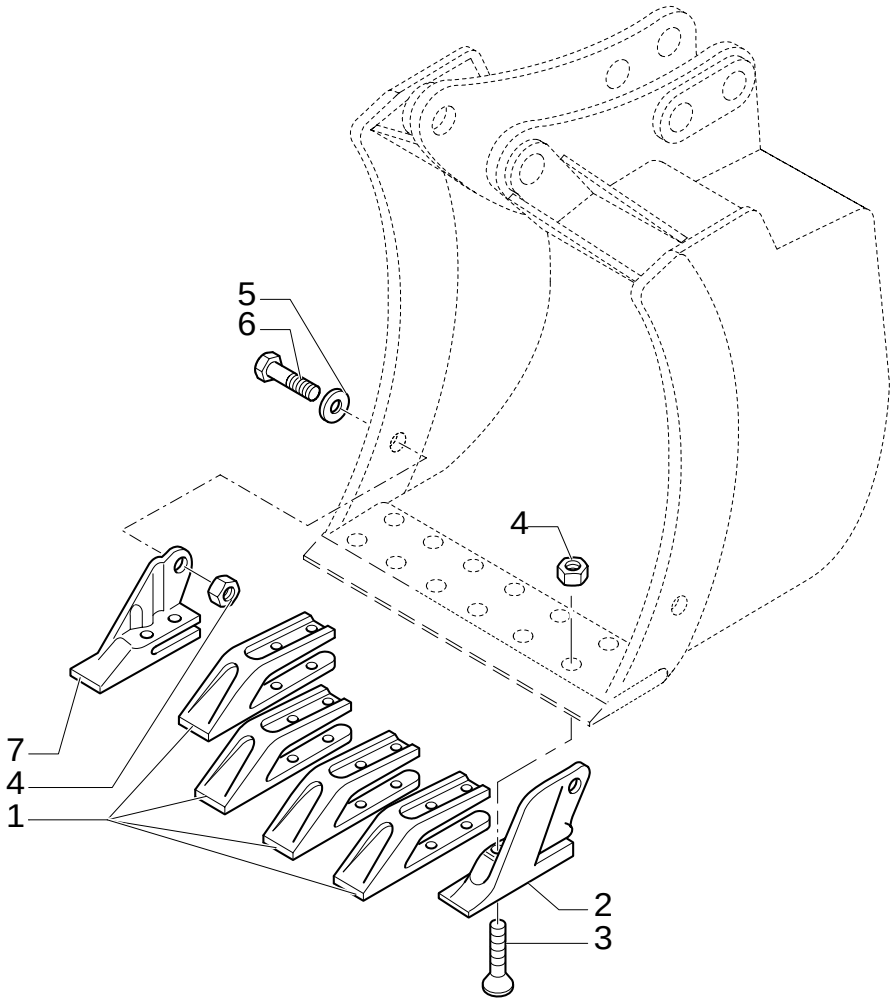

BOLT-ON TOOTH KIT, 36" (914MM) BACKHOE BUCKET

REF	FN	PART NUMBER	YR/SN	QTY	DESCRIPTION
1		85811440		4	LUG
2		85801376		1	LUG LH
3		85801371		12	BOLT
4		85801470		14	NUT 5/8"-11
5		10520211		2	WASHER
6		88706		2	BOLT Cap, HH, G8, 5/8"-11 x 1-3/4"
7		85801377		1	LUG RH

530	01	p1	02/05

PIN TOOTH KIT, 12" (305MM) BACKHOE BUCKET

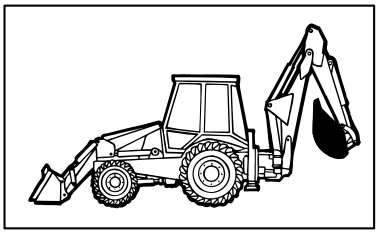

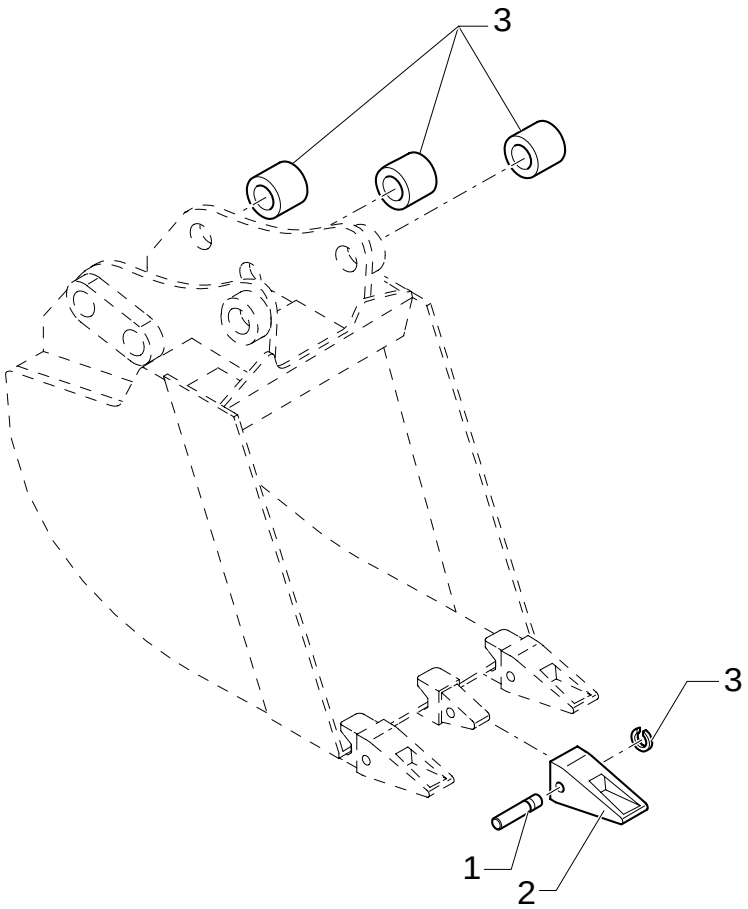

PIN TOOTH KIT, 12" (305MM) BACKHOE BUCKET

REF	FN	PART NUMBER	YR/SN	QTY	DESCRIPTION
1		85801097		3	PIN
2		85811432		3	TOOTH, BUCKET
3		85801098		3	STOP

532	01	p1	02/05

PIN TOOTH KIT, 30" (762MM) BACKHOE BUCKET

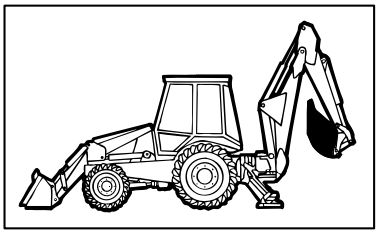

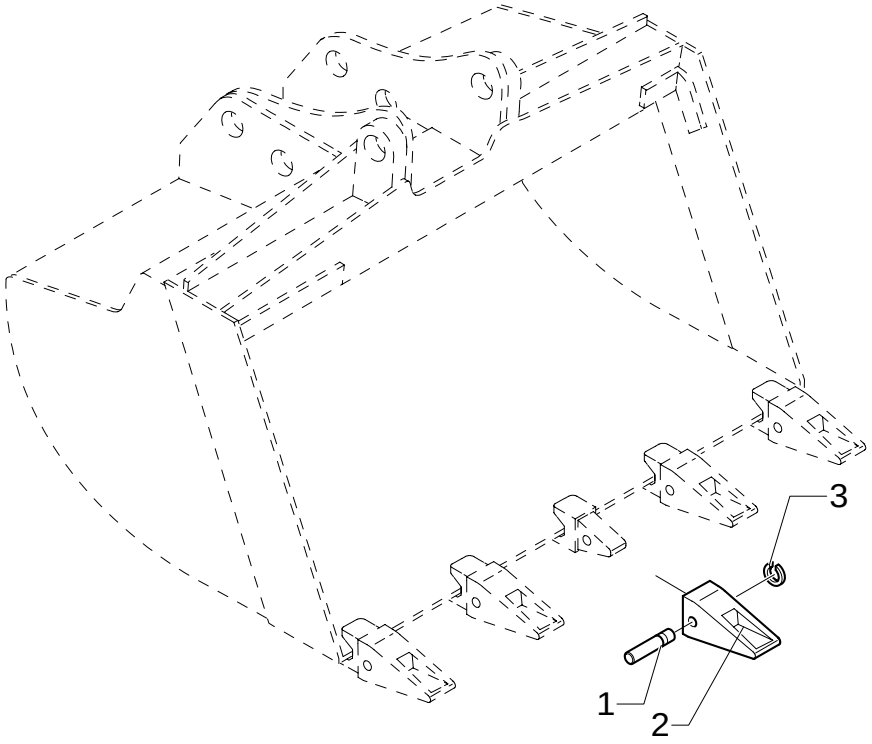

PIN TOOTH KIT, 30" (762MM) BACKHOE BUCKET

REF	FN	PART NUMBER	YR/SN	QTY	DESCRIPTION
1		85801097		5	PIN
2		85811432		5	TOOTH, BUCKET
3		85801098		5	STOP

533	01	p1	02/05

PIN TOOTH KIT, 36" (914MM) BACKHOE BUCKET

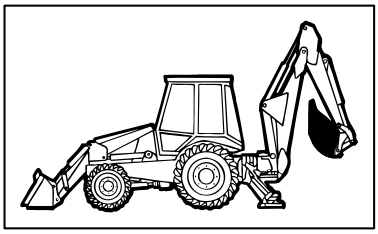

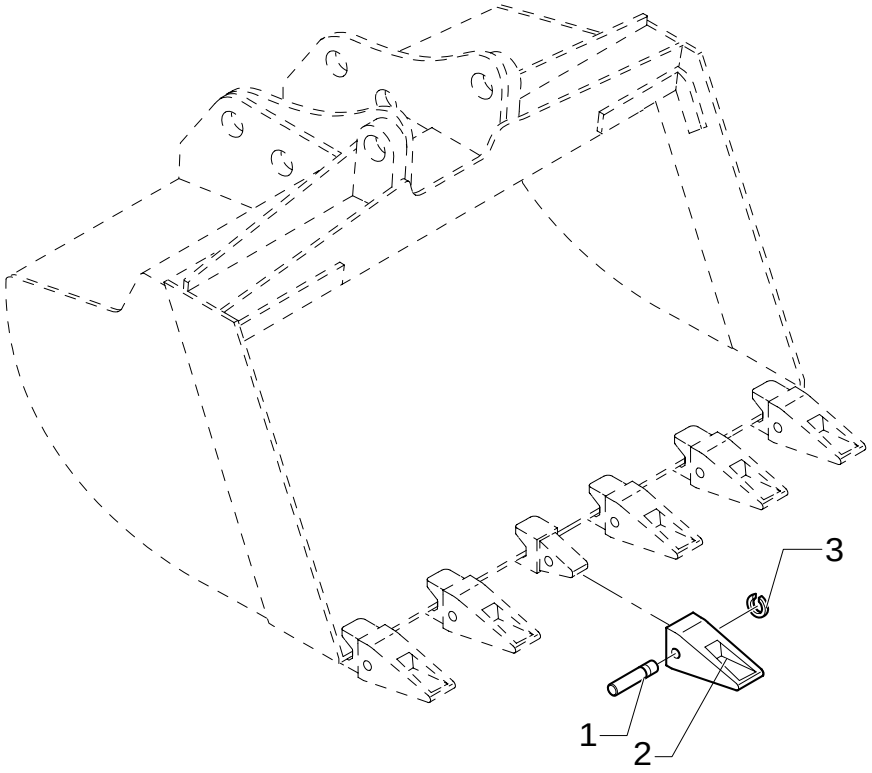

PIN TOOTH KIT, 36" (914MM) BACKHOE BUCKET

REF	FN	PART NUMBER	YR/SN	QTY	DESCRIPTION
1		85801097		6	PIN
2		85811432		6	TOOTH, BUCKET
3		85801098		6	STOP

536/ 1	01	p1	02/05

STANDARD 1MC BUCKET WITH TINE

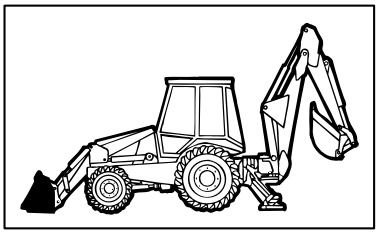

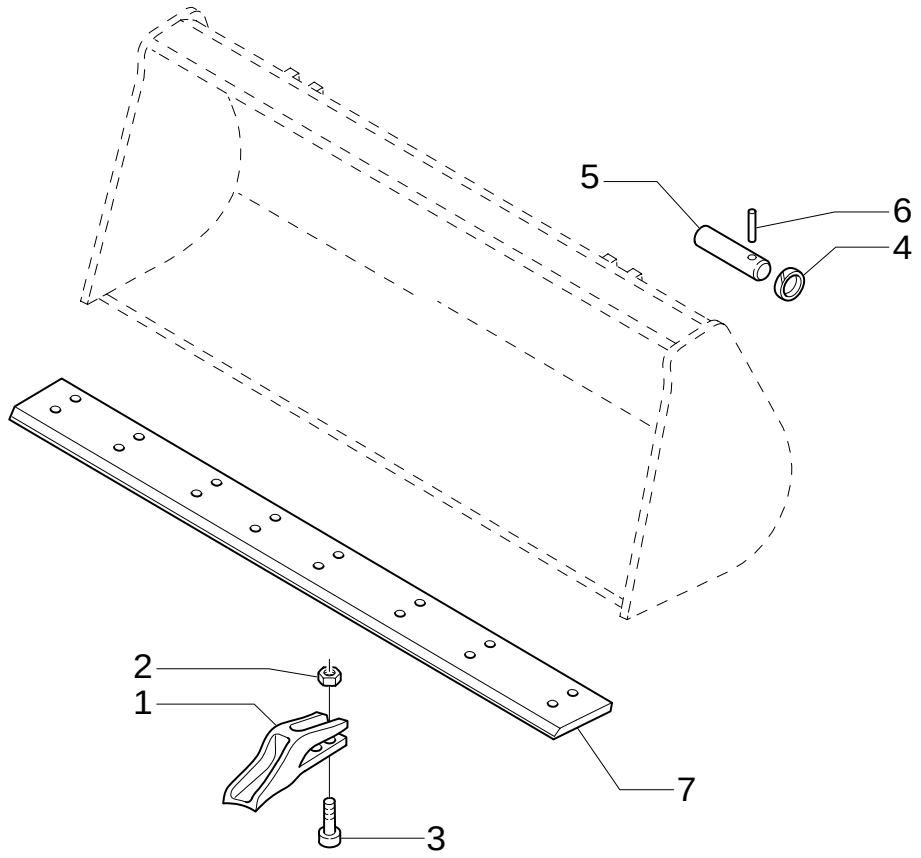

STANDARD 1MC BUCKET WITH TINE

REF	FN	PART NUMBER	YR/SN	QTY	DESCRIPTION
1		85811440		8	LUG
2		85801470		16	NUT 5/8"-11
3		85801371		16	BOLT
4		85802992		4	O-RING
5		85802993		4	PIN
6		85801051		4	PIN
7	1	85801034		1	EDGE, CUTTING
7		85807867		1	BLADE, KNIFE

(1) PART WELDED TO BUCKET

537/ 1	01	p1	02/05

STANDARD 1MC BUCKET WITH EXTRA REVERSIBLE BLADE

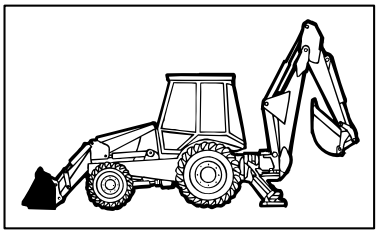

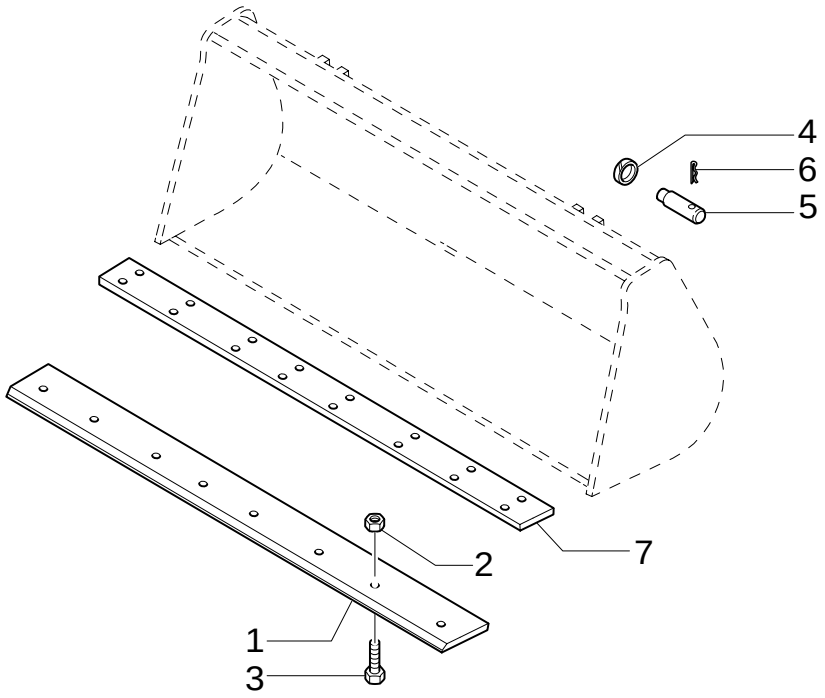

STANDARD 1MC BUCKET WITH EXTRA REVERSIBLE BLADE

REF	FN	PART NUMBER	YR/SN	QTY	DESCRIPTION
1	1	85801161		1	EDGE, CUTTING 35 Deg. cutting edge
2		85801470		8	NUT 5/8"-11
3		85801371		8	BOLT
4		85802992		4	O-RING
5		85802993		4	PIN
6		85801051		4	PIN
7	2	85801034		1	EDGE, CUTTING
7		85807867		1	BLADE, KNIFE

(1) Reversible bolt on
(2) PART WELDED TO BUCKET

548	01	p1	02/05

DITCH CLEANING BUCKET

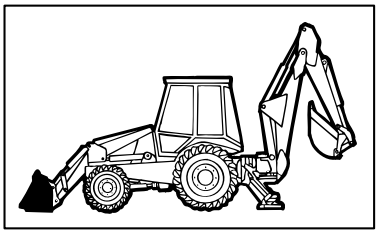

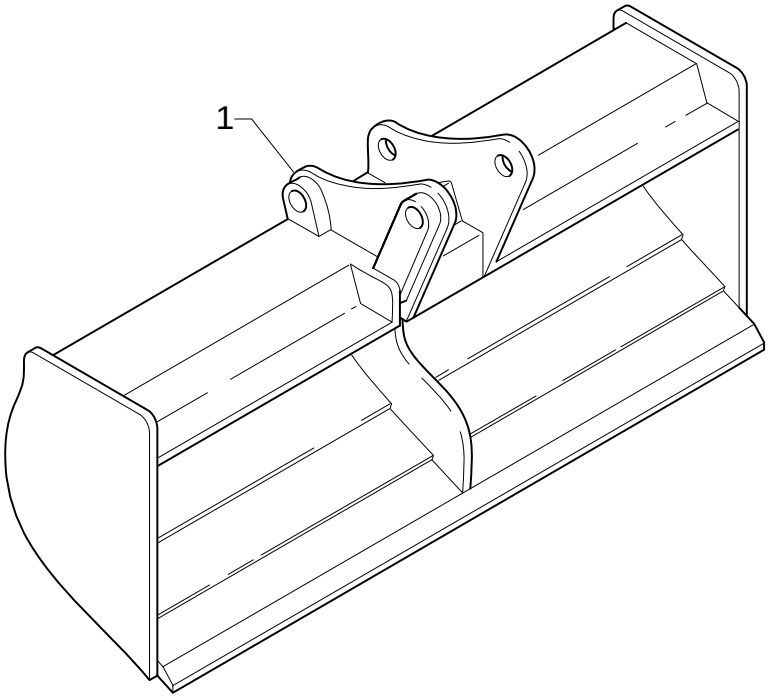

DITCH CLEANING BUCKET

REF	FN	PART NUMBER	YR/SN	QTY	DESCRIPTION
1		85824356		1	BUCKET

555	01	p1	02/05

FRONT BUCKET TEETH

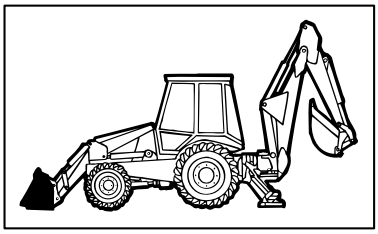

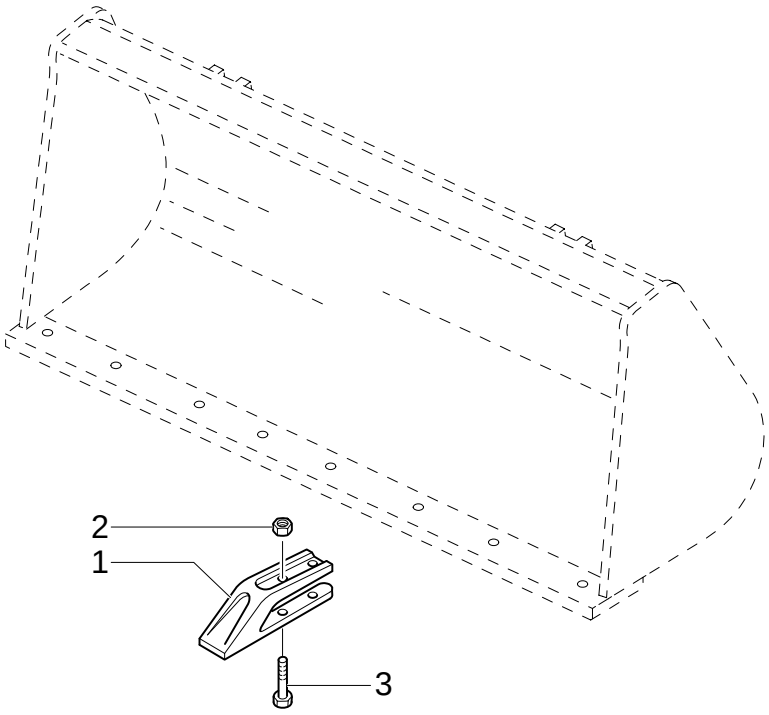

FRONT BUCKET TEETH

REF	FN	PART NUMBER	YR/SN	QTY	DESCRIPTION
1		85811440		8	LUG
2		85801470		16	NUT 5/8"-11
3		85801371		16	BOLT 5/8"

556	01	p1	02/05

LOADER BUCKET REVERSIBLE BLADE

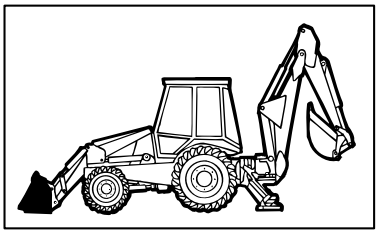

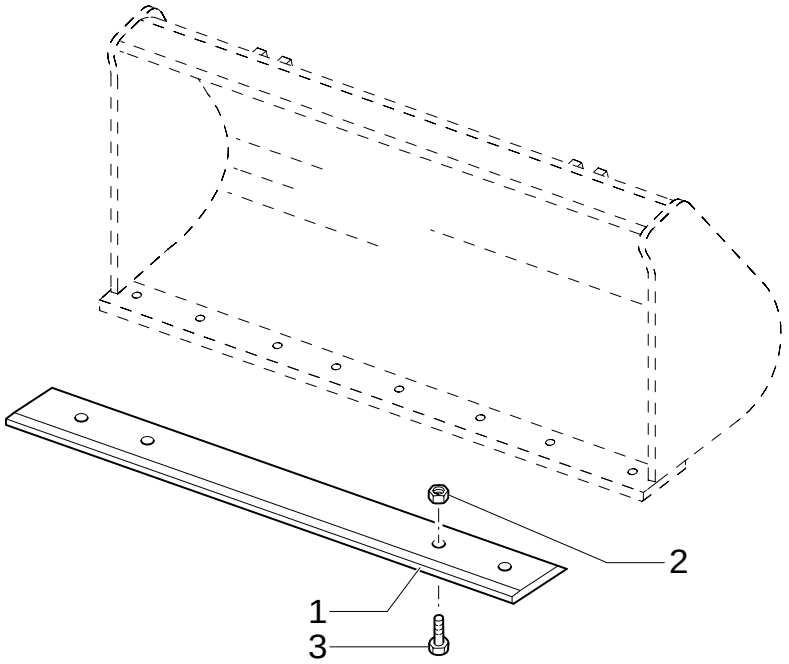

LOADER BUCKET REVERSIBLE BLADE

REF	FN	PART NUMBER	YR/SN	QTY	DESCRIPTION
1	1	85801161		1	EDGE, CUTTING 35 Deg. cutting edge
2		85801470		8	NUT 5/8"-11
3		85801371		8	BOLT 5/8"X2" 1/4

(1) Reversible bolt on

626	01	p1	02/05

SCRAB GRAB

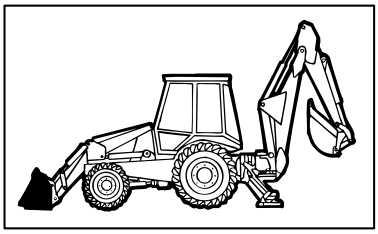

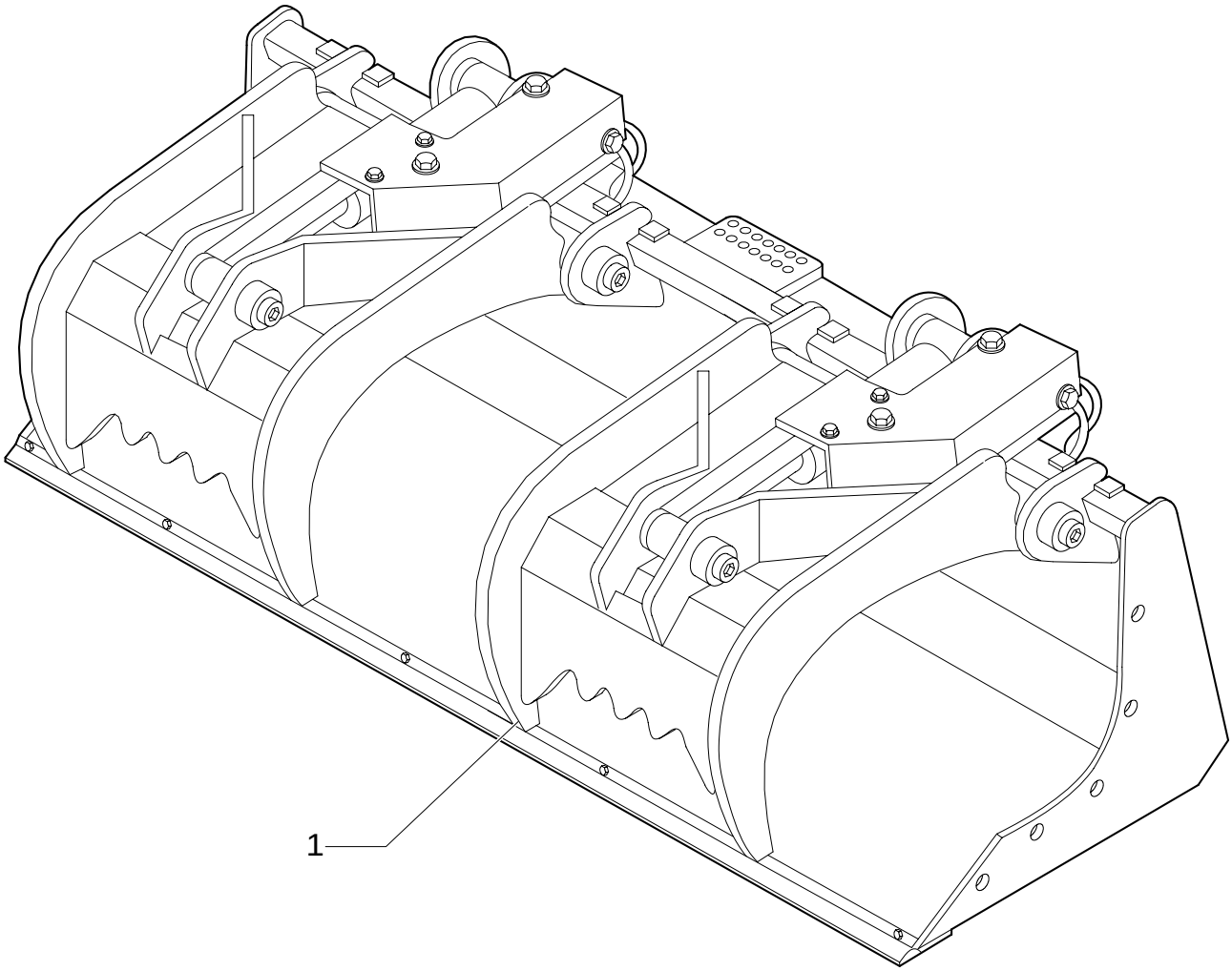

SCRAB GRAB

REF	FN	PART NUMBER	YR/SN	QTY	DESCRIPTION
1		85819330		1	BUCKET, CLAMSHELL

699	01	p1	02/05

HAND HAMMER SWITCH

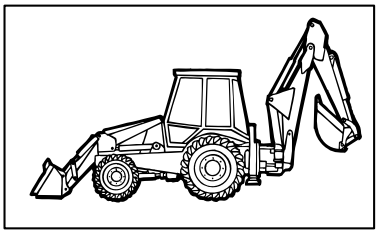

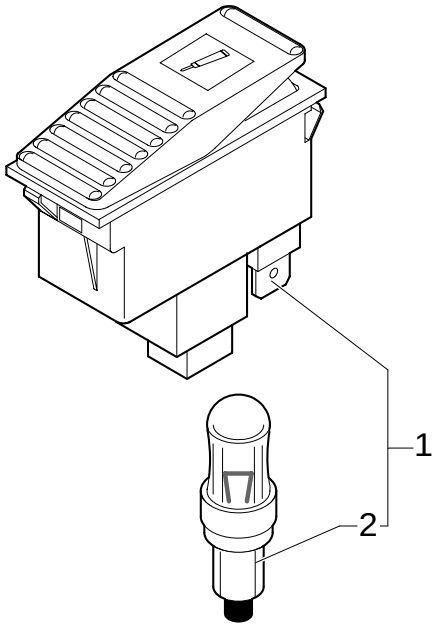

HAND HAMMER SWITCH

REF	FN	PART NUMBER	YR/SN	QTY	DESCRIPTION
1		85819072		1	SWITCH
2		14143790		1	BULB

700/ 2	01	p1	12/05

4X1 & 6X1 BUCKET HYDRAULIC LINES (P. SHUTTLE)

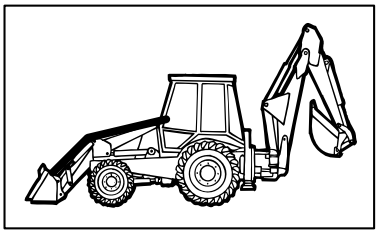

KIT KIT KIT 2=▲

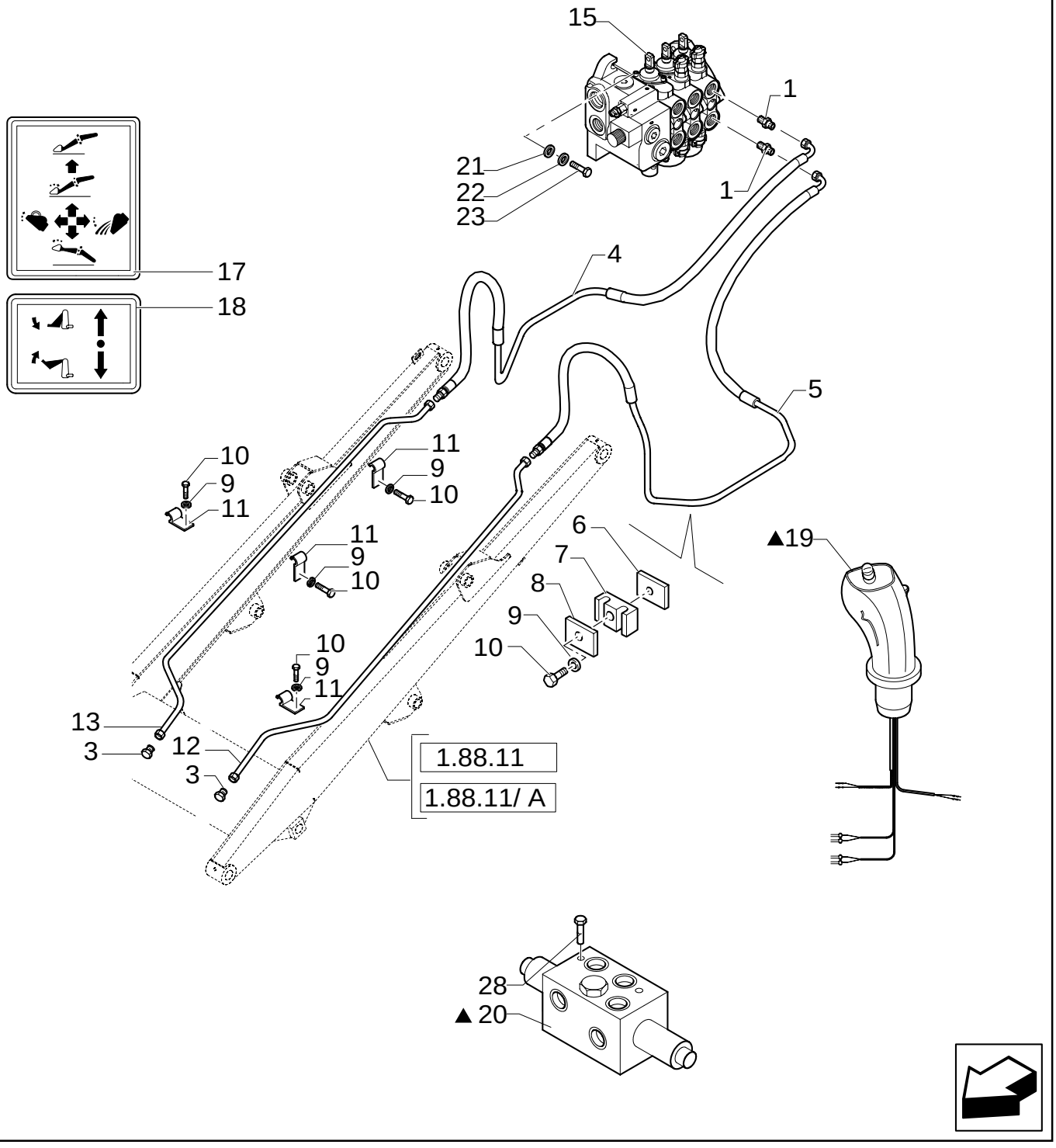

4X1 & 6X1 BUCKET HYDRAULIC LINES (P. SHUTTLE)

REF	FN	PART NUMBER	YR/SN	QTY	DESCRIPTION
1		85805258		2	CONNECTOR, HYD.
2		87384365		1	JOYSTICK
3		85803408		2	PLUG
4		85819572		1	PIPE
5		85819571		1	PIPE LH
6		85805340		2	PLATE, COVER
7		85805193		2	CLAMP
8		85805195		2	PLATE
9		11193979		8	WASHER, LOCK 8x22x1,5
10		16043821		8	SCREW M8x30
11		85805247		6	CLAMP
12		85805864		1	TUBE, RIGID LH
12	1	87306873		1	TUBE, RIGID LH
13		85805865		1	TUBE, RIGID RH
13	1	87306871		1	TUBE, RIGID RH
15		87305111		1	VALVE, CONTROL
17		85804346		1	DECAL
18		87305209		1	DECAL
19		{87382112}		1	ASSEMBLY; Includes 19A - 19F; Which Are Not Illustrated
20		87304801		1	VALVE, HYDRAULIC
21		11190679		3	WASHER, LOCK
22		13578621		3	WASHER 10x30x2
23		11234721		3	SCREW M10x1.25x45
28		14300521		2	SCREW M6x75

(1) Only for B95TC

700/ 2	02	p1	12/05

4X1 & 6X1 BUCKET HYDRAULIC LINES (P. SHUTTLE)

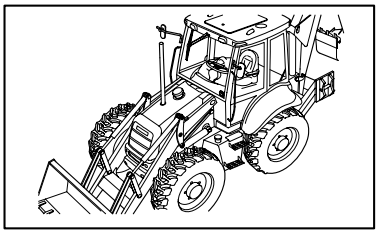

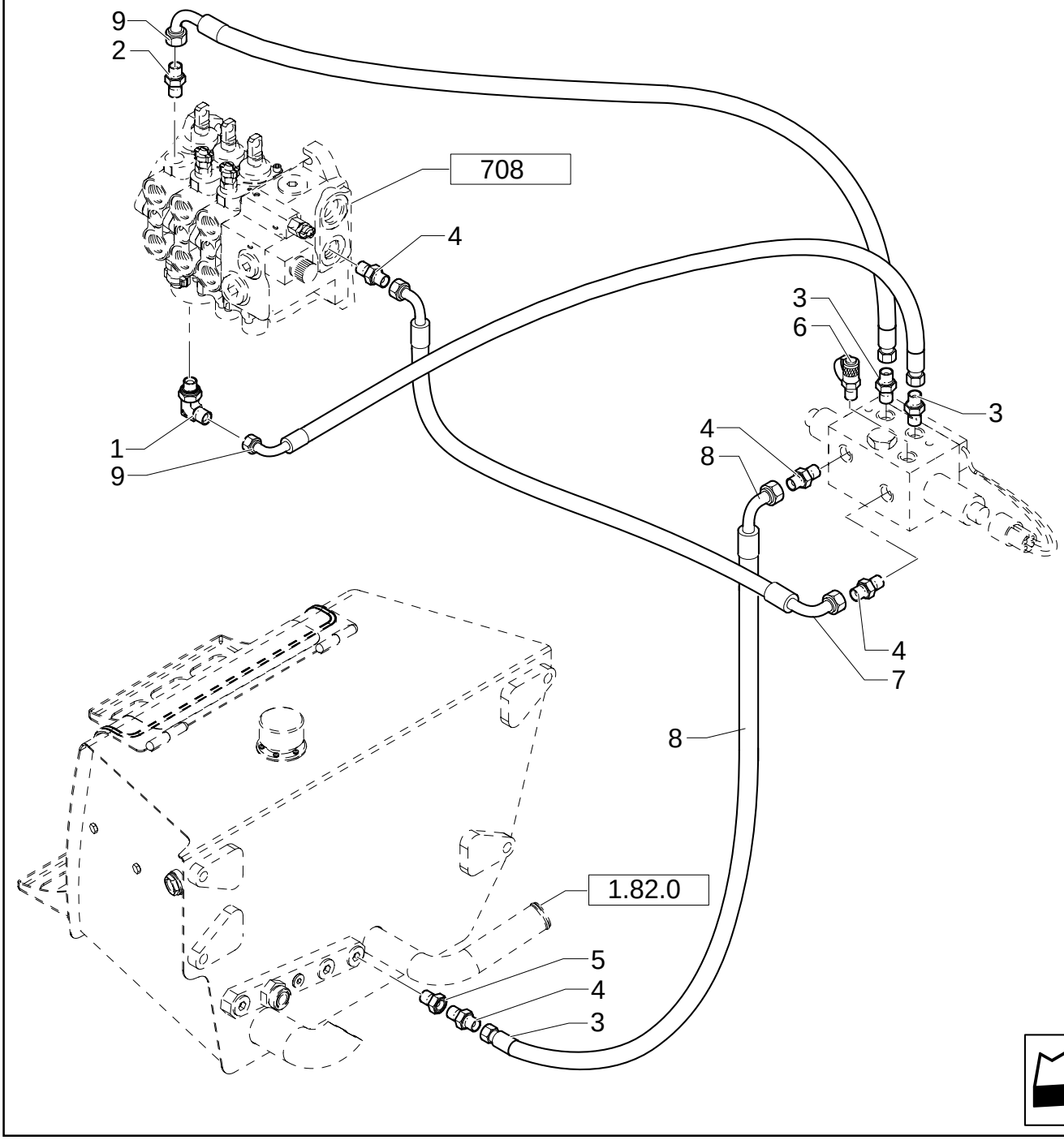

4X1 & 6X1 BUCKET HYDRAULIC LINES (P. SHUTTLE)

REF	FN	PART NUMBER	YR/SN	QTY	DESCRIPTION
1		85802234		1	CONNECTOR, HYD.
2		85803312		1	CONNECTOR, HYD.
3		47050685		2	CONNECTOR, HYD.
4	1	47050686		3	CONNECTOR, HYD.
4	2	47050686		4	CONNECTOR, HYD.
5		85826100		1	GEAR REDUCTION UNIT
6		85828211		1	INSERT
7		87305211		1	HOSE, FLEXIBLE
8		87303401		1	HOSE, FLEXIBLE
9		87303400		2	HOSE, FLEXIBLE

(1) UP TO S/N 031054045
(2) FROM TO S/N 031054046

704	01	p1	12/05

MANUAL HAMMER SYSTEM

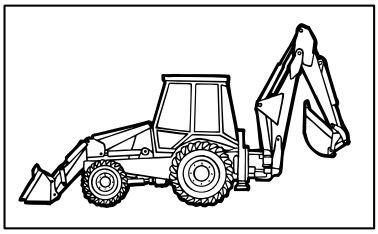

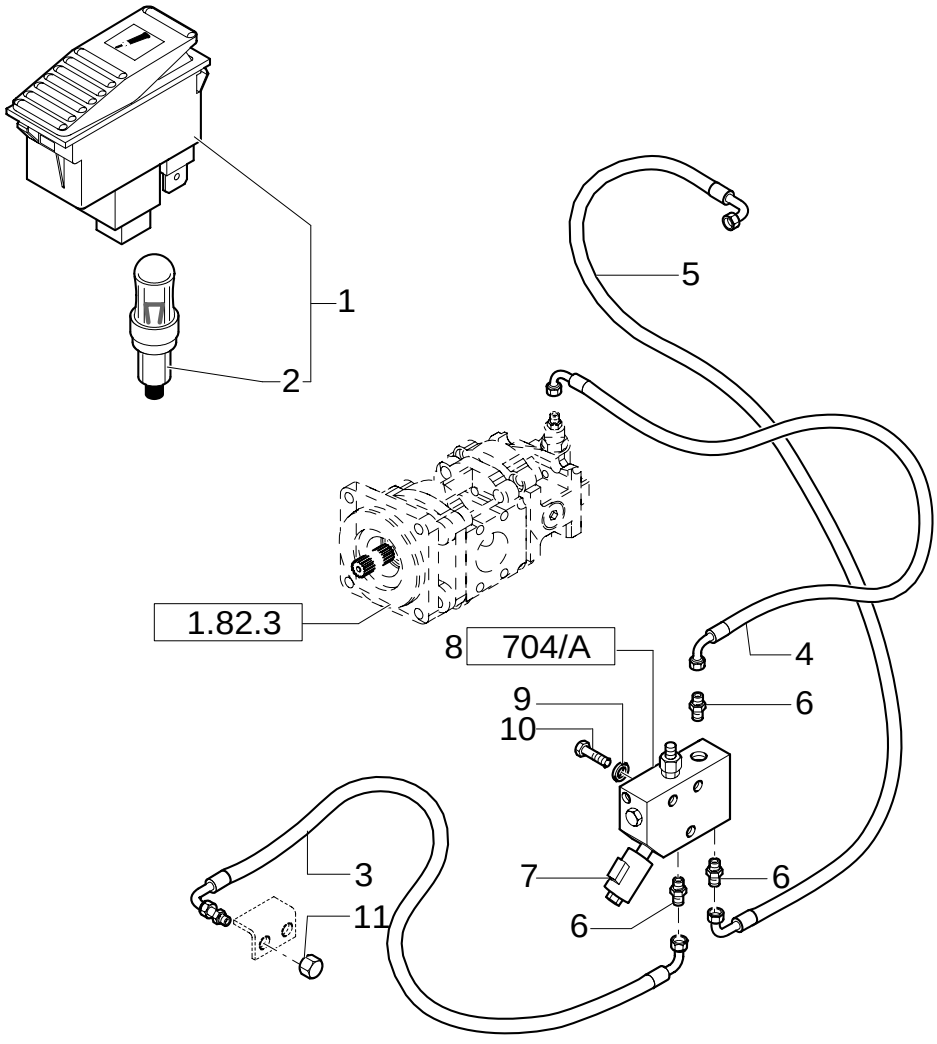

MANUAL HAMMER SYSTEM

REF	FN	PART NUMBER	YR/SN	QTY	DESCRIPTION
1		85819072		1	SWITCH
2		14143790		1	BULB 12V - 1,2W
3		85812184		1	HOSE, FLEXIBLE 1230 MM.
4	1	85825187		1	HOSE, FLEXIBLE 680 MM.
5		85826092		1	HOSE, FLEXIBLE
6		85803234		3	CONNECTOR, HYD.
7		87357715		1	SENDER UNIT
8		87358190		1	VALVE, HYDRAULIC
9		11193879		3	WASHER, LOCK
10		16044521		3	SCREW M8x65
11		E9NNP864BA		1	PLUG

(1) Only for Side Shift

MANUAL HAMMER SYSTEM

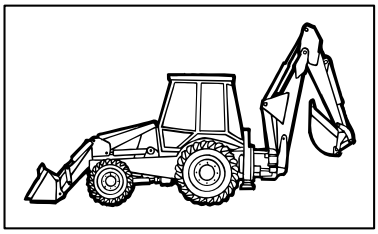

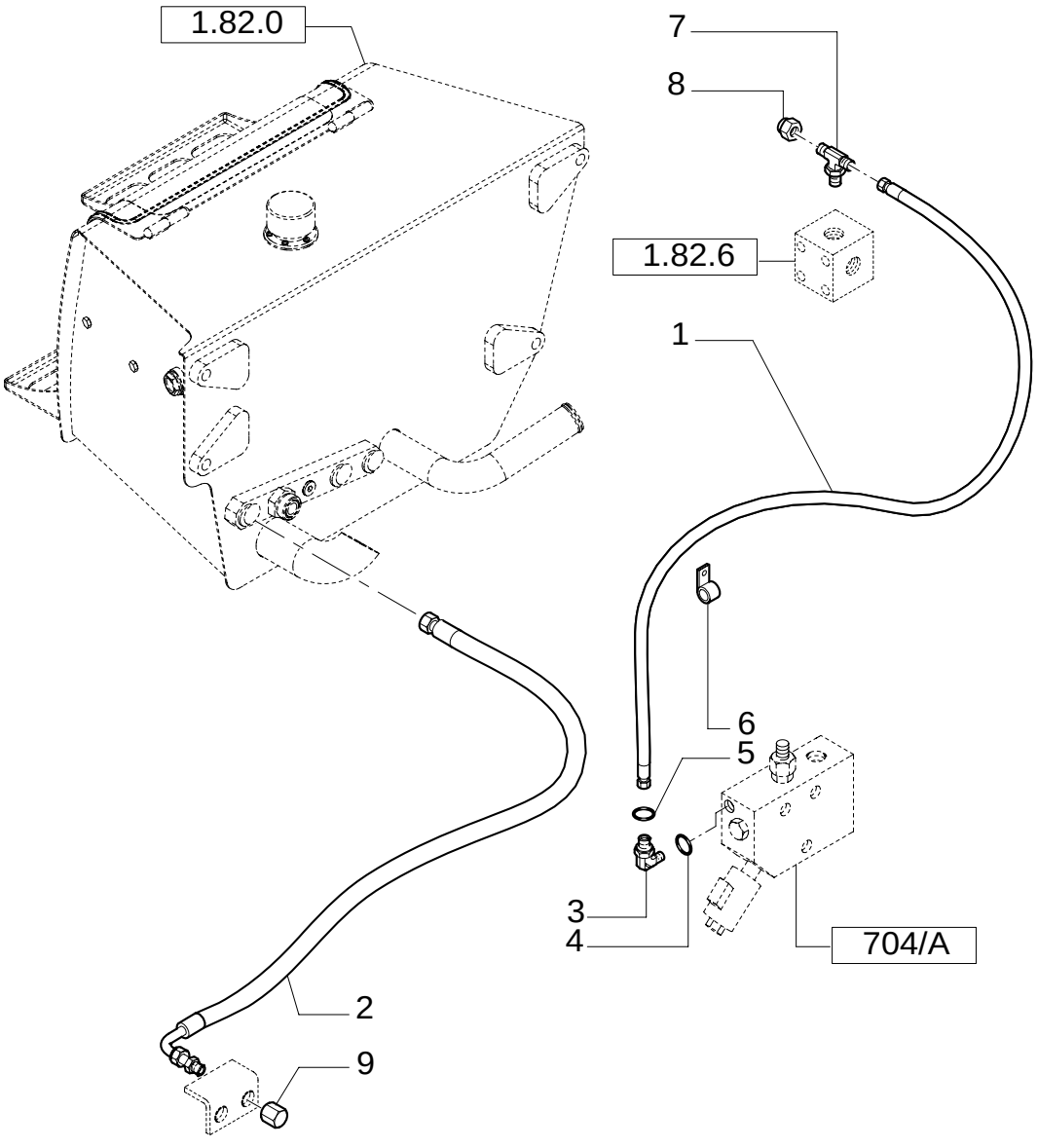

MANUAL HAMMER SYSTEM

REF	FN	PART NUMBER	YR/SN	QTY	DESCRIPTION
1		85803230		1	HOSE, FLEXIBLE 1050MM.
2		85803231		1	HOSE, FLEXIBLE 900 MM.
3	1	390989S36		1	ELBOW
4		87008S95		1	O-RING 90 Duro, .375" ID x .070" Thk
5		86482S95		1	O-RING 90 Duro, .468" ID x .078" Thk
6		85803393		1	COLLAR, RETAINER
7		85802780		1	CONNECTOR, HYD.
8		E9NNP864CA		1	COVER
9		E9NNP864BA		1	PLUG

(1) Includes 4, 5

704/ A	01	p1	11/05

MANUAL HAMMER VALVE

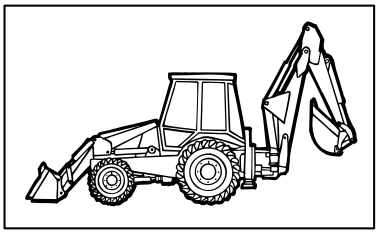

KIT KIT KIT = 2

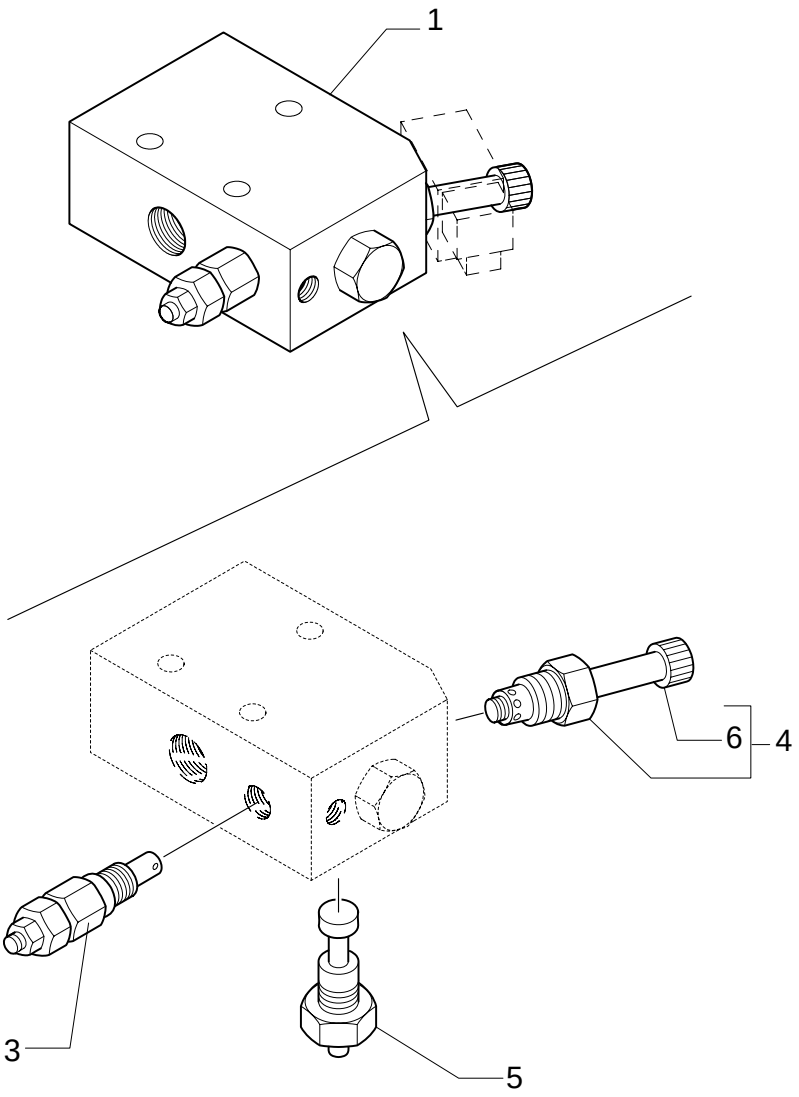

MANUAL HAMMER VALVE

REF	FN	PART NUMBER	YR/SN	QTY	DESCRIPTION
1		87358190		1	VALVE, HYDRAULIC
2		9970382		1	SET OF PARTS GASKETS
3		9970178		1	VALVE, PRESSURE RELIEF
4		9970180		1	VALVE, HYDRAULIC
5		9970383		1	VALVE, HYDRAULIC
6		9970384		1	NUT, RING

724	01	p1	12/05

HYDRAULIC SYSTEM FOR HAMMER (CENTER PIVOT)

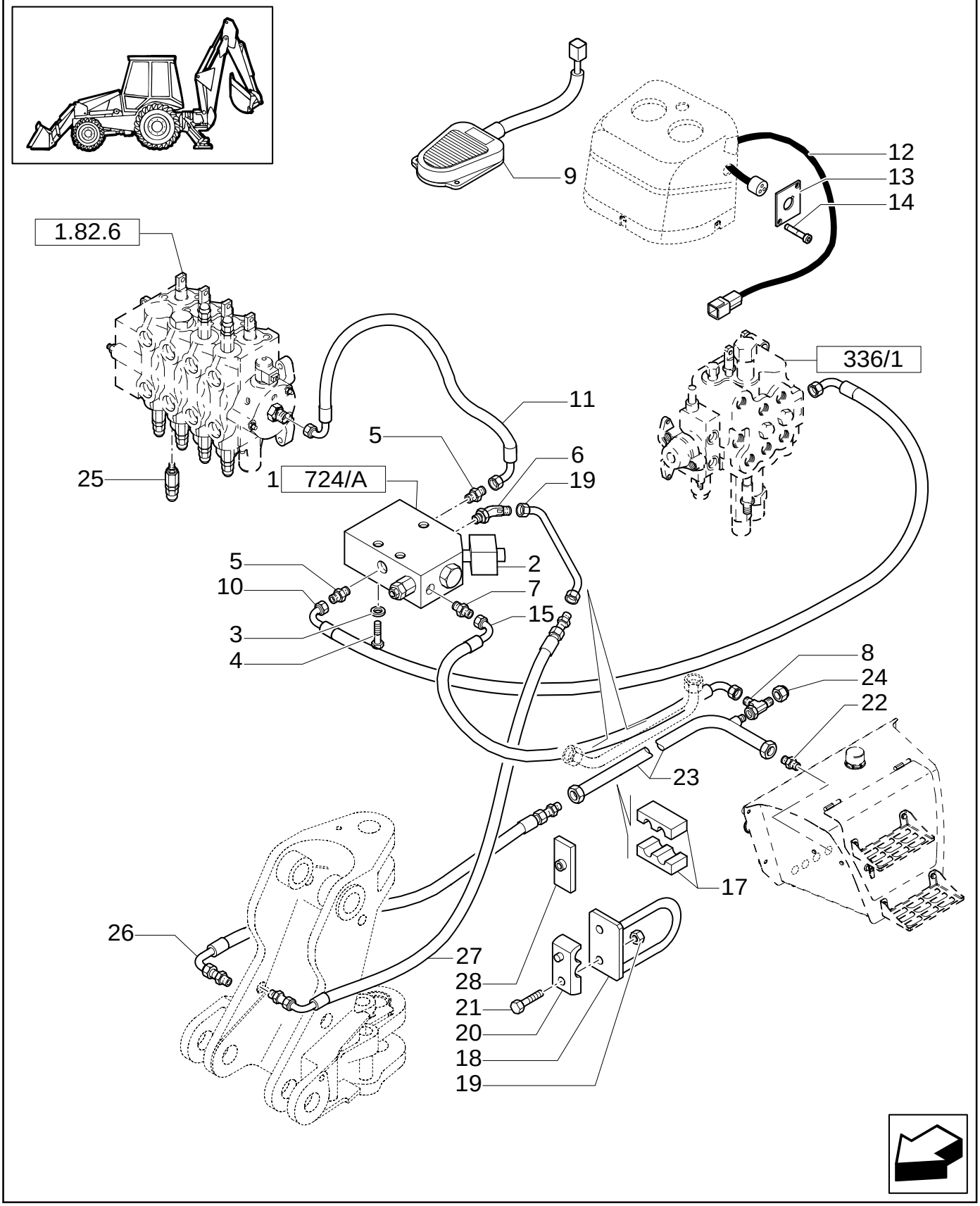

HYDRAULIC SYSTEM FOR HAMMER (CENTER PIVOT)

REF	FN	PART NUMBER	YR/SN	QTY	DESCRIPTION
1		87358199		1	VALVE, HYDRAULIC
2		87357715		1	SENDER UNIT
3		11193879		3	WASHER, LOCK
4		16044821		3	SCREW M8x80
5		85803486		2	CONNECTOR, HYD.
6		85803487		1	ELBOW
7		390951S36		1	CONNECTOR, HYD.
8		85807876		1	CONNECTOR, HYD.
9		85826123		1	SWITCH, ASSY
10		85802776		1	HOSE, FLEXIBLE
11		85803428		1	HOSE, FLEXIBLE
12		85819237		1	CABLE, ELECTRIC
13		85816760		1	PLATE, COVER
14		13272477		2	SCREW
15		85817633		1	HOSE, FLEXIBLE
16		85817629		1	TUBE, RIGID
17		85819492		1	CLAMP
18		85802214		2	SUPPORT
19		16104111		1	NUT
20		85804442		2	BRACKET
21		16044221		1	SCREW M8x1.25x50
22		85802801		1	CONNECTOR, HYD. 1-11/16"-12 ORS x 1-5/16"-12 SAE O-ring
23		85827926		1	TUBE, RIGID
24		E9NNP864BA		1	PLUG
25		9968595		1	VALVE, HYDRAULIC
26		85817635		1	HOSE, FLEXIBLE 1400 mm (55-1/8 in)
27		85817634		1	HOSE, FLEXIBLE 1750 mm (68-29/32 in)
28		85820222		1	PLATE, COVER
30		167266		2	O-RING 90 Duro, .924" ID x .116" Thk
29		9993141		2	O-RING 90 Duro, .364" ID x .070" Thk

724	02	p1	06/05

HYDRAULIC SYSTEM FOR HAMMER (CENTER PIVOT)

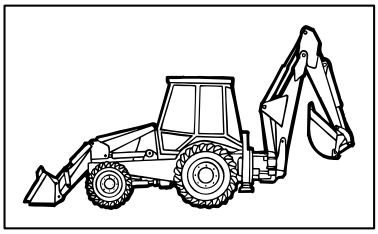

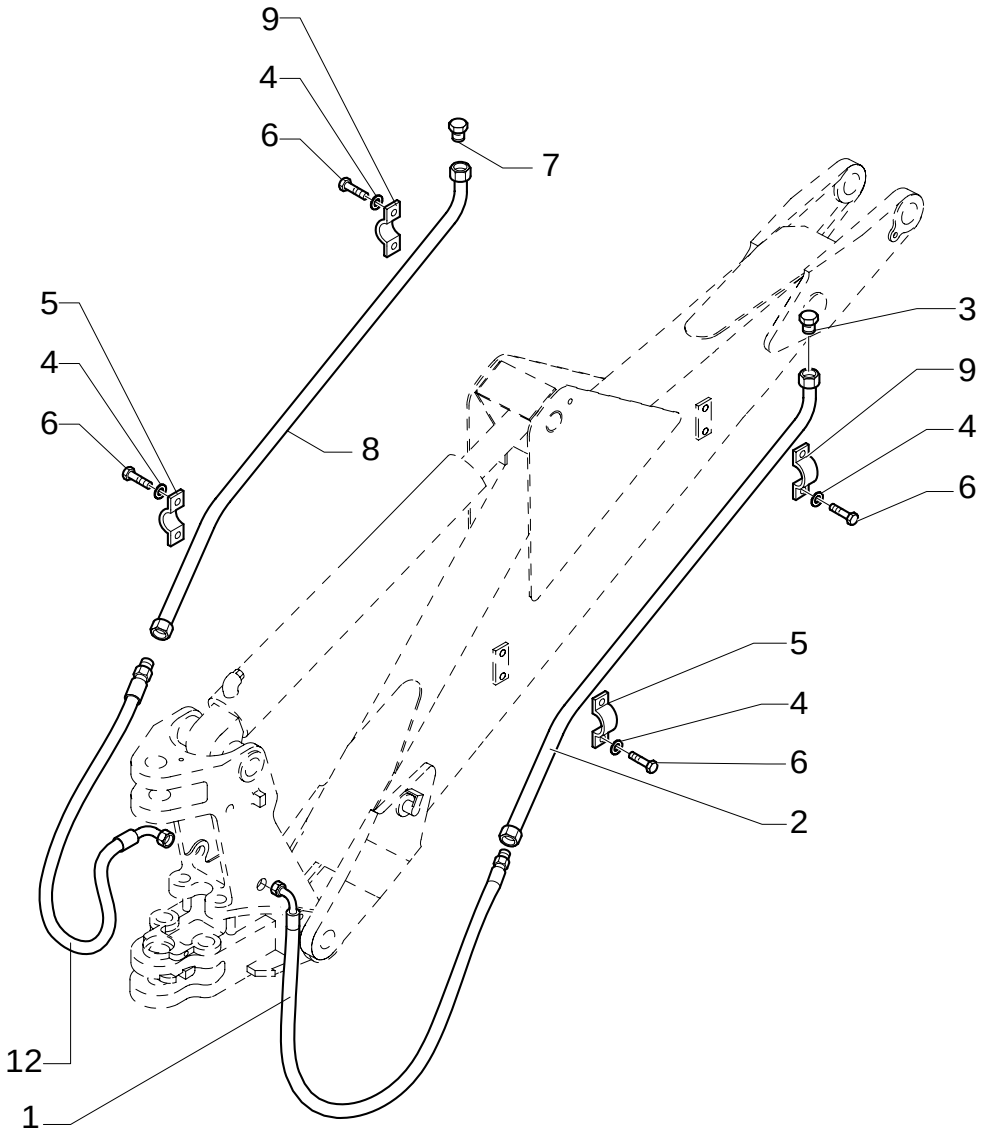

HYDRAULIC SYSTEM FOR HAMMER (CENTER PIVOT)

REF	FN	PART NUMBER	YR/SN	QTY	DESCRIPTION
1		85819619		1	HOSE, FLEXIBLE
2		85802454		1	TUBE, RIGID
3		85801397		1	PLUG
4		11190579		8	WASHER, LOCK
5		87310951		2	CLIP, HOSE
6		10979221		8	SCREW M6x16
7		85801452		1	PLUG
8		85803184		1	TUBE, RIGID
9		87310952		2	CLIP, HOSE
12		85819618		1	HOSE, FLEXIBLE

REAR HAMMER CONTROL VALVE

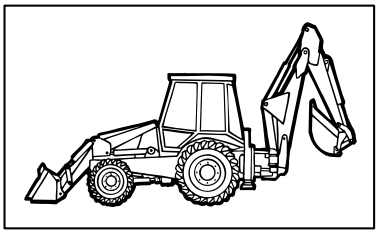

KIT = 2

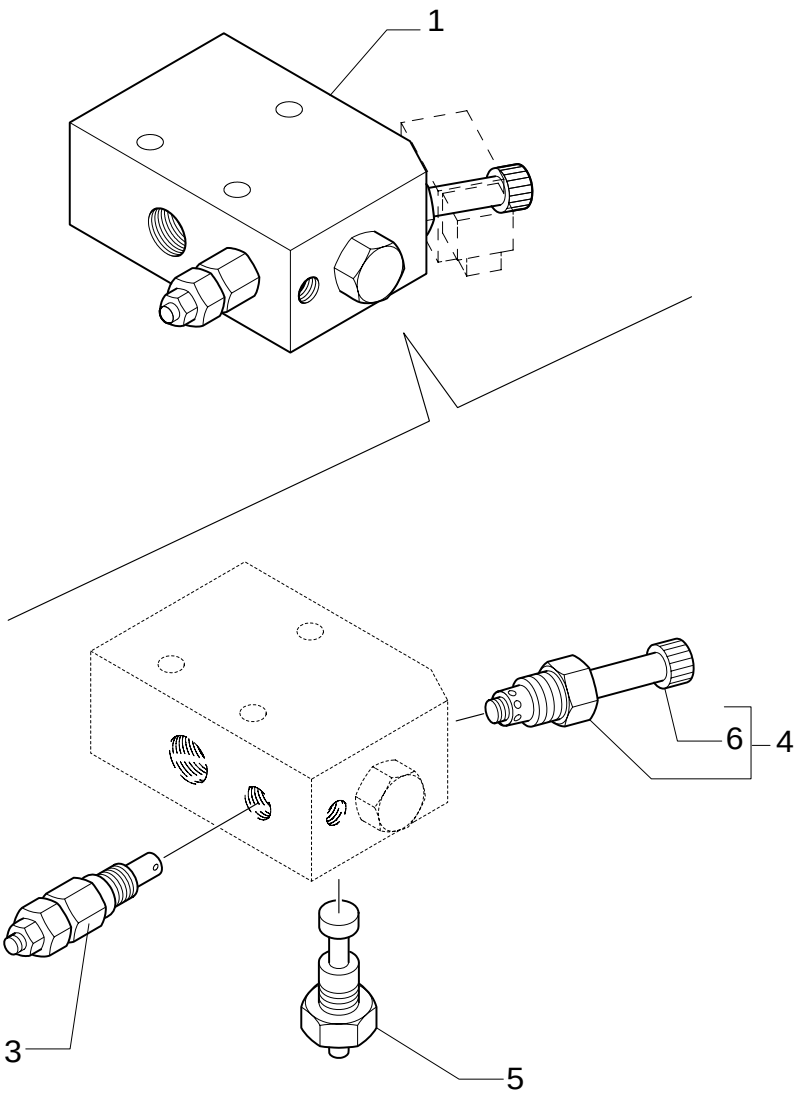

REAR HAMMER CONTROL VALVE

REF	FN	PART NUMBER	YR/SN	QTY	DESCRIPTION
1		87358199		1	VALVE, HYDRAULIC ASSY
2		9970181		1	KIT, SEALS GASKETS
3		9970178		1	VALVE, PRESSURE RELIEF ASSY
4		9970180		1	VALVE, HYDRAULIC ASSY
5		9970179		1	REGULATOR, VOLTAGE ASSY
6		9970384		1	NUT, RING

724/ 3	01	p1	12/05

HYDRAULIC SYSTEM FOR HAMMER (CENTER PIVOT)

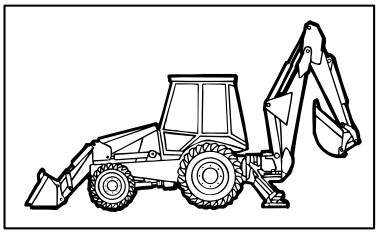

HYDRAULIC SYSTEM FOR HAMMER (CENTER PIVOT)

REF	FN	PART NUMBER	YR/SN	QTY	DESCRIPTION
1		87358199		1	VALVE, HYDRAULIC
2		87357715		1	SENDER UNIT
3		11193879		3	WASHER, LOCK
4		16044821		3	SCREW M8x80
5		85803486		2	CONNECTOR, HYD.
6		85803487		1	ELBOW
7		390951S36		1	CONNECTOR, HYD.
8		85807876		1	CONNECTOR, HYD.
9		85826123		1	SWITCH, ASSY
10		85802776		1	HOSE, FLEXIBLE
11		85803428		1	HOSE, FLEXIBLE
12		85819237		1	CABLE, ELECTRIC
13		85816760		1	PLATE, COVER
14		13272477		2	SCREW
15		85817633		1	HOSE, FLEXIBLE
16		85817629		1	TUBE, RIGID
17		85819492		1	CLAMP
18		85802214		2	SUPPORT
19		16104111		1	NUT
20		85804442		2	BRACKET
21		16044221		1	SCREW M8x1.25x50
22		85802801		1	CONNECTOR, HYD. 1-11/16"-12 ORSx1-5/16"-12 SAE O-ring
23	1	85826987		1	TUBE, RIGID
24		E9NNP864BA		1	PLUG
25		85812116		1	VALVE, HYDRAULIC
26		85817635		1	HOSE, FLEXIBLE 1400 mm (55-1/8 in)
27		85817634		1	HOSE, FLEXIBLE 1750 mm (68-29/32 in)
28		85820222		1	PLATE, COVER
30		167266		2	O-RING 90 Duro, .924" ID x .116" Thk
29		9993141		2	O-RING 90 Duro, .364" ID x .070" Thk

(1) Only for LB 90.B - LB95.B - LB110.B - LB115.B

Pilot Control Version

724/ 3	02	p1	06/05

HYDRAULIC SYSTEM FOR HAMMER (CENTER PIVOT)

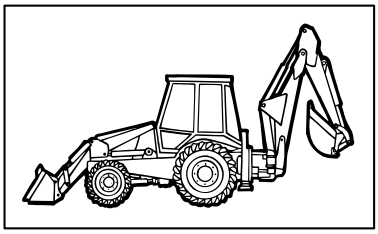

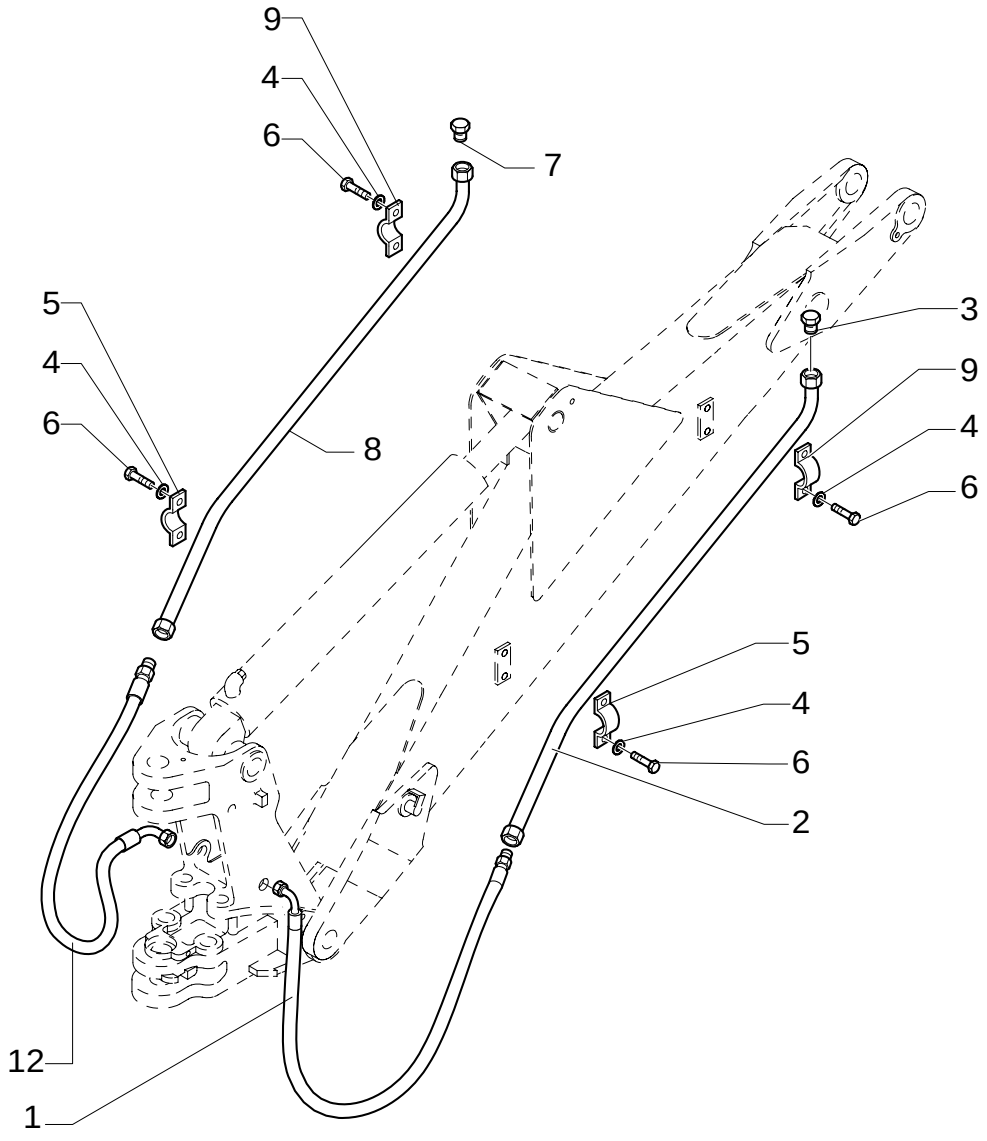

HYDRAULIC SYSTEM FOR HAMMER (CENTER PIVOT)

REF	FN	PART NUMBER	YR/SN	QTY	DESCRIPTION
1		85819619		1	HOSE, FLEXIBLE
2		85802454		1	TUBE, RIGID
3		85801397		1	PLUG
4		11190579		8	WASHER, LOCK
5		87310951		2	CLIP, HOSE
6		10979221		4	SCREW M6x16
7		85801452		1	PLUG
8		85803184		1	TUBE, RIGID
9		87310952		2	CLIP, HOSE

Pilot Control Version

724/ 5	01	p1	12/05

HYDRAULIC SYSTEM FOR HAMMER (4WS)

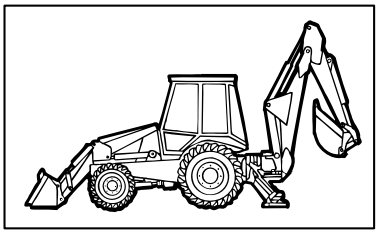

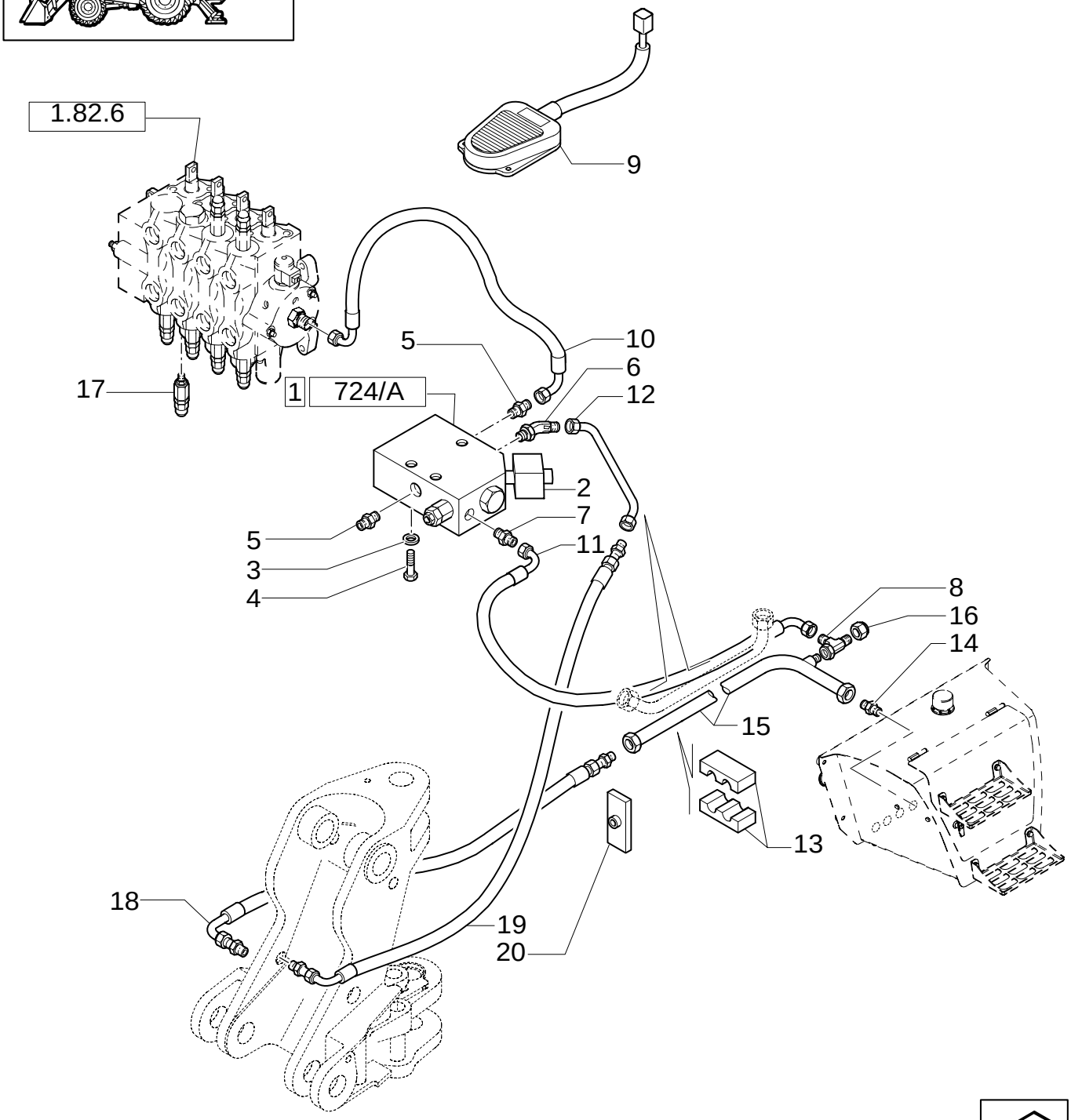

HYDRAULIC SYSTEM FOR HAMMER (4WS)

REF	FN	PART NUMBER	YR/SN	QTY	DESCRIPTION
1		87358199		1	VALVE, HYDRAULIC
2		87357715		1	SENDER UNIT
3		11193879		3	WASHER, LOCK
4		16044821		3	SCREW M8x80
5		85803486		2	CONNECTOR, HYD.
6		85803487		1	ELBOW
7		390951S36		1	CONNECTOR, HYD.
8		85807876		1	CONNECTOR, HYD.
9		85826123		1	SWITCH, ASSY
10		85803428		1	HOSE, FLEXIBLE
11		85817633		1	HOSE, FLEXIBLE
12		85817629		1	TUBE, RIGID
13		85819492		1	CLAMP
14		85802801		1	CONNECTOR, HYD. 1-11/16"-12 ORSx1-5/16"-12 SAE O-ring
15		85826987	BSN XXX	1	TUBE, RIGID
16		E9NNP864BA	ASN XXX	1	PLUG
17		85812116		1	VALVE, HYDRAULIC
18		85817635		1	HOSE, FLEXIBLE 1400 mm (55-1/8 in)
19		85817634		1	HOSE, FLEXIBLE 1750 mm (68-29/32 in)
20		85820222		1	PLATE, COVER

724/ 6	01	p1	12/05

HYDRAULIC SYSTEM FOR HAMMER (SIDE SHIFT EUROPA)

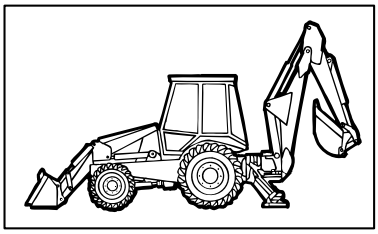

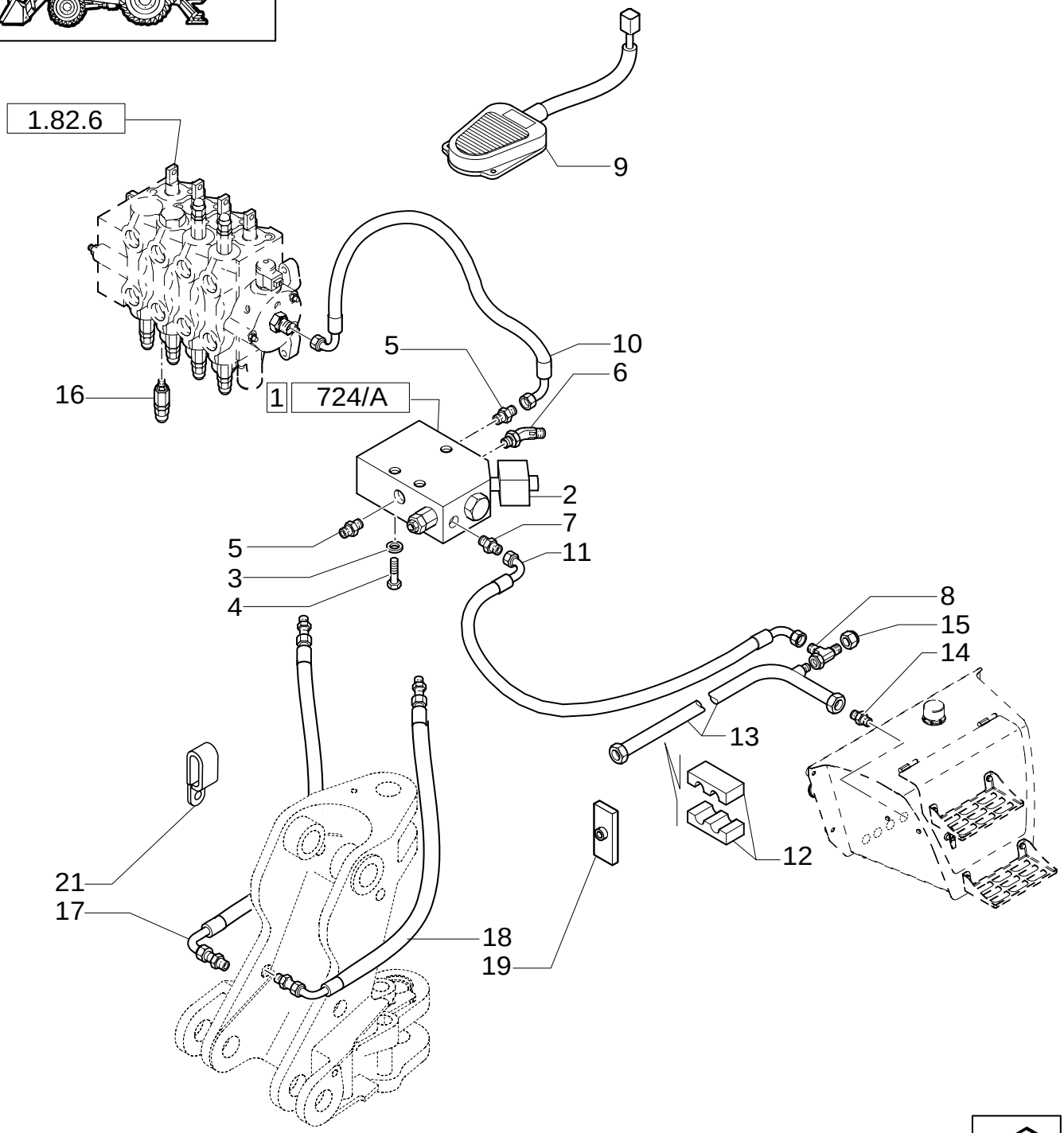

HYDRAULIC SYSTEM FOR HAMMER (SIDE SHIFT EUROPA)

REF	FN	PART NUMBER	YR/SN	QTY	DESCRIPTION
1		87358199		1	VALVE, HYDRAULIC
2		87357715		1	SENDER UNIT
3		11193879		3	WASHER, LOCK
4		16044821		3	SCREW M8x80
5		85803486		2	CONNECTOR, HYD.
6		85803487		1	ELBOW
7		390951S36		1	CONNECTOR, HYD.
8		85807876		2	CONNECTOR, HYD.
9		85826123		1	SWITCH, ASSY
10		85803428		1	HOSE, FLEXIBLE
11		85817633		1	HOSE, FLEXIBLE
12		85819492		1	CLAMP
13		85802801		1	CONNECTOR, HYD. 1-11/16"-12 ORSx1-5/16"-12 SAE O-ring
14		85827926	BSN XXX	1	TUBE, RIGID
15		E9NNP864BA		1	PLUG
16		85812116		1	VALVE, HYDRAULIC
17		85820122		1	HOSE, FLEXIBLE
18		85820123		1	HOSE, FLEXIBLE
19		85820222		1	PLATE, COVER
21		85803346		2	BRACKET

725	01	p1	12/05

HAMMER KIT FROM LIFTING ARM TO DEMOLITION ARM

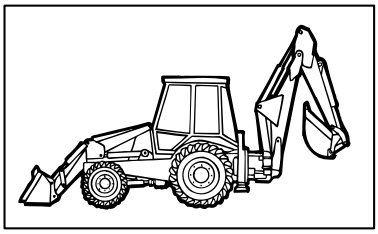

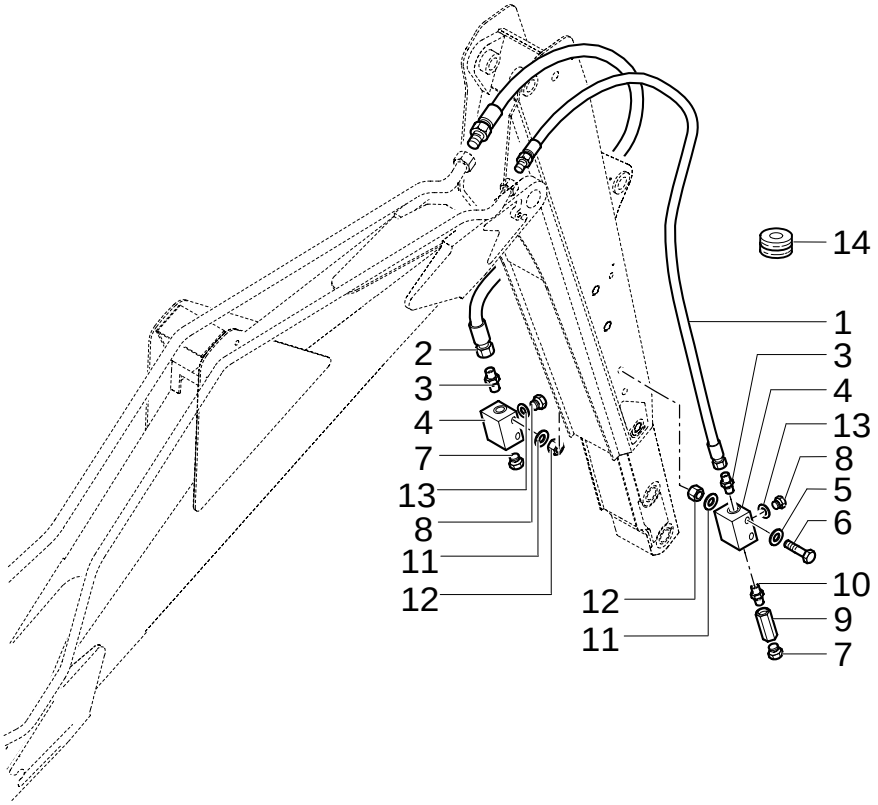

HAMMER KIT FROM LIFTING ARM TO DEMOLITION ARM

REF	FN	PART NUMBER	YR/SN	QTY	DESCRIPTION
1		85819621		1	HOSE, FLEXIBLE
2		85819620		1	HOSE, FLEXIBLE
3		85803486		2	CONNECTOR, HYD.
4		85802247		2	BLOCK
5		11193879		4	WASHER, LOCK
6		16045021		4	SCREW
7		85802457		2	PLUG
8		85803409		2	PLUG
9		85802372		1	VALVE, HYDRAULIC 10BAR
10		85804879		1	CONNECTOR, HYD.
11		12647121		6	WASHER M8
12		14048211		2	NUT
13		167269		2	O-RING 90 Duro, .755" IDx.097" Thk
14		10398580		1	RING

Mechanical Version

725/ 1	01	p1	12/05

4X1 & 6X1 BUCKET HYDRAULIC LINES

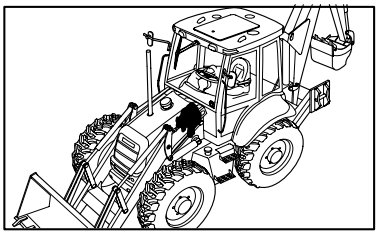

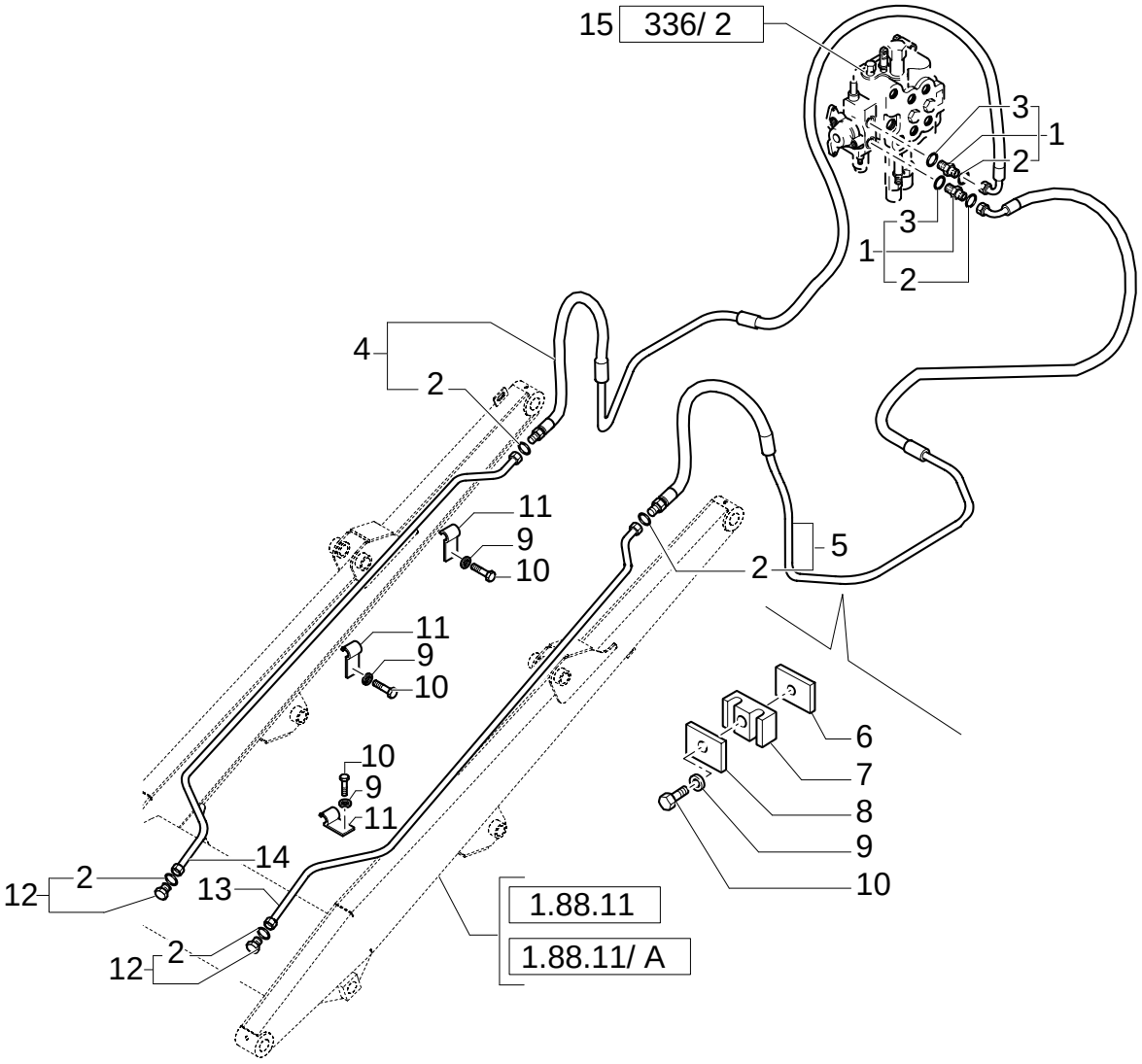

4X1 & 6X1 BUCKET HYDRAULIC LINES

REF	FN	PART NUMBER	YR/SN	QTY	DESCRIPTION
1		390955S36		2	CONNECTOR, HYD.
2		9992298		6	O-RING 90 Duro, .489" IDx.070" Thk
3		167269		2	O-RING 90 Duro, .755" IDx.097" Thk
4	1	85805863		1	HOSE, FLEXIBLE RH
5	1	85805862		1	HOSE, FLEXIBLE LH
6		85805340		2	PLATE, COVER
7		85805193		2	CLAMP
8		85805195		2	PLATE
9		11193979		8	WASHER, LOCK
10		16043821		8	SCREW M8x30
11		85805247		6	CLAMP
12	1	85803408		2	PLUG
13		85805864		1	TUBE, RIGID LH
13	2	87306871		1	TUBE, RIGID
14		85805865		1	TUBE, RIGID RH
14	2	87306873		1	TUBE, RIGID
15	3	85819650		1	DISTRIBUTOR
15	4	87326256		1	DISTRIBUTOR

(1) Includes 2
(2) Only for B95TC
(3) UP TO S/N XXX
(4) FROM TO S/N XXX

Mechanical Version

725/ 1	02	p1	12/05

4X1 & 6X1 BUCKET HYDRAULIC LINES (P. SHUTTLE)

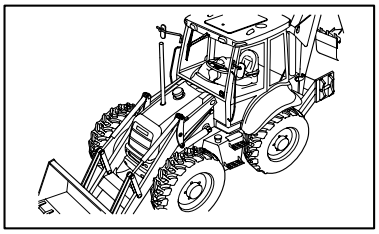

KIT KIT KIT 10=●

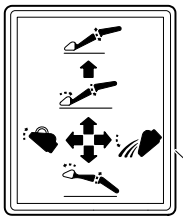

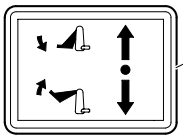

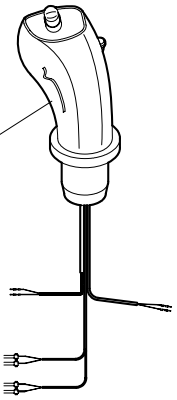

● 11
12
13

9
1

14
7

3
6
16

1
9

2
8

15 ●
2

1.82.0

5
4

4X1 & 6X1 BUCKET HYDRAULIC LINES (P. SHUTTLE)

REF	FN	PART NUMBER	YR/SN	QTY	DESCRIPTION
1		85802234		2	CONNECTOR, HYD.
2		85805318		2	ELBOW
3		47050685		2	CONNECTOR, HYD.
4		47050686		1	CONNECTOR, HYD.
5		85826100		1	GEAR REDUCTION UNIT
6		85828211		1	INSERT
7		87316092		1	HOSE, FLEXIBLE
8		87316096		1	HOSE, FLEXIBLE
9		87316091		2	HOSE, FLEXIBLE
10		87384365		1	JOYSTICK
11		{87382112}		1	
12		85804346		1	DECAL
13		87305209		4	DECAL
14		201-422		4	TEE
15		87304801		1	VALVE, HYDRAULIC
16		14300521		1	SCREW M6x75

732	01	p1	12/05

REAR MECHANICAL QUICK-COUPLING

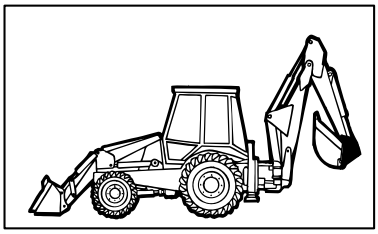

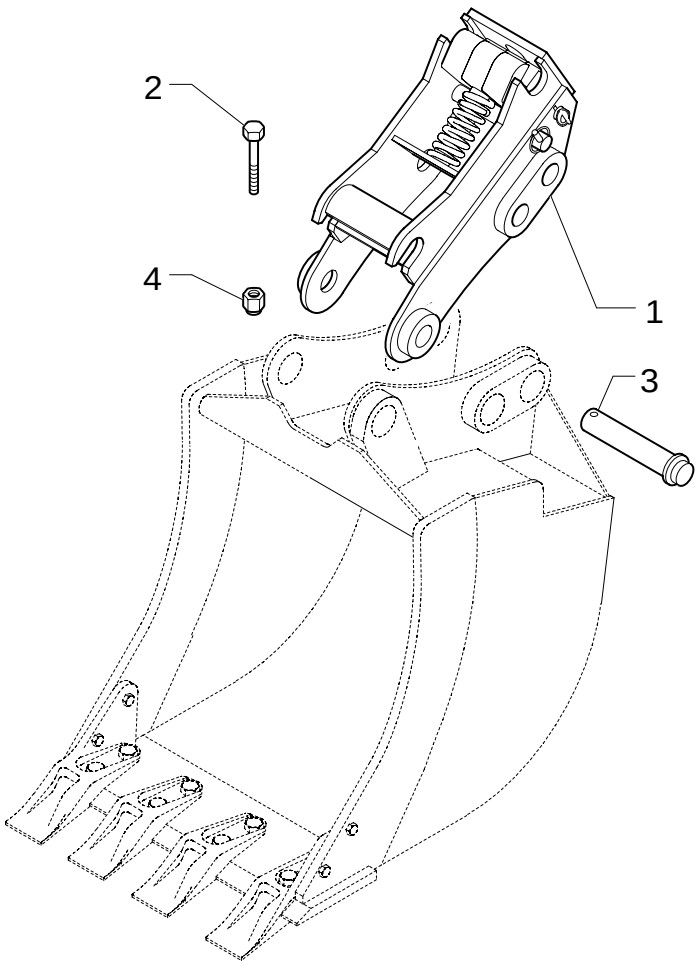

REAR MECHANICAL QUICK-COUPLING

REF	FN	PART NUMBER	YR/SN	QTY	DESCRIPTION
1		85801542		1	COUPLING, QUICK, MALE
2		15972034		2	BOLT M10x1.25x110
3		85803005		2	PIN
4		12574511		2	NUT M10x1.25

Mechanical Version

732/ A	01	p1	12/05

REAR MECHANICAL QUICK-COUPLING

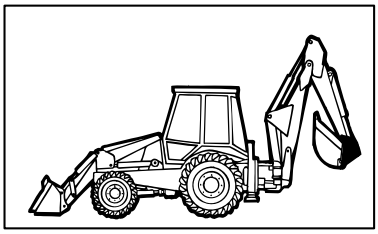

KIT 1= ●

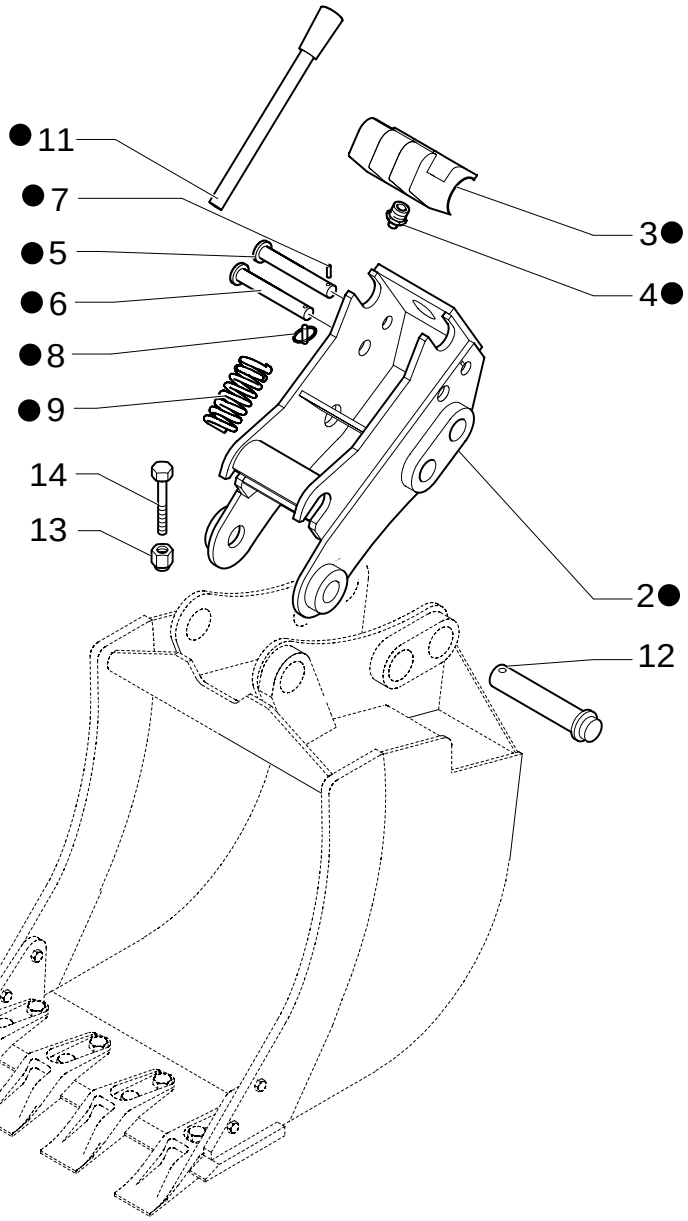

REAR MECHANICAL QUICK-COUPLING

REF	FN	PART NUMBER	YR/SN	QTY	DESCRIPTION
1		85801542		1	COUPLING, QUICK, MALE
2		{85827551}		1	
3		{87302836}		1	
4		85824266		1	NIPPLE, LUBE
5		87302837		1	PIN
6		87302838		1	PIN
7		85825285		1	PIN
8		85824265		1	PIN
9		87302840		1	SPRING
11		85824267		1	HANDLE
12		85803005		2	PIN
13		12574511		2	NUT
14		15972034		2	BOLT M10x110

734	01	p1	12/05

FRONT MECHANICAL QUICK-COUPLING

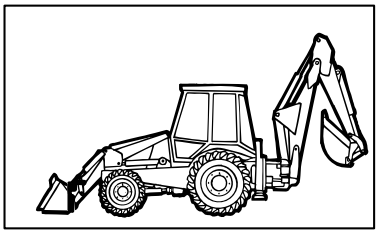

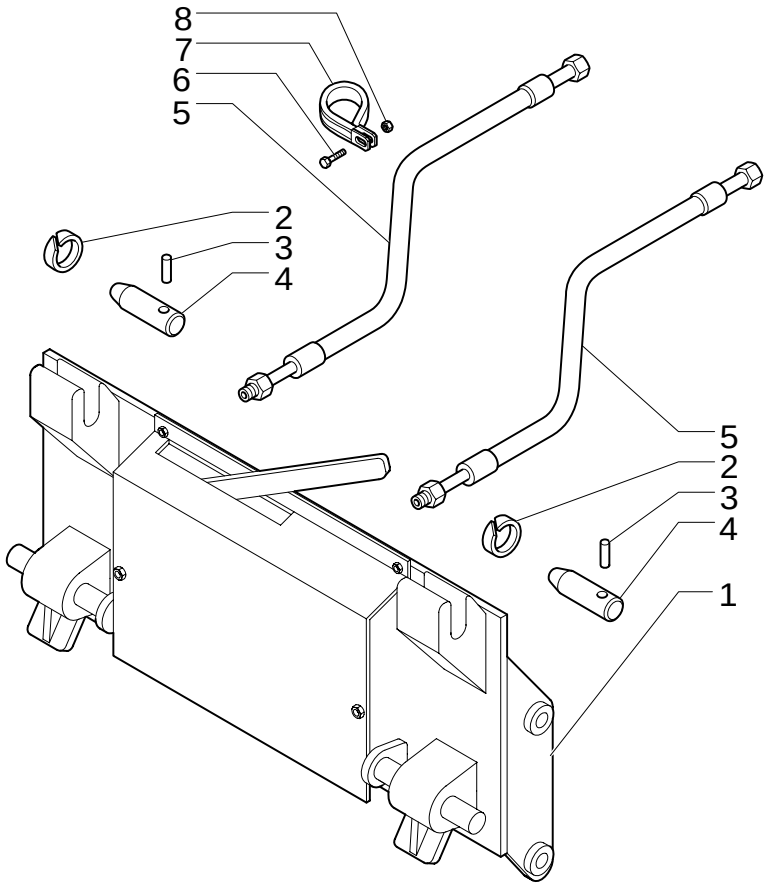

FRONT MECHANICAL QUICK-COUPLING

REF	FN	PART NUMBER	YR/SN	QTY	DESCRIPTION
1		85824397		1	COUPLING, QUICK, MALE
2		85802992		2	O-RING
3		85802993		2	PIN
4		85801051		2	PIN
5		85813378		2	HOSE, FLEXIBLE
6		16043921		2	SCREW M8x1.25x35
7		85803393		2	COLLAR, RETAINER
8		16104111		2	NUT M8

900	01	p1	02/05

BOOM - LONG DIPPER

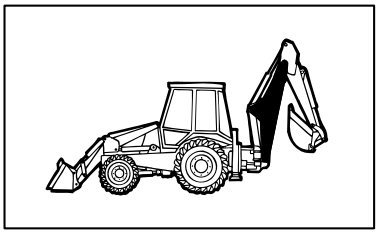

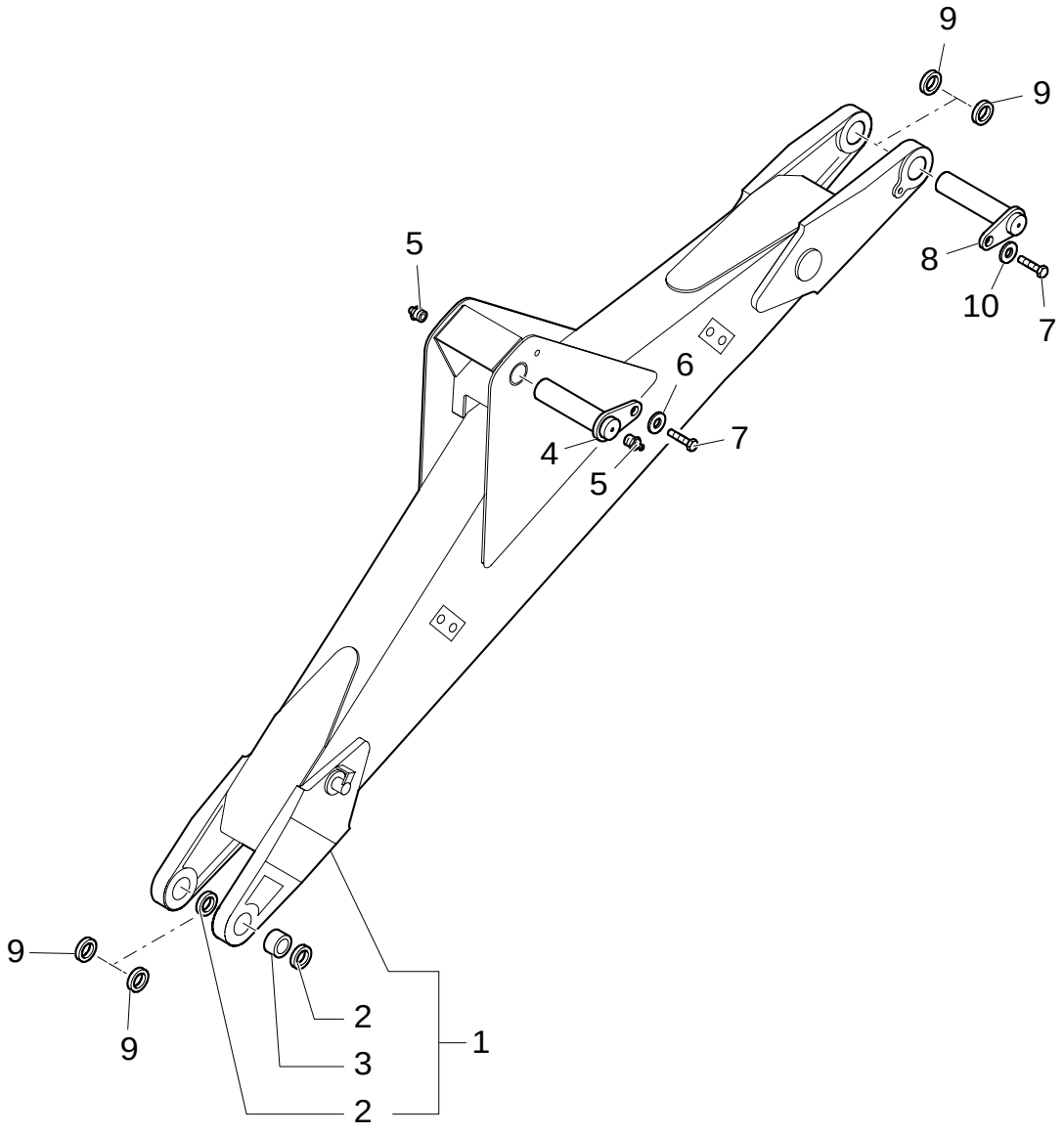

BOOM - LONG DIPPER

REF	FN	PART NUMBER	YR/SN	QTY	DESCRIPTION
1	1	85816801		1	ARM
2		D7NNC512C		2	BUSHING, DRIVE
3		D9NNC513CA		4	SEAL PROTECTION
4		85815698		1	PIN
5		87901S8		2	NIPPLE, LUBE 1/8"-27
6		85802396		1	WASHER
7		85802397		2	SCREW
8		85815607		1	PIN
9		85818916		4	SHIM
10		85815609		1	WASHER

(1) Includes 2, 3

900	02	p1	09/05

LONG DIPPER

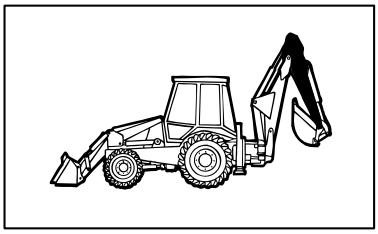

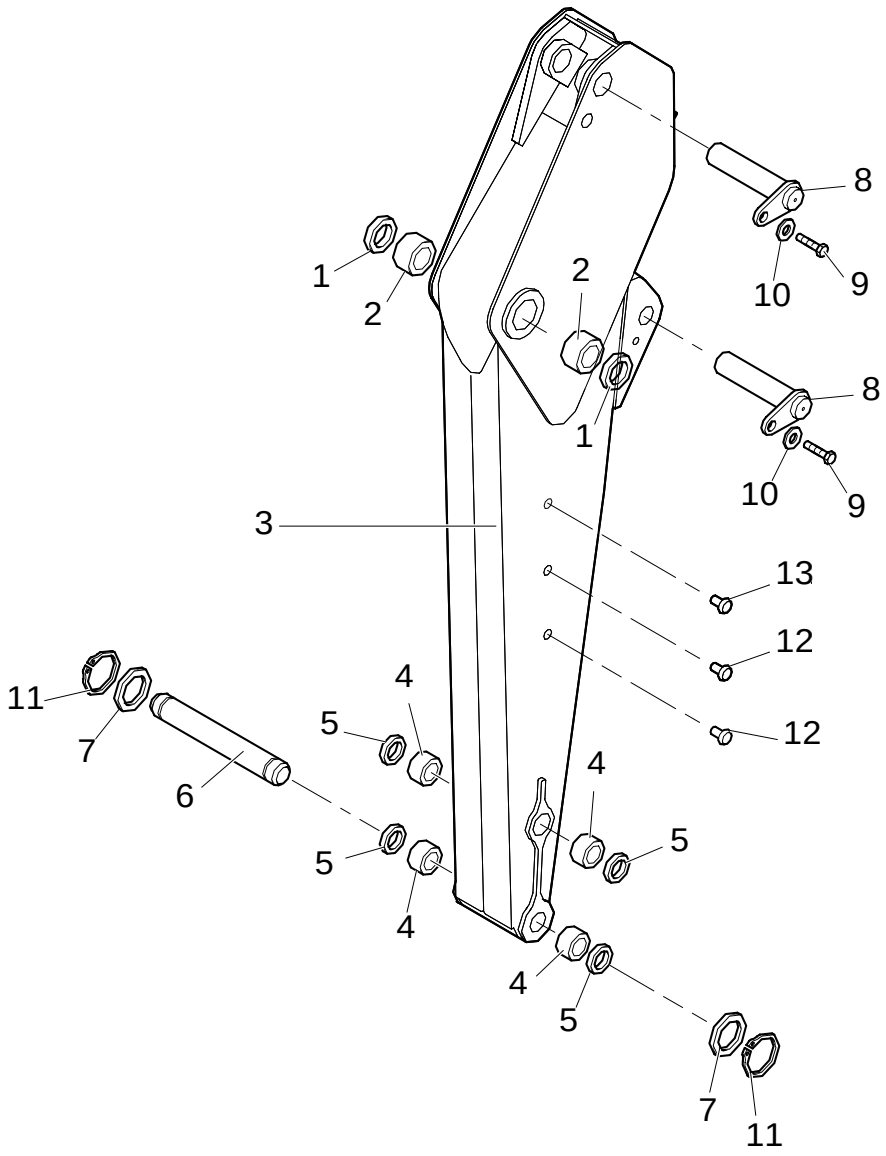

LONG DIPPER

REF	FN	PART NUMBER	YR/SN	QTY	DESCRIPTION
1		D9NNC513CA		2	SEAL PROTECTION
2		D7NNC512F		2	BUSHING 2.175" ID x 2.80" OD x 1.969"
3	1	85817039		1	ARM
4		D7NNC512H		4	BUSHING
5		D9NNC513BA		4	SEAL PROTECTION
6		86992966		1	PIN
7		D7NNC622C		2	SPACER
8		85803002		2	PIN
9		85802397		2	SCREW
10		85802396		2	WASHER
11		11069071		2	RING, LOCKING
12		85804447		4	PLUG
13		F1NN94000Z36AA		7	STUD

(1) Includes 1, 2, 4, 5

900	03	p1	02/05

LONG DIPPER - BUCKET MOTION

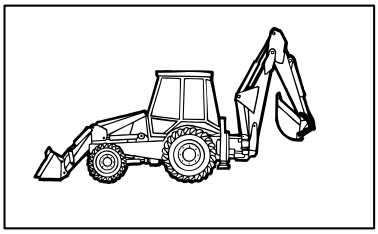

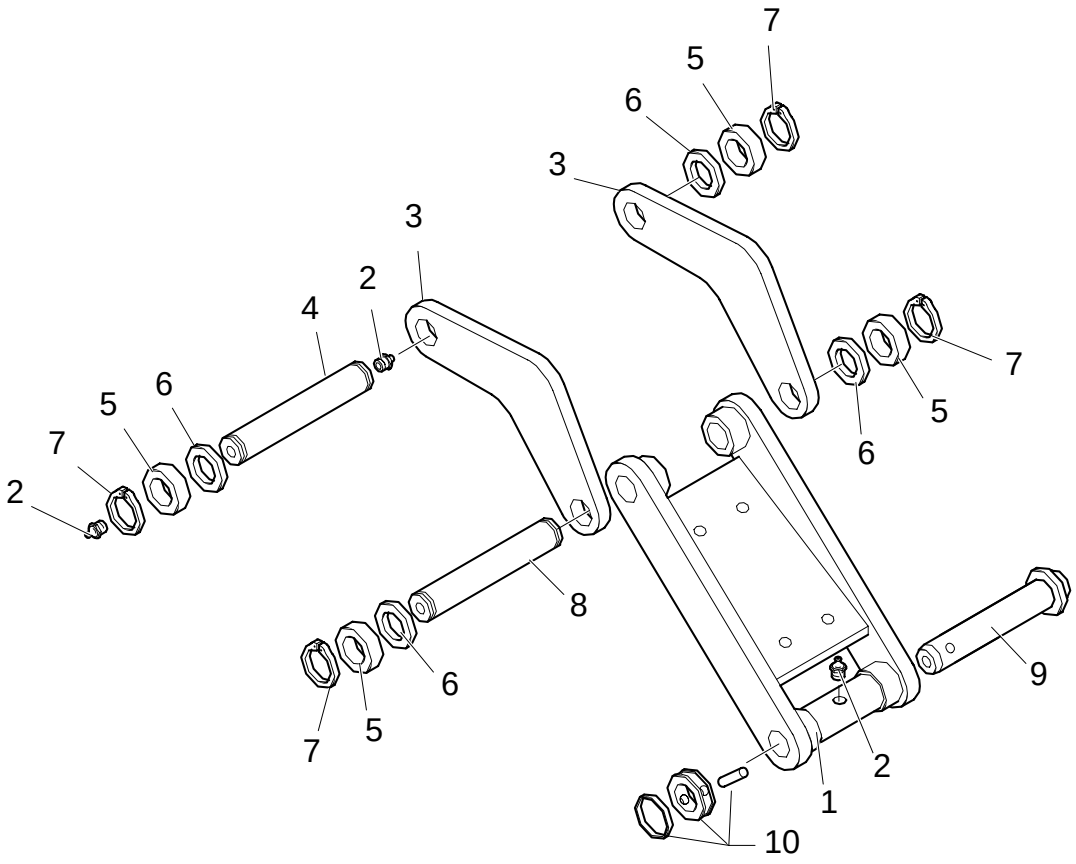

LONG DIPPER - BUCKET MOTION

REF	FN	PART NUMBER	YR/SN	QTY	DESCRIPTION
1		85803613		1	LINK CONROD
2		87901S8		5	NIPPLE, LUBE 1/8"-27
3		{85817133}		2	
4		85815517		1	PIN
5		D7NNC622C		4	SPACER
6		85818916		4	SHIM
7		11069071		4	RING, LOCKING
8		85813469		1	PIN
9		85803005		1	PIN
10		85802975		1	PIN

900	04	p1	11/05

LONG DIPPÊR - HYDRAULIC SYSTEM

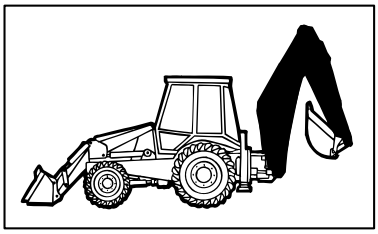

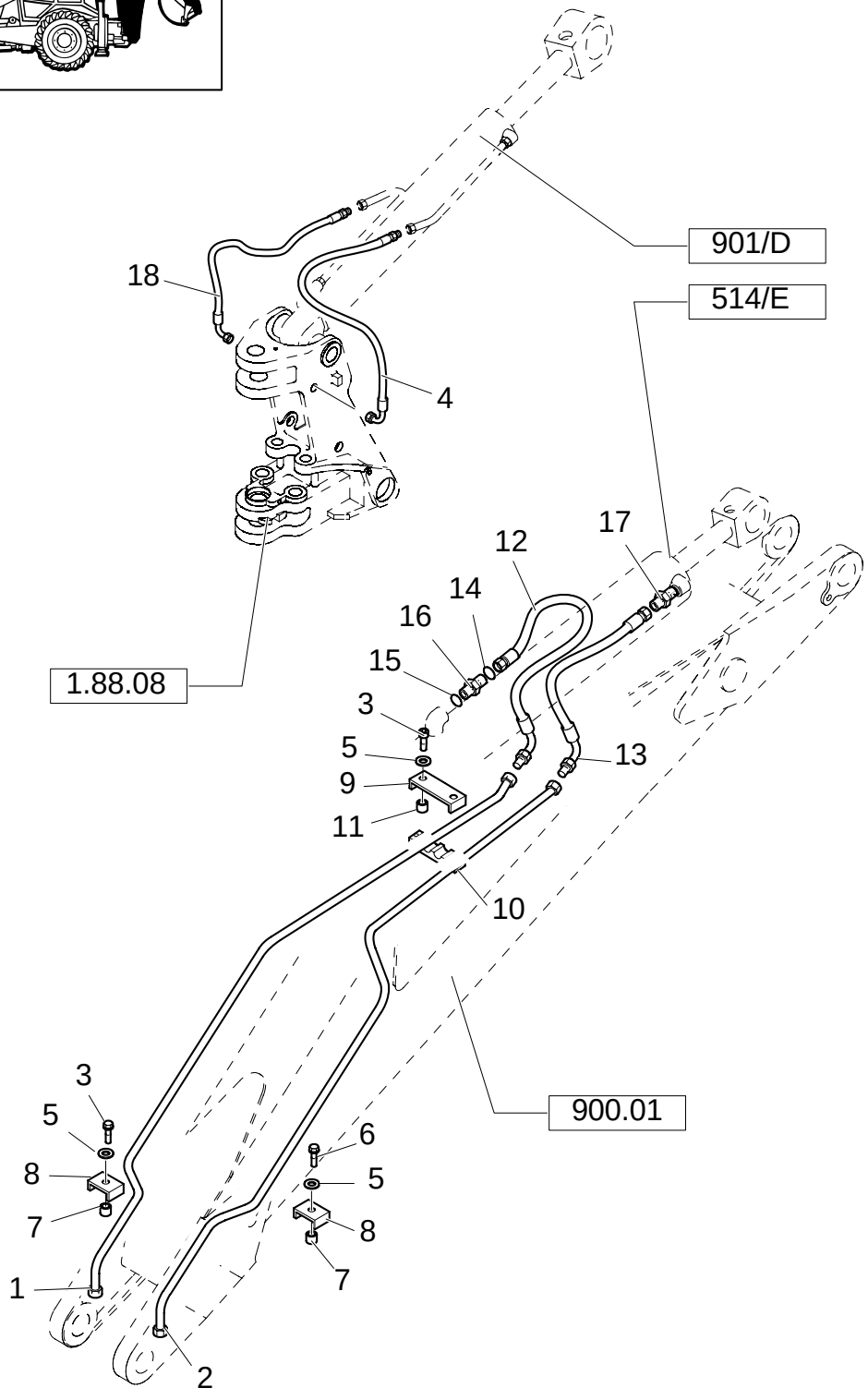

LONG DIPPÊR - HYDRAULIC SYSTEM

REF	FN	PART NUMBER	YR/SN	QTY	DESCRIPTION
1		85815632		1	TUBE, RIGID
2		85815630		1	TUBE, RIGID
3		16044421		1	SCREW M8x60
4		85812142		1	HOSE, FLEXIBLE
5		11193979		4	WASHER, LOCK
6		16044221		1	SCREW M8x50
7		85802902		1	SPACER
8		85802900		1	CLAMP
9		85802894		1	U-BRACKET
10		85802895		1	CLAMP
11		85802893		2	SPACER
12		85812154		1	HOSE, FLEXIBLE
13		85812178		1	HOSE, FLEXIBLE
14		9991976		1	O-RING 90 Duro, .739" ID x .070" Thk
15		167266		1	O-RING 90 Duro, .924" ID x .116" Thk
16	1	390937S36		1	CONNECTOR, HYD. 1-3/16"-12 ORS x 1-1/16"-12 SAE O-Ring
17		390938S36		1	CONNECTOR, HYD.
18		85812150		1	HOSE, FLEXIBLE

(1) Includes 14, 15

900	05	p1	12/05

LONG DIPPER - HYDRAULIC SYSTEM

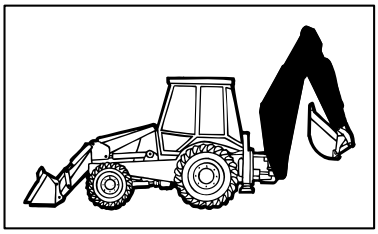

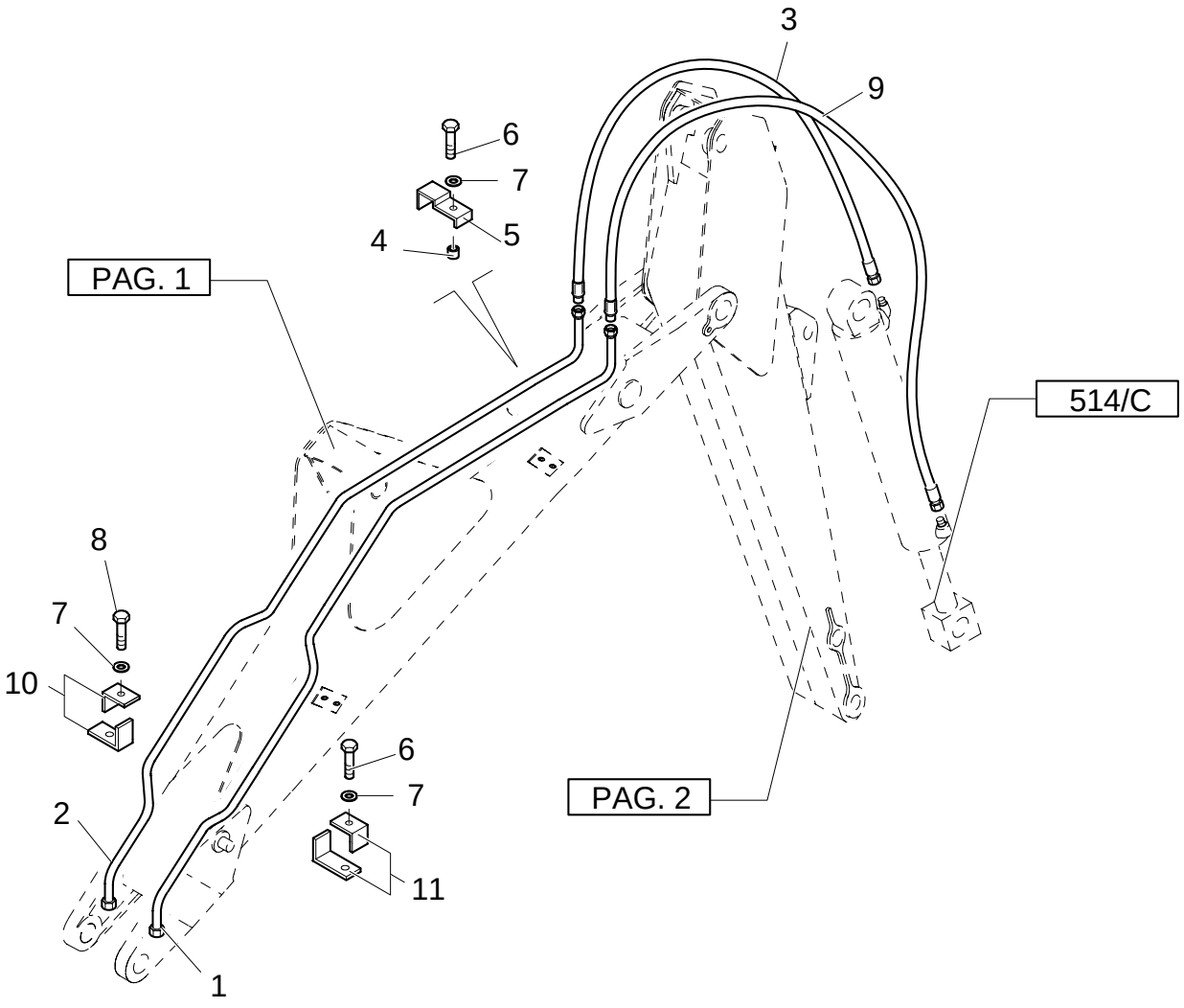

LONG DIPPER - HYDRAULIC SYSTEM

REF	FN	PART NUMBER	YR/SN	QTY	DESCRIPTION
1		85815636		1	TUBE, RIGID
2		85815634		1	TUBE, RIGID
3		85826222		1	HOSE, FLEXIBLE
4		85802901		1	SPACER
5		85802909		1	CLAMP
6		16044221		2	SCREW M8x50
7		11193979		3	WASHER, LOCK
8		16044421		1	SCREW
9		85826224		1	HOSE, FLEXIBLE
10		85815628		2	HALF-CONNECTOR
11		85815627		2	HALF-CONNECTOR

LONG DIPPER - HYDRAULIC SYSTEM

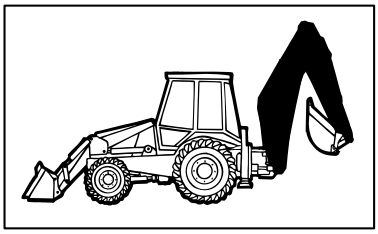

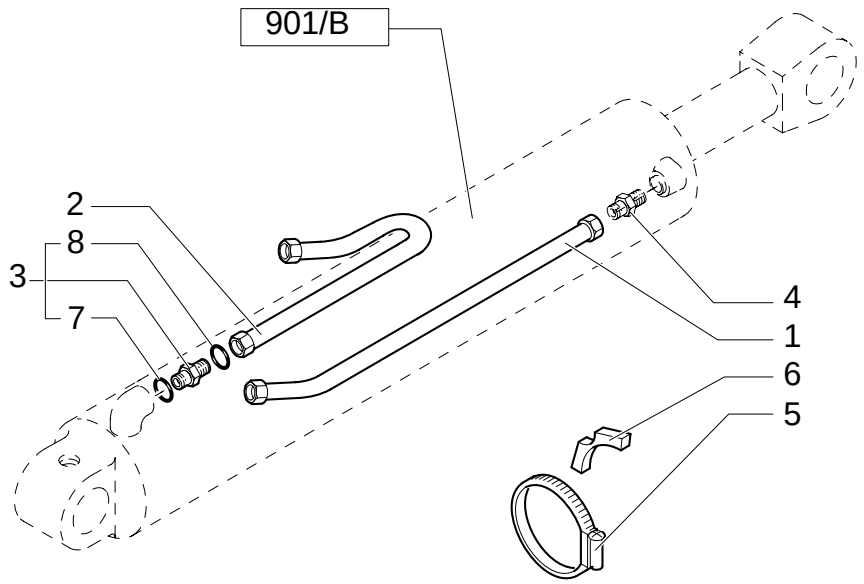

LONG DIPPER - HYDRAULIC SYSTEM

REF	FN	PART NUMBER	YR/SN	QTY	DESCRIPTION
1		85815683		1	TUBE, RIGID
2		85816813		1	TUBE, RIGID
3	1	390937S36		1	CONNECTOR, HYD. 1-3/16"-12 ORS x 1-1/16"-12 SAE O-Ring
4		390938S36		1	CONNECTOR, HYD.
5		85802744		1	CLAMP
6		87303912		2	SPACER
7		167266		1	O-RING 90 Duro, .924" ID x .116" Thk
8		9991976		1	O-RING 90 Duro, .739" ID x .070" Thk

(1) Includes 7, 8

LONG DIPPER - HYDRAULIC SYSTEM

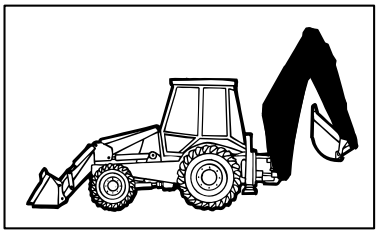

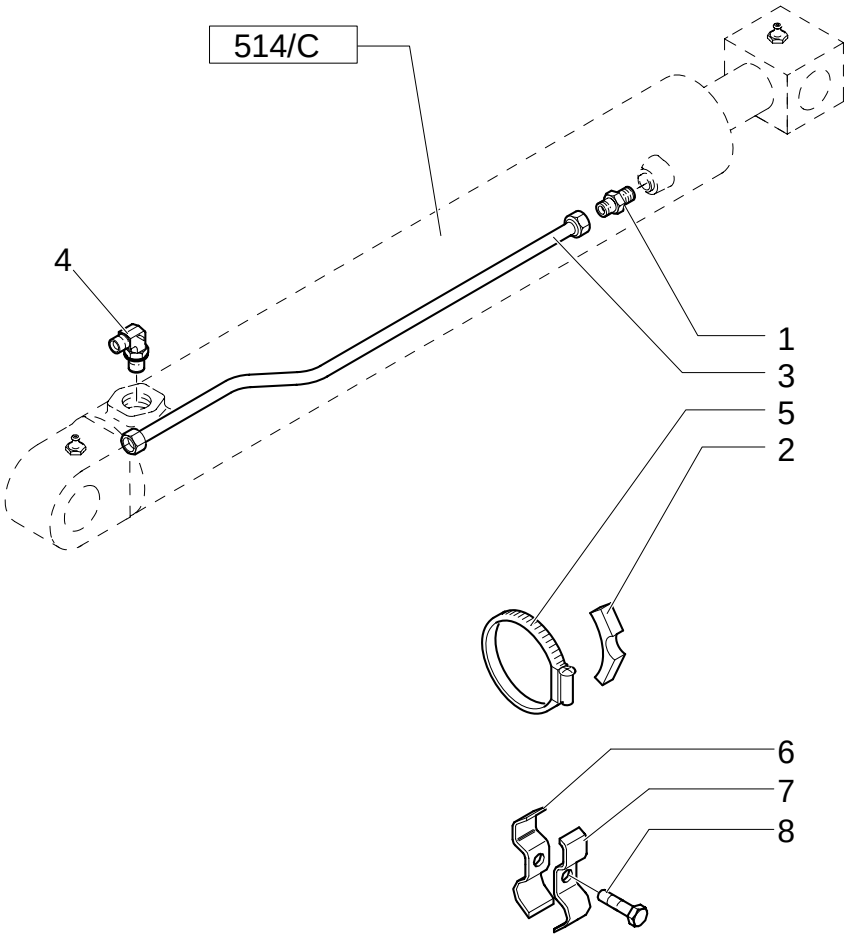

LONG DIPPER - HYDRAULIC SYSTEM

REF	FN	PART NUMBER	YR/SN	QTY	DESCRIPTION
1		390938S36		1	CONNECTOR, HYD.
2		87303910		1	SPACER
3		85815638		1	TUBE, RIGID
4		85802957		1	ELBOW
5		85803008		1	COLLAR
6		85825442		1	COLLAR
7		85825441		1	CLIP
8		14305321		1	SCREW

900	08	p1	02/05

LONG DIPPER - HYDRAULIC SYSTEM

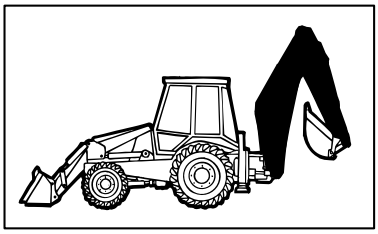

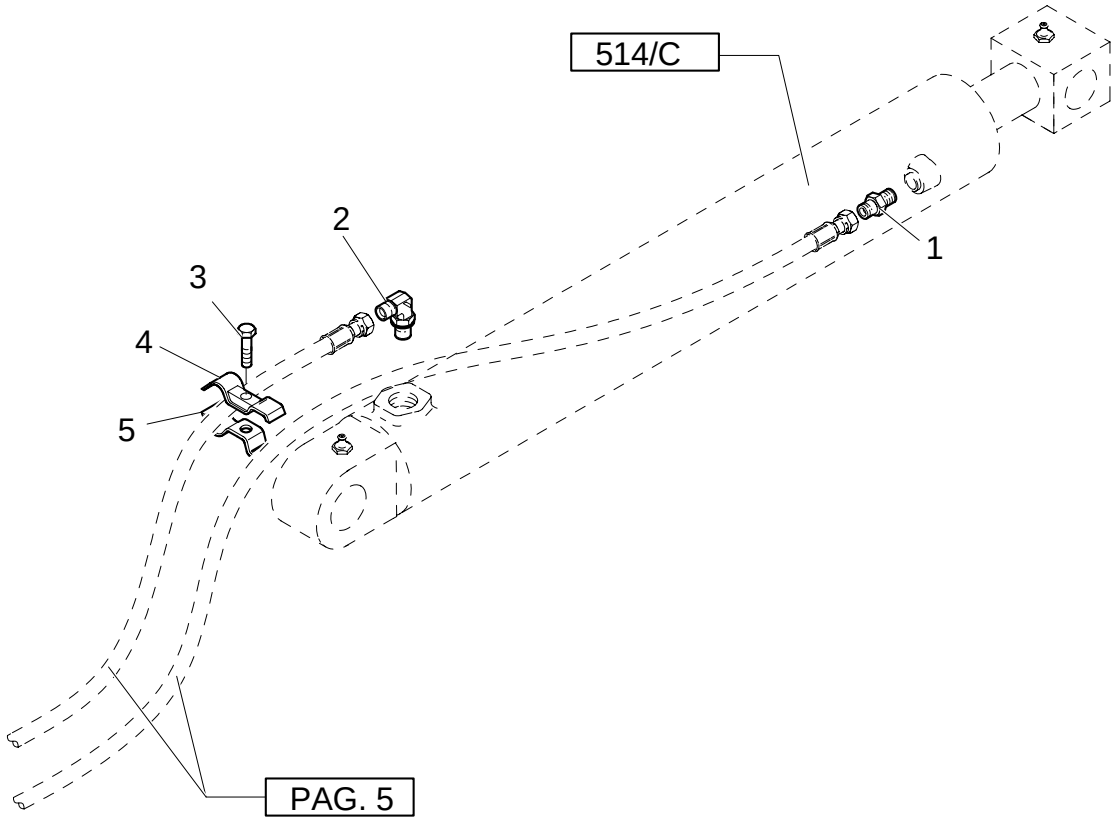

LONG DIPPER - HYDRAULIC SYSTEM

REF	FN	PART NUMBER	YR/SN	QTY	DESCRIPTION
1		390938S36		1	CONNECTOR, HYD.
2		85802957		1	ELBOW
3		14305321		1	SCREW
4		85825441		1	CLIP
5		85825442		1	COLLAR

902	01	p1	02/05

BOOM - TELESCOPIC DIPPER SHORT

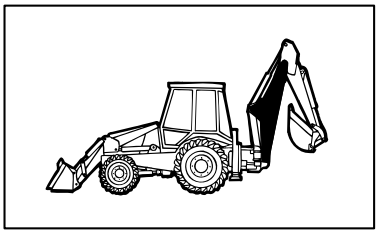

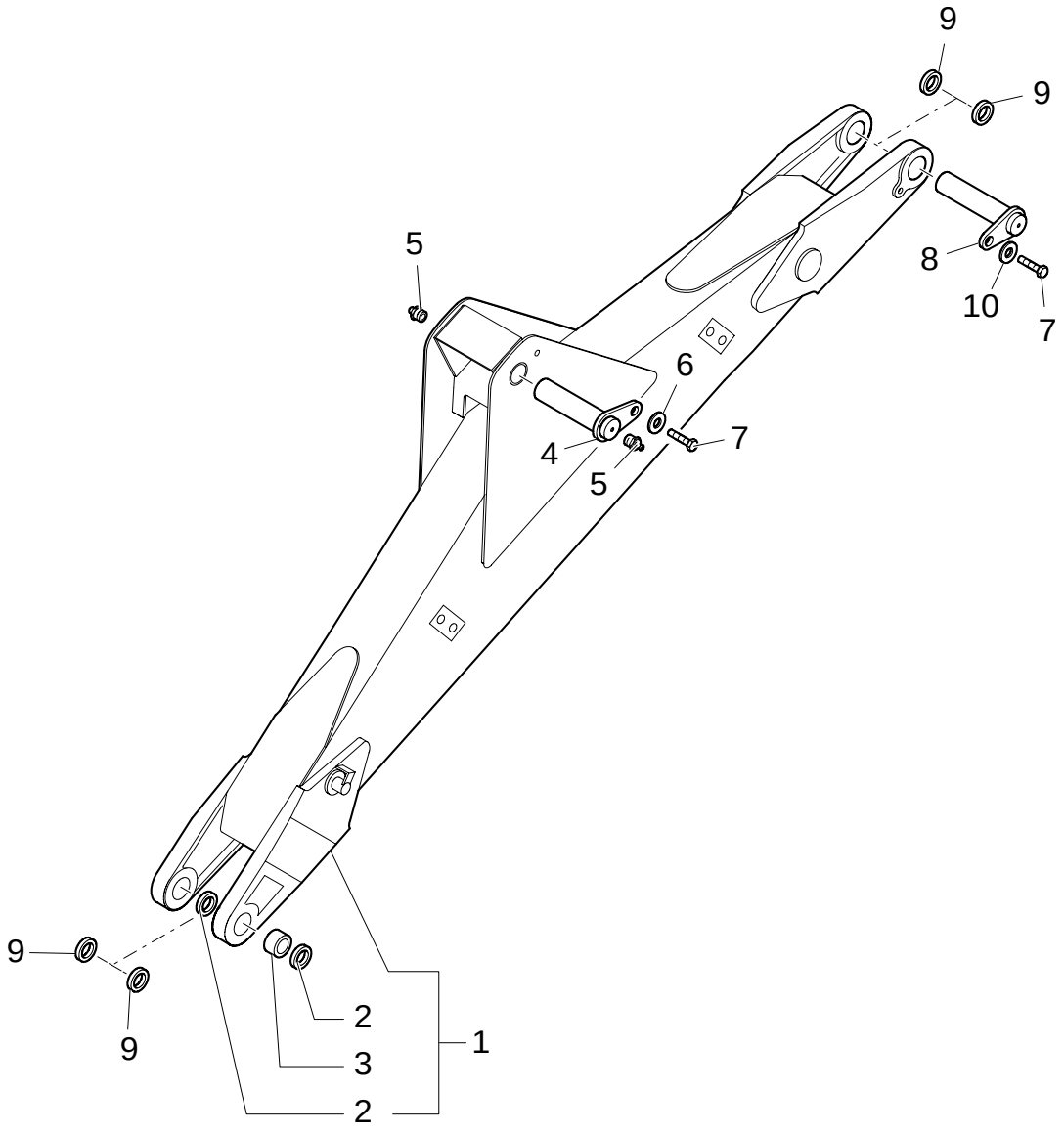

BOOM - TELESCOPIC DIPPER SHORT

REF	FN	PART NUMBER	YR/SN	QTY	DESCRIPTION
1	1	85816801		1	ARM
2		D7NNC512C		2	BUSHING, DRIVE
3		D8NND659AB		4	KNIFE SECTION
4		85815698		1	PIN
5		87901S8		2	NIPPLE, LUBE 1/8"-27
6		85802396		1	WASHER
7		85802397		2	SCREW
8		85815607		1	PIN
9		85818916		4	SHIM
10		85815609		1	WASHER

(1) Includes 2, 3

Mechanical Version

902	02	p1	12/05

TELESCOPIC DIPPER SHORT - HYDRAULIC SYSTEM

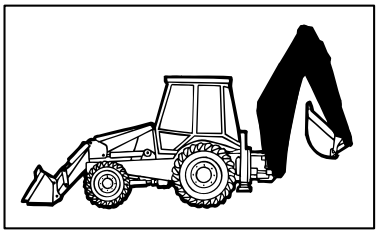

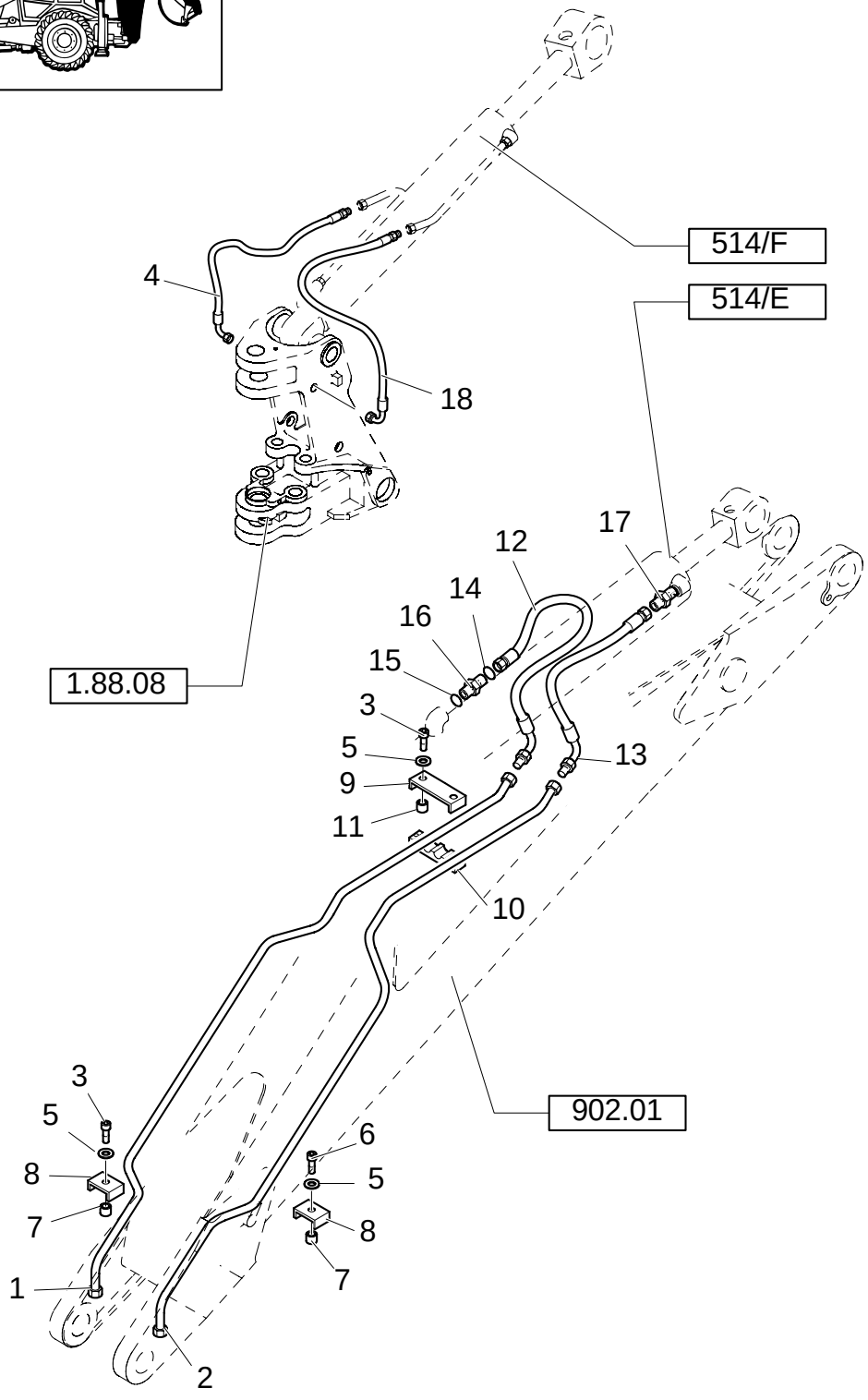

TELESCOPIC DIPPER SHORT - HYDRAULIC SYSTEM

REF	FN	PART NUMBER	YR/SN	QTY	DESCRIPTION
1		85815632		1	TUBE, RIGID
2		85815630		1	TUBE, RIGID
3		16044421		1	SCREW
4		85812150		1	HOSE, FLEXIBLE
5		11193879		4	WASHER, LOCK
6		16044221		1	SCREW M8x50
7		85802902		1	SPACER
8		85802900		1	CLAMP
9		85802894		2	U-BRACKET
10		85802895		2	CLAMP
11		85802893		2	SPACER
12		85812154		1	HOSE, FLEXIBLE
13		85812178		1	HOSE, FLEXIBLE
14		9991976		1	O-RING 90 Duro, .739" ID x .070" Thk
15		167266		1	O-RING 90 Duro, .924" ID x .116" Thk
16	1	390937S36		1	CONNECTOR, HYD. 1-3/16"-12 ORS x 1-1/16"-12 SAE O-Ring
17		390938S36		1	CONNECTOR, HYD.
18		85812142		1	HOSE, FLEXIBLE

(1) Includes 14, 15

Mechanical Version

902	03	p1	02/05

TELESCOPIC DIPPER SHORT - HYDRAULIC SYSTEM

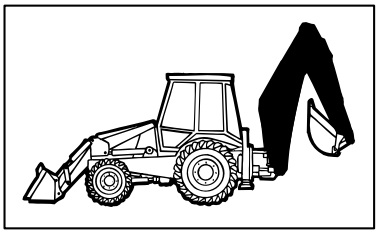

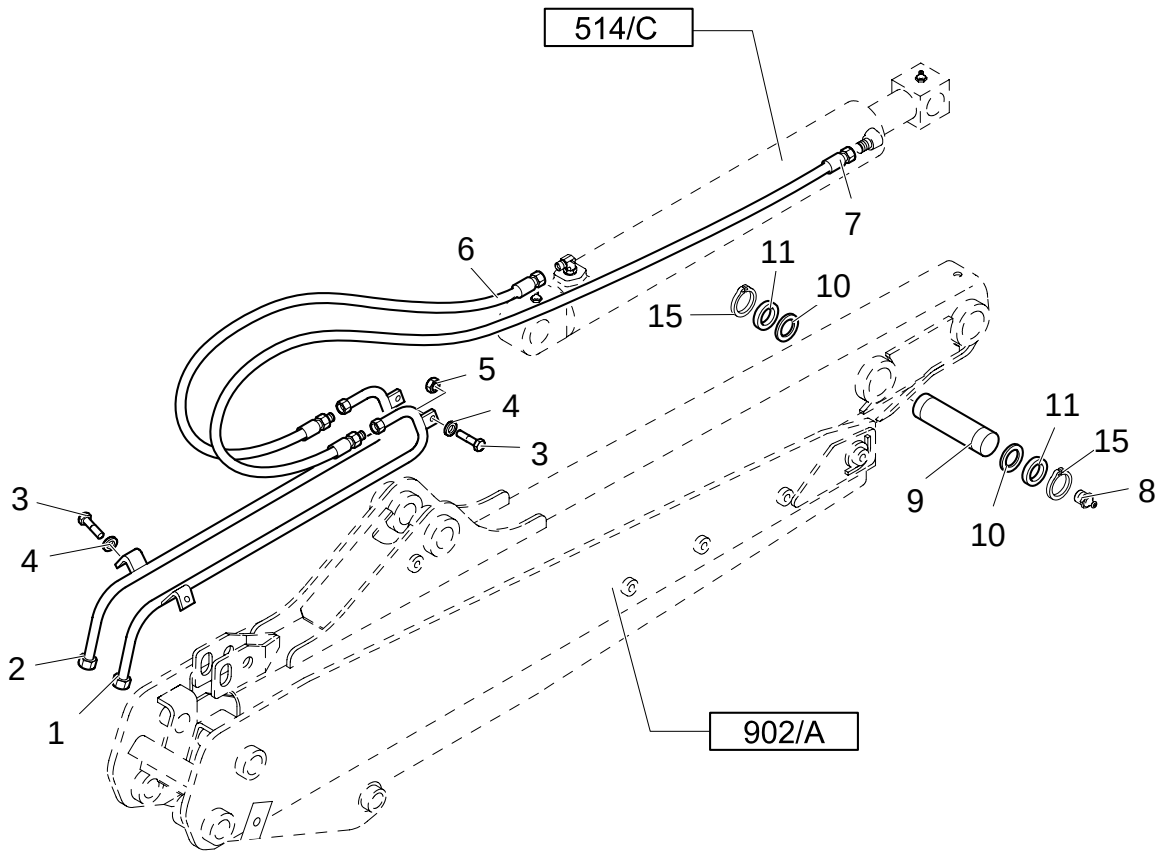

TELESCOPIC DIPPER SHORT - HYDRAULIC SYSTEM

REF	FN	PART NUMBER	YR/SN	QTY	DESCRIPTION
1		85815679		1	TUBE, RIGID
2		85815677		1	TUBE, RIGID
3		16043621		4	SCREW
4		11193979		4	WASHER, LOCK
5		14048211		2	NUT
6		85812164		1	HOSE, FLEXIBLE
7		85826108		1	HOSE, FLEXIBLE
8		87901S8		1	NIPPLE, LUBE 1/8"-27
9		86992966		1	PIN
10		85818916		2	SHIM
11		D7NNC622C		2	SPACER
12		85802396		1	WASHER
13		85802397		1	SCREW
14		85803002		1	PIN
15		11069071		2	RING, LOCKING

Mechanical Version

902	04	p1	02/05

TELESCOPIC DIPPER SHORT- BUCKET MOTION

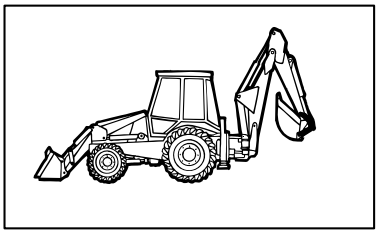

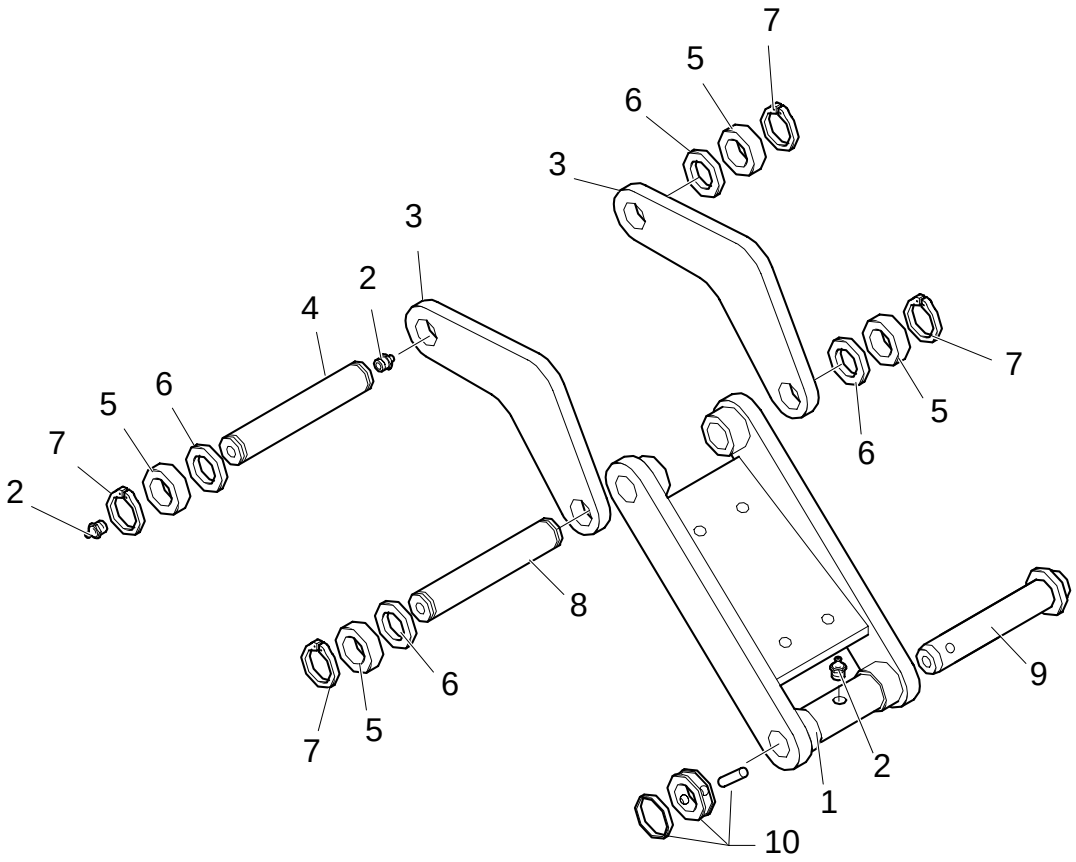

TELESCOPIC DIPPER SHORT- BUCKET MOTION

REF	FN	PART NUMBER	YR/SN	QTY	DESCRIPTION
1		85803613		1	LINK CONROD
2		87901S8		3	NIPPLE, LUBE 1/8"-27
3		{85817133}		2	
4		85815517		1	PIN
5		D7NNC622C		4	SPACER
6		85818916		4	SHIM
7		11069071		4	RING, LOCKING
8		85813469		1	PIN
9		85803005		1	PIN
10		85802975		1	PIN

Mechanical Version

902	05	p1	03/05

TELESCOPIC DIPPER SHORT - HYDRAULIC SYSTEM

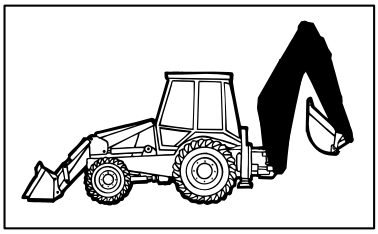

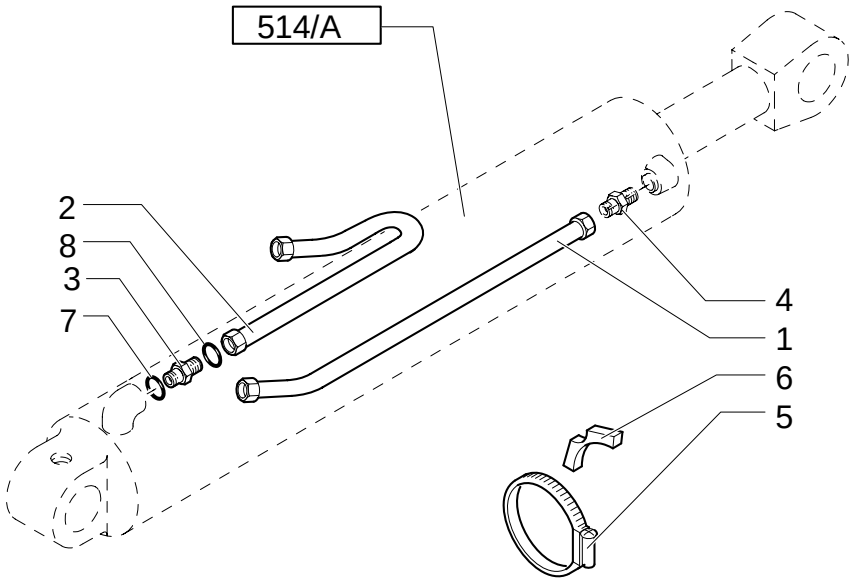

TELESCOPIC DIPPER SHORT - HYDRAULIC SYSTEM

REF	FN	PART NUMBER	YR/SN	QTY	DESCRIPTION
1		85815683		1	TUBE, RIGID
2		85816813		1	TUBE, RIGID
3	1	390937S36		1	CONNECTOR, HYD. 1-3/16"-12 ORS x 1-1/16"-12 SAE O-Ring
4		390938S36		1	CONNECTOR, HYD.
5		85802744		1	CLAMP
6		87303912		2	SPACER
7		167266		1	O-RING 90 Duro, .924" ID x .116" Thk
8		9991976		1	O-RING 90 Duro, .739" ID x .070" Thk

(1) Includes 7, 8

Mechanical Version

902	06	p1	03/05

TELESCOPIC DIPPER SHORT - HYDRAULIC SYSTEM

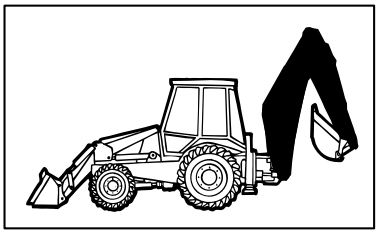

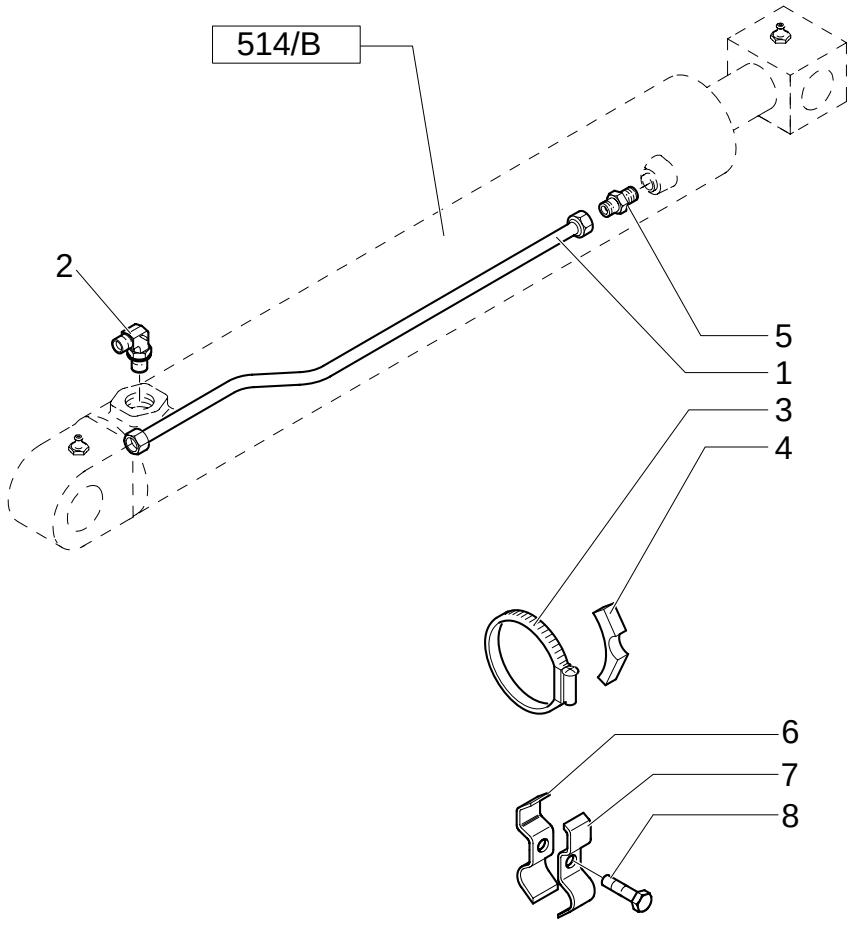

TELESCOPIC DIPPER SHORT - HYDRAULIC SYSTEM

REF	FN	PART NUMBER	YR/SN	QTY	DESCRIPTION
1		85815638		1	TUBE, RIGID
2		85802957		1	ELBOW
3		85803008		1	COLLAR
4		87303910		1	SPACER
5		390938S36		1	CONNECTOR, HYD.
6		85825442		1	COLLAR
7		85825441		1	CLIP
8		14305321		1	SCREW

Mechanical Version

902	07	p1	02/05

TELESCOPIC DIPPER SHORT - HYDRAULIC SYSTEM

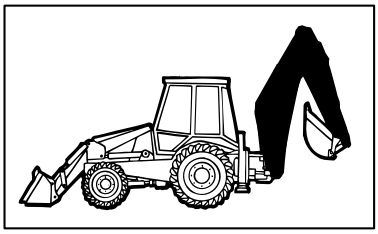

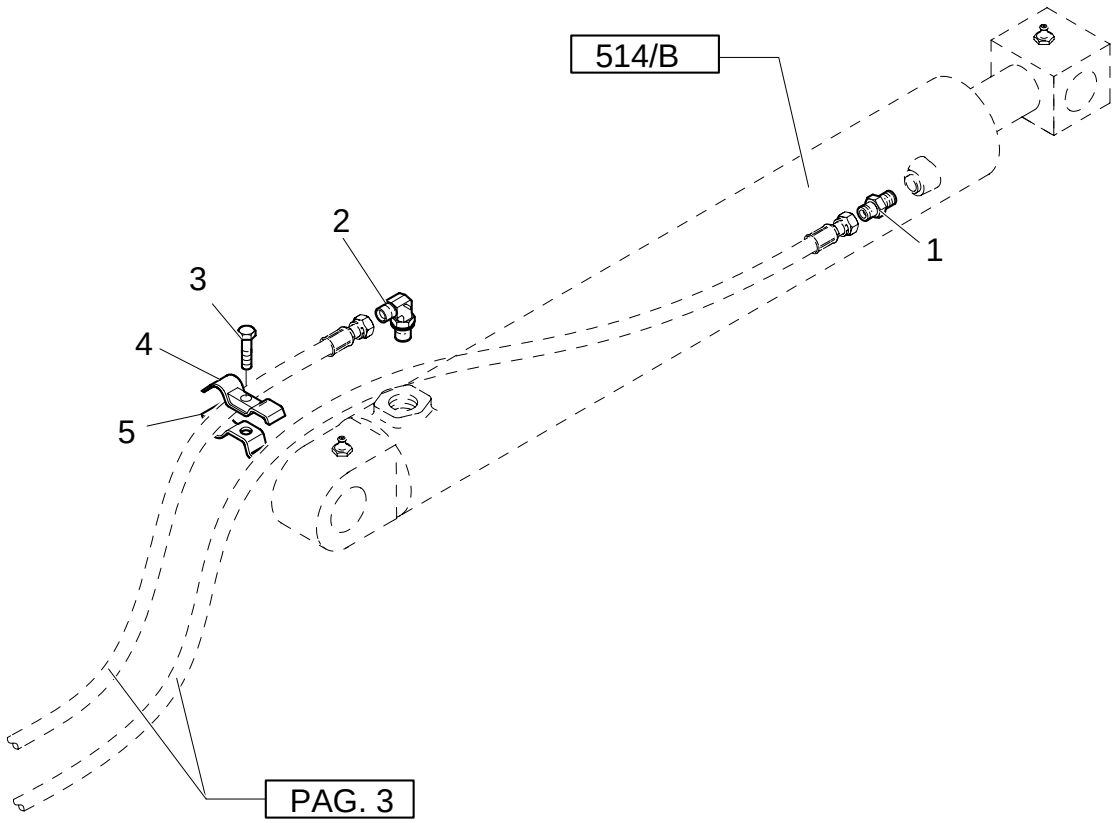

TELESCOPIC DIPPER SHORT - HYDRAULIC SYSTEM

REF	FN	PART NUMBER	YR/SN	QTY	DESCRIPTION
1		390938S36		1	CONNECTOR, HYD.
2		85802957		1	ELBOW
3		14305321		1	SCREW
4		85825441		1	CLIP
5		85825442		1	COLLAR

Mechanical Version

902/ A	01	p1	12/05

TELESCOPIC DIPPER SHORT

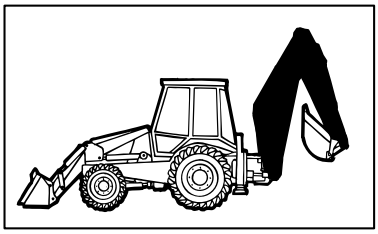

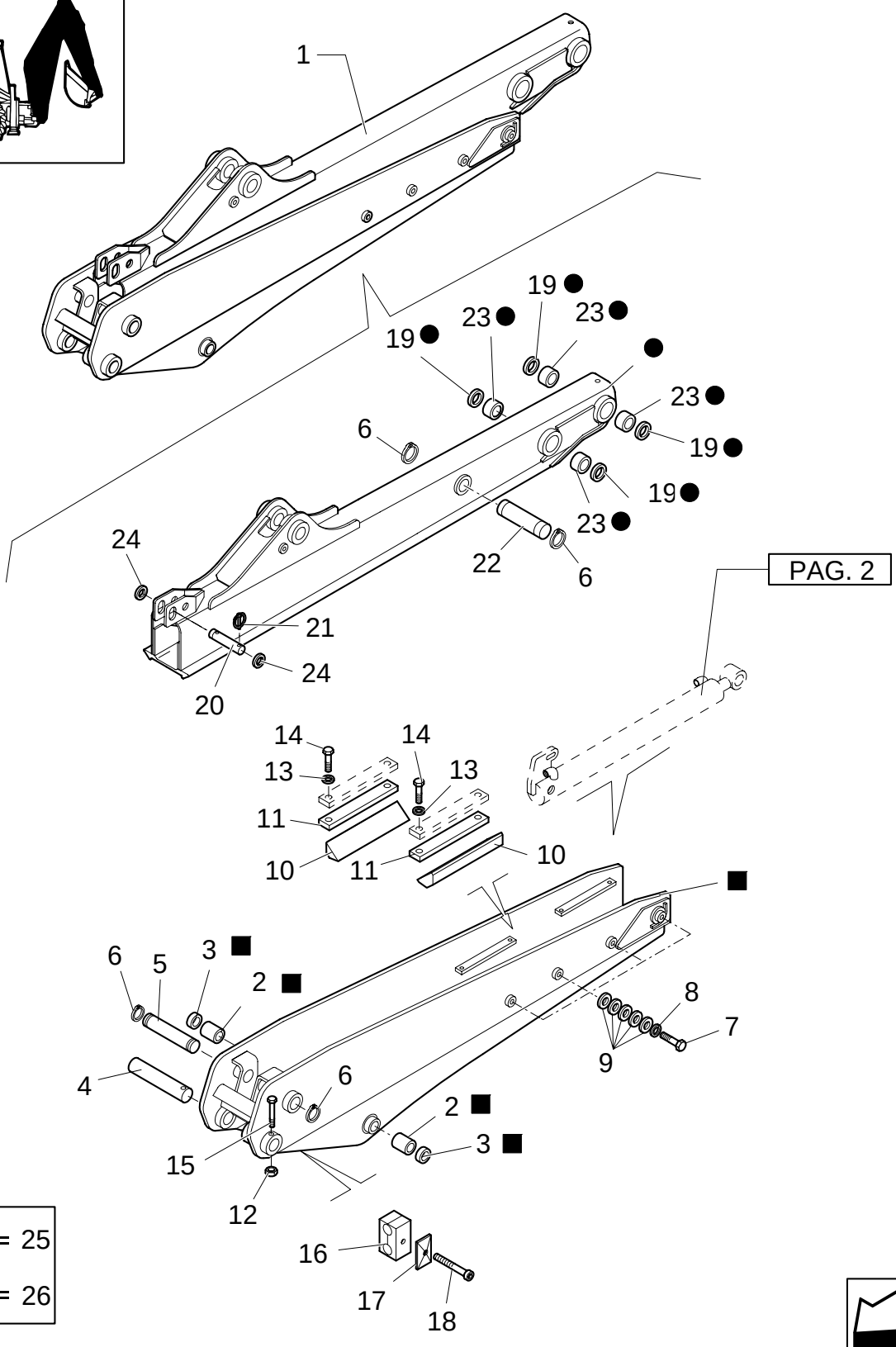

KIT ■ = 25
● = 26

TELESCOPIC DIPPER SHORT

REF	FN	PART NUMBER	YR/SN	QTY	DESCRIPTION
1	1	85817150		1	ARM, LIFT
1	2	87348934		1	ARM, LIFT
2		D7NNC512F		2	BUSHING 2.175"IDx2.80"ODx1.969"
3		D9NNC513CA		2	SEAL PROTECTION
4		85801310		1	PIN
5		85801309		1	PIN
6		N800271S36M		4	RING
7		11124421		8	SCREW
8		14497121		8	WASHER
9		85801307		40	WASHER
10		85808473		4	PAD, SLIDING
11		85808472		4	PAD, SLIDING
12		16105011		1	NUT
13		11190579		8	WASHER, LOCK
14		11106721		8	SCREW M10x38
15		14332521		1	SCREW
16		85803088		2	CLAMP
16		85802534		2	KIT
17		85803289		2	PLATE, COVER
18		16044121		2	SCREW
19		D9NNC513BA		4	SEAL PROTECTION
20		85801314		1	PIN
21		7704794		2	PIN, SPLIT (COTTER)
22		85801308		1	PIN
23		D7NNC512H		4	BUSHING
24		14497401		2	WASHER, LOCK
25	3	85817152		1	ARM, LIFT
26	4	85801258		1	ARM

(1) UP TO S/N XXX
(2) FROM TO S/N XXX
(3) Includes 2, 3
(4) Includes 19, 23

Mechanical Version

902/ A	02	p1	10/05

TELESCOPIC DIPPER SHORT - HYDRAULIC SYSTEMM

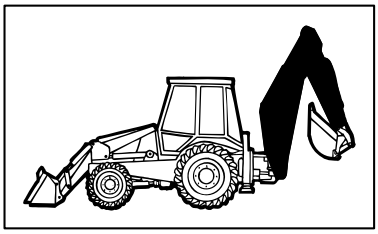

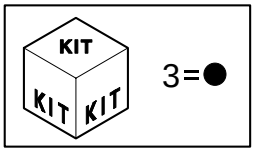

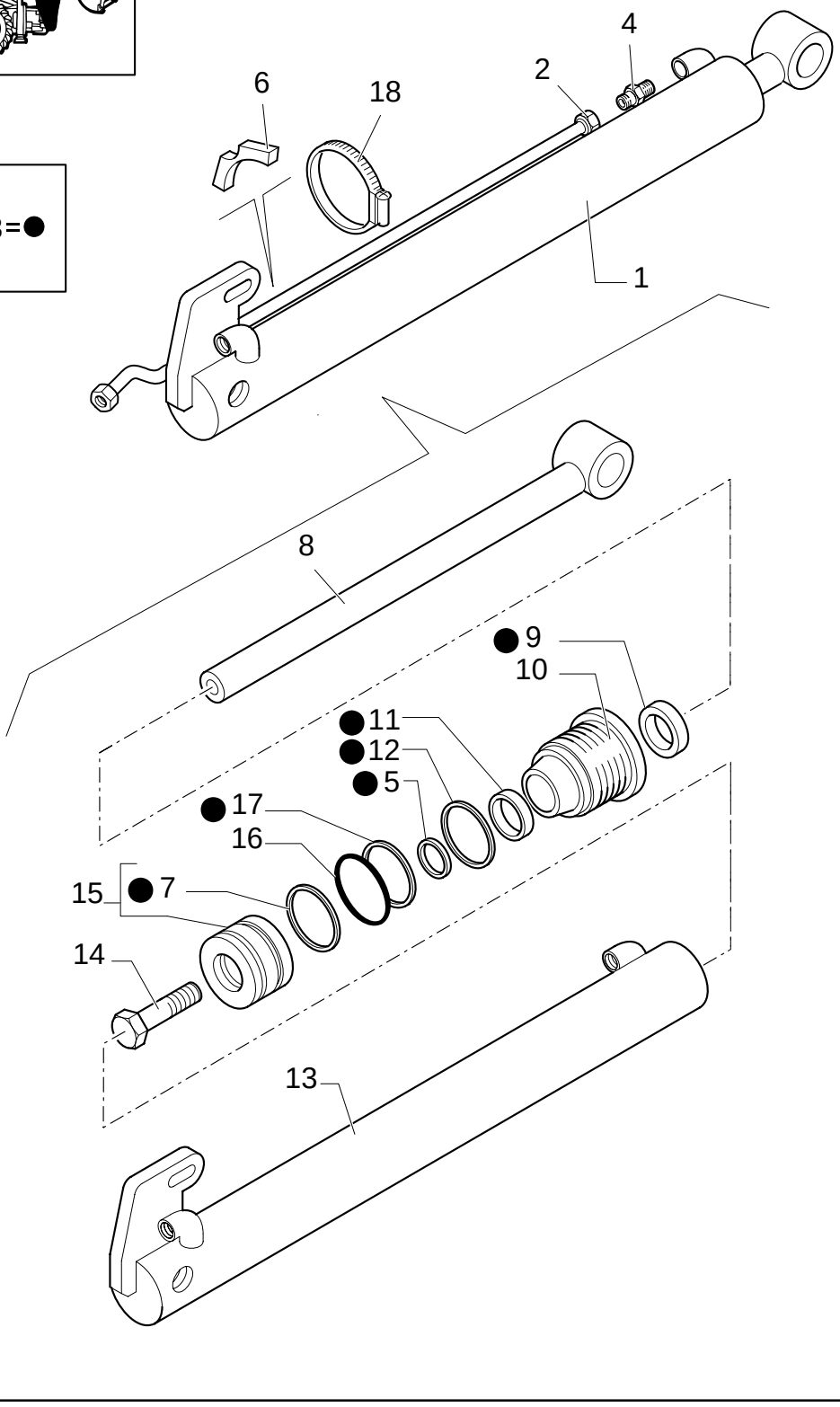

TELESCOPIC DIPPER SHORT - HYDRAULIC SYSTEMM

REF	FN	PART NUMBER	YR/SN	QTY	DESCRIPTION
1		85800860		1	HYDRAULIC CYLINDER ASSY
2		85816811		1	TUBE, RIGID
3		85819357		1	KIT
4		E9NN3R862AA		2	CONNECTOR, HYD.
5		85800090		1	GASKET
6		E7NNB165AA		1	SPACER
7		D8NNA273AA		1	SEAL PROTECTION
8		85800805		1	ROD
9		85800082		1	GASKET
10		85800972		1	PLATE, BASE
11		85800086		1	GASKET
12		D8NNA233AB		1	WIRE, RETAINING
13		85800806		1	LINER, ENGINE CYLINDER
14		E8NNA156FB		1	BOLT
15	1	E7NNA265HA		1	PISTON
16		87073S95		1	O-RING
17		85800001		1	RING
18		85803010		1	CLAMP

(1) Includes 7

Mechanical Version, Up To S/N XXX

902/ B	01	p1	10/05

TELESCOPIC DIPPER SHORT - HYDRAULIC SYSTEMM

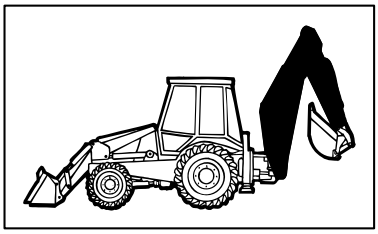

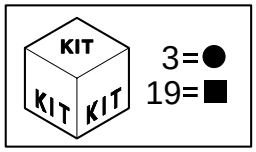

TELESCOPIC DIPPER SHORT - HYDRAULIC SYSTEMM

REF	FN	PART NUMBER	YR/SN	QTY	DESCRIPTION
1		87315517		1	HYDRAULIC CYLINDER ASSY
2		85816811		1	TUBE, RIGID
3		87428620		1	KIT, SEALS
4		E9NN3R862AA		2	CONNECTOR, HYD.
5		87414339		1	GASKET
6		87303910		1	SPACER
7		87414331		1	GASKET
8		85800805		1	ROD
9		87414969		1	WIPER
10		87415113		1	PLATE, BASE
11		87414970		1	PACKAGE, SEALS
12		D8NNA233AB		1	WIRE, RETAINING
13		85800806		1	LINER, ENGINE CYLINDER
14		87428020		1	SCREW
15	1	87405560		1	PISTON
16		87421142		1	O-RING
17		87440399		1	BACK-UP RING
18		85803010		1	CLAMP
19		87424184		1	CYLINDER HEAD
20		86482S95		2	O-RING

(1) Includes 7

Mechanical Version, Up To S/N XXX

902/ C	01	p1	11/05

TELESCOPIC DIPPER SHORT - HYDRAULIC SYSTEMM

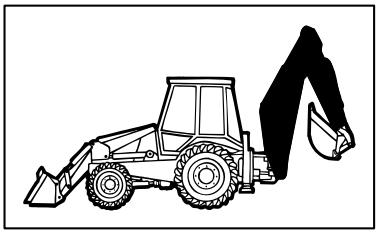

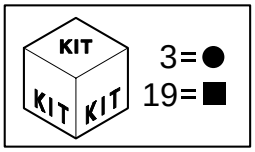

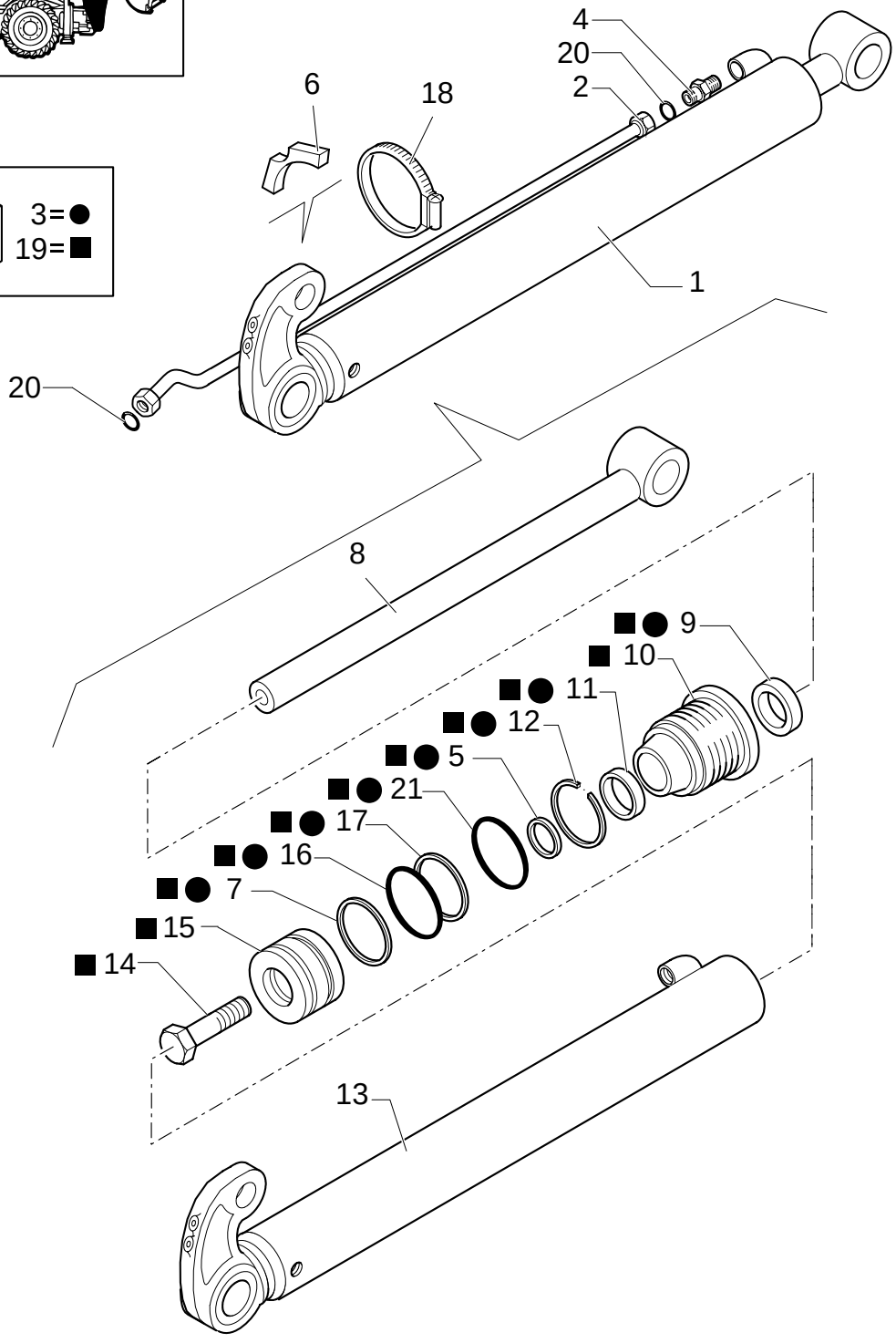

TELESCOPIC DIPPER SHORT - HYDRAULIC SYSTEMM

REF	FN	PART NUMBER	YR/SN	QTY	DESCRIPTION
1	1	{87357264}		1	ASSY
1	2	87327261		1	HYDRAULIC CYLINDER ASSY
2		87327252		1	HOSE, FLEXIBLE
3		87342131		1	KIT
4		E9NN3R862AA		2	CONNECTOR, HYD.
5		{154875C1}		1	
6		87303910		1	SPACER
7		G100444		1	SEAL
8		87314278		1	ROD
9		D95143		1	SEAL
10		297281A1		1	CAP CYLINDER END
11		G102425		1	BUSHING, LARGE
12		G109298		1	RING
13		87314277		1	LINER, ENGINE CYLINDER
14		86982435		1	BOLT, SPECIAL
15		{G107277}		1	
16		{G100443}		1	
17		G100449		1	Ring, Wear
18		85803010		1	CLAMP
19		{110692A4}		1	
20		86482S95		2	O-RING
21		238-5231		1	O-RING

(1) Only for EUROPE Version
(2) Only for NA Version

Mechanical Version, From To S/N XXX

NOTES

SECTION INDEX

SEC. 10	00	BODY, HOOD & DRIVER"S POST 1/3
SEC. 10	01	BODY, HOOD & DRIVER"S POST 2/3
SEC. 10	02	BODY, HOOD & DRIVER"S POST 3/3
095	01	STABILIZER CONTROL WITHOUT AUTO-UP (CENTER PIVOT)
096	01	STABILIZER CONTROL WITH AUTO-UP (CENTER PIVOT)
1.91.1	01	CAB / CEILING LIGHT
1.91.1/ 1	01	SAFETY FRAME- INSTRUMENTS AND GAUGES
1.91.3	01	BACK-UP ALARM
1.91.4	01	IGNITON SWITCH, POWER POINT, FUSE PANEL & SIDE CONSOLE HARNESS (ROPS CP POWER SHUTTLE)
1.91.4	02	IGNITON SWITCH, POWER POINT, FUSE PANEL & SIDE CONSOLE HARNESS (ROPS CP POWER SHUTTLE)
1.91.4	03	IGNITON SWITCH, POWER POINT, FUSE PANEL & SIDE CONSOLE HARNESS (ROPS CP POWER SHUTTLE)
1.91.4	04	IGNITON SWITCH, POWER POINT, FUSE PANEL & SIDE CONSOLE HARNESS (ROPS CP POWER SHUTTLE)
1.91.4	05	RH SIDE CONSOLE TRIM, INSTRUMENT CLUSTER & SWITCHES (ROPS CP POWER SHUTTLE)
1.91.4/ 2	01	IGNITON SWITCH, POWER POINT, FUSE PANEL & SIDE CONSOLE HARNESS (CAB CP POWER SHUTTLE)
1.91.4/ 2	02	IGNITON SWITCH, POWER POINT, FUSE PANEL & SIDE CONSOLE HARNESS (CAB CP POWER SHUTTLE)
1.91.4/ 2	03	IGNITON SWITCH, POWER POINT, FUSE PANEL & SIDE CONSOLE HARNESS (CAB CP POWER SHUTTLE)
1.91.4/ 2	04	IGNITON SWITCH, POWER POINT, FUSE PANEL & SIDE CONSOLE HARNESS (CAB CP POWER SHUTTLE)
1.91.4/ 2	05	IGNITON SWITCH, POWER POINT, FUSE PANEL & SIDE CONSOLE HARNESS (CAB CP POWER SHUTTLE)
1.91.5	01	FRONT AND REAR WINDSCREEN WIPERS
1.91.5	02	WINDSCREEN WIPERS RESERVOIR & NOZZLES
1.91.6	01	RADIO ANTENNA & SPEAKER COVER
1.91.7/ 1	01	LAMPS & LIGHTS - CAB (USA)
1.91.7/ 3	01	LAMPS & LIGHTS - ROPS (USA)
1.91.8	01	CAB-SAFETY FRAME / EXTINGUISHER
1.92.1	01	CAB - FRAME-DOOR
1.92.1/ 1	01	ROPS - SAFETY FRAME
1.92.1/ 2	01	CAB - FRAME-DOOR
1.92.1/ 3	01	ROPS - SAFETY FRAME
1.92.3	01	WINDOWS
1.92.4	01	WINDOWS
1.92.4	02	WINDOWS
1.92.4	03	WINDOWS
1.92.5	01	FENDERS, REAR
1.92.6	01	DOOR COMPONENTS
1.92.6	02	DOOR COMPONENTS
1.92.6	03	DOOR COMPONENTS
1.92.8	01	FIREWALL SEAL, ROPS
1.92.9	01	REAR WINDOWS
1.92.9	02	REAR WINDOWS
1.92.9	03	REAR WINDOWS
1.93.0	01	CAB / SOFT TRIM
1.93.0	02	CAB / SOFT TRIM (POWER SHUTTLE)

SECTION INDEX

1.93.0	03	CAB / SOFT TRIM
1.93.0	04	CAB / SOFT TRIM
1.93.0/ 2	01	RH & BACKHOE CONSOLE TRIM, ROPS (CENTER PIVOT)
1.93.0/ 3	01	CAB / SOFT TRIM
1.93.0/ 3	04	CAB / SOFT TRIM
1.93.0/ 5	01	RH & BACKHOE CONSOLE TRIM, ROPS (CENTER PIVOT)
1.93.0/ 6	01	ROOF, ROPS
1.93.0/ 6A	01	ROOF, ROPS
1.93.4	01	REAR MIRROR- SUN SCREEN
1.93.5	01	FRONT CONSOLE - ROPS (POWER SHUTTLE)
1.93.5	02	RH SIDE CONSOLE SEAL & CLIPS - ROPS (POWER SHUTTLE)
1.93.5/ 1	01	CAB / PANEL DASH
1.93.5/ 1	02	CAB / PANEL DASH
1.93.5/ 3	01	CAB / PANEL DASH
1.94.0	01	CAB/ CANOPY
1.94.2	03	HEATER WATER HOSES
1.94.2/ 1	03	HEATER WATER HOSES
1.95.0	01	CAB-SAFETY FRAME / BRAKE PEDAL
1.95.0	02	CAB-SAFETY FRAME / BRAKE PEDAL
1.95.0	03	CAB-SAFETY FRAME / BRAKE PEDAL
1.95.0/ A	01	CAB-SAFETY FRAME / BRAKE PEDAL
1.95.1	01	CAB-SAFETY FRAME / HAND BRAKE
1.95.2	01	TRANSPORT LOCK CONTROL
1.95.3	01	HAND-OPERATED AND PEDAL-OPERATED ACCELERATOR CONTROL
1.95.5	01	POWER STEERING MOTOR, WHEEL & COLUMN TRIM (NA)
1.95.5	02	POWER STEERING MOTOR HOSES
1.95.5/ A	01	POWER STEERING MOTOR
1.95.5/ A	02	POWER STEERING MOTOR
1.95.5/ 3	01	POWER STEERING MOTOR, WHEEL & COLUMN (NA)
1.96.0	01	FOWARD/REVERSE & MULTI-PURPOSE LEVER (POWER-SHUTTLE - CENTER PIVOT)
1.96.2	01	STABILIZER CONTROL
1.96.2	02	STABILIZER CONTROL
1.96.2/ 1	01	PILOT CONTROL DIAGNOSTICS
1.96.7	01	CAB PLUGS, FLOOR PLATES & AIR CONVEYER, CENTER PIVOT
1.96.7/ 4	01	ROPS PLUGS & FLOOR PLATE (CENTER PIVOT)
1.96.7/ 6	01	CAB PLUGS, FLOOR PLATES & AIR CONVEYER, CENTER PIVOT
1.96.7/10	01	ROPS PLUGS & FLOOR PLATE (CENTER PIVOT)
1.98.0	01	INFORMATION SYMBOL DECALS - USA (POWER SHUTTLE)
1.98.0	02	CAB WARNING & INFORMATION DECALS (POWER SHUTTLE)
1.98.0	03	BACKHOE, LOADER & ENGINE WARNING DECALS (POWER SHUTTLE)
1.98.0	04	BACKHOE, LOADER & ENGINE WARNING DECALS (POWER SHUTTLE)
1.98.0	05	PLATES (POWER SHUTTLE)
1.98.0	06	PLATES (POWER SHUTTLE)
1.98.1	08	B95TC MODEL IDENTIFICATIO
346	01	A/C HOUSING & FILTERS
346	02	A/C BLOWER & COILS
346	03	HEATER COIL HOSES
346	04	A/C & HEATER CONTROL PANEL
346	05	A/C & HEATER CONSOLE DUCTS
346/1	01	TRANSFORMATION SET FROM HEATING TO AIR CONDITIONING
346/1	02	TRANSFORMATION SET FROM HEATING TO AIR CONDITIONING

SECTION INDEX

347	01	HOUSING & FILTERS
347	02	HEATER BLOWER & COILS
347	03	HEATER COIL HOSES
347	04	A/C & HEATER CONTROL PANEL
347	05	A/C & HEATER CONSOLE DUCTS
347	06	CAB HEATING COATING PLUG
351	04	CASE 3 LEVER BACKHOE CONTROLS, CONSOLE & LEVERS
351	05	CASE 3 LEVER BACKHOE CONTROLS, BELLCRANK & SUPPORT
351	06	CASE 3 LEVER BACKHOE CONTROLS, BUCKET TIE-ROD ASSEMBLY
351	07	CASE 3 LEVER BACKHOE CONTROLS, UPPER SWING TIE-ROD ASSEMBLY
351	08	CASE 3 LEVER BACKHOE CONTROLS, DIPPER, SWING & BOOM LINKAGE
351	09	CASE 3 LEVER BACKHOE CONTROLS, SWING CONTROL PEDAL
390	01	LOADER CONTROL VALVE, TWO SECTION, LEVER & DECAL
390/ 1	01	2 LEVER BACKHOE CONTROLS, LEVER, BOOT & DECALS (CENTER PIVOT)
393	01	2 LEVER BACKHOE CONTROLS, LEVER, BOOT & DECALS
393	03	LOCKING VALVE ON BACKHOE LIFT CYLINDER
394	01	ISO 2 LEVER BACKHOE CONTROLS, LEVERS, BOOT & DECALS (CENTER PIVOT)
394	02	ISO 2 LEVER BACKHOE CONTROLS, TIE-ROD ASSEMBLY (CENTER PIVOT)
394/ 1	01	4 LEVER BACKHOE CONTROLS, CONSOLE, LEVERS & BELLCRANK (CENTER PIVOT)
394/ 1	02	4 LEVER BACKHOE CONTROLS, UPPER TIE-ROD ASSEMBLY, CENTER PIVOT
394/ 1	03	4 LEVER BACKHOE CONTROLS, LOWER TIE-ROD ASSEMBLY (CENTER PIVOT)
622	01	INTERNAL FAN
646/1	01	MACHINE PART AIR CONDITIONING SET
646/1	02	A/C COMPRESSOR ATTACHING GROUP
646/1	03	A/C COMPRESSOR
646/1	04	A/C FILTER & CONDENSER ATTACHING GROUP
646A	01	A/C COMPRESSOR ATTACHING GROUP
650	01	STEERING COLUMN, FIXED & ADJUSTABLE
705	01	SEAT BELTS, 2" & 3"
758	01	ROTATING BEACON
782	01	FRONT CONSOLE WITH SPEEDOMETER, 4WD
787/ 1	01	FRONT CONSOLE WITHOUT SPEEDOMETER (CAB)
787/ 2	01	FRONT CONSOLE WITHOUT SPEEDOMETER (CAB)
788/ 1	01	FRONT CONSOLE WITH SPEEDOMETER, 4WD
788/ 2	01	FRONT CONSOLE WITH SPEEDOMETER, 4WD
789	01	SPEED SENSOR(P.SHUTTLE)
791	01	RH CONSOLE WITH INSTRUMENTS
792	01	RH CONSOLE WITH INSTRUMENTS AND DIAGNOSTICS
795	01	RH CONSOLE WITH INSTRUMENTS AND DIAGNOSTICS
796	01	ANTITHEFT
851/ 2	01	CLOTH SEAT & ATTACHING HARDWARE - CABINE
855/ 2	01	AIR RIDE CLOTH SEAT & ATTACHING HARDWARE - CABINE
856	01	VINYL SEAT CUSHIONS, ARMRESTS & RELATED PARTS (ROPS)
856/ 1	01	VINYL SEAT WITH ARMRESTS & MOUNTING HARDWARE (ROPS)
856/ 1	02	VINYL SEAT MOUNTING PLATE, ADJUSTING RAILS & SEAT BELT (ROPS)
856/ 1	03	VINYL SEAT UPPER SUSPENSION PARTS (ROPS)
856/ 1	04	VINYL SEAT LOWER SUSPENSION PARTS (ROPS)
856/ 2	01	VINYL SEAT CUSHIONS, ARMRESTS & RELATED PARTS (ROPS)
990	01	TOOL KIT
993	01	SAFETY PLATES - USA

BODY, HOOD & DRIVER'S POST 1/3

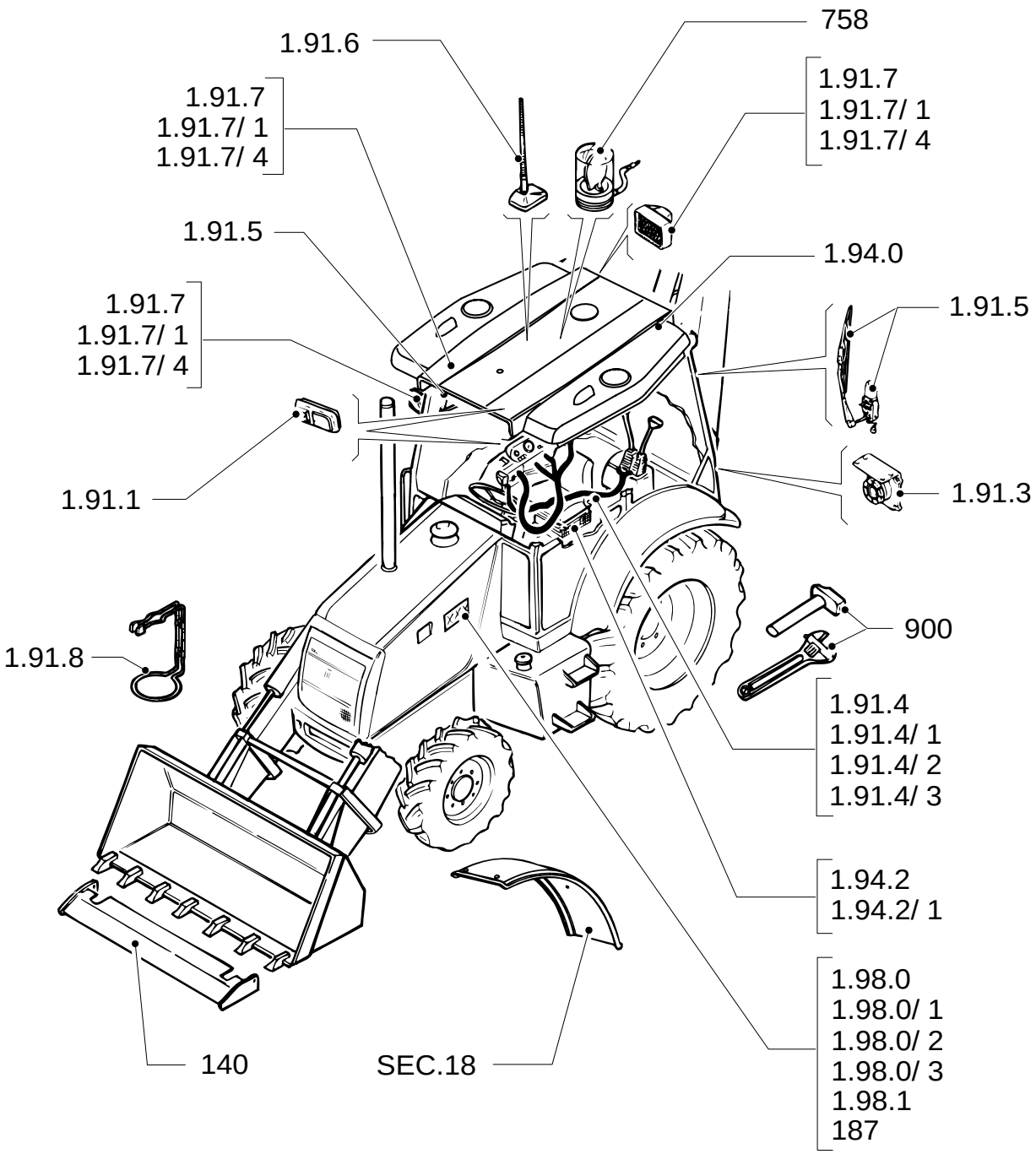

BODY, HOOD & DRIVER'S POST 1/3

REF	FN	PART NUMBER	YR/SN	QTY	DESCRIPTION

BODY, HOOD & DRIVER'S POST 2/3

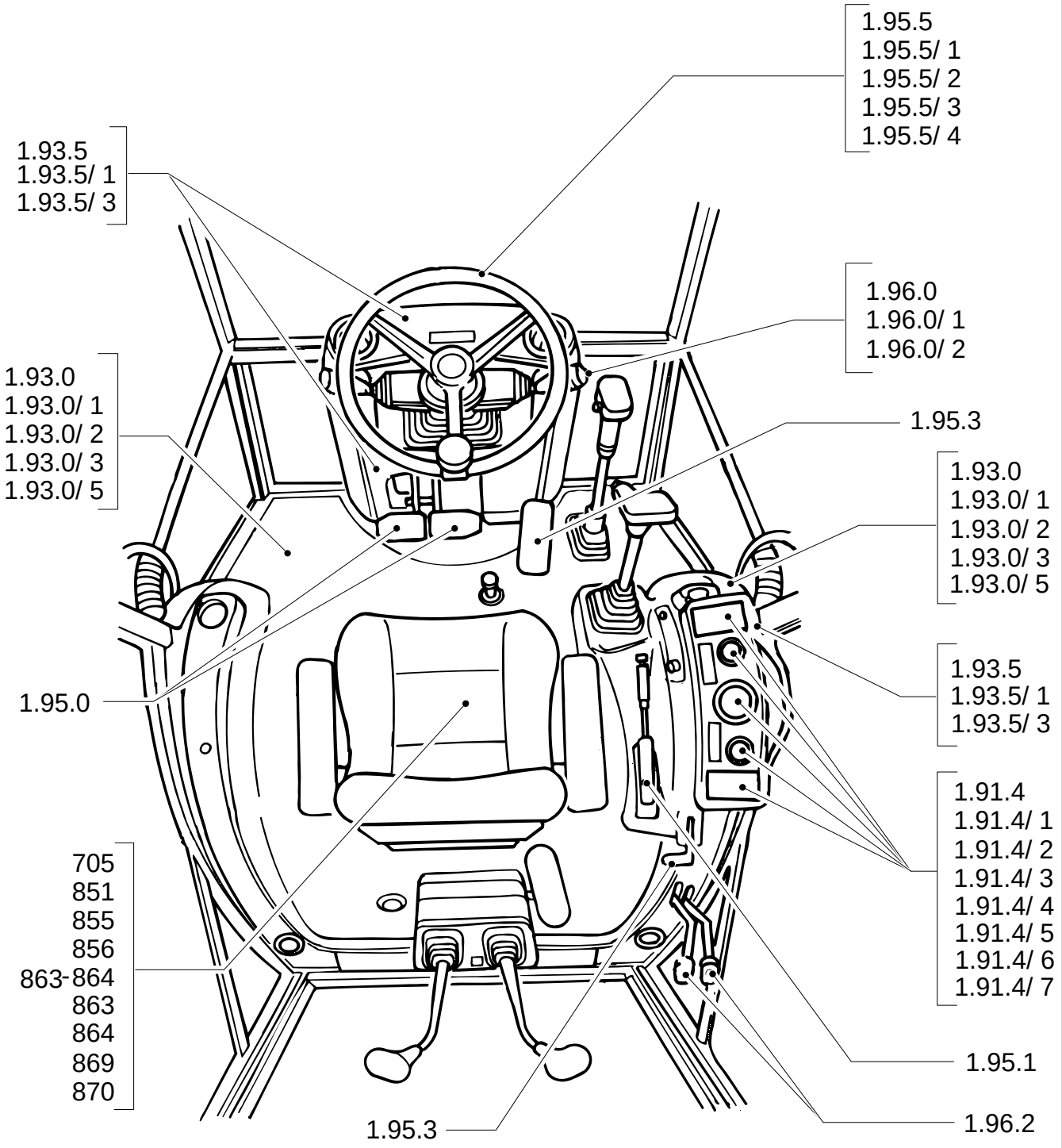

BODY, HOOD & DRIVER'S POST 2/3

REF	FN	PART NUMBER	YR/SN	QTY	DESCRIPTION

BODY, HOOD & DRIVER'S POST 3/3

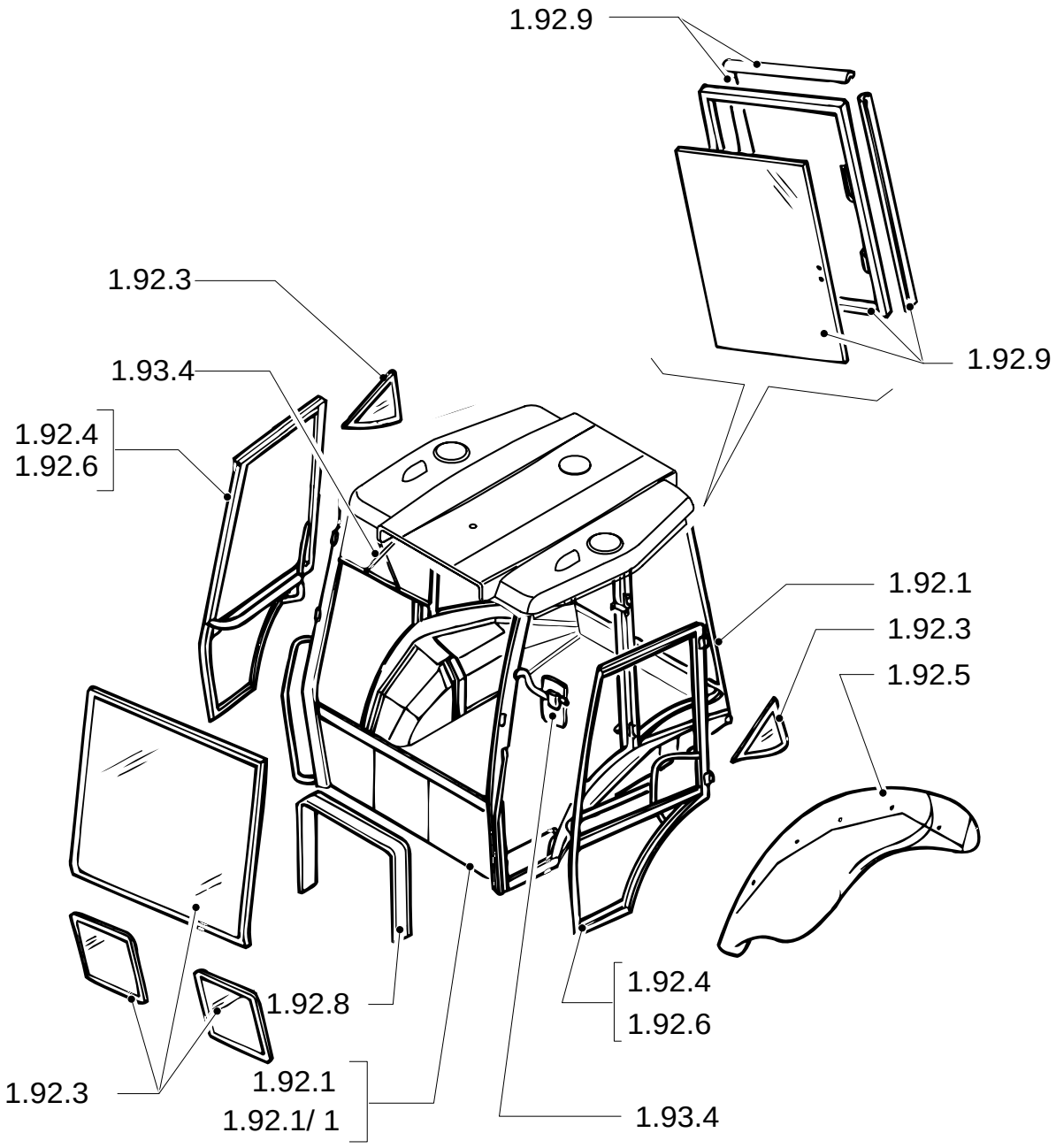

BODY, HOOD & DRIVER'S POST 3/3

REF	FN	PART NUMBER	YR/SN	QTY	DESCRIPTION

095	01	p1	02/05

STABILIZER CONTROL WITHOUT AUTO-UP (CENTER PIVOT)

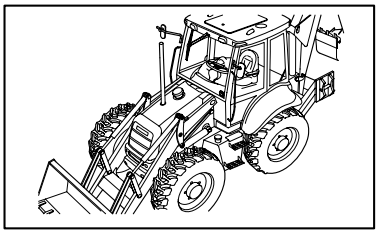

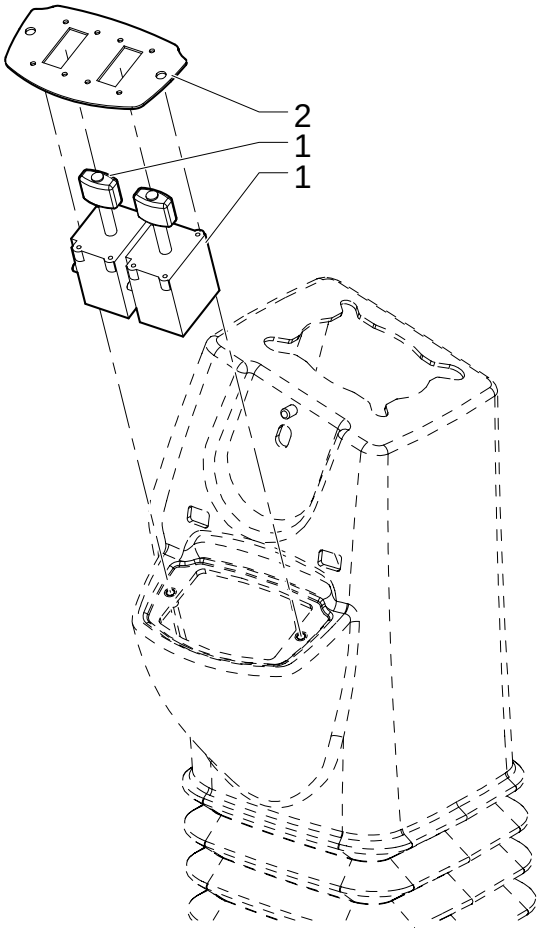

STABILIZER CONTROL WITHOUT AUTO-UP (CENTER PIVOT)

REF	FN	PART NUMBER	YR/SN	QTY	DESCRIPTION
1		86988086		2	SWITCH, TOGGLE
2		87435381		1	PLATE, MOUNTING

Pilot Control Version

096	01	p1	02/05

STABILIZER CONTROL WITH AUTO-UP (CENTER PIVOT)

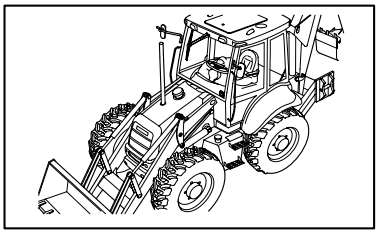

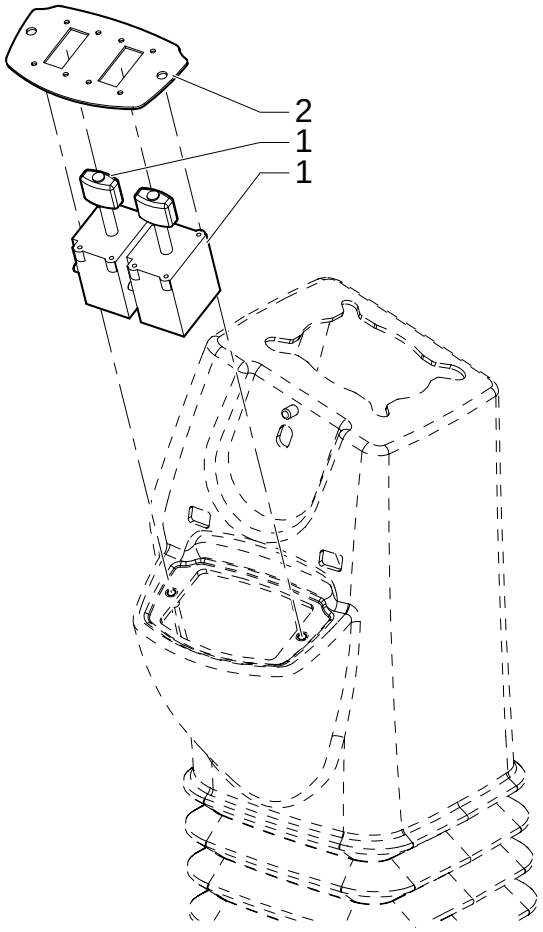

STABILIZER CONTROL WITH AUTO-UP (CENTER PIVOT)

REF	FN	PART NUMBER	YR/SN	QTY	DESCRIPTION
1		86988086		2	SWITCH, TOGGLE
2		87435381		1	PLATE, MOUNTING

Pilot Control Version

CAB / CEILING LIGHT

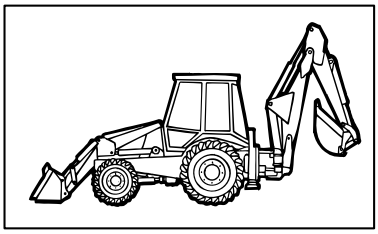

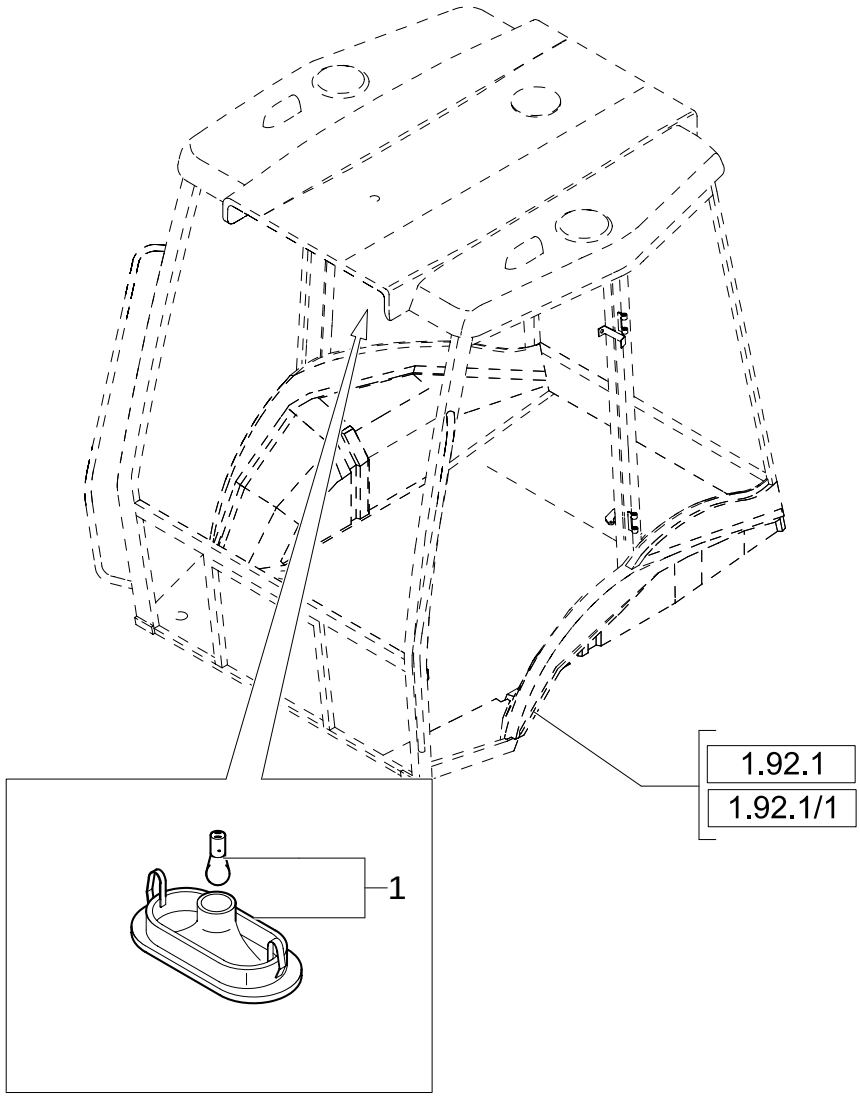

CAB / CEILING LIGHT

REF	FN	PART NUMBER	YR/SN	QTY	DESCRIPTION
1		82022833		1	LAMP, CEILING

SAFETY FRAME- INSTRUMENTS AND GAUGES

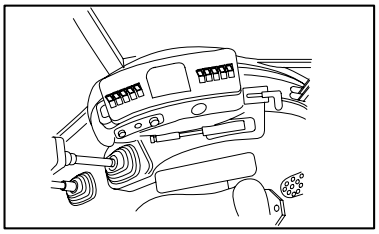

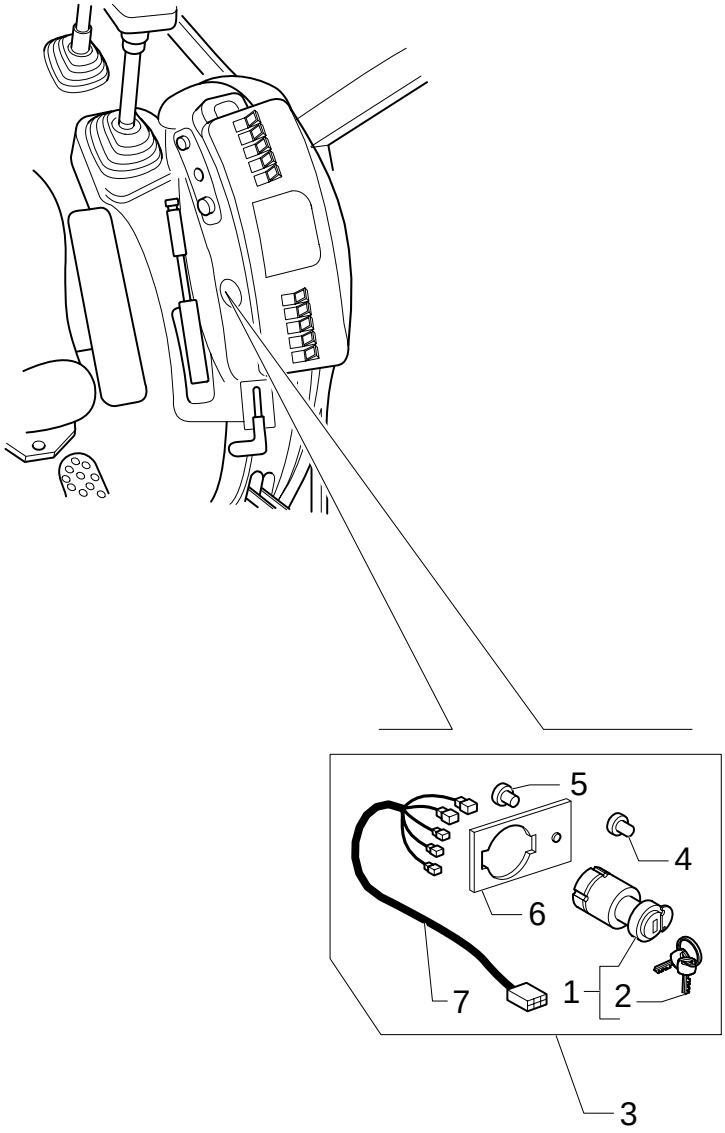

SAFETY FRAME- INSTRUMENTS AND GAUGES

REF	FN	PART NUMBER	YR/SN	QTY	DESCRIPTION
1		87431469		1	SWITCH
2		85804675		2	KEY, LOCK
3		85807866		1	KIT
4		784122		1	PLUG
5		10427200		1	RIVET
6		85827548		1	SEAT/SLOT
7		85807855		1	CABLE, ELECTRIC

BACK-UP ALARM

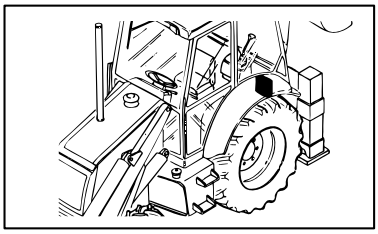

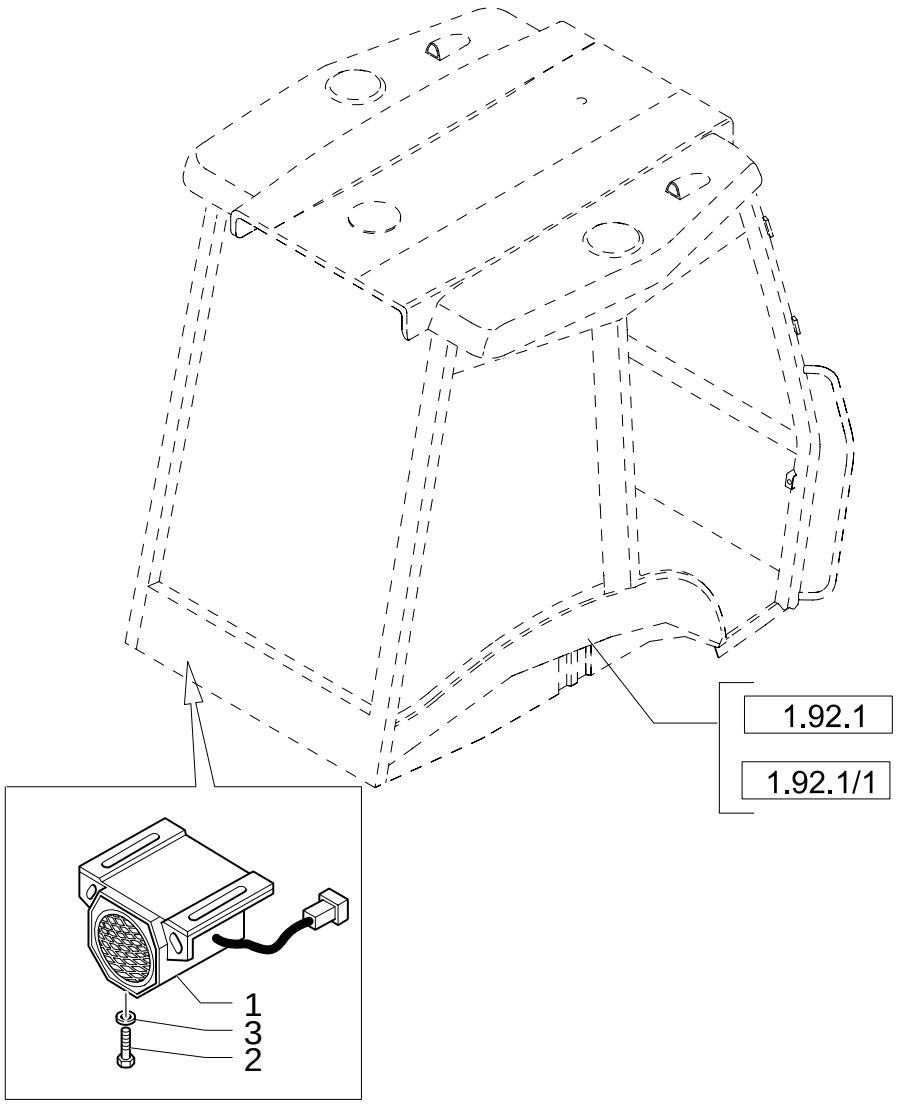

BACK-UP ALARM

REF	FN	PART NUMBER	YR/SN	QTY	DESCRIPTION
1		87303261		1	ALARM
2		13276424		2	SCREW M6X20
3		11197774		2	WASHER, LOCK 6X15X1.2

1.91.4	01	p1	11/05

IGNITON SWITCH, POWER POINT, FUSE PANEL & SIDE CONSOLE HARNESS (ROPS CP POWER SHUTTLE)

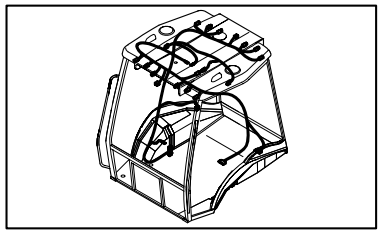

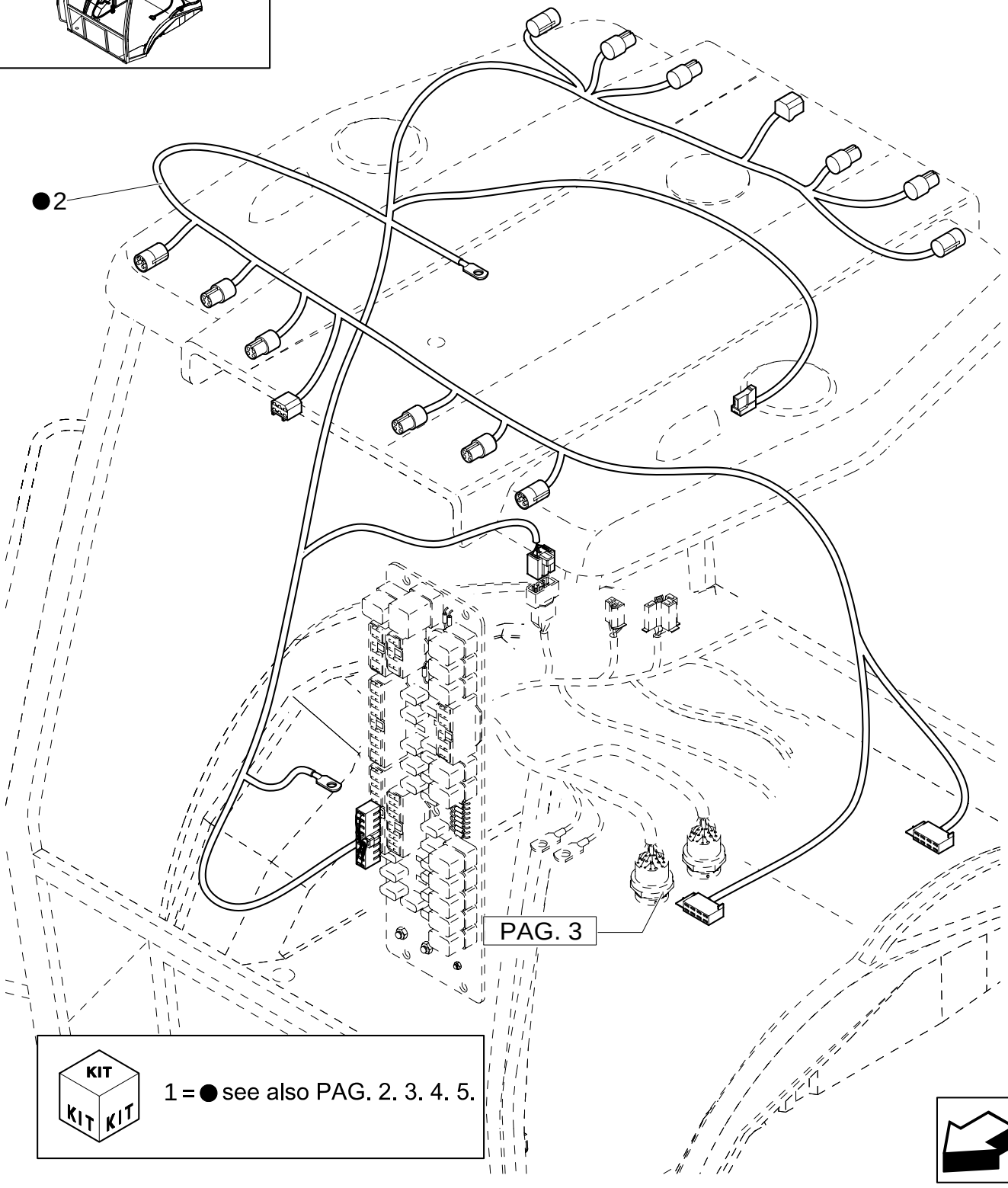

KIT KIT KIT

1 = ● see also PAG. 2. 3. 4. 5.

IGNITON SWITCH, POWER POINT, FUSE PANEL & SIDE CONSOLE HARNESS (ROPS CP POWER SHUTTLE)

REF	FN	PART NUMBER	YR/SN	QTY	DESCRIPTION
1	1	{87431460}		1	
2		85819724		1	CABLE, ELECTRIC

(1) See Page 1.91.4.02, 1.91.4.03, 1.91.4.04, 1.91.4.05

1.91.4	02	p1	11/05

IGNITON SWITCH, POWER POINT, FUSE PANEL & SIDE CONSOLE HARNESS (ROPS CP POWER SHUTTLE)

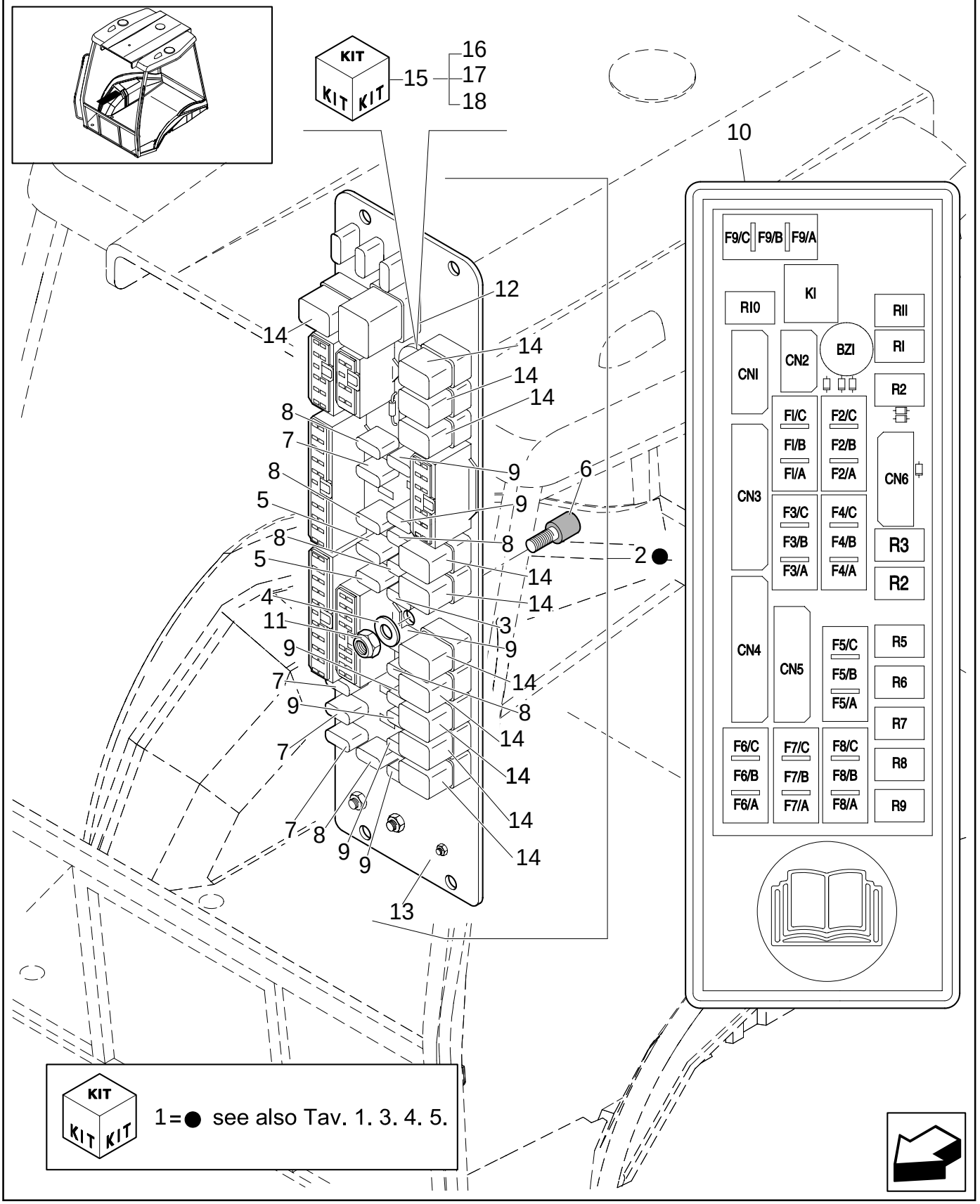

IGNITON SWITCH, POWER POINT, FUSE PANEL & SIDE CONSOLE HARNESS (ROPS CP POWER SHUTTLE)

REF	FN	PART NUMBER	YR/SN	QTY	DESCRIPTION
1		{87431460}		1	
2		87431459		1	ELECTRONIC UNIT, CONTROL
3		11054790		1	FUSE 5A
4		10519204		1	WASHER M4
5		11054590		2	FUSE 3A
6		85806135		1	SILENTBLOC
7		11054890		4	FUSE 7,5A
8		11054990		6	FUSE 10A
9		11055090		7	FUSE 15A
10		85802250		1	DECAL
11		12574011		1	NUT M4
12		85803986		1	RELAY
13		85825197		1	BODY
14		85825198		11	RELAY
15		85826012		1	KIT
16		NSS		1	NOT SERVICED SEPARATELY
17		85826014		1	CABLE, ELECTRIC
18		NSS		1	NOT SERVICED SEPARATELY

1.91.4	03	p1	11/05

IGNITON SWITCH, POWER POINT, FUSE PANEL & SIDE CONSOLE HARNESS (ROPS CP POWER SHUTTLE)

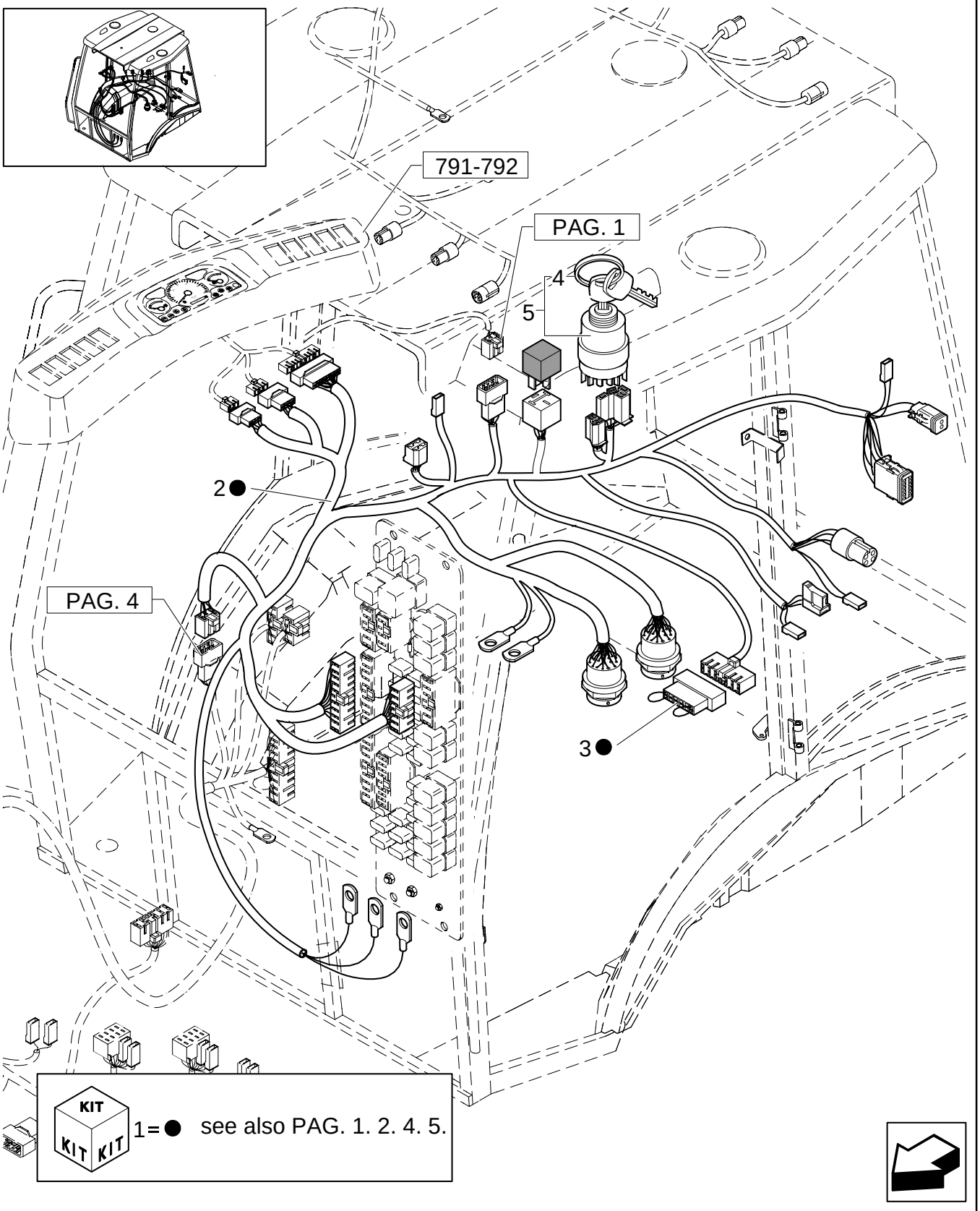

IGNITON SWITCH, POWER POINT, FUSE PANEL & SIDE CONSOLE HARNESS (ROPS CP POWER SHUTTLE)

REF	FN	PART NUMBER	YR/SN	QTY	DESCRIPTION
1	1	{87431460}		1	
2		87431461		1	CABLE, ELECTRIC
3		85821410		1	BLOCK
4		85804675		2	KEY, LOCK
5		87431469		1	SWITCH

(1) See Page 1.91.4.01, 1.91.4.02, 1.91.4.04, 1.91.4.05

IGNITON SWITCH, POWER POINT, FUSE PANEL & SIDE CONSOLE HARNESS (ROPS CP POWER SHUTTLE)

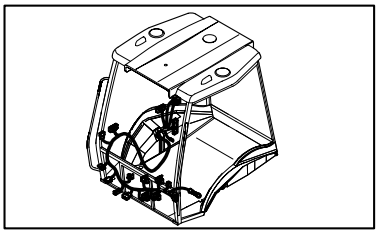

KIT KIT KIT 1 = ● see also PAG. 1. 2. 3. 5.

IGNITON SWITCH, POWER POINT, FUSE PANEL & SIDE CONSOLE HARNESS (ROPS CP POWER SHUTTLE)

REF	FN	PART NUMBER	YR/SN	QTY	DESCRIPTION
1	1	{87431460}		1	
2		85819586		1	CABLE, ELECTRIC
3		85806133		1	PUSH BUTTON Hazard Switch
4		14143790		1	BULB
5		85819144		1	SWITCH Turn Indicator

(1) See Page 1.91.4.01, 1.91.4.02, 1.91.4.03, 1.91.4.05

1.91.4	05	p1	11/05

RH SIDE CONSOLE TRIM, INSTRUMENT CLUSTER & SWITCHES (ROPS CP POWER SHUTTLE)

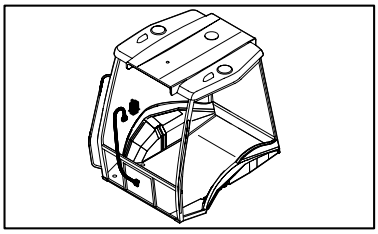

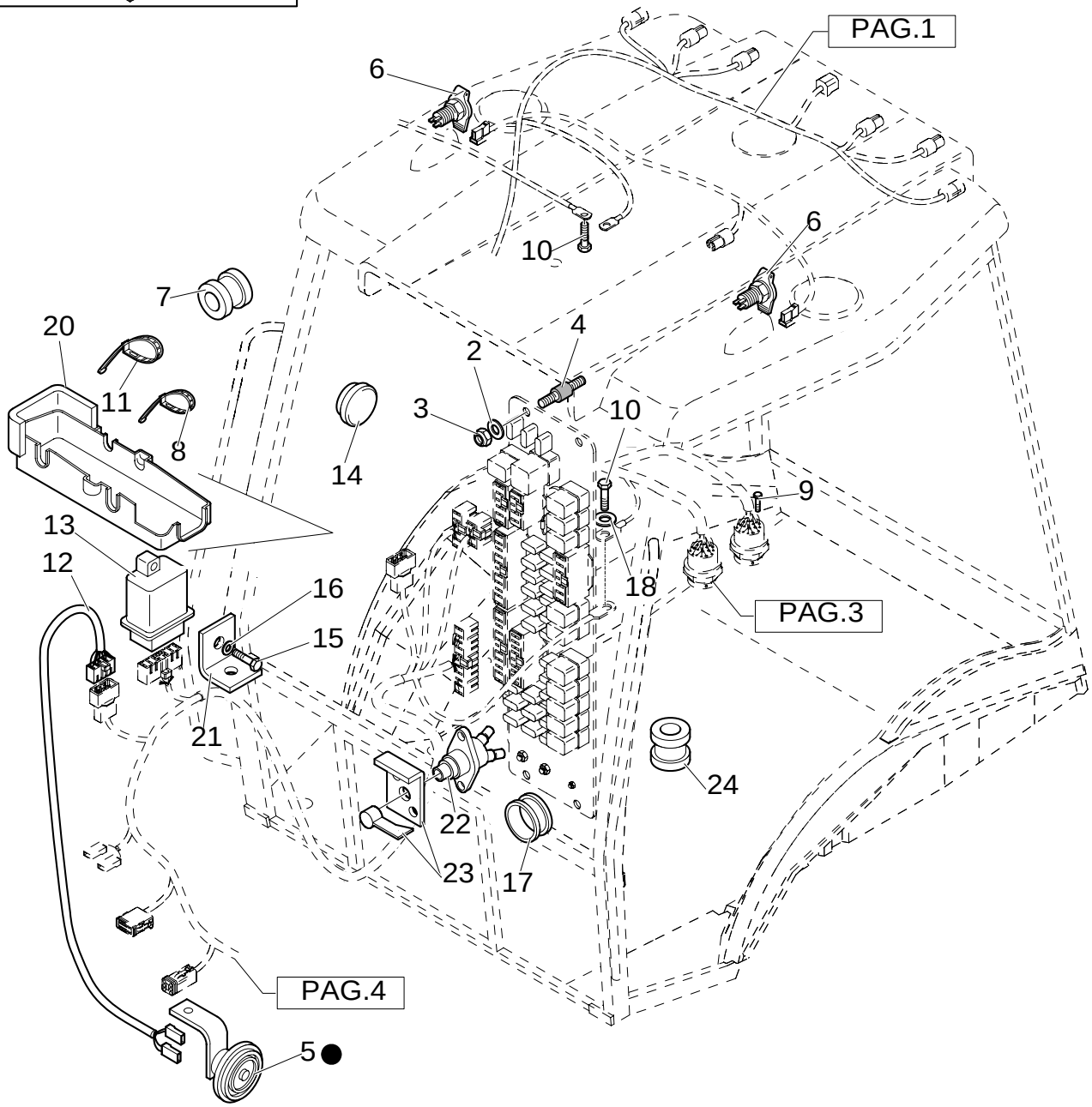

KIT

1 = ● see also PAG. 1. 2. 3. 4.

RH SIDE CONSOLE TRIM, INSTRUMENT CLUSTER & SWITCHES (ROPS CP POWER SHUTTLE)

REF	FN	PART NUMBER	YR/SN	QTY	DESCRIPTION
1	1	{87431460}		1	
2		10615274		4	WASHER, LOCK
3		12574011		4	NUT
4		85825129		4	SHOCK ABSORBER
5		47133992		1	HORN
6		82002966		2	SOCKET, POWER
7		10398980		2	RING, INSULATING
8		5112712		5	COLLAR
9		13272214		2	SCREW
10		16043121		2	SCREW
11		85805383		26	RETAINER, CABLE
12		87410259		1	CABLE, ELECTRIC
13		85806132		1	ELECTRONIC UNIT, CONTROL
14		85808460		1	PLUG
16		11193274		1	WASHER, LOCK
17		10398680		5	RING, INSULATING
18		11193879		2	WASHER, LOCK
20		85825136		1	COVER
21		85821326		1	SUPPORT
22		87409316		1	SWITCH
23		87409315		1	SWITCH
24		10398980		1	RING, INSULATING
15		10902624		1	SCREW

(1) See Page 1.91.4.01, 1.91.4.02, 1.91.4.03, 1.91.4.04

1.91.4/ 2	01	p1	11/05

IGNITON SWITCH, POWER POINT, FUSE PANEL & SIDE CONSOLE HARNESS (CAB CP POWER SHUTTLE)

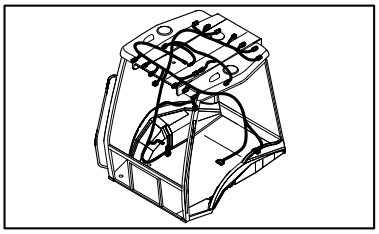

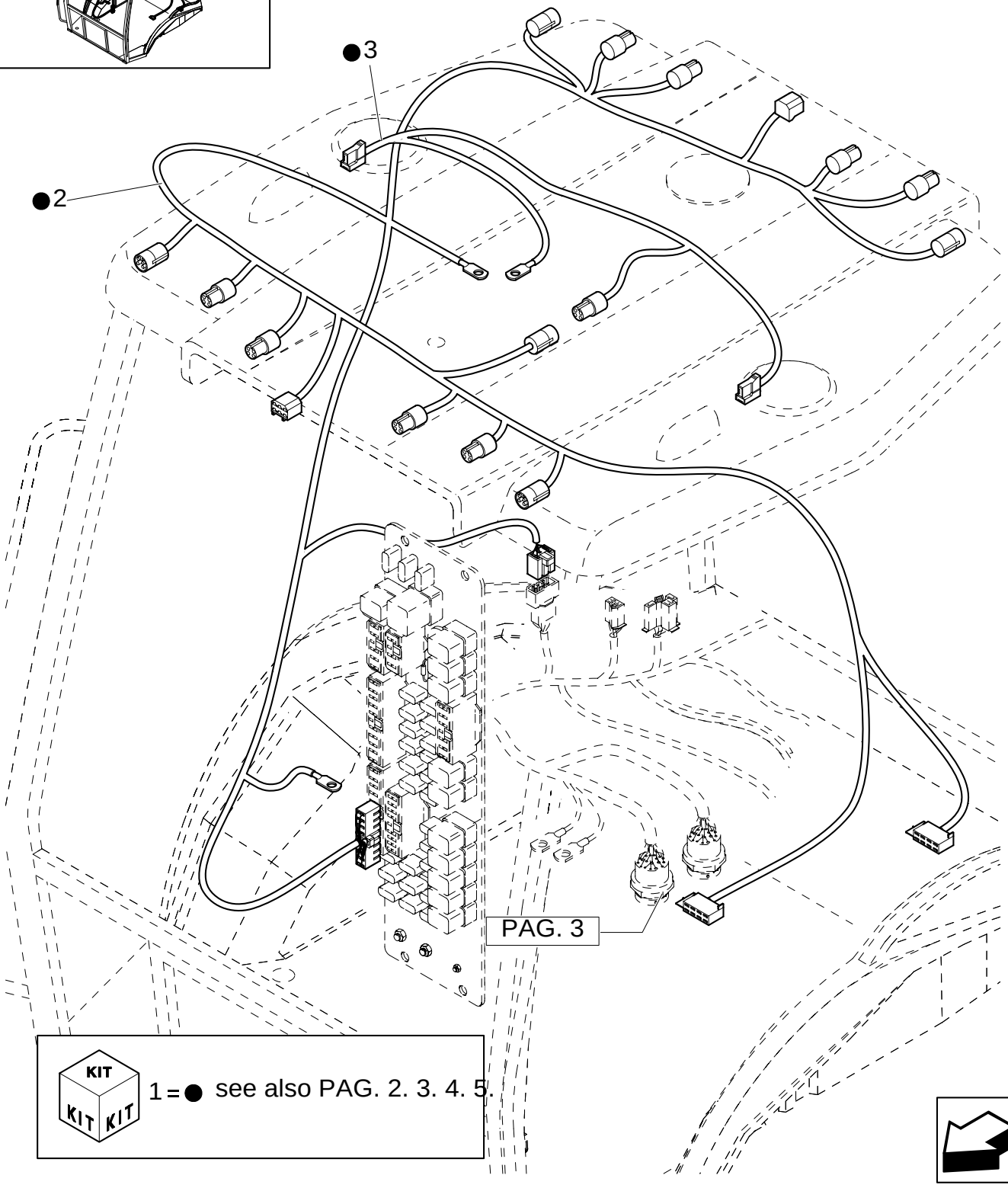

KIT KIT KIT

1 = ● see also PAG. 2. 3. 4. 5.

IGNITON SWITCH, POWER POINT, FUSE PANEL & SIDE CONSOLE HARNESS (CAB CP POWER SHUTTLE)

REF	FN	PART NUMBER	YR/SN	QTY	DESCRIPTION
1	1	{87318748}		1	
2		85825330		1	CABLE, ELECTRIC
3		85819568		1	CABLE, ELECTRIC Rotary Beacon

(1) See Page 1.91.4/2.02, 1.91.4/2.03, 1.91.4/2.04, 1.91.4/2.05

1.91.4/ 2	02	p1	11/05

IGNITON SWITCH, POWER POINT, FUSE PANEL & SIDE CONSOLE HARNESS (CAB CP POWER SHUTTLE)

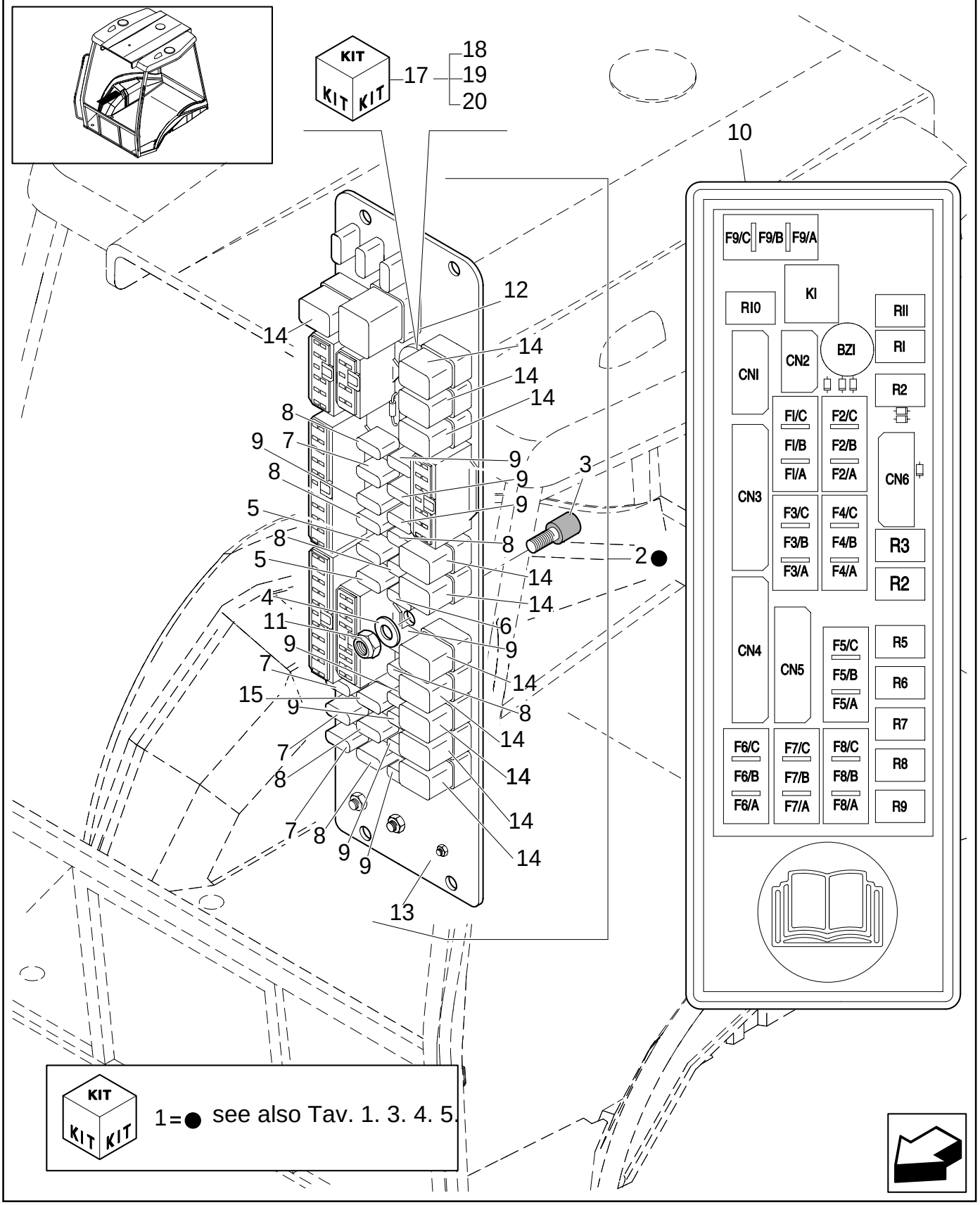

KIT
KIT KIT

1=● see also Tav. 1. 3. 4. 5.

IGNITON SWITCH, POWER POINT, FUSE PANEL & SIDE CONSOLE HARNESS (CAB CP POWER SHUTTLE)

REF	FN	PART NUMBER	YR/SN	QTY	DESCRIPTION
1	1	{87318748}		1	
2		87431451		1	ELECTRONIC UNIT, CONTROL
3		85806135		1	SILENTBLOC
4		10519204		1	WASHER M4
5		11054590		2	FUSE 3A
6		11054790		1	FUSE 5A
7		11054890		4	FUSE 7,5A
8		11054990		7	FUSE 10A
9		11055090		9	FUSE 15A
10		85802250		1	DECAL
11		12574011		1	NUT M4
12		85803986		1	RELAY
13		85825197		1	BODY
14		85825198		11	RELAY
15		85806134		1	FUSE
17		85826012		1	KIT
18		NSS		1	NOT SERVICED SEPARATELY
19		85826014		1	CABLE, ELECTRIC
20		NSS		1	NOT SERVICED SEPARATELY

(1) See Page 1.91.4/2.01, 1.91.4/2.03, 1.91.4/2.04, 1.91.4/2.05

1.91.4/ 2	03	p1	11/05

IGNITON SWITCH, POWER POINT, FUSE PANEL & SIDE CONSOLE HARNESS (CAB CP POWER SHUTTLE)

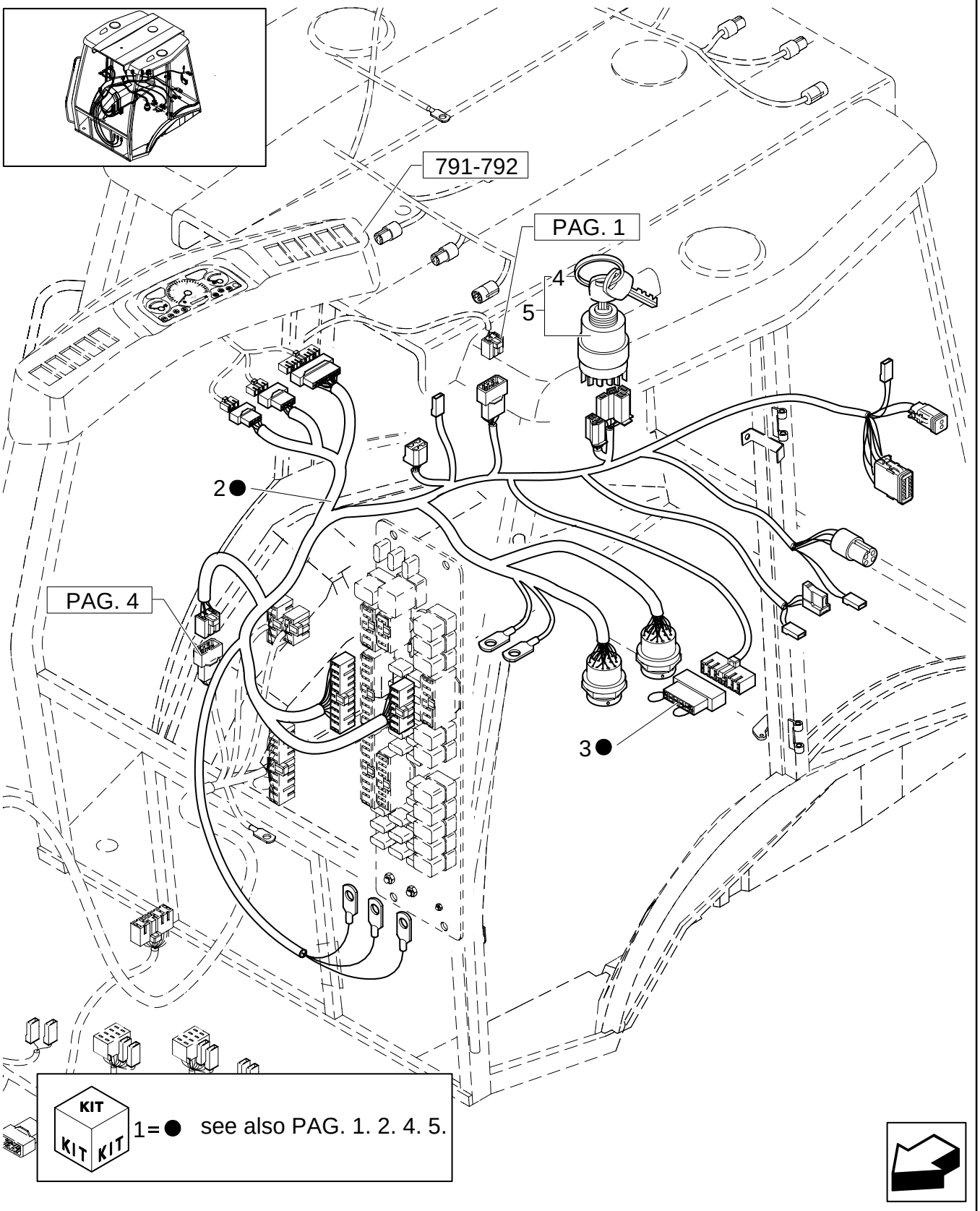

IGNITON SWITCH, POWER POINT, FUSE PANEL & SIDE CONSOLE HARNESS (CAB CP POWER SHUTTLE)

REF	FN	PART NUMBER	YR/SN	QTY	DESCRIPTION
1	1	{87318748}		1	
2	1	87318749		1	CABLE, ELECTRIC
3		85821410		1	BLOCK
4		85804675		2	KEY, LOCK
5		87431469		1	SWITCH

(1) See Page 1.91.4/2.01, 1.91.4/2.02, 1.91.4/2.04, 1.91.4/2.05

1.91.4/ 2	04	p1	01/06

IGNITON SWITCH, POWER POINT, FUSE PANEL & SIDE CONSOLE HARNESS (CAB CP POWER SHUTTLE)

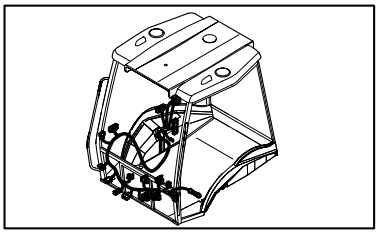

KIT KIT KIT 1 = ● see also PAG. 1. 2. 3. 5.

IGNITON SWITCH, POWER POINT, FUSE PANEL & SIDE CONSOLE HARNESS (CAB CP POWER SHUTTLE)

REF	FN	PART NUMBER	YR/SN	QTY	DESCRIPTION
1	1	{87318748}		1	
2		85818820		1	CABLE, ELECTRIC
3		85806133		1	PUSH BUTTON Hazard Switch

(1) See Page 1.91.4/2.01, 1.91.4/2.03, 1.91.4/2.04, 1.91.4/2.05

1.91.4/ 2	05	p1	11/05

IGNITON SWITCH, POWER POINT, FUSE PANEL & SIDE CONSOLE HARNESS (CAB CP POWER SHUTTLE)

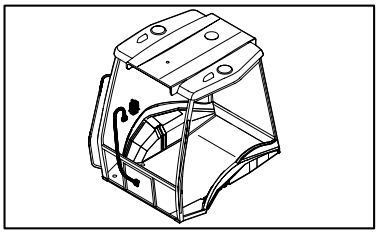

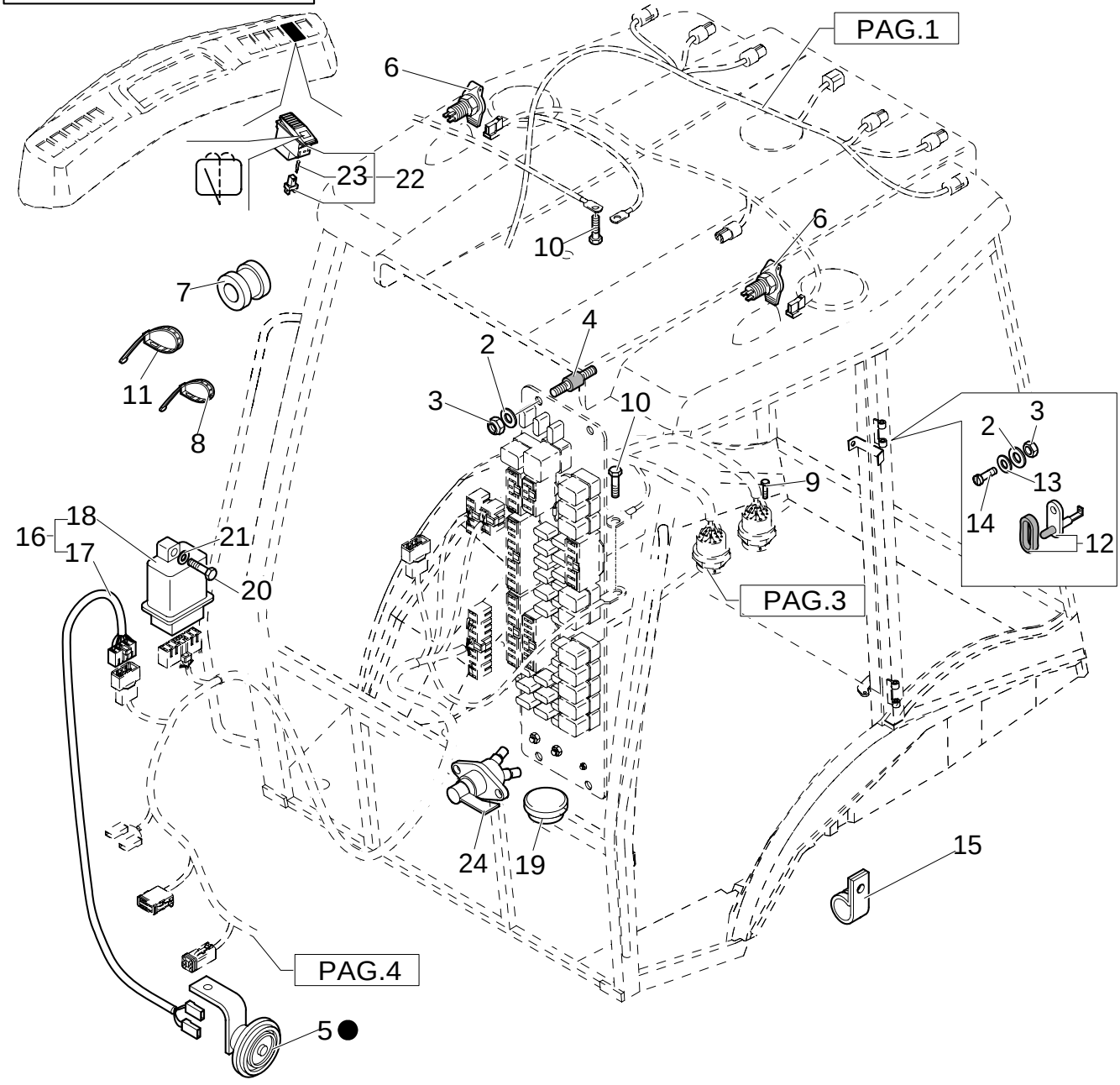

KIT KIT KIT 1= ● see also PAG. 1. 2. 3. 4.

IGNITON SWITCH, POWER POINT, FUSE PANEL & SIDE CONSOLE HARNESS (CAB CP POWER SHUTTLE)

REF	FN	PART NUMBER	YR/SN	QTY	DESCRIPTION
1		{87318748}		1	
2		10615274		6	WASHER, LOCK
3		12574011		6	NUT
4		85802478		4	SILENTBLOC
5		47133992		1	HORN
6		82002966		2	SOCKET, POWER
7		10398980		1	RING, INSULATING
8		5112712		5	COLLAR
9		13272214		2	SCREW M4X16
10		16042924		2	SCREW M8X10
11		85805383		30	RETAINER, CABLE
12		E7NN13752AA		2	SWITCH, ASSY
13		10519204		2	WASHER M4
14		13309417		2	SCREW M4X20
15		10450090		1	COLLAR, RETAINER
16	1	NSS		1	NOT SERVICED SEPARATELY
17		87410259		1	CABLE, ELECTRIC
18		85806132		1	ELECTRONIC UNIT, CONTROL
19		85808460		1	PLUG
21		11193274		1	WASHER, LOCK
22		85818823		1	SWITCH
23		14143790		1	BULB
24		87409316		1	SWITCH
20		10902624		1	SCREW M6X25

(1) Includes 17, 18

1.91.5	01	p1	02/05

FRONT AND REAR WINDSCREEN WIPERS

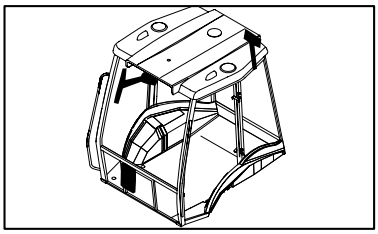

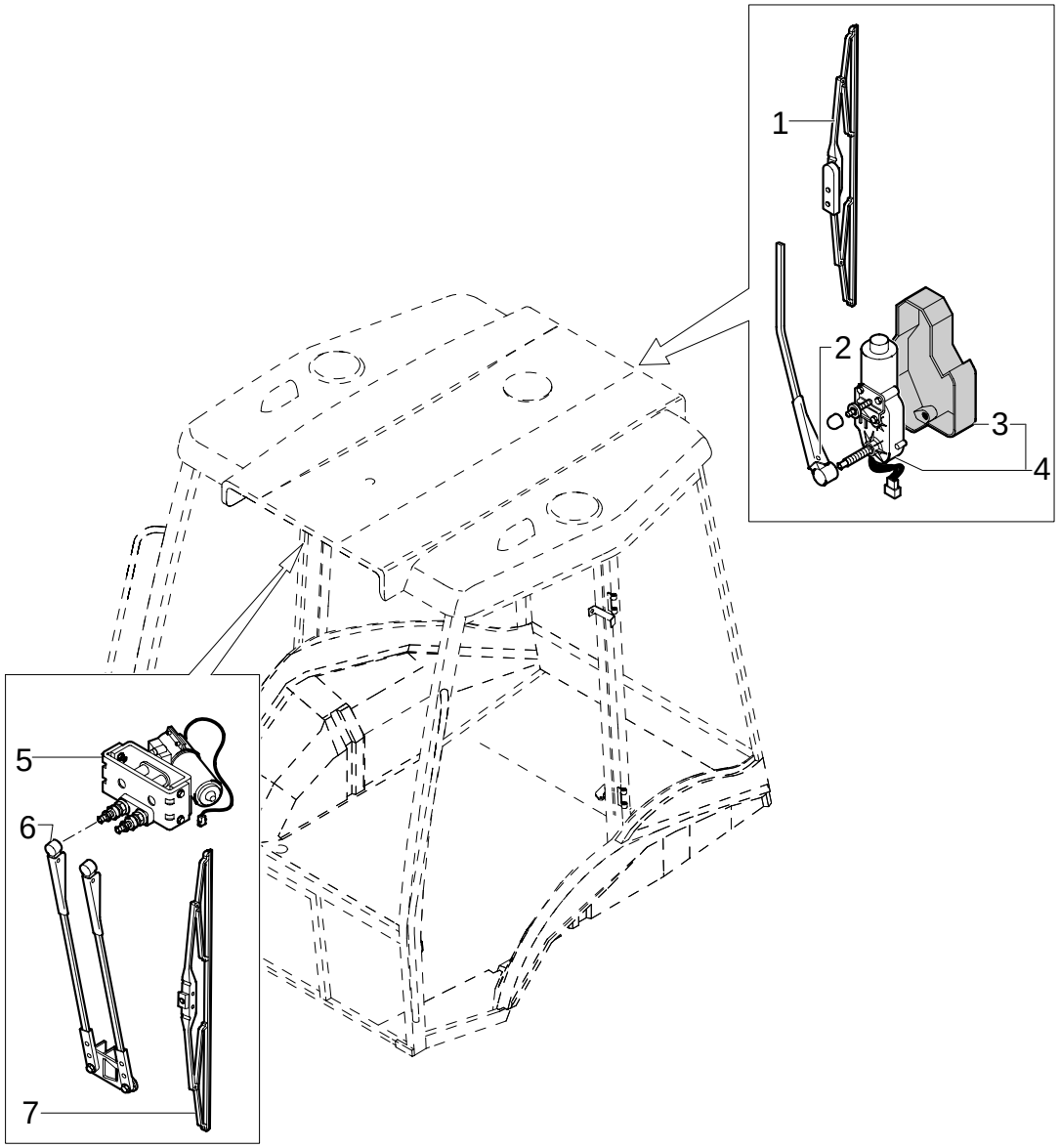

FRONT AND REAR WINDSCREEN WIPERS

REF	FN	PART NUMBER	YR/SN	QTY	DESCRIPTION
1		85819827		1	WIPER BLADE REAR
2		85806098		1	WIPER ARM REAR
3		85806095		1	BOX REAR
4	1	85806097		1	MOTOR, ELECTRIC, SMALL REAR
5		85806184		1	MOTOR, ELECTRIC, SMALL FRONT
6		85806185		1	WIPER ARM FRONT
7		85819826		1	WIPER BLADE FRONT

(1) Includes 3

1.91.5	02	p1	02/05

WINDSCREEN WIPERS RESERVOIR & NOZZLES

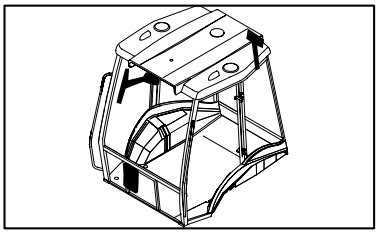

KIT KIT KIT 1 = ●

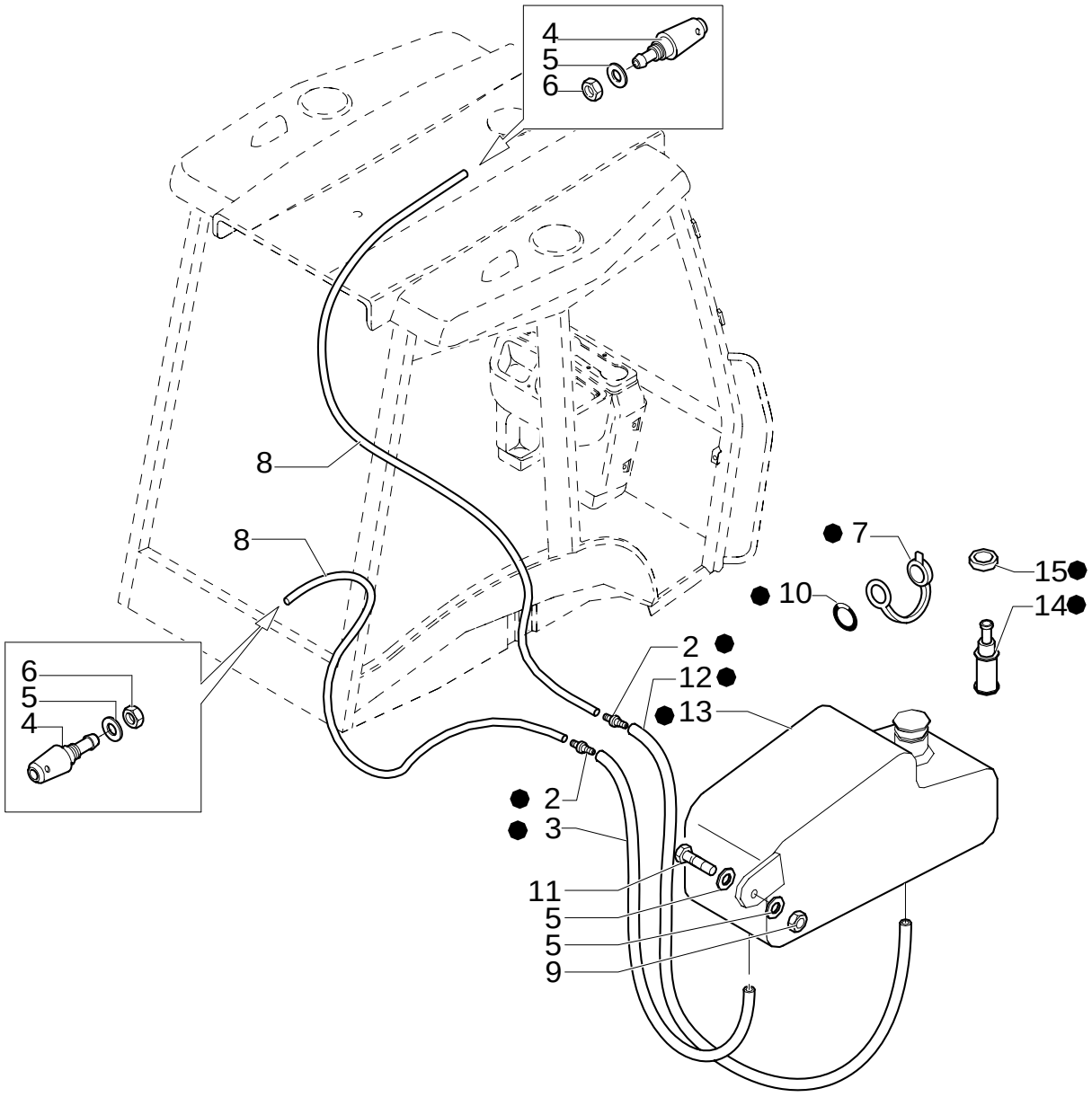

WINDSCREEN WIPERS RESERVOIR & NOZZLES

REF	FN	PART NUMBER	YR/SN	QTY	DESCRIPTION
1		85821153		1	PAN
2		85821337		2	VALVE, HYDRAULIC
3		85821335		2	HOSE, FLEXIBLE
4		85802398		2	TOOL, SPECIAL
5		12646704		4	WASHER
6		16102411		2	NUT
7		5175736		1	PLUG
8		85821338		2	HOSE, FLEXIBLE
9		12574211		1	NUT
10		85820237		1	RING
11		13313417		1	SCREW
12		85824450		1	HOSE, FLEXIBLE
13		{85821334}		1	
14		85821333		2	PUMP, HYDRAULIC
15		85821336		2	SEAL, RUBBER

1.91.6	01	p1	02/05

RADIO ANTENNA & SPEAKER COVER

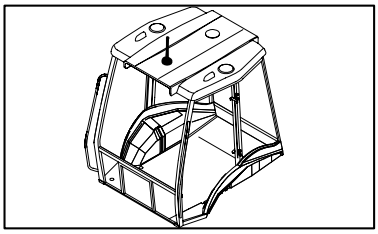

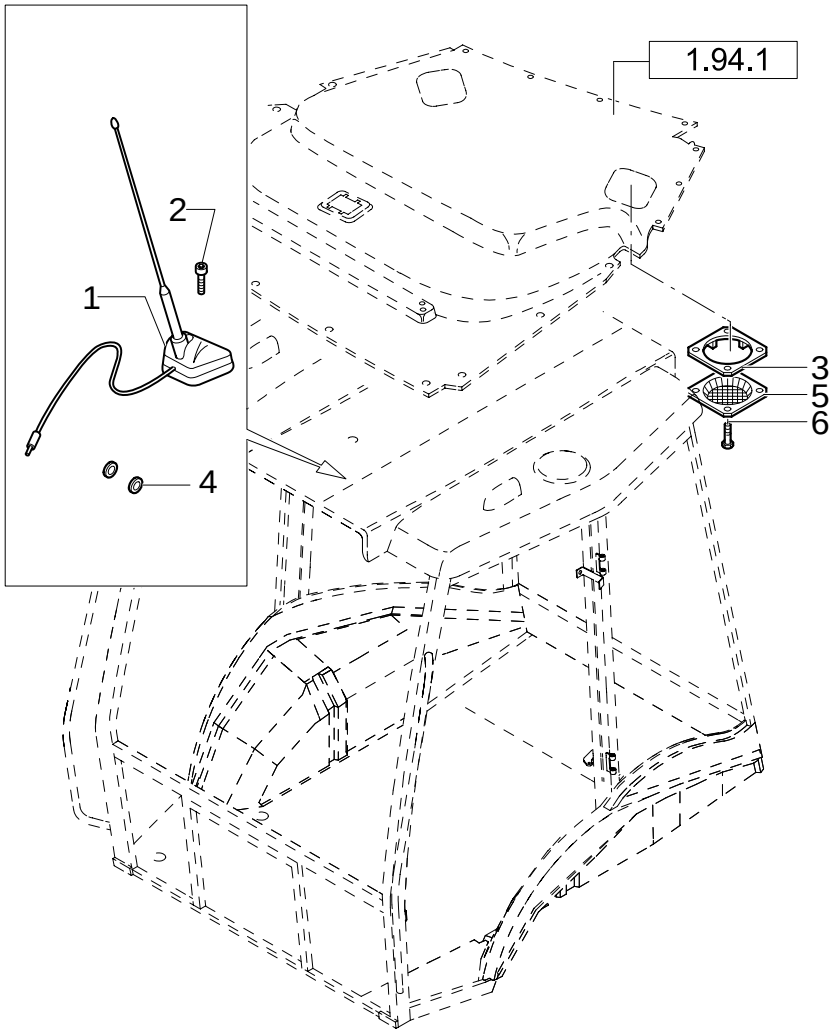

RADIO ANTENNA & SPEAKER COVER

REF	FN	PART NUMBER	YR/SN	QTY	DESCRIPTION
1		85819569		1	ANTENNA
2		13311817		1	SCREW M5X40
3		85802107		2	PLATE, MOUNTING
4		10399580		1	RING, INSULATING
5		85804362		2	GRILLE
6		13297842		8	SCREW

1.91.7/ 1	01	p1	01/06

LAMPS & LIGHTS - CAB (USA)

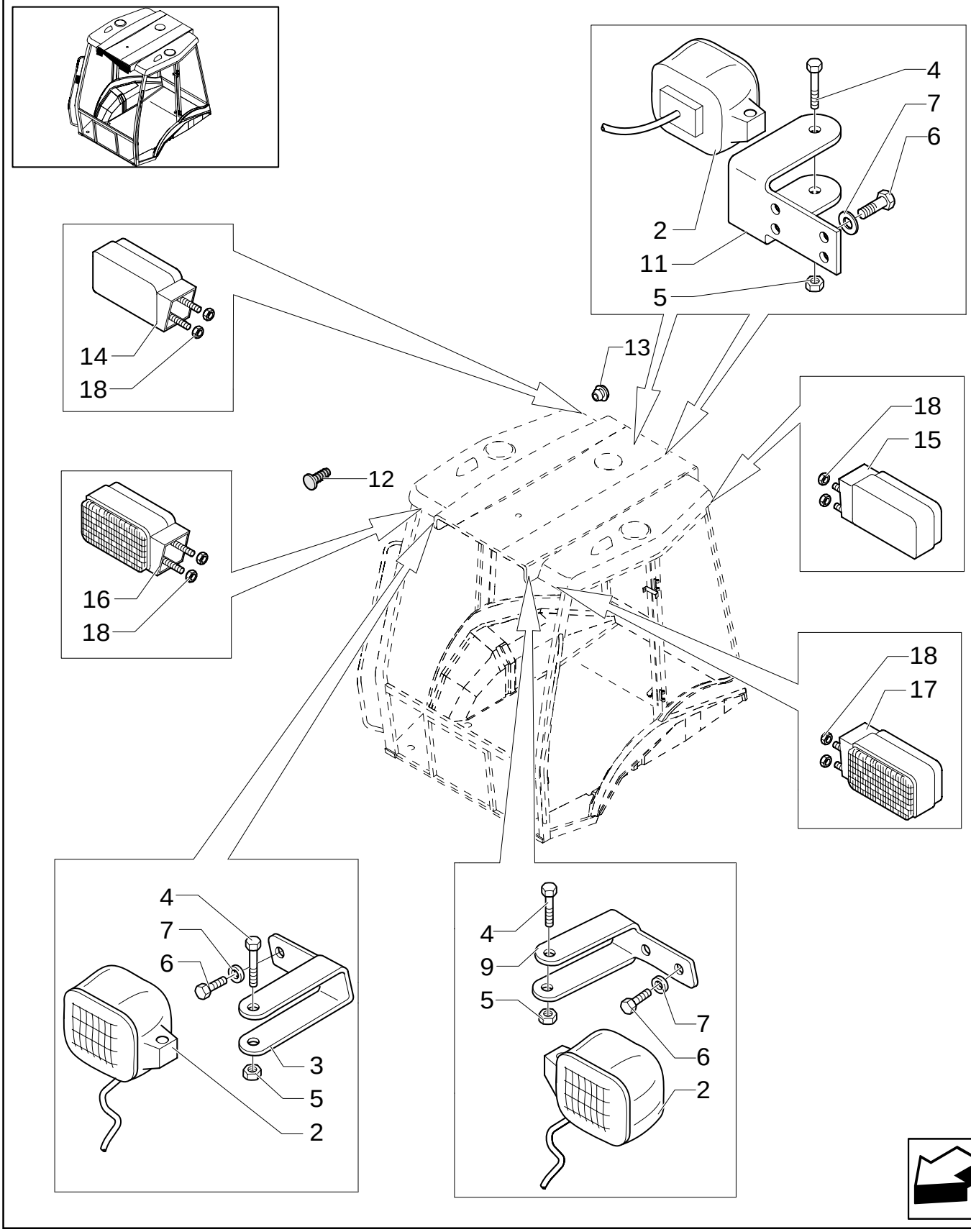

LAMPS & LIGHTS - CAB (USA)

REF	FN	PART NUMBER	YR/SN	QTY	DESCRIPTION
2		85819200		8	HEADLAMP Includes H3 12V 55W Bulb, Order 9703399 For Bulb
3		85819190		1	BRACKET RH
4		16044324		8	SCREW M8x55
5		16104111		8	NUT M8
6		10902124		24	SCREW Cap,HH,CL8.8, M6x14
7		11197774		24	WASHER, LOCK Ø 6
9		85819191		1	BRACKET LH
11		85819194		2	BRACKET
12		E9NN94218N48AA		1	FASTENER
13		5118658		1	PLUG
14		85819198		1	LAMP, TAIL RH; Red/Amber Lens
15		85819199		1	LAMP, TAIL LH; Red/Amber Lens
16		85819196		2	LAMP, FRONT RH; Solid Amber Lens
17		85819197		2	LAMP, FRONT LH; Solid Amber Lens
18		14084111		1	NUT

1.91.7/ 3	01	p1	01/06

LAMPS & LIGHTS - ROPS (USA)

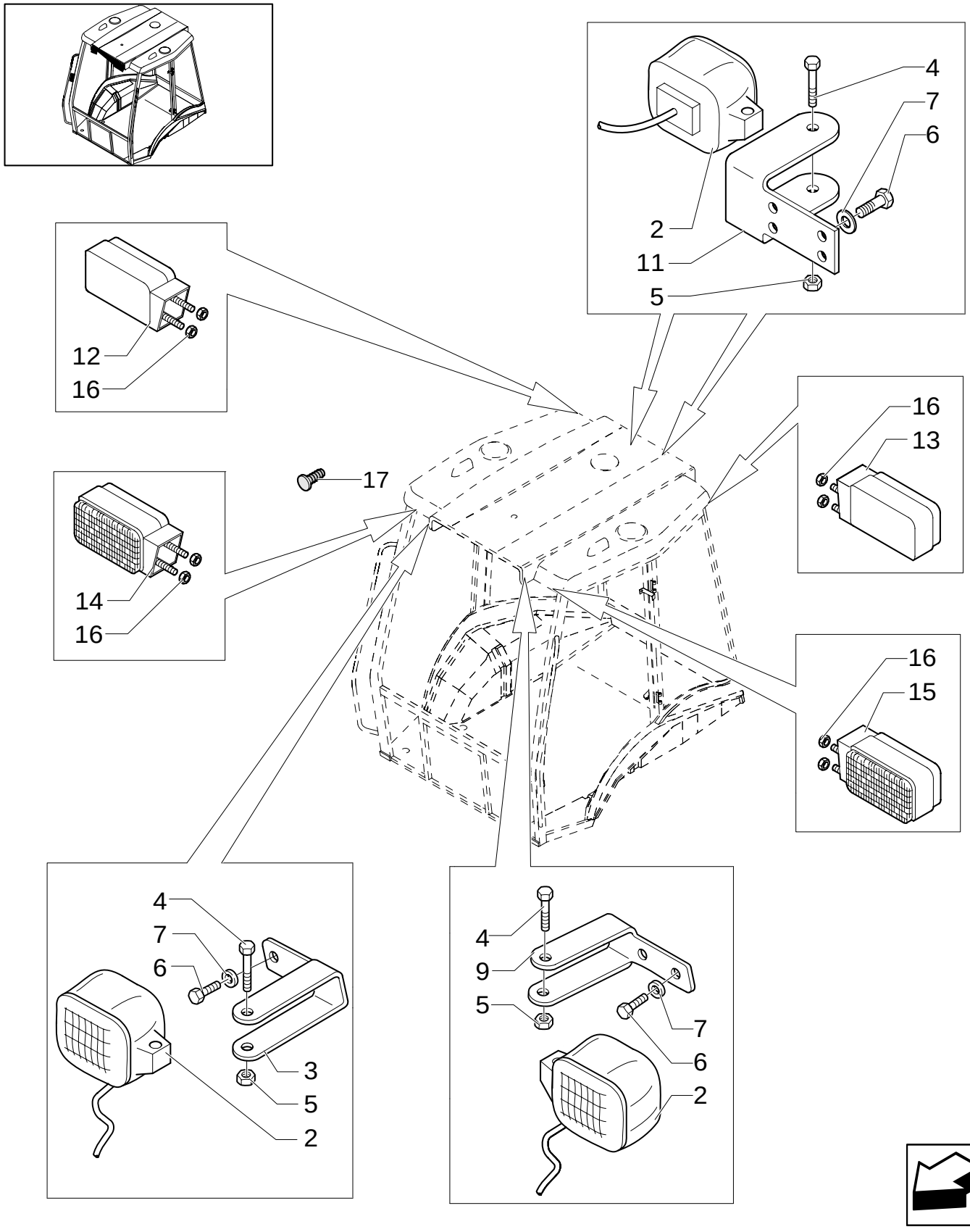

LAMPS & LIGHTS - ROPS (USA)

REF	FN	PART NUMBER	YR/SN	QTY	DESCRIPTION
2		85819200		4	HEADLAMP Includes H3 12V 55W Bulb, Order 9703399 For Bulb
3		85819190		1	BRACKET RH
4		16044324		4	SCREW M8X55
5		16104111		4	NUT M8
6		10902124		12	SCREW Cap, HH, CL 8.8, M6 x 1 x 14
7		11197774		12	WASHER, LOCK Ø 6
9		85819191		1	BRACKET LH
11		85819194		2	BRACKET
12		85819198		1	LAMP, TAIL RH; Red/Amber Lens
13		85819199		1	LAMP, TAIL LH; Red/Amber Lens
14		85819196		1	LAMP, FRONT RH; Solid Amber Lens
15		85819197		1	LAMP, FRONT LH; Solid Amber Lens
16		14084111		8	NUT
17		14591687		1	BUTTON

CAB-SAFETY FRAME / EXTINGUISHER

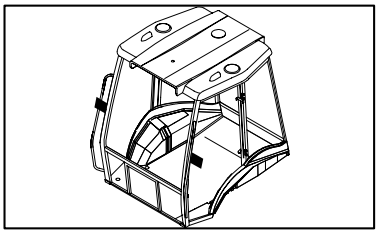

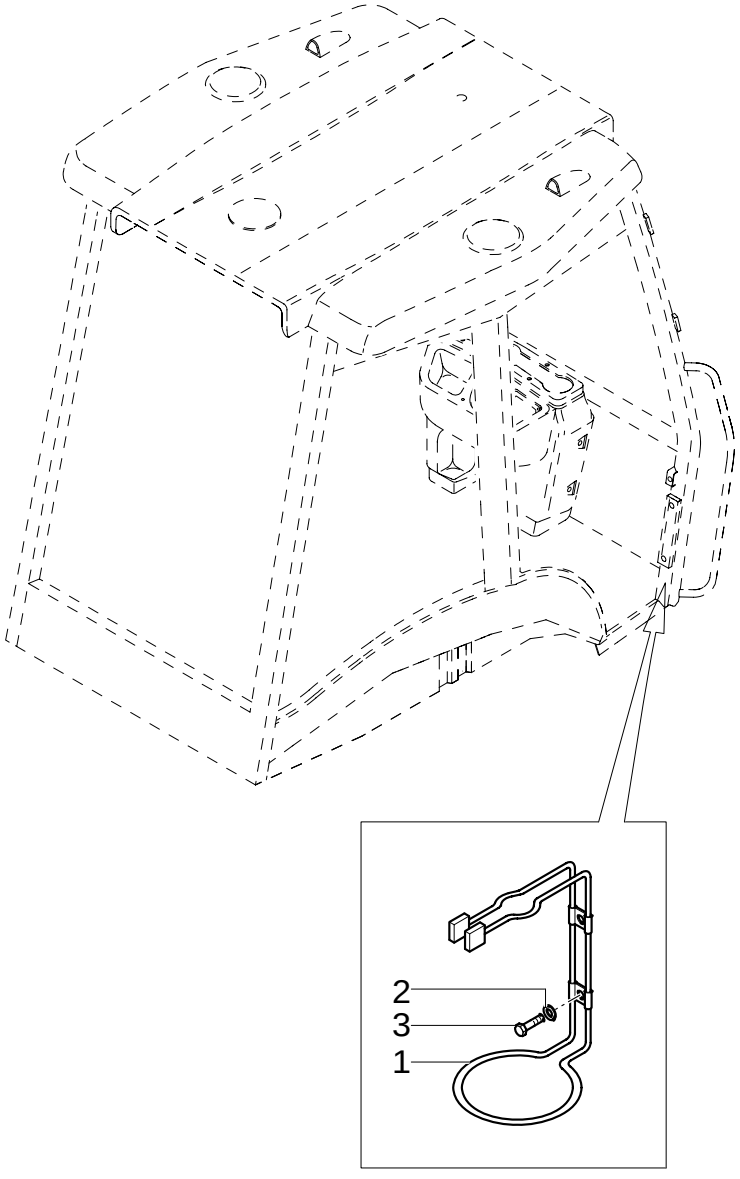

CAB-SAFETY FRAME / EXTINGUISHER

REF	FN	PART NUMBER	YR/SN	QTY	DESCRIPTION
1		85802276		1	SUPPORT
2		11193274		2	WASHER, LOCK M6X15X1.2
3		13275914		2	SCREW M6X10

1.92.1	01	p1	11/05

CAB - FRAME-DOOR

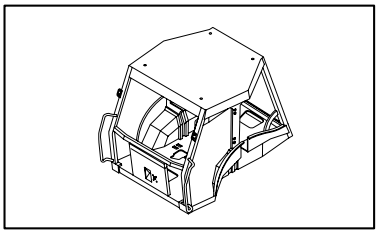

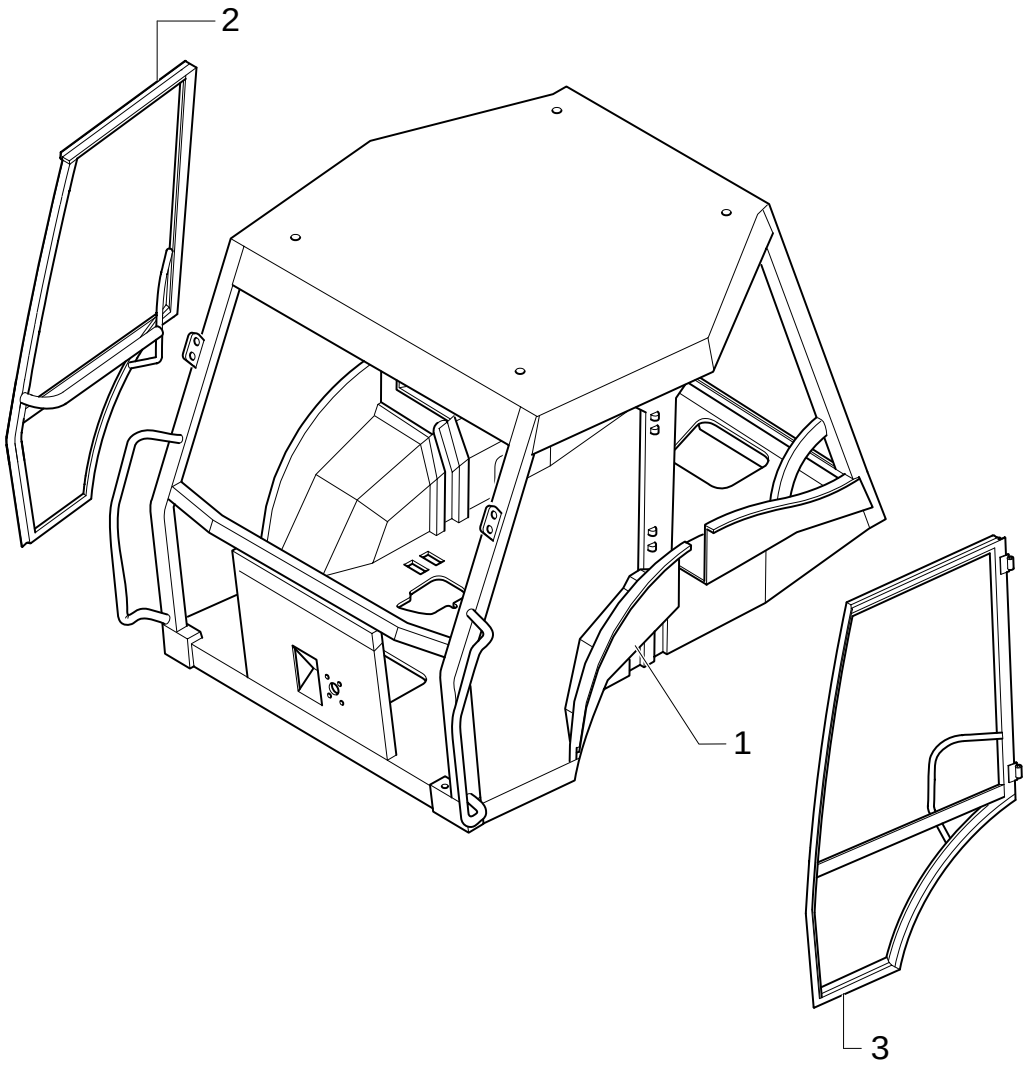

CAB - FRAME-DOOR

REF	FN	PART NUMBER	YR/SN	QTY	DESCRIPTION
1	1, 2	85826042		1	SHELL, CAB
1	3	87354654		1	FRAME
2	1	85801654		1	FRAME RH
2	3	87354650		1	FRAME RH
3	1	85801655		1	FRAME LH
3	3	87354652		1	FRAME LH

(1) UP TO S/N XXX
(2) Only for EUROPE Version
(3) FROM TO S/N XXX

Mechanical Version

1.92.1/ 1	01	p1	02/05

ROPS - SAFETY FRAME

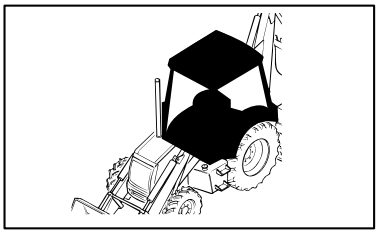

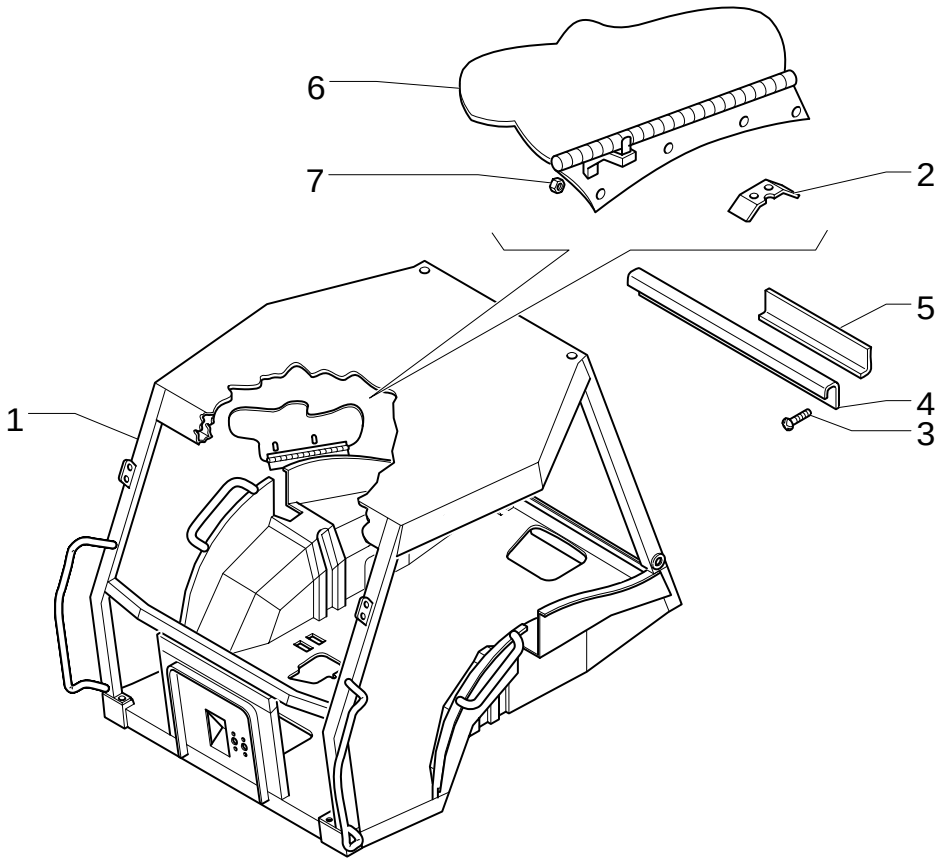

ROPS - SAFETY FRAME

REF	FN	PART NUMBER	YR/SN	QTY	DESCRIPTION
1	1	85826047		1	FRAME, CAB ASSY
2		85801863		1	BRACKET
3		13271814		6	SCREW M4X8
4		85805067		2	COVER
5		85807880		8	PLATE
6		85806187		1	SHIELD
7		15896219		4	NUT M6

(1) Includes 2, 6, 7

1.92.1/ 2	01	p1	11/05

CAB - FRAME-DOOR

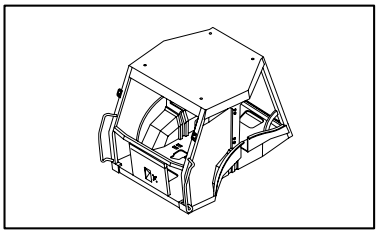

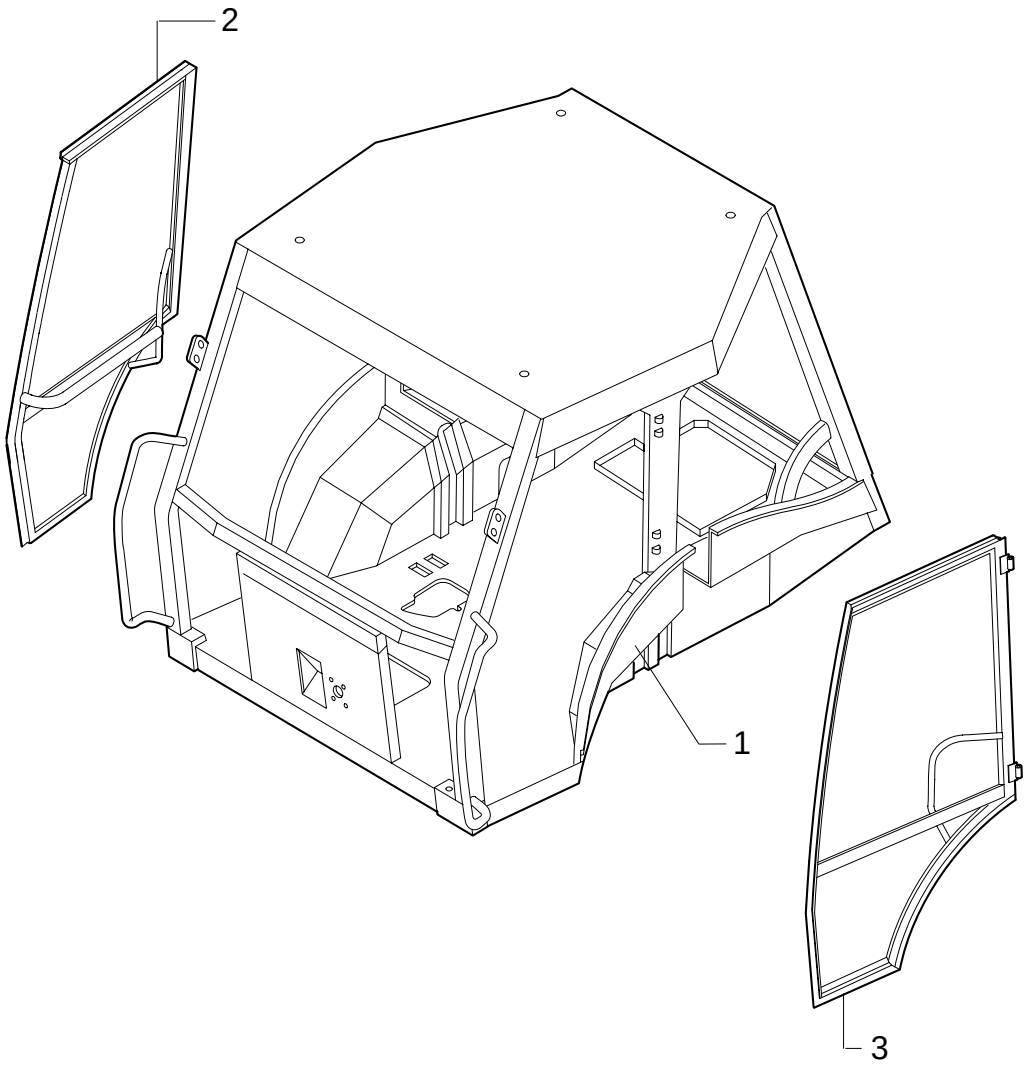

CAB - FRAME-DOOR

REF	FN	PART NUMBER	YR/SN	QTY	DESCRIPTION
1	1, 2	87410408		1	SHELL, CAB
1	3	87354656		1	FRAME
2	1, 2	85801654		1	FRAME RH
2	3	87354650		1	FRAME RH
3	1, 2	85801655		1	FRAME LH
3	3	87354652		1	FRAME LH

(1) UP TO S/N XXX
(2) Only for EUROPE Version
(3) FROM TO S/N XXX

Pilot Control Version

1.92.1/ 3	01	p1	02/05

ROPS - SAFETY FRAME

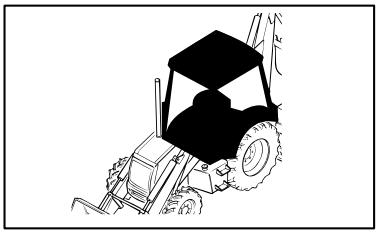

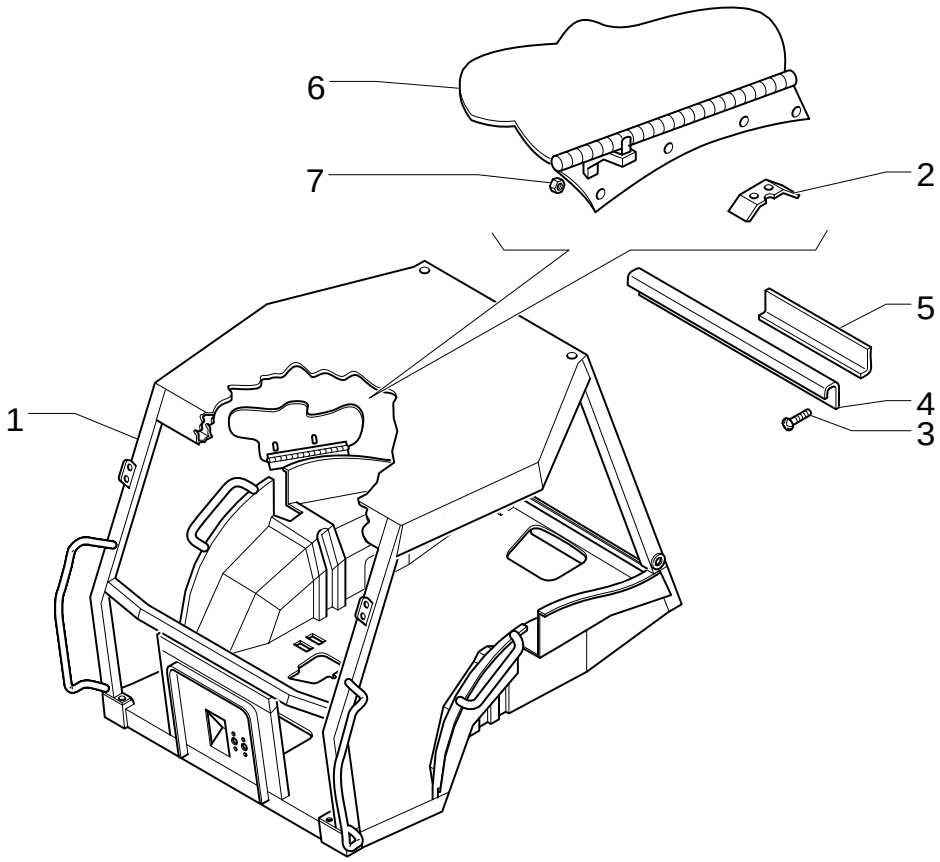

ROPS - SAFETY FRAME

REF	FN	PART NUMBER	YR/SN	QTY	DESCRIPTION
1	1	87410409		1	FRAME ASSY
2		85801863		1	BRACKET
3		13271814		6	SCREW M4X8
4		85805067		2	COVER
5		85807880		8	PLATE
6		NSS		1	NOT SERVICED SEPARATELY
7		15896219		4	NUT M6

(1) Includes 2, 6, 7

Pilot Control Version

1.92.3	01	p1	02/05

WINDOWS

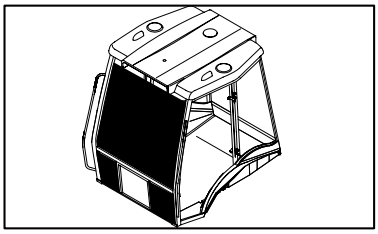

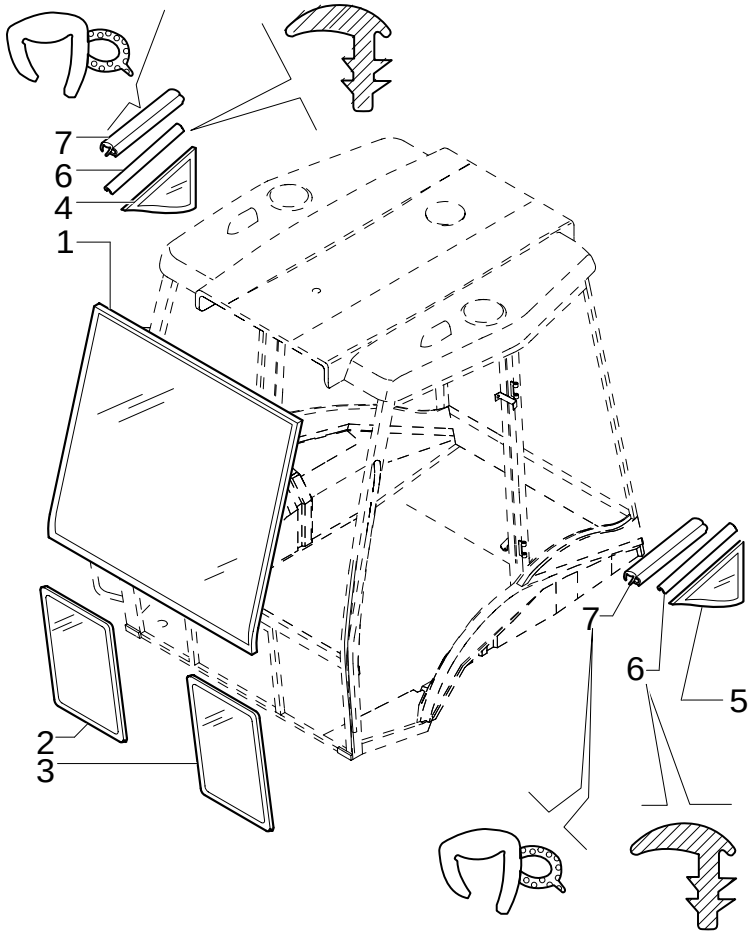

WINDOWS

REF	FN	PART NUMBER	YR/SN	QTY	DESCRIPTION
1		85801621		1	GLASS
2		85801622		1	GLASS ASSY, CAB RH
3		85801623		1	GLASS ASSY, CAB LH
4		85801630		1	GLASS ASSY, CAB RH
5		85801631		1	GLASS ASSY, CAB LH
6		85802334		M	GASKET
7		85805065		2	GASKET

1.92.4	01	p1	11/05

WINDOWS

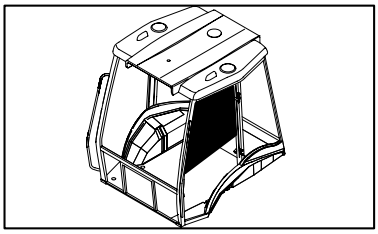

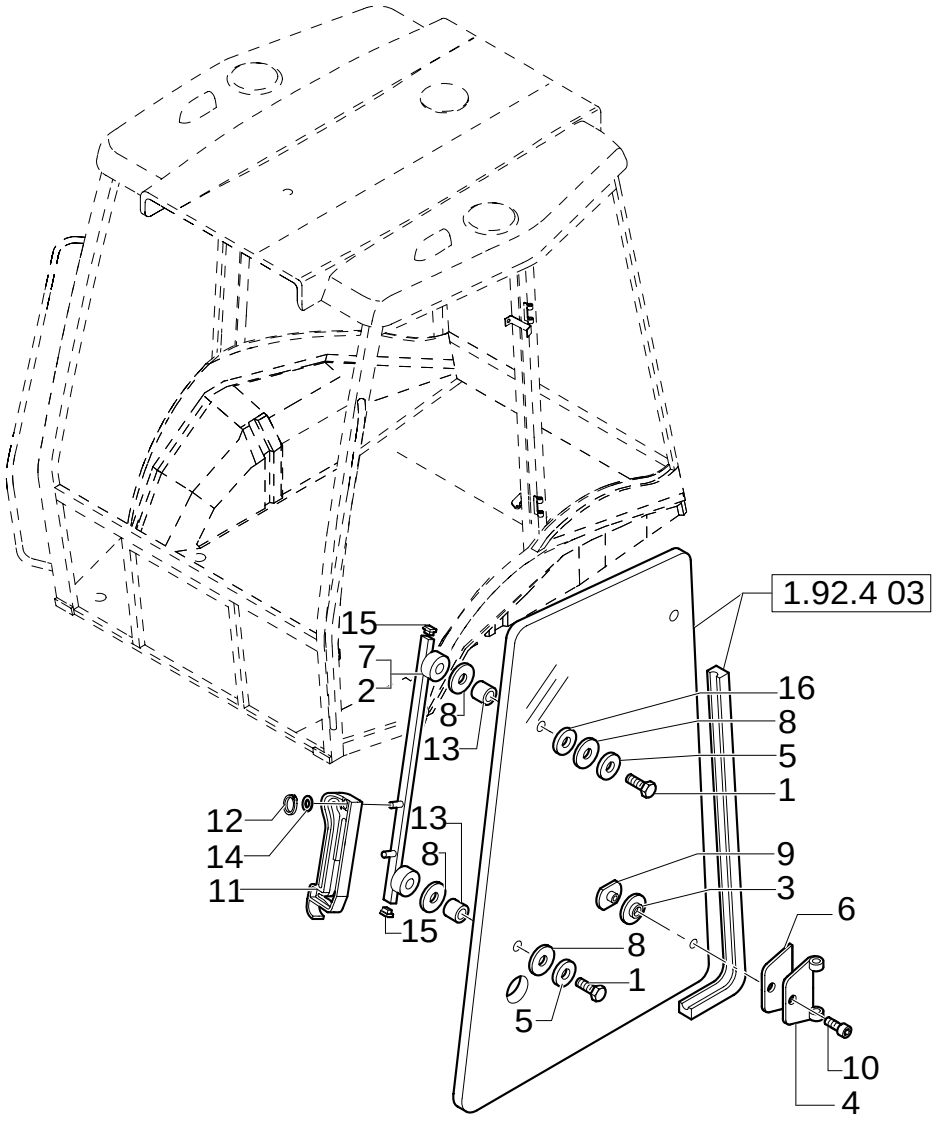

WINDOWS

REF	FN	PART NUMBER	YR/SN	QTY	DESCRIPTION
1		82859922		4	SCREW
2		85802063		1	SUPPORT RH
3		83961985		4	SPACER
4		85804869		4	HINGE
5		E7NN94305N22BA		4	SPACER
6		E9NN94305N24BB		4	GASKET
7		85802062		1	SUPPORT LH
8		E7NN94201N27CA		12	SPACER
9		85805448		4	NUT, RING
10		81871864		4	SCREW Socket Drive, M8 x 1.25 x 16
11	1, 2	85801804		4	HANDLE
11	3	{87345870}		4	
12	1, 2	11087871		4	RING, LOCKING
12	3	11087776		4	RING, LOCKING
13		E7NN94305N22AA		4	SPACER
14		10519404		2	WASHER
15		E9NN94296N08AB		8	COVER, CAP
16		12638504		4	WASHER 8X15

(1) UP TO S/N XXX
(2) Only for EUROPE Version
(3) FROM TO S/N XXX

1.92.4	02	p1	06/05

WINDOWS

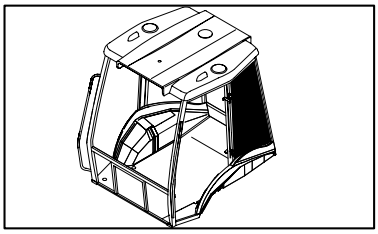

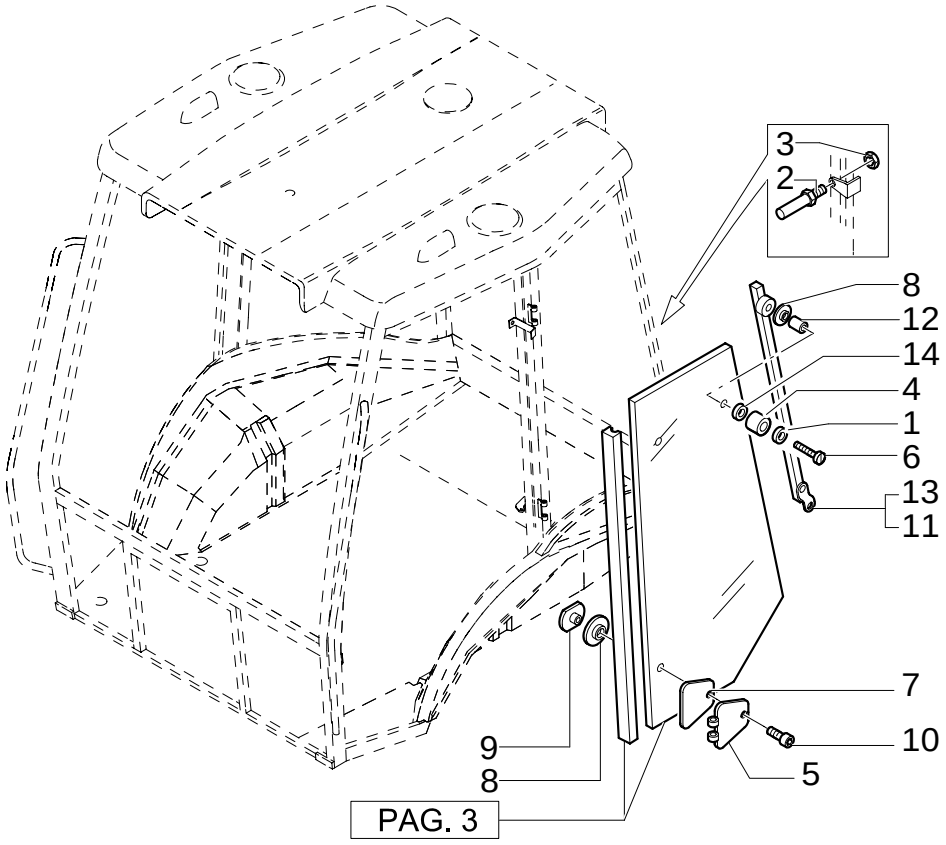

WINDOWS

REF	FN	PART NUMBER	YR/SN	QTY	DESCRIPTION
1		10519404		2	WASHER
2		85827848		4	PIN
3		14039611		4	NUT
4		E8NN9423036AA		2	BUMPER
5		85804870		4	HINGE
6		10903224		2	VALVE, HYDRAULIC M6X40
7		E9NN94305N24AB		4	RING
8		83961985		8	SPACER
9		85805448		4	NUT, RING
10		81871864		4	SCREW Socket Drive, M8 x 1.25 x 16
11		85801883		1	SUPPORT RH
12		E7NN94305N22AA		2	SPACER
13		85801884		1	SUPPORT LH
14		12638504		2	WASHER

WINDOWS

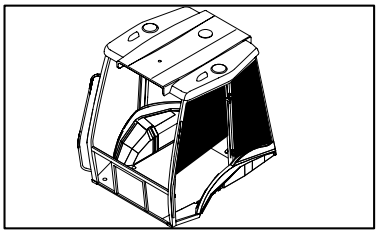

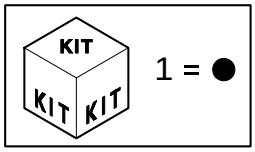

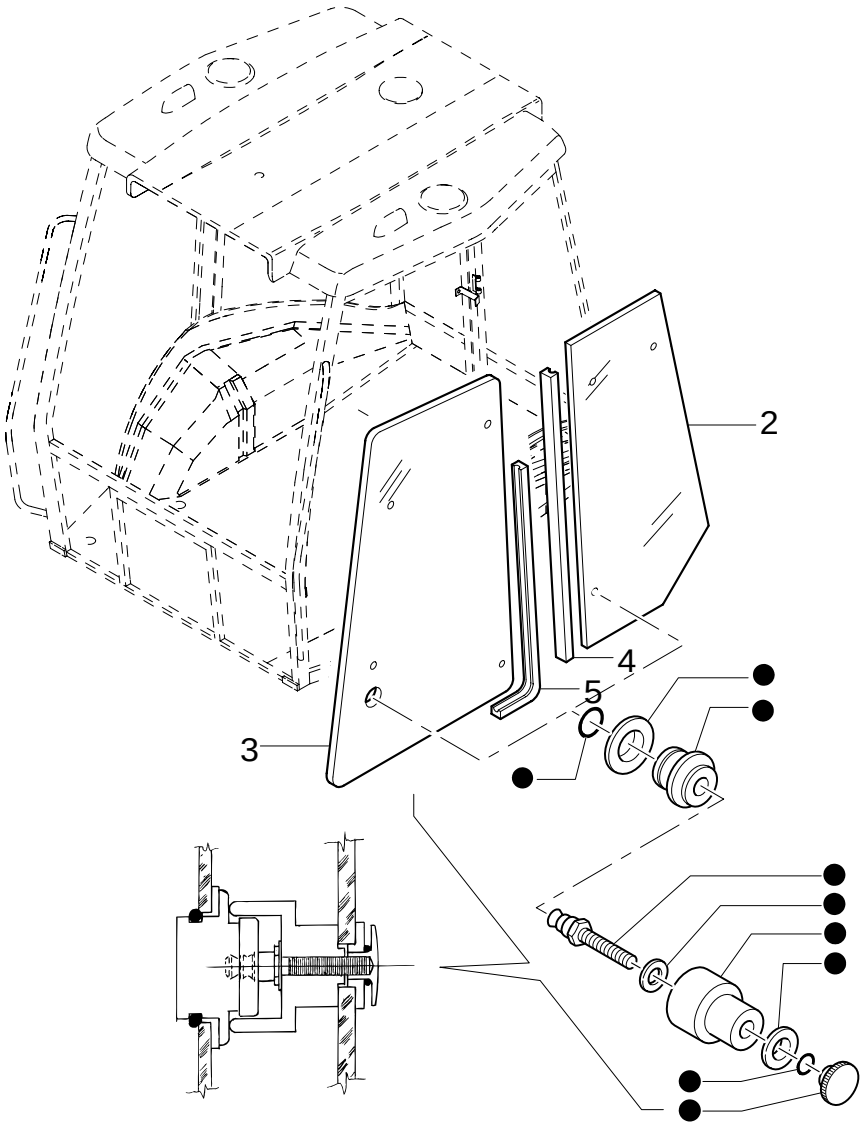

WINDOWS

REF	FN	PART NUMBER	YR/SN	QTY	DESCRIPTION
1		85804617		2	KIT
2		85801628		2	GLASS ASSY, CAB
3		85801626		2	GLASS ASSY, CAB
4		85812254		2	SEAL, RUBBER L=3150
5		85812255		2	SEAL, RUBBER L=3315

1.92.5	01	p1	02/05

FENDERS, REAR

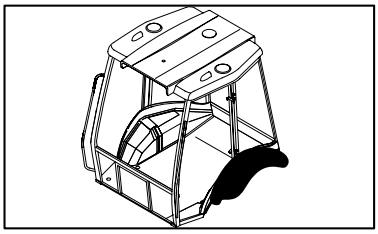

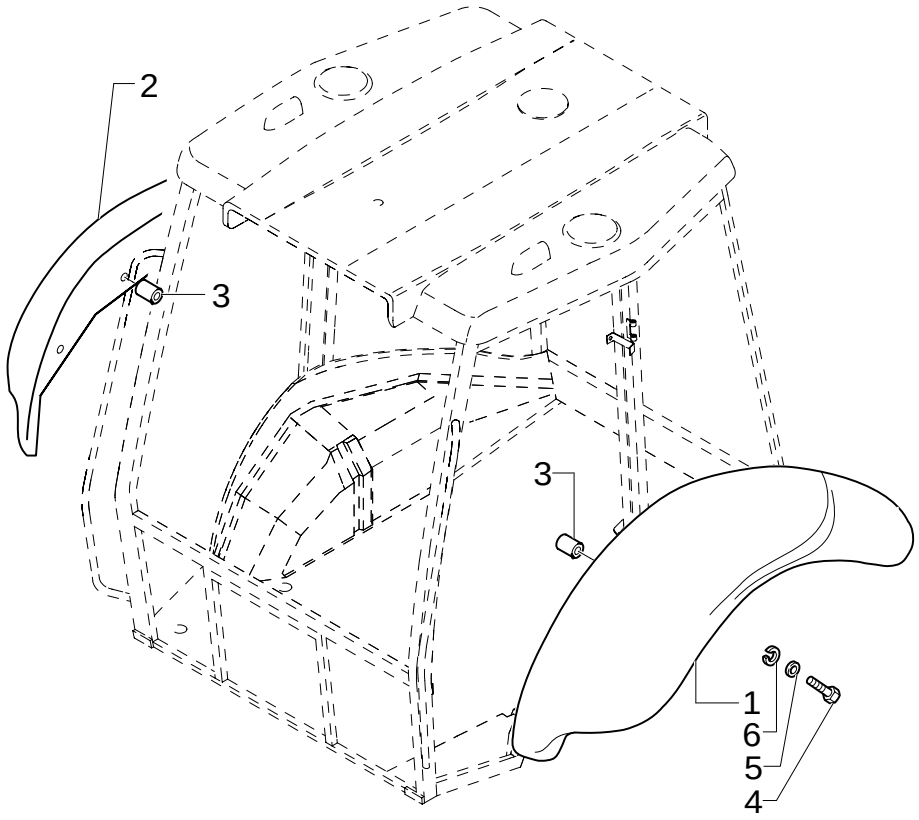

FENDERS, REAR

REF	FN	PART NUMBER	YR/SN	QTY	DESCRIPTION
1	1	85817211		1	FENDER, REAR LH
1	2	85817213		1	FENDER, REAR LH
2	1	85817210		1	FENDER, REAR RH
2	2	85817212		1	FENDER, REAR RH
3		85812338		12	INSERT, THREADED
4		16044124		10	SCREW M8X1,25X45
5		12646204		10	WASHER 8X35
6		11193874		10	WASHER, LOCK 8X16X1.4

(1) Only for LB90.B - LB95.B - LB110.B
(2) Only for LB115.B 4WS

1.92.6	01	p1	01/06

DOOR COMPONENTS

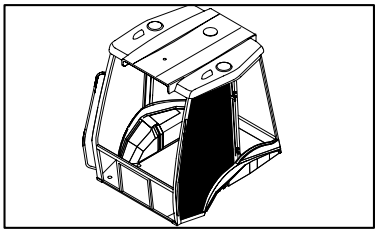

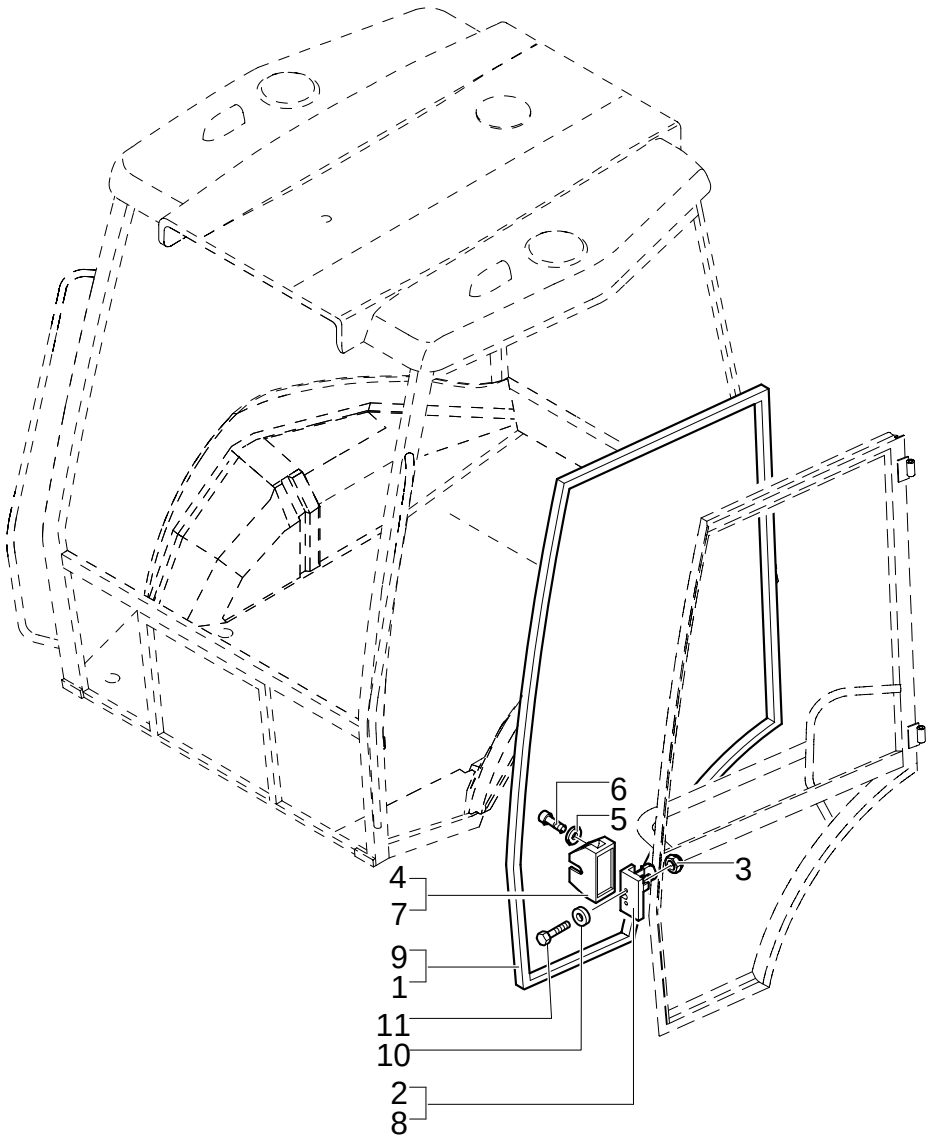

DOOR COMPONENTS

REF	FN	PART NUMBER	YR/SN	QTY	DESCRIPTION
1		85812252		1	SEAL, RUBBER RH
2		44910052		1	LOCK RH
3		14048214		4	NUT M8X1.25
4		85805771		1	COVER RH
5		12643701		4	WASHER
6		13273911		4	SCREW M5X10
7		85805770		1	COVER LH
8		44910053		1	LOCK, CYLINDER LH
9		85812253		1	SEAL, RUBBER LH
10		10519604		2	WASHER
11		14442421		2	SCREW

1.92.6	02	p1	02/05

DOOR COMPONENTS

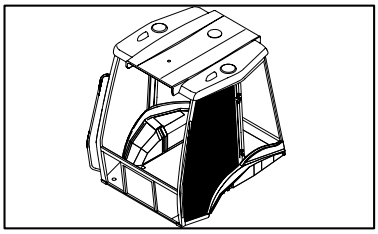

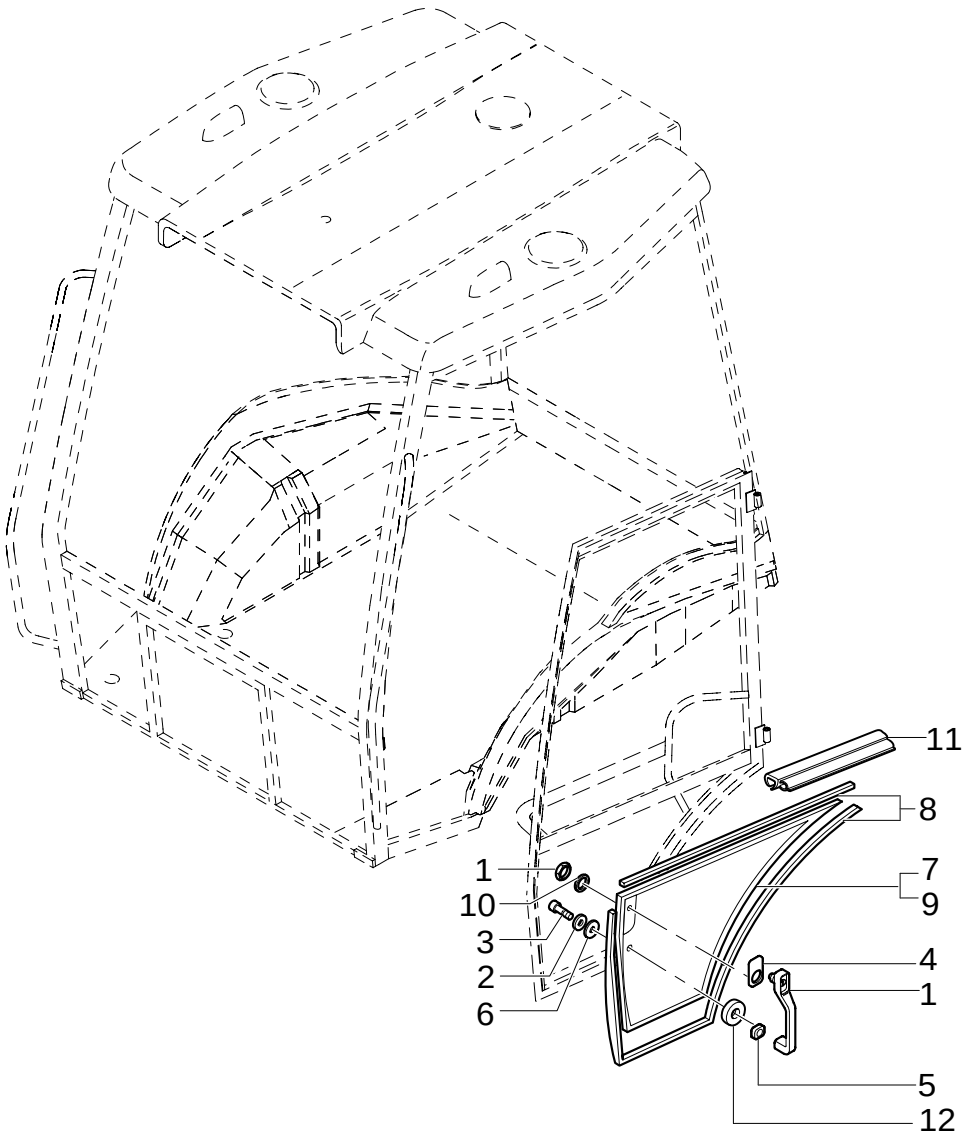

DOOR COMPONENTS

REF	FN	PART NUMBER	YR/SN	QTY	DESCRIPTION
1		85805659		2	HANDLE
2		12640601		2	WASHER
3		13276621		2	SCREW M6
4		85801799		2	GASKET
5		85801800		2	GASKET
6		E7NN94305N22AA		4	SPACER
7		85801624		1	GLASS ASSY, CAB RH
8		85802334		MT	GASKET
9		85801625		1	GLASS ASSY, CAB LH
10		85802307		2	GASKET
11		85805065		2	GASKET
12		85801801		2	GASKET 24X6X2

1.92.6	03	p1	06/05

DOOR COMPONENTS

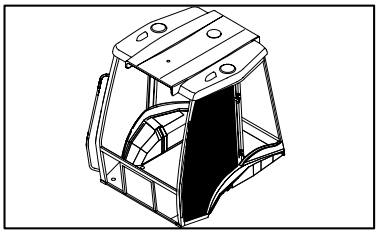

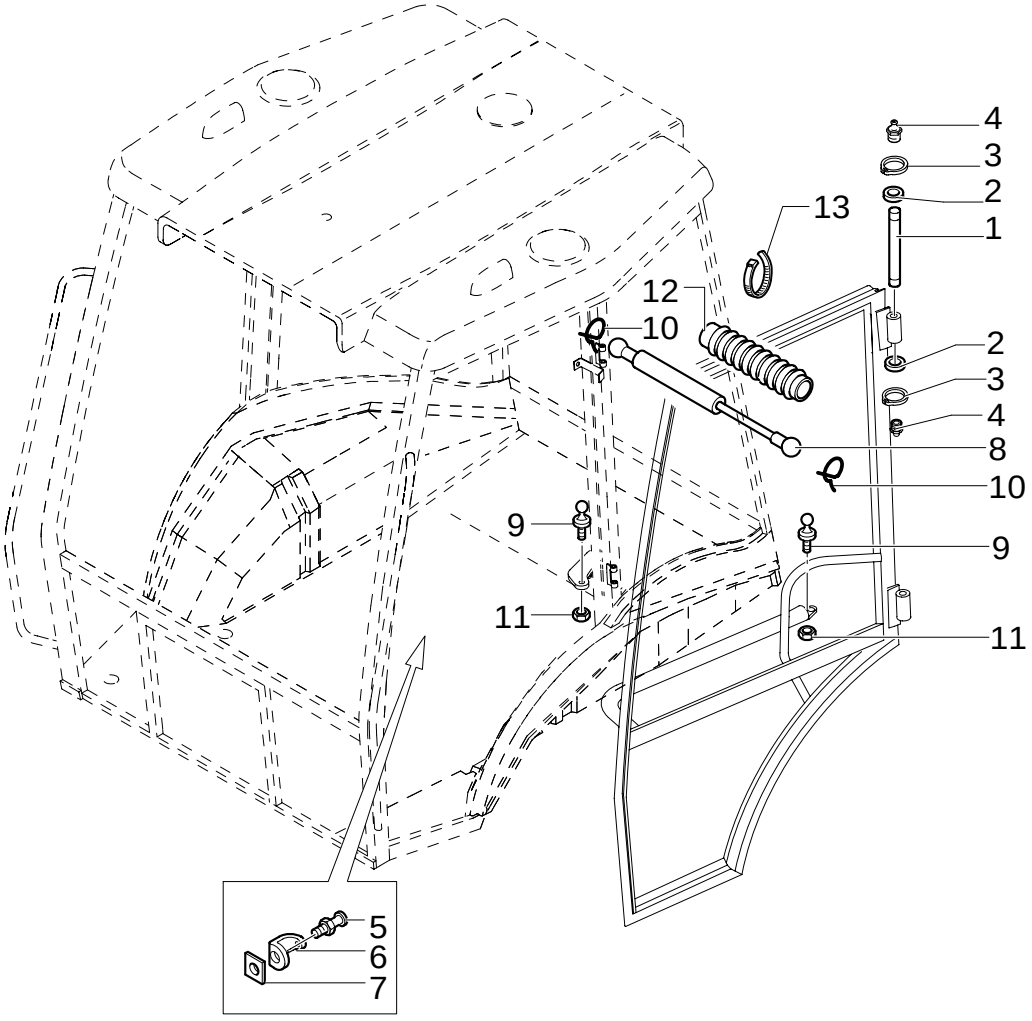

DOOR COMPONENTS

REF	FN	PART NUMBER	YR/SN	QTY	DESCRIPTION
1		87304810		4	PIN
2		E8NN16N647AA		8	WASHER
3		11088076		8	RING, LOCKING D.9
4		13406911		4	NIPPLE, LUBE
5		E9NN9422196AA		2	PLATE, STEEL
6		E9NN94218N45AA		2	COVER
7		E9NN94218N36AA		2	NUT M12 x 1
8		5183854		2	SHOCK ABSORBER
9		82000409		4	BALL JOINT
10		F1NN94231N19AA		4	CLIP
11		16104511		4	NUT
12		E9NN94231N12AB		2	SUPPORT
13		5112712		4	COLLAR

1.92.8	01	p1	02/05

FIREWALL SEAL, ROPS

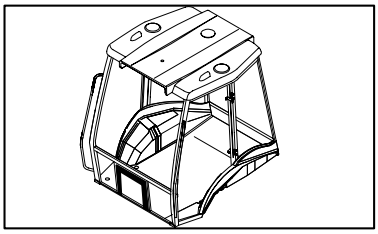

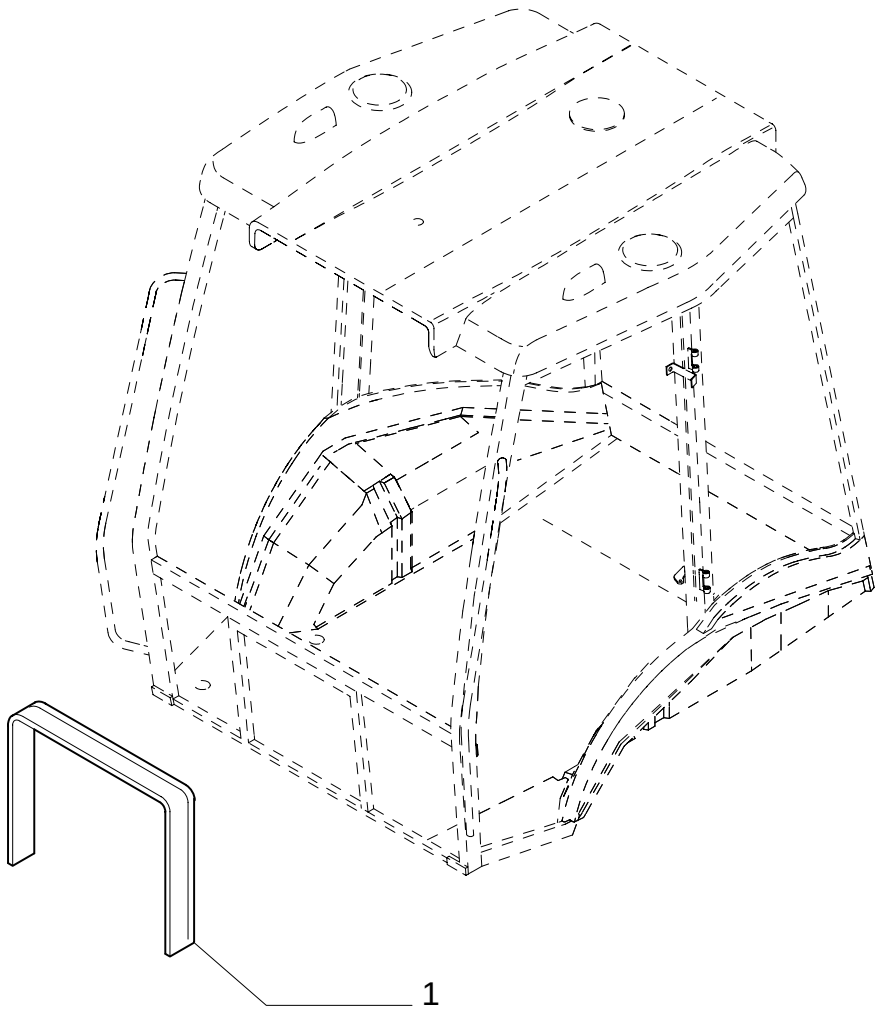

FIREWALL SEAL, ROPS

REF	FN	PART NUMBER	YR/SN	QTY	DESCRIPTION
1		85805571		1	GASKET

1.92.9	01	p1	11/05

REAR WINDOWS

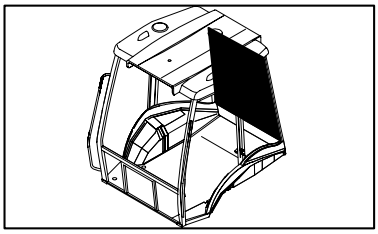

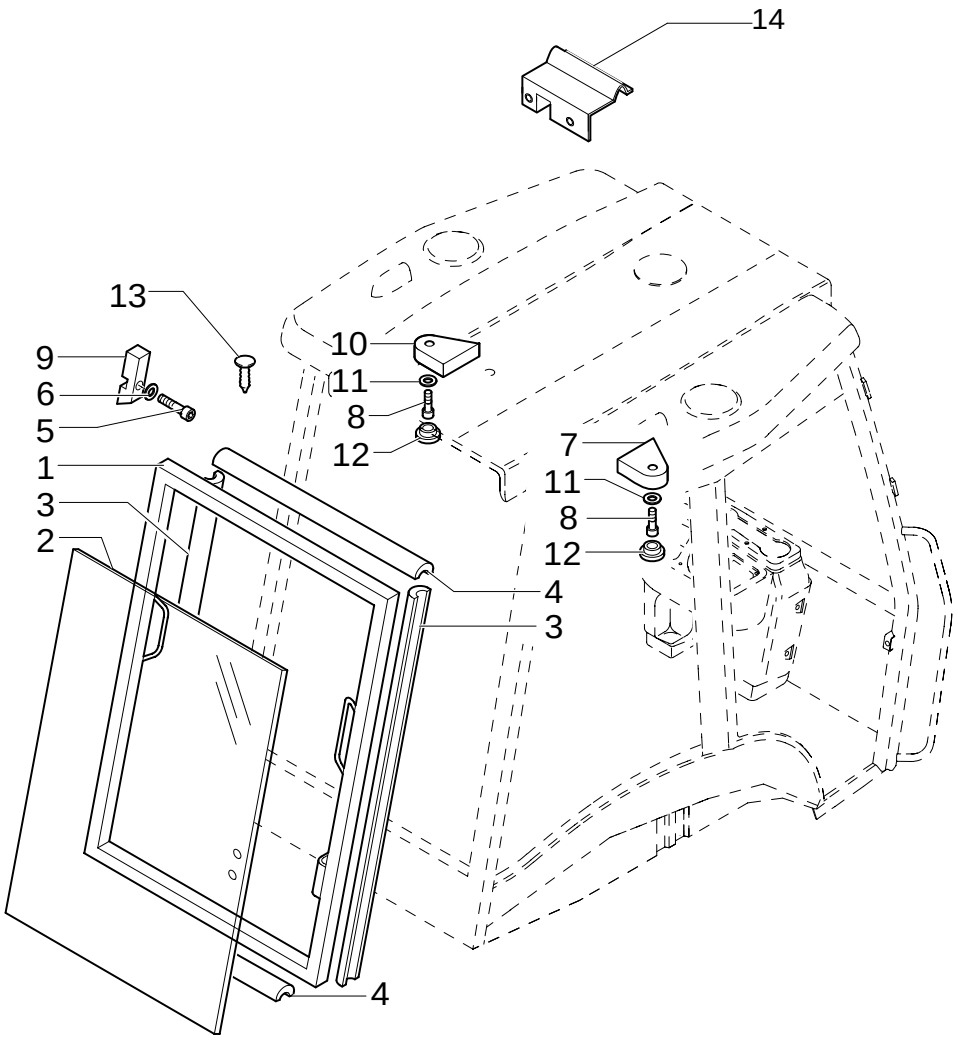

REAR WINDOWS

REF	FN	PART NUMBER	YR/SN	QTY	DESCRIPTION
1		85801739		1	LID
2		85801632		1	GLASS ASSY, CAB
3		85801811		2	EXTRUSION
4		85819017		1	GASKET L=1010
4		85819018		1	GASKET L=965
6		12646704		6	WASHER
7		85801828		1	PAD RH
8		13313417		2	SCREW
9		85801826		2	STOP
10		85801829		1	PAD LH
11		85801991		2	WASHER
12		79111978		2	PLUG
13		E9NN94218N48AA		2	FASTENER
14		85812365		1	COLLAR, RETAINER
5		16043324		6	SCREW

1.92.9	02	p1	02/05

REAR WINDOWS

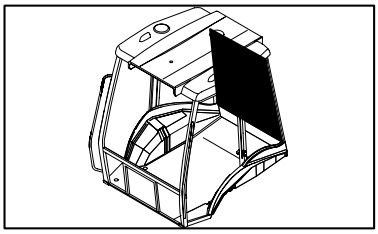

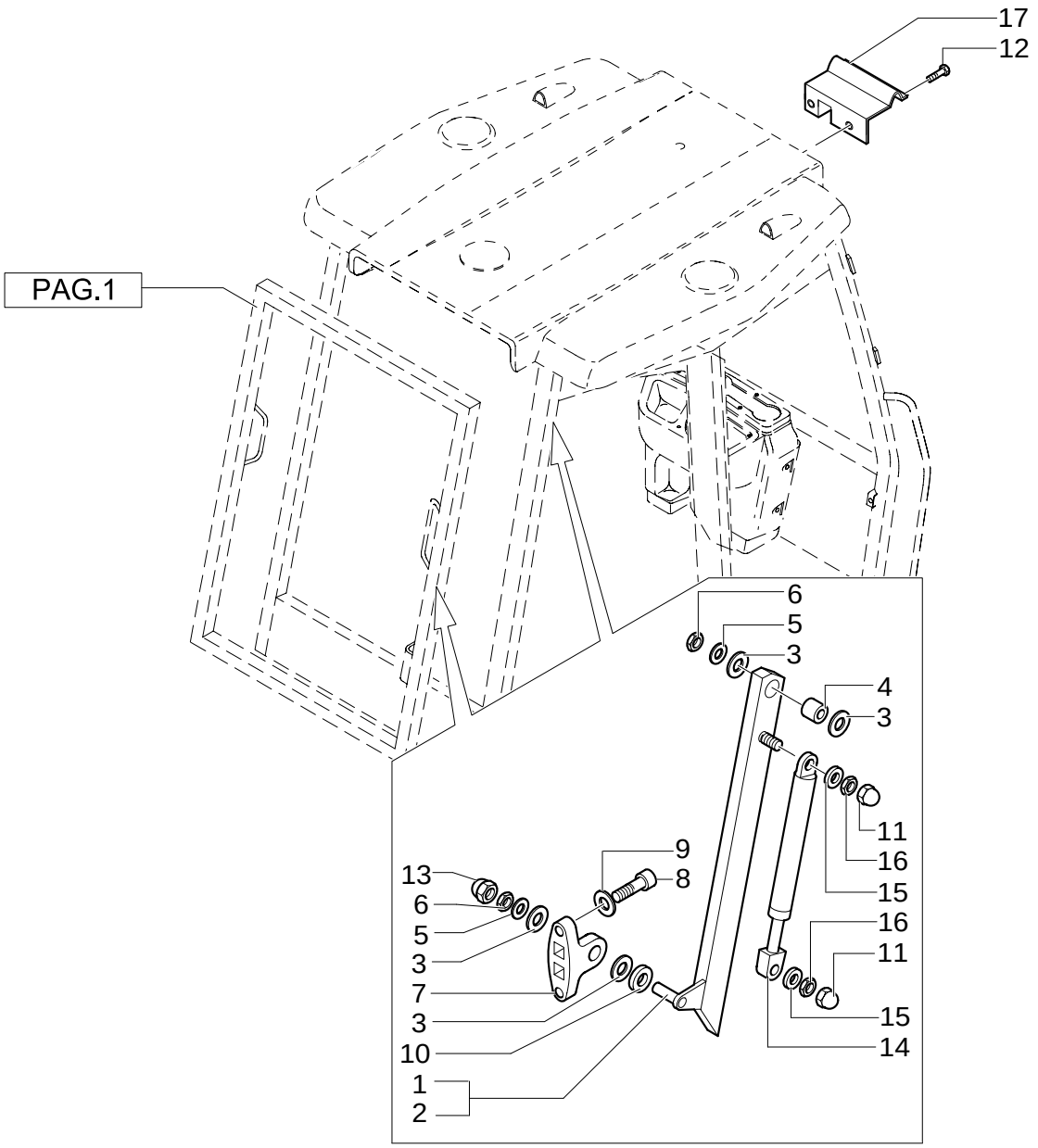

REAR WINDOWS

REF	FN	PART NUMBER	YR/SN	QTY	DESCRIPTION
1		85801812		1	TIE-ROD RH
2		85801813		1	TIE-ROD LH
3		85801814		12	SPACER
4		85801815		2	BUSHING
5		12646904		4	WASHER
6		16104111		4	NUT
7		85801816		2	SUPPORT
8		12638501		4	WASHER
9		14306424		4	SCREW
10		12647004		2	WASHER
11		15811387		4	PROTECTION CAP
12		13276217		2	SCREW M6X16
13		5132136		2	GUARD
14		85801827		2	SHOCK ABSORBER
15		14496407		4	WASHER
16		12574215		4	NUT
17		85812364		1	COLLAR, RETAINER

1.92.9	03	p1	11/05

REAR WINDOWS

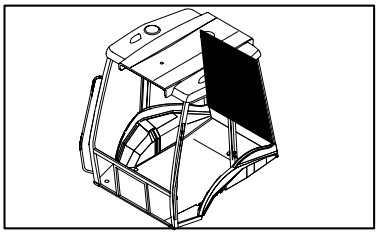

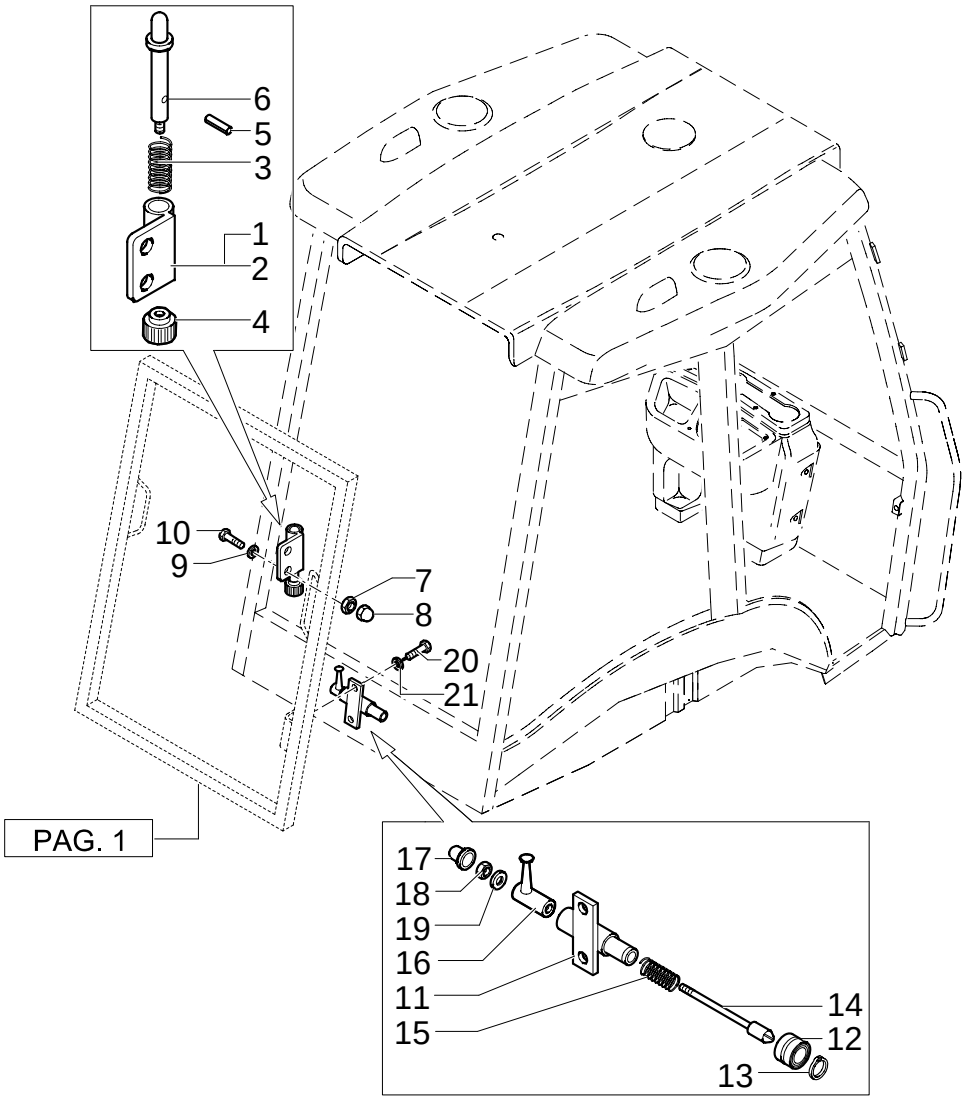

REAR WINDOWS

REF	FN	PART NUMBER	YR/SN	QTY	DESCRIPTION
1		85801831		1	CLIP LH
2		85801830		1	BLOCK RH
3		85801832		2	SPRING
4		85801833		2	KNOB
5		14161771		2	PIN, ROLL
6		85801834		2	PIN
7		16104111		4	NUT
8		5132136		4	GUARD
9		11198074		4	WASHER, SEALING
10		85827836		4	SCREW Cap, HH, CL 8.8, M8 x 1.25 x 25
11		85801820		1	PIN RH
11		85801821		2	PIN LH
12		85802018		2	BEARING ASSY
13		85802351		2	RING, LOCKING
14		85801823		2	PIN
15		85801824		2	SPRING
16		85801825		2	ARM, TRIP
17		15811387		2	PROTECTION CAP
19		12637821		4	WASHER
20		14306424		4	SCREW
21		11198074		4	WASHER, SEALING
18		12574111		4	NUT

1.93.0	01	p1	11/05

CAB / SOFT TRIM

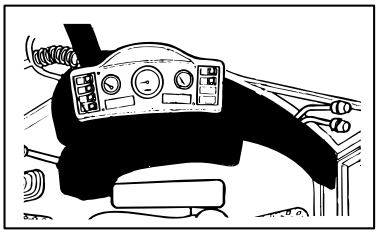

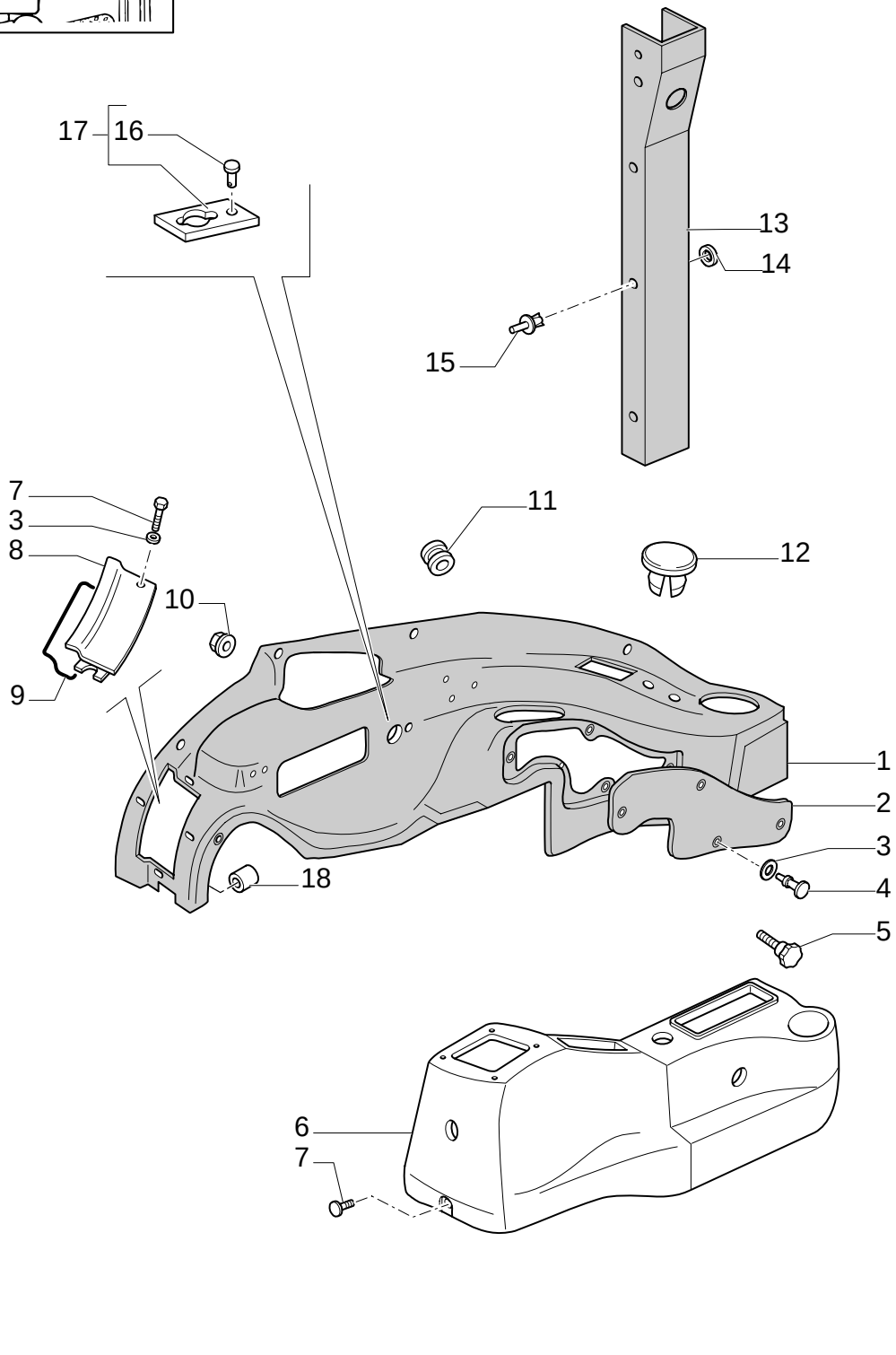

CAB / SOFT TRIM

REF	FN	PART NUMBER	YR/SN	QTY	DESCRIPTION
1	1, 2	85821318		1	SOFT TRIM RH
1	3, 2	87362096		1	SOFT TRIM
2		85801649		1	SOFT TRIM
3		85801991		AR	WASHER
4		13311217		5	SCREW M5X20
5		85805323		1	KNOB
6		87319785		1	SOFT TRIM
7		13311017		AR	SCREW M5X16
8		85825191		1	COVER
9		85806023		1	GASKET
10		14084814		5	NUT M8
11		10398980		1	RING, INSULATING 46X5
12		79111815		1	PLUG
13		85819285		1	SOFT TRIM RH
14		85801991		4	WASHER
15		F1NN94000Z36AA		6	STUD
16		10427200		1	RIVET
17		85827548		1	SEAT/SLOT
18		85805819		6	BUSHING, THREADED

(1) UP TO S/N XXX
(2) Includes 2, 8, 9, 18
(3) FROM TO S/N XXX

1.93.0	02	p1	11/05

CAB / SOFT TRIM (POWER SHUTTLE)

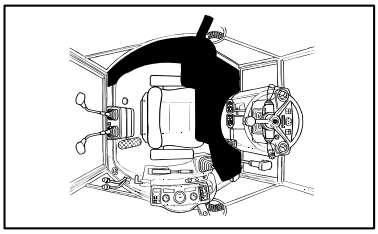

CAB / SOFT TRIM (POWER SHUTTLE)

REF	FN	PART NUMBER	YR/SN	QTY	DESCRIPTION
1	1	85819277		1	SOFT TRIM LH
1	2	87362098		1	SOFT TRIM
2		79089592		6	WASHER D=24
3		13313417		6	SCREW M6X20
4		85819287		1	SOFT TRIM LH
5		5178468		1	GRAB STRAP
6		14084011		1	NUT M4
7		14084814		4	NUT M8
8		85801991		4	WASHER
9		15627011		12	RIVET
10		E7NN94290N06AA		1	STRAP
11		12638107		1	SPACER 5X14
12		85806154		1	RIVET
13		79111978		1	PLUG
14		5148132		1	SOCKET, LAMP
15		14143790		1	BULB 1,2W
16		F1NN94000Z36AA		6	STUD
17		5148131		1	SEAT/SLOT
18		79111978		1	PLUG D=23
19		85808460		1	PLUG

(1) UP TO S/N XXX
(2) FROM TO S/N XXX

CAB / SOFT TRIM

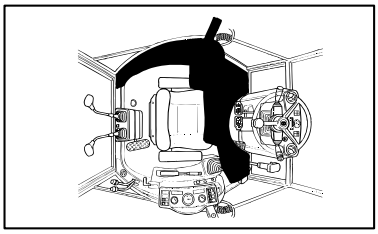

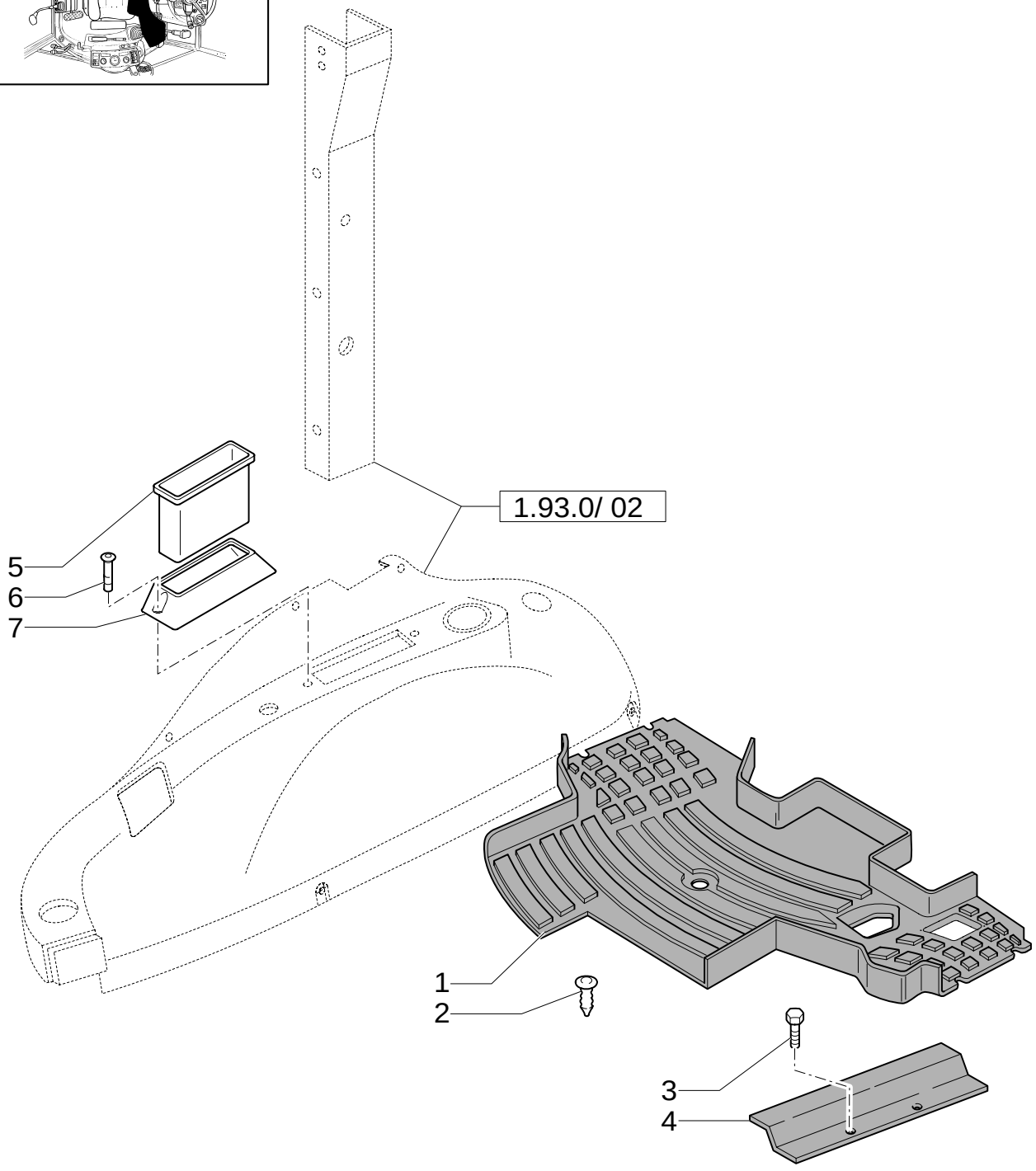

CAB / SOFT TRIM

REF	FN	PART NUMBER	YR/SN	QTY	DESCRIPTION
1		85804865		1	MAT
2		14568887		2	BUTTON
3		14441521		5	SCREW M6X25
4		85805591		2	MOULDING, DOOR SILL
5		85801979		1	CONTAINER
6		13276617		2	SCREW
7		85801651		1	HOUSING

1.93.0	04	p1	11/05

CAB / SOFT TRIM

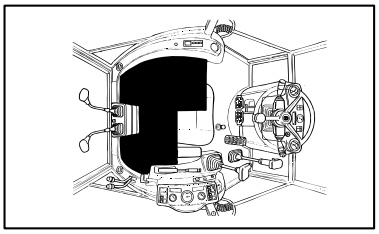

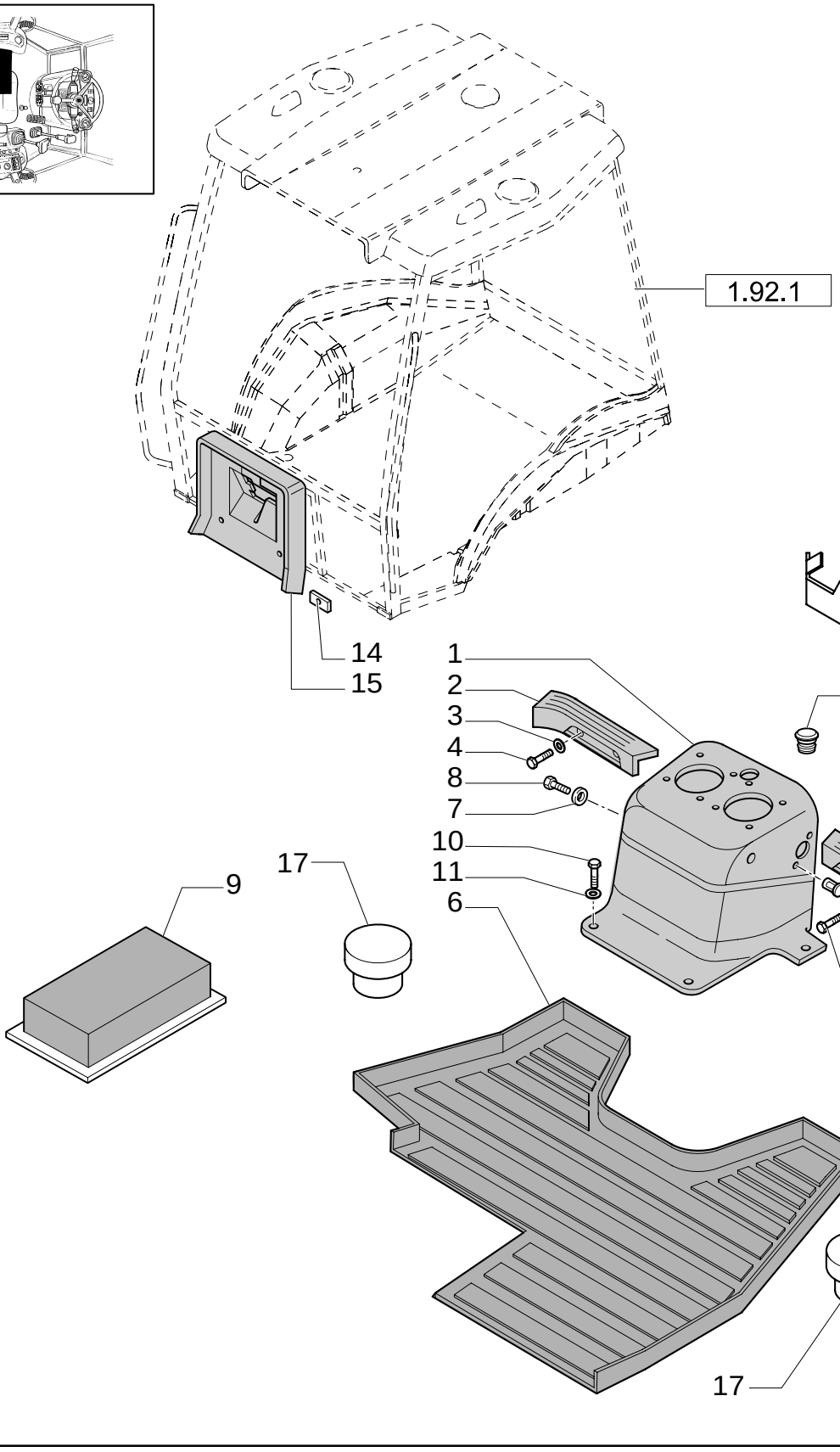

CAB / SOFT TRIM

REF	FN	PART NUMBER	YR/SN	QTY	DESCRIPTION
1		87319801		1	BLISTER
2		85804863		1	FOOT REST
3		10519604		4	WASHER
4		16043824		4	SCREW
5		85804864		1	FOOT REST
6		85804866		1	MAT
7		79089592		1	WASHER
8		79105220		1	SCREW
9		4999021		1	GASKET
11		12640621		4	WASHER
12		85802259		2	BUSHING, THREADED
13		82001909		1	PLUG
14		85812080		4	NUT
15		87408893		1	PANEL
16		87323749		1	BRACKET
17		87319803		2	PLUG
10		10902624		4	SCREW

1.93.0/ 2	01	p1	11/05

RH & BACKHOE CONSOLE TRIM, ROPS (CENTER PIVOT)

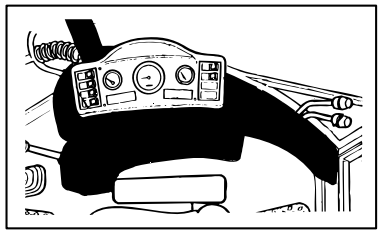

RH & BACKHOE CONSOLE TRIM, ROPS (CENTER PIVOT)

REF	FN	PART NUMBER	YR/SN	QTY	DESCRIPTION
1	1	85821320		1	SOFT TRIM
2		85801649		1	SOFT TRIM
3		85801991		AR	WASHER
4		13311217		5	SCREW M5X20
5		85805323		1	KNOB
6		85805803		1	UTILITY HOLDER
7		16043424		2	SCREW M6X20
8		85825191		1	COVER Fuse Panel
9		85806023		1	GASKET
10		14084814		5	NUT M8
11		85805308		1	GASKET
12		79111815		1	PLUG
13		79089592		2	WASHER D=24
14		13311017		4	SCREW M5X16
15		85812081		1	GASKET
16		10427200		1	RIVET
17		85827548		1	SEAT/SLOT
18		85804750		6	BUSHING, THREADED
19	2	85816763		1	BLISTER
20		85802259		2	BUSHING, THREADED
22		11193974		4	WASHER, LOCK M8
23		79111978		1	PLUG
24		82001909		1	PLUG
25		4999021		1	GASKET
21		10902624		4	SCREW Cap, HH, CL 8.8, M8 x 1.25 x 20

(1) Includes 2, 8, 9, 18
(2) Includes 20

Mechanical Version

1.93.0/ 3	01	p1	11/05

CAB / SOFT TRIM

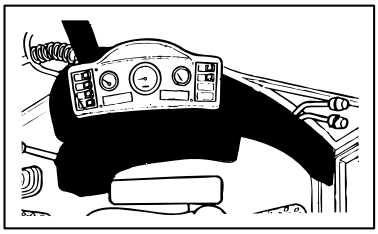

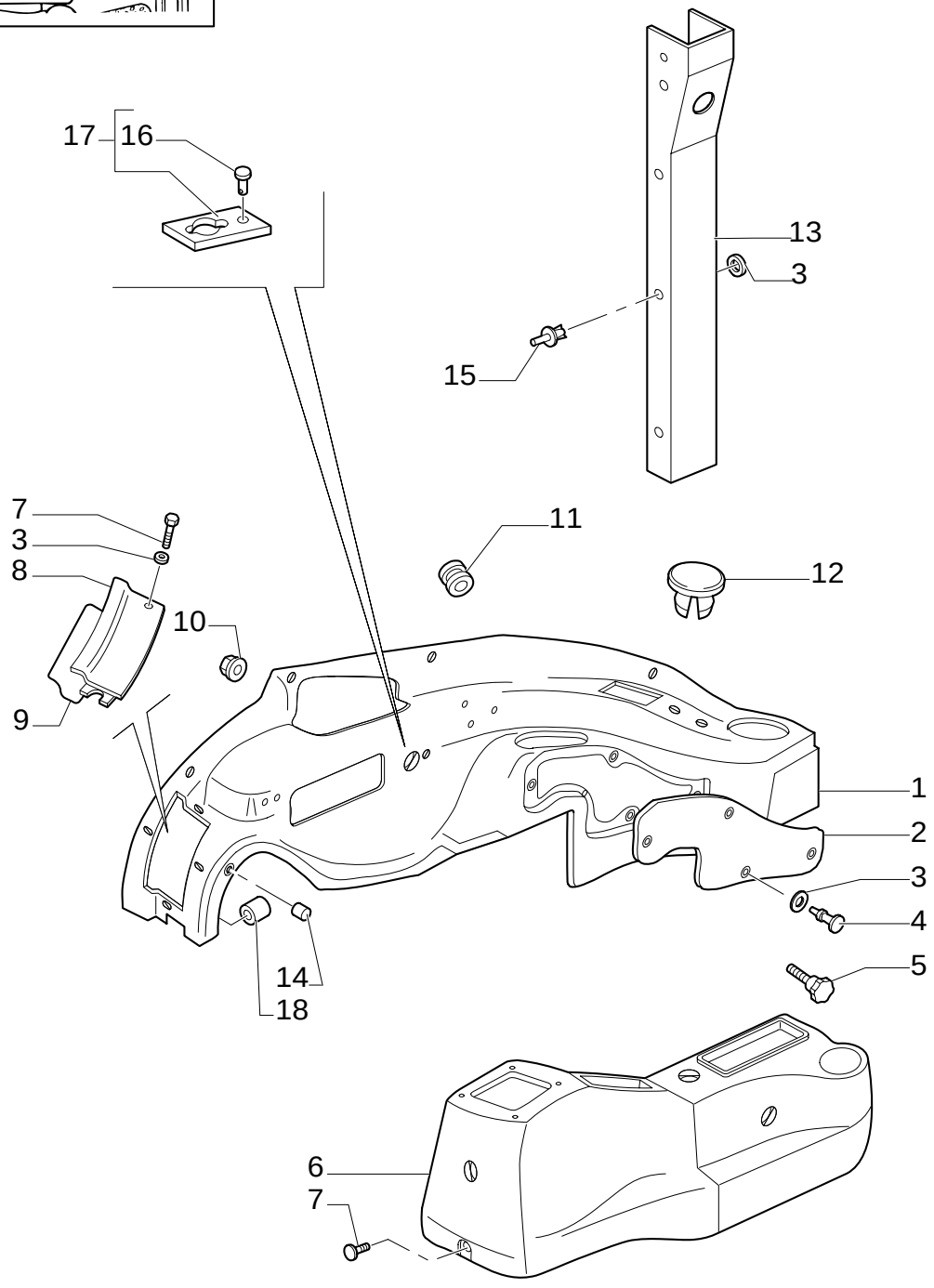

CAB / SOFT TRIM

REF	FN	PART NUMBER	YR/SN	QTY	DESCRIPTION
1	1, 2	85825277		1	SOFT TRIM RH
1	3, 2	87362092		1	SOFT TRIM
2		85801649		1	SOFT TRIM
3		85801991		AR	WASHER
4		13311217		5	SCREW M5X20
5		85805323		1	KNOB
6		87319785		1	SOFT TRIM
7		13311017		AR	SCREW M5X16
8		85825191		1	COVER
9		85806023		1	GASKET
10		14084814		5	NUT M8
11		10398980		1	RING, INSULATING 46X5
12		79111815		1	PLUG
13		85819285		1	SOFT TRIM RH
14		85805819		4	BUSHING, THREADED
15		F1NN94000Z36AA		6	STUD
16		10427200		1	RIVET
17		85827548		1	SEAT/SLOT
18		85804750		6	BUSHING, THREADED

(1) UP TO S/N XXX
(2) Includes 2, 8, 9, 14, 18
(3) FROM TO S/N XXX

Pilot Control Version

1.93.0/ 3	04	p1	11/05

CAB / SOFT TRIM

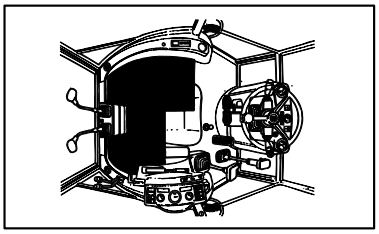

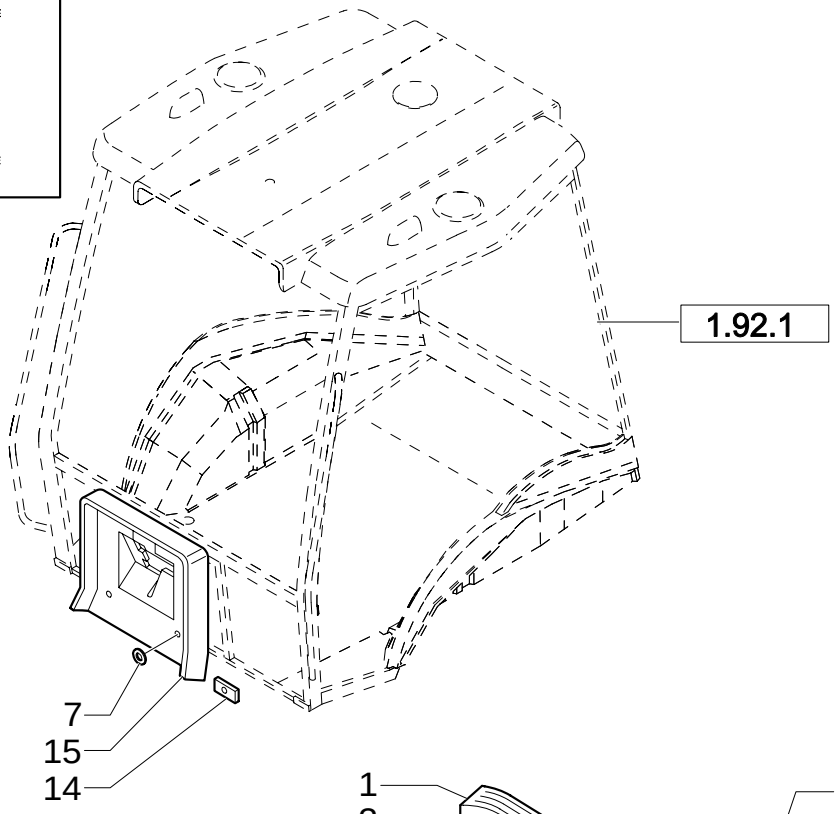

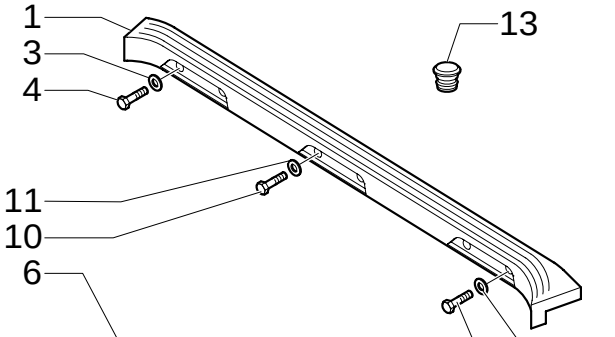

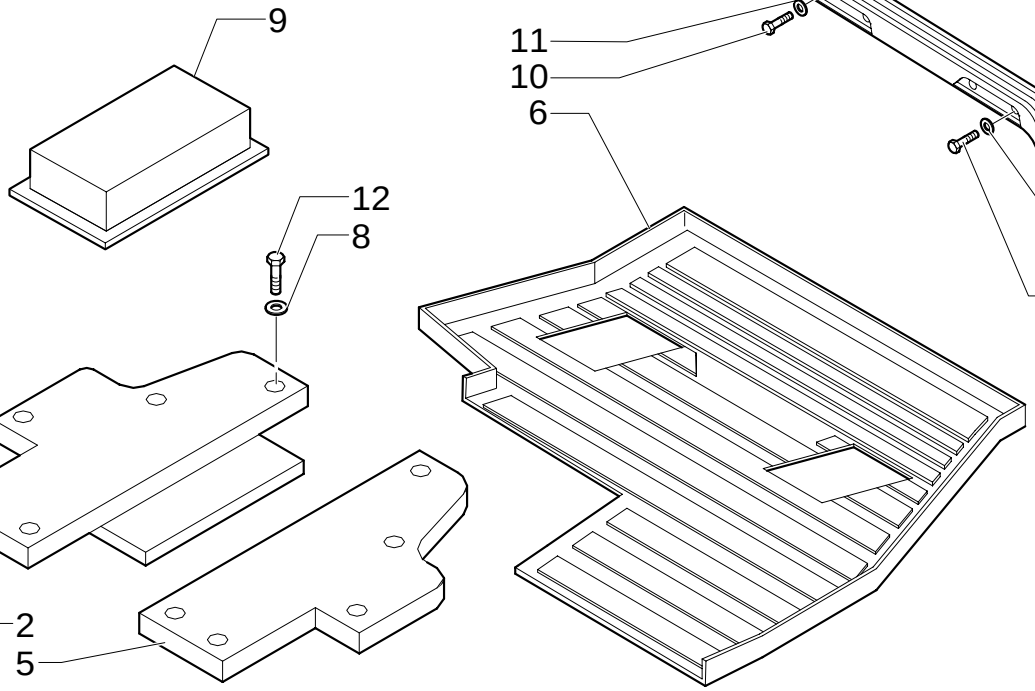

CAB / SOFT TRIM

REF	FN	PART NUMBER	YR/SN	QTY	DESCRIPTION
1		87410385		1	PANEL
2		87426550		1	COVER, TOP
3		10519604		4	WASHER
4		16043824		4	SCREW
5		87426546		1	COVER, TOP
6		87410108		1	MAT
7		79089592		1	WASHER
8		11193274		10	WASHER, LOCK
9		4999021		1	GASKET
11		12640621		4	WASHER
12		10902524		10	SCREW
13		82001909		1	PLUG
14		85812080		4	NUT
15		87408893		1	PANEL
10		10902624		4	SCREW

1.93.0/ 5	01	p1	02/05

RH & BACKHOE CONSOLE TRIM, ROPS (CENTER PIVOT)

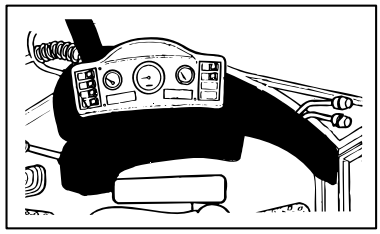

RH & BACKHOE CONSOLE TRIM, ROPS (CENTER PIVOT)

REF	FN	PART NUMBER	YR/SN	QTY	DESCRIPTION
1	1	85825272		1	SOFT TRIM
2		85801649		1	SOFT TRIM
3		85801991		AR	WASHER
4		13311217		5	SCREW M5x20
5		85805323		1	KNOB
6		85805803		1	UTILITY HOLDER
7		16043424		2	SCREW M6x20
8		85825191		1	COVER Fuse Panel
9		85806023		1	GASKET
10		14084814		5	NUT M8
11		85805308		1	GASKET
12		79111815		1	PLUG
13		79089592		2	WASHER D=24
14		13311017		4	SCREW M5x16
15		85812081		1	GASKET
16		10427200		1	RIVET
17		85827548		1	SEAT/SLOT
18		85804750		6	BUSHING, THREADED
19		85819016		1	GASKET
20		85808460		1	PLUG
21		87426550		1	COVER, TOP
22		11193974		4	WASHER, LOCK M8
23		79111978		1	PLUG
24		82001909		1	PLUG
25		4999021		1	GASKET

(1) Includes 2, 8, 9, 18

Pilot Control Version

1.93.0/ 6	01	p1	08/05

ROOF, ROPS

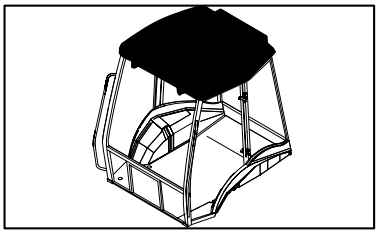

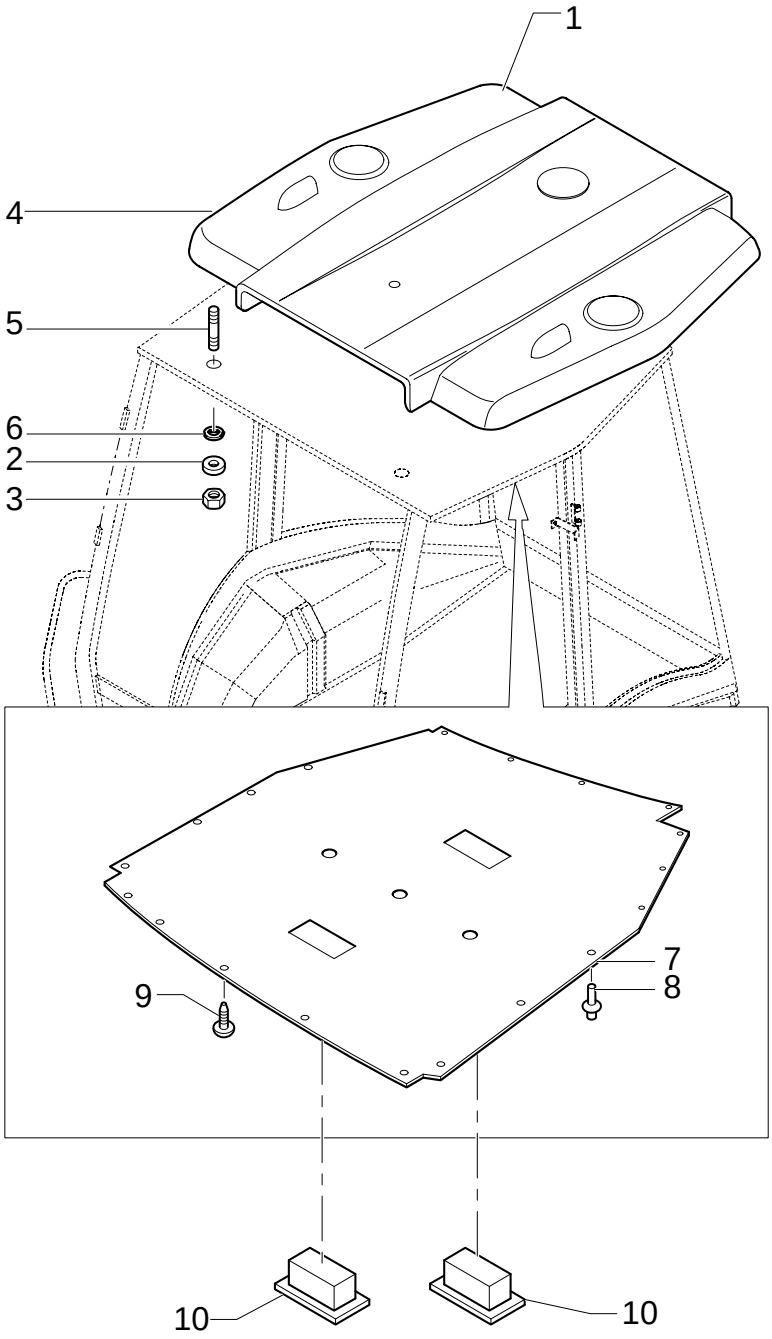

ROOF, ROPS

REF	FN	PART NUMBER	YR/SN	QTY	DESCRIPTION
1	1, 2	87315646		1	ROOF
1	1, 3	87315647		1	ROOF
2		12647004		8	WASHER
3		16104111		8	NUT
4		85819549		8	PLUG
5		13517021		8	STUD
6		85801801		8	GASKET
7		87319727		1	SOFT TRIM
8		5162852		21	BUTTON
9		85805777		1	PLUG
10		87318763		2	PLUG

(1) Includes 5
(2) Only for CAB
(3) Only for ROPS

1.93.0/ 6A	01	p1	02/05

ROOF, ROPS

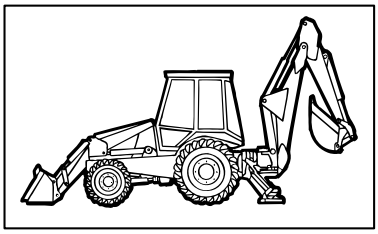

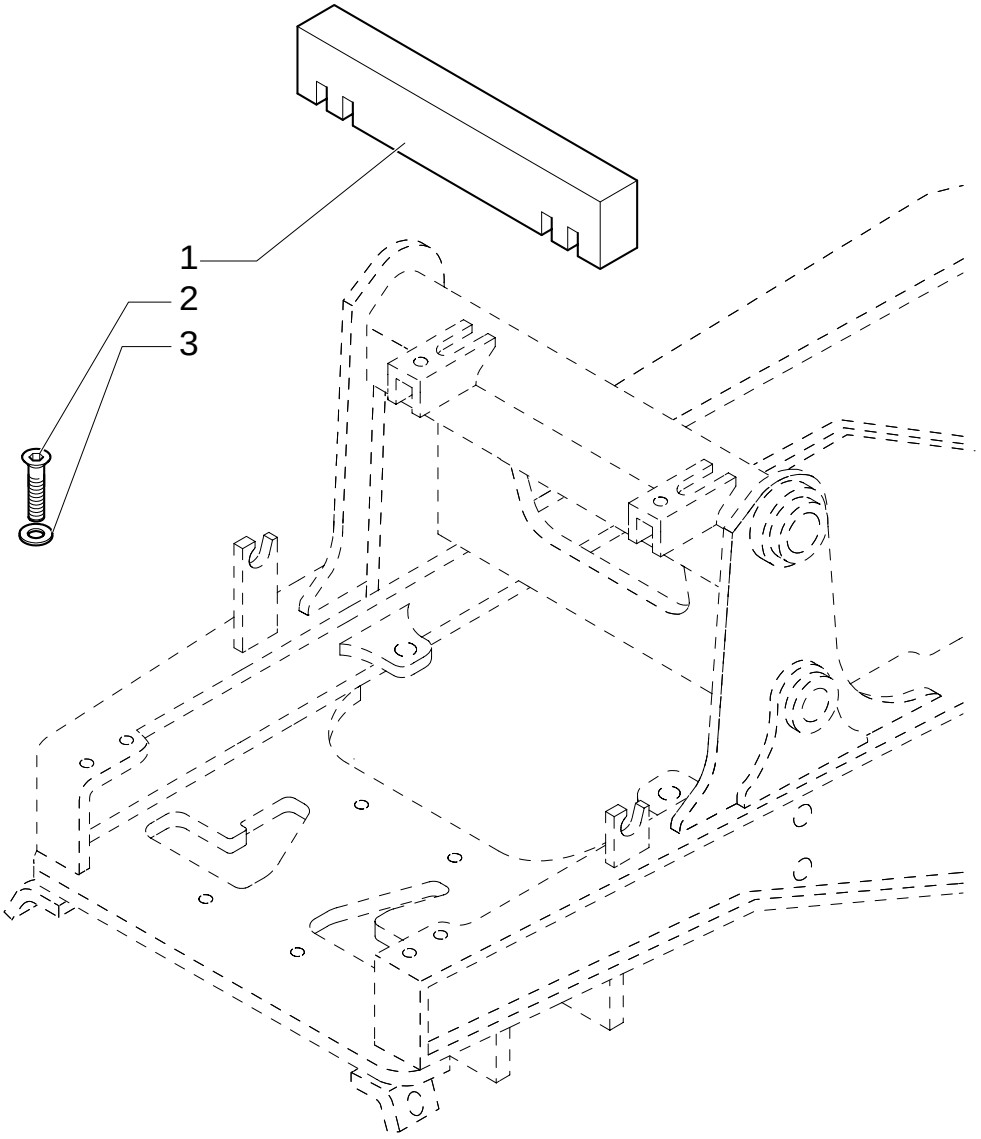

ROOF, ROPS

REF	FN	PART NUMBER	YR/SN	QTY	DESCRIPTION
1		85817287		1	STRIP-GASKET
2		13311217		5	SCREW M5x20
3		85801991		5	WASHER

1.93.4	01	p1	02/05

REAR MIRROR- SUN SCREEN

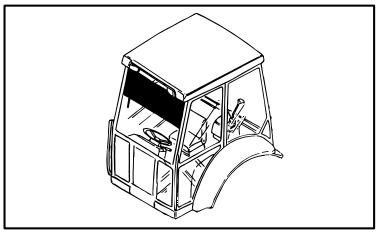

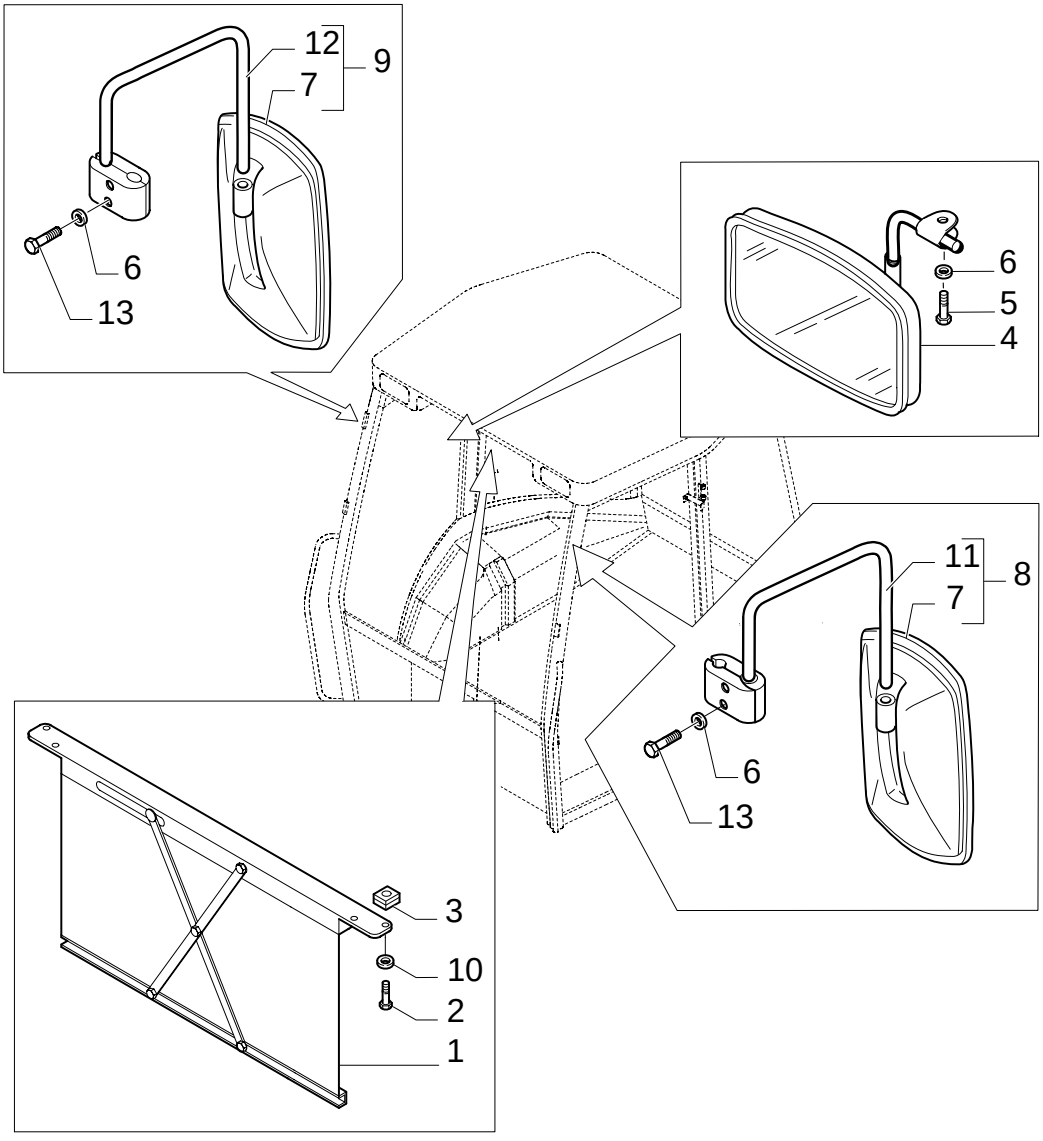

REAR MIRROR- SUN SCREEN

REF	FN	PART NUMBER	YR/SN	QTY	DESCRIPTION
1		5176441		1	SUN CURTAIN
2		14303324		4	SCREW
3		14197790		4	NUT
4		83995298		1	MIRROR, LH SX (CAB)
5		13313417		1	SCREW M6x25 (CAB)
6		11193274		4	WASHER, LOCK (ROPS)
7		85820138		2	MIRROR, REAR-VIEW
8		85820139		1	MIRROR, LH SX
9		85820136		1	MIRROR, RH DX
10		12642821		4	WASHER, LOCK
11		{85820140}		1	SX
12		{85820137}		1	DH
13		10902127		4	SCREW

1.93.5	01	p1	02/05

FRONT CONSOLE - ROPS (POWER SHUTTLE)

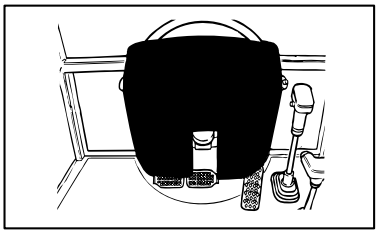

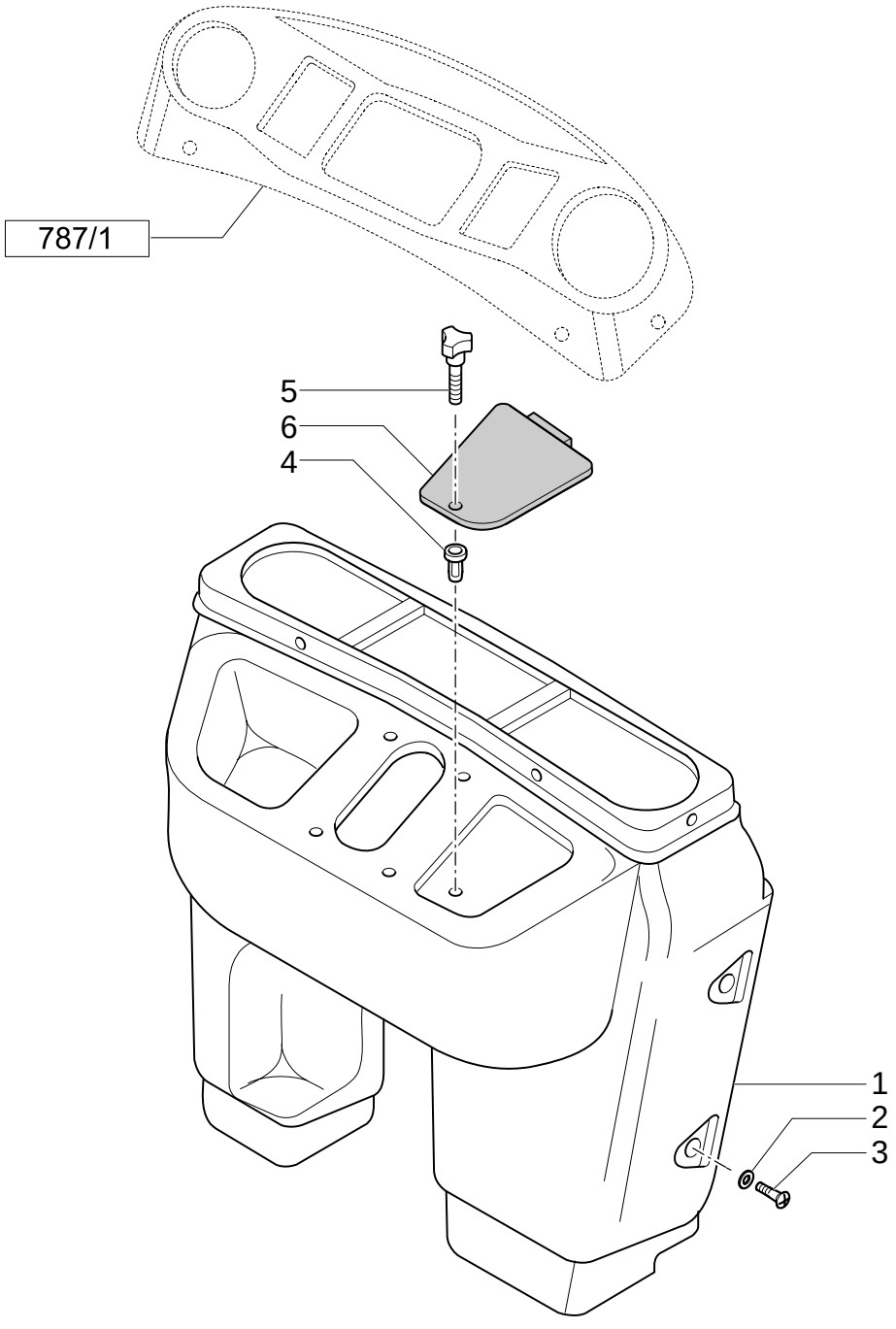

FRONT CONSOLE - ROPS (POWER SHUTTLE)

REF	FN	PART NUMBER	YR/SN	QTY	DESCRIPTION
1	1	85819407		1	PANEL, DASH ASSY ROPS
2		79089592		2	WASHER D=24
3		79105220		2	SCREW M6X20
4		85804750		4	BUSHING, THREADED M5
5		85805323		1	KNOB M5
6		85806089		1	COVER

(1) Includes 4 To 6

1.93.5	02	p1	02/05

RH SIDE CONSOLE SEAL & CLIPS - ROPS (POWER SHUTTLE)

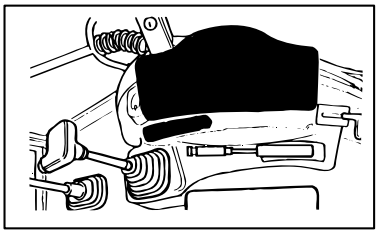

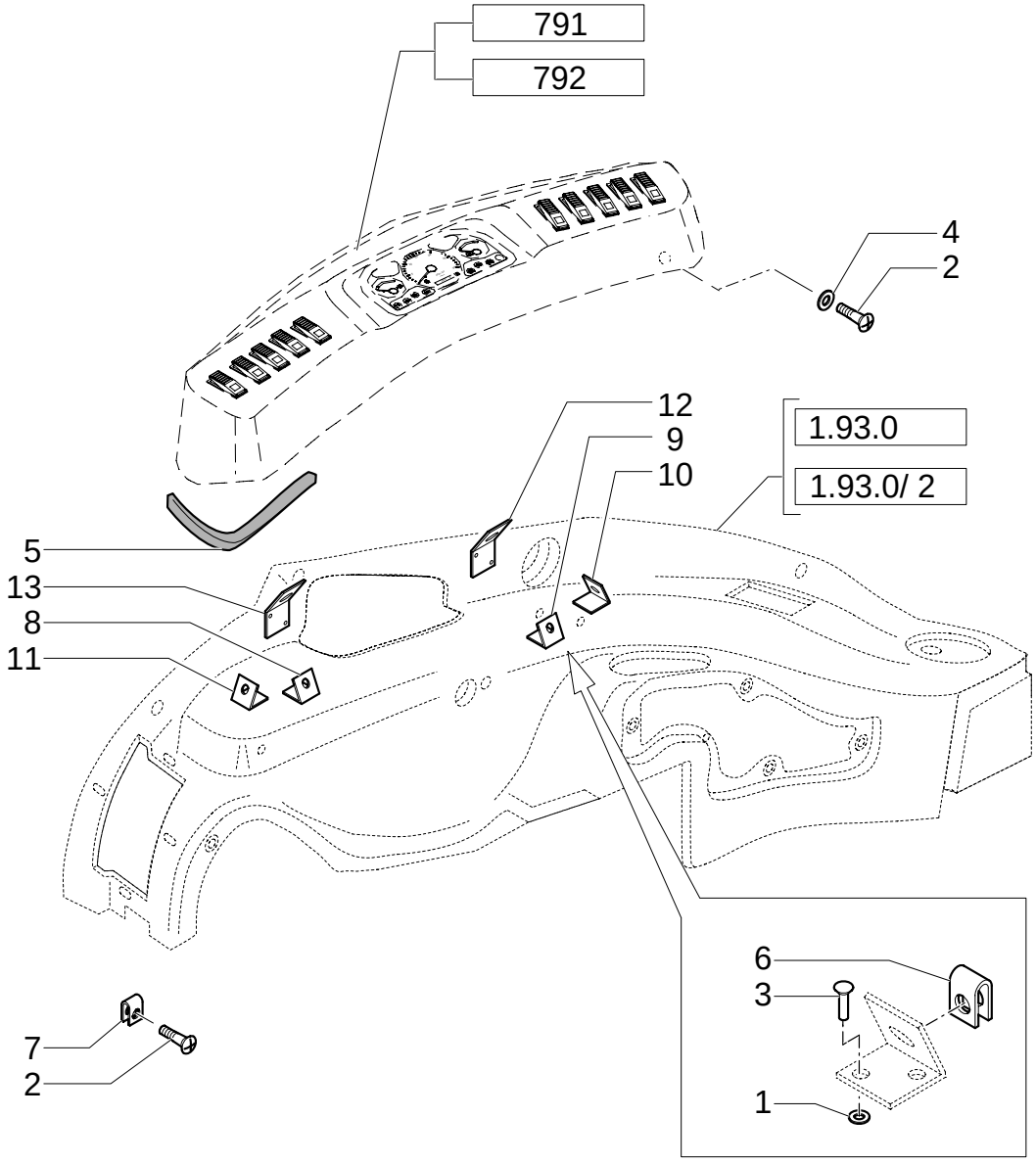

RH SIDE CONSOLE SEAL & CLIPS - ROPS (POWER SHUTTLE)

REF	FN	PART NUMBER	YR/SN	QTY	DESCRIPTION
1		12642804		12	WASHER
2		15693507		AR	SCREW
3				12	
4		85801991		AR	WASHER
5		85824393		1	SEAL, RUBBER
6		14189176		6	COLLAR, RETAINER
7		14372671		2	NUT
8		85802141		1	COLLAR, RETAINER
9		85802142		1	COLLAR, RETAINER
10		85802143		1	COLLAR, RETAINER
11		85802144		1	COLLAR, RETAINER
12		85802145		1	COLLAR, RETAINER
13		85802146		1	COLLAR, RETAINER

1.93.5/ 1	01	p1	02/05

CAB / PANEL DASH

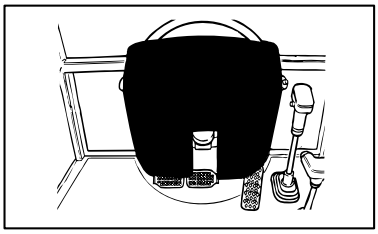

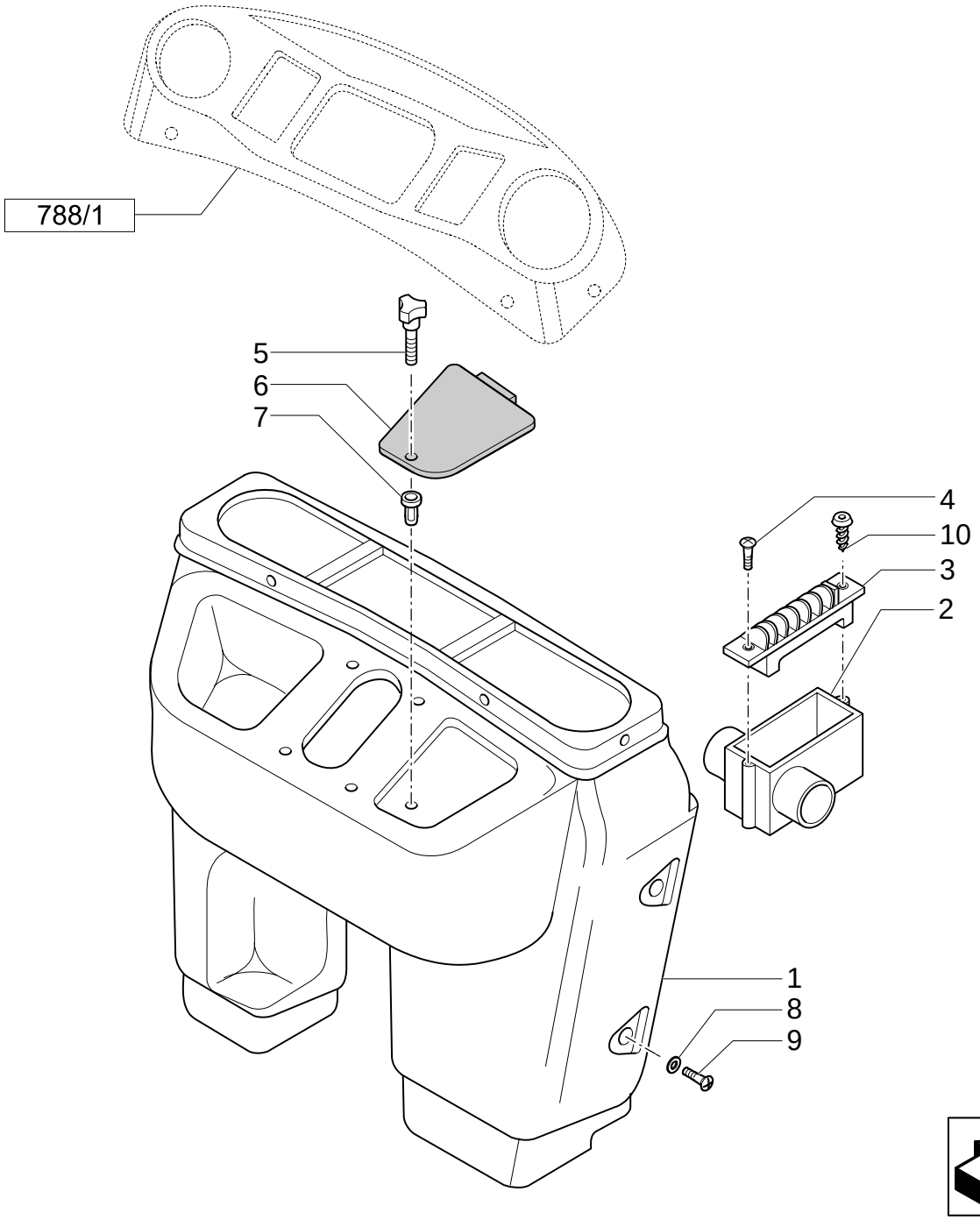

CAB / PANEL DASH

REF	FN	PART NUMBER	YR/SN	QTY	DESCRIPTION
1	1	85819289		1	PANEL, DASH ASSY CAB
2		85819567		2	CONVEYOR CAB
3		85819454		2	DIFFUSER CAB
4		14440327		4	SCREW CAB M4X20
5		85805323		1	KNOB M5
6		85806089		1	COVER
7		85804750		5	BUSHING, THREADED M5
8		79089592		AR	WASHER D=24
9		79105220		AR	SCREW M6X20
10		14568887		4	BUTTON CAB 8X20

(1) Includes 2 To 6

1.93.5/ 1	02	p1	02/05

CAB / PANEL DASH

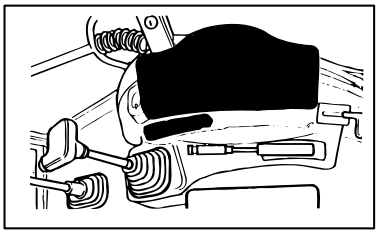

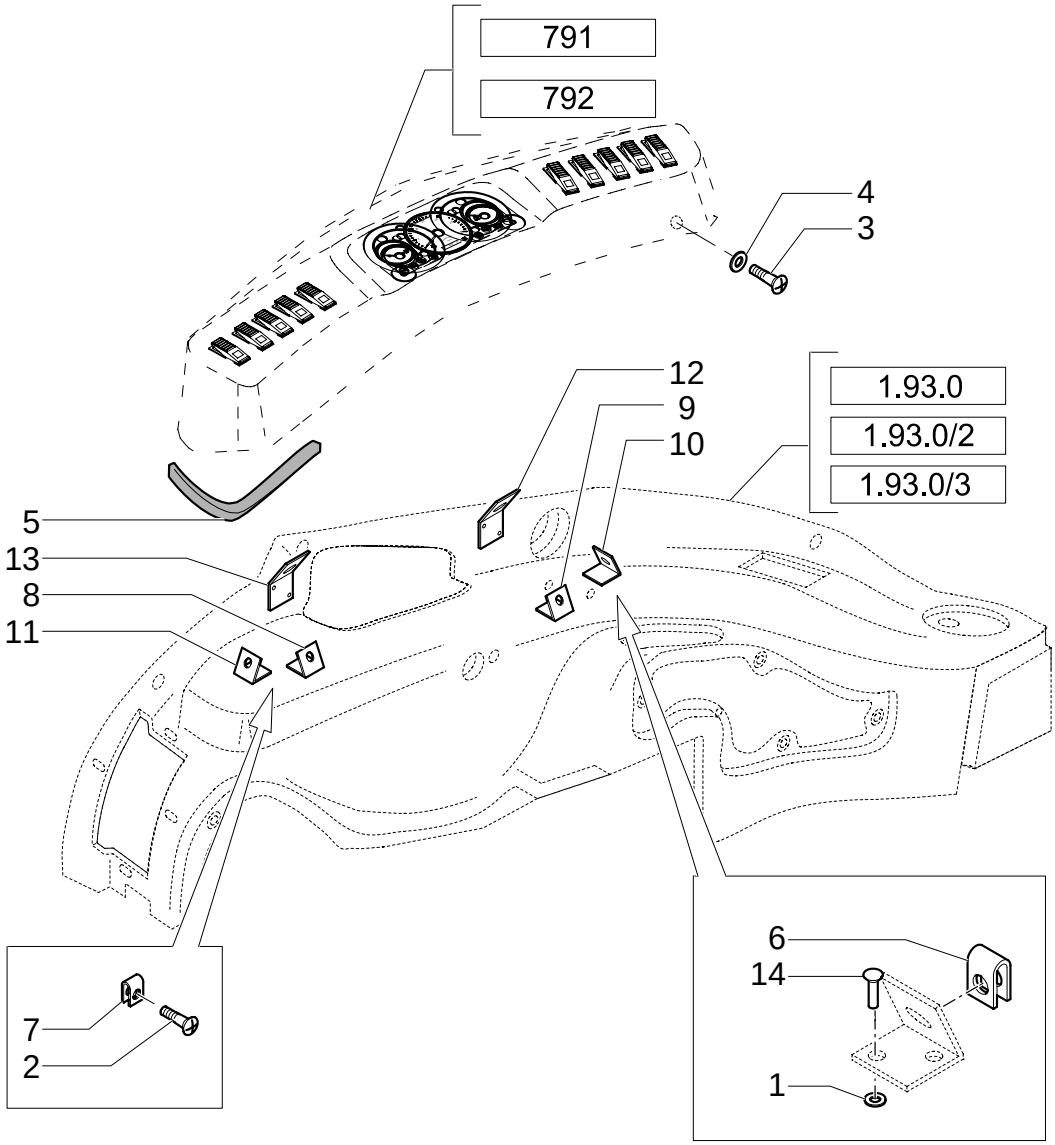

CAB / PANEL DASH

REF	FN	PART NUMBER	YR/SN	QTY	DESCRIPTION
1		12642804		1	WASHER
2		15693301		2	SCREW CAB
3		15693507		AR	SCREW
4		85801991		AR	WASHER
5		85824393		1	SEAL, RUBBER
6		14189176		6	COLLAR, RETAINER
7		14372671		2	NUT CAB
8		85802141		1	COLLAR, RETAINER
9		85802142		1	COLLAR, RETAINER
10		85802143		1	COLLAR, RETAINER
11		85802144		1	COLLAR, RETAINER
12		85802145		1	COLLAR, RETAINER
13		85802146		1	COLLAR, RETAINER
14		14642192		12	RIVET

1.93.5/ 3	01	p1	11/05

CAB / PANEL DASH

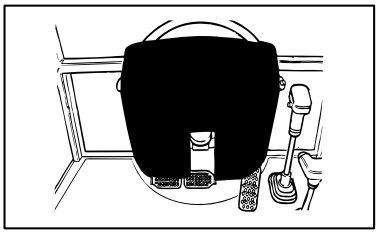

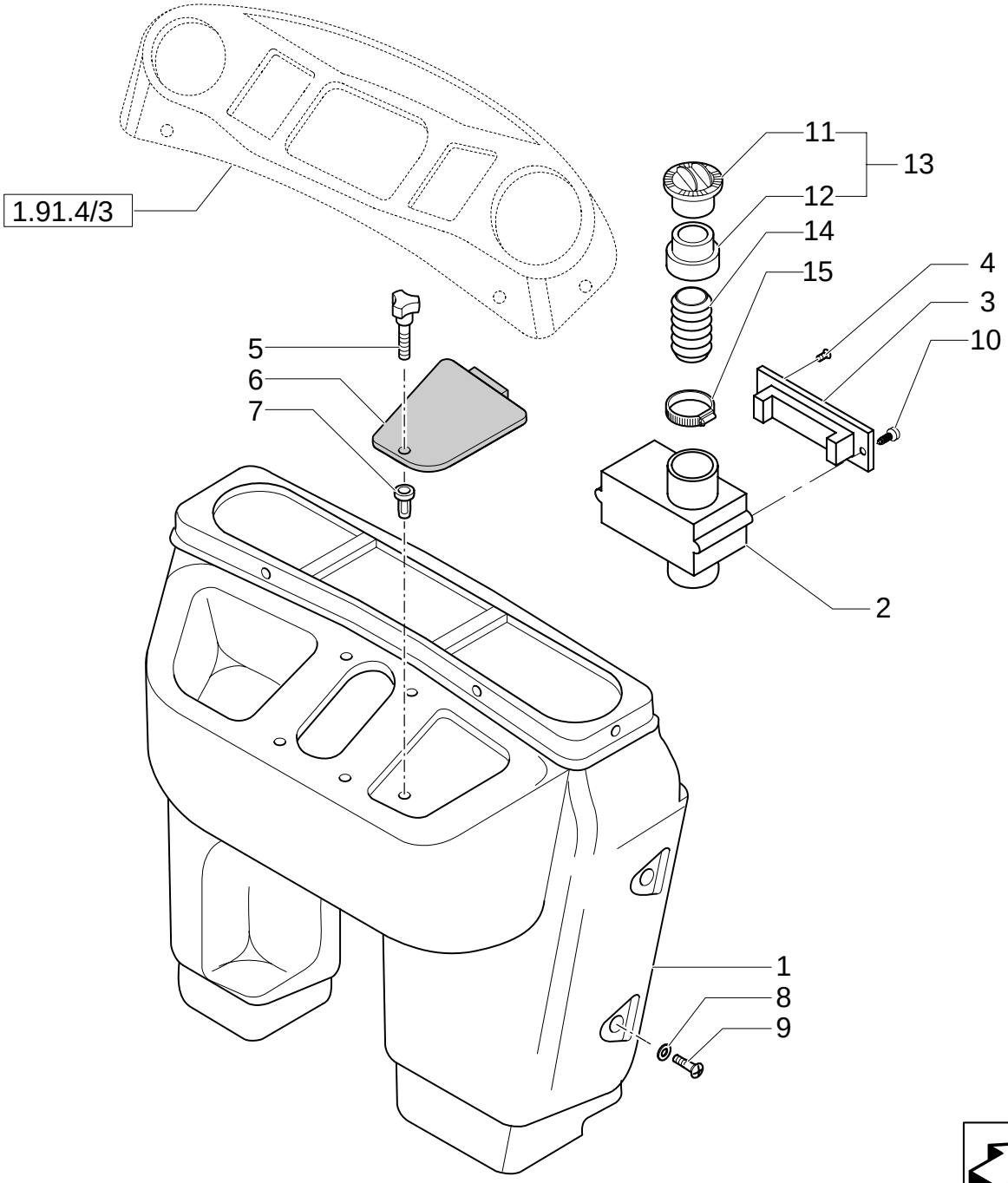

CAB / PANEL DASH

REF	FN	PART NUMBER	YR/SN	QTY	DESCRIPTION
1	1	85819291		1	PANEL, DASH ASSY
2		85819567		2	CONVEYOR
3		85819454		2	DIFFUSER
4		14440327		4	SCREW M4X20
5		85805323		1	KNOB M5
6		85806089		1	COVER
7		85804750		5	BUSHING, THREADED M5
8		79089592		AR	WASHER D=24
9		79105220		AR	SCREW M6X20
10		14568887		4	BUTTON 8X20
11		85819544		2	DIFFUSER
12	2	85819545		2	REDUCER
12	2	87358811		2	REDUCER
13	3	85819543		2	DIFFUSER
13	3	87358807		2	DIFFUSER
14		85819592		2	SLEEVE
15		13000990		2	CLIP, HOSE

(1) Includes 2 To 7
(2) UP TO S/N XXX
(3) FROM TO S/N XXX

1.94.0	01	p1	02/05

CAB/ CANOPY

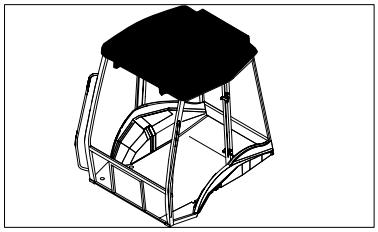

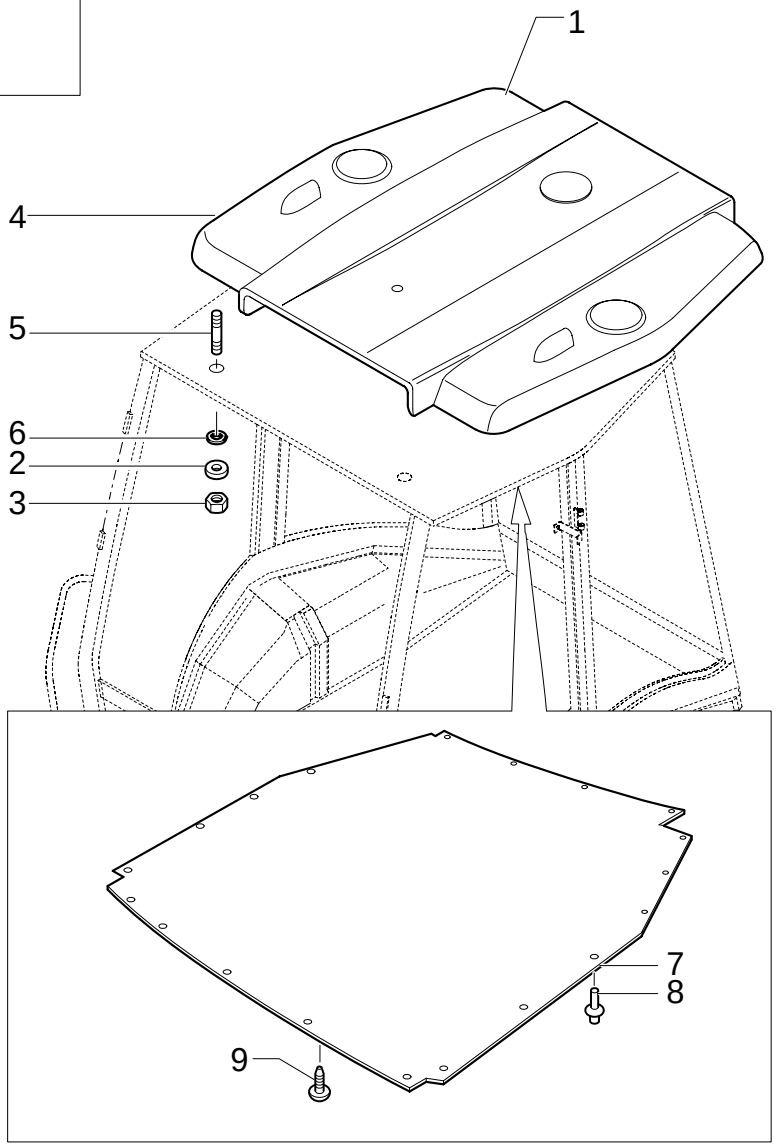

CAB/ CANOPY

REF	FN	PART NUMBER	YR/SN	QTY	DESCRIPTION
1		85817287		1	STRIP-GASKET CAB
2		13311217		5	SCREW
3		85801991		5	WASHER

1.94.2	03	p1	08/05

HEATER WATER HOSES

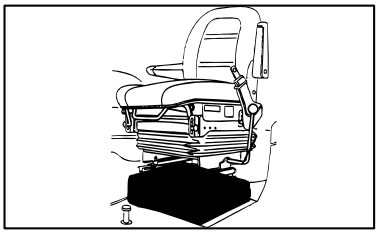

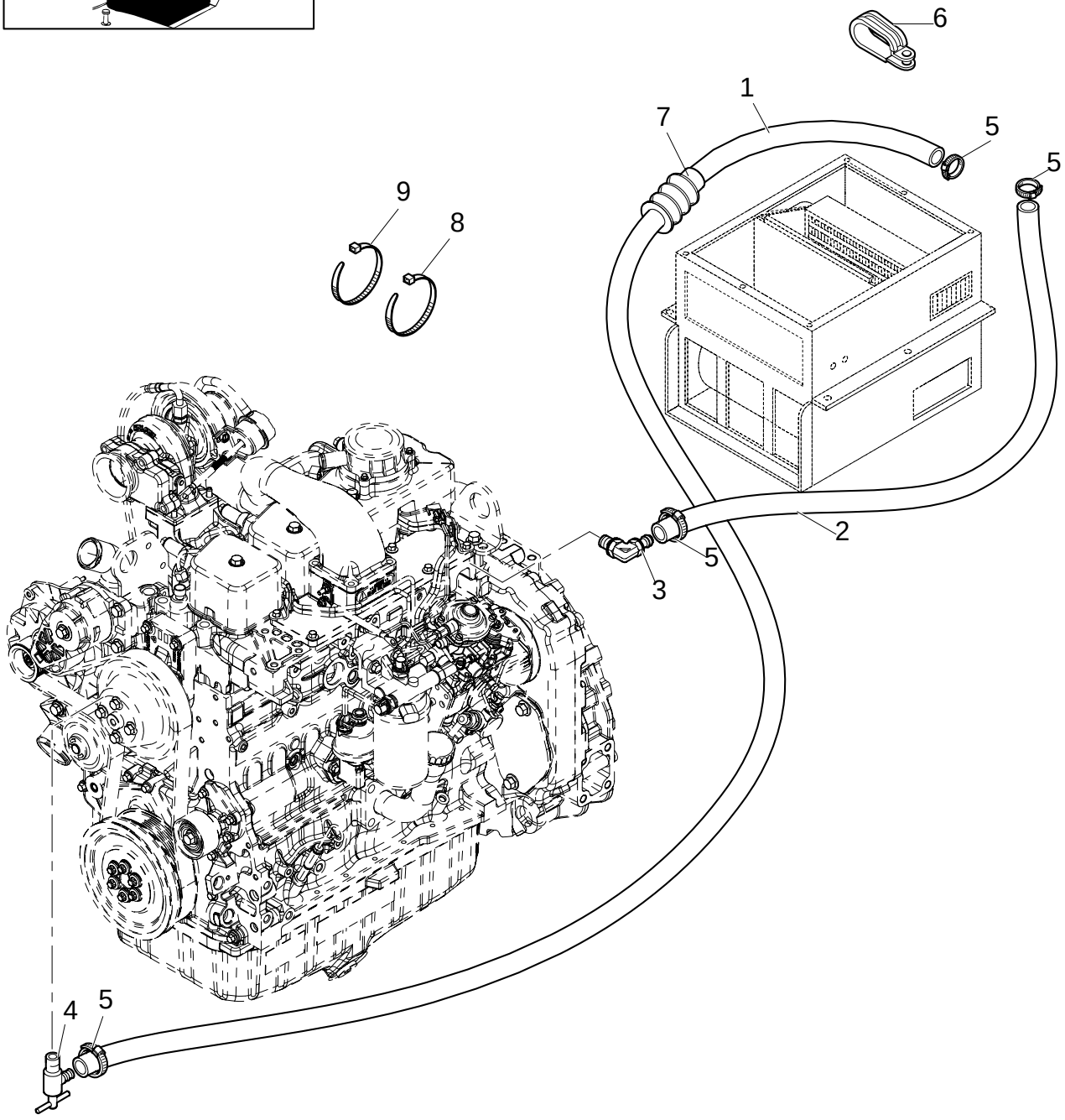

HEATER WATER HOSES

REF	FN	PART NUMBER	YR/SN	QTY	DESCRIPTION
1		87403646		1	HOSE, FLEXIBLE
2		87403647		1	HOSE, FLEXIBLE
3		86637716		1	STEM
4		47048896		1	VALVE, HYDRAULIC
5		85803079		4	CLAMP
6		47048653		2	COLLAR
7		87345955		3	SHIELD
8		47048448		1	COLLAR
9		47048451		3	COLLAR

Up To S/N XXX

1.94.2/ 1	03	p1	08/05

HEATER WATER HOSES

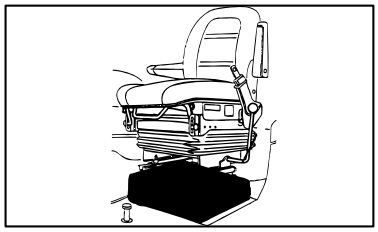

HEATER WATER HOSES

REF	FN	PART NUMBER	YR/SN	QTY	DESCRIPTION
1		87324991		1	HOSE, FLEXIBLE
2		87324999		1	HOSE, FLEXIBLE
3		86637716		1	STEM
4		47048896		1	VALVE, HYDRAULIC
5		85803079		4	CLAMP
6		85802336		2	COLLAR, RETAINER
7		87345955		3	SHIELD
8		47044673		2	WASHER
9		47048451		3	COLLAR
10		11112221		2	SCREW

Pilot Control Version, From S/N XXX

1.95.0	01	p1	11/05

CAB-SAFETY FRAME / BRAKE PEDAL

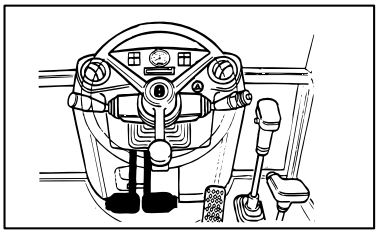

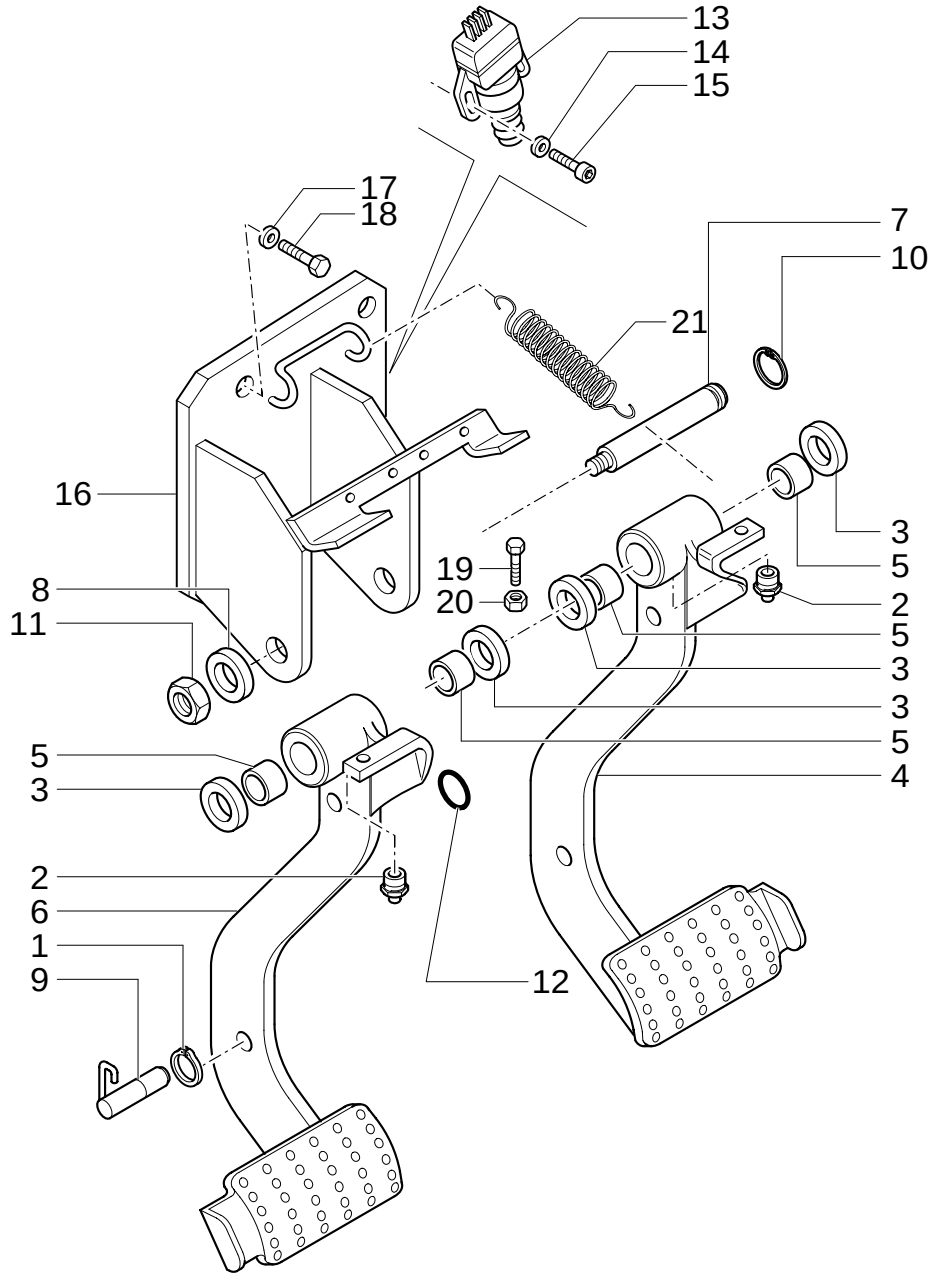

CAB-SAFETY FRAME / BRAKE PEDAL

REF	FN	PART NUMBER	YR/SN	QTY	DESCRIPTION
1		11088176		1	RING, LOCKING
2		13407214		2	NIPPLE, LUBE
3		5148062		4	WASHER
4		85805285		1	PEDAL RH
5		4983992		4	BEARING ASSY
6		85805283		1	PEDAL LH
7		85801860		1	PIN
8		10517274		1	WASHER, LOCK
9		87316455		1	BLOCK
10		11067376		1	RING, LOCKING
11		12164114		1	NUT
12		13399076		2	RING
13		82026949		2	SWITCH Brake
14		12642821		4	WASHER, LOCK W/CAB
15		14303324		4	SCREW M4 x 20 W/CAB
16		85805277		1	SUPPORT
17		11190574		4	WASHER, LOCK
19		16043921		2	SCREW M8 x 1,25 x 35
20		11701621		2	NUT M8
21		5153180		1	SPRING
18		15970524		4	SCREW

1.95.0	02	p1	11/05

CAB-SAFETY FRAME / BRAKE PEDAL

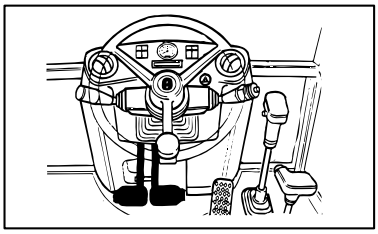

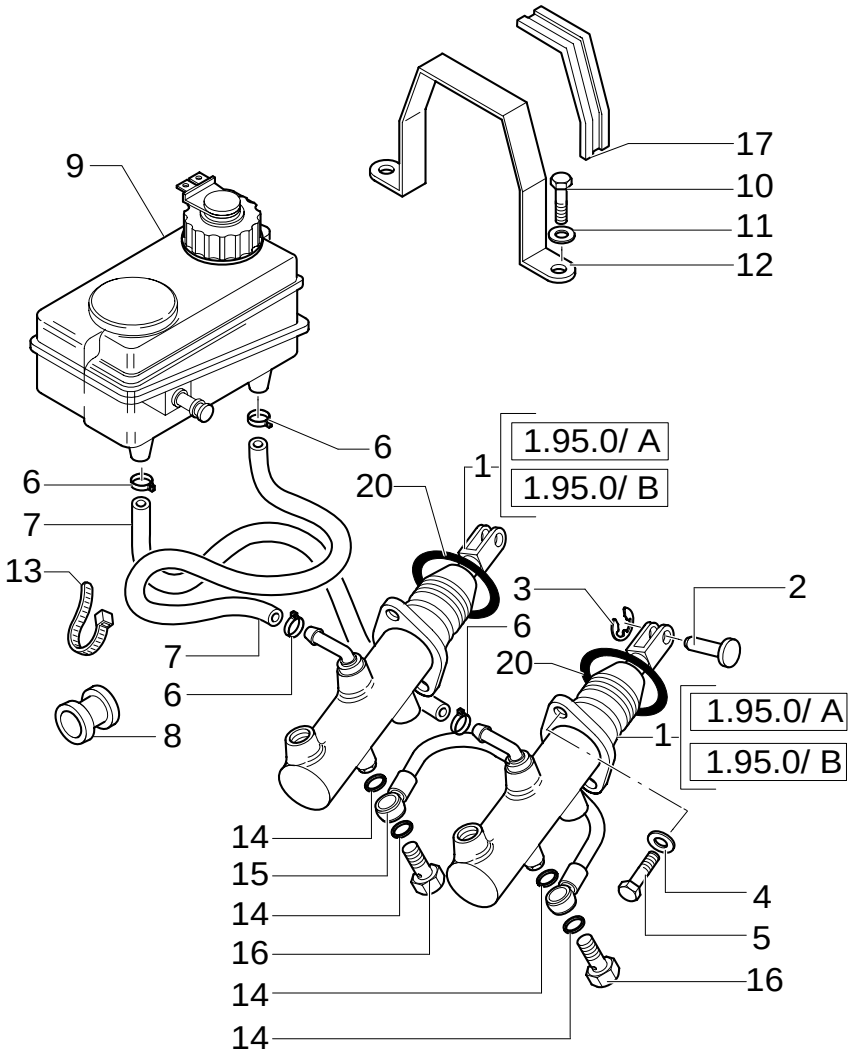

CAB-SAFETY FRAME / BRAKE PEDAL

REF	FN	PART NUMBER	YR/SN	QTY	DESCRIPTION
1	1	85805257		2	MASTER CYLINDER
2		5155381		2	PIN
3		11064176		2	CLIP
4	2	11193874		4	WASHER, LOCK
5	3	14306324		4	SCREW M8X20
6		13423271		4	CLIP, HOSE
7		87302705		2	SHEATH, FLEXIBLE
8		85801941		2	RING, RUBBER
9	4	82003369		1	TANK
11		11193274		2	WASHER, LOCK M6X15X1.2
12		85801092		1	BRACKET
13		14560187		1	COLLAR
14		4858607		8	GASKET
15		5155701		1	TUBE, RIGID
16		5155703		4	CONNECTOR, HYD.
17		85801093		1	STRIP-GASKET
19		85824114		2	PUMP, HYDRAULIC
20		13399076		2	RING
21	5	85806176		AR	PLUG
10		10902624		2	SCREW

(1) Only for LB90.B - LB95.B - LB110.B
(2) Only for ROPS
(3) Only for CAB
(4) Brake Fluid, Cap is P/N 85806176
(5) Not Illustrated

CAB-SAFETY FRAME / BRAKE PEDAL

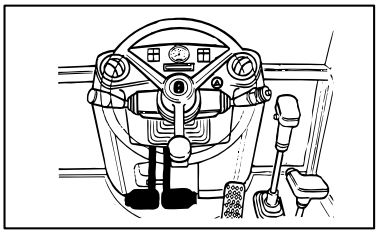

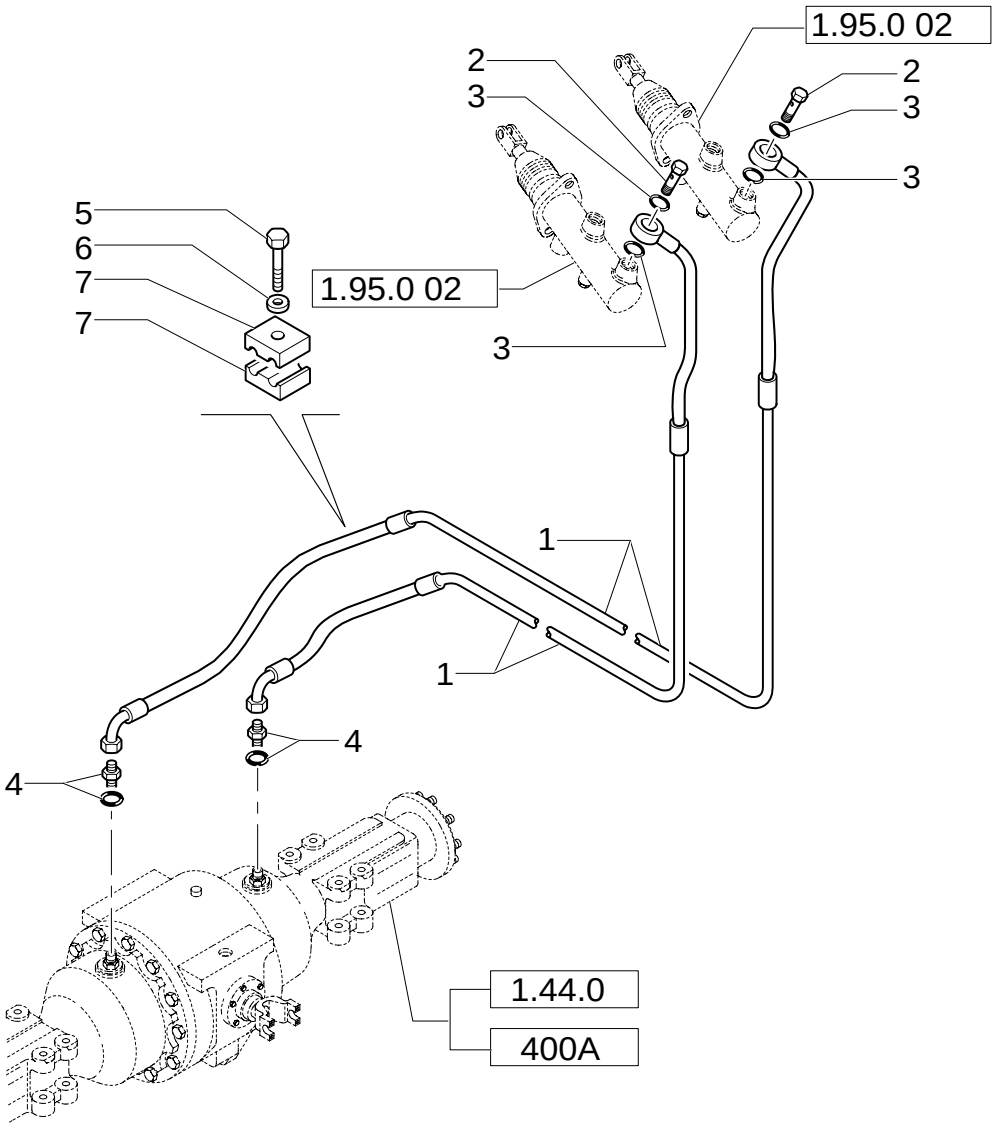

CAB-SAFETY FRAME / BRAKE PEDAL

REF	FN	PART NUMBER	YR/SN	QTY	DESCRIPTION
1		85819177		2	TUBE, RIGID
2		5155703		2	CONNECTOR, HYD.
3		4858607		4	GASKET
4		85803312		2	CONNECTOR, HYD.
5		15212721		2	SCREW Hex, M6 x 40 8.8, Full Thd
6		14447021		2	WASHER
7		85805548		4	CLIP

CAB-SAFETY FRAME / BRAKE PEDAL

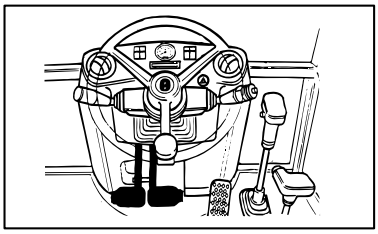

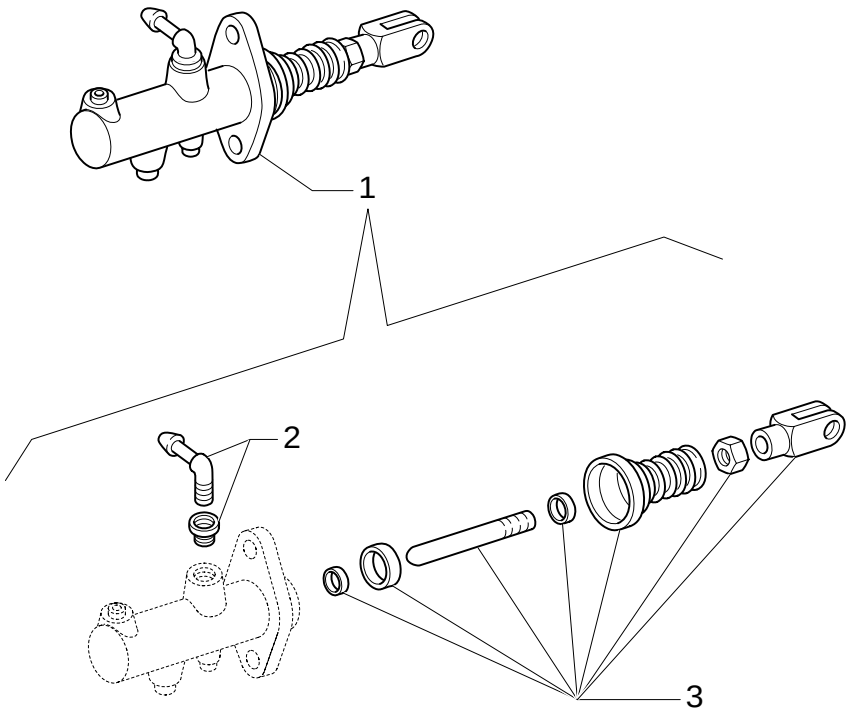

CAB-SAFETY FRAME / BRAKE PEDAL

REF	FN	PART NUMBER	YR/SN	QTY	DESCRIPTION
1		85805257		1	MASTER CYLINDER ASSY
2		85817242		1	KIT
3		85817241		1	KIT

1.95.1	01	p1	03/05

CAB-SAFETY FRAME / HAND BRAKE

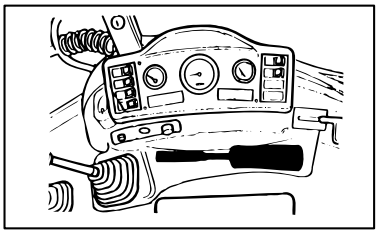

KIT KIT KIT 19= ●

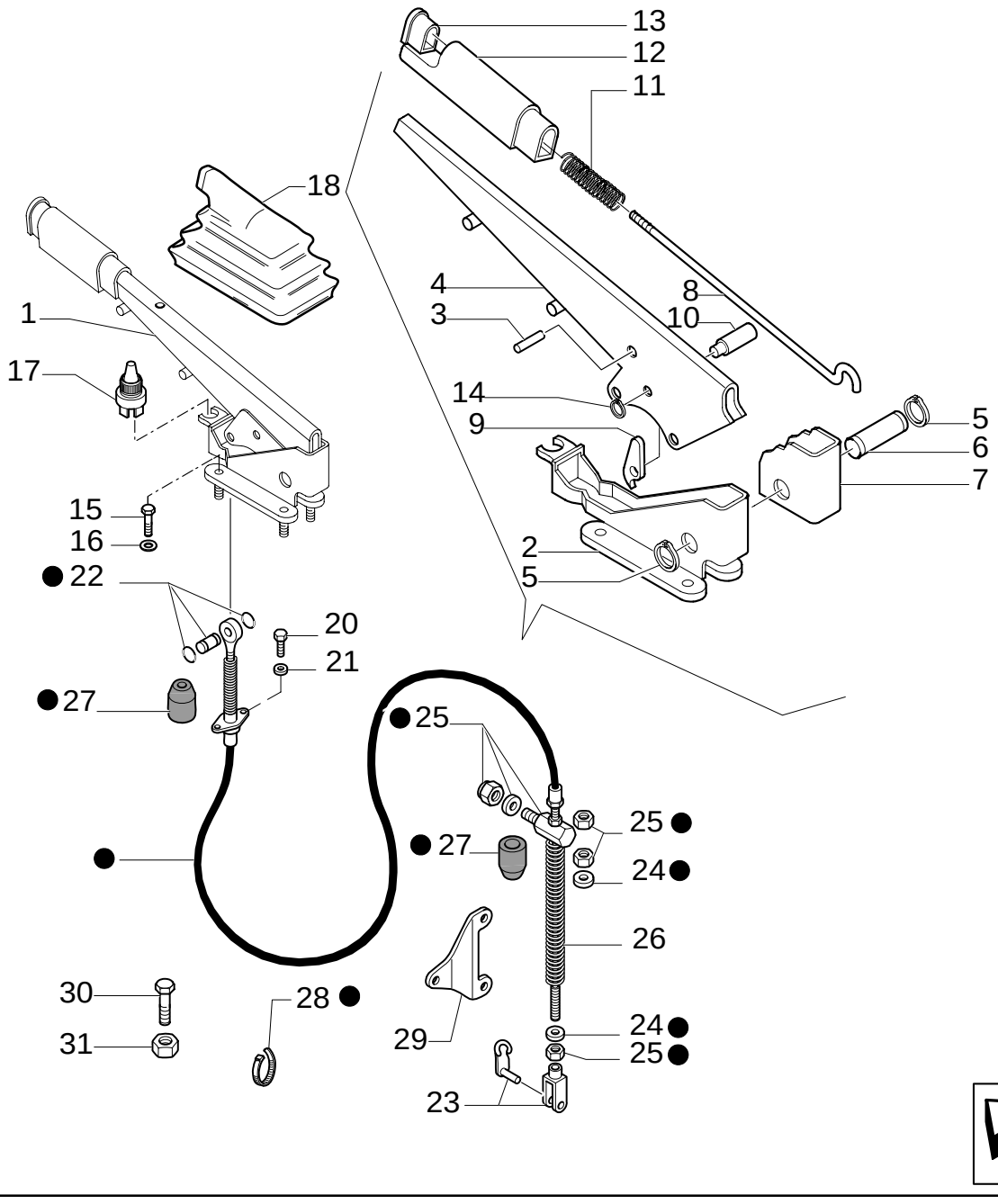

CAB-SAFETY FRAME / HAND BRAKE

REF	FN	PART NUMBER	YR/SN	QTY	DESCRIPTION
1		85827832		1	LEVER
2		85805441		1	SUPPORT
3		4985127		1	RIVET
4		85805440		1	LEVER
5		13400776		2	RING, LOCKING
6		4988275		1	PIN
7		5110153		1	TOOTHED SECTOR
8		5128712		1	TIE-ROD
8		85827833		1	DIPSTICK
9		5110155		1	PAWL
10		5131437		1	PIN
11		5105729		1	SPRING
12		5128431		1	HANDLE, CRANKED
12		86021837		1	HANDLE GRIP
13		5174275		1	PUSH BUTTON
13		4985122		1	BUTTON
14		11065476		1	RING, SNAP
15		14306424		4	SCREW M8X25
16		11197874		4	WASHER, LOCK 8X16X1.4
17		85816770		1	SWITCH, ASSY
18		5106733		1	BOOT
19		85815536		1	CABLE
20		10978024		2	SCREW M5X20
21		10615371		2	WASHER, LOCK
22		85815550		1	CONNECTOR
23		85815556		1	CONNECTOR
24		85815555		1	WASHER 22X10.2X2
25		85815552		1	JOINT, UNIVERSAL
26		85821173		1	SPRING
27		85821172		2	GASKET
28		85815549		1	COLLAR
29		85826099		1	SUPPORT
30		13272319		1	SCREW
31		10794011		1	NUT

1.95.2	01	p1	08/05

TRANSPORT LOCK CONTROL

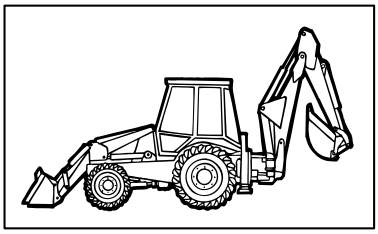

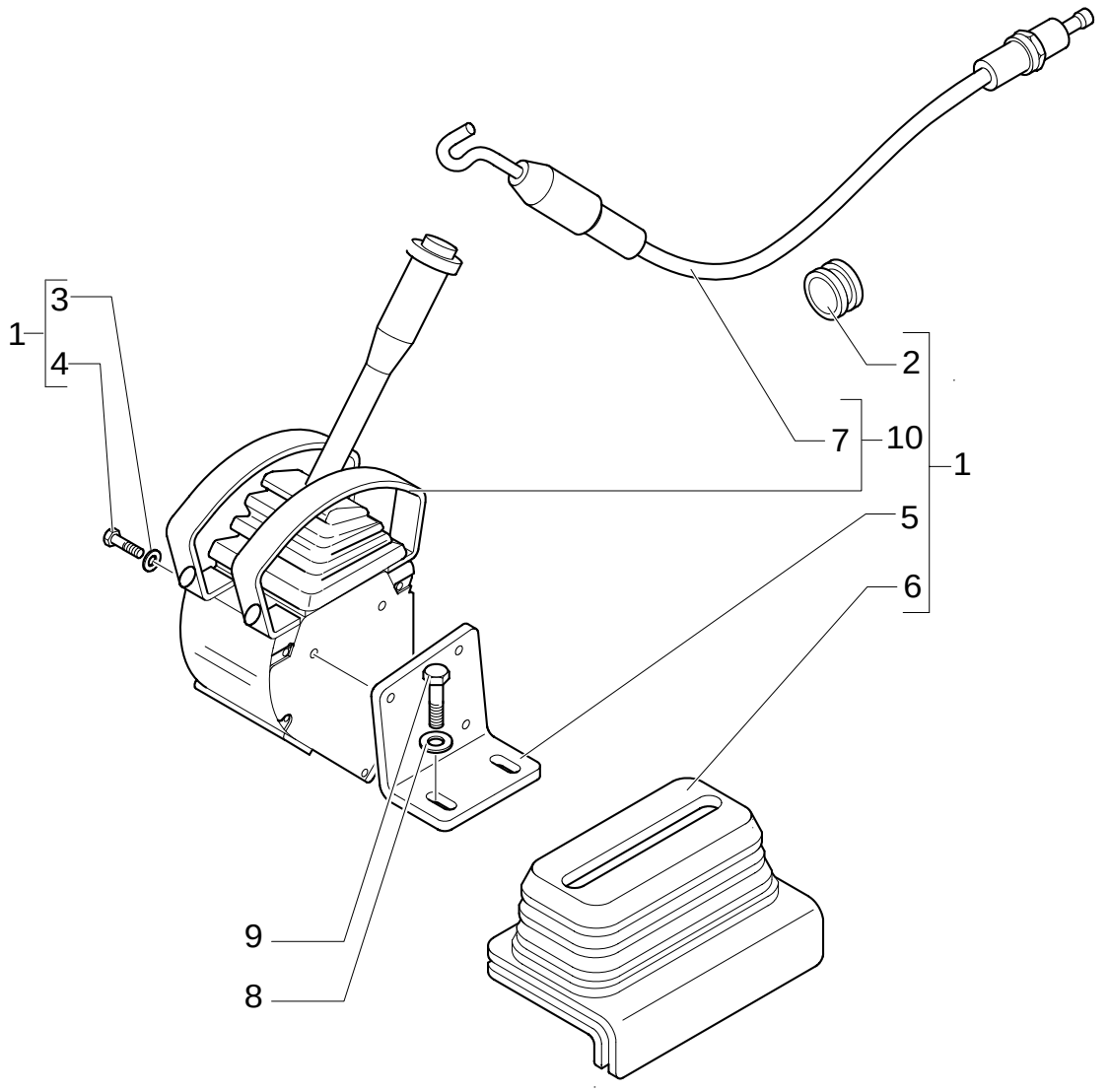

TRANSPORT LOCK CONTROL

REF	FN	PART NUMBER	YR/SN	QTY	DESCRIPTION
1	1, 2	{87324490}		1	
1	3, 4	{87324535}		1	
2		10398680		1	RING, INSULATING
3		11193274		3	WASHER, LOCK
4		15212921		3	SCREW
5		85808419		1	SUPPORT
6		85813132		1	BOOT
7		85819629		1	CABLE
7		87325156		1	CABLE
8		11193874		2	WASHER, LOCK
9		16043624		2	SCREW Cap, HH, CL 8.8, M8 x 1.25 x 25
10		87324496		1	LEVER

(1) Only for CAB
(2) Includes 2 To 7, 10
(3) Only for ROPS
(4) Includes 2 To 5, 7, 10

HAND-OPERATED AND PEDAL-OPERATED ACCELERATOR CONTROL

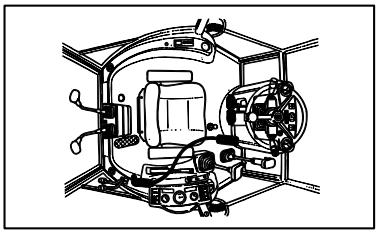

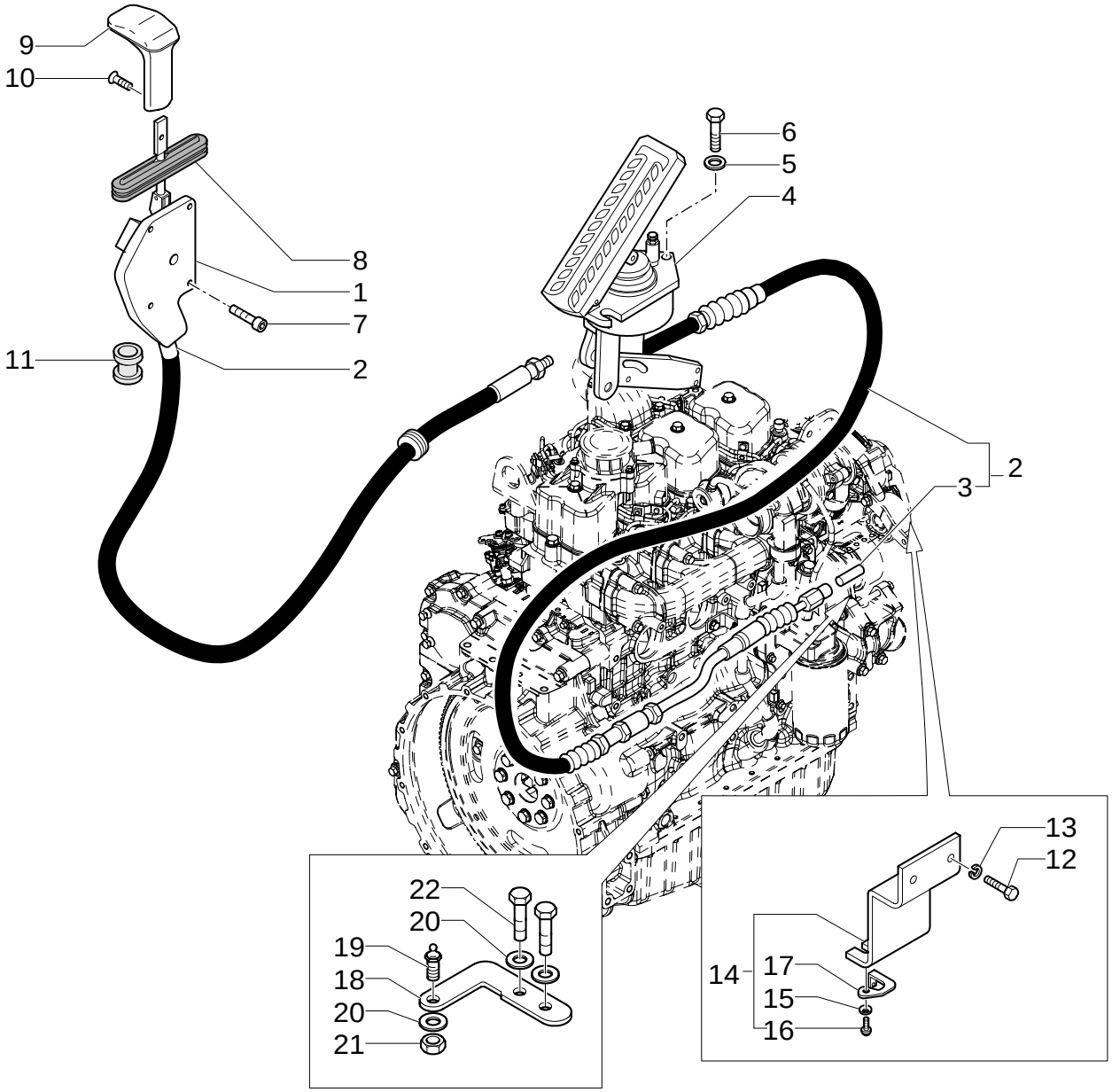

HAND-OPERATED AND PEDAL-OPERATED ACCELERATOR CONTROL

REF	FN	PART NUMBER	YR/SN	QTY	DESCRIPTION
1		85821328		1	LEVER ASSY
2		85821324		1	CABLE ASSY,
3		85813140		1	BALL JOINT, HEAD
4		85813096		1	PEDAL
5		11193274		3	WASHER, LOCK
6		10902424		3	SCREW M6X20
7		13311217		4	SCREW M5X30
8		85803380		1	BOOT W/CAB
9		13312721		1	SCREW
10		82002692		1	KNOB
11		10398280		1	RING
12		47049149		2	SCREW M12X25
13		47048994		2	WASHER
14		86988396		1	BRACKET CPL
15		12604179		1	WASHER
16		13769401		1	RIVET
17		85803040		1	KEY
18		86989315		1	LEVER
19		85813311		1	PIN
20		47048991		3	WASHER
21		47049029		1	NUT
22		86977726		2	SCREW

1.95.5	01	p1	12/05

POWER STEERING MOTOR, WHEEL & COLUMN TRIM (NA)

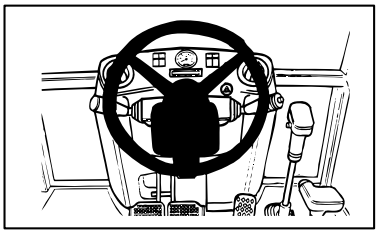

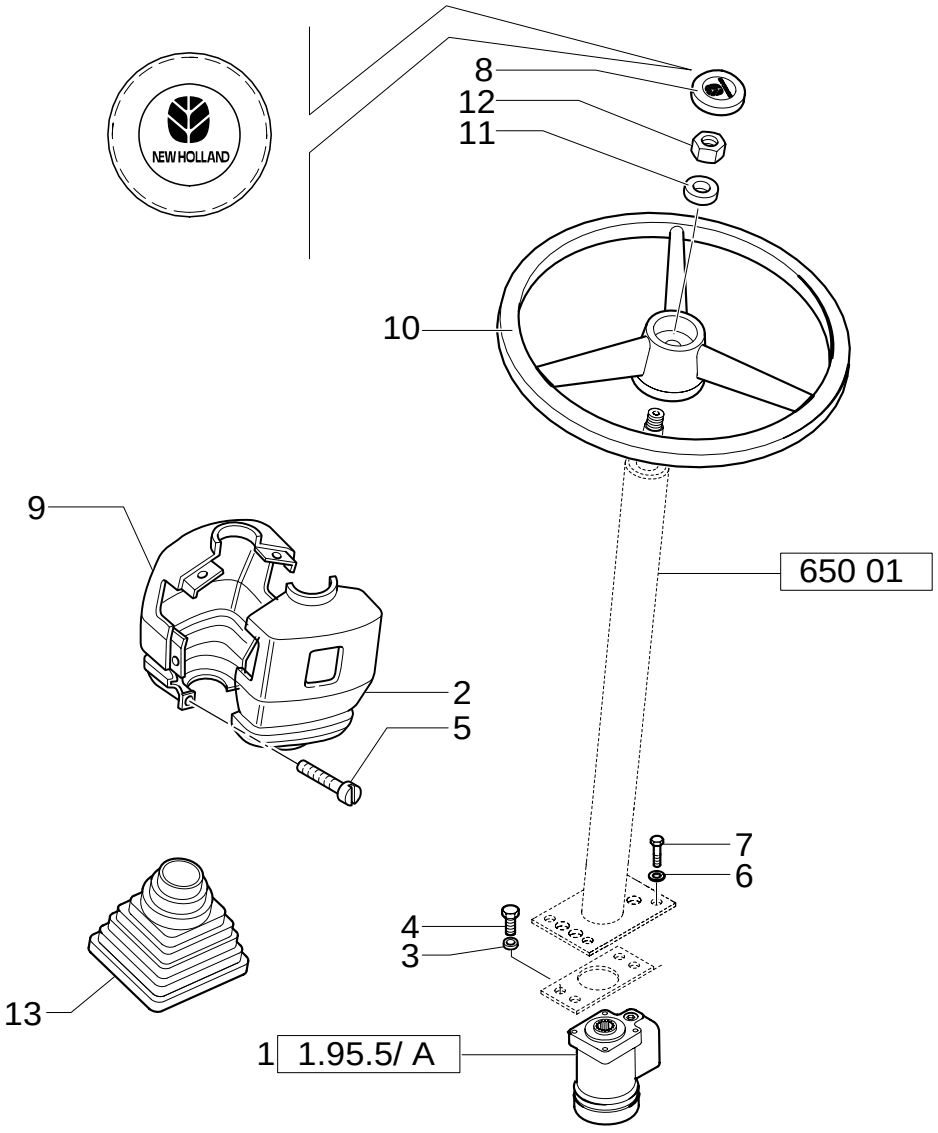

POWER STEERING MOTOR, WHEEL & COLUMN TRIM (NA)

REF	FN	PART NUMBER	YR/SN	QTY	DESCRIPTION
1	1	85805624		1	STEERING HYDRAULIC ASSY
1	2	87360424		1	STEERING HYDRAULIC
2		85805775		1	SOFT TRIM UPPER
3		10615774		4	WASHER, LOCK
4	1	14432334		4	SCREW M10x22
4	2	85804705		4	SCREW 3/8"-16 x 7/8"
5		14303324		4	SCREW M4X20
6		11190574		4	WASHER, LOCK 10X20X2.3
7		15970724		4	SCREW Cap, HH, CL 8.8, M10 x 1.25 x 25
8		85820105		1	COVER, CAP
9		85805772		1	SOFT TRIM LOWER
10		5148946		1	STEERING WHEEL
11		4998760		1	WASHER
12		10791414		1	NUT M16X1,5
13		85801976		1	BELLOWS

(1) UP TO S/N XXX
(2) FROM TO S/N XXX

1.95.5	02	p1	12/05

POWER STEERING MOTOR HOSES

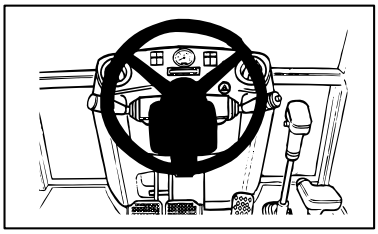

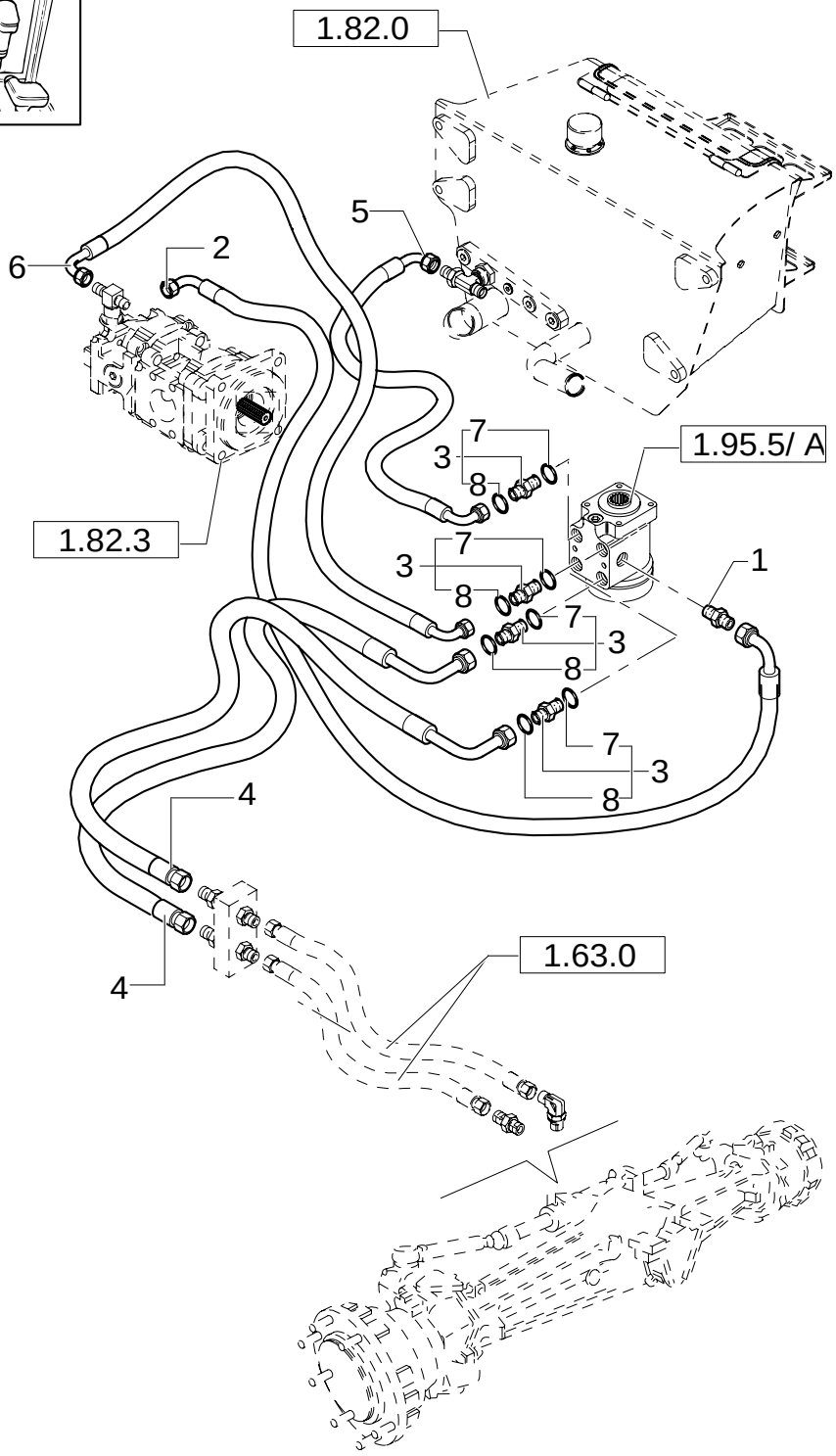

POWER STEERING MOTOR HOSES

REF	FN	PART NUMBER	YR/SN	QTY	DESCRIPTION
1		85802640		1	CONNECTOR, HYD.
2		85819041		1	HOSE, FLEXIBLE
3	1	390953S36		4	CONNECTOR, HYD.
4		85826080		2	HOSE, FLEXIBLE RH CYLINDER
5		85802761		1	HOSE, FLEXIBLE
6		85820282		1	HOSE, FLEXIBLE
7		128825		4	O-RING 8-1, 90 Duro, .644" ID x .087" Thk
8		9992298		4	O-RING 90 Duro, .489" ID x .070" Thk

(1) Includes 7, 8

POWER STEERING MOTOR

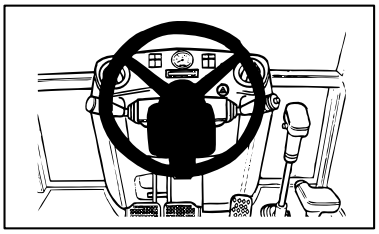

KIT KIT KIT 2 = ●

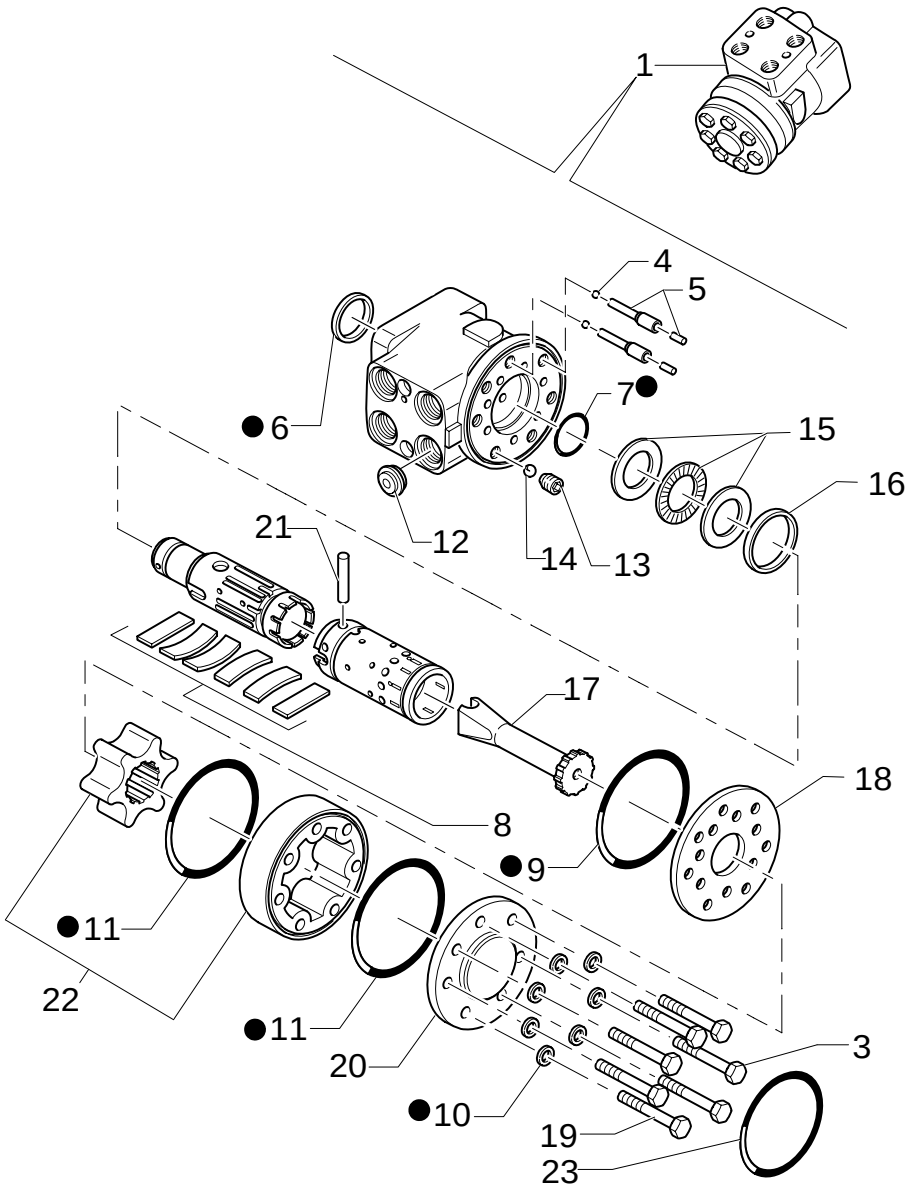

POWER STEERING MOTOR

REF	FN	PART NUMBER	YR/SN	QTY	DESCRIPTION
1		85805624		1	STEERING HYDRAULIC
2		85808390		1	KIT
3		85812135		6	SCREW
4		85808385		2	BALL
5		9961829		2	PIN
6		85812109		1	O-RING
7		85808380		1	O-RING
8		9960181		1	SET OF PARTS
9		85812110		1	O-RING
10		85812112		7	WASHER
11		85812111		2	O-RING
12		85808386		1	VALVE, HYDRAULIC
13		85812132		1	BUSHING, THREADED
14		85812131		1	BALL
15		9961810		1	KIT
16		85812133		1	RING
17		85808381		1	SHAFT
18		85808382		1	PLATE
19		85808383		1	SCREW W/PIN
20		85812134		1	COVER
21		9932887		1	PIN
22		9967908		1	GEAR
23		85808384		1	PLAQUE, DATA

Up To S/N XXX

POWER STEERING MOTOR

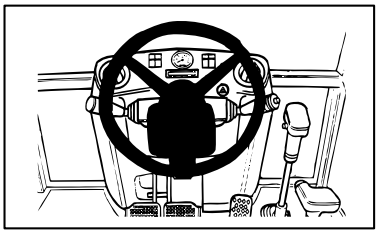

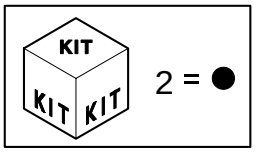

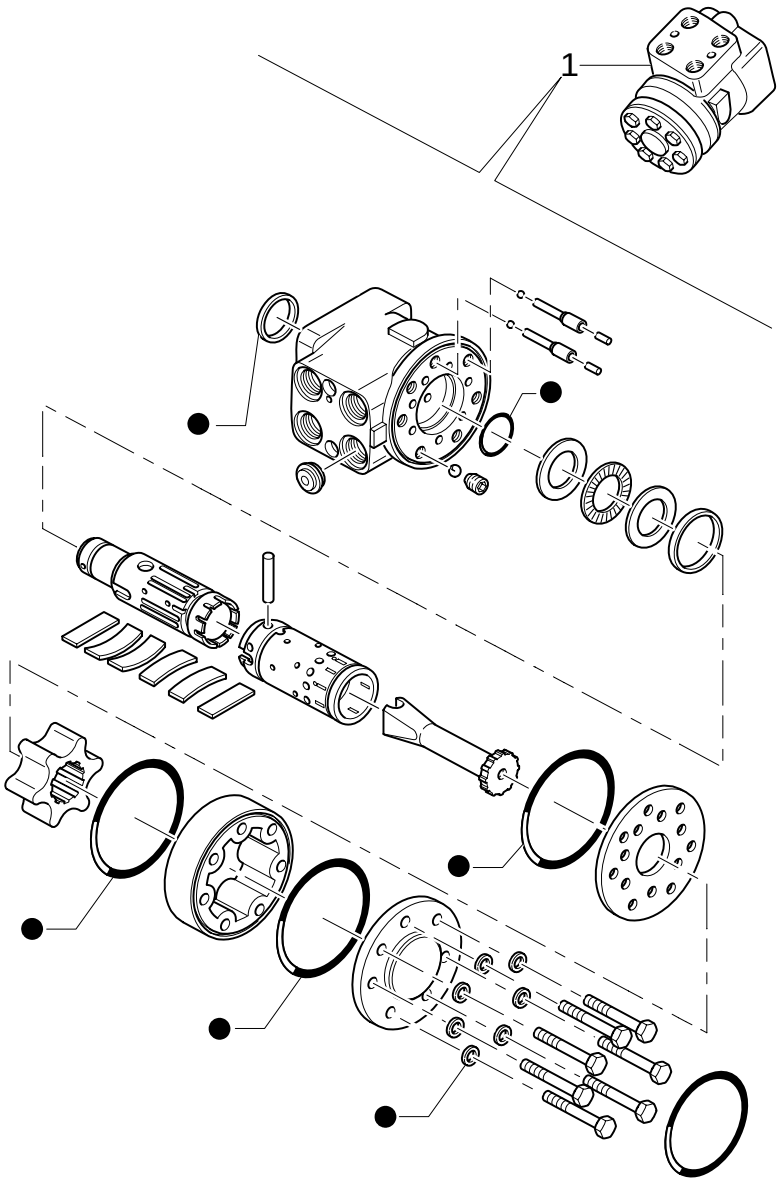

POWER STEERING MOTOR

REF	FN	PART NUMBER	YR/SN	QTY	DESCRIPTION
1		87360424		1	STEERING HYDRAULIC
2		85808390		1	KIT

From To S/N XXX

POWER STEERING MOTOR, WHEEL & COLUMN (NA)

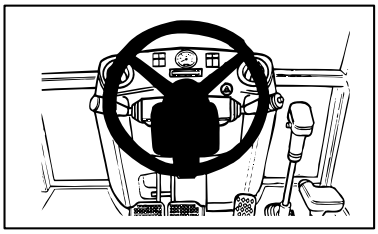

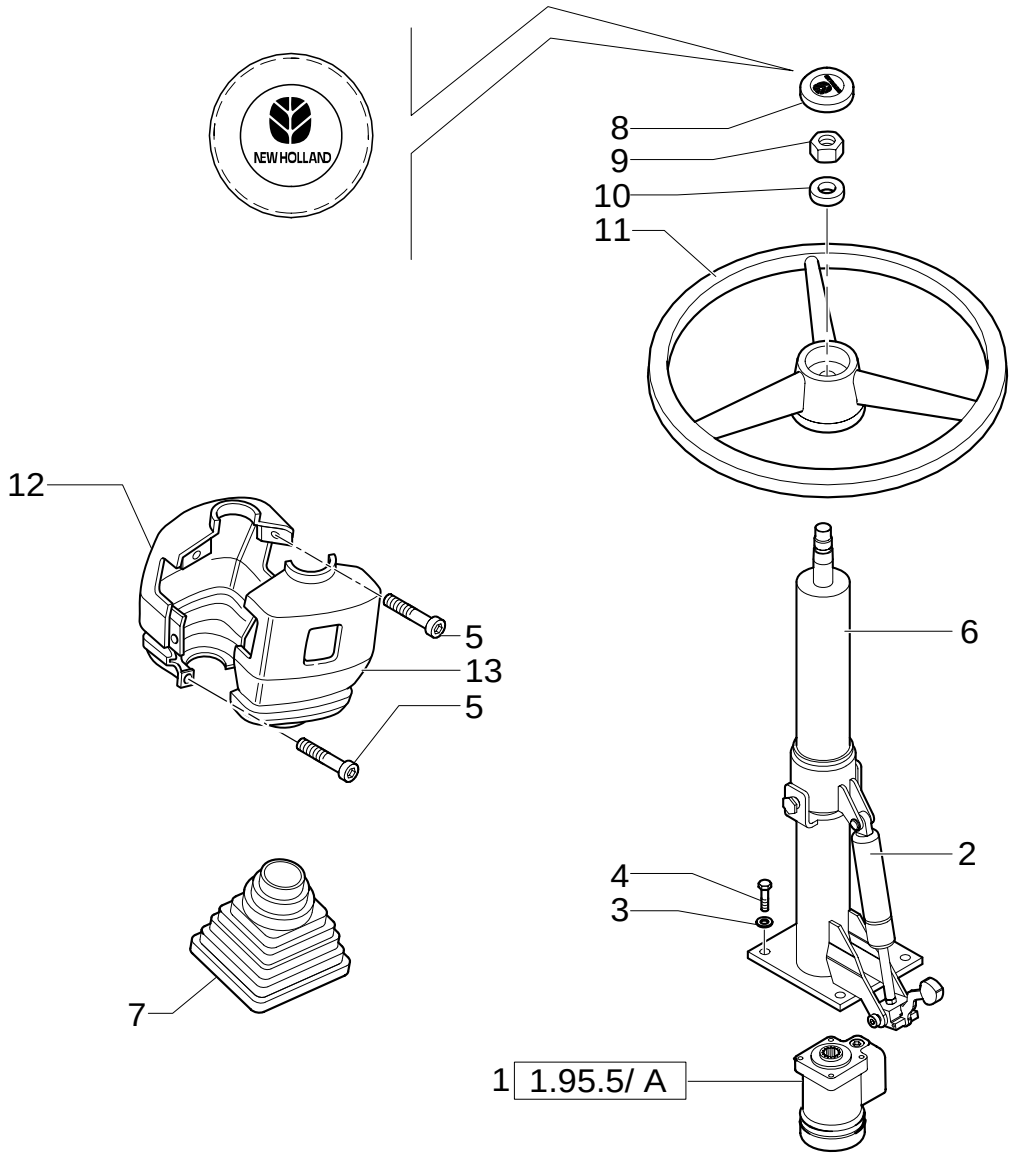

POWER STEERING MOTOR, WHEEL & COLUMN (NA)

REF	FN	PART NUMBER	YR/SN	QTY	DESCRIPTION
1	1	85805624		1	STEERING HYDRAULIC
1	2	87360424		1	STEERING HYDRAULIC
2	1, 3	85824197		1	GAS STRUT SIDE SHIFT
2	2	87328136		1	SHOCK ABSORBER
3		10615774		4	WASHER, LOCK 10X18X2
4	1	85804705		4	SCREW 3/8"-16 x 7/8"
4	2	14432334		4	SCREW M10x22
5		14303324		4	SCREW
6	1	85805545		1	STEERING COLUMN
6	2	87324867		1	STEERING COLUMN
7		85801976		1	BELLOWS
8		85820105		1	COVER, CAP
9		10791414		1	NUT M16X1,5
10		4998760		1	WASHER
11		5148946		1	STEERING WHEEL
12		85805774		1	SOFT TRIM LOWER
13		85805773		1	SOFT TRIM UPPER
14		14303324		4	SCREW

(1) UP TO S/N XXX
(2) FROM TO S/N XXX
(3) Only for 85805545

1.96.0	01	p1	11/05

FOWARD/REVERSE & MULTI-PURPOSE LEVER (POWER-SHUTTLE - CENTER PIVOT)

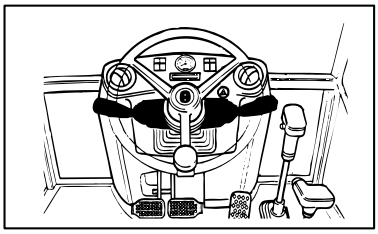

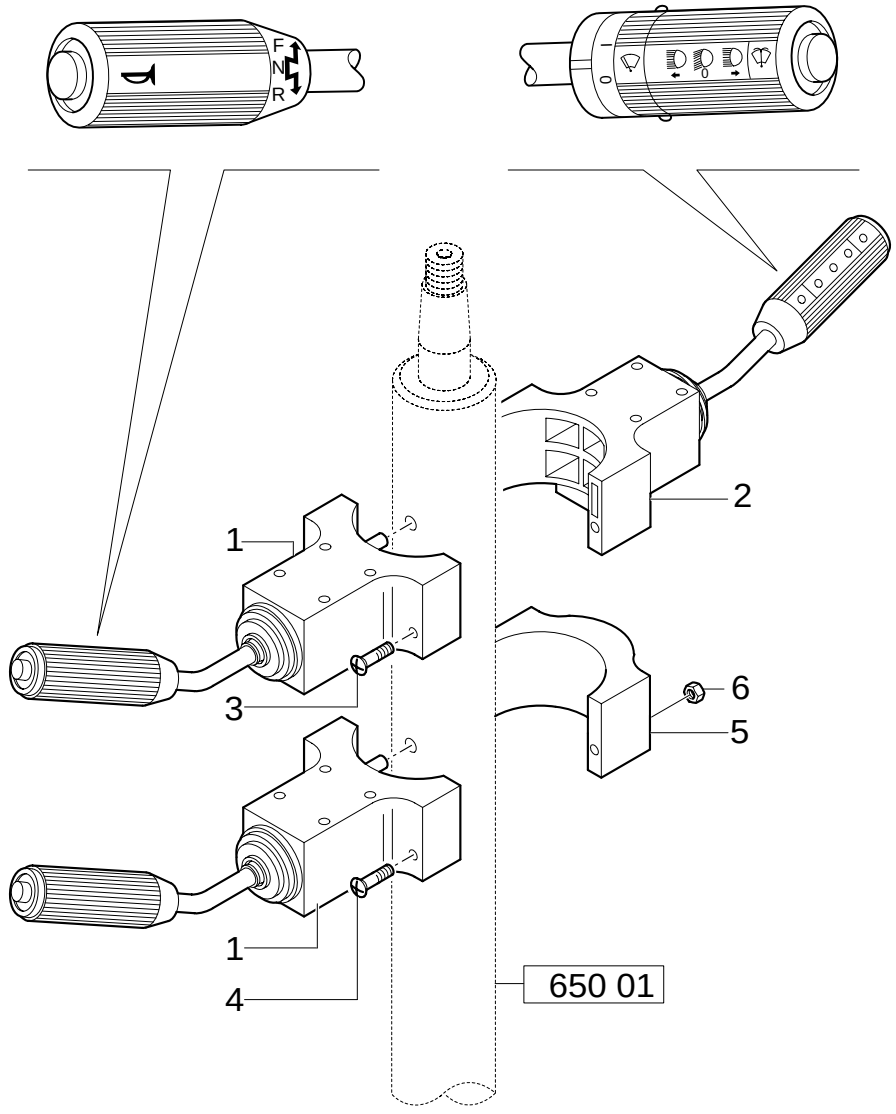

FOWARD/REVERSE & MULTI-PURPOSE LEVER (POWER-SHUTTLE - CENTER PIVOT)

REF	FN	PART NUMBER	YR/SN	QTY	DESCRIPTION
1		85801938		1	REVERSER
2		85801939		1	SHUNTER CAB
3		14304724		2	SCREW M5X50 CAB
4		14301521		2	SCREW M5X60 ROPS
5		85804676		1	U-BOLT ROPS
6		12574111		2	NUT ROPS

1.96.2	01	p1	11/05

STABILIZER CONTROL

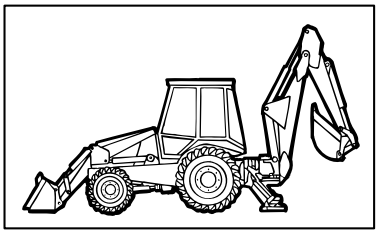

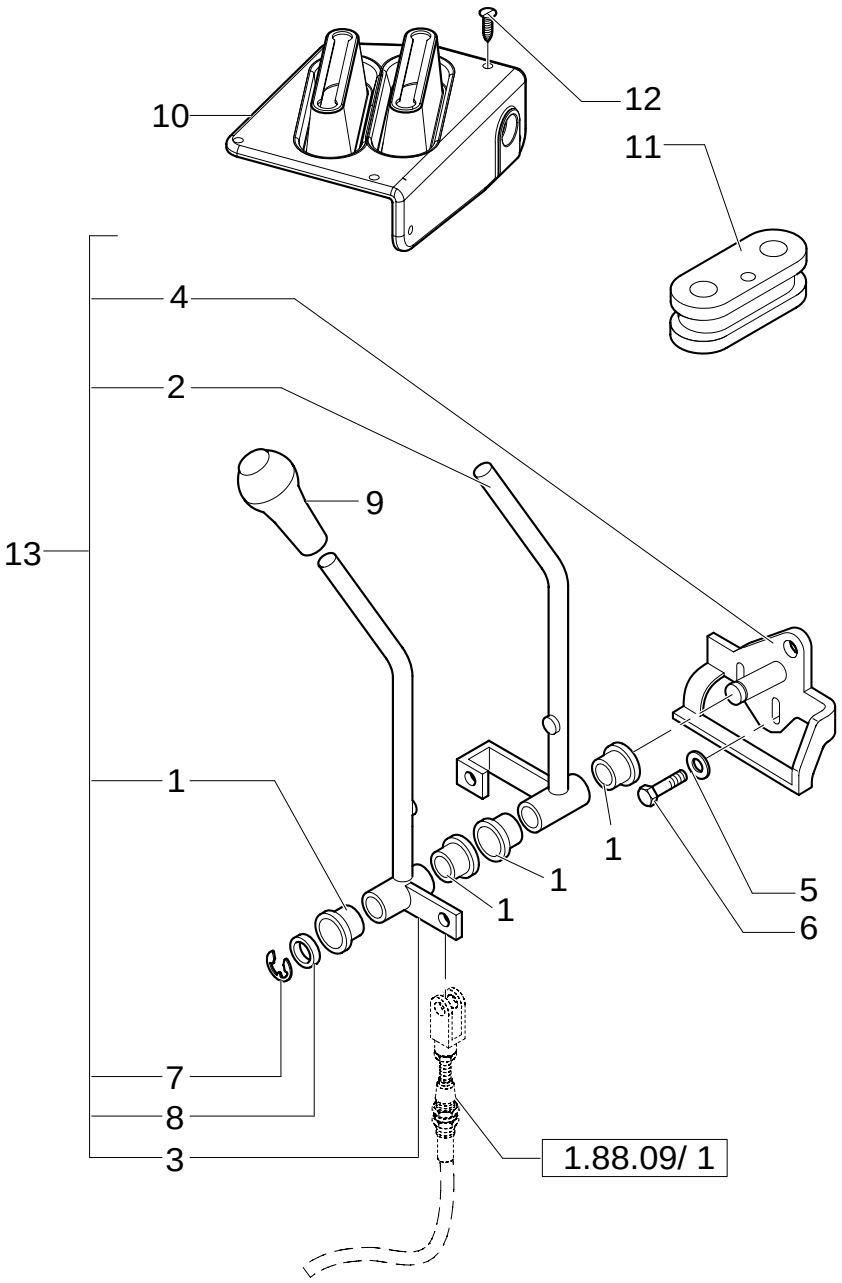

STABILIZER CONTROL

REF	FN	PART NUMBER	YR/SN	QTY	DESCRIPTION
1		85813136		4	BUSHING
2		85813134		1	LEVER RH
3		85813135		1	LEVER LH
4		85813133		1	SUPPORT
5		11193874		2	WASHER, LOCK
6		16043624		2	SCREW Cap, HH, CL 8.8, M8x25
7		85813138		1	CIRCLIP
8		85813137		1	WASHER
9		85802763		2	KNOB
10		85821316		1	BOOT
11		87407927		1	INSULATOR BLOCK
12		85827850		6	PLUG
13	1	85813100		1	ARM, TRIP

(1) Includes 1 To 4, 7, 8

Mechanical Version

1.96.2	02	p1	02/05

STABILIZER CONTROL

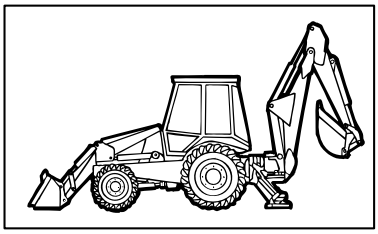

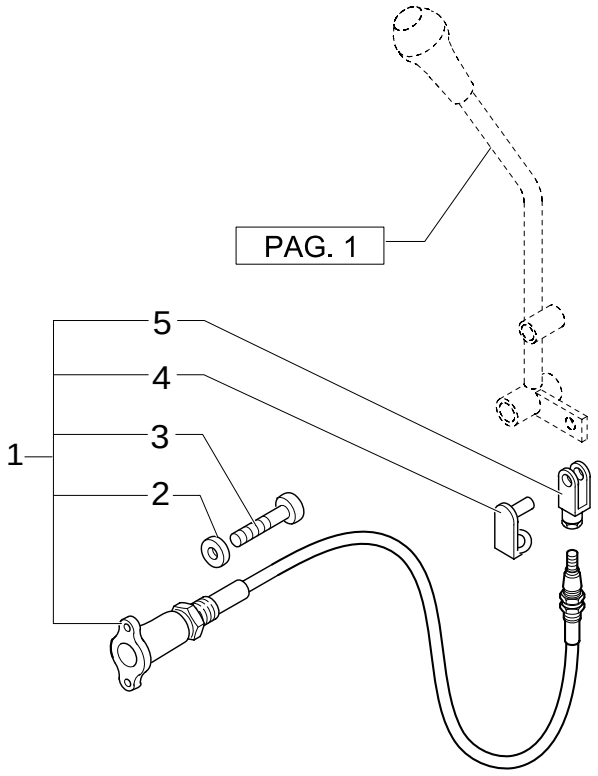

STABILIZER CONTROL

REF	FN	PART NUMBER	YR/SN	QTY	DESCRIPTION
1		85813104		2	CABLE
2		85813201		4	WASHER
3		85813200		4	SCREW M6x15
4		85813186		2	CLIP
5		85813187		2	YOKE

Mechanical Version

PILOT CONTROL DIAGNOSTICS

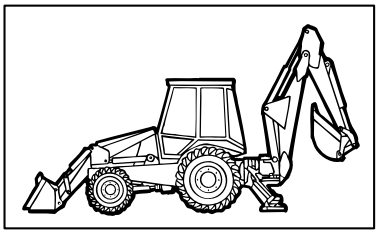

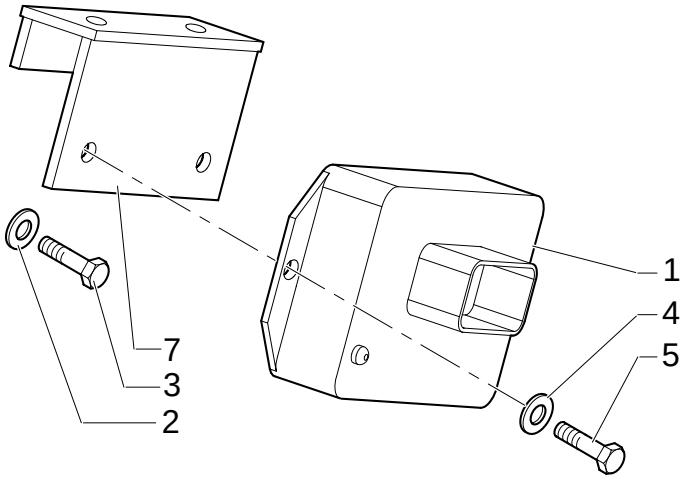

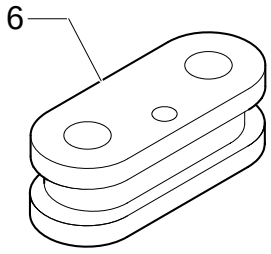

PILOT CONTROL DIAGNOSTICS

REF	FN	PART NUMBER	YR/SN	QTY	DESCRIPTION
1	1	87419454		1	BOX
1	2	87419455		1	CONTROL UNIT
2		11193874		2	WASHER, LOCK
3		16043624		2	SCREW TE M8x25
4		47048959		2	WASHER
5		85824079		2	SCREW M4x20
6		87407927		1	INSULATOR BLOCK
7		85828213		1	SUPPORT

(1) 6 function black color
(2) 8 function white color

Pilot Control Version

1.96.7	01	p1	05/05

CAB PLUGS, FLOOR PLATES & AIR CONVEYER, CENTER PIVOT

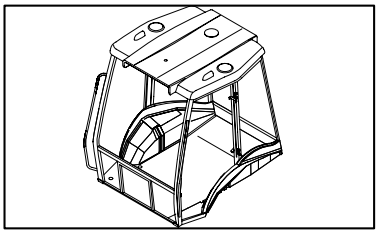

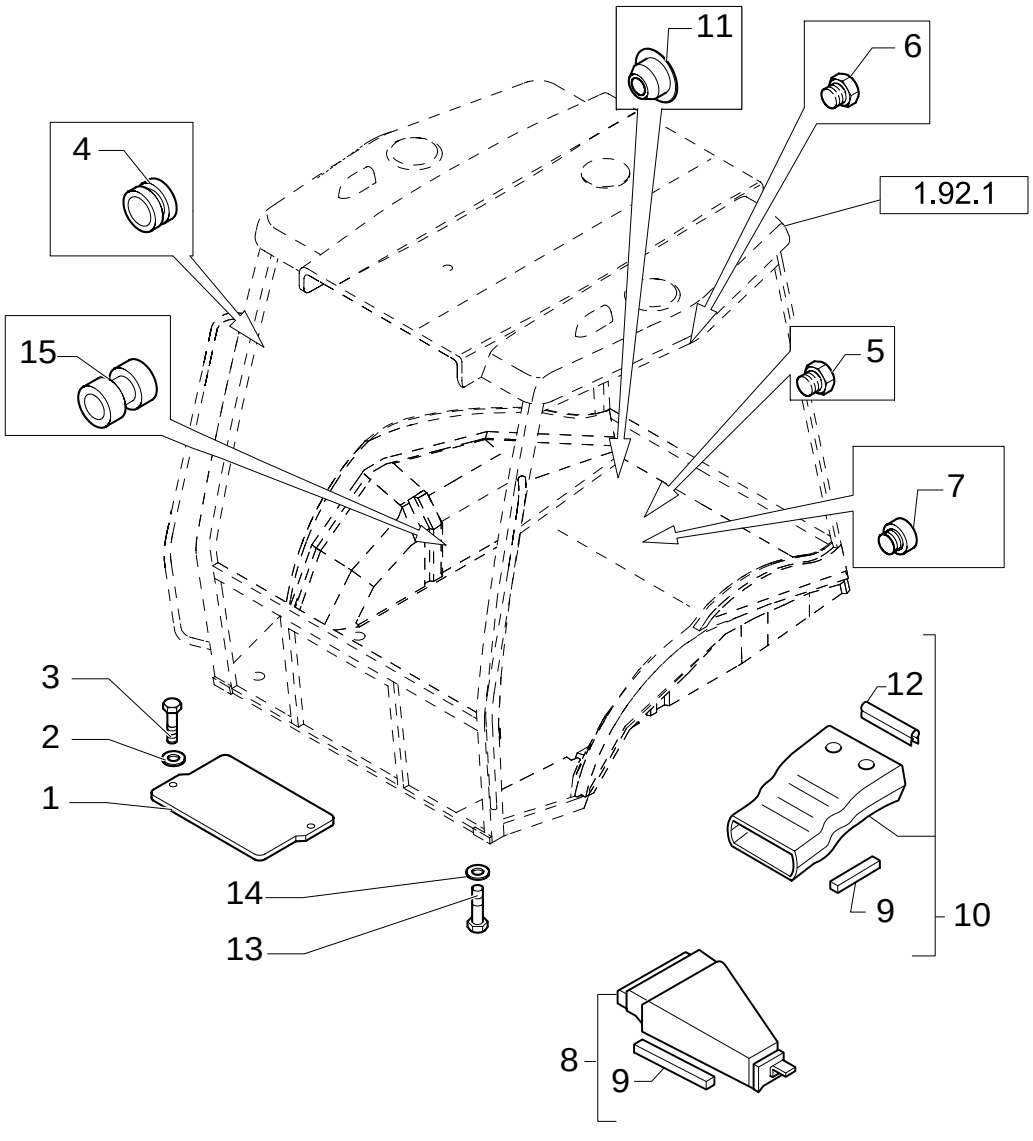

CAB PLUGS, FLOOR PLATES & AIR CONVEYER, CENTER PIVOT

REF	FN	PART NUMBER	YR/SN	QTY	DESCRIPTION
1		85801968		1	PLATE
2		11198074		2	WASHER, SEALING
3		16043424		2	SCREW Cap, HH, CL 8.8, M8 x 1.25 x 20
4		85801953		2	RIVET
5		79111978		5	PLUG
6		E9NN94218N48AA		2	FASTENER
7		85802309		4	PLUG
8		85805200		1	CONVEYOR FRONT
9		85806023		11	GASKET
10		85820141		1	CONVEYOR REAR
11		85802310		4	PLUG
12		85812021		1	GASKET
13		10902224		5	SCREW Cap, HH, CL 8.8, M6 x 1 x 16
14		11193274		5	WASHER, LOCK
15		10398580		2	RING

Mechanical Version

1.96.7/ 4	01	p1	02/05

ROPS PLUGS & FLOOR PLATE (CENTER PIVOT)

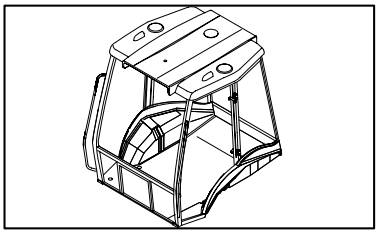

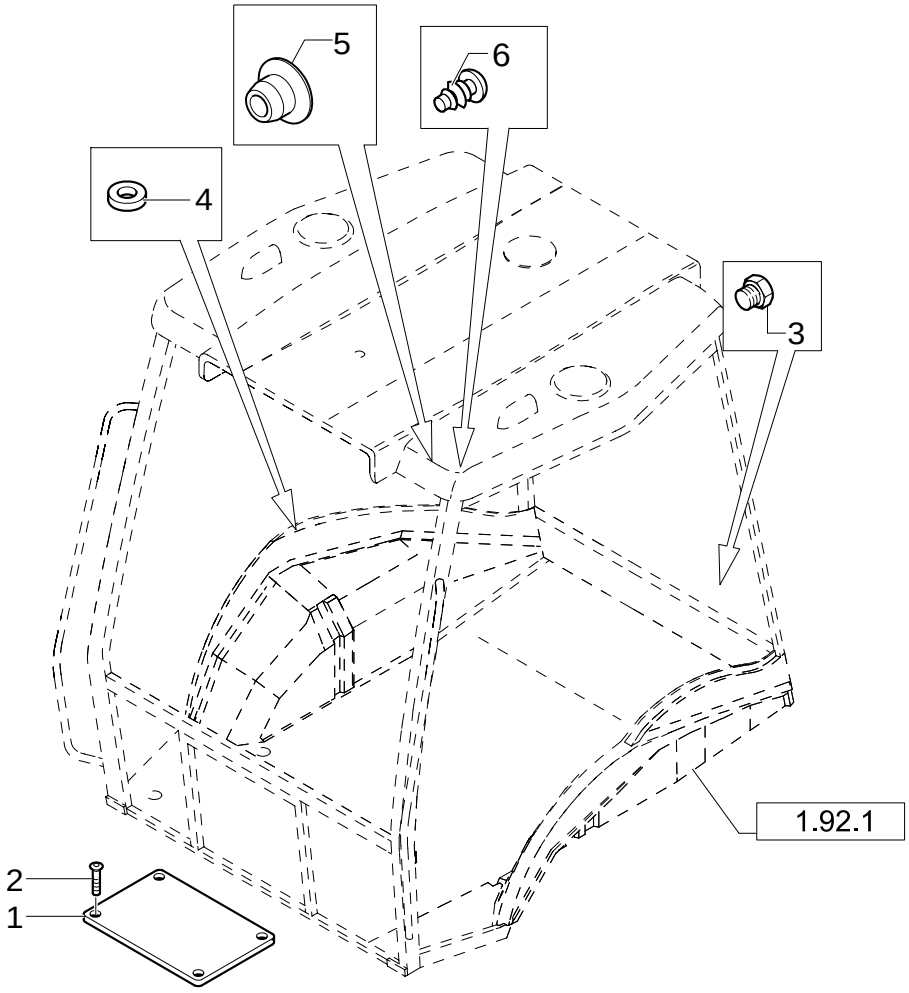

ROPS PLUGS & FLOOR PLATE (CENTER PIVOT)

REF	FN	PART NUMBER	YR/SN	QTY	DESCRIPTION
1		85804688		1	COVER
2		13313417		4	SCREW 6X25
3		85802309		4	PLUG
4		85804734		5	PAD, RUBBER
5		82003283		4	PLUG
6		85802310		4	PLUG

Mechanical Version

1.96.7/ 6	01	p1	08/05

CAB PLUGS, FLOOR PLATES & AIR CONVEYER, CENTER PIVOT

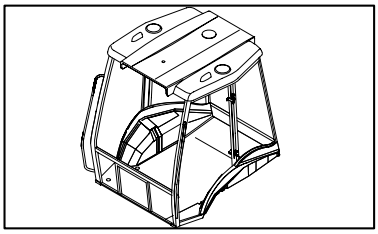

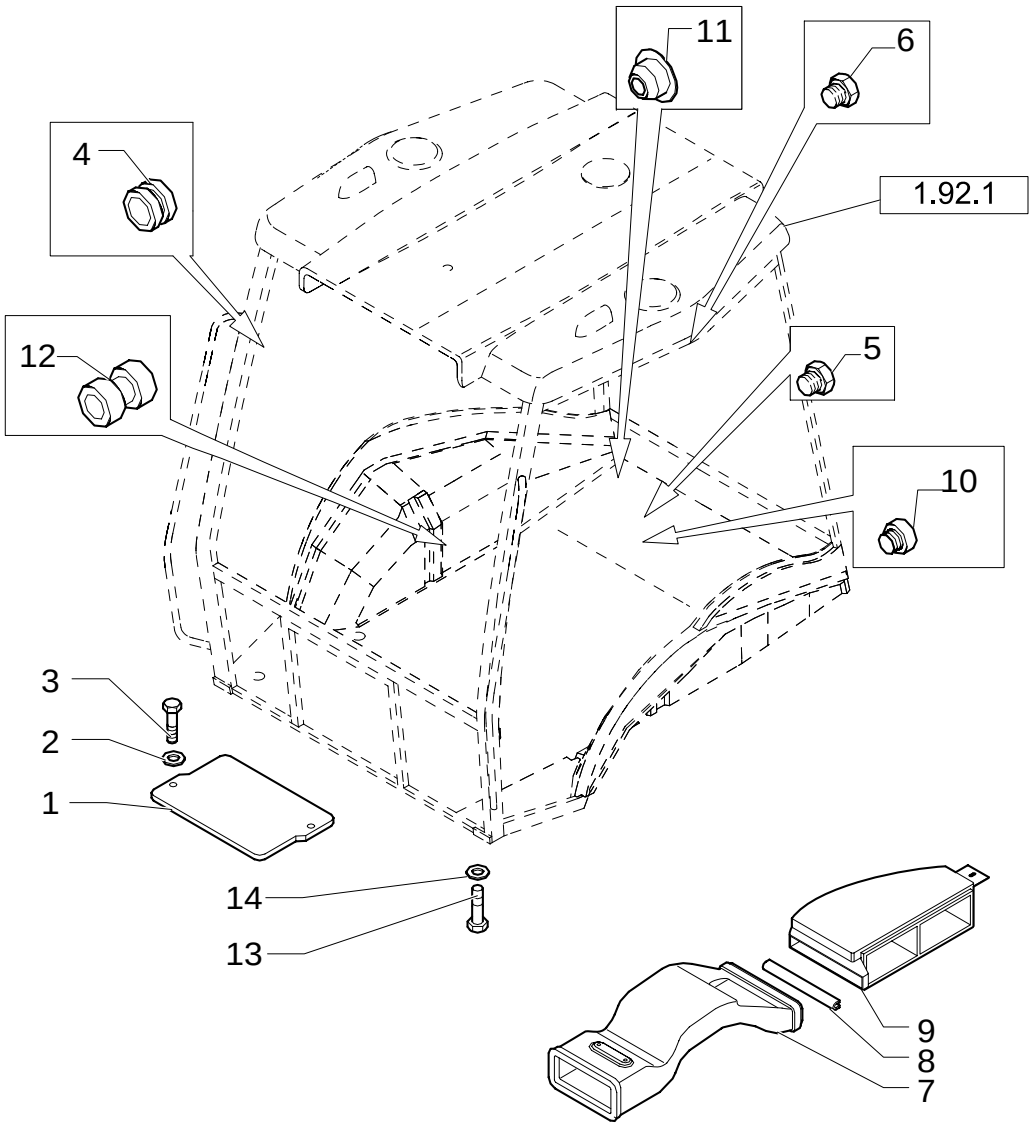

CAB PLUGS, FLOOR PLATES & AIR CONVEYER, CENTER PIVOT

REF	FN	PART NUMBER	YR/SN	QTY	DESCRIPTION
1		85801968		1	PLATE
2		11198074		2	WASHER, SEALING
3		16043424		2	SCREW Cap, HH, CL 8.8, M8 x 1.25 x 20
4		85801953		2	RIVET
5		79111978		5	PLUG
6		E9NN94218N48AA		2	FASTENER
7		87408277		1	DUCT, AIR
8		{87812021}		1	
9		87319754		1	BOX
10		85802309		4	PLUG REAR
11		85802310		4	PLUG
12		10398580		2	RING
13		10902224		5	SCREW Cap, HH, CL 8.8, M6 x 1 x 16
14		11193274		5	WASHER, LOCK

Pilot Control Version

1.96.7/10	01	p1	02/05

ROPS PLUGS & FLOOR PLATE (CENTER PIVOT)

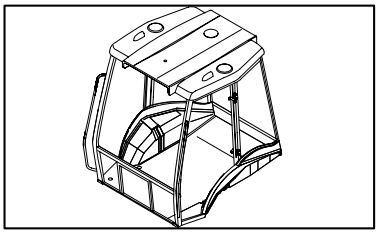

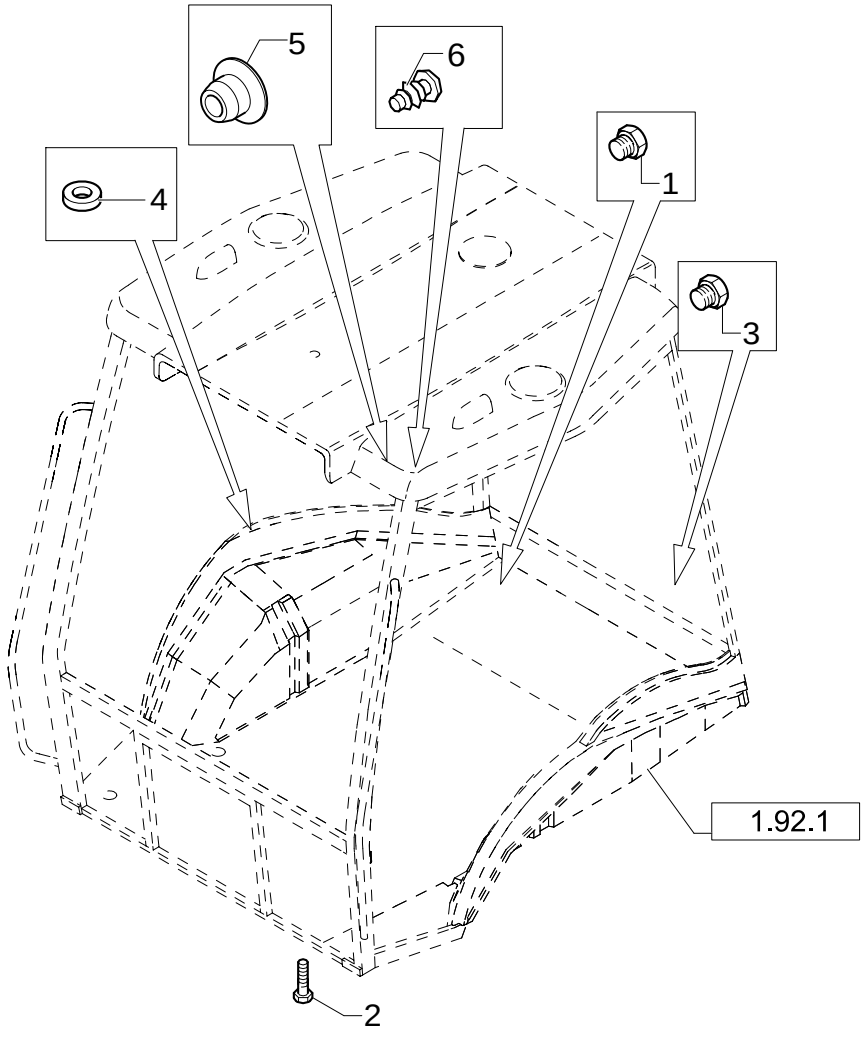

ROPS PLUGS & FLOOR PLATE (CENTER PIVOT)

REF	FN	PART NUMBER	YR/SN	QTY	DESCRIPTION
1		85802309		2	PLUG
2		13313417		4	SCREW 6X25
3		85802309		4	PLUG
4		85804734		5	PAD, RUBBER
5		82003283		4	PLUG
6		85802310		4	PLUG

Pilot Control Version

INFORMATION SYMBOL DECALS - USA (POWER SHUTTLE)

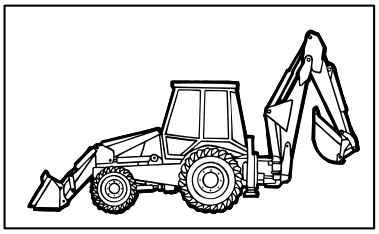

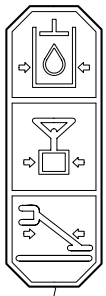

1

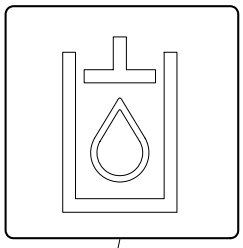

2

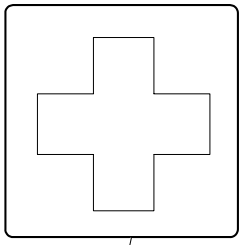

3

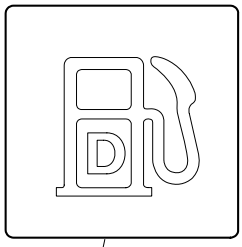

4

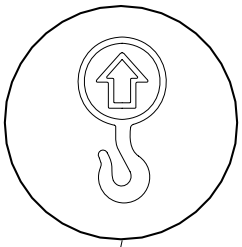

5

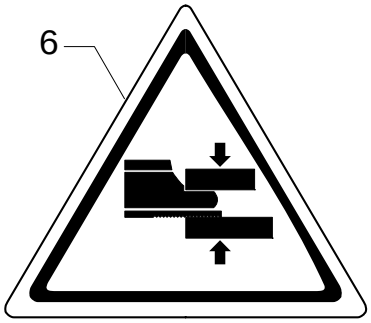

6

11

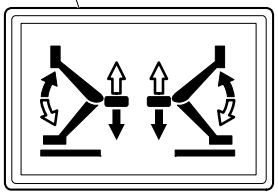

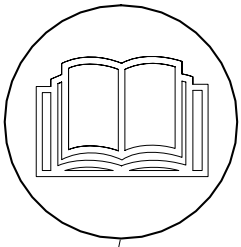

7

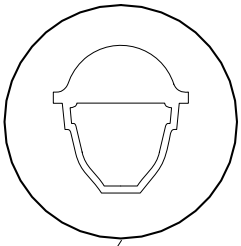

8

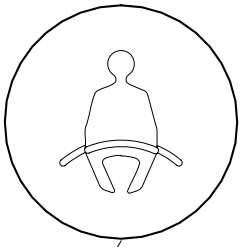

9

12

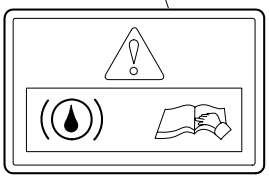

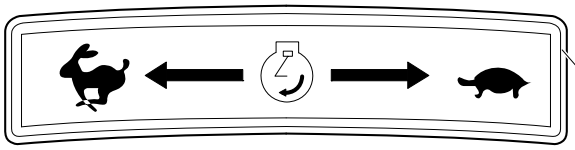

10

13

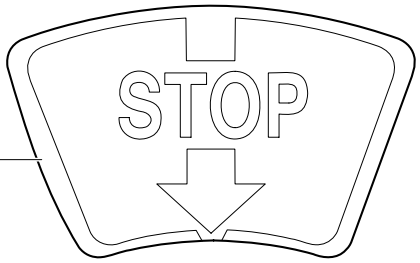

15

14

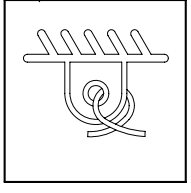



INFORMATION SYMBOL DECALS - USA (POWER SHUTTLE)

REF	FN	PART NUMBER	YR/SN	QTY	DESCRIPTION
1	1	85804395		1	DECAL
1	2	85825415		1	DECAL
2		85804341		1	DECAL
3		85804339		1	DECAL
4		85804338		1	DECAL
5		85804336		4	DECAL
6		85804332		1	DECAL
7		85804333		3	DECAL
8		85804334		2	DECAL
9		85804335		1	DECAL
10		85803789		1	DECAL
11		85803788		1	DECAL
12		85807870		1	DECAL
13		85802441		1	DECAL
14		85804083		1	DECAL MM.600x60
15		86500514		1	DECAL

(1) Only for CAB
(2) Only for ROPS

CAB WARNING & INFORMATION DECALS (POWER SHUTTLE)

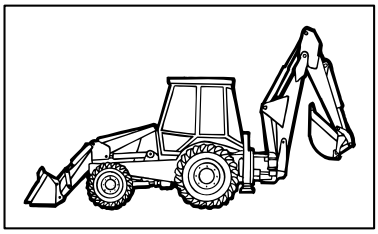

- BEFORE LEAVING THE OPERATOR' S SEAT TURN THE ENGINE OFF AND CONNECT THE PARKING BRAKE
- LAY THE EQUIPMENT TO THE GROUND
- REMOVE THE KEY FROM THE DASHBOARD BEFORE LEAVING THE OPERATOR' S SEAT
- TURN THE ENGINE OFF BEFORE ANY MAINTENANCE OPERATION

5

25

6

WARNING

- Before starting and operating: Know the operating and safety instructions in the operators manual and on the tractor Clear the area of bystanders. Locate and know operation of controls.
- Start engine only from operators seat with transmission in neutral, and hydraulic controls in lowered position.
- Do not permit anyone but the operator to ride on the tractor. There is no sale place for riders.
- Lock brakes together, use warning lights and SMV emblem when driving on roads.
- Lower equipment, place gear shift in neutral, stop engine and apply parking brake before leaving tractor seat.
- Loader bucket must be installed during machine operation for proper balance. Out f balance condition can result in overturn and personal injury.
- Do not enter platform from the rear. Operate backhoe from operator's seat only.
- Do not low start.
- When lowing place gear lever in fourth gear.

FAILURE TO FOLLOW ANY OF THE ABOVE INSTRUCTION CAN CAUSE SERIOUS INJURY TO THE OPERATOR OR OTHER PERSONS.

3

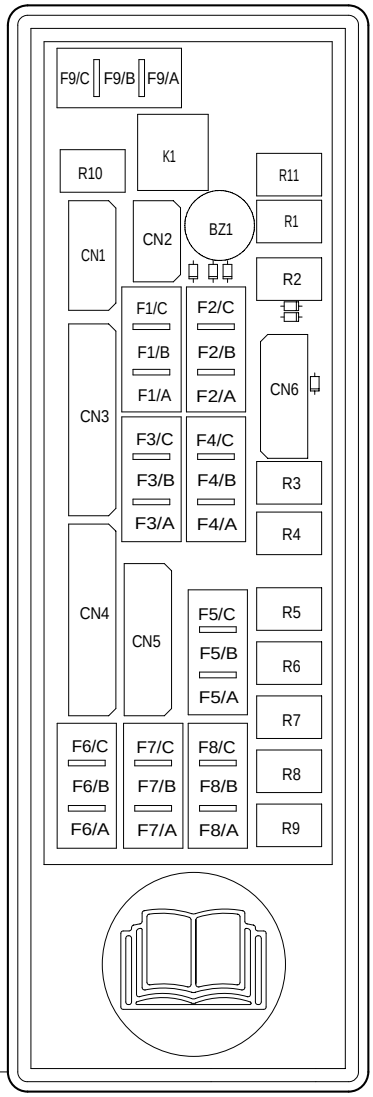

2

WATCH YOUR PROOF-METER HOURS

LUBRICATION AND MAINTENANCE SERVICE INTERVALS

LUBRICATION AND MAINTENANCE ITEM	CHECK	CLEAN	LUBE	SERVICE INTERVAL
AIR CLEANER OUTER ELEMENT (1)		•		AS REQUIRED
HYDRAULIC OIL LEVEL ENGINE OIL LEVEL	• •			DAILY
BACKHOE PIVOTS LOADER PIVOTS			• •	EVERY 10 HOURS
RADIATOR COOLANT LEVEL FRONT AXLE AND STEERING PIVOTS	•		•	EVERY 50 HOURS
SEAT RAILS DIFF LOCK PEDAL PIVOTS			• •	EVERY 250 HOURS

1) NOTE: IMPROPER CLEANING CAN DAMAGE THE FILTER. REFER TO THE OPERATOR'S MANUAL FOR CORRECT CLEANING PROCEDURE. (LUBRICATION AND MAINTENANCE SECTION).

REFER TO YOUR OPERATOR'S MANUAL FOR EXTENDED SERVICE INTERVAL REQUIREMENTS OF OTHER MAJOR COMPONENTS.

1

Caution

AIR CONDITIONING SYSTEM

CONTAINS "HFC 134 a". A NON OZONE DEPLETING REFRIGERANT AND PAG OIL. SERVICE,REPAIR OR RECHARGING MUST BE PERFORMED BY QUALIFIED PERSONNEL ONLY.

REFRIGERANT HFC 134 a
CHARGE 2.86 LBS (1.3 K g.)

4

CAB WARNING & INFORMATION DECALS (POWER SHUTTLE)

REF	FN	PART NUMBER	YR/SN	QTY	DESCRIPTION
1		85802243		1	DECAL FINNISH
1		85802246		1	DECAL SWEDISH
1		85802249		1	DECAL NORWEGIAN
1		85802261		1	DECAL DANISH
1		85821915		1	DECAL ENGLISH
1		85828050		1	DECAL FRENCH
1		85828051		1	DECAL SPANISH
1		85802252		1	DECAL DUTCH
1		85802255		1	DECAL POTUGUESE
1		85802258		1	DECAL GREEK
1		85803867		1	DECAL ITALIAN
1		85803875		1	DECAL GERMAN
2		85826071		1	DECAL
3		85804087		1	DECAL ENGLISH
3		85804550		1	DECAL FRENCH
3		85804563		1	DECAL SPANISH
4		85812064		1	DECAL ENGLISH
4		85819180		1	DECAL FRENCH
4		85819181		1	DECAL SPANISH
5		85802242		2	DECAL FINNISH
5		85802245		2	DECAL SWEDISH
5		85802248		2	DECAL NORWEGIAN
5		85802251		2	DECAL DUTCH
5		85802254		2	DECAL POTUGUESE
5		85802257		2	DECAL GREEK
5		85802260		2	DECAL DANISH
5		85804328		2	DECAL ITALIAN
5		85804400		2	DECAL ENGLISH
5		85804401		2	DECAL FRENCH
5		85804402		2	DECAL GERMAN
5		85804403		2	DECAL SPANISH
6		85804358		3	DECAL

BACKHOE, LOADER & ENGINE WARNING DECALS (POWER SHUTTLE)

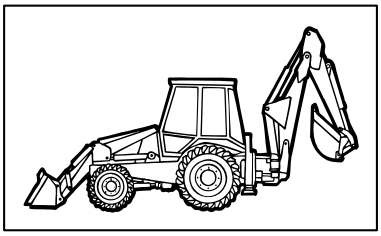



6



1

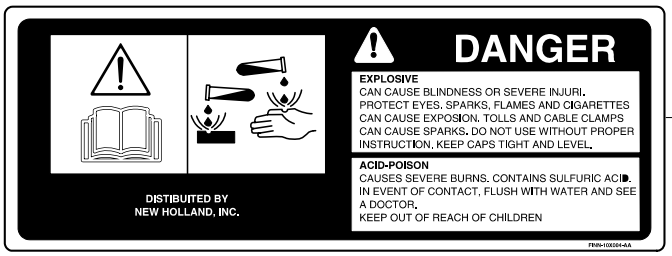

2

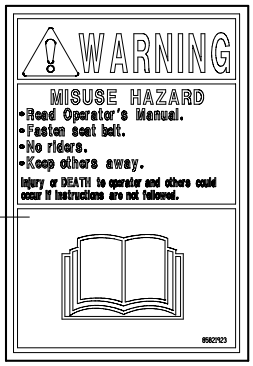

8



3

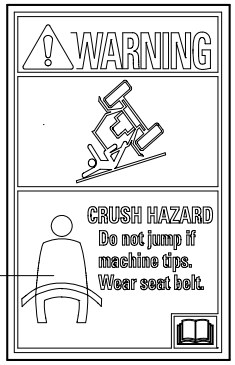

7



5

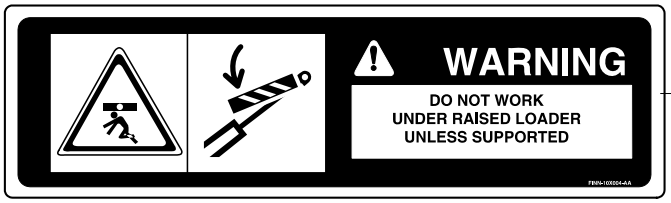

4

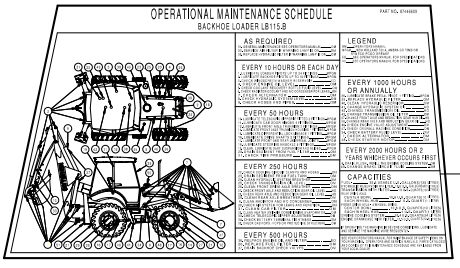

9

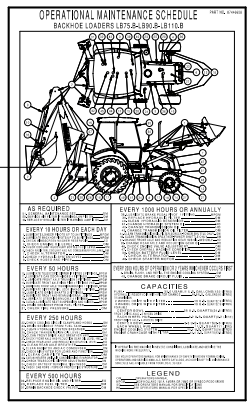

10

BACKHOE, LOADER & ENGINE WARNING DECALS (POWER SHUTTLE)

REF	FN	PART NUMBER	YR/SN	QTY	DESCRIPTION
1		85804395		1	DECAL ENGLISH
1		85804542		1	DECAL FRENCH
1		85804555		1	DECAL SPANISH
2		85804079		1	DECAL ENGLISH
2		85804544		1	DECAL FRENCH
2		85804557		1	DECAL SPANISH
3		85804080		1	DECAL ENGLISH
3		85804545		1	DECAL FRENCH
3		85804558		1	DECAL SPANISH
4		85804086		3	DECAL ENGLISH
4		85804549		3	DECAL FRENCH
4		85804562		3	DECAL SPANISH
5		85804089		1	DECAL ENGLISH
5		85804552		1	DECAL FRENCH
5		85804565		1	DECAL SPANISH
6		85804078		1	DECAL ENGLISH
6		85804543		1	DECAL FRENCH
6		85804556		1	DECAL SPANISH
7		85821920		1	DECAL ENGLISH
7		85828063		1	DECAL FRENCH
7		85828064		1	DECAL SPANISH
8	1	85821923		1	DECAL ENGLISH
8		85828065		1	DECAL FRENCH
8		85828066		1	DECAL SPANISH
9		87446609		1	DECAL ENGLISH
9		87446611		1	DECAL FRENCH
9		87446613		1	DECAL SPANISH
9	2	87379329		1	DECAL ENGLISH
9	2	87378872		1	DECAL SPANISH
9	2	87378873		1	DECAL FRENCH
9	3	87363280		1	DECAL ENGLISH
9	3	87379330		1	DECAL SPANISH
9	3	87379331		1	DECAL FRENCH
10		87446608		1	DECAL ENGLISH

(1) Only for LB90.B - LB110.B - LB115.B
(2) Only for B115
(3) Only for B95TC

BACKHOE, LOADER & ENGINE WARNING DECALS (POWER SHUTTLE)

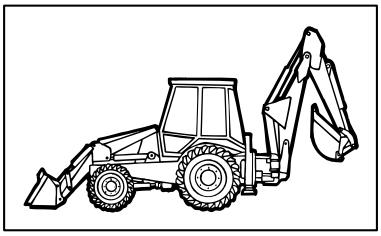



6



1

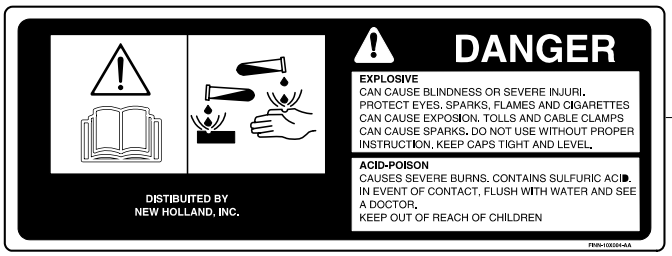

2

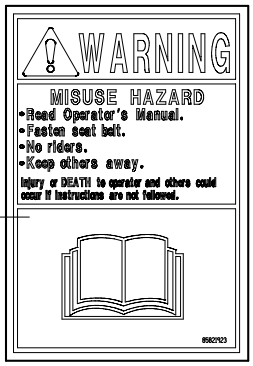

8



3

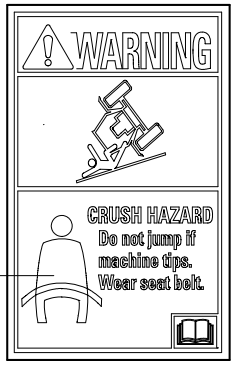

7



5

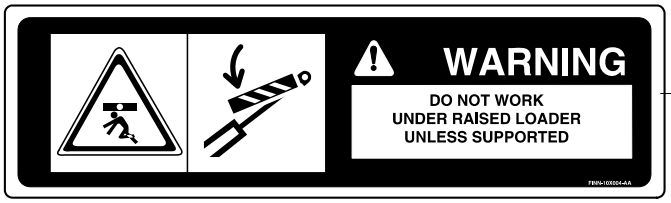

4

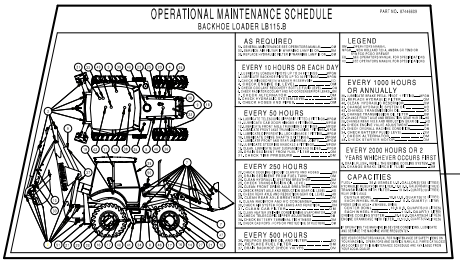

9

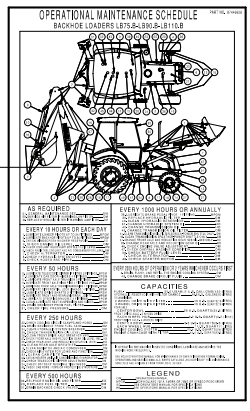

10

BACKHOE, LOADER & ENGINE WARNING DECALS (POWER SHUTTLE)

REF	FN	PART NUMBER	YR/SN	QTY	DESCRIPTION
10		87446610		1	DECAL FRENCH
10		87446612		1	DECAL SPANISH
10	1	87363002		1	DECAL ENGLISH
10	1	87378869		1	DECAL SPANISH
10	1	87378871		1	DECAL FRENCH

(1) Only for B95, B95LR, B110

BACKHOE, LOADER & ENGINE WARNING DECALS (POWER SHUTTLE)

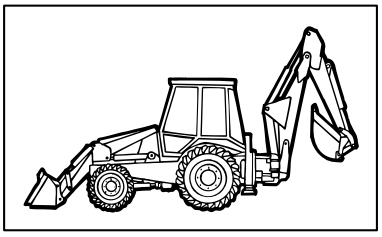

TRANSPORT HEIGHT
13'
(3962 mm)

1

WARNING

LOADER SAFETY

- know all operation, warning and safety instructions in the operator' s manual before operating.
- Operate only from the operator's seat.
- Stay out from under raised loader arms unless supported
- Carry bucket low during transport for better visibility and to avoid overturns.
- Using front end loaders without special attachments for handling large heavy object such as large bales, logs, and oil drums, is NOT recommended.
Handling large heavy object with the loader can be extremely dangerous due to the object rolling or sliding down the loader arms onto the operator.
- Use wheel ballast and/or rear weight for stability as recommended in the operator' s manual.

When parking or servicing:
-Lower the bucket to the ground.
-Stop the engine.
-Set the parking brake.

FAILURE TO FOLLOW ANY OF THE INSTRUCTIONS ABOVE CAN CAUSE SERIOUS INJURY TO THE OPERATOR OR OTHER PERSONS.

2

3

EMERGENCY STOPPING AND PARKING BRAKE
85804081

"NOTE"

WARRANTY ON THIS ENGINE AND/OR POWER TRAIN COMPONENTS SMALL NOT APPLY TO ANY FAILURE RESULTING FROM UNSPECIFIED ADJUSTMENTS OF THE FUEL INJECTION SYSTEM.
85804090

5

WARNING

KEEP HANDS AND CLOTHING AWAY FROM ROTATING FAN AND BELTS TO PREVENT SERIOUS INJURY
85804085

7

TORQUE CONVERTER TRANSMISSION WITH CLUTCH DISCONNECT

F
N
R

BEFORE STARTING - Place both shuttle (power reversing) and gear shift lever in neutral and assure parking brake is applied.

TO SHIFT - Select operating gear (1, 2, 3, or 4), then use shuttle lever to select direction of travel

1 3 N 2 4

SHUTTLE SHIFTING - Reduce engine speed when changing direction of travel from (F) to (R)

CLUTCH DISCONNECT - Press button on loader control or gear shift levers to disconnect hydraulic clutch during loader lift cycle or gear changes.

4

WARNING

- Start engine only from operator's seat. If safety start switch is bypassed engine can start with transmission in gear.
- Do not connector or short across terminals on starter solenoid.
- Attach beester cables as shown on battery decal.

Starting in gear causing runaway can result in serious ingury.
85804084

6

BACKHOE, LOADER & ENGINE WARNING DECALS (POWER SHUTTLE)

REF	FN	PART NUMBER	YR/SN	QTY	DESCRIPTION
1		85805829		1	DECAL
2		85804088		1	DECAL ENGLISH
2		85804551		1	DECAL FRENCH
2		85804564		1	DECAL SPANISH
3		85804081		1	DECAL ENGLISH
3		85804546		1	DECAL FRENCH
3		85804559		1	DECAL SPANISH
4		85804091		1	DECAL ENGLISH
4		85804554		1	DECAL FRENCH
4		85804567		1	DECAL SPANISH
5		85804090		1	DECAL ENGLISH
5		85804553		1	DECAL FRENCH
5		85804566		1	DECAL SPANISH
6		85804084		1	DECAL ENGLISH
6		85804547		1	DECAL FRENCH
6		85804560		1	DECAL SPANISH
7		85804085		2	DECAL ENGLISH
7		85804548		2	DECAL FRENCH
7		85804561		2	DECAL SPANISH

PLATES (POWER SHUTTLE)

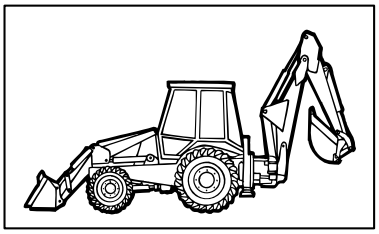

4
1

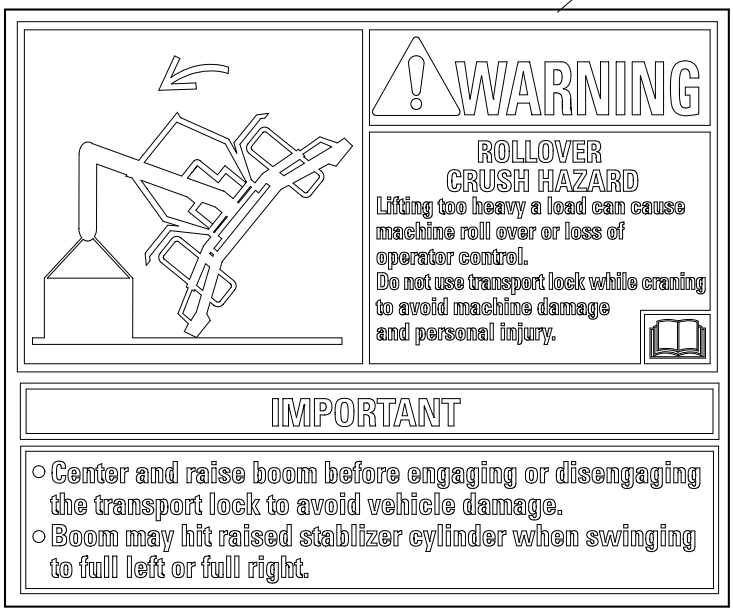

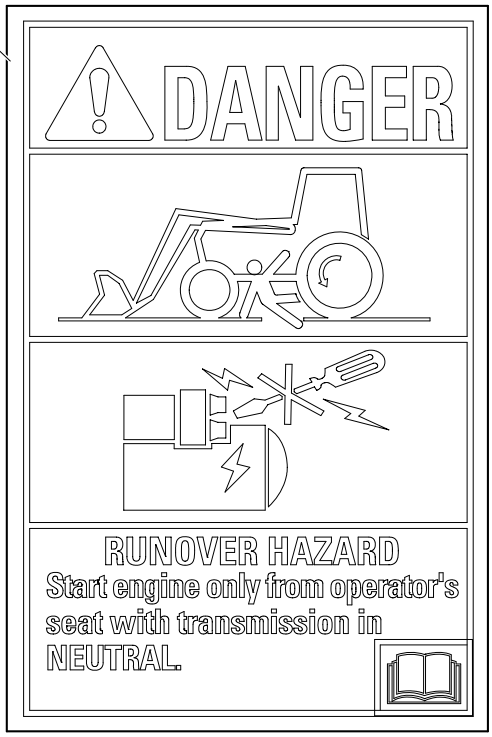

3
6

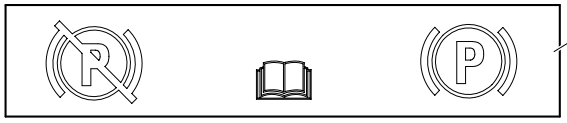

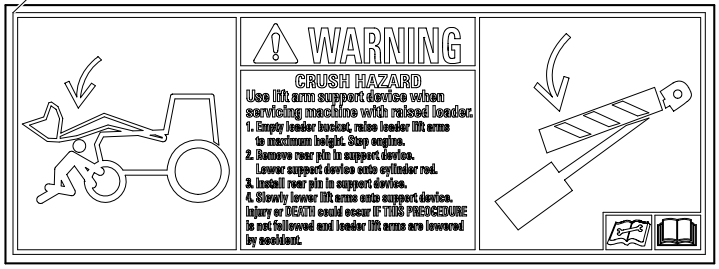



2
5

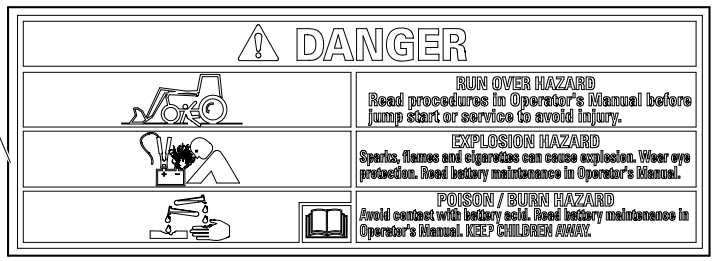

PLATES (POWER SHUTTLE)

REF	FN	PART NUMBER	YR/SN	QTY	DESCRIPTION
1		85821924		1	DECAL ENGLISH
1		85828069		1	DECAL FRENCH
1		85828070		1	DECAL SPANISH
2		85821917		1	DECAL ENGLISH
2		85828088		1	DECAL FRENCH
2		85828089		1	DECAL SPANISH
3		85821925		1	DECAL
4		85821918		1	DECAL FRENCH
4		85828086		1	DECAL SPANISH
4		85828087		1	DECAL ENGLISH
5		85821919		1	DECAL ENGLISH
5		85828090		1	DECAL FRENCH
5		85828091		1	DECAL SPANISH
6		85821921		1	DECAL ENGLISH
6		85828084		1	DECAL FRENCH
6		85828085		1	DECAL SPANISH

PLATES (POWER SHUTTLE)

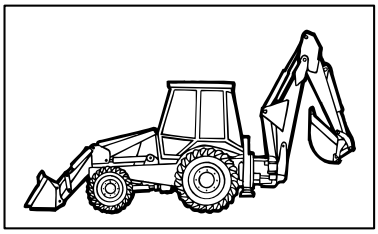

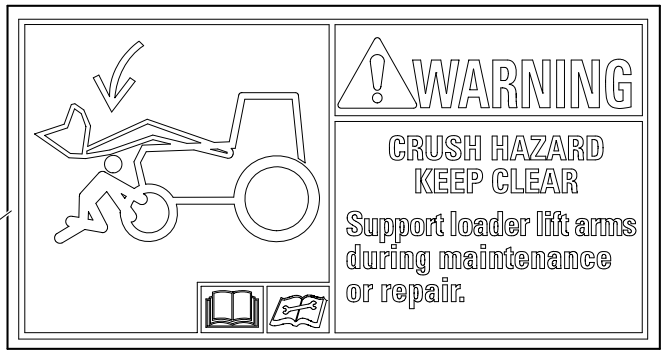

2

1

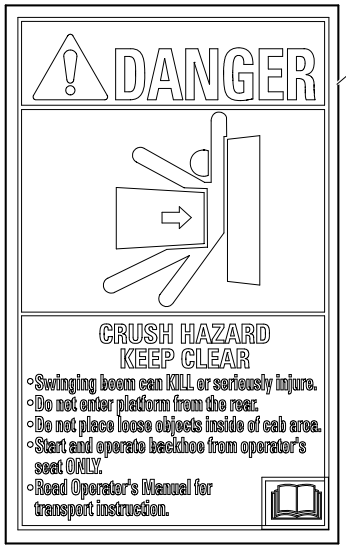

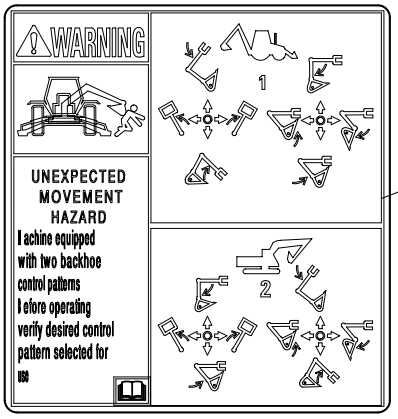

5

6

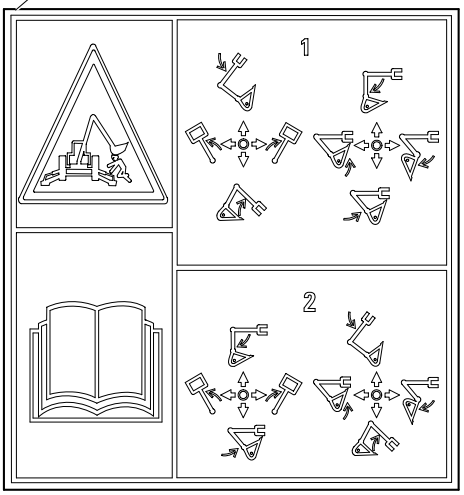

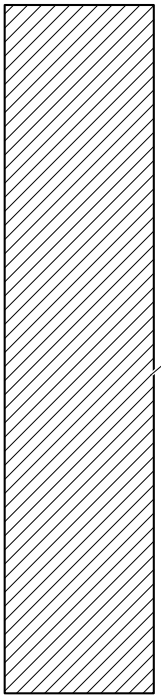

4

3

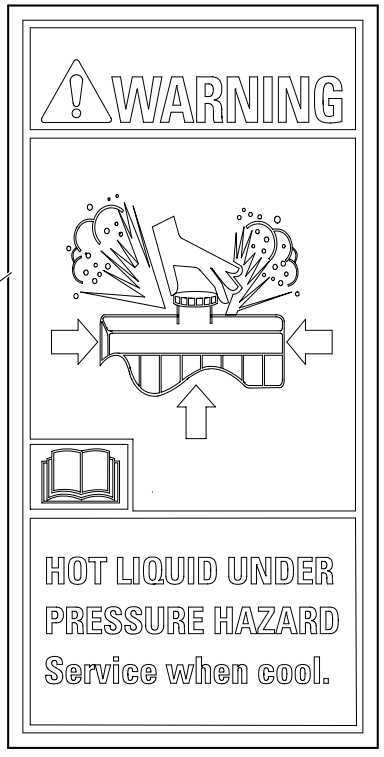



PLATES (POWER SHUTTLE)

REF	FN	PART NUMBER	YR/SN	QTY	DESCRIPTION
1		85821922		1	DECAL ENGLISH
1		85828080		1	DECAL FRENCH
1		85828081		1	DECAL SPANISH
2		85821946		1	DECAL ENGLISH
2		85828082		1	DECAL FRENCH
2		85828083		1	DECAL SPANISH
3		86547781		1	DECAL
4		85821916		1	DECAL ENGLISH
4		85828094		1	DECAL FRENCH
4		85828095		1	DECAL SPANISH
5		87305413		1	DECAL ENGLISH
5		85828092		1	DECAL FRENCH
5		{85829093}		1	SPANISH

B95TC MODEL IDENTIFICATIO

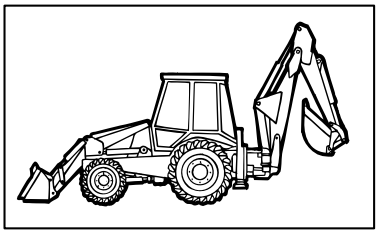

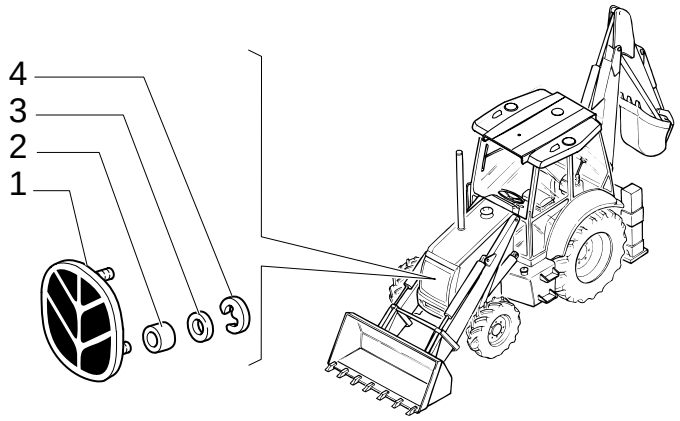

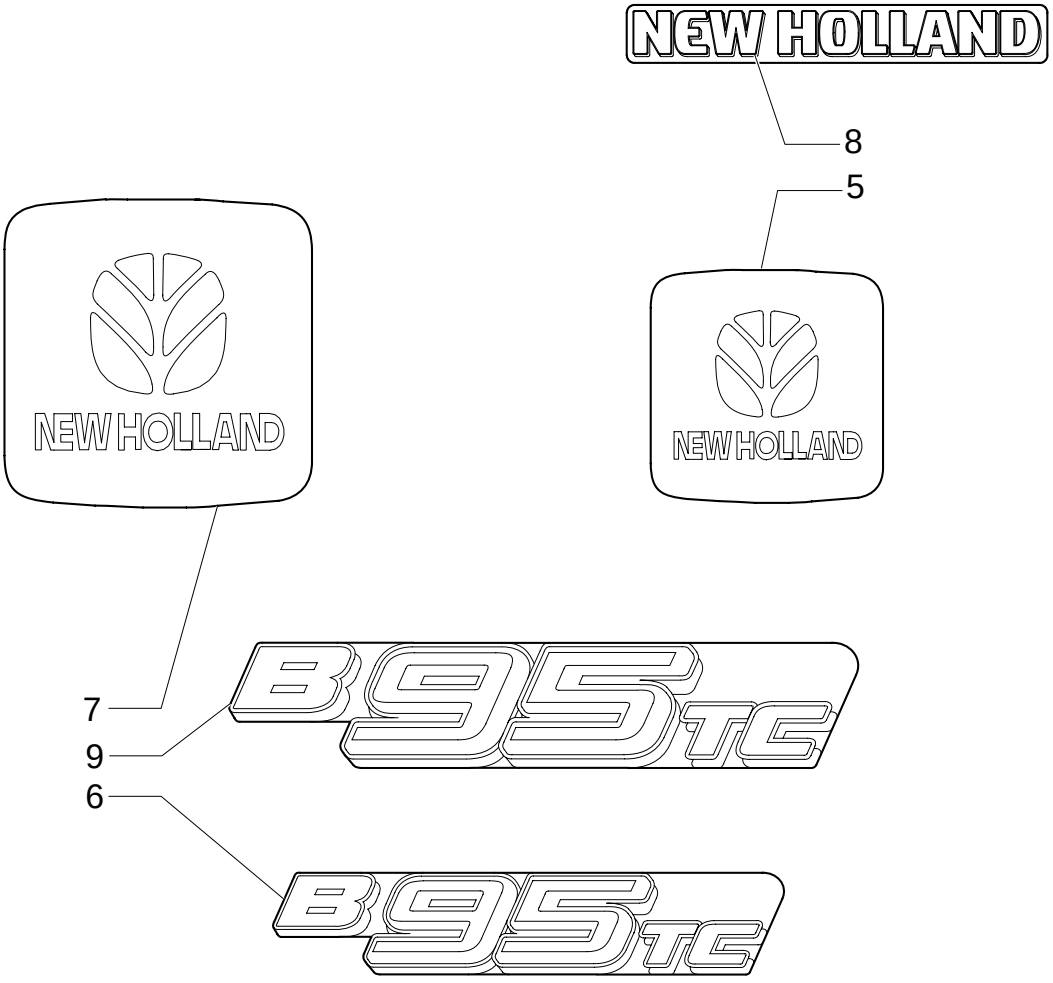

B95TC MODEL IDENTIFICATIO

REF	FN	PART NUMBER	YR/SN	QTY	DESCRIPTION
1		85820107		1	EMBLEM
2		12643711		2	WASHER
3		5138360		2	RING
4		5135069		2	CLIP
5		87802964		1	DECAL RH, HOOD
6		87360211		2	DECAL L=MM.800
7		87415930		2	DECAL
8		87319148		3	DECAL L=MM.580
9		87360217		2	DECAL L=MM.470

346	01	p1	11/05

A/C HOUSING & FILTERS

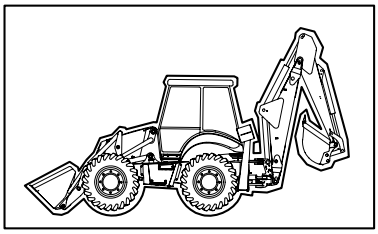

KIT KIT KIT = 16

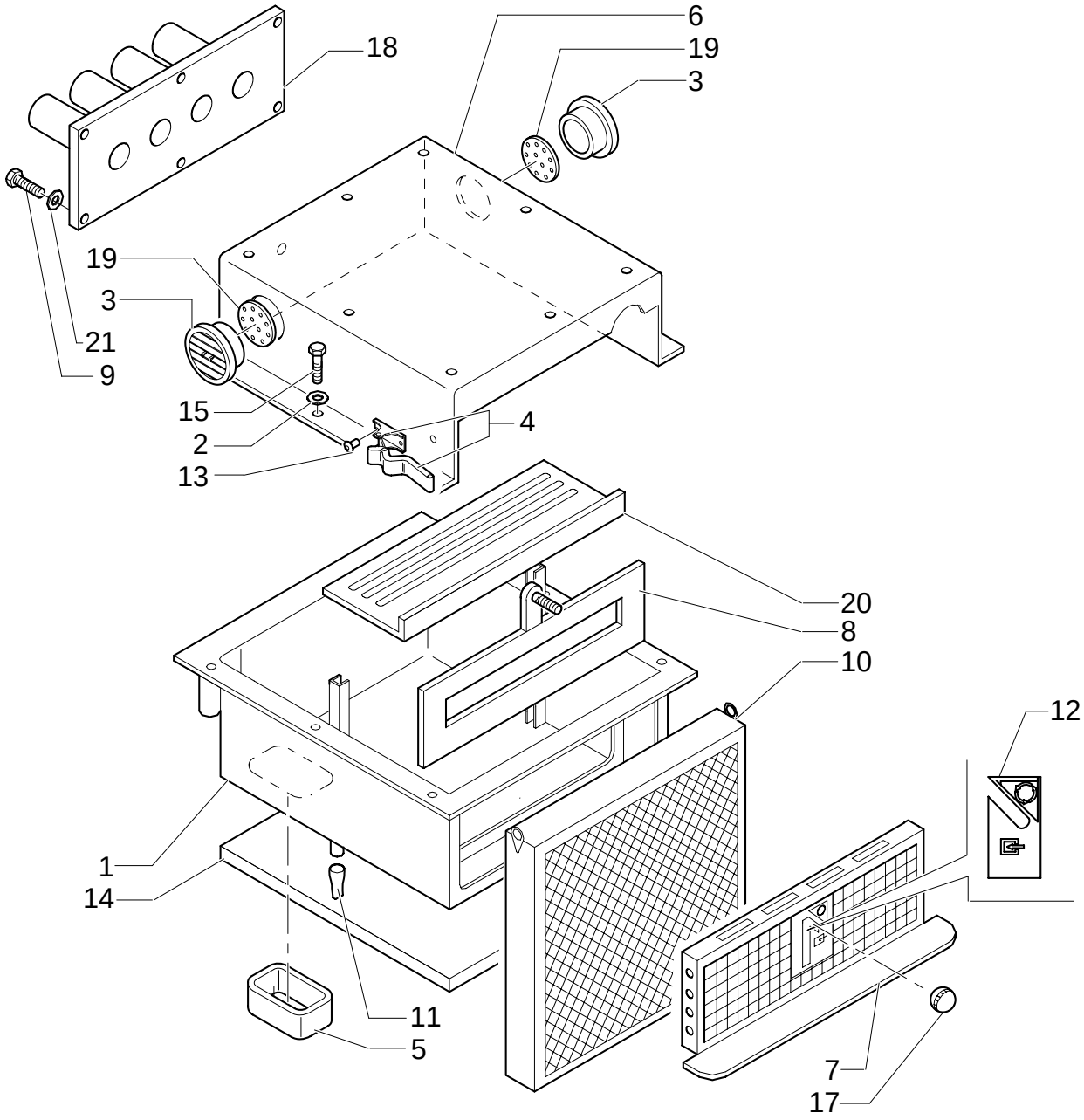

A/C HOUSING & FILTERS

REF	FN	PART NUMBER	YR/SN	QTY	DESCRIPTION
1		87314323		1	PANEL, BOXED
2		11193974		6	WASHER, LOCK
3		87314728		2	INTAKE, AIR
4		87358142		2	HOSE, FLEXIBLE
5		87314730		1	SHIELD
6		87314328		1	INTAKE, AIR
7		87314330		1	GRILLE
8		87314350		1	LID
9		85819184		6	SCREW
10		87314367		1	FILTER, AIR
11		87315029		2	STOP DEVICE
12		87314351		1	DECAL
13		{87358141}		4	
14		87314520		1	INSULATOR
15		16043624		6	SCREW
16		87314518		1	INSULATOR - KIT
17		87314353		1	KNOB
18		87314357		1	CONVEYOR
19		87314362		2	BULKHEAD
20		87314355		1	PANEL, BOXED
21		11193974		6	WASHER, LOCK

Mechanical Version, From To S/N XXX

346	02	p1	10/05

A/C BLOWER & COILS

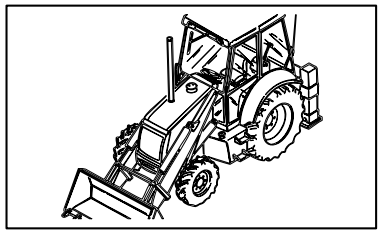

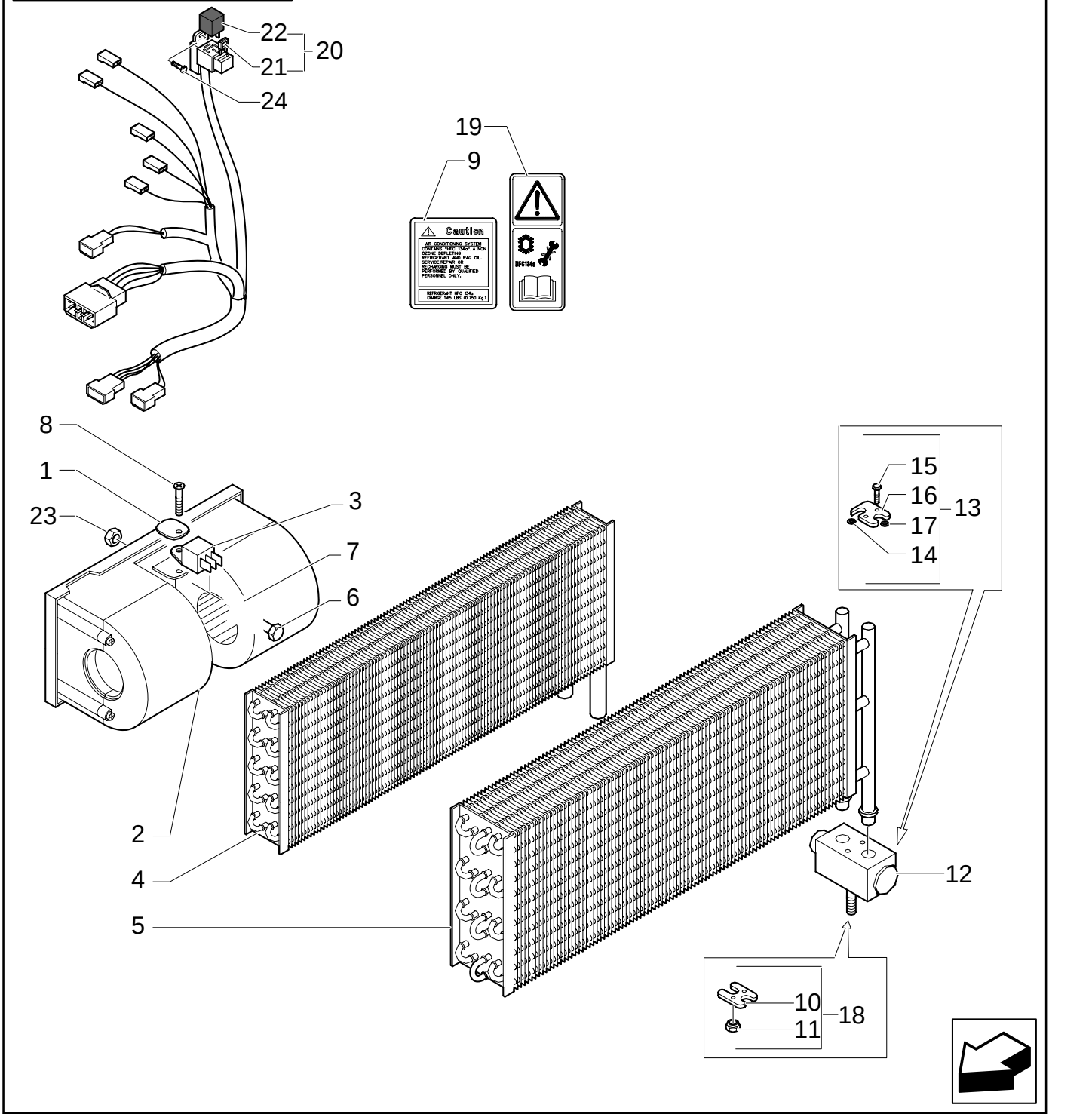

A/C BLOWER & COILS

REF	FN	PART NUMBER	YR/SN	QTY	DESCRIPTION
1		85817289		1	COLLAR, RETAINER
2		85813079		1	MOTOR, ELECTRIC, SMALL
3		85804041		1	RESISTOR
4		87314527		1	HEATER
5		87314369		1	EVAPORATOR
6		10902424		1	SCREW
7		11197774		1	WASHER, LOCK
8		85817189		1	SCREW
9		87324469		1	DECAL
10		85805008		1	FLANGE
11		14040611		1	NUT
12		87314524		1	VALVE, HYDRAULIC
13		85804038		1	FLANGE
14		85805003		1	O-RING
15		85805004		2	SCREW
16		85805005		1	FLANGE
17		85805006		1	O-RING
18		85821131		1	FLANGE
19		85804441		1	DECAL
20		87314517		1	CABLE, ELECTRIC
21		11055290		1	FUSE
22		85805144		1	RELAY
23		12574211		1	NUT
24		85819184		1	SCREW

Mechanical Version, From To S/N XXX

346	03	p1	08/05

HEATER COIL HOSES

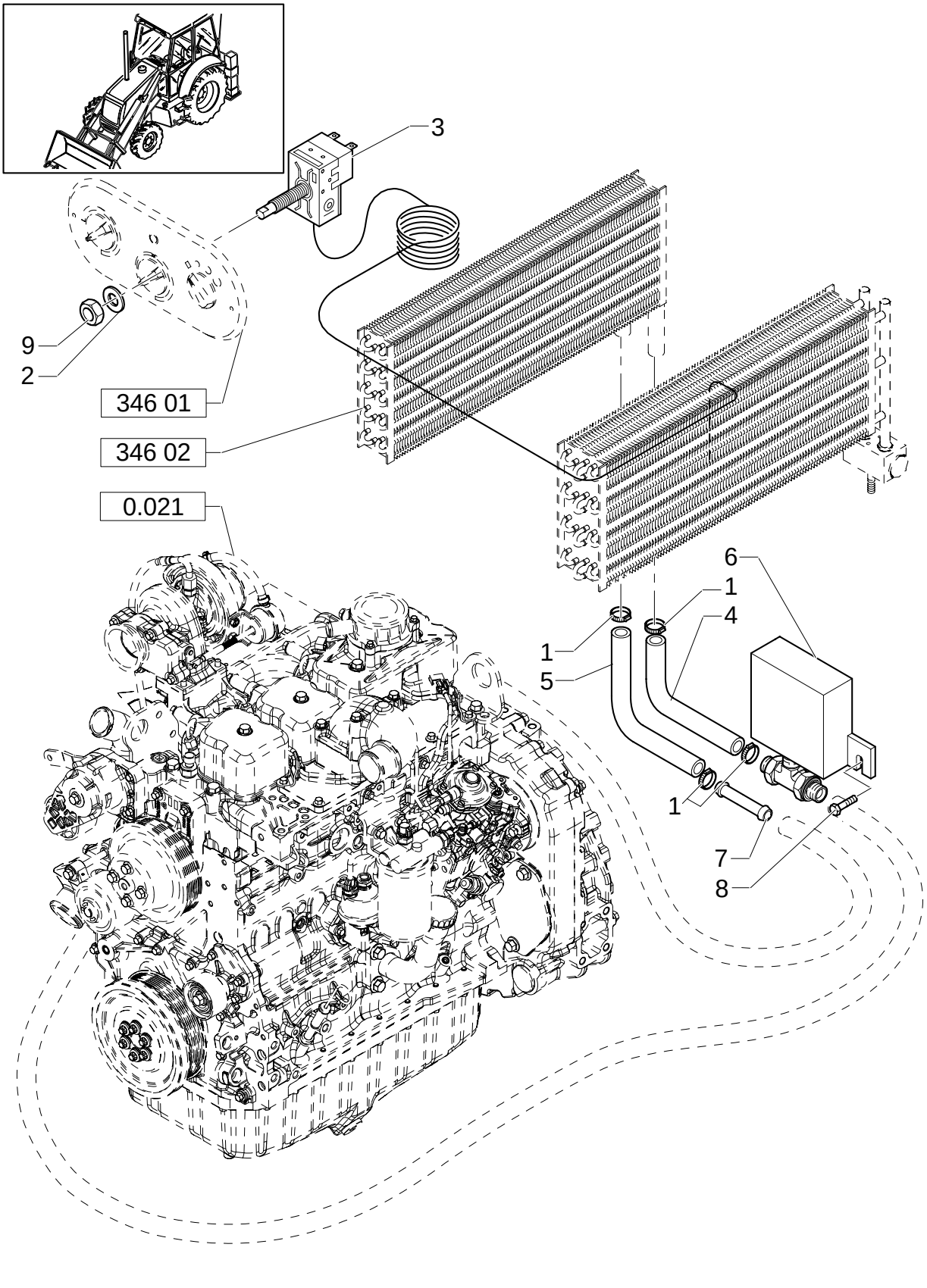

HEATER COIL HOSES

REF	FN	PART NUMBER	YR/SN	QTY	DESCRIPTION
1		87314726		4	COLLAR
2		85817295		1	NUT
3		87314526		1	THERMOSTAT
4		87318747		1	HOSE, FLEXIBLE
5		87318750		1	HOSE, FLEXIBLE
6		87314554		1	DRAINCOCK/TAP, SUPPLY
7		85804051		1	JOINT, UNIVERSAL
8		85819184		2	SCREW
9		87358348		1	WASHER

Mechanical Version, From To S/N XXX

346	04	p1	08/05

A/C & HEATER CONTROL PANEL

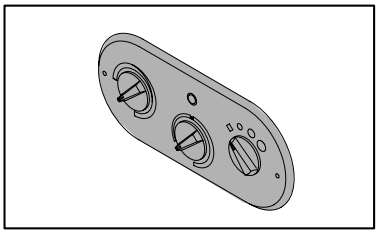

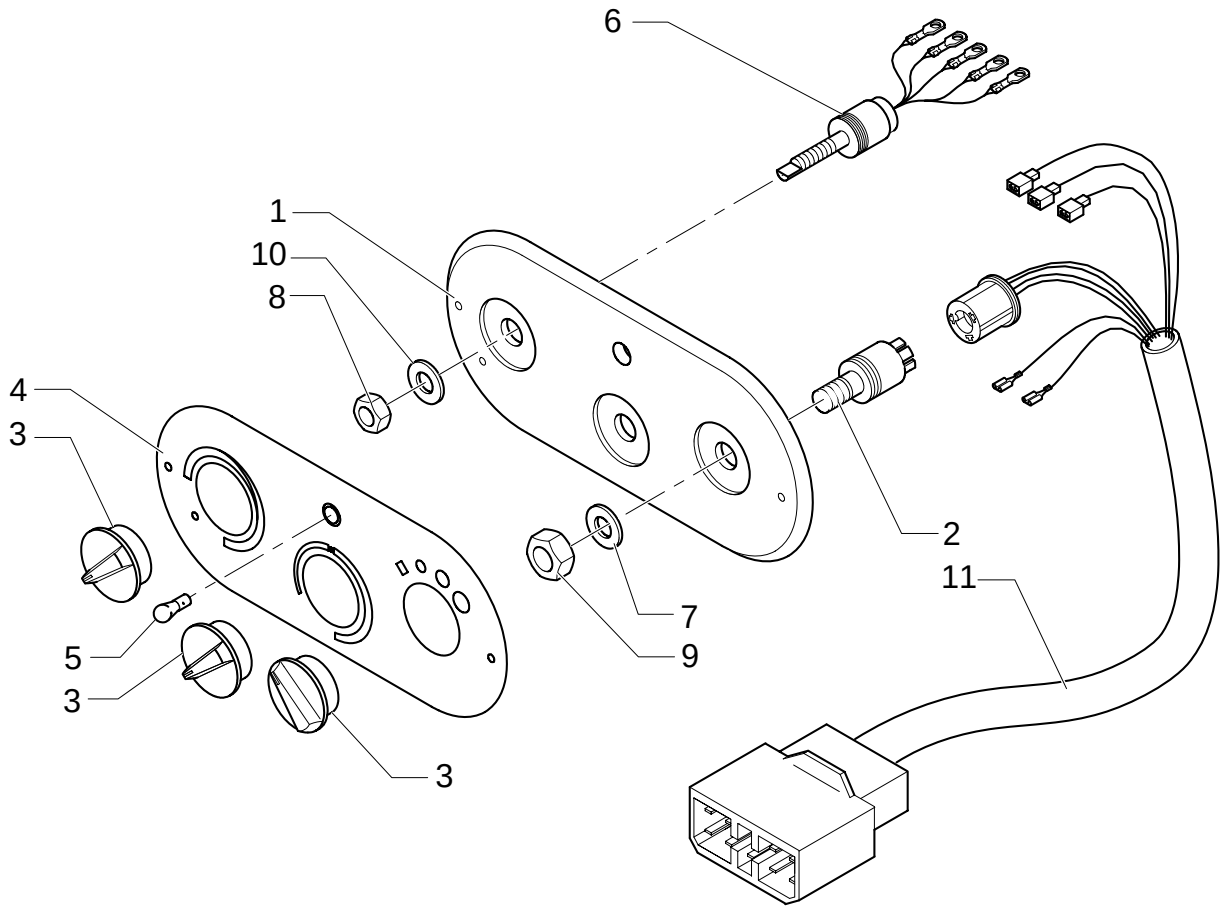

A/C & HEATER CONTROL PANEL

REF	FN	PART NUMBER	YR/SN	QTY	DESCRIPTION
1		87314743		1	DASHBOARD
2		87314747		1	SWITCH
3		87314749		3	DASHBOARD
4		87314750		1	DECAL
5		87314751		1	DIODE
6		87314753		1	POTENTIOMETER
7		87358348		1	WASHER 13X20
8		87334860		1	NUT
9		87334861		1	NUT 12,5X18X1,5
10		87358349		1	WASHER 10,5X16X1,5
11		87314522		1	CABLE, ELECTRIC

Mechanical Version, From To S/N XXX

346	05	p1	11/05

A/C & HEATER CONSOLE DUCTS

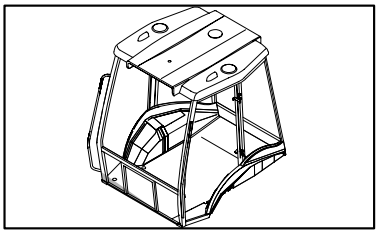

A/C & HEATER CONSOLE DUCTS

REF	FN	PART NUMBER	YR/SN	QTY	DESCRIPTION
1		85819452		5	PIPE
2		85819451		1	PIPE
3		87314771		1	HOSE, FLEXIBLE
4		87314772		2	HOSE, FLEXIBLE
5		87314773		1	HOSE, FLEXIBLE
6		87319448		1	HOSE, FLEXIBLE
7		85819454		2	DIFFUSER
8		87314946		1	SPOUT, DISCHARGE
9		87314947		1	SPOUT, DISCHARGE
10		87314948		1	SPOUT, DISCHARGE
11		85819453		1	CONNECTOR, HYD.
12	1	85819544		2	DIFFUSER
13	1	70741298		2	DIFFUSER
13	2	{87362068}		4	
14		{15915901}		4	
15		87319437		1	HOSE, FLEXIBLE
17		87314767		2	HOSE, FLEXIBLE
18		87314769		2	HOSE, FLEXIBLE
20		13000990		2	CLIP, HOSE
21		87319443		1	HOSE, FLEXIBLE
22		5112712		12	COLLAR
23		87319453		2	CONNECTOR
24	1	85818891		1	JOINT, UNIVERSAL
25		85813324		6	COLLAR
26		14440327		4	SCREW

(1) UP TO S/N XXX
(2) FROM TO S/N XXX

Mechanical Version, From To S/N XXX

346/1	01	p1	10/05

TRANSFORMATION SET FROM HEATING TO AIR CONDITIONING

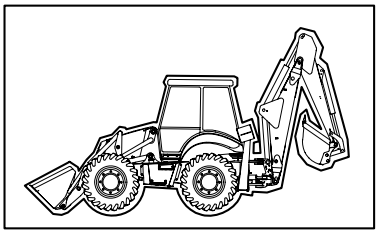

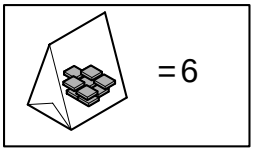

TRANSFORMATION SET FROM HEATING TO AIR CONDITIONING

REF	FN	PART NUMBER	YR/SN	QTY	DESCRIPTION
1		87314730		1	SHIELD
2		87314350		1	LID
4		87314351		1	DECAL
5		87314520		1	INSULATOR
6		87314518		1	INSULATOR
7		87314353		1	KNOB
8		87314357		1	CONVEYOR
9		87314362		2	BULKHEAD
10		87314369		1	EVAPORATOR
11		87314524		1	VALVE, HYDRAULIC
12		85804038		1	FLANGE
13		85805003		1	O-RING
14		85805004		2	SCREW
15		85805005		1	FLANGE
16		85805006		1	O-RING
17		85821131		1	FLANGE
18		85805008		1	FLANGE
19		14040611		1	NUT
23		85817295		1	NUT
24		87314526		1	THERMOSTAT
25		87314749		1	DASHBOARD
26		87314750		1	DECAL
27		87314751		1	DIODE
28		87314757		1	WASHER, SEALING

Mechanical Version, From To S/N XXX

346/1	02	p1	11/05

TRANSFORMATION SET FROM HEATING TO AIR CONDITIONING

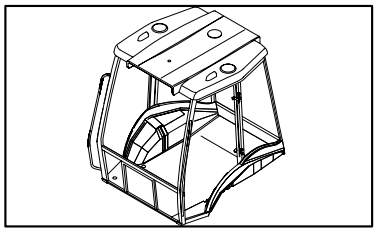

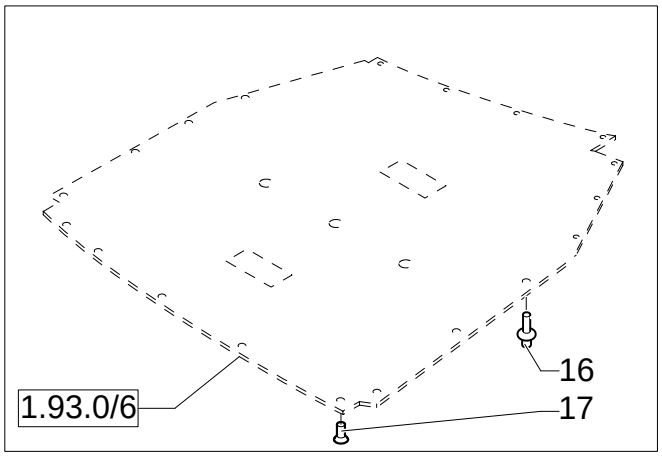

TRANSFORMATION SET FROM HEATING TO AIR CONDITIONING

REF	FN	PART NUMBER	YR/SN	QTY	DESCRIPTION
1		85819452		3	PIPE
2		85819451		1	PIPE
3		87314771		1	HOSE, FLEXIBLE
4		87314772		2	HOSE, FLEXIBLE
5		87314773		1	HOSE, FLEXIBLE
6		87319448		1	HOSE, FLEXIBLE
7		85819454		2	DIFFUSER
8		87314946		1	SPOUT, DISCHARGE
9		87314947		1	SPOUT, DISCHARGE
10		87314948		1	SPOUT, DISCHARGE
11		85819453		2	CONNECTOR, HYD.
12	1	85819544		2	DIFFUSER
12	2	{87362068}		4	
13		5112712		3	COLLAR
14		13000690		4	CLIP, HOSE
15		14440327		4	SCREW
16		5162852		21	BUTTON
17		85805777		1	PLUG
18		F1NN94000Z36AA		12	STUD

(1) UP TO S/N XXX
(2) FROM TO S/N XXX

Mechanical Version, From To S/N XXX

347	01	p1	11/05

HOUSING & FILTERS

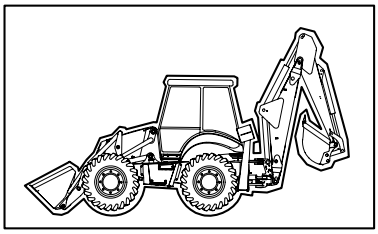

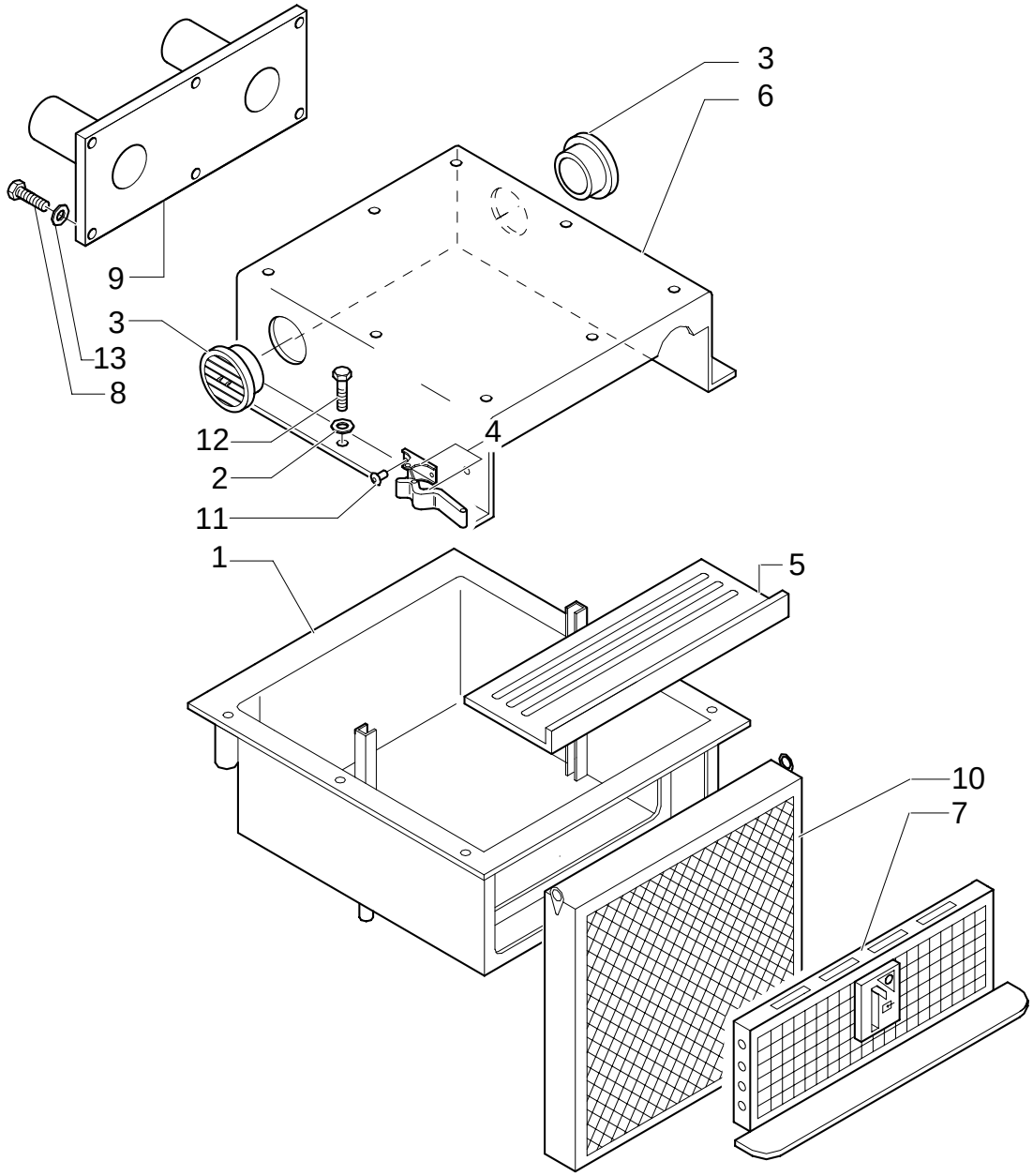

HOUSING & FILTERS

REF	FN	PART NUMBER	YR/SN	QTY	DESCRIPTION
1		87314323		1	PANEL, BOXED
2		11193974		6	WASHER, LOCK
3		87314728		2	INTAKE, AIR
4		87358142		2	HOSE, FLEXIBLE
5		87314355		1	PANEL, BOXED
6		87314328		1	INTAKE, AIR
7		87314330		1	GRILLE
8		85819184		6	SCREW
9		87316439		1	CONVEYOR
10		87314367		1	FILTER, AIR
11		{87358141}		4	
12		16043624		6	SCREW
13		11193974		1	WASHER, LOCK

Mechanical Version, From To S/N XXX

347	02	p1	06/05

HEATER BLOWER & COILS

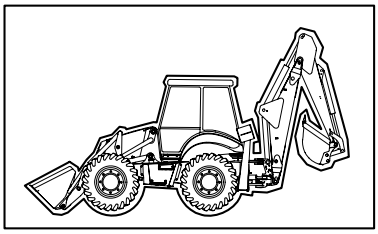

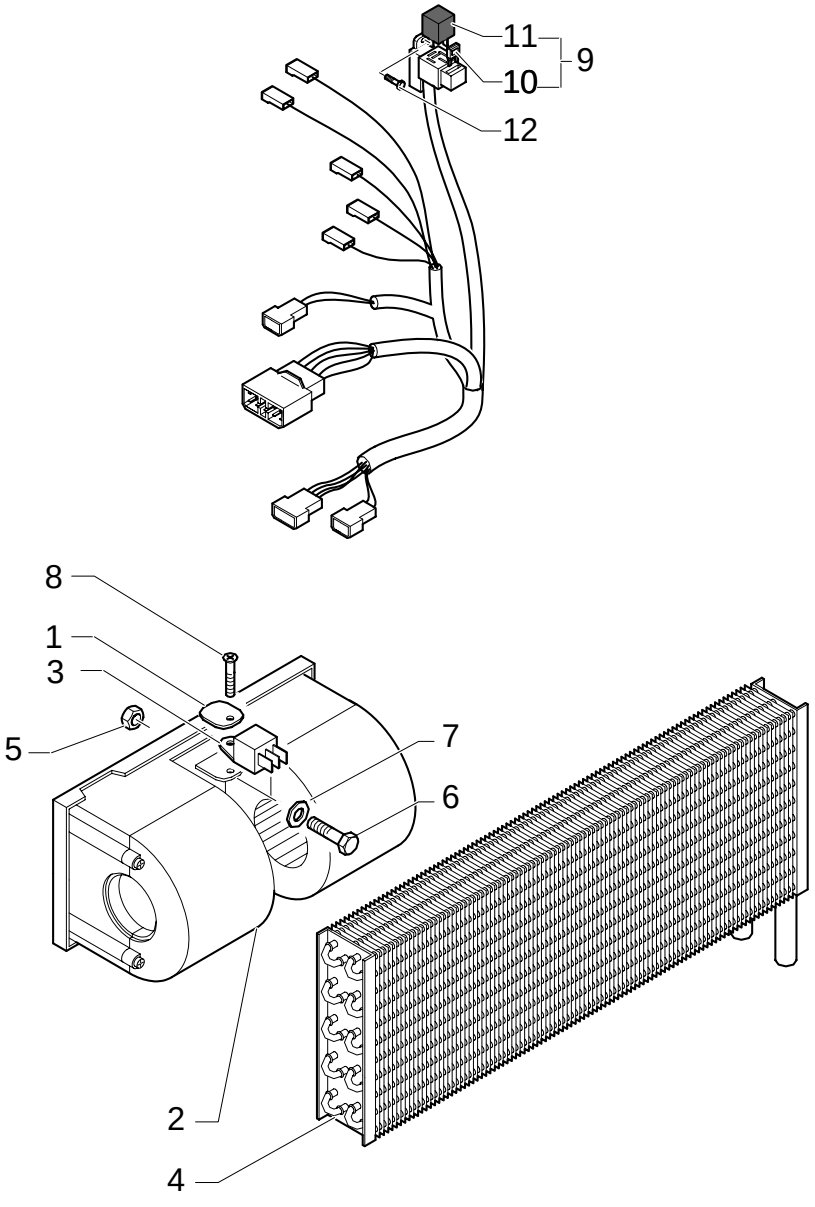

HEATER BLOWER & COILS

REF	FN	PART NUMBER	YR/SN	QTY	DESCRIPTION
1		85817289		1	COLLAR, RETAINER
2		85813079		1	MOTOR, ELECTRIC, SMALL
3		85804041		1	RESISTOR
4		87314527		1	HEATER
5		12574211		1	NUT
6		10902424		1	SCREW
7		11197774		1	WASHER, LOCK
8		85817189		1	SCREW
9		87314517		1	CABLE, ELECTRIC
10		11054990		1	FUSE
11		85821537		1	RELAY
12		85819184		1	SCREW

Mechanical Version, From To S/N XXX

347	03	p1	08/05

HEATER COIL HOSES

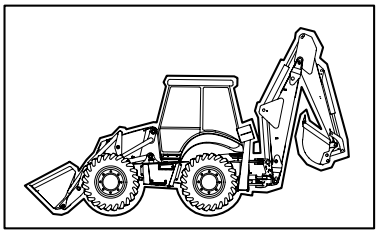

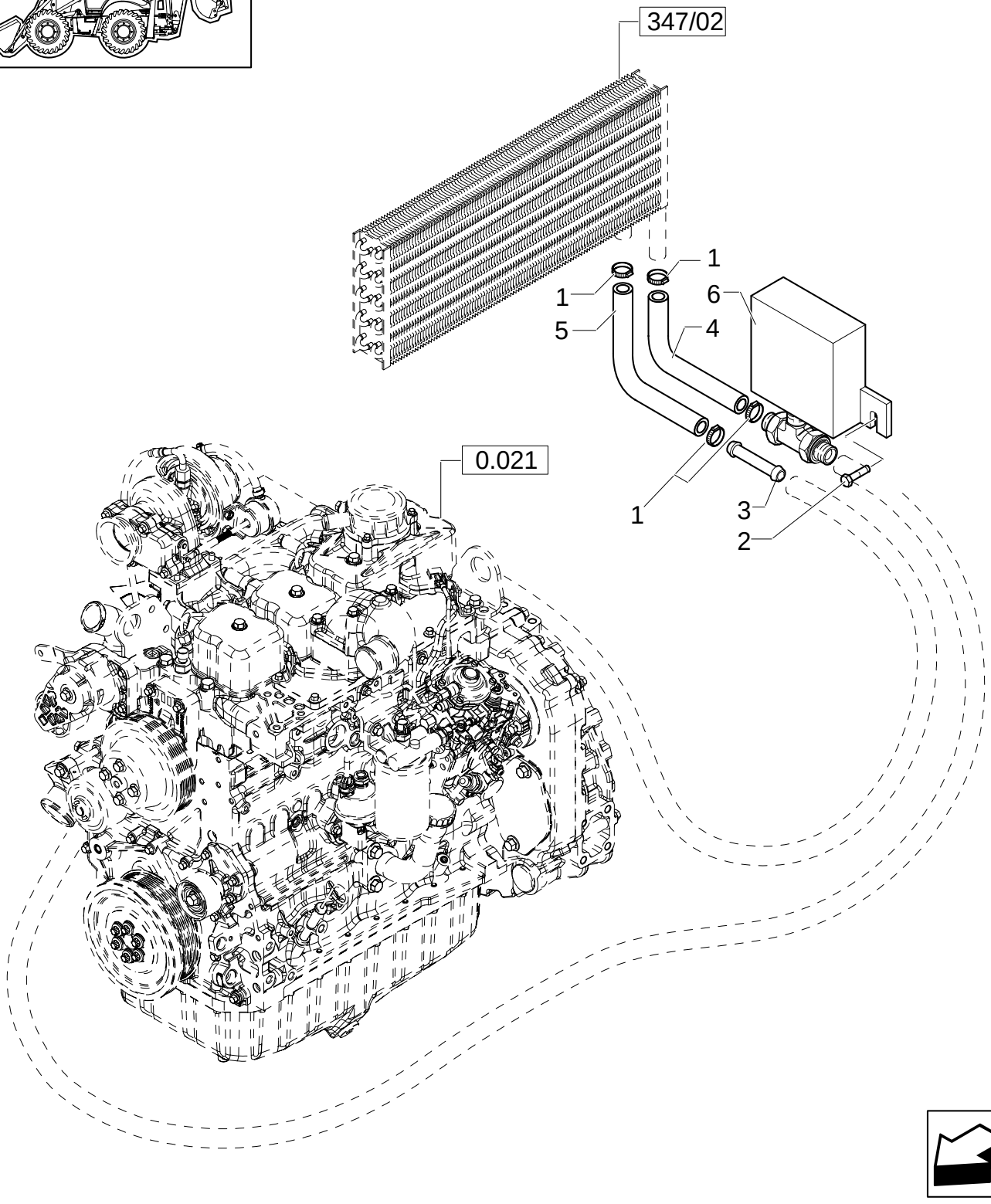

HEATER COIL HOSES

REF	FN	PART NUMBER	YR/SN	QTY	DESCRIPTION
1		87314726		4	COLLAR
2		85819184		2	SCREW
3		85804051		1	JOINT, UNIVERSAL
4		87318747		1	HOSE, FLEXIBLE
5		87318750		1	HOSE, FLEXIBLE
6		87314554		1	DRAINCOCK/TAP, SUPPLY

Mechanical Version, From To S/N XXX

347	04	p1	12/05

A/C & HEATER CONTROL PANEL

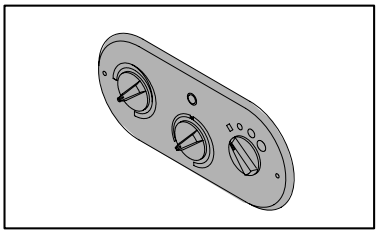

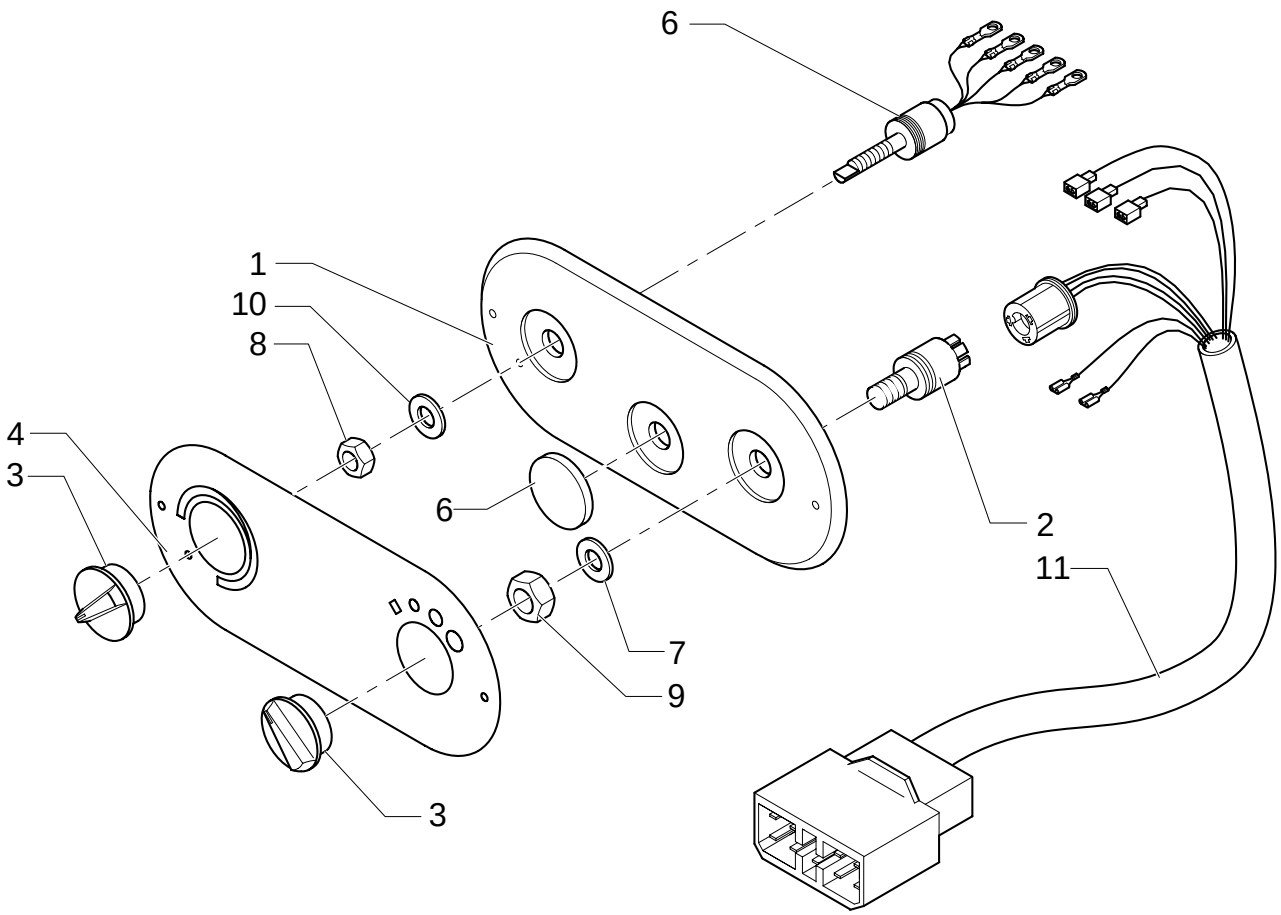

A/C & HEATER CONTROL PANEL

REF	FN	PART NUMBER	YR/SN	QTY	DESCRIPTION
1		87314743		1	DASHBOARD
2		87314747		1	SWITCH
3		87314749		2	DASHBOARD
4		87314753		1	POTENTIOMETER
5		87314757		2	WASHER, SEALING 13X20
6		87316442		1	PLUG
7		87358348		1	WASHER 12,5X18X1,5
8		87334860		1	NUT
9		87334861		1	NUT
10		87358349		1	WASHER 10,5X16X1,5
11		87314522		1	CABLE, ELECTRIC

Mechanical Version, From To S/N XXX

347	05	p1	11/05

A/C & HEATER CONSOLE DUCTS

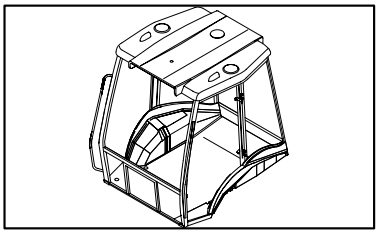

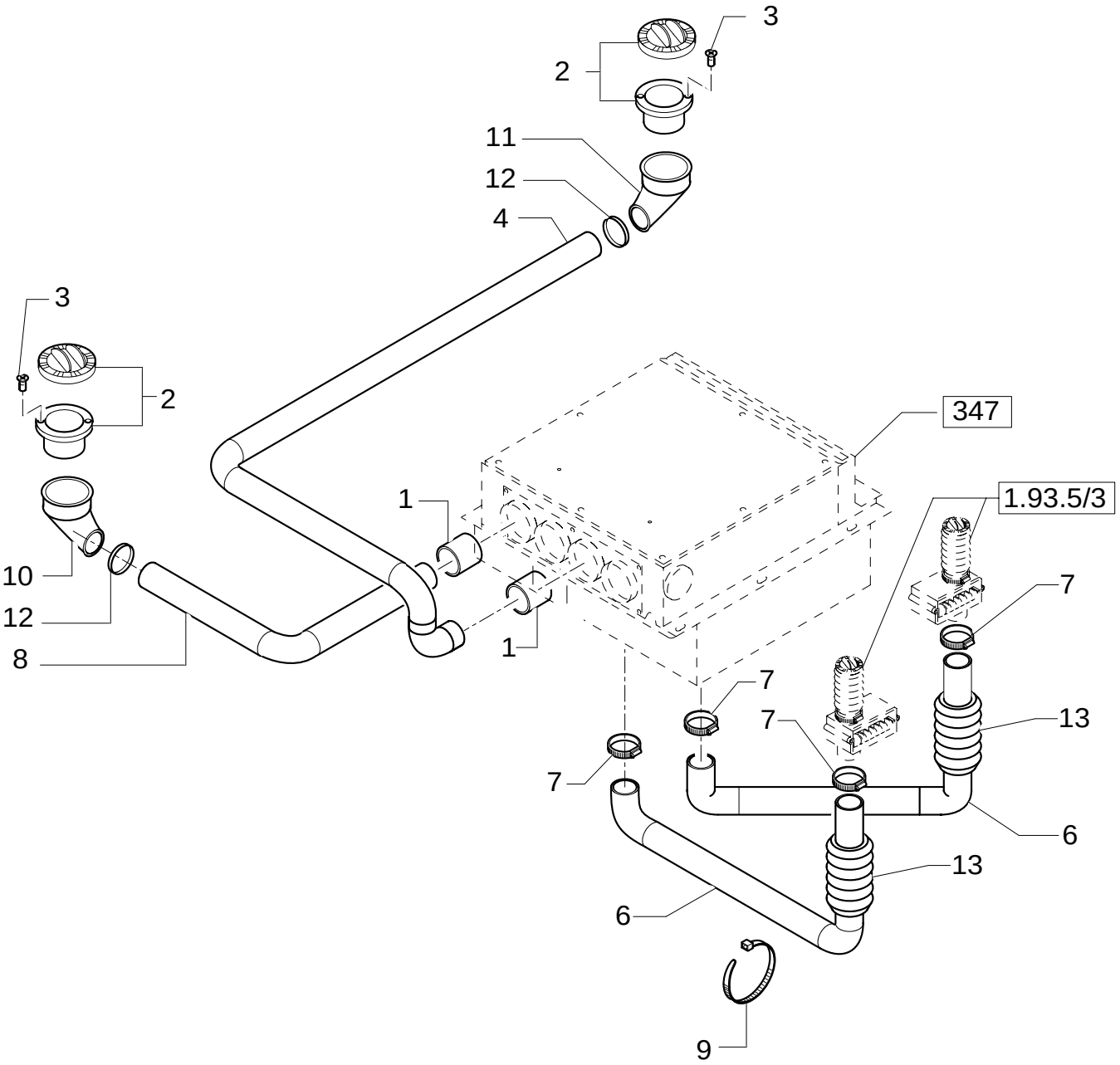

A/C & HEATER CONSOLE DUCTS

REF	FN	PART NUMBER	YR/SN	QTY	DESCRIPTION
1		85819452		2	PIPE
2	1	70741298		2	DIFFUSER
2	2	{87362068}		2	
3		{15915901}		4	
4		87319437		1	HOSE, FLEXIBLE
6		87314767		2	HOSE, FLEXIBLE
7		13000990		4	CLIP, HOSE
8		87319443		1	HOSE, FLEXIBLE
9		5112712		12	COLLAR
10		87319453		2	CONNECTOR
11	1	85818891		1	JOINT, UNIVERSAL
12		85813324		2	COLLAR
13		87314769		2	HOSE, FLEXIBLE

(1) UP TO S/N XXX
(2) FROM TO S/N XXX

Mechanical Version, From To S/N XXX

347	06	p1	08/05

CAB HEATING COATING PLUG

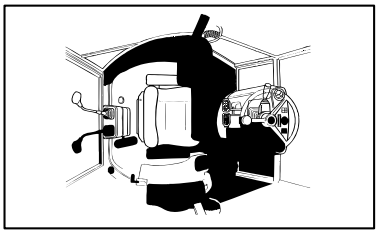

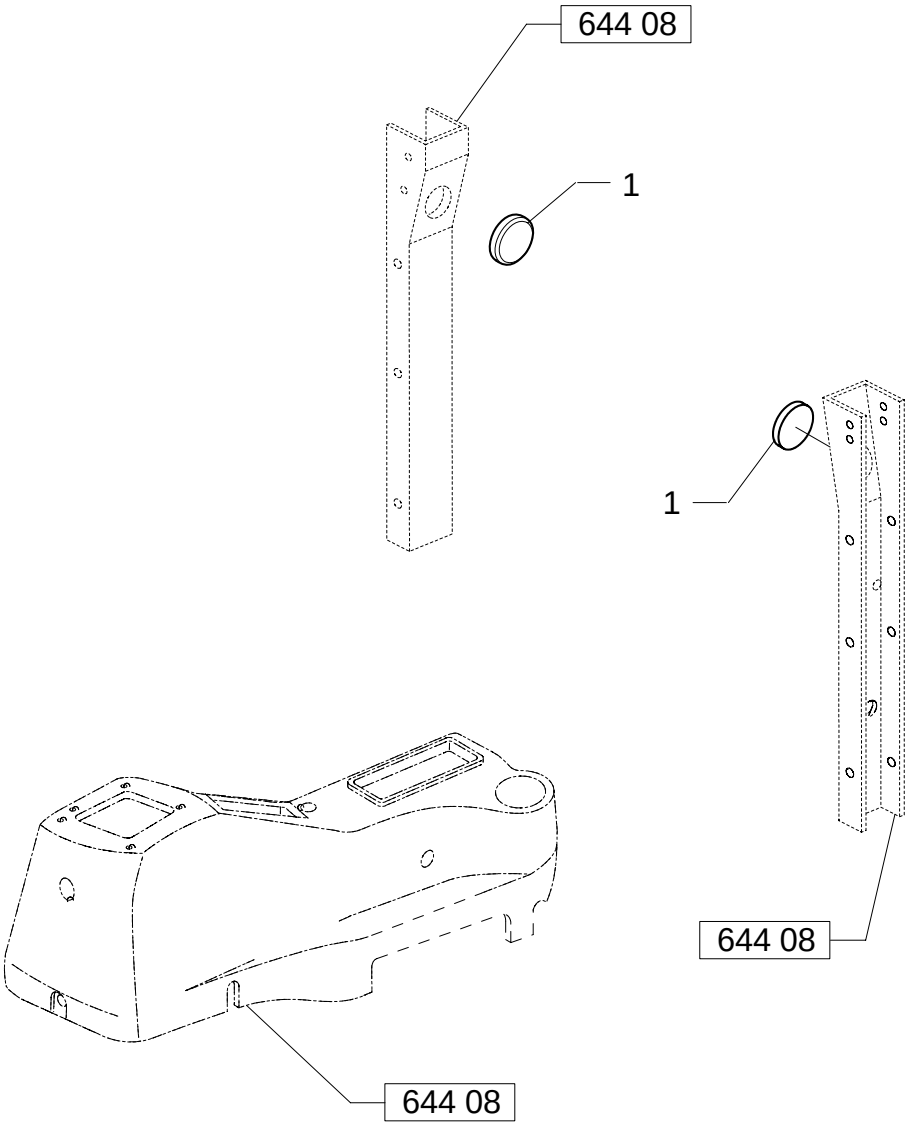

CAB HEATING COATING PLUG

REF	FN	PART NUMBER	YR/SN	QTY	DESCRIPTION
1		87319018		2	PLUG

Mechanical Version, From To S/N XXX

351	04	p1	12/05

CASE 3 LEVER BACKHOE CONTROLS, CONSOLE & LEVERS

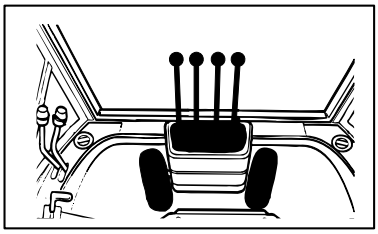

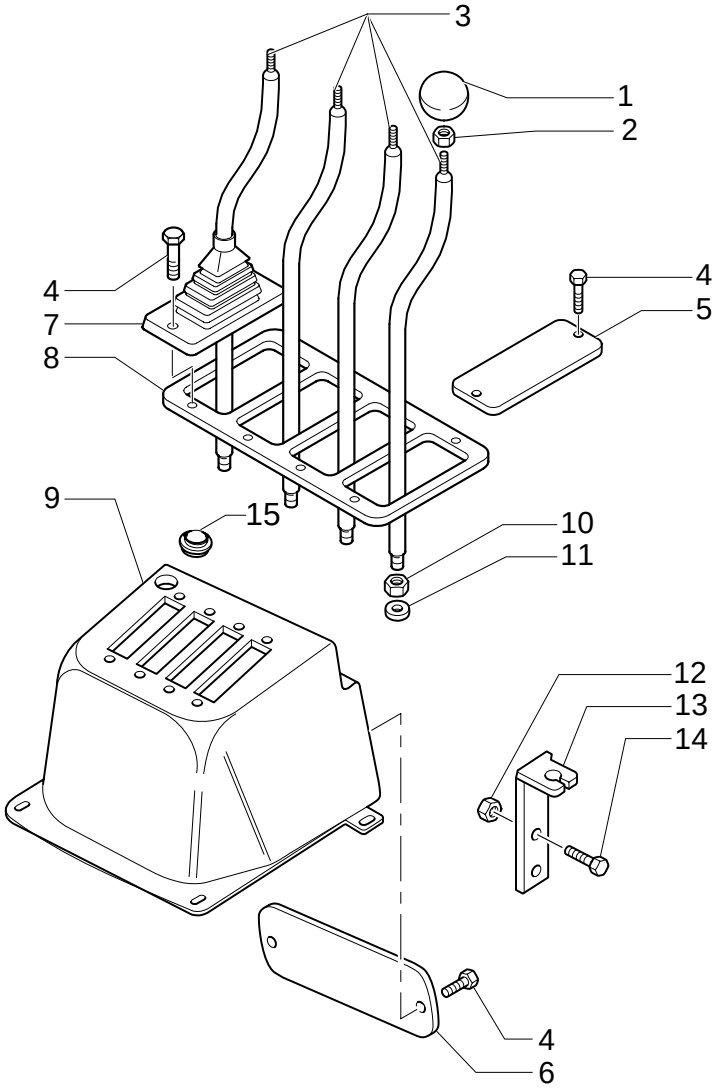

CASE 3 LEVER BACKHOE CONTROLS, CONSOLE & LEVERS

REF	FN	PART NUMBER	YR/SN	QTY	DESCRIPTION
1		85805242		4	KNOB
2		15500111		4	NUT M10X1,5
3		85804780		4	ARM, TRIP
4		13272477		10	SCREW M4X20
5		85804159		1	PLATE
6		85804781		1	COVER
7		85803382		4	BOOT
8		85803540		1	PLATE
9		85805239		1	CONSOLE
10		16101511		4	NUT M12X1,25
11		11190779		4	WASHER, LOCK
12		16104111		2	NUT M8 W/CAB
13		85805635		1	SUPPORT W/CAB
14		16043621		2	SCREW M8X25 W/CAB
15		85802227		1	PLUG

Mechanical Version

CASE 3 LEVER BACKHOE CONTROLS, BELLCRANK & SUPPORT

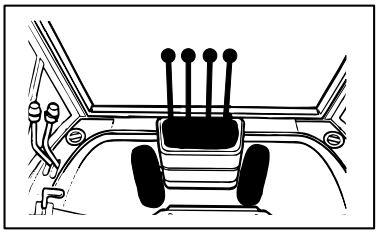

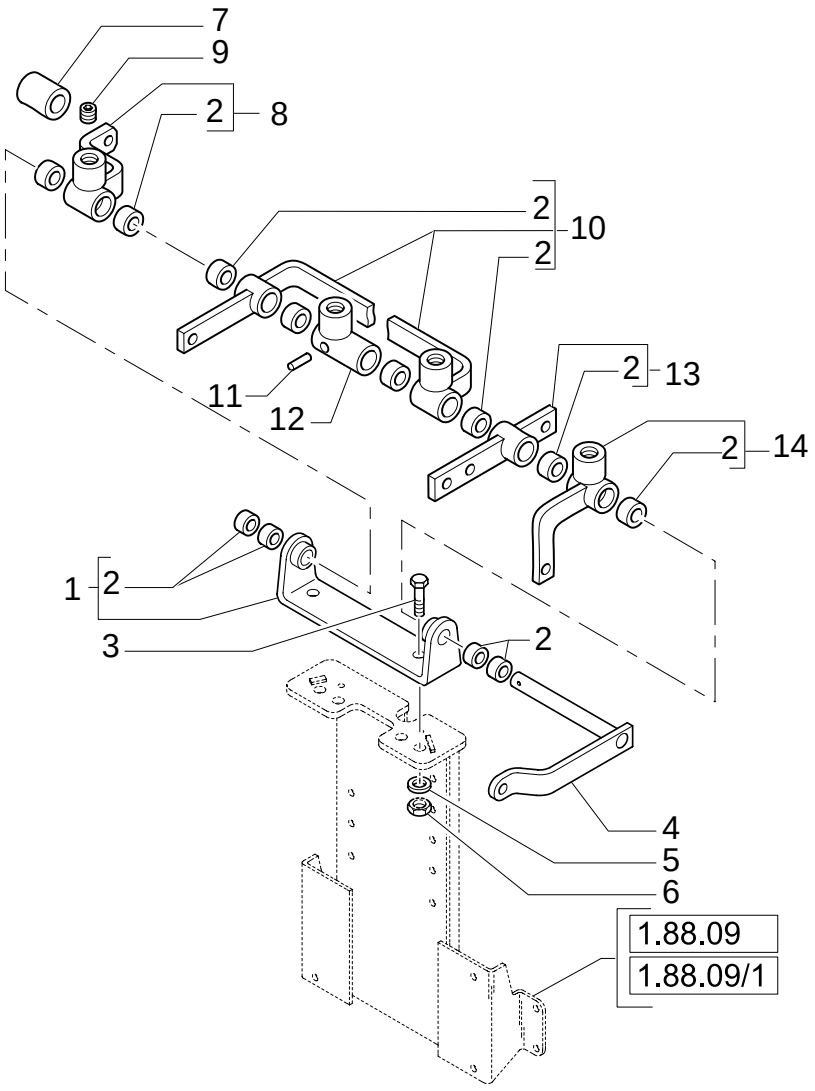

CASE 3 LEVER BACKHOE CONTROLS, BELLCRANK & SUPPORT

REF	FN	PART NUMBER	YR/SN	QTY	DESCRIPTION
1		85802647		1	SUPPORT
2		85802494		AR	BUSHING 16X19X8
3		15540421		2	SCREW M12X1,25X30
4		85805059		1	PIN
5		11190779		2	WASHER, LOCK
6		16101511		2	NUT M12X1,25
7		85805056		1	SPACER
8		85805632		1	LEVER, IDLER W/CAB
8		85805250		1	LEVER, IDLER W/ROPS
9		13812631		1	DOWEL M12X1,25
10		85805047		1	LEVER, IDLER ASSY
11		13940370		1	PIN, ROLL
12		85805057		1	LEVER, IDLER
13		85805049		1	LEVER, IDLER ASSY
14		85805053		1	LEVER, IDLER ASSY

Mechanical Version

351	06	p1	02/05

CASE 3 LEVER BACKHOE CONTROLS, BUCKET TIE-ROD ASSEMBLY

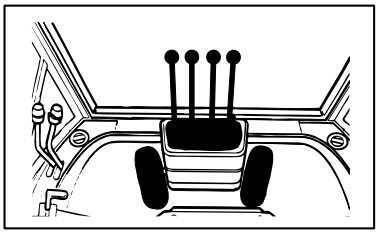

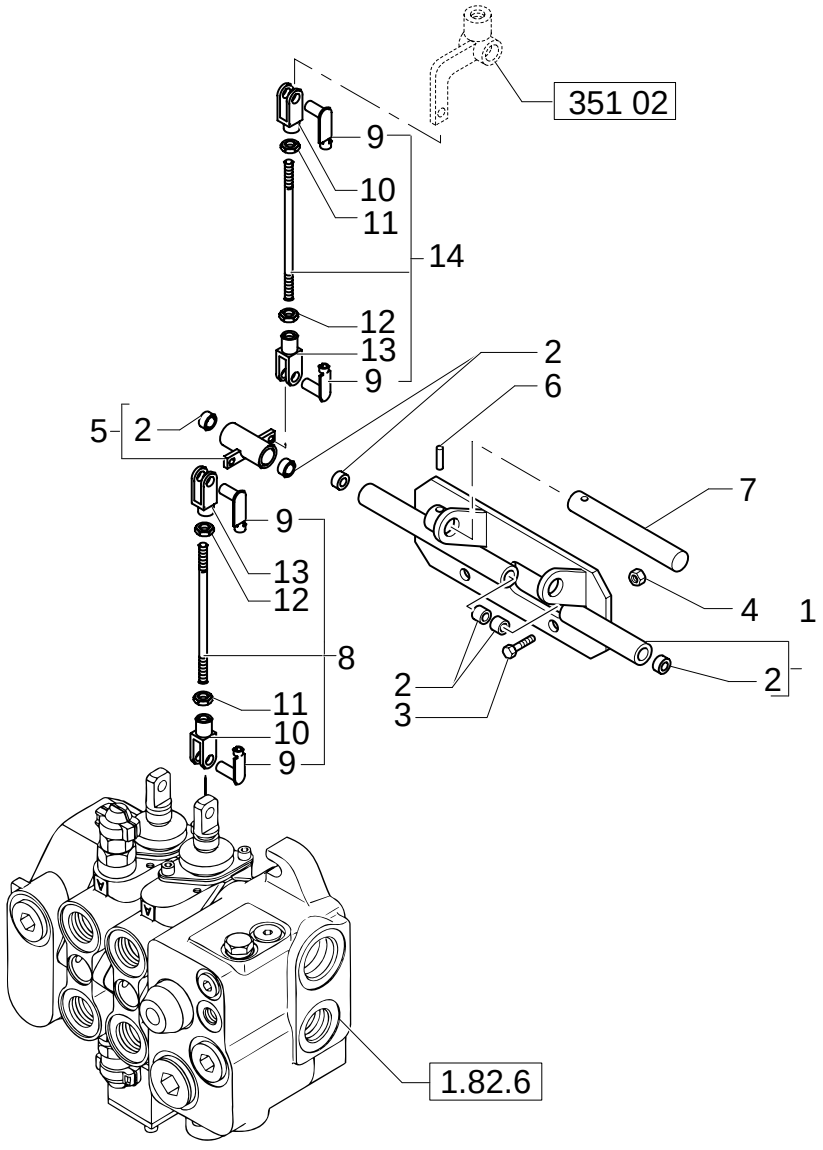

CASE 3 LEVER BACKHOE CONTROLS, BUCKET TIE-ROD ASSEMBLY

REF	FN	PART NUMBER	YR/SN	QTY	DESCRIPTION
1		85805625		1	SUPPORT W/CAB
1		85805040		1	SUPPORT W/ROPS
2		85802494		AR	BUSHING 16X19X8
3		16043621		4	SCREW M8X25
4		16104111		4	NUT M8
5		85805043		1	LEVER, IDLER
6		13940370		1	PIN, ROLL
7		85805042		1	PIN
8		85803447		1	TIE-ROD
9		85802738		4	PIN
10		10007871		2	YOKE RH
11		16102311		2	NUT RH
12		16102911		2	NUT LH
13		11991971		2	YOKE LH
14		85805046		1	TIE-ROD

Mechanical Version

CASE 3 LEVER BACKHOE CONTROLS, UPPER SWING TIE-ROD ASSEMBLY

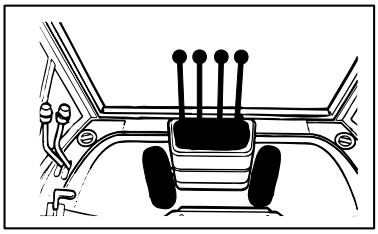

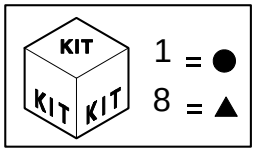

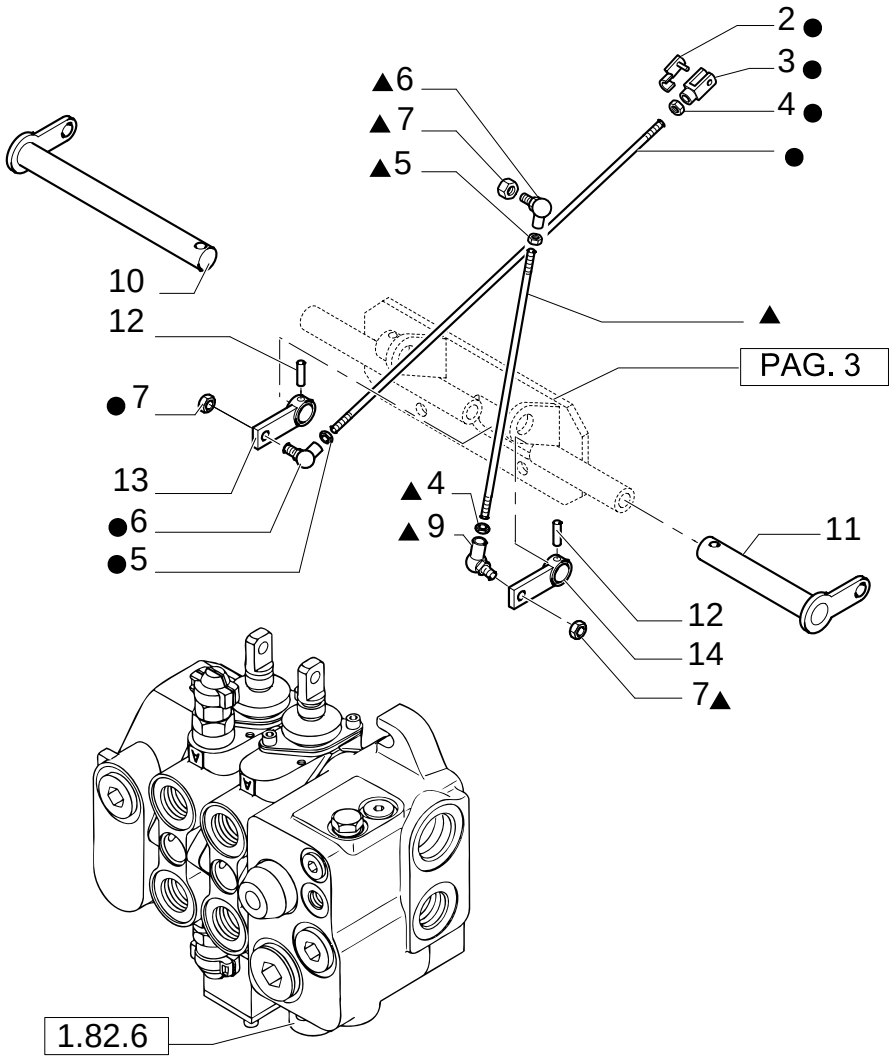

CASE 3 LEVER BACKHOE CONTROLS, UPPER SWING TIE-ROD ASSEMBLY

REF	FN	PART NUMBER	YR/SN	QTY	DESCRIPTION
1		85805033		1	TIE-ROD
2		85802738		1	PIN
3		11991971		1	YOKE LH
4		16102911		2	NUT LH
5		16102311		2	NUT RH
6		85804375		2	JOINT, UNIVERSAL RH
7		14048211		3	NUT
8		85805035		1	TIE-ROD
9		85804376		1	JOINT, UNIVERSAL LH
10		85805629		1	PIN LH W/CAB
10		85805039		1	PIN LH W/ROPS
11		85805038		1	PIN RH
12		13940370		2	PIN, ROLL
13		85803492		1	LEVER, IDLER
14		85805037		1	LEVER, IDLER

Mechanical Version

CASE 3 LEVER BACKHOE CONTROLS, DIPPER, SWING & BOOM LINKAGE

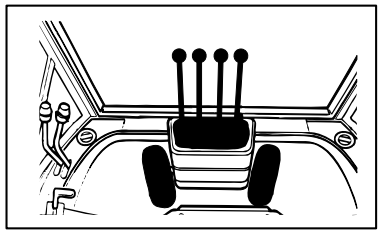

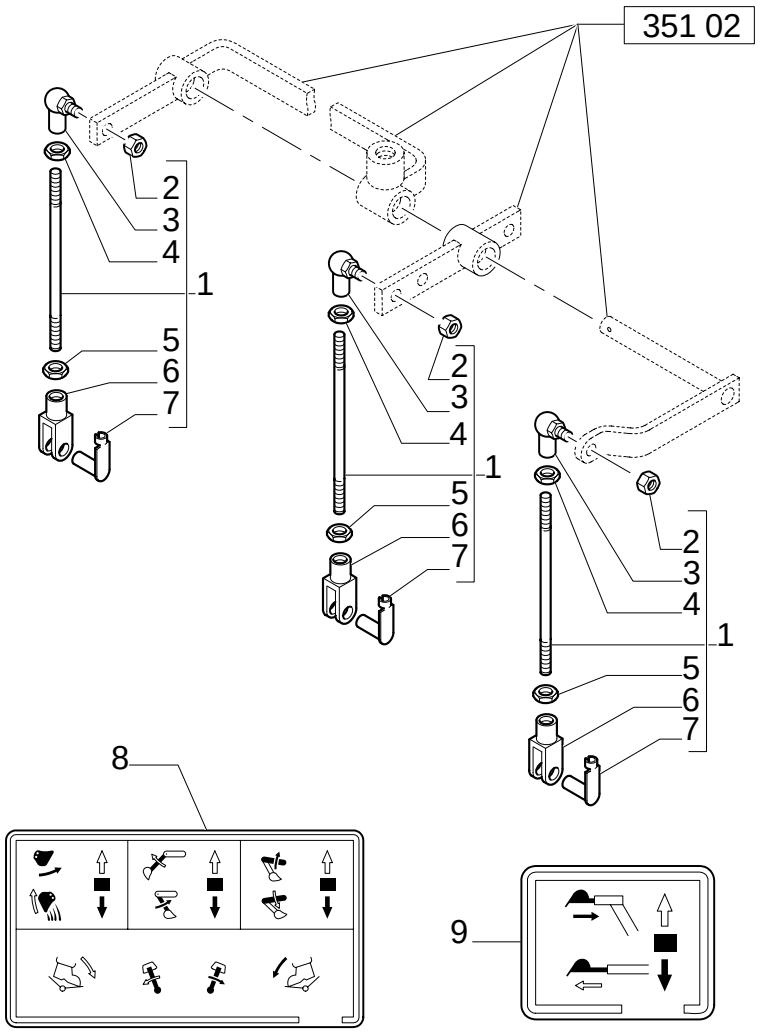

CASE 3 LEVER BACKHOE CONTROLS, DIPPER, SWING & BOOM LINKAGE

REF	FN	PART NUMBER	YR/SN	QTY	DESCRIPTION
1		85804803		3	TIE-ROD
2		14048211		3	NUT M8x1.25
3		85804375		3	JOINT, UNIVERSAL
4		16102311		3	NUT RH
5		16102911		3	NUT LH
6		11991971		3	YOKE LH
7		85802738		3	PIN
8		85803916		1	DECAL
9		85803787		1	DECAL

Mechanical Version

CASE 3 LEVER BACKHOE CONTROLS, SWING CONTROL PEDAL

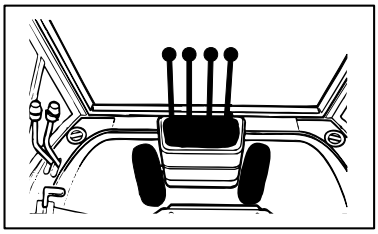

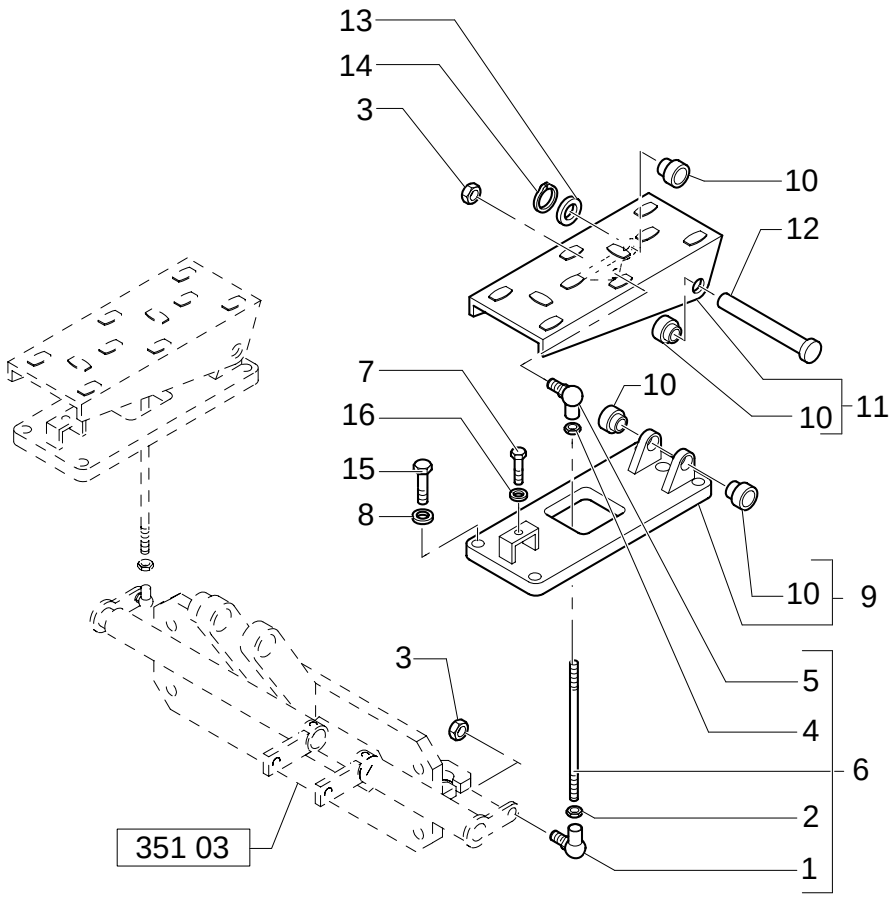

CASE 3 LEVER BACKHOE CONTROLS, SWING CONTROL PEDAL

REF	FN	PART NUMBER	YR/SN	QTY	DESCRIPTION
1		85804375		2	JOINT, UNIVERSAL
2		16102311		2	NUT RH
3		16102311		4	NUT CL 10, M8 x 1.25
4		16102911		2	NUT LH
5		85804376		2	JOINT, UNIVERSAL LH
6	1	85804151		2	TIE-ROD
7		16043621		2	SCREW M8X25
8		11190679		6	WASHER, LOCK
9		85804141		2	SUPPORT
10		85803587		8	BUSHING
11		85804136		2	PEDAL
12		85804153		2	PIN
13		14499521		2	WASHER
14		N663109S2		2	RING, SNAP
15		15970721		6	SCREW
16		16100811		2	NUT CL 5, M8 x 1.25

(1) Includes 1, 2, 4, 5

Mechanical Version

390	01	p1	12/05

LOADER CONTROL VALVE, TWO SECTION, LEVER & DECAL

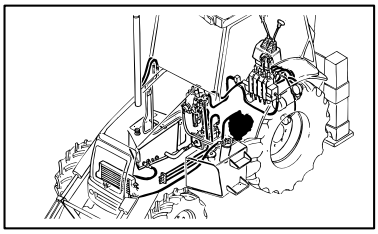

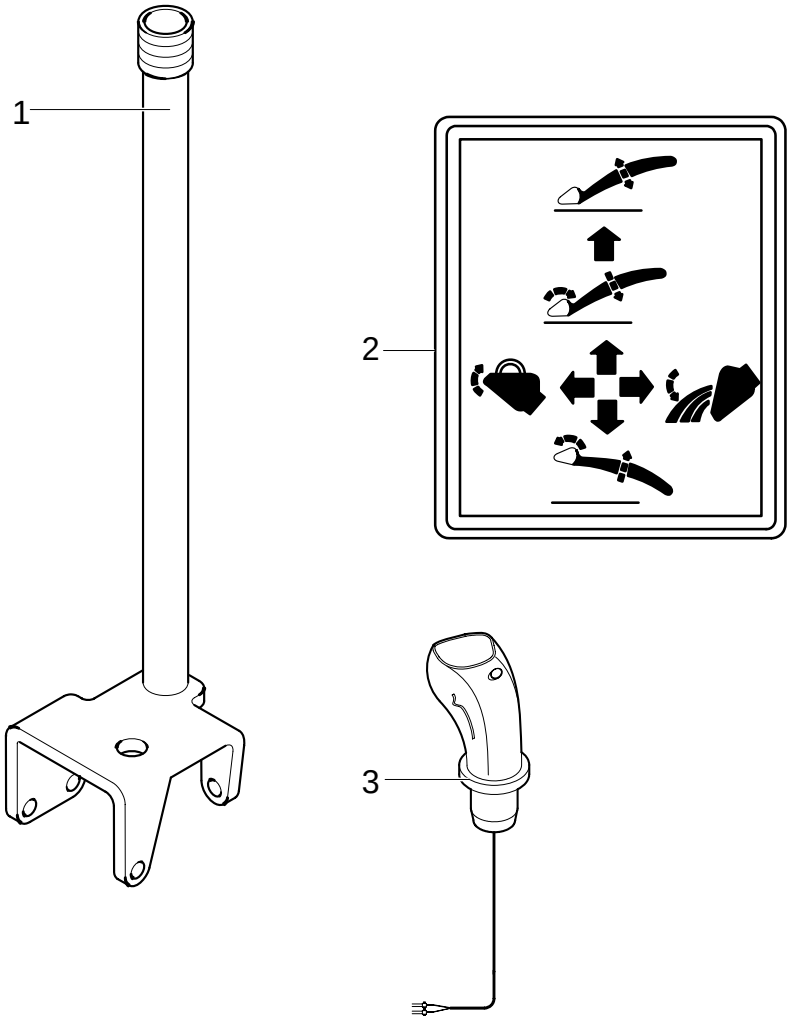

LOADER CONTROL VALVE, TWO SECTION, LEVER & DECAL

REF	FN	PART NUMBER	YR/SN	QTY	DESCRIPTION
1	1	85802617		1	LEVER
1	2	87312049		1	LEVER
2		85804346		1	DECAL
3	3	87311102		1	MANIPULATOR
3	4	87311103		1	MANIPULATOR

(1) UP TO S/N XXX
(2) FROM TO S/N XXX
(3) Only for POWER SHIFT
(4) Only for POWER SHUTTLE

390/ 1	01	p1	12/05

2 LEVER BACKHOE CONTROLS, LEVER, BOOT & DECALS (CENTER PIVOT)

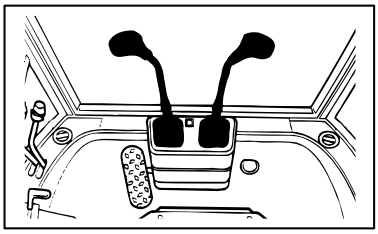

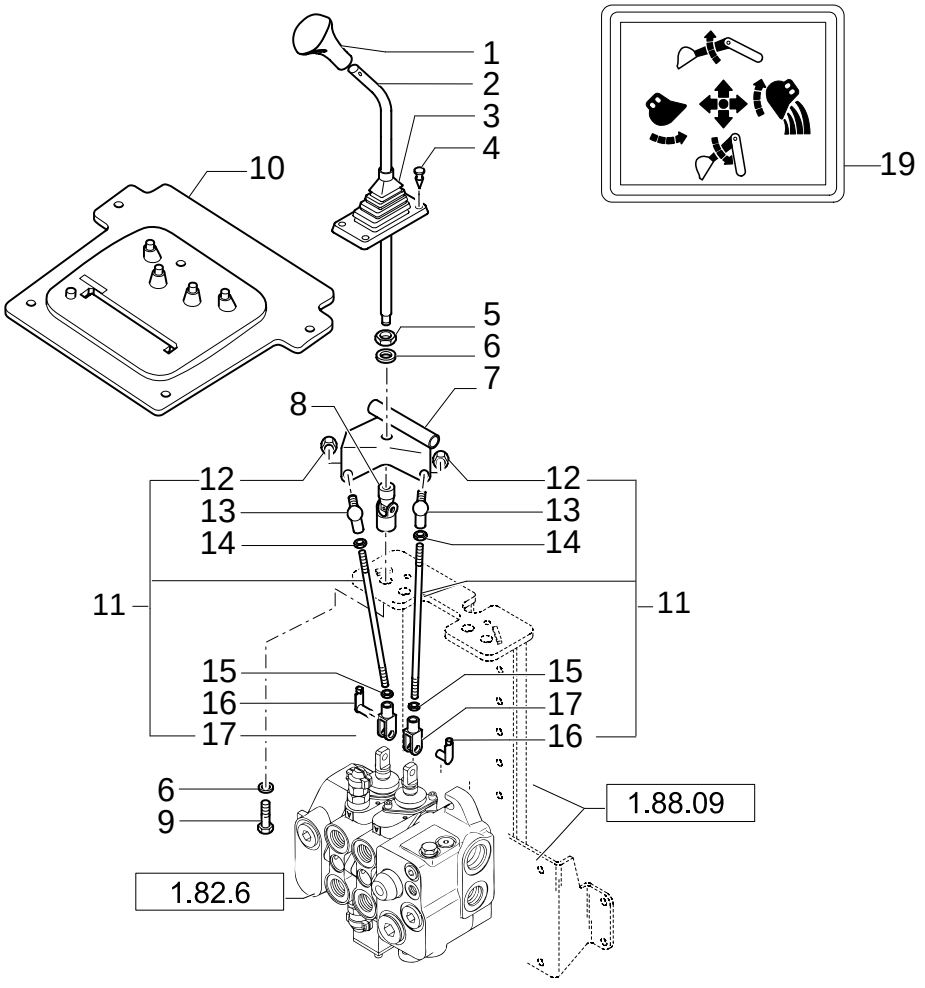

2 LEVER BACKHOE CONTROLS, LEVER, BOOT & DECALS (CENTER PIVOT)

REF	FN	PART NUMBER	YR/SN	QTY	DESCRIPTION
1		85801502		1	KNOB
1		85802682		1	KNOB W/SWITCH
2		85801488		2	ARM, TRIP
3		85802843		1	BOOT
4		14568887		4	BUTTON
5		16101511		2	NUT
6		11190779		4	WASHER, LOCK
7		85803107		1	BRACKET RH
7		85803124		1	BRACKET LH
8		85801518		2	JOINT, UNIVERSAL
9		15540321		2	SCREW Cap, HH, CL 8.8, M12 x 1.25 x 25
10		85804540		1	BOOT W/CAB
11		85801514		4	TIE-ROD
11	1	85805237		1	TIE-ROD
12		14048211		4	NUT
13		85804375		4	JOINT, UNIVERSAL
14		16102311		4	NUT
15		16102911		4	NUT
16		85802738		4	PIN
17		11991971		4	YOKE
18		85804345		1	DECAL
19		85804344		1	DECAL

(1) Only for LB 90.B

Mechanical Version

393	01	p1	12/05

2 LEVER BACKHOE CONTROLS, LEVER, BOOT & DECALS

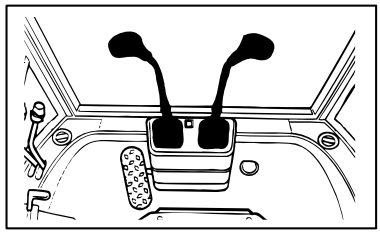

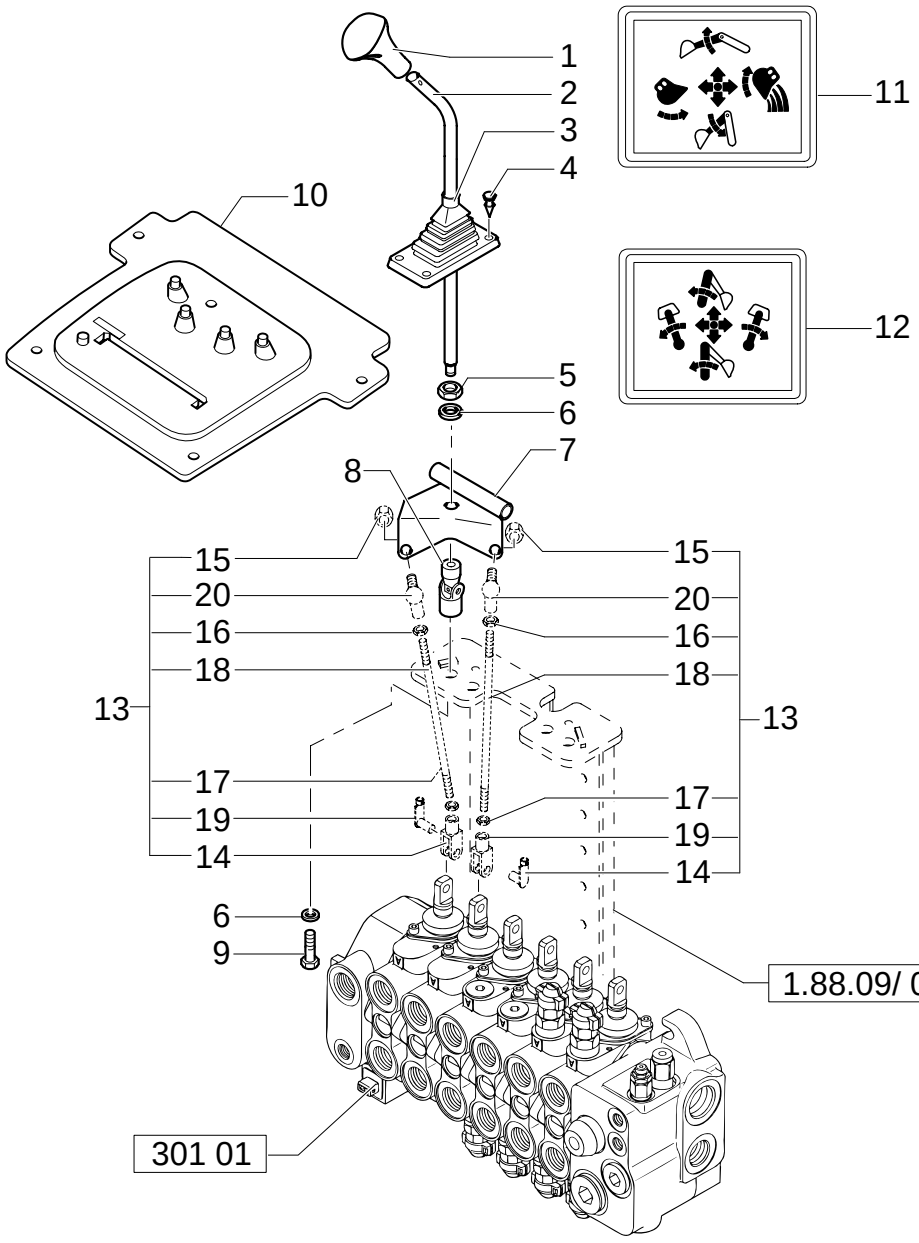

2 LEVER BACKHOE CONTROLS, LEVER, BOOT & DECALS

REF	FN	PART NUMBER	YR/SN	QTY	DESCRIPTION
1		85801502		1	KNOB REAR CONTROL
1		85802682		1	KNOB FOR SWITCH - REAR CONTROL
2		85801488		2	ARM, TRIP
3		85802843		2	BOOT
4		14568887		8	BUTTON
5		16101511		2	NUT
6		11190779		4	WASHER, LOCK 12x24x2.8
7		85803124		1	BRACKET LH
7		85803107		1	BRACKET RH
8		85801518		2	JOINT, UNIVERSAL
9		15540321		2	SCREW Cap, HH, CL 8.8, M12 x 1.25 x 25
10		85804540		1	BOOT
11		85804344		1	DECAL
12		85804345		1	DECAL
13		85801514		4	TIE-ROD
14		11991971		1	YOKE
15		14048211		1	NUT M8x1.25
16		16102311		1	NUT M8x1.25
17		16102911		1	NUT M8
18		85801515		1	TIE-ROD
19		85802738		1	PIN
20		85804375		1	JOINT, UNIVERSAL

Mechanical Version

393	03	p1	12/05

LOCKING VALVE ON BACKHOE LIFT CYLINDER

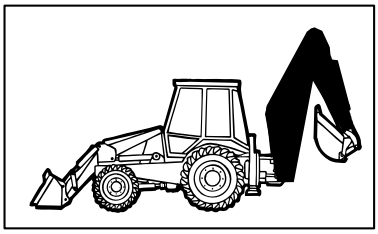

KIT KIT KIT 2=●

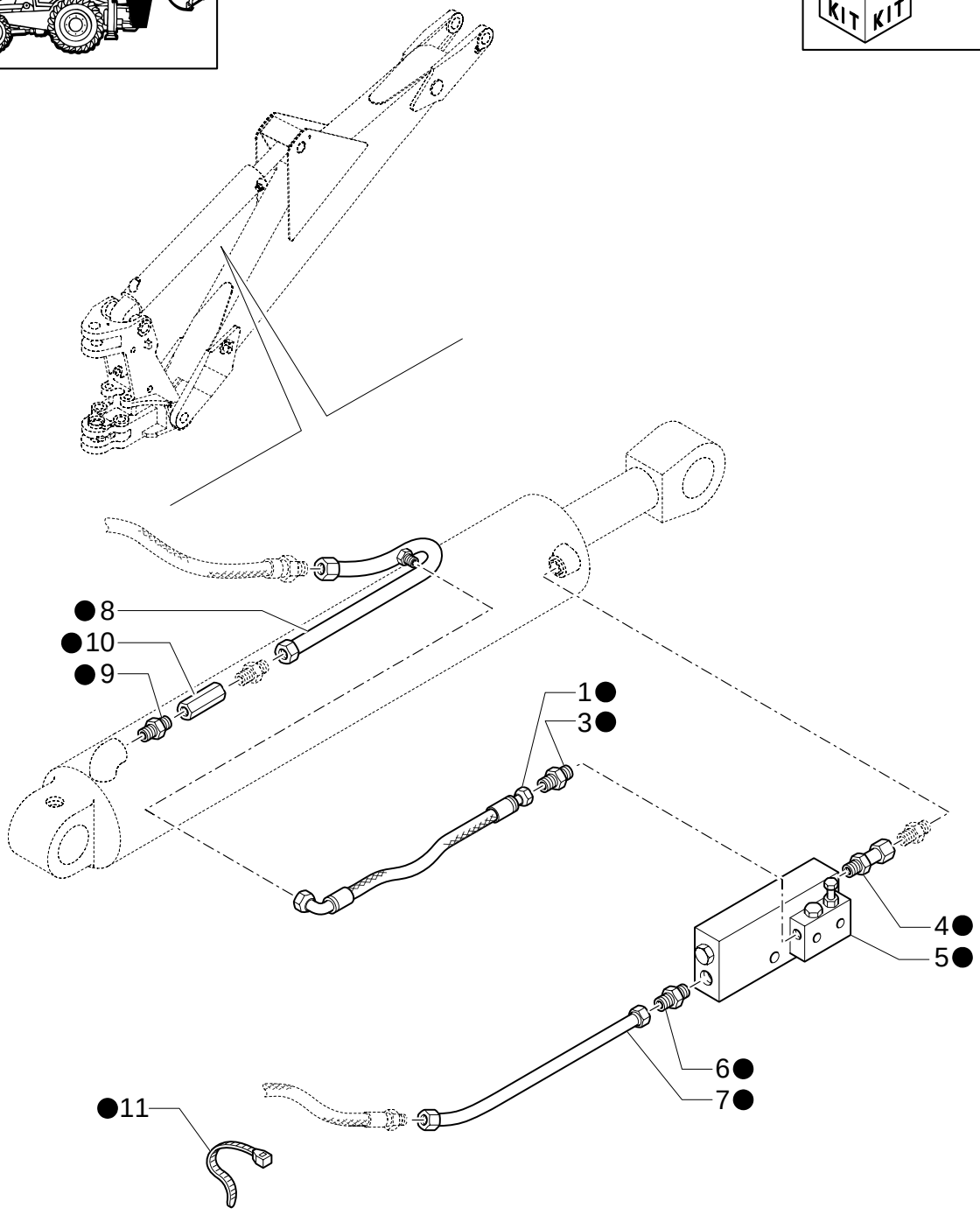

LOCKING VALVE ON BACKHOE LIFT CYLINDER

REF	FN	PART NUMBER	YR/SN	QTY	DESCRIPTION
1		85815505		1	HOSE, FLEXIBLE
2		{87356233}		1	
3		85802803		1	CONNECTOR, HYD.
4		85805124		1	CONNECTOR, HYD.
5		87353316		1	VALVE, SAFETY ASSY
6		390828S36		1	CONNECTOR, HYD.
7		85820835		1	TUBE, RIGID
8		85820836		1	TUBE, RIGID
9		85804879		1	CONNECTOR, HYD.
10		85824308		1	VALVE, HYDRAULIC
11		79072960		2	COLLAR

394	01	p1	12/05

ISO 2 LEVER BACKHOE CONTROLS, LEVERS, BOOT & DECALS (CENTER PIVOT)

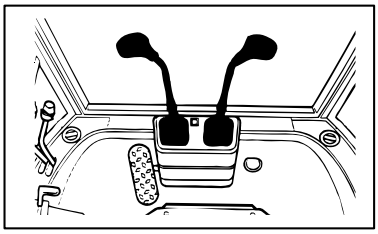

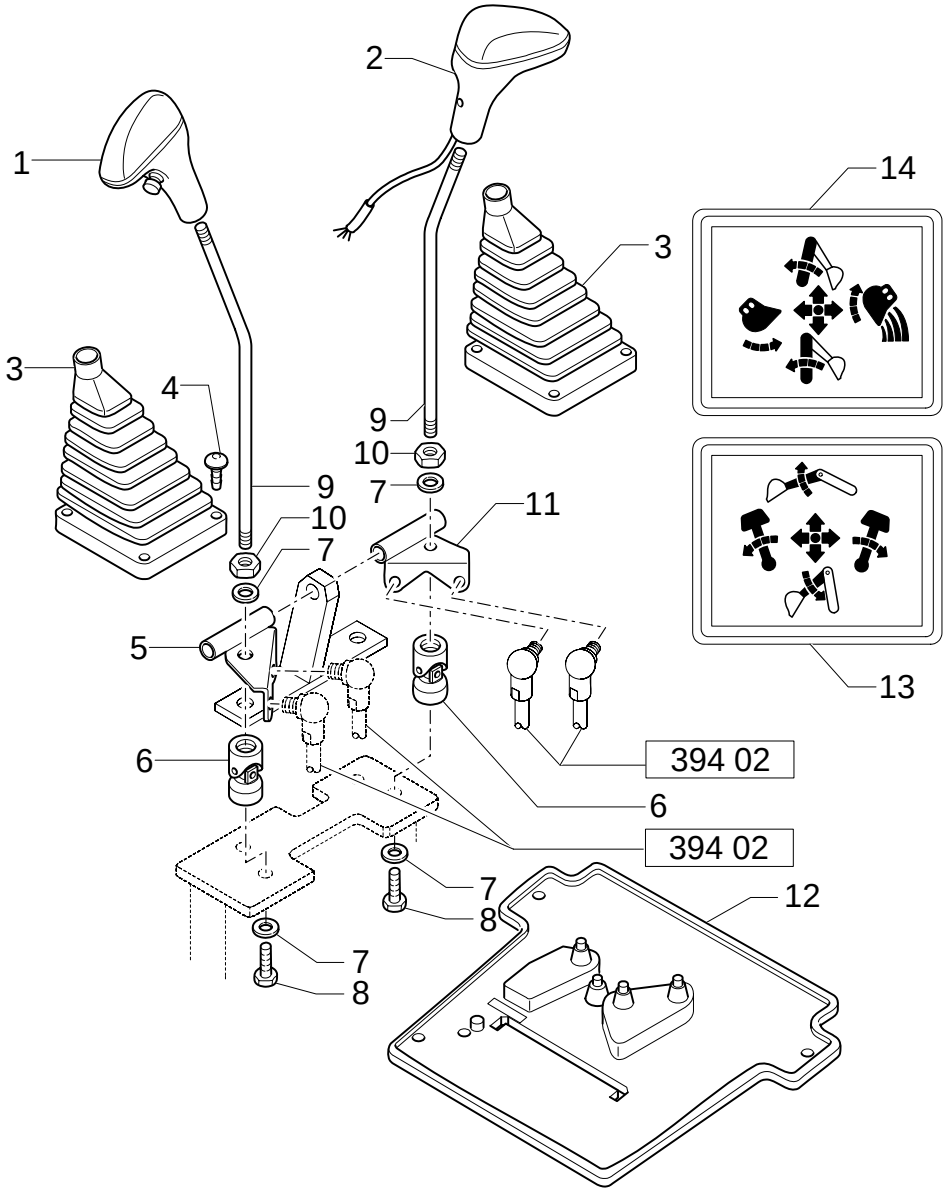

ISO 2 LEVER BACKHOE CONTROLS, LEVERS, BOOT & DECALS (CENTER PIVOT)

REF	FN	PART NUMBER	YR/SN	QTY	DESCRIPTION
1		85801502		1	KNOB
2		85802682		1	KNOB
3		85802843		2	BOOT
4		14568887		8	BUTTON 8X20
5		85803124		1	BRACKET L.H.
6		85801518		2	JOINT, UNIVERSAL
7		11190779		4	WASHER, LOCK
8		15540321		2	SCREW Cap, HH, CL 8.8, M12 x 1.25 x 25
9		85801488		2	ARM, TRIP
10		16101511		2	NUT M12X1.25
11		85803107		1	BRACKET R.H.
12		85804541		1	BOOT W/CAB
13		85803782		1	DECAL
14		85803783		1	DECAL

Mechanical Version

394	02	p1	12/05

ISO 2 LEVER BACKHOE CONTROLS, TIE-ROD ASSEMBLY (CENTER PIVOT)

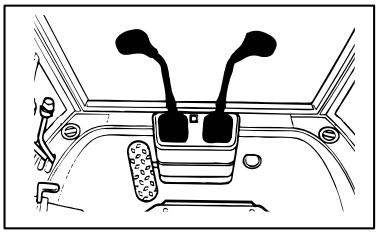

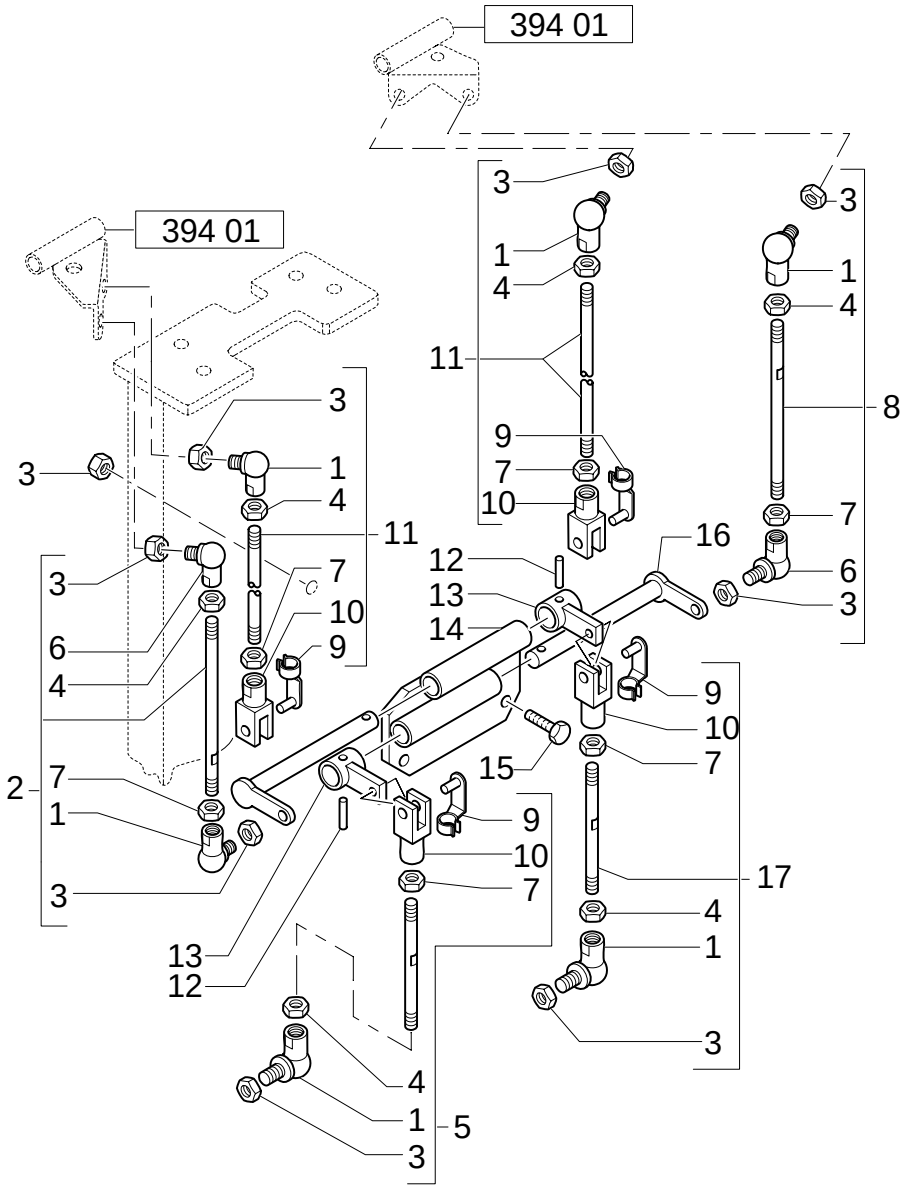

ISO 2 LEVER BACKHOE CONTROLS, TIE-ROD ASSEMBLY (CENTER PIVOT)

REF	FN	PART NUMBER	YR/SN	QTY	DESCRIPTION
1		85804375		6	JOINT, UNIVERSAL
2		85803474		1	TIE-ROD
3		14048211		9	NUT M8x1.25
4		16102311		6	NUT M8x1.25
5		85803479		1	ROD, THREADED
5	1	85805806		1	TIE-ROD
6		85804376		2	JOINT, UNIVERSAL
7		16102911		6	NUT M8
8		85803477		1	TIE-ROD, THREADED
9		85802738		4	PIN
10		11991971		4	YOKE L.H.
11		85801514		2	TIE-ROD
12		13940370		2	PIN, ROLL
13		85803492		2	LEVER, IDLER
13	1	85805866		2	LEVER, IDLER
14		85803493		1	SUPPORT
15		16043621		3	SCREW M8x25
16		85803489		2	PIN
17		85803476		1	TIE-ROD, THREADED
17	1	85805867		1	TIE-ROD

(1) Only for LB90.B

Mechanical Version

394/ 1	01	p1	08/05

4 LEVER BACKHOE CONTROLS, CONSOLE, LEVERS & BELLCRANK (CENTER PIVOT)

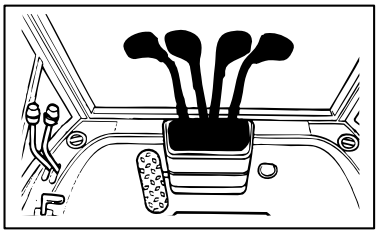

KIT ● = 19

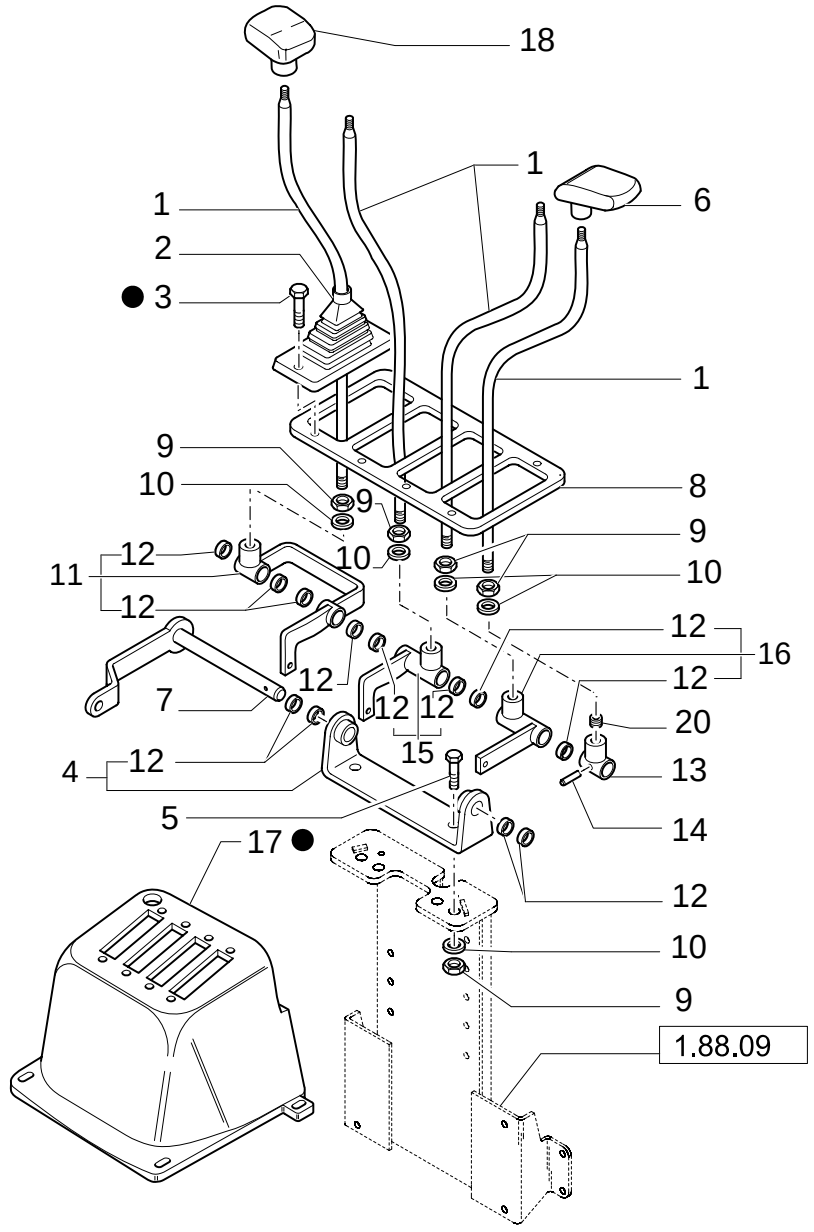

4 LEVER BACKHOE CONTROLS, CONSOLE, LEVERS & BELLCRANK (CENTER PIVOT)

REF	FN	PART NUMBER	YR/SN	QTY	DESCRIPTION
1		85804780		4	ARM, TRIP
2		85803382		4	BOOT
3		13272477		8	SCREW
4		85802647		1	SUPPORT
5		15540421		2	SCREW
6		83962918		2	HANDLE LH
7		85804782		1	PIN
8		85803540		1	PLATE
9		16101511		6	NUT M12X1,25
10		11190779		6	WASHER, LOCK
11		85804801		1	LEVER, IDLER
12		85802494		12	BUSHING
13		85804787		1	LEVER, IDLER
14		13940370		1	PIN, ROLL
15		85804794		1	LEVER, IDLER
16		85804791		1	LEVER, IDLER
17		87319744		1	DASHBOARD
18		83962919		2	HANDLE RH
19		{87319741}		1	

Mechanical Version

394/ 1	02	p1	02/05

4 LEVER BACKHOE CONTROLS, UPPER TIE-ROD ASSEMBLY, CENTER PIVOT

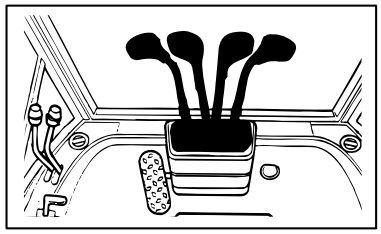

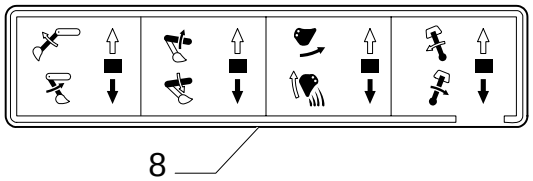

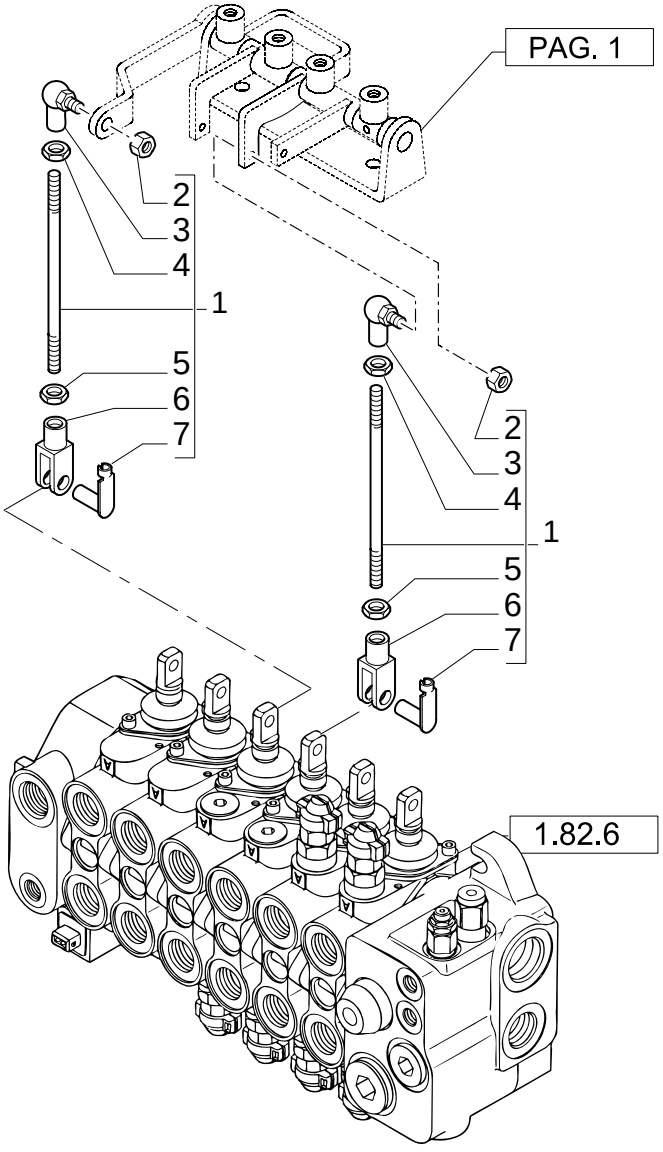

4 LEVER BACKHOE CONTROLS, UPPER TIE-ROD ASSEMBLY, CENTER PIVOT

REF	FN	PART NUMBER	YR/SN	QTY	DESCRIPTION
1		85804803		3	TIE-ROD
2		14048211		3	NUT
3		85804375		3	JOINT, UNIVERSAL
4		16102311		3	NUT
5		16102911		3	NUT
6		11991971		3	YOKE
7		85802738		3	PIN
8		85803917		1	DECAL

Mechanical Version

394/ 1	03	p1	02/05

4 LEVER BACKHOE CONTROLS, LOWER TIE-ROD ASSEMBLY (CENTER PIVOT)

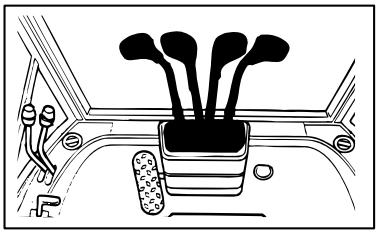

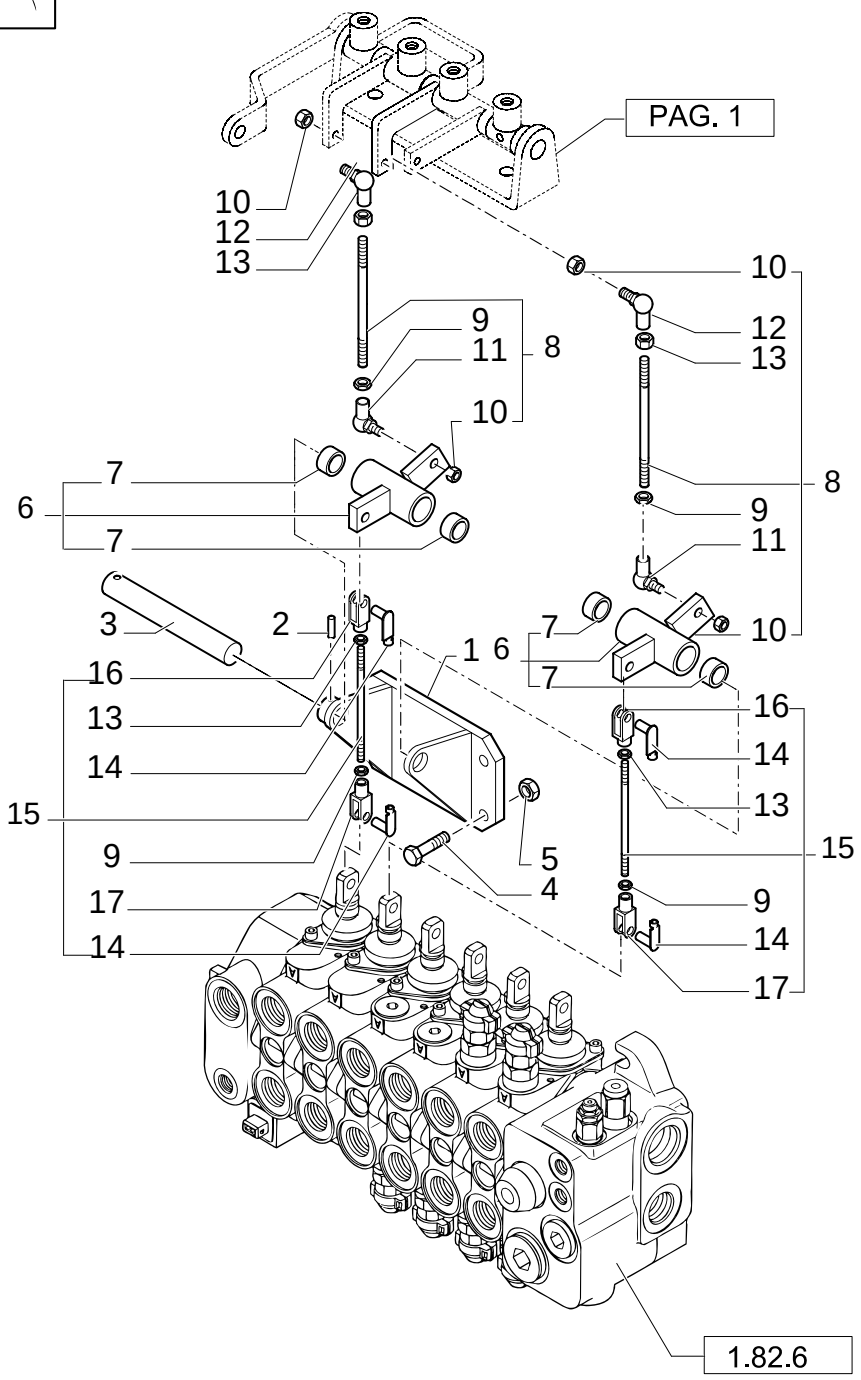

4 LEVER BACKHOE CONTROLS, LOWER TIE-ROD ASSEMBLY (CENTER PIVOT)

REF	FN	PART NUMBER	YR/SN	QTY	DESCRIPTION
1		85803360		1	SUPPORT
2		13940370		1	PIN, ROLL
3		85803364		1	PIN
4		16043621		4	SCREW M8X25
5		16104111		4	NUT
6		85807926		2	LEVER, IDLER
7		85802494		4	BUSHING
8		85804736		2	TIE-ROD
9		16102911		4	NUT
10		14048211		4	NUT
11		85804376		2	JOINT, UNIVERSAL
12		85804375		2	JOINT, UNIVERSAL
13		16102311		6	NUT
14		85802738		4	PIN
15		85803447		2	TIE-ROD
16		10007871		2	YOKE
17		11991971		2	YOKE

Mechanical Version

622	01	p1	02/05

INTERNAL FAN

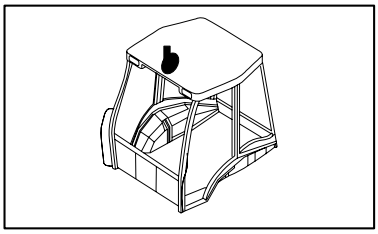

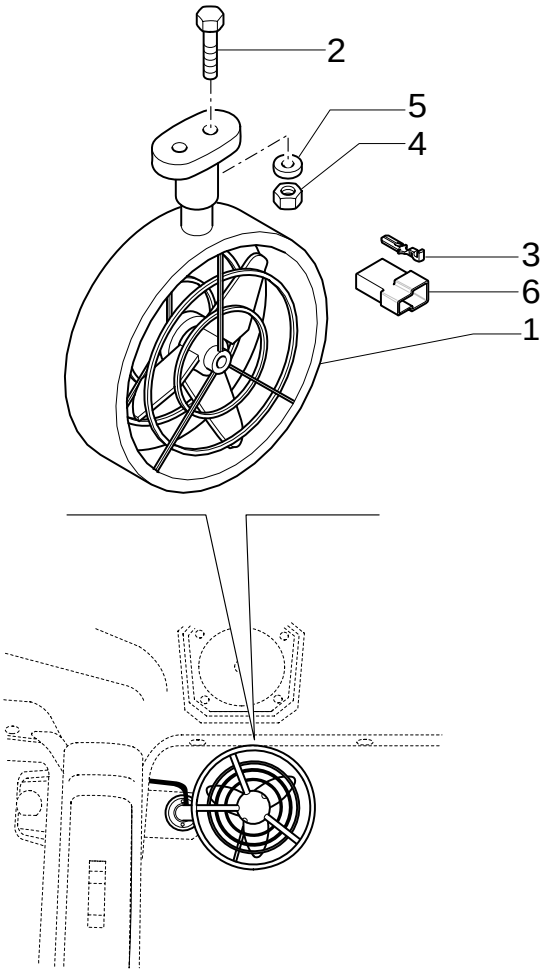

INTERNAL FAN

REF	FN	PART NUMBER	YR/SN	QTY	DESCRIPTION
1		85804323		1	FAN
2		14303324		2	SCREW M4X20
3		10250644		2	CABLE TERMINAL
4		12574011		2	NUT M4
5		12642804		2	WASHER
6		12059980		1	JOINT, UNIVERSAL

646/1	01	p1	06/05

MACHINE PART AIR CONDITIONING SET

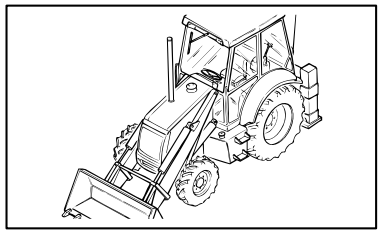

MACHINE PART AIR CONDITIONING SET

REF	FN	PART NUMBER	YR/SN	QTY	DESCRIPTION
1	1	87315364		1	HOSE, FLEXIBLE
2	1	87315368		1	HOSE, FLEXIBLE
3	2	87315371		1	HOSE, FLEXIBLE
4	3	87315381		1	HOSE, FLEXIBLE
5		85817287		1	STRIP-GASKET
6		14560187		2	COLLAR
7		47048451		4	COLLAR
8		85805013		4	O-RING
9		85805006		1	O-RING
10		85817186		2	O-RING
11		85805014		1	O-RING

(1) Includes 8 in q.ty 2
(2) Includes 9, 10 in q.ty 1
(3) Includes 10 in q.ty 1, 11

From To S/N XXX

646/1	02	p1	11/05

A/C COMPRESSOR ATTACHING GROUP

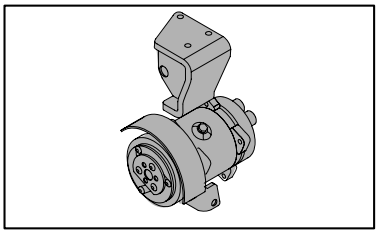

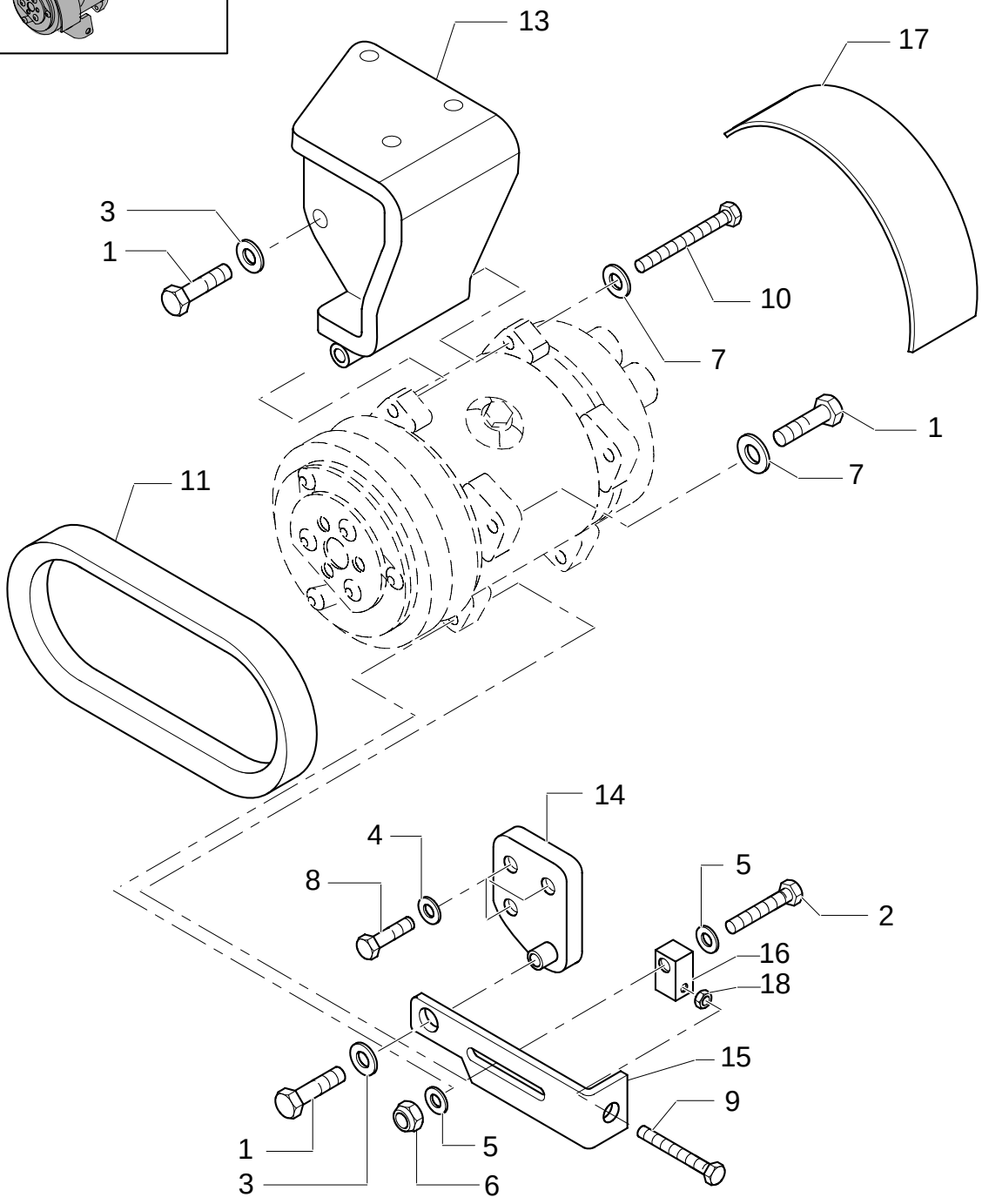

A/C COMPRESSOR ATTACHING GROUP

REF	FN	PART NUMBER	YR/SN	QTY	DESCRIPTION
1		11106421		3	SCREW
2		11107421		1	SCREW
3		11190574		2	WASHER, LOCK
4		11193874		3	WASHER, LOCK
5		14496601		2	WASHER
6		12577211		1	NUT
7		12601471		2	WASHER, LOCK
8		16043621		3	SCREW
9		15214521		1	SCREW
10		11108821		1	SCREW
11		87304910		1	BELT
13		87315441		1	SUPPORT
14		87315446		1	SUPPORT
15		87315457		1	TENSIONER, BELT
16		87315459		1	BLOCK
17		87315460		1	GUARD
18		16102211		1	NUT

From To S/N XXX

646/1	03	p1	05/05

A/C COMPRESSOR

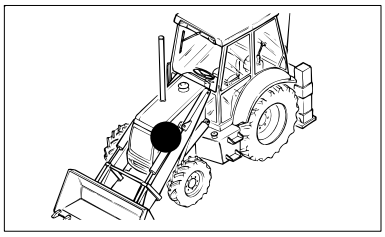

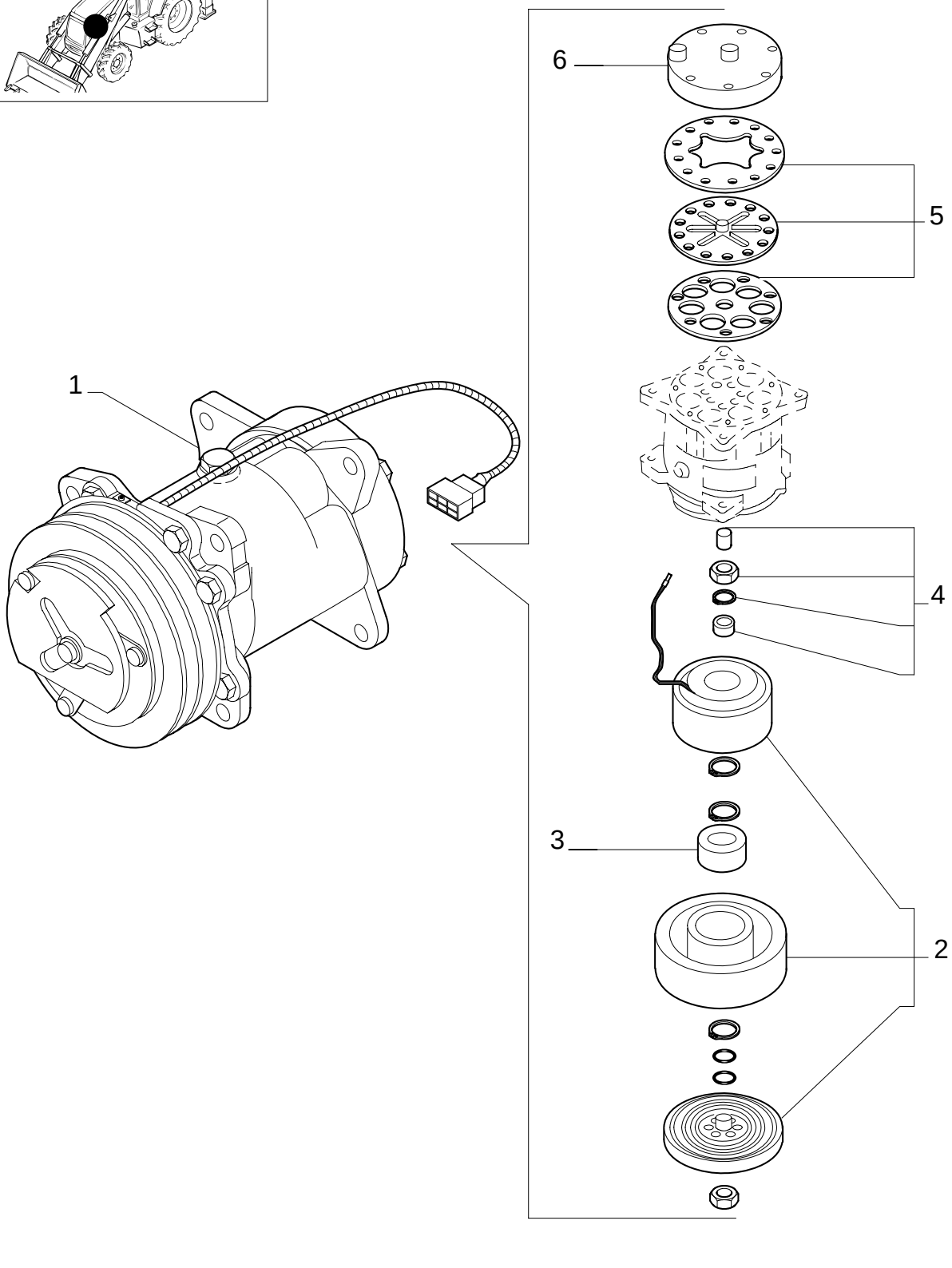

A/C COMPRESSOR

REF	FN	PART NUMBER	YR/SN	QTY	DESCRIPTION
1		85817170		1	COMPRESSOR, AIRCOND. (SD7H15) ASSY
2		85817171		1	KIT
3		85817172		3	BEARING ASSY
4		85817173		1	KIT
5		85817174		1	KIT
6		85817175		1	KIT

646/1	04	p1	08/05

A/C FILTER & CONDENSER ATTACHING GROUP

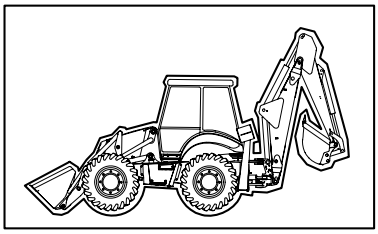

A/C FILTER & CONDENSER ATTACHING GROUP

REF	FN	PART NUMBER	YR/SN	QTY	DESCRIPTION
1		14496534		4	WASHER
2		16043421		2	SCREW
3		16104111		2	NUT
4		87315252		1	BRACKET
5		85819184		7	SCREW
6	1	85804065		1	SENDER UNIT
7		87315214		1	BRACKET
8		87315219		1	BRACKET
9		87315221		1	BRACKET RH
10		87315225		1	BRACKET LH
11		87315236		1	BRACKET
12		87315239		2	COLLAR
13		87314566		1	CONDENSER
14		87315241		1	FILTER, AIR
15		16043621		4	SCREW
16		85819185		1	GASKET
17	2	87319438		1	SUPPORT
18	2	14040711		8	WASHER
19	2	87319441		1	SUPPORT

(1) Includes 20
(2) Only For Version Without Intercooler

From To S/N XXX

646A	01	p1	02/05

A/C COMPRESSOR ATTACHING GROUP

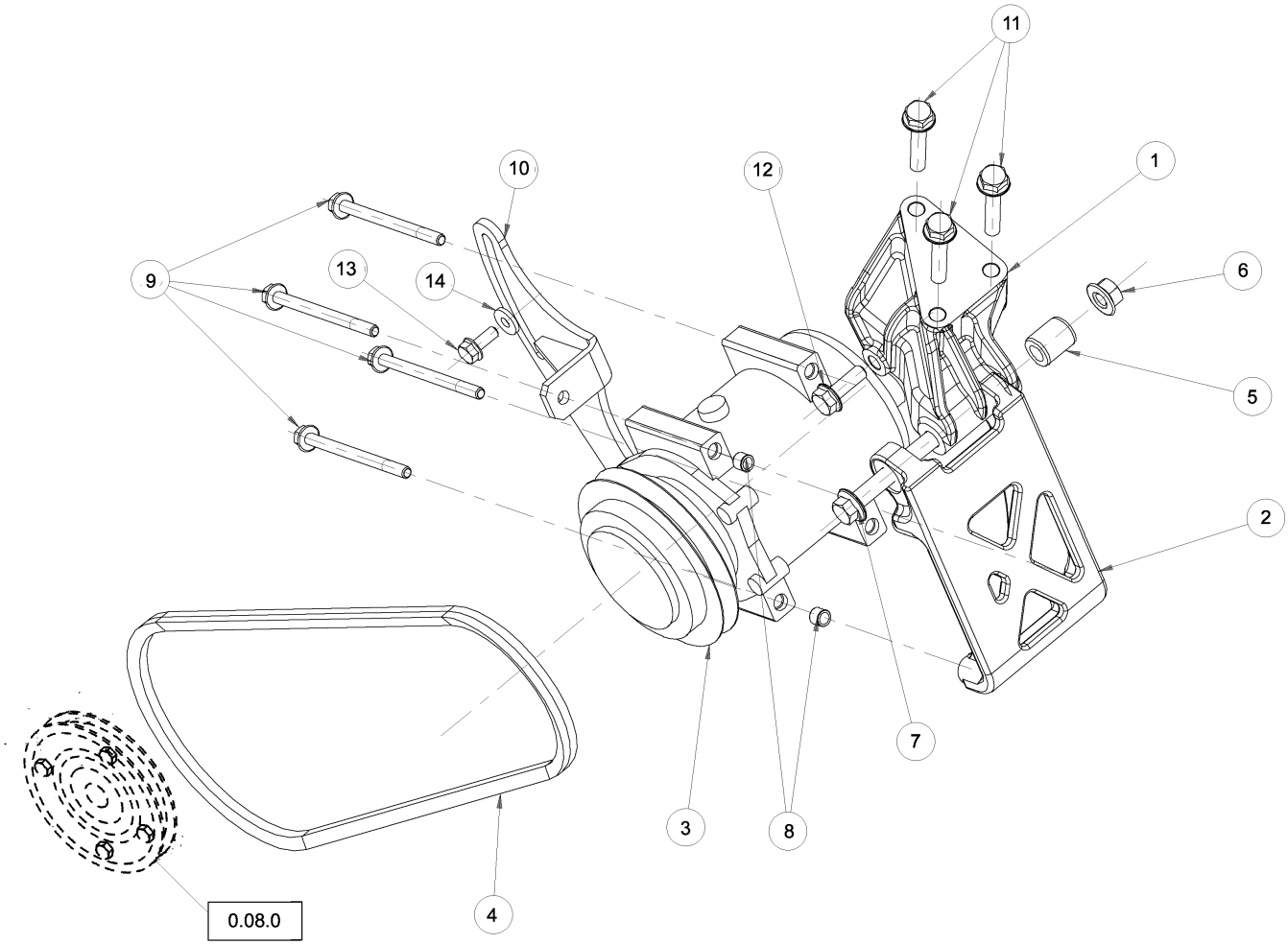

A/C COMPRESSOR ATTACHING GROUP

REF	FN	PART NUMBER	YR/SN	QTY	DESCRIPTION
1		2852622		1	SUPPORT
2		2852623		1	SUPPORT
3		87430122		1	COMPRESSOR, AIRCOND.
4		2852625		1	BELT
5		98433179		1	SPACER
6		17044921		1	NUT M12
7		2852925		1	SCREW
8		4895227		2	DOWEL
9		2852628		4	SCREW
10		2852629		1	TENSIONER
11		2852630		3	SCREW
12		16675834		1	SCREW
13		87803136		1	SCREW
14		12647121		1	WASHER

Up To S/N XXX

STEERING COLUMN, FIXED & ADJUSTABLE

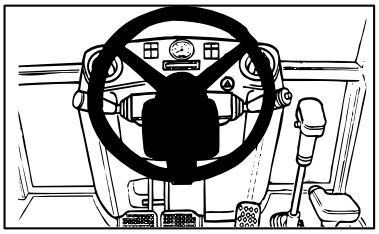

EQUIP.650

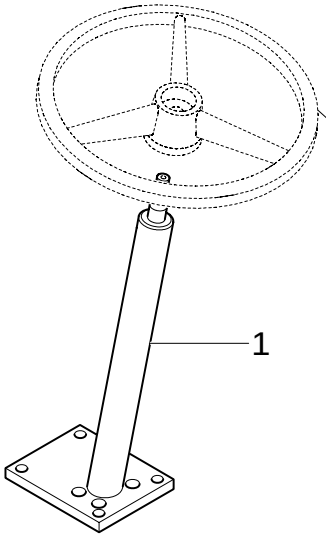

EQUIP.651

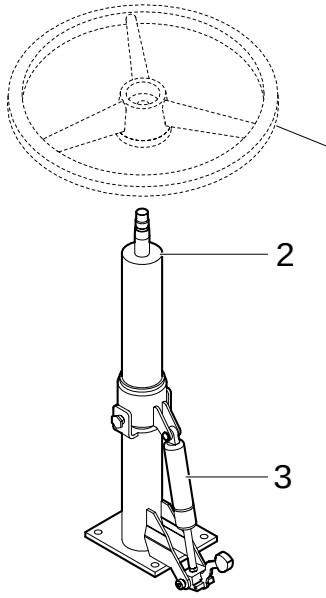

STEERING COLUMN, FIXED & ADJUSTABLE

REF	FN	PART NUMBER	YR/SN	QTY	DESCRIPTION
1	1	85804706		1	STEERING COLUMN
1	2	87324864		1	STEERING COLUMN
2	1	85805545		1	STEERING COLUMN
2	2	87324867		1	STEERING COLUMN
3	1	85824197		1	GAS STRUT
3	2	87328136		1	SHOCK ABSORBER

(1) UP TO S/N XXX
(2) FROM TO S/N XXX

705	01	p1	02/05

SEAT BELTS, 2" & 3"

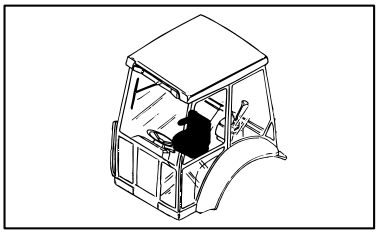

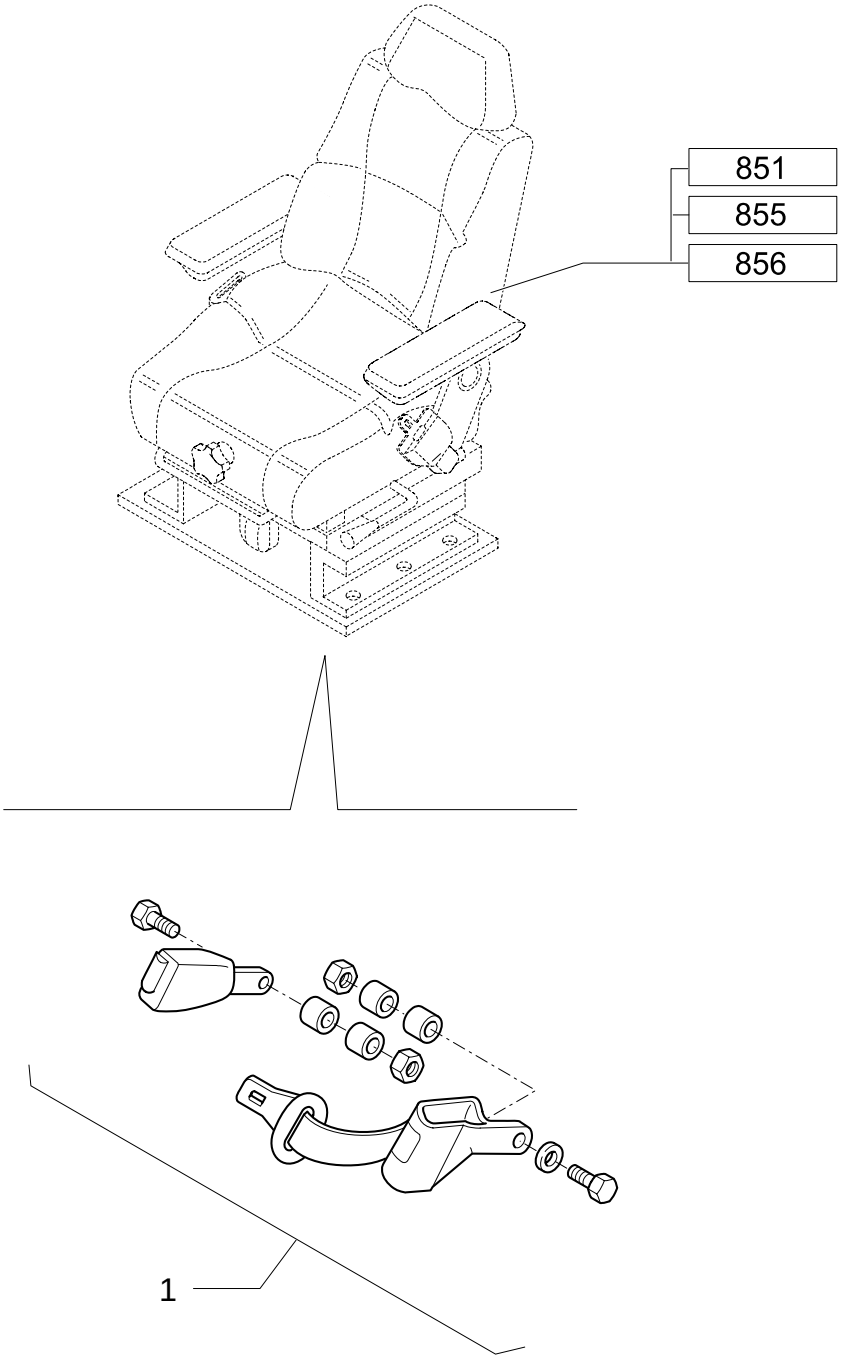

SEAT BELTS, 2" & 3"

REF	FN	PART NUMBER	YR/SN	QTY	DESCRIPTION
1		85815578		1	SEAT BELT 2" (EQUIP.705)
1		85815579		1	SEAT BELT 3" (EQUIP.706)

758	01	p1	02/05

ROTATING BEACON

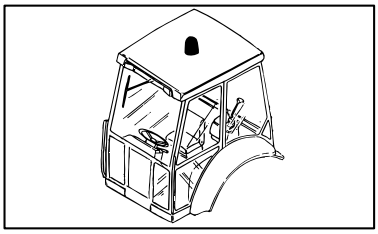

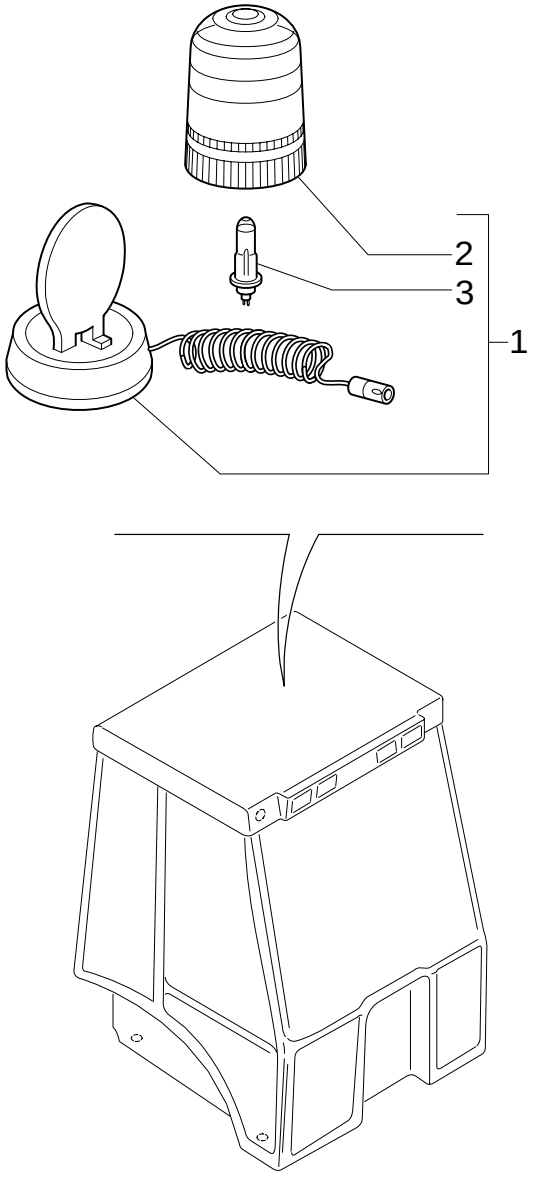

ROTATING BEACON

REF	FN	PART NUMBER	YR/SN	QTY	DESCRIPTION
1		85817129		1	BEACON, ROTATING
2		85817131		1	LENS
3		85817130		1	BULB

782	01	p1	02/05

FRONT CONSOLE WITH SPEEDOMETER, 4WD

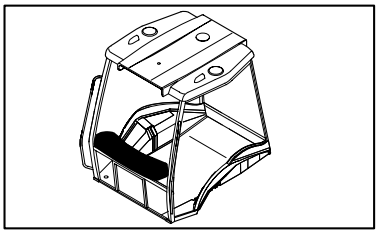

FRONT CONSOLE WITH SPEEDOMETER, 4WD

REF	FN	PART NUMBER	YR/SN	QTY	DESCRIPTION
1		85817587		1	INSTRUMENT CLUSTER
2		85804156		1	SENSOR

787/ 1	01	p1	02/05

FRONT CONSOLE WITHOUT SPEEDOMETER (CAB)

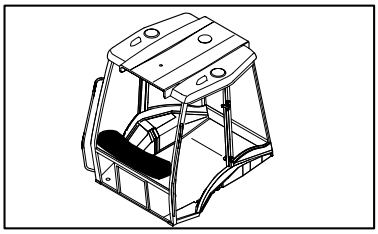

FRONT CONSOLE WITHOUT SPEEDOMETER (CAB)

REF	FN	PART NUMBER	YR/SN	QTY	DESCRIPTION
1		85825254		4	PLUG
2		85817586		1	INSTRUMENT CLUSTER
3		85818826		1	DASHBOARD
4		85818827		1	SWITCH
5		14143790		4	BULB
6		85818828		1	SWITCH
7		85819134		1	SWITCH FWD

787/ 2	01	p1	02/05

FRONT CONSOLE WITHOUT SPEEDOMETER (CAB)

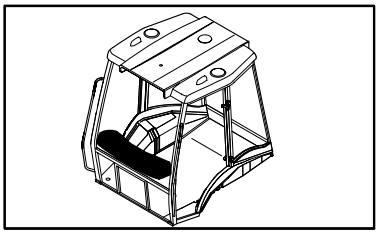

FRONT CONSOLE WITHOUT SPEEDOMETER (CAB)

REF	FN	PART NUMBER	YR/SN	QTY	DESCRIPTION
1		85825254		4	PLUG
2		85817586		1	INSTRUMENT CLUSTER
3		85818827		1	SWITCH
4		14143790		2	BULB
5		85818828		1	SWITCH
6		85818940		1	DASHBOARD

788/ 1	01	p1	02/05

FRONT CONSOLE WITH SPEEDOMETER, 4WD

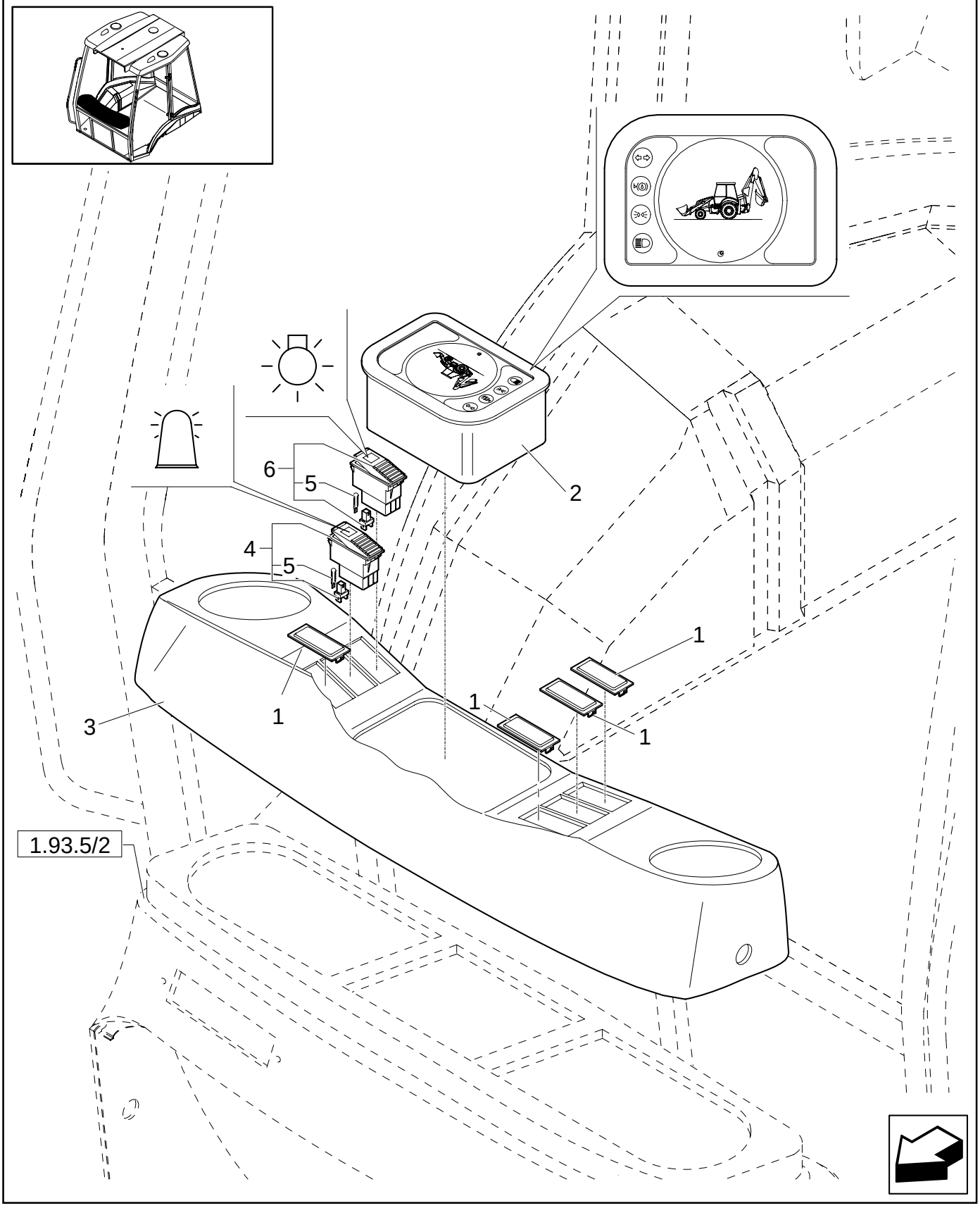

FRONT CONSOLE WITH SPEEDOMETER, 4WD

REF	FN	PART NUMBER	YR/SN	QTY	DESCRIPTION
1		85825254		4	PLUG
2		85817587		1	INSTRUMENT CLUSTER
3		85818826		1	DASHBOARD
4		85818827		1	SWITCH
5		14143790		2	BULB
6		85818828		1	SWITCH

788/ 2	01	p1	02/05

FRONT CONSOLE WITH SPEEDOMETER, 4WD

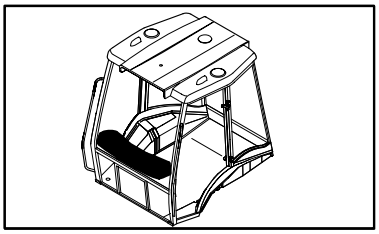

FRONT CONSOLE WITH SPEEDOMETER, 4WD

REF	FN	PART NUMBER	YR/SN	QTY	DESCRIPTION
1		85825254		4	PLUG
2		85817587		1	INSTRUMENT CLUSTER
3		85818827		1	SWITCH
4		14143790		2	BULB
5		85818828		1	SWITCH
6		85818940		1	DASHBOARD

789	01	p1	02/05

SPEED SENSOR(P.SHUTTLE)

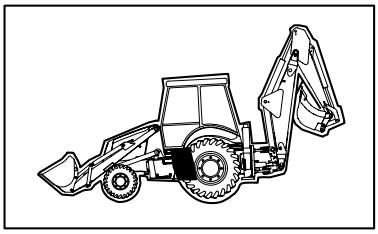

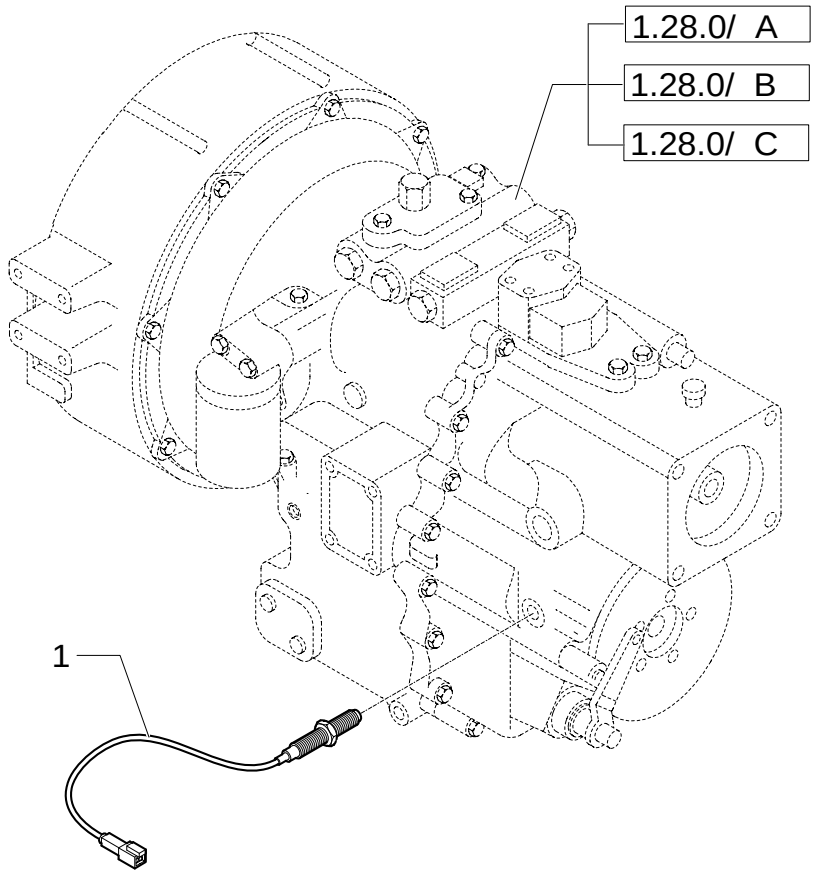

SPEED SENSOR(P.SHUTTLE)

REF	FN	PART NUMBER	YR/SN	QTY	DESCRIPTION
1		85804156		1	SENSOR

791	01	p1	02/05

RH CONSOLE WITH INSTRUMENTS

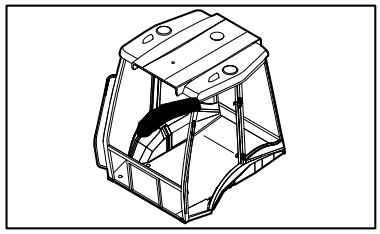

RH CONSOLE WITH INSTRUMENTS

REF	FN	PART NUMBER	YR/SN	QTY	DESCRIPTION
1		85825254		7	PLUG
2		87412250		1	INSTRUMENT CLUSTER
3		85818817		1	DASHBOARD
4		85818818		1	SWITCH
5		14143790		2	BULB
6		85818819		1	SWITCH
7		87431463		1	CABLE, ELECTRIC

792	01	p1	02/05

RH CONSOLE WITH INSTRUMENTS AND DIAGNOSTICS

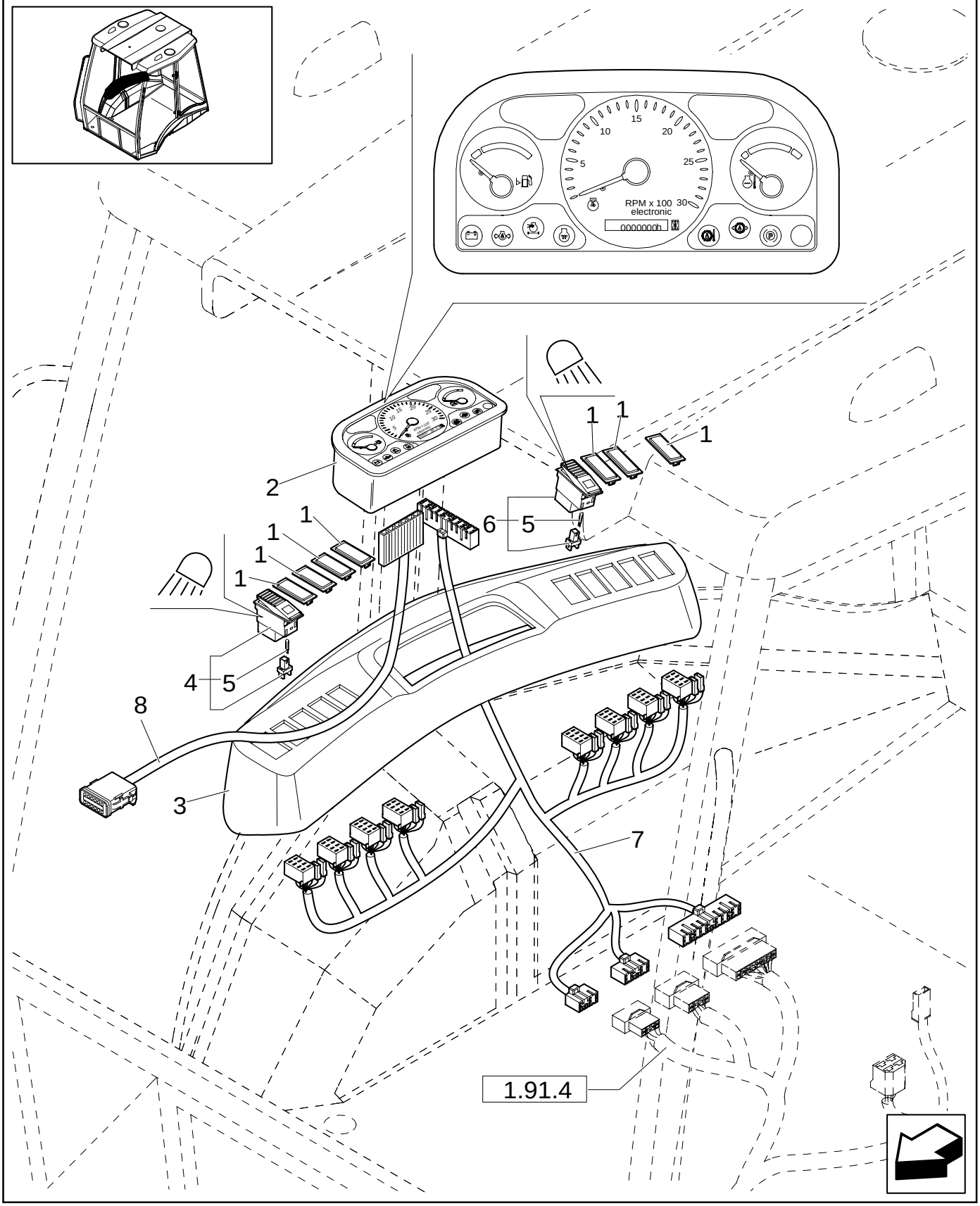

RH CONSOLE WITH INSTRUMENTS AND DIAGNOSTICS

REF	FN	PART NUMBER	YR/SN	QTY	DESCRIPTION
1		85825254		7	PLUG
2		87412252		1	TESTER
3		85818817		1	DASHBOARD
4		85818818		1	SWITCH
5		14143790		2	BULB
6		85818819		1	SWITCH
7		87431463		1	CABLE, ELECTRIC
8		85819214		1	CABLE, ELECTRIC

795	01	p1	02/05

RH CONSOLE WITH INSTRUMENTS AND DIAGNOSTICS

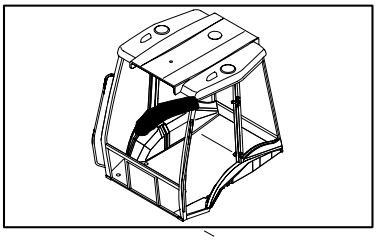

RH CONSOLE WITH INSTRUMENTS AND DIAGNOSTICS

REF	FN	PART NUMBER	YR/SN	QTY	DESCRIPTION
1		85819758		1	TOOL, SPECIAL
2		297449		1	CABLE, ELECTRIC
3		NSS		1	NOT SERVICED SEPARATELY
4		NSS		1	NOT SERVICED SEPARATELY

796	01	p1	02/05

ANTITHEFT

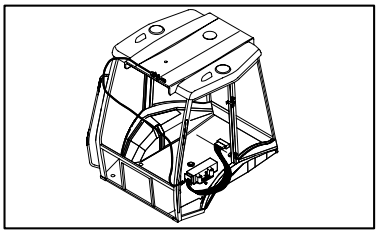

ANTITHEFT

REF	FN	PART NUMBER	YR/SN	QTY	DESCRIPTION
1		85819765		1	KIT
2		12574011		2	NUT
3		12642821		2	WASHER, LOCK
4		14303324		2	SCREW
5		85819766		1	COVER
6		NSS		1	NOT SERVICED SEPARATELY

851/ 2	01	p1	12/05

CLOTH SEAT & ATTACHING HARDWARE - CABINE

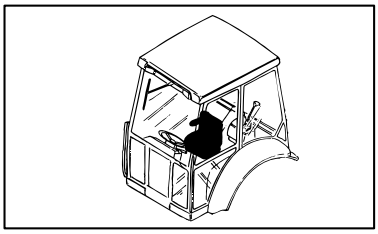

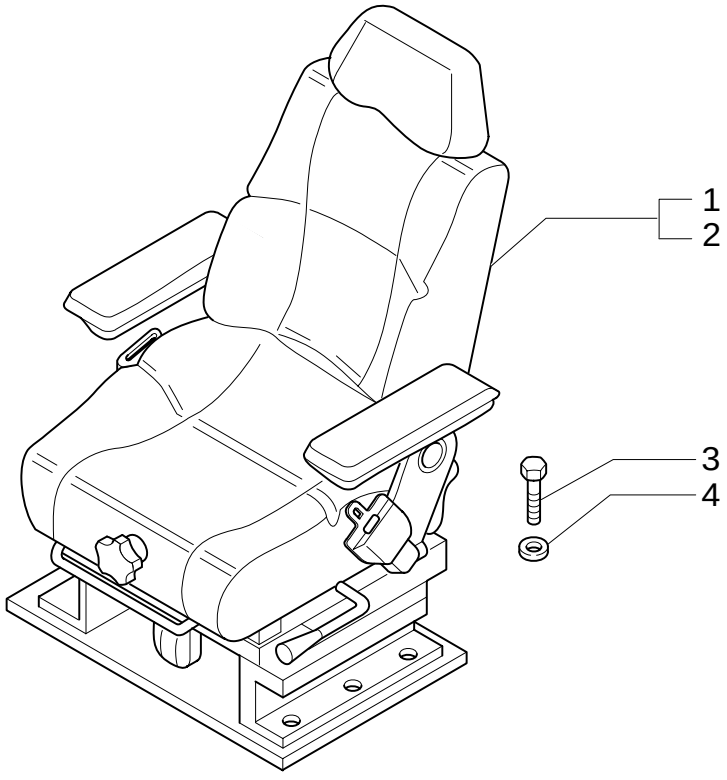

CLOTH SEAT & ATTACHING HARDWARE - CABINE

REF	FN	PART NUMBER	YR/SN	QTY	DESCRIPTION
1	1, 2	87363998		1	SEAT ASSY.
1	1, 3, 4	87364043		1	SEAT ASSY.
2	5, 2	87364212		1	SEAT ASSY.
2	5, 3, 4	87364214		1	SEAT ASSY.
3		16043424		8	SCREW Cap, HH, CL 8.8, M8x1,25x20
4		11198074		8	WASHER, SEALING

(1) Mechanical Control Version
(2) 3" Seat Belt
(3) Only for EUROPE Version
(4) 2" Seat Belt
(5) Pilot Control Version

855/ 2	01	p1	12/05

AIR RIDE CLOTH SEAT & ATTACHING HARDWARE - CABINE

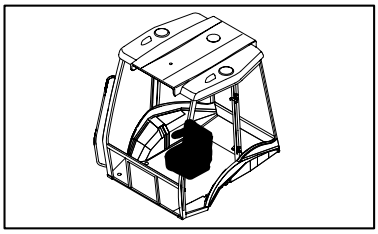

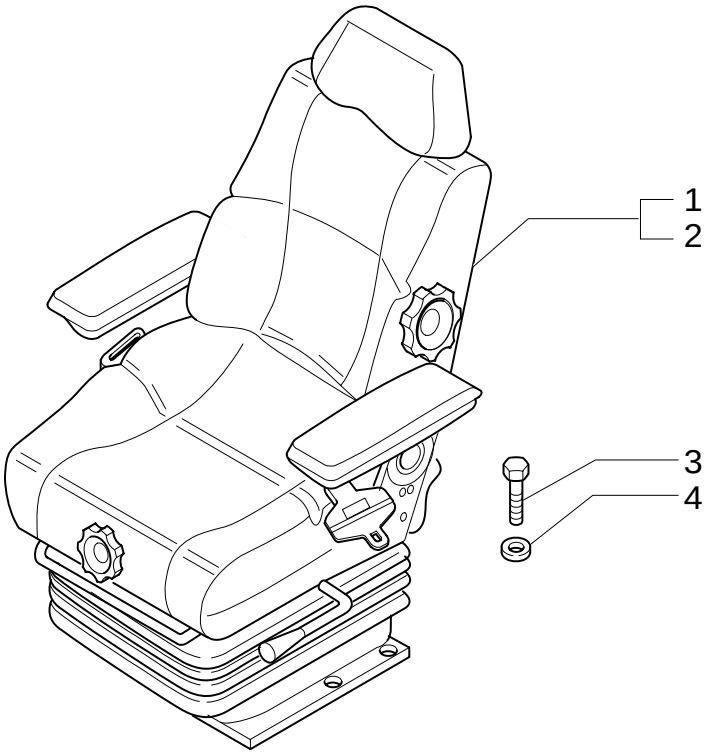

AIR RIDE CLOTH SEAT & ATTACHING HARDWARE - CABINE

REF	FN	PART NUMBER	YR/SN	QTY	DESCRIPTION
1	1, 2, 3	87364045		1	SEAT ASSY.
1	1, 4	87364046		1	SEAT ASSY.
2	5, 2, 3	87364215		1	SEAT ASSY.
2	5, 4	87364216		1	SEAT ASSY.
3		16043424		8	SCREW Cap, HH, CL 8.8, M8x1.25x20
4		11198074		8	WASHER, SEALING

(1) Mechanical Control Version
(2) Only for EUROPE Version
(3) 2" Seat Belt
(4) 3" Seat Belt
(5) Pilot Control Version

856	01	p1	12/05

VINYL SEAT CUSHIONS, ARMRESTS & RELATED PARTS (ROPS)

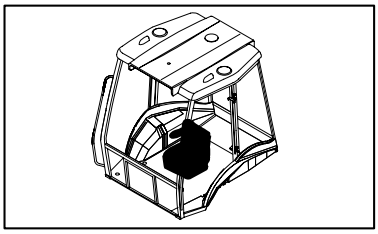

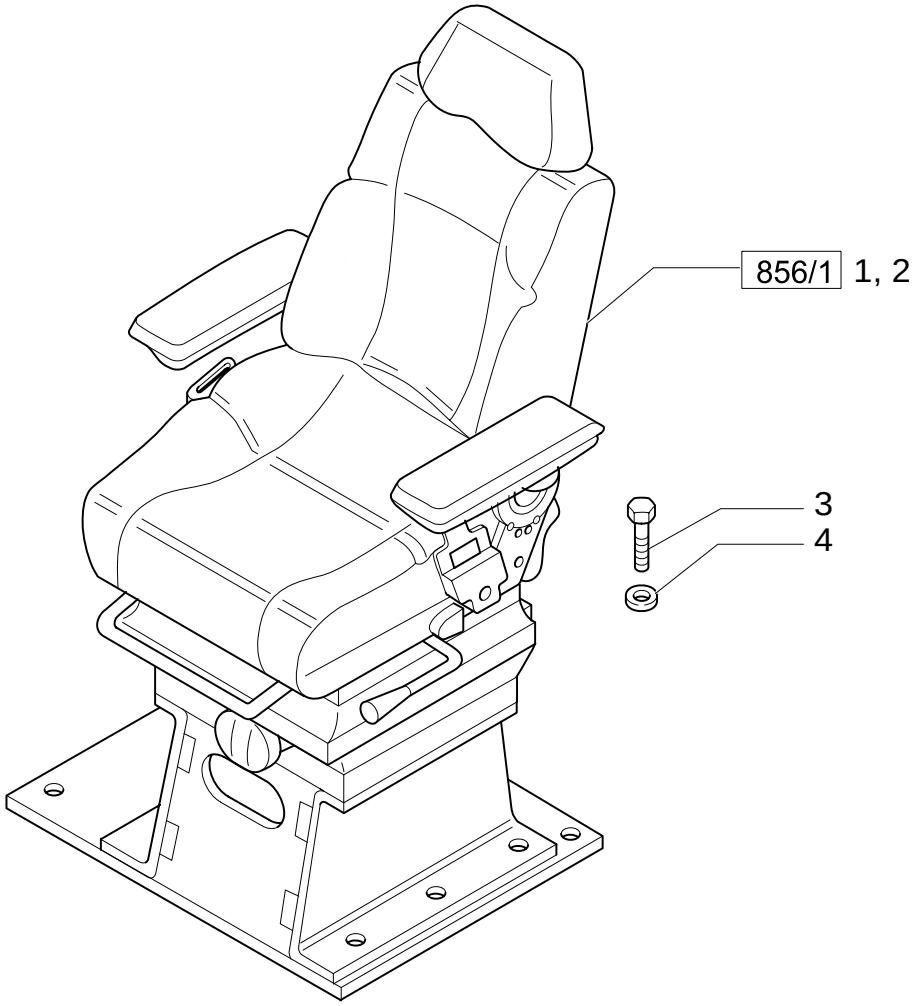

VINYL SEAT CUSHIONS, ARMRESTS & RELATED PARTS (ROPS)

REF	FN	PART NUMBER	YR/SN	QTY	DESCRIPTION
1	1, 2, 3	85826262		1	SEAT, DRIVER
1	4, 5, 3	85827703		1	SEAT, DRIVER
2	1, 2, 3	85826263		1	SEAT, DRIVER
2	4, 5, 3	85827704		1	SEAT, DRIVER
3		16043424		8	SCREW Cap, HH, CL 8.8, M8x1.25x20
4		11198074		8	WASHER, SEALING

(1) Mechanical Control Version
(2) 2" Seat Belt
(3) Consists Of Page 863/1-864/1 01 To 863/1-864/1 04
(4) Pilot Control Version
(5) 3" Seat Belt

856/ 1	01	p1	12/05

VINYL SEAT WITH ARMRESTS & MOUNTING HARDWARE (ROPS)

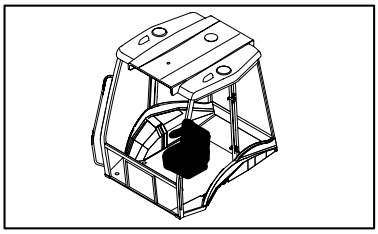

VINYL SEAT WITH ARMRESTS & MOUNTING HARDWARE (ROPS)

REF	FN	PART NUMBER	YR/SN	QTY	DESCRIPTION
1	1, 2, 3	85826262		1	SEAT, DRIVER
1	1, 4, 3	85826263		1	SEAT, DRIVER
1	5, 2, 3	85827703		1	SEAT, DRIVER
1	5, 4, 3	85827704		1	SEAT, DRIVER
2		85817562		1	HEADREST, SEAT
3		85817563		1	SEAT, BACK Cap, HH, CL 8.8, M8x1.25x20
4		85817564		1	CUSHION, SEAT
5	6	85817481		1	BOX
6		85817480		4	SCREW
7		9958845		2	BUSHING
8	7	85817485		1	SEAT, BACK
9	1, 8	85817453		1	ARMREST
9	5, 8	85828196		1	BLOCK
10	9	85827918		1	ARMREST
11		10519601		AR	WASHER
12		85817459		2	NUT
13		13838071		1	SCREW
14		13838071		1	SCREW
15		85817466		1	COVER
16		85817467		AR	SCREW
17		85817468		2	SCREW 7/16"-20UNFx60.0
18		85817470		1	PLATE, COVER
19		9960795		1	PLATE
20		9960793		1	SPRING
21		85817469		1	BUSHING
22		85817471		1	SCREW
23		85821419		1	SUPPORT
24		85817476		1	PLATE

(1) Mechanical Control Version
(2) 2" Seat Belt
(3) Consists Of Page 863/1-864/1 01 To 863/1-864/1 04
(4) 3" Seat Belt
(5) Pilot Control Version
(6) Includes 6
(7) Includes 7, 21
(8) Includes 11 To 13
(9) Includes 11, 12, 14

856/ 1	01	p2	12/05

VINYL SEAT WITH ARMRESTS & MOUNTING HARDWARE (ROPS)

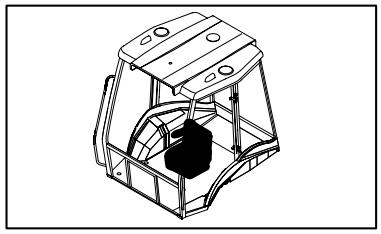

VINYL SEAT WITH ARMRESTS & MOUNTING HARDWARE (ROPS)

REF	FN	PART NUMBER	YR/SN	QTY	DESCRIPTION
25		85817460		1	LEVER
26		85821418		1	STOP DEVICE
27		15213321		1	SCREW
28		9960692		AR	SPACER
29		85817477		1	TUBE, RIGID
30		9960803		1	PLATE
31		85817479		1	COVER
32		85817478		1	LEVER
33		9960797		1	SPRING

856/ 1	02	p1	02/05

VINYL SEAT MOUNTING PLATE, ADJUSTING RAILS & SEAT BELT (ROPS)

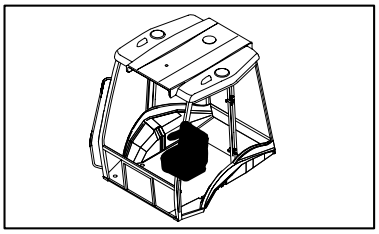

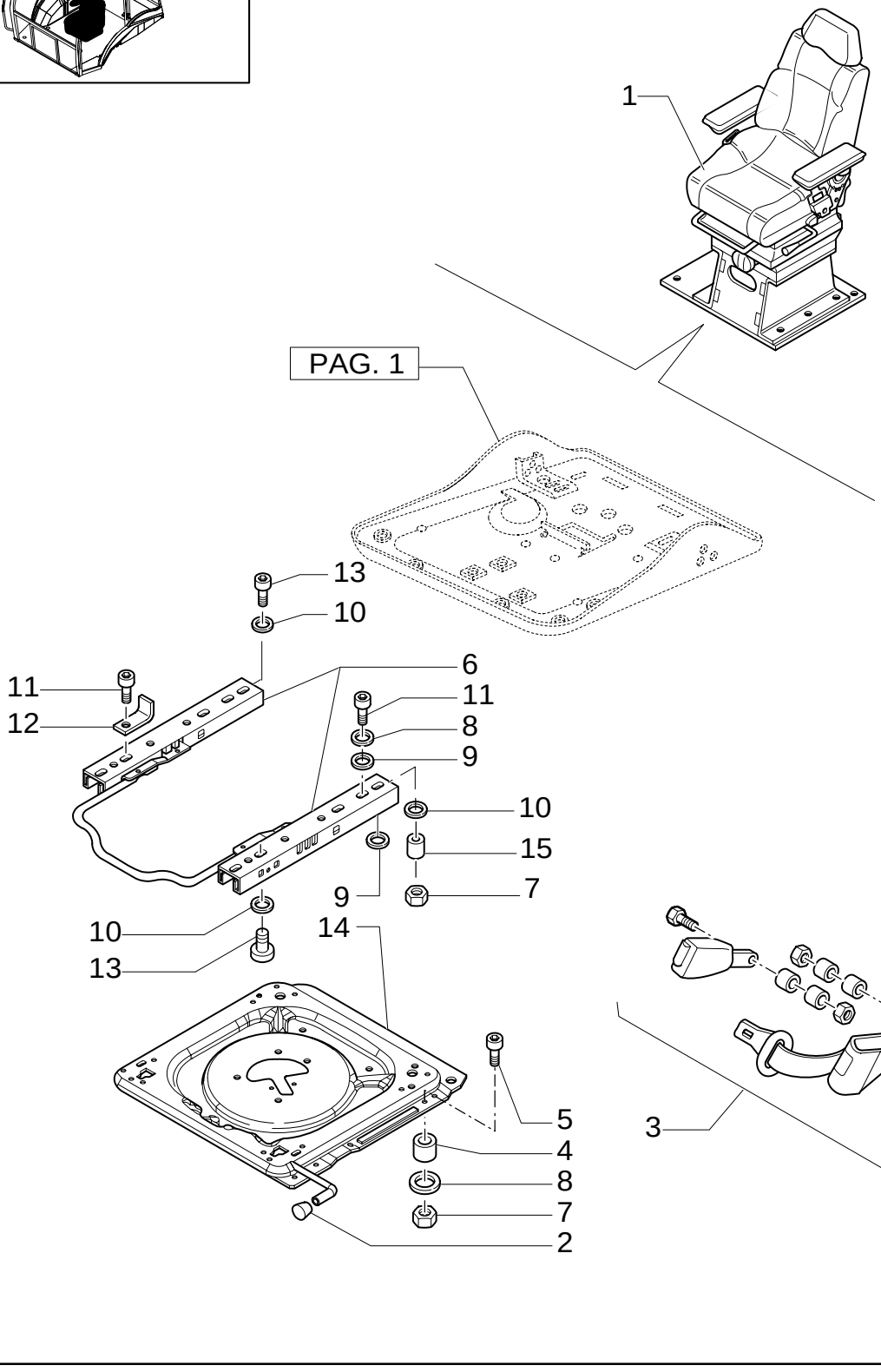

VINYL SEAT MOUNTING PLATE, ADJUSTING RAILS & SEAT BELT (ROPS)

REF	FN	PART NUMBER	YR/SN	QTY	DESCRIPTION
1	1, 2, 3	85826262		1	SEAT, DRIVER
1	4, 2, 3	85827703		1	SEAT, DRIVER
1	1, 5, 3	85826263		1	SEAT, DRIVER
1	4, 5, 3	85827704		1	SEAT, DRIVER
2		85817482		1	PUSH BUTTON
3	2	85815578		1	SEAT BELT
3	5	85815519		1	CABLE, ELECTRIC
4		85817456		4	TUBE, RIGID
5		85817465		4	SCREW M8x40
6		85817484		1	KIT
7		85817458		8	NUT
8		9960692		AR	SPACER
9		9958776		8	SPACER
10		10519601		AR	WASHER
11		85817467		8	SCREW M8x20
12		85824204		1	BRACKET
13		14306321		4	SCREW M8x25
14	6	85817483		1	FLOOR STAND
15		85819813		1	BUSHING

(1) Mechanical Control Version
(2) 2" Seat Belt
(3) Consists Of Page 863/1-864/1 01 To 863/1-864/1 04
(4) Pilot Control Version
(5) 3" Seat Belt
(6) Includes 2

856/ 1	03	p1	09/05

VINYL SEAT UPPER SUSPENSION PARTS (ROPS)

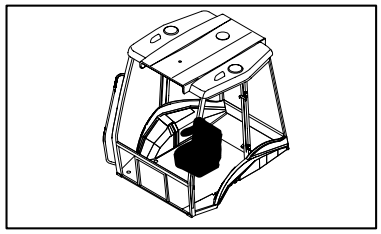

VINYL SEAT UPPER SUSPENSION PARTS (ROPS)

REF	FN	PART NUMBER	YR/SN	QTY	DESCRIPTION
1	1, 2, 3	85826262		1	SEAT, DRIVER
1	1, 4, 3	85826263		1	SEAT, DRIVER
1	5, 2, 3	85827703		1	SEAT, DRIVER
1	5, 4, 3	85827704		1	SEAT, DRIVER
2		85817556		1	SHOCK ABSORBER
3		85817450		1	PLATE
4		85817444		4	SCREW M6x16
5	6	9967960		2	SEAT, DRIVER
6		85817445		2	BUSHING
7		85817429		1	BOLT
8		11088076		1	RING, LOCKING
9		9958784		4	SPACER
10		85817442		2	BUSHING
11		9958782		1	PLATE, COVER
12		85817430		2	SPRING
13		9958792		2	PLATE, COVER
14		9958793		1	BOLT
15	7	85817446		1	DRAWBAR, SWINGING
16		9960755		2	BUSHING
17		85817448		2	RIVET
18		85817449		2	PLATE
19	8	85817447		1	SOFT TRIM
20		85817428		1	BELLOWS
21	9	85817561		1	DASHBOARD
22		85817559		2	BOLT
23		85817560		2	WASHER
24		85817558		1	DASHBOARD
25		85817458		4	NUT M8

(1) Mechanical Control Version
(2) 2" Seat Belt
(3) Consists Of Page 863/1-864/1 01 To 863/1-864/1 04
(4) 3" Seat Belt
(5) Pilot Control Version
(6) Includes 4, 6
(7) Includes 7, 9 To 14, 16
(8) Includes 17, 18
(9) Includes 22 To 24

856/ 1	03	p2	09/05

VINYL SEAT UPPER SUSPENSION PARTS (ROPS)

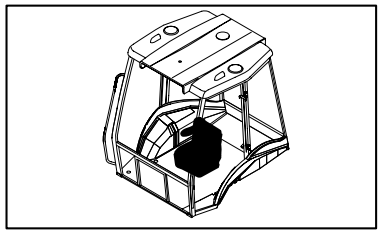

VINYL SEAT UPPER SUSPENSION PARTS (ROPS)

REF	FN	PART NUMBER	YR/SN	QTY	DESCRIPTION
26		10519601		4	WASHER 8x17
27		14306321		4	SCREW M8x20

856/ 1	04	p1	02/05

VINYL SEAT LOWER SUSPENSION PARTS (ROPS)

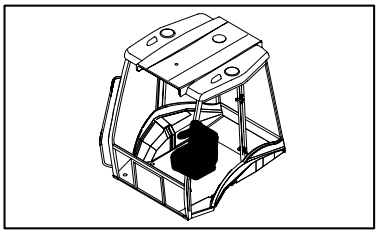

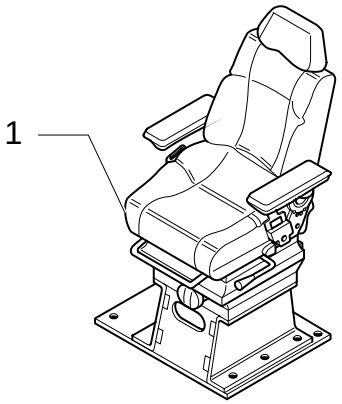

2 SEE ALSO PAG. 03

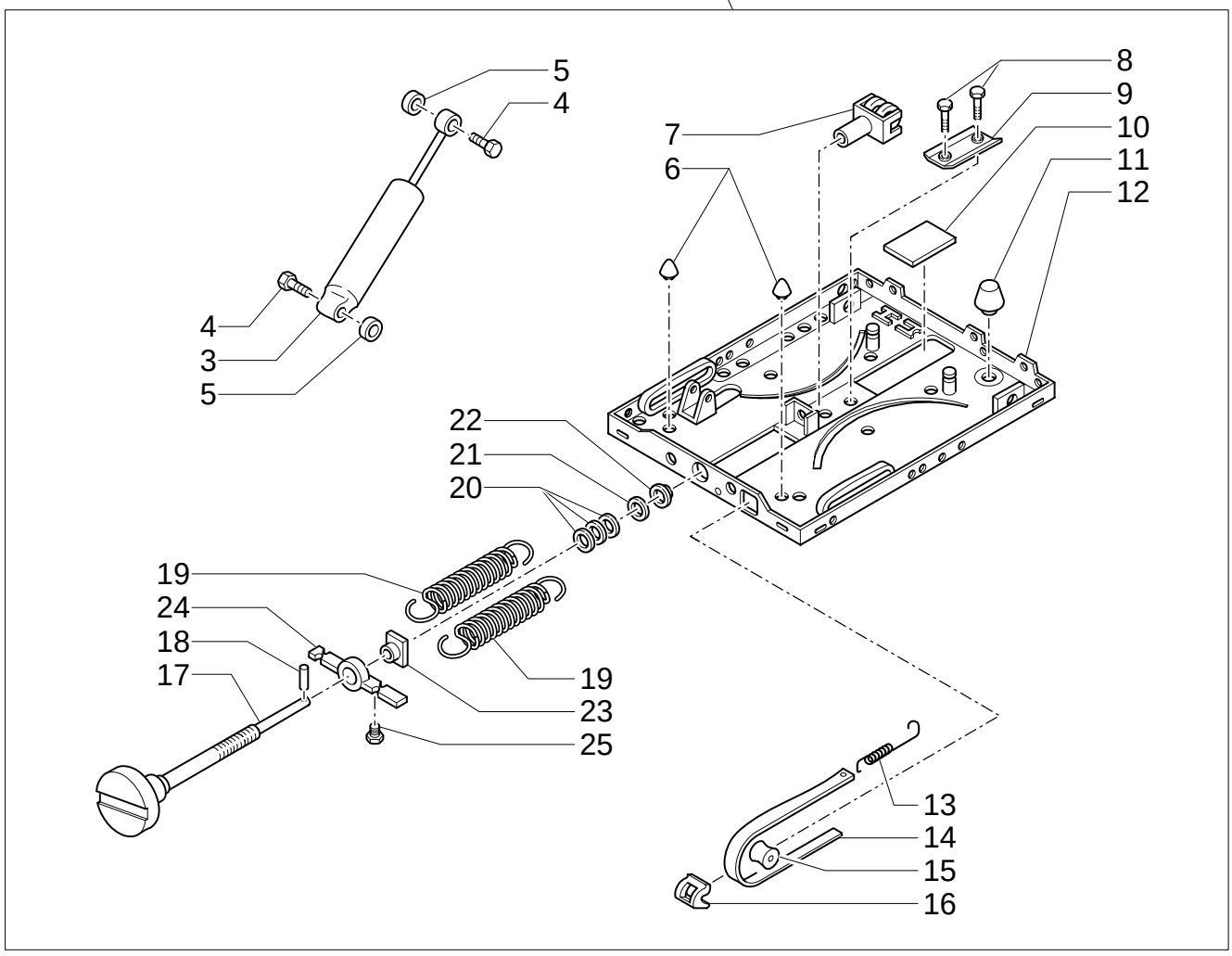

VINYL SEAT LOWER SUSPENSION PARTS (ROPS)

REF	FN	PART NUMBER	YR/SN	QTY	DESCRIPTION
1	1, 2, 3	85826262		1	SEAT, DRIVER
1	1, 4, 3	85826263		1	SEAT, DRIVER
1	5, 2, 3	85827703		1	SEAT, DRIVER
1	5, 4, 3	85827704		1	SEAT, DRIVER
2		85817556		1	SHOCK ABSORBER
3	6	85817431		1	SHOCK ABSORBER
4		9959588		2	BOLT
5		85817432		2	WASHER
6		85817440		2	GUARD
7		9960736		1	YOKE
8		9959585		2	PLUG
9		9960767		1	CLIP
10		9959580		1	PLATE, COVER
11		85817441		1	GUARD
12	7	85817436		1	SUSPENSION
13		9958790		1	SPRING
14	8	85817443		1	GAUGE, LEVEL
15		9958785		1	NEEDLE ROLLER
16		9958786		1	GUARD
17	9	85817451		1	REGULATING SYSTEM
18		85817433		1	DOWEL
19		85817434		2	SPRING
20		9958800		1	WASHER
21		9958788		1	O-RING
22		85817435		1	BUSHING
23		9959583		1	NUT
24		9959577		1	PLATE, FIXING
25		9958789		1	PLUG

(1) Mechanical Control Version
(2) 2" Seat Belt
(3) Consists Of Page 863/1-864/1 01 To 863/1-864/1 04
(4) 3" Seat Belt
(5) Pilot Control Version
(6) Includes 4, 5
(7) Includes 6, 8 To 11
(8) Includes 13, 15, 16, 25
(9) Includes 18

856/ 2	01	p1	12/05

VINYL SEAT CUSHIONS, ARMRESTS & RELATED PARTS (ROPS)

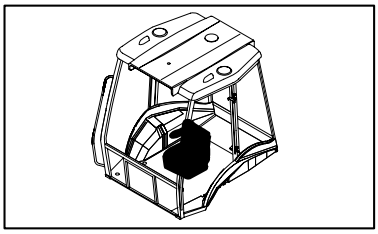

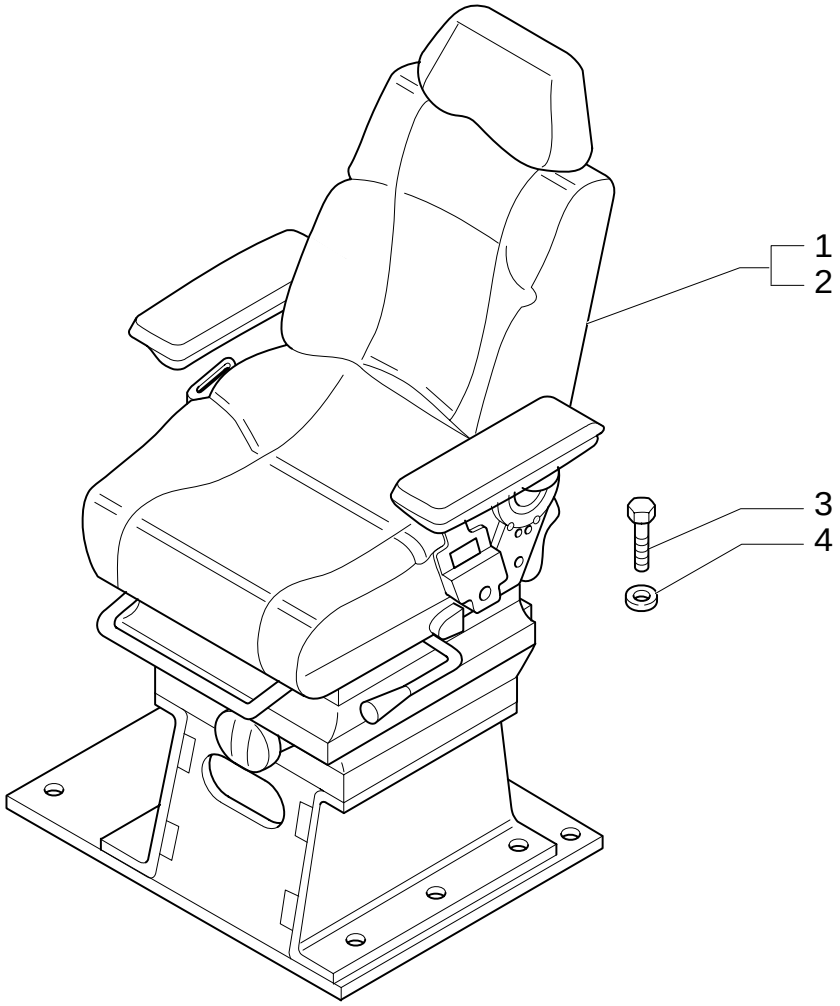

VINYL SEAT CUSHIONS, ARMRESTS & RELATED PARTS (ROPS)

REF	FN	PART NUMBER	YR/SN	QTY	DESCRIPTION
1	1, 2, 3	87363828		1	SEAT ASSY.
1	2, 4	87363997		1	SEAT ASSY.
2	5, 3	87364209		1	SEAT ASSY.
2	5, 4	87364211		1	SEAT ASSY.
3		16043424		8	SCREW Cap, HH, CL 8.8, M8x1.25x2
4		11198074		8	WASHER, SEALING

(1) Only for LB90.B
(2) Mechanical Control Version
(3) 2" Seat Belt
(4) 3" Seat Belt
(5) Pilot Control Version

990	01	p1	02/05

TOOL KIT

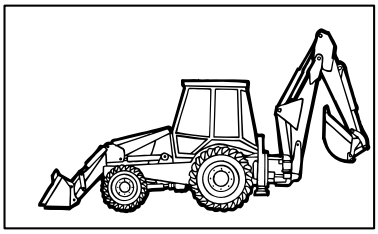

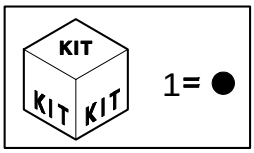

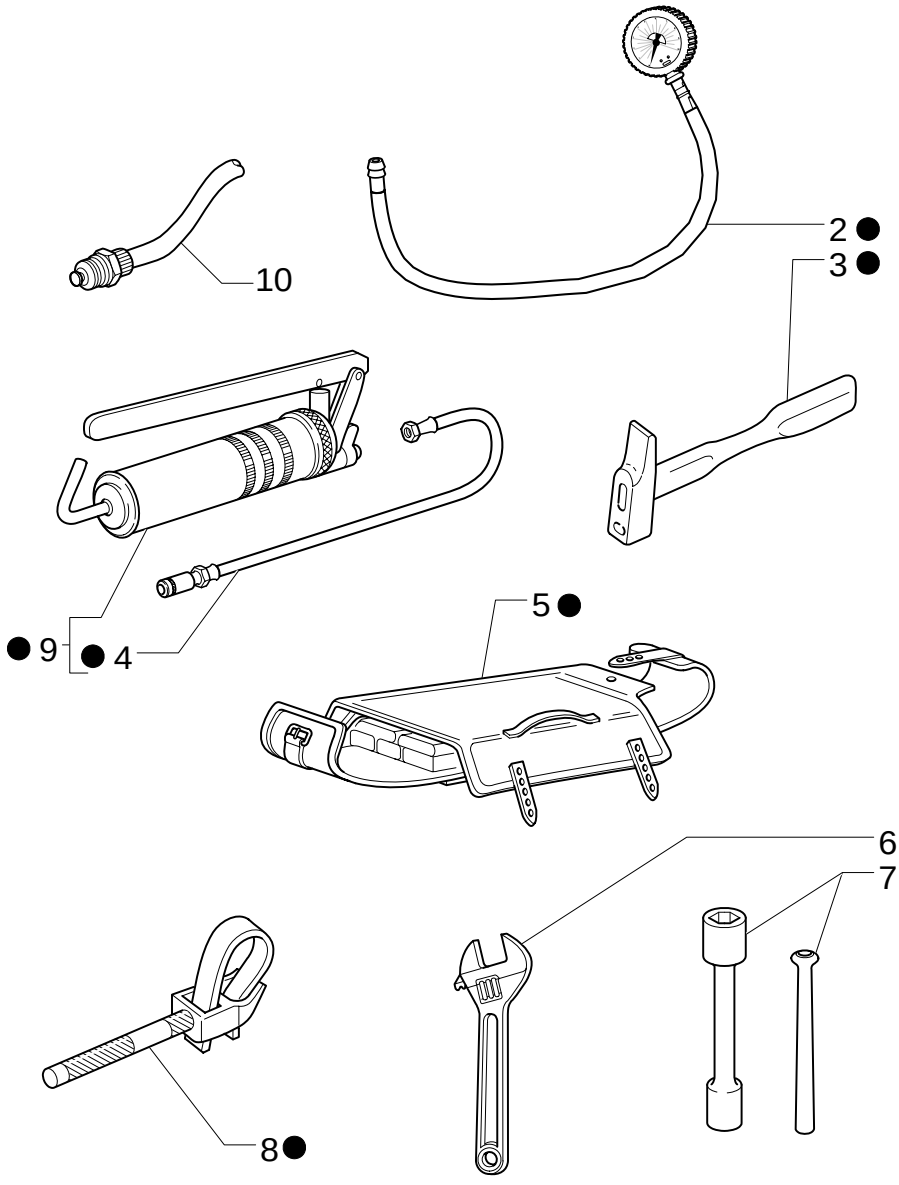

TOOL KIT

REF	FN	PART NUMBER	YR/SN	QTY	DESCRIPTION
1		85803394		1	TOOL, SPECIAL
2		85803396		1	INSTRUMENT, MEASURING
3		14582790		1	HAMMER
4		79028981		1	HOSE, FLEXIBLE
5		79062734		1	TOOL BAG
6		71431438		1	KEY, LOCK
7		85803395		1	SPANNER, BOX
8		71304923		1	KEY, LOCK
9		79028977		1	PUMP, HYDRAULIC
10		85826260		1	VALVE, HYDRAULIC

SAFETY PLATES - USA

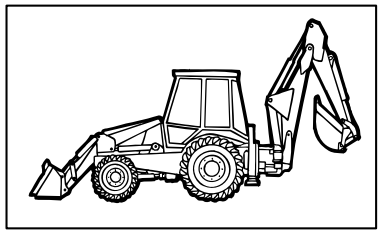



1

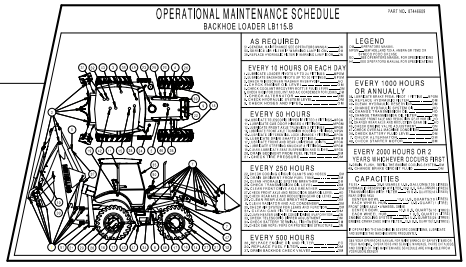

5

7

2



8



11

10

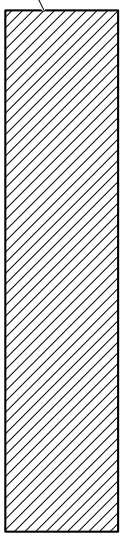

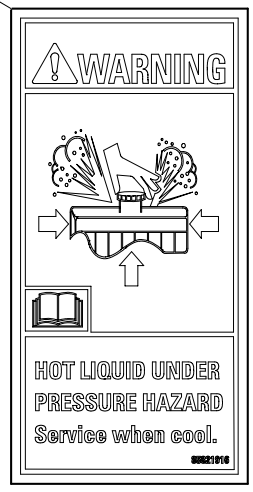

13



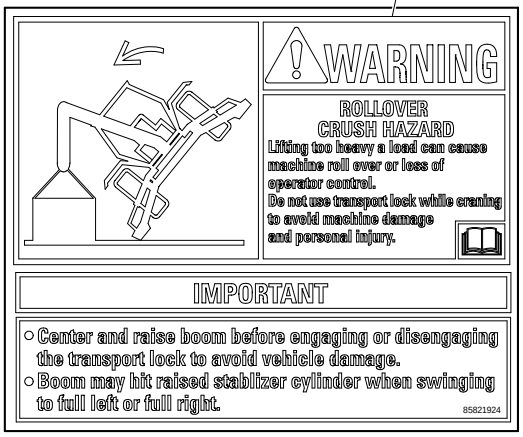

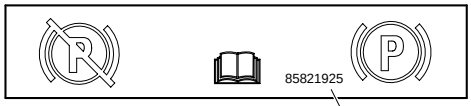



9

4

12

3

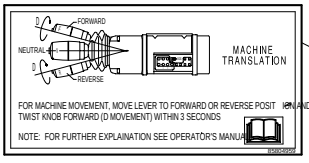

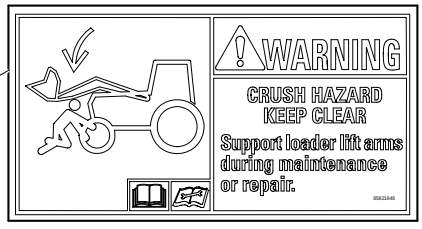

6

14

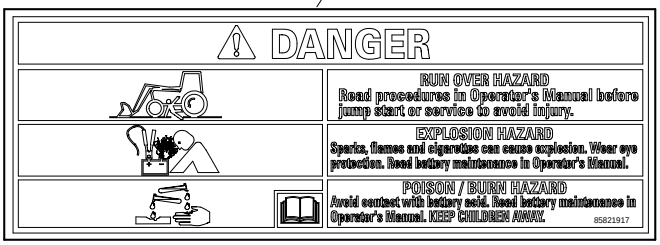

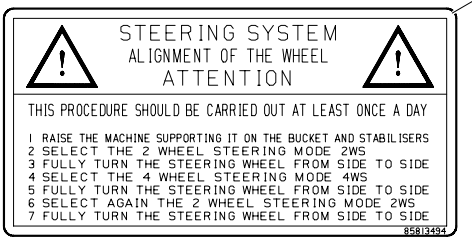

SAFETY PLATES - USA

REF	FN	PART NUMBER	YR/SN	QTY	DESCRIPTION
1		87446609		1	DECAL
2		85821924		1	DECAL
3		85821917		1	DECAL
4		85821925		1	DECAL
5		85821918		1	DECAL
6		85821919		2	DECAL
7		85821921		1	DECAL
8		85821922		2	DECAL
9	1	85821946		1	DECAL
10		86547781		2	DECAL
11		85821916		1	DECAL
12		85804959		1	DECAL
13		85821927		2	DECAL
14		85813494		1	DECAL

(1) FROM TO S/N 031056415

NOTES

SECTION INDEX

SEC. 11	00	WHEELS
81.00	01	FRONT WHEELS, 2WD
82.00	01	DRIVING WHEELS(4WD)
83.00	01	DRIVE WHEELS

WHEELS

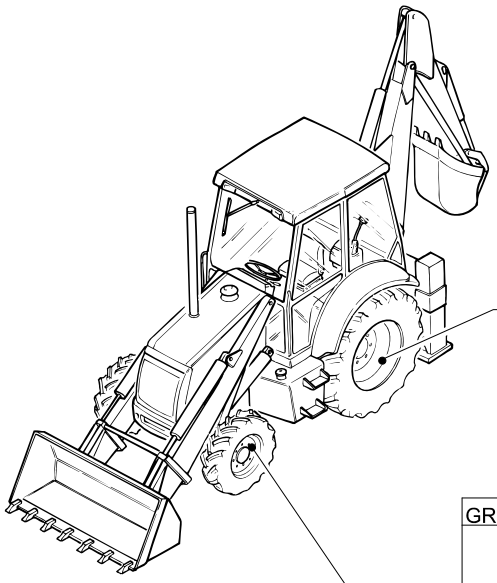

GROUP	EQUIP	TIRE SIZE	RIM
83.00	83.52	16.9 - 28 R4-10PLY TITAN	W14LX28Z
	83.62	16.9 - 28 R4 - 12PR	W14LX 28
	83.64	16.9 - 24 R4 - 10PR	W15LX 24
	83.65	17.5 - L24 R4 - 10PR	W15LX 24
	83.91	19.5 - 24 R4 - 10PR	W16LX 24
	83.92	18.4 - 26 R4 - 12PR	DW16L X26
	83.92	21L24 R4 - 10PR	W18L X24
	83.93	18.4 - 26 R1 - 12PR	DW16L X26
	83.93	19,5 x 24 "JUMBO NJLK"	W16L X24
	83.96	480/80 R26 IT520	DW16LX26

GROUP	EQUIP	TIRE SIZE	RIM
82.00	82.75	14 -17.5NHS - 8PR	10.5 X 17.5
	82.76	12 -16.5NHS -8PR	9,75 X 16,5
	82.78	10.5/80 -18I3 - 10PR	9 X 18
	82.79	12.5/80 -18I3 - 10PR	9 X 18
	82.80	12.5/80 -18I3 - 10PR	9 X 18
	82.86	340/80-R18-136A8	9 X 18
	82.87	320/80-R18-IT520	9 X 18

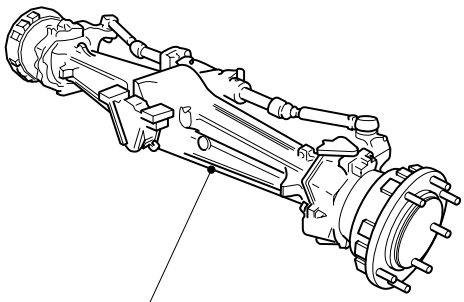

GROUP	EQUIP	TIRE SIZE	RIM
81.00	81.35	11L - 16F3 - 10PR	W8LX 16
	81.38	11L - 16SLF3 - 10PR	W8LX 16

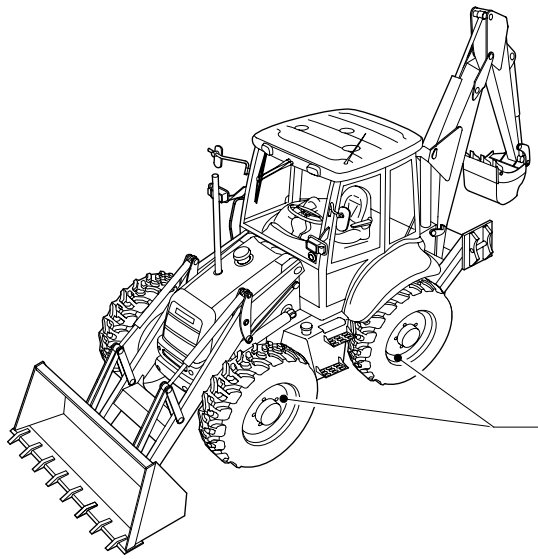

GROUP	EQUIP	TIRE SIZE	RIM
85.00	85.64	16.9 - 24 R4 - 12PR	W14LX 24
	85.64	16.9 - 24 R4 - 12PR (I.S.G.)	W15LX 24
	85.65	16.9 - 28 R4 - 12PR	W15LX 28
	85.65	16.9 - 28 R4 12PLY GY (I.S.G.T.)	W15LX 28
	85.66	440/80 R28 156A8 IT530	W14LX 28
	85.67	440/80 R28 156A8 IT520	W14LX 28

WHEELS

REF	FN	PART NUMBER	YR/SN	QTY	DESCRIPTION

From To S/N XXX

FRONT WHEELS, 2WD

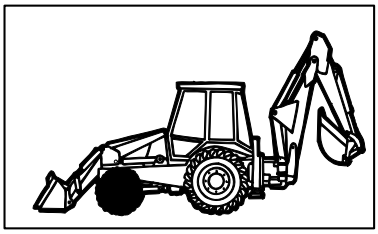

EQUIP	TIRE SIZE	RIM
81.35	11L-16F3-10PR	W8LX16
81.38	11L-16SL F3-10PR	W8LX16

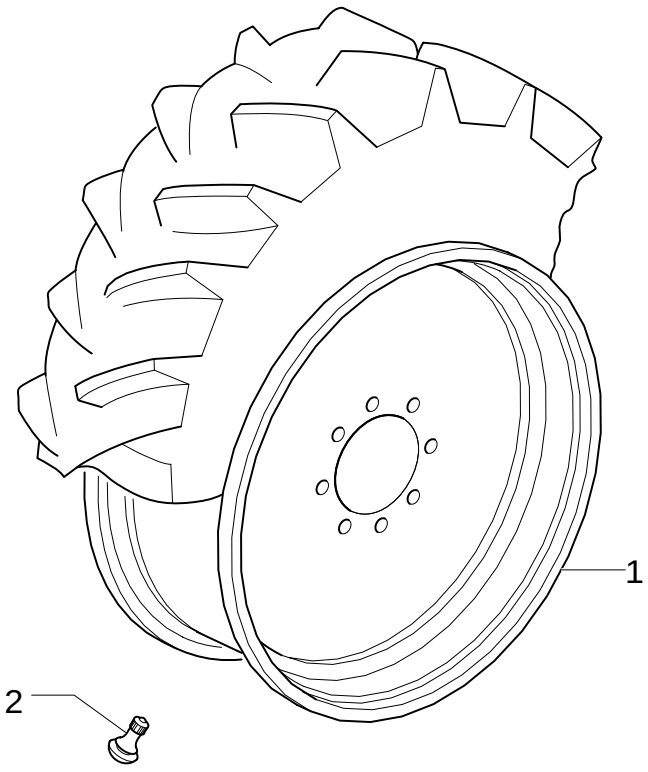

FRONT WHEELS, 2WD

REF	FN	PART NUMBER	YR/SN	QTY	DESCRIPTION
1	1	85812260		2	RIM W8Lx16
1		87344537		2	RIM W8Lx16
2		85700224		2	VALVE, HYDRAULIC

(1) Only for LB90.B - B95 - B95LR

Mechanical Version

DRIVING WHEELS(4WD)

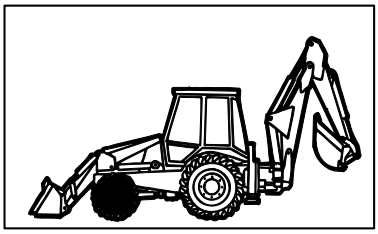

EQUIP	TIRE SIZE	RIM
82.75	14-17.5NHS-8PR	10.5X17.5
82.76	12-16.5NHS-8PR	9.75x16.5

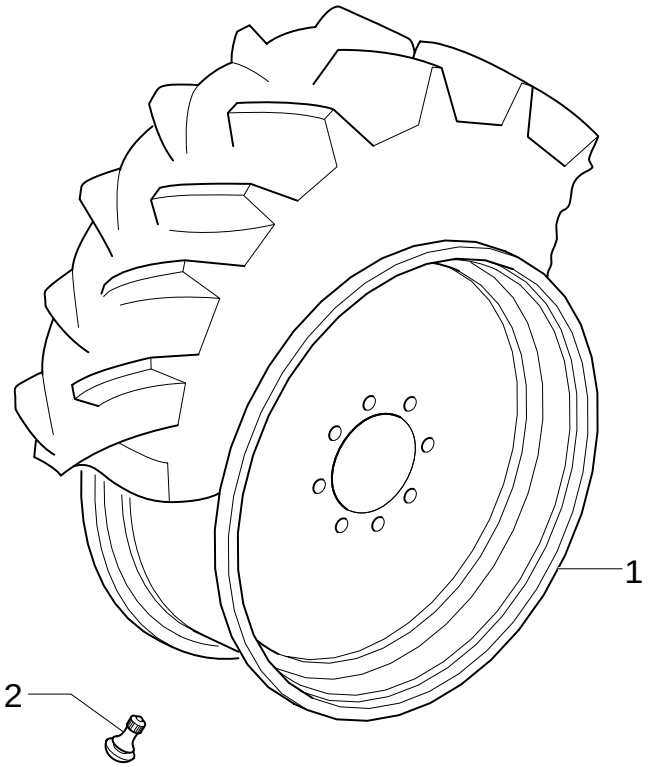

DRIVING WHEELS(4WD)

REF	FN	PART NUMBER	YR/SN	QTY	DESCRIPTION
1		87344374		2	RIM 10,5x17.5
1		87344386		2	RIM 9.75x16.5
2		85700224		2	VALVE, HYDRAULIC

DRIVE WHEELS

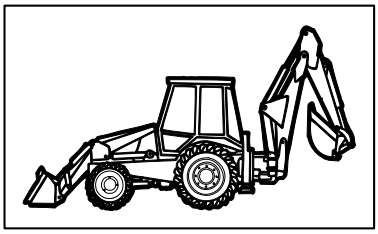

EQUIP	TIRE SIZE	RIM
83.52	16.9-28 R4-10PR	W15LX28Z
83.64	16.9-24R4-10R	W15LX24
83.65	17.5L24 R4-10PR	W15LX24
83.91	19.5L24 R4-10PR	W16LX24
83.92	21L24 R4 - 10PR	W18LX24
83.93	13,5 x 24 "JUMBO NJLK"	W16LX24

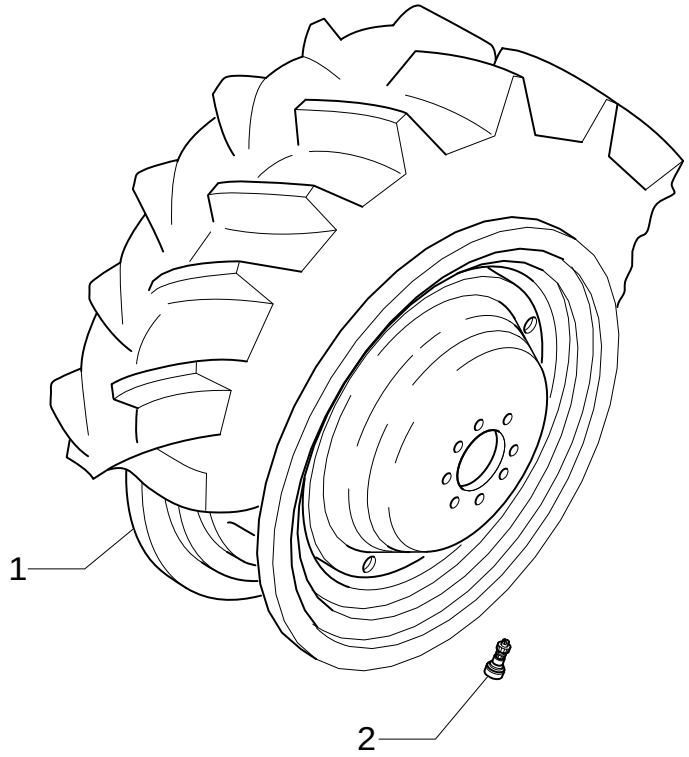

DRIVE WHEELS

REF	FN	PART NUMBER	YR/SN	QTY	DESCRIPTION
1		87344431		2	RIM W15Lx24
1		87344461		2	RIM W15Lx28
1		87344422		2	RIM W16Lx24
1		87344545		2	RIM W18Lx24
1	1	87305240		2	RIM W14Lx28Z
2		85700224		2	VALVE, HYDRAULIC

(1) Only for LB 90.B - LB95.B - LB110.B

NOTES

SECTION INDEX

SEC. 18	00	VARIATION
535	01	STABILIZER FOOT GROUND (CENTER PIVOT)
535/ 1	01	STABILIZER FOOT STREET PAD (CENTER PIVOT)
536	01	REVERSIBLE STABILIZER FOOT (CENTER PIVOT)
537	01	STABILIZER FOOT STREET PAD (CENTER PIVOT)
628	01	4WD STEERING LOCK
803	01	FENDERS, FRONT
848	01	BATTERY CONNECTION

VARIATION

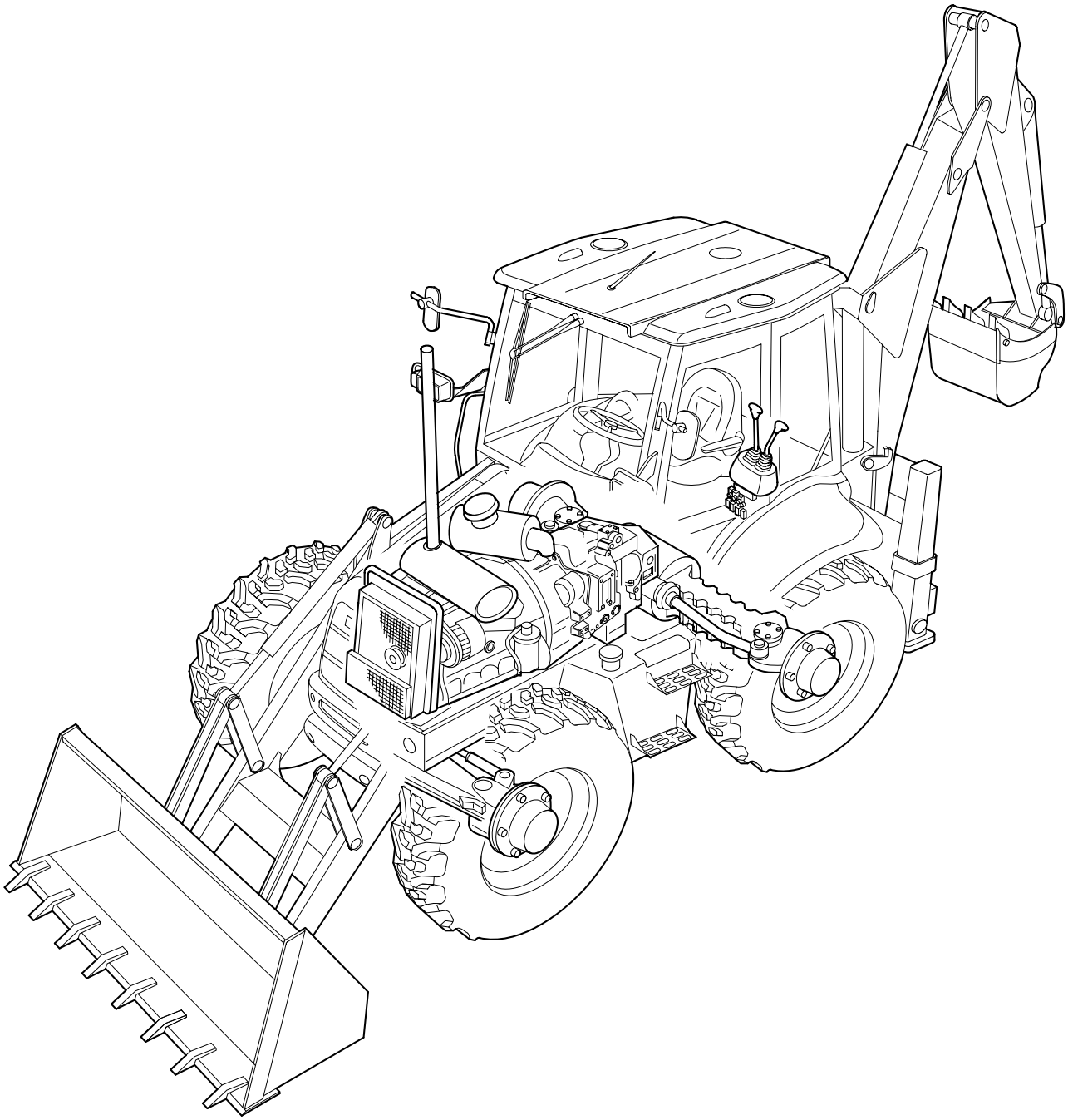

VARIATION

REF	FN	PART NUMBER	YR/SN	QTY	DESCRIPTION

535	01	p1	02/05

STABILIZER FOOT GROUND (CENTER PIVOT)

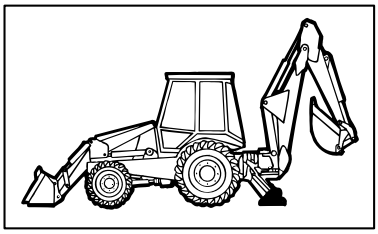

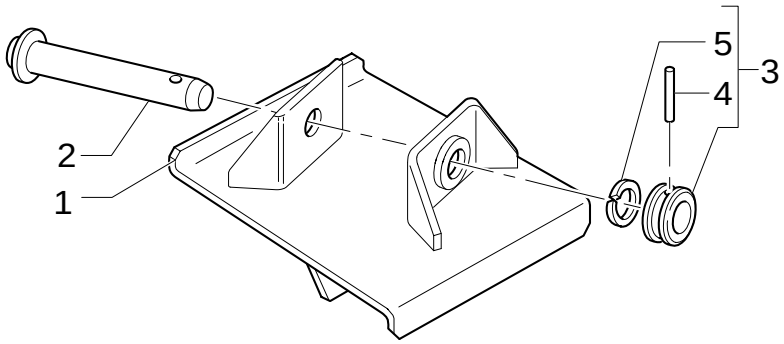

STABILIZER FOOT GROUND (CENTER PIVOT)

REF	FN	PART NUMBER	YR/SN	QTY	DESCRIPTION
1		85804847		1	SUPPORT RH
1		85804848		1	SUPPORT LH
2		85803141		2	PIN
3	1	85803139		2	PIN, LOCK ASSY
4		85802992		2	O-RING
5		85802993		2	PIN

(1) Includes 4, 5

535/ 1	01	p1	02/05

STABILIZER FOOT STREET PAD (CENTER PIVOT)

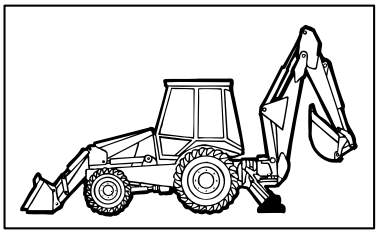

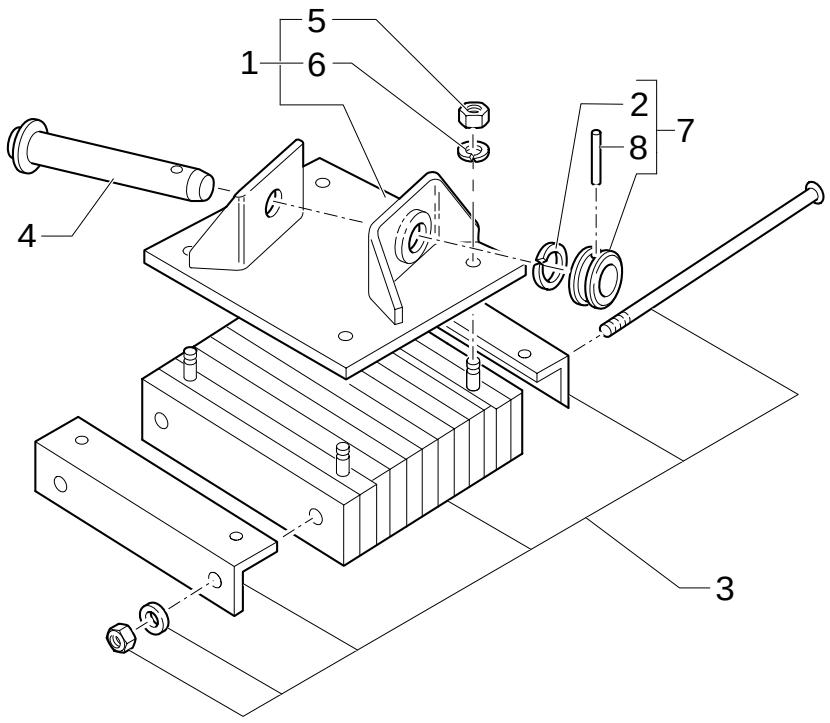

STABILIZER FOOT STREET PAD (CENTER PIVOT)

REF	FN	PART NUMBER	YR/SN	QTY	DESCRIPTION
1	1	85804845		1	SUPPORT RH
1	1	85804846		1	SUPPORT LH
2		85802992		2	O-RING
3		D7NNB694A12Z		2	PAD, RUBBER ASSY
4		85803141		2	PIN
5		N620017S36		8	NUT M20x2.5
6		N630177S36		8	WASHER, LOCK D=20
7	2	85803139		2	PIN, LOCK ASSY
8		85802993		2	PIN

(1) Includes 3, 5, 6
(2) Includes 2, 8

536	01	p1	02/05

REVERSIBLE STABILIZER FOOT (CENTER PIVOT)

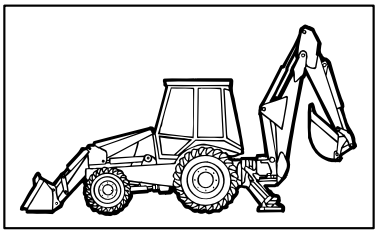

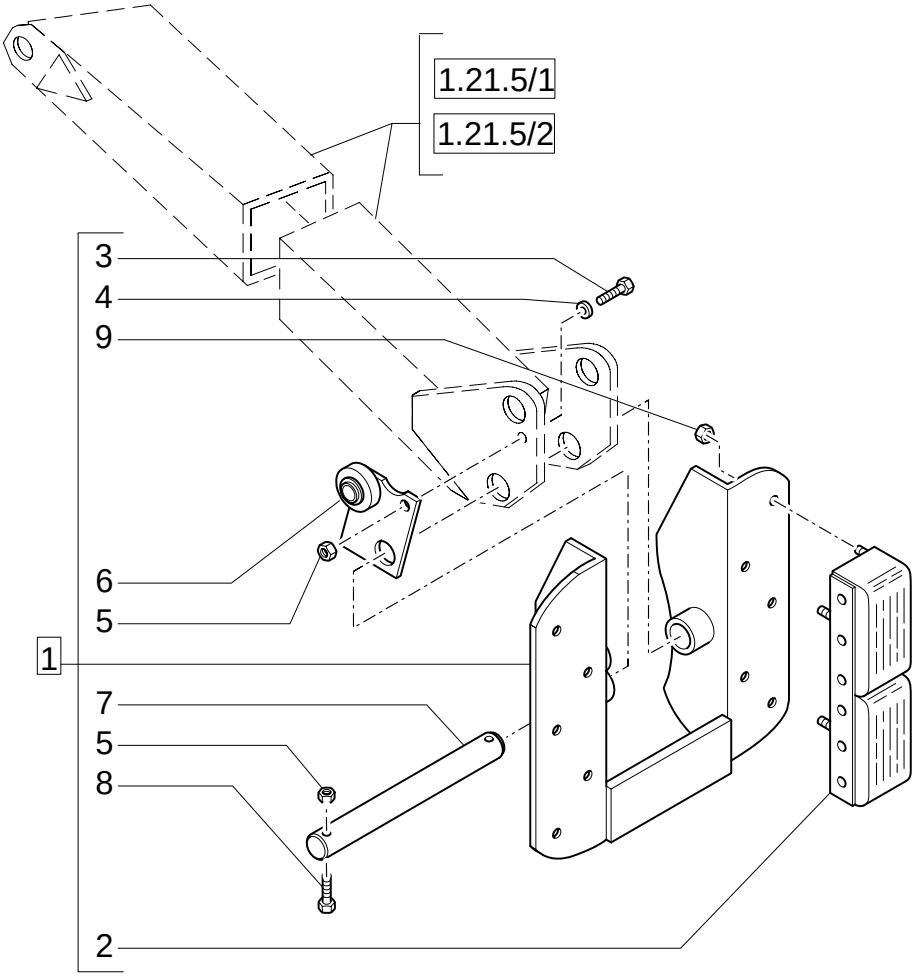

REVERSIBLE STABILIZER FOOT (CENTER PIVOT)

REF	FN	PART NUMBER	YR/SN	QTY	DESCRIPTION
1		85811985		1	SUPPORT LH
1		85811986		1	SUPPORT RH
2		85811992		4	PAD, RUBBER
3		304760S36		2	SCREW 3/8"-16x1"1/2
4		12641004		2	WASHER 10x20
5		33799S36		6	NUT 3/8"-16
6		85811990		1	BRACKET
6		85811991		1	BRACKET
7		85811989		2	PIN
8		85804878		2	SCREW
9		34670S36		20	NUT 7/16"-14

537	01	p1	02/05

STABILIZER FOOT STREET PAD (CENTER PIVOT)

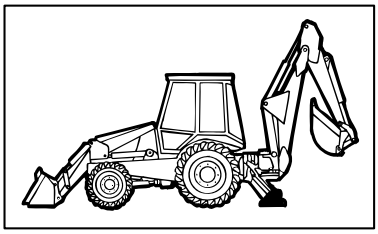

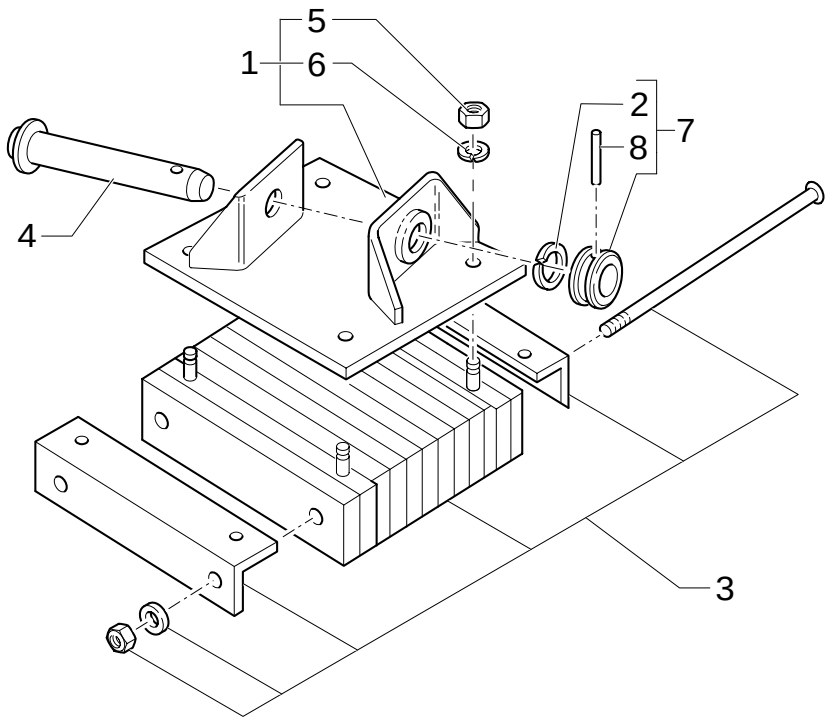

STABILIZER FOOT STREET PAD (CENTER PIVOT)

REF	FN	PART NUMBER	YR/SN	QTY	DESCRIPTION
1	1	85824095		1	SHOCK ABSORBER RH
1	1	85825000		1	SHOCK ABSORBER LH
2		85802992		2	O-RING
3		D7NNB694A12Z		2	PAD, RUBBER ASSY
4		85825003		2	PIN
5		N620017S36		8	NUT
6		N630177S36		8	WASHER, LOCK
7	2	85803139		2	PIN, LOCK ASSY
8		85802993		2	PIN

(1) Includes 3, 5, 6
(2) Includes 2, 8

628	01	p1	02/05

4WD STEERING LOCK

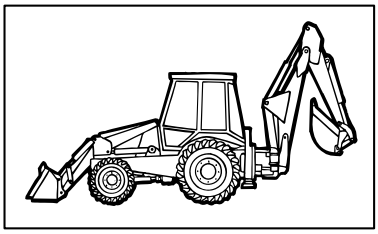

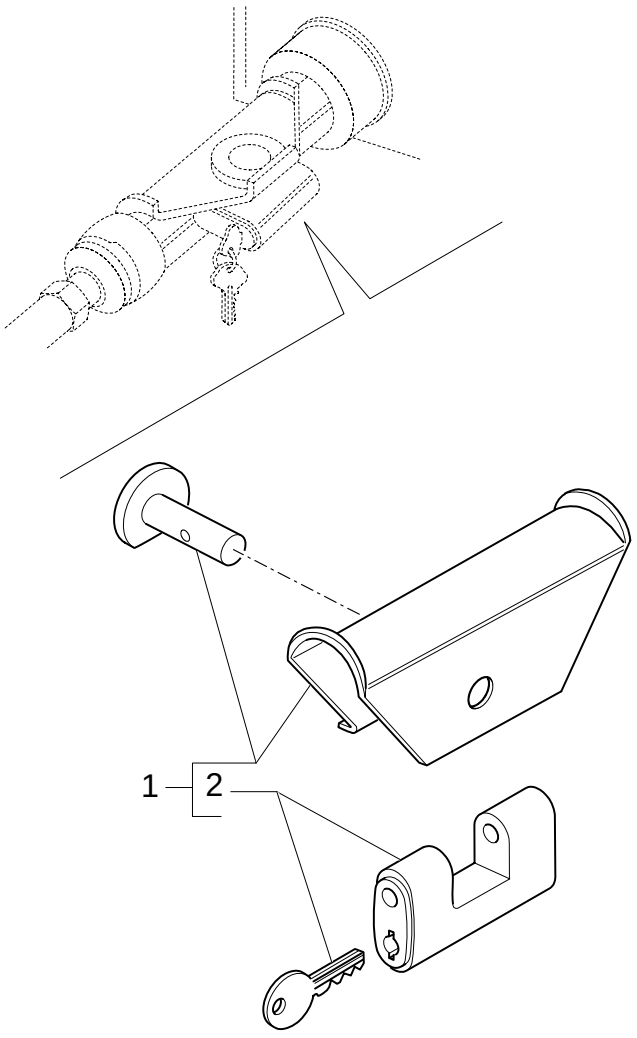

4WD STEERING LOCK

REF	FN	PART NUMBER	YR/SN	QTY	DESCRIPTION
1		85816802		1	LOCK, CYLINDER
2		85803372		1	LOCK, CYLINDER

803	01	p1	11/05

FENDERS, FRONT

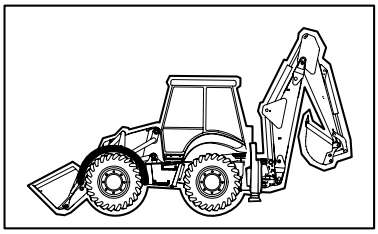

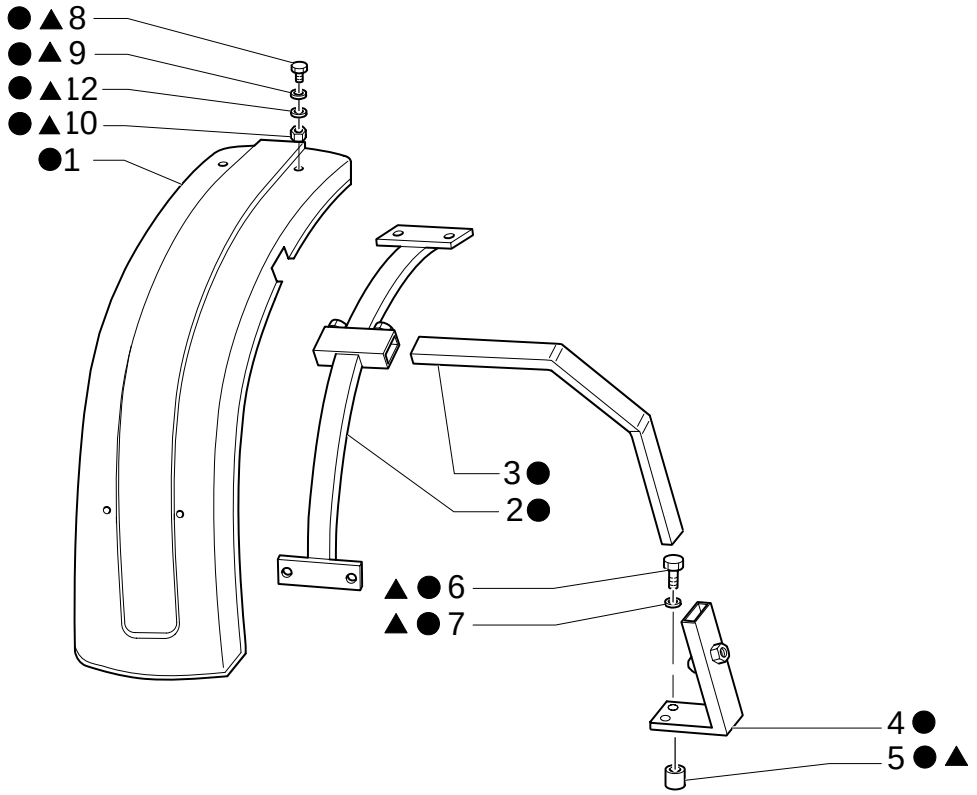

KIT 13 = ●
KIT 11 = ▲

FENDERS, FRONT

REF	FN	PART NUMBER	YR/SN	QTY	DESCRIPTION
1		9968885		1	FENDER, FRONT LH
1		9968886		1	FENDER, FRONT RH
2		9968884		2	SUPPORT
3		85826132		2	SUPPORT
4		85826134		1	SUPPORT RH
4		85826133		1	SUPPORT LH
5		87348002		6	SPACER
6		11119121		6	SCREW Hex, M16x2x 60
7		14496901		6	WASHER 16x30
8		87302831		8	SCREW M6x20
9		11194779		8	WASHER, LOCK 6.5x18x1.5
10		12574211		8	NUT M6
11		{87302715}		8	M10x20
12	1	11193279		1	WASHER, LOCK 6.5x15x1.5
13		85826131		8	KIT

(1) Includes 1 To 12

848	01	p1	02/05

BATTERY CONNECTION

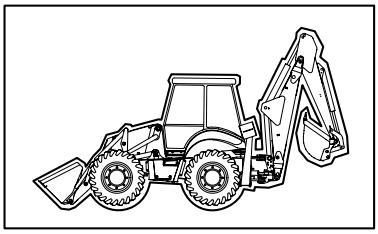

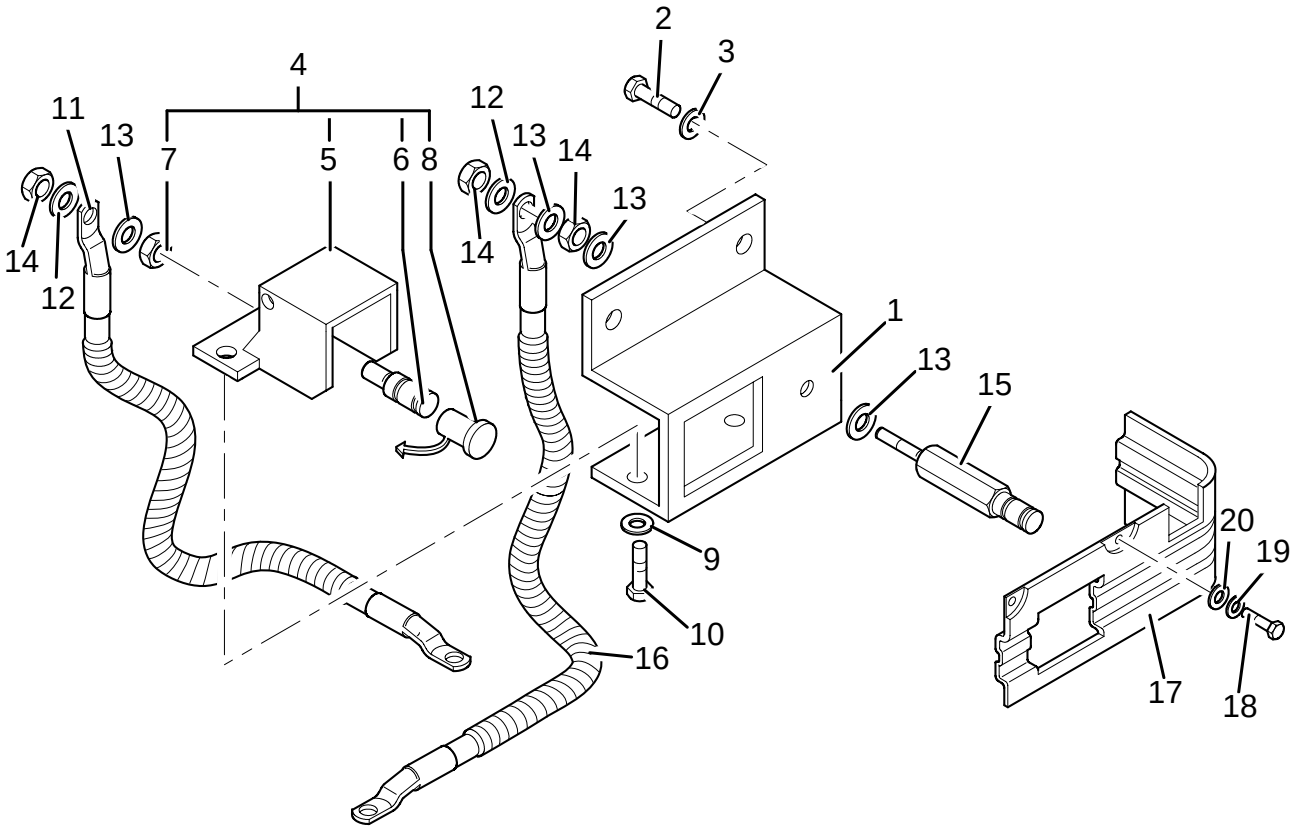

BATTERY CONNECTION

REF	FN	PART NUMBER	YR/SN	QTY	DESCRIPTION
1		85821205		1	SUPPORT
2		10902424		2	SCREW
3		11197774		2	WASHER, LOCK
4		82013379		1	BRACKET
5		{82013446}		1	
6		82014590		1	TERMINAL
7		10717511		1	NUT
8		82013445		1	COVER, CAP
9		10571474		2	WASHER, LOCK
10		13274214		2	SCREW
11		85827743		1	CABLE, GROUND
12		11190579		2	WASHER, LOCK
13		14496601		4	WASHER
14		15500111		3	NUT
15		82012402		1	TERMINAL
16		85827744		1	CABLE, GROUND
17		85824113		1	GUARD
18		10902421		3	SCREW
19		11194679		3	WASHER
20		12643721		3	WASHER

Number	Figure	Sequence	Ref.	Number	Figure	Sequence	Ref.
{110692A4}	902/ C	01	19	{87357264}	902/ C	01	1
{13550035}	340/ 1	01	14	{87358141}	346	01	13
{15210321}	340/ 1	01	13		347	01	11
{154875C1}	902/ C	01	5	{87362068}	346	05	13
{15915901}	346	05	14		346/1	02	12
	347	05	3		347	05	2
{1598734}	1.88.11/ 5	02	19	{87372186}	514	01	1
{17295480}	0.270/A	01	10	{87382112}	700/ 2	01	19
{2831303}	0.105	02	5		725/ 1	02	11
{2831304}	0.105	02	6	{87429594}	1.11.2/ 01	01	17
{353-779}	1.88.11/ 9C	01	28	{87429862}	1.11.1	01	6
{47334140}	1.82.6	05F	10	{87429864}	1.11.1	01	8
	1.82.6	05G	10	{87429865}	1.11.1	01	26
{47334530}	340/ 1	01	17	{87431460}	1.91.4	01	1
{47352048}	1.88.01/ 2	01	13		1.91.4	02	1
{47352049}	1.88.01/ 2	01	16		1.91.4	03	1
{500301568}	0.270/A	01	9		1.91.4	04	1
{504087621}	0.270/A	01	6		1.91.4	05	1
{504095659}	0.080	01	1	{87437661}	636A	05	1
{504097164}	0.043	01	5	{87449734}	331/ C	01	1
{8094739}	0.082	01	4		333/ B	01	1
{8094740}	0.082	01	1	{87449735}	331/ C	01	2
{8094752}	0.082	01	4		333/ B	01	2
{8094753}	0.082	01	1	{87453109}	331/ B	01	3
{82013446}	848	01	5	{87812021}	1.96.7/ 6	01	8
{85803959}	1.21.5/ 5	01	15	{87824346}	402	01	8
{85803960}	1.21.5/ 5	01	14	{9668025}	402	02	14
{85817133}	514	03	3	{G100443}	902/ C	01	16
	900	03	3	{G107277}	902/ C	01	15
	902	04	3	10007871	351	06	10
{85820036}	433	01	29		394/ 1	03	16
{85820037}	433	01	30	10250644	622	01	3
{85820137}	1.93.4	01	12	10398280	1.95.3	01	11
{85820140}	1.93.4	01	11	10398580	1.96.7	01	15
{85821334}	1.91.5	02	13		1.96.7/ 6	01	12
{85824018}	518	01	6		725	01	14
{85826274}	391/ 1	03	2	10398680	1.91.4	05	17
{85827185}	1.11.2/ 01	01	19		1.95.2	01	2
{85827401}	1.11.1	01	5	10398980	1.91.4	05	24
{85827402}	1.11.1	01	21		1.91.4	05	7
{85827403}	1.11.1	01	9		1.91.4/ 2	05	7
{85827404}	1.11.1	01	4		1.93.0	01	11
{85827551}	732/ A	01	2		1.93.0/ 3	01	11
{85828014}	333/ A	03	16	10399580	1.91.6	01	4
{85829093}	1.98.0	06	5	10427200	1.91.1/ 1	01	5
{85848133}	120	01	7		1.93.0	01	16
	120/ 1	01	7		1.93.0/ 2	01	16
{86576091}	1.44.0E	02	39		1.93.0/ 3	01	16
{86621058}	514/ E	01	3		1.93.0/ 5	01	16
{87302715}	803	01	11	10450090	1.91.4/ 2	05	15
{87302836}	732/ A	01	3	10450190	1.88.01	02	9
{87302920}	636	01	2	10517274	1.95.0	01	8
	636	02	22	10519204	1.91.4	02	4
	636/ 1	01	2		1.91.4/ 2	02	4
{87302921}	637/ 1	01	2		1.91.4/ 2	05	13
	637/ 3	01	2	10519404	1.92.4	01	14
{87304798}	340/ 1	01	10		1.92.4	02	1
{87304802}	340/ 1	01	12	10519411	1.82.6	04A	14
{87304804}	340/ 1	01	11		1.82.6	11A	11
{87311152}	1.38.1	01	4		1.82.6	12B	9
{87311153}	1.38.1	01	3	10519601	856/ 1	01	11
{87318748}	1.91.4/ 2	01	1		856/ 1	02	10
	1.91.4/ 2	02	1		856/ 1	03	26
	1.91.4/ 2	03	1	10519604	1.92.6	01	10
	1.91.4/ 2	04	1		1.93.0	04	3
	1.91.4/ 2	05	1		1.93.0/ 3	04	3
{87319445}	339	01	21	10520211	515	02	5
{87319741}	394/ 1	01	19		516	02	5
{87324490}	1.95.2	01	1		517	02	5
{87324535}	1.95.2	01	1		518	02	5
{87325632}	392	01	15		519	02	5
	392	02	15		526	01	5
{87326258}	339	02	17		527	01	5
{87327632}	336	02	16		528	01	5
	339	02	16		529	01	5
{87335146}	120	01	11	10520431	1.21.5/ 5	01	9
	120/ 1	01	11		1.87.8	01	3
{87345870}	1.92.4	01	11		1.88.11/ 9A	01	3
{87345950}	636	01	20		203	01	5
{87345951}	636	01	21		215	01	3
{87353252}	356	01	14	10571474	848	01	9
{87356233}	393	03	2	10615274	1.91.4	05	2

Number	Figure	Sequence	Ref.	Number	Figure	Sequence	Ref.
10615274	1.91.4/ 2	05	2	11107421	646/1	02	2
10615371	1.95.1	01	21	11108821	646/1	02	10
10615774	1.95.5	01	3	11112221	1.94.2/ 1	03	10
	1.95.5/ 3	01	3	11112421	636	01	14
10717421	1.88.08	01	10		636/ 1	01	14
	1.88.08	02	8		636A	01	4
10717511	848	01	7	11112821	1.88.12/ 3	01	23
10766901	1.44.0E	04	9	11119121	803	01	6
10791414	1.95.5	01	12	11124421	902/ A	01	7
	1.95.5/ 3	01	9	11190574	1.82.6	13A	5
10794011	1.95.1	01	31		1.95.0	01	17
10802801	1.44.0E	04	6		1.95.5	01	6
10902124	1.91.7/ 1	01	6		646/1	02	3
	1.91.7/ 3	01	6	11190579	1.82.6	02B	5
10902127	1.93.4	01	13		1.82.6	06A	5
10902221	1.82.6	04A	15		1.82.6	06B	5
	1.82.6	11A	12		1.88.01	01	7
	1.82.6	12B	7		1.88.08	01	2
10902224	1.96.7	01	13		336	01	2
	1.96.7/ 6	01	13		339	01	2
10902321	331/ C	01	18		437/ 1	01	13
	333/ B	01	18		724	02	4
10902421	1.87.2	01	5		724/ 3	02	4
	848	01	18		848	01	12
10902424	1.95.3	01	6		902/ A	01	13
	346	02	6	11190679	1.88.11/ 5	01	7
	347	02	6		302	01	10
	848	01	2		331	01	3
10902524	1.93.0/ 3	04	12		333/ 1	01	3
10902624	1.91.4	05	15		351	09	8
	1.91.4/ 2	05	20		700/ 2	01	21
	1.93.0	04	10		708	01	2
	1.93.0/ 2	01	21	11190779	1.28.0/ A	02	15
	1.93.0/ 3	04	10		1.28.0/ B	02	18
	1.95.0	02	10		1.82.6	03B	21
10903021	1.29.1	01	5		1.82.6	04A	9
10903224	1.92.4	02	6		1.82.6	04B	16
10978024	1.95.1	01	20		1.82.6	04B	9
10979221	724	02	6		1.88.12/ 3	01	19
	724/ 3	02	6		351	04	11
10979421	1.88.11/ 5	02	14		351	05	5
11030921	1.88.01/ 2	01	6		390/ 1	01	6
11054590	1.91.4	02	5		393	01	6
	1.91.4/ 2	02	5		394	01	7
11054790	1.91.4	02	3		394/ 1	01	10
	1.91.4/ 2	02	6	11193274	1.91.4	05	16
11054890	1.91.4	02	7		1.91.4/ 2	05	21
	1.91.4/ 2	02	7		1.91.8	01	2
11054990	1.91.4	02	8		1.93.0/ 3	04	8
	1.91.4/ 2	02	8		1.93.4	01	6
	347	02	10		1.95.0	02	11
11055090	1.91.4	02	9		1.95.2	01	3
	1.91.4/ 2	02	9		1.95.3	01	5
11055290	346	02	21		1.96.7	01	14
11055890	1.75.2/ 3	03	2		1.96.7/ 6	01	14
11064071	1.88.11/ 5	01	10	11193279	1.88.11/ 5	02	15
11064176	1.95.0	02	3		803	01	12
11065476	1.95.1	01	14	11193874	1.21.5/ 5	01	27
11067376	1.95.0	01	10		1.92.5	01	6
11069071	514	02	11		1.95.0	02	4
	514	03	7		1.95.2	01	8
	900	02	11		1.96.2	01	5
	900	03	7		1.96.2/ 1	01	2
	902	03	15		391	01	6
	902	04	7		646/1	02	4
11069874	1.11.0	01	25	11193879	1.75.2/ 3	01	7
11087776	1.92.4	01	12		1.82.6	03B	7
11087871	1.92.4	01	12		1.88.01	01	2
11088076	1.92.6	03	3		1.88.01/ 2	02	6
	856/ 1	03	8		1.88.11/ 7	01	13
11088176	1.95.0	01	1		1.91.4	05	18
11106021	1.28.0/ A	01	25		333/ B	08	8
	1.28.0/ B	01	13		344	01	2
11106221	1.82.6	06A	6		356	01	2
	1.82.6	06B	6		391/ 1	01	10
	1.82.6	13A	4		391/ 1	02	4
	1.88.01	01	6		636	01	7
	437/ 1	01	24		636/ 1	01	7
11106421	437/ 1	01	11		637/ 2	01	17
	646/1	02	1		704	01	9
11106721	902/ A	01	14		721	01	2
11107321	1.88.08	01	17		721	03	8

Number	Figure	Sequence	Ref.	Number	Figure	Sequence	Ref.
11193879	721	05	9	12574211	803	01	10
	724	01	3	12574215	1.92.9	02	16
	724/ 3	01	3	12574511	1.82.6	02B	14
	724/ 5	01	3		732	01	4
	724/ 6	01	3		732/ A	01	13
	725	01	5	12574825	200	01	3
	902	02	5	12574921	1.87.8	01	8
11193974	1.93.0/ 2	01	22	12575121	1.87.8	01	4
	1.93.0/ 5	01	22		1.88.11/ 9A	01	4
	346	01	2		203	01	6
	346	01	21		215	01	2
	347	01	13	12575321	1.44.0E	01	10
	347	01	2	12577211	646/1	02	6
11193979	1.17.2	01	9	12601471	646/1	02	7
	1.82.6	02A	10	12604179	1.95.3	01	15
	1.82.6	07	12	12637821	1.92.9	03	19
	1.82.6	09A	7	12638107	1.93.0	02	11
	1.82.6	09B	7	12638501	1.92.9	02	8
	1.87.2	01	10	12638504	1.92.4	01	16
	1.88.08	01	20		1.92.4	02	14
	514	04	5	12638511	1.75.2/ 3	03	6
	514	05	7	12640601	1.92.6	02	2
	700/ 2	01	9	12640621	1.93.0	04	11
	725/ 1	01	9		1.93.0/ 3	04	11
	900	04	5	12641004	536	01	4
	900	05	7	12642804	1.93.5	02	1
	902	03	4		1.93.5/ 1	02	1
11194679	1.87.2	01	4		622	01	5
	848	01	19	12642821	1.93.4	01	10
11194779	803	01	9		1.95.0	01	14
11197774	1.91.3	01	3		796	01	3
	1.91.7/ 1	01	7	12643701	1.92.6	01	5
	1.91.7/ 3	01	7	12643711	1.98.1	08	2
	346	02	7	12643721	1.87.2	01	3
	347	02	7		848	01	20
	848	01	3	12644921	1.44.0E	04	10
11197779	1.29.1	01	6	12646204	1.92.5	01	5
	1.88.01/ 2	01	5	12646701	636	01	11
11197874	1.95.1	01	16		636/ 1	01	11
11198074	1.92.9	03	21	12646704	1.91.5	02	5
	1.92.9	03	9		1.92.9	01	6
	1.96.7	01	2	12646901	636	01	13
	1.96.7/ 6	01	2		636/ 1	01	13
	851/ 2	01	4	12646904	1.92.9	02	5
	855/ 2	01	4	12646921	1.82.6	03B	20
	856	01	4		1.82.6	04B	15
	856/ 2	01	4	12647004	1.92.9	02	10
11198679	1.21.5/ 5	01	24		1.93.0/ 6	01	2
11200679	1.44.0E	01	13	12647121	1.75.2/ 3	01	9
11234721	302	01	8		1.75.2/ 3	02	3
	700/ 2	01	23		1.82.6	03A	7
	708	01	4		1.82.6	03B	16
11383634	1.88.11/ 5	02	22		1.82.6	08A	10
11394334	200	01	1		1.82.6	08C	10
11701621	1.95.0	01	20		1.82.6	13A	2
11991971	1.88.11/ 5	01	11		646A	01	14
	1.88.12/ 3	01	11		725	01	11
	351	06	13	128825	1.82.6	03B	18
	351	07	3		1.88.11/ 7	01	3
	351	08	6		1.95.5	02	7
	390/ 1	01	17		391/ 1	01	15
	393	01	14		391/ 1	02	15
	394	02	10		437/ 1	01	18
	394/ 1	02	6		721	02	5
	394/ 1	03	17	13000390	636/ 1	01	9
12059980	622	01	6	13000690	346/1	02	14
12164114	1.95.0	01	11	13000990	1.93.5/ 3	01	15
12574011	1.91.4	02	11		346	05	20
	1.91.4	05	3		347	05	7
	1.91.4/ 2	02	11	13271814	1.92.1/ 1	01	3
	1.91.4/ 2	05	3		1.92.1/ 3	01	3
	416-417	01	4	13272214	1.91.4	05	9
	622	01	4		1.91.4/ 2	05	9
	796	01	2	13272319	1.95.1	01	30
12574111	1.92.9	03	18	13272477	351	04	4
	1.96.0	01	6		394/ 1	01	3
12574211	1.82.6	04A	16		416-417	01	3
	1.82.6	11A	13		724	01	14
	1.82.6	12B	10		724/ 3	01	14
	1.91.5	02	9	13273911	1.92.6	01	6
	346	02	23	13274214	848	01	10
	347	02	5	13275914	1.91.8	01	3

Number	Figure	Sequence	Ref.	Number	Figure	Sequence	Ref.
13276217	1.92.9	02	12	14084814	1.93.0/ 5	01	10
13276424	1.91.3	01	2	14143790	1.91.4	04	4
13276617	1.93.0	03	6		1.91.4/ 2	05	23
13276621	1.92.6	02	3		1.93.0	02	15
13297842	1.91.6	01	6		698	01	2
13309417	1.91.4/ 2	05	14		699	01	2
13311017	1.93.0	01	7		704	01	2
	1.93.0/ 2	01	14		787/ 1	01	5
	1.93.0/ 3	01	7		787/ 2	01	4
	1.93.0/ 5	01	14		788/ 1	01	5
13311217	1.93.0	01	4		788/ 2	01	4
	1.93.0/ 2	01	4		791	01	5
	1.93.0/ 3	01	4		792	01	5
	1.93.0/ 5	01	4	14161771	1.92.9	03	5
	1.93.0/ 6A	01	2	14189176	1.93.5	02	6
	1.94.0	01	2		1.93.5/ 1	02	6
	1.95.3	01	7	14197790	1.93.4	01	3
13311817	1.91.6	01	2	14300521	340/ 1	01	16
13312721	1.95.3	01	9		700/ 2	01	28
13313417	1.91.5	02	11		725/ 1	02	16
	1.92.9	01	8	14301521	1.96.0	01	4
	1.93.0	02	3	14302921	331/ A	02	10
	1.93.4	01	5		333/ A	02	10
	1.96.7/ 4	01	2		333/ A	03	1
	1.96.7/10	01	2	14303324	1.93.4	01	2
13399076	1.95.0	01	12		1.95.0	01	15
	1.95.0	02	20		1.95.5	01	5
13400776	1.95.1	01	5		1.95.5/ 3	01	14
13406911	1.44.0E	04	8		1.95.5/ 3	01	5
	1.92.6	03	4		622	01	2
13407214	1.95.0	01	2		796	01	4
13423271	1.95.0	02	6	14304021	331/ A	02	2
13517021	1.93.0/ 6	01	5	14304724	1.96.0	01	3
13578621	302	01	9	14305321	514	07	8
	331	01	13		514	08	3
	333/ 1	01	14		900	07	8
	700/ 2	01	22		900	08	3
	708	01	3		902	06	8
13736611	1.29.1	01	9		902	07	3
13769401	1.95.3	01	16	14305621	1.88.11/ 8	01	3
13789621	302	01	15	14306321	856/ 1	02	13
13812631	351	05	9		856/ 1	03	27
13838071	856/ 1	01	13	14306324	1.95.0	02	5
	856/ 1	01	14	14306424	1.92.9	02	9
13940370	351	05	11		1.92.9	03	20
	351	06	6		1.95.1	01	15
	351	07	12	14308221	336	01	3
	394	02	12		339	01	3
	394/ 1	01	14	14332521	902/ A	01	15
	394/ 1	03	2	14358921	333/ A	02	2
14039611	1.92.4	02	3		333/ A	03	2
14040611	346	02	11	14372671	1.93.5	02	7
	346/1	01	19		1.93.5/ 1	02	7
14040711	646/1	04	18	14422021	1.82.6	01A	3
14048211	1.75.2/ 3	01	8		1.82.6	01B	3
	1.75.2/ 3	03	5	14432334	1.95.5	01	4
	1.82.6	02A	11		1.95.5/ 3	01	4
	1.82.6	08A	7	14440327	1.93.5/ 1	01	4
	1.82.6	08C	7		1.93.5/ 3	01	4
	1.88.11/ 5	01	23		346	05	26
	1.88.11/ 7	01	12		346/1	02	15
	1.88.12/ 3	01	13	14441521	1.93.0	03	3
	351	07	7	14442421	1.92.6	01	11
	351	08	2	14447021	1.95.0	03	6
	390/ 1	01	12	14464680	1.82.6	01A	5
	393	01	15		1.82.6	01B	5
	394	02	3	14466880	1.82.3	01	5
	394/ 1	02	2		1.82.3/ 1	01	5
	394/ 1	03	10		1.82.3/ 2	01	5
	725	01	12	14496407	1.92.9	02	15
	902	03	5	14496521	1.88.11/ 5	01	15
14048214	1.92.6	01	3	14496534	646/1	04	1
14048221	1.82.6	13A	1	14496601	646/1	02	5
	391/ 1	01	11		848	01	13
	391/ 1	02	3	14496721	1.29.1	01	10
14084011	1.93.0	02	6	14496901	721	05	5
14084111	1.91.7/ 1	01	18		803	01	7
	1.91.7/ 3	01	16	14496931	1.87.8	01	6
14084814	1.93.0	01	10	14497001	1.88.11/ 8	01	8
	1.93.0	02	7	14497121	1.44.0E	04	13
	1.93.0/ 2	01	10		902/ A	01	8
	1.93.0/ 3	01	10	14497331	1.44.0E	01	9

Number	Figure	Sequence	Ref.	Number	Figure	Sequence	Ref.
14497401	902/ A	01	24	16043221	1.82.6	03A	6
14499521	351	09	13		1.82.6	03B	6
14560187	1.14.0	01	13		342	01	12
	1.17.2	01	13		636	01	12
	1.75.2/ 3	01	4		636/ 1	01	12
	1.88.11/ 3	01	13		636/ 2	02	3
	1.95.0	02	13	16043324	1.92.9	01	5
	331/ C	06	4	16043421	1.21.5/ 5	01	28
	333/ B	06	4		1.82.0	01	27
	646/1	01	6		646/1	04	2
14568887	1.88.12/ 3	01	16	16043424	1.93.0/ 2	01	7
	1.93.0	03	2		1.93.0/ 5	01	7
	1.93.5/ 1	01	10		1.96.7	01	3
	1.93.5/ 3	01	10		1.96.7/ 6	01	3
	390/ 1	01	4		851/ 2	01	3
	393	01	4		855/ 2	01	3
	394	01	4		856	01	3
14582790	990	01	3		856/ 2	01	3
14591687	1.91.7/ 3	01	17	16043621	1.82.6	07	13
14642192	1.93.5/ 1	02	14		1.88.01	01	3
15201934	1.88.08	02	7		1.88.08	01	19
15212721	1.95.0	03	5		333/ B	08	7
15212921	1.95.2	01	4		351	04	14
15213321	856/ 1	01	27		351	06	3
15213621	1.88.11/ 7	01	11		351	09	7
15213721	331/ B	01	6		394	02	15
15214521	646/1	02	9		394/ 1	03	4
15215821	1.88.09	01	2		636A	04	2
15216421	1.88.09	01	7		646/1	02	8
15500111	351	04	2		646/1	04	15
	848	01	14		721	03	7
15540321	1.88.12/ 3	01	18		721	05	8
	390/ 1	01	9		902	03	3
	393	01	9	16043624	1.95.2	01	9
	394	01	8		1.96.2	01	6
15540421	351	05	3		1.96.2/ 1	01	3
	394/ 1	01	5		346	01	15
15540534	1.21.5/ 5	01	25		347	01	12
15540721	1.14.0	01	11	16043821	1.17.2	01	10
	1.14.0	01	3		1.19.1	01	5
	1.82.0	01	13		1.82.6	07	17
	1.82.0	01	8		636	01	15
15540821	1.29.1	01	4		636/ 1	01	15
	1.82.6	03B	19		637/ 2	01	18
	1.82.6	04B	14		700/ 2	01	10
15541621	1.82.6	04A	10		725/ 1	01	10
	1.82.6	04B	8	16043824	1.75.2/ 3	03	8
15627011	1.93.0	02	9		1.93.0	04	4
15687475	331/ D	03	9		1.93.0/ 3	04	4
	333/ B	10	9	16043921	1.95.0	01	19
	333/ C	01	9		344	01	3
	333/ C	02	9		356	01	3
15693301	1.93.5/ 1	02	2		721	01	3
15693507	1.93.5	02	2		734	01	6
	1.93.5/ 1	02	3	16044021	1.82.6	08A	8
15811387	1.92.9	02	11		1.82.6	08C	8
	1.92.9	03	17		1.82.6	09A	8
15896219	1.92.1/ 1	01	7		1.82.6	09B	3
	1.92.1/ 3	01	7	16044121	391	01	8
15970524	1.88.11/ 5	01	6		902/ A	01	18
	1.95.0	01	18	16044124	1.92.5	01	4
15970721	1.82.6	02B	12	16044221	1.88.01/ 2	02	7
	351	09	15		514	04	3
15970724	1.95.5	01	7		514	04	6
15970921	1.82.6	02B	6		514	05	8
15971321	437/ 1	01	23		724	01	21
15972034	732	01	2		724/ 3	01	21
	732/ A	01	14		900	04	6
15981834	1.87.8	01	11		900	05	6
15982134	1.87.8	01	5		902	02	6
15988934	1.88.11/ 9A	01	5	16044321	1.88.11/ 3	01	1
15989134	1.21.5/ 5	01	10		391	01	5
15989334	1.87.8	01	2	16044324	1.91.7/ 1	01	4
15991134	215	01	4		1.91.7/ 3	01	4
15999434	1.44.0E	01	11	16044421	1.75.2/ 3	03	12
16040821	331/ B	01	23		1.82.6	13A	6
16042924	1.91.4/ 2	05	10		1.88.11/ 7	01	18
16043021	1.75.2/ 3	01	6		514	05	6
	1.88.01	02	13		900	04	3
	636	02	1		900	05	8
	636/ 2	02	1		902	02	3
16043121	1.91.4	05	10	16044521	704	01	10

Number	Figure	Sequence	Ref.	Number	Figure	Sequence	Ref.
16044821	724	01	4	167269	1.82.6	08A	5
	724/ 3	01	4		1.82.6	08C	5
	724/ 5	01	4		1.82.6	09A	2
	724/ 6	01	4		1.82.6	11A	16
16045021	725	01	6		1.82.6	11A	4
16100811	331/ B	01	7		1.88.11/ 3	01	10
	351	09	16		725	01	13
16100821	1.88.01/ 2	02	9		725/ 1	01	3
16101511	351	04	10	16746824	0.142	01	3
	351	05	6	16784504	0.063	01	2
	390/ 1	01	5	16866473	0.105	01	1
	393	01	5	16979231	0.140	01	4
	394	01	10	17044625	0.305	01	12
	394/ 1	01	9	17044921	646A	01	6
16102211	646/1	02	18	17278780	0.043	01	7
16102311	1.88.11/ 5	01	9	17282280	0.042	01	5
	1.88.12/ 3	01	2	17283181	0.270	01	8
	351	06	11		0.270/A	01	8
	351	07	5	17285481	0.043	03	7
	351	08	4	18137824	0.305	01	14
	351	09	2	18138324	0.305	01	13
	351	09	3	18139524	0.360	01	2
	390/ 1	01	14	191823	1.88.11	01	5
	393	01	16		1.88.11/ 2	02	2
	394	02	4	1930010	MPARTS	00	1
	394/ 1	02	4		0.200	01	6
	394/ 1	03	13	201-112	1.82.6	10A	2
16102411	1.91.5	02	6	201-422	725/ 1	02	14
16102911	1.88.11/ 5	01	12	21T4022	1.44.0E	01	24
	1.88.12/ 3	01	4	225315C1	333/ C	02	6
	351	06	12	225318C1	333/ C	02	7
	351	07	4	225350C1	331/ D	03	6
	351	08	5		333/ B	10	6
	351	09	4		333/ C	01	6
	390/ 1	01	15	225353C1	331/ D	03	7
	393	01	17		333/ B	10	7
	394	02	7		333/ C	01	7
	394/ 1	02	5	238-5231	902/ C	01	21
	394/ 1	03	9	263136	1.44.0E	01	3
16104111	1.75.2/ 3	02	12	280248	1.44.0E	03	37
	1.87.2	01	9	2830082	0.040	01	1
	1.91.7/ 1	01	5	2830156	0.201	01	2
	1.91.7/ 3	01	5	2830266	0.201	01	1
	1.92.9	02	6	2830433	0.105	01	7
	1.92.9	03	7	2830559	0.315	01	10
	1.93.0/ 6	01	3	2830775	0.063	01	5
	351	04	12	2830784	0.063	01	7
	351	06	4	2830905	0.105	02	4
	394/ 1	03	5	2830919	0.060	01	15
	646/1	04	3	2830948	0.105	02	3
	721	05	7	2831031	0.105	01	8
	724	01	19	2831203	0.077	01	1
	724/ 3	01	19	2831297	0.081	01	3
	734	01	8	2831298	0.081	01	1
16104511	1.92.6	03	11	2831300	0.105	01	10
16105011	1.29.1	01	3	2831305	0.105	02	1
	636A	01	5	2852098	0.200	01	1
	902/ A	01	12	2852105	0.203	01	1
16586624	0.326	01	1	2852111	0.203	01	3
16587924	0.270	01	7	2852594	0.203	01	2
	0.270/A	01	7	2852621	342	01	10
16592624	0.326	01	1	2852622	646A	01	1
16675834	646A	01	12	2852623	646A	01	2
16676834	0.345/A	01	8	2852625	646A	01	4
167266	1.82.6	01A	7	2852628	646A	01	9
	1.82.6	01B	6	2852629	646A	01	10
	1.82.6	04B	18	2852630	646A	01	11
	1.82.6	11B	2	2852741	0.140	01	6
	1.82.6	12B	2	2852834	0.077	01	3
	514	04	15	2852865	0.043	03	2
	514	06	7	2852869	0.140	02	1
	724	01	30	2852925	646A	01	7
	724/ 3	01	30	2854073	0.043	03	12
	900	04	15	290620	1.88.11/ 1B	01	8
	900	06	7		1.88.11/ 2A	01	6
	902	02	15	290621	1.88.11	01	2
	902	05	7	290885	1.21.5/ 5	01	7
167268	1.82.6	04A	2	291549	1.88.11	01	10
	1.82.6	04B	11	291550	1.11.1	01	15
167269	1.82.6	02A	3		1.88.11/ 1B	01	10
	1.82.6	02B	1	292877	1.88.11/ 2A	01	8
	1.82.6	02B	16	293312	1.88.11	01	6

Number	Figure	Sequence	Ref.	Number	Figure	Sequence	Ref.
293312	1.88.11/ 2	02	3	390989S36	704	02	3
297281A1	902/ C	01	10	3947107	1.44.0E	03	38
297449	795	01	2	412005	131	01	3
2992147	0.080	01	4		321	01	2
2992148	0.080	01	4	413-1036	1.82.6	10A	10
2992149	0.080	01	4	43104S	1.44.0E	03	18
2992153	0.080	01	3	44910052	1.92.6	01	2
2992154	0.080	01	3	44910053	1.92.6	01	8
2992155	0.080	01	3	47042074	1.82.0	01	34
304760S36	536	01	3	47042342	342	01	7
304766S36	1.44.0E	03	36	47042364	1.39.8	01	9
304792S36	1.44.0E	02	21	47043563	1.82.0	01	37
304909S8	1.44.0E	01	8	47044673	1.94.2/ 1	03	8
304911S36	1.44.0E	04	14	47044758	1.82.0	01	35
322357	995	01	16	47048328	1.82.6	05G	8
33799S36	536	01	5	47048440	637/ 2	01	5
33923S36	1.44.0E	04	3	47048448	1.94.2	03	8
33943S36	1.44.0E	04	17	47048450	1.19.1	01	13
34670S36	536	01	9	47048451	1.94.2	03	9
380135S43	1.44.0E	03	29		1.94.2/ 1	03	9
384909S2	1.44.0E	03	39		646/1	01	7
386170C1	331/ C	06	5	47048646	637/ 2	01	6
	333/ B	06	5	47048653	1.94.2	03	6
390256S36	1.44.0E	04	4	47048664	1.39.8	01	4
390828S36	1.82.6	02A	2		1.82.6	05F	11
	1.82.6	02B	18		1.82.6	05G	11
	1.82.6	08A	4	47048668	637/ 2	01	8
	1.82.6	08C	4	47048702	995	01	21
	1.82.6	09A	1		995	02	21
	1.82.6	11A	2	47048759	637/ 2	01	3
	392	01	6	47048760	1.82.6	05G	9
	392	02	4	47048788	131	01	6
	393	03	6		321	01	9
390937S36	1.82.6	01A	6	47048896	1.94.2	03	4
	1.82.6	01B	7		1.94.2/ 1	03	4
	1.82.6	04B	5	47048898	1.15.0	01	5
	1.82.6	11B	1	47048959	1.96.2/ 1	01	4
	1.82.6	12B	1	47048961	331/ A	01	2
	514	04	16		333/ A	01	2
	514	06	3		995	01	10
	900	04	16		995	02	10
	900	06	3	47048962	1.19.1	01	6
	902	02	16		1.82.0	01	28
	902	05	3		636	02	2
390938S36	1.82.6	09B	1		636/ 2	02	2
	1.82.6	11B	4	47048963	131	01	4
	1.82.6	12B	4		321	01	10
	333/ B	07	3		637/ 2	01	7
	334	09	1	47048964	1.39.8	01	5
	514	04	17		1.82.6	05F	8
	514	06	4		1.82.6	05G	12
	514	07	5	47048969	331/ B	01	8
	514	08	1	47048972	1.15.0	01	6
	900	04	17		1.82.0	01	24
	900	06	4		342	01	9
	900	07	1	47048973	1.14.0	01	4
	900	08	1		1.82.0	01	14
	902	02	17	47048976	1.14.0	01	8
	902	05	4		1.82.0	01	9
	902	06	5		636A	01	6
	902	07	1	47048991	1.95.3	01	20
390951S36	1.82.6	03A	3	47048992	331/ B	01	9
	1.82.6	03B	3		342	01	8
	1.82.6	04A	11		636A	04	3
	724	01	7		995	01	17
	724/ 3	01	7	47048993	1.75.2/ 3	02	9
	724/ 5	01	7	47048994	1.95.3	01	13
	724/ 6	01	7	47049010	1.75.2/ 3	02	10
390953S36	1.82.6	03B	17	47049029	1.95.3	01	21
	1.88.11/ 7	01	1		995	01	15
	1.95.5	02	3		995	02	15
	391	01	4	47049030	995	01	18
	391/ 1	01	4	47049031	1.75.2/ 3	02	11
	391/ 1	02	6	47049041	1.15.0	01	7
	437/ 1	01	5		1.82.0	01	25
	721	02	2		131	01	5
390954S36	1.82.6	04A	1		321	01	5
	1.82.6	04B	1		331/ B	01	10
390955S36	1.88.11/ 3	01	5		331/ C	02	2
	725/ 1	01	1		333/ B	02	2
390967S36	391	01	7		637/ 2	01	10
	437/ 1	01	4	47049078	331/ A	01	3

Number	Figure	Sequence	Ref.	Number	Figure	Sequence	Ref.
47049078	333/ A	01	3	4890343	0.345/A	01	4
47049082	1.82.6	02A	8		342	01	1
	331/ B	01	11	4890732	0.345/A	01	9
47049086	637/ 2	01	2	4890832	0.043	02	4
47049088	637/ 2	01	11	4890833	0.043	03	8
47049094	1.11.1	01	20	4890964	0.201	01	4
	1.88.11/ 1B	01	13	4891209	0.043	02	5
47049098	1.15.0	01	4		0.105	02	7
47049101	636A	02	5	4891252	0.320	01	1
47049149	1.95.3	01	12	4891353	0.040	01	6
47049157	995	01	12	4892426	0.345/A	01	6
47049160	1.19.1	01	7	4892708	0.081	01	2
	636A	04	2	4892712	0.082	01	2
47049161	1.82.6	02A	12	4892713	0.082	01	3
	1.82.6	05F	12	4892732	0.345/A	01	7
	1.82.6	05G	13	4892859	0.060	01	2
47049164	995	01	3	4892860	0.066	01	4
47049176	1.28.6	01	4	4892861	0.060	01	1
47049184	331/ B	01	12	4892867	0.084	01	2
	636/ 2	02	4	4892915	0.043	03	2
47049185	1.75.2/ 3	03	10	4893386	0.080	01	2
	1.82.0	01	23	4893391	0.315	01	8
47049186	1.15.0	01	8	4893518	0.142	01	6
	1.75.2/ 3	03	11	4894095	0.203	01	4
	342	01	5	4894139	0.042	01	6
47049187	637/ 2	01	4	4894218	0.040	02	1
47049195	995	01	9	4894641	0.083	01	3
47049372	1.28.0/ A	01	26	4894721	0.201	01	5
	1.28.0/ B	01	25	4895038	0.040	01	4
	636A	02	1	4895039	0.040	01	3
47049404	331/ C	02	14	4895040	0.040	01	7
	333/ B	02	14	4895043	0.315	01	3
47049442	331/ C	02	12	4895045	0.315	01	5
	333/ B	02	12	4895049	0.040	02	8
47049581	636	02	5	4895078	0.060	01	16
	636/ 2	02	5	4895107	0.305	01	2
47049590	131	01	7	4895133	0.240	01	2
	321	01	6	4895155	0.043	03	11
47049809	342	01	4	4895164	0.305	01	1
47049943	342	01	3	4895166	0.200	01	5
47050653	331/ C	03	10		0.400	01	6
	331/ C	04	14	4895179	0.060	01	12
	331/ C	05	7	4895180	0.040	02	9
	333/ B	03	10	4895183	0.060	01	4
	333/ B	04	14	4895184	0.060	01	9
	333/ B	05	7	4895187	0.060	01	6
47050658	1.28.6	01	3	4895188	0.060	01	5
47050671	1.14.0	01	5	4895195	0.066	01	1
	1.82.0	01	10	4895196	0.066	01	7
47050674	636	02	6	4895198	0.066	01	9
	636/ 2	02	6	4895199	0.066	01	10
47050685	331/ C	03	11	4895200	0.066	01	11
	333/ B	03	11	4895204	0.066	01	12
	340/ 1	01	3	4895214	0.063	01	3
	700/ 2	02	3	4895215	0.060	01	8
	725/ 1	02	3	4895227	646A	01	8
47050686	331/ C	01	13	4895228	0.040	01	5
	331/ C	04	13	4895244	0.204	01	1
	331/ C	05	6	4895291	0.345/A	01	2
	333/ B	01	13		0.400	01	4
	333/ B	04	13	4895294	0.071	01	7
	333/ B	05	6	4895297	0.140	02	2
	340/ 1	01	4	4895305	0.204	01	2
	700/ 2	02	4	4895323	0.105	02	8
	700/ 2	02	4		0.120	01	1
	725/ 1	02	4	4895327	0.350	01	3
47050733	636	02	7	4895347	0.060	01	7
	636/ 2	02	7	4895355	0.043	01	4
47050734	636	02	8	4895360	0.063	01	1
	636/ 2	02	8	4895361	0.066	01	2
47050861	1.75.2/ 3	02	8	4895363	0.066	01	5
47054518	995	01	11	4895364	0.066	01	6
47055750	1.15.0	02	1	4895365	0.066	01	8
47120173	331/ C	04	12	4895378	0.043	03	4
	333/ B	04	12	4895379	0.043	03	5
47120179	636/ 2	02	9	4895392	0.040	02	6
47120207	995	01	13		0.323	01	6
47133992	1.91.4	05	5	4895393	0.040	02	7
	1.91.4/ 2	05	5		0.323	01	7
4858605	0.142	01	8	4895489	0.042	01	2
4858607	1.95.0	02	14	4895538	0.042	01	10
	1.95.0	03	3		0.400	01	5

Number	Figure	Sequence	Ref.	Number	Figure	Sequence	Ref.
4895576	0.323	01	4	4899467	0.305	01	5
4895586	0.105	01	6	4899519	0.305	01	6
4895605	0.040	02	2	4899610	0.120	01	5
4895610	0.270	01	5	4899629	0.071	01	8
	0.270/A	01	5	4899643	0.315	01	2
4895623	0.323	01	8	4899921	0.071	01	5
4895625	0.323	01	9	4983992	1.95.0	01	5
4895648	0.071	01	4	4985122	1.95.1	01	13
4895790	0.060	01	3	4985127	1.95.1	01	3
4896404	0.315	01	4	4988275	1.95.1	01	6
4896406	0.315	01	9	4998760	1.95.5	01	11
4896409	0.315	01	11		1.95.5/ 3	01	10
4896410	0.315	01	7	4999021	1.93.0	04	9
4896770	0.142	01	7		1.93.0/ 2	01	25
4896773	0.084	01	1		1.93.0/ 3	04	9
4896897	0.350	01	2		1.93.0/ 5	01	25
4896947	0.105	01	5	500315794	0.045	01	1
4897024	0.043	02	1	500315795	0.045	01	2
4897048	0.105	01	4	500395697	0.345/A	01	5
4897071	0.105	01	3	504001088	0.200	01	2
4897123	0.105	01	2	504010786	0.240	01	4
4897178	0.060	01	13	504011329	0.270	01	1
4897179	0.060	01	14		0.270/A	01	1
4897330	0.270	01	4	504011338	0.270	01	6
	0.270/A	01	4	504025599	0.326	01	6
4897457	0.120	01	4	504026078	0.450	01	1
4897480	0.300	01	1	504028028	0.340	01	2
4897934	0.105	01	11	504031929	0.360	01	1
4898301	0.042	01	3	504032877	0.140	01	2
4898482	0.240	01	6	504034954	0.120	01	7
4899003	0.142	01	4	504035094	0.240	01	5
4899009	0.040	02	4	504035148	0.345/A	01	3
	0.060	01	10	504036358	0.270	01	10
4899019	0.315	01	1	504038890	0.326	01	5
4899020	0.042	01	1	504042116	0.149	01	1
	0.043	03	3	504042165	0.042	01	9
	0.200	01	3	504043550	0.042	01	4
4899026	0.040	01	2	504047260	0.040	02	10
	0.043	01	1	504049033	0.350	01	1
	0.043	03	1	504051210	0.326	01	2
4899027	0.105	02	2	504051276	0.204	01	3
4899031	0.201	01	3	504052006	0.071	01	6
4899035	0.315	01	6	504052013	0.326	01	3
4899036	0.270	01	3	504053166	0.305	01	10
	0.270/A	01	3	504053173	0.305	01	8
4899039	0.071	01	2	504053512	0.326	01	4
4899053	0.345/A	01	1	504053522	0.063	01	6
4899058	0.305	01	9	504053894	0.305	01	15
4899063	0.043	02	3	504057292	0.142	01	5
4899068	0.043	03	9	504057736	0.083	01	1
	0.120	01	3	504060728	0.140	01	3
	0.149	01	2	504060839	0.400	01	2
4899072	0.040	02	5	504061374	0.240	01	3
	0.060	01	11	504061464	0.400	01	3
4899073	0.043	01	3	504061622	0.084	01	3
	0.450	01	2	504062460	0.083	01	2
4899074	0.043	03	2	504062710	0.323	01	2
4899076	0.043	03	2	504062752	0.120	01	2
4899078	0.043	02	2	504062795	0.270	01	2
4899079	0.043	03	6		0.270/A	01	2
	0.320	01	3	504062812	0.042	01	8
	0.340	01	5	504062856	0.320	01	2
4899080	0.120	01	6	504063450	0.140	01	1
4899090	0.300	01	2	504063980	0.071	01	3
4899091	0.042	01	2	504064336	0.323	01	3
	0.043	01	2	504064340	0.340	01	1
4899093	0.043	01	3	504064865	0.071	01	1
	0.200	01	4	504065040	0.063	01	4
4899106	0.305	01	7	504065880	0.340	01	3
4899107	0.305	01	3	504067723	0.066	01	3
4899108	0.305	01	4	504069775	0.043	03	10
4899109	0.043	03	2	504069777	0.042	01	7
	0.105	01	11	504074001	0.043	01	6
	0.323	01	1	504074178	0.323	01	5
	0.340	01	6	504081248	0.077	01	2
4899110	0.045	01	3	504083433	0.142	01	2
4899115	0.040	02	3	504084983	0.270/A	01	11
	0.270	01	11	504088119	0.105	01	9
4899118	0.240	01	1	504088120	0.105	01	12
4899119	0.077	01	4	504093385	0.142	01	1
4899121	0.305	01	11	5105729	1.95.1	01	11
4899143	0.043	03	2	5106733	1.95.1	01	18

Number	Figure	Sequence	Ref.	Number	Figure	Sequence	Ref.
510884	1.44.0E	03	17	81805231	1.44.0E	04	11
510892	1.44.0E	03	6	81816246	1.44.0E	03	10
5110153	1.95.1	01	7	81824478	1.44.0E	03	20
5110155	1.95.1	01	9	81845711	1.44.0E	03	23
5112712	1.91.4	05	8	81845713	1.44.0E	03	35
	1.91.4/ 2	05	8	81847146	1.44.0E	03	25
	1.92.6	03	13	81871864	1.92.4	01	10
	346	05	22		1.92.4	02	10
	346/1	02	13	81876885	1.44.0E	03	14
	347	05	9	8190393	0.140	01	5
5118658	1.91.7/ 1	01	13	82000409	1.92.6	03	9
5128431	1.95.1	01	12	82001909	1.93.0	04	13
5128712	1.95.1	01	8		1.93.0/ 2	01	24
5131437	1.95.1	01	10		1.93.0/ 3	04	13
5132136	1.92.9	02	13		1.93.0/ 5	01	24
	1.92.9	03	8	82002692	1.95.3	01	10
5135069	1.98.1	08	4	82002966	1.91.4	05	6
5138360	1.98.1	08	3		1.91.4/ 2	05	6
5148062	1.95.0	01	3	82003283	1.96.7/ 4	01	5
5148131	1.93.0	02	17		1.96.7/10	01	5
5148132	1.93.0	02	14	82003369	1.95.0	02	9
5148946	1.95.5	01	10	82012402	848	01	15
	1.95.5/ 3	01	11	82013379	848	01	4
5153180	1.95.0	01	21	82013445	848	01	8
5155381	1.95.0	02	2	82014590	848	01	6
5155701	1.95.0	02	15	82017872	995	02	24
5155703	1.95.0	02	16	82022833	1.91.1	01	1
	1.95.0	03	2	82026949	1.95.0	01	13
5162852	1.93.0/ 6	01	8	8274447	1.88.08	02	15
	346/1	02	16	82848118	120/ 1	01	1
5174275	1.95.1	01	13	82848120	120	01	1
5175736	1.91.5	02	7	82848343	120	01	2
5176441	1.93.4	01	1		120/ 1	01	2
5178468	1.93.0	02	5	82848344	120/ 1	01	3
5183854	1.92.6	03	8	82859922	1.92.4	01	1
52491	1.44.0E	03	30	82879400	1.88.11/ 5	02	3
614-10040	1.82.6	10A	3	82895716	1.44.0E	01	21
614-10045	331	01	2	829-1410	1.82.6	10A	4
	333/ 1	01	2	82958118	1.44.0E	02	29
614-8016	637/ 1	01	4	82958961	1.44.0E	03	22
70741298	346	05	13	82959373	1.44.0E	01	23
	347	05	2	82959375	1.44.0E	03	16
71304923	990	01	8	83417133	1.44.0E	01	6
71431438	990	01	6	83910645	1.21.5/ 5	01	5
76009S36	1.44.0E	04	5		1.88.11/ 9A	01	2
76088638	995	01	6	83912378	1.88.11/ 9C	01	4
7704794	902/ A	01	21	83937315	1.88.11/ 2A	01	9
784122	1.91.1/ 1	01	4	83949810	1.44.0E	03	32
79028977	990	01	9	83949811	1.44.0E	02	20
79028981	990	01	4	83949838	1.44.0E	04	1
79062734	990	01	5	83957533	1.44.0E	03	28
79072960	1.88.01/ 2	02	12	83961985	1.92.4	01	3
	392	01	11		1.92.4	02	8
	392	02	10	83962918	394/ 1	01	6
	393	03	11	83962919	394/ 1	01	18
79089592	1.93.0	02	2	83963252	514/ C	01	6
	1.93.0	04	7	83963433	1.88.11/ 5	02	1
	1.93.0/ 2	01	13	83995298	1.93.4	01	4
	1.93.0/ 3	04	7	84058418	331/ B	01	13
	1.93.0/ 5	01	13	85700130	1.88.11/ 5	02	20
	1.93.5	01	2	85700224	81.00	01	2
	1.93.5/ 1	01	8		82.00	01	2
	1.93.5/ 3	01	8		83.00	01	2
79105220	1.93.0	04	8	85700341	1.88.11/ 5	02	13
	1.93.5	01	3	85700728	1.21.5/ 5	01	2
	1.93.5/ 1	01	9	85800001	902/ A	02	17
	1.93.5/ 3	01	9	85800007	1.88.11/ 9C	01	19
79111815	1.93.0	01	12	85800082	902/ A	02	9
	1.93.0/ 2	01	12	85800086	902/ A	02	11
	1.93.0/ 3	01	12	85800090	902/ A	02	5
	1.93.0/ 5	01	12	85800103	1.88.11/ 1B	01	7
79111978	1.92.9	01	12	85800105	1.88.11/ 1B	01	9
	1.93.0	02	13	85800202	514/ F	01	19
	1.93.0	02	18	85800210	514/ F	01	17
	1.93.0/ 2	01	23	85800211	514/ F	01	1
	1.93.0/ 5	01	23	85800303	1.88.11/ 9C	01	14
	1.96.7	01	5	85800504	1.88.11/ 2A	01	5
	1.96.7/ 6	01	5	85800603	1.88.11/ 6	02	3
8093882	0.081	01	4	85800604	1.88.11/ 6	02	2
81803445	1.44.0E	03	13	85800805	902/ A	02	8
81803503	1.44.0E	02	23		902/ B	01	8
81803517	1.44.0E	03	43	85800806	902/ A	02	13

Number	Figure	Sequence	Ref.	Number	Figure	Sequence	Ref.
85800806	902/ B	01	13	85801371	516	02	3
85800860	902/ A	02	1		517	02	3
85800965	1.88.11/ 9A	01	10		518	02	3
85800972	902/ A	02	10		519	02	3
85800990	1.88.11/ 9C	01	6		525	02	3
85801011	1.88.11	01	1		526	01	3
85801025	1.88.08	01	4		526/ 1	01	17
	514/ F	01	22		527	01	3
85801026	1.88.08	02	1		527/ 1	01	7
85801029	1.88.08	01	3		528	01	3
85801034	522/ B	01	1		529	01	3
	522/ C	01	1		536/ 1	01	3
	525	02	7		537/ 1	01	3
	526/ 1	01	15		555	01	3
	536/ 1	01	7		556	01	3
	537/ 1	01	7	85801376	515	02	8
85801044	520	01	1		516	02	8
	527/ 1	01	1		517	02	8
85801048	1.88.11/ 5	02	5		518	02	8
85801049	1.88.11/ 1B	01	2		519	02	8
	1.88.11/ 2	02	5		526	01	2
85801050	1.88.11/ 1B	01	5		527	01	2
85801051	1.88.11	01	11		528	01	2
	471	02	3		529	01	2
	520	01	3	85801377	515	02	7
	522/ B	01	2		516	02	7
	522/ C	01	16		517	02	7
	525	02	6		518	02	7
	526/ 1	01	20		519	02	7
	527/ 1	01	3		526	01	7
	536/ 1	01	6		527	01	7
	537/ 1	01	6		528	01	7
	734	01	4		529	01	7
85801052	1.88.11	01	3	85801397	724	02	3
85801053	1.88.11	01	3		724/ 3	02	3
85801057	1.88.11	01	8	85801452	724	02	7
85801076	1.88.08	01	14		724/ 3	02	7
85801079	1.88.08	02	5	85801470	432	01	2
85801087	1.88.11/ 5	02	21		434	01	4
85801092	1.95.0	02	12		471	02	1
85801093	1.95.0	02	17		515	02	4
85801097	515	01	1		516	02	4
	516	01	3		517	02	4
	517	01	3		518	02	4
	518	01	3		519	02	4
	519	01	3		525	02	2
	530	01	1		526	01	4
	532	01	1		526/ 1	01	16
	533	01	1		527	01	4
85801098	515	01	4		527/ 1	01	6
	516	01	2		528	01	4
	517	01	2		529	01	4
	518	01	2		536/ 1	01	2
	519	01	2		537/ 1	01	2
	530	01	3		555	01	2
	532	01	3		556	01	2
	533	01	3	85801486	522/ C	01	14
85801153	1.88.11/ 9A	01	7		525	01	14
85801161	432	01	3		526/ 1	01	14
	471	02	7	85801488	390/ 1	01	2
	525	02	1		393	01	2
	527/ 1	01	8		394	01	9
	537/ 1	01	1	85801492	995	01	8
	556	01	1	85801502	390/ 1	01	1
85801191	1.88.08	02	13		393	01	1
85801218	1.14.0	01	6		394	01	1
	1.82.0	01	11	85801514	390/ 1	01	11
85801249	1.82.0	01	2		393	01	13
85801258	902/ A	01	26		394	02	11
85801262	1.21.5/ 5	01	22	85801515	393	01	18
85801307	902/ A	01	9	85801518	1.88.12/ 3	01	20
85801308	902/ A	01	22		390/ 1	01	8
85801309	902/ A	01	5		393	01	8
85801310	902/ A	01	4		394	01	6
85801314	902/ A	01	20	85801542	732	01	1
85801319	1.87.8	01	1		732/ A	01	1
85801324	1.87.8	01	9	85801562	1.88.12/ 3	01	12
	203	01	7	85801564	1.88.12/ 3	01	3
85801371	432	01	4	85801566	1.88.12/ 3	01	8
	434	01	2	85801585	636A	01	7
	471	02	8	85801596	1.88.11/ 3	01	11
	515	02	3	85801599	721	05	4

Number	Figure	Sequence	Ref.	Number	Figure	Sequence	Ref.
85801621	1.92.3	01	1	85802144	1.93.5/ 1	02	11
85801622	1.92.3	01	2	85802145	1.93.5	02	12
85801623	1.92.3	01	3		1.93.5/ 1	02	12
85801624	1.92.6	02	7	85802146	1.93.5	02	13
85801625	1.92.6	02	9		1.93.5/ 1	02	13
85801626	1.92.4	03	3	85802214	724	01	18
85801628	1.92.4	03	2		724/ 3	01	18
85801630	1.92.3	01	4	85802227	351	04	15
85801631	1.92.3	01	5	85802231	1.88.01/ 2	01	3
85801632	1.92.9	01	2	85802233	1.88.01/ 2	01	9
85801649	1.93.0	01	2	85802234	340/ 1	01	1
	1.93.0/ 2	01	2		700/ 2	02	1
	1.93.0/ 3	01	2		725/ 1	02	1
	1.93.0/ 5	01	2	85802242	1.98.0	02	5
85801651	1.93.0	03	7	85802243	1.98.0	02	1
85801654	1.92.1	01	2	85802245	1.98.0	02	5
	1.92.1/ 2	01	2	85802246	1.98.0	02	1
85801655	1.92.1	01	3	85802247	725	01	4
	1.92.1/ 2	01	3	85802248	1.98.0	02	5
85801739	1.92.9	01	1	85802249	1.98.0	02	1
85801799	1.92.6	02	4	85802250	1.91.4	02	10
85801800	1.92.6	02	5		1.91.4/ 2	02	10
85801801	1.92.6	02	12	85802251	1.98.0	02	5
	1.93.0/ 6	01	6	85802252	1.98.0	02	1
85801804	1.92.4	01	11	85802254	1.98.0	02	5
85801811	1.92.9	01	3	85802255	1.98.0	02	1
85801812	1.92.9	02	1	85802257	1.98.0	02	5
85801813	1.92.9	02	2	85802258	1.98.0	02	1
85801814	1.92.9	02	3	85802259	1.93.0	04	12
85801815	1.92.9	02	4		1.93.0/ 2	01	20
85801816	1.92.9	02	7	85802260	1.98.0	02	5
85801820	1.92.9	03	11	85802261	1.98.0	02	1
85801821	1.92.9	03	11	85802276	1.91.8	01	1
85801823	1.92.9	03	14	85802307	1.92.6	02	10
85801824	1.92.9	03	15	85802309	1.96.7	01	7
85801825	1.92.9	03	16		1.96.7/ 4	01	3
85801826	1.92.9	01	9		1.96.7/ 6	01	10
85801827	1.92.9	02	14		1.96.7/10	01	1
85801828	1.92.9	01	7		1.96.7/10	01	3
85801829	1.92.9	01	10	85802310	1.96.7	01	11
85801830	1.92.9	03	2		1.96.7/ 4	01	6
85801831	1.92.9	03	1		1.96.7/ 6	01	11
85801832	1.92.9	03	3		1.96.7/10	01	6
85801833	1.92.9	03	4	85802334	1.92.3	01	6
85801834	1.92.9	03	6		1.92.6	02	8
85801860	1.95.0	01	7	85802336	1.88.01/ 2	02	10
85801863	1.92.1/ 1	01	2		1.94.2/ 1	03	6
	1.92.1/ 3	01	2	85802338	1.21.5/ 5	01	13
85801883	1.92.4	02	11	85802351	1.92.9	03	13
85801884	1.92.4	02	13	85802372	725	01	9
85801938	1.96.0	01	1	85802396	1.88.08	01	13
85801939	1.96.0	01	2		1.88.08	02	11
85801941	1.95.0	02	8		514	01	6
85801953	1.96.7	01	4		514	02	10
	1.96.7/ 6	01	4		900	01	6
85801968	1.96.7	01	1		900	02	10
	1.96.7/ 6	01	1		902	01	6
85801976	1.95.5	01	13		902	03	12
	1.95.5/ 3	01	7	85802397	1.88.08	01	12
85801979	1.93.0	03	5		1.88.08	02	12
85801991	1.92.9	01	11		514	01	7
	1.93.0	01	14		514	02	9
	1.93.0	01	3		900	01	7
	1.93.0	02	8		900	02	9
	1.93.0/ 2	01	3		902	01	7
	1.93.0/ 3	01	3		902	03	13
	1.93.0/ 5	01	3	85802398	1.91.5	02	4
	1.93.0/ 6A	01	3	85802403	1.88.11/ 5	02	9
	1.93.5	02	4	85802441	1.98.0	01	13
	1.93.5/ 1	02	4	85802454	724	02	2
	1.94.0	01	3		724/ 3	02	2
85802018	1.92.9	03	12	85802457	725	01	7
85802062	1.92.4	01	7	85802478	1.91.4/ 2	05	4
85802063	1.92.4	01	2	85802494	1.88.11/ 5	01	2
85802107	1.91.6	01	3		1.88.12/ 3	01	21
85802141	1.93.5	02	8		351	05	2
	1.93.5/ 1	02	8		351	06	2
85802142	1.93.5	02	9		394/ 1	01	12
	1.93.5/ 1	02	9		394/ 1	03	7
85802143	1.93.5	02	10		721	05	3
	1.93.5/ 1	02	10	85802509	721	05	1
85802144	1.93.5	02	11	85802510	721	05	11

Number	Figure	Sequence	Ref.
85802513	1.44.0E	04	12
85802515	1.44.0E	04	18
85802527	333/ B	08	10
	721	03	10
85802528	333/ B	08	11
	721	03	11
85802529	333/ B	08	9
	721	03	9
85802532	333/ B	08	6
	721	03	6
85802534	902/ A	01	16
85802580	1.82.0	01	20
85802599	200	01	2
85802617	390	01	1
85802618	1.88.09	01	3
	636A	01	8
85802620	1.88.11/ 7	01	17
85802640	1.95.5	02	1
85802642	1.82.6	02B	10
	1.82.6	04B	6
	1.82.6	11A	1
85802647	351	05	1
	394/ 1	01	4
85802682	390/ 1	01	1
	393	01	1
	394	01	2
85802683	1.28.0/ A	02	13
	1.28.0/ B	02	13
85802684	1.28.0/ A	02	14
	1.28.0/ B	02	16
85802724	1.88.11/ 5	01	1
85802731	1.82.6	13A	7
85802734	1.88.11/ 5	01	5
85802735	1.88.11/ 5	01	13
85802736	1.88.11/ 5	01	8
85802737	1.88.11/ 5	01	16
85802738	1.88.11/ 5	01	14
	1.88.12/ 3	01	10
	351	06	9
	351	07	2
	351	08	7
	390/ 1	01	16
	393	01	19
	394	02	9
	394/ 1	02	7
	394/ 1	03	14
85802741	1.88.11/ 5	01	19
85802742	1.88.11/ 5	01	21
85802743	1.19.1	01	14
	1.88.11/ 3	01	6
	176	01	2
	176	01	4
	391/ 1	01	14
	391/ 1	02	12
85802744	514	06	5
	900	06	5
	902	05	5
85802761	1.95.5	02	5
85802763	1.96.2	01	9
85802776	1.82.6	02B	11
	724	01	10
	724/ 3	01	10
85802777	1.82.6	04B	2
85802780	704	02	7
85802799	1.82.6	04B	7
85802800	1.82.6	01A	10
85802801	1.82.6	05F	1
	1.82.6	05G	1
	1.82.6	06A	2
	724	01	22
	724/ 3	01	22
	724/ 5	01	14
	724/ 6	01	13
85802803	392	01	3
	392	02	5
	393	03	3
85802804	1.17.2	01	11
85802805	391/ 1	01	6
	391/ 1	02	8
85802820	1.88.11/ 7	01	5
85802829	176	01	7
85802838	1.82.6	04B	4
85802839	1.82.6	04B	3
85802842	1.88.12/ 3	01	17
85802843	390/ 1	01	3
	393	01	3
	394	01	3
85802846	1.82.6	03A	5
	1.82.6	03B	5
85802847	1.29.1	01	8
85802872	1.88.08	02	10
85802890	1.82.6	02A	9
	1.82.6	02B	13
	1.82.6	03B	12
	1.82.6	04B	13
	1.88.01/ 2	02	8
85802891	1.82.6	08A	9
	1.82.6	08C	9
85802893	514	04	11
	900	04	11
	902	02	11
85802894	514	04	9
	900	04	9
	902	02	9
85802895	514	04	10
	900	04	10
	902	02	10
85802900	514	04	8
	900	04	8
	902	02	8
85802901	514	05	4
	900	05	4
85802902	514	04	7
	900	04	7
	902	02	7
85802903	1.21.5/ 5	01	8
	721	05	17
85802909	514	05	5
	900	05	5
85802910	1.88.11/ 3	01	3
	1.88.11/ 7	01	16
85802911	1.88.11/ 3	01	2
	1.88.11/ 7	01	10
85802912	1.88.11/ 7	01	14
85802947	1.29.1	01	1
85802950	1.88.11/ 8	01	7
85802954	1.82.6	04A	13
85802955	1.82.6	04A	6
	1.82.6	04B	12
85802957	514	07	2
	514	08	2
	900	07	4
	900	08	2
	902	06	2
	902	07	2
85802958	1.82.6	02B	9
85802960	1.82.6	05F	6
	1.82.6	05G	6
	1.82.6	06B	2
85802961	1.88.11/ 3	01	4
85802965	1.88.11/ 7	01	7
85802970	1.87.8	01	7
85802974	1.11.0	01	9
	1.11.1	01	23
85802975	900	03	10
	902	04	10
85802986	431	01	2
85802987	431	01	3
85802991	1.11.0	01	6
85802992	1.88.11	01	12
	1.88.11/ 1B	01	12
	1.88.11/ 2	02	7
	471	02	5
	520	01	5
	522/ B	01	4
	522/ C	01	17
	525	02	4
	526/ 1	01	18
	527/ 1	01	5
	535	01	4
	535/ 1	01	2
	536/ 1	01	4
	537	01	2
	537/ 1	01	4

Number	Figure	Sequence	Ref.	Number	Figure	Sequence	Ref.
85802992	734	01	2	85803312	333/ B	01	30
85802993	1.88.11	01	4		333/ B	03	9
	1.88.11/ 1B	01	11		333/ B	04	15
	1.88.11/ 2	02	6		340/ 1	01	2
	471	02	4		700/ 2	02	2
	520	01	4	85803332	1.88.01/ 2	02	11
	522/ B	01	3		721	02	9
	522/ C	01	18	85803346	724/ 6	01	21
	525	02	5	85803360	394/ 1	03	1
	526/ 1	01	19	85803364	394/ 1	03	3
	527/ 1	01	4	85803372	628	01	2
	535	01	5	85803380	1.95.3	01	8
	535/ 1	01	8	85803382	351	04	7
	536/ 1	01	5		394/ 1	01	2
	537	01	8	85803393	333/ B	07	5
	537/ 1	01	5		704	02	6
	734	01	3		721	02	8
85802994	1.11.0	01	8		734	01	7
85803002	514	02	8	85803394	990	01	1
	900	02	8	85803395	990	01	7
	902	03	14	85803396	990	01	2
85803005	732	01	3	85803402	333/ B	08	3
	732/ A	01	12		721	03	3
	900	03	9	85803408	700/ 2	01	3
	902	04	9		725/ 1	01	12
85803008	1.88.11/ 3	01	8	85803409	725	01	8
	1.88.11/ 7	01	8	85803428	724	01	11
	391/ 1	02	10		724/ 3	01	11
	514	07	3		724/ 5	01	10
	900	07	5		724/ 6	01	10
	902	06	3	85803447	351	06	8
85803010	1.19.1	01	10		394/ 1	03	15
	1.88.11/ 8	01	5	85803474	394	02	2
	391/ 1	01	7	85803476	394	02	17
	902/ A	02	18	85803477	394	02	8
	902/ B	01	18	85803479	394	02	5
	902/ C	01	18	85803486	1.82.6	02A	1
85803012	1.82.6	01A	1		724	01	5
	1.82.6	01B	1		724/ 3	01	5
85803013	1.17.2	01	5		724/ 5	01	5
	1.19.1	01	12		724/ 6	01	5
85803019	1.17.2	01	12		725	01	3
85803039	1.88.11/ 9A	01	8	85803487	724	01	6
85803040	1.95.3	01	17		724/ 3	01	6
85803079	1.94.2	03	5		724/ 5	01	6
	1.94.2/ 1	03	5		724/ 6	01	6
85803088	902/ A	01	16	85803489	394	02	16
85803107	390/ 1	01	7	85803492	351	07	13
	393	01	7		394	02	13
	394	01	11	85803493	394	02	14
85803124	390/ 1	01	7	85803517	1.88.11/ 7	01	19
	393	01	7		721	05	12
	394	01	5	85803524	1.75.2/ 3	02	6
85803139	535	01	3	85803540	351	04	8
	535/ 1	01	7		394/ 1	01	8
	537	01	7	85803587	351	09	10
85803141	535	01	2	85803613	900	03	1
	535/ 1	01	4		902	04	1
85803184	724	02	8	85803617	1.88.11/ 9A	01	1
	724/ 3	02	8	85803623	1.88.08	01	7
85803192	1.88.08	01	8	85803637	1.88.08	02	14
85803193	1.88.08	01	6	85803782	394	01	13
85803194	1.88.08	01	15	85803783	394	01	14
85803196	1.88.08	01	1	85803786	721	05	10
85803197	1.88.08	01	5	85803787	351	08	9
85803198	1.88.08	02	6	85803788	1.98.0	01	11
85803215	1.88.11/ 5	01	17	85803789	1.98.0	01	10
85803226	1.17.2	01	8	85803867	1.98.0	02	1
85803230	704	02	1	85803875	1.98.0	02	1
85803231	704	02	2	85803879	1.75.2/ 3	02	1
85803234	704	01	6	85803884	1.75.2/ 3	01	5
	721	02	3	85803916	351	08	8
85803246	1.88.08	02	9	85803917	394/ 1	02	8
85803277	1.88.11/ 5	02	16	85803986	1.91.4	02	12
85803289	902/ A	01	17		1.91.4/ 2	02	12
85803297	1.88.11/ 5	02	7	85804026	1.88.11/ 5	02	4
85803312	1.88.01/ 2	01	14	85804038	346	02	13
	1.88.01/ 2	02	1		346/1	01	12
	1.95.0	03	4	85804041	346	02	3
	331/ C	01	30		347	02	3
	331/ C	03	9	85804051	346	03	7
	331/ C	04	15		347	03	3

Number	Figure	Sequence	Ref.	Number	Figure	Sequence	Ref.
85804065	646/1	04	6	85804495	1.11.0	01	21
85804078	1.98.0	03	6	85804497	1.11.0	01	11
85804079	1.98.0	03	2	85804504	1.11.0	01	32
85804080	1.98.0	03	3	85804506	1.11.0	01	12
85804081	1.98.0	04	3	85804508	1.11.0	01	20
85804083	1.98.0	01	14	85804510	1.11.0	01	16
85804084	1.98.0	04	6	85804513	1.11.0	01	27
85804085	1.98.0	04	7	85804515	1.11.0	01	28
85804086	1.98.0	03	4	85804533	1.11.0	01	30
85804087	1.98.0	02	3	85804534	1.11.0	01	10
85804088	1.98.0	04	2		1.11.1	01	24
85804089	1.98.0	03	5	85804538	1.11.1	01	22
85804090	1.98.0	04	5	85804539	1.88.12/ 3	01	24
85804091	1.98.0	04	4	85804540	390/ 1	01	10
85804136	351	09	11		393	01	10
85804141	351	09	9	85804541	394	01	12
85804151	351	09	6	85804542	1.98.0	03	1
85804153	351	09	12	85804543	1.98.0	03	6
85804156	782	01	2	85804544	1.98.0	03	2
	789	01	1	85804545	1.98.0	03	3
85804159	351	04	5	85804546	1.98.0	04	3
85804171	1.21.5/ 5	01	23	85804547	1.98.0	04	6
85804302	1.17.2	01	7	85804548	1.98.0	04	7
85804323	622	01	1	85804549	1.98.0	03	4
85804328	1.98.0	02	5	85804550	1.98.0	02	3
85804332	1.98.0	01	6	85804551	1.98.0	04	2
85804333	1.98.0	01	7	85804552	1.98.0	03	5
85804334	1.98.0	01	8	85804553	1.98.0	04	5
85804335	1.98.0	01	9	85804554	1.98.0	04	4
85804336	1.98.0	01	5	85804555	1.98.0	03	1
85804338	1.98.0	01	4	85804556	1.98.0	03	6
85804339	1.98.0	01	3	85804557	1.98.0	03	2
85804341	1.98.0	01	2	85804558	1.98.0	03	3
85804344	390/ 1	01	19	85804559	1.98.0	04	3
	393	01	11	85804560	1.98.0	04	6
85804345	390/ 1	01	18	85804561	1.98.0	04	7
	393	01	12	85804562	1.98.0	03	4
85804346	302	01	12	85804563	1.98.0	02	3
	340/ 1	01	18	85804564	1.98.0	04	2
	390	01	2	85804565	1.98.0	03	5
	700/ 2	01	17	85804566	1.98.0	04	5
	725/ 1	02	12	85804567	1.98.0	04	4
85804347	176	01	1	85804573	1.82.6	13A	3
	176	01	3	85804574	1.82.6	13A	8
85804349	176	01	5	85804578	1.11.0	01	7
85804358	1.98.0	02	6	85804587	1.11.0	01	22
85804362	1.91.6	01	5	85804588	1.11.0	01	23
85804366	1.88.11/ 5	02	11	85804602	175	01	1
85804375	1.88.11/ 5	01	22	85804617	1.92.4	03	1
	1.88.12/ 3	01	5	85804675	1.14.0	01	16
	351	07	6		1.91.1/ 1	01	2
	351	08	3		1.91.4	03	4
	351	09	1		1.91.4/ 2	03	4
	390/ 1	01	13	85804676	1.96.0	01	5
	393	01	20	85804688	1.96.7/ 4	01	1
	394	02	1	85804705	1.95.5	01	4
	394/ 1	02	3		1.95.5/ 3	01	4
	394/ 1	03	12	85804706	650	01	1
85804376	1.88.11/ 5	01	20	85804734	1.96.7/ 4	01	4
	1.88.12/ 3	01	1		1.96.7/10	01	4
	351	07	9	85804736	394/ 1	03	8
	351	09	5	85804750	1.93.0/ 2	01	18
	394	02	6		1.93.0/ 3	01	18
	394/ 1	03	11		1.93.0/ 5	01	18
85804395	1.98.0	01	1		1.93.5	01	4
	1.98.0	03	1		1.93.5/ 1	01	7
85804400	1.98.0	02	5		1.93.5/ 3	01	7
85804401	1.98.0	02	5	85804780	351	04	3
85804402	1.98.0	02	5		394/ 1	01	1
85804403	1.98.0	02	5	85804781	351	04	6
85804422	1.21.5/ 5	01	4	85804782	394/ 1	01	7
85804441	346	02	19	85804787	394/ 1	01	13
85804442	724	01	20	85804791	394/ 1	01	16
	724/ 3	01	20	85804794	394/ 1	01	15
85804447	514	02	12	85804801	394/ 1	01	11
	900	02	12	85804803	351	08	1
85804467	1.11.0	01	5		394/ 1	02	1
85804468	1.11.0	01	3	85804838	203	01	1
	1.21.5/ 5	01	3		215	01	1
85804469	1.11.0	01	13	85804845	535/ 1	01	1
85804475	1.11.0	01	2	85804846	535/ 1	01	1
85804493	1.87.8	01	10	85804847	535	01	1

Number	Figure	Sequence	Ref.
85804848	535	01	1
85804863	1.93.0	04	2
85804864	1.93.0	04	5
85804865	1.93.0	03	1
85804866	1.93.0	04	6
85804869	1.92.4	01	4
85804870	1.92.4	02	5
85804878	536	01	8
85804879	392	01	9
	393	03	9
	725	01	10
85804947	1.82.6	11A	10
	1.82.6	12B	8
85804959	993	01	12
85805003	346	02	14
	346/1	01	13
85805004	346	02	15
	346/1	01	14
85805005	346	02	16
	346/1	01	15
85805006	346	02	17
	346/1	01	16
	646/1	01	9
85805008	346	02	10
	346/1	01	18
85805013	646/1	01	8
85805014	646/1	01	11
85805033	351	07	1
85805035	351	07	8
85805037	351	07	14
85805038	351	07	11
85805039	351	07	10
85805040	351	06	1
85805042	351	06	7
85805043	351	06	5
85805046	351	06	14
85805047	351	05	10
85805049	351	05	13
85805053	351	05	14
85805056	351	05	7
85805057	351	05	12
85805059	351	05	4
85805065	1.92.3	01	7
	1.92.6	02	11
85805067	1.92.1/ 1	01	4
	1.92.1/ 3	01	4
85805069	203	01	3
85805071	203	01	2
85805108	1.88.11/ 8	01	1
85805111	1.88.11/ 8	01	2
85805113	1.88.11/ 8	01	4
85805115	392	02	1
85805123	392	02	9
85805124	392	01	4
	392	02	2
	393	03	4
85805126	392	02	8
85805137	1.88.08	01	21
85805142	1.87.2	01	11
85805144	346	02	22
85805162	1.75.2/ 3	03	4
85805166	1.82.6	04A	8
85805168	1.82.6	04A	7
85805193	700/ 2	01	7
	725/ 1	01	7
85805195	700/ 2	01	8
	725/ 1	01	8
85805200	1.96.7	01	8
85805203	1.82.6	07	21
85805206	1.82.6	07	18
85805207	1.82.6	07	20
85805208	1.82.6	07	19
85805209	1.82.6	07	16
85805210	1.82.6	07	14
85805211	1.82.6	07	15
85805217	391/ 1	02	7
85805218	391/ 1	01	1
85805220	391/ 1	01	3
	391/ 1	02	14
85805221	391/ 1	01	8
	391/ 1	02	13
85805223	391/ 1	02	5
85805224	391/ 1	01	9
85805228	391/ 1	03	1
85805237	390/ 1	01	11
85805239	351	04	9
85805242	351	04	1
85805247	700/ 2	01	11
	725/ 1	01	11
85805250	351	05	8
85805256	1.17.2	01	6
85805257	1.95.0	02	1
	1.95.0/ A	01	1
85805258	1.82.6	12B	11
	333/ B	07	2
	334	09	2
	700/ 2	01	1
85805262	391/ 1	01	5
85805264	391/ 1	01	12
85805266	391/ 1	02	1
85805271	391/ 1	02	9
85805273	391/ 1	02	9
85805277	1.95.0	01	16
85805283	1.95.0	01	6
85805285	1.95.0	01	4
85805300	203	01	4
85805301	1.87.2	01	14
85805302	1.87.2	01	15
85805303	1.87.2	01	6
85805304	1.87.2	01	7
85805305	1.87.2	01	8
85805306	1.11.0	01	31
85805308	1.93.0/ 2	01	11
	1.93.0/ 5	01	11
85805318	331/ C	05	4
	333/ B	05	4
	725/ 1	02	2
85805323	1.93.0	01	5
	1.93.0/ 2	01	5
	1.93.0/ 3	01	5
	1.93.0/ 5	01	5
	1.93.5	01	5
	1.93.5/ 1	01	5
	1.93.5/ 3	01	5
85805340	700/ 2	01	6
	725/ 1	01	6
85805383	1.91.4	05	11
	1.91.4/ 2	05	11
85805440	1.95.1	01	4
85805441	1.95.1	01	2
85805448	1.92.4	01	9
	1.92.4	02	9
85805502	1.82.6	03A	8
85805545	1.95.5/ 3	01	6
	650	01	2
85805548	1.95.0	03	7
85805567	1.88.11/ 3	01	9
85805571	1.92.8	01	1
85805591	1.93.0	03	4
85805616	1.88.11/ 5	01	4
	1.88.12/ 3	01	6
85805619	1.88.11/ 8	01	6
85805624	1.95.5	01	1
	1.95.5/ A	01	1
	1.95.5/ 3	01	1
85805625	351	06	1
85805629	351	07	10
85805632	351	05	8
85805635	351	04	13
85805648	1.88.08	01	18
85805654	1.11.0	01	14
85805659	1.92.6	02	1
85805663	200	01	5
85805664	200	01	6
85805685	1.75.2/ 3	01	3
85805686	1.75.2/ 3	01	2
85805690	1.88.12/ 3	01	9
85805692	1.88.12/ 3	01	7
85805703	1.40.0	01	18
85805704	1.40.0	01	22
85805705	1.40.0	01	25
85805706	1.40.0	01	14
85805707	1.40.0	01	21
	1.40.0	02	29

Number	Figure	Sequence	Ref.	Number	Figure	Sequence	Ref.
85805709	1.40.0	02	28	85805987	415	02	3
	402	03	14	85805988	402	02	8
	415	03	14		415	02	8
85805710	1.40.0	02	30	85805989	1.40.0	02	4
85805711	1.40.0	02	22		402	02	4
	402	03	3		415	02	4
	415	03	3	85805990	1.40.0	02	18
85805770	1.92.6	01	7		402	02	18
85805771	1.92.6	01	4		415	02	18
85805772	1.95.5	01	9	85805992	1.40.0	02	19
85805773	1.95.5/ 3	01	13		402	02	19
85805774	1.95.5/ 3	01	12		415	02	19
85805775	1.95.5	01	2	85805993	402	06	1
85805777	1.93.0/ 6	01	9		415	06	1
	346/1	02	17	85805996	402	06	5
85805803	1.93.0/ 2	01	6		415	06	5
	1.93.0/ 5	01	6	85805997	402	06	7
85805806	394	02	5		415	06	7
85805807	200	01	4	85805999	402	06	2
85805813	302	01	11		415	06	2
85805819	1.93.0	01	18	85806000	402	06	8
	1.93.0/ 3	01	14		415	06	8
85805824	1.82.6	06A	7	85806002	1.40.0	02	21
85805829	1.98.0	04	1		402	03	2
85805840	1.82.6	06A	1		415	03	2
85805854	1.82.6	07	1	85806003	1.40.0	02	20
85805855	1.82.6	07	2		402	03	1
85805856	1.82.6	07	5		415	03	1
85805857	1.82.6	07	6	85806004	402	05	1
85805858	1.82.6	07	3		415	05	1
85805859	1.82.6	07	4	85806006	402	03	11
85805860	1.82.6	07	7		415	03	11
85805861	1.82.6	07	8	85806008	402	03	7
85805862	725/ 1	01	5		415	03	7
85805863	725/ 1	01	4	85806009	402	03	5
85805864	700/ 2	01	12		415	03	5
	725/ 1	01	13	85806010	1.40.0	02	27
85805865	700/ 2	01	13		402	03	6
	725/ 1	01	14		415	03	6
85805866	394	02	13	85806011	402	03	12
85805867	394	02	17		415	03	12
85805869	1.82.6	07	11	85806012	402	03	15
85805870	1.82.6	07	9		415	03	15
85805872	1.82.6	07	10	85806014	402	03	16
85805969	402	01	7		415	03	16
	415	01	7	85806015	402	03	17
85805973	1.40.0	01	7		415	03	17
	402	01	23	85806016	402	03	13
	415	01	23		415	03	13
85805974	1.40.0	02	31	85806023	1.93.0	01	9
85805975	1.40.0	02	7		1.93.0/ 2	01	9
	402	02	7		1.93.0/ 3	01	9
	415	02	7		1.93.0/ 5	01	9
85805976	1.40.0	02	6		1.96.7	01	9
	402	02	6	85806089	1.93.5	01	6
	415	02	6		1.93.5/ 1	01	6
85805977	1.40.0	02	5		1.93.5/ 3	01	6
	402	02	5	85806095	1.91.5	01	3
	415	02	5	85806097	1.91.5	01	4
85805978	1.40.0	02	16	85806098	1.91.5	01	2
	402	02	16	85806132	1.91.4	05	13
	415	02	16		1.91.4/ 2	05	18
85805979	1.40.0	02	11	85806133	1.91.4	04	3
	402	02	11		1.91.4/ 2	04	3
	415	02	11	85806134	1.91.4/ 2	02	15
85805980	1.40.0	02	12	85806135	1.91.4	02	6
	402	02	12		1.91.4/ 2	02	3
	415	02	12	85806154	1.93.0	02	12
85805982	1.40.0	02	15	85806176	1.95.0	02	21
	402	02	15	85806184	1.91.5	01	5
	415	02	15	85806185	1.91.5	01	6
85805983	1.40.0	02	14	85806187	1.92.1/ 1	01	6
	402	02	14	85807182	1.11.2/ 01	01	12
	415	02	14	85807283	402	06	5
85805984	1.40.0	02	8		415	06	5
	402	02	20	85807284	402	06	6
	415	02	20		415	06	6
85805986	1.40.0	02	13	85807827	1.82.6	16	18
	402	02	13	85807828	1.82.6	16	21
	415	02	13	85807829	1.82.6	16	22
85805987	1.40.0	02	3	85807830	1.82.6	16	19
	402	02	3	85807831	1.82.6	16	20

Number	Figure	Sequence	Ref.	Number	Figure	Sequence	Ref.
85807832	1.82.6	16	15	85811934	333/ 1	02	2
85807833	1.82.6	16	25		333/ 1	03	2
85807834	1.82.6	16	24		333/ 1	04	2
85807855	1.91.1/ 1	01	7		333/ 1	05	2
85807857	336	02	4		333/ 1	06	2
	336	05	11		333/ 1	08	2
	339	02	4	85811937	333/ 1	05	3
85807858	336	02	15		333/ 1	06	3
	336	05	9	85811938	302	02	5
	339	02	15		302	03	4
85807866	1.91.1/ 1	01	3		302	04	4
85807867	522/ B	01	1		333/ 1	02	3
	536/ 1	01	7		333/ 1	03	3
	537/ 1	01	7		333/ 1	04	3
85807868	520	01	2		333/ 1	05	5
	527/ 1	01	2		333/ 1	06	5
85807870	1.98.0	01	12		333/ 1	07	2
85807873	1.88.11/ 7	01	6		333/ 1	08	3
85807874	1.88.11/ 7	01	15	85811946	302	02	4
85807876	724	01	8	85811953	302	02	8
	724/ 3	01	8	85811954	302	02	7
	724/ 5	01	8	85811958	331	01	4
	724/ 6	01	8	85811959	333/ 1	01	4
85807880	1.92.1/ 1	01	5	85811975	176	01	6
	1.92.1/ 3	01	5	85811977	1.11.0	01	17
85807926	394/ 1	03	6	85811985	536	01	1
85808380	1.95.5/ A	01	7	85811986	536	01	1
85808381	1.95.5/ A	01	17	85811989	536	01	7
85808382	1.95.5/ A	01	18	85811990	536	01	6
85808383	1.95.5/ A	01	19	85811991	536	01	6
85808384	1.95.5/ A	01	23	85811992	536	01	2
85808385	1.95.5/ A	01	4	85811995	1.11.0	01	18
85808386	1.95.5/ A	01	12	85812021	1.96.7	01	12
85808390	1.95.5/ A	01	2	85812029	333/ B	07	6
	1.95.5/ A	02	2		721	02	1
85808403	336	01	11	85812064	1.98.0	02	4
	339	01	11	85812080	1.93.0	04	14
85808419	1.95.2	01	5		1.93.0/ 3	04	14
85808422	1.87.2	01	12	85812081	1.93.0/ 2	01	15
	1.88.12/ 3	01	25		1.93.0/ 5	01	15
85808460	1.91.4	05	14	85812085	1.28.0/ A	03	5
	1.91.4/ 2	05	19		1.28.0/ B	03	9
	1.93.0	02	19	85812086	1.28.0/ A	03	2
	1.93.0/ 5	01	20		1.28.0/ B	03	1
85808472	902/ A	01	11	85812087	1.28.0/ A	03	1
85808473	902/ A	01	10		1.28.0/ B	03	2
85811432	515	01	2	85812091	1.28.0/ A	03	15
	516	01	4		1.28.0/ B	03	16
	517	01	4	85812092	1.28.0/ A	04	3
	518	01	4		1.28.0/ B	04	3
	519	01	4	85812094	1.28.0/ A	02	16
	530	01	2		1.28.0/ B	02	17
	532	01	2	85812096	1.28.0/ A	01	3
	533	01	2		1.28.0/ B	01	27
85811440	434	01	3	85812109	1.95.5/ A	01	6
	515	02	1	85812110	1.95.5/ A	01	9
	516	02	1	85812111	1.95.5/ A	01	11
	517	02	1	85812112	1.95.5/ A	01	10
	518	02	1	85812113	302	04	12
	519	02	1		333/ 1	02	4
	526	01	1	85812114	333/ 1	04	4
	526/ 1	01	21	85812115	333/ 1	05	6
	527	01	1	85812116	302	04	8
	528	01	1		333/ 1	03	4
	529	01	1		333/ 1	06	6
	536/ 1	01	1		724/ 3	01	25
	555	01	1		724/ 5	01	17
85811870	1.82.6	01A	2		724/ 6	01	16
	1.82.6	01B	2	85812117	333/ 1	03	6
85811916	708/ 1	01	1	85812131	1.95.5/ A	01	14
85811921	331	01	12	85812132	1.95.5/ A	01	13
	333/ 1	01	13	85812133	1.95.5/ A	01	16
85811923	302	02	3	85812134	1.95.5/ A	01	20
85811933	302	04	9	85812135	1.95.5/ A	01	3
	333/ 1	02	5	85812142	900	04	4
	333/ 1	03	5		902	02	18
	333/ 1	04	5	85812143	1.82.6	11A	6
	333/ 1	05	4		1.82.6	12B	5
	333/ 1	06	4	85812150	900	04	18
	333/ 1	08	5		902	02	4
85811934	302	02	6	85812151	1.82.6	11A	5
	302	04	10		1.82.6	12B	6

Number	Figure	Sequence	Ref.	Number	Figure	Sequence	Ref.
85812152	1.82.6	11A	14	85813362	1.82.6	09A	6
	1.82.6	11B	6		1.82.6	09B	6
85812153	1.82.6	11A	8	85813363	1.82.6	08A	6
85812154	514	04	12		1.82.6	08C	6
	900	04	12		391/ 1	02	18
	902	02	12	85813378	734	01	5
85812155	1.82.6	11B	8	85813379	1.82.6	09A	9
85812156	514	05	3		1.82.6	09B	2
85812161	1.82.6	02B	8	85813380	1.82.6	08A	11
85812164	902	03	6		1.82.6	08C	11
85812170	1.82.6	03B	1	85813407	1.88.01	01	9
85812171	1.82.6	03A	1	85813418	344	02	2
	1.82.6	03B	2		356	02	2
85812173	1.82.6	03A	2	85813419	344	02	3
85812174	1.82.6	04A	12		356	02	3
85812176	1.82.6	11A	7	85813469	514	03	8
	1.82.6	11B	5		900	03	8
85812177	1.82.6	11A	9		902	04	8
	1.82.6	11B	7	85813484	302	01	3
85812178	514	04	13		302	03	1
	900	04	13	85813494	993	01	14
	902	02	13	85815505	392	01	1
85812180	514	05	9		392	02	7
85812184	704	01	3		393	03	1
85812185	1.82.6	08A	2	85815506	391/ 1	01	2
	1.82.6	09A	4		391/ 1	02	2
85812186	1.82.6	08A	1	85815517	514	03	4
	1.82.6	09A	5		900	03	4
85812192	333/ B	07	1		902	04	4
85812193	721	02	7	85815519	856/ 1	02	3
85812211	333/ B	07	4	85815536	1.95.1	01	19
85812214	721	02	4	85815549	1.95.1	01	28
85812252	1.92.6	01	1	85815550	1.95.1	01	22
85812253	1.92.6	01	9	85815552	1.95.1	01	25
85812254	1.92.4	03	4	85815555	1.95.1	01	24
85812255	1.92.4	03	5	85815556	1.95.1	01	23
85812260	81.00	01	1	85815567	1.82.6	02B	19
85812278	1.88.01	01	4	85815568	1.82.6	01B	11
85812338	1.92.5	01	3	85815578	705	01	1
85812364	1.92.9	02	17		856/ 1	02	3
85812365	1.92.9	01	14	85815579	705	01	1
85813054	1.40.0	02	26	85815580	1.82.6	02B	2
85813059	402	04	1	85815581	1.82.6	01B	10
85813060	402	04	1	85815582	1.82.6	03B	8
85813079	346	02	2	85815583	437/ 1	01	14
	347	02	2	85815607	514	01	8
85813096	1.95.3	01	4		900	01	8
85813100	1.96.2	01	13		902	01	8
85813103	721	05	2	85815609	514	01	10
85813104	1.96.2	02	1		900	01	10
85813132	1.95.2	01	6		902	01	10
85813133	1.96.2	01	4	85815620	437/ 1	01	2
85813134	1.96.2	01	2	85815627	514	05	11
85813135	1.96.2	01	3		900	05	11
85813136	1.96.2	01	1	85815628	514	05	10
85813137	1.96.2	01	8		900	05	10
85813138	1.96.2	01	7	85815630	514	04	2
85813140	1.95.3	01	3		900	04	2
85813186	1.96.2	02	4		902	02	2
	721	05	15	85815632	514	04	1
85813187	1.96.2	02	5		900	04	1
	721	05	16		902	02	1
85813200	1.96.2	02	3	85815634	514	05	2
	721	05	14		900	05	2
85813201	1.96.2	02	2	85815636	514	05	1
	721	05	13		900	05	1
85813244	1.82.3	01	2	85815638	514	07	1
	1.82.3/ 1	01	2		900	07	3
	1.82.3/ 2	01	2		902	06	1
85813300	1.28.0/ A	04	7	85815640	333/ B	08	2
	1.28.0/ B	04	7		721	03	2
85813311	1.95.3	01	19	85815642	333/ B	08	1
85813318	1.28.0/ A	04	15		721	03	1
	1.28.0/ B	04	15	85815667	336	02	9
85813324	346	05	25		336	05	2
	347	05	12		339	02	9
85813350	1.82.0	01	19	85815668	336	02	10
85813351	1.82.0	01	17		336	05	6
85813352	1.82.0	01	6		339	02	10
85813353	1.82.0	01	22	85815674	333/ B	09	1
85813354	1.82.0	01	18		334	11	1
85813361	391/ 1	01	18		721	04	1

Number	Figure	Sequence	Ref.	Number	Figure	Sequence	Ref.
85815676	333/ B	09	2	85817212	1.92.5	01	2
	334	11	2	85817213	1.92.5	01	1
	721	04	2	85817220	1.82.6	02A	7
85815677	902	03	2	85817222	437/ 1	01	3
85815679	902	03	1	85817223	437/ 1	01	12
85815683	514	06	1	85817226	1.82.6	03B	4
	900	06	1		331/ C	02	15
	902	05	1		333/ B	02	15
85815698	514	01	4	85817241	1.95.0/ A	01	3
	900	01	4	85817242	1.95.0/ A	01	2
	902	01	4	85817252	1.88.09	01	5
85816760	416-417	01	2	85817265	1.88.01/ 2	01	4
	724	01	13	85817287	1.93.0/ 6A	01	1
	724/ 3	01	13		1.94.0	01	1
85816763	1.93.0/ 2	01	19		646/1	01	5
85816770	1.95.1	01	17	85817289	346	02	1
85816776	1.88.08	02	17		347	02	1
85816793	336	05	1	85817295	346	03	2
85816801	900	01	1		346/1	01	23
	902	01	1	85817428	856/ 1	03	20
85816802	628	01	1	85817429	856/ 1	03	7
85816804	336	01	15	85817430	856/ 1	03	12
	336	05	12	85817431	856/ 1	04	3
	339	01	15	85817432	856/ 1	04	5
85816811	902/ A	02	2	85817433	856/ 1	04	18
	902/ B	01	2	85817434	856/ 1	04	19
85816813	514	06	2	85817435	856/ 1	04	22
	900	06	2	85817436	856/ 1	04	12
	902	05	2	85817440	856/ 1	04	6
85817001	1.28.0/ A	01	13	85817441	856/ 1	04	11
	1.28.0/ B	01	16	85817442	856/ 1	03	10
85817002	1.28.0/ A	03	9	85817443	856/ 1	04	14
	1.28.0/ B	03	5	85817444	856/ 1	03	4
85817004	MPARTS	00	8	85817445	856/ 1	03	6
	1.28.0/ A	03	11	85817446	856/ 1	03	15
	1.28.0/ B	03	14	85817447	856/ 1	03	19
85817006	1.28.0/ A	04	21	85817448	856/ 1	03	17
	1.28.0/ B	04	21	85817449	856/ 1	03	18
85817007	1.28.0/ A	04	22	85817450	856/ 1	03	3
	1.28.0/ B	04	22	85817451	856/ 1	04	17
85817025	336	01	13	85817453	856/ 1	01	9
	339	01	13	85817456	856/ 1	02	4
85817039	900	02	3	85817458	856/ 1	02	7
85817068	514	02	3		856/ 1	03	25
85817106	333/ B	09	3	85817459	856/ 1	01	12
	334	11	3	85817460	856/ 1	01	25
	721	04	3	85817465	856/ 1	02	5
85817107	333/ B	09	4	85817466	856/ 1	01	15
	334	11	4	85817467	856/ 1	01	16
	721	04	4		856/ 1	02	11
85817108	333/ B	08	5	85817468	856/ 1	01	17
	721	03	5	85817469	856/ 1	01	21
85817109	333/ B	08	4	85817470	856/ 1	01	18
	721	03	4	85817471	856/ 1	01	22
85817129	758	01	1	85817476	856/ 1	01	24
85817130	758	01	3	85817477	856/ 1	01	29
85817131	758	01	2	85817478	856/ 1	01	32
85817150	902/ A	01	1	85817479	856/ 1	01	31
85817152	902/ A	01	25	85817480	856/ 1	01	6
85817163	1.28.0/ A	01	12	85817481	856/ 1	01	5
	1.28.0/ A	04	5	85817482	856/ 1	02	2
	1.28.0/ B	01	15	85817483	856/ 1	02	14
	1.28.0/ B	04	5	85817484	856/ 1	02	6
85817164	1.28.0/ A	01	6	85817485	856/ 1	01	8
	1.28.0/ B	01	4	85817531	336	01	16
85817165	1.28.0/ A	03	10		336	05	7
	1.28.0/ B	03	13		339	01	16
85817169	1.28.0/ A	01	18	85817556	856/ 1	03	2
	1.28.0/ B	01	20		856/ 1	04	2
85817170	646/1	03	1	85817558	856/ 1	03	24
85817171	646/1	03	2	85817559	856/ 1	03	22
85817172	646/1	03	3	85817560	856/ 1	03	23
85817173	646/1	03	4	85817561	856/ 1	03	21
85817174	646/1	03	5	85817562	856/ 1	01	2
85817175	646/1	03	6	85817563	856/ 1	01	3
85817186	646/1	01	10	85817564	856/ 1	01	4
85817189	346	02	8	85817586	787/ 1	01	2
	347	02	8		787/ 2	01	2
85817190	1.28.0/ B	01	7	85817587	782	01	1
85817201	336	04	1		788/ 1	01	2
85817210	1.92.5	01	2		788/ 2	01	2
85817211	1.92.5	01	1	85817596	1.82.6	01B	12

Number	Figure	Sequence	Ref.
85817596	1.82.6	02B	7
85817622	1.88.11/ 5	02	17
85817623	1.88.11/ 5	02	18
85817629	724	01	16
	724/ 3	01	16
	724/ 5	01	12
85817633	724	01	15
	724/ 3	01	15
	724/ 5	01	11
	724/ 6	01	11
85817634	724	01	27
	724/ 3	01	27
	724/ 5	01	19
85817635	724	01	26
	724/ 3	01	26
	724/ 5	01	18
85817672	1.75.2/ 3	02	5
85817674	698	01	1
85817697	402	06	9
	415	06	9
85817698	402	03	4
	415	03	4
85817789	1.88.12/ 3	01	22
85818817	791	01	3
	792	01	3
85818818	791	01	4
	792	01	4
85818819	791	01	6
	792	01	6
85818820	1.91.4/ 2	04	2
85818823	1.91.4/ 2	05	22
85818826	787/ 1	01	3
	788/ 1	01	3
85818827	787/ 1	01	4
	787/ 2	01	3
	788/ 1	01	4
	788/ 2	01	3
85818828	787/ 1	01	6
	787/ 2	01	5
	788/ 1	01	6
	788/ 2	01	5
85818891	346	05	24
	347	05	11
85818909	1.82.6	04A	4
85818916	1.11.0	01	29
	514	01	9
	514	03	6
	900	01	9
	900	03	6
	902	01	9
	902	03	10
	902	04	6
85818940	787/ 2	01	6
	788/ 2	01	6
85819016	1.93.0/ 5	01	19
85819017	1.92.9	01	4
85819018	1.92.9	01	4
85819027	1.82.3	01	3
	1.82.3/ 1	01	3
	1.82.3/ 2	01	3
85819040	302	03	9
	302	04	13
85819041	1.95.5	02	2
85819066	334	09	4
85819067	334	09	3
85819068	1.88.01/ 2	01	10
85819069	1.88.01/ 2	01	2
85819071	1.88.01/ 2	01	12
	1.88.01/ 2	02	2
85819072	699	01	1
	704	01	1
85819074	391/ 1	03	4
85819083	1.88.01/ 2	01	11
85819134	787/ 1	01	7
85819144	1.91.4	04	5
85819148	302	02	10
	302	03	2
	302	04	2
	333/ 1	02	6
	333/ 1	03	6
	333/ 1	04	6
	333/ 1	05	7
85819148	333/ 1	06	6
	333/ 1	07	3
	333/ 1	08	6
85819177	1.95.0	03	1
85819179	1.88.11/ 5	02	12
85819180	1.98.0	02	4
85819181	1.98.0	02	4
85819184	346	01	9
	346	02	24
	346	03	8
	347	01	8
	347	02	12
	347	03	2
	646/1	04	5
85819185	646/1	04	16
85819186	1.38.1	01	8
85819190	1.91.7/ 1	01	3
	1.91.7/ 3	01	3
85819191	1.91.7/ 1	01	9
	1.91.7/ 3	01	9
85819194	1.91.7/ 1	01	11
	1.91.7/ 3	01	11
85819196	1.91.7/ 1	01	16
	1.91.7/ 3	01	14
85819197	1.91.7/ 1	01	17
	1.91.7/ 3	01	15
85819198	1.91.7/ 1	01	14
	1.91.7/ 3	01	12
85819199	1.91.7/ 1	01	15
	1.91.7/ 3	01	13
85819200	1.91.7/ 1	01	2
	1.91.7/ 3	01	2
85819214	792	01	8
85819237	416-417	01	1
	724	01	12
	724/ 3	01	12
85819277	1.93.0	02	1
85819285	1.93.0	01	13
	1.93.0/ 3	01	13
85819287	1.93.0	02	4
85819289	1.93.5/ 1	01	1
85819291	1.93.5/ 3	01	1
85819330	626	01	1
85819353	1.88.11/ 9C	01	30
85819357	902/ A	02	3
85819378	302	03	3
	302	04	3
	333/ 1	02	7
	333/ 1	03	7
	333/ 1	05	8
	333/ 1	07	4
	333/ 1	08	7
85819407	1.93.5	01	1
85819451	346	05	2
	346/1	02	2
85819452	346	05	1
	346/1	02	1
	347	05	1
85819453	346	05	11
	346/1	02	11
85819454	1.93.5/ 1	01	3
	1.93.5/ 3	01	3
	346	05	7
	346/1	02	7
85819467	1.88.01	02	1
85819468	1.88.01	01	10
85819469	1.88.01	02	2
85819471	1.88.01	02	3
85819477	1.88.01	01	12
85819478	1.88.01	01	13
85819479	1.88.01	01	14
85819480	1.88.01	01	17
85819481	1.88.01	01	15
85819482	1.88.01	01	5
85819485	1.88.01	01	8
85819486	1.88.01	02	7
85819492	724	01	17
	724/ 3	01	17
	724/ 5	01	13
	724/ 6	01	12
85819493	1.88.08	02	14
85819543	1.93.5/ 3	01	13

Number	Figure	Sequence	Ref.	Number	Figure	Sequence	Ref.
85819544	1.93.5/ 3	01	11	85820159	1.88.11/ 7	01	22
	346	05	12	85820160	1.88.11/ 7	01	23
	346/1	02	12	85820167	1.88.09	01	1
85819545	1.93.5/ 3	01	12	85820170	1.88.09	01	8
85819549	1.93.0/ 6	01	4	85820172	1.88.09	01	6
85819567	1.93.5/ 1	01	2	85820222	724	01	28
	1.93.5/ 3	01	2		724/ 3	01	28
85819568	1.91.4/ 2	01	3		724/ 5	01	20
85819569	1.91.6	01	1		724/ 6	01	19
85819571	700/ 2	01	5	85820237	1.91.5	02	10
85819572	700/ 2	01	4	85820282	1.95.5	02	6
85819586	1.91.4	04	2	85820819	471	02	6
85819592	1.93.5/ 3	01	14	85820835	392	01	7
85819613	1.88.08	02	16		393	03	7
85819618	724	02	12	85820836	392	01	8
85819619	724	02	1		393	03	8
	724/ 3	02	1	85820844	391	01	1
85819620	725	01	2	85820908	1.38.1	01	6
85819621	725	01	1	85820909	1.28.0/ A	06	4
85819629	1.95.2	01	7		1.28.0/ B	06	4
85819649	336	01	1		1.38.1	01	10
85819650	725/ 1	01	15	85820912	392	01	16
85819684	344	01	1	85820913	392	02	14
85819685	721	01	1	85820914	1.38.1	01	9
85819702	1.88.08	02	16	85821126	1.88.11/ 7	01	20
85819721	344	01	5	85821127	391	01	2
	721	01	5	85821131	346	02	18
85819722	336	03	13		346/1	01	17
	339	03	13	85821153	1.91.5	02	1
85819724	1.91.4	01	2	85821172	1.95.1	01	27
85819758	795	01	1	85821173	1.95.1	01	26
85819765	796	01	1	85821205	848	01	1
85819766	796	01	5	85821236	302	02	9
85819813	856/ 1	02	15	85821268	1.88.01	01	1
85819826	1.91.5	01	7	85821270	1.88.01	01	18
85819827	1.91.5	01	1	85821271	1.88.01	01	19
85819945	336	03	1	85821273	1.88.01	02	12
	339	03	1	85821277	1.88.01	02	10
	344	01	13	85821278	1.88.01	02	4
85820005	433	01	1	85821279	1.88.01	02	11
	469/ A	01	1	85821316	1.96.2	01	10
85820008	433	01	4	85821318	1.93.0	01	1
85820009	433	01	5	85821320	1.93.0/ 2	01	1
85820011	433	01	7	85821324	1.95.3	01	2
85820012	433	01	8	85821326	1.91.4	05	21
85820013	433	01	9	85821328	1.95.3	01	1
85820014	433	01	10	85821333	1.91.5	02	14
85820015	433	01	11	85821335	1.91.5	02	3
85820016	433	01	12	85821336	1.91.5	02	15
85820017	433	01	13	85821337	1.91.5	02	2
85820018	433	01	14	85821338	1.91.5	02	8
85820020	433	01	16	85821410	1.91.4	03	3
85820026	433	01	22		1.91.4/ 2	03	3
85820027	433	01	23	85821418	856/ 1	01	26
85820030	433	01	24	85821419	856/ 1	01	23
85820031	433	01	25	85821452	1.28.0/ A	05	15
85820035	433	01	28		1.28.0/ B	05	15
85820051	469/ A	01	2	85821454	1.28.0/ A	05	16
85820052	469/ A	01	11		1.28.0/ B	05	16
85820053	469/ A	01	5	85821514	331/ C	02	7
85820054	469/ A	01	10		333/ B	02	7
85820055	469/ A	01	9	85821515	331/ C	02	10
85820056	469/ A	01	12		333/ B	02	10
85820057	469/ A	01	3	85821516	331/ C	02	9
85820058	469/ A	01	4		333/ B	02	9
85820059	469/ A	01	7	85821519	331/ C	01	10
85820060	469/ A	01	8		333/ B	01	10
85820061	469/ A	01	6	85821520	331/ C	02	11
85820105	1.95.5	01	8		333/ B	02	11
	1.95.5/ 3	01	8	85821537	331/ C	06	6
85820107	1.98.1	08	1		333/ B	06	6
85820122	724/ 6	01	17		347	02	11
85820123	724/ 6	01	18	85821538	995	01	14
85820130	302	03	5	85821539	995	01	22
	302	04	5	85821788	515	01	5
85820136	1.93.4	01	9		516	01	5
85820138	1.93.4	01	7		517	01	5
85820139	1.93.4	01	8		518	01	5
85820141	1.96.7	01	10		519	01	5
85820154	1.38.1	01	5	85821915	1.98.0	02	1
85820156	1.75.2/ 3	02	13	85821916	1.98.0	06	4
85820157	1.38.1	01	2		993	01	11

Number	Figure	Sequence	Ref.	Number	Figure	Sequence	Ref.
85821917	1.98.0	05	2	85824348	415	02	2
	993	01	3	85824349	402	02	1
85821918	1.98.0	05	4		415	02	1
	993	01	5	85824350	1.40.0	02	2
85821919	1.98.0	05	5	85824351	1.40.0	02	1
	993	01	6	85824352	1.40.0	02	9
85821920	1.98.0	03	7	85824356	548	01	1
85821921	1.98.0	05	6	85824381	1.14.0	01	14
	993	01	7		1.17.2	01	14
85821922	1.98.0	06	1	85824393	1.93.5	02	5
	993	01	8		1.93.5/ 1	02	5
85821923	1.98.0	03	8	85824397	734	01	1
85821924	1.98.0	05	1	85824450	1.91.5	02	12
	993	01	2	85824469	1.40.0	01	20
85821925	1.98.0	05	3		402	01	6
	993	01	4		415	01	5
85821927	993	01	13	85825000	537	01	1
85821946	1.98.0	06	2	85825003	537	01	4
	993	01	9	85825067	1.87.2	01	16
85824053	331/ B	01	14	85825129	1.91.4	05	4
85824054	331/ B	01	15	85825136	1.91.4	05	20
85824059	331/ B	01	16	85825154	1.82.0	01	29
85824060	1.82.6	05F	7	85825155	1.82.0	01	30
	1.82.6	05G	7	85825158	1.14.0	01	7
85824067	331/ C	02	1	85825164	636A	02	3
	333/ B	02	1		637/ 1	01	1
85824079	1.96.2/ 1	01	5		637/ 2	01	14
85824080	331/ C	02	6		637/ 3	01	1
	333/ B	02	6	85825169	1.82.6	05F	9
85824081	331/ C	02	7		636	02	15
	333/ B	02	7		995	01	2
85824089	1.88.01/ 2	02	3	85825170	636	02	11
85824095	537	01	1		636/ 2	02	11
85824110	1.88.01/ 2	01	7	85825187	1.82.6	01B	9
85824113	848	01	17		1.82.6	02B	4
85824114	1.95.0	02	19		704	01	4
85824187	1.29.1	01	7	85825188	302	01	1
85824196	1.82.3	01	4	85825191	1.93.0	01	8
	1.82.3/ 1	01	4		1.93.0/ 2	01	8
	1.82.3/ 2	01	4		1.93.0/ 3	01	8
85824197	1.95.5/ 3	01	2		1.93.0/ 5	01	8
	650	01	3	85825197	1.91.4	02	13
85824204	856/ 1	02	12		1.91.4/ 2	02	13
85824211	437/ 1	01	22	85825198	1.91.4	02	14
85824227	1.88.01	01	20		1.91.4/ 2	02	14
85824265	732/ A	01	8	85825254	787/ 1	01	1
85824266	732/ A	01	4		787/ 2	01	1
85824267	732/ A	01	11		788/ 1	01	1
85824278	302	03	7		788/ 2	01	1
	302	04	7		791	01	1
85824280	302	03	6		792	01	1
85824281	302	03	8	85825272	1.93.0/ 5	01	1
	302	04	11	85825277	1.93.0/ 3	01	1
	333/ 1	02	8	85825285	732/ A	01	7
	333/ 1	03	8	85825330	1.91.4/ 2	01	2
	333/ 1	05	9	85825392	1.14.0	01	2
	333/ 1	06	7	85825415	1.98.0	01	1
	333/ 1	07	5	85825441	514	07	7
	333/ 1	08	8		514	08	4
85824282	333/ 1	04	7		900	07	7
85824283	302	03	10		900	08	4
	302	04	14		902	06	7
85824308	392	01	10		902	07	4
	393	03	10	85825442	514	07	6
85824329	402	01	1		514	08	5
85824331	402	01	1		900	07	6
85824333	415	01	1		900	08	5
85824335	415	01	1		902	06	6
85824337	415	01	1		902	07	5
85824339	1.40.0	01	1	85825468	302	01	2
85824341	415	01	1		302	02	1
85824343	402	01	8	85825469	302	01	4
	415	01	8		302	04	1
85824345	402	02	9	85825470	302	01	5
	415	02	9	85825471	302	04	6
85824346	402	04	6	85825472	302	02	2
	415	01	8	85825473	302	01	7
	415	04	6	85825475	302	01	6
85824347	1.40.0	01	16	85825505	1.28.0/ B	06	5
	402	01	16	85825506	1.28.0/ A	06	5
	415	01	16		1.28.0/ B	08	20
85824348	402	02	2	85826012	1.91.4	02	15

Number	Figure	Sequence	Ref.
85826012	1.91.4/ 2	02	17
85826014	1.91.4	02	17
	1.91.4/ 2	02	19
85826026	MPARTS	00	6
85826032	MPARTS	00	7
85826042	1.92.1	01	1
85826047	1.92.1/ 1	01	1
85826071	1.98.0	02	2
85826080	1.95.5	02	4
85826086	1.82.6	08C	2
85826087	1.82.6	09B	5
85826088	1.82.6	09B	4
85826089	1.82.6	08C	1
85826092	704	01	5
85826093	1.82.6	02A	6
85826099	1.95.1	01	29
85826100	331/ C	05	5
	333/ B	05	5
	340/ 1	01	5
	700/ 2	02	5
	725/ 1	02	5
85826108	902	03	7
85826123	724	01	9
	724/ 3	01	9
	724/ 5	01	9
	724/ 6	01	9
85826131	803	01	13
85826132	803	01	3
85826133	803	01	4
85826134	803	01	4
85826147	1.82.3	01	1
85826148	1.82.3/ 1	01	1
85826149	1.82.3/ 2	01	1
85826212	514	04	4
85826213	514	04	18
85826222	1.82.6	11B	8
	900	05	3
85826223	514	05	3
85826224	900	05	9
85826225	514	05	9
85826229	636A	02	4
85826230	636A	02	2
85826250	331	01	11
	333/ 1	01	12
85826260	990	01	10
85826262	856	01	1
	856/ 1	01	1
	856/ 1	02	1
	856/ 1	03	1
	856/ 1	04	1
85826263	856	01	2
	856/ 1	01	1
	856/ 1	02	1
	856/ 1	03	1
	856/ 1	04	1
85826275	391/ 1	02	20
85826276	391/ 1	01	19
85826339	331	01	7
	333/ 1	01	8
	333/ 1	04	1
85826340	331	01	10
	333/ 1	01	11
	333/ 1	07	1
85826344	333/ 1	02	9
	333/ 1	03	9
	333/ 1	04	8
	333/ 1	05	10
	333/ 1	06	8
	333/ 1	07	6
	333/ 1	08	9
85826345	333/ 1	04	9
	333/ 1	06	9
85826382	1.82.0	01	31
85826383	1.82.0	01	32
85826901	331	01	6
	333/ 1	01	7
	333/ 1	03	1
85826902	331	01	9
	333/ 1	01	10
	333/ 1	06	1
85826903	331	01	8
	333/ 1	01	9
85826903	333/ 1	05	1
85826904	333/ 1	01	6
	333/ 1	02	1
85826906	321	01	14
85826943	1.29.1	01	2
85826987	724/ 3	01	23
	724/ 5	01	15
85827041	1.82.6	01A	4
85827067	1.40.0	02	23
	402	03	8
	415	03	8
85827068	402	05	10
	415	05	10
85827069	402	06	3
	415	06	3
85827070	402	06	4
	415	06	4
85827072	321	01	3
85827076	331/ C	04	9
	333/ B	04	9
85827077	331/ C	04	4
	333/ B	04	4
85827078	331/ C	04	11
	333/ B	04	11
85827080	331/ C	04	10
	333/ B	04	10
85827082	331/ C	04	6
	333/ B	04	6
85827084	331/ C	04	1
	333/ B	04	1
85827085	331/ C	04	2
	333/ B	04	2
85827086	331/ C	04	3
	333/ B	04	3
85827087	331/ C	04	5
	333/ B	04	5
85827088	331/ C	03	8
	333/ B	03	8
85827089	331/ C	03	4
	333/ B	03	4
85827090	331/ C	03	7
	333/ B	03	7
85827091	331/ C	03	3
	333/ B	03	3
85827092	331/ C	03	5
	333/ B	03	5
85827093	331/ C	03	1
	333/ B	03	1
85827094	331/ C	03	2
	333/ B	03	2
85827095	331/ C	03	6
	333/ B	03	6
85827097	333/ B	03	12
85827100	1.82.6	02B	15
85827101	1.82.6	16	13
85827102	1.82.6	16	11
85827130	1.88.11/ 9C	01	31
85827178	1.11.2/ 01	01	10
85827181	1.11.2/ 01	01	9
85827183	1.11.2/ 01	01	11
85827184	1.11.2/ 01	01	8
85827186	1.11.2/ 01	01	16
85827187	1.11.2/ 01	01	15
85827188	1.11.2/ 01	01	14
85827197	1.11.1	01	10
85827198	1.11.1	01	2
85827199	1.11.1	01	3
85827200	1.11.1	01	7
85827416	321	01	12
85827423	1.38.1	01	14
	1.38.1	01	7
85827424	1.38.1	01	1
85827466	331/ C	04	8
	333/ B	04	8
85827467	331/ C	04	7
	333/ B	04	7
85827471	333/ A	01	1
85827472	331/ A	01	1
85827475	331/ C	05	3
	333/ B	05	3
85827476	331/ C	05	1
	333/ B	05	1

Number	Figure	Sequence	Ref.
85827477	333/ B	05	2
85827548	1.91.1/ 1	01	6
	1.93.0	01	17
	1.93.0/ 2	01	17
	1.93.0/ 3	01	17
	1.93.0/ 5	01	17
85827703	856	01	1
	856/ 1	01	1
	856/ 1	02	1
	856/ 1	03	1
	856/ 1	04	1
85827704	856	01	2
	856/ 1	01	1
	856/ 1	02	1
	856/ 1	03	1
	856/ 1	04	1
85827725	402	01	1
85827726	402	01	1
85827727	415	01	1
85827729	415	01	1
85827731	415	01	1
85827733	415	01	1
85827738	402	01	16
	415	01	16
85827739	402	02	2
	415	02	2
85827740	402	02	1
	415	02	1
85827741	402	06	1
	415	06	1
85827743	848	01	11
85827744	848	01	16
85827764	1.28.0/ A	04	1
	1.28.0/ B	04	1
85827769	1.28.0/ A	01	1
85827770	1.28.0/ A	01	2
85827771	1.28.0/ A	05	7
	1.28.0/ B	05	7
85827772	1.28.0/ A	05	8
	1.28.0/ B	05	8
85827773	1.28.0/ A	05	13
	1.28.0/ B	05	13
85827774	1.28.0/ A	05	14
	1.28.0/ B	05	14
85827776	1.28.0/ A	04	20
	1.28.0/ A	04	23
	1.28.0/ A	04	23
	1.28.0/ B	04	20
85827777	1.28.0/ B	04	23
85827779	1.28.0/ A	04	8
	1.28.0/ B	04	8
85827782	1.28.0/ B	08	5
85827783	1.28.0/ B	01	2
85827784	1.28.0/ B	01	3
85827787	1.88.11/ 5	01	3
85827803	1.28.0/ A	06	24
	1.28.0/ B	06	22
85827822	416-417	01	5
85827823	1.82.6	04A	5
85827824	1.82.6	05F	2
	1.82.6	05G	2
85827830	636	01	5
	636/ 1	01	5
	637/ 2	01	15
85827831	636	01	6
	636/ 1	01	6
	637/ 2	01	16
85827832	1.95.1	01	1
85827833	1.95.1	01	8
85827836	1.92.9	03	10
85827848	1.92.4	02	2
85827850	1.96.2	01	12
85827918	856/ 1	01	10
85827926	724	01	23
	724/ 6	01	14
85827991	331/ A	02	3
85827992	331/ A	02	15
	333/ A	02	15
	333/ A	03	5
85827993	331/ A	02	11
	333/ A	02	11
	333/ A	03	3
85827994	331/ A	02	9
	333/ A	02	9
	333/ A	03	7
85827995	331/ A	02	7
	333/ A	02	7
	333/ A	03	8
85827996	331/ A	02	6
	333/ A	02	6
	333/ A	03	10
85827997	331/ A	02	13
	333/ A	02	13
	333/ A	03	12
85827998	331/ A	02	8
	333/ A	02	8
	333/ A	03	9
85827999	331/ A	02	4
	333/ A	02	4
	333/ A	03	14
85828000	331/ A	02	12
	333/ A	02	12
	333/ A	03	4
85828001	331/ A	02	14
	333/ A	02	14
	333/ A	03	13
85828002	331/ A	02	5
	333/ A	02	5
	333/ A	03	11
85828003	331/ A	02	16
	333/ A	02	16
	333/ A	03	6
85828004	333/ A	02	3
85828005	331/ A	02	17
	333/ A	02	17
	333/ A	03	15
85828013	331/ A	02	1
	333/ A	03	17
85828015	333/ A	02	1
85828017	1.82.0	01	36
85828050	1.98.0	02	1
85828051	1.98.0	02	1
85828063	1.98.0	03	7
85828064	1.98.0	03	7
85828065	1.98.0	03	8
85828066	1.98.0	03	8
85828069	1.98.0	05	1
85828070	1.98.0	05	1
85828080	1.98.0	06	1
85828081	1.98.0	06	1
85828082	1.98.0	06	2
85828083	1.98.0	06	2
85828084	1.98.0	05	6
85828085	1.98.0	05	6
85828086	1.98.0	05	4
85828087	1.98.0	05	4
85828088	1.98.0	05	2
85828089	1.98.0	05	2
85828090	1.98.0	05	5
85828091	1.98.0	05	5
85828092	1.98.0	06	5
85828094	1.98.0	06	4
85828095	1.98.0	06	4
85828107	1.82.0	01	33
85828168	636	01	16
	636	02	9
	636/ 1	01	16
85828196	856/ 1	01	9
85828211	1.82.6	03A	4
	340/ 1	01	6
	700/ 2	02	6
	725/ 1	02	6
85828212	331/ C	05	8
	333/ B	05	8
85828213	1.96.2/ 1	01	7
85828216	331/ C	06	1
	333/ B	06	1
85828253	1.11.0	01	33
85828254	1.88.11	01	9
86014151	995	02	25
86021837	1.95.1	01	12
86482S95	1.82.6	03A	9
	1.82.6	03B	11
	1.82.6	04A	17

Number	Figure	Sequence	Ref.	Number	Figure	Sequence	Ref.
86482S95	704	02	5	87019767	1.28.0/ A	01	8
	902/ B	01	20		1.28.0/ B	01	26
	902/ C	01	20	87022296	331/ C	01	16
86500514	1.98.0	01	15		333/ B	01	16
86505999	1.44.0E	01	8	87026277	636	02	13
86507337	1.88.11/ 5	02	6		636/ 2	02	13
86511646	1.44.0E	01	14	87031S95	1.44.0E	01	22
86511845	636A	06	2	87037944	331/ D	03	4
86536749	1.44.0E	01	5		333/ B	10	4
86547781	1.98.0	06	3		333/ C	01	4
	993	01	10		333/ C	02	4
86552793	1.44.0E	01	7	87073S95	902/ A	02	16
86552794	1.44.0E	01	7	87090S94	1.44.0E	03	24
86584272	1.44.0E	02	17	87111S95	1.44.0E	01	26
86584273	1.44.0E	02	11	87302151	1.21.5/ 5	01	26
86597537	1.44.0E	01	27	87302279	636	01	10
86619908	995	01	5		636/ 1	01	10
86625071	637/ 2	01	9	87302280	636	01	1
86625128	333/ C	02	13		636/ 1	01	1
86632588	1.44.0E	01	30	87302506	1.39.8	01	1
	1.44.0E	02	31	87302507	1.39.8	01	2
86637716	1.94.2	03	3	87302508	636	01	8
	1.94.2/ 1	03	3		636/ 1	01	8
86977726	1.95.3	01	22	87302607	336	03	14
86982435	902/ C	01	14	87302608	336	03	3
86982437	1.11.2/ 01	01	4		339	03	3
86982440	1.11.1	01	11	87302609	336	03	2
86982444	514/ E	01	2		339	03	2
86982600	437/ 1	01	20	87302611	336	03	12
86982972	637/ 2	01	1		339	03	12
86983070	636	02	12	87302705	1.95.0	02	7
	636/ 2	02	12	87302744	333/ 1	01	1
86983077	637/ 2	01	12	87302745	331	01	1
86983311	331/ D	03	1	87302760	1.44.0E	02	7
	333/ B	10	1	87302761	1.44.0E	02	8
	333/ C	01	1	87302831	803	01	8
	333/ C	02	1	87302837	732/ A	01	5
86984549	331/ C	02	8	87302838	732/ A	01	6
	333/ B	02	8	87302840	732/ A	01	9
86985587	1.14.0	01	9	87302922	636	01	17
86988086	095	01	1		636	02	14
	096	01	1		636/ 1	01	17
86988396	1.95.3	01	14	87302956	1.88.01	01	21
86989315	1.95.3	01	18	87302958	1.88.01	01	11
86989616	331/ C	02	5	87302959	1.88.01	02	6
	333/ B	02	5	87302960	1.88.01	02	5
86989733	MPARTS	00	3	87302967	1.88.01	02	8
	1.82.6	06A	4	87303120	636	01	3
	1.82.6	06B	4		636/ 1	01	3
86990460	331/ B	01	21	87303261	1.91.3	01	1
86990710	0.021	01	1	87303400	340/ 1	01	9
86992395	636A	06	1		700/ 2	02	9
86992966	514	02	6	87303401	340/ 1	01	8
	514	03	9		700/ 2	02	8
	900	02	6	87303506	321	01	11
	902	03	9	87303780	1.87.8	01	1
86993546	1.28.0/ A	01	22	87303909	1.88.11/ 3	01	12
	1.28.0/ B	01	1	87303910	391/ 1	01	13
86999310	331/ C	02	13		391/ 1	02	11
	333/ B	02	13		514	07	4
87000312	331/ D	03	15		900	07	2
	333/ B	10	15		902	06	4
	333/ C	01	15		902/ B	01	6
	333/ C	02	17		902/ C	01	6
87008S95	1.82.6	03A	11	87303912	1.88.11/ 7	01	9
	1.82.6	03B	9		514	06	6
	1.82.6	04A	18		900	06	6
	331/ C	02	17		902	05	6
	333/ B	02	17	87304344	1.44.0E	02	1
	704	02	4	87304345	1.44.0E	02	1
87016552	331/ C	01	15	87304793	302	01	11
	333/ B	01	15	87304799	302	01	13
87016S95	1.82.6	02A	4		302	01	17
	1.82.6	02B	17	87304800	302	01	13
	1.82.6	02B	3	87304801	340/ 1	01	15
	1.82.6	08A	3		700/ 2	01	20
	1.82.6	08C	3		725/ 1	02	15
	1.82.6	09A	3	87304810	1.92.6	03	1
	1.82.6	11A	3	87304910	646/1	02	11
	437/ 1	01	15	87305111	700/ 2	01	15
87017743	1.39.8	01	8		708	01	1
87017744	1.39.8	01	7	87305181	1.11.0	01	26

Number	Figure	Sequence	Ref.	Number	Figure	Sequence	Ref.
87305209	340/ 1	01	19	87311103	390	01	3
	700/ 2	01	18	87311105	340/ 1	01	10
	725/ 1	02	13	87311190	514	01	1
87305211	340/ 1	01	7	87311302	302	01	13
	700/ 2	02	7	87311303	302	01	14
87305240	83.00	01	1	87311306	302	01	13
87305413	1.98.0	06	5	87311320	340/ 1	01	11
87305604	331/ C	06	3	87311592	131	01	9
	333/ B	06	3	87311611	131	01	10
87305611	331/ C	06	2	87311836	302	01	16
	333/ B	06	2	87311838	302	01	16
87305713	1.44.0E	02	5	87312027	1.88.12/ 3	01	22
87305999	708/ 1	01	3	87312049	390	01	1
87306000	708/ 1	01	2	87312328	433	01	3
87306186	333/ B	03	13	87312330	433	01	6
87306512	331/ C	01	31	87312331	433	01	17
	333/ B	01	31	87312333	433	01	21
87306871	700/ 2	01	13	87312335	433	01	31
	725/ 1	01	13	87312340	433	01	18
87306873	700/ 2	01	12	87312342	433	01	19
	725/ 1	01	14	87312343	433	01	20
87306886	636	01	19	87313966	1.44.0E	01	19
	636	02	3		1.44.0E	02	2
	636/ 1	01	19	87314076	1.39.8	01	3
87306887	636	01	18		636	01	9
	636	02	4	87314211	1.44.0E	01	4
	636/ 1	01	18		1.44.0E	02	32
87306927	402	02	5	87314277	902/ C	01	13
	415	02	5	87314278	902/ C	01	8
87306929	402	06	3	87314323	346	01	1
	415	06	7		347	01	1
87306930	402	06	7	87314328	346	01	6
	415	06	3		347	01	6
87306932	402	01	6	87314330	346	01	7
	415	01	5		347	01	7
87306933	402	06	8	87314350	346	01	8
	415	06	8		346/1	01	2
87306934	402	02	21	87314351	346	01	12
	415	02	21		346/1	01	4
87307301	1.11.1	01	14	87314353	346	01	17
87307302	1.11.2/ 01	01	5		346/1	01	7
87307303	1.11.2/ 01	01	7	87314355	346	01	20
87307305	1.11.1	01	12		347	01	5
87307656	331/ C	01	11	87314357	346	01	18
	333/ B	01	11		346/1	01	8
87308	1.44.0E	02	25	87314362	346	01	19
87308014	1.44.0E	02	9		346/1	01	9
87308016	1.44.0E	02	9	87314367	346	01	10
87308017	1.44.0E	02	6		347	01	10
87308018	1.44.0E	02	4	87314369	346	02	5
87308019	1.44.0E	02	38		346/1	01	10
87308614	433	01	2	87314517	346	02	20
87308747	331	01	5		347	02	9
	333/ 1	01	5	87314518	346	01	16
87308840	331/ C	01	19		346/1	01	6
	333/ B	01	19	87314520	346	01	14
87308844	331/ C	01	12		346/1	01	5
	333/ B	01	12	87314522	346	04	11
87309556	1.44.0E	01	1		347	04	11
87309923	331/ C	01	1	87314524	346	02	12
	333/ B	01	1		346/1	01	11
87309924	331/ C	01	2	87314526	346	03	3
	333/ B	01	2		346/1	01	24
87310085	331/ C	01	17	87314527	346	02	4
	331/ C	01	34		347	02	4
	333/ B	01	17	87314554	346	03	6
	333/ B	01	34		347	03	6
87310098	331/ C	01	22	87314566	646/1	04	13
	333/ B	01	22	87314726	346	03	1
87310186	331/ C	01	32		347	03	1
	333/ B	01	32	87314728	346	01	3
87310285	1.88.08	01	16		347	01	3
87310286	433	01	15	87314730	346	01	5
87310354	433	01	27		346/1	01	1
87310434	433	01	26	87314743	346	04	1
87310951	724	02	5		347	04	1
	724/ 3	02	5	87314747	346	04	2
87310952	724	02	9		347	04	2
	724/ 3	02	9	87314749	346	04	3
87311102	302	01	17		346/1	01	25
	390	01	3		347	04	3
87311103	302	01	17	87314750	346	04	4

Number	Figure	Sequence	Ref.	Number	Figure	Sequence	Ref.
87314750	346/1	01	26	87319727	1.93.0/ 6	01	7
87314751	346	04	5	87319744	394/ 1	01	17
	346/1	01	27	87319754	1.96.7/ 6	01	9
87314753	346	04	6	87319785	1.93.0	01	6
	347	04	4		1.93.0/ 3	01	6
87314757	346/1	01	28	87319801	1.93.0	04	1
	347	04	5	87319803	1.93.0	04	17
87314767	346	05	17	87323749	1.93.0	04	16
	347	05	6	87324212	1.11.1	01	1
87314769	346	05	18	87324213	1.11.2/ 01	01	1
	347	05	13	87324469	346	02	9
87314771	346	05	3	87324496	1.95.2	01	10
	346/1	02	3	87324864	650	01	1
87314772	346	05	4	87324867	1.95.5/ 3	01	6
	346/1	02	4		650	01	2
87314773	346	05	5	87324991	1.94.2/ 1	03	1
	346/1	02	5	87324999	1.94.2/ 1	03	2
87314946	346	05	8	87325156	1.95.2	01	7
	346/1	02	8	87326170	1.44.0E	02	19
87314947	346	05	9	87326256	339	01	1
	346/1	02	9		725/ 1	01	15
87314948	346	05	10	87326808	1.39.8	01	10
	346/1	02	10		1.82.6	05F	4
87315029	346	01	11	87326809	1.39.8	01	11
87315214	646/1	04	7		1.82.6	05F	3
87315219	646/1	04	8	87327076	336	01	10
87315221	646/1	04	9		339	01	22
87315225	646/1	04	10	87327252	902/ C	01	2
87315236	646/1	04	11	87327261	902/ C	01	1
87315239	646/1	04	12	87327768	333/ 1	01	1
87315241	646/1	04	14	87328136	1.95.5/ 3	01	2
87315252	646/1	04	4		650	01	3
87315364	646/1	01	1	87331094	356	01	1
87315368	646/1	01	2		721	01	1
87315371	646/1	01	3	87331276	356	01	5
87315381	646/1	01	4		721	01	15
87315438	1.82.6	06A	3	87334836	1.44.0E	01	29
	1.82.6	06B	3		1.44.0E	02	30
87315441	646/1	02	13	87334860	346	04	8
87315446	646/1	02	14		347	04	8
87315457	646/1	02	15	87334861	346	04	9
87315459	646/1	02	16		347	04	9
87315460	646/1	02	17	87335337	120	01	3
87315517	902/ B	01	1	87335345	1.19.1	01	9
87315521	1.88.11/ 2A	01	1	87337288	1.88.01/ 2	02	5
87315525	1.88.11/ 1B	01	1	87340008	342	01	6
87315527	514/ C	01	18	87341088	333/ 1	08	4
87315528	1.88.11/ 6	02	1	87342131	902/ C	01	3
87315529	1.88.11/ 9A	01	9	87342412	0.021	01	1
	1.88.11/ 9C	01	1	87342832	1.88.01/ 2	01	17
87315531	514/ E	01	1	87342882	437/ 1	01	9
87315532	514/ F	01	23	87343616	333/ 1	01	6
87315628	1.87.2	01	13		333/ 1	08	1
87315641	1.87.2	01	1	87344374	82.00	01	1
87315643	1.87.2	01	2	87344386	82.00	01	1
87315646	1.93.0/ 6	01	1	87344422	83.00	01	1
87315647	1.93.0/ 6	01	1	87344431	83.00	01	1
87316091	725/ 1	02	9	87344461	83.00	01	1
87316092	725/ 1	02	7	87344537	81.00	01	1
87316096	725/ 1	02	8	87344545	83.00	01	1
87316439	347	01	9	87345955	1.39.8	01	6
87316442	347	04	6		1.94.2	03	7
87316455	1.95.0	01	9		1.94.2/ 1	03	7
87316861	391	01	3	87346228	1.44.0E	02	33
87318747	346	03	4		1.44.0E	03	26
	347	03	4	87346229	1.44.0E	02	34
87318749	1.91.4/ 2	03	2		1.44.0E	03	26
87318750	346	03	5	87346231	1.44.0E	02	35
	347	03	5		1.44.0E	03	26
87318763	1.93.0/ 6	01	10	87346232	1.44.0E	02	36
87319018	347	06	1		1.44.0E	03	26
87319148	1.98.1	08	8	87346427	1.44.0E	02	37
87319437	346	05	15		1.44.0E	03	26
	347	05	4	87347670	1.15.0	01	1
87319438	646/1	04	17	87347671	1.15.0	01	2
87319441	646/1	04	19	87348000	1.44.0E	01	16
87319443	346	05	21	87348002	803	01	5
	347	05	8	87348165	1.88.09	01	4
87319448	346	05	6	87348934	902/ A	01	1
	346/1	02	6	87350477	1.82.6	10A	1
87319453	346	05	23	87350828	1.21.5/ 5	01	1
	347	05	10	87352045	1.11.0	01	1

Number	Figure	Sequence	Ref.	Number	Figure	Sequence	Ref.
87353314	392	02	3	87384365	725/ 1	02	10
87353316	392	01	5	87400114	1.28.0/ A	01	11
	393	03	5		1.28.0/ B	01	14
87353741	1.14.0	01	17	87400400	1.11.0	01	19
	1.82.0	01	38	87401079	1.11.0	01	24
87354650	1.92.1	01	2	87401159	514/ F	01	18
	1.92.1/ 2	01	2	87402306	331/ B	01	22
87354652	1.92.1	01	3	87402741	1.11.1	01	19
	1.92.1/ 2	01	3	87402742	1.88.11/ 1B	01	6
87354654	1.92.1	01	1	87403241	1.82.0	01	16
87354656	1.92.1/ 2	01	1	87403646	1.94.2	03	1
87355226	1.14.0	01	1	87403647	1.94.2	03	2
87356499	1.82.6	10A	5	87403672	1.14.0	01	12
87356501	1.82.6	10A	6	87403805	1.88.01/ 2	01	1
87357715	704	01	7	87404127	321	01	7
	724	01	2	87404248	1.75.2/ 3	02	7
	724/ 3	01	2	87404557	636/ 2	02	14
	724/ 5	01	2	87404628	636/ 2	02	15
	724/ 6	01	2	87404910	1.14.0	01	10
87358142	346	01	4		1.82.0	01	15
	347	01	4	87405018	1.75.2/ 3	02	4
87358190	704	01	8	87405560	902/ B	01	15
	704/ A	01	1	87405706	331/ B	01	18
87358199	724	01	1	87405859	1.88.11/ 1B	01	21
	724/ A	01	1	87406289	1.82.0	01	26
	724/ 3	01	1	87406389	1.75.2/ 3	01	10
	724/ 5	01	1	87406398	1.75.2/ 3	01	10
	724/ 6	01	1		1.75.2/ 3	03	1
87358348	346	03	9	87406399	1.75.2/ 3	01	1
	346	04	7	87406750	1.88.11/ 2A	01	17
	347	04	7	87406921	1.88.11/ 6	02	11
87358349	346	04	10	87406934	1.28.0/ A	01	23
	347	04	10		1.28.0/ B	01	6
87358807	1.93.5/ 3	01	13	87407206	1.75.2/ 3	03	3
87358808	437/ 1	01	21	87407272	636	02	16
87358811	1.93.5/ 3	01	12		636/ 2	02	16
87358815	437/ 1	01	1	87407275	636A	01	1
87358816	437/ 1	01	10	87407276	636A	01	2
87358817	437/ 1	01	8	87407281	131	01	8
87358818	437/ 1	01	9	87407463	1.82.0	01	3
87360211	1.98.1	08	6	87407464	1.82.0	01	4
87360217	1.98.1	08	9	87407465	1.82.0	01	5
87360331	1.82.6	02A	5	87407927	1.96.2	01	11
87360332	1.82.6	01A	9		1.96.2/ 1	01	6
87360424	1.95.5	01	1	87408120	514/ C	01	5
	1.95.5/ A	02	1	87408277	1.96.7/ 6	01	7
	1.95.5/ 3	01	1	87408479	1.28.6	01	1
87361461	1.82.6	10A	7	87408557	1.28.6	01	2
87362092	1.93.0/ 3	01	1	87408633	1.88.11/ 2A	01	18
87362096	1.93.0	01	1	87408634	1.88.11/ 1B	01	14
87362098	1.93.0	02	1		514/ C	01	9
87362336	1.82.3	01	1	87408635	1.88.11/ 6	02	13
87362337	1.82.3/ 1	01	1	87408636	1.88.11/ 9C	01	12
87362349	1.88.01/ 2	02	5	87408893	1.93.0	04	15
87363002	1.98.0	03	10		1.93.0/ 3	04	15
87363280	1.98.0	03	9	87409046	995	01	4
87363478	1.88.08	01	9	87409201	1.28.0/ A	01	24
87363828	856/ 2	01	1		1.28.0/ B	01	12
87363997	856/ 2	01	1	87409315	1.91.4	05	23
87363998	851/ 2	01	1	87409316	1.91.4	05	22
87364043	851/ 2	01	1		1.91.4/ 2	05	24
87364045	855/ 2	01	1	87409319	514/ F	01	13
87364046	855/ 2	01	1	87409515	1.82.6	01B	4
87364209	856/ 2	01	2	87410096	636	02	17
87364211	856/ 2	01	2		636/ 2	02	17
87364212	851/ 2	01	2	87410099	636	02	18
87364214	851/ 2	01	2		636/ 2	02	18
87364215	855/ 2	01	2	87410101	637/ 1	01	5
87364216	855/ 2	01	2	87410105	331/ C	01	8
87367627	431	01	1		333/ B	01	8
	432	01	1	87410108	1.93.0/ 3	04	6
87367628	434	01	1	87410259	1.91.4	05	12
87373943	1.82.3	01	3		1.91.4/ 2	05	17
	1.82.3/ 1	01	3	87410263	995	02	26
87378869	1.98.0	03	10	87410264	995	02	27
87378871	1.98.0	03	10	87410265	995	02	28
87378872	1.98.0	03	9	87410266	995	02	29
87378873	1.98.0	03	9	87410268	1.75.2/ 3	03	7
87379329	1.98.0	03	9	87410385	1.93.0/ 3	04	1
87379330	1.98.0	03	9	87410408	1.92.1/ 2	01	1
87379331	1.98.0	03	9	87410409	1.92.1/ 3	01	1
87384365	700/ 2	01	2	87410546	1.17.2	01	1

Number	Figure	Sequence	Ref.
87410547	1.17.2	01	4
87410548	1.82.6	05G	3
87410602	995	01	7
87410603	995	01	1
87410647	636A	01	9
87410723	331/ C	01	9
87410916	636	02	19
	636/ 2	02	19
87411090	995	01	20
87411092	995	01	19
87412250	791	01	2
87412252	792	01	2
87412400	1.88.11/ 6	02	4
87412754	1.19.1	01	8
87412988	1.15.0	01	3
87413162	995	02	30
87413237	636	02	20
	636/ 2	02	20
87414205	331/ C	01	28
	333/ B	01	28
87414237	995	01	23
87414331	902/ B	01	7
87414332	1.88.11/ 2A	01	16
87414333	1.88.11/ 1B	01	22
	514/ C	01	15
87414334	1.88.11/ 6	02	12
87414335	1.88.11/ 9C	01	13
87414336	514/ E	01	5
87414337	514/ F	01	14
87414339	902/ B	01	5
87414340	1.88.11/ 2A	01	14
87414341	1.88.11/ 1B	01	23
	514/ C	01	16
87414342	1.88.11/ 6	02	10
87414343	1.88.11/ 9C	01	25
87414344	514/ E	01	6
87414345	514/ F	01	15
87414506	514/ C	01	2
87414560	1.14.0	01	15
87414964	1.88.11/ 2A	01	12
87414965	1.88.11/ 2A	01	11
87414966	1.88.11/ 1B	01	18
	1.88.11/ 9C	01	21
87414969	1.88.11/ 1B	01	15
	1.88.11/ 9C	01	23
	902/ B	01	9
87414970	1.88.11/ 1B	01	17
	1.88.11/ 9C	01	16
	902/ B	01	11
87414971	1.88.11/ 6	02	6
87414974	1.88.11/ 6	02	5
87414975	1.88.11/ 6	02	7
87414976	514/ C	01	1
	514/ E	01	8
	514/ F	01	8
87414979	514/ C	01	13
	514/ E	01	13
	514/ F	01	3
87414980	514/ C	01	11
	514/ E	01	12
	514/ F	01	11
87414983	1.82.6	06B	1
87415113	902/ B	01	10
87415115	1.88.11/ 2A	01	10
87415116	1.88.11/ 1B	01	19
87415119	514/ E	01	11
87415121	514/ F	01	2
87415208	1.75.2/ 3	03	9
87415774	342	01	2
87415781	321	01	8
87415930	1.98.1	08	7
	636/ 1	01	4
	637/ 2	01	13
87416576	1.82.6	05F	3
	1.82.6	05G	3
87416637	636	02	21
	636/ 2	02	21
87416643	1.15.0	02	2
87416929	131	01	2
87416966	636A	01	3
87417207	1.82.0	01	7
87418364	1.19.1	01	3
87418365	1.19.1	01	4
87418368	331/ C	01	20
	333/ B	01	20
87418369	331/ C	01	21
	333/ B	01	21
87419240	636	02	10
	636/ 2	02	10
87419385	342	01	11
87419454	1.96.2/ 1	01	1
87419455	1.96.2/ 1	01	1
87421142	902/ B	01	16
87421143	1.88.11/ 2A	01	15
87421144	1.88.11/ 1B	01	20
	514/ C	01	4
87421145	1.88.11/ 6	02	9
87421147	514/ E	01	9
87421148	514/ F	01	10
87421149	1.88.11/ 9C	01	20
87422777	0.400	01	1
	636A	04	1
87422783	1.88.11/ 9C	01	2
87423401	331/ C	01	36
	331/ C	04	16
	333/ B	01	36
	333/ B	04	16
87423802	331/ C	01	7
	333/ B	01	7
87423812	331/ C	01	33
	333/ B	01	33
87424184	902/ B	01	19
87424195	1.88.11/ 2A	01	19
87424196	1.88.11/ 1B	01	26
87424197	514/ C	01	17
87424198	1.88.11/ 6	02	17
87424199	514/ E	01	21
87424200	514/ F	01	24
87424267	331/ D	03	13
	333/ B	10	13
	333/ C	01	13
	333/ C	02	14
87424301	331/ C	01	23
	333/ B	01	23
87424795	1.75.2/ 3	02	2
87424838	1.88.11/ 9C	01	10
87424935	1.88.11/ 9C	01	29
87425131	514/ E	01	15
87425142	514/ E	01	19
87425174	514/ E	01	4
87425225	331/ A	01	4
	333/ A	01	4
87425696	331/ C	01	27
	333/ B	01	27
87426546	1.93.0/ 3	04	5
87426550	1.93.0/ 3	04	2
	1.93.0/ 5	01	21
87426808	1.82.6	05G	4
87427004	331/ B	01	2
87427922	321	01	4
87427925	321	01	13
87427962	331/ C	01	14
87427963	331/ C	01	29
87427989	331/ C	01	25
	333/ B	01	25
87427991	331/ C	01	24
	333/ B	01	24
87427993	331/ C	01	26
	333/ B	01	26
87427999	514/ C	01	3
87428011	1.88.11/ 6	02	14
87428014	1.88.11/ 9C	01	9
87428018	514/ F	01	21
87428020	1.88.11/ 1B	01	24
	1.88.11/ 2A	01	4
	902/ B	01	14
87428023	331/ D	03	2
	333/ B	10	2
	333/ C	01	2
	333/ C	02	3
87428164	331/ D	03	8
	333/ B	10	8
	333/ C	01	8
	333/ C	02	8

Number	Figure	Sequence	Ref.
87428165	331/ D	03	10
	333/ B	10	10
	333/ C	01	10
	333/ C	02	10
87428620	902/ B	01	3
87428627	1.88.11/ 2A	01	13
87428628	1.88.11/ 1B	01	25
87428630	1.88.11/ 6	02	15
87428631	1.88.11/ 9C	01	11
87428632	514/ E	01	14
87428633	514/ F	01	16
87429593	1.11.2/ 01	01	18
87429863	1.11.1	01	25
87430028	331/ C	02	3
	333/ B	02	3
87430122	646A	01	3
87431300	331/ C	01	29
	333/ B	01	29
87431301	331/ C	01	14
	333/ B	01	14
87431451	1.91.4/ 2	02	2
87431459	1.91.4	02	2
87431461	1.91.4	03	2
87431463	791	01	7
	792	01	7
87431469	1.91.1/ 1	01	1
	1.91.4	03	5
	1.91.4/ 2	03	5
87432407	1.11.1	01	18
87432412	1.11.2/ 01	01	13
87433032	1.88.11/ 9C	01	22
87434992	331/ B	01	1
87435242	331/ D	03	11
	333/ B	10	11
	333/ C	01	11
87435243	333/ C	02	11
87435372	331/ C	01	9
	333/ B	01	9
87435381	095	01	2
	096	01	2
87435506	331/ D	03	14
	333/ B	10	14
	333/ C	01	14
	333/ C	02	15
87436225	331/ D	03	3
	333/ B	10	3
	333/ C	01	3
	333/ C	02	2
87436396	331/ C	01	11
	333/ B	01	11
87436824	1.15.0	01	1
87436825	1.15.0	01	2
87437366	331/ C	01	5
	333/ B	01	5
87437369	331/ C	01	6
	333/ B	01	6
87437371	331/ D	03	12
	333/ B	10	12
	333/ C	01	12
87437372	333/ C	02	12
87437688	331/ C	01	4
	333/ B	01	4
87437689	331/ C	01	3
	333/ B	01	3
87438046	331/ D	03	16
	333/ B	10	16
	333/ C	01	16
	333/ C	02	16
87438246	MPARTS	00	5
87438249	MPARTS	00	4
87440396	1.88.11/ 2A	01	20
87440399	902/ B	01	17
87440401	1.88.11/ 1B	01	16
	514/ C	01	8
87440410	1.88.11/ 6	02	8
87440411	514/ E	01	10
87440412	514/ F	01	9
87442309	1.19.1	01	9
87442310	1.19.1	01	11
87442601	1.19.1	01	2
87442705	1.19.1	01	1
87443692	331/ C	02	4
87443692	333/ B	02	4
87443721	331/ D	03	5
	333/ B	10	5
	333/ C	01	5
	333/ C	02	5
87443740	331/ C	01	12
	333/ B	01	12
	333/ C	02	1
87443743	331/ C	01	19
	331/ D	03	1
	333/ B	01	19
	333/ B	10	
	333/ C	01	1
87445307	1.88.11/ 9C	01	26
87445758	1.88.11/ 9C	01	27
87446608	1.98.0	03	10
87446609	1.98.0	03	9
	993	01	1
87446610	1.98.0	03	10
87446611	1.98.0	03	9
87446612	1.98.0	03	10
87446613	1.98.0	03	9
87449373	1.82.6	10A	8
87450315	1.11.1	01	13
	1.11.2/ 01	01	6
87450926	1.88.11/ 9A	01	9
87452511	331/ C	01	35
	333/ B	01	35
87453110	331/ B	01	17
87453116	331/ B	01	4
87453117	331/ B	01	5
87453118	331/ B	01	19
87455335	1.88.11/ 9C	01	24
87779444	120	01	9
	120/ 1	01	9
87779459	120	01	4
	120/ 1	01	4
87779460	120	01	6
	120/ 1	01	6
87779461	120	01	5
	120/ 1	01	5
87779462	120	01	8
	120/ 1	01	8
87779474	120	01	10
	120/ 1	01	10
87802964	1.98.1	08	5
87803136	646A	01	13
87803260	MPARTS	00	2
	0.302	01	1
87811S36	1.44.0E	01	12
87901S8	1.11.0	01	4
	1.11.1	01	16
	1.11.2/ 01	01	3
	1.21.5/ 5	01	12
	1.88.08	01	11
	1.88.08	02	4
	1.88.11	01	7
	1.88.11/ 2	02	4
	1.88.11/ 2A	01	3
	1.88.11/ 9A	01	6
	1.88.11/ 9C	01	15
	514	01	5
	514	03	2
	514/ C	01	12
	514/ E	01	17
	514/ F	01	7
	900	01	5
	900	03	2
	902	01	5
	902	03	8
	902	04	2
87916S8	1.11.1	01	17
	1.11.2/ 01	01	2
	1.21.5/ 5	01	16
	1.88.11/ 1B	01	3
	1.88.11/ 2A	01	2
	1.88.11/ 6	02	16
88706	517	02	6
	518	02	6
	519	02	6
	526	01	6
	527	01	6

Number	Figure	Sequence	Ref.	Number	Figure	Sequence	Ref.
88706	528	01	6	9967682	402	01	13
	529	01	6		415	01	13
895-11010	1.82.6	10A	9	9967683	1.40.0	01	26
89626929	336	01	20		402	01	15
	336	05	15		415	01	15
	339	01	20	9967734	402	05	9
9511008	637/ 1	01	3		415	05	9
957E4221	1.44.0E	03	5	9967736	402	05	4
957E4228	1.44.0E	03	11		415	05	4
957E4292B	1.44.0E	03	8	9967739	402	05	5
957E7245	1.44.0E	02	24		415	05	5
960E4627	1.44.0E	03	21	9967740	402	05	6
9617873	1.88.01/ 2	01	15		415	05	6
	1.88.01/ 2	01	8	9967741	402	05	7
	1.88.01/ 2	02	4		415	05	7
9673604DS	131	01	1	9967769	1.40.0	01	17
9706729	1.44.0E	01	28		402	01	2
	1.44.0E	03	27		415	01	2
9824050	1.82.6	04A	3	9967908	1.95.5/ A	01	22
	1.82.6	04B	10	9967960	856/ 1	03	5
	336	01	18	9967990	1.40.0	01	15
	336	05	13		402	01	17
	339	01	18		415	01	17
9825770	336	01	17	9967991	1.40.0	01	2
	336	05	14		402	01	18
	339	01	17		415	01	18
	391/ 1	01	17	9967992	1.40.0	01	3
	391/ 1	02	17		402	01	19
98429552	0.270	01	9		415	01	19
98429625	0.204	01	4	9967993	1.40.0	01	4
98433179	646A	01	5		402	01	20
98442879	0.270	01	12		415	01	20
98445111	0.270	01	12	9967994	1.40.0	01	5
9932887	1.95.5/ A	01	21		402	01	21
9958776	856/ 1	02	9		415	01	21
9958782	856/ 1	03	11	9967995	1.40.0	01	11
9958784	856/ 1	03	9		402	01	27
9958785	856/ 1	04	15		415	01	27
9958786	856/ 1	04	16	9967996	1.40.0	01	6
9958788	856/ 1	04	21		402	01	22
9958789	856/ 1	04	25		415	01	22
9958790	856/ 1	04	13	9967997	402	01	4
9958792	856/ 1	03	13		415	01	4
9958793	856/ 1	03	14	9968002	402	01	9
9958800	856/ 1	04	20		415	01	9
9958845	856/ 1	01	7	9968003	402	01	10
9959577	856/ 1	04	24		415	01	10
9959580	856/ 1	04	10	9968004	402	01	11
9959583	856/ 1	04	23		415	01	11
9959585	856/ 1	04	8	9968005	402	01	14
9959588	856/ 1	04	4		415	01	14
9960181	1.95.5/ A	01	8	9968006	1.40.0	01	8
9960692	856/ 1	01	28		402	01	24
	856/ 1	02	8		415	01	24
9960736	856/ 1	04	7	9968007	1.40.0	01	9
9960755	856/ 1	03	16		402	01	25
9960767	856/ 1	04	9		415	01	25
9960793	856/ 1	01	20	9968008	1.40.0	01	10
9960795	856/ 1	01	19		402	01	26
9960797	856/ 1	01	33		415	01	26
9960803	856/ 1	01	30	9968009	1.40.0	01	12
9961810	1.95.5/ A	01	15		402	01	28
9961829	1.95.5/ A	01	5		415	01	28
9966352	402	05	2	9968010	1.40.0	01	13
	415	05	2		402	01	5
9966354	402	05	3		415	01	6
	415	05	3	9968019	402	01	7
9966356	402	05	11		415	01	7
	415	05	11	9968021	1.40.0	02	10
9967672	402	01	3		402	02	10
	415	01	3		415	02	10
9967673	1.40.0	01	19	9968022	402	02	11
	402	01	4		415	02	11
	415	01	4	9968023	402	02	12
9967678	1.40.0	01	23		415	02	12
	402	01	9	9968025	415	02	14
	415	01	9	9968028	1.40.0	02	17
9967679	1.40.0	01	24		402	02	17
	402	01	10		415	02	17
	415	01	10	9968031	402	04	3
9967681	402	01	12		415	04	3
	415	01	12	9968032	402	04	2

Number	Figure	Sequence	Ref.	Number	Figure	Sequence	Ref.
9968032	415	04	2	9968154	526/ 1	01	11
9968033	402	04	4	9968155	522/ C	01	12
	415	04	4		525	01	12
9968034	402	04	5		526/ 1	01	12
	415	04	5	9968156	522/ C	01	13
9968035	415	04	1		525	01	13
9968036	415	04	1		526/ 1	01	13
9968037	402	04	13	9968218	1.28.0/ A	01	4
	415	04	13		1.28.0/ A	02	11
9968038	402	04	13		1.28.0/ A	03	7
	415	04	13		1.28.0/ A	07	14
9968039	402	04	13		1.28.0/ B	02	11
	415	04	13		1.28.0/ B	03	15
9968040	402	04	13		1.28.0/ B	07	14
	415	04	13	9968219	1.28.0/ A	01	5
9968041	402	04	13		1.28.0/ A	02	9
	415	04	13		1.28.0/ A	03	6
9968042	402	04	13		1.28.0/ A	07	10
	415	04	13		1.28.0/ B	02	9
9968043	402	04	13		1.28.0/ B	03	8
	415	04	13		1.28.0/ B	07	10
9968044	402	04	13	9968223	1.28.0/ A	06	15
	415	04	13		1.28.0/ B	06	15
9968045	402	04	13	9968226	1.28.0/ A	05	18
	415	04	13		1.28.0/ B	05	18
9968046	402	04	13	9968228	1.28.0/ A	05	2
	415	04	13		1.28.0/ B	05	2
9968047	402	04	7	9968229	1.28.0/ B	08	11
	415	04	7	9968230	1.28.0/ A	05	30
9968048	402	04	9		1.28.0/ B	05	30
	415	04	9	9968232	1.28.0/ B	08	10
9968049	402	04	8	9968233	1.28.0/ B	08	17
	415	04	8	9968234	1.28.0/ B	08	12
9968050	402	04	10	9968235	1.28.0/ B	08	15
	415	04	10	9968236	1.28.0/ B	08	16
9968051	402	04	11	9968239	1.28.0/ B	08	9
	415	04	11	9968240	1.28.0/ B	08	7
9968052	402	04	12	9968244	1.28.0/ B	08	4
	415	04	12	9968246	1.28.0/ A	06	18
9968054	402	05	8		1.28.0/ B	06	18
	415	05	8	9968247	1.28.0/ A	06	16
9968060	402	06	6		1.28.0/ B	06	16
	415	06	6	9968248	1.28.0/ A	06	13
9968070	1.40.0	02	24		1.28.0/ B	06	13
	402	03	9	9968249	1.28.0/ B	06	9
	415	03	9	9968250	1.28.0/ A	06	11
9968071	1.40.0	02	25		1.28.0/ B	06	11
	402	03	10	9968251	1.28.0/ A	06	12
	415	03	10		1.28.0/ B	06	12
9968083	402	03	19	9968252	1.28.0/ A	06	10
	415	03	19		1.28.0/ B	06	10
9968084	402	03	18	9968253	1.28.0/ A	06	21
	415	03	18		1.28.0/ B	06	21
9968144	522/ C	01	15	9968254	1.28.0/ B	08	8
	525	01	1	9968255	1.28.0/ B	08	1
	526/ 1	01	1	9968256	1.28.0/ B	08	2
9968146	522/ C	01	3	9968257	1.28.0/ B	08	2
	525	01	3	9968258	1.28.0/ B	08	2
	526/ 1	01	3	9968259	1.28.0/ B	08	2
9968147	522/ C	01	4	9968260	1.28.0/ A	06	23
	525	01	4		1.28.0/ B	06	23
	526/ 1	01	4	9968261	1.28.0/ A	05	27
9968148	522/ C	01	5		1.28.0/ B	05	27
	525	01	5	9968262	1.28.0/ A	05	26
	526/ 1	01	5		1.28.0/ B	05	26
9968149	522/ C	01	6	9968263	1.28.0/ A	05	26
	525	01	6		1.28.0/ B	05	26
	526/ 1	01	6	9968264	1.28.0/ A	05	26
9968150	522/ C	01	7		1.28.0/ B	05	26
	525	01	7	9968265	1.28.0/ A	05	26
	526/ 1	01	7		1.28.0/ B	05	26
9968151	522/ C	01	8	9968266	1.28.0/ A	05	26
	525	01	8		1.28.0/ B	05	26
	526/ 1	01	8	9968267	1.28.0/ A	05	26
9968152	522/ C	01	9		1.28.0/ B	05	26
	525	01	9	9968268	1.28.0/ A	05	24
	526/ 1	01	9		1.28.0/ B	05	24
9968153	522/ C	01	10	9968269	1.28.0/ A	06	17
	525	01	10		1.28.0/ B	06	17
	526/ 1	01	10	9968270	1.28.0/ A	06	8
9968154	522/ C	01	11		1.28.0/ A	07	3
	525	01	11		1.28.0/ B	06	8

Number	Figure	Sequence	Ref.	Number	Figure	Sequence	Ref.
9968270	1.28.0/ B	07	3	9968314	1.28.0/ A	05	29
9968271	1.28.0/ A	06	6		1.28.0/ B	05	29
	1.28.0/ A	07	5	9968315	1.28.0/ A	07	9
	1.28.0/ B	06	6		1.28.0/ B	07	9
	1.28.0/ B	07	5	9968316	1.28.0/ A	07	8
9968272	1.28.0/ A	06	7		1.28.0/ B	07	8
	1.28.0/ A	07	4	9968317	1.28.0/ A	07	11
	1.28.0/ B	06	7		1.28.0/ B	07	11
	1.28.0/ B	07	4	9968318	1.28.0/ A	07	12
9968273	1.28.0/ A	06	7		1.28.0/ B	07	12
	1.28.0/ A	07	4	9968319	1.28.0/ A	07	6
	1.28.0/ B	06	7		1.28.0/ B	07	6
	1.28.0/ B	07	4	9968322	1.28.0/ A	07	7
9968274	1.28.0/ A	06	7		1.28.0/ B	07	7
	1.28.0/ A	07	4	9968323	1.28.0/ A	07	13
	1.28.0/ B	06	7		1.28.0/ B	07	13
	1.28.0/ B	07	4	9968324	1.28.0/ A	04	9
9968275	1.28.0/ A	06	7		1.28.0/ B	04	9
	1.28.0/ A	07	4	9968326	1.28.0/ A	04	11
	1.28.0/ B	06	7		1.28.0/ B	04	11
	1.28.0/ B	07	4	9968327	1.28.0/ A	04	10
9968276	1.28.0/ A	05	31		1.28.0/ B	04	10
	1.28.0/ B	05	31	9968328	1.28.0/ A	04	12
	1.28.0/ B	08	3		1.28.0/ B	04	12
9968277	1.28.0/ A	07	1	9968333	1.28.0/ A	02	6
	1.28.0/ B	07	1		1.28.0/ B	02	6
9968278	1.28.0/ A	06	22	9968334	1.28.0/ A	02	2
	1.28.0/ B	06	19		1.28.0/ B	02	2
9968279	1.28.0/ A	05	1	9968336	1.28.0/ A	03	3
	1.28.0/ B	05	1		1.28.0/ B	03	7
9968280	1.28.0/ A	07	2	9968337	1.28.0/ B	03	3
	1.28.0/ B	07	2	9968339	1.28.0/ A	01	20
9968281	1.28.0/ A	05	25		1.28.0/ B	01	9
	1.28.0/ B	05	25	9968340	1.28.0/ B	03	6
9968282	1.28.0/ A	05	28	9968341	1.28.0/ A	05	19
	1.28.0/ B	05	28		1.28.0/ B	05	19
9968285	1.28.0/ A	05	21	9968342	1.28.0/ A	05	20
	1.28.0/ B	05	21		1.28.0/ B	05	20
9968286	1.28.0/ A	05	5	9968343	1.28.0/ A	05	20
	1.28.0/ B	05	5		1.28.0/ B	05	20
9968287	1.28.0/ A	05	9	9968344	1.28.0/ A	05	20
	1.28.0/ B	05	9		1.28.0/ B	05	20
9968288	1.28.0/ A	05	10	9968345	1.28.0/ A	05	20
	1.28.0/ B	05	10		1.28.0/ B	05	20
9968289	1.28.0/ A	05	12	9968347	1.28.0/ A	05	23
	1.28.0/ B	05	12		1.28.0/ B	05	23
9968290	1.28.0/ A	05	11	9968350	1.28.0/ A	02	1
	1.28.0/ B	05	11		1.28.0/ B	02	1
9968291	1.28.0/ A	05	6	9968351	1.28.0/ B	01	8
	1.28.0/ B	05	6	9968354	1.28.0/ A	03	12
9968297	1.28.0/ B	08	14		1.28.0/ B	03	12
9968298	1.28.0/ B	08	13	9968356	1.28.0/ A	01	7
9968299	1.28.0/ A	04	14		1.28.0/ B	01	5
	1.28.0/ B	04	14	9968358	1.28.0/ A	06	20
9968300	1.28.0/ B	08	21		1.28.0/ B	06	20
9968301	1.28.0/ B	08	19	9968359	1.28.0/ A	01	15
9968302	1.28.0/ A	05	4		1.28.0/ B	01	17
	1.28.0/ B	05	4	9968360	1.28.0/ A	01	17
9968304	1.28.0/ A	05	3		1.28.0/ B	01	19
	1.28.0/ B	05	3	9968361	1.28.0/ A	01	16
9968305	1.28.0/ A	05	22		1.28.0/ B	01	18
	1.28.0/ B	05	22	9968362	1.28.0/ A	01	19
9968306	1.28.0/ A	06	2		1.28.0/ B	01	21
	1.28.0/ B	06	2	9968364	1.28.0/ A	02	12
	1.28.0/ B	08	23		1.28.0/ B	02	12
	1.38.1	01	12	9968365	1.28.0/ A	01	21
9968307	1.28.0/ A	06	14		1.28.0/ B	01	10
	1.28.0/ B	06	14	9968368	1.28.0/ A	02	10
9968308	1.28.0/ A	06	1		1.28.0/ B	02	10
	1.28.0/ B	06	1	9968370	1.28.0/ A	04	19
	1.28.0/ B	08	18		1.28.0/ B	04	19
	1.38.1	01	13	9968371	1.28.0/ A	02	5
9968309	1.28.0/ A	06	3		1.28.0/ B	02	5
	1.28.0/ B	06	3	9968374	1.28.0/ A	03	13
	1.28.0/ B	08	22		1.28.0/ B	03	11
	1.38.1	01	11	9968375	1.28.0/ A	03	14
9968311	1.28.0/ A	01	9		1.28.0/ B	03	10
	1.28.0/ B	01	11	9968382	1.28.0/ B	02	15
9968312	1.28.0/ A	01	10	9968383	1.28.0/ B	02	14
	1.28.0/ B	01	23	9968393	1.28.0/ B	08	6
9968313	1.28.0/ A	01	14	9968396	1.28.0/ A	06	19
	1.28.0/ B	01	22	9968438	339	02	7

Number	Figure	Sequence	Ref.
9968439	339	02	5
9968440	336	02	8
	339	02	8
	344	01	4
	356	01	4
	721	01	14
9968441	336	02	6
	339	02	6
	344	01	6
	356	01	6
	721	01	13
9968443	336	02	3
	339	02	3
9968444	336	03	6
	339	03	6
9968445	336	03	7
	339	03	7
9968446	336	03	8
	339	03	8
9968447	1.82.6	16	10
	336	03	11
	339	03	11
9968448	1.82.6	16	9
	336	03	10
	339	03	10
9968449	336	03	9
	339	03	9
9968451	336	01	12
	339	01	12
9968454	336	01	14
	339	01	14
9968455	336	01	4
	339	01	4
9968456	336	01	6
	339	01	6
9968457	336	01	5
	339	01	5
9968458	1.82.6	17	11
	1.82.6	18	11
	336	01	7
	339	01	7
9968460	1.82.6	17	12
	1.82.6	18	12
	339	01	8
	344	02	12
	356	02	12
9968461	336	04	6
9968464	336	02	1
	336	05	10
	339	02	1
9968465	336	04	2
9968466	1.82.6	16	1
	336	02	12
	336	04	4
	336	05	4
	339	02	12
9968467	336	02	11
	336	04	3
	336	05	3
	339	02	11
9968468	1.82.6	16	8
	336	02	13
	336	04	5
	336	05	5
	339	02	13
9968470	336	03	5
	339	03	5
9968471	336	03	4
	339	03	4
9968476	336	02	2
	339	02	2
	344	01	8
	356	01	8
	721	01	8
9968477	344	02	9
	356	02	9
9968478	344	02	10
	356	02	10
9968480	344	02	11
	356	02	11
9968481	344	02	4
	356	02	4
9968483	344	02	6
	356	02	6
9968484	344	02	7
	356	02	7
9968486	344	02	8
	356	02	8
9968488	336	02	14
	336	05	8
	339	02	14
9968489	1.82.6	17	2
	1.82.6	18	2
	336	01	8
	339	01	9
9968490	1.82.6	17	3
	1.82.6	18	3
	336	01	9
	339	01	10
9968494	1.82.6	16	14
9968495	1.82.6	16	12
	1.82.6	17	1
	1.82.6	18	1
9968497	1.82.6	16	6
9968498	1.82.6	16	7
9968500	1.82.6	16	4
9968501	1.82.6	16	2
9968502	1.82.6	16	3
9968503	1.82.6	16	5
9968504	1.82.6	16	31
9968505	1.82.6	16	30
9968506	1.82.6	16	16
9968507	1.82.6	16	17
9968508	1.82.6	16	28
9968510	1.82.6	17	9
	1.82.6	18	9
9968511	1.82.6	17	10
	1.82.6	18	10
9968512	1.82.6	17	4
	1.82.6	18	4
9968513	1.82.6	17	7
	1.82.6	18	7
	336	01	19
	339	01	19
9968514	1.82.6	17	5
	1.82.6	18	5
9968515	1.82.6	17	6
	1.82.6	18	6
9968516	1.82.6	17	8
	1.82.6	18	8
9968520	336	02	7
9968521	336	02	5
9968523	1.82.6	16	23
9968524	344	01	7
	356	01	7
	721	01	7
9968526	356	01	13
	356	02	1
	721	01	10
9968527	344	01	11
	356	01	11
	721	01	11
9968528	356	01	10
	721	01	6
9968529	356	01	12
	721	01	12
9968531	344	02	5
	356	02	5
9968532	344	01	12
9968533	344	01	10
9968594	721	01	15
9968595	1.82.6	16	26
	724	01	25
9968596	1.82.6	16	27
9968676	1.28.0/ A	03	8
	1.28.0/ B	03	4
9968791	1.82.6	03A	10
	1.82.6	03B	13
	331/ C	02	16
	333/ B	02	16
9968884	803	01	2
9968885	803	01	1
9968886	803	01	1
9968925	415	04	1

Number	Figure	Sequence	Ref.
9968926	1.28.0/ A	04	17
	1.28.0/ B	04	17
9968927	1.28.0/ A	04	18
	1.28.0/ B	04	18
9968988	MPARTS	00	8
9969170	522/ C	01	2
	525	01	2
	526/ 1	01	2
9969281	1.28.0/ A	04	13
	1.28.0/ B	04	13
9969344	1.28.0/ B	04	2
9969380	1.82.0	01	21
9969445	1.28.0/ A	04	4
	1.28.0/ B	04	4
9969449	1.28.0/ A	03	4
9970107	344	01	9
	344	02	1
	356	01	9
	721	01	9
9970178	704/ A	01	3
	724/ A	01	3
9970179	724/ A	01	5
9970180	704/ A	01	4
	724/ A	01	4
9970181	724/ A	01	2
9970382	704/ A	01	2
9970383	704/ A	01	5
9970384	704/ A	01	6
	724/ A	01	6
9991976	1.82.6	01A	8
	1.82.6	01B	8
	1.82.6	04B	17
	1.82.6	11A	15
	1.82.6	11B	3
	1.82.6	12B	3
	334	11	3A
	514	04	14
	514	06	8
	721	04	3A
	900	04	14
	900	06	8
	902	02	14
	902	05	8
9992069	334	11	4A
	721	04	4A
9992298	1.82.6	03B	10
	1.82.6	03B	15
	1.88.11/ 3	01	7
	1.88.11/ 7	01	2
	1.88.11/ 7	01	21
	1.95.5	02	8
	391/ 1	01	16
	391/ 1	02	16
	437/ 1	01	16
	721	02	6
	725/ 1	01	2
9993141	724	01	29
	724/ 3	01	29
C5NN2N333B	1.44.0E	02	3
C5NN2N439A	1.44.0E	02	22
C5NN4049B	1.44.0E	02	10
C5NN4239A	1.44.0E	03	15
C5NN4374AB	1.44.0E	02	23
C5NN4374L	1.44.0E	02	23
C5NN4374N	1.44.0E	02	23
C5NN4374R	1.44.0E	02	23
C5NN4374S	1.44.0E	02	23
C5NN4374T	1.44.0E	02	23
C5NN4374U	1.44.0E	02	23
C5NN4374V	1.44.0E	02	23
C5NN4374Y	1.44.0E	02	23
C5NN4374Z	1.44.0E	02	23
C5NN4548A	1.44.0E	03	43
C5NN4548B	1.44.0E	03	43
C5NN4548D	1.44.0E	03	43
C5NN4548E	1.44.0E	03	43
C5NN4548F	1.44.0E	03	43
C5NN4548G	1.44.0E	03	43
C5NN4548H	1.44.0E	03	43
C5NN4A007B	1.44.0E	02	15
C5NN4A008B	1.44.0E	02	16
C5NN4A012B	1.44.0E	02	14
C5NN4N050B	1.44.0E	02	26
C5NN4N064A	1.44.0E	03	3
C5NN4N079A	1.44.0E	02	28
C5NN4N221B	1.44.0E	01	18
C7NN2N033A	1.44.0E	01	20
C7NN4048E	1.44.0E	02	13
C7NN4N031B	1.44.0E	02	18
CF960WDS	321	01	1
D1NN4662A	1.44.0E	03	42
D1NN4662B	1.44.0E	03	42
D1NN4662C	1.44.0E	03	42
D1NN4662D	1.44.0E	03	42
D1NN4662E	1.44.0E	03	42
D1NN4662F	1.44.0E	03	42
D1NN4662G	1.44.0E	03	42
D1NN4662H	1.44.0E	03	42
D1NN4662J	1.44.0E	03	42
D1NN4662K	1.44.0E	03	42
D1NN4662L	1.44.0E	03	42
D1NN4662M	1.44.0E	03	42
D1NN4662N	1.44.0E	03	42
D1NN4662R	1.44.0E	03	42
D1NN4662S	1.44.0E	03	42
D1NN4N116A	1.44.0E	03	41
D3NN4676A	1.44.0E	03	33
D3NN4N118A	1.44.0E	03	40
D4NN4668A	1.44.0E	03	34
D5NN4N186C	1.44.0E	04	16
D5NN94420N02B	515	02	6
	516	02	6
D7NNB694A12Z	535/ 1	01	3
	537	01	3
D7NNC511A	1.88.11/ 9C	01	5
D7NNC512C	514	01	2
	900	01	2
	902	01	2
D7NNC512D	514/ E	01	20
D7NNC512F	514	02	2
	900	02	2
	902/ A	01	2
D7NNC512G	514/ C	01	7
	514/ E	01	16
D7NNC512H	514	02	4
	900	02	4
	902/ A	01	23
D7NNC512L	514/ F	01	4
D7NNC513E	1.88.11/ 9C	01	3
D7NNC584A	515	01	3
	515	02	2
	516	01	1
	516	02	2
	517	01	1
	517	02	2
	518	01	1
	518	02	2
	519	01	1
	519	02	2
D7NNC622A	1.21.5/ 5	01	18
D7NNC622C	1.11.0	01	15
	1.21.5/ 5	01	21
	1.88.08	02	2
	514	02	7
	514	03	5
	900	02	7
	900	03	5
	902	03	11
	902	04	5
D7NNC669A	1.21.5/ 5	01	11
D8NN4616AA	1.44.0E	03	31
D8NNA233AB	902/ A	02	12
	902/ B	01	12
D8NNA273AA	902/ A	02	7
D8NND659AB	902	01	3
D95143	902/ C	01	9
D9NN4230AA	1.44.0E	03	9
D9NNA353AA	1.88.11/ 5	01	18
D9NNC513BA	1.88.11/ 9C	01	18
	514	02	5
	514/ C	01	14
	514/ E	01	7
	900	02	5
	902/ A	01	19

Number	Figure	Sequence	Ref.
D9NNC513CA	514	01	3
	514	02	1
	514/ E	01	18
	514/ F	01	6
	900	01	3
	900	02	1
	902/ A	01	3
E0NNB543AA	1.88.11/ 9C	01	7
E185EB9	1.44.0E	03	12
E186EB9	1.44.0E	03	7
E188EB9	1.44.0E	03	2
E189EB9	1.44.0E	03	4
E196EB9	1.44.0E	02	27
E1ADDN4221	1.44.0E	02	12
E1ADDN4286	1.44.0E	03	1
E209EB9	1.44.0E	04	2
E212EB9	1.44.0E	04	7
E2NN4024AA	1.44.0E	01	2
E2NN4209DA	1.44.0E	03	19
E4NN1N118AA	1.44.0E	01	15
E662341S72	1.88.11/ 5	02	2
E7NN13752AA	1.91.4/ 2	05	12
E7NN171DA	514/ F	01	5
E7NN194AA	1.88.11/ 5	02	10
E7NN94201N27CA	1.92.4	01	8
E7NN94290N06AA	1.93.0	02	10
E7NN94305N22AA	1.92.4	01	13
	1.92.4	02	12
	1.92.6	02	6
E7NN94305N22BA	1.92.4	01	5
E7NNA265HA	902/ A	02	15
E7NNA362BA	1.88.11/ 2A	01	7
E7NNB165AA	391/ 1	02	11
	902/ A	02	6
E7NNC501AA	514/ C	01	10
E8NN16N647AA	1.92.6	03	2
E8NN337AA	514/ F	01	20
E8NN4N191AA	1.44.0E	04	15
E8NN9423036AA	1.92.4	02	4
E8NNA156FB	902/ A	02	14
E8NNC667AA	1.21.5/ 5	01	19
E9NN3R862AA	1.88.11/ 7	01	4
	902/ A	02	4
	902/ B	01	4
	902/ C	01	4
E9NN4N297AB	1.44.0E	01	17
E9NN94218N36AA	1.92.6	03	7
E9NN94218N45AA	1.92.6	03	6
E9NN94218N48AA	1.91.7/ 1	01	12
	1.92.9	01	13
	1.96.7	01	6
	1.96.7/ 6	01	6
E9NN9422196AA	1.92.6	03	5
E9NN94231N12AB	1.92.6	03	12
E9NN94296N08AB	1.92.4	01	15
E9NN94305N24AB	1.92.4	02	7
E9NN94305N24BB	1.92.4	01	6
E9NNE602AA	1.88.11/ 9C	01	8
E9NNP864BA	704	01	11
	704	02	9
	724	01	24
	724/ 3	01	24
	724/ 5	01	16
	724/ 6	01	15
E9NNP864CA	704	02	8
F0NN2B280AB	1.44.0E	01	25
F1NN94000Z36AA	1.93.0	01	15
	1.93.0	02	16
	1.93.0/ 3	01	15
	346/1	02	18
	514	02	13
	900	02	13
F1NN94231N19AA	1.92.6	03	10
F910DSW	131	01	1
F960DS	321	01	1
G100444	902/ C	01	7
G100449	902/ C	01	17
G102425	902/ C	01	11
G109298	902/ C	01	12
N620017S36	535/ 1	01	5
	537	01	5
N630177S36	535/ 1	01	6
N630177S36	537	01	6
N663109S2	351	09	14
N663114S36	1.88.11/ 5	02	8
	721	05	6
N800270S36M	1.21.5/ 5	01	17
N800271S36M	1.21.5/ 5	01	20
	1.88.08	02	3
	902/ A	01	6
N800272S36M	1.21.5/ 5	01	6
	1.88.11/ 1B	01	4
NSS	1.88.11/ 2	02	1
	1.91.4	02	16
	1.91.4	02	18
	1.91.4/ 2	02	18
	1.91.4/ 2	02	20
	1.91.4/ 2	05	16
	1.92.1/ 3	01	6
	331/ B	01	20
	391/ 1	01	20
	391/ 1	02	19
	391/ 1	03	3
	515	01	6
	516	01	6
	517	01	6
	519	01	6
	795	01	3
	795	01	4
	796	01	6
REF	0.340	01	4