RUTHZIL TRATOR COMERCIAL DE PEÇAS LTDA 11 97083-6812 ROLANDO CITRANGULO

BALDWIN FILTERS®
a CLARCOR company

Form 123-10
Supercedes
Form 123-09

2010

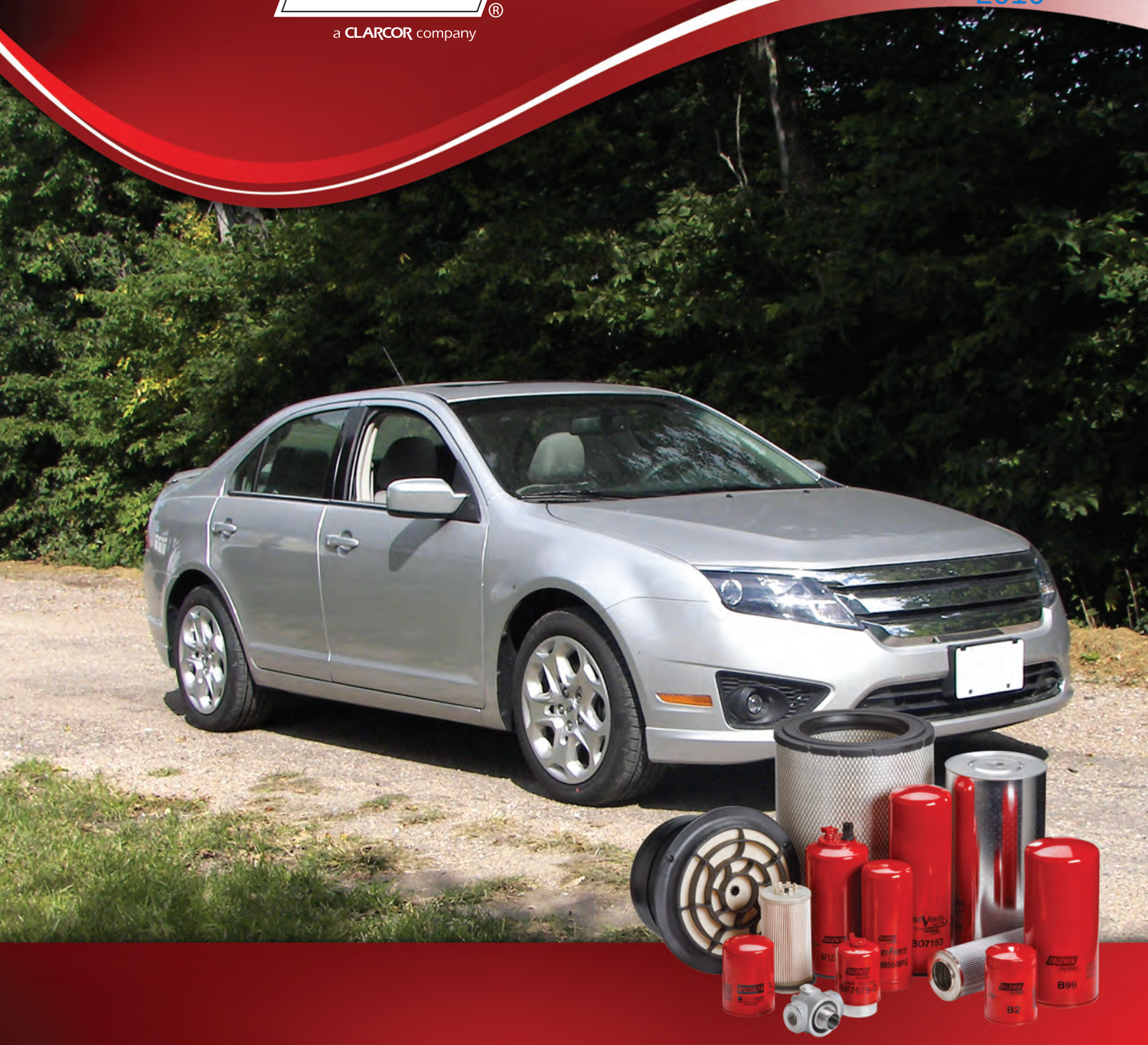

2010
Automotive Applications

RUTHZIL TRATOR COMERCIAL DE PEÇAS LTDA 11 97083-6812 ROLANDO

Online Catalog...
Explore the Advantages.

The Baldwin Filters E-Catalog offers many features to provide cataloging information quickly and easily.

Features of the Online Catalog Include:

- Streamlined Application Searches
- Multiple Line Cross-Reference Look-up
- Searchable Size Charts
- Searchable UPC Codes
- New Product Releases
  (updated as products are released)



www.baldwinfilter.com

TABLE OF CONTENTS

Automotive
Application Sections

Baldwin Filters Online - New E-Catalog Features.....Inside Front Cover

Table of Contents 1
Form 124-10, Form 560-10, Form 561-10 & Form 562-10 List of Contents 2
Baldwin New Products 3-11
Footnotes Listing 11
Baldwin Obsolete Products.....12-17
Abbreviations Used Anywhere in Our Catalogs.....18-20
Prefixes and Suffixes 21-23
Disposal of Used Oil Filters.....24
Automotive Model to Make Cross-Reference 25-30
Vehicle Identification Number (VIN) Decoding.....31
Domestic Vehicle Identification Number (VIN).....31-32
Imported Vehicle Identification Number (VIN).....32-33
Conversion Chart for Popular Engine Displacement Sizes 33

AUTOMOTIVE APPLICATIONS 34-559
How Automotive Applications are Arranged.....34-36
Automotive and Light-Duty Truck Applications 1980-on (Includes Imports) 37-350
Automotive and Light-Duty Truck Applications Pre-1980 (Includes Imports) 351-501
Spin-on Filter Installation Instructions 502
Easy Steps in Changing Transmission Filters.....503
Transmission Identification Code Listing.....503-504
Transmission Filters for Cars, Light-Duty Trucks, Etc.....505-514
Cabin Air Filter Installation Instructions.....515-559

Diagnosing Engine Oil Filters with Collapsed Centertubes 560
Product Investigation.....561
Field Report Form 562
Baldwin Filters Date Coding Methods.....563-565
A Word About Warranties.....563-565
Baldwin Filter Warranty 566
We Would Like To Hear From You.....567-568

PureForce® Hydraulic Filtration Product Line.....Inside Back Cover

Form 124-10, Form 560-10, Form 561-10 & Form 562-10 List of Contents

FORM 124-10 FILTER APPLICATIONS

Refer to the following list of contents for information contained in the Baldwin Trucks, Buses & Off-Highway Filter Applications Catalog, Form 124-10.

TRUCKS & BUSES APPLICATIONS
- *Trucks & Buses Applications*

OFF-HIGHWAY APPLICATIONS
- *Off-Highway Applications*

FORM 560-10 MANUFACTURERS' CROSS-REFERENCE

Refer to the following list of contents for information contained in the Baldwin Manufacturers' Cross-Reference Catalog, Form 560-10.

MANUFACTURERS' CROSS-REFERENCE
- *Cross-Reference Information Arranged by Manufacturer*

ALSO INCLUDED
- *Manufacturers' Codes*

FORM 561-10 NUMBER-FINDER CROSS-REFERENCE

Refer to the following list of contents for information contained in the Baldwin Number-Finder Cross-Reference Catalog, Form 561-10.

NUMBER-FINDER CROSS-REFERENCE
- *Cross-Reference Information Arranged in Number-Finder Format*

ALSO INCLUDED
- *Manufacturers' Codes*

FORM 562-10 PRODUCT GUIDE

Refer to the following list of contents for information contained in the Baldwin Product Guide Catalog, Form 562-10.

PRODUCT GUIDE
- *Filter Bases*
- *Vacuum/Pressure Gauges*
- *Farr Tube-Type Air Filters*
- *Air Filter Adapters*
- *Coolant Filters/Products*
- *Truck Service Kits*
- *500 (B7040 Series) & 750 (B7500 Series) Housings*
- *B7500A & BF7500-A Housings*
- *Hydraulic Pall-Type Replacement Elements (9000)*
- *Automatic Transmission Filters*
- *Oil/Air Separators*
- *Gaskets*
- *Caterpillar Gaskets*

SIZE CHARTS
- *O-Ring Uniform Dash Numbers*
- *Round Gaskets Arranged by O.D.*
- *Spin-on Filters by Tap Size*
- *Liquid Elements by Length*
- *Round Air Filters by Length*
- *Panel Air Filters*
- *Oval, Oblong and Miscellaneous Air Filters*
- *Box-Style and Can-Type Fuel Filters*
- *Oil/Air Separator Elements*
- *Oil/Air Separator Spin-ons*
- *In-Line Fuel Filters by Inlet Size*

ALSO INCLUDED
- *DAHL Fuel Filter/Water Separators*
- *Radial Seal Air Element Adapters*
- *Industrial Air Cartridges*
- *Filter Wrenches*
- *PKG Items*
- *UPC Codes*
- *Baldwin Weights and Volumes*

BALDWIN NEW PRODUCTS

BALDWIN NUMBER	DESCRIPTION	REPLACES	APPLICATIONS
BF1272-SPS	Fuel/Water Separator Spin-on with Drain, Sensor Port and Reusable Sensor	Case J800394; Cummins 3800394; Donaldson P551022; Fleetguard FS1022	Cummins Engines
BF1352-SPS	Fuel/Water Separator Spin-on with Drain and Sensor Port	Cummins 3991498; Fleetguard FS19616	Equipment with Cummins B4.5, B5.9 Tier II Engines
BF1354-SPS	Primary Fuel/Water Separator Spin-on with Drain, Sensor Port and Reusable Sensor	John Deere RE531703; Donaldson P550668; Fleetguard FS19701	John Deere Engines, Equipment, Trucks
BF1360-SP	Fuel/Water Separator Spin-on with Drain and Sensor Port	Racor R90S	Blue Bird Buses with Caterpillar, Cummins Engines
BF1372	Fuel/Water Separator Spin-on with Drain	Liebherr 7008775, 7382048; M.A.N. 51.12503.0040; Donaldson P550498; Fleetguard FS19599	Liebherr Equipment; M.A.N. Trucks
BF1383	Fuel/Water Separator Spin-on with Open Port for Bowl	DAF 1433649; M.A.N. 51.12503.0052, 51.12501.7288; Donaldson P550778	DAF Trucks
BF1384-SP	Fuel/Water Separator Spin-on with Drain and Sensor Port	Mack 20539578	Mack Trucks with MP7, MP8 Engines
BF1385-SPS	Fuel/Water Separator Spin-on with Drain, Sensor Port and Reusable Sensor	Case 87356193; Cummins 3973233; Fleetguard FS19732; SF-Filter SK3183	Case Equipment; Cummins Engines
BF1386-O	Fuel/Water Separator Spin-on with Open Port for Bowl	Mack 21017305; Volvo 20879806	Mack, Volvo Engines, Trucks
BF1387-O	Fuel/Water Separator Spin-on with Open Port for Bowl	Volvo 20879812	Volvo Engines, Trucks
BF1388-O	Fuel/Water Separator Spin-on with Open Port for Bowl	Renault 7420851191; Volvo 20853583; Racor R60T-D-MAX; Fleetguard FS19895	R.V.I., Volvo Trucks
BF1389-O	Fuel/Water Separator Spin-on with Open Port for Bowl	Volvo 20381204; Racor R45T; Donaldson P550746; Fleetguard FS19734	Volvo Engines, Trucks
BF1390-O	Fuel/Water Separator Spin-on with Open Port for Bowl	Racor R90T; Volvo 20450423; Fleetguard FS19551	Blue Bird Buses, Volvo Trucks, Western Star Trucks
BF1391-O	Fuel/Water Separator Spin-on with Open Port for Bowl	Mercedes-Benz 4771302, A0004771302; Fleetguard FS19914	Mercedes-Benz Engines, Trucks
BF1393-SP	High Efficiency Fuel/Water Separator Spin-on with Drain and Sensor Port	Fleetguard FS1015	Hamm Rollers; Hyundai Excavators, Loaders; Optional on Various Motor Homes, Trucks with Cummins Engines
BF1394-SP	Fuel/Water Separator Spin-on with Drain and Sensor Port	Komatsu 600-311-3610, 600-311-3620, 600-319-3610, 600-319-3620	Komatsu Equipment
BF1395-SP	Fuel/Water Separator Spin-on with Drain and Sensor Port	Alliance ABP/N122R50421; Freightliner RD591300	Freightliner Trucks
BF1397-SP	Fuel/Water Separator Spin-on with Drain and Sensor Port	Caterpillar 326-1643	Caterpillar Equipment
BF1398-O	Fuel/Water Separator Spin-on with Open Port for Bowl	Volvo 20386080; Racor R25P; Fleetguard FS19704	Volvo Trucks with D6B Engine
BF1399-SP	Fuel/Water Separator Spin-on with Drain and Sensor Port	Caterpillar 326-1644	Caterpillar Equipment
PA4188	Cabin Air Element	Toyota 87139-47010	Mitsubishi, Subaru, Toyota Automotive
PA4190	Panel Air Element	Honda 17220-PGK-A00; ACDelco A2964C	Acura, Honda Automotive
PA4191	Panel Air Element	Honda 17220-RAA-A00; ACDelco A2950C	Acura, Honda Automotive
PA4192	Panel Air Element	Toyota 17801-21040	2004-09 Toyota Prius
PA4193	Panel Air Element	Honda 17220-RRA-A00	Acura, Honda Automotive
PA4194	Cabin Air Element	Toyota 87139-32010	Lexus, Toyota Automotive
PA4195 KIT	Set of 2 Cabin Air Elements	Honda 80292-S5D-A01, 80292-S5A-003	Acura, Honda Automotive
PA4196	Cabin Air Element	Honda 80292-SEC-A01	Acura, Honda Automotive
PA4197	Panel Air Element	Subaru 16546-AA10A	Subaru Automotive, Light-Duty Trucks
PA4198	Panel Air Element	Mitsubishi MR571396	Mitsubishi Automotive
PA4199	Cabin Air Element	Nissan B7200-5M000	Infiniti, Nissan Automotive, Light-Duty Trucks
PA4303	Panel Air Element	Honda 17220-P8F-A10	2002-04 Honda Odyssey
PA4304	Cabin Air Element	Honda 80290-S0X-A01	Acura, Honda Automotive, Light-Duty Trucks
PA4305	Panel Air Element	Toyota 17801-21030	Scion, Toyota Automotive
PA4306	Panel Air Element	Honda 17220-RCA-A00; ACDelco A2951C	2003-05 Honda Accord
PA4307	Panel Air Element	Toyota 17801-28010	2001-05 Toyota RAV4
PA4308	Panel Air Element	Hyundai 28113-2D000	Hyundai, Kia Automotive
PA4309	Panel Air Element	Hyundai 28113-26000	2001-06 Hyundai Santa Fe
PA4310	Panel Air Element	Mazda RF2A-13-Z40A9U, RF2A-13-Z40A	2000-06 Mazda MPV Van, 2003-08 Mazda6
PA4311	Panel Air Element	Hyundai 28113-22600; ACDelco A2936C	2000-05 Hyundai Accent
PA4312	Panel Air Element	GMC 22679620; ACDelco A2953C	Saturn Automotive
PA4313	Panel Air Element	Hyundai 28113-37101	Hyundai Sonata; Kia Optima, Magentis
PA4314	Panel Air Element	Chrysler 4891176AA; ACDelco A2937C	Chrysler PT Cruiser
SA4315	Crankcase Breather Filter in Plastic Housing	GMC 25041487, 25047377; ACDelco FB82	Buick, Chevrolet, GMC, Oldsmobile, Pontiac Automotive, Light-Duty Trucks, Vans

BALDWIN NEW PRODUCTS

BALDWIN NUMBER	DESCRIPTION	REPLACES	APPLICATIONS
PA4316	Panel Air Element	GMC 22731072; ACDelco A3054C	2006-on Chevrolet HHR
PA4317	Cabin Air Element	GMC 52493319, ACDelco CF125	Chevrolet, Pontiac, Saturn Automotive, Light-Duty Trucks
PA4318	Panel Air Element	Chrysler 53034051AB	Dodge Light-Duty Trucks; Sterling Bullet
PA4320	Panel Air Element	Honda 17220-RNA-A00; Wix 49065	2006-on Civic with 4-1800cc (1.8L) FI or Natural Gas Engines
PA4321	Panel Air Element	Ford 7T4Z-9601-A; Motorcraft FA1884	Ford, Mazda, Mercury, Lincoln Automotive
PA4322	Panel Air Element	Toyota 17801-0S010	2008-on Lexus LX570, 2007-on Toyota Light-Duty Trucks, Vans
PA4323	Panel Air Element	Ford 7C3Z-9601-A; Motorcraft FA1883	Ford, Lincoln Light-Duty Trucks
PA4324	Panel Air Element	GMC 15925738; ACDelco A3084C	Pontiac Solstice, Saturn Sky Red Line
PA4327	Cabin Air Element	Toyota 87139-YZZ08	Lexus, Scion, Toyota Automotive, Light-Duty Trucks
PA4328	Air Element	Toyota 17801-31050, 17801-54080, 17801-54120	Isuzu, Toyota Automotive, Light-Duty Trucks
PA4329	Panel Air Element	GMC 21999324; ACDelco A2956C	Chevrolet Cobalt; Pontiac G5, Pursuit
PA4330	Cabin Air Element	GMC 25654414; ACDelco CF117	Buick, Cadillac, Oldsmobile, Pontiac Automotive
PA4331	Cabin Air Element	Volkswagen 1J0819644, 1J0819644A	Audi, SEAT, Volkswagen Automotive
PA4332	Cabin Air Element	Toyota 88568-02020; Wix 24873	Toyota Corolla, Matrix
PA4333	Panel Air Element	Toyota 17801-31120, 17801-AD010	Lexus, Pontiac, Scion, Toyota Automotive, Light-Duty Trucks
PA4334	Cabin Air Element	Hyundai 97133-2B010, 97133-3K000	Hyundai, Kia Automotive, Light-Duty Trucks
PA4335	Panel Air Element	Chrysler 4891926AA	Chrysler, Dodge Automotive
PA4336	Cabin Air Element	Chrysler 68012876AA; Mercedes-Benz AA9068300318	Dodge, Freightliner, Mercedes-Benz Sprinter Vans
PA4337	Panel Air Element	General Motors 10366901; ACDelco A2930C	Chevrolet, Pontiac Automotive
PA4338	Panel Air Element	Ford 3W3Z-9601-AA; Motorcraft FA1745	Ford, Mercury Automotive
PA4340	Cabin Air Element	Saturn 22665802	Chevrolet, Pontiac, Saturn Automotive, Light-Duty Trucks
PA4341	Panel Air Element	Kia 28113-3E000, 28113-3E500	Kia Sorento
PA4344	Panel Air Element	GMC 96536696	Chevrolet Aveo, Pontiac Wave, Suzuki Swift
PA4345	Panel Air Element	Mazda LF50-13-Z40A, LF50-13-Z40-9U	2004-08 Mazda3, 2005-08 Mazda5, 2007-08 MazdaSpeed3
PA4348	Panel Air Element	Hyundai 28113-08000	Hyundai Tucson, Kia Sportage
PA4349	Panel Air Element	Hyundai 28113-3K200	Hyundai Automotive
PA4350	Panel Air Element	Toyota 17801-28030, 17801-0H050	2007-on Toyota Camry, 2009-on Toyota Venza
PA4351	Panel Air Element	Honda 17220-RGL-A00, 17220-RGL-A10	Honda Odyssey
PA4352	Panel Air Element	Toyota 17801-21020	2001-03 Toyota Prius
PA4353	Panel Air Element	Kia OK011-13-Z40	Kia Sportage
PA4354	Panel Air Element	Toyota 17801-46080	Lexus Automotive
PA4355	Panel Air Element	Honda 17220-RDA-A00	Acura, Honda Automotive
PA4356	Panel Air Element	Toyota 17801-0C040	Toyota Tacoma Light-Duty Truck
PA4357	Panel Air Element	Kia OK52Y-13-33X	Kia Sedona
PA4358	Panel Air Element	General Motors 25728874	Cadillac CTS
PA4359	Panel Air Element	Volvo 9454647, 9454647-0	Volvo Automotive
PA4360	Panel Air Element	Mazda AJ57-13-Z40, AJ57-13-Z409U	2003-08 Mazda6, 2006-07 MazdaSpeed6, 2007-on CX7
PA4361	Panel Air Element	Ford 4R3Z-9601-AA; Motorcraft FA1773	2005-on Ford Mustang
PA4362	Panel Air Element	Chrysler 4891694AA	2007-08 Dodge Caliber, 2007-on Jeep Compass, Patriot
PA4363	Panel Air Element	Hyundai 28113-1G000; Kia 28113-1G000	Hyundai, Kia Automotive
PA4364	Panel Air Element	Honda 17220-R70-A00	Acura, Honda Automotive
PA4365	Cabin Air Element	Ford 7T4Z-19N619-B	Ford, Lincoln Automotive
PA4366	Panel Air Element	Honda 17220-PWA-J10, 17315-SLN-A01	Honda Automotive
PA4367	Panel Air Element	Chrysler 5189933AA	2007-on Dodge Nitro; 2008-on Jeep Liberty
PA4368	Panel Air Element	GMC 96553450; Suzuki 13780-85Z00	Chevrolet, Suzuki Light-Duty Trucks
PA4369	Panel Air Element	Acura 17220-RWC-A00; Honda 17220-RWC-A00	Acura RDX
PA4370	Cabin Air Element	Ford YL8Z-19N619-AB, YL84-19N619-AA; Motorcraft FP46, FP49	Ford, Mazda Automotive, Light-Duty Trucks
PA4371	Cabin Air Element	Toyota 87139-48020	Lexus, Toyota Light-Duty Trucks
PA4372	Cabin Air Element	Toyota 88568-52010	Scion, Toyota Automotive
PA4373	Cabin Air Element	Chrysler 5058381AA, 5058693AA	Chrysler, Dodge, Jeep Automotive
PA4374	Panel Air Element	Honda 17220-R40-A00	Honda Automotive
PA4375	Panel Air Element	Hyundai 28113-39000; ACDelco A2992C	Hyundai, Kia Automotive
PA4376	Panel Air Element	Kia K30C-13-Z40A, OK30C-13-Z40A	Kia Automotive, Light-Duty Trucks
PA4377	Panel Air Element	Honda 17220-RJE-A00	2006-09 Honda Ridgeline
PA4380	Panel Air Element	Toyota 17801-50030	Lexus Automotive
PA4381	Panel Air Element	Honda 17220-PZA-000	Honda Civic Hybrid
PA4382	Panel Air Element	Suzuki 13780-54G10	Suzuki Aerio
PA4383	Panel Air Element	Audi 6F133843A; Volkswagen 6F133843A	Audi, Volkswagen Automotive

BALDWIN NEW PRODUCTS

BALDWIN NUMBER	DESCRIPTION	REPLACES	APPLICATIONS
PA4384	Cabin Air Element	GMC 25689297; ACDelco CF105C, CF118C	Buick, Cadillac, Oldsmobile, Pontiac Automotive
PA4385	Panel Air Element	Ford 5M6Z-9601-AA; Motorcraft FA1772	2005-09 Ford Escape Hybrid, 2009-on Escape; 2006-09 Mercury Mariner Hybrid, 2009-on Mariner
PA4386	Panel Air Element	Land Rover ESR4238	Land Rover Discovery, Freelander, Range Rover
PA4387	Panel Air Element	Hyundai 28113-26350	Hyundai Santa Fe
PA4388	Air Element	Citroen 1444.H1; Peugeot 1444-H2	Citroen, Peugeot Automotive
PA4389	Air Element	Citroen 1444F5; Peugeot 1444-F5	
PA4391	Cabin Air Element	Kia 97133-2E200, 97133-2E210	Hyundai, Kia Automotive, Light-Duty Trucks
PA4392	Foam Cabin Air Element	Mazda GD7A-61-J6X; Wix 24486	1998-2002 Mazda 626
PA4393	Cabin Air Element	Toyota 87139-07010	Lexus, Toyota Automotive, Light-Duty Trucks
PA4394	Cabin Air Element	Ford 8L8Z-19N619-B; Motorcraft FP66	Ford, Mazda, Mercury Light-Duty Trucks
PA4395	Cabin Air Element	Volkswagen 1K1819653A, 1K1819653B	Audi, Volkswagen Automotive
PA4396	Panel Air Element	Volkswagen 1K0129620	Audi, Volkswagen Automotive
PA4397	Panel Air Element	Saturn 96815102	Saturn VUE, VUE Green Line, VUE Red Line
PA4398	Cabin Air Element	Saturn 19130294	Saturn Automotive, GMC Light-Duty Trucks
PA4399	Panel Air Element	Nissan 16546-JA00A, 16546-JA00B	Nissan Automotive
PA4400	Panel Air Element	Kia 28113-2G000	Kia Automotive
PA4401	Panel Air Element	Hyundai 28113-2H000	Hyundai Elantra, Kia Forte
PA4402	Panel Air Element	Hyundai 28113-2B000	2007-09 Hyundai Santa Fe
PA4403	Set of 2 Cabin Air Elements	Mazda BP4K-61-J6X	Mazda Automotive
PA4404	Cabin Air Element	Hyundai 87901-E000A, 971331-E000	Hyundai Automotive, Chrysler, Dodge Light-Duty Trucks
PA4405	Cabin Air Element	Nissan 27277-EG025	Infiniti Automotive
PA4406 KIT	Set of 2 Cabin Air Elements	Mazda TA05-61-J6X	2001-02 Mazda Millenia
PA4407	Cabin Air Element	Land Rover JKR100280	2002-05 Land Rover Freelander
PA4408	Cabin Air Element	Subaru 3B451-30361; 72880-FE000; G3210-FE100	Subaru Automotive, Light-Duty Trucks
PA4409	Cabin Air Element	Chrysler 5103600AA; Mercedes-Benz A9018300418	Dodge, Freightliner, Mercedes-Benz Sprinter Vans
PA4410 KIT	Set of 2 Cabin Air Elements	Nissan 999M1-VR056	
PA4411	Cabin Air Element	Honda 80291-SAA-J01	2007-08 Honda Fit
PA4412	Panel Air Element	General Motors 15942429; ACDelco A3095C	Chevrolet, GMC, Hummer, Isuzu Light-Duty Trucks
PA4413	Panel Air Element	Hyundai 28113-4D000; Kia 28113-4D000	2007-09 Hyundai Entourage; 2006-on Kia Sedona
PA4415	Cabin Air Element	BMW 64311496710	2002-08 MINI Cooper, Cooper S
PA4416 KIT	Set of 2 Cabin Air Elements	Honda 80291-S84-A01	Acura, Honda Automotive
PA4417	Panel Air Element	Honda 17220-RZA-000	2007-09 Honda CR-V
PA4418	Panel Air Element	GMC 15278634; ACDelco A3083C	2008-on Buick Enclave; 2009-on Chevrolet Traverse; 2007-on GMC Acadia, Saturn Outlook
PA4419	Panel Air Element	Ford 8S4Z-9601-A; Motorcraft FA1890	2008-on Ford Focus
PA4420	Panel Air Element	Honda 17220-RCJ-A00	2005-07 Honda Accord Hybrid with V6-183 (3.0L) Engine
PA4421	Panel Air Element	Suzuki 13780-65J00	2006-08 Suzuki Grand Vitara
CA4702	Channel Flow Air Element	John Deere AL119839, AL172780; Donaldson P606119; Fleetguard AF26157; SF-Filter SL82001	John Deere Tractors
CA4703	Channel Flow Air Element	John Deere AL150285, AL172781; Donaldson P606120; Fleetguard AF26156; Hengst E711L; Mann & Hummel C33530; SF-Filter SL82002	John Deere Tractors
PA4704	Channel Flow Air Safety Element	John Deere AL150288; Donaldson P606121; Fleetguard AF26155	John Deere Tractors
B5091	Coolant Spin-on without Chemicals	Mack 20575545	Mack Trucks
RS5344	Radial Seal Outer Air Element	Reytor IT2000; Fleetguard AF25856	
RS5345	Radial Seal Inner Air Element	Reytor IT2000S; Fleetguard AF25857	
RS5347	Radial Seal Inner Air Element	Reytor IT2002S; Luber-finer LAF5764	
RS5348	Radial Seal Outer Air Element	Reytor IT2004	
CA5352	Channel Flow Air Element	GMC 15282462; Donaldson P605313, P610875	2006-on Chevrolet Silverado, GMC Sierra all with V8-400 (6.6L) Turbo Diesel Engine; Chevrolete Kodiak, GMC Topkick with Isuzu 7.8L Diesel Engine
RS5354	Radial Seal Outer Air Element	John Deere RE210102; Fleetguard AF26337	John Deere Sprayers, Tractors
RS5355	Radial Seal Inner Air Element	John Deere RE210103; Fleetguard AF26336	John Deere Sprayers, Tractors

BALDWIN NEW PRODUCTS

BALDWIN NUMBER	DESCRIPTION	REPLACES	APPLICATIONS
CA5366	Channel Flow Air Element	Ford 4C4Z-9601-AA; Motorcraft FA1753; Donaldson P609086; Fleetguard AF26493	Ford Trucks with 6.0L Turbo Diesel Engine
CA5368	Channel Flow Air Element	Donaldson P607965, P544325	Freightliner Business Class M2
BA5371	Air Dryer Spin-on	Haldex DA33120	Haldex Pure Air Plus DA33100, DA33105, DA33110, DA33200 Air Dryers
BA5372	Dessicant Air Dryer	Bendix 103981, 104358	IHC, Freightliner Trucks, Bendix AD-4 System
BA5373	Air Dryer Spin-on	Bendix 065624, 109493	Blue Bird, Ford, Freightliner, Hino, IHC, Kenworth, Mack, Peterbilt, Sterling, Volvo Trucks
BA5377	Dessicant Air Dryer	Bendix 107794, 107796	Blue Bird, Thomas Buses; Autocar, Capacity, Freightliner, IHC, Kenworth, Mack, Oshkosh, Peterbilt, Sterling, Western Star Trucks
RS5390	Radial Seal Air Element	Volvo 20732726; Renault 5001865723; Donaldson P785522; Fleetguard AF26244	R.V.I., Volvo Trucks
RS5392	Radial Seal Inner Air Element	John Deere F435742	John Deere Feller Bunchers, Loaders
PA5393	Foam Cab Air Element	Ford F6HZ-19N619-BA	Sterling Acterra, A-Line Series, L-Line Series
PA5394	Air Element	John Deere M71952	John Deere 22, 22R Greensmowers, SR7, 519 Mowers, 529 Vacuum Blower
RS5396	Cab Air Element with Foam	Case 82022328, 820223280, 82034664; New Holland 82022328, 820223280, 82034664	Case-IH, New Holland Tractors
RS5397	Radial Seal Outer Air Element	Case 82027573, 82034433, 82034434, 82034440; New Holland 82027573, 82034433, 82034434, 82034440	Case-IH, New Holland Tractors
RS5398	Radial Seal Inner Air Element	Case 82034435, 82034436, 82027574; New Holland 82034435, 82034436, 82027574	Case-IH, New Holland Tractors
PA5399	Cab Air Element	Case 87302687; New Holland 87302687	Case-IH, New Holland Tractors
PA5400	Cab Air Element with Foam	Case 87311194; New Holland 87311194	Case-IH, New Holland Tractors
PA5401	Cab Air Element	J.C. Bamford 33/125629	J.C. Bamford Equipment
PA5402	Cab Air Element with Plastic Cover	Case 87385160; New Holland 87385160	Case/New Holland Equipment
PA5403	Cab Air Element	Case 82029888, 82034662, 82034663; New Holland 82029888, 82034662, 82034663	Case-IH, New Holland Tractors
PA5404	Cab Air Element	Case C001723, C001896, 82034661, 87385322; New Holland C001723, C001896, 87385322	Case-IH Tractors
PA5405	Cab Air Element	J.C. Bamford 30/925759	J.C. Bamford Equipment
PA5406-FN	Air Element with Lid & Fins	Schmidt 1297503131	
PA5407	Air Element	Citroen 144499; Fiat 1310636080; Fleetguard AF25296; SF-Filter SL8327	Citroen, Fiat, Peugeot Automotive
RS5408	Radial Seal Inner Air Element	Volvo 3979928; Fleetguard AF26162; Wix Europe 93250E	Volvo Trucks
RS5409	Radial Seal Air Element	M.A.N. 81.08405.0022; Donaldson P785002; Fleetguard AF26261	M.A.N. Trucks
PA5410-FN	Air Element with Fins	Tennant 51561	Kalmar AC P80 Lift Truck
RS5411	Radial Seal Air Element	Volvo 3827589; Fleetguard AF26237; Alco MD7580	
PA5412	Inner Air Element	Mitsubishi AE073385, DC073385, ME073385; Donaldson P815403; Fleetguard AF25582M	Mitsubishi Trucks
RS5413	Radial Seal Air Element	DAF 1638054; Donaldson P786443	DAF Trucks
RS5414	Radial Seal Outer Air Element	John Deere AH164062; Donaldson P612469	John Deere Equipment
RS5415	Radial Seal Inner Air Element	John Deere AH164063	John Deere Equipment
CA5419	Channel Flow Air Element	Donaldson P605960	Freightliner Business Class M2 Series Trucks
CA5420	Channel Flow Air Element	Donaldson P607960; Wix 49959	Freightliner Business Class M2 Series Trucks, Thomas Buses
CA5421	Channel Flow Air Element	Volvo 70320440	
RS5422	Radial Seal Air Element	Mercedes-Benz 40941804, A0040941804; Donaldson P783117; Fleetguard AF26172; Hengst E626L	Evobus, Mercedes-Benz/Setra Models S 315 GT-HD, S 319 GT-HD, S 415 HD/HDH, S 416 HDH, S 417 HDH, S 431 DT, 17 RHD (629)
PA5423-FN	Air Element with Fins	Case 808039R1; John Deere CM18213; Donaldson P900247; Fleetguard AF25027K	

BALDWIN NEW PRODUCTS

BALDWIN NUMBER	DESCRIPTION	REPLACES	APPLICATIONS
PA5425	Air Element with Lid	Cummins 3351735; Fleetguard AF25688	Cummins NTA855 Gen Sets
PA5426	Panel Air Element with Foam Pad and Lift Tabs	Mercedes-Benz 40941104, A0040941104; Fleetguard AF25731	Mercedes-Benz Engines, Trucks
PA5428	Panel Air Element	General Motors 19152817; ACDelco A3102C	Chevrolet Kodiak C4500, C5500, GMC TopKick C4500, C5500 all with 6.6L Turbo Diesel Engine
RS5429	Radial Seal Outer Air Element	Fleetguard AF26124; Wix 49148	Miller Application Technologies Equipment; Fleetguard OptiAir 1300 Air Filter Housing
RS5430	Radial Seal Inner Air Element	Fleetguard AF26125; Wix 49149	Miller Application Technologies Equipment; Fleetguard OptiAir 1300 Air Filter Housing
RS5434	Radial Seal Air Element	Isuzu 8-97062-294-0; Donaldson P543614, P828633	Isuzu Trucks
PA5436	Outer Air Element	Massey Ferguson 3703703-M91	Challenger, Massey Ferguson Tractors
RS5438	Radial Seal Air Element	M.A.N. 81.08405.0023; Donaldson P785001; Fleetguard AF26262	2005-on M.A.N. TGL Series, TGM Series Trucks
RS5440	Radial Seal Air Element	Deutz 1182912	
RS5441	Radial Seal Air Element	Nissan 16546-LA40A	Nissan Atleon Trucks with Cummins ISB4 Series Engine
RS5442	Radial Seal Outer Air Element	Donaldson P601767; Wix 49767	Tigercat 720D Feller Buncher with Cummins 6BT5.9 Engine (Tier II)
RS5443	Radial Seal Inner Air Element	Donaldson P601774; Wix 49766	Tigercat 720D Feller Buncher with Cummins 6BT5.9 Engine (Tier II)
PA5444-FN	Air Element with Fins	Foton D136703E; CLARCOR Filtration (China) KQ1317A8	Foton Tractors
PA5445	Outer Air Element with Lift Tabs	CLARCOR Filtration (China) K3250	Hualing 280HP Heavy-Duty Truck
PA5446	Inner Air Element	CLARCOR Filtration (China) K3250	Hualing 280HP Heavy-Duty Truck
RS5447	Radial Seal Outer Air Element	Dynapac 909270; Donaldson P781470; Fleetguard AF25612	Dynapac Rollers
RS5448	Radial Seal Inner Air Element	Dynapac 909271; Donaldson P781471	Dynapac Rollers
RS5452	Radial Seal Outer Air Element	Mercedes-Benz A3740947104; Reytor IT3095	2008-09 Mercedes-Benz 1019/44, 1219/52, 1419/60 Buses with OM904LA, OM924LS Engines
PA5454	Panel Air Element	Waukesha 214275A	Waukesha VHP 12, 15 Cylinder Stationary Engines
RS5459	Radial Seal Outer Air Element	Volvo 11110532; Fleetguard AF26490	Volvo Dump Trucks, Excavators, Loaders
RS5460	Radial Seal Inner Air Element	Volvo 11110533; Fleetguard AF26491	Volvo Dump Trucks, Excavators, Loaders
BK6029	Service Kit for Mack		
BK6031	Service Kit for Cummins		
BK6032	Service Kit for Cummins		
BK6650	Service Kit for Volvo		
BK6652	Service Kit for International		
BK6653	Service Kit for Mack	Mack 57GC2245	Mack ASET-CEGR Engine
BK6656	Service Kit for Mack		
BK6657	Service Kit for Mack	Mack 57GC2234	Mack ASET-IEGR Engine
BK6956	Service Kit		
B7333	Lube Spin-on	Jacobsen 2701908; Suzuki 16510-82703	Cushman Haulster, Turf-Truckster, Spraytek DS 175 all with Suzuki Engine
B7335-MPG	Maximum Performance Glass Lube Spin-on	John Deere RE521420; Fleetguard LF16106	John Deere Equipment
P7336 KIT	Set of 2 Hydraulic Breather Elements	Iveco 2992447; Coopers AEM2940; Hengst EAS304MD152; Mann & Hummel C911X2	Iveco EuroCargo Trucks
P7337	2-Section Hydraulic Element	Cummins 3420742; Fleetguard LF16031	Cummins QSV81, QSV91 Engines
P7338	Lube Element	Volvo 12758116	Volvo Automotive
B7350	Lube Spin-on	J.C. Bamford 320/04133; Alco SP-1294	Gillisons GVF5000 Lift Truck; J.C. Bamford Generators, Equipment
B7351-MPG	Maximum Performance Glass Lube Spin-on	Komatsu 6731-52-5130	Komatsu Loaders
BD7353	Dual-Flow Lube Spin-on	John Deere RE530107; Fleetguard LF9032	John Deere Equipment
P7354	Lube Element	DAF 1629393, 1643070; Coopers LEF5207; Donaldson P550812; Fleetguard LF16233	DAF Engines, Trucks
B7356	Lube Spin-on	Agco 72201898; Massey Ferguson 3609410-M1, 3710280-M2	Agco, Challenger, Massey Ferguson Tractors
B7357	Lube Spin-on	Tata Cummins 252518130139; Fleetguard LF16060	Tata 697 BS II, 697 BS III Diesel Engines
B7359	Lube Spin-on	Tata Cummins 253418130165; Fleetguard LF16062	Tata Engines
B7361	Lube Spin-on	J.C. Bamford 2/630935, 2/630935A	J.C. Bamford Equipment

BALDWIN NEW PRODUCTS

BALDWIN NUMBER	DESCRIPTION	REPLACES	APPLICATIONS
B7397	Lube Spin-on	Case 87300047; Fleetguard LF3593	Case-IH Tractors
P7398	Lube Element	Toyota 4152-31090	Lexus, Toyota Automotive, Light-Duty Trucks
P7399	Lube Element	Volkswagen 6D115466, 6D115562	Audi, Volkswagen Automotive
P7400	Lube Element	Hyundai 26320-3C100	Hyundai, Kia Automotive, Light-Duty Trucks
B7401	Lube Spin-on	Chrysler 4884900AB	Chrysler, Dodge, Jeep Automotive, Light-Duty Trucks
B7402	Lube Spin-on	Caterpillar 249-2347	Caterpillar C13 Engine; Kenworth, Peterbilt Trucks
B7403	Lube Spin-on	Case 285451A1; Perkins 2654412	Case, New Holland Wheel Loaders
P7405	Lube Element	Detroit Diesel A4721800109, A4721840225	Freightliner, Sterling, Western Star Trucks; Detroit Diesel DD15 (14.8L) Engine
P7406	Lube Element	Toyota 4152-YZZA4	Toyota Light-Duty Trucks
P7408	Lube Element	BMW 11427509208, 11427512446	2002-06 MINI Cooper, Cooper S
B7407	Lube Spin-on	Hitachi 4454526	Hitachi, John Deere Excavators
B7409	By-Pass Lube Spin-on	Mack 20843764; Volvo 20843764	Mack MP7, MP8 Engines, Trucks
B7410	Lube Spin-on	Case ND103597; Deutz 1182236; Fleetguard LF3848	Case Compactors; Deutz Engines
P7411	Lube Element	GMC 24415388, 88894390	2003-04 Cadillac CTS with V6-197 (3.2L) Engine
P7413	Lube Element	Chrysler 5175571AA; Mercedes-Benz A6421800009; Fleetguard LF16231	Jeep, Mercedes-Benz Light-Duty Trucks, Dodge, Mercedes-Benz Sprinter Vans
P7414	Lube Element	Audi 6E115562A	Audi Automotive
P7415	Lube Element	Volkswagen 71115562, 71115562A, 71115562B; ACDelco PF1708	Audi, Volkswagen Automotive, Light-Duty Trucks
B7416	Lube Spin-on	Case 87327673; Isuzu 1-87610-006-1	Case CX210N Excavator
P7417	Lube Element	Volvo 8642570	Volvo Automotive
P7418	Lube Element	Toyota 4152-31060, 4152-YZZA5	Lexus Automotive
B7419	Lube Spin-on	Suzuki 16510-03G00, 16510-06B01	Suzuki ATVs, Motorcycles
B7420	Lube Spin-on	Komatsu 6732-51-5141, 6732-51-5142; Fleetguard LF3915	Komatsu Excavators
B7422	Lube Spin-on	Suzuki 16510-78J01	2009-on Suzuki Grand Vitara, 2009 XL-7
B7424	Lube Spin-on	Jaguar EAC1467	Jaguar Automotive
P7426	Lube Element	BMW 11421432097, 11421743398, 11421216192	BMW Automotive
P7427	Lube Element	BMW 11427506677, 11427511161	BMW Automotive
B7428	Lube Spin-on	Peugeot 1109R0, 1109R1, 1109T0	Citroen, Fiat, Peugeot Automotive
B7429	Lube Spin-on	Fiat 46808398, 71736159; Wix Europe WL7083	
B7430	Lube Spin-on	Fiat 5984044, 71736157; Wix Europe WL7091	
B7431	Lube Spin-on	Nissan 15208-BN30A, 15208-BN300	Nissan European Light-Duty Trucks
B7432	Lube Spin-on	Renault 8200007832	Renault Master I European Light-Duty Trucks
B7433	Lube Spin-on	Fiat 46805831, 71736160	
B7434	Chrome Lube Spin-on	Harley-Davidson 6379677A	Harley-Davidson Motorcycles
B7435	By-Pass Lube Spin-on	Fleetguard LF3882	
P7438	Lube Element	BMW 11427566327	BMW Automotive
B7440	Lube Spin-on	Komatsu 6733-51-5142	Komatsu Engines, Equipment
B7441	Lube Spin-on	Fiat 46544820, 71736161; Wix Europe WL7134	
P7442	Lube Element	GM 12605566; ACDelco PF457G	Chevrolet, Pontiac, Saturn Automotive
B7443	Lube Spin-on	Chrysler 4892339AA; Mopar MO-339	Chrysler, Dodge, Jeep Automotive
B7444	Lube Spin-on	Chrysler 5184231AA; Mopar MO231	Dodge, Jeep, Mitsubishi Light-Duty Trucks
B7445	Lube Spin-on	Fiat 71736158, 46805832; Mann & Hummel W714/4	Antonio Carraro Equipment
B7446	Lube Spin-on	Hyster 1350036; Donaldson P550047	Hyster Lift Trucks
B7449	Lube Spin-on	Ford AA5Z-6714-A; Mazda ZZC4-23-802	Ford, Mercury, Lincoln Automotive, Light-Duty Trucks
P7450	Lube Element	BMW 11427557012	MINI Cooper Automotive; Citroen, Ford, Peugeot European Light-Duty Vehicles
B7451	Lube Spin-on	CLARCOR Filtration (China) CX85100C, JX85100C, WB202C	Foton FT404, FT504, Taishan TS554 Tractors
B7452	Lube Spin-on	Volkswagen 6J115403C, 6J115561B; Wix 57561	Audi, Volkswagen Automotive
B7453	Lube Spin-on	CLARCOR Filtration (China) JX0707, WB173-S	Kama, Taishan TS254C, TS354C Tractors
P7454	Lube Element	Toyota 4152-YZZA6; Wix 57064	Pontiac, Scion, Toyota Automotive

BALDWIN NEW PRODUCTS

BALDWIN NUMBER	DESCRIPTION	REPLACES	APPLICATIONS
P7455	Lube Element	Nissan 15209-00QAA; Opel 4415941, 4506039, 93184133; Renault 7700109402, 7701472321, 8200004835	Nissan, Opel, Renault Light-Duty Trucks
BC7456 KIT	Paper Insert	Spinner II 73165, 73187	Mack Trucks
PF7928	Fuel Element	Davco 102011, 102526; Fleetguard FS19763	Davco FH230, FH234, DI9100 Housings
BF7929 KIT	Set of 2 Fuel Filters	John Deere RE520906, RE523236, RE525523; SF-Filter SK3188-SET	John Deere Equipment
PF7930	Fuel/Water Separator Element	Davco 102528; Fleetguard FS19765	Davco FH230 Series Fuel Pro, FH234 Series Industrial Pro
BF7932	Fuel Spin-on	Cummins 4964100; Fleetguard FF5607, FF5634, FF5644	Cummins QSK 19 (Tier 3) Engine
BF7933 KIT	Set of 2 Fuel Filters	GMC 19149845; ACDelco TP1537	Chevrolet Express Van, GMC Savana
PF7934 KIT	Set of 2 Fuel Elements	Ford 8C3Z-9N184-A; Motorcraft FD4609	2008-on Ford Super Duty Pickups with V8-391 (6.4L) DI Turbo Diesel Engine
PF7936	Fuel Element	Scania 1459762; Donaldson P550653; Fleetguard FF5463, FF5684	Scania Trucks
BF7937	In-Line Fuel Filter	GMC 15077584	Chevrolet, GMC Light-Duty Trucks
PF7938	Fuel Element	Deutz 2931530, 4901031; Renault 2931711, 7420796772, 7420998806; Volvo 2931712, 20796775, 20998805	R.V.I., Volvo Trucks
PF7939	Nylon Screen Fuel Element	M.A.N. 51.12503.0062; Freightliner 902051; Mercedes-Benz 902051, A0000902051	Freightliner, IHC, M.A.N., Sterling Trucks; IHC, M.A.N., Mercedes-Benz Engines
BF7940	Fuel Spin-on	Cummins 4934845; Fleetguard FF5632	Ford, Freightliner, Kenworth, Peterbilt, Sterling Trucks; Cummins ISB, Paccar PX-6 Engine
BF7941	Fuel/Water Separator Spin-on with Sensor Port	DAF 1437070; Fleetguard FS19584	Cummins ISBE Engine, OAF Trucks
BF7942	Fuel/Water Separator Spin-on with Sensor Port	DAF 1618993; Fleetguard FS19689	Cummins ISBE Engine; DAF, Kenworth, Peterbilt Trucks
BF7943	Fuel Spin-on	Mack 20972295; Volvo 20972293	Mack, Volvo Trucks
BF7944	In-Line Fuel Filter	Jacobsen 2701898; Suzuki 15410-72F01	Cushman 3 and 4 Wheel Haulsters, Turf-Trucksters
BF7945	In-Line Fuel Filter	GMC 25313807; Hyundai 31911-29000	Hyundai Automotive
PF7946	Fuel Element	DAF 1450184	DAF Trucks
BF7948	Fuel Spin-on	Komatsu 600-319-3520, 600-319-3550	Komatsu Equipment
BF7949-D	Secondary Fuel/Water Separator Element with Removable Drain	John Deere RE522878	John Deere Equipment
BF7949-DM	Secondary Fuel Element with Drain	John Deere RE521538	John Deere PowerTech 6068TFM (6.8L) Marine Engine
BF7950-D	Primary Fuel/Water Separator Element with Removable Drain	John Deere RE529643	John Deere Equipment
BF7951-D	Secondary Fuel/Water Separator Element with Removable Drain	Iveco 504107584	Iveco Engines, Generators
BF7952-D	Secondary Fuel/Water Separator Element with Removable Drain	John Deere RE522868; Wix 33739	John Deere Tractors
BF7953-D	Secondary Fuel/Water Separator Element with Removable Drain	Case 87803442; New Holland 87803441	Case-IH, New Holland Equipment
BF7954-D	Primary Fuel/Water Separator Element with Removable Drain	Case 87803445; New Holland 87803444	Case, Case-IH, New Holland Equipment
BF7955	Fuel Spin-on	Liebherr 7382045; Fleetguard FF5427	Liebherr Cranes
BF7956-D	Primary Fuel/Water Separator Element with Removable Drain	J.C. Bamford 32/925694	J.C. Bamford Equipment with 444 Diesel Max Engine
BF7957	Fuel Spin-on	Komatsu 6754-79-6130, 6754-79-6140	Komatsu Equipment
BF7958	In-Line Fuel Filter with Drain	Volkswagen 1J0127401A, 1J0127401B	Volkswagen Automotive
BF7959	In-Line Fuel Filter	Kia K2A1-20-490A, OK2A11-20-490A	Kia Automotive
BF7960	In-Line Fuel Filter	Ford XF5Z-9155-AA, XL5E-9155-AB; Mazda ZZP1-13-470, ZZR0-13-470	Ford, Mazda Light-Duty Trucks
BF7961	In-Line Fuel Filter	Toyota 23030-62010	Toyota Light-Duty Trucks
BF7962	In-Line Fuel Filter	Kia K32A-20-490; ACDelco GF782	Kia Automotive
BF7963	In-Line Fuel Filter	GMC 30020673; ACDelco GF826	1999-2004 Chevrolet Tracker
BF7964-D	Secondary Fuel/Water Separator Element with Removable Drain	Ford 2C11-9176-AA, 4386518; Motorcraft EFG331	Ford Transit Light-Duty Trucks
BF7965	In-Line Fuel/Water Separator with Drain	J.C. Bamford 320/07057, 320/07155; Donaldson P765325	J.C. Bamford Equipment
BF7966	Fuel Spin-on	Cummins 3978040; Fleetguard FF5421	Freightliner S2 Bus Chassis; Kawasaki 70ZV Loader; Kenworth Trucks
BF7967	Fuel Spin-on	Hino 23401-1510, S23401-1510	Hino Trucks
BF7968	Fuel Spin-on	Evinrude 502905, 174144; Johnson Marine 502905, 174144	Evinrude, Johnson Marine Engines
BF7969	Fuel Spin-on	Volvo-Penta 38512182, 3852413, 3862228	Volvo-Penta Marine Engines

BALDWIN NEW PRODUCTS

BALDWIN NUMBER	DESCRIPTION	REPLACES	APPLICATIONS
BF7970	Fuel Spin-on with Drain	Chrysler 52129238AA; Iveco 2992300, 504018807; Fleetguard FS19781	2005-06 Jeep Liberty; Iveco Light-Duty Trucks
BF7971-D	Primary Fuel Element with Drain	John Deere RE522966	John Deere Equipment
BF7971-DM	Primary Fuel Element with Drain	John Deere RE521540	John Deere PowerTech 6068TFM (6.8L) Marine Engine
BF7972	In-Line Fuel Filter with Sensor Port	Chrysler 5117494AA, 5170896AA, 5170896AB, 5175429AB; Mercedes-Benz A6420920101, A6460920701	Dodge Sprinter; 2007-09 Jeep Grand Cherokee, Mercedes-Benz Automotive, Sprinter Vans
PF7974	Nylon Screen Fuel Element	Mercedes-Benz 901351, A0000901351; Freightliner 901351	Freightliner, Sterling Trucks; Mercedes-Benz Engines
PF7975	Nylon Fuel Element	Volvo 7412921	Volvo Excavators
PF7978	Fuel/Water Separator Element	International 1878042-C91; Donaldson P550824; Fleetguard FS19947	International Engines, Trucks
BF7979	Fuel/Water Separator Spin-on with Drain	Ashok Leyland F8835100; Fleetguard FS19636	
PF7986	Fuel Element	International 3004473-C91; Donaldson P550821	International Engines, Trucks
OV8728	Heavy-Duty Hydraulic Indicator	Donaldson P167580	
OP8750	Hex Head Plug		Optional for BF1223-SP, BF1329-SP Furnished with: BF1284-SP, BF1330-SP, BF1351-SP, BF1358-SP, BF1374-SP, BF1382-SP
OP8751	Hex Head Plug		Optional for BF1222-SP, BF1345-SP
OP8752	Hex Head Plug		Optional for BF1204-SP, BF1205-SP, BF1249-SP, BF1283-SP, BF1346-SP, BF1348-SP, BF1355-SP
OP8753	Hex Head Plug		Optional for BF1274-SP, BF1277-SP, BF1352-SP, BF1354-SP
BT9366-MPG	Maximum Performance Glass Hydraulic Spin-on	Caterpillar 156-0214	Caterpillar Equipment, Trucks
BT9387	Hydraulic Spin-on	AGCO 3383386M92; Massey Ferguson 3383386-M92; Fleetguard HF7950	Massey Ferguson Tractors
PT9389-MPG	Wire Mesh Supported Maximum Performance Glass Hydraulic Element	John Deere AT181127; Fleetguard HF28999	John Deere Motor Graders
BT9392-MPG	Maximum Performance Glass Hydraulic Spin-on	Caterpillar 126-1814; Donaldson P170309	Caterpillar Equipment, Trucks
BT9393-MPG	Maximum Performance Glass Hydraulic Spin-on	Caterpillar 126-1813; Donaldson P170308	Caterpillar Equipment, Off-Highway Trucks
PT9394-MPG	Wire Supported Maximum Performance Glass Power Steering Element	Mack 5839870678A; Nelson 870678A	Kenworth, Mack Trucks
PT9395-MPG	Maximum Performance Glass Hydraulic Element	Case 192200280705; Fleetguard HF35320	Case-IH Tractors
PT9396	Hydraulic Element	Kobelco PA33H01040P1; New Holland PA33H01040P1	Case, Kobelco, New Holland Excavators
PT9397-MPG	Wire Mesh Supported Maximum Performance Glass Hydraulic Element	Caterpillar 77-5479	Barber-Greene, Caterpillar Equipment
BT9398-MPG	Maximum Performance Glass Hydraulic/Transmission Spin-on	John Deere AL156624, RE55801; Donaldson P178619; Fleetguard HF35339	John Deere Tractors
PT9399-MPG	Maximum Performance Glass Hydraulic Element	Komatsu 209-60-77531	Komatsu Excavators, Loaders
BT9400-MPG	Maximum Performance Glass Hydraulic Spin-on	Dana 4209440; Kalmar 9210280007	Terex PPM TFC45H Superstacker
PT9401	Wire Mesh Supported Hydraulic Element	Hitachi 4333464	Hitachi Excavators
BT9402	Transmission Spin-on	New Holland 85817004	New Holland Loader Backhoes, Telehandlers
PT9403-MPG	Wire Mesh Supported Maximum Performance Glass Hydraulic Element with Bail Handle	John Deere F061786; Donaldson P173178	John Deere Equipment
PT9404-MPG	Maximum Performance Glass Hydraulic Element	Case K210049; Fleetguard HF28939	Case Tractors; Link-Belt, Sumitomo Excavators
PT9405	Hydraulic Element	Caterpillar 92-2568; Fleetguard HF6465 Donaldson P161413	Caterpillar Lift Trucks
PT9406-MPG	Maximum Performance Glass Hydraulic Element	Caterpillar 1G5459	Caterpillar Equipment
PT9407-MPG	Maximum Performance Glass Hydraulic Element	Caterpillar 1R1809	Caterpillar Equipment, Off-Highway Trucks
BT9408	Air Coalescer Spin-on	Cummins 3682984; Mack 279GB43M; Donaldson P566130; Fleetguard AF26113	Mack CHN613 Truck, Iveco Trucks
PT9409-MPG	Wire Supported Maximum Performance Glass Hydraulic Element	John Deere AL160316, AL160771; Fleetguard HF35343	John Deere Tractors
PT9410-MPG	Wire Supported Maximum Performance Glass Hydraulic Element	Lull 10727810, P27810	Lull Lift Trucks
PT9411-MPG	Maximum Performance Glass Hydraulic Element	Komatsu 2076-07-1182	Komatsu Dozers, Excavators
PT9412-MPG	Wire Supported Maximum Performance Glass Hydraulic Element	Zinga S0810HN; Fleetguard HF30462; Purolator-Facet 9800EAH124N2	Cummins Engines; Waste Pro Garbage Trucks

BALDWIN NEW PRODUCTS

BALDWIN NUMBER	DESCRIPTION	REPLACES	APPLICATIONS
PT9413-MPG	Maximum Performance Glass Hydraulic Element	Komatsu 14X-60-31150	Komatsu Equipment
PT9414-MPG	Wire Supported Maximum Performance Glass Hydraulic Element	John Deere F058437; Timberjack F058437; Fleetguard HF35198	John Deere Forwarders, Wheeled Harvesters
PT9415-MPG KIT	Set of 2 Wire Mesh Supported Maximum Performance Glass Transmission Elements	Allison 29545779; GMC 29506337; John Deere AT327883; Fleetguard HF28943	Allison World Transmissions with 4 Inch Sump
PT9416-MPG KIT	Set of 2 Wire Mesh Supported Maximum Performance Glass Transmission Elements	Allison 29545776; Donaldson P179206, P560972; Fleetguard HF28944, HF35153	Allison World Transmissions with 2 Inch or 7 Inch Sump
PT9418	Hydraulic Element	Caterpillar 1R0778	Caterpillar Equipment
PT9419-MPG	Maximum Performance Glass Hydraulic Element	International 1695528-C1; Nelson 87795A	IHC Trucks
BT9553	Hydraulic or Transmission Spin-on	J.C. Bamford 581/18076; S-F Filter SPH94040	J.C. Bamford Equipment
PT9555	Hydraulic Element	Caterpillar 1R0773; Donaldson P165238	Caterpillar Equipment, Off-Highway Trucks
PT9556-MPG	Wire Supported Maximum Performance Glass Hydraulic Element	Caterpillar 179-9806, 179-9806X; Fleetguard HF35440	Caterpillar Equipment
PT9557	Hydraulic Element	Hitachi 4448402, 4443773; Donaldson P502270; Fleetguard HF7691	Hitachi Excavators; John Deere Excavators, Loaders
BT9558-MPG	Maximum Performance Glass Hydraulic Spin-on	Quincy 142136	Quincy Compressors
PT9559-MPG	Wire Mesh Supported Maximum Performance Glass Hydraulic Spin-on	Euclid 4099538, E4099538; Hitachi E4099538; Donaldson P560404; Fleetguard HF30357	Euclid, Hitachi Dump Trucks
CV15000	Air Breather Element	Cummins 3683918; Fleetguard CV50601, CV50607, CV5060100, CV5060700	Cummins ISM/ISX Engines
20014	Transmission Filter	Wix 58837	Buick, Cadillac, Chevrolet, Oldsmobile, Pontiac, Saturn Automotive with 4T60E, 4T65E Electronic Transmission (FWD, 4 Spd.)
20015	Transmission Filter	Toyota 35330-06010; 35330-0W010	Lexus, Scion, Toyota Automotive, Light-Duty Trucks
20016	Transmission Filter	Allison 29537965; General Motors 29537965	Allison Transmissions
20017	Transmission Filter	Allison 29537966; General Motors 29537966	Allison Transmissions
20018	Transmission Filter	Ford 6L2Z-7A098-AA; Motorcraft FT160	Ford Explorer, Explorer Sport Trac, Mercury Mountaineer
20019	Transmission Filter	Ford 7L1Z-7A098-A; Motorcraft FT171	2007-on Ford Expedition, Expedition, 2008-09 Explorer, 2008 Explorer Sport Trac; 2008-on Mercury Mountaineer
20020	Transmission Filter	General Motors 24225323; Isuzu 8-24225-323-6	Chevrolet Colorado; GMC Canyon; Hummer H3, H3 SUT; Isuzu I-370
100-DEPR KIT	DAHL Model 100 Depressurizer Kit		
100-MNTG KIT	DAHL Model 100 Mounting Kit		
200-DEPR KIT	DAHL Model 200 Depressurizer Kit		

FOOTNOTES LISTING

Footnotes	Description	Footnotes	Description
*	Extra-Long Life Versions Available.	36	Use PA4135 for Severe Service Environments.
+	See Product Guide for Variations of This Number.	41	In-Line.
10	To VIN BF28601100052.	44	Power Steering.
11	From VIN BF28601100052.	52	w/o Charcoal.
12	To VIN BF28601205905.	53	w/Charcoal.
13	From VIN BF28601205905.	61	Contains Pan-Type and Spin-on Filter.
17	Exc. Calif.	65	Stripped Chassis.
20	w/Oil Cooler.	73	Police Version.
21	w/o Oil Cooler.	74	Exc. Police.
22	To Chassis # 35082.	76	Contains Pri. and Sec. Fuel Elements.
23	Chassis # 35082-up.	77	Exc. Carter Carburetor.
25	Chassis # J3007496-up.	82	04/21/01-03/04/02
27	Vehicles Over 8500 GVW.	83	03/04/02-08/04/03
28	w/Off-Road Package.	84	w/Hoses and Clamps, Use BF840-K1.
29	w/o Off-Road Package.	G	Gasket
31	Calif.	H	Housing

BALDWIN OBSOLETE PRODUCTS

OBSOLETE NUMBER	REPLACED BY
EHL	
B-1/2-S	
B-1/2	
BO-1A	
B-1	**B2**
V-1-F	**V2-F***
DL2	**B2**
V-2-A	**B9**
V2-F	**B2**
B-3	**B9**
V-3-A	**B9**
C-5-K	**C-50-MH***
E-5	
ME-6-F	
V-6-A	**B6**
D-7	
B-8	**B27**
V-9-A	**B9**
B-10	**B10-AL**
B-10 BOWL	**B10-AL BOWL**
B-10-HD	**B10-AL**
B-10-HD BOWL	**B10-AL BOWL**
B-13	**B10-AL**
B-13 BOWL	**B10-AL BOWL**
P-13	
P-14	
EO-16-A	
S-16	**S16-1**
C18-A	**P18,-HD**
C-19-A	**P19**
P-20	**P20-HD**
P-20-E	**P20-HDE***
P20-HDE	**P20-HD**
C21-A	
P-21	**C21-A***
C22-A	
P-22	**C22-A***
C23-A	
C24-A	
C25-A	**P25**
C-26-A	**P26**
V-27-A	**B27**
C-28-A	
C-30-B	
C-31-B	
C-32-B	
C-33-B	
P-33	**C-33-B***
C-34-M	
P-34	
B-35	**B35-S**
C-35-M	
ES35	
C36-M	
P-36	**C36-M***
C-37-M	
P-37	**C-37-M***
B38	
V-39-A	**B39**
C-40-F	**P40**
C-41-F	**P41**
C-42-F	**P42**
B43	**B43-S**
PT-43	**PT29**
T44-M	
PT-45	
T-45-F	**PT-45***
T-46-F	**PT46**
C-47-P	**P47**
C-49-F	
C-50-MH	
PT-51	**T51-M***
T51-M	
C-52-MS	**P52**
C-53-MJ	**P53**
C-54-M	**P54**
PT-55	**T55-M***
T55-M	
T-56-M	**V835-M***
T57-M	
T58-M	
P-59	**C59-C***
C59-C	
C-59-C3	**C59-C***
C-60-C	**P60**
PT-61	**PT61-HD**
T-62-P	**PT62**
T-63-P	**PT63-1**
C64-P	**P64**
BT65	
C-65-P	**T77-P***
P-65	**T77-P***
PT-66	**PT66-HD**
C-67-P	**P67**
C-68-P	**P68**
C-69-P	**P69**
T70-P	**PT70**
T71-P	**PT71**
T72-P	**PT72**
C-73-P	**P73**
C-73-PS	**P73**
PT-73	**P73**
T-73-P	**P73**
C-74-P	
T-75-P	
B76-HPG	**B76-SS**
PT-77	**T77-P***
T77-P	
C78-P	
C80-P	**P80**
C81-P	**P81**
C-84-P1	**C84-P2***
C84-P2	**P84-2**
P-84-1	**P84-2**
T-85-P	**PT85**
PT-86	**PT86-HD**
PT-87	**PT87-S**
PT-87-HD	**PT87-S**
PT88	**PT88-HD**
PT-90	**PT90-10**
B95-HPG	**B95-SS**
C-95-IL	
B96-B	**B96**
B96-HPG	**B96-SS**
B-96 KIT	**BK6311***
C-96-IL	
B97-B	**B97**
C-97-G	
B99-HPG	**B99-SS**
C-100-C	
C-101-W	**T101-W***
PT-101	**T101-W***
T101-W	
C-102-W	
T-103-W	**P42 w/G143**
P-105	
P107	
P-109	
P-110	
P-113	
V-117-F	**PT117**
V-118-MN	
PT-119-5DL	**(2) PT119-5**
PT-119-5TR	**(3) PT119-5**
PT-119-TR	**(3) PT119**
PF-120	
B-121	**B50**
B-122	
B-127	
C130-C	
C-132-C SERIES	
C-134-EL	
BT136	
PT-139	
B-140	
C-141-F	
B-142	
B-145	**B243**
PT147	
T-153-M	
V-156-M	
PT-157	**P80,-HD**
PT-159	**PT385**
PT-159-E	**PT385-E**
PT-160	
B-161	**B161-S**
P-168	
B-173	**B173-S**
P-173	
B175	**B1422**
P-175	
P-178	
P-179	**P177**
P180	
PT-182 KIT	
C184-P	**P184**
P188	
T192-P	
PT-195	**P15**
P-196	
B-197	**B243**
P-197	
P-200	**C200-K***
C200-K	
T-200-K	**C200-K***
B-201	**B201-S**
C-201-K	**P42**
P-202	**PT154**
P-202-S	
P-205	
PT-208-10	
P-209	
PT-211	
PT-212	**PT212-5**
PT-215	**P41**
PT-216	**P198**
P-217	
C-218-A	
V-220-R	
V-221-R	
F-222-P	
P-223	
F225-F	**PF225**
F226-F	**PF226**
PT-227	
P-228	**P190**
C-229-A	
P-230	
B-232	**B233**
B233-HPG	
V-233-F	**B233**
B-234	**B296**
PT-236	
P-237	
P-238	
PF-239	
P-241	**PT29**
PT-242	
PT-243	**PT82-HD**
P-244	
PT-245	
PT-246	
V-247-M	
B-249	**B2 or V2-F***
P250	
PD-250	
P-252	
B-254	**B50**
PT-255	
V-261-A	
PT-262	
P-263	
BT-266	**B2 or V2-F***
P270	
BT272	**B7082**
P-272	
B-278	
B-280	**B39**
BT-281	**B975**
BT282	**BT8449**
BT282-10	**BT8449-10**
PT-286	
PT-288	**PT288-HD**
B-290	
B291	
PT-291	
PT-294	
B297	**B2**
B-298	**BT223**
VT-299	**V842-O***
T-301-M	**T300-M**
T-302-M	**T303-M**
T304-M	**PT304**
T-305-M	**T304-M***
T-306-M	
T-307-M	
PT317	**PT317-MPG**
PT318	**PT318-MPG**
PT319	**PT319-MPG**
PT320	**PT320-MPG**
BD321	**BD325**
BD322	**BD232**
BD323	**BD232**
C327-O	
B328	**BT8417**
BF335	
BT-344	**BT344-S**
BT-352	**BT486**
BT-356	**BT292**
BF362	**BF7629**
BF363	**BF984**
PT384	
PT390	**PT390-MPG**
PT391	**PT391-MPG**
PT-394	**P194HD**
PT-394-5	
PT399	**P7003**
WG-400	
PT401	**PT401-MPG**
WG-401	
WG-402	
WG-403	
WG-404	
JC-405-B	**JC405**
CU-406-B	**CU406**
CU-406-I	**CU406**
CU-406-WO	**CU406**
P-406	**CU406**
VCU-406	**CU406**
VCU-406-HD	**CU406**
SD407	
VSD-407	**SD407***
VDF-408	**DF408**
T-409-PE	
T-410-PE	
TA410-CPE5	
T-411-PE	
TB411-CPE25	
TC411-CPE2	
TC411-CPE5	
TC411-CPE10	
TC411-OPE2	
TC411-OPE5	
P412-5	
P412-5A	
P412-25	
P412-25A	
T-412-PE	
TA412-CPE5	
TA412-CPE10	
TA412-CPE10A	
TB412-CPE25	
TB412-OPE25	
TC412-CPE2	
TC412-CPE5	
TC412-OPE5	
TC412-CPE10	
TC412-CPE25	
TC412-CPE25A	
TC412-CPE50	
TC412-OPE5A	
TC412-OPE10	
TS412-CPE50	
T-413-PE	
TA413-CPE10	
TA413-CPE10S	
TB413-CPE25	
TC413-CPE10	
TC413-CPE10AS	
TS413-CPE50	
TS413-CPE75	
F-414-B	
PF-414-10	
PF-414-15	
PF-414-25	
PF-415	**P415-5**
P-415-2A	**P415-5A**
S-416	**PT416**
S417	
S-418	
PT-420	
S-421	**PT435**
S422	
S-424	
PT-425	
S-426	
S-427	
BT428	**BT372-MPG**
V-428-B	
V-428-FF	
V-429-BP	**V429-B**
PF-430	
PT-430-B	
PT432	
S-433	
PT-436-WO	**PT436**
S-438	
PT-439-HD20	
PT-439-HD40	**PT-439-HD20***
S-440	
S-441	
PT442	**PT442-MPG**
S-442	
S-443	
S444	
PT445	**PT445-MPG**
S-445	**S423**
S-447	**S444***
S448	
PT449	
PT-452	
BT453	**BT260-10**
PT-453	
PT-454	
P457	
PT457	**PT457-MPG**
S458	
T-460-PE	
TB460-CPE25	
BT464	**BT8860*, BT8861**
P-464	
P-466	
P-467	
PT467	**PT467-MPG**
PT468	**PT468-MPG**
T-468-R	
P-470	
PT-472 KIT	
S-473	
PT-474	
PT478	**PT478-MPG***
PT478-MPG	
S-478	
PT-481	**P446**
PT482	**PT482-MPG*, PT725-MPG**
PT482-MPG	**PT725-MPG**
S-482	
S-483	
P-486	
PT487 KIT	**PT487**
P-488	
PT491(2)	**(2) PT491**
BK495-A	
BK495-B	
P-495	
PT-499	**PT499-5**
T500-MD	
T502-AMD	
T-503-MD	
P505	
P-506	
PT508	**PT508-MPG**
P-509	
PT509 KIT	**PT509-MPG KIT**
T-509-E	
F-510-S	
V-510-S	
P-511	
P-511-HD	

*These Part Numbers are also Obsolete.

BALDWIN OBSOLETE PRODUCTS

OBSOLETE NUMBER	REPLACED BY
F-515-O	
EL-518	
F-518-O	
V-518-O	
B519	**B1400**
P-519	
BT523	**BT8803-MPG**
PT-523	**PT561**
BT-524	**B2**
P524	**P294**
EL-527	
B530	**B1402**
PT-530	**PT390* or PT391*, PT390-MPG or PT391-MPG**
S-530	
PT531	
S-531	
PT-532-10	**PT482***
S-532	
PT533	**PT8331-MPG**
S-533	
P540-S	**P540**
PT544	
PT-544-10	
PT-547	
PT-553-10	
BT-556	
PT557-10	
PT559	
PT569-10	
P-570	
PT570-10	
PT574-10	
B-576 KIT	**BK6700**
BF580	**BF5800**
BF580-B	**BF5800-B*, BF5800**
BF581	**BF5810**
BF581-B	**BF5810-B*, BF5810**
PF589	**PF7889**
PF589-10	**PF7889-10**
PF589-30E	
PF589-E	
PF590	**PF7890**
PF590-10	**PF7890-10**
PF590-30	**PF7890-30**
PF590-30E	
PF590-E	
PA-601	**PA602**
PA-603	
PA-605	
BT606	**BT606-MPG**
PA-606	
B608	**B227**
PA-608	
PA-609	
BT610	**BT610-MPG**
PA-610	
BT611	**BT611-MPG**
PA-611	
PA-614	**PA650**
PA-619	
PA-620	
PA-622	
PA-623	**PA602**
SA-624	
PA-626	
PA-627	
PA-628	**PA634**
PA-629	
PA-630	
PA-635	**PA-603***
PA-636	
PA-637	
PA-640-HD	
PA-646	**PA2007**
PA656 FOAM	
PA659	
BF660	**BF1179**
PA-660	
T-660-P	
BF661	
PA-661	
PA-663	**PA675**
PA-664	**PA664-1**
PA664 FOAM	**PA664-1 FOAM**
PA-664-1 ELE.	
PA-664-1 SCR.	
PA-665	
PA-667	
PA-668	
PA-672	
PA-673	
PA-674	
PA-676	
PA-679	
PA-681	
PA-682	
PA-682(2)	
PA-683	
PA-684	
PT684**	**PT8400-MPG**
PA-685	
PT685	**PT685-MPG**
PA-686	
PT686**	
PA-687	
PT687**	
PA-689	
PA-690	
PA-692	
PA-694	**PA642**
PA-698	
C701-L	
C702-L	
C703-L	
C-704-L POLY	**C704-L**
C-704-LS	**C704-L**
F-704-L	**P7040**
C705-L	
PV706-M	**P706-M**
PV-706-M POLY	**PV706-M***
PT-707	**PT707-HD**
PT-707-10	**PT707-HD10**
PT-707-HD5	
VT-708	
C-709-L	
VT-710	
V-711	
V-712	
V-713	
P718	
V-718-FF	**P718***
P-719	
P-720	
PT-727	**PT727-HD**
PT-727-10	**PT727-HD10**
PT-727-HD5	
PT728	**PT728-MPG**
V-728-O	
PT730	**PT8361**
BT731 KIT	**BT8308-MPG KIT**
BT734	**BT8851-MPG**
V736-O	
PT-737-5	
BT742	**BT8870-MPG**
V-743-O	
V743-T	
BT744	**BT8862**
BT745	**BT8844**
BT746	**BT8845**
BT747	**BT8846**
BT748	**BT8840-MPG**
BT749	**BT8852-MPG**
C-750-EP	
C-750-L POLY	**C750-L**
C-750-LS	**C750-L**
F-750-L	**P7500**
PT754	
PT755	
PT-757-5	
BT758	**BT8850-MPG**
C759	
PT-760	**PT760-10 or PT760-25**
PT762	
PT769	**PT8395 or PT8396**
BT770	**BT8861**
BT771	**BT8863**
PT773	**PT773-MPG**
PT776	**PT776-MPG**
V-780-S	
BF785-MPG	
BF787	**BF1280**
BF793	
BF796	**BF7546**
BF799-D	**BF7639-D**
F800-A	
F801-P	
F-802-A	**PF802**
F-803-A	
PF803	
F-804-A	**PF804**
F-805-A	
F-806-C	
F808-A	
F-808-P	**PF828**
F-809-P	**PF809**
F-811-A	
PF-812	**PF906**
F813-F	
PF-813	**F813-F***
B-815-O	
BF815	**BF7713**
F-815-A	
F817-F	
F-818-A	**F800-A***
F-820-P	**PF820-S**
F-820-S	
PF-821	**PF821-S**
F-823-P	**PF823**
PF824(2)	**(2) PF824**
F828-F	
PF-830	
BF832	**BF7713**
PF-832	
F-833-P	
F-835-M	
V835-M	
F-836-F	
PF-837	
BF-839	**BT839**
BF-840-K2	**BF833-K2**
BF-840-K3	**BF836-K3**
BF-840-K4	**BF836-K4**
BF-841	
V842-O	**VT842-O**
F848-A	
PF-849	**PT849**
BF850	
BF850-K	
BF851	**BF833**
PF-851	
PF-852	
PF-853	
PF-854	
V-854-O	**V854-T***
V854-T	
PF-855	
PF-856	**PF859**
PF-858	
F-861-C	
F-862-C	**F924-C***
F-863-C	
PF-865	
BF867	**BF7713**
F-867-M	
PF-867	
PF-868	
PF870	**PF7521***
F871-F	
F-872-A	
PF-873	
BF875	
F878-F	
BF880	**BF880-FP**
PF-880	
PF-881	
PF-885	
BF887	
PF-889	
PF-893-GR	**PF893**
PF-894-GR	**PF894**
PF-895	
SF-898-GR	**SF898**
F901-C	
F902-C1	
F-902-S	**PF902-S**
PF-902-3	
F-903-C	**PF903***
PF-903	
F-904-C	**PF904**
F905-C	
F-905-W	
F906-C	
PF-906-S	**PF906**
F-910-C	**PF910**
F911-C	**PF926**
F911-DL	**PF952**
F-911-W	
PF-911	**PF926**
V-911-C	**PF926**
F-912-W	
PF-914	
R915	**BF915**
F917-C	
BF918	**BF918-K**
PT-918	
F-919-A6	**(6) F919C w/(2) 7B-7635**
F-919-A9	**(9) F919C w/2F-9341*, 2F-9342***
F-919-A17	**(17) F919C w/9F-1805*, 9F1806***
F-919-B9	**(9) F919C w/1H-4511*, 1H-4514-R***
F-919-C3	**(3) F919C w/5B-1581, 7B-8037**
F919-C4	**(4) F919C w/(2) 7B-7635**
F-919-C5	**(5) F919C w/3H-5671*, 3H-5673***
F-919-C6	**(6) F919C w/(2) 7B-7999***
F-919-C9	**(9) F919C w/(2) 7B-7664**
F-919-C10	**(10) F919C w/8F-7715*, 8F-7716***
F-919-C12	**(12) F919C w/6B-2955*, 7B-8017**
F-919-C17	**(17) F919C w/2F-9228*, 2F9231***
P-920	
F921-C	
F922-C	
F923-C	
F924-C	**PF924**
F-925-C	
F927-C	
PF-928	
PF-929	
F-930-C	
PF-930	
T931-3T	
V-931-W(57)	**V931-W(8)**
F-932-C	
F-933-C	
F-934-C	
P-937-C8	
F-941-C	
PF-944	**PF947**
BF948-B	**BF948**
BF948-D	
BF-948-D KIT	**BF948-D***
F-949-F	**PF949**
P-951	**PT951**
BF-953	
F-954-F	
PF-956	
BF-957-D KIT	**BF957-D**
B-958	**BT839-10**
BT-958	**BT839-10**
F-959-C	
PF-960	**P960**
F961-C	
F-964-C	
BF965	
PF-965	
PF-966	
F-969-M	
BF-973	**BF970**
PF-973	
PF-973 KIT	**PF973***
BF976-B	**BF976**
F-976-W	
B-977 KIT	**BK6710**
BF-977	
PF-980	
BF-981	
BF982	
BF-983	**BF970**
BF-985	**BF991**
PF-988	
BF-989 KIT	
BF990	
BF-993	**BF988**
PF994	
P-997	
P-999 KIT	
P-999-B KIT	
B-1002-CD	**B1000-CD**
F1002-C	
B-1003-N	
B-1004-N	
B1005-N	
B-1007-N	
BF1007	
B-1008-N	
P-1010-L	
PV-1010-L	**P-1010-L***
F-1030-C	
V-1030-C	
B1031	
B-1032	
F-1033-O	
V-1033-O	
F-1035-C	
V-1035-C	
T-1036-B	
V-1037-A	
V-1038-T	
F-1040-O	
F-1050-O	
BF1051	
V-1055-O	
V-1060-O	
V-1074-O	
BF1103	
BF1106	**BF1100**
BF1107	**BF1155***
BF1108	**BF1179**
BF1109	**BF1108*, BF1179**
BF1111	
BF1116	**BF1120**
BF1117	
BF1118	
BF1121	**BF1123**
BF1126	
BF1127	
BF1128	
BF1129	
BF1130	
BF1133	
BF1135	**BF1100**
BF1136	**BF1100**
V-1136-O	
BF1137	**BF1100**
BF1138	
BF1139	**BF1105**
BF1144	**BF1100**
BF1145	
BF1149	**BF1191**
BF1152	**BF1100**
BF1153	**BF1100**
BF1155	
BF1157	**BF1100**
BF1158	**BF1100**
BF1162	
BF1167	**BF1057**
BF1168	**BF1057**
BF1169	

*These Part Numbers are also Obsolete.

BALDWIN OBSOLETE PRODUCTS

OBSOLETE NUMBER	REPLACED BY
BF1175	
BF1183	
BF1192	
BF1202	**BF1237*, BF7674-D**
BF1203	**BF1236*, BF7673-D**
BF1212-HP	**BF1212**
BF1229	**BF1230*, BF1222,-SP**
BF1230	**BF1222 or BF1222-SP**
BF1234	**BF1205 or BF1205-SP**
BF1235	**BF1257**
BF1236	**BF7673*, BF7673-D**
BF1237	**BF7674*, BF7674-D**
BF1238	**BF7672*, BF7672-D**
F-1240-C	
V1240-O	
V-1240-O1	
BF1241	**BF7679*, BF7679-D**
F-1241-C	
V-1241-C	
V-1250-O	
V-1251-O	
BF1254	**BF7681*, BF7681-D**
BF1255	**BF7677*, BF7677-D**
BF1259-W	
BF1260	**BF1283**
BF1260-SP	**BF1283-SP**
BF1263-SP	**BF1272-SP**
BF1264-SP	**BF1274-SP or BF1274-SPS**
F-1280-C	
BF1321	**BF1212**
BF1322	**BF5813**
BF1323	**BF1214**
BF1324	**BF1220**
BF1341	**BF1212**
BF1342	**BF5813**
BF1343	**BF1214**
BF1344	**BF1220**
B1401	**B1400**
B1403	**BD1403**
B1404	**B245**
B1408	
B1412	**B33**
B1415	
B1420	**B173-S**
B1423	**B113**
B1424	
B1427	**B421**
HC-1430	
P1439	**P1445**
B1442	**B1429**
V1506-FF	
V1506-R	
V-1507-R	
V1509-R	
F-1510-R	**P1510**
PF-1510	**P1510**
PF-1510-7	
V-1510-R	**P1510**
V-1515-R	
V-1530-FF	
F-1540-C	
PA-1601	
PA-1604	
PA-1605	
PA-1611	
PA-1612	
PA-1612-1A	**PA1754**
PA-1617	
PA-1620-2S	**PA1620-S**
PA1622	
PA-1623-S	
PA-1624	
PA-1628	
PA1632 FOAM	
PA-1636-2	
PA-1636-2K	
PA-1638	
PA-1640	**PA2007**
V1650-O	
PA-1651(2)	
PA-1652	
PA-1654	
PA-1655	
PA-1656	**PA2140 (Cars), PA2139 (Comp.)**
V-1657-O	
PA1658	
PA-1659	
PA-1660	
PA-1660 SPECIAL	**PA2698**
PA-1662	
PA-1665	
PA-1668	
PA-1671	
PA-1672	
PA-1676	**PA1863**
PA-1677	
PA-1678(2)	
PA-1685	
PA-1690	
PA-1691	
PA-1693	
PA-1694	
PA-1695	
PA-1700 ELE.	
PA-1700 SCR.	
PA-1701 SCR.	
PA1702 ELE.	
PA-1702 SCR.	
PA-1703 ELE.	
PA1703 FOAM	
PA-1703 SCR.	
PA-1708-FN	**PA2657-FN**
PA-1711	
PA1713	
PA-1714 ELE.	
PA-1714 FOAM	
PA-1714 SCR.	
PA-1715	
PA-1716	
PA-1716-FN	
PA-1717	
PA-1720	
PA-1722	
PA-1723	
PA-1724	
PA-1725	
PA-1727	
PA-1728	
PA-1728-1	
PA1729	
PA-1730	
PA-1731	
PA-1732	
PA-1733	
PA-1734	
PA-1736	
PA-1737	
PA-1738	
PA-1738(3)	
PA1739	
PA-1740	
PA-1741	
PA-1741 FOAM	
PA-1741-WPC	
PA-1742	
PA-1743	
PA-1744	
PA-1744-FN	
PA-1744-K	
PA-1745	
PA-1746	
PA-1747	
PA-1751	
PA-1752	
PA-1753	
PA-1756	
PA-1759	
PA-1760	
PA-1761	
PA-1762	
PA-1764	
PA-1766	
PA-1767	
PA1770	
PA-1785	
PA-1791	
PA-1792	
PA-1793	
PA-1796	**PA1815**
PA-1796-K	**PA1815**
PA-1799	**PA1848**
PA1800 FOAM	
PA-1801	
PA-1803	
PA1804	
PA1807	
PA-1808	
SA-1809	
PA1810-WPC	
PA-1811	
PA-1812	
PA-1813-FN	
PA-1820	
PA-1822	
PA-1829	
PA-1833	
PA-1835	
PA-1837	
PA-1838	
PA-1838-K	
PA-1842	
PA-1843	
PA-1844	
PA-1847	
LL1847-FN	
PA-1850	
PA-1853	
PA-1853-K	
PA-1854	
PA1855	
PA-1856	**PA2000***
PA-1862	**PA1885**
PA-1869	
PA-1870	
PA-1871	
PA-1872	
PA-1874	**PA1884**
PA-1876	
PA-1878	
PA-1879	
PA-1883	
PA1887	
PA-1890	
PA-1902	
PA-1903	
PA-1908	
PA-1910	
PA-1914	
PA-1917	
PA-1918	
PA-1918-K	**PA1667-FN**
LL1922-FN	**PA1922-FN**
PA-1923	
PA-1924	
PA-1927	
PA-1927-FN	
PA-1928	**PA1848**
PA-1929	
PA-1930-FN	
PA-1931(2)	
PA-1933	
PA-1935	
PA-1938	
PA-1939	
PA-1939-FN	
PA-1939-K	
PA-1944	
PA-1947	
PA-1948	
F-1950-O	
V1950-O	
PA-1950	
PA1954	
PA-1955	
PA-1958	
PA-1959	
PA-1962	
PA-1964	
PA-1965	
PA-1966	
PA-1968-FN	
PA-1968-K	
PA-1970	
PA1971	
PA1974	
PA1983	
PA-1986 KIT	**PA1986-K**
PA-1987-K	
PA-1987 KIT	**PA-1987-K***
PA-1990	
PA-1991-FN	
LL1992-FN	
PA1992	**LL1992**
PA-1993	**PA2546**
PA-1994	**PA2547**
PA-1999	
PA-2000	
PA-2003	
PA2008 FOAM	
PA-2011	
PA-2012	
PA-2013	**PA1802**
PA2014	
PA2015	
PA-2016	
PA-2017	
PA-2018	
PA-2019	
PA-2020	
PA-2021	
PA-2022	
PA2025	
PA-2026	
PA-2028	
PA-2029	
PA-2030	
PA-2032	
PA-2033	
PA2034	
SA-2038	**SA2045 (Pad Only)**
SA2040	
PA-2043	
PA-2047	
PA-2048	**PA648**
PA-2049	
PA2054	
PA2055	
PA-2056	
PA-2058	
PA2059	
PA-2060	
PA2062	
PA2066	
PA2078	
PA-2080	
PA2082	
SA2086	
SA2087	
PA2089	
PA-2098	
PA-2101	**PA2101A**
PA2105	
PA2108	
PA2111	
PA2112	
PA2115 FOAM	
PA2118	
PA2120	
PA2123	
PA2126	
PA2130	
PA2131	
PA2132	
PA2133	
PA2137	
PA2141	
PA2142	
SA2144	
PA2145	
PA2151	
PA2155	
V-2160-O	
PA2161	
PA2170	
PA2172	
PA2175	
PA2180	
PA2184	
PA2185**	
PA2187	
PA2197	
PA2198	
PA2199	
PA2202	
PA2203	
PA2206	
PA2209	
PA2210	
PA2213	
PA2219	
PA2236	
PA2239	
PA2245	**PA2243**
PA2246	
PA-2311-FN	
LL2316	**PA2316**
PA-2324	**PA2324-1***
PA-2324-1	
PA-2324-K	**PA2324-1***
PA-2326-WO	**PA2326**
PA-2334	
PA-2336	
PA2348-FN	
PA-2355	
LL2357	**PA2357**
PA-2365	**PA2546**
PA-2366	**PA2547**
PA2373	
LL2382	
LL2389-FN	
C2400-A	
V-2400-A	**C2400-A***
PA2416	**PA2845**
PA2449-K	
LL2461	
LL2465	
PA-2470	**PA2667**
PA-2471	**PA2668**
PA2492	
LL2494	**PA2494**
PA2501	**PA3951**
PA-2505	
PA2506	
LL2531	
LL2532	
PA-2537	
LL2555	**PA2555**
PA2594	
PA-2627 ELE.	
PA2639**	
LL2663-FN	**PA2663-FN**
LL2675	**PA2675**
LL2679	**PA2679**
PA2681	
PA2683	
PA2685	**LL2685**
PA2697	
PA2698-K	
PA2720	
LL2734	
PA2741	**PA3467**
LL2749	**PA2749**
PA2760**	
PA2770**	
LL2780	**LL2503**
PA2780	**PA2503**
PA2802**	**PA3499**
PA2804 KIT	**PA2804**
PA2808**	
PA2809**	
PA2810	
PA2811**	
PA2841**	
PA2850	
PA2859	**PA2859-FN**
PA2863	**RS2863**
PA2868-FN**	**PA2778-FN**
PA2893	**PA3477**

*These Part Numbers are also Obsolete.

BALDWIN OBSOLETE PRODUCTS

OBSOLETE NUMBER	REPLACED BY
PA2901	
PA2907**	
PA2910	
PA2911**	
PA2916-FN**	**PA3664-FN**
PA2920**	
PA2927-FN**	
PA2934	**PA3445**
PA2937	**PA2698**
PA2939	**PA2855**
PA2940	
PA2941	
PA2965**	
PA2966**	
PA2969**	**PA2689**
PA2972-FN**	
PA2975**	
PA2983**	
PA2985**	
PA2986**	
AD2990	
AK2990	
AD2991	
AK2991	**AD2991* & PA2735**
AD2992	
AK2992	**AD2992* & PA2737**
AD2993	
AK2993	**AD2993* & PA2625**
AD2994	
AK2994	**AD2994* & PA2738**
AD2995	
AK2995	
AD2997	
AK2997	**AD2997* & PA2739**
AD2998	
AK2998	
AD2999	
AK2999	
AD3000	
AK3000	
HSG3000	
AD3001	
AK3001	
HSG3001	
AD3002	
AK3002	
HSG3002	
HSG3003	
HSG3004	
HSG3005	
HSG3006	
HSG3007	
HSG3008	
HSG3009	
HSG3010	
HSG3011	
HSG3012	
HSG3013	
HSG3014	
HSG3015	
HSG3016	
HSG3017	
HSG3018	
HSG3019	
HSG3020	
HSG3021	
HSG3022	
HSG3023	
HSG3024	
HSG3025	
HSG3026	
HSG3027	
HSG3028	
HSG3029	
HSG3030	
HSG3031	
HSG3032	
HSG3033	
HSG3034	
HSG3035	
HSG3036	
HSG3037	
HSG3038	
HSG3039	
HSG3040	
HSG3041	**HSG3069***
HSG3042	
HSG3043	
HSG3044	
HSG3045	
HSG3046	
HSG3047	
HSG3048	
HSG3049	
HSG3050	
HSG3051	
HSG3052	
HSG3053	
HSG3054	
HSG3055	
HSG3056	
HSG3057	**HSG3070***
HSG3058	
HSG3059	
HSG3060	
HSG3061	
HSG3062	
HSG3063	
HSG3064	
HSG3065	**HSG3064***
HSG3066	**HSG3059***
HSG3067	**HSG3068***
HSG3068	
HSG3069	
HSG3070	
HSG3072	
HSG3073	
HSG3074	
HSG3075	
HSG3076	
AE3200	
AS3200	
AE3201	
AE3202	
AE3203	
AE3204	
AE3205	
AE3206	
AE3207	
AE3208	
AE3209	
AE3210	
AE3211	
AE3212	
AE3213	
AE3214	
AE3215	
AE3216	
AE3217	
AE3218	
AE3219	
AE3220	
AE3221	
AE3222	
AE3223	
AE3224	
AE3225	
AE3226	
AE3227	
AE3228	
AE3229	
AE3230	
AE3231	
AE3232	
AE3233	
AE3234	
AE3235	
AE3236	
AE3237	
AE3238	
AH3239	
AH3240	
AH3241	
AH3242	
AH3243	
AH3244	
AH3245	
AH3246	
AH3247	
AH3248	
AH3249	
AH3250	
AH3251	
AH3252	
AH3253	
AH3254	
AH3255	
AH3256	
AH3257	
AH3258	
AH3259	
AH3260	
AH3261	
AS3262	
AS3263	
AS3264	
AS3265	
AS3266	
AS3267	
AS3268	
AS3269	
AS3270	**AS3269***
AS3271	
AS3272	
AS3273	
AS3274	
AS3275	
AB3276	
AB3277	
AB3278	
AB3279	
AB3280	**AB3312***
AB3281	**AB3314***
AB3282	
AB3283	
AB3284	
AB3285	
AC3286	
AC3287	
AC3288	
AC3289	
AC3290	
AC3291	
AC3292	
AC3293	
AC3294	
AC3295	
AC3296	
AC3297	
AC3298	
AC3299	
AC3300	
AC3301	
AH3302	
AH3303	
AH3304	
AS3305	
AS3306	
AB3307	
AB3308	
AB3309	
AB3310	
AB3311	**AB3278***
AB3312	
AB3313	
AB3314	
AB3315	
AV3316	
AV3317	
AV3318	
AV3319	
AC3320	
AC3321	
AC3322	
AR3323	
AR3324	
AR3325	
AR3326	
AR3327	
AR3328	
AR3329	
AR3330	
AW3332	
AW3333	
AW3334	
AW3335	
AW3336	
AW3337	
AW3338	
AW3339	
AW3340	
AW3341	
AS3343	
AS3344	
AD3345	
AS3346	
AD3347	
AS3348	
PA3402	
PA3403	
PA3410	**PA3410-FN***
PA3410-FN	
PA3418**	
PA3423-FN**	
PA3424-FN	
PA3425**	
PA3454	
PA3459	
PA3462	
PA3468	
PA3561	
PA3564**	**PA3606**
PA3570	**PA3691**
PA3582-FN**	**PA3671-FN**
PA3583**	**PA3672**
PA3586	
PA3589	
PA3590	
PA3591	
PA3593	
PA3634	
PA3639	
PA3659	
PA3665	
RS3702	**RS3988**
PA3770	
PA3784	
PA3825	
PA3917	
BF-4000	
PF4001	
WF4002-M	
WF4003-M	
PA4004	
BF-4010	
PF4011	
WF4012-A	
WF4013-A	
PA4014	
PA4018	
PA4020	
WG-4033	
PA4034	
PA4036	
PA4038	
PA4040	
PA4051	
PA4052	
PA4053	
PA4054	
PA4067	
PA4068	
PA4074	**PA3763**
PA4083	**PA4081**
PA4087	
PA4098	
PA4115	**PA4154**
PA4117	
PA4122	**PA4163**
PA4135	
PA4136	**PA4155 KIT**
OAS4200	
OAS4201	
OAS4202	
OAS4203	
OAS4204	
OAS4205	
OAS4206	
OAS4207	
OAS4208	
OAS4209	
OAS4210	
OAS4211	
OAS4212	
OAS4213	
OAS4214	
OAS4215	
OAS4216	
OAS4217	
OAS4218	
OAS4219	
OAS4220	
OAS4221	
OAS4222	
OAS4223	
OAS4224	
OAS4225	
OAS4226	
OAS4227	
OAS4228	
OAS4229	
OAS4230	
OAS4231	
OAS4232	
OAS4233	
OAS4234	
OAS4235	
OAS4236	
OAS4237	
OAS4238	
OAS4239	
OAS4240	
OAS4241	
OAS4242	
OAS4243	
OAS4244	
OAS4245	
OAS4246	
OAS4247	
OAS4248	
OAS4249	
OAS4250	
OAS4251	
OAS4252	
OAS4253	
OAS4254	
OAS4255	
OAS4256	
OAS4257	
OAS4258	
OAS4259	
OAS4260	
OAS4261	
OAS4262	
OAS4263	
OAS4264	
OAS4265	
OAS4266	
OAS4267	
OAS4268	
OAS4269	
OAS4270	
OAS4271	
OAS4272	
OAS4273	
OAS4274	
OAS4275	
OAS4276	
OAS4277	
OAS4278	
OAS4279	
OAS4280	
OAS4281	
OAS4282	
OAS4283	
OAS4284	
OAS4285	
OAS4286	
OAS4287	
OAS4288	

* These Part Numbers are also Obsolete.

BALDWIN OBSOLETE PRODUCTS

OBSOLETE NUMBER	REPLACED BY
OAS4289	
OAS4290	
OAS4291	
OAS4292	
OAS4293	
OAS4294	
OAS4295	
OAS4296	
OAS4297	
OAS4298	
OAS4299	
OAS4300	
OAS4301	
OAS4302	
RS4584	**RS4634**
PA4640	**PA4640-FN**
RS4686	**RS4678**
RS4687	**RS4679**
PA4739	
PA4771	**PA4689**
PA4812	**PA3672**
PA4821	
PA4946	**PA4938**
PA4951	**PA4947**
PA4965	
PA4976	**PA3872**
PA4980	
PA4998	**PA4820**
CS-5001	
CS-5002	**CS5008**
CS-5003	**CS5009**
CS-5004	**CS5011**
CS-5005	**CS5010**
CK5006B	
CT5006A	
CTK5006	**CTK5029**
CSC5014	
CT5026A	
CT5026B	
CTK5026	**CTK5029**
CTK5027	**CTK5029**
LB-5100 KIT	
WF5100	
WF5101	
BW-5120	
BWC-5120	
BW-5121	
BWC-5121	
C5130-P	
CW5130-P	
CW-5130-PWP	**CW5130-P* & WF4002-M***
CWC-5130-P	
CWC-5130-PWP	
CW5131-P	
CWC-5131-P	
CW-5132-P	**(2) CW-5131-P***
CW5132-PWP	**(2) CW5131-P* & WF4003-M***
CWC-5132-P	
CWC-5132-PWP	
BW-5133	**BW5139**
BW-5133-A	**BW-5133*, BW5139**
BW-5133-Z	**BW-5133*, BW5139**
BWC-5133	
BWC-5133-Z	
BW-5134	**BW5137**
BW-5134-Z	**BW-5134*, BW5137**
BWC-5134	
BWC-5134-A	
BWC-5134-A	
BW-5135	**BW5136**
CW5150-L	
BW5170	**BW5070**
BW5171	**BW5071**
BW5173	**BW5073**
BW5174	**BW5074**
BW-5176	**BW5178**
BW-5177	**BW5179**
BW5180	
BW5181	
RS5387 KIT	
BF5800-B	**BF5800**
BF5810-B	**BF5810**
6010	
6011	
6012	
6015	
6016	
6018	
6019	
BK6200	
BK6203	
BK6209	
BK6210	
BK6211	
BK6212	
BK6217	
BK6220	
BK6221	
BK6223	
BK6226	
BK6227	
BK6229	
BK6230	
BK6231	
BK6233	
BK6236	
BK6237	
BK6238	
BK6239	
BK6240	
BK6243	
BK6247	
BK6254	
BK6259	
BK6260	
BK6261	
BK6266	
BK6269	
BK6271	
BK6284	
BK6289	
BK6300	
BK6301	
BK6302	
BK6303	
BK6310	
BK6311	
BK6312	
BK6313	
BK6314	
BK6316	
BK6317	
BK6318	
BK6321	
BK6327	
BK6342	
BK6348	
BK6350	**BK6371***
BK6351	
BK6352	
BK6355	
BK6370	
BK6371	
BK6374	
BK6384	
BK6386	
BK6388	
BK6389	
BK6395	
BK6398	
BK6400	
BK6401	
BK6404	
BK6411	
BK6413	
BK6416	
BK6418	
BK6419	
BK6420	
BK6421	
BK6423	
BK6430	
BK6431	
BK6432	
BK6433	
BK6435	
BK6439	
BK6471	
BK6475	
BK6479	
BK6481	
BK6485	
BK6496	
BK6498	
BK6500	
BK6504	
BK6509	
BK6510	
BK6511	
BK6514	
BK6516	
BK6520	
BK6523	
BK6526	
BK6530	
BK6531	
BK6534	
BK6537	
BK6540	
BK6547	
BK6553	
BK6555	
BK6556	**BK6575***
BK6557	
BK6558	
BK6565	
BK6573	
BK6575	
BK6580	
BK6582	
BK6584	
BK6585	
BK6588	
BK6589	
BK6590	
BK6592	
BK6593	
BK6594	
BK6596	
BK6602	
BK6603	
BK6604	
BK6606	
BK6609	
BK6611	
BK6612	
BK6614	
BK6669	
BK6671	
BK6674	
BK6701	
BK6708	
BK6709	
BK6712	
BK6718	
BK6742	
BK6788	
BK6792	
BK6793	
BK6800	
BK6802	
BK6804	
BK6806	
BK6807	
BK6808	
BK6810	
BK6811	
BK6818	
BK6826	
BK6829	
BK6830	
BK6831	
BK6832	
BK6834	
BK6838	
BK6839	
BK6900	
BK6901	
BK6902	
BK6906	
BK6907	
BK6908	
BK6939	
BK6940	
BK6941	
B7006	
B7008-D	**B7019**
B7026	**B7026-MPG**
B7027	**B7085*, B7144**
B7032**	**B7130**
B7040	**B7040-A***
B7040-A	
B7040-CH	**B7040-A***
B7040-PR	**B7040-A***
BF7040	
BH7040	**B7040-A***
BH7040-CH	**B7040-A***
BH7040-PR	**B7040-A***
P7040 POLY	**P7040**
BD7041	**BD7166**
B7043	
B7046	
B7085	**B7144**
BD7100	
B7108	**B7004**
B7109	**B7585**
B7118	**B7144**
BC7140	**BC7194**
B7149	
B7150	**B7180**
P7198	**P1443**
BD7244	**BD7105**
B7288	**B7217**
P7300	**P1562**
BT7339	**BT7349**
B-7500	**B7500A***
B7500A	
B-7500 KIT	
B-7500-CH	**B7500A-CH***
B-7500-PR	**B7500A***
B7500A-CH	
BF7500	**BF7500-A***
BF7500-A	
BH-7500	**B7500A***
BH-7500-CH	**B7500A-CH***
BH-7500-PR	**B7500A***
C-7500-M	**P7500**
P7500 POLY	**P7500**
PF7520	**PF7799**
PF7521	**PF7655**
BF7523	
BF7524	**BF788**
BF7525	**BF970**
BF7526	**B605**
BF7530-MPG	**BF7632**
BF7533	**BF7535**
BF7539	**BF7644**
BF7542	
BF7543	
PF7548	**PF7620* (Cat, Cummins); PF7621* (Detroit)**
K-7550 KIT	**BK6355***
BF7557-B	**BF7557**
B7575	**B7577**
B7577-B	**B7577**
K-7577 KIT	**BK6401***
PF7578	**PF7678**
BF7581	**BF7646*, BF7674-D**
BF7582	**BF7647*, BF7681-D**
K-7596 KIT	**BK6350***
PF7610	**PF7651*, PF7751**
PF7611	
PF7620	**PF7680**
PF7621	**PF7680**
BF7643	**BF7682*, BF7682-D**
BF7646	**BF7674*, BF7674-D**
BF7647	**BF7681*, BF7681-D**
BF7649	**BF7672*, BF7672-D**
BF7650	**BF7679*, BF7679-D**
PF7651	**PF7751**
BF7652	**BF7674-D**
PF7654	**PF7777**
BF7665	**BF7675*, BF7675-D**
BF7672	**BF7672-D**
BF7673	**BF7673-D**
BF7674	**BF7674-D**
BF7675	**BF7675-D**
BF7677	**BF7677-D**
BF7679	**BF7679-D**
BF7681	**BF7681-D**
BF7682	**BF7682-D**
PF7688	**PF7698**
BF7689	**BF788**
BF7710	**BF7765**
BF7723	
BF7724	
BF7727	**BF7827**
BF7739	**BF7801**
PF7789	**PF7889**
PF7789-10	**PF7889-10**
PF7789-30	**PF7889-30**
PF7790	**PF7890**
PF7790-10	**PF7890-10**
PF7790-30	**PF7890-30**
BF7858	**BF7693**
PF7902	**FD7926 & BF7925**
BF7918	**BF7972**
H8000	
H8001	**H9001**
H8002	
H8003	
H8004	
H8005	
H8006	**H9006***
H8007	**H9007**
H8008	
H8009	
H8010	**H9010**
H8011	
H8012	
H8013	**H9013**
H8014	**H9014**
H8015	
H8016	
H8017	
H8018	**H9018**
H8019	
H8020	**H9020**
H8021	**H9021**
H8022	
H8023	
H8024	**H9024**
H8025	
H8026	
H8027	
H8028	
H8029	**H9029**
H8030	
H8031	
H8032	
H8033	
H8034	
H8035	
H8036	**H9036**
H8037	**H9037**
H8038	
H8039	**H9039**
H8040	**H9040**
H8041	**H9041**
H8042	**H9042**
H8043	**H9043**
H8044	**H9044**
H8045	**H9045**
H8046	**H9046**
H8047	**H9047**
H8048	**H9048**
H8049	**H9049**
H8050	**H9050**
H8051	**H9051**
H8052	
H8053	**H9053***
H8054	**H9054**
H8055	**H9055**
H8056	**H9056**
H8057	**H9057**
H8058	**H9058**
H8059	
H8060	**H9060**

* These Part Numbers are also Obsolete.

BALDWIN OBSOLETE PRODUCTS

OBSOLETE NUMBER	REPLACED BY
H8061	
H8062	**H9062**
H8063	
H8064	
H8065	
H8066	
H8067	
H8068	
H8069	**H9069**
H8070	**H9070**
H8071	**H9071**
H8072	**H9072**
H8073	**H9073**
H8074	**H9074**
H8075	**H9075**
H8076	**H9076**
H8077	**H9077**
H8078	**H9078**
H8079	**H9079**
H8080	**H9080**
H8081	**H9081**
H8082	**H9082**
H8083	**H9083**
H8084	**H9084**
H8085	**H9085**
H8086	**H9086**
H8087	
H8088	
H8089	
H8090	
H8091	
H8092	**H9092**
H8093	**H9093**
H8094	
H8095	**H9095***
H8096	**H9096**
H8097	**H9097**
H8098	
H8099	
H8100	
H8101	
H8102	
H8103	**H9103**
H8104	
H8105	
H8106	
H8107	**H9107**
H8108	**H9108**
H8109	
H8110	**H9110**
H8111	**H9111**
H8112	**H9112**
H8113	**H9113**
H8114	**H9114**
H8115	
H8116	
H8117	
H8118	
H8119	
H8120	
H8121	
H8122	
H8123	**H9123**
BT8300	**BT8871-MPG*, BF8876-MPG**
BT8303	**BT8304**
BT8311	**BT8873**
BT8313	**BT8874-MPG**
BT8315	**BT8512**
PT8321	**PT8378-MPG**
BT8324	
BT8325	
BT8327	**BT8856-MPG**
PT8337	
BT8340-MPG	**BT8876-MPG**
C8342	
PT8343	
PT8358	
BT8360	**BT8871-MPG*, BF8876-MPG**
PT8362	
PT8374-MPG	
BT8377-MPG	**BT8853-MPG**
BT8379	**BT8437**

OBSOLETE NUMBER	REPLACED BY
BT8380	**PT8380**
BT8399	**BT8444**
PT8405-MPG KIT	**PT8515-MPG KIT*, PT9415-MPG KIT**
PT8406-MPG KIT	**PT8516-MPG KIT*, PT9416-MPG KIT**
BT8434	**B114**
PT8515-MPG KIT	**PT9415-MPG KIT**
PT8516-MPG KIT	**PT9416-MPG KIT**
BT8806-MPG	
BT8807-MPG	**BT8800-MPG**
BT8860	**BT8861**
BT8871-MPG	**BT8876-MPG**
PT8961-MPG	**PT9337-MPG**
PT8964-MPG	**PT9403-MPG**
H9006	
H9015	
H9053	
H9095	
PT9160	
PT9235-MPG	**PT9350-MPG**
PT9301-MPG	**PT9359-MPG**
PT9317-MPG	**PT8975-MPG**
18000	
18001	
18006	**18033**
18008	**18022**
18014	
18016	
18017	
18018	
18019	
18020	
18023	
18026	
18028	
18030	
18058	
18066	**18155**
18074	
18082	
18112	
18121	
18180	**18025**
18201	
18210	
18228	
18253	
18254	**18264**
18255	**18265**
18256	
18257	
18258	
18261	
18266	
18269	
18274	
18275	
18277	
18278	
18283	
18284	
18286	
18287	
18288	**18024**
18290	
18291	
19551	
19569	
19577	
19585	
19607	**18112**
19615	**19739**
19623	
19631	
19658	
19666	
19674	
19682	
19691	

OBSOLETE NUMBER	REPLACED BY
19801	
19852	
19861	
19887	
19895	
19909	
19917	
19925	
19933	
19941	
19950	**18032**
19968	**18032**
19976	
19984	
DAHL PARTS	
12-WLK	
60-15▼	**60-GK**
60-17▼	**60-GK**
60-23	
60-24	
60-31B	
60-35	
65-14	
75-15▼	**60-GK**
85-VK6x4	
85-VK6x6	
85-VK10x8	
85-VK10x10	
85-VK12x10	
85-VK12x12	
100-10▼	**100-MNTG KIT**
100-11▼	**100-MNTG KIT**
100-13	
100-14	
100-15▼	**100-GK**
100-16	
100-17▼	**100-GK**
100-19▼	**100-GK, 150-GK**
100-20	
100-21HBP	
100-22▼	**100-GK, 150-GK, 100 DEPR KIT**
100-23▼	**100-GK, 150-GK, 100 DEPR KIT**
100-24▼	**100 DEPR KIT**
100-25,26,27▼	**100-DEPR KIT**
100-33	
100-35	
100-36	
100-AL	
100-BMK	
100-BMKBP	
100-BMKH	
100-CUT	
100-DGK	
100-HBP	
100-M30	
100-MMV30	
100-MMVBP	
100-MPC	
100-W/O	
100-W/OBP	
101-A	
140 KIT	
140-12	
140-25 KIT	
143-6L KIT	
143-6L9 KIT	
150-10	
150-14	
150-15▼	**150-GK**
150-16	
150-17▼	**150-GK**
150-22▼	**150-GK**
150-24	
150-32▼	**150-GK**
150-35	
150-AL	
150-BP	
150-HBP	
150-MFV	
150-W	

OBSOLETE NUMBER	REPLACED BY
186-11	
186-12	
186-21	
186-22	
200-10P	
200-11▼	**200-GK**
200-12▼	**200-GK**
200-13▼	**200-GK**
200-14	
200-15A▼	**200-GK**
200-16	
200-17▼	**200-GK**
200-18	
200-19A▼	**200-GK**
200-20	
200-22▼	**200-GK**
200-23▼	**200-GK**
200-24▼	**200-DEPR KIT**
200-25,26,27▼	**200-DEPR KIT**
200-30T	
200-32▼	**100-GK, 150-GK, 200-GK**
200-33	
200-34	
200-AL	
200-BP	
200-CUT	
200-DGK	
200-HBP	
200-HN	
200-M30	
200-MBP	
200-MMV30	
200-MPC	
200-SR	
200-W	
300-14	
300-16	
300-35	
300-AL	
300-BP	
300-DB	
300-DB W/O	
300-DB5	
300-DB5 W/O	
300-DB5220	
300-DBA	
300-DBA5	
300-DBA220	
300-DR	
300-DR W/O	
300-DR5	
300-DR5 W/O	
300-DR220	
300-DR5220	
300-DRA	
300-H	
300-MBP	
300-MF	
300-MF3	
300-MM	
300-MM30	
300-MMV3-30	
300-MMV3BP	
300-MMV30	
300-MPC	
300-SB	
300-SB5	
300-SB12V	
300-SB22	
300-SBBP	
300-SR	
300-W	
500-BK1	
500-MFVBP	**500-MFVBP22**
500-SBBP W/O	
1010-6x4	
1010-6x4DTD	
1010-6x6	
1010-6x6DTC	
1010-6x6DTD	
1010-10x8	
1010-10x8DTA	
1010-10x8DTB	
1010-10x8DTC	

OBSOLETE NUMBER	REPLACED BY
1010-10x8DTD	
1010-10x10	
1010-10x10DTB	
1010-12x10	
1010-12x10DTB	
1010-12x12	
1010-12x12DTB	
1015-DDT	
1015-F	
1020-6x4	
1020-6x6	
1020-10x8	
1020-10x10	
1020-12x10	
1020-12x12	
1028-F	
1030-4x4	
1030-6x6	
1030-8x8	
1030-10x10	
1030-12x12	
1040-6x4	
1040-6x6	
1040-10x6	
1040-10x8	
1040-10x12	
1040-12x8	
1040-12x12	
1063-BK1	
1063-BK2	
1063-BK3	
1063-D	
1063-F	
1072-B	
DEMO-100 MINI	
EC-005	
EC-112	
EM-03D11	
EM-05D11	
HH4	
HH6	
HH8	
HH10	
HH12	

* These Part Numbers are also Obsolete. ▼ Parts Available Now in Kits Only.

ABBREVIATIONS USED ANYWHERE IN OUR CATALOGS

2WD .....2-Wheel Drive
4WD .....4-Wheel Drive

A. Gskt. .....Attached Gasket(s)
ABS .....Anti-Lock Braking System
AD .....Anti-Drainback Valve
ADP.....Anti-Drainback Pipe
AirCond. .....Air Conditioned or Air Conditioner
Alum. .....Aluminum
AMC.....American Motors
Amp .....Ampere
App......Approved
Approx......Approximately
Arr. .....Arrangement
A.T. .....Automatic Transmission
ATAAC.....Air-to-Air Aftercooling
Attach......Attachment
AutoTrans. .....Automatic Transmission
Aux......Auxiliary
AWD.....All Wheel Drive

Bbl......Barrel
BP.....By-Pass Valve (8-10 PSID)
B-P .....By-Pass
BPS.....By-Pass Screen
BSP ...British Standard Pipe Thread
BSP-PL .....British Standard Pipe Parallel Thread
BTA PLUS.....Balanced Treatment Additive Plus
BTE .....Balanced Treatment for Ethylene Glycol Antifreeze
BTU.....British Thermal Unit

C.....Celsius, Centigrade
Calif......California
Carb......Carburetor, Carbureted
Cat.....Caterpillar
cc .....Cubic Centimeters
CCLS...Closed Center Load Sensing
CES.....Closed Emission System
CFI.....Central Fuel Injection
CFM.....Cubic Feet per Minute
CID.....Cubic Inch Displacement
CLN&R.....Clean & Reuse Present Filter
Co......Company
COE .....Cab Over Engine
Comp. .....Compressor
Cont'd. .....Continued
Corp......Corporation
CPI.....Center Port Injection
CSC .....Coolant System Cleaner
Cu......Cubic
Cyl. .....Cylinder

D. Pan.....Deep Pan
Dbl......Double
DC .....Direct Current
DDA .....Detroit Diesel Allison
DI.....Direct Injection
Div. .....Division
DOHC .....Dual Overhead Cam
Don......Donaldson

ea......Each
EFI.....Electronic Fuel Injection
EGR.....Exhaust Gas Recirculation
EHSS.....Electro-Hydraulic Shuttle Shift
Ele. .....Element
Elec......Electric
E.M.D. .....Electro-Motive Division
Eng......Engine
Equip......Equipment
Etc. .....Et cetera (and so forth)
EUI.....Electronic Unit Injector
Exc......Except
ExHiPres......Extra High Pressure
ExpHsg. .....Exposed Housing
ExpTank.....Expansion Tank
Ext. .....Extended

F.....Fahrenheit
F. Drive.....Final Drive
F. Fuel.....Final Fuel
F. Gskt. .....Furnished Gasket(s)
FECV .....Front-End Check Valve
F-F.....Full-Flow
FFV.....Flex Fuel Vehicle
FI .....Fuel Injection
FldC/O.....Field Change-Over
FldInst. .....Field Installation
FP .....Fill Port
FRM .....Flame Retardant Media
Ft. .....Foot
FWD.....Front Wheel Drive
FWS.....Fuel/Water Separator

G .....Gasket
Gal......Gallon
GM, GMC.....General Motors Corporation
gph.....Gallons per Hour
gpm.....Gallons per Minute
Gskt. .....Gasket(s)
GVW.....Gross Vehicle Weight

H .....Base or Housing Number
HBP.....High Pressure By-Pass Valve (18-25 PSID)
HEUI.....Hydraulic Electronic Unit Injector
Hi.....High
HiPerf. .....High Performance
HiPres......High Pressure
HLT.....High-Low Transmission
HO .....High Output
HP.....Horsepower
Hsg......Housing
HvyDty......Heavy-Duty
Hyd. .....Hydraulic
Hz.....Hertz

I. Air.....Inner Air
I. Gskt. .....Integral Gasket(s)
I.D. .....Inside Diameter
IH, IHC.....International Harvester, International Navistar
In......Inch(es)
Inc......Incorporated
Incl. .....Included
Ind......Industrial
Info .....Information
Int......International
ISO .....Inside-Out Flow Direction
IVT...Infinitely Variable Transmission

J.C.W. .....John Cooper Works
JD.....John Deere
JIC .....Joint Industry Conference
Jr......Junior
KHD.....Klockner-Humboldt-Deutz
Kw.....Kilowatt

L.....Liters
LBP.....Low Pressure By-Pass Valve (2-7 PSID)
Lb(s)......Pound(s)
LGP .....Low Ground Pressure
L.H......Left Hand
LoPres......Low Pressure
LPG.....Liquefied Petroleum Gas
LPH.....Liters per Hour
Ltd......Limited

M-F.....Massey Ferguson
MBP.....Medium Pressure By-Pass Valve (11-17 PSID)
Mfg......Manufacturing
MFI.....Multi-Port Fuel Injection
Mfr. .....Manufacturer
MichFIPow....Michigan Fluid Power
Min. .....Minimum Order Quantity
mm .....Millimeter
M-M.....Minneapolis-Moline
MO.....Metering Orifice
MPI.....Multi-Point Fuel Injection
M.T. .....Manual Transmission
Mtd......Mounted
Mtr. .....Motor

NPSF ....National Pipe Straight Fine
NPT.....National Pipe Thread
N/R.....Not Required
N/S .....Non-Serviceable

O. Air.....Outer Air
O. Gskt. .....Optional Gasket(s)
OBS......Obsolete
O.D......Outside Diameter
OE .....Original Equipment
OEM .....Original Equipment Manufacturer
OES.....Open Emission System
Off-Hwy .....Off-Highway
OHC.....Overhead Cam
OHV.....Overhead Valve
Olds.....Oldsmobile
Opt. .....Optional
oz. .....Ounce(s)

P. Cab .....Pressurized Cab
P. Fuel .....Primary Fuel
PCV .....Positive Crankcase Ventilation
PEEC.....Programmable Electronic Engine Control
PFI.....Program Fuel Injection
Pkg. .....Package
Pltd......Pleated
PowBrakes .....Power Brakes
PowDr. .....Power Drive
PowrQuad.....Power Quad
PowShift.....Power Shift
PowSteer. .....Power Steering
Pri......Primary
PRWD .....Power Rear Wheel Drive
PS .....Integral Post Seal Gasket
PSID.....Pounds per Square Inch Displacement
PSR .....Post Seal Required
Pt. .....Pint
PTO.....Power Take-Off
PZEV .....Partial Zero Emissions Vehicle

QR/SR...Quad Range or Syncro Range
Qt......Quart
Qty......Quantity

RC.....Reinforced Centertube
Res......Reservoir
RetLine .....Return Line
R.H......Right Hand
ROPS...Roll Over Protection System
Rpl......Replaced, Replacement
rpm .....Revolutions per Minute
R.R. .....Railroad
RWD.....Rear Wheel Drive

S. Eng......Starter Engine
S. Fuel.....Secondary Fuel
S. Pan.....Shallow Pan
Sec. .....Secondary
SFI.....Sequential Fuel Injection
Sgl. .....Single
SHBP .....Super High Pressure By-Pass Valve (30-45 PSID)
SHO .....Super High Output
SintBronze .....Sintered Bronze
S/N.....Serial Number(s)
SOHC .....Single Overhead Cam
SP .....Sensor Port
Spd......Speed
Spec......Specification
Specs. .....Specifications
SPI.....Sequential Port Injection
Sr......Senior
SSS.....Synchro Shuttle Shift
Std......Standard
Steer......Steering
Sub. .....Substitute
SuctLine.....Suction Line

TBA .....To Be Announced
TBI .....Throttle Bodied Injection
Temp. .....Temperature
Thd......Thread
THM.....Turbo-Hydramatic
TorqConv......Torque Converter
TPI.....Tuned Port Injection
Trans. .....Transmission
Turbo...Turbocharger, Turbocharged

UK.....United Kingdom
UL, U.L. .....Underwriters Lab Listed
UNF .....Universal National Fine
U.S. .....United States
U.S.C.G......U.S. Coast Guard Accepted

V.....Volt
VapDiv. .....Vapor Diverter
VIN ....Vehicle Identification Number
VV .....Variable Venturi
VVT.....Variable Valve Timing
VW .....Volkswagen

w/.....With
w/o.....Without
W.B......Wheel Base

XHBP.....Extra High Pressure By-Pass Valve (50+ PSID)

Yd......Yard(s)

ABREVIATIONS UTILISEES DANS NOS CATALOGUES

2WD.....2 Roues motrices
4WD.....4 Roues motrices

A. Gskt. .....Joint(s) attaché(s)
ABS ...système de freinage antibloquant
AD.....Clapet anti-retour
ADP.....Conduit anti-retour
AirCond. .....Avec air conditionné ou climatiseur
Alum. .....Aluminium
AMC.....American Motors
Amp .....Ampère
App......Approuvé
Approx. .....Environ
Arr......Arrangement
A.T. ....Boîte de vitesses automatique
ATAAC.....Refroidissement secondaire Air-Air
Attach. .....Accessoire
AutoTrans......Boîte de vitesses automatique
Aux......Auxiliaire
AWD .....Toutes roues motrices

Bbl......Corps
BP...Vanne de dérivation (55 à 69 kPa)
B-P.....Dérivation
BPS .....Crépine de dérivation
BSP...Normes britanniques de tuyaux
BSP-PL.....Filetage droit de tuyauterie aux normes britanniques
BTA PLUS .....Additif de traitement équilibré Plus
BTE.....Traitement équilibré pour antigel éthylène glycol
BTU.....British Thermal Unit

C.....Celsius
Calif......Californie
Carb. ...Carburateur, avec carburateur
Cat.....Caterpillar
cc.....Centimètres cubes
CCLS.....Détection de charge à fermeture centrale
CES .....Système fermé d'émissions
CFI.....injection de carburant centrale
CFM.....Pied cube par minute
CID .....Cylindrée, en pouces cubes
CLN&R.....Nettoyer et ré-utiliser le filtre existant
Co......Compagnie
COE .....Cabine avancée
Comp. .....Compresseur
Cont'd. .....A suivre, suite
Corp......Corporation
CPI .....Injection d'orifice centrale
CSC .....Produit de nettoyage de circuit de refroidissement
Cu. .....cube
Cyl. .....Cylindre

D. Pan .....Cuvette profonde
Dbl......Double
DC .....Courant continu
DDA .....Detroit Diesel Allison
DI.....Injection Directe
Div. .....Division
DOHC...Double arbre à cames en tête
Don......Donaldson

ea......Chacun
EFI ...Injection de carburant électronique
EGR.....Recirculation des gaz d'échappement
EHSS.....Transmission électro-hydraulique automatique
Ele. .....Elément
Elec......Electrique
E.M.D. .....Electro-Motive Division
Eng. .....Moteur
Equip......Equipement
Etc......Et cetera
EUI.....Injecteur électronique
Exc. .....excepté
ExHiPres. .....Pression très élevée
ExpHsg......Carter exposé
ExpTank .....Vase d'expansion
Ext. .....Prolongé

F.....Farenheit
F. Drive.....Entraînement final
F. Fuel .....Carburant final
F. Gskt......Joint(s) fourni(s)
FECV...Clapet antiretour d'extrémité avant
F-F.....A plein débit
FFV .....Véhicule polycarburant
FI.....Injection de carburant
FldC/O.....Changement sur chantier
FldInst. .....Montage sur le chantier
FP .....Orifice de remplissage
FRM.....Média ignifuge
Ft. .....Pied
FWD .....Traction avant
FWS.....Séparateur carburant / eau

G .....Joint
Gal......Gallon
GM, GMC...General Motors Corporation
gph.....Gallons par heure
gpm .....Gallons par minute
Gskt. .....Joint(s)
GVW .....Poids Total Brut

H .....Numéro de boîtier (Notre remplacement n'est que le filtre)
HBP .....Vanne de dérivation haute pression (124 à 138 kPa)
HEUI.....Injecteur électronique unité hydraulique
Hi.....Haut
HiPerf......Haute performance
HiPres......Pression élevée
HLT...Boîte de vitesses hautes-basses
HO .....Puissance élevée
HP .....Puissance
Hsg. .....Carter
HvyDty......Service sévère
Hyd......Hydraulique
Hz.....Hertz

I. Air .....Air interne (sécurité)
I. Gskt. .....Joint intégral
I.D......Diamètre interne
IH, IHC.....International Harvester, International Navistar
In......Pouce
Inc......Incorporated, incorporé
Incl......Inclus, compris
Ind. .....Industriel
Info .....Renseignements
Int......International
ISO .....Direction d'écoulement intérieur vers extérieur
IVT....Transmission à variation infinie

J.C.W. .....John Cooper Works
JD.....John Deere
JIC .....Joint Industry Conference
Jr. .....Junior

KHD .....Klockner-Humboldt-Deutz
Kw.....Kilowatt, kW

L.....Litres
LBP .....Vanne de dérivation basse pression (14 à 20 kPa)
Lb(s). .....Livre(s)
LGP .....Pression au sol faible
L.H......Gauche
LoPres......Basse Pression
LPG .....Gaz de pétrole liquéfié
LPH .....Litres par heure
Ltd. .....Limited, Limité

M-F.....Massey Ferguson
MBP.....Valve de dérivation moyenne pression (76 à 117 kPa)
Mfg......Fabrication
MFI...Injection de carburant multiports
Mfr......Fabricant
MichFlPow......Michigan Fluid Power
Min....Quantité minimum de la commande
mm .....Millimètre
M-M.....Minneapolis-Moline
MO.....Orifice de mesure
MPI.....Injection multipoint
M.T......Boîte de vitesse manuelle
Mtd......Monté
Mtr. .....Moteur

NPSF ...Filetage tuyauterie NPT droit fin
NPT.....National Pipe Thread
N/R .....Non requis
N/S.....Non remplaçable

O. Air.....Air extérieur
O. Gskt. .....Joint(s) en option
OBS. .....Plus en usage
O.D......Diamètre extérieur
OE.....Equipement d'origine
OEM .....Fabricant d'équipement d'origine
OES .....Système ouvert d'émissions
Off-Hwy .....Hors route, de chantier
OHC .....Arbre à cames en tête
OHV.....Soupapes en tête
Olds .....Oldsmobile
Opt......En option
oz. .....Once

P. Cab .....Cabine pressurisée
P. Fuel.....Carburant primaire
PCV...Réaspiration des gaz du carter
PEEC .....Contrôleur moteur électronique programmable
PFI.....Injection de carburant par programme
Pkg......Paquet
Pltd......Plissé
PowBrakes.....Freins assistés
PowDr. .....Motorisation
PowrQuad.....Power Quad
PowShift .....Servo commande des vitesses
PowSteer. .....Direction assistée
Pri. .....Primaire, principal
PRWD .....Roue motrice arrière
PS.....Joint intégral de montant
PSID.....Livres par pouce carré
PSR .....Joint de montant nécessaire
Pt. .....Pinte
PTO .....Prise de force
PZEV .....Partial Zero Emissions Vehicle

QR/SR...Gamme quad ou gamme Syncro
Qt. .....Quart
Qty......Quantité

RC.....Tube central renforcé
Res. .....Réservoir
RetLine.....Conduite de retour
R.H......Droit(e)
ROPS.....Système de protection en cas de renversement
Rpl......Remplacé, Remplacement
rpm .....Tours par minute, tr/min
R.R......Train, ferroviaire
RWD .....Traction arrière

S. Eng. .....Moteur de démarrage
S. Fuel .....Carburant secondaire
S. Pan .....Bac peu profond
Sec. .....Secondaire
SFI ...Injection de carburant séquentielle
Sgl. .....Unique
SHBP .....Vanne de dérivation super haute pression (207 à 276 kPa)
SHO.....Rendement super élevé
SintBronze.....Bronze fritté
S/N .....Numéro de série
SOHC.....à cames en tête unique
SP.....Orifice de capteur
Spd......Vitesse
Spec. .....Spécification
Specs. .....Spécifications
SPI...Injection séquentielle par orifice
Sr. .....Senior
SSS.....Transmission synchro
Std......Standard
Steer. .....Direction
Sub. .....Remplacement
SuctLine.....Conduite d'aspiration
TBA.....À déterminer
TBI.....injection à étranglement
Temp......Température
Thd......Pas de vis
THM .....Turbo-Hydramatique
TorqConv....Convertisseur de couple
TPI.....Injection réglée par orifice
Trans. ...Transmission, boîte de vitesses
Turbo.....Turbo-compresseur
UK.....Royaume-Uni
UL, U.L....Homologué Underwriters Lab
UNF .....Universal National Fine
U.S. .....Etats-Unis
U.S.C.G......Accepté par U.S. Coast Guard, Garde Côtière Américaine
V.....Volt
VapDiv. .....Dérivation de vapeur
VIN ...Numéro d'identification du véhicule
VV .....Venturi variable
VVT ...Distribution à programme variable
VW .....Volkswagen
w/ .....Avec
w/o.....Sans
W.B......Empattement
XHBP .....Vanne de dérivation extra haute pression (plus de 345 kPa)
Yd. .....Yard

ABREVIATURAS USADAS EN CUALQUIER PARTE DE NUESTROS CATALOGOS

2WD .....Tracción sencilla a 2 ruedas
4WD .....Tracción doble a 4 ruedas

A. Gskt......Empaque(s) adjunto(s)
ABS...Sistema de frenos antibloqueo
AD.....Válvula anti-retorno
ADP.....Tubo anti-retorno
AirCond......Climatizado o acondicionador de aire
Alum......Aluminio
AMC.....American Motors
Amp.....Amperio
App......Aprobado
Approx......Aproximadamente
Arr......Arreglo, disposición
A.T......Transmisión Automotriz
ATAAC.....Postrefrigeración de aire a aire
Attach......Accesorio
AutoTrans....Transmisión automática
Aux......Auxiliar
AWD.....Tracción de cuatro ruedas

Bbl......Barril, tambor
BP ...Válvula de desviación (8-10 PSID)
B-P.....Desviación
BPS.....Tamiz de desvío
BSP.....Rosca de tubería británica estándar
BSP-PL.....Rosca paralela de tubería británica estándar
BTA PLUS.....Aditivo de tratamiento equilibrado Plus
BTE.....Tratamiento balanceado para anticongelante de etileno glicol
BTU.....Unidad térmica británica

C.....Celsius, centígrado
Calif......California
Carb......Carburador, carburado
Cat.....Caterpillar
cc.....Centímetros cúbicos
CCLS.....Detección de carga en posición de cierre
CES.....Sistema de escape cerrado
CFI...Inyección central de combustible
CFM.....Pie cúbico por minuto
CID...Cilindrada en pulgada cuadradas
CLN&R.....Limpie y reutilice el filtro instalado
Co......Compañía
COE ...Cabina montada arriba del motor
Comp......Compresor
Cont'd......Continua
Corp......S.A.
CPI.....Inyección por Puerto Central
CSC.....Limpiador del sistema de refrigeración
Cu......Cúbico
Cyl......Cilindro

D. Pan.....Colector profundo
Dbl......Doble
DC.....Corriente directa
DDA.....Detroit Diesel Allison
DI.....Inj. Directa
Div......División
DOHC...Árbol de levas doble en la culata
Don......Donaldson

ea......Cada uno
EFI...Inyección electrónica de combustible
EGR...Recirculación de gas de escape
EHSS.....Cambio de sentido de desplazamiento electrohidráulico
Ele......Cartucho de repuesto
Elec......Electrico
E.M.D......División electromotriz
Eng......Motor
Equip......Equipo
Etc......Etcétera
EUI.....Inyector de unidad electrónica
Exc......Excepto
ExHiPres......Muy alta presión
ExpHsg......Cárter abierto
ExpTank.....Tanque de expansión
Ext......Extendido

F.....Fahrenheit
F. Drive ...Tracción de transmisión final
F. Fuel.....Filtro final (último)
F. Gskt......Empaque(s) surtido(s)
FECV...Válvula de no retorno al frente
F-F.....Flujo de combustible
FFV...Vehículo de combustible flexible
FI.....Inyección de combustible
FldC/O.....Conversión en el campo
FldInst......Instalación en el campo
FP.....Puerto de llenado
FRM.....Medio ignífugo
Ft......Pie
FWD.....Tracción delantera
FWS...Separador de combustible/agua

G .....Empaque
Gal......Galón
GM, GMC...General Motors Corporation
gph.....Galones por hora
gpm.....Galones por minuto
Gskt......Empaque(s)
GVW.....Peso Bruto Vehicular

H.....Número de cárter (Nuestro repuesto es sólo el cartucho)
HBP.....Válvula de desviación de alta presión (18-25 PSID)
HEUI.....Inyector de unidad hidráulica-electrónica
Hi.....Alto
HiPerf......Alto rendimiento
HiPres......Alta presión
HLT.....Transmisión alta-baja
HO.....Alta capacidad
HP.....Caballaje
Hsg......Cárter del cigüeñal
HvyDty......Servicio pesado
Hyd......Hidráulico
Hz.....Hertzio

I. Air.....Aire interior (forma tapón de seguridad)
I. Gskt......Empaque(s) integral(es)
I.D......Diámetro interior
IH, IHC.....International Harvester, International Navistar
In......Pulgada
Inc......Incorporado
Incl......Incluido
Ind......Industrial
Info.....Información
Int......Internacional
ISO.....Dirección de flujo de adentro hacia afuera
IVT.....Transmision variable sin fin

J.C.W......John Cooper Works
JD.....John Deere
JIC.....Joint Industrial Conference
Jr......Junior

KHD.....Klockner-Humboldt-Deutz
Kw.....Kilovatios

L.....Litros
LBP.....Válvula de desviación de baja presión (2-7 PSID)
Lb(s)......Libra(s)
LGP.....Presión baja del terreno
L.H......Lado izquierdo
LoPres......Presion Baja
LPG.....Gas de petróleo licuado
LPH.....Litros por hora
Ltd......Limitado

M-F.....Massey Ferguson
MBP.....Válvula de desviación de presión intermedia (11-17 PSID)
Mfg......Producción
MFI.....Inyección de combustible de lumbreras múltiples
Mfr......Fabricante
MichFIPow......Michigan Fluid Power
Min......Cantidad mínima a pedir
mm.....Milímetro
M-M.....Minneapolis-Moline
MO.....Orificio de medición
MPI.....Inyección de combustible en puntos múltiples
M.T......Transmision automatica
Mtd......Montado
Mtr......Motor

NPSF...Tubería nacional recta angosta
NPT.....National Pipe Thread (Rosca nacional para tubería EE.UU.)
N/R.....No se requiere
N/S.....No se puede reparar

O. Air.....Aire exterior
O. Gskt......Empaque(s) opcional(es)
OBS......Obsoleto
O.D......Diámetro exterior
OE.....Equipo original
OEM....Fabricante de equipo original
OES.....Sistema de escape abierto
Off-Hwy.....Todo terreno
OHC.....Arbol de levas a la cabeza
OHV.....Válvulas a la cabeza
Olds.....Oldsmobile
Opt......Opcional
oz......Onza

P. Cab.....Cabina a presión
P. Fuel.....Combustible primario
PCV.....Ventilación positiva de cárter del cigüenal
PEEC.....Control de motor electrónico programable
PFI.....Inyección de Combustible Programada
Pkg......Paquete promocional
Pltd......Plegado
PowBrakes.....Frenos de potencia
PowDr......Unidad impulsora
PowrQuad.....Power Quad
PowShift.....Velocidades hidráulicas
PowSteer......Dirección hidráulica
Pri......Primario
PRWD...Tracción Trasera de Potencia
PS...Empaque integral de sello de poste
PSID.....Libras por pulgada cuadrada
PSR.....Se requiere sello de poste
Pt......Pinta
PTO.....Toma de fuerza
PZEV.....Partial Zero Emissions Vehicle

QR/SR.....Transmisión Quad Range o Synchro Range
Qt......Un cuarto
Qty......La cantidad

RC.....Tubo central reforzado
Res......Depósito
RetLine.....Línea de retorno
R.H......Lado derecho
ROPS.....Sistema de protección contra vuelcos
Rpl......Reemplazado, reemplazo
rpm.....Revoluciones por minuto
R.R......Ferrocarril
RWD.....Tracción trasera

S. Eng......Motor de arranque
S. Fuel.....Combustible secundario
S. Pan.....Un carter llano
Sec......Secundario
SFI.....Inyección secuencial de combustible
Sgl......Sencillo
SHBP.....Válvula de desviación de super alta presión (30-45 PSID)
SHO.....Rendimiento superalto
SintBronze.....Bronce sinterizado
S/N.....Número(s) de serie
SOHC.....Arbol de levas único sobre la culata
SP.....Puerto del sensor
Spd......La velocidad
Spec......Especificación
Specs......Especificaciones
SPI...Inyección Secuencial por Puertos
Sr......Senior
SSS.....Cambio de sentido de desplazamiento sincronizado
Std......Estándar
Steer......Dirección
Sub.....Sustituto
SuctLine.....Linea de succión

TBA.....A anunciarse
TBI.....Inyección por el Cuerpo del Estrangulador
Temp......Temperatura
Thd......Rosca
THM.....Turbo-hydramatic
TorqConv......Convertidor de torsión
TPI.....Inyección a Punto por Puertos
Trans......Transmisión
Turbo.....Turboalimentado

UK.....Reino Unido
UL, U.L......Registrado por Underwriters Laboratories
UNF...Universal National Fine (Rosca fina nacional universal-EE.UU.)
U.S......Estados Unidos
U.S.C.G......Aceptado por los Guardacostas de los EE.UU.

V.....Voltio
VapDiv......Desviador de vapores
VIN.....Número de identificación de vehículo
VV.....Venturi variable
VVT.....Tiempo de válvula variable
VW.....Volkswagen

w/.....Con
w/o.....Sin
W.B......La distancia entre ejes

XHBP.....Válvula de desviación de extra alta presión (50+ PSID)

Yd......Yarda(s)

PREFIXES AND SUFFIXES

PREFIXES

AB Air Housing Mounting Band
AC Air Housing Accessory - Air Inlet Hoods or Clamps
AD Air Housing Dust Bowl, Air Filter Adapter
AE Air Housing Elbow
AFG Air Filter Restriction Gauge
AH Air Housing Hump Hose
AR Air Housing O-Ring
AS Air Housing Sleeve, Stack Cap
AV Air Housing Dust Ejector Valve
AW Air Housing Wing or Metric Nut
B Spin-on or Bag-Type Filter *****
BA Bag Air or Air Dryer
BC Centrifugal Element
BD Dual-Flow Lube Spin-on
BF Spin-on, Can-Type or In-Line Fuel Filter
BK Baldwin Kit
BT Spin-on Lube or Hydraulic/Transmission Filter
BW Coolant Spin-on with Chemicals
C Cotton Lube Element
CA Channel Flow® Air Filter
CFB Coolant Filter Base
CS Chemical Supplement
CSC Coolant System Cleaner
CTK Coolant Test Kit
CV Crankcase Ventilation Breather
CW Coolant Sock-Type Element with Chemicals
ES End Seal
F Cotton Fuel Element
FB Fuel Filter Base
FD Fuel Filter Adapter
G Gasket
H Pall-Type Hydraulic Element
HH Hose
HSG Air Filter Housing
LL Long Life Air Filter Element
OAS Oil/Air Separator
OB Lube or Hydraulic Filter Base
OP Plug
OS Electrical Indicator
OTK Oil Test Kit
OV Visual Indicator
P Paper Lube or Hydraulic Element
PA Paper Air Element
PF Paper Fuel Element
PG Pressure Gauge
PKG Package, Premium Item
PT Paper Lube or Hydraulic Element
PV Paper and Vac-Cel Element *****
RS Radial Seal Air Filter
S, SA, SF Special Material *****
T Cotton Lube Element *****
TA Acrylic and Other Synthetic Fibers for Most Fluids; Medium Flow; 5 or 10 Micron Retention (Peco Prefix AF)
TB Blend of Cotton and Sisal for Non-Acid Fluids; Medium to High Flow; 25 to 40 Micron Retention (Peco Prefix FTE)
TC All Cotton for Non-Acid Fluids; Low Flow Rates; 2, 5, or 10 Micron Retention (Peco Prefix FT)
V Vac-Cel (Cotton) Lube Element *****
VG Vacuum Gauge
VT Vac-Cel (Cotton) Lube Element *****

SUFFIXES

Multiple letter suffixes may need to be read as single letters. Suffixes often indicate the maker of the filter housing in which the element fits. When the suffix is not used for this purpose, it most often indicates the following:

-1 Specification Change
-2 Double Length or Air Element with 2 Inch Pleats
(2), (3), (4) Number of Elements in a Kit
-3, -5, -10, -25, -30 Nominal Micron Retention
-A Closed End, Conversion Kit, Aluminum, Version # *
-AF Normally on Air Filters
-AL Can be Used with Fluids Containing Alcohol
-B By-Pass Lube, Boxed, Version # *
-BSP British Standard Pipe
-CPE Cotton Sock for Use with Non-Acid Fluids Flowing at Moderate Temperatures
-CS Water Aborbent Media
-D Drain, Direct Mount *
-DL Double Length
-DM Drain - Marine Applications
-E Economy or Fleet Pack *
-F Wound Cotton or Felt Media
-FF Full-Flow Lube Element
-FN Air Filter with Fins
-FP Contains Fill Port
-H Hydraulic Element
-HD Heavy-Duty or Hydraulic
-HPG High Performance Glass Media
-K Kit, Includes Reusable Parts, Fittings *
-M Magnesium, Mason Jar Screw Neck *
-MPG Maximum Performance Glass Media
-O Open End *
-OPE Orlon Sock for Use with Most Fluids; Particularly Recommended for High Heat or Acid-Content Fluids
-OW Orlon Wrap
-RV Roll-Over Valve
-S Specification Change on Liquid Filters; Smaller, Solid Lid on Air Filters *
-SP With Sensor Port
-SPS With Reusable Sensor Port
-SS Filter for Severe Service
-T Sisal Sock for High Flow Applications *
-V Viton O-Ring
-W With Wrap, Winter - Cold Weather Applications *
-WO Without - See Specifications
-WPC With Pre-Cleaner

* See Specific Number in Product Guide for Details and Exceptions.

PREFIXES ET SUFFIXES

PREFIXES

AB Bande de montage de boîtier d'air
AC Accessoire de boîtier d'air - capots ou colliers d'entrée d'air
AD Adaptateur de filtre à air
AE Coude de boîtier d'air
AFG Indicateur de colmatage de filtre à air
AH Flexible de bosse de boîtier d'air
AR Joint torique de boîtier d'air
AS Manchon de boîtier d'air, capuchon cheminée
AV Valve d'éjection de poussière du boîtier d'air
AW Ecrou papillon ou métrique du boîtier d'air
B Filtre de type vissable ou en ligne *
BA Élément sac ou sécheur d'air
BC Cartouche centrifuge
BD Lubrification, flux double, vissable
BF Filtre à carburant vissable, type bidon ou sur conduite
BK Jeu Baldwin
BT Filtre à huile de lubrification ou hydraulique/de transmission vissable
BW Liquide de refroidissement avec produits chimiques, vissable
C Cartouche coton pour lubrification
CA Filtre à air Channel Flow®
CFB Base de filtre à liquide de refroidissement
CS Supplément chimique
CSC Produit de nettoyage de circuit de refroidissement
CTK Jeu de test de liquide de refroidissement
CV Reniflard de carter
CW Elément de type chaussette pour liquide de refroidissement avec produits chimiques
ES Joint d'extrémité
F Cartouche en coton pour carburant
FB Base de filtre à carburant
FD Adaptateur pour filtre à carburant
G Joint
H Cartouche hydraulique
HH Flexible
HSG Boîtier de filtre à air
LL Cartouche de filtre à air longue durée
OAS Séparateur huile / air
OB Base de filtre à huile de lubrification ou hydraulique
OP Obturateur
OS Indicateur électrique
OTK Nécessaire de contrôle d'huile
OV Indicateur visuel
P Cartouche en papier pour filtre à huile de lubrification ou hydraulique
PA Cartouche en papier pour filtre à air
PF Cartouche en papier pour filtre à carburant
PG Manomètre
PKG Paquet, article de qualité nepérieure
PT Cartouche en papier pour filtre à huile de lubrification ou hydraulique
PV Cartouche Papier et Vac-Cel *
RS Filtre à air à joint radial
S, SA, SF Matériau spécial *
T Cartouche coton pour lubrification *
TA Fibres acryliques et autres fibres synthétiques pour la plupart des fluides; flux moyen; rétention 5 ou 10 microns (Préfixe peco AT)
TB Mélange de coton et sisal pour fluides non acides; flux moyen à élevé; rétention 25 à 40 microns (Préfixe peco FTE)
TC Tout coton pour fluides non acides; débits faibles; rétention 2, 5 ou 10 microns (Préfixe peco TT)
V Cartouche pour lubrification Vac-Cel (coton) *
VG Déprimomètre
VT Cartouche pour lubrification Vac-Cel (coton) *

SUFFIXES

Les suffixes à lettres multiples doivent parfois être lus comme lettres individuelles. Les suffixes indiquent souvent le fabricant du boîtier du filtre dans lequel s'ajuste la cartouche. Lorsque le suffixe n'est pas utilisé dans ce but, il indique le plus souvent ce qui suit:

-1 Changement de spécification
-2 Double longueur ou cartouche air avec plis de 2 pouces (5 cm)
(2), (3), (4) Nombre d'éléments dans un nécessaire
-3, -5, -10, -25, -30 Rétention nominale en microns
-A Version extrémité fermée, nécessaire de conversion, aluminium *
-AF Normalement sur filtres à air
-AL Peut être utilisé avec des fluides contenant de l'alcool
-B Version en boîte, dérivation, lubrification *
-BSP British Standard Pipe
-CPE Chaussette coton pour utiliser avec les fluides non acides s'écoulant à températures modérées
-CS Milieu avide d'eau
-D Montage direct, vidange *
-DL Double longueur
-DM Drain – Applications marines
-E Paquet économie ou flotte *
-F En coton enroulé ou feutre
-FF Cartouche pour lubrification à passage intégral
-FN Filtre à air avec ailettes
-FP Contient orifice de remplissage
-H Cartouche hydraulique
-HD Usage intensif ou hydraulique
-HPG En verre haute performance
-K Nécessaire, comprend pièces réutilisables, garnitures *
-M Tubulure filetée, magnésium, récipient maçon *
-MPG En verre performance maximum
-O Extrémité ouverte *
-OPE Chaussette Orlon pour utiliser avec la plupart des fluides; particulièrement recommandée pour la chaleur élevée ou les fluides acides
-OW Enveloppe Orlon
-RV Vanne de reuversement
-S Changement de spécification sur filtres à liquide; Couvercle plein, plus petit sur filtres à air *
-SP Avec orifice de capteur
-SPS Avec orifice de capteur réutilisable
-SS Filtre SS pour les utilisations intensives
-T Chaussette sisal pour applications de'bit élevé *
-V Joint torique en Viton
-W Avec enveloppe, Hiver - Applications pour temps froid *
-WO Sans - Voir les spécifications
-WPC Avec préfiltre

* Voir le numéro spécifique dans le Guide des Produits pour les détails et exceptions.

PREFIJOS Y SUFIJOS

PREFIJOS

AB Banda de montaje para la caja de aire
AC Accesorio de caja de aire - Capucha o abrazador de la toma de aire
AD Adaptador del filtro de aire
AE Codo de la caja de aire
AFG Indicador de restricción del filtro de aire
AH Manguera encorvada de la caja de aire
AR Anillo "O" de la caja de aire
AS Manga de unidad de aire, tapón de escape
AV Válvula eyectora de polvo de la caja de aire
AW Tuerca métrica o tuerca de orejetas de la caja de aire
B Filtro de rosca o tipo-bolsa *****
BA Aire en bolsa o secadora de aire
BC Elemento de centrifugación
BD Filtro de lubricante de rosca de corriente dual
BF Filtro de combustible de rosca, tipo-lata o de línea
BK Kit de Baldwin
BT Filtro de lubricante de rosca o de sistema de transmisión hidraúlica
BW Filtro de refrigerante de rosca con químicos
C Elemento de algodón para lubricación
CA Filtro de aire Channel Flow®
CFB Base del filtro de refrigerante
CS Suplemento químico
CSC Limpiador del sistema de refrigeración
CTK Kit de comprobación del refrigerante
CV Respiradero de ventilación del cárter
CW Elemento de refrigeración tipo calcetín con químicos
ES Sello de extremo
F Elemento de algodón para combustible
FB Base del filtro para combustible
FD Adaptador para filtro de combustible
G Empaque
H Elemento hidráulico
HH Manguera
HSG Caja de filtro de aire
LL Elemento de filtro de aire de larga duración
OAS Oil/Air Separator
OB Base del filtro hidráulico o del lubricante
OP Tapón
OS Indicador eléctrico
OTK Kit de comprobación del aceite
OV Indicador visual
P Elemento de papel para lubricantes o hidráulicos
PA Elemento de papel para aire
PF Elemento de papel para combustible
PG Indicador de presión
PKG Paquete, artículo de primera
PT Elemento de papel para lubricantes o hidráulicos
PV Papel y Vac-Cel *****
RS Filtro de aire de sellado radial
S, SA, SF Material especial *****
T Elemento de algodón para lubricante *****
TA Acrílicos y otras fibras sintéticas para la mayoría de los fluidos; caudal medio; 5 ó 10 micrometros de retención (Prefijo Peco AF)
TB Derivados de algodón y fibra de para fluidos sin contenido de acidos; caudal medio a alto; de 25 a 40 micrometros de retención (Prefijo Peco FTE)
TC Puro algodón para fluidos sin contenido de acidos; Porcentajes de caudal bajo; 2, 5, ó 10 micrometros de retención (Prefijo Peco FT)
V Elemento de lubricación de Vac-Cel (algodón) *****
VG Vaciómetro
VT Elemento de lubricación de Vac-Cel (algodón) *****

SUFIJOS

Puede que los sufijos de múltiples letras necesiten leerse como letras simples. Los sufijos a menudo indican el fabricante de la caja de filtro en la que el elemento encaja. Cuando el sufijo no se utiliza para este propósito, la mayoría de las veces indica lo siguiente:

-1 Cambio de especificación
-2 Doble longitud o elemento de aire con 2 pulgadas de pliegues
(2), (3), (4) Número de elementos en un kit
-3, -5, -10, -25, -30 Retención nominal de micrometros
-A Versión de extremo cerrado, de kit de conversión, Aluminio *****
-AF Normalmente en filtros de aire
-AL Puede usarse junto con fluidos que contengan alcohol
-B Versión de lubricación por derivación en caja
-BSP Tubería estándar británica
-CPE Calcetín de algodón para el uso en fluidos sin contenido de ácidos corriendo a temperaturas moderadas
-CS Medio de fécula de maíz
-D Desagüe, montaje directo *****
-DL Doble longitud
-DM Drenaje – Aplicaciones marinas
-E Paquete económico o de carga
-F Medio de algodón en ovillo o fieltro
-FF Elemento de lubricación de flujo pleno
-FN Filtro de aire con aletas
-FP Contiene orificio de entrada
-H Elemento hidraúlico
-HD Trabajos pesados o hidraúlicos
-HPG Medio de cristal de alto rendimiento
-K Kit, incluye piezas reutilizables, accesorios *****
-M Magnesio, bote hermético con cuello de rosca *****
-MPG Medio de cristal de máximo rendimiento
-O Extremo abierto *****
-OPE Calcetín de Orlón a utilizar con la mayoría de los fluidos; Recomendado particularmente en fluidos de temperaturas elevadas o en fluidos conteniendo acidos
-OW Envoltura de Orlón
-RV Válvula de rotación
-S Cambio de especificación en los filtros de líquidos; más pequeños, tapadera sólida en filtros de aire *
-SP Con lumbrera sensora
-SPS Con lumbrera sensora reutilizable
-SS Filtro SS para servicio severo
-T Calcetín de fibra de para aplicaciones de alta corriente *****
-V Anillo-O de Vitón
-W Con envoltura, aplicaciones de temperaturas frías - Invierno
-WO Sin - Veáse las especificaciones
-WPC Con Pre-limpiador

* Veáse el número específico en la Guía de Productos para observar los detalles y excepciones.

DISPOSAL OF USED OIL FILTERS

The Resource Conservation and Recovery Act (RCRA) provides that generators of waste materials are to determine whether those wastes are hazardous. This determination may be made in one of two ways: either the waste is specifically listed as hazardous, or the generator must make the determination.

Used filters, like most other wastes, have never been listed as hazardous waste. Therefore, generators of used filters have been required to test these wastes using the Toxic Characteristics Leaching Procedure (TCLP) to determine if the waste should be classified as hazardous for purposes of handling and disposal. On May 20, 1992, the EPA made further ruling on the regulations regarding disposal of used oil filters. Effective with this ruling, all used oil filters manufactured with non-terne plated material, which have been gravity hot drained, no longer must be tested prior to disposal. (It should be noted that at this time this easing of regulations only applies to oil filters, not other wastes or other filters.)

There are various methods of gravity hot draining filters including (1) puncturing the filter's anti-drainback valve or the dome end of the filter and hot draining, (2) hot draining and crushing, and (3) dismantling and hot draining. In addition, any other equivalent hot draining method may be used. "Hot drained" means that the oil filter is drained at or near the engine operating temperature and above room temperature (i.e. 60°F).

The length of time for draining is not specified, although testing has demonstrated that draining for 12 hours is sufficient to remove excess used oil. At the very least, in order to enjoy this exemption from testing, no used oil should immediately leak or drip from a used filter.

It is noteworthy that used filters which are recycled are exempt from RCRA. Recycling takes care of wet filters (fuel, hydraulic, coolant) which are currently not exempt.

Baldwin understands the difficulties faced by users and disposers of oil filters. The Filter Manufacturers Council (FMC), of which Baldwin is a member, agreed to eliminate the use of terne plated material in filters by December 31, 1992. Baldwin further adopted a policy to eliminate terne plated material from production by October 1, 1992, a goal which has been reached. The FMC is currently working with the EPA to gain exemption for other types of wet filters.

An online database for promoting the proper management of used vehicular filters is available at www.fitercouncil.org. The web site is sponsored by the Filter Manufacturers Council.

Filter users will be able to access the database to obtain a summary of state disposal regulations and a list of companies providing used filter transportation, processing and recycling services in a particular state. The database will also include regulatory information for the Canadian provinces as it becomes available.

AUTOMOTIVE MODEL TO MAKE CROSS-REFERENCE

MODEL	LISTED UNDER
024	Dodge
2+2 Sports Coupe	Saturn
3	Mazda
3.0 Series	BMW
3.3 Series	BMW
4 Porte	Maserati
4Runner	Toyota
6	Mazda
9-2 Aero	Saab
9-2 Linear	Saab
9-3	Saab
9-3X	Saab
9-5	Saab
9-7X	Saab
18I/Sportwagon	Renault
25 Series	Fiat
57	Maybach
57S	Maybach
60	Cadillac
62	Cadillac
62	Maybach
62S	Maybach
75	Cadillac
80	Audi
80 Quattro	Audi
88	Oldsmobile
88 Royale	Oldsmobile
90	Audi
90 Quattro	Audi
90 Sport	Audi
92	Saab
93	Saab
95	Saab
96	Saab
98	Oldsmobile
98 Regency	Oldsmobile
98 Touring Sedan	Oldsmobile
99	Saab
100	IHC
100 Series	Audi
100 Series	Austin-Healey
104	Triumph
120	Volvo
121	Volvo
122	Volvo
124 Series	Fiat
125 Series	Ferrari
125 Series	Fiat
127	Ferrari
128 Series	Fiat
128i	BMW
130	Volvo
131	Fiat
132	Ferrari
135i	BMW
140	Volvo
142	Volvo
144	Volvo
145	Volvo
150	IHC
164	Alfa Romeo
164	Volvo
170 Series	Mercedes-Benz
180 Series	Mercedes-Benz
190 Series	Mercedes-Benz
200	IHC
200 Estate	Triumph
200 Series	Audi
200D	Mercedes-Benz
200SX	Nissan
202	Peugeot
204	Peugeot
206 GT	Ferrari
210	Nissan
219	Mercedes-Benz
220 Series	Mercedes-Benz
230 Series	Mercedes-Benz
240	Jaguar
240	Volvo
240 Turbo	Volvo
240D	Mercedes-Benz
240SX	Nissan
240Z	Nissan
242	Volvo
244	Volvo
245	Volvo
250	Ferrari
250	Lancia
250 Series	Mercedes-Benz
260	Volvo
260E	Mercedes-Benz
260Z	Nissan
262	Volvo
264	Volvo
265	Volvo
275 Series	Ferrari
280 Series	Mercedes-Benz
280Z	Nissan
280ZX	Nissan
300	Chrysler
300 Series	Mercedes-Benz
300C	Chrysler
300C SRT 8	Chrysler
300M	Chrysler
300SX	Nissan
300ZX	Nissan
301	Peugeot
302	Peugeot
304	Peugeot
308 Series	Ferrari
310	Nissan
316	BMW
318 Series	BMW
320 Series	BMW
323	Mazda
323 Series	BMW
325 Series	BMW
328 Series	BMW
328TB	Ferrari
328TS	Ferrari
330 Series	BMW
330 Series	Ferrari
335 Series	BMW
340	Jaguar
348 Series	Ferrari
350 GT	Lamborghini
350 Series	Mercedes-Benz
350Z	Nissan
356	Porsche
360 Modena	Ferrari
360 Spider	Ferrari
360 Sport	Dodge
365 Series	Ferrari
380 Series	Mercedes-Benz
400	Dodge
400	Triumph
400 GT	Lamborghini
400 Series	Mercedes-Benz
400 Super America	Ferrari
401	Peugeot
402	Peugeot
403	Peugeot
404	Peugeot
405	Peugeot
406	Peugeot
410	Nissan
411	Nissan
411	Volkswagen
411E	Volkswagen
411SS	Nissan
412	Volkswagen
415	Fiat
420	Jaguar
420G	Jaguar
420SEL	Mercedes-Benz
450 Series	Mercedes-Benz
456GT	Ferrari
456M Series+A169	Ferrari
500	Fiat
500	Nissan
500 Series	Mercedes-Benz
500 Series	Steyr-Daimler-Puch
501 Series	BMW
502 Series	BMW
503	BMW
504	Peugeot
505 Series	Peugeot
506	BMW
507	BMW
510	Nissan
512 Series	Ferrari
518 Series	BMW
520	Nissan
520 Series	BMW
521	Nissan
524TD	BMW
525 Series	BMW
528 Series	BMW
530 Series	BMW
533 Series	BMW
535 Series	BMW
540 Series	BMW
544	Volvo
545 Series	BMW
550 Maranello	Ferrari
550 Series	BMW
560 Series	Mercedes-Benz
575M Maranello	Ferrari
599 GTB	Ferrari
600	BMW
600	Dodge
600	Honda
600 Series	Fiat
600 Series	Mercedes-Benz
604	Peugeot
607	Peugeot
610	Nissan
612 Scaglietti	Ferrari
615	Fiat
616	Mazda
618	Mazda
620	Nissan
625CS	BMW
626	Mazda
630 Series	BMW
633 Series	BMW
635 Series	BMW
645 Series	BMW
650 Series	BMW
650T	Steyr-Daimler-Puch
700C	Steyr-Daimler-Puch
710	Nissan
720	Nissan
730 Series	BMW
733 Series	BMW
735 Series	BMW
740	Volvo
740 GLE	Volvo
740 Series	BMW
745 Series	BMW
750 Series	BMW
750 Tour de Monde	Moretti
760	Volvo
760 GLE	Volvo
760 Series	BMW
780	Volvo
808	Mazda
810	Nissan
825	Sterling
827	Sterling
840 Series	BMW
850	Austin
850	Volvo
850 Mascot	Morris
850 Series	BMW
850 Series	Fiat
900	Simca
900 Series	Saab
911 Series	Porsche
912	Porsche
914	Porsche
914/4	Porsche
914/6	Porsche
924	Porsche
928	Porsche
929 Series	Mazda
930	Porsche
940	Volvo
944	Porsche
960	Volvo
968	Porsche
1000	Mazda
1000	MG
1000	Pontiac
1000	Simca
1000 Minor	Morris
1010	IHC
1100	Simca
1100 Series	Austin
1100 Series	Fiat
1100 Series	MG
1100 Series	Morris
1200	Fiat
1200	Mazda
1200	Nissan
1200	Simca
1200 Cowley	Morris
1200 Herald	Triumph
1204	Simca
1250	MG
1250	Sunbeam
1300	Subaru
1300 (Canada)	Lada
1300 Saloon	Triumph
1300 Series	Alfa Romeo
1300 Series	Austin
1300 Series	Fiat
1300 Series	MG
1300 Series	Morris
1301	Simca
1400	Subaru
1400 Series	Fiat
1500	BMW
1500	Mazda
1500	MG
1500	Simca
1500 MK II Cowley	Morris
1500 Series	Fiat
1500 Series	Triumph
1500DX	Honda
1500TC	Sunbeam
1501	Simca
1502	BMW
1600	Nissan
1600	Subaru
1600 Beetle	Volkswagen
1600 Sedan	Volkswagen
1600 Series	BMW
1600 Series	Fiat
1602	BMW
1700	Volkswagen
1750	Alfa Romeo
1800	Mazda
1800	Subaru
1800	Volvo
1800 Sedan	Volkswagen
1800 Series	Austin
1800 Series	BMW
1800 Series	Fiat
1800 Series	Morris
1900	Fiat
1900	Opel
1900	Volvo
2000	Alfa Romeo
2000	Nissan
2000	Pontiac
2000	Rover
2000	Steyr-Daimler-Puch
2000	Triumph
2000 GTX (Canada)	Dodge
2000 Series	BMW
2000 Series	Triumph
2000TC	Rover
2002 Series	BMW
2100	Fiat
2106	Lada
2200 Series	Austin
2200 Series	Morris
2200SC	Rover
2200TC	Rover
2300	Steyr-Daimler-Puch
2300 Series	Fiat
2500	BMW
2600	Alfa Romeo
2724 E	Triumph
2800 Series	BMW
3000 Series	Austin-Healey
3000GT	Mitsubishi
3200 Series	BMW
3500NAS	Rover
3500S	Rover
4000 Series	Audi
5000 Series	Audi
6000	Pontiac
9000	Saab

A

A3	Audi
A4	Audi
A4 Avant	Audi
A4 Avant Quattro	Audi
A4 Cabriolet	Audi
A4 Quattro	Audi
A5	Audi
A6	Audi
A6 Avant	Audi
A6 Avant Quattro	Audi
A6 Quattro	Audi
A8	Audi
A8 L	Audi
A8 Quattro	Audi
A35	Austin
A40	Austin
A50 Series	Austin
A55 Series	Austin
A60 Series	Austin
A70	Austin
A90 Series	Austin
A95	Austin
A99	Austin
A105	Austin
A110 Westminster MK I	Austin
A125 Sheerline	Austin
A135 Princess	Austin
Abeille	Simca
Acadia	GMC
Acadian (Canada)	Pontiac
Acadian Scooter	Pontiac
Accent	Hyundai
Acclaim	Plymouth
Accord	Honda
Accord Coupe	Honda
Accord Crosstour	Honda
Ace	AC Imports
Ace	Toyota
Aceca	AC Imports
Achieva	Oldsmobile
Admiral	Opel
Aerio	Suzuki
Aerostar	Ford
Alero	Oldsmobile
Alfasud Series	Alfa Romeo
Alfetta	Alfa Romeo
Alhambra	Seat

AUTOMOTIVE MODEL TO MAKE CROSS-REFERENCE

MODEL	LISTED UNDER
A (Cont'd.)	
Allante	Cadillac
Allegro Series	Austin
Alliance	American Motors
Alliance	Renault
Allroad	Audi
Allroad Quattro	Audi
Allure (Canada)	Buick
Allure Super (Canada)	Buick
Alpine	Renault
Alpina B7	BMW
Alpina Roadster	BMW
Alpina Series	Sunbeam
Altima	Nissan
Amanti	Kia
Ambassador	American Motors
America	Austin
Amigo	Isuzu
AMX	American Motors
Anglia	Ford
Apollo	Buick
Appia	Lancia
Aprillia	Lancia
APV	Chevrolet
Arian	Simca
Aries	Dodge
Armada	Nissan
Arnage	Bentley
Aronde	Simca
Arrow	Plymouth
Arrow	Sunbeam
Ascender	Isuzu
Aspen	Chrysler
Aspen	Dodge
Aspire	Ford
Astra	Chevrolet
Astra	Saturn
Astre	Pontiac
Astro	Chevrolet
Astro Van	Chevrolet
Aura	Saturn
Aura Green Line	Saturn
Aurelia	Lancia
Aurora	Oldsmobile
Avalanche	Chevrolet
Avalon	Toyota
Avanti	Studebaker
Avenger	Dodge
Avenger Series	Hillman
Aveo	Chevrolet
Aveo5	Chevrolet
Aviator	Lincoln
Axiom	Isuzu
Axxess	Nissan
Azera	Hyundai
Aztek	Pontiac
Azure	Bentley
B	
B9 Tribeca	Subaru
B110	Nissan
B200 (Canada)	Mercedes-Benz
B210	Nissan
B1600	Mazda
B1800	Mazda
B2000	Mazda
B2200	Mazda
B2300	Mazda
B2500	Mazda
B2600	Mazda
B3000	Mazda
B4000	Mazda
Baja	Subaru
Barracuda	Plymouth
Bavaria	BMW
Beetle	Volkswagen
Bel Air	Chevrolet
Bellet Series	Isuzu
B (Cont'd.)	
Belvedere	Plymouth
Beretta	Chevrolet
Berlina	Alfa Romeo
Beta	Lancia
Bi	Maserati
Biscayne	Chevrolet
Blackwood	Lincoln
Blazer	Chevrolet
Bluebird	Nissan
Bobcat	Mercury
Bonneville	Pontiac
Bora	Maserati
Borrego	Kia
Boxster	Porsche
Boxster S	Porsche
Brat	Subaru
Brava	Fiat
Bravada	Oldsmobile
Breeze	Plymouth
Briar SJ	Jeep
Briar WD	Jeep
Briarwood	Jeep
Bronco	Ford
Bronco II	Ford
Brooklands	Bentley
Brookwood	Chevrolet
Brougham	Cadillac
Brougham	Chrysler
Brougham	Ford
Bullet	Sterling
C	
C Class	Mercedes-Benz
C30	Volvo
C32	Mercedes-Benz
C36	Mercedes-Benz
C43	Mercedes-Benz
C55 AMG	Mercedes-Benz
C63 AMG	Mercedes-Benz
C70	Volvo
C80	Nissan
C220	Mercedes-Benz
C230	Mercedes-Benz
C240	Mercedes-Benz
C280	Mercedes-Benz
C300	Mercedes-Benz
C320	Mercedes-Benz
C350	Mercedes-Benz
Caballero	GMC
Cabrio	Volkswagen
Cabrio	Yugo
Cabriolet	Audi
Cabriolet	Volkswagen
Cadet	Chevrolet
Calais	Cadillac
Calais	Oldsmobile
Caliber	Dodge
Caliber SRT4	Dodge
Camaro	Chevrolet
Cambridge	Austin
Campagnola	Fiat
Camry	Toyota
Camry Hybrid	Toyota
Canyon	GMC
Capri	Ford
Capri	Mercury
Capri II	Mercury
Caprice	Chevrolet
Caravan	Dodge
Caravan	Opel
Caravelle	Plymouth
Caravelle	Renault
Carina	Toyota
Carrera GT	Porsche
Catalina	Pontiac
Catera	Cadillac
Cavalier	Chevrolet
C (Cont'd.)	
Cayenne	Porsche
Cayman	Porsche
Cayman S	Porsche
Cedric	Nissan
Celebrity	Chevrolet
Celeste	Dodge
Celica	Toyota
Centurion	Buick
Century	Buick
Century Wagon	Buick
Challenger	Dodge
Champ	Plymouth
Charade	Daihatsu
Charger	Dodge
Charger SRT 8	Dodge
Cherokee	Jeep
Cherry Cab	Nissan
Chevelle	Chevrolet
Chevette	Chevrolet
Chevy II	Chevrolet
Chevy Joy	Chevrolet
Chevy Pop	Chevrolet
Chevy Swing	Chevrolet
Cheyenne	Chevrolet
Ciera	Oldsmobile
Cimarron	Cadillac
Cirrus	Chrysler
Citation	Chevrolet
City Golf (Canada)	Volkswagen
City Jetta (Canada)	Volkswagen
Civic Series	Honda
CJ5	Jeep
CJ6	Jeep
CJ7	Jeep
CJ8	Jeep
CL	Acura
CL55	Mercedes-Benz
CL55 AMG	Mercedes-Benz
CL63 AMG	Mercedes-Benz
CL63 AMG Black Series	Mercedes-Benz
CL65	Mercedes-Benz
CL65 AMG	Mercedes-Benz
CL500	Mercedes-Benz
CL550	Mercedes-Benz
CL600	Mercedes-Benz
Classic	American Motors
Classic	Chevrolet
Classic 98	Oldsmobile
Clio	Renault
Clipper	Nissan
CLK55	Mercedes-Benz
CLK55 AMG	Mercedes-Benz
CLK55 AMG Cabriolet	Mercedes-Benz
CLK63 AMG	Mercedes-Benz
CLK320	Mercedes-Benz
CLK320 Cabriolet	Mercedes-Benz
CLK350	Mercedes-Benz
CLK350 Cabriolet	Mercedes-Benz
CLK430	Mercedes-Benz
CLK430 Cabriolet	Mercedes-Benz
CLK500	Mercedes-Benz
CLK500 Cabriolet	Mercedes-Benz
CLK550	Mercedes-Benz
CLK550 Cabriolet	Mercedes-Benz
CLS55 AMG	Mercedes-Benz
CLS63 AMG	Mercedes-Benz
CLS500	Mercedes-Benz
CLS550	Mercedes-Benz
Club Wagon	Ford
Clubman	Mini
Clubman S	Mini
Cobalt	Chevrolet
Cobalt SS	Chevrolet
Cobra	AC Imports
Cobra	Ford
Cobra II	Ford
C (Cont'd.)	
Colonnade	Chevrolet
Colony	Mercury
Colony Park	Mercury
Colorado	Chevrolet
Colt	Dodge
Colt	Plymouth
Colt GT	Dodge
Colt GT	Plymouth
Colt Vista	Dodge
Colt Vista	Plymouth
Comanche	Jeep
Combi	Volkswagen
Comet	Mercury
Comete	Ford
Comete	Simca
Commander	Jeep
Commando	Jeep
Commodore	Opel
Commuter	Mercury
Compass	Jeep
Concord	American Motors
Concorde	Chrysler
Concours	Cadillac
Concours	Chevrolet
Conquest	Chrysler
Conquest	Dodge
Conquest	Plymouth
Consul	Ford
Continental	Lincoln
Continental Flying Spur	Bentley
Continental GT	Bentley
Continental GTC	Bentley
Contour	Ford
Cooper	Mini
Cooper S	Mini
Cooper Series	Austin
Cordia	Mitsubishi
Cordoba	Chrysler
Cordoba	Seat
Corolla Series	Toyota
Corona	Toyota
Coronet	Dodge
Corrado	Volkswagen
Corsa	Chevrolet
Corsair Series	Ford
Corsica	Chevrolet
Cortina	Lotus
Cortina Series	Ford
Corvair	Chevrolet
Corvette	Chevrolet
Corvette	Simca
Cosmo	Mazda
Cosworth	Chevrolet
Cougar	Mercury
Country Sedan	Ford
Country Squire	Ford
Coupe	Audi
Coupe	Jaguar
Courier	Ford
CR-2 400SS	Chevrolet
Cressida	Toyota
Cricket	Plymouth
Crossfire	Chrysler
Crossfire SRT 6	Chrysler
Crossman	Mini
Crossman S	Mini
Crown	Toyota
Crown Victoria	Ford
Cruiser Wagon	Oldsmobile
Cruze	Chevrolet
CR-V	Honda
CRX	Honda
CSX	Acura
CSX Type-S	Acura
CTS	Cadillac
CTS-V	Cadillac
Custom Cruiser	Oldsmobile
Custom Series	Ford
C (Cont'd.)	
Cutlass	Oldsmobile
Cutlass Calais	Oldsmobile
Cutlass Ciera	Oldsmobile
Cutlass Supreme	Oldsmobile
CX-7	Mazda
CX-9	Mazda
Cyclone	Mercury
D	
D Special	Citroen
D19	Citroen
D21	Citroen
D21 Truck	Nissan
D50	Dodge
Dakota	Dodge
Dart	Dodge
Dasher	Volkswagen
Dauphine	Renault
Daytona Series	Dodge
DB2	Aston Martin
DB2/4	Aston Martin
DB3	Aston Martin
DB4 Series	Aston Martin
DB5	Aston Martin
DB6	Aston Martin
DB7	Aston Martin
DB7 Vantage	Aston Martin
DB9	Aston Martin
DB9 Volante	Aston Martin
DBS	Aston Martin
Defender	Rover
Defender 90	Land Rover
del Sol	Honda
Delta 88	Oldsmobile
Deluxe Saloon	Austin
Demon	Dodge
Denali	GMC
Derby	Volkswagen
DeVille	Cadillac
Diablo	Lamborghini
Diamante	Mitsubishi
Dino	Ferrari
Dino Spider	Fiat
Dino Spider Coupe	Fiat
Diplomat	Dodge
Diplomat	Opel
Discovery Series	Land Rover
DL	Subaru
DL	Volvo
DL4	Subaru
DL5	Subaru
DMC	Delorean
Dolomite 1300	Triumph
Dolomite 1500 Series	Triumph
Dolomite 1850HL	Triumph
Dorset	Austin
D.S.	Citroen
DS19	Citroen
DS20	Citroen
DS21	Citroen
DS23	Citroen
DTS	Cadillac
Duetto	Alfa Romeo
Durango	Dodge
Duster	Plymouth
D/W Series Pickups	Dodge
DX21	Citroen
Dynasty	Dodge
E	
E Class	Chrysler
E Class	Mercedes-Benz
E Series Vans	Ford
E Type	Jaguar
E55	Mercedes-Benz
E55 AMG	Mercedes-Benz

AUTOMOTIVE MODEL TO MAKE CROSS-REFERENCE

MODEL	LISTED UNDER
E (Cont'd.)	
E63 AMG	Mercedes-Benz
E300 Series	Mercedes-Benz
E320	Mercedes-Benz
E320 CDI	Mercedes-Benz
E350	Mercedes-Benz
E420	Mercedes-Benz
E430	Mercedes-Benz
E500	Mercedes-Benz
E550	Mercedes-Benz
Eagle	American Motors
Echo	Toyota
Eclat	Lotus
Eclipse	Dodge
Eclipse	Mitsubishi
Eclipse Spyder	Mitsubishi
Econoline	Ford
Edge	Ford
Edsel	Edsel
EL	Acura
El Camino	Chevrolet
Elan	Lotus
Elantra	Hyundai
Eldorado	Cadillac
Electra Series	Buick
Element	Honda
Elf	Isuzu
Elfin	Isuzu
Elite	Ford
Elite	Lotus
Enclave	Buick
Encore	American Motors
Encore	Renault
Endeavor	Mitsubishi
Entourage	Hyundai
Envoy	GMC
Envoy	Vauxhall
Envoy Denali	GMC
Enzo	Ferrari
Eos	Volkswagen
Epica (Canada)	Chevrolet
Equator	Suzuki
Equinox	Chevrolet
ES250	Lexus
ES300	Lexus
ES320 BLUETEC	Mercedes-Benz
ES330	Lexus
ES350	Lexus
Escalade	Cadillac
Escalade ESV	Cadillac
Escalade EXT	Cadillac
Escape	Ford
Escort Series	Ford
Espada	Lamborghini
Esprit	Lotus
Esprit	Pontiac
Estafette 800	Renault
Estate Car	Standard
Estate Wagon	Buick
Esteem	Suzuki
Europa	Lotus
Eurovan	Volkswagen
EX35	Infiniti
Excel	Hyundai
Excursion	Ford
Executive	Chrysler
EXP	Ford
Expedition	Ford
Expedition EL	Ford
Explorer	Ford
Explorer Sport	Ford
Explorer Sport Trac	Ford
Expo	Mitsubishi
Expo (Canada)	Plymouth
Express Van	Chevrolet
F	
F Series Light-Duty Truck	Ford
F10	Nissan
F85	Oldsmobile
F355 Spider	Ferrari
F430	Ferrari
F430 Spider	Ferrari
Fairlady	Nissan
Fairlane	Ford
Fairmont	Ford
Falcon	Ford
Festiva	Ford
FF-I	Subaru
Fiat-Puch 600	Steyr-Daimler-Puch
Fiero	Pontiac
Fiesta	Ford
Fifth Avenue	Chrysler
Firebird	Pontiac
Firefly (Canada)	Pontiac
Firenza	Oldsmobile
Firenze	Vauxhall
Fit	Honda
Five Hundred	Ford
FJ Cruiser	Toyota
FK2500	Ford
FK3500	Ford
FK4500	Ford
Flamina	Lancia
Flavia Series	Lancia
Fleetwood	Cadillac
Fleetwood Brougham	Cadillac
Florian	Isuzu
Florida S	Renault
Flex	Ford
Focus	Ford
Forenza	Suzuki
Forester	Subaru
Formula	Pontiac
Formula S	Plymouth
Forsa	Suzuki
Forte	Kia
Fortwo	Smart
Fox	Audi
Fox	Volkswagen
Freelander	Land Rover
Freestar	Ford
Freestyle	Ford
Frontier	Nissan
Fuego	Renault
Fulvia	Lancia
Furgone	Fiat
Furgone	Lancia
Fury	Plymouth
Fusion	Ford
Futura	Ford
FX35	Infiniti
FX45	Infiniti
FX50	Infiniti
G	
G3	Pontiac
G3 Wave	Pontiac
G4	Pontiac
G5	Pontiac
G6	Pontiac
G8	Pontiac
G20	Infiniti
G35	Infiniti
G37	Infiniti
G55	Mercedes-Benz
G55 AMG	Mercedes-Benz
G65 AMG	Mercedes-Benz
G500	Mercedes-Benz
Galant	Mitsubishi
Galaxie Series	Ford
Gazelle	Hillman
Genesis	Hyundai
GF	Subaru
Ghia	Ford
Ghia	Mercury
Ghibli	Maserati
Gipsy	Austin
Giulia	Alfa Romeo
Giulia Spider	Alfa Romeo
Giulia Sprint Series	Alfa Romeo
Giulietta	Alfa Romeo
GL	Subaru
GL	Volvo
GL320 Series	Mercedes-Benz
GL450	Mercedes-Benz
GL500	Mercedes-Benz
GL550	Mercedes-Benz
Gladiator	Jeep
GLC	Mazda
GLE	Volvo
GLF	Subaru
GLI	Volkswagen
Gloria	Nissan
GLT	Volvo
Golf	Volkswagen
Gordini	Renault
Graduate	Alfa Romeo
Gran Fury	Plymouth
Gran Torino	Ford
Granada	Ford
Grand Am	Pontiac
Grand Caravan	Dodge
Grand Cherokee	Jeep
Grand Cherokee SRT-8	Jeep
Grand Marquis	Mercury
Grand Prix	Pontiac
Grand Vitara	Suzuki
Grand Voyager	Plymouth
Grand Wagoneer	Jeep
Grandville	Pontiac
Gransport	Buick
Gremlin	American Motors
GS	Buick
GS300	Lexus
GS350	Lexus
GS400	Lexus
GS430	Lexus
GS450h	Lexus
GS460	Lexus
GT	Ford
GT	Opel
GT	Pontiac
GT	Sunbeam
GT (Canada)	Asuna
GT-6	Triumph
GT Coupe	Audi
GTA	American Motors
GTA	Renault
GTI	Volkswagen
GTO	Pontiac
GT-R	Nissan
GTV/6	Alfa Romeo
GV	Yugo
GVL	Yugo
GVS	Yugo
GVX	Yugo
GX460	Lexus
GX470	Lexus
H	
H1	Hummer
H1 Alpha	Hummer
H2	Hummer
H2 SUT	Hummer
H3	Hummer
H3 Alpha	Hummer
H3 SUT	Hummer
H3T	Hummer
H3T Alpha	Hummer
H3x	Hummer
Hawk	Studebaker
Hawk Series	Humber
Healy GT	Jensen
Herald Series	Triumph
HHR	Chevrolet
HHR SS	Chevrolet
Hiace	Toyota
Highlander	Toyota
Hikari	Nissan
Hilux	Toyota
Hombre	Isuzu
Honey Bee	Nissan
Horizon	Plymouth
Hornet	American Motors
HPE	Lancia
HS250h	Lexus
Hudson	Hudson
Hummer	Hummer
Hunter	Sunbeam
Hunter Series	Hillman
Husky	Hillman
HY	Citroen
I	
I30	Infiniti
I35	Infiniti
i-280	Isuzu
i-290	Isuzu
i-350	Isuzu
i-370	Isuzu
Ibiza	Seat
Ichi Van	Nissan
I.D.	Citroen
ID19	Citroen
ID20	Citroen
Ikon	Ford
I-Mark	Isuzu
IMP	Hillman
IMP	Sunbeam
Impala	Chevrolet
Impala SS	Chevrolet
Imperial	Chrysler
Imperial	Humber
Impreza	Subaru
Impreza Outback Sport	Subaru
Impreza WRX	Subaru
Impulse	Isuzu
Insight	Honda
Integra	Acura
Interceptor Series	Jensen
Intrepid	Chrysler
Intrepid	Dodge
Intrigue	Oldsmobile
ION	Saturn
ION Red Line	Saturn
IS250	Lexus
IS250C	Lexus
IS300	Lexus
IS350	Lexus
IS350C	Lexus
Isetta Series	BMW
IS-F	Lexus
Islero	Lamborghini
Isuzu	Opel
J	
J10	Jeep
J20	Jeep
J30	Infiniti
J2000	Pontiac
Jarama	Lamborghini
Jatco	Mazda
Javelin	American Motors
Jetta	Volkswagen
Jimmy	GMC
JO Pickup	Bedford
Journey	Dodge
Junior GTA	Alfa Romeo
Justy	Subaru
K	
K70	Volkswagen
KA	Ford
Kadett	Opel
Kaiser	American Motors
Kammback	American Motors
Kangoo	Renault
Kapitan	Opel
Karmann Ghia	Volkswagen
Kingswood	Chevrolet
Kizashi	Suzuki
L	
L Series	Saturn
L15	GMC
L20 Series	Nissan
L30	Infiniti
L300	Saturn
L520	Nissan
LaCrosse	Buick
LaCrosse Super	Buick
Laforza	Mercury
Lagonda	Aston Martin
Laguna	Chevrolet
Lancer	Dodge
Lancer	Mitsubishi
Lancer Evolution	Mitsubishi
Land Cruiser	Toyota
Land Rover	Rover
Landaulet	Maybach
Lanos	Daewoo
Lark	Studebaker
Laser	Chrysler
Laser	Plymouth
Laurentian (Canada)	Pontiac
LeBaron	Chrysler
LeCar	Renault
Legacy	Subaru
Leganza	Daewoo
Legend	Acura
Lemans	Pontiac
Leon	Seat
LeSabre Series	Buick
LG5	Nissan
LHS	Chrysler
Liberty	Jeep
Limousine	Chrysler
LJ81 (Canada)	Suzuki
LLV	Chevrolet
LLV	GMC
LN7	Mercury
Lobo	Ford
Lotus Cortina	Ford
Loyale	Subaru
LR2	Land Rover
LR3	Land Rover
LS	Dodge
LS	Ford
LS	Lincoln
LS Series	Saturn
LS400	Lexus
LS430	Lexus
LS460	Lexus
LS460hL	Lexus
LS460L	Lexus
LS600hL	Lexus
LSS	Oldsmobile
LTD Series	Ford
LTS	Mercury
Lumina	Chevrolet
Lucerne	Buick
Lucerne Super	Buick
Lucino	Nissan

AUTOMOTIVE MODEL TO MAKE CROSS-REFERENCE

MODEL	LISTED UNDER
M (Cont'd.)	
LUV	Chevrolet
LW Series	Saturn
LX450	Lexus
LX470	Lexus
LX570	Lexus
Lynx	Mercury
M	
M	BMW
M3	BMW
M5	BMW
M6	BMW
M10	Chevrolet
M15	GMC
M30	Infiniti
M35	Infiniti
M45	Infiniti
Magentis (Canada)	Kia
Magnette	MG
Magnum	Dodge
Magnum SRT-8	Dodge
Majestic	Jaguar
Major (Australia)	Morris
Malibu	Chevrolet
Malibu Maxx	Chevrolet
Malibu Maxx SS	Chevrolet
Malibu SS	Chevrolet
Mangusta	de Tomaso
Manta	Opel
Marathon	Checker
Marauder	Mercury
Marina	Austin
Marina	Morris
Mariner	Mercury
Mark	Lotus
Mark LT	Lincoln
Mark Series	Lincoln
Marlin	American Motors
Marly	Simca
Marquis	Mercury
Matador	American Motors
Matiz	Pontiac
Matrix	Toyota
Maverick	Ford
Maxi Series	Austin
Maxima	Nissan
Mazda3	Mazda
Mazda5	Mazda
Mazda6	Mazda
MazdaSpeed3	Mazda
MazdaSpeed6	Mazda
MDX	Acura
Medallion	Eagle
Medallion	Renault
Megane	Renault
Meriva	Chevrolet
Merkur	Mercury
Meteor	Mercury
Metro	Chevrolet
Metro	Geo
Metro (Canada)	Chevrolet
Metropolitan	Nash
Metropolitan B Series	Austin
Mexico	Maserati
MG-TC	MG
MG-TD	MG
MG-TF	MG
MGA Series	MG
MGB Series	MG
MGC Series	MG
Miata	Mazda
Miata MX-5	Mazda
Micra (Canada)	Nissan
Midget Series	MG
Mighty Max	Mitsubishi
Milan	Mercury
Milano	Alfa Romeo
M (Cont'd.)	
Milano Verde	Alfa Romeo
Millenia	Mazda
Mini	Austin
Mini Automatic	Austin
Mini Clubman Series	Austin
Mini Cooper Series	Austin
Mini MK I	Austin
Mini MK II Series	Austin
Mini Ram Van	Dodge
Mini-Blazer	Chevrolet
Mini-Jimmy	GMC
Mini-Minor	Morris
Mini-Saloon	Austin
Minor	Morris
Minstral	Maserati
Minx	Sunbeam
Minx Series	Hillman
Mirada	Dodge
Mirage	Mitsubishi
Mizer	Mazda
MK	Hillman
MK Series	Austin-Healey
MK Series	Lotus
MK-L	Jaguar
MK-LI	Jaguar
MK-LIS	Jaguar
MK-LX	Jaguar
MKS	Lincoln
MK-VII	Jaguar
MK-VIII	Jaguar
MK-X	Jaguar
MKX	Lincoln
MKZ	Lincoln
ML55	Mercedes-Benz
ML63	Mercedes-Benz
ML63 AMG	Mercedes-Benz
ML320	Mercedes-Benz
ML350	Mercedes-Benz
ML430	Mercedes-Benz
ML450	Mercedes-Benz
ML500	Mercedes-Benz
ML550	Mercedes-Benz
Moke	Austin
Monaco	Dodge
Monarch	Mercury
Mondeo	Ford
Mondial	Ferrari
Montana	Pontiac
Montclair	Mercury
Monte Carlo	Chevrolet
Monte Carlo	Simca
Monte Carlo SS	Chevrolet
Montego	Mercury
Monterey	Mercury
Montero	Mitsubishi
Montero Sport	Mitsubishi
Monza	Chevrolet
Mountaineer	Mercury
MPV Van	Mazda
MR-Spyder	Toyota
MR2	Toyota
Multi	Nissan
Murano	Nissan
Mustang	Ford
Mustang Cobra	Ford
Mustang GT	Ford
Mustang II	Ford
Mustang Mach 1	Ford
MX3	Mazda
MX5	Mazda
MX6	Mazda
Mystique	Mercury
N	
Navajo	Mazda
Navigator	Lincoln
Navigator L	Lincoln
N (Cont'd.)	
Neon	Dodge
Neon	Plymouth
New Yorker	Chrysler
Newport	Chrysler
Nitro	Dodge
Niva (Canada)	Lada
Nomad	Chevrolet
Nova	Chevrolet
NSX	Acura
Nubira	Daewoo
NX1600	Nissan
NX2000	Nissan
O	
Oasis	Isuzu
Odyssey	Honda
Olds 98	Oldsmobile
Olympia	Opel
Omega	Oldsmobile
Omni	Dodge
Opel	Buick
Opel	Opel
Optima	Kia
Optima (Canada)	Pontiac
Optra (Canada)	Chevrolet
Outback Series	Subaru
Outlander	Mitsubishi
Outlook	Saturn
Oxford Series	Morris
P	
P'up	Isuzu
Pacer	American Motors
Pacifica	Chrysler
Packard	Studebaker
Palio	Fiat
Palio Adventure	Fiat
Pantera	de Tomaso
Parisienne	Pontiac
Park Avenue	Buick
Paseo	Toyota
Passat	Volkswagen
Passport	Honda
Pathfinder	Nissan
Patriot	Jeep
Patrol	Nissan
Phaeton	Volkswagen
Phantom	Rolls-Royce
Phoenix	Pontiac
Pilot	Honda
Pinto	Ford
PL312	Nissan
PL620	Nissan
Pointer	Volkswagen
Pointer Pickup	Volkswagen
Polara	Dodge
Police	Ford
Polo	Volkswagen
Pony	Ford
Pony (Canada)	Hyundai
Popular	Ford
Power Wagons	Dodge
Precis	Mitsubishi
Prefect	Ford
Prelude	Honda
Premier	Eagle
President	Nissan
Previa Van	Toyota
Prius	Toyota
Prizm	Chevrolet
Prizm	Geo
Probe	Ford
Protegé	Mazda
Protegé5	Mazda
Prowler	Plymouth
PT Cruiser	Chrysler
P (Cont'd.)	
Pulsar	Nissan
Pursuit (Canada)	Pontiac
Q	
Q5	Audi
Q7	Audi
Q30	Infiniti
Q45	Infiniti
Quadrafoglio	Alfa Romeo
Quantum	Volkswagen
Quattro	Audi
Quest	Nissan
QX4	Infiniti
QX56	Infiniti
R	
R5	Renault
R8	Audi
R8	Renault
R10	Renault
R12 Series	Renault
R15 Series	Renault
R16 Series	Renault
R17 Series	Renault
R18	Renault
R18i	Renault
R9	Audi
R32	Volkswagen
R63 AMG	Mercedes-Benz
R100	Mazda
R320 CDI	Mercedes-Benz
R350	Mercedes-Benz
R500	Mercedes-Benz
Rabbit	Volkswagen
Raider	Dodge
Rainier	Buick
Rally	GMC
Rally Sport	Chevrolet
Rallye	Opel
Ram 50	Dodge
Ram SRT-10	Dodge
Ram Van	Dodge
Rambler	American Motors
Ramcharger	Dodge
Rampage	Dodge
Ranch Wagon	Ford
Ranchero	Ford
Range Rover Sport	Land Rover
Range Rover	Land Rover
Ranger	Ford
Rapier	Sunbeam
RAV4	Toyota
RDX	Acura
Reatta	Buick
Rebel	American Motors
Rebel	Reliant
Regal	Buick
Regence	Ford
Regence	Simca
Regency	Oldsmobile
Regent	Plymouth
Rekord	Opel
Relay	Saturn
Reliant	Plymouth
Rendezvous	Buick
Reno	Suzuki
Ridgeline	Honda
Rio	Kia
Rio5	Kia
Rio Cinco	Kia
Riviera	Buick
RL	Acura
Road Hawk	Buick
Road Runner	Plymouth
Roadmaster	Buick
Roadster	Jensen
R (Cont'd.)	
Rocky	Daihatsu
Rodeo	Isuzu
Rodeo Sport	Isuzu
Rogue	Nissan
Rondo	Kia
Routan	Volkswagen
Royal	Dodge
Royal Monaco	Dodge
RS4	Audi
RS6	Audi
RSX	Acura
RSX Type-S	Acura
RX2	Mazda
RX3	Mazda
RX4	Mazda
RX7	Mazda
RX-8	Mazda
RX300	Lexus
RX330	Lexus
RX350	Lexus
RX400h	Lexus
S	
S Class	Mercedes-Benz
S-Type	Jaguar
S-Type R	Jaguar
S3	Audi
S4	Audi
S4 Avant	Audi
S4 Cabriolet	Audi
S4 Quattro	Audi
S5	Audi
S6	Audi
S6 Avant	Audi
S8	Audi
S10	Chevrolet
S15	GMC
S40	Volvo
S55	Mercedes-Benz
S55 AMG	Mercedes-Benz
S60	Volvo
S60 T5	Volvo
S60R	Volvo
S63 AMG	Mercedes-Benz
S65 AMG	Mercedes-Benz
S70	Volvo
S80	Volvo
S80 T6	Volvo
S90	Volvo
S320	Mercedes-Benz
S350	Mercedes-Benz
S400	Mercedes-Benz
S420	Mercedes-Benz
S430	Mercedes-Benz
S500	Mercedes-Benz
S550 AMG	Mercedes-Benz
S600	Mercedes-Benz
S2000	Honda
S2000 CR	Honda
SA310 (Canada)	Suzuki
Sable	Mercury
Safari	Pontiac
Safari Van	GMC
Salon	Oldsmobile
Saloon	Daimler
Saloon	Jaguar
Samara (Canada)	Lada
Samurai	Suzuki
Santa Fe	Hyundai
Sapporo	Plymouth
Satellite	Plymouth
Saturn	Saturn
Savana	GMC
Savoy	Plymouth
SC Coupe	Saturn
SC1	Saturn
SC2	Saturn

AUTOMOTIVE MODEL TO MAKE CROSS-REFERENCE

MODEL	LISTED UNDER
S (Cont'd.)	
SC300	Lexus
SC400	Lexus
SC430	Lexus
Scamp	Plymouth
Scenic	Renault
Sceptre Series	Humber
Scimitar	Reliant
Scirocco	Volkswagen
Scorpio	Merkur
Scorpion	Lancia
Scoupe	Hyundai
Scout	IHC
Scrambler	Jeep
SE (Canada)	Asuna
Sebring	Chrysler
Sebring	Maserati
Sedona	Kia
Sentra	Nissan
Sentra SE-R	Nissan
Sentra SE-R Spec V	Nissan
Sephia	Kia
Sequoia	Toyota
Seven	Austin
Seven Series	Lotus
Seville	Cadillac
Shadow	Dodge
Sharan	Volkswagen
Shelby Charger	Dodge
Sidekick	Suzuki
Sienna	Toyota
Sierra	GMC
Sierra Denali	GMC
Sigma	Mitsubishi
Signet	Plymouth
Signet (Canada)	Lada
Silhouette APV	Oldsmobile
Silverado	Chevrolet
Sixty Special	Cadillac
SJ	Pontiac
SJ410 (Canada)	Suzuki
SJ413 (Canada)	Suzuki
Skipper	Austin
Sky	Saturn
Sky Red Line	Saturn
Skyhawk	Buick
Skylark	Buick
SL	Saturn
SL Class	Mercedes-Benz
SL1	Saturn
SL2	Saturn
SL55	Mercedes-Benz
SL55 AMG	Mercedes-Benz
SL63 AMG	Mercedes-Benz
SL65	Mercedes-Benz
SL65 AMG	Mercedes-Benz
SL320	Mercedes-Benz
SL500	Mercedes-Benz
SL550	Mercedes-Benz
SL600	Mercedes-Benz
SLK32	Mercedes-Benz
SLK55	Mercedes-Benz
SLK55 AMG	Mercedes-Benz
SLK230	Mercedes-Benz
SLK280	Mercedes-Benz
SLK300	Mercedes-Benz
SLK320	Mercedes-Benz
SLK350	Mercedes-Benz
SLK550	Mercedes-Benz
SLR	Mercedes-Benz
SLR McLaren	Mercedes-Benz
SLX	Acura
SM	Citroen
Solara	Toyota
Solstice	Pontiac
Somerset	Buick
Sonata	Hyundai
Sonett	Saab
Sonoma	GMC
S (Cont'd.)	
Sonora	Chevrolet
Sorento	Kia
Sovereign	Daimler
Sovereign	Mercedes-Benz
Special	Buick
Special Series	Alfa Romeo
Spectra	Kia
Spectra5	Kia
Spectrum	Chevrolet
Spectrum	Geo
Spider	Alfa Romeo
Spider	Fiat
Spider	Pininfarina
Spider Veloce	Alfa Romeo
Spider Zagato	Lancia
Spirit	American Motors
Spirit	Dodge
Spitfire Series	Triumph
SPL-310	Nissan
SPL-311	Nissan
Sport	Dodge
Sport 90	Audi
Sport Coupe	Acura
Sport Coupe	Opel
Sport Wagon	Jeep
Sportage	Kia
SportCross	Lexus
Sportsman	Daimler
Sportswagon	Buick
Sportvan	Chevrolet
Sprint	Chevrolet
Sprint	GMC
Sprint	Lotus
Sprint Series	Alfa Romeo
Sprinter	Dodge
Sprite	Austin-Healey
SR5	Toyota
SRL-311	Nissan
SRT	Dodge
SRX	Cadillac
SSR	Chevrolet
SST	American Motors
SSX	Honda
St. Regis	Dodge
Stag	Triumph
Stalwart	Alvis
Standard 20	Standard
Stanza	Nissan
Starchief	Pontiac
Starfire	Oldsmobile
Starion	Mitsubishi
Starlet	Toyota
Stealth	Dodge
Stellar (Canada)	Hyundai
Stiletto	Sunbeam
Stingray	Chevrolet
Storm	Geo
Strada	Fiat
Stratus	Dodge
STS	Cadillac
STS-V	Cadillac
Stylus	Isuzu
Suburban	Chevrolet
Suburban	GMC
Summit	Eagle
Sunbird	Pontiac
Sunburst (Canada)	Pontiac
Sundance	Plymouth
Sunfire	Pontiac
Sunfire (Canada)	Asuna
Sunny	Nissan
Sunrunner (Canada)	Pontiac
Super 90	Audi
Super 90 Wagon	Audi
Super Bee	Dodge
Super Beetle	Volkswagen
Super Duty	Ford
Super IMP	Hillman
S (Cont'd.)	
Super Minx	Hillman
Super Seven	Austin
Super Seven	Lotus
Super Snipe	Humber
Super V8	Jaguar
Super V8 Portfolio	Jaguar
Supra	Toyota
SVX	Subaru
SW1	Saturn
SW2	Saturn
Swift	Suzuki
Swift (Canada)	Suzuki
Swinger Series	Dodge
SX (Canada)	Dodge
SX 2.0 (Canada)	Dodge
SX4	Suzuki
Syclone	GMC
T	
T5R	Volvo
T10 Blazer/Pickup	Chevrolet
T15	GMC
T100	Toyota
T1000	Pontiac
Tacoma	Toyota
Tacoma X-Runner	Toyota
Tahoe	Chevrolet
Tahoe Hybrid	Chevrolet
Talon	Eagle
Taunus Series	Ford (Germany)
Taurus	Ford
Taurus X	Ford
TC	Chrysler
TC	MG
Tc	Scion
TC3	Plymouth
TD Series	MG
TD21	Alvis
TDB	Triumph
TE21	Alvis
Tempest	Pontiac
Tempo	Ford
Tercel	Toyota
Terra	IHC
Terraza	Buick
Testarossa	Ferrari
TF21	Alvis
Thunderbird	Ford
Tiburon	Hyundai
Tiger	Sunbeam
Tigra	Chevrolet
Tiguan	Volkswagen
Tipi Series	Citroen
Titan	Nissan
TJ (Canada)	Jeep
TL	Acura
TL Type S	Acura
Toledo	Seat
Toledo	Triumph
Topaz	Mercury
Torino	Ford
Toronado	Chevrolet
Toronado	Oldsmobile
Torrent	Pontiac
Touareg	Volkswagen
Touareg 2	Volkswagen
Town & Country	Chrysler
Town Car	Lincoln
Townsman	Chevrolet
TP400 Miura	Lamborghini
TR2	Triumph
TR3	Triumph
TR4	Triumph
TR5 Series	Triumph
TR6	Triumph
TR7	Triumph
TR8	Triumph
T (Cont'd.)	
TR10	Triumph
TR250	Triumph
Tracer	Mercury
Tracker	Chevrolet
Tracker	Geo
TrailBlazer	Chevrolet
TrailBlazer EXT	Chevrolet
Trailblazer SS	Chevrolet
Trailduster	Plymouth
Trans Am	Pontiac
Trans Sport APV	Pontiac
Transit 1500	Ford
Transporter (Canada)	Volkswagen
Travelall	IHC
Traveler	IHC
Traverse	Chevrolet
Tredia	Mitsubishi
Trianon	Simca
Tribeca	Subaru
Tribute	Mazda
Tribute Hybrid	Mazda
Trofeo	Oldsmobile
Trooper	Isuzu
Trooper II	Isuzu
Tsubame	Nissan
Tsuru	Nissan
TSX	Acura
TT	Audi
TT Quattro	Audi
TTS	Audi
Tucson	Hyundai
Tundra	Toyota
Turismo	Plymouth
Type 1	Volkswagen
Type 2	Volkswagen
Type 3	Volkswagen
Type 4	Volkswagen
Type S	Acura
Typhoon	GMC
U	
Urraco	Lamborghini
Uplander	Chevrolet
Urvan	Nissan
V	
V8 Quattro	Audi
V12	Mercedes-Benz
V40	Volvo
V50	Volvo
V50 T5	Volvo
V70	Volvo
V70R	Volvo
V90	Volvo
Valiant	Plymouth
Vanagon	Volkswagen
Vanden Plas	Jaguar
Vanden Plas 1300	Austin
Vanden Plas Princess Series	Austin
Vanden Princess	Austin
Vanguard	Standard
Vanquish	Aston Martin
Vanquish S	Aston Martin
Vantage	Aston Martin
Vectra	Chevrolet
Vedette	Ford
Vedette	Simca
Vega	Chevrolet
VehiCross	Isuzu
Veloce	Alfa Romeo
Vendome	Ford
Vendome	Simca
Ventura	Pontiac
Venture	Chevrolet
Venza	Toyota
V (Cont'd.)	
Veracruz	Hyundai
Verona	Suzuki
Versa	Nissan
Versailles	Ford
Versailles	Lincoln
Versailles	Simca
Vibe	Pontiac
Victor	Vauxhall
Vignale	Standard
Vigor	Acura
Villager	Mercury
Viper	Dodge
Viper SRT-10	Dodge
Virage	Aston Martin
Vision	Eagle
Vista	Dodge
Vista (Canada)	Eagle
Vitara	Suzuki
Vitesse	Triumph
Volante	Aston Martin
Volare	Plymouth
Volt	Chevrolet
Voyager	Chrysler
Voyager	Plymouth
VUE	Saturn
VUE Green Line	Saturn
VUE Red Line	Saturn
VW Model 10	Fiat
W	
Wagoneer	Jeep
Wagovan	Honda
Wave (Canada)	Pontiac
Wildcat	Buick
Windstar	Ford
Wrangler	Jeep
Wrangler Unlimited	Jeep
X	
X-Trail (Canada)	Nissan
X Type	Isuzu
X-Type	Jaguar
X1/9	Bertone
X1/9	Fiat
X3	BMW
X5	BMW
X6	BMW
X90	Suzuki
X100	Mercury
xA	Scion
xB	Scion
xD	Scion
XC60	Volvo
XC70	Volvo
XC70 Cross Country	Volvo
XC90	Volvo
XC90 T6	Volvo
XE	Chrysler
XF	Jaguar
XG300	Hyundai
XG350	Hyundai
XJ Sport	Jaguar
XJ Super	Jaguar
XJ Super V8	Jaguar
XJ Vanden Plas	Jaguar
XJ6	Jaguar
XJ6L	Jaguar
XJ8	Jaguar
XJ8L	Jaguar
XJ12	Jaguar
XJ16	Jaguar
XJM	Jaguar
XJR	Jaguar
XJRS	Jaguar
XJS	Jaguar
XK	Jaguar

AUTOMOTIVE MODEL TO MAKE CROSS-REFERENCE

MODEL	LISTED UNDER
X (Cont'd.)	
XK8	Jaguar
XK100	Jaguar
XK120	Jaguar
XK140	Jaguar
XK150	Jaguar
XKE	Jaguar
XKR	Jaguar
XL-7	Suzuki
XLR	Cadillac
XLR-V	Cadillac
X (Cont'd.)	
XR4TI	Merkur
XR-7	Mercury
XT	Subaru
Xterra	Nissan
XT6	Subaru
Y	
Yaris	Toyota
Yukon	GMC
Y (Cont'd.)	
Yukon Denali	GMC
Yukon Denali XL	GMC
Yukon XL	GMC
Z	
Z3	BMW
Z4	BMW
Z4 M	BMW
Z8	BMW
Z (Cont'd.)	
Z24	Chevrolet
Z28	Chevrolet
Z34	Chevrolet
Zafira	Chevrolet
Zagato	Aston Martin
Zagato	Lancia
ZDX	Acura
Zephyr	Ford
Zephyr	Lincoln
Zephyr	Mercury
Z (Cont'd.)	
ZF	Alfa Romeo
ZF	BMW
Zodiac	Ford
ZR1	Chevrolet
ZX2	Ford

NOTES

VEHICLE IDENTIFICATION NUMBER (VIN) DECODING

Originally, Vehicle Identification Numbers (VIN) were designated to identify a vehicle, but there was no standardization. Beginning in 1981, vehicles were assigned an international VIN code consisting of 17 characters (which cannot include the letter I, O or Q) unique to each vehicle.

The VIN serves a variety of purposes. As well as providing identification in licensing and insuring the vehicle, the history of the vehicle can be tracked. VIN codes provide complete vehicle information including:

- is the vehicle defective (lemon car)
- has the vehicle been totaled or had major accident damage
- has the vehicle had flood damage
- has the vehicle had odometer fraud
- has the vehicle been stolen

To help decode the VIN, the following information has been provided:

- **1st - 3rd Characters**
  Identify the manufacturer (country), make and type of vehicle.
- **4th - 8th Characters**
  Identify the different aspects of the vehicle.

  For each type of vehicle (passenger cars, multi-passenger vehicles (MPVs), trucks, buses, trailers, motorcycles, incomplete vehicles other than trailers) different information is required.

  For cars, MPVs and light-duty trucks:

  4th - 5th positions are alphabetic

  6th - 7th positions are numeric

  8th position can be either alphabetic or numeric
- **9th Character (or Check Digit)**
  Is determined by a complicated formula.

  Each character is assigned a numerical value and then multiplied by the value assigned to its position. These values are added and then divided by 11. The remainder is the Check Digit. This character can be numeric or the letter X.
- **10th Character**
  Identifies the vehicle model year.
- **11th Character**
  Identifies the plant of manufacture.
- **12th - 17th Characters**
  Consists of a sequential production number for manufacturers producing more than 500 vehicles per year.

VIN NUMBER ORIGIN AND YEAR

1ST CHARACTER - COUNTRY OF ORIGIN

1	U.S.A.	K	Korea	W	Germany
2	Canada	L	Taiwan	Y	Sweden or Finland
3	Mexico	M	Thailand	Z	Italy
4	U.S.A.	S	Great Britain		
5	Brazil	V	France or Yugoslavia		
J	Japan				

10TH CHARACTER - YEAR

A	1980	J	1988	T	1996	4	2004
B	1981	K	1989	V	1997	5	2005
C	1982	L	1990	W	1998	6	2006
D	1983	M	1991	X	1999	7	2007
E	1984	N	1992	Y	2000	8	2008
F	1985	P	1993	1	2001	9	2009
G	1986	R	1994	2	2002	A	2010
H	1987	S	1995	3	2003	B	2011

VIN plates are read through the windshield on the driver's side of most vehicles. A manufacturer may use a variation of the same size engine in one model. To insure that you are using the correct filters for the application, it is necessary to identify the proper engine code. The following examples illustrate the location of the engine code in most manufacturer's VIN codes.

DOMESTIC VEHICLE IDENTIFICATION NUMBER (VIN)

AM GENERAL/HUMMER

1995-on

ENGINE CODE
(Fourth Character)

137**X**E82H*TE013212

AMC/EAGLE (EXCEPT JEEP)

1972-1980

ENGINE CODE
(Seventh Character)

A3M798**Z**700001

1981-1988

ENGINE CODE
(Fourth Character)

2CC**B**N387*GB529063

1989-on

ENGINE CODE
(Eighth Character)

2E3BB66**U***LH038364

* See VIN Decoding Information on 9th Character (Check Digit).

DOMESTIC VEHICLE IDENTIFICATION NUMBER (VIN) (Cont'd.)

CHEVROLET/GMC TRUCK

1970-1980

ENGINE CODE
(Third Character)

CC**D**13AF100007

1981-on

ENGINE CODE
(Eighth Character)

1GTDC14**N***GF100001

CHRYSLER, FORD, GMC

1972-1980

ENGINE CODE
(Fifth Character)

1H35**L**7R100001

1981-on

ENGINE CODE
(Eighth Character)

1G3AL69**N***CM100001

FORD TRUCK

1970-1980

ENGINE CODE
(Fourth Character)

F25**F**LGA0000

1981-on

ENGINE CODE
(Eighth Character)

1G3AL69**N***CM100001

JEEP

1971-1974

(up to SN #100000)

ENGINE CODE
(Eighth Character)

J4A154C**N**00001

1975-1980

(from SN #100000)

ENGINE CODE
(Seventh Character)

J5A15E**N**100011

1981-1988

ENGINE CODE
(Fourth Character)

1JT**H**E811*HT309520

1989-on

ENGINE CODE
(Eighth Character)

1J4ET37**L***LT438789

IMPORTED VEHICLE IDENTIFICATION NUMBER (VIN)

DAIHATSU

1988-92

ENGINE CODE
(Eighth Character)

JD1FG12**0***J4200020

HYUNDAI

1986-on

ENGINE CODE
(Eighth Character)

KMHBF31**S***MU000001

INFINITI

1990-on

ENGINE CODE
(Fourth Character)

JNK**N**G01C*M1100001

ISUZU (EXCEPT OASIS)

1981-2008

ENGINE CODE
(Eighth Character)

JABRT69**7***FU015643

JAGUAR

1979-1980

ENGINE CODE
(Fifth Character)

JAVL**N**49C000001

1981-on

ENGINE CODE
(Seventh Character)

SAJAV1**3**N*00000100

KIA

1994-on

ENGINE CODE
(Eighth Character)

KNARA12**2***T1234560

LAND ROVER

1987-on

ENGINE CODE
(Seventh Character)

SALHV1**2**4*MA123456

MERKUR

1985-90

ENGINE CODE
(Eighth Character)

WF1BT81**V***H1000010

* See VIN Decoding Information on 9th Character (Check Digit).

IMPORTED VEHICLE IDENTIFICATION NUMBER (VIN) (Cont'd.)

MG

1970-79

ENGINE CODE
(Second Character)

GNN5UH000001G

1980

ENGINE CODE
(Fifth Character)

GVADJ1AG000001

MITSUBISHI

1983-on

ENGINE CODE
(Eighth Character)

JA4MT41P*WP123456

NISSAN (EXCEPT QUEST)

1995-on

ENGINE CODE
(Fourth Character)

JN1PS245*GW000001

PEUGEOT

1981-91

ENGINE CODE
(Sixth Character)

VF3BA516*FS368001

SAAB

1981-83

ENGINE CODE
(Seventh Character)

YS3BT55S*D3000001

1984-on

ENGINE CODE
(Eighth Character)

YS3CT55N*F3000001

SUBARU

1975-79, 1980 (Brat)

ENGINE CODE
(Third Character)

A26-000001

1980 (Except Brat)

ENGINE CODE
(Seventh Character)

JF1AF421FAG000001

1981-on

ENGINE CODE
(Sixth Character)

JF1AC43B*GB200001

SUZUKI

1986-on

ENGINE CODE
(Sixth Character)

JS3TA01C*K1000010

VOLVO

1981-96

ENGINE CODE
(Sixth and Seventh Characters)

YV1AX845*C3375067

CONVERSION CHART FOR POPULAR ENGINE DISPLACEMENT SIZES

To calculate Liters from Cubic Inches, Take CUBIC INCHES x 0.01639 = LITERS
To calculate Cubic Inches from Liters, Take LITERS x 61.024 = CUBIC INCHES

LITERS	CUBIC INCHES	LITERS	CUBIC INCHES	LITERS	CUBIC INCHES	LITERS	CUBIC INCHES	LITERS	CUBIC INCHES	LITERS	CUBIC INCHES	LITERS	CUBIC INCHES
1.0	60	1.8	110	2.3	139	3.0	180	3.7	225	4.4	267	5.6	342	6.8	415
1.0	61	1.8	111	2.3	140	3.0	181	3.8	229	4.5	274	5.7	345	6.9	420
1.1	67	1.8	112	2.3	141	3.0	182	3.8	230	4.5	275	5.7	350	6.9	421
1.2	73	1.9	113	2.4	143	3.0	183	3.8	231	4.5	276	5.8	351	7.0	425
1.3	79	1.9	116	2.4	146	3.0	184	3.8	232	4.6	279	5.9	359	7.0	427
1.4	85	1.9	118	2.4	149	3.1	189	3.9	238	4.6	281	5.9	360	7.0	429
1.4	86	2.0	119	2.5	150	3.1	191	3.9	239	4.7	285	6.0	364	7.2	440
1.5	90	2.0	120	2.5	151	3.2	196	4.0	242	4.8	292	6.0	365	7.3	444
1.5	91	2.0	121	2.5	152	3.2	198	4.0	243	4.8	293	6.0	366	7.3	445
1.5	92	2.0	122	2.5	153	3.3	200	4.0	244	4.9	300	6.0	368	7.3	446
1.6	96	2.1	126	2.6	155	3.3	201	4.1	250	4.9	301	6.1	370	7.4	454
1.6	97	2.1	128	2.6	156	3.3	202	4.1	252	5.0	302	6.2	379	7.5	455
1.6	98	2.2	132	2.6	159	3.3	204	4.2	255	5.0	304	6.2	381	7.5	460
1.7	104	2.2	133	2.7	164	3.4	207	4.2	258	5.0	305	6.4	390	7.8	476
1.7	105	2.2	134	2.8	169	3.4	209	4.3	260	5.0	307	6.5	395	8.0	488
1.8	107	2.2	135	2.8	171	3.5	211	4.3	262	5.2	318	6.6	400	8.1	496
1.8	108	2.2	136	2.8	173	3.5	214	4.3	263	5.3	323	6.6	401	8.2	500
1.8	109	2.3	138	2.9	177	3.6	220	4.3	265	5.4	330	6.6	403	8.8	534

1000cc Equal 1 Liter. 61.02 Cubic Inches Equal 1 Liter. * See VIN Decoding Information on 9th Character (Check Digit).

AUTOMOTIVE APPLICATIONS

Automobiles, Light-Duty Trucks, Motorcycles, Vans, Pre-1980 Automobiles, Transmissions

1980-ON AUTOMOTIVE SECTION

Alphabetically by Make
All automobiles, light-duty trucks, motorcycles and vans are listed in this section alphabetically by make.

By Year
Within each make, all automobiles, light-duty trucks, motorcycles and vans are listed in year sequence from the latest to the earliest year shown.

Alphabetically by Model Name
Within each year, all models are arranged alphabetically. If the model begins with a number, it will be listed numerically before the alphabetically listed models.

By Engine Size
Under each model, the engines are listed according to size, from the smallest to the largest. Sometimes, more than one variation of the same size engine is listed under one model. These engines are sorted by VIN code.

PRE-1980 AUTOMOTIVE SECTION

Alphabetically by Make
All automobiles, light-duty trucks and vans are listed in this section alphabetically by make.

By Year
Within each make, all automobiles, light-duty trucks and vans are listed in year sequence from 1979 to the earliest year shown.

Models are listed at the beginning of each year, with engine size, when known.

By Engine Size
Within each year, the engines are listed according to size, from the smallest to the largest engines. 4 cylinder engines are listed before 6 cylinder engines. 6 cylinder engines are listed before 8 cylinder engines.

TRANSMISSIONS

Transmissions are arranged alphabetically by manufacturer, then numerically by model number.

IMPORTANT NOTICE

All product applications and specifications in Baldwin catalogs are based upon the most authoritative information available at the time of publication. However, there are many filter options offered by equipment manufacturers during a given model year making it impossible to be absolutely certain that all equipment of the same make, model and year will use the same filter. For this reason, we cannot be responsible for misapplications.

Original equipment manufacturer's tradenames or trademarks are for identification purposes only. There is no affiliation, sponsorship or connection with the original equipment parts or manufacturer.

APPLICATIONS AUTOMOBILES

Automobiles, Camions légers, Motos, Fourgons, Automobiles antérieures à 1980, Boîtes de vitesses

Air	=	Air
Fuel	=	Carburant
Fuel Vapor	=	Vapeur de carburant
Lube	=	Lubrification
Oil Vapor	=	Vapeur d'huile
Transmission	=	Boîte de vitesses

SECTION AUTOMOBILES POSTÉRIEURES À 1980

Par ordre alphabétique par marque
Les automobiles, camions légers, motos et fourgons sont classés dans cette section par ordre alphabétique et par marque.

Par année
Pour chaque marque, les automobiles, camions légers, motos et fourgons sont classés par ordre chronologique inverse, des plus récents aux plus anciens.

Par ordre alphabétique par nom de modèle
Pour chaque année, les modèles sont classés par ordre alphabétique. Les modèles qui commencent par un chiffre sont classés numériquement avant les modèles classés par ordre alphabétique.

Par cylindrée
Pour chaque modèle, les moteurs sont classés par cylindrée, de la plus petite à la plus grande. Quelquefois, un modèle comprend plusieurs variations de la même cylindrée. Ces moteurs sont classés par numéro d'identification du véhicule.

SECTION AUTOMOBILES ANTÉRIEURES À 1980

Par ordre alphabétique par marque
Les automobiles, camions légers et fourgons sont classés dans cette section par ordre alphabétique et par marque.

Par année
Pour chaque marque, les automobiles, camions légers et fourgons sont classés par ordre chronologique inverse, de 1979 à l'année la plus ancienne indiquée.

Les modèles sont indiqués au début de chaque année, avec la cylindrée si elle est connue.

Par cylindrée
Pour chaque année, les moteurs sont classés par cylindrée, de la plus petite à la plus grande. Les moteurs à quatre cylindres sont classés avant les moteurs à six cylindres. Les moteurs à six cylindres sont classés avant les moteurs à huit cylindres.

BOÎTES DE VITESSES

Les boîtes de vitesses sont classées par ordre alphabétique et par fabricant, puis numériquement par numéro de modèle.

AVIS IMPORTANT

Toutes les données techniques et les applications de produits des catalogues Baldwin sont basées sur les meilleurs renseignements disponibles au moment de la mise sous presse. Toutefois, pendant une année donnée, un fabricant d'équipement d'origine peut offrir de nombreuses options de filtres qui font qu'il est impossible d'être absolument certain que tous les équipements de la même marque, du même modèle et de la même année utilisent le même filtre. Pour cette raison, nous ne pouvons pas être tenus responsables des mauvaises applications.

Les marques et noms de fabricant d'équipement d'origine ne sont utilisés que pour des raisons d'identification. Il n'existe aucune affiliation, parrainage ou connexion avec le fabricant d'équipement d'origine ou ses pièces.

APLICACIONES AUTOMOTRICES

Automóviles, Camiones ligeros, Motocicletas, Vagonetas, Automóviles anteriores a 1980, Transmisiones

Air	=	Aire
Fuel	=	Combustible
Fuel Vapor	=	Vapor de combustible
Lube	=	Lubriacación
Oil Vapor	=	Vapor de aceite
Transmission	=	Transmisión

SECCIÓN AUTOMOTRIZ DE 1980 EN ADELANTE

Alfabéticamente por marca
Todos los automóviles, las camionetas, motonetas, vagonetas, etc., en esta sección están anotados alfabéticamente por marca.

Por Año
Dentro de cada marca, todos los automóviles, las camionetas, motocicletas, vagonetas, furgonetas etc., están en lista secuencial por año, empezando con el más reciente.

Alfabéticamente, por nombre del modelo
Dentro de cada año, todos los modelos están ordenados alfabéticamente. Si el modelo comienza por un número, se listará numéricamente antes que los modelos listados alfabéticamente.

De acuerdo a la cilindrada
Para cada modelo, los motores están anotados de acuerdo a las cilindradas, del más pequeño al más grande. A veces se incluye más de un tamaño con variantes para el mismo modelo. Estos motores están ordenados de acuerdo a su código VIN.

SECCIÓN AUTOMOTRIZ PARA MODELOS ANTERIORES A 1980

Alfabéticamente por marca

Todos los automóviles, camionetas y furgonetas en esta sección están en lista alfabética por marca.

Por Año
Dentro de cada marca, todos los automóviles, camionetas y furgonetas están en lista secuencial por año desde 1979 al año más antiguo mostrado.

Se prepara una lista de los modelos al comienzo de cada año, con la cilindrada, cuando se conoce.

De acuerdo a la cilindrada
Dentro de cada año, los motores están anotados de acuerdo a las cilindradas, del más chico al más grande. Los motores de 4 cilindros preceden a los de 6, y los de 6 cilindros preceden a los motores de 8 cilindros.

TRANSMISIONES

Las transmisiones se presentan en orden alfabético por fabricante, luego en orden numérico por número de modelo.

NOTA IMPORTANTE

Todas las aplicaciones y especificaciones en los catálogos Baldwin están basadas en los informes más fidedignos obtenibles a la fecha de la publicación. Sin embargo, existen muchas opciones para seleccionar diferentes filtros para cualquier modelo de cualquier año, haciendo imposible que todo el equipo de una misma marca y de un mismo año y modelo utilicen el mismo filtro. Por esta razón, no podemos hacernos responsables de selecciones erróneas o aplicaciones mal hechas.

Los nombres comerciales o marcas registradas de los fabricantes de equipos se dan solamente para propósito de identificación. No existe ninguna afiliación, patrocinio o conexión con el fabricante o pieza de equipo original.

Year	Model and Engine	VIN	Lube	Air	Cabin Air	Fuel	Breather	Trans.t
ACURA								
2010	CSX 4-122 (2.0L) EFI Canada		**B1402**	**PA4191**	**PA4196**	**N/S**	**N/R**	**N/S**
	CSX Type-S 4-122 (2.0L) EFI Canada		**B1402**	**PA4193**	**PA4196**	**N/S**	**N/R**	**M.T.**
	MDX V6-3664cc (3.7L) FI		**B1402**		**PA4196**	**N/S**	**N/R**	
	RDX 4-141 (2.3L) MFI Turbo		**B1402**	**PA4369**	**PA4196**	**N/S**	**N/R**	
	RL V6-3664cc (3.7L) FI		**B1402**		**PA4196**	**N/S**	**N/R**	
	TL V6-3471cc (3.5L) FI		**B1402**	**PA4364**	**PA4196**	**N/S**	**N/R**	**N/S**
	V6-3664cc (3.7L) FI		**B1402**	**PA4364**	**PA4196**	**N/S**	**N/R**	**N/S**
	TSX 4-2354cc (2.4L) FI		**B1402**		**PA4196**	**N/S**	**N/R**	**N/S**
	V6-3471cc (3.5L) FI		**B1402**	**PA4364**	**PA4196**	**N/S**	**N/R**	**N/S**
	ZDX V6-3664cc (3.7L) FI		**B1402**		**PA4196**	**N/S**	**N/R**	
2009	CSX 4-122 (2.0L) EFI Canada		**B1402**	**PA4191**	**PA4196**	**N/S**	**N/R**	**N/S**
	CSX Type-S 4-122 (2.0L) FI HO Canada		**B1402**	**PA4193**	**PA4196**	**N/S**	**N/R**	**M.T.**
	MDX V6-3664cc (3.7L) FI		**B1402**		**PA4196**	**N/S**	**N/R**	
	RDX 4-141 (2.3L) MFI Turbo		**B1402**	**PA4369**	**PA4196**	**N/S**	**N/R**	
	RL V6-3664cc (3.7L) FI		**B1402**		**PA4196**	**N/S**	**N/R**	
	TL V6-3471cc (3.5L) FI		**B1402**	**PA4364**	**PA4196**	**N/S**	**N/R**	**N/S**
	V6-3664cc (3.7L) FI		**B1402**	**PA4364**	**PA4196**	**N/S**	**N/R**	**N/S**
	TSX 4-2354cc (2.4L) FI		**B1402**		**PA4196**	**N/S**	**N/R**	**N/S**
2008	CSX 4-122 (2.0L) EFI Canada		**B1402**	**PA4191**	**PA4196**	**N/S**	**N/R**	**N/S**
	CSX Type-S 4-122 (2.0L) FI HO Canada		**B1402**	**PA4193**	**PA4196**	**N/S**	**N/R**	**M.T.**
	MDX V6-3664cc (3.7L) FI		**B1402**		**PA4196**	**N/S**	**N/R**	
	RDX 4-141 (2.3L) MFI Turbo		**B1402**	**PA4369**	**PA4196**	**N/S**	**N/R**	
	RL V6-212 (3.5L) FI		**B1402**	**PA4355**	**PA4196**	**N/S**	**N/R**	
	TL V6-196 (3.2L) FI		**B1402**		**PA4196**	**N/S**	**N/R**	**N/S**
	TL Type S V6-212 (3.5L) FI		**B1402**		**PA4196**	**N/S**	**N/R**	**N/S**
	TSX 4-2354cc (2.4L) FI		**B1402**	**PA4191**	**PA4196**	**N/S**	**N/R**	**N/S**
2007	CSX 4-122 (2.0L) EFI Canada		**B1402**	**PA4193**	**PA4196**	**N/S**	**N/R**	**N/S**
	CSX Type-S 4-1998cc (2.0L) FI Canada		**B1402**	**PA4193**	**PA4196**	**N/S**	**N/R**	**M.T.**
	MDX V6-3664cc (3.7L) FI		**B1402**		**PA4196**	**N/S**	**N/R**	
	RDX 4-140 (2.3L) MFI Turbo		**B1402**	**PA4369**	**PA4196**	**N/S**	**N/R**	
	RL V6-212 (3.5L) FI		**B1402**	**PA4355**	**PA4196**	**N/S**	**N/R**	
	TL V6-196 (3.2L) FI		**B1402**		**PA4196**	**N/S**	**N/R**	**N/S**
	TL Type S V6-212 (3.5L) FI		**B1402**	**PA4355**	**PA4196**	**N/S**	**N/R**	
	TSX 4-2354cc (2.4L) FI		**B1402**	**PA4191**	**PA4196**	**N/S**	**N/R**	**N/S**
2006	CSX 4-122 (2.0L) EFI Canada		**B1402**	**RS4189**	**PA4195 KIT**	**N/S**	**N/R**	**N/S**
	MDX V6-3471cc (3.5L) FI		**B1402**	**PA4190**	**PA4304**	**N/S**	**N/R**	**N/S**
	RL V6-212 (3.5L) FI		**B1402**	**PA4355**	**PA4196**	**N/S**	**N/R**	
	RSX 4-122 (2.0L) FI i-VTEC		**B1402**	**RS4189**	**PA4195 KIT**	**N/S**	**N/R**	**N/S**
	RSX Type S 4-122 (2.0L) FI HO i-VTEC		**B1402**	**RS4189**	**PA4195 KIT**	**N/S**	**N/R**	**M.T.**
	TL V6-196 (3.2L) FI		**B1402**	**PA4355**	**PA4196**	**N/S**	**N/R**	**N/S**
	TSX 4-2354cc (2.4L) FI		**B1402**	**PA4191**	**PA4196**	**N/S**	**N/R**	**N/S**
2005	EL 4-1668cc (1.7L) FI Canada		**B1402**	**PA4182**	**PA4195 KIT**	**N/S**	**N/R**	**N/S**
	MDX V6-3471cc (3.5L) PFI		**B1402**	**PA4190**	**PA4304**	**N/S**	**N/R**	**N/S**
	NSX V6-182 (3.0L) FI VTEC		**B1422**		**N/R**	**N/S**	**N/R**	**N/S**
	V6-194 (3.2L) FI VTEC		**B1422**		**N/R**	**N/S**	**N/R**	**N/S**
	RL V6-212 (3.5L) PFI		**B1421**		**PA4196**	**N/S**	**N/R**	
	RSX 4-122 (2.0L) MFI i-VTEC		**B1402**	**RS4189**	**PA4195 KIT**	**N/S**	**N/R**	**N/S**
	RSX Type S 4-122 (2.0L) FI HO i-VTEC		**B1402**	**RS4189**	**PA4195 KIT**	**N/S**	**N/R**	**M.T.**
	TL V6-196 (3.2L) PFI		**B1402**	**PA4355**	**PA4196**	**N/S**	**N/R**	**N/S**
	TSX 4-2354cc (2.4L) PFI		**B1402**	**PA4191**	**PA4196**	**N/S**	**N/R**	**N/S**
2004	EL 4-1668cc (1.7L) FI Canada		**B1402**	**PA4182**	**PA4195 KIT**	**N/S**	**N/R**	**N/S**
	MDX V6-3471cc (3.5L) PFI		**B1402**	**PA4190**	**PA4304**	**N/S**	**N/R**	**N/S**
	NSX V6-182 (3.0L) PFI VTEC		**B1422**		**N/R**	**N/S**	**N/R**	**N/S**
	V6-194 (3.2L) PFI VTEC		**B1422**		**N/R**	**N/S**	**N/R**	**M.T.**
	RL V6-212 (3.5L) PFI		**B1421**			**N/S**	**N/R**	
	RSX 4-122 (2.0L) PFI i-VTEC		**B1421**	**RS4189**	**PA4195 KIT**	**N/S**	**N/R**	**N/S**
	RSX Type S 4-122 (2.0L) PFI HO i-VTEC		**B1402**	**RS4189**	**PA4195 KIT**	**N/S**	**N/R**	**M.T.**
	TL V6-196 (3.2L) PFI		**B1402**	**PA4355**	**PA4196**	**N/S**	**N/R**	**N/S**
	TSX 4-2354cc (2.4L) PFI		**B1402**	**PA4191**	**PA4196**	**N/S**	**N/R**	**N/S**
2003	CL V6-196 (3.2L) FI		**B1421**	**PA4106**	**PA4416 KIT**	**N/S**	**N/R**	**N/S**
	CL Type S V6-196 (3.2L) PFI HO		**B1421**		**PA4416 KIT**	**N/S**	**N/R**	**N/S**
	EL 4-1668cc (1.7L) FI Canada		**B1402**	**PA4182**	**PA4195 KIT**	**N/S**	**N/R**	**N/S**
	MDX V6-3474cc (3.5L) PFI		**B1402**	**PA4190**	**PA4304**	**N/S**	**N/R**	**N/S**
	NSX V6-182 (3.0L) PFI VTEC		**B1422**		**N/R**	**N/S**	**N/R**	**N/S**
	V6-194 (3.2L) PFI VTEC		**B1422**		**N/R**	**N/S**	**N/R**	**M.T.**
	RL V6-212 (3.5L) PFI		**B1421**			**BF1193**	**N/R**	
	RSX 4-122 (2.0L) PFI VTEC		**B1402**	**RS4189**	**PA4195 KIT**	**N/S**	**N/R**	**N/S**

[t] Transmission, Not Model, Determines Which Transmission Filter is Used. OBS = Obsolete. Availability Limited to Distributor Stock.

ACURA Cont'd.

Year	Model and Engine	VIN	Lube	Air	Cabin Air	Fuel	Breather	Trans.t
2003	RSX Type S 4-122 (2.0L) PFI HO VTEC		**B1402**	**RS4189**	**PA4195 KIT**	**N/S**	**N/R**	**M.T.**
	TL V6-196 (3.2L) PFI		**B1421**	**PA4106**	**PA4416 KIT**	**N/S**	**N/R**	**N/S**
	TL Type S V6-196 (3.2L) PFI HO		**B1421**		**PA4416 KIT**	**N/S**	**N/R**	**N/S**
2002	CL V6-196 (3.2L) PFI		**B1421**	**PA4106**	**PA4416 KIT**	**N/S**	**N/R**	**N/S**
	CL Type S V6-196 (3.2L) PFI HO		**B1421**		**PA4416 KIT**	**N/S**	**N/R**	**N/S**
	EL 4-1668cc (1.7L) FI Canada		**B1402**	**PA4182**	**PA4195 KIT**	**N/S**	**N/R**	**N/S**
	MDX V6-3471cc (3.5L) PFI		**B1421**	**PA4190**	**PA4304**	**N/S**	**N/R**	**N/S**
	NSX V6-182 (3.0L) PFI		**B1422**		**N/R**	**N/S**	**N/R**	**N/S**
	V6-194 (3.2L) PFI VTEC		**B1422**		**N/R**	**N/S**	**N/R**	**M.T.**
	RL V6-212 (3.5L) PFI		**B1421**			**BF1193**	**N/R**	
	RSX 4-122 (2.0L) PFI VTEC		**B1402**	**RS4189**	**PA4195 KIT**	**N/S**	**N/R**	**N/S**
	RSX Type S 4-122 (2.0L) PFI VTEC		**B1402**	**RS4189**	**PA4195 KIT**	**N/S**	**N/R**	**M.T.**
	TL V6-196 (3.2L) PFI		**B1421**	**PA4106**	**PA4416 KIT**	**N/S**	**N/R**	**N/S**
	TL Type S V6-196 (3.2L) PFI HO		**B1421**		**PA4416 KIT**	**N/S**	**N/R**	**N/S**
2001	CL V6-196 (3.2L) PFI		**B1421**	**PA4106**	**PA4416 KIT**	**N/S**	**N/R**	**N/S**
	CL Type S V6-196 (3.2L) PFI HO		**B1421**		**PA4416 KIT**	**N/S**	**N/R**	**N/S**
	EL 4-97 (1.6L) FI Canada		**B227**	**PA4099**	**PA4195 KIT**	**BF1193**	**N/R**	
	4-1668cc (1.7L) FI Canada		**B1402**	**PA4182**	**PA4195 KIT**	**N/S**	**N/R**	**N/S**
	Integra 4-110 (1.8L) PFI		**B1421**	**PA4101**	**N/R**	**BF1193**	**N/R**	**N/S**
	MDX V6-3471cc (3.5L) FI		**B1421**	**PA4190**	**PA4304**	**N/S**	**N/R**	
	NSX V6-182 (3.0L) PFI VTEC		**B1422**		**N/R**	**N/S**	**N/R**	**N/S**
	V6-194 (3.2L) PFI VTEC		**B1422**		**N/R**	**N/S**	**N/R**	**M.T.**
	RL V6-212 (3.5L) PFI		**B1421**			**BF1193**	**N/R**	
	TL V6-196 (3.2L) PFI		**B1421**	**PA4106**	**PA4416 KIT**	**N/S**	**N/R**	**N/S**
2000	EL 4-97 (1.6L) FI Canada		**B227**	**PA4099**	**N/R**	**BF1193**	**N/R**	
	Integra 4-110 (1.8L) PFI		**B1421**	**PA4101**	**N/R**	**BF1193**	**N/R**	**N/S**
	NSX V6-182 (3.0L) PFI VTEC		**B1422**		**N/R**	**N/S**	**N/R**	**N/S**
	V6-194 (3.2L) PFI VTEC		**B1422**		**N/R**	**N/S**	**N/R**	**M.T.**
	RL V6-212 (3.5L) PFI		**B1421**			**BF1193**	**N/R**	
	TL V6-196 (3.2L) PFI		**B1421**	**PA4106**	**PA4416 KIT**	**N/S**	**N/R**	**N/S**
1999	CL 4-138 (2.3L) PFI		**B1421**	**PA4077**	**N/R**	**BF1193**	**N/R**	**N/S**
	V6-183 (3.0L) PFI		**B1421**	**PA4090**	**N/R**	**BF1193**	**N/R**	**N/S**
	EL 4-97 (1.6L) FI Canada		**B227**	**PA4099**	**N/R**	**BF1193**	**N/R**	**N/S**
	Integra 4-110 (1.8L) PFI		**B1421**	**PA4101**	**N/R**	**BF1193**	**N/R**	**N/S**
	NSX V6-182 (3.0L) PFI VTEC		**B1422**		**N/R**	**N/S**	**N/R**	**N/S**
	V6-194 (3.2L) PFI VTEC		**B1422**		**N/R**		**N/R**	**M.T.**
	RL V6-212 (3.5L) PFI		**B1421**			**BF1193**	**N/R**	
	SLX V6-212 (3.5L) SFI		**B1425**	**PA4081**	**N/R**	**BF1049**	**N/R**	
	TL V6-196 (3.2L) PFI		**B1421**	**PA4106**	**PA4416 KIT**	**N/S**	**N/R**	**N/S**
1998	CL 4-138 (2.3L) PFI		**B1421**	**PA4077**	**N/R**	**BF1193**	**N/R**	**N/S**
	V6-183 (3.0L) PFI		**B1421**	**PA4090**	**N/R**	**BF1193**	**N/R**	**N/S**
	EL 4-97 (1.6L) FI Canada		**B227**	**PA4099**	**N/R**	**BF1193**	**N/R**	**N/S**
	Integra 4-110 (1.8L) PFI		**B227**	**PA4101**	**N/R**	**BF1193**	**N/R**	**N/S**
	NSX V6-182 (3.0L) PFI VTEC		**B1422**		**N/R**		**N/R**	**N/S**
	V6-194 (3.2L) PFI VTEC		**B1422**		**N/R**		**N/R**	**M.T.**
	RL V6-212 (3.5L) PFI		**B1421**			**BF1193**	**N/R**	
	SLX V6-212 (3.5L) SFI	X	**B1425**	**PA4081**	**N/R**	**BF1049**	**N/R**	
	TL 5-150 (2.5L) PFI		**B227**		**N/R**	**BF1193**	**N/R**	
	V6-196 (3.2L) PFI		**B1422**		**N/R**	**BF1193**	**N/R**	
1997	CL 4-132 (2.2L) PFI		**B1421**	**PA4077**	**N/R**	**BF1193**	**N/R**	**N/S**
	V6-183 (3.0L) PFI		**B1421**	**PA4090**	**N/R**	**BF1193**	**N/R**	**N/S**
	EL 4-97 (1.6L) FI Canada		**B227**	**PA4099**	**N/R**	**BF1193**	**N/R**	**N/S**
	Integra 4-110 (1.8L) PFI		**B227**	**PA4101**	**N/R**	**BF1193**	**N/R**	**N/S**
	NSX V6-182 (3.0L) VTEC		**B1422**		**N/R**		**N/R**	**N/S**
	V6-194 (3.2L) PFI VTEC		**B1422**		**N/R**		**N/R**	**N/S**
	RL V6-212 (3.5L) PFI		**B1421**			**BF1193**	**N/R**	
	SLX V6-193 (3.2L) SFI	V	**B1425**	**PA4081**	**N/R**	**BF1049**	**N/R**	
	TL 5-150 (2.5L) PFI		**B227**		**N/R**	**BF1193**	**N/R**	
	V6-196 (3.2L) PFI		**B1422**		**N/R**	**BF1193**	**N/R**	
1996	Integra 4-110 (1.8L) PFI	2,4,7,8	**B227**	**PA4101**	**N/R**	**BF1193**	**N/R**	**N/S**
	NSX V6-182 (3.0L) PFI VTEC	1	**B1422**		**N/R**		**N/R**	**N/S**
	RL V6-212 (3.5L) PFI		**B1421**			**BF1193**	**N/R**	
	SLX V6-193 (3.2L) SFI	V	**B1425**	**PA4081**	**N/R**	**BF1049**	**N/R**	
	TL 5-150 (2.5L) PFI	2	**B227**		**N/R**	**BF1193**	**N/R**	
	V6-196 (3.2L) PFI	3	**B1422**		**N/R**	**BF1193**	**N/R**	
1995	Integra 4-110 (1.8L) PFI		**B227**	**PA4101**	**N/R**	**BF1193**	**N/R**	**N/S**
	Legend V6-196 (3.2L) PFI		**B1422**		**N/R**		**N/R**	

OBS = Obsolete. Availability Limited to Distributor Stock. t Transmission, Not Model, Determines Which Transmission Filter is Used.

Year	Model and Engine	VIN	Lube	Air	Cabin Air	Fuel	Breather	Trans.t
ACURA Cont'd.								
1995	NSX V6-182 (3.0L) PFI		B1422		N/R		N/R	N/S
	TL 5-150 (2.5L) PFI	2	B227		N/R	BF1193	N/R	
1994	Integra 4-110 (1.8L) PFI		B227	PA4101	N/R	BF1193	N/R	N/S
	Legend V6-196 (3.2L) PFI		B1422		N/R		N/R	
	NSX V6-182 (3.0L) PFI		B1422		N/R		N/R	N/S
	Vigor 5-150 (2.5L) PFI		B227		N/R	BF1006	N/R	
1993	Integra 4-1678cc (1.7L) PFI		B227	PA4140	N/R		N/R	N/S
	4-1834cc (1.8L) PFI		B227	PA4140	N/R		N/R	N/S
	Legend V6-196 (3.2L) PFI		B1422		N/R	BF7721	N/R	
	NSX V6-182 (3.0L) PFI		B1422		N/R		N/R	N/S
	Vigor 5-150 (2.5L) PFI		B227		N/R	BF1006	N/R	
1992	Integra 4-1678cc (1.7L) PFI VTEC		B227	PA4140	N/R		N/R	N/S
	4-1834cc (1.8L) PFI		B227	PA4140	N/R		N/R	N/S
	Legend V6-196 (3.2L) PFI		B1422		N/R	BF7721	N/R	
	NSX V6-182 (3.0L) FI		B1422		N/R		N/R	N/S
	Vigor 5-150 (2.5L) PFI		B227		N/R	BF1006	N/R	
1991	Integra 4-1834cc (1.8L) MFI		B227	PA4140	N/R		N/R	N/S
	Legend V6-3206cc (3.2L) MFI		B1422		N/R	BF7721	N/R	
	NSX V6-2977cc (3.0L) FI		B1422		N/R		N/R	N/S
1990	Integra 4-1834cc (1.8L) MFI		B161-S	PA4140	N/R		N/R	N/S
	Legend V6-2675cc (2.7L) MFI		B1422	PA4039	N/R	BF7721	N/R	N/S
1989	Integra 4-1600cc (1.6L) FI		B161-S		N/R		N/R	N/S
	Legend V6-2700cc (2.7L) MFI		B1422	PA4039	N/R	BF7721	N/R	N/S
1988	Integra 4-1600cc (1.6L) FI		B161-S		N/R		N/R	N/S
	Legend V6-2700cc (2.7L) MFI		B1422	PA4039	N/R		N/R	N/S
1987	Integra 4-1600cc (1.6L) FI		B156		N/R		N/R	N/S
	Legend V6-2500cc (2.5L) FI			PA4039	N/R		N/R	N/S
	V6-2700cc (2.7L) MFI			PA4039	N/R		N/R	N/S
1986	Integra 4-1600cc (1.6L) FI		B156		N/R		N/R	N/S
	Legend V6-2500cc (2.5L) FI			PA4039	N/R		N/R	N/S
ALFA ROMEO								
1994	164 V6-2959cc (3.0L) FI	3	BT223			BF885	N/R	
	Spider, Spider Veloce 4-1961cc (2.0L) FI	2	BT223		N/R	BF1195	N/R	
1993	164 V6-2959cc (3.0L) FI	3	B163			BF885	N/R	
	Spider, Spider Veloce 4-1961cc (2.0L) FI	2	B163		N/R	BF1195	N/R	
1992	164 V6-2959cc (3.0L) FI	3	B163			BF885	N/R	
	Spider, Spider Veloce 4-1961cc (2.0L) FI	2	B163		N/R	BF1195	N/R	
1991	164 V6-2959cc (3.0L) FI	3	B163			BF885	N/R	
	Spider, Spider Veloce 4-1961cc (2.0L) FI	2	B163		N/R	BF1195	N/R	
1990	Spider Graduate, Spider Quadrifoglio, Spider Veloce 4-1961cc (2.0L) FI	2	B163		N/R	BF1195	N/R	
1989	Milano V6-2492cc (2.5L) FI		B163		N/R	BF1195	N/R	
	V6-2959cc (3.0L) FI		B163		N/R	BF1195	N/R	
	Spider Graduate, Spider Quadrifoglio, Spider Veloce 4-1961cc (2.0L) FI		B163		N/R	BF1195	N/R	
1988	Milano V6-2492cc (2.5L) FI		B163		N/R	BF1195	N/R	
	V6-2959cc (3.0L) FI		B163		N/R	BF1195	N/R	
	Spider Graduate, Spider Quadrifoglio, Spider Veloce 4-1961cc (2.0L) FI		B163		N/R	BF1195	N/R	
1987	Milano V6-2492cc (2.5L) FI		BT5		N/R	BF1195	N/R	
	V6-2959cc (3.0L) FI		B163		N/R	BF1195	N/R	
	Spider Graduate, Spider Quadrifoglio, Spider Veloce 4-1961cc (2.0L) FI		B163		N/R	BF1195	N/R	
1986	GTV-6 V6-2492cc (2.5L) FI		BT5		N/R	BF1195	N/R	
	Spider Graduate, Spider Quadrifoglio, Spider Veloce 4-1961cc (2.0L) FI		B163		N/R	BF1195	N/R	
1985	GTV-6 V6-2492cc (2.5L) FI		BT5		N/R	BF1195	N/R	
	Spider Graduate, Spider Veloce 4-1961cc (2.0L) FI		B163		N/R	BF1195	N/R	
1984	GTV-6 V6-2492cc (2.5L) FI		BT5		N/R	BF1195	N/R	
	Spider Veloce 4-1961cc (2.0L) FI		B163		N/R	BF1195	N/R	
1983	GTV-6 V6-2492cc (2.5L) FI		BT5		N/R	BF1195	N/R	
	Spider Veloce 4-1961cc (2.0L) FI		B163		N/R	BF1195	N/R	
1982	GTV-6 V6-2492cc (2.5L) FI		BT5		N/R	BF1195	N/R	
	Spider Veloce 4-1961cc (2.0L) FI		B163		N/R	BF1195	N/R	
1981	GTV-6 V6-2492cc (2.5L) FI		BT5		N/R	BF1195	N/R	

[t] Transmission, Not Model, Determines Which Transmission Filter is Used. OBS = Obsolete. Availability Limited to Distributor Stock.

Year	Model and Engine	VIN	Lube	Air	Cabin Air	Fuel	Breather	Trans.[t]
ALFA ROMEO Cont'd.								
1981	Spider Veloce 4-1961cc (2.0L) FI		**B163**		**N/R**	**BF825**	**N/R**	
1980	Spider Veloce 4-1961cc (2.0L) FI		**BT5**		**N/R**	**BF825**	**N/R**	
AMERICAN MOTORS CORP.								
1988	Eagle 6-258 (4.2L) 2 Bbl.	C	**B141**	**PA642**	**N/R**	**BF886**		
1987	Alliance 4-1400cc (1.4L) FI	D	**B173-S**	**PA691**	**N/R**	**BF890**		
	4-1700cc (1.7L) FI	A	**B173-S**		**N/R**	**BF890**		
	Eagle 6-258 (4.2L) 2 Bbl.	C	**B141**	**PA642**	**N/R**	**BF886**		**18032**
1986	Alliance 4-1400cc (1.4L) FI	D	**B173-S**	**PA691**	**N/R**	**BF890**		
	4-1700cc (1.7L) FI	A	**B173-S**		**N/R**	**BF890**		
	Eagle 6-258 (4.2L) 2 Bbl.	C	**B31**	**PA642**	**N/R**	**BF886**		**18032**
	Encore 4-1400cc (1.4L) FI	D	**B173-S**	**PA691**	**N/R**	**BF890**		
	4-1700cc (1.7L) FI	A	**B173-S**		**N/R**	**BF890**		
1985	Alliance 4-1400cc (1.4L) FI	D	**B173-S**	**PA691**	**N/R**	**BF890**		
	4-1700cc (1.7L) FI	A	**B173-S**		**N/R**	**BF890**		
	Eagle 6-258 (4.2L) 2 Bbl.	C	**B31**	**PA642**	**N/R**	**BF886**		**18032**
	Encore 4-1400cc (1.4L) FI	D	**B173-S**	**PA691**	**N/R**	**BF890**		
	4-1700cc (1.7L) FI	A	**B173-S**		**N/R**	**BF890**		
1984	Eagle 4-150 (2.5L) 1 Bbl.	U	**B43-S**	**PA642**	**N/R**			**18032**
	6-258 (4.2L) 2 Bbl.	C	**B31**	**PA642**	**N/R**	**BF886**		**18032**
1983	Alliance 4-1400cc (1.4L)	A,D,E	**B132**	**PA691**[17]	**N/R**	**BF890**		
	Concord 6-258 (4.2L) 2 Bbl.	C	**B31**	**PA642**	**N/R**	**BF886**	**SA2046**	**18032**
	Eagle 4-151 (2.5L) 2 Bbl.	B	**B43-S**	**PA642**	**N/R**	**PF893,-RV**	**SA2046**	**18032**
	6-258 (4.2L) 2 Bbl.	C	**B31**	**PA642**	**N/R**	**BF886**	**SA2046**	**18032**
	Spirit 6-258 (4.2L) 2 Bbl.	C	**B31**	**PA642**	**N/R**	**BF886**	**SA2046**	**18032**
1982	Concord 4-151 (2.5L) 2 Bbl.	B	**B43-S**	**PA642**	**N/R**	**PF893,-RV**	**SA2046**	**18032**
	6-258 (4.2L) 2 Bbl.	C	**B39**	**PA642**	**N/R**	**BF886**	**SA2046**	**18032**
	Eagle 4-151 (2.5L) 2 Bbl.	B	**B43-S**	**PA642**	**N/R**	**PF893,-RV**	**SA2046**	**18032**
	6-258 (4.2L) 2 Bbl.	C	**B39**	**PA642**	**N/R**	**BF886**	**SA2046**	**18032**
	Spirit 4-151 (2.5L) 2 Bbl.	B	**B43-S**	**PA642**	**N/R**	**PF893,-RV**	**SA2046**	**18032**
	6-258 (4.2L) 2 Bbl.	C	**B39**	**PA642**	**N/R**	**BF886**	**SA2046**	**18032**
1981	Concord 4-151 (2.5L) 2 Bbl.	B	**B43-S**	**PA642**	**N/R**	**PF893,-RV**	**SA2046**	**18032**
	6-258 (4.2L) 2 Bbl.	C	**B39**	**PA642**	**N/R**	**BF886**	**SA2046**	**18032**
	Eagle 4-151 (2.5L) 2 Bbl.	B	**B43-S**	**PA642**	**N/R**	**PF893,-RV**	**SA2046**	**18032**
	6-258 (4.2L) 2 Bbl.	C	**B39**	**PA642**	**N/R**	**BF886**	**SA2046**	**18032**
	Spirit 4-151 (2.5L) 2 Bbl.	B	**B43-S**	**PA642**	**N/R**	**PF893,-RV**	**SA2046**	**18032**
	6-258 (4.2L) 2 Bbl.	C	**B39**	**PA642**	**N/R**	**BF886**	**SA2046**	**18032**
1980	AMX 6-258 (4.2L) 2 Bbl.	C	**B39**	**PA642**	**N/R**	**BF886**	**SA2046**	**18032**
	Concord 4-151 (2.5L) 2 Bbl.	B	**B43-S**	**PA642**	**N/R**	**PF893,-RV**	**SA2046**	**18032**
	6-258 (4.2L) 2 Bbl.	C	**B39**	**PA642**	**N/R**	**BF886**	**SA2046**	**18032**
	Eagle 6-258 (4.2L) 2 Bbl.	C	**B39**	**PA642**	**N/R**	**BF886**	**SA2046**	**18032**
	Pacer 6-258 (4.2L) 2 Bbl.	C	**B39**	**PA642**	**N/R**	**BF886**	**SA2046**	**18032**
	Spirit 4-151 (2.5L) 2 Bbl.	B	**B43-S**	**PA642**	**N/R**	**PF893,-RV**	**SA2046**	**18032**
	6-258 (4.2L) 2 Bbl.	C	**B39**	**PA642**	**N/R**	**BF886**	**SA2046**	**18032**
ASTON MARTIN								
2008	DB9 V12-5935cc (6.0L) FI						**N/R**	**M.T.**
	DB9 Volante V12-5935cc (6.0L) FI						**N/R**	**M.T.**
	DBS V12-5935cc (6.0L) FI						**N/R**	**M.T.**
	Vantage V8-261 (4.3L) FI						**N/R**	**M.T.**
2007	DB9 V12-5935cc (6.0L) FI						**N/R**	
	DB9 Volante V12-5935cc (6.0L) FI						**N/R**	
	Vantage V8-4282cc (4.3L) FI						**N/R**	**M.T.**
2006	DB9, DB9 Volante V12-5935cc (6.0L) FI						**N/R**	
	Vanquish S V12-362 (6.0L) FI							
	Vantage V8-4282cc (4.3L) FI							
2005	DB9, DB9 Volante V12-5935cc (6.0L) FI						**N/R**	
2004	DB7 GT, DB7 Vantage, DB7 Vantage Volante V12-362 (6.0L) FI				**N/R**			
	Vanquish V12-362 (6.0L) FI							
2003	DB7 Vantage, DB7 Vantage Volante V12-362 (6.0L) FI				**N/R**			
	Vanquish V12-362 (6.0L) FI							
2002	DB7 Vantage, DB7 Vantage Volante V12-362 (6.0L) FI				**N/R**			
	Vanquish V12-362 (6.0L) FI							
2001	DB7 6-3239cc (3.2L) FI Supercharged	1			**N/R**			

OBS = Obsolete. Availability Limited to Distributor Stock. [t] Transmission, Not Model, Determines Which Transmission Filter is Used.

[17] Exc. Calif.

Year	Model and Engine	VIN	Lube	Air	Cabin Air	Fuel	Breather	Trans.[t]
ASTON MARTIN Cont'd.								
2001	DB7 Vantage V12-5935cc (6.0L) FI				**N/R**			
	Vanquish V12-5900cc (5.9L) FI							
2000	DB7 6-3239cc (3.2L) FI	1			**N/R**			
	DB7 Vantage V12-5935cc (6.0L) FI				**N/R**			
1999	DB7 6-3239cc (3.2L) FI	1			**N/R**			
1998	DB7 6-3239cc (3.2L) FI	1			**N/R**			
1997	DB7 6-3239cc (3.2L) FI	1			**N/R**			
1994	Virage V8-5340cc (5.3L) FI				**N/R**		**N/R**	
1993	Virage V8-5340cc (5.3L) FI				**N/R**		**N/R**	
1992	Virage V8-5340cc (5.3L) FI				**N/R**		**N/R**	
1991	Virage V8-5340cc (5.3L) FI				**N/R**		**N/R**	
ASUNA								
1993	GT 4-1588cc (1.6L) FI Canada	6	**B43-S**	**PA2190**	**N/R**	**BF853**	**N/R**	
	SE 4-1588cc (1.6L) FI Canada	6	**B43-S**	**PA2190**	**N/R**	**BF853**	**N/R**	
	Sunfire 4-1788cc (1.8L) FI Canada	8	**B227**		**N/R**	**BF1186**	**N/R**	
	Sunrunner 4-1588cc (1.6L) FI Canada	U	**BT223**	**PA4023**	**N/R**	**BF1100**	**N/R**	
1992	Sunfire 4-1788cc (1.8L) FI Canada	8	**B227**		**N/R**	**BF1186**	**N/R**	
	Sunrunner 4-1588cc (1.6L) FI Canada	U	**BT223**	**PA4023**	**N/R**	**BF1100**	**N/R**	
AUDI								
2011	A7 V8-4200cc (4.2L) DI						**N/R**	
	V10-5200cc (5.2L) DI						**N/R**	
2010	A3 4-121 (2.0L) SFI Turbo	E,F	**B7452**		(w/Charcoal) **PA4395**		**N/R**	
	4-121 (2.0L) SFI Turbo Diesel	L	**P7415**		(w/Charcoal) **PA4395**		**N/R**	
	A4 4-121 (2.0L) DI Turbo	F	**B7452**			**N/S**	**N/R**	**N/S**
	A4 Avant 4-121 (2.0L) DI Turbo	F	**B7452**			**N/S**	**N/R**	**N/S**
	A5 4-2000cc (2.0L) FI Turbo	F	**B7452**			**N/S**	**N/R**	
	V6-3123cc (3.2L) SFI	K	**P7414**			**N/S**	**N/R**	**N/S**
	A6 V6-2995cc (3.0L) SFI Supercharged	G	**P7414**				**N/R**	**N/S**
	V6-3123cc (3.2L) DI	K	**P7414**				**N/R**	**N/S**
	V8-4163cc (4.2L) DI	V					**N/R**	**N/S**
	A8 V8-4163cc (4.2L) FI	V					**N/R**	**N/S**
	A8 L V8-4163cc (4.2L) FI	V					**N/R**	**N/S**
	Q5 V6-3123cc (3.2L) FI	K	**P7414**			**N/S**	**N/R**	**N/S**
	Q7 V6-3000cc (3.0L) FI Turbo Diesel	M					**N/R**	**N/S**
	V6-219 (3.6L) FI	Y	**P7136**			**N/S**	**N/R**	
	V8-4163cc (4.2L) FI	V				**N/S**	**N/R**	
	R8 V8-4163cc (4.2L) DI	U					**N/R**	**N/S**
	V10-5204cc (5.2L) DI	N					**N/R**	**N/S**
	S4 V6-2995cc (3.0L) DI Supercharged	G	**P7414**			**N/S**	**N/R**	**N/S**
	S5 V6-2995cc (3.0L) DI Supercharged	G	**P7414**			**N/S**	**N/R**	**N/S**
	V8-4172cc (4.2L) DI	V				**N/S**	**N/R**	
	S6 V10-5204cc (5.2L) FI	N					**N/R**	**N/S**
	TT 4-121 (2.0L) DI Turbo	F	**B7452**		(w/Charcoal) **PA4395**		**N/R**	
	TTS 4-121 (2.0L) DI Turbo	F	**B7452**		(w/Charcoal) **PA4395**		**N/R**	
2009	A3 4-121 (2.0L) SFI Turbo	E,F	**B7452**	**PA4383**	(w/Charcoal) **PA4395**		**N/R**	
	V6-195 (3.2L) SFI	D	**P7415**	**PA4396**	(w/Charcoal) **PA4395**		**N/R**	
	A4 4-121 (2.0L) DI Turbo	F	**P7399**			**N/S**	**N/R**	**N/S**
	V6-3123cc (3.2L) SFI	H	**P7414**			**N/S**	**N/R**	**N/S**
	A4 Avant 4-121 (2.0L) DI Turbo	K	**B7452**			**N/S**	**N/R**	**N/S**
	A4 Quattro 4-121 (2.0L) DI Turbo	K	**B7452**			**N/S**	**N/R**	**N/S**
	V6-3123cc (3.2L) DI	K	**P7414**			**N/S**	**N/R**	
	A5 V6-3123cc (3.2L) SFI	K	**P7414**			**N/S**	**N/R**	**N/S**
	A6 V6-2995cc (3.0L) Supercharged	G	**P7414**				**N/R**	**N/S**
	V6-3123cc (3.2L) SFI	H	**P7414**				**N/R**	**N/S**
	V8-4163cc (4.2L) SFI	V					**N/R**	**N/S**
	A6 Quattro V8-4200cc (4.2L) DI	V					**N/R**	**N/S**
	A8 V8-4163cc (4.2L) FI	V					**N/R**	**N/S**
	A8 L V8-4163cc (4.2L) FI	V					**N/R**	**N/S**
	W12-5998cc (6.0L) FI	R				**BF7670**	**N/R**	**N/S**

[t] Transmission, Not Model, Determines Which Transmission Filter is Used. OBS = Obsolete. Availability Limited to Distributor Stock.

AUDI Cont'd.

Year	Model and Engine	VIN	Lube	Air	Cabin Air	Fuel	Breather	Trans.[t]
2009	Q5 V6-3123cc (3.2L) FI	K	**P7414**			**N/S**	**N/R**	
	Q7 V6-3000cc (3.0L) FI Turbo Diesel	M				**N/S**	**N/R**	**N/S**
	V6-219 (3.6L) FI	Y	**P7136**			**N/S**	**N/R**	
	V8-4163cc (4.2L) FI	V				**N/S**	**N/R**	
	R8 V8-4163cc (4.2L) DI	U					**N/R**	**N/S**
	S4 Cabriolet V8-255 (4.2L) FI	L				**BF7670**	**N/R**	**N/S**
	S5 V8-4172cc (4.2L) DI	V				**N/S**	**N/R**	
	S6 V10-5204cc (5.2L) SFI	N					**N/R**	**N/S**
	S8 V10-5204cc (5.2L) SFI	N					**N/R**	**N/S**
	TT 4-121 (2.0L) DI Turbo	F	**B7452**		(w/Charcoal) **PA4395**		**N/R**	
	V6-195 (3.2L) FI	D	**P7415**	**PA4396**	(w/Charcoal) **PA4395**		**N/R**	
	TTS 4-121 (2.0L) DI Turbo	F	**B7452**		(w/Charcoal) **PA4395**		**N/R**	
2008	A3 4-121 (2.0L) SFI Turbo	F	**P7399**	**PA4383**	(w/Charcoal) **PA4395**		**N/R**	
	V6-195 (3.2L) SFI	D	**P7415**	**PA4396**	(w/Charcoal) **PA4395**		**N/R**	
	A4 4-121 (2.0L) DI Turbo	F	**P7399**				**N/R**	**N/S**
	V6-3123cc (3.2L) SFI	H	**P7414**				**N/R**	**N/S**
	A4 Avant 4-121 (2.0L) DI Turbo	F	**P7399**				**N/R**	**N/S**
	V6-3123cc (3.2L) SFI	H	**P7414**				**N/R**	**N/S**
	A5 V6-3123cc (3.2L) SFI	H	**P7414**			**N/S**	**N/R**	**N/S**
	A6 V6-3123cc (3.2L) SFI	H	**P7414**				**N/R**	**N/S**
	V8-4163cc (4.2L) SFI	V					**N/R**	**N/S**
	A6 Avant V6-3123cc (3.2L) SFI	K	**P7414**				**N/R**	**N/S**
	A8 V8-4163cc (4.2L) FI	V					**N/R**	**N/S**
	A8 L V8-4163cc (4.2L) FI	V					**N/R**	**N/S**
	W12-5998cc (6.0L) FI	R				**BF7670**	**N/R**	**N/S**
	Q7 V6-219 (3.6L) SFI	Y	**P7136**			**N/S**	**N/R**	
	V8-4163cc (4.2L) SFI	V				**N/S**	**N/R**	
	R8 V8-4163cc (4.2L) DI	U					**N/R**	**N/S**
	RS4 V8-255 (4.2L) DI	U					**N/R**	6 Spd. **M.T.**
	S4 V8-4172cc (4.2L) FI	L					**N/R**	**N/S**
	S4 Avant V8-4172cc (4.2L) FI	L					**N/R**	**N/S**
	S4 Cabriolet V8-255 (4.2L) FI	L				**BF7670**	**N/R**	**N/S**
	S5 V8-4172cc (4.2L) DI	L				**N/S**	**N/R**	**N/S**
	S6 V10-5204cc (5.2L) SFI	N					**N/R**	**N/S**
	S8 V10-5204cc (5.2L) DI	N					**N/R**	**N/S**
	TT 4-121 (2.0L) DI Turbo	F	**P7399**	**PA4383**	(w/Charcoal) **PA4395**		**N/R**	
	V6-195 (3.2L) FI	D	**P7415**	**PA4396**	(w/Charcoal) **PA4395**		**N/R**	
2007	A3 4-121 (2.0L) DI Turbo	F	**P7399**	**PA4383**	(w/Charcoal) **PA4395**		**N/R**	
	V6-3189cc (3.2L) SFI	D	**P7415**	**PA4396**	(w/Charcoal) **PA4395**		**N/R**	
	A4 4-121 (2.0L) DI Turbo	F	**P7399**				**N/R**	**N/S**
	V6-195 (3.2L) SFI	H	**P7414**				**N/R**	**N/S**
	A4 Avant 4-121 (2.0L) DI Turbo	F	**P7399**				**N/R**	**N/S**
	V6-195 (3.2L) SFI	H	**P7414**				**N/R**	**N/S**
	A6 V6-195 (3.2L) DI	H	**P7414**				**N/R**	**N/S**
	V8-255 (4.2L) DI	V					**N/R**	**N/S**
	A6 Avant V6-195 (3.2L) DI	H	**P7414**				**N/R**	**N/S**
	A8, A8 L V8-255 (4.2L) FI	V					**N/R**	**N/S**
	A8 L W12-5998cc (6.0L) SFI	R				**BF7670**	**N/R**	**N/S**
	Q7 V6-3597cc (3.6L) SFI	Y	**P7136**			**N/S**	**N/R**	
	V8-255 (4.2L) SFI	V				**N/S**	**N/R**	
	RS4 V8-255 (4.2L) SFI	U					**N/R**	**M.T.**
	S4, S4 Avant, S4 Cabriolet V8-255 (4.2L) SFI	L					**N/R**	**N/S**
	S6 V10-5204cc (5.2L) SFI	N					**N/R**	**N/S**
	S8 V10-5204cc (5.2L) DI	N					**N/R**	**N/S**
2006	A3 4-1984cc (2.0L) DI Turbo	F	**P7399**	**PA4383**	(w/Charcoal) **PA4395**		**N/R**	

OBS = Obsolete. Availability Limited to Distributor Stock. [t] Transmission, Not Model, Determines Which Transmission Filter is Used.

AUDI Cont'd.

Year	Model and Engine	VIN	Lube	Air	Cabin Air	Fuel	Breather	Trans.t
2006	A3 V6-3189cc (3.2L) DI	D	**P7415**	**PA4396**	(w/Charcoal) **PA4395**		**N/R**	
	A4, A4 Avant 4-121 (2.0L) Turbo DI	F	**P7399**				**N/R**	**N/S**
	V6-195 (3.2L) SFI	G	**P7414**				**N/R**	**N/S**
	A4 Cabriolet 4-109 (1.8L) FI Turbo	C	**B114**				**N/R**	
	V6-182 (3.0L) SFI	T	**B1429**				**N/R**	
	A6, A6 Avant V6-195 (3.2L) DI	G	**P7414**				**N/R**	
	V8-255 (4.2L) DI	L					**N/R**	
	A8 V8-255 (4.2L) SFI	L				**BF7670**	**N/R**	**N/S**
	A8 L V8-4172cc (4.2L) SFI	L					**N/R**	**N/S**
	W12-5998cc (6.0L) SFI	R				**BF7670**	**N/R**	**N/S**
	S4, S4 Avant, S4 Cabriolet V8-254 (4.2L) SFI	L				**BF7670**	**N/R**	**N/S**
	TT 4-107 (1.8L) FI Turbo	F	**B178**	**PA4111**	**PA4331**	**BF7670**	**N/R**	**N/S**
	TT Quattro 4-107 (1.8L) FI HO Turbo	T	**B178**	**PA4111**	**PA4331**	**BF7670**	**N/R**	**M.T.**
	V6-3189cc (3.2L) SFI	D	**P7415**	**PA4111**	**PA4331**	**BF7670**	**N/R**	**N/S**
2005	A4, A4 Avant, A4 Avant Quattro 4-109 (1.8L) SFI Turbo	C	**B114**				**N/R**	
	4-121 (2.0L) FI Turbo	F	**B1429**				**N/R**	**N/S**
	V6-182 (3.0L) SFI	T	**B1429**			**BF7670**	**N/R**	
	V6-195 (3.2L) SFI	T	**B1429**				**N/R**	**N/S**
	A4 Cabriolet 4-109 (1.8L) FI Turbo	C	**B178**				**N/R**	
	V6-182 (3.0L) SFI	T	**B1429**			**BF7670**	**N/R**	
	A6, A6 Quattro 6-195 (3.2L) DI	G	**P7414**				**N/R**	Quattro **N/S**
	V8-254 (4.2L) FI	L					**N/R**	Quattro **N/S**
	A8 Quattro, A8 L Quattro V8-255 (4.2L) SFI	L				**BF7670**	**N/R**	**N/S**
	W12-5998cc (6.0L) SFI	R				**BF7670**	**N/R**	**N/S**
	Allroad Quattro V6-163 (2.7L) DI Twin Turbo	D	**B1429**	**PA4091**		**BF885**	**N/R**	
	V8-255 (4.2L) SFI	L	**B1429**	**PA4091**		**BF885**	**N/R**	
	S4, S4 Avant, S4 Cabriolet V8-254 (4.2L) SFI	L					**N/R**	**N/S**
	TT Coupe, TT Roadster 4-107 (1.8L) SFI Turbo or HO	C,T	**B178**	**PA4111**	(w/Charcoal) **PA4331**	**BF7670**	**N/R**	**N/S**
	V6-195 (3.2L) SFI	F	**P7415**	**PA4111**	(w/Charcoal) **PA4331**	**BF7670**	**N/R**	**N/S**
2004	A4, A4 Avant, A4 Cabriolet, A4 Quattro 4-109 (1.8L) SFI Turbo	C	**B178**				**N/R**	
	V6-182 (3.0L) SFI	T	**B1429**			**BF7670**	**N/R**	
	A6, A6 Avant Quattro, A6 Quattro V6-163 (2.7L) SFI Twin Turbo	D	**B1429**	**PA4091**		**BF885**	**N/R**	
	V6-182 (3.0L) SFI	T	**B1429**	**PA4091**		**BF885**	**N/R**	
	V8-255 (4.2L) SFI	L		**PA4091**		**BF885**	**N/R**	
	A8 L Quattro V8-255 (4.2L) SFI	L				**BF7670**	**N/R**	**N/S**
	Allroad Quattro V6-163 (2.7L) SFI Twin Turbo	D	**B1429**	**PA4091**		**BF885**	**N/R**	
	V8-255 (4.2L) SFI	L		**PA4091**		**BF885**	**N/R**	
	RS6 V8-255 (4.2L) FI Twin Turbo	V	**B178**			**BF1049**	**N/R**	
	S4, S4 Avant V8-254 (4.2L) SFI	U					**N/R**	**N/S**
	TT 4-107 (1.8L) SFI Turbo	C	**B178**	**PA4111**	**PA4331**	**BF7670**	**N/R**	**N/S**
	V6-195 (3.2L) SFI	F	**P7415**	**PA4111**	**PA4331**	**BF7670**	**N/R**	**M.T.**
2003	A4, A4 Avant, A4 Cabriolet 4-107 (1.8L) SFI Turbo	C	**B178**				**N/R**	
	V6-2976cc (3.0L) SFI	H	**B1429**			**BF7670**	**N/R**	
	A4 Quattro 4-107 (1.8L) SFI Turbo	C	**B178**				**N/R**	
	V6-2976cc (3.0L) SFI	T	**B1429**			**BF7670**	**N/R**	
	A6 V6-181 (3.0L) SFI	T	**B1429**	**PA4091**		**BF1195**	**N/R**	
	A6 Avant Quattro, A6 Quattro, Allroad Quattro V6-163 (2.7L) SFI Twin Turbo	D,H	**B1429**	**PA4091**		**BF885**	**N/R**	
	V6-181 (3.0L) SFI	T	**B1429**	**PA4091**		**BF885**	**N/R**	
	V8-255 (4.2L) SFI Twin Turbo	L		**PA4091**		**BF885**	**N/R**	
	A8 Quattro, A8L Quattro V8-255 (4.2L) SFI	L	**P7136**			**BF885**	**N/R**	
	RS6 V8-255 (4.2L) FI Twin Turbo	V	**B178**			**BF1049**	**N/R**	
	S6 Avant V8-255 (4.2L) SFI	L		**PA4091**		**BF885**	**N/R**	
	S8 V8-255 (4.2L) SFI	U	**P7136**			**BF885**	**N/R**	
	TT 4-107 (1.8L) SFI Turbo	C,T	**B178**	**PA4111**	**PA4331**	**BF7670**	**N/R**	**M.T.**
2002	A4, A4 Quattro 4-107 (1.8L) SFI Turbo	C	**B178**				**N/R**	

t Transmission, Not Model, Determines Which Transmission Filter is Used. OBS = Obsolete. Availability Limited to Distributor Stock.

AUDI Cont'd.

Year	Model and Engine	VIN	Lube	Air	Cabin Air	Fuel	Breather	Trans.t
2002	A4, A4 Quattro V6-2976cc (3.0L) FI	H	**B1429**			**BF7670**	**N/R**	
	A6 V6-181 (3.0L) SFI	T	**B1429**	**PA4091**		**BF1195**	**N/R**	
	A6 Avant Quattro, A6 Quattro V6-163 (2.7L) SFI Twin Turbo	D	**B1429**	**PA4091**		**BF885**	**N/R**	
	V6-181 (3.0L) SFI	T	**B1429**	**PA4091**		**BF885**	**N/R**	
	V8-255 (4.2L) SFI	L		**PA4091**		**BF885**	**N/R**	
	A8 Quattro V8-255 (4.2L) SFI	L	**P7136**			**BF885**	**N/R**	
	S4, S4 Avant V6-163 (2.7L) FI Twin Turbo	D	**B1429**	**PA4091**		**BF885**	**N/R**	
	S6 Avant V8-255 (4.2L) FI	L		**PA4091**		**BF885**	**N/R**	
	S8 V8-255 (4.2L) SFI	L	**P7136**			**BF885**	**N/R**	
	TT, TT Quattro 4-107 (1.8L) SFI Turbo	C,T	**B178**	**PA4111**	**PA4331**	**BF7670**	**N/R**	**M.T.**
2001	A4 4-107 (1.8L) SFI Turbo	C	**B178**	**PA4091**		**BF1195**	**N/R**	
	V6-169 (2.8L) SFI	H	**B1429**	**PA4091**		**BF1195**	**N/R**	
	A4 Avant Quattro, A4 Quattro 4-107 (1.8L) SFI Turbo	C	**B178**	**PA4091**		**BF885**	**N/R**	
	V6-169 (2.8L) SFI	H	**B1429**	**PA4091**		**BF885**	**N/R**	
	A6 V6-169 (2.8L) SFI	H	**B1429**	**PA4091**		**BF1195**	**N/R**	
	A6 Avant Quattro, A6 Quattro V6-163 (2.7L) SFI Turbo	D	**B1429**	**PA4091**		**BF885**	**N/R**	
	V6-169 (2.8L) SFI	H	**B1429**	**PA4091**		**BF885**	**N/R**	
	V8-255 (4.2L) SFI	L		**PA4091**		**BF885**	**N/R**	
	A8 Quattro V8-255 (4.2L) SFI	L	**P7136**			**BF885**	**N/R**	
	S4 Avant Quattro, S4 Quattro V6-163 (2.7L) SFI Turbo	D	**B1429**	**PA4091**		**BF885**	**N/R**	
	S8 V8-255 (4.2L) SFI	L	**P7136**			**BF885**	**N/R**	
	TT, TT Quattro 4-107 (1.8L) SFI HO Turbo	C,T	**B178**	**PA4111**	**PA4331**	**BF7670**	**N/R**	**M.T.**
2000	A4 4-107 (1.8L) SFI Turbo	C	**B178**	**PA4091**		**BF1195**	**N/R**	
	V6-169 (2.8L) SFI	H	**B1429**	**PA4091**		**BF1195**	**N/R**	
	A4 Avant Quattro, A4 Quattro 4-107 (1.8L) SFI Turbo	C	**B178**	**PA4091**		**BF885**	**N/R**	
	V6-169 (2.8L) SFI	H	**B1429**	**PA4091**		**BF885**	**N/R**	
	A6 V6-169 (2.8L) SFI	H	**B1429**	**PA4091**		**BF1195**	**N/R**	
	A6 Avant Quattro V6-169 (2.8L) SFI	H	**B1429**	**PA4091**		**BF885**	**N/R**	
	A6 Quattro V6-163 (2.7L) FI Turbo	D	**B1429**	**PA4091**		**BF885**	**N/R**	
	V6-169 (2.8L) SFI	H	**B1429**	**PA4091**		**BF885**	**N/R**	
	V8-255 (4.2L) SFI	L		**PA4091**		**BF885**	**N/R**	
	A8 Quattro V8-255 (4.2L) SFI	L	**P7136**			**BF885**	**N/R**	
	S4 Quattro V6-163 (2.7L) SFI Turbo	D	**B1429**	**PA4091**		**BF885**	**N/R**	
	TT, TT Quattro 4-107 (1.8L) SFI Turbo	S	**B178**	**PA4111**	**PA4331**	**BF7670**	**N/R**	**M.T.**
1999	A4, A4 Avant Quattro, A4 Quattro 4-107 (1.8L) Turbo	B	**B178**	**PA4091**		**BF1195**	**N/R**	
	V6-169 (2.8L) SFI	D	**B1429**	**PA4091**		**BF1195**	**N/R**	
	A6, A6 Avant Quattro, A6 Quattro V6-169 (2.8L) SFI	A	**B1429**	**PA4091**		**BF1195**	**N/R**	
	A8 V8-226 (3.7L) SFI	F				**BF885**	**N/R**	
	A8 Quattro V8-255 (4.2L) SFI	G				**BF885**	**N/R**	
1998	A4, A4 Avant, A4 Avant Quattro, A4 Quattro 4-107 (1.8L) Turbo	B	**B178**	**PA4091**		**BF1195**	**N/R**	
	V6-169 (2.8L) SFI	D	**B1429**	**PA4091**		**BF1195**	**N/R**	
	A6, A6 Quattro V6-169 (2.8L) SFI	A,C	**B1429**				**N/R**	
	A8 V8-226 (3.7L) SFI	F				**BF885**	**N/R**	
	A8 Quattro V8-255 (4.2L) SFI	G				**BF885**	**N/R**	
	Cabriolet V6-169 (2.8L) SFI	A	**B1429**				**N/R**	
1997	A4, A4 Quattro 4-107 (1.8L) Turbo	B	**B178**	**PA4091**		**BF885**	**N/R**	
	V6-169 (2.8L) SFI	A	**B1429**	**PA4091**		**BF885**	**N/R**	
	A6, A6 Quattro V6-169 (2.8L) SFI	A,C	**B1429**				**N/R**	
	A8, A8 Quattro V8-226 (3.7L) SFI	F				**BF885**	**N/R**	
	V8-255 (4.2L) SFI	G				**BF885**	**N/R**	
	Cabriolet V6-169 (2.8L) SFI	A	**B1429**				**N/R**	
	S6 5-136 (2.2L) FI Turbo	A	**B178**		**N/R**		**N/R**	**M.T.**
1996	A4 V6-169 (2.8L) SFI AAH	A	**B178**	**PA4091**		**BF1195**	**N/R**	
	V6-169 (2.8L) SFI AFC	A	**B1429**	**PA4091**		**BF1195**	**N/R**	
	A4 Quattro V6-169 (2.8L) SFI AAH	A	**B178**	**PA4091**		**BF885**	**N/R**	
	V6-2771cc (2.8L) SFI AFC	A	**B1429**	**PA4091**		**BF885**	**N/R**	
	A6 V6-169 (2.8L) SFI AAH	A,C	**B178**				**N/R**	
	V6-169 (2.8L) SFI AFC	A,C	**B1429**				**N/R**	
	A6 Quattro V6-169 (2.8L) SFI AAH	A,C	**B178**				**N/R**	

OBS = Obsolete. Availability Limited to Distributor Stock. t Transmission, Not Model, Determines Which Transmission Filter is Used.

AUDI Cont'd.

Year	Model and Engine	VIN	Lube	Air	Cabin Air	Fuel	Breather	Trans.t
1996	A6 Quattro V6-169 (2.8L) SFI AFC	A,C	**B1429**				**N/R**	
	Cabriolet V6-169 (2.8L) SFI	A	**B1429**				**N/R**	
	S6 5-136 (2.2L) EFI Turbo	A	**B178**		**N/R**		**N/R**	**M.T.**
1995	90, 90 Sport V6-169 (2.8L) SFI	K	**B1429**			**BF885**	**N/R**	
	90 Quattro V6-169 (2.8L) SFI	K	**B178**			**BF885**	**N/R**	
	A6 V6-169 (2.8L) SFI AAH	B	**B178**				**N/R**	
	V6-169 (2.8L) SFI AFC	A,C	**B1429**				**N/R**	
	A6 Quattro V6-169 (2.8L) SFI AAH	A	**B178**				**N/R**	
	V6-169 (2.8L) SFI AFC	A	**B1429**				**N/R**	
	Cabriolet V6-169 (2.8L) SFI	L	**B178**				**N/R**	
	S6 5-136 (2.2L) SFI Turbo	A	**B178**		**N/R**		**N/R**	**M.T.**
1994	90, 90 Quattro V6-169 (2.8L) SFI	J,K,L	**B178**			**BF885**	**N/R**	
	100, 100 Quattro V6-169 (2.8L) SFI	J,K	**B178**		**N/R**		**N/R**	
	Cabriolet V6-169 (2.8L) SFI	L	**B178**				**N/R**	
	S4 5-136 (2.2L) SFI Turbo	R	**B178**		**N/R**		**N/R**	**M.T.**
	V8 Quattro V8-254 (4.2L) SFI	W			**N/R**	**BF885**	**N/R**	
1993	90, 90 Quattro V6-169 (2.8L) SFI	J,K	**B178**		**N/R**	**BF885**	**N/R**	
	100, 100 Quattro V6-169 (2.8L) MFI	J,K	**B178**		**N/R**		**N/R**	
	S4 5-136 (2.2L) FI Turbo	R	**B178**		**N/R**		**N/R**	**M.T.**
	V8 Quattro V8-254 (4.2L) SFI	W			**N/R**	**BF885**	**N/R**	
1992	80, 80 Quattro 5-2309cc (2.3L) EFI	C,D	**B178**	**PA2101A**	**N/R**		**N/R**	
	100, 100 Quattro V6-169 (2.8L) MFI	J,K	**B178**		**N/R**		**N/R**	
	S4 5-2226cc (2.2L) FI Turbo	P,R	**B178**		**N/R**		**N/R**	**M.T.**
	V8 Quattro V8-254 (4.2L) SFI	W			**N/R**	**BF885**	**N/R**	
1991	80, 80 Quattro 5-2309cc (2.3L) EFI	C,D	**B178**	**PA2101A**	**N/R**		**N/R**	
	90, 90 Quattro 5-2309cc (2.3L) FI	C,D,E,F	**B178**	**PA2101A**	**N/R**		**N/R**	
	100, 100 Quattro 5-2309cc (2.3L) EFI	C	**B178**	**PA2208**	**N/R**		**N/R**	
	200, 200 Quattro 5-2226cc (2.2L) FI Turbo	C	**B178**	**PA2208**	**N/R**		**N/R**	
	Coupe, Quattro 5-2309cc (2.3L) FI	E,F	**B178**	**PA2101A**	**N/R**		**N/R**	
	V8 Quattro V8-3562cc (3.6L) FI	E			**N/R**	**BF885**	**N/R**	
1990	80, 80 Quattro 4-1983cc (2.0L) FI	A,B	**B178**	**PA2101A**	**N/R**		**N/R**	
	5-2309cc (2.3L) EFI	C,D	**B178**	**PA2101A**	**N/R**		**N/R**	
	90, 90 Quattro 5-2309cc (2.3L) FI	C,D,E,F	**B178**	**PA2101A**	**N/R**		**N/R**	
	100, 100 Quattro 5-2309cc (2.3L) EFI	C	**B178**	**PA2208**	**N/R**		**N/R**	
	200, 200 Quattro 5-2226cc (2.2L) FI Turbo	C	**B178**	**PA2208**	**N/R**		**N/R**	
	Coupe, Quattro 5-2309cc (2.3L) FI	D,E,F	**B178**	**PA2101A**	**N/R**		**N/R**	
	V8 Quattro V8-3562cc (3.6L) FI	E			**N/R**	**BF885**	**N/R**	
1989	80, 80 Quattro 4-1983cc (2.0L) FI	B	**B178**	**PA2101A**	**N/R**		**N/R**	
	5-2300cc (2.3L) FI	C	**B178**	**PA2101A**	**N/R**		**N/R**	
	90, 90 Quattro 5-2309cc (2.3L) FI	C	**B178**	**PA2101A**	**N/R**		**N/R**	
	100, 100 Quattro 5-2300cc (2.3L) FI	B	**B178**	**PA2208**	**N/R**		**N/R**	
	200, 200 Quattro 5-2200cc (2.2L) FI Turbo	C	**B178**	**PA2208**	**N/R**		**N/R**	
1988	80, 80 Quattro 4-1983cc (2.0L) FI	B	**B178**	**PA2101A**	**N/R**		**N/R**	
	5-2309cc (2.3L) FI	C	**B178**	**PA2101A**	**N/R**		**N/R**	
	90, 90 Quattro 4-1983cc (2.0L) FI	B	**B178**	**PA2101A**	**N/R**		**N/R**	
	5-2309cc (2.3L) FI	C	**B178**	**PA2101A**	**N/R**		**N/R**	
	5000CS, 5000CS Quattro, 5000S, 5000S Quattro 5-2226cc (2.2L) FI Turbo	D,E	**B178** Turbocharger **B228**	**PA2208**	**N/R**		**N/R**	
	5-2309cc (2.3L) FI	C	**B178**	**PA2208**	**N/R**		**N/R**	
1987	4000CS, 4000S, 4000S Quattro 4-1780cc (1.8L) FI	B	**B178**	**PA2101A**	**N/R**	Sec. **BF944**	**N/R**	
	5-2226cc (2.2L) FI	B	**B178**	**PA2101A**	**N/R**	Sec. **BF944**	**N/R**	
	5000CS, 5000CS Quattro, 5000S, 5000S Quattro 5-2226cc (2.2L) FI	B,C	**B178**	**PA2208**	**N/R**		**N/R**	
	5-2226cc (2.2L) FI Turbo	D,E	**B178** Turbocharger **B228**	**PA2208**	**N/R**		**N/R**	
	5-2309cc (2.3L) FI	C	**B178**	**PA2208**	**N/R**		**N/R**	
	GT Coupe 5-2226cc (2.2L) FI	D,E	**B178**	**PA2101A**	**N/R**	Sec. **BF944**	**N/R**	
1986	4000S, 4000S Quattro 4-1780cc (1.8L) FI	B	**B178**	**PA2101A**	**N/R**	Sec. **BF944**	**N/R**	
	5-2226cc (2.2L) FI	B	**B178**	**PA2101A**	**N/R**	Sec. **BF944**	**N/R**	
	5000S, 5000S Quattro 5-2226cc (2.2L) FI	B	**B178**	**PA2208**	**N/R**		**N/R**	
	5-2226cc (2.2L) FI Turbo	E	**B178** Turbocharger **B228**	**PA2101A**	**N/R**	Sec. **BF944**	**N/R**	

t Transmission, Not Model, Determines Which Transmission Filter is Used. OBS = Obsolete. Availability Limited to Distributor Stock.

Year	Model and Engine	VIN	Lube	Air	Cabin Air	Fuel	Breather	Trans.†
AUDI Cont'd.								
1986	GT Coupe 5-2226cc (2.2L) FI	D	**B178**	**PA2101A**	**N/R**	Sec. **BF944**	**N/R**	
1985	4000S, 4000S Quattro 4-1780cc (1.8L) FI	B	**B178**	**PA2101A**	**N/R**	Sec. **BF944**	**N/R**	
	5-2226cc (2.2L) FI	B,C	**B178**	**PA2101A**	**N/R**	Sec. **BF944**	**N/R**	
	5000 L5-1986cc (2.0L) FI Turbo Diesel, Canada	H	**B178** Turbocharger **B228**	**PA2208**	**N/R**		**N/R**	
	5000S, 5000S Turbo 5-2144cc (2.1L) FI	B,C	**B178** Turbocharger **B228**	**PA2208**	**N/R**		**N/R**	
	Coupe 5-2226cc (2.2L) FI	D	**B178**	**PA2101A**	**N/R**	Sec. **BF944**	**N/R**	
	Quattro 5-2200cc (2.2L) FI Turbo	C	**B178** Turbocharger **B228**	**PA2101A**	**N/R**	Sec. **BF944**	**N/R**	
1984	4000S, 4000S Quattro 4-1780cc (1.8L) FI	A	**B178**	**PA2101A**	**N/R**	Sec. **BF944**	**N/R**	
	5-2226cc (2.2L) FI	B	**B178**	**PA2101A**	**N/R**	Sec. **BF944**	**N/R**	
	5000 L5-1986cc (2.0L) Turbo Diesel, Canada	H	**B178** Turbocharger **B228**	**PA2208**	**N/R**		**N/R**	
	5000S, 5000S Turbo 5-2226cc (2.2L) FI	B,C	**B178** Turbocharger **B228**	**PA2208**	**N/R**	**BF885**	**N/R**	
	Coupe 5-2144cc (2.1L) FI	D	**B178**	**PA2101A**	**N/R**	Sec. **BF944**	**N/R**	
	Quattro 5-2144cc (2.1L) FI Turbo	C	**B178** Turbocharger **B228**	**PA2101A**	**N/R**	Sec. **BF944**	**N/R**	
1983	4000 4-1600cc (1.6L) Diesel	G,H	**B114**	**PA2101A**	**N/R**	**BF587-D**	**N/R**	
	4-1715cc (1.7L) FI	A	**B178**	**PA2103**	**N/R**		**N/R**	
	5-2144cc (2.1L) FI	B	**B178**	**PA2101A**	**N/R**	Pri. **BF885**	**N/R**	
	5000 L5-1986cc (2.0L) Turbo Diesel	H	**B114**	**PA2208**	**N/R**	**BF587-D**	**N/R**	
	5-2144cc (2.1L) FI	B	**B178**	**PA2208**	**N/R**	**BF885**	**N/R**	
	5-2144cc (2.1L) FI Turbo	C	**B178** Turbocharger **B228**	**PA2208**	**N/R**	**BF885**	**N/R**	
	Coupe 5-2144cc (2.1L) FI	B	**B178**	**PA2101A**	**N/R**	Sec. **BF944**	**N/R**	
	Quattro 5-2144cc (2.1L) FI Turbo	C	**B178** Turbocharger **B228**	**PA2101A**	**N/R**	Sec. **BF944**	**N/R**	
1982	4000 4-1600cc (1.6L) Diesel	G	**B114**	**PA2101A**	**N/R**	**BF587-D**	**N/R**	
	4-1715cc (1.7L) FI	A	**B178**	**PA2103**	**N/R**	Sec. **BF944**	**N/R**	
	5-2144cc (2.1L) FI	B	**B178**	**PA2101A**	**N/R**	**BF885**	**N/R**	
	5000 5-1986cc (2.0L) Turbo Diesel	H	**B114**	**PA2101A**	**N/R**	**BF587-D**	**N/R**	
	5-2144cc (2.1L) FI	B	**B178**	**PA2208**	**N/R**	**BF885**	**N/R**	
	5-2144cc (2.1L) FI Turbo	C	**B178** Turbocharger **B228**	**PA2208**	**N/R**	**BF885**	**N/R**	
	Coupe 5-2144cc (2.1L) FI	B	**B178**	**PA2101A**	**N/R**	Sec. **BF944**	**N/R**	
1981	4000 4-1715cc (1.7L)	A	**B178**	**PA2103**	**N/R**		**N/R**	
	5-2144cc (2.1L)	B	**B178**	**PA2101A**	**N/R**	**BF885**	**N/R**	
	5000 5-1986cc (2.0L) Diesel	G	**B114**	**PA2101A**	**N/R**	**BF587-D**	**N/R**	
	5-2144cc (2.1L) FI	B	**B178**	**PA2208**	**N/R**	**BF885**	**N/R**	
	5-2144cc (2.1L) FI Turbo	C	**B178** Turbocharger **B228**	**PA2208**	**N/R**	**BF885**	**N/R**	
	Coupe 5-2144cc (2.1L) FI	B	**B178**	**PA2101A**	**N/R**	**BF885**	**N/R**	
1980	4000 4-1588cc (1.6L)		**B178**	**PA2103**	**N/R**	**BF885**	**N/R**	
	5-2144cc (2.1L)		**B178**	**PA2101A**	**N/R**	**BF885**	**N/R**	
	5000 5-1986cc (2.0L) Diesel		**B114**	**PA2101A**	**N/R**	**BF587-D**	**N/R**	
	5-2144cc (2.1L)		**B178**	**PA2208**	**N/R**	**BF885**	**N/R**	
AVANTI								
1991	II V8-305 (5.0L) Carb.		**B1438**	**PA2008**	**N/R**		**N/R**	**18155**
1990	II V8-305 (5.0L) Carb.		**B1438**	**PA2008**	**N/R**		**SA2027**	**18155**
1989	II V8-305 (5.0L) Carb.		**B1438**	**PA2008**	**N/R**		**SA2027**	**18155**
1988	II V8-305 (5.0L) Carb.		**B1438**	**PA2008**	**N/R**		**SA2027**	**18155**
1987	II V8-305 (5.0L) Carb.		**B1438**	**PA2008**	**N/R**		**SA2027**	**18155**
1986	II V8-305 (5.0L) Carb.		**B1438**	**PA2008**	**N/R**		**SA2027**	
1985	II V8-305 (5.0L) Carb.		**B1438**	**PA2008**	**N/R**		**SA2027**	

OBS = Obsolete. Availability Limited to Distributor Stock. † Transmission, Not Model, Determines Which Transmission Filter is Used.

Year	Model and Engine	VIN	Lube	Air	Cabin Air	Fuel	Breather	Trans.t
AVANTI Cont'd.								
1984	II V8-305 (5.0L) Carb.		**B1438**	**PA2008**	**N/R**		**SA2027**	
BENTLEY								
2007	Arnage V8-6748cc (6.8L) FI Twin Turbo						**N/R**	
	Azure V8-6748cc (6.8L) FI Twin Turbo						**N/R**	
	Continental Flying Spur W12-5998cc (6.0L) FI Twin Turbo					**BF7670**	**N/R**	**N/S**
	Continental GT W12-5998cc (6.0L) FI Twin Turbo					**BF7670**	**N/R**	**N/S**
2006	Arnage Drophead V8-6800cc (6.8L) FI Twin Turbo						**N/R**	
	Continental Flying Spur W12-5998cc (6.0L) FI Twin Turbo					**BF7670**	**N/R**	
	Continental GT W12-5998cc (6.0L) FI Twin Turbo					**BF7670**	**N/R**	
2005	Continental GT 12-5998cc (6.0L) FI DOHC Twin Turbo					**BF7670**	**N/R**	
BERTONE								
1989	X 1/9 4-1498cc (1.5L) FI	A	**B34**	**PA658**	**N/R**	**BF1195**	**PA643**	**M.T.**
1988	X 1/9 4-1498cc (1.5L) FI	A	**B34**	**PA658**	**N/R**	**BF1195**	**PA643**	**M.T.**
1987	X 1/9 4-1498cc (1.5L) FI	A	**B34**	**PA658**	**N/R**	**BF1195**	**PA643**	**M.T.**
1986	X 1/9 4-1498cc (1.5L) FI	A	**B34**	**PA658**	**N/R**	**BF1195**	**PA643**	**M.T.**
1985	X 1/9 4-1498cc (1.5L) FI	A	**B34**	**PA658**	**N/R**	**BF1195**	**PA643**	**M.T.**
	4-1995cc (2.0L) FI	B	**B34**	**PA658**	**N/R**	**BF1195**	**N/R**	**M.T.**
1984	X 1/9 4-1498cc (1.5L) FI	A	**B34**	**PA658**	**N/R**	**BF1195**	**PA643**	**M.T.**
	4-1995cc (2.0L) FI	B	**B34**	**PA658**	**N/R**	**BF1195**	**N/R**	**M.T.**
BMW								
2010	128i 6-2996cc (3.0L) FI		**P7438**			**N/S**	**N/R**	
	135i 6-2979cc (3.0L) DI Twin Turbo		**P7438**			**N/S**	**N/R**	
	328i 6-2996cc (3.0L) FI		**P7438**			**N/S**	**N/R**	
	328ix 6-2996cc (3.0L) FI		**P7438**			**N/S**	**N/R**	
	335d 6-2993cc (3.0L) DI Twin Turbo Diesel						**N/R**	
	335i 6-2979cc (3.0L) DI Twin Turbo		**P7438**				**N/R**	**N/S**
	335i xDrive 6-2979cc (3.0L) DI Twin Turbo		**P7438**			**N/S**	**N/R**	
	528i 6-2996cc (3.0L) FI		**P7438**			**N/S**	**N/R**	
	528ix 6-2996cc (3.0L) FI		**P7438**			**N/S**	**N/R**	
	535i 6-2979cc (3.0L) DI Twin Turbo		**P7438**			**N/S**	**N/R**	
	535ix 6-2979cc (3.0L) DI Twin Turbo		**P7438**			**N/S**	**N/R**	
	550i V8-4837cc (4.8L) FI					**N/S**	**N/R**	**N/S**
	650i V8-4837cc (4.8L) FI					**N/S**	**N/R**	**N/S**
	750i V8-4395cc (4.4L) FI Twin Turbo						**N/R**	**N/S**
	750Li V8-4395cc (4.4L) FI Twin Turbo						**N/R**	**N/S**
	760Li V12-5972cc (6.0L) FI Twin Turbo						**N/R**	**N/S**
	M3 V8-3999cc (4.0L) FI					**N/S**	**N/R**	**M.T.**
	M5 V10-4999cc (5.0L) FI					**N/S**	**N/R**	**M.T.**
	M6 V10-4999cc (5.0L) FI					**N/S**	**N/R**	
	X3 6-2996cc (3.0L) FI		**P7438**			**N/S**	**N/R**	
	X5 6-2993cc (3.0L) DI Twin Turbo Diesel					**N/S**	**N/R**	
	6-2996cc (3.0L) FI		**P7438**			**N/S**	**N/R**	
	V8-293 (4.8L) FI					**N/S**	**N/R**	
	X5 M V8-4395cc (4.4L) DI					**N/S**	**N/R**	**N/S**
	X6 6-2979cc (3.0L) Twin Turbo		**P7438**			**N/S**	**N/R**	
	V8-4395cc (4.4L) DI Twin Turbo					**N/S**	**N/R**	**N/S**
	X6 M V8-4395cc (4.4L) Twin Turbo					**N/S**	**N/R**	**N/S**
	Z4 6-2996cc (3.0L) FI		**P7438**			**N/S**	**N/R**	
	6-2979cc (3.0L) FI Turbo		**P7438**			**N/S**	**N/R**	
2009	128i 6-2996cc (3.0L) FI		**P7438**			**N/S**	**N/R**	
	135i 6-2979cc (3.0L) DI Twin Turbo		**P7438**			**N/S**	**N/R**	**N/S**
	323i 6-2497cc (2.5L) FI Canada		**P7438**			**N/S**	**N/R**	
	328i 6-2996cc (3.0L) FI		**P7438**			**N/S**	**N/R**	**N/S**
	335d 6-2993cc (3.0L) DI Twin Turbo Diesel						**N/R**	**N/S**
	335i 6-2996cc (3.0L) DI Twin Turbo		**P7438**			**N/S**	**N/R**	**N/S**
	528i 6-2996cc (3.0L) FI		**P7438**			**N/S**	**N/R**	
	535i 6-2979cc (3.0L) DI Twin Turbo		**P7438**			**N/S**	**N/R**	**N/S**
	535xi 6-2979cc (3.0L) DI Twin Turbo		**P7438**			**N/S**	**N/R**	**N/S**

[t] Transmission, Not Model, Determines Which Transmission Filter is Used. OBS = Obsolete. Availability Limited to Distributor Stock.

BMW Cont'd.

Year	Model and Engine	VIN	Lube	Air	Cabin Air	Fuel	Breather	Trans.[t]
2009	550i V8-4837cc (4.8L) FI					**N/S**	**N/R**	**N/S**
	650i V8-4837cc (4.8L) FI					**N/S**	**N/R**	**N/S**
	750i V8-4395cc (4.4L) FI Twin Turbo						**N/R**	**N/S**
	750Li V8-4395cc (4.4L) FI Twin Turbo						**N/R**	**N/S**
	M3 V8-3999cc (4.0L) FI					**N/S**	**N/R**	**M.T.**
	M5 V10-4999cc (5.0L) FI					**N/S**	**N/R**	**M.T.**
	M6 V10-4999cc (5.0L) FI					**N/S**	**N/R**	7 Spd. **M.T.**
	X3 6-2996cc (3.0L) FI		**P7438**			**N/S**	**N/R**	
	X5 6-2996cc (3.0L) FI		**P7438**			**N/S**	**N/R**	**N/S**
	6-2996cc (3.0L) DI Twin Turbo Diesel					**N/S**	**N/R**	**N/S**
	V8-293 (4.8L) FI					**N/S**	**N/R**	**N/S**
	X6 6-2979cc (3.0L) FI Twin Turbo		**P7438**			**N/S**	**N/R**	
	V8-4395cc (4.4L) FI Twin Turbo					**N/S**	**N/R**	**N/S**
	Z4 6-2996cc (3.0L) FI		**P7438**			**N/S**	**N/R**	
	6-2979cc (3.0L) FI Turbo		**P7438**			**N/S**	**N/R**	
2008	128i 6-2996cc (3.0L) FI		**P7438**			**N/S**	**N/R**	
	135i 6-2979cc (3.0L) DI Twin Turbo		**P7438**			**N/S**	**N/R**	**N/S**
	323i 6-2497cc (2.5L) FI Canada		**P7438**			**N/S**	**N/R**	
	328i 6-2996cc (3.0L) FI		**P7438**			**N/S**	**N/R**	**N/S**
	328Xi 6-2996cc (3.0L) FI		**P7438**			**N/S**	**N/R**	**N/S**
	335i 6-2996cc (3.0L) DI Twin Turbo		**P7438**			**N/S**	**N/R**	**N/S**
	335xi 6-2996cc (3.0L) DI Twin Turbo		**P7438**			**N/S**	**N/R**	**N/S**
	528i 6-2996cc (3.0L) FI		**P7438**			**N/S**	**N/R**	
	528xi 6-2996cc (3.0L) FI		**P7438**			**N/S**	**N/R**	
	535i 6-2979cc (3.0L) DI Twin Turbo		**P7438**			**N/S**	**N/R**	**N/S**
	535xi 6-2979cc (3.0L) DI Twin Turbo		**P7438**			**N/S**	**N/R**	**N/S**
	550i V8-4837cc (4.8L) FI					**N/S**	**N/R**	**N/S**
	650i V8-4837cc (4.8L) FI					**N/S**	**N/R**	**N/S**
	750i V8-4837cc (4.8L) FI						**N/R**	**N/S**
	750Li V8-4837cc (4.8L) FI						**N/R**	**N/S**
	760Li V12-5972cc (6.0L) FI						**N/R**	**N/S**
	Alpina B7 V8-4398cc (4.4L) Supercharged		**P7427**		**N/R**	**N/S**	**N/R**	
	M3 V8-3999cc (4.0L) FI					**N/S**	**N/R**	**M.T.**
	M5 V10-4999cc (5.0L) FI					**N/S**	**N/R**	**M.T.**
	M6 V10-4999cc (5.0L) FI					**N/S**	**N/R**	7 Spd. **M.T.**
	X3 6-2996cc (3.0L) FI		**P7438**			**N/S**	**N/R**	
	X5 6-2996cc (3.0L) FI		**P7438**			**N/S**	**N/R**	**N/S**
	V8-293 (4.8L) FI					**N/S**	**N/R**	**N/S**
	X6 6-2979cc (3.0L) FI Twin Turbo		**P7438**			**N/S**	**N/R**	
	V8-4395cc (4.4L) FI Twin Turbo					**N/S**	**N/R**	**N/S**
	Z4 6-2996cc (3.0L) FI		**P7438**			**N/S**	**N/R**	
	Z4 M 6-3246cc (3.2L) FI					**N/S**	**N/R**	**M.T.**
2007	323i 6-2497cc (2.5L) FI Canada		**P7438**			**N/S**	**N/R**	
	328i 6-2996cc (3.0L) FI		**P7438**			**N/S**	**N/R**	**N/S**
	328Xi 6-2996cc (3.0L) FI		**P7438**			**N/S**	**N/R**	**N/S**
	335i 6-2996cc (3.0L) FI Twin Turbo		**P7438**			**N/S**	**N/R**	**N/S**
	525i, 525xi 6-182 (3.0L) FI		**P7438**			**N/S**	**N/R**	
	530i, 530xi, 530xiT 6-182 (3.0L) FI		**P7438**			**N/S**	**N/R**	
	550i V8-4837cc (4.8L) FI					**N/S**	**N/R**	**N/S**
	650Ci, 650i V8-4837cc (4.8L) FI					**N/S**	**N/R**	**N/S**
	750i, 750iL V8-4837cc (4.8L) FI						**N/R**	**N/S**
	760i, 760Li V12-5972cc (6.0L) FI						**N/R**	
	Alpina B7 V8-4398cc (4.4L) FI		**P7427**		**N/R**	**N/S**	**N/R**	
	M5 V10-4999cc (5.0L) FI					**N/S**	**N/R**	**M.T.**
	M6 V10-4999cc (5.0L) FI					**N/S**	**N/R**	7 Spd. **M.T.**
	X3 6-2996cc (3.0L) FI		**P7438**			**N/S**	**N/R**	
	X5 6-2979cc (3.0L) FI	4	**P7438**			**N/S**	**N/R**	
	V8-293 (4.8L) FI	8				**N/S**	**N/R**	**N/S**
	Z4 6-2996cc (3.0L) FI		**P7438**	**PA4048**		**N/S**	**N/R**	
	6-3246cc (3.2L) FI					**N/S**	**N/R**	**N/S**
2006	323i 6-2497cc (2.5L) FI Canada		**P7438**			**N/S**	**N/R**	
	325Ci, 325Cic 6-152 (2.5L) FI		**P7138**	**PA4048**		**BF7641**	**N/R**	
	325i, 325xi, 325xiT 6-182 (3.0L) FI		**P7438**			**N/S**	**N/R**	
	330Ci, 330Cic, 330i, 330xi 6-182 (3.0L) FI HO		**P7138**			**N/S**	**N/R**	
	525i, 525xi 6-182 (3.0L) FI		**P7438**			**N/S**	**N/R**	
	530i, 530xi 6-182 (3.0L) FI		**P7138**			**N/S**	**N/R**	

OBS = Obsolete. Availability Limited to Distributor Stock. [t] Transmission, Not Model, Determines Which Transmission Filter is Used.

BMW Cont'd.

Year	Model and Engine	VIN	Lube	Air	Cabin Air	Fuel	Breather	Trans.t
2006	550i V8-4837cc (4.8L) FI					**N/S**	**N/R**	**N/S**
	650Ci, 650i V8-4837cc (4.8L) SFI					**N/S**	**N/R**	**N/S**
	750i, 750iL V8-4837cc (4.8L) FI						**N/R**	**N/S**
	750Li V8-4837cc (4.8L) EFI						**N/R**	
	760i, 760Li V12-5972cc (6.0L) FI						**N/R**	**N/S**
	M3 V6-192 (3.2L) FI		**P7088**	**PA4048**			**N/R**	**M.T.**
	M5 V10-4999cc (5.0L) FI					**N/S**	**N/R**	**M.T.**
	X3 6-152 (2.5L) FI Canada		**P7138**	**PA4048**		**N/S**	**N/R**	
	6-2979cc (3.0L) FI		**P7138**	**PA4048**		**N/S**	**N/R**	
	X5 6-2979cc (3.0L) SFI		**P7138**				**N/R**	
	V8-4398cc (4.4L) SFI		**P7427**	**PA4091**			**N/R**	
	V8-293 (4.8L) SFI		**P7427**	**PA4091**			**N/R**	
	Z4 6-2979cc (3.0L) FI		**P7138**	**PA4048**		**N/S**	**N/R**	
	6-3246cc (3.2L) FI HO		**P7138**	**PA4048**		**N/S**	**N/R**	
2005	320i 6-2171cc (2.2L) FI Canada		**P7138**	**PA4048**	**N/R**		**N/R**	
	325Ci, 325Cic, 325i, 325iT, 325xi 6-152 (2.5L) EFI		**P7138**	**PA4048**			**N/R**	
	330Ci, 330Cic, 330i, 330xi 6-182 (3.0L) FI		**P7138**	**PA4048**			**N/R**	
	525i 6-152 (2.5L) EFI		**P7138**			**N/S**	**N/R**	
	530i 6-182 (3.0L) FI		**P7138**			**N/S**	**N/R**	
	545i V8-268 (4.4L) FI		**P7427**			**N/S**	**N/R**	
	645Ci, 645Cic V8-268 (4.4L) FI		**P7427**			**N/S**	**N/R**	
	745i, 745Li V8-268 (4.4L) FI		**P7427**				**N/R**	**N/S**
	760i, 760Li V12-5972cc (6.0L) FI						**N/R**	
	M3 6-192 (3.2L) FI		**P7088**	**PA4048**			**N/R**	**M.T.**
	X3 6-152 (2.5L) FI		**P7138**	**PA4048**		**N/S**	**N/R**	
	6-2979cc (3.0L) FI		**P7138**	**PA4048**		**N/S**	**N/R**	
	X5 6-2979cc (3.0L) FI		**P7138**				**N/R**	
	V8-4398cc (4.4L) FI		**P7427**	**PA4091**			**N/R**	
	V8-293 (4.8L) FI		**P7427**	**PA4091**			**N/R**	
	Z4 6-152 (2.5L) FI		**P7138**	**PA4048**		**N/S**	**N/R**	**N/S**
	6-2979cc (3.0L) FI		**P7138**	**PA4048**		**N/S**	**N/R**	**N/S**
2004	320i 6-2171cc (2.2L) FI Canada		**P7138**	**PA4048**	**N/R**		**N/R**	
	325Ci, 325Cic, 325i, 325xi 6-152 (2.5L) EFI		**P7138**	**PA4048**			**N/R**	
	330Ci, 330Cic, 330i, 330xi 6-182 (3.0L) FI		**P7138**	**PA4048**			**N/R**	
	525i, 525iT 6-152 (2.5L) EFI		**P7138**	**PA4048**		**BF7641**	**N/R**	
	530i 6-182 (3.0L) FI		**P7138**	**PA4048**			**N/R**	
	545i V8-268 (4.4L) SFI		**P7137**	**PA4091**			**N/R**	
	645Ci V8-4398cc (4.4L) SFI		**P7427**			**N/S**	**N/R**	
	745i, 745Li V8-4398cc (4.4L) FI		**P7427**				**N/R**	**N/S**
	760i V12-5972cc (6.0L) EFI						**N/R**	
	760Li V12-5972cc (6.0L) FI						**N/R**	**N/S**
	M3 6-192 (3.2L) FI		**P7088**	**PA4048**			**N/R**	**M.T.**
	X3 6-152 (2.5L) FI		**P7138**	**PA4048**		**N/S**	**N/R**	
	6-2979cc (3.0L) FI		**P7138**	**PA4048**		**N/S**	**N/R**	
	X5 6-182 (3.0L) FI		**P7138**				**N/R**	
	V8-4398cc (4.4L) FI		**P7137**	**PA4091**			**N/R**	
	V8-4837cc (4.8L) EFI		**P7427**	**PA4091**			**N/R**	
	Z4 6-152 (2.5L) FI		**P7138**	**PA4048**		**N/S**	**N/R**	
	6-182 (3.0L) FI		**P7138**	**PA4048**		**N/S**	**N/R**	
2003	320i 6-2171cc (2.2L) FI Canada		**P7138**	**PA4048**	**N/R**		**N/R**	
	325Ci, 325Cic, 325i, 325Ti, 325xi, 325xiT 6-152 (2.5L) EFI		**P7138**	**PA4048**			**N/R**	
	330Ci, 330Cic, 330i, 330xi 6-182 (3.0L) FI		**P7138**	**PA4048**			**N/R**	
	525i, 525iT 6-152 (2.5L) EFI		**P7138**	**PA4048**		**BF7641**	**N/R**	
	530i 6-182 (3.0L) FI		**P7138**	**PA4048**			**N/R**	
	540i, 540iT V8-268 (4.4L) FI		**P7137**	**PA4091**			**N/R**	
	745i, 745Li V8-4398cc (4.4L) FI		**P7427**				**N/R**	**N/S**
	760Li V12-5972cc (6.0L) FI						**N/R**	
	M3 6-192 (3.2L) FI		**P7088**	**PA4048**			**N/R**	**M.T.**
	M5 V8-4941cc (5.0L) FI		**P7137**	**PA4091**			**N/R**	**M.T.**
	X5 6-182 (3.0L) FI		**P7138**				**N/R**	
	V8-4398cc (4.4L) FI		**P7137**	**PA4091**			**N/R**	
	V8-4598cc (4.6L) FI		**P7137**	**PA4091**			**N/R**	
	Z4 6-152 (2.5L) FI		**P7138**	**PA4048**		**N/S**	**N/R**	
	6-2979cc (3.0L) FI		**P7138**	**PA4048**		**N/S**	**N/R**	
	Z8 V8-4800cc (4.8L) FI		**P7137**	**PA4091**			**N/R**	

[t] Transmission, Not Model, Determines Which Transmission Filter is Used. OBS = Obsolete. Availability Limited to Distributor Stock.

BMW Cont'd.

Year	Model and Engine	VIN	Lube	Air	Cabin Air	Fuel	Breather	Trans.t
2003	Z8 V8-303 (5.0L) FI		**P7137**	**PA4091**			**N/R**	**M.T.**
2002	320i 6-2171cc (2.2L) FI Canada		**P7138**	**PA4048**	**N/R**		**N/R**	
	325Ci, 325Cic, 325i, 325iT, 325xi, 325xiT 6-152 (2.5L) EFI		**P7138**	**PA4048**		**BF7641**	**N/R**	
	330Ci, 330i, 330xi 6-182 (3.0L) FI		**P7138**	**PA4048**			**N/R**	
	525i, 525iT 6-152 (2.5L) EFI		**P7138**	**PA4048**		**BF7641**	**N/R**	
	530i 6-182 (3.0L) FI		**P7138**	**PA4048**			**N/R**	
	540i, 540iT V8-268 (4.4L) FI		**P7137**	**PA4091**			**N/R**	
	745i, 745Li V8-4398cc (4.4L) FI		**P7427**				**N/R**	
	M3 6-192 (3.2L) FI		**P7088**	**PA4048**			**N/R**	**M.T.**
	M5 V8-4941cc (5.0L) FI		**P7137**	**PA4091**			**N/R**	**M.T.**
	X5 6-182 (3.0L) FI		**P7138**				**N/R**	
	V8-4398cc (4.4L) FI		**P7137**	**PA4091**			**N/R**	
	V8-4598cc (4.6L) FI		**P7137**	**PA4091**			**N/R**	
	Z3 6-152 (2.5L) FI		**P7138**	**PA4048**	**N/R**	(w/o Return Line) **BF7641**	**N/R**	
	6-2979cc (3.0L) FI		**P7138**	**PA4048**	**N/R**	(w/o Return Line) **BF7641**	**N/R**	
	Z3 M 6-3246cc (3.2L) FI		**P7088**	**PA4048**	**N/R**	**BF7641**	**N/R**	**M.T.**
	Z8 V8-303 (5.0L) FI		**P7137**	**PA4091**			**N/R**	**M.T.**
2001	320i 6-2171cc (2.2L) FI Canada		**P7138**	**PA4048**	**N/R**		**N/R**	
	325Ci, 325Cic, 325i, 325Ti, 325xi 6-152 (2.5L) EFI		**P7138**	**PA4048**		**BF7641**	**N/R**	
	330Ci, 330Cic, 330i, 330xi 6-2979cc (3.0L) FI		**P7138**	**PA4048**			**N/R**	
	525i, 525iT 6-152 (2.5L) EFI		**P7138**	**PA4048**		**BF7641**	**N/R**	
	530i 6-2979cc (3.0L) FI		**P7138**	**PA4048**			**N/R**	
	540i, 540iT V8-268 (4.4L) FI		**P7137**	**PA4091**			**N/R**	
	740i, 740iL V8-268 (4.4L) FI		**P7137**	**PA4091**	**[2] PA4097**		**N/R**	
	750iL V12-328 (5.4L) FI		**P7137**		**[2] PA4097**	**BF7641**	**N/R**	
	M3 6-192 (3.2L) FI		**P7088**	**PA4048**		**BF7641**	**N/R**	**M.T.**
	M5 V8-303 (5.0L) SFI		**P7137**	**PA4091**			**N/R**	**M.T.**
	X5 6-2979cc (3.0L) FI		**P7138**				**N/R**	
	V8-4398cc (4.4L) FI		**P7137**	**PA4091**			**N/R**	
	Z3 6-152 (2.5L) FI		**P7138**	**PA4048**	**N/R**	(w/o Return Line) **BF7641**	**N/R**	
	6-2979cc (3.0L) FI		**P7138**	**PA4048**	**N/R**	(w/o Return Line) **BF7641**	**N/R**	
	Z3 M 6-3246cc (3.2L) FI		**P7088**	**PA4048**	**N/R**	**BF7641**	**N/R**	**M.T.**
	Z8 V8-303 (5.0L) FI		**P7137**	**PA4091**			**N/R**	**M.T.**
2000	323Ci, 323i 6-152 (2.5L) EFI		**P7138**	**PA4048**		**BF7641**	**N/R**	
	328Ci, 328i 6-170 (2.8L) EFI		**P7138**	**PA4048**		**BF7641**	**N/R**	
	528i, 528iT 6-170 (2.8L) EFI		**P7138**	**PA4048**		**BF7641**	**N/R**	
	540i, 540iT V8-268 (4.4L) FI		**P7137**	**PA4091**			**N/R**	
	740i, 740iL V8-268 (4.4L) FI		**P7137**	**PA4091**	**[2] PA4097**	(w/o Return Line) **BF7641**	**N/R**	
	750iL V12-328 (5.4L) EFI		**P7137**		**[2] PA4097**	**BF7641**	**N/R**	
	M5 V8-303 (5.0L) SFI		**P7137**	**PA4091**			**N/R**	**M.T.**
	X5 V8-4398cc (4.4L) FI		**P7137**	**PA4091**			**N/R**	
	Z3 6-152 (2.5L) FI		**P7138**	**PA4048**	**N/R**	**BF7641**	**N/R**	
	6-170 (2.8L) FI		**P7138**	**PA4048**	**N/R**	**BF7641**	**N/R**	
	6-192 (3.2L) FI		**P7088**	**PA4048**	**N/R**	**BF7641**	**N/R**	
	Z8 V8-303 (5.0L) FI		**P7137**	**PA4091**			**N/R**	**M.T.**
1999	318 Series 4-116 (1.9L) SFI		**P7426**		**PA4096**	**BF7641**	**N/R**	
	323i, 323is 6-152 (2.5L) SFI		**P7138**	**PA4048**		**BF7641**	**N/R**	
	328i, 328is 6-170 (2.8L) EFI		**P7138**	**PA4048**	**PA4096**	**BF7641**	**N/R**	
	528i, 528iT 6-170 (2.8L) EFI		**P7138**	**PA4048**		**BF7641**	**N/R**	
	540i, 540iT V8-268 (4.4L) FI		**P7137**	**PA4091**			**N/R**	
	740i, 740iL V8-268 (4.4L) EFI		**P7137**	**PA4091**	**[2] PA4097**	**BF7641**	**N/R**	
	750iL V12-328 (5.4L) EFI		**P7137**		**[2] PA4097**	**BF7641**	**N/R**	
	M3 6-192 (3.2L) EFI		**P7088**	**PA4048**	**PA4096**	**BF7641**	**N/R**	**M.T.**
	Z3 6-2494cc (2.5L) FI		**P7138**	**PA4048**	**N/R**	**BF7641**	**N/R**	
	6-170 (2.8L) FI		**P7138**	**PA4048**	**N/R**	**BF7641**	**N/R**	
	6-192 (3.2L) EFI		**P7088**	**PA4048**	**N/R**	**BF7641**	**N/R**	**M.T.**
1998	318 Series 4-116 (1.9L) SFI		**P7426**		**PA4096**	**BF7641**	**N/R**	
	323is 6-152 (2.5L) SFI		**P7138**	**PA4048**	**N/R**	**BF7641**	**N/R**	
	328 Series 6-170 (2.8L) EFI		**P7138**	**PA4048**	**PA4096**	**BF7641**	**N/R**	

OBS = Obsolete. Availability Limited to Distributor Stock. t Transmission, Not Model, Determines Which Transmission Filter is Used.

BMW Cont'd.

Year	Model and Engine	VIN	Lube	Air	Cabin Air	Fuel	Breather	Trans.t
1998	528i 6-170 (2.8L) SFI		**P7138**	**PA4048**		**BF7641**	**N/R**	
	540i V8-268 (4.4L) FI		**P7137**	**PA4091**		**BF7641**	**N/R**	
	740i, 740iL V8-268 (4.4L) EFI		**P7137**	**PA4091**	**[2] PA4097**	**BF7641**	**N/R**	
	750iL V12-328 (5.4L) EFI		**P7137**		**[2] PA4097**	**BF7641**	**N/R**	
	M3 6-192 (3.2L) EFI		**P7088**	**PA4048**	**PA4096**	**BF7641**	**N/R**	**M.T.**
	Z3 4-116 (1.9L) SFI		**P7426**		**N/R**	**BF7641**	**N/R**	
	6-170 (2.8L) FI		**P7138**	**PA4048**	**N/R**	**BF7641**	**N/R**	
	6-192 (3.2L) EFI		**P7088**	**PA4048**	**N/R**	**BF7641**	**N/R**	**M.T.**
1997	318 Series 4-116 (1.9L) SFI		**P7426**		**PA4096**	**BF7641**	**N/R**	
	328 Series 6-170 (2.8L) EFI		**P7138**	**PA4048**	**PA4096**	**BF7641**	**N/R**	
	528i 6-170 (2.8L) SFI		**P7138**	**PA4048**		**BF7641**	**N/R**	
	540i V8-268 (4.4L) FI		**P7137**	**PA4091**		**BF7641**	**N/R**	
	740i, 740iL V8-268 (4.4L) EFI		**P7137**	**PA4091**	**[2] PA4097**	**BF7641**	**N/R**	
	750iL V12-328 (5.4L) EFI		**P7137**		**[2] PA4097**	**BF7641**	**N/R**	
	840Ci V8-268 (4.4L) EFI		**P7137**	**PA4091**	**N/R**	**BF7641**	**N/R**	
	850Ci V12-328 (5.4L) SFI		**P7137**	**[2] PA4047**	**N/R**		**N/R**	
	M3 6-192 (3.2L) EFI		**P7088**	**PA4048**	**PA4096**	**BF7641**	**N/R**	**M.T.**
	Z3 4-116 (1.9L) SFI		**P7426**		**N/R**	**BF7641**	**N/R**	
	6-170 (2.8L) FI		**P7138**	**PA4048**	**N/R**	**BF7641**	**N/R**	
1996	318 Series 4-116 (1.9L) EFI		**P7426**		**PA4096**	**BF7641**	**N/R**	
	328 Series 6-170 (2.8L) EFI		**P7138**	**PA4048**	**PA4096**	**BF7641**	**N/R**	
	740i, 740iL V8-268 (4.4L) EFI		**P7137**	**PA4091**	**[2] PA4097**	**BF7641**	**N/R**	
	750iL V12-328 (5.4L) EFI		**P7137**		**[2] PA4097**	**BF7641**	**N/R**	
	840Ci V8-268 (4.4L) EFI		**P7137**	**PA4091**	**N/R**	**BF7641**	**N/R**	
	850Ci V12-328 (5.4L) SFI		**P7137**	**[2] PA4047**	**N/R**		**N/R**	
	M3 6-192 (3.2L) EFI		**P7088**	**PA4048**	**PA4096**	**BF7641**	**N/R**	
	Z3 4-116 (1.9L) SFI		**P7426**		**N/R**	**BF7641**	**N/R**	
1995	318 Series 4-110 (1.8L) EFI	3	**P7087**				**N/R**	
	320i 6-1990cc (2.0L) FI Canada		**P7088**	**PA4048**	**N/R**	**BF7641**	**N/R**	
	325i 6-152 (2.5L) EFI	3	**P7088**	**PA4048**	**PA4096**	**BF1195**	**N/R**	
	325iS 6-152 (2.5L) FI		**P7088**	**PA4048**	**PA4096**	**BF1195**	**N/R**	
	525i, 525iT 6-152 (2.5L) EFI	3	**P7088**	**PA2235**	**N/R**	**BF1195**	**N/R**	
	530i V8-183 (3.0L) EFI	3	**P7137**	**PA4091**	**N/R**	**BF7641**	**N/R**	
	530iT V8-183 (3.0L) EFI	3	**P7137**	**PA4091**	**N/R**		**N/R**	
	540i V8-243 (4.0L) EFI	3	**P7137**	**PA4091**	**N/R**	**BF7641**	**N/R**	
	740i, 740iL V8-243 (4.0L) EFI	3	**P7137**	**PA4091**	**N/R**	**BF7641**	**N/R**	
	750iL V12-328 (5.4L) EFI		**P7137**	**[2] PA4047**	**N/R**		**N/R**	
	840Ci V8-243 (4.0L) EFI	3	**P7137**	**PA4091**	**N/R**	**BF7641**	**N/R**	
	850Ci V12-328 (5.4L) SFI		**P7137**	**[2] PA4047**	**N/R**		**N/R**	
	V12-340 (5.6L) EFI		**P7137**	**[2] PA4047**	**N/R**		**N/R**	
	M3 6-182 (3.0L) EFI	3	**P7088**	**PA4048**	**N/R**	**BF1195**	**N/R**	
1994	318 Series 4-110 (1.8L) EFI		**P7087**				**N/R**	
	320i 6-1990cc (2.0L) FI Canada		**P7088**	**PA4048**	**N/R**	**BF1195**	**N/R**	
	325i, 325iS 6-152 (2.5L) EFI 12 Valve		**B178**	**PA4047**	**PA4096**	**BF1195**	**N/R**	
	6-152 (2.5L) EFI 24 Valve		**P7088**	**PA4048**	**PA4096**	**BF1195**	**N/R**	
	325iS 6-152 (2.5L) FI		**P7088**	**PA4048**	**PA4096**	**BF1195**	**N/R**	
	525i, 525iT 6-152 (2.5L) EFI 12 Valve		**P7088**	**PA4047**	**N/R**	**BF1195**	**N/R**	
	6-152 (2.5L) EFI 24 Valve		**P7088**	**PA4048**	**N/R**	**BF1195**	**N/R**	
	530i, 530iT V8-183 (3.0L) EFI	3	**P7137**	**PA4091**	**N/R**		**N/R**	
	540i V8-243 (4.0L) EFI	3	**P7137**	**PA4091**	**N/R**		**N/R**	
	740i, 740iL V8-243 (4.0L) EFI		**P7137**	**PA4091**	**N/R**		**N/R**	
	750iL V12-328 (5.4L) EFI		**P7137**	**[2] PA4047**	**N/R**		**N/R**	
	840Ci V8-243 (4.0L) EFI		**P7137**	**PA4091**	**N/R**	**BF7641**	**N/R**	
	850Ci, 850CSi V12-304 (5.0L) EFI		**P7137**	**[2] PA4047**	**N/R**		**N/R**	
	V12-340 (5.6L) EFI		**P7137**	**[2] PA4047**	**N/R**		**N/R**	
	M3 6-2990cc (3.0L) FI Canada		**P7088**	**PA4048**	**N/R**	**BF1195**	**N/R**	
1993	318 Series 4-110 (1.8L) SFI		**P7087**	**PA4047**	**N/R**		**N/R**	
	320i 6-1990cc (2.0L) FI Canada		**P7088**	**PA4048**	**N/R**	**BF1195**	**N/R**	
	325i, 325iC, 325iS 6-152 (2.5L) SFI 12 Valve		**B178**	**PA4047**	**PA4096**	**BF1195**	**N/R**	
	6-152 (2.5L) SFI 24 Valve		**P7088**	**PA4048**	**PA4096**	**BF1195**	**N/R**	
	325iS L6-152 (2.5L) FI		**P7088**	**PA4048**	**PA4096**	**BF1195**	**N/R**	
	525i, 525iT 6-152 (2.5L) SFI 12 Valve		**B178**	**PA4047**	**N/R**	**BF1195**	**N/R**	
	6-152 (2.5L) SFI 24 Valve		**P7088**	**PA2235**	**N/R**	**BF1195**	**N/R**	
	535i 6-209 (3.5L) EFI		**P7114**		**N/R**	**BF1195**	**N/R**	
	740i, 740iL V8-243 (4.0L) SFI		**P7137**	**PA4091**	**N/R**		**N/R**	
	750iL V12-304 (5.0L) EFI		**P7137**	**[2] PA4047**	**N/R**		**N/R**	

[t] Transmission, Not Model, Determines Which Transmission Filter is Used. OBS = Obsolete. Availability Limited to Distributor Stock.

BMW Cont'd.

Year	Model and Engine	VIN	Lube	Air	Cabin Air	Fuel	Breather	Trans.[t]
1993	850Ci V12-304 (5.0L) FI		**P7137**	**[2] PA4047**	**N/R**		**N/R**	
	M5 6-216 (3.6L) EFI		**P7114**	**PA2235**	**N/R**	**BF1195**	**N/R**	**M.T.**
1992	318 Series 4-110 (1.8L) SFI		**P7087**	**PA4047**	**N/R**	**BF1195**	**N/R**	
	320i 6-1990cc (2.0L) FI Canada		**P7088**	**PA4048**	**N/R**	**BF1195**	**N/R**	
	325i, 325iS 6-152 (2.5L) EFI		**B178**	**PA4048**	**PA4096**	**BF1195**	**N/R**	
	325iC 6-152 (2.5L) EFI		**B178**	**PA4047**	**PA4096**	**BF1195**	**N/R**	
	525i 6-152 (2.5L) EFI 12 Valve		**BT223**	**PA4047**	**N/R**	**BF1195**	**N/R**	
	6-152 (2.5L) EFI 24 Valve		**P7088**	**PA2235**	**N/R**	**BF1195**	**N/R**	
	535i 6-209 (3.5L) EFI		**P7114**		**N/R**	**BF1195**	**N/R**	
	735i, 735iL 6-209 (3.5L) EFI		**P7114**		**N/R**	**BF1195**	**N/R**	
	750iL V12-304 (5.0L) EFI		**P7137**	**[2] PA4047**	**N/R**		**N/R**	
	850i V12-304 (5.0L) EFI		**P7137**	**[2] PA4047**	**N/R**		**N/R**	
	M5 6-216 (3.6L) EFI		**P7114**	**PA2235**	**N/R**	**BF1195**	**N/R**	**M.T.**
1991	318 Series 4-110 (1.8L) EFI		**P7087**	**PA4047**	**N/R**	**BF1195**	**N/R**	
	325i, 325iC, 325iS, 325iX 6-152 (2.5L) EFI		**B178**	**PA4047**	**PA4096**	**BF1195**	**N/R**	
	525i 6-152 (2.5L) EFI 12 Valve		**BT223**	**PA4047**	**N/R**	**BF1195**	**N/R**	
	6-152 (2.5L) EFI 24 Valve		**P7088**	**PA2235**	**N/R**	**BF1195**	**N/R**	
	535i 6-209 (3.5L) EFI		**P7114**		**N/R**	**BF1195**	**N/R**	
	735i, 735iL 6-209 (3.5L) EFI		**P7114**		**N/R**	**BF1195**	**N/R**	
	750iL V12-304 (5.0L) EFI		**P7137**	**[2] PA4047**	**N/R**		**N/R**	
	850i V12-304 (5.0L) EFI		**P7137**	**[2] PA4047**	**N/R**		**N/R**	
	M3 4-140 (2.3L) EFI		**BT223**		**N/R**	**BF1195**	**N/R**	
	M5 6-216 (3.6L) EFI		**P7114**	**PA2235**	**N/R**	**BF1195**	**N/R**	**M.T.**
1990	325i, 325iC, 325iS, 325iX 6-152 (2.5L) EFI		**BT223**	**PA4047**	**PA4096**	**BF1195**	**N/R**	
	525i 6-152 (2.5L) EFI		**BT223**	**PA4047**	**N/R**	**BF1195**	**N/R**	
	535i 6-209 (3.5L) EFI		**P7114**		**N/R**	**BF1195**	**N/R**	
	735i, 735iL 6-209 (3.5L) EFI		**P7114**		**N/R**	**BF1195**	**N/R**	
	750iL V12-304 (5.0L) EFI			**[2] PA4047**	**N/R**		**N/R**	
	M3 4-140 (2.3L) EFI		**BT223**		**N/R**	**BF1195**	**N/R**	
1989	325i, 325iC, 325iS, 325iX 6-152 (2.5L) EFI		**BT223**	**PA4047**	**N/R**	**BF1195**	**N/R**	
	525i 6-152 (2.5L) EFI		**BT223**	**PA4047**	**N/R**	**BF1195**	**N/R**	
	535i 6-209 (3.5L) EFI		**P7114**		**N/R**	**BF1195**	**N/R**	
	635CSi 6-209 (3.5L) EFI		**P7114**		**N/R**	**BF1195**	**N/R**	
	735i, 735iL 6-209 (3.5L) EFI		**P7114**		**N/R**	**BF1195**	**N/R**	
	750iL V12-304 (5.0L) EFI			**[2] PA4047**	**N/R**		**N/R**	
	M3 4-140 (2.3L) EFI		**BT223**		**N/R**	**BF1195**	**N/R**	
1988	325, 325i, 325iC, 325iS, 325iX 6-152 (2.5L) EFI		**BT223**	**PA4047**	**N/R**	**BF1195**	**N/R**	
	6-164 (2.7L) EFI		**BT223**	**PA4047**	**N/R**	**BF1195**	**N/R**	
	528e 6-164 (2.7L) EFI		**BT223**	**PA4047**	**N/R**	**BF1195**	**N/R**	
	535i, 535iS 6-209 (3.5L) EFI		**P7114**		**N/R**	**BF1195**	**N/R**	
	635CSi 6-209 (3.5L) EFI		**P7114**		**N/R**	**BF1195**	**N/R**	
	735i, 735iL 6-209 (3.5L) EFI		**P7114**		**N/R**	**BF1195**	**N/R**	
	750iL V12-304 (5.0L) EFI			**[2] PA4047**	**N/R**		**N/R**	
	M3 4-140 (2.3L) EFI		**BT223**		**N/R**	**BF1195**	**N/R**	
	M5, M6 6-211 (3.5L) EFI		**P7114**	**PA2235**	**N/R**	**BF1195**	**N/R**	**M.T.**
1987	325, 325e 6-2693cc (2.7L) FI		**BT223**	**PA4047**	**N/R**	**BF1195**	**N/R**	
	325i, 325iC, 325iS 6-152 (2.5L) FI		**BT223**	**PA4047**	**N/R**	**BF1195**	**N/R**	
	528e 6-2693cc (2.7L) FI		**B178**	**PA4047**	**N/R**	**BF1195**	**N/R**	
	535i 6-209 (3.5L) FI		**P7114**		**N/R**	**BF1195**	**N/R**	
	635CSi 6-209 (3.5L) FI		**P7114**		**N/R**	**BF1195**	**N/R**	
	735i 6-209 (3.5L) FI		**P7114**		**N/R**	**BF1195**	**N/R**	
	M5, M6 6-211 (3.5L) EFI		**P7114**	**PA2235**	**N/R**	**BF1195**	**N/R**	
1986	325 6-2693cc (2.7L) EFI		**B178**		**N/R**	**BF1195**	**N/R**	
	325e 6-2693cc (2.7L) FI		**B178**	**PA4047**	**N/R**	**BF1195**	**N/R**	
	528e 6-2693cc (2.7L) FI		**B178**	**PA4047**	**N/R**	**BF1195**	**N/R**	
	535i 6-209 (3.5L) FI		**P7114**		**N/R**	**BF1195**	**N/R**	
	635CSi 6-209 (3.5L) FI		**P7114**		**N/R**	**BF1195**	**N/R**	
	735i 6-209 (3.5L) FI		**P7114**		**N/R**	**BF1195**	**N/R**	
1985	318i 4-110 (1.8L) FI		**BT223**	**PA4047**	**N/R**	**BF1195**	**N/R**	
	325, 325e 6-2693cc (2.7L) FI		**B178**		**N/R**	**BF1195**	**N/R**	
	528e 6-2693cc (2.7L) FI		**B178**		**N/R**	**BF1195**	**N/R**	
	535i 6-209 (3.5L) FI		**P7114**		**N/R**	**BF1195**	**N/R**	
	635CSi 6-209 (3.5L) FI		**P7114**		**N/R**	**BF1195**	**N/R**	
	735i 6-209 (3.5L) FI		**P7114**		**N/R**	**BF1195**	**N/R**	
1984	318i 4-110 (1.8L) FI		**BT223**		**N/R**	**BF1195**	**N/R**	
	325e 6-2693cc (2.7L) FI		**B178**		**N/R**	**BF1195**	**N/R**	

OBS = Obsolete. Availability Limited to Distributor Stock. [t] Transmission, Not Model, Determines Which Transmission Filter is Used.

Year	Model and Engine	VIN	Lube	Air	Cabin Air	Fuel	Breather	Trans.t
BMW Cont'd.								
1984	528e 6-2693cc (2.7L) FI		**B178**		**N/R**	**BF1195**	**N/R**	
	533i 6-3210cc (3.2L) FI		**P7114**		**N/R**	**BF1195**	**N/R**	
	633CSi 6-3210cc (3.2L) FI		**P7114**		**N/R**	**BF1195**	**N/R**	
	733i 6-3210cc (3.2L) FI		**P7114**		**N/R**	**BF1195**	**N/R**	
1983	318i 4-110 (1.8L) FI		**BT223**		**N/R**	**BF1195**	**N/R**	
	320i 4-110 (1.8L) FI		**BT223**		**N/R**		**N/R**	
	528e 6-2693cc (2.7L) FI		**B178**		**N/R**	**BF1195**	**N/R**	
	533i 6-3210cc (3.2L) FI		**P7114**		**N/R**	**BF1195**	**N/R**	
	633CSi 6-3210cc (3.2L) FI		**P7114**		**N/R**	**BF1195**	**N/R**	
	733i 6-3210cc (3.2L) FI		**P7114**		**N/R**	**BF1195**	**N/R**	
1982	320i 4-110 (1.8L) FI		**BT223**		**N/R**		**N/R**	
	528e 6-2693cc (2.7L) FI		**B178**		**N/R**	**BF1195**	**N/R**	
	633CSi 6-3210cc (3.2L) FI		**P7114**		**N/R**	**BF1195**	**N/R**	
	733i 6-3210cc (3.2L) FI		**P7114**		**N/R**	**BF1195**	**N/R**	
1981	320i 4-110 (1.8L) FI		**BT223**		**N/R**		**N/R**	
	528i 6-2788cc (2.8L) FI		**P7114**		**N/R**	**BF1195**	**N/R**	
	633CSi 6-3210cc (3.2L) FI		**P7114**		**N/R**	**BF1195**	**N/R**	
	733i 6-3210cc (3.2L) FI		**P7114**		**N/R**	**BF1195**	**N/R**	
1980	320i 4-110 (1.8L) FI		**BT223**		**N/R**		**N/R**	
	633CSi 6-3210cc (3.2L) FI		**P7114**		**N/R**	**BF1195**	**N/R**	
	733i 6-3210cc (3.2L) FI		**P7114**		**N/R**	**BF1195**	**N/R**	
BMW Motorcycles								
	900/5, 900/6		**P149**					
	K100							
	F650							
	F800							
	G650							
	K1							
	K1100							
	R45		1969-72 **P149**					
	R50/5		**P149**	4 1/2 In. **PA2044**				
	R60		1969-84 **P149**	4 1/2 In. **PA2044**				
	R60/5		1969-73 **P149**	4 1/2 In. **PA2044**				
	R60/6		1973-76 **P149**	4 1/2 In. **PA2044**				
	R60/7		1976-80 **P149**	4 1/2 In. **PA2044**				
	R65		1978-85 **P149**	4 1/2 In. **PA2044**				
	R65 LS		1978-85 **P149**					
	R67/3, R69			**PA697**				
	R75		1969-84 **P149**	**PA2044**				
	K1200							
	R75/5		1970-73 **P149**	1970-73 **PA2044**				
	R75/6		1974-76 **P149**	1974-76 4 1/2 In. **PA2044**				
	R75/7		1976-77 **P149**	4 1/2 In. **PA2044**				
	R75/9			4 1/2 In. **PA2044**				
	R80			**PA2044**				
	R80G							
	R80 GS		1987-90 (w/o Oil Cooler) **P149**					
	R80RT		1982-95 **P149**	1982-84 **PA2044**				
	R80S							
	R80ST							
	R80/7		1976-84 **P149**	1976-84 (Round) **PA2044**				
	R90/S		1969-76 **P149**	1969-76 **PA2044**				
	R90/5		**P149**	**PA2044**				
	R90/6		1974-76 **P149**	1974-76 **PA2044**				
	R100C S		1980-84 **P149**	1980-84 **PA2044**				
	R100G S							
	R100M YS							
	R100P D							
	R100R							
	R100RS			**PA2044**				
	R100RT			**PA2044**				
	R100S		1976-80 **P149**	**PA2044**				
	R100T		1976-84 **P149**					

[t] Transmission, Not Model, Determines Which Transmission Filter is Used. OBS = Obsolete. Availability Limited to Distributor Stock.

Year	Model and Engine	VIN	Lube	Air	Cabin Air	Fuel	Breather	Trans.[t]
BMW Motorcycles Cont'd.								
	R100/7		1976-78 **P149**	1976-78 **PA2044**				
	R560/5		1969-72 **P149**					
	R850, R1100							
BUELL Motorcycles								
	M2 Cyclone Series		1997-2002 **B1413**					
	R1200 Series		1989-93 **B1413**					
	RR1000		1987-88 **B1413**					
	S1 Lightning		1994-99 **B1413**					
	S1 White Lightning		1998, 2002 **B1413**					
	S2 Thunderbolt		1994-99 **B1413**					
	S2T Thunderbolt		1994-99 **B1413**					
	S3 Thunderbolt		1994-99 **B1413**					
	S3T Thunderbolt		1994-99 **B1413**					
	SportTouring ST3 Series		1997-2003 **B1413**					
	ST2		1997-2003 **B1413**					
	Superbike		1990-97 **B1413**					
	X1 Lightning		1999-2002 **B1413**					
	X1W White Lightning		2002 **B1413**					
BUICK								
2010	Allure 4-145 (2.4L) DI Canada	W	**P1445**			**N/S**	**N/R**	**N/S**
	V6-182 (3.0L) DI Canada	G	**B160**			**N/S**	**N/R**	
	V6-217 (3.6L) DI Canada	V	**B160**			**N/S**	**N/R**	
	Enclave V6-217 (3.6L) SFI	D	**B160**	**PA4418**	**N/R**	**N/S**	**N/R**	
	LaCrosse 4-145 (2.4L) DI	W	**P1445**			**N/S**	**N/R**	
	V6-182 (3.0L) DI	G	**B160**			**N/S**	**N/R**	
	V6-217 (3.6L) SFI	V	**B160**			**N/S**	**N/R**	
	Lucerne V6-237 (3.9L) FI or Flex Fuel	1,M	**B7010**	**PA4157**	(w/o Charcoal) **PA4330** (w/Charcoal) **PA4384**	**N/S**	**N/R**	4T65-E (w/o Gskt.) **18022** (w/Gskt.) **20014**
	Lucerne Super V8-281 (4.6L) FI HO	9	**B7010**	**PA4157**	(w/o Charcoal) **PA4330** (w/Charcoal) **PA4384**	**N/S**	**N/R**	
2009	Allure V6-217 (3.6L) FI Canada	7	**B160**	**PA4146**	**PA4154**	**N/S**	**N/R**	4T65-E (w/o Gskt.) **18022** (w/Gskt.) **20014**
	V6-231 (3.8L) FI Canada	2	**B43-S**	**PA4146**	**PA4154**	**N/S**	**N/R**	4T65-E (w/o Gskt.) **18022** (w/Gskt.) **20014**
	Allure Super V8-325 (5.3L) FI Canada	C	**B160**	**PA4178**	**PA4154**	**N/S**	**N/R**	(w/o Gskt.) **18022** (w/Gskt.) **20014**
	Enclave V6-217 (3.6L) SFI	D	**B160**	**PA4418**	**N/R**	**N/S**	**N/R**	
	LaCrosse V6-217 (3.6L) SFI	7	**B160**	**PA4146**	**PA4154**	**N/S**	**N/R**	4T65-E (w/o Gskt.) **18022** (w/Gskt.) **20014**
	V6-231 (3.8L) SFI	2	**B43-S**	**PA4146**	**PA4154**	**N/S**	**N/R**	4T65-E (w/o Gskt.) **18022** (w/Gskt.) **20014**
	LaCrosse Super V8-325 (5.3L) SFI	C	**B160**	**PA4178**	**PA4154**	**N/S**	**N/R**	4T65-E (w/o Gskt.) **18022** (w/Gskt.) **20014**
	Lucerne V6-237 (3.9L) FI or Flex Fuel	1,M	**B7010**	**PA4157**	(w/o Charcoal) **PA4330** (w/Charcoal) **PA4384**	**N/S**	**N/R**	4T65-E (w/o Gskt.) **18022** (w/Gskt.) **20014**
	Lucerne Super V8-281 (4.6L) FI HO	9	**B7010**	**PA4157**	(w/o Charcoal) **PA4330** (w/Charcoal) **PA4384**	**N/S**	**N/R**	4T65-E (w/o Gskt.) **18022** 4T65E (w/Gskt.) **20014** 4T80-E **18009**
2008	Allure V6-217 (3.6L) FI Canada	7	**B160**	**PA4146**	**PA4154**	**N/S**	**N/R**	4T65-E (w/o Gskt.) **18022** (w/Gskt.) **20014**

OBS = Obsolete. Availability Limited to Distributor Stock. [t] Transmission, Not Model, Determines Which Transmission Filter is Used.

BUICK Cont'd.

Year	Model and Engine	VIN	Lube	Air	Cabin Air	Fuel	Breather	Trans.[t]
2008	Allure V6-231 (3.8L) FI Canada	2	**B43-S**	**PA4146**	**PA4154**	**N/S**	**N/R**	4T65-E (w/o Gskt.) **18022** (w/Gskt.) **20014**
	Allure Super V8-325 (5.3L) FI Canada	C	**B160**	**PA4178**	**PA4154**	**N/S**	**N/R**	(w/o Gskt.) **18022** (w/Gskt.) **20014**
	Enclave V6-217 (3.6L) SFI	7	**B160**	**PA4418**	**N/R**	**N/S**	**N/R**	
	LaCrosse V6-217 (3.6L) SFI	7	**B160**	**PA4146**	**PA4154**	**N/S**	**N/R**	(w/o Gskt.) **18022** (w/Gskt.) **20014**
	V6-231 (3.8L) SFI	2	**B43-S**	**PA4146**	**PA4154**	**N/S**	**N/R**	(w/o Gskt.) **18022** (w/Gskt.) **20014**
	LaCrosse Super V8-325 (5.3L) SFI	C	**B160**	**PA4178**	**PA4154**	**N/S**	**N/R**	4T65-E (w/o Gskt.) **18022** (w/Gskt.) **20014**
	Lucerne V6-231 (3.8L) FI	2	**B43-S**	**PA4157**	(w/o Charcoal) **PA4330** (w/Charcoal) **PA4384**	**N/S**	**N/R**	4T60-E (w/o Gskt.) **18022** 4T60-E (w/Gskt.) **20014** 4T80-E **18009**
	V8-281 (4.6L) FI	Y	**B7010**	**PA4157**	(w/o Charcoal) **PA4330** (w/Charcoal) **PA4384**	**N/S**	**N/R**	4T60-E (w/o Gskt.) **18022** 4T60-E (w/Gskt.) **20014** 4T80-E **18009**
	Lucerne Super V8-281 (4.6L) FI HO	9	**B7010**	**PA4157**	(w/o Charcoal) **PA4330** (w/Charcoal) **PA4384**	**N/S**	**N/R**	4T60-E (w/o Gskt.) **18022** 4T60-E (w/Gskt.) **20014** 4T80-E **18009**
2007	Allure V6-217 (3.6L) FI Canada	7	**B7010**	**PA4146**	**PA4154**	**N/S**	**N/R**	4T65-E (w/o Gskt.) **18022** (w/Gskt.) **20014**
	V6-231 (3.8L) FI Canada	2	**B43-S**	**PA4146**	**PA4154**	**N/S**	**N/R**	4T65-E (w/o Gskt.) **18022** (w/Gskt.) **20014**
	LaCrosse V6-217 (3.6L) SFI	7	**B7010**	**PA4146**	**PA4154**	**N/S**	**N/R**	4T65-E (w/o Gskt.) **18022** (w/Gskt.) **20014**
	V6-231 (3.8L) SFI	2	**B43-S**	**PA4146**	**PA4154**	**N/S**	**N/R**	4T65-E (w/o Gskt.) **18022** (w/Gskt.) **20014**
	Lucerne V6-231 (3.8L) SFI	2	**B43-S**	**PA4157**	(w/o Charcoal) **PA4330** (w/Charcoal) **PA4384**	**N/S**	**N/R**	4T60E (w/o Gskt.) **18022** 4T60E (w/Gskt.) **20014** 4T80E **18009**
	V8-281 (4.6L) SFI	Y	**B7010**	**PA4157**	(w/o Charcoal) **PA4330** (w/Charcoal) **PA4384**	**N/S**	**N/R**	4T60E (w/o Gskt.) **18022** 4T60E (w/Gskt.) **20014** 4T80E **18009**
	Rainier 6-256 (4.2L) SFI	S	**B7010**	**RS4161**	**N/R**	**N/S**	**N/R**	4L60E S. Pan **18010** 4L60E D. Pan **18056**
	V8-325 (5.3L) SFI	M	**B160**	**RS4161**	**N/R**	**N/S**	**N/R**	4L60E S. Pan **18010** 4L60E D. Pan **18056**
	Rendezvous V6-213 (3.5L) SFI	L	**B43-S**	**PA2231**	**PA4156 KIT**	**BF7769**	**N/R**	4T65-E (w/o Gskt.) **18022** (w/Gskt.) **20014**
	Terraza V6-238 (3.9L) SFI or Flex Fuel	1,W	**B7010**	**PA2231**	**PA4156 KIT**	**N/S**	**N/R**	4T65-E (w/o Gskt.) **18022** (w/Gskt.) **20014**
2006	Allure V6-217 (3.6L) FI Canada	7	**B7010**	**PA4146**	**PA4154**	**BF1171**	**N/R**	4T65-E (w/o Gskt.) **18022** (w/Gskt.) **20014**
	V6-231 (3.8L) FI Canada	2	**B43-S**	**PA4146**	**PA4154**	**BF1171**	**N/R**	4T65-E (w/o Gskt.) **18022** (w/Gskt.) **20014**

[t] Transmission, Not Model, Determines Which Transmission Filter is Used. OBS = Obsolete. Availability Limited to Distributor Stock.

BUICK Cont'd.

Year	Model and Engine	VIN	Lube	Air	Cabin Air	Fuel	Breather	Trans.†
2006	LaCrosse V6-217 (3.6L) SFI	7	**B7010**	**PA4146**	**PA4154**	**N/S**	**N/R**	4T65-E (w/o Gskt.) **18022** (w/Gskt.) **20014**
	V6-231 (3.8L) SFI	2	**B43-S**	**PA4146**	**PA4154**	**N/S**	**N/R**	4T65-E (w/o Gskt.) **18022** (w/Gskt.) **20014**
	Lucerne V6-231 (3.8L) SFI	2	**B43-S**	**PA4157**	(w/o Charcoal) **PA4330** (w/Charcoal) **PA4384**	**N/S**	**N/R**	4T60-E (w/o Gskt.) **18022** 4T60-E (w/Gskt.) **20014** 4T80-E **18009**
	V6-281 (4.6L) FI	Y	**B7010**	**PA4157**	(w/o Charcoal) **PA4330** (w/Charcoal) **PA4384**	**N/S**	**N/R**	4T60-E (w/o Gskt.) **18022** 4T60-E (w/Gskt.) **20014** 4T80E **18009**
	Rainier 6-256 (4.2L) SFI	S	**B7010**	**RS4161**	**N/R**	**N/S**	**N/R**	4L60E S. Pan **18010** 4L60E D. Pan **18056**
	V8-325 (5.3L) SFI	M	**B31**	**RS4161**	**N/R**	**N/S**	**N/R**	4L60E S. Pan **18010** 4L60E D. Pan **18056**
	Rendezvous V6-213 (3.5L) SFI	L	**B43-S**	**PA2231**	**PA4156 KIT**	**N/S**	**N/R**	AWD & 4T65-E (w/o Gskt.) **18022** (w/Gskt.) **20014**
	V6-217 (3.6L) SFI	7	**B7010**	**PA2231**	**PA4156 KIT**	**N/S**	**N/R**	AWD & 4T65-E (w/o Gskt.) **18022** (w/Gskt.) **20014**
	Terraza V6-213 (3.5L) SFI	L	**B43-S**	**PA2231**	**PA4156 KIT**	**N/S**	**N/R**	4T65-E (w/o Gskt.) **18022** (w/Gskt.) **20014**
	V6-237 (3.9L) SFI	1	**B7010**	**PA2231**	**PA4156 KIT**	**N/S**	**N/R**	4T65-E (w/o Gskt.) **18022** (w/Gskt.) **20014**
2005	Allure V6-217 (3.6L) FI Canada	7	**B7010**	**PA4146**	**PA4154**	**BF1171**	**N/R**	4T65-E (w/o Gskt.) **18022** (w/Gskt.) **20014**
	V6-231 (3.8L) FI Canada	2	**B43-S**	**PA4146**	**PA4154**	**BF1171**	**N/R**	4T65-E (w/o Gskt.) **18022** (w/Gskt.) **20014**
	Century V6-189 (3.1L) SFI	J	**B43-S**	**PA4146**	**PA4154**	**BF1171**	**N/R**	(w/o Gskt.) **18022** (w/Gskt.) **20014**
	LaCrosse V6-217 (3.6L) SFI	7	**B7010**	**PA4146**	**PA4154**	**BF1171**	**N/R**	4T65-E (w/o Gskt.) **18022** (w/Gskt.) **20014**
	V6-231 (3.8L) SFI	2	**B43-S**	**PA4146**	**PA4154**	**BF1171**	**N/R**	4T65-E (w/o Gskt.) **18022** (w/Gskt.) **20014**
	LeSabre V6-231 (3.8L) SFI	K	**B43-S**	**PA2189**	Opt. (w/o Charcoal) **PA4330** Opt. (w/Charcoal) **PA4384**	**BF1171**	**N/R**	(w/o Gskt.) **18022** (w/Gskt.) **20014**
	Park Avenue V6-231 (3.8L) SFI or Supercharged	1,K	**B43-S**	**PA2189**		**BF1171**	**N/R**	(w/o Gskt.) **18022** (w/Gskt.) **20014**
	Rainier 6-256 (4.2L) MFI	S	**B7010**	**RS4161**	**N/R**	**BF7762**	**N/R**	4L60E S. Pan **18010** 4L60E D. Pan **18056**
	V8-323 (5.3L) SFI	M	**B31**	**RS4161**	**N/R**	**BF7762**	**N/R**	4L60E S. Pan **18010** 4L60E D. Pan **18056**
	Rendezvous V6-207 (3.4L) SFI	E	**B43-S**	**PA2231**	**PA4156 KIT**	**BF7769**	**N/R**	AWD & 4T65-E (w/o Gskt.) **18022** (w/Gskt.) **20014**
	V6-217 (3.6L) SFI	7	**B7010**	**PA2231**	**PA4156 KIT**	**BF7769**	**N/R**	AWD (w/o Gskt.) **18022** (w/Gskt.) **20014**
	Terraza V6-213 (3.5L) SFI	L	**B43-S**	**PA2231**	**PA4156 KIT**	**N/S**	**N/R**	(w/o Gskt.) **18022** (w/Gskt.) **20014**

OBS = Obsolete. Availability Limited to Distributor Stock. † Transmission, Not Model, Determines Which Transmission Filter is Used.

BUICK Cont'd.

Year	Model and Engine	VIN	Lube	Air	Cabin Air	Fuel	Breather	Trans.[t]
2004	Century V6-189 (3.1L) SFI	J	**B43-S**	**PA4146**	**PA4154**	**BF1171**	**N/R**	(w/o Gskt.) **18022** (w/Gskt.) **20014**
	LeSabre V6-231 (3.8L) SFI	K	**B43-S**	**PA2189**	Opt. (w/o Charcoal) **PA4330** Opt. (w/Charcoal) **PA4384**	**BF1171**	**N/R**	(w/o Gskt.) **18022** (w/Gskt.) **20014**
	Park Avenue V6-231 (3.8L) SFI or Supercharged	1,K	**B43-S**	**PA2189**		**BF1171**	**N/R**	(w/o Gskt.) **18022** (w/Gskt.) **20014**
	Rainier 6-256 (4.2L) MFI	S	**B7010**	**RS4161**	**N/R**	**BF7762**	**N/R**	4L60E S. Pan **18010** 4L60E D. Pan **18056**
	V8-323 (5.3L) SFI	P	**B31**	**RS4161**	**N/R**	**BF7762**	**N/R**	4L60E S. Pan **18010** 4L60E D. Pan **18056**
	Regal V6-231 (3.8L) SFI or Supercharged	1,K	**B43-S**	**PA4146**	**PA4154**	**BF1171**	**N/R**	4T65-E (w/o Gskt.) **18022** (w/Gskt.) **20014**
	Rendezvous V6-207 (3.4L) SFI	E	**B43-S**	**PA2231**	**PA4156 KIT**	1 Quick Connect End **BF7719** 2 Male Ends **BF7769**	**N/R**	AWD (w/o Gskt.) **18022** (w/Gskt.) **20014**
	V6-217 (3.6L) SFI	7	**B7010**	**PA2231**	**PA4156 KIT**	1 Quick Connect End **BF7719** 2 Male Ends **BF7769**	**N/R**	(w/o Gskt.) **18022** (w/Gskt.) **20014**
2003	Century V6-189 (3.1L) SFI	J	**B43-S**	**PA4146**	**PA4154**	**BF1171**	**N/R**	4T65-E (w/o Gskt.) **18022** (w/Gskt.) **20014**
	LeSabre V6-231 (3.8L) SFI	K	**B43-S**	**PA2189**	Opt. (w/o Charcoal) **PA4330** Opt. (w/Charcoal) **PA4384**	**BF1171**	**N/R**	4T65-E (w/o Gskt.) **18022** (w/Gskt.) **20014**
	Park Avenue V6-231 (3.8L) SFI or Supercharged	1,K	**B43-S**	**PA2189**		**BF1171**	**N/R**	4T65-E (w/o Gskt.) **18022** (w/Gskt.) **20014**
	Regal V6-231 (3.8L) SFI or Supercharged	1,K	**B43-S**	**PA4146**	**PA4154**	**BF1171**	**N/R**	4T65-E (w/o Gskt.) **18022** (w/Gskt.) **20014**
	Rendezvous V6-207 (3.4L) SFI	E	**B43-S**	**PA2231**	**PA4156 KIT**	(w/1 Male End) **BF7719** (w/2 Male Ends) **BF7769**	**N/R**	4T65-E (w/o Gskt.) **18022** (w/Gskt.) **20014**
2002	Century V6-189 (3.1L) SFI	J	**B43-S**	**PA4146**	**PA4154**	**BF1171**	**N/R**	4T65-E (w/o Gskt.) **18022** (w/Gskt.) **20014**
	LeSabre V6-231 (3.8L) SFI	K	**B43-S**	**PA2189**	(w/o Charcoal) **PA4330** (w/Charcoal) **PA4384**	**BF1171**	**N/R**	4T65-E (w/o Gskt.) **18022** (w/Gskt.) **20014**
	Park Avenue V6-231 (3.8L) SFI or Supercharged	1,K	**B43-S**	**PA2189**		**BF1171**	**N/R**	4T65-E (w/o Gskt.) **18022** (w/Gskt.) **20014**
	Regal V6-231 (3.8L) SFI or Supercharged	1,K	**B43-S**	**PA4146**	**PA4154**	**BF1171**	**N/R** **N/R**	4T65-E (w/o Gskt.) **18022** (w/Gskt.) **20014**
	Rendezvous V6-207 (3.4L) SFI	E	**B43-S**	**PA2231**	**PA4156 KIT**	**BF7719**	**N/R**	4T65-E (w/o Gskt.) **18022** (w/Gskt.) **20014**
2001	Century V6-189 (3.1L) SFI	J	**B43-S**	**PA4146**	**PA4154**	**BF1171**	**N/R**	(w/o Gskt.) **18022** (w/Gskt.) **20014**
	LeSabre V6-231 (3.8L) SFI	K	**B43-S**	**PA2189**	(w/o Charcoal) **PA4330** (w/Charcoal) **PA4384**	**BF1171**	**N/R**	(w/o Gskt.) **18022** (w/Gskt.) **20014**

[t] Transmission, Not Model, Determines Which Transmission Filter is Used. OBS = Obsolete. Availability Limited to Distributor Stock.

BUICK Cont'd.

Year	Model and Engine	VIN	Lube	Air	Cabin Air	Fuel	Breather	Trans.[t]
2001	Park Avenue V6-231 (3.8L) SFI or Supercharged	1,K	**B43-S**	**PA2189**		**BF1171**	**N/R**	(w/o Gskt.) **18022** (w/Gskt.) **20014**
	Regal V6-231 (3.8L) SFI or Supercharged	1,K	**B43-S**	**PA4146**	**PA4154**	**BF1171**	**N/R**	(w/o Gskt.) **18022** (w/Gskt.) **20014**
2000	Century V6-189 (3.1L) SFI	J	**B43-S**	**PA4146**	**PA4154**	**BF1171**	**N/R**	4T60E, 4T65-E (w/o Gskt.) **18022** (w/Gskt.) **20014**
	LeSabre V6-231 (3.8L) SFI	K	**B43-S**	**PA2189**	(w/o Charcoal) **PA4330** (w/Charcoal) **PA4384**	**BF1171**	**N/R**	4T60E, 4T65-E (w/o Gskt.) **18022** (w/Gskt.) **20014**
	Park Avenue V6-231 (3.8L) SFI or Supercharged	1,K	**B43-S**	**PA2189**		**BF1171**	**N/R**	(w/o Gskt.) **18022** (w/Gskt.) **20014**
	Regal V6-231 (3.8L) SFI or Supercharged	1,K	**B43-S**	**PA4146**	**PA4154**	**BF1171**	**N/R**	(w/o Gskt.) **18022** (w/Gskt.) **20014**
1999	Century V6-191 (3.1L) SFI	M	**B43-S**	**PA4146**	**PA4154**	**BF1171**	**N/R**	(w/o Gskt.) **18022** (w/Gskt.) **20014**
	LeSabre V6-231 (3.8L) SFI	K	**B43-S**	**PA2189**	**N/R**	**BF1171**	**N/R**	(w/o Gskt.) **18022** (w/Gskt.) **20014**
	Park Avenue V6-231 (3.8L) SFI or Supercharged	1,K	**B43-S**	**PA2189**		**BF1171**	**N/R**	(w/o Gskt) **18022** (w/Gskt.) **20014**
	Regal V6-231 (3.8L) SFI or Supercharged	1,K	**B43-S**	**PA4146**	**PA4154**	**BF1171**	**N/R**	(w/o Gskt.) **18022** (w/Gskt.) **20014**
	Riviera V6-231 (3.8L) Supercharged	1	**B43-S**	**PA2189**	**N/R**	**BF1171**	**N/R**	(w/o Gskt.) **18022** (w/Gskt.) **20014**
1998	Century V6-191 (3.1L) SFI	M	**B43-S**	**PA2231**	**PA4154**	**BF1171**	**N/R**	(w/o Gskt.) **18022** (w/Gskt.) **20014**
	LeSabre V6-231 (3.8L) SFI	K	**B43-S**	**PA2189**	**N/R**	**BF1171**	**N/R**	(w/o Gskt.) **18022** (w/Gskt.) **20014**
	Park Avenue V6-231 (3.8L) SFI or Supercharged	1,K	**B43-S**	**PA2189**		**BF1171**	**N/R**	(w/o Gskt.) **18022** (w/Gskt.) **20014**
	Regal V6-231 (3.8L) SFI or Supercharged	1,K	**B43-S**	**PA2231**	**PA4154**	**BF1171**	**N/R**	(w/o Gskt.) **18022** (w/Gskt.) **20014**
	Riviera V6-231 (3.8L) Supercharged	1	**B43-S**	**PA2189**	**N/R**	**BF1171**	**N/R**	(w/o Gskt.) **18022** (w/Gskt.) **20014**
	Skylark 4-146 (2.4L) SFI	T	**B31**	**PA4079**	**N/R**	**BF1171**	**N/R**	(w/o Gskt.) **18022** (w/Gskt.) **20014**
	V6-191 (3.1L) SFI	M	**B43-S**	**PA4079**	**N/R**	**BF1171**	**N/R**	(w/o Gskt.) **18022** (w/Gskt.) **20014**
1997	Century V6-191 (3.1L) SFI	M	**B43-S**	**PA2231**	**PA4154**	**BF1171**	**N/R**	(w/o Gskt.) **18022** (w/Gskt.) **20014**
	LeSabre V6-231 (3.8L) SFI	K	**B43-S**	**PA2189**	**N/R**	**BF1171**	**N/R**	(w/o Gskt.) **18022** (w/Gskt.) **20014**
	Park Avenue V6-231 (3.8L) SFI or Supercharged	1,K	**B43-S**	**PA2189**		**BF1171**	**N/R**	(w/o Gskt.) **18022** (w/Gskt.) **20014**
	Regal V6-231 (3.8L) SFI or Supercharged	1,K	**B43-S**	**PA2231**	**PA4154**	**BF1171**	**N/R**	(w/o Gskt.) **18022** (w/Gskt.) **20014**
	Riviera V6-231 (3.8L) SFI or Supercharged	1,K	**B43-S**	**PA2189**	**N/R**	**BF1171**	**N/R**	(w/o Gskt.) **18022** (w/Gskt.) **20014**
	Skylark 4-146 (2.4L) SFI	T	**B31**	**PA4079**	**N/R**	**BF1171**	**N/R**	(w/o Gskt.) **18022** (w/Gskt.) **20014**
	V6-191 (3.1L) SFI	M	**B43-S**	**PA4079**	**N/R**	**BF1171**	**N/R**	(w/o Gskt.) **18022** (w/Gskt.) **20014**
1996	Century 4-134 (2.2L) PFI	4	**B43-S**	**PA2134**	**N/R**	**BF1172**	**N/R**	4T60 **19593** 4T60E, 4T65-E (w/o Gskt.) **18022** 4T60E, 4T65E (w/Gskt.) **20014**
	V6-191 (3.1L) SFI	M	**B43-S**	**PA2136**	**N/R**	**BF1172**	**N/R**	4T60 **19593** 4T60E, 4T65-E (w/o Gskt.) **18022** 4T60E, 4T65E (w/Gskt.) **20014**
	LeSabre V6-231 (3.8L) SFI	K	**B43-S**	**PA2189**	**N/R**	**BF1171**	**N/R**	(w/o Gskt.) **18022** (w/Gskt.) **20014**
	Park Avenue, Park Avenue Ultra V6-231 (3.8L) SFI or Supercharged	1,K	**B43-S**	**PA2189**	**N/R**	**BF1171**	**N/R**	(w/o Gskt.) **18022** (w/Gskt.) **20014**

OBS = Obsolete. Availability Limited to Distributor Stock. [t] Transmission, Not Model, Determines Which Transmission Filter is Used.

BUICK Cont'd.

Year	Model and Engine	VIN	Lube	Air	Cabin Air	Fuel	Breather	Trans.[t]
1996	Regal V6-191 (3.1L) SFI	M	**B43-S**	**PA2231**	**N/R**	**BF1171**	**N/R**	(w/o Gskt.) **18022** (w/Gskt.) **20014**
	V6-231 (3.8L) SFI	K	**B43-S**	**PA2231**	**N/R**	**BF1171**	**N/R**	(w/o Gskt.) **18022** (w/Gskt.) **20014**
	Riviera V6-231 (3.8L) SFI or Supercharged	1,K	**B43-S**	**PA2189**	**N/R**	**BF1171**	**N/R**	(w/o Gskt.) **18022** (w/Gskt.) **20014**
	Roadmaster, Estate Wagon V8-350 (5.7L) SFI	P	**B35-S**	**PA2189**	**N/R**	**BF1045**	**N/R**	4L60E **18010**
	Skylark 4-148 (2.4L) SFI	T	**B31**	**PA4079**	**N/R**	**BF1171**	**N/R**	(w/o Gskt.) **18022** (w/Gskt.) **20014**
	V6-191 (3.1L) SFI	M	**B43-S**	**PA4079**	**N/R**	**BF1171**	**N/R**	(w/o Gskt.) **18022** (w/Gskt.) **20014**
1995	Century 4-133 (2.2L) MFI	4	**B43-S**	**PA2134**	**N/R**	**BF1172**	**N/R**	4T60 **19593** 4T60E, 4T65-E (w/o Gskt.) **18022** 4T60E, 4T65E (w/Gskt.) **20014**
	V6-191 (3.1L) SFI	M	**B43-S**	**PA2136**	**N/R**	**BF1172**	**N/R**	4T60 **19593** 4T60E, 4T65-E (w/o Gskt.) **18022** 4T60E, 4T65E (w/Gskt.) **20014**
	LeSabre V6-231 (3.8L) SFI	L	**B43-S**	**PA2189**	**N/R**	**BF1171**	**N/R**	(w/o Gskt.) **18022** (w/Gskt.) **20014**
	Park Avenue, Park Avenue Ultra V6-231 (3.8L) SFI or Supercharged	1,K	**B43-S**	**PA2189**	**N/R**	**BF1171**	**N/R**	(w/o Gskt.) **18022** (w/Gskt.) **20014**
	Regal V6-191 (3.1L) SFI	M	**B43-S**	**PA2231**	**N/R**	**BF1171**	**N/R**	(w/o Gskt.) **18022** (w/Gskt.) **20014**
	V6-231 (3.8L) SFI	L	**B43-S**	**PA2231**	**N/R**	**BF1171**	**N/R**	(w/o Gskt.) **18022** (w/Gskt.) **20014**
	Riviera V6-231 (3.8L) SFI	1,K	**B43-S**	**PA2189**	**N/R**	**BF1171**	**N/R**	(w/o Gskt.) **18022** (w/Gskt.) **20014**
	Roadmaster, Estate Wagon V8-350 (5.7L) SFI	P	**B35-S**	**PA2189**	**N/R**	**BF1045**	**N/R**	4L60E **18010**
	Skylark 4-138 (2.3L) MFI	D	**B43-S**	**PA4079**	**N/R**	**BF1171**	**N/R**	4T60 **19593** 4T60E, 4T65-E (w/o Gskt.) **18022** 4T60E, 4T65E (w/Gskt.) **20014**
	V6-191 (3.1L) SFI	M	**B43-S**	**PA4079**	**N/R**	**BF1171**	**N/R**	(w/o Gskt.) **18022** (w/Gskt.) **20014**
1994	Century 4-133 (2.2L) MFI	4	**B43-S**	**PA2134**	**N/R**	**BF1172**	**N/R**	4T60 **19593** 4T60E (w/o Gskt.) **18022** 4T60E (w/Gskt.) **20014**
	V6-191 (3.1L) SFI	M	**B43-S**	**PA2136**	**N/R**	**BF1172**	**N/R**	4T60 **19593** 4T60E, 4T65-E (w/o Gskt.) **18022** 4T60E, 4T65E (w/Gskt.) **20014**
	LeSabre V6-231 (3.8L) SFI	L	**B43-S**	**PA2189**	**N/R**	**BF1171**	**N/R**	(w/o Gskt.) **18022** (w/Gskt.) **20014**
	Park Avenue, Park Avenue Ultra V6-231 (3.8L) SFI or Supercharged	1,L	**B43-S**	**PA2189**	**N/R**	**BF1171**	**N/R**	(w/o Gskt.) **18022** (w/Gskt.) **20014**
	Regal V6-191 (3.1L) SFI	M	**B43-S**	**PA2231**	**N/R**	**BF1171**	**N/R**	4T60E (w/o Gskt.) **18022** (w/Gskt.) **20014**
	V6-231 (3.8L) SFI	L	**B43-S**	**PA2231**	**N/R**	**BF1171**	**N/R**	4T60 **18139** 4T60E (w/o Gskt.) **18022** 4T60E (w/Gskt.) **20014**
	Roadmaster, Estate Wagon V8-350 (5.7L) SFI	P	**B35-S**	**PA2189**	**N/R**	**BF1045**	**N/R**	4L60E **18010**

[t] Transmission, Not Model, Determines Which Transmission Filter is Used. OBS = Obsolete. Availability Limited to Distributor Stock.

BUICK Cont'd.

Year	Model and Engine	VIN	Lube	Air	Cabin Air	Fuel	Breather	Trans.[t]
1994	Skylark 4-138 (2.3L) MFI	3	**B43-S**	**PA4079**	**N/R**	**BF1171**	**N/R**	4T60 **19593** 4T60E, 4T65-E (w/o Gskt.) **18022** 4T60E, 4T65E (w/Gskt.) **20014**
	V6-191 (3.1L) SFI	M	**B43-S**	**PA4079**	**N/R**	**BF1171**	**N/R**	4T60 **19593** 4T60E, 4T65-E (w/o Gskt.) **18022** 4T60E, 4T65E (w/Gskt.) **20014**
1993	Century 4-133 (2.2L) MFI	4	**B43-S**	**PA2134**	**N/R**	**BF1046**	**N/R**	4T60 **19593** 4T60E (w/o Gskt.) **18022** 4T60E (w/Gskt.) **20014**
	V6-204 (3.3L) MFI	N	**B43-S**	**PA2160**	**N/R**	**BF1046**	**N/R**	TH125C **19593** TH440-T4 **18139**
	LeSabre V6-231 (3.8L) SFI	L	**B43-S**	**PA2189**	**N/R**	**BF1046**	**N/R**	(w/o Gskt.) **18022** (w/Gskt.) **20014**
	Park Avenue, Park Avenue Ultra V6-231 (3.8L) SFI or Supercharged	L	**B43-S**	**PA2189**	**N/R**	**BF1046**	**N/R**	(w/o Gskt.) **18022** (w/Gskt.) **20014**
	Regal V6-191 (3.1L) MFI	T	**B35-S**	**PA2196**	**N/R**	**BF1171**	**N/R**	(w/o Gskt.) **18022** (w/Gskt.) **20014**
	V6-231 (3.8L) SFI	L	**B43-S**	**PA2136**	**N/R**	**BF1171**	**N/R**	(w/o Gskt.) **18022** (w/Gskt.) **20014**
	Riviera V6-231 (3.8L) SFI	L	**B43-S**	**PA2160**	**N/R**	**BF1046**	**N/R**	(w/o Gskt.) **18022** (w/Gskt.) **20014**
	Roadmaster, Estate Wagon V8-350 (5.7L) TBI	7	**B27**	**PA2218**	**N/R**	**BF1046**	**N/R**	4L60 **18155**
	Skylark 4-138 (2.3L) MFI	3	**B43-S**	**PA2160**	**N/R**	**BF1171**	**N/R**	**19593**
	V6-204 (3.3L) MFI	N	**B43-S**	**PA2160**	**N/R**	**BF1171**	**N/R**	**19593**
1992	Century 4-151 (2.5L) EFI	R	**P140**	**PA2109**	**N/R**	**BF1172**	**SA4315**	**19593**
	V6-204 (3.3L) MFI	N	**B43-S**	**PA2160**	**N/R**	**BF1046**	**N/R**	TH125C **19593** TH440-T4 **18139**
	LeSabre V6-231 (3.8L) SFI	L	**B43-S**	**PA2189**	**N/R**	**BF1046**	**N/R**	(w/o Gskt.) **18022** (w/Gskt.) **20014**
	Park Avenue, Park Avenue Ultra V6-231 (3.8L) SFI	L	**B43-S**	**PA2189**	**N/R**	**BF1046**	**N/R**	(w/o Gskt.) **18022** (w/Gskt.) **20014**
	Regal V6-191 (3.1L) MFI	T	**B35-S**	**PA2196**	**N/R**	**BF1171**	**N/R**	TH125C **19593** TH440-T4 **18139**
	V6-231 (3.8L) SFI	L	**B43-S**	**PA2136**	**N/R**	**BF1171**	**N/R**	**18139**
	Riviera V6-231 (3.8L) SFI	L	**B43-S**	**PA2160**	**N/R**	**BF1185**	**N/R**	(w/o Gskt.) **18022** (w/Gskt.) **20014**
	Roadmaster, Estate Wagon V8-350 (5.7L) TBI	7	**B27**	**PA2218**	**N/R**	**BF1046**	**N/R**	4L60 **18155**
	Skylark 4-138 (2.3L) MFI	3	**B43-S**	**PA2160**	**N/R**	**BF1171**	**N/R**	**19593**
	V6-204 (3.3L) MFI	N	**B43-S**	**PA2160**	**N/R**	**BF1171**	**SA2046**	**19593**
1991	Century 4-151 (2.5L) EFI	R	**P140**	**PA2109**	**N/R**	**BF1172**	**SA4315**	**19593**
	V6-204 (3.3L) MFI	N	**B43-S**	**PA2160**	**N/R**	**BF1172**	**N/R**	TH125C **19593** TH440-T4 **18139**
	LeSabre V6-231 (3.8L) SFI	C	**B43-S**	**PA2160**	**N/R**	**BF853**	**N/R**	**18139**
	Park Avenue, Park Avenue Ultra V6-231 (3.8L) SFI	L	**B43-S**	**PA2189**	**N/R**	**BF1046**	**N/R**	(w/o Gskt.) **18022** (w/Gskt.) **20014**
	Reatta V6-231 (3.8L) SFI	L	**B43-S**	**PA2160**	**N/R**	**BF1185**	**SA2046**	(w/o Gskt.) **18022** (w/Gskt.) **20014**
	Regal V6-191 (3.1L) MFI	T	**B35-S**	**PA2196**	**N/R**	**BF853**	**N/R**	**18139**
	V6-231 (3.8L) SFI	L	**B43-S**	**PA2136**	**N/R**	**BF853**	**N/R**	**18139**
	Riviera V6-231 (3.8L) SFI	L	**B43-S**	**PA2160**	**N/R**	**BF1185**	**N/R**	(w/o Gskt.) **18022** (w/Gskt.) **20014**
	Roadmaster, Estate Wagon V8-305 (5.0L) 4 Bbl.	E	**B27**	**PA2218**	**N/R**	(w/Bracket) **BF1165** (Ele. Only) **BF1046**	**N/R**	**18155**
	Skylark 4-138 (2.3L) MFI	D	**B43-S**	**PA2160**	**N/R**	**BF853**	**N/R**	**19593**
	4-151 (2.5L) EFI	U	**P140**	**PA2109**	**N/R**	**BF853**	**SA4315**	**19593**
	V6-201 (3.3L) MFI	N	**B43-S**	**PA2160**	**N/R**	**BF853**	**N/R**	**19593**
1990	Century 4-151 (2.5L) EFI	R	**P140**	**PA2109**	**N/R**	**BF1172**	**SA4315**	TH125C **19593**

OBS = Obsolete. Availability Limited to Distributor Stock. [t] Transmission, Not Model, Determines Which Transmission Filter is Used.

BUICK Cont'd.

Year	Model and Engine	VIN	Lube	Air	Cabin Air	Fuel	Breather	Trans.[t]
1990	Century V6-204 (3.3L) MFI	N	**B43-S**	**PA2160**	**N/R**	**BF1172**	**N/R**	TH125C **19593** TH440-T4 **18139**
	Electra V6-231 (3.8L) FI	C	**B43-S**	**PA2160**	**N/R**	**BF853**	**N/R**	TH440-T4 **18139**
	LeSabre V6-231 (3.8L) SFI	C	**B43-S**	**PA2160**	**N/R**	**BF853**	**N/R**	TH440-T4 **18139**
	LeSabre Estate Wagon V8-307 (5.0L) 4 Bbl.	Y	**B30**	**PA2008**	**N/R**	**PF894,-RV**	**N/R**	
	Park Avenue V6-231 (3.8L) FI	C	**B43-S**	**PA2160**	**N/R**	**BF853**	**SA2046**	TH440-T4 **18139**
	Reatta V6-231 (3.8L) SFI	C	**B43-S**	**PA2160**	**N/R**	**BF1185**	**SA2046**	TH440-T4 **18139**
	Regal V6-189 (3.1L) MFI	T	**B35-S**	**PA2196**	**N/R**	**BF853**	**N/R**	TH440-T4 **18139**
	V6-231 (3.8L) SFI	L	**B43-S**	**PA2136**	**N/R**	**BF853**	**N/R**	TH440-T4 **18139**
	Riviera V6-231 (3.8L) SFI	C	**B43-S**	**PA2160**	**N/R**	**BF1185**	**N/R**	TH440-T4 **18139**
	Skylark 4-138 (2.3L) MFI	D	**B43-S**	**PA2160**	**N/R**	**BF853**	**N/R**	**19593**
	4-151 (2.5L) EFI	U	**P140**	**PA2109**	**N/R**	**BF853**	**SA4315**	**19593**
	V6-201 (3.3L) MFI	N	**B43-S**	**PA2160**	**N/R**	**BF853**	**N/R**	**19593**
1989	Century 4-151 (2.5L) EFI	R	**P140**	**PA2109**	**N/R**	**BF1172**	**SA4315**	TH125C **19593** TH440-T4 **18139**
	V6-173 (2.8L) FI	W	**B35-S**	**PA2162**	**N/R**	**BF1172**	**N/R**	TH125C **19593** TH440-T4 **18139**
	V6-204 (3.3L) MFI	N	**B43-S**	**PA2160**	**N/R**	**BF1172**	**N/R**	TH125C **19593** TH440-T4 **18139**
	Electra V6-231 (3.8L) FI	C	**B43-S**	**PA2160**	**N/R**	**BF853**	**N/R**	TH440-T4 **18139**
	V8-307 (5.0L) 4 Bbl.	Y	**B30**	**PA2008**	**N/R**	**PF894,-RV**	**N/R**	TH700-R4 **18155**
	LeSabre V6-231 (3.8L) SFI	C	**B43-S**	**PA2160**	**N/R**	**BF853**	**N/R**	**19593**
	V8-307 (5.0L) 4 Bbl.	Y	**B30**	**PA2008**	**N/R**	**PF894,-RV**	**N/R**	
	Reatta V6-231 (3.8L) SFI	C	**B43-S**	**PA2160**	**N/R**	**BF853**	**SA2046**	TH440-T4 **18139**
	Regal V6-173 (2.8L) FI	W	**B35-S**	**PA2196**	**N/R**	**BF853**	**N/R**	TH440-T4 **18139**
	V6-189 (3.1L) FI	T	**B35-S**	**PA2196**	**N/R**	**BF853**	**N/R**	**19593**
	Riviera V6-231 (3.8L) SFI	C	**B43-S**	**PA2160**	**N/R**	**BF853**	**N/R**	TH440-T4 **18139**
	Skyhawk 4-122 (2.0L) EFI	1	**B35-S**	**PA2138**	**N/R**	**BF853**	**N/R**	**19593**
	Skylark 4-2300cc (2.3L) MFI	D	**B43-S**	**PA2193**	**N/R**	**BF853**	**N/R**	**19593**
	4-151 (2.5L) EFI	U	**P140**	**PA2109**	**N/R**	**BF853**	**SA4315**	**19593**
	V6-204 (3.3L) MFI	N	**B43-S**	**PA2160**	**N/R**	**BF853**	**N/R**	**19593**
1988	Century 4-151 (2.5L) EFI	R	**P140**	**PA2109**	**N/R**	**BF853**	**SA4315**	TH125C **19593** TH440-T4 **18139**
	V6-173 (2.8L) MFI	W	**B43-S**	**PA2162**	**N/R**	**BF853**	**N/R**	TH125C **19593** TH440-T4 **18139**
	V6-231 (3.8L) SFI	3	**B43-S**	**PA2140**	**N/R**	**BF853**	**N/R**	TH125C **19593** TH440-T4 **18139**
	Electra, Electra Estate Wagon V6-231 (3.8L) FI	3,C	**B43-S**	**PA2160**	**N/R**	**BF853**	**N/R**	TH440-T4 **18139**
	V8-307 (5.0L) 4 Bbl.	Y	**B30**	**PA2008**	**N/R**	**PF894,-RV**	**N/R**	TH700-R4 **18155**
	LeSabre, LeSabre Estate Wagon V6-231 (3.8L) SFI	3,C	**B43-S**	**PA2160**	**N/R**	**BF853**	**N/R**	TH440-T4 **18139**
	V8-307 (5.0L) 4 Bbl.	Y	**B30**	**PA2008**	**N/R**	**PF894,-RV**	**N/R**	TH700-R4 **18155**
	Reatta V6-231 (3.8L) SFI	C	**B43-S**	**PA2160**	**N/R**	**BF853**	**SA2046**	TH440-T4 **18139**
	Regal V6-173 (2.8L) MFI	W	**B43-S**	**PA2162**	**N/R**	**BF853**	**N/R**	TH440-T4 **18139**
	Riviera V6-231 (3.8L) SFI	C	**B43-S**	**PA2160**	**N/R**	**BF853**	**N/R**	TH440-T4 **18139**
	Skyhawk 4-2000cc (2.0L) FI HO	1	**B35-S**	**PA2138**	**N/R**	**BF853**	**N/R**	**19593**
	4-2000cc (2.0L) EFI	K	**B43-S**	**PA2109**	**N/R**	**BF853**	**SA2046**	**19593**
	Skylark 4-2300cc (2.3L) MFI	D	**B43-S**	**PA2193**	**N/R**	**BF853**	**N/R**	**19593**
	4-151 (2.5L) EFI	U	**P140**	**PA2109**	**N/R**	**BF853**	**SA4315**	**19593**
	V6-181 (3.0L) MFI	L	**B43-S**	**PA2138**	**N/R**	**BF853**	**N/R**	**19593**
1987	Century 4-151 (2.5L) FI	R	**B43-S**	**PA2109**	**N/R**	**BF853**	**SA4315**	TH125C **19593** TH440-T4 **18139**
	V6-173 (2.8L) FI	W	**B43-S**	**PA2162**	**N/R**	**BF853**	**N/R**	TH125C **19593** TH440-T4 **18139**
	V6-231 (3.8L) FI	3	**B43-S**	**PA2140**	**N/R**	**BF853**	**N/R**	TH125C **19593** TH440-T4 **18139**
	Electra V6-231 (3.8L) FI	3	**B43-S**	**PA2160**	**N/R**	**BF853**	**SA2046**	TH440-T4 **18139**
	V8-307 (5.0L) 4 Bbl.	Y	**B30**	**PA2008**	**N/R**	**PF894,-RV**	**N/R**	TH440-T4 **18139**
	LeSabre, LeSabre Estate Wagon V6-231 (3.8L) FI	3	**B43-S**	**PA2160**	**N/R**	**BF853**	**SA2046**	TH440-T4 **18139**
	V8-307 (5.0L) 4 Bbl.	Y	**B30**	**PA2008**	**N/R**	**PF894,-RV**	**N/R**	
	Regal V6-231 (3.8L) FI Turbo	7	**B43-S**	**PA2140**	**N/R**	**BF853**	**SA2046**	4L60 **18155**
	V6-231 (3.8L) 2 Bbl.	A	**B43-S**	**PA1680**	**N/R**	**PF894,-RV**	**SA2046**	
	V8-307 (5.0L) 4 Bbl.	Y	**B30**	**PA2008**	**N/R**	**PF894,-RV**	**N/R**	
	Riviera V6-231 (3.8L) FI	3	**B43-S**	**PA2160**	**N/R**	**BF853**	**N/R**	TH440-T4 **18139**

[t] Transmission, Not Model, Determines Which Transmission Filter is Used. OBS = Obsolete. Availability Limited to Distributor Stock.

BUICK Cont'd.

Year	Model and Engine	VIN	Lube	Air	Cabin Air	Fuel	Breather	Trans.[t]
1987	Skyhawk 4-2000cc (2.0L) FI HO	1	**B35-S**	**PA2138**	**N/R**	**BF853**	**SA2046**	**19593**
	4-2000cc (2.0L) FI	K	**B43-S**	**PA2109**	**N/R**	**BF853**	**SA2046**	**19593**
	4-2000cc (2.0L) FI Turbo	M	**B43-S**	**PA2134**	**N/R**	**BF853**	**SA2046**	**19593**
	Skylark, Somerset 4-151 (2.5L) FI	U	A.T. **B43-S** M.T. **P140**	**PA2109**	**N/R**	**BF853**	**SA4315**	**19593**
	V6-181 (3.0L) FI	L	**B43-S**	**PA2138**	**N/R**	**BF853**	**N/R**	**19593**
1986	Century 4-151 (2.5L) FI	R	**B43-S**	**PA2109**	**N/R**	**BF853**	**N/R**	TH125C **19593** TH440-T4 **18139**
	V6-173 (2.8L) 2 Bbl.	X	**B43-S**	**PA2076**	**N/R**	**PF894,-RV**	**SA2027** **SA2046**	TH125C **19593** TH440-T4 **18139**
	V6-231 (3.8L) FI	3	**B43-S**	**PA2140**	**N/R**	**BF853**	**N/R**	TH125C **19593** TH440-T4 **18139**
	Electra V6-231 (3.8L) FI	B	**B43-S**	**PA2160**	**N/R**	**BF853**	**SA2046**	TH440-T4 **18139**
	V8-307 (5.0L) 4 Bbl.	Y	**B30**	**PA2008**	**N/R**	**PF894,-RV**	**N/R**	TH440-T4 **18139**
	LeSabre V6-181 (3.0L) FI	L	**B43-S**	**PA2138**	**N/R**	**BF853**	**N/R**	TH440-T4 **18139**
	V6-231 (3.8L) FI	3	**B43-S**	**PA2140**	**N/R**	**BF853**	**N/R**	TH440-T4 **18139**
	V6-231 (3.8L) FI	B	**B43-S**	**PA2160**	**N/R**	**BF853**	**N/R**	TH440-T4 **18139**
	V8-307 (5.0L) 4 Bbl.	Y	**B30**	**PA2008**	**N/R**	**PF894,-RV**	**N/R**	TH440-T4 **18139**
	Regal V6-231 (3.8L) FI Turbo	7	**B43-S**	**PA2140**	**N/R**	**BF853**	**SA2027** **SA2046**	4L60 **18155**
	V6-231 (3.8L) 2 Bbl.	A	**B43-S**	**PA1680**	**N/R**	**PF894,-RV**	**SA2046**	
	V8-307 (5.0L) 4 Bbl.	Y	**B30**	**PA2008**	**N/R**	**PF894,-RV**	**N/R**	
	Riviera V6-231 (3.8L) FI	B	**B43-S**	**PA2160**	**N/R**	**BF853**	**N/R**	TH440-T4 **18139**
	Skyhawk 4-1800cc (1.8L) FI Turbo	J	**B43-S**		**N/R**	**BF853**	**SA4315** **SA2046**	TH125C **19593**
	4-1800cc (1.8L) FI	O	**B43-S**	**PA2109**	**N/R**	**BF853**	**SA2046**	TH125C **19593**
	4-2000cc (2.0L) FI	P	**B35-S**	**PA2109**	**N/R**	**BF853**	**SA2046**	TH125C **19593**
	Skylark 4-151 (2.5L) FI	U	**B43-S**	**PA2109**	**N/R**	**BF853**	**N/R**	TH125C **19593**
	V6-181 (3.0L) FI	L	**B43-S**	**PA2138**	**N/R**	**BF853**	**SA2046**	TH125C **19593**
	Somerset 4-151 (2.5L) FI	U	**B43-S**	**PA2109**	**N/R**	**BF853**	**N/R**	TH125C **19593**
	V6-181 (3.0L) FI	L	**B43-S**	**PA2138**	**N/R**	**BF853**	**SA2046**	TH125C **19593**
1985	Century 4-151 (2.5L) FI	R	**B43-S**	**PA2109**	**N/R**	**BF853**	**N/R**	TH125,C **19593** TH440-T4 **18139**
	V6-173 (2.8L) 2 Bbl.	X	**B43-S**	**PA2076**	**N/R**	**PF894,-RV**	**SA2027** **SA2046**	TH125,C **19593** TH440-T4 **18139**
	V6-181 (3.0L) 2 Bbl.	E	**B43-S**	**PA2006**	**N/R**	**PF894,-RV**	**SA2027** **SA2046**	TH125,C **19593** TH440-T4 **18139**
	V6-231 (3.8L) FI	3	**B43-S**	**PA2140**	**N/R**	**BF868**	**N/R**	TH125,C **19593** TH440-T4 **18139**
	V6-262 (4.3L) Diesel	T	**B35-S**	**PA2110**	**N/R**		**N/R**	TH125,C **19593** TH440-T4 **18139**
	Electra, Estate Wagon V6-181 (3.0L) 2 Bbl.	E	**B43-S**		**N/R**	**PF894,-RV**	**SA2027** **SA2046**	TH440-T4 **18139**
	V6-231 (3.8L) FI	3	**B43-S**	**PA2140**	**N/R**	**BF868**	**SA2046**	TH440-T4 **18139**
	V6-262 (4.3L) Diesel	T	**B35-S**	**PA2110**	**N/R**	**BF806**	**N/R**	TH440-T4 **18139**
	LeSabre, LeSabre Estate Wagon V6-231 (3.8L) 2 Bbl.	A	**B43-S**	**PA1680**	**N/R**	**PF894,-RV**	**SA2046**	
	V8-307 (5.0L) 4 Bbl.	Y	**B30**	**PA2008**	**N/R**	**PF894,-RV**	**N/R**	
	V8-350 (5.7L) Diesel	N	**B30**	**PA2079**	**N/R**		**N/R**	
	Regal V6-231 (3.8L) FI Turbo	9	**B43-S**	**PA2140**	**N/R**	**BF853**	**SA2027** **SA2046**	
	V6-231 (3.8L) 2 Bbl.	A	**B43-S**	**PA1680**	**N/R**	**PF894,-RV**	**SA2046**	
	V6-262 (4.3L) Diesel	T	**B35-S**	**PA2110**	**N/R**		**N/R**	
	V8-305 (5.0L) Carb Canada	H	**B1438**	**PA2008**	**N/R**	**PF894,-RV**	**SA2027**	
	Riviera V6-231 (3.8L) FI Turbo	9	**B43-S**	**PA2140**	**N/R**	**BF853**	**SA2027** **SA2046**	TH325-4L **18091**
	V8-307 (5.0L) 4 Bbl.	Y	**B30**	**PA2006**	**N/R**	**PF894,-RV**	**N/R**	TH325-4L **18091**
	V8-350 (5.7L) Diesel	N	**B30**	**PA2078 OBS**	**N/R**		**N/R**	TH325-4L **18091**
	Skyhawk 4-1800cc (1.8L) FI Turbo	J	**B43-S**		**N/R**	**BF853**	**N/R**	TH125,C **19593**
	4-1800cc (1.8L) FI	O	**B43-S**	**PA2109**	**N/R**	**BF853**	**N/R**	TH125,C **19593**
	4-2000cc (2.0L) FI	P	**B35-S**	**PA2109**	**N/R**	**BF853**	**SA4315**	TH125,C **19593**
	Skylark 4-151 (2.5L) FI	R	**B43-S**	**PA2109**	**N/R**	**BF853**	**N/R**	TH125,C **19593**
	V6-173 (2.8L) FI HO	W	**B43-S**	**PA2134**	**N/R**	**BF853**	**SA2046**	TH125,C **19593**
	V6-173 (2.8L) 2 Bbl.	X	**B43-S**	**PA2076**	**N/R**	**PF894,-RV**	**SA2046**	TH125,C **19593**
	Somerset 4-151 (2.5L) FI	U	**B43-S**	**PA2109**	**N/R**	**BF853**	**N/R**	TH125,C **19593**
	V6-181 (3.0L) FI	L	**B43-S**	**PA2138**	**N/R**	**BF853**	**N/R**	TH125,C **19593**

OBS = Obsolete. Availability Limited to Distributor Stock. [t] Transmission, Not Model, Determines Which Transmission Filter is Used.

BUICK Cont'd.

Year	Model and Engine	VIN	Lube	Air	Cabin Air	Fuel	Breather	Trans.[t]
1984	Century 4-151 (2.5L) FI	R	**B43-S**	**PA2109**	**N/R**	**BF868**	**N/R**	TH125,C **19593** TH440-T4 **18139**
	V6-173 (2.8L) 2 Bbl.	X	**B35-S**	**PA2076**	**N/R**	**PF894,-RV**	**SA2027** **SA2046**	TH125,C **19593**
	V6-181 (3.0L) 2 Bbl.	E	**B43-S**	**PA2006**	**N/R**	**PF894,-RV**	**SA2027** **SA2046**	TH125,C **19593** TH440-T4 **18139**
	V6-231 (3.8L) FI	3	**B43-S**	**PA2140**	**N/R**	**BF853**	**SA2046**	TH125,C **19593** TH440 **18139**
	V6-262 (4.3L) Diesel	T	**B35-S**	**PA2110**	**N/R**	**BF806**	**N/R**	TH125,C **19593**
	Electra, Estate Wagon V6-252 (4.1L) 4 Bbl.	4	**B43-S**	**PA1680**	**N/R**	**PF894,-RV**	**SA2027** **SA2046**	TH440-T4 **18139**
	V8-307 (5.0L) 4 Bbl.	Y	**B30**	**PA2008**	**N/R**	**PF894,-RV**	**SA2046**	TH440-T4 **18139**
	V8-350 (5.7L) Diesel	N	**B30**	**PA2079**	**N/R**	**BF806**	**N/R**	
	LeSabre V6-231 (3.8L) 2 Bbl.	A	**B43-S**	**PA1680**	**N/R**	**PF894,-RV**	**SA2046**	
	V6-252 (4.1L) 4 Bbl.	4	**B43-S**	**PA1680**	**N/R**	**PF894,-RV**	**SA2027** **SA2046**	
	V8-307 (5.0L) 4 Bbl.	Y	**B30**	**PA2008**	**N/R**	**PF894,-RV**	**SA2046**	
	V8-350 (5.7L) Diesel	N	**B30**	**PA2079**	**N/R**	**BF806**	**N/R**	
	Regal V6-231 (3.8L) FI Turbo	9	**B43-S**	**PA2140**	**N/R**	**BF853**	**SA2027** **SA2046**	
	V6-231 (3.8L) 2 Bbl.	A	**B43-S**	**PA1680**	**N/R**	**PF894,-RV**	**SA2046**	TH250,C **6021**
	V6-252 (4.1L) 4 Bbl.	4	**B43-S**	**PA2006**	**N/R**	**PF894,-RV**	**SA2027** **SA2046**	
	V6-262 (4.3L) Diesel	V	**B35-S**	**PA2079**	**N/R**	**BF806**	**N/R**	
	V8-305 (5.0L) Carb Canada	H	**B27**	**PA2008**	**N/R**	**PF894,-RV**	**SA2027**	
	Riviera V6-231 (3.8L) FI Turbo	9	**B43-S**	**PA2140**	**N/R**	**BF853**	**SA2046**	TH325-4L **18091**
	V6-252 (4.1L) 4 Bbl.	4	**B43-S**	**PA2006**	**N/R**	**PF894,-RV**	**SA2027** **SA2046**	TH325-4L **18091**
	V8-307 (5.0L) 4 Bbl.	Y	**B30**	**PA2006**	**N/R**	**PF894,-RV**	**SA2046**	TH325-4L **18091**
	V8-350 (5.7L) Diesel	N	**B30**	**PA2078 OBS**	**N/R**	**BF806**	**N/R**	TH325-4L **18091**
	Skyhawk 4-1800cc (1.8L) FI Turbo	J	**B43-S**		**N/R**	**BF853**	**N/R**	TH125,C **19593**
	4-1800cc (1.8L) FI	O	**B43-S**	**PA2109**	**N/R**	**BF853**	**SA4315**	TH125,C **19593**
	4-2000cc (2.0L) FI	P	**B35-S**	**PA2109**	**N/R**	**BF853**	**N/R**	TH125,C **19593**
	Skylark 4-151 (2.5L) FI	R	**B43-S**	**PA2109**	**N/R**	**BF868**	**N/R**	TH125,C **19593**
	V6-173 (2.8L) 2 Bbl.	X,Z	**B43-S**	**PA2076**	**N/R**	**PF894,-RV**	**N/R**	TH125,C **19593**
1983	Century 4-151 (2.5L) FI	R	**B43-S**	**PA2109**	**N/R**	**BF868**	**SA2046**	TH125,C **19593**
	V6-181 (3.0L) 2 Bbl.	E	**B43-S**	**PA2006**	**N/R**	**PF894,-RV**	**SA2027** **SA2046**	TH125,C **19593**
	V6-262 (4.3L) Diesel	T	**B35-S**	**PA2110**	**N/R**	**BF806**	**N/R**	TH125,C **19593**
	Electra V6-252 (4.1L) 4 Bbl.	4	**B43-S**	**PA1680**	**N/R**	**PF894,-RV**	**SA2027** **SA2046**	TH350,C **18031**
	V8-307 (5.0L) 4 Bbl.	Y	**B30**	**PA2008**	**N/R**	**PF894,-RV**	**SA2046**	TH250,C **6021**
	V8-350 (5.7L) Diesel	N	**B30**	**PA2079**	**N/R**	**BF806**	**N/R**	TH250,C **6021** TH350,C **18031**
	LeSabre V6-231 (3.8L) 2 Bbl.	A	**B43-S**	**PA1680**	**N/R**	**PF894,-RV**	**SA2046**	TH250,C **6021** TH350,C **18031**
	V6-252 (4.1L) 4 Bbl.	4	**B43-S**	**PA1680**	**N/R**	**PF894,-RV**	**SA2027** **SA2046**	TH350,C **18031**
	V8-307 (5.0L) 4 Bbl.	Y	**B30**	**PA2008**	**N/R**	**PF894,-RV**	**SA2046**	TH250,C **6021**
	V8-350 (5.7L) Diesel	N	**B30**	**PA2079**	**N/R**	**BF806**	**N/R**	TH250,C **6021** TH350,C **18031**
	Regal V6-231 (3.8L) 2 Bbl.	A	**B43-S**	**PA1680**	**N/R**	**PF894,-RV**	**SA2046**	TH250,C **6021** TH350,C **18031**
	V6-231 (3.8L) 4 Bbl. Turbo	8	**B43-S**	**PA2140**	**N/R**	**PF894,-RV**	**SA2027** **SA2046**	
	V6-252 (4.1L) 4 Bbl.	4	**B43-S**	**PA2006**	**N/R**	**PF894,-RV**	**SA2027** **SA2046**	TH350,C **18031**
	V6-262 (4.3L) Diesel	V	**B35-S**	**PA2079**	**N/R**	**BF806**	**N/R**	
	V8-305 (5.0L) Carb Canada	H	**B27**	**PA2008**	**N/R**	**PF894,-RV**	**SA2027**	
	V8-350 (5.7L) Diesel	N	**B30**	**PA2079**	**N/R**	**BF806**	**N/R**	TH250,C **6021** TH350,C **18031**
	Riviera V6-231 (3.8L) Turbo	8	**B43-S**	**PA2140**	**N/R**	**PF894,-RV**	**SA2027** **SA2046**	TH325-4L **18091**
	V6-252 (4.1L) 4 Bbl.	4	**B43-S**	**PA2006**	**N/R**	**PF894,-RV**	**SA2027** **SA2046**	TH325-4L **18091**
	V8-307 (5.0L) 4 Bbl.	Y	**B30**	**PA2006**	**N/R**	**PF894,-RV**	**SA2046**	TH325-4L **18091**
	V8-350 (5.7L) Diesel	N	**B30**	**PA2078 OBS**	**N/R**	**BF806**	**N/R**	TH325-4L **18091**

[t] Transmission, Not Model, Determines Which Transmission Filter is Used. OBS = Obsolete. Availability Limited to Distributor Stock.

BUICK Cont'd.

Year	Model and Engine	VIN	Lube	Air	Cabin Air	Fuel	Breather	Trans.[t]
1983	Skyhawk 4-1800cc (1.8L) FI	O	**B43-S**	**PA2109**	**N/R**	**BF868**	**SA4315 SA2046**	TH125,C **19593**
	4-2000cc (2.0L) FI	P	**B35-S**	**PA2109**	**N/R**	**BF853**	**SA2046**	TH125,C **19593**
	Skylark 4-151 (2.5L) FI	R	**B43-S**	**PA2109**	**N/R**	**BF868**	**SA2046**	TH125,C **19593**
	V6-173 (2.8L) 2 Bbl.	X	**B35-S**	**PA2076**	**N/R**	**PF894,-RV**	**SA2046**	TH125,C **19593**
	V6-173 (2.8L) 2 Bbl. HO	Z	**B35-S**	**PA2076**	**N/R**	**PF894,-RV**	**SA2046**	TH125,C **19593**
1982	Century 4-151 (2.5L) FI	R	**B43-S**	**PA2109**	**N/R**		**SA2046**	TH125,C **19593**
	V6-173 (2.8L) 2 Bbl.	X	**B35-S**	**PA2076**	**N/R**	**PF894,-RV**	**SA2046**	TH125,C **19593**
	V6-181 (3.0L) 2 Bbl.	E	**B43-S**	**PA2006**	**N/R**	**PF893,-RV**	**SA2027 SA2046**	TH125,C **19593**
	V6-262 (4.3L) Diesel	T	**B35-S**	**PA2110**	**N/R**	**BF806**	**N/R**	TH125 **19593**
	Electra V6-252 (4.1L) 4 Bbl.	4	**B43-S**	**PA1680**	**N/R**	**PF894,-RV**	**SA2027 SA2046**	TH350,C **18031**
	V8-307 (5.0L) 4 Bbl.	Y	**B30**	**PA2008**	**N/R**	**PF894,-RV**	**SA2046**	TH250,C **6021** TH350,C **18031**
	V8-350 (5.7L) Diesel	N	**B30**	**PA2079**	**N/R**	**BF806**	**N/R**	TH250,C **6021** TH350,C **18031**
	LeSabre V6-231 (3.8L) 2 Bbl.	A	**B43-S**	**PA1680**	**N/R**	**PF893,-RV**	**SA2046**	TH250,C **6021** TH350,C **18031**
	V6-252 (4.1L) 4 Bbl.	4	**B43-S**	**PA1680**	**N/R**	**PF894,-RV**	**SA2027 SA2046**	TH350,C **18031**
	V8-267 (4.4L) 2 Bbl.	J	**B27**	**PA2106**	**N/R**	**PF893,-RV**	**SA2027 SA2046**	TH250,C **6021** TH350,C **18031**
	V8-307 (5.0L) 4 Bbl.	Y	**B30**	**PA2008**	**N/R**	**PF894,-RV**	**SA2046**	TH250,C **6021** TH350,C **18031**
	V8-350 (5.7L) Diesel	N	**B30**	**PA2079**	**N/R**	**BF806**	**N/R**	TH250,C **6021** TH350,C **18031**
	Regal V6-231 (3.8L) Turbo	3	**B43-S**	**PA2140**	**N/R**	**PF894,-RV**	**SA2027 SA2046**	TH250,C **6021** TH350,C **18031**
	V6-231 (3.8L) 2 Bbl.	A	**B43-S**	**PA1680**	**N/R**	**PF893,-RV**	**SA2046**	TH250,C **6021** TH350,C **18031**
	V6-252 (4.1L) 4 Bbl.	4	**B43-S**	**PA2006**	**N/R**	**PF894,-RV**	**SA2027 SA2046**	TH350,C **18031**
	V6-262 (4.2L) Diesel	V	**B35-S**	**PA2110**	**N/R**	**BF806**	**N/R**	TH350,C **18031**
	V8-267 (4.4L) 2 Bbl.	J	**B27**	**PA2106**	**N/R**	**PF893,-RV**	**SA2027 SA2046**	TH250,C **6021**
	V8-305 (5.0L) Carb Canada	H	**B27**	**PA2008**	**N/R**	**PF894,-RV**	**SA2027**	
	V8-350 (5.7L) Diesel	N	**B30**	**PA2079**	**N/R**	**BF806**	**N/R**	TH250,C **6021** TH350,C **18031**
	Riviera V6-231 (3.8L) Turbo	3	**B43-S**	**PA2140**	**N/R**	**PF894,-RV**	**SA2027 SA2046**	TH325-4L **18091**
	V6-252 (4.1L) 4 Bbl.	4	**B43-S**	**PA2006**	**N/R**	**PF894,-RV**	**SA2027 SA2046**	TH325-4L **18091**
	V8-307 (5.0L) 4 Bbl.	Y	**B30**	**PA2006**	**N/R**	**PF894,-RV**	**SA2046**	TH325-4L **18091**
	V8-350 (5.7L) Diesel	N	**B30**	**PA2078 OBS**	**N/R**	**BF806**	**N/R**	TH325-4L **18091**
	Skyhawk 4-1800cc (1.8L) 2 Bbl.	G	**B35-S**	**PA2112 OBS**	**N/R**	**PF894,-RV**	**N/R**	TH125,C **19593**
	4-1800cc (1.8L) FI	O	**B43-S**	**PA2109**	**N/R**	**BF853**	**SA4315**	TH125,C **19593**
	4-2000cc (2.0L) 2 Bbl.	B	**B43-S**	**PA2112 OBS**	**N/R**	**PF894,-RV**	**N/R**	TH125,C **19593**
	Skylark 4-151 (2.5L) FI	R	**B43-S**	**PA2109**	**N/R**		**SA2046**	TH125,C **19593**
	V6-173 (2.8L) 2 Bbl.	X	**B35-S**	**PA2076**	**N/R**	**PF894,-RV**	**SA2027 SA2046**	TH125,C **19593**
	V6-173 (2.8L) 2 Bbl. HO	Z	**B35-S**	**PA2076**	**N/R**	**PF894,-RV**	**SA2027 SA2046**	TH125,C **19593**
1981	Century V6-231 (3.8L) 2 Bbl.	A	**B43-S**	**PA1680**	**N/R**	**PF894,-RV**	**SA2046**	TH350 **18031**
	V8-265 (4.3L) 2 Bbl.	S	**B43-S**	**PA2105 OBS**	**N/R**	**PF894,-RV**	**SA2046**	TH350 **18031**
	V8-267 (4.4L) 2 Bbl.	J	**B27**	**PA2106**	**N/R**	**PF894-RV**	**SA2027**	TH350 **18031**
	V8-305 (5.0L) 4 Bbl.	H	**B27**	**PA2008**	**N/R**	**PF894-RV**	**SA2027**	TH350 **18031**
	V8-350 (5.7L) Diesel	N	**B30**	**PA2079**	**N/R**	**BF806**	**N/R**	TH350 **18031**
	Electra V6-252 (4.1L) 4 Bbl.	4	**B43-S**	**PA1680**	**N/R**	**PF894,-RV**	**SA2027 SA2046**	TH350,C **18031**
	V8-307 (5.0L) 4 Bbl.	Y	**B30**	**PA2008**	**N/R**	**PF894,-RV**	**SA2046**	
	V8-350 (5.7L) Diesel	N	**B30**	**PA2079**	**N/R**	**BF806**	**N/R**	
	LeSabre V6-231 (3.8L) 2 Bbl.	A	**B43-S**	**PA1680**	**N/R**	**PF894,-RV**	**SA2046**	TH350,C **18031**
	V6-252 (4.1L) 4 Bbl.	4	**B43-S**	**PA1680**	**N/R**	**PF894,-RV**	**SA2027 SA2046**	TH350,C **18031**
	V8-307 (5.0L) 4 Bbl.	Y	**B30**	**PA2008**	**N/R**	**PF894,-RV**	**SA2046**	
	V8-350 (5.7L) Diesel	N	**B30**	**PA2079**	**N/R**	**BF806**	**N/R**	

OBS = Obsolete. Availability Limited to Distributor Stock. [t] Transmission, Not Model, Determines Which Transmission Filter is Used.

BUICK Cont'd.

Year	Model and Engine	VIN	Lube	Air	Cabin Air	Fuel	Breather	Trans.[t]
1981	Regal V6-231 (3.8L) Turbo	3	**B43-S**	**PA2140**	**N/R**	**PF894,-RV**	**SA2027 SA2046**	
	V6-231 (3.8L) 2 Bbl.	A	**B43-S**	**PA1680**	**N/R**	**PF894,-RV**	**SA2046**	TH350,C **18031**
	V8-265 (4.3L) 2 Bbl.	S	**B43-S**	**PA2105 OBS**	**N/R**	**PF894,-RV**	**SA2046**	
	V8-267 (4.4L) 2 Bbl.	J	**B27**	**PA2106**	**N/R**	**PF894-RV**	**SA2027**	TH350 **18031**
	V8-350 (5.7L) Diesel	N	**B30**	**PA2079**	**N/R**	**BF806**	**N/R**	
	Riviera V6-231 (3.8L) Turbo	3	**B43-S**	**PA2140**	**N/R**	**PF894,-RV**	**SA2027 SA2046**	
	V6-252 (4.1L) 4 Bbl.	4	**B43-S**	**PA2006**	**N/R**	**PF894,-RV**	**SA2027 SA2046**	
	V8-307 (5.0L) 4 Bbl.	Y	**B30**	**PA2006**	**N/R**	**PF894,-RV**	**SA2046**	
	V8-350 (5.7L) Diesel	N	**B30**	**PA2078 OBS**	**N/R**	**BF806**	**N/R**	
	Skylark 4-151 (2.5L) 2 Bbl.	5	**B43-S**	**PA2082 OBS**	**N/R**	**PF893,-RV**	**SA2027 SA2046**	TH125,C **19593**
	V6-173 (2.8L) 2 Bbl.	X	**B35-S**	**PA2076**	**N/R**	**PF894,-RV**	**SA2046**	TH125,C **19593**
1980	Century V6-231 (3.8L) Turbo	3	**B43-S**	**PA2140**	**N/R**	**PF894,-RV**	**SA2027 SA2046**	TH350,C **18031**
	V6-231 (3.8L) 2 Bbl.	A	**B43-S**	**PA1680**	**N/R**	**PF893,-RV**	**SA2046**	TH350,C **18031**
	V8-265 (4.3L) 2 Bbl.	S	**B43-S**	**PA2105 OBS**	**N/R**	**PF893,-RV**	**SA2027 SA2046**	TH350,C **18031**
	V8-301 (4.9L) 4 Bbl.	W	**B43-S**	**PA2006**	**N/R**	**PF894,-RV**	**SA2027 SA2046**	
	V8-305 (5.0L) 4 Bbl.	H	**B27**	**PA2008**	**N/R**	**PF894,-RV**	**SA2027 SA2046**	
	Electra V6-252 (4.1L) 4 Bbl.	4	**B43-S**	**PA1680**	**N/R**	**PF894,-RV**	**SA2027 SA2046**	TH350,C **18031**
	V8-301 (4.9L) 4 Bbl.	W	**B43-S**	**PA2006**	**N/R**	**PF894,-RV**	**SA2027 SA2046**	TH350,C **18031**
	V8-350 (5.7L) Diesel	N	**B30**	**PA2079**	**N/R**	**BF806**	**N/R**	
	V8-350 (5.7L) 4 Bbl.	R	**B30**	**PA2008**	**N/R**	**PF894,-RV**	**SA2046**	TH400 **6020**
	V8-350 (5.7L) 4 Bbl.	X	**B39**	**PA2008**	**N/R**	**PF894,-RV**	**SA2027 SA2046**	TH400 **6020**
	Estate Wagon V8-301 (4.9L) 4 Bbl.	W	**B43-S**	**PA2006**	**N/R**	**PF894,-RV**	**SA2027 SA2046**	TH350,C **18031**
	V8-350 (5.7L) Diesel	N	**B30**	**PA2079**	**N/R**	**BF806**	**N/R**	TH350,C **18031**
	V8-350 (5.7L) 4 Bbl.	R	**B30**	**PA2008**	**N/R**	**PF894,-RV**	**SA2046**	TH350,C **18031**
	V8-350 (5.7L) 4 Bbl.	X	**B39**	**PA2008**	**N/R**	**PF894,-RV**	**SA2027 SA2046**	TH350,C **18031**
	LeSabre V6-231 (3.8L) Turbo	3	**B43-S**	**PA2140**	**N/R**	**PF894,-RV**	**SA2027 SA2046**	TH350,C **18031**
	V6-231 (3.8L) 2 Bbl.	A	**B43-S**	**PA1680**	**N/R**	**PF893,-RV**	**SA2046**	TH350,C **18031**
	V6-252 (4.1L) 4 Bbl.	4	**B43-S**	**PA1680**	**N/R**	**PF894,-RV**	**SA2027 SA2046**	TH350,C **18031**
	V8-301 (4.9L) 4 Bbl.	W	**B43-S**	**PA2006**	**N/R**	**PF894,-RV**	**SA2027 SA2046**	TH350,C **18031**
	V8-350 (5.7L) Diesel	N	**B30**	**PA2079**	**N/R**	**BF806**	**N/R**	TH350,C **18031**
	V8-350 (5.7L) 4 Bbl.	R	**B30**	**PA2008**	**N/R**	**PF894,-RV**	**SA2046**	TH350,C **18031**
	V8-350 (5.7L) 4 Bbl.	X	**B39**	**PA2008**	**N/R**	**PF894,-RV**	**SA2027 SA2046**	TH350,C **18031**
	Regal V6-231 (3.8L) Turbo	3	**B43-S**	**PA2140**	**N/R**	**PF894,-RV**	**SA2027 SA2046**	TH350,C **18031**
	V6-231 (3.8L) 2 Bbl.	A	**B43-S**	**PA1680**	**N/R**	**PF893,-RV**	**SA2046**	TH350,C **18031**
	V8-265 (4.3L) 2 Bbl.	S	**B43-S**	**PA2006**	**N/R**	**PF893,-RV**	**SA2027 SA2046**	TH350,C **18031**
	V8-301 (4.9L) 4 Bbl.	W	**B43-S**	**PA2006**	**N/R**	**PF894,-RV**	**SA2027 SA2046**	
	V8-305 (5.0L) 4 Bbl.	H	**B27**	**PA2008**	**N/R**	**PF894,-RV**	**SA2027 SA2046**	
	Riviera V6-231 (3.8L) Turbo	3	**B43-S**	**PA2140**	**N/R**	**PF894,-RV**	**SA2027 SA2046**	
	V8-307 (5.0L) 4 Bbl.	Y	**B30**	**PA2006**	**N/R**	**PF894,-RV**	**SA2046**	
	V8-350 (5.7L) 4 Bbl.	R	**B30**	**PA2006**	**N/R**	**PF894,-RV**	**SA2046**	
	Skyhawk V6-231 (3.8L) 2 Bbl.	A	**B43-S**	**PA2006**	**N/R**	**PF893,-RV**	**SA2027 SA2046**	TH350,C **18031**
	Skylark 4-151 (2.5L) 2 Bbl.	5	**B43-S**	**PA2082 OBS**	**N/R**	**PF893,-RV**	**SA2027 SA2046**	TH125,C **19593**
	V6-173 (2.8L) 2 Bbl.	7	**B35-S**	**PA2076**	**N/R**	**PF894,-RV**	**SA2046**	TH125,C **19593**

[t] Transmission, Not Model, Determines Which Transmission Filter is Used. OBS = Obsolete. Availability Limited to Distributor Stock.

CADILLAC

Year	Model and Engine	VIN	Lube	Air	Cabin Air	Fuel	Breather	Trans.[t]
2010	CTS V6-182 (3.0L) FI	G	**P1433**				**N/R**	
	V6-217 (3.6L) FI	V	**P1433**			**BF7776**	**N/R**	
	CTS-V V8-376 (6.2L) FI Supercharged	P	**B160**			**N/S**	**N/R**	
	DTS V8-281 (4.6L) FI	9,Y	**B7010**	**PA4157**	(w/o Charcoal) **PA4330** (w/Charcoal) **PA4384**	**N/S**	**N/R**	4T80-E **18009**
	Escalade V8-364 (6.0L) FI Hybrid	J	**B160**	**PA4113**	**N/R**	**N/S**	**N/R**	
	V8-378 (6.2L) FI	F	**B160**	**PA4113**	**N/R**	**N/S**	**N/R**	
	Escalade ESV V8-378 (6.2L) FI	F	**B160**	**PA4113**	**N/R**	**N/S**	**N/R**	
	Escalade EXT V8-378 (6.2L) FI	F	**B160**	**PA4113**	**N/R**	**N/S**	**N/R**	
	SRX V6-182 (3.0L) FI	Y	**B160**				**N/R**	
	STS V6-217 (3.6L) FI	V	**P1433**			**BF7776**	**N/R**	
	V8-281 (4.6L) FI	A	**B7010**			**BF7776**	**N/R**	
2009	CTS V6-217 (3.6L) FI or DI	7,V	**P1433**			**BF7776**	**N/R**	
	CTS-V V8-376 (6.2L) FI Supercharged	P	**B160**			**N/S**	**N/R**	
	DTS V8-281 (4.6L) FI	9,Y	**B7010**	**PA4157**	(w/o Charcoal) **PA4330** (w/Charcoal) **PA4384**	**N/S**	**N/R**	4T80-E **18009**
	Escalade V8-364 (6.0L) FI Hybrid	5	**B160**	**PA4113**	**N/R**	**N/S**	**N/R**	
	V8-376 (6.2L) SFI	2	**B160**	**PA4113**	**N/R**	**N/S**	**N/R**	4 Spd. **18056**
	Escalade ESV V8-376 (6.2L) SFI	2	**B160**	**PA4113**	**N/R**	**N/S**	**N/R**	4 Spd. **18056**
	Escalade EXT V8-376 (6.2L) SFI	2	**B160**	**PA4113**	**N/R**	**N/S**	**N/R**	4 Spd. **18056**
	SRX V6-217 (3.6L) SFI	7	**P1433**			**BF7776**	**N/R**	
	V8-281 (4.6L) SFI	A	**B7010**			**BF7776**	**N/R**	
	STS V6-217 (3.6L) DI	V	**P1433**			**BF7776**	**N/R**	
	V8-281 (4.6L) SFI	A	**B7010**			**BF7776**	**N/R**	
	STS-V V8-267 (4.4L) MFI Supercharged	D				**N/S**	**N/R**	
	XLR V8-281 (4.6L) SFI	A	**B7010**	**[2] PA2231**		**N/S**	**N/R**	
	XLR-V V8-267 (4.4L) SFI Supercharged	D				**N/S**	**N/R**	
2008	CTS V6-217 (3.6L) FI or DI	7,V	**P1433**			**BF7776**	**N/R**	
	DTS V8-281 (4.6L) FI	9,Y	**B7010**	**PA4157**	(w/o Charcoal) **PA4330** (w/Charcoal) **PA4384**	**N/S**	**N/R**	4T80-E **18009**
	Escalade V8-376 (6.2L) SFI	8	**B160**	**PA4113**	**N/R**	**N/S**	**N/R**	4 Spd. **18056**
	Escalade ESV V8-376 (6.2L) SFI HO	8	**B160**	**PA4113**	**N/R**	**N/S**	**N/R**	4 Spd. **18056**
	Escalade EXT V8-376 (6.2L) SFI	8	**B160**	**PA4113**	**N/R**	**N/S**	**N/R**	4 Spd. **18056**
	SRX V6-217 (3.6L) SFI	7	**P1433**			**BF7776**	**N/R**	
	V8-281 (4.6L) EFI	A	**B7010**			**BF7776**	**N/R**	
	STS V6-217 (3.6L) DI	7,V	**P1433**			**BF7776**	**N/R**	
	V8-281 (4.6L) SFI	A	**B7010**			**BF7776**	**N/R**	
	STS-V V8-267 (4.4L) MFI Supercharged	D				**BF7776**	**N/R**	
	XLR V8-281 (4.6L) SFI	A	**B7010**	**[2] PA2231**		**N/S**	**N/R**	
	XLR-V V8-267 (4.4L) SFI Supercharged	D				**N/S**	**N/R**	
2007	CTS V6-173 (2.8L) FI	T	**P1433**	**PA4358**		**BF7776**	**N/R**	
	V6-217 (3.6L) FI	7	**P1433**	**PA4358**		**BF7776**	**N/R**	
	CTS-V V8-364 (6.0L) SFI	U	**B160**			**BF7776**	**N/R**	
	DTS V8-281 (4.6L) SFI	9,Y	**B7010**	**PA4157**	(w/o Charcoal) **PA4330** (w/Charcoal) **PA4384**	**N/S**	**N/R**	4T80-E **18009**
	Escalade, Escalade ESV, Escalade EXT V8-376 (6.2L) SFI HO	8	**B160**	**PA4113**	**N/R**	**N/S**	**N/R**	4 Spd. **18056**
	SRX V6-220 (3.6L) SFI	7	**P1433**			**BF7776**	**N/R**	
	V8-281 (4.6L) FI	A	**B7010**			**BF7776**	**N/R**	
	STS V6-220 (3.6L) FI	7	**P1433**			**BF7776**	**N/R**	
	V8-281 (4.6L) FI	A	**B7010**			**BF7776**	**N/R**	
	STS-V V8-267 (4.4L) FI Supercharged	D				**BF7776**	**N/R**	
	XLR V8-281 (4.6L) SFI	A	**B7010**	**[2] PA2231**		**N/S**	**N/R**	
	XLR-V V8-267 (4.4L) FI Supercharged	D				**N/S**	**N/R**	
2006	CTS V6-173 (2.8L) FI	T	**P1433**	**PA4358**		**BF7776**	**N/R**	
	V6-217 (3.6L) FI	7	**P1433**	**PA4358**		**BF7776**	**N/R**	
	CTS-V V8-364 (6.0L) SFI	U	**B31**			**BF7776**	**N/R**	

OBS = Obsolete. Availability Limited to Distributor Stock. [t] Transmission, Not Model, Determines Which Transmission Filter is Used.

CADILLAC Cont'd.

Year	Model and Engine	VIN	Lube	Air	Cabin Air	Fuel	Breather	Trans.t
2006	DTS V8-281 (4.6L) SFI	9,Y	**B7010**	**PA4157**	(w/o Charcoal) **PA4330** (w/Charcoal) **PA4384**	**N/S**	**N/R**	**18009**
	Escalade, Escalade ESV, Escalade EXT V8-364 (6.0L) SFI HO	N	**B31**	**PA4113**	**N/R**	**N/S**	**N/R**	4L60E S. Pan **18010** 4L60E D. Pan **18056** 4L80-E **18027**
	SRX V6-217 (3.6L) FI	7	**P1433**			**BF7776**	**N/R**	
	V8-281 (4.6L) FI	A	**B7010**			**BF7776**	**N/R**	
	STS V6-220 (3.6L) FI	7	**P1433**			**BF7776**	**N/R**	
	V8-281 (4.6L) FI	A	**B7010**			**BF7776**	**N/R**	
	STS-V V8-267 (4.4L) FI Supercharged	D				**BF7776**	**N/R**	
	XLR V8-281 (4.6L) SFI	A	**B7010**	**[2] PA2231**		**N/S**	**N/R**	
	XLR-V V8-267 (4.4L) FI Supercharged	D				**N/S**	**N/R**	
2005	CTS V6-170 (2.8L) FI	T	**P1433**	**PA4358**		**BF7776**	**N/R**	
	V6-220 (3.6L) FI	7	**P1433**	**PA4358**		**BF7776**	**N/R**	
	CTS-V V8-350 (5.7L) SFI	S	**B31**			**BF7776**	**N/R**	
	DeVille V8-279 (4.6L) SFI or HO	9,Y	**B7010**	**PA2231**	(w/o Charcoal) **PA4330** (w/Charcoal) **PA4384**	**BF1171**	**N/R**	**18009**
	Escalade V8-327 (5.3L) SFI	T	**B31**	**PA4113**	**N/R**	**N/S**	**N/R**	4L60E S. Pan **18010** 4L60E D. Pan **18056** 4L80-E **18027**
	V8-364 (6.0L) SFI HO	N	**B31**	**PA4113**	**N/R**	**N/S**	**N/R**	4L60E S. Pan **18010** 4L60E D. Pan **18056** 4L80-E **18027**
	SRX V6-220 (3.6L) MFI	7	**P1433**			**BF7776**	**N/R**	
	V8-279 (4.6L) SFI	A	**B7010**			**BF7776**	**N/R**	
	STS V6-220 (3.6L) SFI	7	**P1433**			**BF7776**	**N/R**	
	V8-279 (4.6L) SFI	A	**B7010**			**BF7776**	**N/R**	
	XLR V8-279 (4.6L) SFI	A	**B7010**	**[2] PA2231**		**BF1171**	**N/R**	
2004	CTS V6-197 (3.2L) SFI	N	**P7411**	**PA4358**		**BF1171**	**N/R**	
	V6-220 (3.6L) FI	7	**P1433**	**PA4358**		**BF7776**	**N/R**	
	CTS-V V8-350 (5.7L) FI	S	**B31**			**BF7776**	**N/R**	
	DeVille V8-279 (4.6L) SFI	9,Y	**B7010**	**PA2231**	(w/o Charcoal) **PA4330** (w/Charcoal) **PA4384**	**BF1171**	**N/R**	**18009**
	Escalade V8-327 (5.3L) SFI	T	**B31**	**PA4113**	**PA4169**	**N/S**	**N/R**	4L60E S. Pan **18010** 4L60E D. Pan **18056** 4L80-E **18027**
	V8-364 (6.0L) SFI HO	N	**B31**	**PA4113**	**PA4169**	**N/S**	**N/R**	4L60E S. Pan **18010** 4L60E D. Pan **18056** 4L80-E **18027**
	Seville V8-279 (4.6L) SFI	9,Y	**B7010**	**PA2231**		**BF1171**	**N/R**	**18009**
	SRX V6-220 (3.6L) MFI	7	**P1433**			**BF7776**	**N/R**	
	V8-279 (4.6L) SFI	A	**B7010**			**BF7776**	**N/R**	
	XLR V8-279 (4.6L) SFI	A	**B7010**	**[2] PA2231**		**BF1171**	**N/R**	
2003	CTS V6-197 (3.2L) SFI	N	**P7411**	**PA4358**		**BF1171**	**N/R**	
	DeVille V8-279 (4.6L) SFI	9,Y	**B7010**	**PA2231**	(w/o Charcoal) **PA4330** (w/Charcoal) **PA4384**	**BF1171**	**N/R**	4T80E **18009**
	Escalade V8-327 (5.3L) SFI	T	**B31**	**PA4113**	Opt. **PA4149 KIT**	**BF853**	**N/R**	4L60E S. Pan **18010** D. Pan **18056**
	V8-364 (6.0L) SFI	N,U	**B31**	**PA4113**	Opt. **PA4149 KIT**	**BF853**	**N/R**	**18027**
	Seville V8-279 (4.6L) SFI	9,Y	**B7010**	**PA2231**		**BF1171**	**N/R**	4T80E **18009**
2002	DeVille V8-279 (4.6L) SFI	9,Y	**B7010**	**PA2231**	(w/o Charcoal) **PA4330** (w/Charcoal) **PA4384**	**BF1171**	**N/R**	4 Spd. **18009**
	Eldorado V8-279 (4.6L) SFI	9,Y	**B7010**	**PA2189**	**N/R**	**BF7667**	**N/R**	4 Spd. **18009**
	Escalade V8-327 (5.3L) SFI	T	**B1432**	**PA4113**	**PA4149 KIT**	**BF853**	**N/R**	4L60E S. Pan **18010** 4L60E D. Pan **18056** 4L80-E **18027**

[t] Transmission, Not Model, Determines Which Transmission Filter is Used. OBS = Obsolete. Availability Limited to Distributor Stock.

CADILLAC Cont'd.

Year	Model and Engine	VIN	Lube	Air	Cabin Air	Fuel	Breather	Trans.[t]
2002	Escalade V8-364 (6.0L) SFI	N	**B1432**	**PA4113**	**PA4149 KIT**	**BF853**	**N/R**	AWD **18027**
	Seville V8-279 (4.6L) SFI	9,Y	**B7010**	**PA2231**		**BF1171**	**N/R**	4 Spd. **18009**
2001	Catera V6-181 (3.0L) MFI	R	**P1440**			**BF885**	**N/R**	
	DeVille V8-279 (4.6L) SFI	9,Y	**B7010**	**PA2231**	(w/o Charcoal) **PA4330** (w/Charcoal) **PA4384**	**BF1171**	**N/R**	**18009**
	Eldorado V8-279 (4.6L) SFI	9,Y	**B7010**	**PA2189**	**N/R**	**BF7667**	**N/R**	**18009**
	Seville V8-279 (4.6L) SFI	9,Y	**B7010**	**PA2231**		**BF1171**	**N/R**	**18009**
2000	Catera V6-181 (3.0L) MFI	R	**P1440**			**BF885**	**N/R**	
	DeVille V8-279 (4.6L) SFI	9,Y	**B7010**	**PA2231**	(w/o Charcoal) **PA4330** (w/Charcoal) **PA4384**	**BF1171**	**N/R**	4T80E **18009**
	Eldorado V8-279 (4.6L) SFI	9,Y	**B7010**	**PA2189**	**N/R**	**BF7667**	**N/R**	4T80E **18009**
	Escalade V8-350 (5.7L) SFI	W	**B35-S**	Std. **RS3707** HvyDty. **RS3706**	**N/R**	**BF853**	**N/R**	4L60E S. Pan **18010** 4L60E D. Pan **18056**
	Seville V8-279 (4.6L) SFI	9,Y	**B7010**	**PA2231**		**BF1171**	**N/R**	4T80E **18009**
1999	Catera V6-181 (3.0L) MFI	R	**P1440**			**BF885**	**N/R**	
	DeVille, DeVille Concours V8-279 (4.6L) SFI	9,Y	**B7010**	**PA2189**	**N/R**	**BF7667**	**N/R**	4T80E **18009**
	Eldorado V8-279 (4.6L) SFI	9,Y	**B7010**	**PA2189**	**N/R**	**BF7667**	**N/R**	4T80E **18009**
	Escalade V8-350 (5.7L) FI	R	**B35-S**	Std. **RS3707** HvyDty. **RS3706**	**N/R**	**BF853**	**N/R**	4L60E S. Pan **18010** 4L60E D. Pan **18056**
	Seville V8-279 (4.6L) SFI	9,Y	**B7010**	**PA2231**		**BF1171**	**N/R**	4T80E **18009**
1998	Catera V6-181 (3.0L) MFI	R	**B43-S**			**BF885**	**N/R**	
	DeVille, DeVille Concours V8-279 (4.6L) SFI	9,Y	**B7010**	**PA2189**	**N/R**	**BF7667**	**N/R**	4T80E **18009**
	Eldorado V8-279 (4.6L) SFI	9,Y	**B7010**	**PA2189**	**N/R**	**BF7667**	**N/R**	4T80E **18009**
	Seville V8-279 (4.6L) SFI	9,Y	**B7010**	**PA2231**		**BF1171**	**N/R**	4T80E **18009**
1997	Catera V6-181 (3.0L) FI	R	**B43-S**			**BF885**	**N/R**	
	DeVille, DeVille Concours V8-279 (4.6L) SFI	9,Y	**B7010**	**PA2189**	**N/R**	**BF7667**	**N/R**	4T80E **18009**
	Eldorado V8-279 (4.6L) SFI	9,Y	**B7010**	**PA2189**	**N/R**	**BF7667**	**N/R**	4T80E **18009**
	Seville V8-279 (4.6L) SFI	9,Y	**B7010**	**PA2189**	**N/R**	**BF7667**	**N/R**	4T80E **18009**
1996	DeVille, DeVille Concours V8-279 (4.6L) SFI	9,Y	**B7010**	**PA2189**	**N/R**	**BF1046**	**N/R**	4T80E **18009**
	Eldorado V8-279 (4.6L) SFI	9,Y	**B7010**	**PA2189**	**N/R**	**BF1046**	**N/R**	4T80E **18009**
	Fleetwood, Fleetwood Brougham V8-350 (5.7L) SFI	P	**B35-S**	**PA2189**	**N/R**	**BF1045**	**N/R**	4L60E **18010**
	Seville V8-279 (4.6L) SFI	9,Y	**B7010**	**PA2189**	**N/R**	**BF1046**	**N/R**	4T80E **18009**
1995	DeVille, DeVille Concours V8-279 (4.6L) MFI	9,Y	**B7010**	**PA2189**	**N/R**	**BF1046**	**N/R**	4T80E **18009**
	V8-300 (4.9L) MFI	B	**B7010**	**PA2189**	**N/R**	**BF1046**	**N/R**	(w/o Gskt.) **18022** (w/Gskt.) **20014**
	Eldorado V8-279 (4.6L) TPI	9,Y	**B7010**	**PA2189**	**N/R**	**BF1046**	**N/R**	4T80E **18009**
	Fleetwood V8-350 (5.7L) SFI	P	**B35-S**	**PA2189**	**N/R**	**BF1045**	**N/R**	4L60E **18010**
	Seville V8-279 (4.6L) TPI	9,Y	**B7010**	**PA2189**	**N/R**	**BF1046**	**N/R**	4T80E **18009**
1994	DeVille, DeVille Concours V8-279 (4.6L) MFI	9,Y	**B7010**	**PA2189**	**N/R**	**BF1046**	**N/R**	4T80E **18009**
	V8-300 (4.9L) SFI	B	**B7010**	**PA2189**	**N/R**	**BF1046**	**N/R**	(w/o Gskt.) **18022** (w/Gskt.) **20014**
	Eldorado V8-279 (4.6L) TPI	9,Y	**B7010**	**PA2189**	**N/R**	**BF1046**	**N/R**	4T80E **18009**
	Fleetwood V8-350 (5.7L) SFI	P	**B35-S**	**PA2189**	**N/R**	**BF1045**	**N/R**	4L60E **18010**
	Seville, Seville STS V8-279 (4.6L) TPI	9,Y	**B7010**	**PA2189**	**N/R**	**BF1046**	**N/R**	4T80E **18009**
1993	Allante V8-279 (4.6L) SFI	9	**B7010**	**PA2189**	**N/R**	**BF1046**	**N/R**	4T80E **18009**
	DeVille, Fleetwood, Sixty Special V8-300 (4.9L) SFI	B	**B7010**	**PA2189**	**N/R**	**BF1046**	**N/R**	(w/o Gskt.) **18022** (w/Gskt.) **20014**
	V8-350 (5.7L) TBI	7	**B27**	**PA2008**	**N/R**	**BF1046**	**SA2027**	**18155**
	Eldorado, Seville V8-279 (4.6L) TPI	9,Y	**B7010**	**PA2189**	**N/R**	**BF1046**	**N/R**	4T80E **18009**
	V8-300 (4.9L) SFI	B	**B7010**	**PA2189**	**N/R**	**BF1046**	**SA2027**	(w/o Gskt.) **18022** (w/Gskt.) **20014**
1992	Allante V8-273 (4.5L) SFI	8	**B30**	**PA2196**	**N/R**	**BF853**	**N/R**	**18139**
	Brougham V8-305 (5.0L) EFI	E	**B27**	**PA2008**	**N/R**	**BF1046**	**SA2027**	**18155**
	V8-350 (5.7L) EFI	7	**B27**	**PA2008**	**N/R**	**BF1046**	**SA2027**	**18155**
	DeVille, Fleetwood V8-300 (4.9L) SFI	B	**B30**	**PA2189**	**N/R**	**BF1046**	**N/R**	(w/o Gskt.) **18022** (w/Gskt.) **20014**

OBS = Obsolete. Availability Limited to Distributor Stock. [t] Transmission, Not Model, Determines Which Transmission Filter is Used.

CADILLAC Cont'd.

Year	Model and Engine	VIN	Lube	Air	Cabin Air	Fuel	Breather	Trans.[t]
1992	Eldorado V8-300 (4.9L) SFI	B	**B30**	**PA2189**	**N/R**	**BF1185**	**SA2027**	(w/o Gskt.) **18022** (w/Gskt.) **20014**
	Seville V8-300 (4.9L) SFI	B	**B30**	**PA2189**	**N/R**	**BF1185**	**SA2046**	(w/o Gskt.) **18022** (w/Gskt.) **20014**
1991	Allante V8-273 (4.5L) SFI	8	**B30**	**PA2196**	**N/R**	**BF853**	**N/R**	**18139**
	Brougham V8-305 (5.0L) TBI	E	**B27**	**PA2008**	**N/R**	(w/Bracket) **BF1165** (Ele. Only) **BF1046**	**SA2027**	**18155**
	V8-350 (5.7L) TBI	7	**B27**	**PA2008**	**N/R**	(w/Bracket) **BF1165** (Ele. Only) **BF1046**	**SA2027**	**18155**
	DeVille, Fleetwood V8-300 (4.9L) SFI	B	**B30**	**PA2189**	**N/R**	**BF1046**	**N/R**	(w/o Gskt.) **18022** (w/Gskt.) **20014**
	Eldorado, Seville V8-300 (4.9L) SFI	B	**B30**	**PA2189**	**N/R**	**BF1185**	**SA2046**	(w/o Gskt.) **18022** (w/Gskt.) **20014**
1990	Allante V8-273 (4.5L) SFI	8	**B30**	**PA2196**	**N/R**	**BF853**	**N/R**	TH440-T4 **18139**
	Brougham V8-307 (5.0L) Carb.	9,Y	**B30**	**PA2008**	**N/R**	**PF894,-RV**	**SA2046**	TH400 **6020**
	V8-350 (5.7L) TBI	7	**B27**	**PA2008**	**N/R**	(w/Bracket) **BF1165** (Ele. Only) **BF1046**	**SA2027**	**18155**
	DeVille, Fleetwood V8-273 (4.5L) SFI	3	**B30**	**PA2189**	**N/R**	**BF853**	**N/R**	TH440-T4 **18139**
	Eldorado, Seville V8-273 (4.5L) SFI	3	**B30**	**PA2189**	**N/R**	**BF1185**	**N/R**	TH440-T4 **18139**
1989	Allante V8-273 (4.5L) SFI	8	**B30**	**PA2196**	**N/R**	**BF853**	**N/R**	TH440-T4 **18139**
	Brougham V8-307 (5.0L) Carb.	9,Y	**B7010**	**PA2008**	**N/R**	**PF894-RV**	**SA2046**	TH400 **6020**
	DeVille, Fleetwood V8-273 (4.5L) FI	5	**B30**	**PA2189**	**N/R**	**BF853**	**N/R**	TH440-T4 **18139**
	Eldorado, Seville V8-273 (4.5L) FI	5	**B30**	**PA2189**	**N/R**	**BF853**	**N/R**	TH440-T4 **18139**
1988	Allante V8-252 (4.1L) SFI	7	**B30**	**PA2140**	**N/R**	**BF853**	**N/R**	TH440-T4 **18139**
	Brougham V8-307 (5.0L) Carb.	Y	**B7010**	**PA2008**	**N/R**	**PF894-RV**	**SA2046**	TH400 **6020**
	Cimarron V6-173 (2.8L) FI	W	**B43-S**	**PA2162**	**N/R**	**BF853**	**N/R**	TH125,C **19593**
	DeVille, Fleetwood V8-273 (4.5L) FI	5	**B30**	**PA2189**	**N/R**	**BF853**	**N/R**	TH440-T4 **18139**
	Eldorado, Seville V8-273 (4.5L) FI	5	**B30**	**PA2189**	**N/R**	**BF853**	**N/R**	TH440-T4 **18139**
1987	Allante V8-252 (4.1L) FI	7	**B30**	**PA2140**	**N/R**	**BF853**	**SA2046**	TH440-T4 **18139**
	Brougham V8-307 (5.0L) Carb.	9,Y	**B7010**	**PA2008**	**N/R**	**PF894-RV**	**SA2046**	TH400 **6020**
	Cimarron V6-173 (2.8L) FI	W	**B43-S**	**PA2162**	**N/R**	**BF853**	**N/R**	TH125,C **19593**
	DeVille, Fleetwood V8-252 (4.1L) FI	8	**B30**	**PA2106**	**N/R**	**BF853**	**SA2046**	TH440-T4 **18139**
	Eldorado, Seville V8-252 (4.1L) FI	8	**B30**		**N/R**	**BF853**	**SA2046**	TH440-T4 **18139**
1986	Cimarron 4-122 (2.0L) FI	P	**B35-S**	**PA2109**	**N/R**	**BF853**	**N/R**	TH125,C **19593**
	V6-173 (2.8L) FI	W	**B43-S**	**PA2134**	**N/R**	**BF853**	**N/R**	TH125,C **19593**
	DeVille, Fleetwood V8-252 (4.1L) FI	8	**B30**	**PA2106**	**N/R**	**BF853**	**SA2046**	TH440-T4 **18139**
	V8-307 (5.0L) 4 Bbl.	Y	**B30**	**PA2006**	**N/R**	**PF894,-RV**	**N/R**	
	Eldorado, Seville V8-252 (4.1L) FI	8	**B30**		**N/R**	**BF853**	**SA2046**	TH440-T4 **18139**
1985	Cimarron 4-122 (2.0L) FI	P	**B35-S**	**PA2109**	**N/R**	**BF853**	**N/R**	TH125,C **19593**
	V6-173 (2.8L) FI	W	**B35-S**	**PA2134**	**N/R**	**BF868**	**N/R**	TH125,C **19593**
	DeVille, Fleetwood V6-262 (4.3L) Diesel	T	**B30**	**PA2110**	**N/R**	**BF806**	**N/R**	TH440-T4 **18139**
	V8-252 (4.1L) FI	8	**B30**	(FWD) **PA2106** (RWD) **PA2006**	**N/R**	**BF868**	**SA2046**	TH440-T4 **18139**
	V8-350 (5.7L) Diesel	N	**B30**	**PA2079**	**N/R**		**N/R**	
	Eldorado, Seville V8-252 (4.1L) FI	8	**B30**	**PA2006**	**N/R**	**BF858**	**SA2046**	TH325-4L **18091**
	V8-350 (5.7L) Diesel	N	**B30**	**PA2078 OBS**	**N/R**		**N/R**	TH325-4L **18091**
1984	Cimarron 4-122 (2.0L) FI	P	**B35-S**	**PA2109**	**N/R**	**BF853**	**SA4315**	TH125,C **19593**
	DeVille V8-252 (4.1L) FI	8	**B30**	**PA2006**	**N/R**	**BF858**	**SA2046**	
	V8-350 (5.7L) Diesel	N	**B30**	**PA2079**	**N/R**	**BF806**	**N/R**	
	Eldorado, Seville V8-252 (4.1L) FI	8	**B30**	**PA2006**	**N/R**	**BF858**	**SA2046**	TH325-4L **18091**
	V8-350 (5.7L) Diesel	N	**B30**	**PA2078 OBS**	**N/R**	**BF806**	**N/R**	TH325-4L **18091**
	Fleetwood V8-252 (4.1L) FI	8	**B30**	**PA2006**	**N/R**	**BF858**	**SA2046**	
	V8-350 (5.7L) Diesel	N	**B30**	**PA2079**	**N/R**	**BF806**	**N/R**	
	V8-368 (6.0L) FI	9	**B30**	**PA2008**	**N/R**	**PF827**	**SA2046**	
1983	Cimarron 4-122 (2.0L) FI	P	**B35-S**	**PA2109**	**N/R**	**BF853**	**SA4315**	TH125,C **19593**
	DeVille, Fleetwood V8-252 (4.1L) FI	8	**B30**	**PA2006**	**N/R**	**BF858**	**SA2027** **SA2046**	
	V8-350 (5.7L) Diesel	N	**B30**	**PA2079**	**N/R**	**BF806**	**N/R**	
	V8-368 (6.0L) FI	9	**B30**	**PA2006**	**N/R**	**BF858**	**SA2046**	TH400 **6020**
	Eldorado, Seville V8-252 (4.1L) FI	8	**B30**	**PA2006**	**N/R**	**BF858**	**SA2027** **SA2046**	TH325-4L **18091**

[t] Transmission, Not Model, Determines Which Transmission Filter is Used. OBS = Obsolete. Availability Limited to Distributor Stock.

Year	Model and Engine	VIN	Lube	Air	Cabin Air	Fuel	Breather	Trans.[t]
CADILLAC Cont'd.								
1983	Eldorado, Seville V8-350 (5.7L) Diesel	N	**B30**	**PA2078 OBS**	**N/R**	**BF806**	**N/R**	TH325-4L **18091**
1982	Cimarron 4-112 (1.8L) 2 Bbl.	G	**B35-S**	**PA2112 OBS**	**N/R**	**PF894,-RV**	**N/R**	TH125,C **19593**
	DeVille, Fleetwood V6-252 (4.1L) 4 Bbl.	4	**B43-S**	**PA1680**	**N/R**	**PF894,-RV**	**SA2027 SA2046**	
	V8-252 (4.1L) FI	8	**B30**	**PA2006**	**N/R**	**BF858**	**SA2046**	
	V8-350 (5.7L) Diesel	N	**B30**	**PA2079**	**N/R**	**BF806**	**N/R**	TH350,C **6021**
	V8-368 (6.0L) 4 Bbl.	6	**B30**	**PA2008**	**N/R**	**PF894,-RV**	**SA2046**	TH400 **6020**
	V8-368 (6.0L) FI	9	**B30**	**PA2006**	**N/R**	**PF827**	**SA2046**	TH400 **6020**
	Eldorado, Seville V6-252 (4.1L) 4 Bbl.	4	**B43-S**	**PA2006**	**N/R**	**PF894,-RV**	**SA2027 SA2046**	TH325-4L **18091**
	V8-252 (4.1L) FI	8	**B30**	**PA2006**	**N/R**	**BF858**	**SA2046**	TH325-4L **18091**
	V8-350 (5.7L) Diesel	N	**B30**	**PA2078 OBS**	**N/R**	**BF806**	**N/R**	TH325-4L **18091**
1981	DeVille, Fleetwood V6-252 (4.1L) 4 Bbl.	4	**B43-S**	**PA1680**	**N/R**	**PF894,-RV**	**SA2027 SA2046**	TH400 **6020**
	V8-350 (5.7L) Diesel	N	**B30**	**PA2079**	**N/R**	**BF806**	**N/R**	
	V8-368 (6.0L) FI	9	**B30**	**PA2006**	**N/R**	**PF827**	**N/R**	TH400 **6020**
	Eldorado, Seville V6-252 (4.1L) 4 Bbl.	4	**B43-S**	**PA2006**	**N/R**	**PF894,-RV**	**SA2027 SA2046**	
	V8-350 (5.7L) Diesel	N	**B30**	**PA2078 OBS**	**N/R**	**BF806**	**N/R**	
	V8-368 (6.0L) FI	9	**B30**	**PA2006**	**N/R**	**PF827**	**N/R**	
1980	Calais, DeVille, Fleetwood V6-252 (4.1L) 4 Bbl.	4	**B43-S**	**PA1680**	**N/R**	**PF894,-RV**	**SA2027 SA2046**	**18031**
	V8-350 (5.7L) Diesel	N	**B30**	**PA2079**	**N/R**	**BF806**	**N/R**	TH400 **6020**
	V8-368 (6.0L) 4 Bbl.	6	**B30**	**PA2008**	**N/R**	**PF827**	**SA2046**	TH400 **6020**
	Eldorado, Seville V8-350 (5.7L) FI	8	**B30**	**PA2006**	**N/R**	**PF827**	**SA2046**	
	V8-350 (5.7L) Diesel	N	**B30**	**PA2078 OBS**	**N/R**	**BF806**	**N/R**	
	V8-368 (6.0L) FI	9	**B30**	**PA2006**	**N/R**	**PF827**	**SA2046**	
CHEVROLET								
2011	Cruze 4-1400cc (1.4L) FI Turbo							
	4-1800cc (1.8L) FI							
	Volt 4-1400cc (1.4L) Turbo & Electric Motor						**N/R**	
2010	Avalanche V8-325 (5.3L) SFI Flex Fuel	0	**B160**	**PA4113**	**N/R**	**N/S**	**N/R**	4L60E S. Pan **18010** 4L60E D. Pan **18056**
	Aveo 4-98 (1.6L) FI	E		**PA4344**		**N/S**	**N/R**	
	Aveo5 4-98 (1.6L) MFI	E		**PA4344**		**N/S**	**N/R**	
	Camaro V6-217 (3.6L) SFI	V	**P1433**			**N/S**	**N/R**	
	V8-376 (6.2L) SFI	J,W	**B160**			**N/S**	**N/R**	
	Cobalt 4-134 (2.2L) SFI	H	**P7442**	**PA4329**	**PA4317**		**N/R**	4T40E **18057**
	Cobalt SS 4-122 (2.0L) SFI Turbo	X	**P7442**		**PA4317**		**N/R**	**M.T.**
	Colorado 4-178 (2.9L) FI	9	**B31**	**PA4412**	**N/R**	**N/S**	**N/R**	4L60E S. Pan **20020** 4L60E D. Pan **18056**
	L5-226 (3.7L) MFI	E	**B7010**	**PA4412**	**N/R**	**N/S**	**N/R**	4L60E S. Pan **20020** 4L60E D. Pan **18056**
	V8-325 (5.3L) FI	P	**B160**	**PA4412**	**N/R**	**N/S**	**N/R**	4L60E S. Pan **20020** 4L60E D. Pan **18056**
	Corvette V8-378 (6.2L) FI	W	**B160**			**N/S**	**N/R**	
	V8-378 (6.2L) FI Supercharged	R				**N/S**	**N/R**	
	V8-427 (7.0L) FI	E	**B160**			**N/S**	**N/R**	
	Equinox 4-147 (2.4L) FI	W	**P1445**		**PA4398**	**N/S**	**N/R**	
	V6-182 (3.0L) FI	Y	**B160**		**PA4398**	**N/S**	**N/R**	**N/S**
	Express Van V6-262 (4.3L) FI	X	**B43-S**	**RS4131**	**N/R**	**N/S**	**N/R**	4L60E S. Pan **18010** 4L60E D. Pan **18056** 4L80-E **18027**
	V8-292 (4.8L) FI or Flex Fuel	A	**B160**	**RS4131**	**N/R**	**N/S**	**N/R**	4L60E S. Pan **18010** 4L60E D. Pan **18056** 4L80-E **18027**
	V8-325 (5.3L) FI Flex Fuel	4	**B160**	**RS4131**	**N/R**	**N/S**	**N/R**	4L60E S. Pan **18010** 4L60E D. Pan **18056** 4L80-E **18027**
	V8-364 (6.0L) FI Flex Fuel	K	**B160**	**RS4131**	**N/R**	**N/S**	**N/R**	4L60E S. Pan **18010** 4L60E D. Pan **18056** 4L80-E **18027**
	V8-403 (6.6L) FI Turbo Diesel	6	**B1441**		**N/R**	**BF7933 KIT**[76]	**N/R**	4L60E S. Pan **18010** 4L60E D. Pan **18056** 4L80-E **18027**
	HHR 4-134 (2.2L) FI or Flex Fuel	B	**P7442**	**PA4316**	**PA4317**	**N/S**	**N/R**	4T45E **18057**

OBS = Obsolete. Availability Limited to Distributor Stock. [t] Transmission, Not Model, Determines Which Transmission Filter is Used.

[76] Contains Pri. and Sec. Fuel Elements.

CHEVROLET Cont'd.

Year	Model and Engine	VIN	Lube	Air	Cabin Air	Fuel	Breather	Trans.[t]
2010	HHR 4-146 (2.4L) FI Flex Fuel	V	**P7442**	**PA4316**	**PA4317**	**N/S**	**N/R**	4T45E **18057**
	HHR SS 4-122 (2.0L) FI Turbo	M	**P7442**		**PA4317**	**N/S**	**N/R**	4T45E **18057**
	Impala V6-213 (3.5L) FI or Flex Fuel	K,N	**B7010**	**PA4178**		**N/S**	**N/R**	4T65-E (w/o Gskt.) **18022** (w/Gskt.) **20014**
	V6-238 (3.9L) FI Flex Fuel	M	**B7010**	**PA4178**		**N/S**	**N/R**	4T65-E (w/o Gskt.) **18022** (w/Gskt.) **20014**
	Impala SS V8-325 (5.3L) SFI	C	**B160**	**PA4178**	**PA4154**	**N/S**	**N/R**	4T65-E (w/o Gskt.) **18022** (w/Gskt.) **20014**
	Malibu 4-145 (2.4L) Flex Fuel or Hybrid	0,B	**P7442**	**PA4157**	**N/R**	**N/S**	**N/R**	4T45E **18057**
	V6-214 (3.5L) FI	N	**B7010**	**PA4157**	**N/R**	**N/S**	**N/R**	4T45-E **18057**
	V6-217 (3.6L) FI	7	**B160**	**PA4157**	**N/R**	**N/S**	**N/R**	
	Silverado V6-262 (4.3L) FI	X	**B43-S**	**PA4113**	**N/R**	**N/S**	**N/R**	4L60E S. Pan **18010** 4L60E D. Pan **18056** 4L80-E **18027**
	V6-292 (4.8L) FI Flex Fuel	A	**B160**	**PA4113**	**N/R**	**N/S**	**N/R**	4L60E S. Pan **18010** 4L60E D. Pan **18056** 4L80-E **18027**
	V8-325 (5.3L) FI Flex Fuel	0,3	**B160**	**PA4113**	**N/R**	**N/S**	**N/R**	4L60E S. Pan **18010** 4L60E D. Pan **18056** 4L80-E **18027**
	V8-366 (6.0L) FI Hybrid	J	**B160**	**PA4113**	**N/R**	**N/S**	**N/R**	
	V8-366 (6.0L) FI Flex Fuel	G,K	**B160**	**PA4113**	**N/R**	**N/S**	**N/R**	4L80-E **18027**
	V8-406 (6.6L) Turbo Diesel	6	**B1441**	**CA5352**	**N/R**	**BF7827**	**N/R**	S. Pan (w/o Gskt.) **20004** S. Pan (w/Gskt.) **20016** D. Pan (w/o Gskt.) **20003** D. Pan (w/Gskt.) **20017** Spin-on **BT8460**
	Suburban V8-325 (5.3L) FI Flex Fuel	0,3	**B160**	**PA4113**	**N/R**	**N/S**	**N/R**	4L60E S. Pan **18010** 4L60E D. Pan **18056**
	V8-366 (6.0L) FI Flex Fuel	G	**B160**	**PA4113**	**N/R**	**N/S**	**N/R**	
	Tahoe V8-293 (4.8L) FI	A	**B160**	**PA4113**	**N/R**	**N/S**	**N/R**	4L60E S. Pan **18010** 4L60E D. Pan **18056** 4L80-E **18027**
	V8-325 (5.3L) FI Flex Fuel	0,3	**B160**	**PA4113**	**N/R**	**N/S**	**N/R**	4L60E S. Pan **18010** 4L60E D. Pan **18056** 4L80-E **18027**
	V8-366 (6.0L) FI Hybrid	J	**B160**	**PA4113**	**N/R**	**N/S**	**N/R**	
	V8-376 (6.2L) FI	2	**B160**	**PA4113**	**N/R**	**N/S**	**N/R**	
	Traverse V6-217 (3.6L) FI	D	**B160**	**PA4418**	**N/R**	**N/S**	**N/R**	
2009	Avalanche V8-325 (5.3L) SFI or Flex Fuel	0,3,J	**B160**	**PA4113**	**N/R**	**N/S**	**N/R**	4L60E S. Pan **18010** 4L60E D. Pan **18056** 4L80-E **18027**
	V8-364 (6.0L) SFI	Y	**B160**	**PA4113**	**N/R**	**N/S**	**N/R**	4L60E S. Pan **18010** 4L60E D. Pan **18056**
	Aveo 4-98 (1.6L) MFI	E		**PA4344**		**N/S**	**N/R**	
	Aveo5 4-98 (1.6L) MFI	E		**PA4344**		**N/S**	**N/R**	
	Cobalt 4-134 (2.2L) SFI	H	**P7442**	**PA4329**	**PA4317**		**N/R**	4T40E **18057**
	Cobalt SS 4-122 (2.0L) SFI Turbo	X	**P7442**		**PA4317**		**N/R**	**M.T.**
	Colorado 4-178 (2.9L) MFI	9	**B31**	**PA4412**	**N/R**	**N/S**	**N/R**	4L60E S. Pan **20020** 4L60E D. Pan **18056**
	L5-226 (3.7L) MFI	E	**B7010**	**PA4412**	**N/R**	**N/S**	**N/R**	4L60E S. Pan **20020** 4L60E D. Pan **18056**
	V8-325 (5.3L) MFI	L	**B160**	**PA4412**	**N/R**	**N/S**	**N/R**	4L60E S. Pan **20020** 4L60E D. Pan **18056**
	V8-325 (5.3L) FI	P	**B160**	**PA4412**	**N/R**	**N/S**	**N/R**	4L60E S. Pan **20020** 4L60E D. Pan **18056**
	Corvette V8-378 (6.2L) SFI Supercharged	R				**N/S**	**N/R**	
	V8-378 (6.2L) SFI	W	**B160**			**N/S**	**N/R**	
	V8-427 (7.0L) SFI	E	**B160**			**N/S**	**N/R**	
	Equinox V6-207 (3.4L) FI	F	**B43-S**	**PA4157**	**PA4340**	**BF7771**	**N/R**	**N/S**

[t] Transmission, Not Model, Determines Which Transmission Filter is Used. OBS = Obsolete. Availability Limited to Distributor Stock.

CHEVROLET Cont'd.

Year	Model and Engine	VIN	Lube	Air	Cabin Air	Fuel	Breather	Trans.[t]
2009	Equinox V6-217 (3.6L) SFI	7	**B160**	**PA4157**	**PA4340**	**BF7771**	**N/R**	**N/S**
	Express Van V6-262 (4.3L) MFI	X	**B43-S**	**RS4131**	**N/R**	**N/S**	**N/R**	4L60E S. Pan **18010** 4L60E D. Pan **18056** 4L80-E **18027**
	V8-292 (4.8L) SFI	C	**B160**	**RS4131**	**N/R**	**N/S**	**N/R**	4L60E S. Pan **18010** 4L60E D. Pan **18056** 4L80-E **18027**
	V8-325 (5.3L) FI Flex Fuel	4	**B160**	**RS4131**	**N/R**	**N/S**	**N/R**	4L60E **18056** 4L80-E **18027**
	V8-364 (6.0L) SFI	K	**B160**	**RS4131**	**N/R**	**N/S**	**N/R**	4L60E **18056** 4L80-E **18027**
	V8-403 (6.6L) FI Turbo Diesel	6	**B1441**		**N/R**	**BF7933 KIT**[76]	**N/R**	4L60E **18056** 4L80-E **18027**
	HHR 4-134 (2.2L) EFI Flex Fuel	B	**P7442**	**PA4316**	**PA4317**	**N/S**	**N/R**	4T45E **18057**
	4-146 (2.4L) EFI Flex Fuel	V	**P7442**	**PA4316**	**PA4317**	**N/S**	**N/R**	4T45E **18057**
	HHR SS 4-122 (2.0L) FI Turbo	X	**P7442**		**PA4317**	**N/S**	**N/R**	4T45E **18057**
	Impala V6-213 (3.5L) FI or Flex Fuel	K,N	**B7010**	**PA4178**	**PA4154**	**N/S**	**N/R**	4T65-E (w/o Gskt.) **18022** (w/Gskt.) **20014**
	V6-238 (3.9L) FI Flex Fuel	3,M	**B7010**	**PA4178**	**PA4154**	**N/S**	**N/R**	4T65-E (w/o Gskt.) **18022** (w/Gskt.) **20014**
	Impala SS V8-325 (5.3L) SFI	C	**B160**	**PA4178**	**PA4154**	**N/S**	**N/R**	4T65-E (w/o Gskt.) **18022** (w/Gskt.) **20014**
	Malibu 4-145 (2.4L) MFI or Hybrid	5,B	**P7442**	**PA4157**	**N/R**	**N/S**	**N/R**	4T45E **18057**
	V6-213 (3.5L) SFI	N	**B7010**	**PA4157**	**N/R**	**N/S**	**N/R**	4T45E **18057**
	V6-217 (3.6L) SFI	7	**B160**	**PA4157**	**N/R**	**N/S**	**N/R**	4T45E **18057** 6T70 **N/S**
	Silverado V6-262 (4.3L) FI	X	**B43-S**	**PA4113**	**N/R**	**N/S**	**N/R**	4L60E S. Pan **18010** 4L60E D. Pan **18056** 4L80-E **18027**
	V8-292 (4.8L) FI	C	**B160**	**PA4113**	**N/R**	**N/S**	**N/R**	4L60E S. Pan **18010** 4L60E D. Pan **18056** 4L80-E **18027**
	V8-325 (5.3L) SFI or Flex Fuel	0,3,J,M	**B160**	**PA4113**	**N/R**	**N/S**	**N/R**	4L60E S. Pan **18010** 4L60E D. Pan **18056** 4L80-E **18027**
	V8-364 (6.0L) SFI or Hybrid	5,K,Y	**B160**	**PA4113**	**N/R**	**N/S**	**N/R**	4L60E S. Pan **18010** 4L60E D. Pan **18056** 4L80-E **18027**
	V8-376 (6.2L) FI Flex Fuel	2	**B160**	**PA4113**	**N/R**	**N/S**	**N/R**	4L60E S. Pan **18010** 4L60E D. Pan **18056**
	V8-406 (6.6L) Turbo Diesel	6	**B1441**	**CA5352**	**N/R**	**BF7827**	**N/R**	S. Pan (w/o Gskt.) **20004** S. Pan (w/Gskt.) **20016** D. Pan (w/o Gskt.) **20003** D. Pan (w/Gskt.) **20017** Spin-on **BT8460**
	Suburban V8-325 (5.3L) SFI or Flex Fuel	0,3,J	**B160**	**PA4113**	**N/R**	**N/S**	**N/R**	4L60E S. Pan **18010** 4L60E D. Pan **18056**
	V8-364 (6.0L) SFI	K,Y	**B160**	**PA4113**	**N/R**	**N/S**	**N/R**	4L60E S. Pan **18010** 4L60E D. Pan **18056** 4L80-E **18027**
	Tahoe V8-294 (4.8L) SFI	C	**B160**	**PA4113**	**N/R**	**N/S**	**N/R**	4L60E S. Pan **18010** 4L60E D. Pan **18056** 4L80-E **18027**
	V8 325 (5.3L) SFI or Flex Fuel	0,J	**B160**	**PA4113**	**N/R**	**N/S**	**N/R**	4L60E S. Pan **18010** 4L60E D. Pan **18056** 4L80-E **18027**
	V8-364 (6.0L) FI Hybrid	5	**B160**	**PA4113**	**N/R**	**N/S**	**N/R**	
	V8-376 (6.2L) SFI Flex Fuel	2	**B160**	**PA4113**	**N/R**	**N/S**	**N/R**	4L60E S. Pan **18010** 4L60E D. Pan **18056**

OBS = Obsolete. Availability Limited to Distributor Stock. [t] Transmission, Not Model, Determines Which Transmission Filter is Used.

[76] Contains Pri. and Sec. Fuel Elements.

CHEVROLET Cont'd.

Year	Model and Engine	VIN	Lube	Air	Cabin Air	Fuel	Breather	Trans.[t]
2009	TrailBlazer 6-254 (4.2L) SFI	S	**B7010**	**RS4161**	**N/R**	**N/S**	**N/R**	4L60E S. Pan **18010** 4L60E D. Pan **18056**
	TrailBlazer SS V8-364 (6.0L) SFI	H	**B160**	**RS4161**	**N/R**	**N/S**	**N/R**	4L60E S. Pan **18010** 4L60E D. Pan **18056**
	Traverse V6-217 (3.6L) FI	D	**B160**	**PA4418**	**N/R**	**N/S**	**N/R**	
	Uplander V6-238 (3.9L) SFI Canada	1	**B7010**	**PA2231**	**PA4156 KIT**	**N/S**	**N/R**	4 Spd. (w/o Gskt.) **18022** (w/Gskt.) **20014**
2008	Avalanche V8-327 (5.3L) SFI or Flex Fuel	0,3,J	**B160**	**PA4113**	**N/R**	**N/S**	**N/R**	4L60E S. Pan **18010** 4L60E D. Pan **18056** 4L80-E **18027**
	V8-364 (6.0L) SFI	Y	**B160**	**PA4113**	**N/R**	**N/S**	**N/R**	4L60E **18056**
	Aveo 4-98 (1.6L) MFI	6	**B43-S**	**PA4344**		**N/S**	**N/R**	
	Aveo5 4-98 (1.6L) MFI	6	**B43-S**	**PA4344**		**N/S**	**N/R**	
	Cheyenne V8-5300cc (5.3L) FI Mexico		**B31**	**PA4113**			**N/R**	
	Cobalt 4-134 (2.2L) SFI	F	**P7442**	**PA4329**	**PA4317**		**N/R**	4T40E **18057**
	4-145 (2.4L) SFI	B	**P7442**	**PA4329**	**PA4317**		**N/R**	4T40E **18057**
	Cobalt SS 4-122 (2.0L) SFI Turbo	X	**P7442**		**PA4317**		**N/R**	**M.T.**
	Colorado 4-178 (2.9L) MFI	9	**B31**	**PA4412**	**N/R**	**N/S**	**N/R**	4L60E S. Pan **20020** 4L60E D. Pan **18056**
	L5-226 (3.7L) MFI	E	**B7010**	**PA4412**	**N/R**	**N/S**	**N/R**	4L60E S. Pan **20020** 4L60E D. Pan **18056**
	Corvette V8-378 (6.2L) SFI	W	**B160**			**N/S**	**N/R**	
	V8-427 (7.0L) SFI	E	**B160**			**N/S**	**N/R**	
	Equinox V6-207 (3.4L) FI	F	**B43-S**	**PA4157**	**PA4340**	**N/S**	**N/R**	5 Spd. **N/S**
	V6-217 (3.6L) SFI	7	**B160**	**PA4157**	**PA4340**	**N/S**	**N/R**	**N/S**
	Express Van V6-262 (4.3L) MFI	X	**B43-S**	**RS4131**	**N/R**	**N/S**	**N/R**	4L60E S. Pan **18010** 4L60E D. Pan **18056** 4L80-E **18027**
	V8-292 (4.8L) SFI	C	**B160**	**RS4131**	**N/R**	**N/S**	**N/R**	4L60E S. Pan **18010** 4L60E D. Pan **18056** 4L80-E **18027**
	V8-325 (5.3L) SFI Flex Fuel	4	**B160**	**RS4131**	**N/R**	**N/S**	**N/R**	4L60E S. Pan **18010** 4L60E D. Pan **18056** 4L80-E **18027**
	V8-364 (6.0L) SFI	K	**B160**	**RS4131**	**N/R**	**N/S**	**N/R**	4L60E S. Pan **18010** 4L60E D. Pan **18056** 4L80-E **18027**
	V8-403 (6.6L) Turbo Diesel	6	**B1441**		**N/R**	**BF7933 KIT**[76]	**N/R**	4L60E S. Pan **18010** 4L60E D. Pan **18056** 4L80-E **18027**
	HHR 4-134 (2.2L) EFI	D	**P7442**	**PA4316**	**PA4317**	**N/S**	**N/R**	4T45E **18057**
	4-146 (2.4L) EFI	P	**P7442**	**PA4316**	**PA4317**	**N/S**	**N/R**	4T45E **18057**
	HHR SS 4-122 (2.0L) FI Turbo	X	**P7442**		**PA4317**	**N/S**	**N/R**	4T45E **18057**
	Impala V6-213 (3.5L) SFI or Flex Fuel	K,N	**B7010**	**PA4178**	**PA4154**	**N/S**	**N/R**	4T65-E (w/o Gskt.) **18022** (w/Gskt.) **20014**
	V6-238 (3.9L) SFI Flex Fuel	3	**B7010**	**PA4178**	**PA4154**	**N/S**	**N/R**	4 Spd. (w/o Gskt.) **18022** (w/Gskt.) **20014**
	Impala SS V8-325 (5.3L) SFI	C	**B160**	**PA4178**	**PA4154**	**N/S**	**N/R**	4 Spd. (w/o Gskt.) **18022** (w/Gskt.) **20014**
	Malibu 4-134 (2.2L) MFI	F	**P1445**	**PA2231**	**N/S**	**N/S**	**N/R**	4T45E **18057**
	4-145 (2.4L) FI or Hybrid	5,B	**P7442**	**PA4157**	**N/R**	**N/S**	**N/R**	4T45E **18057**
	V6-213 (3.5L) SFI	N	**B7010**	10 15/16 In. **PA4157** 11 5/8 In. **PA4337**	**N/S**	**N/S**	**N/R**	**18057**
	V6-217 (3.6L) SFI	7	**B160**	**PA4157**	**N/R**	**N/S**	**N/R**	**18057**
	Meriva 4-1800cc (1.8L) FI Mexico		**B43-S**			**BF1185**	**N/R**	
	Silverado V6-262 (4.3L) MFI	X	**B43-S**	**PA4113**	**N/R**	**N/S**	**N/R**	4L60E S. Pan **18010** 4L60E D. Pan **18056** 4L80-E **18027**
	V8-292 (4.8L) FI	C	**B160**	**PA4113**	**N/R**	**N/S**	**N/R**	4L60E S. Pan **18010** 4L60E D. Pan **18056** 4L80-E **18027**

[t] Transmission, Not Model, Determines Which Transmission Filter is Used. OBS = Obsolete. Availability Limited to Distributor Stock.

[76] Contains Pri. and Sec. Fuel Elements.

CHEVROLET Cont'd.

Year	Model and Engine	VIN	Lube	Air	Cabin Air	Fuel	Breather	Trans.[t]
2008	Silverado V8-325 (5.3L) SFI or Flex Fuel	0,3,J,M	**B160**	**PA4113**	**N/R**	**N/S**	**N/R**	4L60E S. Pan **18010** 4L60E D. Pan **18056** 4L80-E **18027**
	V8-364 (6.0L) SFI	K,Y	**B160**	**PA4113**	**N/R**	**N/S**	**N/R**	Allison S. Pan (w/o Gskt.) **20004** Allison S. Pan (w/Gskt.) **20016** Allison D. Pan (w/o Gskt.) **20003** Allison D. Pan (w/Gskt.) **20017** Allison Spin-on **BT8460** 4L80-E **18027**
	V8-400 (6.6L) Turbo Diesel	D	**B1441**	**CA5352**	**N/R**	**BF7827**	**N/R**	S. Pan (w/o Gskt.) **20004** S. Pan (w/Gskt.) **20016** D. Pan (w/o Gskt.) **20003** D. Pan (w/Gskt.) **20017** Spin-on **BT8460**
	Suburban V8-325 (5.3L) SFI or Flex Fuel	0,3,J	**B160**	**PA4113**	**N/R**	**N/S**	**N/R**	4L60E S. Pan **18010** 4L60E D. Pan **18056**
	V8-364 (6.0L) SFI	K,Y	**B160**	**PA4113**	**N/R**	**N/S**	**N/R**	4L60E S. Pan **18010** 4L60E D. Pan **18056** 4L80-E **18027**
	Tahoe V8-294 (4.8L) SFI	C	**B160**	**PA4113**	**N/R**	**N/S**	**N/R**	4L60E S. Pan **18010** 4L60E D. Pan **18056** 4L80-E **18027**
	V8-325 (5.3L) SFI or Flex Fuel	0,J	**B160**	**PA4113**	**N/R**	**N/S**	**N/R**	4L60E S. Pan **18010** 4L60E D. Pan **18056** 4L80-E **18027**
	V8-364 (6.0L) FI (Hybrid)	5	**B160**	**PA4113**	**N/R**	**N/S**	**N/R**	4L60E **18056**
	Tornado 4-1800cc (1.8L) FI Mexico		**B43-S**			**BF1185**	**N/R**	
	TrailBlazer 6-254 (4.2L) SFI	S	**B7010**	**RS4161**	**N/R**	**N/S**	**N/R**	4L60E S. Pan **18010** 4L60E D. Pan **18056**
	V8-325 (5.3L) SFI	M	**B160**	**RS4161**	**N/R**	**N/S**	**N/R**	4L60E S. Pan **18010** 4L60E D. Pan **18056**
	TrailBlazer SS V8-364 (6.0L) SFI	H	**B160**	**RS4161**	**N/R**	**N/S**	**N/R**	4L60E S. Pan **18010** 4L60-E D. Pan **18056**
	Uplander V6-238 (3.9L) SFI or Flex Fuel	1,W	**B7010**	**PA2231**	**PA4156 KIT**	**N/S**	**N/R**	4 Spd. (w/o Gskt.) **18022** (w/Gskt.) **20014**
2007	Avalanche V8-327 (5.3L) SFI or Flex Fuel	0,3,J	**B160**	**PA4113**	**N/R**	**N/S**	**N/R**	4L60E S. Pan **18010** 4L60E D. Pan **18056** 4L80-E **18027**
	V8-364 (6.0L) SFI	Y	**B160**	**PA4113**	**N/R**	**N/S**	**N/R**	4L60E S. Pan **18010** 4L60E D. Pan **18056**
	Aveo, Aveo5 4-98 (1.6L) MFI	6	**B43-S**	**PA4344**		**N/S**	**N/R**	
	Cheyenne V8-5300cc (5.3L) FI Mexico		**B31**	**PA4113**			**N/R**	
	Cobalt 4-122 (2.0L) FI Supercharged	P	**P7442**		**PA4317**		**N/R**	4T40E **18057**
	4-134 (2.2L) SFI	F	**P7442**	**PA4329**	**PA4317**		**N/R**	4T40E **18057**
	4-149 (2.4L) SFI HO	B	**P7442**	**PA4329**	**PA4317**		**N/R**	4T40E **18057**
	Colorado 4-178 (2.9L) MFI	9	**B31**	**PA4173**	**N/R**	**N/S**	**N/R**	4L60E S. Pan **20020** 4L60E D. Pan **18056**
	5-226 (3.7L) MFI	E	**B7010**	**PA4173**	**N/R**	**N/S**	**N/R**	4L60E S. Pan **20020** 4L60E D. Pan **18056**
	Corvette V8-364 (6.0L) SFI	U	**B160**			**N/S**	**N/R**	
	V8-427 (7.0L) SFI	E	**B160**			**N/S**	**N/R**	
	Epica 6-152 (2.5L) FI Canada	L	**B7167**			**N/S**	**N/R**	**N/S**
	Equinox V6-207 (3.4L) FI	F	**B43-S**	**PA4157**	**PA4340**	**N/S**	**N/R**	**N/S**
	Express Van V6-262 (4.3L) MFI	X	**B43-S**	**RS4131**	**N/R**	**N/S**	**N/R**	4L60E S. Pan **18010** 4L60E D. Pan **18056** 4L80-E **18027**

OBS = Obsolete. Availability Limited to Distributor Stock. [t] Transmission, Not Model, Determines Which Transmission Filter is Used.

CHEVROLET Cont'd.

Year	Model and Engine	VIN	Lube	Air	Cabin Air	Fuel	Breather	Trans.[t]
2007	Express Van V8-292 (4.8L) SFI	V	**B160**	**RS4131**	**N/R**	**N/S**	**N/R**	4L60E S. Pan **18010** 4L60E D. Pan **18056** 4L80-E **18027**
	V8-325 (5.3L) SFI or Flex Fuel	T,Z	**B160**	**RS4131**	**N/R**	**N/S**	**N/R**	4L60E S. Pan **18010** 4L60E D. Pan **18056** 4L80-E **18027**
	V8-364 (6.0L) SFI	U	**B160**	**RS4131**	**N/R**	**N/S**	**N/R**	4L60E S. Pan **18010** 4L60E D. Pan **18056** 4L80-E **18027**
	V8-403 (6.6L) FI Turbo Diesel	2	**B1441**		**N/R**	**BF7933 KIT**[76]	**N/R**	4L60E D. Pan **18056** 4L80-E **18027**
	HHR 4-134 (2.2L) SFI	D	**P7442**	**PA4316**	**PA4317**	**N/S**	**N/R**	4T45E **18057**
	4-146 (2.4L) SFI	P	**P7442**	**PA4316**	**PA4317**	**N/S**	**N/R**	4T65E **18057**
	Impala V6-213 (3.5L) FI or Flex Fuel	K,N	**B7010**	**PA4178**	**PA4154**	**N/S**	**N/R**	4 Spd. (w/o Gskt.) **18022** (w/Gskt.) **20014**
	V6-238 (3.9L) SFI	R	**B7010**	**PA4178**	**PA4154**	**N/S**	**N/R**	4 Spd. (w/o Gskt.) **18022** (w/Gskt.) **20014**
	Impala SS V8-325 (5.3L) SFI	C	**B160**	**PA4178**	**PA4154**	**N/S**	**N/R**	4 Spd. (w/o Gskt.) **18022** (w/Gskt.) **20014**
	Malibu 4-134 (2.2L) MFI	F	**P1445**	**PA2231**	**N/S**	**N/S**	**N/R**	4T40E **18057**
	V6-213 (3.5L) SFI	N	**B7010**	**PA4337**	**N/S**	**N/S**	**N/R**	4T45E **18057**
	Malibu Maxx V6-213 (3.5L) SFI	N	**B7010**	**PA4337**	**N/S**	**N/S**	**N/R**	4T45E **18057**
	Malibu Maxx SS V6-238 (3.9L) SFI	1	**B7010**	**PA4337**	**N/S**	**N/S**	**N/R**	4T65-E (w/o Gskt.) **18022** (w/Gskt.) **20014**
	Malibu SS V6-238 (3.9L) FI	1	**B7010**	**PA4337**	**N/S**	**N/S**	**N/R**	4T65-E (w/o Gskt.) **18022** (w/Gskt.) **20014**
	Meriva 4-1800cc (1.8L) FI Mexico		**B43-S**			**BF1185**	**N/R**	
	Monte Carlo V6-213 (3.5L) SFI or Flex Fuel	K,N	**B7010**	**PA4178**	**PA4154**	**N/S**	**N/R**	4 Spd. (w/o Gskt.) **18022** (w/Gskt.) **20014**
	Monte Carlo SS V8-325 (5.3L) SFI	C	**B160**	**PA4178**	**PA4154**	**N/S**	**N/R**	4 Spd. (w/o Gskt.) **18022** (w/Gskt.) **20014**
	Optra 4-122 (2.0L) FI Canada	Z	**B43-S**	**PA4368**		**N/S**	**N/R**	4 Spd. **N/S**
	Silverado V6-262 (4.3L) MFI	X	**B43-S**	**PA4113**	**N/R**	**N/S**	**N/R**	4L60E S. Pan **18010** 4L60E D. Pan **18056** 4L80-E **18027**
	V8-292 (4.8L) SFI	C,V	**B160**	**PA4113**	**N/R**	**N/S**	**N/R**	4L60E S. Pan **18010** 4L60E D. Pan **18056** 4L80-E **18027**
	V8-325 (5.3L) SFI Flex Fuel or Bi-Fuel	0,Z	**B160**	**PA4113**	**N/R**	**N/S**	**N/R**	4L60E S. Pan **18010** 4L60E D. Pan **18056** 4L80-E **18027**
	V8-325 (5.3L) FI, HO or Hybrid	B,J,T	**B160**	**PA4113**	**N/R**	**N/S**	**N/R**	4L60E S. Pan **18010** 4L60E D. Pan **18056** 4L80-E **18027**
	V8-364 (6.0L) SFI or HO	K,N,U	**B160**	**PA4113**	**N/R**	**N/S**	**N/R**	4L60E S. Pan **18010** 4L60E D. Pan **18056** 4L80-E **18027** Allison S. Pan (w/o Gskt.) **20004** Allison S. Pan (w/Gskt.) **20016** Allison D. Pan (w/o Gskt.) **20003** Allison D. Pan (w/Gskt.) **20017** Allison Spin-on **BT8460**

[t] Transmission, Not Model, Determines Which Transmission Filter is Used. OBS = Obsolete. Availability Limited to Distributor Stock.

[76] Contains Pri. and Sec. Fuel Elements.

CHEVROLET Cont'd.

Year	Model and Engine	VIN	Lube	Air	Cabin Air	Fuel	Breather	Trans.[t]
2007	Silverado V8-403 (6.6L) Turbo Diesel	6,D	**B1441**	**CA5352**	**N/R**	**BF7827**	**N/R**	Allison S. Pan (w/o Gskt.) **20004** Allison S. Pan (w/Gskt.) **20016** Allison D. Pan (w/o Gskt.) **20003** Allison D. Pan (w/Gskt.) **20017** Allison Spin-on **BT8460** 4L80-E **18027**
	V8-496 (8.1L) SFI	G	**B1438**	**PA4113**	**N/R**	**N/S**	**N/R**	Allison S. Pan (w/o Gskt.) **20004** Allison S. Pan (w/Gskt.) **20016** Allison D. Pan (w/o Gskt.) **20003** Allison D. Pan (w/Gskt.) **20017** Allison Spin-on **BT8460** 4L80-E **18027**
	Suburban V8-325 (5.3L) SFI or Flex Fuel	0,3,J	**B160**	**PA4113**	**N/R**	**N/S**	**N/R**	4L60E S. Pan **18010** 4L60E D. Pan **18056** 4L80-E **18027**
	V8-364 (6.0L) SFI	K,Y	**B160**	**PA4113**	**N/R**	**N/S**	**N/R**	4L60E S. Pan **18010** 4L60E D. Pan **18056** 4L80-E **18027**
	Tahoe V8-292 (4.8L) SFI	C	**B160**	**PA4113**	**N/R**	**N/S**	**N/R**	4L60E S. Pan **18010** 4L60E D. Pan **18056** 4L80-E **18027**
	V8-325 (5.3L) SFI or Flex Fuel	0,J	**B160**	**PA4113**	**N/R**	**N/S**	**N/R**	4L60E S. Pan **18010** 4L60E D. Pan **18056** 4L80-E **18027**
	Tornado 4-1800cc (1.8L) FI Mexico		**B43-S**			**BF1185**	**N/R**	
	TrailBlazer 6-254 (4.2L) SFI	S	**B7010**	**RS4161**	**N/R**	**N/S**	**N/R**	4L60E S. Pan **18010** 4L60E D. Pan **18056**
	V8-325 (5.3L) SFI	M	**B160**	**RS4161**	**N/R**	**N/S**	**N/R**	4L60E S. Pan **18010** 4L60E D. Pan **18056**
	TrailBlazer SS V8-366 (6.0L) SFI	H	**B160**	**RS4161**	**N/R**	**N/S**	**N/R**	4L60E **18056**
	Uplander V6-238 (3.9L) SFI or Flex Fuel	1,W	**B7010**	**PA2231**	**PA4156 KIT**	**N/S**	**N/R**	4T65-E (w/o Gskt.) **18022** (w/Gskt.) **20014**
	Zafira 4-2200cc (2.2L) FI Mexico					**BF1185**	**N/R**	
2006	Astra 4-1800cc (1.8L) FI Mexico		**P1440**				**N/R**	
	4-2000cc (2.0L) FI Mexico		**B43-S**				**N/R**	
	4-2400cc (2.4L) SFI Mexico						**N/R**	
	Avalanche V8-327 (5.3L) SFI or Flex Fuel	Z	**B31**	**PA4113**	**N/R**	**BF7808**	**N/R**	4L60E S. Pan **18010** 4L60E D. Pan **18056** 4L80-E **18027**
	V8-496 (8.1L) SFI	G	**B1438**	**PA4113**	**N/R**	**N/S**	**N/R**	Allison S. Pan (w/o Gskt.) **20004** Allison S. Pan (w/Gskt.) **20016** Allison D. Pan (w/o Gskt.) **20003** Allison D. Pan (w/Gskt.) **20017** Allison Spin-on **BT8460** 4L80-E **18027**
	Aveo 4-98 (1.6L) MFI	6	**B43-S**	**PA4344**		**N/S**	**N/R**	
	Cheyenne V8-5300cc (5.3L) FI Mexico		**B31**	**PA4113**			**N/R**	
	Cobalt 4-122 (2.0L) SFI Supercharged	P	**P1445**		**PA4317**		**N/R**	4T40E **18057**
	4-134 (2.2L) SFI	F	**P1445**	**PA4329**	**PA4317**		**N/R**	4T40E **18057**
	4-149 (2.4L) SFI HO	B	**P1445**	**PA4329**	**PA4317**		**N/R**	4T40E **18057**

OBS = Obsolete. Availability Limited to Distributor Stock. [t] Transmission, Not Model, Determines Which Transmission Filter is Used.

CHEVROLET Cont'd.

Year	Model and Engine	VIN	Lube	Air	Cabin Air	Fuel	Breather	Trans.[t]
2006	Colorado 4-169 (2.8L) MFI	8	**B31**	**PA4173**	**N/R**	**N/S**	**N/R**	4L60E S. Pan **20020** 4L60E D. Pan **18056**
	5-211 (3.5L) MFI	6	**B7010**	**PA4173**	**N/R**	**N/S**	**N/R**	4L60E S. Pan **20020** 4L60E D. Pan **18056**
	Corsa 4-1800cc (1.8L) FI Mexico		**B43-S**			**BF1185**	**N/R**	
	Corvette V8-364 (6.0L) SFI	U	**B31**			**N/S**	**N/R**	
	V8-427 (7.0L) SFI	E	**B160**			**N/S**	**N/R**	
	Epica 6-152 (2.5L) FI Canada	L	**B7167**			**N/S**	**N/R**	**N/S**
	Equinox V6-207 (3.4L) SFI	F	**B43-S**	**PA4157**	**PA4340**	**N/S**	**N/R**	**N/S**
	Express Van V6-262 (4.3L) MFI	X	**B43-S**	**RS4131**	**N/R**	**N/S**	**N/R**	4L60E S. Pan **18010** 4L60E D. Pan **18056** 4L80-E **18027**
	V8-294 (4.8L) SFI	V	**B31**	**RS4131**	**N/R**	**N/S**	**N/R**	4L60E S. Pan **18010** 4L60E D. Pan **18056** 4L80-E **18027**
	V8-325 (5.3L) SFI	T	**B31**	**RS4131**	**N/R**	**N/S**	**N/R**	4L60E S. Pan **18010** 4L60E D. Pan **18056** 4L80-E **18027**
	V8-364 (6.0L) FI or Bi-Fuel	N,U	**B31**	**RS4131**	**N/R**	**N/S**	**N/R**	4L60E S. Pan **18010** 4L60E D. Pan **18056** 4L80-E **18027**
	V8-400 (6.6L) FI Turbo Diesel	2	**B1441**		**N/R**	**BF7933 KIT**[76]	**N/R**	4L60E S. Pan **18010** 4L60E D. Pan **18056** 4L80-E **18027**
	HHR 4-134 (2.2L) SFI	D	**P1445**	**PA4316**	**PA4317**	**N/S**	**N/R**	4T45E **18057**
	4-146 (2.4L) SFI	P	**P1445**	**PA4316**	**PA4317**	**N/S**	**N/R**	4T45E **18057**
	Impala V6-213 (3.5L) FI or Flex Fuel	K,N	**B7010**	**PA4178**	**PA4154**	**N/S**	**N/R**	4T65-E (w/o Gskt.) **18022** (w/Gskt.) **20014**
	V6-231 (3.9L) SFI	1	**B7010**	**PA4178**	**PA4154**	**N/S**	**N/R**	4T65-E (w/o Gskt.) **18022** (w/Gskt.) **20014**
	Impala SS V8-325 (5.3L) SFI	C	**B31**	**PA4178**	**PA4154**	**N/S**	**N/R**	4T65-E (w/o Gskt.) **18022** (w/Gskt.) **20014**
	LUV 4-2200cc (2.2L) MFI Mexico		**B227**			**BF1049**	**N/R**	
	Malibu, Malibu Maxx 4-134 (2.2L) MFI	F	**P1445**	**PA2231**	**N/S**	**N/S**	**N/R**	**18057**
	V6-213 (3.5L) SFI	8	**B43-S**	**PA2231**	**N/S**	**N/S**	**N/R**	4T45E **18057**
	Malibu Maxx SS, Malibu SS V6-238 (3.9L) SFI	1	**B7010**	**PA4337**	**N/R**	**N/S**	**N/R**	4T45E **18057** 4T65-E (w/o Gskt.) **18022** (w/Gskt.) **20014**
	Meriva 4-1800cc (1.8L) FI Mexico		**B43-S**			**BF1185**	**N/R**	
	Monte Carlo V6-213 (3.5L) SFI or Flex Fuel	K,N	**B7010**	**PA4178**	**PA4154**	**N/S**	**N/R**	4T65-E (w/o Gskt.) **18022** (w/Gskt.) **20014**
	V6-239 (3.9L) SFI	1	**B7010**	**PA4178**	**PA4154**	**N/S**	**N/R**	4T65-E (w/o Gskt.) **18022** (w/Gskt.) **20014**
	Monte Carlo SS V8-325 (5.3L) SFI	C	**B31**	**PA4178**	**PA4154**	**N/S**	**N/R**	4T65-E (w/o Gskt.) **18022** (w/Gskt.) **20014**
	Optra 4-122 (2.0L) FI Canada	Z	**B43-S**	**PA4368**		**N/S**	**N/R**	**N/S**
	Silverado V6-262 (4.3L) MFI	X	**B43-S**	**PA4113**	**N/R**	**BF853**	**N/R**	4L60E S. Pan **18010** 4L60E D. Pan **18056** 4L80-E **18027**
	V8-292 (4.8L) MFI	V	**B31**	**PA4113**	**N/R**	**N/S**	**N/R**	4L60E S. Pan **18010** 4L60E D. Pan **18056** 4L80-E **18027**
	V8-325 (5.3L) SFI HO or Hybrid	B,T	**B31**	**PA4113**	**N/R**	**N/S**	**N/R**	4L60E S. Pan **18010** 4L60E D. Pan **18056** 4L80-E **18027**
	V8-325 (5.3L) FI Bi-Fuel	Z	**B31**	**PA4113**	**N/R**	**N/S**	**N/R**	4L60E S. Pan **18010** 4L60E D. Pan **18056** 4L80-E **18027**

[t] Transmission, Not Model, Determines Which Transmission Filter is Used. OBS = Obsolete. Availability Limited to Distributor Stock.

[76] Contains Pri. and Sec. Fuel Elements.

CHEVROLET Cont'd.

Year	Model and Engine	VIN	Lube	Air	Cabin Air	Fuel	Breather	Trans.[t]
2006	Silverado V8-364 (6.0L) FI or Bi-Fuel	N,U	**B31**	**PA4113**	**N/R**	**N/S**	**N/R**	4L60E S. Pan **18010** 4L60E D. Pan **18056** 4L80-E **18027**
	V8-400 (6.6L) Turbo Diesel or HO	2,D	**B1441**	**CA5352**	**N/R**	**BF7827**	**N/R**	Allison S. Pan (w/o Gskt.) **20004** Allison S. Pan (w/Gskt.) **20016** Allison D. Pan (w/o Gskt.) **20003** Allison D. Pan (w/Gskt.) **20017** Allison Spin-on **BT8460** 4L80-E **18027**
	V8-496 (8.1L) FI Vortec	G	**B1438**	**PA4113**	**N/R**	**N/S**	**N/R**	Allison S. Pan (w/o Gskt.) **20004** Allison S. Pan (w/Gskt.) **20016** Allison D. Pan (w/o Gskt.) **20003** Allison D. Pan (w/Gskt.) **20017** Allison Spin-on **BT8460** 4L80-E **18027**
	Sonora V8-5300cc (5.3L) MFI Mexico		**B31**	**PA4113**		**BF853**	**N/R**	
	SSR V8-364 (6.0L) SFI	H	**B31**	**PA2178**	**N/R**	**N/S**	**N/R**	4L60E S. Pan **18010** 4L60E D. Pan **18056**
	Suburban V8-325 (5.3L) SFI or Bi-Fuel	T,Z	**B31**	**PA4113**	**N/R**	**N/S**	**N/R**	4L60E S. Pan **18010** 4L60E D. Pan **18056** 4L80-E **18027**
	V8-364 (6.0L) SFI	U	**B31**	**PA4113**	**N/R**	**N/S**	**N/R**	4L60E S. Pan **18010** 4L60E D. Pan **18056** 4L80-E **18027**
	V8-496 (8.1L) FI Vortec	G	**B1438**	**PA4113**	**N/R**	**N/S**	**N/R**	Allison S. Pan (w/o Gskt.) **20004** Allison S. Pan (w/Gskt.) **20016** Allison D. Pan (w/o Gskt.) **20003** Allison D. Pan (w/Gskt.) **20017** Allison Spin-on **BT8460** 4L80-E **18027**
	Tahoe V8-292 (4.8L) SFI	V	**B31**	**PA4113**	**N/R**	**N/S**	**N/R**	4L60E S. Pan **18010** 4L60E D. Pan **18056**
	V8-325 (5.3L) SFI or Bi-Fuel	T,Z	**B31**	**PA4113**	**N/R**	**N/S**	**N/R**	4L60E S. Pan **18010** 4L60E D. Pan **18056** 4L80-E **18027**
	Tornado 4-1800cc (1.8L) FI Mexico		**B43-S**				**N/R**	
	TrailBlazer, TrailBlazer EXT 6-254 (4.2L) SFI	S	**B7010**	**RS4161**	**N/R**	**N/S**	**N/R**	4L60E S. Pan **18010** 4L60E D. Pan **18056**
	V8-325 (5.3L) SFI	M	**B31**	**RS4161**	**N/R**	**N/S**	**N/R**	4L60E S. Pan **18010** 4L60E D. Pan **18056**
	TrailBlazer SS V8-364 (6.0L) SFI	H	**B31**	**RS4161**	**N/R**	**N/S**	**N/R**	**18056**
	Uplander V6-213 (3.5L) SFI	L	**B43-S**	**PA2231**	**PA4156 KIT**	**N/S**	**N/R**	4T65-E (w/o Gskt.) **18022** (w/Gskt.) **20014**
	V6-238 (3.9L) SFI	1	**B7010**	**PA2231**	**PA4156 KIT**	**N/S**	**N/R**	4T65-E (w/o Gskt.) **18022** (w/Gskt.) **20014**
	Vectra 4-2200cc (2.2L) FI Mexico						**N/R**	
	V6-3200cc (3.2L) FI Mexico						**N/R**	
	Zafria 4-1800cc (1.8L) FI Mexico		**B43-S**				**N/R**	
	4-2200cc (2.2L) FI Mexico						**N/R**	
2005	Astra 4-1800cc (1.8L) FI Mexico		**P1440**				**N/R**	

OBS = Obsolete. Availability Limited to Distributor Stock. [t] Transmission, Not Model, Determines Which Transmission Filter is Used.

CHEVROLET Cont'd.

Year	Model and Engine	VIN	Lube	Air	Cabin Air	Fuel	Breather	Trans.[t]
2005	Astra 4-2000cc (2.0L) FI Mexico		**B43-S**				**N/R**	
	4-2400cc (2.4L) SFI Mexico						**N/R**	
	Astro Van V6-262 (4.3L) MFI	X	**B43-S**	**PA2257**	**N/R**	**BF853**	**N/R**	4L60E S. Pan **18010** 4L60E D. Pan **18056**
	Avalanche V8-327 (5.3L) SFI or Flex Fuel	T,Z	**B31**	**PA4113**	**N/R**	**N/S**	**N/R**	4L60E S. Pan **18010** 4L60E D. Pan **18056** 4L80-E **18027**
	V8-496 (8.1L) SFI	G	**B1438**	**PA4113**	**N/R**	**N/S**	**N/R**	Allison S. Pan (w/o Gskt.) **20004** Allison S. Pan (w/Gskt.) **20016** Allison D. Pan (w/o Gskt.) **20003** Allison D. Pan (w/Gskt.) **20017** Allison Spin-on **BT8460** 4L80-E **18027**
	Aveo 4-98 (1.6L) MFI	6	**B43-S**	**PA4344**		**N/S**	**N/R**	
	Blazer V6-262 (4.3L) SFI	X	2WD **B43-S** 4WD **B35-S**	**PA2257**	**N/R**	**BF7658**	**N/R**	4L60E S. Pan **18010** 4L60E D. Pan **18056**
	Cavalier 4-134 (2.2L) SFI	F	**P1445**	**PA2160**	**N/R**	**BF1171**	**N/R**	**18057**
	Cheyenne V8-5300cc (5.3L) FI Mexico		**B31**	**PA4113**			**N/R**	
	Classic 4-134 (2.2L) SFI	F	**P1445**	**PA4107**	**N/R**	**BF1171**	**N/R**	**18057**
	Cobalt 4-122 (2.0L) SFI Supercharged	P	**P1445**		**PA4317**		**N/R**	**18057**
	4-134 (2.2L) SFI	F	**P1445**	**PA4329**	**PA4317**		**N/R**	**18057**
	Colorado 4-169 (2.8L) MFI	8	**B31**	**PA4173**	**N/R**	**BF1046**	**N/R**	4L60E S. Pan **20020** 4L60E D. Pan **18056**
	5-211 (3.5L) SFI	6	2WD **B31** 4WD **B7010**	**PA4173**	**N/R**	**BF1046**	**N/R**	4L60E S. Pan **20020** 4L60E D. Pan **18056**
	Corsa 4-1800cc (1.8L) FI Mexico		**B43-S**			**BF1185**	**N/R**	
	Corvette V8-365 (6.0L) SFI	U	**B31**			**N/S**	**N/R**	
	Epica 6-152 (2.5L) FI Canada	L	**B7167**			**N/S**	**N/R**	**N/S**
	Equinox V6-209 (3.4L) SFI	F	**B43-S**	**PA4157**	**PA4340**	**N/S**	**N/R**	**N/S**
	Express Van V6-262 (4.3L) MFI	X	**B43-S**	**RS4131**	**N/R**	**N/S**	**N/R**	4L60E S. Pan **18010** 4L60E D. Pan **18056** 4L80-E **18027**
	V8-294 (4.8L) SFI	V	**B31**	**RS4131**	**N/R**	**N/S**	**N/R**	4L60E S. Pan **18010** 4L60E D. Pan **18056** 4L80-E **18027**
	V8-325 (5.3L) SFI	T	**B31**	**RS4131**	**N/R**	**N/S**	**N/R**	4L60E S. Pan **18010** 4L60E D. Pan **18056** 4L80-E **18027**
	V8-365 (6.0L) FI Natural Gas	N	**B31**	**RS4131**	**N/R**	**N/S**	**N/R**	4L60E S. Pan **18010** 4L60E D. Pan **18056** 4L80-E **18027**
	V8-365 (6.0L) SFI	U	**B31**	**RS4131**	**N/R**	Some **N/S**	**N/R**	4L60E S. Pan **18010** 4L60E D. Pan **18056** 4L80-E **18027**
	Impala V6-207 (3.4L) SFI	E	**B43-S**	**PA4146**	**PA4154**	**BF1171**	**N/R**	(w/o Gskt.) **18022** (w/Gskt.) **20014**
	V6-231 (3.8L) SFI or Supercharged	1,K	**B43-S**	**PA4146**	**PA4154**	**BF1171**	**N/R**	(w/o Gskt.) **18022** (w/Gskt.) **20014**
	LUV 4-2200cc (2.2L) MFI Mexico		**B227**			**BF1049**	**N/R**	
	Malibu, Malibu Maxx 4-134 (2.2L) MFI	F	**P1445**	**PA2231**	**N/S**	**N/S**	**N/R**	**18057**
	V6-213 (3.5L) SFI	8	**B43-S**	**PA2231**	**N/S**	**N/S**	**N/R**	**18057**
	Meriva 4-1800cc (1.8L) FI Mexico		**B43-S**			**BF1185**	**N/R**	
	Monte Carlo V6-207 (3.4L) SFI	E	**B43-S**	**PA4146**	**PA4154**	**BF1171**	**N/R**	(w/o Gskt.) **18022** (w/Gskt.) **20014**
	V6-231 (3.8L) SFI or Supercharged	1,K	**B43-S**	**PA4146**	**PA4154**	**BF1171**	**N/R**	(w/o Gskt.) **18022** (w/Gskt.) **20014**
	Optra 4-122 (2.0L) FI Canada	Z	**B43-S**	**PA4368**	**N/R**	**N/S**	**N/R**	**N/S**
	Silverado V6-262 (4.3L) MFI	X	**B43-S**	**PA4113**	**PA4169**	**BF853**	**N/R**	4L60E S. Pan **18010** 4L60E D. Pan **18056** 4L80-E **18027**

[t] Transmission, Not Model, Determines Which Transmission Filter is Used. OBS = Obsolete. Availability Limited to Distributor Stock.

CHEVROLET Cont'd.

Year	Model and Engine	VIN	Lube	Air	Cabin Air	Fuel	Breather	Trans.[t]
2005	Silverado V8-294 (4.8L) SFI	V	**B31**	**PA4113**	**PA4169**	**BF853**	**N/R**	4L60E S. Pan **18010** 4L60E D. Pan **18056** 4L80-E **18027**
	V8-325 (5.3L) SFI HO or Hybrid	B,T	**B31**	**PA4113**	**PA4169**	**BF853**	**N/R**	4L60E S. Pan **18010** 4L60E D. Pan **18056** 4L80-E **18027**
	V8-325 (5.3L) SFI Flex Fuel	Z	**B31**	**PA4113**	**PA4169**	**BF7808**	**N/R**	4L60E S. Pan **18010** 4L60E D. Pan **18056** 4L80-E **18027**
	V8-364 (6.0L) SFI Natural Gas	N	**B31**	**PA4113**	**PA4169**	**N/R**	**N/R**	4L60E S. Pan **18010** 4L60E D. Pan **18056** 4L80-E **18027**
	V8-364 (6.0L) SFI	U	**B31**	**PA4113**	**PA4169**	**BF853**	**N/R**	4L60E S. Pan **18010** 4L60E D. Pan **18056** 4L80-E **18027**
	V8-400 (6.6L) Turbo Diesel	2	**B1441**	**PA4134**	**PA4169**	**BF7827**	**N/R**	Allison S. Pan (w/o Gskt.) **20004** Allison S. Pan (w/Gskt.) **20016** Allison D. Pan (w/o Gskt.) **20003** Allison D. Pan (w/Gskt.) **20017** Allison Spin-on **BT8460** 4L80-E **18027**
	V8-496 (8.1L) SFI Vortec	G	**B1438**	**PA4113**	**PA4169**	**BF853**	**N/R**	Allison S. Pan (w/o Gskt.) **20004** Allison S. Pan (w/Gskt.) **20016** Allison D. Pan (w/o Gskt.) **20003** Allison D. Pan (w/Gskt.) **20017** Allison Spin-on **BT8460** 4L80-E **18027**
	Sonora V8-5300cc (5.3L) MFI Mexico		**B31**	**PA4113**		**BF853**	**N/R**	
	SSR V8-365 (6.0L) SFI	H	**B31**	**PA2178**	**N/R**	**BF7762**	**N/R**	4L60E S. Pan **18010** 4L60E D. Pan **18056** 4L80-E **18027**
	Suburban V8-325 (5.3L) SFI	T	**B31**	**PA4113**	**N/R**	**BF853**	**N/R**	4L60E S. Pan **18010** 4L60E D. Pan **18056** 4L80-E **18027**
	V8-325 (5.3L) SFI Flex Fuel	Z	**B31**	**PA4113**	**N/R**	**BF7808**	**N/R**	4L60E S. Pan **18010** 4L60E D. Pan **18056** 4L80-E **18027**
	V8-364 (6.0L) SFI	U	**B31**	**PA4113**	**N/R**	**BF853**	**N/R**	4L60E S. Pan **18010** 4L60E D. Pan **18056** 4L80-E **18027**
	V8-496 (8.1L) SFI Vortec	G	**B1438**	**PA4113**	**N/R**	**BF853**	**N/R**	Allison S. Pan (w/o Gskt.) **20004** Allison S. Pan (w/Gskt.) **20016** Allison D. Pan (w/o Gskt.) **20003** Allison D. Pan (w/Gskt.) **20017** Allison Spin-on **BT8460** 4L80-E **18027**
	Tahoe V8-294 (4.8L) SFI	V	**B31**	**PA4113**	**N/R**	**BF853**	**N/R**	4L60E S. Pan **18010** 4L60E D. Pan **18056** 4L80-E **18027**
	V8-325 (5.3L) SFI	T	**B31**	**PA4113**	**N/R**	**BF853**	**N/R**	4L60E S. Pan **18010** 4L60E D. Pan **18056** 4L80-E **18027**

OBS = Obsolete. Availability Limited to Distributor Stock. [t] Transmission, Not Model, Determines Which Transmission Filter is Used.

CHEVROLET Cont'd.

Year	Model and Engine	VIN	Lube	Air	Cabin Air	Fuel	Breather	Trans.t
2005	Tahoe V8-325 (5.3L) SFI Flex Fuel	Z	**B31**	**PA4113**	**N/R**	**BF7808**	**N/R**	4L60E S. Pan **18010** 4L60E D. Pan **18056** 4L80-E **18027**
	Tornado 4-1800cc (1.8L) FI Mexico		**B43-S**				**N/R**	
	TrailBlazer 6-254 (4.2L) SFI	S	**B7010**	**RS4161**	**N/R**	**BF7762**	**N/R**	4L60E S. Pan **18010** 4L60E D. Pan **18056**
	V8-325 (5.3L) SFI	M	**B31**	**RS4161**	**N/R**	**BF7762**	**N/R**	4L60E S. Pan **18010** 4L60E D. Pan **18056**
	Uplander V6-213 (3.5L) SFI	L	**B43-S**	**PA2231**	**PA4156 KIT**	**N/S**	**N/R**	(w/o Gskt.) **18022** (w/Gskt.) **20014**
	Vectra 4-2200cc (2.2L) FI Mexico		**P1445**				**N/R**	
	V6-3200cc (3.2L) FI Mexico						**N/R**	
	Venture Van V6-207 (3.4L) SFI	E	**B43-S**	**PA2231**	**PA4156 KIT**	**BF7769**	**N/R**	(w/o Gskt.) **18022** (w/Gskt.) **20014**
	Zafira 4-1800cc (1.8L) FI Mexico		**B43-S**				**N/R**	
	4-2200cc (2.2L) FI Mexico						**N/R**	
2004	Astra 4-1800cc (1.8L) FI Mexico		**P1440**				**N/R**	
	4-2000cc (2.0L) FI Mexico		**B43-S**				**N/R**	
	4-2400cc (2.4L) SFI Mexico						**N/R**	
	Astro Van V6-262 (4.3L) MFI	X	**B43-S**	**PA2257**	**N/R**	**BF853**	**N/R**	4L60E S. Pan **18010** 4L60E D. Pan **18056**
	Avalanche V8-327 (5.3L) SFI or Flex Fuel	T,Z	**B31**	**PA4113**	Opt. **PA4169**	**N/S**	**N/R**	4L60E S. Pan **18010** 4L60E D. Pan **18056**
	V8-496 (8.1L) SFI	G	**B1438**	**PA4113**	Opt. **PA4169**	**BF853**	**N/R**	Allison S. Pan (w/o Gskt.) **20004** Allison S. Pan (w/Gskt.) **20016** Allison D. Pan (w/o Gskt.) **20003** Allison D. Pan (w/Gskt.) **20017** Allison Spin-on **BT8460** 4L80-E **18027**
	Aveo 4-98 (1.6L) FI	6	**B43-S**	**PA4344**		**N/S**	**N/R**	
	Blazer V6-262 (4.3L) SFI	X	2WD **B43-S** 4WD **B35-S**	**PA2257**	**N/R**	**BF7658**	**N/R**	4L60E S. Pan **18010** 4L60E D. Pan **18056**
	Cavalier 4-134 (2.2L) SFI or Flex Fuel	6,F	**P1445**	**PA2160**	**N/R**	**BF1171**	**N/R**	4T40E **18057**
	Cheyenne V8-5300cc (5.3L) FI Mexico		**B31**	**PA4113**			**N/R**	
	Classic 4-134 (2.2L) FI	F	**P1445**	**PA4107**	**N/R**	**BF1171**	**N/R**	4T40E **18057**
	Colorado 4-169 (2.8L) MFI	8	**B31**	**PA4173**	**N/R**	**BF1046**	**N/R**	4L60E S. Pan **20020** 4L60E D. Pan **18056**
	5-211 (3.5L) MFI	6	2WD **B31** 4WD **B7010**	**PA4173**	**N/R**	**BF1046**	**N/R**	4L60E S. Pan **20020** 4L60E D. Pan **18056**
	Corsa 4-1800cc (1.8L) FI Mexico		**B43-S**			**BF1185**	**N/R**	
	Corvette V8-350 (5.7L) SFI	G	**B31**	**PA2178**	**N/R**	**N/S**	**N/R**	
	V8-350 (5.7L) SFI HO	S	**B31**	**PA2178**	**N/R**	**N/S**	**N/R**	**M.T.**
	Epica 6-152 (2.5L) FI Canada	L	**B7167**			**N/S**	**N/R**	**N/S**
	Express Van V6-262 (4.3L) MFI	X	**B43-S**	**RS4131**	**N/R**	Thd. One End **BF1171** Thd. Both Ends **BF853**	**N/R**	4L60E S. Pan **18010** 4L60E D. Pan **18056** 4L80-E **18027**
	V8-294 (4.8L) SFI	V	**B31**	**RS4131**	**N/R**	Thd. One End **BF1171** Thd. Both Ends **BF853**	**N/R**	4L60E S. Pan **18010** 4L60E D. Pan **18056** 4L80-E **18027**
	V8-325 (5.3L) SFI	T	**B31**	**RS4131**	**N/R**	Thd. One End **BF1171** Thd. Both Ends **BF853**	**N/R**	4L60E S. Pan **18010** 4L60E D. Pan **18056** 4L80-E **18027**
	V8-364 (6.0L) SFI or Bi-Fuel	N,U	**B31**	**RS4131**	**N/R**	Thd. One End **BF1171** Thd. Both Ends **BF853**	**N/R**	4L60E S. Pan **18010** 4L60E D. Pan **18056** 4L80-E **18027**
	Impala V6-207 (3.4L) SFI	E	**B43-S**	**PA4146**	**PA4154**	**BF1171**	**N/R**	(w/o Gskt.) **18022** (w/Gskt.) **20014**

[t] Transmission, Not Model, Determines Which Transmission Filter is Used. OBS = Obsolete. Availability Limited to Distributor Stock.

CHEVROLET Cont'd.

Year	Model and Engine	VIN	Lube	Air	Cabin Air	Fuel	Breather	Trans.[t]
2004	Impala V6-231 (3.8L) SFI or Supercharged	1,K	**B43-S**	**PA4146**	**PA4154**	**BF1171**	**N/R**	(w/o Gskt.) **18022** (w/Gskt.) **20014**
	LUV 4-2200cc (2.2L) MFI Mexico		**B227**			**BF1049**	**N/R**	
	Malibu 4-134 (2.2L) MFI	F	**P1445**	9 3/8 In. **PA2231** 12 25/32 In. **PA4107**	**N/R**	**N/S**	**N/R**	**18057**
	V6-213 (3.5L) SFI	8	**B43-S**	**PA2231**	**N/R**	**N/S**	**N/R**	**18057**
	Meriva 4-1800cc (1.8L) FI Mexico		**B43-S**			**BF1185**	**N/R**	
	Monte Carlo V6-207 (3.4L) SFI	E	**B43-S**	**PA4146**	**PA4154**	**BF1171**	**N/R**	(w/o Gskt.) **18022** (w/Gskt.) **20014**
	V6-231 (3.8L) SFI or Supercharged	1,K	**B43-S**	**PA4146**	**PA4154**	**BF1171**	**N/R**	(w/o Gskt.) **18022** (w/Gskt.) **20014**
	Optra 4-122 (2.0L) FI Canada	Z	**B43-S**	**PA4368**	**N/R**	**N/S**	**N/R**	**N/S**
	S10 Pickup V6-262 (4.3L) MFI	X	**B35-S**	**PA2257**	**N/R**	**BF7658**	**N/R**	4L60E S. Pan **18010** 4L60E D. Pan **18056**
	Silverado V6-262 (4.3L) MFI	X	**B43-S**	**PA4113**	Opt. **PA4169**	**BF853**	**N/R**	4L60E S. Pan **18010** 4L60E D. Pan **18056** 4L80-E **18027**
	V8-294 (4.8L) SFI	V	**B31**	**PA4113**	Opt. **PA4169**	**BF853**	**N/R**	4L60E S. Pan **18010** 4L60E D. Pan **18056**
	V8-325 (5.3L) SFI	T	**B31**	**PA4113**	Opt. **PA4169**	**BF853**	**N/R**	4L60E S. Pan **18010** 4L60E D. Pan **18056** 4L80-E **18027**
	V8-364 (6.0L) SFI	U	**B31**	**PA4113**	Opt. **PA4169**	**BF853**	**N/R**	4L60E S. Pan **18010** 4L60E D. Pan **18056** 4L80-E **18027**
	V8-400 (6.6L) Turbo Diesel	1,2	**B1441**	**PA4134**	Opt. **PA4169**	**BF7827**	**N/R**	Allison S. Pan (w/o Gskt.) **20004** Allison S. Pan (w/Gskt.) **20016** Allison D. Pan (w/o Gskt.) **20003** Allison D. Pan (w/Gskt.) **20017** Allison Spin-on **BT8460** 4L80-E **18027**
	V8-496 (8.1L) SFI	G	**B1438**	**PA4113**	Opt. **PA4169**	**BF853**	**N/R**	Allison S. Pan (w/o Gskt.) **20004** Allison S. Pan (w/Gskt.) **20016** Allison D. Pan (w/o Gskt.) **20003** Allison D. Pan (w/Gskt.) **20017** Allison Spin-on **BT8460** 4L80-E **18027**
	SSR V8-325 (5.3L) SFI	T	**B31**	**PA2178**	**N/R**	**BF7762**	**N/R**	4L60E S. Pan **18010** 4L60E D. Pan **18056**
	Suburban V6-262 (4.3L) MFI	X	**B43-S**	**PA4113**	**PA4169**	**BF853**	**N/R**	4L60E S. Pan **18010** 4L60E D. Pan **18056** 4L80-E **18027**
	V8-294 (4.8L) SFI	V	**B31**	**PA4113**	**PA4169**	**BF853**	**N/R**	4L60E S. Pan **18010** 4L60E D. Pan **18056**
	V8-325 (5.3L) SFI	T	**B31**	**PA4113**	**PA4169**	**BF853**	**N/R**	4L60E S. Pan **18010** 4L60E D. Pan **18056** 4L80-E **18027**
	V8 364 (6.0L) SFI	U	**B31**	**PA4113**	**PA4169**	**BF853**	**N/R**	4L60E S. Pan **18010** 4L60E D. Pan **18056** 4L80-E **18027**

OBS = Obsolete. Availability Limited to Distributor Stock. [t] Transmission, Not Model, Determines Which Transmission Filter is Used.

CHEVROLET Cont'd.

Year	Model and Engine	VIN	Lube	Air	Cabin Air	Fuel	Breather	Trans.[t]
2004	Suburban V8-400 (6.6L) Turbo Diesel	1,2	**B1441**	**PA4134**	**PA4169**	**BF7827**	**N/R**	Allison S. Pan (w/o Gskt.) **20004** Allison S. Pan (w/Gskt.) **20016** Allison D. Pan (w/o Gskt.) **20003** Allison D. Pan (w/Gskt.) **20017** Allison Spin-on **BT8460** 4L80-E **18027**
	V8-496 (8.1L) SFI	G	**B1438**	**PA4113**	**PA4169**	**BF853**	**N/R**	Allison S. Pan (w/o Gskt.) **20004** Allison S. Pan (w/Gskt.) **20016** Allison D. Pan (w/o Gskt.) **20003** Allison D. Pan (w/Gskt.) **20017** Allison Spin-on **BT8460** 4L80-E **18027**
	Tahoe V8-294 (4.8L) SFI	V	**B31**	**PA4113**	**N/R**	**BF853**	**N/R**	4L60E S. Pan **18010** 4L60E D. Pan **18056**
	V8-325 (5.3L) SFI	T	**B31**	**PA4113**	**N/R**	**BF853**	**N/R**	4L60E S. Pan **18010** 4L60E D. Pan **18056** 4L80-E **18027**
	Tornado 4-1800cc (1.8L) FI Mexico		**B43-S**				**N/R**	
	Tracker 4-97 (1.6L) FI Canada	6	**B37**	**PA4108**			**N/R**	**M.T.**
	V6-151 (2.5L) MFI	4	**B159**	**PA4108**		**BF7963**	**N/R**	**18012**
	TrailBlazer 6-254 (4.2L) SFI	S	**B7010**	**RS4161**	**N/R**	**BF7762**	**N/R**	4L60E S. Pan **18010** 4L60E D. Pan **18056**
	V8-325 (5.3L) SFI	P	**B31**	**RS4161**	**N/R**	**BF7762**	**N/R**	4L60E S. Pan **18010** 4L60E D. Pan **18056**
	Vectra 4-2200cc (2.2L) FI Mexico		**P1445**				**N/R**	
	V6-3200cc (3.2L) FI Mexico						**N/R**	
	Venture Van V6-207 (3.4L) SFI	E	**B43-S**	**PA2231**	**PA4156 KIT**	**BF7769**	**N/R**	(w/o Gskt.) **18022** (w/Gskt.) **20014**
	Zafira 4-1800cc (1.8L) FI Mexico					**BF1185**	**N/R**	
	4-2200cc (2.2L) FI Mexico					**BF1185**	**N/R**	
2003	Astra 4-1800cc (1.8L) FI Mexico		**P1440**				**N/R**	
	Astro Van V6-262 (4.3L) MFI	X	**B43-S**	**PA2257**	**N/R**	**BF853**	**N/R**	4L60E S. Pan **18010** 4L60E D. Pan **18056**
	Avalanche V8-327 (5.3L) SFI or Flex Fuel	T,Z	**B31**	**PA4113**	Opt. **PA4169**	**BF853**	**N/R**	4L60E S. Pan **18010** 4L60E D. Pan **18056**
	V8-496 (8.1L) SFI	G	**B1438**	**PA4113**	Opt. **PA4169**	**BF853**	**N/R**	Allison S. Pan (w/o Gskt.) **20004** Allison S. Pan (w/Gskt.) **20016** Allison D. Pan (w/o Gskt.) **20003** Allison D. Pan (w/Gskt.) **20017** Allison Spin-on **BT8460** 4L80-E **18027**
	Blazer, S10 Pickup 4-134 (2.2L) MFI	4,H	**B43-S**	**PA2257**	**N/R**	**BF7937**	**N/R**	4L60E S. Pan **18010** 4L60E D. Pan **18056**
	V6-262 (4.3L) MFI	X	2WD **B43-S** 4WD **B35-S**	**PA2257**	**N/R**	**BF7658**	**N/R**	4L60E S. Pan **18010** 4L60E D. Pan **18056**
	Cavalier 4-134 (2.2L) SFI or Flex Fuel	6,F	**P1445**	**PA2160**	**N/R**	**BF1171**	**N/R**	4T40E **18057**
	Chevy Joy 4-1400cc (1.4L) MFI Mexico		**B43-S**				**N/R**	
	4-1600cc (1.6L) FI Mexico		**B43-S**				**N/R**	
	Chevy Swing 4-1600cc (1.6L) TBI Mexico		**B43-S**				**N/R**	
	Cheyenne V8-5300cc (5.3L) FI Mexico		**B31**	**PA4113**			**N/R**	
	Corsa 4-1800cc (1.8L) FI Mexico		**B43-S**			**BF1185**	**N/R**	
	Corvette V8-350 (5.7L) SFI or HO	G,S	**B31**	**PA2178**	**N/R**		**N/R**	

[t] Transmission, Not Model, Determines Which Transmission Filter is Used. OBS = Obsolete. Availability Limited to Distributor Stock.

CHEVROLET Cont'd.

Year	Model and Engine	VIN	Lube	Air	Cabin Air	Fuel	Breather	Trans.[t]
2003	Express Van V6-262 (4.3L) MFI	X	**B43-S**	**RS4131**	**N/R**	Thd. One End. **BF1171** Thd. Both Ends. **BF853**	**N/R**	4L60E S. Pan **18010** 4L60E D. Pan **18056** 4L80-E **18027**
	V8-294 (4.8L) SFI	V	**B31**	**RS4131**	**N/R**	Thd. One End **BF1171** Thd. Both Ends **BF853**	**N/R**	4L60E **18056** 4L80-E **18027**
	V8-325 (5.3L) SFI	T	**B31**	**RS4131**	**N/R**	Thd. One End **BF1171** Thd. Both Ends **BF853**	**N/R**	4L60E S. Pan **18010** 4L60E D. Pan **18056** 4L80-E **18027**
	V8-364 (6.0L) SFI Bi-Fuel Natural Gas	N	**B31**	**RS4131**	**N/R**		**N/R**	4L60E S. Pan **18010** 4L60E D. Pan **18056** 4L80-E **18027**
	V8-364 (6.0L) SFI	U	**B31**	**RS4131**	**N/R**	Thd. One End **BF1171** Thd. Both Ends **BF853**	**N/R**	4L60E S. Pan **18010** 4L60E D. Pan **18056** 4L80-E **18027**
	Impala, Impala SS V6-207 (3.4L) SFI	E	**B43-S**	**PA4146**	**PA4154**	**BF1171**	**N/R**	(w/o Gskt.) **18022** (w/Gskt.) **20014**
	V6-231 (3.8L) SFI or Supercharged	1,K	**B43-S**	**PA4146**	**PA4154**	**BF1171**	**N/R**	(w/o Gskt.) **18022** (w/Gskt.) **20014**
	LUV 4-2200cc (2.2L) MFI Mexico		**B227**			**BF1049**	**N/R**	
	Malibu V6-191 (3.1L) SFI	J	**B43-S**	**PA4107**	**N/R**	**BF1171**	**N/R**	**18057**
	Monte Carlo V6-205 (3.4L) SFI	E	**B43-S**	**PA4146**	**PA4154**	**BF1171**	**N/R**	(w/o Gskt.) **18022** (w/Gskt.) **20014**
	V6-231 (3.8L) SFI	K	**B43-S**	**PA4146**	**PA4154**	**BF1171**	**N/R**	(w/o Gskt.) **18022** (w/Gskt.) **20014**
	Monza 4-1600cc (1.6L) TBI Mexico		**B43-S**				**N/R**	
	Silverado, Suburban, Tahoe V6-262 (4.3L) MFI	X	**B43-S**	**PA4113**	Opt. **PA4169**	**BF853**	**N/R**	4L60E S. Pan **18010** 4L60E D. Pan **18056** 4L80-E **18027**
	V8-294 (4.8L) SFI	V	**B31**	**PA4113**	Opt. **PA4169**	**BF853**	**N/R**	4L60E S. Pan **18010** 4L60E D. Pan **18056** 4L80-E **18027**
	V8-325 (5.3L) SFI	T	**B31**	**PA4113**	Opt. **PA4169**	**BF853**	**N/R**	4L60E S. Pan **18010** 4L60E D. Pan **18056** 4L80-E **18027**
	V8-325 (5.3L) SFI Flex Fuel	Z	**B31**	**PA4113**	Opt. **PA4169**	**BF7808**	**N/R**	4L60E S. Pan **18010** 4L60E D. Pan **18056** 4L80-E **18027**
	V8-365 (6.0L) SFI Bi-Fuel Natural Gas	N	**B31**	**PA4113**	Opt. **PA4169**		**N/R**	4L60E S. Pan **18010** 4L60E D. Pan **18056** 4L80-E **18027**
	V8-365 (6.0L) SFI	U	**B31**	**PA4113**	Opt. **PA4169**	**BF853**	**N/R**	4L60E S. Pan **18010** 4L60E D. Pan **18056** 4L80-E **18027**
	V8-400 (6.6L) Turbo Diesel	1	**B1441**	**PA4134**	Opt. **PA4169**	**BF7827**	**N/R**	Allison S. Pan (w/o Gskt.) **20004** Allison S. Pan (w/Gskt.) **20016** Allison D. Pan (w/o Gskt.) **20003** Allison D. Pan (w/Gskt.) **20017** Allison Spin-on **BT8460** 4L80-E **18027**

OBS = Obsolete. Availability Limited to Distributor Stock. [t] Transmission, Not Model, Determines Which Transmission Filter is Used.

CHEVROLET Cont'd.

Year	Model and Engine	VIN	Lube	Air	Cabin Air	Fuel	Breather	Trans.t
2003	Silverado,Suburban V8-496 (8.1L) SFI	G	**B1438**	**PA4113**	Opt. **PA4169**	**BF853**	**N/R**	Allison S. Pan (w/o Gskt.) **20004** Allison S. Pan (w/Gskt.) **20016** Allison D. Pan (w/o Gskt.) **20003** Allison D. Pan (w/Gskt.) **20017** Allison Spin-on **BT8460** 4L80-E **18027**
	SSR V8-325 (5.3L) EFI	P	**B31**	**PA2178**	**N/R**	**BF7762**	**N/R**	4L60E S. Pan **18010** 4L60E D. Pan **18056** 4L80-E **18027**
	Tracker 4-121 (2.0L) MFI	C	**B37**	**PA4108**		**BF7963**	**N/R**	**18012**
	V6-151 (2.5L) MFI	4	**B159**	**PA4108**		**BF7963**	**N/R**	**18012**
	4-1600cc (1.6L) FI Canada	6	**B33**	**PA4108**		**BF7963**	**N/R**	
	TrailBlazer 6-254 (4.2L) SFI	S	**B7010**	**RS4161**	**N/R**	**BF7762**	**N/R**	4L60E S. Pan **18010** 4L60E D. Pan **18056**
	V8-325 (5.3L) SFI	P	**B31**	**RS4161**	**N/R**	**BF7762**	**N/R**	4L60E S. Pan **18010** 4L60E D. Pan **18056**
	Vectra 4-2200cc (2.2L) FI Mexico		**P1445**				**N/R**	
	V6-3200cc (3.2L) FI Mexico						**N/R**	
	Venture Van V6-207 (3.4L) SFI	E	**B43-S**	**PA2231**	**PA4156 KIT**	1 Quick Connect End **BF7719** 2 Male Ends **BF7769**	**N/R**	(w/o Gskt.) **18022** (w/Gskt.) **20014**
	Zafira 4-1800cc (1.8L) FI Mexico					**BF1185**	**N/R**	
	4-2200cc (2.2L) FI Mexico					**BF1185**	**N/R**	
2002	Astra 4-1800cc (1.8L) FI Mexico		Ele. **P1440** Spin-on **B43-S**				**N/R**	
	4-2200cc (2.2L) FI Mexico		**B43-S**				**N/R**	
	Astro Van V6-262 (4.3L) SFI	W	**B43-S**	**PA2257**	**N/R**	**BF853**	**N/R**	4L60E S. Pan **18010** 4L60E D. Pan **18056**
	Avalanche V8-327 (5.3L) SFI	T	**B1432**	**PA4113**	**PA4149 KIT**	**BF853**	**N/R**	4L60E S. Pan **18010** 4L60E D. Pan **18056** 4L80-E **18027**
	V8-496 (8.1L) SFI	G	**B1438**	**PA4113**	**PA4149 KIT**	**BF853**	**N/R**	Allison S. Pan (w/o Gskt.) **20004** Allison S. Pan (w/Gskt.) **20016** Allison D. Pan (w/o Gskt.) **20003** Allison D. Pan (w/Gskt.) **20017** Allison Spin-on **BT8460** 4L80-E **18027**
	Blazer, S10 Pickup 4-134 (2.2L) SFI Flex Fuel	5	**B43-S**	**PA2257**	**N/R**	**BF7937**	**N/R**	4L60E S. Pan **18010** 4L60E D. Pan **18056**
	V6-262 (4.3L) SFI	W	2WD **B43-S** 4WD **B35-S**	**PA2257**	**N/R**	**BF7658**	**N/R**	4L60E S. Pan **18010** 4L60E D. Pan **18056**
	Camaro V6-231 (3.8L) SFI	K	**B43-S**	**PA2178**	**N/R**	**BF1171**	**N/R**	4L60E **18010**
	V8-350 (5.7L) SFI	G	**B31**	**PA2178**	**N/R**	**BF1171**	**N/R**	4L60E S. Pan **18010** 4L60E D. Pan **18056**
	Cavalier 4-134 (2.2L) SFI	4	**B43-S**	**PA2160**	**N/R**	**BF1171**	**N/R**	4T40E **18057**
	4-134 (2.2L) SFI	F	**P1445**	**PA2160**	**N/R**	**BF1171**	**N/R**	4T40E **18057**
	4-146 (2.4L) SFI	T	**B31**	**PA2160**	**N/R**	**BF1171**	**N/R**	4T60E **18057**
	Chevy Joy 4-1400cc (1.4L) MFI Mexico		**B43-S**				**N/R**	
	4-1600cc (1.6L) FI Mexico		**B43-S**				**N/R**	
	Chevy Pop 4-1400cc (1.4L) TBI Mexico		**B43-S**				**N/R**	
	Chevy Swing 4-1600cc (1.6L) TBI Mexico		**B43-S**				**N/R**	
	Cheyenne V8-5700cc (5.7L) FI Mexico		**B31**	**PA4113**			**N/R**	
	Corsa 4-1400cc (1.4L) FI Mexico		**B43-S**			**BF1185**	**N/R**	
	Corvette V8-350 (5.7L) SFI	G,S	**B31**	**PA2178**	**N/R**		**N/R**	VIN S **M.T.**

[t] Transmission, Not Model, Determines Which Transmission Filter is Used. OBS = Obsolete. Availability Limited to Distributor Stock.

CHEVROLET Cont'd.

Year	Model and Engine	VIN	Lube	Air	Cabin Air	Fuel	Breather	Trans.[t]
2002	Express Van V6-262 (4.3L) SFI	W	**B43-S**	**RS4131**	**N/R**	**BF1046**	**N/R**	4L60E S. Pan **18010** 4L60E D. Pan **18056** 4L80-E **18027**
	V8-305 (5.0L) SFI	M	**B1428**	**RS4131**	**N/R**	**BF1046**	**N/R**	4L60E S. Pan **18010** 4L60E D. Pan **18056** 4L80-E **18027**
	V8-350 (5.7L) SFI	R	**B1428**	**RS4131**	**N/R**	**BF1046**	**N/R**	4L60E S. Pan **18010** 4L60E D. Pan **18056** 4L80-E **18027**
	V8-395 (6.5L) FI Turbo Diesel	F	**B1428**	**PA2232**	**N/R**	**BF7674-D**	**N/R**	**18027**
	V8-496 (8.1L) SFI	G	**B1438**	**RS4131**	**N/R**	**BF1046**	**N/R**	**18027**
	Impala V6-207 (3.4L) SFI	E	**B43-S**	**PA4146**	**PA4154**	**BF1171**	**N/R**	(w/o Gskt.) **18022** (w/Gskt.) **20014**
	V6-231 (3.8L) SFI	K	**B43-S**	**PA4146**	**PA4154**	**BF1171**	**N/R**	(w/o Gskt.) **18022** (w/Gskt.) **20014**
	LUV 4-2200cc (2.2L) MFI Mexico		**B227**			**BF1049**	**N/R**	
	Malibu V6-191 (3.1L) SFI	J	**B43-S**	**PA4107**	**N/R**	**BF1171**	**N/R**	**18057**
	Monte Carlo V6-205 (3.4L) SFI	E	**B43-S**	**PA4146**	**PA4154**	**BF1171**	**N/R**	(w/o Gskt.) **18022** (w/Gskt.) **20014**
	V6-231 (3.8L) SFI	K	**B43-S**	**PA4146**	**PA4154**	**BF1171**	**N/R**	(w/o Gskt.) **18022** (w/Gskt.) **20014**
	Monza 4-1600cc (1.6L) TBI Mexico		**B43-S**				**N/R**	
	Prizm 4-110 (1.8L) SFI	8	**B33**	**PA2243**	**N/R**	**N/S**	**N/R**	3 Spd. **18163**
	Silverado, Suburban V6-262 (4.3L) SFI or Flex Fuel	W,X	**B43-S**	**PA4113**	**PA4149 KIT**	**BF853**	**N/R**	4L60E S. Pan **18010** 4L60E D. Pan **18056** 4L80-E **18027**
	V8-294 (4.8L) SFI	V	**B1432**	**PA4113**	**PA4149 KIT**	**BF853**	**N/R**	4L60E S. Pan **18010** 4L60E D. Pan **18056** 4L80-E **18027**
	V8-325 (5.3L) SFI or Flex Fuel	T,Z	**B1432**	**PA4113**	**PA4149 KIT**	**BF853**	**N/R**	4L60E S. Pan **18010** 4L60E D. Pan **18056** 4L80-E **18027**
	V8-365 (6.0L) SFI	U	**B1432**	**PA4113**	**PA4149 KIT**	**BF853**	**N/R**	4L60E S. Pan **18010** 4L60E D. Pan **18056** 4L80-E **18027**
	V8-400 (6.6L) Turbo Diesel	1	**B1441**	**PA4134**	**PA4149 KIT**	**BF7827**	**N/R**	Allison S. Pan (w/o Gskt.) **20004** Allison S. Pan (w/Gskt.) **20016** Allison D. Pan (w/o Gskt.) **20003** Allison D. Pan (w/Gskt.) **20017** Allison Spin-on **BT8460** 4L80-E **18027**
	V8-496 (8.1L) SFI	G	**B1438**	**PA4113**	**PA4149 KIT**	**BF853**	**N/R**	Allison S. Pan (w/o Gskt.) **20004** Allison S. Pan (w/Gskt.) **20016** Allison D. Pan (w/o Gskt.) **20003** Allison D. Pan (w/Gskt.) **20017** Allison Spin-on **BT8460** 4L80-E **18027**
	Sonora V8-4800cc (4.8L) FI Mexico		**B1432**	**PA4113**		**BF853**	**N/R**	
	Tahoe V8-292 (4.8L) SFI	V	**B1432**	**PA4113**	**PA4149 KIT**	**BF853**	**N/R**	4L60E S. Pan **18010** 4L60E D. Pan **18056** 4L80-E **18027**
	V8-325 (5.3L) SFI	T	**B31**	**PA4113**	**PA4149 KIT**	**BF853**	**N/R**	4L60E S. Pan **18010** 4L60E D. Pan **18056** 4L80-E **18027**
	V8-325 (5.3L) SFI Flex Fuel	Z	**B31**	**PA4113**	**PA4149 KIT**	**BF7808**	**N/R**	4L60E S. Pan **18010** 4L60E D. Pan **18056** 4L80-E **18027**

OBS = Obsolete. Availability Limited to Distributor Stock. [t] Transmission, Not Model, Determines Which Transmission Filter is Used.

CHEVROLET Cont'd.

Year	Model and Engine	VIN	Lube	Air	Cabin Air	Fuel	Breather	Trans.[t]
2002	Tracker 4-1588cc (1.6L) FI Canada	6	**B33**	**PA4108**		**BF7963**	**N/R**	
	4-121 (2.0L) MFI	C	**B37**	**PA4108**		**BF7963**	**N/R**	**18012**
	V6-151 (2.5L) MFI	4	**B159**	**PA4108**		**BF7963**	**N/R**	**18012**
	TrailBlazer 6-254 (4.2L) SFI	S	**B7010**	**RS4161**	**N/R**	**BF7762**	**N/R**	4L60E S. Pan **18010** 4L60E D. Pan **18056**
	Venture Van V6-207 (3.4L) SFI	E	**B43-S**	**PA2231**	**PA4156 KIT**	**BF7719**	**N/R**	(w/o Gskt.) **18022** (w/Gskt.) **20014**
	Zafira 4-1800cc (1.8L) FI Mexico					**BF1185**	**N/R**	
	4-2200cc (2.2L) FI Mexico					**BF1185**	**N/R**	
2001	Astra 4-1800cc (1.8L) FI Mexico		**P1440**				**N/R**	
	4-2200cc (2.2L) FI Mexico						**N/R**	
	Astro Van V6-262 (4.3L) SFI	W	2WD **B43-S** 4WD **B35-S**	**PA2257**	**N/R**	**BF853**	**N/R**	4L60E S. Pan **18010** 4L60E D. Pan **18056**
	Blazer, S10 Pickup 4-134 (2.2L) SFI or Flex Fuel	5	**B43-S**	**PA2257**	**N/R**	**BF7937**	**N/R**	4L60E S. Pan **18010** 4L60E D. Pan **18056**
	V6-262 (4.3L) SFI	W	2WD **B43-S** 4WD **B35-S**	**PA2257**	**N/R**	**BF7658**	**N/R**	4L60E S. Pan **18010** 4L60E D. Pan **18056**
	Camaro V6-231 (3.8L) SFI	K	**B43-S**	**PA2178**	**N/R**	**BF1171**	**N/R**	**18010**
	V8-350 (5.7L) SFI	G	**B31**	**PA2178**	**N/R**	**BF1171**	**N/R**	**18010**
	Cavalier 4-134 (2.2L) SFI	4	**B43-S**	**PA2160**	**N/R**	**BF1171**	**N/R**	4T40E **18057** TH125C **19593**
	4-146 (2.4L) SFI	T	**B31**	**PA2160**	**N/R**	**BF1171**	**N/R**	**18057**
	Chevy Joy 4-1400cc (1.4L) MFI Mexico		**B43-S**				**N/R**	
	4-1600cc (1.6L) FI Mexico		**B43-S**				**N/R**	
	Chevy Pop 4-1400cc (1.4L) TBI Mexico		**B43-S**				**N/R**	
	Chevy Swing 4-1600cc (1.6L) TBI Mexico		**B43-S**				**N/R**	
	Cheyenne V8-5700cc (5.7L) FI Mexico		**B1428**	**PA4113**		**BF853**	**N/R**	
	Corvette V8-350 (5.7L) SFI	G,S	**B31**	**PA2178**	**N/R**		**N/R**	
	Express Van V6-262 (4.3L) SFI	W	**B43-S**	**RS4131**	**N/R**	**BF1046**	**N/R**	4L60E S. Pan **18010** 4L60E D. Pan **18056** 4L80-E **18027**
	V8-305 (5.0L) SFI	M	**B1428**	**RS4131**	**N/R**	**BF1046**	**N/R**	4L60E S. Pan **18010** 4L60E D. Pan **18056** 4L80-E **18027**
	V8-350 (5.7L) SFI	R	**B1428**	**RS4131**	**N/R**	**BF1046**	**N/R**	4L60E S. Pan **18010** 4L60E D. Pan **18056** 4L80-E **18027**
	V8-395 (6.5L) FI Turbo Diesel	F	**B1428**	**PA2178**	**N/R**	**BF7674-D**	**N/R**	**18027**
	V8-496 (8.1L) FI	G	**B1438**	**RS4131**	**N/R**	**BF1046**	**N/R**	**18027**
	Impala V6-207 (3.4L) SFI	E	**B43-S**	**PA4146**	**PA4154**	**BF1171**	**N/R**	(w/o Gskt.) **18022** (w/Gskt.) **20014**
	V6-231 (3.8L) SFI	K	**B43-S**	**PA4146**	**PA4154**	**BF1171**	**N/R**	(w/o Gskt.) **18022** (w/Gskt.) **20014**
	Lumina V6-191 (3.1L) SFI	J	**B43-S**	**PA2231**	**N/R**	**BF1171**	**N/R**	(w/o Gskt.) **18022** (w/Gskt.) **20014**
	LUV 4-2200cc (2.2L) MFI Mexico		**B227**			**BF1049**	**N/R**	
	Malibu V6-191 (3.1L) SFI	J	**B43-S**	**PA4107**	**N/R**	**BF1171**	**N/R**	**18057**
	Metro 4-79 (1.3L) MFI	2	**BT223**	**PA4026**	**N/R**	**N/S**	**N/R**	
	Monte Carlo V6-205 (3.4L) SFI	E	**B43-S**	**PA4146**	**PA4154**	**BF1171**	**N/R**	(w/o Gskt.) **18022** (w/Gskt.) **20014**
	V6-231 (3.8L) SFI	K	**B43-S**	**PA4146**	**PA4154**	**BF1171**	**N/R**	(w/o Gskt.) **18022** (w/Gskt.) **20014**
	Monza 4-1600cc (1.6L) TBI Mexico		**B43-S**				**N/R**	
	Pickups, C Series V8-395 (6.5L) Turbo Diesel	F	**B1428**	Std. **RS3707** w/Foam **RS3735**	**N/R**	**BF1201**	**N/R**	4L60E S. Pan **18010** 4L60E D. Pan **18056** 4L80-E **18027**
	V8-496 (8.1L) SFI	G	**B1438**	Std. **RS3707** w/Foam **RS3735**	**N/R**	**BF853**	**N/R**	4L80-E **18027**
	Prizm 4-110 (1.8L) SFI	8	**B33**	**PA2243**	**N/R**	**N/S**	**N/R**	3 Spd. **18163**
	Silverado, Suburban, Tahoe V6-262 (4.3L) SFI	W	**B43-S**	**PA4113**	**PA4149 KIT**	**BF853**	**N/R**	4L60E S. Pan **18010** 4L60E D. Pan **18056**
	V8-292 (4.8L) SFI	V	**B1432**	**PA4113**	**PA4149 KIT**	**BF853**	**N/R**	4L60E S. Pan **18010** 4L60E D. Pan **18056** 4L80-E **18027**
	V8-325 (5.3L) SFI	T	**B1432**	**PA4113**	**PA4149 KIT**	**BF853**	**N/R**	4L60E S. Pan **18010** 4L60E D. Pan **18056** 4L80-E **18027**

[t] Transmission, Not Model, Determines Which Transmission Filter is Used. OBS = Obsolete. Availability Limited to Distributor Stock.

CHEVROLET Cont'd.

Year	Model and Engine	VIN	Lube	Air	Cabin Air	Fuel	Breather	Trans.[t]
2001	V8-365 (6.0L) SFI	U	**B1432**	**PA4113**	**PA4149 KIT**	**BF853**	**N/R**	4L60E S. Pan **18010** 4L60E D. Pan **18056** 4L80-E **18027**
	V8-400 (6.6L) Turbo Diesel	1	**B1441**	**PA4134**	**PA4149 KIT**	**BF7827**	**N/R**	Allison S. Pan (w/o Gskt.) **20004** Allison S. Pan (w/Gskt.) **20016** Allison D. Pan (w/o Gskt.) **20003** Allison D. Pan (w/Gskt.) **20017** Allison Spin-on **BT8460** 4L80-E **18027**
	V8-496 (8.1L) SFI	G	**B1438**	**PA4113**	**PA4149 KIT**	**BF853**	**N/R**	Allison S. Pan (w/o Gskt.) **20004** Allison S. Pan (w/Gskt.) **20016** Allison D. Pan (w/o Gskt.) **20003** Allison D. Pan (w/Gskt.) **20017** Allison Spin-on **BT8460** 4L80-E **18027**
	Sonora V8-4800cc (4.8L) FI Mexico		**B1432**	**PA4113**		**BF853**	**N/R**	
	Tracker 4-1588cc (1.6L) FI Canada	6	**B33**	**PA4108**		**BF7963**	**N/R**	
	4-121 (2.0L) MFI	C	**B37**	**PA4108**		**BF7963**	**N/R**	**18012**
	V6-151 (2.5L) MFI	4	**B159**	**PA4108**		**BF7963**	**N/R**	**18012**
	Venture Van V6-207 (3.4L) SFI	E	**B43-S**	**PA2231**	**PA4156 KIT**	**BF7719**	**N/R**	(w/o Gskt.) **18022** (w/Gskt.) **20014**
	Zafira 4-1800cc (1.8L) FI Mexico		**P1440**				**N/R**	
	4-2200cc (2.2L) FI Mexico						**N/R**	
2000	Astra 4-1800cc (1.8L) FI Mexico		**P1440**				**N/R**	
	4-2200cc (2.2L) FI Mexico						**N/R**	
	Astro Van V6-262 (4.3L) SFI	W	**B35-S**	**PA2257**	**N/R**	**BF853**	**N/R**	4L60E S. Pan **18010** 4L60E D. Pan **18056**
	Blazer, S10 Pickup 4-134 (2.2L) SFI or Flex Fuel	4,5	**B43-S**	**PA2257**	**N/R**	w/o Return Line **BF7658** w/Return Line **BF7937**	**N/R**	4L60E S. Pan **18010** 4L60E D. Pan **18056**
	V6-262 (4.3L) SFI	W,X	2WD **B43-S** 4WD **B35-S**	**PA2257**	**N/R**	**BF7658**	**N/R**	4L60E S. Pan **18010** 4L60E D. Pan **18056**
	Camaro V6-231 (3.8L) SFI	K	**B43-S**	**PA2178**	**N/R**	**BF1171**	**N/R**	4L60E **18010**
	V8-350 (5.7L) SFI	G	**B31**	**PA2178**	**N/R**	**BF1171**	**N/R**	4L60E **18010**
	Cavalier 4-134 (2.2L) SFI	4	**B43-S**	**PA2160**	**N/R**	**BF1171**	**N/R**	4T40E **18057** TH125C **19593**
	4-146 (2.4L) SFI	T	**B31**	**PA2160**	**N/R**	**BF1171**	**N/R**	4T40E **18057** TH125C **19593**
	Chevy Joy 4-1400cc (1.4L) MFI Mexico		**B43-S**				**N/R**	
	4-1600cc (1.6L) FI Mexico		**B43-S**				**N/R**	
	Chevy Pop 4-1400cc (1.4L) TBI Mexico		**B43-S**				**N/R**	
	Chevy Swing 4-1600cc (1.6L) TBI Mexico		**B43-S**				**N/R**	
	Cheyenne V8-5700cc (5.7L) FI Mexico		**B1428**	**PA4113**		**BF853**	**N/R**	
	Corvette V8-350 (5.7L) SFI	G	**B31**	**PA2178**	**N/R**		**N/R**	
	Express Van V6-262 (4.3L) SFI	W	**B43-S**	**PA2178**	**N/R**	2 Quick Connect **BF1046** Thd. One End **BF7658**	**N/R**	4L60E S. Pan **18010** 4L60E D. Pan **18056** 4L80-E **18027**
	V8-305 (5.0L) SFI	M	**B1428**	**PA2178**	**N/R**	2 Quick Connect **BF1046** Thd. One End **BF7658**	**N/R**	4L60E S. Pan **18010** 4L60E D. Pan **18056** 4L80-E **18027**
	V8-350 (5.7L) SFI	R	**B1428**	**PA2178**	**N/R**	2 Quick Connect **BF1046** Thd. One End. **BF7658**	**N/R**	4L60E S. Pan **18010** 4L60E D. Pan **18056** 4L80-E **18027**

OBS = Obsolete. Availability Limited to Distributor Stock. [t] Transmission, Not Model, Determines Which Transmission Filter is Used.

CHEVROLET Cont'd.

Year	Model and Engine	VIN	Lube	Air	Cabin Air	Fuel	Breather	Trans.[t]
2000	Express Van V8-395 (6.5L) FI Turbo Diesel	F	**B1428**	**PA2232**	**N/R**	**BF7674-D**	**N/R**	4L60E S. Pan **18010** 4L60E D. Pan **18056** 4L80-E **18027**
	V8-454 (7.4L) SFI	J	**B1438**	**PA2178**	**N/R**	2 Quick Connect **BF1046** Thd. One End. **BF7658**	**N/R**	4L80-E **18027**
	Impala V6-207 (3.4L) SFI	E	**B43-S**	**PA4146**	**PA4154**	**BF1171**	**N/R**	(w/o Gskt.) **18022** (w/Gskt.) **20014**
	V6-231 (3.8L) SFI	K	**B43-S**	**PA4146**	**PA4154**	**BF1171**	**N/R**	(w/o Gskt.) **18022** (w/Gskt.) **20014**
	Lumina V6-191 (3.1L) SFI	J	**B43-S**	**PA2231**	**PA4116**	**BF1171**	**N/R**	(w/o Gskt.) **18022** (w/Gskt.) **20014**
	LUV 4-2200cc (2.2L) MFI Mexico		**B227**			**BF1049**	**N/R**	
	Malibu V6-191 (3.1L) SFI	J	**B43-S**	**PA4107**	**N/R**	**BF1171**	**N/R**	**18057**
	Metro 3-61 (1.0L) EFI	6	**BT223**	**PA2216**	**N/R**	**N/S**	**N/R**	**M.T.**
	4-79 (1.3L) MFI	2	**BT223**	**PA4026**	**N/R**	**N/S**	**N/R**	
	Monte Carlo V6-205 (3.4L) SFI	E	**B43-S**	**PA4146**	**PA4154**	**BF1171**	**N/R**	(w/o Gskt.) **18022** (w/Gskt.) **20014**
	V6-231 (3.8L) SFI	K	**B43-S**	**PA4146**	**PA4154**	**BF1171**	**N/R**	(w/o Gskt.) **18022** (w/Gskt.) **20014**
	Monza 4-1600cc (1.6L) TBI Mexico		**B43-S**				**N/R**	
	Pickups, C, K Series V8-350 (5.7L) SFI	R	2WD **B1428** 4WD **B35-S**	Std. **RS3707** w/Foam **RS3735**	**N/R**	**BF853**	**N/R**	4L60E S. Pan **18010** 4L60E D. Pan **18056** 4L80-E **18027**
	V8-395 (6.5L) Turbo Diesel	F	**B1428**	Std. **RS3707** w/Foam **RS3735**	**N/R**	**BF1201**	**N/R**	4L60E S. Pan **18010** 4L60E D. Pan **18056** 4L80-E **18027**
	V8-454 (7.4L) SFI	J	**B1438**	Std. **RS3707** w/Foam **RS3735**	**N/R**	**BF853**	**N/R**	4L60E S. Pan **18010** 4L60E D. Pan **18056** 4L80-E **18027**
	Prizm 4-110 (1.8L) SFI	8	**B33**	**PA2243**	**N/R**	**N/S**	**N/R**	3 Spd. **18163**
	Silverado, Suburban, Tahoe V6-262 (4.3L) SFI	W	**B43-S**	**PA4113**	**PA4149 KIT**	**BF853**	**N/R**	4L60E S. Pan **18010** 4L60E D. Pan **18056** 4L80-E **18027**
	V8-292 (4.8L) SFI	V	**B1432**	**PA4113**	**PA4149 KIT**	**BF853**	**N/R**	4L60E S. Pan **18010** 4L60E D. Pan **18056** 4L80-E **18027**
	V8-325 (5.3L) SFI	T	**B1432**	**PA4113**	**PA4149 KIT**	**BF853**	**N/R**	4L60E S. Pan **18010** 4L60E D. Pan **18056** 4L80-E **18027**
	V8-350 (5.7L) SFI	R	2WD **B1428** 4WD **B35-S**	Std. **RS3707** HvyDty. **RS3706**	**N/R**	**BF853**	**N/R**	4L60E S. Pan **18010** 4L60E D. Pan **18056** 4L80-E **18027**
	V8-365 (6.0L) SFI	U	**B1432**	**PA4113**	**PA4149 KIT**	**BF853**	**N/R**	4L60E S. Pan **18010** 4L60E D. Pan **18056** 4L80-E **18027**
	Sonora V8-4800cc (4.8L) FI Mexico		**B1432**	**PA4113**		**BF853**	**N/R**	
	Tracker 4-97 (1.6L) MFI	6	3 In. **B33** 3 1/2 In. **BT223**	**PA4108**		**BF7963**	**N/R**	
	4-121 (2.0L) MFI	C	**B37**	**PA4108**		**BF7963**	**N/R**	
	Venture Van V6-207 (3.4L) SFI	E	**B43-S**	**PA2231**	**PA4155 KIT**	**BF7719**	**N/R**	(w/o Gskt.) **18022** (w/Gskt.) **20014**
	Zafira 4-1800cc (1.8L) FI Mexico		**P1440**				**N/R**	
	4-2200cc (2.2L) FI Mexico						**N/R**	
1999	Astro Van V6-262 (4.3L) SFI	W	**B35-S**	**PA2257**	**N/R**	**BF853**	**N/R**	4L60E S. Pan **18010** 4L60E D. Pan **18056**
	Blazer, S10 Pickup 4-134 (2.2L) SFI	4	**B43-S**	**PA2257**	**N/R**	**BF7658**	**N/R**	4L60E S. Pan **18010** 4L60E D. Pan **18056**
	V6-262 (4.3L) SFI	W,X	**B35-S**	**PA2257**	**N/R**	**BF7658**	**N/R**	4L60E S. Pan **18010** 4L60E D. Pan **18056**
	Camaro V6-231 (3.8L) SFI	K	**B43-S**	**PA2178**	**N/R**	**BF1171**	**N/R**	4L60E **18010**
	V8-350 (5.7L) SFI	G	**B31**	w/Ram Air **PA2257** w/o Ram Air **PA2178**	**N/R**	**BF1171**	**N/R**	4L60E **18010**

[t] Transmission, Not Model, Determines Which Transmission Filter is Used. OBS = Obsolete. Availability Limited to Distributor Stock.

CHEVROLET Cont'd.

Year	Model and Engine	VIN	Lube	Air	Cabin Air	Fuel	Breather	Trans.[t]
1999	Cavalier 4-134 (2.2L) SFI	4	**B43-S**	**PA2160**	**N/R**	**BF1171**	**N/R**	4T40E **18057** TH125C **19593**
	4-146 (2.4L) SFI	T	**B31**	**PA2160**	**N/R**	**BF1171**	**N/R**	4T40E **18057** TH125C **19593**
	Chevy Joy 4-1400cc (1.4L) MFI Mexico		**B43-S**				**N/R**	
	4-1600cc (1.6L) FI Mexico		**B43-S**				**N/R**	
	Chevy Pop 4-1400cc (1.4L) TBI Mexico		**B43-S**				**N/R**	
	Chevy Swing 4-1600cc (1.6L) TBI Mexico		**B43-S**				**N/R**	
	Cheyenne V8-5700cc (5.7L) FI Mexico		**B1428**	**PA4113**		**BF853**	**N/R**	
	Corvette V8-350 (5.7L) SFI	G	**B31**	**PA2178**	**N/R**		**N/R**	
	CR-2 400SS 4-1600cc (1.6L) CPI Mexico		**B1428**		**N/R**		**N/R**	
	Express Van V6-262 (4.3L) SFI	W	**B35-S**	**PA2178**	**N/R**	**BF1046**	**N/R**	4L60E S. Pan **18010** 4L60E D. Pan **18056** 4L80-E **18027**
	V8-305 (5.0L) SFI	M	**B1428**	**PA2178**	**N/R**	**BF1046**	**N/R**	4L60E S. Pan **18010** 4L60E D. Pan **18056** 4L80-E **18027**
	V8-350 (5.7L) SFI	R	**B1428**	**PA2178**	**N/R**	**BF1046**	**N/R**	4L60E S. Pan **18010** 4L60E D. Pan **18056** 4L80-E **18027**
	V8-395 (6.5L) FI Turbo Diesel	F	**B1428**	**PA2232**	**N/R**	**BF7674-D**	**N/R**	4L60E S. Pan **18010** 4L60E D. Pan **18056** 4L80-E **18027**
	V8-454 (7.4L) SFI	J	To 5/10/99 **B1428** 5/10/99-on **B1438**	**PA2178**	**N/R**	**BF1046**	**N/R**	4L60E S. Pan **18010** 4L60E D. Pan **18056** 4L80-E **18027**
	Lumina V6-191 (3.1L) SFI	M	**B43-S**	**PA2231**	**PA4116**	**BF1171**	**N/R**	(w/o Gskt.) **18022** (w/Gskt.) **20014**
	V6-231 (3.8L) SFI	K	**B43-S**	**PA2231**	**PA4116**	**BF1171**	**N/R**	(w/o Gskt.) **18022** (w/Gskt.) **20014**
	LUV 4-2200cc (2.2L) MFI Mexico		**B227**			**BF1049**	**N/R**	
	Malibu 4-146 (2.4L) SFI	T	**B31**	**PA4107**	**N/R**	**BF1171**	**N/R**	4T40E **18057** 4T60E (w/o Gskt.) **18022** 4T60E (w/Gskt.) **20014**
	V6-191 (3.1L) SFI	M	**B43-S**	**PA4107**	**N/R**	**BF1171**	**N/R**	4T40E **18057** 4T60E (w/o Gskt.) **18022** 4T60E (w/Gskt.) **20014**
	Metro 3-61 (1.0L) EFI	6	**BT223**	**PA2216**	**N/R**	**N/S**	**N/R**	
	4-79 (1.3L) MFI	2	**BT223**	**PA4026**	**N/R**	**N/S**	**N/R**	
	Monte Carlo V6-191 (3.1L) SFI	M	**B43-S**	**PA2231**	**PA4116**	**BF1171**	**N/R**	(w/o Gskt.) **18022** (w/Gskt.) **20014**
	V6-231 (3.8L) SFI	K	**B43-S**	**PA2231**	**PA4116**	**BF1171**	**N/R**	(w/o Gskt.) **18022** (w/Gskt.) **20014**
	Monza 4-1600cc (1.6L) TBI Mexico		**B43-S**				**N/R**	
	Pickups, C, K Series V8-305 (5.0L) EFI	M	**B35-S**	**RS3707**	**N/R**	**BF853**	**N/R**	4L60E S. Pan **18010** 4L60E D. Pan **18056** 4L80-E **18027**
	V8-350 (5.7L) SFI	R	2WD **B1428** 4WD **B35-S**	Std. **RS3707** HvyDty. **RS3706**	**N/R**	**BF853**	**N/R**	4L60E S. Pan **18010** 4L60E D. Pan **18056** 4L80-E **18027**
	V8-395 (6.5L) Turbo Diesel	F,S	**B1428**	Std. **RS3707** w/Foam **RS3735**	**N/R**	**BF1201**	**N/R**	4L60E S. Pan **18010** 4L60E D. Pan **18056** 4L80-E **18027**
	V8-454 (7.4L) SFI	J	To 5/10/99 **B1428** 5/10/99-on **B1438**	Std. **RS3707** HvyDty. **RS3706**	**N/R**	**BF853**	**N/R**	4L60E S. Pan **18010** 4L60E D. Pan **18056** 4L80-E **18027**
	Prizm 4-110 (1.8L) SFI	8	**B33**	**PA2243**	**N/R**	**N/S**	**N/R**	MB3 **18163**
	Silverado V6-262 (4.3L) SFI	W	**B35-S**	**PA4113**	**PA4149 KIT**	**BF853**	**N/R**	4L60E S. Pan **18010** 4L60E D. Pan **18056** 4L80-E **18027**
	V8-294 (4.8L) SFI	V	**B1432**	**PA4113**	**PA4149 KIT**	**BF853**	**N/R**	4L60E S. Pan **18010** 4L60E D. Pan **18056**

OBS = Obsolete. Availability Limited to Distributor Stock. [t] Transmission, Not Model, Determines Which Transmission Filter is Used.

CHEVROLET Cont'd.

Year	Model and Engine	VIN	Lube	Air	Cabin Air	Fuel	Breather	Trans.t
1999	Silverado V8-323 (5.3L) SFI	T	**B1432**	**PA4113**	**PA4149 KIT**	**BF853**	**N/R**	4L60E S. Pan **18010** 4L60E D. Pan **18056**
	V8-364 (6.0L) SFI	U	**B1432**	**PA4113**	**PA4149 KIT**	**BF853**	**N/R**	4L60E S. Pan **18010** 4L60E D. Pan **18056**
	V8-395 (6.5L) Turbo Diesel	F	**B1428**	Std. **RS3707** w/Foam **RS3735**	**PA4149 KIT**	**BF1201**	**N/R**	4L60E S. Pan **18010** 4L60E D. Pan **18056** 4L80-E **18027**
	Suburban V8-305 (5.0L) SFI	M	2WD **B1428** 4WD **B35-S**	Std. **RS3707** HvyDty. **RS3706**	**N/R**	**BF853**	**N/R**	4L60E S. Pan **18010** 4L60E D. Pan **18056** 4L80-E **18027**
	V8-350 (5.7L) SFI	R	2WD **B1428** 4WD **B35-S**	Std. **RS3707** HvyDty. **RS3706**	**N/R**	**BF853**	**N/R**	4L60E S. Pan **18010** 4L60E D. Pan **18056** 4L80-E **18027**
	Tahoe V8-350 (5.7L) SFI	R	2WD **B1428** 4WD **B35-S**	Std. **RS3707** HvyDty. **RS3706**	**N/R**	**BF853**	**N/R**	4L60E S. Pan **18010** 4L60E D. Pan **18056** 4L80-E **18027**
	Tigra 4-1600cc (1.6L) FI Mexico		**B43-S**		**N/R**		**N/R**	
	Tracker 4-97 (1.6L) MFI	6	3 In. **B33** 3 1/2 In. **BT223**	**PA4108**		**BF7963**	**N/R**	
	4-122 (2.0L) FI	C	**B37**	**PA4108**		**BF7963**	**N/R**	
	Vans, G Series V6-262 (4.3L) SFI	W	**B35-S**	**PA2178**	**N/R**	**BF1046**	**N/R**	4L60E S. Pan **18010** 4L60E D. Pan **18056**
	V8-305 (5.0L) SFI	M	**B1428**	**PA2178**	**N/R**	**BF1046**	**N/R**	4L60E S. Pan **18010** 4L60E D. Pan **18056**
	V8-350 (5.7L) SFI	R	**B1428**	**PA2178**	**N/R**	**BF1046**	**N/R**	4L60E S. Pan **18010** 4L60E D. Pan **18056**
	V8-395 (6.5L) Turbo Diesel	F	**B1428**	**PA2232**	**N/R**	**BF7674-D**	**N/R**	4L60E S. Pan **18010** 4L60E D. Pan **18056**
	V8-454 (7.4L) SFI	J	To 5/10/99 **B1428** 5/10/99-on **B1438**	**PA2178**	**N/R**	**BF1046**	**N/R**	4L60E S. Pan **18010** 4L60E D. Pan **18056**
	Vans, P Series V6-262 (4.3L) SFI	W	**B35-S**	**PA2232**	**N/R**	**BF853**	**N/R**	**18027**
	V8-350 (5.7L) SFI	R	**B35-S**	**PA2232**	**N/R**	**BF853**	**N/R**	**18027**
	V8-395 (6.5L) Turbo Diesel	F	**B1428**	**PA2232**	**N/R**	**BF1201**	**N/R**	**18027**
	V8-395 (6.5L) Diesel	Y	**B1428**	**PA2073**	**N/R**	**BF1201**	**N/R**	**18027**
	V8-454 (7.4L) EFI	B	To 5/10/99 **B1428** 5/10/99-on **B1438**	**RS3706**	**N/R**	**BF853**	**N/R**	**18027**
	V8-454 (7.4L) FI	J	**B1428**	**PA2232**	**N/R**	**BF853**	**N/R**	**18027**
	Venture Van V6-206 (3.4L) SFI	E	**B43-S**	**PA2231**	**PA4155 KIT**	**BF7719**	**N/R**	(w/o Gskt.) **18022** (w/Gskt.) **20014**
1998	Astro Van V6-262 (4.3L) SFI	W	**B35-S**	**PA2257**	**N/R**	**BF853**	**N/R**	4L60E S. Pan **18010** 4L60E D. Pan **18056**
	Blazer, S10 Pickup 4-134 (2.2L) SFI	4	**B43-S**	**PA2257**	**N/R**	**BF7658**	**N/R**	4L60E S. Pan **18010** 4L60E D. Pan **18056**
	V6-262 (4.3L) SFI	W,X	**B35-S**	**PA2257**	**N/R**	**BF7658**	**N/R**	4L60E S. Pan **18010** 4L60E D. Pan **18056**
	Camaro V6-231 (3.8L) SFI	K	**B43-S**	**PA2178**	**N/R**	**BF1171**	**N/R**	4L60E **18010**
	V8-350 (5.7L) SFI	G	**B31**	**PA2178**	**N/R**	**BF1171**	**N/R**	4L60E **18010**
	Cavalier 4-134 (2.2L) SFI	4	**B43-S**	**PA2160**	**N/R**	**BF1171**	**N/R**	4T40E **18057** TH125C **19593**
	4-146 (2.4L) SFI	T	**B31**	**PA2160**	**N/R**	**BF1171**	**N/R**	4T40E **18057** TH125C **19593**
	Chevy Joy 4-1400cc (1.4L) MFI Mexico		**B43-S**				**N/R**	
	4-1600cc (1.6L) FI Mexico		**B43-S**				**N/R**	
	Chevy Pop 4-1400cc (1.4L) TBI Mexico		**B43-S**				**N/R**	
	Chevy Swing 4-1600cc (1.6L) TBI Mexico		**B43-S**				**N/R**	
	Cheyenne V8-5700cc (5.7L) FI Mexico		**B1428**	**PA2008**		**BF853**	**N/R**	
	Corvette V8-350 (5.7L) SFI	G	**B31**	**PA2178**	**N/R**		**N/R**	
	Express Van V6-262 (4.3L) SFI	W	**B35-S**	**PA2178**	**N/R**	**BF1046**	**N/R**	4L60E S. Pan **18010** 4L60E D. Pan **18056**
	V8-305 (5.0L) SFI	M	**B1428**	**PA2178**	**N/R**	**BF1046**	**N/R**	4L60E S. Pan **18010** 4L60E D. Pan **18056**
	V8-350 (5.7L) SFI	R	**B1428**	**PA2178**	**N/R**	**BF1046**	**N/R**	4L60E S. Pan **18010** 4L60E D. Pan **18056**
	V8-395 (6.5L) FI Turbo Diesel	F	**B1428**	**PA2232**	**N/R**	**BF7674-D**	**N/R**	4L60E S. Pan **18010** 4L60E D. Pan **18056**
	V8-454 (7.4L) SFI	J	**B1428**	**PA2178**	**N/R**	**BF1046**	**N/R**	4L60E S. Pan **18010** 4L60E D. Pan **18056**

t Transmission, Not Model, Determines Which Transmission Filter is Used. OBS = Obsolete. Availability Limited to Distributor Stock.

CHEVROLET Cont'd.

Year	Model and Engine	VIN	Lube	Air	Cabin Air	Fuel	Breather	Trans.[t]
1998	Lumina V6-191 (3.1L) SFI	M	**B43-S**	**PA2231**	**PA4116**	**BF1171**	**N/R**	(w/o Gskt.) **18022** (w/Gskt.) **20014**
	V6-231 (3.8L) SFI	K	**B43-S**	**PA2231**	**PA4116**	**BF1171**	**N/R**	(w/o Gskt.) **18022** (w/Gskt.) **20014**
	LUV 4-2300cc (2.3L) MFI Mexico		**B227**			**BF1049**	**N/R**	
	Malibu 4-146 (2.4L) SFI	T	**B31**	**PA4107**	**N/R**	**BF1171**	**N/R**	4T40E **18057** 4T60E (w/o Gskt.) **18022** 4T60E (w/Gskt.) **20014**
	V6-191 (3.1L) SFI	M	**B43-S**	**PA4107**	**N/R**	**BF1171**	**N/R**	4T40E **18057** 4T60E (w/o Gskt.) **18022** 4T60E (w/Gskt.) **20014**
	Metro 3-61 (1.0L) EFI	6	**BT223**	**PA2216**	**N/R**	**N/S**	**N/R**	
	4-79 (1.3L) MFI	2	**BT223**	**PA4026**	**N/R**	**N/S**	**N/R**	
	Monte Carlo V6-191 (3.1L) SFI	M	**B43-S**	**PA2231**	**PA4116**	**BF1171**	**N/R**	(w/o Gskt.) **18022** (w/Gskt.) **20014**
	V6-231 (3.8L) SFI	K	**B43-S**	**PA2231**	**PA4116**	**BF1171**	**N/R**	(w/o Gskt.) **18022** (w/Gskt.) **20014**
	Monza 4-1600cc (1.6L) TBI Mexico		**B43-S**				**N/R**	
	Pickups, C, K Series, Suburban, Tahoe V6-262 (4.3L) SFI	W	**B35-S**	Std. **RS3707** HvyDty. **RS3706**	**N/R**	**BF853**	**N/R**	4L60E S. Pan **18010** 4L60E D. Pan **18056** 4L80-E **18027**
	V8-305 (5.0L) SFI	M	2WD **B1428** 4WD **B35-S**	Std. **RS3707** HvyDty. **RS3706**	**N/R**	**BF853**	**N/R**	4L60E S. Pan **18010** 4L60E D. Pan **18056** 4L80-E **18027**
	V8-350 (5.7L) SFI	R	2WD **B1428** 4WD **B35-S**	Std. **RS3707** HvyDty. **RS3706**	**N/R**	**BF853**	**N/R**	4L60E S. Pan **18010** 4L60E D. Pan **18056** 4L80-E **18027**
	V8-395 (6.5L) Turbo Diesel	F,S	**B1428**	Std. **RS3707** w/Foam **RS3735**	**N/R**	**BF1201**	**N/R**	4L60E S. Pan **18010** 4L60E D. Pan **18056** 4L80-E **18027**
	V8-454 (7.4L) SFI	J	**B1428**	Std. **RS3707** HvyDty. **RS3706**	**N/R**	**BF853**	**N/R**	4L60E S. Pan **18010** 4L60E D. Pan **18056** 4L80-E **18027**
	Prizm 4-110 (1.8L) SFI	8	**B33**	**PA2243**	**N/R**	**N/S**	**N/R**	
	Tracker 4-97 (1.6L) SFI	6	3 1/2 In. **BT223** 4 1/16 In. **B1430**	**PA4078**	**N/R**	**BF1100**	**N/R**	
	Vans, G Series V6-262 (4.3L) SFI	W	**B1428**	**PA2178**	**N/R**	**BF1046**	**N/R**	4L60E S. Pan **18010** 4L60E D. Pan **18056** 4L80-E **18027**
	V8-305 (5.0L) SFI	M	**B1428**	**PA2178**	**N/R**	**BF1046**	**N/R**	4L60E S. Pan **18010** 4L60E D. Pan **18056** 4L80-E **18027**
	V8-350 (5.7L) SFI	R	**B1428**	**PA2178**	**N/R**	**BF1046**	**N/R**	4L60E S. Pan **18010** 4L60E D. Pan **18056** 4L80-E **18027**
	V8-395 (6.5L) Turbo Diesel	F	**B1428**	**PA2232**	**N/R**	**BF7674-D**	**N/R**	4L60E S. Pan **18010** 4L60E D. Pan **18056** 4L80-E **18027**
	V8-454 (7.4L) SFI	J	**B1428**	**PA2178**	**N/R**	**BF1046**	**N/R**	4L60E S. Pan **18010** 4L60E D. Pan **18056** 4L80-E **18027**
	Vans, P Series V6-262 (4.3L) SFI	W	**B35-S**	**PA2232**	**N/R**	**BF853**	**N/R**	**18027**
	V8-350 (5.7L) SFI	R	**B35-S**	**PA2232**	**N/R**	**BF853**	**N/R**	**18027**
	V8-395 (6.5L) Turbo Diesel	F	**B1428**	**PA2232**	**N/R**	**BF1201**	**N/R**	**18027**
	V8-395 (6.5L) Diesel	Y	**B1428**	**PA2073**	**N/R**	**BF1201**	**N/R**	**18027**
	V8-454 (7.4L) EFI	B	**B1428**	**RS3706**	**N/R**	**BF853**	**N/R**	**18027**
	V8-454 (7.4L) FI	J	**B1428**	**PA2232**	**N/R**	**BF853**	**N/R**	**18027**
	Venture Van V6-206 (3.4L) SFI	E	**B43-S**	**PA2231**	**PA4155 KIT**	**BF7719**	**N/R**	(w/o Gskt.) **18022** (w/Gskt.) **20014**
1997	Astro Van V6-262 (4.3L) SFI	W	**B35-S**	**PA2257**	**N/R**	**BF853**	**N/R**	**18010**
	Blazer, S10 Pickup 4-134 (2.2L) SFI	4	**B43-S**	**PA2257**	**N/R**	**BF7658**	**N/R**	**18010**
	V6-262 (4.3L) CPI	W,X	**B35-S**	**PA2257**	**N/R**	**BF7658**	**N/R**	4L60E **18010**
	Camaro V6-231 (3.8L) SFI	K	**B43-S**	**PA2257**	**N/R**	**BF1171**	**N/R**	4L60E **18010**

OBS = Obsolete. Availability Limited to Distributor Stock. [t] Transmission, Not Model, Determines Which Transmission Filter is Used.

CHEVROLET Cont'd.

Year	Model and Engine	VIN	Lube	Air	Cabin Air	Fuel	Breather	Trans.t
1997	Camaro V8-350 (5.7L) SFI	P	**B27**	**PA2257**	**N/R**	**BF1171**	**N/R**	4L60E **18010**
	Cavalier 4-134 (2.2L) SFI	4	**B43-S**	**PA2160**	**N/R**	**BF1171**	**N/R**	4T40E **18057** TH125C **19593**
	4-146 (2.4L) SFI	T	**B31**	**PA2160**	**N/R**	**BF1171**	**N/R**	4T40E **18057** TH125C **19593**
	Chevy Joy 4-1400cc (1.4L) MFI Mexico		**B43-S**				**N/R**	
	Chevy Pop 4-1400cc (1.4L) TBI Mexico		**B43-S**				**N/R**	
	Chevy Swing 4-1600cc (1.6L) TBI Mexico		**B43-S**				**N/R**	
	Cheyenne V8-5700cc (5.7L) FI Mexico		**B1428**	**PA2008**		**BF853**	**N/R**	
	Corvette V8-350 (5.7L) SFI	G	**B31**	**PA2178**	**N/R**		**N/R**	4L60E **18010**
	Express Van V6-262 (4.3L) SFI	W	**B35-S**	**PA2178**	**N/R**	**BF1046**	**N/R**	**18027**
	V8-305 (5.0L) SFI	M	**B1428**	**PA2178**	**N/R**	**BF1046**	**N/R**	**18027**
	V8-350 (5.7L) SFI	R	**B1428**	**PA2178**	**N/R**	**BF1046**	**N/R**	**18027**
	V8-395 (6.5L) FI Turbo Diesel	F	**B1428**	**PA2232**	**N/R**	**BF7674-D**	**N/R**	**18027**
	V8-454 (7.4L) SFI	J	**B1428**	**PA2178**	**N/R**	**BF1046**	**N/R**	**18027**
	Lumina V6-191 (3.1L) SFI	M	**B43-S**	**PA2231**	**PA4116**	**BF1171**	**N/R**	(w/o Gskt.) **18022** (w/Gskt.) **20014**
	V6-206 (3.4L) SFI	X	**B35-S**	**PA2231**	**PA4116**	**BF1171**	**N/R**	(w/o Gskt.) **18022** (w/Gskt.) **20014**
	LUV 4-2300cc (2.3L) MFI Mexico		**B227**			**BF1049**	**N/R**	
	Malibu 4-146 (2.4L) SFI	T	**B31**	**PA4107**	**N/R**	**BF1171**	**N/R**	4T40E **18057** 4T60E (w/o Gskt.) **18022** 4T60E (w/Gskt.) **20014**
	V6-191 (3.1L) SFI	M	**B43-S**	**PA4107**	**N/R**	**BF1171**	**N/R**	4T40E **18057** 4T60E (w/o Gskt.) **18022** 4T60E (w/Gskt.) **20014**
	Monte Carlo V6-191 (3.1L) SFI	M	**B43-S**	**PA2231**	**PA4116**	**BF1171**	**N/R**	(w/o Gskt.) **18022** (w/Gskt.) **20014**
	V6-206 (3.4L) SFI	X	**B35-S**	**PA2231**	**PA4116**	**BF1171**	**N/R**	(w/o Gskt.) **18022** (w/Gskt.) **20014**
	Monza 4-1600cc (1.6L) TBI Mexico		**B43-S**				**N/R**	
	Pickups, C, K Series, Suburban, Tahoe V6-262 (4.3L) SFI	W	**B35-S**	Std. **RS3707** HvyDty. **RS3706**	**N/R**	**BF853**	**N/R**	4L60E **18010** 4L80-E **18027**
	V8-305 (5.0L) SFI	M	2WD **B1428** 4WD **B35-S**	Std. **RS3707** HvyDty. **RS3706**	**N/R**	**BF853**	**N/R**	4L60E **18010** 4L80-E **18027**
	V8-350 (5.7L) SFI	R	2WD **B1428** 4WD **B35-S**	Std. **RS3707** HvyDty. **RS3706**	**N/R**	**BF853**	**N/R**	4L60E **18010** 4L80-E **18027**
	V8-395 (6.5L) Turbo Diesel	F,S	**B1428**	Std. **RS3707** w/Foam **RS3735**	**N/R**	**BF1201**	**N/R**	4L60E **18010** 4L80-E **18027**
	V8-454 (7.4L) SFI	J	**B1428**	Std. **RS3707** HvyDty. **RS3706**	**N/R**	**BF853**	**N/R**	4L60E **18010** 4L80-E **18027**
	Vans, G Series V6-262 (4.3L) SFI	W	**B1428**	**PA2178**	**N/R**	**BF1046**	**N/R**	4L60E **18010** 4L80-E **18027**
	V8-305 (5.0L) SFI	M	**B1428**	**PA2178**	**N/R**	**BF1046**	**N/R**	4L60E **18010** 4L80-E **18027**
	V8-350 (5.7L) SFI	R	**B1428**	**PA2178**	**N/R**	**BF1046**	**N/R**	4L60E **18010** 4L80-E **18027**
	V8-395 (6.5L) Turbo Diesel	F	**B1428**	**PA2232**	**N/R**	**BF7674-D**	**N/R**	4L60E **18010** 4L80-E **18027**
	V8-454 (7.4L) FI	J	**B1428**	**PA2178**	**N/R**	**BF1046**	**N/R**	4L60E **18010** 4L80-E **18027**
	Vans, P Series V6-262 (4.3L) SFI	W	**B35-S**	**PA2232**	**N/R**	**BF853**	**N/R**	**18027**
	V8-350 (5.7L) SFI	R	**B35-S**	**PA2232**	**N/R**	**BF853**	**N/R**	**18027**
	V8-395 (6.5L) Turbo Diesel	F	**B1428**	**PA2232**	**N/R**	**BF1201**	**N/R**	**18027**
	V8-395 (6.5L) Diesel	Y	**B1428**	**PA2073**	**N/R**	**BF1201**	**N/R**	**18027**
	V8-454 (7.4L) FI	J	**B1428**	**PA2232**	**N/R**	**BF853**	**N/R**	**18027**
	V8-454 (7.4L) TBI	N	**B1428**	**PA2008**	**N/R**	**BF853**	**N/R**	**18027**
	Venture Van V6-206 (3.4L) SFI	E	**B43-S**	**PA2231**	**PA4155 KIT**	**BF7719**	**N/R**	(w/o Gskt.) **18022** (w/Gskt.) **20014**
1996	Astro Van V6-262 (4.3L) SFI	W	**B35-S**	**PA2257**	**N/R**	**BF853**	**N/R**	4L60E **18010** 4L80E **18007**

[t] Transmission, Not Model, Determines Which Transmission Filter is Used. OBS = Obsolete. Availability Limited to Distributor Stock.

CHEVROLET Cont'd.

Year	Model and Engine	VIN	Lube	Air	Cabin Air	Fuel	Breather	Trans.[t]
1996	Beretta, Corsica 4-133 (2.2L) MFI	4	**B43-S**	**PA4079**	**N/R**	**BF1171**	**N/R**	3 Spd. **19593** 4 Spd. (w/o Gskt.) **18022** 4 Spd. (w/Gskt.) **20014**
	V6-191 (3.1L) SFI	M	**B43-S**	**PA4079**	**N/R**	**BF1171**	**N/R**	3 Spd. **19593** 4 Spd. (w/o Gskt.) **18022** 4 Spd. (w/Gskt.) **20014**
	Blazer, S10 Pickup 4-134 (2.2L) MFI	4	**B43-S**	**PA2257**	**N/R**	**BF853**	**N/R**	**18010**
	V6-262 (4.3L) SFI	W,X	**B35-S**	**PA2257**	**N/R**	**BF853**	**N/R**	4L60E **18010**
	Camaro V6-231 (3.8L) SFI	K	**B43-S**	**PA2257**	**N/R**	**BF1171**	**N/R**	4L60E **18010**
	V8-350 (5.7L) SFI	P	**B27**	**PA2257**	**N/R**	**BF1171**	**N/R**	4L60E **18010**
	Caprice V8-265 (4.3L) SFI	W	**B35-S**	**PA2189**	**N/R**	**BF1045**	**N/R**	4L60E **18010**
	V8-350 (5.7L) SFI	P	**B35-S**	**PA2189**	**N/R**	**BF1045**	**N/R**	4L60E **18010**
	Cavalier 4-134 (2.2L) SFI	4	**B43-S**	**PA2160**	**N/R**	**BF1171**	**N/R**	4T40E **18057** TH125C **19593**
	4-146 (2.4L) SFI	T	**B31**	**PA2160**	**N/R**	**BF1171**	**N/R**	TH125C **18057** 4T40E **19593**
	Chevy Joy 4-1400cc (1.4L) MFI Mexico		**B43-S**		**N/R**		**N/R**	
	Chevy Pop 4-1400cc (1.4L) TBI Mexico		**B43-S**		**N/R**		**N/R**	
	Cheyenne V8-5700cc (5.7L) FI Mexico		**B1428**	**PA2008**	**N/R**	**BF853**	**N/R**	
	Corvette V8-350 (5.7L) SFI	5,P	**B35-S**	**PA2241**	**N/R**	**BF853**	**N/R**	4L60E **18010**
	Impala SS V8-350 (5.7L) FI	P	**B35-S**	**PA2189**	**N/R**	**BF1045**	**N/R**	4L60E **18010**
	Lumina V6-191 (3.1L) SFI	M	**B43-S**	**PA2231**	**N/R**	**BF1171**	**N/R**	(w/o Gskt.) **18022** (w/Gskt.) **20014**
	V6-207 (3.4L) SFI	X	**B35-S**	**PA2231**	**N/R**	**BF1171**	**N/R**	(w/o Gskt.) **18022** (w/Gskt.) **20014**
	Lumina APV V6-207 (3.4L) SFI	E	**B43-S**	**PA2160**	**N/R**	**BF1046**	**N/R**	(w/o Gskt.) **18022** (w/Gskt.) **20014**
	Monte Carlo V6-191 (3.1L) SFI	M	**B43-S**	**PA2231**	**N/R**	**BF1171**	**N/R**	(w/o Gskt.) **18022** (w/Gskt.) **20014**
	V6-207 (3.4L) SFI	X	**B35-S**	**PA2231**	**N/R**	**BF1171**	**N/R**	(w/o Gskt.) **18022** (w/Gskt.) **20014**
	Pickups, C, K Series V6-262 (4.3L) SFI	W	**B35-S**	Std. **RS3707** HvyDty. **RS3706**	**N/R**	**BF853**	**N/R**	4L60E **18010** 4L80E **18007**
	V8-305 (5.0L) SFI	M	2WD **B1428** 4WD **B35-S**	Std. **RS3707** HvyDty. **RS3706**	**N/R**	**BF853**	**N/R**	4L60E **18010** 4L80E **18007**
	V8-350 (5.7L) SFI	R	2WD **B1428** 4WD **B35-S**	Std. **RS3707** HvyDty. **RS3706**	**N/R**	**BF853**	**N/R**	4L60E **18010** 4L80E **18007**
	V8-395 (6.5L) Turbo Diesel	F,S	**B1428**	**PA2232**	**N/R**	**BF1201**	**N/R**	4L60E **18010** 4L80E **18007**
	V8-454 (7.4L) SFI	J	**B1428**	Std. **RS3707** HvyDty. **RS3706**	**N/R**	**BF853**	**N/R**	4L60E **18010** 4L80E **18007**
	Suburban, Tahoe V8-350 (5.7L) SFI	R	2WD **B1428** 4WD **B35-S**	Std. **RS3707** HvyDty. **RS3706**	**N/R**	**BF853**	**N/R**	4L60E **18010** 4L80E **18007**
	V8-395 (6.5L) Turbo Diesel	F,S	**B1428**	**PA2232**	**N/R**	**BF1201**	**N/R**	4L60E **18010** 4L80E **18007**
	V8-454 (7.4L) SFI	J	**B1428**	Std. **RS3707** HvyDty. **RS3706**	**N/R**	**BF853**	**N/R**	4L60E **18010** 4L80E **18007**
	Vans, G Series V6-262 (4.3L) SFI	W	**B35-S**	**PA2178**	**N/R**	**BF1046**	**N/R**	4L60E **18010** 4L80E **18007**
	V6-262 (4.3L) EFI	Z	**B35-S**	**PA1680**	**N/R**	**BF853**	**N/R**	4L60E **18010** 4L80E **18007**
	V8-305 (5.0L) SFI	M	**B1428**	**PA2178**	**N/R**	**BF1046**	**N/R**	4L60E **18010** 4L80E **18007**
	V8-350 (5.7L) EFI	K	**B1428**	**PA1680**	**N/R**	**BF853**	**N/R**	4L60E **18010** 4L80E **18007**
	V8-350 (5.7L) SFI	R	**B1428**	**PA2178**	**N/R**	**BF1046**	**N/R**	4L60E **18010** 4L80E **18007**
	V8-395 (6.5L) Turbo Diesel	F	**B1428**	**PA2232**	**N/R**	**BF7674-D**	**N/R**	4L60E **18010** 4L80E **18007**
	V8-395 (6.5L) Diesel	Y	**B1428**	**PA2073**	**N/R**	**BF1201**	**N/R**	4L60E **18010** 4L80E **18007**
	V8-454 (7.4L) SFI	J	**B1428**	**PA2178**	**N/R**	**BF1046**	**N/R**	4L60E **18010** 4L80E **18007**

OBS = Obsolete. Availability Limited to Distributor Stock. [t] Transmission, Not Model, Determines Which Transmission Filter is Used.

CHEVROLET Cont'd.

Year	Model and Engine	VIN	Lube	Air	Cabin Air	Fuel	Breather	Trans.t
1996	Vans, G Series V8-454 (7.4L) EFI	N	**B1428**	**PA2008**	**N/R**	**BF853**	**N/R**	4L60E **18010** 4L80E **18007**
	Vans, P Series V6-262 (4.3L) SFI	W	**B35-S**	**PA2232**	**N/R**	**BF853**	**N/R**	4L60E **18010** 4L80E **18007**
	V8-350 (5.7L) SFI	R	**B35-S**	**PA2232**	**N/R**	**BF853**	**N/R**	4L60E **18010** 4L80E **18007**
	V8-395 (6.5L) Turbo Diesel	F	**B1428**	**PA2232**	**N/R**	**BF1201**	**N/R**	4L60E **18010** 4L80E **18007**
	V8-395 (6.5L) Diesel	Y	**B1428**	**PA2073**	**N/R**	**BF1201**	**N/R**	4L60E **18010** 4L80E **18007**
	V8-454 (7.4L) SFI	J	**B1428**	**PA2232**	**N/R**	**BF853**	**N/R**	4L60E **18010** 4L80E **18007**
	V8-454 (7.4L) EFI	N	**B1428**	**PA2008**	**N/R**	**BF853**	**N/R**	4L60E **18010** 4L80E **18007**
1995	Astro Van V6-262 (4.3L) FI	W	**B35-S**	**PA2257**	**N/R**	**BF853**	**N/R**	4L60E **18010** 4L80E **18007**
	Beretta, Corsica 4-133 (2.2L) MFI	4	**B43-S**	**PA4079**	**N/R**	**BF1171**	**N/R**	3T40 **19593** 4T60E (w/o Gskt.) **18022** 4T60E (w/Gskt.) **20014**
	V6-191 (3.1L) SFI	M	**B43-S**	**PA4079**	**N/R**	**BF1171**	**N/R**	3T40 **19593** 4T60E (w/o Gskt.) **18022** 4T60E (w/Gskt.) **20014**
	Camaro V6-207 (3.4L) SFI	S	**B43-S**	**PA2257**	**N/R**	**BF1171**	**N/R**	4L60E **18010**
	V6-231 (3.8L) SFI	K	**B43-S**	**PA2257**	**N/R**	**BF1171**	**N/R**	4L60E **18010**
	V8-350 (5.7L) SFI	P	**B27**	**PA2257**	**N/R**	**BF1171**	**N/R**	4L60 **18155** 4L60E **18010**
	Caprice V8-265 (4.3L) SFI	W	**B35-S**	**PA2189**	**N/R**	**BF1045**	**N/R**	4L60E **18010**
	V8-350 (5.7L) SFI	P	**B35-S**	**PA2189**	**N/R**	**BF1045**	**N/R**	4L60E **18010**
	Cavalier 4-134 (2.2L) MFI	4	**B43-S**	**PA2160**	**N/R**	**BF1171**	**N/R**	4T40E **18057** TH125C **19593**
	4-138 (2.3L) MFI	D	**B43-S**	**PA2160**	**N/R**	**BF1171**	**N/R**	**18057**
	Chevy Joy 4-1400cc (1.4L) MFI Mexico		**B43-S**		**N/R**		**N/R**	
	Cheyenne V8-5700cc (5.7L) FI Mexico		**B1428**	**PA2008**	**N/R**	**BF853**	**N/R**	
	Corvette V8-350 (5.7L) SFI ZR1	J	**B109**	**PA2241**	**N/R**	**BF853**	**N/R**	**18010**
	V8-350 (5.7L) SFI	P	**B35-S**	**PA2241**	**N/R**	**BF853**	**N/R**	4L60E **18010**
	Impala SS V8-350 (5.7L) FI	P	**B35-S**	**PA2189**	**N/R**	**BF1045**	**N/R**	4L60E **18010**
	LLV 4-134 (2.2L) FI	4	**B43-S**	**PA2136**	**N/R**	**BF853**	**N/R**	
	Lumina V6-191 (3.1L) SFI	M	**B43-S**	**PA2231**	**N/R**	**BF1171**	**N/R**	3T40 **19593** 4T60E (w/o Gskt.) **18022** 4T60E (w/Gskt.) **20014**
	V6-207 (3.4L) SFI	X	**B35-S**	**PA2231**	**N/R**	**BF1171**	**N/R**	3T40 **19593** 4T60E (w/o Gskt.) **18022** 4T60E (w/Gskt.) **20014**
	Lumina APV V6-191 (3.1L) EFI	D	**B43-S**	**PA2106**	**N/R**	**BF1046**	**N/R**	3T40 **19593** 4T60E (w/o Gskt.) **18022** 4T60E (w/Gskt.) **20014**
	V6-231 (3.8L) SFI	L	**B43-S**	**PA2160**	**N/R**	**BF1046**	**N/R**	3T40 **19593** 4T60E (w/o Gskt.) **18022** 4T60E (w/Gskt.) **20014**
	Monte Carlo V6-191 (3.1L) SFI	M	**B43-S**	**PA2231**	**N/R**	**BF1171**	**N/R**	3T40 **19593** 4T60E (w/o Gskt.) **18022** 4T60E (w/Gskt.) **20014**

[t] Transmission, Not Model, Determines Which Transmission Filter is Used. OBS = Obsolete. Availability Limited to Distributor Stock.

CHEVROLET Cont'd.

Year	Model and Engine	VIN	Lube	Air	Cabin Air	Fuel	Breather	Trans.[t]
1995	Monte Carlo V6-207 (3.4L) SFI	X	**B35-S**	**PA2231**	**N/R**	**BF1171**	**N/R**	3T40 **19593** 4T60E (w/o Gskt.) **18022** 4T60E (w/Gskt.) **20014**
	Pickups, C, K Series V6-262 (4.3L) EFI	Z	**B35-S**	**PA1680**	**N/R**	**BF853**	**N/R**	4L60E **18010** 4L80E **18007**
	V8-305 (5.0L) EFI	H	2WD **B1428** 4WD **B35-S**	**PA2008**	**N/R**	**BF853**	**N/R**	4L60E **18010** 4L80E **18007**
	V8-350 (5.7L) EFI	K	2WD **B1428** 4WD **B35-S**	**PA2008**	**N/R**	**BF853**	**N/R**	4L60E **18010** 4L80E **18007**
	V8-395 (6.5L) Turbo Diesel	F,S	**B1428**	**PA2232**	**N/R**	**BF1201**	**N/R**	4L60E **18010** 4L80E **18007**
	V8-395 (6.5L) Diesel	P	**B1428**	**PA2073**	**N/R**	**BF1201**	**N/R**	4L60E **18010** 4L80E **18007**
	V8-454 (7.4L) EFI	N	**B1428**	**PA2008**	**N/R**	**BF853**	**N/R**	4L60E **18010** 4L80E **18007**
	S10, T10 Pickups, Mini-Blazer 4-133 (2.2L) MFI	4	**B43-S**	**PA2257**	**N/R**	**BF853**	**N/R**	4L60E **18010**
	V6-262 (4.3L) CPI	W	**B35-S**	**PA2257**	**N/R**	**BF853**	**N/R**	4L60E **18010**
	V6-262 (4.3L) EFI	Z	**B35-S**	**PA2106**	**N/R**	**BF853**	**N/R**	4L60E **18010**
	Suburban, Tahoe V8-350 (5.7L) EFI	K	2WD **B1428** 4WD **B35-S**	**PA2008**	**N/R**	**BF853**	**N/R**	4L60E **18010** 4L80E **18007**
	V8-395 (6.5L) Turbo Diesel	F,S	**B1428**	**PA2232**	**N/R**	**BF1201**	**N/R**	4L60E **18010** 4L80E **18007**
	V8-454 (7.4L) EFI	N	**B1428**	**PA2008**	**N/R**	**BF853**	**N/R**	4L60E **18010** 4L80E **18007**
	Vans, G, P Series V6-262 (4.3L) EFI	Z	**B35-S**	**PA1680**	**N/R**	**BF853**	**N/R**	4L60E **18010** 4L80E **18007**
	V8-305 (5.0L) EFI	H	**B1428**	**PA1680**	**N/R**	**BF853**	**N/R**	4L60E **18010** 4L80E **18007**
	V8-350 (5.7L) EFI	K	**B1428**	**PA1680**	**N/R**	**BF853**	**N/R**	4L60E **18010** 4L80E **18007**
	V8-395 (6.5L) Turbo Diesel	F	**B1428**	**PA2232**	**N/R**	**BF1201**	**N/R**	4L60E **18010** 4L80E **18007**
	V8-395 (6.5L) Diesel	P,Y	**B1428**	**PA2073**	**N/R**	**BF1201**	**N/R**	4L60E **18010** 4L80E **18007**
	V8-454 (7.4L) EFI	N	**B1428**	**PA2008**	**N/R**	**BF853**	**N/R**	4L60E **18010** 4L80E **18007**
1994	Astro Van V6-262 (4.3L) CPI	W	**B35-S**	**PA2257**	**N/R**	**BF853**	**N/R**	4L60E **18010** 4L80E **18007**
	V6-262 (4.3L) EFI	Z	**B35-S**	**PA2106**	**N/R**	**BF853**	**N/R**	4L60E **18010** 4L80E **18007**
	Beretta, Corsica 4-133 (2.2L) MFI	4	**B43-S**	**PA4079**	**N/R**	**BF1171**	**N/R**	3T40 **19593** 4T60E (w/o Gskt.) **18022** 4T60E (w/Gskt.) **20014**
	4-138 (2.3L) MFI	A	**B43-S**	**PA4079**	**N/R**	**BF1171**	**N/R**	3T40 **19593** 4T60E (w/o Gskt.) **18022** 4T60E (w/Gskt.) **20014**
	V6-191 (3.1L) SFI	M	**B43-S**	**PA4079**	**N/R**	**BF1171**	**N/R**	3T40 **19593** 4T60E (w/o Gskt.) **18022** 4T60E (w/Gskt.) **20014**
	Blazer, Suburban V8-350 (5.7L) EFI	K	2WD **B1428** 4WD **B35-S**	**PA2008**	**N/R**	**BF853**	**N/R**	4L60E **18010** 4L80E **18007**
	V8-395 (6.5L) Turbo Diesel	F,S	**B1428**	**PA2232**	**N/R**	**BF1201**	**N/R**	4L60E **18010** 4L80E **18007**
	V8-454 (7.4L) FI	N	**B1428**	**PA2008**	**N/R**	**BF853**	**N/R**	4L60E **18010** 4L80E **18007**
	Camaro V6-207 (3.4L) SFI	S	**B43-S**	**PA2257**	**N/R**	**BF1171**	**N/R**	4L60E **18010**
	V8-350 (5.7L) SFI	P	**B27**	**PA2257**	**N/R**	**BF1171**	**N/R**	4L60E **18010**
	Caprice V8-265 (4.3L) SFI	W	**B35-S**	**PA2189**	**N/R**	**BF1045**	**N/R**	4L60E **18010**

OBS = Obsolete. Availability Limited to Distributor Stock. [t] Transmission, Not Model, Determines Which Transmission Filter is Used.

CHEVROLET Cont'd.

Year	Model and Engine	VIN	Lube	Air	Cabin Air	Fuel	Breather	Trans.t
1994	Caprice V8-350 (5.7L) SFI	P	**B35-S**	**PA2189**	**N/R**	**BF1045**	**N/R**	4L60E **18010**
	Cavalier 4-133 (2.2L) MFI	4	**B43-S**	**PA2160**	**N/R**	**BF1171**	**N/R**	**19593**
	V6-191 (3.1L) MFI	T	**B43-S**	Exc. Z24 **PA2162** Z24 **PA2136**	**N/R**	**BF1171**	**N/R**	**19593**
	Chevy Joy 4-1400cc (1.4L) MFI Mexico		**B43-S**		**N/R**		**N/R**	
	Corvette V8-350 (5.7L) MFI ZR1	J	**B109**	**PA2241**	**N/R**	**BF853**	**N/R**	**18010**
	V8-350 (5.7L) SFI	P	**B35-S**	**PA2241**	**N/R**	**BF853**	**N/R**	4L60E **18010**
	Impala V8-350 (5.7L) FI	P	**B35-S**	**PA2189**	**N/R**	**BF1045**	**N/R**	4L60E **18010**
	LLV 4-134 (2.2L) FI	4	**B43-S**	**PA2136**	**N/R**	**BF853**	**N/R**	
	Lumina V6-191 (3.1L) MFI	T	**B43-S**	**PA2231**	**N/R**	**BF1171**	**N/R**	3T40 **19593** 4T60E (w/o Gskt.) **18022** 4T60E (w/Gskt.) **20014**
	V6-207 (3.4L) SFI	X	**B35-S**	**PA2231**	**N/R**	**BF1171**	**N/R**	(w/o Gskt.) **18022** (w/Gskt.) **20014**
	Lumina APV V6-191 (3.1L) EFI	D	**B35-S**	**PA2106**	**N/R**	**BF1046**	**N/R**	3T40 **19593** 4T60E (w/o Gskt.) **18022** 4T60E (w/Gskt.) **20014**
	V6-231 (3.8L) SFI	L	**B43-S**	**PA2160**	**N/R**	**BF1046**	**N/R**	3T40 **19593** 4T60E (w/o Gskt.) **18022** 4T60E (w/Gskt.) **20014**
	Pickups, C, K Series V6-262 (4.3L) EFI	Z	**B35-S**	**PA1680**	**N/R**	**BF853**	**N/R**	4L60E **18010** 4L80E **18007**
	V8-305 (5.0L) EFI	H	2WD **B1428** 4WD **B35-S**	**PA2008**	**N/R**	**BF853**	**N/R**	4L60E **18010** 4L80E **18007**
	V8-350 (5.7L) EFI	K	2WD **B1428** 4WD **B35-S**	**PA2008**	**N/R**	**BF853**	**N/R**	4L60E **18010** 4L80E **18007**
	V8-395 (6.5L) Turbo Diesel	F,S	**B1428**	**PA2232**	**N/R**	**BF1201**	**N/R**	4L60E **18010** 4L80E **18007**
	V8-395 (6.5L) Diesel	P	**B1428**	**PA2073**	**N/R**	**BF1201**	**N/R**	4L60E **18010** 4L80E **18007**
	V8-454 (7.4L) EFI	N	**B1428**	**PA2008**	**N/R**	**BF853**	**N/R**	4L60E **18010** 4L80E **18007**
	S10, T10 Pickups, Blazer 4-134 (2.2L) MFI	4	**B43-S**	**PA2257**	**N/R**	**BF853**	**N/R**	4L60E **18010**
	V6-262 (4.3L) CPI	W	**B35-S**	**PA2257**	**N/R**	**BF853**	**N/R**	4L60E **18010**
	V6-262 (4.3L) EFI	Z	**B35-S**	**PA2106**	**N/R**	**BF853**	**N/R**	4L60E **18010**
	Vans, G, P Series V6-262 (4.3L) EFI	Z	**B35-S**	**PA1680**	**N/R**	**BF853**	**N/R**	4L60E **18010** 4L80E **18007**
	V8-305 (5.0L) EFI	H	**B1428**	**PA1680**	**N/R**	**BF853**	**N/R**	4L60E **18010** 4L80E **18007**
	V8-350 (5.7L) EFI	K	**B1428**	G Series **PA1680** P Series **PA2008**	**N/R**	**BF853**	**N/R**	4L60E **18010** 4L80E **18007**
	V8-395 (6.5L) Turbo Diesel	F	**B1428**	**PA2232**	**N/R**	**BF1201**	**N/R**	4L60E **18010** 4L80E **18007**
	V8-395 (6.5L) Diesel	P,Y	**B1428**	**PA2073**	**N/R**	**BF1201**	**N/R**	4L60E **18010** 4L80E **18007**
	V8-454 (7.4L) EFI	N	**B1428**	**PA2008**	**N/R**	**BF853**	**N/R**	4L60E **18010** 4L80E **18007**
1993	Astro Van V6-262 (4.3L) CPI	W	**B35-S**	**PA2257**	**N/R**	**BF853**	**N/R**	4L60E **18010** 4L80E **18007**
	V6-262 (4.3L) EFI	Z	**B35-S**	**PA2106**	**N/R**	**BF853**	**N/R**	4L60E **18010** 4L80E **18007**
	Beretta, Corsica 4-133 (2.2L) MFI	4	**B43-S**	**PA2160**	**N/R**	**BF1171**	**N/R**	**19593**
	4-138 (2.3L) MFI HO	A	**B43-S**	**PA2160**	**N/R**	**BF1171**	**N/R**	**19593**
	V6-191 (3.1L) MFI	T	**B43-S**	**PA2195**	**N/R**	**BF1171**	**N/R**	**19593**
	Blazer, Suburban V8-350 (5.7L) EFI	K	2WD **B1428** 4WD **B35-S**	**PA2008**	**N/R**	**BF853**	**N/R**	4L60E **18010** 4L80E **18007**
	V8-454 (7.4L) EFI	N	**B1428**	**PA2008**	**N/R**	**BF853**	**N/R**	4L60E **18010** 4L80E **18007**
	Camaro V6-207 (3.4L) SFI	S	**B43-S**	**PA2257**	**N/R**	**BF1171**	**N/R**	**18155**
	V8-350 (5.7L) MFI	P	**B27**	**PA2257**	**N/R**	**BF1171**	**N/R**	**18155**
	Caprice V6-262 (4.3L) FI	Z	**B35-S**	**PA2218**	**N/R**	**BF1046**	**N/R**	**18155**

[t] Transmission, Not Model, Determines Which Transmission Filter is Used. OBS = Obsolete. Availability Limited to Distributor Stock.

CHEVROLET Cont'd.

Year	Model and Engine	VIN	Lube	Air	Cabin Air	Fuel	Breather	Trans.[t]
1993	Caprice V8-305 (5.0L) EFI	E	**B27**	**PA2218**	**N/R**	**BF1046**	**N/R**	**18155**
	V8-350 (5.7L) EFI	7	**B27**	**PA2218**	**N/R**	**BF1046**	**N/R**	**18155**
	Cavalier 4-133 (2.2L) MFI	4	**B43-S**	**PA2160**	**N/R**	**BF1171**	**N/R**	**19593**
	V6-191 (3.1L) MFI	T	**B43-S**	Exc. Z24 **PA2162** Z24 **PA2136**	**N/R**	**BF1171**	**N/R**	**19593**
	Corvette V8-350 (5.7L) MFI ZR1	J	**B109**	**PA2241**	**N/R**	**BF853**	**N/R**	4L60 **18155** 4L60E **18010**
	V8-350 (5.7L) MFI	P	**B35-S**	**PA2241**	**N/R**	**BF853**	**N/R**	4L60 **18155** 4L60E **18010**
	LLV 4-151 (2.5L) FI	A	**B43-S**	**PA2109**	**N/R**	**BF853**	**SA4315**	
	Lumina 4-133 (2.2L) MFI	4	**B43-S**	**PA2134**	**N/R**	**BF1171**	**N/R**	**19593**
	V6-191 (3.1L) MFI	T	**B35-S**	**PA2196**	**N/R**	**BF1171**	**N/R**	3T40 **19593** 4T60 **18139**
	V6-191 (3.1L) MFI	W	**B43-S**	**PA2196**	**N/R**	**BF1171**	**N/R**	4T60E (w/o Gskt.) **18022** (w/Gskt.) **20014**
	V6-207 (3.4L) MFI	X	**B35-S**	**PA2196**	**N/R**	**BF1171**	**N/R**	(w/o Gskt.) **18022** (w/Gskt.) **20014**
	Lumina APV V6-191 (3.1L) SFI	D	**B35-S**	**PA2106**	**N/R**	**BF1046**	**N/R**	3T40 **19593** 4T60 **18139**
	V6-231 (3.8L) SFI	L	**B43-S**	**PA2160**	**N/R**	**BF1046**	**N/R**	4T60 **18139** 4T60E (w/o Gskt.) **18022** 4T60E (w/Gskt.) **20014**
	Pickups, C, K Series V6-262 (4.3L) EFI	Z	**B35-S**	**PA1680**	**N/R**	**BF853**	**N/R**	4L60E **18010** 4L80E **18007**
	V8-305 (5.0L) EFI	H	2WD **B1428** 4WD **B35-S**	**PA2008**	**N/R**	**BF853**	**N/R**	4L60E **18010** 4L80E **18007**
	V8-350 (5.7L) EFI	K	2WD **B1428** 4WD **B35-S**	**PA2008**	**N/R**	**BF853**	**N/R**	4L60E **18010** 4L80E **18007**
	V8-381 (6.2L) Diesel	C,J	**B1428**	**PA2073**	**N/R**	**BF856**	**N/R**	4L60E **18010** 4L80E **18007**
	V8-395 (6.5L) Turbo Diesel	F	**B1428**	**PA2232**	**N/R**	**BF1201**	**N/R**	4L60E **18010** 4L80E **18007**
	V8-454 (7.4L) EFI	N	**B1428**	**PA2008**	**N/R**	**BF853**	**N/R**	4L60E **18010** 4L80E **18007**
	S10, T10 Pickups, Mini-Blazer 4-151 (2.5L) EFI	A	**B43-S**	**PA2109**	**N/R**	**BF853**	**SA4315**	**18155**
	V6-173 (2.8L) EFI	R	**B35-S**	**PA2106**	**N/R**	**BF853**	**N/R**	4L60 **18155** 4L60E **18010**
	V6-262 (4.3L) CPI	W	**B35-S**	**PA2257**	**N/R**	**BF853**	**N/R**	4L60 **18155** 4L60E **18010**
	V6-262 (4.3L) EFI	Z	**B35-S**	**PA2106**	**N/R**	**BF853**	**N/R**	4L60 **18155** 4L60E **18010**
	Vans, G, P Series V6-262 (4.3L) EFI	Z	**B35-S**	**PA1680**	**N/R**	**BF853**	**N/R**	4L60E **18010** 4L80E **18007**
	V8-305 (5.0L) EFI	H	**B1428**	**PA1680**	**N/R**	**BF853**	**N/R**	4L60E **18010** 4L80E **18007**
	V8-350 (5.7L) EFI	K	**B1428**	G Series **PA1680** P Series **PA2008**	**N/R**	**BF853**	**N/R**	4L60E **18010** 4L80E **18007**
	V8-379 (6.2L) Diesel	C,J	**B1428**	**PA2073**	**N/R**	**BF856**	**N/R**	4L60E **18010** 4L80E **18007**
	V8-454 (7.4L) EFI	N	**B1428**	**PA2008**	**N/R**	**BF853**	**N/R**	4L60E **18010** 4L80E **18007**
1992	Astro Van V6-262 (4.3L) TBI	W	**B35-S**	**PA2257**	**N/R**	**BF853**	**N/R**	4L80E **18007** TH700-R4 **18155**
	V6-262 (4.3L) EFI	Z	**B35-S**	**PA2106**	**N/R**	**BF853**	**N/R**	4L80E **18007** TH700-R4 **18155**
	Beretta, Corsica 4-133 (2.2L) FI	4	**B43-S**	**PA2160**	**N/R**	**BF1171**	**N/R**	**19593**
	4-138 (2.3L) MFI HO	A	**B43-S**	**PA2160**	**N/R**	**BF1171**	**N/R**	**19593**
	V6-191 (3.1L) MFI	T	**B43-S**	**PA2195**	**N/R**	**BF1171**	**N/R**	**19593**
	Blazer, Suburban V8-350 (5.7L) EFI	K	2WD **B1428** 4WD **B35-S**	**PA2008**	**N/R**	**BF853**	**N/R**	4L80E **18007** TH700-R4 **18155**
	V8-454 (7.4L) EFI	N	**B1428**	**PA2008**	**N/R**	**BF853**	**N/R**	4L80E **18007** TH700-R4 **18155**
	Camaro V6-191 (3.1L) MFI	T	**B35-S**	**PA2136**	**N/R**	**BF853**	**N/R**	**18155**

OBS = Obsolete. Availability Limited to Distributor Stock. [t] Transmission, Not Model, Determines Which Transmission Filter is Used.

CHEVROLET Cont'd.

Year	Model and Engine	VIN	Lube	Air	Cabin Air	Fuel	Breather	Trans.t
1992	Camaro V8-305 (5.0L) TPI	E	**B27**	**PA2006**	**N/R**	**BF853**	**SA2027**	**18155**
	V8-305 (5.0L) EFI	F	**B27**	**[2] PA2143**	**N/R**	**BF853**	**N/R**	**18155**
	V8-350 (5.7L) TPI	8	**B27**	**[2] PA2143**	**N/R**	**BF853**	**N/R**	**18155**
	Caprice V6-262 (4.3L) EFI	Z	**B35-S**	**PA2218**	**N/R**	**BF1046**	**N/R**	**18155**
	V8-305 (5.0L) EFI	E	**B27**	**PA2218**	**N/R**	**BF1046**	**N/R**	**18155**
	V8-350 (5.7L) EFI	7	**B27**	**PA2218**	**N/R**	**BF1046**	**SA2027**	**18155**
	Cavalier 4-133 (2.2L) MFI	4	**B43-S**	**PA2160**	**N/R**	**BF1171**	**N/R**	**19593**
	V6-191 (3.1L) MFI	T	**B35-S**	**PA2162**	**N/R**	**BF1171**	**N/R**	**19593**
	Cavalier Z24 V6-191 (3.1L) MFI	T	**B35-S**	**PA2136**	**N/R**	**BF1171**	**N/R**	**19593**
	Corvette V8-350 (5.7L) MFI ZR1	J	**B109**	**PA2241**	**N/R**	**BF853**	**N/R**	**18155**
	V8-350 (5.7L) MFI	P	**B35-S**	**PA2241**	**N/R**	**BF853**	**N/R**	**18155**
	LLV 4-151 (2.5L) FI	A	**B43-S**	**PA2109**	**N/R**	**BF853**	**SA4315**	
	Lumina 4-151 (2.5L) TBI	R	**P140**	**PA2134**	**N/R**	**BF1171**	**N/R**	**19593**
	V6-191 (3.1L) MFI	T	**B35-S**	**PA2196**	**N/R**	**BF1171**	**N/R**	3 Spd. **19593** 4 Spd. **18139**
	V6-207 (3.4L) MFI	X	**B35-S**	**PA2196**	**N/R**	**BF1171**	**N/R**	(w/o Gskt.) **18022** (w/Gskt.) **20014**
	Lumina APV V6-191 (3.1L) EFI	D	**B35-S**	**PA2106**	**N/R**	**BF1046**	**N/R**	**19593**
	V6-231 (3.8L) SFI	L	**B43-S**	**PA2160**	**N/R**	**BF1046**	**N/R**	**18139**
	Metro 4-1295cc (1.3L) FI Canada	9	**BT223**	**PA2216**	**N/R**	**BF1003**	**N/R**	
	Pickups, C, K Series, Pickups, R, V Series V6-262 (4.3L) EFI	Z	**B35-S**	**PA1680**	**N/R**	**BF853**	**N/R**	4L60 **18155** 4L80E **18007**
	V8-305 (5.0L) EFI	H	2WD **B1428** 4WD **B35-S**	**PA2008**	**N/R**	**BF853**	**N/R**	**18155**
	V8-350 (5.7L) EFI	K	2WD **B1428** 4WD **B35-S**	**PA2008**	**N/R**	**BF853**	**N/R**	4L60E **18155** 4L80E **18007**
	V8-381 (6.2L) Diesel	C,J	**B1428**	**PA2073**	**N/R**	**BF856**	**N/R**	4L60 **18155** 4L80E **18007**
	V8-395 (6.5L) Turbo Diesel	F	**B1428**	**PA2232**	**N/R**	**BF1201**	**N/R**	**18155**
	V8-454 (7.4L) EFI	N	**B1428**	C, K Series **PA2008** R, V Series **PA2091**	**N/R**	**BF853**	**N/R**	4L60 **18155** 4L80E **18007**
	S10, T10 Pickups, Blazer 4-151 (2.5L) EFI	A	**B43-S**	**PA2109**	**N/R**	**BF853**	**SA4315**	**18155**
	V6-173 (2.8L) EFI	R	**B35-S**	**PA2106**	**N/R**	**BF853**	**N/R**	**18155**
	V6-262 (4.3L) EFI	W,Z	**B35-S**	Exc. Turbo **PA2106** Turbo **PA2257**	**N/R**	**BF853**	**N/R**	4L60 **18155** 4L80E **18007**
	Vans, G, P Series V6-262 (4.3L) EFI	Z	**B35-S**	**PA1680**	**N/R**	**BF853**	**N/R**	4L60 **18155** 4L80E **18007**
	V8-305 (5.0L) EFI	H	**B1428**	**PA1680**	**N/R**	**BF853**	**N/R**	4L60 **18155** 4L80E **18007**
	V8-350 (5.7L) EFI	K	**B1428**	G Series **PA1680** P Series **PA2008**	**N/R**	**BF853**	**N/R**	4L60 **18155** 4L80E **18007**
	V8-379 (6.2L) Diesel	C,J	**B1428**	**PA2073**	**N/R**	**BF856**	**N/R**	4L60 **18155** 4L80E **18007**
	V8-454 (7.4L) EFI	N	**B1428**	**PA2008**	**N/R**	**BF853**	**N/R**	4L60 **18155** 4L80E **18007**
1991	Astro Van V6-262 (4.3L) EFI	B,Z	**B35-S**	**PA2106**	**N/R**	**BF853**	**N/R**	4L60 **18155** 4L80E **18007**
	Beretta, Corsica 4-133 (2.2L) EFI	G	**B35-S**	**PA2109**	**N/R**	**BF1174**	**N/R**	**19593**
	4-138 (2.3L) MFI HO	A	**B43-S**	**PA2160**	**N/R**	**BF1174**	**N/R**	**19593**
	V6-191 (3.1L) MFI	T	**B35-S**	**PA2195**	**N/R**	**BF1174**	**N/R**	**19593**
	Blazer, Pickups, R, V Series, Suburban, R, V Series V8-350 (5.7L) EFI	K	2WD **B1428** 4WD **B35-S**	**PA2008**	**N/R**	**BF853**	**N/R**	4L60 **18155** 4L80E **18007**
	V8-381 (6.2L) Diesel	C,J	**B1428**	**PA2073**	**N/R**	**BF856**	**N/R**	4L60 **18155** 4L80E **18007**
	V8-454 (7.4L) EFI	N	**B1428**	**PA2091**	**N/R**	**BF853**	**N/R**	4L60 **18155** 4L80E **18007**
	Camaro V6-189 (3.1L) MFI	T	**B35-S**	**PA2136**	**N/R**	**BF853**	**N/R**	**18155**
	V8-305 (5.0L) EFI	E	**B27**	**PA2006**	**N/R**	**BF853**	**SA2027**	**18155**
	V8-305 (5.0L) TPI	F	**B27**	**[2] PA2143**	**N/R**	**BF853**	**N/R**	**18155**
	V8-350 (5.7L) TPI	8	**B27**	**[2] PA2143**	**N/R**	**BF853**	**N/R**	**18155**
	Caprice V8-305 (5.0L) EFI	E	**B27**	**PA2218**	**N/R**	w/Bracket **BF1165** Ele. Only **BF1046**	**SA2027**	**18155**

t Transmission, Not Model, Determines Which Transmission Filter is Used. OBS = Obsolete. Availability Limited to Distributor Stock.

CHEVROLET Cont'd.

Year	Model and Engine	VIN	Lube	Air	Cabin Air	Fuel	Breather	Trans.[t]
1991	Caprice V8-350 (5.7L) TBI	7	**B27**	**PA2218**	**N/R**	w/Bracket **BF1165** Ele. Only **BF1046**	**SA2027**	**18155**
	Cavalier 4-133 (2.2L) EFI	G	**B35-S**	**PA2109**	**N/R**	**BF853**	**N/R**	**19593**
	V6-191 (3.1L) MFI	T	**B35-S**	4 15/16 In. **PA2162** 6 In. **PA2136**	**N/R**	**BF853**	**N/R**	**19593**
	Cavalier Z24 V6-191 (3.1L) MFI	T	**B35-S**	**PA2136**	**N/R**	**BF853**	**N/R**	**19593**
	Corvette V8-350 (5.7L) TPI	8	**B27**	**PA2241**	**N/R**	**BF853**	**N/R**	**18155**
	V8-350 (5.7L) MFI ZR1	J	**B109**	**PA2241**	**N/R**	**BF853**	**N/R**	**18155**
	LLV 4-151 (2.5L) FI	A,E	**B43-S**	**PA2109**	**N/R**	**BF853**	**SA4315**	
	Lumina 4-151 (2.5L) EFI	R	**P140**	**PA2134**	**N/R**	**BF853**	**N/R**	**19593**
	V6-191 (3.1L) MFI	T	**B35-S**	**PA2196**	**N/R**	**BF853**	**N/R**	4T60E (w/o Gskt.) **18022** 4T60E (w/Gskt.) **20014** TH125 **19593** TH440-T4 **18139**
	V6-207 (3.4L) MFI	X	**B35-S**	**PA2196**	**N/R**	**BF853**	**N/R**	4T60E (w/o Gskt.) **18022** 4T60E (w/Gskt.) **20014** TH125 **19593** TH440-T4 **18139**
	Lumina APV V6-191 (3.1L) EFI	D	**B35-S**	**PA2106**	**N/R**		**N/R**	**19593**
	Pickups, C, K Series V6-262 (4.3L) EFI	Z	**B35-S**	**PA1680**	**N/R**	**BF853**	**N/R**	4L60 **18155** 4L80E **18007**
	V8-305 (5.0L) EFI	H	2WD **B1428** 4WD **B35-S**	**PA2008**	**N/R**	**BF853**	**N/R**	4L60 **18155** 4L80E **18007**
	V8-350 (5.7L) EFI	K	2WD **B1428** 4WD **B35-S**	**PA2008**	**N/R**	**BF853**	**N/R**	4L60 **18155** 4L80E **18007**
	V8-381 (6.2L) Diesel	C,J	**B1428**	**PA2073**	**N/R**	**BF856**	**N/R**	4L60 **18155** 4L80E **18007**
	V8-454 (7.4L) EFI	N	**B1428**	**PA2008**	**N/R**	**BF853**	**N/R**	4L60 **18155** 4L80E **18007**
	S10, T10 Pickups, Blazer 4-151 (2.5L) EFI	A,E	**B43-S**	**PA2109**	**N/R**	**BF853**	**SA4315**	**18155**
	V6-173 (2.8L) EFI	R	**B35-S**	**PA2106**	**N/R**	**BF868**	**N/R**	**18155**
	V6-262 (4.3L) EFI	Z	**B35-S**	**PA2106**	**N/R**	**BF853**	**N/R**	**18155**
	Sprint 3-993cc (1.0L) FI Turbo Canada	2	**BT223**		**N/R**	**BF1003**	**N/R**	**M.T.**
	3-61 (1.0L) TBI Canada	6	**BT223**	**PA2216**	**N/R**	**BF1003**	**N/R**	
	Tracker 4-1588cc (1.6L) FI Canada	U	**B1430**	**PA4023**	**N/R**	**BF1100**	**N/R**	
	Vans, G, P Series V6-262 (4.3L) EFI	Z	**B35-S**	**PA1680**	**N/R**	**BF853**	**N/R**	4L60 **18155** 4L80E **18007**
	V8-305 (5.0L) EFI	H	**B1428**	**PA1680**	**N/R**	**BF853**	**N/R**	4L60 **18155** 4L80E **18007**
	V8-350 (5.7L) EFI	K	**B1428**	G Series **PA1680** P Series **PA2008**	**N/R**	**BF853**	**N/R**	4L60 **18155** 4L80E **18007**
	V8-379 (6.2L) Diesel	C,J	**B1428**	**PA2073**	**N/R**	**BF856**	**N/R**	4L60 **18155** 4L80E **18007**
	V8-454 (7.4L) EFI	N	**B1428**	**PA2008**	**N/R**	**BF853**	**N/R**	4L60 **18155** 4L80E **18007**
1990	Astro Van 4-151 (2.5L) EFI	E	**B43-S**	**PA2109**	**N/R**	**BF853**	**SA4315**	**18155**
	V6-262 (4.3L) EFI	B,Z	**B35-S**	**PA2106**	**N/R**	**BF853**	**N/R**	**18155**
	Beretta, Corsica 4-133 (2.2L) EFI	G	**B35-S**	**PA2109**	**N/R**	**BF1174**	**N/R**	**19593**
	4-138 (2.3L) MFI HO	A	**B43-S**	**PA2160**	**N/R**	**BF1174**	**N/R**	**19593**
	V6-191 (3.1L) MFI	T	**B35-S**	**PA2195**	**N/R**	**BF1174**	**N/R**	**19593**
	Blazer, Pickups, R, V Series, Suburban, R, V Series V8-350 (5.7L) EFI	K	**B1428**	**PA2008**	**N/R**	**BF853**	**N/R**	4L60 **18155**
	V8-379 (6.2L) Diesel	C,J	**B1428**	**PA2073**	**N/R**	**BF856**	**N/R**	4L60 **18155**
	V8-454 (7.4L) EFI	N	**B1428**	**PA2091**	**N/R**	**BF853**	**N/R**	**18155**
	Camaro V6-189 (3.1L) MFI	T	**B35-S**	**PA2136**	**N/R**	**BF853**	**N/R**	**18155**
	V8-305 (5.0L) EFI	E	**B27**	**PA2006**	**N/R**	**BF853**	**SA2027**	**18155**
	V8-305 (5.0L) TPI	F	**B27**	**[2] PA2143**	**N/R**	**BF853**	**N/R**	**18155**
	V8-350 (5.7L) FI	8	**B27**	**[2] PA2143**	**N/R**	**BF853**	**N/R**	**18155**

OBS = Obsolete. Availability Limited to Distributor Stock. [t] Transmission, Not Model, Determines Which Transmission Filter is Used.

CHEVROLET Cont'd.

Year	Model and Engine	VIN	Lube	Air	Cabin Air	Fuel	Breather	Trans.[t]
1990	Caprice V6-262 (4.3L) FI	Z	**B35-S**	**PA2006**	**N/R**	w/Bracket **BF1165** Ele. Only **BF1046**	**N/R**	**18155**
	V8-305 (5.0L) EFI	E	**B27**	**PA2008**	**N/R**	w/Bracket **BF1165** Ele. Only **BF1046**	**SA2027**	
	V8-307 (5.0L) 4 Bbl.	Y	**B30**	**PA2008**	**N/R**	**PF894,-RV**	**SA2039**	
	V8-350 (5.7L) FI	7	w/Oil Cooler **B27** w/o Oil Cooler **B1428**	**PA2008**	**N/R**	w/Bracket **BF1165** Ele. Only **BF1046**	**SA2027**	**18155**
	Cavalier 4-133 (2.2L) EFI	G	**B35-S**	**PA2109**	**N/R**	**BF853**	**N/R**	**19593**
	V6-191 (3.1L) MFI	T	**B35-S**	4 15/16 In. **PA2162** 6 In. **PA2136**	**N/R**	**BF853**	**N/R**	**19593**
	Cavalier Z24 V6-191 (3.1L) MFI	T	**B35-S**	**PA2136**	**N/R**	**BF853**	**N/R**	**19593**
	Celebrity 4-151 (2.5L) EFI	R	**P140**	**PA2109**	**N/R**	**BF1172**	**SA4315**	**19593**
	V6-189 (3.1L) MFI	T	**B35-S**	**PA2162**	**N/R**	**BF1172**	**N/R**	3 Spd. **19593** 4 Spd. **18139**
	Corvette V8-350 (5.7L) TPI	8	**B27**	**PA2241**	**N/R**	**BF853**	**N/R**	**18155**
	V8-350 (5.7L) TPI ZR1 32 Valve	J	**B109**	**PA2241**	**N/R**	**BF853**	**N/R**	**18155**
	LLV 4-151 (2.5L) FI	E	**B43-S**	**PA2109**	**N/R**	**BF853**	**SA4315**	
	Lumina 4-151 (2.5L) EFI	R	**P140**	**PA2134**	**N/R**	**BF853**	**N/R**	**19593**
	V6-191 (3.1L) MFI	T	**B35-S**	**PA2196**	**N/R**	**BF853**	**N/R**	3 Spd. **19593** 4 Spd. **18139**
	Lumina APV V6-191 (3.1L) EFI	D	**B35-S**	**PA2106**	**N/R**		**N/R**	**19593**
	Pickups, C, K Series V6-262 (4.3L) EFI	Z	**B35-S**	**PA1680**	**N/R**	**BF853**	**N/R**	**18155**
	V8-305 (5.0L) EFI	H	2WD **B1428** 4WD **B35-S**	**PA2008**	**N/R**	**BF853**	**N/R**	**18155**
	V8-350 (5.7L) EFI	K	2WD **B1428** 4WD **B35-S**	**PA2008**	**N/R**	**BF853**	**N/R**	**18155**
	V8-379 (6.2L) Diesel	C,J	**B1428**	**PA2073**	**N/R**	**BF856**	**N/R**	**18155**
	V8-454 (7.4L) EFI	N	**B1428**	**PA2008**	**N/R**	**BF853**	**N/R**	**18155**
	S10, T10 Pickups, Blazer 4-151 (2.5L) EFI	E	**B43-S**	**PA2109**	**N/R**	**BF853**	**SA4315**	**18155**
	V6-173 (2.8L) EFI	B,R	**B35-S**	**PA2106**	**N/R**	**BF868**	**N/R**	**18155**
	V6-262 (4.3L) EFI	Z	**B35-S**	**PA2106**	**N/R**	**BF853**	**N/R**	**18155**
	Sprint 3-993cc (1.0L) FI Turbo Canada	2	**BT223**		**N/R**	**BF1003**	**N/R**	**M.T.**
	3-993cc (1.0L) FI Canada	6	**BT223**	**PA2216**	**N/R**	**BF1003**	**N/R**	
	Tracker 4-1588cc (1.6L) FI Canada	U	**B1430**	**PA4023**	**N/R**	**BF1100**	**N/R**	
	Vans, G, P Series V6-262 (4.3L) EFI	Z	**B35-S**	**PA1680**	**N/R**	**BF853**	**N/R**	3L80 **6020** 4L60, 700-R4 **18155**
	V8-305 (5.0L) EFI	H	**B1428**	**PA1680**	**N/R**	**BF853**	**N/R**	3L80 **6020** 4L60, 700-R4 **18155**
	V8-350 (5.7L) EFI	K	**B1428**	G Series **PA1680** P Series **PA2008**	**N/R**	**BF853**	**N/R**	3L80 **6020** 4L60, 700-R4 **18155**
	V8-379 (6.2L) Diesel	C,J	**B1428**	**PA2073**	**N/R**	**BF856**	**N/R**	3L80 **6020** 4L60, 700-R4 **18155**
	V8-454 (7.4L) EFI	N	**B1428**	**PA2008**	**N/R**	**BF853**	**N/R**	3L80 **6020** 4L60, 700-R4 **18155**
1989	Astro Van 4-151 (2.5L) EFI	E	**B43-S**	**PA2109**	**N/R**	**BF853**	**SA4315**	**18155**
	V6-262 (4.3L) EFI	Z	**B35-S**	**PA2106**	**N/R**	**BF853**	**N/R**	**18155**
	Beretta, Corsica 4-2000cc (2.0L) EFI	1	**B35-S**	**PA2138**	**N/R**	**BF853**	**N/R**	**19593**
	V6-173 (2.8L) MFI	W	**B43-S**	**PA2195**	**N/R**	**BF853**	**N/R**	**19593**
	Blazer, Pickups, R, V Series, Suburban, R, V Series V8-350 (5.7L) EFI	K	**B1428**	**PA2008**	**N/R**	**BF853**	**N/R**	**18155**
	V8-379 (6.2L) Diesel	C,J	**B1428**	**PA2073**	**N/R**	**BF856**	**N/R**	**18155**
	V8-454 (7.4L) EFI	N	**B1428**	**PA2091**	**N/R**	**BF853**	**N/R**	**18155**
	V8-454 (7.4L) 4 Bbl.	W	**B1428**	**PA2091**	**N/R**	**PF894,-RV**	**SA2027**	**18155**
	Camaro V6-173 (2.8L) MFI	S	**B35-S**	**[2] PA2143**	**N/R**	**BF853**	**N/R**	**18155**
	V8-305 (5.0L) FI	E	**B27**	**PA2006**	**N/R**	**BF853**	**SA2027** **SA2046**	**18155**
	V8-305 (5.0L) FI	F	**B27**	**[2] PA2143**	**N/R**	**BF853**	**N/R**	**18155**
	V8-350 (5.7L) TPI	8	**B27**	**[2] PA2143**	**N/R**	**BF853**	**N/R**	**18155**
	Caprice V6-262 (4.3L) FI	Z	**B35-S**	**PA2006**	**N/R**	**BF853**	**SA2027**	**18155**

[t] Transmission, Not Model, Determines Which Transmission Filter is Used. OBS = Obsolete. Availability Limited to Distributor Stock.

CHEVROLET Cont'd.

Year	Model and Engine	VIN	Lube	Air	Cabin Air	Fuel	Breather	Trans.†
1989	Caprice V8-305 (5.0L) EFI	E	**B27**	**PA2008**	**N/R**	**BF853**	**SA2027 SA2046**	**18155**
	V8-307 (5.0L) 4 Bbl.	Y	**B30**	**PA2008**	**N/R**	**PF894,-RV**	**SA2039**	**18155**
	V8-350 (5.7L) FI	7	w/Oil Cooler **B27** w/o Oil Cooler **B1428**	**PA2008**	**N/R**	**BF853**	**SA2027**	**18155**
	Cavalier 4-2000cc (2.0L) EFI	1	**B35-S**	**PA2138**	**N/R**	**BF853**	**N/R**	**19593**
	V6-173 (2.8L) MFI	W	**B43-S**	**PA2162**	**N/R**	**BF853**	**N/R**	**19593**
	Cavalier Z24 V6-173 (2.8L) MFI	W	**B43-S**	**PA2136**	**N/R**	**BF853**	**N/R**	**19593**
	Celebrity 4-151 (2.5L) EFI	R	**P140**	**PA2109**	**N/R**	**BF1172**	**SA4315**	**19593**
	V6-173 (2.8L) MFI	W	**B43-S**	**PA2162**	**N/R**	**BF1172**	**N/R**	**19593**
	Corvette V8-350 (5.7L) TPI	8	**B27**	**PA2178**	**N/R**	**BF853**	**N/R**	**18155**
	LLV 4-151 (2.5L) FI	E	**B43-S**	**PA2109**	**N/R**	**BF853**	**SA4315**	
	Pickups, C, K Series V6-262 (4.3L) EFI	Z	**B35-S**	**PA1680**	**N/R**	**BF853**	**SA2046**	**18155**
	V8-305 (5.0L) EFI	H	2WD **B1428** 4WD **B35-S**	**PA2008**	**N/R**	**BF853**	**N/R**	**18155**
	V8-350 (5.7L) EFI	K	2WD **B1428** 4WD **B35-S**	**PA2008**	**N/R**	**BF853**	**SA2046**	**18155**
	V8-379 (6.2L) Diesel	C,J	**B1428**	**PA2073**	**N/R**	**BF856**	**N/R**	**18155**
	V8-454 (7.4L) EFI	N	**B1428**	**PA2008**	**N/R**	**BF853**	**SA2027 SA2046**	**18155**
	S10, T10 Pickups, Blazer 4-151 (2.5L) EFI	E	**B43-S**	**PA2109**	**N/R**	**BF853**	**SA4315**	**18155**
	V6-173 (2.8L) EFI	A,R	**B35-S**	**PA2106**	**N/R**	**BF868**	**N/R**	**18155**
	V6-262 (4.3L) EFI	Z	**B35-S**	**PA2106**	**N/R**	**BF853**	**N/R**	**18155**
	Sprint 3-993cc (1.0L) FI Canada	2,6	**BT223**	**PA2216**	**N/R**	**BF1003**	**N/R**	
	Tracker 4-1588cc (1.6L) FI Canada	U	**B1430**	**PA4023**	**N/R**	**BF1100**	**N/R**	
	Vans, G, P Series V6-262 (4.3L) EFI	Z	**B35-S**	**PA1680**	**N/R**	**BF853**	**N/R**	**18155**
	6-292 (4.8L) 2 Bbl.	T	**B27**	**PA648**	**N/R**	**PF894,-RV**	**N/R**	TH400 **6020**
	V8-305 (5.0L) EFI	H	**B1428**	**PA1680**	**N/R**	**BF853**	**N/R**	**18155**
	V8-350 (5.7L) EFI	K	**B1428**	G Series **PA1680** P Series **PA2008**	**N/R**	**BF853**	**N/R**	**18155**
	V8-379 (6.2L) Diesel	C,J	**B1428**	**PA2073**	**N/R**	**BF856**	**N/R**	**18155**
	V8-454 (7.4L) EFI	N	**B1428**	**PA2008**	**N/R**	**BF853**	**N/R**	**18155**
	V8-454 (7.4L) 4 Bbl.	W	**B1428**	**PA2091**	**N/R**	**PF894,-RV**	**SA2027**	**18155**
1988	Astro Van 4-151 (2.5L) EFI	E	**B43-S**	**PA2109**	**N/R**	**BF853**	**SA4315**	**18155**
	V6-262 (4.3L) EFI	Z	**B35-S**	**PA2106**	**N/R**	**BF853**	**N/R**	**18155**
	Beretta, Corsica 4-2000cc (2.0L) EFI	1	**B35-S**	**PA2138**	**N/R**	**BF853**	**N/R**	**19593**
	V6-173 (2.8L) MFI	W	**B43-S**	**PA2153**	**N/R**	**BF853**	**N/R**	**19593**
	Blazer, Pickups, R, V Series, Suburban, R, V Series 6-292 (4.8L) 1 Bbl.	T	**B27**	**PA648**	**N/R**	**PF894,-RV**	**SA2027**	3 Spd. **6020**
	V8-350 (5.7L) EFI	K	**B1428**	**PA2008**	**N/R**	**BF853**	**N/R**	3 Spd. **6020** 4 Spd. **18155**
	V8-350 (5.7L) 4 Bbl.	M	**B1428**	**PA2091**	**N/R**	**PF894,-RV**	**SA2027**	TH400 **6020**
	V8-379 (6.2L) Diesel	C,J	**B1428**	**PA2073**	**N/R**	**BF856**	**N/R**	TH400 **6020**
	V8-454 (7.4L) EFI	N	**B1428**	**PA2008**	**N/R**	**BF853**	**N/R**	TH400 **6020**
	V8-454 (7.4L) 4 Bbl.	W	**B1428**	**PA2091**	**N/R**	**PF894,-RV**	**SA2027**	TH400 **6020**
	Camaro V6-173 (2.8L) MFI	S	**B43-S**	**[2] PA2143**	**N/R**	**BF853**	**SA2046**	**18155**
	V8-305 (5.0L) EFI	E	**B27**	**PA2006**	**N/R**	**BF853**	**SA2027 SA2046**	**18155**
	V8-305 (5.0L) TPI	F	**B27**	**[2] PA2143**	**N/R**	**BF853**	**SA2046**	**18155**
	V8-350 (5.7L) TPI	8	**B27**	**[2] PA2143**	**N/R**	**BF853**	**N/R**	**18155**
	Caprice V6-262 (4.3L) EFI	Z	**B35-S**	**PA2006**	**N/R**	**BF853**	**SA2027 SA2046**	TH700-R4 **18155**
	V8-305 (5.0L) 4 Bbl.	H	**B27**	**PA2008**	**N/R**	**PF894,-RV**	**SA2027 SA2046**	TH700-R4 **18155**
	V8-307 (5.0L) 4 Bbl.	Y	**B30**	**PA2008**	**N/R**	**PF894,-RV**	**SA2027 SA2046**	TH700-R4 **18155**
	V8-350 (5.7L) 4 Bbl.	6	**B27**	**PA2008**	**N/R**	**PF894,-RV**	**SA2027 SA2046**	TH700-R4 **18155**
	Cavalier 4-2000cc (2.0L) EFI	1	**B35-S**	**PA2138**	**N/R**	**BF853**	**N/R**	**19593**
	V6-173 (2.8L) MFI	W	**B43-S**	**PA2162**	**N/R**	**BF853**	**N/R**	**19593**
	Cavalier Z24 V6-173 (2.8L) MFI	W	**B43-S**	**PA2136**	**N/R**	**BF853**	**N/R**	**19593**
	Celebrity 4-151 (2.5L) EFI	R	**P140**	**PA2109**	**N/R**	**BF853**	**SA4315 SA2046**	**19593**
	V6-173 (2.8L) MFI	W	**B43-S**	**PA2162**	**N/R**	**BF853**	**N/R**	3 Spd. **19593** 4 Spd. **18139**
	Corvette V8-350 (5.7L) TPI	8	**B27**	**PA2178**	**N/R**	**BF853**	**N/R**	**18155**

OBS = Obsolete. Availability Limited to Distributor Stock. † Transmission, Not Model, Determines Which Transmission Filter is Used.

CHEVROLET Cont'd.

Year	Model and Engine	VIN	Lube	Air	Cabin Air	Fuel	Breather	Trans.[t]
1988	LLV 4-151 (2.5L) FI	E	**B43-S**	**PA2109**	**N/R**	**BF853**	**SA4315**	
	Monte Carlo V6-262 (4.3L) EFI	Z	**B35-S**	**PA2006**	**N/R**	**BF853**	**SA2027** **SA2046**	
	V8-305 (5.0L) 4 Bbl. or HO	G,H	**B27**	**PA2008**	**N/R**	**PF894,-RV**	**SA2027** **SA2046**	
	Nova 4-1600cc (1.6L) 2 Bbl.	4	**B131**	**PA2124**	**N/R**	**BF7807**	**N/R**	**18163**
	4-1600cc (1.6L) MFI	5	**B37**	**PA2169**	**N/R**	**BF1156**	**N/R**	**18163**
	Pickups, C, K Series V6-262 (4.3L) EFI	Z	**B35-S**	**PA1680**	**N/R**	**BF853**	**SA2027** **SA2046**	**18155**
	V8-305 (5.0L) EFI	H	2WD **B1428** 4WD **B35-S**	**PA2008**	**N/R**	**BF853**	**SA2027** **SA2046**	3 Spd. **6020** 4 Spd. **18155**
	V8-350 (5.7L) EFI	K	2WD **B1428** 4WD **B35-S**	**PA2008**	**N/R**	**BF853**	**SA2027** **SA2046**	3 Spd. **6020** 4 Spd. **18155**
	V8-379 (6.2L) Diesel	C,J	**B1428**	**PA2073**	**N/R**	**BF856**	**N/R**	3 Spd. **6020** 4 Spd. **18155**
	V8-454 (7.4L) EFI	N	**B1428**	**PA2008**	**N/R**	**BF853**	**SA2027**	TH400 **6020**
	S10, T10 Pickups, Blazer 4-151 (2.5L) EFI	E	**B43-S**	**PA2109**	**N/R**	**BF853**	**SA4315**	**18155**
	V6-173 (2.8L) EFI	R	**B35-S**	**PA2106**	**N/R**	**BF868**	**N/R**	**18155**
	V6-262 (4.3L) EFI	Z	**B35-S**	**PA2106**	**N/R**	**BF853**	**N/R**	**18155**
	Spectrum 4-1500cc (1.5L) 2 Bbl.	7	**B227**		**N/R**	**BF805**	**N/R**	3 Spd. **18163** 4 Spd. **18013**
	4-1500cc (1.5L) MFI Turbo	9	**B227**	**PA4058**	**N/R**		**N/R**	3 Spd. **18163** 4 Spd. **18013**
	Sprint 3-1000cc (1.0L) MFI Turbo	2	**BT223**	**PA4026**	**N/R**	**BF1100**	**N/R**	3 Spd. **18163** 4 Spd. **18013**
	3-1000cc (1.0L) 2 Bbl.	5	**BT223**	**PA2216**	**N/R**	**BF933**	**N/R**	
	Vans, G, P Series V6-262 (4.3L) FI	Z	**B35-S**	**PA1680**	**N/R**	**BF853**	**SA2027**	TH400 **6020**
	V8-305 (5.0L) EFI	H	**B1428**	**PA1680**	**N/R**	**BF853**	**SA2027**	TH400 **6020**
	V8-350 (5.7L) EFI	K	**B1428**	**PA1680**	**N/R**	**BF853**	**SA2027**	TH400 **6020**
	V8-350 (5.7L) 4 Bbl.	M	**B1428**	G Series **PA1680** P Series **PA2091**	**N/R**	**PF894-RV**	**SA2027**	TH400 **6020**
	V8-379 (6.2L) Diesel	C,J	**B1428**	**PA2073**	**N/R**	**BF856**	**N/R**	3 Spd. **6020** 4 Spd. **18155**
	V8-454 (7.4L) EFI	N	**B1428**	**PA2008**	**N/R**	**BF853**	**N/R**	TH400 **6020**
1987	Astro Van 4-151 (2.5L) FI	E	**B43-S**	**PA2109**	**N/R**	**BF853**	**SA4315** **SA2046**	**18155**
	V6-262 (4.3L) FI	Z	**B35-S**	**PA2106**	**N/R**	**BF853**	**SA2027**	**18155**
	Beretta, Corsica 4-2000cc (2.0L) FI	1	**B35-S**	**PA2138**	**N/R**	**BF853**	**N/R**	**19593**
	V6-173 (2.8L) FI	W	**B43-S**	**PA2153**	**N/R**	**BF853**	**N/R**	**19593**
	Blazer, Pickups, R, V Series, Suburban, R, V Series V6-262 (4.3L) FI	Z	**B35-S**	**PA1680**	**N/R**	**BF853**	**SA2027**	TH400 **6020** TH700-R4 **18155**
	V8-305 (5.0L) FI	H	**B1428**	**PA2008**	**N/R**	**BF853**	**SA2027**	TH400 **6020** TH700-R4 **18155**
	V8-350 (5.7L) FI	K	**B1428**	**PA2008**	**N/R**	**BF853**	**SA2027**	TH400 **6020** TH700-R4 **18155**
	V8-379 (6.2L) Diesel	C,J	**B1428**	**PA2073**	**N/R**	**BF856**	**N/R**	TH400 **6020** TH700-R4 **18155**
	V8-454 (7.4L) FI	N	**B1428**	**PA2008**	**N/R**	**BF853**	**SA2027**	**6020**
	Camaro V6-173 (2.8L) FI	S	**B43-S**	**[2] PA2143**	**N/R**	**BF853**	**SA2046**	**18155**
	V8-305 (5.0L) FI	F	**B27**	**[2] PA2143**	**N/R**	**BF853**	**N/R**	**18155**
	V8-305 (5.0L) 4 Bbl.	H	**B27**	**PA2006**	**N/R**	**PF894,-RV**	**SA2027** **SA2046**	**18155**
	V8-350 (5.7L) FI	8	**B27**	**[2] PA2143**	**N/R**	**BF853**	**SA2027**	**18155**
	Caprice V6-262 (4.3L) FI	Z	**B35-S**	**PA2006**	**N/R**	**BF853**	**SA2027** **SA2046**	TH700-R4 **18155**
	V8-305 (5.0L) 4 Bbl.	H	**B27**	**PA2008**	**N/R**	**PF894,-RV**	**SA2027** **SA2046**	TH700-R4 **18155**
	V8-307 (5.0L) 4 Bbl.	Y	**B30**	**PA2008**	**N/R**	**PF894,-RV**	**N/R**	TH700-R4 **18155**
	V8-350 (5.7L) 4 Bbl.	6	**B27**	**PA2008**	**N/R**	**PF894,-RV**	**SA2027**	
	Cavalier 4-2000cc (2.0L) FI	1	**B35-S**	**PA2138**	**N/R**	**BF853**	**N/R**	**19593**
	V6-173 (2.8L) FI	W	**B43-S**	w/Fiberglass Hood **PA2136** w/Steel Hood **PA2162**	**N/R**	**BF853**	**N/R**	**19593**
	Celebrity 4-151 (2.5L) FI	R	**B43-S**	**PA2109**	**N/R**	**BF853**	**SA2046**	TH125C **19593**
	V6-173 (2.8L) FI	W	**B43-S**	**PA2162**	**N/R**	**BF853**	**N/R**	3 Spd. **19593** 4 Spd. **18139**

[t] Transmission, Not Model, Determines Which Transmission Filter is Used. OBS = Obsolete. Availability Limited to Distributor Stock.

CHEVROLET Cont'd.

Year	Model and Engine	VIN	Lube	Air	Cabin Air	Fuel	Breather	Trans.[t]
1987	Chevette 4-1600cc (1.6L) 2 Bbl.	C	**B43-S**	**PA2077**	**N/R**	**PF894,-RV**	**N/R**	
	Corvette V8-350 (5.7L) FI	8	**B27**	**PA2178**	**N/R**	**BF853**	**N/R**	**18155**
	El Camino V6-262 (4.3L) FI	Z	**B35-S**	**PA2006**	**N/R**	**BF853**	**SA2027** **SA2046**	
	V8-305 (5.0L) 4 Bbl.	G,H	**B27**	**PA2008**	**N/R**	**PF894,-RV**	**SA2027** **SA2046**	
	LLV 4-151 (2.5L) FI	E	**B43-S**	**PA2109**	**N/R**	**BF853**	**SA4315**	
	Monte Carlo V6-231 (3.8L) Carb Canada	A	**B43-S**	**PA1680**	**N/R**	**PF894,-RV**	**N/R**	
	V6-262 (4.3L) FI	Z	**B35-S**	**PA2006**	**N/R**	**BF853**	**SA2027** **SA2046**	
	V8-305 (5.0L) 4 Bbl.	G,H	**B27**	**PA2008**	**N/R**	**PF894,-RV**	**SA2027** **SA2046**	
	Nova 4-1600cc (1.6L) 2 Bbl.	4	**B131**	**PA2124**	**N/R**	**BF7807**	**N/R**	**18163**
	S10, T10 Pickups, Blazer 4-151 (2.5L) FI	E	**B43-S**	**PA2109**	**N/R**	**BF853**	**SA4315**	**18155**
	V6-173 (2.8L) FI	R	2WD **B35-S** 4WD **B43-S**	**PA2106**	**N/R**	**BF868**	**SA2027** **SA2046**	**18155**
	Spectrum 4-1500cc (1.5L) 2 Bbl.	7	**B227**		**N/R**	**BF805**	**N/R**	3 Spd. **18163** 4 Spd. **18013**
	4-1500cc (1.5L) FI Turbo	9	**B227**	**PA4058**	**N/R**		**N/R**	3 Spd. **18163** 4 Spd. **18013**
	Sprint 3-1000cc (1.0L) FI Turbo	2	**BT223**	**PA4026**	**N/R**	**BF1100**	**N/R**	3 Spd. **18163** 4 Spd. **18013**
	3-1000cc (1.0L) 2 Bbl.	5	**BT223**	**PA2216**	**N/R**	**BF933**	**N/R**	
	Vans, G, P Series V6-262 (4.3L) 4 Bbl.	Z	**B35-S**	**PA1680**	**N/R**	**BF853**	**SA2027** **SA2046**	TH400 **6020** TH700-R4 **18155**
	6-292 (4.8L) 1 Bbl.	T	**B27**	**PA648**	**N/R**	**PF893,-RV**	**SA2027**	**6020**
	V8-305 (5.0L) FI	H	**B1428**	**PA1680**	**N/R**	**BF853**	**SA2027** **SA2046**	TH400 **6020** TH700-R4 **18155**
	V8-350 (5.7L) FI	K	**B1428**	**PA1680**	**N/R**	**BF853**	**SA2027**	TH400 **6020** TH700-R4 **18155**
	V8-350 (5.7L) 4 Bbl.	M	**B1428**	**PA1680** Air Pump Ele. **PA4094**	**N/R**	**PF894,-RV**	**SA2027** **SA2046**	TH400 **6020** TH700-R4 **18155**
	V8-379 (6.2L) Diesel	C,J	**B1428**	**PA2073**	**N/R**	**BF856**	**N/R**	TH400 **6020** TH700-R4 **18155**
	V8-454 (7.4L) 4 Bbl.	W	**B1428**	**PA2008**	**N/R**	**PF894,-RV**	**SA2027**	TH400 **6020**
1986	Astro Van 4-151 (2.5L) FI	E	**B43-S**	**PA2109**	**N/R**	**BF853**	**SA2046**	**18155**
	V6-262 (4.3L) FI	Z	**B35-S**	**PA2106**	**N/R**	**BF853**	**SA2027** **SA2046**	**18155**
	Blazer, Pickups, C, K Series, Suburban, C, K Series V6-262 (4.3L) 4 Bbl.	N	**B35-S**	**PA1680**	**N/R**	**PF894,-RV**	**SA2027** **SA2046**	TH400 **6020** TH700-R4 **18155**
	6-292 (4.8L) 1 Bbl.	T	**B27**	**PA648** Air Pump Ele. **PA4094**	**N/R**	**PF893,-RV**	**SA2027** **SA2046**	3 Spd. **6020** 4 Spd. **18155**
	V8-305 (5.0L) 4 Bbl.	F,H	**B1428**	3 15/32 In. **PA2008** 5 7/16 In. **PA2091**	**N/R**	**PF894,-RV**	**SA2027** **SA2046**	TH350C **6021** TH400 **6020** TH700-R4 **18155**
	V8-350 (5.7L) 4 Bbl.	L,M	**B1428**	**PA2091**	**N/R**	**PF894,-RV**	**SA2027** **SA2046**	TH400 **6020** TH700-R4 **18155**
	V8-379 (6.2L) Diesel	C,J	**B1428**	**PA2073**	**N/R**	**BF856**	**N/R**	TH400 **6020** TH700-R4 **18155**
	V8-454 (7.4L) 4 Bbl.	W	**B1428**	**PA2091**	**N/R**	**PF894,-RV**	**SA2027** **SA2046**	TH400 **6020**
	Camaro 4-151 (2.5L) FI	2	**B43-S**	**PA2109**	**N/R**	**BF853**	**SA2046**	**18155**
	V6-173 (2.8L) FI	S	**B43-S**	**[2] PA2143**	**N/R**	**BF853**	**SA2046**	**18155**
	V8-305 (5.0L) FI	F	**B27**	**[2] PA2143**	**N/R**	**BF853**	**N/R**	**18155**
	V8-305 (5.0L) 4 Bbl.	G,H	**B27**	**PA2006**	**N/R**	**PF894,-RV**	**SA2027** **SA2046**	**18155**
	Caprice V6-262 (4.3L) FI	Z	**B35-S**	**PA2006**	**N/R**	**BF853**	**SA2027** **SA2046**	TH700-R4 **18155**
	V8-305 (5.0L) 4 Bbl.	H	**B27**	**PA2008**	**N/R**	**PF894,-RV**	**SA2027** **SA2046**	TH700-R4 **18155**
	V8-307 (5.0L) 4 Bbl.	Y	**B30**	**PA2008**	**N/R**	**PF894,-RV**	**SA2027**	TH700-R4 **18155**
	V8-350 (5.7L) 4 Bbl.	6	**B27**	**PA2008**	**N/R**	**PF894,-RV**	**SA2027**	
	Cavalier 4-2000cc (2.0L) FI	P	**B35-S**	**PA2109**	**N/R**	**BF853**	**N/R**	**19593**
	V6-173 (2.8L) FI	W	**B43-S**	**PA2134**	**N/R**	**BF853**	**N/R**	**19593**
	Celebrity 4-151 (2.5L) FI	R	**B43-S**	**PA2109**	**N/R**	**BF853**	**SA2046**	TH125C **19593**

OBS = Obsolete. Availability Limited to Distributor Stock. [t] Transmission, Not Model, Determines Which Transmission Filter is Used.

CHEVROLET Cont'd.

Year	Model and Engine	VIN	Lube	Air	Cabin Air	Fuel	Breather	Trans.[t]
1986	Celebrity V6-173 (2.8L) FI	W	**B43-S**	**PA2134**	**N/R**	**BF868**	**N/R**	TH125C **19593** TH440-T4 **18139**
	V6-173 (2.8L) 2 Bbl.	X	**B43-S**	**PA2076**	**N/R**	**PF894,-RV**	**SA2046**	TH125C **19593** TH440-T4 **18139**
	Chevette 4-1600cc (1.6L) 2 Bbl.	C	**B43-S**	**PA2077**	**N/R**	**PF894,-RV**	**N/R**	
	4-1800cc (1.8L) Diesel	D	**B109**		**N/R**	**BF7534**	**N/R**	
	Corvette V8-350 (5.7L) FI	8	**B27**	**PA2178**	**N/R**	**BF853**	**N/R**	**18155**
	El Camino V6-262 (4.3L) FI	Z	**B35-S**	**PA2006**	**N/R**	**BF853**	**SA2027**	**18155**
	V8-305 (5.0L) 4 Bbl.	G,H	**B27**	**PA2008**	**N/R**	**PF894,-RV**	**SA2027**	TH700-R4 **18155**
	Monte Carlo V6-231 (3.8L) 2 Bbl.	A	**B43-S**	**PA1680**	**N/R**	**PF894,-RV**	**SA2027**	
	V6-262 (4.3L) FI	Z	**B35-S**	**PA2006**	**N/R**	**BF853**	**SA2027** **SA2046**	TH700-R4 **18155**
	V8-305 (5.0L) 4 Bbl.	G,H	**B27**	**PA2008**	**N/R**	**PF894,-RV**	**SA2027** **SA2046**	TH700-R4 **18155**
	Nova 4-1600cc (1.6L) 2 Bbl.	4	**B131**	**PA2124**	**N/R**	**BF7807**	**N/R**	**18163**
	S10, T10 Pickups, Blazer 4-151 (2.5L) FI	E	**B43-S**	**PA2109**	**N/R**	**BF853**	**N/R**	Blazer **18155**
	V6-173 (2.8L) FI	R	2WD **B35-S** 4WD **B43-S**	**PA2106**	**N/R**	**BF868**	**N/R**	**18155**
	Spectrum 4-1500cc (1.5L) 2 Bbl.	7,K	**B227**		**N/R**	**BF805**	**N/R**	3 Spd. **18163** 4 Spd. **18013**
	Sprint 3-1000cc (1.0L) 2 Bbl.	M	**BT223**		**N/R**	**BF933**	**N/R**	
	Vans, G, P Series V6-262 (4.3L) 4 Bbl.	N	**B35-S**	**PA1680**	**N/R**	**PF894,-RV**	**SA2027** **SA2046**	TH400 **6020** TH700-R4 **18155**
	V8-305 (5.0L) 4 Bbl.	F,H	**B1428**	**PA1680**	**N/R**	**PF894,-RV**	**SA2027** **SA2046**	TH350C **6021** TH400 **6020** TH700-R4 **18155**
	V8-350 (5.7L) 4 Bbl.	L,M	**B1428**	**PA1680** Air Pump Ele. **PA4094**	**N/R**	**PF894,-RV**	**SA2027** **SA2046**	TH700-R4 **18155**
	V8-379 (6.2L) Diesel	C,J	**B1428**	**PA2073**	**N/R**	**BF856**	**N/R**	TH400 **6020** TH700-R4 **18155**
	V8-454 (7.4L) 4 Bbl.	W	**B1428**	**PA2091**	**N/R**	**PF894,-RV**	**SA2027**	TH400 **6020**
1985	Astro Van 4-151 (2.5L) FI	E	**B43-S**	**PA2109**	**N/R**	**BF853**	**SA2046**	TH700-R4 **18155**
	V6-262 (4.3L) 4 Bbl.	N	**B35-S**	**PA2106**	**N/R**	**PF894,-RV**	**SA2027** **SA2046**	TH700-R4 **18155**
	Blazer, Pickups, C, K Series, Suburban, C, K Series V6-262 (4.3L) 4 Bbl.	N	**B35-S**	**PA1680**	**N/R**	**PF894,-RV**	**SA2027** **SA2046**	TH400 **6020** TH700-R4 **18155**
	6-292 (4.8L) 1 Bbl.	T	**B27**	**PA648** Air Pump Ele. **PA4094**	**N/R**	**PF893,-RV**	**SA2027** **SA2046**	TH400 **6020** TH700-R4 **18155**
	V8-305 (5.0L) 4 Bbl.	F,H	**B6**	3 15/32 In. **PA2008** 5 7/16 In. **PA2091**	**N/R**	**PF894,-RV**	**SA2027** **SA2046**	TH400 **6020** TH700-R4 **18155**
	V8-350 (5.7L) 4 Bbl.	L,M	**B6**	3 15/32 In. **PA2008** 5 7/16 In. **PA2091**	**N/R**	**PF894,-RV**	**SA2027** **SA2046**	TH400 **6020** TH700-R4 **18155**
	V8-379 (6.2L) Diesel	C,J	**B6**	**PA2073**	**N/R**	**BF856**	**N/R**	TH400 **6020** TH700-R4 **18155**
	V8-454 (7.4L) 4 Bbl.	W	**B6**	**PA2008**[17] **PA2091**[31]	**N/R**	**PF894,-RV**	**SA2027** **SA2046**	TH400 **6020**
	Camaro 4-151 (2.5L) FI	2	**B43-S**	**PA2109**	**N/R**	**BF853**	**SA2046**	
	V6-173 (2.8L) FI	S	**B43-S**	**[2] PA2143**	**N/R**	**BF853**	**SA2046**	
	V8-305 (5.0L) FI	F	**B27**	**[2] PA2143**	**N/R**	**BF853**	**SA2039**	
	V8-305 (5.0L) 4 Bbl.	G,H	**B27**	**PA2006**	**N/R**	**PF894,-RV**	**SA2027** **SA2046**	
	Caprice, Impala V6-231 (3.8L) Carb Canada	A	**B43-S**	**PA1680**	**N/R**	**PF894,-RV**	**N/R**	
	V6-262 (4.3L) FI	Z	**B35-S**	**PA2006**	**N/R**	**BF853**	**SA2027** **SA2046**	
	V8-305 (5.0L) 4 Bbl.	H	**B27**	**PA2008**	**N/R**	**PF894,-RV**	**SA2027** **SA2046**	
	V8-350 (5.7L) 4 Bbl.	6	**B27**	**PA2008**	**N/R**	**PF894,-RV**	**SA2027** **SA2046**	
	V8-350 (5.7L) Diesel	N	**B30**	**PA2079**	**N/R**		**N/R**	
	Cavalier 4-2000cc (2.0L) FI	P	**B35-S**	**PA2109**	**N/R**	**BF853**	**N/R**	TH125,C **19593**
	V6-173 (2.8L) FI	W	**B43-S**	**PA2134**	**N/R**	**BF853**	**N/R**	TH125,C **19593**

[t] Transmission, Not Model, Determines Which Transmission Filter is Used. OBS = Obsolete. Availability Limited to Distributor Stock. [17] Exc. Calif.
[31] Calif.

CHEVROLET Cont'd.

Year	Model and Engine	VIN	Lube	Air	Cabin Air	Fuel	Breather	Trans.[t]
1985	Celebrity 4-151 (2.5L) FI	R	**B43-S**	**PA2109**	**N/R**	**BF853**	**N/R**	TH125,C **19593** TH440-T4 **18139**
	V6-173 (2.8L) FI	W	**B43-S**	**PA2134**	**N/R**	**BF868**	**N/R**	TH125,C **19593** TH440-T4 **18139**
	V6-173 (2.8L) 2 Bbl.	X	**B43-S**	**PA2076**	**N/R**	**PF894,-RV**	**N/R**	TH125,C **19593** TH440-T4 **18139**
	V6-262 (4.3L) Diesel	T	**B35-S**	**PA2110**	**N/R**		**N/R**	TH125,C **19593** TH440-T4 **18139**
	Chevette 4-1600cc (1.6L) 2 Bbl.	C	**B43-S**	**PA2077**	**N/R**	**PF894,-RV**	**N/R**	
	4-1800cc (1.8L) Diesel	D	**B109**		**N/R**	**BF7534**	**N/R**	
	Citation II 4-151 (2.5L) FI	R	**B43-S**	**PA2109**	**N/R**	**BF853**	**N/R**	TH125,C **19593**
	V6-173 (2.8L) FI	W	**B43-S**	**PA2134**	**N/R**	**BF868**	**N/R**	TH125,C **19593**
	V6-173 (2.8L) 2 Bbl.	X	**B43-S**	**PA2076**	**N/R**	**PF894,-RV**	**N/R**	TH125,C **19593**
	Corvette V8-350 (5.7L) FI	8	**B27**	**PA2178**	**N/R**	**BF853**	**N/R**	THM700-R4 **18155**
	El Camino V6-262 (4.3L) FI	Z	**B35-S**	**PA2006**	**N/R**	**BF853**	**SA2027** **SA2046**	
	V8-305 (5.0L) 4 Bbl.	G,H	**B27**	**PA2008**	**N/R**	**PF894,-RV**	**SA2027** **SA2046**	
	Monte Carlo V6-231 (3.8L) Carb Canada	A	**B43-S**	**PA1680**	**N/R**	**PF894,-RV**	**N/R**	
	V6-262 (4.3L) FI	Z	**B35-S**	**PA2006**	**N/R**	**BF853**	**SA2027** **SA2046**	
	V8-305 (5.0L) 4 Bbl.	G,H	**B27**	**PA2008**	**N/R**	**PF894,-RV**	**SA2027** **SA2046**	
	Nova 4-1600cc (1.6L) 2 Bbl.	4	**B131**	**PA2124**	**N/R**	**BF7807**	**N/R**	**18163**
	S10, T10 Pickups, Blazer 4-1900cc (1.9L) 2 Bbl.	A	**B141**	**PA1657**	**N/R**	**BF881**	**N/R**	TH700-R4 **18155**
	4-2200cc (2.2L) Diesel	S	**BD142**	**PA1657**	**N/R**	**BF7534**	**N/R**	**18155**
	4-151 (2.5L) FI	E	**B43-S**	**PA2109**	**N/R**	**BF853**	**SA2046**	TH700-R4 **18155**
	V6-173 (2.8L) 2 Bbl.	B	**B43-S**	**PA2113**	**N/R**	**PF894,-RV**	**SA2046**	TH700-R4 **18155**
	Spectrum 4-1500cc (1.5L) 2 Bbl.	K	**B227**		**N/R**	**BF805**	**N/R**	3 Spd. **18163** 4 Spd. **18013**
	Sprint 3-1000cc (1.0L) 2 Bbl.	M	**BT223**		**N/R**	**BF933**	**N/R**	
	Vans, G, P Series V6-262 (4.3L) 4 Bbl.	N	**B35-S**	**PA1680**	**N/R**	**PF894,-RV**	**SA2027** **SA2046**	TH400 **6020** TH700-R4 **18155**
	V8-305 (5.0L) 4 Bbl.	F,H	**B6**	**PA1680**	**N/R**	**PF894,-RV**	**SA2027** **SA2046**	TH400 **6020** TH700-R4 **18155**
	V8-350 (5.7L) 4 Bbl.	L,M	**B6**	**PA1680** Air Pump Ele. **PA4094**	**N/R**	**PF894,-RV**	**SA2027** **SA2046**	TH400 **6020** TH700-R4 **18155**
	V8-379 (6.2L) Diesel	C,J	**B6**	**PA2073**	**N/R**	**BF856**	**N/R**	TH400 **6020** TH700-R4 **18155**
	V8-454 (7.4L) 4 Bbl.	W	**B6**	**PA2008**[17] **PA2091**[31]	**N/R**	**PF894,-RV**	**SA2027**	TH400 **6020**
1984	Blazer, Pickups, C, K Series, Suburban, C, K Series 6-250 (4.1L) 2 Bbl.	D	**B27**	**PA2077**	**N/R**	**PF894,-RV**	**SA2046**	TH350C **6021** TH700-R4 **18155**
	6-292 (4.8L) 1 Bbl.	T	**B27**	**PA648**	**N/R**	**PF893,-RV**	**SA2027** **SA2046**	TH400 **6020**
	V8-305 (5.0L) 4 Bbl.	F,H	**B6**	**PA2008**[17] **PA2091**[31]	**N/R**	**PF894,-RV**	**SA2027** **SA2046**	TH350C **6021** TH700-R4 **18155**
	V8-350 (5.7L) 4 Bbl.	L,M	**B6**	**PA2008**[17] **PA2091**[31]	**N/R**	**PF894,-RV**	**SA2027** **SA2046**	TH400 **6020** TH700-R4 **18155**
	V8-379 (6.2L) Diesel	C,J	**B6**	**PA2073**	**N/R**	**BF856**	**N/R**	TH400 **6020** TH700-R4 **18155**
	V8-454 (7.4L) 4 Bbl.	W	**B6**	**PA2008**[17] **PA2091**[31]	**N/R**	**PF894,-RV**	**SA2027** **SA2046**	TH400 **6020** TH700-R4 **18155**
	Camaro 4-151 (2.5L) FI	2	**B43-S**	**PA2109**	**N/R**	**BF853**	**SA2046**	
	V6-173 (2.8L) 2 Bbl.	1	**B43-S**	**PA2077**	**N/R**	**PF894,-RV**	**SA2046**	
	V8-305 (5.0L) 4 Bbl.	G,H	**B27**	**PA2006**	**N/R**	**PF894,-RV**	**SA2027** **SA2046**	
	Caprice, Impala V6-229 (3.8L) 2 Bbl.	9	**B35-S**	**PA2106**	**N/R**	**PF894,-RV**	**SA2027** **SA2046**	TH700-R4 **18155**
	V6-231 (3.8L) 2 Bbl.	A	**B43-S**	**PA1680**	**N/R**	**PF894,-RV**	**SA2046**	
	V8-305 (5.0L) 4 Bbl.	H	**B27**	**PA2008**	**N/R**	**PF894,-RV**	**SA2027** **SA2046**	TH250 **6021** TH700-R4 **18155**
	V8-350 (5.7L) 4 Bbl.	6	**B27**	**PA2008**	**N/R**	**PF894,-RV**	**SA2027** **SA2046**	
	V8-350 (5.7L) Diesel	N	**B30**	**PA2079**	**N/R**	**BF806**	**N/R**	

[17] Exc. Calif. OBS = Obsolete. Availability Limited to Distributor Stock. [t] Transmission, Not Model, Determines Which Transmission Filter is Used. [31] Calif.

CHEVROLET Cont'd.

Year	Model and Engine	VIN	Lube	Air	Cabin Air	Fuel	Breather	Trans.[t]
1984	Cavalier 4-2000cc (2.0L) FI	P	**B35-S**	**PA2109**	**N/R**	**BF853**	**SA2046**	TH125,C **19593**
	Celebrity 4-151 (2.5L) FI	R	**B43-S**	**PA2109**	**N/R**	**BF868**	**N/R**	TH125,C **19593** TH440-T4 **18139**
	V6-173 (2.8L) 2 Bbl.	X,Z	**B43-S**	**PA2076**	**N/R**	**PF894,-RV**	**N/R**	TH125,C **19593** TH440-T4 **18139**
	V6-262 (4.3L) Diesel	T	**B35-S**	**PA2110**	**N/R**	**BF806**	**N/R**	TH125,C **19593** TH440-T4 **18139**
	Chevette 4-1600cc (1.6L) 2 Bbl.	C	**B43-S**	**PA2077**	**N/R**	**PF894,-RV**	**N/R**	
	4-1800cc (1.8L) Diesel	D	**B109**		**N/R**	**BF7534**	**N/R**	
	Citation II 4-151 (2.5L) FI	R	**B43-S**	**PA2109**	**N/R**	**BF868**	**N/R**	TH125,C **19593**
	V6-173 (2.8L) 2 Bbl.	X,Z	**B43-S**	**PA2076**	**N/R**	**PF894,-RV**	**N/R**	TH125,C **19593**
	Corvette V8-350 (5.7L) FI	8	**B27**		**N/R**		**SA2046**	TH700-R4 **18155**
	El Camino V6-229 (3.8L) 2 Bbl.	9	**B35-S**	**PA2106**	**N/R**	**PF894,-RV**	**SA2027** **SA2046**	TH250 **6021**
	V6-231 (3.8L) 2 Bbl.	A	**B43-S**	**PA1680**	**N/R**	**PF894,-RV**	**SA2046**	
	V8-305 (5.0L) 4 Bbl.	G,H	**B27**	**PA2008**	**N/R**	**PF894,-RV**	**SA2027** **SA2046**	TH700-R4 **18155**
	V8-350 (5.7L) Diesel	N	**B30**	**PA2079**	**N/R**	**BF806**	**N/R**	
	Monte Carlo V6-229 (3.8L) 2 Bbl.	9	**B35-S**	**PA2106**	**N/R**	**PF894,-RV**	**SA2027** **SA2046**	TH250 **6021**
	V6-231 (3.8L) 2 Bbl.	A	**B43-S**	**PA1680**	**N/R**	**PF894,-RV**	**SA2046**	
	V8-305 (5.0L) 4 Bbl.	G,H	**B27**	**PA2008**	**N/R**	**PF894,-RV**	**SA2027** **SA2046**	TH250 **6021** TH700-R4 **18155**
	V8-350 (5.7L) Diesel	N	**B30**	**PA2079**	**N/R**	**BF806**	**N/R**	
	S10, T10 Pickups, Blazer 4-1900cc (1.9L) 2 Bbl.	A	**B141**	**PA1657**	**N/R**	**BF881**	**N/R**	
	4-2000cc (2.0L) 2 Bbl.	Y	**B43-S**	**PA2113**	**N/R**	**PF894,-RV**	**N/R**	**18155**
	4-2200cc (2.2L) Diesel	S	**BD142**	**PA1657**	**N/R**	**BF7534**	**N/R**	TH700-R4 **18155**
	V6-173 (2.8L) 2 Bbl.	B	**B43-S**	**PA2113**	**N/R**	**PF894,-RV**	**SA2046**	**18155**
	Vans, G, P Series 6-250 (4.1L) 2 Bbl.	D	**B27**	**PA2077**	**N/R**	**PF894,-RV**	**SA2046**	TH350C **6021** TH700-R4 **18155**
	V8-305 (5.0L) 4 Bbl.	F,H	**B6**	**PA1680**	**N/R**	**PF894,-RV**	**SA2027** **SA2046**	TH350C **6021** TH700-R4 **18155**
	V8-350 (5.7L) 4 Bbl.	L,M	**B6**	**PA1680**	**N/R**	**PF894,-RV**	**SA2027** **SA2046**	TH350C **6021** TH700-R4 **18155**
	V8-379 (6.2L) Diesel	C,J	**B6**	**PA2073**	**N/R**	**BF856**	**N/R**	TH350C **6021** TH700-R4 **18155**
	V8-454 (7.4L) 4 Bbl.	W	**B6**	3 15/32 In. **PA2008** 5 7/16 In. **PA2091**	**N/R**	**PF894,-RV**	**SA2027**	TH400 **6020**
1983	Blazer, Pickups, C, K Series, Suburban, C, K Series 6-250 (4.1L) 2 Bbl.	D	**B27**	**PA2077**	**N/R**	**PF894,-RV**	**SA2046**	TH400 **6020** TH700-R4 **18155**
	6-292 (4.8L) 1 Bbl.	T	**B27**	**PA648**	**N/R**	**PF893,-RV**	**SA2027** **SA2046**	**6020**
	V8-305 (5.0L) 4 Bbl.	F,H	**B6**	3 9/16 In. **PA1680** 5 7/16 In. **PA2091**	**N/R**	**PF894,-RV**	**SA2027** **SA2046**	TH250 **6021** TH700-R4 **18155**
	V8-350 (5.7L) 4 Bbl.	L,M	**B6**	3 15/32 In. **PA2008** 5 7/16 In. **PA2091**	**N/R**	**PF894,-RV**	**SA2027** **SA2046**	TH400 **6020** TH700-R4 **18155**
	V8-379 (6.2L) Diesel	C,J	**B6**	**PA2073**	**N/R**	Pri. **BF781** Sec. **BF782**	**N/R**	TH400 **6020** TH700-R4 **18155**
	V8-454 (7.4L) 4 Bbl.	W	**B6**	3 15/32 In. **PA2008** 5 7/16 In. **PA2091**	**N/R**	**PF894,-RV**	**SA2027** **SA2046**	**6020**
	Camaro 4-151 (2.5L) FI	2	**B43-S**	**PA2109**	**N/R**	**BF868**	**SA2046**	
	V6-173 (2.8L) 2 Bbl.	1,Z	**B35-S**	**PA2077**	**N/R**	**PF894,-RV**	**SA2046**	
	V8-305 (5.0L) 4 Bbl.	H	**B27**	**PA2006**	**N/R**	**PF894,-RV**	**SA2027** **SA2046**	
	V8-305 (5.0L) FI	S	**B27**		**N/R**		**SA2046**	
	Caprice, Impala V6-229 (3.8L) 2 Bbl.	9	**B35-S**	**PA2106**	**N/R**	**PF894,-RV**	**SA2027** **SA2046**	TH250,C **6021**
	V6-231 (3.8L) 2 Bbl.	A	**B43-S**	**PA1680**	**N/R**	**PF894,-RV**	**SA2046**	TH250,C **6021** TH350,C **18031**
	V8-305 (5.0L) 4 Bbl.	H	**B27**	**PA2008**	**N/R**	**PF894,-RV**	**SA2027** **SA2046**	TH250,C **6021** TH350,C **18031** TH700-R4 **18155**

[t] Transmission, Not Model, Determines Which Transmission Filter is Used. OBS = Obsolete. Availability Limited to Distributor Stock.

CHEVROLET Cont'd.

Year	Model and Engine	VIN	Lube	Air	Cabin Air	Fuel	Breather	Trans.†
1983	Caprice, Impala V8-350 (5.7L) 4 Bbl.	6	**B27**	**PA2008**	**N/R**	**PF894,-RV**	**SA2027 SA2046**	TH250,C **6021**
	V8-350 (5.7L) Diesel	N	**B30**	**PA2079**	**N/R**	**BF806**	**N/R**	TH350,C **18031**
	Cavalier 4-2000cc (2.0L) FI	P	**B35-S**	**PA2109**	**N/R**	**BF853**	**SA2046**	TH125,C **19593**
	Celebrity 4-151 (2.5L) 2 Bbl. Canada	5	**B43-S**	**PA2082 OBS**	**N/R**	**PF893,-RV**		**19593**
	4-151 (2.5L) FI	R	**B43-S**	**PA2109**	**N/R**	**PF893,-RV**	**SA2046**	**19593**
	V6-173 (2.8L) 2 Bbl.	X	**B35-S**	**PA2076**	**N/R**	**PF894,-RV**	**SA2046**	**19593**
	V6-262 (4.3L) Diesel	T	**B35-S**	**PA2110**	**N/R**	**BF806**	**N/R**	**19593**
	Chevette 4-1600cc (1.6L) 2 Bbl.	C	**B43-S**	**PA2077**	**N/R**	**PF893,-RV**	**SA2046**	
	4-1800cc (1.8L) Diesel	D	**B109**		**N/R**	**BF7534**	**N/R**	
	Citation II 4-151 (2.5L) FI	R	**B43-S**	**PA2109**	**N/R**	**BF868**	**SA2046**	TH125,C **19593**
	V6-173 (2.8L) 2 Bbl.	X,Z	**B35-S**	**PA2076**	**N/R**	**PF894,-RV**	**SA2046**	TH125,C **19593**
	El Camino V6-229 (3.8L) 2 Bbl.	9	**B35-S**	**PA2106**	**N/R**	**PF894,-RV**	**SA2027 SA2046**	TH350,C **6021**
	V6-231 (3.8L) 2 Bbl.	A	**B43-S**	**PA1680**	**N/R**	**PF894,-RV**	**SA2046**	**6021**
	V8-305 (5.0L) 4 Bbl.	H	**B27**	**PA2008**	**N/R**	**PF894,-RV**	**SA2027 SA2046**	**6021**
	V8-350 (5.7L) Diesel	N	**B30**	**PA2079**	**N/R**	**BF806**	**N/R**	TH250,C **6021**
	Malibu, Monte Carlo V6-229 (3.8L) 2 Bbl.	9	**B35-S**	**PA2106**	**N/R**	**PF894,-RV**	**SA2027 SA2046**	TH250,C **6021**
	V6-231 (3.8L) 2 Bbl.	A	**B43-S**	**PA1680**	**N/R**	**PF894,-RV**	**SA2046**	TH250,C **6021**
	V6-262 (4.3L) Diesel	V	**B35-S**	**PA2079**	**N/R**	**BF806**	**N/R**	
	V8-305 (5.0L) 4 Bbl.	H	**B27**	**PA2008**	**N/R**	**PF894,-RV**	**SA2027 SA2046**	**6021**
	V8-350 (5.7L) Diesel	N	**B30**	**PA2079**	**N/R**	**BF806**	**N/R**	TH350,C **18031**
	S10, T10 Pickups, Blazer 4-1900cc (1.9L) 2 Bbl.	A	**B141**	**PA1657**	**N/R**	**BF881**	**N/R**	
	4-2000cc (2.0L) 2 Bbl.	Y	**B35-S**	**PA2113**	**N/R**	**PF894,-RV**	**N/R**	**18155**
	4-2200cc (2.2L) Diesel	S	**BD142**	**PA1657**	**N/R**	**BF7534**	**N/R**	4 Spd. **18155**
	V6-173 (2.8L) 2 Bbl.	B	**B43-S**	**PA2113**	**N/R**	**PF894,-RV**	**SA2046**	**18155**
	Vans, G, P Series 6-250 (4.1L) 2 Bbl.	D	**B27**	**PA2077**	**N/R**	**PF894,-RV**	**SA2046**	TH400 **6020** TH700-R4 **18155**
	6-292 (4.8L) 1 Bbl.	T	**B27**	**PA648**	**N/R**	**PF893,-RV**	**SA2027**	**6020**
	V8-305 (5.0L) 4 Bbl.	F,H	**B6**	3 9/16 In. **PA1680** 5 7/16 In. **PA2091**	**N/R**	**PF894,-RV**	**SA2027 SA2046**	**6020**
	V8-350 (5.7L) 4 Bbl.	L,M	**B6**	**PA1680**	**N/R**	**PF894,-RV**	**SA2027 SA2046**	TH250 **6021** TH700-R4 **18155**
	V8-379 (6.2L) Diesel	C,J	**B6**	**PA2073**	**N/R**	Pri. **BF592** Sec. **BF855**	**N/R**	**6020**
1982	Blazer, Pickups, C, K Series, Suburban, C, K Series 6-250 (4.1L) 2 Bbl.	D	**B27**	**PA2077**	**N/R**	**PF894,-RV**	**SA2046**	TH400 **6020** TH700-R4 **18155**
	6-292 (4.8L) 1 Bbl.	T	**B27**	**PA648**	**N/R**	**PF893,-RV**	**SA2027 SA2046**	**6020**
	V8-305 (5.0L) 4 Bbl.	F,H	**B6**	3 9/16 In. **PA1680** 5 7/16 In. **PA2091**	**N/R**	**PF894,-RV**	**SA2027 SA2046**	**6021**
	V8-350 (5.7L) 4 Bbl.	L,M	**B6**	3 15/32 In. **PA2008** 5 7/16 In. **PA2091**	**N/R**	**PF894,-RV**	**SA2027 SA2046**	TH400 **6020** TH700-R4 **18155**
	V8-379 (6.2L) Diesel	C,J	**B6**	**PA2073**	**N/R**	Pri. **BF781** Sec. **BF782**	**N/R**	TH400 **6020** TH700-R4 **18155**
	V8-454 (7.4L) 4 Bbl.	W	**B6**	3 15/32 In. **PA2008** 5 7/16 In. **PA2091**	**N/R**	**PF894,-RV**	**SA2027 SA2046**	**6020**
	Camaro 4-151 (2.5L) FI	2	**B43-S**	**PA2109**	**N/R**		**SA2046**	
	V6-173 (2.8L) 2 Bbl.	X	**B35-S**	**PA2077**	**N/R**	**PF894,-RV**	**SA2027 SA2046**	
	V8-305 (5.0L) FI	7	**B27**		**N/R**		**SA2046**	
	V8-305 (5.0L) 4 Bbl.	H	**B27**	**PA2006**	**N/R**	**PF894,-RV**	**SA2027 SA2046**	
	Caprice, Impala V6-229 (3.8L) 2 Bbl.	K	**B35-S**	**PA2106**	**N/R**	**PF893,-RV**	**SA2027 SA2046**	TH250,C **6021**
	V6-231 (3.8L) 2 Bbl.	A	**B43-S**	**PA1680**	**N/R**	**PF893,-RV**	**SA2046**	TH250,C **6021**
	V8-267 (4.4L) 2 Bbl.	J	**B27**	**PA2106**	**N/R**	**PF893,-RV**	**SA2027 SA2046**	TH250,C **6021**
	V8-305 (5.0L) 4 Bbl.	H	**B27**	**PA2008**	**N/R**	**PF894,-RV**	**SA2027 SA2046**	TH250,C **6021**

OBS = Obsolete. Availability Limited to Distributor Stock. † Transmission, Not Model, Determines Which Transmission Filter is Used.

CHEVROLET Cont'd.

Year	Model and Engine	VIN	Lube	Air	Cabin Air	Fuel	Breather	Trans.[t]
1982	Caprice, Impala V8-350 (5.7L) 4 Bbl.	L	**B27**	**PA2008**	**N/R**	**PF894,-RV**	**SA2027** **SA2046**	TH250,C **6021**
	V8-350 (5.7L) Diesel	N	**B30**	**PA2079**	**N/R**	**BF806**	**N/R**	TH250,C **6021** TH350,C **18031**
	Cavalier 4-1800cc (1.8L) 2 Bbl.	G	**B35-S**	**PA2112 OBS**	**N/R**	**PF894,-RV**	**N/R**	TH125,C **19593**
	Celebrity 4-151 (2.5L) 2 Bbl. Canada	5	**B43-S**	**PA2082 OBS**	**N/R**	**PF893,-RV**	**N/R**	**19593**
	4-151 (2.5L) FI	R	**B43-S**	**PA2109**	**N/R**		**SA2046**	TH125,C **19593**
	V6-173 (2.8L) 2 Bbl.	X	**B35-S**	**PA2076**	**N/R**	**PF894,-RV**	**SA4315** **SA2046**	TH125,C **19593**
	V6-262 (4.3L) Diesel	T	**B35-S**	**PA2110**	**N/R**	**BF806**	**N/R**	TH125,C **19593**
	Chevette 4-1600cc (1.6L) 2 Bbl.	C	**B43-S**	**PA2077**	**N/R**	**PF893,-RV**	**N/R**	
	4-1800cc (1.8L) Diesel	D	**B109**		**N/R**	**BF7534**	**N/R**	
	Citation 4-151 (2.5L) FI	R	**B43-S**	**PA2109**	**N/R**		**SA2046**	TH125,C **19593**
	V6-173 (2.8L) 2 Bbl.	X,Z	**B35-S**	**PA2076**	**N/R**	**PF894,-RV**	**SA4315** **SA2046**	TH125,C **19593**
	Corvette V8-350 (5.7L) FI	8	**B27**		**N/R**	**PF894,-RV**	**SA2046**	TH250,C **6021** TH700-R4 **18155**
	El Camino V6-229 (3.8L) 2 Bbl.	K	**B35-S**	**PA2106**	**N/R**	**PF893,-RV**	**SA2027** **SA2046**	TH250,C **6021**
	V6-231 (3.8L) 2 Bbl.	A	**B43-S**	**PA1680**	**N/R**	**PF893,-RV**	**SA2046**	**6021**
	V8-267 (4.4L) 2 Bbl.	J	**B27**	**PA2106**	**N/R**	**PF893,-RV**	**SA2027** **SA2046**	**6021**
	V8-305 (5.0L) 4 Bbl.	H	**B27**	**PA2008**	**N/R**	**PF894,-RV**	**SA2027** **SA2046**	**6021**
	LUV 4-1800cc (1.8L) 2 Bbl.	N	**B141**	**PA1657**	**N/R**	**BF840,-K1**	**N/R**	
	4-2200cc (2.2L) Diesel	S	**B1446**	**PA1657**	**N/R**	**BF7534**	**N/R**	
	Malibu, Monte Carlo V6-229 (3.8L) 2 Bbl.	K	**B35-S**	**PA2106**	**N/R**	**PF893,-RV**	**SA2027** **SA2046**	TH250,C **6021**
	V6-231 (3.8L) 2 Bbl.	A	**B43-S**	**PA1680**	**N/R**	**PF893,-RV**	**SA2046**	**6021**
	V6-262 (4.3L) Diesel	V	**B35-S**	**PA2079**	**N/R**	**BF806**	**N/R**	TH350,C **18031**
	V8-267 (4.4L) 2 Bbl.	J	**B27**	**PA2106**	**N/R**	**PF893,-RV**	**SA2027** **SA2046**	TH250 **6021**
	V8-305 (5.0L) 4 Bbl.	H	**B27**	**PA2008**	**N/R**	**PF894,-RV**	**SA2027** **SA2046**	**6021**
	V8-350 (5.7L) Diesel	N	**B30**	**PA2079**	**N/R**	**BF806**	**N/R**	**6021**
	S10, T10 Pickups, Blazer 4-1900cc (1.9L) 2 Bbl.	A	**B141**	**PA1657**	**N/R**	**BF881**	**N/R**	
	V6-173 (2.8L) 2 Bbl.	B	**B43-S**	**PA2113**	**N/R**	**PF894,-RV**	**SA2046**	**18155**
	Vans, G, P Series 6-250 (4.1L) 2 Bbl.	D	**B27**	**PA2077**	**N/R**	**PF894,-RV**	**SA2046**	TH400 **6020** TH700-R4 **18155**
	6-292 (4.8L) 1 Bbl.	T	**B27**	**PA648**	**N/R**	**PF893,-RV**	**SA2027**	**6020**
	V8-305 (5.0L) 4 Bbl.	F,H	**B6**	**PA1680**	**N/R**	**PF894,-RV**	**SA2027** **SA2046**	**6021**
	V8-350 (5.7L) 4 Bbl.	L,M	**B6**	**PA1680**	**N/R**	**PF894,-RV**	**SA2027** **SA2046**	**6020**
	V8-379 (6.2L) Diesel	C,J	**B6**	**PA2073**	**N/R**	Pri. **BF781** Sec. **BF782**	**N/R**	TH400 **6020** TH700-R4 **18155**
	V8-454 (7.4L) 4 Bbl.	W	**B6**	**PA2008**	**N/R**	**PF894,-RV**	**SA2027**	TH400 **6020**
1981	BelAir V8-267 (4.4L) Carb Canada	J	**B27**	**PA2106**	**N/R**	**PF894,-RV**	**SA2027**	3 Spd. **6021**
	V8-308 (5.0L) Carb Canada	H	**B27**	**PA2008**	**N/R**	**PF894,-RV**	**SA2027**	3 Spd. **6021**
	Blazer, Pickups, C, K Series, Suburban, C, K Series 6-250 (4.1L) 2 Bbl.	D	**B27**	**PA2077**	**N/R**	**PF894,-RV**	**SA2046**	**6020**
	6-292 (4.8L) 1 Bbl.	T	**B27**	**PA648**	**N/R**	**PF893,-RV**	**SA2027** **SA2046**	TH400 **6020**
	V8-305 (5.0L) 2 Bbl.	G	**B6**	**PA1680**	**N/R**	**PF894,-RV**	**SA2027** **SA2046**	**6021**
	V8-305 (5.0L) 4 Bbl.	F,H	**B6**	**PA2091**	**N/R**	**PF894,-RV**	**SA2027** **SA2046**	**6021**
	V8-350 (5.7L) 4 Bbl.	L,M	**B6**	3 15/32 In. **PA2008** 5 7/16 In. **PA2091**	**N/R**	**PF894,-RV**	**SA2027** **SA2046**	TH400 **6020**
	V8-350 (5.7L) Diesel	Z	**B30**	**PA2073**	**N/R**	**BF806**	**N/R**	**6021**
	V8-454 (7.4L) 4 Bbl.	W	**B6**	3 15/32 In. **PA2008** 5 7/16 In. **PA2091**	**N/R**	**PF894,-RV**	**SA2027** **SA2046**	TH400 **6020**
	Camaro V6-229 (3.8L) 2 Bbl.	K	**B35-S**	**PA2106**	**N/R**	**PF894,-RV**	**SA2027** **SA2046**	TH350,C **6021**

[t] Transmission, Not Model, Determines Which Transmission Filter is Used. OBS = Obsolete. Availability Limited to Distributor Stock.

CHEVROLET Cont'd.

Year	Model and Engine	VIN	Lube	Air	Cabin Air	Fuel	Breather	Trans.†
1981	Camaro V6-231 (3.8L) 2 Bbl.	A	**B43-S**	**PA2006**	**N/R**	**PF894,-RV**	**SA2027** **SA2046**	TH350,C **6021**
	V8-267 (4.4L) 2 Bbl.	J	**B27**	**PA2106**	**N/R**	**PF894,-RV**	**SA2027** **SA2046**	TH350,C **6021**
	V8-305 (5.0L) 4 Bbl.	H	**B27**	**PA2008**	**N/R**	**PF894,-RV**	**SA2027** **SA2046**	TH350,C **6021**
	V8-350 (5.7L) 4 Bbl.	L	**B27**	**PA2008**	**N/R**	**PF894,-RV**	**SA2027** **SA2046**	TH350,C **6021**
	Caprice, Impala V6-229 (3.8L) 2 Bbl.	K	**B35-S**	**PA2106**	**N/R**	**PF894,-RV**	**SA2027** **SA2046**	**6021**
	V6-231 (3.8L) 2 Bbl.	A	**B43-S**	**PA1680**	**N/R**	**PF894,-RV**	**SA2046**	TH250,C **6021**
	V8-267 (4.4L) 2 Bbl.	J	**B27**	**PA2106**	**N/R**	**PF894,-RV**	**SA2027** **SA2046**	TH250,C **6021**
	V8-305 (5.0L) 4 Bbl.	H	**B27**	**PA2008**	**N/R**	**PF894,-RV**	**SA2027** **SA2046**	**6021**
	V8-350 (5.7L) 4 Bbl.	L	**B27**	**PA2008**	**N/R**	**PF894,-RV**	**SA2027** **SA2046**	**6021**
	V8-350 (5.7L) Diesel	N	**B30**	**PA2079**	**N/R**	**BF806**	**N/R**	**6021**
	Chevette 4-1600cc (1.6L) 2 Bbl.	9	**B43-S**	**PA2077**	**N/R**	**PF894,-RV**	**N/R**	
	4-1800cc (1.8L) Diesel	D	**B109**		**N/R**	**BF7534**	**N/R**	
	Citation 4-151 (2.5L) 2 Bbl.	5	**B43-S**	**PA2082 OBS**	**N/R**	**PF894,-RV**	**SA2027** **SA2046**	TH125,C **19593**
	V6-173 (2.8L) 2 Bbl.	X	**B35-S**	**PA2076**	**N/R**	**PF894,-RV**	**SA2046**	TH125,C **19593**
	V6-173 (2.8L) 2 Bbl. HO	Z	**B35-S**		**N/R**	**PF894-RV**	**SA2046**	TH125,C **19593**
	Corvette V8-350 (5.7L) 4 Bbl.	6	**B27**	**PA2008**	**N/R**	**PF894,-RV**	**SA2027** **SA2046**	TH250,C **6021**
	El Camino V6-229 (3.8L) 2 Bbl.	K	**B35-S**	**PA2106**	**N/R**	**PF894,-RV**	**SA2027** **SA2046**	TH250,C **6021**
	V6-231 (3.8L) 2 Bbl.	A	**B43-S**	**PA1680**	**N/R**	**PF894,-RV**	**SA2046**	
	V8-267 (4.4L) 2 Bbl.	J	**B27**	**PA2106**	**N/R**	**PF894,-RV**	**SA2027** **SA2046**	**6021**
	V8-305 (5.0L) 4 Bbl.	H	**B27**	**PA2008**	**N/R**	**PF894,-RV**	**SA2027** **SA2046**	**6021**
	LUV 4-1800cc (1.8L) 2 Bbl.	N	**B141**	**PA1657**	**N/R**	**BF840,-K1**	**N/R**	
	4-2200cc (2.2L) Diesel	S	**B1446**	**PA1657**	**N/R**	**BF7534**	**SA2027**	
	Malibu V6-229 (3.8L) 2 Bbl.	K	**B35-S**	**PA2106**	**N/R**	**PF894,-RV**	**SA2027** **SA2046**	TH250,C **6021**
	V6-231 (3.8L) 2 Bbl.	A	**B43-S**	**PA1680**	**N/R**	**PF894,-RV**	**SA2046**	**6021**
	V8-267 (4.4L) 2 Bbl.	J	**B27**	**PA2106**	**N/R**	**PF894,-RV**	**SA2027** **SA2046**	TH250,C **6021**
	V8-305 (5.0L) 4 Bbl.	H	**B27**	**PA2008**	**N/R**	**PF894,-RV**	**SA2027** **SA2046**	TH250,C **6021**
	Monte Carlo V6-229 (3.8L) 2 Bbl.	K	**B35-S**	**PA2106**	**N/R**	**PF894,-RV**	**SA2027** **SA2046**	TH250,C **6021**
	V6-231 (3.8L) Turbo	3	**B43-S**	**PA2140**	**N/R**	**PF894,-RV**	**SA2027** **SA2046**	**6021**
	V6-231 (3.8L) 2 Bbl.	A	**B43-S**	**PA1680**	**N/R**	**PF894,-RV**	**SA2046**	
	V8-267 (4.4L) 2 Bbl.	J	**B27**	**PA2106**	**N/R**	**PF894,-RV**	**SA2027** **SA2046**	TH250,C **6021**
	V8-305 (5.0L) 4 Bbl.	H	**B27**	**PA2008**	**N/R**	**PF894,-RV**	**SA2027** **SA2046**	TH250,C **6021**
	Vans, G, P Series 6-250 (4.1L) 2 Bbl.	D	**B27**	**PA2077**	**N/R**	**PF894,-RV**	**SA2046**	**6020**
	6-292 (4.8L) 1 Bbl.	T	**B27**	**PA648**	**N/R**	**PF893,-RV**	**SA2027**	**6020**
	V8-305 (5.0L)	G,H	**B6**	**PA1680**	**N/R**	**PF894,-RV**	**SA2027** **SA2046**	**6021**
	V8-350 (5.7L) 4 Bbl.	L,M	**B6**	**PA1680**	**N/R**	**PF894,-RV**	**SA2027** **SA2046**	**6021**
	V8-454 (7.4L) 4 Bbl.	W	**B6**	**PA2091**	**N/R**	**PF894,-RV**	**SA2027**	TH400 **6020**
1980	Blazer, Pickups, C, K Series, Suburban, C, K Series 6-250 (4.1L) 2 Bbl.	D	**B27**	**PA2077**	**N/R**	**PF894,-RV**	**SA2046**	**6020**
	6-292 (4.8L) 1 Bbl.	T	**B27**	**PA648**	**N/R**	**PF893,-RV**	**SA2027** **SA2046**	TH350 **6021** TH400 **6020**
	V8-305 (5.0L) 2 Bbl.	G	**B6**	**PA1680**	**N/R**	**PF894,-RV**	**SA2027** **SA2046**	**6021**
	V8-350 (5.7L) 4 Bbl.	L,M	**B6**	3 15/32 In. **PA2008** 5 7/16 In. **PA2091**	**N/R**	**PF894,-RV**	**SA2027** **SA2046**	TH350 **6021** TH400 **6020**

OBS = Obsolete. Availability Limited to Distributor Stock. † Transmission, Not Model, Determines Which Transmission Filter is Used.

CHEVROLET Cont'd.

Year	Model and Engine	VIN	Lube	Air	Cabin Air	Fuel	Breather	Trans.[t]
1980	Blazer, Pickups, C, K Series, Suburban, C, K Series V8-350 (5.7L) Diesel	Z	**B30**	**PA2073**	**N/R**	**BF806**	**N/R**	
	V8-400 (6.6L) 4 Bbl.	R,X	**B6**	**PA2008**	**N/R**	**PF894,-RV**	**SA2027** **SA2046**	TH350 **6021** TH400 **6020**
	V8-454 (7.4L) 4 Bbl.	W	**B6**	3 15/32 In. **PA2008** 5 7/16 In. **PA2091**	**N/R**	**PF894,-RV**	**SA2027** **SA2046**	TH400 **6020**
	Camaro V6-229 (3.8L) 2 Bbl.	K	**B43-S**	**PA658**	**N/R**	**PF894,-RV**	**SA2027** **SA2046**	TH350,C **6021**
	V6-231 (3.8L) 2 Bbl.	A	**B43-S**	**PA2006**	**N/R**	**PF894,-RV**	**SA2027** **SA2046**	TH350,C **6021**
	V8-267 (4.4L) 2 Bbl.	J	**B27**	**PA658**	**N/R**	**PF893,-RV**	**SA2027** **SA2046**	TH350,C **6021**
	V8-305 (5.0L) 4 Bbl.	H	**B27**	**PA2008**	**N/R**	**PF894,-RV**	**SA2027** **SA2046**	TH350,C **6021**
	V8-350 (5.7L) 4 Bbl.	6,L	**B27**	**PA2008**	**N/R**	**PF894,-RV**	**SA2027** **SA2046**	TH350,C **6021**
	Caprice, Impala V6-229 (3.8L) 2 Bbl.	K	**B43-S**	**PA1680**	**N/R**	**PF894,-RV**	**SA2027** **SA2046**	**6021**
	V6-231 (3.8L) 2 Bbl.	A	**B43-S**	**PA1680**	**N/R**	**PF894,-RV**	**SA2046**	TH250,C **6021**
	V8-267 (4.4L) 2 Bbl.	J	**B27**	**PA1680**	**N/R**	**PF893,-RV**	**SA2027** **SA2046**	TH250,C **6021**
	V8-305 (5.0L) 4 Bbl.	H	**B27**	**PA2008**	**N/R**	**PF894,-RV**	**SA2027** **SA2046**	**6021**
	V8-350 (5.7L) 4 Bbl.	6,L	**B27**	**PA2008**	**N/R**	**PF894,-RV**	**SA2027** **SA2046**	TH250,C **6021**
	V8-350 (5.7L) Diesel	N	**B30**	**PA2079**	**N/R**	**BF806**	**N/R**	**6021**
	Chevette 4-1600cc (1.6L) 2 Bbl.	0,9	**B43-S**	**PA2077**	**N/R**	**PF893,-RV**	**N/R**	
	Citation 4-151 (2.5L) 2 Bbl.	5,V	**B43-S**	**PA2082 OBS**	**N/R**	**PF893,-RV**	**SA2027** **SA2046**	TH125,C **19593**
	V6-173 (2.8L) 2 Bbl.	7	**B35-S**	**PA2076**	**N/R**	**PF894,-RV**	**SA2027** **SA2046**	TH125,C **19593**
	Corvette V8-305 (5.0L) 4 Bbl.	H	**B27**	**PA2008**	**N/R**	**PF894,-RV**	**SA2027** **SA2046**	TH350,C **18031**
	V8-350 (5.7L) 4 Bbl.	8	**B27**	**PA2008**	**N/R**	**PF894,-RV**	**SA2027** **SA2046**	TH250,C **6021**
	El Camino V6-229 (3.8L) 2 Bbl.	K	**B43-S**	**PA1680**	**N/R**	**PF894,-RV**	**SA2027** **SA2046**	**6021**
	V6-231 (3.8L) 2 Bbl.	A	**B43-S**	**PA1680**	**N/R**	**PF894,-RV**	**SA2046**	**6021**
	V8-267 (4.4L) 2 Bbl.	J	**B27**	**PA1680**	**N/R**	**PF894,-RV**	**SA2027** **SA2046**	**6021**
	V8-305 (5.0L) 4 Bbl.	H	**B27**	**PA2008**	**N/R**	**PF894,-RV**	**SA2027** **SA2046**	**6021**
	LUV 4-1800cc (1.8L) 2 Bbl.	N	**B141**	**PA1657**	**N/R**	**BF840,-K1**	**N/R**	
	Malibu V6-229 (3.8L) 2 Bbl.	K	**B43-S**	**PA1680**	**N/R**	**PF894,-RV**	**SA2027** **SA2046**	TH250,C **6021**
	V6-231 (3.8L) 2 Bbl.	A	**B43-S**	**PA1680**	**N/R**	**PF894,-RV**	**SA2046**	**6021**
	V8-267 (4.4L) 2 Bbl.	J	**B27**	**PA1680**	**N/R**	**PF893,-RV**	**SA2027** **SA2046**	TH250,C **6021**
	V8-305 (5.0L) 4 Bbl.	H	**B27**	**PA2008**	**N/R**	**PF894,-RV**	**SA2027** **SA2046**	TH250,C **6021**
	Monte Carlo V6-229 (3.8L) 2 Bbl.	K	**B43-S**	**PA1680**	**N/R**	**PF894,-RV**	**SA2027** **SA2046**	TH250,C **6021**
	V6-231 (3.8L) Turbo	3	**B43-S**	**PA2140**	**N/R**	**PF894,-RV**	**SA2027** **SA2046**	TH250,C **6021**
	V6-231 (3.8L) 2 Bbl.	A	**B43-S**	**PA1680**	**N/R**	**PF894,-RV**	**SA2046**	TH250,C **6021**
	V8-267 (4.4L) 2 Bbl.	J	**B27**	**PA1680**	**N/R**	**PF893,-RV**	**SA2027** **SA2046**	
	V8-305 (5.0L) 4 Bbl.	H	**B27**	**PA2008**	**N/R**	**PF894,-RV**	**SA2027** **SA2046**	
	Monza 4-151 (2.5L) 2 Bbl.	5,V	**B43-S**	**PA2082 OBS**	**N/R**	**PF893,-RV**	**SA2027** **SA2046**	TH350 **6021**
	V6-231 (3.8L) 2 Bbl.	A	**B43-S**	**PA2006**	**N/R**	**PF894,-RV**	**SA2027** **SA2046**	**6021**
	Vans, G, P Series 6-250 (4.1L) 2 Bbl.	D	**B27**	**PA2077**	**N/R**	**PF894,-RV**	**SA2046**	TH400 **6020**
	V8-305 (5.0L) 2 Bbl.	G	**B6**	**PA1680**	**N/R**	**PF894,-RV**	**SA2027** **SA2046**	**6021**

[t] Transmission, Not Model, Determines Which Transmission Filter is Used. OBS = Obsolete. Availability Limited to Distributor Stock.

Year	Model and Engine	VIN	Lube	Air	Cabin Air	Fuel	Breather	Trans.[t]
CHEVROLET Cont'd.								
1980	Vans, G, P Series V8-350 (5.7L) 4 Bbl.	L,M	**B6**	**PA1680**	**N/R**	**PF894,-RV**	**SA2027** **SA2046**	TH350 **6021** TH400 **6020**
	V8-400 (6.6L) 4 Bbl.	R,X	**B6**	**PA1680**	**N/R**	**PF894,-RV**	**SA2027** **SA2046**	TH350 **6021** TH400 **6020**
	V8-454 (7.4L) 4 Bbl.	W	**B6**	**PA1680**	**N/R**	**PF894,-RV**	**SA2027**	TH400 **6020**
	Vans, P Series 6-292 (4.8L) 1 Bbl.	T	**B27**	**PA648**	**N/R**	**PF893,-RV**	**SA2027** **SA2046**	TH350 **6021** TH400 **6020**
CHRYSLER								
2010	300 V6-167 (2.7L) FI	D	**B7443**	**PA4177**	**PA4174**	**N/S**	**N/R**	42RLE **20011**
	V6-215 (3.5L) FI	V	**B329**	**PA4177**	**PA4174**	**N/S**	**N/R**	42RLE **20011**
	300C V8-345 (5.7L) FI Hemi	T	**B329**	**PA4177**	**PA4174**	**N/S**	**N/R**	
	300C SRT8 V8-372 (6.1L) FI Hemi	W	**B329**	**PA4177**	**PA4174**	**N/S**	**N/R**	
	PT Cruiser 4-148 (2.4L) FI	9	**BT223**	**PA4325**		**N/S**	**N/R**	40TES **18004**
	Sebring 4-144 (2.4L) FI	B	**B7443**	**PA4335**	**PA4373**	**N/S**	**N/R**	40TES **18004**
	V6-167 (2.7L) FI or Flex Fuel	D	**B7443**		**PA4373**	**N/S**	**N/R**	40TES **18004**
	V6-214 (3.5L) FI	V	**B7443**		**PA4373**	**N/S**	**N/R**	40TES **18004**
	Town & Country V6-202 (3.3L) FI Flex Fuel	E	**BT223**		**PA4405**	**N/S**	**N/R**	40TES **18004**
	V6-231 (3.8L) FI	1	**BT223**		**PA4405**	**N/S**	**N/R**	40TES **18004**
	V6-241 (4.0L) FI	X	**BT223**		**PA4405**	**N/S**	**N/R**	
2009	300 V6-167 (2.7L) SFI	D	**B7443**	**PA4177**	**PA4174**	**N/S**	**N/R**	42RLE RWD **20011**
	V6-215 (3.5L) FI	V	**B329**	**PA4177**	**PA4174**	**N/S**	**N/R**	42RLE RWD **20011**
	300C V8-345 (5.7L) FI Hemi	T	**B329**	**PA4177**	**PA4174**	**N/S**	**N/R**	
	300C SRT8 V8-372 (6.1L) FI Hemi	W	**B329**	**PA4177**	**PA4174**	**N/S**	**N/R**	
	Aspen V8-287 (4.7L) FI Flex Fuel	P	**B329**	**PA4184**	**N/R**	**N/S**	**N/R**	45RFE 2WD **19999**[61] 45RFE 4WD **20000**[61]
	V8-345 (5.7L) FI or Hybrid	T	**B329**	**PA4184**	**N/R**	**N/S**	**N/R**	45RFE 2WD **19999**[61] 45RFE 4WD **20000**[61]
	Cirrus 4-144 (2.4L) FI Mexico	B	**B7401**		**PA4373**	**N/S**	**N/R**	**18004**
	PT Cruiser 4-148 (2.4L) Turbo	8	**B243**	**PA4325**		**N/S**	**N/R**	**18004**
	4-148 (2.4L) FI	9	**BT223**	**PA4325**		**N/S**	**N/R**	**18004**
	Sebring 4-144 (2.4L) FI	B	**B7401** Opt. **B7443**	**PA4335**	**PA4373**	**N/S**	**N/R**	**18004**
	V6-167 (2.7L) FI Flex Fuel	D	**B329**		**PA4373**	**N/S**	**N/R**	
	V6-214 (3.5L) FI	V	**B329**		**PA4373**	**N/S**	**N/R**	
	Town & Country V6-202 (3.3L) FI Flex Fuel	E	**BT223**		**PA4159**	**N/S**	**N/R**	**18004**
	V6-231 (3.8L) FI	1	**BT223**		**PA4159**	**N/S**	**N/R**	
	V6-241 (4.0L) FI	X	**B7443**		**PA4159**	**N/S**	**N/R**	
2008	300 V6-167 (2.7L) SFI	R	22 mm. Thd. **B329** 3/4 In. Thd. **B34**	**PA4177**	**PA4174**	**N/S**	**N/R**	42RLE RWD **20011**
	V6-215 (3.5L) SFI HO	G	22 mm. Thd. **B329** 3/4 In. Thd. **B34**	**PA4177**	**PA4174**	**N/S**	**N/R**	42RLE RWD **20011**
	300C V8-345 (5.7L) FI Hemi	H	22 mm. Thd. **B329** 3/4 In. Thd. **B34**	**PA4177**	**PA4174**	**N/S**	**N/R**	
	300C SRT8 V8-372 (6.1L) FI Hemi	W	22 mm. Thd. **B329** 3/4 In. Thd. **B34**	**PA4177**	**PA4174**	**N/S**	**N/R**	
	Aspen V8-287 (4.7L) SFI or Flex Fuel	N	22 mm. Thd. **B329** 3/4 In. Thd. **B34**	**PA4184**	**N/R**	**N/S**	**N/R**	45RFE 2WD **19999**[61] 45RFE 4WD **20000**[61]
	V8-345 (5.7L) FI Hemi	2	22 mm. Thd. **B329** 3/4 In. Thd. **B34**	**PA4184**	**N/R**	**N/S**	**N/R**	45RFE 2WD **19999**[61] 45RFE 4WD **20000**[61]
	Cirrus 4-144 (2.4L) FI Mexico	K	**B7401**		**PA4373**	**N/S**	**N/R**	**18004**
	Crossfire V6-195 (3.2L) FI	L	**P1443**				**N/R**	
	Pacifica V6-231 (3.8L) FI	L	**BT223**	**PA4170**	**PA4159**	**N/S**	**N/R**	4 Spd. **18004**
	V6-241 (4.0L) FI	X	**B34**	**PA4170**	**PA4159**	**N/S**	**N/R**	
	PT Cruiser 4-148 (2.4L) SFI	B,X	**BT223**	**PA4325**		**N/S**	**N/R**	**18004**
	4-148 (2.4L) Turbo	8,E	**B243**	**PA4325**		**N/S**	**N/R**	**18004**
	Sebring 4-144 (2.4L) SFI	J,K	**B7401**	**PA4335**	**PA4373**	**N/S**	**N/R**	4 Spd. **18004**
	V6-167 (2.7L) Flex Fuel	R	22 mm. Thd. **B329** 3/4 In. Thd. **B34**		**PA4373**	**N/S**	**N/R**	

OBS = Obsolete. Availability Limited to Distributor Stock. [t] Transmission, Not Model, Determines Which Transmission Filter is Used.

[61] Contains Pan-Type Filter and Spin-on Filter.

CHRYSLER Cont'd.

Year	Model and Engine	VIN	Lube	Air	Cabin Air	Fuel	Breather	Trans.t
2008	Sebring V6-214 (3.5L) SFI HO	M	22 mm. Thd. **B329** 3/4 In. Thd. **B34**		**PA4373**	**N/S**	**N/R**	
	Town & Country V6-201 (3.3L) SFI Flex Fuel	H	**BT223**		**PA4159**	**N/S**	**N/R**	**18004**
	V6-231 (3.8L) SFI	P	**BT223**		**PA4159**	**N/S**	**N/R**	
	V6-241 (4.0L) SFI	X	**B7443**		**PA4159**	**N/S**	**N/R**	
2007	300 V6-167 (2.7L) SFI	R	**B34**	**PA4177**	**PA4174**	**N/S**	**N/R**	42RLE **20011**
	V6-215 (3.5L) SFI HO	G	**B34**	**PA4177**	**PA4174**	**N/S**	**N/R**	42RLE RWD **20011**
	300C V8-345 (5.7L) FI Hemi	H	**B34**	**PA4177**	**PA4174**	**N/S**	**N/R**	
	300C SRT8 V8-372 (6.1L) FI Hemi	W	**B34**	**PA4177**	**PA4174**	**N/S**	**N/R**	45RFE 2WD **19999**[61] 45RFE 4WD **20000**[61]
	Aspen V8-285 (4.7L) SFI or Flex Fuel	N,P	**B34**	**PA4184**	**N/R**	**N/S**	**N/R**	45RFE 2WD **19999**[61] 45RFE 4WD **20000**[61]
	V8-345 (5.7L) FI Hemi	2	**B34**	**PA4184**	**N/R**	**N/S**	**N/R**	45RFE 2WD **19999**[61] 45RFE 4WD **20000**[61]
	Cirrus 4-148 (2.4L) FI Mexico	K	**B7401**	**PA4335**	**PA4373**	**N/S**	**N/R**	**18004**
	V6-215 (3.5L) FI Mexico		**B34**		**PA4373**	**N/S**	**N/R**	
	Crossfire V6-195 (3.2L) FI	L	**P1443**				**N/R**	
	Crossfire SRT6 V6-195 (3.2L) FI Supercharged	L	**P1443**				**N/R**	
	Pacifica V6-230 (3.8L) SFI	L	**B34**	**PA4170**	**PA4159**	**N/S**	**N/R**	**18004**
	V6-241 (4.0L) SFI	X	**B34**	**PA4170**	**PA4159**	**N/S**	**N/R**	**18004**
	PT Cruiser 4-148 (2.4L) Turbo or HO Turbo	8,E,G,S	**B243**	**PA4325**		**N/S**	**N/R**	**18004**
	4-148 (2.4L) SFI	B,X	**BT223**	**PA4325**		**N/S**	**N/R** **N/R**	**18004**
	Sebring 4-144 (2.4L) FI	K	**B7401**	**PA4335**	**PA4373**	**N/S**	**N/R**	**18004**
	V6-167 (2.7L) Flex Fuel	R	**B34**		**PA4373**	**N/S**	**N/R**	**18004**
	V6-214 (3.5L) FI HO	M	**B34**		**PA4373**	**N/S**	**N/R**	
	Town & Country V6-202 (3.3L) SFI	R	**BT223**	**PA4132**	**PA4159**	**N/S**	**N/R**	**18004**
	V6-231 (3.8L) SFI	L	**BT223**	**PA4132**	**PA4159**	**N/S**	**N/R**	**18004**
2006	300 V6-167 (2.7L) SFI	R	**B34**	**PA4177**	**PA4174**	**N/S**	**N/R**	42RLE **20011**
	V6-215 (3.5L) SFI HO	G	**B34**	**PA4177**	**PA4174**	**N/S**	**N/R**	42RLE **20011**
	300C V8-345 (5.7L) FI Hemi	H	**B34**	**PA4177**	**PA4174**	**N/S**	**N/R**	
	300C SRT8 V8-372 (6.1L) FI Hemi	W	**B34**	**PA4177**	**PA4174**	**N/S**	**N/R**	
	Crossfire V6-195 (3.2L) FI	L	**P1443**				**N/R**	
	Crossfire SRT6 V6-195 (3.2L) FI Supercharged	S	**P1443**				**N/R**	
	Pacifica V6-215 (3.5L) FI HO	4	**B34**	**PA4170**	**PA4159**	**N/S**	**N/R**	**18004**
	V6-231 (3.8L) SFI	L	**B34**	**PA4170**	**PA4159**	**N/S**	**N/R**	**18004**
	PT Cruiser 4-148 (2.4L) Turbo or HO Turbo	8,E,G,S	**B243**			**N/S**	**N/R**	**18004**
	4-148 (2.4L) FI	B,X	**BT223**	**PA4325**		**N/S**	**N/R** **N/R**	**18004**
	Sebring 4-148 (2.4L) SFI	J,X	**BT223**	**RS4130**	**N/R**	**N/S**	**N/R**	**18004**
	V6-167 (2.7L) SFI or Flex Fuel	R,T	**B34**	**RS4130**	**N/R**	**N/S**	**N/R**	**18004**
	Town & Country V6-201 (3.3L) SFI	R	**B34**	**PA4132**	**PA4159**	**N/S**	**N/R**	**18004**
	V6-230 (3.8L) SFI	L	**B34**	**PA4132**	**PA4159**	**N/S**	**N/R**	**18004**
2005	300 V6-167 (2.7L) MFI	R	**B34**	**PA4177**	**PA4174**	**N/S**	**N/R**	RWD **20011**
	V6-215 (3.5L) MFI HO	G	**B34**	**PA4177**	**PA4174**	**N/S**	**N/R**	RWD **20011**
	300C V8-345 (5.7L) FI Hemi	H	**B34**	**PA4177**	**PA4174**	**N/S**	**N/R**	RWD **20011**
	300C SRT8 V8-370 (6.1L) FI Hemi	W	**B34**	**PA4177**	**PA4174**	**N/S**	**N/R**	RWD **20011**
	Crossfire V6-195 (3.2L) SFI	L	**P1443**				**N/R**	
	V6-195 (3.2L) SFI Supercharged	N	**P1443**				**N/R**	
	Pacifica V6-215 (3.5L) SFI HO	4	**B34**	**PA4170**	**PA4159**	**N/S**	**N/R**	**18004**
	V6-231 (3.8L) SFI	L	**B34**	**PA4170**	**PA4159**	**N/S**	**N/R**	**18004**
	PT Cruiser 4-148 (2.4L) SFI	B	**BT223**	**PA4314**		**N/S**	**N/R**	**18004**
	4-148 (2.4L) SFI Turbo	8,G	**B243**	**PA4314**		**N/S**	**N/R**	**18004**
	Sebring 4-148 (2.4L) SFI	B,G	**B1402**	**PA4015**	**N/R**	**N/S**	**N/R**	**N/S**
	4-148 (2.4L) SFI	J,X	**BT223**	**RS4130**	**N/R**	**N/S**	**N/R**	**18004**
	V6-167 (2.7L) SFI or Flex Fuel	R,T	**B34**	**RS4130**	**N/R**	**N/S**	**N/R**	**18004**
	V6-181 (3.0L) SFI	H	**B7243**	**PA4015**	**N/R**	**N/S**	**N/R**	**N/S**

[t] Transmission, Not Model, Determines Which Transmission Filter is Used. OBS = Obsolete. Availability Limited to Distributor Stock.

[61] Contains Pan-Type Filter and Spin-on Filter.

CHRYSLER Cont'd.

Year	Model and Engine	VIN	Lube	Air	Cabin Air	Fuel	Breather	Trans.[t]
2005	Town & Country V6-202 (3.3L) SFI or Flex Fuel	3,R	**B34**	**PA4132**	**PA4159**	**BF7763**	**N/R**	**18004**
	V6-231 (3.8L) SFI	L	**B34**	**PA4132**	**PA4159**	**BF7763**	**N/R**	**18004**
2004	300M, 300M Special V6-215 (3.5L) MFI HO	G,K	**B34**	**PA4109**		**N/S**	**N/R**	**18003**
	Concorde V6-167 (2.7L) MFI	R	**B34**	**PA4109**	**N/R**	**N/S**	**N/R**	**18003**
	V6-215 (3.5L) MFI or HO	G,M	**B34**	**PA4109**	**N/R**	**N/S**	**N/R**	**18003**
	Crossfire V6-195 (3.2L) SFI	L	**P1443**				**N/R**	
	Intrepid V6-167 (2.7L) FI Canada	R	**B34**	**PA4109**	**N/R**	**N/S**	**N/R**	**18003**
	V6-215 (3.5L) FI Canada	M	**B34**	**PA4109**	**N/R**	**N/S**	**N/R**	**18003**
	Pacifica V6-215 (3.5L) SFI HO	4	**B34**	**PA4170**	**PA4159**	**N/S**	**N/R**	**18004**
	PT Cruiser 4-148 (2.4L) SFI Turbo	8,G	**B243**	**PA4314**		**N/S**	**N/R**	**18004**
	4-148 (2.4L) SFI	B	**BT223**	**PA4314**		**N/S**	**N/R**	**18004**
	Sebring 4-148 (2.4L) SFI SOHC	G	**B1402**	**PA4015**	**N/R**	**N/S**	**N/R**	**N/S**
	4-148 (2.4L) SFI DOHC	X,J	**BT223**	**RS4130**	**N/R**	**N/S**	**N/R**	**18004**
	V6-167 (2.7L) SFI	R	**B34**	**RS4130**	**N/R**	**N/S**	**N/R**	**18004**
	V6-181 (3.0L) SFI	H	**B7243**	**PA4015**	**N/R**	**N/S**	**N/R**	**N/S**
	Town & Country V6-201 (3.3L) SFI or Flex Fuel	3,R	**B34**	**PA4132**	**PA4159**	**BF7763**	**N/R**	**18004**
	V6-231 (3.8L) SFI	L	**B34**	**PA4132**	**PA4159**	**BF7763**	**N/R**	**18004**
2003	300M V6-215 (3.5L) MFI or HO	G,K	**B34**	**PA4109**		**N/S**	**N/R**	**18003**
	Concorde V6-167 (2.7L) MFI	R	**B34**	**PA4109**	**N/R**	**N/S**	**N/R**	**18003**
	V6-215 (3.5L) MFI or HO	G,M	**B34**	**PA4109**	**N/R**	**N/S**	**N/R**	**18003**
	Intrepid V6-167 (2.7L) FI Canada	R	**B34**	**PA4109**	**N/R**	**N/S**	**N/R**	**18003**
	V6-215 (3.5L) FI Canada	M	**B34**	**PA4109**	**N/R**	**N/S**	**N/R**	**18003**
	PT Cruiser 4-148 (2.4L) SFI	B	**BT223**	**PA4314**		**N/S**	**N/R**	**18004**
	4-148 (2.4L) SFI Turbo	G	**B243**	**PA4314**		**N/S**	**N/R**	**18004**
	Sebring 4-143 (2.4L) SFI SOHC	G	**B1402**	**PA4015**	**N/R**	**N/S**	**N/R**	**N/S**
	4-148 (2.4L) SFI DOHC	X	**BT223**	**RS4130**	**N/R**	**N/S**	**N/R**	**18004**
	V6-167 (2.7L) MFI	R	**B34**	**RS4130**	**N/R**	**N/S**	**N/R**	**18004**
	V6-181 (3.0L) SFI	H	**B7243**	**PA4015**	**N/R**	**N/S**	**N/R**	**N/S**
	Town & Country V6-201 (3.3L) SFI or Flex Fuel	3,R	**B34**	**PA4132**	**PA4159**	**BF7763**	**N/R**	**18004**
	V6-231 (3.8L) SFI	L	**B34**	**PA4132**	**PA4159**	**BF7763**	**N/R**	**18004**
	Voyager 4-148 (2.4L) SFI	B	**BT223**	**PA4132**	**PA4159**	**BF7763**	**N/R**	**18004**
	V6-201 (3.3L) SFI Flex Fuel	3	**B34**	**PA4132**	**PA4159**	**BF7763**	**N/R**	**18004**
	V6-201 (3.3L) SFI	R	**B34**	**PA4132**	**PA4159**	**BF7763**	**N/R**	**18004**
2002	300M V6-215 (3.5L) SFI HO	G	**B34**	**PA4109**	**N/R**	**N/S**	**N/R**	**18003**
	Concorde V6-167 (2.7L) SFI	R	**B34**	**PA4109**	**N/R**	**N/S**	**N/R**	**18003**
	V6-215 (3.5L) SFI or HO	G,M	**B34**	**PA4109**	**N/R**	**N/S**	**N/R**	**18003**
	Intrepid V6-167 (2.7L) FI Canada	R	**B34**	**PA4109**	**N/R**	**N/S**	**N/R**	**18003**
	V6-215 (3.5L) FI Canada	M	**B34**	**PA4109**	**N/R**	**N/S**	**N/R**	**18003**
	Prowler V6-215 (3.5L) MFI HO	G	**B34**	**PA2103**	**N/R**	**N/S**	**N/R**	**18003**
	PT Cruiser 4-148 (2.4L) SFI	B	**BT223**	**PA4314**		**N/S**	**N/R**	**18004**
	Sebring 4-143 (2.4L) SFI SOHC	G	**B1402**	**PA4015**	**N/R**	**N/S**	**N/R**	**N/S**
	4-148 (2.4L) SFI DOHC	X	**BT223**	**RS4130**	**N/R**	**N/S**	**N/R**	**18004**
	V6-167 (2.7L) SFI	R	**B34**	**RS4130**	**N/R**	**N/S**	**N/R**	**18004**
	V6-181 (3.0L) SFI	H	**B7243**	**PA4015**	**N/R**	**N/S**	**N/R**	**N/S**
	Town & Country V6-201 (3.3L) SFI Flex Fuel	H	**B34**	**PA4132**	**PA4159**	**BF7763**	**N/R**	**18004**
	V6-231 (3.8L) SFI	L	**B34**	**PA4132**	**PA4159**	**BF7763**	**N/R**	**18004**
	Voyager 4-148 (2.4L) SFI	B	**BT223**	**PA4132**	**PA4159**	**BF7763**	**N/R**	**18104**
	V6-201 (3.3L) SFI	H	**B34**	**PA4132**	**PA4159**	**BF7763**	**N/R**	3 Spd. **18104** 4 Spd. **18004**
2001	300M V6-215 (3.5L) SFI HO	G	**B34**	**PA4109**	**N/R**	**N/S**	**N/R**	**18003**
	Concorde V6-167 (2.7L) SFI	R	**B34**	**PA4109**	**N/R**	**N/S**	**N/R**	**18003**
	V6-197 (3.2L) SFI	J	**B34**	**PA4109**	**N/R**	**N/S**	**N/R**	**18003**
	Intrepid V6-167 (2.7L) FI Canada	R	**B34**	**PA4109**	**N/R**	**N/S**	**N/R**	**18003**
	V6-197 (3.2L) FI Canada	J	**B34**	**PA4109**	**N/R**	**N/S**	**N/R**	**18003**
	LHS V6-215 (3.5L) SFI HO	G	**B34**	**PA4109**	**N/R**	**N/S**	**N/R**	**18003**
	Prowler V6-215 (3.5L) MFI HO	G	**B34**	**PA2103**	**N/R**	**N/S**	**N/R**	**18003**
	PT Cruiser 4-148 (2.4L) SFI	B	**BT223**	**PA4314**		**N/S**	**N/R**	**18004**
	Sebring 4-148 (2.4L) SFI SOHC	G	**B1402**	**PA4015**	**N/R**	**N/S**	**N/R**	**N/S**
	4-148 (2.4L) SFI DOHC	X	**BT223**	**RS4130**	**N/R**	**N/S**	**N/R**	**18004**
	V6-167 (2.7L) SFI	U	**B34**	**RS4130**	**N/R**	**N/S**	**N/R**	**18004**
	V6-181 (3.0L) SFI	H	**B7243**	**PA4015**	**N/R**	**N/S**	**N/R**	**N/S**
	Town & Country V6-201 (3.3L) SFI Flex Fuel	3	**B34**	**PA4132**	**PA4159**	**BF7763**	**N/R**	**18004**

OBS = Obsolete. Availability Limited to Distributor Stock. [t] Transmission, Not Model, Determines Which Transmission Filter is Used.

CHRYSLER Cont'd.

Year	Model and Engine	VIN	Lube	Air	Cabin Air	Fuel	Breather	Trans.[t]
2001	Town & Country V6-231 (3.8L) SFI	L	**B34**	**PA4132**	**PA4159**	**BF7763**	**N/R**	**18004**
	Voyager 4-148 (2.4L) SFI	B	**BT223**	**PA4132**	**PA4159**	**BF7763**	**N/R**	3 Spd. **18104** 4 Spd. **18004**
	V6-201 (3.3L) SFI or Flex Fuel	3,G,R	**B34**	**PA4132**	**PA4159**	**BF7763**	**N/R**	3 Spd. **18104** 4 Spd. **18004**
2000	300M V6-215 (3.5L) SFI	G	**B34**	**PA4109**	**N/R**	**N/S**	**N/R**	**18003**
	Cirrus 4-122 (2.0L) FI	C	**BT223**	**PA4085**	**N/R**	**BF7671**	**N/R**	**18004**
	4-148 (2.4L) FI	X	**BT223**	**PA4085**	**N/R**	**BF7671**	**N/R**	**18004**
	V6-152 (2.5L) SFI	H	**B34**	**PA4085**	**N/R**	**BF7671**	**N/R**	**18004**
	Concorde V6-165 (2.7L) SFI	R	**B34**	**PA4109**	**N/R**	**N/S**	**N/R**	**18003**
	V6-197 (3.2L) SFI	J	**B34**	**PA4109**	**N/R**	**N/S**	**N/R**	**18003**
	Intrepid V6-167 (2.7L) FI Canada	R	**B34**	**PA4109**	**N/R**	**N/S**	**N/R**	**18003**
	V6-197 (3.2L) FI Canada	J	**B34**	**PA4109**	**N/R**	**N/S**	**N/R**	**18003**
	LHS V6-215 (3.5L) SFI	G	**B34**	**PA4109**	**N/R**	**N/S**	**N/R**	**18003**
	Sebring V6-152 (2.5L) SFI Convertible	H	**B34**	**PA4085**	**N/R**	**BF7671**	**N/R**	**18004**
	V6-152 (2.5L) SFI Coupe	N	**B34**	**PA4015**	**N/R**	**BF7659**	**N/R**	**18004**
	Town & Country V6-201 (3.3L) Flex Fuel	G,R	**B34**	**PA2103**	**PA4159**	Std. W.B. **BF7669** Ext. W.B. **BF1053**	**N/R**	**18004**
	V6-231 (3.8L) SFI	L	**B34**	**PA2103**	**PA4159**	**BF1053**	**N/R**	**18004**
	Voyager, Grand Voyager 4-148 (2.4L) SFI	B	**BT223**	**PA2103**	**N/R**	**BF7669**	**N/R**	3 Spd. **18104**
	V6-181 (3.0L) SFI	3	**B34**	**PA2103**	**N/R**	Std. W.B. **BF7669** Ext. W.B. **BF1053**	**N/R**	4 Spd. **18004**
	V6-201 (3.3L) SFI or Flex Fuel	G,R	**B34**	**PA2103**	**N/R**	Std. W.B. **BF7669** Ext. W.B. **BF1053**	**N/R**	4 Spd. **18004**
1999	300M V6-215 (3.5L) SFI	G	**B34**	**PA4109**	**N/R**	**N/S**	**N/R**	**18003**
	Cirrus V6-152 (2.5L) SFI	H	**B34**	**PA4085**	**N/R**	**BF7671**	**N/R**	**18004**
	Concorde V6-165 (2.7L) SFI	R	**B34**	**PA4109**	**N/R**	**N/S**	**N/R**	**18003**
	V6-197 (3.2L) SFI	J	**B34**	**PA4109**	**N/R**	**N/S**	**N/R**	**18003**
	Intrepid V6-165 (2.7L) FI Canada	R	**B34**	**PA4109**	**N/R**	**N/S**	**N/R**	**18003**
	V6-197 (3.2L) FI Canada	J	**B34**	**PA4109**	**N/R**	**N/S**	**N/R**	**18003**
	LHS V6-215 (3.5L) SFI	G	**B34**	**PA4109**	**N/R**	**N/S**	**N/R**	**18003**
	Sebring 4-122 (2.0L) SFI	Y	**B34**	**PA4015**	**N/R**	**BF7659**	**N/R**	**18004**
	V6-152 (2.5L) SFI Convertible	H	**B34**	**PA4085**	**N/R**	**BF1054**	**N/R**	**18004**
	V6-152 (2.5L) SFI Coupe	N	**B34**	**PA4015**	**N/R**	**BF7659**	**N/R**	**18004**
	Town & Country V6-201 (3.3L) Flex Fuel	G	**B34**	**PA2103**	**N/R**	**BF1053**	**N/R**	**18004**
	V6-201 (3.3L) SFI	R	**B34**	**PA2103**	**N/R**	Std. W.B. **BF7669** Ext. W.B. **BF1053**	**N/R**	**18004**
	V6-231 (3.8L) SFI	L	**B34**	**PA2103**	**N/R**	Std. W.B. **BF7669** Ext. W.B. **BF1053**	**N/R**	**18004**
1998	Cirrus V6-152 (2.5L) SFI	H	**B34**	**PA4085**	**N/R**	**BF7671**	**N/R**	**18004**
	Concorde V6-165 (2.7L) MFI	R	**B34**	**PA4109**	**N/R**	**N/S**	**N/R**	**18003**
	V6-197 (3.2L) MFI	J	**B34**	**PA4109**	**N/R**	**N/S**	**N/R**	**18003**
	Intrepid V6-165 (2.7L) FI Canada	R	**B34**	**PA4109**	**N/R**	**N/S**	**N/R**	**18003**
	V6-197 (3.2L) FI Canada	J	**B34**	**PA4109**	**N/R**	**N/S**	**N/R**	**18003**
	Sebring 4-122 (2.0L) SFI	Y	**B34**	**PA4015**	**N/R**	**BF7659**	**N/R**	**18004**
	4-146 (2.4L) SFI	X	**BT223**	**PA4085**	**N/R**	**BF1054**	**N/R**	**18004**
	V6-152 (2.5L) SFI Convertible	H	**B34**	**PA4085**	**N/R**	**BF1054**	**N/R**	**18004**
	V6-152 (2.5L) SFI Coupe	N	**B34**	**PA4015**	**N/R**	**BF7659**	**N/R**	**18004**
	Town & Country V6-201 (3.3L) FI Flex Fuel	G	**B34**	**PA2103**	**N/R**	**BF1053**	**N/R**	**18004**
	V6-201 (3.3L) SFI	R	**B34**	**PA2103**	**N/R**	Std. W.B. **BF7669** Ext. W.B. **BF1053**	**N/R**	**18004**
	V6-231 (3.8L) SFI	L	**B34**	**PA2103**	**N/R**	Std. W.B. **BF7669** Ext. W.B. **BF1053**	**N/R**	**18004**

[t] Transmission, Not Model, Determines Which Transmission Filter is Used. OBS = Obsolete. Availability Limited to Distributor Stock.

CHRYSLER Cont'd.

Year	Model and Engine	VIN	Lube	Air	Cabin Air	Fuel	Breather	Trans.[t]
1997	Cirrus 4-148 (2.4L) SFI	X	**BT223**	**PA4085**	**N/R**	**BF1054**	**N/R**	**18004**
	V6-152 (2.5L) SFI	H	**B34**	**PA4085**	**N/R**	**BF1054**	**N/R**	**18004**
	Concorde V6-215 (3.5L) SFI	F	**B34**	**PA2230**	**N/R**	**BF1181**	**N/R**	**18003**
	Intrepid V6-201 (3.3L) FI Canada	T	**B34**	**PA2230**	**N/R**	**BF1181**	**N/R**	**18003**
	V6-215 (3.5L) FI Canada	F	**B34**	**PA2230**	**N/R**	**BF1181**	**N/R**	**18003**
	LHS V6-215 (3.5L) SFI	F	**B34**	**PA2230**	**N/R**	**BF1181**	**N/R**	**18003**
	Sebring 4-122 (2.0L) SFI	Y	**B34**	**PA4015**	**N/R**	**BF7659**	**N/R**	**18004**
	4-146 (2.4L) SFI	X	**BT223**	**PA4085**	**N/R**	**BF1054**	**N/R**	**18004**
	V6-152 (2.5L) SFI Convertible	H	**B34**	**PA4085**	**N/R**	**BF1054**	**N/R**	**18004**
	V6-152 (2.5L) SFI Coupe	N	**B34**	**PA4015**	**N/R**	**BF7659**	**N/R**	**18004**
	Town & Country V6-201 (3.3L) SFI	R	**B34**	**PA2103**	**N/R**	Std. W.B. **BF7669** Ext. W.B. **BF1053**	**N/R**	**18004**
	V6-231 (3.8L) SFI	L	**B34**	**PA2103**	**N/R**	Std. W.B. **BF7669** Ext. W.B. **BF1053**	**N/R**	**18004**
1996	Cirrus 4-146 (2.4L) SFI	X	**BT223**	**PA4085**	**N/R**	**BF1054**	**N/R**	**18004**
	V6-153 (2.5L) SFI	H	**B34**	**PA4085**	**N/R**	**BF1054**	**N/R**	**18004**
	Concorde V6-201 (3.3L) SFI	T	**B34**	**PA2230**	**N/R**	**BF1181**	**N/R**	**18003**
	V6-215 (3.5L) SFI	F	**B34**	**PA2230**	**N/R**	**BF1181**	**N/R**	**18003**
	Intrepid V6-201 (3.3L) FI Canada	T	**B34**	**PA2230**	**N/R**	**BF1181**	**N/R**	**18003**
	V6-201 (3.3L) Flex Fuel Canada	U	**B34**	**PA2230**	**N/R**		**N/R**	**18003**
	V6-215 (3.5L) FI Canada	F	**B34**	**PA2230**	**N/R**	**BF1181**	**N/R**	**18003**
	LHS, New Yorker V6-215 (3.5L) SFI	F	**B34**	**PA2230**	**N/R**	**BF1181**	**N/R**	**18003**
	Sebring 4-122 (2.0L) SFI	Y	**B34**	**PA4015**	**N/R**	**BF7659**	**N/R**	**18004**
	4-146 (2.4L) SFI	X	**BT223**	**PA4085**	**N/R**	**BF1054**	**N/R**	**18004**
	V6-152 (2.5L) SFI Convertible	H	**B34**	**PA4085**	**N/R**	**BF1054**	**N/R**	**18004**
	V6-152 (2.5L) SFI Coupe	N	**B34**	**PA4015**	**N/R**	**BF7659**	**N/R**	**18004**
	Town & Country V6-201 (3.3L) SFI	R	**B34**	**PA2103**	**N/R**	Std. W.B. **BF7669** Ext. W.B. **BF1053**	**N/R**	31TH **18104** 4 Spd. **18004**
	V6-231 (3.8L) SFI	L	**B34**	**PA2103**	**N/R**	Std. W.B. **BF7669** Ext. W.B. **BF1053**	**N/R**	31TH **18104** 4 Spd. **18004**
1995	Cirrus 4-146 (2.4L) FI	X	**B34**	**PA4085**	**N/R**	**BF1054**	**N/R**	**18004**
	V6-153 (2.5L) SFI	H	**B34**	**PA4085**	**N/R**	**BF1054**	**N/R**	**18004**
	Concorde V6-201 (3.3L) SFI or Flex Fuel	T	**B34**	**PA2230**	**N/R**	Exc. Flex Fuel **BF1181**	**N/R**	**18003**
	V6-216 (3.5L) SFI	F	**B34**	**PA2230**	**N/R**	**BF1181**	**N/R**	**18003**
	Intrepid V6-201 (3.3L) FI Canada	T	**B34**	**PA2230**	**N/R**	**BF1181**	**N/R**	**18003**
	V6-201 (3.3L) Flex Fuel Canada	U	**B34**	**PA2230**	**N/R**		**N/R**	**18003**
	V6-215 (3.5L) FI Canada	F	**B34**	**PA2230**	**N/R**	**BF1181**	**N/R**	**18003**
	LeBaron V6-181 (3.0L) SFI	3	**B34**	**PA2103**	**N/R**	**BF1057**	**SA4143** **SA4142**	31TH **18104** 4 Spd. **18004**
	LHS, New Yorker V6-216 (3.5L) SFI	F	**B34**	**PA2230**	**N/R**	**BF1181**	**N/R**	**18003**
	Sebring 4-122 (2.0L) FI	Y	**B34**	**PA4015**	**N/R**	**BF1179**	**N/R**	**18004**
	V6-152 (2.5L) SFI	N	**B34**	**PA4015**	**N/R**	**BF1179**	**N/R**	**18004**
	Town & Country V6-232 (3.8L) SFI	L	**B34**	**PA2104**	**N/R**	**BF795**	**[2] SA2048**	**18004**
1994	Concorde V6-201 (3.3L) MFI or Flex Fuel	T	**B34**	**PA2230**	**N/R**	Exc. Flex Fuel **BF1181**	**N/R**	**18003**
	V6-216 (3.5L) MFI	F	**B34**	**PA2230**	**N/R**	**BF1181**	**N/R**	**18003**
	Intrepid V6-201 (3.3L) FI Canada	T	**B34**	**PA2230**	**N/R**	**BF1181**	**N/R**	**18003**
	V6-201 (3.3L) FI Flex Fuel Canada	U	**B34**	**PA2230**	**N/R**		**N/R**	**18003**
	V6-215 (3.5L) FI Canada	F	**B34**	**PA2230**	**N/R**	**BF1181**	**N/R**	**18003**
	LeBaron V6-181 (3.0L) MFI	3	**B34**	**PA2103**	**N/R**	**BF1057**	**SA4143** **SA4142**	31TH **18104** 4 Spd. **18004**
	LHS, New Yorker V6-216 (3.5L) MFI	F	**B34**	**PA2230**	**N/R**	**BF1181**	**N/R**	**18003**
	Town & Country V6-232 (3.8L) MFI	L	**B34**	**PA2104**	**N/R**	**BF795**	**[2] SA2048**	**18004**
1993	Concorde V6-201 (3.3L) MFI	T	**B34**	**PA2230**	**N/R**	**BF1181**	**N/R**	**18003**
	V6-215 (3.5L) MFI	F	**B34**	**PA2230**	**N/R**	**BF1181**	**N/R**	**18003**
	Daytona 4-135 (2.2L) FI Turbo Canada	A	**B34**	**PA2103**	**N/R**	**BF1057**	**SA4139**	**M.T.**
	4-153 (2.5L) FI Canada	K	**B34**	**PA2158**	**N/R**	**BF1057**	**SA4142**	**18104**

OBS = Obsolete. Availability Limited to Distributor Stock. [t] Transmission, Not Model, Determines Which Transmission Filter is Used.

CHRYSLER Cont'd.

Year	Model and Engine	VIN	Lube	Air	Cabin Air	Fuel	Breather	Trans.t
1993	Daytona V6-181 (3.0L) FI Canada	3	**B34**	**PA2103**	**N/R**	**BF1057**	**SA4143** **SA4142**	**18004**
	Dynasty 4-153 (2.5L) EFI Canada	K	**B34**	**PA2158**	**N/R**	**BF1057**	**SA4139**	**18104**
	V6-201 (3.3L) EFI Canada	R	**B34**		**N/R**	**BF1057**	**SA2048**	**18004**
	Fifth Avenue, Imperial V6-201 (3.3L) MFI	R	**B34**	**PA2104**	**N/R**	**BF1057**	[2] **SA2048**	**18004**
	V6-231 (3.8L) MFI	L	**B34**	**PA2104**	**N/R**	**BF1057**	[2] **SA2048**	**18004**
	Intrepid V6-201 (3.3L) FI Canada	T	**B34**	**PA2230**	**N/R**	**BF1181**	**N/R**	**18003**
	V6-215 (3.5L) FI Canada	F	**B34**	**PA2230**	**N/R**	**BF1181**	**N/R**	**18003**
	LeBaron 4-2507cc (2.5L) EFI	K	**B34**	**PA2158**	**N/R**	**BF1057**	**SA4139**	**18104**
	4-2507cc (2.5L) EFI Flex Fuel	V	**B34**	**PA2103**	**N/R**		**SA2048**	**18104**
	V6-181 (3.0L) MFI	3	**B34**	**PA2103**	**N/R**	**BF1057**	**SA4143** **SA4142**	31TH **18104** 4 Spd. **18004**
	New Yorker V6-201 (3.3L) MFI	R	**B34**	**PA2104**	**N/R**	**BF1057**	[2] **SA2048**	**18004**
	V6-230 (3.8L) EFI	L	**B34**	**PA2104**	**N/R**	**BF1057**	[2] **SA2048**	**18004**
	Town & Country V6-201 (3.3L) MFI	R	**B34**	**PA2104**	**N/R**	**BF795**	[2] **SA2048**	**18004**
1992	Daytona 4-135 (2.2L) FI Turbo Canada	A	**B34**	**PA2103**	**N/R**	**BF1057**	**SA4142**	**M.T.**
	4-153 (2.5L) FI Canada	K	**B34**	**PA2158**	**N/R**	**BF1057**	**SA4139**	**18104**
	4-153 (2.5L) FI Turbo Canada	J	**B34**	**PA2217**	**N/R**	**BF1057**	**N/R**	**18104**
	V6-181 (3.0L) FI Canada	3	**B34**	**PA2103**	**N/R**	**BF1057**	**SA4143** **SA4142**	**18004**
	Dynasty 4-153 (2.5L) EFI Canada	K	**B34**	**PA2158**	**N/R**	**BF1057**	**SA4139**	**18104**
	V6-201 (3.3L) EFI Canada	R	**B34**		**N/R**	**BF1057**	**SA2048**	**18004**
	Fifth Avenue, Imperial V6-201 (3.3L) MFI	R	**B34**	**PA2104**	**N/R**	**BF1057**	[2] **SA2048**	**18004**
	V6-231 (3.8L) MFI	L	**B34**	**PA2104**	**N/R**	**BF1057**	[2] **SA2048**	**18004**
	LeBaron, LeBaron GTS 4-2507cc (2.5L) MFI Turbo	J	**B34**	**PA2217**	**N/R**	**BF1057**	**N/R**	**18104**
	4-2507cc (2.5L) EFI	K	**B34**	**PA2158**	**N/R**	**BF1057**	**SA4139**	**18104**
	V6-181 (3.0L) MFI	3	**B34**	**PA2103**	**N/R**	**BF1057**	**SA4143** **SA4142**	31TH **18104** 4 Spd. **18004**
	New Yorker Salon V6-201 (3.3L) MFI	R	**B34**	**PA2104**	**N/R**	**BF1057**	[2] **SA2048**	**18004**
	V6-230 (3.8L) EFI	L	**B34**	**PA2104**	**N/R**	**BF1057**	[2] **SA2048**	**18004**
	Town & Country V6-201 (3.3L) MFI	R	**B34**	**PA2104**	**N/R**	**BF795**	[2] **SA2048**	**18004**
1991	Daytona 4-153 (2.5L) FI Canada	K	**B34**	**PA2158**	**N/R**	**BF1057**	**SA4139**	**18104**
	4-153 (2.5L) FI Turbo Canada	J	**B34**	**PA2217**	**N/R**	**BF1057**	**N/R**	**18104**
	V6-181 (3.0L) FI Canada	3	**B34**	**PA2103**	**N/R**	**BF1057**	**SA4143** **SA4142**	**18004**
	Dynasty 4-153 (2.5L) EFI Canada	K	**B34**	**PA2158**	**N/R**	**BF1057**	**SA4139**	**18104**
	V6-201 (3.3L) EFI Canada	R	**B34**		**N/R**	**BF1057**	**SA2048**	**18004**
	Fifth Avenue, Imperial V6-201 (3.3L) MFI	R	**B34**	**PA2104**	**N/R**	**BF1057**	[2] **SA2048**	**18004**
	V6-230 (3.8L) MFI	L	**B34**	**PA2104**	**N/R**	**BF1057**	[2] **SA2048**	**18004**
	LeBaron 4-2507cc (2.5L) MFI Turbo	J	**B34**	**PA2217**	**N/R**	**BF1057**	**N/R**	**18104**
	4-2507cc (2.5L) EFI	K	**B34**	**PA2158**	**N/R**	**BF1057**	**SA4139**	**18104**
	V6-181 (3.0L) MFI	3	**B34**	**PA2103**	**N/R**	**BF1057**	**SA4143** **SA4142**	31TH **18104** 4 Spd. **18004**
	New Yorker, New Yorker Salon V6-3201 (3.3L) MFI	R	**B34**	**PA2104**	**N/R**	**BF1057**	[2] **SA2048**	**18004**
	V6-230 (3.8L) EFI	L	**B34**	**PA2104**	**N/R**	**BF1057**	[2] **SA2048**	**18004**
	TC V6-181 (3.0L) MFI	S	**B34**	**PA2103**	**N/R**	**BF794**	**SA4143** **SA4142**	**18004**
	Town & Country V6-201 (3.3L) MFI	R	**B34**	**PA2104**	**N/R**	**BF795**	[2] **SA2048**	**18004**
1990	Daytona 4-153 (2.5L) FI Canada	K	**BT223**	**PA2158**	**N/R**	**BF794**	**SA4139**	3 Spd. **18104** 4 Spd. **18004**
	4-153 (2.5L) FI Turbo Canada	J	**BT223**	**PA2217**	**N/R**	**BF794**	**SA4143**	3 Spd. **18104** 4 Spd. **18004**
	V6-181 (3.0L) FI Canada	3	**BT223**	**PA2103**	**N/R**	**BF794**	**SA4143** **SA4142**	3 Spd. **18104** 4 Spd. **18004**
	Dynasty 4-153 (2.5L) EFI Canada	K	**BT223**	**PA2158**	**N/R**	**BF794**	**SA4139**	A404 **18104** A604 **18004**
	V6-181 (3.0L) EFI Canada	3	**BT223**	**PA2103**	**N/R**	**BF794**	**SA2048**	**18104**
	V6-201 (3.3L) EFI Canada	R	**BT223**		**N/R**	**BF794**	**SA2048**	**18004**
	Fifth Avenue V6-201 (3.3L) MFI	R	**BT223**	**PA2104**	**N/R**	**BF794**	[2] **SA2048**	31TH **18104** 41TE **18004**
	Imperial V6-201 (3.3L) MFI	R	**BT223**	**PA2104**	**N/R**	**BF794**	[2] **SA2048**	**18004**
	LeBaron 4-135 (2.2L) MFI Turbo	C	**BT223**	**PA2217**	**N/R**	**BF794**	**SA4139**	31TH **18104** 41TE **18004**
	4-153 (2.5L) MFI Turbo	J	**BT223**	**PA2217**	**N/R**	**BF794**	**N/R**	31TH **18104** 41TE **18004**

[t] Transmission, Not Model, Determines Which Transmission Filter is Used. OBS = Obsolete. Availability Limited to Distributor Stock.

CHRYSLER Cont'd.

Year	Model and Engine	VIN	Lube	Air	Cabin Air	Fuel	Breather	Trans.[t]
1990	LeBaron 4-153 (2.5L) EFI	K	**BT223**	**PA2158**	**N/R**	**BF794**	**SA4139**	31TH **18104** 41TE **18004**
	V6-181 (3.0L) MFI	3	**BT223**	**PA2103**	**N/R**	**BF794**	**SA4143**	31TH **18104** 41TE **18004**
	New Yorker V6-181 (3.0L) FI	3	**BT223**	**PA2103**	**N/R**	**BF794**	**SA4143** **SA4142**	**18004**
	V6-201 (3.3L) MFI	R	**BT223**	**PA2104**	**N/R**	**BF794**	[2] **SA2048**	**18004**
	TC 4-135 (2.2L) FI Turbo	A	**BT223**	**PA2104**	**N/R**	**BF794**	**SA4143**	41TE **18004**
	V6-181 (3.0L) FI	S	**BT223**	**PA2103**	**N/R**	**BF794**	**SA4143** **SA4142**	41TE **18004**
	Town & Country Van V6-181 (3.0L) FI	3	**BT223**	**PA2103**	**N/R**	**BF794**	**SA4143** **SA4142**	**18004**
	V6-201 (3.3L) MFI	R	**BT223**	**PA2104**	**N/R**	**BF795**	[2] **SA2048**	**18004**
1989	Conquest 4-2600cc (2.6L) MFI Turbo	N	**B173-S**		**N/R**	**BF1100**	**N/R**	
	Daytona 4-135 (2.2L) FI Turbo Canada	A	**BT223**	**PA2104**	**N/R**	**BF794**	**SA4143**	**M.T.**
	4-153 (2.5L) FI Canada	K	**BT223**	**PA2158**	**N/R**	**BF794**	**SA4139**	**18104**
	4-153 (2.5L) FI Turbo Canada	J	**BT223**	**PA2104**	**N/R**	**BF794**	**SA4143**	**18104**
	Dynasty 4-153 (2.5L) EFI Canada	K	**BT223**	**PA2158**	**N/R**	**BF794**	**SA4139**	A404 **18104** A604 **18004**
	V6-181 (3.0L) EFI Canada	3	**BT223**	**PA2103**	**N/R**	**BF794**	**SA2048**	**18104**
	Fifth Avenue V8-318 (5.2L) Carb.	4,P,R,S	**B233**	2 Bbl. **PA615** 4 Bbl. **PA2010**	**N/R**	w/VapDiv. **BF865,-K** w/o VapDiv. **BF840,-K1**	**SA4141**	**18032**
	LeBaron 4-2200cc (2.2L) MFI Turbo	A	**BT223**	**PA2104**	**N/R**	**BF794**	**SA4143**	**18104**
	4-2200cc (2.2L) EFI	D	**BT223**	**PA2158**	**N/R**	**BF794**	**SA4139**	**18104**
	4-2507cc (2.5L) MFI Turbo	J	**BT223**	**PA2104**	**N/R**	**BF794**	**SA4143**	**18104**
	4-2507cc (2.5L) EFI	K	**BT223**	**PA2158**	**N/R**	**BF794**	**SA4139**	**18104**
	New Yorker V6-181 (3.0L) MFI	3	**BT223**	**PA2103**	**N/R**	**BF794**	**SA4143** **SA4142**	**18004**
	TC 4-2200cc (2.2L) MFI Turbo	P,R	**BT223**	**PA2104**	**N/R**	**BF794**	**SA4143**	31TH **18104** 41TE **18004**
1988	Conquest 4-2600cc (2.6L) FI Turbo	N	**B173-S**		**N/R**	**BF1100**	**N/R**	
	Daytona 4-135 (2.2L) FI Turbo Canada	A	**BT223**	**PA2104**	**N/R**	**BF794**	**SA4143**	**18104**
	4-135 (2.2L) FI Turbo Canada	E	**BT223**	**PA2104**	**N/R**	**BF794**	**SA4143**	**18104**
	4-153 (2.5L) FI Canada	K	**BT223**	**PA2158**	**N/R**	**BF794**	**SA4139**	**18104**
	Dynasty 4-153 (2.5L) EFI Canada	K	**BT223**	**PA2158**	**N/R**	**BF794**	**SA4139**	**18104**
	V6-181 (3.0L) EFI Canada	3	**BT223**	**PA2103**	**N/R**	**BF794**	**SA2048**	**18104**
	Fifth Avenue V8-318 (5.2L) 2 Bbl.	P	**B233**	**PA2010**	**N/R**	w/VapDiv. **BF865,-K** w/o VapDiv. **BF840,-K1**	**SA4141**	**18032**
	LeBaron 4-2200cc (2.2L) EFI	D	**BT223**	**PA2158**	**N/R**	**BF794**	**SA4139**	**18104**
	4-2200cc (2.2L) EFI Turbo	E	**BT223**	**PA2104**	**N/R**	**BF794**	**SA4143**	**18104**
	4-2500cc (2.5L) EFI	K	**BT223**	**PA2158**	**N/R**	**BF794**	**SA4139**	**18104**
	New Yorker 4-135 (2.2L) EFI Turbo	E	**BT223**	**PA2104**	**N/R**	**BF794**	**SA4143**	**18104**
	V6-181 (3.0L) FI	3	**BT223**	**PA2103**	**N/R**	**BF794**	**SA2048**	**18104**
1987	Conquest 4-2600cc (2.6L) FI Turbo	H,N	**B173-S**		**N/R**	**BF1100**	**N/R**	
	Daytona 4-135 (2.2L) FI Turbo Canada	A	**BT223**	**PA2104**	**N/R**		**N/R**	**18104**
	4-135 (2.2L) FI Turbo Canada	E	**BT223**	**PA2104**	**N/R**		**N/R**	**18104**
	4-153 (2.5L) FI Canada	K	**BT223**	**PA2158**	**N/R**		**SA4139**	**18104**
	Fifth Avenue V8-318 (5.2L) 2 Bbl.	P	**B233**	**PA615**	**N/R**	w/VapDiv. **BF865,-K** w/o VapDiv. **BF840,-K1**	**SA4141**	**18032**
	LeBaron 4-2200cc (2.2L) FI	D	**BT223**	**PA2158**	**N/R**		**SA4139**	**18104**
	4-2200cc (2.2L) FI Turbo	E	**BT223**	**PA2104**	**N/R**		**N/R**	**18104**
	4-2500cc (2.5L) FI	K	**BT223**	**PA2158**	**N/R**		**SA4139**	**18104**
	New Yorker 4-135 (2.2L) FI Turbo	E	**BT223**	**PA2104**	**N/R**		**N/R**	**18104**
	4-153 (2.5L) FI	K	**BT223**	**PA2158**	**N/R**		**SA4139**	**18104**
1986	Daytona 4-135 (2.2L) FI Turbo Canada	E	**BT223**	**PA2104**	**N/R**		**N/R**	**18104**
	Fifth Avenue V8-318 (5.2L) 2 Bbl.	P	**B233**	**PA615**	**N/R**	w/VapDiv. **BF865,-K** w/o VapDiv. **BF840,-K1**	**SA4141**	**18032**
	Laser 4-135 (2.2L) FI	D	**BT223**	**PA2158**	**N/R**		**SA4139**	**18104**
	4-135 (2.2L) FI Turbo	E	**BT223**	**PA2104**	**N/R**		**N/R**	**18104**

OBS = Obsolete. Availability Limited to Distributor Stock. [t] Transmission, Not Model, Determines Which Transmission Filter is Used.

CHRYSLER Cont'd.

Year	Model and Engine	VIN	Lube	Air	Cabin Air	Fuel	Breather	Trans.t
1986	Laser 4-153 (2.5L) FI	K	**BT223**	**PA2158**	**N/R**		**SA4139**	**18104**
	LeBaron 4-2200cc (2.2L) FI	D	**BT223**	**PA2158**	**N/R**		**SA4139**	**18104**
	4-2200cc (2.2L) FI Turbo	E	**BT223**	**PA2104**	**N/R**		**N/R**	**18104**
	4-2500cc (2.5L) FI	K	**BT223**	**PA2158**	**N/R**		**SA4139**	**18104**
	New Yorker 4-135 (2.2L) FI Turbo	E	**BT223**	**PA2104**	**N/R**		**N/R**	**18104**
	4-153 (2.5L) FI	K	**BT223**	**PA2158**	**N/R**		**SA4139**	**18104**
1985	Daytona 4-135 (2.2L) FI Turbo Canada	E	**BT223**	**PA2104**	**N/R**		**N/R**	**18104**
	Executive 4-156 (2.6L) 2 Bbl.	G	**B173-S**	**PA2157**	**N/R**	**BF964**	**N/R**	**18104**
	Fifth Avenue V8-318 (5.2L) Carb.	P,R,S	**B233**	2 Bbl. **PA615** 4 Bbl. **PA2010**	**N/R**	**BF865,-K**	**SA4141**	**18032**
	Laser 4-135 (2.2L) FI	D	**BT223**	**PA2103**	**N/R**		**N/R**	**18104**
	4-135 (2.2L) FI Turbo	E	**BT223**	**PA2104**	**N/R**		**N/R**	**18104**
	LeBaron 4-2200cc (2.2L) FI	D	**BT223**	**PA2103**	**N/R**		**N/R**	**18104**
	4-2200cc (2.2L) FI Turbo	E	**BT223**	**PA2104**	**N/R**		**N/R**	**18104**
	4-2600cc (2.6L) 2 Bbl.	G	**B173-S**	**PA2157**	**N/R**	**BF964**	**N/R**	**18104**
	New Yorker 4-135 (2.2L) FI Turbo	E	**BT223**	**PA2104**	**N/R**		**N/R**	**18104**
	4-156 (2.6L) 2 Bbl.	G	**B173-S**	**PA2157**	**N/R**	**BF964**	**N/R**	**18104**
1984	Daytona 4-135 (2.2L) FI Turbo Canada	E	**BT223**	**PA2104**	**N/R**		**N/R**	**18104**
	E Class, New Yorker 4-135 (2.2L) FI	D	**BT223**	**PA2103**	**N/R**		**N/R**	**18104**
	4-135 (2.2L) FI Turbo	E	**BT223**	**PA2104**	**N/R**	**BF964**	**N/R**	**18104**
	4-156 (2.6L) 2 Bbl.	G	**B173-S**	**PA2157**	**N/R**	**BF964**	**N/R**	**18104**
	Executive 4-156 (2.6L) 2 Bbl.	G	**B173-S**	**PA2157**	**N/R**	**BF964**	**N/R**	**18104**
	Fifth Avenue V8-318 (5.2L) Carb.	P,R,S	**B233**	2 Bbl. **PA615** 4 Bbl. **PA2010**	**N/R**	**BF865,-K**	**SA4141**	**18032**
	Laser 4-135 (2.2L) FI	D	**BT223**	**PA2103**	**N/R**		**N/R**	**18104**
	4-135 (2.2L) FI Turbo	E	**BT223**	**PA2104**	**N/R**		**N/R**	**18104**
	LeBaron, Town & Country 4-2200cc (2.2L) 2 Bbl.	C	**BT223**	**PA2104**	**N/R**	**BF930**	**N/R**	**18104**
	4-2200cc (2.2L) FI	D	**BT223**	**PA2103**	**N/R**		**N/R**	**18104**
	4-2200cc (2.2L) FI Turbo	E	**BT223**	**PA2104**	**N/R**		**N/R**	**18104**
	4-2600cc (2.6L) 2 Bbl.	G	**B173-S**	**PA2157**	**N/R**	**BF964**	**N/R**	**18104**
1983	Cordoba, Fifth Avenue 6-225 (3.7L) 1 Bbl.	H,J,K	**B233**	**PA615**	**N/R**	**BF865,-K**	**SA4141** **SA2046**	**18032**
	V8-318 (5.2L) 2 Bbl.	P	**B233**	**PA615**	**N/R**	**BF865,-K**	**SA4141** **SA2046**	**18032**
	Fifth Avenue 6-225 (3.7L) Carb Canada	K	**B34**	**PA615**	**N/R**	**BF865,-K**	**SA4141** **SA2046**	**18032**
	Imperial V8-318 (5.2L) FI	N	**B233**	**PA2010**	**N/R**	**BF840,-K1**	**SA4141** **SA2046**	**18032**
	V8-318 (5.2L) 2 Bbl.	P	**B233**	**PA615**	**N/R**	**BF865,-K**	**SA4141** **SA2046**	**18032**
	LeBaron, New Yorker (FWD) 4-2200cc (2.2L) 2 Bbl.	C	**BT223**	**PA2104**	**N/R**	**BF930**	**N/R**	**18104**
	4-2600cc (2.6L) 2 Bbl.	7,G	**B173-S**	**PA2157**	**N/R**	**BF964**	**N/R**	**18104**
1982	Cordoba, New Yorker 6-225 (3.7L) 1 Bbl.	E,F,G	**B233**	**PA615**	**N/R**	**BF865,-K**	**SA4141** **SA2046**	**18032**
	V8-318 (5.2L) 2 Bbl.	K,L	**B233**	**PA615**	**N/R**	**BF865,-K**	**SA4141** **SA2046**	**18032**
	V8-318 (5.2L) 4 Bbl.	M,N	**B233**	**PA2010**	**N/R**	**BF865,-K**	**SA4141** **SA2046**	**18032**
	Imperial V8-318 (5.2L) FI	J	**B233**	**PA2010**	**N/R**	**[2] BF840,-K1**	**SA4141** **SA2046**	**18032**
	LeBaron 4-2200cc (2.2L) 2 Bbl.	B	**BT223**	**PA2104**	**N/R**	**BF930**	**N/R**	
	4-2600cc (2.6L) 2 Bbl.	D	**B173-S**	**PA2157**	**N/R**	**BF964**	**N/R**	
1981	Cordoba, LeBaron, New Yorker, Newport 6-225 (3.7L)	E,F,G	**B233**	**PA615**	**N/R**	**BF840,-K1**[17] **BF865,-K**[31]	**SA4141** **SA2046**	**18032**
	V8-318 (5.2L) 2 Bbl.	K,L	**B233**	**PA615**	**N/R**	**BF840,-K1**[17] **BF865,-K**[31]	**SA4141** **SA2046**	**18032**
	V8-318 (5.2L) 4 Bbl.	M,N	**B233**	**PA2010**	**N/R**	**BF840,-K1**[17] **BF865,-K**[31]	**SA4141** **SA2046**	**18032**
	Imperial V8-318 (5.2L) FI	J	**B233**	**PA2010**	**N/R**	**[2] BF840,-K1**	**SA4141** **SA2046**	**18032**
1980	Cordoba, LeBaron, New Yorker, Newport 6-225 (3.7L) 1 Bbl.	C,D	**B233**	**PA615**	**N/R**	**BF840,-K1**[17] **BF865,-K**[31]	**SA4141** **SA2046**	**18032**
	6-225 (3.7L) 2 Bbl.	D	**B233**	**PA650**	**N/R**	**BF840,-K1**[17] **BF865,-K**[31]	**SA4141** **SA2046**	**18032**

[t] Transmission, Not Model, Determines Which Transmission Filter is Used. OBS = Obsolete. Availability Limited to Distributor Stock. [17] Exc. Calif.
[31] Calif.

Year	Model and Engine	VIN	Lube	Air	Cabin Air	Fuel	Breather	Trans.[t]
CHRYSLER Cont'd.								
1980	Cordoba, LeBaron, New Yorker, Newport V8-318 (5.2L) 2 Bbl.	G	**B233**	**PA615**	**N/R**	**BF840,-K1**[17] **BF865,-K**[31]	**SA4141** **SA2046**	**18032**
	V8-318 (5.2L) 4 Bbl.	H	**B233**	**PA2010**	**N/R**	**BF840,-K1**[17] **BF865,-K**[31]	**SA4141** **SA2046**	**18032**
	V8-360 (5.9L) 2,4 Bbl.	K,L	**B233**	VIN K **PA615** VIN L **PA2010**	**N/R**	Exc. HiPerf. **BF840,-K1**[17] **BF865,-K**[31]	**SA4141** **SA2046**	**18032**
DAEWOO								
2002	Lanos 4-98 (1.6L) MFI	6	**B43-S**		**N/R**	**BF1185**	**N/R**	**18057**
	Leganza 4-134 (2.2L) MFI	2	**B43-S**			**BF1185**	**N/R**	
	Nubira 4-122 (2.0L) MFI	Z	**B43-S**			**BF1185**	**N/R**	**18057**
2001	Lanos 4-98 (1.6L) MFI	6	**B43-S**		**N/R**	**BF1185**	**N/R**	**18057**
	Leganza 4-134 (2.2L) MFI	2	**B43-S**			**BF1185**	**N/R**	
	Nubira 4-122 (2.0L) MFI	Z	**B43-S**			**BF1185**	**N/R**	**18057**
2000	Lanos 4-98 (1.6L) MFI	N	**B43-S**		**N/R**	**BF1185**	**N/R**	**18057**
	Leganza 4-134 (2.2L) MFI	2	**B43-S**			**BF1185**	**N/R**	
	Nubira 4-122 (2.0L) MFI	Z	**B43-S**			**BF1185**	**N/R**	**18057**
1999	Lanos 4-98 (1.6L) MFI	N	**B43-S**		**N/R**	**BF1185**	**N/R**	**18057**
	Leganza 4-134 (2.2L) MFI	2	**B43-S**			**BF1185**	**N/R**	
	Nubira 4-122 (2.0L) FI	Z	**B43-S**			**BF1185**	**N/R**	**18057**
1998	Nubira 4-122 (2.0L) FI	Z	**B43-S**			**BF1185**	**N/R**	**18057**
DAIHATSU								
1992	Charade 3-993cc (1.0L) EFI	0	**B33**	**PA2169**	**N/R**	**BF1179**	**N/R**	
	4-1295cc (1.3L) EFI	2	**B33**	**PA2169**	**N/R**	**BF1179**	**N/R**	
	Rocky 4-1589cc (1.6L)	0	**B33**	**PA4041**	**N/R**	**BF1100**	**N/R**	**M.T.**
1991	Charade 3-993cc (1.0L) EFI	0	**B33**	**PA2169**	**N/R**	**BF1179**	**N/R**	
	4-1295cc (1.3L) EFI	2	**B33**	**PA2169**	**N/R**	**BF1179**	**N/R**	
	Rocky 4-1589cc (1.6L)	0	**B33**	**PA4041**	**N/R**	**BF1100**	**N/R**	**M.T.**
1990	Charade 3-993cc (1.0L) EFI	0	**B33**	**PA2169**	**N/R**	**BF1179**	**N/R**	
	4-1295cc (1.3L) EFI	2	**B33**	**PA2169**	**N/R**	**BF1179**	**N/R**	
	Rocky 4-1589cc (1.6L)	0	**B33**	**PA4041**	**N/R**	**BF1100**	**N/R**	**M.T.**
1989	Charade 3-1000cc (1.0L) EFI	0	**B33**	**PA2169**	**N/R**	**BF1179**	**N/R**	**M.T.**
	4-1300cc (1.3L) EFI	2	**B33**	**PA2169**	**N/R**	**BF1179**	**N/R**	
1988	Charade 3-1000cc (1.0L) EFI	0	**B37**	**PA2169**	**N/R**	**BF1179**	**N/R**	**M.T.**
DELOREAN								
1983	DMC 12 V6-2850cc (2.9L) FI		**B163**		**N/R**	**BF885**	**N/R**	
1982	DMC 12 V6-2850cc (2.9L) FI		**B163**		**N/R**	**BF885**	**N/R**	
1981	DMC 12 V6-2850cc (2.9L) FI		**B163**		**N/R**	**BF885**	**N/R**	
DODGE								
2010	Avenger 4-144 (2.4L) FI	B	**B7443**	**PA4335**	**PA4373**	**N/S**	**N/R**	40TES **18004**
	V6-214 (3.5L) FI	V	**B7443**		**PA4373**	**N/S**	**N/R**	
	Caliber 4-110 (1.8L) FI	C	**B7443**	**PA4362**	**PA4373**	**N/S**	**N/R**	
	4-122 (2.0L) FI	A	**B7443**	**PA4362**	**PA4373**	**N/S**	**N/R**	
	4-148 (2.4L) FI	B	**B7443**	**PA4362**	**PA4373**	**N/S**	**N/R**	
	Challenger V6-215 (3.5L) FI	V	**B7443**	**PA4177**	**N/R**	**N/S**	**N/R**	
	V8-345 (5.7L) FI Hemi	T	**B329**	**PA4177**	**N/R**	**N/S**	**N/R**	
	V8-372 (6.1L) FI Hemi	W	**B329**	**PA4177**	**N/R**	**N/S**	**N/R**	
	Charger V6-167 (2.7L) FI	D	**B7443**	**PA4177**	**PA4174**	**N/S**	**N/R**	42RLE **20011**
	V6-215 (3.5L) FI	V	**B329**	**PA4177**	**PA4174**	**N/S**	**N/R**	
	V8-345 (5.7L) FI	T	**B329**	**PA4177**	**PA4174**	**N/S**	**N/R**	
	Charger SRT-8 V8-372 (6.1L) FI Hemi	W	**B329**	**PA4177**	**PA4174**	**N/S**	**N/R**	
	Dakota V6-225 (3.7L) FI	K	**B7444**	**PA2163**	**N/R**	**N/S**	**N/R**	42RLE **20011** 5-45RFE 2WD **19999**[61] 5-45RFE 4WD **20000**[61]
	V8-287 (4.7L) FI Flex Fuel	P	**B329**	**PA2163**	**N/R**	**N/S**	**N/R**	5-45RFE 2WD **19999**[61] 5-45RFE 4WD **20000**[61]
	Grand Caravan V6-202 (3.3L) FI Flex Fuel	E	**BT223**		**PA4405**	**N/S**	**N/R**	**18004**
	V6-231 (3.8L) FI	1	**BT223**		**PA4405**	**N/S**	**N/R**	
	V6-241 (4.0L) FI	X	**BT223**		**PA4405**	**N/S**	**N/R**	

[17] Exc. Calif. OBS = Obsolete. Availability Limited to Distributor Stock. [t] Transmission, Not Model, Determines Which Transmission Filter is Used.
[31] Calif. [61] Contains Pan-Type Filter and Spin-on Filter.

DODGE Cont'd.

Year	Model and Engine	VIN	Lube	Air	Cabin Air	Fuel	Breather	Trans.t
2010	Journey 4-144 (2.4L) FI	B	**B7443**		**PA4373**	**N/S**	**N/R**	**18004**
	V6-215 (3.5L) FI	V	**B7443**		**PA4373**	**N/S**	**N/R**	
	Nitro V6-225 (3.7L) FI	K	**B7444**	**PA4367**		**N/S**	**N/R**	4 Spd. **20011**
	V6-241 (4.0L) FI	X		**PA4367**		**N/S**	**N/R**	
	Pickups V6-225 (3.7L) FI	K	**B7444**	**PA4151**	**N/R**	**N/S**	**N/R**	5-45RFE 2WD **19999**[61] 5-45RFE 4WD **20000**[61]
	V8-287 (4.7L) FI Flex Fuel	P	**B329**	**PA4151**	**N/R**	**N/S**	**N/R**	5-45RFE 2WD **19999**[61] 5-45RFE 4WD **20000**[61]
	V8-345 (5.7L) FI Hemi	T	**B329**	**PA4151**	**N/R**	**N/S**	**N/R**	5-45RFE 2WD **19999**[61] 5-45RFE 4WD **20000**[61]
	6-359 (5.9L) HO Turbo Diesel	7	**BT7349**	**PA4162**	**N/R**	**PF7977**	**N/R**	**18055** 5-45RFE 4WD **20000**[61]
	6-408 (6.7L) FI Turbo Diesel	L	**BT7349**	**PA4318**	**N/R**		**N/R**	5-45RFE 2WD **19999**[61] 5-45RFE 4WD **20000**[61]
	Sprinter V6-182 (3.0L) DI Turbo Diesel	5	**P7413**		**PA4336**	**BF7972**	**N/R**	
	Viper SRT-10 V10-515 (8.4L) SFI	Z			**N/R**	**N/S**	**N/R**	**M.T.**
2009	Avenger 4-144 (2.4L) FI	B	**B7401**	**PA4335**	**PA4373**	**N/S**	**N/R**	40TES **18004**
	V6-167 (2.7L) FI Flex Fuel	D	**B7401**		**PA4373**	**N/S**	**N/R**	
	V6-214 (3.5L) FI	V	**B7401** Opt. **B7443**		**PA4373**	**N/S**	**N/R**	
	Caliber 4-110 (1.8L) FI	C	**B7443**	**PA4362**	**PA4373**	**N/S**	**N/R**	
	4-122 (2.0L) FI	A	**B7443**	**PA4362**	**PA4373**	**N/S**	**N/R**	
	4-148 (2.4L) FI	B	**B7443**	**PA4362**	**PA4373**	**N/S**	**N/R**	
	Caliber SRT4 4-148 (2.4L) FI Turbo	F	**B329**		**PA4373**	**N/S**	**N/R**	**M.T.**
	Challenger V6-215 (3.5L) FI	V	**B7443**	**PA4177**	**N/R**	**N/S**	**N/R**	
	V8-345 (5.7L) FI Hemi	T	**B329**	**PA4177**	**N/R**	**N/S**	**N/R**	
	V8-372 (6.1L) FI Hemi	W	**B329**	**PA4177**	**N/R**	**N/S**	**N/R**	
	Charger V6-167 (2.7L) FI	D	**B7443**	**PA4177**	**PA4174**	**N/S**	**N/R**	42RLE **20011**
	V6-215 (3.5L) FI	V	**B329**	**PA4177**	**PA4174**	**N/S**	**N/R**	
	V8-345 (5.7L) FI Hemi	T	**B329**	**PA4177**	**PA4174**	**N/S**	**N/R**	
	Charger SRT-8 V8-372 (6.1L) FI Hemi	W	**B329**	**PA4177**	**PA4174**	**N/S**	**N/R**	
	Dakota V6-225 (3.7L) FI	K	**B7444**	**PA2163**	**N/R**	**N/S**	**N/R**	42RLE **20011** 45RFE-2WD **19999**[61] 45RFE-4WD **20000**[61]
	V8-287 (4.7L) FI Flex Fuel	P	**B329**	**PA2163**	**N/R**	**N/S**	**N/R**	45RFE-2WD **19999**[61] 45RFE-4WD **20000**[61]
	Durango V6-225 (3.7L) FI	K	**B7444**	**PA4184**	**N/R**	**N/S**	**N/R**	42RLE **20011** 45RFE-2WD **19999**[61] 45RFE-4WD **20000**[61]
	V8-287 (4.7L) FI Flex Fuel	P	**B329**	**PA4184**	**N/R**	**N/S**	**N/R**	45RFE-2WD **19999**[61] 45RFE-4WD **20000**[61]
	V8-345 (5.7L) FI Hemi or Hybrid	T	**B329**	**PA4184**	**N/R**	**N/S**	**N/R**	45RFE-2WD **19999**[61] 45RFE-4WD **20000**[61]
	Grand Caravan V6-202 (3.3L) FI Flex Fuel	E	**BT223**		**PA4159**	**N/S**	**N/R**	**18004**
	V6-231 (3.8L) FI	1	**BT223**		**PA4159**	**N/S**	**N/R**	
	V6-241 (4.0L) FI	X	**B7443**		**PA4159**	**N/S**	**N/R**	
	Journey 4-144 (2.4L) FI	B	**B7443**		**PA4373**	**N/S**	**N/R**	**18004**
	V6-215 (3.5L) FI	V	**B7443**		**PA4373**	**N/S**	**N/R**	

[t] Transmission, Not Model, Determines Which Transmission Filter is Used. OBS = Obsolete. Availability Limited to Distributor Stock.

[61] Contains Pan-Type Filter and Spin-on Filter.

DODGE Cont'd.

Year	Model and Engine	VIN	Lube	Air	Cabin Air	Fuel	Breather	Trans.[t]
2009	Nitro V6-225 (3.7L) FI	K	**B7444**	**PA4367**		**N/S**	**N/R**	4 Spd. **20011**
	V6-241 (4.0L) FI	X		**PA4367**		**N/S**	**N/R**	
	Pickups V6-225 (3.7L) FI	K	**B7444**	**PA4151**	**N/R**	**N/S**	**N/R**	45RFE 2WD **19999**[61] 45RFE 4WD **20000**[61]
	V8-287 (4.7L) FI Flex Fuel	P	**B329**	**PA4151**	**N/R**	**N/S**	**N/R**	45RFE 2WD **19999**[61] 45RFE 4WD **20000**[61]
	V8-345 (5.7L) FI Hemi	T	**B329**	**PA4151**	**N/R**	**N/S**	**N/R**	45RFE 2WD **19999**[61] 45RFE 4WD **20000**[61]
	6-359 (5.9L) HO Turbo Diesel	7	**BT7349**	**PA4162**	**N/R**	**PF7977**	**N/R**	**18055**
	6-408 (6.7L) FI Turbo Diesel	L	**BT7349**	**PA4318**	**N/R**		**N/R**	
	Sprinter V6-182 (3.0L) DI Turbo Diesel	5	**P7413**		**PA4336**	**BF7972**	**N/R**	
	Viper SRT-10 V10-515 (8.4L) SFI	Z			**N/R**	**N/S**	**N/R**	**M.T.**
2008	Avenger 4-144 (2.4L) FI	K,J	**B7401**	**PA4335**	**PA4373**	**N/S**	**N/R**	4 Spd. **18004**
	V6-167 (2.7L) Flex Fuel	R	22 mm. Thd. **B329** 3/4 In. Thd. **B34**		**PA4373**	**N/S**	**N/R**	**18004**
	V6-215 (3.5L) FI HO	M	22 mm. Thd. **B329** 3/4 In. Thd. **B34**		**PA4373**	**N/S**	**N/R**	
	Caliber 4-110 (1.8L) SFI	C	**B7401**	**PA4362**	**PA4373**	**N/S**	**N/R**	
	4-122 (2.0L) SFI	B	**B7401**	**PA4362**	**PA4373**	**N/S**	**N/R**	
	4-148 (2.4L) SFI	F,K	22 mm. Thd. **B7401** 3/4 In. Thd. **B34**	**PA4362**	**PA4373**	**N/S**	**N/R**	
	Caliber SRT4 4-148 (2.4L) FI Turbo	F	**B329**		**PA4373**	**N/S**	**N/R**	**M.T.**
	Challenger V8-372 (6.1L) FI Hemi	W	**B329**	**PA4177**	**N/R**	**N/S**	**N/R**	
	Charger V6-167 (2.7L) FI	R	22 mm. Thd. **B329** 3/4 In. Thd. **B34**	**PA4177**	**PA4174**	**N/S**	**N/R**	42RLE **20011**
	V6-215 (3.5L) MFI HO	G	22 mm. Thd. **B329** 3/4 In. Thd. **B34**	**PA4177**	**PA4174**	**N/S**	**N/R**	
	V8-345 (5.7L) SFI Hemi	H	22 mm. Thd. **B329** 3/4 In. Thd. **B34**	**PA4177**	**PA4174**	**N/S**	**N/R**	
	Charger SRT-8 V8-372 (6.1L) SFI Hemi	W	22 mm. Thd. **B329** 3/4 In. Thd. **B34**	**PA4177**	**PA4174**	**N/S**	**N/R**	
	Dakota V6-226 (3.7L) FI	K	**B243**	**PA2163**	**N/R**	**N/S**	**N/R**	42RLE **20011**
	V8-287 (4.7L) Flex Fuel	N	22 mm. Thd. **B329** 3/4 In. Thd. **B34**	**PA2163**	**N/R**	**N/S**	**N/R**	45RFE 2WD **19999**[61] 45RFE 4WD **20000**[61]
	Durango V6-225 (3.7L) SFI	K	**B243**	**PA4184**	**N/R**	**N/S**	**N/R**	42RLE 4 Spd. **20011**
	V8-287 (4.7L) SFI or Flex Fuel	N	22 mm. Thd. **B329** 3/4 In. Thd. **B34**	**PA4184**	**N/R**	**N/S**	**N/R**	45RFE 2WD **19999**[61] 45RFE 4WD **20000**[61]
	V8-345 (5.7L) FI Hemi	2	22 mm. Thd. **B329** 3/4 In. Thd. **B34**	**PA4184**	**N/R**	**N/S**	**N/R**	45RFE 2WD **19999**[61] 45RFE 4WD **20000**[61]
	Grand Caravan V6-201 (3.3L) FI Flex Fuel	H	**BT223**		**PA4159**	**N/S**	**N/R**	**18004**
	V6-231 (3.8L) FI	P	**BT223**		**PA4159**	**N/S**	**N/R**	
	V6-241 (4.0L) FI	X	**B34**		**PA4159**	**N/S**	**N/R**	
	Magnum V6-167 (2.7L) MFI	T	22 mm. Thd. **B329** 3/4 In. Thd. **B34**	**PA4177**	**PA4174**	**N/S**	**N/R**	4 Spd. **20011**
	V6-215 (3.5L) MFI HO	V	22 mm. Thd. **B329** 3/4 In. Thd. **B34**	**PA4177**	**PA4174**	**N/S**	**N/R**	
	V8-345 (5.7L) MFI Hemi	2	22 mm. Thd. **B329** 3/4 In. Thd. **B34**	**PA4177**	**PA4174**	**N/S**	**N/R**	
	Magnum SRT8 V8-372 (6.1L) SFI Hemi	3	22 mm. Thd. **B329** 3/4 In. Thd. **B34**	**PA4177**	**PA4174**	**N/S**	**N/R**	
	Nitro V6-225 (3.7L) SFI	K	**B243**	**PA4367**	**N/R**	**N/S**	**N/R**	4 Spd. **20011**
	V6-241 (4.0L) SFI	6	**B34**	**PA4367**	**N/R**	**N/S**	**N/R**	

OBS = Obsolete. Availability Limited to Distributor Stock. [t] Transmission, Not Model, Determines Which Transmission Filter is Used.

[61] Contains Pan-Type Filter and Spin-on Filter.

DODGE Cont'd.

Year	Model and Engine	VIN	Lube	Air	Cabin Air	Fuel	Breather	Trans.t
2008	Pickups V6-225 (3.7L) FI	K	**B243**	**PA4151**	**N/R**	**N/S**	**N/R**	45RFE 2WD **19999**[61] 45RFE 4WD **20000**[61]
	V8-287 (4.7L) FI or Flex Fuel	N,P	22 mm. Thd. **B329** 3/4 In. Thd. **B34**	**PA4151**	**N/R**	**N/S**	**N/R**	4 Spd. **18055**
	V8-345 (5.7L) FI Hemi	2,D	22 mm. Thd. **B329** 3/4 In. Thd. **B34**	**PA4151**	**N/R**	**N/S**	**N/R**	545RFE-2WD **19999**[61] 545RFE-4WD **20000**[61] 5 Spd. **N/S**
	6-359 (5.9L) HO Turbo Diesel	C	**BT7349**	**PA4162**	**N/R**	**PF7977**	**N/R**	**18055**
	6-408 (6.7L) FI Turbo Diesel	A	**BT7349**	**PA4318**	**N/R**		**N/R**	
	Sprinter V6-182 (3.0L) Turbo Diesel	5	**P7413**		**PA4336**	**BF7972**	**N/R**	
	V6-215 (3.5L) FI	6	**P1443**		**PA4336**	**N/S**	**N/R**	
	Viper SRT-10 V10-515 (8.4L) SFI	Z			**N/R**	**N/S**	**N/R**	**M.T.**
2007	Caliber 4-110 (1.8L) SFI	C	**B7401**	**PA4362**	**PA4373**	**N/S**	**N/R**	
	4-122 (2.0L) SFI	B	**B7401**	**PA4362**	**PA4373**	**N/S**	**N/R**	
	4-148 (2.4L) SFI	K	**B7401**	**PA4362**	**PA4373**	**N/S**	**N/R**	
	Caravan 4-148 (2.4L) SFI	B	**BT223**	**PA4132**	**PA4159**	**N/S**	**N/R**	**18004**
	Charger V6-167 (2.7L) MFI	R	**B34**	**PA4177**	**PA4174**	**N/S**	**N/R**	42RLE RWD **20011**
	V6-215 (3.5L) MFI HO	G	**B34**	**PA4177**	**PA4174**	**N/S**	**N/R**	
	V8-345 (5.7L) FI Hemi	H	**B34**	**PA4177**	**PA4174**	**N/S**	**N/R**	
	Charger SRT-8 V8-372 (6.1L) SFI Hemi	W	**B34**	**PA4177**	**PA4174**	**N/S**	**N/R**	
	Dakota V6-225 (3.7L) MFI	K	**B243**	**PA2163**	**N/R**	**N/S**	**N/R**	42RLE **20011**
	V6-287 (4.7L) MFI, HO or Flex Fuel	J,N,P	**B34**	**PA2163**	**N/R**	**N/S**	**N/R**	45RFE 2WD **19999**[61] 45RFE 4WD **20000**[61]
	Durango V6-225 (3.7L) SFI	K	**B243**	**PA4184**	**N/R**	**N/S**	**N/R**	42RLE **20011**
	V8-285 (4.7L) SFI or Flex Fuel	N,P	**B34**	**PA4184**	**N/R**	**N/S**	**N/R**	45RFE 2WD **19999**[61] 45RFE 4WD **20000**[61]
	V8-345 (5.7L) FI Hemi	2	22 mm. Thd. **B329** 3/4 In. Thd. **B34**	**PA4184**	**N/R**	**N/S**	**N/R**	45RFE 2WD **19999**[61] 45RFE 4WD **20000**[61]
	Grand Caravan V6-202 (3.3L) FI or Flex Fuel	E,R	**BT223**	**PA4132**	**PA4159**	**N/S**	**N/R**	**18004**
	V6-231 (3.8L) SFI	L	**BT223**	**PA4132**	**PA4159**	**N/S**	**N/R**	**18004**
	Magnum V6-167 (2.7L) MFI	T	**B34**	**PA4177**	**PA4174**	**N/S**	**N/R**	42RLE **20011**
	V6-215 (3.5L) MFI	V	**B34**	**PA4177**	**PA4174**	**N/S**	**N/R**	
	V8-345 (5.7L) MFI Hemi	2	**B34**	**PA4177**	**PA4174**	**N/S**	**N/R**	
	Magnum SRT8 V8-372 (6.1L) SFI Hemi	3	**B34**	**PA4177**	**PA4174**	**N/S**	**N/R**	
	Nitro V6-225 (3.7L) SFI	K	**B243**	**PA4367**	**N/R**	**N/S**	**N/R**	**20011**
	V6-241 (4.0L) SFI	6	**B34**	**PA4367**	**N/R**	**N/S**	**N/R**	**20011**
	Pickups V6-225 (3.7L) FI	K	**B243**	**PA4151**	**N/R**	**N/S**	**N/R**	45RFE-2WD **19999**[61] 45RFE-4WD **20000**[61]
	6-359 (5.9L) HO Turbo Diesel	C	**BT7349**	**PA4162**	**N/R**	**PF7977**	**N/R**	**18055**
	6-408 (6.7L) FI Turbo Diesel	A	**BT7349**	**PA4318**	**N/R**		**N/R**	45RFE-2WD **19999**[61] 45RFE-4WD **20000**[61]
	V8-287 (4.7L) SFI or Flex Fuel	N,P	**B34**	**PA4151**	**N/R**	**N/S**	**N/R**	**18055**
	V8-345 (5.7L) FI Hemi	2,D	**B34**	**PA4151**	**N/R**	**N/S**	**N/R**	**N/S**
	Sprinter V6-182 (3.0L) Turbo Diesel	5	**P7413**		(w/Charcoal) **PA4336**	**BF7972**	**N/R**	
	V6-215 (3.5L) FI	6	**P1443**		(w/Charcoal) **PA4336**	**N/S**	**N/R**	
	Viper SRT-10 V10-505 (8.3L) FI	Z	**B34**		**N/R**	**N/S**	**N/R**	**M.T.**
2006	Caravan, Grand Caravan 4-148 (2.4L) SFI	B	**BT223**	**PA4132**	**PA4159**	**N/S**	**N/R**	**18004**
	V6-202 (3.3L) FI or Flex Fuel	E,R	**B34**	**PA4132**	**PA4159**	**N/S**	**N/R**	**18004**
	V6-231 (3.8L) SFI	L	**B34**	**PA4132**	**PA4159**	**N/S**	**N/R**	**18004**
	Charger V6-167 (2.7L) MFI	R	**B34**	**PA4177**	**PA4174**	**N/S**	**N/R**	42RLE **20011**

[t] Transmission, Not Model, Determines Which Transmission Filter is Used. OBS = Obsolete. Availability Limited to Distributor Stock.

[61] Contains Pan-Type Filter and Spin-on Filter.

DODGE Cont'd.

Year	Model and Engine	VIN	Lube	Air	Cabin Air	Fuel	Breather	Trans.[t]
2006	Charger V6-215 (3.5L) SFI HO	G	**B34**	**PA4177**	**PA4174**	**N/S**	**N/R**	
	V8-345 (5.7L) FI Hemi	H	**B34**	**PA4177**	**PA4174**	**N/S**	**N/R**	
	Charger SRT8 V8-370 (6.1L) SFI Hemi	W	**B34**	**PA4177**	**PA4174**	**N/S**	**N/R**	
	Dakota V6-225 (3.7L) SFI	K	**B243**	**PA2163**	**N/R**	**N/S**	**N/R**	42RLE **20011**
	V8-287 (4.7L) FI or HO	J,N	**B34**	**PA2163**	**N/R**	**N/S**	**N/R**	45RFE 2WD **19999**[61] 45RFE 4WD **20000**[61]
	Durango V6-225 (3.7L) SFI	K	**B243**	**PA4184**	**N/R**	**N/S**	**N/R**	42RLE **20011**
	V8-287 (4.7L) SFI or Flex Fuel	N,P	**B34**	**PA4184**	**N/R**	**N/S**	**N/R**	45RFE 2WD **19999**[61] 45RFE 4WD **20000**[61]
	V8-345 (5.7L) FI Hemi	2	**B34**	**PA4184**	**N/R**	**N/S**	**N/R**	45RFE 2WD **19999**[61] 45RFE 4WD **20000**[61]
	Magnum V6-167 (2.7L) MFI	T	**B34**	**PA4177**	**PA4174**	**N/S**	**N/R**	**20011**
	V6-215 (3.5L) SFI HO	V	**B34**	**PA4177**	**PA4174**	**N/S**	**N/R**	
	V8-345 (5.7L) SFI Hemi	2	**B34**	**PA4177**	**PA4174**	**N/S**	**N/R**	
	Magnum SRT8 V8-372 (6.1L) SFI Hemi	3	**B34**	**PA4177**	**PA4174**	**N/S**	**N/R**	
	Pickups V6-225 (3.7L) SFI	K	**B243**	**PA4151**	**N/R**	**N/S**	**N/R**	45RFE 2WD **19999**[61] 45RFE 4WD **20000**[61]
	6-360 (5.9L) Turbo Diesel or HO	C	**BT7349**	**PA4162**	**N/R**	**PF7977**	**N/R**	**18055**
	V8-287 (4.7L) FI or Flex Fuel	N,P	**B34**	**PA4151**	**N/R**	**N/S**	**N/R**	45RFE 2WD **19999**[61] 45RFE 4WD **20000**[61]
	V8-345 (5.7L) FI Hemi	2,D	**B34**	**PA4151**	**N/R**	**N/S**	**N/R**	45RFE 2WD **19999**[61] 45RFE 4WD **20000**[61]
	Ram SRT10 V10-505 (8.3L) SFI	H	**B34**	**PA4162**	**N/R**	**N/S**	**N/R**	**18055**
	Sprinter 5-165 (2.7L) Turbo Diesel	4	**P1443**	w/o Foam **PA4600** w/Foam **PA4601**	**PA4409**	MBE600 Eng. **BF7778** OM647 Eng. **BF7972**	**N/R**	
	Stratus 4-148 (2.4L) SFI	J,X	**BT223**	**RS4130**	**N/R**	**N/S**	**N/R**	**18004**
	V6-167 (2.7L) SFI or Flex Fuel	R,T	**B34**	**RS4130**	**N/R**	**N/S**	**N/R**	**18004**
	SX 4-122 (2.0L) FI or HO Canada	C,F	**BT223**	**PA4118**	**N/R**	**N/S**	**N/R**	**18004**
	Viper SRT-10 V10-505 (8.3L) FI	Z	**B34**		**N/R**	**N/S**	**N/R**	**M.T.**
2005	Caravan, Grand Caravan 4-148 (2.4L) SFI	B	**BT223**	**PA4132**	**PA4159**	**N/S**	**N/R**	**18004**
	V6-202 (3.3L) SFI	R	**B34**	**PA4132**	**PA4159**	**N/S**	**N/R**	**18004**
	V6-231 (3.8L) SFI	L	**B34**	**PA4132**	**PA4159**	**N/S**	**N/R**	**18004**
	Dakota V6-225 (3.7L) MFI	K	**B243**	**PA2163**	**N/R**	**N/S**	**N/R**	42RLE **20011** 45RFE 2WD **19999**[61] 45RFE 4WD **20000**[61]
	V8-287 (4.7L) SFI Magnum or HO	J,N	**B34**	**PA2163**	**N/R**	**N/S**	**N/R**	42RLE **20011** 45RFE 2WD **19999**[61] 45RFE 4WD **20000**[61]
	Durango V6-225 (3.7L) MFI	K	**B243**	**PA4184**	**N/R**	**N/S**	**N/R**	45RFE 2WD **19999**[61] 45RFE 4WD **20000**[61]
	V8-287 (4.7L) SFI	N	**B34**	**PA4184**	**N/R**	**N/S**	**N/R**	45RFE 2WD **19999**[61] 45RFE 4WD **20000**[61]

OBS = Obsolete. Availability Limited to Distributor Stock. [t] Transmission, Not Model, Determines Which Transmission Filter is Used.

[61] Contains Pan-Type Filter and Spin-on Filter.

DODGE Cont'd.

Year	Model and Engine	VIN	Lube	Air	Cabin Air	Fuel	Breather	Trans.t
2005	Durango V8-345 (5.7L) SFI Hemi	D	**B34**	**PA4184**	**N/R**	**N/S**	**N/R**	45RFE 2WD **19999**[61] 45RFE 4WD **20000**[61]
	Magnum V6-167 (2.7L) MFI	T	**B34**	**PA4177**	**PA4174**	**N/S**	**N/R**	4 Spd. **20011**
	V6-215 (3.5L) MFI HO	V	**B34**	**PA4177**	**PA4174**	**N/S**	**N/R**	4 Spd. **20011**
	V8-345 (5.7L) MFI Hemi	2	**B34**	**PA4177**	**PA4174**	**N/S**	**N/R**	4 Spd. **20011**
	Neon 4-122 (2.0L) SFI or HO	C,F	**BT223**	**PA4118**	**N/R**	**N/S**	**N/R**	**18004**
	4-148 (2.4L) SFI Turbo HO	S	**B243**	**PA4118**	**N/R**	**N/S**	**N/R**	**M.T.**
	Pickups V6-225 (3.7L) SFI	K	**B243**	**PA4151**	**N/R**	**N/S**	**N/R**	45RFE 2WD **19999**[61] 45RFE 4WD **20000**[61]
	6-360 (5.9L) Turbo Diesel or HO	6,C	**BT7349**	**PA4162**	**N/R**	**PF7977**	**N/R**	**18055**
	V8-287 (4.7L) SFI or Flex Fuel	N	**B34**	**PA4151**	**N/R**	**N/S**	**N/R**	45RFE 2WD **19999**[61] 45RFE 4WD **20000**[61]
	V8-345 (5.7L) SFI Hemi	D	**B34**	**PA4151**	**N/R**	**N/S**	**N/R**	55RFE 2WD **19999**[61] 55RFE 4WD **20000**[61]
	Ram SRT10 V10-505 (8.3L) SFI	H	**B34**	**PA4162**	**N/R**	**N/S**	**N/R**	**18055**
	Sprinter 5-2687cc (2.7L) EFI Turbo Diesel	4	**P1443**	w/o Foam **PA4600** w/Foam **PA4601**	**PA4409**	MBE612 Eng. **BF7778** OM647 Eng. **BF7972**	**N/R**	
	Stratus 4-143 (2.4L) SFI SOHC	G	**B1402**	**PA4015**	**N/R**	**N/S**	**N/R**	**N/S**
	4-148 (2.4L) SFI DOHC	J,X	**BT223**	**RS4130**	**N/R**	**N/S**	**N/R**	**18004**
	V6-167 (2.7L) SFI or Flex Fuel	R,T	**B34**	**RS4130**	**N/R**	**N/S**	**N/R**	**18004**
	V6-181 (3.0L) SFI	H	**B7243**	**PA4015**	**N/R**	**N/S**	**N/R**	**N/S**
	SX 4-122 (2.0L) FI Canada	C,F	**BT223**	**PA4118**	**N/R**	**N/S**	**N/R**	**18004**
	4-148 (2.4L) FI Canada		**B243**	**PA4118**	**N/R**	**N/S**	**N/R**	**18004**
	Viper V10-505 (8.3L) SFI	Z	**B34**			**N/S**	**N/R**	**M.T.**
2004	Caravan, Grand Caravan 4-148 (2.4L) SFI	B	**BT223**	**PA4132**	**PA4159**	**BF7763**	**N/R**	**18004**
	V6-202 (3.3L) SFI or Flex Fuel	3,R,S	**B34**	**PA4132**	**PA4159**	**BF7763**	**N/R**	**18004**
	V6-231 (3.8L) SFI	L	**B34**	**PA4132**	**PA4159**	**BF7763**	**N/R**	**18004**
	Dakota V6-225 (3.7L) MFI	K	**B243**	**PA2163**	**N/R**	**N/S**	**N/R**	42RLE **20011** 45RFE 2WD **19999**[61] 45RFE 4WD **20000**[61]
	V8-287 (4.7L) SFI	N	**B34**	**PA2163**	**N/R**	**N/S**	**N/R**	42RLE **20011** 45RFE 2WD **19999**[61] 45RFE 4WD **20000**[61]
	Durango V6-225 (3.7L) MFI	K	**B243**	**PA4184**	**N/R**	**N/S**	**N/R**	42RLE **20011** 45RFE 2WD **19999**[61] 45RFE 4WD **20000**[61]
	V8-287 (4.7L) SFI	N	**B34**	**PA4184**	**N/R**	**N/S**	**N/R**	42RLE **20011** 45RFE 2WD **19999**[61] 45RFE 4WD **20000**[61]
	V8-345 (5.7L) FI Hemi Magnum	D	**B34**	**PA4184**	**N/R**	**N/S**	**N/R**	42RLE **20011** 45RFE 2WD **19999**[61] 45RFE 4WD **20000**[61]
	Intrepid V6-167 (2.7L) SFI	R,U	**B34**	**PA4109**	**N/R**	**N/S**	**N/R**	**18003**
	V6-215 (3.5L) SFI or HO, Police	G,M,V	**B34**	**PA4109**	**N/R**	**N/S**	**N/R**	**18003**
	Neon, SRT-4 4-122 (2.0L) SFI or HO	C,F	**BT223**	**PA4118**	**N/R**	**N/S**	**N/R**	**18004**
	4-148 (2.4L) SFI Turbo HO	S	**B243**	**PA4118**	**N/R**	**N/S**	**N/R**	**M.T.**

[t] Transmission, Not Model, Determines Which Transmission Filter is Used. OBS = Obsolete. Availability Limited to Distributor Stock.

[61] Contains Pan-Type Filter and Spin-on Filter.

DODGE Cont'd.

Year	Model and Engine	VIN	Lube	Air	Cabin Air	Fuel	Breather	Trans.[t]
2004	Pickups V6-226 (3.7L) SFI	K	**B243**	**PA4151**	**N/R**	**N/S**	**N/R**	45RFE 2WD **19999**[61] 45RFE 4WD **20000**[61]
	6-360 (5.9L) Turbo Diesel or HO	6	**BT7349**	**PA4162**	**N/R**	**PF7977**	**N/R**	**18055**
	V8-287 (4.7L) SFI	N	**B34**	**PA4151**	**N/R**	**N/S**	**N/R**	45RFE 2WD **19999**[61] 45RFE 4WD **20000**[61]
	V8-345 (5.7L) SFI Hemi Magnum	D	**B34**	**PA4151**	**N/R**	**N/S**	**N/R**	55RFE 2WD **19999**[61] 55RFE 4WD **20000**[61]
	Ram SRT10 V10-505 (8.3L) SFI	H	**B34**	**PA4162**	**N/R**	**N/S**	**N/R**	**18055**
	Sprinter 5-2687cc (2.7L) EFI Turbo Diesel	4	**P1443**	w/o Foam **PA4600** w/Foam **PA4601**	**PA4409**	MBE612 Eng. **BF7778** OM647 Eng. **BF7972**	**N/R**	
	Stratus 4-143 (2.4L) SFI SOHC Coupe	G	**B1402**	**PA4015**	**N/R**	**N/S**	**N/R**	**N/S**
	4-148 (2.4L) SFI DOHC Sedan	X,J	**BT223**	**RS4130**	**N/R**	**N/S**	**N/R**	**18004**
	V6-167 (2.7L) SFI or Flex Fuel	R,T	**B34**	**RS4130**	**N/R**	**N/S**	**N/R**	**18004**
	V6-181 (3.0L) SFI	H	**B7243**	**PA4015**	**N/R**	**N/S**	**N/R**	**N/S**
	SX 4-122 (2.0L) FI Canada	C	**BT223**	**PA4118**	**N/R**	**N/S**	**N/R**	**18004**
	Viper V10-505 (8.3L) SFI	Z	**B34**		**N/R**	**N/S**	**N/R**	**M.T.**
2003	Caravan, Grand Caravan 4-148 (2.4L) SFI	B	**BT223**	**PA4132**	**PA4159**	**BF7763**	**N/R**	**18004**
	V6-201 (3.3L) SFI or Flex Fuel	3,R	**B34**	**PA4132**	**PA4159**	**BF7763**	**N/R**	**18004**
	V6-231 (3.8L) SFI	L	**B34**	**PA4132**	**PA4159**	**BF7763**	**N/R**	**18004**
	Dakota, Durango V6-239 (3.9L) SFI	X	**B34**	**PA2163**	**N/R**	**N/S**	**N/R**	**18055**
	V8-287 (4.7L) SFI	N	**B34**	**PA2163**	**N/R**	**N/S**	**N/R**	2WD **19999**[61] 4WD **20000**[61]
	V8-360 (5.9L) SFI	Z	**B34**	**PA2163**	**N/R**	**N/S**	**N/R**	**18055**
	Intrepid V6-167 (2.7L) SFI	R	**B34**	**PA4109**	**N/R**	**N/S**	**N/R**	**18003**
	V6-215 (3.5L) SFI or HO, Police	G,M,V	**B34**	**PA4109**	**N/R**	**N/S**	**N/R**	**18003**
	Neon, Neon SRT 4-122 (2.0L) SFI or HO	C,F	**BT223**	**PA4118**	**N/R**	**N/S**	**N/R**	**18004**
	4-148 (2.4L) FI Turbo	S	**BT223**	**PA4118**	**N/R**	**N/S**	**N/R**	**18004**
	Pickups V6-226 (3.7L) SFI	K	**B243**	**PA4151**	**N/R**	**N/S**	**N/R**	45RFE 2WD **19999**[61] 45RFE 4WD **20000**[61]
	6-360 (5.9L) Turbo Diesel or HO	6,C	**BT7349**	**PA4162**	**N/R**	**PF7977**	**N/R**	**18055**
	V8-287 (4.7L) SFI	N	**B34**	**PA4151**	**N/R**	**N/S**	**N/R**	45RFE 2WD **19999**[61] 45RFE 4WD **20000**[61]
	V8-350 (5.7L) SFI Hemi	K	**B34**	**PA4151**	**N/R**	**N/S**	**N/R**	55RFE 2WD **19999**[61] 55RFE 4WD **20000**[61]
	V8-360 (5.9L) SFI	Z	**B34**	**PA4151**	**N/R**	**N/S**	**N/R**	**18055**
	V10-488 (8.0L) SFI	W	**B34**	**PA4151**	**N/R**	**N/S**	**N/R**	**18055**
	Ram Vans V6-239 (3.9L) SFI	X	**B34**	**PA615**	**N/R**	**N/S**	**SA4141**	**18055**
	V8-318 (5.2L) SFI or Natural Gas	T,Y	**B34**	**PA615**	**N/R**	**N/S**	**SA4141**	**18055**
	V8-360 (5.9L) SFI	Z	**B34**	**PA615**	**N/R**	**N/S**	**N/R**	**18055**
	Sprinter 5-2687cc (2.7L) EFI Turbo Diesel	2	**P1443**	w/o Foam **PA4600** w/Foam **PA4601**	**PA4409**	**BF7778**	**N/R**	
	Stratus 4-143 (2.4L) SFI SOHC Coupe	G	**B1402**	**PA4015**	**N/R**	**N/S**	**N/R**	**N/S**
	4-148 (2.4L) SFI DOHC Sedan	X	**BT223**	**RS4130**	**N/R**	**N/S**	**N/R**	**18004**
	V6-167 (2.7L) SFI	R	**B34**	**RS4130**	**N/R**	**N/S**	**N/R**	**18004**
	V6-181 (3.0L) SFI	H	**B7243**	**PA4015**	**N/R**	**N/S**	**N/R**	**N/S**
	SX 4-122 (2.0L) FI Canada	C	**BT223**	**PA4118**	**N/R**	**N/S**	**N/R**	**18004**
	Viper V10-505 (8.3L) SFI	Z	**B34**		**N/R**	**N/S**	**N/R**	**M.T.**
2002	Caravan, Grand Caravan 4-148 (2.4L) SFI	B	**BT223**	**PA4132**	**PA4159**	**BF7763**	**N/R**	3 Spd. **18104** 4 Spd. **18004**
	V6-201 (3.3L) SFI Flex Fuel	3	**B34**	**PA4132**	**PA4159**	**BF7763**	**N/R**	**18004**
	V6-231 (3.8L) SFI	L	**B34**	**PA4132**	**PA4159**	**BF7763**	**N/R**	**18004**
	Dakota, Durango 4-151 (2.5L) SFI	P	**B34**	**PA2163**	**N/R**	**N/S**	**N/R**	**M.T.**

OBS = Obsolete. Availability Limited to Distributor Stock. [t] Transmission, Not Model, Determines Which Transmission Filter is Used.

[61] Contains Pan-Type Filter and Spin-on Filter.

DODGE Cont'd.

Year	Model and Engine	VIN	Lube	Air	Cabin Air	Fuel	Breather	Trans.t
2002	Dakota, Durango V6-239 (3.9L) SFI	X	**B34**	**PA2163**	**N/R**	**N/S**	**N/R**	**18055**
	V8-287 (4.7L) SFI	N	**B34**	**PA2163**	**N/R**	**N/S**	**N/R**	45RFE 2WD **19999**[61] 45RFE 4WD **20000**[61]
	V8-360 (5.9L) SFI	Z	**B34**	**PA2163**	**N/R**	**N/S**	**N/R**	**18055**
	Intrepid V6-167 (2.7L) SFI	R	**B34**	**PA4109**	**N/R**	**N/S**	**N/R**	**18003**
	V6-215 (3.5L) SFI	G,M	**B34**	**PA4109**	**N/R**	**N/S**	**N/R**	**18003**
	Neon 4-122 (2.0L) SFI	C,F	**BT223**	**PA4118**	**N/R**	**N/S**	**N/R**	**18004**
	Pickups V6-226 (3.7L) FI	K	**B243**	**PA4151**	**N/R**	**N/S**	**N/R**	45RFE 2WD **19999**[61] 45RFE 4WD **20000**[61]
	6-360 (5.9L) Turbo Diesel or HO	6,C	**BT7349**	**PA3763**	**N/R**	To 7/02 **PF7777** 7/02-on **PF7977**	**N/R**	**18055**
	V8-287 (4.7L) FI	N	**B34**	**PA4151**	**N/R**	**N/S**	**N/R**	45RFE 2WD **19999**[61] 45RFE 4WD **20000**[61]
	V8-360 (5.9L) FI	5,Z	**B34**	VIN 5 **PA2163** VIN Z **PA4151**	**N/R**	**N/S**	**SA4141**	**18055**
	V10-488 (8.0L) SFI	W	**B34**		**N/R**	**N/S**	**N/R**	**18055**
	Ram Vans V6-239 (3.9L) SFI	X	**B34**	**PA615**	**N/R**	**N/S**	**SA4141**	**18055**
	V8-318 (5.2L) SFI or Natural Gas	T,Y	**B34**	**PA615**	**N/R**	**N/S**	**SA4141**	**18055**
	V8-360 (5.9L) SFI	Z	**B34**	**PA615**	**N/R**	**N/S**	**SA4141**	**18055**
	Sprinter 5-2687cc (2.7L) EFI Turbo Diesel		**P1443**	w/o Foam **PA4600** w/Foam **PA4601**	**PA4409**	**BF7778**	**N/R**	
	Stratus 4-143 (2.4L) SFI SOHC Coupe	G	**B1402**	**PA4015**	**N/R**	**N/S**	**N/R**	**N/S**
	4-148 (2.4L) SFI DOHC Sedan	X	**BT223**	**RS4130**	**N/R**	**N/S**	**N/R**	**18004**
	V6-167 (2.7L) EFI	R	**B34**	**RS4130**	**N/R**	**N/S**	**N/R**	**18004**
	V6-181 (3.0L) SFI	H	**B7243**	**PA4015**	**N/R**	**N/S**	**N/R**	**N/S**
	Viper V10-488 (8.0L) SFI	E	**B34**		**N/R**	**BF1182**	**N/R**	**M.T.**
2001	Caravan, Grand Caravan 4-148 (2.4L) SFI	B	**BT223**	**PA4132**	**PA4159**	**BF7763**	**N/R**	3 Spd. **18104** 4 Spd. **18004**
	V6-201 (3.3L) SFI or Flex Fuel	3,G	**B34**	**PA4132**	**PA4159**	**BF7763**	**N/R**	**18004**
	V6-231 (3.8L) SFI	L	**B34**	**PA4132**	**PA4159**	**BF7763**	**N/R**	**18004**
	Dakota, Durango 4-151 (2.5L) SFI	P	**B34**	**PA2163**	**N/R**	**N/S**	**N/R**	**M.T.**
	V6-239 (3.9L) SFI	X	**B34**	**PA2163**	**N/R**	**N/S**	**N/R**	**18055**
	V8-287 (4.7L) SFI	N	**B34**	**PA2163**	**N/R**	**N/S**	**N/R**	42RFE **18055** 45RFE 2WD **19999**[61] 45RFE 4WD **20000**[61]
	V8-318 (5.2L) SFI	Y	**B34**	**PA2163**	**N/R**	**N/S**	**N/R**	**18055**
	V8-360 (5.9L) SFI	Z	**B34**	**PA2163**	**N/R**	**N/S**	**N/R**	**18055**
	Intrepid V6-167 (2.7L) SFI	R	**B34**	**PA4109**	**N/R**	**N/S**	**N/R**	**18003**
	V6-197 (3.2L) SFI	J	**B34**	**PA4109**	**N/R**	**N/S**	**N/R**	**18003**
	V6-215 (3.5L) SFI	G	**B34**	**PA4109**	**N/R**	**N/S**	**N/R**	**18003**
	Neon 4-122 (2.0L) SFI	C,F	**BT223**	**PA4118**	**N/R**	**N/S**	**N/R**	3 Spd. **18104** 4 Spd. **18004**
	Pickups V6-239 (3.9L) SFI	X	**B34**	**PA2163**	**N/R**	**N/S**	**SA4141**	**18055**
	6-360 (5.9L) Turbo Diesel or HO	6,7	**BT7349**	**PA3763**	**N/R**	**PF7777**	**N/R**	**18055**
	V8-318 (5.2L) SFI	Y	**B34**	**PA2163**	**N/R**	**N/S**	**SA4141**	**18055**
	V8-360 (5.9L) SFI	5,Z	**B34**	**PA2163**	**N/R**	**N/S**	**SA4141**	**18055**
	V10-488 (8.0L) SFI	W	**B34**	**PA2234**	**N/R**	**N/S**	**N/R**	**18055**
	Ram Vans V6-239 (3.9L) SFI	X	**B34**	**PA615**	**N/R**	**N/S**	**SA4141**	**18055**
	V8-318 (5.2L) SFI or Natural Gas	T,Y	**B34**	**PA615**	**N/R**	**N/S**	**SA4141**	**18055**
	V8-360 (5.9L) SFI	Z	**B34**	**PA615**	**N/R**	**N/S**	**SA4141**	**18055**
	Stratus 4-143 (2.4L) SFI SOHC Coupe	G	**B1402**	**PA4015**	**N/R**	**N/S**	**N/R**	**N/S**
	4-148 (2.4L) SFI DOHC Sedan	X	**BT223**	**RS4130**	**N/R**	**N/S**	**N/R**	**18004**
	V6-167 (2.7L) SFI	U	**B34**	**RS4130**	**N/R**	**N/S**	**N/R**	**18004**
	V6-181 (3.0L) SFI	H	**B7243**	**PA4015**	**N/R**	**N/S**	**N/R**	**N/S**
	Viper V10-488 (8.0L) SFI	E	**B34**		**N/R**	**BF1182**	**N/R**	**M.T.**
2000	Avenger V6-152 (2.5L) SFI	N	**B34**	**PA4015**	**N/R**	**BF7659**	**N/R**	**18004**
	Caravan, Grand Caravan 4-148 (2.4L) SFI	B	**BT223**	**PA2103**	**N/R**	**BF7669**	**N/R**	3 Spd. **18104**

[t] Transmission, Not Model, Determines Which Transmission Filter is Used. OBS = Obsolete. Availability Limited to Distributor Stock.

[61] Contains Pan-Type Filter and Spin-on Filter.

DODGE Cont'd.

Year	Model and Engine	VIN	Lube	Air	Cabin Air	Fuel	Breather	Trans.[t]
2000	Caravan, Grand Caravan V6-181 (3.0L) SFI	3	**B34**	**PA2103**	**N/R**	Std. W.B. **BF7669** Ext. W.B. **BF1053**	**N/R**	4 Spd. **18004**
	V6-201 (3.3L) SFI or Flex Fuel	G,R	**B34**	**PA2103**	**N/R**	Std. W.B. **BF7669** Ext. W.B. **BF1053**	**N/R**	**18004**
	V6-231 (3.8L) SFI	L	**B34**	**PA2103**	**N/R**	Std. W.B. **BF7669** Ext. W.B. **BF1053**	**N/R**	**18004**
	Dakota, Durango 4-151 (2.5L) SFI	P	**B34**	**PA2163**	**N/R**	**N/S**	**N/R**	**M.T.**
	V6-239 (3.9L) SFI	X	**B34**	**PA2163**	**N/R**	**N/S**	**N/R**	**18055**
	V8-287 (4.7L) SFI	N	**B34**	**PA2163**	**N/R**	**N/S**	**N/R**	42RFE **18055** 45RFE 2WD **19999**[61] 45RFE 4WD **20000**[61]
	V8-318 (5.2L) SFI	Y	**B34**	**PA2163**	**N/R**	**N/S**	**N/R**	**18055**
	V8-360 (5.9L) SFI	Z	**B34**	**PA2163**	**N/R**	**N/S**	**N/R**	**18055**
	Intrepid V6-165 (2.7L) SFI	R,U	**B34**	**PA4109**	**N/R**	**N/S**	**N/R**	**18003**
	V6-197 (3.2L) SFI	J	**B34**	**PA4109**	**N/R**	**N/S**	**N/R**	**18003**
	V6-215 (3.5L) MFI	G	**B34**	**PA4109**	**N/R**	**N/S**	**N/R**	**18003**
	Neon 4-122 (2.0L) SFI	C,Y	**BT223**	**PA4118**	**N/R**	**N/S**	**N/R**	**18104**
	Pickups V6-239 (3.9L) SFI	X	**B34**	**PA2163**	**N/R**	**N/S**	**SA4141**	**18055**
	6-360 (5.9L) Turbo Diesel	6	**BT7349**	**PA3763**	**N/R**	**PF7777**	**N/R**	**18055**
	V8-318 (5.2L) SFI	Y	**B34**	**PA2163**	**N/R**	**N/S**	**SA4141**	**18055**
	V8-360 (5.9L) SFI	5,Z	**B34**	**PA2163**	**N/R**	**N/S**	**N/R**	**18055**
	V10-488 (8.0L) SFI	W	**B34**	**PA2234**	**N/R**	**N/S**	**N/R**	**18055**
	Ram Vans V6-239 (3.9L) SFI	X	**B34**	**PA615**	**N/R**	**N/S**	**SA4141**	**18055**
	V8-318 (5.2L) SFI or Natural Gas	T,Y	**B34**	**PA615**	**N/R**	**N/S**	**SA4141**	**18055**
	V8-360 (5.9L) SFI	Z	**B34**	**PA615**	**N/R**	**N/S**	**SA4141**	**18055**
	Stratus 4-122 (2.0L) SFI	C	**BT223**	**PA4085**	**N/R**	**BF7671**	**N/R**	**18004**
	4-148 (2.4L) SFI	X	**BT223**	**PA4085**	**N/R**	**BF7671**	**N/R**	**18004**
	V6-152 (2.5L) SFI	H	**B34**	**PA4085**	**N/R**	**BF7671**	**N/R**	**18004**
	Viper V10-488 (8.0L) SFI	E	**B34**		**N/R**	**BF1182**	**N/R**	**M.T.**
1999	Avenger 4-122 (2.0L) SFI	Y	**B34**	**PA4015**	**N/R**	**BF7659**	**N/R**	**18004**
	V6-152 (2.5L) SFI	N	**B34**	**PA4015**	**N/R**	**BF7659**	**N/R**	**18004**
	Caravan, Grand Caravan 4-148 (2.4L) SFI	B	**BT223**	**PA2103**	**N/R**	**BF7669**	**N/R**	3 Spd. **18104** 4 Spd. **18004**
	V6-181 (3.0L) SFI	3	**B34**	**PA2103**	**N/R**	Std. W.B. **BF7669** Ext. W.B. **BF1053**	**N/R**	3 Spd. **18104** 4 Spd. **18004**
	V6-201 (3.3L) SFI Flex Fuel	G,R	**B34**	**PA2103**	**N/R**	Std. W.B. **BF7669** Ext. W.B. **BF1053**	**N/R**	**18004**
	V6-231 (3.8L) SFI	L	**B34**	**PA2103**	**N/R**	Std. W.B. **BF7669** Ext. W.B. **BF1053**	**N/R**	**18004**
	Dakota, Durango 4-151 (2.5L) SFI	P	**B34**	**PA2163**	**N/R**	**N/S**	**N/R**	**M.T.**
	V6-239 (3.9L) SFI	X	**B34**	**PA2163**	**N/R**	**N/S**	**SA4141**	**18055**
	V8-318 (5.2L) SFI	Y	**B34**	**PA2163**	**N/R**	**N/S**	**SA4141**	8-727 **18032** 4 Spd. **18055**
	V8-360 (5.9L) SFI	Z	**B34**	**PA2163**	**N/R**	**N/S**	**SA4141**	**18055**
	Intrepid V6-165 (2.7L) MFI	R	**B34**	**PA4109**	**N/R**	**N/S**	**N/R**	**18003**
	V6-197 (3.2L) MFI	J	**B34**	**PA4109**	**N/R**	**N/S**	**N/R**	**18003**
	Neon 4-122 (2.0L) SFI	C,Y	**BT223**	**PA2103**	**N/R**	**N/S**	**N/R**	**18104**
	Pickups V6-239 (3.9L) SFI	X	**B34**	**PA2163**	**N/R**	**N/S**	**SA4141**	**18055**
	6-360 (5.9L) Turbo Diesel	6	**BT7349**	**PA3763**	**N/R**	**PF7751**	**N/R**	**18055**
	V8-318 (5.2L) SFI	Y	**B34**	**PA2163**	**N/R**	**N/S**	**SA4141**	8-727 **18032**
	V8-360 (5.9L) SFI	5,Z	**B34**	**PA2163**	**N/R**	**N/S**	**SA4141**	8-727 **18032** 4 Spd. **18055**

OBS = Obsolete. Availability Limited to Distributor Stock. [t] Transmission, Not Model, Determines Which Transmission Filter is Used.

[61] Contains Pan-Type Filter and Spin-on Filter.

DODGE Cont'd.

Year	Model and Engine	VIN	Lube	Air	Cabin Air	Fuel	Breather	Trans.[t]
1999	Pickups V10-488 (8.0L) SFI	W	**B34**	**PA2234**	**N/R**	**N/S**	**N/R**	3 Spd. **18032** 4 Spd. **18055**
	Ram Vans V6-239 (3.9L) SFI	X	**B34**	**PA615**	**N/R**	**N/S**	**SA4141**	6-904, 8-727 **18032**
	V8-318 (5.2L) SFI Natural Gas	T,Y	**B34**	**PA615**	**N/R**	**N/S**	**SA4141**	3 Spd. **18032** 4 Spd. **18055**
	V8-360 (5.9L) SFI	Z	**B34**	**PA615**	**N/R**	**N/S**	**SA4141**	**18055**
	Stratus 4-122 (2.0L) SFI	C	**BT223**	**PA4085**	**N/R**	**BF7671**	**N/R**	**18004**
	4-148 (2.4L) SFI	X	**BT223**	**PA4085**	**N/R**	**BF7671**	**N/R**	**18004**
	V6-152 (2.5L) SFI	H	**B34**	**PA4085**	**N/R**	**BF7671**	**N/R**	**18004**
	Viper V10-488 (8.0L) SFI	E	**B34**		**N/R**	**BF1182**	**N/R**	**M.T.**
1998	Avenger 4-122 (2.0L) SFI	Y	**B34**	**PA4015**	**N/R**	**BF7659**	**N/R**	**18004**
	V6-152 (2.5L) SFI	N	**B34**	**PA4015**	**N/R**	**BF7659**	**N/R**	**18004**
	Caravan, Grand Caravan 4-148 (2.4L) SFI	B	**BT223**	**PA2103**	**N/R**	**BF7669**	**N/R**	3 Spd. **18104** 4 Spd. **18004**
	V6-181 (3.0L) SFI	3	**B34**	**PA2103**	**N/R**	Std. W.B. **BF7669** Ext. W.B. **BF1053**	**N/R**	3 Spd. **18104** 4 Spd. **18004**
	V6-201 (3.3L) SFI or Flex Fuel	G,R	**B34**	**PA2103**	**N/R**	Std. W.B. **BF7669** Ext. W.B. **BF1053**	**N/R**	3 Spd. **18104** 4 Spd. **18004**
	V6-231 (3.8L) SFI	L	**B34**	**PA2103**	**N/R**	Std. W.B. **BF7669** Ext. W.B. **BF1053**	**N/R**	3 Spd. **18104** 4 Spd. **18004**
	Dakota, Durango 4-151 (2.5L) SFI	P	**B34**	**PA2163**	**N/R**	**N/S**	**SA2048**	
	V6-239 (3.9L) SFI	X	**B34**	**PA2163**	**N/R**	**N/S**	**SA4141**	**18055**
	V8-318 (5.2L) SFI	Y	**B34**	**PA2163**	**N/R**	**N/S**	**SA4141**	8-727 **18032** 4 Spd. **18055**
	V8-360 (5.9L) SFI	Z	**B34**	**PA2163**	**N/R**	**N/S**	**SA4141**	**18055**
	Intrepid V6-165 (2.7L) SFI	R	**B34**	**PA4109**	**N/R**	**N/S**	**N/R**	**18003**
	V6-197 (3.2L) SFI	J	**B34**	**PA4109**	**N/R**	**N/S**	**N/R**	**18003**
	Neon 4-122 (2.0L) SFI	C,Y	**BT223**	**PA2103**	**N/R**	**N/S**	**N/R**	**18104**
	Pickups V6-239 (3.9L) SFI	X	**B34**	**PA2163**	**N/R**	**N/S**	**SA4141**	6-904 **18032** 4 Spd. **18055**
	6-360 (5.9L) Turbo Diesel	6,D	**BT7349**	**PA3763**	**N/R**	**PF7751**	**N/R**	**18055**
	V8-318 (5.2L) FI	Y	**B34**	**PA2163**	**N/R**	**N/S**	**SA4141**	**18032**
	V8-360 (5.9L) SFI	5,Z	**B34**	**PA2163**	**N/R**	**N/S**	**SA4141**	8-727 **18032** 4 Spd. **18055**
	V10-488 (8.0L) SFI	W	**B34**	**PA2234**	**N/R**	**N/S**	**N/R**	8-727 **18032** 4 Spd. **18055**
	Ram Vans V6-239 (3.9L) SFI	X	**B34**	**PA615**	**N/R**	**N/S**	**SA4141**	**18032**
	V8-318 (5.2L) SFI	Y	**B34**	**PA615**	**N/R**	**N/S**	**SA4141**	**18055**
	V8-360 (5.9L) SFI	Z	**B34**	**PA615**	**N/R**	**N/S**	**SA4141**	**18055**
	Stratus 4-122 (2.0L) SFI	C	**BT223**	**PA4085**	**N/R**	**BF7671**	**N/R**	**18004**
	4-148 (2.4L) SFI	X	**BT223**	**PA4085**	**N/R**	**BF7671**	**N/R**	**18004**
	V6-152 (2.5L) SFI	H	**B34**	**PA4085**	**N/R**	**BF7671**	**N/R**	**18004**
	Viper V10-488 (8.0L) SFI	E	**B34**		**N/R**	**BF1182**	**N/R**	**M.T.**
1997	Avenger 4-122 (2.0L) SFI	Y	**B34**	**PA4015**	**N/R**	**BF7659**	**N/R**	**18004**
	V6-152 (2.5L) SFI	N	**B34**	**PA4015**	**N/R**	**BF7659**	**N/R**	**18004**
	Caravan, Grand Caravan 4-148 (2.4L) SFI	B	**BT223**	**PA2103**	**N/R**	**BF7669**	**N/R**	3 Spd. **18104** 4 Spd. **18004**
	V6-181 (3.0L) SFI	3	**B34**	**PA2103**	**N/R**	Std. W.B. **BF7669** Ext. W.B. **BF1053**	**N/R**	3 Spd. **18104** 4 Spd. **18004**
	V6-201 (3.3L) SFI	R	**B34**	**PA2103**	**N/R**	Std. W.B. **BF7669** Ext. W.B. **BF1053**	**N/R**	3 Spd. **18104** 4 Spd. **18004**
	V6-231 (3.8L) SFI	L	**B34**	**PA2103**	**N/R**	Std. W.B. **BF7669** Ext. W.B. **BF1053**	**N/R**	3 Spd. **18104** 4 Spd. **18004**

[t] Transmission, Not Model, Determines Which Transmission Filter is Used. OBS = Obsolete. Availability Limited to Distributor Stock.

DODGE Cont'd.

Year	Model and Engine	VIN	Lube	Air	Cabin Air	Fuel	Breather	Trans.†
1997	Dakota 4-150 (2.5L) SFI	P	**B34**	**PA2104**	**N/R**	**BF1008** Regulator **BF7626**	**SA4139**	**18032**
	V6-239 (3.9L) SFI	X	**B34**	**PA2163**	**N/R**	**N/S**	**SA4141**	**18032**
	V8-318 (5.2L) SFI	Y	**B34**	**PA2163**	**N/R**	**N/S**	**SA4141**	**18032**
	Intrepid V6-201 (3.3L) SFI or Flex Fuel	T,U	**B34**	**PA2230**	**N/R**	**BF1181**	**N/R**	**18003**
	V6-215 (3.5L) SFI	F	**B34**	**PA2230**	**N/R**	**BF1181**	**N/R**	**18003**
	Neon 4-122 (2.0L) SFI	C,Y	**BT223**	**PA2103**	**N/R**	**N/S**	**N/R**	**18104**
	Pickups V6-239 (3.9L) SFI	X	**B34**	**PA2163**	**N/R**	**N/S**	**SA4141**	**18032**
	6-360 (5.9L) Turbo Diesel	D	**BT339**	**PA3763**	**N/R**	**PF7751**	**N/R**	**18032**
	V8-318 (5.2L) EFI	T,Y	**B34**	**PA2163**	**N/R**	**N/S**	**SA4141**	**18032**
	V8-360 (5.9L) SFI	5,Z	**B34**	**PA2163**	**N/R**	**N/S**	**SA4141**	**18032**
	V10-488 (8.0L) SFI	W	**B34**	**PA2234**	**N/R**	**N/S**	**N/R**	**18032**
	Ram Vans V6-239 (3.9L) SFI	X	**B34**	**PA615**	**N/R**	Pri. **PF7627**	**SA4141**	**18032**
	V8-318 (5.2L) Natural Gas	T	**B34**	**PA615**	**N/R**	**N/S**	**SA4141**	**18032**
	V8-318 (5.2L) SFI	Y	**B34**	**PA615**	**N/R**	Pri. **PF7627**	**SA4141**	8-727 **18032**
	V8-360 (5.9L) SFI	Z	**B34**	**PA615**	**N/R**	Pri. **PF7627**	**SA4141**	**18032**
	Stratus 4-122 (2.0L) SFI	C	**BT223**	**PA4085**	**N/R**	**BF1054**	**N/R**	**18004**
	4-148 (2.4L) SFI	X	**BT223**	**PA4085**	**N/R**	**BF1054**	**N/R**	**18004**
	V6-152 (2.5L) SFI	N	**B34**	**PA4085**	**N/R**	**BF1054**	**N/R**	**18004**
	Viper V10-488 (8.0L) SFI	E	**B34**		**N/R**	**BF1182**	**N/R**	**M.T.**
1996	Avenger 4-122 (2.0L) SFI	Y	**B34**	**PA4015**	**N/R**	**BF7659**	**N/R**	Exc. Turbo **18004**
	V6-153 (2.5L) SFI	N	**B34**	**PA4015**	**N/R**	**BF7659**	**N/R**	**18004**
	Caravan, Grand Caravan 4-148 (2.4L) SFI	B,X	**BT223**	**PA2103**	**N/R**	Std. W.B. **BF7669** Ext. W.B. **BF1053**	**N/R**	3 Spd. **18104** 4 Spd. **18004**
	V6-181 (3.0L) SFI	3,H	**B34**	**PA2103**	**N/R**	Std. W.B. **BF7669** Ext. W.B. **BF1053**	**N/R**	3 Spd. **18104** 4 Spd. **18004**
	V6-201 (3.3L) Natural Gas FI	J	**B34**	**PA2103**	**N/R**	**N/S**	**SA2048**	3 Spd. **18104** 4 Spd. **18004**
	V6-201 (3.3L) SFI	R	**B34**	**PA2103**	**N/R**	Std. W.B. **BF7669** Ext. W.B. **BF1053**	**N/R**	3 Spd. **18104** 4 Spd. **18004**
	V6-231 (3.8L) SFI	L	**B34**	**PA2103**	**N/R**	Std. W.B. **BF7669** Ext. W.B. **BF1053**	**N/R**	3 Spd. **18104** 4 Spd. **18004**
	Dakota 4-151 (2.5L) SFI	G	**B34**	**PA2104**	**N/R**	**BF1008** Regulator **BF7626**	**SA4141**	**18032**
	V6-239 (3.9L) SFI	X	**B34**	**PA615**	**N/R**	Pri. **PF7627** Regulator **BF7626**	**SA4141**	**18032**
	V8-318 (5.2L) FI Natural Gas	T	**B34**	**PA615**	**N/R**	**N/S**	**SA4141**	**18032**
	V8-318 (5.2L) SFI	Y	**B34**	**PA615**	**N/R**	Pri. **PF7627** Regulator **BF7626**	**SA4141**	**18032**
	Intrepid V6-201 (3.3L) SFI	T	**B34**	**PA2230**	**N/R**	**BF1181**	**N/R**	**18003**
	V6-215 (3.5L) SFI	F	**B34**	**PA2230**	**N/R**	**BF1181**	**N/R**	**18003**
	Neon 4-122 (2.0L) SFI	B,C	**BT223**	**PA2103**	**N/R**	**BF1058**	**N/R**	**18104**
	Pickups V6-239 (3.9L) SFI	X	**B34**	**PA2163**	**N/R**	**N/S**	**SA4141**	**18032**
	6-360 (5.9L) Turbo Diesel	C	**BT339**	**PA3763**	**N/R**	**BF1233**	**N/R**	**18032**
	V8-318 (5.2L) FI or Natural Gas	T,Y	**B34**	**PA2163**	**N/R**	**N/S**	**SA4141**	**18032**
	V8-360 (5.9L) SFI	5,Z	**B34**	**PA2163**	**N/R**	**N/S**	**SA4141**	**18032**
	V10-488 (8.0L) SFI	W	**B34**	**PA2234**	**N/R**	**N/S**	**N/R**	**18032**
	Ram Vans V6-239 (3.9L) SFI	X	**B34**	**PA615**	**N/R**	Pri. **PF7627**	**SA4141**	**18032**
	V8-318 (5.2L) Natural Gas	T	**B34**	**PA615**	**N/R**	**N/S**	**SA4141**	8-727 **18032**
	V8-318 (5.2L) SFI	Y	**B34**	**PA615**	**N/R**	Pri. **PF7627**	**SA4141**	8-727 **18032**
	V8-360 (5.9L) SFI	Z	**B34**	**PA615**	**N/R**	Pri. **PF7627**	**SA4141**	**18032**
	Stealth V6-181 (3.0L) SFI	H	**B227**	**PA4016**	**N/R**	**BF1100**	**N/R**	
	V6-181 (3.0L) SFI	J	**B227**	**PA4016**	**N/R**	**BF1100**	**N/R**	
	V6-181 (3.0L) SFI Turbo	K	**B227**	**PA4016**	**N/R**	**BF1100**	**N/R**	**M.T.**
	Stratus 4-122 (2.0L) SFI	C	**BT223**	**PA4085**	**N/R**	**BF1054**	**N/R**	**18004**

OBS = Obsolete. Availability Limited to Distributor Stock. † Transmission, Not Model, Determines Which Transmission Filter is Used.

DODGE Cont'd.

Year	Model and Engine	VIN	Lube	Air	Cabin Air	Fuel	Breather	Trans.[t]
1996	Stratus 4-146 (2.4L) SFI	X	**BT223**	**PA4085**	**N/R**	**BF1054**	**N/R**	**18004**
	V6-153 (2.5L) SFI	N	**B34**	**PA4085**	**N/R**	**BF1054**	**N/R**	**18004**
	Viper V10-488 (8.0L) SFI	E	**B34**		**N/R**	**BF1182**	**N/R**	**M.T.**
1995	Avenger 4-122 (2.0L) FI	Y	**B34**	**PA4015**	**N/R**	**BF1179**	**N/R**	**18004**
	V6-153 (2.5L) FI	N	**B34**	**PA4015**	**N/R**	**BF1179**	**N/R**	**18004**
	Caravan, Grand Caravan 4-153 (2.5L) FI	K	**B34**	**PA2104**	**N/R**	**BF795**	**SA4139**	**18104**
	V6-181 (3.0L) FI	3	**B34**	**PA2103**	**N/R**	**BF795**	**SA4143** 3 Spd. **18104** **SA4142** 4 Spd. **18004**	
	V6-201 (3.3L) FI	R	**B34**	**PA2104**	**N/R**	**BF795**	[2] **SA2048** 3 Spd. **18104** 4 Spd. **18004**	
	V6-201 (3.3L) FI Natural Gas	J	**B34**	**PA2104**	**N/R**	**N/S**	[2] **SA2048** 3 Spd. **18104** 4 Spd. **18004**	
	V6-231 (3.8L) FI	L	**B34**	**PA2104**	**N/R**	**BF795**	[2] **SA2048** 3 Spd. **18104** 4 Spd. **18004**	
	Colt 4-1468cc (1.5L) FI Canada	A	**B1402**		**N/R**	**BF1179**	**N/R**	
	Dakota 4-153 (2.5L) EFI	G	**B34**	**PA2104**	**N/R**	**BF1008** Regulator **BF7626**	**SA4139**	**18032**
	V6-239 (3.9L) SFI	X	**B34**	**PA615**	**N/R**	**BF1008** Regulator **BF7626** Some **N/S**	**SA4141**	**18032**
	V8-318 (5.2L) SFI or Natural Gas	T,Y	**B34**	**PA615**	**N/R**	**BF1008** Regulator **BF7626** Some **N/S**	**SA4141**	**18032**
	Intrepid V6-201 (3.3L) SFI or Flex Fuel	T,U	**B34**	**PA2230**	**N/R**	**BF1181**	**N/R**	**18003**
	V6-216 (3.5L) SFI	F	**B34**	**PA2230**	**N/R**	**BF1181**	**N/R**	**18003**
	Neon 4-122 (2.0L) SFI	C,Y	**BT223**	**PA2103**	**N/R**	**BF1058**	**N/R**	**18104**
	Pickups V6-239 (3.9L) SFI	X	**B34**	**PA2163**	**N/R**	**N/S**	**SA4141**	**18032**
	6-360 (5.9L) Turbo Diesel	C	**BT339**	**PA3763**	**N/R**	**BF1233**	**N/R**	**18032**
	V8-318 (5.2L) SFI or Natural Gas	T,Y	**B34**	**PA2163**	**N/R**	**N/S**	**SA4141**	**18032**
	V8-360 (5.9L) SFI	5,Z	**B34**	**PA2163**	**N/R**	**N/S**	**SA4141**	**18032**
	V10-488 (8.0L) SFI	W	**B34**	**PA2234**	**N/R**	**N/S**	**N/R**	**18032**
	Ram Vans V6-239 (3.9L) SFI	X	**B34**	**PA615**	**N/R**	**N/S**	**SA4141**	**18032**
	V8-318 (5.2L) SFI or Natural Gas	T,Y	**B34**	**PA615**	**N/R**	**N/S**	**SA4141**	**18032**
	V8-360 (5.9L) SFI	5,Z	**B34**	**PA615**	**N/R**	**N/S**	**SA4141**	**18032**
	Spirit 4-153 (2.5L) EFI	K	**B34**	**PA2158**	**N/R**	**BF1057**	**SA4139**	**18104**
	V6-181 (3.0L) MFI	3	**B34**	**PA2103**	**N/R**	**BF1057**	**SA4143** 3 Spd. **18104** **SA4142** 4 Spd. **18004**	
	Stealth V6-181 (3.0L) MFI	H	**B227**	**PA4016**	**N/R**	**BF1100**	**N/R**	
	V6-181 (3.0L) MFI	J	**B227**	**PA4016**	**N/R**	**BF1100**	**N/R**	
	V6-181 (3.0L) FI Turbo	K	**B227**	**PA4016**	**N/R**	**BF1100**	**N/R**	**M.T.**
	Stratus 4-122 (2.0L) SFI	C	**BT223**	**PA4085**	**N/R**	**BF1054**	**N/R**	**18004**
	4-146 (2.4L) SFI	X	**BT223**	**PA4085**	**N/R**	**BF1054**	**N/R**	**18004**
	V6-153 (2.5L) SFI	H	**B34**	**PA4085**	**N/R**	**BF1054**	**N/R**	**18004**
	Viper V10-488 (8.0L) SFI	E	**B34**		**N/R**	**BF1182**	**N/R**	**M.T.**
1994	Caravan, Grand Caravan 4-153 (2.5L) EFI	K	**B34**	**PA2104**	**N/R**	**BF795**	**SA4139**	**18104**
	V6-181 (3.0L) MFI	3	**B34**	**PA2103**	**N/R**	**BF795**	**SA4143** 3 Spd. **18104** **SA4142** 4 Spd. **18004**	
	V6-201 (3.3L) MFI	J,R	**B34**	**PA2104**	**N/R**	**BF795**	[2] **SA2048** 3 Spd. **18104** 4 Spd. **18004**	
	V6-232 (3.8L) MFI	L	**B34**	**PA2104**	**N/R**	**BF795**	[2] **SA2048** 3 Spd. **18104** 4 Spd. **18004**	
	Colt 4-90 (1.5L) MFI	A	**B1402**	Exc. ES **PA2194**	**N/R**	**BF1179**	**N/R**	
	4-112 (1.8L) MFI	C	**B1402**	Exc. ES **PA2194**	**N/R**	**BF1179**	**N/R**	
	4-2351cc (2.4L) FI Canada	G	**B173-S**	**PA4015**	**N/R**	**BF1179**	**N/R**	
	Dakota 4-153 (2.5L) EFI	G	**B34**	**PA2104**	**N/R**	**BF1008** Regulator **BF7626**	**SA4139**	**18032**
	V6-239 (3.9L) MFI	X	**B34**	**PA615**	**N/R**	**BF1008** Regulator **BF7626**	**SA4141**	**18032**
	V8-318 (5.2L) MFI	Y	**B34**	**PA615**	**N/R**	**BF1008** Regulator **BF7626**	**SA4141**	**18032**
	Intrepid V6-201 (3.3L) SFI or Flex Fuel	R,T	**B34**	**PA2230**	**N/R**	**BF1181**	**N/R**	**18003**

[t] Transmission, Not Model, Determines Which Transmission Filter is Used. OBS = Obsolete. Availability Limited to Distributor Stock.

DODGE Cont'd.

Year	Model and Engine	VIN	Lube	Air	Cabin Air	Fuel	Breather	Trans.†
1994	Intrepid V6-216 (3.5L) MFI	F	**B34**	**PA2230**	**N/R**	**BF1181**	**N/R**	**18003**
	Pickups V6-239 (3.9L) SFI	X	**B34**	**PA2163**	**N/R**	**N/S**	**SA4141**	**18032**
	6-360 (5.9L) Turbo Diesel	C	**BT339**	**PA3763**	**N/R**	**BF1233**	**N/R**	**18032**
	V8-318 (5.2L) SFI	Y	**B34**	**PA2163**	**N/R**	**N/S**	**SA4141**	**18032**
	V8-360 (5.9L) SFI	5,Z	**B34**	**PA2163**	**N/R**	Regulator **BF7626**	**SA4141**	**18032**
	V10-488 (8.0L) SFI	W	**B34**	**PA2234**	**N/R**	**N/S**	**N/R**	**18032**
	Ram Vans V6-239 (3.9L) SFI	X	**B34**	**PA615**	**N/R**	**BF1182**	**SA4141**	**18032**
	V8-318 (5.2L) SFI or Natural Gas	T,Y	**B34**	**PA615**	**N/R**	**N/S**	**SA4141**	**18032**
	V8-360 (5.9L) SFI	5,Z	**B34**	**PA615**	**N/R**	**N/S**	**SA4141**	**18032**
	Shadow 4-135 (2.2L) EFI	D	**B34**	**PA2158**	**N/R**	**BF1057**	**SA4139**	**18104**
	4-153 (2.5L) EFI	K	**B34**	**PA2158**	**N/R**	**BF1057**	**SA4139**	**18104**
	V6-181 (3.0L) MFI	3	**B34**	**PA2103**	**N/R**	**BF1057**	**SA4143**	3 Spd. **18104**
							SA4142	4 Spd. **18004**
	Spirit 4-153 (2.5L) EFI	K	**B34**	**PA2158**	**N/R**	**BF1057**	**SA4139**	**18104**
	4-153 (2.5L) FI Flex Fuel	V	**B34**	**PA2103**	**N/R**	**BF1057**	**SA2048**	**18104**
	V6-181 (3.0L) MFI	3	**B34**	**PA2103**	**N/R**	**BF1057**	**SA4143**	3 Spd. **18104**
							SA4142	4 Spd. **18004**
	Stealth V6-181 (3.0L) MFI SOHC	H	**B227**	**PA4016**	**N/R**	**BF1100**	**N/R**	
	V6-181 (3.0L) MFI DOHC	J	**B227**	**PA4016**	**N/R**	**BF1100**	**N/R**	
	V6-181 (3.0L) MFI Turbo	K	**B227**	**PA4016**	**N/R**	**BF1100**	**N/R**	**M.T.**
	Viper V10-488 (8.0L) SFI	E	**B34**		**N/R**	**BF1182**	**N/R**	**M.T.**
1993	Caravan, Grand Caravan 4-153 (2.5L) EFI	K	**B34**	**PA2104**	**N/R**	**BF795**	**SA4139**	3 Spd. **18104**
								4 Spd. **18004**
	V6-181 (3.0L) MFI	3	**B34**	**PA2103**	**N/R**	**BF795**	**SA4143**	3 Spd. **18104**
							SA4142	4 Spd. **18004**
	V6-201 (3.3L) FI	R	**B34**	**PA2104**	**N/R**	**BF795**	**[2] SA2048**	3 Spd. **18104**
								4 Spd. **18004**
	Colt, Colt Vista 4-90 (1.5L) MFI	A	**B1402**		**N/R**	**BF1179**	**N/R**	
	4-112 (1.8L) MFI	C	**B1402**	**PA2194**	**N/R**	**BF1179**	**N/R**	
	4-2351cc (2.4L) FI	G	**B173-S**	**PA4015**	**N/R**	**BF1179**	**N/R**	
	Dakota 4-153 (2.5L) EFI	G	**B34**	**PA2104**	**N/R**	**BF1008**	**SA4139**	**18032**
	V6-239 (3.9L) MFI	X	**B34**	**PA615**	**N/R**	**BF1008**	**SA4141**	**18032**
	V8-318 (5.2L) MFI	Y	**B34**	**PA615**	**N/R**	**BF1008**	**SA4141**	**18032**
	Daytona 4-135 (2.2L) MFI Turbo	A	**B34**	**PA2103**	**N/R**	**BF1057**	**SA4139**	**18104**
	4-153 (2.5L) EFI	K	**B34**	**PA2158**	**N/R**	**BF1057**	**SA4139**	**18104**
	V6-181 (3.0L) MFI	3	**B34**	**PA2103**	**N/R**	**BF1057**	**SA4143**	**18004**
							SA4142	
	Dynasty 4-153 (2.5L) EFI	K	**B34**	**PA2158**	**N/R**	**BF1057**	**SA4139**	**18104**
	V6-181 (3.0L) MFI	3	**B34**	**PA2103**	**N/R**	**BF1057**	**SA4143**	**18004**
							SA4142	
	V6-201 (3.3L) MFI	R	**B34**	**PA2104**	**N/R**	**BF1057**	**[2] SA2048**	**18004**
	Intrepid V6-201 (3.3L) MFI	T	**B34**	**PA2230**	**N/R**	**BF1181**	**N/R**	**18003**
	V6-215 (3.5L) MFI	F	**B34**	**PA2230**	**N/R**	**BF1181**	**N/R**	**18003**
	Pickups, Ramcharger V6-239 (3.9L) MFI	X	**B34**	**PA2192**	**N/R**	**BF7713**	**SA4141**	**18032**
	6-360 (5.9L) Turbo Diesel	C	**BT339**	**RS3550**	**N/R**	w/o Intercooler **BF1232** w/Intercooler **BF1008**	**N/R**	**18032**
	V8-318 (5.2L) MFI	Y	**B34**	**PA615**	**N/R**	**BF1008**	**SA4141**	**18032**
	V8-360 (5.9L) MFI	Z	**B34**	**PA615**	**N/R**	**BF1008**	**SA4141**	**18032**
	Ram 50 4-144 (2.4L) MFI	G	**B245**	**PA4016**	**N/R**	4WD **BF1100**	**N/R**	**18032**
	Ram Vans V6-239 (3.9L) MFI	X	**B34**	**PA615**	**N/R**	**BF1182**	**SA4141**	**18032**
	V8-318 (5.2L) MFI	Y	**B34**	**PA615**	**N/R**	**BF1182**	**SA4141**	**18032**
	V8-360 (5.9L) MFI	5,Z	**B34**	**PA615**	**N/R**	**BF1182**	**SA4141**	**18032**
	Shadow 4-135 (2.2L) EFI	D	**B34**	**PA2158**	**N/R**	**BF1057**	**SA4139**	**18104**
	4-153 (2.5L) EFI	K	**B34**	**PA2158**	**N/R**	**BF1057**	**SA4139**	**18104**
	V6-181 (3.0L) MFI	3	**B34**	**PA2103**	**N/R**	**BF1057**	**SA4143**	3 Spd. **18104**
							SA4142	4 Spd. **18004**
	Spirit 4-153 (2.5L) EFI	K	**B34**	**PA2158**	**N/R**	**BF1057**	**SA4139**	3 Spd. **18104**
								4 Spd. **18004**
	4-153 (2.5L) EFI Flex Fuel	V	**B34**	**PA2103**	**N/R**	**BF1057**	**SA2048**	**18104**
	4-182 (3.0L) MFI	3	**B34**	**PA2103**	**N/R**	**BF1057**	**SA4143**	3 Spd. **18104**
							SA4142	4 Spd. **18004**
	Stealth V6-181 (3.0L) FI	H	**B227**	**PA4016**	**N/R**	**BF1100**	**N/R**	
	V6-181 (3.0L) FI	J	**B227**	**PA4016**	**N/R**	**BF1100**	**N/R**	
	V6-181 (3.0L) FI Turbo	K	**B227**	**PA4016**	**N/R**	**BF1100**	**N/R**	**M.T.**

OBS = Obsolete. Availability Limited to Distributor Stock. † Transmission, Not Model, Determines Which Transmission Filter is Used.

DODGE Cont'd.

Year	Model and Engine	VIN	Lube	Air	Cabin Air	Fuel	Breather	Trans.[t]
1993	Viper V10-488 (8.0L) SFI	E	**B34**		**N/R**	**BF1182**	**N/R**	**M.T.**
1992	Caravan, Grand Caravan 4-153 (2.5L) EFI	G	**B34**	**PA2104**	**N/R**	**BF795**	**SA4139**	3 Spd. **18104** 4 Spd. **18004**
	V6-181 (3.0L) EFI	3	**B34**	**PA2103**	**N/R**	**BF795**	**SA4143** **SA4142**	3 Spd. **18104** 4 Spd. **18004**
	V6-201 (3.3L) EFI	R	**B34**	**PA2104**	**N/R**	**BF795**	[2] **SA2048**	3 Spd. **18104** 4 Spd. **18004**
	Colt, Colt GT, Colt Vista 4-1468cc (1.5L) MFI	A,K	**B1402**	**PA2194**	**N/R**	**BF1179**	**N/R**	
	4-1834cc (1.8L) MPI	C,D,W	**B1402**	**PA4015**	**N/R**	**BF1179**	**N/R**	
	Dakota 4-153 (2.5L) EFI	G	**B34**	**PA2104**	**N/R**	**BF1008**	**SA4139**	**M.T.**
	V6-239 (3.9L) MFI	X	**B34**	**PA615**	**N/R**	**BF1008**	**SA4141**	**18032**
	V8-318 (5.2L) MFI	Y	**B34**	**PA615**	**N/R**	**BF1008**	**SA4141**	**18032**
	Daytona, Shelby 4-135 (2.2L) MFI Turbo	A	**B34**	**PA2103**	**N/R**	**BF1057**	**SA4142**	3 Spd. **18104** 4 Spd. **18004**
	4-153 (2.5L) MFI Turbo	J	**B34**	**PA2217**	**N/R**	**BF1057**	**N/R**	**18104**
	4-153 (2.5L) EFI	K	**B34**	**PA2158**	**N/R**	**BF1057**	**SA4139**	**18004**
	V6-181 (3.0L) MFI	3	**B34**	**PA2103**	**N/R**	**BF1057**	**SA4143** **SA4142**	**18004**
	Dynasty 4-153 (2.5L) EFI	K	**B34**	**PA2158**	**N/R**	**BF1057**	**SA4139**	**18104**
	V6-181 (3.0L) MFI	3	**B34**	**PA2103**	**N/R**	**BF1057**	**SA4143** **SA4142**	**18004**
	V6-201 (3.3L) MFI	R	**B34**	**PA2104**	**N/R**	**BF1057**	[2] **SA2048**	**18004**
	Monaco V6-2972cc (3.0L) FI	U	**B141**	**PA2103**	**N/R**		**N/R**	
	Pickups V6-238 (3.9L) EFI	X	**B34**	**PA2192**	**N/R**	**BF7713**	**SA4141**	**18032**
	6BT5.9 Turbo Diesel	8	**BT339**	**PA2183**	**N/R**	**BF1232**	**N/R**	**18032**
	V8-318 (5.2L) EFI	Y	**B34**	**PA615**	**N/R**	**BF7713**	**SA4141**	**18032**
	V8-360 (5.9L) EFI	Z	**B34**	**PA615**	**N/R**	**BF7713**	**SA4141**	**18032**
	Ram 50 4-143 (2.4L) MFI	W	**B245**	**PA4016**	**N/R**	4WD **BF1100**	**N/R**	**18032**
	Ramcharger V8-318 (5.2L) EFI	Y	**B34**	**PA615**	**N/R**	**BF1008**	**SA4141**	**18032**
	V8-360 (5.9L) EFI	Z	**B34**	**PA615**	**N/R**	**BF1008**	**SA4141**	**18032**
	Shadow 4-135 (2.2L) EFI	D	**B34**	**PA2158**	**N/R**	**BF1057**	**SA4139**	**18104**
	4-153 (2.5L) MFI Turbo	J	**B34**	**PA2217**	**N/R**	**BF1057**	**N/R**	**18104**
	4-153 (2.5L) EFI	K	**B34**	**PA2158**	**N/R**	**BF1057**	**SA4139**	**18104**
	V6-181 (3.0L) MFI	3	**B34**	**PA2103**	**N/R**	**BF1057**	**SA4143** **SA4142**	**18004**
	Spirit 4-2200cc (2.2L) MFI Turbo	A	**B34**	**PA2103**	**N/R**	**BF1057**	**SA4142**	**M.T.**
	4-2500cc (2.5L) MFI Turbo	J	**B34**	**PA2217**	**N/R**	**BF1057**	**SA4142**	**18104**
	4-2500cc (2.5L) EFI	K	**B34**	**PA2158**	**N/R**	**BF1057**	**SA4139**	**18104**
	V6-3000cc (3.0L) MFI	3	**B34**	**PA2103**	**N/R**	**BF1057**	**SA4143** **SA4142**	3 Spd. **18104** 4 Spd. **18004**
	Stealth V6-3000cc (3.0L) MFI	B	**B227**	**PA4016**	**N/R**	**BF1100**	**N/R**	
	V6-3000cc (3.0L) MFI Turbo	C	**B227**	**PA4016**	**N/R**	**BF1100**	**N/R**	**M.T.**
	V6-3000cc (3.0L) MFI	S	**B227**	**PA4016**	**N/R**	**BF1100**	**N/R**	
	Vans, B150-350 V6-238 (3.9L) MFI	X	**B34**	**PA615**	**N/R**	**BF1182**	**SA4141**	**18032**
	V8-318 (5.2L) MFI	Y	**B34**	**PA615**	**N/R**	**BF1182**	**SA4141**	**18032**
	V8-360 (5.9L) EFI	Z	**B34**	**PA615**	**N/R**	**BF1182**	**SA4141**	**18032**
	Viper V10-488 (8.0L) SFI	E	**B34**		**N/R**	**BF1182**	**N/R**	**M.T.**
1991	Caravan, Grand Caravan 4-2500cc (2.5L) EFI	G	**B34**	**PA2104**	**N/R**	**BF795**	**SA4139**	3 Spd. **18104** 4 Spd. **18004**
	V6-3000cc (3.0L) FI	3	**B34**	**PA2103**	**N/R**	**BF795**	**SA4143** **SA4142**	3 Spd. **18104** 4 Spd. **18004**
	V6-201 (3.3L) MFI	R	**B34**	**PA2104**	**N/R**	**BF795**	[2] **SA2048**	3 Spd. **18104** 4 Spd. **18004**
	Colt, Colt Vista 4-1468cc (1.5L) MFI	A,K	**B173-S**	**PA2194**	**N/R**	**BF1178**	**N/R**	**18021**
	4-122 (2.0L) MFI	V	**B173-S**	**PA2194**	**N/R**	2WD **BF1179** 4WD **BF1100**	**N/R**	**18021**
	Dakota 4-2500cc (2.5L) EFI	G	**BT223**	**PA2104**	**N/R**	Std. Cab **BF7713** Ext. Cab **BF1008**	**SA4139**	**18032**
	V6-238 (3.9L) EFI	X	**B34**	**PA615**	**N/R**	Std. Cab **BF7713** Ext. Cab **BF1008**	**SA4143**	**18032**

[t] Transmission, Not Model, Determines Which Transmission Filter is Used. OBS = Obsolete. Availability Limited to Distributor Stock.

DODGE Cont'd.

Year	Model and Engine	VIN	Lube	Air	Cabin Air	Fuel	Breather	Trans.†
1991	Dakota V8-318 (5.2L) EFI	Y	**B34**	**PA615**	**N/R**	Std. Cab **BF7713** Ext. Cab **BF1008**	**SA4141**	**18032**
	Daytona 4-2500cc (2.5L) FI Turbo	J	**B34**	**PA2217**	**N/R**	**BF1057**	**N/R**	3 Spd. **18104** 4 Spd. **18004**
	4-2500cc (2.5L) EFI	K	**B34**	**PA2158**	**N/R**	**BF1057**	**SA4139**	3 Spd. **18104** 4 Spd. **18004**
	V6-181 (3.0L) MFI	3	**B34**	**PA2103**	**N/R**	**BF1057**	**SA4143** **SA4142**	3 Spd. **18104** 4 Spd. **18004**
	Dynasty 4-153 (2.5L) EFI	K	**B34**	**PA2158**	**N/R**	**BF1057**	**SA4139**	**18104**
	V6-181 (3.0L) MFI	3	**B34**	**PA2103**	**N/R**	**BF1057**	**SA4143**	**18004**
	V6-201 (3.3L) MFI	R	**B34**	**PA2104**	**N/R**	**BF1057**	[2] **SA2048**	**18004**
	Monaco V6-2972cc (3.0L) MPI	U	**B141**	**PA2101A**	**N/R**		**N/R**	
	Pickups, Ramchargers, A, D, W Series V6-239 (3.9L) EFI	X	**B34**	**PA2192**	**N/R**	**BF7713**	**SA4141**	**18032**
	6-360 (5.9L) Turbo Diesel	2,8,C	**BT339**	**PA2183**	**N/R**	**BF1232**	**N/R**	**18032**
	V8-318 (5.2L) EFI	Y	**B34**	**PA615**	**N/R**	**BF7713**	**SA4141**	**18032**
	V8-360 (5.9L) EFI	5,Z	**B34**	**PA615**	**N/R**	**BF7713**	**SA4141**	**18032**
	Ram 50 4-2400cc (2.4L) EFI	W	**B173-S**	**PA4016**	**N/R**	4WD **BF1100**	**N/R**	**18032**
	V6-3000cc (3.0L) EFI	S	**B173-S**	**PA4016**	**N/R**	4WD **BF1100**	**N/R**	**18032**
	Shadow 4-135 (2.2L) EFI	D	**B34**	**PA2158**	**N/R**	**BF1057**	**SA4139**	**18104**
	4-153 (2.5L) MFI Turbo	J	**B34**	**PA2217**	**N/R**	**BF1057**	**SA4143** **SA4142**	**18104**
	4-153 (2.5L) EFI	K	**B34**	**PA2158**	**N/R**	**BF794**	**SA4139**	**18104**
	Spirit 4-2200cc (2.2L) MFI Turbo 16 Valve	A	**B34**	**PA2103**	**N/R**	**BF1057**	**SA4142**	
	4-2500cc (2.5L) MFI Turbo	J	**B34**	**PA2217**	**N/R**	**BF1057**	**SA4143**	**18104**
	4-2500cc (2.5L) EFI	K	**B34**	**PA2158**	**N/R**	**BF1057**	**SA4139**	**18104**
	V6-3000cc (3.0L) MFI	3	**B34**	**PA2103**	**N/R**	**BF1057**	**SA4143** **SA4142**	3 Spd. **18104** 4 Spd. **18004**
	Stealth V6-3000cc (3.0L) MFI	B	**B227**	**PA4016**	**N/R**	**BF1100**	**N/R**	
	V6-3000cc (3.0L) MFI Turbo	C	**B227**	**PA4016**	**N/R**	**BF1100**	**N/R**	**M.T.**
	V6-3000cc (3.0L) MFI	S	**B227**	**PA4016**	**N/R**	**BF1100**	**N/R**	
	Vans, B150-350 V6-238 (3.9L) EFI	X	**B34**	**PA615**	**N/R**	**BF7713**	**SA4141**	**18032**
	V8-318 (5.2L) EFI	Y	**B34**	**PA615**	**N/R**	**BF7713**	**SA4141**	**18032**
	V8-360 (5.9L) EFI	Z	**B34**	**PA615**	**N/R**	**BF7713**	**SA4141**	**18032**
1990	2000 GTX 4-1997cc (2.0L) FI Canada	R,V	**B173-S**	**PA2194**	**N/R**		**N/R**	
	Caravan, Mini Ram Van 4-2500cc (2.5L) EFI Turbo	J	**BT223**	**PA2104**	**N/R**	**BF795**	**SA4143**	**18104**
	4-2500cc (2.5L) EFI	K	**BT223**	**PA2104**	**N/R**	**BF795**	**SA4139**	**18104**
	V6-3000cc (3.0L) FI	3	**BT223**	**PA2103**	**N/R**	**BF795**	**SA4143** **SA4142**	31TH **18104** 41TE **18004**
	V6-3300cc (3.3L) MFI	R	**BT223**	**PA2104**	**N/R**	**BF795**	[2] **SA2048**	**18004**
	Colt, Colt Vista 4-1468cc (1.5L) CARB	Y	**B173-S**	**PA2194**	**N/R**	**BF1100**	**N/R**	**18021**
	4-1468cc (1.5L) MFI	X	**B173-S**	**PA2194**	**N/R**	**BF1100**	**N/R**	**18021**
	4-1600cc (1.6L) MFI Turbo	F	**B173-S**	**PA2194**	**N/R**	**BF1100**	**N/R**	
	4-1597cc (1.6L) MFI	Y	**B173-S**	**PA2194**	**N/R**	**BF1100**	**N/R**	
	4-1800cc (1.8L) MFI	T	**B173-S**	**PA2194**	**N/R**	**BF1100**	**N/R**	
	4-2000cc (2.0L) MFI	V	**B173-S**	**PA2194**	**N/R**	2WD **BF1179** 4WD **BF1100**	**N/R**	**18021**
	Dakota 4-2500cc (2.5L) EFI	G	**BT223**	**PA2104**	**N/R**	Std. Cab **BF7713** Ext. Cab **BF1008**	**SA4139**	**18104**
	V6-239 (3.9L) EFI	X	**BT223**	**PA615**	**N/R**	Std. Cab **BF7713** Ext. Cab **BF1008**	**SA4141**	**18032**
	V8-318 (5.2L) FI	Y	**B233**	**PA2188**	**N/R**	Std. Cab **BF7713** Ext. Cab **BF1008**	**SA4141**	**18032**
	Daytona 4-2200cc (2.2L) FI Turbo	A	**BT223**	**PA2217**	**N/R**	**BF794**	**SA4143**	31TH **18104** 41TE **18004**
	4-2500cc (2.5L) FI Turbo	J	**BT223**	**PA2217**	**N/R**	**BF794**	**SA4143**	31TH **18104** 41TE **18004**

OBS = Obsolete. Availability Limited to Distributor Stock. † Transmission, Not Model, Determines Which Transmission Filter is Used.

DODGE Cont'd.

Year	Model and Engine	VIN	Lube	Air	Cabin Air	Fuel	Breather	Trans.t
1990	Daytona 4-2500cc (2.5L) EFI	K	**BT223**	**PA2158**	**N/R**	**BF794**	**SA4139**	31TH **18104** 41TE **18004**
	V6-3000cc (3.0L) MFI	3	**BT223**	**PA2103**	**N/R**	**BF794**	**SA4143** **SA4142**	31TH **18104** 41TE **18004**
	Dynasty 4-2500cc (2.5L) EFI	K	**BT223**	**PA2158**	**N/R**	**BF794**	**SA4139**	31TH **18104** 41TE **18004**
	V6-3000cc (3.0L) MFI	3	**BT223**	**PA2103**	**N/R**	**BF794**	**SA4143** **SA4142**	31TH **18104** 41TE **18004**
	V6-3300cc (3.3L) MFI	R	**BT223**	**PA2104**	**N/R**	**BF794**	**[2] SA2048**	31TH **18104** 41TE **18004**
	Monaco V6-2972cc (3.0L) MPI	U	**B141**	**PA2101A**	**N/R**	**BF1199**	**N/R**	
	Omni 4-2200cc (2.2L) EFI	D	**BT223**	**PA2103**	**N/R**	**BF794**	**SA4139**	**18104**
	Pickups, Ramchargers, A, D, W Series V6-238 (3.9L) FI	X	**BT223**	**PA2192**	**N/R**	**BF7713**	**SA4141**	**18032**
	6-360 (5.9L) Turbo Diesel	8	**BT339**	**PA2183**	**N/R**	**BF1232**	**N/R**	**18032**
	V8-318 (5.2L) EFI	Y	**B233**	**PA615**	**N/R**	**BF7713**	**SA4141**	**18032**
	V8-360 (5.9L) EFI	5,Z	**B233**	**PA615**	**N/R**	**BF7713**	**SA4141**	**18032**
	Ram 50 4-2400cc (2.4L) FI	W	**B173-S**	**PA4016**	**N/R**	4WD **BF1100**	**N/R**	**18032**
	V6-3000cc (3.0L) FI	S	**B173-S**	**PA4016**	**N/R**	4WD **BF1100**	**N/R**	**18032**
	Shadow 4-2200cc (2.2L) EFI Turbo	C	**BT223**	**PA2217**	**N/R**	**BF794**	**N/R**	**18104**
	4-2200cc (2.2L) EFI	D	**BT223**	**PA2158**	**N/R**	**BF794**	**SA4139**	**18104**
	4-2500cc (2.5L) EFI Turbo	J	**BT223**	**PA2217**	**N/R**	**BF794**	**N/R**	**18104**
	4-2500cc (2.5L) EFI	K	**BT223**	**PA2158**	**N/R**	**BF794**	**SA4139**	**18104**
	Spirit 4-2500cc (2.5L) MFI Turbo	J	**BT223**	**PA2217**	**N/R**	**BF794**	**SA4143**	31TH **18104** 41TE **18004**
	4-2500cc (2.5L) EFI	K	**BT223**	**PA2158**	**N/R**	**BF794**	**SA4139**	31TH **18104** 41TE **18004**
	V6-3000cc (3.0L) MFI	3	**BT223**	**PA2103**	**N/R**	**BF794**	**SA4142**	31TH **18104** 41TE **18004**
	Vans, B150-350 V6-238 (3.9L) EFI	X	**BT223**	**PA615**	**N/R**	**BF7713**	**SA4141**	**18032**
	V8-318 (5.2L) EFI	Y	**B233**	**PA615**	**N/R**	**BF7713**	**SA4141**	**18032**
	V8-360 (5.9L) EFI	Z	**B233**	**PA615**	**N/R**	**BF7713**	**SA4141**	**18032**
1989	2000 GTX 4-1997cc (2.0L) FI Canada	R,V	**B173-S**	**PA2194**	**N/R**		**N/R**	
	Aries 4-2200cc (2.2L) EFI	D	**BT223**	**PA2158**	**N/R**	**BF794**	**SA4139**	**18104**
	4-2500cc (2.5L) EFI	K	**BT223**	**PA2158**	**N/R**	**BF794**	**SA4139**	**18104**
	Caravan, Grand Caravan, Mini Ram Van 4-2500cc (2.5L) EFI Turbo	J	**BT223**	**PA2104**	**N/R**	**BF795**	**SA4143**	**18104**
	4-2500cc (2.5L) EFI	K	**BT223**	**PA2104**	**N/R**	**BF795**	**SA4139**	31TH **18104** 41TE **18004**
	V6-3000cc (3.0L) MFI	3	**BT223**	**PA2103**	**N/R**	**BF795**	**SA4143** **SA4142**	31TH **18104** 41TE **18004**
	Colt, Colt Vista 4-1500cc (1.5L) MPI	X	**B173-S**	**PA2194**	**N/R**	**BF1100**	**N/R**	**18021**
	4-1600cc (1.6L) FI Turbo	F,Z	**B173-S**	**PA2194**	**N/R**	**BF1179**	**N/R**	
	4-1800cc (1.8L) MPI	T	**B173-S**	**PA2194**	**N/R**	**BF1100**	**N/R**	
	4-2000cc (2.0L) MPI	V	**B173-S**	**PA2194**	**N/R**	2WD **BF1179** 4WD **BF1100**	**N/R**	**18021**
	Dakota 4-2500cc (2.5L) FI	G	**BT223**	**PA2104**	**N/R**	**BF7713**	**SA4139**	**18032**
	V6-238 (3.9L) EFI	X	**BT223**	**PA2188**	**N/R**	**BF7713**	**SA4141**	**18032**
	V8-318 (5.2L) FI	Y	**B233**	**PA615**	**N/R**	**BF7713**	**SA4141**	**18032**
	Daytona 4-2200cc (2.2L) FI Turbo	A	**BT223**	**PA2104**	**N/R**	**BF794**	**SA4143**	**18104**
	4-2500cc (2.5L) FI Turbo	J	**BT223**	**PA2104**	**N/R**	**BF794**	**SA4143**	**18104**
	4-2500cc (2.5L) EFI	K	**BT223**	**PA2158**	**N/R**	**BF794**	**SA4139**	**18104**
	Diplomat V8-318 (5.2L) 2 Bbl.	4,P	**B233**	**PA615**	**N/R**	w/VapDiv. **BF865,-K** w/o VapDiv. **BF840,-K1**	**SA4141**	**18032**
	V8-318 (5.2L) 4 Bbl.	S	**B233**	**PA2010**	**N/R**	w/VapDiv. **BF865,-K** w/o VapDiv. **BF840,-K1**	**SA4141**	**18032**
	Dynasty 4-2500cc (2.5L) EFI	K	**BT223**	**PA2158**	**N/R**	**BF794**	**SA4139**	**18104**
	V6-3000cc (3.0L) EFI	3	**BT223**	**PA2103**	**N/R**	**BF794**	**SA4143** **SA4142**	**18104**
	Lancer, Shadow 4-2200cc (2.2L) EFI Turbo	A	**BT223**	**PA2104**	**N/R**	**BF794**	**SA4143**	**18104**
	4-2200cc (2.2L) EFI	D	**BT223**	**PA2158**	**N/R**	**BF794**	**SA4139**	**18104**
	4-2500cc (2.5L) EFI Turbo	J	**BT223**	**PA2104**	**N/R**	**BF794**	**SA4143**	**18104**
	4-2500cc (2.5L) EFI	K	**BT223**	**PA2158**	**N/R**	**BF794**	**SA4139**	**18104**

[t] Transmission, Not Model, Determines Which Transmission Filter is Used. OBS = Obsolete. Availability Limited to Distributor Stock.

DODGE Cont'd.

Year	Model and Engine	VIN	Lube	Air	Cabin Air	Fuel	Breather	Trans.†
1989	Omni 4-2200cc (2.2L) EFI	D	**BT223**	**PA2103**	**N/R**		**SA4139**	**18104**
	Pickups, Ramchargers, A, D, W Series V6-239 (3.9L) EFI	X	**BT223**	**PA2192**	**N/R**	**BF7713**	**SA4141**	**18032**
	6-360 (5.9L) Turbo Diesel		**BT339**	**PA2183**	**N/R**	**BF1232**	**N/R**	**18032**
	V8-318 (5.2L) EFI	Y	**B233**	Metal Hsg. **PA615** Plastic Hsg. **PA2188**	**N/R**	**BF7713**	**SA4141**	**18032**
	V8-360 (5.9L) EFI	5,Z	**B233**	**PA615**	**N/R**	**BF7713**	**SA4141**	**18032**
	Raider 4-2600cc (2.6L) 2 Bbl.	E	**B173-S**	**PA2165**	**N/R**	**BF928**	**N/R**	
	V6-3000cc (3.0L) FI	S	**B173-S**	**PA2194**	**N/R**	**BF1100**	**N/R**	
	Ram 50 4-2000cc (2.0L) 2 Bbl.	D	**B173-S**	**PA2117**	**N/R**	**BF1178**	**N/R**	
	4-2600cc (2.6L) 2 Bbl.	G	**B173-S**	**PA2117**	**N/R**	**BF1178**	**N/R**	
	Spirit 4-2500cc (2.5L) MFI Turbo	J	**BT223**	**PA2104**	**N/R**	**BF794**	**SA4143**	**18104**
	4-2500cc (2.5L) FI	K	**BT223**	**PA2158**	**N/R**	**BF794**	**SA4139**	**18104**
	V6-3000cc (3.0L) MFI	3	**BT223**	**PA2103**	**N/R**	**BF794**	**SA4142**	**18104**
	Vans, B150-350 V6-238 (3.9L) EFI	X	**BT223**	**PA2188**	**N/R**	**BF7713**	**SA4141**	**18032**
	V8-318 (5.2L) EFI	Y	**B233**	Metal Hsg. **PA615** Plastic Hsg. **PA2188**	**N/R**	**BF7713**	**SA4141**	**18032**
	V8-360 (5.9L) EFI	Z	**B233**	**PA615**	**N/R**	**BF7713**	**SA4141**	**18032**
1988	600, Lancer, Shadow 4-2200cc (2.2L) EFI	D	**BT223**	**PA2158**	**N/R**	**BF794**	**SA4139**	**18104**
	4-2200cc (2.2L) EFI Turbo	E	**BT223**	**PA2104**	**N/R**	**BF794**	**SA4143**	**18104**
	4-2500cc (2.5L) EFI	K	**BT223**	**PA2158**	**N/R**	**BF794**	**SA4139**	**18104**
	Aries 4-2200cc (2.2L) EFI	D	**BT223**	**PA2158**	**N/R**	**BF794**	**SA4139**	**18104**
	4-2500cc (2.5L) EFI	K	**BT223**	**PA2158**	**N/R**	**BF794**	**SA4139**	**18104**
	Caravan, Grand Caravan, Mini Ram Van 4-2500cc (2.5L) FI	K	**BT223**	**PA2104**	**N/R**	**BF795**	**SA4139**	**18104**
	V6-3000cc (3.0L) FI	3	**B132**	**PA2103**	**N/R**	**BF795**	**SA2048**	**18104**
	Colt, Colt Vista 4-1500cc (1.5L) 2 Bbl.	K	**B173-S**		**N/R**	**BF1178**	**N/R**	**18021**
	4-1500cc (1.5L) FI	P	**B173-S**	**PA2194**	**N/R**	**BF1100**	**N/R**	**18021**
	4-1600cc (1.6L) FI Turbo	F	**B173-S**	**PA2194**	**N/R**	**BF1179**	**N/R**	**18021**
	4-2000cc (2.0L) MPI	D	**B173-S**	**PA2194**	**N/R**	FWD **BF1179** 4WD **BF1100**	**N/R**	**18021**
	Dakota 4-2200cc (2.2L) FI	C	**BT223**	**PA1735**	**N/R**	**BF7713**	**N/R**	**18032**
	V6-238 (3.9L) FI	X	**BT223**	**PA2188**	**N/R**	**BF7713**	**SA4141**	**18032**
	Daytona 4-2200cc (2.2L) FI Turbo	A,E	**BT223**	**PA2104**	**N/R**	**BF794**	**SA4143**	**18104**
	4-2500cc (2.5L) EFI	G	**BT223**	**PA2158**	**N/R**	**BF794**	**SA4139**	**18104**
	Diplomat V8-318 (5.2L) 2 Bbl.	4,P	**B233**	**PA2010**	**N/R**	w/VapDiv. **BF865,-K** w/o VapDiv. **BF840,-K1**	**SA4141**	**18032**
	V8-318 (5.2L) 4 Bbl.	S	**B233**	**PA2010**	**N/R**	w/VapDiv. **BF865,-K** w/o VapDiv. **BF840,-K1**	**SA4141**	**18032**
	Dynasty 4-2500cc (2.5L) EFI	K	**BT223**	**PA2158**	**N/R**	**BF794**	**SA4139**	**18104**
	V6-3000cc (3.0L) EFI	3	**B132**	**PA2103**	**N/R**	**BF794**	**SA2048**	**18104**
	Omni 4-2200cc (2.2L) EFI	D	**BT223**	**PA2103**	**N/R**		**SA4139**	**18104**
	Pickups, Ramchargers, A, D, W Series V6-239 (3.9L) EFI	X	**BT223**	**PA2192**	**N/R**	**BF7713**	**SA4141**	**18032**
	V8-318 (5.2L) EFI	Y	**B233**	**PA2188**	**N/R**	**BF7713**	**SA4141**	**18032**
	V8-360 (5.9L) 4 Bbl.	1,5,W	**B233**	**PA615**	**N/R**	**BF865,-K**	**SA4141**	**18032**
	Raider 4-2600cc (2.6L) 2 Bbl.	E	**B173-S**	**PA2165**	**N/R**	**BF928**	**N/R**	
	Ram 50 4-2000cc (2.0L) 2 Bbl.	D	**B173-S**	**PA2117**	**N/R**	**BF1178**	**N/R**	
	4-2600cc (2.6L) 2 Bbl.	G	**B173-S**	**PA2117**	**N/R**	**BF1178**	**N/R**	
	Vans, B150-350, PB150-250 V6-238 (3.9L) EFI	X	**BT223**	**PA2188**	**N/R**	**BF7713**	**SA4141**	**18032**
	V8-318 (5.2L) EFI	Y	**B233**	**PA2188**	**N/R**	**BF7713**	**SA4141**	**18032**
	V8-360 (5.9L) 4 Bbl.	W	**B233**	**PA615**	**N/R**	**BF865,-K**	**SA4141**	**18032**
1987	600, Daytona, Lancer 4-2200cc (2.2L) FI Turbo	A,E	**BT223**	**PA2104**	**N/R**		**SA4143**	**18104**
	4-2200cc (2.2L) FI	D	**BT223**	**PA2158**	**N/R**		**SA4139**	**18104**
	4-2500cc (2.5L) FI	K	**BT223**	**PA2158**	**N/R**		**SA4139**	**18104**
	Aries 4-2200cc (2.2L) FI	D	**BT223**	**PA2158**	**N/R**		**SA4139**	**18104**
	4-2500cc (2.5L) FI	K	**BT223**	**PA2158**	**N/R**		**SA4139**	**18104**

OBS = Obsolete. Availability Limited to Distributor Stock. † Transmission, Not Model, Determines Which Transmission Filter is Used.

DODGE Cont'd.

Year	Model and Engine	VIN	Lube	Air	Cabin Air	Fuel	Breather	Trans.t
1987	Caravan, Mini Ram Van 4-2200cc (2.2L) 2 Bbl.	C	**BT223**	**PA2104**	**N/R**	w/VapDiv. **BF930** w/o VapDiv. **BF840,-K1**	**N/R**	**18104**
	4-153 (2.5L) EFI	K	**BT223**	**PA2104**	**N/R**		**N/R**	**18104**
	4-2600cc (2.6L) 2 Bbl.	G	**B173-S**	**PA2157**	**N/R**	**BF964**	**N/R**	**18104**
	V6-3000cc (3.0L) FI	3	**B132**	**PA2103**	**N/R**	**BF795**	**SA2048**	**18104**
	Charger 4-2200cc (2.2L) 2 Bbl.	C	**BT223**	**PA2104**	**N/R**	w/VapDiv. **BF930** w/VapDiv., HO **BF865,-K**		**18104**
	4-2200cc (2.2L) FI Turbo	E	**BT223**	**PA2104**	**N/R**		**SA4143**	**18104**
	4-2200cc (2.2L) FI Turbo Inter-Cooled	L	**B132**	**PA2104**	**N/R**		**N/R**	**18104**
	Colt, Colt Vista 4-1500cc (1.5L) 2 Bbl.	K	**B173-S**		**N/R**	**BF1178**	**N/R**	**18021**
	4-1600cc (1.6L) FI Turbo	F	**B173-S**	**PA2194**	**N/R**	**BF1179**	**N/R**	**18021**
	4-2000cc (2.0L) 2 Bbl.	D	**B173-S**	**PA2176**	**N/R**	**BF928**	**N/R**	**18021**
	Dakota 4-2200cc (2.2L) FI	C	**BT223**	**PA1735**	**N/R**		**N/R**	**18032**
	V6-238 (3.9L) FI	M	**BT223**	**PA615**	**N/R**	**BF918-K**	**SA4141**	**18032**
	Diplomat V8-318 (5.2L) 2 Bbl.	4,P	**B233**	**PA615**	**N/R**	w/VapDiv. **BF865,-K** w/o VapDiv. **BF840,-K1**	**SA4141**	**18032**
	V8-318 (5.2L) 4 Bbl.	R,S	**B233**	**PA2010**	**N/R**	w/VapDiv. **BF865,-K** w/o VapDiv. **BF840,-K1**	**SA4141**	**18032**
	Omni 4-2200cc (2.2L) 2 Bbl.	8,C	**BT223**	**PA2104**	**N/R**	w/VapDiv. **BF930** w/VapDiv., HO **BF865,-K**		**18104**
	Pickups, Ramchargers, A, D, W Series 6-225 (3.7L) 1 Bbl.	H	**B233**	**PA615**	**N/R**	**BF865,-K**	**SA4141**	**18032**
	V8-318 (5.2L) 2 Bbl.	T	**B233**	**PA615**	**N/R**	**BF865,-K**	**SA4141**	**18032**
	V8-360 (5.9L) 4 Bbl.	5,I,W	**B233**	**PA615**	**N/R**	**BF865,-K**	**SA4141**	**18032**
	Raider 4-2600cc (2.6L) 2 Bbl.	E	**B173-S**	**PA2165**	**N/R**	**BF928**	**N/R**	
	Ram 50 4-2000cc (2.0L) 2 Bbl.	D	**B173-S**	**PA2117**	**N/R**	**BF1178**	**N/R**	
	4-2600cc (2.6L) 2 Bbl.	E	**B173-S**	**PA2117**	**N/R**	**BF1178**	**N/R**	
	Shadow 4-2200cc (2.2L) FI	D	**BT223**	**PA2158**	**N/R**		**SA4139**	**18104**
	4-2500cc (2.5L) FI Turbo	E	**BT223**	**PA2104**	**N/R**		**SA4143**	**18104**
	Vans, B150-350, PB150-250 6-225 (3.7L) 1 Bbl.	H	**B233**	**PA642**	**N/R**	**BF865,-K**	**SA4141**	**18032**
	V8-318 (5.2L) 2 Bbl.	T	**B233**	**PA615**	**N/R**	**BF865,-K**	**SA4141**	**18032**
	V8-360 (5.9L) 4 Bbl.	2,W	**B233**	**PA615**	**N/R**	**BF865,-K**	**SA4141**	**18032**
1986	600, Daytona, Lancer 4-2200cc (2.2L) FI	D	**BT223**	**PA2158**	**N/R**		**SA4139**	**18104**
	4-2200cc (2.2L) FI Turbo	E	**BT223**	**PA2104**	**N/R**		**N/R**	**18104**
	4-2500cc (2.5L) FI	K	**BT223**	**PA2158**	**N/R**		**SA4139**	**18104**
	Aries 4-2200cc (2.2L) FI	D	**BT223**	**PA2158**	**N/R**		**SA4139**	**18104**
	4-2500cc (2.5L) FI	K	**BT223**	**PA2158**	**N/R**		**SA4139**	**18104**
	Caravan, Mini Ram Van 4-2200cc (2.2L) 2 Bbl.	C	**BT223**	**PA2104**	**N/R**	w/VapDiv. **BF930** w/o VapDiv. **BF840,-K1**	**N/R**	**18104**
	4-2600cc (2.6L) 2 Bbl.	G	**B173-S**	**PA2157**	**N/R**	**BF964**	**N/R**	**18104**
	Charger, Omni 4-1600cc (1.6L) 2 Bbl.	A	**BT223**	**PA2104**	**N/R**	**BF918-K**	**N/R**	**18104**
	4-2200cc (2.2L) 2 Bbl.	8,C,F	**BT223**	**PA2104**	**N/R**	w/VapDiv. **BF930** w/o VapDiv. **BF840,-K1**	**N/R**	**18104**
	4-2200cc (2.2L) FI Turbo	E	**BT223**	**PA2104**	**N/R**		**N/R**	**18104**
	Colt 4-1500cc (1.5L) 2 Bbl.	Q	**B173-S**		**N/R**	**BF928**	**N/R**	
	4-1600cc (1.6L) FI Turbo	F	**B173-S**		**N/R**	**BF1100**	**N/R**	
	4-2000cc (2.0L) 2 Bbl.	D	**B173-S**	**PA2176**	**N/R**	**BF928**	**N/R**	
	Conquest 4-2600cc (2.6L) FI Turbo	H,N	**B173-S**		**N/R**	**BF1100**	**N/R**	
	Diplomat V8-318 (5.2L) 2 Bbl.	4,P	**B233**	**PA615**	**N/R**	w/VapDiv. **BF865,-K** w/o VapDiv. **BF840,-K1**	**SA4141**	**18032**

[t] Transmission, Not Model, Determines Which Transmission Filter is Used. OBS = Obsolete. Availability Limited to Distributor Stock.

DODGE Cont'd.

Year	Model and Engine	VIN	Lube	Air	Cabin Air	Fuel	Breather	Trans.†
1986	Diplomat V8-318 (5.2L) 4 Bbl.	R,S	**B233**	**PA2010**	**N/R**	w/VapDiv. **BF865,-K** w/o VapDiv. **BF840,-K1**	**SA4141**	**18032**
	Pickups, Ramchargers, A, D, W Series 6-225 (3.7L) 1 Bbl.	H	**B233**	**PA615**	**N/R**	**BF865,-K**	**SA4141**	**18032**
	V8-318 (5.2L) 2 Bbl.	T	**B233**	**PA615**	**N/R**	**BF865,-K**	**SA4141**	**18032**
	V8-360 (5.9L) 4 Bbl.	I,W	**B233**	**PA615**	**N/R**	**BF865,-K**	**SA4141**	**18032**
	Ram 50 4-2000cc (2.0L) 2 Bbl.	D	**B173-S**	**PA2117**	**N/R**	**BF928**	**N/R**	
	4-2600cc (2.6L) 2 Bbl.	E	**B173-S**	**PA2117**	**N/R**	**BF928**	**N/R**	
	Vans, B150-350, PB150-250 6-225 (3.7L) 1 Bbl.	H	**B233**	**PA642**	**N/R**	**BF865,-K**	**SA4141**	**18032**
	V8-318 (5.2L) 2 Bbl.	T	**B233**	**PA615**	**N/R**	**BF865,-K**	**SA4141**	**18032**
	V8-360 (5.9L) 4 Bbl.	I,W	**B233**	**PA615**	**N/R**	**BF865,-K**	**SA4141**	**18032**
1985	600 4-2200cc (2.2L) FI	D	**BT223**	**PA2103**	**N/R**		**N/R**	**18104**
	4-2200cc (2.2L) FI Turbo	E	**BT223**	**PA2104**	**N/R**		**N/R**	**18104**
	4-2600cc (2.6L) 2 Bbl.	G	**B173-S**	**PA2157**	**N/R**	**BF964**	**N/R**	**18104**
	Aries, Caravan, Mini Ram Van 4-2200cc (2.2L) 2 Bbl.	C	**BT223**	**PA2104**	**N/R**	**BF930**	**N/R**	**18104**
	4-2200cc (2.2L) FI	D	**BT223**	**PA2103**	**N/R**		**N/R**	**18104**
	4-2600cc (2.6L) 2 Bbl.	G	**B173-S**	**PA2157**	**N/R**	**BF964**	**N/R**	**18104**
	Charger, Omni 4-1600cc (1.6L) 2 Bbl.	A	**BT223**	**PA2104**	**N/R**	**BF918-K**	**N/R**	**18104**
	4-2200cc (2.2L) 2 Bbl. HO	8	**BT223**	**PA2103**	**N/R**	**BF840,-K1**	**N/R**	**18104**
	4-2200cc (2.2L) 2 Bbl.	C	**BT223**	**PA2104**	**N/R**	**BF840,-K1**	**N/R**	**18104**
	4-2200cc (2.2L) FI Turbo	E	**BT223**	**PA2104**	**N/R**		**N/R**	**18104**
	Colt 4-1500cc (1.5L) 2 Bbl.	Q	**B173-S**		**N/R**	**BF928**	**N/R**	**18021**
	4-1600cc (1.6L) FI Turbo	F	**B173-S**		**N/R**	**BF1100**	**N/R**	**18021**
	4-2000cc (2.0L) 2 Bbl.	D	**B173-S**	**PA2176**	**N/R**	**BF928**	**N/R**	**18021**
	Conquest 4-2600cc (2.6L) FI Turbo	H,N	**B173-S**		**N/R**	**BF1100**	**N/R**	
	Daytona 4-2200cc (2.2L) FI	D	**BT223**	**PA2103**	**N/R**		**N/R**	**18104**
	4-2200cc (2.2L) FI Turbo	E	**BT223**	**PA2104**	**N/R**		**N/R**	**18104**
	Diplomat V8-318 (5.2L) 2 Bbl.	P	**B233**	**PA615**	**N/R**	**BF865,-K**	**SA4141**	**18032**
	V8-318 (5.2L) 4 Bbl.	R,S	**B233**	**PA2010**	**N/R**	**BF865,-K**	**SA4141**	**18032**
	Lancer 4-2200cc (2.2L) FI	D	**BT223**	**PA2103**	**N/R**		**N/R**	**18104**
	4-2200cc (2.2L) FI Turbo	E	**BT223**	**PA2104**	**N/R**		**N/R**	**18104**
	Pickups, Ramchargers, A, D, W Series 6-225 (3.7L) 1 Bbl.	H	**B233**	**PA615**	**N/R**	**BF865,-K**	**SA4141**	**18032**
	V8-318 (5.2L) 2 Bbl.	T	**B233**	**PA615**	**N/R**	**BF865,-K**	**SA4141**	**18032**
	V8-360 (5.9L) 4 Bbl.	I,W	**B233**	**PA615**	**N/R**	**BF865,-K**	**SA4141**	**18032**
	Ram 50 4-2000cc (2.0L) 2 Bbl.	D	**B173-S**	**PA2117**	**N/R**	**BF928**	**N/R**	
	4-2300cc (2.3L) Turbo Diesel	J		**PA2117**	**N/R**	**BF7534**	**N/R**	
	4-2600cc (2.6L) 2 Bbl.	E	**B173-S**	**PA2117**	**N/R**	**BF928**	**N/R**	
	Vans, B150-350, PB150-250 6-225 (3.7L) 1 Bbl.	H	**B233**	**PA642**	**N/R**	**BF865,-K**	**SA4141**	**18032**
	V8-318 (5.2L) 2 Bbl.	T	**B233**	**PA615**	**N/R**	**BF865,-K**	**SA4141**	**18032**
	V8-360 (5.9L) 4 Bbl.	I	**B233**	**PA615**	**N/R**	**BF865,-K**	**SA4141**	**18032**
1984	600 4-2200cc (2.2L) 2 Bbl.	C	**BT223**	**PA2104**	**N/R**	**BF930**	**N/R**	**18104**
	4-2200cc (2.2L) FI	D	**BT223**	**PA2103**	**N/R**	**BF930**	**N/R**	**18104**
	4-2200cc (2.2L) FI Turbo	E	**BT223**	**PA2104**	**N/R**			**18104**
	4-2600cc (2.6L) 2 Bbl.	G	**B173-S**	**PA2157**	**N/R**	**BF964**	**N/R**	**18104**
	Aries 4-2200cc (2.2L) 2 Bbl.	C	**BT223**	**PA2104**	**N/R**	**BF930**	**N/R**	**18104**
	4-2200cc (2.2L) FI	D	**BT223**	**PA2103**	**N/R**		**N/R**	**18104**
	4-2600cc (2.6L) 2 Bbl.	G	**B173-S**	**PA2157**	**N/R**	**BF964**	**N/R**	**18104**
	Caravan, Mini Ram Van 4-2200cc (2.2L) 2 Bbl.	C	**BT223**	**PA2104**	**N/R**	**BF930**	**N/R**	**18104**
	4-2600cc (2.6L) 2 Bbl.	G	**B173-S**	**PA2157**	**N/R**	**BF964**	**N/R**	**18104**
	Charger 4-1600cc (1.6L) 2 Bbl.	A	**BT223**	**PA2104**	**N/R**	**BF918-K**	**N/R**	**18104**
	4-2200cc (2.2L) 2 Bbl.	8,C	**BT223**	**PA2104**	**N/R**	**BF930**	**N/R**	**18104**
	Colt 4-1400cc (1.4L) 2 Bbl.	A	**B173-S**		**N/R**	**BF928**	**N/R**	**18021**
	4-1600cc (1.6L) 2 Bbl.	B	**B173-S**		**N/R**	**BF928**	**N/R**	**18021**
	4-1600cc (1.6L) FI Turbo	F	**B173-S**		**N/R**		**N/R**	**18021**
	4-2000cc (2.0L) 2 Bbl.	D	**B173-S**	**PA2176**	**N/R**	**BF928**	**N/R**	**18021**
	Conquest 4-2600cc (2.6L) FI Turbo	H	**B173-S**		**N/R**	**BF1100**	**N/R**	
	Daytona 4-2200cc (2.2L) FI	D	**BT223**	**PA2103**	**N/R**		**N/R**	**18104**
	4-2200cc (2.2L) FI Turbo	E	**BT223**	**PA2104**	**N/R**		**N/R**	**18104**
	Diplomat V8-318 (5.2L) 2 Bbl.	4,P	**B233**	**PA615**	**N/R**	**BF865,-K**	**SA4141**	**18032**
	V8-318 (5.2L) 4 Bbl.	R,S	**B233**	**PA2010**	**N/R**	**BF865,-K**	**SA4141**	**18032**

OBS = Obsolete. Availability Limited to Distributor Stock. † Transmission, Not Model, Determines Which Transmission Filter is Used.

DODGE Cont'd.

Year	Model and Engine	VIN	Lube	Air	Cabin Air	Fuel	Breather	Trans.[t]
1984	Omni 4-1600cc (1.6L) 2 Bbl.	A	**BT223**	**PA2104**	**N/R**	**BF918-K**		**18104**
	4-2200cc (2.2L) 2 Bbl.	8,C	**BT223**	**PA2104**	**N/R**	**BF930**	**N/R**	**18104**
	Pickups, Ramchargers, A, D, W Series 6-225 (3.7L) 1 Bbl.	H	**B233**	**PA615**	**N/R**	**BF865,-K**	**SA4141**	**18032**
	V8-318 (5.2L) 2 Bbl.	T	**B233**	**PA615**	**N/R**	**BF865,-K**	**SA4141**	**18032**
	V8-360 (5.9L) 4 Bbl.	1,W	**B233**	**PA615**	**N/R**	**BF865,-K**	**SA4141**	**18032**
	Ram 50 4-2000cc (2.0L) 2 Bbl.	D	**B173-S**	**PA2117**	**N/R**	**BF928**	**N/R**	
	4-2300cc (2.3L) Turbo Diesel	J	**B202**	**PA2117**	**N/R**	**BF7534**	**N/R**	
	4-2600cc (2.6L) 2 Bbl.	E	**B173-S**	**PA2117**	**N/R**	**BF928**	**N/R**	
	Rampage 4-2200cc (2.2L) 2 Bbl.	C	**BT223**	**PA2104**	**N/R**	**BF930**	**N/R**	**18104**
	Vans, B150-350, PB150-250 6-225 (3.7L) 1 Bbl.	H	**B233**	**PA642**	**N/R**	**BF865,-K**	**SA4141**	**18032**
	V8-318 (5.2L) 2 Bbl.	T	**B233**	**PA615**	**N/R**	**BF865,-K**	**SA4141**	**18032**
	V8-360 (5.9L) 4 Bbl.	W	**B233**	**PA615**	**N/R**	**BF865,-K**	**SA4141**	**18032**
1983	400, 600, Aries 4-2200cc (2.2L) 2 Bbl.	C	**BT223**	**PA2104**	**N/R**	**BF930**	**N/R**	**18104**
	4-2600cc (2.6L) 2 Bbl.	G	**B173-S**	**PA2157**	**N/R**	**BF964**	**N/R**	**18104**
	Challenger 4-2600cc (2.6) 2 Bbl.	7	**B173-S**	**PA2117**	**N/R**	**BF928**	**N/R**	
	Charger 4-2200cc (2.2L) 2 Bbl.	C	**BT223**	**PA2104**	**N/R**	**BF930**	**N/R**	**18104**
	Colt 4-1400cc (1.4L) 2 Bbl.	2	**B173-S**	**PA2090**	**N/R**	**BF928**	**N/R**	**18021**
	4-1600cc (1.6L) 2 Bbl.	3	**B173-S**	**PA2090**	**N/R**	**BF928**	**N/R**	**18021**
	Diplomat, Mirada 6-225 (3.7L) 1 Bbl.	H,J,K	**B233**	**PA615**	**N/R**	**BF865,-K**	**SA4141** **SA2046**	**18032**
	V8-318 (5.2L) 2 Bbl.	4,P,Z	**B233**	**PA615**	**N/R**	**BF865,-K**	**SA4141** **SA2046**	**18032**
	V8-318 (5.2L) 4 Bbl.	R,S	**B233**	**PA2010**	**N/R**	**BF865,-K**	**SA4141** **SA2046**	**18032**
	Omni 4-1600cc (1.6L) 2 Bbl.	A	**BT223**	**PA2104**	**N/R**	**BF918-K**		**18104**
	4-1700cc (1.7L) 2 Bbl.	B	**BT223**	**PA2083**	**N/R**	**BF840,-K1**	**N/R**	**18104**
	4-2200cc (2.2L) 2 Bbl.	C	**BT223**	**PA2104**	**N/R**	**BF930**	**N/R**	**18104**
	Pickups, Ramchargers, A, D, W Series 6-225 (3.7L) 1, 2 Bbl.	H,M	**B233**	**PA615**	**N/R**	**BF865,-K**	**SA4141** **SA2046**	**18032**
	V8-318 (5.2L) 2, 4 Bbl.	T,U	**B233**	**PA615**	**N/R**	**BF865,-K**	**SA4141** **SA2046**	**18032**
	V8-360 (5.9L) 4 Bbl.	1,V,W	**B233**	**PA615**	**N/R**	**BF865,-K**	**SA4141** **SA2046**	**18032**
	Ram 50 4-2000cc (2.0L) 2 Bbl.	5	**B173-S**	**PA2117**	**N/R**	**BF928**	**N/R**	
	4-2300cc (2.3L) Turbo Diesel	9	**B202**	**PA2117**	**N/R**	**BF7534**	**N/R**	
	4-2600cc (2.6L) 2 Bbl.	7	**B173-S**	**PA2117**	**N/R**	**BF928**	**N/R**	
	Rampage 4-2200cc (2.2L) 2 Bbl.	C	**BT223**	**PA2104**	**N/R**	**BF930**	**N/R**	**18104**
	Vans, B150-350, PB150-250 6-225 (3.7L) 1 Bbl.	H	**B233**	**PA642**	**N/R**	**BF865,-K**	**SA4141** **SA2046**	**18032**
	V8-318 (5.2L) 2, 4 Bbl.	T,U	**B233**	**PA615**	**N/R**	**BF865,-K**	**SA4141** **SA2046**	**18032**
	V8-360 (5.9L) 4 Bbl.	1,V,W	**B233**	**PA615**	**N/R**	**BF865,-K**	**SA4141** **SA2046**	**18032**
1982	400, Aries 4-2600cc (2.6L) 2 Bbl.	D	**B173-S**	**PA2157**	**N/R**	**BF964**	**N/R**	Late **18104**
	Challenger 4-2600cc (2.6L) 2 Bbl.	7	**B173-S**	**PA2117**	**N/R**	**BF928**	**N/R**	
	Colt 4-1400cc (1.4L) 2 Bbl.	2	**B173-S**	**PA2090**	**N/R**	**BF928**	**N/R**	**18021**
	4-1600cc (1.6L) 2 Bbl.	3	**B173-S**	**PA2090**	**N/R**	**BF928**	**N/R**	**18021**
	Diplomat, Mirada 6-225 (3.7L)	E,F	**B233**	**PA615**	**N/R**	**BF865,-K**	**SA4141** **SA2046**	**18032**
	V8-318 (5.2L) 2 Bbl.	K,L	**B233**	**PA615**	**N/R**	**BF865,-K**	**SA4141** **SA2046**	**18032**
	V8-318 (5.2L) 4 Bbl.	M,N	**B233**	**PA2010**	**N/R**	**BF865,-K**	**SA4141** **SA2046**	**18032**
	Omni, Omni 024, 4-1700cc (1.7L) 2 Bbl.	A	**BT223**	**PA2083**	**N/R**	**BF840,-K1**	**N/R**	
	4-2200cc (2.2L) 2 Bbl.	B	**BT223**	**PA2104**	**N/R**	**BF930**	**N/R**	
	Pickups, Ramchargers, A, D, W Series 6-225 (3.7L)	E,W	**B233**	**PA615**	**N/R**	**BF865,-K**	**SA4141** **SA2046**	**18032**
	V8-318 (5.2L) Carb	P,R	**B233**	**PA615**	**N/R**	**BF865,-K**	**SA4141** **SA2046**	**18032**
	V8-360 (5.9L)	S,T,U	**B233**	**PA615**	**N/R**	**BF865,-K**	**SA4141** **SA2046**	**18032**
	Ram 50, D50 4-2000cc (2.0L) 2 Bbl.	5	**B173-S**	**PA2117**	**N/R**	**BF928**	**N/R**	
	4-2600cc (2.6L) 2 Bbl.	7	**B173-S**	**PA2117**	**N/R**	**BF928**	**N/R**	
	Rampage 4-2200cc (2.2L) 2 Bbl.	B	**BT223**	**PA2104**	**N/R**	**BF930**	**N/R**	**18104**

[t] Transmission, Not Model, Determines Which Transmission Filter is Used. OBS = Obsolete. Availability Limited to Distributor Stock.

Year	Model and Engine	VIN	Lube	Air	Cabin Air	Fuel	Breather	Trans.t
DODGE Cont'd.								
1982	Vans, B150-350, PB150-250 6-225 (3.7L) 1 Bbl.	E,W	**B233**	**PA642**	**N/R**	**BF865,-K**	**SA4141 SA2046**	**18032**
	V8-318 (5.2L) Carb.	P,R	**B233**	**PA615**	**N/R**	**BF865,-K**	**SA4141 SA2046**	**18032**
	V8-360 (5.9L) Carb.	S,T,U	**B233**	**PA615**	**N/R**	**BF865,-K**	**SA4141 SA2046**	**18032**
1981	Aries 4-2200cc (2.2L) 2 Bbl.	B	**BT223**	**PA2104**	**N/R**	**BF930**	**N/R**	
	4-2600cc (2.6L) 2 Bbl.	D	**B141**	**PA2157**	**N/R**	**BF964**	**N/R**	
	Challenger 4-2600cc (2.6L) 2 Bbl.	7	**B141**	**PA2117**	**N/R**	**BF928**	**N/R**	
	Colt 4-1400cc (1.4L) 2 Bbl.	2	**B173-S**	**PA2090**	**N/R**	**BF928**	**N/R**	**18021**
	4-1600cc (1.6L) 2 Bbl.	3	**B173-S**	**PA2090**	**N/R**	**BF928**	**N/R**	**18021**
	Diplomat, Mirada, St. Regis 6-225 (3.7L) Carb.	E,F,G	**B233**	**PA615**	**N/R**	**BF840,-K1**[17] **BF865,-K**[31]	**SA4141 SA2046**	**18032**
	V8-318 (5.2L) 2 Bbl.	K,L	**B233**	**PA615**	**N/R**	**BF840,-K1**[17] **BF865,-K**[31]	**SA4141 SA2046**	**18032**
	V8-318 (5.2L) 4 Bbl.	M,N	**B233**	**PA2010**	**N/R**	**BF840,-K1**[17] **BF865,-K**[31]	**SA4141 SA2046**	**18032**
	Omni, Omni 024 4-1700cc (1.7L) 2 Bbl.	A	**B178**	**PA2083**	**N/R**	**BF840,-K1**	**N/R**	
	4-2200cc (2.2L) 2 Bbl.	B	**BT223**	**PA2104**	**N/R**	**BF930**	**N/R**	
	Pickups, Ramchargers, A, D, W Series 6-225 (3.7L) 1 Bbl.	E	**B233**	**PA615**	**N/R**	**BF840,-K1**[17] **BF865,-K**[31]	**SA4141 SA2046**	**18032**
	V8-318 (5.2L)	P,R	**B233**	**PA615**	**N/R**	**BF840,-K1**[17] **BF865,-K**[31]	**SA4141 SA2046**	**18032**
	V8-360 (5.9L) 4 Bbl.	S,T,V	**B233**	**PA615**	**N/R**	**BF840,-K1**[17] **BF865,-K**[31]	**SA4141 SA2046**	**18032**
	Ram 50, D50 4-2000cc (2.0L) 2 Bbl.	5	**B141**	**PA2117**	**N/R**	**BF928**	**N/R**	
	4-2600cc (2.6L) 2 Bbl.	7	**B141**	**PA2117**	**N/R**	**BF928**	**N/R**	
	Vans, B150-350, Vans, PB150-250 6-225 (3.7L) 1 Bbl.	E	**B233**	**PA642**	**N/R**	**BF840,-K1**[17] **BF865,-K**[31]	**SA4141 SA2046**	**18032**
	V8-318 (5.2L) Carb.	P,R	**B233**	**PA615**	**N/R**	**BF840,-K1**[17] **BF865,-K**[31]	**SA4141 SA2046**	**18032**
	V8-360 (5.9L) 4 Bbl.	T,V	**B233**	**PA615**	**N/R**	**BF840,-K1**[17] **BF865,-K**[31]	**SA4141 SA2046**	**18032**
1980	Aspen, Diplomat, Mirada, St. Regis 6-225 (3.7L)	C,D	**B233**	**PA615**	**N/R**	**BF840,-K1**[17] **BF865,-K**[31]	**SA4141 SA2046**	**18032**
	V8-318 (5.2L) 2 Bbl.	G	**B233**	**PA615**	**N/R**	**BF840,-K1**[17] **BF865,-K**[31]	**SA4141 SA2046**	**18032**
	V8-318 (5.2L) 4 Bbl.	H	**B233**	**PA2010**	**N/R**	**BF840,-K1**[17] **BF865,-K**[31]	**SA4141 SA2046**	**18032**
	V8-360 (5.9L)	K,L	**B233**	**PA2010**	**N/R**	**BF840,-K1**[17] **BF865,-K**[31]	**SA4141 SA2046**	**18032**
	Challenger 4-2600cc (2.6L) 2 Bbl.	F,W	**B141**	**PA2117**	**N/R**	**BF928**	**N/R**	
	Colt 4-1400cc (1.4L) 2 Bbl.	J	**B173-S**	**PA2090**	**N/R**	**BF964**	**N/R**	
	4-1600cc (1.6L) 2 Bbl.	K	**B173-S**	**PA2090**	**N/R**	**BF964**	**N/R**	
	4-2600cc (2.6L) 2 Bbl.	F,W	**B141**	**PA2117**	**N/R**	**BF928**	**N/R**	
	D50 4-2000cc (2.0L) 2 Bbl.	U	**B141**	**PA2117**	**N/R**	**BF928**	**N/R**	
	4-2600cc (2.6L) 2 Bbl.	W	**B141**	**PA2117**	**N/R**	**BF928**	**N/R**	
	Omni 4-1700cc (1.7L) 2 Bbl.	A	**B178**	**PA2083**	**N/R**	**BF840,-K1**	**N/R**	
	Pickups, Ramcharger, Vans 6-225 (3.7L) 1 Bbl.	N	**B233**	**PA642**	**N/R**	**BF840,-K1**[17] **BF865,-K**[31]	**SA4141 SA2046**	**18032**
	V8-318 (5.2L) Carb.	E,P	**B233**	**PA615**	**N/R**	**BF840,-K1**[17] **BF865,-K**[31]	**SA4141 SA2046**	**18032**
	V8-360 (5.9L) Carb.	S,T	**B233**	10 In. O.D. **PA615** 12 3/4 In. O.D. **PA2010**	**N/R**	**BF840,-K1**[17] **BF865,-K**[31]	**SA4141 SA2046**	**18032**
DUCATI Motorcycles								
	350 Series		All Years **B7292**					
	400SS Junior Series		1992-94 **B7292**					
	600 SL Pantah Sports		1981-85 **B7292**					
	600SS		1991-98 **B7292**					
	620 Sport FF		2003 **B7292**					
	650 Indiana Custom		1986-88 **B7292**					
	748 Series		1994-2003 **B7292**					
	749 Series		2003-06 **B7292**					
	750 Paso		1986-90 **B7292**					
	750 Series		1985-2001 **B7292**					

[17] Exc. Calif. OBS = Obsolete. Availability Limited to Distributor Stock. t Transmission, Not Model, Determines Which Transmission Filter is Used. [31] Calif.

DUCATI Motorcycles Cont'd.

Year	Model and Engine	VIN	Lube	Air	Cabin Air	Fuel	Breather	Trans.t
	750 Sport		1988-90, 2001-02 **B7292**					
	750SS Series		1991-2002 **B7292**					
	800 Sport		2003 **B7292**					
	800SS		2003-07 **B7292**					
	848		2008-on **B7292**					
	Monster 696							
	851 Strada		1988-92 **B7292**					
	888 Strada		1992-94 **B7292**					
	900 S2		1979-85 **B7292**					
	900 Sport		2002 **B7292**					
	900 Superlight		1992-97 **B7292**					
	900SS Series		1990-2002 **B7292**					
	906 Paso Sport		1988-91 **B7292**					
	907 I.E.		1990-93 **B7292**					
	916 Series		1993-98 **B7292**					
	996 Series		1998-2001 **B7292**					
	998 Series		2002-03 **B7292**					
	999 Series		2003-07 **B7292**					
	1000SS		2003-06 **B7292**					
	GT1000		2007 **B7292**					
	1098 Series		2007-on **B7292**					
	Hypermotard 1100/1100S		2008 **B7292**					
	M600 Monster		1993-2001 **B7292**					
	M750 Monster		1996-2001 **B7292**					
	MH900E		2001 **B7292**					
	Monster 400 Series		2001-03, 2005-on **B7292**					
	Monster 620 Series		2001-06 **B7292**					
	Monster 695		2007-on **B7292**					
	Monster 750 Series		1999-2000, 2002 **B7292**					
	Monster 800 Series		2003-04 **B7292**					
	Monster 900 Series		1993-2002 **B7292**					
	Monster 1000 Series		2003-06 **B7292**					
	Monster M900 Series		1999-2001 **B7292**					
	Monster S2R Series		2005-on **B7292**					
	Monster S4 Series		2001-on **B7292**					
	Multristrada 620/620 Dark		2005-06 **B7292**					
	Multristrada 1000 Series		2004-06 **B7292**					
	Multrastada 1100/1100S		2007-on **B7292**					
	Paul Smart 1000 LE		2006 **B7292**					
	Sport 1000 Monoposto		2007 **B7292**					
	Sport 1000 Series		2006-on **B7292**					
	SportClassic GT1000		2007 **B7292**					
	SportClassic Sport 1000 Series		2007 **B7292**					
	SportTouring ST3 Series		2007 **B7292**					
	SS1000 Series		2003-06 **B7292**					
	ST2		1997-2003 **B7292**					
	ST3 Series		2004-on **B7292**					
	ST4 Series		1999-2005 **B7292**					
	Monster 1100							
	Superbike 1098/1098S/1098S Tricolore		2007 **B7292**					
	Superbike		1990-97 **B7292**					

EAGLE

1998	Talon 4-122 (2.0L) SFI Turbo	F	**B1402**	**PA4015**	**N/R**	**BF7659**	**N/R**	
	4-122 (2.0L) SFI	Y	**B34**	**PA4015**	**N/R**	**BF7659**	**N/R**	**18004**
1997	Talon 4-122 (2.0L) SFI Turbo	F	**B1402**	**PA4015**	**N/R**	**BF7659**	**N/R**	
	4-122 (2.0L) SFI	Y	**B34**	**PA4015**	**N/R**	**BF7659**	**N/R**	**18004**
	Vision V6-201 (3.3L) SFI	T	**B34**	**PA2230**	**N/R**	**BF1181**	**N/R**	**18003**
	V6-201 (3.3L) SFI Flex Fuel	U	**B34**	**PA2230**	**N/R**		**N/R**	**18003**
	V6-215 (3.5L) SFI	F	**B34**	**PA2230**	**N/R**	**BF1181**	**N/R**	**18003**
1996	Summit, Summit Wagon 4-90 (1.5L) SFI	A	**B1402**		**N/R**	**BF1179**	**N/R**	
	4-112 (1.8L) SFI	C	**B1402**	Wagon **PA4015**	**N/R**	**BF1179**	**N/R**	
	4-144 (2.4L) SFI	G	**B1402**	**PA4015**	**N/R**	**BF1179**	**N/R**	
	Talon 4-122 (2.0L) SFI Turbo	F	**B1402**	**PA4015**	**N/R**	**BF1179**	**N/R**	

[t] Transmission, Not Model, Determines Which Transmission Filter is Used. OBS = Obsolete. Availability Limited to Distributor Stock.

EAGLE Cont'd.

Year	Model and Engine	VIN	Lube	Air	Cabin Air	Fuel	Breather	Trans.†
1996	Talon 4-122 (2.0L) SFI	Y	**B34**	**PA4015**	**N/R**	**BF1179**	**N/R**	**18004**
	Vision V6-201 (3.3L) SFI	T	**B34**	**PA2230**	**N/R**	**BF1181**	**N/R**	**18003**
	V6-215 (3.5L) SFI	F	**B34**	**PA2230**	**N/R**	**BF1181**	**N/R**	**18003**
1995	Summit, Summit Wagon 4-90 (1.5L) MFI	A	**B1402**		**N/R**	**BF1179**	**N/R**	
	4-112 (1.8L) MFI	C	**B1402**	Wagon **PA4015**	**N/R**	**BF1179**	**N/R**	
	4-144 (2.4L) MFI	G	**B1402**	**PA4015**	**N/R**	**BF1179**	**N/R**	
	Talon 4-122 (2.0L) SFI	E	**B34**	**PA4015**	**N/R**	**BF1179**	**N/R**	**18004**
	4-122 (2.0L) SFI Turbo	F	**B1402**	**PA4015**	**N/R**	**BF1179**	**N/R**	
	Vision V6-201 (3.3L) SFI	T	**B34**	**PA2230**	**N/R**	**BF1181**	**N/R**	**18003**
	V6-201 (3.3L) SFI Flex Fuel	T	**B34**	**PA2230**	**N/R**		**N/R**	**18003**
	V6-215 (3.5L) SFI	F	**B34**	**PA2230**	**N/R**	**BF1181**	**N/R**	**18003**
1994	Summit, Summit Wagon 4-90 (1.5L) MFI	A	**B1402**	Exc. ES **PA2194**	**N/R**	**BF1179**	**N/R**	
	4-112 (1.8L) MFI	B,C	**B1402**	Wagon **PA4015**	**N/R**	**BF1179**	**N/R**	
	4-144 (2.4L) MFI	G	2 9/16 In O.D. **B1402** 3 11/16 In. O.D. **B245**	**PA4015**	**N/R**	**BF1179**	**N/R**	
	Talon 4-1800cc (1.8L) MFI	B	2 9/16 In. O.D. **B1402** 3 11/16 In. O.D. **B245**	**PA2194**	**N/R**	**BF1179**	**N/R**	
	4-2000cc (2.0L) MFI or Turbo	E,F	2 9/16 In. O.D. **B1402** 3 11/16 In. O.D. **B245**	**PA2194**	**N/R**	**BF1179**	**N/R**	
	Vision V6-201 (3.3L) MFI	T	**B34**	**PA2230**	**N/R**	**BF1181**	**N/R**	**18003**
	V6-201 (3.3L) MFI Flex Fuel	T	**B34**	**PA2230**	**N/R**		**N/R**	**18003**
	V6-216 (3.5L) MFI SOHC	F	**B34**	**PA2230**	**N/R**	**BF1181**	**N/R**	**18003**
1993	2000 GTX 4-122 (2.0L) FI Canada	D	**B173-S**	**PA2194**	**N/R**	**BF1179**	**N/R**	
	Summit, Summit Wagon 4-90 (1.5L) MFI	A	**B1402**		**N/R**	**BF1179**	**N/R**	
	4-112 (1.8L) MFI	C	**B1402**	**PA4015**	**N/R**	**BF1179**	**N/R**	
	4-144 (2.4L) MFI	G	**B245**	**PA4015**	**N/R**	**BF1179**	**N/R**	
	Talon 4-1800cc (1.8L) MFI	B		**PA2194**	**N/R**	**BF1179**	**N/R**	
	4-2000cc (2.0L) MFI	E	**B245**	**PA2194**	**N/R**	**BF1179**	**N/R**	
	4-2000cc (2.0L) MFI Turbo	F	**B245**	**PA2194**	**N/R**	**BF1179**	**N/R**	
	Vision V6-201 (3.3L) MFI	T	**B34**	**PA2230**	**N/R**	**BF1181**	**N/R**	**18003**
	V6-215 (3.5L) MFI	F	**B34**	**PA2230**	**N/R**	**BF1181**	**N/R**	**18003**
1992	2000 GTX 4-122 (2.0L) FI Canada	R,V	**B173-S**	**PA2194**	**N/R**	**BF1179**	**N/R**	
	Premier V6-182 (3.0L) MFI	U	**B141**	Z7X-711 Eng. **PA2101A** Z7X-715 Eng. **PA2103**	**N/R**		**N/R**	
	Summit, Summit Wagon 4-90 (1.5L) MFI	A	**B1402**	**PA2194**	**N/R**	**BF1179**	**N/R**	
	4-112 (1.8L) MFI	D	**B1402**	**PA4015**	**N/R**	**BF1179**	**N/R**	
	4-2351cc (2.4L) MFI	W	**B245**	**PA4015**	**N/R**	**BF1179**	**N/R**	
	Talon 4-2000cc (2.0L) MFI or Turbo	R,U	**B245**	**PA2194**	**N/R**	**BF1179**	**N/R**	
	Vista 4-90 (1.5L) FI Canada	K	**B1402**	**PA2194**	**N/R**	**BF1179**	**N/R**	
	4-122 (2.0L) FI Canada	V	**B173-S**	**PA2194**	**N/R**	**BF1179**	**N/R**	
1991	2000 GTX 4-122 (2.0L) FI Canada	R,V	**B173-S**	**PA2194**	**N/R**	**BF1179**	**N/R**	
	Premier V6-182 (3.0L) MFI	U	**B141**	Z7X-711 Eng. **PA2101A** Z7X-715 Eng. **PA2103**	**N/R**		**N/R**	
	Summit 4-90 (1.5L) MFI	X	**B173-S**	**PA2194**	**N/R**	**BF1179**	**N/R**	
	Talon 4-2000cc (2.0L) MFI	R,U	**B173-S**	**PA2194**	**N/R**	**BF1179**	**N/R**	
	Vista 4-90 (1.5L) FI Canada	K	**B173-S**	**PA2194**	**N/R**	**BF1179**	**N/R**	
	4-122 (2.0L) FI Canada	V	**B173-S**	**PA2194**	**N/R**	**BF1179**	**N/R**	
1990	Premier V6-182 (3.0L) MFI	U	**B141**	Z7X-711 Eng. **PA2101A** Z7X-715 Eng. **PA2103**	**N/R**	**BF1199**	**N/R**	
	Summit 4-90 (1.5L) MFI	X	**B173-S**	**PA2194**	**N/R**	**BF1100**	**N/R**	
	4-97 (1.6L) MFI	Y	**B173-S**	**PA2194**	**N/R**	**BF1100**	**N/R**	
	Talon 4-2000cc (2.0L) MFI	R,U	**B173-S**	**PA2194**	**N/R**	**BF1179**	**N/R**	
	Vista 4-90 (1.5L) Carb. Canada	K	**B173-S**	**PA1735**	**N/R**	**BF1178**	**N/R**	
	4-122 (2.0L) Carb. Canada	V	**B173-S**	**PA2194**	**N/R**	**BF1179**	**N/R**	
1989	Medallion 4-2163cc (2.2L) MFI	F	**B141**		**N/R**	**BF1195**	**N/R**	

OBS = Obsolete. Availability Limited to Distributor Stock. † Transmission, Not Model, Determines Which Transmission Filter is Used.

Year	Model and Engine	VIN	Lube	Air	Cabin Air	Fuel	Breather	Trans.[t]
EAGLE Cont'd.								
1989	Premier 4-150 (2.5L) EFI	Z	**B141**	**PA2101A**	**N/R**	**BF1199**	**N/R**	
	V6-182 (3.0L) MFI	U	**B141**	**PA2101A**	**N/R**	**BF1199**	**N/R**	
	Summit 4-1500cc (1.5L) MFI	X	**B173-S**	**PA2194**	**N/R**	**BF1100**	**N/R**	
	4-1600cc (1.6L) MFI	Y	**B173-S**	**PA2194**	**N/R**	**BF1179**	**N/R**	
	Vista 4-1997cc (2.0L) FI Canada	V	**B173-S**	**PA2194**	**N/R**		**N/R**	
1988	Medallion 4-2163cc (2.2L) MFI	F	**B141**		**N/R**	**BF1195**	**N/R**	
	Premier 4-150 (2.5L) TBI	Z	**B141**	**PA2101A**	**N/R**	**BF1199**		
	V6-182 (3.0L) MPI	J	**B141**	**PA2101A**	**N/R**	**BF1199**	**N/R**	
	Vista 4-1468cc (1.5L) Carb. Canada	K	**B173-S**	**PA2194**	**N/R**		**N/R**	
FERRARI								
2008	599 GTB V12-5999cc (6.0L) FI	F					**N/R**	**M.T.**
	612 Scaglietti V12-5750cc (5.7L) FI					**N/S**	**N/R**	**M.T.**
	F430 V8-4308cc (4.3L) FI					**N/S**	**N/R**	**M.T.**
	F430 Spider V8-4308cc (4.3L) FI					**N/S**	**N/R**	**M.T.**
2007	599 GTB Fiorano V12-5999cc (6.0L) FI	F					**N/R**	**M.T.**
	612 Scaglietti V12-5750cc (5.7L) FI					**N/S**	**N/R**	**M.T.**
	F430, F430 Spider V8-4308cc (4.3L) FI					**N/S**	**N/R**	**M.T.**
2006	612 Scaglietti V12-5750cc (5.7L) FI					**N/S**	**N/R**	**M.T.**
	F430, F430 Spider V8-4308cc (4.3L) FI					**N/S**	**N/R**	**M.T.**
2005	360 Challenge V8-3586cc (3.6L) FI						**N/R**	
	360 Modena V8-3586cc (3.6L) FI					**N/S**	**N/R**	**M.T.**
	360 Spider V8-3586cc (3.6L) FI					**N/S**	**N/R**	**M.T.**
	575M Maranello V12-5750cc (5.7L) FI					**N/S**	**N/R**	**M.T.**
	612 Scaglietti V12-5750cc (5.7L) FI					**N/S**	**N/R**	**M.T.**
2004	360 Challenge V8-3586cc (3.6L) FI						**N/R**	
	360 Modena V8-3586cc (3.6L) FI					**N/S**	**N/R**	**M.T.**
	360 Spider V8-3586cc (3.6L) FI					**N/S**	**N/R**	**M.T.**
	456M GT, 456M GTA V12-5474cc (5.5L) FI						**N/R**	**M.T.**
	575M Maranello V12-5750cc (5.7L) FI					**N/S**	**N/R**	**M.T.**
	Enzo V12-5998cc (6.0L) FI					**N/S**	**N/R**	**M.T.**
2003	360 Modena V8-3586cc (3.6L) FI					**N/S**	**N/R**	**M.T.**
	360 Spider V8-3586cc (3.6L) FI					**N/S**	**N/R**	**M.T.**
	456M GT, 456M GTA V12-5474cc (5.5L) FI						**N/R**	**M.T.**
	575M Maranello V12-5750cc (5.7L) FI					**N/S**	**N/R**	**M.T.**
	Enzo V12-6000cc (6.0L) FI					**N/S**	**N/R**	**M.T.**
2002	360 Modena V8-3600cc (3.6L) FI					**N/S**	**N/R**	**M.T.**
	360 Spider V8-3600cc (3.6L) FI					**N/S**	**N/R**	**M.T.**
	456M GT, 456M GTA V12-5500cc (5.5L) FI						**N/R**	**M.T.**
	550 Barchetta, 550 Maranello V12-5474cc (5.5L) FI					**[2] BF885**	**N/R**	**M.T.**
2001	360 Modena V8-3600cc (3.6L) FI					**N/S**	**N/R**	**M.T.**
	360 Spider V8-3600cc (3.6L) FI					**N/S**	**N/R**	**M.T.**
	456M GT V12-5500cc (5.5L) FI						**N/R**	**M.T.**
	550 Maranello V12-5474cc (5.5L) FI					**[2] BF885**	**N/R**	**M.T.**
2000	360 Modena V8-3600cc (3.6L) FI	Y					**N/R**	**M.T.**
	550 Maranello V12-5474cc (5.5L) FI	Z				**[2] BF885**	**N/R**	**M.T.**
	F355 V8-3496cc (3.5L) FI						**N/R**	
1999	550 Maranello V12-5474cc (5.5L) FI					**BF885**	**N/R**	
	F355 V8-3496cc (3.5L) FI						**N/R**	
1998	456 GT V12-5474cc (5.5L) FI	W			**N/R**	**BF885**	**N/R**	
	550 Maranello V12-5474cc (5.5L) FI	Z			**N/R**	**BF885**	**N/R**	
1997	456 GT V12-5474cc (5.5L) FI	W			**N/R**	**BF885**	**N/R**	
	512 M H12-4943cc (4.9L) FI	V			**N/R**	**BF885**	**N/R**	
	550 Maranello V12-5474cc (5.5L) FI	Z			**N/R**	**BF885**	**N/R**	
1996	456 GT V12-5474cc (5.5L) FI	S			**N/R**	**BF885**	**N/R**	
1995	456 GT V12-5474cc (5.5L) FI	S			**N/R**	**BF885**	**N/R**	
	512 BBI H12-4943cc (4.9L) FI	V			**N/R**	**BF885**	**N/R**	**M.T.**
1993	348TB, 348TS V8-3400cc (3.4L) FI	R			**N/R**		**N/R**	**M.T.**
	512TR 12-4900cc (4.9L) FI	L			**N/R**		**N/R**	**M.T.**
	Mondial V8-3400cc (3.4L) FI	R			**N/R**		**N/R**	**M.T.**
1992	348TB, 348TS V8-3400cc (3.4L) FI	R			**N/R**		**N/R**	**M.T.**
	Mondial V8-3400cc (3.4L) FI	R			**N/R**		**N/R**	**M.T.**
1991	348TB, 348TS V8-3400cc (3.4L) FI	R			**N/R**		**N/R**	**M.T.**
	Testarossa V12-4900cc (4.9L) FI	S			**N/R**		**N/R**	**M.T.**
1990	348TB, 348TS V8-3400cc (3.4L) FI	F			**N/R**		**N/R**	**M.T.**
	Testarossa 12-4900cc (4.9L) FI	S			**N/R**		**N/R**	**M.T.**

[t] Transmission, Not Model, Determines Which Transmission Filter is Used. OBS = Obsolete. Availability Limited to Distributor Stock.

Year	Model and Engine	VIN	Lube	Air	Cabin Air	Fuel	Breather	Trans.t
FERRARI Cont'd.								
1989	328 GTB V8-3186cc (3.2L) FI	X	B253		N/R		N/R	M.T.
	328 GTS V8-3186cc (3.2L) FI		B253		N/R		N/R	M.T.
	328TB, 328TS V8-3200cc (3.2L) FI	X			N/R			M.T.
	Testarossa 12-4900cc (4.9L) FI	S			N/R		N/R	M.T.
1988	328 GTB V8-3186cc (3.2L) FI	X	B253		N/R		N/R	M.T.
	328 GTS V8-3186cc (3.2L) FI		B253		N/R		N/R	M.T.
	328TB, 328TS V8-3200cc (3.2L) FI	X			N/R			M.T.
	Mondial V8-3186cc (3.2L) FI	X	B253		N/R		N/R	M.T.
	Testarossa 12-4900cc (4.9L) FI	S			N/R		N/R	M.T.
1987	328 GTB V8-3186cc (3.2L) FI	X	B253		N/R		N/R	M.T.
	328 GTS V8-3186cc (3.2L) FI		B253		N/R		N/R	M.T.
	328TB, 328TS V8-3200cc (3.2L) FI	X			N/R			M.T.
	Mondial V8-3186cc (3.2L) FI	X	B253		N/R		N/R	M.T.
	Testarossa 12-4900cc (4.9L) FI	S			N/R		N/R	M.T.
1986	328 GTB V8-3186cc (3.2L) FI	X	B253		N/R		N/R	M.T.
	328 GTS V8-3186cc (3.2L) FI		B253		N/R		N/R	M.T.
	328TBi, 328TSi V8-3200cc (3.2L) FI	X	B253		N/R			M.T.
	Mondial V8-3186cc (3.2L) FI	X	B253		N/R		N/R	M.T.
1985	308GTB V8-2927cc (3.0L) FI		B253		N/R		N/R	M.T.
	308GTS V8-2927cc (3.0L) FI		B253		N/R		N/R	M.T.
	328 GTB V8-3186cc (3.2L) FI		B253		N/R		N/R	M.T.
	328 GTS V8-3186cc (3.2L) FI		B253		N/R		N/R	M.T.
	308TBi, 308TSi, Mondial V8-2900cc (2.9L) FI	N	B253		N/R		N/R	M.T.
1984	308GTB V8-2927cc (3.0L) FI		B253		N/R		N/R	M.T.
	308GTS V8-2927cc (3.0L) FI		B253		N/R		N/R	M.T.
	512 BBI H12-4943cc (4.9L) FI	S	B253		N/R	BF885	N/R	M.T.
	308TBi, 308TSi, Mondial V8-2900cc (2.9L) FI		B253		N/R		N/R	M.T.
1983	308GTB V8-2927cc (3.0L) FI		B253		N/R		N/R	M.T.
	308GTS V8-2927cc (3.0L) FI		B253		N/R		N/R	M.T.
	308TBi, 308TSi, Mondial V8-2900cc (2.9L) FI		B253		N/R		N/R	M.T.
	512 BBI H12-4943cc (4.9L) FI	S	B253		N/R	BF885	N/R	M.T.
1982	308 GTBI V8-2927cc (3.0L) FI		B253		N/R		N/R	
	308 GTSI V8-2927cc (3.0L) FI		B253		N/R		N/R	
	308GTB V8-2927cc (3.0L) FI		B253		N/R		N/R	M.T.
	308GTS V8-2927cc (3.0L) FI		B253		N/R		N/R	M.T.
	512 BBI H12-4943cc (4.9L) FI	S	B253		N/R	BF885	N/R	M.T.
	308TBi, 308TSi, Mondial V8-2900cc (2.9L) FI	A	B253		N/R		N/R	M.T.
1981	308 GTBI V8-2927cc (3.0L) FI		B253		N/R		N/R	
	308 GTSI V8-2927cc (3.0L) FI		B253		N/R		N/R	
	308i GTB, 308i GTS V8-2900cc (2.9L) 4-2 Bbl.	A	B253		N/R		N/R	
FIAT								
2011	500 4-1400cc (1.4L) FI Turbo						N/R	
	4-1400cc (1.4L) FI						N/R	
2005	Palio 4-1600cc (1.6L) FI Mexico							
	Palio Adventure 4-1600cc (1.6L) FI Mexico							
2004	Palio 4-1600cc (1.6L) FI Mexico							
	Palio Adventure 4-1600cc (1.6L) FI Mexico							
1983	124 Spyder 4 Cyl. (2.0L) FI	B	BT5	PA2101A	N/R	BF1195		
	X1/9 4 Cyl. (1.5L) FI	A	BT5		N/R	BF1195	N/R	
1982	124 Spyder 4 Cyl. (2.0L) FI	B	BT5	PA2101A	N/R	BF1195		
	Strada 4 Cyl. (1.5L) FI	A	BT5		N/R	BF1195	N/R	
	X1/9 4 Cyl. (1.5L) FI	A	BT5		N/R	BF1195	N/R	
1981	124 Spyder 4 Cyl. (2.0L) FI		BT5	PA2101A	N/R	BF1195		
	Brava 4 Cyl. (2.0L) FI	B	BT5	PA2101A	N/R	BF1195	N/R	
	Strada 4 Cyl. (1.5L) FI	A	BT5		N/R	BF1195	N/R	
	X1/9 4 Cyl. (1.5L) FI	A	BT5		N/R	BF1195	N/R	
1980	124 Spyder 4 Cyl. (2.0L) FI		BT5		N/R	BF1195		
	Brava 4 Cyl. (2.0L) 2 Bbl.		BT5		N/R	BF840,-K1		
	Strada 4 Cyl. (1.5L) Carb.		BT5	PA658	N/R	BF833,-K2	N/R	
	X1/9 4 Cyl. (1.5L) Carb.		BT5		N/R	BF833,-K2	N/R	

OBS = Obsolete. Availability Limited to Distributor Stock. t Transmission, Not Model, Determines Which Transmission Filter is Used.

Year	Model and Engine	VIN	Lube	Air	Cabin Air	Fuel	Breather	Trans.t
FORD								
2011	Explorer 4-2000cc (2.0L) Turbo							
	V6-3500cc (3.5L) Twin Turbo EcoBoost							
	Fiesta 4-1600cc (1.6L) FI						**N/R**	
2010	Crown Victoria V8-281 (4.6L) SFI or Flex Fuel	V	Exc. Police **B329** Police **BT8409**	Exc. Police **PA2152** Police **PA4338**	**N/R**	**BF7668**	**N/R**	4R70-W **18029**
	Edge V6-213 (3.5L) FI	C	**B7449**	**PA4321**	**PA4365**	**N/S**	**N/R**	6 Spd. **N/S**
	Escape 4-152 (2.5L) SFI Hybrid	3	Ele. **P7313** Spin-on **BT8409**	**PA4385**	**PA4394**	**BF1166**	**N/R**	**N/S**
	4-152 (2.5L) SFI	7	Ele. **P7313** Spin-on **BT8409**	**PA4385**	**PA4394**	**BF1166**	**N/R**	**N/S**
	V6-183 (3.0L) SFI	G	**B7449**		**PA4394**	**BF1166**	**N/R**	**N/S**
	Expedition V8-330 (5.4L) SFI or Flex Fuel	5	**B329**	**PA4323**	**N/R**	**BF7742**	**N/R**	**20019**
	Explorer V6-245 (4.0L) SFI	E	**B329**	**PA4147**	**N/R**	**BF7802**	**N/R**	5R55S **20002**
	V8-281 (4.6L) SFI	8	**B329**	**PA4185**	**N/R**	**BF7802**	**N/R**	6 Spd. **20019**
	Explorer Sport Trac V6-245 (4.0L) SFI	E	**B329**	**PA4147**	**N/R**	**BF7802**	**N/R**	5 Spd. **20018**
	V8-281 (4.6L) SFI	8	**B329**	**PA4185**	**N/R**	**BF7802**	**N/R**	
	Flex V6-213 (3.5L) FI	C	**B7449**	**PA4321**		**N/S**	**N/R**	**N/S**
	V6-213 (3.5L) DI Twin Turbo EcoBoost	T	**B7449**	**PA4321**		**N/S**	**N/R**	**N/S**
	Focus 4-121 (2.0L) FI	N	**BT8409**	**PA4419**		**BF7742**	**N/R**	4F27E **18267**
	Fusion 4-151 (2.5L) FI or Hybrid	3,A	**BT8409**	Exc. Hybrid **PA4175** Hybrid **N/S**		**N/S**	**N/R**	**N/S**
	V6-182 (3.0L) FI Flex Fuel	G	**B7449**	**PA4176**		**N/S**	**N/R**	**N/S**
	V6-214 (3.5L) FI	C	**B7449**	**PA4321**		**N/S**	**N/R**	**N/S**
	Mustang V6-245 (4.0L) SFI	N	**B329**	**PA4361**		**BF7802**	**N/R**	5R55S **20006**
	V6-281 (4.6L) SFI	H	**B329**			**BF7802**	**N/R**	5R55S **20006**
	V8-330 (5.4L) SFI Supercharged	S	**B329**			**BF7802**	**N/R**	**M.T.**
	Pickups, F Series V8-281 (4.6L) EFI	8,W	**B329**	**PA4323**	**N/R**	**BF7802**	**N/R**	4R70-W **18029** 6R80 **20019**
	V8-330 (5.4L) EFI or Flex Fuel	5,V	**B329**	**PA4323**	**N/R**	**BF7802**	**N/R**	4R70-W **18029** 4R75W **20005** 6R80 **20019**
	Pickups, Super Duty V8-330 (5.4L) EFI	5	**B329**	**PA4323**	**N/R**	**BF7802**	**N/R**	4R75W **20005**
	V8-391 (6.4L) DI Turbo Diesel	R	(w/o Cap) **P7235**		**N/R**	**PF7934 KIT**[76]	**N/R**	
	V10-415 (6.8L) EFI	Y	**B329**	**PA4323**	**N/R**	**BF7802**	**N/R**	
	Ranger 4-140 (2.3L) FI	D	**BT8409**	**PA4102**	**N/R**	**BF7742**	**N/R**	2WD **18024** 4WD **18025**
	V6-245 (4.0L) FI	E	**B329**	**PA4102**	**N/R**	**BF7742**	**N/R**	2WD **18024** 4WD **18025**
	Taurus V6-213 (3.5L) FI Twin Turbo EcoBoost	T	**B7449**	**PA4321**		**N/S**	**N/R**	**N/S**
	V6-213 (3.5L) FI	W	**B7449**	**PA4321**		**N/S**	**N/R**	**N/S**
	Transit Connect 4-121 (2.0L) FI	N	**BT8409**			**N/S**	**N/R**	4F27E **18267**
	Vans, E Series V8-281 (4.6L) FI or Flex Fuel	W	**B329**	**PA4075**	**N/R**	**BF7668**	**N/R**	4R70-W **18029** 4R75W **20005** Ele. **P7247**
	V8-330 (5.4L) FI or Flex Fuel	L	**B329**	**PA4075**	**N/R**	**BF7668**	**N/R**	4R75W **20005**
	V8-366 (6.0L) DI Turbo Diesel	P	(w/o Cap) **P7235**	**PA4171**	**N/R**	**PF7852 KIT**[76]	**N/R**	
	V10-415 (6.8L) FI	S	**B329**	**PA4075**	**N/R**	**BF7668**	**N/R**	
2009	Crown Victoria V8-281 (4.6L) SFI or Flex Fuel	V	Exc. Police **B329** Police **BT8409**	Exc. Police **PA2152** Police **PA4338**	**N/R**	**BF7668**	**N/R**	4R70-W **18029**
	Edge V6-213 (3.5L) FI	C	To 1/16/09 **B243** 1/16/09-on **B7449**	**PA4321**	**PA4365**	**N/S**	**N/R**	6 Spd. **N/S**
	Escape 4-152 (2.5L) SFI	7	Ele. **P7313** Spin-on **BT8409**	**PA4385**	**PA4394**	**BF1166**	**N/R**	**N/S**
	4-152 (2.5L) FI Hybrid	3	Ele. **P7313** Spin-on **BT8409**	**PA4385**	**PA4394**	**BF1166**	**N/R**	**N/S**
	V6-183 (3.0L) SFI	G	**B7449**		**PA4394**	**BF1166**	**N/R**	**N/S**
	Expedition V8-330 (5.4L) SFI	5	**B329**	**PA4323**	**N/R**	**BF7742**	**N/R**	6 Spd. **20019**
	Explorer V6-245 (4.0L) SFI	E	**B329**	**PA4147**	**N/R**	**BF7802**	**N/R**	5R55S **20002**
	V8-281 (4.6L) SFI	8	**B329**	**PA4185**	**N/R**	**BF7802**	**N/R**	**20019**
	Explorer Sport Trac V6-245 (4.0L) SFI	K	**B329**	**PA4147**	**N/R**	**BF7802**	**N/R**	5 Spd. **20018**
	V8-281 (4.6L) SFI	8	**B329**	**PA4185**	**N/R**	**BF7802**	**N/R**	
	Flex V6-213 (3.5L) FI	C	To 1/16/09 **B243** 1/16/09-on **B7449**	**PA4321**		**N/S**	**N/R**	**N/S**

[t] Transmission, Not Model, Determines Which Transmission Filter is Used. OBS = Obsolete. Availability Limited to Distributor Stock.

[76] Contains Pri. and Sec. Fuel Elements.

FORD Cont'd.

Year	Model and Engine	VIN	Lube	Air	Cabin Air	Fuel	Breather	Trans.[t]
2009	Focus 4-121 (2.0L) SFI	N	**BT8409**	**PA4419**		**BF7742**	**N/R**	4F27E **18267**
	Fusion 4-140 (2.3L) FI	Z	**P7313**	**PA4175**	**N/R**	**N/S**	**N/R**	
	V6-183 (3.0L) FI	1	To 9/25/08 **B329** 9/25/08-on **B7449**	**PA4176**	**N/R**	**N/S**	**N/R**	
	Mustang V6-245 (4.0L) SFI	N	**B329**	**PA4361**		**BF7802**	**N/R**	5R55S **20006**
	V6-281 (4.6L) SFI	H	**B329**	**PA4361**		**BF7802**	**N/R**	5R55S **20006**
	V8-330 (5.4L) SFI Supercharged	S	**B329**			**BF7802**	**N/R**	**M.T.**
	Mustang Bullitt V6-281 (4.6L) SFI	H	**B329**			**BF7802**	**N/R**	**M.T.**
	Pickups, F Series V8-281 (4.6L) EFI	8,W	**B329**	**PA4323**	**N/R**	**BF7802**	**N/R**	6R80 **20019**
	V8-330 (5.4L) EFI or Flex Fuel	5,V	**B329**	**PA4323**	**N/R**	**BF7802**	**N/R**	
	Pickups, Super Duty V8-330 (5.4L) EFI	5	**B329**	**PA4323**	**N/R**	**BF7802**	**N/R**	
	V8-391 (6.4L) DI Turbo Diesel	R	(w/o Cap) **P7235**		**N/R**	**PF7934 KIT**[76]	**N/R**	
	V10-415 (6.8L) EFI	Y	**B329**	**PA4323**	**N/R**	**BF7802**	**N/R**	
	Ranger 4-140 (2.3L) FI	D	**BT8409**	**PA4102**	**N/R**	**BF7742**	**N/R**	5R44E 2WD **18024** 5R55E 4WD **18025**
	V6-245 (4.0L) FI	E	**B329**	**PA4102**	**N/R**	**BF7742**	**N/R**	5R44E 2WD **18024** 5R55E 4WD **18025**
	Taurus V6-213 (3.5L) FI	W	To 1/16/09 **B243** 1/16/09-on **B7449**	**PA4321**	**N/R**	**N/S**	**N/R**	**N/S**
	Taurus X V6-213 (3.5L) SFI	W	To 1/16/09 **B243** 1/16/09-on **B7449**	**PA4321**	**N/R**	**N/S**	**N/R**	**N/S**
	Vans, E Series V8-281 (4.6L) EFI	W	**B329**	**PA4075**	**N/R**	**BF7668**	**N/R**	4R70-W **18029**
	V8-330 (5.4L) EFI or Flex Fuel	L	**B329**	**PA4075**	**N/R**	**BF7668**	**N/R**	5R110W **20005** 5R100W Ele. **P7247**
	V8-366 (6.0L) Turbo Diesel	P	(w/o Cap) **P7235**	**PA4171**	**N/R**	**PF7852 KIT**[76]	**N/R**	5R110W **20005** 5R110W Ele. **P7247**
	V10-415 (6.8L) SFI	S	**B329**	**PA4075**	**N/R**	**BF7668**	**N/R**	5R110W **20005** 5R110W Ele. **P7247**
2008	Crown Victoria V8-281 (4.6L) SFI or Flex Fuel	V,W	**B329**	Exc. Police **PA2152** Police **PA4338**	**N/R**	**BF7668**	**N/R**	4R70W **18029**
	Edge V6-213 (3.5L) FI	C	**B243**	**PA4321**	**PA4365**	**N/S**	**N/R**	6 Spd. **N/S**
	Escape 4-140 (2.3L) SFI	Z	Ele. **P7313** Spin-on **BT8409**	**PA4163**	**PA4394**	**BF1166**	**N/R**	CD4E **N/S**
	4-140 (2.3L) FI Hybrid	H	**P7313**	**PA4385**	Opt. **PA4370**	**BF1166**	**N/R**	**N/S**
	V6-183 (3.0L) SFI	1	**B329**	**PA4163**	**PA4394**	**BF1166**	**N/R**	CD4E **N/S**
	Expedition V8-330 (5.4L) SFI	5	**B329**	**PA4323**	**N/R**	**BF7742**	**N/R**	6 Spd. **20019**
	Explorer V6-245 (4.0L) SFI	E	**B329**	**PA4147**	**N/R**	**BF7802**	**N/R**	5R55S **20002** Transfer Case **20006**
	V8-281 (4.6L) SFI	8	**B329**	**PA4185**	**N/R**	**BF7802**	**N/R**	5R55S **20002** 6R60 **20019** Transfer Case **20006**
	Explorer Sport Trac V6-245 (4.0L) SFI	K	**B329**	**PA4147**	**N/R**	**BF7802**	**N/R**	5R55S **20002** 6R60 **20019**
	V6-281 (4.6L) SFI	8	**B329**	**PA4185**	**N/R**	**BF7802**	**N/R**	
	Fiesta 4-1600cc (1.6L) FI Mexico			**PA2201**			**N/R**	
	Focus 4-121 (2.0L) SFI	N	**BT8409**	**PA4419**		**BF7742**	**N/R**	4F27E **18267**
	Fusion 4-140 (2.3L) SFI	Z	Ele. **P7313** Spin-on **BT8409**	**PA4175**	**N/R**	**N/S**	**N/R**	
	V6-183 (3.0L) SFI	1	**B329**	**PA4176**	**N/R**	**N/S**	**N/R**	
	KA 4-1600cc (1.6L) FI Mexico		**B1416**			**BF1166**	**N/R**	
	Lobo V8-4600cc (4.6L) FI Mexico		**B329**	**PA4075**		**BF7668**	**N/R**	
	V8-5400cc (5.4L) FI Mexico		**B329**	**PA4323**		**BF7802**	**N/R**	
	Mustang V6-245 (4.0L) SFI	N	**B329**	**PA4361**		**BF7802**	**N/R**	5R55S **20006**
	V8-281 (4.6L) SFI	H	**B329**	**PA4361**		**BF7802**	**N/R**	5R55S **20006**
	V8-330 (5.4L) SFI Supercharged	S	**B329**			**BF7802**	**N/R**	5R55S **20006**
	Mustang Bullitt V6-281 (4.6L) SFI	H	**B329**			**BF7802**	**N/R**	**M.T.**
	Pickups, F Series V6-256 (4.2L) EFI	2	**B243**	**PA4075**	**N/R**	**BF7802**	**N/R**	4R75W **18029**
	V8-281 (4.6L) EFI	W	3 31/32 In. **B329** 4 27/32 In. **B243**	**PA4075**	**N/R**	**BF7802**	**N/R**	4R75W **18029**
	V8-330 (5.4L) EFI or Flex Fuel	5,V	**B329**	**PA4167**	**N/R**	Gas Eng. **BF7802** Flex Fuel **BF7668**	**N/R**	4R75W **18029**

OBS = Obsolete. Availability Limited to Distributor Stock. [t] Transmission, Not Model, Determines Which Transmission Filter is Used.

[76] Contains Pri. and Sec. Fuel Elements.

FORD Cont'd.

Year	Model and Engine	VIN	Lube	Air	Cabin Air	Fuel	Breather	Trans.t
2008	Pickups, Super Duty V8-330 (5.4L) MFI	5	**B329**	**PA4323**	**N/R**	**BF7802**	**N/R**	5R110W (To 11/07) **20005**
	V8-391 (6.4L) DI Turbo Diesel	R	(w/o Cap) **P7235**		**N/R**	**PF7934 KIT**[76]	**N/R**	5R110W (To 11/07) **20005**
	V10-415 (6.8L) EFI	Y	**B329**	**PA4323**	**N/R**	**BF7802**	**N/R**	5R110W (To 11/07) **20005**
	Ranger 4-140 (2.3L) FI	D	**BT8409**	**PA4102**	**N/R**	**BF7742**	**N/R**	5R55E 2WD **18024** 5R55E 4WD **18025**
	V6-182 (3.0L) FI	U	**B243**	**PA4102**	**N/R**	**BF7742**	**N/R**	5R55E 2WD **18024** 5R55E 4WD **18025**
	V6-245 (4.0L) FI	E	**B329**	**PA4102**	**N/R**	**BF7742**	**N/R**	5R55E 2WD **18024** 5R55E 4WD **18025**
	Taurus V6-213 (3.5L) SFI	W	**B243**	**PA4321**	**N/R**	**N/S**	**N/R**	**N/S**
	Taurus X V6-213 (3.5L) SFI	W	**B243**	**PA4321**	**N/R**	**N/S**	**N/R**	**N/S**
	Vans, E Series V8-281 (4.6L) EFI	W	**B329**	**PA4075**	**N/R**	**BF7668**	**N/R**	4R75W **18029**
	V8-330 (5.4L) EFI	L	**B329**	**PA4075**	**N/R**	**BF7668**	**N/R**	Ele. **P7247** 5R110W (To 11/07) **20005**
	V8-366 (6.0L) Turbo Diesel	P	(w/o Cap) **P7235**	**PA4171**	**N/R**	**PF7852 KIT**[76]	**N/R**	5R110W (To 11/07) **20005**
	V10-415 (6.8L) SFI	S	**B329**	**PA4075**	**N/R**	**BF7668**	**N/R**	5R110W (To 11/07) **20005**
2007	Crown Victoria V8-281 (4.6L) SFI or Flex Fuel	V,W	**B329**	Exc. Police **PA2152** Police **PA4338**	**N/R**	**BF7668**	**N/R**	4R70W **18029**
	Edge V6-213 (3.5L) FI	C	**B243**	**PA4321**	**PA4365**	**N/S**	**N/R**	**N/S**
	Escape 4-140 (2.3L) SFI	Z	Ele. **P7313** Spin-on **BT8409**	**PA4163**	Opt. **PA4370**	**BF966**	**N/R**	CD4E **N/S**
	4-140 (2.3L) FI Hybrid	H	**P7313**	**PA4385**	Opt. **PA4370**	**BF966**	**N/R**	CD4E **N/S**
	V6-183 (3.0L) SFI	1	**B329**	**PA4163**	Opt. **PA4370**	**BF966**	**N/R**	CD4E **N/S**
	Expedition V8-330 (5.4L) SFI	5	**B329**	**PA4323**	**N/R**	**BF7742**	**N/R**	4R70W **18029** 6 Spd. **20019**
	Explorer V6-245 (4.0L) FI or Flex Fuel	E,K	**B329**	**PA4147**	**N/R**	**BF7802**	**N/R**	5R55S **20002** Transfer Case **20006**
	V8-281 (4.6L) FI	8	**B329**	**PA4185**	**N/R**	**BF7802**	**N/R**	5R55S **20002** 6R60 **20018** Transfer Case **20006**
	Explorer Sport Trac V6-245 (4.0L) SFI	K	**B329**	**PA4147**	**N/R**	**BF7802**	**N/R**	Rear Transfer Drive **20006** 5R55S **20002**
	V8-281 (4.6L) SFI	8	**B329**	**PA4185**	**N/R**	**BF7802**	**N/R**	Rear Transfer Drive **20006** 5R55S **20002**
	Fiesta 4-1600cc (1.6L) FI Mexico		**BT223**	**PA2201**		**BF7668**	**N/R**	
	Five Hundred V6-183 (3.0L) SFI	1	**B329**	**PA4183**	**N/R**	**BF7668**	**N/R**	**N/S**
	Focus 4-121 (2.0L) SFI	N	**BT8409**	**N/S**		**BF7668**	**N/R**	4F27E **18267**
	4-140 (2.3L) SFI	Z	**BT8409**	**N/S**		**BF7668**	**N/R**	4F27E **18267**
	Freestar V6-241 (3.9L) SFI	6	**B243**	**PA4181**	**PA4152**	**BF7742**	**N/R**	AX4N **18034**
	V6-256 (4.2L) SFI	2	**B243**	**PA4181**	**PA4152**	**BF7742**	**N/R**	4X4N **18034**
	Freestyle V6-183 (3.0L) SFI	1	**B329**	**PA4183**	**N/R**	**BF7668**	**N/R**	
	Fusion 4-140 (2.3L) FI	Z	Ele. **P7313** Spin-on **BT8409**	**PA4175**	**N/R**	**N/S**	**N/R**	
	V6-183 (3.0L) FI	1	**B329**	**PA4176**	**N/R**	**N/S**	**N/R**	
	Grand Marquis V8-281 (4.6L) FI Canada	W	**B329**	**PA2152**	**N/R**	**BF7668**	**N/R**	4R70W **18029**
	Ikon 4-1600cc (1.6L) FI Mexico		**B243**			**BF7668**	**N/R**	
	KA 4-1600cc (1.6L) FI Mexico		**B1416**			**BF1166**	**N/R**	
	Lobo V8-4600cc (4.6L) FI Mexico		**B329**	**PA4075**		**BF7668**	**N/R**	
	V8-5400cc (5.4L) FI Mexico		**B329**	**PA4323**		**BF7802**	**N/R**	
	Mondeo 4-2000cc (2.0L) FI Mexico		**BT8409**				**N/R**	
	V6-2500cc (2.5L) FI Mexico		**BT8409**				**N/R**	
	6-3000cc (3.0L) FI Mexico		**B329**				**N/R**	
	Mustang V6-245 (4.0L) SFI	N	**B329**	**PA4361**		**BF7802**	**N/R**	5R55S **20006**
	V6-281 (4.6L) SFI	H	**B329**	**PA4361**		**BF7802**	**N/R**	5R55S **20006**
	V8-330 (5.4L) SFI Supercharged	S	**B329**			**BF7802**	**N/R**	5R55S **20006**

[t] Transmission, Not Model, Determines Which Transmission Filter is Used. OBS = Obsolete. Availability Limited to Distributor Stock.

[76] Contains Pri. and Sec. Fuel Elements.

FORD Cont'd.

Year	Model and Engine	VIN	Lube	Air	Cabin Air	Fuel	Breather	Trans.[t]
2007	Pickups, F Series V6-256 (4.2L) EFI	2	**B243**	**PA4075**	**PA4133**	**BF7802**	**N/R**	4R75W **18029** 4R100 S. Pan **18264** 4R100 D. Pan **18265**
	V8-281 (4.6L) EFI	W	3 31/32 In. **B329** 4 27/32 In. **B243**	**PA4075**	**PA4133**	**BF7802**	**N/R**	AODE-W S. Pan **18029** 4R100 S. Pan **18264** 4R100 D. Pan **18265**
	V8-330 (5.4L) EFI	5	**B329**	**PA4167**	**PA4133**	**BF7802**	**N/R**	AODE-W S. Pan **18029** 4R100 S. Pan **18264** 4R100 D. Pan **18265**
	V8-330 (5.4L) Flex Fuel	V	**B329**	**PA4167**	**PA4133**	**BF7668**	**N/R**	AODE-W S. Pan **18029** 4R100 S. Pan **18264** 4R100 D. Pan **18265**
	Pickups, Super Duty V8-330 (5.4L) EFI	5	**B329**	**PA4167**	**N/R**	**BF7802**	**N/R**	4R100 S. Pan **18264** 4R100 D. Pan **18265** 5R110W Ele. **P7247**
	V8-363 (6.0L) FI Turbo Diesel	P	(w/o Cap) **P7235**	**CA4999**	**N/R**	**PF7812 KIT**[76]	**N/R**	5R110W **20005**
	V10-415 (6.8L) EFI	Y	**B329**	**PA4172**	**N/R**	**BF7802**	**N/R**	4R100 S. Pan **18264** 4R100 D. Pan **18265** 5R110W **P7247**
	Ranger 4-140 (2.3L) FI	D	**BT8409**	**PA4160**	**N/R**	**BF7742**	**N/R**	5R55E 2WD **18024** 5R55E 4WD **18025**
	V6-182 (3.0L) MFI	U	**B243**	**PA4102**	**N/R**	**BF7742**	**N/R**	5R55E 2WD **18024** 5R55E 4WD **18025**
	V6-245 (4.0L) MFI	E	**B329**	**PA4102**	**N/R**	**BF7742**	**N/R**	5R55E 2WD **18024** 5R55E 4WD **18025**
	Taurus V6-182 (3.0L) FI or Flex Fuel	2,U	**B243**	**PA4163**	**PA4112**	**BF7809**	**N/R**	4E50N **18034**
	Vans, E Series V8-281 (4.6L) FI	W	**B329**	**PA4075**	**N/R**	**BF7668**	**N/R**	4R70W **18029** 4R100 S. Pan **18264** 4R100 D. Pan **18265**
	V8-330 (5.4L) FI	L,Z	**B329**	**PA4075**	**N/R**	**BF7668**	**N/R**	5R110W **20005** 5R100W Ele. **P7247** Cooler Line Kit **18029**
	V8-363 (6.0L) Turbo Diesel	P	(w/o Cap) **P7235**	**PA4171**	**N/R**	**PF7852 KIT**[76]	**N/R**	5R110W **20005** 5R110W Ele. **P7247** Cooler Line Kit **18029**
	V10-415 (6.8L) FI	S	**B329**	**PA4075**	**N/R**	**BF7668**	**N/R**	Cooler Line Kit **18029**
2006	Crown Victoria V8-281 (4.6L) Natural Gas	9	**B329**	**PA2152**	**N/R**		**N/R**	4R70W **18029**
	V8-281 (4.6L) SFI or Flex Fuel	V,W	**B329**	Exc. Police **PA2152** Police **PA4338**	**N/R**	**BF7668**	**N/R**	4R70W **18029**
	Ecosport 4-121 (2.0L) FI Mexico		**B329**			**BF7668**	**N/R**	
	Escape 4-140 (2.3L) FI Hybrid	H	**P7313**	**PA4385**	Opt. **PA4370**	**BF966**	**N/R**	CD4E **N/S**
	4-140 (2.3L) SFI	Z	Ele. **P7313** Spin-on **BT8409**	**PA4163**	Opt. **PA4370**	**BF966**	**N/R**	CD4E **N/S**
	V6-182 (3.0L) SFI	1	**B329**	**PA4163**	Opt. **PA4370**	**BF966**	**N/R**	CD4E **N/S**
	Expedition V8-330 (5.4L) SFI	5	**B329**	**PA4167**	**N/R**	**BF7668**	**N/R**	4R75W **18029**
	Explorer V6-245 (4.0L) FI or Flex Fuel	E,K	**B329**	**PA4147**	**N/R**	**BF7802**	**N/R**	5R55S **20002** Transfer Case **20006**
	V8-281 (4.6L) FI	8	**B329**	**PA4185**	**N/R**	**BF7802**	**N/R**	5R55S **20002** 6R60 **20018** Transfer Case **20006**
	Fiesta 4-1600cc (1.6L) FI Mexico		**BT223**	**PA2201**		**BF7668**	**N/R**	

OBS = Obsolete. Availability Limited to Distributor Stock. [t] Transmission, Not Model, Determines Which Transmission Filter is Used.

[76] Contains Pri. and Sec. Fuel Elements.

FORD Cont'd.

Year	Model and Engine	VIN	Lube	Air	Cabin Air	Fuel	Breather	Trans.[t]
2006	Five Hundred V6-183 (3.0L) SFI	1	**B329**	**PA4183**	**N/R**	**BF7668**	**N/R**	**N/S**
	Focus 4-121 (2.0L) SFI	N	**BT8409**	**N/S**		**BF7668**	**N/R**	4F27E **18267**
	4-140 (2.3L) SFI Duratec 23	Z	**BT8409**	**N/S**		**BF7668**	**N/R**	4F27E **18267**
	Freestar V6-241 (3.9L) SFI	6	**B243**	**PA4181**	**PA4152**	**BF7742**	**N/R**	AX4N **18034**
	V6-256 (4.2L) SFI	2	**B243**	**PA4181**	**PA4152**	**BF7742**	**N/R**	AX4N **18034**
	Freestyle V6-183 (3.0L) SFI	1	**B329**	**PA4183**	**N/R**	**BF7668**	**N/R**	
	Fusion 4-140 (2.3L) FI	Z	Ele. **P7313** Spin-on **BT8409**	**PA4175**	**N/R**	**N/S**	**N/R**	
	4-183 (3.0L) FI	1	**B329**	**PA4176**	**N/R**	**N/S**	**N/R**	
	Grand Marquis V8-281 (4.6L) FI Canada	W	**B329**	**PA2152**	**N/R**	**BF7668**	**N/R**	4R70W **18029**
	GT V8-330 (5.4L) FI Supercharged	G					**N/R**	
	Ikon 4-1600cc (1.6L) FI Mexico		**B243**			**BF7668**	**N/R**	
	KA 4-1600cc (1.6L) FI Mexico		**B1416**			**BF1166**	**N/R**	
	Lobo V8-4600cc (4.6L) FI Mexico		**B329**	**PA4075**		**BF7668**	**N/R**	
	V8-5400cc (5.4L) FI Mexico		**B329**	**PA4167**		**BF7802**	**N/R**	
	Marauder V8-281 (4.6L) FI Canada	V	**B329**	**PA4338**	**N/R**	**BF7668**	**N/R**	**18029**
	Mondeo 4-2000cc (2.0L) FI Mexico		**BT8409**				**N/R**	
	V6-2500cc (2.5L) FI Mexico		**B329**				**N/R**	
	6-3000cc (3.0L) FI Mexico		**B329**				**N/R**	
	Mustang V6-245 (4.0L) SFI	N	**B329**	**PA4361**		**BF7802**	**N/R**	5R55S **20006**
	V8-281 (4.6L) SFI	H	**B329**	**PA4361**		**BF7802**	**N/R**	5R55S **20006**
	Pickups, F Series V6-256 (4.2L) EFI	2	**B243**	**PA4075**	**PA4133**	To 12/5/05 **BF7668** 12/5/05-on **BF7802**	**N/R**	AODE-W **18029** 4R100 S. Pan **18264** 4R100 D. Pan **18265**
	V8-281 (4.6L) EFI	W	3 31/32 In. **B329** 4 27/32 In. **B243**	**PA4075**	**PA4133**	**BF7802**	**N/R**	AODE-W S. Pan **18029** 4R100 S. Pan **18264** 4R100 D. Pan **18265**
	V8-330 (5.4L) EFI	5	**B329**	**PA4167**	**PA4133**	To 12/05/05 **BF7668** 12/05/05-on **BF7802**	**N/R**	AODE-W S. Pan **18029** 4R100 S. Pan **18264** 4R100 D. Pan **18265**
	V8-330 (5.4L) EFI Flex Fuel	V	**B329**	**PA4167**	**PA4133**	To 12/05/05 **BF7668** 12/05/05-on **BF7802**	**N/R**	4R75W **18029**
	Pickups, Super Duty V8-330 (5.4L) EFI	5	**B329**	**PA4167**	**N/R**	**BF7802**	**N/R**	4R100 S. Pan **18264** 4R100 D. Pan **18265** 5R100W **P7247**
	V8-363 (6.0L) FI Turbo Diesel	P	(w/o Cap) **P7235**	**CA4999**	**N/R**	**PF7812 KIT**[76]	**N/R**	5R110W **20005**[27]
	V10-415 (6.8L) EFI	Y	**B329**	**PA4172**	**N/R**	**BF7802**	**N/R**	2WD **18264** 4WD **18265**
	Ranger 4-140 (2.3L) FI	D	**BT8409**	**PA4160**	**N/R**	**BF7742**	**N/R**	5R44E 2WD **18024** 5R44E 4WD **18025**
	V6-182 (3.0L) MFI or Flex Fuel	U,V	**B243**	**PA4160**	**N/R**	**BF7742**	**N/R**	5R44E 2WD **18024** 5R55E 4WD **18025**
	V6-245 (4.0L) MFI	E	**B329**	**PA4160**	**N/R**	**BF7742**	**N/R**	5R44E 2WD **18024** 5R55E 4WD **18025**
	Taurus V6-182 (3.0L) FI Flex Fuel	2	**B243**	**PA4163**	**PA4112**	**BF7809**	**N/R**	AX4N **18034**
	V6-182 (3.0L) FI 24 Valve	S	**B329**	**PA4163**	**PA4112**	**BF7809**	**N/R**	AX4N **18034**
	V6-182 (3.0L) FI 12 Valve	U	**B243**	**PA4163**	**PA4112**	**BF7809**	**N/R**	AX4N **18034**
	Vans, E Series V8-281 (4.6L) EFI	W	**B329**	**PA4075**	**N/R**	**BF7668**	**N/R**	4R70W **18029** 4R100 S. Pan **18264** 4R100 D. Pan **18265**
	V8-330 (5.4L) EFI	L	**B329**	**PA4075**	**N/R**	**BF7668**	**N/R**	5R100W Ele. **P7247** 5R110W **20005** Cooler Line Kit **18029**
	V8-363 (6.0L) DI Turbo Diesel	P	(w/o Cap) **P7235**	**PA4171**	**N/R**	**PF7852 KIT**[76]	**N/R**	5R100W Ele. **P7247** 5R110W **20005** Cooler Line Kit **18029**

[t] Transmission, Not Model, Determines Which Transmission Filter is Used. OBS = Obsolete. Availability Limited to Distributor Stock.

[27] Vehicles Over 8500 GVW. [76] Contains Pri. and Sec. Fuel Elements.

FORD Cont'd.

Year	Model and Engine	VIN	Lube	Air	Cabin Air	Fuel	Breather	Trans.[t]
2006	Vans, E Series V10-415 (6.8L) EFI	S	**B329**	**PA4075**	**N/R**	**BF7668**	**N/R**	Cooler Line Kit **18029**
2005	Crown Victoria V8-281 (4.6L) SFI Natural Gas	9	**B329**	**PA2152**	**N/R**		**N/R**	4R70W **18029**
	V8-281 (4.6L) SFI	W	**B329**	Exc. Police **PA2152** Police **PA4338**	**N/R**	**BF7668**	**N/R**	4R70W **18029**
	Escape 4-140 (2.3L) FI Hybrid	H	**P7313**	**PA4385**	Opt. **PA4370**	**BF966**	**N/R**	CD4E **N/S**
	4-138 (2.3L) SFI	Z	**BT8409**	**PA4163**	Opt. **PA4370**	**BF966**	**N/R**	**N/S**
	V6-181 (3.0L) SFI	1	**B329**	**PA4163**	Opt. **PA4370**	**BF966**	**N/R**	**N/S**
	Excursion V8-330 (5.4L) SFI	L	**B329**	**PA4075**	**N/R**	**BF1166**	**N/R**	Pan-Type **18265** Ele. **P7247**
	V8-363 (6.0L) FI Turbo Diesel	P	(w/o Cap) **P7235**	**CA4999**	**N/R**	**PF7812 KIT**[76]	**N/R**	4R100 **18265** TorqShift **20005**
	V10-415 (6.8L) SFI	S	**B329**	**PA4075**	**N/R**	**BF1166**	**N/R**	4R100 **18265** TorqShift **20005**
	Expedition V8-330 (5.4L) SFI	L	**B329**	**PA4167**	**N/R**	**BF7668**	**N/R**	4R75W **18029**
	Explorer V6-245 (4.0L) SFI or Flex Fuel	E,K	**B329**	**PA4147**	**N/R**	**BF7802**	**N/R**	5R55S **20002** Transfer Case **20006**
	V8-281 (4.6L) SFI	W	**B329**	**PA4147**	**N/R**	**BF7802**	**N/R**	5R55S **20002** Transfer Case **20006**
	Explorer Sport Trac V6-245 (4.0L) SFI Flex Fuel	K	**B329**	**PA4160**	**N/R**	**BF7802**	**N/R**	5R55E 2WD **18024** 5R55E 4WD **18025**
	Fiesta 4-1600cc (1.6L) FI Mexico		**BT223**	**PA2201**		**BF7668**	**N/R**	
	Five Hundred V6-183 (3.0L) SFI	1	**B329**	**PA4183**	**N/R**	**BF7668**	**N/R**	**N/S**
	Focus 4-121 (2.0L) SFI	N	**BT8409**	**PA4123**		**BF7668**	**N/R**	4F27E **18267**
	4-138 (2.3L) SFI	Z	**BT8409**	**N/S**		**BF7668**	**N/R**	4F27E **18267**
	Freestar V6-238 (3.9L) SFI	6	**B243**	**PA4181**	**PA4152**	**BF7668**	**N/R**	To 12/12/04 **18033** 12/12/04-on **18034**
	V6-256 (4.2L) SFI	2	**B243**	**PA4181**	**PA4152**	**BF7668**	**N/R**	To 12/12/04 **18033** 12/12/04-on **18034**
	Freestyle V6-182 (3.0L) SFI	1	**B329**	**PA4183**	**N/R**	**BF7668**	**N/R**	
	Grand Marquis V8-281 (4.6L) FI Canada	W	**B329**	**PA2152**	**N/R**	**BF7668**	**N/R**	**18029**
	GT V8-330 (5.4L) SFI Supercharged	S			**N/R**		**N/R**	
	Ikon 4-1600cc (1.6L) FI Mexico		**B243**			**BF7668**	**N/R**	
	KA 4-1600cc (1.6L) FI Mexico		**B1416**			**BF1166**	**N/R**	
	Lobo V8-4600cc (4.6L) FI Mexico	R,W	VIN R **B329** VIN W **B243**	**PA4075**		**BF7668**	**N/R**	
	V8-5400cc (5.4L) FI Mexico		**B329**	**PA4167**		**BF7802**	**N/R**	
	Marauder V8-281 (4.6L) FI Canada	V	**B329**	**PA4338**	**N/R**	**BF7668**	**N/R**	**18029**
	Mondeo 4-2000cc (2.0L) FI Mexico		**BT8409**				**N/R**	
	V6-2500cc (2.5L) FI Mexico		**B329**				**N/R**	
	6-3000cc (3.0L) FI Mexico		**B329**				**N/R**	
	Mustang V6-245 (4.0L) SFI	N	**B329**	**PA4361**		**BF7802**	**N/R**	5R55S **20006**
	V8-281 (4.6L) SFI	H	**B329**	**PA4361**		**BF7802**	**N/R**	5R55S **20006**
	Pickups, F Series V6-256 (4.2L) EFI	2	**B243**	**PA4075**	**PA4133**	**BF7668**	**N/R**	AODE-W **18029** 4R100 S. Pan **18264** 4R100 D. Pan **18265**
	V8-281 (4.6L) EFI	W	3 31/32 In. **B329** 4 27/32 In. **B243**	**PA4075**	**PA4133**	**BF7668**	**N/R**	AODE-W S. Pan **18029** 4R100 S. Pan **18264** 4R100 D. Pan **18265** 5R110W **20005**
	V8-330 (5.4L) EFI	5	**B329**	**PA4167**	**PA4133**	**BF7668**	**N/R**	AODE-W S. Pan **18029** 4R100 S. Pan **18264** 4R100 D. Pan **18265** 5R110W **20005**
	Pickups, Super Duty V8-330 (5.4L) EFI Triton	5	**B329**	**PA4167**	**N/R**	**BF7802**	**N/R**	4R100 **18265** 5R100W **P7247**
	V8-363 (6.0L) FI Turbo Diesel	P	(w/o Cap) **P7235**	**CA4999**	**N/R**	**PF7812 KIT**[76]	**N/R**	5R110W **20005**[27] 5R100W **P7247**

OBS = Obsolete. Availability Limited to Distributor Stock. [t] Transmission, Not Model, Determines Which Transmission Filter is Used.
[27] Vehicles Over 8500 GVW. [76] Contains Pri. and Sec. Fuel Elements.

FORD Cont'd.

Year	Model and Engine	VIN	Lube	Air	Cabin Air	Fuel	Breather	Trans.[t]
2005	Pickups, Super Duty V10-415 (6.8L) EFI	Y	**B329**	**PA4172**	**N/R**	**BF7802**	**N/R**	4R100 **18265**
	Ranger 4-140 (2.3L) MFI	D	**B243**	**PA4160**	**N/R**	**BF7742**	**N/R**	5R55E 2WD **18024** 5R55E 4WD **18025**
	V6-182 (3.0L) MFI or Flex Fuel	U,V	**B243**	**PA4160**	**N/R**	Exc. Flex Fuel **BF7742** Flex Fuel **BF7803**	**N/R**	5R55E 2WD **18024** 5R55E 4WD **18025**
	V6-245 (4.0L) MFI	E	**B329**	**PA4160**	**N/R**	**BF7742**	**N/R**	5R55E 2WD **18024** 5R55E 4WD **18025**
	Taurus V6-182 (3.0L) SFI Flex Fuel	2	**B243**	**PA4163**	**PA4112**	**BF7809**	**N/R**	4F50N **18034**
	V6-182 (3.0L) SFI 24 Valve	S	**B329**	**PA4163**	**PA4112**	**BF7809**	**N/R**	4F50N **18034**
	V6-182 (3.0L) SFI 12 Valve	U	**B243**	**PA4163**	**PA4112**	**BF7809**	**N/R**	4F50N **18034**
	Thunderbird V8-240 (3.9L) SFI	A	**B1435**	**PA4181**		**BF7802**	**N/R**	5R55S **20006**
	Vans, E Series V8-281 (4.6L) EFI	W	**B329**	**PA4075**	**N/R**	**BF7668**	**N/R**	4R70W **18029** 4R100 S. Pan **18264** 4R100 D. Pan **18265**
	V8-330 (5.4L) EFI	L	**B329**	**PA4075**	**N/R**	**BF7668**	**N/R**	4R70W **18029** 4R100 S. Pan **18264** 4R100 D. Pan **18265** 5R110W **20005**[27] 5R110W Ele. **P7247**
	V8-330 (5.4L) EFI Natural Gas or Bi-Fuel	M,Z	**B329**	**PA4075**	**N/R**		**N/R**	5R110W **20005** 5R110W Ele. **P7247** Cooler Line **18029**
	V8-363 (6.0L) EFI Diesel	P	(w/o Cap) **P7235**	**PA4171**	**N/R**	**PF7852 KIT**	**N/R**	Pan-Type **20005** Ele. **P7247**
	V10-415 (6.8L) EFI Triton	S	**B329**	**PA4075**	**N/R**	**BF7668**	**N/R**	Cooler Line Kit **18029**
2004	Crown Victoria V8-281 (4.6L) SFI Natural Gas	9	**B329**	**PA2152**	**N/R**		**N/R**	4R70W **18029**
	V8-281 (4.6L) SFI	W	**B329**	Exc. Police **PA2152** Police **PA4338**	**N/R**	**BF7668**	**N/R**	4R70W **18029**
	Escape 4-121 (2.0L) SFI	B	**B1416**	**PA4163**	Opt. **PA4370**	**BF966**	**N/R**	CD4E **N/S**
	V6-182 (3.0L) SFI Duratec	1	**B329**	**PA4163**	Opt. **PA4370**	**BF966**	**N/R**	CD4E **N/S**
	Excursion V8-330 (5.4L) SFI	L	**B329**	**PA4075**	**N/R**	**BF1166**	**N/R**	5 Spd. **20005** Ele. **P7247**
	V8-363 (6.0L) FI Turbo Diesel	P	(w/o Cap) **P7235**	**CA4999**	**N/R**	**PF7812 KIT**[76]	**N/R**	5 Spd. **20005**[27]
	V10-415 (6.8L) SFI	S	**B329**	**PA4075**	**N/R**	**BF1166**	**N/R**	4R100 **18265**
	Expedition V8-281 (4.6L) SFI	W	**B329**	**PA4075**	**PA4133**	**BF7805**	**N/R**	4R70W **18029**
	V8-330 (5.4L) SFI	L	**B329**	**PA4075**	**PA4133**	**BF7805**	**N/R**	4R70W **18029**
	Explorer V6-245 (4.0L) SFI	E,K	**B329**	**PA4147**	**N/R**	**BF7802**	**N/R**	5R55S **20002** Transfer Case **20006**
	V8-281 (4.6L) SFI	W	**B329**	**PA4147**	**N/R**	**BF7802**	**N/R**	5R55S **20002** Transfer Case **20006**
	Explorer Sport, Explorer Sport Trac V6-245 (4.0L) SFI Flex Fuel	K	**B329**	**PA4160**	**N/R**	**BF7802**	**N/R**	5R55E 2WD **18024** 5R55E 4WD **18025**
	Fiesta 4-1600cc (1.6L) FI Mexico		**BT223**	**PA2201**		**BF7668**	**N/R**	
	Focus 4-121 (2.0L) SFI DOHC	3	**B1416**	**PA4123**		**BF7668**	**N/R**	4F27E **18267**
	4-121 (2.0L) SFI SVT Zetec	5	**B1416**	**PA4123**		**BF7668**	**N/R**	**M.T.**
	4-121 (2.0L) SFI SOHC	P	**B243**	**PA4123**		**BF7668**	**N/R**	4F27E **18267**
	4-140 (2.3L) FI	Z	**BT8409**	ZTS Models **N/S** Exc. ZTS Models **PA4123**		**BF7668**	**N/R**	4F27E **18267**
	Freestar V6-238 (3.9L) SFI	6	**B243**	**PA4181**	**PA4152**	**BF7668**	**N/R**	AX4N **18033**
	V6-256 (4.2L) FI	2	**B243**	**PA4181**	**PA4152**	**BF7668**	**N/R**	AX4N **18033**
	Ikon 4-1600cc (1.6L) FI Mexico		**B243**			**BF7668**	**N/R**	
	KA 4-1600cc (1.6L) FI Mexico		**B1416**			**BF1166**	**N/R**	
	Lobo V8-4600cc (4.6L) FI Mexico	R,W	VIN R **B329** VIN W **B243**	**PA4075**		**BF7668**	**N/R**	
	V8-5400cc (5.4L) FI Mexico		**B329**	**PA4075**		**BF7668**	**N/R**	
	Marauder V8-281 (4.6L) FI Canada	V	**B329**	**PA4338**	**N/R**	**BF7668**	**N/R**	**18029**
	Mondeo 4-2000cc (2.0L) FI Mexico		**BT8409**				**N/R**	

[t] Transmission, Not Model, Determines Which Transmission Filter is Used. OBS = Obsolete. Availability Limited to Distributor Stock.

[27] Vehicles Over 8500 GVW. [76] Contains Pri. and Sec. Fuel Elements.

FORD Cont'd.

Year	Model and Engine	VIN	Lube	Air	Cabin Air	Fuel	Breather	Trans.[t]
2004	Mondeo V6-2500cc (2.5L) FI Mexico		**B329**				**N/R**	
	Mustang V6-232 (3.8L) SFI	4	**B243**	**PA4071**	**N/R**	**BF7668**	**N/R**	4R70W **18029**
	V6-232 (3.9L) SFI	6	**B243**	**PA4071**	**N/R**	**BF7668**	**N/R**	4R70W **18029**
	V8-281 (4.6L) MFI Mach 1, GT, or Cobra	R,X,Y	**B329**	**PA4075**	**N/R**	**BF7668**	**N/R**	4R70W **18029**
	Pickups, F Series V6-256 (4.2L) EFI	2	**B243**	**PA4075**	Opt. **PA4133**	**BF7668**	**N/R**	4R70W **18029**
	V8-281 (4.6L) EFI	6,W	3 31/32 In. **B329** 4 27/32 In. **B243**	**PA4075**	Opt. **PA4133**	**BF7668**	**N/R**	4R70W **18029** 4R100 2WD **18264** 4R100 4WD **18265**
	V8-330 (5.4L) SFI SVT Lightning	3	**B329**	**PA4167**	Opt. **PA4133**	**BF7668**	**N/R**	4R70W **18029**
	V8-330 (5.4L) EFI or Natural Gas	5,L,M,Z	**B329**	**PA4167**	Opt. **PA4133**	**BF7668**	**N/R**	4R70W **18029** 4R100 2WD **18264** 4R100 4WD **18265**
	Pickups, Super Duty V8-330 (5.4L) EFI	L	**B329**	**PA4167**	**N/R**	**BF1166**	**N/R**	4R100 2WD **18264** 4R100 4WD **18265**
	V8-363 (6.0L) FI Turbo Diesel	P	(w/o Cap) **P7235**	**CA4999**	**N/R**	**PF7812 KIT**[76]	**N/R**	Ele. **P7247** Pan-Type **20005**[27]
	V10-415 (6.8L) EFI	S	**B329**	**PA4075**	**N/R**	**BF1166**	**N/R**	2WD **18264** 4WD **18265**
	Ranger 4-140 (2.3L) MFI	D	**B243**	**PA4102**		**BF7742**	**N/R**	**18024**
	V6-182 (3.0L) MFI and Flex Fuel	U,V	**B243**	**PA4102**		**BF7742** Flex Fuel **BF7803**	**N/R**	2WD **18024** 4WD **18025**
	V6-244 (4.0L) MFI	E	**B329**	**PA4102**		**BF7742**	**N/R**	2WD **18024** 4WD **18025**
	Taurus V6-182 (3.0L) SFI Flex Fuel	2	**B243**	**PA4163**	**PA4112**	**BF7809**	**N/R**	4F50N **18034**
	V6-182 (3.0L) SFI 24 Valve Duratec	S	**B329**	**PA4163**	**PA4112**	**BF7809**	**N/R**	4F50N **18034**
	V6-182 (3.0L) SFI 12 Valve	U	**B243**	**PA4163**	**PA4112**	**BF7809**	**N/R**	4F50N **18034**
	Thunderbird V8-240 (3.9L) SFI	A	**B1435**	**PA4181**		**BF7802**	**N/R**	5R55N **20007** 5R55S **20006**
	Vans, E Series V8-281 (4.6L) EFI	W	**B329**	**PA4075**	**N/R**	**BF7668**	**N/R**	4R70W **18029** 4R100 **18264**
	V8-330 (5.4L) EFI Triton	L,M	**B329**	**PA4075**	**N/R**	**BF7668**	**N/R**	4R70W **18029** 4R100 2WD **18264** 4R100 4WD **18265**
	V8-363 (6.0L) FI Turbo Diesel	P	(w/o Cap) **P7235**	**PA4171**	**N/R**	**PF7852 KIT**[76]	**N/R**	Ele. **P7247** Pan-Type **20005**[27]
	V10-415 (6.8L) EFI	S	**B329**	**PA4075**	**N/R**	**BF7668**	**N/R**	5R110W **20005**
2003	Crown Victoria V8-281 (4.6L) SFI Natural Gas	9	**B329**	**PA2152**	**N/R**		**N/R**	4R70W **18029**
	V8-281 (4.6L) SFI	W	**B329**	Exc. Police **PA2152** Police **PA4338**	**N/R**	**BF7668**	**N/R**	4R70W **18029**
	Escape 4-121 (2.0L) SFI	B	**B1416**	**PA4163**	Opt. **PA4370**	**BF966**	**N/R**	CD4E **N/S**
	V6-182 (3.0L) SFI	1	**B329**	**PA4163**	Opt. **PA4370**	**BF966**	**N/R**	CD4E **N/S**
	Escort ZX2 4-121 (2.0L) SFI	3	**B1416**	**PA4088**		**BF1184**	**N/R**	**18268**
	Excursion V8-330 (5.4L) SFI	L	**B329**	**PA4075**	**N/R**	**BF1166**	**N/R**	4R100 **18265** 5R110W **P7247**
	V8-363 (6.0L) SFI Turbo Diesel	P	(w/o Cap) **P7235**	**CA4999**	**N/R**	**PF7812 KIT**[76]	**N/R**	**20005**
	V8-444 (7.3L) FI Turbo Diesel	F	**B7039**	Panel **PA4148**	**N/R**	**PF7698**	**N/R**	4R100 **18265**
	V10-415 (6.8L) SFI	S	**B329**	**PA4075**	**N/R**	**BF1166**	**N/R**	4R100 **18265** 5R110W **P7247**
	Expedition V8-281 (4.6L) SFI	W	**B329**	**PA4075**	Opt. **PA4133**	**BF7805**	**N/R**	4R70W **18029** 4R100 2WD **18264** 4R100 4WD **18265**
	V8-330 (5.4L) SFI	L	**B329**	**PA4075**	Opt. **PA4133**	**BF7805**	**N/R**	4R70W **18029** 4R100 2WD **18264** 4R100 4WD **18265**
	Explorer V6-245 (4.0L) EFI or Flex Fuel	E,K	**B329**	**PA4147**	**N/R**	**BF7802** Flex Fuel **BF7742**	**N/R**	5R55E **18024** Transfer Case **20006**
	V8-281 (4.6L) SFI	W	**B329**	**PA4147**	**N/R**	**BF7742**	**N/R**	5R55W **20002**
	Explorer Sport, Explorer Sport Trac V6-245 (4.0L) SFI or Flex Fuel	E,K	**B329**	**PA4160**	**N/R**	**BF7802** Flex Fuel **BF7803**	**N/R**	5R55E 2WD **18024** 5R55E 4WD **18025**
	Fiesta 4-1600cc (1.6L) FI Mexico		**BT223**	**PA2201**		**BF7668**	**N/R**	
	Focus 4-121 (2.0L) SFI DOHC	3	**B1416**	**PA4123**		**BF7668**	**N/R**	4F27E **18267**

OBS = Obsolete. Availability Limited to Distributor Stock. [t] Transmission, Not Model, Determines Which Transmission Filter is Used.
[27] Vehicles Over 8500 GVW. [76] Contains Pri. and Sec. Fuel Elements.

FORD Cont'd.

Year	Model and Engine	VIN	Lube	Air	Cabin Air	Fuel	Breather	Trans.[t]
2003	Focus 4-121 (2.0L) SFI SVT	5	**B1416**	**PA4123**		**BF7668**	**N/R**	**M.T.**
	4-121 (2.0L) SFI SOHC	P	**B243**	**PA4123**		**BF7668**	**N/R**	4F27E **18267**
	4-140 (2.3L) FI	Z	**BT8409**	**PA4123**		**BF7668**	**N/R**	4F27E **18267**
	Ikon 4-1600cc (1.6L) FI Mexico		**B243**			**BF7668**	**N/R**	
	KA 4-1600cc (1.6L) FI Mexico		**B1416**			**BF1166**	**N/R**	
	Lobo V8-4600cc (4.6L) FI Mexico	R,W	VIN R **B329** VIN W **B243**	**PA4075**		**BF7668**		
	V8-5400cc (5.4L) FI Mexico		**B329**	**PA4075**		**BF7668**		
	Mondeo 4-2000cc (2.0L) FI Mexico		**P7313**				**N/R**	
	V6-2500cc (2.5L) FI Mexico		**B329**				**N/R**	
	Mustang V6-232 (3.8L) MFI	4	**B243**	**PA4071**	**N/R**	**BF7668**	**N/R**	4R70W **18029**
	V8-281 (4.6L) MFI Mach 1, Cobra or GT	R,V,X,Y	**B329**	**PA4075**	**N/R**	**BF7668**	**N/R**	**M.T.**
	Pickups, F Series V6-256 (4.2L) EFI	2	**B243**	**PA4075**	Opt. **PA4133**	**BF7668**	**N/R**	41R00 2WD **18264** 41R00 4WD **18265**
	V8-281 (4.6L) EFI	6,W	**B329**	**PA4075**	Opt. **PA4133**	**BF7668**	**N/R**	4R70W **18029** 4R100 2WD **18264** 4R100 4WD **18265**
	V8-330 (5.4L) SFI Supercharged SVT Lightning	3	**B329**		Opt. **PA4133**	**BF7668**	**N/R**	4R70W **18029**
	V8-330 (5.4L) EFI	L	**B329**	**PA4075**	Opt. **PA4133**	**BF7668**	**N/R**	4R70W **18029** 4R100 2WD **18264** 4R100 4WD **18265**
	V8-330 (5.4L) EFI Natural Gas	M	**B329**	**PA4075**	Opt. **PA4133**		**N/R**	4R70W **18029** 4R100 2WD **18264** 4R100 4WD **18265**
	V8-330 (5.4L) EFI Flex Fuel	Z	**B329**	**PA4075**	Opt. **PA4133**	**BF7668**	**N/R**	4R70W **18029** 4R100 2WD **18264** 4R100 4WD **18265**
	Pickups, Super Duty V8-330 (5.4L) EFI	L	**B329**	**PA4075**	**N/R**	**BF1166**	**N/R**	4R100 2WD **18264** 4R100 4WD **18265**
	V8-363 (6.0L) FI Turbo Diesel	P	(w/o Cap) **P7235**	**CA4999**	**N/R**	**PF7812 KIT**[76]	**N/R**	Ele. **P7247** Pan-Type **20005**
	V8-444 (7.3L) DI Turbo Diesel	F	**B7039**	**PA4148**	**N/R**	**PF7698**	**N/R**	4R100 2WD **18264** 4R100 4WD **18265**
	V10-415 (6.8L) EFI	S	**B329**	**PA4075**	**N/R**	**BF1166**	**SA2159**	2WD **18264** 4WD **18265**
	Ranger 4-140 (2.3L) MFI	D	**B243**	**PA4102**		**BF7804**	**N/R**	5R44E 2WD **18024** 5R44E 4WD **18025**
	V6-182 (3.0L) MFI	U	**B243**	**PA4102**		**BF7804**	**N/R**	5R44E 2WD **18024** 5R44E 4WD **18025**
	V6-182 (3.0L) FI Flex Fuel	V	**B243**	**PA4102**		**BF7803**	**N/R**	5R44E 2WD **18024** 5R44E 4WD **18025**
	V6-244 (4.0L) MFI	E	**B329**	**PA4102**		**BF7804**	**N/R**	5R44E 2WD **18024** 5R44E 4WD **18025**
	Taurus V6-182 (3.0L) SFI Flex Fuel	2	**B243**	**PA4163**	**PA4112**	**BF7809**	**N/R**	**18034**
	V6-182 (3.0L) SFI 24 Valve	S	**B329**	**PA4163**	**PA4112**	**BF7809**	**N/R**	**18034**
	V6-182 (3.0L) SFI 12 Valve	U	**B243**	**PA4163**	**PA4112**	**BF7809**	**N/R**	**18034**
	Thunderbird V8-240 (3.9L) SFI	A	**B1435**	**PA4181**		**BF7668**	**N/R**	5R55S **20006**
	Vans, E Series V6-256 (4.2L) EFI	2	**B243**	**PA4075**	**N/R**	**BF7668**	**N/R**	**18029**
	V8-281 (4.6L) EFI	W	**B329**	**PA4075**	**N/R**	**BF7668**	**N/R**	**18029**
	V8-330 (5.4L) EFI	L	**B329**	**PA4075**	**N/R**	**BF7668**	**N/R**	4R100 2WD **18264** 4R100 4WD **18265**
	V8-330 (5.4L) EFI Natural Gas or Bi-Fuel	M,Z	**B329**	**PA4075**	**N/R**		**N/R**	4R70W **18029** 4R100 2WD **18264** 4R100 4WD **18265**
	V8-444 (7.3L) Turbo Diesel	F	**B7039**	**[2] PA2237**	**N/R**	**PF7698**	**N/R**	4R100 2WD **18264** 4R100 4WD **18265**
	V10-415 (6.8L) EFI	S	**B329**	**PA4075**	**N/R**	**BF7668**	**N/R**	4R100 2WD **18264** 4R100 4WD **18265**
	Windstar V6-232 (3.8L) SFI	4	**B243**	**PA2240**	**PA4152**	**BF7668**	**N/R**	AX4S **18034**
2002	Crown Victoria V8-281 (4.6L) SFI Natural Gas	9	**B329**	**PA2152**	**N/R**		**N/R**	4R70W **18029**
	V8-281 (4.6L) SFI	W	**B329**	**PA2152**	**N/R**	**BF7668**	**N/R**	4R70W **18029**
	Escape 4-121 (2.0L) SFI	B	**B1416**	**PA4163**	Opt. **PA4370**	**BF966**	**N/R**	CD4E **N/S**
	V6-181 (3.0L) SFI	1	**B329**	**PA4163**	Opt. **PA4370**	**BF966**	**N/R**	CD4E **N/S**
	Escort 4-121 (2.0L) SFI DOHC	3	**B1416**	**PA4088**	**N/R**	**BF1184**	**N/R**	**18268**

[t] Transmission, Not Model, Determines Which Transmission Filter is Used. OBS = Obsolete. Availability Limited to Distributor Stock.

[76] Contains Pri. and Sec. Fuel Elements.

FORD Cont'd.

Year	Model and Engine	VIN	Lube	Air	Cabin Air	Fuel	Breather	Trans.[t]
2002	Escort 4-121 (2.0L) SFI SOHC	P	**B243**	**PA4088**	**N/R**	**BF1184**	**N/R**	**18268**
	Escort ZX2 4-121 (2.0L) MFI	3	**B1416**	**PA4088**		**BF1184**	**N/R**	**18268**
	Excursion V8-330 (5.4L) SFI	L	**B329**	**PA4075**	**N/R**	**BF1166**	**N/R**	4R100 2WD **18264** 4R100 4WD **18265**
	V8-444 (7.3L) FI Turbo Diesel	F	**B7039**	Panel **PA4148**	**N/R**	**PF7698**	**N/R**	4R100 2WD **18264** 4R100 4WD **18265**
	V10-415 (6.8L) SFI	S	**B329**	**PA4075**	**N/R**	**BF1166**	**N/R**	4R100 2WD **18264** 4R100 4WD **18265**
	Expedition V8-281 (4.6L) SFI	W	**B329**	**PA4075**	Opt. **PA4133**	**BF7668**	**N/R**	4R70W **18029**
	V8-330 (5.4L) SFI	L	**B329**	**PA4075**	Opt. **PA4133**	**BF7668**	**N/R**	4R100 2WD **18264** 4R100 4WD **18265**
	Explorer V6-245 (4.0L) SFI or Flex Fuel	E,K	**B329**	**PA4147**	**N/R**	**BF7742**	**N/R**	5R55E S. Pan **18024** 5R55E D. Pan **18025** AWD **20006** 5R55W **20002**
	V8-281 (4.6L) SFI	W	**B329**	**PA4147**	**N/R**	**BF7742**	**N/R**	5R55W **20002**
	Explorer Sport, Explorer Sport Trac V6-245 (4.0L) MFI or Flex Fuel	E	**B329**	To 3/03/02 **PA4102** 3/04/02-on **PA4160**	**N/R**	**BF7742** Flex Fuel **BF7803**	**N/R**	5R55E 2WD **18024** 5R55E 4WD **18025** 5R55W **20002**
	Fiesta 4-1300cc (1.3L) FI Mexico		**BT223**	**PA2201**			**N/R**	
	Focus 4-121 (2.0L) SFI DOHC Zetec	3	**B1416**	**PA4123**		**BF7668**	**N/R**	4F27E **18267**
	4-121 (2.0L) SFI SOHC	P	**B243**	**PA4123**		**BF7668**	**N/R**	4R27E **18267**
	Ikon 4-1600cc (1.6L) FI Mexico		**B243**			**BF7668**	**N/R**	
	KA 4-1600cc (1.6L) FI Mexico		**B1416**			**BF1166**	**N/R**	
	Lobo V8-4600cc (4.6L) FI Mexico	R,W	VIN R **B329** VIN W **B243**	**PA4075**		**BF7668**		
	V8-5400cc (5.4L) FI Mexico		**B329**	**PA4075**		**BF7668**		
	Mondeo 4-2000cc (2.0L) FI Mexico		**P7313**				**N/R**	
	V6-2500cc (2.5L) FI Mexico		**B329**				**N/R**	
	Mustang V6-232 (3.8L) MFI	4	**B243**	**PA4071**	**N/R**	**BF7668**	**N/R**	4R70W **18029**
	V8-281 (4.6L) MFI Cobra, Bullitt, or GT	V,X	**B329**	**PA4075**	**N/R**	**BF7668**	**N/R**	4R70W **18029**
	Pickups, F Series V6-256 (4.2L) EFI	2	**B243**	**PA4075**	Opt. **PA4133**	**BF7668**	**N/R**	4R70W **18029** 41R00 2WD **18264** 41R00 4WD **18265**
	V8-281 (4.6L) EFI	6,W	**B329**	**PA4075**	Opt. **PA4133**	**BF7668**	**N/R**	4R70W **18029** 41R00 2WD **18264** 41R00 4WD **18265**
	V8-330 (5.4L) EFI SVT Lightning	3	**B329**		Opt. **PA4133**	**BF7668**	**N/R**	4R70W **18029**
	V8-330 (5.4L) EFI	L	**B329**	**PA4075**	Opt. **PA4133**	**BF1166**	**N/R**	4R70W **18029** 4R100 2WD **18264** 4R100 4WD **18265**
	V8-330 (5.4L) EFI Natural Gas	M	**B329**	**PA4075**	Opt. **PA4133**		**N/R**	4R70W **18029** 4R100 2WD **18264** 4R100 4WD **18265**
	V8-330 (5.4L) EFI Bi-Fuel	Z	**B329**	**PA4075**	Opt. **PA4133**		**N/R**	4R70W **18029** 4R100 2WD **18264** 4R100 4WD **18265**
	Pickups, Super Duty V8-330 (5.4L) EFI	L	**B329**	**PA4075**	**N/R**	**BF1166**	**N/R**	4R100 2WD **18264** 4R100 4WD **18265**
	V8-444 (7.3L) Turbo Diesel	F	**B7039**	Panel **PA4148**	**N/R**	**PF7698**	**N/R**	2WD **18264** 4WD **18265**
	V10-415 (6.8L) EFI	S	**B329**	**PA4075**	**N/R**	**BF1166**	**SA2159**	2WD **18264** 4WD **18265**
	Ranger 4-140 (2.3L) MFI	D	**B243**	**PA4102**	**N/R**	**BF7804**	**N/R**	5R44E 2WD **18024** 5R55E 4WD **18025**
	V6-182 (3.0L) MFI	U	**B243**	**PA4102**	**N/R**	**BF7804**	**N/R**	5R44E 2WD **18024** 5R44E 4WD **18025**
	V6-182 (3.0L) FI Flex Fuel	V	**B243**	**PA4102**	**N/R**	**BF7803**	**N/R**	5R44E 2WD **18024** 5R44E 4WD **18025**
	V6-244 (4.0L) MFI	E	**B329**	**PA4102**	**N/R**	**BF7804**	**N/R**	5R44E 2WD **18024** 5R44E 4WD **18025**
	Taurus V6-182 (3.0L) SFI Flex Fuel	2	**B243**	**PA4163**	**PA4112**	**BF7809**	**N/R**	**18034**
	V6-182 (3.0L) SFI 24 Valve	S	**B329**	**PA4163**	**PA4112**	**BF7809**	**N/R**	**18034**
	V6-182 (3.0L) SFI 12 Valve	U	**B243**	**PA4163**	**PA4112**	**BF7809**	**N/R**	**18034**

OBS = Obsolete. Availability Limited to Distributor Stock. [t] Transmission, Not Model, Determines Which Transmission Filter is Used.

FORD Cont'd.

Year	Model and Engine	VIN	Lube	Air	Cabin Air	Fuel	Breather	Trans.t
2002	Thunderbird V8-240 (3.9L) SFI	A	**B1435**	**PA4181**		**BF7668**	**N/R**	5R55N **20007**
	Vans, E Series V6-256 (4.2L) EFI	2	**B243**	**PA4075**	**N/R**	**BF1166**	**N/R**	**18029**
	V8-281 (4.6L) EFI	W	**B329**	**PA4075**	**N/R**	**BF1166**	**N/R**	**18029**
	V8-330 (5.4L) EFI	L	**B329**	**PA4075**	**N/R**	**BF1166**	**N/R**	4R100 2WD **18264** 4R100 4WD **18265**
	V8-330 (5.4L) EFI Natural Gas or Bi-Fuel	M,Z	**B329**	**PA4075**	**N/R**		**N/R**	4R70W **18029** 4R100 2WD **18264** 4R100 4WD **18265**
	V8-444 (7.3L) Turbo Diesel	F	**B7039**	**[2] PA2237**	**N/R**	**PF7698**	**N/R**	4R100 2WD **18264** 4R100 4WD **18265**
	V10-415 (6.8L) EFI	S	**B329**	**PA4075**	**N/R**	**BF1166**	**N/R**	4R100 2WD **18264** 4R100 4WD **18265**
	Windstar V6-232 (3.8L) SFI	4	**B243**	**PA2240**	**PA4152**	**BF7668**	**N/R**	AX4S **18033**
2001	Crown Victoria V8-281 (4.6L) SFI Natural Gas	9	**B329**	**PA2152**	**N/R**		**N/R**	4R70W **18029**
	V8-281 (4.6L) SFI	W	**B329**	**PA2152**	**N/R**	**BF7668**	**N/R**	4R70W **18029**
	Escape 4-121 (2.0L) SFI	B	**B1416**	**PA4163**	Opt. **PA4370**	**BF966**	**N/R**	**N/S**
	V6-181 (3.0L) SFI	1	**B329**	**PA4163**	Opt. **PA4370**	**BF966**	**N/R**	**N/S**
	Escort, Escort ZX2 4-121 (2.0L) SFI	3	**B1416**	**PA4088**	**N/R**	**BF1184**	**N/R**	**18268**
	4-121 (2.0L) SPI	P	**B243**	**PA4088**	**N/R**	**BF1184**	**N/R**	**18268**
	Excursion V8-330 (5.4L) SFI	L	**B329**	**PA4075**	**N/R**	**BF1166**	**N/R**	4R100 **18265**
	V8-444 (7.3L) FI Turbo Diesel	F	**B7039**	Panel **PA4120**	**N/R**	**PF7698**	**N/R**	4R100 **18265**
	V10-415 (6.8L) SFI	S	**B329**	**PA4075**	**N/R**	**BF1166**	**N/R**	4R100 **18265**
	Expedition V8-281 (4.6L) SFI	W	**B329**	**PA4075**	Opt. **PA4133**	**BF7668**	**N/R**	4R70W **18029**
	V8-330 (5.4L) SFI	L	**B329**	**PA4075**	Opt. **PA4133**	**BF7668**	**N/R**	4R100 2WD **18264** 4R100 4WD **18265**
	Explorer V6-245 (4.0L) EFI	E,X	Metric **B329** U.S. **B2**	**PA4102**	**N/R**	**BF7668**	**N/R**	4R70W **18029** 5R55E 2WD **18024** 5R55E 4WD **18025**
	V8-302 (5.0L) EFI	P	**B329**	**PA4102**	**N/R**	**BF7668**	**N/R**	4R70W **18029**
	Explorer Sport, Explorer Sport Trac V6-245 (4.0L) EFI	E	Metric **B329** U.S. **B2**	**PA4102**	**N/R**	w/VapDiv. **BF7803** w/o VapDiv. **BF7668** Postal **BF7960**	**N/R**	5R55E 2WD **18024** 5R55E 4WD **18025**
	Fiesta 4-1300cc (1.3L) FI Mexico		**BT223**	**PA2201**				
	4-1600cc (1.6L) FI Mexico		**BT223**	**PA2201**				
	Focus 4-121 (2.0L) SFI DOHC	3	**B1416**	**PA4123**		**BF7668**	**N/R**	4F27E **18267**
	4-121 (2.0L) SFI SOHC	P	**B243**	**PA4123**		**BF7668**	**N/R**	4F27E **18267**
	Ikon 4-1600cc (1.6L) FI Mexico		**B243**			**BF7668**	**N/R**	
	KA 4-1600cc (1.6L) FI Mexico		**B1416**			**BF1166**	**N/R**	
	Lobo V8-4600cc (4.6L) FI Mexico	R,W	VIN R **B329** VIN W **B243**	**PA4075**		**BF7668**		
	V8-5400cc (5.4L) FI Mexico		**B329**	**PA4075**		**BF7668**		
	Mondeo 4-2000cc (2.0L) FI Mexico		**P7313**				**N/R**	
	V6-2500cc (2.5L) FI Mexico		**B329**				**N/R**	
	Mustang V6-232 (3.8L) MFI	4	**B243**	**PA4071**	**N/R**	**BF7668**	**N/R**	4R70W **18029**
	V8-281 (4.6L) SFI Cobra	V	**B329**	**PA4075**	**N/R**	**BF7668**	**N/R**	**M.T.**
	V8-281 (4.6L) EFI GT	X	**B329**	**PA4075**	**N/R**	**BF7668**	**N/R**	4R70W **18029**
	Pickups, F Series V6-256 (4.2L) EFI OHV	2	**B243**	**PA4075**	Opt. **PA4133**	**BF7668**	**N/R**	4R70W **18029** 41R00 2WD **18264** 41R00 4WD **18265**
	V8-281 (4.6L) EFI	W	**B329**	**PA4075**	Opt. **PA4133**	**BF7668**	**N/R**	4R70W **18029** 41R00 2WD **18264** 41R00 4WD **18265**
	V8-330 (5.4L) EFI SVT Lightning	3	**B329**		Opt. **PA4133**	**BF7668**	**N/R**	41R00 2WD **18264** 41R00 4WD **18265**
	V8-330 (5.4L) EFI Supercharged	L	**B329**	**PA4075**	Opt. **PA4133**	**BF7668**	**N/R**	4R70W **18029** 4R100 2WD **18264** 4R100 4WD **18265**
	V8-330 (5.4L) Natural Gas	M	**B329**	**PA4075**	Opt. **PA4133**		**N/R**	4R70W **18029** 4R100 2WD **18264** 4R100 4WD **18265**
	V8-330 (5.4L) Bi-Fuel	Z	**B329**	**PA4075**	Opt. **PA4133**		**N/R**	4R70W **18029** 4R100 2WD **18264** 4R100 4WD **18265**
	Pickups, Super Duty V8-330 (5.4L) EFI	L	**B329**	**PA4075**	**PA4133**	**BF1166**	**N/R**	**18265**

t Transmission, Not Model, Determines Which Transmission Filter is Used. OBS = Obsolete. Availability Limited to Distributor Stock.

FORD Cont'd.

Year	Model and Engine	VIN	Lube	Air	Cabin Air	Fuel	Breather	Trans.†
2001	Pickups, Super Duty V8-444 (7.3L) Turbo Diesel	F	**B7039**	Panel **PA4148**	**N/R**	**PF7698**	**N/R**	2WD **18264** 4WD **18265**
	V10-415 (6.8L) EFI	S	**B329**	**PA4075**	**PA4133**	**BF1166**	**SA2159**	2WD **18264** 4WD **18265**
	Ranger 4-140 (2.3L) MFI	D	**B243**	**PA4102**	**N/R**	To 5/14/01 **BF7765** 5/14/01-on **BF7804**	**N/R**	5R44E 2WD **18024** 5R44E 4WD **18025**
	4-153 (2.5L) MFI	C	**B243**	**PA4102**	**N/R**	To 5/14/01 **BF7765** 5/14/01-on **BF7804**	**N/R**	5R44E 2WD **18024** 5R44E 4WD **18025**
	V6-182 (3.0L) MFI	U	**B243**	**PA4102**	**N/R**	To 5/14/01 **BF7765** 5/14/01-on **BF7804**	**N/R**	5R44E 2WD **18024** 5R44E 4WD **18025**
	V6-182 (3.0L) MFI Flex Fuel	V	**B243**	**PA4102**	**N/R**	**BF7803**	**N/R**	5R44E 2WD **18024** 5R44E 4WD **18025**
	V6-244 (4.0L) MFI	E,X	**B329**	**PA4102**	**N/R**	To 5/14/01 **BF7765** 5/14/01-on **BF7804**	**N/R**	5R44E 2WD **18024** 5R44E 4WD **18025**
	Taurus V6-182 (3.0L) SFI Flex Fuel 12 Valve	2	**B243**	**PA4163**	**PA4112**	**BF7809**	**N/R**	**18034**
	V6-182 (3.0L) SFI 24 Valve	S	**B329**	**PA4163**	**PA4112**	**BF7801**	**N/R**	**18034**
	V6-182 (3.0L) SFI 12 Valve	U	**B243**	**PA4163**	**PA4112**	**BF7801**	**N/R**	**18034**
	Vans, E Series V6-256 (4.2L) EFI	2	**B243**	**PA4075**	**N/R**	**BF1166**	**N/R**	**18029**
	V8-281 (4.6L) EFI	W	**B329**	**PA4075**	**N/R**	**BF1166**	**N/R**	**18029**
	V8-330 (5.4L) EFI	L	**B329**	**PA4075**	**N/R**	**BF1166**	**N/R**	4R70W **18029** 4R100 **18264**
	V8-330 (5.4L) EFI Natural Gas or Bi-Fuel	M,Z	**B329**	**PA4075**	**N/R**		**N/R**	4R70W **18029** 4R100 **18264**
	V8-330 (5.4L) EFI Bi-Fuel	Z	**B329**	**PA4075**	**N/R**		**N/R**	4R70W **18029** 4R100 **18264**
	V8-444 (7.3L) Turbo Diesel	F	**B7039**	**[2] PA2237**	**N/R**	**PF7698**	**N/R**	**18264**
	V10-415 (6.8L) EFI	S	**B329**	**PA4075**	**N/R**	**BF1166**	**N/R**	**18265**
	Windstar V6-232 (3.8L) SFI	4	**B243**	**PA2240**	**PA4152**	**BF7668**	**N/R**	**18033**
2000	Contour 4-121 (2.0L) SFI Zetec	3	**B1416**	**PA2227**	**PA4153**	**BF966**	**N/R**	CD4E **N/S**
	4-121 (2.0L) SFI Natural Gas	Z	**B1416**	**PA2227**	**PA4153**		**N/R**	CD4E **N/S**
	V6-155 (2.5L) SFI SVT	G	**B329**	**PA4071**	**PA4153**	**BF966**	**N/R**	**M.T.**
	V6-155 (2.5L) SFI Duratec	L	**B329**	**PA2200**	**PA4153**	**BF966**	**N/R**	CD4E **N/S**
	Crown Victoria V8-281 (4.6L) SFI Natural Gas	9	**B329**	**PA2152**	**N/R**		**N/R**	4R70W **18029**
	V8-281 (4.6L) SFI	W	**B329**	**PA2152**	**N/R**	**BF7668**	**N/R**	4R70W **18029**
	Escort, Escort ZX2 4-121 (2.0L) SFI DOHC	3	**B1416**	**PA4088**	**N/R**	**BF1184**	**N/R**	**18268**
	4-121 (2.0L) SPI SOHC	P	**B243**	**PA4088**	**N/R**	**BF1184**	**N/R**	**18268**
	Excursion V8-330 (5.4L) SFI	L	**B329**	**PA4075**	**N/R**	**BF1166**	**N/R**	4R100 **18265**
	V8-444 (7.3L) Turbo Diesel	F	**B7039**	Panel **PA4120**	**N/R**	**PF7698**	**N/R**	4R100 **18265**
	V10-415 (6.8L) SFI	S	**B329**	**PA4075**	**N/R**	**BF1166**	**N/R**	4R100 **18265**
	Expedition V8-281 (4.6L) SFI	6,W	**B329**	**PA4075**	Opt. **PA4133**	**BF7668**	**N/R**	4R70W **18029**
	V8-330 (5.4L) SFI	L	**B329**	**PA4075**	Opt. **PA4133**	**BF7668**	**N/R**	4R70W **18029** 4R100 **18264**
	Explorer V6-245 (4.0L) EFI	E,X	**B2**	**PA4102**	**N/R**	**BF7668**	**N/R**	4R70W **18029** 5R55E 2WD **18024** 5R55E 4WD **18025**
	V8-302 (5.0L) EFI	P	**B329**	**PA4102**	**N/R**	**BF7668**	**N/R**	**18029**
	Fiesta 4-1300cc (1.3L) FI Mexico		**BT223**	**PA2201**				
	4-1400cc (1.4L) FI Mexico		**BT223**	**PA2201**				
	Focus 4-121 (2.0L) SFI Zetec	3	**B1416**	**PA4123**		**BF7668**	**N/R**	4F27E **18267**
	4-121 (2.0L) SPI	P	**B243**	**PA4123**		**BF7668**	**N/R**	4F27E **18267**
	Ikon 4-1600cc (1.6L) FI Mexico		**B243**			**BF7668**	**N/R**	
	KA 4-1600cc (1.6L) FI Mexico		**B1416**			**BF7668**	**N/R**	
	Lobo V8-4600cc (4.6L) FI Mexico	R,W	VIN R **B329** VIN W **B243**	**PA4075**		**BF7668**		
	V8-5400cc (5.4L) FI Mexico		**B329**	**PA4075**		**BF7668**		
	Mustang V6-232 (3.8L) EFI	4	**B243**	**PA4071**	**N/R**	**BF7668**	**N/R**	4R70W **18029**
	V8-281 (4.6L) EFI GT	X	**B329**	**PA4075**	**N/R**	**BF7668**	**N/R**	4R70W **18029**

OBS = Obsolete. Availability Limited to Distributor Stock. † Transmission, Not Model, Determines Which Transmission Filter is Used.

FORD Cont'd.

Year	Model and Engine	VIN	Lube	Air	Cabin Air	Fuel	Breather	Trans.[t]
2000	Pickups, F Series V6-256 (4.2L) SFI	2	**B243**	**PA4075**	Opt. **PA4133**	**BF7668**	**N/R**	41R00 **18264**
	V8-281 (4.6L) SFI	6,W	**B329**	**PA4075**	Opt. **PA4133**	**BF7668**	**N/R**	4R70W **18029** 4R100 2WD **18264** 4R100 4WD **18265**
	V8-330 (5.4L) SFI Supercharged Lightning	3	**B329**		Opt. **PA4133**	**BF7668**	**N/R**	4R70W **18029** 4R100 2WD **18264** 4R100 4WD **18265**
	V8-330 (5.4L) SFI	L	**B329**	**PA4075**	Opt. **PA4133**	**BF7668**	**N/R**	4R70W **18029** 4R100 2WD **18264** 4R100 4WD **18265**
	V8-330 (5.4L) Natural Gas	M	**B329**	**PA4075**	Opt. **PA4133**		**N/R**	2WD **18264** 4WD **18265**
	V8-330 (5.4L) EFI Bi-Fuel	Z	**B329**	**PA4075**	Opt. **PA4133**		**N/R**	4R70W **18029** 4R100 2WD **18264** 4R100 4WD **18265**
	V8-444 (7.3L) FI Turbo Diesel	F	**B7039**	**PA4148**	Opt. **PA4133**	**PF7698**	**N/R**	**18265**
	V10-415 (6.8L) SFI	S	**B329**	**PA4075**	Opt. **PA4133**	**BF1166**	**N/R**	41R00 **18265**
	Pickups, Super Duty V10-415 (6.8L) EFI	S	**B329**	**PA4075**	Opt. **PA4133**	**BF1166**	**SA2159**	4R100 **18265**
	V8-445 (7.3L) EFI Turbo Diesel	F	**B7039**	Panel To 12/7/98 **PA4110** Panel 12/7/98-on **PA4148**	Opt. **PA4133**	**PF7698**	**N/R**	4R100 **18265**
	Ranger 4-153 (2.5L) SFI	C	**B243**	**PA4102**	**N/R**	**BF7765**	**N/R**	5R55E 2WD **18024** 5R55E 4WD **18025**
	V6-182 (3.0L) SFI or Flex Fuel	U,V	**B243**	**PA4102**	**N/R**	**BF7765**	**N/R**	5R55E 2WD **18024** 5R55E 4WD **18025**
	V6-244 (4.0L) SFI	X	**B2**	**PA4102**	**N/R**	**BF7765**	**N/R**	5R55E 2WD **18024** 5R55E 4WD **18025**
	Taurus V6-182 (3.0L) SFI Flex Fuel	2	**B243**	**PA4163**	**PA4112**		**N/R**	**18034**
	V6-182 (3.0L) SFI 24 Valve	S	**B329**	**PA4163**	**PA4112**	**BF7809**	**N/R**	**18034**
	V6-182 (3.0L) SFI 12 Valve	U	**B243**	**PA4163**	**PA4112**	**BF7809**	**N/R**	**18034**
	Vans, E Series V6-256 (4.2L) EFI	2	**B243**	**PA4075**	**N/R**	**BF1166**	**N/R**	**18029**
	V8-281 (4.6L) EFI	W	**B329**	**PA4075**	**N/R**	**BF1166**	**N/R**	**18265**
	V8-330 (5.4L) EFI	L	**B329**	**PA4075**	**N/R**	**BF1166**	**N/R**	**18264**
	V8-330 (5.4L) EFI Natural Gas or Bi-Fuel	M,Z	**B329**	**PA4075**	**N/R**	Bi-Fuel **BF1166**	**N/R**	**18264**
	V8-444 (7.3L) Turbo Diesel	F	**B7039**	**[2] PA2237**	**N/R**	**PF7698**	**N/R**	**18264**
	V10-415 (6.8L) SFI	S	**B329**	**PA4075**	**N/R**	**BF1166**	**N/R**	**18265**
	Windstar V6-182 (3.0L) SFI	U	**B243**	**PA2150**	**PA4152**	**BF7668**	**N/R**	**18034**
	V6-232 (3.8L) SFI	4	**B243**	**PA2240**	**PA4152**	**BF7668**	**N/R**	**18033**
1999	Contour 4-121 (2.0L) SFI Zetec	3	**B1416**	**PA2227**	**PA4153**	**BF966**	**N/R**	**N/S**
	4-121 (2.0L) SFI Natural Gas	Z	**B1416**	**PA2227**	**PA4153**		**N/R**	**N/S**
	V6-155 (2.5L) SFI HO	G	**B329**	**PA4071**	**PA4153**	**BF966**	**N/R**	**M.T.**
	V6-155 (2.5L) SFI Duratec	L	**B329**	Exc. SVT **PA2200** SVT **PA4071**	**PA4153**	**BF966**	**N/R**	**N/S**
	Crown Victoria V8-281 (4.6L) SFI Natural Gas	9	**B329**	**PA2152**	**N/R**		**N/R**	4R70W **18029**
	V8-281 (4.6L) SFI	W	**B329**	**PA2152**	**N/R**	**BF7668**	**N/R**	4R70W **18029**
	Escort, Escort ZX2 4-121 (2.0L) SFI DOHC	3	**B1416**	**PA4088**	**N/R**	**BF1184**	**N/R**	**18268**
	4-121 (2.0L) SPI	P	**B243**	**PA4088**	**N/R**	**BF1184**	**N/R**	**18268**
	Expedition V8-281 (4.6L) SFI	6,W	**B329**	**PA4075**	Opt. **PA4133**	**BF7668**	**N/R**	4R70W **18029** E40D 2WD **18264** E40D 4WD **18265**
	V8-330 (5.4L) SFI	L	**B329**	**PA4075**	Opt. **PA4133**	**BF7668**	**N/R**	4R70W **18029** E40D 2WD **18264** E40D 4WD **18265**
	Explorer V6-245 (4.0L) SFI SOHC	E	**B2**	**PA4102**	**N/R**	**BF7668**	**N/R**	4R70W **18029** A4LD 2WD **18024** A4LD 4WD **18025**
	V6-245 (4.0L) EFI OHV	X	**B2**	**PA4102**	**N/R**	**BF7668**	**N/R**	4R70W **18029** A4LD 2WD **18024** A4LD 4WD **18025**
	V8-302 (5.0L) EFI	P	**B329**	**PA4102**	**N/R**	**BF7668**	**N/R**	4R70W **18029** A4LD 2WD **18024** A4LD 4WD **18025**
	Fiesta 4-1300cc (1.3L) FI Mexico		**BT223**	**PA2201**				
	4-1400cc (1.4L) FI Mexico		**BT223**	**PA2201**				

[t] Transmission, Not Model, Determines Which Transmission Filter is Used. OBS = Obsolete. Availability Limited to Distributor Stock.

FORD Cont'd.

Year	Model and Engine	VIN	Lube	Air	Cabin Air	Fuel	Breather	Trans.†
1999	Lobo V8-4600cc (4.6L) FI Mexico	R,W	VIN R **B329** VIN W **B243**	**PA4075**		**BF7668**		
	Mustang V6-232 (3.8L) EFI	4	**B243**	**PA4071**	**N/R**	**BF7668**	**N/R**	4R70W **18029**
	V8-281 (4.6L) SFI Cobra	V	**B329**	**PA4075**	**N/R**	**BF7668**	**N/R**	**M.T.**
	V8-281 (4.6L) SFI GT	X	**B329**	**PA4075**	**N/R**	**BF7668**	**N/R**	4R70W **18029**
	Pickups, F Series V6-256 (4.2L) SFI OHV	2	**B243**	**PA4075**	Opt. **PA4133**	**BF7668**	**N/R**	4R70W **18029** E40D 2WD **18264** E40D 4WD **18265**
	V8-281 (4.6L) SFI	6,W	**B329**	**PA4075**	Opt. **PA4133**	**BF7668**	**N/R**	4R70W **18029** E40D 2WD **18264** E40D 4WD **18265**
	V8-330 (5.4L) SFI Supercharged Lightning	3	**B329**		Opt. **PA4133**	**BF7668**	**N/R**	4R70W **18029**
	V8-330 (5.4L) SFI	L,Z	**B329**	Panel **PA2152** Round **PA4075**	Opt. **PA4133**	**BF7668**	**N/R**	4R70W **18029** E40D 2WD **18264** E40D 4WD **18265**
	V8-330 (5.4L) Natural Gas	M	**B329**	**PA4075**	Opt. **PA4133**		**N/R**	4R70W **18029** E40D 2WD **18264** E40D 4WD **18265**
	V8-444 (7.3L) FI Turbo Diesel	F	**B7039**	To 12/7/98 **PA4110** 12/7/98-on **PA4148**	Opt. **PA4133**	**PF7698**	**N/R**	4R70W **18029** E40D 2WD **18264** E40D 4WD **18265**
	V10-415 (6.8L) SFI	S	**B329**	**PA4075**	Opt. **PA4133**	**BF1166**	**N/R**	4R70W **18029** E40D 2WD **18264** E40D 4WD **18265**
	Pickups, Super Duty V10-415 (6.8L) EFI	S	**B329**	**PA4075**	**N/R**	**BF1166**	**SA2159**	4R100 **18265**
	V8-445 (7.3L) EFI Turbo Diesel	F	**B7039**	Panel To 12/7/98 **PA4110** Panel 12/7/98-on **PA4148**	**N/R**	**PF7698**	**N/R**	4R100 **18265**
	Ranger 4-153 (2.5L) SFI	C	**B243**	**PA4102**	**N/R**	**BF7668**	**N/R**	4R44E 2WD **18024** 4R44E 4WD **18025**
	V6-182 (3.0L) SFI or Flex Fuel	U,V	**B243**	**PA4102**	**N/R**	**BF7668** Flex Fuel **BF7960**	**N/R**	4R44E 2WD **18024** 4R44E 4WD **18025**
	V6-244 (4.0L) SFI	X	**B2**	**PA4102**	**N/R**	**BF7668**	**N/R**	5R55E 2WD **18024** 5R55E 4WD **18025**
	Taurus V6-182 (3.0L) SFI Flex Fuel	2	**B243**	**PA4044**	**PA4112**		**N/R**	AX4N **18033** AX4S **18034**
	V6-182 (3.0L) SFI 24 Valve	S	**B329**	**PA4044**	**PA4112**	**BF966**	**N/R**	AX4N **18033** AX4S **18034**
	V6-182 (3.0L) SFI 12 Valve	U	**B243**	**PA4044**	**PA4112**	**BF966**	**N/R**	AX4N **18033** AX4S **18034**
	V8-207 (3.4L) SFI SHO	N	**B243**	**PA4044**	**PA4112**	**BF966**	**N/R**	**18033**
	Vans, E Series V6-256 (4.2L) EFI	2	**B243**	**PA4075**	**N/R**	**BF1166**	**N/R**	4R70W 2WD **18002** 4R70W 4WD **18029**
	V8-281 (4.6L) EFI	6	**B329**	**PA4075**	**N/R**	**BF1166**	**N/R**	4R70W 2WD **18002** 4R70W 4WD **18029**
	V8-330 (5.4L) EFI	L	**B329**	**PA4075**	**N/R**	**BF1166**	**N/R**	4R100 **18264**
	V8-330 (5.4L) EFI Natural Gas	M	**B329**	**PA4075**	**N/R**		**N/R**	4R70W **18029** 4R100 **18264**
	V8-330 (5.4L) EFI Bi-Fuel	Z	**B329**	**PA4075**	**N/R**		**N/R**	4R70W **18029** 4R100 **18264**
	V8-444 (7.3L) Turbo Diesel	F	**B7039**	**[2] PA2237**	**N/R**	**PF7698**	**N/R**	4R70W **18029** 4R100 **18264**
	V10-415 (6.8L) SFI	S	**B329**	**PA4075**	**N/R**	**BF1166**	**N/R**	4R70W **18029** E40D **18264**
	V10-415 (6.8L) EFI	S	**B329**	**PA4075**	**N/R**	**BF1166**	**N/R**	4R70W 2WD **18002** 4R70W 4WD **18029**
	Windstar V6-182 (3.0L) SFI	U	**B243**	**PA2150**	**PA4152**	**BF7668**	**N/R**	AX4S **18034**
	V6-232 (3.8L) SPI	4	**B243**	**PA2240**	**PA4152**	**BF7668**	**N/R**	AX4S **18034**
1998	Contour 4-121 (2.0L) SFI DOHC	3	**B1416**	**PA2227**	**PA4153**	**BF966**	**N/R**	**N/S**
	4-121 (2.0L) SFI SOHC	Z	**B1416**	**PA2227**	**PA4153**	**BF966**	**N/R**	**N/S**
	V6-155 (2.5L) SFI HO	G	**B329**	**PA4071**	**PA4153**	**BF966**	**N/R**	**N/S**
	V6-155 (2.5L) SFI	L	**B329**	**PA2200**	**PA4153**	**BF966**	**N/R**	**N/S**
	Crown Victoria V8-281 (4.6L) SFI	6,W	**B329**	**PA2152**	**N/R**	**BF7668**	**SA2085**	4R70W **18029**

OBS = Obsolete. Availability Limited to Distributor Stock. † Transmission, Not Model, Determines Which Transmission Filter is Used.

FORD Cont'd.

Year	Model and Engine	VIN	Lube	Air	Cabin Air	Fuel	Breather	Trans.[t]
1998	Crown Victoria V8-281 (4.6L) Natural Gas	9	**B329**	**PA2152**	**N/R**		**SA2085**	4R70W **18029**
	Escort 4-121 (2.0L) SFI DOHC	3	**B1416**	**PA4088**	**N/R**	**BF1184**	**N/R**	**18268**
	4-121 (2.0L) SPI SOHC	P	**B243**	**PA4088**	**N/R**	**BF1184**	**N/R**	**18268**
	Expedition V8-281 (4.6L) SFI	6,W	**B329**	**PA4075**	Opt. **PA4133**	**BF1166**	**N/R**	E40D 2WD **18264** E40D 4WD **18265** 4R70W **18029**
	V8-330 (5.4L) SFI	L	**B329**	**PA4075**	Opt. **PA4133**	**BF1166**	**N/R**	E40D 2WD **18264** E40D 4WD **18265** 4R70W **18029**
	Explorer V6-245 (4.0L) SFI SOHC	E	**B2**	**PA4102**	**N/R**	**BF1166**	**N/R**	5R55E 2WD **18024** 5R55E 4WD **18025**
	V6-245 (4.0L) SFI OHV	X	**B2**	Panel **PA4102** Round **PA4089**	**N/R**	**BF1166**	**N/R**	5R55E 2WD **18024** 5R55E 4WD **18025**
	V8-302 (5.0L) SFI	P	**B329**	**PA4102**	**N/R**	**BF1166**	**N/R**	4R70W **18029**
	Fiesta 4-1300cc (1.3L) FI Mexico		**BT223**	**PA2201**				
	4-1400cc (1.4L) FI Mexico		**BT223**	**PA2201**				
	Lobo V8-4600cc (4.6L) FI Mexico		**B329**	**PA4075**		**BF1166**		
	Mustang V6-232 (3.8L) EFI	4	**B243**	**PA4071**	**N/R**	**BF7668**	**N/R**	4R70W **18029**
	V8-281 (4.6L) SFI Cobra	V	**B329**	**PA4075**	**N/R**	**BF7668**	**N/R**	**M.T.**
	V8-281 (4.6L) SFI GT	X	**B329**	**PA4075**	**N/R**	**BF7668**	**N/R**	4R70W **18029**
	Pickups, F Series V6-256 (4.2L) FI	2	**B243**	**PA4075**	Opt. **PA4133**	**BF1166**	**N/R**	E40D 2WD **18264** E40D 4WD **18265**
	V8-281 (4.6L) SFI	6,W	**B329**	**PA4075**	Opt. **PA4133**	**BF1166**	**N/R**	AODE **18029**
	V8-330 (5.4L) SFI	L,Z	**B329**	**PA4075**	Opt. **PA4133**	**BF1166**	**N/R**	2WD **18264** 4WD **18265**
	V8-330 (5.4L) Natural Gas	M,Z	**B329**	**PA4075**	Opt. **PA4133**		**N/R**	2WD **18264** 4WD **18265**
	V8-444 (7.3L) Turbo Diesel	F	**B7039**	**PA2233**	Opt. **PA4133**	**PF7678**	**N/R**	2WD **19828** 4WD **18015**
	Ranger 4-153 (2.5L) SFI	C	**B243**	**PA4102**	**N/R**	**BF7668**	**N/R**	4R44E 2WD **18024** 4R44E 4WD **18025**
	V6-182 (3.0L) SFI	U	**B243**	**PA4102**	**N/R**	**BF7668**	**N/R**	4R44E 2WD **18024** 4R44E 4WD **18025**
	V6-244 (4.0L) SFI	X	**B2**	Cone-Shaped **PA2240** Panel **PA4102**	**N/R**	**BF7668**	**N/R**	4R44E 2WD **18024** 4R44E 4WD **18025**
	Taurus V6-182 (3.0L) SFI	1,2,U	**B243**	**PA4044**	**PA4112**	**BF966**	**N/R**	AX4N **18033** AX4S **18034**
	V6-182 (3.0L) SFI 24 Valve	S	**B329**	**PA4044**	**PA4112**	**BF966**	**N/R**	AX4N **18033** AX4S **18034**
	V8-207 (3.4L) SFI SHO	N	**B243**	**PA4044**	**PA4112**	**BF966**	**N/R**	AX4N **18033** AX4S **18034**
	Vans, E Series V6-256 (4.2L) SFI	2	**B243**	**PA4075**	**N/R**	**BF1166**	**SA2047**	4R70W **18029** 4R100 **18264**
	V8-281 (4.6L) EFI	6	**B329**	**PA4075**	**N/R**	**BF1166**	**N/R**	4R70W **18029**
	V8-330 (5.4L) SFI	L,Z	**B329**	**PA4075**	**N/R**	**BF1166**	**SA2047**	2WD **18264**
	V8-330 (5.4L) EFI Natural Gas	M	**B329**	**PA4075**	**N/R**		**SA2047**	2WD **18264**
	V8-444 (7.3L) Turbo Diesel	F	**B7039**	**[2] PA2237**	**N/R**	To 1/12/98 **PF7678** 1/12/98-on **PF7698**	**SA2047**	2WD **18264**
	V10-415 (6.8L) SFI	S	**B329**	**PA4075**	**N/R**	**BF1166**	**SA2047**	2WD **18264**
	Windstar V6-182 (3.0L) SFI	U	**B243**	**PA2150**	**N/R**	**BF1166**	**N/R**	**18034**
	V6-232 (3.8L) SPI	4	**B243**	**PA2240**	**N/R**	**BF1166**	**N/R**	**18034**
1997	Aerostar V6-182 (3.0L) SFI	1,U	**B243**	**PA2150**	**N/R**	**BF966**	**N/R**	5R55E 2WD **18024** 5R55E 4WD **18025**
	V6-245 (4.0L) SFI	E,X	**B2**	**PA2150**	**N/R**	**BF966**	**N/R**	5R55E 2WD **18024** 5R55E 4WD **18025**
	Aspire 4-81 (1.3L) EFI	H	**B1400**	**PA4045**	**N/R**	**BF1190**	**N/R**	
	Contour 4-121 (2.0L) SFI	3,Z	**B233**	**PA2227**	**PA4153**	**BF966**	**N/R**	**N/S**
	V6-155 (2.5L) SFI	L	**B329**	**PA2200**	**PA4153**	**BF966**	**N/R**	**N/S**
	Crown Victoria V8-281 (4.6L) Natural Gas	9	**B329**	**PA2152**	**N/R**		**SA2085**	4R70W **18029**
	V8-281 (4.6L) SFI	W	**B329**	**PA2152**	**N/R**	**BF966**	**SA2085**	**18029**
	Escort 4-121 (2.0L) SFI DOHC	3	**B1416**	**PA4088**	**N/R**	**BF1184**	**N/R**	IF4E **18268**
	4-121 (2.0L) SPI SOHC	P	**B243**	**PA4088**	**N/R**	**BF1184**	**N/R**	IF4E **18268**

[t] Transmission, Not Model, Determines Which Transmission Filter is Used. OBS = Obsolete. Availability Limited to Distributor Stock.

FORD Cont'd.

Year	Model and Engine	VIN	Lube	Air	Cabin Air	Fuel	Breather	Trans.[t]
1997	Expedition V8-281 (4.6L) SFI	6,W	**B329**	**PA4075**	Opt. **PA4133**	**BF1166**	**N/R**	4R70W **18029** E40D 2WD **18264** E40D 4WD **18265**
	V8-330 (5.4L) SFI	L	**B329**	**PA4075**	Opt. **PA4133**	**BF1166**	**N/R**	AODE-W **18029** E40D 2WD **18264** E40D 4WD **18265**
	Explorer V6-245 (4.0L) SFI SOHC	E	**B2**	Round **PA4089** Panel **PA4102**	**N/R**	**BF1166**	**N/R**	2WD **18024** 4WD **18025**
	V6-245 (4.0L) SFI OHV	X	**B2**	Round **PA4089** Panel **PA4102**	**N/R**	**BF1166**	**N/R**	2WD **18024** 4WD **18025**
	V8-302 (5.0L) SFI	P	**B329**	Round **PA4089** Panel **PA4102**	**N/R**	**BF1166**	**N/R**	4R70W **18029**
	Lobo V8-4600cc (4.6L) FI Mexico		**B329**	**PA4075**		**BF1166**		
	Mustang V6-232 (3.8L) EFI	4	**B243**	**PA4071**	**N/R**	**BF966**	**N/R**	4R70W **18029**
	V8-281 (4.6L) SFI Cobra	V	**B329**	**PA4075**	**N/R**	**BF966**	**N/R**	**M.T.**
	V8-281 (4.6L) SFI GT	X	**B329**	**PA4075**	**N/R**	**BF966**	**N/R**	4R70W **18029**
	Pickups, F Series V6-256 (4.2L) EFI	2	**B243**	**PA4075**	Opt. **PA4133**	**BF1166**	**SA2047**	4R70W **18029**
	V8-281 (4.6L) SFI	6,W	**B329**	**PA4075**	Opt. **PA4133**	**BF1166**	**N/R**	4R70W **18029**
	V8-330 (5.4L) EFI	L	**B329**	**PA4075**	Opt. **PA4133**	**BF1166**	**N/R**	E4OD 2WD **18264** E4OD 4WD **18265**
	V8-330 (5.4L) Natural Gas	M	**B329**	**PA4075**	Opt. **PA4133**	**BF1166**	**SA2159**[65] **SA2047**	E40D 2WD **18264** E40D 4WD **18265**
	V8-351 (5.8L) EFI	H	**B329**	**PA2164**	Opt. **PA4133**	**BF1166**	**SA2047**	C6 2WD **19828** C6 4WD **18015** E4OD 2WD **18264** E4OD 4WD **18265**
	V8-444 (7.3L) Turbo Diesel	F	**B7039**	**PA2233**	Opt. **PA4133**	**PF7678**	**N/R**	C6 2WD **19828** C6 4WD **18015** E4OD 2WD **18264** E4OD 4WD **18265**
	V8-460 (7.5L) EFI	G	**B2**	**PA2164**	Opt. **PA4133**	**BF1166**	**SA2047**	C6 2WD **19828** C6 4WD **18015** E4OD 2WD **18264** E4OD 4WD **18265**
	Probe 4-122 (2.0L) SFI	A	**B1402**	**PA2229**	**N/R**	**BF1194**	**N/R**	4EAT **18005**
	V6-153 (2.5L) SFI	B	**B1402**	**PA2229**	**N/R**	**BF1194**	**N/R**	4EAT **18005**
	Ranger 4-140 (2.3L) SFI	A	**B2**	**PA2240**	**N/R**	**BF1166**	**N/R**	2WD **18024** 4WD **18025**
	V6-182 (3.0L) SFI	1,U	**B243**	**PA2240**	**N/R**	**BF1166**	**N/R**	2WD **18024** 4WD **18025**
	V6-244 (4.0L) SFI	X	**B2**	**PA2240**	**N/R**	**BF1166**	**N/R**	2WD **18024** 4WD **18025**
	Taurus V6-182 (3.0L) SFI	1,2,U	**B243**	**PA4044**	**PA4112**	**BF966**	**N/R**	AX4N **18033** AX4S **18034**
	V6-182 (3.0L) SFI 24 Valve	S	**B329**	**PA4044**	**PA4112**	**BF966**	**N/R**	AX4N **18033** AX4S **18034**
	V8-207 (3.4L) SFI	N	**B243**	**PA4044**	**PA4112**	**BF966**	**N/R**	AX4N **18033** AX4S **18034**
	Thunderbird V6-232 (3.8L) SFI	4	**B243**	**PA2191**	**N/R**	**BF1170**	**SA2159**	**18029**
	V8-281 (4.6L) SFI	W	**B329**	**PA2191**	**N/R**	**BF1170**	**N/R**	**18029**
	Vans, E Series V6-256 (4.2L) SPI	2	**B243**	**PA4075**	**N/R**	**BF1166**	**N/R**	**18029**
	V8-281 (4.6L) EFI	6,W	**B329**	**PA4075**	**N/R**	**BF1166**	**SA2047**	**18029**
	V8-330 (5.4L) EFI or Natural Gas	L,M	**B329**	**PA4075**	**N/R**	**BF1166**	**N/R**	**18029**
	V10-415 (6.8L) EFI	S	**B329**	**PA4075**	**N/R**	**BF1166**	**SA2047**	**18264**
	V8-444 (7.3L) Turbo Diesel	F	**B7039**	**[2] PA2237**	**N/R**	**PF7678**	**N/R**	C6 **19828** E4OD **18264**
	Windstar V6-183 (3.0L) SFI	1,U	**B243**	**PA2150**	**N/R**	**BF1166**	**N/R**	**18034**
	V6-232 (3.8L) SPI	4	**B243**	**PA2240**	**N/R**	**BF1166**	**N/R**	**18034**
1996	Aerostar V6-183 (3.0L) SFI	U	**B243**	**PA2150**	**N/R**	**BF966**	**N/R**	4R44E 2WD **18024** 4R44E 4WD **18025**
	V6-245 (4.0L) SFI	X	**B2**	**PA2150**	**N/R**	**BF966**	**N/R**	2WD **18024** 4WD **18025**
	Aspire 4-81 (1.3L) EFI	H	**B1400**	**PA4045**	**N/R**	**BF1190**	**N/R**	

OBS = Obsolete. Availability Limited to Distributor Stock. [t] Transmission, Not Model, Determines Which Transmission Filter is Used.

[65] Stripped Chassis.

FORD Cont'd.

Year	Model and Engine	VIN	Lube	Air	Cabin Air	Fuel	Breather	Trans.[t]
1996	Bronco, Pickups, F Series 6-300 (4.9L) SFI	Y,Z	**B2**	**PA2164**	**N/R**	**BF1166**	**SA2047**	AODE-W 2WD **18002** AODE-W 4WD **18029** C6 2WD **19828** C6 4WD **18015** E40D 2WD **18264** E40D 4WD **18265**
	V8-302 (5.0L) SFI	N	**B2**	**PA2164**	**N/R**	**BF1166**	**SA2047**	AODE-W 2WD **18002** AODE-W 4WD **18029** C6 2WD **19828** C6 4WD **18015** E40D 2WD **18264** E40D 4WD **18265**
	V8-351 (5.8L) SFI	H	**B329**	**PA2164**	**N/R**	**BF1166**	**SA2047**	AODE-W 2WD **18002** AODE-W 4WD **18029** C6 2WD **19828** C6 4WD **18015** E40D 2WD **18264** E40D 4WD **18265**
	V8-444 (7.3L) Turbo Diesel	F	**B7039**	**PA2233**	**N/R**	**PF7678**	**N/R**	C6 2WD **19828** C6 4WD **18015** E40D 2WD **18264** E40D 4WD **18265**
	V8-460 (7.5L) EFI	G	Std. **B2** HvyDty. **BT8328**	**PA2164**	**N/R**	**BF1166**	**SA2047**	AODE **18029** C6 2WD **19828** C6 4WD **18015** E40D 2WD **18264** E40D 4WD **18265**
	Contour 4-121 (2.0L) SFI	3,Z	**B233**	**PA2227**	**PA4153**	**BF966**	**N/R**	**N/S**
	V6-153 (2.5L) SFI	L	**B329**	**PA2200**	**PA4153**	**BF966**	**N/R**	**N/S**
	Crown Victoria V8-281 (4.6L) Natural Gas	9	**B329**	**PA2152**	**N/R**		**N/R**	4R70W **18029**
	V8-281 (4.6L) SFI	6,W	**B329**	**PA2152**	**N/R**	**BF966**	**SA2085**	4R70W **18029**
	Escort 4-113 (1.8L) EFI	8	**B1400**	**PA2220**	**N/R**	**BF966**	**N/R**	4EAT-F **18268**
	4-116 (1.9L) SFI	J	**B243**	**PA2103**	**N/R**	**BF966**	**N/R**	4EAT-F **18268**
	Explorer V6-245 (4.0L) SFI	X	**B2**	**PA2240**	**N/R**	**BF1166**	**N/R**	4R55E 2WD **18024** 4R55E 4WD **18025**
	V8-302 (5.0L) SFI	P	**B329**	**PA4089**	**N/R**	**BF1166**	**N/R**	4R70W **18029**
	Mustang V6-232 (3.8L) SFI	4	**B243**	**PA4071**	**N/R**	**BF966**	**N/R**	**18029**
	V8-281 (4.6L) SFI	V,X	**B329**	**PA4075**	**N/R**	**BF966**	**N/R**	**18029**
	Probe, Probe GT 4-122 (2.0L) SFI	A	**B1402**	**PA2229**	**N/R**	A.T. **BF1105** M.T. **BF1194**	**N/R**	**N/S**
	V6-153 (2.5L) SFI	B	**B1402**	**PA2229**	**N/R**	**BF1194**	**N/R**	4EAT **18005**
	Ranger 4-140 (2.3L) SFI	A	**B2**	**PA2240**	**N/R**	**BF1166**	**N/R**	2WD **18024** 4WD **18025**
	V6-183 (3.0L) SFI	U	**B243**	**PA2240**	**N/R**	**BF1166**	**N/R**	2WD **18024** 4WD **18025**
	V6-245 (4.0L) SFI	X	**B2**	**PA2240**	**N/R**	**BF1166**	**N/R**	A4LD 2WD **18024** A4LD 4WD **18025**
	Taurus, Taurus SHO V6-182 (3.0L) EFI	1,2	**B243**	**PA4044**	**PA4112**		**N/R**	AX4N **18033** AX4S **18034**
	V6-182 (3.0L) SFI	S	**B329**	**PA4044**	**PA4112**	**BF966**	**N/R**	AX4N **18033** AX4S **18034**
	V6-182 (3.0L) SFI	U	**B243**	**PA4044**	**PA4112**	**BF966**	**N/R**	AX4N **18033** AX4S **18034**
	V8-206 (3.4L) SFI	N	**B243**	**PA4044**	**PA4112**	**BF966**	**N/R**	**18033**
	Thunderbird V6-232 (3.8L) SFI	4	**B243**	**PA2191**	**N/R**	**BF1170**	**SA2159**	**18029**
	V8-281 (4.6L) SFI	W	**B329**	**PA2191**	**N/R**	**BF1170**	**N/R**	**18029**
	Vans, E Series 6-300 (4.9L) SFI	Y,Z	**B2**	**PA2164**	**N/R**	**BF1166**	**SA2047**	C6 **19828** E40D **18264**
	V8-302 (5.0L) SFI	N	**B2**	**PA2164**	**N/R**	**BF1166**	**SA2047**	AODE-W **18002** AOT **19640** E40D **18264**

[t] Transmission, Not Model, Determines Which Transmission Filter is Used. OBS = Obsolete. Availability Limited to Distributor Stock.

FORD Cont'd.

Year	Model and Engine	VIN	Lube	Air	Cabin Air	Fuel	Breather	Trans.†
1996	Vans, E Series V8-351 (5.8L) EFI or SFI	H	**B2**	**PA2164**	**N/R**	**BF1166**	**SA2047**	AODE-W **18002** AOT **19640** E40D **18264**
	V8-446 (7.3L) Turbo Diesel	F	**B7039**	**[2] PA2237**	**N/R**	**PF7678**	**N/R**	C6 **19828** E40D **18264**
	V8-460 (7.5L) FI	G	**B2**	**PA2164**	**N/R**	**BF1166**	**SA2047**	**19828**
	Windstar V6-183 (3.0L) SFI	U	**B243**	**PA2150**	**N/R**	**BF1166**	**N/R**	**18034**
	V6-232 (3.8L) SPI	4	**B243**	**PA2240**	**N/R**	**BF1166**	**N/R**	**18034**
1995	Aerostar V6-183 (3.0L) SFI	U	**B243**	**PA2150**	**N/R**	**BF966**	**N/R**	4R55E 2WD **18024** 4R55E 4WD **18025**
	V6-245 (4.0L) EFI	X	**B2**	**PA2150**	**N/R**	**BF966**	**N/R**	4R55E 2WD **18024** 4R55E 4WD **18025**
	Aspire 4-81 (1.3L) EFI	H	**B227**	**PA4045**	**N/R**	**BF1190**	**N/R**	
	Bronco, Pickups, F Series 6-300 (4.9L) EFI	Y,Z	**B2**	**PA2164**	**N/R**	**BF1166**	**SA2047**	C6 2WD **19828** C6 4WD **18015** E40D 2WD **18264** E40D 4WD **18265**
	V8-302 (5.0L) EFI	N	**B2**	**PA2164**	**N/R**	**BF1166**	**SA2047**	AODE 2WD **18002** AODE 4WD **18029** E40D 2WD **18264** E40D 4WD **18265**
	V8-351 (5.8L) EFI	H,R	**B329**	**PA2164**	**N/R**	**BF1166**	**N/R** **SA2047**	C6 2WD **19828** C6 4WD **18015** E40D 2WD **18264** E40D 4WD **18265**
	V8-444 (7.3L) Turbo Diesel	F	**B7039**	**PA2233**	**N/R**	**PF7678**	**N/R**	E40D 2WD **18264** E40D 4WD **18265**
	V8-460 (7.5L) EFI	G	Std. **B2** HvyDty. **BT8328**	**PA2164**	**N/R**	**BF1166**	**N/R** **SA2047**	AODE 2WD **18002** AODE 4WD **18029** E40D 2WD **18264** E40D 4WD **18265**
	Contour 4-121 (2.0L) SFI	3	**B233**	**PA2227**	**PA4153**	**BF966**	**N/R**	**N/S**
	V6-153 (2.5L) SFI	L	**B329**	**PA2200**	**PA4153**	**BF966**	**N/R**	**N/S**
	Crown Victoria V8-281 (4.6L) SFI	W	**B329**	**PA2152**	**N/R**	**BF966**	**SA2085**	AODE **18002**
	Escort 4-113 (1.8L) EFI	8	**B1400**	**PA2220**	**N/R**	**BF966**	**N/R**	4EAT-F **18268**
	4-116 (1.9L) SFI	J	**B243**	**PA2103**	**N/R**	**BF966**	**N/R**	4EAT-F **18268**
	Explorer V6-245 (4.0L) EFI	X	**B2**	**PA2240**	**N/R**	**BF1166**	**N/R**	A4LD 2WD **18024** A4LD 4WD **18025**
	Mustang V6-232 (3.8L) SFI	4	**B243**	**PA4071**	**N/R**	**BF966**	**N/R**	AODE **18002**
	V8-302 (5.0L) SFI Cobra	D	**B233**	**PA4071**	**N/R**	**BF966**	**N/R**	**M.T.**
	V8-302 (5.0L) SFI HO	T	**B2**	**PA4071**	**N/R**	**BF966**	**N/R**	AODE **18002**
	Probe, Probe GT 4-122 (2.0L) MFI	A	**B1402**	**PA2229**	**N/R**	**BF1194**	**N/R**	**18005**
	V6-153 (2.5L) MFI	B	**B1402**	**PA2229**	**N/R**	**BF1194**	**N/R**	**N/S**
	Ranger 4-140 (2.3L) EFI	A	**B2**	**PA2240**	**N/R**	**BF1166**	**N/R**	2WD **18024** 4WD **18025**
	V6-183 (3.0L) EFI	U	**B243**	**PA2240**	**N/R**	**BF1166**	**N/R**	2WD **18024** 4WD **18025**
	V6-245 (4.0L) EFI	X	**B2**	**PA2240**	**N/R**	**BF1166**	**N/R**	2WD **18024** 4WD **18025**
	Taurus V6-182 (3.0L) Flex Fuel	1	**B243**	**PA2150**	**N/R**	**BF966**	**N/R**	AX4N **18033**
	V6-182 (3.0L) EFI	U	**B243**	**PA2150**	**N/R**	**BF966**	**N/R**	AX4N **18033**
	V6-182 (3.0L) EFI SHO	Y	**B243**	**PA2149**	**N/R**	**BF966**	**N/R**	AX4N **18033**
	V6-195 (3.2L) EFI	P	**B243**	**PA2149**	**N/R**	**BF966**	**N/R**	Exc. SHO **18171** SHO **18033**
	V6-232 (3.8L) EFI	4	**B243**	**PA2150**	**N/R**	**BF966**	**SA2159**	Exc. SHO **18171** SHO **18033**
	Thunderbird V6-232 (3.8L) EFI	4,R	**B243**	**PA2191**	**N/R**	**BF1170**	**SA2159**	VIN 4 **18029** VIN R **18002**
	V8-281 (4.6L) EFI	W	**B329**	**PA2191**	**N/R**	**BF1170**	**N/R**	**18002**
	Vans, E Series 6-300 (4.9L) EFI	Y,Z	**B2**	**PA2164**	**N/R**	**BF1166**	**SA2047**	C6 **19828** E40D **18264**
	V8-302 (5.0L) EFI	N	**B2**	**PA2164**	**N/R**	**BF1166**	**SA2159**	AODE **18002**
	V8-351 (5.8L) EFI	H	**B2**	**PA2164**	**N/R**	**BF1166**	**SA2159**	E40D **18264**
	V8-446 (7.3L) Turbo Diesel	F	**B7039**	**[2] PA2237**	**N/R**	**PF7678**	**N/R**	C6 **19828** E40D **18264**
	V8-460 (7.5L) FI	G	**B2**	**PA2164**	**N/R**	**BF1166**	**SA2047**	**19828**
	Windstar V6-183 (3.0L) SFI	U	**B243**	**PA2150**	**N/R**	**BF1166**	**N/R**	**18034**

OBS = Obsolete. Availability Limited to Distributor Stock. † Transmission, Not Model, Determines Which Transmission Filter is Used.

FORD Cont'd.

Year	Model and Engine	VIN	Lube	Air	Cabin Air	Fuel	Breather	Trans.[t]
1995	Windstar V6-232 (3.8L) SFI	4	**B243**	**PA2150**	**N/R**	**BF1166**	**N/R**	**18171**
1994	Aerostar V6-183 (3.0L) EFI	U	**B243**	**PA2150**	**N/R**	**BF966**	**N/R**	2WD **18024** 4WD **18025**
	V6-245 (4.0L) EFI	X	**B2**	**PA2150**	**N/R**	**BF966**	**N/R**	2WD **18024** 4WD **18025**
	Aspire 4-81 (1.3L) EFI	H	**B227**	**PA4045**	**N/R**	**BF1190**	**SA2159**	
	Bronco, Pickups, F Series 6-300 (4.9L) EFI	Y,Z	**B2**	**PA2164**	**N/R**	**BF1166**	**SA2045**	AOT 2WD **19640** AOT 4WD **18198** C6 2WD **19828** C6 4WD **18015** E40D 2WD **18264** E40D 4WD **18265**
	V8-302 (5.0L) EFI	N	**B2**	**PA2164**	**N/R**	**BF1166**	**N/R** **SA2159**	AODE 4WD **18029** AOT 2WD **19640** AOT 4WD **18198** C6 2WD **19828** C6 4WD **18015** E40D 2WD **18264** E40D 4WD **18265**
	V8-351 (5.8L) EFI	H,R	**B329**	**PA2164**	**N/R**	**BF1166**	**N/R** **SA2159**	AODE 4WD **18029** AOT 2WD **19640** AOT 4WD **18198** C6 2WD **19828** C6 4WD **18015** E40D 2WD **18264** E40D 4WD **18265**
	V8-444 (7.3L) DI Turbo Diesel	F	**B7039**	**PA2233**	**N/R**	**PF7678**	**N/R**	E40D 2WD **18264** E40D 4WD **18265**
	V8-444 (7.3L) Turbo Diesel	K	**B134**	**PA4073**	**N/R**	w/o Sensor Port **BF1222** w/Sensor Port **BF1222-SP**	**N/R**	E40D 2WD **18264** E40D 4WD **18265**
	V8-444 (7.3L) Diesel	M	**B134**	**PA2092**	**N/R**	w/o Sensor Port **BF1222** w/Sensor Port **BF1222-SP**	**N/R**	AOT 2WD **19640** AOT 4WD **18198** C6 2WD **19828** C6 4WD **18015** E40D 2WD **18264** E40D 4WD **18265**
	V8-460 (7.5L) EFI	G	Std. **B2** HvyDty. **BT8328**	**PA2164**	**N/R**	**BF1166**	**N/R** **SA2159**	AODE 4WD **18029** AOT 2WD **19640** AOT 4WD **18198** C6 2WD **19828** C6 4WD **18015** E40D 2WD **18264** E40D 4WD **18265**
	Crown Victoria V8-281 (4.6L) SFI	W	**B329**	**PA2152**	**N/R**	**BF966**	**SA2085**	AODE **18002**
	Escort, Escort GT 4-113 (1.8L) EFI DOHC	8	**B1400**	**PA2220**	**N/R**	**BF966**	**N/R**	4EAT-F **18268**
	4-116 (1.9L) EFI	J	**B243**	**PA2103**	**N/R**	**BF966**	**N/R**	4EAT-F **18268**
	Explorer V6-245 (4.0L) EFI	X	**B2**	**PA2150**	**N/R**	**BF1166**	**N/R**	A4LD 2WD **18024** A4LD 4WD **18025**
	Ghia V6-3000cc (3.0L) FI Mexico		**B243**	**PA4069**	**N/R**	**BF966**		
	Mustang V6-232 (3.8L) SFI	4	**B243**	**PA4071**	**N/R**	**BF966**	**N/R**	**18002**
	V8-302 (5.0L) SFI	D,T	**B2**	**PA4071**	**N/R**	**BF966**	**N/R**	AODE **18002**
	Probe, Probe GT 4-122 (2.0L) MFI	A	**B1402**	**PA2229**	**N/R**	**BF1194**	**N/R**	**18005**
	V6-153 (2.5L) MFI	B	**B1402**	**PA2229**	**N/R**	**BF1194**	**N/R**	**N/S**
	Ranger 4-140 (2.3L) EFI	A	**B2**	**PA2150**	**N/R**	**BF966**	**N/R**	A4LD 2WD **18024** A4LD 4WD **18025**
	V6-183 (3.0L) EFI	U	**B243**	**PA2150**	**N/R**	**BF966**	**N/R**	A4LD 2WD **18024** A4LD 4WD **18025**
	V6-245 (4.0L) EFI	X	**B2**	**PA2150**	**N/R**	**BF966**	**N/R**	A4LD 2WD **18024** A4LD 4WD **18025**
	Taurus V6-182 (3.0L) Flex Fuel	1	**B243**	**PA2150**	**N/R**	**BF966**	**N/R**	**18171**
	V6-182 (3.0L) EFI	U	**B243**	**PA2150**	**N/R**	**BF966**	**N/R**	**18171**
	V6-182 (3.0L) EFI SHO	Y	**B243**	**PA2149**	**N/R**	**BF966**	**N/R**	**18033**
	V6-195 (3.2L) EFI DOHC	P	**B243**	**PA2149**	**N/R**	**BF966**	**N/R**	Exc. SHO **18171** SHO **18033**

[t] Transmission, Not Model, Determines Which Transmission Filter is Used. OBS = Obsolete. Availability Limited to Distributor Stock.

FORD Cont'd.

Year	Model and Engine	VIN	Lube	Air	Cabin Air	Fuel	Breather	Trans.[t]
1994	Taurus V6-232 (3.8L) EFI	4	**B243**	**PA2150**	**N/R**	**BF966**	**SA2159**	Exc. SHO **18171** SHO **18033**
	Tempo 4-141 (2.3L) EFI	X	**B233**	**PA4069**	**N/R**	**BF966**	**N/R**	**18040**
	V6-182 (3.0L) EFI	U	**B243**	**PA4069**	**N/R**	**BF966**	**N/R**	**18040**
	Thunderbird V6-232 (3.8L) EFI or Supercharged	4,R	**B243**	**PA2191**	**N/R**	**BF1170**	**SA2159**	**18002**
	V8-281 (4.6L) EFI	W	**B329**	**PA2191**	**N/R**	**BF1170**	**N/R**	**18002**
	Vans, E Series 6-300 (4.9L) EFI	Y	**B2**	**PA2164**	**N/R**	**BF1166**	**SA2047**	AOT 2WD **19640** AOT 4WD **18198** C6 2WD **19828** C6 4WD **18015** E40D 2WD **18264** E40D 4WD **18265**
	V8-302 (5.0L) EFI	N	**B2**	**PA2164**	**N/R**	**BF1166**	**SA2047**	AODE **18002** AOT 2WD **19640** AOT 4WD **18198** C6 2WD **19828** C6 4WD **18015** E40D 2WD **18264** E40D 4WD **18265**
	V8-351 (5.8L) EFI	H	**B2**[21]	**PA2164**	**N/R**	**BF1166**	**SA2047**	AOT 2WD **19640** AOT 4WD **18198** C6 2WD **19828** C6 4WD **18015** E40D 2WD **18264** E40D 4WD **18265**
	V8-446 (7.3L) Diesel	M	**B134**	**PA4005**	**N/R**	w/o Sensor Port **BF1222** w/Sensor Port **BF1222-SP**	**N/R**	AOT 2WD **19640** AOT 4WD **18198** C6 2WD **19828** C6 4WD **18015** E40D 2WD **18264** E40D 4WD **18265**
	V8-460 (7.5L) EFI	G	Std. **B2** HvyDty. **BT8328**	**PA2164**	**N/R**	**BF1166**	**SA2047**	AOT 2WD **19640** AOT 4WD **18198** C6 2WD **19828** C6 4WD **18015** E40D 2WD **18264** E40D 4WD **18265**
1993	Aerostar V6-183 (3.0L) EFI	U	**B243**	**PA2150**	**N/R**	**BF966**	**SA2084**	A4LD 2WD **18024** A4LD 4WD **18025**
	V6-245 (4.0L) EFI	X	**B2**	**PA2150**	**N/R**	**BF966**	**N/R**	A4LD 2WD **18024** A4LD 4WD **18025**
	Bronco, Pickups, F Series 6-300 (4.9L) EFI	Y	**B2**	**PA2164**	**N/R**	**BF1166**	**SA2159**	AOT 2WD **19640** AOT 4WD **18198** C6 2WD **19828** C6 4WD **18015** E40D 2WD **18264** E40D 4WD **18265**
	V8-302 (5.0L) EFI	N	**B2**	**PA2164**	**N/R**	**BF1166**	**SA2159**	AOD, AOT 2WD **19640** AOD, AOT 4WD **18198** E40D 2WD **18264** E40D 4WD **18265**
	V8-351 (5.8L) EFI	H,R	**B2**	**PA2164**	**N/R**	**BF1166**	**SA2159**	AOT **18198** C6 2WD **19828** C6 4WD **18015** E40D 2WD **18264** E40D 4WD **18265**
	V8-444 (7.3L) Turbo Diesel	C	**B134**	**PA4073**	**N/R**	w/o Sensor Port **BF1222** w/Sensor Port **BF1222-SP**	**N/R**	C6 2WD **19828** C6 4WD **18015** E40D 2WD **18264** E40D 4WD **18265**
	V8-446 (7.3L) Diesel	M	**B134**	**PA2092**	**N/R**	w/o Sensor Port **BF1222** w/Sensor Port **BF1222-SP**	**N/R**	E40D 2WD **18264** E40D 4WD **18265**

OBS = Obsolete. Availability Limited to Distributor Stock. [t] Transmission, Not Model, Determines Which Transmission Filter is Used.

[21] w/o Oil Cooler.

FORD Cont'd.

Year	Model and Engine	VIN	Lube	Air	Cabin Air	Fuel	Breather	Trans.[t]
1993	Bronco, Pickups, F Series V8-460 (7.5L) EFI	G	Std. **B2** HvyDty. **BT8328**	**PA2164**	**N/R**	**BF1166**	**SA2159**	E40D 2WD **18264** E40D 4WD **18265**
	Crown Victoria V8-281 (4.6L) EFI	W	**B329**	SOHC **PA2152**	**N/R**	**BF966**	**N/R**	**18002**
	Escort 4-113 (1.8L) EFI	8	**B1400**	**PA2220**	**N/R**	**BF966**	**N/R**	4EAT-F **18268**
	4-116 (1.9L) EFI	J	**B243**	**PA2103**	**N/R**	**BF966**	**N/R**	4EAT-F **18268**
	Explorer V6-245 (4.0L) EFI	X	**B2**	**PA2150**	**N/R**	**BF1166**	**N/R**	A4LD 2WD **18024** A4LD 4WD **18025**
	Festiva 4-1295cc (1.3L) EFI	H	**B227**		**N/R**	**BF1004**	**N/R**	
	Ghia V6-3000cc (3.0L) FI Mexico		**B243**	**PA4069**	**N/R**	**BF966**		
	Mustang 4-140 (2.3L) EFI	M	**B2**	**PA2127**	**N/R**	**BF966**	**N/R**	A4LD **18024**
	V8-302 (5.0L) EFI	D	**B2**	**PA2149**	**N/R**	**BF966**	**N/R**	**19640**
	V8-302 (5.0L) EFI HO	E	**B2**	**PA2149**	**N/R**	**BF966**	**N/R**	**19640**
	Probe, Probe GT 4-122 (2.0L) EFI	A	**B1402**	**PA2229**	**N/R**	**BF1194**	**N/R**	4EAT **18005**
	V6-153 (2.5L) EFI	B	**B1402**	**PA2229**	**N/R**	**BF1194**	**N/R**	4EAT **18005**
	Ranger 4-140 (2.3L) EFI	A	**B2**	**PA2150**	**N/R**	**BF966**	**N/R**	A4LD 2WD **18024** A4LD 4WD **18025**
	V6-183 (3.0L) EFI	U	**B243**	**PA2150**	**N/R**	**BF1166**	**N/R**	A4LD 2WD **18024** A4LD 4WD **18025**
	V6-245 (4.0L) EFI	X	**B2**	**PA2150**	**N/R**	**BF966**	**N/R**	A4LD 2WD **18024** A4LD 4WD **18025**
	Taurus V6-182 (3.0L) EFI Flex Fuel	1	**B243**	**PA2150**	**N/R**		**N/R**	**18171**
	V6-182 (3.0L) EFI	U	**B243**	**PA2150**	**N/R**	**BF966**	**N/R**	**18171**
	V6-182 (3.0L) EFI SHO	Y	**B243**	**PA2149**	**N/R**	**BF966**	**N/R**	**18033**
	V6-195 (3.2L) EFI	P	**B243**	**PA2149**	**N/R**	**BF966**	**N/R**	Exc. SHO **18171** SHO **18033**
	V6-232 (3.8L) EFI	4	**B243**	**PA2150**	**N/R**	**BF966**	**SA2159**	Exc. SHO **18171** SHO **18033**
	Tempo 4-141 (2.3L) EFI	X	**B233**	**PA4069**	**N/R**	**BF966**	**N/R**	**18040**
	V6-182 (3.0L) EFI	U	**B243**	**PA4069**	**N/R**	**BF966**	**N/R**	**18040**
	Thunderbird V6-232 (3.8L) EFI or Supercharged	4,R	**B243**	**PA2191**	**N/R**	**BF1170**	**SA2159**	AOD **19640**
	V8-302 (5.0L) EFI HO	T	**B2**	**PA2191**	**N/R**	**BF1170**	**N/R**	AOD **19640**
	Vans, E Series 6-300 (4.9L) EFI	Y	**B2**	**PA2164**	**N/R**	**BF1166**	**SA2159**	C6 **19828** E40D **18264**
	V8-302 (5.0L) EFI	N	**B2**	**PA2164**	**N/R**	**BF1166**	**SA2159**	AOD, AOT **19640** E40D 2WD **18264**
	V8-351 (5.8L) EFI	H	**B2**	**PA2164**	**N/R**	**BF1166**	**SA2159**	E40D 2WD **18264**
	V8-446 (7.3L) Diesel	M	**B134**	**PA4005**	**N/R**	w/o Sensor Port **BF1222** w/Sensor Port **BF1222-SP**	**N/R**	C6 **19828** E40D **18264**
	V8-460 (7.5L) EFI	G	Std. **B2** HvyDty. **BT8328**	**PA2164**	**N/R**	**BF1166**	**SA2159**	C6 **19828** E40D 2WD **18264**
1992	Aerostar V6-183 (3.0L) EFI	U	**B243**	**PA2150**	**N/R**	**BF966**	**N/R**	A4LD 2WD **18024** A4LD 4WD **18025**
	V6-245 (4.0L) EFI	X	**B2**	**PA2150**	**N/R**	**BF1166**	**N/R**	A4LD 2WD **18024** A4LD 4WD **18025**
	Bronco 6-300 (4.9L) EFI	Y	**B2**	**PA2164**	**N/R**	**BF1166**	**SA2159**	A4LD 2WD **18024** A4LD 4WD **18025** AOT **18198**
	V8-302 (5.0L) EFI	N	**B2**	**PA2164**	**N/R**	**BF1166**	**SA2159**	AOT **18198** C6 **18015**
	V8-351 (5.8L) EFI	H	**B2**	**PA2164**	**N/R**	**BF1166**	**SA2159**	AOT **18198** C6 **18015**
	Crown Victoria V8-281 (4.6L) SFI	W	**B329**	**PA2152**	**N/R**	**BF966**	**N/R**	AOD **19640** AODE **18002**
	Escort 4-113 (1.8L) EFI	8	**B1400**	**PA2220**	**N/R**	**BF966**	**N/R**	4EAT-F **18268**
	4-116 (1.9L) SFI	J	**B243**	**PA2103**	**N/R**	**BF966**	**N/R**	4EAT-F **18268**
	Explorer V6-245 (4.0L) EFI	X	**B2**	**PA2150**	**N/R**	**BF1166**	**N/R**	A4LD 2WD **18024** A4LD 4WD **18025**
	Festiva 4-1295cc (1.3L) EFI	H	**B227**		**N/R**	**BF1004**	**N/R**	
	Ghia V6-3000cc (3.0L) FI Mexico		**B243**	**PA4069**	**N/R**	**BF966**		
	Mustang 4-140 (2.3L) EFI	M	**B2**	**PA2127**	**N/R**	**BF966**	**N/R**	A4LD **18024**
	V8-302 (5.0L) SFI HO	E	**B2**	**PA2149**	**N/R**	**BF966**	**N/R**	AOD **19640**

[t] Transmission, Not Model, Determines Which Transmission Filter is Used. OBS = Obsolete. Availability Limited to Distributor Stock.

FORD Cont'd.

Year	Model and Engine	VIN	Lube	Air	Cabin Air	Fuel	Breather	Trans.[t]
1992	Pickups, F Series 6-300 (4.9L) EFI	Y	**B2**	**PA2164**	**N/R**	**BF1166**	**SA2159**	AOT 2WD **19640** C6 2WD **19828** C6 4WD **18015** E40D 2WD **18264** E40D 4WD **18265**
	V8-302 (5.0L) EFI	N	**B2**	**PA2164**	**N/R**	**BF1166**	**SA2159**	C6 2WD **19828** C6 4WD **18015** E40D 2WD **18264** E40D 4WD **18265**
	V8-351 (5.8L) EFI	H	**B2**	**PA2164**	**N/R**	**BF1166**	**SA2159**	C6 2WD **19828** C6 4WD **18015** E40D 2WD **18264** E40D 4WD **18265**
	Pickups, Super Duty V8-446 (7.3L) Diesel	M	**B134**	**PA2092**	**N/R**	w/o Sensor Port **BF1222** w/Sensor Port **BF1222-SP**	**N/R**	C6 2WD **19828** C6 4WD **18015** E40D 2WD **18264** E40D 4WD **18265**
	V8-460 (7.5L) EFI	G	Std. **B2** HvyDty. **BT8328**	**PA2164**	**N/R**	**BF1166**	**SA2159**	C6 2WD **19828** C6 4WD **18015** E40D 2WD **18264** E40D 4WD **18265**
	Probe 4-133 (2.2L) EFI	C	**B1402**	**PA2201**	**N/R**		**N/R**	**18270**
	4-133 (2.2L) EFI Turbo	L	**B1402**	**PA2201**	**N/R**		**N/R**	**18270**
	V6-182 (3.0L) EFI	U	**B243**	**PA2201**	**N/R**	**BF966**	**N/R**	**18270**
	Ranger 4-140 (2.3L) EFI	A	**B2**	**PA2150**	**N/R**	**BF966**	**N/R**	A4LD 2WD **18024** A4LD 4WD **18025**
	V6-177 (2.9L) EFI	T	**B2**	**PA2150**	**N/R**	**BF1166**	**N/R**	A4LD 2WD **18024** A4LD 4WD **18025**
	V6-182 (3.0L) EFI	U	**B243**	**PA2150**	**N/R**	**BF966**	**N/R**	A4LD 2WD **18024** A4LD 4WD **18025**
	V6-245 (4.0L) EFI	X	**B2**	**PA2150**	**N/R**	**BF1166**	**N/R**	A4LD 2WD **18024** A4LD 4WD **18025**
	Taurus V6-182 (3.0L) SFI	U	**B243**	**PA2150**	**N/R**	**BF966**	**N/R**	**18171**
	V6-182 (3.0L) SFI SHO	Y	**B243**	**PA2149**	**N/R**	**BF966**	**N/R**	**18033**
	V6-232 (3.8L) SFI	4	**B243**	**PA2150**	**N/R**	**BF966**	**SA2159**	**18171**
	Tempo 4-140 (2.3L) FI	X	**B2**	**PA4069**	**N/R**	**BF966**	**N/R**	**18040**
	V6-182 (3.0L) SFI	U	**B243**	**PA4069**	**N/R**	**BF966**	**N/R**	**18171**
	Thunderbird V6-231 (3.8L) SFI or Supercharged	4,R	**B243**	**PA2191**	**N/R**	**BF1170**	**SA2159**	AOD **19640**
	V8-302 (5.0L) SFI HO	T	**B2**	**PA2191**	**N/R**	**BF1170**	**SA2159**	AOD **19640**
	Vans, E Series 6-300 (4.9L) EFI	Y	Std. **B2** HvyDty. **BT8328**	**PA2164**	**N/R**	**BF1166**	**SA2159**	C6 **19828** E40D 2WD **18264**
	V8-302 (5.0L) EFI	N	**B2**	**PA2164**	**N/R**	**BF1166**	**SA2159**	AOD, AOT **19640** C6 **19828** E40D **18264**
	V8-351 (5.8L) EFI	H	**B2**	**PA2164**	**N/R**	**BF1166**	**SA2159**	AOT **19640** E40D 2WD **18264**
	V8-446 (7.3L) Diesel	M	**B134**	**PA4005**	**N/R**	w/o Sensor Port **BF1222** w/Sensor Port **BF1222-SP**	**N/R**	C6 **19828** E40D 2WD **18264**
	V8-460 (7.5L) EFI	G	Std. **B2** HvyDty. **BT8328**	**PA2164**	**N/R**	**BF1166**	**SA2159**	C6 **19828** E40D 2WD **18264**
1991	Aerostar V6-183 (3.0L) EFI	U	**B243**	**PA2150**	**N/R**	**BF966**	**N/R**	A4LD 2WD **18024** A4LD 4WD **18025**
	V6-245 (4.0L) EFI	X	**B2**	**PA2150**	**N/R**	**BF1166**	**N/R**	A4LD 2WD **18024** A4LD 4WD **18025**
	Bronco, Pickups, F Series 6-300 (4.9L) EFI	Y	**B2**	**PA2164**	**N/R**	**BF966**	**SA2159**	A4LD 2WD **18024** A4LD 4WD **18025** E40D 2WD **18264** E40D 4WD **18265**
	V8-302 (5.0L) EFI	N	**B2**	**PA2164**	**N/R**	**BF966**	**SA2159**	AOT 2WD **19640** AOT 4WD **18198** C6 2WD **19828** C6 4WD **18015** E40D 2WD **18264** E40D 4WD **18265**

OBS = Obsolete. Availability Limited to Distributor Stock. [t] Transmission, Not Model, Determines Which Transmission Filter is Used.

FORD Cont'd.

Year	Model and Engine	VIN	Lube	Air	Cabin Air	Fuel	Breather	Trans.[t]
1991	Bronco, Pickups, F Series V8-351 (5.8L) EFI	H	**B2**	**PA2164**	**N/R**	**BF966**	**SA2159**	AOT 2WD **19640** AOT 4WD **18198** C6 2WD **19828** C6 4WD **18015**
	V8-446 (7.3L) Diesel	M	**B134**	**PA2092**	**N/R**	w/o Sensor Port **BF1222** w/Sensor Port **BF1222-SP**	**N/R**	C6 2WD **19828** C6 4WD **18015** E40D 2WD **18264** E40D 4WD **18265**
	V8-460 (7.5L) EFI	G	Std. **B2** HvyDty. **BT8328**	**PA2164**	**N/R**	**BF966**	**SA2159**	C6 2WD **19828** C6 4WD **18015** E40D 2WD **18264** E40D 4WD **18265**
	Country Squire V8-302 (5.0L) FI	F	**B2**	**PA2152**	**N/R**	**BF966**	**SA2085**	
	Crown Victoria V8-302 (5.0L) SFI	F	**B2**	**PA2152**	**N/R**	**BF966**	**N/R**	**19640**
	V8-351 (5.8L) 2 Bbl. HO	G	Exc. Police **B2** Police **B233**	**PA2051**	**N/R**	**BF920**[21]	**N/R**	**19640**
	Escort 4-113 (1.8L) MFI	8	**B1400**	**PA2220**	**N/R**	**BF966**	**N/R**	4EAT-F **18268**
	4-116 (1.9L) SFI	J	**B243**	**PA2103**	**N/R**	**BF966**	**N/R**	4EAT-F **18268**
	Explorer V6-245 (4.0L) EFI	X	**B2**	**PA2150**	**N/R**	**BF1166**	**N/R**	A4LD 2WD **18024** A4LD 4WD **18025**
	Festiva 4-1295cc (1.3L) EFI	H	**B227**		**N/R**	**BF1004**	**N/R**	
	4-1295cc (1.3L) 2 Bbl.	K	**B227**		**N/R**	**BF837**	**N/R**	
	Ghia 4-2300cc (2.3L) FI Mexico		**B233**	**PA2127**	**N/R**	**BF966**	**N/R**	
	V6-3000cc (3.0L) FI Mexico		**B243**	**PA4069**	**N/R**	**BF966**	**N/R**	
	Mustang 4-140 (2.3L) EFI	M	**B2**	**PA2127**	**N/R**	**BF966**	**SA2159**	A4LD **18024** AOD **19640**
	V8-302 (5.0L) SFI HO	E	**B2**	**PA2149**	**N/R**	**BF966**	**N/R**	A4LD **18024** AOD **19640**
	Probe 4-2200cc (2.2L) EFI	C	**B1402**	**PA2201**	**N/R**		**N/R**	**18270**
	4-2200cc (2.2L) EFI Turbo	L	**B1402**	**PA2201**	**N/R**		**N/R**	**18270**
	V6-3000cc (3.0L) EFI	U	**B243**	**PA2201**	**N/R**	**BF966**	**N/R**	**18270**
	Ranger 4-2300cc (2.3L) EFI	A	**B2**	**PA2150**	**N/R**	**BF966**	**N/R**	A4LD 2WD **18024** A4LD 4WD **18025**
	V6-2900cc (2.9L) EFI	T	**B2**	**PA2150**	**N/R**	**BF1166**	**N/R**	A4LD 2WD **18024** A4LD 4WD **18025**
	V6-182 (3.0L) EFI	U	**B243**	**PA2150**	**N/R**	**BF966**	**N/R**	A4LD 2WD **18024** A4LD 4WD **18025**
	V6-4000cc (4.0L) EFI	X	**B2**	**PA2150**	**N/R**	**BF1166**	**N/R**	A4LD 2WD **18024** A4LD 4WD **18025**
	Taurus 4-153 (2.5L) EFI	D	**B233**	**PA2150**	**N/R**	**BF966**	**N/R**	ATX **18040** AXOD **18171**
	V6-182 (3.0L) SFI	U	**B243**	**PA2150**	**N/R**	**BF966**	**SA2159**	ATX **18040** AXOD **18171**
	V6-182 (3.0L) SFI SHO	Y	**B243**	**PA2149**	**N/R**	**BF966**	**N/R**	**18033**
	V6-232 (3.8L) SFI	4	**B243**	**PA2150**	**N/R**	**BF966**	**SA2159**	**18171**
	Tempo 4-2300cc (2.3L) EFI HO	S	**B2**	**PA2127**	**N/R**	**BF966**	**N/R**	ATX **18040**
	4-2300cc (2.3L) EFI	X	**B2**	**PA2127**	**N/R**	**BF966**	**N/R**	ATX **18040**
	Thunderbird V6-232 (3.8L) EFI	4	**B243**	**PA2191**	**N/R**	**BF1184**	**SA2159**	AOD **19640**
	V6-232 (3.8L) EFI or Supercharged	R	**B243**	**PA2191**	**N/R**	**BF1184**	**SA2159**	AOD **19640**
	V8-302 (5.0L) EFI HO	T	**B2**	**PA2191**	**N/R**	**BF966**	**N/R**	AOD **19640**
	Vans, E Series 6-300 (4.9L) EFI	Y	**B2**	**PA2164**	**N/R**	**BF966**	**SA2159**	C6 **19828** E40D **18264**
	V8-302 (5.0L) EFI	N	**B2**	**PA2164**	**N/R**	**BF966**	**SA2159**	C6 **19828** E40D **18264**
	V8-351 (5.8L) EFI	H	**B2**	**PA2164**	**N/R**	**BF966**	**SA2159**	C6 **19828** E40D 2WD **18264**
	V8-446 (7.3L) Diesel	M	**B134**	To 6/91 **PA2092** 6/91-on **PA4005**	**N/R**	w/o Sensor Port **BF1222** w/Sensor Port **BF1222-SP**	**N/R**	C6 **19828** E40D 2WD **18264**
	V8-460 (7.5L) EFI	G	Std. **B2** HvyDty. **BT8328**	**PA2164**	**N/R**	**BF966**	**SA2159**	C6 **19828** E40D 2WD **18264**
1990	Aerostar V6-183 (3.0L) EFI	U	**B243**	**PA2150**	**N/R**	**BF966**	**N/R**	2WD **18024** 4WD **18025**
	V6-245 (4.0L) EFI	X	**B2**	**PA2150**	**N/R**	**BF966**	**SA4137**	2WD **18024** 4WD **18025**

[t] Transmission, Not Model, Determines Which Transmission Filter is Used. OBS = Obsolete. Availability Limited to Distributor Stock. [21] w/o Oil Cooler.

FORD Cont'd.

Year	Model and Engine	VIN	Lube	Air	Cabin Air	Fuel	Breather	Trans.[t]
1990	Bronco, Pickups, F Series 6-300 (4.9L) EFI	Y	**B2**	**PA2164**	**N/R**	**BF966**	**SA2159**	C6 2WD **19828** C6 4WD **18015** E40D 2WD **18264** E40D 4WD **18265**
	V8-302 (5.0L) EFI	N	**B2**	**PA2164**	**N/R**	**BF966**	**SA2159**	C6 2WD **19828** C6 4WD **18015** E40D 2WD **18264** E40D 4WD **18265**
	V8-351 (5.8L) EFI	H	**B2**	**PA2164**	**N/R**	**BF966**	**SA2159**	C6 2WD **19828** C6 4WD **18015** E40D 2WD **18264** E40D 4WD **18265**
	V8-446 (7.3L) Diesel	M	**B134**	**PA2092**	**N/R**	w/o Sensor Port **BF1222** w/Sensor Port **BF1222-SP**	**N/R**	C6 2WD **19828** C6 4WD **18015**
	V8-460 (7.5L) EFI	G	Std. **B2** HvyDty. **BT8328**	**PA2164**	**N/R**	**BF966**	**SA2159**	C6 2WD **19828** C6 4WD **18015** E40D 2WD **18264** E40D 4WD **18265**
	Bronco II V6-177 (2.9L) EFI	T	**B2**	**PA2150**	**N/R**	**BF966**	**SA4137**	2WD **18024** 4WD **18025**
	Country Squire V8-302 (5.0L) FI	F	**B2**	**PA2152**	**N/R**	**BF966**	**SA2085**	
	Crown Victoria V8-302 (5.0L) EFI	F	**B2**	**PA2152**	**N/R**	**BF966**	**N/R**	**19640**
	V8-351 (5.8L) 2 Bbl. HO	G	**B233**	**PA2051**	**N/R**		**SA2085**	**19640**
	Escort 4-116 (1.9L) EFI	9	**B243**	**PA2177**	**N/R**	**BF966**	**N/R**	**18040**
	4-116 (1.9L) EFI HO	J	**B243**	**PA2103**	**N/R**	**BF966**	**N/R**	**18040**
	Festiva 4-1295cc (1.3L) EFI	H	**B227**		**N/R**	**BF1004**	**N/R**	
	4-1295cc (1.3L) 2 Bbl.	K	**B227**		**N/R**	**BF837**	**N/R**	
	Mustang 4-140 (2.3L) EFI	A	**B2**	**PA2127**	**N/R**	**BF966**	**SA2159**	A4LD **18024** AOD **19640**
	V8-302 (5.0L) EFI HO	E	**B2**	**PA2149**	**N/R**	**BF966**	**N/R**	A4LD **18024** AOD **19640**
	Probe 4-2200cc (2.2L) EFI	C	**B1402**	w/Cruise **PA2150** w/o Cruise **PA2201**	**N/R**		**N/R**	**18270**
	4-2200cc (2.2L) EFI Turbo	L	**B1402**	**PA2201**	**N/R**		**N/R**	**18270**
	V6-3000cc (3.0L) EFI	U	**B243**	**PA2201**	**N/R**	**BF966**	**N/R**	**18270**
	Ranger 4-2300cc (2.3L) EFI	A	**B2**	**PA2150**	**N/R**	**BF966**	**N/R**	A4LD 2WD **18024** A4LD 4WD **18025**
	V6-2900cc (2.9L) EFI	T	**B2**	**PA2150**	**N/R**	**BF966**	**SA4137**	A4LD 2WD **18024** A4LD 4WD **18025**
	V6-4000cc (4.0L) EFI	X	**B2**	**PA2150**	**N/R**	**BF966**	**SA4137**	A4LD 2WD **18024** A4LD 4WD **18025**
	Taurus 4-153 (2.5L) EFI	D	**B233**	**PA2150**	**N/R**	**BF966**	**SA4137**	ATX **18040** AXOD **18171**
	V6-182 (3.0L) EFI	U	**B243**	**PA2150**	**N/R**	**BF966**	**SA2159**	**18171**
	V6-182 (3.0L) SFI SHO	Y	**B243**	**PA2149**	**N/R**	**BF966**	**N/R**	**18033**
	V6-232 (3.8L) MFI	4	**B243**	**PA2150**	**N/R**	**BF966**	**SA2159**	**18171**
	Tempo 4-2300cc (2.3L) EFI HO	S	**B2**	**PA2127**	**N/R**	**BF966**	**SA4137**	**18040**
	4-2300cc (2.3L) EFI	X	**B2**	**PA2127**	**N/R**	**BF966**	**SA4137**	**18040**
	Thunderbird V6-232 (3.8L) EFI	4	**B243**	**PA2191**	**N/R**	**BF1184**	**SA2159**	AOD **19640**
	V6-232 (3.8L) Supercharged	C,R	**B243**	**PA2191**	**N/R**	**BF1184**	**SA2159**	AOD **19640**
	Vans, E Series 6-300 (4.9L) EFI	Y	**B2**	**PA2164**	**N/R**	**BF966**	**SA2159**	C6 2WD **19828** E40D 2WD **18264**
	V8-302 (5.0L) EFI	N	**B2**	**PA2164**	**N/R**	**BF966**	**SA2159**	C6 2WD **19828** E40D 2WD **18264**
	V8-351 (5.8L) EFI	H	**B2**	**PA2164**	**N/R**	**BF966**	**SA2159**	C6 2WD **19828** E40D 2WD **18264**
	V8-446 (7.3L) Diesel	M	**B134**	**PA2092**	**N/R**	w/o Sensor Port **BF1222** w/Sensor Port **BF1222-SP**	**N/R**	C6 2WD **19828** E40D 2WD **18264**
	V8-460 (7.5L) EFI	G	Std. **B2** HvyDty. **BT8328**	**PA2164**	**N/R**	**BF966**	**SA2159**	C6 2WD **19828** E40D 2WD **18264**
1989	Aerostar V6-183 (3.0L) EFI	U	**B243**	**PA2150**	**N/R**	**BF966**	**N/R**	**18024**

OBS = Obsolete. Availability Limited to Distributor Stock. [t] Transmission, Not Model, Determines Which Transmission Filter is Used.

FORD Cont'd.

Year	Model and Engine	VIN	Lube	Air	Cabin Air	Fuel	Breather	Trans.[t]
1989	Bronco, Pickups, F Series 6-300 (4.9L) EFI	Y	**B2**	**PA2164**	**N/R**	**BF966**	**SA2159**	C6 **18015** AOD **18198**
	V8-302 (5.0L) EFI	N	**B2**	**PA2164**	**N/R**	**BF966**	**SA2159**	AOD **18198**
	V8-351 (5.8L) EFI	H	**B2**	**PA2164**	**N/R**	**BF966**	**SA2159**	C6 2WD **19828** C6 4WD **18015**
	V8-446 (7.3L) Diesel	M	**B134**	**PA2092**	**N/R**	w/o Sensor Port **BF1222** w/Sensor Port **BF1222-SP**	**N/R**	C6 2WD **19828** C6 4WD **18015**
	V8-460 (7.5L) EFI	G	**B2**	**PA2164**	**N/R**	**BF966**	**SA2159**	C6 2WD **19828** C6 4WD **18015**
	Bronco II V6-177 (2.9L) EFI	T	**B2**	**PA2150**	**N/R**	**BF966**	**SA4137**	A4LD 2WD **18024** A4LD 4WD **18025**
	Country Squire V8-302 (5.0L) FI	F	**B2**	**PA2152**	**N/R**	**BF966**	**SA2085**	**19640**
	Crown Victoria V8-302 (5.0L) EFI	F	w/Oil Cooler **B233** w/o Oil Cooler **B2**	**PA2152**	**N/R**	**BF966**	**N/R**	**19640**
	V8-351 (5.8L) VV HO	G	w/Oil Cooler **B233** w/o Oil Cooler **B2**	**PA2051**	**N/R**		**SA2085**	**19640**
	Escort 4-116 (1.9L) EFI	9	**B243**	**PA2177**	**N/R**	**BF966**	**N/R**	**18040**
	4-116 (1.9L) EFI HO	J	**B243**	**PA2103**	**N/R**	**BF966**	**N/R**	**18040**
	Festiva 4-1300cc (1.3L) FI	H	**B227**		**N/R**	**BF1004**	**N/R**	
	4-1300cc (1.3L) 2 Bbl.	K	**B227**		**N/R**	**BF837**	**N/R**	**M.T.**
	Mustang 4-140 (2.3L) EFI	A	**B2**	**PA2127**	**N/R**	**BF966**	**N/R**	A4LD **18024**
	V8-302 (5.0L) EFI HO	E	**B2**	**PA2149**	**N/R**	**BF966**	**N/R**	AOD **19640** A4LD **18024**
	Probe 4-2200cc (2.2L) EFI	C	**B1402**	**PA2201**	**N/R**		**N/R**	**18270**
	4-2200cc (2.2L) EFI Turbo	L	**B1402**	**PA2201**	**N/R**		**N/R**	**18270**
	Ranger 4-140 (2.3L) EFI	A	**B2**	**PA2150**	**N/R**	Ele. **PF314** In-Line **BF966**	**N/R**	A4LD 2WD **18024** A4LD 4WD **18025**
	V6-177 (2.9L) EFI	T	**B2**	**PA2150**	**N/R**	Ele. **PF314** In-Line **BF966**	**SA4137**	A4LD 2WD **18024** A4LD 4WD **18025**
	Taurus 4-153 (2.5L) EFI	D	**B233**	**PA2150**	**N/R**	**BF966**	**SA4137**	**18040**
	V6-182 (3.0L) EFI	U	**B243**	**PA2150**	**N/R**	**BF966**	**SA2159**	**18171**
	V6-182 (3.0L) EFI SHO	Y	**B243**	**PA2149**	**N/R**	**BF966**	**N/R**	**18171**
	V6-232 (3.8L) EFI	4	**B243**	**PA2150**	**N/R**	**BF966**	**SA2159**	**18171**
	Tempo 4-2300cc (2.3L) EFI HO	S	**B2**	**PA2127**	**N/R**	**BF966**	**SA4137**	**18040**
	4-2300cc (2.3L) EFI	X	**B2**	**PA2127**	**N/R**	**BF966**	**SA4137**	**18040**
	Thunderbird V6-232 (3.8L) EFI	4	**B243**	**PA2191**	**N/R**	**BF1184**	**SA2159**	**19640**
	V6-232 (3.8L) EFI Supercharged	R	**B243**	**PA2191**	**N/R**	**BF1184**	**SA2159**	**19640**
	Vans, E Series 6-300 (4.9L) EFI	9,Y	**B2**	**PA2164**	**N/R**	**BF966**	**SA2159**	C6 **19828** AOD **19640**
	V8-302 (5.0L) EFI	N	**B2**	**PA2164**	**N/R**	**BF966**	**SA2159**	C6 **19828** AOD **19640**
	V8-351 (5.8L) EFI	H	**B2**	**PA2164**	**N/R**	**BF966**	**SA2159**	C6 **19828** AOD **19640**
	V8-446 (7.3L) Diesel	M	**B134**	Std. **PA2092** HvyDty. **PA2115**	**N/R**	w/o Sensor Port **BF1222** w/Sensor Port **BF1222-SP**	**N/R**	**19828**
	V8-460 (7.5L) EFI	G	**B2**	**PA2164**	**N/R**	**BF966**	**SA2159**	**19828**
1988	Aerostar V6-3000cc (3.0L) EFI	U	**B243**	**PA2150**	**N/R**	**BF966**	**N/R**	**18147**
	Bronco, Pickups, F Series 6-300 (4.9L) EFI	Y	**B2**	**PA2164**	**N/R**	**BF966**	**SA2159**	C6 2WD **19828** C6 4WD **18015** AOD **18198**
	V8-302 (5.0L) EFI	N	**B2**	**PA2164**	**N/R**	**BF966**	**SA2159**	C6 2WD **19828** C6 4WD **18015** AOD **18198**
	V8-351 (5.8L) EFI	H	**B2**	**PA2164**	**N/R**	**BF966**	**SA2159**	2WD **19828** 4WD **18015**
	V8-446 (7.3L) Diesel	M	**B134**	**PA2092**	**N/R**	w/o Sensor Port **BF1222** w/Sensor Port **BF1222-SP**	**N/R**	2WD **19828** 4WD **18015**
	V8-460 (7.5L) EFI	G	**B2**	**PA2164**	**N/R**	**BF966**	**SA2159**	2WD **19828** 4WD **18015**
	Bronco II V6-177 (2.9L) EFI	T	**B2**	**PA2150**	**N/R**	**BF966**	**SA4137**	2WD **18147** 4WD **18025**

[t] Transmission, Not Model, Determines Which Transmission Filter is Used. OBS = Obsolete. Availability Limited to Distributor Stock.

FORD Cont'd.

Year	Model and Engine	VIN	Lube	Air	Cabin Air	Fuel	Breather	Trans.[t]
1988	Country Squire V8-302 (5.0L) FI	F	**B2**	**PA2152**	**N/R**	**BF966**	**SA2085**	**19640**
	Crown Victoria V8-302 (5.0L) EFI	F	**B2**	**PA2152**	**N/R**	**BF966**	**N/R**	**19640**
	V8-351 (5.8L) 2 Bbl. VV HO	G	**B233**	**PA2051**	**N/R**		**SA2085**	**19640**
	Escort, EXP 4-116 (1.9L) EFI	9	**B243**	**PA2177**	**N/R**	**BF966**	**N/R**	**18040**
	4-116 (1.9L) EFI	J	**B243**	**PA2103**	**N/R**	**BF966**	**N/R**	**18040**
	Festiva 4-1300cc (1.3L) 2 Bbl.	K	**B227**		**N/R**	**BF837**	**N/R**	**M.T.**
	Mustang 4-140 (2.3L) EFI	A	**B2**	**PA2127**	**N/R**	**BF966**	**N/R**	**18147**
	V8-302 (5.0L) EFI HO	F	**B2**	**PA2149**	**N/R**	**BF966**	**N/R**	**19640**
	Ranger 4-2000cc (2.0L) 2 Bbl.	C	**B2**	**PA2114**	**N/R**	**BF920**	**N/R**	2WD **18147** 4WD **18025**
	4-2300cc (2.3L) EFI	A	**B2**	**PA2103**	**N/R**	Ele. **PF314** In-Line **BF966**	**N/R**	2WD **18147** 4WD **18025**
	V6-2900cc (2.9L) EFI	T	**B2**	**PA2150**	**N/R**	Ele. **PF314** In-Line **BF966**	**SA2159**	2WD **18147** 4WD **18025**
	Taurus 4-153 (2.5L) EFI	D	**B233**	**PA2150**	**N/R**	**BF966**	**SA4137**	**18040**
	V6-3000cc (3.0L) EFI	U	**B243**	**PA2150**	**N/R**	**BF966**	**SA2159**	**18171**
	V6-232 (3.8L) FI	4	**B243**	**PA2150**	**N/R**	**BF966**	**SA2159**	**18171**
	Tempo 4-2300cc (2.3L) EFI HO	S	**B2**	**PA2127**	**N/R**	**BF966**	**SA4137**	**18040**
	4-2300cc (2.3L) EFI	X	**B2**	**PA2127**	**N/R**	**BF966**	**SA4137**	**18040**
	Thunderbird 4-140 (2.3L) EFI Turbo	T	**B233**		**N/R**	**BF966**	**N/R**	**18147**
	V6-232 (3.8L) EFI	4	**B243**	**PA2149**	**N/R**	**BF966**	**SA2159**	**19640**
	V8-302 (5.0L) EFI	F	**B2**	**PA2149**	**N/R**	**BF966**	**N/R**	**19640**
	Vans, E Series 6-300 (4.9L) EFI or LPG	9,Y	**B2**	**PA2164**	**N/R**	**BF966**	**SA2159**	3 Spd. **19828** 4 Spd. **19640**
	V8-302 (5.0L) EFI	N	**B2**	**PA2164**	**N/R**	**BF966**	**SA2159**	4 Spd. **19640**
	V8-351 (5.8L) EFI	H	**B2**	**PA2164**	**N/R**	**BF966**	**SA2159**	C6 2WD **19828**
	V8-446 (7.3L) Diesel	M	**B134**	Std. **PA2092** HvyDty. **PA2115**	**N/R**	w/o Sensor Port **BF1222** w/Sensor Port **BF1222-SP**	**N/R**	**19828**
	V8-460 (7.5L) EFI	G	**B2**	**PA2164**	**N/R**	**BF966**	**SA2159**	**19828**
1987	Aerostar 4-140 (2.3L) FI	A	**B2**	**PA2103**	**N/R**	**BF966**	**N/R**	**18147**
	V6-182 (3.0L) FI	U	**B243**	**PA2150**	**N/R**	**BF966**	**N/R**	**18147**
	Bronco, Pickups, F Series 6-300 (4.9L)	Y	**B2**	**PA2164**	**N/R**	**BF966**	**SA2159**	2WD **19828** 4WD **18015**
	V8-302 (5.0L) FI	N	**B2**	**PA2164**	**N/R**	Ele. **PF314** In-Line **BF966**	**SA2159**	AOD **18198** C6 4WD **18015**
	V8-351 (5.8L) 4 Bbl.	H	**B2**	**PA2002**	**N/R**	**BF920**	**SA2159**	2WD **19828** 4WD **18015**
	V8-420 (6.9L) Diesel	I	**B134**	Std. **PA2092** HvyDty. **PA2115**	**N/R**	**BF786**	**N/R**	2WD **19828** 4WD **18015**
	V8-460 (7.5L) FI	H	**B2**	**PA2164**	**N/R**	**SF898**	**SA2085**	2WD **19828** 4WD **18015**
	V8-460 (7.5L) 4 Bbl.	L	**B2**	**PA2002**	**N/R**	**SF898**	**SA2159**	C6 **19828**
	Bronco II V6-2900cc (2.9L) FI	T	**B2**	**PA2103**	**N/R**	Ele. **PF314** In-Line **BF966**	**SA2159**	2WD **18147** 4WD **18025**
	Country Squire V8-302 (5.0L) FI	F	**B2**	**PA2152**	**N/R**	**BF966**	**SA2085**	**19640**
	Crown Victoria V8-302 (5.0L) FI	F	**B2**	**PA2152**	**N/R**	**BF966**	**N/R**	**19640**
	V8-351 (5.8L) 2 Bbl.	G	**B233**	**PA2051**	**N/R**		**SA2085**	**19640**
	Escort, EXP 4-1900cc (1.9L) FI	9	**B243**	**PA2177**	**N/R**	**BF966**	**N/R**	**18040**
	4-1900cc (1.9L) FI	J	**B243**	**PA2103**	**N/R**	**BF966**	**N/R**	**18040**
	4-2000cc (2.0L) Diesel	H	F-F **B141** B-P **B201-S**		**N/R**		**N/R**	**18040**
	Mustang 4-2300cc (2.3L) FI	A	**B2**	**PA2127**	**N/R**	**BF966**	**N/R**	**18147**
	V8-302 (5.0L) FI	E	**B2**	**PA2149**	**N/R**	**BF966**	**N/R**	**19640**
	Ranger 4-2000cc (2.0L) 2 Bbl.	C	**B2**	**PA2114**	**N/R**	**BF920**	**N/R**	2WD **18147** 4WD **18025**
	4-2300cc (2.3L) FI	A	**B2**	**PA2103**	**N/R**	**BF966**	**N/R**	2WD **18147** 4WD **18025**
	4-2300cc (2.3L) Turbo Diesel	E	**BD28**	**PA2146**	**N/R**	**BF856**	**N/R**	2WD **18147** 4WD **18025**
	V6-2900cc (2.9L) FI	T	**B2**	**PA2103**	**N/R**	Ele. **PF314** In-Line **BF966**	**SA4137**	2WD **18147** 4WD **18025**
	Taurus 4-2500cc (2.5L) FI	D	A.T. **B233** M.T. **B2**	**PA2150**	**N/R**	**BF966**	**SA2159**	**18040**
	V6-3000cc (3.0L) FI	U	**B243**	**PA2150**	**N/R**	**BF966**	**SA2159**	**18171**
	Tempo 4-2300cc (2.3L) FI	S,X	**B2**	**PA2127**	**N/R**	**BF966**	**SA4137**	**18040**

OBS = Obsolete. Availability Limited to Distributor Stock. [t] Transmission, Not Model, Determines Which Transmission Filter is Used.

FORD Cont'd.

Year	Model and Engine	VIN	Lube	Air	Cabin Air	Fuel	Breather	Trans.[t]
1987	Thunderbird 4-2300cc (2.3L) FI Turbo	W	**B233**		**N/R**	**BF966**	**N/R**	**18147**
	V6-232 (3.8L) FI	3	**B2**	**PA2149**	**N/R**	**BF966**	**N/R**	**19640**
	V8-302 (5.0L) FI	F	**B2**	**PA2149**	**N/R**	**BF966**	**N/R**	**19640**
	Vans, E Series 6-300 (4.9L)	Y	**B2**	**PA2164**	**N/R**	**BF966**	**SA2159**	AOD, AOT **19640** C6 **19828**
	V8-302 (5.0L) FI	N	**B2**	**PA2164**	**N/R**	**BF966**	**SA2159**	**19640**
	V8-351 (5.8L) 4 Bbl.	H	**B2**	**PA2002**	**N/R**	**BF920**	**SA2085**	C6 **19828**
	V8-420 (6.9L) Diesel	I	**B134**	Std. **PA2092** HvyDty. **PA2115**	**N/R**	**BF786**	**N/R**	C6 **19828**
	V8-460 (7.5L) 4 Bbl.	L	**B2**	**PA2002**	**N/R**	**SF898**	**SA2159**	C6 **19828**
1986	Aerostar 4-140 (2.3L) FI	A	**B2**	**PA2103**	**N/R**	**BF966**	**N/R**	**18147**
	V6-171 (2.8L) 2 Bbl.	S	**B2**	**PA2074**	**N/R**	**BF920**	**SA2084**	**18147**
	V6-182 (3.0L) FI	U	**B243**	**PA2150**	**N/R**	**BF966**	**N/R**	**18147**
	Bronco, Pickups, F Series 6-300 (4.9L)	Y	**B2**	Std. **PA1802** HvyDty. **PA2119**	**N/R**	**BF920**	**SA2045**	C6 4WD **18015**
	V8-302 (5.0L) FI	N	**B2**	**PA2152**	**N/R**	Ele. **PF314** In-Line **BF966**	**SA2159**	AOD 2WD **19640** AOD 4WD **18198** C6 2WD **19828** C6 4WD **18015**
	V8-351 (5.8L) HO	H	**B2**	**PA2002**	**N/R**	**BF920**	**SA2085**	AOT/F10D **19640** C6 **19828**
	V8-420 (6.9L) Diesel	I	**B134**	Std. **PA2092** HvyDty. **PA2115**	**N/R**	**BF786**	**N/R**	AOT/F10D **19640** C6 **19828**
	Bronco II, Ranger 4-2000cc (2.0L) 1 Bbl.	C	**B2**	**PA2114**	**N/R**	**BF920**	**N/R**	2WD **18147** 4WD **18025**
	4-2300cc (2.3L) FI	A	**B2**	**PA2103**	**N/R**	Ele. **PF314** In-Line **BF966**	**N/R**	2WD **18147** 4WD **18025**
	4-2300cc (2.3L) Turbo Diesel	E	**BD28**	**PA2146**	**N/R**	**BF856**	**N/R**	2WD **18147** 4WD **18025**
	V6-2900cc (2.9L) FI	T	**B2**	**PA2103**	**N/R**	Ele. **PF314** In-Line **BF966**	**SA4137**	2WD **18147** 4WD **18025**
	Crown Victoria V8-302 (5.0L) FI	F	**B2**	**PA2152**	**N/R**	**BF966**	**N/R**	**19640**
	V8-351 (5.8L) 2 Bbl.	G	**B233**	**PA2051**	**N/R**		**SA2085**	**19640**
	Escort, EXP 4-1900cc (1.9L) 2 Bbl.	9	**B243**		**N/R**	**BF920**	**N/R**	**18040**
	4-1900cc (1.9L) FI HO	J	**B243**	**PA2103**	**N/R**	**BF966**	**N/R**	**18040**
	4-2000cc (2.0L) Diesel	H	F-F **B202** B-P **B201-S**		**N/R**		**N/R**	**18040**
	LTD 4-2300cc (2.3L) 1 Bbl.	A,R	**B2**	**PA2005**	**N/R**	**BF920**	**N/R**	**19640**
	V6-232 (3.8L) FI	3,C	**B2**	**PA2057**	**N/R**	**BF966**	**N/R**	**19640**
	Mustang 4-2300cc (2.3L) 1 Bbl.	A,R	**B2**	**PA2005**	**N/R**	**BF920**	**N/R**	
	4-2300cc (2.3L) FI Turbo	T,W	**B233**		**N/R**	**BF966**	**N/R**	
	V6-232 (3.8L) FI	C	**B2**	**PA2057**	**N/R**	**BF966**	**N/R**	
	V8-302 (5.0L) FI	F	**B2**	**PA2149**	**N/R**	**BF966**	**N/R**	**19640**
	Pickups, F Series V8-460 (7.5L) 4 Bbl.	L	**B2**	**PA2002**	**N/R**	External Fuel Pump **SF898**	**SA2085**	C6 2WD **19828** C6 4WD **18015**
	Taurus 4-2500cc (2.5L) FI	D	**B2**	**PA2150**	**N/R**	**BF966**	**SA4137**	**18040**
	V6-3000cc (3.0L) FI	U	**B243**	**PA2150**	**N/R**	**BF966**	**SA2159**	**18171**
	Tempo 4-2000cc (2.0L) Diesel	H	F-F **B202** B-P **B201-S**		**N/R**		**SA4137**	**18040**
	4-2300cc (2.3L) FI	S,X	**B2**	**PA2127**	**N/R**	**BF966** Canada **BF889**	**SA4137**	**18040**
	Thunderbird 4-2300cc (2.3L) FI Turbo	T,W	**B233**		**N/R**	**BF966**	**N/R**	
	V6-232 (3.8L) FI	C	**B2**	**PA2057**	**N/R**	**BF966**	**N/R**	AOT **19640**
	V8-302 (5.0L) FI	F	**B2**	**PA2149**	**N/R**	**BF966**	**N/R**	**19640**
	Vans, E Series 6-300 (4.9L)	Y	**B2**	**PA657**	**N/R**	**BF920**	**SA2084**	AOT/F10D **19640** C6 **19828**
	V8-302 (5.0L) FI	N	**B2**	**PA2152**	**N/R**	Ele. **PF314** In-Line **BF966**	**SA2159**	AOD, AOT **19640** C6 **19828**
	V8-351 (5.8L) 4 Bbl.	H	**B2**	**PA2002**	**N/R**	**BF920**	**SA2085**	C6 **19828**
	V8-420 (6.9L) Diesel	I	**B134**	Std. **PA2092** HvyDty. **PA2115**	**N/R**	**BF786**	**N/R**	C6 **19828**
	V8-460 (7.5L) 4 Bbl.	L	**B2**	**PA2002**	**N/R**	SintBronze **SF898**	**SA2085**	C6 **19828**
1985	Bronco, Pickups, F Series 6-300 (4.9L) 1 Bbl. or LPG	9,Y	**B2**	Std. **PA1802** HvyDty. **PA2119**	**N/R**	**BF920**	**SA2039**	AOT 2WD **19640** AOD 4WD **18198**
	V8-302 (5.0L) 2 Bbl.	F	**B2**	Std. **PA2051** HvyDty. **PA2128**	**N/R**	**BF920**	**SA2085**	AOT/F10D **19640** 4WD **18198**

[t] Transmission, Not Model, Determines Which Transmission Filter is Used. OBS = Obsolete. Availability Limited to Distributor Stock.

FORD Cont'd.

Year	Model and Engine	VIN	Lube	Air	Cabin Air	Fuel	Breather	Trans.[t]
1985	Bronco, Pickups, F Series V8-302 (5.0L) FI	N	**B2**	**PA2152**	**N/R**	Ele. **PF506** In-Line **BF966**	**SA2159**	AOT/F10D **19640** 4WD **18198**
	V8-351 (5.8L) 2 Bbl.	G	**B2**	Std. **PA2051** HvyDty. **PA2128**	**N/R**	**BF920**	**SA2085**	2WD **19828** 4WD **18015**
	V8-351 (5.8L) 4 Bbl.	H	**B2**	**PA2002**	**N/R**	**BF920**	**SA2085**	2WD **19828** 4WD **18015**
	V8-420 (6.9L) Diesel	1	**B134**	Std. **PA2092** HvyDty. **PA2115**	**N/R**	**BF786**	**N/R**	2WD **19828** 4WD **18015**
	V8-460 (7.5L) 4 Bbl.	L	**B2**	**PA2002**	**N/R**	**SF898**	**SA2085**	2WD **19828** 4WD **18015**
	Bronco II, Ranger 4-2000cc (2.0L) 1 Bbl.	C	**B2**	**PA2114**	**N/R**	**BF920**	**N/R**	
	4-2300cc (2.3L) FI	A	**B2**	**PA2103**	**N/R**	Ele. **PF506**	**N/R**	
	4-2300cc (2.3L) Turbo Diesel	E	**BD28**	**PA2146**	**N/R**	**BF856**	**N/R**	
	V6-2800cc (2.8L) 2 Bbl.	S	**B2**	**PA2074**	**N/R**	**BF920**	**SA2084**	A4LD 4WD **18025**
	Crown Victoria V8-302 (5.0L) FI	F	**B2**	**PA2051**	**N/R**	**BF966**	**N/R**	AOT/F10D **19640**
	V8-351 (5.8L) 2 Bbl.	G	**B2**	**PA2051**	**N/R**	**BF920**	**SA2085**	AOT/F10D **19640**
	Escort, EXP 4-1600cc (1.6L) 2 Bbl.	2,4	**B243**		**N/R**	**BF920**	**N/R**	ATX **18040**
	4-1600cc (1.6L) FI	5	**B243**		**N/R**	**BF966**	**N/R**	ATX **18040**
	4-1600cc (1.6L) FI Turbo	8	**B233**	**PA2103**	**N/R**	**BF966**	**N/R**	ATX **18040**
	4-1900cc (1.9L) 2 Bbl.	9	**B243**		**N/R**	**BF920**	**N/R**	ATX **18040**
	4-2000cc (2.0L) Diesel	H	F-F **B202** B-P **B201-S**		**N/R**		**N/R**	ATX **18040**
	LTD 4-2300cc (2.3L) 1 Bbl. or LPG	6,A,R	**B2**	**PA2005**	**N/R**	**BF920**	**N/R**	
	V6-232 (3.8L) FI	3	**B2**	**PA2057**	**N/R**	**BF966**	**N/R**	
	V8-302 (5.0L) FI	F	**B2**	**PA2051**	**N/R**	**BF966**	**SA2085**	AOT/F10D **19640**
	V8-302 (5.0L) Carb.	M	**B2**	**PA2002** Some **PA2051**	**N/R**	**SF898**	**SA2085**	AOT/F10D **19640**
	Mustang 4-2300cc (2.3L) 1 Bbl.	A,R	**B2**	**PA2005**	**N/R**	**BF920**	**N/R**	**19640**
	4-2300cc (2.3L) FI Turbo	T,W	**B233**		**N/R**	**BF966**	**N/R**	**19640**
	V6-232 (3.8L) FI	3	**B2**	**PA2057**	**N/R**	**BF966**	**N/R**	AOT **19640**
	V8-302 (5.0L) FI	F	**B2**	**PA2002**	**N/R**	**BF966**	**SA2085**	AOT/F10D **19640**
	V8-302 (5.0L) 4 Bbl.	M	**B2**	**PA2002**	**N/R**	**SF898**	**SA2085**	AOT/F10D **19640**
	Tempo 4-2000cc (2.0L) Diesel	H	F-F **B202** B-P **B201-S**		**N/R**		**N/R**	ATX **18040**
	4-2300cc (2.3L) FI Canada	R	**B233**	**PA2127**	**N/R**	**BF966**	**SA4137**	ATX **18040**
	4-2300cc (2.3L) FI	S,X	**B233**	**PA2127**	**N/R**	**BF966**	**SA4137**	ATX **18040**
	Thunderbird 4-2300cc (2.3L) FI Turbo	T,W	**B233**		**N/R**	**BF966**	**N/R**	
	V6-232 (3.8L) FI	3	**B2**	**PA2057**	**N/R**	**BF966**	**N/R**	
	V8-302 (5.0L) FI	F	**B2**	**PA2051**	**N/R**	**BF966**	**SA2085**	AOT/F10D **19640**
	Vans, E Series 6-300 (4.9L) Carb	Y	**B2**	Std. **PA657** HvyDty. **PA2107**	**N/R**	**BF920**	**SA2084**	AOT/F10D **19640** C6 **19828**
	V8-302 (5.0L) Carb.	F	**B2**	Std. **PA2051** HvyDty. **PA2128**	**N/R**	**BF920**	**SA2085**	AOT/F10D **19640**
	V8-351 (5.8L) 2 Bbl.	G	**B2**	Std. **PA2051** HvyDty. **PA2128**	**N/R**	**BF920**	**SA2085**	C6 **19828**
	V8-351 (5.8L) 4 Bbl.	H	**B2**	**PA2002**	**N/R**	**SF898**	**SA2085**	C6 **19828**
	V8-420 (6.9L) Diesel	1	**B134**	Std. **PA2092** HvyDty. **PA2115**	**N/R**	**BF786**	**N/R**	C6 **19828**
	V8-460 (7.5L) 4 Bbl.	L	**B2**	**PA2002**	**N/R**	**SF898**	**N/R**	C6 **19828**
1984	Bronco, Pickups, F Series 6-300 (4.9L) 1 Bbl. or LPG	9,Y	**B2**	Std. **PA1802** HvyDty. **PA2119**	**N/R**	**BF920**	**SA2039**	AOT/F10D **19640**
	V8-302 (5.0L) 2 Bbl.	F	**B2**	Std. **PA2051** HvyDty. **PA2128**	**N/R**	**BF920**[17]	**SA2085**	AOT/F10D **19640** 4WD **18198**
	V8-351 (5.8L) 2 Bbl.	G	**B2**	Std. **PA2051** HvyDty **PA2128**	**N/R**	**BF920**[17]	**SA2085**	2WD **19828** 4WD **18015**
	V8-351 (5.8L) 4 Bbl.	H	**B2**	**PA2002**	**N/R**	**BF920**	**SA2085**	2WD **19828** 4WD **18015**
	V8-420 (6.9L) Diesel	1	**B134**	Std. **PA2092** HvyDty. **PA2115**	**N/R**	**BF786**	**N/R**	2WD **19828** 4WD **18015**
	V8-460 (7.5L) 4 Bbl.	L	**B2**	**PA2002**	**N/R**	**SF898**	**SA2085**	2WD **19828** 4WD **18015**
	Bronco II, Ranger 4-2000cc (2.0L) 1 Bbl.	C	**B2**	**PA2114**	**N/R**	**BF920**	**N/R**	
	4-2200cc (2.2L) Diesel	P	F-F **B202** B-P **B201-S**		**N/R**	**BF789**	**N/R**	
	4-2300cc (2.3L) 1 Bbl.	A	**B2**	**PA2114**	**N/R**	**BF920**	**N/R**	
	V6-2800cc (2.8L) 2 Bbl.	S	**B2**	**PA2074**	**N/R**	**BF920**	**SA2084**	
	Crown Victoria V8-302 (5.0L) FI	F	**B2**	**PA2051**	**N/R**	**BF966**	**SA2085**	AOT/F10D **19640**

OBS = Obsolete. Availability Limited to Distributor Stock. [t] Transmission, Not Model, Determines Which Transmission Filter is Used.

[17] Exc. Calif.

FORD Cont'd.

Year	Model and Engine	VIN	Lube	Air	Cabin Air	Fuel	Breather	Trans.[t]
1984	Crown Victoria V8-351 (5.8L) 2 Bbl.	G	**B233**	**PA2051**	**N/R**	**BF920**	**SA2085**	AOT/F10D **19640**
	Escort, EXP 4-1600cc (1.6L) 2 Bbl.	2,4	**B243**		**N/R**	**BF920**	**N/R**	ATX **18040**
	4-1600cc (1.6L) FI	5	**B243**		**N/R**	**BF966**	**N/R**	ATX **18040**
	4-1600cc (1.6L) FI Turbo	8	**B233**	**PA2103**	**N/R**	**BF966**	**N/R**	ATX **18040**
	4-2000cc (2.0L) Diesel	H	F-F **B202** B-P **B201-S**		**N/R**		**N/R**	ATX **18040**
	LTD 4-2300cc (2.3L) 1 Bbl. or LPG	6,A,R	**B2**	**PA2005**	**N/R**	**BF920**	**SA2039**	
	V6-232 (3.8L) FI	3	**B2**	**PA2057**	**N/R**	**BF920**	**N/R**	
	V6-232 (3.8L) 2 Bbl.	C	**B2**	**PA2057**	**N/R**	**BF920**	**N/R**	4 Spd. **19640**
	V8-302 (5.0L) FI	M	**B2**	**PA2051**	**N/R**	**BF966**	**SA2085**	AOT/F10D **19640**
	Mustang 4-2300cc (2.3L) 1 Bbl.	A,R	**B2**	**PA2005**	**N/R**	**BF920**	**SA2045**	
	4-2300cc (2.3L) FI Turbo	W	**B233**		**N/R**	**BF966**	**N/R**	
	V6-232 (3.8L) FI	C	**B2**	**PA2057**	**N/R**	**BF966**	**N/R**	
	V8-302 (5.0L) FI	F	**B2**	**PA2002**	**N/R**	A.T. **BF966** M.T. **SF898**	**SA2085**	AOT/F10D **19640**
	V8-302 (5.0L) 4 Bbl.	M	**B2**	**PA2002**	**N/R**	**SF898**	**SA2085**	AOT/F10D **19640**
	Tempo 4-2000cc (2.0L) Diesel	H	F-F **B202** B-P **B201-S**		**N/R**		**N/R**	ATX **18040**
	4-2300cc (2.3L) 1 Bbl. HSC	R	**B233**	**PA2127**	**N/R**	**BF889**	**N/R**	ATX **18040**
	Thunderbird 4-2300cc (2.3L) FI Turbo	W	**B233**		**N/R**	**BF966**	**N/R**	
	V6-232 (3.8L) FI	C	**B2**	**PA2057**	**N/R**	**BF966**	**N/R**	
	V8-302 (5.0L) FI	F	**B2**	**PA2051**	**N/R**	**BF966**	**SA2085**	AOT/F10D **19640**
	Vans, E Series 6-300 (4.9L) Carb or LPG	9,Y	**B2**	Std. **PA657** HvyDty. **PA2107**	**N/R**	**BF920**	**SA2039**	AOT/F10D **19640** C6 **19828**
	V8-302 (5.0L) 2 Bbl.	F	**B2**	Std. **PA2051** HvyDty. **PA2128**	**N/R**	**BF920**[17]	**SA2085**	3 Spd. **19828** 4 Spd. **19640**
	V8-351 (5.8L) 2 Bbl.	G	**B2**	Std. **PA2051** HvyDty. **PA2128**	**N/R**	**BF920**[17]	**SA2085**	C6 **19828**
	V8-351 (5.8L) 4 Bbl.	H	**B2**	**PA2002**	**N/R**	**BF920**[17]	**SA2085**	C6 **19828**
	V8-420 (6.9L) Diesel	1	**B134**	**PA2115**	**N/R**	**BF786**	**SA2085**	C6 **19828**
	V8-460 (7.5L) 4 Bbl.	L	**B2**	**PA2002**	**N/R**	**SF898**	**SA2085**	C6 **19828**
1983	Bronco 6-300 (4.9L) 1 Bbl.	9	**B2**	Std. **PA1802** HvyDty. **PA2119**	**N/R**	**BF920**	**SA2045**	4WD **18015**
	V8-302 (5.0L) 2 Bbl.	F	**B2**	Std. **PA2051** HvyDty. **PA2128**	**N/R**	**BF920**	**SA2085**	AOT/F10D **19640**
	V8-351 (5.8L) 2 Bbl.	G	**B2**	Std. **PA2051** HvyDty. **PA2128**	**N/R**	**BF920**[17]	**SA2085**	4WD **18015**
	Crown Victoria V8-302 (5.0L) FI	F	**B2**	**PA2051**	**N/R**	**BF932**	**SA2085**	AOT/F10D **19640**
	V8-351 (5.8L) 2 Bbl.	G	**B2**[74] **B233**[73]	**PA2051**	**N/R**	**BF920**	**SA2085**	AOT/F10D **19640**
	Escort, EXP 4-1600cc (1.6L) 2 Bbl.	2,4,7	**B243**		**N/R**	**BF920**	**N/R**	ATX **18040**
	4-1600cc (1.6L) FI	5	**B243**		**N/R**	**BF966**	**N/R**	ATX **18040**
	Fairmont, Futura 4-2300cc (2.3L) 1 Bbl.	A	**B2**	**PA2005**	**N/R**	**BF879**	**SA2039**	
	6-200 (3.3L) 1 Bbl.	X	**B2**	**PA1802**	**N/R**	**BF920**	**SA2039**	
	LTD 4-2300cc (2.3L) 1 Bbl. or LPG	6,A	**B2**	**PA2005**	**N/R**	**BF920**	**SA2039**	
	6-200 (3.3L) 1 Bbl.	X	**B2**	**PA1802**	**N/R**	**BF920**	**SA2039**	
	V6-232 (3.8L) 2 Bbl.	3	**B2**	**PA2057**	**N/R**	**BF920**	**N/R**	4 Spd. **19640**
	Mustang 4-2300cc (2.3L) 1 Bbl.	A	**B2**	**PA2005**	**N/R**	**BF920**	**SA2039**	
	4-2300cc (2.3L) Turbo	W	**B233**		**N/R**	**BF966**	**SA2039**	
	V6-232 (3.8L) 2 Bbl.	3	**B2**	**PA2057**	**N/R**	**BF920**	**N/R**	
	V8-302 (5.0L) 4 Bbl.	F	**B2**	**PA2002**	**N/R**	**SF898**	**SA2085**	**M.T.**
	Pickups, F Series V6-232 (3.8L) 2 Bbl.	3	**B2**	**PA2057**	**N/R**	**BF920**	**SA2039**	
	6-300 (4.9L) 1 Bbl.	Y	**B2**	Std. **PA1802** HvyDty. **PA2119**	**N/R**	**BF920**	**SA2045**	AOD, AOT 2WD **19640** AOD, AOT 4WD **18198** C6 2WD **19828** C6 4WD **18015**
	V8-302 (5.0L) 2 Bbl.	F	**B2**	Std. **PA2051** HvyDty. **PA2128**	**N/R**	**BF920**	**SA2085**	AOD, AOT 2WD **19640** AOD, AOT 4WD **18198** C6 2WD **19828** C6 4WD **18015**
	V8-351 (5.8L) 2 Bbl.	G	**B2**	Std. **PA2051** HvyDty. **PA2128**	**N/R**	**BF920**[17]	**SA2085**	C6 2WD **19828** C6 4WD **18015**

[t] Transmission, Not Model, Determines Which Transmission Filter is Used. OBS = Obsolete. Availability Limited to Distributor Stock. [17] Exc. Calif.
[73] Police. [74] Exc. Police.

FORD Cont'd.

Year	Model and Engine	VIN	Lube	Air	Cabin Air	Fuel	Breather	Trans.[t]
1983	Pickups, F Series V8-420 (6.9L) Diesel	1	**B134**	**PA2115**	**N/R**	**BF786**	**N/R**	C6 2WD **19828** C6 4WD **18015**
	V8-460 (7.5L) 4 Bbl.	L	**B2**	**PA2002**	**N/R**	**SF898**	**SA2085**	C6 2WD **19828** C6 4WD **18015**
	Ranger 4-2000cc (2.0L) 1 Bbl.	C	**B2**	Std. **PA2114**	**N/R**	**BF920**	**N/R**	
	4-2200cc (2.2L) Diesel	P	F-F **B202** B-P **B201-S**		**N/R**	**BF789**	**N/R**	
	4-2300cc (2.3L) 1 Bbl.	A	**B2**	**PA2114**	**N/R**	**BF920**	**N/R**	
	V6-2800cc (2.8L) 2 Bbl.	2	**B2**	**PA2074**	**N/R**	**BF920**	**SA2084**	
	Thunderbird 4-2300cc (2.3L) FI Turbo	W	**B233**		**N/R**	**BF966**	**N/R**	**M.T.**
	V6-232 (3.8L) 2 Bbl.	3	**B2**	**PA2057**	**N/R**	**BF920**	**N/R**	AOT/F10D **19640**
	V8-302 (5.0L) FI	F	**B2**	**PA2051**	**N/R**	**BF966**	**SA2085**	**19640**
	Vans, E Series 6-300 (4.9L) 1 Bbl. or LPG	9,Y	**B2**	Std. **PA657** HvyDty. **PA2107**	**N/R**	**BF920**	**SA2084**	AOD, AOT **19640** C6 **19828**
	V8-302 (5.0L) 2 Bbl.	F	**B2**	Std. **PA2051** HvyDty. **PA2128**	**N/R**	**BF920**	**SA2085**	AOD, AOT **19640** C6 **19828**
	V8-351 (5.8L) 2 Bbl.	G	**B2**	**PA2051**	**N/R**	**BF920**[17]	**SA2085**	AOT **19640**
	V8-420 (6.9L) Diesel	1	**B134**	**PA2115**	**N/R**	**BF786**	**N/R**	C6 **19828**
	V8-460 (7.5L) 4 Bbl.	L	**B2**	**PA2002**	**N/R**	**SF898**	**SA2085**	C6 **19828**
1982	Bronco 6-300 (4.9L) 1 Bbl.	E	**B2**	**PA1802**	**N/R**	**BF920**	**SA2084**	C6 **19828**
	V8-302 (5.0L) 2 Bbl.	F	**B2**	**PA2051**	**N/R**	**BF920**[17]	**SA2085**	C6 **18015**
	V8-351 (5.8L) 2 Bbl.	G	**B2**	**PA2051**	**N/R**	**BF920**[17]	**SA2085**	C6 **18015**
	Courier 4-2000cc (2.0L) 2 Bbl.	1	**B161-S**	**PA2075**	**N/R**	**BF840,-K1**	**N/R**	
	4-2300cc (2.3L) 2 Bbl.	2	**B233**	**PA2075**	**N/R**	**BF840,-K1**	**N/R**	
	Escort, EXP 4-1598cc (1.6L) 2 Bbl.	2,4	**B243**		**N/R**	**BF920**	**N/R**	ATX **18040**
	Fairmont 4-2300cc (2.3L) 2 Bbl.	A	**B2**	**PA2005**	**N/R**	**BF920**	**SA2045**	
	6-200 (3.3L) 1 Bbl.	B	**B2**	**PA1802**	**N/R**	**BF920**	**SA2039**	
	V8-255 (4.2L) 2 Bbl.	D	**B2**	**PA2066 OBS**	**N/R**	**BF920**[17]	**SA2085**	
	Granada 4-2300cc (2.3L) 2 Bbl.	A	**B2**	**PA2005**	**N/R**	**BF920**	**SA2045**	
	6-200 (3.3L) 1 Bbl.	B	**B2**	**PA1802**	**N/R**	**BF920**	**SA2039**	
	V6-232 (3.8L) 2 Bbl.	3	**B2**	**PA2057**	**N/R**	**BF920**[17]	**N/R**	
	LTD V8-255 (4.2L) 2 Bbl.	D	**B2**	**PA2051**	**N/R**	**BF920**[17]	**SA2085**	AOT/F10D **19640**
	V8-302 (5.0L)	F	**B2**	**PA2051**	**N/R**	**BF920**[17]	**SA2085**	AOT/F10D **19640**
	V8-351 (5.8L) 2 Bbl.	G	**B2**	**PA2051**	**N/R**	**BF920**[17]	**SA2085**	AOT/F10D **19640**
	Mustang 4-2300cc (2.3L) 2 Bbl.	A,T	**B2**	**PA2005**	**N/R**	**BF920**	**SA2045**	
	6-200 (3.3L) 1 Bbl.	B	**B2**	**PA1802**	**N/R**	To 11/81 **BF879** 11/81-on **BF920**	**SA2039**	
	V8-255 (4.2L) 2 Bbl.	D	**B2**	**PA2066 OBS**	**N/R**	**BF920**[17]	**SA2085**	
	V8-302 (5.0L)	F	**B2**	**PA2051**	**N/R**	**BF920**[17]	**SA2085**	**M.T.**
	Pickups, F Series V6-232 (3.8L) 2 Bbl.	3	**B2**	**PA2057**	**N/R**	**BF920**[17]	**SA2039**	
	6-300 (4.9L) 1 Bbl. or LPG	9,E	**B2**	Std. **PA1802** HvyDty. **PA2119**	**N/R**	**BF920**[17]	**SA2084**	C6 **19828**
	V8-255 (4.2L) 2 Bbl.	D	**B2**	**PA2051**	**N/R**	**BF920**[17]	**SA2085**	
	V8-302 (5.0L) 2 Bbl.	F	**B2**	Std. **PA2051** HvyDty. **PA2128**	**N/R**	**BF920**[17]	**SA2085**	AOT/F10D **19640** C6 **19828**
	V8-351 (5.8L) 2 Bbl.	G	**B2**	Std. **PA2051** HvyDty. **PA2128**	**N/R**	**BF920**[17]	**SA2085**	AOT/F10D **19640**
	V8-400 (6.6L) 2 Bbl.	Z	**B2**	**PA2051**	**N/R**	**BF920**	**SA2085**	C6 **19828**
	Thunderbird 6-200 (3.3L) 1 Bbl.	B	**B2**	**PA1802**	**N/R**	**BF920**	**SA2039**	
	V6-232 (3.8L) 2 Bbl.	3	**B2**	**PA2057**	**N/R**	**BF920**[17]		AOT/F10D **19640**
	V8-255 (4.2L) 2 Bbl.	D	**B2**	**PA2066 OBS**	**N/R**	**BF920**[17]	**SA2085**	AOT/F10D **19640**
	Vans, E Series 6-300 (4.9L) 1 Bbl. or LPG	9,B,E	**B2**	Std. **PA657** HvyDty. **PA2107**	**N/R**	**BF920**	**SA2084**	C6 **19828**
	V8-302 (5.0L) 2 Bbl.	F	**B2**	Std. **PA2051** HvyDty. **PA2128**	**N/R**	**BF920**[17]	**SA2085**	C6 **19828**
	V8-351 (5.8L) 2 Bbl.	G	**B2**	Std. **PA2051** HvyDty. **PA2128**	**N/R**	**BF920**[17]	**SA2085**	C6 **19828**
	V8-400 (6.6L) 2 Bbl.	Z	**B2**	**PA2051**	**N/R**	**BF920**	**SA2085**	C6 **19828**
	V8-460 (7.5L) 4 Bbl.	L	**B2**	**PA2002**	**N/R**	**SF898**	**SA2085**	C6 **19828**
1981	Bronco 6-300 (4.9L) 1 Bbl.	E	**B2**	Std. **PA657** HvyDty. **PA2107**	**N/R**	**BF989**	**SA2084**	C6 **18015**
	V8-302 (5.0L) 2 Bbl.	F	**B2**	**PA2051**	**N/R**	**BF920**[17]	**SA2085**	C6 **18015**
	V8-351 (5.8L) 2 Bbl.	G,W	**B2**	**PA2051**	**N/R**	**BF920**[17]	**SA2085**	C6 **18015**
	Courier 4-2000cc (2.0L) 2 Bbl.	1	**B161-S**	**PA2075**	**N/R**	**BF840,-K1**	**N/R**	
	4-2300cc (2.3L) 2 Bbl.	2	**B233**	**PA2075**	**N/R**	**BF840,-K1**	**N/R**	
	Escort 4-1600cc (1.6L) 2 Bbl.	2	**B243**		**N/R**	**BF920**	**N/R**	ATX **18040**
	Fairmont 4-2300cc (2.3L) 2 Bbl.	A	**B2**	**PA2005**	**N/R**	**BF920**	**SA2045**	C4 **19879**

OBS = Obsolete. Availability Limited to Distributor Stock. [t] Transmission, Not Model, Determines Which Transmission Filter is Used.

[17] Exc. Calif.

FORD Cont'd.

Year	Model and Engine	VIN	Lube	Air	Cabin Air	Fuel	Breather	Trans.[t]
1981	Fairmont 6-200 (3.3L) 1 Bbl.	B	**B2**	**PA1802**	**N/R**	**BF879**	**SA2039**	C4 **19879**
	V8-255 (4.2L) 2 Bbl.	D	**B2**	**PA2066 OBS**	**N/R**	**BF920**[17]	**SA2085**	C4 **19879**
	Granada 4-2300cc (2.3L) 2 Bbl.	A	**B2**	**PA2005**	**N/R**	**BF920**	**SA2045**	C4 **19879**
	6-200 (3.3L) 1 Bbl.	B	**B2**	**PA1802**	**N/R**	**BF879**	**SA2039**	C4 **19879**
	V8-255 (4.2L) 2 Bbl.	D	**B2**	**PA2066 OBS**	**N/R**	**BF920**[17]	**SA2085**	C4 **19879**
	LTD V8-255 (4.2L) 2 Bbl.	D	**B2**	**PA2051**	**N/R**	**BF920**[17]	**SA2085**	C4 **19879**
	V8-302 (5.0L) 2 Bbl.	F	**B2**	**PA2051**	**N/R**	**BF920**	**SA2085**	AOT/F10D **19640**
	V8-351 (5.8L) 2 Bbl.	G	**B2**	**PA2051**	**N/R**	**BF920**[17]	**SA2085**	AOT/F10D **19640**
	Mustang 4-2300cc (2.3L) 2 Bbl.	A,T	**B2**	**PA2005**	**N/R**	**BF879**	**SA2045**	
	6-200 (3.3L) 1 Bbl.	B	**B2**	**PA1802**	**N/R**	**BF879**	**SA2039**	
	V8-255 (4.2L) 2 Bbl.	D	**B2**	**PA2066 OBS**	**N/R**	**BF920**[17]	**SA2085**	
	Pickups, F Series 6-300 (4.9L) 1 Bbl.	E	**B2**	Std. **PA657** HvyDty. **PA2107**	**N/R**	**BF989**	**SA2084**	C4 **19879** C6 **19828**
	V8-255 (4.2L) 2 Bbl.	D	**B2**	**PA2051**	**N/R**	**BF920**	**SA2085**	C6 **19828**
	V8-302 (5.0L) 2 Bbl.	F	**B2**	Std. **PA2051** HvyDty. **PA2128**	**N/R**	**BF920**[17]	**SA2085**	AOT/F10D **19640** C6 **19828**
	V8-351 (5.8L) 2 Bbl.	G,W	**B2**	Std. **PA2051** HvyDty. **PA2128**	**N/R**	**BF920**[17]	**SA2085**	C6 2WD **19828** C6 4WD **18015**
	V8-400 (6.6L) 2 Bbl.	Z	**B2**	**PA2051**	**N/R**	**BF920**	**SA2085**	C6 2WD **19828** C6 4WD **18015**
	Thunderbird 6-200 (3.3L) 1 Bbl.	B	**B2**	**PA1802**	**N/R**	**BF879**	**SA2039**	C4 **19879**
	V8-255 (4.2L) 2 Bbl.	D	**B2**	**PA2066 OBS**	**N/R**	**BF920**[17]	**SA2085**	AOT/F10D **19640** C4 **19879**
	V8-302 (5.0L)	F	**B2**	**PA2066 OBS**	**N/R**	**BF920**[17]	**SA2085**	AOT/F10D **19640**
	Vans, E Series 6-300 (4.9L) 1 Bbl.	E	**B2**	Std. **PA657** HvyDty. **PA2107**	**N/R**	**BF879**	**SA2084**	C6 **19828**
	V8-302 (5.0L) 2 Bbl.	F	**B2**	Std. **PA2051** HvyDty. **PA2128**	**N/R**	**BF920**[17]	**SA2085**	C6 **19828**
	V8-351 (5.8L) 2 Bbl.	G,W	**B2**	Std. **PA2051** HvyDty. **PA2128**	**N/R**	**BF920**[17]	**SA2085**	C6 **19828**
	V8-400 (6.6L) 2 Bbl.	Z	**B2**	**PA2051**	**N/R**	**BF920**	**SA2085**	C6 **19828**
	V8-460 (7.5L) 4 Bbl.	L	**B2**	**PA2051**	**N/R**	**SF898**	**SA2085**	C6 **19828**
1980	Bronco 6-300 (4.9L) 1 Bbl.	E	**B2**	Std. **PA657** HvyDty. **PA2107**	**N/R**	**BF989**	**SA2084**	C6 **18015**
	V8-302 (5.0L) 2 Bbl.	F	**B2**	**PA2051**	**N/R**	**BF989**	**SA2085**	C6 **18015**
	V8-351 (5.8L) 2 Bbl.	G,W	**B2**	**PA2051**	**N/R**	**BF989**	**SA2085**	C6 **18015**
	Courier 4-2000cc (2.0L) 2 Bbl.	C	**B161-S**	**PA2075**	**N/R**	**BF840,-K1**	**N/R**	
	4-2300cc (2.3L) 2 Bbl.	B	**B233**	**PA2075**	**N/R**	**BF840,-K1**	**N/R**	
	Fairmont 4-2300cc (2.3L) 2 Bbl.	A	**B2**	**PA2005**	**N/R**	**BF879**	**SA2045**	C4 **19879**
	4-2300cc (2.3L) 2 Bbl. Turbo	T	**B2**	**PA2005**	**N/R**	**BF920**	**SA2045**	C4 **19879**
	6-200 (3.3L) 1 Bbl.	B	**B2**	**PA1802**	**N/R**	**BF879**	**SA2039**	C4 **19879**
	V8-255 (4.2L) 2 Bbl.	D	**B2**	**PA2066 OBS**	**N/R**	**BF989**[17]	**SA2085**	C4 **19879**
	Fiesta 4-1600cc (1.6L) 2 Bbl.	4,L	**B243**	**PA2074**	**N/R**	**BF879**	**N/R**	
	Granada 6-250 (4.1L) 1 Bbl.	C	**B2**	**PA2005**	**N/R**	**BF879**	**SA2039**	C4 **19879**
	V8-255 (4.2L) 2 Bbl.	D	**B2**	**PA2051**	**N/R**	**BF989**[17]	**SA2085**	C4 **19879**
	V8-302 (5.0L) 2 Bbl.	F	**B2**	**PA2051**	**N/R**	**BF989**[17]	**SA2085**	C4 **19879**
	LTD V8-302 (5.0L) 2 Bbl.	F	**B2**	**PA2051**	**N/R**	**BF989**[17]	**SA2085**	AOT/F10D **19640** C4 **19879** C6 **19828**
	V8-351 (5.8L) 2 Bbl.	G	**B2**	**PA2051**	**N/R**	**BF989**[17]	**SA2085**	AOT/F10D **19640** C6 **19828**
	Mustang 4-2300cc (2.3L) 2 Bbl.	A	**B2**	**PA2005**	**N/R**	**BF879**	**SA2045**	
	6-200 (3.3L) 1 Bbl.	B	**B2**	**PA1802**	**N/R**	**BF879**	**SA2039**	
	V8-255 (4.2L) 2 Bbl.	D	**B2**	**PA2066 OBS**	**N/R**	**BF989**[17]	**SA2085**	
	Pickups, F Series 6-300 (4.9L) 1 Bbl.	E	**B2**	Std. **PA657** HvyDty. **PA2107**	**N/R**	**BF989**	**SA2084**	C4 **19879** C6 **19828**
	V8-302 (5.0L) 2 Bbl.	F	**B2**	Std. **PA2051** HvyDty. **PA2128**	**N/R**	**BF989**	**SA2085**	C4 **19879** C6 **19828**
	V8-351 (5.8L) 2 Bbl.	G,W	**B2**	Std. **PA2051** HvyDty. **PA2128**	**N/R**	**BF989**	**SA2085**	C4 **19879** C6 **19828**
	V8-400 (6.6L) 2 Bbl.	Z	**B2**	**PA2051**	**N/R**	**BF989**	**SA2085**	C4 **19879** C6 **19828**
	Pinto 4-2300cc (2.3L) 2 Bbl.	A	**B2**	**PA2005**	**N/R**	**BF879**	**SA2045**	
	Thunderbird 6-200 (3.3L) 1 Bbl.	B	**B2**	**PA1802**	**N/R**	**BF879**	**SA2039**	C4 **19879**
	V8-255 (4.2L) 2 Bbl.	D	**B2**	**PA2066 OBS**	**N/R**	**BF989**[17]	**SA2085**	C4 **19879**
	V8-302 (5.0L) 2 Bbl.	F	**B2**	**PA2075**	**N/R**	**BF989**[17]	**SA2085**	AOT/F10D **19640** C4 **19879**

[t] Transmission, Not Model, Determines Which Transmission Filter is Used. OBS = Obsolete. Availability Limited to Distributor Stock. [17] Exc. Calif.

Year	Model and Engine	VIN	Lube	Air	Cabin Air	Fuel	Breather	Trans.[t]
FORD Cont'd.								
1980	Vans, E Series 6-300 (4.9L) 1 Bbl.	E	**B2**	Std. **PA657** HvyDty. **PA2107**	**N/R**	**BF879**	**SA2084**	C6 **19828**
	V8-302 (5.0L) 2 Bbl.	F	**B2**	Std. **PA2051** HvyDty. **PA2128**	**N/R**	**BF989**	**SA2085**	C6 **19828**
	V8-351 (5.8L) 2 Bbl.	G,W	**B2**	Std. **PA2051** HvyDty. **PA2128**	**N/R**	**BF989**	**SA2085**	C6 **19828**
	V8-400 (6.6L) 2 Bbl.	Z	**B2**	**PA2051**	**N/R**	**BF989**	**SA2085**	C6 **19828**
	V8-460 (7.5L) 4 Bbl.	L	**B2**	**PA2002**	**N/R**	**SF898**	**SA2085**	C6 **19828**
FORD (ENGLAND)								
1980	Capri 4-2300cc (2.3L)		**B2**	**PA2005**	**N/R**	**BF879**		
	6-2800cc (2.8L)		**B163**	**PA2074**	**N/R**	**BF879**		
	Escort 4-1600cc (1.6L)		**B233**	**PA642**	**N/R**			
GEO								
1997	Metro 3-61 (1.0L) EFI	6	**BT223**	**PA2216**	**N/R**	**BF7720**	**N/R**	
	4-79 (1.3L) EFI	9	**BT223**	**PA2216**	**N/R**	**BF7720**	**N/R**	
	Prizm 4-97 (1.6L) SFI	6	**B33**	**PA4095**	**N/R**	**BF1050**	**N/R**	**18163**
	4-110 (1.8L) SFI	8	**B33**	**PA4095**	**N/R**	**BF1050**	**N/R**	
	Tracker 4-97 (1.6L) MFI	6	3 1/2 In. **BT223** 4 1/16 In. **B1430**	**PA4078**	**N/R**	**BF1100**	**N/R**	
1996	Metro 3-61 (1.0L) EFI	6	**BT223**	**PA2216**	**N/R**	**BF7720**	**N/R**	
	4-79 (1.3L) EFI	9	**BT223**	**PA2216**	**N/R**	**BF7720**	**N/R**	
	Prizm 4-97 (1.6L) MFI	6	**B33**	**PA4095**	**N/R**	**BF1050**	**N/R**	**18163**
	4-108 (1.8L) SFI	8	**B33**	**PA4095**	**N/R**	**BF1050**	**N/R**	
	Tracker 4-97 (1.6L) MFI	6	3 1/2 In. **BT223** 4 1/16 In. **B1430**	**PA4078**	**N/R**	**BF1100**	**N/R**	
1995	Metro 3-61 (1.0L) EFI	6	**BT223**	**PA2216**	**N/R**	**BF7720**	**N/R**	
	4-79 (1.3L) EFI	9	**BT223**	**PA2216**	**N/R**	**BF7720**	**N/R**	
	Prizm 4-97 (1.6L) MFI	6	**B33**	**PA4095**	**N/R**	**BF1050**	**N/R**	**18163**
	4-108 (1.8L) MFI	8	**B33**	**PA4095**	**N/R**	**BF1050**	**N/R**	
	Tracker 4-97 (1.6L) MFI	6,U	3 1/2 In. **BT223** 4 1/16 In. **B1430**	**PA4023** Calif. **PA4078**	**N/R**	**BF1100**	**N/R**	
1994	Metro 3-1000cc EFI	6	**BT223**	**PA2216**	**N/R**	**BF1003**	**N/R**	
	Prizm 4-97 (1.6L) MFI	6	**B33**	**PA4095**	**N/R**	**BF1050**	**N/R**	**18163**
	4-110 (1.8L) MFI	8	**B33**	**PA4095**	**N/R**	**BF1050**	**N/R**	
	Tracker 4-97 (1.6L) MFI	6,U	**B1430**	**PA4023** Calif. **PA4078**	**N/R**	**BF1100**	**N/R**	
1993	4-1298cc (1.3L) FI Canada	3	**BT223**	**PA2216**	**N/R**	**BF1003**	**N/R**	
	Metro 3-61 (1.0L) EFI	6	**BT223**	**PA2216**	**N/R**	**BF1003**	**N/R**	
	Prizm 4-97 (1.6L) MFI	6	**B33**	**PA4095**	**N/R**	**BF1050**	**N/R**	**18163**
	4-110 (1.8L) MFI	8	**B33**	**PA4095**	**N/R**	**BF1050**	**N/R**	
	Storm 4-97 (1.6L) MFI	6			**N/R**	**BF1186**	**N/R**	3 Spd. **18163** 4 Spd. **18013**
	4-110 (1.8L) MFI	8	**B227**		**N/R**	**BF1186**	**N/R**	3 Spd. **18163** 4 Spd. **18013**
	Tracker 4-97 (1.6L) EFI	U	**B1430**	**PA4023**	**N/R**	**BF1100**	**N/R**	
1992	Metro 3-1000cc (1.0L) EFI	6	**BT223**	**PA2216**	**N/R**	**BF1003**	**N/R**	
	4-1298cc (1.3L) FI Canada	3	**BT223**	**PA2216**	**N/R**	**BF1003**	**N/R**	
	Prizm 4-1587cc (1.6L) MFI	5	**B37**		**N/R**		**N/R**	MX1 **18163**
	4-1587cc (1.6L) MFI	6	**B33**	**PA2041**	**N/R**		**N/R**	MX1 **18163**
	Storm, Storm GSI 4-1588cc (1.6L) MFI	6			**N/R**	**BF1186**	**N/R**	3 Spd. **18163** 4 Spd. **18013**
	4-1788cc (1.8L) MFI	8	**B227**		**N/R**	**BF1186**	**SA2046**	3 Spd. **18163** 4 Spd. **18013**
	Tracker 4-97 (1.6L) EFI	L,U	**B1430**	**PA4023**	**N/R**	**BF1100**	**N/R**	
1991	Metro 3-1000cc (1.0L) EFI	6	**BT223**	**PA2216**	**N/R**	**BF1003**	**N/R**	
	Prizm 4-1600cc (1.6L) MFI	5	**B37**		**N/R**		**N/R**	MX1 **18163**
	4-1600cc (1.6L) MFI	6	**B33**	**PA2041**	**N/R**		**N/R**	MX1 **18163**
	Storm 4-1588cc (1.6L) MFI 16 Valve GSI	5	**B227**		**N/R**	**BF1186**	**N/R**	3 Spd. **18163** 4 Spd. **18013**
	4-1588cc (1.6L) MFI	6			**N/R**	**BF1186**	**N/R**	3 Spd. **18163** 4 Spd. **18013**
	Tracker 4-1588cc (1.6L) EFI	U	**B159**	**PA4023**	**N/R**	**BF1100**	**N/R**	
1990	Metro 3-1000cc (1.0L) EFI Turbo Canada	2	**BT223**		**N/R**	**BF1003**	**N/R**	
	3-1000cc (1.0L) EFI	6	**BT223**	**PA2216**	**N/R**	**BF1003**	**N/R**	
	Prizm 4-1600cc (1.6L) MFI	5	**B37**		**N/R**		**N/R**	MX1 **18163**

OBS = Obsolete. Availability Limited to Distributor Stock. [t] Transmission, Not Model, Determines Which Transmission Filter is Used.

Year	Model and Engine	VIN	Lube	Air	Cabin Air	Fuel	Breather	Trans.[t]
GEO Cont'd.								
1990	Prizm 4-1600cc (1.6L) MFI	6	**B33**	**PA2041**	**N/R**		**N/R**	MX1 **18163**
	Storm 4-1588cc (1.6L) MFI HO GSI	5	**B227**		**N/R**	**BF1186**	**N/R**	3 Spd. **18163** 4 Spd. **18013**
	4-1588cc (1.6L) MFI	6			**N/R**	**BF1186**	**N/R**	3 Spd. **18163** 4 Spd. **18013**
	Tracker 4-1588cc (1.6L) EFI	U	**B159**	**PA4023**	**N/R**	**BF1100**	**N/R**	
1989	Metro 3-1000cc (1.0L) EFI Turbo Canada	2	**BT223**		**N/R**	**BF1003**	**N/R**	
	3-1000cc (1.0L) EFI	6	**BT223**	**PA2216**	**N/R**	**BF1003**	**N/R**	
	Prizm 4-1600cc (1.6L) MFI	6	**B33**	**PA2041**	**N/R**		**N/R**	**18163**
	Spectrum 4-1471cc (1.5L) 2 Bbl.	7	**B227**		**N/R**	**BF805**	**N/R**	3 Spd. **18163** 4 Spd. **18013**
	4-1471cc (1.5L) FI Turbo	9	**B227**	**PA4058**	**N/R**	**BF805**	**N/R**	3 Spd. **18163** 4 Spd. **18013**
	Tracker 4-1588cc (1.6L) EFI	U	**B159**	**PA4023**	**N/R**	**BF1100**	**N/R**	
GMC Light-Duty Trucks								
2010	Acadia V6-217 (3.6L) FI	D	**B160**	**PA4418**	**N/R**	**N/S**	**N/R**	
	Canyon 4-178 (2.9L) MFI	9	**B31**	**PA4412**	**N/R**	**N/S**	**N/R**	4L60E S. Pan **20020** 4L60E D. Pan **18056**
	5-226 (3.7L) FI	E	**B7010**	**PA4412**	**N/R**	**N/S**	**N/R**	4L60E S. Pan **20020** 4L60E D. Pan **18056**
	V8-325 (5.3L) FI	P	**B160**	**PA4412**	**N/R**	**N/S**	**N/R**	4L60E S. Pan **20020** 4L60E D. Pan **18056**
	Pickups, Sierra Series V6-262 (4.3L) FI	X	**B43-S**	**PA4113**	**N/R**	**N/S**	**N/R**	4L60E S. Pan **18010** 4L60E D. Pan **18056** 4L80-E **18027**
	V8-292 (4.8L) FI Flex Fuel	A	**B160**	**PA4113**	**N/R**	**N/S**	**N/R**	4L60E S. Pan **18010** 4L60E D. Pan **18056** 4L80-E **18027**
	V8-325 (5.3L) FI Flex Fuel	0,3	**B160**	**PA4113**	**N/R**	**N/S**	**N/R**	4L60E S. Pan **18010** 4L60E D. Pan **18056** 4L80-E **18027**
	V8-364 (6.0L) FI or Flex Fuel	G,K	**B160**	**PA4113**	**N/R**	**N/S**	**N/R**	4L80-E **18027**
	V8-364 (6.0L) FI Flex Fuel or Hybrid	J	**B160**	**PA4113**	**N/R**	**N/S**	**N/R**	
	V8-376 (6.2L) FI Flex Fuel	2	**B160**	**PA4113**	**N/R**	**N/S**	**N/R**	
	V8-403 (6.6L) FI Turbo Diesel	6	**B1441**	**CA5352**	**N/R**	**BF7827**	**N/R**	S. Pan (w/o Gskt.) **20004** S. Pan (w/Gskt.) **20016** D. Pan (w/o Gskt.) **20003** D. Pan (w/Gskt.) **20017** Spin-on **BT8460**
	Savana V6-262 (4.3L) FI	X	**B43-S**	**RS4131**	**N/R**	**N/S**	**N/R**	4L60E **18056**
	V6-292 (4.8L) FI	A	**B160**	**RS4131**	**N/R**	**N/S**	**N/R**	
	V8-325 (5.3L) FI Flex Fuel	4	**B160**	**RS4131**	**N/R**	**N/S**	**N/R**	4L60E **18056** 4L80-E **18027**
	V8-364 (6.0L) FI Flex Fuel	G	**B160**	**RS4131**	**N/R**	**N/S**	**N/R**	
	V8-403 (6.6L) Turbo Diesel	6	**B1441**		**N/R**	**BF7933 KIT**[76]	**N/R**	4L60E **18056** 4L80-E **18027**
	Terrain 4-145 (2.4L) DI	W	**P1445**		**PA4398**	**N/S**	**N/R**	
	V6-182 (3.0L) DI	Y	**B160**		**PA4398**	**N/S**	**N/R**	
	Yukon V8-325 (5.3L) FI Flex Fuel	0,3	**B160**	**PA4113**	**N/R**	**N/S**	**N/R**	
	V8-364 (6.0L) FI Flex Fuel	G	**B160**	**PA4113**	**N/R**	**N/S**	**N/R**	
	V8-364 (6.0L) FI Hybrid	J	**B160**	**PA4113**	**N/R**	**N/S**	**N/R**	
	V8-376 (6.2L) FI Flex Fuel	2	**B160**	**PA4113**	**N/R**	**N/S**	**N/R**	
	Yukon Denali V8-376 (6.2L) FI Flex Fuel	2	**B160**	**PA4113**	**N/R**	**N/S**	**N/R**	
	Yukon XL V8-325 (5.3L) FI Flex Fuel	0,3	**B160**	**PA4113**	**N/R**	**N/S**	**N/R**	
	V8-364 (6.0L) FI Flex Fuel	G	**B160**	**PA4113**	**N/R**	**N/S**	**N/R**	4L80-E **18027**
	V8-376 (6.2L) FI Flex Fuel	2	**B160**	**PA4113**	**N/R**	**N/S**	**N/R**	4L60E S. Pan **18010** 4L60E D. Pan **18056** 4L80-E **18027**
2009	Acadia V6-217 (3.6L) FI	D	**B160**	**PA4418**	**N/R**	**N/S**	**N/R**	
	Canyon 4-178 (2.9L) MFI	9	**B31**	**PA4412**	**N/R**	**N/S**	**N/R**	4L60E S. Pan **20020** 4L60E D. Pan **18056**

[t] Transmission, Not Model, Determines Which Transmission Filter is Used. OBS = Obsolete. Availability Limited to Distributor Stock.

[76] Contains Pri. and Sec. Fuel Elements.

GMC Light-Duty Trucks Cont'd.

Year	Model and Engine	VIN	Lube	Air	Cabin Air	Fuel	Breather	Trans.[t]
2009	Canyon 5-223 (3.7L) MFI	E	**B7010**	**PA4412**	**N/R**	**N/S**	**N/R**	4L60E S. Pan **20020** 4L60E D. Pan **18056**
	V8-325 (5.3L) MFI	L	**B160**	**PA4412**	**N/R**	**N/S**	**N/R**	4L60E S. Pan **20020** 4L60E D. Pan **18056**
	Envoy 6-256 (4.2L) SFI	S	**B7010**	**RS4161**	**N/R**	**N/S**	**N/R**	4L60E S. Pan **20020** 4L60E D. Pan **18056**
	Envoy Denali V8-325 (5.3L) MFI	M	**B160**	**RS4161**	**N/R**	**N/S**	**N/R**	4L60E S. Pan **20020** 4L60E D. Pan **18056**
	Pickups, Sierra Series V6-262 (4.3L) FI	X	**B43-S**	**PA4113**	**N/R**	**N/S**	**N/R**	4L60E S. Pan **18010** 4L60E D. Pan **18056** 4L80-E **18027**
	V8-292 (4.8L) SFI or Flex Fuel	C	**B160**	**PA4113**	**N/R**	**N/S**	**N/R**	4L60E S. Pan **18010** 4L60E D. Pan **18056** 4L80-E **18027**
	V8-325 (5.3L) SFI or Flex Fuel	0,3,J,M	**B160**	**PA4113**	**N/R**	**N/S**	**N/R**	4L60E S. Pan **18010** 4L60E D. Pan **18056** 4L80-E **18027**
	V8-364 (6.0L) SFI or Hybrid	5,K,Y	**B160**	**PA4113**	**N/R**	**N/S**	**N/R**	4L60E S. Pan **18010** 4L60E D. Pan **18056** 4L80-E **18027**
	V8-376 (6.2L) SFI Flex Fuel	2	**B160**	**PA4113**	**N/R**	**N/S**	**N/R**	4L60E S. Pan **18010** 4L60E D. Pan **18056**
	V8-400 (6.6L) SFI Turbo Diesel	6	**B1441**	**CA5352**	**N/R**	**BF7827**	**N/R**	S. Pan (w/o Gskt.) **20004** S. Pan (w/Gskt.) **20016** D. Pan (w/o Gskt.) **20003** D. Pan (w/Gskt.) **20017** Spin-on **BT8460**
	Savana V6-262 (4.3L) MFI	X	**B43-S**	**RS4131**	**N/R**	**N/S**	**N/R**	4L60E **18056** 4L80-E **18027**
	V6-292 (4.8L) SFI	C	**B160**	**RS4131**	**N/R**	**N/S**	**N/R**	4L60E **18056** 4L80-E **18027**
	V8-325 (5.3L) SFI	4	**B160**	**RS4131**	**N/R**	**N/S**	**N/R**	4L60E **18056** 4L80-E **18027**
	V8-364 (6.0L) SFI	K	**B160**	**RS4131**	**N/R**	**N/S**	**N/R**	4L80-E **18027**
	V8-403 (6.6L) Turbo Diesel	6	**B1441**		**N/R**	**BF7933 KIT**[76]	**N/R**	4L60E **18056** 4L80-E **18027**
	Sierra Denali V8-376 (6.2L) SFI Flex Fuel	2	**B160**	**PA4113**	**N/R**	**N/S**	**N/R**	4L60E S. Pan **18010** 4L60E D. Pan **18056**
	Yukon V8-292 (4.8L) SFI	C	**B160**	**PA4113**	**N/R**	**N/S**	**N/R**	4L60E S. Pan **18010** 4L60E D. Pan **18056** 4L80-E **18027**
	V8-325 (5.3L) SFI or Flex Fuel	0,3,J	**B160**	**PA4113**	**N/R**	**N/S**	**N/R**	4L60E S. Pan **18010** 4L60E D. Pan **18056** 4L80-E **18027**
	V8-364 (6.0L) SFI Hybrid	5	**B160**	**PA4113**	**N/R**	**N/S**	**N/R**	
	Yukon Denali V8-376 (6.2L) SFI Flex Fuel	2	**B160**	**PA4113**	**N/R**	**N/S**	**N/R**	4L60E S. Pan **18010** 4L60E D. Pan **18056**
	Yukon Denali XL V8-376 (6.2L) FI Flex Fuel	2	**B160**	**PA4113**	**N/R**	**N/S**	**N/R**	4L60E S. Pan **18010** 4L60E D. Pan **18056** 4L80-E **18027**
	Yukon XL V8-325 (5.3L) SFI or Flex Fuel	0,3,J	**B160**	**PA4113**	**N/R**	**N/S**	**N/R**	4L60E S. Pan **18010** 4L60E D. Pan **18056** 4L80-E **18027**
	V8-364 (6.0L) SFI	K,Y	**B160**	**PA4113**	**N/R**	**N/S**	**N/R**	4L60E S. Pan **18010** 4L60E D. Pan **18056** 4L80-E **18027**
2008	Acadia V6-217 (3.6L) FI	7	**B160**	**PA4418**	**N/R**	**N/S**	**N/R**	
	Canyon 4-178 (2.9L) MFI	9	**B31**	**PA4412**	**N/R**	**N/S**	**N/R**	4L60E S. Pan **20020** 4L60E D. Pan **18056**
	5-226 (3.7L) MFI	E	**B7010**	**PA4412**	**N/R**	**N/S**	**N/R**	4L60E S. Pan **20020** 4L60E D. Pan **18056**
	Envoy 6-254 (4.2L) SFI	S	**B7010**	**RS4161**	**N/R**	**N/S**	**N/R**	4L60E S. Pan **18010** 4L60E D. Pan **18056**

OBS = Obsolete. Availability Limited to Distributor Stock. [t] Transmission, Not Model, Determines Which Transmission Filter is Used.

[76] Contains Pri. and Sec. Fuel Elements.

GMC Light-Duty Trucks Cont'd.

Year	Model and Engine	VIN	Lube	Air	Cabin Air	Fuel	Breather	Trans.[t]
2008	Envoy Denali V8-325 (5.3L) SFI	M	**B160**	**RS4161**	**N/R**	**N/S**	**N/R**	4L60E S. Pan **18010** 4L60E D. Pan **18056**
	Pickups, Sierra Series V6-262 (4.3L) MFI	X	**B43-S**	**PA4113**	**N/R**	**N/S**	**N/R**	4L60E S. Pan **18010** 4L60E D. Pan **18056** 4L80-E **18027**
	V8-292 (4.8L) SFI	C	**B160**	**PA4113**	**N/R**	**N/S**	**N/R**	4L60E S. Pan **18010** 4L60E D. Pan **18056** 4L80-E **18027**
	V8-325 (5.3L) FI Flex Fuel	0,3	**B160**	**PA4113**	**N/R**	**N/S**	**N/R**	4L80-E **18027**
	V8-325 (5.3L) FI	J,M	**B160**	**PA4113**	**N/R**	**N/S**	**N/R**	4L60E S. Pan **18010** 4L60E D. Pan **18056** 4L80-E **18027**
	V8-364 (6.0L) SFI	K,Y	**B160**	**PA4113**	**N/R**	**N/S**	**N/R**	4 Spd. **18056**
	V8-376 (6.2L) SFI	8	**B160**	**PA4113**	**N/R**	**N/S**	**N/R**	4 Spd. **18056**
	V8-403 (6.6L) Turbo Diesel	6	**B1441**	**CA5352**	**N/R**	**BF7827**	**N/R**	S. Pan (w/o Gskt.) **20004** S. Pan (w/Gskt.) **20016** D. Pan (w/o Gskt.) **20003** D. Pan (w/Gskt.) **20017** Spin-on **BT8460**
	Savana V6-262 (4.3L) MFI	X	**B43-S**	**RS4131**	**N/R**	**N/S**	**N/R**	4L60E **18056** 4L80-E **18027**
	V6-292 (4.8L) SFI	C	**B160**	**RS4131**	**N/R**	**N/S**	**N/R**	4L60E S. Pan **18010** 4L60E D. Pan **18056** 4L80-E **18027**
	V8-325 (5.3L) SFI Flex Fuel	4	**B160**	**RS4131**	**N/R**	**N/S**	**N/R**	4L60E **18056** 4L80-E **18027**
	V8-364 (6.0L) SFI	K	**B160**	**RS4131**	**N/R**	**N/S**	**N/R**	4L80-E **18027**
	V8-403 (6.6L) Turbo Diesel	6	**B1441**		**N/R**	**BF7933 KIT**[76]	**N/R**	4L60E **18056** 4L80-E **18027**
	Yukon V8-292 (4.8L) SFI	C	**B160**	**PA4113**	**N/R**	**N/S**	**N/R**	4L60E S. Pan **18010** 4L60E D. Pan **18056**
	V8-325 (5.3L) SFI or Flex Fuel	0,3,J	**B160**	**PA4113**	**N/R**	**N/S**	**N/R**	4L60E S. Pan **18010** 4L60E D. Pan **18056** 4L80-E **18027**
	V8-364 (6.0L) FI Hybrid	5	**B160**	**PA4113**	**N/R**	**N/S**	**N/R**	4L60E S. Pan **18010** 4L60E D. Pan **18056**
	Yukon Denali V8-376 (6.2L) SFI	8	**B160**	**PA4113**	**N/R**	**N/S**	**N/R**	4L60E S. Pan **18010** 4L60E D. Pan **18056**
	Yukon Denali XL V8-376 (6.2L) FI	8	**B160**	**PA4113**	**N/R**	**N/S**	**N/R**	4L60E S. Pan **18010** 4L60E D. Pan **18056** 4L80-E **18027**
	Yukon XL V8-325 (5.3L) SFI or Flex Fuel	0,3,J	**B160**	**PA4113**	**N/R**	**N/S**	**N/R**	4L60E S. Pan **18010** 4L60E D. Pan **18056** 4L80-E **18027**
	V8-364 (6.0L) SFI	K,Y	**B160**	**PA4113**	**N/R**	**N/S**	**N/R**	4L60E S. Pan **18010** 4L60E D. Pan **18056** 4L80-E **18027**
2007	Acadia V6-217 (3.6L) FI	7	**B160**	**PA4418**	**N/R**	**N/S**	**N/R**	
	Canyon L4-178 (2.9L) MFI	9	**B31**	**PA4173**	**N/R**	**N/S**	**N/R**	4L60E S. Pan **20020** 4L60E D. Pan **18056**
	L5-226 (3.7L) MFI	E	**B7010**	**PA4173**	**N/R**	**N/S**	**N/R**	4L60E S. Pan **20020** 4L60E D. Pan **18056**
	Envoy 6-254 (4.2L) SFI Vortec	S	**B7010**	**RS4161**	**N/R**	**N/S**	**N/R**	4L60E S. Pan **18010** 4L60E D. Pan **18056**
	Envoy Denali V8-325 (5.3L) SFI	M	**B160**	**RS4161**	**N/R**	**N/S**	**N/R**	4L60E S. Pan **18010** 4L60E D. Pan **18056**
	Pickups, Sierra Series V6-262 (4.3L) MFI	X	**B43-S**	**PA4113**	**N/R**	**N/S**	**N/R**	4L60E **18056** 4L80-E **18027**
	V8-292 (4.8L) SFI	C,V	**B160**	**PA4113**	**N/R**	**N/S**	**N/R**	4L60E **18056** 4L80-E **18027**
	V8-325 (5.3L) FI Flex Fuel	0,3,Z	**B160**	**PA4113**	**N/R**	**N/S**	**N/R**	4L60E **18056** 4L80-E **18027**

[t] Transmission, Not Model, Determines Which Transmission Filter is Used. OBS = Obsolete. Availability Limited to Distributor Stock.

[76] Contains Pri. and Sec. Fuel Elements.

GMC Light-Duty Trucks Cont'd.

Year	Model and Engine	VIN	Lube	Air	Cabin Air	Fuel	Breather	Trans.[t]
2007	Pickups, Sierra Series V8-325 (5.3L) SFI or FI HO or Hybrid	B,J,T	**B160**	**PA4113**	**N/R**	**N/S**	**N/R**	4L60E **18056** 4L80-E **18027**
	V8-364 (6.0L) SFI or HO	K,N,U,Y	**B160**	**PA4113**	**N/R**	**N/S**	**N/R**	Allison S. Pan (w/o Gskt.) **20004** Allison S. Pan (w/Gskt.) **20016** Allison D. Pan (w/o Gskt.) **20003** Allison D. Pan (w/Gskt.) **20017** Allison Spin-on **BT8460** 4L80-E **18027**
	V8-378 (6.2L) SFI	8	**B160**	**PA4113**	**N/R**	**N/S**	**N/R**	4L60E **18056**
	V8-400 (6.6L) Turbo Diesel	6,D	**B1441**	**CA5352**	**N/R**	**BF7827**	**N/R**	Allison S. Pan (w/o Gskt.) **20004** Allison S. Pan (w/Gskt.) **20016** Allison D. Pan (w/o Gskt.) **20003** Allison D. Pan (w/Gskt.) **20017** Allison Spin-on **BT8460** 4L80-E **18027**
	V8-496 (8.1L) FI	G	**B1438**	**PA4113**	**N/R**	**N/S**	**N/R**	Allison S. Pan (w/o Gskt.) **20004** Allison S. Pan (w/Gskt.) **20016** Allison D. Pan (w/o Gskt.) **20003** Allison D. Pan (w/Gskt.) **20017** Allison Spin-on **BT8460** 4L80-E **18027**
	Savana V6-262 (4.3L) MFI	X	**B43-S**	**RS4131**	**N/R**	**N/S**	**N/R**	4L60E S. Pan **18010** 4L60E D. Pan **18056** 4L80-E **18027**
	V8-294 (4.8L) SFI	V	**B160**	**RS4131**	**N/R**	**N/S**	**N/R**	4L60E S. Pan **18010** 4L60E D. Pan **18056** 4L80-E **18027**
	V8-325 (5.3L) SFI or Flex Fuel	T,Z	**B160**	**RS4131**	**N/R**	**N/S**	**N/R**	4L60E S. Pan **18010** 4L60E D. Pan **18056** 4L80-E **18027**
	V8-364 (6.0L) SFI	U	**B160**	**RS4131**	**N/R**	**N/S**	**N/R**	4L60E S. Pan **18010** 4L60E D. Pan **18056** 4L80-E **18027**
	V8-403 (6.6L) FI Turbo Diesel	2	**B1441**		**N/R**	**BF7933 KIT**[76]	**N/R**	4L60E S. Pan **18010** 4L60E D. Pan **18056** 4L80-E **18027**
	Sierra Denali V8-364 (6.0L) FI	U	**B160**	**PA4113**	**N/R**	**N/S**	**N/R**	4L80-E **18027**
	Yukon V8-292 (4.8L) SFI	C	**B160**	**PA4113**	**N/R**	**N/S**	**N/R**	4L60E S. Pan **18010** 4L60E D. Pan **18056**
	V8-325 (5.3L) FI or Flex Fuel	0,3,J	**B160**	**PA4113**	**N/R**	**N/S**	**N/R**	4L60E S. Pan **18010** 4L60E D. Pan **18056** 4L80-E **18027**
	Yukon Denali V8-376 (6.2L) SFI	8	**B160**	**PA4113**	**N/R**	**N/S**	**N/R**	4 Spd. **18056**
	Yukon Denali XL V8-376 (6.2L) SFI	8	**B160**	**PA4113**	**N/R**	**N/S**	**N/R**	4 Spd. **18056**
	Yukon XL V8-325 (5.3L) SFI or Flex Fuel	0,J	**B160**	**PA4113**	**N/R**	**N/S**	**N/R**	4L60E S. Pan **18010** 4L60E D. Pan **18056** 4L80-E **18027**
	V8-364 (6.0L) SFI	K	**B160**	**PA4113**	**N/R**	**N/S**	**N/R**	4L60E S. Pan **18010** 4L60E D. Pan **18056** 4L80-E **18027**
2006	Canyon 4-169 (2.8L) MFI	8	**B31**	**PA4173**	**N/R**	**N/S**	**N/R**	4L60E S. Pan **20020** 4L60E D. Pan **18056**

OBS = Obsolete. Availability Limited to Distributor Stock. [t] Transmission, Not Model, Determines Which Transmission Filter is Used.

[76] Contains Pri. and Sec. Fuel Elements.

GMC Light-Duty Trucks Cont'd.

Year	Model and Engine	VIN	Lube	Air	Cabin Air	Fuel	Breather	Trans.[t]
2006	Canyon 5-211 (3.5L) MFI	6	**B7010**	**PA4173**	**N/R**	**N/S**	**N/R**	4L60E S. Pan **20020** 4L60E D. Pan **18056**
	Envoy 6-256 (4.2L) SFI Vortec	S	**B7010**	**RS4161**	**N/R**	**N/S**	**N/R**	4L60E S. Pan **18010** 4L60E D. Pan **18056**
	Envoy XL, Envoy Denali V8-325 (5.3L) SFI	M	**B31**	**RS4161**	**N/R**	**N/S**	**N/R**	4L60E S. Pan **18010** 4L60E D. Pan **18056**
	Pickups, Sierra Series V6-262 (4.3L) MFI	X	**B43-S**	**PA4113**	**N/R**	**BF853**	**N/R**	4L60E S. Pan **18010** 4L60E D. Pan **18056** 4L80-E **18027**
	V8-292 (4.8L) SFI	V	**B31**	**PA4113**	**N/R**	**N/S**	**N/R**	4L60E S. Pan **18010** 4L60E D. Pan **18056** 4L80-E **18027**
	V8-325 (5.3L) SFI, Hybrid, or HO	B,T	**B31**	**PA4113**	**N/R**	**N/S**	**N/R**	4L60E S. Pan **18010** 4L60E D. Pan **18056** 4L80-E **18027**
	V8-325 (5.3L) FI Flex Fuel	Z	**B31**	**PA4113**	**N/R**	**N/S**	**N/R**	4L60E S. Pan **18010** 4L60E D. Pan **18056** 4L80-E **18027**
	V8-364 (6.0L) SFI	U	**B31**	**PA4113**	**N/R**	**N/S**	**N/R**	4L60E S. Pan **18010** 4L60E D. Pan **18056** 4L80-E **18027**
	V8-400 (6.6L) Turbo Diesel or HO	2,D	**B1441**	**CA5352**	**N/R**	**BF7827**	**N/R**	Allison S. Pan (w/Gskt.) **20016** Allison S. Pan (w/o Gskt.) **20004** Allison D. Pan (w/o Gskt.) **20003** Allison D. Pan (w/Gskt.) **20017** Allison Spin-on **BT8460** 4L80-E **18027**
	V8-496 (8.1L) FI Vortec	G	**B1438**	**PA4113**	**N/R**	**N/S**	**N/R**	Allison S. Pan (w/o Gskt.) **20004** Allison S. Pan (w/Gskt.) **20016** Allison D. Pan (w/o Gskt.) **20003** Allison D. Pan (w/Gskt.) **20017** Allison Spin-on **BT8460** 4L80-E **18027**
	Savana V6-262 (4.3L) MFI	X	**B43-S**	**RS4131**	**N/R**	**N/S**	**N/R**	4L60E S. Pan **18010** 4L60E D. Pan **18056** 4L80-E **18027**
	V8-294 (4.8L) SFI	V	**B31**	**RS4131**	**N/R**	**N/S**	**N/R**	4L60E S. Pan **18010** 4L60E D. Pan **18056** 4L80-E **18027**
	V8-325 (5.3L) SFI	T	**B31**	**RS4131**	**N/R**	**N/S**	**N/R**	4L60E S. Pan **18010** 4L60E D. Pan **18056** 4L80-E **18027**
	V8-364 (6.0L) SFI or Natural Gas	N,U	**B31**	**RS4131**	**N/R**	**N/S**	**N/R**	4L60E S. Pan **18010** 4L60E D. Pan **18056** 4L80-E **18027**
	V8-400 (6.6L) FI Turbo Diesel	2	**B1441**		**N/R**	**BF7933 KIT**[76]	**N/R**	4L60E S. Pan **18010** 4L60E D. Pan **18056** 4L80-E **18027**
	Yukon, Yukon Denali, Yukon XL V8-294 (4.8L) SFI	V	**B31**	**PA4113**	**N/R**	**N/S**	**N/R**	4L60E S. Pan **18010** 4L60E D. Pan **18056** 4L80-E **18027**
	V8-325 (5.3L) SFI or Flex Fuel	T,Z	**B31**	**PA4113**	**N/R**	**N/S**	**N/R**	4L60E S. Pan **18010** 4L60E D. Pan **18056** 4L80-E **18027**
	V8-364 (6.0L) SFI	U	**B31**	**PA4113**	**N/R**	**N/S**	**N/R**	4L60E S. Pan **18010** 4L60E D. Pan **18056** 4L80-E **18027**

[t] Transmission, Not Model, Determines Which Transmission Filter is Used. OBS = Obsolete. Availability Limited to Distributor Stock.

[76] Contains Pri. and Sec. Fuel Elements.

GMC Light-Duty Trucks Cont'd.

Year	Model and Engine	VIN	Lube	Air	Cabin Air	Fuel	Breather	Trans.[t]
2006	Yukon, Yukon Denali, Yukon XL V8-496 (8.1L) SFI Vortec	G	**B1438**	**PA4113**	**N/R**	**N/S**	**N/R**	Allison S. Pan (w/Gskt.) **20016** Allison S. Pan (w/o Gskt.) **20004** Allison D. Pan (w/o Gskt.) **20003** Allison D. Pan (w/Gskt.) **20017** Allison Spin-on **BT8460** 4L80-E **18027**
2005	Canyon 4-169 (2.8L) MFI	8	**B31**	**PA4173**	**N/R**	**BF1046**	**N/R**	4L60E S. Pan **20020** 4L60E D. Pan **18056**
	5-211 (3.5L) MFI	6	**B7010**	**PA4173**	**N/R**	**BF1046**	**N/R**	4L60E S. Pan **20020** 4L60E D. Pan **18056**
	Envoy 6-254 (4.2L) SFI	S	**B7010**	**RS4161**	**N/R**	**BF7762**	**N/R**	4L60E S. Pan **18010** 4L60E D. Pan **18056**
	V8-325 (5.3L) SFI	M,P	**B31**	**PA4113**	**N/R**	**BF853**	**N/R**	4L60E S. Pan **18010** 4L60E D. Pan **18056**
	Jimmy V6-262 (4.3L) FI Canada	X	2WD **B43-S** 4WD **B35-S**	**PA2257**	**N/R**	**BF7658**	**N/R**	4L60E D. Pan **18056**
	Pickups, Sierra Series V6-262 (4.3L) MFI	X	**B43-S**	**PA4113**	**PA4169**	**BF853**	**N/R**	4L60E S. Pan **18010** 4L60E D. Pan **18056** 4L80-E **18027**
	V8-292 (4.8L) SFI	V	**B31**	**PA4113**	**PA4169**	**BF853**	**N/R**	4L60E S. Pan **18010** 4L60E D. Pan **18056** 4L80-E **18027**
	V8-325 (5.3L) SFI or Hybrid	B,T	**B31**	**PA4113**	**PA4169**	**BF853**	**N/R**	4L60E S. Pan **18010** 4L60E D. Pan **18056** 4L80-E **18027**
	V8-325 (5.3L) FI HO	B	**B31**	**PA4113**	**PA4169**	**N/S**	**N/R**	4L60E S. Pan **18010** 4L60E D. Pan **18056** 4L80-E **18027**
	V8-325 (5.3L) SFI Flex Fuel	Z	**B31**	**PA4113**	**PA4169**	**BF7808**	**N/R**	4L60E S. Pan **18010** 4L60E D. Pan **18056** 4L80-E **18027**
	V8-364 (6.0L) SFI	U	**B31**	**PA4113**	**PA4169**	**BF853**	**N/R**	4L60E S. Pan **18010** 4L60E D. Pan **18056** 4L80-E **18027**
	V8-400 (6.6L) Turbo Diesel	2	**B1441**	**PA4134**	**PA4169**	**BF7827**	**N/R**	Allison S. Pan (w/o Gskt.) **20004** Allison S. Pan (w/Gskt.) **20016** Allison D. Pan (w/o Gskt.) **20003** Allison D. Pan (w/Gskt.) **20017** Allison Spin-on **BT8460** 4L80-E **18027**
	V8-496 (8.1L) SFI	G	**B1438**	**PA4113**	**PA4169**	**BF853**	**N/R**	Allison S. Pan (w/o Gskt.) **20004** Allison S. Pan (w/Gskt.) **20016** Allison D. Pan (w/o Gskt.) **20003** Allison D. Pan (w/Gskt.) **20017** Allison Spin-on **BT8460** 4L80-E **18027**
	Safari V6-262 (4.3L) MFI	X	**B43-S**	**PA2257**	**N/R**	**BF853**	**N/R**	4L60E S. Pan **18010** 4L60E D. Pan **18056**
	Savana V6-262 (4.3L) MFI	X	**B43-S**	**RS4131**	**N/R**	2 Male Ends **BF853** 1 Quick Connect End **BF1171**	**N/R**	4L60E S. Pan **18010** 4L60E D. Pan **18056** 4L80-E **18027**

OBS = Obsolete. Availability Limited to Distributor Stock. [t] Transmission, Not Model, Determines Which Transmission Filter is Used.

GMC Light-Duty Trucks Cont'd.

Year	Model and Engine	VIN	Lube	Air	Cabin Air	Fuel	Breather	Trans.[t]
2005	Savana V8-294 (4.8L) SFI	V	**B31**	**RS4131**	**N/R**	2 Male Ends **BF853** 1 Quick Connect End **BF1171**	**N/R**	4L60E S. Pan **18010** 4L60E D. Pan **18056** 4L80-E **18027**
	V8-325 (5.3L) SFI	T	**B31**	**RS4131**	**N/R**	2 Male Ends **BF853** 1 Quick Connect End **BF1171**	**N/R**	4L60E **18056** 4L80-E **18027**
	V8-364 (6.0L) SFI Natural Gas	N	**B31**	**RS4131**	**N/R**	**BF1171**	**N/R**	4L60E S. Pan **18010** 4L60E D. Pan **18056** 4L80-E **18027**
	V8-364 (6.0L) SFI	U	**B31**	**RS4131**	**N/R**	2 Male Ends **BF853** 1 Quick Connect End **BF1171**	**N/R**	4L60E S. Pan **18010** 4L60E D. Pan **18056** 4L80-E **18027**
	Yukon, Yukon Denali, Yukon XL V8-292 (4.8L) SFI	V	**B31**	**PA4113**	Opt. **PA4169**	**BF853**	**N/R**	4L60E S. Pan **18010** 4L60E D. Pan **18056** 4L80-E **18027**
	V8-325 (5.3L) SFI	T	**B31**	**PA4113**	Opt. **PA4169**	**BF853**	**N/R**	4L60E S. Pan **18010** 4L60E D. Pan **18056** 4L80-E **18027**
	V8-325 (5.3L) SFI Flex Fuel	Z	**B31**	**PA4113**	Opt. **PA4169**	**BF7808**	**N/R**	4L60E S. Pan **18010** 4L60E D. Pan **18056** 4L80-E **18027**
	V8-364 (6.0L) SFI	U	**B31**	**PA4113**	Opt. **PA4169**	**BF853**	**N/R**	4L60E S. Pan **18010** 4L60E D. Pan **18056** 4L80-E **18027**
	V8-496 (8.1L) SFI	G	**B1438**	**PA4113**	Opt. **PA4169**	**BF853**	**N/R**	Allison S. Pan (w/o Gskt.) **20004** Allison S. Pan (w/Gskt.) **20016** Allison D. Pan (w/o Gskt.) **20003** Allison D. Pan (w/Gskt.) **20017** Allison Spin-on **BT8460** 4L80-E **18027**
2004	Canyon 4-169 (2.8L) MFI	8	**B31**	**PA4173**	**N/R**	**BF1046**	**N/R**	4L60E S. Pan **20020** 4L60E D. Pan **18056**
	5-211 (3.5L) MFI	6	2WD **B31** 4WD **B7010**	**PA4173**	**N/R**	**BF1046**	**N/R**	4L60E S. Pan **20020** 4L60E D. Pan **18056**
	Envoy 6-254 (4.2L) SFI	S	**B7010**	**RS4161**	**N/R**	**BF7762**	**N/R**	4L60E S. Pan **18010** 4L60E D. Pan **18056**
	V8-325 (5.3L) SFI	T	**B31**	**RS4161**	**N/R**	**BF7762**	**N/R**	4L60E S. Pan **18010** 4L60E D. Pan **18056**
	Jimmy V6-262 (4.3L) FI Canada	W	2WD **B43-S** 4WD **B35-S**	**PA2257**	**N/R**	**BF7658**	**N/R**	4L60E D. Pan **18056**
	Pickups, Sierra Series V6-262 (4.3L) MFI	X	**B43-S**	**PA4113**	Opt. **PA4169**	**BF853**	**N/R**	4L60E S. Pan **18010** 4L60E D. Pan **18056** 4L80-E **18027**
	V8-293 (4.8L) SFI	V	**B31**	**PA4113**	Opt. **PA4169**	**BF853**	**N/R**	4L60E S. Pan **18010** 4L60E D. Pan **18056** 4L80-E **18027**
	V8-325 (5.3L) SFI	T,Z	**B31**	**PA4113**	Opt. **PA4169**	**BF853**	**N/R**	4L60E S. Pan **18010** 4L60E D. Pan **18056** 4L80-E **18027**
	V8-364 (6.0L) SFI	U	**B31**	**PA4113**	Opt. **PA4169**	**BF853**	**N/R**	4L60E S. Pan **18010** 4L60E D. Pan **18056** 4L80-E **18027**

[t] Transmission, Not Model, Determines Which Transmission Filter is Used. OBS = Obsolete. Availability Limited to Distributor Stock.

GMC Light-Duty Trucks Cont'd.

Year	Model and Engine	VIN	Lube	Air	Cabin Air	Fuel	Breather	Trans.[t]
2004	Pickups, Sierra Series V8-400 (6.6L) Turbo Diesel	1,2	**B1441**	**PA4134**	Opt. **PA4169**	**BF7827**	**N/R**	Allison S. Pan (w/o Gskt.) **20004** Allison S. Pan (w/Gskt.) **20016** Allison D. Pan (w/o Gskt.) **20003** Allison D. Pan (w/Gskt.) **20017** Allison Spin-on **BT8460** 4L80-E **18027**
	V8-496 (8.1L) SFI	G	**B1438**	**PA4113**	Opt. **PA4169**	**BF853**	**N/R**	Allison S. Pan (w/o Gskt.) **20004** Allison S. Pan (w/Gskt.) **20016** Allison D. Pan (w/o Gskt.) **20003** Allison D. Pan (w/Gskt.) **20017** Allison Spin-on **BT8460** 4L80-E **18027**
	Safari V6-262 (4.3L) MFI	X	**B43-S**	**PA2257**	**N/R**	**BF853**	**N/R**	4L60E S. Pan **18010** 4L60E D. Pan **18056**
	Savana V6-262 (4.3L) MFI	X	**B43-S**	**RS4131**	**N/R**	Thd. One End **BF1171** Thd. Both Ends **BF853**	**N/R**	4L60E S. Pan **18010** 4L60E D. Pan **18056**
	V8-292 (4.8L) SFI	V	**B31**	**RS4131**	**N/R**	Thd. One End **BF1171** Thd. Both Ends **BF853**	**N/R**	4L60E S. Pan **18010** 4L60E D. Pan **18056** 4L80-E **18027**
	V8-325 (5.3L) SFI	T	**B31**	**RS4131**	**N/R**	Thd. One End **BF1171** Thd. Both Ends **BF853**	**N/R**	4L60E S. Pan **18010** 4L60E D. Pan **18056** 4L80-E **18027**
	V8-364 (6.0L) SFI Natural Gas	N	**B31**	**RS4131**	**N/R**	**N/R**	**N/R**	4L60E S. Pan **18010** 4L60E D. Pan **18056** 4L80-E **18027**
	V8-364 (6.0L) SFI	U	**B31**	**RS4131**	**N/R**	Thd. One End **BF1171** Thd. Both Ends **BF853**	**N/R**	4L60E S. Pan **18010** 4L60E D. Pan **18056** 4L80-E **18027**
	Sonoma V6-262 (4.3L) MFI	X	**B43-S**	**PA2257**	**N/R**	**BF7658**	**N/R**	4L60E S. Pan **18010** 4L60E D. Pan **18056**
	Yukon, Yukon Denali, Yukon XL V8-293 (4.8L) SFI	V	**B31**	**PA4113**	**PA4169**	**BF853**	**N/R**	4L60E S. Pan **18010** 4L60E D. Pan **18056** 4L80-E **18027**
	V8-325 (5.3L) SFI	T	**B31**	**PA4113**	**PA4169**	**BF853**	**N/R**	4L60E S. Pan **18010** 4L60E D. Pan **18056** 4L80-E **18027**
	V8-325 (5.3L) SFI Flex Fuel	Z	**B31**	**PA4113**	**PA4169**	**BF7808**	**N/R**	4L60E S. Pan **18010** 4L60E D. Pan **18056** 4L80-E **18027**
	V8-364 (6.0L) SFI	U	**B31**	**PA4113**	Opt. **PA4169**	**BF853**	**N/R**	4L60E S. Pan **18010** 4L60E D. Pan **18056** 4L80-E **18027**

OBS = Obsolete. Availability Limited to Distributor Stock. [t] Transmission, Not Model, Determines Which Transmission Filter is Used.

GMC Light-Duty Trucks Cont'd.

Year	Model and Engine	VIN	Lube	Air	Cabin Air	Fuel	Breather	Trans.[t]
2004	Yukon, Yukon Denali, Yukon XL V8-496 (8.1L) SFI	G	**B1438**	**PA4113**	**PA4169**	**BF853**	**N/R**	Allison S. Pan (w/o Gskt.) **20004** Allison S. Pan (w/Gskt.) **20016** Allison D. Pan (w/o Gskt.) **20003** Allison D. Pan (w/Gskt.) **20017** Allison Spin-on **BT8460** 4L80-E **18027**
2003	Envoy 6-254 (4.2L) SFI	S	**B7010**	**RS4161**	**N/R**	**BF7762**	**N/R**	4L60E S. Pan **18010** 4L60E D. Pan **18056**
	Envoy XL V8-323 (5.3L) SFI	P	**B31**	**RS4161**	**N/R**	**BF7762**	**N/R**	4L60-E 2WD **18010** 4L60-E 4WD **18056**
	Jimmy V6-262 (4.3L) FI Canada	W	2WD **B43-S** 4WD **B35-S**	**PA2257**	**N/R**	**BF7658**	**N/R**	4L60E D. Pan **18056**
	Pickups, Sierra Series V6-262 (4.3L) MFI	X	**B43-S**	**PA4113**	Opt. **PA4169**	**BF853**	**N/R**	4L60E S. Pan **18010** 4L60E D. Pan **18056**
	V8-293 (4.8L) SFI	V	**B31**	**PA4113**	Opt. **PA4169**	**BF853**	**N/R**	4L60E S. Pan **18010** 4L60E D. Pan **18056** 4L80-E **18027**
	V8-325 (5.3L) SFI	T	**B31**	**PA4113**	Opt. **PA4169**	**BF853**	**N/R**	4L60E S. Pan **18010** 4L60E D. Pan **18056** 4L80-E **18027**
	V8-325 (5.3L) SFI Flex Fuel	Z	**B31**	**PA4113**	Opt. **PA4169**	**BF7808**	**N/R**	4L60E S. Pan **18010** 4L60E D. Pan **18056** 4L80-E **18027**
	V8-364 (6.0L) SFI	U	**B31**	**PA4113**	Opt. **PA4169**	**BF853**	**N/R**	Allison S. Pan (w/o Gskt.) **20004** Allison S. Pan (w/Gskt.) **20016** Allison D. Pan (w/o Gskt.) **20003** Allison D. Pan (w/Gskt.) **20017** Allison Spin-on **BT8460** 4L80-E **18027**
	V8-400 (6.6L) Turbo Diesel	1	**B1441**	**PA4134**	Opt. **PA4169**	**BF7827**	**N/R**	Allison S. Pan (w/o Gskt.) **20004** Allison S. Pan (w/Gskt.) **20016** Allison D. Pan (w/o Gskt.) **20003** Allison D. Pan (w/Gskt.) **20017** Allison Spin-on **BT8460** 4L80-E **18027**
	V8-496 (8.1L) SFI	G	**B1438**	**PA4113**	Opt. **PA4169**	**BF853**	**N/R**	Allison S. Pan (w/o Gskt.) **20004** Allison S. Pan (w/Gskt.) **20016** Allison D. Pan (w/o Gskt.) **20003** Allison D. Pan (w/Gskt.) **20017** Allison Spin-on **BT8460** 4L80-E **18027**
	Safari V6-262 (4.3L) MFI	X	**B43-S**	**PA2257**	**N/R**	**BF853**	**N/R**	4L60E S. Pan **18010** 4L60E D. Pan **18056**
	Savana V6-262 (4.3L) MFI	X	**B43-S**	**RS4131**	**N/R**	Thd. One End **BF1171** Thd. Both Ends **BF853**	**N/R**	4L60E S. Pan **18010** 4L60E D. Pan **18056**

[t] Transmission, Not Model, Determines Which Transmission Filter is Used. OBS = Obsolete. Availability Limited to Distributor Stock.

GMC Light-Duty Trucks Cont'd.

Year	Model and Engine	VIN	Lube	Air	Cabin Air	Fuel	Breather	Trans.[t]
2003	Savana V8-292 (4.8L) SFI	V	**B31**	**RS4131**	**N/R**	Thd. One End **BF1171** Thd. Both Ends **BF853**	**N/R**	4L60E S. Pan **18010** 4L60E D. Pan **18056**
	V8-325 (5.3L) SFI	T	**B31**	**RS4131**	**N/R**	Thd. One End **BF1171** Thd. Both Ends **BF853**	**N/R**	4L60E S. Pan **18010** 4L60E D. Pan **18056**
	V8-364 (6.0L) SFI	U	**B31**	**RS4131**	**N/R**	Thd. One End **BF1171** Thd. Both Ends **BF853**	**N/R**	4L60E S. Pan **18010** 4L60E D. Pan **18056**
	Sonoma 4-134 (2.2L) MFI	H	**B43-S**	**PA2257**	**N/R**	**BF7937**	**N/R**	4L60E S. Pan **18010** 4L60E D. Pan **18056**
	V6-262 (4.3L) MFI	X	**B43-S**	**PA2257**	**N/R**	**BF7658**	**N/R**	4L60E S. Pan **18010** 4L60E D. Pan **18056**
	Yukon, Yukon Denali, Yukon XL V8-293 (4.8L) SFI	V	**B31**	**PA4113**	**PA4169**	**BF853**	**N/R**	4L60E S. Pan **18010** 4L60E D. Pan **18056**
	V8-325 (5.3L) SFI	T	**B31**	**PA4113**	**PA4169**	**BF853**	**N/R**	4L60E S. Pan **18010** 4L60E D. Pan **18056**
	V8-325 (5.3L) SFI Flex Fuel	Z	**B31**	**PA4113**	**PA4169**	**BF7808**	**N/R**	4L60E S. Pan **18010** 4L60E D. Pan **18056**
	V8-364 (6.0L) SFI	U	**B31**	**PA4113**	Opt. **PA4169**	**BF853**	**N/R**	4L60E S. Pan **18010** 4L60E D. Pan **18056** 4L80-E **18027**
	V8-496 (8.1L) SFI	G	**B1438**	**PA4113**	**PA4169**	**BF853**	**N/R**	Allison S. Pan (w/o Gskt.) **20004** Allison S. Pan (w/Gskt.) **20016** Allison D. Pan (w/o Gskt.) **20003** Allison D. Pan (w/Gskt.) **20017** Allison Spin-on **BT8460** 4L80-E **18027**
2002	Envoy 6-254 (4.2L) SFI	S	**B1432**	**RS4161**	**N/R**	**BF7762**	**N/R**	4L60E S. Pan **18010** 4L60E D. Pan **18056**
	Jimmy V6-262 (4.3L) FI Canada	W	2WD **B43-S** 4WD **B35-S**	**PA2257**	**N/R**	**BF7658**	**N/R**	4L60E D. Pan **18056**
	Pickups, Sierra Series V6-262 (4.3L) SFI	W,X	**B43-S**	**PA4113**	**PA4149 KIT**	**BF853**	**N/R**	4L60E S. Pan **18010** 4L60E D. Pan **18056** 4L80-E **18027**
	V8-293 (4.8L) SFI	V	**B1432**	**PA4113**	**PA4149 KIT**	**BF853**	**N/R**	4L60E S. Pan **18010** 4L60E D. Pan **18056** 4L80-E **18027**
	V8-325 (5.3L) SFI	T	**B1432**	**PA4113**	**PA4149 KIT**	**BF853**	**N/R**	4L60E S. Pan **18010** 4L60E D. Pan **18056** 4L80-E **18027**
	V8-325 (5.3L) SFI Flex Fuel	Z	**B1432**	**PA4113**	**PA4149 KIT**	**BF7808**	**N/R**	4L60E S. Pan **18010** 4L60E D. Pan **18056** 4L80-E **18027**
	V8-364 (6.0L) SFI or Natural Gas	U	**B1432**	**PA4113**	**PA4149 KIT**	**BF853**	**N/R**	4L60E S. Pan **18010** 4L60E D. Pan **18056** 4L80-E **18027**
	V8-400 (6.6L) Turbo Diesel	1	**B1441**	**PA4134**	**PA4149 KIT**	**BF7827**	**N/R**	Allison S. Pan (w/Gskt.) **20016** Allison S. Pan (w/o Gskt.) **20004** Allison D. Pan (w/o Gskt.) **20003** Allison D. Pan (w/Gskt.) **20017** Allison Spin-on **BT8460** 4L60E **18027**

OBS = Obsolete. Availability Limited to Distributor Stock. [t] Transmission, Not Model, Determines Which Transmission Filter is Used.

GMC Light-Duty Trucks Cont'd.

Year	Model and Engine	VIN	Lube	Air	Cabin Air	Fuel	Breather	Trans.[t]
2002	Pickups, Sierra Series V8-496 (8.1L) SFI	G	**B1438**	Exc. Chassis Cab **PA4113** Chassis Cab **RS3707**	**PA4149 KIT**	**BF853**	**N/R**	Allison S. Pan (w/o Gskt.) **20004** Allison S. Pan (w/Gskt.) **20016** Allison D. Pan (w/o Gskt.) **20003** Allison D. Pan (w/Gskt.) **20017** Allison Spin-on **BT8460** 4L80-E **18027**
	Safari V6-262 (4.3L) MFI	W	**B43-S**	**PA2257**	**N/R**	**BF853**	**N/R**	4L60E S. Pan **18010** 4L60E D. Pan **18056**
	Savana, Vans, G Series V6-262 (4.3L) SFI	W	**B43-S**	**RS4131**	**N/R**	**BF1046**	**N/R**	4L60E S. Pan **18010** 4L60E D. Pan **18056**
	V8-305 (5.0L) SFI	M	**B1428**	**RS4131**	**N/R**	**BF1046**	**N/R**	4L60E S. Pan **18010** 4L60E D. Pan **18056**
	V8-350 (5.7L) SFI	R	**B1428**	**RS4131**	**N/R**	**BF1046**	**N/R**	4L60E S. Pan **18010** 4L60E D. Pan **18056**
	V8-395 (6.5L) FI Turbo Diesel	F	**B1428**	**PA2232**	**N/R**	**BF7674-D**	**N/R**	**18027**
	V8-496 (8.1L) MFI	G	**B1438**	**RS4131**	**N/R**	**BF1046**	**N/R**	**18027**
	Sonoma 4-134 (2.2L) SFI Flex Fuel	5	**B43-S**	**PA2257**	**N/R**	**BF7937**	**N/R**	4L60E S. Pan **18010** 4L60E D. Pan **18056**
	V6-262 (4.3L) SFI	W	2WD **B43-S** 4WD **B35-S**	**PA2257**	**N/R**	**BF7658**	**N/R**	4L60E S. Pan **18010** 4L60E D. Pan **18056**
	Yukon, Yukon Denali V8-293 (4.8L) SFI	V	**B1432**	**PA4113**	**PA4149 KIT**	**BF853**	**N/R**	4L60E S. Pan **18010** 4L60E D. Pan **18056** 4L80-E **18027**
	V8-325 (5.3L) SFI	T	**B1432**	**PA4113**	**PA4149 KIT**	**BF853**	**N/R**	4L60E S. Pan **18010** 4L60E D. Pan **18056** 4L80-E **18027**
	V8-325 (5.3L) SFI Flex Fuel	Z	**B1432**	**PA4113**	**PA4149 KIT**	**BF7808**	**N/R**	4L60E S. Pan **18010** 4L60E D. Pan **18056** 4L80-E **18027**
	V8-364 (6.0L) SFI	U	**B1432**	**PA4113**	**PA4149 KIT**	**BF853**	**N/R**	4L60E S. Pan **18010** 4L60E D. Pan **18056** 4L80-E **18027**
	V8-496 (8.1L) SFI	G	**B1438**	**PA4113**	**PA4149 KIT**	**BF853**	**N/R**	Allison S. Pan (w/o Gskt.) **20004** Allison S. Pan (w/Gskt.) **20016** Allison D. Pan (w/o Gskt.) **20003** Allison D. Pan (w/Gskt.) **20017** Allison Spin-on **BT8460** 4L80-E **18027**
2001	Envoy, Jimmy V6-262 (4.3L) SFI	W	2WD **B43-S** 4WD **B35-S**	**PA2257**	**N/R**	**BF7658**	**N/R**	4L60E S. Pan **18010** 4L60E D. Pan **18056**
	Pickups, Sierra Series, Yukon V6-262 (4.3L) SFI	W	**B43-S**	**PA4113**	**PA4149 KIT**	**BF853**	**N/R**	4L60E S. Pan **18010** 4L60E D. Pan **18056** 4L80-E **18027**
	V8-293 (4.8L) SFI	V	**B1432**	**PA4113**	**PA4149 KIT**	**BF853**	**N/R**	4L60E S. Pan **18010** 4L60E D. Pan **18056** 4L80-E **18027**
	V8-325 (5.3L) SFI	T	**B1432**	**PA4113**	**PA4149 KIT**	**BF853**	**N/R**	4L60E S. Pan **18010** 4L60E D. Pan **18056** 4L80-E **18027**
	V8-364 (6.0L) SFI	U	**B1432**	**PA4113**	**PA4149 KIT**	**BF853**	**N/R**	4L60E S. Pan **18010** 4L60E D. Pan **18056** 4L80-E **18027**
	V8-395 (6.5L) Turbo Diesel	F	**B1428**	**RS3707**	**PA4149 KIT**	**BF1201**	**N/R**	4L80-E **18027**

[t] Transmission, Not Model, Determines Which Transmission Filter is Used. OBS = Obsolete. Availability Limited to Distributor Stock.

GMC Light-Duty Trucks Cont'd.

Year	Model and Engine	VIN	Lube	Air	Cabin Air	Fuel	Breather	Trans.[t]
2001	Pickups, Sierra Series, Yukon V8-400 (6.6L) Turbo Diesel	1	**B1441**	**PA4134**	**PA4149 KIT**	**BF7827**	**N/R**	Allison S. Pan (w/o Gskt.) **20004** Allison S. Pan (w/Gskt.) **20016** Allison D. Pan (w/o Gskt.) **20003** Allison D. Pan (w/Gskt.) **20017** Allison Spin-on **BT8460** 4L80-E **18027**
	V8-496 (8.1L) SFI	G	**B1438**	**PA4113**	**PA4149 KIT**	**BF853**	**N/R**	Allison S. Pan (w/o Gskt.) **20004** Allison S. Pan (w/Gskt.) **20016** Allison D. Pan (w/o Gskt.) **20003** Allison D. Pan (w/Gskt.) **20017** Allison Spin-on **BT8460** 4L80-E **18027**
	Safari V6-262 (4.3L) SFI	W	2WD **B43-S** 4WD **B35-S**	**PA2257**	**N/R**	**BF853**	**N/R**	4L60E S. Pan **18010** 4L60E D. Pan **18056** 4L80-E **18027**
	Savana, Vans, G Series V6-262 (4.3L) SFI	W	**B43-S**	**RS4131**	**N/R**	**BF1046**	**N/R**	4L60E S. Pan **18010** 4L60E D. Pan **18056** 4L80-E **18027**
	V8-305 (5.0L) SFI	M	**B1428**	**RS4131**	**N/R**	**BF1046**	**N/R**	4L60E S. Pan **18010** 4L60E D. Pan **18056** 4L80-E **18027**
	V8-350 (5.7L) SFI	R	**B1428**	**RS4131**	**N/R**	**BF1046**	**N/R**	4L60E S. Pan **18010** 4L60E D. Pan **18056** 4L80-E **18027**
	V8-395 (6.5L) Turbo Diesel	F	**B1428**	**PA2232**	**N/R**	Ele. **BF7674-D**	**N/R**	**18027**
	V8-496 (8.1L) MFI	G	**B1438**	**RS4131**	**N/R**	**BF1046**	**N/R**	**18027**
	Sonoma 4-134 (2.2L) SFI or Flex Fuel	4,5	**B43-S**	**PA2257**	**N/R**	Exc. Flex Fuel **BF7937** Flex Fuel **BF7658**	**N/R**	4L60E S. Pan **18010** 4L60E D. Pan **18056**
	V6-262 (4.3L) SFI	W	2WD **B43-S** 4WD **B35-S**	**PA2257**	**N/R**	**BF7658**	**N/R**	4L60E S. Pan **18010** 4L60E D. Pan **18056**
2000	Envoy, Jimmy, Sonoma 4-133 (2.2L) SFI	4,5	**B43-S**	**PA2257**	**N/R**	**BF7658**	**N/R**	4L60E S. Pan **18010** 4L60E D. Pan **18056**
	V6-262 (4.3L) SFI	W,X	2WD **B43-S** 4WD **B35-S**	**PA2257**	**N/R**	**BF7658**	**N/R**	4L60E S. Pan **18010** 4L60E D. Pan **18056**
	Pickups, Sierra Series, Yukon V6-262 (4.3L) SFI	W	2WD **B43-S** 4WD **B35-S**	**PA4113**	**PA4149 KIT**	**BF853**	**N/R**	4L60E S. Pan **18010** 4L60E D. Pan **18056** 4L80-E **18027**
	V8-293 (4.8L) SFI	V	**B1432**	**PA4113**	**PA4149 KIT**	**BF853**	**N/R**	4L60E S. Pan **18010** 4L60E D. Pan **18056** 4L80-E **18027**
	V8-323 (5.3L) SFI	T	**B1432**	**PA4113**	**PA4149 KIT**	**BF853**	**N/R**	4L60E S. Pan **18010** 4L60E D. Pan **18056** 4L80-E **18027**
	V8-350 (5.7L) SFI	R	**B35-S**	Std. **RS3707** w/Foam **RS3735**	**PA4149 KIT**	**BF853**	**N/R**	4L60E S. Pan **18010** 4L60E D. Pan **18056** 4L80-E **18027**
	V8-364 (6.0L) SFI	U	**B1432**	**PA4113**	**PA4149 KIT**	**BF853**	**N/R**	4L60E S. Pan **18010** 4L60E D. Pan **18056** 4L80-E **18027**
	V8-454 (7.4L) SFI	J	**B1438**	Std. **RS3707** w/Foam **RS3735**	**PA4149 KIT**	**BF853**	**N/R**	4L60E S. Pan **18010** 4L60E D. Pan **18056** 4L80-E **18027**
	Safari V6-262 (4.3L) SFI	W	**B43-S**	**PA2257**	**N/R**	**BF853**	**N/R**	4L60E S. Pan **18010** 4L60E D. Pan **18056**

OBS = Obsolete. Availability Limited to Distributor Stock. [t] Transmission, Not Model, Determines Which Transmission Filter is Used.

GMC Light-Duty Trucks Cont'd.

Year	Model and Engine	VIN	Lube	Air	Cabin Air	Fuel	Breather	Trans.[t]
2000	Savana, Vans, G Series V6-262 (4.3L) SFI	W	**B43-S**	**PA2178**	**N/R**	2 Quick Connect **BF1046** Thd. One End **BF7658**	**N/R**	4L60E S. Pan **18010** 4L60E D. Pan **18056** 4L80-E **18027**
	V8-305 (5.0L) SFI	M	**B1428**	**PA2178**	**N/R**	2 Quick Connect **BF1046** Thd. One End **BF7658**	**N/R**	4L60E S. Pan **18010** 4L60E D. Pan **18056** 4L80-E **18027**
	V8-350 (5.7L) SFI	R	**B1428**	**PA2178**	**N/R**	2 Quick Connect **BF1046** Thd. One End **BF7658**	**N/R**	4L60E S. Pan **18010** 4L60E D. Pan **18056** 4L80-E **18027**
	V8-395 (6.5L) Turbo Diesel	F	**B1428**	**PA2232**	**N/R**	**BF7674-D**	**N/R**	**18027**
	V8-454 (7.4L) SFI	J	3 3/16 In. **B1438** 5 11/32 In. **B1428**	**PA2178**	**N/R**	2 Quick Connect **BF1046** Thd. One End **BF7658**	**N/R**	**18027**
	Yukon V8-395 (6.5L) Turbo Diesel	F	**B1428**	Std. **RS3707** HvyDty. **RS3706**	**N/R**	**BF1201**	**N/R**	4L60E S. Pan **18010** 4L60E D. Pan **18056** 4L80-E **18027**
	Yukon Denali V8-350 (5.7L) FI	R	2WD **B43-S** 4WD **B35-S**	Std. **RS3707** w/Foam **RS3735**	**N/R**	**BF853**	**N/R**	4L60E S. Pan **18010** 4L60E D. Pan **18056**
1999	Envoy, Jimmy, Sonoma 4-133 (2.2L) SFI	4	**B43-S**	**PA2257**	**N/R**	**BF7658**	**N/R**	4L60E S. Pan **18010** 4L60E D. Pan **18056**
	V6-262 (4.3L) SFI	W,X	**B35-S**	**PA2257**	**N/R**	**BF7658**	**N/R**	4L60E S. Pan **18010** 4L60E D. Pan **18056**
	Pickups, Sierra Series, Suburban, Yukon V6-262 (4.3L) SFI	W	**B35-S**	**PA4113**	**PA4149 KIT**	**BF853**	**N/R**	4L60E S. Pan **18010** 4L60E D. Pan **18056** 4L80-E **18027**
	V8-293 (4.8L) SFI	V	**B1432**	**PA4113**	**PA4149 KIT**	**BF853**	**N/R**	4L60E S. Pan **18010** 4L60E D. Pan **18056**
	V8-305 (5.0L) SFI	M	2WD **B1428** 4WD **B35-S**	Std. **RS3707** HvyDty. **RS3706**	**N/R**	**BF853**	**N/R**	4L60E S. Pan **18010** 4L60E D. Pan **18056** 4L80-E **18027**
	V8-323 (5.3L) SFI	T	**B1432**	**PA4113**	**PA4149 KIT**	**BF853**	**N/R**	4L60E S. Pan **18010** 4L60E D. Pan **18056**
	V8-350 (5.7L) SFI	R	2WD **B1428** 4WD **B35-S**	Std. **RS3707** HvyDty. **RS3706**	**N/R**	**BF853**	**N/R**	4L60E S. Pan **18010** 4L60E D. Pan **18056** 4L80-E **18027**
	V8-364 (6.0L) SFI	U	**B1432**	**PA4113**	**PA4149 KIT**	**BF853**	**N/R**	4L60E S. Pan **18010** 4L60E D. Pan **18056**
	V8-395 (6.5L) SFI Turbo Diesel	F	**B1428**	**RS3707**	**PA4149 KIT**	**BF1201**	**N/R**	4L60-E **18056** 4L80-E **18027**
	V8-454 (7.4L) SFI	J	To 5/10/99 **B1428** 5/10/99-on **B1438**	Std. **RS3707** HvyDty. **RS3706**	**PA4149 KIT**	**BF853**	**N/R**	4L60E S. Pan **18010** 4L60E D. Pan **18056** 4L80-E **18027**
	Safari V6-262 (4.3L) SFI	W	**B35-S**	**PA2257**	**N/R**	**BF853**	**N/R**	4L60E S. Pan **18010** 4L60E D. Pan **18056**
	Savana, Vans, G Series V6-262 (4.3L) SFI	W	**B35-S**	**PA2178**	**N/R**	**BF1046**	**N/R**	4L60E S. Pan **18010** 4L60E D. Pan **18056**
	V8-305 (5.0L) SFI	M	**B1428**	**PA2178**	**N/R**	**BF1046**	**N/R**	4L60E S. Pan **18010** 4L60E D. Pan **18056**
	V8-350 (5.7L) SFI	R	3 11/16 In. **B1438** 5 11/32 In. **B1428**	**PA2178**	**N/R**	**BF1046**	**N/R**	4L60E S. Pan **18010** 4L60E D. Pan **18056**
	V8-395 (6.5L) Turbo Diesel	F	**B1428**	**PA2232**	**N/R**	**BF7674-D**	**N/R**	4L60E S. Pan **18010** 4L60E D. Pan **18056**
	V8-454 (7.4L) SFI	J	To 5/10/99 **B1428** 5/10/99-on **B1438**	**PA2232**	**N/R**	**BF1046**	**N/R**	4L60E S. Pan **18010** 4L60E D. Pan **18056**
	Vans, P Series V6-262 (4.3L) CPI	W	**B35-S**	**PA2232**	**N/R**	**BF853**	**N/R**	**18027**
	V8-350 (5.7L) SFI	R	**B35-S**	**PA2232**	**N/R**	**BF853**	**N/R**	**18027**
	V8-395 (6.5L) Turbo Diesel	F	**B1428**	**PA2232**	**N/R**	**BF1201**	**N/R**	**18027**
	V8-395 (6.5L) Diesel	Y	**B1428**	**PA2073**	**N/R**	**BF1201**	**N/R**	**18027**
	V8-454 (7.4L) MFI	B	To 5/10/99 **B1428** 5/10/99-on **B1438**	**RS3706**	**N/R**	**BF853**	**N/R**	**18027**
	V8-454 (7.4L) MFI	J	To 5/10/99 **B1428** 5/10/99-on **B1438**	**PA2232**	**N/R**	**BF853**	**N/R**	**18027**

[t] Transmission, Not Model, Determines Which Transmission Filter is Used. OBS = Obsolete. Availability Limited to Distributor Stock.

GMC Light-Duty Trucks Cont'd.

Year	Model and Engine	VIN	Lube	Air	Cabin Air	Fuel	Breather	Trans.[t]
1999	Yukon Denali V8-350 (5.7L) FI	R	**B35-S**	Std. **RS3707** HvyDty. **RS3706**	**N/R**	**BF853**	**N/R**	4L60E S. Pan **18010** 4L60E D. Pan **18056**
1998	Jimmy, Sonoma 4-133 (2.2L) SFI	4	**B43-S**	**PA2257**	**N/R**	**BF7658**	**N/R**	4L60E S. Pan **18010** 4L60E D. Pan **18056**
	V6-262 (4.3L) SFI	W,X	**B35-S**	**PA2257**	**N/R**	**BF7658**	**N/R**	4L60E S. Pan **18010** 4L60E D. Pan **18056**
	Pickups, Sierra Series, Suburban, Yukon V6-262 (4.3L) SFI	W	**B35-S**	Std. **RS3707** HvyDty. **RS3706**	**N/R**	**BF853**	**N/R**	4L60E S. Pan **18010** 4L60E D. Pan **18056**
	V8-305 (5.0L) SFI	M	2WD **B1428** 4WD **B35-S**	Std. **RS3707** HvyDty. **RS3706**	**N/R**	**BF853**	**N/R**	4L60E S. Pan **18010** 4L60E D. Pan **18056**
	V8-350 (5.7L) SFI	R	2WD **B1428** 4WD **B35-S**	Std. **RS3707** HvyDty. **RS3706**	**N/R**	**BF853**	**N/R**	4L60E S. Pan **18010** 4L60E D. Pan **18056**
	V8-395 (6.5L) Turbo Diesel	F,S	**B1428**	Std. **RS3707** w/Foam **RS3735**	**PA4149 KIT**	**BF1201**	**N/R**	4L60E S. Pan **18010** 4L60E D. Pan **18056**
	V8-454 (7.4L) SFI	J	**B1428**	Std. **RS3707** HvyDty. **RS3706**	**PA4149 KIT**	**BF853**	**N/R**	4L60E S. Pan **18010** 4L60E D. Pan **18056** 4L80-E **18027**
	Safari V6-262 (4.3L) SFI	W	**B35-S**	**PA2257**	**N/R**	**BF853**	**N/R**	4L60E S. Pan **18010** 4L60E D. Pan **18056**
	Savana V6-262 (4.3L) SFI	W	**B35-S**	**PA2178**	**N/R**	**BF1046**	**N/R**	4L60E S. Pan **18010** 4L60E D. Pan **18056**
	V8-305 (5.0L) SFI	M	**B1428**	**PA2178**	**N/R**	**BF1046**	**N/R**	4L60E S. Pan **18010** 4L60E D. Pan **18056**
	V8-350 (5.7L) SFI	R	**B1428**	**PA2178**	**N/R**	**BF1046**	**N/R**	4L60E S. Pan **18010** 4L60E D. Pan **18056**
	V8-395 (6.5L) Turbo Diesel	F	**B1428**	**PA2232**	**N/R**	**BF7674-D**	**N/R**	4L60E S. Pan **18010** 4L60E D. Pan **18056**
	V8-454 (7.4L) SFI	J	**B1428**	**PA2178**	**N/R**	**BF1046**	**N/R**	4L60E S. Pan **18010** 4L60E D. Pan **18056**
	Vans, G Series V6-262 (4.3L) SFI	W	**B1428**	**PA2178**	**N/R**	**BF1046**	**N/R**	4L60E S. Pan **18010** 4L60E D. Pan **18056** 4L80-E **18027**
	V8-305 (5.0L) SFI	M	**B1428**	**PA2178**	**N/R**	**BF1046**	**N/R**	4L60E S. Pan **18010** 4L60E D. Pan **18056** 4L80-E **18027**
	V8-350 (5.7L) SFI	R	**B1428**	**PA2178**	**N/R**	**BF1046**	**N/R**	4L60E S. Pan **18010** 4L60E D. Pan **18056** 4L80-E **18027**
	V8-395 (6.5L) Turbo Diesel	F	**B1428**	**PA2232**	**N/R**	**BF7674-D**	**N/R**	4L60E S. Pan **18010** 4L60E D. Pan **18056** 4L80-E **18027**
	V8-454 (7.4L) SFI	J	**B1428**	**PA2178**	**N/R**	**BF1046**	**N/R**	4L60E S. Pan **18010** 4L60E D. Pan **18056** 4L80-E **18027**
	Vans, P Series V6-262 (4.3L) SFI	W	**B35-S**	**PA2232**	**N/R**	**BF853**	**N/R**	**18027**
	V8-350 (5.7L) SFI	R	**B35-S**	**PA2232**	**N/R**	**BF853**	**N/R**	**18027**
	V8-395 (6.5L) Turbo Diesel	F	**B1428**	**PA2232**	**N/R**	**BF1201**	**N/R**	**18027**
	V8-395 (6.5L) Diesel	Y	**B1428**	**PA2073**	**N/R**	**BF1201**	**N/R**	**18027**
	V8-454 (7.4L) SFI	B	**B1428**	**RS3706**	**N/R**	**BF853**	**N/R**	**18027**
	V8-454 (7.4L) SFI	J	**B1428**	**PA2232**	**N/R**	**BF853**	**N/R**	**18027**
1997	Jimmy, Sonoma 4-133 (2.2L) SFI	4	**B43-S**	**PA2257**	**N/R**	**BF7658**	**N/R**	**18010**
	V6-262 (4.3L) SFI	W,X	**B35-S**	**PA2257**	**N/R**	**BF7658**	**N/R**	**18010**
	Pickups, Sierra Series, Suburban, Yukon V6-262 (4.3L) SFI	W	**B35-S**	Std. **RS3707** HvyDty. **RS3706**	**N/R**	**BF853**	**N/R**	4L60E **18010** 4L80-E **18027**
	V8-305 (5.0L) SFI	M	2WD **B1428** 4WD **B35-S**	Std. **RS3707** HvyDty. **RS3706**	**N/R**	**BF853**	**N/R**	4L60E **18010** 4L80-E **18027**
	V8-350 (5.7L) SFI or Natural Gas	R	2WD **B1428** 4WD **B35-S**	Std. **RS3707** HvyDty. **RS3706**	**N/R**	**BF853**	**N/R**	4L60E **18010** 4L80-E **18027**
	V8-395 (6.5L) Turbo Diesel	F	**B1428**	Std. **RS3707** w/Foam **RS3735**	**N/R**	**BF1201**	**N/R**	4L60E **18010** 4L80-E **18027**
	V8-395 (6.5L) Diesel	S	**B1428**	Std. **RS3707** HvyDty. **RS3706**	**N/R**	**BF1201**	**N/R**	4L60E **18010** 4L80-E **18027**
	V8-454 (7.4L) SFI	J	**B1428**	Std. **RS3707** HvyDty. **RS3706**	**N/R**	**BF853**	**N/R**	4L60E **18010** 4L80-E **18027**
	Safari V6-262 (4.3L) SFI	W	**B35-S**	**PA2257**	**N/R**	**BF853**	**N/R**	**18010**
	Savana V6-262 (4.3L) SFI	W	**B35-S**	**PA2178**	**N/R**	**BF1046**	**N/R**	**18027**
	V8-305 (5.0L) SFI	M	**B1428**	**PA2178**	**N/R**	**BF1046**	**N/R**	**18027**

OBS = Obsolete. Availability Limited to Distributor Stock. [t] Transmission, Not Model, Determines Which Transmission Filter is Used.

GMC Light-Duty Trucks Cont'd.

Year	Model and Engine	VIN	Lube	Air	Cabin Air	Fuel	Breather	Trans.t
1997	Savana V8-350 (5.7L) SFI	R	**B1428**	**PA2178**	**N/R**	**BF1046**	**N/R**	**18027**
	V8-395 (6.5L) Diesel	F	**B1428**	**PA2232**	**N/R**	**BF7674-D**	**N/R**	**18027**
	V8-454 (7.4L) SFI	J	**B1428**	**PA2178**	**N/R**	**BF1046**	**N/R**	**18027**
	Vans, G Series V6-262 (4.3L) SFI	W	**B1428**	**PA2178**	**N/R**	**BF1046**	**N/R**	4L60E **18010** 4L80-E **18027**
	V8-305 (5.0L) SFI	M	**B1428**	**PA2178**	**N/R**	**BF1046**	**N/R**	4L60E **18010** 4L80-E **18027**
	V8-350 (5.7L) SFI	R	**B1428**	**PA2178**	**N/R**	**BF1046**	**N/R**	4L60E **18010** 4L80-E **18027**
	V8-395 (6.5L) Turbo Diesel	F	**B1428**	**PA2232**	**N/R**	**BF7674-D**	**N/R**	4L60E **18010** 4L80-E **18027**
	V8-454 (7.4L) SFI	J	**B1428**	**PA2178**	**N/R**	**BF1046**	**N/R**	4L60E **18010** 4L80-E **18027**
	Vans, P Series V6-262 (4.3L) CPI	W	**B35-S**	**PA2232**	**N/R**	**BF853**	**N/R**	**18027**
	V8-350 (5.7L) SFI	R	**B35-S**	**PA2232**	**N/R**	**BF853**	**N/R**	**18027**
	V8-395 (6.5L) Turbo Diesel	F	**B1428**	**PA2232**	**N/R**	**BF1201**	**N/R**	**18027**
	V8-395 (6.5L) Diesel	Y	**B1428**	**PA2073**	**N/R**	**BF1201**	**N/R**	**18027**
	V8-454 (7.4L) MFI	J	**B1428**	**PA2232**	**N/R**	**BF853**	**N/R**	**18027**
	V8-454 (7.4L) TBI	N	**B1428**	**PA2008**	**N/R**	**BF853**	**N/R**	**18027**
1996	Jimmy, Suburban, Yukon V6-262 (4.3L) SFI	W,X	**B35-S**	**PA2257**	**N/R**	**BF853**	**N/R**	4L60E **18010** 4L80E **18007**
	V8-350 (5.7L) SFI	R	2WD **B1428** 4WD **B35-S**	Std. **RS3707** HvyDty. **RS3706**	**N/R**	**BF853**	**N/R**	4L60E **18010** 4L80E **18007**
	V8-395 (6.5L) Turbo Diesel	F	**B1428**	**PA2232**	**N/R**	**BF1201**	**N/R**	4L60E **18010** 4L80E **18007**
	V8-454 (7.4L) SFI	J	**B1428**	Std. **RS3707** HvyDty. **RS3706**	**N/R**	**BF853**	**N/R**	4L60E **18010** 4L80E **18007**
	Pickups, Sierra Series V6-262 (4.3L) SFI	W	**B35-S**	Std. **RS3707** HvyDty. **RS3706**	**N/R**	**BF853**	**N/R**	4L60E **18010** 4L80E **18007**
	V8-305 (5.0L) SFI	M	2WD **B1428** 4WD **B35-S**	Std. **RS3707** HvyDty. **RS3706**	**N/R**	**BF853**	**N/R**	4L60E **18010** 4L80E **18007**
	V8-350 (5.7L) SFI	R	2WD **B1428** 4WD **B35-S**	Std. **RS3707** HvyDty. **RS3706**	**N/R**	**BF853**	**N/R**	4L60E **18010** 4L80E **18007**
	V8-395 (6.5L) Turbo Diesel	F,S	**B1428**	**PA2232**	**N/R**	**BF1201**	**N/R**	4L60E **18010** 4L80E **18007**
	V8-454 (7.4L) SFI	J	**B1428**	Std. **RS3707** HvyDty. **RS3706**	**N/R**	**BF853**	**N/R**	4L60E **18010** 4L80E **18007**
	Safari V6-262 (4.3L) SFI	W	**B35-S**	**PA2257**	**N/R**	**BF853**	**N/R**	4L60E **18010** 4L80E **18007**
	Sonoma 4-134 (2.2L) SFI	4	**B43-S**	**PA2257**	**N/R**	**BF853**	**N/R**	**18010**
	V6-262 (4.3L) SFI	W,X	**B35-S**	**PA2257**	**N/R**	**BF853**	**N/R**	**18010**
	Vans, G Series V6-262 (4.3L) SFI	W	**B35-S**	**PA2178**	**N/R**	**BF1046**	**N/R**	4L60E **18010** 4L80E **18007**
	V6-262 (4.3L) EFI	Z	**B35-S**	**PA1680**	**N/R**	**BF853**	**N/R**	4L60E **18010** 4L80E **18007**
	V8-305 (5.0L) FI	M	**B1428**	**PA1680**	**N/R**	**BF1046**	**N/R**	4L60E **18010** 4L80E **18007**
	V8-350 (5.7L) EFI	K	**B1428**	**PA1680**	**N/R**	**BF853**	**N/R**	4L60E **18010** 4L80E **18007**
	V8-350 (5.7L) EFI	R	**B1428**	**PA2178**	**N/R**	**BF1046**	**N/R**	4L60E **18010** 4L80E **18007**
	V8-395 (6.5L) Turbo Diesel	F	**B1428**	**PA2232**	**N/R**	**BF7674-D**	**N/R**	4L60E **18010** 4L80E **18007**
	V8-395 (6.5L) Diesel	Y	**B1428**	**PA2073**	**N/R**	**BF1201**	**N/R**	4L60E **18010** 4L80E **18007**
	V8-454 (7.4L) EFI	J	**B1428**	**PA2178**	**N/R**	**BF1046**	**N/R**	4L60E **18010** 4L80E **18007**
	V8-454 (7.4L) EFI	N	**B1428**	**PA2008**	**N/R**	**BF853**	**N/R**	4L60E **18010** 4L80E **18007**
	Vans, P Series V6-262 (4.3L) SFI	W	**B35-S**	**PA2232**	**N/R**	**BF853**	**N/R**	4L60E **18010** 4L80E **18007**
	V8-350 (5.7L) EFI	K	**B1428**	**PA1680**	**N/R**	**BF853**	**N/R**	4L60E **18010** 4L80E **18007**
	V8-350 (5.7L) EFI	R	**B35-S**	**PA2232**	**N/R**	**BF853**	**N/R**	4L60E **18010** 4L80E **18007**
	V8-395 (6.5L) FI Turbo Diesel	F	**B1428**	**PA2232**	**N/R**	**BF1201**	**N/R**	4L60E **18010** 4L80E **18007**

[t] Transmission, Not Model, Determines Which Transmission Filter is Used. OBS = Obsolete. Availability Limited to Distributor Stock.

GMC Light-Duty Trucks Cont'd.

Year	Model and Engine	VIN	Lube	Air	Cabin Air	Fuel	Breather	Trans.[t]
1996	Vans, P Series V8-395 (6.5L) FI Diesel	Y	**B1428**	**PA2073**	**N/R**	**BF1201**	**N/R**	4L60E **18010** 4L80E **18007**
	V8-454 (7.4L) EFI	J	**B1428**	**PA2232**	**N/R**	**BF853**	**N/R**	4L60E **18010** 4L80E **18007**
	V8-454 (7.4L) EFI	N	**B1428**	**PA2008**	**N/R**	**BF853**	**N/R**	4L60E **18010** 4L80E **18007**
1995	Jimmy, Suburban, Yukon V6-262 (4.3L) EFI	W	**B35-S**	**PA2257**	**N/R**	**BF853**	**N/R**	**18010**
	V8-350 (5.7L) EFI	K	2WD **B1428** 4WD **B35-S**	**PA2008**	**N/R**	**BF853**	**N/R**	4L60E **18010** 4L80E **18007**
	V8-395 (6.5L) Turbo Diesel	F,S	**B1428**	**PA2232**	**N/R**	**BF1201**	**N/R**	4L60E **18010** 4L80E **18007**
	V8-454 (7.4L) EFI	N	**B1428**	**PA2008**	**N/R**	**BF853**	**N/R**	4L60E **18010** 4L80E **18007**
	Pickups, Sierra Series V6-262 (4.3L) EFI	Z	**B35-S**	**PA1680**	**N/R**	**BF853**	**N/R**	4L60E **18010** 4L80E **18007**
	V8-305 (5.0L) EFI	H	2WD **B1428** 4WD **B35-S**	**PA2008**	**N/R**	**BF853**	**N/R**	4L60E **18010** 4L80E **18007**
	V8-350 (5.7L) EFI	K	2WD **B1428** 4WD **B35-S**	**PA2008**	**N/R**	**BF853**	**N/R**	4L60E **18010** 4L80E **18007**
	V8-395 (6.5L) Turbo Diesel	F,S	**B1428**	**PA2232**	**N/R**	**BF1201**	**N/R**	4L60E **18010** 4L80E **18007**
	V8-395 (6.5L) Diesel	P	**B1428**	**PA2073**	**N/R**	**BF1201**	**N/R**	4L60E **18010** 4L80E **18007**
	V8-454 (7.4L) EFI	N	**B1428**	**PA2008**	**N/R**	**BF853**	**N/R**	4L60E **18010** 4L80E **18007**
	Safari V6-262 (4.3L) CPI	W	**B35-S**	**PA2257**	**N/R**	**BF853**	**N/R**	4L60E **18010** 4L80E **18007**
	Sonoma 4-134 (2.2L) FI	4	**B43-S**	**PA2257**	**N/R**	**BF853**	**N/R**	**18010**
	V6-262 (4.3L) FI	W	**B35-S**	**PA2257**	**N/R**	**BF853**	**N/R**	**18010**
	V6-262 (4.3L) FI	Z	**B35-S**	**PA2106**	**N/R**	**BF853**	**N/R**	**18010**
	Vans, G, P Series V6-262 (4.3L) EFI	Z	**B35-S**	**PA1680**	**N/R**	**BF853**	**N/R**	4L60E **18010** 4L80E **18007**
	V8-305 (5.0L) EFI	H	**B1428**	**PA1680**	**N/R**	**BF853**	**N/R**	4L60E **18010** 4L80E **18007**
	V8-350 (5.7L) EFI	K	**B1428**	**PA1680**	**N/R**	**BF853**	**N/R**	4L60E **18010** 4L80E **18007**
	V8-395 (6.5L) Turbo Diesel	F	**B1428**	**PA2232**	**N/R**	**BF1201**	**N/R**	4L60E **18010** 4L80E **18007**
	V8-395 (6.5L) Diesel	P,Y	**B1428**	**PA2073**	**N/R**	**BF1201**	**N/R**	4L60E **18010** 4L80E **18007**
	V8-454 (7.4L) EFI	N	**B1428**	**PA2008**	**N/R**	**BF853**	**N/R**	4L60E **18010** 4L80E **18007**
1994	Jimmy, Suburban, Yukon V6-262 (4.3L) EFI	W	**B35-S**	**PA2257**	**N/R**	**BF853**	**N/R**	**18010**
	V6-262 (4.3L) EFI	Z	**B35-S**	**PA2106**	**N/R**	**BF853**	**N/R**	**18010**
	V8-350 (5.7L) EFI	K	2WD **B1428** 4WD **B35-S**	**PA2008**	**N/R**	**BF853**	**N/R**	4L60E **18010** 4L80E **18007**
	V8-395 (6.5L) Turbo Diesel	F,S	**B1428**	**PA2232**	**N/R**	**BF1201**	**N/R**	4L60E **18010** 4L80E **18007**
	V8-454 (7.4L) EFI	N	**B1428**	**PA2008**	**N/R**	**BF853**	**N/R**	4L60E **18010** 4L80E **18007**
	Pickups, C, K Series V6-262 (4.3L) EFI	Z	**B35-S**	**PA1680**	**N/R**	**BF853**	**N/R**	4L60E **18010** 4L80E **18007**
	V8-305 (5.0L) EFI	H	2WD **B1428** 4WD **B35-S**	**PA2008**	**N/R**	**BF853**	**N/R**	4L60E **18010** 4L80E **18007**
	V8-350 (5.7L) EFI	K	2WD **B1428** 4WD **B35-S**	**PA2008**	**N/R**	**BF853**	**N/R**	4L60E **18010** 4L80E **18007**
	V8-395 (6.5L) Turbo Diesel	F,S	**B1428**	**PA2232**	**N/R**	**BF1201**	**N/R**	4L60E **18010** 4L80E **18007**
	V8-395 (6.5L) Diesel	P	**B1428**	**PA2073**	**N/R**	**BF1201**	**N/R**	4L60E **18010** 4L80E **18007**
	V8-454 (7.4L) EFI	N	**B1428**	**PA2008**	**N/R**	**BF853**	**N/R**	4L60E **18010** 4L80E **18007**
	Safari V6-262 (4.3L) FI	W	**B35-S**	**PA2257**	**N/R**	**BF853**	**N/R**	4L60E **18010** 4L80E **18007**

OBS = Obsolete. Availability Limited to Distributor Stock. [t] Transmission, Not Model, Determines Which Transmission Filter is Used.

GMC Light-Duty Trucks Cont'd.

Year	Model and Engine	VIN	Lube	Air	Cabin Air	Fuel	Breather	Trans.t
1994	Safari V6-262 (4.3L) FI	Z	**B35-S**	**PA2106**	**N/R**	**BF853**	**N/R**	4L60E **18010** 4L80E **18007**
	Sonoma 4-134 (2.2L) MFI	4	**B43-S**	**PA2257**	**N/R**	**BF853**	**N/R**	**18010**
	V6-262 (4.3L) CPI	W	**B35-S**	**PA2257**	**N/R**	**BF853**	**N/R**	**18010**
	V6-262 (4.3L) EFI	Z	**B35-S**	**PA2106**	**N/R**	**BF853**	**N/R**	**18010**
	Vans, G, P Series V6-262 (4.3L) EFI	Z	**B35-S**	**PA1680**	**N/R**	**BF853**	**N/R**	4L60E **18010** 4L80E **18007**
	V8-305 (5.0L) EFI	H	**B1428**	**PA1680**	**N/R**	**BF853**	**N/R**	4L60E **18010** 4L80E **18007**
	V8-350 (5.7L) EFI	K	**B1428**	**PA1680**	**N/R**	**BF853**	**N/R**	4L60E **18010** 4L80E **18007**
	V8-395 (6.5L) Turbo Diesel	F	**B1428**	**PA2232**	**N/R**	**BF1201**	**N/R**	4L60E **18010** 4L80E **18007**
	V8-395 (6.5L) Diesel	P,Y	**B1428**	**PA2073**	**N/R**	**BF1201**	**N/R**	4L60E **18010** 4L80E **18007**
	V8-454 (7.4L) EFI	N	**B1428**	**PA2008**	**N/R**	**BF853**	**N/R**	4L60E **18010** 4L80E **18007**
1993	Jimmy, Suburban, Yukon V8-350 (5.7L) EFI	K	2WD **B1428** 4WD **B35-S**	**PA2008**	**N/R**	**BF853**	**N/R**	4L60E **18010** 4L80E **18007**
	V8-454 (7.4L) EFI	N	**B1428**	**PA2008**	**N/R**	**BF853**	**N/R**	4L60E **18010** 4L80E **18007**
	Pickups, C, K Series V6-262 (4.3L) EFI	Z	**B35-S**	**PA1680**	**N/R**	**BF853**	**N/R**	4L60E **18010** 4L80E **18007**
	V8-305 (5.0L) EFI	H	2WD **B1428** 4WD **B35-S**	**PA2008**	**N/R**	**BF853**	**N/R**	4L60E **18010** 4L80E **18007**
	V8-350 (5.7L) EFI	K	2WD **B1428** 4WD **B35-S**	**PA2008**	**N/R**	**BF853**	**N/R**	4L60E **18010** 4L80E **18007**
	V8-379 (6.2L) Diesel	C,J	**B1428**	**PA2073**	**N/R**	**BF856**	**N/R**	4L60E **18010** 4L80E **18007**
	V8-395 (6.5L) Diesel	F	**B1428**	**PA2232**	**N/R**	**BF1201**	**N/R**	4L60E **18010** 4L80E **18007**
	V8-454 (7.4L) EFI	N	**B1428**	**PA2008**	**N/R**	**BF853**	**N/R**	4L60E **18010** 4L80E **18007**
	S15 Jimmy, Sonoma 4-151 (2.5L) EFI	A	**B43-S**	**PA2109**	**N/R**	**BF853**	**SA4315**	**18155**
	V6-173 (2.8L) EFI	R	**B35-S**	**PA2106**	**N/R**	**BF853**	**N/R**	4L60 **18155** 4L60E **18010**
	V6-262 (4.3L) CPI	W	**B35-S**	**PA2257**	**N/R**	**BF853**	**N/R**	4L60 **18155** 4L60E **18010**
	V6-262 (4.3L) FI	Z	**B35-S**	**PA2106**	**N/R**	**BF853**	**N/R**	4L60 **18155** 4L60E **18010**
	Safari V6-262 (4.3L) FI Turbo	W	**B35-S**	**PA2257**	**N/R**	**BF853**	**N/R**	4L60E **18010** 4L80E **18007**
	V6-262 (4.3L) FI	Z	**B35-S**	**PA2106**	**N/R**	**BF853**	**N/R**	4L60E **18010** 4L80E **18007**
	Typhoon V6-262 (4.3L) FI Turbo	Z	**B35-S**	**PA2257**	**N/R**	**BF853**	**N/R**	4L60-E **18010** TH700-R4 **18155**
	Vans, G, P Series V6-262 (4.3L) EFI	Z	**B35-S**	**PA1680**	**N/R**	**BF853**	**N/R**	4L60E **18010** 4L80E **18007**
	V8-305 (5.0L) EFI	H	**B1428**	**PA1680**	**N/R**	**BF853**	**N/R**	4L60E **18010** 4L80E **18007**
	V8-350 (5.7L) EFI	K	**B1428**	**PA1680**	**N/R**	**BF853**	**N/R**	4L60E **18010** 4L80E **18007**
	V8-379 (6.2L) Diesel	C,J	**B1428**	**PA2073**	**N/R**	**BF856**	**N/R**	4L60E **18010** 4L80E **18007**
	V8-454 (7.4L) EFI	N	**B1428**	**PA2008**	**N/R**	**BF853**	**N/R**	4L60E **18010** 4L80E **18007**
1992	Jimmy, Suburban V8-350 (5.7L) EFI	K	2WD **B1428** 4WD **B35-S**	**PA2008**	**N/R**	**BF853**	**N/R**	4L60 **18155** 4L80E **18007**
	V8-454 (7.4L) EFI	N	**B1428**	**PA2008**	**N/R**	**BF853**	**N/R**	4L60 **18155** 4L80E **18007**
	Pickups, C, K Series, Pickups, Sierra Series V6-262 (4.3L) EFI	Z	**B35-S**	**PA1680**	**N/R**	**BF853**	**N/R**	4L60 **18155** 4L80E **18007**
	V8-305 (5.0L) EFI	H	2WD **B1428** 4WD **B35-S**	**PA2008**	**N/R**	**BF853**	**N/R**	4L60 **18155** 4L80E **18007**
	V8-350 (5.7L) EFI	K	2WD **B1428** 4WD **B35-S**	**PA2008**	**N/R**	**BF853**	**N/R**	4L60 **18155** 4L80E **18007**

[t] Transmission, Not Model, Determines Which Transmission Filter is Used. OBS = Obsolete. Availability Limited to Distributor Stock.

GMC Light-Duty Trucks Cont'd.

Year	Model and Engine	VIN	Lube	Air	Cabin Air	Fuel	Breather	Trans.[t]
1992	Pickups, C, K Series, Pickups, Sierra Series V8-379 (6.2L) Diesel	C,J	**B1428**	**PA2073**	**N/R**	**BF856**	**N/R**	4L60 **18155** 4L80E **18007**
	V8-395 (6.5L) Turbo Diesel	F	**B1428**	**PA2232**	**N/R**	**BF1201**	**N/R**	**18155**
	V8-454 (7.4L) EFI	N	**B1428**	**PA2008**	**N/R**	**BF853**	**N/R**	4L60 **18155** 4L80E **18007**
	S15 Jimmy, Sonoma 4-151 (2.5L) EFI	A	**B43-S**	**PA2109**	**N/R**	**BF853**	**SA4315**	**18155**
	V6-173 (2.8L) EFI	R	**B35-S**	**PA2106**	**N/R**	**BF853**	**N/R**	**18155**
	V8-262 (4.3L) CPI	W	**B35-S**	**PA2257**	**N/R**	**BF853**	**N/R**	**18155**
	V8-262 (4.3L) EFI or Turbo	Z	**B35-S**	Exc. Turbo **PA2106** Turbo **PA2257**	**N/R**	**BF853**	**N/R**	**18155**
	Safari V6-262 (4.3L) FI	W	**B35-S**	**PA2257**	**N/R**	**BF853**	**N/R**	**18155**
	V6-262 (4.3L) FI	Z	**B35-S**	**PA2106**	**N/R**	**BF853**	**N/R**	**18155**
	Typhoon V6-262 (4.3L) FI Turbo	Z	**B35-S**	**PA2257**	**N/R**	**BF853**	**N/R**	TH700-R4 **18155**
	Vans, G, P Series V6-262 (4.3L) EFI	Z	**B35-S**	**PA1680**	**N/R**	**BF853**	**N/R**	4L60 **18155** 4L80E **18007**
	V8-305 (5.0L) EFI	H	**B1428**	**PA1680**	**N/R**	**BF853**	**N/R**	4L60 **18155** 4L80E **18007**
	V8-350 (5.7L) EFI	K	**B1428**	G Series **PA1680** P Series **PA2008**	**N/R**	**BF853**	**N/R**	4L60 **18155** 4L80E **18007**
	V8-379 (6.2L) Diesel	C,J	**B1428**	**PA2073**	**N/R**	**BF856**	**N/R**	4L60 **18155** 4L80E **18007**
	V8-454 (7.4L) EFI	N	**B1428**	**PA2008**	**N/R**	**BF853**	**N/R**	4L60 **18155** 4L80E **18007**
	Yukon V8-350 (5.7L) FI	K	**B35-S**	**PA2008**	**N/R**	**BF853**	**N/R**	4L80E **18007** TH700-R4 **18155**
1991	Jimmy, Pickups, Suburban, R, V Series V8-350 (5.7L) EFI	K	**B1428**	**PA2008**	**N/R**	**BF853**	**N/R**	4L60 **18155** 4L80E **18007**
	V8-379 (6.2L) Diesel	C,J	**B1428**	**PA2073**	**N/R**	**BF856**	**N/R**	4L60 **18155** 4L80E **18007**
	V8-454 (7.4L) EFI	N	**B1428**	**PA2091**	**N/R**	**BF853**	**N/R**	4L60 **18155** 4L80E **18007**
	Pickups, C, K Series V6-262 (4.3L) EFI	Z	**B35-S**	**PA1680**	**N/R**	**BF853**	**N/R**	4L60 **18155** 4L80E **18007**
	V8-305 (5.0L) EFI	H	2WD **B1428** 4WD **B35-S**	**PA2008**	**N/R**	**BF853**	**N/R**	4L60 **18155** 4L80E **18007**
	V8-350 (5.7L) EFI	K	2WD **B1428** 4WD **B35-S**	**PA2008**	**N/R**	**BF853**	**N/R**	4L60 **18155** 4L80E **18007**
	V8-381 (6.2L) Diesel	C,J	**B1428**	**PA2073**	**N/R**	**BF856**	**N/R**	4L60 **18155** 4L80E **18007**
	V8-454 (7.4L) EFI	N	**B1428**	**PA2008**	**N/R**	**BF853**	**N/R**	4L60 **18155** 4L80E **18007**
	S15 Jimmy, Sonoma 4-151 (2.5L) EFI	A,E	**B43-S**	**PA2109**	**N/R**	**BF853**	**SA4315**	**18155**
	V6-173 (2.8L) EFI	R	**B35-S**	**PA2106**	**N/R**	**BF868**	**N/R**	**18155**
	V6-262 (4.3L) EFI	Z	**B35-S**	**PA2106**	**N/R**	**BF853**	**N/R**	**18155**
	Safari V6-262 (4.3L) EFI	B,Z	**B35-S**	**PA2106**	**N/R**	**BF853**	**N/R**	**18155**
	Syclone V6-262 (4.3L) FI Turbo	Z	**B35-S**	**PA2257**	**N/R**	**BF853**	**N/R**	**18155**
	Tracker 4-1588cc (1.6L) FI Canada	U	**BT223**	**PA4023**	**N/R**	**BF1100**	**N/R**	
	Vans, G, P Series 4-239 (3.9L) FI Turbo Diesel	L	**B229**	**PA2712**	**N/R**	**BF954**	**N/R**	**18007**
	V6-262 (4.3L) EFI	Z	**B35-S**	**PA1680**	**N/R**	**BF853**	**N/R**	4L60 **18155** 4L80E **18007**
	V8-305 (5.0L) EFI	H	**B1428**	**PA1680**	**N/R**	**BF853**	**N/R**	4L60 **18155** 4L80E **18007**
	V8-350 (5.7L) EFI	K	**B1428**	G Series **PA1680** P Series **PA2008**	**N/R**	**BF853**	**N/R**	4L60 **18155** 4L80E **18007**
	V8-379 (6.2L) Diesel	C,J	**B1428**	**PA2073**	**N/R**	**BF856**	**N/R**	4L60 **18155** 4L80E **18007**
	V8-454 (7.4L) EFI	N	**B1428**	**PA2008**	**N/R**	**BF853**	**N/R**	4L60 **18155** 4L80E **18007**
1990	Jimmy, Pickups, Suburban, R, V Series V8-350 (5.7L) EFI	K	**B1428**	**PA2008**	**N/R**	**BF853**	**N/R**	**18155**
	V8-379 (6.2L) Diesel	C,J	**B1428**	**PA2073**	**N/R**	**BF856**	**N/R**	**18155**
	V8-454 (7.4L) EFI	N	**B1428**	**PA2091**	**N/R**	**BF853**	**N/R**	**18155**
	Pickups, C, K Series V6-262 (4.3L) EFI	Z	**B35-S**	**PA1680**	**N/R**	**BF853**	**N/R**	**18155**
	V8-305 (5.0L) EFI	H	2WD **B1428** 4WD **B35-S**	**PA2008**	**N/R**	**BF853**	**N/R**	**18155**

OBS = Obsolete. Availability Limited to Distributor Stock. [t] Transmission, Not Model, Determines Which Transmission Filter is Used.

GMC Light-Duty Trucks Cont'd.

Year	Model and Engine	VIN	Lube	Air	Cabin Air	Fuel	Breather	Trans.t
1990	Pickups, C, K Series V8-350 (5.7L) EFI	K	2WD **B1428** 4WD **B35-S**	**PA2008**	**N/R**	**BF853**	**N/R**	**18155**
	V8-379 (6.2L) Diesel	C,J	**B1428**	**PA2073**	**N/R**	**BF856**	**N/R**	**18155**
	V8-454 (7.4L) EFI	N	**B1428**	**PA2008**	**N/R**	**BF853**	**N/R**	**18155**
	S15 Jimmy, S15 Pickup 4-151 (2.5L) EFI	E	**B43-S**	**PA2109**	**N/R**	**BF853**	**SA4315**	**18155**
	V6-173 (2.8L) EFI	R	**B35-S**	**PA2106**	**N/R**	**BF868**	**N/R**	**18155**
	V6-262 (4.3L) EFI	Z	**B35-S**	**PA2106**	**N/R**	**BF853**	**N/R**	**18155**
	Safari 4-151 (2.5L) EFI	E	**B43-S**	**PA2109**	**N/R**	**BF853**	**SA4315**	**18155**
	V6-262 (4.3L) EFI HO	B,Z	**B35-S**	**PA2106**	**N/R**	**BF853**	**N/R**	**18155**
	Tracker 4-1588cc (1.6L) FI Canada	U	**BT223**	**PA4023**	**N/R**	**BF1100**	**N/R**	
	Vans, G, P Series 4-239 (3.9L) Turbo Diesel	L	**BT427** **B229**	**PA641**	**N/R**	**BF1226**	**N/R**	**6020**
	V6-262 (4.3L) EFI	Z	**B35-S**	**PA1680**	**N/R**	**BF853**	**N/R**	**18155**
	V8-305 (5.0L) EFI	H	**B1428**	**PA1680**	**N/R**	**BF853**	**N/R**	**18155**
	V8-350 (5.7L) EFI	K	**B1428**	G Series **PA1680** P Series **PA2008**	**N/R**	**BF853**	**N/R**	**18155**
	V8-379 (6.2L) Diesel	C,J	**B1428**	**PA2073**	**N/R**	**BF856**	**N/R**	**18155**
	V8-454 (7.4L) EFI	N	**B1428**	**PA2008**	**N/R**	**BF853**	**N/R**	**18155**
1989	Jimmy, Pickups, Suburban, R, V Series V8-350 (5.7L) EFI	K	**B1428**	**PA2008**	**N/R**	**BF853**	**N/R**	**18155**
	V8-379 (6.2L) Diesel	C,J	**B1428**	**PA2073**	**N/R**	**BF856**	**N/R**	**18155**
	V8-454 (7.4L) EFI	N	**B1428**	**PA2091**	**N/R**	**BF853**	**N/R**	3 Spd. **6020** 4 Spd. **18155**
	V8-454 (7.4L) 4 Bbl.	W	**B1428**	**PA2091**	**N/R**	**PF894,-RV**	**SA2027**	3 Spd. **6020** 4 Spd. **18155**
	LLV, US Postal Van 4-151 (2.5L) EFI	E	**B43-S**	**PA2109**	**N/R**	**BF853**	**SA4315**	
	Pickups, C, K Series V6-262 (4.3L) EFI	Z	**B35-S**	**PA1680**	**N/R**	**BF853**	**SA2027** **SA2046**	**18155**
	V8-305 (5.0L) EFI	H	2WD **B1428** 4WD **B35-S**	**PA2008**	**N/R**	**BF853**	**SA2027** **SA2046**	3 Spd. **6020** 4 Spd. **18155**
	V8-350 (5.7L) EFI	K	2WD **B1428** 4WD **B35-S**	**PA2008**	**N/R**	**BF853**	**SA2027** **SA2046**	3 Spd. **6020** 4 Spd. **18155**
	V8-379 (6.2L) Diesel	C,J	**B1428**	**PA2073**	**N/R**	**BF856**	**N/R**	3 Spd. **6020** 4 Spd. **18155**
	V8-454 (7.4L) EFI	N	**B1428**	**PA2008**	**N/R**	**BF853**	**N/R**	**18155**
	S15 Jimmy, S15 Pickup 4-151 (2.5L) EFI	E	**B43-S**	**PA2109**	**N/R**	**BF853**	**SA4315**	**18155**
	V6-173 (2.8L) EFI	R	**B35-S**	**PA2106**	**N/R**	**BF868**	**N/R**	**18155**
	V6-262 (4.3L) EFI	Z	**B35-S**	**PA2106**	**N/R**	**BF853**	**SA2046**	**18155**
	Safari 4-151 (2.5L) EFI	E	**B43-S**	**PA2109**	**N/R**	**BF853**	**SA4315**	**18155**
	V6-262 (4.3L) EFI	Z	**B35-S**	**PA2106**	**N/R**	**BF853**	**N/R**	**18155**
	Tracker 4-1588cc (1.6L) FI Canada	U	**BT223**	**PA4023**	**N/R**	**BF1100**	**N/R**	
	Vans, G, P Series V6-262 (4.3L) EFI	Z	**B35-S**	**PA1680**	**N/R**	**BF853**	**N/R**	**18155**
	6-292 (4.8L) 2 Bbl.	T	**B27**	**PA648**	**N/R**	**PF894,-RV**	**N/R**	TH400 **6020**
	V8-305 (5.0L) EFI	H	**B1428**	**PA1680**	**N/R**	**BF853**	**N/R**	3 Spd. **6020** 4 Spd. **18155**
	V8-350 (5.7L) EFI	K	**B1428**	G Series **PA1680** P Series **PA2008**	**N/R**	**BF853**	**N/R**	3 Spd. **6020** 4 Spd. **18155**
	V8-379 (6.2L) Diesel	C,J	**B1428**	**PA2073**	**N/R**	**BF856**	**N/R**	3 Spd. **6020** 4 Spd. **18155**
	V8-454 (7.4L) EFI	N	**B1428**	**PA2008**	**N/R**	**BF853**	**N/R**	3 Spd. **6020** 4 Spd. **18155**
	V8-454 (7.4L) 4 Bbl.	W	**B1428**	**PA2091**	**N/R**		**SA2027**	**18155**
1988	Jimmy, Pickups, Suburban, R, V Series 6-292 (4.8L) 1 Bbl.	T	**B27**	**PA648** Air Pump Ele. **PA4094**	**N/R**	**PF894,-RV**	**SA2027**	3 Spd. **6020** 4 Spd. **18155**
	V8-350 (5.7L) EFI	K	**B1428**	**PA2008**	**N/R**	**BF853**	**N/R**	3 Spd. **6020** 4 Spd. **18155**
	V8-350 (5.7L) 4 Bbl.	M	**B1428**	**PA2091**	**N/R**	**PF894,-RV**	**SA2027**	3 Spd. **6020**
	V8-379 (6.2L) Diesel	C,J	**B1428**	**PA2073**	**N/R**	**BF856**	**N/R**	3 Spd. **6020** 4 Spd. **18155**
	V8-454 (7.4L) EFI	N	**B1428**	**PA2008**	**N/R**	**BF853**	**N/R**	3 Spd. **6020**
	V8-454 (7.4L) 4 Bbl.	W	**B1428**	**PA2091**	**N/R**	**PF894,-RV**	**SA2027**	3 Spd. **6020**
	Pickups, C, K Series V6-262 (4.3L) EFI	Z	**B35-S**	**PA1680**	**N/R**	**BF853**	**SA2027** **SA2046**	3 Spd. **6020** 4 Spd. **18155**
	V8-305 (5.0L) EFI	H	2WD **B1428** 4WD **B35-S**	**PA2008**	**N/R**	**BF853**	**SA2027** **SA2046**	3 Spd. **6020** 4 Spd. **18155**

[t] Transmission, Not Model, Determines Which Transmission Filter is Used. OBS = Obsolete. Availability Limited to Distributor Stock.

GMC Light-Duty Trucks Cont'd.

Year	Model and Engine	VIN	Lube	Air	Cabin Air	Fuel	Breather	Trans.†
1988	Pickups, C, K Series V8-350 (5.7L) EFI	K	2WD **B1428** 4WD **B35-S**	**PA2008**	**N/R**	**BF853**	**SA2027** **SA2046**	3 Spd. **6020** 4 Spd. **18155**
	V8-379 (6.2L) Diesel	C,J	**B1428**	**PA2073**	**N/R**	**BF856**	**N/R**	3 Spd. **6020** 4 Spd. **18155**
	V8-454 (7.4L) EFI	N	**B1428**	**PA2008**	**N/R**	**BF853**	**N/R**	TH400 **6020**
	S15 Jimmy, S15 Pickup 4-151 (2.5L) EFI	E	**B43-S**	**PA2109**	**N/R**	**BF853**	**SA4315**	**18155**
	V6-173 (2.8L) EFI	R	**B35-S**	**PA2106**	**N/R**	**BF868**	**N/R**	**18155**
	V6-262 (4.3L) EFI	Z	**B35-S**	**PA2106**	**N/R**	**BF853**	**SA2046**	**18155**
	Safari 4-151 (2.5L) EFI	E	**B43-S**	**PA2109**	**N/R**	**BF853**	**SA4315**	**18155**
	V6-262 (4.3L) EFI	Z	**B35-S**	**PA2106**	**N/R**	**BF853**	**N/R**	**18155**
	Vans, G Series V6-262 (4.3L) 4 Bbl.	Z	**B35-S**	**PA1680**	**N/R**	**BF853**	**SA2027** **SA2046**	3 Spd. **6020** 4 Spd. **18155**
	V8-305 (5.0L) EFI	H	**B1428**	**PA1680**	**N/R**	**BF853**	**SA2027** **SA2046**	3 Spd. **6020** 4 Spd. **18155**
	V8-350 (5.7L) EFI	K	**B1428**	**PA1680**	**N/R**	**BF853**	**SA2027** **SA2046**	3 Spd. **6020** 4 Spd. **18155**
	V8-379 (6.2L) Diesel	C,J	**B1428**	**PA2073**	**N/R**	**BF856**	**N/R**	3 Spd. **6020** 4 Spd. **18155**
	V8-454 (7.4L) EFI	N	**B1428**	**PA2073**	**N/R**	**BF853**	**N/R**	TH400 **6020**
1987	Caballero V6-262 (4.3L) FI	Z	**B35-S**	**PA2006**	**N/R**	**BF853**	**SA2027** **SA2046**	
	V8-305 (5.0L) 4 Bbl.	G,H	**B27**	**PA2008**	**N/R**	**PF894,-RV**	**SA2027** **SA2046**	
	Jimmy, Pickups, Suburban, R, V Series V6-262 (4.3L) FI	Z	**B35-S**	**PA1680**	**N/R**	**BF853**	**SA2027**	TH700-R4 **18155**
	V8-305 (5.0L) FI	H	**B1428**	**PA2008**	**N/R**	**BF853**	**N/R**	TH700-R4 **18155**
	V8-350 (5.7L) FI	K,M	**B1428**	**PA2008**	**N/R**	**BF853**	**SA2027**	TH700-R4 **18155**
	V8-379 (6.2L) Diesel	C,J	**B1428**	**PA2073**	**N/R**	**BF856**	**N/R**	TH700-R4 **18155**
	V8-454 (7.4L) FI	N,W	**B1428**	**PA2008**	**N/R**	**BF853**	**SA2027**	TH400 **6020** TH700-R4 **18155**
	S1500 Jimmy, S1500 Pickup 4-151 (2.5L) FI	E	**B43-S**	**PA2109**	**N/R**	**BF853**	**SA4315**	
	V6-173 (2.8L) FI	R	**B35-S**	**PA2106**	**N/R**	**BF868**	**N/R**	
	Safari 4-151 (2.5L) FI	E	**B43-S**	**PA2109**	**N/R**	**BF853**	**SA4315** **SA2046**	**18155**
	V6-262 (4.3L) FI	Z	**B35-S**	**PA2106**	**N/R**	**BF853**	**SA2027**	**18155**
	Vans, G Series V6-262 (4.3L) FI	Z	**B35-S**	**PA1680**	**N/R**	**BF853**	**SA2027** **SA2046**	3 Spd. **6020** 4 Spd. **18155**
	V8-305 (5.0L) FI	H	**B1428**	**PA1680**	**N/R**	**BF853**	**SA2027** **SA2046**	3 Spd. **6020** 4 Spd. **18155**
	V8-350 (5.7L) FI	K	**B1428**	**PA1680**	**N/R**	**BF853**	**SA2027**	4 Spd. **18155**
	V8-350 (5.7L) 4 Bbl.	M	**B1428**	**PA1680** Air Pump Ele. **PA4094**	**N/R**	**PF894,-RV**	**SA2027** **SA2046**	4 Spd. **18155**
	V8-379 (6.2L) Diesel	C,J	**B1428**	**PA2073**	**N/R**	**BF856**	**N/R**	3 Spd. **6020** 4 Spd. **18155**
1986	Caballero V6-262 (4.3L) FI	Z	**B35-S**	**PA2006**	**N/R**	**BF853**	**N/R**	**18155**
	V8-305 (5.0L) 4 Bbl.	G,H	**B27**	**PA2008**	**N/R**	**PF894,-RV**	**SA2027**	TH700-R4 **18155**
	Jimmy, Pickups, Suburban, C, K Series V6-262 (4.3L) 4 Bbl.	N	**B35-S**	**PA1680**	**N/R**	**PF894,-RV**	**SA2027** **SA2046**	3 Spd. **6020** 4 Spd. **18155**
	6-292 (4.8L) 1 Bbl.	T	**B27**	**PA648** Air Pump Ele. **PA4094**	**N/R**	**PF893,-RV**	**SA2027** **SA2046**	**6020**
	V8-305 (5.0L) 4 Bbl.	F,H	**B1428**	3 15/32 In. **PA2008** 5 7/16 In. **PA2091**	**N/R**	**PF894,-RV**	**SA2027** **SA2046**	3 Spd. **6020** 4 Spd. **18155**
	V8-350 (5.7L) 4 Bbl.	L,M	**B1428**	**PA2091**	**N/R**	**PF894,-RV**	**SA2027** **SA2046**	TH400 **6020** TH700-R4 **18155**
	V8-379 (6.2L) Diesel	C,J	**B1428**	**PA2073**	**N/R**	**BF856**	**N/R**	TH400 **6020** TH700-R4 **18155**
	V8-454 (7.4L) 4 Bbl.	W	**B1428**	**PA2091**	**N/R**	**PF894,-RV**	**SA2027** **SA2046**	**6020**
	S1500 Jimmy, S1500 Pickup 4-151 (2.5L) FI	E	**B43-S**	**PA2109**	**N/R**	**BF853**	**N/R**	**18155**
	V6-173 (2.8L) FI	R	2WD **B35-S** 4WD **B43-S**	**PA2106**	**N/R**	**BF868**	**N/R**	**18155**
	Safari 4-151 (2.5L) FI	E	**B43-S**	**PA2109**	**N/R**	**BF853**	**SA2046**	**18155**

OBS = Obsolete. Availability Limited to Distributor Stock. † Transmission, Not Model, Determines Which Transmission Filter is Used.

GMC Light-Duty Trucks Cont'd.

Year	Model and Engine	VIN	Lube	Air	Cabin Air	Fuel	Breather	Trans.[t]
1986	Safari V6-262 (4.3L) FI	Z	**B35-S**	**PA2106**	**N/R**	**BF853**	**SA2027** **SA2046**	**18155**
	Vans, G Series V6-262 (4.3L) 4 Bbl.	N	**B35-S**	**PA1680**	**N/R**	**PF894,-RV**	**SA2027** **SA2046**	TH400 **6020** TH700-R4 **18155**
	V8-305 (5.0L) 4 Bbl.	F,H	**B1428**	**PA1680**	**N/R**	**PF894,-RV**	**SA2027** **SA2046**	**6021**
	V8-350 (5.7L) 4 Bbl.	L,M	**B1428**	**PA1680** Air Pump Ele. **PA4094**	**N/R**	**PF894,-RV**	**SA2027** **SA2046**	TH700-R4 **18155**
	V8-379 (6.2L) Diesel	C,J	**B1428**	**PA2073**	**N/R**	**BF856**	**N/R**	TH400 **6020** TH700-R4 **18155**
1985	Caballero V6-262 (4.3L) FI	Z	**B35-S**	**PA2006**	**N/R**	**BF853**	**SA2027** **SA2046**	
	V8-305 (5.0L) 4 Bbl.	G,H	**B27**	**PA2008**	**N/R**	**PF894,-RV**	**SA2027** **SA2046**	
	Jimmy, Pickups, Suburban, C, K Series V6-262 (4.3L) 4 Bbl.	N	**B35-S**	**PA1680**	**N/R**	**PF894,-RV**	**SA2027** **SA2046**	TH400 **6020** TH700-R4 **18155**
	6-292 (4.8L) 1 Bbl.	T	**B27**	**PA648** Air Pump Ele. **PA4094**	**N/R**	**PF893,-RV**	**SA2027** **SA2046**	TH400 **6020** TH700-R4 **18155**
	V8-305 (5.0L) 4 Bbl.	F,H	**B6**	3 15/32 In. **PA2008** 5 7/16 In. **PA2091**	**N/R**	**PF894,-RV**	**SA2027** **SA2046**	TH400 **6020** TH700-R4 **18155**
	V8-350 (5.7L) 4 Bbl.	L,M	**B6**	3 15/32 In. **PA2008** 5 7/16 In. **PA2091**	**N/R**	**PF894,-RV**	**SA2027** **SA2046**	TH400 **6020** TH700-R4 **18155**
	V8-379 (6.2L) Diesel	C,J	**B6**	**PA2073**	**N/R**	**BF856**	**N/R**	TH400 **6020** TH700-R4 **18155**
	V8-454 (7.4L) 4 Bbl.	W	**B6**	**PA2008**[17] **PA2091**[31]	**N/R**	**PF894,-RV**	**SA2027** **SA2046**	TH400 **6020**
	S1500 Jimmy, S1500 Pickup 4-1900cc (1.9L) 2 Bbl.	A	**B141**	**PA1657**	**N/R**	**BF881**	**N/R**	TH700-R4 **18155**
	4-2200cc (2.2L) Diesel	S	**BD142**	**PA1657**	**N/R**	**BF7534**	**N/R**	**18155**
	4-151 (2.5L) FI	E	**B43-S**	**PA2109**	**N/R**	**BF853**	**SA2046**	TH700-R4 **18155**
	V6-173 (2.8L) 2 Bbl.	B	**B43-S**	**PA2113**	**N/R**	**PF894,-RV**	**SA2046**	TH700-R4 **18155**
	Safari 4-151 (2.5L) FI	E	**B43-S**	**PA2109**	**N/R**	**BF853**	**SA2046**	TH700-R4 **18155**
	V6-262 (4.3L) 4 Bbl.	N	**B35-S**	**PA2106**	**N/R**	**PF894,-RV**	**SA2027** **SA2046**	TH700-R4 **18155**
	Vans, G Series V6-262 (4.3L) 4 Bbl.	N	**B35-S**	**PA1680**	**N/R**	**PF894,-RV**	**SA2027** **SA2046**	TH400 **6020** TH700-R4 **18155**
	V8-305 (5.0L) 4 Bbl.	F,H	**B6**	**PA1680**	**N/R**	**PF894,-RV**	**SA2027** **SA2046**	TH400 **6020** TH700-R4 **18155**
	V8-350 (5.7L) 4 Bbl.	L,M	**B6**	**PA1680** Air Pump Ele. **PA4094**	**N/R**	**PF894,-RV**	**SA2027** **SA2046**	TH400 **6020** TH700-R4 **18155**
	V8-379 (6.2L) Diesel	C,J	**B6**	**PA2073**	**N/R**	**BF856**	**N/R**	TH400 **6020** TH700-R4 **18155**
1984	Caballero V6-229 (3.8L) 2 Bbl.	9	**B35-S**	**PA2106**	**N/R**	**PF894,-RV**	**SA2027** **SA2046**	**6021**
	V6-231 (3.8L) 2 Bbl.	A	**B43-S**	**PA1680**	**N/R**	**PF894,-RV**	**SA2046**	
	V8-305 (5.0L) 4 Bbl.	G,H	**B27**	**PA2008**	**N/R**	**PF894,-RV**	**SA2027** **SA2046**	
	V8-350 (5.7L) Diesel	N	**B30**	**PA2079**	**N/R**	**BF806**	**N/R**	
	Jimmy, Pickups, Suburban, C, K Series 6-250 (4.1L) 2 Bbl.	D	**B27**	**PA2077**	**N/R**	**PF894,-RV**	**SA2046**	TH350,C **6021** TH700-R4 **18155**
	6-292 (4.8L) 1 Bbl.	T	**B27**	**PA648**	**N/R**	**PF893,-RV**	**SA2027** **SA2046**	TH400 **6020**
	V8-305 (5.0L) 4 Bbl.	F,H	**B6**	3 15/32 In. **PA2008** 5 7/16 In. **PA2091**	**N/R**	**PF894,-RV**	**SA2027** **SA2046**	TH350,C **6021** TH700-R4 **18155**
	V8-350 (5.7L) 4 Bbl.	L,M	**B6**	3 15/32 In. **PA2008** 5 7/16 In. **PA2091**	**N/R**	**PF894,-RV**	**SA2027** **SA2046**	TH350,C **6021** TH700-R4 **18155**
	V8-379 (6.2L) Diesel	C,J	**B6**	**PA2073**	**N/R**	**BF856**	**N/R**	TH400 **6020** TH700-R4 **18155**
	V8-454 (7.4L) 4 Bbl.	W	**B6**	**PA2008**[17] **PA2091**[31]	**N/R**	**PF894,-RV**	**SA2027** **SA2046**	TH400 **6020** TH700-R4 **18155**

[t] Transmission, Not Model, Determines Which Transmission Filter is Used. OBS = Obsolete. Availability Limited to Distributor Stock. [17] Exc. Calif.
[31] Calif.

GMC Light-Duty Trucks Cont'd.

Year	Model and Engine	VIN	Lube	Air	Cabin Air	Fuel	Breather	Trans.[t]
1984	S1500 Jimmy, S1500 Pickup 4-1900cc (1.9L) 2 Bbl.	A	**B141**	**PA1657**	**N/R**	**BF881**	**N/R**	
	4-2000cc (2.0L) 2 Bbl.	Y	**B43-S**	**PA2113**	**N/R**	**PF894,-RV**	**N/R**	
	4-2200cc (2.2L) Diesel	S	**BD142**	**PA1657**	**N/R**	**BF7534**	**N/R**	4 Spd. **18155**
	V6-173 (2.8L) 2 Bbl.	B	**B43-S**	**PA2113**	**N/R**	**PF894,-RV**	**SA2046**	
	Vans, G Series 6-250 (4.1L) 2 Bbl.	D	**B27**	**PA2077**	**N/R**	**PF894,-RV**	**SA2046**	TH350,C **6021** TH700-R4 **18155**
	V8-305 (5.0L) 4 Bbl.	F,H	**B6**	**PA1680**	**N/R**	**PF894,-RV**	**SA2027** **SA2046**	TH350,C **6021** TH700-R4 **18155**
	V8-350 (5.7L) 4 Bbl.	E,L,M	**B6**	**PA1680**	**N/R**	**PF894,-RV**	**SA2027** **SA2046**	TH350,C **6021** TH700-R4 **18155**
	V8-379 (6.2L) Diesel	C,J	**B6**	**PA2073**	**N/R**	**BF856**	**N/R**	TH350,C **6021** TH700-R4 **18155**
1983	Caballero V6-229 (3.8L) 2 Bbl.	9	**B35-S**	**PA2106**	**N/R**	**PF894,-RV**	**SA2027** **SA2046**	TH350,C **6021**
	V6-231 (3.8L) 2 Bbl.	A	**B43-S**	**PA1680**	**N/R**	**PF894,-RV**	**SA2046**	TH350,C **6021**
	V8-305 (5.0L) 4 Bbl.	H	**B27**	**PA2008**	**N/R**	**PF894,-RV**	**SA2027** **SA2046**	**6021**
	V8-350 (5.7L) Diesel	N	**B30**	**PA2079**	**N/R**	**BF806**	**N/R**	TH350,C **18031**
	Jimmy, Pickups, Suburban, C, K Series 6-250 (4.1L) 2 Bbl.	D	**B27**	**PA2077**	**N/R**	**PF894,-RV**	**SA2046**	3 Spd. **6021** 4 Spd. 4WD **18139**
	6-292 (4.8L) 1 Bbl.	T	**B27**	**PA648**	**N/R**	**PF893,-RV**	**SA2027** **SA2046**	**6020**
	V8-305 (5.0L) 4 Bbl.	F,H	**B6**	3 9/16 In. **PA1680** 5 7/16 In. **PA2091**	**N/R**	**PF894,-RV**	**SA2027** **SA2046**	3 Spd. **6021** 4 Spd. **18155**
	V8-350 (5.7L) 4 Bbl.	L,M	**B6**	3 15/32 In. **PA2008** 5 7/16 In. **PA2091**	**N/R**	**PF894,-RV**	**SA2027** **SA2046**	3 Spd. **6020** 4 Spd. **18155**
	V8-379 (6.2L) Diesel	C,J	**B6**	**PA2073**	**N/R**	Pri. **BF781** Sec. **BF782**	**N/R**	3 Spd. **6020** 4 Spd. **18155**
	V8-454 (7.4L) 4 Bbl.	W	**B6**	**PA2008**[17] **PA2091**[31]	**N/R**	**PF894,-RV**	**SA2027** **SA2046**	**6020**
	S1500 Jimmy, S1500 Pickup 4-1900cc (1.9L) 2 Bbl.	A	**B141**	**PA1657**	**N/R**	**BF881**	**N/R**	
	4-2000cc (2.0L) 2 Bbl.	Y	**B35-S**	**PA2113**	**N/R**	**PF894,-RV**	**N/R**	**18155**
	V6-173 (2.8L) 2 Bbl.	B	**B43-S**	**PA2113**	**N/R**	**PF894,-RV**	**SA2046**	**18155**
	Vans, G Series 6-250 (4.1L) 2 Bbl.	D	**B27**	**PA2077**	**N/R**	**PF894,-RV**	**SA2046**	**6021**
	V8-305 (5.0L) 4 Bbl.	F,H	**B6**	**PA1680**	**N/R**	**PF894,-RV**	**SA2027** **SA2046**	**6021**
	V8-350 (5.7L) 4 Bbl.	L,M	**B6**	**PA1680**	**N/R**	**PF894,-RV**	**SA2027** **SA2046**	3 Spd. **6020** 4 Spd. **18155**
	V8-379 (6.2L) Diesel	C,J	**B6**	**PA2073**	**N/R**	Pri. **BF592** Sec. **BF855**	**N/R**	3 Spd. **6020** 4 Spd. **18155**
1982	Caballero V6-229 (3.8L) 2 Bbl.	K	**B35-S**	**PA2106**	**N/R**	**PF893,-RV**	**SA2027** **SA2046**	TH250,C **6021**
	V6-231 (3.8L) 2 Bbl.	A	**B43-S**	**PA1680**	**N/R**	**PF893,-RV**	**SA2046**	TH350 **6021**
	V8-267 (4.4L) 2 Bbl.	J	**B27**	**PA2106**	**N/R**	**PF893,-RV**	**SA2027** **SA2046**	
	V8-305 (5.0L) 4 Bbl.	H	**B27**	**PA2008**	**N/R**	**PF894,-RV**	**SA2027** **SA2046**	
	Jimmy, Pickups, Suburban, C, K Series 6-250 (4.1L) 2 Bbl.	D	**B27**	**PA2077**	**N/R**	**PF894,-RV**	**SA2046**	TH350 **6021** TH700-R4 **18155**
	6-292 (4.8L) 1 Bbl.	T	**B27**	**PA648**	**N/R**	**PF893,-RV**	**SA2027** **SA2046**	**6020**
	V8-305 (5.0L) 4 Bbl.	F,H	**B6**	3 9/16 In. **PA1680** 5 7/16 In. **PA2091**	**N/R**	**PF894,-RV**	**SA2027** **SA2046**	3 Spd. **6021** 4 Spd. **18155**
	V8-350 (5.7L) 4 Bbl.	L,M	**B6**	3 15/32 In. **PA2008** 5 7/16 In. **PA2091**	**N/R**	**PF894,-RV**	**SA2027** **SA2046**	3 Spd. **6020** 4 Spd. **18155**
	V8-379 (6.2L) Diesel	C,J	**B6**	**PA2073**	**N/R**	Pri. **BF781** Sec. **BF782**	**N/R**	3 Spd. **6020** 4 Spd. **18155**
	V8-454 (7.4L) 4 Bbl.	W	**B6**	**PA2008**[17] **PA2091**[31]	**N/R**	**PF894,-RV**	**SA2027** **SA2046**	**6020**
	S1500 Pickup 4-1900cc (1.9L) 2 Bbl.	A	**B141**	**PA1657**	**N/R**	**BF881**	**N/R**	
	V6-173 (2.8L) 2 Bbl.	B	**B43-S**	**PA2113**	**N/R**	**PF894,-RV**	**SA2046**	
	Vans, G, P Series (4.1L) 2 Bbl.	D	**B27**	**PA2077**	**N/R**	**PF894,-RV**	**SA2046**	**6021**

[17] Exc. Calif. OBS = Obsolete. Availability Limited to Distributor Stock. [t] Transmission, Not Model, Determines Which Transmission Filter is Used. [31] Calif.

GMC Light-Duty Trucks Cont'd.

Year	Model and Engine	VIN	Lube	Air	Cabin Air	Fuel	Breather	Trans.[t]
1982	Vans, G, P Series V8-305 (5.0L) 4 Bbl.	F,H	**B6**	**PA1680**	**N/R**	**PF894,-RV**	**SA2027** **SA2046**	**6021**
	V8-350 (5.7L) 4 Bbl.	L,M	**B6**	**PA1680**	**N/R**	**PF894,-RV**	**SA2027** **SA2046**	**6021**
	V8-379 (6.2L) Diesel	C,J	**B6**	**PA2073**	**N/R**	Pri. **BF781** Sec. **BF782**	**N/R**	3 Spd. **6020** 4 Spd. **18155**
1981	Caballero V6-229 (3.8L) 2 Bbl.	K	**B35-S**	**PA2106**	**N/R**	**PF894,-RV**	**SA2027** **SA2046**	TH250,C **6021**
	V6-231 (3.8L) 2 Bbl.	A	**B43-S**	**PA1680**	**N/R**	**PF894,-RV**	**SA2046**	
	V8-267 (4.4L) 2 Bbl.	J	**B27**	**PA2106**	**N/R**	**PF894,-RV**	**SA2027** **SA2046**	**6021**
	V8-305 (5.0L) 4 Bbl.	H	**B27**	**PA2008**	**N/R**	**PF894,-RV**	**SA2027** **SA2046**	**6021**
	Jimmy, Pickups, Suburban, C, K Series 6-250 (4.1L) 2 Bbl.	D	**B27**	**PA2077**	**N/R**	**PF894,-RV**	**SA2046**	**6021**
	6-292 (4.8L) 1 Bbl.	T	**B27**	**PA648**	**N/R**	**PF893,-RV**	**SA2027** **SA2046**	TH400 **6020**
	V8-305 (5.0L) 2 Bbl.	G	**B6**	**PA1680**	**N/R**	**PF894,-RV**	**SA2027** **SA2046**	**6021**
	V8-305 (5.0L) 4 Bbl.	F,H	**B6**	**PA2091**	**N/R**	**PF894,-RV**	**SA2027** **SA2046**	**6021**
	V8-350 (5.7L) 4 Bbl.	L,M	**B6**	3 15/32 In. **PA2008** 5 7/16 In. **PA2091**	**N/R**	**PF894,-RV**	**SA2027** **SA2046**	TH400 **6020**
	V8-350 (5.7L) Diesel	Z	**B30**	**PA2073**	**N/R**	**BF806**	**N/R**	**6021**
	V8-454 (7.4L) 4 Bbl.	W	**B6**	**PA2008**[17] **PA2091**[31]	**N/R**	**PF894,-RV**	**SA2027** **SA2046**	TH400 **6020**
	Vans, G Series 6-250 (4.1L) 2 Bbl.	D	**B27**	**PA2077**	**N/R**	**PF894,-RV**	**SA2046**	**6021**
	V8-305 (5.0L) 2,4 Bbl.	F,G,H	**B6**	**PA1680**	**N/R**	**PF894,-RV**	**SA2027** **SA2046**	**6021**
	Vans, G, P Series V8-350 (5.7L) 4 Bbl.	L,M	**B6**	**PA1680**	**N/R**	**PF894,-RV**	**SA2027** **SA2046**	TH400 **6020**
1980	Caballero V6-229 (3.8L) 2 Bbl.	K	**B43-S**	**PA1680**	**N/R**	**PF894,-RV**	**SA2027** **SA2046**	TH350,C **6021**
	V6-231 (3.8L) 2 Bbl.	A	**B43-S**	**PA1680**	**N/R**	**PF894,-RV**	**SA2046**	TH350 **6021**
	V8-267 (4.4L) 2 Bbl.	J	**B27**	**PA1680**	**N/R**	**PF894,-RV**	**SA2027** **SA2046**	TH350 **6021**
	V8-305 (5.0L) 4 Bbl.	H	**B27**	**PA2008**	**N/R**	**PF894,-RV**	**SA2027** **SA2046**	
	Jimmy, Pickups, Suburban, C, K Series 6-250 (4.1L) 2 Bbl.	D	**B27**	**PA2077**	**N/R**	**PF894,-RV**	**SA2046**	**6021**
	6-292 (4.8L) 1 Bbl.	T	**B27**	**PA648**	**N/R**	**PF893,-RV**	**SA2027** **SA2046**	**6020**
	V8-305 (5.0L) 2 Bbl.	G	**B6**	**PA1680**	**N/R**	**PF894,-RV**	**SA2027** **SA2046**	**6021**
	V8-350 (5.7L) 4 Bbl.	L,M,P	**B6**	3 15/32 In. **PA2008** 5 7/16 In. **PA2091**	**N/R**	**PF894,-RV**	**SA2027** **SA2046**	TH350 **6021** TH400 **6020**
	V8-350 (5.7L) Diesel	Z	**B30**	**PA2073**	**N/R**	**BF806**	**N/R**	
	V8-400 (6.6L) 4 Bbl.	R,X	**B6**	**PA2008**	**N/R**	**PF894,-RV**	**SA2027** **SA2046**	TH350 **6021** TH350C **18031**
	V8-454 (7.4L) 4 Bbl.	S,W	**B6**	3 15/32 In. **PA2008** 5 7/16 In. **PA2091**	**N/R**	**PF894,-RV**	**SA2027** **SA2046**	TH400 **6020**
	Vans, G Series 6-250 (4.1L) 2 Bbl.	D	**B27**	**PA2077**	**N/R**	**PF894,-RV**	**SA2046**	**6021**
	6-292 (4.8L) 1 Bbl.	T	**B27**	**PA648**	**N/R**	**PF893,-RV**	**SA2027** **SA2046**	TH350 **6021** TH400 **6020**
	V8-305 (5.0L) 2 Bbl.	G	**B6**	**PA1680**	**N/R**	**PF894,-RV**	**SA2027** **SA2046**	**6021**
	V8-350 (5.7L) 4 Bbl.	L,M	**B6**	**PA1680**	**N/R**	**PF894,-RV**	**SA2027** **SA2046**	TH350 **6021** TH400 **6020**
	V8-400 (6.6L) 4 Bbl.	R,X	**B6**	**PA1680**	**N/R**	**PF894,-RV**	**SA2027** **SA2046**	TH350 **6021** TH400 **6020**
	V8-454 (7.4L) 4 Bbl.	S,W	**B6**	3 15/32 In. **PA2008** 5 7/16 In. **PA2091**	**N/R**	**PF894,-RV**	**SA2027**	TH350 **6021** TH400 **6020**

[t] Transmission, Not Model, Determines Which Transmission Filter is Used. OBS = Obsolete. Availability Limited to Distributor Stock. [17] Exc. Calif.
[31] Calif.

HARLEY-DAVIDSON Motorcycles

Year	Model and Engine	VIN	Lube	Air	Cabin Air	Fuel	Breather	Trans.[t]
	Dyna Models		1991-98 **B243**					
	G			1955-2007 **PA678**				
	FL			1956-2007 **PA678**				
	FLHR Electra Glide Road King		1996-98 **B1413** 1996-98 (Chrome) **B7434**					
	FLHR Road King		1997-98 **B1413** 1997-2002 (Chrome) **B7434** 2007-on **BT223**					
	FLHRC-I		2003 (Chrome) **B7434**					
	FLHRI		1997-on **B1413** 2000, 2003 (Chrome) **B7434**					
	FLHRI Electra Glide Road King		1996 **B1413** 1996 (Chrome) **B7434**					
	FLHS 1340cc		1987-94 **B1413** 1987-94 (Chrome) **B7434**					
	FLHS Electra Glide Sport		1987-93 **B1413** 1987-93 (Chrome) **B7434**					
	FLHT Electra Glide		1984-90, 1997-98 (Chrome) **B7434**					
	FLHT, FLHTC 1450cc		1999-on **B1413**					
	FLHT, FLHT Electra Glide, FLHTC Electra Glide, FLHTC-U 1340cc		1980-98 **B1413** 1999-2008 **BT223**					
	FLHTC Electra Glide Classic Series		1984-98 **B1413** 1984-98 (Chrome) **B7434**					
	FLHTC-I		1999-2005 (Chrome) **B7434**					
	FLHTC-U		1987-on **B1413** 1987-on (Chrome) **B7434**					
	FLHTCU Electra Glide Ultra Classic		1980-98 **B1413** 1980-98 (Chrome) **B7434**					
	FLHTCUI Electra Glide Ultra Classic		1998 **B1413** 1998 (Chrome) **B7434**					
	FLHTP 1340cc		1984-95 **B1413** 1984-95 (Chrome) **B7434** 1995-96 (Police Models) **B1413**					
	FLST		1997-on **B1413** 1980-96 (Chrome) **B7434**					
	FLST Heritage Softail		1987-90 **B1413** 1987-90 (Chrome) **B7434**					
	FLSTC, FLSTF, FLSTS 1450cc		1999-on **B1413**					
	FLSTC Softail, FLSTS Softail 1340cc		1980-99 **B1413** 2000-06 **BT223**					
	FLSTC Heritage Softail Classic		1988-98 **B1413** 1988-98 (Chrome) **B7434**					
	FLSTF Fatboy		1990-98 **B1413** 1990-98 (Chrome) **B7434**					

OBS = Obsolete. Availability Limited to Distributor Stock. [t] Transmission, Not Model, Determines Which Transmission Filter is Used.

HARLEY-DAVIDSON Motorcycles Cont'd.

Year	Model and Engine	VIN	Lube	Air	Cabin Air	Fuel	Breather	Trans.t
	FLSTN Heritage Softail Special		1994-98 **B1413** 1994-98 (Chrome) **B7434** 2005-on **BT223**					
	FLSTS Heritage Springer		1997-2003 (Chrome) **B7434**					
	FLSTS Spinger Softail		1988-98 **B1413** 1988-98 (Chrome) **B7434**					
	FLT Tour Glide		1980-96 **B1413** 1980-96 (Chrome) **B7434**					
	FLT, FLTCU Road Glide 1340cc		1980-98 **B1413**					
	FLTC		1980-92 **B1413** 1980-92 (Chrome) **B7434**					
	FLTC Tour Glide Classic		1980-92 **B1413** 1980-92 (Chrome) **B7434**					
	FLTC-U		1987-96 (Chrome) **B7434**					
	FLTCU Ultra Tour Glide Series		1987-95 **B1413** 1987-95 (Chrome) **B7434**					
	FLTR Road Glide Series		1998 **B1413** 1998 (Chrome) **B7434** 1999-2002 **BT223**					
	FLSTS Heritage Springer		1997-98 **B1413** 1997-98 (Chrome) **B7434**					
	FLSTSC		2005-07 **BT223**					
	FXB Sturgis		1980, 1982 **B243**					
	FXD							
	FXD Dyna Super Glide		1996-98 **B243**					
	FXDB Dyna Glide Series		1980, 1982 **B243**					
	FXDC Dyna Glide Custom		1992 **B243**					
	FXDL, FXDL Dyna, FXDWG, FXDWG Dyna, FXDX, FXDX Dyna 1450cc		1999-2007 **B1413**					
	FXDL Dyna Low Rider		1993-98 **B243**					
	FXDS-Conv		1995-98 **B243** 1999-2000 (Chrome) **B7434**					
	FXDWG Dyna Wide Glide		1999-on **BT223**					
	FXDX Dyna Super Glide Sport		1999-2005 (Chrome) **B7434**					
	FXLR Low Rider Custom		1987-94 **B1413** 1987-94 (Chrome) **B7434**					
	FXLR		1987-94 **B1413**					
	FXR		1982-94 **B1413**					
	FXR Super Glide		1983-93 **B1413** 1983-93 (Chrome) **B7434**					
	FXRC Low Glide Custom		1987 **B1413** 1987 (Chrome) **B7434**					
	FXRD GT		1986 **B1413** 1986 (Chrome) **B7434**					
	FXRP		1984-95 **B1413** 1984-95 (Chrome) **B7434**					
	FXRS Low Rider Series		1987-93 **B1413** 1987-93 (Chrome) **B7434**					

[t] Transmission, Not Model, Determines Which Transmission Filter is Used. OBS = Obsolete. Availability Limited to Distributor Stock.

HARLEY-DAVIDSON Motorcycles Cont'd.

Year	Model and Engine	VIN	Lube	Air	Cabin Air	Fuel	Breather	Trans.[t]
	FXRS-SP Low Rider Sport		1989-93 **B1413** 1989-93 (Chrome) **B7434**					
	FXRT 1340cc		1987-92 **B1413**					
	FXRT Sport Glide		1983-89 **B1413** 1983-89 (Chrome) **B7434**					
	FXST Softail		1984-1990 (Chrome) **B7434** 2000-on **BT223**					
	FXST, FXSTB, FXSTC, FXSTS, FXSTS-B 1340cc		1984-85, 1987-99 **B1413** 2000-on **BT223**					
	FXST, FXSTB, FXSTC, FXSTS, FXSTS-B 1450cc		2000-on **B1413**					
	FXST Softail		1984-90 **B1413** 1984-90 (Chrome) **B7434**					
	FXSTC Softail		1987-99 (Chrome) **B7434** 2000-08 **BT223**					
	FXSTC Softail Custom		1986-98 **B1413** 1986-98 (Chrome) **B7434**					
	FXSTD Softail Deuce		2000-05 (Chrome) **B7434**					
	FXSTSB Bad Boy		1995-97 **B1413** 1995-97 (Chrome) **B7434**					
	FXWG 1340cc							
	K			1955-2007 **PA678**				
	Softails		1984-98 **B1413** 1984-98 (Chrome) **B7434**					
	XL Sportster 1000cc		1993-94 (Chrome) **B7434**					
	XL, XLX		Late 1984-on (Chrome) **B7434** Late 1984-on **B1413**					
	XL Sportster		1984-on **B1413**					
	XLC, XLCH 883cc		1993-94 **B1413**	1993-94 **PA615**				
	1200cc		1993-99 **B1413** 1993-94 (Chrome) **B7434**					
	XLH, XLH Sportster		1986-on **B1413**					
	XLH Sportster 1000cc		1986-2003 (Chrome) **B7434**					
	XLH Sportster Anniversary		1993 (Chrome) **B7434**					
	XL50 50th Anniversary Sportster		2007 (Chrome) **B7434**					
	XL53C Sportster Custom		1999-2003 (Chrome) **B7434**					
	XL883 Sportster		2004-07 (Chrome) **B7434**					
	XL883C Sportster Custom		2003-07 (Chrome) **B7434**					
	XL883L Sportster Low		2005-07 (Chrome) **B7434**					
	XL883R Sportster		2002-07 (Chrome) **B7434**					
	XL1200 Sportster Series		1996-2007 (Chrome) **B7434**					
	XL1200C Sportster Custom		1996-2007 (Chrome) **B7434**					

OBS = Obsolete. Availability Limited to Distributor Stock. [t] Transmission, Not Model, Determines Which Transmission Filter is Used.

Year	Model and Engine	VIN	Lube	Air	Cabin Air	Fuel	Breather	Trans.[t]
HARLEY-DAVIDSON Motorcycles Cont'd.								
	XLH883 Sportster Series		1986-2003 (Chrome) **B7434**					
	XLH883R Sportster Flat Track		2000 (Chrome) **B7434**					
	XLH1000 Sportster		1987 (Chrome) **B7434**					
	XLH1100 Sportster		1986-87 (Chrome) **B7434**					
	XLH 1200 Sportster		1988-2002 (Chrome) **B7434**					
	XLS, XLX 1000cc		1984-85 **B1413** 1984-85 (Chrome) **B7434**					
	XLS1000 Roadster		Late 1984-85 (Chrome) **B7434**					
	XLX61		Late 1984-85 (Chrome) **B7434**					
HONDA								
2011	CR-Z 4-1800cc (1.8L) Hybrid							
2010	Accord 4-2354cc (2.4L) FI		**B1402**	**PA4374**	**PA4196**	**N/S**	**N/R**	5 Spd. **N/S**
	V6-212 (3.5L) FI		**B1402**	**PA4364**	**PA4196**	**N/S**	**N/R**	**N/S**
	Accord Crosstour V6-3471cc (3.5L) FI		**B1402**	**PA4364**		**N/S**	**N/R**	In Sump **N/S**
	Civic 4-1339cc (1.3L) FI Hybrid		**B1402**			**N/S**	**N/R**	In Sump **N/S**
	4-1799cc (1.8L) FI or Natural Gas		**B1402**	**PA4320**	**PA4196**	**N/S**	**N/R**	5 Spd. **N/S**
	4-1998cc (2.0L) FI		**B1402**	**PA4193**	**PA4196**	**N/S**	**N/R**	**M.T.**
	CR-V 4-2354cc (2.4L) FI		**B1402**		**PA4196**	**N/S**	**N/R**	In Sump **N/S**
	Element 4-2354cc (2.4L) FI		**B1402**	**PA4193**	**PA4195 KIT**	**N/S**	**N/R**	**N/S**
	Fit 4-1497cc (1.5L) FI		**B1402**			**N/S**	**N/R**	**N/S**
	Insight 4-1339cc (1.3L) Hybrid		**B1402**			**N/S**	**N/R**	**N/S**
	Odyssey V6-212 (3.5L) EFI		**B1402**		**PA4196**	**N/S**	**N/R**	In Sump **N/S**
	Pilot V6-212 (3.5L) FI		**B1402**		**PA4196**	**N/S**	**N/R**	In Sump **N/S**
	Ridgeline V6-212 (3.5L) MFI		**B1402**		**PA4196**	**N/S**	**N/R**	
2009	Accord 4-2354cc (2.4L) FI		**B1402**	**PA4374**	**PA4196**	**N/S**	**N/R**	**N/S**
	V6-212 (3.5L) FI		**B1402**	**PA4364**	**PA4196**	**N/S**	**N/R**	**N/S**
	Civic 3-1339cc (1.3L) FI Hybrid		**B1402**		**PA4196**	**N/S**	**N/R**	**N/S**
	4-1799cc (1.8L) FI or Natural Gas		**B1402**	**PA4320**	**PA4196**	**N/S**	**N/R**	**N/S**
	4-1998cc (2.0L) FI		**B1402**	**PA4193**	**PA4196**	**N/S**	**N/R**	**M.T.**
	CR-V 4-144 (2.4L) FI		**B1402**	**PA4417**	**PA4196**	**N/S**	**N/R**	In Sump **N/S**
	Element 4-2354cc (2.4L) FI		**B1402**	**PA4193**	**PA4195 KIT**	**N/S**	**N/R**	**N/S**
	Fit 4-1497cc (1.5L) FI		**B1402**			**N/S**	**N/R**	**N/S**
	Odyssey V6-212 (3.5L) EFI		**B1402**	**PA4351**	**PA4196**	**N/S**	**N/R**	**N/S**
	Pilot V6-212 (3.5L) MFI		**B1402**		**PA4196**	**N/S**	**N/R**	**N/S**
	Ridgeline V6-212 (3.5L) MFI		**B1402**	**PA4377**	**PA4196**	**N/S**	**N/R**	
	S2000 4-2157cc (2.2L) FI		**B179**			**N/S**	**N/R**	**M.T.**
2008	Accord 4-2354cc (2.4L) FI		**B1402**	**PA4374**	**PA4196**	**N/S**	**N/R**	**N/S**
	V6-212 (3.5L) FI		**B1402**	**PA4364**	**PA4196**	**N/S**	**N/R**	**N/S**
	Civic 3-1339cc (1.3L) FI Hybrid		**B1402**		**PA4196**	**N/S**	**N/R**	In Sump **N/S**
	4-1799cc (1.8L) FI or Natural Gas		**B1402**	**PA4320**	**PA4196**	**N/S**	**N/R**	**N/S**
	4-1998cc (2.0L) FI		**B1402**	**PA4193**	**PA4196**	**N/S**	**N/R**	**N/S**
	CR-V 4-144 (2.4L) MFI		**B1402**	**PA4417**	**PA4196**	**N/S**	**N/R**	In Sump **N/S**
	Element 4-2354cc (2.4L) FI		**B1402**	**PA4193**	**PA4195 KIT**	**N/S**	**N/R**	**N/S**
	Fit 4-1497cc (1.5L) FI		**B1402**	**PA4366**	**PA4411**	**N/S**	**N/R**	**N/S**
	Odyssey V6-212 (3.5L) EFI		**B1402**	**PA4351**	**PA4196**	**N/S**	**N/R**	In Sump **N/S**
	Pilot V6-212 (3.5L) MFI		**B1402**	**PA4190**	**PA4304**	**N/S**	**N/R**	In Sump **N/S**
	Ridgeline V6-212 (3.5L) MFI		**B1402**	**PA4377**	**PA4196**	**N/S**	**N/R**	**N/S**
	S2000 4-2157cc (2.2L) FI		**B179**			**N/S**	**N/R**	**M.T.**
2007	Accord 4-2354cc (2.4L) VTEC		**B1402**	**PA4191**	**PA4196**	**N/S**	**N/R**	**N/S**
	V6-183 (3.0L) FI VTEC		**B1402**	**PA4355**	**PA4196**	**N/S**	**N/R**	**N/S**
	V6-183 (3.0L) Hybrid		**B1402**	**PA4420**	**PA4196**	**N/S**	**N/R**	**N/S**
	Civic 3-1339cc (1.3L) FI Hybrid		**B1402**		**PA4196**	**N/S**	**N/R**	In Sump **N/S**
	4-1799cc (1.8L) FI or Natural Gas		**B1402**	**PA4320**	**PA4196**	**N/S**	**N/R**	**N/S**
	4-1998cc (2.0L) FI		**B1402**	**PA4193**	**PA4196**	**N/S**	**N/R**	**N/S**
	CR-V 4-144 (2.4L) MFI		**B1402**	**PA4417**	**PA4196**	**N/S**	**N/R**	In Sump **N/S**
	Element 4-2354cc (2.4L) FI		**B1402**	**PA4193**	**PA4195 KIT**	**N/S**	**N/R**	**N/S**
	Fit 4-1497cc (1.5L) FI		**B1402**	**PA4366**	**PA4411**	**N/S**	**N/R**	**N/S**
	Odyssey V6-212 (3.5L) MFI VTEC		**B1402**	**PA4351**	**PA4196**	**N/S**	**N/R**	

[t] Transmission, Not Model, Determines Which Transmission Filter is Used. OBS = Obsolete. Availability Limited to Distributor Stock.

HONDA Cont'd.

Year	Model and Engine	VIN	Lube	Air	Cabin Air	Fuel	Breather	Trans.[t]
2007	Pilot V6-212 (3.5L) MFI		**B1402**	**PA4190**	**PA4304**	**N/S**	**N/R**	In Sump **N/S**
	Ridgeline V6-212 (3.5L) MFI		**B1402**	**PA4377**	**PA4196**	**N/S**	**N/R**	**N/S**
	S2000 4-2157cc (2.2L) FI VTEC		**B179**			**N/S**	**N/R**	6 Spd. **M.T.**
2006	Accord 4-2354cc (2.4L) VTEC		**B1402**	**PA4191**	**PA4196**	**N/S**	**N/R**	**N/S**
	V6-183 (3.0L) VTEC		**B1402**	**PA4355**	**PA4196**	**N/S**	**N/R**	**N/S**
	V6-183 (3.0L) MPFI Hybrid		**B1402**	**PA4420**	**PA4196**	**N/S**	**N/R**	**N/S**
	Civic 4-1339cc (1.3L) FI Hybrid		**B1402**		**PA4196**	**N/S**	**N/R**	**N/S**
	4-1799cc (1.8L) MFI		**B1402**	**PA4320**	**PA4196**	**N/S**	**N/R**	**N/S**
	4-1998cc (2.0L) MFI		**B1402**	**PA4193**	**PA4196**	**N/S**	**N/R**	**M.T.**
	CR-V 4-2354cc (2.4L) MFI		**B1402**	**RS4189**	**PA4195 KIT**	**N/S**	**N/R**	In Sump **N/S**
	Element 4-2354cc (2.4L) FI		**B1402**	**RS4189**	**PA4195 KIT**	**N/S**	**N/R**	**N/S**
	Insight 3-995cc (1.0L) VTEC Hybrid		**B1402**			**N/S**	**N/R**	**N/S**
	Odyssey V6-212 (3.5L) MFI VTEC		**B1402**	**PA4351**	**PA4196**	**N/S**	**N/R**	
	Pilot V6-212 (3.5L) MFI		**B1402**	**PA4190**	**PA4304**	**N/S**	**N/R**	In Pan **N/S**
	Ridgeline V6-212 (3.5L) MFI		**B1402**	**PA4377**	**PA4196**	**N/S**	**N/R**	**N/S**
	S2000 4-2157cc (2.2L) FI VTEC		**B179**			**N/S**	**N/R**	**M.T.**
2005	Accord 4-2354cc (2.4L) MFI		**B1402**	**PA4191**	**PA4196**	**N/S**	**N/R**	**N/S**
	V6-183 (3.0L) MFI VTEC		**B1402**	**PA4306**	**PA4196**	**N/S**	**N/R**	**N/S**
	V6-183 (3.0L) MFI VTEC Hybrid		**B1402**	**PA4420**	**PA4196**	**N/S**	**N/R**	**N/S**
	Civic 4-1339cc (1.3L) MFI Hybrid		**B1402**	**PA4381**	**PA4195 KIT**	**N/S**	**N/R**	**N/S**
	4-102 (1.7L) FI or Natural Gas		**B1402**	**PA4182**	**PA4195 KIT**	**N/S**	**N/R**	**N/S**
	4-1998cc (2.0L) FI		**B1402**	**RS4189**	**PA4195 KIT**	**N/S**	**N/R**	**M.T.**
	CR-V 4-2354cc (2.4L) MFI		**B1402**	**RS4189**	**PA4195 KIT**	**N/S**	**N/R**	**N/S**
	Element 4-2354cc (2.4L) FI		**B1402**	**RS4189**	**PA4195 KIT**	**N/S**	**N/R**	**N/S**
	Insight 3-995cc (1.0L) MFI VTEC		**B1400**			**N/S**	**N/R**	**N/S**
	Odyssey V6-212 (3.5L) MFI VTEC		**B1402**	**PA4351**	**PA4196**	**N/S**	**N/R**	
	Pilot V6-212 (3.5L) MFI		**B1402**	**PA4190**	**PA4304**	**N/S**	**N/R**	
	S2000 4-2157cc (2.2L) FI VTEC		**B179**			**N/S**	**N/R**	**M.T.**
2004	Accord 4-2354cc (2.4L) MFI VTEC		**B1402**	**PA4191**	**PA4196**	**N/S**	**N/R**	**N/S**
	V6-183 (3.0L) MFI VTEC		**B1402**	**PA4306**	**PA4196**	**N/S**	**N/R**	**N/S**
	Civic 4-1339cc (1.3L) MFI Hybrid		**B1402**	**PA4381**	**PA4195 KIT**	**N/S**	**N/R**	**N/S**
	4-102 (1.7L) MFI or Natural Gas		**B1402**	**PA4182**	**PA4195 KIT**	**N/S**	**N/R**	**N/S**
	4-1998cc (2.0L) MFI		**B1402**	**RS4189**	**PA4195 KIT**	**N/S**	**N/R**	**M.T.**
	CR-V 4-2354cc (2.4L) PFI		**B1402**	**RS4189**	**PA4195 KIT**	**N/S**	**N/R**	**N/S**
	Element 4-2354cc (2.4L) FI		**B1402**	**RS4189**	**PA4195 KIT**	**N/S**	**N/R**	**N/S**
	Insight 3-995cc (1.0L) MFI VTEC		**B1400**			**N/S**	**N/R**	**N/S**
	Odyssey V6-212 (3.5L) MFI VTEC		**B1402**	**PA4303**	**PA4304**	**N/S**	**N/R**	**N/S**
	Pilot V6-212 (3.5L) MFI		**B1402**	**PA4190**	**PA4304**	**N/S**	**N/R**	
	S2000 4-2157cc (2.2L) FI		**B179**			**N/S**	**N/R**	**M.T.**
2003	Accord 4-2354cc (2.4L) MFI VTEC		**B1402**	**PA4191**	**PA4196**	**N/S**	**N/R**	**N/S**
	V6-183 (3.0L) MFI VTEC		**B1402**	**PA4306**	**PA4196**	**N/S**	**N/R**	**N/S**
	Civic 4-1339cc (1.3L) MFI Hybrid		**B1402**	**PA4381**	**PA4195 KIT**	**N/S**	**N/R**	**N/S**
	4-102 (1.7L) MFI or Natural Gas		**B1402**	**PA4182**	**PA4195 KIT**	**N/S**	**N/R**	**N/S**
	4-1998cc (2.0L) MFI		**B1402**	**PA4182**	**PA4195 KIT**	**N/S**	**N/R**	**M.T.**
	CR-V 4-2354cc (2.4L) MFI		**B1402**	**RS4189**	**PA4195 KIT**	**N/S**	**N/R**	**N/S**
	Element 4-2354cc (2.4L) FI		**B1402**	**RS4189**	**PA4195 KIT**	**N/S**	**N/R**	**N/S**
	Insight 3-995cc (1.0L) MFI VTEC		**B1400**			**N/S**	**N/R**	**N/S**
	Odyssey V6-212 (3.5L) MFI VTEC		**B1402**	**PA4303**	**PA4304**	**N/S**	**N/R**	**N/S**
	Pilot V6-212 (3.5L) MFI		**B1402**	**PA4190**	**PA4304**	**N/S**	**N/R**	
	S2000 4-122 (2.0L) MFI VTEC		**B179**			**N/S**	**N/R**	**M.T.**
2002	Accord 4-138 (2.3L) MFI		**B1402**	**PA4104**	**PA4416 KIT**	**N/S**	**N/R**	
	V6-183 (3.0L) MFI VTEC		**B1402**	**PA4106**	**PA4416 KIT**	**N/S**	**N/R**	**N/S**
	Civic 4-102 (1.7L) MFI		**B1402**	**PA4182**	**PA4195 KIT**	**N/S**	**N/R**	**N/S**
	4-1998cc (2.0L) FI		**B1402**	**PA4182**	**PA4195 KIT**	**N/S**	**N/R**	**N/S**
	CR-V 4-2354cc (2.4L) FI		**B1402**	**RS4189**	**PA4195 KIT**	**N/S**	**N/R**	**N/S**
	Insight 3-995cc (1.0L) FI		**B1400**			**N/S**	**N/R**	**N/S**
	Odyssey V6-212 (3.5L) MFI VTEC		**B1402**	**PA4303**	**PA4304**	**N/S**	**N/R**	**N/S**
	Passport V6-193 (3.2L) MFI	W	**B1425**	**PA4081**	**N/R**	**BF1049**	**N/R**	
	S2000 4-122 (2.0L) MFI VTEC		**B179**			**N/S**	**N/R**	**M.T.**
2001	Accord 4-138 (2.3L) MFI		**B1402**	**PA4104**	**PA4416 KIT**	**N/S**	**N/R**	
	V6-184 (3.0L) MFI		**B1402**	**PA4106**	**PA4416 KIT**	**N/S**	**N/R**	**N/S**
	Civic 4-102 (1.7L) MFI		**B1402**	**PA4182**	**PA4195 KIT**	**N/S**	**N/R**	**N/S**
	CR-V 4-122 (2.0L) MFI		2 27/32 In. **B179** 3 7/16 In. **B1421**	**PA4099**		**BF1193**	**N/R**	**N/S**
	Insight 3-995cc (1.0L) FI		**B1400**			**N/S**	**N/R**	**N/S**
	Odyssey V6-212 (3.5L) MFI VTEC		**B1402**	**PA4129**	**PA4304**	**N/S**	**N/R**	**N/S**
	Passport V6-193 (3.2L) MFI	W	**B1425**	**PA4081**	**N/R**	**BF1049**	**N/R**	

OBS = Obsolete. Availability Limited to Distributor Stock. [t] Transmission, Not Model, Determines Which Transmission Filter is Used.

HONDA Cont'd.

Year	Model and Engine	VIN	Lube	Air	Cabin Air	Fuel	Breather	Trans.[t]
2001	Prelude 4-132 (2.2L) MFI VTEC		**B1402**			**BF1193**	**N/R**	
	S2000 4-1997cc (2.0L) MFI VTEC		**B179**			**N/S**	**N/R**	**M.T.**
2000	Accord 4-138 (2.3L) MFI		**B1402**	**PA4104**	**PA4416 KIT**	**N/S**	**N/R**	
	V6-184 (3.0L) MFI VTEC		**B1402**	**PA4106**	**PA4416 KIT**	**N/S**	**N/R**	**N/S**
	Civic 4-97 (1.6L) MFI CX, DX, LX 16 Valve		**B1402**	**PA4100**	**N/R**	**BF1193**	**N/R**	**N/S**
	4-97 (1.6L) MFI VTEC EX		**B1402**	**PA4099**	**N/R**	**BF1193**	**N/R**	**N/S**
	4-97 (1.6L) MFI VTEC-E HX		**B1402**	**PA4099**	**N/R**	**BF1193**	**N/R**	**N/S**
	4-97 (1.6L) MFI DOHC VTEC Si		**B1402**	**PA4099**	**N/R**	**BF1193**	**N/R**	**M.T.**
	CR-V 4-122 (2.0L) MFI		2 27/32 In. **B179** 3 7/16 In. **B1421**	**PA4099**		**BF1193**	**N/R**	**N/S**
	Insight 3-995cc (1.0L) FI		**B1400**			**N/S**	**N/R**	**M.T.**
	Odyssey V6-212 (3.5L) MFI VTEC		**B1402**	**PA4129**	**PA4304**	**N/S**	**N/R**	**N/S**
	Passport V6-193 (3.2L) MFI	W	**B1425**	**PA4081**	**N/R**	**BF1049**	**N/R**	
	Prelude 4-132 (2.2L) MFI VTEC		**B1402**			**BF1193**	**N/R**	
	S2000 4-1997cc (2.0L) FI VTEC		**B179**			**N/S**	**N/R**	**M.T.**
1999	Accord 4-138 (2.3L) MFI		**B1402**	**PA4104**	**PA4416 KIT**	**N/S**	**N/R**	
	V6-184 (3.0L) MFI		**B1402**	**PA4106**	**PA4416 KIT**	**N/S**	**N/R**	**N/S**
	Civic 4-97 (1.6L) MFI 16 Valve		**B1402**	**PA4100**	**N/R**	**BF1193**	**N/R**	**N/S**
	4-97 (1.6L) MFI Natural Gas		**B1402**	**PA4099**	**N/R**		**N/R**	**N/S**
	4-97 (1.6L) MFI VTEC		**B1402**	**PA4099**	**N/R**	**BF1193**	**N/R**	**N/S**
	CR-V 4-122 (2.0L) MFI		2 27/32 In. **B179** 3 7/16 In. **B1421**	**PA4099**		**BF1193**	**N/R**	**N/S**
	Odyssey V6-212 (3.5L) MFI		**B1402**	**PA4129**	**PA4304**	**N/S**	**N/R**	**N/S**
	Passport V6-193 (3.2L) MFI	W	**B1425**	**PA4081**	**N/R**	**BF1049**	**N/R**	
	Prelude 4-132 (2.2L) MFI VTEC		**B1402**			**BF1193**	**N/R**	
1998	Accord 4-138 (2.3L) MFI		**B1402**	**PA4104**	**PA4416 KIT**	**N/S**	**N/R**	
	V6-184 (3.0L) MFI		**B1402**	**PA4106**	**PA4416 KIT**	**N/S**	**N/R**	**N/S**
	Civic 4-97 (1.6L) MFI		**B1402**	**PA4100**	**N/R**	**BF1193**	**N/R**	
	4-97 (1.6L) MFI VTEC		**B1402**	**PA4099**	**N/R**	**BF1193**	**N/R**	
	CR-V 4-1972cc (2.0L) MFI		**B1421**	**PA4099**		**BF1193**	**N/R**	**N/S**
	Odyssey 4-2234cc (2.3L) MFI		**B1402**	**PA4077**	**N/R**	**BF1193**	**N/R**	
	Passport V6-193 (3.2L) MFI	W	**B1425**	**PA4081**	**N/R**	**BF1049**	**N/R**	
	Prelude 4-132 (2.2L) MFI VTEC		**B1402**		**N/R**	**BF1193**	**N/R**	
1997	Accord 4-132 (2.2L) MFI		**B1402**	**PA4077**	**N/R**	**BF1193**	**N/R**	
	V6-163 (2.7L) MFI		**B1402**	**PA4090**	**N/R**	**BF1193**	**N/R**	
	Civic 4-97 (1.6L) MFI		**B1402**	**PA4100**	**N/R**	**BF1193**	**N/R**	
	4-97 (1.6L) MFI VTEC, VTEC2		**B1402**	**PA4099**	**N/R**	**BF1193**	**N/R**	
	Civic del Sol 4-97 (1.6L) MFI		**B1402**	**PA4100**	**N/R**	**BF1193**	**N/R**	
	4-97 (1.6L) MFI VTEC		**B1402**	**PA4099**	**N/R**	**BF1193**	**N/R**	
	CR-V 4-1972cc (2.0L) MFI		**B1421**	**PA4099**		**BF1193**	**N/R**	**N/S**
	Odyssey 4-132 (2.2L) MFI	4,6,7	**B1402**	**PA4077**	**N/R**	**BF1193**	**N/R**	
	Passport V6-193 (3.2L) MFI	V	**B1425**	**PA4081**	**N/R**	**BF1049**	**N/R**	
	Prelude 4-132 (2.2L) PFI VTEC		**B1402**		**N/R**	**BF1006**	**N/R**	
1996	Accord 4-132 (2.2L) PFI	1,5,7	**B1402**	**PA4077**	**N/R**	**BF1193**	**N/R**	
	V6-163 (2.7L) PFI	6	**B1402**	**PA4090**	**N/R**	**BF1193**	**N/R**	
	Civic 4-97 (1.6L) PFI		**B1402**	**PA4100**	**N/R**	**BF1193**	**N/R**	
	4-97 (1.6L) PFI VTEC, VTEC2		**B1402**	**PA4099**	**N/R**	**BF1193**	**N/R**	
	Civic del Sol 4-97 (1.6L) MFI		**B1402**	**PA4100**	**N/R**	**BF1193**	**N/R**	
	4-97 (1.6L) MFI VTEC		**B1402**	**PA4099**	**N/R**	**BF1193**	**N/R**	
	Odyssey 4-132 (2.2L) MFI	4,6,7	**B1402**	**PA4077**	**N/R**	**BF1193**	**N/R**	
	Passport 4-159 (2.6L) MFI	E	**B1425**		**N/R**	**BF1049**	**N/R**	
	V6-195 (3.2L) MFI	V	**B1425**	**PA4081**	**N/R**	**BF1049**	**N/R**	
	Prelude 4-132 (2.2L) PFI VTEC	1,8	**B1402**		**N/R**	**BF1006**	**N/R**	
	4-138 (2.3L) PFI	2	**B1402**		**N/R**	**BF1006**	**N/R**	
1995	Accord 4-132 (2.2L) MFI		**B1402**	**PA4077**	**N/R**	**BF1193**	**N/R**	
	V6-163 (2.7L) MFI		**B1402**	**PA4090**	**N/R**	**BF1193**	**N/R**	
	Civic, Civic del Sol 4-91 (1.5L) MFI		**B1402**	**PA4050**	**N/R**	**BF1193**	**N/R**	
	4-97 (1.6L) MFI		**B1402**	**PA4050**	**N/R**	**BF1193**	**N/R**	
	Odyssey 4-132 (2.2L) MFI		**B1402**	**PA4077**	**N/R**	**BF1193**	**N/R**	
	Passport 4-159 (2.6L) MFI	E	**B1425**		**N/R**	**BF1049**	**N/R**	
	V6-195 (3.2L) MFI	V	**B1425**	**PA4081**	**N/R**	**BF1049**	**N/R**	
	Prelude 4-132 (2.2L) MFI		**B1402**		**N/R**	**BF1006**	**N/R**	
	4-138 (2.3L) MFI		**B1402**		**N/R**	**BF1006**	**N/R**	
1994	Accord 4-132 (2.2L) MFI		**B1402**	**PA4077**	**N/R**	**BF1193**	**N/R**	
	Civic, Civic del Sol 4-91 (1.5L) MFI		**B1402**	**PA4050**	**N/R**	**BF1188**	**N/R**	
	4-97 (1.6L) MFI		**B1402**	**PA4050**	**N/R**	**BF1188**	**N/R**	

[t] Transmission, Not Model, Determines Which Transmission Filter is Used. OBS = Obsolete. Availability Limited to Distributor Stock.

HONDA Cont'd.

Year	Model and Engine	VIN	Lube	Air	Cabin Air	Fuel	Breather	Trans.t
1994	Passport 4-159 (2.6L) MFI	E	**B1425**		**N/R**	**BF1049**	**N/R**	
	V6-195 (3.2L) MFI	V	**B1425**	**PA4081**	**N/R**	**BF1049**	**N/R**	
	Prelude 4-132 (2.2L) MFI		**B1402**		**N/R**	**BF1006**	**N/R**	
	4-138 (2.3L) MFI		**B1402**		**N/R**	**BF1006**	**N/R**	
1993	Accord 4-132 (2.2L) MFI		**B1402**	**PA2204**	**N/R**	**BF1188**	**N/R**	
	Civic, Civic del Sol 4-91 (1.5L) MFI		**B1402**	**PA4050**	**N/R**	**BF1188**	**N/R**	
	4-97 (1.6L) MFI		**B1402**	**PA4050**	**N/R**	**BF1188**	**N/R**	
	Prelude 4-132 (2.2L) MFI		**B1402**		**N/R**	**BF1006**	**N/R**	
	4-138 (2.3L) MFI		**B1402**		**N/R**	**BF1006**	**N/R**	
1992	Accord 4-2156cc (2.2L) MFI		**B1402**	**PA2204**	**N/R**	**BF1188**	**N/R**	
	Civic 4-91 (1.5L) MFI		**B1402**	**PA4050**	**N/R**	**BF1188**	**N/R**	
	4-1590cc (1.6L) FI		**B1421**	**PA4050**	**N/R**	**N/S**	**N/R**	
	Prelude 4-2156cc (2.2L) MFI		**B1402**		**N/R**	**BF1006**	**N/R**	
	4-2259cc (2.3L) MFI		**B1402**		**N/R**	**BF1006**	**N/R**	
1991	Accord 4-2156cc (2.2L) MFI		**B1402**	**PA2204**	**N/R**	**BF1188**	**N/R**	
	Civic 4-1493cc (1.5L) FI Canada		**B227**		**N/R**	**BF1120**	**N/R**	
	Civic, CRX 4-1493cc (1.5L) FI		**B1402**		**N/R**	**BF1120**	**N/R**	
	4-1590cc (1.6L) MFI		**B1402**		**N/R**	**BF1120**	**N/R**	
	Prelude 4-1958cc (2.0L) MFI		**B1402**		**N/R**		**N/R**	
	4-2056cc (2.1L) MFI		**B1402**		**N/R**		**N/R**	
1990	Accord 4-2156cc (2.2L) EFI		**B1402**	**PA2204**	**N/R**	**BF1188**	**N/R**	
	Civic 4-1493cc (1.5L) FI Canada		**B227**		**N/R**	**BF1120**	**N/R**	
	Civic, CRX 4-1493cc (1.5L) FI		**B1402**		**N/R**	**BF1120**	**N/R**	
	4-1590cc (1.6L) MFI		**B1402**		**N/R**	**BF1120**	**N/R**	
	Prelude 4-1958cc (2.0L) 2 Bbl.		**B1402**		**N/R**	Pri. **BF1160**	**N/R**	
	4-1958cc (2.0L) MFI		**B1402**		**N/R**		**N/R**	
1989	Accord 4-1955cc (2.0L) 2 Bbl.		**B1402**	**PA2211**	**N/R**	Pri. **BF1160**	**N/R**	
	4-1955cc (2.0L) EFI		**B1402**		**N/R**		**N/R**	
	Civic 4-1493cc (1.5L) FI Canada		**B227**		**N/R**	**BF1120**	**N/R**	
	Civic, CRX 4-1493cc (1.5L) FI		**B1402**		**N/R**	**BF1120**	**N/R**	
	4-1590cc (1.6L) FI		**B1402**		**N/R**	**BF1120**	**N/R**	
	Prelude 4-1958cc (2.0L) 2 Bbl.		**B1402**		**N/R**	Pri. **BF1160**	**N/R**	
	4-1958cc (2.0L) MFI		**B1402**		**N/R**		**N/R**	
1988	Accord 4-1955cc (2.0L) 2 Bbl.		**B1402**	**PA2211**	**N/R**	Pri. **BF1160**	**N/R**	
	4-1955cc (2.0L) EFI		**B1402**		**N/R**		**N/R**	
	Civic 4-1488cc (1.5L) FI		**B161-S**		**N/R**	**BF1120**	**N/R**	
	4-1600cc (1.6L) FI		**B161-S**		**N/R**	**BF1120**	**N/R**	
	CRX 4-1488cc (1.5L) FI		**B1402**		**N/R**	**BF1120**	**N/R**	
	4-1600cc (1.6L) FI		**B1402**		**N/R**	**BF1120**	**N/R**	
	Prelude 4-1955cc (2.0L) 2 Bbl.		**B1402**		**N/R**	Pri. **BF1160**	**N/R**	
	4-1955cc (2.0L) FI		**B1402**		**N/R**		**N/R**	
1987	Accord 4-1955cc (2.0L) 2 Bbl.		**B1402**	**PA2211**	**N/R**	Pri. **BF1160**	**N/R**	
	4-1955cc (2.0L) FI		**B1402**		**N/R**		**N/R**	
	Civic 4-82 (1.3L) Carb.		**B156**	**PA2147**	**N/R**		**N/R**	
	Civic, CRX Si 4-1342cc (1.3L) 3 Bbl.		**B156**	**PA2147**	**N/R**	Pri. **BF837**	**N/R**	
	4-1487cc (1.5L) 3 Bbl.		**B156**	**PA2147**	**N/R**	Pri. **BF837**	**N/R**	
	4-1487cc (1.5L) FI		**B156**		**N/R**		**N/R**	
	Prelude 4-1829cc (1.8L)		**B1402**		**N/R**	Pri. **BF837**	**N/R**	
	4-1955cc (2.0L) FI		**B1402**		**N/R**		**N/R**	
1986	Accord 4-1955cc (2.0L) 2 Bbl.		**B1402**	**PA2211**	**N/R**	Pri. **BF1160**		
	4-1955cc (2.0L) FI		**B1402**		**N/R**			
	Civic, CRX 4-1342cc (1.3L) 3 Bbl.		**B156**	**PA2147**	**N/R**	Pri. **BF837**	**N/R**	
	4-1487cc (1.5L) 3 Bbl.		**B156**	**PA2147**	**N/R**	Pri. **BF837**	**N/R**	
	4-1487cc (1.5L) FI		**B156**		**N/R**		**N/R**	
	Prelude 4-1829cc (1.8L)		**B1402**		**N/R**	Pri. **BF837**	**N/R**	
	4-1955cc (2.0L) FI		**B1402**		**N/R**		**N/R**	
1985	Accord 4-1829cc (1.8L) 2 Bbl.		**B1402**	**PA2205**	**N/R**	Pri. **BF837**		
	4-1829cc (1.8L) FI		**B1402**		**N/R**			
	Civic, CRX 4-1342cc (1.3L) 3 Bbl.		**B156**	**PA2147**	**N/R**	Pri. **BF837**	**N/R**	
	4-1487cc (1.5L) 3 Bbl.		**B156**	**PA2147**	**N/R**	Pri. **BF837**	**N/R**	
	CRX 4-1487cc (1.5L) FI		**B156**		**N/R**	**BF1111**		
	Prelude 4-1829cc (1.8L) 2 Bbl., 3 Bbl.		**B1402**		**N/R**	Pri. **BF837**	**N/R**	
	4-1955cc (2.0L) FI		**B1402**		**N/R**		**N/R**	
1984	Accord 4-1829cc (1.8L) 2 Bbl.		**B1402**	**PA2205**	**N/R**	Pri. **BF837**		
	Civic, CRX 4-1342cc (1.3L)		**B156**	**PA2147**	**N/R**	Pri. **BF837**	**N/R**	
	4-1488cc (1.5L)		**B156**	**PA2147**	**N/R**	Pri. **BF837**	**N/R**	
	Prelude 4-1829cc (1.8L)		**B1402**		**N/R**	Pri. **BF837**	**N/R**	

OBS = Obsolete. Availability Limited to Distributor Stock. t Transmission, Not Model, Determines Which Transmission Filter is Used.

Year	Model and Engine	VIN	Lube	Air	Cabin Air	Fuel	Breather	Trans.t
HONDA Cont'd.								
1983	Accord 4-1751cc (1.8L)		**B156**	**PA2075**	**N/R**	Pri. **BF837**	**N/R**	
	Civic 4-1335cc (1.3L)		**B156**	**PA2090**	**N/R**	Pri. **BF837**	**N/R**	
	4-1488cc (1.5L)		**B156**	**PA2090**	**N/R**	Pri. **BF837**	**N/R**	
	Prelude 4-1829cc (1.8L)		**B1402**		**N/R**	Pri. **BF837**	**N/R**	
1982	Accord, Prelude 4-1751cc (1.8L)		**B156**	**PA2075**	**N/R**	Pri. **BF837**	**N/R**	
	Civic CVCC 4-1335cc (1.3L)		**B156**	**PA2090**	**N/R**		**N/R**	
	4-1488cc (1.5L)		**B156**	**PA2090**	**N/R**		**N/R**	
1981	Accord, Prelude 4-1751cc (1.8L)		**B156**	**PA2075**	**N/R**	**BF840-K1**	**N/R**	
	Civic CVCC 4-1335cc (1.3L)		**B156**	**PA2090**	**N/R**		**N/R**	
	4-1488cc (1.5L)		**B156**	**PA2090**	**N/R**		**N/R**	
1980	Accord, Prelude 4-1751cc (1.8L)		**B156**	**PA2075**	**N/R**	**BF840-K1**	**N/R**	
	Civic CVCC 4-1335cc (1.3L)		**B156**	**PA2090**	**N/R**		**N/R**	
	4-1488cc (1.5L)		**B156**	**PA2090**	**N/R**		**N/R**	
HONDA Motorcycles								
	250 AX1		All Years **P7132**					
	599		2004, 2006 **B1400**					
	919		2002-06 **B1400**					
	Aspencade 1500		**B1400**					
	ATC250ES		1985-87 **P7132**					
	ATC250SX		1985-87 **P7132**					
	ATC350X		1985-86 **P7132**					
	CB-1		1989 **B1400**					
	CB250, CB350SG							
	CB350F							
	CB400, CB450							
	CB400 (NC31)		All Years **B1400**					
	CB400A							
	CB400CB, CB400F Super Sport		1989-90 **B1400**					
	CB400F							
	CB400F Series		1989-90 **B1400**					
	CB400 Super Four		All Years **B1400**					
	CB400T							
	CB400TI, CB400TII							
	CB400 Vtec		1998 **P7132**					
	CB450C							
	CB450SC							
	CB450T							
	CB500		1989-90 **P148** 1994-2002 **P7132**					
	CB500K							
	CB550 Series							
	CB550F							
	CB600F		2004-06 **B1400**					
	CB600 Hornet		1998-2006 **B1400**					
	CB650 Series							
	CB700SC Nighthawk		1984-86 **B227**					
	CB750 Nighthawk		1991-2003 **B1400**					
	CB750 Series							
	CB900 Hornet Series		2002-07 **B1400**					
	CB900R3		**B1400**					
	CB900 Series		2002-07 **B1400**					
	CB1000		1993-97 **B1400**					
	CB1000C							
	CB1000 Custom							
	CB1100F							
	CB1100F Super Sport							
	CB1100SF		1999-2001 **B1400**					
	CB1300 Super Four		2003-05 **B1400**					
	CBF250		2004-06 **P7132**					
	CBF500		2004-06 **B1400**					
	CBF600 Series		2004-06 **B1400**					
	CBF1000							
	CBR400RRH (NC23)		All Years **B1400**					
	CBR400 Tri-Arm/Gull-Arm		All Years **B1400**					
	CBR600F Series		1987-2006 **B1400**					
	CBR600RR		2003-06 **B1400**					

[t] Transmission, Not Model, Determines Which Transmission Filter is Used. OBS = Obsolete. Availability Limited to Distributor Stock.

HONDA Motorcycles Cont'd.

Year	Model and Engine	VIN	Lube	Air	Cabin Air	Fuel	Breather	Trans.t
	CBR900RR Series		1993-on **B1400**					
	CBR929RR		2000-01 **B1400**					
	CBR954RR		2002-03 **B1400**					
	CBF1000F		1987-96 **B1400**					
	CBR1000RR Series		2004-on **B1400**					
	CBR1100F		1997-on **B1400**					
	CBR1100R Blackbird, CBR1100XX		1997-2003 **B1400**					
	CBR1100XX Blackbird Series		1996-2006 **B1400**					
	CBX							
	CBX250RS		1983 **P7132**					
	CBX250 RSE		1983-2000 **P7132**					
	CJ360T							
	CM400A							
	CM400C							
	CM400E							
	CM400T							
	CM450A							
	CM450C							
	CM450E							
	CMX450C							
	CX500 Series							
	CX650C, CX650T		1984-86 **B227**					
	F1000		1993 (Custom) **P148**					
	FJS600 Silver Wing		2001-05 **B1400**					
	FMX650		2005-06 **P7132**					
	FSC600 Silver Wing		2001-06 **B1400**					
	FX650 Vigor		1999-2002 **P7132**					
	GB400F Series		1998 **P7132**					
	GB500		1989-90 **P7132**					
	GL12SE-I Goldwing							
	GL500, GL500i, GL650, GL650i Silver Wing							
	GL1000 Gold Wing							
	GL1100 Gold Wing							
	GL1100, GL1100I Gold Wing Interstate							
	GL1100A Gold Wing							
	GL1200 Gold Wing Series							
	GL1200A Gold Wing Aspencade							
	GL1200I Gold Wing Interstate							
	GL1200SE-I Gold Wing Aspencade							
	GL1500 Gold Wing Series		1988-2000 **B1400**					
	GL1500A Aspencade, GL1500C Valkyrie, GL1500I Interstate, GL1500SE Gold Wing		Spin-on **B1400**					
	GL1500 Valkyrie Series		1997-2003 **B1400**					
	GL1800 Gold Wing		2001-on **B1400**					
	KL250							
	NRX1800 Valkyrie Rune		2004-05 **B1400**					
	NT400 Bros		1988-92 **B1400**					
	NT650 Series		1988-92 **B1400**					
	NT650V Deauville		1998-2005 **B1400**					
	NT700V Deauville		2006-07, 2010-on **B1400**					
	NTV650 Series		1988-97 **B1400**					
	NX250		1988-95 **P7132**					
	NX650		1988-89 **P7132**					
	NX650 Dominator		1988-2000 **P7132**					
	PC800 Pacific Coast		1989-98 **B1400**					
	RC30		1988-91 **B1400**					
	RC51		2000-06 **B1400**					
	RVF400		1999 **B1400**					
	RVF750R (RC45)		1994-98 **B1400**					
	RVT1000R		2001-06 **B1400**					
	SLR650		1997-2000 **P7132**					
	ST1100 Series		1991-2002 **B1400**					
	ST1300 Series		2002-on **B1400**					

OBS = Obsolete. Availability Limited to Distributor Stock. t Transmission, Not Model, Determines Which Transmission Filter is Used.

HONDA Motorcycles Cont'd.

Year	Model and Engine	VIN	Lube	Air	Cabin Air	Fuel	Breather	Trans.t
	TLR250		1985-87 **P7132**					
	VF400FD		1983 **B227**					
	VF500C Magna, VF500F Interceptor		1984-86 **B227**					
	VF700C Magna, VF700F Interceptor, VF700S Sabre, VFR700F Interceptor, VT700 Shadow		1984-87 **B227**					
	VF750 Series		1982 **B227** 1994-on **B1400**					
	VF1000F, VF1000F Interceptor		1984 **B227**					
	VF1000R Interceptor		1985-86 **B227**					
	VF1100C Magna, VF1100C Shadow, VF1100S Sabre		1983-86 **B227**					
	VF1100S Sabre		1984-85 **B227**					
	VFR400R (NC30)		1990-93 **B1400**					
	VFR750F Interceptor		1988-98 **B1400**					
	VFR750R		1990, 2000 **B1400**					
	VFR800F Interceptor		1998-on **B1400**					
	VLX400 Shadow		All Years **B1400**					
	VT125C Shadow		1999-2006 **P7132**					
	VT500C Shadow, VT500FT Ascot		1983-86 **B227**					
	VT600C Shadow VLX Series		1988-2007 **B1400**					
	VT750 Shadow Series		1983 **B227** 1998-on **B1400**					
	VT750C Shadow		1998-on **B1400**					
	VT800 Shadow		1988 **B227**					
	VT1100 Shadow Series		1987-2007 **B1400**					
	VT1100C Shadow		1985-88 **B179**					
	VT1300CX		2010 **B1400**					
	VTR250 Interceptor							
	VTR1000 Series		1997-2005 **B1400**					
	VTX1300 Series		2003-on **B1400**					
	VTX1800		2002-on **B1400**					
	X-11		1999-2001 **B1400**					
	XBR500		1985-88 **P7132**					
	XL125 V Varadero		2001-07 **P7132**					
	XL250		1982-91 **P7132**					
	XL250R		1984-87 **P7132**					
	XL350 Series		1985-87 **P7132**					
	XL600		1983-88 **P7132**					
	XL600R, XR600R		1983-87 **P7132**					
	XL600V Transalp		1989-2000 **B1400**					
	XL650V Transalp		2000-05, 2007 **B1400**					
	XL1000 Valadero		1999-2007 **B1400**					
	XLR600R		1983-87 **P7132**					
	XL-X 350		All Years **P7132**					
	XR200R		1981-2002 **P7132**					
	XR250 Series		1982, 1984-2004 **P7132**					
	XR350R		1983-87 **P7132**					
	XR400R		1996-2004 **P7132**					
	XR500 Series		1981-85 **P7132**					
	XR600R		1985-2000 **P7132**					
	XR650 Series		1993-on **P7132**					
	XRV750 Africa Twin		1990-2003 **B1400**					
	XRV650 Africa Twin		1988-90 **B1400**					

HUMMER

2010	H2 V8-376 (6.2L) Flex Fuel	2	**B160**		**PA4169**	**N/S**	**N/R**	
	H2 SUT V8-376 (6.2L) Flex Fuel	2	**B160**		**PA4169**	**N/S**	**N/R**	
	H3 5-226 (3.7L) FI	E	**B7010**	**PA4412**	**N/R**	**N/S**	**N/R**	4L60-E **20020**
	H3 Alpha V8-325 (5.3L) FI	P	**B160**	**PA4412**	**N/R**	**N/S**	**N/R**	4L60-E **20020**
	H3T 5-226 (3.7L) FI	E	**B7010**	**PA4412**	**N/R**	**N/S**	**N/R**	4L60-E **20020**
	H3T Alpha V8-325 (5.3L) FI	P	**B160**	**PA4412**	**N/R**	**N/S**	**N/R**	4L60-E **20020**
2009	H2 V8-376 (6.2L) FI Flex Fuel	2	**B160**		**PA4169**	**N/S**	**N/R**	
	H2 SUT V8-376 (6.2L) FI Flex Fuel	2	**B160**		**PA4169**	**N/S**	**N/R**	
	H3 5-226 (3.7L) FI	E	**B7010**	**PA4412**	**N/R**	**N/S**	**N/R**	**20020**

[t] Transmission, Not Model, Determines Which Transmission Filter is Used. OBS = Obsolete. Availability Limited to Distributor Stock.

Year	Model and Engine	VIN	Lube	Air	Cabin Air	Fuel	Breather	Trans.†
HUMMER Cont'd.								
2009	H3 Alpha V8-325 (5.3L) FI	L	**B160**	**PA4412**	**N/R**	**N/S**	**N/R**	**20020**
	H3T 5-226 (3.7L) FI	E	**B7010**	**PA4412**	**N/R**	**N/S**	**N/R**	**20020**
	H3x 5-226 (3.7L) FI	E	**B7010**	**PA4412**	**N/R**	**N/S**	**N/R**	**20020**
	V8-325 (5.3L) FI	L	**B160**	**PA4412**	**N/R**	**N/S**	**N/R**	**20020**
2008	H2 V8-378 (6.2L) SFI	8	**B160**		**PA4169**	**N/S**	**N/R**	
	H2 SUT V8-378 (6.2L) SFI	8	**B160**		**PA4169**	**N/S**	**N/R**	
	H3 5-226 (3.7L) MFI	E	**B7010**	**PA4412**	**N/R**	**N/S**	**N/R**	4L60-E **20020**
	H3 Alpha V8-325 (5.3L) MFI	L	**B160**	**PA4412**	**N/R**	**N/S**	**N/R**	4L60-E **20020**
	H3x 5-226 (3.7L) FI	E	**B7010**	**PA4412**	**N/R**	**N/S**	**N/R**	4L60-E **20020**
2007	H2, H2 SUT V8-364 (6.0L) SFI	U	**B160**		**N/R**	**N/S**	**N/R**	4L60E **18056**
	H3, H3 SUT, H3x L5-223 (3.7L) MFI	E	**B7010**	**PA4173**	**N/R**	**N/S**	**N/R**	4 Spd. **20020**
2006	H1 Alpha V8-400 (6.6L) Turbo Diesel	2	**B1441**	**PA4145**	**N/R**	**BF1201**	**N/R**	S. Pan (w/o Gskt.) **20004** S. Pan (w/Gskt.) **20016** D. Pan (w/o Gskt.) **20003** D. Pan (w/Gskt.) **20017** Spin-on **BT8460**
	H2, H2 SUT V8-364 (6.0L) SFI	U	**B31**		**N/R**	**N/S**	**N/R**	4L60E **18056**
	H3, H3 SUT 5-211 (3.5L) FI	6	**B7010**	**PA4173**	**N/R**	**N/S**	**N/R**	**20020**
2005	H2, H2 SUT V8-364 (6.0L) SFI	U	**B31**		**PA4169**	**BF7762**	**N/R**	**18056**
2004	H1 V8-395 (6.5L) Turbo Diesel	Z	**B1428**	**PA4145**	**N/R**	**BF1201**	**N/R**	**18027**
	H2 V8-364 (6.0L) SFI	U	**B31**		Opt. **PA4169**	**BF7762**	**N/R**	**18056**
2003	H1 V8-395 (6.5L) Turbo Diesel	Z	**B1428**	**PA4145**	**N/R**	**BF1201**	**N/R**	**18027**
	H2 V8-364 (6.0L) SFI	U	**B31**		Opt. **PA4169**	**BF7762**	**N/R**	**18056**
2002	H1 V8-395 (6.5L) Turbo Diesel	Z	**B1428**	**PA4145**	**N/R**	**BF1201**	**N/R**	**18027**
2001	Hummer V8-395 (6.5L) Turbo Diesel	Z	**B1428**	**PA4145**	**N/R**	**BF1201**	**N/R**	**18027**
2000	Hummer V8-395 (6.5L) Turbo Diesel	Z	**B1428**	**PA4145**	**N/R**	**BF1201**	**N/R**	**18027**
1999	Hummer V8-395 (6.5L) Turbo Diesel	Z	**B1428**	**PA4145**	**N/R**	**BF1201**	**N/R**	**18007**
1998	Hummer V8-395 (6.5L) Diesel or Turbo Diesel	Y,Z	**B1428**	**PA4145**	**N/R**	**BF1201**	**N/R**	**18007**
1997	Hummer V8-395 (6.5L) Diesel or Turbo Diesel	Y,Z	**B1428**	**PA4145**	**N/R**	**BF1201**	**N/R**	**18007**
1996	Hummer V8-350 (5.7L) FI	D	**B35-S**		**N/R**	**BF853**	**N/R**	**18007**
	V8-395 (6.5L) Diesel or Turbo Diesel	Y,Z	**B1428**	**PA4145**	**N/R**	**BF1201**	**N/R**	**18007**
1995	Hummer V8-350 (5.7L) FI	D	**B35-S**		**N/R**	**BF853** Water Separator **BF1201**	**N/R**	**18007**
	V8-395 (6.5L) Diesel	Y	**B1428**	**PA4145**	**N/R**	**BF1201**	**N/R**	**18007**
1994	Hummer V8-395 (6.5L) Diesel	Y	**B1428**	**PA4145**	**N/R**	**BF1201**	**N/R**	**18007**
1993	Hummer V8-379 (6.2L) Diesel	X	**B1428**	**PA4145**	**N/R**	**BF1201**	**N/R**	**6020**
1992	Hummer V8-379 (6.2L) Diesel	X	**B1428**	**PA4145**	**N/R**	**BF1201**	**N/R**	**6020**
HYUNDAI								
2010	Accent 4-98 (1.6L) FI	C	**B7243**	**PA4363**	**PA4404**	**N/S**	**N/R**	**20010**
	Azera V6-3342cc (3.3L) FI	D		**PA4349**		**N/S**	**N/R**	**N/S**
	V6-3778cc (3.8L) FI	F		**PA4349**		**N/S**	**N/R**	**N/S**
	Elantra 4-122 (2.0L) FI	D,E	**B7243**	**PA4401**		**N/S**	**N/R**	
	Genesis V6-3778cc (3.8L) FI	H				**N/S**	**N/R**	**N/S**
	V8-4627cc (4.6L) FI	F				**N/S**	**N/R**	**N/S**
	Genesis Coupe 4-1998cc (2.0L) FI	D	**B7243**		**PA4391**	**N/S**	**N/R**	**N/S**
	V6-3778cc (3.8L) FI	H				**N/S**	**N/R**	**N/S**
	Santa Fe 4-2400cc (2.4L) FI	C				**N/S**	**N/R**	**N/S**
	V6-3500cc (3.5L) FI					**N/S**	**N/R**	**N/S**
	Sonata 4-2359cc (2.4L) MFI	C	**B7243**		**PA4334**	**N/S**	**N/R**	**N/S**
	V6-3342cc (3.3L) MFI	F	**P7400**	**PA4349**	**PA4334**	**N/S**	**N/R**	**N/S**
	Tucson 4-2400cc (2.4L) FI	C			**PA4391**	**N/S**	**N/R**	**N/S**
	Veracruz V6-3778cc (3.8L) FI	C				**N/S**	**N/R**	In Pan **N/S**
2009	Accent 4-98 (1.6L) MFI	C	**B7243**	**PA4363**	**PA4404**	**N/S**	**N/R**	**20010**
	Azera V6-3342cc (3.3L) FI	D	**P7400**	**PA4349**	**PA4334**	**N/S**	**N/R**	**N/S**
	V6-3778cc (3.8L) FI	F	**P7400**	**PA4349**	**PA4334**	**N/S**	**N/R**	**N/S**
	Elantra 4-122 (2.0L) MFI	D	**B7243**	**PA4401**		**N/S**	**N/R**	
	Entourage V6-3778cc (3.8L) FI	3	**P7400**	**PA4413**		**N/S**	**N/R**	**N/S**
	Genesis V6-3778cc (3.8L) FI	E				**N/S**	**N/R**	
	V8-4627cc (4.6L) FI	F				**N/S**	**N/R**	**N/S**

OBS = Obsolete. Availability Limited to Distributor Stock. † Transmission, Not Model, Determines Which Transmission Filter is Used.

HYUNDAI Cont'd.

Year	Model and Engine	VIN	Lube	Air	Cabin Air	Fuel	Breather	Trans.t
2009	Santa Fe V6-162 (2.7L) FI	D	**B7243**	**PA4402**	**PA4334**	**N/S**	**N/R**	In Pan **N/S**
	V6-3342cc (3.3L) FI	E	**P7400**	**PA4402**	**PA4334**	**N/S**	**N/R**	In Pan **N/S**
	Sonata 4-2359cc (2.4L) MFI	C	**B7243**		**PA4334**	**N/S**	**N/R**	**N/S**
	V6-3342cc (3.3L) MFI	F	**P7400**	**PA4349**	**PA4334**	**N/S**	**N/R**	**N/S**
	Tucson 4-122 (2.0L) FI	B	**B7243**	**PA4348**	**PA4391**	**N/S**	**N/R**	In Pan **N/S**
	V6-162 (2.7L) FI	D	**B7243**	**PA4348**	**PA4391**	**N/S**	**N/R**	In Pan **N/S**
	Veracruz V6-3778cc (3.8L) FI	C				**N/S**	**N/R**	In Pan **N/S**
2008	Accent 4-98 (1.6L) MFI	C	**B7243**	**PA4363**	**PA4404**	**N/S**	**N/R**	**20010**
	Azera V6-3342cc (3.3L) FI	D	**P7400**	**PA4349**	**PA4334**	**N/S**	**N/R**	**N/S**
	V6-3778cc (3.8L) FI	F	**P7400**	**PA4349**	**PA4334**	**N/S**	**N/R**	**N/S**
	Elantra 4-122 (2.0L) MFI	D	**B7243**	**PA4401**		**N/S**	**N/R**	
	Entourage V6-3778cc (3.8L) FI	3	**P7400**	**PA4413**		**N/S**	**N/R**	**N/S**
	Santa Fe V6-162 (2.7L) FI	D	**B7243**	**PA4402**	**PA4334**	**N/S**	**N/R**	In Pan **N/S**
	V6-3342cc (3.3L) FI	E	**P7400**	**PA4402**	**PA4334**	**N/S**	**N/R**	In Pan **N/S**
	Sonata 4-2359cc (2.4L) MFI	C	**B7243**		**PA4334**	**N/S**	**N/R**	4 & 5 Spd. **N/S**
	V6-3342cc (3.3L) MFI	F	**P7400**	**PA4349**	**PA4334**	**N/S**	**N/R**	4 & 5 Spd. **N/S**
	Tiburon 4-122 (2.0L) FI	D	**B7243**	**PA4308**		**N/S**	**N/R**	In Pan **N/S**
	V6-162 (2.7L) FI	F	**B7243**	**PA4308**		**N/S**	**N/R**	In Pan **N/S**
	Tucson 4-122 (2.0L) FI	B	**B7243**	**PA4348**	**PA4391**	**N/S**	**N/R**	In Pan **N/S**
	V6-162 (2.7L) FI	D	**B7243**	**PA4348**	**PA4391**	**N/S**	**N/R**	In Pan **N/S**
	Veracruz V6-3778cc (3.8L) MFI	C	To 10/4/07 **P7400**			**N/S**	**N/R**	In Pan **N/S**
2007	Accent 4-98 (1.6L) MFI	C	**B7243**	**PA4363**	**PA4404**	**N/S**	**N/R**	**20010**
	Azera V6-3342cc (3.3L) FI	D	**P7400**	**PA4349**	**PA4334**	**N/S**	**N/R**	**N/S**
	V6-3778cc (3.8L) FI	F	**P7400**	**PA4349**	**PA4334**	**N/S**	**N/R**	**N/S**
	Elantra 4-122 (2.0L) MFI	D	**B7243**	**PA4401**		**N/S**	**N/R**	
	Entourage V6-3778cc (3.8L) FI	3	**P7400**	**PA4413**		**N/S**	**N/R**	**N/S**
	Santa Fe V6-162 (2.7L) MFI	D	**B7243**	**PA4402**	**PA4334**	**N/S**	**N/R**	In Pan **N/S**
	V6-3342cc (3.3L) MFI	E	**P7400**	**PA4402**	**PA4334**	**N/S**	**N/R**	In Pan **N/S**
	Sonata 4-2359cc (2.4L) MFI	C	**B7243**		**PA4334**	**N/S**	**N/R**	4 & 5 Spd. **N/S**
	V6-3342cc (3.3L) MFI	F	**P7400**	**PA4349**	**PA4334**	**N/S**	**N/R**	4 & 5 Spd. **N/S**
	Tiburon 4-122 (2.0L) FI	D	**B7243**	**PA4308**		**N/S**	**N/R**	In Pan **N/S**
	V6-162 (2.7L) FI	F	**B7243**	**PA4308**		**N/S**	**N/R**	In Pan **N/S**
	Tucson 4-122 (2.0L) MFI	B	**B7243**	**PA4348**	**PA4391**	**N/S**	**N/R**	In Pan **N/S**
	V6-162 (2.7L) MFI	D	**B7243**	**PA4348**	**PA4391**	**N/S**	**N/R**	In Pan **N/S**
	Veracruz V6-3778cc (3.8L) MFI	C	**P7400**		**N/R**	**N/S**	**N/R**	**N/S**
2006	Accent 4-98 (1.6L) MFI	C	**B7243**	**PA4363**			**N/R**	**20010**
	Azera V6-3778cc (3.8L) FI	F	**P7400**	**PA4349**	**PA4334**	**N/S**	**N/R**	**N/S**
	Elantra 4-122 (2.0L) MFI	D	**B7243**	**PA4308**		**N/S**	**N/R**	In Pan **N/S**
	Sante Fe 4-2351cc (2.4L) FI Canada		**B227**	**PA4309**		**N/S**	**N/R**	**N/S**
	V6-162 (2.7L) MFI	D	**B7243**	**PA4309**		**N/S**	**N/R**	In Pan **N/S**
	V6-3467cc (3.5L) MFI	E	**B7243**	**PA4387**		**N/S**	**N/R**	In Pan **N/S**
	Sonata 4-143 (2.4L) MFI	C	**B7243**		**PA4334**	**N/S**	**N/R**	**N/S**
	V6-143 (3.3L) MFI	F	**P7400**	**PA4349**	**PA4334**	**N/S**	**N/R**	**N/S**
	Tiburon 4-122 (2.0L) MFI	D	**B7243**	**PA4308**		**N/S**	**N/R**	In Pan **N/S**
	V6-162 (2.7L) MFI	F	**B7243**	**PA4308**		**N/S**	**N/R**	In Pan **N/S**
	Tucson 4-122 (2.0L) MFI	B	**B7243**	**PA4348**	**PA4391**	**N/S**	**N/R**	In Pan **N/S**
	V6-162 (2.7L) MFI	D	**B7243**	**PA4348**	**PA4391**	**N/S**	**N/R**	In Pan **N/S**
2005	Accent 4-98 (1.6L) MFI	C	**B7243**	**PA4311**		In Tank **N/S**	**N/R**	**20010**
	Elantra 4-122 (2.0L) MFI	D	**B7243**	**PA4308**		**N/S**	**N/R**	In Pan **N/S**
	Sante Fe 4-2351cc (2.4L) FI Canada		**B227**	**PA4309**		**N/S**	**N/R**	**N/S**
	V6-162 (2.7L) MFI	D	**B7243**	**PA4309**		**N/S**	**N/R**	In Pan **N/S**
	V6-3467cc (3.5L) MFI	E	**B7243**	**PA4387**		**N/S**	**N/R**	In Pan **N/S**
	Sonata 4-143 (2.4L) MFI	S	**B7243**	**PA4313**		**N/S**	**N/R**	**N/S**
	V6-162 (2.7L) MFI	H	**B7243**	**PA4313**		**N/S**	**N/R**	**N/S**
	Tiburon 4-122 (2.0L) MFI	D	**B7243**	**PA4308**		**N/S**	**N/R**	In Pan **N/S**
	V6-162 (2.7L) MFI	F	**B7243**	**PA4308**		**N/S**	**N/R**	In Pan **N/S**
	Tucson 4-122 (2.0L) FI	B	**B7243**	**PA4348**	**PA4391**	**N/S**	**N/R**	**N/S**
	V6-162 (2.7L) FI	D	**B7243**	**PA4348**	**PA4391**	**N/S**	**N/R**	**N/S**
	XG350 V6-3467cc (3.5L) MFI	E	**B7243**	**PA4375**		**N/S**	**N/R**	In Pan **N/S**
2004	Accent 4-98 (1.6L) MFI	C	**B7243**	**PA4311**		In Tank **N/S**	**N/R**	**20010**
	Elantra 4-122 (2.0L) MFI	D	**B7243**	**PA4308**		**N/S**	**N/R**	In Pan **N/S**
	Santa Fe 4-143 (2.4L) MFI	B	**B7243**	**PA4309**		**N/S**	**N/R**	
	V6-162 (2.7L) MFI	D	**B7243**	**PA4309**		**N/S**	**N/R**	
	V6-3467cc (3.5L) MFI	E	**B7243**	**PA4387**		**N/S**	**N/R**	
	Sonata 4-143 (2.4L) MFI	S	**B7243**	**PA4313**		**N/S**	**N/R**	
	V6-162 (2.7L) MFI	H	**B7243**	**PA4313**		**N/S**	**N/R**	
	Tiburon 4-122 (2.0L) MFI	D	**B7243**	**PA4308**		**BF7945**	**N/R**	In Pan **N/S**

t Transmission, Not Model, Determines Which Transmission Filter is Used. OBS = Obsolete. Availability Limited to Distributor Stock.

HYUNDAI Cont'd.

Year	Model and Engine	VIN	Lube	Air	Cabin Air	Fuel	Breather	Trans.[t]
2004	Tiburon V6-162 (2.7L) MFI	F	**B7243**	**PA4308**		**BF7945**	**N/R**	In Pan **N/S**
	XG350, XG350 L V6-3467cc (3.5L) MFI	E	**B7243**	**PA4375**		**BF1148**	**N/R**	In Pan **N/S**
2003	Accent 4-98 (1.6L) MFI	C	**B7243**	**PA4311**		In Tank **N/S**	**N/R**	**20010**
	Elantra 4-122 (2.0L) MFI	D	**B7243**	**PA4308**		**N/S**	**N/R**	In Pan **N/S**
	Santa Fe 4-143 (2.4L) MFI	B	**B7243**	**PA4309**		**N/S**	**N/R**	
	V6-162 (2.7L) MFI	D	**B7243**	**PA4309**		**N/S**	**N/R**	
	V6-3467cc (3.5L) FI	E	**B7243**	**PA4387**		**N/S**	**N/R**	
	Sonata 4-143 (2.4L) MFI	S	**B7243**	**PA4313**		**N/S**	**N/R**	
	V6-2657cc (2.7L) MFI	H	**B7243**	**PA4313**		**N/S**	**N/R**	
	Tiburon 4-122 (2.0L) MFI	D	**B7243**	**PA4308**		**BF7945**	**N/R**	**N/S**
	V6-162 (2.7L) MFI	F	**B7243**	**PA4308**		**BF7945**	**N/R**	**N/S**
	XG350 V6-3467cc (3.5L) MFI	E	**B7243**	**PA4375**		**BF1148**	**N/R**	In Pan **N/S**
2002	Accent 4-91 (1.5L) MFI	N	**B7243**	**PA4311**			**N/R**	**20010**
	4-98 (1.6L) MFI	C	**B7243**	**PA4311**			**N/R**	**20010**
	Elantra 4-122 (2.0L) MFI	F	**B7243**	**PA4308**		**N/S**	**N/R**	
	Santa Fe 4-143 (2.4L) MFI	B	**B7243**	**PA4309**		**N/S**	**N/R**	
	V6-162 (2.7L) MFI	D	**B7243**	**PA4309**		**N/S**	**N/R**	
	Sonata 4-143 (2.4L) MFI	S	**B7243**	**PA4313**		**N/S**	**N/R**	
	V6-2657cc (2.7L) MFI	H	**B7243**	**PA4313**		**N/S**	**N/R**	
	XG350 V6-3467cc (3.5L) MFI	E	**B7243**	**PA4375**		**N/S**	**N/R**	In Pan **N/S**
2001	Accent 4-91 (1.5L) MFI	N	**B7243**	**PA4311**			**N/R**	**20010**
	4-98 (1.6L) MFI	C	**B7243**	**PA4311**			**N/R**	**20010**
	Elantra 4-122 (2.0L) MFI	F	**B7243**	**PA4308**		**N/S**	**N/R**	
	Santa Fe 4-143 (2.4L) MFI	B	**B7243**	**PA4309**		**N/S**	**N/R**	
	V6-162 (2.7L) MFI	D	**B7243**	**PA4309**		**N/S**	**N/R**	
	Sonata 4-143 (2.4L) MFI	S	**B7243**	**PA4313**		**BF1148**	**N/R**	
	V6-152 (2.5L) MFI	V	**B7243**	**PA4313**		**BF1148**	**N/R**	
	Tiburon 4-122 (2.0L) MFI	F	**B7243**	**PA4138**		**BF7945**	**N/R**	
	XG300 V6-181 (3.0L) MFI	D	**B7243**	**PA4375**		**BF1148**	**N/R**	In Pan **N/S**
2000	Accent 4-91 (1.5L) MFI	N	**B7243**	**PA4311**		**BF1196**	**N/R**	
	Elantra 4-122 (2.0L) MFI	F	**B7243**	**PA4138**	**N/R**	**BF7945**	**N/R**	**20010**
	Sonata 4-2351cc (2.4L) MFI	S	**B7243**	**PA4313**		**BF1148**	**N/R**	
	V6-2493cc (2.5L) MFI	V	**B7243**	**PA4313**		**BF1148**	**N/R**	
	Tiburon 4-122 (2.0L) MFI	F	**B7243**	**PA4138**	**N/R**	**BF7945**	**N/R**	
1999	Accent 4-91 (1.5L) MFI	N	**B7243**	**PA4043**	**N/R**	**BF1196**	**N/R**	
	Elantra 4-122 (2.0L) MFI	F	**B7243**	**PA4138**	**N/R**	**BF7945**	**N/R**	
	Sonata 4-2351cc (2.4L) MFI	S	**B7243**	**PA4313**		**BF1148**	**N/R**	
	V6-2493cc (2.5L) MFI	V	**B7243**	**PA4313**		**BF1148**	**N/R**	
	Tiburon 4-122 (2.0L) MFI	F	**B7243**	**PA4138**	**N/R**	**BF7945**	**N/R**	
1998	Accent 4-91 (1.5L) MFI	N	**B7243**	**PA4043**	**N/R**	**BF1196**	**N/R**	
	Elantra 4-110 (1.8L) MFI	M	**B7243**	**PA4138**	**N/R**	**BF7945**	**N/R**	
	Sonata 4-122 (2.0L) MFI	F	**B7243**	**PA2194**	**N/R**	**BF1148**	**N/R**	
	V6-181 (3.0L) MFI	T	**B7243**	**PA2194**	**N/R**	**BF1148**	**N/R**	
	Tiburon 4-121 (2.0L) MFI	F	**B7243**	**PA4138**	**N/R**	**BF7945**	**N/R**	
1997	Accent 4-91 (1.5L) MFI	N	**B7243**	**PA4043**	**N/R**	**BF1196**	**N/R**	
	Elantra 4-110 (1.8L) MFI	M	**B7243**	**PA4138**	**N/R**	**BF7945**	**N/R**	
	Sonata 4-122 (2.0L) MFI	F	**B7243**	**PA2194**	**N/R**	**BF1148**	**N/R**	
	V6-181 (3.0L) MFI	T	**B7243**	**PA2194**	**N/R**	**BF1148**	**N/R**	
	Tiburon 4-110 (1.8L) MFI	M	**B7243**	**PA4138**	**N/R**	**BF7945**	**N/R**	
	4-121 (2.0L) MFI	F	**B7243**	**PA4138**	**N/R**	**BF7945**	**N/R**	
1996	Accent 4-91 (1.5L) MFI	N	**B7243**	**PA4043**	**N/R**	**BF1196**	**N/R**	
	Elantra 4-110 (1.8L) MFI	M	**B7243**	**PA4138**	**N/R**	**BF7945**	**N/R**	
	Sonata 4-122 (2.0L) MFI	F	**B7243**	**PA2194**	**N/R**	**BF1148**	**N/R**	
	V6-181 (3.0L) MFI	T	**B7243**	**PA2194**	**N/R**	**BF1148**	**N/R**	
1995	Accent 4-91 (1.5L) MFI	J	**B7243**	**PA4043**	**N/R**	**BF1196**	**N/R**	
	Elantra 4-97 (1.6L) MFI	R	**B7243**	**PA2194**	**N/R**	**BF1100**	**N/R**	
	4-110 (1.8L) MFI	M	**B7243**	**PA2194**	**N/R**	**BF1100**	**N/R**	
	Scoupe 4-91 (1.5L) MFI	J	**B7243**		**N/R**	**BF1100**	**N/R**	
	4-91 (1.5L) MFI Turbo	N	**B7243**		**N/R**	**BF1196**	**N/R**	**M.T.**
	Sonata 4-122 (2.0L) MFI	F	**B7243**	**PA2194**	**N/R**	**BF1148**	**N/R**	
	V6-181 (3.0L) MFI	T	**B7243**	**PA2194**	**N/R**	**BF1148**	**N/R**	KM175-5 **18021**
1994	Elantra 4-97 (1.6L) MFI	R	**B7243**	**PA2194**	**N/R**	**BF1100**	**N/R**	
	4-110 (1.8L) MFI	M	**B7243**	**PA2194**	**N/R**	**BF1100**	**N/R**	
	Excel 4-90 (1.5L) MFI	J	**B7243**	**PA2194**	**N/R**	**BF1100**	**N/R**	
	Scoupe 4-91 (1.5L) MFI	J	**B7243**		**N/R**	**BF1100**	**N/R**	
	4-91 (1.5L) MFI Turbo	N	**B7243**		**N/R**	**BF1196**	**N/R**	**M.T.**
	Sonata 4-122 (2.0L) MFI	F	**B7243**	**PA2194**	**N/R**	**BF1100**	**N/R**	

OBS = Obsolete. Availability Limited to Distributor Stock. [t] Transmission, Not Model, Determines Which Transmission Filter is Used.

Year	Model and Engine	VIN	Lube	Air	Cabin Air	Fuel	Breather	Trans.[t]
HYUNDAI Cont'd.								
1994	Sonata V6-181 (3.0L) MFI	T	**B7243**	**PA2194**	**N/R**	**BF1100**	**N/R**	**18021**
1993	Elantra 4-97 (1.6L) MFI	R	**B7243**	**PA2194**	**N/R**	**BF1100**	**N/R**	
	4-110 (1.8L) MFI	M	**B7243**	**PA2194**	**N/R**	**BF1100**	**N/R**	
	Excel 4-90 (1.5L) MFI	J	**B7243**	**PA2194**	**N/R**	**BF1100**	**N/R**	
	Scoupe 4-1495cc (1.5L) MFI	J	**B7243**		**N/R**	**BF1100**	**N/R**	
	4-1495cc (1.5L) MFI Turbo	N	**B7243**		**N/R**	**BF1196**	**N/R**	**M.T.**
	Sonata 4-122 (2.0L) MFI	F	**B7243**	**PA2194**	**N/R**	**BF1100**	**N/R**	
	V6-181 (3.0L) MFI	T	**B7243**	**PA2194**	**N/R**	**BF1100**	**N/R**	**18021**
1992	Elantra 4-97 (1.6L) MFI	R	**B7243**	**PA2194**	**N/R**	**BF1100**	**N/R**	
	Excel 4-90 (1.5L) MFI	J	**B7243**	**PA2194**	**N/R**	**BF1100**	**N/R**	
	Scoupe 4-1468cc (1.5L) MFI	J	**B7243**	**PA2194**	**N/R**	**BF1100**	**N/R**	**18021**
	Sonata 4-122 (2.0L) MFI	F	**B7243**	**PA2194**	**N/R**	**BF1100**	**N/R**	
	V6-181 (3.0L) MFI	T	**B7243**	**PA2194**	**N/R**	**BF1100**	**N/R**	**18021**
1991	Excel 4-90 (1.5L) MFI	J	**B7243**	**PA2194**	**N/R**	**BF1100**	**N/R**	
	Scoupe 4-1468cc (1.5L) MFI	J	**B7243**	**PA2194**	**N/R**	**BF1100**	**N/R**	**18021**
	Sonata 4-2351cc (2.4L) MFI	S	**B7243**	**PA2194**	**N/R**	**BF1100**	**N/R**	**18021**
	V6-181 (3.0L) MFI	T	**B7243**	**PA2194**	**N/R**	**BF1100**	**N/R**	**18021**
1990	Excel 4-90 (1.5L) MFI	J	**B7243**	**PA2194**	**N/R**	**BF1100**	**N/R**	
	Sonata 4-2351cc (2.4L) MFI	S	**B7243**	**PA2194**	**N/R**	**BF1100**	**N/R**	**18021**
	V6-181 (3.0L) MFI	T	**B7243**	**PA2194**	**N/R**	**BF1100**	**N/R**	**18021**
1989	Excel 4-90 (1.5L) FI	J	**B173-S**		**N/R**	**BF928**	**N/R**	**18021**
	Sonata 4-2351cc (2.4L) FI	S	**B227**	**PA2194**	**N/R**	**BF1100**	**N/R**	**18021**
1988	Excel 4-90 (1.5L) FI	J	**B173-S**		**N/R**	**BF928**	**N/R**	**18021**
	Stellar 4-1997cc (2.0L) Carb Canada		**B173-S**		**N/R**	**BF928**	**N/R**	
1987	Excel 4-90 (1.5L) FI	J	**B173-S**		**N/R**	**BF928**	**N/R**	**18021**
	Pony 4-1393cc (1.4L) Carb Canada	E	**B173-S**	**PA1657**	**N/R**	**BF928**	**N/R**	
	4-1596cc (1.6L) Carb Canada	K	**B173-S**	**PA1657**	**N/R**	**BF928**	**N/R**	
	Stellar 4-1997cc (2.0L) Carb Canada	F	**B173-S**	**PA2194**	**N/R**	**BF928**	**N/R**	
1986	Excel 4-90 (1.5L) FI	J	**B173-S**		**N/R**	**BF928**	**N/R**	**18021**
	Pony 4-1393cc (1.4L) Carb Canada	E	**B173-S**	**PA1657**	**N/R**	**BF928**	**N/R**	
	4-1468cc (1.5L) Carb Canada	K	**B173-S**	**PA1657**	**N/R**	**BF928**	**N/R**	
	Stellar 4-1468cc (1.5L) Carb Canada	K	**B173-S**		**N/R**	**BF928**	**N/R**	
1985	Pony 4-1393cc (1.4L) Carb Canada	E	**B173-S**	**PA1657**	**N/R**	**BF928**	**N/R**	
	4-1596cc (1.6L) Carb Canada	K	**B173-S**	**PA1657**	**N/R**	**BF928**	**N/R**	
	Stellar 4-1596cc (1.6L) Carb Canada	K	**B173-S**		**N/R**	**BF928**	**N/R**	
1984	Pony 4-1393cc (1.4L) Carb Canada	E	**B173-S**	**PA1657**	**N/R**	**BF928**	**N/R**	**N/R**
	4-1596cc (1.6L) Carb Canada	K	**B173-S**	**PA1657**	**N/R**	**BF928**	**N/R**	**N/R**
1983	Pony 4-1393cc (1.4L) Carb Canada	E	**B173-S**	**PA1657**	**N/R**	**BF928**	**N/R**	**N/R**
IHC Light-Duty Trucks								
1980	Scout, Scout Terra, Scout Traveller 4-196 (3.2L)		**B2**	**PA1735**	**N/R**	**BF840,-K1**	**SA2046**	8-727 **18032**
	6-198 (3.5L) Turbo Diesel		**PT153**	**PA1735**	**N/R**	Pri. **BF991** Sec. **PF861**		8-727 **18032**
	V8-304 (5.0L)		**B2**	**PA1735**	**N/R**	**BF840,-K1**	**SA2046**	8-727 **18032**
	V8-345 (5.7L)		**B2**	**PA1735**	**N/R**	**BF840,-K1**	**SA2046**	8-727 **18032**
INDIAN Motorcycles								
	Chief		1999-2003 **B1413**					
	Scout		2001-03 **B1413**					
	Spirit		2001-03 **B1413**					
INFINITI								
2010	EX35 V6-3498cc (3.5L) FI	A	**B1400**		**PA4405**	**N/S**	**N/R**	**N/S**
	FX35 V6-3498cc (3.5L) FI	A	**B1400**	**PA2135**	**PA4405**	**N/S**	**N/R**	**N/S**
	FX50 V8-5026cc (5.0L) FI	B	**B1402**			**N/S**	**N/R**	**N/S**
	G37 V6-3696cc (3.7L) SFI	C	**B1400**		**PA4405**	**N/S**	**N/R**	**N/S**
	M35 V6-3498cc (3.5L) FI	A	**B1400**		**PA4405**	**N/S**	**N/R**	**N/S**
	M45 V8-274 (4.5L) FI	B	**B1402**		**PA4405**	**N/S**	**N/R**	**N/S**
	QX56 V8-5552cc (5.6L) FI	Z	**B1402**	**PA4046**		**N/S**	**N/R**	**N/S**
2009	EX35 V6-3498cc (3.5L) FI	A	**B1400**		**PA4405**	**N/S**	**N/R**	**N/S**
	FX35 V6-3498cc (3.5L) FI	A	**B1400**	**PA2135**	**PA4199**	**N/S**	**N/R**	**N/S**
	FX50 V8-5026cc (5.0L) FI	B	**B1402**			**N/S**	**N/R**	**N/S**
	G37 V6-3696cc (3.7L) SFI	C	**B1400**		**PA4405**	**N/S**	**N/R**	**N/S**
	M35 V6-3498cc (3.5L) FI	A	**B1400**		**PA4405**	**N/S**	**N/R**	**N/S**
	M45 V8-274 (4.5L) FI	B	**B1402**		**PA4405**	**N/S**	**N/R**	**N/S**
	QX56 V8-5552cc (5.6L) FI	A	**B1402**	**PA4046**		**N/S**	**N/R**	**N/S**

[t] Transmission, Not Model, Determines Which Transmission Filter is Used. OBS = Obsolete. Availability Limited to Distributor Stock.

INFINITI Cont'd.

Year	Model and Engine	VIN	Lube	Air	Cabin Air	Fuel	Breather	Trans.†
2008	EX35 V6-3498cc (3.5L) FI	A	**B1400**		**PA4405**	**N/S**	**N/R**	**N/S**
	FX35 V6-3498cc (3.5L) FI	A	**B1400**	**PA2135**	Opt. **PA4199**	**N/S**	**N/R**	**N/S**
	FX45 V8-274 (4.5L) FI	B	**B1402**		Opt. **PA4199**	**N/S**	**N/R**	**N/S**
	G35 V6-3498cc (3.5L) FI	B	**B1400**		**PA4199**	**N/S**	**N/R**	
	G37 V6-3696cc (3.7L) SFI	C	**B1400**		**PA4405**	**N/S**	**N/R**	**N/S**
	M35 V6-3498cc (3.5L) FI	A	**B1400**		**PA4405**	**N/S**	**N/R**	**N/S**
	M45 V8-274 (4.5L) FI	B	**B1402**		**PA4405**	**N/S**	**N/R**	**N/S**
	QX56 V8-5552cc (5.6L) FI	A	**B1402**	**PA4046**		**N/S**	**N/R**	**N/S**
2007	FX35 V6-3498cc (3.5L) FI	A	**B1400**	**PA2135**	Opt. **PA4199**	**N/S**	**N/R**	**N/S**
	FX45 V8-274 (4.5L) FI	B	**B1402**		Opt. **PA4199**	**N/S**	**N/R**	**N/S**
	G35 V6-3498cc (3.5L) FI	B,C	**B1400**	Coupe **PA2135**	**PA4199**	**N/S**	**N/R**	
	M35 V6-3498cc (3.5L) SFI	A	**B1400**		**PA4405**	**N/S**	**N/R**	**N/S**
	M45 V8-274 (4.5L) SFI	B	**B1402**		**PA4405**	**N/S**	**N/R**	**N/S**
	QX56 V8-5552cc (5.6L) FI	A	**B1402**	**PA4046**		**N/S**	**N/R**	**N/S**
2006	FX35 V6-3498cc (3.5L) FI	A	**B1400**	**PA2135**	Opt. **PA4199**	**N/S**	**N/R**	**N/S**
	FX45 V8-274 (4.5L) FI	B	**B1402**		Opt. **PA4199**	**N/S**	**N/R**	**N/S**
	G35 V6-3498cc (3.5L) SFI	C	**B1400**	**PA2135**	**PA4199**	**N/S**	**N/R**	
	M35 V6-3498cc (3.5L) SFI	A	**B1400**		**PA4405**	**N/S**	**N/R**	**N/S**
	M45 V8-274 (4.5L) SFI	B	**B1402**		**PA4405**	**N/S**	**N/R**	**N/S**
	Q45 V8-274 (4.5L) FI	B	**B1402**			**N/S**	**N/R**	**N/S**
	QX56 V8-5552cc (5.6L) FI	A	**B1402**	**PA4046**		**N/S**	**N/R**	**N/S**
2005	FX35 V6-3498cc (3.5L) FI	A	**B1400**	**PA2135**	Opt. **PA4199**	**N/S**	**N/R**	**N/S**
	FX45 V8-274 (4.5L) FI	B	**B1402**		Opt. **PA4199**	**N/S**	**N/R**	**N/S**
	G35 V6-3498cc (3.5L) SFI	C	**B1400**	**PA2135**	**PA4199**	**N/S**	**N/R**	
	Q45 V8-274 (4.5L) SFI	B	**B1402**			**N/S**	**N/R**	
	QX56 V8-5552cc (5.6L) FI	A	**B1402**	**PA4046**		**N/S**	**N/R**	**N/S**
2004	FX35 V6-3498cc (3.5L) SFI	A	**B1400**	**PA2135**	Opt. **PA4199**	**N/S**	**N/R**	**N/S**
	FX45 V8-274 (4.5L) FI	B	**B1402**		Opt. **PA4199**	**N/S**	**N/R**	**N/S**
	G35 V6-3498cc (3.5L) SFI	C	**B1400**	**PA2135**	**PA4199**	**N/S**	**N/R**	
	I35 V6-3498cc (3.5L) SFI	D	**B1402**	**PA2135**		**N/S**	**N/R**	**18011**
	M45 V8-274 (4.5L) SFI	A	**B1402**			**BF1104**	**N/R**	
	Q45 V8-274 (4.5L) SFI	B	**B1402**			**N/S**	**N/R**	
	QX56 V8-5552cc (5.6L) FI	A	**B1402**	**PA4046**	**PA4199**	**N/S**	**N/R**	**N/S**
2003	FX35 V6-3498cc (3.5L) SFI	A	**B1400**	**PA2135**	Opt. **PA4199**	**N/S**	**N/R**	**N/S**
	FX45 V8-274 (4.5L) FI	B	**B1402**		Opt. **PA4199**	**N/S**	**N/R**	**N/S**
	G35 V6-3498cc (3.5L) SFI	C	**B1400**	**PA2135**	**PA4199**	**N/S**	**N/R**	
	I35 V6-3498cc (3.5L) SFI	D	**B1402**	**PA2135**		**N/S**	**N/R**	**18011**
	M45 V8-274 (4.5L) SFI	A	**B1402**			**BF1104**	**N/R**	
	Q45 V8-4494cc (4.5L) SFI	B	**B1402**			**N/S**	**N/R**	
	QX4 V6-3498cc (3.5L) SFI	D	**B1400**	**PA2135**		**BF1104**	**N/R**	**18273**
2002	G20 4-122 (2.0L) SFI	C	**B1400**	**PA2135**	**N/R**	**BF1163**	**N/R**	
	I35 V6-3498cc (3.5L) SFI	D	**B1400**	**PA2135**		**N/S**	**N/R**	**18011**
	Q45 V8-4494cc (4.5L) SFI	B	**B1402**			**N/S**	**N/R**	**N/S**
	QX4 V6-3498cc (3.5L) SFI	D	**B1400**	**PA2135**		**BF1104**	**N/R**	**18273**
2001	G20 4-122 (2.0L) SFI	C	**B1400**	**PA2135**	**N/R**	**BF1163**	**N/R**	
	I30 V6-182 (3.0L) SFI	C	**B1402**	**PA2135**		**BF1104**	**N/R**	
	Q45 V8-252 (4.1L) SFI	B	**B1402**			**N/S**	**N/R**	
	QX4 V6-3498cc (3.5L) SFI	D	**B1402**	**PA2135**		**BF1104**	**N/R**	**18273**
2000	G20 4-122 (2.0L) SFI	C	**B1400**	**PA2135**	**N/R**	**BF1163**	**N/R**	
	I30 V6-182 (3.0L) SFI	C	**B1402**	**PA2135**		**BF1104**	**N/R**	
	Q45 V8-252 (4.1L) SFI	B	**B1402**			**BF1104**	**N/R**	
	QX4 V6-201 (3.3L) SFI	A	**B1402**	**PA2135**		**BF1104**	**N/R**	2WD **19993** 4WD **18273**
1999	G20 4-122 (2.0L) SFI	C	**B1400**	**PA2135**	**N/R**	**BF1163**	**N/R**	
	I30 V6-182 (3.0L) SFI	C	**B1402**	**PA2135**	**N/R**	**BF1104**	**N/R**	**18011**
	Q45 V8-252 (4.1L) SFI	B	**B1402**			**BF1104**	**N/R**	
	QX4 V6-201 (3.3L) SFI	A	**B1402**	**PA2135**		**BF1104**	**N/R**	2WD **19993** 4WD **18273**
1998	I30 V6-182 (3.0L) SFI	C	**B1402**	**PA2135**	**N/R**	**BF1104**	**N/R**	**18011**
	Q45 V8-252 (4.1L) SFI	B	**B1402**			**BF1104**	**N/R**	
	QX4 V6-201 (3.3L) SFI	A	**B1402**	**PA2135**		**BF1104**	**N/R**	2WD **19993** 4WD **18273**
1997	I30 V6-182 (3.0L) SFI	C	**B1402**	**PA2135**	**N/R**	**BF1104**	**N/R**	**18011**
	J30 V6-181 (3.0L) SFI	A	**B113**	**PA2135**	**N/R**	**BF1163**	**N/R**	**19993**
	Q45 V8-252 (4.1L) SFI	B	**B1402**			**BF1104**	**N/R**	
	QX4 V6-201 (3.3L) SFI	A	**B1402**	**PA2135**		**BF1104**	**N/R**	2WD **19993** 4WD **18273**

OBS = Obsolete. Availability Limited to Distributor Stock. † Transmission, Not Model, Determines Which Transmission Filter is Used.

Year	Model and Engine	VIN	Lube	Air	Cabin Air	Fuel	Breather	Trans.[t]
INFINITI Cont'd.								
1996	G20 4-122 (2.0L) SFI	C	**B1406**	**PA2135**	**N/R**	**BF1104**	**N/R**	
	I30 V6-182 (3.0L) SFI	C	**B1402**	**PA2135**	**N/R**	**BF1104**	**N/R**	**18011**
	J30 V6-181 (3.0L) SFI	A	**B113**	**PA2135**	**N/R**	**BF1163**	**N/R**	**19993**
	Q45 V8-274 (4.5L) SFI	N	**B113**		**N/R**	**BF1104**	**N/R**	
1995	G20 4-122 (2.0L) SFI	C	**B1406**	**PA2135**	**N/R**	**BF1104**	**N/R**	
	J30 V6-181 (3.0L) SFI	A	**B113**	**PA2135**	**N/R**	**BF1163**	**N/R**	**19993**
	Q45 V8-274 (4.5L) SFI	N	**B113**		**N/R**	**BF1104**	**N/R**	
1994	G20 4-122 (2.0L) SFI	C	**B1406**	**PA2135**	**N/R**	**BF1104**	**N/R**	
	J30 V6-181 (3.0L) SFI	A	**B113**	**PA2135**	**N/R**	**BF1163**	**N/R**	**19993**
	Q45 V8-274 (4.5L) SFI	N	**B113**		**N/R**	**BF1104**	**N/R**	
1993	G20 4-122 (2.0L) SFI	C	**B1406**	**PA2135**	**N/R**	**BF1104**	**N/R**	
	J30 V6-181 (3.0L) SFI	A	**B113**	**PA2135**	**N/R**	**BF1163**	**N/R**	**19993**
	Q45 V8-274 (4.5L) SFI	N	**B113**		**N/R**	**BF1104**	**N/R**	
1992	G20 4-1998cc (2.0L) SFI	C	**B1406**	**PA2135**	**N/R**	**BF1104**	**N/R**	
	M30 V6-2960cc (3.0L) SFI	H	**B113**	**PA2135**	**N/R**	**BF1104**	**N/R**	**19993**
	Q45 V8-4500cc (4.5L) SFI	N	**B113**		**N/R**	**BF1104**	**N/R**	
1991	G20 4-1998cc (2.0L) MFI	C	**B1406**	**PA2135**	**N/R**	**BF1104**	**N/R**	
	M30 V6-2960cc (3.0L) MFI	H	**B113**	**PA2135**	**N/R**	**BF1104**	**N/R**	**19993**
	Q45 V8-4500cc (4.5L) MFI	N	**B113**		**N/R**	**BF1104**	**N/R**	
1990	M30 V6-2960cc (3.0L) MFI	H	**B113**	**PA2135**	**N/R**	**BF1104**	**N/R**	**19993**
	Q45 V8-4500cc (4.5L) MFI	N	**B113**		**N/R**	**BF1104**	**N/R**	
ISUZU								
2008	Ascender 6-256 (4.2L) MFI	S	**B7010**	**RS4161**	**N/R**	**BF7762**	**N/R**	4L60E S. Pan **18010** 4L60E D. Pan **18056**
	i-290 4-178 (2.9L) SFI	9	**B31**	**PA4412**	**N/R**	**N/S**	**N/R**	2WD **18056** 4WD **20020**
	i-370 5-226 (3.7L) SFI	E	**B7010**	**PA4412**	**N/R**	**N/S**	**N/R**	2WD **18056** 4WD **20020**
2007	Ascender 6-254 (4.2L) MFI	S	**B7010**	**RS4161**	**N/R**	**BF7762**	**N/R**	4L60E S. Pan **18010** 4L60E D. Pan **18056**
	i-290 4-178 (2.9L) SFI	9	**B31**	**PA4173**	**N/R**	**N/S**	**N/R**	2WD **18056** 4WD **20020**
	i-370 5-226 (3.7L) SFI	E	**B7010**	**PA4173**	**N/R**	**N/S**	**N/R**	2WD **18056** 4WD **20020**
2006	Ascender 6-254 (4.2L) FI	S	**B7010**	**RS4161**	**N/R**	**BF7762**	**N/R**	4L60E S. Pan **18010** 4L60E D. Pan **18056**
	V8-325 (5.3L) FI	M	**B31**	**RS4161**	**N/R**	**BF7762**	**N/R**	4L60E S. Pan **18010** 4L60E D. Pan **18056**
	i-280 4-169 (2.8L) SFI	8	**B31**	**PA4173**	**N/R**	**N/S**	**N/R**	2WD **18056** 4WD **20020**
	i-350 5-211 (3.5L) SFI	6	**B7010**	**PA4173**	**N/R**	**N/S**	**N/R**	2WD **18056** 4WD **20020**
2005	Ascender 6-254 (4.2L) FI	S	**B7010**	**RS4161**	**N/R**	**BF7762**	**N/R**	4L60E S. Pan **18010** 4L60E D. Pan **18056**
	V8-325 (5.3L) FI	M	**B31**	**RS4161**	**N/R**	**BF7762**	**N/R**	4L60E S. Pan **18010** 4L60E D. Pan **18056**
2004	Ascender 6-254 (4.2L) FI	S	**B7010**	**RS4161**	**N/R**	**BF7762**	**N/R**	4L60E S. Pan **18010** 4L60E D. Pan **18056**
	V8-325 (5.3L) FI	T	**B31**	**RS4161**	**N/R**	**BF7762**	**N/R**	4L60E S. Pan **18010** 4L60E D. Pan **18056**
	Axiom V6-213 (3.5L) SFI	Y	**B1425**	**PA4081**	**N/R**	**BF1049**	**N/R**	
	Rodeo V6-193 (3.2L) SFI	W	**B1425**	**PA4081**	**N/R**	**BF1049**	**N/R**	
	V6-213 (3.5L) FI	Y	**B1425**	**PA4081**	**N/R**	**BF1049**	**N/R**	
2003	Ascender 6-254 (4.2L) FI	S	**B7010**	**RS4161**	**N/R**	**BF7762**	**N/R**	4L60E S. Pan **18010** 4L60E D. Pan **18056**
	V8-325 (5.3L) FI	T	**B31**	**RS4161**	**N/R**	**BF7762**	**N/R**	4L60E S. Pan **18010** 4L60E D. Pan **18056**
	Axiom V6-213 (3.5L) SFI	X	**B1425**	**PA4081**	**N/R**	**BF1049**	**N/R**	
	Rodeo, Rodeo Sport 4-133 (2.2L) SFI	D	**B43-S**	**PA4081**	**N/R**	**BF1049**	**N/R**	
	V6-193 (3.2L) SFI	W	**B1425**	**PA4081**	**N/R**	**BF1049**	**N/R**	
2002	Axiom V6-213 (3.5L) SFI	X	**B1425**	**PA4081**	**N/R**	**BF1049**	**N/R**	
	Rodeo, Rodeo Sport 4-133 (2.2L) SFI	D	**B43-S**	**PA4081**	**N/R**	**BF1049**	**N/R**	
	V6-193 (3.2L) SFI	W	**B1425**	**PA4081**	**N/R**	**BF1049**	**N/R**	
	Trooper V6-213 (3.5L) SFI	X	**B1425**	**PA4081**	**N/R**	**BF1049**	**N/R**	
2001	Rodeo, Rodeo Sport 4-133 (2.2L) SFI	D	**B43-S**	**PA4081**	**N/R**	**BF1049**	**N/R**	
	V6-193 (3.2L) SFI	W	**B1425**	**PA4081**	**N/R**	**BF1049**	**N/R**	

[t] Transmission, Not Model, Determines Which Transmission Filter is Used. OBS = Obsolete. Availability Limited to Distributor Stock.

ISUZU Cont'd.

Year	Model and Engine	VIN	Lube	Air	Cabin Air	Fuel	Breather	Trans.†
2001	Trooper V6-213 (3.5L) SFI	X	**B1425**	**PA4081**	**N/R**	**BF1049**	**N/R**	
	VehiCross V6-213 (3.5L) SFI	X	**B1425**	**PA4081**	**N/R**	**BF1049**	**N/R**	
2000	Amigo 4-134 (2.2L) SFI	D	**B43-S**	**PA4081**	**N/R**	**BF1049**	**N/R**	**M.T.**
	V6-193 (3.2L) SFI	W	**B1425**	**PA4081**	**N/R**	**BF1049**	**N/R**	
	Hombre 4-133 (2.2L) SFI	4	**B43-S**	**PA2257**	**N/R**	**BF7658**	**N/R**	S. Pan **18010** D. Pan **18056**
	V6-262 (4.3L) SFI	X	**B35-S**	**PA2257**	**N/R**	**BF7658**	**N/R**	S. Pan **18010** D. Pan **18056**
	Rodeo 4-133 (2.2L) SFI	D	**B43-S**	**PA4081**	**N/R**	**BF1049**	**N/R**	
	V6-193 (3.2L) SFI	W	**B1425**	**PA4081**	**N/R**	**BF1049**	**N/R**	
	Trooper V6-213 (3.5L) SFI	X	**B1425**	**PA4081**	**N/R**	**BF1049**	**N/R**	
	VehiCross V6-213 (3.5L) SFI	X	**B1425**	**PA4081**	**N/R**	**BF1049**	**N/R**	
1999	Amigo 4-134 (2.2L) SFI	D	**B43-S**	**PA4081**	**N/R**	**BF1049**	**N/R**	**M.T.**
	V6-193 (3.2L) SFI	W	**B1425**	**PA4081**	**N/R**	**BF1049**	**N/R**	
	Hombre 4-133 (2.2L) SFI	4	**B43-S**	**PA2257**	**N/R**	**BF7658**	**N/R**	S. Pan **18010** D. Pan **18056**
	V6-262 (4.3L) SFI	X	**B35-S**	**PA2257**	**N/R**	**BF7658**	**N/R**	S. Pan **18010** D. Pan **18056**
	Oasis 4-138 (2.3L) FI VTEC		**B1425**	**PA4077**	**N/R**	**BF1193**	**N/R**	
	Rodeo 4-133 (2.2L) SFI	D	**B43-S**	**PA4081**	**N/R**	**BF1049**	**N/R**	
	V6-193 (3.2L) SFI	W	**B1425**	**PA4081**	**N/R**	**BF1049**	**N/R**	
	Trooper V6-213 (3.5L) SFI	X	**B1425**	**PA4081**	**N/R**	**BF1049**	**N/R**	
	VehiCross V6-213 (3.5L) SFI	X	**B1425**	**PA4081**	**N/R**	**BF1049**	**N/R**	
1998	Amigo 4-134 (2.2L) SFI	D	**B43-S**	**PA4081**	**N/R**	**BF1049**	**N/R**	**M.T.**
	V6-193 (3.2L) SFI	W	**B1425**	**PA4081**	**N/R**	**BF1049**	**N/R**	
	Hombre 4-133 (2.2L) SFI	4	**B43-S**	**PA2257**	**N/R**	**BF7658**	**N/R**	S. Pan **18010** D. Pan **18056**
	V6-262 (4.3L) SFI	X	**B35-S**	**PA2257**	**N/R**	**BF7658**	**N/R**	S. Pan **18010** D. Pan **18056**
	Oasis 4-138 (2.3L) VTEC		**B1425**	**PA4077**	**N/R**	**BF1193**	**N/R**	**N/S**
	Rodeo 4-133 (2.2L) SFI	D	**B1425**	**PA4081**	**N/R**	**BF1049**	**N/R**	
	V6-193 (3.2L) SFI	W	**B1425**	**PA4081**	**N/R**	**BF1049**	**N/R**	
	Trooper V6-3475cc (3.5L) SFI	X	**B1425**	**PA4081**	**N/R**	**BF1049**	**N/R**	
1997	Hombre 4-133 (2.2L) SFI	4	**B43-S**	**PA2257**	**N/R**	**BF7658**	**N/R**	**18010**
	V6-262 (4.3L) SFI	X	**B35-S**	**PA2257**	**N/R**	**BF7658**	**N/R**	**18010**
	Oasis 4-132 (2.2L) SFI	4,6,7	**B1425**	**PA4077**	**N/R**	**BF1193**	**N/R**	**N/S**
	Rodeo 4-156 (2.6L) SFI	E	**B1425**		**N/R**	**BF1049**	**N/R**	
	V6-193 (3.2L) SFI	V	**B1425**	**PA4081**	**N/R**	**BF1049**	**N/R**	
	Trooper V6-193 (3.2L) SFI	V	**B1425**	**PA4081**	**N/R**	**BF1049**	**N/R**	
1996	Hombre 4-133 (2.2L) SFI	4	**B43-S**	**PA2257**	**N/R**	**BF853**	**N/R**	**18010**
	Oasis 4-132 (2.2L) SFI	4,6,7	**B1425**	**PA4077**	**N/R**	**BF1193**	**N/R**	**N/S**
	Rodeo 4-156 (2.6L) SFI	E	**B1425**		**N/R**	**BF1049**	**N/R**	
	V6-193 (3.2L) SFI	V	**B1425**	**PA4081**	**N/R**	**BF1049**	**N/R**	
	Trooper V6-193 (3.2L) SFI	V	**B1425**	**PA4081**	**N/R**	**BF1049**	**N/R**	
1995	Pickups 4-138 (2.3L) MFI	L	**B1425**		**N/R**	To 5/95 **BF1104** 6/95 on **BF1049**	**N/R**	
	4-156 (2.6L) MFI	E	**B1425**		**N/R**	**BF1104**	**N/R**	
	Rodeo 4-156 (2.6L) MFI	E	**B1425**		**N/R**	**BF1049**	**N/R**	
	V6-193 (3.2L) MFI	V	**B1425**	**PA4081**	**N/R**	**BF1049**	**N/R**	
	Trooper V6-193 (3.2L) MFI	K,V,W	**B1425**	**PA4081**	**N/R**	**BF1049**	**N/R**	
1994	Amigo 4-156 (2.6L) FI	E	**B1425**		**N/R**	**BF1104**	**N/R**	**M.T.**
	Pickups 4-138 (2.3L) 2 Bbl.	L	**B1425**	**PA1657**	**N/R**	**BF840,-K1**	**N/R**	
	4-156 (2.6L) MFI	E	**B1425**		**N/R**	**BF1104**	**N/R**	
	V6-191 (3.1L) TBI	Z	**B43-S**	**PA2106**	**N/R**	**BF1049**	**N/R**	
	Rodeo 4-156 (2.6L) MFI	E	**B1425**		**N/R**	**BF1049**	**N/R**	
	V6-193 (3.2L) MFI	V	**B1425**	**PA4081**	**N/R**	**BF1049**	**N/R**	
	Trooper V6-193 (3.2L) MFI	V,W	**B1402**	**PA4081**	**N/R**	**BF1049**	**N/R**	
1993	Amigo 4-2300cc (2.3L) Carb.	L	**B421**	**PA1657**	**N/R**	**BF840,-K1**	**N/R**	**M.T.**
	4-2600cc (2.6L) FI	E	**B421**		**N/R**	**BF1104**	**N/R**	
	Pickups 4-138 (2.3L) 2 Bbl. 4ZD1	L	**B421**	**PA1657**	**N/R**	**BF840,-K1**	**N/R**	
	4-2600cc (2.6L) MFI SOHC	E	**B421**		**N/R**	**BF1104**	**N/R**	
	V6-3100cc (3.1L) MFI OHV	Z	**B43-S**	**PA2106**	**N/R**	To 10/92 **BF1104** 10/92-on **BF1049**	**N/R**	
	Rodeo 4-2600cc (2.6L) MFI	E	**B421**		**N/R**	**BF1104**	**N/R**	
	V6-3165cc (3.2L) MFI	V	**B421**	**PA4081**	**N/R**	**BF1049**	**N/R**	

OBS = Obsolete. Availability Limited to Distributor Stock. † Transmission, Not Model, Determines Which Transmission Filter is Used.

ISUZU Cont'd.

Year	Model and Engine	VIN	Lube	Air	Cabin Air	Fuel	Breather	Trans.[t]
1993	Stylus 4-97 (1.6L) MFI	6			N/R	BF1186	N/R	18262
	Trooper V6-193 (3.2L) MFI	V,W	B421	PA4081	N/R	BF1049	N/R	
1992	Amigo 4-2300cc (2.3L) 2 Bbl.	L	B421	PA1657	N/R	BF840,-K1	N/R	M.T.
	4-2600cc (2.6L) MFI	E	B421		N/R	BF1104	N/R	
	Impulse 4-1600cc (1.6L) MFI Turbo	4	B421	PA2214	N/R	BF1186	N/R	
	4-1817cc (1.8L) MFI	8	B421	PA2214	N/R	BF1186	N/R	
	Pickups 4-2300cc (2.3L) 2 Bbl.	L	B421	PA1657	N/R	BF840,-K1	N/R	
	4-2600cc (2.6L) MFI	E	B421		N/R	BF1104	N/R	
	V6-3100cc (3.1L) FI	Z	B43-S	PA2106	N/R	BF1104	N/R	
	Rodeo 4-2600cc (2.6L) MFI	E	B421		N/R	BF1104	N/R	
	V6-3137cc (3.1L) TBI	Z	B43-S	PA2106	N/R	BF1104	N/R	
	Stylus 4-97 (1.6L) MFI	6			N/R	BF1186	N/R	18262
	4-110 (1.8L) MFI	8	B227		N/R	BF1186	N/R	18262
	Trooper V6-193 (3.2L) MFI	V	B421	PA4081	N/R	BF1049	N/R	
1991	Amigo 4-2300cc (2.3L) 2 Bbl.	L	B421	PA1657	N/R	BF840,-K1	N/R	M.T.
	4-2600cc (2.6L) MFI	E	B421		N/R	BF1104	N/R	M.T.
	Impulse 4-1600cc (1.6L) MFI Turbo	4	B227	PA2214	N/R	BF1186	N/R	
	4-1600cc (1.6L) MFI	5	B227		N/R	BF1186	N/R	
	Pickups 4-2300cc (2.3L) 2 Bbl.	L	B421	PA1657	N/R	BF840,-K1	N/R	
	4-2600cc (2.6L) MFI	E	B421		N/R	BF1104	N/R	
	V6-3100cc (3.1L) FI	Z	B43-S	PA2106	N/R	BF1104	N/R	
	Rodeo 4-2600cc (2.6L) FI	E	B421		N/R	BF1104	N/R	
	V6-3100cc (3.1L) FI	Z	B43-S	PA2106	N/R	BF1104	N/R	
	Stylus 4-1588cc (1.6L) MFI	5,6			N/R	BF1186	N/R	18262
	Trooper, Trooper II 4-2600cc (2.6L) MFI	E	B421		N/R	BF1104	N/R	
	V6-2800cc (2.8L) FI	R	B43-S	PA2106	N/R	BF1104	N/R	
1990	Amigo 4-2300cc (2.3L) 2 Bbl.	L	B421	PA1657	N/R	BF840,-K1	N/R	M.T.
	4-2600cc (2.6L) MFI	E	B421		N/R	BF1104	N/R	M.T.
	Impulse 4-1600cc (1.6L) EFI	5	B421		N/R	BF1186	N/R	
	Pickups 4-2300cc (2.3L) 2 Bbl.	L	B421	PA1657	N/R	BF840,-K1	N/R	
	4-2600cc (2.6L) MFI	E	B421		N/R	BF1104	N/R	
	Trooper, Trooper II 4-2600cc (2.6L) MFI	E	B421		N/R	BF1104	N/R	
	V6-2800cc (2.8L) TBI	R	B43-S	PA2106	N/R	BF1104	N/R	
1989	Amigo 4-2300cc (2.3L) 2 Bbl.	L	B421	PA1657	N/R	BF840,-K1	N/R	M.T.
	4-2600cc (2.6L) FI	E	B421		N/R	BF1104	N/R	M.T.
	I-Mark 4-1471cc (1.5L) 2 Bbl.	7	B227		N/R	BF805	N/R	
	4-1471cc (1.5L) EFI Turbo	9	B227	PA4058	N/R		N/R	
	4-1588cc (1.6L) MFI	5	B227	PA4058	N/R		N/R	
	Impulse 4-1994cc (2.0L) Turbo	F	B173-S	PA2182	N/R	BF966	N/R	
	4-2254cc (2.3L) EFI	L	B173-S	PA2182	N/R	BF966	N/R	
	Pickups 4-2300cc (2.3L) 2 Bbl.	L	B421	PA1657	N/R	BF840,-K1	N/R	
	4-2600cc (2.6L) FI	E	B421		N/R	BF1104	N/R	
	Trooper, Trooper II 4-2600cc (2.6L) MFI	E	B421		N/R	BF1104	N/R	18281
	V6-2800cc (2.8L) MFI	R	B43-S	PA2106	N/R	BF1104	N/R	
1988	I-Mark 4-1471cc (1.5L) EFI	7	B227		N/R	BF805	N/R	
	4-1471cc (1.5L) MFI Turbo	9	B227	PA4058	N/R		N/R	
	Impulse 4-1994cc (2.0L) FI Turbo	9		PA2182	N/R	BF1105	N/R	
	4-2254cc (2.3L) EFI	L		PA2182	N/R	BF1105	N/R	
	Pickups 4-2254cc (2.3L)	L	B421	PA1657	N/R	BF840,-K1	N/R	
	4-2559cc (2.6L) FI	E	B421		N/R	BF1104	N/R	
	Trooper II 4-2559cc (2.6L) FI	E	B173-S		N/R	BF1104	N/R	
1987	I-Mark 4-1471cc (1.5L) 2 Bbl.	7	B227		N/R	BF805	N/R	
	4-1471cc (1.5L) FI Turbo	9	B227	PA4058	N/R		N/R	
	Impulse 4-1949cc (1.9L) FI	A		PA2182	N/R	BF966	N/R	
	4-1994cc (2.0L) FI Turbo	9		PA2182	N/R	BF966	N/R	
	Pickups 4-1949cc (2.0L) 2 Bbl.	A		PA1657	N/R	BF840,-K1	N/R	
	4-2238cc (2.2L) Diesel	S	BD142	PA1657	N/R	BF7534	N/R	
	4-2238cc (2.2L) Turbo Diesel	U	BD142	PA2135	N/R	BF7534	N/R	18012
	4-2254cc (2.3L) 2 Bbl.	L		PA1657	N/R	BF840,-K1	N/R	
	Trooper II 4-2238cc (2.2L) Diesel	S	BD142	PA2129	N/R	BF7534	N/R	M.T.
	4-2254cc (2.3L) 2 Bbl.	L		PA1657	N/R	BF840,-K1	N/R	M.T.
1986	I-Mark 4-1471cc (1.5L) 2 Bbl.	7	B227		N/R	BF805	N/R	
	Impulse 4-1949cc (1.9L) FI	A		PA2182	N/R	BF966	N/R	
	4-1994cc (2.0L) FI Turbo	F		PA2182	N/R	BF966	N/R	
	Pickups 4-1949cc (1.9L) 2 Bbl.	A		PA1657	N/R	BF840,-K1	N/R	
	4-2238cc (2.2L) Diesel	S	BD142	PA1657	N/R	BF7534	N/R	
	4-2238cc (2.2L) Turbo Diesel	U	BD142	PA2135	N/R	BF7534	N/R	18012

[t] Transmission, Not Model, Determines Which Transmission Filter is Used. OBS = Obsolete. Availability Limited to Distributor Stock.

Year	Model and Engine	VIN	Lube	Air	Cabin Air	Fuel	Breather	Trans.†
ISUZU Cont'd.								
1986	Pickups 4-2254cc (2.3L) 2 Bbl.	L		**PA1657**	**N/R**	**BF840,-K1**	**N/R**	
	Trooper II 4-2238cc (2.2L) Turbo Diesel	U	**BD142**	**PA2129**	**N/R**	**BF7534**	**N/R**	**M.T.**
	4-2254cc (2.2L) 2 Bbl.	L		**PA1657**	**N/R**	**BF840,-K1**	**N/R**	**M.T.**
1985	I-Mark 4-1471cc (1.5L) 2 Bbl.	K	**B141**		**N/R**	**BF928**	**N/R**	
	4-1817cc (1.8L) 2 Bbl.	B	**B141**	**PA1657**	**N/R**	**BF928**	**N/R**	**18262**
	Impulse 4-1949cc (1.9L) FI	A		**PA2182**	**N/R**	**BF966**	**N/R**	
	4-1994cc (2.0L) FI Turbo	F		**PA2182**	**N/R**	**BF1105**	**N/R**	
	Pickups 4-1949cc (1.9L) 2 Bbl.	A		**PA1657**	**N/R**	**BF840,-K1**	**N/R**	
	4-2238cc (2.2L) Diesel	S	**BD142**	**PA1657**	**N/R**	**BF7534**	**N/R**	
	Trooper II 4-1949cc (1.9L) 2 Bbl.	A		**PA1657**	**N/R**	**BF840,-K1**	**N/R**	
1984	I-Mark 4-1817cc (1.8L) 2 Bbl.	B		**PA1657**	**N/R**	**BF928**	**N/R**	
	4-1817cc (1.8L) Diesel	P			**N/R**	**BF7534**	**N/R**	
	Impulse 4-1949cc (1.9L) FI	A		**PA2182**	**N/R**	**BF966**	**N/R**	
	Pickups 4-1949cc (1.9L) 2 Bbl.	A		**PA1657**	**N/R**	**BF840,-K1**	**N/R**	
	4-2238cc (2.2L) Diesel	S	**BD142**	**PA1657**	**N/R**	**BF7534**	**N/R**	
	Trooper II 4-1949cc (1.9L) 2 Bbl.	A		**PA1657**	**N/R**	**BF840,-K1**	**N/R**	
1983	I-Mark 4-1800cc (1.8L) Gas	B	**B141**	**PA1657**	**N/R**	**BF928**	**N/R**	
	4-1800cc (1.8L) Diesel	P	**B109**		**N/R**	**BF7534**	**N/R**	
	Impulse 4-1949cc (1.9L)	A		**PA2182**	**N/R**	**BF966**	**N/R**	
	Pickups 4-1949cc (1.9L) 2 Bbl.	A	**B173-S**	**PA1657**	**N/R**	**BF840,-K1**	**N/R**	
	4-2238cc (2.2L) Diesel	S	**B1446**	**PA1657**	**N/R**	**BF7534**	**N/R**	
1982	I-Mark 4-1800cc (1.8L) Gas	B		**PA1657**	**N/R**	**BF928**	**N/R**	
	4-1800cc (1.8L) Diesel	P	**B109**		**N/R**	**BF7534**	**N/R**	
	Pickups 4-1800cc (1.8L) Gas	N		**PA1657**	**N/R**	**BF840,-K1**	**N/R**	
	4-2238cc (2.2L) Diesel	S	**B1446**	**PA1657**	**N/R**	**BF7534**	**N/R**	
1981	I-Mark 4-1800cc (1.8L) Gas	B		**PA1657**	**N/R**	**BF928**	**N/R**	
	4-1800cc (1.8L) Diesel	P	**B109**		**N/R**	**BF7534**	**N/R**	
	Pickups 4-1800cc (1.8L) Gas	N		**PA1657**	**N/R**	**BF840,-K1**	**N/R**	
	4-2238cc (2.2L) Diesel	S	**B1446**	**PA1657**	**N/R**	**BF7534**	**N/R**	
JAGUAR								
2010	XF V8-4196cc (4.2L) EFI	A	**B1435**			**BF7668**	**N/R**	**N/S**
	V8-5000cc (5.0L) DI	B				**BF7668**	**N/R**	**N/S**
	XFR V8-5000cc (5.0L) DI Supercharged	C				**BF7668**	**N/R**	**N/S**
	XJ V8-5000cc (5.0L) DI	B				**N/S**	**N/R**	**N/S**
	V8-5000cc (5.0L) DI Supercharged	C				**N/S**	**N/R**	**N/S**
	XJL V8-5000cc (5.0L) DI	B				**N/S**	**N/R**	**N/S**
	V8-5000cc (5.0L) DI Supercharged	C				**N/S**	**N/R**	**N/S**
	XK V8-5000cc (5.0L) DI	B				**N/S**	**N/R**	**N/S**
	XKR V8-5000cc (5.0L) FI Supercharged	C				**N/S**	**N/R**	**N/S**
2009	XF V8-4196cc (4.2L) EFI	B	**B1435**			**BF7668**	**N/R**	**N/S**
	V8-4196cc (4.2L) EFI Supercharged	C	**B1435**			**BF7668**	**N/R**	**N/S**
	XJ Super V8 V8-4196cc (4.2L) FI Supercharged	C	**B1435**			**BF853**	**N/R**	**N/S**
	XJ Vanden Plas V8-4196cc (4.2L) MFI	B	**B1435**			**BF853**	**N/R**	**N/S**
	XJ8 V8-4196cc (4.2L) FI	B	**B1435**				**N/R**	**N/S**
	XJ8 L V8-4196cc (4.2L) FI	B	**B1435**				**N/R**	**N/S**
	XJR V8-4196cc (4.2L) FI Supercharged	C	**B1435**			**BF853**	**N/R**	**N/S**
	XK V8-4196cc (4.2L) EFI	B	**B1435**				**N/R**	6 Spd. **N/S**
	XKR V8-4196cc (4.2L) FI Supercharged	C	**B1435**				**N/R**	6 Spd. **N/S**
2008	S-Type V6-183 (3.0L) FI	A	**B243**			**BF7668**	**N/R**	**N/S**
	V8-4196cc (4.2L) FI	B	**B1435**			**BF7668**	**N/R**	**N/S**
	S-Type R V8-4196cc (4.2L) FI Supercharged	C	**B1435**			**BF7668**	**N/R**	**N/S**
	XJ Super V8 V8-4196cc (4.2L) FI Supercharged	C	**B1435**			**BF853**	**N/R**	**N/S**
	XJ Vanden Plas V8-4196cc (4.2L) MFI	B	**B1435**			**BF853**	**N/R**	**N/S**
	XJ8 V8-4196cc (4.2L) FI	B	**B1435**				**N/R**	**N/S**
	XJ8 L V8-4196cc (4.2L) FI	B	**B1435**				**N/R**	**N/S**
	XJR V8-4196cc (4.2L) FI Supercharged	C	**B1435**			**BF853**	**N/R**	**N/S**
	XK V8-4196cc (4.2L) EFI	B	**B1435**				**N/R**	**N/S**
	XKR V8-4196cc (4.2L) EFI Supercharged	C	**B1435**				**N/R**	**N/S**
	X-Type V6-181 (3.0L) FI	A	**B243**				**N/R**	**20007**
2007	S-Type V6-181 (3.0L) FI	A	**B243**			**BF7668**	**N/R**	**N/S**
	V8-4196cc (4.2L) FI	B	**B1435**			**BF7668**	**N/R**	**N/S**
	S-Type R V8-4196cc (4.2L) FI Supercharged	C	**B1435**			**BF7668**	**N/R**	**N/S**

OBS = Obsolete. Availability Limited to Distributor Stock. † Transmission, Not Model, Determines Which Transmission Filter is Used.

JAGUAR Cont'd.

Year	Model and Engine	VIN	Lube	Air	Cabin Air	Fuel	Breather	Trans.t
2007	Super V8, Super V8 Portfolio V8-4196cc (4.2L) FI Supercharged	C	**B1435**			**BF853**	**N/R**	**N/S**
	Vanden Plas V8-4196cc (4.2L) FI	B	**B1435**			**BF853**	**N/R**	**N/S**
	XJ Super V8 V8-4196cc (4.2L) FI Supercharged	C	**B1435**			**BF853**	**N/R**	**N/S**
	XJ Vanden Plas V8-4196cc (4.2L) MFI	B	**B1435**			**BF853**	**N/R**	**N/S**
	XJ8, XJ8 L V8-4196cc (4.2L) MFI	B	**B1435**			**BF853**	**N/R**	**N/S**
	XJR V8-4196cc (4.2L) MFI Supercharged	C	**B1435**			**BF853**	**N/R**	**N/S**
	XK V8-4196cc (4.2L) EFI	B	**B1435**				**N/R**	
	XKR V8-4196cc (4.2L) EFI Supercharged	C	**B1435**				**N/R**	**N/S**
	X-Type, X-Type Sportwagon V6-181 (3.0L) FI	A	**B243**				**N/R**	**20007**
2006	S-Type V6-181 (3.0L) MFI	A	**B243**			**BF7668**	**N/R**	**N/S**
	S-Type, S-Type R V8-4196cc (4.2L) MFI	B	**B1435**			**BF7668**	**N/R**	**N/S**
	Super V8, Super V8 Portfolio V8-4196cc (4.2L) MFI	C	**B1435**			**BF7668**	**N/R**	**N/S**
	Vanden Plas V8-4196cc (4.2L) FI	B	**B1435**			**BF853**	**N/R**	**N/S**
	XJ8, XJ8 L V8-4196cc (4.2L) MFI	B	**B1435**				**N/R**	
	XJR V8-4196cc (4.2L) MFI Supercharged	C	**B1435**			**BF853**	**N/R**	
	XK8, XKR V8-4196cc (4.2L) EFI	B	**B1435**				**N/R**	**N/S**
	XKR V8-4196cc (4.2L) EFI Supercharged	C	**B1435**				**N/R**	
	X-Type, X-Type Sportwagon V6-181 (3.0L) FI	A	**B243**				**N/R**	**20007**
2005	S-Type, S-Type R V6-181 (3.0L) MFI	T	**B243**			**BF7668**	**N/R**	
	V8-4196cc (4.2L) MFI or Supercharged	U,V	**B1435**			**BF7668**	**N/R**	
	Super V8 V8-4196cc (4.2L) FI Supercharged		**B1435**			**BF7668**	**N/R**	**N/S**
	Vanden Plas V8-4196cc (4.2L) FI	C	**B1435**			**BF853**	**N/R**	
	XJ8, XJR V8-4196cc (4.2L) MFI or Supercharged	B,C	**B1435**				**N/R**	
	XK8, XKR V8-4196cc (4.2L) EFI or Supercharged	U,V	**B1435**			**BF853**	**N/R**	
	X-Type V6-152 (2.5L) MFI	D	**B243**			**BF1185**	**N/R**	
	V6-181 (3.0L) SFI	C	**B243**			**BF1185**	**N/R**	
2004	S-Type, S-Type R V6-181 (3.0L) SFI	T	**B243**			**BF7668**	**N/R**	
	V8-4196cc (4.2L) SFI	U	**B1435**	**PA4181**		**BF7668**	**N/R**	
	V8-4196cc (4.2L) SFI Supercharged	V	**B1435**			**BF7668**	**N/R**	
	XJ Vanden Plas, XJ8 V8-4196cc (4.2L) MFI	C	**B1435**			**BF853**	**N/R**	
	XJR V8-4196cc (4.2L) MFI Supercharged	B	**B1435**			**BF853**	**N/R**	
	XK8, XKR V8-4196cc (4.2L) EFI or Supercharged	U,V	**B1435**			**BF853**	**N/R**	
	X-Type V6-152 (2.5L) SFI	D	**B243**			**BF1185**	**N/R**	**20007**
	V6-181 (3.0L) SFI	C	**B243**			**BF1185**	**N/R**	**20007**
2003	S-Type, S-Type R V6-181 (3.0L) SFI	N	**B243**	**PA4181**		**BF7668**	**N/R**	
	V8-4196cc (4.2L) SFI or Supercharged	U,V	**B1435**			**BF7668**	**N/R**	
	Vanden Plas, XJ Sport, XJ8 V8-244 (4.0L) SFI or Supercharged	2,8	**B1435**			**BF853**	**N/R**	
	XJ Super, XJR V8-244 (4.0L) SFI Supercharged	2,8	**B1435**			**BF853**	**N/R**	
	XK8, XKR V8-4196cc (4.2L) EFI or Supercharged	B,C	**B1435**			**BF853**	**N/R**	
	X-Type V6-152 (2.5L) SFI	D	**B243**			**BF1185**	**N/R**	**20007**
	V6-181 (3.0L) SFI	C	**B243**			**BF1185**	**N/R**	**20007**
2002	S-Type V6-181 (3.0L) SFI	N	**B243**	**PA4181**		**BF7668**	**N/R**	
	V8-244 (4.0L) SFI	P	**B1435**	**PA4181**		**BF7668**	**N/R**	
	Vanden Plas, XJ Super, XJR, XJR100, XKR, XKR100 V8-244 (4.0L) SFI or Supercharged	2,B	**B1435**			**BF853**	**N/R**	
	XJ Sport, XJ8, XK8 V8-244 (4.0L) SFI or Supercharged	C	**B1435**			**BF853**	**N/R**	
	X-Type V6-152 (2.5L) SFI	D	**B243**			**BF1185**	**N/R**	
	V6-181 (3.0L) SFI	C	**B243**			**BF1185**	**N/R**	
2001	S-Type V6-181 (3.0L) SFI	F	**B243**	**PA4181**		**BF7668**	**N/R**	
	V8-244 (4.0L) SFI	G	**B1435**	**PA4181**		**BF7668**	**N/R**	
	Vanden Plas V8-244 (4.0L) SFI	2	**B1435**			**BF853**	**N/R**	
	V8-244 (4.0L) SFI Supercharged	8	**B1435**			**BF853**	**N/R**	

[t] Transmission, Not Model, Determines Which Transmission Filter is Used. OBS = Obsolete. Availability Limited to Distributor Stock.

JAGUAR Cont'd.

Year	Model and Engine	VIN	Lube	Air	Cabin Air	Fuel	Breather	Trans.t
2001	XJ8, XJ8L, XK8 V8-244 (4.0L) SFI	2,C	**B1435**			**BF853**	**N/R**	
	XJR, XKR V8-244 (4.0L) SFI Supercharged	8,B	**B1435**			**BF853**	**N/R**	
2000	S-Type V6-181 (3.0L) EFI	F	**B243**	**PA4181**		**BF7668**	**N/R**	
	V8-244 (4.0L) EFI	G	**B1435**	**PA4181**		**BF7668**	**N/R**	
	Vanden Plas, XJ8, XJ8L V8-244 (4.0L) SFI	2,8	**B1435**			**BF853**	**N/R**	
	XJR V8-244 (4.0L) FI Supercharged	8	**B1435**			**BF853**	**N/R**	
	XK8 V8-244 (4.0L) SFI	C	**B1435**			**BF853**	**N/R**	
	XKR V8-244 (4.0L) SFI	8	**B1435**			**BF853**	**N/R**	
1999	Vanden Plas, XJ8, XJ8L V8-244 (4.0L) SFI	2	**B1435**			**BF853**	**N/R**	
	XJR V8-244 (4.0L) FI Supercharged	8	**B1435**			**BF853**	**N/R**	
	XK8 V8-244 (4.0L) SFI	2	**B1435**			**BF853**	**N/R**	
1998	Vanden Plas, XJ8, XJ8L V8-244 (4.0L) SFI	2	**B1435**		**N/R**	**BF853**	**N/R**	
	XJR V8-244 (4.0L) FI Supercharged	8	**B1435**		**N/R**	**BF853**	**N/R**	
	XK8 V8-244 (4.0L) SFI	2	**B1435**		**N/R**	**BF853**	**N/R**	
1997	Vanden Plas, XJ6, XJ6L 6-243 (4.0L) SFI	2	**B7424**	**PA2208**	**N/R**	**BF853**	**N/R**	
	XJR 6-243 (4.0L) FI Supercharged	1	**B7424**	**PA2208**	**N/R**	**BF853**	**N/R**	**18007**
	XK8 V8-244 (4.0L) SFI	7	**B1435**		**N/R**	**BF853**	**N/R**	
1996	Vanden Plas, XJ6 6-243 (4.0L) SFI	7	**B7424**	**PA2208**	**N/R**	**BF853**	**N/R**	
	XJ12 V12-366 (6.0L) SFI	3	**B7424**	**PA2208**	**N/R**	**BF853**	**N/R**	**18007**
	XJR 6-243 (4.0L) FI Supercharged	1	**B7424**	**PA2208**	**N/R**	**BF853**	**N/R**	**18007**
	XJS 6-243 (4.0L) SFI	7	**B7424**		**N/R**	**BF853**	**N/R**	**18007**
1995	Vanden Plas, XJ6 6-243 (4.0L) EFI	7	**B7424**	**PA2208**	**N/R**	**BF853**	**N/R**	
	XJ12 V12-366 (6.0L) EFI	3	**B7424**	**PA2208**	**N/R**	**BF853**	**N/R**	**18007**
	XJR 6-243 (4.0L) FI Supercharged	1	**B7424**	**PA2208**	**N/R**	**BF853**	**N/R**	**18007**
	XJS 6-243 (4.0L) EFI	7	**B7424**		**N/R**	**BF853**	**N/R**	**18007**
	V12-366 (6.0L) EFI	3	**B7424**		**N/R**	**BF853**	**N/R**	**18007**
1994	Vanden Plas, XJ6 6-243 (4.0L) EFI	7		**PA2208**	**N/R**	**BF853**	**N/R**	
	XJ12 V12-366 (6.0L) EFI	3	**B7424**	**[2] PA2208**	**N/R**	**BF853**	**N/R**	**18007**
	XJS 6-243 (4.0L) EFI	7			**N/R**	**BF853**	**N/R**	**18007**
	V12-366 (6.0L) EFI	3	**B7424**	**[2] PA2208**	**N/R**	**BF853**	**N/R**	**18007**
1993	Vanden Plas, XJ6 6-243 (4.0L) EFI	7		**PA2208**	**N/R**	**BF853**	**N/R**	
	XJ12 V12-366 (6.0L) EFI	3	**B7424**	**PA2208**	**N/R**	**BF853**	**N/R**	**18007**
	XJRS V12-5994cc (6.0L) FI	3	**B1435**	**PA2208**	**N/R**	**BF853**	**N/R**	**18007**
	XJS 6-243 (4.0L) EFI	7			**N/R**	**BF853**	**N/R**	**18007**
1992	Majestic, Sovereign, Vanden Plas, XJ6 6-243 (4.0L) EFI	7		**PA2208**	**N/R**	**BF853**	**N/R**	
	XJ12 V12-5343cc (5.3L) FI Canada	8			**N/R**		**N/R**	
	XJS 6-3980cc (4.0L) FI Canada	9			**N/R**	**BF853**	**N/R**	
	V12-326 (5.3L) EFI	8			**N/R**	**BF853**	**N/R**	**6020**
1991	Majestic, Sovereign, Vanden Plas, XJ6 6-243 (4.0L) EFI	7		**PA2208**	**N/R**	**BF853**	**N/R**	
	XJ12 V12-5343cc (5.3L) FI Canada	8			**N/R**		**N/R**	
	XJS V12-326 (5.3L) EFI	8			**N/R**	**BF1195**	**N/R**	**6020**
1990	Majestic, Sovereign, Vanden Plas, XJ6 6-243 (4.0L) EFI	8		**PA2208**	**N/R**	**BF885**	**N/R**	
	XJ12 V12-5343cc (5.3L) FI Canada	8			**N/R**		**N/R**	
	XJS V12-326 (5.3L) EFI	8			**N/R**	**BF1195**	**N/R**	**6020**
1989	Vanden Plas, XJ6 6-219 (3.6L) FI	5,6		**PA2208**	**N/R**	**BF885**	**N/R**	
	XJS V12-326 (5.3L) EFI	8			**N/R**	**BF1195**	**N/R**	**6020**
1988	Vanden Plas, XJ6 6-219 (3.6L) FI	5,6		**PA2208**	**N/R**	**BF885**	**N/R**	
	XJS V12-326 (5.3L) EFI	0,8			**N/R**	**BF1195**	**N/R**	**6020**
1987	Vanden Plas, XJ6 6-4235cc (4.2L) FI	2,3	**B7424**		**N/R**	**BF1195**	**N/R**	
	XJS V12-326 (5.3L) FI	0,8			**N/R**	**BF1195**	**N/R**	**6020**
1986	Vanden Plas, XJ6 6-4235cc (4.2L) FI	2,3	**B7424**		**N/R**	**BF1195**	**N/R**	
	XJS V12-326 (5.3L) FI	0,8			**N/R**	**BF1195**	**N/R**	**6020**
1985	Vanden Plas, XJ6 6-4235cc (4.2L) FI	2,3	**B7424**		**N/R**	**BF1195**	**N/R**	
	XJS V12-326 (5.3L) FI	0,8			**N/R**	**BF1195**	**N/R**	**6020**
1984	Vanden Plas, XJ6 6-4235cc (4.2L) FI	2,3	**B7424**		**N/R**	**BF1195**	**N/R**	
	XJS V12-326 (5.3L) FI	0,8			**N/R**	**BF1195**	**N/R**	**6020**
1983	Vanden Plas, XJ6 6-4235cc (4.2L) FI	2,3	**B7424**		**N/R**	**BF1195**	**N/R**	
	XJS V12-326 (5.3L) FI	0,8			**N/R**	**BF1195**	**N/R**	**6020**
1982	Vanden Plas, XJ6 6-4235cc (4.2L) FI	2,3	**B7424**		**N/R**	**BF1195**	**N/R**	
	XJS V12-326 (5.3L) FI	0,8			**N/R**	**BF1195**	**N/R**	**6020**
1981	XJ6 6-4235cc (4.2L) FI	2,3	**B7424**		**N/R**	**BF1195**	**N/R**	
	XJS V12-326 (5.3L) FI	8			**N/R**	**BF1195**	**N/R**	**6020**
1980	XJ6 6-4235cc (4.2L) FI	N	**B7424**		**N/R**	**BF1195**	**N/R**	
	XJS V12-326 (5.3L) FI	V			**N/R**	**BF1195**	**N/R**	**6020**

OBS = Obsolete. Availability Limited to Distributor Stock. t Transmission, Not Model, Determines Which Transmission Filter is Used.

Year	Model and Engine	VIN	Lube	Air	Cabin Air	Fuel	Breather	Trans.t
JEEP								
2010	Commander V6-226 (3.7L) FI	K	**B7444**	**PA4179**	**N/R**	**N/S**	**N/R**	
	V8-345 (5.7L) FI Hemi	T	**B329**	**PA4179**	**N/R**	**N/S**	**N/R**	5-45RFE 2WD **19999**[61] 5-45RFE 4WD **20000**[61]
	Compass 4-121 (2.0L) FI	A	**B7443**	**PA4362**	**PA4373**	**N/S**	**N/R**	
	4-144 (2.4L) FI	B	**B7443**	**PA4362**	**PA4373**	**N/S**	**N/R**	
	Grand Cherokee V6-226 (3.7L) FI	K	**B7444**	**PA4179**	Opt. **PA4168**	**N/S**	**N/R**	
	V8-345 (5.7L) FI	T	**B329**	**PA4179**	Opt. **PA4168**	**N/S**	**N/R**	5-45RFE 2WD **19999**[61] 5-45RFE 4WD **20000**[61]
	Grand Cherokee SRT-8 V8-370 (6.1L) FI Hemi	W	**B329**	**PA4179**	Opt. **PA4168**	**N/S**	**N/R**	
	Liberty V6-226 (3.7L) SFI	K	**B7444**	**PA4367**		**N/S**	**N/R**	42RLE **20011**
	Patriot 4-121 (2.0L) FI	A	**B7443**	**PA4362**	**PA4373**	**N/S**	**N/R**	
	4-144 (2.4L) FI	B	**B7443**	**PA4362**	**PA4373**	**N/S**	**N/R**	
	Wrangler V6-231 (3.8L) SFI	1	**BT223**		**N/R**	**N/S**	**N/R**	
	Wrangler Unlimited V6-231 (3.8L) SFI	1	**BT223**		**N/R**	**N/S**	**N/R**	
2009	Commander V6-226 (3.7L) FI	K	**B7444**	**PA4179**		**N/S**	**N/R**	
	V8-287 (4.7L) FI or Flex Fuel	P	**B329**	**PA4179**	**N/R**	**N/S**	**N/R**	45RFE 2WD **19999**[61] 45RFE 4WD **20000**[61]
	V8-345 (5.7L) FI Hemi	T	**B329**	**PA4179**	**N/R**	**N/S**	**N/R**	55RFE 2WD **19999**[61] 55RFE 4WD **20000**[61]
	Compass 4-121 (2.0L) FI	A	**B7443**	**PA4362**	**PA4373**	**N/S**	**N/R**	
	4-144 (2.4L) FI	B	**B7443**	**PA4362**	**PA4373**	**N/S**	**N/R**	
	Grand Cherokee V6-182 (3.0L) DI Turbo Diesel	M	**P7413**	**PA4179**	**N/R**	**BF7972**	**N/R**	
	V6-226 (3.7L) FI	K	**B7444**	**PA4179**	Opt. **PA4168**	**N/S**	**N/R**	
	V8-287 (4.7L) FI Flex Fuel	P	**B329**	**PA4179**	Opt. **PA4168**	**N/S**	**N/R**	45RFE 2WD **19999**[61] 45RFE 4WD **20000**[61]
	V8-345 (5.7L) FI Hemi	T	**B329**	**PA4179**	Opt. **PA4168**	**N/S**	**N/R**	45RFE 2WD **19999**[61] 45RFE 4WD **20000**[61]
	Grand Cherokee SRT-8 V8-372 (6.1L) FI Hemi	W	**B329**	**PA4179**	Opt. **PA4168**	**BF7780**	**N/R**	
	Liberty V6-226 (3.7L) SFI	K	**B7444**	**PA4367**		**N/S**	**N/R**	42RLE **20011**
	Patriot 4-121 (2.0L) FI	A	**B7443**	**PA4362**	**PA4373**	**N/S**	**N/R**	
	4-144 (2.4L) FI	B	**B7443**	**PA4362**	**PA4373**	**N/S**	**N/R**	
	Wrangler V6-231 (3.8L) SFI	1	**BT223**		**N/R**	**N/S**	**N/R**	42RLE **20011**
	Wrangler Unlimited V6-231 (3.8L) SFI	1	**BT223**		**N/R**	**N/S**	**N/R**	42RLE **20011**
2008	Commander V6-226 (3.7L) FI	K	**B243**	**PA4179**		**N/S**	**N/R**	
	V8-287 (4.7L) FI Flex Fuel	N	**B329**	**PA4179**	**N/R**	**N/S**	**N/R**	55RFE 2WD **19999**[61] 55RFE 4WD **20000**[61]
	V8-345 (5.7L) FI Hemi	2	**B329**	**PA4179**	**N/R**	**N/S**	**N/R**	55RFE 2WD **19999**[61] 55RFE 4WD **20000**[61]
	Compass 4-121 (2.0L) FI	O	**B7443**	**PA4362**	**PA4373**	**N/S**	**N/R**	
	4-144 (2.4L) FI	W	**B7443**	**PA4362**	**PA4373**	**N/S**	**N/R**	
	Grand Cherokee V6-182 (3.0L) DI Turbo Diesel	M	**P7413**	**PA4179**	**N/R**	**BF7972**	**N/R**	
	V6-226 (3.7L) FI	K	**B243**	**PA4179**	Opt. **PA4168**	**N/S**	**N/R**	
	V8-287 (4.7L) FI Flex Fuel	N	**B329**	**PA4179**	Opt. **PA4168**	**N/S**	**N/R**	55RFE 2WD **19999**[61] 55RFE 4WD **20000**[61]

[t] Transmission, Not Model, Determines Which Transmission Filter is Used. OBS = Obsolete. Availability Limited to Distributor Stock.

[61] Contains Pan-Type Filter and Spin-on Filter.

JEEP Cont'd.

Year	Model and Engine	VIN	Lube	Air	Cabin Air	Fuel	Breather	Trans.[t]
2008	Grand Cherokee V8-345 (5.7L) FI Hemi	2	**B329**	**PA4179**	Opt. **PA4168**	**N/S**	**N/R**	55RFE 2WD **19999**[61] 55RFE 4WD **20000**[61]
	Grand Cherokee SRT-8 V8-372 (6.1L) FI Hemi	3	**B34**	**PA4179**	Opt. **PA4168**	**N/S**	**N/R**	
	Liberty V6-226 (3.7L) SFI	K	**B243**	**PA4367**	**N/R**	**N/S**	**N/R**	**20011**
	Patriot 4-121 (2.0L) FI	O	**B7443**	**PA4362**	**PA4373**	**N/S**	**N/R**	
	4-144 (2.4L) FI	W	**B7443**	**PA4362**	**PA4373**	**N/S**	**N/R**	
	Wrangler V6-231 (3.8L) SFI	1	**BT223**		**N/R**	**N/S**	**N/R**	**20011**
	Wrangler Unlimited V6-231 (3.8L) SFI	1	**BT223**		**N/R**	**N/S**	**N/R**	**20011**
2007	Commander V6-226 (3.7L) SFI	K	**B243**	**PA4179**	**N/R**	**N/S**	**N/R**	55RFE 2WD **19999**[61] 55RFE 4WD **20000**[61]
	V8-287 (4.7L) SFI or Flex Fuel	N,P	**B34**	**PA4179**	**N/R**	**N/S**	**N/R**	55RFE 2WD **19999**[61] 55RFE 4WD **20000**[61]
	V8-345 (5.7L) FI Hemi	2	**B34**	**PA4179**	**N/R**	**N/S**	**N/R**	55RFE 2WD **19999**[61] 55RFE 4WD **20000**[61]
	Compass 4-121 (2.0L) FI	O	**B7401**	**PA4362**	**PA4373**	**N/S**	**N/R**	
	4-144 (2.4L) FI	W	**B7401**	**PA4362**	**PA4373**	**N/S**	**N/R**	
	Grand Cherokee V6-182 (3.0L) DI Turbo Diesel	M	**P7413**	**PA4179**	**PA4168**	**BF7972**	**N/R**	
	V6-226 (3.7L) SFI	K	**B243**	**PA4179**	**PA4168**	**N/S**	**N/R**	
	V8-287 (4.7L) SFI or Flex Fuel	N,P	**B34**	**PA4179**	**PA4168**	**N/S**	**N/R**	55RFE 2WD **19999**[61] 55RFE 4WD **20000**[61]
	V8-345 (5.7L) FI Hemi	2	**B34**	**PA4179**	**PA4168**	**N/S**	**N/R**	55RFE 2WD **19999**[61] 55RFE 4WD **20000**[61]
	Grand Cherokee SRT-8 V8-372 (6.1L) FI Hemi	3	**B34**	**PA4179**	**PA4168**	**N/S**	**N/R**	
	Liberty V6-226 (3.7L) FI	K	**B243**	**PA4179**	**N/R**	**N/S**	**N/R**	42RLE **20011** 55RFE 2WD **19999**[61] 55RFE 4WD **20000**[61]
	Patriot 4-121 (2.0L) FI	O	**B7401**	**PA4362**	**PA4373**	**N/S**	**N/R**	
	4-144 (2.4L) FI	W	**B7401**	**PA4362**	**PA4373**	**N/S**	**N/R**	
	Wrangler, Wrangler Unlimited V6-3778cc (3.8L) SFI	1	**BT223**		**N/R**	**N/S**	**N/R**	42RLE **20011**
2006	Commander V6-226 (3.7L) SFI	K	**B243**	**PA4179**	**N/R**	**N/S**	**N/R**	
	V8-287 (4.7L) SFI	N	**B34**	**PA4179**	**N/R**	**N/S**	**N/R**	55RFE 2WD **19999**[61] 55RFE 4WD **20000**[61]
	V8-345 (5.7L) FI Hemi	2	**B34**	**PA4179**	**N/R**	**N/S**	**N/R**	55RFE 2WD **19999**[61] 55RFE 4WD **20000**[61]
	Grand Cherokee V6-226 (3.7L) SFI	K	**B243**	**PA4179**	**PA4168**	**N/S**	**N/R**	
	V8-287 (4.7L) SFI	N	**B34**	**PA4179**	**PA4168**	**N/S**	**N/R**	55RFE 2WD **19999**[61] 55RFE 4WD **20000**[61]
	V8-345 (5.7L) FI Hemi	2	**B34**	**PA4179**	**PA4168**	**N/S**	**N/R**	55RFE 2WD **19999**[61] 55RFE 4WD **20000**[61]
	Grand Cherokee SRT-8 V8-372 (6.1L) FI Hemi	3	**B34**	**PA4179**	**PA4168**	**N/S**	**N/R**	

OBS = Obsolete. Availability Limited to Distributor Stock. [t] Transmission, Not Model, Determines Which Transmission Filter is Used.

[61] Contains Pan-Type Filter and Spin-on Filter.

JEEP Cont'd.

Year	Model and Engine	VIN	Lube	Air	Cabin Air	Fuel	Breather	Trans.t
2006	Liberty 4-171 (2.8L) FI Turbo Diesel	5		**PA4179**	**N/R**	**BF7970**	**N/R**	42RLE **20011** 55RFE 2WD **19999**[61] 55RFE 4WD **20000**[61]
	V6-226 (3.7L) MFI	K	**B243**	**PA4179**	**N/R**	**N/S**	**N/R**	42RLE **20011** 55RFE 2WD **19999**[61] 55RFE 4WD **20000**[61]
	TJ 4-148 (2.4L) FI Canada	1	**BT223**		**N/R**	**N/S**	**N/R**	**20011**
	6-242 (4.0L) FI Canada	S	**B34**	**PA4092**	**N/R**	**N/S**	**N/R**	**20011**
	Wrangler 4-148 (2.4L) SFI	1	**BT223**		**N/R**	**N/S**	**N/R**	**20011**
	6-242 (4.0L) SFI	S	**B34**	**PA4092**	**N/R**	**N/S**	**N/R**	**20011**
2005	Grand Cherokee V6-226 (3.7L) SFI	K	**B243**	**PA4179**	**PA4168**	**N/S**	**N/R**	
	V8-287 (4.7L) SFI	N	**B34**	**PA4179**	**PA4168**	**N/S**	**N/R**	55RFE 2WD **19999**[61] 55RFE 4WD **20000**[61]
	V8-345 (5.7L) SFI Hemi	2	**B34**	**PA4179**	**PA4168**	**N/S**	**N/R**	55RFE 2WD **19999**[61] 55RFE 4WD **20000**[61]
	Liberty 4-148 (2.4L) SFI	1	**BT223**		**N/R**	**N/S**	**N/R**	42RLE **20011**
	4-171 (2.8L) FI Turbo Diesel	5		**PA4179**	**N/R**	**BF7970**	**N/R**	42RLE **20011** 55RFE 2WD **19999**[61] 55RFE 4WD **20000**[61]
	V6-225 (3.7L) SFI	K	**B243**	**PA4179**	**N/R**	**N/S**	**N/R**	45RFE 2WD **19999**[61] 45RFE 4WD **20000**[61]
	TJ 4-148 (2.4L) SFI Canada	1	**BT223**		**N/R**	**N/S**	**N/R**	42RLE **20011**
	6-242 (4.0L) FI Canada	S	**B34**	**PA4092**	**N/R**	**N/S**	**N/R**	42RLE **20011**
	Wrangler 4-146 (2.4L) SFI	1	**BT223**		**N/R**	**N/S**	**N/R**	42RLE **20011**
	6-242 (4.0L) SFI	S	**B34**	**PA4092**	**N/R**	**N/S**	**N/R**	42RLE **20011**
2004	Grand Cherokee 6-242 (4.0L) SFI	S	**B34**	**PA4046**	**PA4168**	**BF7780**	**N/R**	47RE **18055**
	V8-287 (4.7L) SFI HO	J	**B34**	**PA4164**	**PA4168**	**BF7780**	**N/R**	55RFE 2WD **19999**[61] 55RFE 4WD **20000**[61]
	V8-287 (4.7L) SFI	N	**B34**	**PA4046**	**PA4168**	**BF7780**	**N/R**	2WD **19999**[61] 4WD **20000**[61]
	Liberty 4-148 (2.4L) SFI	1	**BT223**		**N/R**		**N/R**	42RLE **20011** 45RFE 2WD **19999**[61] 45RFE 4WD **20000**[61]
	V6-225 (3.7L) SFI	K	**B243**	**PA4179**	**N/R**	**N/S**	**N/R**	42RLE **20011** 45RFE 2WD **19999**[61] 45RFE 4WD **20000**[61]
	TJ 4-148 (2.4L) SFI Canada	1	**BT223**		**N/R**	**N/S**	**N/R**	42RLE **20011** 45RFE 2WD **19999**[61] 45RFE 4WD **20000**[61]
	6-242 (4.0L) SFI Canada	S	**B34**	**PA4092**	**N/R**	**N/S**	**N/R**	42RLE **20011** 45RFE 2WD **19999**[61] 45RFE 4WD **20000**[61]

[t] Transmission, Not Model, Determines Which Transmission Filter is Used. OBS = Obsolete. Availability Limited to Distributor Stock.

[61] Contains Pan-Type Filter and Spin-on Filter.

JEEP Cont'd.

Year	Model and Engine	VIN	Lube	Air	Cabin Air	Fuel	Breather	Trans.[t]
2004	Wrangler 4-146 (2.4L) SFI	1	**BT223**		**N/R**	**N/S**	**N/R**	42RLE **20011** 45RFE 2WD **19999**[61] 45RFE 4WD **20000**[61]
	6-242 (4.0L) SFI	S	**B34**	**PA4092**	**N/R**	**N/S**	**N/R**	**20011**
2003	Grand Cherokee 6-242 (4.0L) SFI	S	**B34**	**PA4046**	**PA4168**	**BF7780**	**N/R**	**18055**
	V8-287 (4.7L) SFI HO	J	**B34**	**PA4164**	**PA4168**	**BF7780**	**N/R**	2WD **19999**[61] 4WD **20000**[61]
	V8-287 (4.7L) SFI	N	**B34**	**PA4046**	**PA4168**	**BF7780**	**N/R**	2WD **19999**[61] 4WD **20000**[61]
	Liberty 4-148 (2.4L) SFI	1	**BT223**		**N/R**		**N/R**	42RLE **20011** 45RFE 2WD **19999**[61] 45RFE 4WD **20000**[61]
	V6-225 (3.7L) SFI	K	**B243**	**PA4179**	**N/R**		**N/R**	42RLE **20011** 45RFE 2WD **19999**[61] 45RFE 4WD **20000**[61]
	TJ 4-148 (2.4L) SFI Canada	1	**BT223**		**N/R**	**N/S**	**N/R**	
	6-242 (4.0L) SFI Canada	S	**B34**	**PA4092**	**N/R**	**N/S**	**N/R**	
	Wrangler 4-146 (2.4L) SFI	1	**BT223**		**N/R**	**N/S**	**N/R**	
	6-242 (4.0L) SFI	S	**B34**	**PA4092**	**N/R**	**N/S**	**N/R**	
2002	Grand Cherokee 6-242 (4.0L) SFI	S	**B34**	**PA4046**	**PA4168**	**BF7780**	**N/R**	**18055**
	V8-287 (4.7L) SFI HO	J	**B34**	**PA4164**	**PA4168**	**BF7780**	**N/R**	45RFE 2WD **19999**[61] 45RFE 4WD **20000**[61]
	V8-287 (4.7L) SFI	N	**B34**	**PA4046**	**PA4168**	**BF7780**	**N/R**	45RFE 2WD **19999**[61] 45RFE 4WD **20000**[61]
	Liberty 4-148 (2.4L) SFI	1	**BT223**		**N/R**		**N/R**	**M.T.**
	V6-225 (3.7L) SFI	K	**B243**	**PA4179**	**N/R**		**N/R**	45RFE 2WD **19999**[61] 45RFE 4WD **20000**[61]
	TJ 4-150 (2.5L) SFI Canada	P	**B34**	**PA4092**	**N/R**	**N/S**	**N/R**	**18032**
	6-242 (4.0L) SFI Canada	S	**B34**	**PA4092**	**N/R**	**N/S**	**N/R**	**18032**
	Wrangler 4-150 (2.5L) SFI	P	**B34**	**PA4092**	**N/R**	**N/S**	**N/R**	**18032**
	6-242 (4.0L) SFI	S	**B34**	**PA4092**	**N/R**	**N/S**	**N/R**	**18032**
2001	Cherokee 6-242 (4.0L) SFI	S	**B34**	**PA2163**	**N/R**	**N/S**	**N/R**	3 Spd. **18032** 4 Spd. **18245** 45RFE, 55RFE 2WD **19999** 45RFE, 55RFE 4WD **20000**[61]
	Grand Cherokee 6-242 (4.0L) SFI	S	**B34**	**PA4046**	**PA4168**	**BF7711**	**N/R**	**18055**
	V8-287 (4.7L) SFI	N	**B34**	**PA4046**	**PA4168**	**BF7711**	**N/R**	55RFE 2WD **19999**[61] 55RFE 4WD **20000**[61]
	TJ 4-150 (2.5L) SFI Canada	P	**B34**	**PA4092**	**N/R**	**N/S**	**N/R**	**18032**
	6-242 (4.0L) SFI Canada	S	**B34**	**PA4092**	**N/R**	**N/S**	**N/R**	**18032**
	Wrangler 4-150 (2.5L) SFI	P	**B34**	**PA4092**	**N/R**	**N/S**	**N/R**	**18032**
	6-242 (4.0L) SFI	S	**B34**	**PA4092**	**N/R**	**N/S**	**N/R**	**18032**
2000	Cherokee 4-150 (2.5L) SFI	P	**B34**	**PA2163**	**N/R**	**N/S**	**N/R**	**18032**
	6-242 (4.0L) SFI	S	**B34**	**PA2163**	**N/R**	**N/S**	**N/R**	**18245**
	Grand Cherokee 6-242 (4.0L) SFI	S	**B34**	**PA4046**	**PA4168**	**BF7711**	**N/R**	**18055**
	V8-287 (4.7L) SFI	N	**B34**	**PA4046**	**PA4168**	**BF7711**	**N/R**	**18055**
	TJ 4-150 (2.5L) SFI Canada	P	**B34**	**PA4092**	**N/R**	**N/S**	**N/R**	**18032**
	6-242 (4.0L) SFI Canada	S	**B34**	**PA4092**	**N/R**	**N/S**	**N/R**	**18032**
	Wrangler 4-150 (2.5L) SFI	P	**B34**	**PA4092**	**N/R**	**N/S**	**N/R**	**18032**
	6-242 (4.0L) SFI	S	**B34**	**PA4092**	**N/R**	**N/S**	**N/R**	**18032**
1999	Cherokee 4-150 (2.5L) SFI	P	**B34**	**PA2163**	**N/R**	**N/S**	**N/R**	

OBS = Obsolete. Availability Limited to Distributor Stock. [t] Transmission, Not Model, Determines Which Transmission Filter is Used.

[61] Contains Pan-Type Filter and Spin-on Filter.

JEEP Cont'd.

Year	Model and Engine	VIN	Lube	Air	Cabin Air	Fuel	Breather	Trans.[t]
1999	Cherokee 6-242 (4.0L) SFI	S	**B34**	**PA2163**	**N/R**	**N/S**	**N/R**	**18245**
	Grand Cherokee 6-242 (4.0L) SFI	S	**B34**	**PA4046**	**PA4168**	**BF7711**	**N/R**	3 Spd. **18032** 4 Spd. **18245**
	V8-287 (4.7L) SFI	N	**B34**	**PA4046**	**PA4168**	**BF7711**	**N/R**	47RE **18055**
	TJ 4-150 (2.5L) SFI Canada	P	**B34**	**PA4092**	**N/R**	**N/S**	**N/R**	
	6-242 (4.0L) SFI Canada	S	**B34**	**PA4092**	**N/R**	**N/S**	**N/R**	**18032**
	Wrangler 4-150 (2.5L) SFI	P	**B34**	**PA4092**	**N/R**	**N/S**	**N/R**	
	6-242 (4.0L) SFI	S	**B34**	**PA4092**	**N/R**	**N/S**	**N/R**	**18032**
1998	Cherokee 4-150 (2.5L) SFI	P	**B34**	**PA2163**	**N/R**	**N/S**	**N/R**	
	6-242 (4.0L) SFI	S	**B34**	**PA2163**	**N/R**	**N/S**	**N/R**	**18245**
	Grand Cherokee 6-242 (4.0L) SFI	S	**B34**	**PA4046**	**N/R**	**N/S**	**N/R**	4 Spd. **18055** 6-904 **18032**
	V8-318 (5.2L) SFI	Y	**B34**	**PA4046**	**N/R**	**N/S**	**N/R**	4 Spd. **18055** 8-727 **18032**
	V8-360 (5.9L) SFI	Z	**B34**	**PA4046**	**N/R**	**N/S**	**N/R**	4 Spd. **18055** 8-727 **18032**
	TJ 4-150 (2.5L) SFI Canada	P	**B34**	**PA4092**	**N/R**	**N/S**	**N/R**	**18032**
	6-242 (4.0L) SFI Canada	S	**B34**	**PA4092**	**N/R**	**N/S**	**N/R**	**18032**
	Wrangler 4-150 (2.5L) SFI	P	**B34**	**PA4092**	**N/R**	**N/S**	**N/R**	
	6-242 (4.0L) SFI	S	**B34**	**PA4092**	**N/R**	**N/S**	**N/R**	**18032**
1997	Cherokee 4-150 (2.5L) SFI	P	**B34**	**PA2163**	**N/R**	**N/S**	**N/R**	**18245**
	6-242 (4.0L) SFI	S	**B34**	**PA2163**	**N/R**	**N/S**	**N/R**	**18245**
	Grand Cherokee 6-242 (4.0L) SFI	S	**B34**	**PA4046**	**N/R**	**N/S**	**N/R**	**18032**
	V8-318 (5.2L) SFI	Y	**B34**	**PA4046**	**N/R**	**N/S**	**SA4141**	**18032**
	TJ 4-150 (2.5L) SFI Canada	P	**B34**	**PA4092**	**N/R**	**N/S**	**N/R**	**18032**
	6-242 (4.0L) SFI Canada	S	**B34**	**PA4092**	**N/R**	**N/S**	**N/R**	**18032**
	Wrangler 4-150 (2.5L) SFI	P	**B34**	**PA4092**	**N/R**	**N/S**	**N/R**	**18032**
	6-242 (4.0L) SFI	S	**B34**	**PA4092**	**N/R**	**N/S**	**N/R**	**18032**
1996	Cherokee 4-126 (2.1L) Turbo Diesel Canada	B	**B141**		**N/R**		**N/R**	**18032**
	4-150 (2.5L) SFI	P	**B34**	**PA2163**	**N/R**	**BF890**	**N/R**	
	6-242 (4.0L) SFI	S	**B34**	**PA2163**	**N/R**	**BF890**	**N/R**	**18032**
	Grand Cherokee 6-242 (4.0L) SFI	S	**B34**	**PA4046**	**N/R**	**BF1199**	**N/R**	**18032**
	V8-318 (5.2L) SFI	Y	**B34**	**PA4046**	**N/R**	**BF1199**	**SA4141**	**18032**
	Wrangler 4-150 (2.5L) SFI	P	**B34**	**PA4092**	**N/R**	**BF890**	**N/R**	
	6-242 (4.0L) SFI	S	**B34**	**PA4092**	**N/R**	**BF890**	**N/R**	**18032**
1995	Cherokee 4-150 (2.5L) SFI	P	**B34**	**PA2163**	**N/R**	**BF890**	**N/R**	
	6-242 (4.0L) SFI	S	**B34**	**PA2163**	**N/R**	**BF890**	**N/R**	4 Spd. **18245** 6-904 **18032**
	Grand Cherokee 6-242 (4.0L) SFI	S	**B34**	**PA4046**	**N/R**	**BF1199**	**N/R**	**18032**
	V8-318 (5.2L) SFI	Y	**B34**	**PA4046**	**N/R**	**BF1199**	**SA4141**	**18032**
	Wrangler 4-150 (2.5L) SFI	P	**B34**	**PA2101A**	**N/R**	**BF890**	**N/R**	
	6-242 (4.0L) SFI	S	**B34**	**PA2101A**	**N/R**	**BF890**	**N/R**	**18032**
1994	Cherokee 4-126 (2.1L) Diesel Canada	B	**B141**	**PA4890**	**N/R**		**N/R**	**18032**
	4-150 (2.5L) MFI	P	**B34**	**PA2163**	**N/R**	**BF890**	**N/R**	
	6-242 (4.0L) MFI	S	**B34**	**PA2163**	**N/R**	**BF890**	**N/R**	AW4 **18245**
	Grand Cherokee 6-242 (4.0L) MFI	S	**B34**	**PA4046**	**N/R**	**BF1199**	**N/R**	**18032**
	V8-318 (5.2L) MFI	Y	**B34**	**PA4046**	**N/R**	**BF1199**	**SA4141**	**18032**
	Wrangler 4-150 (2.5L) MFI	P	**B34**	**PA2101A**	**N/R**	**BF890**	**N/R**	
	6-242 (4.0L) MFI	S	**B34**	**PA2101A**	**N/R**	**BF890**	**N/R**	**18032**
1993	Cherokee, Comanche 4-126 (2.1L) Diesel Canada	B	**B141**	**PA4890**	**N/R**		**N/R**	**18032**
	4-150 (2.5L) MFI	P	**B34**	**PA2163**	**N/R**	**BF890**	**N/R**	AW4 **18245**
	6-242 (4.0L) MFI	S	**B34**	**PA2163**	**N/R**	**BF890**	**N/R**	AW4 **18245**
	Grand Cherokee, Grand Wagoneer 6-242 (4.0L) MFI	S	**B34**	**PA4046**	**N/R**	**BF1199**	**N/R**	AW4 **18245**
	V8-318 (5.2L) MFI	Y	**B34**	**PA4046**	**N/R**	**BF1199**	**SA4141**	AW4 **18245**
	Wrangler 4-150 (2.5L) MFI	P	**B34**	**PA2101A**	**N/R**	**BF890**	**N/R**	
	6-242 (4.0L) MFI	S	**B34**	**PA2101A**	**N/R**	**BF890**	**N/R**	**18032**
1992	Briarwood, Cherokee, Comanche MJ 4-150 (2.5L) MFI	P	**B34**	**PA2163**	**N/R**	**BF890**	**N/R**	AW4 **18245**
	6-242 (4.0L) MFI	S	**B34**	**PA2163**	**N/R**	**BF890**	**N/R**	AW4 **18245**
	Wrangler 4-150 (2.5L) MFI	P	**B34**	**PA2163**	**N/R**	**BF890**	**N/R**	AW4 **18245** 30RH, 31RH, 36RH **18032**

[t] Transmission, Not Model, Determines Which Transmission Filter is Used. OBS = Obsolete. Availability Limited to Distributor Stock.

JEEP Cont'd.

Year	Model and Engine	VIN	Lube	Air	Cabin Air	Fuel	Breather	Trans.[t]
1992	Wrangler 6-242 (4.0L) MFI	S	**B34**	**PA2101A**	**N/R**	**BF890**	**N/R**	AW4 **18245** 30RH, 31RH, 36RH **18032**
1991	Briarwood, Cherokee, Comanche 4-126 (2.1L) Diesel Canada	B	**B141**	**PA2163**	**N/R**	**BF890**	**N/R**	**18032**
	4-150 (2.5L) MFI	P	**B34**	**PA2163**	**N/R**	**BF890**	**N/R**	AW4 **18245** 30RH, 31RH, 36RH **18032**
	6-242 (4.0L) MFI	S	**B34**	**PA2163**	**N/R**	**BF890**	**N/R**	AW4 **18245** 30RH, 31RH, 36RH **18032**
	Grand Wagoneer V8-360 (5.9L) 2 Bbl.	7	**B34**	**PA615**	**N/R**	**BF886**	**N/R**	**18032**
	Wrangler 4-150 (2.5L) MFI	P	**B34**	**PA2163**	**N/R**	**BF890**	**N/R**	**18032**
	6-242 (4.0L) MFI	S	**B34**	**PA2101A**	**N/R**	**BF890**	**N/R**	**18032**
1990	Cherokee, Comanche, Wagoneer 4-150 (2.5L) FI	P	**B141**	**PA2163**	**N/R**	**BF890**	**N/R**	AW4 **18245**
	6-242 (4.0L) MFI	S	**B141**	**PA2163**	**N/R**	**BF890**	**N/R**	AW4 **18245**
	Grand Wagoneer V8-360 (5.9L) 2 Bbl.	N	**B141**	**PA615**	**N/R**	**BF886**	**SA2046**	**18032**
	Wrangler 4-150 (2.5L) TBI	E	**B141**	**PA2101A**	**N/R**	**BF890**	**N/R**	**18032**
	6-258 (4.2L) 2 Bbl.	T	**B141**	**PA642**	**N/R**	**BF886**	**N/R**	**18032**
1989	Cherokee, Comanche, Wagoneer 4-150 (2.5L) EFI	E	**B141**	**PA2163**	**N/R**	**BF890**	**SA2046**	AW4 **18245**
	6-242 (4.0L) MFI	L	**B141**	**PA2163**	**N/R**	**BF890**	**SA2046**	AW4 **18245**
	Grand Wagoneer V8-360 (5.9L) 2 Bbl.	N	**B141**	**PA615**	**N/R**	**BF886**	**SA2046**	**18032**
	Wrangler 4-150 (2.5L) EFI	E	**B141**	**PA2101A**	**N/R**	**BF890**	**SA2046**	**18032**
	6-258 (4.2L) 2 Bbl.	M	**B141**	**PA642**	**N/R**	**BF886**	**N/R**	**18032**
1988	Cherokee, Comanche, Wagoneer 4-150 (2.5L) EFI	U	**B141**	**PA2163**	**N/R**	**BF890**	**SA2046**	AW4 **18245**
	6-242 (4.0L) EFI	M	**B141**	**PA2163**	**N/R**	**BF890**	**N/R**	AW4 **18245**
	Grand Wagoneer V8-360 (5.9L) 2 Bbl.	N	**B141**	**PA615**	**N/R**	**BF886**	**SA2046**	**18032**
	Wrangler 4-150 (2.5L) TBI	H	**B141**	**PA2101A**	**N/R**	**BF890**	**SA2046**	**18032**
	6-258 (4.2L) 2 Bbl.	C,M	**B141**	**PA642**	**N/R**	**BF886**	**N/R**	**18032**
1987	Cherokee, Comanche, Wagoneer 4-2100cc (2.1L) Turbo Diesel	B	**B141**	**PA4890**	**N/R**	**BF856**	**N/R**	**18032**
	4-150 (2.5L) FI	H	**B141**	**PA2163**	**N/R**	**BF890**	**SA2046**	**18245**
	6-242 (4.0L) FI	M	**B141**	**PA2163**	**N/R**	**BF890**	**N/R**	**18245**
	Grand Wagoneer, Pickups 6-258 (4.2L) 2 Bbl.	C	**B141**	**PA642**	**N/R**	**BF886**	**N/R**	**18032**
	V8-360 (5.9L) 2 Bbl.	N	**B141**	**PA615**	**N/R**	**BF886**	**SA2046**	**18032**
	Wrangler 6-258 (4.2L) 2 Bbl.	C	**B141**	**PA642**	**N/R**	**BF886**	**N/R**	**18032**
1986	Cherokee, Comanche, Wagoneer 4-2100cc (2.1L) Turbo Diesel	B	**B141**	**PA4890**	**N/R**	**BF856**	**N/R**	**18032**
	4-150 (2.5L) FI	H	**B43-S**	**PA2101A**	**N/R**	**BF890**	**N/R**	**18032**
	V6-173 (2.8L) 2 Bbl.	W	**B43-S**	**PA642**	**N/R**	**PF894,-RV**	**N/R**	**18032**
	CJ7 4-150 (2.5L) 1 Bbl.	U	**B43-S**	**PA642**	**N/R**	**BF886**	**N/R**	**18032**
	6-258 (4.2L) 2 Bbl.	C	**B31**	**PA642**	**N/R**	**BF886**	**N/R**	**18032**
	Grand Wagoneer, Pickups 6-258 (4.2L) 2 Bbl.	C	**B31**	**PA642**	**N/R**	**BF886**	**N/R**	**18032**
	V8-360 (5.9L) 2 Bbl.	N	**B39**	**PA615**	**N/R**	**BF886**	**N/R**	**18032**
1985	Cherokee, Sport Wagon, Wagoneer 4-2100cc (2.1L) Turbo Diesel	B	**B141**	**PA4890**	**N/R**	**BF856**	**N/R**	**18032**
	4-150 (2.5L) 1 Bbl.	U	**B43-S**	**PA2005**	**N/R**		**SA2046**	**18032**
	V6-173 (2.8L) 2 Bbl.	W	**B43-S**	**PA642**	**N/R**	**PF894,-RV**	**N/R**	**18032**
	CJ7, Scrambler 4-150 (2.5L) 1 Bbl.	U	**B43-S**	**PA642**	**N/R**		**SA2046**	**18032**
	6-258 (4.2L) 2 Bbl.	C	**B31**	**PA642**	**N/R**	**BF886**	**SA2046**	**18032**
	Grand Wagoneer, Pickups 6-258 (4.2L) 2 Bbl.	C	**B31**	**PA642**	**N/R**	**BF886**	**SA2046**	**18032**
	V8-360 (5.9L) 2 Bbl.	N	**B39**	**PA615**	**N/R**	**BF886**	**SA2046**	**18032**
1984	Cherokee, Wagoneer 4-150 (2.5L) 1 Bbl.	U	**B43-S**	**PA2005**	**N/R**		**N/R**	
	V6-173 (2.8L) 2 Bbl.	W	**B35-S**	**PA642**	**N/R**	**PF894,-RV**	**N/R**	**18032**
	CJ7, Scrambler 4-150 (2.5L) 1 Bbl.	U	**B43-S**	**PA642**	**N/R**	**BF886**	**SA2046**	
	6-258 (4.2L) 2 Bbl.	C	**B31**	**PA642**	**N/R**	**BF886**	**SA2046**	**18032**
	Grand Wagoneer, Pickups 6-258 (4.2L) 2 Bbl.	C	**B31**	**PA642**	**N/R**	**BF886**	**SA2046**	**18032**
	V8-360 (5.9L) 2 Bbl.	N	**B39**	**PA615**	**N/R**	**BF886**	**SA2046**	**18032**
1983	Cherokee, CJ Series, Pickups, Scrambler, Wagoneer 4-150 (2.5L) 2 Bbl.	B,U	**B43-S**	**PA642**	**N/R**	**PF893,-RV**	**SA2046**	

OBS = Obsolete. Availability Limited to Distributor Stock. [t] Transmission, Not Model, Determines Which Transmission Filter is Used.

Year	Model and Engine	VIN	Lube	Air	Cabin Air	Fuel	Breather	Trans.t
JEEP Cont'd.								
1983	Cherokee, CJ Series, Pickups, Scrambler, Wagoneer 6-258 (4.2L) 2 Bbl.	C	**B31**	**PA642**	**N/R**	**BF886**	**SA2046**	**18032**
	V8-360 (5.9L) 2 Bbl.	N	**B39**	**PA615**	**N/R**	**BF886**	**SA2046**	**18032**
1982	Cherokee, CJ Series, Pickups, Wagoneer 4-151 (2.5L) 2 Bbl.	B	**B43-S**	**PA642**	**N/R**	**PF893,-RV**	**SA2046**	**18032**
	6-258 (4.2L) 2 Bbl.	C	Exc. CJ **B30** CJ **B39**	**PA642**	**N/R**	**BF886**	**SA2046**	**18032**
	V8-360 (5.9L) 2 Bbl.	N	**B39**	**PA615**	**N/R**	**BF886**	**SA2046**	**18032**
1981	Cherokee, CJ Series, Pickups, Wagoneer 4-151 (2.5L) 2 Bbl.	B	**B43-S**	**PA642**	**N/R**	**PF893,-RV**	**SA2046**	**18032**
	6-258 (4.2L) 2 Bbl.	C	Exc. CJ **B30** CJ **B39**	**PA642**	**N/R**	**BF886**	**SA2046**	**18032**
	V8-304 (5.0L) 2 Bbl.	H	**B39**	**PA615**	**N/R**	**BF886**	**SA2046**	**18032**
	V8-360 (5.9L) 2 Bbl.	N	**B39**	**PA615**	**N/R**	**BF886**	**SA2046**	**18032**
1980	Cherokee, CJ Series, Pickups, Wagoneer 4-151 (2.5L) 2 Bbl.	B	**B43-S**	**PA642**	**N/R**	**PF893,-RV**	**SA2046**	**18032**
	6-258 (4.2L) 2 Bbl.	C	**B39**	**PA642**	**N/R**	**BF886**	**SA2046**	**18032**
	V8-304 (5.0L) 2 Bbl.	H	**B39**	**PA615**	**N/R**	**BF886**	**SA2046**	**18032**
	V8-360 (5.9L) 2 Bbl.	N	**B39**	**PA615**	**N/R**	**BF886**	**SA2046**	**18032**
KAWASAKI Motorcycles								
	454 LTD		1985-90 **B1400**					
	600R		1985-97 Ele. **P148** 1990-on Spin-on **B1400**					
	BN125 Eliminator		1998-on **P7132**					
	EL250 Eliminator Series		1988-2002 **P148**					
	EL252		1996-2002 **P148**					
	EN450 Series		1980-83 **P148** 1984-90 **B1400**					
	EN500 Ninja		1997-on **B1400**					
	EN500 Vulcan Series		1990-on **B1400**					
	ER5		1997-2005 **B1400**					
	ER6 Series		2006-on **B1400**					
	ER500 Twister		1999 **B1400**					
	EX250 Ninja		1986-on **P148**					
	EX250R Ninja		1986-on **P148**					
	EX400		1989-90 **P7132**					
	EX500		1990-93 **B1400**					
	EX500 Ninja		1994-96 **B1400**					
	EX500R Ninja		1997-2007 **B227**					
	EX650R Ninja		2006-on **B1400**					
	GPX600		1988-90 **P148**					
	GPX750R		1987-89 **P148**					
	GPZ500S		1990-2003 **B1400**					
	GPZ600R		1985-89 **P148**					
	GPZ750		1982-85 **P148**					
	GPZ900R		1984-92 **P148**					
	GPZ1000RX		1985-97 **P148**					
	GPZ1100 Series		1983-84, 1995-97 **P148**					
	GT550		1986-87 **P148**					
	KFX450R		2008-on **P7132**					
	KL250							
	KL250 Super Sherpa		2000-on **P7132**					
	KL600							
	KL650							
	KLE500		1991-2005 **B1400**					
	KLE650 Versys		2007-on **B1400**					
	KLF300B8, KLF300C7		1991-95 **B1400**					
	KLF400 Bayou, KLF400B3		1993-95 **B1400**					
	KLR250							
	KLR650							
	KLT200							
	KLT250							
	KLV1000		2004-05 **B7419**					
	KLX110		2002-on **P7132**					

[t] Transmission, Not Model, Determines Which Transmission Filter is Used. OBS = Obsolete. Availability Limited to Distributor Stock.

KAWASAKI Motorcycles Cont'd.

Year	Model and Engine	VIN	Lube	Air	Cabin Air	Fuel	Breather	Trans.[t]
	KLX250 Series		1991-2007 **P7132**					
	KLX300R		1996-2007 **P7132**					
	KLX450R		2008-on **P7132**					
	KLX650							
	KLX650R							
	KLZ250							
	KN700 LTD		1984-85 **P148**					
	KN1300		1983-88 **P165**					
	KR550 Zephyr		1990-91 **P148**					
	KSR110		2003-05, 2008 **P7132**					
	KX450F		2006-on **P7132**					
	KZ250 Series							
	KZ400 Series		1977-79 **P148**					
	KZ440 Series		1980-83 **P148**					
	KZ550 Series		1980-86 **P148**					
	KZ650 Series		1977-83 **P148**					
	KZ700		1984 **P148**					
	KZ750 2 Cyl.		1976-79 **P165**					
	KZ750 4 Cyl., KZ750 LTD 4 Cyl.		1980-83 **P148**					
	KZ750 GP		1982 **P148**					
	KZ750 CSR		1982 **P165**					
	KZ750 LTD 2 Cyl.		1976-83 **P165**					
	KZ750 Series		1976-83 (2 1/4 In.) **P148** 1976-83 (3 1/4 In.) **P165**					
	KZ750 Spectre		1982-84 **P148**					
	KZ900, KZ900 LTD		1976-77 **P165**					
	KZ900 Series		1976-77 **P165**					
	KZ1000A		1977-85 (2 1/4 In.) **P148** 1977-85 (3 1/4 In.) **P165**					
	KZ1000 Police		1978-81 **P165** 1982-86 **P148**					
	KZ1000, KZ1000 Classic		1977-80 **P165** 1981-97 **P148**					
	KZ1000 CSR		1981-83 **P148**					
	KZ1000 LTD		1977-80 **P165** 1981-82 **P148**					
	KZ1000 Republica		1982-83 **P148**					
	KZ1000 ST/Shaft		1979-80 **P165**					
	KZ1000 (Z1-R)		1978-80 **P165**					
	KZ1100, KZ1100 GP		1981-83 **P148**					
	KZ1100 LTD		1983 **P148**					
	KZ1100 Series		1981-83 **P148**					
	KZ1100 Spectre		1982-83 **P148**					
	KZ1300 Series		1979-82 **P165**					
	Police 1000		1978-81 (w/2 Gskts.) **P165** 1982-2002 **P148**					
	Tengai							
	VN250 Eliminator V		1997-2006 **B1400**					
	VN400 Vulcan		1998 **B1400**					
	VN700 Vulcan		1985 **B227**					
	VN750 Vulcan		1986-2006 **B227**					
	VN800 Vulcan Series		1995-2006 **B1400**					
	VN800A		1995-on **B1400**					
	VN900 Vulcan Series		2006-on **B1400**					
	VN1500 Vulcan Series		1987-2005 **B1400**					
	VN1600 Vulcan Series		2003-on **B1400**					
	VN2000 Vulcan Series		2004-on **B1400**					
	Voyager X11		1983-2003 **P148**					
	Vulcan 88		1987-95 **B1400**					
	Vulcan 1700 Classic		2006-on **B1400**					
	Vulcan Mean Streak Series		2002-08 **B1400**					

OBS = Obsolete. Availability Limited to Distributor Stock. [t] Transmission, Not Model, Determines Which Transmission Filter is Used.

KAWASAKI Motorcycles Cont'd.

Year	Model and Engine	VIN	Lube	Air	Cabin Air	Fuel	Breather	Trans.[t]
	W400		2006-07 **B1400**					
	W650		1999-2007 **B1400**					
	Z1		1973-75, 1978, 1980 (w/2 Gskts.) **P165**					
	Z750 Series		2004-on **B1400**					
	Z1000		2003-on **B1400**					
	ZG1000 Concours		1986-2006 **P148**					
	ZG1200 Voyager XII		1986-2006 **P148**					
	ZG1400 Concours		2008 **B1400**					
	ZL400 Eliminator		1994-2005 **P148**					
	ZL600		1986-87 **P148**					
	ZL600 Eliminator		1996-97 **P148**					
	ZL900 Eliminator		1985-86 **P148**					
	ZL1000 Eliminator		1987 **P148**					
	ZN700 LTD		1984-85 **P148**					
	ZN1100 LTD, ZN1100 Ninja		1984-85 **P148**					
	ZN1108B LTD		1984-85 **P148**					
	ZN1300 Voyager		1983-88 **P165**					
	ZR7 Series		1991-2005 **P148**					
	ZR250 Balius II		1997-2006 **B1400**					
	ZR400 Xanthus		1992, 1994-2005 **B1400**					
	ZR400 Zephyr Series		1989-2006 **P148**					
	ZR550 Zephyr		1990-2000 **P148**					
	ZR750 Zephyr		1991-99, 2001-06 **P148**					
	ZRX1100		1997-2000 **P148**					
	ZRX1200 Series		2001-06 **P148**					
	ZX6 Ninja Series		1995-on **B1400**					
	ZX7 Ninja Series		1989 **B1400** 1990 **P148** 1991-2003 **B1400**					
	ZX9R Ninja		1984-86 **P148** 1994-2003 **B1400**					
	ZX10 Ninja Series		1988-90 **P148** 2004-on **B1400**					
	ZX11 Ninja Series		1990-2001 **P148**					
	ZX12R Ninja		2000-06 Ele. **P148** 2000-05 Spin-on **B1400**					
	ZX14R Ninja		2006-on **B1400**					
	ZX400F		1989-2006 **P148**					
	ZX400J2		All Years **B1400**					
	ZX550 GPZ		1984-86 **P148**					
	ZX600 Ninja Series		1985-97 **P148**					
	ZX700R		1991-on **B1400**					
	ZX750 GPZ, ZX750 Turbo		1983-85 **P148**					
	ZX750 Ninja Series		1983-90 Ele. **P148** 1989-2001 Spin-on **B1400**					
	ZX750 (ZX-7R)		1991-2003 **B1400**					
	ZX900 Ninja (ZX-9R)		1984-86 **P148** 1994-on **B1400**					
	ZX1000 Ninja Series		1985-90 **P148**					
	ZX1100 GPZ		1983-84, 1995-98 **P148**					
	ZX1100 Ninja (ZX-11)		1990-99 **P148**					
	ZXR400 Series		1989-2002 **B1400**					
	ZXR750		1989-90 **B1400**					
	ZZR250		1998-2002 **P148**					
	ZZR400		1993-2006 **B1400**					
	ZZR600		1990-2008 **B1400**					
	ZZR1100		1990-2001 **P148**					
	ZR1100 Zephyr Series		1992-2006 **P148**					
	ZZR1200		2002-05 **P148**					
	ZZR1400		2006-07 **B1400**					

[t] Transmission, Not Model, Determines Which Transmission Filter is Used. OBS = Obsolete. Availability Limited to Distributor Stock.

Year	Model and Engine	VIN	Lube	Air	Cabin Air	Fuel	Breather	Trans.†
KIA								
2011	Sorento 4-2400cc (2.4L) FI						**N/R**	
	V6-3500cc (3.5L) FI						**N/R**	
2010	Borrego V6-3778cc (3.8L) FI	1				**N/S**	**N/R**	
	V8-282 (4.6L) FI	2				**N/S**	**N/R**	
	Forte 4-1998cc (2.0L) FI	2	**B7243**	**PA4401**	**PA4391**	**N/S**	**N/R**	
	4-2359cc (2.4L) FI	3	**B7243**	**PA4401**	**PA4391**	**N/S**	**N/R**	
	Magentis 4-2359cc (2.4L) FI Canada	3	**B7243**	**PA4400**	**PA4334**	**N/S**	**N/R**	In Pan **N/S**
	V6-2656cc (2.7L) FI Canada	4	**B7243**	**PA4400**	**PA4334**	**N/S**	**N/R**	In Pan **N/S**
	Optima 4-144 (2.4L) FI	8	**B7243**	**PA4400**	**PA4334**	**N/S**	**N/R**	In Pan **N/S**
	V6-163 (2.7L) FI	4	**B7243**	**PA4400**	**PA4334**	**N/S**	**N/R**	In Pan **N/S**
	Rio 4-98 (1.6L) FI	3	**B7243**	**PA4363**	**PA4391**	**N/S**	**N/R**	
	Rio5 4-98 (1.6L) FI	3	**B7243**	**PA4363**	**PA4391**	**N/S**	**N/R**	
	Rondo 4-144 (2.4L) FI	8	**B7243**	**PA4400**	**PA4391**	**N/S**	**N/R**	In Pan **N/S**
	V6-163 (2.7L) FI	6	**B7243**	**PA4400**	**PA4391**	**N/S**	**N/R**	In Pan **N/S**
	Sedona V6-231 (3.8L) FI	3		**PA4413**		**N/S**	**N/R**	In Pan **N/S**
	Soul 4-1591cc (1.6L) FI	1	**B7243**			**N/S**	**N/R**	
	4-1975cc (2.0L) FI	2	**B7243**			**N/S**	**N/R**	
	Sportage 4-122 (2.0L) FI	2	**B7243**	**PA4348**	**PA4391**	**N/S**	**N/R**	**N/S**
	V6-2656cc (2.7L) FI	3	**B7243**	**PA4348**	**PA4391**	**N/S**	**N/R**	**N/S**
2009	Amanti V6-3778cc (3.8L) MFI	5	**P7400**			**N/S**	**N/R**	In Pan **N/S**
	Borrego V6-3778cc (3.8L) FI	1				**N/S**	**N/R**	**N/S**
	V8-282 (4.6L) FI	2				**N/S**	**N/R**	**N/S**
	Magentis 4-2359cc (2.4L) FI Canada	6	**B7243**	**PA4400**	**PA4334**	**N/S**	**N/R**	In Pan **N/S**
	V6-2656cc (2.7L) FI Canada	8	**B7243**	**PA4400**	**PA4334**	**N/S**	**N/R**	In Pan **N/S**
	Optima 4-144 (2.4L) FI	3	**B7243**	**PA4400**	**PA4334**	**N/S**	**N/R**	In Pan **N/S**
	V6-163 (2.7L) FI	8	**B7243**	**PA4400**	**PA4334**	**N/S**	**N/R**	In Pan **N/S**
	Rio 4-98 (1.6L) FI	3	**B7243**	**PA4363**	**PA4391**	**N/S**	**N/R**	
	Rio5 4-98 (1.6L) FI	3	**B7243**	**PA4363**	**PA4391**	**N/S**	**N/R**	
	Rondo 4-144 (2.4L) FI	5	**B7243**	**PA4400**	**PA4391**	**N/S**	**N/R**	In Pan **N/S**
	V6-163 (2.7L) FI	6	**B7243**	**PA4400**	**PA4391**	**N/S**	**N/R**	In Pan **N/S**
	Sedona V6-231 (3.8L) FI	3		**PA4413**		**N/S**	**N/R**	In Pan **N/S**
	Sorento V6-3342cc (3.3L) FI	5		**PA4341**		**N/S**	**N/R**	**N/S**
	V6-3778cc (3.8L) FI	6		**PA4341**		**N/S**	**N/R**	**N/S**
	Spectra 4-121 (2.0L) MFI	1	**B7243**	**PA4308**		**N/S**	**N/R**	**N/S**
	Spectra5 4-121 (2.0L) MFI	1,2	**B7243**	**PA4308**		**N/S**	**N/R**	**N/S**
	Sportage 4-122 (2.0L) FI	4	**B7243**	**PA4348**	**PA4391**	**N/S**	**N/R**	**N/S**
	V6-2656cc (2.7L) FI	3	**B7243**	**PA4348**	**PA4391**	**N/S**	**N/R**	**N/S**
2008	Amanti V6-3778cc (3.8L) MFI	5	**P7400**			**N/S**	**N/R**	In Pan **N/S**
	Magentis 4-2359cc (2.4L) FI Canada	6	**B7243**	**PA4400**	**PA4334**	**N/S**	**N/R**	In Pan **N/S**
	V6-2656cc (2.7L) FI Canada	8	**B7243**	**PA4400**	**PA4334**	**N/S**	**N/R**	In Pan **N/S**
	Optima 4-144 (2.4L) FI	3	**B7243**	**PA4400**	**PA4334**	**N/S**	**N/R**	In Pan **N/S**
	V6-163 (2.7L) FI	4	**B7243**	**PA4400**	**PA4334**	**N/S**	**N/R**	In Pan **N/S**
	Rio 4-98 (1.6L) FI	3	**B7243**	**PA4363**	**PA4391**	**N/S**	**N/R**	
	Rio5 4-98 (1.6L) FI	3	**B7243**	**PA4363**	**PA4391**	**N/S**	**N/R**	
	Rondo 4-144 (2.4L) FI	5	**B7243**	**PA4400**	**PA4391**	**N/S**	**N/R**	In Pan **N/S**
	V6-163 (2.7L) FI	6	**B7243**	**PA4400**	**PA4391**	**N/S**	**N/R**	In Pan **N/S**
	Sedona V6-231 (3.8L) MFI	3	**P7400**	**PA4413**		**N/S**	**N/R**	In Pan **N/S**
	Sorento V6-3342cc (3.3L) MFI	5	To 8/26/07 **P7400**	**PA4341**		**N/S**	**N/R**	**N/S**
	V6-231 (3.8L) MFI	6	To 8/26/07 **P7400**	**PA4341**		**N/S**	**N/R**	**N/S**
	Spectra 4-121 (2.0L) MFI	1	**B7243**	**PA4308**		**N/S**	**N/R**	**N/S**
	Spectra5 4-121 (2.0L) MFI	1	**B7243**	**PA4308**		**N/S**	**N/R**	**N/S**
	Sportage 4-122 (2.0L) FI	4	**B7243**	**PA4348**	**PA4391**	**N/S**	**N/R**	**N/S**
	V6-163 (2.7L) FI	3	**B7243**	**PA4348**	**PA4391**	**N/S**	**N/R**	**N/S**
2007	Amanti V6-3778cc (3.8L) FI	5	**P7400**			**N/S**	**N/R**	Sump **N/S**
	Magentis 4-2359cc (2.4L) FI Canada	6	**B7243**	**PA4400**	**PA4334**	**N/S**	**N/R**	Sump **N/S**
	V6-2656cc (2.7L) FI Canada	8	**B7243**	**PA4400**	**PA4334**	**N/S**	**N/R**	Sump **N/S**
	Optima 4-144 (2.4L) FI	3	**B7243**	**PA4400**	**PA4334**	**N/S**	**N/R**	Sump **N/S**
	V6-163 (2.7L) FI	4	**B7243**	**PA4400**	**PA4334**	**N/S**	**N/R**	Sump **N/S**
	Rio, Rio5 4-98 (1.6L) FI	3	**B7243**	**PA4363**	**PA4391**	**N/S**	**N/R**	
	Rondo 4-144 (2.4L) FI	5	**B7243**	**PA4400**	**PA4391**	**N/S**	**N/R**	In Pan **N/S**
	V6-163 (2.7L) FI	6	**B7243**	**PA4400**	**PA4391**	**N/S**	**N/R**	In Pan **N/S**
	Sedona V6-231 (3.8L) MFI	3	**P7400**	**PA4413**		**N/S**	**N/R**	**N/S**
	Sorento V6-231 (3.8L) MFI	6	**P7400**	**PA4341**		**N/S**	**N/R**	**N/S**
	Spectra, Spectra5 4-121 (2.0L) MFI	1	**B7243**	**PA4308**		**N/S**	**N/R**	**N/S**
	Sportage V6-122 (2.0L) FI	4	**B7243**	**PA4348**	**PA4391**	**N/S**	**N/R**	**N/S**
	V6-163 (2.7L) FI	3	**B7243**	**PA4348**	**PA4391**	**N/S**	**N/R**	**N/S**
2006	Amanti V6-213 (3.5L) FI	1	**B7243**	**PA4375**		**N/S**	**N/R**	Sump **N/S**

OBS = Obsolete. Availability Limited to Distributor Stock. † Transmission, Not Model, Determines Which Transmission Filter is Used.

KIA Cont'd.

Year	Model and Engine	VIN	Lube	Air	Cabin Air	Fuel	Breather	Trans.[t]
2006	Magentis 4-144 (2.4L) FI Canada	6	**B7243**	**PA4313**		**N/S**	**N/R**	Sump **N/S**
	V6-163 (2.7L) FI Canada	8	**B7243**	**PA4313**		**N/S**	**N/R**	Sump **N/S**
	Optima 4-144 (2.4L) MFI	6	**B7243**	**PA4313**	**PA4334**	**BF1148**	**N/R**	Sump **N/S**
	V6-163 (2.7L) MFI	8	**B7243**	**PA4313**	**PA4334**	**BF1148**	**N/R**	Sump **N/S**
	Rio, Rio5 4-98 (1.6L) MFI	3	**B7243**	**PA4363**	**PA4391**	**N/S**	**N/R**	
	Sedona V6-231 (3.8L) MFI	3	Ele. **P7400** Spin-on **B227**	**PA4413**		**N/S**	**N/R**	**N/S**
	Sorento V6-213 (3.5L) MFI	3	**B7243**	**PA4341**	**N/R**	**N/S**	**N/R**	
	Spectra, Spectra5 4-121 (2.0L) MFI	1	**B7243**	**PA4308**		**N/S**	**N/R**	**N/S**
	Sportage 4-122 (2.0L) FI	4	**B7243**	**PA4348**	**PA4391**	**N/S**	**N/R**	**N/S**
	V6-163 (2.7L) FI	3	**B7243**	**PA4348**	**PA4391**	**N/S**	**N/R**	**N/S**
2005	Amanti V6-213 (3.5L) FI	1	**B7243**	**PA4375**		**N/S**	**N/R**	Sump **N/S**
	Magentis 4-144 (2.4L) FI Canada	6	**B7243**	**PA4313**	**N/R**	**N/S**	**N/R**	Sump **N/S**
	V6-163 (2.7L) FI Canada	8	**B7243**	**PA4313**	**N/R**	**N/S**	**N/R**	Sump **N/S**
	Optima 4-144 (2.4L) MFI	6	**B7243**	**PA4313**		**BF1148**	**N/R**	Sump **N/S**
	V6-163 (2.7L) MFI	8	**B7243**	**PA4313**	**N/R**	**BF1148**	**N/R**	Sump **N/S**
	Rio, Rio Cinco 4-98 (1.6L) MFI	5	**B1400**	**PA4376**	**N/R**	**BF7962**	**N/R**	
	Sedona V6-213 (3.5L) MFI	1	**B7243**	**PA4357**	**N/R**	**N/S**	**N/R**	
	Sorento V6-213 (3.5L) MFI	3	**B7243**	**PA4341**	**N/R**	**N/S**	**N/R**	
	Spectra, Spectra5 4-121 (2.0L) MFI	1,2	**B7243**	**PA4308**		**N/S**	**N/R**	**N/S**
	Sportage 4-122 (2.0L) FI	4	**B7243**	**PA4348**	**PA4391**	**N/S**	**N/R**	**18012**
	V6-163 (2.7L) FI	3	**B7243**	**PA4348**	**PA4391**	**N/S**	**N/R**	**N/S**
2004	Amanti V6-213 (3.5L) FI	4	**B7243**	**PA4375**		**N/S**	**N/R**	**N/S**
	Magentis 4-144 (2.4L) FI Canada	6	**B7243**	**PA4313**	**N/R**	**N/S**	**N/R**	Sump **N/S**
	V6-163 (2.7L) FI Canada	8	**B7243**	**PA4313**	**N/R**	**N/S**	**N/R**	Sump **N/S**
	Optima 4-144 (2.4L) MFI	6	**B7243**	**PA4313**		**BF1148**	**N/R**	Sump **N/S**
	V6-163 (2.7L) MFI	8	**B7243**	**PA4313**	**N/R**	**BF1148**	**N/R**	Sump **N/S**
	Rio, Rio Cinco 4-98 (1.6L) MFI	5	**B1400**	**PA4376**	**N/R**	**BF7962**	**N/R**	
	Sedona V6-213 (3.5L) MFI	1	**B7243**	**PA4357**	**N/R**	**N/S**	**N/R**	
	Sorento V6-213 (3.5L) MFI	3	**B7243**	**PA4341**	**N/R**	**N/S**	**N/R**	
	Spectra 4-109 (1.8L) MFI	1	**B1400**	**PA4124**	**N/R**	**BF7959**	**N/R**	
2003	Magentis 4-144 (2.4L) FI Canada	6	**B7243**	**PA4313**	**N/R**	**N/S**	**N/R**	
	V6-163 (2.7L) FI Canada	8	**B7243**	**PA4313**	**N/R**	**N/S**	**N/R**	Sump **N/S**
	Optima 4-144 (2.4L) MFI	6	**B7243**	**PA4313**		**BF1148**	**N/R**	Sump **N/S**
	V6-163 (2.7L) MFI	8	**B7243**	**PA4313**	**N/R**	**BF1148**	**N/R**	Sump **N/S**
	Rio, Rio Cinco 4-98 (1.6L) MFI	5	**B1400**	**PA4376**	**N/R**	**BF7962**	**N/R**	
	Sedona V6-213 (3.5L) MFI	1	**B7243**	**PA4357**	**N/R**	**N/S**	**N/R**	**N/S**
	Sorento V6-213 (3.5L) MFI	3	**B7243**	**PA4341**	**N/R**	**N/S**	**N/R**	**N/S**
	Spectra 4-109 (1.8L) MFI	1	**B1400**	**PA4124**	**N/R**	**BF7959**	**N/R**	
2002	Magentis 4-144 (2.4L) FI Canada	6	**B7243**	**PA4313**	**N/R**	**BF1148**	**N/R**	**N/S**
	V6-2700cc (2.7L) FI Canada	8	**B7243**	**PA4313**	**N/R**	**BF1148**	**N/R**	**N/S**
	Optima 4-144 (2.4L) MFI	6	**B7243**	**PA4313**	**N/R**	**BF1148**	**N/R**	**N/S**
	V6-163 (2.7L) FI	8	**B7243**	**PA4313**	**N/R**	**BF1148**	**N/R**	**N/S**
	Rio, Rio Cinco 4-91 (1.5L) MFI	3	**B1400**	**PA4376**	**N/R**	**BF7962**	**N/R**	
	Sedona V6-213 (3.5L) MFI	1	**B7243**	**PA4357**	**N/R**	**N/S**	**N/R**	
	Spectra 4-109 (1.8L) MFI	1	**B1400**	**PA4124**	**N/R**	**BF7959**	**N/R**	
	Sportage 4-122 (2.0L) MFI	3	**B1400**	**PA4353**	**N/R**		**N/R**	**18012**
2001	Magentis 4-2351cc (2.4L) FI Canada	S	**B227**	**PA4313**	**N/R**	**BF1148**	**N/R**	**N/S**
	V6-2500cc (2.5L) FI Canada	4	**B227**	**PA4313**	**N/R**	**BF1148**	**N/R**	**N/S**
	Optima 4-144 (2.4L) MFI	6	**B7243**	**PA4313**	**N/R**	**BF1148**	**N/R**	**N/S**
	V6-150 (2.5L) MFI	4	**B7243**	**PA4313**	**N/R**	**BF1148**	**N/R**	**N/S**
	Rio 4-91 (1.5L) MFI	3	**B1400**	**PA4376**	**N/R**	**BF7962**	**N/R**	
	Sephia 4-109 (1.8L) MFI	1	**B1400**	**PA4124**	**N/R**	**BF7959**	**N/R**	**18268**
	Spectra 4-109 (1.8L) MFI	1	**B1400**	**PA4124**	**N/R**	**BF7959**	**N/R**	
	Sportage 4-122 (2.0L) MFI	3	**B1400**	**PA4353**	**N/R**		**N/R**	**18012**
2000	Sephia 4-109 (1.8L) MFI	1	**B1400**	**PA4124**	**N/R**	**BF7959**	**N/R**	**18268**
	Spectra 4-109 (1.8L) MFI	1	**B1400**	**PA4124**	**N/R**	**BF7959**	**N/R**	
	Sportage 4-122 (2.0L) MFI	3	**B1400**	**PA4353**	**N/R**		**N/R**	**18012**
1999	Sephia 4-109 (1.8L) MFI	1	**B1400**	**PA4124**	**N/R**	**BF7959**	**N/R**	**18268**
	Sportage 4-122 (2.0L) FI	3	**B1400**	**PA4353**	**N/R**		**N/R**	**18012**
1998	Sephia 4-109 (1.8L) MFI	1	**B1400**	**PA4124**	**N/R**	**BF7959**	**N/R**	**18268**
	Sportage 4-1998cc (2.0L) FI	3	**B1400**	**PA4353**	**N/R**		**N/R**	**18012**
1997	Sephia 4-98 (1.6L) FI	4	**B1400**	**PA4125**	**N/R**	**BF1131**	**N/R**	**18268**
	4-112 (1.8L) FI	5	**B1400**	**PA4125**	**N/R**	**BF1131**	**N/R**	**18268**
	Sportage 4-1998cc (2.0L) FI	3	**B1400**	**PA4353**	**N/R**		**N/R**	**18012**
1996	Sephia 4-98 (1.6L) MFI	4	**B1400**	**PA4125**	**N/R**	**BF1131**	**N/R**	**18268**
	4-112 (1.8L) FI	5	**B1400**	**PA4125**	**N/R**	**BF1131**	**N/R**	**18268**

[t] Transmission, Not Model, Determines Which Transmission Filter is Used. OBS = Obsolete. Availability Limited to Distributor Stock.

Year	Model and Engine	VIN	Lube	Air	Cabin Air	Fuel	Breather	Trans.t
KIA Cont'd.								
1996	Sportage 4-1998cc (2.0L) FI	3	**B1400**	**PA4353**	**N/R**		**N/R**	**18012**
1995	Sephia 4-98 (1.6L) MFI	1,3	**B1400**	**PA4125**	**N/R**	**BF1131**	**N/R**	**18268**
	4-112 (1.8L) FI	5	**B1400**	**PA4125**	**N/R**	**BF1131**	**N/R**	**18268**
	Sportage 4-1998cc (2.0L) FI	1,3	**B1400**	**PA4353**	**N/R**		**N/R**	**18012**
1994	Sephia 4-98 (1.6L) MFI	1	**B1400**	**PA4125**	**N/R**	**BF1131**	**N/R**	**18268**
LADA								
1993	Niva 4-1590cc (1.6L) Carb. Canada			**PA691**	**N/R**	**BF840,-K1**		
	Samara 4-1295cc (1.3L) Carb. Canada			**PA691**	**N/R**	**BF840,-K1**		
	4-1508cc (1.5L) Carb. Canada	3		**PA691**	**N/R**	**BF840,-K1**		
	Signet 4-1508cc (1.5L) Carb. Canada	3		**PA691**	**N/R**	**BF840,-K1**		
1992	Niva 4-1590cc (1.6L) Carb. Canada			**PA691**	**N/R**	**BF840,-K1**		
	Samara 4-1295cc (1.3L) Carb. Canada			**PA691**	**N/R**	**BF840,-K1**		
	4-1508cc (1.5L) Carb. Canada	3,9		**PA691**	**N/R**	**BF840,-K1**		
	Signet 4-1508cc (1.5L) Carb. Canada	3		**PA691**	**N/R**	**BF840,-K1**		
1991	Niva 4-1590cc (1.6L) Carb. Canada			**PA691**	**N/R**	**BF840,-K1**		
	Samara 4-1295cc (1.3L) Carb. Canada			**PA691**	**N/R**	**BF840,-K1**		
	4-1508cc (1.5L) Carb. Canada	3		**PA691**	**N/R**	**BF840,-K1**		
	Signet 4-1508cc (1.5L) Carb. Canada	3		**PA691**	**N/R**	**BF840,-K1**		
1990	Niva 4-1590cc (1.6L) Carb. Canada			**PA691**	**N/R**	**BF840,-K1**		
	Samara 4-1295cc (1.3L) Carb. Canada			**PA691**	**N/R**	**BF840,-K1**		
	4-1508cc (1.5L) Carb. Canada	3		**PA691**	**N/R**	**BF840,-K1**		
	Signet 4-1508cc (1.5L) Carb. Canada	3		**PA691**	**N/R**	**BF840,-K1**		
1989	Niva 4-1590cc (1.6L) Carb. Canada		**B163**	**PA691**	**N/R**	**BF840,-K1**		
	Samara 4-1295cc (1.3L) Carb. Canada		**B163**	**PA691**	**N/R**	**BF840,-K1**		
	4-1508cc (1.5L) Carb. Canada	3	**B163**	**PA691**	**N/R**	**BF840,-K1**		
	Signet 4-1508cc (1.5L) Carb. Canada	3	**B163**	**PA691**	**N/R**	**BF840,-K1**		
1988	Niva 4-1590cc (1.6L) Carb. Canada		**B163**	**PA691**	**N/R**	**BF840,-K1**		
	Samara 4-1295cc (1.3L) Carb. Canada		**B163**	**PA691**	**N/R**	**BF840,-K1**		
	4-1508cc (1.5L) Carb. Canada	3	**B163**	**PA691**	**N/R**	**BF840,-K1**		
	Signet 4-1452cc (1.5L) Carb. Canada		**B163**	**PA691**	**N/R**	**BF840,-K1**		
1987	Niva 4-1590cc (1.6L) Carb. Canada		**B163**	**PA691**	**N/R**	**BF840,-K1**		
	Signet 4-1295cc (1.3L) Carb. Canada		**B163**	**PA691**	**N/R**	**BF840,-K1**		
	4-1508cc (1.5L) Carb. Canada	3	**B163**	**PA691**	**N/R**	**BF840,-K1**		
1986	Niva 4-1590cc (1.6L) Carb. Canada		**B163**	**PA691**	**N/R**	**BF840,-K1**		
	Signet 4-1295cc (1.3L) Carb. Canada		**B163**	**PA691**	**N/R**	**BF840,-K1**		
	4-1508cc (1.5L) Carb. Canada	0,3	**B163**	**PA691**	**N/R**	**BF840,-K1**		
1985	Niva 4-1590cc (1.6L) Carb. Canada		**B163**	**PA691**	**N/R**	**BF840,-K1**		
	Signet 4-1295cc (1.3L) Carb. Canada		**B163**	**PA691**	**N/R**	**BF840,-K1**		
	4-1508cc (1.5L) Carb. Canada	0,3	**B163**	**PA691**	**N/R**	**BF840,-K1**		
1984	Niva 4-1590cc (1.6L) Carb. Canada			**PA691**	**N/R**	**BF840,-K1**		
	Signet 4-79 (1.3L) Carb. Canada			**PA691**	**N/R**	**BF840,-K1**		
	4-92 (1.5L) Carb. Canada	3		**PA691**	**N/R**	**BF840,-K1**		
1983	1300 4-79 (1.3L) Carb. Canada			**PA691**	**N/R**	**BF840,-K1**		
LAMBORGHINI								
2001	Diablo V12-5992cc (6.0L) FI		**BT292**				**N/R**	**M.T.**
2000	Diablo V12-5992cc (6.0L) FI		**BT292**				**N/R**	**M.T.**
1999	Diablo V12-5703cc (5.7L) FI		**BT292**					
1998	Diablo V12-5703cc (5.7L) FI		**BT292**					
1994	Diablo V12-5703cc (5.7L) FI		**BT292**					
1991	Diablo V12-5703cc (5.7L) FI		**BT292**					
1989	Countach 5000 QVi V12-5163cc (5.2L) FI		**BT292**		**N/R**			
	Countach V12-5163cc (5.2L) FI		**BT292**		**N/R**			
1988	LM002 V12-5163cc (5.2L) Carb.		**BT292**		**N/R**			
1985	Countach 5000 QV V12-5163cc (5.2L) FI		**BT292**		**N/R**			
1984	Jalpa V8-3489cc (3.5L) Carb.		**BT292**		**N/R**			
LAND ROVER								
2010	LR2 6-3192cc (3.2L) FI	N				**N/S**	**N/R**	
	LR4 V8-5000cc (5.0L) FI	D				**N/S**	**N/R**	**N/S**
	Range Rover V8-5000cc (5.0L) FI	D				**N/S**	**N/R**	**N/S**
	V8-5000cc (5.0L) FI Supercharged	E				**N/S**	**N/R**	**N/S**
	Range Rover Sport V8-5000cc (5.0L) FI	D				**N/S**	**N/R**	**N/S**
	V8-5000cc (5.0L) FI Supercharged	E				**N/S**	**N/R**	**N/S**
2009	LR2 6-3192cc (3.2L) FI	4				**N/S**	**N/R**	
	LR3 V8-268 (4.4L) FI	5	**B1435**			**N/S**	**N/R**	**N/S**

OBS = Obsolete. Availability Limited to Distributor Stock. t Transmission, Not Model, Determines Which Transmission Filter is Used.

LAND ROVER Cont'd.

Year	Model and Engine	VIN	Lube	Air	Cabin Air	Fuel	Breather	Trans.t
2009	Range Rover V8-256 (4.2L) SFI Supercharged	3	**B1435**			**N/S**	**N/R**	**N/S**
	V8-268 (4.4L) FI	5	**B1435**			**N/S**	**N/R**	
	Range Rover Sport V8-256 (4.2L) FI Supercharged	3	**B1435**			**N/S**	**N/R**	**N/S**
	V8-268 (4.4L) FI	5	**B1435**			**N/S**	**N/R**	**N/S**
2008	LR2 6-3192cc (3.2L) FI	4				**N/S**	**N/R**	
	LR3 V6-4009cc (4.0L) FI	4	**B1435**			**N/S**	**N/R**	**N/S**
	V8-268 (4.4L) FI	5	**B1435**			**N/S**	**N/R**	**N/S**
	Range Rover V8-256 (4.2L) SFI Supercharged	3	**B1435**			**N/S**	**N/R**	**N/S**
	V8-268 (4.4L) FI	5	**B1435**			**N/S**	**N/R**	
	Range Rover Sport V8-256 (4.2L) FI Supercharged	3	**B1435**			**N/S**	**N/R**	**N/S**
	V8-268 (4.4L) FI	5	**B1435**			**N/S**	**N/R**	**N/S**
2007	LR3 V6-4009cc (4.0L) FI	4	**B329**			**N/S**	**N/R**	**N/S**
	V8-268 (4.4L) FI	5	**B1435**			**N/S**	**N/R**	**N/S**
	Range Rover V8-256 (4.2L) FI Supercharged	3	**B1435**			**N/S**	**N/R**	**N/S**
	V8-268 (4.4L) FI	5	**B1435**			**N/S**	**N/R**	
	Range Rover Sport V8-256 (4.2L) FI Supercharged	3	**B1435**			**N/S**	**N/R**	**N/S**
	V8-268 (4.4L) FI	5	**B1435**			**N/S**	**N/R**	
2006	LR3 V6-4009cc (4.0L) SFI	4	**B329**			**N/S**	**N/R**	**N/S**
	V8-268 (4.4L) SFI	5	**B1435**			**N/S**	**N/R**	**N/S**
	Range Rover V8-256 (4.2L) FI Supercharged	3	Ele. **P7137** Spin-on **B1435**			**N/S**	**N/R**	**N/S**
	V8-268 (4.4L) FI 32 Valve	5	Ele. **P7137** Spin-on **B1435**			**N/S**	**N/R**	
	Range Rover Sport V8-256 (4.2L) SFI Supercharged	3	**B1435**			**N/S**	**N/R**	**N/S**
	V8-268 (4.4L) SFI	5	**P7137**			**N/S**	**N/R**	**N/S**
2005	Freelander V6-152 (2.5L) SFI	2	**B1447**	**PA4386**	**PA4407**		**N/R**	
	LR3 V6-4009cc (4.0L) SFI	4					**N/R**	**N/S**
	V8-268 (4.4L) SFI	5	**B1435**			**N/S**	**N/R**	**N/S**
	Range Rover V8-268 (4.4L) SFI	1	**P7137**				**N/R**	
2004	Discovery V8-278 (4.6L) SFI	4	**B74**	**PA4386**	**N/R**	**BF853**	**N/R**	
	Freelander V6-152 (2.5L) SFI	2	**B1447**	**PA4386**	**PA4407**		**N/R**	
	Range Rover V8-268 (4.4L) SFI	1	**P7137**				**N/R**	
2003	Discovery V8-278 (4.6L) SFI	4	**B74**	**PA4386**		**BF853**	**N/R**	
	Freelander V6-152 (2.5L) SFI	2	**B1447**	**PA4386**	**PA4407**		**N/R**	**N/S**
	Range Rover V8-268 (4.4L) SFI	1	**P7137**				**N/R**	
2002	Discovery V8-241 (4.0L) SFI	2	**B74**	**PA4386**	**N/R**	**BF853**	**N/R**	
	Freelander V6-152 (2.5L) SFI	2	**B1447**	**PA4386**	**PA4407**		**N/R**	**N/S**
	Range Rover V8-278 (4.6L) SFI	4	**B74**	**PA4386**		**BF853**	**N/R**	
2001	Discovery V8-241 (4.0L) SFI	2	**B74**	**PA4386**	**N/R**	**BF853**	**N/R**	
	Range Rover V8-4554cc (4.6L) FI	4	**B74**	**PA4386**		**BF853**	**N/R**	
2000	Discovery V8-241 (4.0L) SFI	2	**B74**	**PA4386**	**N/R**	**BF853**	**N/R**	
	Range Rover V8-241 (4.0L) SFI	2	**B74**	**PA4386**		**BF853**	**N/R**	
	V8-278 (4.6L) SFI	4	**B74**	**PA4386**		**BF853**	**N/R**	
1999	Discovery V8-241 (4.0L) SFI	2	**B74**	**PA4126**	**N/R**	**BF853**	**N/R**	
	Discovery Series II V8-241 (4.0L) SFI	2	**B74**	**PA4386**	**N/R**	**BF853**	**N/R**	
	Range Rover V8-241 (4.0L) SFI	2	**B74**	**PA4386**		**BF853**	**N/R**	
	V8-278 (4.6L) SFI	4	**B74**	**PA4386**		**BF853**	**N/R**	
1998	Discovery V8-3950cc (4.0L) SFI	2	**B74**	**PA4126**	**N/R**	**BF853**	**N/R**	
	Range Rover V8-3950cc (4.0L) SFI	2	**B74**	**PA4386**		**BF853**	**N/R**	
	V8-4554cc (4.6L) SFI	4	**B74**	**PA4386**		**BF853**	**N/R**	
1997	Defender 90 V8-3950cc (4.0L) FI	2	**B74**		**N/R**	**BF853**	**N/R**	
	Discovery V8-3950cc (4.0L) SFI	2	**B74**	**PA4126**	**N/R**	**BF853**	**N/R**	
	Range Rover V8-3950cc (4.0L) SFI	2	**B74**	**PA4386**		**BF853**	**N/R**	
	V8-4554cc (4.6L) SFI	4	**B74**	**PA4386**		**BF853**	**N/R**	
1996	Defender 90 V8-3947cc (3.9L) FI	2	**B74**		**N/R**	**BF853**	**N/R**	
	Discovery V8-3950cc (4.0L) SFI	2	**B74**	**PA4126**	**N/R**	**BF853**	**N/R**	
	Range Rover V8-3950cc (4.0L) SFI	2	**B74**			**BF853**	**N/R**	
	V8-4554cc (4.6L) SFI	4	**B74**			**BF853**	**N/R**	
1995	Defender 90 V8-3947cc (3.9L) MFI	2	**B74**		**N/R**	**BF853**	**N/R**	
	Discovery V8-3947cc (3.9L) MFI	2	**B74**	**PA4126**	**N/R**	**BF853**	**N/R**	

t Transmission, Not Model, Determines Which Transmission Filter is Used. OBS = Obsolete. Availability Limited to Distributor Stock.

Year	Model and Engine	VIN	Lube	Air	Cabin Air	Fuel	Breather	Trans.[t]
LAND ROVER Cont'd.								
1995	Range Rover V8-3950cc (4.0L) MFI	2	**B74**			**BF853**	**N/R**	
	V8-4278cc (4.2L) MFI	3	**B74**			**BF853**	**N/R**	
1994	Defender 90 V8-3950cc (3.9L) MFI	2	**B74**		**N/R**	**BF853**	**N/R**	
	Discovery V8-3947cc (3.9L) MFI	2	**B74**	**PA4126**	**N/R**	**BF853**	**N/R**	
	Range Rover V8-3947cc (3.9L) MFI	2	**B74**		**N/R**	**BF853**	**N/R**	
	V8-4278cc (4.2L) MFI	3	**B74**		**N/R**	**BF853**	**N/R**	
1993	Defender 110 V8-241 (3.9L) FI	2	**B74**		**N/R**	**BF853**	**N/R**	
	Range Rover V8-4200cc (4.2L) FI	3	**B74**	**PA4126**	**N/R**	**BF853**	**N/R**	
	Range Rover County V8-241 (3.9L) FI	3	**B74**		**N/R**	**BF853**	**N/R**	
1992	Range Rover, Range Rover County V8-241 (3.9L) FI	2	**B74**		**N/R**	**BF853**	**N/R**	
1991	Range Rover, Range Rover County V8-241 (3.9L) FI	2	**B74**		**N/R**	**BF853**	**N/R**	
1990	Range Rover, Range Rover County V8-241 (3.9L) FI	2	**B74**		**N/R**	**BF1195**	**N/R**	
1989	Range Rover, Range Rover County V8-241 (3.9L) FI	2	**B74**		**N/R**	**BF1195**	**N/R**	
1988	Range Rover V8-215 (3.5L) FI	1	**B74**		**N/R**	**BF1195**	**N/R**	
LEXUS								
2011	LF-A V10-4800cc (4.8L) FI						**N/R**	
2010	ES350 V6-3456cc (3.5L) SFI	J	**P7398**	**PA4333**	(w/o Charcoal) **PA4393**	**N/S**	**N/R**	U660E **N/S**
	GS350 V6-3456cc (3.5L) DI	E	**P7418**		(w/o Charcoal) **PA4393**	**N/S**	**N/R**	**N/S**
	GS450h V6-3456cc (3.5L) DI & Electric Motor	E	**P7418**		(w/o Charcoal) **PA4393**	**N/S**	**N/R**	**N/S**
	GS460 V8-4608cc (4.6L) FI	L	**P7418**		(w/o Charcoal) **PA4393**	**N/S**	**N/R**	**N/S**
	GX460 V8-4608cc (4.6L) FI	M					**N/R**	
	HS250h 4-2362cc (2.4L) FI & Electric Motor	B	**B37**		**PA4327**	**N/S**	**N/R**	**N/S**
	IS C V6-152 (2.5L) FI	4				**N/S**	**N/R**	
	V6-210 (3.5L) FI	E				**N/S**	**N/R**	
	IS250 V6-2499cc (2.5L) DI	F,K	**P7418**		(w/o Charcoal) **PA4393**	**N/S**	**N/R**	**N/S**
	IS350 V6-3456cc (3.5L) DI	E	**P7418**		(w/o Charcoal) **PA4393**	**N/S**	**N/R**	**N/S**
	IS-F V8-4969cc (5.0L) FI	P			**PA4327**	**N/S**	**N/R**	**N/S**
	LS460 V8-281 (4.6L) FI	L	**P7418**			**N/S**	**N/R**	**N/S**
	LS460L V8-281 (4.6L) FI	L	**P7418**			**N/S**	**N/R**	**N/S**
	LS600hL V8-4968cc (5.0L) FI & Electric Motor	U	**P7418**			**N/S**	**N/R**	**N/S**
	LX570 V8-5663cc (5.7L) FI	Y	**P7406**	**PA4322**	(w/o Charcoal) **PA4393**	**N/S**	**N/R**	
	RX350 V6-3456cc (3.5L) DI	K	**P7398**		(w/o Charcoal) **PA4393**	**N/S**	**N/R**	**N/S**
	RX450h V6-3456cc (3.5L) DI Hybrid	C	**P7398**		(w/o Charcoal) **PA4393**	**N/S**	**N/R**	**N/S**
	SC430 V8-262 (4.3L) FI	N	**B7020**			**N/S**	**N/R**	A761E **N/S**
2009	ES350 V6-3456cc (3.5L) SFI	J	**P7398**	**PA4333**	(w/o Charcoal) **PA4393**	**N/S**	**N/R**	U660E **N/S**
	GS350 V6-3456cc (3.5L) DI	E	**P7418**		(w/o Charcoal) **PA4393**	**N/S**	**N/R**	AWD & RWD **N/S**
	GS450h V6-3456cc (3.5L) DI & Electric Motor	E	**P7418**		(w/o Charcoal) **PA4393**	**N/S**	**N/R**	**N/S**
	GS460 V8-4608cc (4.6L) FI	L	**P7418**		(w/o Charcoal) **PA4393**	**N/S**	**N/R**	**N/S**
	GX470 V8-285 (4.7L) FI	T	**B1405**	**PA4127**		**N/S**	**N/R**	A750F **N/S**
	IS250 V6-2499cc (2.5L) DI	K	**P7418**		(w/o Charcoal) **PA4393**	**N/S**	**N/R**	AWD & RWD **N/S**
	IS350 V6-3456cc (3.5L) DI	E	**P7418**		(w/o Charcoal) **PA4393**	**N/S**	**N/R**	**N/S**
	IS-F V8-4969cc (5.0L) FI	P			**PA4327**	**N/S**	**N/R**	**N/S**
	LS460 V8-281 (4.6L) FI	L	**P7418**			**N/S**	**N/R**	**N/S**
	LS460L V8-281 (4.6L) FI	L	**P7418**			**N/S**	**N/R**	**N/S**

OBS = Obsolete. Availability Limited to Distributor Stock. [t] Transmission, Not Model, Determines Which Transmission Filter is Used.

LEXUS Cont'd.

Year	Model and Engine	VIN	Lube	Air	Cabin Air	Fuel	Breather	Trans.[t]
2009	LS600hL V8-4968cc (5.0L) FI & Electric Motor	U	**P7418**			**N/S**	**N/R**	**N/S**
	LX570 V8-5663cc (5.7L) FI	Y	**P7406**	**PA4322**	(w/o Charcoal) **PA4393**	**N/S**	**N/R**	
	RX350 V6-3456cc (3.5L) DI	K	**P7398**	**PA4150**	**PA4194**	**N/S**	**N/R**	**20008**
	RX400h V6-202 (3.3L) DI Hybrid	W	**B1405**		**PA4194**	**N/S**	**N/R**	**N/S**
	SC430 V8-262 (4.3L) FI	N	**B7020**			**N/S**	**N/R**	A761E **N/S**
2008	ES350 V6-3456cc (3.5L) SFI	J	**P7398**	**PA4333**	(w/o Charcoal) **PA4393**	**N/S**	**N/R**	U660E **N/S**
	GS350 V6-3456cc (3.5L) DI	E	**P7418**		(w/o Charcoal) **PA4393**	**N/S**	**N/R**	RWD & AWD **N/S**
	GS450h V6-3456cc (3.5L) DI & Electric Motor	E	**P7418**		(w/o Charcoal) **PA4393**	**N/S**	**N/R**	**N/S**
	GS460 V8-4608cc (4.6L) FI	L	**P7418**		(w/Charcoal) **PA4393**	**N/S**	**N/R**	**N/S**
	GX470 V8-285 (4.7L) FI	T	**B1405**	**PA4127**		**N/S**	**N/R**	A750F **N/S**
	IS250 V6-2499cc (2.5L) DI	K	**P7418**		(w/o Charcoal) **PA4393**	**N/S**	**N/R**	2WD & AWD **N/S**
	IS350 V6-3456cc (3.5L) DI	E	**P7418**		(w/o Charcoal) **PA4393**	**N/S**	**N/R**	**N/S**
	IS-F V8-4969cc (5.0L) FI	P			**PA4327**	**N/S**	**N/R**	**N/S**
	LS460 V8-281 (4.6L) FI	L	**P7418**			**N/S**	**N/R**	**N/S**
	LS460L V8-281 (4.6L) FI	L	**P7418**			**N/S**	**N/R**	**N/S**
	LS600hL V8-4968cc (5.0L) FI & Electric Motor	U	**P7418**			**N/S**	**N/R**	**N/S**
	LX570 V8-5663cc (5.7L) FI	Y	**P7406**	**PA4322**	(w/o Charcoal) **PA4393**	**N/S**	**N/R**	
	RX350 V6-3456cc (3.5L) DI	K	**P7398**	**PA4150**	**PA4194**	**N/S**	**N/R**	**20008**
	RX400h V6-202 (3.3L) DI Hybrid	W	**B1405**		**PA4194**	**N/S**	**N/R**	**N/S**
	SC430 V8-262 (4.3L) FI	N	**B7020**			**N/S**	**N/R**	A761E **N/S**
2007	ES350 V6-3456cc (3.5L) SFI	J	**P7398**	**PA4333**	(w/o Charcoal) **PA4393**	**N/S**	**N/R**	**N/S**
	GS350 V6-3456cc (3.5L) DI	E	**P7418**		(w/o Charcoal) **PA4393**	**N/S**	**N/R**	RWD & AWD **N/S**
	GS430 V8-262 (4.3L) FI	N	**B7020**		**PA4393**	**N/S**	**N/R**	**N/S**
	GS450h V6-3456cc (3.5L) DI & Electric Motor	E	**P7418**		(w/o Charcoal) **PA4393**	**N/S**	**N/R**	**N/S**
	GX470 V8-285 (4.7L) FI	T	**B1405**	**PA4127**		**N/S**	**N/R**	A750F **N/S**
	IS250 V6-2499cc (2.5L) DI	K	**P7418**		(w/o Charcoal) **PA4393**	**N/S**	**N/R**	2WD & AWD **N/S**
	IS350 V6-3456cc (3.5L) DI	D	**P7418**		(w/o Charcoal) **PA4393**	**N/S**	**N/R**	**N/S**
	LS460, LS460L V8-281 (4.6L) FI	L	**P7418**			**N/S**	**N/R**	**N/S**
	LX470 V8-285 (4.7L) FI	T	**B1405**	**PA4127**			**N/R**	A750F **N/S**
	RX350 V6-3456cc (3.5L) DI	K	**P7398**	**PA4150**	**PA4194**	**N/S**	**N/R**	**20008**
	RX400h V6-202 (3.3L) FI Hybrid	W	**B1405**		**PA4194**	**N/S**	**N/R**	**N/S**
	SC430 V8-262 (4.3L) FI	N	**B7020**			**N/S**	**N/R**	A761E **N/S**
2006	ES330 V6-202 (3.3L) SFI	A	**BT223**	**PA4150**	**PA4194**	**N/S**	**N/R**	**20008**
	GS300 6-183 (3.0L) MFI	D	**P7418**		**PA4327**	**N/S**	**N/R**	**N/S**
	GS430 V8-262 (4.3L) FI	N	**B7020**		**PA4327**	**N/S**	**N/R**	**N/S**
	GX470 V8-285 (4.7L) FI	T	**B7020**	**PA4127**		**N/S**	**N/R**	A750F **N/S**
	IS250 V6-2499cc (2.5L) DI	K	**P7418**		**PA4327**	**N/S**	**N/R**	2WD & AWD **N/S**
	IS350 V6-3456cc (3.5L) DI	D	**P7418**		**PA4327**	**N/S**	**N/R**	**N/S**
	LS430 V8-262 (4.3L) FI	N	**B7020**	**PA4380**		**N/S**	**N/R**	A761E **N/S**
	LX470 V8-285 (4.7L) FI	T	**B7020**	**PA4127**			**N/R**	**N/S**
	RX330 V6-202 (3.3L) MFI	A	**BT223**	**PA4150**		**N/S**	**N/R**	**20008**
	RX400h V6-202 (3.3L) FI Hybrid	W	**B1405**		**PA4194**	**N/S**	**N/R**	**N/S**
	SC430 V8-262 (4.3L) FI	N	**B7020**			**N/S**	**N/R**	**N/S**
2005	ES330 V6-202 (3.3L) SFI	A	**BT223**	**PA4150**	**PA4194**	**N/S**	**N/R**	**20008**
	GS300 6-183 (3.0L) MFI	D	**BT223**	**PA4354**		**N/S**	**N/R**	**N/S**
	GS430 V8-262 (4.3L) FI	L	**B7020**			**N/S**	**N/R**	**N/S**
	GX470 V8-285 (4.7L) FI	T	**B7020**	**PA4127**		**N/S**	**N/R**	**N/S**
	IS300, SportCross 6-183 (3.0L) SFI	D	**BT223**	**PA4354**	**PA4371**	**N/S**	**N/R**	**N/S**
	LS430 V8-262 (4.3L) FI	N	**B7020**	**PA4380**		**N/S**	**N/R**	**N/S**
	LX470 V8-285 (4.7L) FI	T	**B7020**	**PA4127**			**N/R**	**N/S**
	RX330 V6-202 (3.3L) MFI	A	**BT223**	**PA4150**		**N/S**	**N/R**	**20008**
	SC430 V8-262 (4.3L) FI	N	**B7020**			**N/S**	**N/R**	**N/S**

[t] Transmission, Not Model, Determines Which Transmission Filter is Used. OBS = Obsolete. Availability Limited to Distributor Stock.

LEXUS Cont'd.

Year	Model and Engine	VIN	Lube	Air	Cabin Air	Fuel	Breather	Trans.[t]
2004	ES330 V6-202 (3.3L) SFI	A	**BT223**	**PA4150**	**PA4194**	**N/S**	**N/R**	**N/S**
	GS300 6-183 (3.0L) MFI	D	**B1405**	**PA4354**		**N/S**	**N/R**	**N/S**
	GS430 V8-262 (4.3L) FI	L	**B1405**			**N/S**	**N/R**	**N/S**
	GX470 V8-285 (4.7L) FI	T	**B7020**	**PA4127**		**N/S**	**N/R**	**N/S**
	IS300, SportCross 6-183 (3.0L) SFI	D	**B1405**	**PA4354**	**PA4371**	**N/S**	**N/R**	**N/S**
	LS430 V8-262 (4.3L) FI	N	**B1405**	**PA4380**		**N/S**	**N/R**	**N/S**
	LX470 V8-285 (4.7L) FI	T	**B1405**	**PA4127**			**N/R**	**N/S**
	RX330 V6-202 (3.3L) MFI	A	**BT223**	**PA4150**		**N/S**	**N/R**	**20008**
	SC430 V8-262 (4.3L) FI	N	**B1405**			**N/S**	**N/R**	**N/S**
2003	ES300 V6-183 (3.0L) SFI	F	**B1405**	**PA4150**	**PA4194**	**N/S**	**N/R**	**N/S**
	GS300 6-183 (3.0L) MFI	D	**B1405**	**PA4354**		**N/S**	**N/R**	**N/S**
	GS430 V8-262 (4.3L) FI	L	**B1405**			**N/S**	**N/R**	**N/S**
	GX470 V8-285 (4.7L) FI	F	**B7020**	**PA4127**		**N/S**	**N/R**	**N/S**
	IS300, SportCross 6-183 (3.0L) SFI	D	**B1405**	**PA4354**	**PA4371**	**N/S**	**N/R**	**N/S**
	LS430 V8-262 (4.3L) SFI	N	**B1405**	**PA4380**		**N/S**	**N/R**	**N/S**
	LX470 V8-285 (4.7L) FI	T	**B1405**	**PA4127**			**N/R**	**N/S**
	RX300 V6-183 (3.0L) FI	F	**B1405**	**PA4028**	**PA4371**	**N/S**	**N/R**	**20015**
	SC430 V8-262 (4.3L) FI	N	**B1405**			**N/S**	**N/R**	**N/S**
2002	ES300 V6-183 (3.0L) SFI	F	**B1405**	**PA4150**	**PA4194**	**N/S**	**N/R**	**N/S**
	GS300 6-183 (3.0L) MFI	D	**B1405**	**PA4354**		**N/S**	**N/R**	**N/S**
	GS430 V8-262 (4.3L) FI	L	**B1405**			**N/S**	**N/R**	**N/S**
	IS300 6-183 (3.0L) SFI	D	**B1405**	**PA4354**	**PA4371**	**N/S**	**N/R**	**N/S**
	LS430 V8-262 (4.3L) SFI	N	**B1405**	**PA4380**		**N/S**	**N/R**	**N/S**
	LX470 V8-285 (4.7L) FI	T	**B1405**	**PA4127**			**N/R**	**19996**
	RX300 V6-183 (3.0L) FI	F	**B1405**	**PA4028**	**PA4371**	**N/S**	**N/R**	**20015**
	SC430 V8-262 (4.3L) FI	N	**B1405**			**N/S**	**N/R**	**N/S**
2001	ES300 V6-183 (3.0L) SFI	F	**B1405**	**PA4028**		**BF7661**	**N/R**	U140E **20015**
	GS300 6-183 (3.0L) MFI	D	**B1405**	**PA4354**		**N/S**	**N/R**	**N/S**
	GS430 V8-262 (4.3L) FI	L	**B1405**			**N/S**	**N/R**	**N/S**
	IS300 6-183 (3.0L) SFI	D	**B1405**	**PA4354**	**PA4371**	**N/S**	**N/R**	**N/S**
	LS430 V8-262 (4.3L) SFI	N	**B1405**	**PA4380**		**N/S**	**N/R**	**N/S**
	LX470 V8-285 (4.7L) FI	T	**B1405**	**PA4127**			**N/R**	**19996**
	RX300 V6-183 (3.0L) FI	F	**B1405**	**PA4028**	**PA4371**	**N/S**	**N/R**	**20015**
2000	ES300 V6-183 (3.0L) SFI	F	**B1405**	**PA4028**		**BF7661**	**N/R**	U140E **20015**
	GS300 6-183 (3.0L) MFI	D	**B1405**	**PA4354**		**N/S**	**N/R**	
	GS400 V8-242 (4.0L) SFI	H	**B1405**	**PA4380**		**N/S**	**N/R**	
	LS400 V8-242 (4.0L) SFI	H	**B1405**	**PA4061**			**N/R**	
	LX470 V8-285 (4.7L) FI	T	**B1405**	**PA4127**			**N/R**	**19996**
	RX300 V6-183 (3.0L) FI	F	**B1405**	**PA4028**	**PA4371**	**N/S**	**N/R**	**20015**
	SC300 6-183 (3.0L) MFI	D	**B1405**	**PA4060**		**BF1148**	**N/R**	
	SC400 V8-242 (4.0L) MFI	H	**B1405**	**PA4060**		**BF1148**	**N/R**	
1999	ES300 V6-183 (3.0L) SFI	F	**B1405**	**PA4028**		**BF7661**	**N/R**	U140E **20015** A340F **19995**
	GS300 6-183 (3.0L) MFI	D	**B1405**	**PA4354**		**N/S**	**N/R**	
	GS400 V8-242 (4.0L) SFI	H	**B1405**	**PA4380**		**N/S**	**N/R**	
	LS400 V8-242 (4.0L) SFI	H	**B1405**	**PA4061**			**N/R**	
	LX470 V8-285 (4.7L) FI	T	**B1405**	**PA4127**			**N/R**	**19996**
	RX300 V6-183 (3.0L) FI	F	**B1405**	**PA4028**	**PA4371**	**N/S**	**N/R**	**20015**
	SC300 6-183 (3.0L) MFI	D	**B1405**	**PA4060**		**BF1148**	**N/R**	
	SC400 V8-242 (4.0L) MFI	H	**B1405**	**PA4060**		**BF1148**	**N/R**	
1998	ES300 V6-183 (3.0L) SFI	F	**B1405**	**PA4028**		**BF7661**	**N/R**	
	GS300 6-183 (3.0L) MFI	D	**B1405**	**PA4354**		**N/S**	**N/R**	
	GS400 V8-242 (4.0L) SFI	H	**B1405**	**PA4380**		**N/S**	**N/R**	
	LS400 V8-242 (4.0L) SFI	H	**B1405**	**PA4061**			**N/R**	
	LX470 V8-285 (4.7L) FI	T	**B1405**	**PA4127**			**N/R**	**19996**
	SC300 6-183 (3.0L) MFI	D	**B1405**	**PA4060**		**BF1148**	**N/R**	
	SC400 V8-242 (4.0L) MFI	H	**B1405**	**PA4060**		**BF1148**	**N/R**	
1997	ES300 V6-183 (3.0L) SFI	F	**B1405**	**PA4028**		**BF7661**	**N/R**	
	GS300 6-183 (3.0L) MFI	D	**B1405**			**BF1148**	**N/R**	
	LS400 V8-242 (4.0L) SFI	H	**B1405**	**PA4061**			**N/R**	
	LX450 6-273 (4.5L) SFI	J	**B1405**	**PA2042**	**N/R**		**N/R**	**19994**
	SC300 6-183 (3.0L) SFI	D	**B1405**	**PA4060**		**BF1148**	**N/R**	
	SC400 V8-242 (4.0L) SFI	H	**B1405**	**PA4060**		**BF1148**	**N/R**	
1996	ES300 V6-183 (3.0L) SFI	F	**B1405**	**PA4028**		**BF1179**	**N/R**	
	GS300 6-183 (3.0L) SFI	D	**B1405**			**BF1148**	**N/R**	
	LS400 V8-242 (4.0L) SFI	H	**B1405**	**PA4061**			**N/R**	
	LX450 6-273 (4.5L) SFI	J	**B1405**	**PA2042**	**N/R**		**N/R**	**19994**

OBS = Obsolete. Availability Limited to Distributor Stock. [t] Transmission, Not Model, Determines Which Transmission Filter is Used.

Year	Model and Engine	VIN	Lube	Air	Cabin Air	Fuel	Breather	Trans.t
LEXUS Cont'd.								
1996	SC300 6-183 (3.0L) SFI	D	**B1405**	**PA4060**		**BF1148**	**N/R**	
	SC400 V8-242 (4.0L) SFI	H	**B1405**	**PA4060**		**BF1148**	**N/R**	
1995	ES300 V6-183 (3.0L) MFI	G	**B1405**	**PA4028**		**BF1179**	**N/R**	
	GS300 6-183 (3.0L) MFI	J	**B1405**			**BF1148**	**N/R**	**19997**
	LS400 V8-242 (4.0L) SFI	U	**B1405**	**PA4061**			**N/R**	
	SC300 6-183 (3.0L) MFI	J	**B1405**	**PA4060**		**BF1148**	**N/R**	
	SC400 V8-242 (4.0L) MFI	U	**B1405**	**PA4060**		**BF1148**	**N/R**	
1994	ES300 V6-183 (3.0L) MFI	G	**B1405**	**PA4028**		**BF1179**	**N/R**	
	GS300 6-183 (3.0L) MFI	J	**B1405**			**BF1148**	**N/R**	**19997**
	LS400 V8-242 (4.0L) MFI	U	**B1405**	**PA4061**		**BF1148**	**N/R**	
	SC300 6-183 (3.0L) MFI	J	**B1405**	**PA4060**		**BF1148**	**N/R**	
	SC400 V8-242 (4.0L) MFI	U	**B1405**	**PA4060**		**BF1148**	**N/R**	
1993	ES300 V6-2959cc (3.0L) MFI	V	**B1405**	**PA4028**		**BF1179**	**N/R**	
	GS300 6-3000cc (3.0L) MFI	J	**B1405**			**BF1148**	**N/R**	
	LS400 V8-3967cc (4.0L) MFI	U	**B1405**	**PA4061**		**BF1148**	**N/R**	
	SC300 6-2997cc (3.0L) MFI	J	**B1405**	**PA4060**		**BF1148**	**N/R**	
	SC400 V8-3967cc (4.0L) MFI	U	**B1405**	**PA4060**		**BF1148**	**N/R**	
1992	ES300 V6-2959cc (3.0L) MFI	V	**B1405**	**PA4028**		**BF1179**	**N/R**	
	LS400 V8-3967cc (4.0L) MFI	U	**B1405**	**PA4061**	**N/R**	**BF1148**	**N/R**	
	SC300 6-2997cc (3.0L) MFI	J	**B1405**	**PA4060**		**BF1148**	**N/R**	
	SC400 V8-3967cc (4.0L) MFI	U	**B1405**	**PA4060**		**BF1148**	**N/R**	
1991	ES250 V6-2508cc (2.5L) MFI	V	**B1405**	**PA2041**	**N/R**	**BF1179**	**N/R**	
	LS400 V8-3967cc (4.0L) MFI	U	**B1405**	**PA4061**	**N/R**	**BF1148**	**N/R**	
1990	ES250 V6-2508cc (2.5L) MFI	V	**B1405**	**PA2041**	**N/R**	**BF1179**	**N/R**	
	LS400 V8-3967cc (4.0L) EFI	U	**B1405**	**PA4061**	**N/R**	**BF1148**	**N/R**	
LINCOLN								
2010	MKS V6-214 (3.5L) FI Twin Turbo	T	**B7449**	**PA4321**	**PA4365**	**N/S**	**N/R**	**N/S**
	V6-227 (3.7L) FI	R	**B7449**	**PA4321**	**PA4365**	**N/S**	**N/R**	**N/S**
	MKT V6-214 (3.5L) FI Twin Turbo	T	**B7449**	**PA4321**	**PA4365**	**N/S**	**N/R**	**N/S**
	V6-226 (3.7L) FI	R	**B7449**	**PA4321**	**PA4365**	**N/S**	**N/R**	**N/S**
	MKX V6-214 (3.5L) FI	C	**B7449**	**PA4321**	**PA4365**	**N/S**	**N/R**	**N/S**
	MKZ V6-214 (3.5L) FI	C	**B7449**	**PA4321**		**N/S**	**N/R**	**N/S**
	Navigator V8-330 (5.4L) FI	5	**B329**	**PA4323**	**N/R**	**BF7742**	**N/R**	
	Town Car V8-281 (4.6L) FI or Flex Fuel	V	**B329**	**PA2152**	**N/R**	**BF7668**	**N/R**	4R70W **18029**
2009	MKS V6-227 (3.7L) FI	R	To 4/27/09 **B243** 4/27/09-on **B7449**	**PA4321**	**N/R**	**N/S**	**N/R**	**N/S**
	MKX V6-213 (3.5L) FI	C	To 1/16/09 **B243** 1/16/09-on **B7449**	**PA4321**	**PA4365**	**N/S**	**N/R**	**N/S**
	MKZ V6-214 (3.5L) SFI	T	To 1/16/09 **B243** 1/16/09-on **B7449**	**PA4321**	**N/R**	**N/S**	**N/R**	**N/S**
	Navigator V8-330 (5.4L) FI	5	**B329**	**PA4323**	**N/R**	**BF7742**	**N/R**	
	Town Car V8-281 (4.6L) FI or Flex Fuel	V,W	**B329**	**PA2152**	**N/R**	**BF7668**	**N/R**	4R70W **18029**
2008	Mark LT V8-330 (5.4L) FI	5	**B329**	**PA4167**	**N/R**	**BF7802**	**N/R**	**18029**
	MKX V6-214 (3.5L) FI	C	**B243**	**PA4321**	**PA4365**	**N/S**	**N/R**	**N/S**
	MKZ V6-214 (3.5L) SFI	T	**B243**	**PA4321**	**N/R**	**N/S**	**N/R**	**N/S**
	Navigator V8-330 (5.4L) SFI	5	**B329**	**PA4323**	**N/R**	**BF7742**	**N/R**	6 Spd. **20006**
	Town Car V8-281 (4.6L) FI or Flex Fuel	V,W	**B329**	**PA2152**	**N/R**	**BF7668**	**N/R**	4R70W **18029**
2007	Mark LT V8-330 (5.4L) EFI	5	**B329**	**PA4167**	**N/R**	**BF7802**	**N/R**	**18029**
	MKX V6-214 (3.5L) FI	C	**B243**	**PA4321**	**PA4365**	**N/S**	**N/R**	**N/S**
	MKZ V6-214 (3.5L) SFI	T	**B243**	**PA4321**	**N/R**	**N/S**	**N/R**	**N/S**
	Navigator V8-330 (5.4L) SFI	5	**B329**	**PA4323**	**N/R**	**BF7742**	**N/R**	6 Speed **20006**
	Town Car V8-281 (4.6L) FI or Flex Fuel	V,W	**B329**	**PA2152**	**N/R**	**BF7668**	**N/R**	4R70W **18029**
2006	LS V8-241 (3.9L) EFI or Flex Fuel	A	**B1435**	**PA4181**		**BF7802**	**N/R**	5R55S **20006**
	Mark LT V8-330 (5.4L) EFI	5	**B329**	**PA4167**	**N/R**	To 12/05/05 **BF7668** 12/05/05-on **BF7802**	**N/R**	4R75W **18029**
	Navigator V8-330 (5.4L) SFI	5	**B329**	**PA4167**	**PA4133**	**BF7668**	**N/R**	4R100 2WD **18264** 4R100 4WD **18265**
	Town Car V8-281 (4.6L) FI or Flex Fuel	V,W	**B329**	**PA2152**	**N/R**	**BF7668**	**N/R**	4R70W **18029**
	Zephyr V6 183 (3.0L) FI	1	**B329**	**PA4176**	**N/R**	**N/S**	**N/R**	
2005	Aviator V8-281 (4.6L) SFI	H	**B329**	**PA4147**		**BF7802**	**N/R**	5R55S **20002**
	LS V6-181 (3.0L) EFI	S	**B243**	**PA4181**		**BF7802**	**N/R**	5R55S **20006**
	V8-241 (3.9L) EFI	A	**B1435**	**PA4181**		**BF7802**	**N/R**	5R55S **20006**
	Navigator V8-330 (5.4L) SFI	5	**B329**	**PA4167**	**PA4133**	**BF7668**	**N/R**	4R100 2WD **18264** 4R100 4WD **18265**

[t] Transmission, Not Model, Determines Which Transmission Filter is Used. OBS = Obsolete. Availability Limited to Distributor Stock.

LINCOLN Cont'd.

Year	Model and Engine	VIN	Lube	Air	Cabin Air	Fuel	Breather	Trans.†
2005	Town Car V8-281 (4.6L) SFI	W	**B329**	**PA2152**	**N/R**	**BF7668**	**N/R**	4R70W **18029**
2004	Aviator V8-281 (4.6L) SFI	H	**B329**	**PA4147**	**N/R**	**BF7802**	**N/R**	5R55S **20002**
	LS V6-181 (3.0L) SFI	S	**B243**	**PA4181**		**BF7802**	**N/R**	5R55S **20006**
	V8-241 (3.9L) SFI	A	**B1435**	**PA4181**		**BF7802**	**N/R**	5R55S **20006**
	Navigator V8-330 (5.4L) SFI	R	**B329**	**PA4167**	Opt. **PA4133**	**BF7800**	**N/R**	4R100 2WD **18264** 4R100 4WD **18265**
	Town Car V8-281 (4.6L) SFI	W	**B329**	**PA2152**	**N/R**	**BF7668**	**N/R**	4R70W **18029**
2003	Aviator V8-281 (4.6L) SFI	H	**B329**	**PA4147**	**N/R**	**BF7802**	**N/R**	5R55S **20002**
	LS V6-181 (3.0L) SFI	S	**B243**	**PA4181**		**BF7802**	**N/R**	5R55S **20006**
	V8-241 (3.9L) SFI	A	**B1435**	**PA4181**		**BF7802**	**N/R**	5R55S **20006**
	Navigator V8-330 (5.4L) SFI	R	**B329**	**PA4075**	Opt. **PA4133**	**BF7800**	**N/R**	4R100 2WD **18264** 4R100 4WD **18265**
	Town Car V8-281 (4.6L) SFI	W	**B329**	**PA2152**	**N/R**	**BF7668**	**N/R**	4R70W **18029**
2002	Blackwood V8-330 (5.4L) SFI	A	**B329**	**PA4075**	Opt. **PA4133**	**BF7668**	**N/R**	4R100 2WD **18264** 4R100 4WD **18265**
	Continental V8-281 (4.6L) SFI	V	**B329**	**PA4075**		**BF966**	**N/R**	4F50N **18033**
	LS V6-181 (3.0L) SFI	S	**B243**	**PA4181**		**BF7668**	**N/R**	5R55N **20007**
	V8-241 (3.9L) SFI	A	**B1435**	**PA4181**		**BF7668**	**N/R**	5R55N **20007**
	Navigator V8-330 (5.4L) SFI	R	**B329**	**PA4075**	Opt. **PA4133**	**BF7668**	**N/R**	4R100 2WD **18264** 4R100 4WD **18265**
	Town Car V8-281 (4.6L) SFI	W	**B329**	**PA2152**	**N/R**	**BF7668**	**N/R**	4R70W **18029**
2001	Continental V8-281 (4.6L) SFI	V	**B329**	**PA4075**		**BF966**	**N/R**	AX4N **18033**
	LS V6-181 (3.0L) SFI	S	**B243**	**PA4181**		**BF7668**	**N/R**	5R55N **20007**
	V8-241 (3.9L) SFI	A	**B1435**	**PA4181**		**BF7668**	**N/R**	5R55N **20007**
	Navigator V8-330 (5.4L) SFI	A,R	**B329**	**PA4075**	Opt. **PA4133**	**BF7668**	**N/R**	4R100 2WD **18264** 4R100 4WD **18265**
	Town Car V8-281 (4.6L) SFI	W	**B329**	**PA2152**	**N/R**	**BF7668**	**N/R**	4R70W **18029**
2000	Continental V8-281 (4.6L) SFI	V	**B329**	**PA4075**		**BF966**	**N/R**	AX4N **18033**
	LS V6-181 (3.0L) SFI	S	**B243**	**PA4181**		**BF7668**	**N/R**	5R55N **20007**
	V8-241 (3.9L) SFI	A	**B1435**	**PA4181**		**BF7668**	**N/R**	5R55N **20007**
	Navigator V8-330 (5.4L) SFI	A	**B329**	**PA4075**	Opt. **PA4133**	**BF7668**	**N/R**	4R100 2WD **18264** 4R100 4WD **18265**
	Town Car V8-281 (4.6L) SFI	W	**B329**	**PA2152**	**N/R**	**BF7668**	**N/R**	4R70W **18029**
1999	Continental V8-281 (4.6L) SFI	V	**B329**	**PA4075**		**BF966**	**N/R**	AX4N **18033**
	Navigator V8-330 (5.4L) SFI	L	**B329**	**PA4075**	Opt. **PA4133**	**BF7668**	**N/R**	4R100 2WD **18264** 4R100 4WD **18265**
	Town Car V8-281 (4.6L) SFI	W	**B329**	**PA2152**	**N/R**	**BF7668**	**N/R**	**18029**
1998	Continental V8-281 (4.6L) SFI	V	**B329**	**PA4075**		**BF966**	**N/R**	AX4N **18033**
	Mark VIII V8-281 (4.6L) SFI	V	**B329**	**PA2228**	**N/R**	**BF1170**	**N/R**	**18029**
	Navigator V8-330 (5.4L) SFI	L	**B329**	**PA4075**	Opt. **PA4133**	**BF1166**	**N/R**	4R100 2WD **18264** 4R100 4WD **18265**
	Town Car V8-281 (4.6L) SFI	W	**B329**	**PA2152**	**N/R**	**BF7668**	**N/R**	**18029**
1997	Continental V8-281 (4.6L) SFI	V	**B329**	**PA4075**		**BF966**	**N/R**	AX4N **18033**
	Mark VIII V8-281 (4.6L) SFI	V	**B329**	**PA2228**	**N/R**	**BF1170**	**N/R**	**18029**
	Town Car V8-281 (4.6L) SFI	W	**B329**	**PA2152**	**N/R**	**BF966**	**N/R**	**18029**
1996	Continental V8-281 (4.6L) SFI	V	**B329**	**PA4075**		**BF966**	**N/R**	AX4N **18033**
	Mark VIII V8-281 (4.6L) SFI	V	**B329**	**PA2228**	**N/R**	**BF1170**	**N/R**	**18029**
	Town Car V8-281 (4.6L) SFI	W	**B329**	**PA2152**	**N/R**	**BF966**	**N/R**	**18029**
1995	Continental V8-281 (4.6L) SFI	V	**B329**	**PA4075**		**BF966**	**N/R**	AX4N **18033**
	Mark VIII V8-281 (4.6L) SFI	V	**B329**	**PA2228**	**N/R**	**BF1170**	**N/R**	AODE **18002**
	Town Car V8-281 (4.6L) SFI	W	**B329**	**PA2152**	**N/R**	**BF966**	**N/R**	AODE **18002**
1994	Continental V6-232 (3.8L) EFI	4	**B243**	**PA2150**	**N/R**	**BF966**	**SA2159**	**18171**
	Mark VIII V8-281 (4.6L) SFI	V	**B329**	**PA2228**	**N/R**	**BF1170**	**N/R**	AODE **18002**
	Town Car V8-281 (4.6L) EFI	W	**B329**	**PA2152**	**N/R**	**BF966**	**N/R**	AODE **18002**
1993	Continental V6-232 (3.8L) EFI	4	**B243**	**PA2150**	**N/R**	**BF966**	**SA2159**	**18171**
	Mark VIII V8-281 (4.6L) SFI	V	**B329**	**PA2228**	**N/R**	**BF1170**	**N/R**	AODE **18002**
	Town Car V8-281 (4.6L) EFI	W	**B329**	**PA2152**	**N/R**	**BF966**	**N/R**	AODE **18002**
1992	Continental V6-232 (3.8L) SFI	4	**B243**	**PA2150**	**N/R**	**BF966**	**SA2159**	**18171**
	Mark VII V8-302 (5.0L) SFI HO	E	**B2**	**PA2149**	**N/R**	**BF966**	**N/R**	**19640**
	Town Car V8-281 (4.6L) SFI	W	**B329**	**PA2152**	**N/R**	**BF966**	**N/R**	AOD **19640** AODE **18002**
1991	Continental V6-232 (3.8L) SFI	4	**B243**	**PA2150**	**N/R**	**BF966**	**SA2159**	**18171**
	Mark VII V8-302 (5.0L) SFI	E	**B2**	**PA2149**	**N/R**	**BF966**	**N/R**	**19640**
	Town Car V8-281 (4.6L) SFI	W	**B329**	**PA2152**	**N/R**	**BF966**	**N/R**	AOD **19640** AODE **18002**
1990	Continental V6-232 (3.8L) EFI	4	**B243**	**PA2150**	**N/R**	**BF966**	**SA2159**	**18171**
	Mark VII V8-302 (5.0L) MFI	E	**B2**	**PA2149**	**N/R**	**BF966**	**N/R**	**19640**

OBS = Obsolete. Availability Limited to Distributor Stock. † Transmission, Not Model, Determines Which Transmission Filter is Used.

Year	Model and Engine	VIN	Lube	Air	Cabin Air	Fuel	Breather	Trans.[t]
LINCOLN Cont'd.								
1990	Town Car V8-302 (5.0L) EFI	F	**B2**	**PA2152**	**N/R**	**BF966**	**N/R**	**19640**
1989	Continental V6-232 (3.8L) EFI	4	**B243**	**PA2150**	**N/R**	**BF966**	**N/R**	**18171**
	Mark VII V8-302 (5.0L) EFI	E	**B2**	**PA2149**	**N/R**	**BF966**	**N/R**	**19640**
	Town Car V8-302 (5.0L) EFI	F	**B2**	**PA2152**	**N/R**	**BF966**	**N/R**	**19640**
1988	Continental V6-232 (3.8L) EFI	5	**B243**	**PA2150**	**N/R**	**BF966**	**N/R**	**18171**
	Mark VII V8-302 (5.0L) EFI HO	E	**B2**	**PA2149**	**N/R**	**BF966**	**N/R**	**19640**
	Town Car V8-302 (5.0L) EFI	F	**B2**	**PA2152**	**N/R**	**BF966**	**N/R**	**19640**
1987	Continental V8-302 (5.0L) FI	F	**B2**	**PA2149**	**N/R**	**BF966**	**N/R**	**19640**
	Mark VII V8-302 (5.0L) FI	F	**B2**	**PA2149**	**N/R**	**BF966**	**N/R**	**19640**
	V8-302 (5.0L) FI	M	**B2**	**PA2149**	**N/R**	**BF966**	**N/R**	**19640**
	Town Car V8-302 (5.0L) FI	F	**B2**	**PA2152**	**N/R**	**BF966**	**N/R**	**19640**
1986	Continental V8-302 (5.0L) FI	F	**B2**	**PA2149**	**N/R**	**BF966**	**N/R**	**19640**
	Mark VII V8-302 (5.0L) FI	F	**B2**	**PA2149**	**N/R**	**BF966**	**N/R**	**19640**
	V8-302 (5.0L) FI	M	**B2**	**PA2149**	**N/R**	**BF966**	**N/R**	**19640**
	Town Car V8-302 (5.0L) FI	F	**B2**	**PA2152**	**N/R**	**BF966**	**N/R**	**19640**
1985	Continental 6-2400cc (2.4L) Turbo Diesel	L	**B141**		**N/R**		**N/R**	**19640**
	V8-302 (5.0L) FI	F	**B2**	**PA2051**	**N/R**	**BF966**	**SA2085**	AOT/F10D **19640**
	Mark VII 6-2400cc (2.4L) Turbo Diesel	L			**N/R**		**N/R**	
	V8-302 (5.0L) FI	F	**B2**	**PA2051**	**N/R**	**BF966**	**SA2085**	AOT/F10D **19640**
	V8-302 (5.0L) FI	M	**B2**	**PA2002**	**N/R**	**BF966**	**SA2085**	AOT/F10D **19640**
	Town Car V8-302 (5.0L) FI	F	**B2**	**PA2051**	**N/R**	**BF966**	**SA2085**	AOT/F10D **19640**
1984	Continental, Mark VII, Town Car 6-2400cc (2.4L) Turbo Diesel	L			**N/R**		**N/R**	
	V8-302 (5.0L) FI	F	**B2**	**PA2051**	**N/R**	**BF966**	**SA2085**	AOT/F10D **19640**
1983	Continental V8-302 (5.0L) FI	F	**B2**	**PA2051**	**N/R**	**BF966**	**SA2085**	AOT/F10D **19640**
	Mark VI, Town Car V8-302 (5.0L) FI	F	**B2**	**PA2051**	**N/R**	**BF966**	**SA2085**	AOT/F10D **19640**
1982	Continental V6-232 (3.8L) 2 Bbl.	3	**B2**	**PA2057**	**N/R**	**BF920**[17]	**SA2085**	AOT/F10D **19640**
	V8-302 (5.0L) FI	F	**B2**	**PA2066 OBS**	**N/R**		**SA2085**	AOT/F10D **19640**
	Mark VI, Town Car V8-302 (5.0L) FI	F	**B2**	**PA2051**	**N/R**		**SA2085**	AOT/F10D **19640**
1981	Continental, Mark VI, Versailles V8-302 (5.0L) FI	F	**B2**	**PA2051**	**N/R**		**SA2085**	AOT/F10D **19640**
	Town Car V8-302 (5.0L) EFI	F	**B2**	**PA2051**	**N/R**		**SA2085**	**19640**
1980	Continental, Mark VI V8-302 (5.0L) FI	F	**B2**	**PA2051**	**N/R**		**SA2085**	AOT/F10D **19640**
	V8-351 (5.8L) 2 Bbl.	G	**B2**	**PA2051**	**N/R**	In-Line **BF989**	**SA2085**	AOT/F10D **19640**
	Versailles V8-302 (5.0L) 2 Bbl.	F	**B2**	**PA2051**	**N/R**	In-Line **BF989**	**SA2085**	
LOTUS								
1993	Esprit 4-2174cc (2.2L) FI Turbo Canada	0			**N/R**		**N/R**	
1991	Esprit 4-2174cc (2.2L) FI Turbo Canada	0			**N/R**		**N/R**	
1990	Esprit 4-2174cc (2.2L) FI Turbo Canada	0			**N/R**		**N/R**	
1989	Esprit 4-2174cc (2.2L) FI Turbo Canada	0	**B34**		**N/R**		**N/R**	
MAYBACH								
2010	57 V12-5499cc (5.5L) FI Bi-Turbo					**N/S**	**N/R**	
	57S V12-5980cc (6.0L) FI Bi-Turbo					**N/S**	**N/R**	
	62 V12-5499cc (5.5L) FI Bi-Turbo					**N/S**	**N/R**	
	62S V12-5980cc (6.0L) FI Bi-Turbo					**N/S**	**N/R**	
	Landaulet V12-5980cc (6.0L) FI Bi-Turbo					**N/S**	**N/R**	
2009	57 V12-5499cc (5.5L) FI Twin Turbo					**N/S**	**N/R**	
	57S V12-5980cc (6.0L) FI Twin Turbo						**N/R**	
	62 V12-5499cc (5.5L) FI Twin Turbo					**N/S**	**N/R**	
	62S V12-5980cc (6.0L) FI Twin Turbo						**N/R**	
	Landaulet V12-5980cc (6.0L) FI Twin Turbo					**N/S**	**N/R**	
2008	57 V12-5499cc (5.5L) FI Twin Turbo						**N/R**	
	57S V12-5980cc (6.0L) FI Twin Turbo						**N/R**	
	62 V12-5499cc (5.5L) FI Twin Turbo						**N/R**	
	62S V12-5980cc (6.0L) FI Twin Turbo						**N/R**	
2007	57 V12-5499cc (5.5L) FI Twin Turbo						**N/R**	
	57S V12-5980cc (6.0L) FI Twin Turbo						**N/R**	
	62 V12-5499cc (5.5L) FI Twin Turbo						**N/R**	
	62S V12-5980cc (6.0L) FI Twin Turbo						**N/R**	
2006	57S V12-5980cc (6.0L) FI Twin Turbo						**N/R**	
	62 V12-5499cc (5.5L) FI Twin Turbo						**N/R**	
	62S V12-5980cc (6.0L) FI Twin Turbo						**N/R**	
2005	57 V12-5499cc (5.5L) FI Twin Turbo						**N/R**	
	62 V12-5499cc (5.5L) FI Twin Turbo						**N/R**	
2004	57 V12-5499cc (5.5L) FI Twin Turbo					**N/S**	**N/R**	

[t] Transmission, Not Model, Determines Which Transmission Filter is Used. OBS = Obsolete. Availability Limited to Distributor Stock. [17] Exc. Calif.

Year	Model and Engine	VIN	Lube	Air	Cabin Air	Fuel	Breather	Trans.[t]
MAYBACH Cont'd.								
2004	62 V12-5499cc (5.5L) FI Twin Turbo					**N/S**	**N/R**	
2003	57 V12-5499cc (5.5L) FI Twin Turbo					**N/S**	**N/R**	
	62 V12-5499cc (5.5L) FI Twin Turbo					**N/S**	**N/R**	
MAZDA								
2010	CX-7 4-138 (2.3L) FI Turbo	3,L	Ele. **P7313** Spin-on **B1413**	**PA4360**		**N/S**	**N/R**	
	4-2488cc (2.5L) FI	5,M	**B1413**	**PA4360**		**N/S**	**N/R**	
	CX-9 V6-3726cc (3.7L) EFI	A,V	**B243**	**PA4321**		**N/S**	**N/R**	
	Mazda3 4-122 (2.0L) MFI	F,G	**B1413**	**PA4345**	**PA4403**	**N/S**	**N/R**	
	4-152 (2.5L) FI	5,6	**B1413**	**PA4345**	**PA4403**	**N/S**	**N/R**	
	Mazda5 4-138 (2.3L) FI	3,L	**P7313**	**PA4345**	**PA4403**	**N/S**	**N/R**	4 Spd. **18267**
	Mazda6 4-152 (2.5L) FI	A	Ele. **P7313** Spin-on **B1413**	**PA4175**		**N/S**	**N/R**	
	V6-227 (3.7L) FI	B	**B243**	**PA4321**		**N/S**	**N/R**	
	MazdaSpeed3 4-138 (2.3L) DI Turbo	3,4	**B1413**	**PA4345**	**PA4403**	**N/S**	**N/R**	**M.T.**
	Miata MX-5 4-122 (2.0L) MFI	F	**B1413**		**N/R**		**N/R**	
	RX-8 2-1308cc (1.3L) Rotary MFI	2,4,M,P				**N/S**	**N/R**	
	Tribute 4-152 (2.5L) FI Hybrid	3	Ele. **P7313**		**PA4394**	**BF1166**	**N/R**	**N/S**
	4-152 (2.5L) FI	7	Ele. **P7313**		**PA4394**	**BF1166**	**N/R**	**N/S**
	V6-183 (3.0L) FI	G	**B7449**		**PA4394**	**BF1166**	**N/R**	**N/S**
2009	B2300 Pickup 4-138 (2.3L) MFI	D	**B1413**	**PA4160**	**N/R**		**N/R**	5R55E S. Pan **18024** 5R55E D. Pan **18025**
	B4000 Pickup V6-245 (4.0L) FI	E	**B329**	**PA4160**	**N/R**		**N/R**	5R55E S. Pan **18024** 5R55E D. Pan **18025**
	CX-7 4-138 (2.3L) DI Turbo	3,L	**P7313**	**PA4360**		**N/S**	**N/R**	
	CX-9 V6-3726cc (3.7L) EFI	A,V	**B243**	**PA4321**		**N/S**	**N/R**	
	Mazda3 4-122 (2.0L) MFI	F,G	**B1413**	**PA4345**	**PA4403**	**N/S**	**N/R**	4 Spd. **18267**
	4-138 (2.3L) MFI	3,4	**P7313**	**PA4345**	**PA4403**	**N/S**	**N/R**	4 Spd. **18267**
	Mazda5 4-138 (2.3L) FI	3,L	**P7313**	**PA4345**	**PA4403**	**N/S**	**N/R**	4 Spd. **18267**
	Mazda6 4-152 (2.5L) MFI	A	Ele. **P7313** Spin-on **B7165**	**PA4175**		**N/S**	**N/R**	
	V6-227 (3.7L) FI	B	**B243**	**PA4321**		**N/S**	**N/R**	
	MazdaSpeed3 4-138 (2.3L) DI Turbo	L,M	**P7313**	**PA4345**	**PA4403**	**N/S**	**N/R**	**M.T.**
	Miata MX-5 4-122 (2.0L) MFI	F	**B1413**		**N/R**		**N/R**	
	RX-8 2-1308cc (1.3L) Rotary MFI	4,M,P				**N/S**	**N/R**	
	Tribute 4-152 (2.5L) FI Hybrid	3	**P7313**		**PA4394**	**BF1166**	**N/R**	**N/S**
	4-152 (2.5L) FI	7	**P7313**		**PA4394**	**BF1166**	**N/R**	**N/S**
	V6-183 (3.0L) FI	G			**PA4394**	**BF1166**	**N/R**	**N/S**
2008	B2300 Pickup 4-138 (2.3L) MFI	D	**B1413**	**PA4160**	**N/R**	**BF7765**	**N/R**	5R55E S. Pan **18024** 5R55E D. Pan **18025**
	B4000 Pickup V6-245 (4.0L) FI	E	**B329**	**PA4160**	**N/R**	**BF7765**	**N/R**	2WD **18024** 4WD **18025**
	CX-7 4-138 (2.3L) DI Turbo	3,L	**P7313**	**PA4360**		**N/S**	**N/R**	
	CX-9 V6-3726cc (3.7L) EFI	A,V	**B243**	**PA4321**		**N/S**	**N/R**	
	Mazda3 4-122 (2.0L) MFI	F,G	**B1413**	**PA4345**	**PA4403**	**N/S**	**N/R**	4 Spd. **18267**
	4-138 (2.3L) MFI	3,4	**P7313**	**PA4345**	**PA4403**	**N/S**	**N/R**	4 Spd. **18267**
	Mazda5 4-138 (2.3L) FI	3	**P7313**	**PA4345**	**PA4403**	**N/S**	**N/R**	4 Spd. **18267**
	Mazda6 4-138 (2.3L) MFI	C	**P7313**	**PA4310**		**N/S**	**N/R**	**18267**
	V6-182 (3.0L) MFI	D	**B329**	**PA4360**		**N/S**	**N/R**	6 Spd. **N/S**
	MazdaSpeed3 4-138 (2.3L) DI Turbo	L,M	**P7313**	**PA4345**	**PA4403**	**N/S**	**N/R**	**M.T.**
	Miata MX-5 4-122 (2.0L) MFI	F	**B1413**		**N/R**		**N/R**	
	RX-8 2-1308cc (1.3L) Rotary MFI	3	**B1400**			**N/S**	**N/R**	**M.T.**
	Tribute 4-138 (2.3L) MFI Hybrid	H	**P7313**		**PA4394**	**BF966**	**N/R**	**N/S**
	4-138 (2.3L) MFI	Z	**B1413**	**PA4163**	**PA4394**	**BF966**	**N/R**	
	6-181 (3.0L) MFI	1	**B329**	**PA4163**	**PA4394**	**BF966**	**N/R**	
2007	B2300 Pickup 4-138 (2.3L) EFI	D	**B1413**	**PA4160**	**N/R**	**BF7765**	**N/R**	2WD **18024** 4WD **18025**
	B3000 Pickup V6-182 (3.0L) FI	U	**B243**	**PA4160**	**N/R**	**BF7765**	**N/R**	2WD **18024** 4WD **18025**

OBS = Obsolete. Availability Limited to Distributor Stock. [t] Transmission, Not Model, Determines Which Transmission Filter is Used.

MAZDA Cont'd.

Year	Model and Engine	VIN	Lube	Air	Cabin Air	Fuel	Breather	Trans.t
2007	B4000 Pickup V6-245 (4.0L) EFI	E	**B329**	**PA4160**	**N/R**	**BF7765**	**N/R**	2WD **18024** 4WD **18025**
	CX-7 4-138 (2.3L) DI Turbo	3	**P7313**	**PA4360**		**N/S**	**N/R**	
	CX-9 V6-3496cc (3.5L) EFI	Y	**B243**	**PA4321**		**N/S**	**N/R**	**N/S**
	Mazda3 4-122 (2.0L) MFI	F	**B1413**	**PA4345**	**PA4403**	**N/S**	**N/R**	**18267**
	4-138 (2.3L) MFI	3	**P7313**	**PA4345**	**PA4403**	**N/S**	**N/R**	**18267**
	Mazda5 4-138 (2.3L) MFI	3	**P7313**	**PA4345**	**PA4403**	**N/S**	**N/R**	4 Spd. **18267**
	Mazda6 4-138 (2.3L) MFI	C	**P7313**	**PA4310**		**N/S**	**N/R**	**18267**
	V6-182 (3.0L) MFI	D	**B329**	**PA4360**		**N/S**	**N/R**	6 Spd. **N/S**
	MazdaSpeed3 4-138 (2.3L) FI Turbo	L,M	**P7313**	**PA4345**	**PA4403**	**N/S**	**N/R**	6 Spd. **M.T.**
	MazdaSpeed6 4-138 (2.3L) FI Turbo	L	**P7313**	**PA4360**		**N/S**	**N/R**	**18267**
	MX-5 4-122 (2.0L) MFI	F	**B1413**		**N/R**		**N/R**	
	RX-8 2-1308cc (1.3L) Rotary MFI	3	**B1400**			**N/S**	**N/R**	6 Spd. **M.T.**
2006	B2300 Pickup 4-2300cc (2.3L) FI	D	**B1413**	**PA4160**	**N/R**	**BF7765**	**N/R**	2WD **18024** 4WD **18025**
	B3000 Pickup V6-182 (3.0L) FI	U	**B243**	**PA4160**	**N/R**	**BF7765**	**N/R**	2WD **18024** 4WD **18025**
	B4000 Pickup V6-245 (4.0L) EFI	E	**B329**	**PA4160**	**N/R**	**BF7765**	**N/R**	2WD **18024** 4WD **18025**
	Mazda3 4-121 (2.0L) MFI	F	**B1413**	**PA4345**	**PA4403**	**N/S**	**N/R**	**18267**
	4-2254cc (2.3L) MFI	3	**P7313**	**PA4345**	**PA4403**	**N/S**	**N/R**	**18267**
	Mazda5 4-138 (2.3L) MFI	3	**P7313**	**PA4345**	**PA4403**	**N/S**	**N/R**	**18267**
	Mazda6 4-138 (2.3L) MFI	C	**P7313**	**PA4310**		**N/S**	**N/R**	4 Spd. **18267** 6 Spd. **N/S**
	V6-181 (3.0L) MFI	D	**B329**	**PA4360**		**N/S**	**N/R**	4 Spd. **18267** 6 Spd. **N/S**
	MazdaSpeed6 4-183 (2.3L) FI Turbo	2	**P7313**	**PA4360**		**N/S**	**N/R**	**18267**
	MPV Van V6-181 (3.0L) MFI	A	**B329**	**PA4310**		**N/S**	**N/R**	**N/S**
	MX-5 4-122 (2.0L) MFI	F	**B1413**				**N/R**	
	RX-8 2-1308cc (1.3L) Rotary MFI	3	**B1400**			**N/S**	**N/R**	**M.T.**
	Tribute 4-138 (2.3L) SFI	Z	**B1413**	**PA4163**	Opt. **PA4370**	**BF966**	**N/R**	
	V6-181 (3.0L) SFI	1	**B329**	**PA4163**	Opt. **PA4370**	**BF966**	**N/R**	
2005	B2300 Pickup 4-2300cc (2.3L) EFI	D	**B243**	**PA4160**	**N/R**	**BF7765**	**N/R**	2WD **18024** 4WD **18025**
	B3000 Pickup V6-182 (3.0L) EFI	U	**B243**	**PA4160**	**N/R**	**BF7765**	**N/R**	2WD **18024** 4WD **18025**
	B4000 Pickup V6-245 (4.0L) EFI	E	**B329**	**PA4160**	**N/R**	**BF7765**	**N/R**	2WD **18024** 4WD **18025**
	Mazda3 4-122 (2.0L) MFI	F	**B1413**	**PA4345**	**N/R**	**N/S**	**N/R**	**18267**
	4-138 (2.3L) MFI	3	**P7313**	**PA4345**	**N/R**	**N/S**	**N/R**	**18267**
	Mazda6 4-138 (2.3L) MFI	C	**P7313**	**PA4310**		**N/S**	**N/R**	**18267**
	V6-181 (3.0L) MFI	D	**B329**	**PA4360**		**N/S**	**N/R**	**N/S**
	Miata MX-5 4-112 (1.8L) MFI or Turbo	3	**B1400**		**N/R**		**N/R**	
	MPV Van V6-181 (3.0L) MFI	A	**B329**	**PA4310**		**N/S**	**N/R**	**N/S**
	RX-8 2-1308cc (1.3L) MFI Renesis	3	**B1400**			**N/S**	**N/R**	**M.T.**
	Tribute 4-138 (2.3L) SFI	Z	**B1413**	**PA4163**	Opt. **PA4370**	**BF966**	**N/R**	
	V6-181 (3.0L) SFI	1	**B329**	**PA4163**	Opt. **PA4370**	**BF966**	**N/R**	
2004	B2300 Pickup 4-2300cc (2.3L) MFI	D	**B243**	**PA4102**	**N/R**	**BF7765**	**N/R**	2WD **18024** 4WD **18025**
	B3000 Pickup V6-182 (3.0L) MFI	U	**B243**	**PA4102**	**N/R**	**BF7765**	**N/R**	2WD **18024** 4WD **18025**
	B4000 Pickup V6-245 (4.0L) MFI	E	**B329**	**PA4102**	**N/R**	**BF7765**	**N/R**	2WD **18024** 4WD **18025**
	Mazda3 4-122 (2.0L) MFI	F	**B1413**	**PA4345**	**N/R**	**N/S**	**N/R**	**18267**
	4-138 (2.3L) MFI	3	**P7313**	**PA4345**	**N/R**	**N/S**	**N/R**	**18267**
	Mazda6 4-138 (2.3L) MFI	C	**P7313**	**PA4310**		**N/S**	**N/R**	**18267**
	V6-181 (3.0L) MFI	D	**B329**	**PA4360**		**N/S**	**N/R**	**N/S**
	Miata 4-112 (1.8L) MFI or Turbo	3	**B179**		**N/R**		**N/R**	
	MPV Van V6-181 (3.0L) MFI	A	**B329**	**PA4310**		**N/S**	**N/R**	**N/S**
	RX-8 2-1308cc Rotary (1.3L) FI Renesis	3	**B1400**			**N/S**	**N/R**	**N/S**
	Tribute 4-121 (2.0L) SFI	B	**B1416**	**PA4163**	Opt. **PA4370**	**BF966**	**N/R**	
	V6-183 (3.0L) SFI	1	**B329**	**PA4163**	Opt. **PA4370**	**BF966**	**N/R**	
2003	B2300 Pickup 4-2300cc (2.3L) MFI	D	**B243**	**PA4102**	**N/R**	**BF7765**	**N/R**	2WD **18024** 4WD **18025**
	B3000 Pickup V6-182 (3.0L) MFI or Flex Fuel	U	**B243**	**PA4102**	**N/R**	**BF7765**	**N/R**	2WD **18024** 4WD **18025**

t Transmission, Not Model, Determines Which Transmission Filter is Used. OBS = Obsolete. Availability Limited to Distributor Stock.

MAZDA Cont'd.

Year	Model and Engine	VIN	Lube	Air	Cabin Air	Fuel	Breather	Trans.t
2003	B4000 Pickup V6-245 (4.0L) MFI	X	**B329**	**PA4102**	**N/R**	**BF7765**	**N/R**	2WD **18024** 4WD **18025**
	Mazda6 4-138 (2.3L) MFI	C	**P7313**	**PA4310**		**N/S**	**N/R**	**18267**
	V6-181 (3.0L) MFI	D	**B329**	**PA4360**		**N/S**	**N/R**	**N/S**
	Miata 4-112 (1.8L) MFI	3	**B1400**		**N/R**		**N/R**	
	MPV Van V6-181 (3.0L) MFI	A	**B329**	**PA4310**		**N/S**	**N/R**	**N/S**
	Protege 4-1589cc (1.6L) FI Canada		**B1400**	**PA4084**	**N/R**	**N/S**	**N/R**	**18267**
	4-122 (2.0L) MFI	5	**B1400**	**PA4084**	**N/R**	**N/S**	**N/R**	**18267**
	4-122 (2.0L) MFI Turbo	7	**B1400**	**PA4084**	**N/R**	**N/S**	**N/R**	**M.T.**
	Tribute 4-121 (2.0L) SFI	B	**B1416**	**PA4163**	Opt. **PA4370**	**BF966**	**N/R**	**M.T.**
	V6-2954cc (3.0L) SFI	1	**B329**	**PA4163**	Opt. **PA4370**	**BF966**	**N/R**	
2002	626 4-122 (2.0L) MFI	E	**B1400**	**PA4114**	**PA4392**	**BF1194**	**N/R**	**18005**
	V6-152 (2.5L) MFI	F	**B1402**	**PA4114**	**PA4392**	**BF1194**	**N/R**	**18005**
	B2300 Pickup 4-2300cc (2.3L) MFI	D	**B243**	**PA4102**	**N/R**	**BF7765**	**N/R**	2WD **18024** 4WD **18025**
	B3000 Pickup V6-182 (3.0L) MFI or Flex Fuel	U	**B243**	**PA4102**	**N/R**	**BF7765**	**N/R**	2WD **18024** 4WD **18025**
	B4000 Pickup V6-245 (4.0L) MFI	E	**B329**	**PA4102**	**N/R**	**BF7765**	**N/R**	2WD **18024** 4WD **18025**
	Miata 4-112 (1.8L) MFI	3	**B1400**		**N/R**		**N/R**	
	Millenia V6-138 (2.3L) MFI	2	**B1402**	**PA2243**	**PA4406 KIT**	**BF1010**	**N/R**	
	V6-152 (2.5L) MFI	I	**B1402**	**PA4015**	**PA4406 KIT**	**BF1010**	**N/R**	**18005**
	MPV Van V6-181 (3.0L) MFI	A,J	**B329**	**PA4310**		**N/S**	**N/R**	**N/S**
	Protege 4-1589cc (1.6L) FI Canada		**B1400**	**PA4084**	**N/R**	**N/S**	**N/R**	**18267**
	4-122 (2.0L) MFI	5,6	**B1400**	**PA4084**	**N/R**	**N/S**	**N/R**	**18267**
	Tribute 4-121 (2.0L) SFI	B	**B1416**	**PA4163**	Opt. **PA4370**	**BF966**	**N/R**	
	V6-181 (3.0L) MFI	1	**B329**	**PA4163**	Opt. **PA4370**	**BF966**	**N/R**	
2001	626 4-122 (2.0L) MFI	C,E	**B1400**	**PA4114**	**PA4392**	**BF1194**	**N/R**	**18005**
	V6-152 (2.5L) MFI	D,F	**B1402**	**PA4114**	**PA4392**	**BF1194**	**N/R**	**18005**
	B2300 Pickup 4-2294cc (2.3L) MFI	D	**B243**	**PA4102**	**N/R**	**BF7765**	**N/R**	2WD **18024** 4WD **18025**
	B2500 Pickup 4-152 (2.5L) MFI	C	**B243**	**PA4102**	**N/R**	**BF7765**	**N/R**	2WD **18024** 4WD **18025**
	B3000 Pickup V6-182 (3.0L) MFI	U	**B243**	**PA4102**	**N/R**	**BF7765**	**N/R**	2WD **18024** 4WD **18025**
	V6-182 (3.0L) MFI Flex Fuel	V	**B243**	**PA4102**	**N/R**	**BF7803**	**N/R**	2WD **18024** 4WD **18025**
	B4000 Pickup V6-245 (4.0L) MFI	E	**B329**	**PA4102**	**N/R**	**BF7765**	**N/R**	2WD **18024** 4WD **18025**
	Miata, MX5 4-112 (1.8L) MFI	3	**B1400**		**N/R**		**N/R**	
	Millenia V6-138 (2.3L) MFI Supercharged	2	**B1402**	**PA2243**	**PA4406 KIT**	**BF1010**	**N/R**	
	V6-152 (2.5L) MFI	1	**B1402**	**PA4015**	**PA4406 KIT**	**BF1010**	**N/R**	**18005**
	MPV Van V6-152 (2.5L) MFI	2,4	**B329**	**PA4310**		**N/S**	**N/R**	**18005**
	Protege 4-97 (1.6L) MFI	5,6	**B1400**	**PA4084**	**N/R**	**N/S**	**N/R**	**18267**
	4-2000cc (2.0L) MFI	5	**B1400**	**PA4084**	**N/R**	**N/S**	**N/R**	**18267**
	Tribute 4-121 (2.0L) SFI	B	**B1416**	**PA4163**	Opt. **PA4370**	**BF966**	**N/R**	
	V6-181 (3.0L) SFI	1	**B329**	**PA4163**	Opt. **PA4370**	**BF966**	**N/R**	
2000	626 4-122 (2.0L) MFI		**B1400**	**PA4114**	**PA4392**	**BF1194**	**N/R**	**18005**
	V6-152 (2.5L) MFI		**B1402**	**PA4114**	**PA4392**	**BF1194**	**N/R**	**18005**
	B2500 Pickup 4-152 (2.5L) MFI	C	**B243**	**PA4102**	**N/R**	**BF7960**	**N/R**	2WD **18024** 4WD **18025**
	B3000 Pickup V6-182 (3.0L) MFI or Flex Fuel	U	**B243**	**PA4102**	**N/R**	**BF7960**	**N/R**	2WD **18024** 4WD **18025**
	B4000 Pickup V6-245 (4.0L) MFI	X	**B2**	**PA4102**	**N/R**	**BF7960**	**N/R**	2WD **18024** 4WD **18025**
	Miata, MX5 4-112 (1.8L) MFI		**B1400**		**N/R**		**N/R**	
	Millenia V6-138 (2.3L) MFI	2	**B1402**	**PA2243**	**N/R**	**BF1010**	**N/R**	
	V6-152 (2.5L) MFI		**B1402**	**PA4015**	**N/R**	**BF1010**	**N/R**	**18005**
	MPV Van V6-152 (2.5L) MFI		**B329**	**PA4310**		**N/S**	**N/R**	**18005**
	Protege 4-97 (1.6L) MFI		**B1400**	**PA4084**	**N/R**	**N/S**	**N/R**	**18267**
	4-112 (1.8L) MFI	2	**B1400**	**PA4084**	**N/R**	**N/S**	**N/R**	**18267**
1999	626 4-122 (2.0L) MFI		**B1400**	**PA4114**	**PA4392**	**BF1194**	**N/R**	**18005**
	V6-152 (2.5L) MFI		**B1402**	**PA4114**	**PA4392**	**BF1194**	**N/R**	**18005**
	B2500 Pickup 4-152 (2.5L) MFI	C	**B243**	**PA4102**	**N/R**	**BF7960**	**N/R**	2WD **18024** 4WD **18025**
	B3000 Pickup V6-182 (3.0L) MFI or Flex Fuel	U	**B243**	**PA4102**	**N/R**	**BF7960**	**N/R**	2WD **18024** 4WD **18025**

OBS = Obsolete. Availability Limited to Distributor Stock. t Transmission, Not Model, Determines Which Transmission Filter is Used.

MAZDA Cont'd.

Year	Model and Engine	VIN	Lube	Air	Cabin Air	Fuel	Breather	Trans.t
1999	B4000 Pickup V6-245 (4.0L) MFI	X	**B2**	**PA4102**	**N/R**	**BF7960**	**N/R**	2WD **18024** 4WD **18025**
	Miata, MX5 4-112 (1.8L) MFI		**B1400**		**N/R**		**N/R**	
	Millenia V6-138 (2.3L) MFI	2	**B1402**	**PA2243**	**N/R**	**BF1010**	**N/R**	
	V6-152 (2.5L) MFI		**B1402**	**PA4015**	**N/R**	**BF1010**	**N/R**	**18005**
	Protege 4-97 (1.6L) MFI		**B1400**	**PA4084**	**N/R**	**N/S**	**N/R**	**18267**
	4-112 (1.8L) MFI	1	**B1400**	**PA4084**	**N/R**	**N/S**	**N/R**	**18267**
1998	626 4-122 (2.0L) MFI	C	**B1400**	**PA4114**	**PA4392**	**BF1194**	**N/R**	**18005**
	V6-152 (2.5L) MFI	1	**B1402**	**PA4114**	**PA4392**	**BF1194**	**N/R**	**18005**
	B2500 Pickup 4-152 (2.5L) MFI	C	**B243**	**PA4102**	**N/R**	**BF7668**	**N/R**	2WD **18024** 4WD **18025**
	B3000 Pickup V6-182 (3.0L) MFI	U	**B243**	**PA4102**	**N/R**	**BF7668**	**N/R**	2WD **18024** 4WD **18025**
	B4000 Pickup V6-245 (4.0L) MFI	X	**B2**	**PA4102**	**N/R**	**BF7668**	**N/R**	2WD **18024** 4WD **18025**
	Millenia V6-138 (2.3L) MFI	2	**B1402**	**PA2243**	**N/R**	**BF1010**	**N/R**	
	V6-152 (2.5L) MFI	1	**B1402**	**PA4015**	**N/R**	**BF1010**	**N/R**	**18005**
	MPV Van V6-180 (3.0L) MFI	2,3	**B1402**	**PA2212**	**N/R**		**N/R**	**18273**
	Protege 4-91 (1.5L) MFI	1	**B1400**	**PA4084**	**N/R**	**BF1131**	**N/R**	**18268**
	4-112 (1.8L) MFI	2	**B1400**	**PA4084**	**N/R**	**BF1131**	**N/R**	**18268**
1997	626, MX6 4-122 (2.0L) MFI	C	**B1400**	**PA2229**	**N/R**	A.T. **BF1105** M.T. **BF1194**	**N/R**	**18005**
	V6-152 (2.5L) MFI	D	**B1402**	**PA2229**	**N/R**	**BF1194**	**N/R**	**18005**
	B2300 Pickup 4-2295cc (2.3L) MFI	A	**B2**	**PA2240**	**N/R**	**BF1166**	**N/R**	2WD **18024** 4WD **18025**
	B3000 Pickup V6-2983cc (3.0L) MFI	U	**B243**	**PA2240**	**N/R**	**BF1166**	**N/R**	2WD **18024** 4WD **18025**
	B4000 Pickup V6-4016cc (4.0L) MFI	X	**B2**	**PA2240**	**N/R**	**BF1166**	**N/R**	2WD **18024** 4WD **18025**
	Miata, MX5 4-112 (1.8L) MFI		**B1400**	**PA2220**	**N/R**		**N/R**	
	Millenia V6-138 (2.3L) MFI	2	**B1402**	**PA2243**	**N/R**	**BF1010**	**N/R**	
	V6-152 (2.5L) MFI	1	**B1402**	**PA4015**	**N/R**	**BF1010**	**N/R**	**18005**
	MPV Van V6-180 (3.0L) MFI	2,3	**B1402**	**PA2212**	**N/R**		**N/R**	**18273**
	Protege 4-91 (1.5L) MFI	1	**B1400**	**PA4084**	**N/R**	**BF1131**	**N/R**	**18268**
	4-112 (1.8L) MFI	2	**B1400**	**PA4084**	**N/R**	**BF1131**	**N/R**	**18268**
1996	626, MX6 4-122 (2.0L) MFI	C	**B1400**	**PA2229**	**N/R**	A.T. **BF1105** M.T. **BF1194**	**N/R**	**18005**
	V6-152 (2.5L) MFI	D	**B1402**	**PA2229**	**N/R**	**BF1194**	**N/R**	**18005**
	B2300 Pickup 4-2295cc (2.3L) MFI	A	**B2**	**PA2240**	**N/R**	**BF1166**	**N/R**	2WD **18024** 4WD **18025**
	B3000 Pickup V6-2983cc (3.0L) MFI	U	**B243**	**PA2240**	**N/R**	**BF1166**	**N/R**	2WD **18024** 4WD **18025**
	B4000 Pickup V6-4016cc (4.0L) MFI	X	**B2**	**PA2240**	**N/R**	**BF1166**	**N/R**	2WD **18024** 4WD **18025**
	Miata, MX5 4-113 (1.8L) MFI	3	**B1400**	**PA2220**	**N/R**		**N/R**	
	Millenia V6-138 (2.3L) MFI	2	**B1402**	**PA2243**	**N/R**	**BF1010**	**N/R**	
	V6-152 (2.5L) MFI	1	**B1402**	**PA4015**	**N/R**	**BF1010**	**N/R**	**18005**
	MPV Van V6-180 (3.0L) MFI	2,3	**B1402**	**PA2212**	**N/R**		**N/R**	Elec. Control **18273**
	MX3 4-1597cc (1.6L) FI Canada		**B1400**	**PA2238**	**N/R**	**BF1131**	**N/R**	**18268**
	Protege 4-91 (1.5L) MFI	1	**B1400**	**PA4084**	**N/R**	**BF1131**	**N/R**	**18268**
	4-112 (1.8L) MFI	2	**B1400**	**PA4084**	**N/R**	**BF1131**	**N/R**	**18268**
1995	323 4-1597cc (1.6L) MFI		**B1400**	**PA2238**	**N/R**	**BF1131**	**N/R**	**18268**
	626, MX6 4-122 (2.0L) MFI	C	**B1400**	**PA2229**	**N/R**	A.T. **BF1105** M.T. **BF1194**	**N/R**	**18005**
	V6-153 (2.5L) MFI	D	**B1402**	**PA2229**	**N/R**	**BF1194**	**N/R**	**18005**
	929 V6-180 (3.0L) MFI	1	**B1402**	**PA2214**	**N/R**	**BF1010**	**N/R**	**18273**
	B2300 Pickup 4-2295cc (2.3L) MFI	A	**B2**	**PA2240**	**N/R**	**BF1166**	**N/R**	2WD **18024** 4WD **18025**
	B3000 Pickup V6-2983cc (3.0L) MFI	U	**B243**	**PA2240**	**N/R**	**BF966**	**N/R**	2WD **18024** 4WD **18025**
	B4000 Pickup V6-4016cc (4.0L) MFI	X	**B2**	**PA2240**	**N/R**	**BF1166**	**N/R**	2WD **18024** 4WD **18025**
	Miata, MX5 4-113 (1.8L) MFI	3	**B1400**	**PA2220**	**N/R**		**N/R**	
	Millenia V6-138 (2.3L) MFI	2	**B1402**	**PA2243**	**N/R**	**BF1010**	**N/R**	
	V6-152 (2.5L) MFI	1	**B1402**	**PA4015**	**N/R**	**BF1010**	**N/R**	**18005**
	MPV Van V6-180 (3.0L) MFI	2,3	**B1402**	**PA2212**	**N/R**		**N/R**	Elec. Control **18273**
	MX3 4-97 (1.6L) MFI	5	**B1400**	**PA2238**	**N/R**	**BF1131**	**N/R**	**18268**

[t] Transmission, Not Model, Determines Which Transmission Filter is Used. OBS = Obsolete. Availability Limited to Distributor Stock.

MAZDA Cont'd.

Year	Model and Engine	VIN	Lube	Air	Cabin Air	Fuel	Breather	Trans.†
1995	MX3 V6-1845cc (1.8L) FI	4	**B1402**	**PA2238**	**N/R**		**N/R**	**18268**
	Protege 4-91 (1.5L) MFI	1	**B1400**	**PA4084**	**N/R**	**BF1131**	**N/R**	**18268**
	4-1597cc (1.6L) FI Canada		**B1400**	**PA4084**	**N/R**	**BF1131**	**N/R**	**18268**
	4-112 (1.8L) MFI	2	**B1400**	**PA4084**	**N/R**	**BF1131**	**N/R**	**18268**
	RX7 Rotary 1308cc (1.3L) MFI Turbo	3	**B1400**	**PA2173**	**N/R**		**N/R**	**18273**
1994	323 4-98 (1.6L) MFI		**B1400**	**PA2220**	**N/R**	**BF1131**	**N/R**	**18268**
	4-1839cc (1.8L) FI Canada		**B1400**	**PA2220**	**N/R**	**BF1131**	**N/R**	**18268**
	626, MX6 4-121 (2.0L) MFI	C	**B1400**	**PA2229**	**N/R**	A.T. **BF1105** M.T. **BF1194**	**N/R**	**18005**
	V6-152 (2.5L) MFI	D	**B1402**	**PA2229**	**N/R**	**BF1194**	**N/R**	**18005**
	929 V6-180 (3.0L) MFI	1	**B1402**	**PA2214**	**N/R**	**BF1010**	**N/R**	**18273**
	B2300 Pickup 4-2295cc (2.3L) MFI	A	**B2**	**PA2150**	**N/R**	**BF966**	**N/R**	2WD **18024** 4WD **18025**
	B3000 Pickup V6-2983cc (3.0L) MFI	U	**B243**	**PA2150**	**N/R**	**BF966**	**N/R**	2WD **18024** 4WD **18025**
	B4000 Pickup V6-4016cc (4.0L) MFI	X	**B2**	**PA2150**	**N/R**	**BF966**	**N/R**	2WD **18024** 4WD **18025**
	Miata, MX5 4-113 (1.8L) MFI		**B1400**	**PA2220**	**N/R**		**N/R**	
	MPV Van 4-2606cc (2.6L) MFI	1	**B1402**	**PA2212**	**N/R**		**N/R**	Elec. Control **18273**
	V6-2954cc (3.0L) MFI	2,3,5	**B1402**	**PA2212**	**N/R**		**N/R**	Elec. Control **18273**
	MX3 4-97 (1.6L) MFI	5	**B1400**	**PA2238**	**N/R**	**BF1131**	**N/R**	**18268**
	V6-1845cc (1.8L) FI	4	**B1402**	**PA2238**	**N/R**		**N/R**	**18268**
	Navajo V6-245 (4.0L) MFI	X	**B2**	**PA2150**	**N/R**	**BF1166**	**N/R**	2WD **18024** 4WD **18025**
	Protege 4-113 (1.8L) MFI	5,B	**B1400**	**PA2220**	**N/R**	**BF1131**	**N/R**	**18268**
	RX7 Rotary 1308cc (1.3L) MFI Twin Turbo		**B1400**	**PA2173**	**N/R**		**N/R**	**18268**
1993	323, Protege 4-98 (1.6L) MFI	1	**B1400**	**PA2220**	**N/R**	**BF1131**	**N/R**	**18268**
	4-1839cc (1.8L) EFI	2,4	**B1400**	**PA2220**	**N/R**	**BF1131**	**N/R**	**18268**
	626, MX6 4-121 (2.0L) MFI	A	**B1400**	**PA2229**	**N/R**	**BF1194**	**N/R**	**18005**
	V6-152 (2.5L) MFI	1	**B1402**	**PA2229**	**N/R**	**BF1194**	**N/R**	**18005**
	929 V6-180 (3.0L) MFI	1	**B1402**	**PA2214**	**N/R**	**BF1010**	**N/R**	**18273**
	B2200 Pickup 4-2184cc (2.2L) 2 Bbl.		**B1400**	**PA2075**	**N/R**		**N/R**	
	4-2184cc (2.2L) EFI	3	**B1402**	**PA2212**	**N/R**		**N/R**	
	B2600 Pickup 4-2606cc (2.6L) EFI		**B1402**	**PA2212**	**N/R**		**N/R**	
	Miata, MX5 4-1597cc (1.6L) MFI		**B1400**	**PA2220**	**N/R**		**N/R**	
	MPV Van 4-2606cc (2.6L) MFI	1	**B1402**	**PA2212**	**N/R**		**N/R**	Elec. Control **18273**
	V6-2954cc (3.0L) MFI	2	**B1402**	**PA2212**	**N/R**		**N/R**	Elec. Control **18273**
	MX3 4-97 (1.6L) MFI	1	**B1400**	**PA2238**	**N/R**	**BF1131**	**N/R**	**18268**
	V6-1845cc (1.8L) FI		**B1402**	**PA2238**	**N/R**		**N/R**	**18268**
	Navajo V6-245 (4.0L) MFI	X	**B2**	**PA2150**	**N/R**	**BF1166**	**N/R**	2WD **18024** 4WD **18025**
	RX7 Rotary 1308cc (1.3L) FI Twin Turbo		**B1400**	**PA2173**	**N/R**		**N/R**	
1992	323, Protege 4-98 (1.6L) MFI	1	**B1400**	**PA2220**	**N/R**	**BF1131**	**N/R**	**18268**
	4-1800cc (1.8L) MFI		**B1400**	**PA2220**	**N/R**	**BF1131**	**N/R**	**18268**
	626, MX6 4-2200cc (2.2L) MFI or Turbo	1,3	**B1400**	**PA2201**	**N/R**		**N/R**	**18270**
	929 V6-180 (3.0L) MFI	1	**B1402**	**PA2214**	**N/R**	**BF1010**	**N/R**	
	B2200 Pickup 4-2200cc (2.2L) 2 Bbl.	3	**B1400**	**PA2075**	**N/R**	**BF837**	**N/R**	
	4-2200cc (2.2L) EFI	3	**B1400**	**PA2212**	**N/R**		**N/R**	
	B2600 Pickup 4-2600cc (2.6L) MFI		**B1402**	**PA2212**	**N/R**		**N/R**	
	Miata, MX5 4-1600cc (1.6L) MFI		**B1400**	**PA2220**	**N/R**		**N/R**	
	MPV Van, Wagon 4-2600cc (2.6L) MFI	1	**B1402**	**PA2212**	**N/R**		**N/R**	Elec. Control **18273**
	V6-3000cc (3.0L) MFI	2	**B1402**	**PA2212**	**N/R**		**N/R**	Elec. Control **18273**
	MX3 4-97 (1.6L) MFI	3	**B1400**	**PA2238**	**N/R**	**BF1131**	**N/R**	**18268**
	V6-1845cc (1.8L) MFI	4	**B1402**	**PA2238**	**N/R**		**N/R**	**18268**
	Navajo V6-245 (4.0L) MFI	X	**B2**	**PA2150**	**N/R**	**BF1166**	**N/R**	2WD **18024** 4WD **18025**
	RX7 Rotary 1308cc (1.3L) SFI Turbo		**B1400**	**PA2173**	**N/R**	**BF929**	**N/R**	
1991	323, Protege 4-1600cc (1.6L) EFI	1	**B1400**	**PA2220**	**N/R**	**BF1131**	**N/R**	**18268**
	4-1800cc (1.8L) MFI	3,5	**B1400**	**PA2220**	**N/R**	**BF1131**	**N/R**	**18268**
	626, MX6 4-2200cc (2.2L) EFI	1	**B1400**	**PA2201**	**N/R**		**N/R**	**18270**
	4-2200cc (2.2L) EFI Turbo	3,4	**B1400**	**PA2201**	**N/R**		**N/R**	**18270**
	929 V6-2954cc (3.0L) MFI	2,4	**B1402**	**PA2212**	**N/R**		**N/R**	
	B2200 Pickup 4-2200cc (2.2L) 2 Bbl.	3	**B1400**	**PA2075**	**N/R**	**BF837**	**N/R**	
	4-2200cc (2.2L) FI	3	**B1402**	**PA2212**	**N/R**		**N/R**	
	B2600 Pickup 4-2600cc (2.6L) MFI		**B1402**	**PA2212**	**N/R**		**N/R**	
	Miata, MX5 4-1600cc (1.6L) MFI		**B1400**	**PA2220**	**N/R**		**N/R**	
	MPV Van 4-2600cc (2.6L) EFI	1	**B1402**	**PA2212**	**N/R**		**N/R**	Elec. Control **18273**

OBS = Obsolete. Availability Limited to Distributor Stock. † Transmission, Not Model, Determines Which Transmission Filter is Used.

MAZDA Cont'd.

Year	Model and Engine	VIN	Lube	Air	Cabin Air	Fuel	Breather	Trans.[t]
1991	MPV Van V6-3000cc (3.0L) EFI	2	**B1402**	**PA2212**	**N/R**		**N/R**	Elec. Control **18273**
	Navajo V6-245 (4.0L) MFI	X	**B2**	**PA2150**	**N/R**	**BF1166**	**N/R**	2WD **18024** 4WD **18025**
	RX7 Rotary 1308cc (1.3L) EFI or Turbo	1	**B1400**	**PA2173**	**N/R**	**BF929**	**N/R**	
1990	4-1800cc (1.8L) MFI	3,5	**B1400**	**PA2220**	**N/R**	**BF1131**	**N/R**	**18268**
	323 4-1600cc (1.6L) EFI	1	**B1400**	**PA2220**	**N/R**	2WD **BF1131**	**N/R**	
	626, MX6 4-2200cc (2.2L) EFI	1	**B1400**	**PA2201**	**N/R**		**N/R**	
	4-2200cc (2.2L) EFI Turbo	3	**B1400**	**PA2201**	**N/R**		**N/R**	
	929 V6-2954cc (3.0L) MFI	3,4	**B1402**	**PA2212**	**N/R**		**N/R**	
	B2200 Pickup 4-2200cc (2.2L) 2 Bbl.	3	**B1400**	**PA2075**	**N/R**	**BF837**	**N/R**	
	4-2200cc (2.2L) FI	3	**B1402**	**PA2212**	**N/R**		**N/R**	
	B2600 Pickup 4-2600cc (2.6L) MFI		**B1402**	**PA2212**	**N/R**		**N/R**	
	Miata, MX5 4-1600cc (1.6L) MFI		**B1400**	**PA2220**	**N/R**		**N/R**	
	MPV Van 4-2600cc (2.6L) EFI	1	**B1402**	**PA2212**	**N/R**		**N/R**	Elec. Control **18273**
	V6-3000cc (3.0L) EFI	2	**B1402**	**PA2212**	**N/R**		**N/R**	Elec. Control **18273**
	Protege 4-1800cc (1.8L) MFI	3,5	**B1400**	**PA2220**	**N/R**	2WD **BF1131**	**N/R**	
	RX7 Rotary 1308cc (1.3L) EFI or Turbo	1	**B1400**	**PA2173**	**N/R**	**BF929**	**N/R**	
1989	323 4-1597cc (1.6L) EFI	2	**B1400**		**N/R**	**BF925**[10]	**N/R**	
	4-1597cc (1.6L) EFI Turbo		**B1400**		**N/R**	**BF925**[10]	**N/R**	
	626, MX6 4-2200cc (2.2L) EFI	1	**B1400**	**PA2201**	**N/R**		**N/R**	
	4-2200cc (2.2L) EFI Turbo	3	**B1400**	**PA2201**	**N/R**		**N/R**	
	929 V6-2954cc (3.0L) EFI	1	**B1402**	**PA2212**	**N/R**		**N/R**	
	B2200 Pickup 4-2200cc (2.2L) 2 Bbl.	3	**B161-S**	**PA2075**	**N/R**	**BF837**	**N/R**	
	B2600 Pickup 4-2600cc (2.6L) FI	2	**B245**	**PA2212**	**N/R**		**N/R**	
	MPV Van 4-2600cc (2.6L) EFI	2	**B1402**	**PA2212**	**N/R**		**N/R**	Elec. Control **18273**
	V6-3000cc (3.0L) EFI	3	**B1402**	**PA2212**	**N/R**		**N/R**	Elec. Control **18273**
	RX7 Rotary 1308cc (1.3L) FI or Turbo	1	**B1400**	**PA2173**	**N/R**	**BF929**	**N/R**	
1988	323 4-1597cc (1.6L) EFI	1	**B1400**		**N/R**	**BF925**[12]	**N/R**	
	4-1597cc (1.6L) EFI Turbo		**B1400**		**N/R**	**BF925**[12]	**N/R**	
	626, MX6 4-2200cc (2.2L) EFI	1	**B161-S**	**PA2201**	**N/R**		**N/R**	
	4-2200cc (2.2L) EFI Turbo	3	**B161-S**	**PA2201**	**N/R**		**N/R**	
	929 V6-2954cc (3.0L) EFI	1	**B161-S**	**PA2212**	**N/R**		**N/R**	
	B2200 Pickup 4-2200cc (2.2L) 2 Bbl.	3	**B161-S**	**PA2075**	**N/R**	**BF837**	**N/R**	
	B2600 Pickup 4-2600cc (2.6L) 2 Bbl.	2	**B245**	**PA2205**	**N/R**	**BF933**	**N/R**	
	RX7 Rotary 1308cc (1.3L) EFI	1	**B1400**	**PA2173**	**N/R**	**BF929**	**N/R**	
	1308cc (1.3L) EFI Turbo		**B1400**	**PA2173**	**N/R**	**BF929**	**N/R**	
1987	323 4-1600cc (1.6L) FI		**B1400**		**N/R**		**N/R**	
	626 4-2000cc (2.0L) FI or Turbo		**B161-S**		**N/R**		**N/R**	
	B2000 Pickup 4-1998cc (2.0L) Carb.	1	**B1402**	**PA2075**	**N/R**	**BF837**	**N/R**	
	B2200 Pickup 4-2200cc (2.2L) 2 Bbl.	3	**B161-S**	**PA2075**	**N/R**	**BF933**	**N/R**	
	B2600 Pickup 4-2600cc (2.6L) 2 Bbl.	2	**B245**	**PA2205**	**N/R**	**BF933**	**N/R**	
	RX7 Rotary 1308cc (1.3L) FI	1	**B1400**	**PA2173**	**N/R**	**BF929**	**N/R**	
	1308cc (1.3L) FI Turbo		**B1400**	**PA2173**	**N/R**	**BF929**	**N/R**	
1986	323 4-1600cc (1.6L) FI	1	**B1400**		**N/R**		**N/R**	
	626 4-2000cc (2.0L) FI or Turbo		**B161-S**		**N/R**		**N/R**	
	B2000 Pickup 4-1998cc (2.0L) Carb.	1	**B1402**	**PA2075**	**N/R**	**BF837**	**N/R**	
	RX7 Rotary 1308cc (1.3L) FI	1	**B1400**	**PA2173**	**N/R**	**BF929**	**N/R**	
1985	626 4-2000cc (2.0L) 2 Bbl.		**B1402**	**PA2075**	**N/R**	**BF933**	**N/R**	
	4-2000cc (2.0L) Diesel		F-F **B161-S** B-P **B201-S**		**N/R**	**BF789**	**N/R**	
	GLC 4-1490cc (1.5L) 2 Bbl.	1	**B1400**		**N/R**	**BF933**	**N/R**	
	RX7 Rotary 1146cc (1.1L) 4 Bbl.		**B1400**	**PA2133 OBS**	**N/R**	**BF933**		
	1308cc (1.3L) FI	2	**B1400**		**N/R**		**N/R**	
1984	626 4-2000cc (2.0L) 2 Bbl.		**B1402**	**PA2075**	**N/R**	**BF837**	**N/R**	
	4-2000cc (2.0L) Diesel		F-F **B161-S** B-P **B201-S**		**N/R**	**BF789**	**N/R**	
	B2000 Pickup 4-2000cc (2.0L) 2 Bbl.		**B161-S**	**PA2075**	**N/R**	**BF837**		**18015**
	B2200 Pickup 4-2200cc (2.2L) Diesel		F-F **B202** B-P **B201-S**		**N/R**	**BF789**	**N/R**	**18015**
	GLC 4-1490cc (1.5L) 2 Bbl.	1	**B1400**		**N/R**	**BF837**		
	RX7 Rotary 1146cc (1.1L) 4 Bbl.		**B1400**	**PA2133 OBS**	**N/R**	**BF837**		
	1308cc (1.3L) FI	2	**B1400**	**PA2133 OBS**	**N/R**		**N/R**	
1983	626 4-2000cc (2.0L) 2 Bbl.		**B1402**	**PA2075**	**N/R**	**BF837**	**N/R**	
	B2000 Pickup 4-2000cc (2.0L) 2 Bbl.		**B161-S**	**PA2075**	**N/R**	**BF837**		**18015**
	B2200 Pickup 4-2200cc (2.2L) Diesel		F-F **B202** B-P **B201-S**		**N/R**	**BF789**	**N/R**	**18015**
	GLC 4-1490cc (1.5L) 2 Bbl.	1	**B1400**	Wagon **PA2031**	**N/R**	**BF837**		

[t] Transmission, Not Model, Determines Which Transmission Filter is Used. OBS = Obsolete. Availability Limited to Distributor Stock.

[10] To VIN BF28601100052. [12] To VIN BF28601205905.

Year	Model and Engine	VIN	Lube	Air	Cabin Air	Fuel	Breather	Trans.t
MAZDA Cont'd.								
1983	RX7 Rotary 1146cc (1.1L) 4 Bbl.		**B1400**	**PA2133 OBS**	**N/R**	**BF837**		
1982	626 4-2000cc (2.0L) 2 Bbl.		**B161-S**	**PA2075**	**N/R**	**BF837**	**N/R**	
	B2000 Pickup 4-2000cc (2.0L) 2 Bbl.		**B161-S**	**PA2075**	**N/R**	**BF837**		
	B2200 Pickup 4-2209cc (2.2L) Diesel		F-F **B202** B-P **B201-S**		**N/R**	**BF789**	**N/R**	**18015**
	GLC 4-1490cc (1.5L) 2 Bbl.	1	**B1400**	Wagon **PA2031**	**N/R**	**BF837**	**N/R**	
	RX7 Rotary 1146cc (1.1L) 4 Bbl.		**B1400**	**PA2133 OBS**	**N/R**	Early **BF840,-K1** Late **BF837**	**N/R**	
1981	626 4-2000cc (2.0L) 2 Bbl.		**B161-S**	**PA2075**	**N/R**	**BF840,-K1**	**N/R**	
	B2000 Pickup 4-2000cc (2.0L) 2 Bbl.		**B161-S**	**PA2075**	**N/R**	**BF840,-K1**		
	GLC 4-1490cc (1.5L) 2 Bbl.	1	**B1400**	Wagon **PA2031**	**N/R**	**BF840,-K1**	**N/R**	
	RX7 Rotary 1146cc (1.1L) 4 Bbl.		**B1400**	**PA2133 OBS**	**N/R**	**BF840,-K1**	**N/R**	
1980	626 4-2000cc (2.0L) 2 Bbl.		**B161-S**	**PA2075**	**N/R**	**BF840,-K1**	**N/R**	
	B2000 Pickup 4-2000cc (2.0L) 2 Bbl.		**B161-S**	**PA2075**	**N/R**	**BF840,-K1**		
	GLC 4-1415cc (1.4L) 2 Bbl.		**B1400**	**PA2031**	**N/R**	**BF840,-K1**	**N/R**	
	RX7 Rotary 1146cc (1.1L) 4 Bbl.		**B1400**	**PA2133 OBS**	**N/R**	**BF840,-K1**	**N/R**	
MERCEDES-BENZ								
2010	B200 4-2034cc (2.0L) FI Canada					**N/S**	**N/R**	
	4-2034cc (2.0L) FI Turbo Canada					**N/S**	**N/R**	**N/S**
	C63 AMG V8-6208cc (6.3L) FI					**N/S**	**N/R**	
	C250 V6-2500cc (2.5L) FI Canada		**P1443**			**N/S**	**N/R**	
	C300 V6-2996cc (3.0L) FI		**P1443**				**N/R**	
	C350 V6-3498cc (3.5L) FI		**P1443**				**N/R**	
	CL63 AMG V8-6208cc (6.3L) FI					**N/S**	**N/R**	
	CL65 AMG V12-5980cc (6.0L) FI Twin Turbo					**N/S**	**N/R**	
	CL550 V8-5461cc (5.5L) FI		**P1443**			**N/S**	**N/R**	
	CL600 V12-5513cc (5.5L) FI Twin Turbo					**N/S**	**N/R**	
	CLK350 V6-3498cc (3.5L) FI		**P1443**			**N/S**	**N/R**	
	CLK550 V6-5461cc (5.5L) FI		**P1443**				**N/R**	
	CLS63 AMG V8-6208cc (6.3L) FI					**N/S**	**N/R**	
	CLS550 V8-5461cc (5.5L) FI		**P1443**			**N/S**	**N/R**	
	E63 AMG V8-6208cc (6.3L) FI					**N/S**	**N/R**	
	E350 V6-3498cc (3.5L) FI		**P1443**			**N/S**	**N/R**	
	E550 V8-5461cc (5.5L) FI		**P1443**			**N/S**	**N/R**	
	G55 AMG V8-335 (5.5L) FI Supercharged		**P1443**				**N/R**	
	G550 V8-5461cc (5.5L) FI		**P1443**			**N/S**	**N/R**	
	GL350 V6-2987cc (3.0L) DI Turbo Diesel		**P7413**			(Opt. Filter w/Sensor Port) **BF7972**		
	GL450 V8-4663cc (4.5L) FI		**P1443**			**N/S**	**N/R**	
	GL550 V8-5461cc (5.5L) FI		**P1443**			**N/S**	**N/R**	
	GLK350 V6-3498cc (3.5L) FI		**P1443**			**N/S**	**N/R**	
	ML63 AMG V8-6208cc (6.3L) FI					**N/S**	**N/R**	
	ML350 V6-2987cc (3.0L) FI Turbo Diesel		**P7413**			(Opt. Filter w/Sensor Port) **BF7972**		
	V6-3498cc (3.5L) FI		**P1443**			**N/S**	**N/R**	
	ML450 V6-3498cc (3.5L) FI Hybrid		**P1443**			**N/S**	**N/R**	
	ML550 V8-5461cc (5.5L) FI		**P1443**			**N/S**	**N/R**	
	R350 V6-2987cc (3.0L) FI Turbo Diesel		**P7413**			(Opt. Filter w/Sensor Port) **BF7972**		
	V6-3498cc (3.5L) FI		**P1443**			**N/S**	**N/R**	
	S63 AMG V8-6208cc (6.3L) FI					**N/S**	**N/R**	
	S65 AMG V12-5980cc (6.0L) FI Twin Turbo						**N/R**	
	S400 V6-3498cc (3.5L) FI Hybrid		**P1443**			**N/S**	**N/R**	
	S550 V8-5461cc (5.5L) FI		**P1443**			**N/S**	**N/R**	
	S600 V12-5513cc (5.5L) FI Twin Turbo					**N/S**	**N/R**	
	SL63 AMG V8-6208cc (6.3L) FI					**N/S**	**N/R**	
	SL550 V8-5461cc (5.5L) SFI		**P1443**				**N/R**	
	SL600 V12-5513cc (5.5L) FI Twin Turbo						**N/R**	
	SLK55 AMG V8-5439cc (5.5L) FI					**N/S**	**N/R**	
	SLK300 V6-2996cc (3.0L) FI		**P1443**			**N/S**	**N/R**	
	SLK350 V6-3498cc (3.5L) FI		**P1443**			**N/S**	**N/R**	

OBS = Obsolete. Availability Limited to Distributor Stock. t Transmission, Not Model, Determines Which Transmission Filter is Used.

MERCEDES-BENZ Cont'd.

Year	Model and Engine	VIN	Lube	Air	Cabin Air	Fuel	Breather	Trans.[t]
2009	B200 4-2034cc (2.0L) FI Canada					**N/S**	**N/R**	**N/S**
	4-2034cc (2.0L) FI Turbo Canada					**N/S**	**N/R**	**N/S**
	C63 AMG V8-6208cc (6.3L) FI					**N/S**	**N/R**	
	C230 V6-2496cc (2.5L) FI Canada		**P1443**			**N/S**	**N/R**	
	C300 V6-2996cc (3.0L) FI		**P1443**				**N/R**	
	C350 V6-3498cc (3.5L) FI		**P1443**				**N/R**	
	CL63 AMG V8-6208cc (6.3L) FI					**N/S**	**N/R**	
	CL65 AMG V12-5980cc (6.0L) FI Twin Turbo					**N/S**	**N/R**	
	CL550 V8-5461cc (5.5L) FI		**P1443**			**N/S**	**N/R**	
	CL600 V12-5513cc (5.5L) FI Twin Turbo					**N/S**	**N/R**	
	CLK63 AMG V8-6208cc (6.3L) FI					**N/S**	**N/R**	
	CLK350 V6-3498cc (3.5L) SFI		**P1443**			**N/S**	**N/R**	
	CLK550 V6-5461cc (5.5L) FI		**P1443**				**N/R**	
	CLS63 AMG V8-6208cc (6.3L) FI					**N/S**	**N/R**	
	CLS550 V8-5461cc (5.5L) FI		**P1443**			**N/S**	**N/R**	
	E300 V6-2996cc (3.0L) FI Canada		**P1443**			**N/S**	**N/R**	
	E63 AMG V8-6208cc (6.3L) FI					**N/S**	**N/R**	
	E320 BLUETEC V6-2987cc (3.0L) FI Turbo Diesel		**P7413**			(Opt. Filter w/Sensor Port) **BF7972**		
	E350 V6-3498cc (3.5L) FI		**P1443**			**N/S**	**N/R**	
	E550 V8-5461cc (5.5L) FI		**P1443**			**N/S**	**N/R**	
	G55 AMG V8-335 (5.5L) FI Supercharged		**P1443**				**N/R**	
	G550 V8-5461cc (5.5L) FI		**P1443**			**N/S**	**N/R**	
	GL320 Blue Tec V6-2987cc (3.0L) DI Turbo Diesel		**P7413**			(Opt. Filter w/Sensor Port) **BF7972**		
	GL450 V8-4663cc (4.6L) FI		**P1443**			**N/S**	**N/R**	
	GL550 V8-5461cc (5.5L) FI		**P1443**			**N/S**	**N/R**	
	ML63 AMG V8-6208cc (6.3L) FI					**N/S**	**N/R**	
	ML320 V6-2987cc (3.0L) FI Turbo Diesel		**P7413**			(Opt. Filter w/Sensor Port) **BF7972**		
	ML350 V6-3498cc (3.5L) FI		**P1443**			**N/S**	**N/R**	
	ML550 V8-5461cc (5.5L) FI		**P1443**			**N/S**	**N/R**	
	R320 V6-2987cc (3.0L) DI Turbo Diesel		**P7413**			(Opt. Filter w/Sensor Port) **BF7972**		
	R350 V6-3498cc (3.5L) FI		**P1443**			**N/S**	**N/R**	
	S63 AMG V8-6208cc (6.3L) SFI					**N/S**	**N/R**	
	S65 AMG V12-5980cc (6.0L) FI Twin Turbo						**N/R**	
	S450 V8-4663cc (4.6L) FI Canada		**P1443**			**N/S**	**N/R**	
	S550 V8-5461cc (5.5L) SFI		**P1443**			**N/S**	**N/R**	
	S600 V12-5513cc (5.5L) FI Twin Turbo					**N/S**	**N/R**	
	SL63 AMG V8-6208cc (6.3L) FI		**P1443**			**N/S**	**N/R**	
	SL65 AMG V12-5980cc (6.0L) FI Twin Turbo					**N/S**	**N/R**	
	SL550 V8-5461cc (5.5L) SFI		**P1443**				**N/R**	
	SL600 V12-5513cc (5.5L) FI Twin Turbo						**N/R**	
	SLK55 AMG V8-5439cc (5.5L) SFI					**N/S**	**N/R**	
	SLK300 V6-2996cc (3.0L) FI		**P1443**			**N/S**	**N/R**	
	SLK350 V6-3498cc (3.5L) SFI		**P1443**			**N/S**	**N/R**	
	SLR McLaren V8-335 (5.4L) FI Supercharged					**N/S**	**N/R**	
2008	B200 4-2034cc (2.0L) FI Canada					**N/S**	**N/R**	**N/S**
	4-2034cc (2.0L) FI Turbo Canada					**N/S**	**N/R**	**N/S**
	C63 AMG V8-6208cc (6.3L) FI					**N/S**	**N/R**	
	C300 V6-2996cc (3.0L) SFI		**P1443**				**N/R**	
	C350 V6-3498cc (3.5L) SFI		**P1443**				**N/R**	
	CL63 AMG V8-6208cc (6.3L) FI					**N/S**	**N/R**	
	CL65 AMG V12-5980cc (6.0L) FI Twin Turbo					**N/S**	**N/R**	
	CL550 V8-5461cc (5.5L) FI		**P1443**			**N/S**	**N/R**	
	CL600 V12-5513cc (5.5L) FI Twin Turbo					**N/S**	**N/R**	
	CLK63 AMG V8-6208cc (6.3L) SFI					**N/S**	**N/R**	

[t] Transmission, Not Model, Determines Which Transmission Filter is Used. OBS = Obsolete. Availability Limited to Distributor Stock.

MERCEDES-BENZ Cont'd.

Year	Model and Engine	VIN	Lube	Air	Cabin Air	Fuel	Breather	Trans.[t]
2008	CLK63 AMG Black Series V8-6208cc (6.3L) SFI					**N/S**	**N/R**	
	CLK350 V6-3498cc (3.5L) SFI		**P1443**			**N/S**	**N/R**	
	CLK550 V8-5461cc (5.5L) SFI		**P1443**				**N/R**	
	CLS63 AMG V8-6208cc (6.3L) FI					**N/S**	**N/R**	
	CLS550 V8-5461cc (5.5L) SFI		**P1443**			**N/S**	**N/R**	
	E63 AMG V8-6208cc (6.3L) SFI					**N/S**	**N/R**	
	E320 BLUETEC V6-2987cc (3.0L) FI Turbo Diesel		**P7413**			(Opt. Filter w/Sensor Port) **BF7972**		
	E350 V6-3498cc (3.5L) SFI		**P1443**			**N/S**	**N/R**	
	E350 Wagon V6-3498cc (3.5L) SFI		**P1443**			**N/S**	**N/R**	
	E550 V8-5461cc (5.5L) SFI		**P1443**			**N/S**	**N/R**	
	G55 AMG V8-335 (5.5L) FI Supercharged		**P1443**				**N/R**	
	G500 V8-303 (5.0L) FI		**P1443**				**N/R**	
	GL320 CDI V6-2987cc (3.0L) DI Turbo Diesel		**P7413**			(Opt. Filter w/Sensor Port) **BF7972**		
	GL450 V8-4663cc (4.6L) FI		**P1443**			**N/S**	**N/R**	
	GL550 V8-5461cc (5.5L) FI		**P1443**			**N/S**	**N/R**	
	ML63 AMG V8-6208cc (6.3L) SFI					**N/S**	**N/R**	
	ML320 CDI V6-2987cc (3.0L) FI Turbo Diesel		**P7413**			(Opt. Filter w/Sensor Port) **BF7972**		
	ML350 V6-3498cc (3.5L) SFI		**P1443**			**N/S**	**N/R**	
	ML550 V8-5461cc (5.5L) SFI		**P1443**			**N/S**	**N/R**	
	R320 CDI V6-2987cc (3.0L) DI Turbo Diesel		**P7413**				**N/R**	
	R350 V6-3498cc (3.5L) SFI		**P1443**			**N/S**	**N/R**	
	S63 AMG V8-6208cc (6.3L) SFI					**N/S**	**N/R**	
	S65 AMG V12-5980cc (6.0L) FI Twin Turbo						**N/R**	
	S550 V8-5461cc (5.5L) SFI		**P1443**			**N/S**	**N/R**	
	S600 V12-5513cc (5.5L) FI Twin Turbo					**N/S**	**N/R**	
	SL55 AMG V8-5439cc (5.5L) FI Supercharged		**P1443**			**BF1195**	**N/R**	
	SL65 AMG V12-5980cc (6.0L) FI Twin Turbo					**N/S**	**N/R**	
	SL550 V8-5461cc (5.5L) SFI		**P1443**				**N/R**	
	SL600 V12-5513cc (5.5L) FI Twin Turbo						**N/R**	
	SLK55 AMG V8-5439cc (5.5L) SFI					**N/S**	**N/R**	
	SLK280 V6-2996cc (3.0L) SFI		**P1443**			**N/S**	**N/R**	
	SLK350 V6-3498cc (3.5L) SFI		**P1443**			**N/S**	**N/R**	
	SLK550 V8-5500cc (5.5L) FI					**N/S**	**N/R**	
	SLR McLaren V8-335 (5.4L) FI Supercharged					**N/S**	**N/R**	
2007	B200 4-2034cc (2.0L) FI Canada					**N/S**	**N/R**	**N/S**
	4-2034cc (2.0L) FI Turbo Canada					**N/S**	**N/R**	**N/S**
	C230 V6-2496cc (2.5L) SFI or Flex Fuel		**P1443**			**N/S**	**N/R**	
	C280 V6-2996cc (3.0L) SFI		**P1443**			**N/S**	**N/R**	
	C350 V6-3498cc (3.5L) SFI		**P1443**			**N/S**	**N/R**	
	CL550 V8-335 (5.5L) FI					**N/S**	**N/R**	
	CL600 V12-5513cc (5.5L) FI Twin Turbo					**N/S**	**N/R**	
	CLK63 AMG V8-6208cc (6.3L) SFI					**N/S**	**N/R**	
	CLK350 V8-3498cc (3.5L) SFI		**P1443**				**N/R**	
	CLK550 V8-5461cc (5.5L) SFI		**P1443**			**N/S**	**N/R**	
	CLS63 AMG V8-6208cc (6.3L) SFI					**N/S**	**N/R**	
	CLS550 V8-5461cc (5.5L) SFI		**P1443**			**N/S**	**N/R**	
	E63 AMG V8-6208cc (6.3L) SFI					**N/S**	**N/R**	
	E320 CDI V6-2987cc (3.0L) FI Turbo Diesel					(Opt. Filter w/Sensor Port) **BF7972**		
	E350, E350 Wagon V6-3498cc (3.5L) SFI		**P1443**			**N/S**	**N/R**	
	E550 V8-5461cc (5.5L) SFI		**P1443**				**N/R**	
	G55 AMG V8-332 (5.5L) FI Supercharged		**P1443**				**N/R**	
	G500 V8-303 (5.0L) FI		**P1443**				**N/R**	

OBS = Obsolete. Availability Limited to Distributor Stock. [t] Transmission, Not Model, Determines Which Transmission Filter is Used.

MERCEDES-BENZ Cont'd.

Year	Model and Engine	VIN	Lube	Air	Cabin Air	Fuel	Breather	Trans.t
2007	GL320 CDI V6-2987cc (3.0L) DI Turbo Diesel		**P7413**			(Opt. Filter w/Sensor Port) **BF7972**		
	GL450 V8-4663cc (4.6L) SFI		**P1443**			**N/S**	**N/R**	
	ML63 AMG V8-6208cc (6.3L) SFI					**N/S**	**N/R**	
	ML320 CDI V6-2987cc (3.0L) FI Turbo Diesel		**P7413**			(Opt. Filter w/Sensor Port) **BF7972**		
	ML350 V6-3498cc (3.5L) SFI		**P1443**			**N/S**	**N/R**	
	ML500 V8-303 (5.0L) SFI		**P1443**			**N/S**	**N/R**	
	R63 AMG V8-6208cc (6.3L) FI					**N/S**	**N/R**	
	R320 CDI V6-2987cc (3.0L) DI Turbo Diesel		**P7413**				**N/R**	
	R350 V6-3498cc (3.5L) SFI		**P1443**			**N/S**	**N/R**	
	R500 V8-303 (5.0L) SFI		**P1443**			**N/S**	**N/R**	
	S65 AMG V12-365 (6.0L) FI Twin Turbo						**N/R**	
	S550 V8-5461cc (5.5L) SFI		**P1443**			**N/S**	**N/R**	
	S600 V12-5513cc (5.5L) FI Twin Turbo					**N/S**	**N/R**	
	SL55 AMG V8-332 (5.5L) SFI Supercharged		**P1443**			**BF1195**	**N/R**	
	SL65 AMG V12-365 (6.0L) FI Twin Turbo					**N/S**	**N/R**	
	SL550 V8-5461cc (5.5L) FI		**P1443**				**N/R**	
	SL600 V12-336 (5.5L) FI Twin Turbo						**N/R**	
	SLK55 AMG V8-5439cc (5.5L) SFI		**P1443**			**N/S**	**N/R**	
	SLK280 V6-2996cc (3.0L) SFI		**P1443**			**N/S**	**N/R**	
	SLK350 V6-227 (3.5L) SFI		**P1443**			**N/S**	**N/R**	
	SLR McLaren V8-335 (5.4L) FI Supercharged					**N/S**	**N/R**	
2006	B200 4-2034cc (2.0L) FI Canada					**N/S**	**N/R**	**N/S**
	4-2034cc (2.0L) FI Turbo Canada					**N/S**	**N/R**	**N/S**
	C55 AMG V8-335 (5.5L) SFI		**P1443**			**N/S**	**N/R**	
	C230 Sport Sedan V6-2496cc (2.5L) SFI		**P1443**			**N/S**	**N/R**	
	C280 V6-2996cc (3.0L) SFI		**P1443**				**N/R**	
	C350, C350 Sport Sedan V6-3498cc (3.5L) SFI		**P1443**			**N/S**	**N/R**	
	CL55 V8-332 (5.5L) SFI Supercharged		**P1443**				**N/R**	
	CL55 AMG V8-335 (5.5L) SFI Supercharged		**P1443**			**BF1195**	**N/R**	
	CL65 AMG V12-365 (6.0L) FI Twin Turbo					**N/S**	**N/R**	
	CL500 V8-303 (5.0L) SFI		**P1443**				**N/R**	
	CL600 V12-5513cc (5.5L) FI Twin Turbo						**N/R**	
	CLK55 AMG, CLK55 AMG Cabriolet V8-335 (5.5L) SFI		**P1443**				**N/R**	
	CLK350 V6-3498cc (3.5L) SFI		**P1443**				**N/R**	
	CLK500, CLK500 Cabriolet V8-303 (5.0L) SFI		**P1443**				**N/R**	
	CLS55 AMG V8-335 (5.5L) FI Supercharged		**P1443**			**N/S**	**N/R**	
	CLS500 V8-303 (5.0L) SFI		**P1443**			**N/S**	**N/R**	
	E55 AMG V8-335 (5.5L) SFI Supercharged		**P1443**			**N/S**	**N/R**	
	E320 CDI 6-195 (3.2L) FI Turbo Diesel						**N/R**	
	E350, E350 Wagon V6-3498cc (3.5L) FI		**P1443**			**N/S**	**N/R**	
	E500, E500 Wagon V8-303 (5.0L) SFI		**P1443**			**N/S**	**N/R**	
	G55 AMG V8-332 (5.5L) FI Supercharged		**P1443**				**N/R**	
	G500 V8-303 (5.0L) FI		**P1443**				**N/R**	
	ML350 V6-3498cc (3.5L) SFI		**P1443**			**N/S**	**N/R**	
	ML500 V8-303 (5.0L) SFI		**P1443**			**N/S**	**N/R**	
	R350 V6-3498cc (3.5L) SFI		**P1443**			**N/S**	**N/R**	
	R500 V8-303 (5.0L) SFI		**P1443**			**N/S**	**N/R**	
	S55 AMG V8-332 (5.5L) SFI Supercharged		**P1443**			**BF1195**	**N/R**	
	S65 AMG V12-365 (6.0L) FI Twin Turbo					**N/S**	**N/R**	
	S350 V6-3724cc (3.7L) SFI		**P1443**			**N/S**	**N/R**	
	S430 V8-260 (4.3L) SFI		**P1443**				**N/R**	
	S500 V8-303 (5.0L) SFI		**P1443**				**N/R**	
	S600 V12-332 (5.5L) FI Twin Turbo					**N/S**	**N/R**	
	SL55 AMG V8-332 (5.5L) SFI Supercharged		**P1443**			**BF1195**	**N/R**	

[t] Transmission, Not Model, Determines Which Transmission Filter is Used. OBS = Obsolete. Availability Limited to Distributor Stock.

MERCEDES-BENZ Cont'd.

Year	Model and Engine	VIN	Lube	Air	Cabin Air	Fuel	Breather	Trans.[t]
2006	SL65 AMG V12-365 (6.0L) FI Twin Turbo					**N/S**	**N/R**	
	SL500 V8-303 (5.0L) SFI		**P1443**				**N/R**	
	SL600 V12-336 (5.5L) FI Twin Turbo					**N/S**	**N/R**	
	SLK55 AMG V8-5439cc (5.5L) SFI		**P1443**			**N/S**	**N/R**	
	SLK280 V6-2996cc (3.0L) SFI		**P1443**			**N/S**	**N/R**	
	SLK350 V6-227 (3.5L) SFI		**P1443**			**N/S**	**N/R**	
	SLR McLaren V8-335 (5.4L) FI Supercharged					**N/S**	**N/R**	
2005	C55 AMG V8-335 (5.5L) EFI		**P1443**			**N/S**	**N/R**	
	C230 4-110 (1.8L) SFI Supercharged					**N/S**	**N/R**	
	C240 V6-159 (2.6L) SFI		**P1443**				**N/R**	
	C320 V6-195 (3.2L) SFI Flex Fuel		**P1443**				**N/R**	
	CL55 V8-332 (5.5L) SFI Supercharged		**P1443**				**N/R**	
	CL65 AMG V12-365 (6.0L) SFI Twin Turbo					**N/S**	**N/R**	
	CL500 V8-303 (5.0L) SFI		**P1443**				**N/R**	
	CL600 V12-5513cc (5.5L) SFI Twin Turbo						**N/R**	
	CLK55 AMG V8-332 (5.5L) SFI		**P1443**				**N/R**	
	CLK320 V6-195 (3.2L) SFI		**P1443**				**N/R**	
	CLK500, CLK500 Cabriolet V8-303 (5.0L) SFI		**P1443**				**N/R**	
	E55 AMG V8-335 (5.5L) SFI Supercharged		**P1443**			**N/S**	**N/R**	
	E320 V6-195 (3.2L) SFI		**P1443**			**N/S**	**N/R**	
	E320 CDI 6-195 (3.2L) FI Turbo Diesel						**N/R**	
	E500 V8-303 (5.0L) SFI		**P1443**			**N/S**	**N/R**	
	G55 AMG V8-332 (5.5L) FI Supercharged		**P1443**				**N/R**	
	G500 V8-303 (5.0L) FI		**P1443**				**N/R**	
	ML350 V6-227 (3.7L) SFI		**P1443**			**N/S**	**N/R**	
	ML500 V8-303 (5.0L) SFI		**P1443**			**N/S**	**N/R**	
	S55 AMG V8-332 (5.5L) SFI Supercharged		**P1443**				**N/R**	
	S430 V8-260 (4.3L) SFI		**P1443**				**N/R**	
	S500 V8-303 (5.0L) SFI		**P1443**				**N/R**	
	S600 V12-336 (5.5L) SFI Twin Turbo					**N/S**	**N/R**	
	SL55 AMG V8-332 (5.5L) SFI Supercharged		**P1443**			**BF1195**	**N/R**	
	SL65 AMG V12-365 (6.0L) SFI Twin Turbo					**N/S**	**N/R**	
	SL500 V8-303 (5.0L) SFI		**P1443**				**N/R**	
	SL600 V12-336 (5.5L) FI Twin Turbo						**N/R**	
	SLK55 AMG V8-5439cc (5.5L) SFI		**P1443**			**N/S**	**N/R**	
	SLK350 V6-227 (3.5L) SFI		**P1443**			**N/S**	**N/R**	**N/S**[44]
	SLR McLaren V8-332 (5.4L) FI Supercharged					**N/S**	**N/R**	
2004	C32 V6-195 (3.2L) SFI Supercharged		**P1443**				**N/R**	
	C230 4-110 (1.8L) SFI Supercharged						**N/R**	
	C240 V6-2597cc (2.6L) SFI		**P1443**				**N/R**	
	C320 V6-195 (3.2L) SFI		**P1443**				**N/R**	
	CL55 V8-332 (5.5L) SFI Supercharged		**P1443**				**N/R**	
	CL500 V8-303 (5.0L) SFI		**P1443**				**N/R**	
	CL600 V12-5513cc (5.5L) SFI Twin Turbo						**N/R**	
	CLK55 V8-332 (5.5L) SFI		**P1443**				**N/R**	
	CLK320, CLK320 Cabriolet V6-195 (3.2L) SFI		**P1443**				**N/R**	
	CLK500, CLK500 Cabriolet V8-303 (5.0L) SFI		**P1443**				**N/R**	
	E55 AMG V8-335 (5.5L) SFI Supercharged		**P1443**			**N/S**	**N/R**	
	E320 V6-195 (3.2L) SFI		**P1443**			**N/S**	**N/R**	
	E500 V8-303 (5.0L) SFI		**P1443**			**N/S**	**N/R**	
	G55 V8-332 (5.5L) FI		**P1443**		**N/R**	**N/S**	**N/R**	
	G500 V8-303 (5.0L) FI		**P1443**		**N/R**		**N/R**	
	ML350 V6-227 (3.7L) SFI		**P1443**			**N/S**	**N/R**	
	ML500 V8-303 (5.0L) SFI		**P1443**			**N/S**	**N/R**	
	S55 V8-332 (5.5L) SFI Supercharged		**P1443**				**N/R**	
	S430 V8-260 (4.3L) SFI		**P1443**				**N/R**	
	S500 V8-303 (5.0L) SFI		**P1443**				**N/R**	
	S600 V12-5513cc (5.5L) SFI Twin Turbo					**N/S**	**N/R**	
	SL55 AMG V8-332 (5.5L) SFI Supercharged		**P1443**			**N/S**	**N/R**	
	SL500 V8-303 (5.0L) SFI		**P1443**				**N/R**	

OBS = Obsolete. Availability Limited to Distributor Stock. [t] Transmission, Not Model, Determines Which Transmission Filter is Used.

[44] Power Steering.

MERCEDES-BENZ Cont'd.

Year	Model and Engine	VIN	Lube	Air	Cabin Air	Fuel	Breather	Trans.t
2004	SL600 V12-5513cc (5.5L) SFI Twin Turbo				**N/R**		**N/R**	
	SLK32 AMG V6-195 (3.2L) SFI Supercharged		**P1443**				**N/R**	
	SLK230 4-140 (2.3L) SFI Supercharged		**P1419**				**N/R**	
	SLK320 V6-195 (3.2L) SFI		**P1443**				**N/R**	
2003	C32 V6-195 (3.2L) SFI Supercharged		**P1443**				**N/R**	
	C230 4-110 (1.8L) SFI Supercharged						**N/R**	
	C240 V6-2597cc (2.6L) SFI		**P1443**				**N/R**	
	C320 V6-195 (3.2L) SFI		**P1443**				**N/R**	
	CL55 V8-332 (5.5L) SFI Supercharged		**P1443**				**N/R**	
	CL500 V8-303 (5.0L) SFI		**P1443**				**N/R**	
	CL600 V12-5513cc (5.5L) SFI Twin Turbo		**P1443**				**N/R**	
	CLK55 V8-332 (5.5L) SFI		**P1443**				**N/R**	
	CLK320 V6-195 (3.2L) SFI		**P1443**				**N/R**	
	CLK320 Cabriolet V6-195 (3.2L) SFI		**P1443**				**N/R**	
	CLK430 Cabriolet V8-260 (4.3L) SFI		**P1443**				**N/R**	
	CLK500 V8-303 (5.0L) SFI		**P1443**				**N/R**	
	E55 AMG V8-335 (5.5L) SFI Supercharged		**P1443**			**N/S**	**N/R**	
	E320 V6-195 (3.2L) SFI		**P1443**			**N/S**	**N/R**	
	E500 V8-303 (5.0L) SFI		**P1443**				**N/R**	
	G55 V8-332 (5.5L) MFI		**P1443**		**N/R**	**N/S**	**N/R**	
	G500 V8-303 (5.0L) FI		**P1443**		**N/R**		**N/R**	
	ML55 V8-335 (5.5L) FI		**P1443**				**N/R**	
	ML320 V6-195 (3.2L) SFI		**P1443**				**N/R**	
	ML350 V6-3699cc (3.7L) FI		**P1443**			**N/S**	**N/R**	
	ML500 V8-303 (5.0L) SFI		**P1443**			**N/S**	**N/R**	
	S55 V8-332 (5.5L) SFI Supercharged		**P1443**				**N/R**	
	S430 V8-260 (4.3L) SFI		**P1443**				**N/R**	
	S500 V8-303 (5.0L) SFI		**P1443**				**N/R**	
	S600 V12-5513cc (5.5L) SFI Twin Turbo		**P1443**			**N/S**	**N/R**	
	SL55 AMG V8-332 (5.5L) SFI Supercharged		**P1443**			**N/S**	**N/R**	
	SL500 V8-303 (5.0L) SFI		**P1443**				**N/R**	
	SLK32 AMG V6-195 (3.2L) SFI Supercharged		**P1443**				**N/R**	
	SLK230 4-140 (2.3L) SFI Supercharged		**P1419**				**N/R**	
	SLK320 V6-195 (3.2L) SFI		**P1443**				**N/R**	
2002	C32 V6-195 (3.2L) SFI Supercharged		**P1443**				**N/R**	
	C230 Sport Coupe 4-2295cc (2.3L) FI Supercharged		**P1419**				**N/R**	
	C240 V6-2597cc (2.6L) SFI		**P1443**				**N/R**	
	C320 V6-195 (3.2L) SFI		**P1443**				**N/R**	
	CL55 V8-332 (5.5L) SFI		**P1443**				**N/R**	
	CL500 V8-303 (5.0L) SFI		**P1443**				**N/R**	
	CL600 V12-5786cc (5.8L) SFI		**P1443**				**N/R**	
	CLK55 V8-332 (5.5L) SFI		**P1443**				**N/R**	
	CLK320 V6-195 (3.2L) SFI		**P1443**				**N/R**	
	CLK430 V8-260 (4.3L) SFI		**P1443**				**N/R**	
	CLK430 Cabriolet V8-260 (4.3L) SFI		**P1443**				**N/R**	
	E55 AMG V8-335 (5.5L) SFI		**P1443**				**N/R**	
	E320 V6-195 (3.2L) SFI		**P1443**				**N/R**	
	E430 V8-260 (4.3L) SFI		**P1443**				**N/R**	
	G500 V8-303 (5.0L) FI		**P1443**		**N/R**		**N/R**	
	ML55 V8-332 (5.5L) SFI		**P1443**				**N/R**	
	ML320 V6-195 (3.2L) SFI		**P1443**				**N/R**	
	ML500 V8-303 (5.0L) SFI		**P1443**			**N/S**	**N/R**	
	S55 V8-332 (5.5L) SFI		**P1443**				**N/R**	
	S430 V8-260 (4.3L) SFI		**P1443**				**N/R**	
	S500 V8-303 (5.0L) SFI		**P1443**				**N/R**	
	S600 V12-5786cc (5.8L) SFI		**P1443**			**N/S**	**N/R**	
	SL500 V8-303 (5.0L) SFI		**P1443**				**N/R**	
	SL600 V12-365 (6.0L) SFI						**N/R**	
	SLK32 AMG V6-195 (3.2L) SFI Supercharged		**P1443**				**N/R**	
	SLK230 4-140 (2.3L) SFI Supercharged		**P1419**				**N/R**	
	SLK320 V6-195 (3.2L) SFI		**P1443**				**N/R**	
2001	C240 V6-2597cc (2.6L) SFI		**P1443**				**N/R**	

[t] Transmission, Not Model, Determines Which Transmission Filter is Used. OBS = Obsolete. Availability Limited to Distributor Stock.

MERCEDES-BENZ Cont'd.

Year	Model and Engine	VIN	Lube	Air	Cabin Air	Fuel	Breather	Trans.t
2001	C320 V6-195 (3.2L) SFI		**P1443**				**N/R**	
	CL55 V8-332 (5.5L) SFI		**P1443**				**N/R**	
	CL500 V8-303 (5.0L) SFI		**P1443**				**N/R**	
	CL600 V12-5786cc (5.8L) SFI		**P1443**				**N/R**	
	CLK55 V8-332 (5.5L) SFI		**P1443**				**N/R**	
	CLK320 V6-195 (3.2L) SFI		**P1443**				**N/R**	
	CLK430 V8-260 (4.3L) SFI		**P1443**				**N/R**	
	E55 AMG V8-335 (5.5L) SFI		**P1443**				**N/R**	
	E320 V6-195 (3.2L) SFI		**P1443**				**N/R**	
	E430 V8-260 (4.3L) SFI		**P1443**				**N/R**	
	ML55 V8-332 (5.5L) SFI		**P1443**				**N/R**	
	ML320 V6-195 (3.2L) SFI		**P1443**				**N/R**	
	ML430 V8-260 (4.3L) SFI		**P1443**				**N/R**	
	S55 V8-332 (5.5L) SFI		**P1443**				**N/R**	
	S430 V8-260 (4.3L) SFI		**P1443**				**N/R**	
	S500 V8-303 (5.0L) SFI		**P1443**				**N/R**	
	S600 V12-5786cc (5.8L) SFI		**P1443**			**N/S**	**N/R**	
	SL500 V8-303 (5.0L) SFI		**P1443**				**N/R**	
	SL600 V12-365 (6.0L) SFI						**N/R**	
	SLK230 4-140 (2.3L) SFI Supercharged		**P1419**			**BF1195**	**N/R**	
	SLK320 V6-195 (3.2L) SFI		**P1443**				**N/R**	
2000	C43 V8-260 (4.3L) SFI		**P1443**				**N/R**	
	C230 4-140 (2.3L) SFI Supercharged		**P1419**			**BF1195**	**N/R**	
	C280 V6-171 (2.8L) SFI		**P1443**				**N/R**	
	CL500 V8-303 (5.0L) SFI		**P1443**				**N/R**	
	CLK320 6-195 (3.2L) SFI		**P1443**				**N/R**	
	CLK430 V8-260 (4.3L) SFI		**P1443**				**N/R**	
	E55 AMG V8-335 (5.5L) SFI		**P1443**				**N/R**	
	E320 6-195 (3.2L) SFI		**P1443**				**N/R**	
	E430 V8-260 (4.3L) SFI		**P1443**				**N/R**	
	ML55 V8-332 (5.5L) SFI		**P1443**				**N/R**	
	ML320 V6-195 (3.2L) SFI		**P1443**				**N/R**	
	ML430 V8-260 (4.3L) SFI		**P1443**				**N/R**	
	S430 V8-260 (4.3L) SFI		**P1443**				**N/R**	
	S500 V8-303 (5.0L) SFI		**P1443**				**N/R**	
	SL500 V8-303 (5.0L) SFI		**P1443**				**N/R**	
	SL600 V12-365 (6.0L) SFI						**N/R**	
	SLK230 4-140 (2.3L) SFI Supercharged		**P1419**			**BF1195**	**N/R**	
1999	C43 V8-260 (4.3L) SFI		**P1443**				**N/R**	
	C230 4-140 (2.3L) SFI Supercharged		**P1419**			**BF1195**	**N/R**	
	C280 V6-171 (2.8L) SFI		**P1443**				**N/R**	
	CL500 V8-303 (5.0L) SFI		**P1418**				**N/R**	
	CL600 V12-365 (6.0L) SFI					**BF1195**	**N/R**	
	CLK320 6-195 (3.2L) SFI		**P1443**				**N/R**	
	CLK430 V8-260 (4.3L) SFI		**P1443**				**N/R**	
	E55 AMG V8-335 (5.5L) SFI		**P1443**				**N/R**	
	E300TD 6-183 (3.0L) EFI Turbo Diesel		**P7196**			**BF7619**	**N/R**	
	E320 6-195 (3.2L) SFI		**P1443**				**N/R**	
	E430 V8-260 (4.3L) SFI		**P1443**				**N/R**	
	ML320 V6-195 (3.2L) SFI		**P1443**				**N/R**	
	ML430 V8-260 (4.3L) SFI		**P1443**				**N/R**	
	S320 6-195 (3.2L) SFI		**P1419**			**BF1195**	**N/R**	
	S420 V8-256 (4.2L) SFI		**P1418**			**BF1195**	**N/R**	
	S500 V8-303 (5.0L) SFI		**P1418**			**BF1195**	**N/R**	
	S600 V12-365 (6.0L) SFI					**BF1195**	**N/R**	
	SL500 V8-303 (5.0L) SFI		**P1443**			**BF1195**	**N/R**	
	SL600 V12-365 (6.0L) SFI					**BF1195**	**N/R**	
	SLK230 4-140 (2.3L) SFI Supercharged		**P1419**			**BF1195**	**N/R**	
1998	C43 V8-260 (4.3L) SFI		**P1443**				**N/R**	
	C230 4-140 (2.3L) SFI		**P1419**			**BF1195**	**N/R**	
	C280 V6-171 (2.8L) SFI		**P1443**				**N/R**	
	CL500 V8-303 (5.0L) SFI		**P1418**		**N/R**		**N/R**	
	CL600 V12-365 (6.0L) SFI					**BF1195**	**N/R**	
	CLK320 6-195 (3.2L) SFI		**P1443**				**N/R**	
	E300TD 6-183 (3.0L) EFI Turbo Diesel		**P7196**			**BF7619**	**N/R**	
	E320 6-195 (3.2L) SFI		**P1443**				**N/R**	
	E430 V8-260 (4.3L) SFI		**P1443**				**N/R**	

OBS = Obsolete. Availability Limited to Distributor Stock. t Transmission, Not Model, Determines Which Transmission Filter is Used.

MERCEDES-BENZ Cont'd.

Year	Model and Engine	VIN	Lube	Air	Cabin Air	Fuel	Breather	Trans.t
1998	ML320 V6-195 (3.2L) SFI		**P1443**		**N/R**		**N/R**	
	S320 6-195 (3.2L) SFI		**P1419**			**BF1195**	**N/R**	
	S420 V8-256 (4.2L) SFI		**P1418**			**BF1195**	**N/R**	
	S500 V8-303 (5.0L) SFI		**P1418**			**BF1195**	**N/R**	
	S600 V12-365 (6.0L) SFI					**BF1195**	**N/R**	
	SL500 V8-303 (5.0L) SFI		**P1418**		**N/R**	**BF1195**	**N/R**	
	SL600 V12-365 (6.0L) SFI				**N/R**	**BF1195**	**N/R**	
1997	C36 6-220 (3.6L) SFI		**P1419**			**BF1195**	**N/R**	
	C230 4-140 (2.3L) SFI		**P1419**			**BF1195**	**N/R**	
	C280 6-171 (2.8L) SFI		**P1419**				**N/R**	
	E300D 6-183 (3.0L) SFI Diesel		**P7196**			**BF7619**	**N/R**	
	E320 6-195 (3.2L) SFI		**P1419**			**BF1195**	**N/R**	
	E420 V8-256 (4.2L) SFI		**P1418**			**BF1195**	**N/R**	
	S320 6-195 (3.2L) SFI		**P1419**			**BF1195**	**N/R**	
	S420 V8-256 (4.2L) SFI		**P1418**			**BF1195**	**N/R**	
	S500 V8-303 (5.0L) SFI		**P1418**			**BF1195**	**N/R**	
	S600 V12-365 (6.0L) SFI					**BF1195**	**N/R**	
	SL320 6-195 (3.2L) SFI		**P1419**			**BF1195**	**N/R**	
	SL500 V8-303 (5.0L) SFI		**P1418**		**N/R**	**BF1195**	**N/R**	
	SL600 V12-365 (6.0L) SFI				**N/R**	**BF1195**	**N/R**	
1996	C36 6-220 (3.6L) SFI		**P1419**			**BF1195**	**N/R**	
	C220 4-134 (2.2L) SFI		**P1419**			**BF1177**	**N/R**	
	C280 6-171 (2.8L) SFI		**P1419**				**N/R**	
	E300D 6-183 (3.0L) SFI Diesel		**P7196**			**BF7619**	**N/R**	
	E320 6-195 (3.2L) SFI		**P1419**			**BF1195**	**N/R**	
	S320 6-195 (3.2L) SFI		**P1419**			**BF1177**	**N/R**	
	S420 V8-256 (4.2L) SFI		**P1418**			**BF1177**	**N/R**	
	S500 V8-303 (5.0L) SFI		**P1418**			**BF1177**	**N/R**	
	S600 V12-365 (6.0L) SFI					**BF1177**	**N/R**	
	SL320 6-195 (3.2L) SFI		**P1419**			**BF1177**	**N/R**	
	SL500 V8-303 (5.0L) SFI		**P1418**		**N/R**		**N/R**	
	SL600 V12-365 (6.0L) SFI				**N/R**	**BF1177**	**N/R**	
1995	C36 6-220 (3.6L) EFI		**P1419**				**N/R**	
	C220 4-134 (2.2L) SFI		**P1419**			**BF1177**	**N/R**	
	C280 6-171 (2.8L) SFI		**P1419**			**BF1177**	**N/R**	
	E300D 6-183 (3.0L) FI Diesel		**P7615**		**N/R**	Sec. **BF7619**	**N/R**	
	E320 6-195 (3.2L) SFI		**P1419**			**BF1177**	**N/R**	
	E420 V8-256 (4.2L) SFI		**P1418**			**BF1177**	**N/R**	
	S320 6-195 (3.2L) SFI		**P1419**			**BF1177**	**N/R**	
	S350D 6-211 (3.5L) FI Turbo Diesel		**P7615**			Pri. **BF7725** Sec. **BF7619**	**N/R**	
	S420 V8-256 (4.2L) SFI		**P1418**			**BF1177**	**N/R**	
	S500 V8-303 (5.0L) SFI		**P1418**			**BF1177**	**N/R**	
	S600 V12-365 (6.0L) SFI					**BF1177**	**N/R**	
	SL320 6-195 (3.2L) SFI		**P1419**			**BF1177**	**N/R**	
	SL500 V8-303 (5.0L) SFI		**P1418**		**N/R**	**BF1177**	**N/R**	
	SL600 V12-365 (6.0L) SFI				**N/R**	**BF1177**	**N/R**	
1994	C220 4-134 (2.2L) MFI		**P1419**			**BF1177**	**N/R**	
	C280 6-171 (2.8L) MFI		**P1419**			**BF1177**	**N/R**	
	E320 6-195 (3.2L) MFI		**P1419**			**BF1177**	**N/R**	
	E420 V8-256 (4.2L) MFI		**P1418**		**N/R**	**BF1177**	**N/R**	
	E500 V8-303 (5.0L) MFI		**P1418**		**N/R**	**BF1177**	**N/R**	
	S320 6-195 (3.2L) MFI		**P1419**			**BF1177**	**N/R**	
	S350D 6-211 (3.5L) FI Turbo Diesel		**P7615**			Pri. **BF7725** Sec. **BF7619**	**N/R**	
	S420 V8-256 (4.2L) MFI		**P1418**			**BF1177**	**N/R**	
	S500 V8-303 (5.0L) MFI		**P1418**			**BF1177**	**N/R**	
	S600 V12-365 (6.0L) MFI					**BF1177**	**N/R**	
	SL320 6-195 (3.2L) MFI		**P1419**			**BF1177**	**N/R**	
	SL500 V8-303 (5.0L) MFI		**P1418**		**N/R**	**BF1177**	**N/R**	
	SL600 V12-365 (6.0L) MFI				**N/R**	**BF1177**	**N/R**	
1993	190E 4-140 (2.3L) EFI		**B178**		**N/R**	**BF1177**	**N/R**	
	6-159 (2.6L) EFI		**B178**		**N/R**	**BF1177**	**N/R**	
	300CE 6-3199cc (3.2L) EFI		**P1419**		**N/R**	**BF1177**	**N/R**	
	300D 5-152 (2.5L) Turbo Diesel		**P7615**		**N/R**	Pri. **BF7848** Sec. **BF7619**	**N/R**	
	300E 6-2799cc (2.8L) EFI		**P1419**	**PA3771**	**N/R**	**BF1177**	**N/R**	

[t] Transmission, Not Model, Determines Which Transmission Filter is Used. OBS = Obsolete. Availability Limited to Distributor Stock.

MERCEDES-BENZ Cont'd.

Year	Model and Engine	VIN	Lube	Air	Cabin Air	Fuel	Breather	Trans.t
1993	300E 6-181 (3.0L) EFI			**PA3771**	**N/R**		**N/R**	
	6-3199cc (3.2L) EFI		**P1419**		**N/R**	**BF1177**	**N/R**	
	300SD 6-210 (3.5L) Turbo Diesel		**P7615**			Pri. **BF7725** Sec. **BF7619**	**N/R**	
	300SE, 300TE 6-3199cc (3.2L) EFI		**P1419**			**BF1177**	**N/R**	
	300SL 6-181 (3.0L) EFI		**P1419**		**N/R**	**BF1177**	**N/R**	
	300TE 6-181 (3.0L) EFI		**B178**	**PA3771**	**N/R**	**BF1177**	**N/R**	
	400E, 400SEL V8-256 (4.2L) EFI		**P1418**			**BF1177**	**N/R**	
	500E, 500SEC, 500SEL, 500SL V8-303 (5.0L) EFI		**P1418**			**BF1177**	**N/R**	
	600SEC, 600SEL, 600SL V12-365 (6.0L) EFI					**BF1177**	**N/R**	
1992	190E 4-140 (2.3L) EFI		**B178**		**N/R**	**BF1177**	**N/R**	
	6-159 (2.6L) EFI				**N/R**	**BF1177**	**N/R**	
	300CE, 300SL 6-181 (3.0L) EFI		**P1419**		**N/R**	**BF1177**	**N/R**	
	300D 5-152 (2.5L) Turbo Diesel		**P7615**		**N/R**	Pri. **BF7848** Sec. **BF7619**	**N/R**	
	300E, 300TE 6-159 (2.6L) EFI			**PA3771**	**N/R**	**BF1177**	**N/R**	
	6-181 (3.0L) EFI			**PA3771**	**N/R**	**BF1177**	**N/R**	
	300SD 6-210 (3.5L) Turbo Diesel		**P7615**			Pri. **BF7725** Sec. **BF7619**	**N/R**	
	300SE 6-3199cc (3.2L) EFI		**P1419**			**BF1177**	**N/R**	
	400E, 400SE V8-256 (4.2L) EFI		**P1418**			**BF1177**	**N/R**	
	500E, 500SEL, 500SL V8-303 (5.0L) EFI		**P1418**		**N/R**	**BF1177**	**N/R**	
	600SEL V12-365 (6.0L) EFI				**N/R**	**BF1177**	**N/R**	
1991	190E 4-140 (2.3L) EFI		**B178**		**N/R**	**BF1177**	**N/R**	
	6-159 (2.6L) EFI				**N/R**	**BF1177**	**N/R**	
	300CE 6-181 (3.0L) EFI		**P1419**	**PA3771**	**N/R**	**BF1177**	**N/R**	
	300D 5-152 (2.5L) Turbo Diesel		**P7615**		**N/R**	Pri. **BF7848** Sec. **BF7619**	**N/R**	
	300E, 300SE, 300SEL, 300TE 6-159 (2.6L) EFI			**PA3771**	**N/R**	**BF1177**	**N/R**	
	6-181 (3.0L) EFI			**PA3771**	**N/R**	**BF1177**	**N/R**	
	300SL 6-181 (3.0L) EFI		**P1419**		**N/R**	**BF1177**	**N/R**	
	350SD, 350SDL 6-210 (3.5L) MFI Turbo Diesel		**P7615**		**N/R**	Pri. **BF7848** Sec. **BF7619**	**N/R**	
	420SEL V8-256 (4.2L) EFI		**P125**		**N/R**	**BF1177**	**N/R**	
	500SL V8-303 (5.0L) EFI		**P1418**		**N/R**	**BF1177**	**N/R**	
	560SEC, 560SEL V8-339 (5.6L) EFI		**P125**		**N/R**	**BF1177**	**N/R**	
1990	190E 6-159 (2.6L) EFI				**N/R**	**BF1177**	**N/R**	
	300CE 6-181 (3.0L) EFI		**P1419**		**N/R**	**BF1177**	**N/R**	
	300D 5-152 (2.5L) Turbo Diesel		**P7615**		**N/R**	Pri. **BF7848** Sec. **BF7619**	**N/R**	
	300E, 300SE, 300SEL, 300TE 6-159 (2.6L) EFI			**PA3771**	**N/R**	**BF1177**	**N/R**	
	6-181 (3.0L) EFI			**PA3771**	**N/R**	**BF1177**	**N/R**	
	300SL 6-181 (3.0L) EFI		**P1419**		**N/R**	**BF1177**	**N/R**	
	350SD, 350SDL 6-210 (3.5L) MFI Turbo Diesel		**P7615**		**N/R**	Pri. **BF7848** Sec. **BF7619**	**N/R**	
	420SEL V8-256 (4.2L) EFI		**P125**		**N/R**	**BF1177**	**N/R**	
	500SL V8-303 (5.0L) EFI		**P1418**		**N/R**	**BF1177**	**N/R**	
	560SEC, 560SEL V8-339 (5.6L) EFI		**P125**		**N/R**	**BF1177**	**N/R**	
1989	190D 5-152 (2.5L) Diesel		**P7615**		**N/R**	Pri. **BF7725** Sec. **BF7619**	**N/R**	
	190E 6-159 (2.6L) EFI		**B178**		**N/R**	**BF1177**	**N/R**	
	260E 6-159 (2.6L) EFI		**B295**	**PA3771**	**N/R**	**BF1177**	**N/R**	
	300CE, 300E, 300SE, 300SEL, 300TE 6-181 (3.0L) EFI		**B178**	**PA3771**	**N/R**	**BF1177**	**N/R**	
	420SEL V8-256 (4.2L) EFI		**P125**		**N/R**	**BF1177**	**N/R**	
	560SEC, 560SEL, 560SL V8-339 (5.6L) EFI		**P125**		**N/R**	**BF1177**	**N/R**	
1988	190D 5-152 (2.5L) Diesel		**P7615**		**N/R**	Pri. **BF7725** Sec. **BF7619**	**N/R**	
	190E 4-140 (2.3L) EFI				**N/R**	**BF1177**	**N/R**	
	6-159 (2.6L) EFI				**N/R**	**BF1177**	**N/R**	
	260E 6-159 (2.6L) EFI		**B295**	**PA3771**	**N/R**	**BF1177**	**N/R**	

OBS = Obsolete. Availability Limited to Distributor Stock. t Transmission, Not Model, Determines Which Transmission Filter is Used.

MERCEDES-BENZ Cont'd.

Year	Model and Engine	VIN	Lube	Air	Cabin Air	Fuel	Breather	Trans.[t]
1988	300CE, 300E, 300SE, 300SEL, 300TE 6-181 (3.0L) EFI			**PA3771**	**N/R**	**BF1177**	**N/R**	
	420SEL V8-256 (4.2L) EFI		**P125**		**N/R**	**BF1177**	**N/R**	
	560SEC, 560SEL, 560SL V8-339 (5.6L) EFI		**P125**		**N/R**	**BF1177**	**N/R**	
1987	190D 5-152 (2.5L) Diesel		**P7615**		**N/R**	Pri. **BF7725** Sec. **BF7619**	**N/R**	
	5-152 (2.5L) Turbo Diesel		**P7615**		**N/R**	Pri. **BF7725** Sec. **BF7619**	**N/R**	
	190E 4-140 (2.3L) FI 8 Valve		**B295**		**N/R**	**BF1177**	**N/R**	
	4-140 (2.3L) FI 16 Valve				**N/R**	**BF1177**	**N/R**	
	6-159 (2.6L) FI				**N/R**	**BF1177**	**N/R**	
	260E 6-159 (2.6L) FI		**B295**	**PA3771**	**N/R**	**BF1177**	**N/R**	
	300D 6-2998cc (3.0L) Turbo Diesel		**P7615**		**N/R**	Pri. **BF7848** Sec. **BF7619**	**N/R**	
	300E 6-2962cc (3.0L) FI			**PA3771**	**N/R**	**BF1177**	**N/R**	
	300SDL, 300TDT 6-2996cc (3.0L) Turbo Diesel		**P7615**		**N/R**	Pri. **BF7848** Sec. **BF7619**	**N/R**	
	420SEL V8-4196cc (4.2L) FI		**P125**		**N/R**	**BF1177**	**N/R**	
	560SEC, 560SEL, 560SL V8-339 (5.6L) FI		**P125**		**N/R**	**BF1177**	**N/R**	
1986	190D 5-152 (2.5L) Diesel		**P7615**		**N/R**	Pri. **BF7725** Sec. **BF7619**	**N/R**	
	190E 4-140 (2.3L) FI 8 Valve				**N/R**	**BF1177**	**N/R**	
	4-140 (2.3L) FI 16 Valve				**N/R**	**BF1177**	**N/R**	
	300E 6-2962cc (3.0L) FI			**PA3771**	**N/R**	**BF1177**	**N/R**	
	300SDL 6-2962cc (3.0L) Turbo Diesel		**P7615**		**N/R**	Pri. **BF7725** Sec. **BF7619**	**N/R**	
	420SEL V8-4196cc (4.2L) FI		**P125**		**N/R**	**BF1177**	**N/R**	
	560SEC, 560SEL, 560SL V8-339 (5.6L) FI		**P125**		**N/R**	**BF1177**	**N/R**	
1985	190D 4-2200cc (2.2L) Diesel		**P7615**		**N/R**	Pri. **BF7725** Sec. **BF7619**	**N/R**	
	190E 4-140 (2.3L) FI				**N/R**	**BF1177**	**N/R**	
	300CD, 300D 5-2998cc (3.0L) Turbo Diesel		**P102**		**N/R**	Pri. **BF7848** Sec. **BF1056**	**N/R**	
	300SD, 300TD 5-2998cc (3.0L) Turbo Diesel		**P102**		**N/R**	Pri. **BF7848** Sec. **BF7619**	**N/R**	
	380SE, 380SL V8-3839cc (3.8L) FI		**P125**		**N/R**	**BF1177**	**N/R**	
	500SEC, 500SEL V8-4973cc (5.0L) FI		**P125**		**N/R**	**BF1177**	**N/R**	
1984	190D 4-2200cc (2.2L) Diesel		**P7615**		**N/R**	Pri. **BF7725** Sec. **BF7619**	**N/R**	
	190E 4-140 (2.3L) FI				**N/R**	**BF1177**	**N/R**	
	300CD, 300D, 300SD, 300TD 5-2998cc (3.0L) Turbo Diesel		**P102**		**N/R**	Pri. **BF7848** Sec. **BF1056**	**N/R**	
	380SE, 380SL V8-3839cc (3.8L) FI		**P125**		**N/R**	**BF1177**	**N/R**	
	500SEC, 500SEL V8-4973cc (5.0L) FI		**P125**		**N/R**	**BF1177**	**N/R**	
1983	240D 4-2404cc (2.4L) FI Diesel		**P102**	**PA2081**	**N/R**	Pri. **BF7848** Sec. **BF1056**	**N/R**	
	300CD, 300D, 300SD, 300TD 5-2998cc (3.0L) Turbo Diesel		**P102**		**N/R**	Pri. **BF7848** Sec. **BF1056**	**N/R**	
	380SEC, 380SEL, 380SL V8-3839cc (3.8L) FI		**P125**		**N/R**	**BF1177**	**N/R**	
1982	240D 4-2404cc (2.4L) FI Diesel		**P102**	**PA2081**	**N/R**	Pri. **BF7848** Sec. **BF1056**	**N/R**	
	300CD, 300D, 300SD, 300TD 5-2998cc (3.0L) Turbo Diesel		**P102**		**N/R**	Pri **BF7848** Sec. **BF1056**	**N/R**	
	380SEC, 380SEL, 380SL V8-3839cc (3.8L) FI		**P125**		**N/R**	**BF1177**	**N/R**	
1981	240D 4-2404cc (2.4L) FI Diesel		**P102**	**PA2081**	**N/R**	Pri. **BF7848** Sec. **BF1056**	**N/R**	
	280CE, 280E 6-2746cc (2.7L) FI		**P125**		**N/R**	**BF1177**	**N/R**	
	300CD, 300D 5-2998cc (3.0L) FI Diesel		**P102**	**PA2081**	**N/R**	Pri. **BF7848** Sec. **BF1056**	**N/R**	
	300SD, 300TD 5-2998cc (3.0L) Turbo Diesel		**P102**		**N/R**	Pri. **BF7848** Sec. **BF1056**	**N/R**	
	380SEL, 380SL, 380SLC V8-3839cc (3.8L) FI		**P125**		**N/R**	**BF1177**	**N/R**	

[t] Transmission, Not Model, Determines Which Transmission Filter is Used. OBS = Obsolete. Availability Limited to Distributor Stock.

Year	Model and Engine	VIN	Lube	Air	Cabin Air	Fuel	Breather	Trans.[t]
MERCEDES-BENZ Cont'd.								
1980	240D 4-2404cc (2.4L) FI Diesel		**P102**	**PA2081**	**N/R**	Pri. **BF7848** Sec. **BF1056**	**N/R**	
	280CE, 280E, 280SE 6-2778cc (2.8L) FI		**P125**		**N/R**	**BF1177**	**N/R**	
	300CD, 300D 5-2998cc (3.0L) FI Diesel			**PA2081**	**N/R**	Pri. **BF7848** Sec. **BF1056**	**N/R**	
	300SD, 300TD 5-2998cc (3.0L) Turbo Diesel		**P102**		**N/R**	Pri. **BF7848** Sec. **BF1056**	**N/R**	
	450SEL, 450SL, 450SLC V8-4520cc (4.5L) FI		**P125**		**N/R**	**BF1177**	**N/R**	
MERCURY								
2010	Grand Marquis V8-281 (4.6L) FI or Flex Fuel	V	**B329**	**PA2152**	**N/R**	**BF7668**	**N/R**	4R70W **18029**
	Mariner 4-152 (2.5L) SFI Hybrid	3	Ele. **P7313** Spin-on **BT8409**	**PA4385**	**PA4394**	**BF1166**	**N/R**	**N/S**
	4-152 (2.5L) SFI	7	Ele. **P7313** Spin-on **BT8409**	**PA4385**	**PA4394**	**BF1166**	**N/R**	**N/S**
	V6-183 (3.0L) SFI	G	**B7449**		**PA4394**	**BF1166**	**N/R**	**N/S**
	Milan 4-151 (2.5L) FI	A	**BT8409**	**N/S**		**N/S**	**N/R**	**N/S**
	4-151 (2.5L) FI Hybrid	A	**BT8409**	**N/S**		**N/S**	**N/R**	**N/S**
	V6-183 (3.0L) FI or Flex Fuel	G	**B7449**	**PA4176**		**N/S**	**N/R**	**N/S**
	Mountaineer V6-245 (4.0L) SFI	E	**B329**	**PA4147**	**N/R**	**BF7802**	**N/R**	5R55S **20002** 6R60 **20018**
	V8-281 (4.6L) SFI	8	**B329**	**PA4185**	**N/R**	**BF7802**	**N/R**	**20019**
2009	Grand Marquis V8-281 (4.6L) FI or Flex Fuel	V	**B329**	**PA2152**	**N/R**	**BF7668**	**N/R**	4R70W **18029**
	Mariner 4-152 (2.5L) FI Hybrid	3	Ele. **P7313** Spin-on **BT8409**	**PA4385**	**PA4394**	**BF1166**	**N/R**	**N/S**
	4-152 (2.5L) SFI	7	Ele. **P7313** Spin-on **BT8409**	**PA4385**	**PA4394**	**BF1166**	**N/R**	**N/S**
	V6-183 (3.0L) SFI	G	**B7449**		**PA4394**	**BF1166**	**N/R**	**N/S**
	Milan 4-140 (2.3L) SFI	Z	**P7313**	**PA4175**	**N/R**	**N/S**	**N/R**	
	V6-183 (3.0L) SFI	1	To 9/25/08 **B329** 9/25/08-on **B7449**	**PA4176**	**N/R**	**N/S**	**N/R**	
	Mountaineer V6-245 (4.0L) SFI	E	**B329**	**PA4147**	**N/R**	**BF7802**	**N/R**	5R55S **20002** 6R60 **20018**
	V8-281 (4.6L) SFI	8	**B329**	**PA4185**	**N/R**	**BF7802**	**N/R**	**20019**
	Sable V6-215 (3.5L) SFI	W	To 1/16/09 **B243** 1/16/09-on **B7449**	**PA4321**	**N/R**	**N/S**	**N/R**	6 Spd. **N/S**
2008	Grand Marquis V8-281 (4.6L) FI or Flex Fuel	V	**B329**	**PA2152**	**N/R**	**BF7668**	**N/R**	4R70W **18029**
	Mariner 4-140 (2.3L) SFI	Z	Ele. **P7313** Spin-on **BT8409**	**PA4163**	**PA4394**	**BF1166**	**N/R**	CD4E **N/S**
	4-140 (2.3L) FI Hybrid	H	**P7313**	**PA4385**	**PA4394**	**BF966**	**N/R**	**N/S**
	V6-183 (3.0L) SFI	1	**B329**	**PA4163**	**PA4394**	**BF966**	**N/R**	CD4E **N/S**
	Milan 4-140 (2.3L) SFI	Z	Ele. **P7313** Spin-on **BT8409**	**PA4175**	**N/R**	**N/S**	**N/R**	
	V6-183 (3.0L) SFI	1	**B329**	**PA4176**	**N/R**	**N/S**	**N/R**	
	Mountaineer V6-245 (4.0L) SFI or Flex Fuel	E,K	**B329**	**PA4147**	**N/R**	**BF7802**	**N/R**	5R55S **20002** 6R60 **20019**
	V8-281 (4.6L) SFI	8	**B329**	**PA4185**	**N/R**	**BF7802**	**N/R**	**20019**
	Sable V6-215 (3.5L) SFI	W	**B243**	**PA4321**	**N/R**	**N/S**	**N/R**	6 Spd. **N/S**
2007	Grand Marquis V8-281 (4.6L) FI or Flex Fuel	V,W	**B329**	**PA2152**	**N/R**	**BF7668**	**N/R**	4R70W **18029**
	Mariner 4-140 (2.3L) FI Hybrid	H	**P7313**	**PA4385**	**PA4370**	**BF966**	**N/R**	**N/S**
	4-140 (2.3L) SFI	Z	Ele. **P7313** Spin-on **BT8409**	**PA4163**	**PA4370**	**BF966**	**N/R**	CD4E **N/S**
	V6-181 (3.0L) SFI	1	**B329**	**PA4163**	**PA4370**	**BF966**	**N/R**	CD4E **N/S**
	Milan 4-140 (2.3L) SFI	Z	Ele. **P7313** Spin-on **BT8409**	**PA4175**	**N/R**	**N/S**	**N/R**	
	V6-183 (3.0L) SFI	1	**B329**	**PA4176**	**N/R**	**N/S**	**N/R**	
	Montego V6-182 (3.0L) SFI	1	**B329**	**PA4183**	**N/R**	**BF7668**	**N/R**	
	Monterey V6-256 (4.2L) SFI	2	**B243**	**PA4181**	**PA4152**	**BF7742**	**N/R**	AX4N **18034**
	Mountaineer V6-245 (4.0L) SFI or Flex Fuel	E,K	**B329**	**PA4147**	**N/R**	**BF7802**	**N/R**	5R55S **20002** 6R60 **20018**
	V8-281 (4.6L) SFI	8	**B329**	**PA4185**	**N/R**	**BF7802**	**N/R**	5R55S **20002** 6R60 **20018**

OBS = Obsolete. Availability Limited to Distributor Stock. [t] Transmission, Not Model, Determines Which Transmission Filter is Used.

MERCURY Cont'd.

Year	Model and Engine	VIN	Lube	Air	Cabin Air	Fuel	Breather	Trans.t
2006	Grand Marquis V8-281 (4.6L) FI or Flex Fuel	V,W	**B329**	**PA2152**	**N/R**	**BF7668**	**N/R**	4R70W **18029**
	Mariner 4-140 (2.3L) SFI	Z	Ele. **P7313** Spin-on **BT8409**	**PA4163**	**PA4370**	**BF966**	**N/R**	**N/S**
	4-140 (2.3L) FI Hybrid	H	**P7313**	**PA4385**	**PA4370**	**BF966**	**N/R**	**N/S**
	V6-181 (3.0L) SFI	1	**B329**	**PA4163**	**PA4370**	**BF966**	**N/R**	**N/S**
	Milan 4-138 (2.3L) SFI	Z	Ele. **P7313** Spin-on **BT8409**	**PA4175**	**N/R**	**N/S**	**N/R**	
	V6-183 (3.0L) SFI	1	**B329**	**PA4176**	**N/R**	**N/S**	**N/R**	
	Montego V6-182 (3.0L) SFI	1	**B329**	**PA4183**	**N/R**	**BF7668**	**N/R**	
	Monterey V6-256 (4.2L) SFI	2	**B243**	**PA4181**	**PA4152**	**BF7742**	**N/R**	**18034**
	Mountaineer V6-245 (4.0L) SFI	E	**B329**	**PA4147**	**N/R**	**BF7802**	**N/R**	5R55S **20002** 6R60 **20018**
	V8-281 (4.6L) SFI	8	**B329**	**PA4185**	**N/R**	**BF7802**	**N/R**	5R55S **20002** 6R60 **20018**
2005	Grand Marquis V8-281 (4.6L) SFI	W	**B329**	**PA2152**	**N/R**	**BF7668**	**N/R**	4R70W **18029**
	Mariner 4-140 (2.3L) SFI	Z	**BT8409**	**PA4163**	**PA4370**	**BF966**	**N/R**	CD4E **N/S**
	V6-181 (3.0L) SFI	1	**B329**	**PA4163**	**PA4370**	**BF966**	**N/R**	CD4E **N/S**
	Montego V6-182 (3.0L) SFI	1	**B329**	**PA4183**	**N/R**	**BF7668**	**N/R**	
	Monterey V6-256 (4.2L) SFI	2	**B243**	**PA4181**	**PA4152**	**BF7668**	**N/R**	To 12/12/04 **18033** 12/12/04-on **18034**
	Mountaineer V6-245 (4.0L) SFI or Flex Fuel	E,K	**B329**	**PA4147**	**N/R**	**BF7802**	**N/R**	Transfer Case **20006** 5R55W **20002**
	V8-281 (4.6L) SFI	W	**B329**	**PA4147**	**N/R**	**BF7802**	**N/R**	Transfer Case **20006** 5R55S **20002**
	Sable V6-182 (3.0L) SFI Flex Fuel	2	**B329**	**PA4163**	**PA4112**	**BF7809**	**N/R**	4F50N **18034**
	V6-182 (3.0L) SFI 24 Valve	S	**B329**	**PA4163**	**PA4112**	**BF7809**	**N/R**	4F50N **18034**
	V6-182 (3.0L) SFI 12 Valve	U	**B243**	**PA4163**	**PA4112**	**BF7809**	**N/R**	4F50N **18034**
2004	Grand Marquis V8-281 (4.6L) SFI	W	**B329**	**PA2152**	**N/R**	**BF7668**	**N/R**	4R70W **18029**
	Marauder V8-281 (4.6L) SFI	V	**B329**	**PA4338**	**N/R**	**BF7668**	**N/R**	4R70W **18029**
	Monterey V6-256 (4.2L) FI	2	**B243**	**PA4181**	**PA4152**	**BF7668**	**N/R**	**18033**
	Mountaineer V6-245 (4.0L) SFI or Flex Fuel	E,K	**B329**	**PA4147**	**N/R**	**BF7742**	**N/R**	5R55S **20002** Transfer Case **20006**
	V8-281 (4.6L) SFI	W	**B329**	**PA4147**	**N/R**	**BF7802**	**N/R**	5R55S **20002** Transfer Case **20006**
	Sable V6-182 (3.0L) SFI Flex Fuel 12 Valve	2	**B243**	**PA4163**	**PA4112**	**BF7809**	**N/R**	4F50N **18034**
	V6-182 (3.0L) SFI 24 Valve	S	**B329**	**PA4163**	**PA4112**	**BF7809**	**N/R**	4F50N **18034**
	V6-182 (3.0L) SFI 12 Valve	U	**B243**	**PA4163**	**PA4112**	**BF7809**	**N/R**	4F50N **18034**
2003	Grand Marquis V8-281 (4.6L) SFI	W	**B329**	**PA2152**	**N/R**	**BF7668**	**N/R**	4R70W **18029**
	Marauder V8-281 (4.6L) SFI	V	**B329**	**PA4338**	**N/R**	**BF7668**	**N/R**	**18029**
	Mountaineer V6-245 (4.0L) SFI or Flex Fuel	E,K	**B329**	**PA4147**	**N/R**	**BF7802**	**N/R**	5R55W **20002**
	V8-281 (4.6L) SFI	W	**B329**	**PA4147**	**N/R**	**BF7742**	**N/R**	5R55W **20002**
	Sable V6-182 (3.0L) SFI 12 Valve or Flex Fuel	2,U	**B243**	**PA4163**	**PA4112**	**BF7809**	**N/R**	4F50N **18034**
	V6-182 (3.0L) SFI 24 Valve	S	**B329**	**PA4163**	**PA4112**	**BF7809**	**N/R**	4F50N **18034**
2002	Cougar 4-121 (2.0L) MFI	3	**B1416**	**PA2227**	**PA4153**	**BF966**	**N/R**	CD4E **N/S**
	V6-155 (2.5L) MFI	L	**B329**	**PA2200**	**PA4153**	**BF966**	**N/R**	CD4E **N/S**
	Grand Marquis V8-281 (4.6L) SFI	W	**B329**	**PA2152**	**N/R**	**BF7668**	**N/R**	4R70W **18029**
	Mountaineer V6-245 (4.0L) SFI or Flex Fuel	E,K	**B329**	**PA4147**	**N/R**	**BF7742**	**N/R**	5R55W **20002** Transfer Case **20006**
	V8-281 (4.6L) SFI	W	**B329**	**PA4147**	**N/R**	**BF7742**	**N/R**	5R55W **20002** Transfer Case **20006**
	Sable V6-182 (3.0L) SFI 24 Valve	S	**B329**	**PA4163**	**PA4112**	**BF7809**	**N/R**	4F50N **18034**
	V6-182 (3.0L) SFI 12 Valve	U	**B243**	**PA4163**	**PA4112**	**BF7809**	**N/R**	4F50N **18034**
	Villager V6-200 (3.3L) SFI	T	**B1402**	**PA4076**		**BF1104**	**N/R**	4F20E **18011**
2001	Cougar 4-121 (2.0L) SFI	3	**B1416**	**PA2227**	**PA4153**	**BF966**	**N/R**	CD4E **N/S**
	V6-155 (2.5L) SFI HO	G,L	**B329**	**PA2200**	**PA4153**	**BF966**	**N/R**	CD4E **N/S**
	Grand Marquis V8-281 (4.6L) SFI	W	**B329**	**PA2152**	**N/R**	**BF7668**	**N/R**	4R70W **18029**
	Mountaineer V6-245 (4.0L) SFI	E	**B2**	**PA4102**	**N/R**	**BF7668**	**N/R**	2WD **18024** 4WD **18025**

[t] Transmission, Not Model, Determines Which Transmission Filter is Used. OBS = Obsolete. Availability Limited to Distributor Stock.

MERCURY Cont'd.

Year	Model and Engine	VIN	Lube	Air	Cabin Air	Fuel	Breather	Trans.†
2001	Mountaineer V8-302 (5.0L) SFI	P	**B329**	**PA4102**	**N/R**	**BF7668**	**N/R**	4R70W **18029** 5R55E 2WD **18024** 5R55E 4WX **18025**
	Sable V6-182 (3.0L) SFI 24 Valve	S	**B329**	**PA4163**	**PA4112**	**BF7801**	**N/R**	4R50N **18034**
	V6-182 (3.0L) SFI 12 Valve, or Flex Fuel	2,U	**B243**	**PA4163**	**PA4112**	**BF7801**	**N/R**	4F50N **18034**
	Villager V6-200 (3.3L) SFI	T	**B1402**	**PA4076**		**BF1104**	**N/R**	4F20E **18011**
2000	Cougar 4-121 (2.0L) SFI	3	**B1416**	**PA2227**	**PA4153**	**BF966**	**N/R**	CD4E **N/S**
	V6-155 (2.5L) SFI	L	**B329**	**PA2200**	**PA4153**	**BF966**	**N/R**	CD4E **N/S**
	Grand Marquis V8-281 (4.6L) SFI	W	**B329**	**PA2152**	**N/R**	**BF7668**	**N/R**	**18029**
	Mountaineer V6-245 (4.0L) SFI	E	**B2**	**PA4102**	**N/R**	**BF7668**	**N/R**	2WD **18024** 4WD **18025**
	V8-302 (5.0L) SFI	P	**B329**	**PA4102**	**N/R**	**BF7668**	**N/R**	4R70W **18029** 5R55E 2WD **18024** 5R55E 4WD **18025**
	Mystique 4-121 (2.0L) SFI	3	**B1416**	**PA2227**	**PA4153**	**BF966**	**N/R**	CD4E **N/S**
	V6-153 (2.5L) SFI	L	**B329**	**PA2200**	**PA4153**	**BF966**	**N/R**	CD4E **N/S**
	Sable V6-182 (3.0L) SFI 24 Valve	S	**B329**	**PA4163**	**PA4112**	**BF7809**	**N/R**	AX4S **18034**
	V6-182 (3.0L) SFI 12 Valve	U	**B243**	**PA4163**	**PA4112**	**BF7809**	**N/R**	AX4S **18034**
	Villager V6-200 (3.3L) SFI	T	**B1402**	**PA4076**		**BF1104**	**N/R**	4F20E **18011**
1999	Cougar 4-121 (2.0L) SFI	3	**B1416**	**PA2227**	**PA4153**	**BF966**	**N/R**	**N/S**
	V6-155 (2.5L) SFI	L	**B329**	**PA2200**	**PA4153**	**BF966**	**N/R**	**N/S**
	Grand Marquis V8-281 (4.6L) SFI	W	**B329**	**PA2152**	**N/R**	**BF7668**	**N/R**	**18029**
	Mountaineer V6-245 (4.0L) EFI	E	**B2**	**PA4102**	**N/R**	**BF7668**	**N/R**	2WD **18024** 4WD **18025**
	V8-302 (5.0L) EFI	P	**B329**	**PA4102**	**N/R**	**BF7668**	**N/R**	4R70W **18029**
	Mystique 4-121 (2.0L) SFI	3	**B1416**	**PA2227**	**PA4153**	**BF966**	**N/R**	**N/S**
	V6-153 (2.5L) SFI	L	**B329**	**PA2200**	**PA4153**	**BF966**	**N/R**	**N/S**
	Sable V6-182 (3.0L) SFI 24 Valve	S	**B329**	**PA4044**	**PA4112**	**BF966**	**N/R**	AX4N **18033** AX4S **18034**
	V6-182 (3.0L) SFI 12 Valve	U	**B243**	**PA4044**	**PA4112**	**BF966**	**N/R**	AX4N **18033** AX4S **18034**
	Tracer 4-122 (2.0L) SFI	P	**B243**	**PA4088**		**BF1184**	**N/R**	**18268**
	Villager V6-200 (3.3L) SFI	T	**B1402**	**PA4076**		**BF1104**	**N/R**	4F20E **18011**
1998	Grand Marquis V8-281 (4.6L) SFI	6,W	**B329**	**PA2152**	**N/R**	**BF7668**	**N/R**	**18029**
	Mountaineer V6-245 (4.0L) EFI	E	**B2**	**PA4102**	**N/R**	**BF1166**	**N/R**	AODE **18029** 5R55E 2WD **18024** 5R55E 4WD **18025**
	V8-302 (5.0L) EFI	P	**B329**	**PA4102**	**N/R**	**BF1166**	**N/R**	AODE **18029**
	Mystique 4-121 (2.0L) SFI	3	**B1416**	**PA2227**	**PA4153**	**BF966**	**N/R**	**N/S**
	V6-153 (2.5L) SFI	L	**B329**	**PA2200**	**PA4153**	**BF966**	**N/R**	**N/S**
	Sable V6-182 (3.0L) SFI 24 Valve	S	**B329**	**PA4044**	**PA4112**	**BF966**	**N/R**	AX4N **18033** AX4S **18034**
	V6-182 (3.0L) SFI 12 Valve	U	**B243**	**PA4044**	**PA4112**	**BF966**	**N/R**	AX4N **18033** AX4S **18034**
	Tracer 4-122 (2.0L) SPI	P	**B243**	**PA4088**		**BF1184**	**N/R**	**18268**
	Villager V6-182 (3.0L) EFI	W	**B113**	**PA4076**	**N/R**	**BF1104**	**N/R**	**18011**
1997	Cougar V6-232 (3.8L) SFI	4	**B243**	**PA2191**	**N/R**	**BF1170**	**SA2159**	**18029**
	V8-281 (4.6L) SFI	W	**B329**	**PA2191**	**N/R**	**BF1170**	**N/R**	**18029**
	Grand Marquis V8-281 (4.6L) SFI	W	**B329**	**PA2152**	**N/R**	**BF966**	**N/R**	**18029**
	Mountaineer V8-302 (5.0L) EFI	P	**B329**	Panel **PA4102** Round **PA4089**	**N/R**	**BF1166**	**N/R**	AODE **18029**
	Mystique 4-121 (2.0L) SFI	3	**B233**	**PA2227**	**PA4153**	**BF966**	**N/R**	**N/S**
	V6-153 (2.5L) SFI	L	**B329**	**PA2200**	**PA4153**	**BF966**	**N/R**	**N/S**
	Sable V6-182 (3.0L) SFI 24 Valve	S	**B329**	**PA4044**	**PA4112**	**BF966**	**N/R**	AX4N **18033** AX4S **18034**
	V6-182 (3.0L) SFI 12 Valve	U	**B243**	**PA4044**	**PA4112**	**BF966**	**N/R**	AX4N **18033** AX4S **18034**
	Tracer 4-122 (2.0L) SPI	P	**B243**	**PA4088**		**BF1184**	**N/R**	**18268**
	Villager V6-182 (3.0L) EFI	W	**B113**	**PA4076**	**N/R**	**BF1105**	**N/R**	**18011**
1996	Cougar V6-232 (3.8L) SFI	4	**B243**	**PA2191**	**N/R**	**BF1170**	**SA2159**	4R70W **18029**
	V8-281 (4.6L) SFI	W	**B329**	**PA2191**	**N/R**	**BF1170**	**N/R**	4R70W **18029**
	Grand Marquis V8-281 (4.6L) SFI	6,W	**B329**	**PA2152**	**N/R**	**BF966**	**N/R**	4R70W **18029**
	Mystique 4-121 (2.0L) SFI	3	**B233**	**PA2227**	**PA4153**	**BF966**	**N/R**	**N/S**
	V6-153 (2.5L) SFI	L	**B329**	**PA2200**	**PA4153**	**BF966**	**N/R**	**N/S**
	Sable V6-182 (3.0L) SFI 24 Valve	S	**B329**	**PA4044**	**PA4112**	**BF966**	**N/R**	AX4N **18033** AX4S **18034**

OBS = Obsolete. Availability Limited to Distributor Stock. † Transmission, Not Model, Determines Which Transmission Filter is Used.

MERCURY Cont'd.

Year	Model and Engine	VIN	Lube	Air	Cabin Air	Fuel	Breather	Trans.t
1996	Sable V6-182 (3.0L) SFI 12 Valve	U	**B243**	**PA4044**	**PA4112**	**BF966**	**N/R**	AX4N **18033** AX4S **18034**
	Tracer 4-113 (1.8L) EFI	8	**B1400**	**PA2220**		**BF966**	**N/R**	**18268**
	4-116 (1.9L) SFI	J	**B243**	**PA2103**		**BF966**	**N/R**	**18268**
	Villager V6-182 (3.0L) SFI	W	**B113**	**PA4076**	**N/R**	**BF1105**	**N/R**	**18011**
1995	Cougar V6-232 (3.8L) SFI	4	**B243**	**PA2191**	**N/R**	**BF1170**	**SA2159**	AODE **18002**
	V8-281 (4.6L) SFI	W	**B329**	**PA2191**	**N/R**	**BF1170**	**N/R**	AODE **18002**
	Grand Marquis V8-281 (4.6L) SFI	W	**B329**	**PA2152**	**N/R**	**BF966**	**N/R**	AODE **18002**
	Mystique 4-121 (2.0L) SFI	3	**B233**	**PA2227**	**PA4153**	**BF966**	**N/R**	**N/S**
	V6-153 (2.5L) SFI	L	**B329**	**PA2200**	**PA4153**	**BF966**	**N/R**	**N/S**
	Sable V6-182 (3.0L) EFI	U	**B243**	**PA2150**	**N/R**	**BF966**	**N/R**	4F50N **18033**
	V6-232 (3.8L) EFI	4	**B243**	**PA2150**	**N/R**	**BF966**	**SA2159**	4F50N **18033**
	Tracer 4-113 (1.8L) MFI	8	**B1400**	**PA2220**	**N/R**	**BF966**	**N/R**	**18268**
	4-116 (1.9L) SFI	J	**B243**	**PA2103**	**N/R**	**BF966**	**N/R**	**18268**
	Villager V6-183 (3.0L) EFI	W	**B113**	**PA4076**	**N/R**	**BF1105**	**N/R**	**18011**
1994	Capri 4-98 (1.6L) EFI Turbo	6,Z	**B1400**		**N/R**		**N/R**	**M.T.**
	Cougar V6-232 (3.8L) FI	4	**B243**	**PA2191**	**N/R**	**BF1170**	**SA2159**	**18002**
	V8-281 (4.6L) SFI	W	**B329**	**PA2191**	**N/R**	**BF1170**	**N/R**	AODE **18002**
	Grand Marquis V8-281 (4.6L) SFI	W	**B329**	**PA2152**	**N/R**	**BF966**	**N/R**	AODE **18002**
	Sable V6-182 (3.0L) EFI	U	**B243**	**PA2150**	**N/R**	**BF966**	**N/R**	4F50N **18033**
	V6-232 (3.8L) EFI	4	**B243**	**PA2150**	**N/R**	**BF966**	**SA2159**	4F50N **18033**
	Topaz 4-141 (2.3L) SFI	X	**B233**	**PA4069**		**BF966**	**N/R**	**18040**
	V6-182 (3.0L) SFI	U	**B243**	**PA4069**		**BF966**	**N/R**	**18040**
	Tracer 4-113 (1.8L) EFI	8	**B1400**	**PA2220**	**N/R**	**BF966**	**N/R**	**18268**
	4-116 (1.9L) SFI	J	**B243**	**PA2103**	**N/R**	**BF966**	**N/R**	**18268**
	Villager V6-183 (3.0L) EFI	W	**B113**	**PA4076**	**N/R**	**BF1105**	**N/R**	**18011**
1993	Capri 4-1598cc (1.6L) EFI or Turbo	6,Z	**B1400**		**N/R**		**N/R**	**M.T.**
	Cougar V6-232 (3.8L) SFI	4	**B243**	**PA2191**	**N/R**	**BF1170**	**SA2159**	**19640**
	V8-302 (5.0L) SFI	T	**B2**	**PA2191**	**N/R**	**BF1170**	**N/R**	**19640**
	Grand Marquis V8-280 (4.6L) SFI	W	**B329**	**PA2152**	**N/R**	**BF966**	**N/R**	AODE **18002**
	Sable V6-182 (3.0L) EFI	U	**B243**	**PA2150**	**N/R**	**BF966**	**N/R**	**18033**
	V6-232 (3.8L) EFI	4	**B243**	**PA2150**	**N/R**	**BF966**	**SA2159**	**18171**
	Topaz 4-141 (2.3L) EFI	X	**B233**	**PA4069**		**BF966**	**N/R**	**18040**
	V6-182 (3.0L) EFI	U	**B243**	**PA4069**		**BF966**	**N/R**	ATX **18040**
	Tracer 4-113 (1.8L) EFI	8	**B1400**	**PA2220**	**N/R**	**BF966**	**N/R**	**18268**
	4-116 (1.9L) SFI	J	**B243**	**PA2103**	**N/R**	**BF966**	**N/R**	**18268**
	Villager V6-182 (3.0L) EFI	W	**B113**	**PA4076**	**N/R**	**BF1105**	**N/R**	**18011**
1992	Capri 4-1598cc (1.6L) EFI or Turbo	6,Z	**B1400**		**N/R**		**N/R**	**M.T.**
	Cougar V6-232 (3.8L) SFI	4	**B243**	**PA2191**	**N/R**	**BF1170**	**SA2159**	**19640**
	V8-302 (5.0L) SFI HO	T	**B2**	**PA2191**	**N/R**	**BF1170**	**SA2085**	**19640**
	Grand Marquis V8-280 (4.6L) SFI	W	**B329**	**PA2152**	**N/R**	**BF966**	**N/R**	AOD **19640** AODE **18002**
	Sable V6-182 (3.0L) SFI	U	**B243**	**PA2150**	**N/R**	**BF966**	**N/R**	3 Spd. **18040** 4 Spd. **18171**
	V6-232 (3.8L) SFI	4	**B243**	**PA2150**	**N/R**	**BF966**	**SA2159**	3 Spd. **18040** 4 Spd. **18171**
	Topaz 4-140 (2.3L) SFI	X	**B2**	**PA4069**		**BF966**	**N/R**	**18040**
	V6-182 (3.0L) SFI	U	**B243**	**PA4069**		**BF966**	**N/R**	3 Spd. **18040** 4 Spd. **18171**
	Tracer, LTS 4-113 (1.8L) EFI	8	**B1400**	**PA2220**	**N/R**	**BF966**	**N/R**	**18268**
	4-116 (1.9L) SFI	J	**B243**	**PA2103**	**N/R**	**BF966**	**N/R**	**18268**
1991	Capri 4-98 (1.6L) MFI or Turbo	6,Z	**B1400**		**N/R**		**N/R**	**M.T.**
	Colony Park V8-302 (5.0L) FI	F	**B2**	**PA2152**	**N/R**	**BF966**	**N/R**	**19640**
	Cougar V6-232 (3.8L) SFI	4	**B243**	**PA2191**	**N/R**	**BF1184**	**SA2159**	**19640**
	V8-302 (5.0L) SFI	T	**B2**	**PA2191**	**N/R**	**BF966**	**SA2085**	**19640**
	Grand Marquis V8-302 (5.0L) SFI	F	**B2**	**PA2152**	**N/R**	**BF966**	**N/R**	**19640**
	Sable V6-182 (3.0L) SFI	U	**B243**	**PA2150**	**N/R**	**BF966**	**N/R**	**18033**
	V6-230 (3.8L) SFI	4	**B243**	**PA2150**	**N/R**	**BF966**	**SA2159**	3 Spd. **18040** 4 Spd. **18171**
	Topaz 4-140 (2.3L) MFI HO	S	**B2**	**PA2127**		**BF966**	**SA2159**	**18040**
	4-140 (2.3L) MFI	X	**B2**	**PA2127**		**BF966**	**SA2159**	**18040**
	Tracer 4-113 (1.8L) MFI	8	**B1400**	**PA2220**	**N/R**	**BF966**	**N/R**	**18268**
	4-116 (1.9L) SFI	J	**B243**	**PA2103**	**N/R**	**BF966**	**N/R**	**18268**
1990	Colony Park V8-302 (5.0L) FI	F	**B2**	**PA2152**	**N/R**	**BF966**	**N/R**	**19640**
	Cougar V6-232 (3.8L) EFI	4	**B243**	**PA2191**	**N/R**	**BF1184**	**SA2159**	**19640**
	V6-232 (3.8L) Supercharged	R	**B243**	**PA2191**	**N/R**	**BF1184**	**SA2159**	**19640**
	Grand Marquis V8-302 (5.0L) EFI	F	**B2**	**PA2152**	**N/R**	**BF966**	**N/R**	**19640**

[t] Transmission, Not Model, Determines Which Transmission Filter is Used. OBS = Obsolete. Availability Limited to Distributor Stock.

MERCURY Cont'd.

Year	Model and Engine	VIN	Lube	Air	Cabin Air	Fuel	Breather	Trans.t
1990	Sable V6-182 (3.0L) EFI	U	**B243**	**PA2150**	**N/R**	**BF966**	**SA2159**	**18033**
	V6-232 (3.8L) EFI	4	**B243**	**PA2150**	**N/R**	**BF966**	**SA2159**	**18033**
	Topaz 4-140 (2.3L) EFI HO	S	**B2**	**PA2127**	**N/R**	**BF966**	**SA4137**	**18040**
	4-140 (2.3L) EFI	X	**B2**	**PA2127**	**N/R**	**BF966**	**SA4137**	**18040**
1989	Colony Park V8-302 (5.0L) FI	F	**B2**	**PA2152**	**N/R**	**BF966**	**N/R**	**19640**
	Cougar V6-230 (3.8L) EFI	4,C	**B243**	**PA2191**	**N/R**	**BF1184**	**SA2159**	**19640**
	Grand Marquis V8-302 (5.0L) EFI	F	**B2**	**PA2152**	**N/R**	**BF966**	**N/R**	**19640**
	V8-351 (5.8L) Carb. Canada	G	**B34**	**PA2051**	**N/R**		**SA2085**	**19640**
	Sable V6-182 (3.0L) EFI	U	**B243**	**PA2150**	**N/R**	**BF966**	**SA2159**	**18171**
	V6-230 (3.8L) EFI	4	**B243**	**PA2150**	**N/R**	**BF966**	**SA2159**	**18171**
	Topaz 4-2300cc (2.3L) EFI HO	S	**B2**	**PA2127**	**N/R**	**BF966**	**SA4137**	ATX **18040**
	4-2300cc (2.3L) EFI	X	**B2**	**PA2127**	**N/R**	**BF966**	**SA4137**	ATX **18040**
	Tracer 4-1600cc (1.6L) MFI	5	**B227**		**N/R**		**N/R**	
1988	Colony Park V8-302 (5.0L) FI	F	**B2**	**PA2152**	**N/R**	**BF966**	**N/R**	**19640**
	Cougar V6-232 (3.8L) EFI	4	**B243**	**PA2149**	**N/R**	**BF966**	**SA2159**	**19640**
	V8-302 (5.0L) EFI	F	**B2**	**PA2149**	**N/R**	**BF966**	**N/R**	**19640**
	Grand Marquis V8-302 (5.0L) EFI	F	**B2**	**PA2152**	**N/R**	**BF966**	**N/R**	**19640**
	V8-351 (5.8L) 2 Bbl.	G	**B233**	**PA2051**	**N/R**		**SA2085**	AOT/F10D **19640**
	Sable V6-182 (3.0L) MFI	U	**B243**	**PA2150**	**N/R**	**BF966**	**SA2159**	**18171**
	V6-231 (3.8L) EFI	R	**B243**	**PA2150**	**N/R**	**BF966**	**SA2159**	**18171**
	Topaz 4-2300cc (2.3L) EFI HO	S	**B243**	**PA2127**	**N/R**	**BF966**	**SA4137**	ATX **18040**
	4-2300cc (2.3L) EFI	X	**B243**	**PA2127**	**N/R**	**BF966**	**SA4137**	ATX **18040**
	Tracer 4-1600cc (1.6L) EFI	5	**B227**		**N/R**	To 6/88 **BF925**	**N/R**	
1987	Colony Park V8-302 (5.0L) FI	F	**B2**	**PA2152**	**N/R**	**BF966**	**SA2085**	**19640**
	Cougar V6-232 (3.8L) FI	3,4	**B2**	**PA2149**	**N/R**	**BF966**	**N/R**	**19640**
	V8-302 (5.0L) FI	F	**B2**	**PA2149**	**N/R**	**BF966**	**N/R**	**19640**
	Grand Marquis V8-302 (5.0L) FI	F	**B2**	**PA2152**	**N/R**	**BF966**	**SA2085**	**19640**
	V8-351 (5.8L) 2 Bbl.	G	w/Oil Cooler **B233** w/o Oil Cooler **B2**	**PA2051**	**N/R**		**SA2085**	**19640**
	Lynx 4-1900cc (1.9L) FI	9	**B243**	**PA2177**	**N/R**	**BF966**	**N/R**	ATX **18040**
	4-1900cc (1.9L) FI	J	**B243**	**PA2103**	**N/R**	**BF966**	**N/R**	ATX **18040**
	4-2000cc (2.0L) Diesel	H	F-F **B141** B-P **B201-S**		**N/R**		**N/R**	ATX **18040**
	Sable V6-3000cc (3.0L) FI	U	**B243**	**PA2150**	**N/R**	**BF966**	**SA2159**	**18171**
	Topaz 4-2300cc (2.3L) FI	S,X	**B2**	**PA2127**	**N/R**	**BF966**	**SA4137**	ATX **18040**
	Tracer 4-1600cc (1.6L) EFI		**B227**		**N/R**		**N/R**	
1986	Capri 4-2300cc (2.3L) 1 Bbl.	A	**B2**	**PA2005**	**N/R**	**BF920**	**SA2039**	**19640**
	4-2300cc (2.3L) FI Turbo	W	**B233**		**N/R**	**BF966**		**19640**
	V6-232 (3.8L) FI	C	**B2**	**PA2057**	**N/R**	**BF966**	**N/R**	
	V8-302 (5.0L) FI	F	**B2**	**PA2149**	**N/R**	**BF966**	**SA2085**	**19640**
	Colony Park V8-302 (5.0L) FI	F	**B2**	**PA2152**	**N/R**	**BF966**	**SA2085**	**19640**
	Cougar 4-140 (2.3L) FI Turbo	T,W	**B233**		**N/R**	**BF966**	**N/R**	**19640**
	V6-232 (3.8L) FI	C	**B2**	**PA2057**	**N/R**	**BF966**		AOD, AOT **19640**
	V8-302 (5.0L) FI	F	**B2**	**PA2149**	**N/R**	**BF966**	**N/R**	**19640**
	Grand Marquis V8-302 (5.0L) FI	F	**B2**	**PA2152**	**N/R**	**BF966**	**SA2085**	**19640**
	V8-351 (5.8L) 2 Bbl.	G	**B233**	**PA2051**	**N/R**		**SA2085**	**19640**
	Lynx 4-1900cc (1.9L) 2 Bbl.	9	**B243**		**N/R**	**BF920**	**N/R**	ATX **18040**
	4-1900cc (1.9L) FI HO	J	**B243**	**PA2103**	**N/R**	**BF966**	**N/R**	ATX **18040**
	4-2000cc (2.0L) Diesel	H	F-F **B202** B-P **B201-S**		**N/R**		**N/R**	ATX **18040**
	Marquis 4-2300cc (2.3L) 1 Bbl.	A,R	**B2**	**PA2005**	**N/R**	**BF920**	**N/R**	
	V6-232 (3.8L) FI	3,C	**B2**	**PA2057**	**N/R**	**BF966**	**N/R**	AOT/F10D **19640**
	Sable 4-153 (2.5L) FI	D	A.T. **B233** M.T. **B2**	**PA2150**	**N/R**	**BF966**	**N/R**	ATX **18040**
	V6-183 (3.0L) FI	U	**B243**	**PA2150**	**N/R**	**BF966**	**SA2159**	**18171**
	Topaz 4-2000cc (2.0L) Diesel	H	F-F **B202** B-P **B201-S**		**N/R**		**N/R**	ATX **18040**
	4-2300cc (2.3L) FI	S,X	**B2**	**PA2127**	**N/R**	**BF966**	**SA4137**	ATX **18040**
1985	Capri 4-2300cc (2.3L) 1 Bbl.	A,R	**B2**	**PA2005**	**N/R**	**BF920**	**N/R**	**19640**
	4-2300cc (2.3L) FI Turbo	W	**B233**		**N/R**	**BF966**	**N/R**	**19640**
	V6-232 (3.8L) FI	3	**B2**	**PA2057**	**N/R**	**BF966**	**SA2085**	
	V8-302 (5.0L) FI	F	**B2**	**PA2002**	**N/R**	**BF966**	**SA2085**	AOT/F10D **19640**
	V8-302 (5.0L) 4 Bbl.	M	**B2**	**PA2002**	**N/R**	**SF898**	**SA2085**	AOT/F10D **19640**
	Colony Park V8-302 (5.0L) FI	F	**B2**	**PA2051**	**N/R**	**BF966**	**SA2085**	**19640**
	Cougar 4-140 (2.3L) FI Turbo	T,W	**B233**		**N/R**	**BF966**	**N/R**	**19640**
	V6-232 (3.8L) FI	3	**B2**	**PA2057**	**N/R**	**BF966**	**N/R**	
	V8-302 (5.0L) FI	F	**B2**	**PA2051**	**N/R**	**BF966**	**SA2085**	AOT/F10D **19640**

OBS = Obsolete. Availability Limited to Distributor Stock. t Transmission, Not Model, Determines Which Transmission Filter is Used.

MERCURY Cont'd.

Year	Model and Engine	VIN	Lube	Air	Cabin Air	Fuel	Breather	Trans.[t]
1985	Grand Marquis V8-302 (5.0L) FI	F	**B2**	**PA2051**	**N/R**	**BF966**	**SA2085**	AOT/F10D **19640**
	V8-351 (5.8L) 2 Bbl.	G	**B2**	**PA2051**	**N/R**	**BF920**	**SA2085**	AOT/F10D **19640**
	Lynx 4-1600cc (1.6L) 2 Bbl.	2,4	**B243**		**N/R**	**BF920**	**N/R**	ATX **18040**
	4-1600cc (1.6L) FI	5	**B243**		**N/R**	**BF966**	**N/R**	ATX **18040**
	4-1600cc (1.6L) FI Turbo	8	**B233**	**PA2103**	**N/R**	**BF966**	**N/R**	ATX **18040**
	4-1900cc (1.9L) 2 Bbl.	9	**B243**		**N/R**	**BF920**	**N/R**	ATX **18040**
	4-2000cc (2.0L) Diesel	H	F-F **B202** B-P **B201-S**		**N/R**		**N/R**	ATX **18040**
	Marquis 4-2300cc (2.3L) 1 Bbl.	A,R	**B2**	**PA2005**	**N/R**	**BF920**	**N/R**	
	V6-232 (3.8L) FI	3	**B2**	**PA2057**	**N/R**	**BF966**	**N/R**	**19640**
	V8-302 (5.0L) FI	M	**B2**	**PA2051**	**N/R**	**BF966**	**SA2085**	AOT/F10D **19640**
	Topaz 4-2000cc (2.0L) Diesel	H	F-F **B202** B-P **B201-S**		**N/R**		**N/R**	ATX **18040**
	4-2300cc (2.3L) FI	S,X	**B2**	**PA2127**	**N/R**	**BF966**	**N/R**	ATX **18040**
1984	Capri 4-2300cc (2.3L) 1 Bbl.	A,R	**B2**	**PA2005**	**N/R**	**BF920**	**SA2045**	**19640**
	4-2300cc (2.3L) FI Turbo	W	**B233**		**N/R**	**BF966**	**N/R**	**19640**
	V6-232 (3.8L) FI	C	**B2**	**PA2057**	**N/R**	**BF966**	**N/R**	
	V8-302 (5.0L) FI	F	**B2**	**PA2002**	**N/R**	**BF966**	**SA2085**	AOT/F10D **19640**
	V8-302 (5.0L) 4 Bbl.	M	**B2**	**PA2002**	**N/R**	**SF898**	**SA2085**	AOT/F10D **19640**
	Colony Park V8-302 (5.0L) TBI	F	**B2**	**PA2051**	**N/R**	**BF966**	**SA2085**	**19640**
	Cougar 4-2300cc (2.3L) FI Turbo	W	**B233**		**N/R**	**BF966**	**SA2039**	
	V6-232 (3.8L) FI	C	**B2**	**PA2057**	**N/R**	**BF966**	**N/R**	
	V8-302 (5.0L) FI	F	**B2**	**PA2051**	**N/R**	**BF966**	**SA2085**	AOT/F10D **19640**
	Grand Marquis 8-302 (5.0L) FI	F	**B2**	**PA2051**	**N/R**	**BF966**	**SA2085**	AOT/F10D **19640**
	V8-351 (5.8L) 2 Bbl.	G	**B2**[74] **B233**[73]	**PA2051**	**N/R**	**BF920**	**SA2085**	AOT/F10D **19640**
	Lynx 4-1600cc (1.6L) 2 Bbl.	2,4	**B243**		**N/R**	**BF920**	**N/R**	ATX **18040**
	4-1600cc (1.6L) FI	5	**B243**		**N/R**	**BF966**	**N/R**	ATX **18040**
	4-1600cc (1.6L) FI Turbo	8	**B233**	**PA2103**	**N/R**	**BF966**	**N/R**	ATX **18040**
	4-2000cc (2.0L) Diesel	H	F-F **B202** B-P **B201-S**		**N/R**		**N/R**	ATX **18040**
	Marquis 4-2300cc (2.3L) Propane	6	**B2**	**PA2005**	**N/R**		**SA2039**	**19640**
	4-2300cc (2.3L) 1 Bbl.	A	**B2**	**PA2005**	**N/R**	**BF920**		
	V6-232 (3.8L) FI	3	**B2**	**PA2057**	**N/R**	**BF966**	**N/R**	
	V6-232 (3.8L) 2 Bbl.	C	**B2**	**PA2057**	**N/R**	**BF920**	**SA2085**	3 Spd. **19879**
	Topaz 4-2000cc (2.0L) Diesel	H	F-F **B202** B-P **B201-S**		**N/R**		**N/R**	ATX **18040**
	4-2300cc (2.3L) HSC		**B2**	**PA2127**	**N/R**	**BF889**	**N/R**	ATX **18040**
1983	Capri 4-2300cc (2.3L) 1 Bbl.	A	**B2**	**PA2005**	**N/R**	**BF920**	**SA2039**	**19640**
	4-2300cc (2.3L) FI Turbo	T	**B233**		**N/R**	**BF966**	**SA2039**	**19640**
	V6-232 (3.8L) 2 Bbl.	3	**B2**	**PA2057**	**N/R**	**BF920**	**SA2039**	
	V8-302 (5.0L) 4 Bbl.	F	**B2**	**PA2002**	**N/R**	**SF898**	**SA2085**	**M.T.**
	Cougar V6-232 (3.8L) 2 Bbl.	3	**B2**	**PA2057**	**N/R**	**BF920**	**SA2039**	AOT/F10D **19640**
	V8-302 (5.0L) FI	F	**B2**	**PA2051**	**N/R**	**BF966**	**SA2085**	**19640**
	Grand Marquis V8-302 (5.0L) FI	F	**B2**	**PA2051**	**N/R**	**BF966**	**SA2085**	AOT/F10D **19640**
	V8-351 (5.8L) 2 Bbl.	G	**B2**[74] **B233**[73]	**PA2051**	**N/R**	**BF920**	**SA2085**	AOT/F10D **19640**
	Lynx, LN7 4-1600cc (1.6L) 2 Bbl.	2,4	**B243**		**N/R**	**BF920**	**N/R**	ATX **18040**
	4-1600cc (1.6L) FI	5	**B243**		**N/R**	**BF966**	**N/R**	ATX **18040**
	Marquis 4-2300cc (2.3L) 1 Bbl. or Natural Gas	A,6	**B2**	**PA2005**	**N/R**	**BF920**	**N/R**	**19640**
	6-200 (3.3L) 1 Bbl.	X	**B2**	**PA1802**	**N/R**	**BF920**	**SA2039**	
	V6-232 (3.8L) 2 Bbl.	3	**B2**	**PA2057**	**N/R**	**BF920**	**SA2039**	AOT/F10D **19640**
	Zephyr 4-2300cc (2.3L) 1 Bbl.	A	**B2**	**PA2005**	**N/R**	**BF920**	**SA2039**	
	6-200 (3.3L) 1 Bbl.	X	**B2**	**PA1802**	**N/R**	**BF920**	**SA2039**	
1982	Capri 4-2300cc (2.3L) 2 Bbl. or Turbo	A,T	**B2**	**PA2005**	**N/R**	**BF920**	**SA2045**	**19640**
	6-200 (3.3L) 1 Bbl.	B	**B2**	**PA1802**	**N/R**	To 11/81 **BF920** 11/81-on **BF879**	**SA2039**	
	V8-255 (4.2L) 2 Bbl.	D	**B2**	**PA2066 OBS**	**N/R**	**BF920**[17]	**SA2085**	
	V8-302 (5.0L)		**B2**	**PA2051**	**N/R**	**BF920**	**SA2085**	**19640**
	Colony Park V8-302 (5.0L) 2 Bbl.	F	**B2**	**PA2051**	**N/R**		**SA2085**	**19640**
	Cougar 4-2300cc (2.3L) 2 Bbl.	A	**B2**	**PA2005**	**N/R**	**BF920**	**SA2045**	**19640**
	6-200 (3.3L) 1 Bbl.	B	**B2**	**PA1802**	**N/R**	**BF920**	**SA2039**	
	V6-232 (3.8L) 2 Bbl.	3	**B2**	**PA2057**	**N/R**	**BF920**[17]	**SA2039**	
	V8-255 (4.2L) 2 Bbl.	D	**B2**	**PA2066 OBS**	**N/R**	**BF920**[17]	**SA2085**	
	Lynx, LN7 4-1600cc (1.6L) 2 Bbl.	2,4	**B243**		**N/R**	**BF920**	**N/R**	ATX **18040**
	Marquis V8-255 (4.2L) 2 Bbl.	D	**B2**	**PA2051**	**N/R**	**BF920**[17]	**SA2085**	AOT/F10D **19640**

[t] Transmission, Not Model, Determines Which Transmission Filter is Used. OBS = Obsolete. Availability Limited to Distributor Stock. [17] Exc. Calif.
[73] Police. [74] Exc. Police.

Year	Model and Engine	VIN	Lube	Air	Cabin Air	Fuel	Breather	Trans.[t]
MERCURY Cont'd.								
1982	Marquis V8-302 (5.0L)	F	**B2**	**PA2051**	**N/R**	**BF920**[17]	**SA2085**	AOT/F10D **19640**
	V8-351 (5.8L) 2 Bbl.	G	**B2**	**PA2051**	**N/R**	**BF920**[17]	**SA2085**	AOT/F10D **19640**
	Zephyr 4-2300cc (2.3L) 2 Bbl.	A	**B2**	**PA2005**	**N/R**	**BF920**	**SA2045**	
	6-200 (3.3L) 1 Bbl.	B	**B2**	**PA1802**	**N/R**	**BF920**	**SA2039**	
	V8-255 (4.2L) 2 Bbl.	D	**B2**	**PA2066 OBS**	**N/R**	**BF920**[17]	**SA2085**	
1981	Capri 4-2300cc (2.3L) 2 Bbl.	A,T	**B2**	**PA2005**	**N/R**	Exc. Turbo **BF879** Turbo **BF920**	**SA2045**	
	6-200 (3.3L) 1 Bbl.	B	**B2**	**PA1802**	**N/R**	**BF879**	**SA2039**	
	V8-255 (4.2L) 2 Bbl.	D	**B2**	**PA2066 OBS**	**N/R**	**BF920**[17]	**SA2085**	
	Colony Park V8-302 (5.0L) 2 Bbl.	F	**B2**	**PA2051**	**N/R**	**BF920**	**SA2085**	**19640**
	V8-351 (5.8L) 2 Bbl.	G	**B2**	**PA2051**	**N/R**		**SA2085**	**19640**
	Cougar 4-2300cc (2.3L) 2 Bbl.	A	**B2**	**PA2005**	**N/R**	**BF920**	**SA2045**	C4 **19879**
	6-200 (3.3L) 1 Bbl.	B	**B2**	**PA1802**	**N/R**	**BF879**	**SA2039**	C4 **19879**
	V8-255 (4.2L) 2 Bbl.	D	**B2**	**PA2066 OBS**	**N/R**	**BF920**[17]	**SA2085**	C4 **19879**
	V8-302 (5.0L)	F	**B2**	**PA2066 OBS**	**N/R**	**BF920**[17]	**SA2085**	AOT/F10D **19640**
	Lynx 4-1600cc (1.6L) 2 Bbl.	2	**B243**		**N/R**	**BF920**	**N/R**	ATX **18040**
	Marquis V8-255 (4.2L) 2 Bbl.	D	**B2**	**PA2051**	**N/R**	**BF920**[17]	**SA2085**	AOT/F10D **19640**
	V8-302 (5.0L) 2 Bbl.	F	**B2**	**PA2051**	**N/R**	**BF920**	**SA2085**	AOT/F10D **19640**
	V8-351 (5.8L) 2 Bbl.	G	**B2**	**PA2051**	**N/R**	**BF920**[17]	**SA2085**	AOT/F10D **19640**
	Zephyr 4-2300cc (2.3L) 2 Bbl.	A	**B2**	**PA2005**	**N/R**	**BF920**	**SA2045**	C4 **19879**
	6-200 (3.3L) 1 Bbl.	B	**B2**	**PA1802**	**N/R**	**BF879**	**SA2039**	C4 **19879**
	V8-255 (4.2L) 2 Bbl.	D	**B2**	**PA2066 OBS**	**N/R**	**BF920**[17]	**SA2085**	C4 **19879**
1980	Bobcat 4-2300cc (2.3L) 2 Bbl.	A	**B2**	**PA2005**	**N/R**	**BF879**	**SA2045**	C4 **19879**
	Capri 4-2300cc (2.3L) 2 Bbl.	A,T	**B2**	**PA2005**	**N/R**	Exc. Turbo **BF879** Turbo **BF920**	**SA2045**	
	6-200 (3.3L) 1 Bbl.	B	**B2**	**PA1802**	**N/R**	**BF879**	**SA2039**	
	V8-255 (4.2L) 2 Bbl.	D	**B2**	**PA2066 OBS**	**N/R**	**BF989**[17]	**SA2085**	
	Cougar 6-200 (3.8L) 1 Bbl.	B	**B2**	**PA2057**	**N/R**	**BF920**	**SA2085**	3 Spd. **19879**
	V8-255 (4.2L) 2 Bbl.	D	**B2**	**PA2066 OBS**	**N/R**	**BF989**[17]	**SA2085**	C4 **19879**
	V8-302 (5.0L) 2 Bbl.	F	**B2**	**PA2066 OBS**	**N/R**	**BF989**[17]	**SA2085**	AOT/F10D **19640** C4 **19879**
	Marquis V8-302 (5.0L) 2 Bbl.	F	**B2**	**PA2051**	**N/R**	**BF989**[17]	**SA2085**	AOT/F10D **19640** C4 **19879** C6 **19828**
	V8-351 (5.8L) 2 Bbl.	G	**B2**	**PA2051**	**N/R**	**BF989**[17]	**SA2085**	AOT/F10D **19640** C6 **19828**
	Monarch 6-250 (4.1L) 1 Bbl.	C	**B2**	**PA2005**	**N/R**	**BF879**	**SA2039**	C4 **19879**
	V8-255 (4.2L) 2 Bbl.	D	**B2**	**PA2051**	**N/R**	**BF989**[17]	**SA2085**	C4 **19879**
	V8-302 (5.0L) 2 Bbl.	F	**B2**	**PA2051**	**N/R**	**BF989**[17]	**SA2085**	C4 **19879**
	Zephyr 4-2300cc (2.3L) 2 Bbl.	A,T	**B2**	**PA2005**	**N/R**	Exc. Turbo **BF879** Turbo **BF920**	**SA2045**	C4 **19879**
	6-200 (3.3L) 1 Bbl.	B	**B2**	**PA1802**	**N/R**	**BF879**	**SA2039**	C4 **19879**
	V8-255 (4.2L) 2 Bbl.	D	**B2**	**PA2066 OBS**	**N/R**	**BF989**[17]	**SA2085**	C4 **19879**
MERKUR								
1989	Scorpio V6-177 (2.9L) FI	V	**B233**		**N/R**		**N/R**	**18147**
	XR4Ti 4-144 (2.3L) FI Turbo	W	**B2**		**N/R**	**BF966**		
1988	Scorpio V6-177 (2.9L) FI	V	**B233**		**N/R**		**N/R**	**18147**
	XR4Ti 4-140 (2.3L) FI Turbo	W	**B2**		**N/R**	**BF966**		
1987	XR4Ti 4-2299cc (2.3L) FI Turbo	W	**B2**		**N/R**	**BF966**		
1986	XR4Ti 4-2299cc (2.3L) FI Turbo	W	**B2**		**N/R**	**BF966**		
1985	XR4Ti 4-2299cc (2.3L) FI Turbo	W	**B2**		**N/R**	**BF966**		
MG								
1981	MGB 4-1798cc (1.8L) Carb. Canada	J			**N/R**	**BF840,-K1**		
MINI								
2010	Cooper 4-1598cc (1.6L) FI		**P7450**	A.T. **PA4414**		**N/S**	**N/R**	
	Cooper S 4-1598cc (1.6L) FI Turbo		**P7450**			**N/S**	**N/R**	
	Cooper JCW 4-1598cc (1.6L) FI Turbo		**P7450**			**N/S**	**N/R**	**M.T.**
	Cooper Clubman JCW 4-1598cc (1.6L) FI Turbo		**P7450**			**N/S**	**N/R**	**M.T.**
	Cooper Clubman 4-1598cc (1.6L) FI		**P7450**	A.T. **PA4414**		**N/S**	**N/R**	
	4-1598cc (1.6L) FI Turbo		**P7450**			**N/S**	**N/R**	

OBS = Obsolete. Availability Limited to Distributor Stock. [t] Transmission, Not Model, Determines Which Transmission Filter is Used.

[17] Exc. Calif.

Year	Model and Engine	VIN	Lube	Air	Cabin Air	Fuel	Breather	Trans.[t]
MINI Cont'd.								
2010	Crossman 4-1600cc (1.6L) FI Turbo					**N/S**	**N/R**	
	Crossman S 4-1600cc (1.6L) FI Turbo					**N/S**	**N/R**	
2009	Cooper 4-1598cc (1.6L) FI		**P7450**	A.T. **PA4414**		**N/S**	**N/R**	
	Cooper S 4-1598cc (1.6L) FI Turbo		**P7450**			**N/S**	**N/R**	
	Cooper Clubman S 4-1598cc (1.6L) FI Turbo		**P7450**			**N/S**	**N/R**	
	Cooper Clubman 4-1598cc (1.6L) FI		**P7450**	A.T. **PA4414**		**N/S**	**N/R**	
2008	Cooper 4-1598cc (1.6L) FI N12B16A Eng.		**P7450**	A.T. **PA4414**		**N/S**	**N/R**	
	4-1598cc (1.6L) FI W10B16A Eng.		**P7408**		(w/o Charcoal) **PA4415**	**N/S**	**N/R**	
	Cooper S 4-1598cc (1.6L) FI Turbo		**P7450**			**N/S**	**N/R**	
	4-1598cc (1.6L) FI Supercharged		**P7408**		(w/o Charcoal) **PA4415**	**N/S**	**N/R**	
	Cooper Clubman S 4-1598cc (1.6L) FI Turbo		**P7450**			**N/S**	**N/R**	
	Cooper Clubman 4-1598cc (1.6L) FI		**P7450**	A.T. **PA4414**		**N/S**	**N/R**	
2007	Cooper 4-1598cc (1.6L) FI N12B16A Eng.		**P7450**	A.T. **PA4414**		**N/S**	**N/R**	
	4-1598cc (1.6L) FI W10B16A Eng.		**P7408**		(w/o Charcoal) **PA4415**	**N/S**	**N/R**	
	Cooper S 4-1598cc (1.6L) FI Turbo		**P7450**			**N/S**	**N/R**	
	4-1598cc (1.6L) FI Supercharged		**P7408**		(w/o Charcoal) **PA4415**	**N/S**	**N/R**	
2006	Cooper 4-1598cc (1.6L) FI		**P7408**		(w/o Charcoal) **PA4415**	**N/S**	**N/R**	
	Cooper S 4-1598cc (1.6L) FI Supercharged		**P7408**		(w/o Charcoal) **PA4415**	**N/S**	**N/R**	
2005	Cooper 4-1598cc (1.6L) FI		**P7408**		(w/o Charcoal) **PA4415**	**N/S**	**N/R**	
	Cooper S 4-1598cc (1.6L) FI Supercharged		**P7408**		(w/o Charcoal) **PA4415**	**N/S**	**N/R**	**M.T.**
2004	Cooper 4-1598cc (1.6L) FI		**P7408**		(w/o Charcoal) **PA4415**	**N/S**	**N/R**	
	Cooper S 4-1598cc (1.6L) FI Supercharged		**P7408**		(w/o Charcoal) **PA4415**	**N/S**	**N/R**	**M.T.**
2003	Cooper 4-1598cc (1.6L) FI		**P7408**		(w/o Charcoal) **PA4415**	**N/S**	**N/R**	
	Cooper S 4-1598cc (1.6L) FI Supercharged		**P7408**		(w/o Charcoal) **PA4415**	**N/S**	**N/R**	**M.T.**
2002	Cooper 4-1598cc (1.6L) FI		**P7408**		(w/o Charcoal) **PA4415**	**N/S**	**N/R**	**M.T.**
	Cooper S 4-1598cc (1.6L) FI Supercharged		**P7408**		(w/o Charcoal) **PA4415**	**N/S**	**N/R**	**M.T.**
MITSUBISHI								
2010	Eclipse 4-2378cc (2.4L) MFI	F	**B7243**	**PA4198**	**N/R**	**N/S**	**N/R**	4 Spd. **N/S**
	V6-3828cc (3.8L) MFI	T	**B1402**	**PA4198**	**N/R**	**N/S**	**N/R**	5 Spd. **N/S**
	Eclipse Spyder 4-2378cc (2.4L) MFI	F	**B7243**	**PA4198**		**N/S**	**N/R**	4 Spd. **N/S**
	V6-3828cc (3.8L) MFI	T	**B1402**	**PA4198**		**N/S**	**N/R**	5 Spd. **N/S**
	Endeavor V6-230 (3.8L) FI	S	**B1402**	**PA4198**		**N/S**	**N/R**	4 Spd. **N/S**
	Galant 4-2378cc (2.4L) MFI	F	**B7243**	**PA4198**		**N/S**	**N/R**	
	Lancer 4-122 (2.0L) EFI	U	**B1402**			**N/S**	**N/R**	
	4-122 (2.0L) EFI Turbo	V	**B7243**	**PA4103**		**N/S**	**N/R**	**M.T.**
	4-144 (2.4L) EFI	W	**B7243**			**N/S**	**N/R**	
	Outlander 4-144 (2.4L) FI	W	**B1402**			**N/S**	**N/R**	**N/S**
	4-182 (3.0L) FI	X	**B1402**			**N/S**	**N/R**	**N/S**
	Raider V6-226 (3.7L) SFI	K	**B7444**	**PA2163**	**N/R**	**N/S**	**N/R**	4 Spd. **20011**
2009	Eclipse 4-2378cc (2.4L) MFI	F	**B7243**	**PA4198**	**N/R**	**N/S**	**N/R**	4 Spd. **N/S**
	V6-3828cc (3.8L) MFI	T	**B1402**	**PA4198**	**N/R**	**N/S**	**N/R**	5 Spd. **N/S**
	Eclipse Spyder 4-2378cc (2.4L) MFI	F	**B7243**	**PA4198**		**N/S**	**N/R**	4 Spd. **N/S**
	V6-3828cc (3.8L) MFI	T	**B1402**	**PA4198**		**N/S**	**N/R**	5 Spd. **N/S**
	Endeavor V6-230 (3.8L) FI	S	**B1402**	**PA4198**		**N/S**	**N/R**	4 Spd. **N/S**
	Galant 4-2378cc (2.4L) MFI	F	**B7243**	**PA4198**		**N/S**	**N/R**	
	V6-3828cc (3.8L) MFI	S,T	**B1402**	**PA4198**		**N/S**	**N/R**	
	Lancer 4-122 (2.0L) MFI	U	**B1402** Opt. **B7243**			**N/S**	**N/R**	
	4-122 (2.0L) MFI Turbo	V	**B7243**			**N/S**	**N/R**	**M.T.**
	4-144 (2.4L) EFI	W	**B1402**			**N/S**	**N/R**	

[t] Transmission, Not Model, Determines Which Transmission Filter is Used. OBS = Obsolete. Availability Limited to Distributor Stock.

MITSUBISHI Cont'd.

Year	Model and Engine	VIN	Lube	Air	Cabin Air	Fuel	Breather	Trans.[t]
2009	Lancer Evolution 4-1998cc (2.0L) FI Turbo	V	**B7243**			**N/S**	**N/R**	**M.T.**
	Outlander 4-144 (2.4L) FI	W	**B1402** Opt. **B7243**			**N/S**	**N/R**	6 Spd. **N/S**
	4-182 (3.0L) FI	X	**B1402** Opt. **B7243**			**N/S**	**N/R**	6 Spd. **N/S**
	Raider V6-226 (3.7L) SFI	K	**B7444**	**PA2163**	**N/R**	**N/S**	**N/R**	4 Spd. **20011**
2008	Eclipse 4-2378cc (2.4L) MFI	F	**B7243**	**PA4198**	**N/R**	**N/S**	**N/R**	**N/S**
	V6-3828cc (3.8L) MFI	T	**B1402**	**PA4198**	**N/R**	**N/S**	**N/R**	**N/S**
	Eclipse Spyder 4-2378cc (2.4L) MFI	F	**B7243**	**PA4198**		**N/S**	**N/R**	**N/S**
	V6-3828cc (3.8L) MFI	T	**B1402**	**PA4198**		**N/S**	**N/R**	**N/S**
	Endeavor V6-230 (3.8L) FI	S	**B1402**	**PA4198**		**N/S**	**N/R**	**N/S**
	Galant 4-2378cc (2.4L) MFI	F	**B7243**	**PA4198**		**N/S**	**N/R**	
	V6-3828cc (3.8L) MFI	S	**B1402**	**PA4198**		**N/S**	**N/R**	
	Lancer 4-122 (2.0L) MFI	U	**B1402** Opt. **B7243**			**N/S**	**N/R**	
	Lancer Evolution 4-1997cc (2.0L) FI Turbo	D	**B7243**			**N/S**	**N/R**	**M.T.**
	Outlander 4-144 (2.4L) FI	W	**B1402** Opt. **B7243**			**N/S**	**N/R**	**N/S**
	V6-2998cc (3.0L) FI	X	**B1402**			**N/S**	**N/R**	**N/S**
	Raider V6-226 (3.7L) SFI	K	**B243**	**PA2163**	**N/R**	**N/S**	**N/R**	**20011**
2007	Eclipse, Eclipse Spyder 4-2378cc (2.4L) MFI	F	**B227**	**PA4198**	**N/R**	**N/S**	**N/R**	**N/S**
	V6-3828cc (3.8L) MFI	S,T	2 21/32 In. **B1431** 3 1/2 In. **B1402**	**PA4198**	**N/R**	**N/S**	**N/R**	**N/S**
	Endeavor V6-234 (3.8L) FI	S	2 21/32 In. **B1431** 3 1/2 In. **B1402**	**PA4198**		**N/S**	**N/R**	4 Spd. **N/S**
	Galant 4-143 (2.4L) MFI	F	**B227**	**PA4198**		**N/S**	**N/R**	
	V6-230 (3.8L) MFI	S,T	2 21/32 In. **B1431** 3 1/2 In. **B1402**	**PA4198**		**N/S**	**N/R**	
	Lancer 4-122 (2.0L) MFI	E	**B1402**	**PA4103**		**N/S**	**N/R**	**N/S**
	4-2400cc (2.4L) MFI	F	**B227**	**PA4103**		**N/S**	**N/R**	**N/S**
	Lancer Evolution 4-1997cc (2.0L) FI Turbo	D	**B227**	**PA4103**		**N/S**	**N/R**	**M.T.**
	Outlander V6-2998cc (3.0L) FI	X	**B227**			**N/S**	**N/R**	**N/S**
	Raider V6-226 (3.7L) SFI	K	**B243**	**PA2163**	**N/R**	**N/S**	**N/R**	**20011**
	V8-285 (4.7L) FI Flex Fuel	P	**B34**	**PA2163**	**N/R**	**N/S**	**N/R**	2WD **19999**[61] 4WD **20000**[61]
2006	Eclipse, Eclipse Spyder 4-143 (2.4L) SFI	F	**B227**	**PA4198**	**N/R**	**N/S**	**N/R**	**N/S**
	V6-3828cc (3.8L) SFI	T	2 21/32 In. **B1431** 3 1/2 In. **B1402**	**PA4198**	**N/R**	**N/S**	**N/R**	**N/S**
	Endeavor V6-234 (3.8L) FI	S	2 21/32 In. **B1431** 3 1/2 In. **B1402**	**PA4198**		**N/S**	**N/R**	**N/S**
	Galant 4-143 (2.4L) MFI	F	**B227**	**PA4198**		**N/S**	**N/R**	**N/S**
	V6-234 (3.8L) MPI	S	2 21/32 In. **B1431** 3 1/2 In. **B1402**	**PA4198**		**N/S**	**N/R**	**N/S**
	Lancer 4-122 (2.0L) MFI	E	**B1402**	**PA4103**		**N/S**	**N/R**	**N/S**
	4-2378cc (2.4L) MFI	F	**B227**	**PA4103**		**N/S**	**N/R**	**N/S**
	Lancer Evolution 4-1997cc (2.0L) FI Turbo	D	**B227**	**PA4103**		**N/S**	**N/R**	**M.T.**
	Montero V6-232 (3.8L) MPI	S	**B7243**		**N/R**	**N/S**	**N/R**	**20013**
	Outlander 4-143 (2.4L) MFI	F	**B7243**	**PA4103**		**N/S**	**N/R**	**N/S**
	Raider V6-226 (3.7L) SFI	K	**B243**	**PA2163**	**N/R**	**N/S**	**N/R**	**20011**
	V6-285 (4.7L) SFI	N	**B34**	**PA2163**	**N/R**	**N/S**	**N/R**	5 Spd. **20000**[61]
2005	Eclipse, Eclipse Spyder 4-143 (2.4L) MFI	G	**B1402**	**PA4015**		**N/S**	**N/R**	
	V6-181 (3.0L) MFI	H	**B7243**	**PA4015**		**N/S**	**N/R**	
	Endeavor V6-234 (3.8L) FI	S	**B1402**	**PA4198**	**PA4188**	**N/S**	**N/R**	**N/S**
	Galant 4-143 (2.4L) SFI	F	**B7243**	**PA4198**		**N/S**	**N/R**	**N/S**
	V6-234 (3.8L) SFI	S	**B1402**	**PA4198**		**N/S**	**N/R**	**N/S**
	Lancer 4-122 (2.0L) MFI	E	**B1402**	**PA4103**		**N/S**	**N/R**	**N/S**
	Lancer Evolution 4-1997cc (2.0L) FI Turbo	D	**B7243**	**PA4103**		**N/S**	**N/R**	**M.T.**
	Lancer Sportback 4-2378cc (2.4L) MFI	F	**B7243**	**PA4103**		**N/S**	**N/R**	**N/S**
	Montero V6-232 (3.8L) MFI	S	**B7243**		**N/R**	**N/S**	**N/R**	**N/S**
	Outlander 4-143 (2.4L) MFI	G	**B7243**	**PA4103**	**N/R**	**N/S**	**N/R**	**N/S**
2004	Diamante V6-213 (3.5L) MFI	P	**B1402**		**N/R**		**N/R**	
	Eclipse, Eclipse Spyder 4-143 (2.4L) SFI	G	**B1402**	**PA4015**		**N/S**	**N/R**	
	V6-181 (3.0L) SFI	H	**B7243**	**PA4015**		**N/S**	**N/R**	
	Endeavor V6-234 (3.8L) FI	S	**B1402**	**PA4198**	**PA4188**	**N/S**	**N/R**	**N/S**
	Galant 4-143 (2.4L) SFI	G	**B1402**	**PA4198**		**N/S**	**N/R**	**N/S**
	V6-234 (3.8L) SFI	S	**B1402**	**PA4198**		**N/S**	**N/R**	**N/S**

OBS = Obsolete. Availability Limited to Distributor Stock. [t] Transmission, Not Model, Determines Which Transmission Filter is Used.

[61] Contains Pan-Type Filter and Spin-on Filter.

MITSUBISHI Cont'd.

Year	Model and Engine	VIN	Lube	Air	Cabin Air	Fuel	Breather	Trans.t
2004	Lancer 4-122 (2.0L) MFI	E	**B1402**	**PA4103**	**N/R**	**N/S**	**N/R**	**N/S**
	Lancer Evolution 4-122 (2.0L) EFI Turbo	D	**B7243**	**PA4103**		**N/S**	**N/R**	**M.T.**
	Lancer Sportback 4-2378cc (2.4L) MFI	F	**B7243**	**PA4103**	**N/R**	**N/S**	**N/R**	**N/S**
	Montero V6-232 (3.8L) MFI	S	**B7243**		**N/R**	**N/S**	**N/R**	**20013**
	Montero Sport V6-215 (3.5L) EFI	R	**B7243**		**N/R**		**N/R**	**20013**
	Outlander 4-143 (2.4L) MFI	G	**B7243**	**PA4103**	**N/R**	**N/S**	**N/R**	**N/S**
2003	Diamante V6-213 (3.5L) MFI	P	**B1431**		**N/R**		**N/R**	
	Eclipse, Eclipse Spyder 4-143 (2.4L) SFI	G	**B1402**	**PA4015**		**N/S**	**N/R**	**N/S**
	V6-181 (3.0L) SFI	H	**B7243**	**PA4015**		**N/S**	**N/R**	**N/S**
	Galant 4-143 (2.4L) SFI	G	**B1402**	**PA4015**		**N/S**	**N/R**	**N/S**
	V6-181 (3.0L) SFI	H	**B7243**	**PA4015**		**N/S**	**N/R**	
	Lancer 4-122 (2.0L) MFI	E	**B1402**	**PA4103**	**N/R**	**N/S**	**N/R**	**N/S**
	Lancer Evolution 4-122 (2.0L) FI Turbo	F	**B1402**	**PA4103**	**N/R**	**N/S**	**N/R**	**M.T.**
	Montero V6-232 (3.8L) MFI	S	**B7243**		**N/R**	**N/S**	**N/R**	**20013**
	Montero Sport V6-181 (3.0L) SFI	H	**B7243**	**PA4016**	**N/R**		**N/R**	**20013**
	V6-213 (3.5L) SFI	R	**B7243**		**N/R**		**N/R**	**20013**
	Outlander 4-143 (2.4L) MFI	G	**B7243**	**PA4103**	**N/R**	**N/S**	**N/R**	**N/S**
2002	Diamante V6-213 (3.5L) MFI	P	**B1431**		**N/R**		**N/R**	**N/S**
	Eclipse, Eclipse Spyder 4-143 (2.4L) MFI	G	**B1402**	**PA4015**		**N/S**	**N/R**	**N/S**
	V6-181 (3.0L) MFI	H	**B7243**	**PA4015**		**N/S**	**N/R**	**N/S**
	Galant 4-143 (2.4L) MFI	G	**B1402**	**PA4015**		**N/S**	**N/R**	**N/S**
	V6-181 (3.0L) MFI	H	**B7243**	**PA4015**		**N/S**	**N/R**	**N/S**
	Lancer 4-122 (2.0L) MFI	E	**B1402**	**PA4103**	**N/R**	**N/S**	**N/R**	**N/S**
	Mirage 4-90 (1.5L) MFI	A	**B1402**	**PA4103**	**N/R**	**BF1061**	**N/R**	**N/S**
	4-112 (1.8L) MFI	C	**B1402**	**PA4103**	**N/R**	**BF1061**	**N/R**	**N/S**
	Montero V6-213 (3.5L) MFI	R	**B7243**		**N/R**	**N/S**	**N/R**	**20013**
	Montero Sport V6-181 (3.0L) SFI	H	**B7243**	**PA4016**	**N/R**		**N/R**	**18281**
	V6-213 (3.5L) SFI	R	**B7243**		**N/R**		**N/R**	**18281**
2001	Diamante V6-213 (3.5L) MFI	P	**B1431**		**N/R**		**N/R**	**N/S**
	Eclipse, Eclipse Spyder 4-143 (2.4L) SFI	G,Y	**B1402**	**PA4015**		**N/S**	**N/R**	
	V6-181 (3.0L) SFI	F,H	**B7243**	**PA4015**		**N/S**	**N/R**	
	Galant 4-143 (2.4L) SFI	G	**B1402**	**PA4015**		**N/S**	**N/R**	**N/S**
	V6-181 (3.0L) SFI	H	**B7243**	**PA4015**		**N/S**	**N/R**	**N/S**
	Mirage 4-90 (1.5L) MFI	A	**B1402**	**PA4103**	**N/R**	**BF1061**	**N/R**	**N/S**
	4-112 (1.8L) MFI	C	**B1402**	**PA4103**	**N/R**	**BF1061**	**N/R**	Ele. **N/S**
	Montero V6-213 (3.5L) MFI	R	**B7243**		**N/R**	**N/S**	**N/R**	To 11/01/00 **20012** 11/02/00-on **20013**
	Montero Sport V6-181 (3.0L) SFI	H	**B7243**	**PA4016**	**N/R**		**N/R**	**20012**
	V6-213 (3.5L) MFI	R	**B7243**		**N/R**		**N/R**	**20012**
2000	Diamante V6-213 (3.5L) MFI	P	**B1431**		**N/R**		**N/R**	In Pan **N/S**
	Eclipse 4-143 (2.4L) SFI	Y	**B1402**	**PA4015**		**N/S**	**N/R**	In Pan **N/S**
	V6-181 (3.0L) SFI	L	**B7243**	**PA4015**		**N/S**	**N/R**	In Pan **N/S**
	Galant 4-143 (2.4L) MFI	G	**B1402**	**PA4015**		**N/S**	**N/R**	
	V6-181 (3.0L) MFI	L	**B7243**	**PA4015**		**N/S**	**N/R**	
	Mirage 4-90 (1.5L) MFI	A	**B1402**	**PA4103**	**N/R**	**BF1061**	**N/R**	
	4-112 (1.8L) MFI	C	**B1402**	**PA4103**	**N/R**	**BF1061**	**N/R**	**N/S**
	Montero V6-213 (3.5L) MFI	R	**B7243**		**N/R**	**BF1179**	**N/R**	To 9/00 **20012** 10/00-on **20013**
	Montero Sport V6-181 (3.0L) SFI	H	**B7243**	**PA4016**	**N/R**		**N/R**	**18281**
	V6-213 (3.5L) SFI	R	**B7243**		**N/R**	**BF1179**	**N/R**	4WD **18281**
1999	3000GT V6-181 (3.0L) MFI or Turbo	H,J,K	**B227**	**PA4016**	**N/R**	**BF1100**	**N/R**	
	Diamante V6-213 (3.5L) MFI	P	**B1431**		**N/R**		**N/R**	
	Eclipse 4-122 (2.0L) SFI Turbo	F	**B1402**	**PA4015**	**N/R**	**BF1179**	**N/R**	
	4-122 (2.0L) SFI	Y	**B34**	**PA4015**	**N/R**	**BF7659**	**N/R**	
	4-143 (2.4L) SFI	G	**B1402**	**PA4015**	**N/R**	**BF1179**	**N/R**	
	Galant 4-143 (2.4L) MFI	G	**B1402**	**PA4015**		**N/S**	**N/R**	
	V6-181 (3.0L) MFI	L	**B227**	**PA4015**		**N/S**	**N/R**	
	Mirage 4-90 (1.5L) MFI	A	**B1402**	**PA4103**	**N/R**	**BF1061**	**N/R**	
	4-112 (1.8L) MFI	C	**B1402**	**PA4103**	**N/R**	**BF1061**	**N/R**	
	Montero V6-213 (3.5L) MFI	R	**B7243**		**N/R**	**BF1179**	**N/R**	**20012**
	Montero Sport 4-143 (2.4L) MFI	G	**B1402**	**PA4016**	**N/R**		**N/R**	**M.T.**
	V6-181 (3.0L) MFI	P	**B7243**	**PA4016**	**N/R**		**N/R**	**18281**
	V6-213 (3.5L) MFI	R	**B7243**		**N/R**	**BF1179**	**N/R**	4WD **18281**
1998	3000GT V6-181 (3.0L) MFI SOHC	H	**B227**	**PA4016**	**N/R**	**BF1100**	**N/R**	
	V6-181 (3.0L) MFI DOHC	J	**B227**	**PA4016**	**N/R**	**BF1100**	**N/R**	
	V6-181 (3.0L) MFI Turbo	K	**B227**	**PA4016**	**N/R**	**BF1100**	**N/R**	
	Diamante V6-213 (3.5L) SFI	P	**B1431**		**N/R**		**N/R**	

[t] Transmission, Not Model, Determines Which Transmission Filter is Used. OBS = Obsolete. Availability Limited to Distributor Stock.

MITSUBISHI Cont'd.

Year	Model and Engine	VIN	Lube	Air	Cabin Air	Fuel	Breather	Trans.[t]
1998	Eclipse 4-122 (2.0L) SFI Turbo	F	**B1402**	**PA4015**	**N/R**	**BF1179**	**N/R**	
	4-122 (2.0L) SFI	Y	**B34**	**PA4015**	**N/R**	**BF7659**	**N/R**	**18004**
	4-143 (2.4L) SFI	G	**B1402**	**PA4015**	**N/R**	**BF1179**	**N/R**	
	Galant 4-143 (2.4L) SFI	G	**B1402**	**PA4015**	**N/R**	**BF1179**	**N/R**	
	Mirage 4-90 (1.5L) MFI	A	**B1402**	**PA4103**	**N/R**	**BF1061**	**N/R**	
	4-112 (1.8L) MFI	C	**B1402**	**PA4103**	**N/R**	**BF1061**	**N/R**	
	Montero V6-213 (3.5L) MFI	R	**B7243**		**N/R**	**BF1179**	**N/R**	6/98-on **20012**
	Montero Sport 4-143 (2.4L) MFI	G	**B1402**	**PA4016**	**N/R**		**N/R**	
	V6-183 (3.0L) MFI	P	**B7243**	**PA4016**	**N/R**		**N/R**	4WD **18281**
1997	3000GT V6-181 (3.0L) MFI SOHC	H	**B227**	**PA4016**	**N/R**	**BF1100**	**N/R**	
	V6-181 (3.0L) MFI DOHC	J	**B227**	**PA4016**	**N/R**	**BF1100**	**N/R**	
	V6-181 (3.0L) Turbo	K	**B227**	**PA4016**	**N/R**	**BF1100**	**N/R**	
	Diamante V6-213 (3.5L) SFI	P	**B1431**		**N/R**		**N/R**	
	Eclipse 4-122 (2.0L) Turbo	F	**B1402**	**PA4015**	**N/R**	**BF1179**	**N/R**	
	4-122 (2.0L) SFI	Y	**B34**	**PA4015**	**N/R**	**BF7659**	**N/R**	**18004**
	4-143 (2.4L) SFI	G	**B1402**	**PA4015**	**N/R**	**BF1179**	**N/R**	
	Galant 4-143 (2.4L) MFI	G	**B1402**	**PA4015**	**N/R**	**BF1179**	**N/R**	
	Mirage 4-90 (1.5L) MFI	A	**B1402**	**PA4103**	**N/R**	**BF1061**	**N/R**	
	4-112 (1.8L) MFI	C	**B1402**	**PA4103**	**N/R**	**BF1061**	**N/R**	
	Montero, Montero Sport 4-143 (2.4L) MFI	G	**B1402**	**PA4016**	**N/R**		**N/R**	
	V6-183 (3.0L) MFI	P	**B7243**	**PA4016**	**N/R**	**BF1179**	**N/R**	4WD **18281**
	V6-213 (3.5L) MFI	R	**B7243**		**N/R**	**BF1179**	**N/R**	4WD **18281**
1996	3000GT V6-181 (3.0L) MFI or Twin Turbo	J,K	**B227**	**PA4016**	**N/R**	**BF1100**	**N/R**	
	Diamante V6-183 (3.0L) MFI	H,J	**B227**	**PA4016**	**N/R**	**BF1179**	**N/R**	
	Eclipse 4-122 (2.0L) Turbo	F	**B1402**	**PA4015**	**N/R**	**BF1179**	**N/R**	
	4-122 (2.0L) SFI	Y	**B34**	**PA4015**	**N/R**	**BF7659**	**N/R**	
	4-143 (2.4L) SFI	G	**B1402**	**PA4015**	**N/R**	**BF1179**	**N/R**	
	Galant 4-146 (2.4L) SFI	G	**B1402**	**PA4015**	**N/R**	**BF1179**	**N/R**	
	Mighty Max 4-146 (2.4L) MFI	G	**B1402**	**PA4016**	**N/R**		**N/R**	**18032**
	Mirage 4-92 (1.5L) MFI	A	**B1402**		**N/R**	**BF1179**	**N/R**	
	4-110 (1.8L) MFI	C	**B1402**		**N/R**	**BF1179**	**N/R**	
	Montero V6-183 (3.0L) MFI	H	**B7243**		**N/R**	**BF1179**	**N/R**	4WD **18281**
	V6-214 (3.5L) MFI	M	**B7243**		**N/R**	**BF1179**	**N/R**	4WD **18281**
1995	3000GT V6-181 (3.0L) MFI or Twin Turbo	J,K	**B227**	**PA4016**	**N/R**	**BF1100**	**N/R**	
	Diamante V6-183 (3.0L) MFI	H,J	**B227**	**PA4016**	**N/R**	**BF1179**	**N/R**	
	Eclipse 4-122 (2.0L) MFI Turbo	F	**B1402**	**PA4015**	**N/R**	**BF1179**	**N/R**	
	4-122 (2.0L) MFI	Y	**B34**	**PA4015**	**N/R**	**BF1179**	**N/R**	
	Expo, Expo LRV 4-146 (2.4L) MFI	G	**B1402**	**PA4015**	**N/R**	**BF1179**	**N/R**	
	Galant 4-146 (2.4L) MFI	G	**B1402**	**PA4015**	**N/R**	**BF1179**	**N/R**	
	Mighty Max 4-146 (2.4L) MFI	G	**B1402**	**PA4016**	**N/R**		**N/R**	**18032**
	Mirage 4-92 (1.5L) MFI	A	**B1402**		**N/R**	**BF1179**	**N/R**	
	4-110 (1.8L) MFI	C	**B1402**		**N/R**	**BF1179**	**N/R**	
	Montero V6-183 (3.0L) MFI	H	**B7243**		**N/R**	**BF1179**	**N/R**	
	V6-214 (3.5L) MFI	M	**B7243**		**N/R**	**BF1179**	**N/R**	4WD **18281**
1994	3000GT V6-181 (3.0L) MFI or Twin Turbo	J,K	**B227**	**PA4016**	**N/R**	**BF1100**	**N/R**	
	Diamante V6-183 (3.0L) MFI	H,S	**B227**	**PA4016**	**N/R**	**BF1179**	**N/R**	
	V6-183 (3.0L) MFI	J	**B227**	**PA4016**	**N/R**	**BF1179**	**N/R**	
	Eclipse 4-107 (1.8L) MFI	B	**B1402**	**PA2194**	**N/R**	**BF1179**	**N/R**	
	4-122 (2.0L) MFI	E	**B1402**	**PA2194**	**N/R**	**BF1179**	**N/R**	
	4-122 (2.0L) MFI Turbo	F	**B1402**	**PA2194**	**N/R**	**BF1179**	**N/R**	
	Expo, Expo LRV 4-112 (1.8L) MFI	C	**B1402**	**PA4015**	**N/R**	**BF1179**	**N/R**	
	4-143 (2.4L) MFI	G	**B1402**	**PA4015**	**N/R**	**BF1179**	**N/R**	
	Galant 4-144 (2.4L) SFI	G,L	**B1402**	**PA4015**	**N/R**	**BF1179**	**N/R**	
	Mighty Max 4-146 (2.4L) MFI 2WD	G	**B1402**	**PA4016**	**N/R**		**N/R**	**18032**
	V6-181 (3.0L) MFI 4WD	H	**B1402**	**PA4016**	**N/R**	**BF1100**	**N/R**	**18032**
	Mirage 4-92 (1.5L) MFI	A	**B1402**		**N/R**	**BF1179**	**N/R**	
	4-110 (1.8L) MFI	C	**B1402**		**N/R**	**BF1179**	**N/R**	
	Montero V6-183 (3.0L) MFI	H	**B7243**		**N/R**	**BF1179**	**N/R**	
	V6-214 (3.5L) MFI	M	**B7243**		**N/R**	**BF1179**	**N/R**	
	Precis 4-1468cc (1.5L) FI	J	**B7243**	**PA2194**	**N/R**	**BF1100**	**N/R**	
1993	3000GT V6-2972cc (3.0L) MFI	H,K	**B227**	**PA4016**	**N/R**	**BF1100**	**N/R**	
	Diamante V6-3000cc (3.0L) MFI	H,J,S	**B227**	**PA4016**	**N/R**	**BF1179**	**N/R**	
	Eclipse 4-107 (1.8L) MFI	B	**B1402**	**PA2194**	**N/R**	**BF1179**	**N/R**	
	4-2000cc (2.0L) MFI	E	**B1402**	**PA2194**	**N/R**	**BF1179**	**N/R**	
	4-2000cc (2.0L) MFI Turbo	F	**B1402**	**PA2194**	**N/R**	**BF1179**	**N/R**	
	Expo, Expo LRV 4-1800cc (1.8L) EFI	C	**B1402**	**PA4015**	**N/R**	**BF1179**	**N/R**	
	4-2400cc (2.4L) EFI	G	**B1402**	**PA4015**	**N/R**	**BF1179**	**N/R**	

OBS = Obsolete. Availability Limited to Distributor Stock. [t] Transmission, Not Model, Determines Which Transmission Filter is Used.

MITSUBISHI Cont'd.

Year	Model and Engine	VIN	Lube	Air	Cabin Air	Fuel	Breather	Trans.t
1993	Galant 4-2000cc (2.0L) MFI	D	**B1402**	**PA2194**	**N/R**	**BF1179**	**N/R**	
	Mighty Max 4-146 (2.4L) MFI 2WD	G,W	**B173-S**	**PA4016**	**N/R**		**N/R**	**18032**
	V6-181 (3.0L) MFI 4WD	H	**B1402**	**PA4016**	**N/R**	**BF1100**	**N/R**	**18032**
	Mirage 4-90 (1.5L) MFI	A	**B1402**		**N/R**	**BF1179**	**N/R**	
	4-112 (1.8L) MFI	C	**B1402**		**N/R**	**BF1179**	**N/R**	
	Montero V6-181 (3.0L) MFI	H	**B7243**	**PA4016**	**N/R**	**BF1100**	**N/R**	
	Precis 4-1468cc (1.5L) FI	J	**B227**	**PA2194**	**N/R**	**BF1100**	**N/R**	
1992	3000GT V6-2972cc (3.0L) EFI or Turbo	B,C	**B227**	**PA4016**	**N/R**	**BF1100**	**N/R**	
	Diamante V6-3000cc (3.0L) EFI	B,S	**B227**	**PA4016**	**N/R**	**BF1179**	**N/R**	
	Eclipse 4-107 (1.8L) MFI	T	**B173-S**	**PA2194**	**N/R**	**BF1179**	**N/R**	
	4-2000cc (2.0L) MFI	R	**B173-S**	**PA2194**	**N/R**	**BF1179**	**N/R**	
	4-2000cc (2.0L) MFI Turbo	U	**B173-S**	**PA2194**	**N/R**	**BF1179**	**N/R**	
	Expo, Expo LRV 4-1800cc (1.8L) MFI	D	**B1402**	**PA4015**	**N/R**	**BF1179**	**N/R**	
	4-2400cc (2.4L) MFI	W	**B173-S**	**PA4015**	**N/R**	**BF1179**	**N/R**	
	Galant 4-2000cc (2.0L) EFI or Turbo	R,U,V	**B173-S**	**PA2194**	**N/R**	**BF1179**	**N/R**	
	Mighty Max 4-146 (2.4L) MFI	W	**B173-S**	**PA4016**	**N/R**		**N/R**	**18032**
	V6-181 (3.0L) MFI 4WD	S	**B173-S**	**PA4016**	**N/R**	**BF1100**	**N/R**	**18032**
	Mirage 4-90 (1.5L) MFI	A	**B1402**	**PA2194**	**N/R**	**BF1179**	**N/R**	
	4-97 (1.6L) MFI	Y	**B173-S**	**PA2194**	**N/R**	**BF1179**	**N/R**	
	Montero V6-3000cc (3.0L) MFI	S	**B7243**	**PA4016**	**N/R**	**BF1100**	**N/R**	
	Precis 4-1468cc (1.5L) MFI	J	**B227**	**PA2194**	**N/R**	**BF1100**	**N/R**	
1991	3000GT V6-2972cc (3.0L) EFI or Turbo	B,C	**B227**	**PA4016**	**N/R**	**BF1100**	**N/R**	
	Eclipse 4-107 (1.8L) MFI	T	**B173-S**	**PA2194**	**N/R**	**BF1179**	**N/R**	
	4-2000cc (2.0L) MFI	R	**B173-S**	**PA2194**	**N/R**	**BF1179**	**N/R**	
	4-2000cc (2.0L) MFI Turbo	U	**B173-S**	**PA2194**	**N/R**	**BF1179**	**N/R**	
	Galant, Sigma 4-1997cc (2.0L) MFI	R,V	**B173-S**	**PA2194**	**N/R**	**BF1179**	**N/R**	
	4-1997cc (2.0L) MFI Turbo	U	**B173-S**	**PA2194**	**N/R**	**BF1179**	**N/R**	**18021**
	Mighty Max 4-146 (2.4L) MFI	W	**B173-S**	**PA4016**	**N/R**		**N/R**	**18032**
	V6-181 (3.0L) MFI	S	**B173-S**	**PA4016**	**N/R**	**BF1100**	**N/R**	**18032**
	Mirage 4-1468cc (1.5L) MFI	A	**B173-S**	**PA2194**	**N/R**	**BF1179**	**N/R**	
	4-1597cc (1.6L) FI	Y	**B173-S**	**PA2194**	**N/R**	**BF1179**	**N/R**	
	Montero V6-3000cc (3.0L) MFI	S	**B173-S**	**PA2194**	**N/R**	**BF1100**	**N/R**	
	Precis 4-1468cc (1.5L) MFI	J	**B227**	**PA2194**	**N/R**	**BF1100**	**N/R**	
1990	Eclipse 4-107 (1.8L) MFI	E	**B173-S**	**PA2194**	**N/R**	**BF1179**	**N/R**	
	4-2000cc (2.0L) MFI or Turbo	R,U	**B173-S**	**PA2194**	**N/R**	**BF1179**	**N/R**	
	Galant 4-2000cc (2.0L) EFI	R,V	**B173-S**	**PA2194**	**N/R**	**BF1179**	**N/R**	
	Mighty Max 4-146 (2.4L) FI	W	**B173-S**	**PA4016**	**N/R**		**N/R**	**18032**
	V6-181 (3.0L) FI	S	**B173-S**	**PA2194**	**N/R**	**BF1100**	**N/R**	**18032**
	Mirage 4-1468cc (1.5L) MFI	X	**B173-S**	**PA2194**	**N/R**	**BF1100**	**N/R**	
	Montero V6-3000cc (3.0L) MFI	S	**B173-S**	**PA2194**	**N/R**	**BF1100**	**N/R**	
	Precis 4-1468cc (1.5L) 2 Bbl.	J	**B227**	**PA2194**	**N/R**	**BF1100**	**N/R**	
	Sigma V6-2972cc (3.0L) MFI	S	**B227**	**PA2194**	**N/R**	**BF1100**	**N/R**	
	Vans, Wagons 4-2351cc (2.4L) EFI	W	**B173-S**		**N/R**	**BF1100**	**N/R**	
1989	Galant 4-2000cc (2.0L) EFI	R,V	**B173-S**	**PA2194**	**N/R**	**BF1179**	**N/R**	
	Mighty Max 4-122 (2.0L) 2 Bbl.	D	**B173-S**	**PA2117**	**N/R**	**BF1178**	**N/R**	
	4-156 (2.6L) 2 Bbl.	E	**B173-S**	**PA2117**	**N/R**	**BF1178**	**N/R**	
	Mirage 4-1468cc (1.5L) MFI	X	**B173-S**	**PA2194**	**N/R**	**BF1100**	**N/R**	
	4-1600cc (1.6L) MFI Turbo	Z	**B173-S**	**PA2194**	**N/R**	**BF1179**	**N/R**	
	Montero 4-2600cc (2.6L) 2 Bbl.	E	**B173-S**	**PA2165**	**N/R**	**BF928**	**N/R**	
	V6-3000cc (3.0L) MFI	S	**B173-S**	**PA2194**	**N/R**	**BF1100**	**N/R**	
	Precis 4-1468cc (1.5L) 2 Bbl.	J	**B173-S**		**N/R**	**BF928**	**N/R**	
	Sigma V6-2972cc (3.0L) MFI	S	**B227**	**PA2194**	**N/R**	**BF1100**	**N/R**	
	Starion 4-2555cc (2.6L) EFI Turbo	N	**B173-S**		**N/R**	**BF1100**	**N/R**	
	Vans, Wagons 4-2351cc (2.4L) EFI	W	**B173-S**		**N/R**	**BF1100**	**N/R**	
1988	Cordia 4-1800cc (1.8L) Turbo	G	**B173-S**		**N/R**	**BF928**	**N/R**	
	4-2000cc (2.0L) 2 Bbl.	D	**B173-S**	**PA2176**	**N/R**	**BF928**	**N/R**	
	Galant V6-2972cc (3.0L) MFI	S	**B227**	**PA2194**	**N/R**	**BF1100**	**N/R**	
	Mighty Max 4-122 (2.0L) 2 Bbl.	D	**B173-S**	**PA2117**	**N/R**	**BF1178**	**N/R**	
	4-156 (2.6L) 2 Bbl.	E	**B173-S**	**PA2117**	**N/R**	**BF1178**	**N/R**	
	Mirage 4-1468cc (1.5L) 2 Bbl.	J,K	**B173-S**		**N/R**	**BF928**	**N/R**	
	4-1600cc (1.6L) EFI Turbo	F,Z	**B173-S**	**PA2194**	**N/R**	**BF1179**	**N/R**	
	Montero 4-2600cc (2.6L) 2 Bbl.	E	**B173-S**	**PA2165**	**N/R**	**BF928**	**N/R**	
	Precis 4-1468cc (1.5L) 2 Bbl.	J,K	**B173-S**		**N/R**	**BF928**	**N/R**	
	Starion 4-2555cc (2.6L) EFI Turbo	N	**B173-S**		**N/R**	**BF1100**	**N/R**	
	Tredia 4-1800cc (1.8L) EFI Turbo	G	**B173-S**		**N/R**		**N/R**	
	4-2000cc (2.0L) 2 Bbl.	D	**B173-S**	**PA2176**	**N/R**	**BF928**	**N/R**	
	Vans, Wagons 4-2351cc (2.4L) EFI	W	**B173-S**		**N/R**	**BF1100**	**N/R**	

[t] Transmission, Not Model, Determines Which Transmission Filter is Used. OBS = Obsolete. Availability Limited to Distributor Stock.

Year	Model and Engine	VIN	Lube	Air	Cabin Air	Fuel	Breather	Trans.†
MITSUBISHI Cont'd.								
1987	Cordia 4-1800cc (1.8L) Turbo	G	**B173-S**		**N/R**	**BF928**	**N/R**	
	4-2000cc (2.0L) 2 Bbl.	D	**B173-S**	**PA2176**	**N/R**	**BF928**	**N/R**	
	Galant 4-2400cc (2.4L) FI	L	**B173-S**	**PA2194**	**N/R**		**N/R**	
	Mighty Max 4-122 (2.0L) 2 Bbl.	D	**B173-S**	**PA2117**	**N/R**	**BF1178**	**N/R**	
	4-156 (2.6L) 2 Bbl.	E	**B173-S**	**PA2117**	**N/R**	**BF1178**	**N/R**	
	Mirage 4-1468cc (1.5L) 2 Bbl.	J,K	**B173-S**		**N/R**	**BF928**	**N/R**	
	4-1600cc (1.6L) FI Turbo	F	**B173-S**		**N/R**	**BF1100**	**N/R**	
	Montero 4-2600cc (2.6L) 2 Bbl.	E	**B173-S**	**PA2165**	**N/R**	**BF928**	**N/R**	
	Precis 4-1468cc (1.5L) 2 Bbl.	J,K	**B173-S**		**N/R**	**BF928**	**N/R**	
	Starion 4-2555cc (2.6L) FI Turbo	H,N	**B173-S**		**N/R**	**BF1100**	**N/R**	
	Tredia 4-1800cc (1.8L) FI Turbo	G	**B173-S**		**N/R**		**N/R**	
	4-2000cc (2.0L) 2 Bbl.	D	**B173-S**	**PA2176**	**N/R**	**BF928**	**N/R**	
	Vans, Wagons 4-2351cc (2.4L) FI	L	**B173-S**		**N/R**	**BF1100**	**N/R**	
1986	Cordia 4-1800cc (1.8L) Turbo	G	**B173-S**		**N/R**	**BF928**	**N/R**	
	4-2000cc (2.0L)	D	**B173-S**	**PA2176**	**N/R**	**BF928**	**N/R**	
	Galant 4-2400cc (2.4L) FI	L	**B173-S**		**N/R**		**N/R**	
	Mighty Max 4-122 (2.0L) Carb.	D	**B173-S**	**PA2117**	**N/R**	**BF928**	**N/R**	
	4-156 (2.6L) Carb.	E	**B173-S**	**PA2117**	**N/R**	**BF928**	**N/R**	
	Mirage 4-1468cc (1.5L)	K	**B173-S**		**N/R**	**BF928**	**N/R**	
	4-1600cc (1.6L) FI Turbo	F	**B173-S**		**N/R**	**BF1100**	**N/R**	
	Montero 4-2555cc (2.6L) 2 Bbl.	E	**B173-S**		**N/R**	**BF928**	**N/R**	**18032**
	Starion 4-2555cc (2.6L) FI Turbo	H,N	**B173-S**		**N/R**	**BF1100**	**N/R**	
	Tredia 4-1800cc (1.8L) Turbo	G	**B173-S**		**N/R**	**BF928**	**N/R**	
	4-2000cc (2.0L) 2 Bbl.	D	**B173-S**	**PA2176**	**N/R**	**BF928**	**N/R**	
1985	Cordia 4-1800cc (1.8L) Turbo	G	**B173-S**		**N/R**	**BF928**	**N/R**	
	4-2000cc (2.0L)	D	**B173-S**	**PA2176**	**N/R**	**BF928**	**N/R**	
	Galant 4-2400cc (2.4L) FI	L	**B173-S**		**N/R**	**BF1100**	**N/R**	
	Mighty Max 4-122 (2.0L) Carb.	D	**B173-S**	**PA2117**	**N/R**	**BF928**	**N/R**	
	4-143 (2.3L) FI Turbo Diesel	J	To 4/30/84 **B161-S**	**PA2117**	**N/R**	**BF7534**	**N/R**	
	4-156 (2.6L) Carb.	E	**B173-S**	**PA2117**	**N/R**	**BF928**	**N/R**	
	Mirage 4-1468cc (1.5L)	K	**B173-S**		**N/R**	**BF928**	**N/R**	
	4-1600cc (1.6L) FI Turbo	F	**B173-S**		**N/R**	**BF1100**	**N/R**	
	Montero 4-2600cc (2.6L)	E	**B173-S**		**N/R**	**BF928**	**N/R**	**18032**
	Starion 4-2555cc (2.6L) FI Turbo	H,N	**B173-S**		**N/R**	**BF1100**	**N/R**	
	Tredia 4-1800cc (1.8L) Turbo	G	**B173-S**		**N/R**	**BF928**	**N/R**	
	4-2000cc (2.0L) 2 Bbl.	D	**B173-S**	**PA2176**	**N/R**	**BF928**	**N/R**	
1984	Cordia 4-1800cc (1.8L) Turbo	G	**B173-S**		**N/R**	**BF928**	**N/R**	
	4-2000cc (2.0L)	D	**B173-S**	**PA2176**	**N/R**	**BF928**	**N/R**	
	Mighty Max 4-122 (2.0L) Carb.	D	**B173-S**	**PA2117**	**N/R**	**BF928**	**N/R**	
	4-143 (2.3L) FI Turbo Diesel	J	**B202**	**PA2117**	**N/R**	**BF7534**	**N/R**	**18032**
	4-156 (2.6L) Carb.	E	**B173-S**	**PA2117**	**N/R**	**BF928**	**N/R**	**18032**
	Montero 4-2600cc (2.6L)	E,H	**B173-S**		**N/R**	**BF928**	**N/R**	**18032**
	Starion 4-2555cc (2.6L) FI Turbo	H	**B173-S**		**N/R**	**BF1100**	**N/R**	
	Tredia 4-2000cc (2.0L) 2 Bbl.	D	**B173-S**	**PA2176**	**N/R**	**BF928**	**N/R**	
1983	Cordia 4-1800cc (1.8L)	4	**B173-S**	**PA2176**	**N/R**	**BF928**	**N/R**	
	Mighty Max 4-122 (2.0L) Carb.	5	**B173-S**	**PA2117**	**N/R**	**BF928**	**N/R**	
	4-143 (2.3L) FI Turbo Diesel	9	**B202**	**PA2117**	**N/R**	**BF7534**	**N/R**	**18032**
	4-156 (2.6L) Carb.	7	**B173-S**	**PA2117**	**N/R**	**BF928**	**N/R**	**18032**
	Starion 4-2555cc (2.6L) FI Turbo	7	**B173-S**		**N/R**	**BF1100**	**N/R**	
	Tredia 4-1800cc (1.8L) 2 Bbl.	4	**B173-S**	**PA2176**	**N/R**	**BF928**	**N/R**	
MOTO GUZZI Motorcycles								
	Breva 1100		2005-08 **B1413**					
	Breva V750IE		2003-04 **B1413**					
	Jackal		2000-01 **B1413**					
	California EV		2000-06 **B1413**					
	California IE		1994-2001 **B1413**					
	California Special		2000-06 **B1413**					
	California Stone		2000-06 **B1413**					
	Special		1994-2001 **B1413**					
	Sport 1100		1994-97 **B1413**					
	Quota 1100ES		2000-01 **B1413**					
	V11 Bassa		2000-02 **B1413**					
	V11 EV		1998-2001 **B1413**					
	V11 Jackal		2000-02 **B1413**					
	V11 Le Mans		2002-06 **B1413**					

OBS = Obsolete. Availability Limited to Distributor Stock. † Transmission, Not Model, Determines Which Transmission Filter is Used.

Year	Model and Engine	VIN	Lube	Air	Cabin Air	Fuel	Breather	Trans.t
MOTO GUZZI Motorcycles Cont'd.								
	V11 Quota		2000-06 **B1413**					
	V11 Sport		1998-2006 **B1413**					
NISSAN								
2010	370Z V6-3696cc (3.7L)	A	**B1400**		**N/R**	**N/S**	**N/R**	**N/S**
	Altima 4-152 (2.5L) FI	A	**B1400**	**PA4399**		**N/S**	**N/R**	**N/S**
	4-152 (2.5L) DI Hybrid	C	**B1400**	**PA4399**		**N/S**	**N/R**	**N/S**
	V6-213 (3.5L) FI	B	**B1400**	**PA2135**		**N/S**	**N/R**	**N/S**
	Armada V8-339 (5.6L) FI or Flex Fuel	A,B	**B1400**	**PA4046**		**N/S**	**N/R**	**N/S**
	Cube 4-1798cc (1.8L) FI	B	**B1400**			**N/S**	**N/R**	
	Frontier 4-213 (2.5L) FI	B	**B1400**		**PA4410 KIT**	**N/S**	**N/R**	
	V6-3954cc (4.0L) FI	A	**B1400**	**PA4046**	**PA4410 KIT**	**N/S**	**N/R**	
	GT-R V6-3799cc (3.8L) Twin Turbo	A			**PA4405**	**N/S**	**N/R**	**M.T.**
	Maxima V6-3498cc (3.5L) FI	A	**B1400**	**PA2135**	**PA4199**	**N/S**	**N/R**	**N/S**
	Murano V6-3498cc (3.5L) FI	A	**B1400**	**PA2135**		**N/S**	**N/R**	
	Pathfinder V6-3954cc (4.0L) SFI		**B1400**	**PA4046**	**PA4410 KIT**	**N/S**	**N/R**	**N/S**
	V8-5552cc (5.6L) SFI Flex Fuel	B	**B1400**	**PA4046**	**PA4410 KIT**	**N/S**	**N/R**	**N/S**
	Rogue 4-213 (2.5L) DI	A	**B1400**			**N/S**	**N/R**	**N/S**
	Sentra 4-1997cc (2.0L) FI	A	**B1400**			**N/S**	**N/R**	**N/S**
	Sentra SE-R 4-2500cc (2.5L) FI	B	**B1400**			**N/S**	**N/R**	**N/S**
	Sentra SE-R SpecV 4-2500cc (2.5L) FI	C	**B1400**			**N/S**	**N/R**	**M.T.**
	Titan V8-5552cc (5.6L) FI or Flex Fuel	A,B	**B1400**	**PA4046**		**N/S**	**N/R**	**N/S**
	Versa 4-1598cc (1.6L) SFI	C	**B1400**			**N/S**	**N/R**	
	4-1798cc (1.8L) SFI	B	**B1400**		**N/R**	**N/S**	**N/R**	
	Xterra V6-3954cc (4.0L) FI	A	**B1400**	**PA4046**	**PA4410 KIT**	**N/S**	**N/R**	**18273**
2009	350Z V6-213 (3.5L) FI	B	**B1400**		**N/R**	**N/S**	**N/R**	**N/S**
	370Z V6-3696cc (3.7L)	A	**B1400**		**N/R**	**N/S**	**N/R**	**N/S**
	Altima 4-152 (2.5L) FI	A	**B1400**	**PA4399**		**N/S**	**N/R**	
	4-152 (2.5L) FI Hybrid	A	**B1400**	**PA4399**		**N/S**	**N/R**	
	V6-213 (3.5L) FI	B	**B1400**	**PA2135**		**N/S**	**N/R**	
	Armada V8-339 (5.6L) FI or Flex Fuel	A,B	**B1402**	**PA4046**		**N/S**	**N/R**	**N/S**
	Cube 4-1798cc (1.8L) FI	B	**B1400**			**N/S**	**N/R**	
	Frontier 4-213 (2.5L) FI	B	**B1400**		Opt. **PA4410 KIT**	**N/S**	**N/R**	**20001**
	V6-3954cc (4.0L) FI	A	**B1402**	**PA4046**	Opt. **PA4410 KIT**	**N/S**	**N/R**	**18273**
	GT-R V6-3799cc (3.8L) Twin Turbo	A	**B1402**		**PA4405**	**N/S**	**N/R**	**M.T.**
	Maxima V6-3498cc (3.5L) FI	A	**B1400**	**PA2135**	**PA4199**	**N/S**	**N/R**	
	Murano V6-3498cc (3.5L) FI	A	**B1400**	**PA2135**		**N/S**	**N/R**	**N/S**
	Pathfinder V6-3954cc (4.0L) SFI	A	**B1402**	**PA4046**	Opt. **PA4410 KIT**	**N/S**	**N/R**	**N/S**
	V8-5552cc (5.6L) FI Flex Fuel	B	**B1402**	**PA4046**	Opt. **PA4410 KIT**	**N/S**	**N/R**	**N/S**
	Quest V6-3498cc (3.5L) SFI	B	**B1400**	**PA2135**		**N/S**	**N/R**	
	Rogue 4-213 (2.5L) DI	A	**B1400**			**N/S**	**N/R**	**N/S**
	Sentra 4-1997cc (2.0L) FI	A	**B1400**			**N/S**	**N/R**	**N/S**
	Sentra SE-R 4-2500cc (2.5L) FI	B	**B1400**			**N/S**	**N/R**	**N/S**
	Sentra SE-R SpecV 4-2500cc (2.5L) FI	C	**B1400**			**N/S**	**N/R**	**M.T.**
	Titan V8-5552cc (5.6L) FI or Flex Fuel	A,B	**B1402**	**PA4046**		**N/S**	**N/R**	**N/S**
	Tsuru 4-1600cc (1.6L) FI Mexico					**BF1163**	**N/R**	
	Versa 4-1598cc (1.6L) SFI	C	**B1400**			**N/S**	**N/R**	
	4-1798cc (1.8L) SFI	B	**B1400**			**N/S**	**N/R**	
	Xterra V6-3954cc (4.0L) FI	A	**B1402**	**PA4046**	Opt. **PA4410 KIT**	**N/S**	**N/R**	**18273**
2008	350Z V6-213 (3.5L) FI	B	**B1400**		**N/R**	**N/S**	**N/R**	**N/S**
	Altima 4-152 (2.5L) FI	A	**B1400**	**PA4399**		**N/S**	**N/R**	
	4-152 (2.5L) FI Hybrid	A	**B1400**	**PA4399**		**N/S**	**N/R**	
	V6-213 (3.5L) FI	B	**B1400**	**PA2135**		**N/S**	**N/R**	
	Armada V8-339 (5.6L) FI or Flex Fuel	A,B	**B1402**	**PA4046**		**N/S**	**N/R**	**N/S**
	Frontier 4-213 (2.5L) FI	B	**B1400**		Opt. **PA4410 KIT**	**N/S**	**N/R**	**20001**
	V6-3954cc (4.0L) FI	A	**B1402**	**PA4046**	Opt. **PA4410 KIT**	**N/S**	**N/R**	**18273**
	Maxima V6-3498cc (3.5L) FI	B	**B1400**	**PA2135**	**PA4199**	**N/S**	**N/R**	
	Pathfinder V6-3954cc (4.0L) SFI	A	**B1402**	**PA4046**	Opt. **PA4410 KIT**	**N/S**	**N/R**	**N/S**

[t] Transmission, Not Model, Determines Which Transmission Filter is Used. OBS = Obsolete. Availability Limited to Distributor Stock.

NISSAN Cont'd.

Year	Model and Engine	VIN	Lube	Air	Cabin Air	Fuel	Breather	Trans.t
2008	Pathfinder V8-5552cc (5.6L) FI Flex Fuel	B	**B1402**	**PA4046**	Opt. **PA4410 KIT**	**N/S**	**N/R**	**N/S**
	Quest V6-3498cc (3.5L) SFI	B	**B1400**	**PA2135**		**N/S**	**N/R**	
	Rogue 4-213 (2.5L) DI	A	**B1400**			**N/S**	**N/R**	**N/S**
	Sentra 4-1997cc (2.0L) FI	A	**B1400**			**N/S**	**N/R**	**N/S**
	Sentra SE-R 4-2500cc (2.5L) FI	B	**B1400**			**N/S**	**N/R**	**N/S**
	Sentra SE-R SpecV 4-2500cc (2.5L) FI	C	**B1400**			**N/S**	**N/R**	**M.T.**
	Tiida 4-1800cc (1.8L) FI Mexico		**B1400**				**N/R**	
	Titan V8-5552cc (5.6L) FI or Flex Fuel	A,B	**B1402**	**PA4046**		**N/S**	**N/R**	**N/S**
	Tsuru 4-1600cc (1.6L) FI Mexico					**BF1163**	**N/R**	
	Versa 4-1798cc (1.8L) SFI	B	**B1400**			**N/S**	**N/R**	
	Xterra V6-3954cc (4.0L) FI	A	**B1402**	**PA4046**	Opt. **PA4410 KIT**	**N/S**	**N/R**	**18273**
	X-Trail 4-2500cc (2.5L) FI Canada	A	**B1402**	**PA2135**	**PA4199**	**N/S**	**N/R**	**N/S**
2007	350Z V6-213 (3.5L) FI	B	**B1400**	**PA2135**	**N/R**	**N/S**	**N/R**	**N/S**
	Altima 4-152 (2.5L) FI	A	**B1400**	**PA4399**		**N/S**	**N/R**	
	4-152 (2.5L) FI Hybrid	C	**B1400**	**PA4399**		**N/S**	**N/R**	
	V6-213 (3.5L) FI	B	**B1400**	**PA2135**		**N/S**	**N/R**	
	Armada V8-339 (5.6L) FI or Flex Fuel	A,B	**B1402**	**PA4046**		**N/S**	**N/R**	**N/S**
	Frontier 4-213 (2.5L) FI	B	**B1400**		Opt. **PA4410 KIT**	**N/S**	**N/R**	**20001**
	V6-3954cc (4.0L) FI	A	**B1402**	**PA4046**	Opt. **PA4410 KIT**	**N/S**	**N/R**	**18273**
	Maxima V6-3498cc (3.5L) SFI	B	**B1400**	**PA2135**	**PA4199**	**N/S**	**N/R**	
	Murano V6-3498cc (3.5L) FI	A	**B1400**	**PA2135**	Opt. **PA4199**	**N/S**	**N/R**	
	Pathfinder V6-3954cc (4.0L) FI	A	**B1402**	**PA4046**	Opt. **PA4410 KIT**	**N/S**	**N/R**	**N/S**
	Quest V6-3498cc (3.5L) SFI	B	**B1400**	**PA2135**		**N/S**	**N/R**	
	Sentra 4-1997cc (2.0L) FI	A	**B1400**			**N/S**	**N/R**	**N/S**
	Sentra SE-R 4-2500cc (2.5L) FI	C	**B1400**			**N/S**	**N/R**	**N/S**
	Tiida 4-1800cc (1.8L) FI Mexico		**B1400**				**N/R**	
	Titan V8-5552cc (5.6L) FI or Flex Fuel	A,B	**B1402**	**PA4046**		**N/S**	**N/R**	**N/S**
	Tsuru 4-1600cc (1.6L) FI Mexico		**B113**			**BF1163**	**N/R**	
	Versa 4-1798cc (1.8L) FI	B	**B1400**			**N/S**	**N/R**	
	Xterra V6-3954cc (4.0L) FI	A	**B1402**	**PA4046**	Opt. **PA4410 KIT**	**N/S**	**N/R**	**18273**
	X-Trail 4-2500cc (2.5L) FI Canada		**B1402**	**PA2135**	**PA4199**	**N/S**	**N/R**	**N/S**
2006	350Z V6-213 (3.5L) SFI	A	**B1400**	**PA2135**	**N/R**	**N/S**	**N/R**	**N/S**
	Altima 4-152 (2.5L) SFI	A	**B1402**	**PA2135**	Opt. **PA4199**	**N/S**	**N/R**	
	V6-213 (3.5L) SFI	B	**B1400**	**PA2135**	Opt. **PA4199**	**N/S**	**N/R**	
	Armada V8-5552cc (5.6L) FI	A	**B1402**	**PA4046**		**N/S**	**N/R**	**N/S**
	Frontier 4-2500cc (2.5L) FI	B	**B1400**		Opt. **PA4410 KIT**	**N/S**	**N/R**	**20001**
	V6-3954cc (4.0L) FI	A	**B1402**	**PA4046**	Opt. **PA4410 KIT**	**N/S**	**N/R**	**18273**
	Maxima V6-3498cc (3.5L) SFI	B	**B1400**	**PA2135**	Opt. **PA4199**	**N/S**	**N/R**	
	Murano V6-3498cc (3.5L) FI	A	**B1400**	**PA2135**	Opt. **PA4199**	**N/S**	**N/R**	
	Pathfinder V6-3954cc (4.0L) FI	A	**B1402**	**PA4046**	Opt. **PA4410 KIT**	**N/S**	**N/R**	**N/S**
	Quest V6-3498cc (3.5L) SFI	B	**B1400**	**PA2135**		**N/S**	**N/R**	
	Sentra 4-1809cc (1.8L) SFI	C	**B1402**	**PA2135**	Opt. **PA4199**	**N/S**	**N/R**	
	4-2500cc (2.5L) SFI	A	**B1402**	**PA2135**	Opt. **PA4199**	**N/S**	**N/R**	
	Titan V8-5552cc (5.6L) FI or Flex Fuel	A	**B1402**	**PA4046**		**N/S**	**N/R**	**N/S**
	Tsuru 4-1600cc (1.6L) FI Mexico		**B113**			**BF1163**	**N/R**	
	Urvan 4-2400cc (2.4L) FI Mexico					**BF1104**	**N/R**	
	Xterra V6-3954cc (4.0L) FI	A	**B1402**	**PA4046**	Opt. **PA4410 KIT**	**N/S**	**N/R**	**18273**
	X-Trail 4-2500cc (2.5L) FI Canada		**B1402**	**PA2135**	**PA4199**	**N/S**	**N/R**	
2005	350Z V6-213 (3.5L) SFI	A	**B1400**	**PA2135**	**N/R**	**N/S**	**N/R**	**N/S**
	Altima 4-152 (2.5L) SFI	A	**B1400**	**PA2135**	Opt. **PA4199**	**N/S**	**N/R**	
	V6-213 (3.5L) SFI	B	**B1400**	**PA2135**	Opt. **PA4199**	**N/S**	**N/R**	
	Armada V8-5552cc (5.6L) FI	A	**B1402**	**PA4046**		**N/S**	**N/R**	**N/S**
	Frontier 4-2500cc (2.5L) FI	B	**B1400**		Opt. **PA4410 KIT**	**N/S**	**N/R**	**20001**
	V6-3954cc (4.0L) FI	A	**B1402**	**PA4046**	Opt. **PA4410 KIT**	**N/S**	**N/R**	**18273**
	Maxima V6-3498cc (3.5L) SFI	B	**B1400**	**PA2135**	Opt. **PA4199**	**N/S**	**N/R**	

OBS = Obsolete. Availability Limited to Distributor Stock. t Transmission, Not Model, Determines Which Transmission Filter is Used.

NISSAN Cont'd.

Year	Model and Engine	VIN	Lube	Air	Cabin Air	Fuel	Breather	Trans.[t]
2005	Murano V6-3498cc (3.5L) SFI	A	**B1400**	**PA2135**	Opt. **PA4199**	**N/S**	**N/R**	
	Pathfinder V6-3954cc (4.0L) FI	A	**B1402**	**PA4046**	Opt. **PA4410 KIT**	**N/S**	**N/R**	**N/S**
	Quest V6-3498cc (3.5L) SFI	B	**B1400**	**PA2135**		**N/S**	**N/R**	
	Sentra 4-1809cc (1.8L) SFI	C	**B1402**	**PA2135**	Opt. **PA4199**	**N/S**	**N/R**	
	4-2500cc (2.5L) SFI	A	**B1400**	**PA2135**	Opt. **PA4199**	**N/S**	**N/R**	
	Titan V8-5552cc (5.6L) FI or Flex Fuel	A	**B1402**	**PA4046**		**N/S**	**N/R**	**N/S**
	Tsuru 4-1600cc (1.6L) FI Mexico		**B113**			**BF1163**	**N/R**	
	Urvan 4-2400cc (2.4L) FI Mexico					**BF1104**	**N/R**	
	Xterra V6-3954cc (4.0L) FI	E	**B1402**	**PA4046**	Opt. **PA4410 KIT**	**N/S**	**N/R**	**M.T.**
	X-Trail 4-2500cc (2.5L) FI Canada		**B1402**	**PA2135**	**PA4199**	**N/S**	**N/R**	
2004	350Z V6-213 (3.5L) SFI	A	**B1400**	**PA2135**	**N/R**	**N/S**	**N/R**	**M.T.**
	Altima 4-152 (2.5L) SFI	A	**B1402**	**PA2135**	Opt. **PA4199**	**N/S**	**N/R**	
	V6-3498cc (3.5L) SFI	B	**B1400**	**PA2135**	Opt. **PA4199**	**N/S**	**N/R**	
	Armada, Pathfinder Armada V8-5552cc (5.6L) SFI	A	**B1402**	**PA4046**		**N/S**	**N/R**	**18273**
	Frontier 4-146 (2.4L) SFI	D	**B1402**	**PA4070**		**BF1104**	**N/R**	**20001**
	V6-200 (3.3L) SFI	E	**B1402**	**PA2135**		**BF1104**	**N/R**	2WD **19993** 4WD **18273**
	V6-200 (3.3L) SFI Supercharged	M	**B1402**	**PA2135**		**BF1104**	**N/R**	2WD & 4WD **18273**
	Maxima V6-3498cc (3.5L) SFI	B	**B1400**	**PA2135**	Opt. **PA4199**	**N/S**	**N/R**	
	Murano V6-3498cc (3.5L) SFI	A	**B1400**	**PA2135**	Opt. **PA4199**	**N/S**	**N/R**	
	Pathfinder V6-213 (3.5L) SFI	D	**B1402**	**PA2135**		**BF1104**	**N/R**	**18273**
	Quest V6-3498cc (3.5L) SFI	B	**B1400**	**PA2135**		**N/S**	**N/R**	
	Sentra 4-1809cc (1.8L) SFI	C	**B1402**	**PA2135**	Opt. **PA4199**	**N/S**	**N/R**	
	4-2500cc (2.5L) SFI	A	**B1402**	**PA2135**	Opt. **PA4199**	**N/S**	**N/R**	
	Titan V8-5552cc (5.6L) FI	E	**B1402**	**PA4046**		**N/S**	**N/R**	**N/S**
	Tsubame 4-1600cc (1.6L) FI Mexico			**PA2135**			**N/R**	
	Tsuru 4-1600cc (1.6L) FI Mexico					**BF1163**	**N/R**	
	Urvan 4-2400cc (2.4L) FI Mexico					**BF1104**	**N/R**	
	Xterra 4-146 (2.4L) MFI	D	**B1402**	**PA4070**		**BF1104**	**N/R**	**M.T.**
	V6-200 (3.3L) SFI	E	**B1400**	**PA2135**		**BF1104**	**N/R**	2WD **20001** 4WD **18273**
	V6-200 (3.3L) SFI Supercharged	E	**B1402**	**PA2135**		**BF1104**	**N/R**	2WD **20001** 4WD **18273**
2003	350Z V6-213 (3.5L) SFI	A	**B1400**	**PA2135**	**N/R**	**N/S**	**N/R**	**M.T.**
	Altima 4-152 (2.5L) SFI	A	**B1402**	**PA2135**	Opt. **PA4199**	**N/S**	**N/R**	
	V6-3498cc (3.5L) SFI	B	**B1400**	**PA2135**	Opt. **PA4199**	**N/S**	**N/R**	
	Frontier 4-146 (2.4L) SFI	D	**B1402**	**PA4070**		**BF1104**	**N/R**	**20001**
	V6-200 (3.3L) SFI	E	**B1402**	**PA2135**		**BF1104**	**N/R**	2WD **19993** 4WD **18273**
	V6-200 (3.3L) Supercharged	M	**B1402**	**PA2135**		**BF1104**	**N/R**	2WD & 4WD **18273**
	Maxima V6-3498cc (3.5L) SFI	D	**B1402**	**PA2135**		**N/S**	**N/R**	
	Murano V6-3498cc (3.5L) SFI	A	**B1400**	**PA2135**	Opt. **PA4199**	**N/S**	**N/R**	
	Pathfinder V6-213 (3.5L) SFI	D	**B1402**	**PA2135**		**BF1104**	**N/R**	2WD **19993** 4WD **18273**
	Sentra 4-1809cc (1.8L) SFI	C	**B1402**	**PA2135**	Opt. **PA4199**	**N/S**	**N/R**	
	4-2500cc (2.5L) SFI	A	**B1402**	**PA2135**	Opt. **PA4199**	**N/S**	**N/R**	
	Tsubame 4-1600cc (1.6L) FI Mexico		**B113**	**PA2135**			**N/R**	
	Tsuru 4-1600cc (1.6L) FI Mexico					**BF1163**	**N/R**	
	Urvan 4-2400cc (2.4L) FI Mexico					**BF1104**	**N/R**	
	Xterra 4-146 (2.4L) MFI	D	**B1402**	**PA4070**		**BF1104**	**N/R**	**M.T.**
	V6-200 (3.3L) SFI	E	**B1400**	**PA2135**		**BF1104**	**N/R**	2WD **19993** 4WD **18273**
	V6-200 (3.3L) Supercharged	M	**B1400**	**PA2135**		**BF1104**	**N/R**	2WD **19993** 4WD **18273**
2002	Altima 4-152 (2.5L) SFI	A	**B1402**	**PA2135**	Opt. **PA4199**	**N/S**	**N/R**	
	V6-3498cc (3.5L) SFI	B	**B1400**	**PA2135**	Opt. **PA4199**	**N/S**	**N/R**	
	Frontier 4-146 (2.4L) SFI	D	**B1402**	**PA4070**		**BF1104**	**N/R**	**20001**
	V6-200 (3.3L) SFI	E	**B1402**	**PA2135**		**BF1104**	**N/R**	2WD **19993** 4WD **18273**
	V6-200 (3.3L) Supercharged	M	**B1402**	**PA2135**		**BF1104**	**N/R**	2WD & 4WD **18273**
	Maxima V6-3498cc (3.5L) SFI	D	**B1402**	**PA2135**		**BF1104**	**N/R**	**18011**
	Pathfinder V6-213 (3.5L) SFI	D	**B1402**	**PA2135**		**BF1104**	**N/R**	2WD **19993** 4WD **18273**
	Quest V6-201 (3.3L) SFI	T	**B1402**	**PA4076**		**BF1104**	**N/R**	

[t] Transmission, Not Model, Determines Which Transmission Filter is Used. OBS = Obsolete. Availability Limited to Distributor Stock.

NISSAN Cont'd.

Year	Model and Engine	VIN	Lube	Air	Cabin Air	Fuel	Breather	Trans.†
2002	Sentra 4-1809cc (1.8L) SFI	C,D	VIN C **B1402** VIN D **B1400**	**PA2135**	Opt. **PA4199**	**N/S**	**N/R**	
	4-2500cc (2.5L) FI	A	**B1402**	**PA2135**	Opt. **PA4199**	**N/S**	**N/R**	
	Tsubame 4-1600cc (1.6L) FI Mexico		**B113**	**PA2135**			**N/R**	
	Tsuru 4-1600cc (1.6L) FI Mexico					**BF1163**	**N/R**	
	Urvan 4-2400cc (2.4L) FI Mexico					**BF1104**	**N/R**	
	Xterra 4-146 (2.4L) FI	D	**B1402**	**PA4070**		**BF1104**	**N/R**	**M.T.**
	V6-200 (3.3L) SFI	E	**B1402**	**PA2135**		**BF1104**	**N/R**	2WD **19993** 4WD **18273**
	V6-200 (3.3L) Supercharged	M	**B1402**	**PA2135**		**BF1104**	**N/R**	2WD **19993** 4WD **18273**
2001	Altima 4-146 (2.4L) SFI	D	**B1402**	**PA2135**		**BF7660**	**N/R**	
	Frontier 4-146 (2.4L) SFI	D	**B1402**	**PA4070**		**BF1104**	**N/R**	**20001**
	V6-200 (3.3L) SFI or Supercharged	N,S	**B1402**	**PA2135**		**BF1104**	**N/R**	2WD Supercharged Eng. **18273** 2WD Exc. Supercharged Eng. **19993** 4WD **18273**
	Maxima V6-182 (3.0L) SFI	C	**B1402**	**PA2135**		**N/S**	**N/R**	**18011**
	Lucino 4-1600cc (1.6L) FI Mexico		**B113**	**PA2135**			**N/R**	
	4-2000cc (2.0L) FI Mexico					**BF1163**	**N/R**	
	Pathfinder V6-213 (3.5L) SFI	D	**B1402**	**PA2135**		**BF1104**	**N/R**	2WD **19993** 4WD **18273**
	Quest V6-201 (3.3L) SFI	T	**B1402**	**PA4076**		**BF1104**	**N/R**	
	Sentra 4-1809cc (1.8L) SFI	C	**B1402** Low Emissions Vehicle **B1400**	**PA2135**	Opt. **PA4199**	**N/S**	**N/R**	
	4-122 (2.0L) SFI	B	**B1400**	**PA2135**	Opt. **PA4199**	**N/S**	**N/R**	
	Tsubame 4-1600cc (1.6L) FI Mexico		**B113**	**PA2135**			**N/R**	
	Tsuru 4-1600cc (1.6L) FI Mexico					**BF1163**	**N/R**	
	Urvan 4-2400cc (2.4L) FI Mexico					**BF1104**	**N/R**	
	Xterra 4-146 (2.4L) MFI	D	**B1402**	**PA4070**		**BF1104**	**N/R**	**M.T.**
	V6-200 (3.3L) SFI	E	**B1402**	**PA2135**		**BF1104**	**N/R**	2WD **19993** 4WD **18273**
2000	Altima 4-146 (2.4L) SFI	D	**B1402**	**PA2135**		**BF7660**	**N/R**	
	Frontier 4-146 (2.4L) SFI	D	**B1402**	**PA4070**		**BF1104**	**N/R**	**20001**
	V6-200 (3.3L) SFI	E	**B1402**	**PA2135**		**BF1104**	**N/R**	2WD **19993** 4WD **18273**
	Maxima V6-182 (3.0L) SFI	C	**B1402**	**PA2135**		**N/S**	**N/R**	**18011**
	Lucino 4-1600cc (1.6L) FI Mexico		**B113**	**PA2135**			**N/R**	
	4-2000cc (2.0L) FI Mexico		**B1400**			**BF1163**	**N/R**	
	Pathfinder V6-201 (3.3L) SFI	A	**B1402**	**PA2135**		**BF1104**	**N/R**	2WD **19993** 4WD **18273**
	Quest V6-201 (3.3L) SFI	T	**B1402**	**PA4076**		**BF1104**	**N/R**	
	Sentra 4-1809cc (1.8L) FI	A	**B1402** Low Emissions Vehicle **B1400**	**PA2135**	Opt. **PA4199**	**N/S**	**N/R**	
	4-122 (2.0L) SFI	B	**B1400**	**PA2135**	Opt. **PA4199**	**N/S**	**N/R**	
	Tsubame 4-1600cc (1.6L) FI Mexico		**B113**	**PA2135**		**BF1163**	**N/R**	
	Tsuru 4-1600cc (1.6L) FI Mexico					**BF1163**	**N/R**	
	Urvan 4-2400cc (2.4L) FI Mexico					**BF1104**	**N/R**	
	Xterra 4-146 (2.4L) MFI	D	**B1402**	**PA4070**		**BF1104**	**N/R**	**M.T.**
	V6-200 (3.3L) SFI	E	**B1402**	**PA2135**		**BF1104**	**N/R**	2WD **19993** 4WD **18273**
1999	Altima 4-146 (2.4L) SFI	D	**B1402**	**PA2135**		**BF7660**	**N/R**	
	Frontier 4-146 (2.4L) SFI	D	**B1402**	**PA4070**	**N/R**	**BF1104**	**N/R**	**20001**
	V6-200 (3.3L) SFI	E	**B1402**	**PA2135**	**N/R**	**BF1104**	**N/R**	4WD **18273**
	Maxima V6-181 (3.0L) SFI	C	**B1402**	**PA2135**	**N/R**	**BF1104**	**N/R**	**18011**
	Lucino 4-1600cc (1.6L) FI Mexico		**B113**	**PA2135**			**N/R**	
	4-2000cc (2.0L) FI Mexico		**B1400**	**PA2135**		**BF1104**	**N/R**	
	Pathfinder V6-201 (3.3L) SFI	A	**B1402**	**PA2135**		**BF1104**	**N/R**	2WD **19993** 4WD **18273**
	Quest V6-201 (3.3L) SFI	T	**B1402**	**PA4076**		**BF1104**	**N/R**	
	Sentra 4-97 (1.6L) SFI	A	**B113**	**PA2135**	**N/R**	**BF1104**	**N/R**	
	4-122 (2.0L) SFI	B	**B1400**	**PA2135**	**N/R**	**BF1104**	**N/R**	
	Tsubame 4-1600cc (1.6L) FI Mexico		**B113**	**PA2135**	**N/R**	**BF1104**	**N/R**	

OBS = Obsolete. Availability Limited to Distributor Stock. † Transmission, Not Model, Determines Which Transmission Filter is Used.

NISSAN Cont'd.

Year	Model and Engine	VIN	Lube	Air	Cabin Air	Fuel	Breather	Trans.t
1999	Tsuru 4-1600cc (1.6L) FI Mexico					**BF1163**	**N/R**	
1998	200SX 4-97 (1.6L) SFI	A	**B113**	**PA2135**	**N/R**	**BF1104**	**N/R**	
	4-122 (2.0L) SFI	B	**B1400**	**PA2135**	**N/R**	**BF1104**	**N/R**	
	240SX 4-146 (2.4L) SFI	A	**B113**	**PA2135**	**N/R**	**BF1104**	**N/R**	
	Altima 4-146 (2.4L) SFI	D	**B1402**	**PA2135**	**N/R**	**BF7660**	**N/R**	**18011**
	Frontier 4-146 (2.4L) SFI	D	**B1402**	**PA4070**	**N/R**	**BF1104**	**N/R**	**20001**
	Maxima V6-181 (3.0L) SFI	C	**B1402**	**PA2135**	**N/R**	**BF1104**	**N/R**	**18011**
	Lucino 4-1600cc (1.6L) FI Mexico		**B113**	**PA2135**	**N/R**	**BF1104**	**N/R**	
	4-2000cc (2.0L) FI Mexico		**B1400**	**PA2135**	**N/R**	**BF1104**	**N/R**	
	Pathfinder V6-200 (3.3L) SFI	A	**B1402**	**PA2135**	**N/R**	**BF1104**	**N/R**	2WD **19993** 4WD **18273**
	Quest V6-181 (3.0L) SFI	1	**B113**	**PA4076**	**N/R**	**BF1105**	**N/R**	
	Sentra 4-97 (1.6L) SFI	A	**B113**	**PA2135**	**N/R**	**BF1104**	**N/R**	
	4-122 (2.0L) SFI	B	**B1400**	**PA2135**	**N/R**	**BF1104**	**N/R**	
	Tsubame 4-1600cc (1.6L) FI Mexico		**B113**	**PA2135**	**N/R**	**BF1104**	**N/R**	
	Tsuru 4-1600cc (1.6L) FI Mexico				**N/R**	**BF1163**	**N/R**	
1997	200SX 4-97 (1.6L) SFI	A	**B113**	**PA2135**	**N/R**	**BF1104**	**N/R**	
	4-122 (2.0L) SFI	B	**B1400**	**PA2135**	**N/R**	**BF1104**	**N/R**	
	240SX 4-146 (2.4L) SFI	A	**B113**	**PA2135**	**N/R**	**BF1104**	**N/R**	
	Altima 4-146 (2.4L) SFI	B	**B113**	**PA2135**	**N/R**	**BF7660**	**N/R**	**18011**
	Maxima V6-182 (3.0L) SFI	C	**B1402**	**PA2135**	**N/R**	**BF1104**	**N/R**	**18011**
	Lucino 4-1600cc (1.6L) FI Mexico		**B113**	**PA2135**	**N/R**	**BF1104**	**N/R**	
	4-2000cc (2.0L) FI Mexico		**B1400**	**PA2135**	**N/R**	**BF1104**	**N/R**	
	Pathfinder, Pickups 4-146 (2.4L) SFI	S	**B113**	**PA4070**	**N/R**	**BF1163**	**N/R**	2WD **19993** 4WD **18273**
	V6-3300cc (3.3L) SFI	A,H	**B1402**	**PA2135**	**N/R**	**BF1104**	**N/R**	2WD **19993** 4WD **18273**
	Quest V6-181 (3.0L) SFI	W	**B113**	**PA4076**	**N/R**	**BF1105**	**N/R**	**18011**
	Sentra 4-97 (1.6L) SFI	A	**B113**	**PA2135**	**N/R**	**BF1104**	**N/R**	
	Tsubame 4-1600cc (1.6L) FI Mexico		**B113**	**PA2135**	**N/R**	**BF1104**	**N/R**	
	Tsuru 4-1600cc (1.6L) FI Mexico				**N/R**	**BF1163**	**N/R**	
1996	200SX 4-97 (1.6L) SFI	A	**B113**	**PA2135**	**N/R**	**BF1104**	**N/R**	
	4-122 (2.0L) SFI	B	**B1400**	**PA2135**	**N/R**	**BF1104**	**N/R**	
	240SX 4-146 (2.4L) SFI	A	**B113**	**PA2135**	**N/R**	**BF1104**	**N/R**	
	300ZX V6-181 (3.0L) SFI Turbo	C	**B113**		**N/R**	**BF1105**	**N/R**	
	V6-181 (3.0L) SFI	R	**B113**		**N/R**	**BF1105**	**N/R**	**19993**
	Altima 4-146 (2.4L) SFI	B	**B113**	**PA2135**	**N/R**	**BF1163**	**N/R**	**18011**
	Maxima V6-181 (3.0L) SFI	C	**B1402**	**PA2135**	**N/R**	**BF1104**	**N/R**	**18011**
	Lucino 4-1600cc (1.6L) FI Mexico			**PA2135**	**N/R**	**BF1104**	**N/R**	
	4-2000cc (2.0L) FI Mexico		**B1400**	**PA2135**	**N/R**	**BF1104**	**N/R**	
	Pathfinder, Pickups 4-146 (2.4L) SFI	S	**B113**	**PA4070**	**N/R**	**BF1163**	**N/R**	2WD **19993** 4WD **18273**
	V6-181 (3.0L) SFI	H	**B113**	**PA2135**	**N/R**	**BF1104**	**N/R**	2WD **19993** 4WD **18273**
	V6-3300cc (3.3L) SFI	H	**B1402**	**PA2135**	**N/R**	**BF1104**	**N/R**	2WD **19993** 4WD **18273**
	Quest V6-181 (3.0L) SFI	D	**B113**	**PA4076**	**N/R**	**BF1105**	**N/R**	**18011**
	Sentra 4-97 (1.6L) SFI	A	**B113**	**PA2135**	**N/R**	**BF1104**	**N/R**	
	Tsubame 4-1600cc (1.6L) FI Mexico		**B113**	**PA2135**	**N/R**	**BF1104**	**N/R**	
	Tsuru 4-1600cc (1.6L) FI Mexico		**B113**	**PA2135**	**N/R**	**BF1104**	**N/R**	
1995	200SX 4-97 (1.6L) SFI	A	**B113**	**PA2135**	**N/R**	**BF1104**	**N/R**	
	4-122 (2.0L) SFI	B	**B1400**	**PA2135**	**N/R**	**BF1104**	**N/R**	
	240SX 4-146 (2.4L) SFI	A	**B113**	**PA2135**	**N/R**	**BF1104**	**N/R**	
	300ZX V6-181 (3.0L) SFI Turbo	C	**B113**		**N/R**	**BF1105**	**N/R**	
	V6-181 (3.0L) SFI	R	**B113**		**N/R**	**BF1105**	**N/R**	**18273**
	Altima 4-146 (2.4L) SFI	B	**B113**	**PA2135**	**N/R**	**BF1163**	**N/R**	**18011**
	Axxess 4-2389cc (2.4L) FI Canada	H	**B113**	**PA2135**	**N/R**	**BF1104**	**N/R**	**N/S**
	Maxima V6-181 (3.0L) SFI	C	**B1402**	**PA2135**	**N/R**	**BF1104**	**N/R**	**18011**
	Pathfinder, Pickups 4-146 (2.4L) SFI	S	**B113**	**PA4070**	**N/R**	**BF1163**	**N/R**	**18273**
	V6-181 (3.0L) SFI	H	**B113**	**PA2135**	**N/R**	**BF1105**	**N/R**	2WD **19993** 4WD **18273**
	Quest V6-181 (3.0L) FI	W	**B113**	**PA4076**	**N/R**	**BF1105**	**N/R**	**18011**
	Sentra 4-97 (1.6L) SFI	A	**B113**	**PA2135**	**N/R**	**BF1104**	**N/R**	
	Tsubame 4-1600cc (1.6L) FI Mexico		**B113**	**PA2135**	**N/R**	**BF1104**	**N/R**	
	Tsuru 4-1600cc (1.6L) FI Mexico		**B113**	**PA2135**	**N/R**	**BF1104**	**N/R**	
1994	240SX 4-146 (2.4L) SFI	M	**B113**	**PA2135**	**N/R**	**BF1104**	**N/R**	
	300ZX V6-181 (3.0L) SFI Turbo	C	**B113**		**N/R**	**BF1105**	**N/R**	

[t] Transmission, Not Model, Determines Which Transmission Filter is Used. OBS = Obsolete. Availability Limited to Distributor Stock.

NISSAN Cont'd.

Year	Model and Engine	VIN	Lube	Air	Cabin Air	Fuel	Breather	Trans.†
1994	300ZX V6-181 (3.0L) SFI	R	**B113**		**N/R**	**BF1105**	**N/R**	**18273**
	Altima 4-146 (2.4L) SFI	B	**B113**	**PA2135**	**N/R**	**BF1163**	**N/R**	**18011**
	Axxess 4-2389cc (2.4L) FI Canada	H	**B113**	**PA2135**	**N/R**	**BF1104**	**N/R**	**N/S**
	Ichi Van 4-2400cc (2.4L) FI Mexico		**B113**	**PA2135**	**N/R**		**N/R**	
	Maxima V6-181 (3.0L) SFI	E,H	**B113**	**PA2135**	**N/R**	**BF1104**	**N/R**	**18011**
	Pathfinder, Pickups 4-146 (2.4L) SFI	S	**B113**	**PA4070**	**N/R**	**BF1163**	**N/R**	2WD **19993** 4WD **18273**
	V6-181 (3.0L) SFI	H	**B113**	**PA2135**	**N/R**	**BF1105**	**N/R**	2WD **19993** 4WD **18273**
	Quest V6-181 (3.0L) SFI SOHC	W	**B113**	**PA4076**	**N/R**	**BF1105**	**N/R**	**18011**
	Sentra 4-97 (1.6L) SFI	E	**B113**	**PA2135**	**N/R**	**BF1104**	**N/R**	
	4-122 (2.0L) SFI	G	**B1406**	**PA2135**	**N/R**	**BF1104**	**N/R**	
	Tsubame 4-1600cc (1.6L) FI Mexico		**B113**	**PA2135**	**N/R**	**BF1104**	**N/R**	
	Tsuru 4-1600cc (1.6L) FI Mexico		**B113**	**PA2135**	**N/R**	**BF1104**	**N/R**	
1993	240SX 4-146 (2.4L) SFI	M	**B113**	**PA2135**	**N/R**	**BF1104**	**N/R**	
	300ZX V6-181 (3.0L) SFI Turbo	C	**B113**		**N/R**	**BF1105**	**N/R**	
	V6-181 (3.0L) SFI	R	**B113**		**N/R**	**BF1105**	**N/R**	**18273**
	Altima 4-146 (2.4L) SFI	B	**B113**	**PA2135**	**N/R**	**BF1163**	**N/R**	**18011**
	Axxess 4-2389cc (2.4L) FI Canada	H	**B113**	**PA2135**	**N/R**	**BF1104**	**N/R**	**N/S**
	Ichi Van 4-2400cc (2.4L) FI Mexico		**B113**	**PA2135**	**N/R**		**N/R**	
	Maxima V6-181 (3.0L) SFI	E,H	**B113**	**PA2135**	**N/R**	**BF1104**	**N/R**	**18011**
	NX1600 4-97 (1.6L) SFI	E	**B113**	**PA2135**	**N/R**	**BF1104**	**N/R**	
	NX2000 4-122 (2.0L) SFI	G	**B1406**	**PA2135**	**N/R**	**BF1104**	**N/R**	
	Pathfinder V6-181 (3.0L) SFI	H	**B113**	**PA2135**	**N/R**	**BF1105**	**N/R**	2WD **19993** 4WD **18273**
	Pickups 4-146 (2.4L) SFI	S	**B113**	**PA4070**	**N/R**	**BF1105**	**N/R**	2WD **19993** 4WD **18273**
	V6-181 (3.0L) SFI	H	**B113**	**PA2135**	**N/R**	**BF1105**	**N/R**	2WD **19993** 4WD **18273**
	Quest V6-181 (3.0L) SFI	W	**B113**	**PA4076**	**N/R**	**BF1105**	**N/R**	**18011**
	Sentra 4-97 (1.6L) SFI	E,P	**B113**	**PA2135**	**N/R**	**BF1104**	**N/R**	
	4-122 (2.0L) SFI	G	**B1406**	**PA2135**	**N/R**	**BF1104**	**N/R**	
	Tsubame 4-1600cc (1.6L) FI Mexico		**B113**	**PA2135**	**N/R**	**BF1104**	**N/R**	
	Tsuru 4-1600cc (1.6L) FI Mexico		**B113**	**PA2135**	**N/R**	**BF1104**	**N/R**	
1992	240SX 4-146 (2.4L) SFI	M	**B113**	**PA2135**	**N/R**	**BF1104**	**N/R**	
	300ZX V6-181 (3.0L) SFI Turbo	C	**B113**		**N/R**	**BF1105**	**N/R**	
	V6-181 (3.0L) SFI	R	**B113**		**N/R**	**BF1105**	**N/R**	**18273**
	Axxess 4-2389cc (2.4L) FI Canada	H	**B113**	**PA2135**	**N/R**	**BF1104**	**N/R**	**N/S**
	D21 Pickup 4-146 (2.4L) SFI	S	**B113**	Std. **PA4070** HvyDty. **PA2174**	**N/R**	**BF1105**	**N/R**	2WD **19993** 4WD **18273**
	V6-181 (3.0L) SFI	H	**B113**	Panel **PA2135** Round **PA2174**	**N/R**	**BF1105**	**N/R**	2WD **19993** 4WD **18273**
	Hikari 4-1600cc (1.6L) FI Mexico		**B113**	**PA2135**	**N/R**		**N/R**	
	Ichi Van 4-2400cc (2.4L) FI Mexico		**B113**	**PA2135**	**N/R**		**N/R**	
	Maxima V6-181 (3.0L) SFI	E,H	**B113**	**PA2135**	**N/R**	**BF1104**	**N/R**	**18011**
	NX1600 4-1597cc (1.6L) SFI	E	**B113**	**PA2135**	**N/R**	**BF1104**	**N/R**	
	NX2000 4-1998cc (2.0L) SFI	G	**B1406**	**PA2135**	**N/R**	**BF1104**	**N/R**	
	Pathfinder V6-181 (3.0L) SFI	H	**B113**	**PA2135**	**N/R**	**BF1105**	**N/R**	2WD **19993** 4WD **18273**
	Sentra 4-97 (1.6L) SFI	E,P	**B113**	**PA2135**	**N/R**	**BF1104**	**N/R**	
	4-122 (2.0L) SFI	G	**B1406**	**PA2135**	**N/R**	**BF1104**	**N/R**	
	Stanza 4-2389cc (2.4L) SFI	F	**B113**	**PA2135**	**N/R**	**BF1163**	**N/R**	
	Tsuru 4-1600cc (1.6L) FI Mexico		**B113**		**N/R**	**BF1104**	**N/R**	
1991	240SX 4-2389cc (2.4L) MFI	M	**B113**	**PA2135**	**N/R**	**BF1104**	**N/R**	
	300ZX V6-181 (3.0L) MFI Turbo	C	**B113**		**N/R**	**BF1105**	**N/R**	
	V6-181 (3.0L) MFI	R	**B113**		**N/R**	**BF1105**	**N/R**	**18273**
	Axxess 4-2389cc (2.4L) FI Canada	H	**B113**	**PA2135**	**N/R**	**BF1104**	**N/R**	**N/S**
	Hikari 4-1600cc (1.6L) FI Mexico		**B113**	**PA2135**	**N/R**		**N/R**	
	Ichi Van 4-1800cc (1.8L) FI Mexico			**PA2135**	**N/R**		**N/R**	
	Maxima V6-3000cc (3.0L) MFI	H	**B113**	**PA2135**	**N/R**	**BF1104**	**N/R**	
	Micra 4-1229cc (1.2L) 2 Bbl. Canada	H	**B113**		**N/R**	**BF932**	**N/R**	
	NX1600 4-1597cc (1.6L) SFI	E	**B113**	**PA2135**	**N/R**	**BF1104**	**N/R**	
	NX2000 4-1998cc (2.0L) SFI	G	**B1406**	**PA2135**	**N/R**	**BF1104**	**N/R**	
	Pathfinder V6-3000cc (3.0L) MFI	H	**B113**	**PA2135**	**N/R**	**BF1105**	**N/R**	2WD **19993** 4WD **18273**
	Pickups 4-2400cc (2.4L) MFI	S	**B113**	Std. **PA4070** HvyDty. **PA2135**	**N/R**	**BF1105**	**N/R**	2WD **19993** 4WD **18273**

OBS = Obsolete. Availability Limited to Distributor Stock. † Transmission, Not Model, Determines Which Transmission Filter is Used.

NISSAN Cont'd.

Year	Model and Engine	VIN	Lube	Air	Cabin Air	Fuel	Breather	Trans.t
1991	Pickups V6-3000cc (3.0L) MFI	H	**B113**	Panel **PA2135** Round **PA2174**	**N/R**	**BF1105**	**N/R**	2WD **19993** 4WD **18273**
	Sentra 4-1600cc (1.6L) SFI	E,P	**B113**	**PA2135**	**N/R**	**BF1104**	**N/R**	
	4-2000cc (2.0L) SFI	G	**B1406**	**PA2135**	**N/R**	**BF1104**	**N/R**	
	Stanza 4-2389cc (2.4L) MFI	F	**B113**	**PA2135**	**N/R**	**BF1163**	**N/R**	
1990	240SX 4-2389cc (2.4L) MFI	H	**B113**	**PA2135**	**N/R**	**BF1104**	**N/R**	
	300ZX V6-181 (3.0L) MFI Turbo	C	**B113**		**N/R**	**BF1105**	**N/R**	
	V6-181 (3.0L) MFI	R	**B113**		**N/R**	**BF1105**	**N/R**	**18273**
	Axxess 4-2389cc (2.4L) FI Canada	H	**B113**	**PA2135**	**N/R**	**BF1104**	**N/R**	**N/S**
	Hikari 4-1600cc (1.6L) FI Mexico		**B113**	**PA2135**	**N/R**		**N/R**	
	Ichi Van 4-1800cc (1.8L) FI Mexico			**PA2135**	**N/R**		**N/R**	
	Maxima V6-3000cc (3.0L) MFI	H	**B113**	**PA2135**	**N/R**	**BF1104**	**N/R**	
	Micra 4-1229cc (1.2L) 2 Bbl. Canada	H	**B113**		**N/R**	**BF932**	**N/R**	
	Pathfinder V6-3000cc (3.0L) MFI	H	**B113**	**PA2135**	**N/R**	**BF1105**	**N/R**	2WD **19993** 4WD **18273**
	Pickups 4-2400cc (2.4L) EFI	S	**B113**	**PA4070**	**N/R**	**BF1105**	**N/R**	2WD **19993** 4WD **18273**
	V6-3000cc (3.0L) EFI	H	**B113**	**PA2174**	**N/R**	**BF1105**	**N/R**	2WD **19993** 4WD **18273**
	Pulsar 4-1597cc (1.6L) EFI	G	**B113**		**N/R**	**BF1104**	**N/R**	
	Sentra 4-1597cc (1.6L) EFI	G	**B113**		**N/R**	**BF1104**	**N/R**	
	Stanza 4-2389cc (2.4L) MFI	F	**B113**	**PA2135**	**N/R**	**BF1163**	**N/R**	
1989	240SX 4-2389cc (2.4L) MFI	H	**B113**	**PA2135**	**N/R**	**BF1104**	**N/R**	
	300ZX V6-3000cc (3.0L) MFI Turbo	C	**B113**	**PA2121**	**N/R**	**BF1104**	**N/R**	
	V6-3000cc (3.0L) MFI	H	**B113**	**PA2135**	**N/R**	**BF1104**	**N/R**	
	Maxima V6-3000cc (3.0L) MFI	H	**B113**	**PA2135**	**N/R**	**BF1104**	**N/R**	
	Micra 4-1229cc (1.2L) 2 Bbl. Canada	H	**B113**		**N/R**	**BF932**		
	Pathfinder, Pickups 4-2400cc (2.4L) EFI	N	**B120**	**PA4019**	**N/R**	**BF1105**		4WD **18273**
	V6-3000cc (3.0L) EFI	H	**B113**	**PA2174**	**N/R**	**BF1105**		4WD **18273**
	Pulsar 4-1597cc (1.6L) EFI	C	**B113**		**N/R**	**BF1104**	**N/R**	
	4-1809cc (1.8L) MFI	P	**B113**	**PA2135**	**N/R**	Canada **BF1105** U.S. **BF1104**	**N/R**	
	Sentra 4-1597cc (1.6L) FI	G	**B113**		**N/R**	**BF1104**		
	Stanza 4-1974cc (2.0L) MFI	H	**B113**	**PA2121**	**N/R**	**BF1104**	**N/R**	
1988	200SX 4-1974cc (2.0L) FI	P	**B113**	**PA2121**	**N/R**	**BF1105**	**N/R**	
	V6-2960cc (3.0L) FI	H	**B113**	**PA2121**	**N/R**	**BF1105**	**N/R**	
	300ZX V6-2960cc (3.0L) MFI Turbo	C	**B113**	**PA2121**	**N/R**	**BF1104**	**N/R**	
	V6-2960cc (3.0L) EFI	H	**B113**	**PA2135**	**N/R**	**BF1104**	**N/R**	
	Maxima V6-2960cc (3.0L) MFI	H	**B113**	**PA2121**	**N/R**	**BF1104**	**N/R**	
	Micra 4-1229cc (1.2L) 2 Bbl. Canada	H	**B113**		**N/R**	**BF932**		
	Multi 4-1974cc (2.0L) FI Canada	H	**B113**	**PA2121**	**N/R**	**BF1104**	**N/R**	
	Pathfinder, Pickups 4-2395cc (2.4L) FI	H	**B120**	**PA4019**	**N/R**	**BF1105**		
	V6-2960cc (3.0L) FI	H	**B113**	**PA2174**	**N/R**	**BF1105**		
	Pulsar 4-1597cc (1.6L) EFI	C	**B113**	**PA2031**	**N/R**	**BF1104**	**N/R**	
	4-1798cc (1.8L) MFI	P	**B113**	**PA2135**	**N/R**	Canada **BF1105** U.S. **BF1104**	**N/R**	
	Sentra 4-1597cc (1.6L) FI	P	**B113**	**PA2031**	**N/R**	**BF1104**	**N/R**	
	Stanza 4-1974cc (2.0L) MFI	H	**B113**	**PA2121**	**N/R**	**BF1104**	**N/R**	
	Vans 4-2389cc (2.4L) EFI	S	**B113**	**PA2242**	**N/R**	**BF1105**	**N/R**	
1987	200SX 4-1809cc (1.8L) FI Turbo	C	**B113**	**PA2121**	**N/R**	**BF1105**		
	4-1974cc (2.0L) FI	H	**B113**	**PA2121**	**N/R**	**BF1105**	**N/R**	
	V6-2960cc (3.0L) FI	H	**B113**	**PA2121**	**N/R**	**BF1105**	**N/R**	
	300ZX V6-2960cc (3.0L) FI Turbo	C	**B113**	**PA2121**	**N/R**	**BF1104**		
	V6-2960cc (3.0L) FI	H	**B113**	**PA2121**	**N/R**	**BF1104**		
	Maxima V6-2960cc (3.0L) FI	H	**B113**	**PA2121**	**N/R**	**BF1104**		
	Micra 4-1229cc (1.2L) 2 Bbl. Canada	H	**B113**		**N/R**	**BF932**		
	Multi 4-1974cc (2.0L) FI Canada	H	**B113**	**PA2121**	**N/R**	**BF1104**	**N/R**	
	Pathfinder, Pickups 4-2389cc (2.4L) FI	N	**B120**	**PA4019**	**N/R**	**BF1105**		
	V6-2960cc (3.0L) FI	H	**B113**	**PA2174**	**N/R**	**BF1105**		
	Pulsar 4-1597cc (1.6L) E16	P	**B113**	**PA2031**	**N/R**	**BF836**	**N/R**	
	4-1598cc (1.6L) CA16D		**B113**	**PA2135**	**N/R**	**BF1104**	**N/R**	
	Sentra 4-1597cc (1.6L)	P	**B113**	**PA2031**	**N/R**	**BF1104**	**N/R**	
	4-1688cc (1.7L) FI Diesel, Canada	S	**BD142**	**PA2536**	**N/R**		**N/R**	
	Stanza 4-1974cc (2.0L) FI	H	**B113**	**PA2121**	**N/R**	**BF1104**	**N/R**	
	Vans 4-2389cc (2.4L) FI	S	**B113**	**PA2536**	**N/R**	**BF1105**	**N/R**	

[t] Transmission, Not Model, Determines Which Transmission Filter is Used. OBS = Obsolete. Availability Limited to Distributor Stock.

NISSAN Cont'd.

Year	Model and Engine	VIN	Lube	Air	Cabin Air	Fuel	Breather	Trans.†
1986	200SX 4-1809cc (1.8L) FI Turbo	C	**B113**	**PA2121**	**N/R**	**BF1105**		
	4-1974cc (2.0L) FI	P	**B113**	**PA2121**	**N/R**	**BF1105**	**N/R**	
	300ZX V6-2960cc (3.0L) FI Turbo	C	**B113**	**PA2121**	**N/R**	**BF1104**		
	V6-2960cc (3.0L) FI	H	**B113**	**PA2121**	**N/R**	**BF1104**		
	Maxima V6-2960cc (3.0L) FI	H	**B113**	**PA2121**	**N/R**	**BF1104**		
	Micra 4-1229cc (1.2L) 2 Bbl. Canada	H	**B113**		**N/R**	**BF932**		
	Multi 4-1974cc (2.0L) FI Canada	H	**B113**	**PA2121**	**N/R**	**BF1104**	**N/R**	
	Pickups 4-2389cc (2.4L)	N	**B120**	To 4/86 **PA1657** 4/86-on **PA4019**	**N/R**	**BF1104**		
	4-2488cc (2.5L) FI Diesel	J	**B118**	**PA1657**	**N/R**	**BF7598**		
	V6-2960cc (3.0L)	H	**B113**	**PA2174**	**N/R**	**BF1105**		
	Pulsar 4-1597cc (1.6L)	M	**B113**	**PA2031**	**N/R**		**N/R**	
	Sentra 4-1597cc (1.6L)	P	**B113**	**PA2031**	**N/R**	**BF932**	**N/R**	
	4-1681cc (1.7L) Diesel	S	**BD142**	**PA2536**	**N/R**	**BF7535**	**N/R**	
	Stanza 4-1974cc (2.0L) FI	H	**B113**	**PA2121**	**N/R**	**BF836**	**N/R**	
1985	200SX 4-1809cc (1.8L) FI Turbo	C	**B113**	**PA2121**	**N/R**	**BF1105**		
	4-1974cc (2.0L) FI	P	**B113**	**PA2121**	**N/R**	**BF1105**	**N/R**	
	300ZX V6-2960cc (3.0L) FI Turbo	C	**B113**	**PA2121**	**N/R**	**BF1104**		
	V6-2960cc (3.0L) FI	H	**B113**	**PA2121**	**N/R**	**BF1104**		
	Maxima V6-2960cc (3.0L) FI	H	**B113**	**PA2121**	**N/R**	**BF1104**		
	Micra 4-1229cc (1.2L) 2 Bbl. Canada	H	**B113**		**N/R**	**BF932**		
	Pickups 4-1952cc (2.0L) FI 2 Bbl.	F	**B120**	**PA1657**	**N/R**	**BF1104**	**N/R**	
	4-2389cc (2.4L) 2 Bbl.	N	**B120**	**PA1657**	**N/R**	**BF1104**	**N/R**	
	4-2488cc (2.5L) FI Diesel	J	**B118**	**PA1657**	**N/R**	**BF7598**		
	Pulsar 4-1597cc (1.6L)	M	**B113**	**PA2031**	**N/R**	To 6/85 **BF932** 6/85-on **BF833,-K2**	**N/R**	
	Sentra 4-1597cc (1.6L)	P	**B113**	**PA2031**	**N/R**	**BF932**	**N/R**	
	4-1681cc (1.7L) Diesel	S	**BD142**	**PA2536**	**N/R**	**BF7535**	**N/R**	
	Stanza 4-1974cc (2.0L) FI	H	**B113**	**PA2121**	**N/R**	**BF836**	**N/R**	
1984	200SX 4-1809cc (1.8L) FI Turbo	C	**B113**	**PA2121**	**N/R**	**BF1105**		
	4-1974cc (2.0L) FI	P	**B113**	**PA2121**	**N/R**	**BF1105**	**N/R**	
	300ZX V6-2960cc (3.0L) FI Turbo	C	**B113**	**PA2121**	**N/R**	**BF1104**		
	V6-2960cc (3.0L) FI	H	**B113**	**PA2121**	**N/R**	**BF1104**		
	Maxima 6-2393cc (2.4L) FI	H	**B120**	**PA2135**	**N/R**	**BF1105**		
	Micra 4-1229cc (1.2L) 2 Bbl. Canada	H	**B113**		**N/R**	**BF932**		
	Pickups 4-1974cc (2.0L) 2 Bbl.	F	**B120**	**PA1657**	**N/R**		**N/R**	
	4-2393cc (2.4L) 2 Bbl.	N	**B120**	**PA1657**	**N/R**		**N/R**	
	4-2500cc (2.5L) Diesel	J	**B118**	**PA1657**	**N/R**	**BF7598**		
	4-1597cc (1.6L) 2 Bbl.	M	**B113**	**PA2031**	**N/R**	**BF932**	**N/R**	
	Pulsar 4-1487cc (1.5L) FI Turbo		**B113**	**PA2121**	**N/R**	**BF1104**	**N/R**	
	Sentra 4-1597cc (1.6L)	P	**B113**	**PA2031**	**N/R**	**BF932**	**N/R**	
	4-1681cc (1.7L) Diesel	S	**BD142**	**PA2536**	**N/R**	**BF7535**	**N/R**	
	Stanza 4-1974cc (2.0L) FI	H	**B113**	**PA2121**	**N/R**	**BF933**	**N/R**	
1983	200SX 4-2187cc (2.2L) FI	R	**B120**	**PA2121**	**N/R**	**BF1105**		
	280ZX 6-2750cc (2.8L) FI Turbo	C	**B120**	**PA2122**	**N/R**	**BF1105**		
	6-2750cc (2.8L) FI	H	**B120**	**PA2122**	**N/R**	**BF1105**		
	Maxima 6-2393cc (2.4L) FI	H	**B120**	**PA2135**	**N/R**	**BF1105**		
	6-2793cc (2.8L) Diesel	S	**BD142**	**PA2135**	**N/R**	**BF7598**	**N/R**	
	Pickups 4-1974cc (2.0L) 2 Bbl.	F	**B120**	**PA1657**	**N/R**			
	4-2393cc (2.4L) 2 Bbl.	N	**B120**	**PA1657**	**N/R**			
	4-2500cc (2.5L) Diesel	J	**B118**	**PA1657**	**N/R**	**BF7598**		
	Pulsar 4-1487cc (1.5L) FI Turbo		**B113**	**PA2121**	**N/R**	**BF1104**	**N/R**	
	4-1597cc (1.6L) 2 Bbl.	P	**B113**	**PA2031**	**N/R**	**BF932**	**N/R**	
	Sentra 4-1487cc (1.5L) 2 Bbl.	M	**B113**	**PA2031**	**N/R**	**BF932**	**N/R**	
	4-1597cc (1.6L)	P	**B113**	**PA2031**	**N/R**	**BF932**	**N/R**	
	4-1688cc (1.7L) FI Diesel	S	**BD142**	**PA2536**	**N/R**		**N/R**	
	Stanza 4-1974cc (2.0L) Carb.	H	**B113**		**N/R**	**BF933**		
1982	200SX 4-2187cc (2.2L) FI	R	**B120**	**PA2121**	**N/R**	**BF1105**		
	210 4-1237cc (1.2L) 2 Bbl.	C	**B113**	**PA2031**	**N/R**	**BF932**		
	4-1397cc (1.4L) 2 Bbl.	H	**B113**	**PA2031**	**N/R**	**BF932**		
	4-1488cc (1.5L) 2 Bbl.	P	**B113**	**PA2031**	**N/R**	**BF932**		
	280ZX 6-2750cc (2.8L) FI Turbo	C	**B120**	**PA2122**	**N/R**	**BF1105**		
	6-2750cc (2.8L) FI	H	**B120**	**PA2122**	**N/R**	**BF1105**		
	310 4-1488cc (1.5L) 2 Bbl.	M	**B113**		**N/R**	**BF932**		
	720 Pickup 4-2164cc (2.2L) Diesel	S	**B295**	**PA2536**	**N/R**	**BF954**		

OBS = Obsolete. Availability Limited to Distributor Stock. † Transmission, Not Model, Determines Which Transmission Filter is Used.

Year	Model and Engine	VIN	Lube	Air	Cabin Air	Fuel	Breather	Trans.[t]
NISSAN Cont'd.								
1982	720 Pickup 4-2187cc (2.2L) 2 Bbl.	M	**B120**	**PA1657**	**N/R**			
	Maxima 6-2393cc (2.4L)	H	**B120**	**PA2135**	**N/R**	**BF1105**		
	6-2793cc (2.8L) Diesel	S	**B120**	**PA2135**	**N/R**	**BF7598**	**N/R**	
	Sentra 4-1488cc (1.5L)	H	**B113**	**PA2031**	**N/R**	**BF932**	**N/R**	
	Stanza 4-1974cc (2.0L) Carb.	H	**B113**		**N/R**	**BF933**	**N/R**	
1981	200SX 4-1952cc (2.0L) FI	P	**B120**	**PA2121**	**N/R**	**BF1105**	**N/R**	**18015**
	210 4-1237cc (1.2L) 2 Bbl.	C	**B113**	**PA2031**	**N/R**	**BF932**		
	4-1397cc (1.4L) 2 Bbl.	H	**B113**	**PA2031**	**N/R**	**BF932**		
	4-1488cc (1.5L) 2 Bbl.	P	**B113**	**PA2031**	**N/R**	**BF932**		
	280ZX 6-2750cc (2.8L) FI	H	**B120**	**PA2122**	**N/R**	**BF1105**		
	310 4-1488cc (1.5L) 2 Bbl.	P	**B113**		**N/R**	**BF932**		
	510 4-1952cc (2.0L) 2 Bbl.	H	**B120**	**PA1657**	**N/R**	**BF932**		
	720 Pickup 4-2164cc (2.2L) FI Diesel	M	**B120**	**PA1657**	**N/R**			
	4-2187cc (2.2L) 2 Bbl.	M	**B120**	**PA1657**	**N/R**			
	810 6-2393cc (2.4L) Gas	H	**B120**	**PA2121**	**N/R**	**BF1105**	**SA2046**	
	6-2793cc (2.8L) Diesel	S	**B118**	**PA2135**	**N/R**	**BF7598**		
1980	200SX 4-1952cc (2.0L) FI	P	**B120**	**PA2121**	**N/R**	**BF1105**	**N/R**	**18015**
	210 4-1237cc (1.2L) 2 Bbl.	H	**B113**	**PA2031**	**N/R**	**BF932**		
	4-1397cc (1.4L) 2 Bbl.		**B113**	**PA2031**	**N/R**	**BF932**		
	4-1488cc (1.5L) 2 Bbl.	D	**B113**	**PA2031**	**N/R**	**BF932**		
	280ZX 6-2750cc (2.8L) FI	H	**B120**	7/80-on **PA2122**	**N/R**	**BF1105**	**SA2046**	
	310 4-1397cc (1.4L) 2 Bbl.	H	**B113**		**N/R**	**BF932**		
	510 4-1952cc (2.0L) 2 Bbl.	H	**B120**	**PA1657**	**N/R**	**BF932**		
	720 Pickup 4-1952cc (2.0L) 2 Bbl.	H	**B120**	**PA1657**	**N/R**			
	810 6-2393cc (2.4L) FI	H	**B120**	**PA2121**	**N/R**	**BF1105**		
OLDSMOBILE								
2004	Alero 4-134 (2.2L) SFI	F	**P1445**	**PA4107**	**N/R**	**BF1171**	**N/R**	**18057**
	V6-207 (3.4L) SFI	E	**B43-S**	**PA4107**	**N/R**	**BF1171**	**N/R**	**18057**
	Bravada 6-256 (4.2L) SFI	S	**B7010**	**RS4161**	**N/R**	**BF7762**	**N/R**	4L60E S. Pan **18010** 4L60E D. Pan **18056**
	Silhouette APV V6-207 (3.4L) SFI	E	**B43-S**	**PA2231**	**PA4156 KIT**	**BF7769**	**N/R**	(w/o Gskt.) **18022** (w/Gskt.) **20014**
2003	Alero 4-134 (2.2L) SFI	F	**P1445**	**PA4107**	**N/R**	**BF1171**	**N/R**	**18057**
	V6-207 (3.4L) SFI	E	**B43-S**	**PA4107**	**N/R**	**BF1171**	**N/R**	**18057**
	Aurora V8-244 (4.0L) SFI	C	**B7010**	**PA2231**	(w/o Charcoal) **PA4330** (w/Charcoal) **PA4384**	**BF1171**	**N/R**	4T65-E (w/o Gskt.) **18022** 4T65E (w/Gskt.) **20014** 4T80E **18009**
	Bravada 6-256 (4.2L) SFI	S	**B7010**	**RS4161**	**N/R**	**BF7762**	**N/R**	4L60E S. Pan **18010** 4L60E D. Pan **18056**
	Silhouette APV V6-207 (3.4L) SFI	E	**B43-S**	**PA2231**	**PA4156 KIT**	1 Quick Connect End **BF7719** 2 Male Ends **BF7769**	**N/R**	(w/o Gskt.) **18022** (w/Gskt.) **20014**
2002	Alero 4-134 (2.2L) SFI	F	**P1445**	**PA4107**	**N/R**	**BF1171**	**N/R**	4 Spd. **18057**
	V6-207 (3.4L) SFI	E	**B43-S**	**PA4107**	**N/R**	**BF1171**	**N/R**	**18057**
	Aurora V6-212 (3.5L) SFI	H	**P1433**	**PA2231**	(w/o Charcoal) **PA4330** (w/Charcoal) **PA4384**	**BF1171**	**N/R**	4T65-E (w/o Gskt.) **18022** 4T65E (w/Gskt.) **20014** 4T80E **18009**
	V8-244 (4.0L) SFI	C	**B7010**	**PA2231**	(w/o Charcoal) **PA4330** (w/Charcoal) **PA4384**	**BF1171**	**N/R**	4T65-E (w/o Gskt.) **18022** 4T65E (w/Gskt.) **20014** 4T80E **18009**
	Bravada 6-256 (4.2L) SFI	S	**B7010**	**RS4161**	**N/R**	**BF7762**	**N/R**	4L60E S. Pan **18010** 4L60E D. Pan **18056**
	Intrigue V6-214 (3.5L) SFI	H	**P1433**	**PA4146**	**PA4154**	**BF1171**	**N/R**	(w/o Gskt.) **18022** (w/Gskt.) **20014**
	Silhouette APV V6-207 (3.4L) SFI	E	**B43-S**	**PA2231**	**PA4156 KIT**	**BF7719**	**N/R**	(w/o Gskt.) **18022** (w/Gskt.) **20014**
2001	Alero 4-146 (2.4L) SFI	T	**B31**	**PA4107**	**N/R**	**BF1171**	**N/R**	**18057**
	V6-207 (3.4L) SFI	E	**B43-S**	**PA4107**	**N/R**	**BF1171**	**N/R**	**18057**

[t] Transmission, Not Model, Determines Which Transmission Filter is Used. OBS = Obsolete. Availability Limited to Distributor Stock.

OLDSMOBILE Cont'd.

Year	Model and Engine	VIN	Lube	Air	Cabin Air	Fuel	Breather	Trans.[t]
2001	Aurora V6-212 (3.5L) SFI	H	**P1433**	**PA2231**	(w/o Charcoal) **PA4330** (w/Charcoal) **PA4384**	**BF1171**	**N/R**	4T65-E (w/o Gskt.) **18022** 4T65E (w/Gskt.) **20014** 4T80E **18009**
	V8-244 (4.0L) SFI	C	**B7010**	**PA2231**	(w/o Charcoal) **PA4330** (w/Charcoal) **PA4384**	**BF1171**	**N/R**	4T65-E (w/o Gskt.) **18022** 4T65E (w/Gskt.) **20014** 4T80E **18009**
	Bravada V6-262 (4.3L) SFI	W	**B35-S**	**PA2257**	**N/R**	**BF7658**	**N/R**	**18010**
	Intrigue V6-214 (3.5L) SFI	H	**P1433**	**PA4146**	**PA4154**	**BF1171**	**N/R**	(w/o Gskt.) **18022** (w/Gskt.) **20014**
	Silhouette APV V6-207 (3.4L) SFI	E	**B43-S**	**PA2231**	**PA4156 KIT**	**BF7719**	**N/R**	(w/o Gskt.) **18022** (w/Gskt.) **20014**
2000	Alero 4-146 (2.4L) SFI	T	**B31**	**PA4107**	**N/R**	**BF1171**	**N/R**	4T40E **18057**
	V6-207 (3.4L) SFI	E	**B43-S**	**PA4107**	**N/R**	**BF1171**	**N/R**	4T40E **18057**
	Bravada V6-262 (4.3L) SFI	W	**B35-S**	**PA2257**	**N/R**	**BF7658**	**N/R**	**18010**
	Intrigue V6-214 (3.5L) SFI	H	**P1433**	**PA4146**	**PA4154**	**BF1171**	**N/R**	(w/o Gskt.) **18022** (w/Gskt.) **20014**
	Silhouette V6-207 (3.4L) SFI	E	**B43-S**	**PA2231**	**PA4155 KIT**	**BF7719**	**N/R**	(w/o Gskt.) **18022** (w/Gskt.) **20014**
1999	88 Royale V6-231 (3.8L) SFI	K	**B43-S**	**PA2189**	**N/R**	**BF1171**	**N/R**	(w/o Gskt.) **18022** (w/Gskt.) **20014**
	98 Regency, LSS V6-231 (3.8L) SFI	1,K	**B43-S**	**PA2189**	**N/R**	**BF1171**	**N/R**	(w/o Gskt.) **18022** (w/Gskt.) **20014**
	Alero 4-146 (2.4L) SFI	T	**B31**	**PA4107**	**N/R**	**BF1171**	**N/R**	**18057**
	V6-207 (3.4L) SFI	E	**B43-S**	**PA4107**	**N/R**	**BF1171**	**N/R**	**18057**
	Aurora V8-244 (4.0L) SFI	C	**B7010**	**PA2189**	**N/R**	**BF1171**	**N/R**	**18009**
	Bravada V6-262 (4.3L) SFI	W	**B35-S**	**PA2257**	**N/R**	**BF7658**	**N/R**	**18010**
	Cutlass V6-191 (3.1L) SFI	J,M	**B43-S**	**PA4107**	**N/R**	**BF1171**	**N/R**	(w/o Gskt.) **18022** (w/Gskt.) **20014**
	Delta 88 V6-231 (3.8L) SFI	K	**B43-S**	**PA2189**	**N/R**	**BF1171**	**N/R**	(w/o Gskt.) **18022** (w/Gskt.) **20014**
	Intrigue V6-214 (3.5L) SFI	H	**P1433**	**PA2189**	**PA4154**	**BF1171**	**N/R**	(w/o Gskt.) **18022** (w/Gskt.) **20014**
	V6-231 (3.8L) SFI	K	**B43-S**	**PA2231**	**PA4154**	**BF1171**	**N/R**	(w/o Gskt.) **18022** (w/Gskt.) **20014**
	Silhouette V6-207 (3.4L) SFI	E	**B43-S**	**PA2231**	**PA4155 KIT**		**N/R**	(w/o Gskt.) **18022** (w/Gskt.) **20014**
1998	88 Royale V6-231 (3.8L) SFI	1,K	**B43-S**	**PA2189**	**N/R**	**BF1171**	**N/R**	(w/o Gskt.) **18022** (w/Gskt.) **20014**
	98 Regency, LSS V6-231 (3.8L) SFI	1,K	**B43-S**	**PA2189**	**N/R**	**BF1171**	**N/R**	(w/o Gskt.) **18022** (w/Gskt.) **20014**
	Achieva 4-146 (2.4L) SFI	T	**B31**	**PA4079**	**N/R**	**BF1171**	**N/R**	(w/o Gskt.) **18022** (w/Gskt.) **20014**
	V6-191 (3.1L) SFI	M	**B43-S**	**PA4079**	**N/R**	**BF1171**	**N/R**	(w/o Gskt.) **18022** (w/Gskt.) **20014**
	Aurora V8-244 (4.0L) SFI	C	**B7010**	**PA2189**	**N/R**	**BF1171**	**N/R**	**18009**
	Bravada V6-262 (4.3L) SFI	W,X	**B35-S**	**PA2257**	**N/R**	**BF7658**	**N/R**	4L60E **18010**
	Cutlass V6-191 (3.1L) SFI	M	**B43-S**	**PA4107**	**N/R**	**BF1171**	**N/R**	(w/o Gskt.) **18022** (w/Gskt.) **20014**
	Delta 88 V6-231 (3.8L) FI	K	**B43-S**	**PA2189**	**N/R**	**BF1171**	**N/R**	(w/o Gskt.) **18022** (w/Gskt.) **20014**
	Intrigue V6-231 (3.8L) SFI	K	**B43-S**	**PA2231**	**PA4154**	**BF1171**	**N/R**	(w/o Gskt.) **18022** (w/Gskt.) **20014**
	Silhouette V6-207 (3.4L) SFI	E	**B43-S**	**PA2231**	**PA4155 KIT**		**N/R**	(w/o Gskt.) **18022** (w/Gskt.) **20014**
1997	88 Royale V6-231 (3.8L) SFI	1,K	**B43-S**	**PA2189**	**N/R**	**BF1171**	**N/R**	(w/o Gskt.) **18022** (w/Gskt.) **20014**
	98 Regency, LSS V6-231 (3.8L) SFI	1,K	**B43-S**	**PA2189**	**N/R**	**BF1171**	**N/R**	(w/o Gskt.) **18022** (w/Gskt.) **20014**
	Achieva 4-146 (2.4L) SFI	T	**B31**	**PA4079**	**N/R**	**BF1171**	**N/R**	(w/o Gskt.) **18022** (w/Gskt.) **20014**
	V6-191 (3.1L) SFI	M	**B43-S**	**PA4079**	**N/R**	**BF1171**	**N/R**	(w/o Gskt.) **18022** (w/Gskt.) **20014**
	Aurora V8-244 (4.0L) SFI	C	**B7010**	**PA2189**	**N/R**	**BF1171**	**N/R**	**18009**

OBS = Obsolete. Availability Limited to Distributor Stock. [t] Transmission, Not Model, Determines Which Transmission Filter is Used.

OLDSMOBILE Cont'd.

Year	Model and Engine	VIN	Lube	Air	Cabin Air	Fuel	Breather	Trans.[t]
1997	Bravada V6-262 (4.3L) SFI	W,X	**B35-S**	**PA2257**	**N/R**	**BF7658**	**N/R**	4L60E **18010**
	Cutlass V6-191 (3.1L) SFI	M	**B43-S**	**PA4107**	**N/R**	**BF1171**	**N/R**	(w/o Gskt.) **18022** (w/Gskt.) **20014**
	Cutlass Supreme V6-191 (3.1L) SFI	M	**B43-S**	**PA2231**	**N/R**	**BF1171**	**N/R**	(w/o Gskt.) **18022** (w/Gskt.) **20014**
	LSS V6-231 (3.8L) SFI or Supercharged	1,K	**B43-S**	**PA2189**	**N/R**	**BF1171**	**N/R**	(w/o Gskt.) **18022** (w/Gskt.) **20014**
	Silhouette V6-207 (3.4L) SFI	E	**B43-S**	**PA2231**	**PA4155 KIT**		**N/R**	(w/o Gskt.) **18022** (w/Gskt.) **20014**
1996	88 Royale V6-231 (3.8L) SFI	1,K	**B43-S**	**PA2189**	**N/R**	**BF1171**	**N/R**	(w/o Gskt.) **18022** (w/Gskt.) **20014**
	98 Regency V6-231 (3.8L) SFI	K	**B43-S**	**PA2189**	**N/R**	**BF1171**	**N/R**	(w/o Gskt.) **18022** (w/Gskt.) **20014**
	Achieva 4-146 (2.4L) SFI	T	**B31**	**PA4079**	**N/R**	**BF1171**	**N/R**	(w/o Gskt.) **18022** (w/Gskt.) **20014**
	V6-189 (3.1L) SFI	M	**B43-S**	**PA4079**	**N/R**	**BF1171**	**N/R**	(w/o Gskt.) **18022** (w/Gskt.) **20014**
	Aurora V8-244 (4.0L) SFI	C	**B7010**	**PA2189**	**N/R**	**BF1171**	**N/R**	**18009**
	Bravada V6-262 (4.3L) SFI	W	**B35-S**	**PA2257**	**N/R**	**BF853**	**N/R**	4L60E **18010**
	Cutlass Ciera 4-133 (2.2L) SFI	4	**B43-S**	**PA2134**	**N/R**	**BF1172**	**N/R**	3 Spd. **19593** 4 Spd. (w/o Gskt.) **18022** 4 Spd. (w/Gskt.) **20014**
	V6-191 (3.1L) SFI	M	**B43-S**	**PA2136**	**N/R**	**BF1172**	**N/R**	3 Spd. **19593** 4 Spd. (w/o Gskt.) **18022** 4 Spd. (w/Gskt.) **20014**
	Cutlass Supreme V6-191 (3.1L) SFI	M	**B43-S**	**PA2231**	**N/R**	**BF1171**	**N/R**	(w/o Gskt.) **18022** (w/Gskt.) **20014**
	V6-207 (3.4L) SFI	X	**B35-S**	**PA2231**	**N/R**	**BF1171**	**N/R**	(w/o Gskt.) **18022** (w/Gskt.) **20014**
	LSS V6-231 (3.8L) SFI or Supercharged	1,K	**B43-S**	**PA2189**	**N/R**	**BF1171**	**N/R**	(w/o Gskt.) **18022** (w/Gskt.) **20014**
	Silhouette V6-207 (3.4L) SFI	E	**B43-S**	**PA2160**	**N/R**	**BF1046**	**N/R**	3 Spd. **19593** 4 Spd. (w/o Gskt.) **18022** 4 Spd. (w/Gskt.) **20014**
1995	88 Royale V6-231 (3.8L) SFI	1,K	**B43-S**	**PA2189**	**N/R**	**BF1171**	**N/R**	(w/o Gskt.) **18022** (w/Gskt.) **20014**
	98 Regency V6-231 (3.8L) SFI	1,K	**B43-S**	**PA2189**	**N/R**	**BF1171**	**N/R**	(w/o Gskt.) **18022** (w/Gskt.) **20014**
	Achieva 4-138 (2.3L) MFI	D	**B43-S**	**PA4079**	**N/R**	**BF1171**	**N/R**	3 Spd. **19593** 4 Spd. (w/o Gskt.) **18022** 4 Spd. (w/Gskt.) **20014**
	V6-191 (3.1L) SFI	M	**B43-S**	**PA4079**	**N/R**	**BF1171**	**N/R**	3 Spd. **19593** 4 Spd. (w/o Gskt.) **18022** 4 Spd. (w/Gskt.) **20014**
	Aurora V8-244 (4.0L) SFI	C	**B7010**	**PA2189**	**N/R**	**BF1171**	**N/R**	**18009**
	Cutlass Ciera 4-133 (2.2L) MFI	4	**B43-S**	**PA2134**	**N/R**	**BF1172**	**N/R**	3 Spd. **19593** 4 Spd. (w/o Gskt.) **18022** 4 Spd. (w/Gskt.) **20014**
	V6-191 (3.1L) SFI	M	**B43-S**	**PA2136**	**N/R**	**BF1172**	**N/R**	3 Spd. **19593** 4 Spd. (w/o Gskt.) **18022** 4 Spd. (w/Gskt.) **20014**
	Cutlass Supreme V6-191 (3.1L) SFI	M	**B43-S**	**PA2231**	**N/R**	**BF1171**	**N/R**	(w/o Gskt.) **18022** (w/Gskt.) **20014**

[t] Transmission, Not Model, Determines Which Transmission Filter is Used. OBS = Obsolete. Availability Limited to Distributor Stock.

OLDSMOBILE Cont'd.

Year	Model and Engine	VIN	Lube	Air	Cabin Air	Fuel	Breather	Trans.[t]
1995	Cutlass Supreme V6-204 (3.4L) SFI	X	**B35-S**	**PA2231**	**N/R**	**BF1171**	**N/R**	(w/o Gskt.) **18022** (w/Gskt.) **20014**
	Silhouette APV V6-231 (3.8L) TPI	L	**B43-S**	**PA2160**	**N/R**	**BF1046**	**N/R**	(w/o Gskt.) **18022** (w/Gskt.) **20014**
1994	88 Royale V6-231 (3.8L) TPI	L	**B43-S**	**PA2189**	**N/R**	**BF1171**	**N/R**	4T60 **18139** 4T60E (w/o Gskt.) **18022** 4T60E (w/Gskt.) **20014**
	98 Regency V6-231 (3.8L) TPI	1,L	**B43-S**	**PA2189**	**N/R**	**BF1171**	**N/R**	(w/o Gskt.) **18022** (w/Gskt.) **20014**
	Achieva 4-138 (2.3L) MFI	3,A,D	**B43-S**	**PA4079**	**N/R**	**BF1171**	**N/R**	3 Spd. **19593** 4 Spd. (w/o Gskt.) **18022** 4 Spd. (w/Gskt.) **20014**
	V6-191 (3.1L) SFI	M	**B43-S**	**PA4079**	**N/R**	**BF1171**	**N/R**	(w/o Gskt.) **18022** (w/Gskt.) **20014**
	Bravada V6-262 (4.3L) CPI	W	**B35-S**	**PA2257**	**N/R**	**BF853**	**N/R**	4L60E **18010**
	Cutlass Ciera 4-133 (2.2L) MFI	4	**B43-S**	**PA2134**	**N/R**	**BF1172**	**N/R**	3 Spd. **19593** 4 Spd. (w/o Gskt.) **18022** 4 Spd. (w/Gskt.) **20014**
	V6-191 (3.1L) SFI	M	**B43-S**	**PA2136**	**N/R**	**BF1172**	**N/R**	3 Spd. **19593** 4 Spd. (w/o Gskt.) **18022** 4 Spd. (w/Gskt.) **20014**
	Cutlass Supreme V6-191 (3.1L) SFI	M	**B43-S**	**PA2231**	**N/R**	**BF1171**	**N/R**	(w/o Gskt.) **18022** (w/Gskt.) **20014**
	V6-207 (3.4L) SFI	X	**B35-S**	**PA2231**	**N/R**	**BF1171**	**N/R**	(w/o Gskt.) **18022** (w/Gskt.) **20014**
	Silhouette APV V6-191 (3.1L) TBI	D	**B35-S**	**PA2106**	**N/R**	**BF1046**	**N/R**	**19593**
	V6-231 (3.8L) TPI	L	**B43-S**	**PA2160**	**N/R**	**BF1046**	**N/R**	(w/o Gskt.) **18022** (w/Gskt.) **20014**
1993	88 Royale V6-231 (3.8L) TPI HO	L	**B43-S**	**PA2189**	**N/R**	**BF1046**	**N/R**	(w/o Gskt.) **18022** (w/Gskt.) **20014**
	98 Regency V6-231 (3.8L) TPI	1,L	**B43-S**	**PA2189**	**N/R**	**BF1046**	**N/R**	(w/o Gskt.) **18022** (w/Gskt.) **20014**
	Achieva 4-140 (2.3L) MFI	3,A,D	**B43-S**	**PA2160**	**N/R**	**BF1171**	**N/R**	**19593**
	V6-204 (3.3L) MFI	N	**B43-S**	**PA2160**	**N/R**	**BF1171**	**N/R**	**19593**
	Bravada V6-262 (4.3L) FI	W	**B35-S**	**PA2257**	**N/R**	**BF853**	**N/R**	4L60 **18155** 4L60E **18010**
	Cutlass Ciera, Cutlass Ciera Cruiser 4-133 (2.2L) MFI	4	**B43-S**	**PA2134**	**N/R**	**BF1046**	**N/R**	**19593**
	V6-204 (3.3L) MFI	N	**B43-S**	**PA2160**	**N/R**	w/Bracket **BF1172** w/o Bracket **BF1046**	**N/R**	3 Spd. **19593** 4 Spd. **18139**
	Cutlass Supreme V6-191 (3.1L) MFI	M	**B43-S**	**PA2136**	**N/R**	**BF1171**	**N/R**	(w/o Gskt.) **18022** (w/Gskt.) **20014**
	V6-191 (3.1L) SFI	T	**B35-S**	**PA2196**	**N/R**	**BF1171**	**N/R**	3 Spd. **19593** 4 Spd. **18139**
	V6-207 (3.4L) MFI	X	**B35-S**	**PA2196**	**N/R**	**BF1171**	**N/R**	(w/o Gskt.) **18022** (w/Gskt.) **20014**
	Silhouette APV V6-189 (3.1L) TBI	D	**B35-S**	**PA2106**	**N/R**	**BF1046**	**N/R**	**19593**
	V6-231 (3.8L) TPI	L	**B43-S**	**PA2160**	**N/R**	**BF1046**	**N/R**	(w/o Gskt.) **18022** (w/Gskt.) **20014**
1992	88 Royale V6-231 (3.8L) TPI HO	L	**B43-S**	**PA2189**	**N/R**	**BF1046**	**N/R**	(w/o Gskt.) **18022** (w/Gskt.) **20014**
	98 Regency, Touring Sedan V6-231 (3.8L) FI	1,L	**B43-S**	**PA2189**	**N/R**	**BF1046**	**SA2046**	(w/o Gskt.) **18022** (w/Gskt.) **20014**
	Achieva 4-140 (2.3L) MFI	3,A,D	**B43-S**	**PA2160**	**N/R**	**BF1171**	**N/R**	**19593**
	V6-204 (3.3L) MFI	N	**B43-S**	**PA2160**	**N/R**	**BF1171**	**N/R**	**19593**
	Bravada V6-262 (4.3L) CPI	W	**B35-S**	**PA2257**	**N/R**	**BF853**	**N/R**	**18155**
	V6-262 (4.3L) EFI	Z	**B35-S**	**PA2106**	**N/R**	**BF853**	**N/R**	**18155**

OBS = Obsolete. Availability Limited to Distributor Stock. [t] Transmission, Not Model, Determines Which Transmission Filter is Used.

OLDSMOBILE Cont'd.

Year	Model and Engine	VIN	Lube	Air	Cabin Air	Fuel	Breather	Trans.[t]
1992	Custom Cruiser V8-305 (5.0L) EFI	E	**B27**	**PA2218**	**N/R**	**BF1046**	**N/R**	**18155**
	V8-350 (5.7L) EFI	7	**B27**	**PA2218**	**N/R**	**BF1046**	**N/R**	**18155**
	Cutlass Ciera 4-151 (2.5L) EFI	R	**P140**	**PA2109**	**N/R**	**BF1046**	**SA4315**	**19593**
	V6-204 (3.3L) MFI	N	**B43-S**	**PA2160**	**N/R**	**BF1046**	**N/R**	3 Spd. **19593** 4 Spd. **18139**
	Cutlass Supreme V6-191 (3.1L) MFI	T	**B35-S**	**PA2196**	**N/R**	**BF1171**	**N/R**	**19593**
	V6-207 (3.4L) MFI	X	**B35-S**	**PA2196**	**N/R**	**BF1171**	**N/R**	(w/o Gskt.) **18022** (w/Gskt.) **20014**
	Silhouette V6-191 (3.1L) EFI	D	**B35-S**	**PA2106**	**N/R**	**BF1046**	**N/R**	**19593**
	V6-231 (3.8L) TPI	L	**B43-S**	**PA2160**	**N/R**	**BF1046**	**N/R**	(w/o Gskt.) **18022** (w/Gskt.) **20014**
	Toronado V6-231 (3.8L) TPI	L	**B43-S**	**PA2160**	**N/R**	**BF1185**	**N/R**	(w/o Gskt.) **18022** (w/Gskt.) **20014**
1991	88 Royale V6-231 (3.8L) SFI	C	**B43-S**	**PA2160**	**N/R**	**BF853**	**SA2046**	**18139**
	98 Regency, Touring Sedan V6-231 (3.8L) TPI	L	**B43-S**	**PA2189**	**N/R**	**BF1046**	**SA2046**	(w/o Gskt.) **18022** (w/Gskt.) **20014**
	Bravada V6-262 (4.3L) EFI	Z	**B35-S**	**PA2106**	**N/R**	**BF853**	**N/R**	**18155**
	Custom Cruiser V8-305 (5.0L) TBI	E	**B27**	**PA2218**	**N/R**	**BF1046**	**N/R**	**18155**
	Cutlass Calais 4-2300cc (2.3L) MFI	A,D	**B43-S**	**PA2160**	**N/R**	**BF853**	**N/R**	**19593**
	4-151 (2.5L) EFI	U	**P140**	**PA2109**	**N/R**	**BF853**	**SA4315**	**19593**
	V6-201 (3.3L) MFI	N	**B43-S**	**PA2160**	**N/R**	**BF853**	**N/R**	**19593**
	Cutlass Ciera 4-151 (2.5L) EFI	R	**P140**	**PA2109**	**N/R**	**BF1172**	**SA4315**	**19593**
	V6-204 (3.3L) MFI	N	**B43-S**	**PA2160**	**N/R**	**BF1172**	**N/R**	3 Spd. **19593** 4 Spd. **18139**
	Cutlass Supreme 4-140 (2.3L) MFI QUAD 4	D	**B43-S**	**PA2160**	**N/R**	**BF853**	**N/R**	**18139**
	V6-189 (3.1L) MFI	T	**B35-S**	**PA2196**	**N/R**	**BF853**	**N/R**	**18139**
	V6-207 (3.4L) MFI	X	**B35-S**	**PA2196**	**N/R**	**BF853**	**N/R**	**19593**
	Silhouette APV V6-189 (3.1L) TBI	D	**B35-S**	**PA2106**	**N/R**		**N/R**	**19593**
	Toronado V6-231 (3.8L) TPI	L	**B43-S**	**PA2160**	**N/R**	**BF1185**	**SA2046**	(w/o Gskt.) **18022** (w/Gskt.) **20014**
1990	88 Royale, 98 Touring Sedan V6-231 (3.8L) SFI	C	**B43-S**	**PA2160**	**N/R**	**BF853**	**SA2046**	TH440-T4 **18139**
	Custom Cruiser V8-307 (5.0L) 4 Bbl.	Y	**B30**	**PA2008**	**N/R**	**PF894,-RV**	**N/R**	
	Cutlass Calais 4-2300cc (2.3L) MFI	A,D	**B43-S**	**PA2160**	**N/R**	**BF853**	**N/R**	**19593**
	4-151 (2.5L) EFI	U	**P140**	**PA2109**	**N/R**	**BF853**	**SA4315**	TH125,C **19593**
	V6-204 (3.3L) MFI	N	**B43-S**	**PA2160**	**N/R**	**BF853**	**N/R**	TH125,C **19593**
	Cutlass Ciera 4-151 (2.5L) EFI	R	**P140**	**PA2109**	**N/R**	**BF1172**	**SA4315**	3 Spd. **19593** 4 Spd. **18139**
	V6-201 (3.3L) MFI	N	**B43-S**	**PA2160**	**N/R**	**BF1172**	**N/R**	3 Spd. **19593** 4 Spd. **18139**
	Cutlass Supreme 4-2300cc (2.3L) MFI	A,D	**B43-S**	**PA2160**	**N/R**	**BF853**	**N/R**	**19593**
	V6-191 (3.1L) MFI	T	**B35-S**	**PA2196**	**N/R**	**BF853**	**N/R**	**18139**
	Silhouette APV V6-189 (3.1L) TBI	D	**B35-S**	**PA2106**	**N/R**		**N/R**	**19593**
	Toronado V6-231 (3.8L) SFI	C	**B43-S**	**PA2160**	**N/R**	**BF1185**	**SA2046**	TH440-T4 **18139**
1989	88 Royale, 98 Touring Sedan, Toronado V6-231 (3.8L) SFI	C	**B43-S**	**PA2160**	**N/R**	**BF853**	**SA2046**	TH440-T4 **18139**
	Custom Cruiser V8-307 (5.0L) 4 Bbl.	Y	**B30**	**PA2008**	**N/R**	**PF894,-RV**	**N/R**	**18155**
	Cutlass Calais 4-2300cc (2.3L) FI HO	A	**B43-S**	**PA2160**	**N/R**	**BF853**	**N/R**	TH125,C **19593**
	4-2300cc (2.3L) MFI	D	**B43-S**	**PA2193**	**N/R**	**BF853**	**N/R**	TH125,C **19593**
	4-151 (2.5L) EFI	U	**P140**	**PA2109**	**N/R**	**BF853**	**SA4315**	TH125,C **19593**
	V6-200 (3.3L) MFI	N	**B43-S**	**PA2160**	**N/R**	**BF853**	**N/R**	TH125,C **19593**
	Cutlass Ciera, Cutlass Ciera Cruiser 4-151 (2.5L) EFI	R	**P140**	**PA2109**	**N/R**	**BF1172**	**SA4315**	**19593**
	V6-173 (2.8L) MFI	W	**B35-S**	**PA2162**	**N/R**	**BF1172**	**N/R**	3 Spd. **19593** 4 Spd. **18139**
	V6-200 (3.3L) MFI	N	**B43-S**	**PA2160**	**N/R**	**BF1172**	**N/R**	**19593**
	Cutlass Supreme V6-173 (2.8L) MFI	W	**B35-S**	**PA2196**	**N/R**	**BF853**	**N/R**	**18139**
	V6-189 (3.1L) FI	T	**B35-S**	**PA2196**	**N/R**	**BF853**	**N/R**	**18139**
1988	Ciera 4-151 (2.5L) EFI	R	**P140**	**PA2109**	**N/R**	**BF853**	**SA4315**	TH125,C **19593**
	V6-173 (2.8L) MFI	W	**B43-S**	**PA2162**	**N/R**	**BF853**	**SA2046**	3 Spd. **19593** 4 Spd. **18139**
	V6-231 (3.8L) SFI	3	**B43-S**	**PA2140**	**N/R**	**BF853**	**SA2046**	TH440-T4 **18139**
	Custom Cruiser V8-307 (5.0L) 4 Bbl.	Y	**B30**	**PA2008**	**N/R**	**PF894,-RV**	**SA2046**	TH700-R4 **18155**
	Cutlass Calais 4-2300cc (2.3L) MFI	D	**B43-S**	**PA2193**	**N/R**	**BF853**	**SA4315**	TH125,C **19593**
	4-151 (2.5L) EFI	U	**P140**	**PA2109**	**N/R**	**BF853**	**SA4315**	TH125,C **19593**
	V6-181 (3.0L) MFI	L	**B43-S**	**PA2138**	**N/R**	**BF853**	**N/R**	TH125,C **19593**

[t] Transmission, Not Model, Determines Which Transmission Filter is Used. OBS = Obsolete. Availability Limited to Distributor Stock.

OLDSMOBILE Cont'd.

Year	Model and Engine	VIN	Lube	Air	Cabin Air	Fuel	Breather	Trans.[t]
1988	Cutlass Supreme Classic V8-307 (5.0L) 4 Bbl.	Y	**B30**	**PA2006**	**N/R**	**PF894,-RV**	**N/R**	
	Cutlass Supreme Coupe V6-173 (2.8L) MFI	W	**B43-S**	**PA2162**	**N/R**	**BF853**	**N/R**	**18139**
	Delta 88 V6-231 (3.8L) SFI	3,C	**B43-S**	**PA2160**	**N/R**	**BF853**	**N/R**	TH440-T4 **18139**
	Firenza 4-2000cc (2.0L) EFI	1	**B35-S**	**PA2138**	**N/R**	**BF853**	**N/R**	TH125,C **19593**
	4-2000cc (2.0L) EFI	K	**B43-S**	**PA2109**	**N/R**	**BF853**	**N/R**	TH125,C **19593**
	Regency 98, Toronado V6-231 (3.8L) SFI	C	**B43-S**	**PA2160**	**N/R**	**BF853**	**SA2046**	TH440-T4 **18139**
1987	Calais 4-138 (2.3L) EFI	D	**B43-S**	**PA2193**	**N/R**	**BF853**	**N/R**	TH125,C **19593**
	4-151 (2.5L) FI	U	A.T. **B43-S** M.T. **P140**	**PA2109**	**N/R**	**BF853**	**SA4315**	TH125,C **19593**
	V6-181 (3.0L) MFI	L	**B43-S**	**PA2138**	**N/R**	**BF853**	**N/R**	TH125,C **19593**
	Ciera 4-151 (2.5L) FI	R	**B43-S**	**PA2109**	**N/R**	**BF853**	**SA4315**	TH125,C **19593**
	V6-173 (2.8L) FI	W	**B43-S**	**PA2162**	**N/R**	**BF853**	**SA2046**	TH440-T4 **18139**
	V6-231 (3.8L) FI	3	**B43-S**	**PA2140**	**N/R**	**BF853**	**SA2046**	TH440-T4 **18139**
	Cutlass V8-305 (5.0L) Carb.	H,Y	**B1438**	**PA2008**	**N/R**	**PF894,-RV**	**SA2027**	
	Cutlass Supreme V6-231 (3.8L) 2 Bbl.	A	**B43-S**	**PA1680**	**N/R**	**PF894,-RV**	**SA2046**	
	V8-307 (5.0L) 4 Bbl.	9,Y	**B30**	**PA2008**	**N/R**	**PF894,-RV**	**N/R**	
	Delta 88, Olds 98, Toronado V6-231 (3.8L) FI	3	**B43-S**	**PA2160**	**N/R**	**BF853**	**N/R**	TH440-T4 **18139**
	Firenza 4-2000cc (2.0L) FI HO	1	**B35-S**	**PA2138**	**N/R**	**BF853**	**SA2046**	TH125,C **19593**
	4-2000cc (2.0L) FI	K	**B43-S**	**PA2109**	**N/R**	**BF853**	**N/R**	TH125,C **19593**
	V6-173 (2.8L) FI	W	**B43-S**	**PA2162**	**N/R**	**BF853**	**N/R**	TH125,C **19593**
1986	Calais 4-151 (2.5L) FI	R	**B43-S**	**PA2109**	**N/R**	**BF853**	**N/R**	TH125,C **19593**
	V6-181 (3.0L) FI	L	**B43-S**	**PA2138**	**N/R**	**BF853**	**N/R**	TH125,C **19593**
	Ciera, Cutlass Ciera Cruiser 4-151 (2.5L) FI	R	**B43-S**	**PA2109**	**N/R**	**BF853**	**N/R**	TH125,C **19593**
	V6-173 (2.8L) FI	W	**B43-S**	**PA2134**	**N/R**	**BF853**	**SA2046**	3 Spd. **19593** 4 Spd. **18139**
	V6-173 (2.8L) 2 Bbl.	X	**B43-S**	**PA2076**	**N/R**	**PF894,-RV**	**SA2027**	3 Spd. **19593** 4 Spd. **18139**
	V6-231 (3.8L) FI	3	**B43-S**	**PA2140**	**N/R**	**BF853**	**SA2046**	3 Spd. **19593** 4 Spd. **18139**
	Cutlass V8-305 (5.0L) Carb.	9,H,Y	**B7010**	**PA2008**	**N/R**	**PF894,-RV**	**SA2027**	
	Cutlass Supreme V6-231 (3.8L) 2 Bbl.	A	**B43-S**	**PA1680**	**N/R**	**PF894,-RV**	**SA2046**	
	V8-305 (5.0L) 4 Bbl.	H	**B27**	**PA2008**	**N/R**	**PF894,-RV**	**SA2027**	
	V8-307 (5.0L) 4 Bbl.	Y	**B30**	**PA2008**	**N/R**	**PF894,-RV**	**N/R**	
	Delta 88, Cruiser Wagon V6-181 (3.0L) FI	L	**B43-S**	**PA2138**	**N/R**	**BF853**	**N/R**	TH440-T4 **18139**
	V6-231 (3.8L) FI	3,B	**B43-S**	**PA2160**	**N/R**	**BF853**	**N/R**	TH440-T4 **18139**
	V8-307 (5.0L) 4 Bbl.	Y	**B30**	**PA2008**	**N/R**	**PF894,-RV**	**N/R**	TH440-T4 **18139**
	Firenza 4-112 (1.8L) FI	O	**B43-S**	**PA2109**	**N/R**	**BF853**	**SA4315**	TH125,C **19593**
	4-2000cc (2.0L) FI	P	**B35-S**	**PA2109**	**N/R**	**BF853**	**SA2046**	TH125,C **19593**
	V6-173 (2.8L) FI	W	**B43-S**	**PA2134**	**N/R**	**BF853**	**N/R**	TH125,C **19593**
	Ninety-Eight, Toronado V6-231 (3.8L) FI	B	**B43-S**	**PA2160**	**N/R**	**BF853**	**SA2046**	TH440-T4 **18139**
1985	Calais 4-151 (2.5L) FI	U	**B43-S**	**PA2109**	**N/R**	**BF853**	**N/R**	TH125,C **19593**
	V6-181 (3.0L) FI	L	**B43-S**	**PA2138**	**N/R**	**BF853**	**N/R**	TH125,C **19593**
	Cutlass V6-231 (3.8L) 2 Bbl.	A	**B43-S**	**PA1680**	**N/R**	**PF894,-RV**	**SA2046**	
	V8-307 (5.0L) 4 Bbl.	9,H,Y	**B7010**	**PA2008**	**N/R**	**PF894,-RV**	**SA2046**	
	V8-350 (5.7L) Diesel	N	**B30**	**PA2079**	**N/R**		**N/R**	
	Cutlass Ciera 4-151 (2.5L) FI	R	**B43-S**	**PA2109**	**N/R**	**BF853**	**SA2046**	TH125,C **19593**
	V6-173 (2.8L) 2 Bbl.	X	**B43-S**	**PA2134**	**N/R**	**BF853**		TH125,C **19593**
	V6-181 (3.0L) 2 Bbl.	E	**B43-S**	**PA2006**	**N/R**	**PF894,-RV**	**SA2027** **SA2046**	3 Spd. **19593** 4 Spd. **18139**
	V6-231 (3.8L) FI	3	**B43-S**	**PA2140**	**N/R**	**BF868**	**SA2046**	TH125,C **19593**
	V6-262 (4.3L) Diesel	T	**B35-S**	**PA2110**	**N/R**		**N/R**	TH125,C **19593**
	Cutlass Supreme V8-305 (5.0L) Carb. Canada	H	**B27**	**PA2008**	**N/R**	**PF894,-RV**	**SA2027**	
	Delta 88, Custom Cruiser V6-231 (3.8L) 2 Bbl.	A	**B43-S**	**PA1680**	**N/R**	**PF894,-RV**	**SA2046**	
	V8-307 (5.0L) 4 Bbl.	Y	**B30**	**PA2008**	**N/R**	**PF894,-RV**	**SA2046**	
	V8-350 (5.7L) Diesel	N	**B30**	**PA2079**	**N/R**		**N/R**	
	Firenza 4-112 (1.8L) FI	O	**B43-S**	**PA2109**	**N/R**	**BF853**	**SA4315**	TH125,C **19593**
	4-2000cc (2.0L) FI	P	**B35-S**	**PA2109**	**N/R**	**BF853**	**SA2046**	TH125,C **19593**
	V6-173 (2.8L) FI	W	**B43-S**	**PA2134**	**N/R**	**BF853**	**SA2046**	TH125,C **19593**
	Ninety-Eight V6-181 (3.0L) 2 Bbl.	E	**B43-S**	**PA2073**	**N/R**	**PF894,-RV**	**SA2027** **SA2046**	**18139**
	V6-231 (3.8L) FI	3	**B43-S**	**PA2140**	**N/R**	**BF868**	**SA2046**	**18139**
	V6-262 (4.3L) Diesel	T	**B35-S**	**PA2110**	**N/R**	**BF806**	**SA2046**	**18139**
	Toronado V8-307 (5.0L) 4 Bbl.	Y	**B30**	**PA2006**	**N/R**	**PF894,-RV**	**SA2046**	TH325-4L **18091**

OBS = Obsolete. Availability Limited to Distributor Stock. [t] Transmission, Not Model, Determines Which Transmission Filter is Used.

OLDSMOBILE Cont'd.

Year	Model and Engine	VIN	Lube	Air	Cabin Air	Fuel	Breather	Trans.[t]
1985	Toronado V8-350 (5.7L) Diesel	N	**B30**	**PA2078 OBS**	**N/R**		**N/R**	TH325-4L **18091**
1984	Cutlass V6-231 (3.8L) 2 Bbl.	A	**B43-S**	**PA1680**	**N/R**	**PF894,-RV**	**SA2046**	TH250,C **6021**
	V6-262 (4.3L) Diesel	V	**B35-S**	**PA2079**	**N/R**	**BF806**	**N/R**	
	V8-305 (5.0L) 4 Bbl.	H	**B27**	**PA2008**	**N/R**	**PF894,-RV**	**SA2027** **SA2046**	
	V8-307 (5.0L) 4 Bbl.	9,Y	**B30**	**PA2008**	**N/R**	**PF894,-RV**	**SA2046**	
	V8-350 (5.7L) Diesel	N	**B30**	**PA2079**	**N/R**	**BF806**	**N/R**	
	Cutlass Calais V8-305 (5.0L) Carb Canada	H	**B27**	**PA2008**	**N/R**	**PF894,-RV**	**SA2027**	
	Cutlass Ciera 4-151 (2.5L) FI	R	**B43-S**	**PA2109**	**N/R**	**BF853**	**N/R**	TH125,C **19593**
	V6-173 (2.8L) 2 Bbl.	X	**B43-S**	**PA2076**	**N/R**	**PF894,-RV**	**SA2027**	3 Spd. **19593** 4 Spd. **18139**
	V6-181 (3.0L) 2 Bbl.	E	**B43-S**	**PA2006**	**N/R**	**PF894,-RV**	**SA2027** **SA2046**	3 Spd. **19593** 4 Spd. **18139**
	V6-231 (3.8L) FI	3	**B43-S**	**PA2140**	**N/R**	**BF853**	**SA2046**	TH125,C **19593**
	V6-262 (4.3L) Diesel	T	**B35-S**	**PA2110**	**N/R**	**BF806**	**N/R**	TH125,C **19593**
	Delta 88 V6-231 (3.8L) 2 Bbl.	A	**B43-S**	**PA1680**	**N/R**	**PF894,-RV**	**SA2046**	TH250,C **6021**
	V8-307 (5.0L) 4 Bbl.	Y	**B30**	**PA2008**	**N/R**	**PF894,-RV**	**SA2046**	
	V8-350 (5.7L) Diesel	N	**B30**	**PA2079**	**N/R**	**BF806**	**N/R**	
	Firenza 4-112 (1.8L) FI	O	**B43-S**	**PA2109**	**N/R**	**BF853**	**SA4315**	TH125,C **19593**
	4-2000cc (2.0L) FI	P	**B35-S**	**PA2109**	**N/R**	**BF853**	**SA2046**	TH125,C **19593**
	Ninety-Eight V8-307 (5.0L) 4 Bbl.	Y	**B30**	**PA2008**	**N/R**	**PF894,-RV**	**SA2046**	
	V8-350 (5.7L) Diesel	N	**B30**	**PA2079**	**N/R**	**BF806**	**N/R**	
	Omega 4-151 (2.5L) FI	R	**B43-S**	**PA2109**	**N/R**	**BF853**	**N/R**	TH125,C **19593**
	V6-173 (2.8L) 2 Bbl.	X,Z	**B43-S**	**PA2076**	**N/R**	**PF894,-RV**	**SA2046**	TH125,C **19593**
	Toronado V6-252 (4.1L) 4 Bbl.	4	**B43-S**	**PA2006**	**N/R**	**PF894,-RV**	**SA2027** **SA2046**	TH325-4L **18091**
	V8-307 (5.0L) 4 Bbl.	Y	**B30**	**PA2006**	**N/R**	**PF894,-RV**	**SA2046**	TH325-4L **18091**
	V8-350 (5.7L) Diesel	N	**B30**	**PA2078 OBS**	**N/R**	**BF806**	**N/R**	TH325-4L **18091**
1983	Custom Cruiser V8-307 (5.0L) 4 Bbl.	Y	**B30**	**PA2008**	**N/R**	**PF894,-RV**	**N/R**	
	Cutlass V6-231 (3.8L) 2 Bbl.	A	**B43-S**	**PA1680**	**N/R**	**PF894,-RV**	**SA2046**	TH250,C **6021** TH350,C **18031**
	V6-262 (4.3L) Diesel	V	**B35-S**	**PA2079**	**N/R**	**BF806**	**N/R**	
	V8-307 (5.0L) 4 Bbl.	H,Y	**B30**	**PA2008**	**N/R**	**PF894,-RV**	**SA2027** **SA2046**	TH250,C **6021** TH350,C **18031**
	V8-350 (5.7L) Diesel	N	**B30**	**PA2079**	**N/R**	**BF806**	**N/R**	TH250,C **6021** TH350,C **18031**
	Cutlass Ciera 4-151 (2.5L) FI	R	**B43-S**	**PA2109**	**N/R**	**BF868**	**SA2046**	**19593**
	V6-173 (2.8L) 2 Bbl.	X	**B35-S**	**PA2076**	**N/R**	**PF894,-RV**	**N/R**	TH125,C **19593**
	V6-181 (3.0L) 2 Bbl.	E	**B43-S**	**PA2006**	**N/R**	**PF894,-RV**	**SA2027** **SA2046**	**19593**
	V6-262 (4.3L) Diesel	T	**B35-S**	**PA2110**	**N/R**	**BF806**	**N/R**	**19593**
	Cutlass Supreme V8-231 (3.8L) Carb. Canada	A	**B27**	**PA1680**	**N/R**	**PF894,-RV**	**SA2046**	
	V8-305 (5.0L) Carb. Canada	H	**B27**	**PA2008**	**N/R**	**PF894,-RV**	**SA2027** **SA2046**	**6021**
	Delta 88 V6-231 (3.8L) 2 Bbl.	A	**B43-S**	**PA1680**	**N/R**	**PF894,-RV**	**SA2046**	TH250,C **6021** TH350,C **18031**
	V8-307 (5.0L) 4 Bbl.	Y	**B30**	**PA2008**	**N/R**	**PF894,-RV**	**SA2046**	TH250,C **6021** TH350,C **18031**
	V8-350 (5.7L) Diesel	N	**B30**	**PA2079**	**N/R**	**BF806**	**N/R**	TH250,C **6021** TH350,C **18031**
	Firenza 4-112 (1.8L) FI	O	**B43-S**	**PA2109**	**N/R**	**BF868**	**SA4315** **SA2046**	**19593**
	4-2000cc (2.0L) FI	P	**B35-S**	**PA2109**	**N/R**	**BF853**	**SA2046**	**19593**
	Ninety-Eight V6-252 (4.1L) 4 Bbl.	4	**B43-S**	**PA1680**	**N/R**	**PF894,-RV**	**SA2027** **SA2046**	
	V8-307 (5.0L) 4 Bbl.	Y	**B30**	**PA2008**	**N/R**	**PF894,-RV**	**SA2046**	TH250,C **6021** TH350,C **18031**
	V8-350 (5.7L) Diesel	N	**B30**	**PA2079**	**N/R**	**BF806**	**N/R**	
	Omega 4-151 (2.5L) FI	R	**B43-S**	**PA2109**	**N/R**	**BF868**	**N/R**	TH125,C **19593**
	V6-173 (2.8L) 2 Bbl.	X,Z	**B35-S**	**PA2076**	**N/R**	**PF894,-RV**	**SA2046**	TH125,C **19593**
	Toronado V6-252 (4.1L) 4 Bbl.	4	**B43-S**	**PA2006**	**N/R**	**PF894,-RV**	**SA2027** **SA2046**	TH325-4L **18091**
	V8-307 (5.0L) 4 Bbl.	Y	**B30**	**PA2006**	**N/R**	**PF894,-RV**	**SA2046**	TH325-4L **18091**
	V8-350 (5.7L) Diesel	N	**B30**	**PA1758**	**N/R**	**BF806**	**N/R**	TH325-4L **18091**
1982	Custom Cruiser V8-307 (5.0L) 4 Bbl.	Y	**B30**	**PA2008**	**N/R**	**PF894,-RV**	**N/R**	TH250 **6021** TH350 **18031**

[t] Transmission, Not Model, Determines Which Transmission Filter is Used. OBS = Obsolete. Availability Limited to Distributor Stock.

OLDSMOBILE Cont'd.

Year	Model and Engine	VIN	Lube	Air	Cabin Air	Fuel	Breather	Trans.†
1982	Cutlass, Cruiser Wagon V6-231 (3.8L) 2 Bbl.	A	**B43-S**	**PA1680**	**N/R**	**PF893,-RV**	**SA2046**	TH250,C **6021** TH350,C **18031**
	V8-260 (4.3L) 2 Bbl.	8	**B30**	**PA2008**	**N/R**	**PF894,-RV**	**SA2046**	TH350,C **18031**
	V6-262 (4.3L) Diesel	V	**B35-S**	**PA2079**	**N/R**	**BF806**	**N/R**	TH350,C **18031**
	V8-307 (5.0L) 4 Bbl.	Y	**B30**	**PA2008**	**N/R**	**PF894,-RV**	**SA2046**	TH250,C **6021** TH350,C **18031**
	V8-350 (5.7L) Diesel	N	**B30**	**PA2079**	**N/R**	**BF806**	**N/R**	TH250,C **6021** TH350,C **18031**
	Cutlass Calais V8-267 (4.4L) Carb Canada	J	**B27**	**PA2106**	**N/R**	**PF894,-RV**	**SA2027**	**6021**
	Cutlass Ciera 4-151 (2.5L) FI	R	**B43-S**	**PA2109**	**N/R**		**SA2046**	TH125,C **19593**
	V6-173 (2.8L) 2 Bbl.	X	**B35-S**	**PA2076**	**N/R**	**PF894,-RV**	**SA2046**	TH125,C **19593**
	V6-181 (3.0L) 2 Bbl.	E	**B43-S**	**PA2006**	**N/R**	**PF893,-RV**	**SA2027** **SA2046**	TH125,C **19593**
	V6-262 (4.3L) Diesel	T	**B35-S**	**PA2110**	**N/R**	**BF806**	**N/R**	TH125,C **19593**
	Cutlass Supreme V8-267 (4.4L) Carb. Canada	J	**B27**	**PA2106**	**N/R**	**PF894,-RV**	**SA2027**	**6021**
	Delta 88 V6-231 (3.8L) 2 Bbl.	A	**B43-S**	**PA1680**	**N/R**	**PF893,-RV**	**SA2046**	TH250,C **6021** TH350,C **18031**
	V8-260 (4.3L) 2 Bbl.	8	**B30**	**PA2008**	**N/R**	**PF894,-RV**	**SA2046**	TH350,C **18031**
	V8-267 (4.4L) 2 Bbl. Canada	J	**B27**	**PA2106**	**N/R**	**PF894,-RV**	**SA2027** **SA2046**	TH250,C **6021**
	V8-307 (5.0L) 4 Bbl.	Y	**B30**	**PA2008**	**N/R**	**PF894,-RV**	**SA2046**	TH250,C **6021** TH350,C **18031**
	V8-350 (5.7L) Diesel	N	**B30**	**PA2079**	**N/R**	**BF806**	**N/R**	TH250,C **6021** TH350,C **18031**
	Firenza 4-112 (1.8L) 2 Bbl.	G	**B35-S**	**PA2112 OBS**	**N/R**	**PF894,-RV**	**SA2046**	TH125,C **19593**
	4-112 (1.8L) FI	O	**B43-S**	**PA2109**	**N/R**	**BF853**	**SA4315** **SA2046**	**19593**
	Ninety-Eight V6-252 (4.1L) 4 Bbl.	4	**B43-S**	**PA1680**	**N/R**	**PF894,-RV**	**SA2027** **SA2046**	TH250,C **6021** TH350,C **18031**
	V8-307 (5.0L) 4 Bbl.	Y	**B30**	**PA2008**	**N/R**	**PF894,-RV**	**SA2046**	TH250,C **6021** TH350,C **18031**
	V8-350 (5.7L) Diesel	N	**B30**	**PA2079**	**N/R**	**BF806**	**N/R**	**6021**
	Omega 4-151 (2.5L) FI	R	**B43-S**	**PA2109**	**N/R**		**SA2046**	TH125,C **19593**
	V6-173 (2.8L) 2 Bbl.	X,Z	**B35-S**	**PA2076**	**N/R**	**PF894,-RV**	**SA2046**	TH125,C **19593**
	Toronado V6-252 (4.1L) 4 Bbl.	4	**B43-S**	**PA2006**	**N/R**	**PF894,-RV**	**SA2027** **SA2046**	TH325-4L **18091**
	V8-307 (5.0L) 4 Bbl.	Y	**B30**	**PA2006**	**N/R**	**PF894,-RV**	**SA2046**	TH325-4L **18091**
	V8-350 (5.7L) Diesel	N	**B30**	**PA2078 OBS**	**N/R**	**BF806**	**N/R**	TH325-4L **18091**
1981	Cutlass, Cruiser Wagon V6-231 (3.8L) 2 Bbl.	A	**B43-S**	**PA1680**	**N/R**	**PF894,-RV**	**SA2046**	TH350,C **18031**
	V8-260 (4.3L) 2 Bbl.	F	**B30**	**PA2008**	**N/R**	**PF894,-RV**	**SA2046**	TH350,C **18031**
	V8-307 (5.0L) 4 Bbl.	Y	**B30**	**PA2008**	**N/R**	**PF894,-RV**	**SA2046**	
	V8-350 (5.7L) Diesel	N	**B30**	**PA2079**	**N/R**	**BF806**	**N/R**	
	Delta 88 V6-231 (3.8L) 2 Bbl.	A	**B43-S**	**PA1680**	**N/R**	**PF894,-RV**	**SA2046**	TH350,C **18031**
	V8-260 (4.3L) 2 Bbl.	F	**B30**	**PA2008**	**N/R**	**PF894,-RV**	**SA2046**	
	V8-307 (5.0L) 4 Bbl.	Y	**B30**	**PA2008**	**N/R**	**PF894,-RV**	**SA2046**	TH350,C **6021**
	V8-350 (5.7L) Diesel	N	**B30**	**PA2079**	**N/R**	**BF806**	**N/R**	
	Ninety-Eight V6-252 (4.1L) 4 Bbl.	4	**B43-S**	**PA1680**	**N/R**	**PF894,-RV**	**SA2027** **SA2046**	TH250,C **6021**
	V8-307 (5.0L) 4 Bbl.	Y	**B30**	**PA2008**	**N/R**	**PF894,-RV**	**SA2046**	
	V8-350 (5.7L) Diesel	N	**B30**	**PA2079**	**N/R**	**BF806**	**N/R**	
	Omega 4-151 (2.5L) 2 Bbl.	5	**B43-S**	**PA2082 OBS**	**N/R**	**PF893,-RV**	**SA2027** **SA2046**	TH125,C **19593**
	V6-173 (2.8L) 2 Bbl.	X	**B35-S**	**PA2076**	**N/R**	**PF894,-RV**	**SA2046**	TH125,C **19593**
	Toronado V6-252 (4.1L) 4 Bbl.	4	**B43-S**	**PA1680**	**N/R**	**PF894,-RV**	**SA2027** **SA2046**	
	V8-307 (5.0L) 4 Bbl.	Y	**B30**	**PA2006**	**N/R**	**PF894,-RV**	**SA2046**	
	V8-350 (5.7L) Diesel	N	**B30**	**PA2078 OBS**	**N/R**	**BF806**	**N/R**	
1980	Cutlass, Cruiser Wagon V6-231 (3.8L) 2 Bbl.	A	**B43-S**	**PA1680**	**N/R**	**PF893,-RV**	**SA2046**	TH350,C **18031**
	V8-260 (4.3L) 2 Bbl.	F	**B30**	**PA2008**	**N/R**	**PF894,-RV**	**SA2046**	
	V8-305 (5.0L) 4 Bbl.	H	**B27**	**PA2008**	**N/R**	**PF894,-RV**	**SA2027** **SA2046**	
	V8-307 (5.0L) 4 Bbl.	Y	**B30**	**PA2006**	**N/R**	**PF894,-RV**	**SA2046**	
	V8-350 (5.7L) Diesel	N	**B30**	**PA2079**	**N/R**	**BF806**	**N/R**	

OBS = Obsolete. Availability Limited to Distributor Stock. † Transmission, Not Model, Determines Which Transmission Filter is Used.

Year	Model and Engine	VIN	Lube	Air	Cabin Air	Fuel	Breather	Trans.[t]
OLDSMOBILE Cont'd.								
1980	Cutlass, Cruiser Wagon V8-350 (5.7L) 4 Bbl.	R	**B30**	**PA2008**	**N/R**	**PF894,-RV**	**SA2046**	TH350 **18031** TH375, TH400 **6020**
	Delta 88 V6-231 (3.8L) 2 Bbl.	A	**B43-S**	**PA1680**	**N/R**	**PF893,-RV**	**SA2046**	TH350,C **18031**
	V8-265 (4.3L) 2 Bbl.	F	**B43-S**	**PA2006**	**N/R**	**PF893,-RV**	**SA2027 SA2046**	
	V8-307 (5.0L) 4 Bbl.	Y	**B30**	**PA2008**	**N/R**	**PF894,-RV**	**SA2027 SA2046**	TH350,C **18031**
	V8-350 (5.7L) Diesel	N	**B30**	**PA2079**	**N/R**	**BF806**	**N/R**	TH350,C **18031**
	V8-350 (5.7L) 4 Bbl.	R	**B30**	**PA2008**	**N/R**	**PF894,-RV**	**SA2046**	TH350,C **18031** TH400 **6020**
	Ninety-Eight V8-307 (5.0L) 4 Bbl.	Y	**B30**	**PA2008**	**N/R**	**PF894,-RV**	**SA2046**	TH350,C **18031** TH400 **6020**
	V8-350 (5.7L) Diesel	N	**B30**	**PA2079**	**N/R**	**BF806**	**N/R**	TH350,C **18031** TH400 **6020**
	V8-350 (5.7L) 4 Bbl.	R	**B30**	**PA2008**	**N/R**	**PF894,-RV**	**SA2046**	TH350,C **18031** TH400 **6020**
	Omega 4-151 (2.5L) 2 Bbl.	5,V	**B43-S**	**PA2082 OBS**	**N/R**	**PF893,-RV**	**SA2027 SA2046**	TH125,C **19593**
	V6-173 (2.8L) 2 Bbl.	7	**B35-S**	**PA2076**	**N/R**	**PF894,-RV**	**SA2027 SA2046**	TH125,C **19593**
	Starfire 4-151 (2.5L) 2 Bbl.	5,V	**B43-S**	**PA2082 OBS**	**N/R**	**PF893,-RV**	**SA2027 SA2046**	
	V6-231 (3.8L) 2 Bbl.	A	**B43-S**	**PA2006**	**N/R**	**PF893,-RV**	**SA2027 SA2046**	TH350,C **18031**
	Toronado V8-307 (5.0L) 4 Bbl.	Y	**B30**	**PA2006**	**N/R**	**PF894,-RV**	**SA2046**	
	V8-350 (5.7L) Diesel	N	**B30**	**PA2078 OBS**	**N/R**	**BF806**	**N/R**	
	V8-350 (5.7L) 4 Bbl.	R	**B30**	**PA2006**	**N/R**	**PF894,-RV**	**SA2046**	
PEUGEOT								
2007	607 V6-3000cc (3.0L) FI Mexico			**PA4785**			**N/R**	
2006	607 V6-3000cc (3.0L) FI Mexico			**PA4785**			**N/R**	
2005	607 V6-3000cc (3.0L) FI Mexico		**B7167**	**PA4785**			**N/R**	
2000	406 4-2000cc (2.0L) FI Mexico			**PA4785**			**N/R**	
1992	405 4-1900cc (1.9L) FI Mexico				**N/R**	**BF1195**	**N/R**	
1991	405 4-1905cc (1.9L) EFI	A,B,C,D	**B141**		**N/R**	**BF1195**	**N/R**	
	505 4-2155cc (2.2L) EFI Turbo	E	**B141**		**N/R**	**BF885**	**N/R**	
	4-2165cc (2.2L) EFI	F	**B141**		**N/R**	**BF885**	**N/R**	
1990	405 4-1905cc (1.9L) EFI	A,B,C	**B141**		**N/R**	**BF1195**	**N/R**	
	505 4-2155cc (2.2L) EFI Turbo	F	**B141**		**N/R**	**BF885**	**N/R**	
	4-2165cc (2.2L) EFI	F	**B141**		**N/R**	**BF885**	**N/R**	
1989	405 4-1905cc (1.9L) EFI	1,2	**B141**		**N/R**	**BF1195**	**N/R**	
	505 4-2155cc (2.2L) EFI Turbo	7	**B141**		**N/R**	**BF885**	**N/R**	
	4-2165cc (2.2L) EFI	8	**B141**		**N/R**	**BF885**		
	V6-2849cc (2.8L) EFI	9	**B7042**		**N/R**	**BF885**		
1988	505 4-2155cc (2.2L) EFI Turbo	7	**B141**		**N/R**	**BF885**		
	4-2165cc (2.2L) EFI	8	**B141**		**N/R**	**BF885**		
	V6-2849cc (2.8L) EFI	9	**B7042**		**N/R**	**BF885**		
1987	505 4-1971cc (2.0L) FI	1	**B141**		**N/R**		**N/R**	
	4-2155cc (2.2L) FI Turbo	7	**B141**		**N/R**	**BF885**		
	4-2165cc (2.2L) FI	8	**B141**		**N/R**	**BF885**		
	V6-2849cc (2.8L) FI	9	**B7042**		**N/R**	**BF885**	**N/R**	
1986	505 4-1971cc (2.0L) FI	1	**B141**		**N/R**		**N/R**	
	4-2155cc (2.2L) FI Turbo	7	**B141**		**N/R**	**BF885**		
	4-2500cc (2.5L) Turbo Diesel	6	**B7042**		**N/R**			
1985	505 4-1971cc (2.0L) FI	1	**B141**		**N/R**			
	4-2155cc (2.2L) FI Turbo	5	**B141**		**N/R**	**BF885**		
	4-2500cc (2.5L) Turbo Diesel	6	**B7042**		**N/R**			
1984	505 4-1971cc (2.0L) FI	1	**B141**[22] **B195**[23]		**N/R**		**N/R**	
	4-2300cc (2.3L) Turbo Diesel	4	**B7042**		**N/R**		**N/R**	
	604 4-2300cc (2.3L) Turbo Diesel	4	**B7042**		**N/R**		**N/R**	
1983	504 4-2300cc (2.3L) Diesel	2	**B141**		**N/R**			
	505 4-1971cc (2.0L) FI	1	**B195**		**N/R**		**N/R**	
	4-2300cc (2.3L) Diesel	2	**B141**		**N/R**		**N/R**	
	4-2300cc (2.3L) Turbo Diesel	4			**N/R**		**N/R**	
	604 4-2300cc (2.3L) Turbo Diesel	4			**N/R**		**N/R**	
1982	504 4-2300cc (2.3L) Diesel	2	**B141**		**N/R**			

[t] Transmission, Not Model, Determines Which Transmission Filter is Used. OBS = Obsolete. Availability Limited to Distributor Stock. [22] To Chassis # 35082.

[23] Chassis # 35082-up.

Year	Model and Engine	VIN	Lube	Air	Cabin Air	Fuel	Breather	Trans.[t]
PEUGEOT Cont'd.								
1982	505 4-1971cc (2.0L) FI	1	**B195**		**N/R**		**N/R**	
	4-2300cc (2.3L) Diesel	2	**B141**		**N/R**		**N/R**	
	4-2300cc (2.3L) Turbo Diesel	4			**N/R**		**N/R**	
	604 4-2300cc (2.3L) Turbo Diesel	4			**N/R**		**N/R**	
1981	504 4-2300cc (2.3L) Diesel	2	**B195**		**N/R**			
	505 4-1971cc (2.0L) FI	1	**B195**		**N/R**	**BF885**	**N/R**	
	4-2300cc (2.3L) Diesel	2	**B195**		**N/R**	**PF7596**	**N/R**	
	4-2300cc (2.3L) Turbo Diesel	4			**N/R**		**N/R**	
	604 V6-2849cc (2.8L) Carb. Canada		**B34**		**N/R**		**N/R**	
1980	504 4-2300cc (2.3L) Diesel	2	**B195**		**N/R**	**BF825**		
	505 4-1971cc (2.0L) FI		**B195**		**N/R**	**BF885**	**N/R**	
	4-2300cc (2.3L) Diesel		**B195**		**N/R**	**PF7596**		
PLYMOUTH								
2001	Neon 4-122 (2.0L) SFI	C	**BT223**	**PA4118**	**N/R**	**N/S**	**N/R**	3 Spd. **18104** 4 Spd. **18004**
	Prowler V6-215 (3.5L) SFI	G	**B34**	**PA2103**	**N/R**	**N/S**	**N/R**	**18003**
2000	Breeze 4-122 (2.0L) SFI	C	**BT223**	**PA4085**	**N/R**	**BF7671**	**N/R**	**18004**
	4-148 (2.4L) SFI	X	**BT223**	**PA4085**	**N/R**	**BF7671**	**N/R**	**18004**
	Neon 4-122 (2.0L) SFI	C	**BT223**	**PA4118**	**N/R**	**N/S**	**N/R**	**18104**
	Prowler V6-215 (3.5L) SFI	G	**B34**	**PA2103**	**N/R**	**N/S**	**N/R**	**18003**
	Voyager, Grand Voyager 4-148 (2.4L) SFI	B	**BT223**	**PA2103**	**N/R**	**BF7669**	**N/R**	3 Spd. **18104**
	V6-181 (3.0L) SFI	3	**B34**	**PA2103**	**N/R**	Std. W.B. **BF7669** Ext. W.B. **BF1053**	**N/R**	4 Spd. **18004**
	V6-201 (3.3L) SFI or Flex Fuel	G,R	**B34**	**PA2103**	**N/R**	Std. W.B. **BF7669** Ext. W.B. **BF1053**	**N/R**	4 Spd. **18004**
1999	Breeze 4-122 (2.0L) SFI	C	**BT223**	**PA4085**	**N/R**	**BF7671**	**N/R**	**18004**
	4-148 (2.4L) SFI	X	**BT223**	**PA4085**	**N/R**	**BF7671**	**N/R**	**18004**
	Neon 4-122 (2.0L) SFI	C,Y	**BT223**	**PA2103**	**N/R**	**N/S**	**N/R**	**18104**
	Prowler V6-215 (3.5L) SFI	F	**B34**	**PA2103**	**N/R**	**N/S**	**N/R**	**18003**
	Voyager, Grand Voyager 4-148 (2.4L) SFI	B	**BT223**	**PA2103**	**N/R**	**BF7669**	**N/R**	3 Spd. **18104** 4 Spd. **18004**
	V6-181 (3.0L) SFI	3	**B34**	**PA2103**	**N/R**	Std. W.B. **BF7669** Ext. W.B. **BF1053**	**N/R**	3 Spd. **18104** 4 Spd. **18004**
	V6-201 (3.3L) SFI or Flex Fuel	G,R	**B34**	**PA2103**	**N/R**	Std. W.B. **BF7669** Ext. W.B. **BF1053**	**N/R**	4 Spd. **18004**
	V6-230 (3.8L) FI	L	**B34**	**PA2103**	**N/R**	**BF1053**	**N/R**	3 Spd. **18104** 4 Spd. **18004**
1998	Breeze 4-122 (2.0L) SFI	C	**BT223**	**PA4085**	**N/R**	**BF7671**	**N/R**	**18004**
	4-148 (2.4L) SFI	X	**BT223**	**PA4085**	**N/R**	**BF7671**	**N/R**	**18004**
	Neon 4-122 (2.0L) SFI	C,Y	**BT223**	**PA2103**	**N/R**	**N/S**	**N/R**	**18104**
	Voyager, Grand Voyager 4-148 (2.4L) SFI	B	**BT223**	**PA2103**	**N/R**	**BF7669**	**N/R**	3 Spd. **18104**
	V6-181 (3.0L) SFI	3	**B34**	**PA2103**	**N/R**	Std. W.B. **BF7669** Ext. W.B. **BF1053**	**N/R**	3 Spd. **18104** 4 Spd. **18004**
	V6-201 (3.3L) SFI or Flex Fuel	G,R	**B34**	**PA2103**	**N/R**	Std. W.B. **BF7669** Ext. W.B. **BF1053**	**N/R**	3 Spd. **18104** 4 Spd. **18004**
	V6-231 (3.8L) FI	L	**B34**	**PA2103**	**N/R**	Std. W.B. **BF7669** Ext. W.B. **BF1053**	**N/R**	3 Spd. **18104** 4 Spd. **18004**
1997	Breeze 4-122 (2.0L) SFI	C	**BT223**	**PA4085**	**N/R**	**BF1054**	**N/R**	**18004**
	4-148 (2.4L) SFI	X	**BT223**	**PA4085**	**N/R**	**BF1054**	**N/R**	**18004**
	Neon 4-122 (2.0L) SFI	C,Y	**BT223**	**PA2103**	**N/R**	**N/S**	**N/R**	**18104**
	Prowler V6-215 (3.5L) SFI	F	**B34**	**PA2103**	**N/R**	**N/S**	**N/R**	**18003**

OBS = Obsolete. Availability Limited to Distributor Stock. [t] Transmission, Not Model, Determines Which Transmission Filter is Used.

PLYMOUTH Cont'd.

Year	Model and Engine	VIN	Lube	Air	Cabin Air	Fuel	Breather	Trans.t
1997	Voyager, Grand Voyager 4-148 (2.4L) SFI	B	**BT223**	**PA2103**	**N/R**	**BF7669**	**N/R**	3 Spd. **18104** 4 Spd. **18004**
	V6-181 (3.0L) SFI	3	**B34**	**PA2103**	**N/R**	Std. W.B. **BF7669** Ext. W.B. **BF1053**	**N/R**	3 Spd. **18104** 4 Spd. **18004**
	V6-201 (3.3L) SFI	R	**B34**	**PA2103**	**N/R**	Std. W.B. **BF7669** Ext. W.B. **BF1053**	**N/R**	3 Spd. **18104** 4 Spd. **18004**
	V6-231 (3.8L) FI	L	**B34**	**PA2103**	**N/R**	Std. W.B. **BF7669** Ext. W.B. **BF1053**	**N/R**	3 Spd. **18104** 4 Spd. **18004**
1996	Breeze 4-122 (2.0L) SFI	C	**BT223**	**PA4085**	**N/R**	**BF1054**	**N/R**	**18004**
	4-146 (2.4L) SFI	X	**BT223**	**PA4085**	**N/R**	**BF1054**	**N/R**	**18004**
	Neon 4-122 (2.0L) SFI	C,Y	**BT223**	**PA2103**	**N/R**	**BF1058**	**N/R**	**18104**
	Voyager, Grand Voyager 4-148 (2.4L) SFI	B	**BT223**	**PA2103**	**N/R**	**BF7669**	**N/R**	3 Spd. **18104** 4 Spd. **18004**
	V6-181 (3.0L) SFI	3	**B34**	**PA2103**	**N/R**	Std. W.B. **BF7669** Ext. W.B. **BF1053**	**N/R**	3 Spd. **18104** 4 Spd. **18004**
	V6-201 (3.3L) Natural Gas	J	**B34**	**PA2103**	**N/R**		**N/R**	3 Spd. **18104** 4 Spd. **18004**
	V6-201 (3.3L) SFI	R	**B34**	**PA2103**	**N/R**	Std. W.B. **BF7669** Ext. W.B. **BF1053**	**N/R**	3 Spd. **18104** 4 Spd. **18004**
1995	Acclaim 4-153 (2.5L) EFI	K	**B34**	**PA2158**	**N/R**	**BF1057**	**SA4139**	**18104**
	V6-181 (3.0L) MFI	3	**B34**	**PA2103**	**N/R**	**BF1057**	**SA4143** **SA4142**	3 Spd. **18104** 4 Spd. **18004**
	Colt, Colt Vista 4-1468cc (1.5L) FI Canada		**B1402**		**N/R**	**BF1179**	**N/R**	
	Neon 4-122 (2.0L) SFI	C,Y	**BT223**	**PA2103**	**N/R**	**BF1058**	**N/R**	**18104**
	Voyager, Grand Voyager 4-153 (2.5L) EFI	K	**B34**	**PA2104**	**N/R**	**BF795**	**SA4139**	3 Spd. **18104** 4 Spd. **18004**
	V6-181 (3.0L) MFI	3	**B34**	**PA2103**	**N/R**	**BF795**	**SA4143** **SA4142**	3 Spd. **18104** 4 Spd. **18004**
	V6-201 (3.3L) MFI	J,R	**B34**	**PA2104**	**N/R**	**BF795**	**[2] SA2048**	3 Spd. **18104** 4 Spd. **18004**
	V6-232 (3.8L) MFI	L	**B34**	**PA2104**	**N/R**	**BF795**	**[2] SA2048**	**18004**
1994	Acclaim 4-153 (2.5L) EFI	K	**B34**	**PA2158**	**N/R**	**BF1057**	**SA4139**	3 Spd. **18104** 4 Spd. **18004**
	4-153 (2.5L) EFI Flex Fuel	V	**B34**	**PA2103**	**N/R**	**BF1057**	**SA2048**	3 Spd. **18104** 4 Spd. **18004**
	V6-181 (3.0L) MFI	3	**B34**	**PA2103**	**N/R**	**BF1057**	**SA4143** **SA4142**	3 Spd. **18104** 4 Spd. **18004**
	Colt, Colt Vista 4-90 (1.5L) MFI	A,Q	**B1402**		**N/R**	**BF1179**	**N/R**	
	4-112 (1.8L) MFI	C	**B1402**	Wagon **PA4015** Exc. ES Sedan **PA2194**	**N/R**	**BF1179**	**N/R**	
	4-144 (2.4L) MFI	G	**B1402**	**PA4015**	**N/R**	**BF1179**	**N/R**	
	Laser 4-107 (1.8L) MFI	B	**B1402**	**PA2194**	**N/R**	**BF1179**	**N/R**	
	4-122 (2.0L) MFI	E	**B1402**	**PA2194**	**N/R**	**BF1179**	**N/R**	
	4-122 (2.0L) MFI Turbo	F	**B1402**	**PA2194**	**N/R**	**BF1179**	**N/R**	
	Sundance 4-135 (2.2L) EFI	D	**B34**	**PA2158**	**N/R**	**BF1057**	**SA4139**	**18104**
	4-153 (2.5L) EFI	K	**B34**	**PA2158**	**N/R**	**BF1057**	**SA4139**	**18104**
	V6-181 (3.0L) MFI	3	**B34**	**PA2103**	**N/R**	**BF1057**	**SA4143** **SA4142**	3 Spd. **18104** 4 Spd. **18004**
	Voyager, Grand Voyager 4-153 (2.5L) EFI SOHC	K	**B34**	**PA2104**	**N/R**	**BF795**	**SA4139**	3 Spd. **18104** 4 Spd. **18004**
	V6-181 (3.0L) MFI	3	**B34**	**PA2103**	**N/R**	**BF795**	**SA4143** **SA4142**	3 Spd. **18104** 4 Spd. **18004**
	V6-201 (3.3L) MFI	J,R	**B34**	**PA2104**	**N/R**	**BF795**	**[2] SA2048**	**18004**
	V6-232 (3.8L) MFI OHV	L	**B34**	**PA2104**	**N/R**	**BF795**	**[2] SA2048**	3 Spd. **18104** 4 Spd. **18004**
1993	Acclaim 4-153 (2.5L) EFI	K	**B34**	**PA2158**	**N/R**	**BF1057**	**SA4139**	**18104**

[t] Transmission, Not Model, Determines Which Transmission Filter is Used. OBS = Obsolete. Availability Limited to Distributor Stock.

PLYMOUTH Cont'd.

Year	Model and Engine	VIN	Lube	Air	Cabin Air	Fuel	Breather	Trans.[t]
1993	Acclaim 4-153 (2.5L) EFI Flex Fuel	V	**B34**	**PA2103**	**N/R**	**BF1057**	**SA2048**	3 Spd. **18104** 4 Spd. **18004**
	V6-181 (3.0L) MFI	3	**B34**	**PA2103**	**N/R**	**BF1057**	**SA4143** **SA4142**	3 Spd. **18104** 4 Spd. **18004**
	Colt, Colt Vista 4-90 (1.5L) MFI	A	**B1402**		**N/R**	**BF1179**	**N/R**	
	4-112 (1.8L) MFI	C	**B1402**	**PA2194**	**N/R**	**BF1179**	**N/R**	
	4-144 (2.4L) MFI	G	**B173-S**	**PA4015**	**N/R**	**BF1179**	**N/R**	
	Laser 4-107 (1.8L) MFI	B	**B245**	**PA2194**	**N/R**	**BF1179**	**N/R**	
	4-122 (2.0L) MFI	E	**B245**	**PA2194**	**N/R**	**BF1179**	**N/R**	
	4-122 (2.0L) MFI Turbo	F	**B245**	**PA2194**	**N/R**	**BF1179**	**N/R**	
	Sundance 4-135 (2.2L) EFI	D	**B34**	**PA2158**	**N/R**	**BF1057**	**SA4139**	**18104**
	4-153 (2.5L) EFI	K	**B34**	**PA2158**	**N/R**	**BF1057**	**SA4139**	A404 **18104**
	V6-181 (3.0L) MFI	3	**B34**	**PA2103**	**N/R**	**BF1057**	**SA4143** **SA4142**	3 Spd. **18104** 4 Spd. **18004**
	Voyager, Grand Voyager 4-153 (2.5L) EFI	K	**B34**	**PA2104**	**N/R**	**BF795**	**SA4139**	A404 **18104**
	V6-181 (3.0L) MFI	3	**B34**	**PA2103**	**N/R**	**BF795**	**SA4143** **SA4142**	3 Spd. **18104** 4 Spd. **18004**
	V6-201 (3.3L) SFI	R	**B34**	**PA2104**	**N/R**	**BF795**	**[2] SA2048**	3 Spd. **18104** 4 Spd. **18004**
1992	Acclaim 4-153 (2.5L) EFI	K	**B34**	**PA2158**	**N/R**	**BF1057**	**SA4139**	**18104**
	V6-181 (3.0L) MFI	3	**B34**	**PA2103**	**N/R**	**BF1057**	**SA4143** **SA4142**	3 Spd. **18104** 4 Spd. **18004**
	Colt, Colt Vista 4-1500cc (1.5L) MFI	A	**B1402**	**PA2194**	**N/R**	**BF1179**	**N/R**	
	4-1800cc (1.8L) MFI	D	**B1402**	**PA4015**	**N/R**	**BF1179**	**N/R**	**18021**
	4-2400cc (2.4L) MFI	W	**B173-S**	**PA4015**	**N/R**	**BF1179**	**N/R**	**18021**
	Laser 4-107 (1.8L) MFI	T	**B245**	**PA2194**	**N/R**	**BF1179**	**N/R**	
	4-122 (2.0L) MFI or Turbo	R,U	**B245**	**PA2194**	**N/R**	**BF1179**	**N/R**	
	Sundance 4-135 (2.2L) EFI	D	**B34**	**PA2158**	**N/R**	**BF1057**	**SA4139**	**18104**
	4-153 (2.5L) EFI Turbo	B	**B34**	**PA2217**	**N/R**	**BF1057**	**N/R**	**18104**
	4-153 (2.5L) EFI	K	**B34**	**PA2158**	**N/R**	**BF1057**	**SA4139**	**18104**
	V6-181 (3.0L) MFI	3	**B34**	**PA2103**	**N/R**	**BF1057**	**SA4143** **SA4142**	3 Spd. **18104** 4 Spd. **18004**
	Voyager, Grand Voyager 4-2500cc (2.5L) EFI	K	**B34**	**PA2104**	**N/R**	**BF795**	**SA4139**	**18104**
	V6-3000cc (3.0L) MFI	3	**B34**	**PA2103**	**N/R**	**BF795**	**SA4143** **SA4142**	3 Spd. **18104** 4 Spd. **18004**
	V6-3300cc (3.3L) MFI	R	**B34**	**PA2104**	**N/R**	**BF795**	**[2] SA2048**	3 Spd. **18104** 4 Spd. **18004**
1991	Acclaim 4-2500cc (2.5L) FI Turbo	J	**B34**	**PA2217**	**N/R**	**BF1057**	**SA4139**	**18104**
	4-2500cc (2.5L) EFI	K	**B34**	**PA2158**	**N/R**	**BF1057**	**SA4139**	**18104**
	V6-3000cc (3.0L) MFI	3	**B34**	**PA2103**	**N/R**	**BF1057**	**SA4143** **SA4142**	3 Spd. **18104** 4 Spd. **18004**
	Colt, Colt Vista 4-1500cc (1.5L) MFI	A,K	**B173-S**	**PA2194**	**N/R**	**BF1178**	**N/R**	**18021**
	4-2000cc (2.0L) MFI	V	**B173-S**	**PA2194**	**N/R**	FWD **BF1179** 4WD **BF1100**	**N/R**	**18021**
	Laser 4-1800cc (1.8L) MFI	T	**B173-S**	**PA2194**	**N/R**	**BF1179**	**N/R**	
	4-2000cc (2.0L) MFI or Turbo	R,U	**B173-S**	**PA2194**	**N/R**	**BF1179**	**N/R**	
	Sundance 4-2200cc (2.2L) EFI	D	**B34**	**PA2158**	**N/R**	**BF1057**	**SA4139**	**18104**
	4-2500cc (2.5L) MFI Turbo	J	**B34**	**PA2217**	**N/R**	**BF1057**	**N/R**	**18104**
	4-2500cc (2.5L) EFI	K	**B34**	**PA2158**	**N/R**	**BF1057**	**SA4139**	**18104**
	Voyager 4-2500cc (2.5L) EFI	K	**B34**	**PA2104**	**N/R**	**BF795**	**SA4139**	**18104**
	V6-3000cc (3.0L) MFI	3	**B34**	**PA2103**	**N/R**	**BF795**	**SA4143** **SA4142**	3 Spd. **18104** 4 Spd. **18004**
	V6-3300cc (3.3L) MFI	R	**B34**	**PA2104**	**N/R**	**BF795**	**[2] SA2048**	3 Spd. **18104** 4 Spd. **18004**
1990	Acclaim 4-2500cc (2.5L) EFI	H,K	**BT223**	**PA2104**	**N/R**	**BF794**	**SA4139**	3 Spd. **18104**
	4-2500cc (2.5L) MFI Turbo	J	**BT223**	**PA2104**	**N/R**	**BF794**	**SA4143** **SA4142**	4 Spd. **18004**
	V6-3000cc (3.0L) MFI	3	**BT223**	**PA2103**	**N/R**	**BF794**	**SA4143** **SA4142**	3 Spd. **18104** 4 Spd. **18004**
	Colt, Colt Vista 4-1468cc (1.5L) Carb. Canada	K	**B173-S**	**PA1735**	**N/R**	**BF1178**	**N/R**	**18021**
	4-1500cc (1.5L) MFI	X	**B173-S**	**PA2194**	**N/R**	**BF1100**	**N/R**	**18021**
	4-1600cc (1.6L) FI or Turbo	F,Y	**B173-S**	**PA2194**	**N/R**	**BF1100**	**N/R**	**18021**
	4-1800cc (1.8L) MFI	T	**B173-S**	**PA2194**	**N/R**	**BF1100**	**N/R**	**18021**
	4-2000cc (2.0L) MFI	V	**B173-S**	**PA2194**	**N/R**	FWD **BF1179** 4WD **BF1100**	**N/R**	**18021**

OBS = Obsolete. Availability Limited to Distributor Stock. [t] Transmission, Not Model, Determines Which Transmission Filter is Used.

PLYMOUTH Cont'd.

Year	Model and Engine	VIN	Lube	Air	Cabin Air	Fuel	Breather	Trans.t
1990	Horizon 4-2200cc (2.2L) FI	D	**BT223**	**PA2103**	**N/R**	**BF794**	**SA4139**	**18104**
	Laser 4-1800cc (1.8L) MFI	T	**B173-S**	**PA2194**	**N/R**	**BF1179**	**N/R**	
	4-2000cc (2.0L) MFI or Turbo	R,U	**B173-S**	**PA2194**	**N/R**	**BF1179**	**N/R**	
	Sundance 4-2200cc (2.2L) EFI	D	**BT223**	**PA2158**	**N/R**	**BF794**	**SA4139**	**18104**
	4-2500cc (2.5L) EFI	H,K	**BT223**	**PA2158**	**N/R**	**BF794**	**SA4139**	**18104**
	4-2500cc (2.5L) EFI Turbo	J	**BT223**	**PA2217**	**N/R**	**BF794**	**N/R**	3 Spd. **18104** 4 Spd. **18004**
	Voyager 4-2500cc (2.5L) EFI	H,K	**BT223**	**PA2104**	**N/R**	**BF795**	**SA4139**	3 Spd. **18104** 4 Spd. **18004**
	4-2500cc (2.5L) EFI Turbo	J	**BT223**	**PA2217**	**N/R**	**BF795**	**N/R**	3 Spd. **18104** 4 Spd. **18004**
	V6-3000cc (3.0L) MFI	3	**BT223**	**PA2103**	**N/R**	**BF795**	**SA4143** **SA4142**	3 Spd. **18104** 4 Spd. **18004**
	V6-3300cc (3.3L) MFI	R	**BT223**	**PA2104**	**N/R**	**BF795**	**[2] SA2048**	3 Spd. **18104** 4 Spd. **18004**
1989	Acclaim 4-2200cc (2.2L) FI	D	**BT223**	**PA2158**	**N/R**	**BF794**	**SA4139**	3 Spd. **18104** 4 Spd. **18004**
	4-2500cc (2.5L) EFI Turbo	J	**BT223**	**PA2104**	**N/R**	**BF794**	**SA4143**	3 Spd. **18104** 4 Spd. **18004**
	4-2500cc (2.5L) EFI	K	**BT223**	**PA2158**	**N/R**	**BF794**	**SA4139**	3 Spd. **18104** 4 Spd. **18004**
	V6-3000cc (3.0L) MFI	3	**BT223**	**PA2103**	**N/R**	**BF794**	**SA4143** **SA4142**	3 Spd. **18104** 4 Spd. **18004**
	Caravelle V8-318 (5.2L) Carb. Canada	P	**B233**		**N/R**		**SA4141**	
	Colt, Colt Vista 4-1500cc (1.5L) MPI	X	**B173-S**	**PA2194**	**N/R**	**BF1100**	**N/R**	**18021**
	4-1600cc (1.6L) Turbo	F,Z	**B173-S**	**PA2194**	**N/R**	**BF1100**	**N/R**	**18021**
	4-1800cc (1.8L) MPI	T	**B173-S**	**PA2194**	**N/R**	**BF1100**	**N/R**	**18021**
	4-2000cc (2.0L) MPI	V	**B173-S**	**PA2194**	**N/R**	FWD **BF1179** 4WD **BF1100**	**N/R**	**18021**
	Expo 4-135 (2.2L) FI Canada	D	**BT223**		**N/R**		**SA4139**	
	Gran Fury V8-318 (5.2L) 2 Bbl.	4,P	**B233**	**PA615**	**N/R**	w/VapDiv. **BF865,-K** w/o VapDiv. **BF840,-K1**	**SA4141**	**18032**
	V8-318 (5.2L) 4 Bbl.	S	**B233**	**PA2010**	**N/R**	w/VapDiv. **BF865,-K** w/o VapDiv. **BF840,-K1**	**SA4141**	**18032**
	Horizon 4-2200cc (2.2L) EFI	D	**BT223**	**PA2103**	**N/R**		**SA4139**	**18104**
	Reliant 4-2200cc (2.2L) EFI	D	**BT223**	**PA2158**	**N/R**	**BF794**	**SA4139**	**18104**
	4-2500cc (2.5L) EFI	K	**BT223**	**PA2158**	**N/R**	**BF794**	**SA4139**	**18104**
	Sundance 4-2200cc (2.2L) EFI	D	**BT223**	**PA2158**	**N/R**	**BF794**	**SA4139**	**18104**
	4-2500cc (2.5L) EFI Turbo	J	**BT223**	**PA2217**	**N/R**	**BF794**	**SA2048**[21] **SA4143**[20]	**18104**
	4-2500cc (2.5L) EFI	K	**BT223**	**PA2158**	**N/R**	**BF794**	**SA4139**	**18104**
	Voyager 4-2500cc (2.5L) EFI Turbo	J	**BT223**	**PA2104**	**N/R**	**BF795**	**SA4143** **SA4142**	3 Spd. **18104** 4 Spd. **18004**
	4-2500cc (2.5L) EFI	K	**BT223**	**PA2104**	**N/R**	**BF795**	**SA4139**	3 Spd. **18104** 4 Spd. **18004**
	V6-3000cc (3.0L) MPI	3	**BT223**	**PA2103**	**N/R**	**BF795**	**SA4143** **SA4142**	3 Spd. **18104** 4 Spd. **18004**
1988	Caravelle 4-2200cc (2.2L) EFI	D	**BT223**	**PA2158**	**N/R**	**BF794**	**SA4139**	**18104**
	4-2200cc (2.2L) EFI Turbo	E	**BT223**	**PA2104**	**N/R**	**BF794**	**SA4143**	**18104**
	4-2500cc (2.5L) EFI	K	**BT223**	**PA2158**	**N/R**	**BF794**	**SA4139**	**18104**
	Colt, Colt Vista 4-1500cc (1.5L) 2 Bbl.	K	**B173-S**		**N/R**	**BF1178**	**N/R**	**18021**
	4-1500cc (1.5L) FI	K	**B173-S**	**PA2194**	**N/R**	**BF1100**	**N/R**	**18021**
	4-1600cc (1.6L) FI Turbo	F	**B173-S**	**PA2194**	**N/R**	**BF1179**	**N/R**	**18021**
	4-2000cc (2.0L) FI	D	**B173-S**	**PA2194**	**N/R**	FWD **BF1179** 4WD **BF1100**	**N/R**	**18021**
	Expo 4-135 (2.2L) FI Canada	D	**BT223**		**N/R**		**SA4139**	
	Gran Fury V8-318 (5.2L) 2 Bbl.	4,P	**B233**	**PA615**	**N/R**	w/VapDiv. **BF865,-K** w/o VapDiv. **BF840,-K1**	**SA4141**	**18032**

[t] Transmission, Not Model, Determines Which Transmission Filter is Used. OBS = Obsolete. Availability Limited to Distributor Stock. [20] w/Oil Cooler.

[21] w/o Oil Cooler.

PLYMOUTH Cont'd.

Year	Model and Engine	VIN	Lube	Air	Cabin Air	Fuel	Breather	Trans.†
1988	Gran Fury V8-318 (5.2L) 4 Bbl.	S	**B233**	**PA2010**	**N/R**	w/VapDiv. **BF865,-K** w/o VapDiv. **BF840,-K1**	**SA4141**	**18032**
	Horizon 4-2200cc (2.2L) EFI	D	**BT223**	**PA2103**	**N/R**		**SA4139**	**18104**
	Reliant 4-2200cc (2.2L) EFI	D	**BT223**	**PA2158**	**N/R**	**BF1194**	**SA4139**	**18104**
	4-2500cc (2.5L) EFI	K	**BT223**	**PA2158**	**N/R**	**BF794**	**SA4139**	**18104**
	Sundance 4-2200cc (2.2L) EFI	D	**BT223**	**PA2158**	**N/R**	**BF794**	**SA4139**	**18104**
	4-2200cc (2.2L) EFI Turbo	E	**BT223**	**PA2104**	**N/R**	**BF794**	**SA4143**	**18104**
	4-2500cc (2.5L) EFI	K	**BT223**	**PA2158**	**N/R**	**BF794**	**SA4139**	**18104**
	Voyager 4-2500cc (2.5L) TBI	K	**BT223**	**PA2104**	**N/R**	**BF795**	**SA4139**	**18104**
	V6-3000cc (3.0L) EFI	3	**B132**	**PA2103**	**N/R**	**BF795**	**SA2048**	**18104**
1987	Caravelle 4-2200cc (2.2L) FI	D	**BT223**	**PA2158**	**N/R**		**SA4139**	**18104**
	4-2200cc (2.2L) FI Turbo	E	**BT223**	**PA2104**	**N/R**		**N/R**	**18104**
	4-2500cc (2.5L) FI	K	**BT223**	**PA2158**	**N/R**		**SA4139**	**18104**
	Colt, Colt Vista 4-1500cc (1.5L) 2 Bbl.	K	**B173-S**		**N/R**	**BF1178**	**N/R**	**18021**
	4-1600cc (1.6L) FI Turbo	F	**B173-S**	**PA2194**	**N/R**	**BF1179**	**N/R**	**18021**
	4-2000cc (2.0L) 2 Bbl.	D	**B173-S**	**PA2176**	**N/R**	**BF928**	**N/R**	**18021**
	Expo 4-135 (2.2L) Carb. Canada	C	**BT223**		**N/R**		**N/R**	
	Gran Fury V8-318 (5.2L) 2 Bbl.	4,P	**B233**	**PA615**	**N/R**	w/VapDiv. **BF865,-K** w/o VapDiv. **BF840,-K1**	**SA4141**	**18032**
	V8-318 (5.2L) 4 Bbl.	R,S	**B233**	**PA2010**	**N/R**	w/VapDiv. **BF865,-K** w/o VapDiv. **BF840,-K1**	**SA4141**	**18032**
	Horizon, Turismo 4-2200cc (2.2L) 2 Bbl.	C	**BT223**	**PA2104**	**N/R**	w/VapDiv. **BF930** w/o VapDiv. **BF840**	**N/R**	**18104**
	Reliant 4-2200cc (2.2L) FI	D	**BT223**	**PA2158**	**N/R**		**SA4139**	**18104**
	4-2500cc (2.5L) FI	K	**BT223**	**PA2158**	**N/R**		**SA4139**	**18104**
	Sundance 4-2200cc (2.2L) FI	D	**BT223**	**PA2158**	**N/R**		**SA4139**	**18104**
	4-2200cc (2.2L) FI Turbo	E	**BT223**	**PA2104**	**N/R**		**SA4143**	**18104**
	Voyager 4-2200cc (2.2L) 2 Bbl.	C	**BT223**	**PA2104**	**N/R**	w/VapDiv. **BF930** w/o VapDiv. **BF840,-K1**	**N/R**	**18104**
	4-153 (2.5L) EFI	K	**BT223**	**PA2104**	**N/R**		**SA4139**	**18104**
	4-2600cc (2.6L) 2 Bbl.	G	**B173-S**	**PA2157**	**N/R**	**BF964**	**N/R**	**18104**
	V6-3000cc (3.0L) FI	3	**B132**	**PA2103**	**N/R**	**BF795**	**SA2048**	**18104**
1986	Caravelle 4-2200cc (2.2L) FI	D	**BT223**	**PA2158**	**N/R**		**SA4139**	**18104**
	4-2200cc (2.2L) FI Turbo	E	**BT223**	**PA2104**	**N/R**		**N/R**	**18104**
	4-2500cc (2.5L) FI	K	**BT223**	**PA2158**	**N/R**		**SA4139**	**18104**
	Colt 4-1500cc (1.5L) 2 Bbl.	Q	**B173-S**		**N/R**	**BF928**	**N/R**	**18021**
	4-1600cc (1.6L) FI Turbo	F	**B173-S**		**N/R**	**BF1100**	**N/R**	**18021**
	4-2000cc (2.0L) 2 Bbl.	D	**B173-S**	**PA2176**	**N/R**	**BF928**	**N/R**	**18021**
	Conquest 4-2555cc (2.6L) FI Turbo	H,N	**B173-S**		**N/R**	**BF1100**	**N/R**	
	Gran Fury V8-318 (5.2L) 2 Bbl.	4,P	**B233**	**PA615**	**N/R**	w/VapDiv. **BF865,-K** w/o VapDiv. **BF840,-K1**	**SA4141**	**18032**
	V8-318 (5.2L) 4 Bbl.	R,S	**B233**	**PA2010**	**N/R**	w/VapDiv. **BF865,-K** w/o VapDiv. **BF840,-K1**	**SA4141**	**18032**
	Horizon, Turismo 4-1600cc (1.6L) 2 Bbl.	A	**BT223**	**PA2104**	**N/R**	**BF918-K**	**N/R**	**18104**
	4-2200cc (2.2L) 2 Bbl.	C,F	**BT223**	**PA2104**	**N/R**	w/VapDiv. **BF930** w/o VapDiv. **BF840,-K1**	**N/R**	**18104**
	Reliant 4-2200cc (2.2L) FI	D	**BT223**	**PA2158**	**N/R**		**SA4139**	**18104**
	4-2500cc (2.5L) FI	K	**BT223**	**PA2158**	**N/R**		**SA4139**	**18104**
	Voyager 4-2200cc (2.2L) 2 Bbl.	C	**BT223**	**PA2104**	**N/R**	**BF930**	**N/R**	**18104**
	4-2600cc (2.6L) 2 Bbl.	G	**B173-S**	**PA2157**	**N/R**	**BF964**	**N/R**	**18104**
1985	Caravelle 4-2200cc (2.2L) FI	D	**BT223**	**PA2103**	**N/R**		**N/R**	**18104**

OBS = Obsolete. Availability Limited to Distributor Stock. † Transmission, Not Model, Determines Which Transmission Filter is Used.

PLYMOUTH Cont'd.

Year	Model and Engine	VIN	Lube	Air	Cabin Air	Fuel	Breather	Trans.[t]
1985	Caravelle 4-2200cc (2.2L) FI Turbo	E	**BT223**	**PA2104**	**N/R**		**N/R**	**18104**
	4-2600cc (2.6L) 2 Bbl.	G	**B173-S**	**PA2157**	**N/R**	**BF964**		**18104**
	Colt 4-1500cc (1.5L) 2 Bbl.	Q	**B173-S**		**N/R**	**BF928**	**N/R**	**18021**
	4-1600cc (1.6L) FI Turbo	F	**B173-S**		**N/R**	**BF1100**	**N/R**	**18021**
	4-2000cc (2.0L) 2 Bbl.	D	**B173-S**	**PA2176**	**N/R**	**BF928**	**N/R**	**18021**
	Conquest 4-2555cc (2.6L) FI Turbo	H	**B173-S**		**N/R**	**BF1100**	**N/R**	
	Gran Fury V8-318 (5.2L) 4 Bbl.	4,S	**B233**	**PA2010**	**N/R**	**BF865,-K**	**SA4141**	**18032**
	V8-318 (5.2L) 2 Bbl.	P	**B233**	**PA615**	**N/R**	**BF865,-K**	**SA4141**	**18032**
	Horizon 4-1600cc (1.6L) 2 Bbl.	A	**BT223**	**PA2104**	**N/R**	**BF918-K**	**N/R**	**18104**
	4-2200cc (2.2L) 2 Bbl.	C	**BT223**	**PA2104**	**N/R**	**BF840,-K1**	**N/R**	**18104**
	4-135 (2.2L) FI	D	**BT223**	**PA2103**	**N/R**		**N/R**	**18104**
	Reliant, Voyager 4-2200cc (2.2L) 2 Bbl.	C	**BT223**	**PA2104**	**N/R**	**BF930**	**N/R**	**18104**
	4-2600cc (2.6L) 2 Bbl.	G	**B173-S**	**PA2157**	**N/R**	**BF964**	**N/R**	**18104**
	Turismo 4-1600cc (1.6L) 2 Bbl.	A	**BT223**	**PA2104**	**N/R**	**BF918-K**	**N/R**	**18104**
	4-2200cc (2.2L) 2 Bbl. HO	8	**BT223**	**PA2104**	**N/R**	**BF865,-K**	**N/R**	**18104**
	4-2200cc (2.2L) 2 Bbl.	C	**BT223**	**PA2104**	**N/R**	**BF840,-K1**	**N/R**	**18104**
1984	Caravelle 4-135 (2.2L) Carb. Canada	C	**BT223**	**PA2104**	**N/R**	**BF930**	**N/R**	**18104**
	4-135 (2.2L) FI Canada	D	**BT223**	**PA2103**	**N/R**	**BF930**	**N/R**	**18104**
	4-135 (2.2L) FI Turbo Canada	E	**BT223**	**PA2104**	**N/R**	**BF930**	**N/R**	**18104**
	4-156 (2.6L) Carb. Canada	G	**B173-S**	**PA2157**	**N/R**	**BF964**	**N/R**	**18104**
	V8-318 (5.2L) Carb. Canada	P	**B233**	**PA615**	**N/R**	**BF865,-K**	**SA4141**	
	Colt 4-1400cc (1.4L) 2 Bbl.	A	**B173-S**		**N/R**	**BF928**	**N/R**	**18021**
	4-1600cc (1.6L) 2 Bbl.	B	**B173-S**		**N/R**	**BF928**	**N/R**	**18021**
	4-1600cc (1.6L) 2 Bbl. Turbo	F	**B173-S**		**N/R**		**N/R**	**18021**
	4-2000cc (2.0L) 2 Bbl.	D	**B173-S**	**PA2176**	**N/R**	**BF928**	**N/R**	**18021**
	Conquest 4-2555cc (2.6L) FI Turbo	H	**B173-S**		**N/R**	**BF1100**	**N/R**	
	Gran Fury V8-318 (5.2L) 2 Bbl.	4,P	**B233**	**PA615**	**N/R**	**BF865,-K**	**SA4141**	**18032**
	V8-318 (5.2L) 4 Bbl.	R,S	**B233**	**PA2010**	**N/R**	**BF865,-K**	**SA4141**	**18032**
	Horizon, Turismo 4-1600cc (1.6L) 2 Bbl.	A	**BT223**	**PA2104**	**N/R**	**BF918-K**	**N/R**	**18104**
	4-2200cc (2.2L) 2 Bbl.	8,C	**BT223**	**PA2104**	**N/R**	**BF930**	**N/R**	**18104**
	Reliant, Voyager 4-2200cc (2.2L) 2 Bbl.	C	**BT223**	**PA2104**	**N/R**	**BF930**	**N/R**	**18104**
	4-2600cc (2.6L) 2 Bbl.	G	**B173-S**	**PA2157**	**N/R**	**BF964**	**N/R**	**18104**
1983	Caravelle 4-135 (2.2L) Carb. Canada	C	**BT223**	**PA2104**	**N/R**	**BF858**	**SA4141**	**18104**
	4-156 (2.6L) Carb. Canada	7,G	**B173-S**	**PA2157**	**N/R**	**BF964**	**SA4141**	**18104**
	6-225 (3.7L) Carb. Canada	K	**B233**	**PA615**	**N/R**	**BF865,-K**	**SA4141**	**18032**
	V8-318 (5.2L) Carb. Canada	P	**B233**	**PA615**	**N/R**	2 Bbl. **BF865,-K** 4 Bbl. **BF840,-K1**	**SA4141**	**18032**
	Colt 4-1400cc (1.4L) 2 Bbl.	2	**B173-S**	**PA2090**	**N/R**	**BF928**	**N/R**	**18021**
	4-1600cc (1.6L) 2 Bbl.	3	**B173-S**	**PA2090**	**N/R**	**BF928**	**N/R**	**18021**
	Gran Fury 6-225 (3.7L) 1 Bbl.	H,J,K,L	**B233**	**PA615**	**N/R**	**BF865,-K**	**SA4141** **SA2046**	**18032**
	V8-318 (5.2L) 2 Bbl.	4,P	**B233**	**PA615**	**N/R**	**BF865,-K**	**SA4141** **SA2046**	**18032**
	V8-318 (5.2L) 4 Bbl.	R,S	**B233**	**PA2010**	**N/R**	**BF865,-K**	**SA4141** **SA2046**	**18032**
	Horizon, Turismo 4-1600cc (1.6L) 2 Bbl.	A,3	**BT223**	**PA2104**	**N/R**	**BF918-K**	**N/R**	**18104**
	4-1700cc (1.7L) 2 Bbl.	B	**BT223**	**PA2083**	**N/R**	**BF840,-K1**	**N/R**	**18104**
	4-2200cc (2.2L) 2 Bbl.	C	**BT223**	**PA2104**	**N/R**	**BF930**	**N/R**	**18104**
	Reliant 4-2200cc (2.2L) 2 Bbl.	C	**BT223**	**PA2104**	**N/R**	**BF930**	**N/R**	**18104**
	4-2600cc (2.6L) 2 Bbl.	7,G	**B173-S**	**PA2157**	**N/R**	**BF964**	**N/R**	**18104**
	Sapporo 4-2600cc (2.6L) 2 Bbl.	7	**B173-S**	**PA2117**	**N/R**	**BF928**	**N/R**	
	Scamp 4-135 (2.2L) 2 Bbl.	C	**BT223**	**PA2104**	**N/R**	**BF930**	**N/R**	**18104**
	Voyager Van 6-225 (3.7L) 1 Bbl.	H,J	**B233**	**PA642**	**N/R**	**BF865,-K**	**SA4141** **SA2046**	**18032**
	V8-318 (5.2L) Carb.	T,U	**B233**	**PA615**	**N/R**	**BF865,-K**	**SA4141** **SA2046**	**18032**
	V8-360 (5.9L) Carb.	1,W	**B233**	**PA615**	**N/R**	**BF865,-K**	**SA4141** **SA2046**	**18032**
1982	Arrow 4-2000cc (2.0L) 2 Bbl.	5	**B173-S**	**PA2117**	**N/R**	**BF928**	**N/R**	
	4-2600cc (2.6L) 2 Bbl.	7	**B173-S**	**PA2117**	**N/R**	**BF928**	**N/R**	
	Caravelle 6-225 (3.7L) Carb. Canada	H	**B233**	**PA615**	**N/R**	**BF865,-K**	**SA4141**	**18032**
	V8-318 (5.2L) Carb. Canada	K	**B233**	**PA615**	**N/R**	2 Bbl. **BF865,-K** 4 Bbl. **BF840,-K1**	**SA4141**	**18032**
	Champ 4-1400cc (1.4L) 2 Bbl.	2	**B173-S**	**PA2090**	**N/R**	**BF928**	**N/R**	**18021**
	4-1600cc (1.6L) 2 Bbl.	3	**B173-S**	**PA2090**	**N/R**	**BF928**	**N/R**	**18021**

[t] Transmission, Not Model, Determines Which Transmission Filter is Used. OBS = Obsolete. Availability Limited to Distributor Stock.

PLYMOUTH Cont'd.

Year	Model and Engine	VIN	Lube	Air	Cabin Air	Fuel	Breather	Trans.[t]
1982	Gran Fury 6-225 (3.7L)	E,F	**B233**	**PA615**	**N/R**	**BF865,-K**	**SA4141 SA2046**	**18032**
	V8-318 (5.2L) 2 Bbl.	K,L	**B233**	**PA615**	**N/R**	**BF865,-K**	**SA4141 SA2046**	**18032**
	V8-318 (5.2L) 4 Bbl.	M,N	**B233**	**PA2010**	**N/R**	**BF865,-K**	**SA4141 SA2046**	**18032**
	Horizon, TC-3 4-1700cc (1.7L) 2 Bbl.	A	**BT223**	**PA2083**	**N/R**	**BF840,-K1**	**N/R**	12/1/81-on **18021**
	4-2200cc (2.2L) 2 Bbl.	B	**BT223**	**PA2104**	**N/R**	**BF930**	**N/R**	12/1/81-on **18021**
	Reliant 4-2200cc (2.2L) 2 Bbl.	B	**BT223**	**PA2104**	**N/R**	**BF930**	**N/R**	
	4-2600cc (2.6L) 2 Bbl.	7,D	**B173-S**	**PA2157**	**N/R**	**BF964**	**N/R**	
	Sapporo 4-2600cc (2.6L) 2 Bbl.	7	**B173-S**	**PA2117**	**N/R**	**BF928**	**N/R**	
	Voyager Van 6-225 (3.7L) Carb.	E,W	**B233**	**PA642**	**N/R**	**BF865,-K**	**SA4141 SA2046**	**18032**
	V8-318 (5.2L) Carb.	P,R	**B233**	**PA615**	**N/R**	**BF865,-K**	**SA4141 SA2046**	**18032**
	V8-360 (5.9L) Carb.	S,T,U	**B233**	**PA615**	**N/R**	**BF865,-K**	**SA4141 SA2046**	**18032**
1981	Arrow 4-2000cc (2.0L) 2 Bbl.	5	**B141**	**PA2117**	**N/R**	**BF928**	**N/R**	
	4-2600cc (2.6L) 2 Bbl.	7	**B141**	**PA2117**	**N/R**	**BF928**	**N/R**	
	Caravelle 6-225 (3.7L) Carb. Canada	G,H	**B233**	**PA615**	**N/R**	**BF865,-K**	**SA4141**	**18032**
	V8-318 (5.2L) Carb. Canada	K,M,N	**B233**	**PA2010**	**N/R**	**BF865,-K**	**SA4141**	**18032**
	Champ 4-1400cc (1.4L) 2 Bbl.	2	**B173-S**	**PA2090**	**N/R**	**BF928**	**N/R**	**18021**
	4-1600cc (1.6L) 2 Bbl.	3	**B173-S**	**PA2090**	**N/R**	**BF928**	**N/R**	12/1/81-on **18021**
	Gran Fury 6-225 (3.7L)	E,F,G	**B233**	**PA615**	**N/R**	**BF840,-K1**[17] **BF865,-K**[31]	**SA4141 SA2046**	**18032**
	V8-318 (5.2L) 2 Bbl.	K	**B233**	**PA615**	**N/R**	**BF840,-K1**[17] **BF865,-K**[31]	**SA4141 SA2046**	**18032**
	V8-318 (5.2L) 4 Bbl.	L,M,N	**B233**	**PA2010**	**N/R**	**BF840,-K1**[17] **BF865,-K**[31]	**SA4141 SA2046**	**18032**
	Horizon, TC-3 4-1700cc (1.7L) 2 Bbl.	A	**B178**	**PA2083**	**N/R**	**BF840,-K1**	**N/R**	
	4-2200cc (2.2L) 2 Bbl.	B	**BT223**	**PA2104**	**N/R**	**BF930**	**N/R**	
	Reliant 4-2200cc (2.2L) 2 Bbl.	B	**BT223**	**PA2104**	**N/R**	**BF930**	**N/R**	
	4-2600cc (2.6L) 2 Bbl.	D	**B141**	**PA2157**	**N/R**	**BF964**	**N/R**	
	Sapporo 4-2600cc (2.6L) 2 Bbl.	7	**B141**	**PA2117**	**N/R**	**BF928**	**N/R**	
	Trailduster V8-318 (5.2L)	P,R	**B233**	**PA615**	**N/R**	**BF840,-K1**[17] **BF865,-K**[31]	**SA4141 SA2046**	**18032**
	V8-360 (5.9L) 4 Bbl.	T,V	**B233**	**PA615**	**N/R**	**BF840,-K1**[17] **BF865,-K**[31]	**SA4141 SA2046**	**18032**
	Voyager Van 6-225 (3.7L) 1 Bbl.	E	**B233**	**PA642**	**N/R**	**BF840,-K1**[17] **BF865,-K**[31]	**SA4141 SA2046**	**18032**
	V8-318 (5.2L) Carb.	P,R	**B233**	**PA615**	**N/R**	**BF840,-K1**[17] **BF865,-K**[31]	**SA4141 SA2046**	**18032**
	V8-360 (5.9L) 4 Bbl.	T,V	**B233**	**PA615**	**N/R**	**BF840,-K1**[17] **BF865,-K**[31]	**SA4141 SA2046**	**18032**
1980	Arrow 4-1595cc (1.6L) 2 Bbl.	K	**B173-S**	**PA2117**	**N/R**	**BF928**	**N/R**	
	4-2000cc (2.0L)	F,U	**B141**	**PA2117**	**N/R**	**BF928**	**N/R**	
	4-2600cc (2.6L) Carb	F,U,W	**B141**	**PA2117**	**N/R**	**BF928**	**N/R**	
	Caravelle 6-225 (3.7L) Carb. Canada	C,D	**B233**	**PA615**	**N/R**	**BF865,-K**	**SA4141**	**18032**
	V8-318 (5.2L) Carb. Canada	G,H	**B233**	**PA615**	**N/R**	**BF865,-K**	**SA4141**	**18032**
	Champ 4-1400cc (1.4L)	J	**B173-S**	**PA2090**	**N/R**	**BF928**	**N/R**	
	4-1600cc (1.6L)	K	**B173-S**	**PA2090**	**N/R**	**BF928**	**N/R**	
	Gran Fury, Volare 6-225 (3.7L) Carb.	C,D	**B233**	**PA615**	**N/R**	**BF840,-K1**[17] **BF865,-K**[31]	**SA4141 SA2046**	**18032**
	V8-318 (5.2L) 2 Bbl.	G	**B233**	**PA615**	**N/R**	**BF840,-K1**[17] **BF865,-K**[31]	**SA4141 SA2046**	**18032**
	V8-318 (5.2L) 4 Bbl.	H	**B233**	**PA2010**	**N/R**	**BF840,-K1**[17] **BF865,-K**[31]	**SA4141 SA2046**	**18032**
	V8-360 (5.9L) 2 Bbl.	K	**B233**	**PA615**	**N/R**	**BF865,-K**	**SA4141 SA2046**	**18032**
	V8-360 (5.9L) 4 Bbl.	L	**B233**	**PA2010**	**N/R**	**BF865,-K**	**SA4141 SA2046**	**18032**
	Horizon 4-1700cc (1.7L)	A	**B178**	**PA2083**	**N/R**	**BF840,-K1**	**N/R**	
	Sapporo 4-2600cc (2.6L) 2 Bbl.	F,W	**B141**	**PA2117**	**N/R**	**BF928**	**N/R**	
	Trailduster, Voyager Van 6-225 (3.7L) 1 Bbl.	N	**B233**	**PA642**	**N/R**	**BF840,-K1**[17] **BF865,-K**[31]	**SA4141 SA2046**	**18032**
	V8-318 (5.2L) 2 Bbl.	E,P	**B233**	**PA615**	**N/R**	**BF840,-K1**[17] **BF865,-K**[31]	**SA4141 SA2046**	**18032**

[17] Exc. Calif. OBS = Obsolete. Availability Limited to Distributor Stock. [t] Transmission, Not Model, Determines Which Transmission Filter is Used. [31] Calif.

Year	Model and Engine	VIN	Lube	Air	Cabin Air	Fuel	Breather	Trans.[t]
PLYMOUTH Cont'd.								
1980	Trailduster, Voyager Van V8-360 (5.9L) 4 Bbl.	K,T	**B233**	**PA2010**	**N/R**	**BF840,-K1**[17] **BF865,-K**[31]	**SA4141** **SA2046**	**18032**
PONTIAC								
2010	G3 4-98 (1.6L) FI	E		**PA4344**		**N/S**	**N/R**	
	G5 4-134 (2.2L) FI	H	**P7442**	**PA4329**	**PA4317**		**N/R**	4T45E **18057**
	G6 4-149 (2.4L) FI	0,B	**P7442**	**PA4157**	**N/R**	**N/S**	**N/R**	4T45E **18057**
	V6-213 (3.5L) FI	K,N	**B7010**	**PA4337**	**N/R**	**N/S**	**N/R**	4T45E **18057**
	V6-217 (3.6L) FI	7	**B160**	**PA4157**	**N/R**	**N/S**	**N/R**	
	V6-238 (3.9L) FI	1	**B7010**	**PA4337**	**N/R**	**N/S**	**N/R**	(w/o Gskt.) **18022** (w/Gskt.) **20014**
	G8 V8-376 (6.2L) FI	W	**B160**			**N/S**	**N/R**	
	Solstice 4-122 (2.0L) DI Turbo	X	**P7442**	**PA4324**	**N/R**	**N/S**	**N/R**	
	4-149 (2.4L) FI	B	**P7442**		**N/R**	**N/S**	**N/R**	
	Vibe 4-1798cc (1.8L) FI	8	**P7454**			**N/S**	**N/R**	**18289**
	4-2362cc (2.4L) FI	0	**B33**	**PA4333**		**N/S**	**N/R**	**20008**
2009	G3 4-98 (1.6L) FI Mexico	E		**PA4344**		**N/S**	**N/R**	
	G3 Wave 4-98 (1.6L) FI Canada	E		**PA4344**		**N/S**	**N/R**	
	G5 4-134 (2.2L) SFI	H	**P7442**	**PA4329**	**PA4317**		**N/R**	4T45E **18057**
	G6 4-145 (2.4L) FI	B	**P7442**	**PA4337**	**N/R**	**N/S**	**N/R**	4T45E **18057** 4T65-E (w/o Gskt.) **18022** 4T65-E (w/Gskt.) **20014**
	V6-213 (3.5L) FI or Flex Fuel	N	**B7010**	**PA4337**	**N/R**	**N/S**	**N/R**	4T45E **18057** 4T65-E (w/o Gskt.) **18022** 4T65-E (w/Gskt.) **20014**
	V6-217 (3.6L) SFI	7	**B160**	**PA4157**	**N/R**	**N/S**	**N/R**	4T45E **18057** 4T65-E (w/o Gskt.) **18022** 4T65E (w/Gskt.) **20014**
	V6-238 (3.9L) SFI	1	**B7010**	**PA4337**	**N/R**	**N/S**	**N/R**	4T45E **18057** 4T65-E (w/o Gskt.) **18022** 4T65-E (w/Gskt.) **20014**
	G8 V6-217 (3.6L) FI	7	**P1433**				**N/R**	
	V8-364 (6.0L) FI	Y	**B160**				**N/R**	
	V8-376 (6.2L) FI	W	**B160**				**N/R**	
	Montana SV6 V6-237 (3.9L) FI or Flex Fuel Canada	1	**B7010**	**PA2231**	**PA4156 KIT**	**N/S**	**N/R**	4T65-E (w/o Gskt.) **18022** (w/Gskt.) **20014**
	Solstice 4-122 (2.0L) DI Turbo	X	**P7442**	**PA4324**	**N/R**	**N/S**	**N/R**	
	4-149 (2.4L) SFI	B	**P7442**		**N/R**	**N/S**	**N/R**	
	Torrent V6-207 (3.4L) FI	F	**B43-S**	**PA4157**	**PA4340**	**N/S**	**N/R**	5 Spd. **N/S**
	V6-217 (3.6L) FI	7	**B160**	**PA4157**	**PA4340**	**N/S**	**N/R**	6 Spd. **N/S**
	Vibe 4-1798cc (1.8L) FI	8	**P7454**			**N/S**	**N/R**	**18289**
	4-2362cc (2.4L) FI	0	**B37**	**PA4333**		**N/S**	**N/R**	**20008**
2008	G5 4-134 (2.2L) SFI	F	**P7442**	**PA4329**	**PA4317**		**N/R**	4T45E **18057**
	4-149 (2.4L) SFI	B	**P7442**	**PA4329**	**PA4317**		**N/R**	4T45E **18057**
	G6 4-145 (2.4L) MFI	B	**P1445**	**PA4337**	**N/R**	**N/S**	**N/R**	4T45E **18057** 4T65-E (w/o Gskt.) **18022** 4T65-E (w/Gskt.) **20014**
	V6-213 (3.5L) SFI	N	**B7010**	**PA4337**	**N/R**	**N/S**	**N/R**	4T45E **18057** 4T65-E (w/o Gskt.) **18022** 4T65-E (w/Gskt.) **20014**

[t] Transmission, Not Model, Determines Which Transmission Filter is Used. OBS = Obsolete. Availability Limited to Distributor Stock. [17] Exc. Calif.
[31] Calif.

PONTIAC Cont'd.

Year	Model and Engine	VIN	Lube	Air	Cabin Air	Fuel	Breather	Trans.[t]
2008	G6 V6-217 (3.6L) SFI	7	**B160**	**PA4157**	**N/R**	**N/S**	**N/R**	4T40E **18057** 4T65-E (w/o Gskt.) **18022** 4T65-E (w/Gskt.) **20014**
	V6-238 (3.9L) SFI	1	**B7010**	**PA4337**	**N/R**	**N/S**	**N/R**	4T45E **18057** 4T65-E (w/o Gskt.) **18022** 4T65-E (w/Gskt.) **20014**
	G8 V6-217 (3.6L) FI	7	**P1433**				**N/R**	
	V8-364 (6.0L) FI	Y	**B160**				**N/R**	
	Grand Prix V6-231 (3.8L) SFI	2	**B43-S**	**PA4146**	**PA4154**	**N/S**	**N/R**	(w/o Gskt.) **18022** (w/Gskt.) **20014**
	V8-325 (5.3L) SFI	C	**B160**	**PA4178**	**PA4154**	**N/S**	**N/R**	(w/o Gskt.) **18022** (w/Gskt.) **20014**
	Montana SV6 V6-237 (3.9L) FI or Flex Fuel Canada	1,W	**B7010**	**PA2231**	**PA4156 KIT**	**N/S**	**N/R**	4T65-E (w/o Gskt.) **18022** (w/Gskt.) **20014**
	Solstice 4-122 (2.0L) DI Turbo	X	**P7442**	**PA4324**	**N/R**	**N/S**	**N/R**	
	4-149 (2.4L) SFI	B	**P7442**		**N/R**	**N/S**	**N/R**	
	Torrent V6-207 (3.4L) FI	F	**B43-S**	**PA4157**	**PA4340**	**N/S**	**N/R**	**N/S**
	V6-217 (3.6L) FI	7	**B160**	**PA4157**	**PA4340**	**N/S**	**N/R**	**N/S**
	Vibe 4-109 (1.8L) EFI	8	**B33**	**PA4180**		**N/S**	**N/R**	
	Wave 4-98 (1.6L) FI Canada	6	**B43-S**	**PA4344**		**N/S**	**N/R**	
2007	G5 4-134 (2.2L) SFI	F	**P7442**	**PA4329**	**PA4317**		**N/R**	4T45E **18057**
	4-145 (2.4L) SFI	B	**P7442**	**PA4329**	**PA4317**		**N/R**	4T45E **18057**
	G6 4-145 (2.4L) MFI	B	**P1445**	**PA4337**	**N/R**	**N/S**	**N/R**	4T45E **18057** 4T65-E (w/o Gskt.) **18022** 4T65-E (w/Gskt.) **20014**
	V6-213 (3.5L) SFI	N	**B7010**	**PA4337**	**N/R**	**BF7775**	**N/R**	4T45E **18057** 4T65-E (w/o Gskt.) **18022** 4T65-E (w/Gskt.) **20014**
	V6-217 (3.6L) SFI	7	**B160**	**PA4157**	**N/R**	**N/S**	**N/R**	4T45E **18057** 4T65-E (w/o Gskt.) **18022** 4T65-E (w/Gskt.) **20014**
	V6-237 (3.9L) SFI	1	**B7010**	**PA4337**	**N/R**	**N/S**	**N/R**	4T45E **18057** 4T65-E (w/o Gskt.) **18022** 4T65-E (w/Gskt.) **20014**
	Grand Prix V6-231 (3.8L) SFI or Supercharged	2,4	**B43-S**	**PA4146**	**PA4154**	**N/S**	**N/R**	4T65-E (w/o Gskt.) **18022** (w/Gskt.) **20014**
	V8-325 (5.3L) SFI	C	**B160**	**PA4178**	**PA4154**	**N/S**	**N/R**	4T65-E (w/o Gskt.) **18022** (w/Gskt.) **20014**
	Montana SV6 V6-237 (3.9L) FI Canada	1	**B7010**	**PA2231**	**PA4156 KIT**	**N/S**	**N/R**	4T65-E (w/o Gskt.) **18022** (w/Gskt.) **20014**
	Solstice 4-122 (2.0L) DI Turbo	X	**P7442**	**PA4324**	**N/R**	**N/S**	**N/R**	
	4-145 (2.4L) MFI	B	**P7442**		**N/R**	**N/S**	**N/R**	
	Torrent V6-207 (3.4L) SFI	F	**B43-S**	**PA4157**	**PA4340**	**BF1046**	**N/R**	**N/S**
	Vibe 4-109 (1.8L) EFI	8	**B33**	**PA4180**		**N/S**	**N/R**	
	Wave 4-98 (1.6L) FI Canada	6	**B43-S**	**PA4344**		**N/S**	**N/R**	
2006	G4 4-2200cc (2.2L) FI Mexico		**B43-S**	**PA4329**			**N/R**	
	4-2400cc (2.4L) FI Mexico		**B43-S**	**PA4329**			**N/R**	

OBS = Obsolete. Availability Limited to Distributor Stock. [t] Transmission, Not Model, Determines Which Transmission Filter is Used.

PONTIAC Cont'd.

Year	Model and Engine	VIN	Lube	Air	Cabin Air	Fuel	Breather	Trans.[t]
2006	G6 4-149 (2.4L) MFI	B	**P1445**	**PA4337**	**N/R**	**N/S**	**N/R**	4T45E **18057** 4T65-E (w/o Gskt.) **18022** 4T65-E (w/Gskt.) **20014**
	V6-214 (3.5L) SFI	8	**B43-S**	**PA4337**	**N/R**	**BF7775**	**N/R**	4T45E **18057** 4T65-E (w/o Gskt.) **18022** 4T65-E (w/Gskt.) **20014**
	V6-237 (3.9L) SFI	1	**B7010**	**PA4337**	**N/R**	**N/S**	**N/R**	4T45E **18057** 4T65-E (w/o Gskt.) **18022** 4T65-E (w/Gskt.) **20014**
	Grand Prix V6-231 (3.8L) SFI or Supercharged	2,4	**B43-S**	**PA4146**	**PA4154**	**N/S**	**N/R**	4T65-E (w/o Gskt.) **18022** (w/Gskt.) **20014**
	V8-325 (5.3L) SFI	C	**B31**	**PA4178**	**PA4154**	**N/S**	**N/R**	4T65-E (w/o Gskt.) **18022** (w/Gskt.) **20014**
	GTO V8-364 (6.0L) SFI	U	**B31**		**N/R**		**N/R**	4L60E D. Pan **18056**
	Matiz 4-1000cc (1.0L) MPI Mexico					**N/S**	**N/R**	
	Montana SV6 V6-213 (3.5L) SFI	L	**B43-S**	**PA2231**	**PA4156 KIT**	**N/S**	**N/R**	4T65-E (w/o Gskt.) **18022** (w/Gskt.) **20014**
	V6-238 (3.9L) SFI	1	**B7010**	**PA2231**	**PA4156 KIT**	**N/S**	**N/R**	4T65-E (w/o Gskt.) **18022** (w/Gskt.) **20014**
	Pursuit 4-122 (2.0L) FI Supercharged Canada	P	**P1445**	**RS4161**	**PA4317**		**N/R**	4T40E **18057**
	4-134 (2.2L) FI Canada	F	**P1445**	**PA4329**	**PA4317**		**N/R**	4T40E **18057**
	4-2384cc (2.4L) FI Canada	B	**P7442**	**PA4329**	**PA4317**		**N/R**	4T40E **18057**
	Solstice 4-149 (2.4L) MFI	B	**P7442**		**N/R**	**N/S**	**N/R**	
	Torrent V6-207 (3.4L) SFI	F	**B43-S**	**PA4157**	**PA4340**	**BF7771**	**N/R**	**N/S**
	Vibe 4-109 (1.8L) EFI 1ZZ-FE	8	**B33**	**PA4180**		**N/S**	**N/R**	
	4-109 (1.8L) EFI 2ZZ-GE	L	**B37**	**PA4180**		**N/S**	**N/R**	
	Wave 4-98 (1.6L) FI Canada	6	**B43-S**	**PA4344**		**N/S**	**N/R**	
2005	Aztek V6-207 (3.4L) SFI	E	**B43-S**	**PA2231**	**PA4156 KIT**	**BF7769**	**N/R**	(w/o Gskt.) **18022** (w/Gskt.) **20014**
	Bonneville V6-231 (3.8L) SFI	K	**B43-S**	**PA2189**	Opt. (w/o Charcoal) **PA4330** Opt. (w/Charcoal) **PA4384**	**BF1171**	**N/R**	4T65-E (w/o Gskt.) **18022** 4T65-E (w/Gskt.) **20014** 4T80E **18009**
	V8-279 (4.6L) MFI	Y	**B7010**	**PA2231**	Opt. (w/o Charcoal) **PA4330** Opt. (w/Charcoal) **PA4384**	**BF1171**	**N/R**	4T65-E (w/o Gskt.) **18022** 4T65-E (w/Gskt.) **20014** 4T80E **18009**
	G4 4-2200cc (2.2L) FI Mexico		**B43-S**	**PA4329**			**N/R**	
	4-2400cc (2.4L) FI Mexico		**B43-S**	**PA4329**			**N/R**	
	G6 V6-213 (3.5L) SFI	8	**B43-S**	**PA4337**	**N/R**	**BF7775**	**N/R**	**18057**
	Grand Am 4-135 (2.2L) SFI	F	**P1445**	**PA4107**	**N/R**	**BF1171**	**N/R**	**18057**
	V6-207 (3.4L) SFI	E	**B43-S**	**PA4107**	**N/R**	**BF1171**	**N/R**	**18057**
	Grand Prix V6-231 (3.8L) SFI or Supercharged	2,4	**B43-S**	**PA4146**	**PA4154**	**BF7775**	**N/R**	(w/o Gskt.) **18022** (w/Gskt.) **20014**
	V8-325 (5.3L) FI	C	**B31**	**PA4178**	**PA4154**	**N/S**	**N/R**	(w/o Gskt.) **18022** (w/Gskt.) **20014**
	GTO V8-364 (6.0L) FI	U	**B31**		**N/R**		**N/R**	**18056**
	Matiz 4-1000cc (1.0L) MPI Mexico					**N/S**	**N/R**	
	Montana V6-207 (3.4L) SFI	E	**B43-S**	**PA2231**	**PA4156 KIT**	**BF7769**	**N/R**	(w/o Gskt.) **18022** (w/Gskt.) **20014**
	Montana SV6 V6-213 (3.5L) SFI	L	**B43-S**	**PA2231**	**PA4156 KIT**	**BF7769**	**N/R**	(w/o Gskt.) **18022** (w/Gskt.) **20014**

[t] Transmission, Not Model, Determines Which Transmission Filter is Used. OBS = Obsolete. Availability Limited to Distributor Stock.

PONTIAC Cont'd.

Year	Model and Engine	VIN	Lube	Air	Cabin Air	Fuel	Breather	Trans.t
2005	Pursuit 4-134 (2.2L) SFI Canada	F	**P1445**	**PA4329**	**PA4317**		**N/R**	**18057**
	Sunfire 4-134 (2.2L) SFI	F	**P1445**	**PA2160**	**N/R**	**BF1171**	**N/R**	**18057**
	Vibe 4-109 (1.8L) EFI 1ZZ-FE	8	**B33**	**PA4180**		**N/S**	**N/R**	
	4-109 (1.8L) EFI 2ZZ-GE	L	**B37**	**PA4180**		**N/S**	**N/R**	
	Wave 4-98 (1.6L) FI Canada	6	**B43-S**	**PA4344**		**N/S**	**N/R**	
2004	Aztek V6-207 (3.4L) SFI	E	**B43-S**	**PA2231**	**PA4156 KIT**	w/1 Male End **BF7719** w/2 Male Ends **BF7769**	**N/R**	(w/o Gskt.) **18022** (w/Gskt.) **20014**
	Bonneville V6-231 (3.8L) SFI	K	**B43-S**	**PA2189**	Opt. (w/o Charcoal) **PA4330** Opt. (w/Charcoal) **PA4384**	**BF1171**	**N/R**	4T65-E (w/o Gskt.) **18022** 4T65-E (w/Gskt.) **20014** 4T80E **18009**
	V8-279 (4.6L) SFI	Y	**B7010**	**PA2231**	Opt. (w/o Charcoal) **PA4330** Opt. (w/Charcoal) **PA4384**	**BF1171**	**N/R**	**18009**
	Grand Am 4-134 (2.2L) SFI	F	**P1445**	**PA4107**	**N/R**	**BF1171**	**N/R**	**18057**
	V6-207 (3.4L) SFI	E	**B43-S**	**PA4107**	**N/R**	**BF1171**	**N/R**	**18057**
	Grand Prix V6-231 (3.8L) SFI or Supercharged	2,4	**B43-S**	**PA4146**	**PA4154**	**BF7775**	**N/R**	(w/o Gskt.) **18022** (w/Gskt.) **20014**
	GTO V8-350 (5.7L) FI	G	**B31**		**N/R**		**N/R**	**18056**
	Matiz 4-1000cc (1.0L) MPI Mexico					**N/S**	**N/R**	
	Montana V6-207 (3.4L) SFI	E	**B43-S**	**PA2231**	**PA4156 KIT**	**BF7769**	**N/R**	(w/o Gskt.) **18022** (w/Gskt.) **20014**
	Sunfire 4-134 (2.2L) SFI	F	**P1445**	**PA2160**	**N/R**	**BF1171**	**N/R**	**18057**
	Vibe 4-109 (1.8L) EFI 1ZZ-FE	8	**B33**	**PA4180**		**N/S**	**N/R**	
	4-109 (1.8L) EFI 2ZZ-GE	L	**B37**	**PA4180**		**N/S**	**N/R**	
2003	Aztek V6-207 (3.4L) SFI	E	**B43-S**	**PA2231**	**PA4156 KIT**	w/1 Male End **BF7719** w/2 Male Ends **BF7769**	**N/R**	(w/o Gskt.) **18022** (w/Gskt.) **20014**
	Bonneville V6-231 (3.8L) SFI or Supercharged	1,K	**B43-S**	**PA2189**	Opt. (w/o Charcoal) **PA4330** Opt. (w/Charcoal) **PA4384**	**BF1171**	**N/R**	(w/o Gskt.) **18022** (w/Gskt.) **20014**
	Grand Am 4-134 (2.2L) SFI	F	**P1445**	**PA4107**	**N/R**	**BF1171**	**N/R**	**18057**
	V6-207 (3.4L) SFI	E	**B43-S**	**PA4107**	**N/R**	**BF1171**	**N/R**	**18057**
	Grand Prix V6-191 (3.1L) SFI	J	**B43-S**	**PA4146**	**PA4154**	**BF1171**	**N/R**	(w/o Gskt.) **18022** (w/Gskt.) **20014**
	V6-231 (3.8L) SFI or Supercharged	1,K	**B43-S**	**PA4146**	**PA4154**	**BF1171**	**N/R**	(w/o Gskt.) **18022** (w/Gskt.) **20014**
	Montana V6-207 (3.4L) SFI	E	**B43-S**	**PA2231**	**PA4156 KIT**	w/1 Male End **BF7719** w/2 Male Ends **BF7769**	**N/R**	(w/o Gskt.) **18022** (w/Gskt.) **20014**
	Sunfire 4-134 (2.2L) SFI	F	**P1445**	**PA2160**	**N/S**	**BF1171**	**N/R**	**18057**
	Vibe 4-109 (1.8L) FI 1ZZ-FE	8	**B33**	**PA4180**		**N/S**	**N/R**	
	4-109 (1.8L) FI 2ZZ-GE	L	**B37**	**PA4180**		**N/S**	**N/R**	
2002	Aztek V6-207 (3.4L) SFI	E	**B43-S**	**PA2231**	**PA4156 KIT**	**BF7719**	**N/R**	(w/o Gskt.) **18022** (w/Gskt.) **20014**
	Bonneville V6-231 (3.8L) SFI or Supercharged	1,K	**B43-S**	**PA2189**	(w/o Charcoal) **PA4330** (w/Charcoal) **PA4384**	**BF1171**	**N/R**	(w/o Gskt.) **18022** (w/Gskt.) **20014**
	Firebird V6-231 (3.8L) SFI	K	**B43-S**	**PA2178**	**N/R**	**BF1171**	**N/R**	**18010**
	V8-346 (5.7L) SFI	G	**B31**	**PA2178**	**N/R**	**BF1171**	**N/R**	**18010**
	Grand Am 4-134 (2.2L) FI	F	**P1445**	**PA4107**	**N/S**	**BF1171**	**N/R**	**18057**
	V6-207 (3.4L) SFI	E	**B43-S**	**PA4107**	**N/S**	**BF1171**	**N/R**	**18057**
	Grand Prix V6-191 (3.1L) SFI	J	**B43-S**	**PA4146**	**PA4154**	**BF1171**	**N/R**	(w/o Gskt.) **18022** (w/Gskt.) **20014**

OBS = Obsolete. Availability Limited to Distributor Stock. t Transmission, Not Model, Determines Which Transmission Filter is Used.

PONTIAC Cont'd.

Year	Model and Engine	VIN	Lube	Air	Cabin Air	Fuel	Breather	Trans.[t]
2002	Grand Prix V6-231 (3.8L) SFI or Supercharged	1,K	**B43-S**	**PA4146**	**PA4154**	**BF1171**	**N/R**	(w/o Gskt.) **18022** (w/Gskt.) **20014**
	Montana V6-207 (3.4L) SFI	E	**B43-S**	**PA2231**	**PA4156 KIT**	**BF7719**	**N/R**	(w/o Gskt.) **18022** (w/Gskt.) **20014**
	Sunfire 4-134 (2.2L) SFI	4	**B43-S**	**PA2160**	**N/R**	**BF1171**	**N/R**	**18057**
	4-134 (2.2L) SFI ECOTEC	F	**P1445**	**PA2160**	**N/S**	**BF1171**	**N/R**	**18057**
	4-146 (2.4L) SFI	T	**B31**	**PA2160**	**N/R**	**BF1171**	**N/R**	**18057**
2001	Aztek V6-207 (3.4L) SFI	E	**B43-S**	**PA2231**	**PA4156 KIT**	**BF7719**	**N/R**	(w/o Gskt.) **18022** (w/Gskt.) **20014**
	Bonneville V6-231 (3.8L) SFI or Supercharged	1,K	**B43-S**	**PA2189**	(w/o Charcoal) **PA4330** (w/Charcoal) **PA4384**	**BF1171**	**N/R**	(w/o Gskt.) **18022** (w/Gskt.) **20014**
	Firebird V6-231 (3.8L) SFI	K	**B43-S**	**PA2178**	**N/R**	**BF1171**	**N/R**	**18010**
	V8-346 (5.7L) SFI	G	**B31**	**PA2178**	**N/R**	**BF1171**	**N/R**	**18010**
	Grand Am 4-146 (2.4L) SFI	T	**B31**	**PA4107**	**N/R**	**BF1171**	**N/R**	**18057**
	V6-207 (3.4L) SFI	E	**B43-S**	**PA4107**	**N/R**	**BF1171**	**N/R**	**18057**
	Grand Prix V6-191 (3.1L) SFI	J	**B43-S**	**PA4146**	**PA4154**	**BF1171**	**N/R**	(w/o Gskt.) **18022** (w/Gskt.) **20014**
	V6-231 (3.8L) SFI or Supercharged	1,K	**B43-S**	**PA4146**	**PA4154**	**BF1171**	**N/R**	(w/o Gskt.) **18022** (w/Gskt.) **20014**
	Montana V6-207 (3.4L) SFI	E	**B43-S**	**PA2231**	**PA4156 KIT**	**BF7719**	**N/R**	(w/o Gskt.) **18022** (w/Gskt.) **20014**
	Sunfire 4-134 (2.2L) SFI	4	**B43-S**	**PA2160**	**N/R**	**BF1171**	**N/R**	3 Spd. **19593** 4 Spd. **18057**
	4-146 (2.4L) SFI	T	**B31**	**PA2160**	**N/R**	**BF1171**	**N/R**	3 Spd. **19593** 4 Spd. **18057**
2000	Bonneville V6-231 (3.8L) SFI or Supercharged	1,K	**B43-S**	**PA2189**	(w/o Charcoal) **PA4330** (w/Charcoal) **PA4384**	**BF1171**	**N/R**	(w/o Gskt.) **18022** (w/Gskt.) **20014**
	Firebird V6-231 (3.8L) SFI	K	**B43-S**	**PA2178**	**N/R**	**BF1171**	**N/R**	**18010**
	V8-350 (5.7L) SFI	G	**B31**	**PA2178**	**N/R**	**BF1171**	**N/R**	**18010**
	Firefly 3-993cc (1.0L) FI Canada	6	**BT223**	**PA2216**	**N/R**	**BF7720**	**N/R**	
	4-1295cc (1.3L) FI Canada	2	**BT223**	**PA2216**	**N/R**	**BF7720**	**N/R**	
	Grand Am 4-146 (2.4L) SFI	T	**B31**	**PA4107**	**N/R**	**BF1171**	**N/R**	**18057**
	V6-207 (3.4L) SFI	E,M	**B43-S**	**PA4107**	**N/R**	**BF1171**	**N/R**	**18057**
	Grand Prix V6-191 (3.1L) SFI	J	**B43-S**	**PA4146**	**PA4154**	**BF1171**	**N/R**	(w/o Gskt.) **18022** (w/Gskt.) **20014**
	V6-231 (3.8L) SFI	1,K	**B43-S**	**PA4146**	**PA4154**	**BF1171**	**N/R**	(w/o Gskt.) **18022** (w/Gskt.) **20014**
	Montana V6-207 (3.4L) SFI	E	**B43-S**	**PA2231**	**PA4155 KIT**	**BF7719**	**N/R**	(w/o Gskt.) **18022** (w/Gskt.) **20014**
	Sunfire 4-133 (2.2L) SFI	4	**B43-S**	**PA2160**	**N/R**	**BF1171**	**N/R**	3 Spd. **19593** 4 Spd. **18057**
	4-146 (2.4L) SFI	T	**B31**	**PA2160**	**N/R**	**BF1171**	**N/R**	3 Spd. **19593** 4 Spd. **18057**
1999	Bonneville V6-231 (3.8L) SFI	1,K	**B43-S**	**PA2189**	**N/R**	**BF1171**	**N/R**	(w/o Gskt.) **18022** (w/Gskt.) **20014**
	Firebird V6-231 (3.8L) SFI	K	**B43-S**	**PA2178**	**N/R**	**BF1171**	**N/R**	**18010**
	V8-350 (5.7L) SFI	G	**B31**	**PA2178**	**N/R**	**BF1171**	**N/R**	**18010**
	Firefly 3-993cc (1.0L) FI Canada	6	**BT223**	**PA2216**	**N/R**	**BF7720**	**N/R**	
	4-1295cc (1.3L) FI Canada	2	**BT223**	**PA2216**	**N/R**	**BF7720**	**N/R**	
	Grand Am 4-146 (2.4L) SFI	T	**B31**	**PA4107**	**N/R**	**BF1171**	**N/R**	**18057**
	V6-207 (3.4L) SFI	E	**B43-S**	**PA4107**	**N/R**	**BF1171**	**N/R**	**18057**
	Grand Prix V6-191 (3.1L) SFI	M	**B43-S**	**PA4146**	**N/R**	**BF1171**	**N/R**	(w/o Gskt.) **18022** (w/Gskt.) **20014**
	V6-231 (3.8L) SFI	1,K	**B43-S**	**PA4146**	**N/R**	**BF1171**	**N/R**	(w/o Gskt.) **18022** (w/Gskt.) **20014**
	Montana V6-207 (3.4L) SFI	E	**B43-S**	**PA2231**	**PA4155 KIT**	**BF7719**	**N/R**	(w/o Gskt.) **18022** (w/Gskt.) **20014**
	Sunfire 4-133 (2.2L) SFI	4	**B43-S**	**PA2160**	**N/R**	**BF1171**	**N/R**	3 Spd. **19593** 4 Spd. **18057**
	4-146 (2.4L) SFI	T	**B31**	**PA2160**	**N/R**	**BF1171**	**N/R**	3 Spd. **19593** 4 Spd. **18057**
	Trans Sport APV V6-207 (3.4L) FI Canada	E	**B43-S**	**PA2231**	**PA4155 KIT**		**N/R**	**18022**

[t] Transmission, Not Model, Determines Which Transmission Filter is Used. OBS = Obsolete. Availability Limited to Distributor Stock.

PONTIAC Cont'd.

Year	Model and Engine	VIN	Lube	Air	Cabin Air	Fuel	Breather	Trans.[t]
1998	Bonneville V6-231 (3.8L) SFI	1,K	**B43-S**	**PA2189**	**N/R**	**BF1171**	**N/R**	(w/o Gskt.) **18022** (w/Gskt.) **20014**
	Firebird V6-231 (3.8L) SFI	K	**B43-S**	**PA2178**	**N/R**	**BF1171**	**N/R**	4L60E **18010**
	V8-350 (5.7L) SFI	G	**B31**	**PA2178**	**N/R**	**BF1171**	**N/R**	4L60E **18010**
	Firefly 3-993cc (1.0L) FI Canada	6	**BT223**	**PA2216**	**N/R**	**BF7720**	**N/R**	
	4-1295cc (1.3L) FI Canada	2	**BT223**	**PA2216**	**N/R**	**BF7720**	**N/R**	
	Grand Am 4-146 (2.4L) SFI	T	**B31**	**PA4079**	**N/R**	**BF1171**	**N/R**	(w/o Gskt.) **18022** (w/Gskt.) **20014**
	V6-191 (3.1L) SFI	M	**B43-S**	**PA4079**	**N/R**	**BF1171**	**N/R**	(w/o Gskt.) **18022** (w/Gskt.) **20014**
	Grand Prix V6-191 (3.1L) SFI	M	**B43-S**	**PA2231**	**N/R**	**BF1171**	**N/R**	(w/o Gskt.) **18022** (w/Gskt.) **20014**
	V6-231 (3.8L) SFI	1,K	**B43-S**	**PA2231**	**N/R**	**BF1171**	**N/R**	(w/o Gskt.) **18022** (w/Gskt.) **20014**
	Sunfire 4-133 (2.2L) SFI	4	**B43-S**	**PA2160**	**N/R**	**BF1171**	**N/R**	3 Spd. **19593** 4 Spd. **18057**
	4-146 (2.4L) SFI	T	**B31**	**PA2160**	**N/R**	**BF1171**	**N/R**	3 Spd. **19593** 4 Spd. **18057**
	Trans Sport V6-207 (3.4L) SFI	E	**B43-S**	**PA2231**	Opt. **PA4155 KIT**	**BF7719**	**N/R**	(w/o Gskt.) **18022** (w/Gskt.) **20014**
1997	Bonneville V6-231 (3.8L) SFI	1,K	**B43-S**	**PA2189**	**N/R**	**BF1171**	**N/R**	(w/o Gskt.) **18022** (w/Gskt.) **20014**
	Firebird V6-231 (3.8L) SFI	K	**B43-S**	**PA2257**	**N/R**	**BF1171**	**N/R**	4L60E **18010**
	V8-350 (5.7L) SFI	P	**B27**	**PA2257**	**N/R**	**BF1171**	**N/R**	4L60E **18010**
	Firefly 3-993cc (1.0L) FI Canada	6	**BT223**	**PA2216**	**N/R**	**BF7720**	**N/R**	
	4-1295cc (1.3L) FI Canada	9	**BT223**	**PA2216**	**N/R**	**BF7720**	**N/R**	
	Grand Am 4-146 (2.4L) SFI	T	**B31**	**PA4079**	**N/R**	**BF1171**	**N/R**	(w/o Gskt.) **18022** (w/Gskt.) **20014**
	V6-191 (3.1L) SFI	M	**B43-S**	**PA4079**	**N/R**	**BF1171**	**N/R**	(w/o Gskt.) **18022** (w/Gskt.) **20014**
	Grand Prix V6-191 (3.1L) SFI	M	**B43-S**	**PA2231**	**N/R**	**BF1171**	**N/R**	(w/o Gskt.) **18022** (w/Gskt.) **20014**
	V6-231 (3.8L) SFI	1,K	**B43-S**	**PA2231**	**N/R**	**BF1171**	**N/R**	(w/o Gskt.) **18022** (w/Gskt.) **20014**
	Sunfire 4-133 (2.2L) SFI	4	**B43-S**	**PA2160**	**N/R**	**BF1171**	**N/R**	3 Spd. **19593** 4 Spd. **18057**
	4-146 (2.4L) SFI	T	**B31**	**PA2160**	**N/R**	**BF1171**	**N/R**	3 Spd. **19593** 4 Spd. **18057**
	Sunrunner 4-1588cc (1.6L) FI Canada	6	**BT223**	**PA4023**	**N/R**		**N/R**	
	Trans Sport V6-207 (3.4L) SFI	E	**B43-S**	**PA2231**	Opt. **PA4155 KIT**	**BF7719**	**N/R**	(w/o Gskt.) **18022** (w/Gskt.) **20014**
1996	Bonneville V6-231 (3.8L) SFI	1,K	**B43-S**	**PA2189**	**N/R**	**BF1171**	**N/R**	(w/o Gskt.) **18022** (w/Gskt.) **20014**
	Firebird V6-231 (3.8L) SFI	K	**B43-S**	**PA2257**	**N/R**	**BF1171**	**N/R**	4L60E **18010**
	V8-350 (5.7L) SFI	P	**B27**	**PA2257**	**N/R**	**BF1171**	**N/R**	4L60E **18010**
	Firefly 3-993cc (1.0L) FI Canada	6	**BT223**	**PA2216**	**N/R**	**BF7720**	**N/R**	
	4-1295cc (1.3L) FI Canada	9	**BT223**	**PA2216**	**N/R**	**BF7720**	**N/R**	
	Grand Am 4-148 (2.4L) SFI	T	**B31**	**PA4079**	**N/R**	**BF1171**	**N/R**	(w/o Gskt.) **18022** (w/Gskt.) **20014**
	V6-189 (3.1L) SFI	M	**B43-S**	**PA4079**	**N/R**	**BF1171**	**N/R**	(w/o Gskt.) **18022** (w/Gskt.) **20014**
	Grand Prix V6-191 (3.1L) SFI	M	**B43-S**	**PA2231**	**N/R**	**BF1171**	**N/R**	(w/o Gskt.) **18022** (w/Gskt.) **20014**
	V6-207 (3.4L) SFI	X	**B35-S**	**PA2231**	**N/R**	**BF1171**	**N/R**	(w/o Gskt.) **18022** (w/Gskt.) **20014**
	Sunfire 4-133 (2.2L) SFI	4	**B43-S**	**PA2160**	**N/R**	**BF1171**	**N/R**	3 Spd. **19593** 4 Spd. **18057**
	4-148 (2.4L) SFI	T	**B31**	**PA2160**	**N/R**	**BF1171**	**N/R**	3 Spd. **19593** 4 Spd. **18057**
	Sunrunner 4-1588cc (1.6L) FI Canada	6	**BT223**	**PA4023**	**N/R**	**BF1100**	**N/R**	
	Trans Sport V6-207 (3.4L) SFI	E	**B43-S**	**PA2160**	Opt. **PA4155 KIT**	**BF1046**	**N/R**	3 Spd. **19593** 4 Spd. (w/o Gskt.) **18022** 4 Spd. (w/Gskt.) **20014**
1995	Bonneville V6-231 (3.8L) SFI	1,K	**B43-S**	**PA2189**	**N/R**	**BF1171**	**N/R**	(w/o Gskt.) **18022** (w/Gskt.) **20014**

OBS = Obsolete. Availability Limited to Distributor Stock. [t] Transmission, Not Model, Determines Which Transmission Filter is Used.

PONTIAC Cont'd.

Year	Model and Engine	VIN	Lube	Air	Cabin Air	Fuel	Breather	Trans.[t]
1995	Firebird V6-207 (3.4L) SFI	S	**B43-S**	**PA2257**	**N/R**	**BF1171**	**N/R**	4L60E **18010**
	V6-231 (3.8L) SFI	K	**B43-S**	**PA2257**	**N/R**	**BF1171**	**N/R**	4L60E **18010**
	V8-350 (5.7L) SFI	P	**B27**	**PA2257**	**N/R**	**BF1171**	**N/R**	4L60E **18010**
	Firefly L3-993cc (1.0L) FI Canada	6	**BT223**	**PA2216**	**N/R**	**BF7720**	**N/R**	
	4-1295cc (1.3L) FI Canada	9	**BT223**	**PA2216**	**N/R**	**BF7720**	**N/R**	
	Grand Am 4-138 (2.3L) MFI	D	**B43-S**	**PA4079**	**N/R**	**BF1171**	**N/R**	3 Spd. **19593** 4 Spd. (w/o Gskt.) **18022** 4 Spd. (w/Gskt.) **20014**
	V6-191 (3.1L) SFI	M	**B43-S**	**PA4079**	**N/R**	**BF1171**	**N/R**	(w/o Gskt.) **18022** (w/Gskt.) **20014**
	Grand Prix V6-191 (3.1L) SFI	M	**B43-S**	**PA2231**	**N/R**	**BF1171**	**N/R**	(w/o Gskt.) **18022** (w/Gskt.) **20014**
	V6-207 (3.4L) SFI	X	**B35-S**	**PA2231**	**N/R**	**BF1171**	**N/R**	(w/o Gskt.) **18022** (w/Gskt.) **20014**
	Sunfire 4-133 (2.2L) MFI	4	**B43-S**	**PA2160**	**N/R**	**BF1171**	**N/R**	3 Spd. **19593** 4 Spd. **18057**
	4-138 (2.3L) SFI	D	**B43-S**	**PA2160**	**N/R**	**BF1171**	**N/R**	3 Spd. **19593** 4 Spd. **18057**
	Sunrunner 4-1588cc (1.6L) FI Canada	6	**BT223**	**PA4023**	**N/R**		**N/R**	
	Trans Sport V6-191 (3.1L) TBI	D	**B43-S**	**PA2106**	**N/R**	**BF1046**	**N/R**	**19593**
	V6-231 (3.8L) SFI	L	**B43-S**	**PA2160**	**N/R**	**BF1046**	**N/R**	(w/o Gskt.) **18022** (w/Gskt.) **20014**
1994	Bonneville V6-231 (3.8L) TPI HO	1,L	**B43-S**	**PA2189**	**N/R**	**BF1171**	**N/R**	(w/o Gskt.) **18022** (w/Gskt.) **20014**
	Firebird V6-207 (3.4L) SFI	S	**B43-S**	**PA2257**	**N/R**	**BF1171**	**N/R**	4L60E **18010**
	V8-350 (5.7L) SFI	P	**B27**	**PA2257**	**N/R**	**BF1171**	**N/R**	4L60E **18010**
	Firefly 3-993cc (1.0L) FI Canada	6	**BT223**	**PA2216**	**N/R**	**BF1003**	**N/R**	
	L3-1295cc (1.3L) FI Canada	9	**BT223**	**PA2216**	**N/R**	**BF1003**	**N/R**	
	Grand Am 4-138 (2.3L) MFI	3,A,D	**B43-S**	**PA4079**	**N/R**	**BF1171**	**N/R**	3 Spd. **19593** 4 Spd. (w/o Gskt.) **18022** 4 Spd. (w/Gskt.) **20014**
	V6-191 (3.1L) MFI	M	**B43-S**	**PA4079**	**N/R**	**BF1171**	**N/R**	3 Spd. **19593** 4 Spd. (w/o Gskt.) **18022** 4 Spd. (w/Gskt.) **20014**
	Grand Prix V6-191 (3.1L) SFI	T	**B43-S**	**PA2231**	**N/R**	**BF1171**	**N/R**	(w/o Gskt.) **18022** (w/Gskt.) **20014**
	V6-207 (3.4L) SFI	X	**B35-S**	**PA2231**	**N/R**	**BF1171**	**N/R**	(w/o Gskt.) **18022** (w/Gskt.) **20014**
	Sunbird 4-121 (2.0L) MFI	H	**B43-S**	**PA2160**	**N/R**	**BF1171**	**N/R**	**19593**
	V6-191 (3.1L) MFI	T	**B43-S**	**PA2162**	**N/R**	**BF1171**	**N/R**	**19593**
	Sunrunner 4-1588cc (1.6L) FI Canada	U	**B43-S**		**N/R**	**BF1171**	**N/R**	
	Trans Sport V6-191 (3.1L) EFI	D	**B35-S**	**PA2106**	**N/R**	**BF1046**	**N/R**	3 Spd. **19593** 4 Spd. (w/o Gskt.) **18022** 4 Spd. (w/Gskt.) **20014**
	V6-231 (3.8L) SFI	C	**B43-S**	**PA2160**	**N/R**	**BF1046**	**N/R**	(w/o Gskt.) **18022** (w/Gskt.) **20014**
1993	Bonneville V6-231 (3.8L) TPI HO	1,L	**B43-S**	**PA2189**	**N/R**	**BF1046**	**N/R**	(w/o Gskt.) **18022** (w/Gskt.) **20014**
	Firebird V6-207 (3.4L) SFI	S	**B43-S**	**PA2257**	**N/R**	**BF1171**	**N/R**	**18155**
	V8-350 (5.7L) MFI	P	**B27**	**PA2257**	**N/R**	**BF1171**	**N/R**	4L60 **18155** 4L60E **18010**
	Grand Am 4-140 (2.3L) MFI	3,A,D	**B43-S**	**PA2160**	**N/R**	**BF1171**	**N/R**	**19593**
	V6-3300cc (3.3L) MFI	N	**B43-S**	**PA2160**	**N/R**	**BF1171**	**N/R**	**19593**
	Grand Prix V6-191 (3.1L) MFI	T	**B35-S**	**PA2196**	**N/R**	**BF1171**	**N/R**	3 Spd. **19593** 4 Spd. (w/o Gskt.) **18022** 4 Spd. (w/Gskt.) **20014**

[t] Transmission, Not Model, Determines Which Transmission Filter is Used. OBS = Obsolete. Availability Limited to Distributor Stock.

PONTIAC Cont'd.

Year	Model and Engine	VIN	Lube	Air	Cabin Air	Fuel	Breather	Trans.[t]
1993	Grand Prix V6-207 (3.4L) FI	X	**B35-S**	**PA2196**	**N/R**	**BF1171**	**N/R**	3 Spd. **19593** 4 Spd. (w/o Gskt.) **18022** 4 Spd. (w/Gskt.) **20014**
	LeMans 4-98 (1.6L) EFI	6	**B43-S**	**PA2190**	**N/R**	**BF853**	**N/R**	**19593**
	Sunbird 4-121 (2.0L) MFI	H	**B43-S**	**PA2160**	**N/R**	**BF1171**	**N/R**	**19593**
	V6-191 (3.1L) MFI	T	**B43-S**	**PA2162**	**N/R**	**BF1171**	**N/R**	**19593**
	Trans Sport V6-191 (3.1L) EFI	D	**B35-S**	**PA2106**	**N/R**	**BF1046**	**N/R**	**19593**
	V6-231 (3.8L) SFI	L	**B43-S**	**PA2160**	**N/R**	**BF1046**	**N/R**	(w/o Gskt.) **18022** (w/Gskt.) **20014**
1992	Bonneville V6-231 (3.8L) TPI	1,L	**B43-S**	**PA2189**	**N/R**	**BF1046**	**N/R**	(w/o Gskt.) **18022** (w/Gskt.) **20014**
	Firebird, Trans Am V6-191 (3.1L) MFI	T	**B35-S**	**PA2136**	**N/R**	**BF853**	**N/R**	**18155**
	V8-305 (5.0L) EFI	E	**B27**	**PA2006**	**N/R**	**BF853**	**SA2027**	**18155**
	V8-305 (5.0L) TPI HO	F	**B27**	**PA2136**	**N/R**	**BF853**	**N/R**	**18155**
	V8-350 (5.7L) TPI	8	**B27**	**PA2136**	**N/R**	**BF853**	**N/R**	**18155**
	Grand Am 4-138 (2.3L) MFI	3,A,D	**B43-S**	**PA2160**	**N/R**	**BF1171**	**N/R**	**19593**
	V6-204 (3.3L) MFI	N	**B43-S**	**PA2160**	**N/R**	**BF1171**	**N/R**	**19593**
	Grand Prix V6-191 (3.1L) EFI	T	**B35-S**	**PA2196**	**N/R**	**BF1171**	**N/R**	3 Spd. **19593** 4 Spd. (w/o Gskt.) **18022** 4 Spd. (w/Gskt.) **20014**
	V6-207 (3.4L) FI 24 Valve	X	**B35-S**	**PA2196**	**N/R**	**BF1171**	**N/R**	3 Spd. **19593** 4 Spd. (w/o Gskt.) **18022** 4 Spd. (w/Gskt.) **20014**
	LeMans 4-1600cc (1.6L) EFI	6	**B43-S**	**PA2190**	**N/R**	**BF853**	**N/R**	**19593**
	4-2000cc (2.0L) FI Canada	K	**B43-S**	**PA2109**	**N/R**	**BF853**	**N/R**	**19593**
	Sunbird 4-121 (2.0L) MFI	H	**B43-S**	**PA2160**	**N/R**	**BF1171**	**N/R**	**19593**
	V6-191 (3.1L) MFI	T	**B35-S**	**PA2162**	**N/R**	**BF1171**	**N/R**	**19593**
	Trans Sport V6-189 (3.1L) EFI	D	**B35-S**	**PA2106**	**N/R**	**BF1046**	**N/R**	**19593**
	V6-231 (3.8L) SFI	L	**B43-S**	**PA2160**	**N/R**	**BF1046**	**SA2046**	(w/o Gskt.) **18022** (w/Gskt.) **20014**
1991	6000 4-151 (2.5L) EFI	R	**P140**	**PA2109**	**N/R**	**BF1172**	**SA4315**	3 Spd. **19593**
	V6-191 (3.1L) MFI	T	**B35-S**	**PA2162**	**N/R**	**BF1172**	**N/R**	3 Spd. **19593** 4 Spd. **18139**
	Bonneville V6-231 (3.8L) SFI	C	**B43-S**	**PA2160**	**N/R**	**BF853**	**N/R**	**18139**
	Firebird, Trans Am V6-189 (3.1L) MFI	T	**B35-S**	**PA2136**	**N/R**	**BF853**	**N/R**	**18155**
	V8-305 (5.0L) EFI	E	**B27**	**PA2006**	**N/R**	**BF853**	**SA2027**	**18155**
	V8-305 (5.0L) TPI	F	**B27**	**PA2136**	**N/R**	**BF853**	**N/R**	**18155**
	V8-350 (5.7L) TPI	8	**B27**	**PA2136**	**N/R**	**BF853**	**N/R**	**18155**
	Firefly 3-61 (1.0L) FI Turbo Canada	2	**BT223**	**PA4026**	**N/R**	**BF1003**	**N/R**	
	3-61 (1.0L) FI Canada	6	**BT223**	**PA2216**	**N/R**	**BF1003**	**N/R**	
	Grand Am 4-2300cc (2.3L) MFI	A,D	**B43-S**	**PA2160**	**N/R**	**BF853**	**N/R**	**19593**
	4-151 (2.5L) EFI	U	**P140**	**PA2109**	**N/R**	**BF853**	**SA4315**	**19593**
	Grand Prix 4-2300cc (2.3L) MFI	D	**B43-S**	**PA2160**	**N/R**	**BF853**	**N/R**	**19593**
	V6-189 (3.1L) MFI	T	**B35-S**	**PA2196**	**N/R**	**BF853**	**N/R**	**18139**
	V6-207 (3.4L) MFI	X	**B35-S**	**PA2196**	**N/R**	**BF853**	**N/R**	**18139**
	LeMans 4-1600cc (1.6L) TBI	6	**B43-S**	**PA2190**	**N/R**	**BF853**	**N/R**	**19593**
	Optima 4-1606cc (1.6L) FI Canada	6	**B43-S**	**PA2190**	**N/R**	**BF853**	**N/R**	**19593**
	Sunbird 4-2000cc (2.0L) EFI	K	**B43-S**	**PA2109**	**N/R**	**BF853**	**N/R**	**19593**
	4-189 (3.1L) MFI	T	**B35-S**	**PA2162**	**N/R**	**BF853**	**N/R**	**19593**
	Tempest 4-134 (2.2L) FI Canada	G	**B35-S**	**PA2109**	**N/R**	**BF1174**	**N/R**	**19593**
	4-140 (2.3L) FI Canada	A	**B43-S**	**PA2160**	**N/R**	**BF1174**	**N/R**	**19593**
	V6-189 (3.1L) FI Canada	T	**B43-S**	**PA2195**	**N/R**	**BF1174**	**N/R**	**19593**
	Trans Sport APV V6-189 (3.1L) EFI	D	**B35-S**	**PA2106**	**N/R**		**N/R**	**19593**
1990	6000 4-151 (2.5L) EFI	R	**P140**	**PA2109**	**N/R**	**BF1172**	**SA4315**	**19593**
	V6-191 (3.1L) EFI	T	**B35-S**	**PA2162**	**N/R**	Exc. AWD **BF1172** AWD **BF853**	**N/R**	3 Spd. **19593** 4 Spd. **18139**
	Bonneville V6-231 (3.8L) SFI	C	**B43-S**	**PA2160**	**N/R**	**BF853**	**N/R**	**18139**
	Firebird, Trans Am V6-189 (3.1L) MFI	T	**B35-S**	**PA2136**	**N/R**	**BF853**	**N/R**	TH700-R4 **18155**
	V8-305 (5.0L) EFI	E	**B27**	**PA2006**	**N/R**	**BF853**	**SA2027**	TH700-R4 **18155**
	V8-305 (5.0L) EFI	F	**B27**	**PA2136**	**N/R**	**BF853**	**N/R**	TH700-R4 **18155**

OBS = Obsolete. Availability Limited to Distributor Stock. [t] Transmission, Not Model, Determines Which Transmission Filter is Used.

PONTIAC Cont'd.

Year	Model and Engine	VIN	Lube	Air	Cabin Air	Fuel	Breather	Trans.[t]
1990	Firebird, Trans Am V8-350 (5.7L) TPI	8	**B27**	**PA2136**	**N/R**	**BF853**	**N/R**	TH700-R4 **18155**
	Firefly 3-61 (1.0L) FI Turbo Canada	2	**BT223**	**PA4026**	**N/R**	**BF1003**	**N/R**	
	3-61 (1.0L) 2 Bbl. Canada	6	**BT223**	**PA2216**	**N/R**	**BF1100**	**N/R**	
	Grand Am 4-2300cc (2.3L) MFI	A,D	**B43-S**	**PA2160**	**N/R**	**BF853**	**N/R**	**19593**
	4-151 (2.5L) EFI	U	**P140**	**PA2109**	**N/R**	**BF853**	**SA4315**	**19593**
	Grand Prix 4-2300cc (2.3L) MFI	D	**B43-S**	**PA2160**	**N/R**	**BF853**	**N/R**	**19593**
	V6-189 (3.1L) FI	T	**B35-S**	**PA2196**	**N/R**	**BF853**	**N/R**	**18139**
	V6-189 (3.1L) MFI Turbo	V	**B35-S**	**PA2138**	**N/R**	**BF853**	**N/R**	**18139**
	LeMans 4-1600cc (1.6L) EFI	6	**B43-S**	**PA2190**	**N/R**	**BF853**	**N/R**	**19593**
	4-2000cc (2.0L) EFI	K	**B43-S**	**PA2109**	**N/R**	**BF853**	**N/R**	**19593**
	Optima 4-1606cc (1.6L) FI Canada	6	**B43-S**	**PA2190**	**N/R**	**BF853**	**N/R**	**19593**
	4-122 (2.0L) FI Canada	K	**B43-S**	**PA2109**	**N/R**	**BF853**	**N/R**	**19593**
	Sunbird 4-2000cc (2.0L) EFI	K	**B43-S**	**PA2109**	**N/R**	**BF853**	**N/R**	**19593**
	4-2000cc (2.0L) MFI Turbo	M	**B43-S**	**PA2134**	**N/R**	**BF853**	**N/R**	**19593**
	Tempest 4-134 (2.2L) FI Canada	G	**B35-S**	**PA2109**	**N/R**	**BF1174**	**N/R**	**19593**
	4-140 (2.3L) FI Canada	A	**B43-S**	**PA2160**	**N/R**	**BF1174**	**N/R**	**19593**
	V6-189 (3.1L) FI Canada	T	**B43-S**	**PA2195**	**N/R**	**BF1174**	**N/R**	**19593**
	Trans Sport APV V6-189 (3.1L) EFI	D	**B35-S**	**PA2106**	**N/R**		**N/R**	**19593**
1989	6000 4-151 (2.5L) EFI	R	**P140**	**PA2109**	**N/R**	**BF1172**	**SA4315**	**19593**
	V6-173 (2.8L) MFI	W	**B35-S**	**PA2162**	**N/R**	**BF1172**	**N/R**	3 Spd. **19593** 4 Spd. **18139**
	V6-191 (3.1L) MFI	T	**B35-S**	**PA2162**	**N/R**	**BF853**	**N/R**	3 Spd. **19593** 4 Spd. **18139**
	Bonneville V6-231 (3.8L) SFI	C	**B43-S**	**PA2160**	**N/R**	**BF853**	**N/R**	**18139**
	Firebird, Trans Am V6-173 (2.8L) MFI	S	**B35-S**	**PA2136**	**N/R**	**BF853**	**SA2046**	TH700-R4 **18155**
	V6-231 (3.8L) FI Turbo	7	**B1428**	**PA2140**	**N/R**	**BF853**	**SA2046**	TH700-R4 **18155**
	V8-305 (5.0L) FI	E	**B27**	**PA2006**	**N/R**	**BF853**	**SA2027** **SA2046**	TH700-R4 **18155**
	V8-305 (5.0L) MFI	F	**B27**	**PA2136**	**N/R**	**BF853**	**SA2046**	TH700-R4 **18155**
	V8-350 (5.7L) FI	8	**B27**	**PA2136**	**N/R**	**BF853**	**SA2046**	TH700-R4 **18155**
	Firefly 3-61 (1.0L) FI Turbo Canada	2	**BT223**	**PA4026**	**N/R**	**BF1003**	**N/R**	
	3-61 (1.0L) 2 Bbl. Canada	5	**BT223**	**PA2216**	**N/R**	**BF933**	**N/R**	
	Grand Am 4-2000cc (2.0L) MFI Turbo	M	**B43-S**	**PA2134**	**N/R**	**BF853**	**N/R**	**19593**
	4-2300cc (2.3L) FI HO	A	**B43-S**	**PA2160**	**N/R**	**BF853**	**N/R**	**19593**
	4-2300cc (2.3L) FI	D	**B43-S**	**PA2193**	**N/R**	**BF853**	**N/R**	**19593**
	4-151 (2.5L) EFI	U	**P140**	**PA2109**	**N/R**	**BF853**	**SA4315**	**19593**
	Grand Prix V6-173 (2.8L) MFI	W	**B35-S**	**PA2196**	**N/R**	**BF853**	**N/R**	**18139**
	V6-191 (3.1L) EFI	T	**B35-S**	**PA2196**	**N/R**	**BF853**	**N/R**	**18139**
	V6-191 (3.1L) EFI Turbo	V	**B35-S**	**PA2138**	**N/R**	**BF853**	**N/R**	**18139**
	LeMans 4-1600cc (1.6L) TBI	6	**B43-S**	**PA2190**	**N/R**	**BF853**	**N/R**	**19593**
	4-2000cc (2.0L) TBI	K	**B43-S**	**PA2109**	**N/R**	**BF853**	**N/R**	**19593**
	Optima 4-98 (1.6L) FI Canada	6	**B43-S**	**PA2190**	**N/R**	**BF853**	**N/R**	**19593**
	4-122 (2.0L) FI Canada	K	**B43-S**	**PA2109**	**N/R**	**BF853**	**N/R**	**19593**
	Safari Wagon V8-307 (5.0L) 4 Bbl.	H	**B30**	**PA2008**	**N/R**	**PF894,-RV**	**SA2027**	
	Sunbird 4-2000cc (2.0L) EFI	K	**B43-S**	**PA2109**	**N/R**	**BF853**	**N/R**	**19593**
	4-2000cc (2.0L) MFI Turbo	M	**B43-S**	**PA2134**	**N/R**	**BF853**	**N/R**	**19593**
	Tempest 4-122 (2.0L) FI Canada	1	**B35-S**	**PA2138**	**N/R**	**BF853**	**N/R**	**19593**
	V6-173 (2.8L) FI Canada	W	**B43-S**	**PA2195**	**N/R**	**BF853**	**N/R**	**19593**
1988	6000 4-151 (2.5L) EFI	R	**P140**	**PA2109**	**N/R**	**BF853**	**SA4315**	**19593**
	V6-173 (2.8L) EFI	W	**B43-S**	**PA2162**	**N/R**	**BF853**	**N/R**	3 Spd. **19593** 4 Spd. **18139**
	V6-189 (3.1L) FI	T	**B43-S**	**PA2162**	**N/R**	**BF853**	**N/R**	3 Spd. **19593** 4 Spd. **18139**
	Bonneville V6-231 (3.8L) SFI	3,C	**B43-S**	**PA2160**	**N/R**	**BF853**	**N/R**	TH440-T4 **18139**
	Fiero 4-151 (2.5L) EFI	R	**P140**	**PA2109**	**N/R**	**BF853**	**SA4315**	**19593**
	V6-173 (2.8L) MFI	9	**B43-S**	**PA2136**	**N/R**	**BF853**	**SA4315**	**19593**
	Firebird, Trans Am V6-173 (2.8L) MFI	S	**B43-S**	**PA2136**	**N/R**	**BF853**	**SA2046**	TH700-R4 **18155**
	V8-305 (5.0L) FI	E	**B27**	**PA2006**	**N/R**	**BF853**	**SA2027** **SA2046**	TH700-R4 **18155**
	V8-305 (5.0L) MFI	F	**B27**	**PA2136**	**N/R**	**BF853**	**SA2046**	TH700-R4 **18155**
	V8-350 (5.7L) FI	8	**B27**	**PA2136**	**N/R**	**BF853**	**SA2046**	TH700-R4 **18155**
	Firefly 3-61 (1.0L) FI Turbo Canada	2	**BT223**	**PA4026**	**N/R**	**BF1100**	**N/R**	
	3-61 (1.0L) 2 Bbl. Canada	5	**BT223**	**PA2216**	**N/R**	**BF933**	**N/R**	
	Grand Am 4-2000cc (2.0L) MFI Turbo	M	**B43-S**	**PA2134**	**N/R**	**BF853**	**N/R**	**19593**
	4-2300cc (2.3L) FI	D	**B43-S**	**PA2193**	**N/R**	**BF853**	**N/R**	**19593**
	4-151 (2.5L) EFI	U	**P140**	**PA2109**	**N/R**	**BF853**	**SA4315**	**19593**
	Grand Prix V6-173 (2.8L) EFI	W	**B43-S**	**PA2162**	**N/R**	**BF853**	**N/R**	**18139**

[t] Transmission, Not Model, Determines Which Transmission Filter is Used. OBS = Obsolete. Availability Limited to Distributor Stock.

PONTIAC Cont'd.

Year	Model and Engine	VIN	Lube	Air	Cabin Air	Fuel	Breather	Trans.[t]
1988	LeMans 4-1600cc (1.6L) EFI	6	**B43-S**	**PA2190**	**N/R**	**BF853**	**N/R**	**19593**
	Optima 4-98 (1.6L) FI Canada	6	**B43-S**	**PA2190**	**N/R**	**BF853**	**N/R**	**19593**
	4-122 (2.0L) FI Canada	K	**B43-S**	**PA2134**	**N/R**	**BF853**	**N/R**	**19593**
	Safari Wagon V8-307 (5.0L) 4 Bbl.	Y	**B30**	**PA2008**	**N/R**	**PF894,-RV**	**N/R**	**18155**
	Sunbird 4-2000cc (2.0L) EFI	K	**B43-S**	**PA2109**	**N/R**	**BF853**	**N/R**	**19593**
	4-2000cc (2.0L) EFI Turbo	M	**B43-S**	**PA2134**	**N/R**	**BF853**	**N/R**	**19593**
	Sunburst 4-92 (1.5L) FI Carb. Canada	7	**B227**		**N/R**	**BF805**	**N/R**	
	4-92 (1.5L) FI Turbo Canada	9	**B227**		**N/R**	**BF805**	**N/R**	
	Tempest 4-122 (2.0L) FI Canada	1	**B35-S**	**PA2138**	**N/R**	**BF853**	**N/R**	**19593**
	V6-173 (2.8L) FI Canada	W	**B43-S**	**PA2153**	**N/R**	**BF853**	**N/R**	**19593**
1987	6000 4-151 (2.5L) FI	R	**B43-S**	**PA2109**	**N/R**	**BF853**	**SA4315** **SA2046**	**19593**
	V6-173 (2.8L) FI	W	**B43-S**	**PA2162**	**N/R**	**BF853**	**N/R**	3 Spd. **19593** 4 Spd. **18139**
	Acadian 4-98 (1.6L) 2 Bbl. Canada	C	**B43-S**	**PA2077**	**N/R**	**PF894,-RV**	**N/R**	
	Bonneville V6-231 (3.8L) FI	3	**B43-S**	**PA2160**	**N/R**	**BF853**	**N/R**	TH440-T4 **18139**
	Fiero 4-151 (2.5L) FI	R	**B35-S**	**PA2109**	**N/R**	**BF853**	**SA4315** **SA2046**	**19593**
	V6-173 (2.8L) FI	9	**B43-S**	**PA2136**	**N/R**	**BF853**	**SA4315**	**19593**
	Firebird, Trans Am V6-173 (2.8L) FI	S	**B43-S**	**PA2136**	**N/R**	**BF853**	**SA2046**	TH700-R4 **18155**
	V8-305 (5.0L) FI	F	**B27**	**PA2136**	**N/R**	**BF853**	**SA2046**	TH700-R4 **18155**
	V8-305 (5.0L) 4 Bbl.	H	**B27**	**PA2006**	**N/R**	**PF894,-RV**	**SA2027** **SA2046**	TH700-R4 **18155**
	V8-350 (5.7L) FI	8	**B27**	**PA2136**	**N/R**	**BF853**	**SA2046**	TH700-R4 **18155**
	Firefly 3-61 (1.0L) FI Turbo Canada	2	**BT223**	**PA4026**	**N/R**	**BF1100**	**N/R**	
	3-61 (1.0L) 2 Bbl. Canada	5	**BT223**	**PA2216**	**N/R**	**BF933**	**N/R**	
	Grand Am 4-122 (2.0L) MFI Turbo	M	**B43-S**	**PA2134**	**N/R**	**BF853**	**N/R**	**19593**
	4-151 (2.5L) FI	U	A.T. **B43-S** M.T. **P140**	**PA2109**	**N/R**	**BF853**	**SA4315**	**19593**
	V6-181 (3.0L) FI	L	**B43-S**	**PA2138**	**N/R**	**BF853**	**SA2046**	**19593**
	Grand Prix V6-231 (3.8L) 2 Bbl.	A	**B43-S**	**PA1680**	**N/R**	**PF894,-RV**	**SA2046**	
	V6-262 (4.3L) FI	Z	**B35-S**	**PA2006**	**N/R**	**BF853**	**SA2046**	
	V8-305 (5.0L) 4 Bbl.	H	**B27**	**PA2008**	**N/R**	**PF894,-RV**	**SA2027** **SA2046**	
	Safari Wagon V8-307 (5.0L) 4 Bbl.	Y	**B30**	**PA2008**	**N/R**	**PF894,-RV**	**SA2027** **SA2046**	
	Sunbird 4-2000cc (2.0L) FI	K	**B43-S**	**PA2109**	**N/R**	**BF853**	**SA4315**	**19593**
	4-2000cc (2.0L) FI Turbo	M	**B43-S**	**PA2134**	**N/R**	**BF853**	**N/R**	**19593**
	Sunburst 4-92 (1.5L) Carb. Canada	7	**B227**		**N/R**	**BF805**	**N/R**	
	4-92 (1.5L) FI Turbo Canada	9	**B227**		**N/R**	**BF805**	**N/R**	
	T1000 4-1600cc (1.6L) 2 Bbl.	C	**B43-S**	**PA2077**	**N/R**	**PF894,-RV**	**N/R**	
	Tempest 4-122 (2.0L) FI Canada	1	**B35-S**	**PA2138**	**N/R**	**BF853**	**N/R**	**19593**
	V6-173 (2.8L) FI Canada	W	**B43-S**	**PA2153**	**N/R**	**BF853**	**N/R**	**19593**
1986	6000 4-151 (2.5L) FI	R	**B43-S**	**PA2109**	**N/R**	**BF853**	**SA2046**	**19593**
	V6-173 (2.8L) FI	W	**B43-S**	**PA2134**	**N/R**	**BF853**	**SA2046**	3 Spd. **19593** 4 Spd. **18139**
	V6-173 (2.8L) 2 Bbl.	X	**B43-S**	**PA2076**	**N/R**	**PF894,-RV**	**SA2046**	3 Spd. **19593** 4 Spd. **18139**
	Acadian 4-98 (1.6L) 2 Bbl. Canada	C	**B43-S**	**PA2077**	**N/R**	**PF894,-RV**	**N/R**	
	Bonneville, Grand Prix V6-231 (3.8L) 2 Bbl.	A	**B43-S**	**PA1680**	**N/R**	**PF894,-RV**	**SA2046**	
	V6-262 (4.3L) FI	Z	**B35-S**	**PA2006**	**N/R**	**BF853**	**SA2027** **SA2046**	TH700-R4 **18155**
	V8-305 (5.0L) 4 Bbl.	H	**B27**	**PA2008**	**N/R**	**PF894,-RV**	**SA2027** **SA2046**	TH700-R4 **18155**
	Fiero 4-151 (2.5L) FI	R	**B35-S**	**PA2109**	**N/R**	**BF853**	**SA2046**	**19593**
	V6-173 (2.8L) FI	9	**B43-S**	**PA2136**	**N/R**	**BF853**	**N/R**	**19593**
	Firebird, Trans Am 4-151 (2.5L) FI	2	**B43-S**	**PA2109**	**N/R**	**BF853**	**SA2046**	TH700-R4 **18155**
	V6-173 (2.8L) FI	S	**B43-S**	**PA2136**	**N/R**	**BF853**	**SA2046**	
	V8-305 (5.0L) FI	F	**B27**	**PA2136**	**N/R**	**BF853**	**SA2046**	TH700-R4 **18155**
	V8-305 (5.0L) 4 Bbl.	G,H	**B27**	**PA2006**	**N/R**	**PF894,-RV**	**SA2027** **SA2046**	TH700-R4 **18155**
	Firefly 3-61 (1.0L) 2 Bbl. Canada	5,M	**BT223**		**N/R**	**BF933**	**N/R**	
	Grand Am 4-151 (2.5L) FI	U	**B43-S**	**PA2109**	**N/R**	**BF853**	**N/R**	**19593**
	V6-181 (3.0L) FI	L	**B43-S**	**PA2138**	**N/R**	**BF853**	**SA2046**	**19593**
	Parisienne V6-262 (4.3L) FI	Z	**B35-S**	**PA2006**	**N/R**	**BF853**	**SA2027** **SA2046**	TH700-R4 **18155**

OBS = Obsolete. Availability Limited to Distributor Stock. [t] Transmission, Not Model, Determines Which Transmission Filter is Used.

PONTIAC Cont'd.

Year	Model and Engine	VIN	Lube	Air	Cabin Air	Fuel	Breather	Trans.[t]
1986	Parisienne V8-305 (5.0L) 4 Bbl.	H	**B27**	**PA2008**	**N/R**	**PF894,-RV**	**SA2027 SA2046**	TH700-R4 **18155**
	V8-307 (5.0L) 4 Bbl.	Y	**B30**	**PA2008**	**N/R**	**PF894,-RV**	**N/R**	
	Sunbird 4-1800cc (1.8L) FI Turbo	J	**B43-S**		**N/R**	**BF853**	**SA2046**	**19593**
	4-1800cc (1.8L) FI	O	**B43-S**	**PA2109**	**N/R**	**BF853**	**SA4315**	**19593**
	4-2000cc (2.0L) FI	P	**B35-S**	**PA2109**	**N/R**	**BF853**	**N/R**	**19593**
	Sunburst 4-92 (1.5L) Carb. Canada	7	**B227**		**N/R**	**BF805**	**N/R**	
	T1000 4-1600cc (1.6L) 2 Bbl.	C	**B43-S**	**PA2077**	**N/R**	**PF894,-RV**	**SA2046**	
	4-111 (1.8L) 2 Bbl. Diesel Canada	D	**B109**		**N/R**	**BF7534**	**N/R**	
1985	2000 Sunbird 4-1800cc (1.8L) FI Turbo	J	**B43-S**		**N/R**	**BF853**	**SA2046**	TH125,C **19593**
	4-1800cc (1.8L) FI	O	**B43-S**	**PA2109**	**N/R**	**BF853**	**N/R**	TH125,C **19593**
	4-2000cc (2.0L) FI	P	**B35-S**	**PA2109**	**N/R**	**BF853**	**SA2046**	TH125,C **19593**
	6000 4-151 (2.5L) FI	R	**B43-S**	**PA2109**	**N/R**	**BF853**	**SA2046**	TH125,C **19593**
	V6-173 (2.8L) FI	W	**B43-S**	**PA2134**	**N/R**	**BF868**	**SA2046**	3 Spd. **19593** 4 Spd. **18139**
	V6-173 (2.8L) 2 Bbl.	X	**B43-S**	**PA2076**	**N/R**	**PF894,-RV**	**SA2046**	3 Spd. **19593** 4 Spd. **18139**
	V6-262 (4.3L) Diesel	T	**B35-S**	**PA2110**	**N/R**		**N/R**	3 Spd. **19593** 4 Spd. **18139**
	Acadian 4-98 (1.6L) Carb. Canada	C	**B43-S**	**PA2077**	**N/R**	**PF894,-RV**	**N/R**	
	4-110 (1.8L) FI Diesel, Canada	D	**B141**		**N/R**	**BF7534**	**N/R**	
	Bonneville, Grand Prix V6-231 (3.8L) 2 Bbl.	A	**B43-S**	**PA1680**	**N/R**	**PF894,-RV**	**SA2046**	
	V8-305 (5.0L) 4 Bbl.	H	**B27**	**PA2008**	**N/R**	**PF894,-RV**	**SA2027 SA2046**	TH700-R4 **18155**
	Fiero 4-151 (2.5L) FI	R	**B35-S**	**PA2109**	**N/R**	**BF853**	**SA2046**	TH125,C **19593**
	V6-173 (2.8L) FI	9	**B43-S**	**PA2136**	**N/R**	**BF853**	**SA2046**	TH125,C **19593**
	Firebird, Trans Am 4-151 (2.5L) FI	2	**B43-S**	**PA2109**	**N/R**	**BF853**	**SA2046**	TH700-R4 **18155**
	V6-173 (2.8L) FI	S	**B43-S**	**PA2136**	**N/R**	**BF853**	**SA2046**	TH700-R4 **18155**
	V8-305 (5.0L) FI	F	**B27**	**PA2136**	**N/R**	**BF853**	**SA2046**	TH700-R4 **18155**
	V8-305 (5.0L) 4 Bbl.	G,H	**B27**	**PA2006**	**N/R**	**PF894,-RV**	**SA2027 SA2046**	TH700-R4 **18155**
	Firefly L3-993cc (1.0L) 2 Bbl. Canada	5,M	**BT223**		**N/R**	**BF933**	**N/R**	
	Grand Am 4-151 (2.5L) FI	U	**B43-S**	**PA2109**	**N/R**	**BF853**	**N/R**	TH125,C **19593**
	V6-181 (3.0L) FI	L	**B43-S**	**PA2138**	**N/R**	**BF853**	**SA2046**	TH125,C **19593**
	Parisienne V6-231 (3.8L) 2 Bbl.	A	**B43-S**	**PA1680**	**N/R**	**PF894,-RV**	**N/R**	
	V6-262 (4.3L) FI	Z	**B35-S**	**PA2006**	**N/R**	**BF853**	**SA2027 SA2046**	TH700-R4 **18155**
	V8-305 (5.0L) 4 Bbl.	H	**B27**	**PA2008**	**N/R**	**PF894,-RV**	**SA2027 SA2046**	TH700-R4 **18155**
	V8-350 (5.7L) Diesel	N	**B30**	**PA2079**	**N/R**		**N/R**	TH700-R4 **18155**
	Sunburst 4-92 (1.5L) Carb. Canada	K	**B227**		**N/R**	**BF805**	**N/R**	
	T1000 4-1600cc (1.6L) 2 Bbl.	C	**B43-S**	**PA2077**	**N/R**	**PF894,-RV**	**SA2046**	
1984	2000 Sunbird 4-1800cc (1.8L) FI Turbo	J	**B43-S**	**PA2109**	**N/R**	**BF853**	**SA2046**	TH125,C **19593**
	4-1800cc (1.8L) FI	O	**B43-S**	**PA2109**	**N/R**	**BF853**	**SA4315 SA2046**	TH125,C **19593**
	4-2000cc (2.0L) FI	P	**B35-S**	**PA2109**	**N/R**	**BF853**	**SA4315 SA2046**	TH125,C **19593**
	6000 4-151 (2.5L) FI	R	**B43-S**	**PA2109**	**N/R**	**BF853**	**SA2046**	TH125,C **19593**
	V6-173 (2.8L) 2 Bbl.	X,Z	**B43-S**	**PA2076**	**N/R**	**PF894,-RV**	**N/R**	TH125,C **19593**
	V6-262 (4.3L) Diesel	T	**B35-S**	**PA2110**	**N/R**	**BF806**	**N/R**	TH125,C **19593**
	Acadian 4-98 (1.6L) Carb. Canada	C	**B43-S**	**PA2077**	**N/R**	**PF894,-RV**	**SA2046**	
	4-110 (1.8L) FI Diesel, Canada	D	**B141**		**N/R**	**BF7534**	**N/R**	
	Bonneville, Grand Prix V6-231 (3.8L) 2 Bbl.	A	**B43-S**	**PA1680**	**N/R**	**PF894,-RV**	**SA2046**	
	V8-305 (5.0L) 4 Bbl.	H	**B27**	**PA2008**	**N/R**	**PF894,-RV**	**SA2027 SA2046**	TH700-R4 **18155**
	V8-350 (5.7L) Diesel	N	**B30**	**PA2079**	**N/R**	**BF806**	**N/R**	
	Fiero 4-151 (2.5L) FI	R	**B43-S**	**PA2109**	**N/R**	**BF853**	**SA2046**	TH125,C **19593**
	Firebird, Trans Am 4-151 (2.5L) FI	2	**B43-S**	**PA2109**	**N/R**	**BF853**	**SA2046**	TH700-R4 **18155**
	V6-173 (2.8L) 2 Bbl.	1	**B43-S**	**PA2077**	**N/R**	**PF894,-RV**	**N/R**	TH700-R4 **18155**
	V6-173 (2.8L) 2 Bbl. HO	L	**B43-S**	**PA2077**	**N/R**	**PF894,-RV**	**SA2046**	TH700-R4 **18155**
	V8-305 (5.0L) 4 Bbl.	G,H	**B27**	**PA2006**	**N/R**	**PF894,-RV**	**SA2027 SA2046**	TH700-R4 **18155**
	Parisienne V6-231 (3.8L) 2 Bbl.	A	**B43-S**	**PA1680**	**N/R**	**PF894,-RV**	**SA2046**	
	V8-305 (5.0L) 4 Bbl.	H	**B27**	**PA2008**	**N/R**	**PF894,-RV**	**SA2027 SA2046**	TH700-R4 **18155**
	V8-350 (5.7L) Diesel	N	**B30**	**PA2079**	**N/R**	**BF806**	**N/R**	TH700-R4 **18155**
	Phoenix 4-151 (2.5L) FI	R	**B43-S**	**PA2109**	**N/R**	**BF853**	**N/R**	**19593**

[t] Transmission, Not Model, Determines Which Transmission Filter is Used. OBS = Obsolete. Availability Limited to Distributor Stock.

PONTIAC Cont'd.

Year	Model and Engine	VIN	Lube	Air	Cabin Air	Fuel	Breather	Trans.[t]
1984	Phoenix V6-173 (2.8L) 2 Bbl.	X,Z	**B43-S**	**PA2076**	**N/R**	**PF894,-RV**	**N/R**	**19593**
	T1000 4-1600cc (1.6L) 2 Bbl.	C	**B43-S**	**PA2077**	**N/R**	**PF894,-RV**	**N/R**	
	4-1800cc (1.8L) Diesel Canada	D	**B109**		**N/R**	**BF7534**	**N/R**	
1983	2000 4-1800cc (1.8L) FI	O	**B43-S**	**PA2109**	**N/R**	**BF868**	**SA4315**	TH125,C **19593**
	4-2000cc (2.0L) FI	P	**B35-S**	**PA2109**	**N/R**	**BF853**	**N/R**	TH125,C **19593**
	6000 4-151 (2.5L) FI	5,R	**B43-S**	**PA2109**	**N/R**	**BF868**	**SA2046**	TH125,C **19593**
	V6-173 (2.8L) 2 Bbl.	X	**B43-S**	**PA2076**	**N/R**	**PF894,-RV**	**SA2046**	TH125,C **19593**
	V6-173 (2.8L) 2 Bbl. HO	Z	**B43-S**		**N/R**	**PF894,-RV**	**N/R**	TH125,C **19593**
	V6-262 (4.3L) Diesel	T	**B35-S**	**PA2110**	**N/R**	**BF806**	**N/R**	TH125,C **19593**
	Acadian 4-98 (1.6L) Carb. Canada	C	**B43-S**	**PA2077**	**N/R**	**PF894,-RV**	**SA2027 SA2046**	
	4-110 (1.8L) FI Diesel, Canada	D	**B141**		**N/R**	**BF7534**	**N/R**	
	Bonneville, Grand Prix V6-231 (3.8L) 2 Bbl.	A	**B43-S**	**PA1680**	**N/R**	**PF894,-RV**	**SA2046**	TH250,C **6021** TH350,C **18031**
	V8-305 (5.0L) 4 Bbl.	H	**B27**	**PA2008**	**N/R**	**PF894,-RV**	**SA2027 SA2046**	TH250,C **6021**
	V8-350 (5.7L) Diesel	N	**B30**	**PA2079**	**N/R**	**BF806**	**N/R**	TH350,C **18031**
	Firebird, Trans Am 4-151 (2.5L) FI	2	**B43-S**	**PA2109**	**N/R**	**BF868**	**SA2046**	TH700-R4 **18155**
	V6-173 (2.8L) 2 Bbl.	1	**B43-S**	**PA2077**	**N/R**	**PF894,-RV**	**SA2046**	TH700-R4 **18155**
	V6-173 (2.8L) 2 Bbl. HO	L	**B35-S**	**PA2077**	**N/R**	**PF894,-RV**	**SA2046**	TH700-R4 **18155**
	V8-305 (5.0L) 4 Bbl.	H	**B27**	**PA2006**	**N/R**	**PF894,-RV**	**SA2027 SA2046**	TH700-R4 **18155**
	V8-305 (5.0L) FI	7,S	**B27**		**N/R**		**SA2046**	TH700-R4 **18155**
	Grand LeMans V6-231 (3.8L) Carb. Canada	A	**B43-S**	**PA1680**	**N/R**	**PF894-RV**	**N/R**	TH250,C **6021** TH350,C **18031**
	V8-305 (5.0L) Carb. Canada	H	**B27**	**PA2008**	**N/R**	**PF894-RV**	**SA2045**	TH250,C **6021**
	V8-350 (5.7L) FI Diesel, Canada	N	**B30**	(w/Wrap) **PA2073** (w/o Wrap) **PA2079**	**N/R**	**BF806**	**N/R**	TH250,C **6021**
	Phoenix 4-151 (2.5L) FI	5,R	**B43-S**	**PA2109**	**N/R**	**BF868**	**SA2046**	TH125,C **19593**
	V6-173 (2.8L) 2 Bbl.	X	**B43-S**	**PA2076**	**N/R**	**PF894,-RV**	**N/R**	TH125,C **19593**
	V6-173 (2.8L) 2 Bbl. HO	Z	**B43-S**		**N/R**	**PF894,-RV**	**SA2046**	TH125,C **19593**
	T1000 4-1600cc (1.6L) 2 Bbl.	C	**B43-S**	**PA2077**	**N/R**	**PF894,-RV**	**N/R**	
	4-1800cc (1.8L) Diesel Canada	D	**B109**		**N/R**	**BF7534**	**N/R**	**19593**
1982	2000 4-1800cc (1.8L) 2 Bbl.	G	**B35-S**	**PA2112 OBS**	**N/R**	**PF894,-RV**	**SA2046**	TH125,C **19593**
	4-1800cc (1.8L) FI	O	**B43-S**	**PA2109**	**N/R**	**BF853**	**SA4315**	TH125,C **19593**
	6000 4-151 (2.5L) FI	2,R	**B43-S**	**PA2109**	**N/R**		**SA2046**	TH125,C **19593**
	V6-173 (2.8L) 2 Bbl.	X,Z	**B43-S**	**PA2076**	**N/R**	**PF894,-RV**	**SA2046**	TH125,C **19593**
	V6-262 (4.3L) Diesel	T	**B35-S**	**PA2110**	**N/R**	**BF806**	**N/R**	TH125,C **19593**
	Acadian 4-98 (1.6L) Carb. Canada	9,C	**B43-S**	**PA2077**	**N/R**	**PF894,-RV**	**SA2027 SA2046**	
	4-110 (1.8L) FI Diesel, Canada	D	**B141**		**N/R**	**BF7534**	**N/R**	
	Bonneville, Grand Prix V6-231 (3.8L) 2 Bbl.	A	**B43-S**	**PA1680**	**N/R**	**PF893,-RV**	**SA2046**	TH250,C **6021** TH350,C **18031**
	V6-252 (4.1L) 4 Bbl.	4	**B43-S**	**PA2006**	**N/R**	**PF894,-RV**	**SA2027 SA2046**	TH350,C **18031**
	V8-350 (5.7L) Diesel	N	**B30**	**PA2079**	**N/R**	**BF806**	**N/R**	TH350,C **6021**
	Firebird 4-151 (2.5L) FI	2	**B43-S**	**PA2109**	**N/R**		**SA2046**	
	V6-173 (2.8L) 2 Bbl.	1	**B35-S**	**PA2077**	**N/R**	**PF894,-RV**	**SA2027 SA2046**	
	V8-305 (5.0L) FI	7	**B27**		**N/R**		**SA2046**	
	V8-305 (5.0L) 4 Bbl.	H	**B27**	**PA2006**	**N/R**	**PF894,-RV**	**SA2027 SA2046**	
	Grand LeMans V6-231 (3.8L) Carb. Canada	A	**B43-S**	**PA1680**	**N/R**	**PF894,-RV**	**N/R**	**18031**
	V6-252 (4.1L) Carb. Canada	4	**B43-S**	**PA2006**	**N/R**	**PF894,-RV**	**SA2027**	**6021**
	V8-267 (4.4L) Carb. Canada	J	**B27**	**PA2106**	**N/R**	**PF894,-RV**	**SA2027**	**6021**
	V8-305 (5.0L) Carb. Canada	H	**B27**	**PA2008**	**N/R**	**PF894,-RV**	**SA2027**	**6021**
	V8-350 (5.7L) FI Diesel, Canada	N	**B30**	**PA2079**	**N/R**	**BF806**	**N/R**	**6021**
	Grand Prix V8-267 (4.4L) Carb Canada	J	**B27**	**PA2106**	**N/R**	**PF894,-RV**	**SA2027**	**6021**
	Phoenix 4-151 (2.5L) FI	R	**B43-S**	**PA2109**	**N/R**		**SA2046**	TH125,C **19593**
	V6-173 (2.8L) 2 Bbl.	X	**B43-S**	**PA2076**	**N/R**	**PF894,-RV**	**SA2046**	TH125,C **19593**
	V6-173 (2.8L) 2 Bbl. HO	Z	**B35-S**		**N/R**	**PF894,-RV**	**SA2046**	TH125,C **19593**
	T1000 4-1600cc (1.6L) 2 Bbl.	C	**B43-S**	**PA2077**	**N/R**	**PF893,-RV**	**N/R**	
1981	Acadian 4-98 (1.6L) Carb. Canada	9	**B43-S**	**PA2077**	**N/R**	**PF894,-RV**	**SA2046**	TH125 **19593**
	4-110 (1.8L) FI Diesel, Canada	D	**B141**		**N/R**	**BF7534**	**N/R**	

OBS = Obsolete. Availability Limited to Distributor Stock. [t] Transmission, Not Model, Determines Which Transmission Filter is Used.

PONTIAC Cont'd.

Year	Model and Engine	VIN	Lube	Air	Cabin Air	Fuel	Breather	Trans.t
1981	Bonneville, Catalina V6-231 (3.8L) 2 Bbl.	A	**B43-S**	**PA1680**	**N/R**	**PF894,-RV**	**SA2027 SA2046**	TH350,C **18031**
	V8-265 (4.3L) 2 Bbl.	S	**B43-S**	**PA2105 OBS**	**N/R**	**PF894,-RV**	**SA2046**	
	V8-307 (5.0L) 4 Bbl.	H,Y	**B30**	**PA2008**	**N/R**	**PF894,-RV**	**SA2046**	
	V8-350 (5.7L) Diesel	N	**B30**	**PA2079**	**N/R**	**BF806**	**N/R**	
	Firebird V6-231 (3.8L) 2 Bbl.	A	**B43-S**	**PA2006**	**N/R**	**PF894,-RV**	**SA2027 SA2046**	TH350,C **18031**
	V8-265 (4.3L) 2 Bbl.	S	**B43-S**	**PA2105 OBS**	**N/R**	**PF894,-RV**	**SA2046**	
	V8-301 (4.9L) 4 Bbl. Turbo	T	**B43-S**		**N/R**	**PF894,-RV**	**SA2046**	TH350,C **18031**
	V8-301 (4.9L) 4 Bbl.	W	**B43-S**	**PA2105 OBS**	**N/R**	**PF894,-RV**	**SA2046**	
	V8-305 (5.0L) 4 Bbl.	H	**B27**	**PA2008**	**N/R**	**PF894,-RV**	**SA2027 SA2046**	**18031**
	Grand LeMans V6-229 (3.8L) Carb. Canada	K	**B35-S**	**PA2106**	**N/R**	**PF894,-RV**	**SA2027**	TH350 **18031**
	V6-267 (4.4L) Carb. Canada	J	**B27**	**PA2106**	**N/R**	**PF894,-RV**	**SA2027**	TH350 **18031**
	V6-305 (5.0L) Carb. Canada	H	**B27**	**PA2008**	**N/R**	**PF894,-RV**	**SA2027**	TH350 **18031**
	Grand Prix V6-231 (3.8L) 2 Bbl.	A	**B43-S**	**PA1680**	**N/R**	**PF894,-RV**	**SA2046**	
	V8-265 (4.3L) 2 Bbl.	S	**B43-S**	**PA2105 OBS**	**N/R**	**PF894,-RV**	**SA2046**	
	V8-350 (5.7L) Diesel	N	**B30**	**PA2079**	**N/R**	**BF806**	**N/R**	
	Laurentian V6-231 (3.8L) Carb. Canada	A	**B43-S**	**PA1680**	**N/R**	**PF894,-RV**	**N/R**	
	V8-267 (4.4L) Carb. Canada	J	**B27**	**PA2106**	**N/R**	**PF894,-RV**	**SA2027 SA2046**	**6021**
	V8-305 (5.0L) Carb. Canada	H,Y	**B27**	**PA2008**	**N/R**	**PF894,-RV**	**SA2027 SA2046**	
	V8-350 (5.7L) FI Diesel, Canada	N	**B1432**	**PA2079**	**N/R**	**BF806**	**N/R**	TH350 **18031**
	LeMans V6-231 (3.8L) 2 Bbl.	A,K	**B43-S**	**PA1680**	**N/R**	**PF894,-RV**	**SA2046**	TH350,C **18031**
	V8-265 (4.3L) 2 Bbl.	S	**B43-S**	**PA2105 OBS**	**N/R**	**PF894,-RV**	**SA2046**	
	V8-301 (4.9L) 4 Bbl.	W	**B43-S**	**PA2105 OBS**	**N/R**	**PF894,-RV**	**SA2046**	
	V8-305 (5.0L) 4 Bbl.	H	**B27**	**PA2008**	**N/R**	**PF894,-RV**	**SA2027 SA2046**	
	Phoenix 4-151 (2.5L) 2 Bbl.	5	**B43-S**	**PA2082 OBS**	**N/R**	**PF893,-RV**	**SA2027 SA2046**	TH125,C **19593**
	V6-173 (2.8L) 2 Bbl.	X	**B43-S**	**PA2076**	**N/R**	**PF894,-RV**	**SA2046**	TH125,C **19593**
	T1000 4-1600cc (1.6L) 2 Bbl.	9	**B43-S**	**PA2077**	**N/R**	**PF894-RV**	**N/R**	
1980	Acadian 4-98 (1.6L) Carb. Canada	0,9,E	**B43-S**	**PA2077**	**N/R**	**PF893,-RV**	**SA2046**	
	Bonneville, Catalina V6-231 (3.8L) 2 Bbl.	A,K	**B43-S**	**PA1680**	**N/R**	**PF893,-RV**	**SA2046**	TH350,C **6021**
	V8-265 (4.3L) 2 Bbl.	S	**B43-S**	**PA2006**	**N/R**	**PF893,-RV**	**SA2027 SA2046**	
	V8-301 (4.9L) 4 Bbl.	W	**B43-S**	**PA2006**	**N/R**	**PF894,-RV**	**SA2027 SA2046**	TH350C **18031**
	V8-350 (5.7L) Diesel	N	**B30**	**PA2079**	**N/R**	**BF806**	**N/R**	TH350,C **6021**
	V8-350 (5.7L) 4 Bbl.	R	**B30**	**PA2008**	**N/R**	**PF894,-RV**	**SA2046**	TH350,C **6021**
	V8-350 (5.7L) 4 Bbl.	X	**B39**	**PA2008**	**N/R**	**PF894,-RV**	**SA2027 SA2046**	TH400 **6020**
	Firebird, Trans Am V6-231 (3.8L) 2 Bbl.	A	**B43-S**	**PA2006**	**N/R**	**PF893,-RV**	**SA2027 SA2046**	TH350,C **18031**
	V8-265 (4.3L) 2 Bbl.	S	**B43-S**	**PA2006**	**N/R**	**PF893,-RV**	**SA2027 SA2046**	TH350,C **18031**
	V8-301 (4.9L) 4 Bbl. Turbo	T	**B43-S**	**PA2006**	**N/R**	**PF894,-RV**	**SA2046**	TH350,C **6021**
	V8-301 (4.9L) 4 Bbl.	W	**B43-S**	w/Ram Air **PA2008**	**N/R**	**PF894,-RV**	**SA2027 SA2046**	TH350,C **18031**
	V8-305 (5.0L) 4 Bbl.	H	**B27**	Firebird **PA2008** Trans Am **PA2105 OBS**	**N/R**	**PF894,-RV**	**SA2027 SA2046**	TH350,C **18031**
	Grand Am, LeMans V6-229 (3.8L) 2 Bbl.	K	**B43-S**	**PA1680**	**N/R**	**PF893,-RV**	**SA2027 SA2046**	TH350,C **6021**
	V6-231 (3.8L) 2 Bbl.	A	**B43-S**	**PA1680**	**N/R**	**PF893,-RV**	**SA2046**	TH350,C **18031**
	V8-265 (4.3L) 2 Bbl.	S	**B43-S**	**PA2006**	**N/R**	**PF893,-RV**	**SA2027 SA2046**	
	V8-301 (4.9L) 4 Bbl.	W	**B43-S**	**PA2006**	**N/R**	**PF894,-RV**	**SA2027 SA2046**	
	V8-305 (5.0L) 4 Bbl.	H	**B27**	**PA2008**	**N/R**	**PF894,-RV**	**SA2027 SA2046**	
	Grand LeMans V8-267 (4.4L) Carb. Canada	J	**B27**	**PA2106**	**N/R**	**PF894,-RV**	**SA2027**	TH350 **18031**
	Grand Prix V6-231 (3.8L) 2 Bbl.	A	**B43-S**	**PA1680**	**N/R**	**PF893,-RV**	**SA2046**	TH350,C **18031**

t Transmission, Not Model, Determines Which Transmission Filter is Used. OBS = Obsolete. Availability Limited to Distributor Stock.

Year	Model and Engine	VIN	Lube	Air	Cabin Air	Fuel	Breather	Trans.†
PONTIAC Cont'd.								
1980	Grand Prix V8-265 (4.3L) 2 Bbl.	S	**B43-S**	**PA2006**	**N/R**	**PF893,-RV**	**SA2027** **SA2046**	TH250C **6021** TH350,C **18031**
	V8-301 (4.9L) 4 Bbl.	W	**B43-S**	**PA2006**	**N/R**	**PF894,-RV**	**SA2027** **SA2046**	TH350,C **18031**
	V8-305 (5.0L) 4 Bbl.	H	**B27**	**PA2008**	**N/R**	**PF894,-RV**	**SA2027** **SA2046**	TH350,C **18031**
	Laurentian V6-229 (3.8L) Carb. Canada	K	**B43-S**	**PA1680**	**N/R**	**PF894,-RV**	**N/R**	**18031**
	V8-265 (4.3L) Carb. Canada	S	**B43-S**		**N/R**	**PF894,-RV**	**N/R**	
	V8-267 (4.4L) Carb. Canada	J	**B27**	**PA1680**	**N/R**	**PF894,-RV**	**SA2027**	**6021**
	V8-305 (5.0L) Carb. Canada	H	**B27**	**PA2008**	**N/R**	**PF894,-RV**	**SA2027**	**6021**
	V8-350 (5.7L) Carb. Canada	X	**B39**	**PA2008**	**N/R**	**PF894,-RV**	**SA2027**	TH350 **18031**
	V8-350 (5.7L) FI Diesel, Canada	N	**B1432**	**PA2079**	**N/R**	**BF806**	**N/R**	**6021**
	Phoenix 4-151 (2.5L) 2 Bbl.	5,V	**B43-S**	**PA2082 OBS**	**N/R**	**PF893,-RV**	**SA2027** **SA2046**	TH125,C **19593**
	V6-173 (2.8L) 2 Bbl.	7	**B43-S**	**PA2076**	**N/R**	**PF894,-RV**	**SA2046**	TH125,C **19593**
	Sunbird 4-151 (2.5L) 2 Bbl.	5,V	**B43-S**	**PA2082 OBS**	**N/R**	**PF893,-RV**	**SA2027** **SA2046**	
	V6-231 (3.8L) 2 Bbl.	A	**B43-S**	**PA2006**	**N/R**	**PF893,-RV**	**SA2027** **SA2046**	TH250,C **6021**
	Acadian Diesel, CANADA							
PORSCHE								
2010	911 Carrera 6-3596cc (3.6L) FI	A					**N/R**	
	911 Carrera 4 6-3596cc (3.6L) FI	A					**N/R**	
	911 Carrera 4S 6-3824cc (3.8L) FI	B					**N/R**	
	911 Carrera S 6-3824cc (3.8L) FI	B					**N/R**	
	911 GT2 6-3596cc (3.6L) FI	A					**N/R**	**M.T.**
	911 GT3 6-3824cc (3.8L) FI	B					**N/R**	
	911 GT3 RS 6-3824cc (3.8L) FI	B					**N/R**	**M.T.**
	911 Targa 4 6-3596cc (3.6L) FI	A					**N/R**	
	911 Targa 4S 6-3824cc (3.8L) FI	B					**N/R**	
	911 Turbo 6-3596cc (3.6L) FI Turbo	D					**N/R**	
	Boxster 6-2893cc (2.9L) FI	A					**N/R**	
	Boxster S 6-3387cc (3.4L) FI	B					**N/R**	
	Cayenne V6-3597cc (3.6L) DI	A	**P7136**			**N/S**	**N/R**	
	V8-4806cc (4.8L) DI	C				**N/S**	**N/R**	
	V8-4806cc (4.8L) DI Twin Turbo	C				**N/S**	**N/R**	
	Cayman 6-2893cc (2.9L) FI	A					**N/R**	
	6-3387cc (3.4L) FI	B					**N/R**	
	Panamera V8-4806cc (4.8L) FI	B				**N/S**	**N/R**	
	V8-4806cc (4.8L) FI Twin Turbo	C				**N/S**	**N/R**	
2009	911 Carrera 6-3596cc (3.6L) FI	A					**N/R**	
	911 Carrera 4 6-3596cc (3.6L) FI	A					**N/R**	
	911 Carrera 4S 6-3824cc (3.8L) FI	B					**N/R**	
	911 Carrera S 6-3824cc (3.8L) FI	B					**N/R**	
	911 GT2 6-3596cc (3.6L) FI Twin Turbo	D					**N/R**	
	911 GT3 6-3596cc (3.6L) FI	C					**N/R**	
	911 Targa 4 6-3596cc (3.6L) FI	A					**N/R**	
	911 Targa 4S 6-3824cc (3.8L) FI	B					**N/R**	
	911 Turbo 6-3596cc (3.6L) FI Twin Turbo	A					**N/R**	
	Boxster 6-2893cc (2.9L) FI	A					**N/R**	
	Boxster S 6-3387cc (3.4L) FI	B					**N/R**	
	Cayenne V6-3597cc (3.6L) DI	A	**P7136**			**N/S**	**N/R**	
	V8-4806cc (4.8L) DI	B				**N/S**	**N/R**	
	V8-4806cc (4.8L) DI Twin Turbo	C				**N/S**	**N/R**	
	Cayman 6-2893cc (2.9L) FI	A					**N/R**	
	Cayman S 6-3387cc (3.4L) FI	B					**N/R**	
2008	911 Carrera 6-3596cc (3.6L) FI	A					**N/R**	
	911 Carrera 4 6-3596cc (3.6L) FI	A					**N/R**	
	911 Carrera 4S 6-3824cc (3.8L) FI	B					**N/R**	
	911 Carrera S 6-3824cc (3.8L) FI	B					**N/R**	
	911 GT2 6-3598cc (3.6L) FI Twin Turbo	D					**N/R**	
	911 GT3 6-3598cc (3.6L) FI	C					**N/R**	
	911 Targa 4 6-3596cc (3.6L) FI	A					**N/R**	
	911 Targa 4S 6-3596cc (3.6L) FI	B					**N/R**	
	911 Turbo 6-3596cc (3.6L) FI Twin Turbo	A					**N/R**	
	Boxster 6-164 (2.7L) FI	A					**N/R**	

OBS = Obsolete. Availability Limited to Distributor Stock. † Transmission, Not Model, Determines Which Transmission Filter is Used.

PORSCHE Cont'd.

Year	Model and Engine	VIN	Lube	Air	Cabin Air	Fuel	Breather	Trans.[t]
2008	Boxster S 6-3387cc (3.4L) FI	B					N/R	
	Cayenne V6-3597cc (3.6L) FI	A	P7136			N/S	N/R	
	V8-4806cc (4.8L) DI	B				N/S	N/R	
	V8-4806cc (4.8L) DI Twin Turbo	C				N/S	N/R	
	Cayman 6-2687cc (2.7L) FI	A					N/R	
	Cayman S 6-3387cc (3.4L) FI	B					N/R	
2007	911 Carrera 6-220 (3.6L) FI	A				N/S	N/R	
	911 Carrera 4S 6-3824cc (3.8L) FI	B				N/S	N/R	
	911 Carrera 4S Cabriolet 6-220 (3.6L) FI	B				N/S	N/R	
	911 Carrera S 6-3824cc (3.8L) FI	B				N/S	N/R	
	911 GT3 6-220 (3.6L) FI	C					N/R	M.T.
	911 Targa 6-3596cc (3.6L) FI	A,B					N/R	
	911 Targa 4S 6-3824cc (3.8L) FI						N/R	
	911 Turbo 6-220 (3.6) FI Twin Turbo	D					N/R	
	911 Turbo S 6-220 (3.6L) FI Twin Turbo	D					N/R	
	Boxster 6-164 (2.7L) FI	A					N/R	
	Boxster S 6-3387cc (3.4L) FI	B					N/R	
	Cayman 6-167 (2.7L) FI	A					N/R	
	Cayman S 6-3387cc (3.4L) FI	B					N/R	
2006	911 Carrera, 911 Carrera 4S Cabriolet 6-220 (3.6L) SFI	A					N/R	
	911 Carrera 4S 6-220 (3.6L) FI	A					N/R	
	911 Carrera S 6-3824cc (3.8L) FI	B				N/S	N/R	
	911 GT3 6-220 (3.6L) FI	C					N/R	
	Boxster 6-164 (2.7L) FI	A					N/R	
	Boxster S 6-3179cc (3.2L) FI	B					N/R	
	Cayenne V6-194 (3.2L) FI	A	P7136			N/S	N/R	
	V6-4511cc (4.5L) FI or Twin Turbo	B,C				N/S	N/R	
	Cayman S 6-3387cc (3.4L) FI	B					N/R	
2005	911 Carrera 6-220 (3.6L) SFI	A					N/R	
	911 Carrera 4S 6-220 (3.6L) FI	A					N/R	
	911 Carrera 4S Cabriolet 6-220 (3.6L) FI	A					N/R	
	911 Carrera S 6-3824cc (3.8L) FI	B				N/S	N/R	
	911 GT2 6-220 (3.6L) FI Twin Turbo	B					N/R	
	911 GT3 6-220 (3.6L) FI	C					N/R	
	911 Turbo, 911 Turbo Cabriolet 6-220 (3.6L) FI Twin Turbo	B					N/R	
	911 Turbo S, 911 Turbo S Cabriolet 6-220 (3.6L) FI Twin Turbo	B					N/R	
	Boxster 6-164 (2.7L) SFI	A					N/R	
	Boxster S 6-194 (3.2L) SFI	B					N/R	
	Carrera GT V10-5733cc (5.7L) FI	A				N/S	N/R	M.T.
	Cayenne V6-195 (3.2L) SFI	A	P7136			N/S	N/R	
	V6-4511cc (4.5L) FI or Twin Turbo	B,C				N/S	N/R	
2004	911 Carrera 6-220 (3.6L) SFI	A					N/R	
	911 GT2 6-220 (3.6L) SFI Twin Turbo	C					N/R	
	911 GT3 6-3606cc (3.6L) FI						N/R	M.T.
	911 Targa 6-220 (3.6L) SFI	A			N/R		N/R	
	Boxster 6-164 (2.7L) SFI	A					N/R	
	6-194 (3.2L) SFI	B					N/R	
	Carrera GT V10-5733cc (5.7L) FI	A				N/S	N/R	M.T.
	Cayenne V6-195 (3.2L) FI	A				N/S	N/R	
	V8-4511cc (4.5L) FI or Turbo	B,C				N/S	N/R	
2003	911 Carrera 6-220 (3.6L) SFI	A					N/R	
	911 Turbo 6-220 (3.6L) SFI Twin Turbo	B					N/R	
	Boxster 6-164 (2.7L) SFI	A					N/R	
	6-194 (3.2L) SFI	B					N/R	
	Cayenne V8-4511cc (4.5L) FI or Turbo	B,C				N/S	N/R	
2002	911 Carrera 6-220 (3.6L) SFI	A					N/R	
	911 Turbo 6-220 (3.6L) SFI Twin Turbo	B					N/R	
	Boxster 6-164 (2.7L) SFI	A					N/R	
	6-194 (3.2L) SFI	B					N/R	
2001	911 Carrera 6-207 (3.4L) SFI	A					N/R	
	911 Turbo 6-220 (3.6L) SFI Twin Turbo	C					N/R	
	Boxster 6-164 (2.7L) SFI	A					N/R	
	6-194 (3.2L) SFI	B					N/R	
2000	911 Carrera 6-207 (3.4L) SFI	A					N/R	

[t] Transmission, Not Model, Determines Which Transmission Filter is Used. OBS = Obsolete. Availability Limited to Distributor Stock.

PORSCHE Cont'd.

Year	Model and Engine	VIN	Lube	Air	Cabin Air	Fuel	Breather	Trans.t
2000	Boxster 6-164 (2.7L) SFI	A					**N/R**	
	6-194 (3.2L) SFI	B					**N/R**	
1999	911 Carrera 6-207 (3.4L) EFI	A					**N/R**	
	Boxster 6-151 (2.5L) SFI	A					**N/R**	
1998	911 Carrera 6-220 (3.6L) SFI	A			**N/R**		**N/R**	
	Boxster 6-151 (2.5L) SFI	A					**N/R**	
1997	911 Carrera 6-220 (3.6L) SFI	A			**N/R**		**N/R**	
	911 Turbo 6-220 (3.6L) SFI Twin Turbo	C			**N/R**		**N/R**	**M.T.**
	Boxster 6-151 (2.5L) SFI	A					**N/R**	
1996	911 Carrera 6-220 (3.6L) SFI	A			**N/R**		**N/R**	
	911 Turbo 6-220 (3.6L) SFI Twin Turbo	C			**N/R**		**N/R**	**M.T.**
1995	911 Carrera 6-220 (3.6L) EFI	A			**N/R**		**N/R**	
	928 V8-329 (5.4L) EFI	A			**N/R**		**N/R**	
	968 4-183 (3.0L) EFI	A			**N/R**		**N/R**	
1994	911 Series 6-220 (3.6L) EFI	B	**BT292**		**N/R**		**N/R**	
	6-220 (3.6L) EFI Turbo	C			**N/R**		**N/R**	
	928 V8-329 (5.4L) EFI	A			**N/R**		**N/R**	
	968 4-183 (3.0L) EFI	A			**N/R**		**N/R**	
1993	911 Series 6-220 (3.6L) EFI	B	**BT292**		**N/R**		**N/R**	
	928 V8-329 (5.4L) EFI	A			**N/R**		**N/R**	
	968 4-183 (3.0L) EFI	A			**N/R**		**N/R**	
1992	911 Series 6-220 (3.6L) EFI	B	**BT292**		**N/R**		**N/R**	
	911 Turbo 6-201 (3.3L) EFI	A			**N/R**		**PA1603**	**M.T.**
	968 4-183 (3.0L) EFI	A			**N/R**		**N/R**	
1991	911 Series 6-220 (3.6L) EFI	B	**BT292**		**N/R**		**N/R**	
	911 Turbo 6-201 (3.3L) EFI	A			**N/R**		**PA1603**	**M.T.**
	928 V8-303 (5.0L) EFI	A			**N/R**		**N/R**	
	944 4-183 (3.0L) EFI	B			**N/R**		**N/R**	
1990	911 Carrera 6-220 (3.6L) EFI	B	**BT292**		**N/R**		**N/R**	
	928 V8-303 (5.0L) EFI	B			**N/R**		**N/R**	
	944 4-183 (3.0L) EFI	B			**N/R**		**N/R**	
1989	911 6-193 (3.2L) EFI	B	**BT292**		**N/R**		**N/R**	
	6-220 (3.6L) EFI	B	**BT292**		**N/R**		**N/R**	
	911 Turbo 6-201 (3.3L) EFI	B	**BT292**		**N/R**		**N/R**	**M.T.**
	928 V8-303 (5.0L) EFI	B			**N/R**		**N/R**	
	944 4-151 (2.5L) EFI Turbo	A			**N/R**		**N/R**	
	4-164 (2.7L) EFI	A			**N/R**		**N/R**	
	4-183 (3.0L) EFI	A,B			**N/R**		**N/R**	
1988	911 6-193 (3.2L) EFI	B	**BT292**		**N/R**		**N/R**	
	911 Turbo 6-201 (3.3L) EFI	B	**BT292**		**N/R**		**N/R**	**M.T.**
	924 4-151 (2.5L) EFI	A			**N/R**		**N/R**	
	928 V8-303 (5.0L) EFI	B			**N/R**		**N/R**	
	944 4-151 (2.5L) EFI	A,B			**N/R**		**N/R**	
	4-151 (2.5L) EFI Turbo	A			**N/R**		**N/R**	
1987	911 6-193 (3.2L) FI	B	**BT292**		**N/R**		**N/R**	
	911 Turbo 6-201 (3.3L) FI	B	**BT292**		**N/R**		**N/R**	**M.T.**
	924 4-151 (2.5L) FI	A			**N/R**		**N/R**	
	928 V8-303 (5.0L) FI	B			**N/R**		**N/R**	
	944 4-151 (2.5L) FI	A,B			**N/R**		**N/R**	
	4-151 (2.5L) EFI Turbo	A			**N/R**		**N/R**	
1986	911 6-193 (3.2L) FI	B	**BT292**		**N/R**		**N/R**	
	911 Turbo 6-201 (3.3L) FI	A,B	**BT292**		**N/R**		**N/R**	**M.T.**
	928 V8-303 (5.0L) FI	B			**N/R**		**N/R**	
	944 4-151 (2.5L) FI	A			**N/R**		**N/R**	
	4-151 (2.5L) EFI Turbo	A			**N/R**		**N/R**	
1985	911 6-193 (3.2L) FI	B	**BT292**		**N/R**		**N/R**	
	6-3299cc (3.3L) FI Turbo		**BT292**		**N/R**		**N/R**	
	928 V8-303 (5.0L) FI	B			**N/R**		**N/R**	
	944 4-151 (2.5L) FI	A			**N/R**		**N/R**	
1984	911 6-193 (3.2L) FI	B	**BT292**		**N/R**		**N/R**	
	6-3299cc (3.3L) FI Turbo		**BT292**		**N/R**		**N/R**	
	928 V8-4664cc (4.7L) FI	B			**N/R**		**N/R**	
	944 4-151 (2.5L) FI	A			**N/R**		**N/R**	
1983	911SC 6-2984cc (3.0L) FI	A	**BT292**	**PA4042**	**N/R**		**N/R**	
	928 V8-4664cc (4.7L) FI	B			**N/R**		**N/R**	
	944 4-151 (2.5L) FI	A			**N/R**		**N/R**	
1982	911SC 6-2984cc (3.0L) FI	A	**BT292**	**PA4042**	**N/R**		**N/R**	

OBS = Obsolete. Availability Limited to Distributor Stock. t Transmission, Not Model, Determines Which Transmission Filter is Used.

Year	Model and Engine	VIN	Lube	Air	Cabin Air	Fuel	Breather	Trans.t
PORSCHE Cont'd.								
1982	924 4-1984cc (2.0L) FI	A	**B178**	**PA2208**	**N/R**	**BF885**	**N/R**	
	4-1984cc (2.0L) FI Turbo	A	**B178**		**N/R**		**N/R**	
	928 V8-4474cc (4.5L) FI	A			**N/R**		**N/R**	
1981	911SC 6-2984cc (3.0L) FI	A	**BT292**	**PA4042**	**N/R**		**N/R**	
	924 4-1984cc (2.0L) FI	A	**B178**	**PA2208**	**N/R**		**N/R**	
	4-1984cc (2.0L) FI Turbo	A	**B178**		**N/R**		**N/R**	
	928 V8-4474cc (4.5L) FI	A			**N/R**		**N/R**	
1980	911SC 6-2984cc (3.0L) FI		**BT292**	**PA4042**	**N/R**	**BF885**	**N/R**	
	924 4-1984cc (2.0L) FI		**B178**	**PA2208**	**N/R**	**BF885**	**N/R**	
	4-1984cc (2.0L) FI Turbo		**B178**		**N/R**		**N/R**	
	928 V8-4474cc (4.5L) FI				**N/R**		**N/R**	
RENAULT								
2009	Clio 4-1600cc (1.6L) FI Mexico		**B7276**				**N/R**	
	Kangoo 4-1600cc (1.6L) FI Mexico		**B7276**				**N/R**	
2008	Clio 4-2000cc (2.0L) FI Mexico		**B7276**				**N/R**	
	Kangoo 4-1600cc (1.6L) FI Mexico		**B7276**				**N/R**	
	Scenic 4-2000cc (2.0L) FI Mexico		**B7276**				**N/R**	
2007	Clio 4-1600cc (1.6L) FI Mexico		**B7276**				**N/R**	
	Kangoo 4-1600cc (1.6L) FI Mexico		**B7276**				**N/R**	
	Scenic 4-2000cc (2.0L) FI Mexico		**B7276**				**N/R**	
2006	Clio 4-1600cc (1.6L) FI Mexico		**B7276**				**N/R**	
	4-2000cc (2.0L) FI Mexico		**B7276**				**N/R**	
	Kangoo 4-1600cc (1.6L) FI Mexico		**B7276**				**N/R**	
	Megane 4-2000cc (2.0L) FI Mexico		**B7276**				**N/R**	
	Scenic 4-2000cc (2.0L) FI Mexico		**B7276**				**N/R**	
2005	Clio 4-1600cc (1.6L) FI Mexico		**B7276**				**N/R**	
	4-2000cc (2.0L) FI Mexico		**B7276**				**N/R**	
	Kangoo 4-1600cc (1.6L) FI Mexico		**B7276**				**N/R**	
	Megane 4-2000cc (2.0L) FI Mexico		**B7276**				**N/R**	
	Scenic 4-2000cc (2.0L) FI Mexico		**B7276**				**N/R**	
2004	Clio 4-1600cc (1.6L) FI Mexico		**B7276**				**N/R**	
	4-2000cc (2.0L) FI Mexico		**B7276**				**N/R**	
	Kangoo 4-1600cc (1.6L) FI Mexico		**B7276**				**N/R**	
	Megane 4-2000cc (2.0L) FI Mexico		**B7276**				**N/R**	
	Scenic 4-2000cc (2.0L) FI Mexico		**B7276**				**N/R**	
2003	Clio 4-1600cc (1.6L) FI Mexico		**B7276**				**N/R**	
	4-2000cc (2.0L) FI Mexico		**B7276**				**N/R**	
	Megane 4-2000cc (2.0L) FI Mexico		**B7276**				**N/R**	
	Scenic 4-2000cc (2.0L) FI Mexico		**B7276**				**N/R**	
2002	Clio 4-1600cc (1.6L) FI Mexico		**B7276**				**N/R**	
	4-2000cc (2.0L) FI Mexico		**B7276**				**N/R**	
	Megane 4-2000cc (2.0L) FI Mexico		**B7276**				**N/R**	
	Scenic 4-2000cc (2.0L) FI Mexico		**B7276**				**N/R**	
2001	Clio 4-1600cc (1.6L) FI Mexico		**B7276**				**N/R**	
	Megane 4-2000cc (2.0L) FI Mexico		**B7276**				**N/R**	
	Scenic 4-2000cc (2.0L) FI Mexico		**B7276**				**N/R**	
1987	Alliance 4-1400cc (1.4L) FI	D	**B173-S**	**PA691**	**N/R**	**BF890**	**N/R**	
	4-1721cc (1.7L) FI	A	**B173-S**		**N/R**	**BF890**	**N/R**	
	4-1965cc (2.0L) FI	V	**B141**		**N/R**	**BF890**		
1986	18I/Sportwagon 4-2165cc (2.2L) FI	F	**B173-S**	**PA2099**	**N/R**	**BF1195**	**N/R**	
	Alliance 4-1400cc (1.4L) FI	D	**B173-S**	**PA691**	**N/R**	**BF890**		
	4-1721cc (1.7L) FI	A	**B173-S**		**N/R**	**BF890**	**N/R**	
	Encore 4-1400cc (1.4L) FI	D	**B173-S**	**PA691**	**N/R**	**BF890**		
	4-1721cc (1.7L) FI	A	**B173-S**		**N/R**	**BF890**	**N/R**	
	R5 4-2152cc (2.2L) Carb. Canada	A	**B173-S**		**N/R**			
1985	18I/Sportwagon 4-2165cc (2.2L) FI	F	**B173-S**	**PA2099**	**N/R**	**BF1195**	**N/R**	
	Alliance 4-1400cc (1.4L) FI	D,E	**B173-S**	**PA691**[17]	**N/R**	**BF890**		
	4-1721cc (1.7L) FI	A	**B173-S**		**N/R**	**BF890**	**N/R**	
	Encore 4-1400cc (1.4L) FI	D	**B173-S**	**PA691**[17]	**N/R**	**BF890**		
	4-1721cc (1.7L) FI	A	**B173-S**		**N/R**	**BF890**	**N/R**	
	Fuego 4-1647cc (1.6L) FI Turbo	C	**B173-S**		**N/R**	**BF1195**	**N/R**	
	4-2165cc (2.2L) FI	F	**B173-S**	**PA691**	**N/R**	**BF1195**		
	Le Car 4-2152cc (2.2L) Carb. Canada	A	**B173-S**		**N/R**			
1984	18I/Sportwagon 4-2165cc (2.2L) FI	F	**B173-S**	**PA2099**	**N/R**	**BF1195**	**N/R**	
	Alliance 4-1400cc (1.4L) FI	D,E	Metric **B173-S** U.S. **B132**	**PA691**[17]	**N/R**	**BF890**	**N/R**	

[t] Transmission, Not Model, Determines Which Transmission Filter is Used. OBS = Obsolete. Availability Limited to Distributor Stock. [17] Exc. Calif.

Year	Model and Engine	VIN	Lube	Air	Cabin Air	Fuel	Breather	Trans.[t]
RENAULT Cont'd.								
1984	Encore 4-1400cc (1.4L) FI	D	Metric **B173-S** U.S. **B132**	**PA691**[17]	**N/R**	**BF890**		
	Fuego 4-1565cc (1.6L) FI Turbo	C	**B163**		**N/R**	**BF1195**	**N/R**	
	4-2165cc (2.2L) FI	F	**B163**	**PA2099**	**N/R**	**BF1195**	**N/R**	
	Le Car 4-1397cc (1.4L) Carb. Canada	A	**B7221**	**PA2099**	**N/R**	**BF833,-K2**	**N/R**	
	4-2152cc (2.2L) Carb. Canada	A	**B7221**	**PA2099**	**N/R**	**BF1195**	**N/R**	
1983	18l/Sportwagon 4-1647cc (1.6L) FI	B	**B163**	6 11/16 In. **PA2099**	**N/R**	**BF1195**	**N/R**	
	Alliance 4-1400cc (1.4L) FI	D	**B132**	**PA691**[17]	**N/R**	**BF890**	**N/R**	
	Fuego 4-1565cc (1.6L) FI Turbo	C	**B163**		**N/R**	**BF1195**	**N/R**	
	4-1647cc (1.6L) FI	B	**B163**	**PA2099**	**N/R**	**BF1195**	**N/R**	
	Le Car, R5 4-1397cc (1.4L) 2 Bbl.	A	**B132**	6 11/16 In. **PA2099**	**N/R**	**BF833,-K2**	**N/R**	
1982	18l/Sportwagon 4-1647cc (1.6L) FI	B	**B163**	6 11/16 In. **PA2099**	**N/R**	**BF1195**	**N/R**	
	Fuego 4-1647cc (1.6L) FI	C	**B163**	6 11/16 In. **PA2099**	**N/R**	**BF1195**		
	4-1647cc (1.6L) FI Turbo		**B163**		**N/R**	**BF1195**	**N/R**	
	Le Car, R5 4-1397cc (1.4L) 2 Bbl.	A	**B132**	6 11/16 In. **PA2099**	**N/R**	**BF833,-K2**	**N/R**	
1981	18l/Sportwagon 4-1647cc (1.6L) FI	B	**B163**	6 11/16 In. **PA2099**	**N/R**	**BF1195**	**N/R**	
	Le Car, R5 4-1397cc (1.4L) 2 Bbl.	A	**B132**	6 11/16 In. **PA2099**	**N/R**	**BF833,-K2**	**N/R**	
	R18 4-1647cc (1.6L) Carb Canada	B			**N/R**		**N/R**	
	4-1647cc (1.6L) FI Canada	B	**B34**	**PA2099**	**N/R**	**BF1195**	**N/R**	
1980	Le Car, R5 4-1397cc (1.4L) 2 Bbl.	A	**B132**	**PA2099**	**N/R**	**BF833,-K2**		
ROLLS ROYCE								
2009	Phantom V12-412 (6.7L) FI						**N/R**	**N/S**
	Phantom Drophead Coupe V12-412 (6.7L) FI						**N/R**	**N/S**
2008	Phantom V12-412 (6.7L) FI						**N/R**	**N/S**
	Phantom Drophead Coupe V12-412 (6.7L) FI						**N/R**	**N/S**
2007	Phantom V12-412 (6.7L) FI						**N/R**	**N/S**
2006	Phantom V12-412 (6.7L) FI						**N/R**	**N/S**
SAAB								
2010	9-3 4-2000cc (2.0L) FI Turbo	Y	**P1445**			**N/S**	**N/R**	**N/S**
2009	9-3 4-1985cc (2.0L) FI HO Turbo	Y	**P1445**			**N/S**	**N/R**	**N/S**
	V6-2792cc (2.8L) Twin Turbo	U	**P1433**			**N/S**	**N/R**	**N/S**
	9-5 4-140 (2.3L) FI HO Turbo	G	**BT223**				**N/R**	**N/S**
	9-7X 6-256 (4.2L) FI	S	**B7010**	**RS4161**	**N/R**	**N/S**	**N/R**	4L60E S. Pan **18010** 4L60E D. Pan **18056**
	V8-325 (5.3L) FI	M	**B160**	**RS4161**	**N/R**	**N/S**	**N/R**	4L60E S. Pan **18010** 4L60E D. Pan **18056**
	V8-364 (6.0L) FI	H	**B160**	**RS4161**	**N/R**	**N/S**	**N/R**	4L60E S. Pan **18010** 4L60E D. Pan **18056**
2008	9-3 4-1985cc (2.0L) FI HO Turbo	Y	**P1445**			**N/S**	**N/R**	**N/S**
	V6-2792cc (2.8L) Twin Turbo	U	**P1433**			**N/S**	**N/R**	**N/S**
	9-5 4-140 (2.3L) FI HO Turbo	G	**BT223**				**N/R**	**N/S**
	9-7X 6-256 (4.2L) FI	S	**B7010**	**RS4161**	**N/R**	**N/S**	**N/R**	4L60E S. Pan **18010** 4L60E D. Pan **18056**
	V8-325 (5.3L) FI	M	**B160**	**RS4161**	**N/R**	**N/S**	**N/R**	4L60E S. Pan **18010** 4L60E D. Pan **18056**
	V8-364 (6.0L) FI	H	**B7010**	**RS4161**	**N/R**	**N/S**	**N/R**	**18056**
2007	9-3 4-1985cc (2.0L) FI HO Turbo	Y	**P1445**			**N/S**	**N/R**	**N/S**
	V6-2792cc (2.8L) FI Twin Turbo	U	**P1433**			**N/S**	**N/R**	**N/S**
	9-5 4-140 (2.3L) FI HO Turbo	G	**BT223**				**N/R**	**N/S**
	9-7X 6-256 (4.2L) SFI	S	**B7010**	**RS4161**	**N/R**	**N/S**	**N/R**	4L60E S. Pan **18010** 4L60E D. Pan **18056**
	V8-325 (5.3L) SFI	M	**B160**	**RS4161**	**N/R**	**N/S**	**N/R**	4L60E S. Pan **18010** 4L60E D. Pan **18056**
2006	9-2X Aero 4-121 (2.0L) FI Turbo	2	**B1400**	**PA2135**		**BF1048**	**N/R**	
	9-2X Linear 4-152 (2.5L) FI	6	**B1400**	**PA2135**		**BF1048**	**N/R**	
	9-3 4-121 (2.0L) FI HO Turbo	Y	**P1445**				**N/R**	**N/S**

OBS = Obsolete. Availability Limited to Distributor Stock. [t] Transmission, Not Model, Determines Which Transmission Filter is Used.

[17] Exc. Calif.

SAAB Cont'd.

Year	Model and Engine	VIN	Lube	Air	Cabin Air	Fuel	Breather	Trans.[t]
2006	9-3 Aero, 9-3 SportCombi 4-121 (2.0L) FI HO Turbo	Y	**P1445**				**N/R**	**N/S**
	4-2792cc (2.8L) FI Twin Turbo	U	**P1433**				**N/R**	**N/S**
	9-5 Arc 2.3T 4-140 (2.3L) FI Turbo	A	**BT223**				**N/R**	
	9-7X 6-256 (4.2L) FI	S	**B7010**	**RS4161**	**N/R**	**N/S**	**N/R**	4L60E S. Pan **18010** 4L60E D. Pan **18056**
	V8-325 (5.3L) FI	M	**B31**	**RS4161**	**N/R**	**N/S**	**N/R**	4L60E S. Pan **18010** 4L60E D. Pan **18056**
2005	9-2X Aero 4-121 (2.0L) SFI Turbo	2	**B1400**	**PA2135**		**BF1048**	**N/R**	
	9-2X Linear 4-152 (2.5L) SFI	6	**B1400**	**PA2135**		**BF1048**	**N/R**	
	9-3 Aero, 9-3 Arc 4-121 (2.0L) MFI HO Turbo	S	**P1445**				**N/R**	
	9-3 Linear 4-121 (2.0L) MFI LoPres. Turbo	S	**P1445**				**N/R**	
	9-5 Aero 4-140 (2.3L) MFI HO Turbo	G	**BT223**				**N/R**	
	9-5 Arc 4-140 (2.3L) MFI LoPres. Turbo	E	**BT223**				**N/R**	
	9-5 Linear 4-140 (2.3L) EFI LoPres. Turbo	E	**BT223**				**N/R**	
	9-7X Arc V8-323 (5.3L) FI	M	**B31**	**RS4161**	**N/R**	**N/S**	**N/R**	**18056**
	9-7X Linear 6-256 (4.2L) FI	S	**B7010**	**RS4161**	**N/R**	**N/S**	**N/R**	**18056**
2004	9-3 4-121 (2.0L) MFI HO Turbo	Y	**P1445**			**N/S**	**N/R**	
	4-121 (2.0L) MFI LoPres. Turbo	Y	**BT223**			**N/S**	**N/R**	
	9-5 4-140 (2.3L) EFI LoPres. Turbo	E	**BT223**				**N/R**	
2003	9-3 4-121 (2.0L) MFI HO Turbo	Y	Exc. SE **P1445** SE **BT223**				**N/R**	Vector **M.T.**
	9-5 4-140 (2.3L) EFI Turbo or HO	E	**BT223**				**N/R**	
	V6-181 (3.0L) EFI Turbo	Z	**BT223**				**N/R**	
2002	9-3 4-121 (2.0L) EFI Turbo	H	**BT223**				**N/R**	
	4-140 (2.3L) EFI HO Turbo	G	**BT223**				**N/R**	**M.T.**
	9-5 4-140 (2.3L) EFI Turbo	E	**BT223**				**N/R**	
	V6-181 (3.0L) EFI Turbo	Z	**BT223**				**N/R**	
2001	9-3 4-121 (2.0L) EFI Turbo or HO Turbo	H	**BT223**				**N/R**	
	4-140 (2.3L) EFI HO Turbo	G	**BT223**				**N/R**	
	9-5 4-140 (2.3L) EFI Turbo	E	**BT223**				**N/R**	
	V6-181 (3.0L) EFI Turbo	Z	**BT223**				**N/R**	
2000	9-3 4-121 (2.0L) EFI Turbo or HO Turbo	H	**BT223**				**N/R**	
	4-140 (2.3L) EFI Turbo	E	**BT223**				**N/R**	
	9-5 4-140 (2.3L) EFI Turbo	E	**BT223**				**N/R**	
	V6-181 (3.0L) EFI Turbo	Z	**BT223**				**N/R**	
1999	9-3 4-121 (2.0L) EFI Turbo	N,P	**BT223**				**N/R**	
	4-140 (2.3L) EFI Turbo	E,G	**BT223**				**N/R**	**M.T.**
	9-5 4-140 (2.3L) EFI Turbo	E	**BT223**		**N/R**		**N/R**	
	V6-181 (3.0L) EFI Turbo	Z	**BT223**		**N/R**		**N/R**	
1998	900 4-121 (2.0L) EFI Turbo	N	**BT223**		**N/R**		**N/R**	
	4-140 (2.3L) EFI	B	**BT223**		**N/R**		**N/R**	
	9000 4-140 (2.3L) EFI Turbo	M,R	**BT223**				**N/R**	
1997	900 4-121 (2.0L) EFI Turbo	N	**BT223**		**N/R**		**N/R**	
	4-140 (2.3L) EFI	B	**BT223**		**N/R**		**N/R**	
	V6-152 (2.5L) EFI	V	**B43-S**		**N/R**		**N/R**	
	9000 4-140 (2.3L) EFI Turbo	M,R,U	**BT223**				**N/R**	
	V6-181 (3.0L) EFI	W	**B43-S**				**N/R**	
1996	900 4-121 (2.0L) EFI Turbo	N	**BT223**		**N/R**		**N/R**	
	4-140 (2.3L) EFI	B	**BT223**		**N/R**		**N/R**	
	V6-152 (2.5L) EFI	V	**B43-S**		**N/R**		**N/R**	
	9000 4-140 (2.3L) EFI Turbo	M,R,U	**BT223**				**N/R**	
	V6-181 (3.0L) EFI	W	**B43-S**				**N/R**	
1995	900 4-121 (2.0L) EFI Turbo	N	**BT223**		**N/R**		**N/R**	
	4-140 (2.3L) EFI	B	**BT223**		**N/R**		**N/R**	
	V6-152 (2.5L) EFI	V	**B43-S**		**N/R**		**N/R**	
	9000 4-140 (2.3L) EFI Turbo	M,R,U	**BT223**				**N/R**	
	V6-181 (3.0L) EFI	W	**B43-S**				**N/R**	
1994	900 4-121 (2.0L) EFI Turbo	L,N,T	**BT223**		**N/R**		**N/R**	
	4-129 (2.1L) EFI	E	**BT223**	**PA3773**	**N/R**		**N/R**	
	4-140 (2.3L) EFI	B	**BT223**		**N/R**		**N/R**	
	V6-152 (2.5L) EFI	V	**B43-S**		**N/R**		**N/R**	
	9000 4-140 (2.3L) EFI	B	**BT223**				**N/R**	
	4-140 (2.3L) EFI Turbo	M,R	**BT223**				**N/R**	
1993	900 4-121 (2.0L) EFI Turbo	L,T	**BT223**		**N/R**		**N/R**	
	4-129 (2.1L) EFI	E	**BT223**	**PA3773**	**N/R**		**N/R**	

[t] Transmission, Not Model, Determines Which Transmission Filter is Used. OBS = Obsolete. Availability Limited to Distributor Stock.

Year	Model and Engine	VIN	Lube	Air	Cabin Air	Fuel	Breather	Trans.[t]
SAAB Cont'd.								
1993	9000 4-140 (2.3L) EFI	B	**BT223**				**N/R**	
	4-140 (2.3L) EFI Turbo	M,R	**BT223**				**N/R**	
1992	900 4-121 (2.0L) EFI Turbo	L	**BT223**		**N/R**		**N/R**	
	4-129 (2.1L) EFI	E	**BT223**	**PA3773**	**N/R**		**N/R**	
	9000 4-140 (2.3L) EFI	B	**BT223**				**N/R**	
	4-140 (2.3L) EFI Turbo	M	**BT223**				**N/R**	
1991	900 4-121 (2.0L) EFI Turbo	L	**BT223**		**N/R**		**N/R**	
	4-129 (2.1L) EFI	E	**BT223**	**PA3773**	**N/R**		**N/R**	
	9000 4-140 (2.3L) EFI	B	**BT223**				**N/R**	
	4-140 (2.3L) EFI Turbo	M	**BT223**				**N/R**	
1990	900 4-121 (2.0L) EFI	D	**BT223**		**N/R**		**N/R**	
	4-1985cc (2.0L) EFI Turbo	L	**BT223**		**N/R**		**N/R**	
	9000 4-121 (2.0L) EFI	D,L	**BT223**				**N/R**	
	4-140 (2.3L) EFI	B	**BT223**				**N/R**	
	4-1985cc (2.0L) EFI Turbo	L	**BT223**				**N/R**	
1989	900 4-121 (2.0L) EFI	D	**BT223**		**N/R**		**N/R**	
	9000 4-121 (2.0L) EFI	D	**BT223**				**N/R**	
1988	900 4-121 (2.0L) EFI 8 Valve	D,J	**BT223**		**N/R**	**BF944**[25]	**N/R**	
	4-121 (2.0L) EFI 16 Valve	D,J	**BT223**		**N/R**		**N/R**	
	9000 4-121 (2.0L) EFI	D	**BT223**				**N/R**	
	4-121 (2.0L) EFI Turbo	L	**BT223**				**N/R**	
1987	900 4-121 (2.0L) EFI 8 Valve	J	**BT223**		**N/R**	**BF885**	**N/R**	
	4-121 (2.0L) EFI 16 Valve	J	**BT223**		**N/R**		**N/R**	
	9000 4-121 (2.0L) EFI	D	**BT223**				**N/R**	
	4-121 (2.0L) EFI Turbo	L	**BT223**				**N/R**	
1986	900 4-121 (2.0L) FI 8 Valve	J	**BT223**		**N/R**	**BF885**	**N/R**	
	4-121 (2.0L) FI 16 Valve	J	**BT223**		**N/R**		**N/R**	
	4-121 (2.0L) FI Turbo	L	**BT223**		**N/R**		**N/R**	
	9000 4-121 (2.0L) FI Turbo	L	**BT223**				**N/R**	
1985	900 4-121 (2.0L) FI	J	**BT223**		**N/R**	**BF885**	**N/R**	
	4-121 (2.0L) FI Turbo	L	**BT223**		**N/R**		**N/R**	
1984	900 4-121 (2.0L) FI or Turbo	J,L	**BT223**		**N/R**	**BF885**	**N/R**	
1983	900 4-121 (2.0L) FI or Turbo	3,4	**BT223**		**N/R**	**BF885**	**N/R**	
1982	900 4-121 (2.0L) FI or Turbo	3,4	**BT223**		**N/R**	**BF885**	**N/R**	
1981	900 4-121 (2.0L) FI or Turbo	3,4	**BT223**		**N/R**	**BF885**	**N/R**	
1980	99 4-121 (2.0L) FI or Turbo		**BT223**		**N/R**	**BF885**	**N/R**	
	900 4-121 (2.0L) FI		**BT223**		**N/R**	**BF885**	**N/R**	
SATURN								
2010	Aura 4-145 (2.4L) FI Flex Fuel or Hybrid	5,B,V	**P7442**	**PA4157**	**N/R**	**N/S**	**N/R**	4T45E **18057**
	V6-3600cc (3.6L) FI	7	**B160**	**PA4157**	**N/R**	**N/S**	**N/R**	
	Outlook V6-217 (3.6L) FI	D	**B160**	**PA4418**	**N/R**	**N/S**	**N/R**	
	VUE 4-145 (2.4L) FI	P	**P7442**	**PA4397**	**PA4398**	**N/S**	**N/R**	4T45E **18057**
	V6-213 (3.5L) FI	N	**B7010**	**PA4397**	**PA4398**	**N/S**	**N/R**	4T45E **18057**
	V6-217 (3.6L) FI	7	**B160**	**PA4397**	**PA4398**	**N/S**	**N/R**	6T70 (w/o Gskt.) **18022** (w/Gskt.) **20014**
	VUE Hybrid 4-145 (2.4L) FI	Z	**P7442**	**PA4157**	**PA4398**	**N/S**	**N/R**	4T45E **18057**
	VUE Red Line V6-217 (3.6L) FI	7	**B160**	**PA4397**	**PA4398**	**N/S**	**N/R**	6T70 (w/o Gskt.) **18022** (w/Gskt.) **20014**
2009	Astra 4-110 (1.8L) FI	1				**N/S**	**N/R**	**N/S**
	Aura 4-145 (2.4L) FI Hybrid	5	**P7442**	**PA4157**	**N/R**	**N/S**	**N/R**	4T45E **18057**
	V6-217 (3.6L) FI	7	**B160**	**PA4157**	**N/R**	**N/S**	**N/R**	4T45E **18057**
	4-145 (2.4L) FI	B	**P7442**	**PA4157**	**N/R**	**N/S**	**N/R**	4T45E **18057**
	Outlook V6-217 (3.6L) FI	D	**B160**	**PA4418**	**N/R**	**N/S**	**N/R**	
	Sky 4-145 (2.4L) FI	B	**P7442**		**PA4340**	**N/S**	**N/R**	
	Sky Red Line 4-122 (2.0L) Turbo	X	**P7442**	**PA4324**	**PA4340**	**N/S**	**N/R**	
	VUE 4-145 (2.4L) FI	P	**P7442**	**PA4397**	**PA4398**	**N/S**	**N/R**	4T45E **18057**
	V6-213 (3.5L) FI	N	**B7010**	**PA4397**	**PA4398**	**N/S**	**N/R**	4T45E **18057**
	V6-217 (3.6L) FI	7	**B160**	**PA4397**	**PA4398**	**N/S**	**N/R**	4T45E **18057** 6T70 (w/o Gskt.) **18022** (w/Gskt.) **20014**
	VUE Hybrid 4-145 (2.4L) FI	Z	**P7442**	**PA4157**	**PA4398**	**N/S**	**N/R**	4T45E **18057**

OBS = Obsolete. Availability Limited to Distributor Stock. [t] Transmission, Not Model, Determines Which Transmission Filter is Used.

[25] Chassis # J3007496-up.

SATURN Cont'd.

Year	Model and Engine	VIN	Lube	Air	Cabin Air	Fuel	Breather	Trans.[t]
2009	VUE Red Line V6-217 (3.6L) FI	7	**B160**	**PA4397**	**PA4398**	**N/S**	**N/R**	6T70 (w/o Gskt.) **18022** (w/Gskt.) **20014**
2008	Astra 4-110 (1.8L) FI	1				**N/S**	**N/R**	**N/S**
	Aura 4-145 (2.4L) FI	B	**P7442**	**PA4157**	**N/R**	**N/S**	**N/R**	4T45E **18057**
	V6-213 (3.5L) FI	N	**B7010**	**PA4157**	**N/R**	**N/S**	**N/R**	4T45E **18057**
	V6-217 (3.6L) FI	7	**B160**	**PA4157**	**N/R**	**N/S**	**N/R**	4T45E **18057**
	Aura Green Line Hybrid 4-145 (2.4L) FI & Electric Motor	5	**P7442**	**PA4157**	**N/R**	**N/S**	**N/R**	4T45E **18057**
	Outlook V6-217 (3.6L) FI	7	**B160**	**PA4418**	**N/R**	**N/S**	**N/R**	
	Sky 4-145 (2.4L) FI	B	**P7442**		**N/R**	**N/S**	**N/R**	
	Sky Red Line 4-122 (2.0L) Turbo	X	**P7442**	**PA4324**	**N/R**	**N/S**	**N/R**	
	VUE 4-145 (2.4L) SFI	P	**P7442**	**PA4397**	**PA4398**	**N/S**	**N/R**	**18057**
	V6-213 (3.5L) SFI	N	**B7010**	**PA4397**	**PA4398**	**N/S**	**N/R**	4T45E **18057**
	V6-217 (3.6L) SFI	7	**B160**	**PA4397**	**PA4398**	**N/S**	**N/R**	4T45E **18057**
	VUE Green Line 4-145 (2.4L) Hybrid	Z	**P1445**	**PA4397**	**PA4398**	**N/S**	**N/R**	**18057**
	VUE Red Line V6-217 (3.6L) FI	7	**B160**	**PA4397**	**PA4398**	**N/S**	**N/R**	4T45E **18057** 6T70 (w/o Gskt.) **18022** (w/Gskt.) **20014**
2007	Aura 4-145 (2.4L) EFI Hybrid	Z	**B7010**	**PA4157**	**N/R**	**N/S**	**N/R**	4 Spd. **18057**
	V6-213 (3.5L) FI	N	**B7010**	**PA4157**	**N/R**	**N/S**	**N/R**	4T45E **18057**
	V6-217 (3.6L) FI	7	**B160**	**PA4157**	**N/R**	**N/S**	**N/R**	4T45E **18057**
	ION 4-134 (2.2L) MFI	F	**P1445**		**PA4317**		**N/R**	4T40E **18057**
	4-145 (2.4L) FI	B	**P1445**		**PA4317**		**N/R**	4T40E **18057**
	ION Red Line 4-122 (2.0L) SFI Supercharged	P	**P1445**	**RS4161**	**PA4317**		**N/R**	**M.T.**
	Outlook V6-217 (3.6L) FI	7	**B160**	**PA4418**	**N/R**	**N/S**	**N/R**	
	Relay V6-237 (3.9L) SFI	1	**B7010**	**PA2231**	**PA4156 KIT**	**N/S**	**N/R**	4 Spd. (w/o Gskt.) **18022** (w/Gskt.) **20014**
	Sky 4-145 (2.4L) SFI	B	**P7442**		**N/R**	**N/S**	**N/R**	
	Sky Red Line 4-122 (2.0L) Turbo	X	**P7442**	**PA4324**	**N/R**	**N/S**	**N/R**	
	VUE 4-2198cc (2.2L) SFI	D	**P7442**	**PA4157**	**PA4340**	**BF7771**	**N/R**	**18057**
	V6-212 (3.5L) MFI	4	**P7442**	**PA4157**	**PA4340**	**BF7771**	**N/R**	**18057**
	VUE Green Line 4-145 (2.4L) Hybrid	Z	**P1445**	**PA4157**	**PA4340**	**N/S**	**N/R**	4T45E **18057**
	VUE Red Line V6-212 (3.5L) MFI	4	**B1402**	**PA4157**	**PA4340**	**BF7771**	**N/R**	**18057**
2006	ION 4-134 (2.2L) SFI	F	**P1445**		**PA4317**		**N/R**	4T40E **18057**
	4-145 (2.4L) MFI	B	**P1445**		**PA4317**		**N/R**	4T40E **18057**
	ION Red Line 4-122 (2.0L) SFI Supercharged	P	**P1445**	**RS4161**	**PA4317**		**N/R**	**M.T.**
	Relay V6-211 (3.5L) SFI	L	**B43-S**	**PA2231**	**PA4156 KIT**	**N/S**	**N/R**	4T65-E (w/o Gskt.) **18022** (w/Gskt.) **20014**
	V6-237 (3.9L) SFI	1	2WD **B7010** AWD **B43-S**	**PA2231**	**PA4156 KIT**	**N/S**	**N/R**	4T65-E (w/o Gskt.) **18022** (w/Gskt.) **20014**
	VUE, VUE Red Line 4-134 (2.2L) SFI	D	**P1445**	**PA4157**	**PA4340**	**BF7771**	**N/R**	**18057**
	V6-212 (3.5L) MFI	4	**B1402**	**PA4157**	**PA4340**	**BF7771**	**N/R**	**18057**
2005	ION 4-134 (2.2L) SFI	F	**P1445**	**PA4312**	**PA4317**		**N/R**	**18057**
	ION Red Line 4-122 (2.0L) SFI Supercharged	P	**P1445**	**PA4312**	**PA4317**		**N/R**	**M.T.**
	L300 V6-183 (3.0L) SFI	R	**P1440**	**PA4121**		**BF1046**	**N/R**	**18057**
	Relay V6-211 (3.5L) FI	L	**B43-S**	**PA2231**	**PA4156 KIT**	**BF7769**	**N/R**	(w/o Gskt.) **18022** (w/Gskt.) **20014**
	VUE, VUE Red Line 4-134 (2.2L) SFI	D	**P1445**	**PA4157**	**PA4340**	**BF7771**	**N/R**	**18057**
	V6-212 (3.5L) SFI	4	**B1402**	**PA4157**	**PA4340**	**BF7771**	**N/R**	**18057**
2004	ION 4-134 (2.2L) FI	F	**P1445**	**PA4312**	**PA4317**		**N/R**	**N/S**
	ION Red Line 4-122 (2.0L) SFI Supercharged	P	**P1445**	**PA4312**	**PA4317**		**N/R**	**M.T.**
	L300 4-134 (2.2L) SFI	F	**P1445**	**PA4121**		**BF1046**	**N/R**	**18057**
	V6-183 (3.0L) SFI	R	**P1440**	**PA4121**		**BF1046**	**N/R**	**18057**
	VUE 4-134 (2.2L) FI	D	**P1445**	**PA4157**	**PA4340**	**BF7771**	**N/R**	
	V6-212 (3.5L) FI	4	**B1402**	**PA4157**	**PA4340**	**BF7771**	**N/R**	
2003	ION 4-134 (2.2L) FI	F	**P1445**	**PA4312**	**PA4317**		**N/R**	**N/S**
	L200, LW200 4-134 (2.2L) SFI	F	**P1445**	**PA4121**		**BF1046**	**N/R**	**18057**
	L300, LW300 V6-183 (3.0L) SFI	R	**P1440**	**PA4121**		**BF1046**	**N/R**	**18057**

[t] Transmission, Not Model, Determines Which Transmission Filter is Used. OBS = Obsolete. Availability Limited to Distributor Stock.

Year	Model and Engine	VIN	Lube	Air	Cabin Air	Fuel	Breather	Trans.t
SATURN Cont'd.								
2003	LW200 4-134 (2.2L) SFI	F	**P1445**	**PA4121**		**BF1046**	**N/R**	**18057**
	VUE 4-134 (2.2L) FI	D	**P1445**	**PA4157**	**PA4340**	**BF7771**	**N/R**	**N/S**
	V6-183 (3.0L) FI	B	**P1440**	**PA4157**	**PA4340**	**BF7771**	**N/R**	**N/S**
2002	L100, L200, LW200 4-134 (2.2L) SFI	F	**P1445**	**PA4121**		**BF1046**	**N/R**	**18057**
	L300, LW300 V6-183 (3.0L) SFI	R	**P1440**	**PA4121**		**BF1046**	**N/R**	**18057**
	SC1, SL, SL1 4-116 (1.9L) SFI	8	**BT223**	**PA4049**	**N/R**		**N/R**	**BT8413**
	SC2, SL2 4-116 (1.9L) SFI	7	**BT223**	**PA4049**	**N/R**		**N/R**	**BT8413**
	VUE 4-134 (2.2L) MFI	D	**P1445**	**PA4157**	**PA4340**	**BF7771**	**N/R**	**N/S**
	V6-183 (3.0L) MFI	B	**P1440**	**PA4157**	**PA4340**	**BF7771**	**N/R**	**N/S**
2001	L100, L200, LW200 4-134 (2.2L) FI	F	**P1445**	**PA4121**		**BF1046**	**N/R**	**18057**
	L300, LW300 V6-183 (3.0L) FI	R	**P1440**	**PA4121**		**BF1046**	**N/R**	**18057**
	LS Series 4-134 (2.2L) FI	F	**P7442**	**PA4121**		**BF1046**	**N/R**	**18057**
	V6-181 (3.0L) FI	R	**P1440**	**PA4121**		**BF1046**	**N/R**	**18057**
	SC1, SL1, SW1 4-116 (1.9L) SFI	7,8	**BT223**	**PA4049**	**N/R**		**N/R**	**BT8413**
	SC2, SL2, SW2 4-116 (1.9L) SFI	7	**BT223**	**PA4049**	**N/R**		**N/R**	**BT8413**
2000	LS, LS1, LW1 4-134 (2.2L) SFI	F	**P1445**	**PA4121**		**BF1046**	**N/R**	**18057**
	LS2, LW2 V6-183 (3.0L) SFI	R	**P1440**	**PA4121**		**BF1046**	**N/R**	**18057**
	SC1, SL1, SW1 4-116 (1.9L) SFI	8	**BT223**	**PA4049**	**N/R**		**N/R**	**BT8413**
	SC2, SL2, SW2 4-116 (1.9L) SFI	7	**BT223**	**PA4049**	**N/R**		**N/R**	**BT8413**
1999	SC1, SL1, SW1 4-116 (1.9L) SFI	8	**BT223**	**PA4049**	**N/R**		**N/R**	**BT8413**
	SC2, SL2, SW2 4-116 (1.9L) SFI	7	**BT223**	**PA4049**	**N/R**		**N/R**	**BT8413**
1998	SC1, SL1, SW1 4-116 (1.9L) SFI	8	**BT223**	**PA4049**	**N/R**		**N/R**	**BT8413**
	SC2, SL2, SW2 4-116 (1.9L) SFI	7	**BT223**	**PA4049**	**N/R**		**N/R**	**BT8413**
1997	SC1, SL, SL1, SW1 4-116 (1.9L) SFI	8	**BT223**	**PA4049**	**N/R**	**BF7630**	**N/R**	**BT8413**
	SC2, SL2, SW2 4-116 (1.9L) SFI	7	**BT223**	**PA4049**	**N/R**	**BF7630**	**N/R**	**BT8413**
1996	SC1, SL, SL1, SW1 4-116 (1.9L) SFI	8	**BT223**	**PA4049**	**N/R**	**BF7630**	**N/R**	**BT8413**
	SC2, SL2, SW2 4-116 (1.9L) SFI	7	**BT223**	**PA4049**	**N/R**	**BF7630**	**N/R**	**BT8413**
1995	SC1, SL, SL1, SW1 4-116 (1.9L) MFI	8	**BT223**	**PA4049**	**N/R**	**BF7630**	**N/R**	**BT8413**
	SC2, SL2, SW2 4-116 (1.9L) MFI	7	**BT223**	**PA4049**	**N/R**	**BF7630**	**N/R**	**BT8413**
1994	SC1, SL, SL1, SW1 4-116 (1.9L) EFI	9	**BT223**		**N/R**		**N/R**	**BT8413**
	SC2, SL2, SW2 4-116 (1.9L) MFI	7	**BT223**	**PA4049**	**N/R**		**N/R**	**BT8413**
1993	SC1, SL, SL1, SW1 4-116 (1.9L) EFI	9	**BT223**		**N/R**		**N/R**	**BT8413**
	SC2, SL2, SW2 4-116 (1.9L) MFI	7	**BT223**	**PA4049**	**N/R**		**N/R**	**BT8413**
1992	SC, SL2 4-116 (1.9L) MFI	7	**BT223**	**PA4049**	**N/R**		**N/R**	**BT8413**
	SL, SL1 4-116 (1.9L) TBI	9	**BT223**		**N/R**		**N/R**	**BT8413**
1991	SC, SL2 4-116 (1.9L) MFI	7	**BT223**	**PA4049**	**N/R**		**N/R**	**BT8413**
	SL, SL1 4-116 (1.9L) TBI	9	**BT223**		**N/R**		**N/R**	**BT8413**
SCION								
2010	tC 4-2362cc (2.4L) MFI	E	**B37**	**PA4180**	**PA4372**	**N/S**	**N/R**	U241E **20015**
	xB 4-2362cc (2.4L) EFI	E	**B37**	**PA4333**	**PA4327**	**N/S**	**N/R**	U241E **20015**
	xD 4-1798cc (1.8L) EFI	U	**P7454**		**PA4327**	**N/S**	**N/R**	U340E **18289**
2009	tC 4-2398cc (2.4L) MFI	E	**B37**	**PA4180**	**PA4372**	**N/S**	**N/R**	U241E **20015**
	xB 4-2362cc (2.4L) EFI	E	**B37**	**PA4333**	**PA4327**	**N/S**	**N/R**	U241E **20015**
	xD 4-1798cc (1.8L) EFI	U	**P7454**		**PA4327**	**N/S**	**N/R**	U340E **18289**
2008	tC 4-2398cc (2.4L) MFI	E	**B37**	**PA4180**	**PA4372**	**N/S**	**N/R**	U241E **20015**
	xB 4-2362cc (2.4L) EFI	E	**B37**	**PA4333**	**PA4327**	**N/S**	**N/R**	**20015**
	xD 4-1798cc (1.8L) EFI	U	**P7454**		**PA4327**	**N/S**	**N/R**	U340E **18289**
2007	tC 4-2398cc (2.4L) MFI	E	**B37**	**PA4180**	**PA4372**	**N/S**	**N/R**	U241E **20015**
	xB 4-91 (1.5L) MFI	T	**B37**	**PA4305**	Opt. **PA4372**	**N/S**	**N/R**	**18289**
2006	tC 4-2398cc (2.4L) MFI	E	**B37**	**PA4180**	**PA4372**	**N/S**	**N/R**	**20015**
	xA, xB 4-91 (1.5L) MFI	T	**B33**	**PA4305**	Opt. **PA4372**	**N/S**	**N/R**	**18289**
2005	tC 4-2398cc (2.4L) MFI	E	**B37**	**PA4180**	**PA4372**	**N/S**	**N/R**	**20015**
	xA, xB 4-91 (1.5L) MFI	T	**B33**	**PA4305**	**PA4372**	**N/S**	**N/R**	**18289**
2004	xA, xB 4-1497cc (1.5L) MFI	T	**B33**	**PA4305**	**PA4372**	**N/S**	**N/R**	**18289**
SEAT								
2008	Cordoba 4-2000cc (2.0L) FI Mexico		**B178**				**N/R**	
	Ibiza 4-2000cc (2.0L) FI Mexico		**B178**				**N/R**	
2007	Cordoba 4-2000cc (2.0L) FI Mexico		**B178**				**N/R**	
	Ibiza 4-2000cc (2.0L) FI Mexico		**B178**				**N/R**	
	Leon 4-2000cc (2.0L) FI Mexico	Y	**P7399**				**N/R**	
2006	Cordoba 4-2000cc (2.0L) FI Mexico		**B178**				**N/R**	
	Ibiza 4-1800cc (1.8L) FI Turbo Mexico		**B178**				**N/R**	
	4-2000cc (2.0L) FI Mexico		**B178**				**N/R**	
	Leon 4-1800cc (1.8L) FI Turbo Mexico		**B178**	**PA4111**		**BF7670**	**N/R**	
	Toledo 4-1800cc (1.8L) FI Mexico		**B178**	**PA4111**			**N/R**	

OBS = Obsolete. Availability Limited to Distributor Stock. t Transmission, Not Model, Determines Which Transmission Filter is Used.

Year	Model and Engine	VIN	Lube	Air	Cabin Air	Fuel	Breather	Trans.t
SEAT Cont'd.								
2005	Alhambra 4-1800cc (1.8L) FI Turbo Mexico		**B178**				**N/R**	
	Cordoba 4-2000cc (2.0L) FI Mexico		**B178**				**N/R**	
	Ibiza 4-2000cc (2.0L) FI Mexico		**B178**				**N/R**	
	Leon 4-1800cc (1.8L) FI Turbo Mexico		**B178**	**PA4111**		**BF7670**	**N/R**	
	Toledo 4-1800cc (1.8L) FI Mexico		**B178**	**PA4111**	**PA4331**		**N/R**	
2004	Alhambra 4-1800cc (1.8L) FI Turbo Mexico		**B178**				**N/R**	
	Cordoba 4-2000cc (2.0L) FI Mexico		**B178**				**N/R**	
	Ibiza 4-2000cc (2.0L) FI Mexico		**B178**				**N/R**	
	Leon 4-1800cc (1.8L) FI Turbo Mexico		**B178**	**PA4111**		**BF7670**	**N/R**	
	Toledo 4-1800cc (1.8L) FI Mexico		**B178**	**PA4111**	**PA4331**		**N/R**	
2003	Cordoba 4-1600cc (1.6L) FI Mexico		**B178**				**N/R**	
	Ibiza 4-1600cc (1.6L) FI Mexico		**B178**				**N/R**	
	4-2000cc (2.0L) FI Mexico		**B178**				**N/R**	
	Leon 4-1800cc (1.8L) FI Turbo Mexico		**B178**	**PA4111**		**BF7670**	**N/R**	
	Toledo 4-1800cc (1.8L) FI Mexico		**B178**	**PA4111**	**PA4331**		**N/R**	
2002	Cordoba 4-1600cc (1.6L) FI Mexico		**B178**				**N/R**	
	Ibiza 4-1600cc (1.6L) FI Mexico		**B178**				**N/R**	
	Leon 4-1800cc (1.8L) FI Turbo Mexico		**B178**	**PA4111**		**BF7670**	**N/R**	
	Toledo 4-1800cc (1.8L) FI Turbo Mexico		**B178**	**PA4111**	**PA4331**		**N/R**	
2001	Cordoba 4-1600cc (1.6L) FI Mexico		**B178**				**N/R**	
	Ibiza 4-1600cc (1.6L) FI Mexico		**B178**				**N/R**	
	Leon 4-1800cc (1.8L) FI Turbo Mexico		**B178**	**PA4111**		**BF7670**	**N/R**	
	Toledo 4-1800cc (1.8L) FI Turbo Mexico		**B178**	**PA4111**	**PA4331**		**N/R**	
2000	Cordoba 4-1600cc (1.6L) FI Mexico		**B178**				**N/R**	
	Ibiza 4-1600cc (1.6L) FI Mexico		**B178**				**N/R**	
	Leon 4-1800cc (1.8L) FI Turbo Mexico		**B178**	**PA4111**		**BF7670**	**N/R**	
	Toledo 4-1800cc (1.8L) FI Mexico		**B178**	**PA4111**	**PA4331**		**N/R**	
SMART								
2010	Fortwo 3-800cc (0.8L) FI Turbo Diesel Canada						**N/R**	**N/S**
	3-999cc (1.0L) FI					**N/S**	**N/R**	**N/S**
2009	Fortwo 3-799cc (0.8L) FI Turbo Diesel Canada						**N/R**	**N/S**
	3-999cc (1.0L) FI					**N/S**	**N/R**	**N/S**
2008	Fortwo 3-799cc (0.8L) FI Turbo Diesel Canada						**N/R**	**N/S**
	3-999cc (1.0L) FI					**N/S**	**N/R**	**N/S**
2007	Fortwo 3-799cc (0.8L) Turbo Diesel Canada						**N/R**	**M.T.**
2006	Fortwo 3-799cc (0.8L) Turbo Diesel Canada				**N/R**		**N/R**	**N/S**
2005	Fortwo 3-799cc (0.8L) Turbo Diesel Canada				**N/R**		**N/R**	**N/S**
STERLING								
2009	Bullet 6-408 (6.7L) FI Turbo Diesel	A	**BT7349**	**PA4318**	**N/R**		**N/R**	
2008	Bullet 6-408 (6.7L) FI Turbo Diesel	A	**BT7349**	**PA4318**	**N/R**		**N/R**	
SUBARU								
2010	Forester H4-2458cc (2.5L) EFI or Turbo	6	**B1400**	**PA4197**		**N/S**	**N/R**	
	Impreza 4-2458cc (2.5L) FI	6	**B1400**	**PA4197**	**PA4408**	**N/S**	**N/R**	
	Impreza Outback Sport 4-2458cc (2.5L) FI	6	**B1400**	**PA4197**	**PA4408**	**N/S**	**N/R**	
	Impreza WRX 4-2458cc (2.5L) FI Turbo	7	**B1400**	**PA4197**	**PA4408**	**N/S**	**N/R**	
	Impreza WRX STi 4-2458cc (2.5L) FI HO Turbo	8	**B1400**	**PA4197**	**PA4408**	**N/S**	**N/R**	**M.T.**
	Legacy 4-150 (2.5L) SFI or Turbo	C,F	**B1400**	**PA4197**		**N/S**	**N/R**	
	6-3630cc (3.6L) FI	D	**B1444**	**PA4197**		**N/S**	**N/R**	
	Outback 4-150 (2.5L) SFI or Turbo	B,F		**PA4197**		**N/S**	**N/R**	
	6-3630cc (3.6L) SFI	D	**B1444**	**PA4197**		**N/S**	**N/R**	
	Tribeca H6-3630cc (3.6L) FI	9	**B1444**	**PA4197**	**PA4188**	**N/S**	**N/R**	
2009	Forester H4-2458cc (2.5L) EFI or Turbo	6	**B1400**	**PA4197**		**N/S**	**N/R**	
	Impreza 4-2458cc (2.5L) FI	6	**B1400**	**PA4197**		**N/S**	**N/R**	
	Impreza Outback Sport 4-2458cc (2.5L) FI	6	**B1400**	**PA4197**	**PA4408**	**N/S**	**N/R**	
	Impreza WRX 4-2458cc (2.5L) FI Turbo	7	**B1400**	**PA4197**	**PA4408**	**N/S**	**N/R**	
	Impreza WRX STi 4-2458cc (2.5L) FI HO Turbo	8	**B1400**	**PA4197**	**PA4408**	**N/S**	**N/R**	**M.T.**

[t] Transmission, Not Model, Determines Which Transmission Filter is Used. OBS = Obsolete. Availability Limited to Distributor Stock.

SUBARU Cont'd.

Year	Model and Engine	VIN	Lube	Air	Cabin Air	Fuel	Breather	Trans.t
2009	Legacy 4-150 (2.5L) SFI or Turbo	6	**B1400**	**PA4197**		**N/S**	**N/R**	
	6-183 (3.0L) SFI	8	**B1444**	**PA4197**		**N/S**	**N/R**	
	Outback 4-150 (2.5L) SFI or Turbo	6	**B1400**	**PA4197**		**N/S**	**N/R**	
	6-183 (3.0L) SFI HO	8	**B1444**	**PA4197**		**N/S**	**N/R**	
	Tribeca H6-3630cc (3.6L) FI	9	**B1444**	**PA4197**	**PA4188**	**N/S**	**N/R**	
2008	Forester H4-2458cc (2.5L) EFI or Turbo	6	**B1400**	**PA2135**	**PA4424**	**N/S**	**N/R**	
	Impreza 4-2458cc (2.5L) FI	6	**B1400**	**PA4197**	**PA4408**	**N/S**	**N/R**	
	Impreza Outback Sport 4-2458cc (2.5L) FI	6	**B1400**	**PA2135**	**PA4408**	**N/S**	**N/R**	
	Impreza WRX 4-2458cc (2.5L) FI Turbo	7	**B1400**	**PA2135**	**PA4408**	**N/S**	**N/R**	
	Impreza WRX STi 4-2458cc (2.5L) FI HO Turbo	7	**B1400**	**PA2135**	**PA4408**	**N/S**	**N/R**	**M.T.**
	Legacy 4-150 (2.5L) SFI or Turbo	6	**B1400**	**PA4197**	**PA4188**	**N/S**	**N/R**	
	H6-183 (3.0L) SFI	8	**B1444**	**PA4197**	**PA4188**	**N/S**	**N/R**	
	Outback 4-150 (2.5L) SFI or Turbo	6	**B1400**	**PA4197**	**PA4188**	**N/S**	**N/R**	
	H6-183 (3.0L) SFI HO	8	**B1444**	**PA4197**	**PA4188**	**N/S**	**N/R**	
	Tribeca H6-3630cc (3.6L) FI	9	**B1444**	**PA4197**	**PA4188**	**N/S**	**N/R**	
2007	B9 Tribeca 6-183 (3.0L) SFI	8	**B1444**	**PA4197**	**PA4188**	**N/S**	**N/R**	
	Forester H4-2458cc (2.5L) MFI or Turbo	6	**B1400**	**PA2135**	**PA4424**	**N/S**	**N/R**	
	Impreza 2.5 RS 4-150 (2.5L) SFI	6	**B1400**	**PA2135**	(w/o Plastic Frame) **PA4408** (w/Plastic Frame) **PA4424**	**N/S**	**N/R**	
	Impreza Outback Sport 4-150 (2.5L) SFI	6	**B1400**	**PA2135**	(w/o Plastic Frame) **PA4408** (w/Plastic Frame) **PA4424**	**N/S**	**N/R**	
	Impreza WRX 4-2458cc (2.5L) FI Turbo	7	**B1400**	**PA2135**	(w/o Plastic Frame) **PA4408** (w/Plastic Frame) **PA4424**	**N/S**	**N/R**	
	Impreza WRX STi 4-2458cc (2.5L) Turbo	7	**B1400**	**PA2135**	(w/o Plastic Frame) **PA4408** (w/Plastic Frame) **PA4424**	**N/S**	**N/R**	**M.T.**
	Legacy 4-150 (2.5L) SFI or Turbo	6	**B1400**	**PA4197**	**PA4188**	**N/S**	**N/R**	
	Legacy 2.5 GT H4-150 (2.5L) Turbo	6	**B1400**	**PA4197**	**PA4188**	**N/S**	**N/R**	
	Outback 4-150 (2.5L) SFI or Turbo	6	**B1400**	**PA4197**	**PA4188**	**N/S**	**N/R**	
	6-183 (3.0L) SFI HO	8	**B1444**	**PA4197**	**PA4188**	**N/S**	**N/R**	
2006	B9 Tribeca 6-183 (3.0L) SFI	8	**B1444**	**PA4197**	**PA4188**	**N/S**	**N/R**	
	Baja 4-150 (2.5L) SFI	6	**B301**	**PA4128**		**N/S**	**N/R**	
	4-150 (2.5L) SFI Turbo	6	**B1400**	**PA2135**		**N/S**	**N/R**	
	Forester 4-150 (2.5L) MFI or Turbo	6	**B1400**	**PA2135**	**PA4424**	**N/S**	**N/R**	
	Impreza 2.5 RS 4-150 (2.5L) SFI	6	**B1400**	**PA2135**	(w/o Plastic Frame) **PA4408** (w/Plastic Frame) **PA4424**	**N/S**	**N/R**	
	Impreza Outback Sport 4-150 (2.5L) SFI	6	**B1400**	**PA2135**	(w/o Plastic Frame) **PA4408** (w/Plastic Frame) **PA4424**	**N/S**	**N/R**	

OBS = Obsolete. Availability Limited to Distributor Stock. t Transmission, Not Model, Determines Which Transmission Filter is Used.

SUBARU Cont'd.

Year	Model and Engine	VIN	Lube	Air	Cabin Air	Fuel	Breather	Trans.[t]
2006	Impreza WRX 4-2458cc (2.5L) FI Turbo	6	**B1400**	**PA2135**	(w/o Plastic Frame) **PA4408** (w/Plastic Frame) **PA4424**	**N/S**	**N/R**	
	Impreza WRX STi 4-150 (2.5L) FI HO Turbo	7	**B1400**	**PA2135**	(w/o Plastic Frame) **PA4408** (w/Plastic Frame) **PA4424**	**N/S**	**N/R**	**M.T.**
	Legacy 4-150 (2.5L) FI	6	**B301**	**PA4197**		**N/S**	**N/R**	
	4-150 (2.5L) FI Turbo	6	**B1400**	**PA4197**		**N/S**	**N/R**	
	Outback 4-150 (2.5L) SFI	6	**B301**	**PA4197**		**N/S**	**N/R**	
	4-150 (2.5L) FI Turbo	6	**B1400**	**PA4197**		**N/S**	**N/R**	
	6-183 (3.0L) SFI HO	8	**B1444**	**PA4197**		**N/S**	**N/R**	
2005	Baja 4-150 (2.5L) SFI	6	**B301**	**PA4128**		**N/S**	**N/R**	
	4-150 (2.5L) SFI Turbo	6	**B1400**	**PA2135**		**N/S**	**N/R**	
	Forester 4-150 (2.5L) SFI	6	**B1400**	**PA2135**	**PA4424**	**N/S**	**N/R**	
	4-150 (2.5L) SFI Turbo	6	**B1400**	**PA2135**	**PA4424**	**N/S**	**N/R**	
	Impreza Outback Sport, Impreza RS 4-150 (2.5L) SFI	6	**B1400**	**PA2135**	(w/o Plastic Frame) **PA4408**	**N/S**	**N/R**	
	Impreza WRX 4-122 (2.0L) SFI Turbo	2	**B1400**	**PA2135**	(w/o Plastic Frame) **PA4408** (w/Plastic Frame) **PA4424**	**N/S**	**N/R**	
	4-150 (2.5L) SFI HO Turbo	7	**B1400**	**PA2135**	(w/o Plastic Frame) **PA4408** (w/Plastic Frame) **PA4424**	**N/S**	**N/R**	**M.T.**
	Legacy 4-150 (2.5L) SFI	6	**B301**	**PA4197**		**N/S**	**N/R**	
	4-150 (2.5L) SFI Turbo	6	**B1400**	8 3/4 In. **PA4197** 11 In. **PA2135**		**N/S**	**N/R**	
	Outback 4-150 (2.5L) SFI	6	**B301**	**PA4197**		**N/S**	**N/R**	
	4-150 (2.5L) SFI Turbo	6	**B1400**	**PA4197**		**N/S**	**N/R**	
	6-183 (3.0L) SFI HO	8	**B1444**	**PA4197**		**N/S**	**N/R**	
2004	Baja 4-150 (2.5L) SFI	6	**B301**	**PA4128**	**N/R**	**BF1048**	**N/R**	
	4-150 (2.5L) SFI Turbo	6	**B1400**	**PA4128**	**N/R**	**BF1048**	**N/R**	
	Forester 4-150 (2.5L) SFI or Turbo	6	**B1400**	**PA4128**	**PA4408**	**BF1048**	**N/R**	
	Impreza 4-150 (2.5L) SFI	6	**B301**	**PA4128**	(w/o Plastic Frame) **PA4408** (w/Plastic Frame) **PA4424**	**BF1048**	**N/R**	
	Impreza WRX 4-1994cc (2.0L) SFI Turbo	2	**B301**	**PA2135**	(w/o Plastic Frame) **PA4408** (w/Plastic Frame) **PA4424**	**BF1048**	**N/R**	
	4-2458cc (2.5L) SFI HO Turbo	7	**B1400**	**PA2135**	(w/o Plastic Frame) **PA4408** (w/Plastic Frame) **PA4424**	**BF1048**	**N/R**	**M.T.**
	Legacy 4-150 (2.5L) SFI	6	**B301**	**PA4128**		**BF1048**	**N/R**	
	Outback, Outback Sport 4-150 (2.5L) SFI	6	**B301**	**PA4128**		**BF1048**	**N/R**	
	6-183 (3.0L) SFI	8	**B1444**	**PA2135**		**BF1048**	**N/R**	
2003	Baja 4-150 (2.5L) SFI	6	**B301**	**PA4128**	**N/R**	**BF1048**	**N/R**	

[t] Transmission, Not Model, Determines Which Transmission Filter is Used. OBS = Obsolete. Availability Limited to Distributor Stock.

SUBARU Cont'd.

Year	Model and Engine	VIN	Lube	Air	Cabin Air	Fuel	Breather	Trans.†
2003	Forester 4-150 (2.5L) SFI	6	**B301**	**PA4128**		**BF1048**	**N/R**	
	Impreza 4-122 (2.0L) SFI Turbo	2	**B1400**	**PA2135**	(w/o Plastic Frame) **PA4408** (w/Plastic Frame) **PA4424**	**BF1048**	**N/R**	
	4-150 (2.5L) SFI	6	**B301**	**PA4128**	(w/o Plastic Frame) **PA4408** (w/Plastic Frame) **PA4424**	**BF1048**	**N/R**	
	Legacy 4-150 (2.5L) SFI	6	**B301**	**PA4128**		**BF1048**	**N/R**	
	Outback, Outback Sport 4-150 (2.5L) SFI	6	**B301**	**PA4128**		**BF1048**	**N/R**	
	6-183 (3.0L) SFI HO	8	**B1444**	**PA2135**		**BF1048**	**N/R**	
2002	Forester 4-150 (2.5L) SFI	6	**B301**	**PA4128**		**BF1048**	**N/R**	
	Impreza 4-122 (2.0L) SFI Turbo	2	**B301**	**PA2135**		**BF1048**	**N/R**	
	4-150 (2.5L) SFI	6	**B301**	**PA4128**		**BF1048**	**N/R**	
	Legacy 4-150 (2.5L) SFI	6	**B301**	**PA4128**		**BF1048**	**N/R**	
	Outback, Outback Sport 4-150 (2.5L) SFI	6	**B301**	**PA4128**		**BF1048**	**N/R**	
	6-183 (3.0L) SFI	8	**B1444**	**PA2135**		**BF1048**	**N/R**	
2001	Forester 4-150 (2.5L) SFI	6	**B301**	**PA4128**	**N/R**	**BF1048**	**N/R**	
	Impreza, Impreza RS 4-135 (2.2L) MFI	4	**B301**	**PA4128**	**N/R**	**BF1048**	**N/R**	
	4-150 (2.5L) SFI	6	**B301**	**PA4128**	**N/R**	**BF1048**	**N/R**	
	Legacy 4-150 (2.5L) SFI	5	**B301**	**PA4128**	**N/R**	**BF1048**	**N/R**	
	Outback, Outback Sport 4-135 (2.2L) SFI	4	**B301**	**PA4128**	**N/R**	**BF1048**	**N/R**	
	4-150 (2.5L) SFI	5	**B301**	**PA4128**	**N/R**	**BF1048**	**N/R**	
	6-183 (3.0L) FI	8	**B1444**	**PA2135**	**N/R**	**BF1048**	**N/R**	
2000	Forester 4-150 (2.5L) SFI	6	**B301**	**PA4128**	**N/R**	**BF1048**	**N/R**	
	Impreza, Impreza Outback Sport 4-135 (2.2L) SFI	4	**B301**	**PA4128**	**N/R**	**BF1048**	**N/R**	
	4-150 (2.5L) SFI	6	**B301**	**PA4128**	**N/R**	**BF1048**	**N/R**	
	Legacy, Legacy Outback 4-150 (2.5L) SFI	6	**B301**	**PA4128**	**N/R**	**BF1048**	**N/R**	
1999	Forester 4-150 (2.5L) SFI	6	**B301**	**PA2135**	**N/R**	**BF1048**	**N/R**	
	Impreza, Impreza Outback, Impreza RS 4-135 (2.2L) SFI	4	**B301**	Exc. Calif. **PA2135** Calif. **PA4128**	**N/R**	**BF1048**	**N/R**	
	4-150 (2.5L) SFI	6	**B301**	**PA2135**	**N/R**	**BF1048**	**N/R**	
	Legacy, Legacy Outback 4-135 (2.2L) SFI	4	**B301**	Exc. Calif. **PA2135** Calif. **PA4128**	**N/R**	**BF1048**	**N/R**	
	4-150 (2.5L) SFI	6	**B301**	**PA2135**	**N/R**	**BF1048**	**N/R**	
1998	Forester 4-150 (2.5L) SFI	6	**B301**	**PA2135**	**N/R**	**BF1048**	**N/R**	
	Impreza, Impreza Outback, Impreza RS 4-135 (2.2L) SFI	4	**B301**	**PA2135**	**N/R**	**BF1048**	**N/R**	
	4-150 (2.5L) SFI	6	**B301**	**PA2135**	**N/R**	**BF1048**	**N/R**	
	Legacy, Legacy Outback 4-135 (2.2L) SFI	3,4	**B301**	**PA2135**	**N/R**	**BF1048**	**N/R**	
	4-150 (2.5L) SFI	6	**B301**	**PA2135**	**N/R**	**BF1048**	**N/R**	
1997	Impreza, Impreza Outback 4-111 (1.8L) SFI	2	**B301**	**PA2135**	**N/R**	**BF1048**	**N/R**	
	4-136 (2.2L) SFI	4	**B301**	**PA2135**	**N/R**	**BF1048**	**N/R**	
	Legacy, Legacy Outback 4-135 (2.2L) SFI	3,4	**B301**	**PA2135**	**N/R**	**BF1048**	**N/R**	
	4-150 (2.5L) SFI	6	**B301**	**PA2135**	**N/R**	**BF1048**	**N/R**	
	SVX 6-203 (3.3L) SFI	8	**B227**	**PA2135**	**N/R**	**BF1048**	**N/R**	
1996	Impreza 4-111 (1.8L) SFI	1,2	**B301**	**PA2135**	**N/R**	**BF1048**	**N/R**	
	4-135 (2.2L) SFI	4	**B301**	**PA2135**	**N/R**	**BF1048**	**N/R**	
	Legacy, Legacy Outback 4-135 (2.2L) SFI	3,4,6	**B301**	**PA2135**	**N/R**	**BF1048**	**N/R**	
	4-150 (2.5L) SFI	6	**B301**	**PA2135**	**N/R**	**BF1048**	**N/R**	
	SVX 6-203 (3.3L) SFI	8	**B227**	**PA2135**	**N/R**	**BF1048**	**N/R**	
1995	Impreza 4-111 (1.8L) MFI	2	**B301**	**PA2135**	**N/R**	**BF1048**	**N/R**	
	4-135 (2.2L) MFI	6	**B301**	**PA2135**	**N/R**	**BF1048**	**N/R**	
	Justy 3-1189cc (1.2L) FI Canada	7	**B1400**		**N/R**		**N/R**	
	Legacy 4-2200cc (2.2L) MFI	6	**B301**	**PA2135**	**N/R**	**BF1048**	**N/R**	
	SVX 6-202 (3.3L) MFI	3	**B227**	**PA2135**	**N/R**	**BF1048**	**N/R**	
1994	Impreza 4-111 (1.8L) MFI	2	**B301**	**PA2135**	**N/R**	**BF1048**	**N/R**	
	Justy 3-1189cc (1.2L) MFI	7,8	**B1400**		**N/R**		**N/R**	

OBS = Obsolete. Availability Limited to Distributor Stock. † Transmission, Not Model, Determines Which Transmission Filter is Used.

SUBARU Cont'd.

Year	Model and Engine	VIN	Lube	Air	Cabin Air	Fuel	Breather	Trans.t
1994	Legacy 4-2200cc (2.2L) MFI	6	**B301**	**PA2135**	**N/R**	**BF1048**	**N/R**	
	Loyale 4-1781cc (1.8L) EFI	5	**B113**	**PA2121**	**N/R**	**BF830**	**N/R**	
	SVX 6-3300cc (3.3L) SFI	3	**B227**	**PA2135**	**N/R**	**BF1048**	**N/R**	
1993	Impreza 4-1800cc (1.8L) MFI	2	**B301**	**PA2135**	**N/R**	**BF1048**	**N/R**	
	Justy 3-1189cc (1.2L) MFI	7,8	**B1400**		**N/R**		**N/R**	
	Legacy 4-2200cc (2.2L) MFI	6	**B301**	**PA2135**	**N/R**	**BF1048**	**N/R**	
	Loyale 4-1781cc (1.8L) EFI	4,5	**B113**	**PA2121**	**N/R**	**BF830**	**N/R**	
	SVX 6-3300cc (3.3L) FI	3	**B227**	**PA2135**	**N/R**	**BF1048**	**N/R**	
1992	Justy 3-1189cc (1.2L) 2 Bbl.	7,8	**B1400**	**PA2031**	**N/R**	**BF805**	**N/R**	
	3-1189cc (1.2L) MFI	7,8	**B1400**		**N/R**		**N/R**	
	Legacy 4-2200cc (2.2L) MFI	6	**B301**	**PA2135**	**N/R**	**BF1048**	**N/R**	
	Loyale 4-1781cc (1.8L) EFI	4,5	**B113**	**PA2121**	**N/R**	**BF830**	**N/R**	
	SVX 6-3300cc (3.3L) SFI 4WD	3	**B227**	**PA2135**	**N/R**	**BF1048**	**N/R**	
1991	Justy 3-1189cc (1.2L) 2 Bbl.	7,8	**B1400**	**PA2031**	**N/R**	**BF805**	**N/R**	
	3-1189cc (1.2L) MFI	7,8	**B1400**		**N/R**		**N/R**	
	Legacy 4-2200cc (2.2L) SFI	6	**B301**	**PA2135**	**N/R**	**BF1048**	**N/R**	
	Loyale 4-1781cc (1.8L) EFI	4,5	**B113**	**PA2121**	**N/R**	**BF830**	**N/R**	
	XT, XT6 4-1781cc (1.8L) MFI	4	**B113**	**PA2121**	**N/R**	**BF830**	**N/R**	
	6-2672cc (2.7L) MFI	8,9	**B113**	**PA2121**	**N/R**	**BF830**	**N/R**	
1990	Justy 3-1189cc (1.2L) 2 Bbl.	7,8	**B1400**	**PA2031**	**N/R**	**BF805**	**N/R**	
	3-1189cc (1.2L) MFI	7,8	**B1400**		**N/R**		**N/R**	
	Legacy 4-2200cc (2.2L) MFI	6	**B301**	**PA2135**	**N/R**	**BF1048**	**N/R**	
	Loyale 4-1781cc (1.8L) SFI or Turbo	4,5	**B113**	**PA2121**	**N/R**	**BF830**	**N/R**	
	XT, XT6 4-1781cc (1.8L) MFI	4	**B113**	**PA2121**	**N/R**	**BF830**	**N/R**	
	6-2672cc (2.7L) MFI	8,9	**B113**	**PA2121**	**N/R**	**BF830**	**N/R**	
1989	DL 4-1781cc (1.8L) FI	4,5	**B113**	**PA2121**	**N/R**	**BF830**	**N/R**	
	GL 4-1784cc (1.8L) 2 Bbl.	4,5	**B113**		**N/R**	**BF1140**		
	4-1781cc (1.8L) FI	4,5	**B113**	**PA2121**	**N/R**	**BF830**	**N/R**	
	4-1800cc (1.8L) FI Turbo	5	**B113**	**PA2121**	**N/R**	**BF830**	**N/R**	
	GL-10 4-1781cc (1.8L) FI Turbo	4,5,7	**B113**	**PA2121**	**N/R**	**BF830**	**N/R**	
	Justy 3-1189cc (1.2L) 2 Bbl.	7,8	**B1400**	**PA2031**	**N/R**	**BF805**	**N/R**	
	RX 4-1781cc (1.8L) FI Turbo	5	**B113**	**PA2121**	**N/R**	**BF830**	**N/R**	
	XT, XT6 4-1781cc (1.8L) FI	4,7	**B113**	**PA2121**	**N/R**	**BF830**	**N/R**	
	6-2672cc (2.7L) MPI	8,9	**B113**	**PA2121**	**N/R**	**BF830**	**N/R**	
1988	DL 4-1781cc (1.8L) FI	4,5	**B113**	**PA2121**	**N/R**	**BF830**		
	GL 4-1781cc (1.8L) 2 Bbl.	4,5	**B113**		**N/R**	**BF1140**		
	4-1781cc (1.8L) FI	4,5	**B113**	**PA2121**	**N/R**	**BF830**		
	4-1781cc (1.8L) FI Turbo	5	**B113**	**PA2121**	**N/R**	**BF830**		
	GL-10 4-1781cc (1.8L) FI	4	**B113**	**PA2121**	**N/R**	**BF830**		
	4-1781cc (1.8L) FI Turbo	4,5,7	**B113**	**PA2121**	**N/R**	**BF830**		
	Justy 3-1189cc (1.2L) 2 Bbl.	7,8	**B1400**	**PA2031**	**N/R**	**BF805**		
	RX 4-1781cc (1.8L) FI Turbo	5	**B113**	**PA2121**	**N/R**	**BF830**		
	XT, XT6 4-1781cc (1.8L) FI	4,7	**B113**	**PA2121**	**N/R**	**BF830**	**N/R**	
	6-2672cc (2.7L) MPI	8,9	**B113**	**PA2121**	**N/R**	**BF830**	**N/R**	
1987	Brat 4-1781cc (1.8L) 2 Bbl.	5	**B113**		**N/R**	**BF837**		
	DL 4-1781cc (1.8L) 2 Bbl.	5	**B113**		**N/R**	**BF837**		
	4-1781cc (1.8L) FI	4	**B113**	**PA2121**	**N/R**	**BF830**		
	GL 4-1781cc (1.8L) 2 Bbl.	4	**B113**		**N/R**	**BF837**		
	GL 4-1781cc (1.8L) 2 Bbl.	5	**B113**		**N/R**	**BF837**		
	4-1781cc (1.8L) FI	4	**B113**	**PA2121**	**N/R**	**BF830**		
	GL-10 4-1781cc (1.8L) FI	4	**B113**	**PA2121**	**N/R**	**BF830**		
	4-1781cc (1.8L) FI Turbo	4,5,7	**B113**	**PA2121**	**N/R**	**BF830**	**N/R**	
	Justy 3-1189cc (1.2L)	7	**B1400**	**PA2031**	**N/R**	**BF805**		
	RX 4-1781cc (1.8L) FI Turbo	5	**B113**	**PA2121**	**N/R**	**BF830**	**N/R**	
	XT 4-1781cc (1.8L) FI	4,7	**B113**	**PA2121**	**N/R**	**BF830**	**N/R**	
	4-1781cc (1.8L) FI Turbo	4,7	**B113**	**PA2121**	**N/R**	**BF830**	**N/R**	
1986	Brat 4-1781cc (1.8L) 2 Bbl.	5	**B113**		**N/R**	**BF837**		
	DL, GL 4-1595cc (1.6L) 2 Bbl.	2	**B113**		**N/R**	w/o VapDiv. **BF1140**		
	4-1781cc (1.8L) 2 Bbl.	4,5	**B113**		**N/R**	**BF837**		
	4-1781cc (1.8L) FI or Turbo	4,5,7	**B113**	**PA2121**	**N/R**	**BF830**	**N/R**	
1985	Brat 4-1781cc (1.8L) 2 Bbl.	5	**B113**		**N/R**	**BF837**		
	DL, GL 4-1781cc (1.8L) 2 Bbl.	4,5	**B113**		**N/R**	**BF837**		
	4-1781cc (1.8L) FI or Turbo	4,5,7	**B113**	**PA2121**	**N/R**	**BF830**	**N/R**	
1984	Brat, DL, GL 4-1595cc (1.6L) 2 Bbl.	2	**B113**		**N/R**	w/o VapDiv. **BF1140**		

[t] Transmission, Not Model, Determines Which Transmission Filter is Used. OBS = Obsolete. Availability Limited to Distributor Stock.

Year	Model and Engine	VIN	Lube	Air	Cabin Air	Fuel	Breather	Trans.†
SUBARU Cont'd.								
1984	Brat, DL, GL 4-1781cc (1.8L) 2 Bbl.	4,5	**B113**		**N/R**	w/o VapDiv. **BF1140**		
	4-1781cc (1.8L) FI Turbo	5	**B113**	**PA2121**	**N/R**	**BF830**	**N/R**	
1983	Brat, DL, GL 4-1595cc (1.6L) 2 Bbl.	2	**B113**		**N/R**	w/o VapDiv. **BF1140**		
	4-1781cc (1.8L) 2 Bbl.	4,5	**B113**		**N/R**	w/o VapDiv. **BF1140**		
	4-1781cc (1.8L) FI Turbo	5	**B113**	**PA2121**	**N/R**	**BF830**	**N/R**	
1982	Brat, DL, GL, GLF 4-1595cc (1.6L) 2 Bbl.	2	**B113**		**N/R**	w/o VapDiv. **BF1140**		
	4-1781cc (1.8L) 2 Bbl.	4,5	**B113**		**N/R**	w/o VapDiv. **BF1140**		
1981	Brat, DL, GL, GLF 4-1595cc (1.6L) 2 Bbl.	2	**B113**		**N/R**	w/o VapDiv. **BF805**		
	4-1781cc (1.8L) 2 Bbl.	4,5	**B113**		**N/R**	w/o VapDiv. **BF805**		
1980	Brat, DL, GL, GLF 4-1595cc (1.6L) 2 Bbl.	2,3	**B113**		**N/R**	w/o VapDiv. **BF805**		
	4-1781cc (1.8L) 2 Bbl.	4	**B113**		**N/R**	w/o VapDiv. **BF805**		
SUZUKI								
2010	Equator 4-2500cc (2.5L) EFI	B	**B1400**		**PA4410 KIT**	**BF1104**	**N/R**	
	V6-3954cc (4.0L) EFI	A	**B1402**	**PA4046**	**PA4410 KIT**	**BF1104**	**N/R**	
	Grand Vitara 4-2393cc (2.4L) FI	0				**N/S**	**N/R**	
	V6-3195cc (3.2L) FI	1	**B7422**			**N/S**	**N/R**	
	Kizashi 4-2400cc (2.4L) FI	9				**N/S**	**N/R**	**N/S**
	Swift 4-1598cc (1.6L) FI Canada					**N/S**	**N/R**	
	SX4 4-122 (2.0L) FI	5	**B37**			**N/S**	**N/R**	**N/S**
2009	Equator 4-2500cc (2.5L) EFI	B	**B1400**		**PA4410 KIT**	**BF1104**	**N/R**	**20001**
	V6-3954cc (4.0L) EFI	A	**B1402**	**PA4046**	**PA4410 KIT**	**BF1104**	**N/R**	**18273**
	Grand Vitara 4-2393cc (2.4L) FI	0				**N/S**	**N/R**	
	V6-3195cc (3.2L) FI	1	**B7422**			**N/S**	**N/R**	
	Swift 4-1598cc (1.6L) FI Canada	6,E	VIN 6 **B43-S**	**PA4344**		**N/S**	**N/R**	
	SX4 4-122 (2.0L) FI	4	**B37**			**N/S**	**N/R**	**N/S**
	XL-7 V6-3564cc (3.6L) FI	7	**B7422**	**PA4157**		**N/S**	**N/R**	**N/S**
2008	Forenza 4-122 (2.0L) FI	Z	**B43-S**	**PA4368**		**N/S**	**N/R**	**N/S**
	Grand Vitara V6-2737cc (2.7L) FI	9	**B159**	**PA4421**			**N/R**	
	Reno 4-122 (2.0L) MFI	Z	**B43-S**	**PA4368**		**N/S**	**N/R**	**N/S**
	Swift 4-1598cc (1.6L) FI Canada	6	**B43-S**	**PA4344**		**N/S**	**N/R**	**N/S**
	SX4 4-122 (2.0L) FI	4	**B37**			**N/S**	**N/R**	**N/S**
	XL-7 V6-3564cc (3.6L) MFI	7	**B160**	**PA4157**		**N/S**	**N/R**	**N/S**
2007	Aerio 4-2290cc (2.3L) FI	6	**B37**	**PA4382**	**N/R**	**N/S**	**N/R**	
	Forenza 4-122 (2.0L) FI	5	**B43-S**	**PA4368**		**N/S**	**N/R**	**N/S**
	Grand Vitara V6-2737cc (2.7L) FI	9	**B159**	**PA4421**			**N/R**	
	Reno 4-122 (2.0L) MFI	6	**B43-S**	**PA4368**		**N/S**	**N/R**	**N/S**
	Swift 4-1598cc (1.6L) FI Canada	6	**B43-S**	**PA4344**		**N/S**	**N/R**	**N/S**
	SX4 4-122 (2.0L) FI	4	**B37**			**N/S**	**N/R**	**N/S**
	XL-7 V6-3564cc (3.6L) MFI	2,7,9	**B160**	**PA4157**		**N/S**	**N/R**	
2006	Aerio 4-2290cc (2.3L) FI	6	**B37**	**PA4382**	**N/R**	**N/S**	**N/R**	
	Forenza 4-122 (2.0L) FI	5	**B43-S**	**PA4368**		**N/S**	**N/R**	**N/S**
	Grand Vitara V6-2737cc (2.7L) FI	9	**B159**	**PA4421**			**N/R**	
	Reno 4-122 (2.0L) MFI	6	**B43-S**	**PA4368**		**N/S**	**N/R**	**N/S**
	Swift 4-1598cc (1.6L) FI Canada	6	**B43-S**	**PA4344**		**N/S**	**N/R**	**N/S**
	Verona 6-152 (2.5L) MFI	5	**B7167**				**N/R**	**N/S**
	XL-7 V6-164 (2.7L) MFI	9	**B159**				**N/R**	
2005	Aerio 4-2290cc (2.3L) MFI	4	**B37**	**PA4382**	**N/R**	**N/S**	**N/R**	
	Forenza 4-122 (2.0L) MFI	5	**B43-S**	**PA4368**		**N/S**	**N/R**	**N/S**
	Grand Vitara V6-152 (2.5L) MFI	M	**B159**	**PA4108**			**N/R**	**18012**
	Reno 4-122 (2.0L) MFI	6	**B43-S**	**PA4368**		**N/S**	**N/R**	**N/S**
	Swift 4-1598cc (1.6L) FI Canada	6	**B43-S**	**PA4344**	**N/R**	**N/S**	**N/R**	**N/S**
	Verona 6-152 (2.5L) MFI	5	**B7167**				**N/R**	**N/S**
	XL-7 V6-164 (2.7L) MFI	9	**B159**				**N/R**	**18012**
2004	Aerio 4-2290cc (2.3L) MFI	4	**B37**	**PA4382**	**N/R**	**N/S**	**N/R**	
	Forenza 4-122 (2.0L) MFI	5	**B43-S**	**PA4368**		**N/S**	**N/R**	**N/S**
	Swift 4-1598cc (1.6L) FI Canada	6	**B43-S**	**PA4344**	**N/R**	**N/S**	**N/R**	**N/S**
	Verona 6-152 (2.5L) MFI	5	**B7167**				**N/R**	**N/S**

OBS = Obsolete. Availability Limited to Distributor Stock. † Transmission, Not Model, Determines Which Transmission Filter is Used.

SUZUKI Cont'd.

Year	Model and Engine	VIN	Lube	Air	Cabin Air	Fuel	Breather	Trans.[t]
2004	Vitara, Grand Vitara V6-152 (2.5L) MFI	6	**B159**	**PA4108**			**N/R**	**18012**
	XL-7 V6-164 (2.7L) MFI	6	**B159**				**N/R**	**18012**
2003	Aerio 4-122 (2.0L) MFI	4	**B37**	**PA4382**	**N/R**	**N/S**	**N/R**	
	Vitara, Grand Vitara 4-122 (2.0L) MFI	5	**B37**	**PA4108**		**BF7963**	**N/R**	**18012**
	V6-152 (2.5L) MFI	6	**B159**	**PA4108**			**N/R**	**18012**
	XL-7 V6-164 (2.7L) MFI	6	**B159**	**PA4108**			**N/R**	**18012**
2002	Aerio 4-2000cc (2.0L) FI	4	**B37**		**N/R**	**N/S**	**N/R**	
	Esteem 4-112 (1.8L) MFI	4	**B37**	**PA4105**	**N/R**	**N/S**	**N/R**	
	Grand Vitara XL-7, Vitara V6-2737cc (2.7L) MFI	9	**B159**	**PA4108**			**N/R**	**18012**
	Vitara 4-1590cc (1.6L) FI Canada	5	**B37**	**PA4108**			**N/R**	**18012**
	Vitara, Grand Vitara 4-122 (2.0L) MFI	5	**B37**	**PA4108**			**N/R**	**18012**
	V6-152 (2.5L) MFI	6	**B159**	**PA4108**			**N/R**	**18012**
2001	Esteem 4-97 (1.6L) MFI	3	**BT223**	**PA4105**	**N/R**	**N/S**	**N/R**	
	4-1790cc (1.8L) MFI	4	**B37**	**PA4105**	**N/R**	**N/S**	**N/R**	
	Grand Vitara XL-7, Vitara V6-2737cc (2.7L) MFI	9	**B159**	**PA4108**			**N/R**	**18012**
	Swift 4-79 (1.3L) MFI	2	**B37**	**PA4026**	**N/R**	**N/S**	**N/R**	**18012**
	Vitara, Grand Vitara 4-97 (1.6L) MFI	0	**B37**	**PA4108**			**N/R**	**18012**
	4-2000cc (2.0L) MFI	5	**B37**	**PA4108**			**N/R**	**18012**
	V6-152 (2.5L) MFI	6	**B159**	**PA4108**			**N/R**	**18012**
2000	Esteem 4-97 (1.6L) MFI	3	**BT223**	**PA4105**	**N/R**	**N/S**	**N/R**	
	4-1790cc (1.8L) MFI	4	**B37**	**PA4105**	**N/R**	**N/S**	**N/R**	
	Swift 4-79 (1.3L) MFI	2	**BT223**	**PA4026**	**N/R**	**N/S**	**N/R**	
	Vitara, Grand Vitara 4-97 (1.6L) MFI	0	**B37**	**PA4108**			**N/R**	**18012**
	4-2000cc (2.0L) MFI	5	**B37**	**PA4108**			**N/R**	**18012**
	V6-152 (2.5L) MFI	6	**B159**	**PA4108**			**N/R**	**18012**
1999	Esteem 4-97 (1.6L) MFI	3	**BT223**	**PA4105**	**N/R**		**N/R**	
	4-1790cc (1.8L) MFI	4	**BT223**	**PA4105**	**N/R**		**N/R**	
	Swift 4-79 (1.3L) MFI	2	**BT223**	**PA4026**	**N/R**	**N/S**	**N/R**	
	Vitara, Grand Vitara 4-97 (1.6L) FI	0	**B37**	**PA4108**			**N/R**	**18012**
	4-2000cc (2.0L) FI	5	**B37**	**PA4108**			**N/R**	**18012**
	V6-152 (2.5L) MFI	6	**B159**	**PA4108**			**N/R**	**18012**
1998	Esteem 4-97 (1.6L) MFI	3	**BT223**	**PA4105**	**N/R**		**N/R**	
	Sidekick 4-97 (1.6L) MFI	0	**BT223**	**PA4078**	**N/R**	**BF1100**	**N/R**	4 Spd. **18012**
	4-112 (1.8L) MFI	2	**B37**	**PA4108**	**N/R**	**BF1100**	**N/R**	4 Spd. **18012**
	Swift 4-79 (1.3L) MFI	2	**BT223**	**PA2216**	**N/R**	**N/S**	**N/R**	
	X-90 4-97 (1.6L) MFI	1	**BT223**	**PA4078**	**N/R**	**BF1100**	**N/R**	**18012**
1997	Esteem 4-97 (1.6L) MFI	3	**BT223**	**PA4105**	**N/R**		**N/R**	
	Sidekick 4-97 (1.6L) EFI	0	**BT223**	**PA4078**	**N/R**	**BF1100**	**N/R**	4 Spd. **18012**
	4-112 (1.8L) EFI	2	**B37**	**PA4108**	**N/R**	**BF1100**	**N/R**	4 Spd. **18012**
	Swift 4-79 (1.3L) MFI	2	**BT223**	**PA2216**	**N/R**	**BF7720**	**N/R**	
	X-90 4-97 (1.6L) MFI	1	**BT223**	**PA4078**	**N/R**	**BF1100**	**N/R**	**18012**
1996	Esteem 4-97 (1.6L) MFI	3	**BT223**	**PA4105**	**N/R**		**N/R**	
	Sidekick 4-97 (1.6L) MFI	0	**BT223**	4 Door **PA4078** Convertible **PA4023**	**N/R**	**BF1100**	**N/R**	4 Spd. **18012**
	4-112 (1.8L) MFI	2	**B37**	**PA4108**	**N/R**	**BF1100**	**N/R**	4 Spd. **18012**
	Swift 4-79 (1.3L) EFI	2	**BT223**	SOHC **PA2216** DOHC **PA4026**	**N/R**	**BF7720**	**N/R**	
	X-90 4-97 (1.6L) MFI	1	**BT223**	**PA4078**	**N/R**	**BF1100**	**N/R**	**18012**
1995	Esteem 4-97 (1.6L) MFI	3	**BT223**	**PA4105**	**N/R**		**N/R**	
	Samurai 4-79 (1.3L) EFI	3	**B159**	**PA2215**	**N/R**	**BF1100**	**N/R**	**M.T.**
	Sidekick 4-1590cc (1.6L) FI	0	**BT223**	8 Valve **PA4023** 16 Valve **PA4078**	**N/R**	**BF1100**	**N/R**	4 Spd. **18012**
	Swift, Swift GT 4-79 (1.3L) EFI	3	**BT223**	**PA2216**	**N/R**	**BF7720**	**N/R**	
1994	Samurai 4-1298cc (1.3L) EFI	3	**B159**	**PA2215**	**N/R**	**BF1100**	**N/R**	**M.T.**
	Sidekick 4-1590cc (1.6L) FI	0	**B159**	8 Valve **PA4023** 16 Valve **PA4078**	**N/R**	**BF1100**	**N/R**	4 Spd. **18012**
	Swift 3-993cc (1.0L) FI Canada	4	**BT223**		**N/R**		**N/R**	
	4-79 (1.3L) EFI	3	**B159**	SOHC **PA2216** DOHC **PA4026**	**N/R**	**BF1003**	**N/R**	
1993	Samurai 4-1298cc (1.3L) EFI	3	**B159**	**PA2215**	**N/R**	**BF1100**	**N/R**	**M.T.**
	Sidekick 4-1590cc (1.6L) FI	0	**B159**	8 Valve **PA4023** 16 Valve **PA4078**	**N/R**	**BF1100**	**N/R**	4 Spd. **18012**
	Swift 3-993cc (1.0L) Canada	4	**BT223**		**N/R**		**N/R**	

[t] Transmission, Not Model, Determines Which Transmission Filter is Used. OBS = Obsolete. Availability Limited to Distributor Stock.

SUZUKI Cont'd.

Year	Model and Engine	VIN	Lube	Air	Cabin Air	Fuel	Breather	Trans.[t]
1993	Swift 4-1298cc (1.3L) EFI	3	**B159**	SOHC **PA2216** DOHC **PA4026**	**N/R**	**BF1003**	**N/R**	
	4-1590cc (1.6L) FI Canada	1	**B159**		**N/R**	**BF1003**	**N/R**	
1992	Samurai 4-1298cc (1.3L) EFI	3	**B159**	**PA2215**	**N/R**	**BF1100**	**N/R**	**M.T.**
	Sidekick 4-1590cc (1.6L) FI	0	**B159**	8 Valve **PA4023** 16 Valve **PA4078**	**N/R**	**BF1100**	**N/R**	4 Spd. **18012**
	Swift 4-1298cc (1.3L) MFI	3	**B159**	SOHC **PA2216** DOHC **PA4026**	**N/R**	**BF1003**	**N/R**	
	4-1590cc (1.6L) FI Canada	1	**B159**		**N/R**	**BF1003**	**N/R**	
1991	Samurai 4-1298cc (1.3L) EFI	3	**B159**	**PA2215**	**N/R**	**BF1100**	**N/R**	**M.T.**
	Sidekick 4-1590cc (1.6L) EFI	0	**B159**	**PA4023**	**N/R**	**BF1100**	**N/R**	4 Spd. **18012**
	Swift 4-1298cc (1.3L) EFI	3	**B159**	SOHC **PA2216** DOHC **PA4026**	**N/R**	**BF1003**	**N/R**	
1990	Samurai 4-1298cc (1.3L) EFI	3	**B159**	**PA2215**	**N/R**	**BF1100**	**N/R**	**M.T.**
	Sidekick 4-1590cc (1.6L) EFI	0	**B159**	**PA4023**	**N/R**	**BF1100**	**N/R**	4 Spd. **18012**
	Swift 4-1298cc (1.3L) EFI	3	**B159**	DOHC **PA4026** SOHC **PA2216**	**N/R**	**BF1003**	**N/R**	
1989	Samurai 4-1325cc (1.3L) 2 Bbl.	5	**B159**	**PA2215**	**N/R**	**BF1150**	**N/R**	**M.T.**
	Sidekick 4-1300cc (1.3L) 2 Bbl.	5	**BT223**	**PA4023**	**N/R**	**BF1100**	**N/R**	**M.T.**
	4-1590cc (1.6L) EFI	0	**BT223**	**PA4023**	**N/R**	**BF1100**	**N/R**	4 Spd. **18012**
	Swift 4-1298cc (1.3L) MFI	3	**B159**	SOHC **PA2216** DOHC **PA4026**	**N/R**	**BF1003**	**N/R**	
1988	Forsa 3-993cc (1.0L) FI Canada	4	**BT223**	**PA2216**	**N/R**			
	3-993cc (1.0L) FI Carb. Canada	4,S	**BT223**	**PA2216**	**N/R**		**N/R**	
	Samurai 4-1325cc (1.3L) 2 Bbl.	5	**B159**	**PA2215**	**N/R**	**BF1150**	**N/R**	**M.T.**
1987	Forsa 3-993cc (1.0L) Carb. Canada	S	**BT223**	**PA2216**	**N/R**		**N/R**	
	3-993cc (1.0L) Turbo Canada	4	**BT223**	**PA2216**	**N/R**			
	3-993cc (1.0L) Carb. Canada	4	**BT223**	**PA2216**	**N/R**		**N/R**	
	Samurai 4-1325cc (1.3L) 2 Bbl.	5	**BT223**	**PA2215**	**N/R**	**BF1150**	**N/R**	
1986	Forsa 3-993cc (1.0L) Carb. Canada	4,S	**BT223**	**PA2216**	**N/R**		**N/R**	
	Samurai 4-1325cc (1.3L) 2 Bbl.	5	**BT223**	**PA2215**	**N/R**	**BF1150**	**N/R**	
1985	Forsa 3-993cc (1.0L) Carb. Canada		**BT223**	**PA2216**	**N/R**		**N/R**	
	SA310 3-993cc (1.0L) Carb. Canada	S	**BT223**		**N/R**			
	Samurai 4-1325cc (1.3L) Carb. Canada	5	**BT223**	**PA2215**	**N/R**	**BF1150**	**N/R**	
	SJ413 4-1298cc (1.3L) Carb. Canada	3	**BT223**		**N/R**	**BF1150**		
1984	SJ410 3-993cc (1.0L) Carb. Canada		**BT223**		**N/R**		**N/R**	
1983	SJ410 3-993cc (1.0L) Carb. Canada	2	**BT223**		**N/R**		**N/R**	
1982	SJ410 3-993cc (1.0L) Carb. Canada		**BT223**		**N/R**		**N/R**	
1981	LJ81 3-993cc (1.0L) Carb. Canada	1	**BT223**		**N/R**			
	SJ410 3-993cc (1.0L) Carb. Canada		**BT223**		**N/R**		**N/R**	
1980	SJ410 3-993cc (1.0L) Carb. Canada		**BT223**		**N/R**		**N/R**	

SUZUKI Motorcycles

AN400 Burgman 400							
AN650 Burgman Series	2004-on **B7419**						
AN650 Burgman 650	2003-04 **B7419**						
Boulevard Series	2005-on **B7419**						
DL650 V-Strom Series	2004-on **B7419**						
DRZ250							
DL1000 V-Strom Series	2002-on **B7419**						
DR125							
DR125SE							
DR200							
DR200SE							
DR250							
DR500							
DRZ110	2003-05 **P7132**						
DRZ125, DRZ125-SE							
GN250							
GR650, GR650GS, GR650X							
GS250							
GS300, GS300L, GS300LD, GS300LF, GS300LZ							
GS400							
GS425							
GS450 Series							
GS500, GS500E							

OBS = Obsolete. Availability Limited to Distributor Stock. [t] Transmission, Not Model, Determines Which Transmission Filter is Used.

Year	Model and Engine	VIN	Lube	Air	Cabin Air	Fuel	Breather	Trans.t
SUZUKI Motorcycles Cont'd.								
	GS550 Series							
	GS650 Series							
	GS700							
	GS750							
	GS850							
	GS1000							
	GS1100							
	GS1150							
	GSF400 Bandit							
	GSF600 Bandit Series		1995-2004 **B7419**					
	GSF650 Bandit Series		2005-on **B7419**					
	GSF1200 Bandit Series		1996-2007 **B7419**					
	GSF1200S		1997-2000 **B7419**					
	GSF1250 Bandit S		2007-on **B7419**					
	GSR600 Series		1988-2006 **B7419**					
	GSX600F Katana		1983-95 **B7419**					
	GSX650F		2008-on **B7419**					
	GSX750 Series		1979-2006 **B7419**					
	GSX1100F Katana		1988-93 **B7419**					
	GSX1100G		1991-93 **B7419**					
	GSX1100 Katana, GSX1100F, GSX1100G		1986-on **B7419**					
	GSX1300 Series		1999-on **B7419**					
	GSX1400		2001-06 **B7419**					
	GSXR400		1990-92 **B7419**					
	GSXR600 Series		1992-93, 1997-on **B7419**					
	GSXR750 Series		1986-87 **BT223** 1988-on **B7419**					
	GSXR1000		2001-08 **B7419**					
	GSXR1000W		1993-95 **B7419**					
	GSXR1100 Series		1986-98 **B7419**					
	GV700 Madura		1985 **BT223**					
	GV1200 Madura		1985-86 **BT223**					
	GV1400 Calvacade		1987-88 **B7419**					
	RF600R		1993-98 **B7419**					
	RF900 Series		1994-2000 **B7419**					
	SP125							
	SP200							
	SV650 Series		1999-on **B7419**					
	SV1000 Series		2003-07 **B7419**					
	TL1000 Series		1997-2003 **B7419**					
	VL800 Intruder Series		2001-on **B7419**					
	VL1500 Intruder Series		1998-on **B7419**					
	VS7-700 Intruder		1987 **B7419**					
	VS700 Intruder		1987-88 **B7419**					
	VS750 Intruder		1987-91 **B7419**					
	VS800		1992-on **B7419**					
	VX800		1990-97 **B7419**					
	VZ800 Series		1997-on **B7419**					
	VZ1600 Marauder		2004-05 **B7419**					
	VZR1800 Intruder Series		2006-on **B7419**					
	XN85							
	XN650							
	SFV650		2009-on **B7419**					
	VS1400 Series		1987-on **B7419**					
	VLR1800 Series		2008-on **B7419**					
	VZ1500		2009-on **B7419**					
TOYOTA								
2010	4Runner 4-2700cc (2.7L) FI	X	**B7020**	**PA4356**		**N/S**	**N/R**	**19996**
	V6-241 (4.0L) FI	U	**B7020**	**PA4165**	**PA4188**	**N/S**	**N/R**	A750F **N/S**
	Avalon V6-3456cc (3.5L) FI	K	**P7398**	**PA4333**	(w/o Charcoal) **PA4327**	**N/S**	**N/R**	U151E **20008**
	Camry 4-2362cc (2.4L) EFI Hybrid	B	**B37**	**PA4150**	**PA4327**	**N/S**	**N/R**	**N/S**
	4-2494cc (2.5L) EFI	F	**P7398**	**PA4350**	**PA4327**	**N/S**	**N/R**	**N/S**
	V6-3456cc (3.5L) EFI	K	**P7398**	**PA4333**	**PA4327**	**N/S**	**N/R**	**N/S**
	Corolla 4-1798cc (1.8L) EFI	L,U	**P7454**		**PA4327**	**N/S**	**N/R**	**18289**

t Transmission, Not Model, Determines Which Transmission Filter is Used. OBS = Obsolete. Availability Limited to Distributor Stock.

TOYOTA Cont'd.

Year	Model and Engine	VIN	Lube	Air	Cabin Air	Fuel	Breather	Trans.[t]
2010	Corolla 4-2362cc (2.4L) EFI	E	**B37**	**PA4333**	**PA4327**	**N/S**	**N/R**	**20008**
	FJ Cruiser V6-241 (4.0L) FI	U	**B7020**	**PA4165**	**PA4188**	**N/S**	**N/R**	**N/S**
	Highlander 4-163 (2.7L) FI	A	**P7398**	**PA4150**	**PA4327**	**N/S**	**N/R**	**N/S**
	V6-202 (3.3L) FI Hybrid	W	**B7020**		**PA4371**	**N/S**	**N/R**	
	V6-211 (3.5L) FI	S	**P7398**	**PA4150**	**PA4327**	**N/S**	**N/R**	**20008**
	Land Cruiser V8-5663cc (5.7L) EFI	Y	**P7406**	**PA4322**	(w/o Charcoal) **PA4393**	**N/S**	**N/R**	
	Matrix 4-1798cc (1.8L) EFI	U	**P7454**		**PA4327**	**N/S**	**N/R**	**18289**
	4-2362cc (2.4L) EFI	E	**B37**	**PA4333**	**PA4327**	**N/S**	**N/R**	**20008**
	Prius 4-110 (1.8L) FI & Electric Motor	N	**P7454**		**PA4327**	**N/S**	**N/R**	**N/S**
	RAV4 4-152 (2.5L) SFI	F	**P7398**	**PA4333**	**PA4327**	**N/S**	**N/R**	
	V6-3456cc (3.5L) SFI	K	**P7398**	**PA4333**	**PA4327**	**N/S**	**N/R**	U151E **20008**
	Sequoia V8-4608cc (4.6L) FI	M	**P7406**	**PA4322**	**PA4327**	**N/S**	**N/R**	
	V8-5663cc (5.7L) FI or Flex Fuel	W,Y	**P7406**	**PA4322**	**PA4327**	**N/S**	**N/R**	
	Sienna V6-3456cc (3.5L) FI	K	**P7398**	**PA4150**	**PA4327**	**N/S**	**N/R**	**20008**
	Tacoma Pickup 4-164 (2.7L) FI	X	**B1405**	**PA4356**		**N/S**	**N/R**	A340E **19996**
	V6-241 (4.0L) FI	U	**B7020**	**PA4165**		**N/S**	**N/R**	5 Spd. **N/S**
	Tundra V6-3956cc (4.0L) FI	U	**B7020**	**PA4165**	(w/o Charcoal) **PA4393**	**N/S**	**N/R**	5 Spd. **20009**
	V8-4608cc (4.6L) FI	M	**P7406**	**PA4322**	(w/o Charcoal) **PA4393**	**N/S**	**N/R**	
	V8-5663cc (5.7L) FI or Flex Fuel	Y,W	**P7406**	**PA4322**	(w/o Charcoal) **PA4393**	**N/S**	**N/R**	
	Venza 4-2672cc (2.7L) FI	E	**P7398**	**PA4350**	**PA4327**	**N/S**	**N/R**	**N/S**
	V6-3456cc (3.5L) FI	K	**P7398**	**PA4333**	**PA4327**	**N/S**	**N/R**	**N/S**
	Yaris 4-1497cc (1.5L) FI	T	**B33**	**PA4333**	**PA4327**	**N/S**	**N/R**	U340E **18289**
2009	4Runner V6-241 (4.0L) EFI	U	**B7020**	**PA4165**	**PA4188**	**N/S**	**N/R**	A750F **N/S**
	V8-285 (4.7L) EFI	T	**B7020**	**PA4127**	**PA4188**	**N/S**	**N/R**	A750F **N/S**
	Avalon V6-3456cc (3.5L) FI	K	**P7398**	**PA4333**	**PA4327**	**N/S**	**N/R**	U151E **20008**
	Camry 4-2362cc (2.4L) EFI	E	**B37**	**PA4350**	**PA4327**	**N/S**	**N/R**	**20008**
	4-2362cc (2.4L) FI Hybrid	B	**B37**	**PA4150**	**PA4327**	**N/S**	**N/R**	**N/S**
	V6-3456cc (3.5L) EFI	K	**P7398**	**PA4333**	**PA4327**	**N/S**	**N/R**	**N/S**
	Corolla 4-1798cc (1.8L) EFI	L,U	Ele. **P7454** Spin-on **B33**	**PA4333**	**PA4327**	**N/S**	**N/R**	**18289**
	4-2362cc (2.4L) EFI	E	**B37**	**PA4333**	**PA4327**	**N/S**	**N/R**	**20008**
	FJ Cruiser V6-241 (4.0L) FI	U	**B7020**	**PA4165**	**PA4188**	**N/S**	**N/R**	**N/S**
	Highlander 4-163 (2.7L) FI	A	**P7398**	**PA4150**	**PA4327**	**N/S**	**N/R**	**N/S**
	V6-202 (3.3L) FI Hybrid	W	**B7020**		**PA4371**	**N/S**	**N/R**	
	V6-211 (3.5L) FI	S	**P7398**	**PA4150**	**PA4327**	**N/S**	**N/R**	**20008**
	Land Cruiser V8-5663cc (5.7L) EFI	Y	**P7406**	**PA4322**	(w/o Charcoal) **PA4393**	**N/S**	**N/R**	
	Matrix 4-1798cc (1.8L) EFI	U	Ele. **P7454** Spin-on **B33**		**PA4327**	**N/S**	**N/R**	**18289**
	4-2362cc (2.4L) EFI	E	**B37**	**PA4333**	**PA4327**	**N/S**	**N/R**	**20008**
	Prius 4-91 (1.5L) FI & Electric Motor	B	**B33**	**PA4192**	**PA4188**	**N/S**	**N/R**	
	RAV4 4-152 (2.5L) SFI	F	**P7398**	**PA4333**	**PA4327**	**N/S**	**N/R**	
	V6-3456cc (3.5L) SFI	K	**P7398**	**PA4333**	**PA4327**	**N/S**	**N/R**	**20008**
	Sequoia V8-285 (4.7L) FI	T	**B7020**	**PA4322**	**PA4327**	**N/S**	**N/R**	5 Spd. **N/S**
	V8-5663cc (5.7L) FI or Flex Fuel	Y	**P7406**	**PA4322**	**PA4327**	**N/S**	**N/R**	
	Sienna V6-3456cc (3.5L) FI	K	**P7398**	**PA4150**	**PA4194**	**N/S**	**N/R**	**20008**
	Solara 4-2363cc (2.4L) EFI	E	**B37**	**PA4150**	**PA4194**	**N/S**	**N/R**	U250E **20008**
	V6-202 (3.3L) EFI	A	**BT223**	**PA4150**	**PA4194**	**N/S**	**N/R**	U250E **20008**
	Tacoma Pickup 4-164 (2.7L) FI	X	**B1405**	**PA4356**		**N/S**	**N/R**	A340E **19996**
	V6-241 (4.0L) FI	U	**B7020**	**PA4165**		**N/S**	**N/R**	A750F **N/S**
	Tundra V6-3956cc (4.0L) FI	U	**B7020**	**PA4165**	(w/o Charcoal) **PA4393**	**N/S**	**N/R**	A750F **N/S**
	V8-285 (4.7L) FI	T	**B7020**	**PA4322**	(w/o Charcoal) **PA4393**	**N/S**	**N/R**	A750F **N/S**
	V8-5663cc (5.7L) FI or Flex Fuel	V	**P7406**	**PA4322**	(w/o Charcoal) **PA4393**	**N/S**	**N/R**	
	Venza 4-2672cc (2.7L) FI	E	**P7398**	**PA4350**	**PA4327**	**N/S**	**N/R**	**N/S**
	V6-3456cc (3.5L) FI	K	**P7398**	**PA4333**	**PA4327**	**N/S**	**N/R**	**N/S**
	Yaris 4-1497cc (1.5L) FI	T	**B33**		**PA4327**	**N/S**	**N/R**	U340E **18289**
2008	4Runner V6-241 (4.0L) EFI	U	**B7020**	**PA4165**	**PA4188**	**N/S**	**N/R**	A750F **N/S**
	V8-285 (4.7L) EFI	T	**B7020**	**PA4127**	**PA4188**	**N/S**	**N/R**	**N/S**
	Avalon V6-3456cc (3.5L) FI	K	**P7398**	**PA4333**	**PA4327**	**N/S**	**N/R**	**20008**
	Camry 4-2362cc (2.4L) EFI	E	**B37**	**PA4350**	**PA4327**	**N/S**	**N/R**	**20008**

OBS = Obsolete. Availability Limited to Distributor Stock. [t] Transmission, Not Model, Determines Which Transmission Filter is Used.

TOYOTA Cont'd.

Year	Model and Engine	VIN	Lube	Air	Cabin Air	Fuel	Breather	Trans.t
2008	Camry 4-2362cc (2.4L) FI Hybrid	B	**B37**	**PA4150**	**PA4327**	**N/S**	**N/R**	**N/S**
	V6-211 (3.5L) EFI	K	**P7398**	**PA4333**	**PA4327**	**N/S**	**N/R**	**N/S**
	Corolla 4-109 (1.8L) FI	R	**B33**	**PA4180**	**PA4332**	**N/S**	**N/R**	
	FJ Cruiser V6-241 (4.0L) FI	U	**B7020**	**PA4165**	**PA4188**	**N/S**	**N/R**	**N/S**
	Highlander V6-202 (3.3L) FI Hybrid	W	**B1405**		**PA4371**	**N/S**	**N/R**	
	V6-211 (3.5L) FI	S	**P7398**	**PA4150**	**PA4327**	**N/S**	**N/R**	**20008**
	Land Cruiser V8-5663cc (5.7L) EFI	Y	**P7406**	**PA4322**	(w/o Charcoal) **PA4393**	**N/S**	**N/R**	
	Matrix 4-110 (1.8L) FI	R	**B33**	**PA4180**	**PA4332**	**N/S**	**N/R**	
	Prius 4-91 (1.5L) FI & Electric Motor	B	**B33**	**PA4192**	**PA4188**	**N/S**	**N/R**	
	RAV4 4-144 (2.4L) SFI	D	**B37**	**PA4333**	**PA4327**	**N/S**	**N/R**	
	V6-211 (3.5L) SFI	K	**P7398**	**PA4333**	**PA4327**	**N/S**	**N/R**	**20008**
	Sequoia V8-285 (4.7L) FI	T	**B7020**	**PA4127**	**PA4327**	**N/S**	**N/R**	**N/S**
	V8-5663cc (5.7L) FI	Y	**P7406**	**PA4322**	**PA4327**	**N/S**	**N/R**	
	Sienna V6-3456cc (3.5L) FI	K	**P7398**	**PA4150**	**PA4194**	**N/S**	**N/R**	**20008**
	Solara 4-2362cc (2.4L) EFI	E	**B37**	**PA4150**	**PA4194**	**N/S**	**N/R**	**20008**
	V6-202 (3.3L) EFI	A	**B1405**	**PA4150**	**PA4194**	**N/S**	**N/R**	**20008**
	Tacoma Pickup 4-164 (2.7L) EFI	X	**B7020**	**PA4356**		**N/S**	**N/R**	**19996**
	V6-241 (4.0L) EFI	U	**B7020**	**PA4165**		**N/S**	**N/R**	**N/S**
	Tundra V6-3956cc (4.0L) FI	U	**B7020**	**PA4165**	(w/o Charcoal) **PA4393**	**N/S**	**N/R**	**N/S**
	V8-285 (4.7L) FI	T	**B7020**	**PA4322**	(w/o Charcoal) **PA4393**	**N/S**	**N/R**	**N/S**
	V8-5663cc (5.7L) FI	U	**P7406**	**PA4322**	(w/o Charcoal) **PA4393**	**N/S**	**N/R**	
	Yaris 4-1497cc (1.5L) FI	T	**B33**		**PA4327**	**N/S**	**N/R**	U340E **18289**
2007	4Runner V6-241 (4.0L) EFI	U	**B7020**	**PA4165**	**PA4188**	**N/S**	**N/R**	A750F **N/S**
	V8-285 (4.7L) EFI	T	**B7020**	**PA4127**	**PA4188**	**N/S**	**N/R**	A750F **N/S**
	Avalon V6-3456cc (3.5L) FI	K	**P7398**	**PA4333**	**PA4327**	**N/S**	**N/R**	U151E **20008**
	Camry 4-2362cc (2.4L) EFI	E	**B37**	**PA4350**	**PA4327**	**N/S**	**N/R**	U241E **20015** U250E **20008**
	4-2362cc (2.4L) FI Hybrid	B	**B37**	**PA4150**	**PA4327**	**N/S**	**N/R**	**20015**
	V6-211 (3.5L) EFI	K	**P7398**	**PA4333**	**PA4327**	**N/S**	**N/R**	U241E **20015** U250E **20008**
	Corolla 4-109 (1.8L) FI	R	**B33**	**PA4180**	**PA4332**	**N/S**	**N/R**	
	FJ Cruiser V6-241 (4.0L) FI	U	**B7020**	**PA4165**	**PA4188**	**N/S**	**N/R**	**N/S**
	Highlander 4-144 (2.4L) SFI	D	**B37**	**PA4150**	**PA4371**	**N/S**	**N/R**	U151F **20008** U241E **20015**
	V6-202 (3.3L) SFI	P	**B1405**	**PA4150**	**PA4371**	**N/S**	**N/R**	U151F **20008** U241E **20015**
	V6-202 (3.3L) FI Hybrid	W	**B1405**		**PA4371**	**N/S**	**N/R**	U151F **20008** U241E **20015**
	Land Cruiser V8-285 (4.7L) EFI	T	**B7020**	**PA4127**			**N/R**	**N/S**
	Matrix 4-110 (1.8L) SFI	R	**B33**	**PA4180**	**PA4332**	**N/S**	**N/R**	AWD **18289**
	Prius 4-91 (1.5L) FI & Electric Motor	B	**B33**	**PA4192**	**PA4188**	**N/S**	**N/R**	
	RAV4 4-144 (2.4L) SFI	D	**B37**	**PA4333**	**PA4327**	**N/S**	**N/R**	**20015**
	V6-211 (3.5L) SFI	K	**P7398**	**PA4333**	**PA4327**	**N/S**	**N/R**	**20015**
	Sequoia V8-285 (4.7L) FI	T	**B7020**	**PA4127**	**N/R**	**N/S**	**N/R**	5 Spd. **19996**
	Sienna V6-3456cc (3.5L) FI	K	**P7398**	**PA4150**	**PA4194**	**N/S**	**N/R**	U151E, U151F **20008**
	Solara 4-2362cc (2.4L) SFI	E	**B37**	**PA4150**	**PA4194**	**N/S**	**N/R**	4 Spd. **20015** 5 Spd. **20008**
	V6-202 (3.3L) SFI	A	**B1405**	**PA4150**	**PA4194**	**N/S**	**N/R**	4 Spd. **20015** 5 Spd. **20008**
	Tacoma Pickup 4-164 (2.7L) EFI	X	**BT223**	**PA4356**		**N/S**	**N/R**	A340E **19996**
	V6-241 (4.0L) EFI	U	**B7020**	**PA4165**		**N/S**	**N/R**	A750F **N/S**
	Tacoma X-Runner V6-3956cc (4.0L) EFI	U	**B7020**	**PA4165**		**N/S**	**N/R**	**M.T.**
	Tundra V6-241 (4.0L) FI	U	**B7020**	**PA4165**	(w/o Charcoal) **PA4393**	**N/S**	**N/R**	5 Spd. **N/S**
	V8-285 (4.7L) FI	T	**B7020**	**PA4322**	(w/o Charcoal) **PA4393**	**N/S**	**N/R**	5 Spd. **N/S**
	V8-345 (5.7L) FI	V	**P7406**	**PA4322**	(w/o Charcoal) **PA4393**	**N/S**	**N/R**	
	Yaris 4-1497cc (1.5L) FI	T	**B33**		**PA4327**	**N/S**	**N/R**	U340E **18289**
2006	4Runner V6-241 (4.0L) EFI	V	**B7020**	**PA4165**	**PA4188**	**N/S**	**N/R**	**N/S**
	V8-285 (4.7L) EFI	T	**B7020**	**PA4127**	**PA4188**	**N/S**	**N/R**	**N/S**
	Avalon V6-3456cc (3.5L) FI	K	**P7398**	**PA4333**	**PA4327**	**N/S**	**N/R**	U151E **20008**

[t] Transmission, Not Model, Determines Which Transmission Filter is Used. OBS = Obsolete. Availability Limited to Distributor Stock.

TOYOTA Cont'd.

Year	Model and Engine	VIN	Lube	Air	Cabin Air	Fuel	Breather	Trans.[t]
2006	Camry 4-2362cc (2.4L) SFI	E	**B37**	**PA4150**	**PA4194**	**N/S**	**N/R**	U241E **20015** U250E **20008**
	V6-183 (3.0L) SFI	F	**B1405**	**PA4150**	**PA4194**	**N/S**	**N/R**	U241E **20015** U250E **20008**
	V6-202 (3.3L) SFI	A	**B1405**	**PA4150**	**PA4194**	**N/S**	**N/R**	U241E **20015** U250E **20008**
	Corolla 4-109 (1.8L) FI 1ZZ-FE	R	**B33**	**PA4180**	**PA4332**	**N/S**	**N/R**	
	4-109 (1.8L) FI 2ZZ-GE	Y	**B37**	**PA4180**	**PA4332**	**N/S**	**N/R**	**M.T.**
	Hiace 4-2700cc (2.7L) FI Mexico		**BT223**				**N/R**	
	Highlander 4-144 (2.4L) SFI	D	**B37**	**PA4150**	**PA4371**	**N/S**	**N/R**	U151F **20008** U241E **20015**
	V6-202 (3.3L) SFI	P	**B1405**	**PA4150**	**PA4371**	**N/S**	**N/R**	U151F **20008** U241E **20015**
	V6-202 (3.3L) FI Hybrid	W	**B1405**		**PA4371**	**N/S**	**N/R**	U151F **20008** U241E **20015**
	Hilux 4-2700cc (2.7L) FI Mexico		**BT223**				**N/R**	
	Land Cruiser V8-285 (4.7L) EFI	T	**B7020**	**PA4127**			**N/R**	**N/S**
	Matrix XR 4-110 (1.8L) SFI 1ZZ-FE	R	**B33**	**PA4180**	**PA4332**	**N/S**	**N/R**	AWD **18289**
	Matrix XRS 4-110 (1.8L) SFI 2ZZ-GE	Y	**B37**	**PA4180**	**PA4332**	**N/S**	**N/R**	**M.T.**
	Prius 4-91 (1.5L) FI & Electric Motor	B	**B33**	**PA4192**	**PA4188**	**N/S**	**N/R**	
	RAV4 4-144 (2.4L) EFI	D	**B37**	**PA4333**	**PA4327**	**N/S**	**N/R**	**20015**
	V6-211 (3.5L) FI	K	**P7398**	**PA4333**	**PA4327**	**N/S**	**N/R**	**20015**
	Sequoia V8-285 (4.7L) EFI	T	**B7020**	**PA4127**	**N/R**	**N/S**	**N/R**	5 Spd. **19996**
	Sienna V6-3300cc (3.3L) MFI	A	**B1405**	**PA4150**	**PA4194**	**N/S**	**N/R**	**20008**
	Solara 4-2362cc (2.4L) SFI	E	**B37**	**PA4150**	**PA4194**	**N/S**	**N/R**	**20015**
	V6-202 (3.3L) SFI	A	**B1405**	**PA4150**	**PA4194**	**N/S**	**N/R**	4 Spd. **20015** 5 Spd. **20008**
	Tacoma Pickup 4-164 (2.7L) EFI	M	**BT223**	**PA4356**		**N/S**	**N/R**	**19996**
	V6-241 (4.0L) EFI	U	**B7020**	**PA4165**		**N/S**	**N/R**	**N/S**
	Tacoma X-Runner V6-3956cc (4.0L) EFI	U	**B7020**	**PA4165**		**N/S**	**N/R**	**M.T.**
	Tundra V6-241 (4.0L) EFI	U	**B7020**	**PA4165**	**N/R**	**N/S**	**N/R**	**N/S**
	V8-285 (4.7L) EFI	T	**B7020**	**PA4127**	**N/R**	**N/S**	**N/R**	**N/S**
	Yaris 4-1497cc (1.5L) FI Canada	T	**B33**		**PA4327**	**N/S**	**N/R**	U340E **18289**
2005	4Runner V6-241 (4.0L) EFI	U	**B7020**	**PA4165**	**PA4188**	**N/S**	**N/R**	**N/S**
	V8-285 (4.7L) EFI	T	**B7020**	**PA4127**	**PA4188**	**N/S**	**N/R**	**N/S**
	Avalon V6-3456cc (3.5L) FI	K	**P7398**	**PA4333**	**PA4327**	**N/S**	**N/R**	**20008**
	Camry 4-2362cc (2.4L) MFI	E	**B37**	**PA4150**	**PA4194**	**N/S**	**N/R**	U241E **20015** U250E **20008**
	V6-183 (3.0L) MFI	F	**B1405**	**PA4150**	**PA4194**	**N/S**	**N/R**	U241E **20015** U250E **20008**
	V6-202 (3.3L) MFI	A	**B1405**	**PA4150**	**PA4194**	**N/S**	**N/R**	U241E **20015** U250E **20008**
	Celica GT 4-110 (1.8L) MFI 1ZZ-FE	R	**B33**		**PA4188**	**N/S**	**N/R**	**18289**
	Celica GTS 4-110 (1.8L) MFI 2ZZ-GE	Y	**B33**		**PA4188**	**N/S**	**N/R**	**20015**
	Corolla 4-109 (1.8L) EFI 1ZZ-FE	R	**B33**	**PA4180**	**PA4332**	**N/S**	**N/R**	
	4-109 (1.8L) EFI 2ZZ-GE	Y	**B37**	**PA4180**	**PA4332**	**N/S**	**N/R**	**M.T.**
	Echo 4-91 (1.5L) EFI	T	**B33**	**PA4305**	**PA4372**	**N/S**	**N/R**	**18289**
	Highlander 4-144 (2.4L) SFI	D	**B37**	**PA4150**	**PA4371**	**N/S**	**N/R**	**20015**
	V6-202 (3.3L) FI	P	**B1405**	**PA4150**	**PA4371**	**N/S**	**N/R**	U241E **20015** U250E **20008**
	Hilux 4-2700cc (2.7L) FI Mexico		**BT223**				**N/R**	
	Land Cruiser V8-285 (4.7L) EFI	T	**B7020**	**PA4127**	**N/R**		**N/R**	**N/S**
	Matrix XR 4-110 (1.8L) SFI 1ZZ-FE	R	**B33**	**PA4180**	**PA4332**	**N/S**	**N/R**	AWD **18289**
	Matrix XRS 4-110 (1.8L) SFI 2ZZ-GE	Y	**B37**	**PA4180**	**PA4332**	**N/S**	**N/R**	**M.T.**
	MR2 Spyder 4-109 (1.8L) EFI	R	**B33**		**N/R**	**N/S**	**N/R**	**M.T.**
	Prius 4-91 (1.5L) FI & Electric Motor	B	**B33**	**PA4192**	**PA4188**	**N/S**	**N/R**	
	RAV4 4-144 (2.4L) EFI	D	**B37**	**PA4307**	**PA4372**	**N/S**	**N/R**	**20015**
	Sequoia V8-285 (4.7L) EFI	T	**B7020**	**PA4127**	**N/R**	**N/S**	**N/R**	5 Spd. **19996**
	Sienna V6-3300cc (3.3L) MFI	A	**B1405**	**PA4150**	(CE & LE Trim) **PA4188** (XLE Trim) **PA4194**	**N/S**	**N/R**	**20008**
	Solara 4-2362cc (2.4L) SFI	E	**B37**	**PA4150**	**PA4194**	**N/S**	**N/R**	**20015**
	V6-202 (3.3L) SFI	A	**B1405**	**PA4150**	**PA4194**	**N/S**	**N/R**	4 Spd. **20015** 5 Spd. **20008**

OBS = Obsolete. Availability Limited to Distributor Stock. [t] Transmission, Not Model, Determines Which Transmission Filter is Used.

TOYOTA Cont'd.

Year	Model and Engine	VIN	Lube	Air	Cabin Air	Fuel	Breather	Trans.t
2005	Tacoma Pickup 4-164 (2.7L) EFI	M	**B1405**	**PA4356**	**N/R**	**N/S**	**N/R**	4 Spd. **19996** 5 Spd. **N/S**
	V6-3956cc (4.0L) FI	U	**B7020**	**PA4165**	**N/R**	**N/S**	**N/R**	**M.T.**
	Tundra V6-241 (4.0L) SFI	U	**B7020**	**PA4165**	**N/R**	**N/S**	**N/R**	**N/S**
	V8-285 (4.7L) SFI	T	**B7020**	**PA4127**	**N/R**	**N/S**	**N/R**	**N/S**
2004	4Runner V6-241(4.0L) EFI	U	**B7020**	**PA4165**	**PA4188**	**N/S**	**N/R**	**19996**
	V8-285 (4.7L) EFI	T	**B7020**	**PA4127**	**PA4188**	**N/S**	**N/R**	**N/S**
	Avalon V6-183 (3.0L) MFI	F	**B1405**	**PA4028**	**PA4194**		**N/R**	
	Camry 4-2362cc (2.4L) MFI	E	**B37**	**PA4150**	**PA4194**	**N/S**	**N/R**	U241E **20015** U250E **20008**
	V6-183 (3.0L) MFI	F	**B1405**	**PA4150**	**PA4194**	**N/S**	**N/R**	U241E **20015** U250E **20008**
	V6-202 (3.3L) EFI	A	**B1405**	**PA4150**	**PA4194**	**N/S**	**N/R**	U241E **20015** U250E **20008**
	Celica GT 4-110 (1.8L) EFI 1ZZ-FE	R	**B33**		**PA4188**	**N/S**	**N/R**	**18289**
	Celica GTS 4-110 (1.8L) MFI 2ZZ-GE	R	**B37**		**PA4188**	**N/S**	**N/R**	**20015**
	Corolla 4-109 (1.8L) SFI	R	**B33**	**PA4180**	**PA4332**	**N/S**	**N/R**	
	Echo 4-91 (1.5L) MFI	T	**B33**	**PA4305**	**PA4372**	**N/S**	**N/R**	**18289**
	Highlander 4-144 (2.4L) SFI	D	**B37**	**PA4150**	**PA4371**	**N/S**	**N/R**	**20015**
	V6-202 (3.3L) SFI	P	**B1405**	**PA4150**	**PA4371**	**N/S**	**N/R**	U241E **20015** U250E **20008**
	Hilux 4-2700cc (2.7L) FI Mexico		**BT223**				**N/R**	
	Land Cruiser V8-284 (4.7L) EFI	T	**B7020**	**PA4127**	**N/R**		**N/R**	**N/S**
	Matrix XR 4-110 (1.8L) SFI 1ZZ-FE	R	**B33**	**PA4180**	**PA4332**	**N/S**	**N/R**	AWD **18289**
	Matrix XRS 4-110 (1.8L) SFI 2ZZ-GE	Y	**B37**	**PA4180**	**PA4332**	**N/S**	**N/R**	**M.T.**
	MR2 Spyder 4-109 (1.8L) EFI	R	**B33**		**N/R**	**N/S**	**N/R**	**M.T.**
	Prius 4-91 (1.5L) FI & Electric Motor	B	**B33**	**PA4192**	**PA4188**	**N/S**	**N/R**	
	RAV4 4-144 (2.4L) EFI	D	**B37**	**PA4307**	**PA4372**	**N/S**	**N/R**	**20015**
	Sequoia V8-285 (4.7L) SFI	T	**B7020**	**PA4127**	**N/R**		**N/R**	**19996**
	Sienna V6-3300cc (3.3L) MFI	A	**B1405**	**PA4150**	(CE & LE Trim) **PA4188** (XLE Trim) **PA4194**	**N/S**	**N/R**	**20008**
	Solara 4-2362cc (2.4L) SFI	S	**B37**	**PA4150**	**PA4194**	**N/S**	**N/R**	4 Spd. **20015** 5 Spd. **20008**
	V6-202 (3.3L) SFI	F	**B1405**	**PA4150**	**PA4194**	**N/S**	**N/R**	4 Spd. **20015** 5 Spd. **20008**
	Tacoma Pickup 4-149 (2.4L) EFI	L	**B1405**	**PA2214**	**N/R**	**BF1100**	**N/R**	**19996**
	4-164 (2.7L) EFI	M	**B1405**	**PA2214**	**N/R**	**BF1100**	**N/R**	**19996**
	V6-206 (3.4L) EFI	N	**B1405**	**PA4060**	**N/R**	**BF1148**	**N/R**	**19996**
	Tundra V6-206 (3.4L) EFI	N	**B1405**	**PA4127**	**N/R**	**BF7961**	**N/R**	**19996**
	V8-285 (4.7L) EFI	T	**B1405**	**PA4127**	**N/R**	**BF7961**	**N/R**	**19996**
2003	4Runner V6-241 (4.0L) EFI	N	**B7020**	**PA4165**	**PA4188**	**N/S**	**N/R**	**19996**
	V8-285 (4.7L) EFI	T	**B7020**	**PA4127**	**PA4188**	**N/S**	**N/R**	**N/S**
	Avalon V6-183 (3.0L) MFI	F	**B1405**	**PA4028**	**PA4194**		**N/R**	
	Camry 4-2362cc (2.4L) MFI	E	**B37**	**PA4150**	**PA4194**	**N/S**	**N/R**	U241E **20015** U250E **20008**
	V6-183 (3.0L) MFI	F	**B1405**	**PA4150**	**PA4194**	**N/S**	**N/R**	U241E **20015** U250E **20008**
	Celica GT 4-110 (1.8L) EFI 1ZZ-FE	R	**B33**		**PA4188**	**N/S**	**N/R**	**18289**
	Celica GTS 4-110 (1.8L) MFI 2ZZ-GE	Y	**B37**		**PA4188**	**N/S**	**N/R**	**20015**
	Corolla 4-109 (1.8L) SFI	R	**B33**	**PA4180**	**PA4332**	**N/S**	**N/R**	
	Echo 4-91 (1.5L) MFI	T	**B33**	**PA4305**	**PA4372**	**N/S**	**N/R**	**18289**
	Highlander 4-144 (2.4L) SFI	D	**B37**	**PA4150**	**PA4371**	**N/S**	**N/R**	**20015**
	V6-183 (3.0L) SFI	F	**B1405**	**PA4150**	**PA4371**	**N/S**	**N/R**	**20015**
	Land Cruiser V8-284 (4.7L) EFI	T	**B7020**	**PA4127**	**N/R**		**N/R**	**N/S**
	Matrix XR 4-110 (1.8L) SFI 1ZZ-FE	R	**B33**	**PA4180**	**PA4332**	**N/S**	**N/R**	AWD **18289**
	Matrix XRS 4-110 (1.8L) SFI 2ZZ-GE	R	**B37**	**PA4180**	**PA4332**	**N/S**	**N/R**	**M.T.**
	MR2 Spyder 4-109 (1.8L) EFI	R	**B33**		**N/R**	**N/S**	**N/R**	**M.T.**
	Prius 4-91 (1.5L) FI & Electric Motor	K	**B33**	**PA4352**	**PA4188**	**N/S**	**N/R**	
	RAV4 4-122 (2.0L) EFI	H	**B37**	**PA4307**	**PA4372**	**N/S**	**N/R**	**20015**
	Sequoia V8-285 (4.7L) SFI	T	**B7020**	**PA4127**	**N/R**		**N/R**	**19996**
	Sienna V6-183 (3.0L) MFI	F	**B1405**	**PA4028**	**N/R**	**BF1112**	**N/R**	
	Solara 4-2362cc (2.4L) SFI	E	**B37**	**PA4028**	**PA4194**	**BF1179**	**N/R**	**20015**
	V6-183 (3.0L) EFI	F	**B1405**	**PA4028**	**PA4194**	**BF7661**	**N/R**	**20015**
	Tacoma Pickup 4-149 (2.4L) EFI	L	**B1405**	**PA2214**	**N/R**	**BF1100**	**N/R**	**19996**

[t] Transmission, Not Model, Determines Which Transmission Filter is Used. OBS = Obsolete. Availability Limited to Distributor Stock.

TOYOTA Cont'd.

Year	Model and Engine	VIN	Lube	Air	Cabin Air	Fuel	Breather	Trans.[t]
2003	Tacoma Pickup 4-164 (2.7L) EFI	M	**B1405**	**PA2214**	**N/R**	**BF1100**	**N/R**	**19996**
	V6-206 (3.4L) EFI	N	**B1405**	**PA4060**	**N/R**	**BF1148**	**N/R**	**19996**
	Tundra V6-206 (3.4L) EFI	N	**B1405**	**PA4127**	**N/R**	**BF7961**	**N/R**	**20009**
	V8-285 (4.7L) EFI	T	**B1405**	**PA4127**	**N/R**	**BF7961**	**N/R**	**19996**
2002	4Runner V6-206 (3.4L) SFI	N	**B1405**	**PA4060**	**N/R**	**BF1148**	**N/R**	2WD **20009** 4WD **19996**
	Avalon V6-183 (3.0L) MFI	F	**B1405**	**PA4028**	**PA4194**		**N/R**	
	Camry 4-2362cc (2.4L) MFI	E	**B37**	**PA4150**	**PA4194**	**N/S**	**N/R**	**20015**
	V6-183 (3.0L) MFI	F	**B1405**	**PA4150**	**PA4194**	**N/S**	**N/R**	**20015**
	Celica GT 4-110 (1.8L) EFI 1ZZ-FE	R	**B33**		**PA4188**	**N/S**	**N/R**	**18289**
	Celica GTS 4-110 (1.8L) EFI 2ZZ-GE	Y	**B37**		**PA4188**	**N/S**	**N/R**	**20015**
	Corolla 4-109 (1.8L) EFI	R	**B33**	**PA2243**	**PA4332**	**N/S**	**N/R**	3 Spd. **18163**
	Echo 4-91 (1.5L) MFI	T	**B33**	**PA4305**	**PA4372**	**N/S**	**N/R**	**18289**
	Highlander 4-144 (2.4L) SFI	D	**B37**	**PA4150**	**PA4371**	**N/S**	**N/R**	**20015**
	V6-183 (3.0L) SFI	F	**B1405**	**PA4150**	**PA4371**	**N/S**	**N/R**	**20015**
	Land Cruiser V8-284 (4.7L) EFI	T	**B7020**	**PA4127**	**N/R**		**N/R**	**19996**
	Matrix 4-109 (1.8L) EFI	R	**B33**	**PA2243**	**PA4332**	**N/S**	**N/R**	3 Spd. **18163**
	MR2 Spyder 4-109 (1.8L) MFI	R	**B33**		**N/R**	**N/S**	**N/R**	**M.T.**
	Prius 4-91 (1.5L) FI & Electric Motor	K	**B33**	**PA4352**	**PA4188**	**N/S**	**N/R**	
	RAV4 4-122 (2.0L) EFI	H	**B37**	**PA4307**	**PA4372**	**N/S**	**N/R**	**20015**
	Sequoia V8-285 (4.7L) SFI	T	**B7020**	**PA4127**	**N/R**		**N/R**	**19996**
	Sienna V6-183 (3.0L) MFI	F	**B1405**	**PA4028**	**N/R**	**BF1112**	**N/R**	
	Solara 4-2362cc (2.4L) SFI	G	**B37**	**PA4028**	**PA4194**	**BF1179**	**N/R**	**20015**
	V6-183 (3.0L) EFI	F	**B1405**	**PA4028**	**PA4194**	**BF7661**	**N/R**	**20015**
	Tacoma Pickup 4-149 (2.4L) EFI	L	**B1405**	**PA2214**	**N/R**	**BF1100**	**N/R**	**N/S**
	4-164 (2.7L) EFI	M	**B1405**	**PA2214**	**N/R**	**BF1100**	**N/R**	**19996**
	V6-206 (3.4L) EFI	N	**B1405**	**PA4060**	**N/R**	**BF1148**	**N/R**	**19996**
	Tundra V6-206 (3.4L) EFI	N	**B1405**	**PA4127**	**N/R**	**BF7961**	**N/R**	
	V8-285 (4.7L) EFI	T	**B1405**	**PA4127**	**N/R**	**BF7961**	**N/R**	4WD **19996**
2001	4Runner V6-206 (3.4L) EFI	N	**B1405**	**PA4060**	**N/R**	**BF1148**	**N/R**	2WD **20009** 4WD **19996**
	Avalon V6-183 (3.0L) MFI	F	**B1405**	**PA4028**	**PA4194**		**N/R**	
	Camry 4-132 (2.2L) MFI	G	**B33**	**PA4028**	**N/R**	**BF1179**	**N/R**	**18013**
	V6-183 (3.0L) MFI	F	**B1405**	**PA4028**	**N/R**	**BF7661**	**N/R**	
	Celica GT 4-110 (1.8L) MFI 1ZZ-FE	R	**B33**		**PA4188**	**N/S**	**N/R**	**18289**
	Celica GTS 4-110 (1.8L) MFI 2ZZ-FE	Y	**B37**		**PA4188**	**N/S**	**N/R**	**20015**
	Corolla 4-109 (1.8L) EFI	R	**B33**	**PA2243**	**N/R**	**N/S**	**N/R**	3 Spd. **18163**
	Echo 4-91 (1.5L) MFI	T	**B33**	**PA4305**	**PA4372**	**N/S**	**N/R**	**18289**
	Highlander 4-144 (2.4L) SFI	D	**B37**	**PA4150**	**PA4371**	**N/S**	**N/R**	**20015**
	V6-183 (3.0L) SFI	F	**B1405**	**PA4150**	**PA4371**	**N/S**	**N/R**	**20015**
	Land Cruiser V8-284 (4.7L) EFI	T	**B7020**	**PA4127**	**N/R**		**N/R**	**19996**
	MR2 Spyder 4-109 (1.8L) MFI	R	**B33**		**N/R**	**N/S**	**N/R**	**M.T.**
	Prius 4-91 (1.5L) FI & Electric Motor	K	**B33**	**PA4352**	**PA4188**	**N/S**	**N/R**	
	RAV4 4-122 (2.0L) EFI	H	**B37**	**PA4307**	**PA4372**	**N/S**	**N/R**	**20015**
	Sequoia V8-285 (4.7L) FI	T	**B7020**	**PA4127**	**N/R**		**N/R**	**19996**
	Sienna V6-183 (3.0L) MFI	F	**B1405**	**PA4028**	**N/R**	**BF1112**	**N/R**	
	Solara 4-132 (2.2L) SFI	G	**B33**	**PA4028**	**N/R**	**BF1179**	**N/R**	**18013**
	V6-183 (3.0L) SFI	F	**B1405**	**PA4028**	**N/R**	**BF7661**	**N/R**	
	Tacoma Pickup 4-149 (2.4L) EFI	L	**B1405**	**PA2214**	**N/R**	**BF1100**	**N/R**	
	4-164 (2.7L) EFI	M	**B1405**	**PA2214**	**N/R**	**BF1100**	**N/R**	**19996**
	V6-206 (3.4L) EFI	N	**B1405**	**PA4060**	**N/R**	**BF1148**	**N/R**	**19996**
	Tundra V6-206 (3.4L) EFI	N	**B1405**	**PA4127**	**N/R**	**BF7961**	**N/R**	
	V8-285 (4.7L) EFI	T	**B1405**	**PA4127**	**N/R**	**BF7961**	**N/R**	**19996**
2000	4Runner 4-164 (2.7L) EFI	M	**B1405**	**PA2214**	**N/R**	**BF1100**	**N/R**	4WD **19996**
	V6-206 (3.4L) EFI	N	**B1405**	**PA4060**	**N/R**	**BF1148**	**N/R**	4WD **19996**
	Avalon V6-183 (3.0L) MFI	F	**B1405**	**PA4028**	**PA4194**	**BF7661**	**N/R**	
	Camry 4-132 (2.2L) MFI	G	**B33**	**PA4028**	**N/R**	**BF1179**	**N/R**	**18013**
	V6-183 (3.0L) MFI	F	**B1405**	**PA4028**	**N/R**	**BF7661**	**N/R**	
	Celica GT 4-109 (1.8L) FI 1ZZ-FE	R	**B33**		**PA4188**	**N/S**	**N/R**	**18289**
	Celica GTS 4-109 (1.8L) FI 2ZZ-GE		**B37**		**PA4188**	**N/S**	**N/R**	U240E **20015**
	Corolla 4-108 (1.8L) EFI	R	**B33**	**PA2243**	**N/R**	**N/S**	**N/R**	3 Spd. **18163**
	Echo 4-91 (1.5L) FI	T	**B33**	**PA4305**	**PA4372**	**N/S**	**N/R**	**18289**
	Land Cruiser V8-284 (4.7L) EFI	T	**B7020**	**PA4127**	**N/R**		**N/R**	**19996**
	MR2 Spyder 4-109 (1.8L) FI	R	**B33**		**N/R**	**N/S**	**N/R**	**M.T.**
	RAV4 4-122 (2.0L) EFI	P	**B33**	**PA2041**	**N/R**	In-Line **BF1061** In Tank **BF7625**	**N/R**	
	Sienna V6-183 (3.0L) MFI	F	**B1405**	**PA4028**	**N/R**	**BF1112**	**N/R**	

OBS = Obsolete. Availability Limited to Distributor Stock. [t] Transmission, Not Model, Determines Which Transmission Filter is Used.

TOYOTA Cont'd.

Year	Model and Engine	VIN	Lube	Air	Cabin Air	Fuel	Breather	Trans.t
2000	Solara 4-132 (2.2L) SFI	G	**B33**	**PA4028**	**N/R**	**BF1179**	**N/R**	**18013**
	V6-183 (3.0L) SFI	F	**B1405**	**PA4028**	**N/R**	**BF7661**	**N/R**	
	Tacoma Pickup 4-149 (2.4L) EFI	L	**B1405**	**PA2214**	**N/R**	**BF1100**	**N/R**	4WD **19994**
	4-164 (2.7L) EFI	M	**B1405**	**PA2214**	**N/R**	**BF1100**	**N/R**	4WD **19994**
	V6-206 (3.4L) EFI	N	**B1405**	**PA4060**	**N/R**	**BF1148**	**N/R**	4WD **19994**
	Tundra V6-206 (3.4L) EFI	N	**B1405**	**PA4127**	**N/R**	**BF7961**	**N/R**	4WD **19994**
	V8-285 (4.7L) EFI	T	**B1405**	**PA4127**	**N/R**	**BF7961**	**N/R**	4WD **19996**
1999	4Runner 4-164 (2.7L) EFI	M	**B1405**	**PA2214**	**N/R**	**BF1100**	**N/R**	4WD **19994**
	V6-206 (3.4L) EFI	N	**B1405**	**PA4060**	**N/R**	**BF1148**	**N/R**	4WD **19994**
	Avalon V6-183 (3.0L) MFI	F	**B1405**	**PA4028**	**N/R**	**BF7661**	**N/R**	
	Camry 4-132 (2.2L) MFI	G	**B33**	**PA4028**	**N/R**	**BF1179**	**N/R**	**18013**
	V6-183 (3.0L) MFI	F	**B1405**	**PA4028**	**N/R**	**BF7661**	**N/R**	
	Celica 4-132 (2.2L) EFI	G	**B33**	**PA4028**	**N/R**	**BF1059**	**N/R**	**18013**
	Corolla 4-108 (1.8L) EFI	R	**B33**	**PA2243**	**N/R**	**N/S**	**N/R**	3 Spd. **18163**
	Land Cruiser V8-284 (4.7L) EFI	T	**B7020**	**PA4127**	**N/R**		**N/R**	**19996**
	Paseo 4-1497cc (1.5L) FI Canada	C	**B33**	**PA4031**	**N/R**	**BF7662**	**N/R**	
	RAV4 4-122 (2.0L) EFI	P	**B33**	**PA2041**	**N/R**	In-Line **BF1061** In Tank **BF7625**	**N/R**	
	Sienna V6-183 (3.0L) MFI	F	**B1405**	**PA4028**	**N/R**	**BF1112**	**N/R**	
	Solara 4-132 (2.2L) SFI	G	**B33**	**PA4028**	**N/R**	**BF1179**	**N/R**	**18013**
	V6-183 (3.0L) SFI	F	**B1405**	**PA4028**	**N/R**	**BF7661**	**N/R**	
	Tacoma Pickup 4-149 (2.4L) EFI	L	**B1405**	**PA2214**	**N/R**	**BF1100**	**N/R**	4WD **19994**
	4-164 (2.7L) EFI	M	**B1405**	**PA2214**	**N/R**	**BF1100**	**N/R**	4WD **19994**
	V6-206 (3.4L) EFI	N	**B1405**	**PA4060**	**N/R**	**BF1148**	**N/R**	4WD **19994**
	Tercel 4-1497cc (1.5L) EFI	C	**B33**	**PA4031**	**N/R**	**BF7662**	**N/R**	3 Spd. **18163**
1998	4Runner 4-164 (2.7L) EFI	M	**B1405**	**PA2214**	**N/R**	**BF1100**	**N/R**	4WD **19994**
	V6-206 (3.4L) EFI	N	**B1405**	**PA4060**	**N/R**	**BF1148**	**N/R**	4WD **19994**
	Avalon V6-183 (3.0L) EFI	F	**B1405**	**PA4028**	**N/R**	**BF7661**	**N/R**	
	Camry 4-132 (2.2L) EFI	G	**B33**	**PA4028**	**N/R**	**BF1179**	**N/R**	**18013**
	V6-183 (3.0L) EFI	F	**B1405**	**PA4028**	**N/R**	**BF7661**	**N/R**	
	Celica 4-132 (2.2L) EFI	G	**B33**	**PA4028**	**N/R**	**BF1059**	**N/R**	**18013**
	Corolla 4-108 (1.8L) EFI	R	**B33**	**PA2243**	**N/R**	**N/S**	**N/R**	3 Spd. **18163**
	Land Cruiser V8-284 (4.7L) EFI	T	**B7020**	**PA4127**	**N/R**		**N/R**	**19996**
	Paseo 4-91 (1.5L) EFI	C	**B33**	**PA4031**	**N/R**	**BF7662**	**N/R**	
	RAV4 4-122 (2.0L) EFI	P	**B33**	**PA2041**	**N/R**	In Line **BF1061** In Tank **BF7625**	**N/R**	
	Sienna V6-183 (3.0L) MFI	F	**B1405**	**PA4028**	**N/R**	**BF1112**	**N/R**	
	Supra 6-183 (3.0L) EFI	D	**B1405**	**PA4060**	**N/R**	**BF1112**	**N/R**	
	6-183 (3.0L) Turbo	E	**B1405**	**PA4060**	**N/R**	**BF1112**	**N/R**	
	T100 Pickup 4-164 (2.7L) EFI	M	**B1405**	**PA4081**	**N/R**	**BF1100**	**N/R**	
	V6-206 (3.4L) SFI	N	**B1405**	**PA4081**	**N/R**	**BF1148**	**N/R**	4WD **19994**
	Tacoma Pickup 4-149 (2.4L) EFI	L	**B1405**	**PA2214**	**N/R**	**BF1100**	**N/R**	4WD **19994**
	4-164 (2.7L) EFI	M	**B1405**	**PA2214**	**N/R**	**BF1100**	**N/R**	4WD **19994**
	V6-206 (3.4L) EFI	N	**B1405**	**PA4060**	**N/R**	**BF1148**	**N/R**	4WD **19994**
	Tercel 4-91 (1.5L) EFI	C	**B33**	**PA4031**	**N/R**	**BF7662**	**N/R**	3 Spd. **18163**
1997	4Runner 4-164 (2.7L) SFI	M	**B1405**	**PA2214**	**N/R**	**BF1100**	**N/R**	4WD **19997**
	V6-206 (3.4L) EFI	N	**B1405**	**PA4060**	**N/R**	**BF1148**	**N/R**	4WD **19997**
	Avalon V6-183 (3.0L) MFI	F	**B1405**	**PA4028**	**N/R**	**BF1179**	**N/R**	
	Camry 4-132 (2.2L) MFI	G	**B33**	**PA4028**	**N/R**	**BF1179**	**N/R**	**18013**
	V6-183 (3.0L) MFI	F	**B1405**	**PA4028**	**N/R**	**BF1179**	**N/R**	
	Celica 4-108 (1.8L) EFI	B	**B33**	**PA4028**	**N/R**	**BF1179**	**N/R**	**18013**
	4-132 (2.2L) EFI	G	**B33**	**PA4028**	**N/R**	**BF1179**	**N/R**	**18013**
	Corolla 4-97 (1.6L) EFI	A	**B33**	**PA2243**	**N/R**	**BF1050**	**N/R**	3 Spd. **18163**
	4-108 (1.8L) EFI	B	**B33**	**PA2243**	**N/R**	**BF1050**	**N/R**	3 Spd. **18163**
	Land Cruiser V6-273 (4.5L) EFI	J	**B7020**	**PA2042**	**N/R**		**N/R**	**19994**
	Paseo 4-91 (1.5L) EFI	C	**B33**	**PA4031**	**N/R**	**BF7662**	**N/R**	
	Previa 4-149 (2.4L) EFI or Supercharged	K	**B1405**	**PA2214**	**N/R**	**BF1100**	**N/R**	A43DE **18012** A340H 4WD **18281**
	RAV4 4-122 (2.0L) EFI	P	**B33**	**PA2041**	**N/R**	In-Line **BF1061** In Tank **BF7625**	**N/R**	
	Supra 6-183 (3.0L) EFI	D	**B1405**	**PA4060**	**N/R**	**BF1112**	**N/R**	
	6-183 (3.0L) Turbo	E	**B1405**	**PA4060**	**N/R**	**BF1112**	**N/R**	
	T100 Pickup 4-164 (2.7L) EFI	M	**B1405**	**PA4081**	**N/R**	**BF1100**	**N/R**	
	V6-206 (3.4L) SFI	N	**B1405**	**PA4081**	**N/R**	**BF1148**	**N/R**	4WD **19995**
	Tacoma Pickup 4-149 (2.4L) EFI	L	**B1405**	**PA2214**	**N/R**	**BF1100**	**N/R**	4WD **19994**
	4-164 (2.7L) EFI	M	**B1405**	**PA2214**	**N/R**	**BF1100**	**N/R**	4WD **19994**
	V6-206 (3.4L) EFI	N	**B1405**	**PA4060**	**N/R**	**BF1148**	**N/R**	4WD **19994**

[t] Transmission, Not Model, Determines Which Transmission Filter is Used. OBS = Obsolete. Availability Limited to Distributor Stock.

TOYOTA Cont'd.

Year	Model and Engine	VIN	Lube	Air	Cabin Air	Fuel	Breather	Trans.[t]
1997	Tercel 4-91 (1.5L) EFI	C	**B33**	**PA4031**	**N/R**	**BF7662**	**N/R**	3 Spd. **18163**
1996	4Runner 4-164 (2.7L) EFI	M	**B1405**	**PA2214**	**N/R**	**BF1100**	**N/R**	4WD **19997**
	V6-206 (3.4L) EFI	N	**B1405**	**PA4060**	**N/R**	**BF1148**	**N/R**	4WD **19997**
	Avalon V6-183 (3.0L) EFI	F	**B1405**	**PA4028**	**N/R**	**BF1179**	**N/R**	
	Camry 4-132 (2.2L) MFI	G	**B33**	**PA4028**	**N/R**	**BF1179**	**N/R**	**18013**
	V6-183 (3.0L) MFI	F	**B1405**	**PA4028**	**N/R**	**BF1179**	**N/R**	
	Celica 4-108 (1.8L) EFI	B	**B33**	**PA4028**	**N/R**	**BF1179**	**N/R**	**18013**
	4-132 (2.2L) MFI	G	**B33**	**PA4028**	**N/R**	**BF1059**	**N/R**	**18013**
	Corolla 4-97 (1.6L) EFI	A	**B33**	**PA2243**	**N/R**	**BF1050**	**N/R**	3 Spd. **18163**
	4-108 (1.8L) EFI	B	**B33**	**PA2243**	**N/R**	**BF1050**	**N/R**	3 Spd. **18163**
	Land Cruiser V6-273 (4.5L) EFI	J	**B7020**	**PA2042**	**N/R**		**N/R**	**19994**
	Paseo 4-91 (1.5L) EFI	C	**B33**	**PA4031**	**N/R**	**BF7662**	**N/R**	
	Previa 4-149 (2.4L) EFI	K	**B1405**	**PA2214**	**N/R**	**BF1100**	**N/R**	A43DE **18012** A340H 4WD **18281**
	RAV4 4-122 (2.0L) EFI	P	**B33**	**PA2041**	**N/R**	In-Line **BF1061** In Tank **BF7625**	**N/R**	
	Supra 6-183 (3.0L) EFI or Turbo	D,E	**B1405**	**PA4060**	**N/R**	**BF1112**	**N/R**	
	T100 Pickup 4-164 (2.7L) EFI	M	**B1405**	**PA4081**	**N/R**	**BF1100**	**N/R**	
	V6-206 (3.4L) SFI	N	**B1405**	**PA4081**	**N/R**	**BF1148**	**N/R**	4WD **19995**
	Tacoma Pickup 4-149 (2.4L) EFI	L	**B1405**	**PA2214**	**N/R**	**BF1100**	**N/R**	4WD **19995**
	4-164 (2.7L) EFI	M	**B1405**	**PA2214**	**N/R**	**BF1100**	**N/R**	4WD **19995**
	V6-206 (3.4L) EFI	N	**B1405**	**PA4060**	**N/R**	**BF1148**	**N/R**	4WD **19995**
	Tercel 4-91 (1.5L) EFI	C	**B33**	**PA4031**	**N/R**	**BF7662**	**N/R**	3 Spd. **18163**
1995	4Runner, Pickups 4-144 (2.4L) EFI	R	**B1405**	**PA2214**	**N/R**	**BF1191**	**N/R**	4WD **18281**
	V6-181 (3.0L) EFI	V	**B1405**	**PA2171**	**N/R**	**BF1148**	**N/R**	4WD **18281**
	Avalon V6-183 (3.0L) EFI	G	**B1405**	**PA4028**	**N/R**	**BF1179**	**N/R**	
	Camry 4-132 (2.2L) EFI	S	**B33**	**PA4028**	**N/R**	**BF1179**	**N/R**	**18013**
	V6-183 (3.0L) EFI	G	**B1405**	**PA4028**	**N/R**	**BF1179**	**N/R**	
	Celica 4-108 (1.8L) EFI	A	**B33**	**PA4028**	**N/R**	**BF1179**	**N/R**	**18013**
	4-132 (2.2L) EFI	S	**B33**	**PA4028**	**N/R**	**BF1059**	**N/R**	**18013**
	Corolla 4-97 (1.6L) EFI	A	**B33**	**PA2243**	**N/R**	**BF1050**	**N/R**	3 Spd. **18163**
	4-108 (1.8L) EFI	A	**B33**	**PA2243**	**N/R**	**BF1050**	**N/R**	3 Spd. **18163**
	Land Cruiser V6-273 (4.5L) EFI	D	**B7020**	**PA2042**	**N/R**		**N/R**	A343F **19994**
	MR2 4-122 (2.0L) Turbo	4,S	**B37**	**PA2041**	**N/R**	**BF1100**	**N/R**	
	4-132 (2.2L) EFI	S	**B33**	**PA2041**	**N/R**	**BF1100**	**N/R**	
	Paseo 4-91 (1.5L) EFI	E	**B33**	**PA4031**	**N/R**	Exc. Calif. **BF1179** Calif. **BF7662**	**N/R**	
	Previa 4-149 (2.4L) EFI	A	**B1405**	**PA2214**	**N/R**	**BF1100**	**N/R**	A43DE **18012** A340H 4WD **18281**
	Supra 6-183 (3.0L) EFI or Turbo	J	**B1405**	**PA4060**	**N/R**	**BF1112**	**N/R**	
	T100 Pickup 4-164 (2.7L) EFI	U	**B1405**	**PA4081**	**N/R**	**BF1100**	**N/R**	
	V6-206 (3.4L) EFI	V	**B1405**	**PA4081**	**N/R**	**BF1148**	**N/R**	4WD **19995**
	Tacoma Pickup 4-146 (2.4L) EFI	L	**B1405**	**PA2214**	**N/R**	**BF1100**	**N/R**	4WD **19995**
	4-164 (2.7L) EFI	M	**B1405**	**PA2214**	**N/R**	**BF1100**	**N/R**	4WD **19995**
	V6-206 (3.4L) EFI	V	**B1405**	**PA4060**	**N/R**	**BF1148**	**N/R**	4WD **19995**
	Tercel 4-91 (1.5L) EFI	E	**B33**	**PA4031**	**N/R**	**BF7662**	**N/R**	4 Spd. **18163**
1994	4Runner, Pickups 4-144 (2.4L) EFI	R	**B1405**	**PA2214**	**N/R**	**BF1191**	**N/R**	4WD **18281**
	V6-181 (3.0L) EFI	V	**B1405**	**PA2171**	**N/R**	**BF1148**	**N/R**	4WD **18281**
	Camry 4-132 (2.2L) EFI	S	**B33**	**PA4028**	**N/R**	**BF1179**	**N/R**	**18013**
	V6-183 (3.0L) EFI	G	**B1405**	**PA4028**	**N/R**	**BF1179**	**N/R**	
	Celica 4-108 (1.8L) EFI	A	**B33**	**PA4028**	**N/R**	**BF1179**	**N/R**	**18013**
	4-132 (2.2L) EFI	S	**B33**	**PA4028**	**N/R**	**BF1059**	**N/R**	**18013**
	Corolla 4-97 (1.6L) EFI	A	**B33**	**PA2243**	**N/R**	**BF1050**	**N/R**	3 Spd. **18163**
	4-108 (1.8L) EFI	A	**B33**	**PA2243**	**N/R**	**BF1050**	**N/R**	3 Spd. **18163**
	Land Cruiser V6-273 (4.5L) EFI	D	**B7020**	**PA2042**	**N/R**		**N/R**	
	MR2 4-122 (2.0L) FI Turbo	S	**B37**	**PA2041**	**N/R**	**BF1100**	**N/R**	
	4-132 (2.2L) EFI	S	**B33**	**PA2041**	**N/R**	**BF1100**	**N/R**	
	Paseo 4-91 (1.5L) EFI	E	**B33**	**PA4031**	**N/R**	**BF1179**	**N/R**	
	Previa Van 4-149 (2.4L) EFI	A	**B1405**	**PA2214**	**N/R**	**BF1100**	**N/R**	A43DE **18012** A340H 4WD **18281**
	Supra 6-183 (3.0L) EFI or Turbo	J	**B1405**	**PA4060**	**N/R**	**BF1112**	**N/R**	
	T100 Pickup 4-164 (2.7L) EFI	U	**B1405**	**PA4081**	**N/R**	**BF1100**	**N/R**	
	V6-181 (3.0L) FI	V	**B1405**	**PA4081**	**N/R**	**BF1148**	**N/R**	4WD **18281**
	Tercel 4-89 (1.5L) EFI	E	**B33**	**PA4031**	**N/R**	**BF1179**	**N/R**	**18163**
1993	4Runner 4-144 (2.4L) EFI SOHC	R	**B1405**	**PA2214**	**N/R**	**BF1191**	**N/R**	4WD **18281**
	V6-181 (3.0L) EFI SOHC	V	**B1405**	**PA2171**	**N/R**	**BF1148**	**N/R**	4WD **18281**

OBS = Obsolete. Availability Limited to Distributor Stock. [t] Transmission, Not Model, Determines Which Transmission Filter is Used.

TOYOTA Cont'd.

Year	Model and Engine	VIN	Lube	Air	Cabin Air	Fuel	Breather	Trans.t
1993	Camry 4-132 (2.2L) EFI	S	**B33**	**PA4028**	**N/R**	**BF1179**	**N/R**	**18013**
	V6-181 (3.0L) EFI	V	**BT223**	**PA4028**	**N/R**	**BF1179**	**N/R**	
	Celica 4-97 (1.6L) EFI	A	**B33**		**N/R**	**BF1179**	**N/R**	
	4-122 (2.0L) FI Turbo	4,S	**B37**	**PA2041**	**N/R**	**BF1179**	**N/R**	
	4-132 (2.2L) EFI	S	**B33**	**PA2041**	**N/R**	**BF1179**	**N/R**	
	Corolla 4-97 (1.6L) EFI	A	**B33**	**PA2243**	**N/R**	**BF1050**	**N/R**	3 Spd. **18163**
	4-108 (1.8L) EFI	A	**B33**	**PA2243**	**N/R**	**BF1050**	**N/R**	3 Spd. **18163**
	Land Cruiser V6-273 (4.5L) EFI	F	**B7020**	**PA2042**	**N/R**		**N/R**	
	MR2 4-122 (2.0L) EFI Turbo	4,S	**B37**	**PA2041**	**N/R**	**BF1100**	**N/R**	A140 **18013**
	4-132 (2.2L) EFI	S	**B33**	**PA2041**	**N/R**	**BF1100**	**N/R**	
	Paseo 4-91 (1.5L) EFI	E	**B33**	**PA4031**	**N/R**	**BF1179**	**N/R**	
	Pickups 4-144 (2.4L) EFI	R	**B1405**	**PA2214**	**N/R**	**BF1191**	**N/R**	4WD **18281**
	V6-181 (3.0L) EFI	V	**B1405**	**PA2171**	**N/R**	**BF1148**	**N/R**	4WD **18281**
	Previa Van 4-2438cc (2.4L) EFI	A	**B1405**	**PA2214**	**N/R**	**BF1100**	**N/R**	A43DE **18012** A340H 4WD **18281**
	Supra 6-183 (3.0L) EFI or Turbo	J	**B1405**	To 5/93 **PA2171** 5/93-on **PA4060**	**N/R**	**BF1112**	**N/R**	
	T100 Pickup V6-181 (3.0L) EFI	V	**B1405**	**PA4081**	**N/R**	**BF1148**	**N/R**	4WD **18281**
	Tercel 4-89 (1.5L) EFI	E	**B33**	**PA4031**	**N/R**	**BF1179**	**N/R**	**18163**
1992	4Runner 4-2400cc (2.4L) EFI	R	**BT223**	**PA2214**	**N/R**	**BF1191**	**N/R**	4WD **18281**
	V6-181 (3.0L) EFI	V	**BT223**	**PA2171**	**N/R**	**BF1148**	**N/R**	4WD **18281**
	Camry 4-132 (2.2L) EFI	S	**B33**	**PA4028**	**N/R**	**BF1179**	**N/R**	**18013**
	V6-2508cc (2.5L) EFI Canada	V	**BT223**	**PA4028**	**N/R**		**N/R**	
	V6-181 (3.0L) EFI	V	**BT223**	**PA4028**	**N/R**	**BF1179**	**N/R**	
	Celica 4-97 (1.6L) EFI	A	**B33**		**N/R**	**BF1179**	**N/R**	
	4-122 (2.0L) FI Turbo	S	**B37**	**PA2041**	**N/R**	**BF1179**	**N/R**	
	4-132 (2.2L) EFI	S	**B33**	**PA2041**	**N/R**	**BF1179**	**N/R**	
	Corolla 4-1600cc (1.6L) EFI	A	**B33**	**PA2041**	**N/R**		**N/R**	3 Spd. **18163**
	Cressida 6-3000cc (3.0L) FI	M	**BT223**	**PA2171**	**N/R**	**BF1100**	**N/R**	
	Land Cruiser 6-3956cc (4.0L) EFI	F	**B2**	**PA2042**	**N/R**	**BF1100**	**N/R**	
	MR2 4-121 (2.0L) FI Turbo	S	**B37**	**PA2041**	**N/R**	**BF1100**	**N/R**	A140 **18013**
	4-132 (2.2L) EFI	S	**B33**	**PA2041**	**N/R**	**BF1100**	**N/R**	
	Paseo 4-91 (1.5L) EFI	E	**B33**	**PA4031**	**N/R**	**BF1179**	**N/R**	
	Pickups 4-2400cc (2.4L) EFI	R	**B1405**	**PA2214**	**N/R**	**BF1191**	**N/R**	4WD **18281**
	V6-181 (3.0L) EFI	V	**B1405**	**PA2171**	**N/R**	**BF1148**	**N/R**	4WD **18281**
	Previa Van 4-2438cc (2.4L) EFI	A	**BT223**	**PA2214**	**N/R**	**BF1100**	**N/R**	**18012**
	Supra 6-3000cc (3.0L) EFI or Turbo	M	**BT223**	**PA2171**	**N/R**		**N/R**	
	Tercel 4-89 (1.5L) EFI	E	**B33**	**PA4031**	**N/R**	**BF1179**	**N/R**	**18163**
1991	4Runner 4-2400cc (2.4L) EFI	R	**BT223**	**PA2214**	**N/R**	**BF1191**	**N/R**	4WD **18281**
	V6-181 (3.0L) EFI	V	**BT223**	**PA2171**	**N/R**	**BF1148**	**N/R**	4WD **18281**
	Camry 4-2000cc (2.0L) EFI	S	**B33**	**PA2169**	**N/R**	**BF1179**	**N/R**	**18013**
	V6-2500cc (2.5L) EFI	V	**BT223**	**PA2041**	**N/R**	**BF1179**	**N/R**	
	Celica 4-1600cc (1.6L) EFI 4AFE	A	**B33**		**N/R**	**BF1179**	**N/R**	
	4-2000cc (2.0L) EFI 3SGTE	S	**B37**	**PA2041**	**N/R**	**BF1179**	**N/R**	
	4-2200cc (2.2L) EFI 5SFE	S	**B33**		**N/R**	**BF1179**	**N/R**	
	Corolla 4-1600cc (1.6L) EFI SOHC 4AFE	A	**B33**	**PA2041**	**N/R**		**N/R**	3 Spd. **18163**
	4-1600cc (1.6L) EFI DOHC 4AGE	A	**B37**		**N/R**		**N/R**	3 Spd. **18163**
	Cressida 6-3000cc (3.0L) EFI	M	**BT223**	**PA2171**	**N/R**	**BF1100**	**N/R**	
	Land Cruiser 6-3956cc (4.0L) EFI	F	**B2**	**PA2042**	**N/R**	**BF1100**	**N/R**	
	MR2 4-2000cc (2.0L) EFI	S	**B37**	**PA2041**	**N/R**	**BF1100**	**N/R**	A140 **18013**
	4-2200cc (2.2L) EFI	S	**B33**	**PA2041**	**N/R**	**BF1100**	**N/R**	
	Pickups 4-2400cc (2.4L) EFI	R	**B1405**	**PA2214**	**N/R**	**BF1191**	**N/R**	4WD **18281**
	V6-181 (3.0L) EFI	V	**B1405**	**PA2171**	**N/R**	**BF1148**	**N/R**	4WD **18281**
	Previa Van 4-2438cc (2.4L) EFI	A	**BT223**	**PA2214**	**N/R**	**BF1100**	**N/R**	**18012**
	Supra 6-3000cc (3.0L) EFI or Turbo	M	**BT223**	**PA2171**	**N/R**		**N/R**	
	Tercel 4-1456cc (1.5L) EFI	E	**B33**	**PA4031**	**N/R**	**BF1179**	**N/R**	**18013**
1990	4Runner 4-2366cc (2.4L) EFI	R	**BT223**	**PA2214**	**N/R**	**BF1191**	**N/R**	4WD **18281**
	V6-2958cc (3.0L) EFI	V	**BT223**	**PA2171**	**N/R**	**BF1148**	**N/R**	4WD **18281**
	Camry 4-1998cc (2.0L) EFI	S	**B33**	**PA2169**	**N/R**	**BF1179**	**N/R**	**18013**
	V6-2507cc (2.5L) EFI	V	**BT223**	**PA2041**	**N/R**	**BF1179**	**N/R**	
	Celica 4-1600cc (1.6L) EFI 4AFE	A	**B33**		**N/R**	**BF1179**	**N/R**	
	4-1998cc (2.0L) EFI 3SGTE	S	**B37**	**PA2041**	**N/R**	**BF1179**	**N/R**	
	4-2200cc (2.2L) EFI 5SFE	S	**B33**		**N/R**	**BF1179**	**N/R**	
	Corolla 4-1587cc (1.6L) EFI 4AFE	A	**B33**	**PA2041**	**N/R**		**N/R**	3 Spd. **18163**
	4-1587cc (1.6L) EFI 4AGE	A	**B37**		**N/R**		**N/R**	3 Spd. **18163**
	Cressida 6-2954cc (3.0L) EFI	M	**BT223**	**PA2171**	**N/R**	**BF1100**	**N/R**	
	Land Cruiser 6-3956cc (4.0L) EFI	F	**B2**	**PA2042**	**N/R**	**BF1100**	**N/R**	

[t] Transmission, Not Model, Determines Which Transmission Filter is Used. OBS = Obsolete. Availability Limited to Distributor Stock.

TOYOTA Cont'd.

Year	Model and Engine	VIN	Lube	Air	Cabin Air	Fuel	Breather	Trans.[t]
1990	Pickups 4-2366cc (2.4L) 2 Bbl.	R	**B1405**	**PA2065**	**N/R**	**BF805**	**N/R**	4WD **18281**
	4-2366cc (2.4L) EFI	R	**B1405**	**PA2214**	**N/R**	**BF1191**	**N/R**	4WD **18281**
	V6-2958cc (3.0L) EFI	V	**B1405**	**PA2171**	**N/R**	**BF1148**	**N/R**	4WD **18281**
	Supra 6-2954cc (3.0L) EFI or Turbo	M	**BT223**	**PA2171**	**N/R**		**N/R**	
	Tercel 4-1452cc (1.5L) FI 3EE	E	**B131**	**PA4026**	**N/R**	**BF1179**	**N/R**	**18013**
	4-1456cc (1.5L) 1 Bbl. 3E	E	**B33**	**PA2207**	**N/R**	**BF933**	**N/R**	**18013**
1989	4Runner, Pickups 4-2366cc (2.4L) 2 Bbl.	R	**B1405**	**PA2065**	**N/R**	**BF805**	**N/R**	4WD **18281**
	4-2366cc (2.4L) EFI	R	**B1405**	**PA2214**	**N/R**	**BF1191**	**N/R**	4WD **18281**
	V6-2958cc (3.0L) EFI	V	**B1405**	**PA2171**	**N/R**	**BF1148**	**N/R**	4WD **18281**
	Camry 4-1998cc (2.0L) EFI	S	**B33**	**PA2169**	**N/R**	**BF1179**	**N/R**	**18013**
	V6-2507cc (2.5L) FI	V	**BT223**	**PA2041**	**N/R**	**BF1179**	**N/R**	
	Celica 4-1998cc (2.0L) EFI 3SFE, 3SGELC	S	**B33**	**PA2041**	**N/R**	**BF1156**	**N/R**	**18013**
	4-1998cc (2.0L) EFI 3SGTE	S	**BT223**	**PA2041**	**N/R**	**BF1156**	**N/R**	**18013**
	Corolla 4-1587cc (1.6L) 2 Bbl. 4AF	A	**B33**		**N/R**	**BF7807**	**N/R**	3 Spd. **18163**
	4-1587cc (1.6L) FI 4AFE	A	**B33**		**N/R**		**N/R**	3 Spd. **18163**
	4-1587cc (1.6L) FI 4AGE	A	**B37**		**N/R**		**N/R**	3 Spd. **18163**
	Cressida 6-2954cc (3.0L) EFI	M	**BT223**	**PA2171**	**N/R**	**BF1100**	**N/R**	
	Land Cruiser 6-3956cc (4.0L) EFI	F	**B2**	**PA2042**	**N/R**	**BF1100**	**N/R**	
	MR2 4-1587cc (1.6L) FI or Supercharged	A	**B37**	**PA2171**	**N/R**	**BF1100**	**N/R**	**18163**
	Supra 6-2954cc (3.0L) EFI or Turbo	M	**BT223**	**PA2171**	**N/R**		**N/R**	
	Tercel 4-1456cc (1.5L)	E	**B33**	**PA2207**	**N/R**	**BF933**	**N/R**	**18163**
	Vans 4-2237cc (2.2L) EFI	Y	A.T. **B1405** M.T. **B143**	**PA2168**	**N/R**	**BF1100**	**N/R**	
1988	4Runner, Pickups, SR5 4-2366cc (2.4L) 2 Bbl.	R	**B1405**	**PA2065**	**N/R**	**BF1191**	**N/R**	4WD **18281**
	4-2366cc (2.4L) EFI or Turbo	R	**B1405**	**PA2168**	**N/R**	**BF1191**	**N/R**	4WD **18281**
	V6-3000cc (3.0L) EFI	V	**B1405**	**PA2171**	**N/R**	**BF1148**	**N/R**	4WD **18281**
	Camry 4-1998cc (2.0L) EFI	S	**B33**	**PA2169**	**N/R**	**BF1179**	**N/R**	**18013**
	V6-2507cc (2.5L) FI	V	**BT223**	**PA2041**	**N/R**	**BF1179**	**N/R**	
	Celica 4-1998cc (2.0L) EFI	S	Exc. Turbo **B33** Turbo **B159**	**PA2041**	**N/R**	**BF1156**	**N/R**	**18013**
	Corolla 4-1587cc (1.6L) 2 Bbl.	A	**B33**		**N/R**	**BF7807**	**N/R**	3 Spd. **18163**
	4-1587cc (1.6L) FI 4AGE	A	**B37**		**N/R**	**BF1156**	**N/R**	3 Spd. **18163**
	4-1587cc (1.6L) FI Twin Cam 4AGELC	A	**B37**	**PA2169**	**N/R**	**BF1156**	**N/R**	3 Spd. **18163**
	4-1587cc (1.6L) 4ALC	A	**B131**	**PA2124**	**N/R**	**BF7807**	**N/R**	3 Spd. **18163**
	Cressida 6-2759cc (2.8L) EFI	M	**BT223**	**PA2171**	**N/R**	**BF1100**	**N/R**	
	Land Cruiser 6-3956cc (4.0L) EFI	F	**B2**	**PA2042**	**N/R**	**BF1100**	**N/R**	
	MR2 4-1587cc (1.6L) FI or Supercharged	A	**B33**	**PA2171**	**N/R**	**BF1100**	**N/R**	**18163**
	Supra 6-2954cc (3.0L) EFI or Turbo	M	**BT223**	**PA2171**	**N/R**		**N/R**	
	Tercel 4-1452cc (1.5L) 3AC	A	**B131**	**PA2124**	**N/R**	**BF805**	**N/R**	**18163**
	4-1456cc (1.5L) 3E	E	**B33**	**PA2207**	**N/R**	**BF933**	**N/R**	**18163**
	Vans 4-2237cc (2.2L) EFI	V	A.T. **B1405** M.T. **B143**	**PA2168**	**N/R**	**BF1100**	**N/R**	
1987	4Runner, Pickups 4-2366cc (2.4L) 2 Bbl.	R	**B229**	**PA2065**	**N/R**	**BF805**	**N/R**	4WD **18281**
	4-2366cc (2.4L) FI	R	**B229**	**PA2168**	**N/R**	**BF1191**	**N/R**	4WD **18281**
	4-2366cc (2.4L) FI Turbo	R	**B233**	**PA2168**	**N/R**	**BF1191**	**N/R**	4WD **18281**
	Camry 4-1995cc (2.0L) FI	S	**B131**	**PA2169**	**N/R**	**BF1179**	**N/R**	**18013**
	Celica 4-1995cc (2.0L) FI 2SELV, 3SGELC	S	**B131**		**N/R**	**BF1156**	**N/R**	**18013**
	4-1995cc (2.0L) FI 3SFE	S	**B131**	**PA2041**	**N/R**	**BF1156**	**N/R**	**18013**
	Corolla 4-1587cc (1.6L) 2 Bbl. 4ALC	A	**B131**	**PA2124**	**N/R**	**BF7807**	**N/R**	3 Spd. **18163**
	4-1587cc (1.6L) FI 4AGELC	A	**B131**	**PA2169**	**N/R**	**BF1156**	**N/R**	3 Spd. **18163**
	Cressida 6-2759cc (2.8L) FI	M	**B229**	**PA2171**	**N/R**	**BF1100**	**N/R**	
	Land Cruiser 4-2366cc (2.4L) FI Diesel, Canada	H	**B2**		**N/R**	**BF837**	**N/R**	
	6-4230cc (4.2L) 2 Bbl.	F	**B2**		**N/R**	**BF837**	**N/R**	
	MR2 4-1587cc (1.6L) FI	A	**B131**	**PA2171**	**N/R**	**BF1100**	**N/R**	
	Supra 6-2954cc (3.0L) FI or Turbo	M	**B229**	**PA2171**	**N/R**		**N/R**	
	Tercel 4-1452cc (1.5L) 2 Bbl. 3TC	A	**B131**	**PA2124**	**N/R**	**BF805**	**N/R**	**18163**
	4-1456cc (1.5L) 2 Bbl. 3E	E	**B33**	**PA2207**	**N/R**	**BF933**	**N/R**	**18163**
	Vans 4-2237cc (2.2L) FI	Y	A.T. **B1405** M.T. **B143**	**PA2168**	**N/R**	**BF1100**	**N/R**	
1986	4Runner, Pickups 4-2366cc (2.4L) 2 Bbl.	R	**B229**	**PA2065**	**N/R**	**BF805**	**N/R**	4WD **18281**
	4-2366cc (2.4L) FI	R	**B229**	**PA2168**	**N/R**	**BF1191**	**N/R**	4WD **18281**
	4-2366cc (2.4L) FI Turbo	R	**B233**	**PA2168**	**N/R**	**BF1191**	**N/R**	4WD **18281**
	4-2366cc (2.4L) Diesel	R	**B233**	**PA2129**	**N/R**	**BF7535**	**N/R**	4WD **18281**
	4-2366cc (2.4L) Turbo Diesel		**B233**	**PA2156**	**N/R**	**BF7535**	**N/R**	4WD **18281**
	Camry 4-1995cc (2.0L) FI	S	**B131**	**PA2169**	**N/R**	**BF1179**	**N/R**	**18013**

OBS = Obsolete. Availability Limited to Distributor Stock. [t] Transmission, Not Model, Determines Which Transmission Filter is Used.

TOYOTA Cont'd.

Year	Model and Engine	VIN	Lube	Air	Cabin Air	Fuel	Breather	Trans.t
1986	Celica 4-1995cc (2.0L) FI	S	**B131**		**N/R**	**BF1156**	**N/R**	**18013**
	Corolla 4-1587cc (1.6L) 2 Bbl.	A	**B131**	**PA2124**	**N/R**	**BF7807**	**N/R**	3 Spd. **18163**
	4-1587cc (1.6L) FI	A	**B131**		**N/R**	**BF1179**	**N/R**	3 Spd. **18163**
	Cressida 6-2759cc (2.8L) FI	M	**B229**	**PA2171**	**N/R**	**BF1100**	**N/R**	**18012**
	Land Cruiser 6-4230cc (4.2L)	F	**B2**		**N/R**	**BF837**	**N/R**	
	MR2 4-1587cc (1.6L) FI	A	**B131**	**PA2167**	**N/R**	**BF1100**	**N/R**	**18163**
	Supra 6-2759cc (2.8L) FI	M	**B229**	**PA2156**	**N/R**	**BF1100**	**N/R**	
	6-2954cc (3.0L) FI	M	**B229**	**PA2171**	**N/R**		**N/R**	
	Tercel 4-1452cc (1.5L)	A	**B131**	**PA2124**	**N/R**	**BF805**	**N/R**	
	Vans 4-2237cc (2.2L) FI	Y	**B143**	**PA2168**	**N/R**	**BF1100**	**N/R**	
1985	4Runner, Pickups 4-2366cc (2.4L) 2 Bbl.		**B229**	**PA2065**	**N/R**	**BF805**	**N/R**	4WD **18281**
	4-2366cc (2.4L) FI or Turbo	R	**B229**	**PA2168**	**N/R**	**BF1191**	**N/R**	4WD **18281**
	4-2446cc (2.4L) Diesel		**B2**	**PA2129**	**N/R**	**BF7535**	**N/R**	4WD **18281**
	4-2446cc (2.4L) Turbo Diesel		**B233**	**PA2156**	**N/R**	**BF7535**	**N/R**	4WD **18281**
	Camry 4-1839cc (1.8L) Turbo Diesel	C	**BD7029**		**N/R**	**BF7535**	**N/R**	**18013**
	4-1995cc (2.0L) FI	S	**B131**	**PA2169**	**N/R**	**BF1179**	**N/R**	**18013**
	Celica 4-2366cc (2.4L) FI	R	**B229**	**PA2156**	**N/R**	**BF1191**	**N/R**	
	Celica Supra 6-2759cc (2.8L) FI	M	**B229**	**PA2156**	**N/R**	**BF1100**	**N/R**	**18012**
	Corolla 4-1587cc (1.6L) 2 Bbl.	A	**B131**	**PA2124**	**N/R**	**BF7807**	**N/R**	3 Spd. **18163**
	4-1587cc (1.6L) FI	A	**B131**		**N/R**	**BF1179**	**N/R**	3 Spd. **18163**
	4-1839cc (1.8L) Diesel	C	**BD7029**	**PA2124**	**N/R**	**BF7535**	**N/R**	3 Spd. **18163**
	Cressida 6-2759cc (2.8L) FI	M	**B229**	**PA2171**	**N/R**	**BF1100**	**N/R**	**18012**
	Land Cruiser 4-209 (3.4L) FI Diesel, Canada		**B2**	**PA2042**	**N/R**	**BF954**	**N/R**	**M.T.**
	6-4230cc (4.2L)	F	**B2**		**N/R**	**BF837**	**N/R**	
	MR2 4-1587cc (1.6L) FI	A	**B131**	**PA2167**	**N/R**	**BF1100**	**N/R**	**18163**
	Supra 6-2759cc (2.8L) FI	M	**B229**	**PA2156**	**N/R**	**BF1100**	**N/R**	**18012**
	Tercel 4-1452cc (1.5L)	A	**B131**	**PA2124**	**N/R**	**BF805**	**N/R**	
	Vans 4-1998cc (2.0L) FI	Y	**B143**	**PA2168**	**N/R**	**BF1100**	**N/R**	
1984	4Runner, Pickups 4-2366cc (2.4L) 2 Bbl.	R	**B229**	**PA2065**	**N/R**	**BF805**	**N/R**	
	4-2366cc (2.4L) FI		**B229**	**PA2168**	**N/R**	**BF1191**	**N/R**	
	4-2446cc (2.4L) FI Diesel		**B2**	**PA2129**	**N/R**	**BF7535**	**N/R**	
	Camry 4-1839cc (1.8L) Turbo Diesel	C	**B233**		**N/R**	**BF7535**	**N/R**	**18163**
	4-1995cc (2.0L) FI	S	**B131**	**PA2169**	**N/R**	**BF1179**	**N/R**	**18163**
	Celica 4-2366cc (2.4L) FI	R	**B229**	**PA2156**	**N/R**	**BF1100**	**N/R**	
	Celica Supra 6-2759cc (2.8L) FI	M	**B229**	**PA2156**	**N/R**	**BF1100**	**N/R**	**18012**
	Corolla 4-1587cc (1.6L) 2 Bbl.	A	**B131**	**PA2124**	**N/R**	**BF7807**	**N/R**	3 Spd. **18163**
	4-1839cc (1.8L) Diesel	C	**B233**	**PA2124**	**N/R**	**BF7535**	**N/R**	**18163**
	Cressida 6-2759cc (2.8L) FI	M	**B229**	**PA2168**	**N/R**	**BF1100**	**N/R**	**18012**
	Land Cruiser 4-209 (3.4L) FI Diesel, Canada		**B2**	**PA2042**	**N/R**	**BF954**	**N/R**	**M.T.**
	6-258 (4.2L) FI Diesel, Canada	B	**B2**		**N/R**	**BF837**	**N/R**	
	6-4230cc (4.2L)	F	**B2**		**N/R**	**BF837**	**N/R**	
	Starlet 4-1290cc (1.3L) FI	K	**B143**	**PA2037**	**N/R**	**BF1179**	**N/R**	**M.T.**
	Supra 6-2759cc (2.8L) FI	M	**B229**	**PA2156**	**N/R**	**BF1100**	**N/R**	**18012**
	Tercel 4-1452cc (1.5L) 2 Bbl.	A	**B131**	**PA2124**	**N/R**	**BF805**	**N/R**	
	Vans 4-1998cc (2.0L) FI	Y	**B143**	**PA2168**	**N/R**	**BF1100**	**N/R**	
1983	Camry 4-1995cc (2.0L) FI	S	**B131**	**PA2169**	**N/R**	**BF1179**	**N/R**	**18163**
	Celica 4-2366cc (2.4L) 2 Bbl.	R	**B1405**	**PA2065**	**N/R**	**BF805**	**N/R**	
	4-2366cc (2.4L) FI	R	**B229**	**PA2156**	**N/R**	**BF1100**	**N/R**	
	Celica Supra 6-2759cc (2.8L) FI	M	**B229**	**PA2156**	**N/R**	**BF1100**	**N/R**	**18012**
	Corolla 4-1587cc (1.6L) 2 Bbl.	A	**B131**	**PA2124**	**N/R**	**BF7807**	**N/R**	
	Cressida 6-2759cc (2.8L) FI	M	**B229**	**PA2168**	**N/R**	**BF1100**	**N/R**	**18012**
	Land Cruiser 4-209 (3.4L) FI Diesel, Canada		**B2**	**PA2042**	**N/R**	**BF954**	**N/R**	**M.T.**
	6-4230cc (4.2L)	B,F	**B2**		**N/R**	**BF837**	**N/R**	
	Pickups 4-2188cc (2.2L) Diesel	L	**B2**	**PA2129**	**N/R**	**BF954**	**N/R**	
	4-2366cc (2.4L) 2 Bbl.	R	**B229**	**PA2065**	**N/R**	**BF7807**	**N/R**	
	Starlet 4-1290cc (1.3L) FI	K	**B143**	**PA2037**	**N/R**	**BF1179**	**N/R**	**M.T.**
	Supra 6-2759cc (2.8L) FI	M	**B229**	**PA2156**	**N/R**	**BF1100**	**N/R**	**18012**
	Tercel 4-1452cc (1.5L) 2 Bbl.	A	**B131**	**PA2124**	**N/R**	**BF805**	**N/R**	
1982	Celica 4-2366cc (2.4L) 2 Bbl.	R	**B1405**	**PA2065**	**N/R**	**BF805**	**N/R**	
	Corolla 4-1770cc (1.8L) 2 Bbl.	T	**B233**		**N/R**	**BF805**	**N/R**	
	Corolla Tercel 4-1452cc (1.5L) 2 Bbl.	A	**B131**	**PA2124**	**N/R**	**BF805**	**N/R**	
	Corona 4-2366cc (2.4L) 2 Bbl.	R	**B229**	**PA2065**	**N/R**	**BF805**	**N/R**	
	Cressida 6-2759cc (2.8L) FI	M	**B229**	**PA2168**	**N/R**	**BF1100**	**N/R**	

[t] Transmission, Not Model, Determines Which Transmission Filter is Used. OBS = Obsolete. Availability Limited to Distributor Stock.

Year	Model and Engine	VIN	Lube	Air	Cabin Air	Fuel	Breather	Trans.t
TOYOTA Cont'd.								
1982	Land Cruiser 4-209 (3.4L) FI Diesel, Canada		**B2**	**PA2042**	**N/R**	**BF954**	**N/R**	**M.T.**
	6-4230cc (4.2L)	F	**B2**		**N/R**	**BF837**	**N/R**	**M.T.**
	6-258 (4.2L) FI Diesel, Canada	B	**B2**		**N/R**	**BF837**	**N/R**	**M.T.**
	Pickups 4-2188cc (2.2L) Diesel	L	**B2**	**PA2129**	**N/R**	**BF954**	**N/R**	
	4-2366cc (2.4L) 2 Bbl.	R	**B229**	**PA2065**	**N/R**	**BF7807**	**N/R**	
	Starlet 4-1290cc (1.3L) 2 Bbl.	K	**B143**		**N/R**	**BF933**	**N/R**	**M.T.**
	Supra 6-2759cc (2.8L) FI	M	**B229**	**PA2156**	**N/R**	**BF1100**	**N/R**	**18012**
1981	Celica 4-2366cc (2.4L) 2 Bbl.	R	**B229**	**PA2065**	**N/R**	**BF805**	**N/R**	
	Celica Supra 6-2759cc (2.8L) FI	M	**B229**	**PA2156**	**N/R**	**BF1100**	**N/R**	
	Corolla 4-1770cc (1.8L) 2 Bbl.	T	**B233**		**N/R**	**BF805**	**N/R**	
	Corolla Tercel 4-1452cc (1.5L) 2 Bbl.	A	**B131**	**PA2124**	**N/R**	**BF805**	**N/R**	
	Corona 4-2366cc (2.4L) 2 Bbl.	R	**B229**	**PA2065**	**N/R**	**BF805**	**N/R**	
	Cressida 6-2759cc (2.8L) FI	M	**B229**	**PA2168**	**N/R**	**BF1100**	**N/R**	
	Land Cruiser 4-209 (3.4L) FI Diesel, Canada		**B2**	**PA2042**	**N/R**	**BF954**	**N/R**	**M.T.**
	6-4230cc (4.2L)	F	**B2**		**N/R**		**N/R**	**M.T.**
	6-258 (4.2L) FI Diesel, Canada	B	**B2**		**N/R**	**BF837**	**N/R**	**M.T.**
	Pickups 4-2188cc (2.2L) Diesel	L	**B2**	**PA2129**	**N/R**	**BF954**	**N/R**	
	4-2366cc (2.4L) 2 Bbl.	R	**B229**	**PA2065**	**N/R**	**BF7807**	**N/R**	
	Starlet 4-1290cc (1.3L) 2 Bbl.	K	**B143**		**N/R**	**BF933**	**N/R**	**M.T.**
	Supra 6-2759cc (2.8L) FI	M	**B229**		**N/R**	**BF1100**	**N/R**	
1980	Celica 4-2189cc (2.2L) 2 Bbl.	R	**B229**	**PA2065**	**N/R**	**BF805**	**N/R**	
	Corolla 4-1770cc (1.8L) 2 Bbl.	T	**B233**	To 8/80 **PA2125**	**N/R**	**BF805**	**N/R**	
	Corolla Tercel 4-1452cc (1.5L) 2 Bbl.	A	**B131**	**PA2124**	**N/R**	**BF805**	**N/R**	
	Corona 4-2189cc (2.2L) 2 Bbl.	R	**B229**	**PA2065**	**N/R**	**BF805**	**N/R**	
	Cressida 6-2563cc (2.6L) FI	M	**B229**	**PA2167**	**N/R**	**BF1100**	**N/R**	
	Land Cruiser 6-4230cc (4.2L)	F	**B2**		**N/R**	**BF933**	**N/R**	**M.T.**
	Pickups 4-2189cc (2.2L) 2 Bbl.	R	**B229**	**PA2065**	**N/R**	**BF805**	**N/R**	
	Supra 6-2563cc (2.6L) FI	M	**B229**		**N/R**	**BF1100**	**N/R**	
TRIUMPH								
1982	TR7 4-1998cc (2.0L) FI Canada	1	**P176**		**N/R**	**BF1195**	**N/R**	
	TR8 4-3528cc (3.5L) FI Canada	5	**B34**		**N/R**	**BF1195**	**N/R**	
TRIUMPH Motorcycles								
	1200 Series		1995-2001 **P148**					
	Adventurer		1995-2001 Ele. **P148** 1995-2001 Spin-on **BT223**					
	America		2005-on **B1400**					
	Bonneville 790cc		2001-on **B1400**					
	Daytona		1995-97 Ele. **P148** 1995-97 Spin-on **BT223**					
	Daytona 600		2003-04 **B1400**					
	Daytona 675		2007-08 **B1400**					
	Daytona 955E		2000-on **B1400**					
	Daytona 955i		2000-04 **B1400**					
	Daytona Super III		1995-97 Ele. **P148** 1995-97 Spin-on **BT223**					
	Scrambler		2006-on **B1400**					
	Legend TT		1999-2001 Ele. **P148** 1999-2001 Spin-on **BT223**					
	Rocket III		2004-08 **B1400**					
	Speed Four		2002-04 **B1400**					
	Speed Triple		1995-96 Ele. **P148** 1995-96 Spin-on **BT223**					
	Speed Triple 955cc		1999-on **B1400**					
	Speedmaster		2004 **B1400**					

OBS = Obsolete. Availability Limited to Distributor Stock. t Transmission, Not Model, Determines Which Transmission Filter is Used.

Year	Model and Engine	VIN	Lube	Air	Cabin Air	Fuel	Breather	Trans.t
TRIUMPH Motorcycles Cont'd.								
	Sprint		1995-97 Ele. **P148** 1995-97 Spin-on **BT223**					
	Sprint RS 955cc		2000-02 **B1400**					
	Sprint Sport Tour		1999-2001 **B1400**					
	Sprint ST		2002-on **B1400**					
	T509 Speed Triple 885cc		1997 **B1400**					
	T595 Daytona 955cc		1997 **B1400**					
	Thruxton		2004 **B1400**					
	Thunderbird		1995-2002 Ele. **P148** 1995-2002 Spin-on **BT223**					
	Thunderbird Sport		1998-2004 Ele. **P148** 1998-2004 Spin-on **BT223**					
	Tiger 955cc		1995-97 Ele. **P148** 1995-97 Spin-on **BT223** 2000-04 **B1400**					
	Trident		1995-97 Ele. **P148** 1995-97 Spin-on **BT223**					
	Trophy		1995-2002 Ele. **P148** 1995-2002 Spin-on **BT223**					
	TT600		2000-02 **B1400**					
VICTORY Motorcycles								
	Classic Cruiser		2003 **B1402**					
	Cross Country		2010-on **B1402**					
	Cross Road		2010-on **B1402**					
	Deluxe Cruiser Series		2001 **B1400** 2002 **B1402**					
	Hammer		2005-on **B1402**					
	King Pin		2004-on **B1402**					
	Ness		2009-on **B1402**					
	Platinum		2008 **B1402**					
	Standard Cruiser		2001 **B1400** 2002 **B1402**					
	Touring Cruiser		2002-06 **B1402**					
	V92C		1998-2005 **B1400**					
	V92SC		1998-2005 **B1400**					
	Vegas		2003-on **B1402**					
	Vegas 8-Ball		2006-on **B1402**					
	Vegas Jackpot		2006-on **B1402**					
	Vision 8-Ball		2010-on **B1402**					
	Vision Street		2008-on **B1402**					
	Vision Tour		2008-on **B1402**					
VOLKSWAGEN								
2010	Beetle 5-151 (2.5L) FI	F,G,W	**P7399**	**PA4111**	**PA4331**	**BF7670**	**N/R**	**N/S**
	City Golf 4-1800cc (1.8L) FI Canada		**B178**	**PA4111**	(w/Charcoal) **PA4395**		**N/R**	**N/S**
	V6-219 (3.6L) DI	U	**P7415**	**PA4396**	(w/Charcoal) **PA4395**	**N/S**	**N/R**	**N/S**
	CC 4-121 (2.0L) DI Turbo	L	**B7452**		(w/Charcoal) **PA4395**	**N/S**	**N/R**	**N/S**
	4-2000cc (2.0L) FI Canada		**B178**	**PA4111**	(w/Charcoal) **PA4395**		**N/R**	
	Eos 4-121 (2.0L) FI Turbo	A	**B7452**		(w/Charcoal) **PA4395**		**N/R**	
	GLI 4-2000cc (2.0L) DI Turbo	A,V	**B7452**		(w/Charcoal) **PA4395**		**N/R**	

[t] Transmission, Not Model, Determines Which Transmission Filter is Used. OBS = Obsolete. Availability Limited to Distributor Stock.

VOLKSWAGEN Cont'd.

Year	Model and Engine	VIN	Lube	Air	Cabin Air	Fuel	Breather	Trans.[t]
2010	Golf 4-2000cc (2.0L) FI Turbo Diesel	L	**P7415**		(w/Charcoal) **PA4395**		**N/R**	
	5-2500cc (2.5L) FI	A,B	**P7399**		(w/Charcoal) **PA4395**		**N/R**	**N/S**
	GTI 4-1984cc (2.0L) DI Turbo	D,V	**B7452**		(w/Charcoal) **PA4395**		**N/R**	
	Jetta 4-2000cc (2.0L) DI Turbo	A,V	**B7452**		(w/Charcoal) **PA4395**		**N/R**	
	4-1984cc (2.0L) Turbo Diesel	L	**P7415**		(w/Charcoal) **PA4395**		**N/R**	
	5-2480cc (2.5L) DI	M,Z	**P7399**		(w/Charcoal) **PA4395**		**N/R**	**N/S**
	Passat 4-1984cc (2.0L) DI Turbo		Ele. **P7399** Spin-on **B7452**		(w/Charcoal) **PA4395**	**N/S**	**N/R**	**N/S**
	Routan V6-231 (3.8L) FI	1	**BT223**			**N/S**	**N/R**	
	V6-241 (4.0L) FI	X				**N/S**	**N/R**	
	Tiguan 4-1984cc (2.0L) DI Turbo	V	**B7452**		(w/Charcoal) **PA4395**	**N/S**	**N/R**	
	Touareg 2 V6-3000cc (3.0L) DI Turbo Diesel	M					**N/R**	**N/S**
	V6-3597cc (3.6L) DI	E	**P7136**			**N/S**	**N/R**	**N/S**
	V8-4163cc (4.2L) DI	B				**N/S**	**N/R**	**N/S**
2009	Beetle 5-151 (2.5L) FI	F,G,W	**P7399**	**PA4111**	**PA4331**	**BF7670**	**N/R**	**N/S**
	CC 4-121 (2.0L) DI Turbo	L	**B7452**		(w/Charcoal) **PA4395**	**N/S**	**N/R**	**N/S**
	City Golf 4-1800cc (1.8L) FI Canada		**B178**	**PA4111**	(w/Charcoal) **PA4395**		**N/R**	**N/S**
	V6-219 (3.6L) DI	U	**BT223**			**N/S**	**N/R**	
	4-2000cc (2.0L) FI Canada		**B7452**		(w/Charcoal) **PA4395**		**N/R**	
	City Jetta 4-2000cc (2.0L) FI Canada		**B178**	**PA4111**	**PA4395**		**N/R**	
	Eos 4-121 (2.0L) FI Turbo	A	BPY Eng. Code **P7399** CCTA Eng. Code **B7452**	**PA4383**	(w/Charcoal) **PA4395**		**N/R**	
	GLI 4-2000cc (2.0L) DI Turbo		**B7452**	**PA4396**	(w/Charcoal) **PA4395**		**N/R**	
	GTI 4-1984cc (2.0L) DI Turbo	D,V	**B7452**		(w/Charcoal) **PA4395**		**N/R**	
	Jetta 4-1984cc (2.0L) Turbo		**B7452**	**PA4396**	(w/Charcoal) **PA4395**		**N/R**	
	4-1984cc (2.0L) Turbo Diesel	L	**P7415**	**PA4396**	(w/Charcoal) **PA4395**		**N/R**	
	5-2480cc (2.5L) SFI		**P7399**		(w/Charcoal) **PA4395**		**N/R**	**N/S**
	Passat 4-1984cc (2.0L) DI Turbo (BPY Eng.)	K	**P7399**	**PA4383**	(w/Charcoal) **PA4395**	**N/S**	**N/R**	**N/S**
	4-1984cc (2.0L) DI Turbo (CCTA Eng.)		**B7452**		(w/Charcoal) **PA4395**	**N/S**	**N/R**	**N/S**
	Rabbit 5-151 (2.5L) SFI	A,B	**P7399**		(w/Charcoal) **PA4395**		**N/R**	**N/S**
	Routan V6-231 (3.8L) FI	1	**BT223**			**N/S**	**N/R**	
	V6-241 (4.0L) FI	X				**N/S**	**N/R**	
	Tiguan 4-1984cc (2.0L) DI Turbo	V	**B7452**		(w/Charcoal) **PA4395**	**N/S**	**N/R**	
	Touareg 2 V6-3000cc (3.0L) DI Turbo Diesel	M					**N/R**	**N/S**
	V6-3597cc (3.6L) DI	E	**P7136**			**N/S**	**N/R**	**N/S**
	V8-4163cc (4.2L) DI	B				**N/S**	**N/R**	**N/S**
2008	Beetle 5-151 (2.5L) FI	F,G,W	**P7399**	**PA4111**	**PA4331**	**BF7670**	**N/R**	**N/S**
	City Golf 4-2000cc (2.0L) FI Canada		**B178**	**PA4111**			**N/R**	
	City Jetta 4-2000cc (2.0L) FI Canada		**B178**	**PA4111**	**PA4395**		**N/R**	
	Derby 4-1800cc (1.8L) FI Mexico		**B178**				**N/R**	
	Eos 4-121 (2.0L) FI Turbo	A	**P7399**	**PA4383**	(w/Charcoal) **PA4395**		**N/R**	
	V6-3189cc (3.2L) FI	B	**P7415**	**PA4111**	(w/Charcoal) **PA4395**		**N/R**	

OBS = Obsolete. Availability Limited to Distributor Stock. [t] Transmission, Not Model, Determines Which Transmission Filter is Used.

VOLKSWAGEN Cont'd.

Year	Model and Engine	VIN	Lube	Air	Cabin Air	Fuel	Breather	Trans.[t]
2008	GLI 4-2000cc (2.0L) DI Turbo	A,J	**P7399**	**PA4383**	(w/Charcoal) **PA4395**		**N/R**	
	GTI 4-1984cc (2.0L) DI Turbo	D,V	**P7399**	**PA4383**	(w/Charcoal) **PA4395**		**N/R**	
	Jetta 4-1984cc (2.0L) DI Turbo	A,J	**P7399**	**PA4383**	(w/Charcoal) **PA4395**		**N/R**	
	4-1984cc (2.0L) Turbo Diesel		**P7415**	**PA4396**	(w/Charcoal) **PA4395**		**N/R**	
	5-2480cc (2.5L) SFI	M,Z	**P7399**		(w/Charcoal) **PA4395**		**N/R**	**N/S**
	Passat 4-1984cc (2.0L) DI Turbo (BPY Eng)	K	**P7399**	**PA4383**	(w/Charcoal) **PA4395**	**N/S**	**N/R**	**N/S**
	4-2000cc (2.0L) DI Turbo (CCTA Eng.)		**B7452**		(w/Charcoal) **PA4395**	**N/S**	**N/R**	**N/S**
	V6-3597cc (3.6L) DI	U	**P7415**	**PA4396**	(w/Charcoal) **PA4395**	**N/S**	**N/R**	**N/S**
	Pointer 4-2000cc (2.0L) FI Mexico		**B178**				**N/R**	
	R32 V6-3189cc (3.2L) SFI	C	**P7415**	**PA4396**	(w/Charcoal) **PA4395**	**N/S**	**N/R**	
	Rabbit 5-151 (2.5L) SFI	A,B	**P7399**		(w/Charcoal) **PA4395**		**N/R**	**N/S**
	Touareg 2 V6-3597cc (3.6L) SFI	E	**P7136**			**N/S**	**N/R**	**N/S**
	V8-4163cc (4.2L) SFI	B				**N/S**	**N/R**	**N/S**
	V10-4921cc (5.0L) DI Turbo Diesel	T				**N/S**	**N/R**	**N/S**
2007	Beetle, Cabrio 5-151 (2.5L) SFI	F,G	**P7399**	**PA4111**	**PA4331**	**BF7670**	**N/R**	**N/S**
	City Golf 4-2000cc (2.0L) FI Canada		**B178**	**PA4111**		**BF7670**	**N/R**	
	City Jetta 4-2000cc (2.0L) FI Canada		**B178**	**PA4111**	**PA4395**	**BF7670**	**N/R**	
	Derby 4-1800cc (1.8L) FI Mexico		**B178**				**N/R**	
	Eos 4-121 (2.0L) DI Turbo	A	**P7399**	**PA4383**	**PA4395**		**N/R**	
	V6-3189cc (3.2L) SFI	B	**P7415**	**PA4111**	**PA4395**		**N/R**	**M.T.**
	Golf 4-2000cc (2.0L) DI Turbo	V	**P7399**	**PA4383**	(w/Charcoal) **PA4395**		**N/R**	
	GTI 4-1984cc (2.0L) DI Turbo	V	**P7399**	**PA4383**	(w/Charcoal) **PA4395**		**N/R**	
	Jetta 4-121 (2.0L) DI Turbo	J	**P7399**	**PA4383**	**PA4395**		**N/R**	
	5-151 (2.5L) SFI	F,G	**P7399**		**PA4395**		**N/R**	**N/S**
	Passat 4-1984cc (2.0L) FI Turbo	K	**P7399**	**PA4383**	**PA4395**	**N/S**	**N/R**	**N/S**
	V6-3597cc (3.6L) SFI	U	**P7415**	**PA4396**	**PA4395**	**N/S**	**N/R**	**N/S**
	Pointer 4-2000cc (2.0L) FI Mexico		**B178**				**N/R**	
	Pointer Pick-up 4-1800cc (1.8L) FI Mexico		**B178**				**N/R**	
	Polo 4-2000cc (2.0L) FI Mexico		**B178**				**N/R**	
	R32 V6-3189cc (3.2L) SFI		**P7415**	**PA4111**	**PA4395**	**N/S**	**N/R**	
	Rabbit 5-151 (2.5L) FI	S	**P7399**		**PA4395**		**N/R**	**N/S**
	Sharan 4-1800cc (1.8L) FI Turbo Mexico		**B178**			**BF1195**	**N/R**	
	Touareg V6-219 (3.6L) SFI	E	**P7136**			**N/S**	**N/R**	
	V8-4172cc (4.2L) SFI	M				**N/S**	**N/R**	**N/S**
	V10-4921cc (5.0L) Turbo Diesel	T				**N/S**	**N/R**	
2006	Beetle, Cabrio 4-1896cc (1.9L) DI Turbo Diesel	R	**P7308**	**PA4111**	**PA4331**	**BF7958**	**N/R**	
	5-2480cc (2.5L) SFI	G	**P7399**	**PA4111**	**PA4331**	**BF7670**	**N/R**	6 Spd. **N/S**
	City Jetta 4-2000cc (2.0L) FI Canada		**B178**	**PA4111**	**PA4395**	**BF7670**	**N/R**	
	Derby 4-1800cc (1.8L) FI Mexico		**B178**				**N/R**	
	Golf 4-116 (1.9L) DI Turbo Diesel	R	**P7415**	**PA4111**	**PA4331**	**BF7958**	**N/R**	**N/S**
	4-1984cc (2.0L) SFI	L	**B178**	**PA4111**	**PA4331**	**BF7670**	**N/R**	
	GTI 4-1800cc (1.8L) Turbo	E	**B178**	**PA4111**	**PA4331**	**BF7670**	**N/R**	**N/S**
	4-1984cc (2.0L) DI Turbo	R	**P7399**	**PA4383**	(w/Charcoal) **PA4395**		**N/R**	
	Jetta 4-116 (1.9L) DI Turbo Diesel	T	**P7415**		**PA4395**		**N/R**	
	4-121 (2.0L) DI Turbo	J	**P7399**	**PA4383**	**PA4395**		**N/R**	
	5-151 (2.5L) DI	F,G	**P7399**		**PA4395**		**N/R**	**N/S**
	Passat 4-121 (2.0L) DI Turbo	K	**P7399**	**PA4383**	**PA4395**	**N/S**	**N/R**	**N/S**
	V6-3597cc (3.6L) SFI	U	**P7415**	**PA4396**	(w/Charcoal) **PA4395**	**N/S**	**N/R**	**N/S**
	Phaeton V8-4172cc (4.2L) SFI	F				**BF7670**	**N/R**	6 Spd. **N/S**
	W12-5998cc (6.0L) SFI	H				**BF7670**	**N/R**	6 Spd. **N/S**
	Pointer 4-2000cc (2.0L) FI Mexico		**B178**				**N/R**	
	Pointer Pick-up 4-1800cc (1.8L) FI Mexico		**B178**				**N/R**	

[t] Transmission, Not Model, Determines Which Transmission Filter is Used. OBS = Obsolete. Availability Limited to Distributor Stock.

VOLKSWAGEN Cont'd.

Year	Model and Engine	VIN	Lube	Air	Cabin Air	Fuel	Breather	Trans.[t]
2006	Polo 4-2000cc (2.0L) FI Mexico		**B178**				**N/R**	
	Rabbit 5-151 (2.5L) FI	R,S	**P7399**				**N/R**	**N/S**
	Sharan 4-1800cc (1.8L) FI Turbo Mexico		**B178**			**BF1195**	**N/R**	
	Touareg V6-3189cc (3.2L) SFI	G	**P7136**			**N/S**	**N/R**	
	V6-3597cc (3.6L) SFI	E	**P7136**			**N/S**	**N/R**	**N/S**
	V8-4172cc (4.2L) SFI	M				**N/S**	**N/R**	**N/S**
	V10-300 (5.0L) FI Turbo Diesel						**N/R**	**N/S**
2005	Beetle, Cabrio 4-109 (1.8L) SFI Turbo	D	**B178**	**PA4111**	**PA4331**	**BF7670**	**N/R**	
	4-116 (1.9L) DI Turbo Diesel	P	**P7308**	**PA4111**	**PA4331**	**BF7958**	**N/R**	
	4-121 (2.0L) SFI	K	**B178**	**PA4111**	**PA4331**	**BF7670**	**N/R**	
	Beetle Turbo S 4-109 (1.8L) SFI Turbo HO	D	**B178**	**PA4111**	**PA4331**	**BF7670**	**N/R**	**M.T.**
	Derby 4-1800cc (1.8L) FI Mexico		**B178**				**N/R**	
	Golf 4-116 (1.9L) DI Turbo Diesel	R	**P7308**	**PA4111**	**PA4331**	**BF7958**	**N/R**	
	4-121 (2.0L) SFI	L	**B178**	**PA4111**	**PA4331**	**BF7670**	**N/R**	
	GTI 4-109 (1.8L) SFI Turbo	E	**B178**	**PA4111**	**PA4331**	**BF7670**	**N/R**	
	V6-170 (2.8L) SFI	H	**P7415**	**PA4111**	**PA4331**	**BF7670**	**N/R**	5 Spd. **N/S**
	Jetta 4-109 (1.8L) SFI Turbo	E	**B178**	**PA4111**	**PA4331**	**BF7670**	**N/R**	
	4-116 (1.9L) DI Turbo Diesel	P	**P7308**	**PA4111**	**PA4331**	**BF7958**	**N/R**	5 Spd. **N/S**
	4-121 (2.0L) SFI	K	**B178**	**PA4111**	**PA4331**	**BF7670**	**N/R**	5 Spd. **N/S**
	5-2480cc (2.5L) SFI	K	**P7399**		**PA4395**		**N/R**	
	Passat 4-109 (1.8L) SFI Turbo	D	**B114**	**PA4091**	**PA4331**	**BF1195**	**N/R**	
	4-121 (2.0L) FI Turbo Diesel	E	**P7308**	**PA4091**	**PA4331**	**BF7958**	**N/R**	
	V6-170 (2.8L) SFI	H	**B1429**	**PA4091**	**PA4331**	**BF1195**	**N/R**	
	Phaeton V8-4172cc (4.2L) SFI	F				**BF7670**	**N/R**	6 Spd. **N/S**
	W12-5998cc (6.0L) SFI	H				**BF7670**	**N/R**	6 Spd. **N/S**
	Pointer 4-2000cc (2.0L) FI Mexico		**B178**				**N/R**	
	Pointer Pick-up 4-1800cc (1.8L) FI Mexico		**B178**				**N/R**	
	Polo 4-2000cc (2.0L) FI Mexico		**B178**				**N/R**	
	R32 V6-3189cc (3.2L) SFI		**P7415**	**PA4111**	**PA4331**	**BF7670**	**N/R**	
	Sharan 4-1800cc (1.8L) FI Turbo Mexico		**B178**			**BF1195**	**N/R**	
	Touareg V6-3200cc (3.2L) FI	G	**P7136**			**N/S**	**N/R**	**N/S**
	V8-4172cc (4.2L) FI	M				**N/S**	**N/R**	**N/S**
	V10-300 (5.0L) FI Turbo Diesel						**N/R**	**N/S**
2004	Beetle, Cabrio 4-109 (1.8L) SFI Turbo	D	**B178**	**PA4111**	**PA4331**	**BF7670**	**N/R**	Turbo S **M.T.**
	4-116 (1.9L) DI Turbo Diesel	F	**P7308**	**PA4111**	**PA4331**	**BF7958**	**N/R**	
	4-121 (2.0L) SFI	C	**B178**	**PA4111**	**PA4331**	**BF7670**	**N/R**	
	Beetle Turbo S 4-109 (1.8L) SFI Turbo	D	**B178**	**PA4111**	**PA4331**	**BF7670**	**N/R**	**M.T.**
	Derby 4-1800cc (1.8L) FI Mexico		**B178**				**N/R**	
	4-2000cc (2.0L) FI Mexico		**B178**				**N/R**	
	Golf 4-116 (1.9L) DI Turbo Diesel	F	**P7308**	**PA4111**	**PA4331**	**BF7958**	**N/R**	
	4-121 (2.0L) SFI	C	**B178**	**PA4111**	**PA4331**	**BF7670**	**N/R**	
	GTI 4-109 (1.8L) SFI Turbo	E	**B178**	**PA4111**	**PA4331**	**BF7670**	**N/R**	Turbo S **M.T.**
	V6-170 (2.8L) SFI	E	**P7415**	**PA4111**	**PA4331**	**BF7670**	**N/R**	
	Jetta 4-109 (1.8L) SFI Turbo	E	**B178**	**PA4111**	**PA4331**	**BF7670**	**N/R**	5 Spd. **N/S**
	4-116 (1.9L) DI Turbo Diesel	F	**P7308**	**PA4111**	**PA4331**	**BF7958**	**N/R**	BEW Eng. **N/S**
	4-121 (2.0L) SFI	C	**B178**	**PA4111**	**PA4331**	**BF7670**	**N/R**	
	V6-170 (2.8L) SFI	E	**P7415**	**PA4111**	**PA4331**	**BF7670**	**N/R**	BDF Eng. **N/S**
	Passat 4-109 (1.8L) MFI Turbo	A	**B114**	**PA4091**	**PA4331**	**BF1195**	**N/R**	
	4-1780cc (1.8L) FI	C	**P7308**	**PA4091**			**N/R**	
	V6-170 (2.8L) SFI	H	**B1429**	**PA4091**	**PA4331**	FWD **BF1195** AWD **BF885**	**N/R**	
	W8-244 (4.0L) SFI	K	**P7136**	**PA4091**	**PA4331**	**BF885**	**N/R**	
	Phaeton V8-4172cc (4.2L) FI				**N/R**	**BF7670**	**N/R**	
	W12-5998cc (6.0L) FI				**N/R**	**BF7670**	**N/R**	
	Pointer 4-2000cc (2.0L) FI Mexico		**B178**				**N/R**	
	Pointer Pick-up 4-1800cc (1.8L) FI Mexico		**B178**				**N/R**	
	Polo 4-2000cc (2.0L) FI Mexico		**B178**				**N/R**	
	R32 V6-3189cc (3.2L) SFI		**P7415**	**PA4111**	**PA4331**	**BF7670**	**N/R**	
	Sharan 4-1800cc (1.8L) FI Turbo Mexico					**BF1195**	**N/R**	
	Touareg V6-3200cc (3.2L) FI		**P7136**			**N/S**	**N/R**	**N/S**
	V8-4172cc (4.2L) FI					**N/S**	**N/R**	**N/S**
2003	Beetle, Beetle Turbo S 4-109 (1.8L) SFI Turbo or HO	D	**B178**	**PA4111**	**PA4331**	**BF7670**	**N/R**	Turbo S **M.T.**
	4-116 (1.9L) DI Turbo Diesel	F	**P7308**	**PA4111**	**PA4331**	**BF7958**	**N/R**	
	4-121 (2.0L) SFI	C	**B178**	**PA4111**	**PA4331**	**BF7670**	**N/R**	
	Derby 4-1800cc (1.8L) FI Mexico		**B178**				**N/R**	
	4-2000cc (2.0L) FI Mexico		**B178**				**N/R**	

OBS = Obsolete. Availability Limited to Distributor Stock. [t] Transmission, Not Model, Determines Which Transmission Filter is Used.

VOLKSWAGEN Cont'd.

Year	Model and Engine	VIN	Lube	Air	Cabin Air	Fuel	Breather	Trans.[t]
2003	EuroVan V6-170 (2.8L) SFI AXK	B	**P7415**			**BF1195**	**N/R**	
	Golf 4-116 (1.9L) DI Turbo Diesel	P	**P7308**	**PA4111**	**PA4331**	**BF7958**	**N/R**	
	4-121 (2.0L) SFI	T	**B178**	**PA4111**	**PA4331**	**BF7670**	**N/R**	
	GTI 4-109 (1.8L) SFI Turbo	A	**B178**	**PA4111**	**PA4331**	**BF7670**	**N/R**	
	V6-170 (2.8L) SFI	E	**P7415**	**PA4111**	**PA4331**	**BF7670**	**N/R**	**M.T.**
	Jetta 4-109 (1.8L) SFI Turbo	D	**B178**	**PA4111**	**PA4331**	**BF7670**	**N/R**	
	4-116 (1.9L) DI Turbo Diesel	P	**P7308**	**PA4111**	**PA4331**	**BF7958**	**N/R**	
	4-121 (2.0L) SFI	T	**B178**	**PA4111**	**PA4331**	**BF7670**	**N/R**	
	V6-170 (2.8L) SFI	H	**P7415**	**PA4111**	**PA4331**	**BF7670**	**N/R**	
	Passat 4-109 (1.8L) MFI Turbo	A	**B114**	**PA4091**	**PA4331**	**BF1195**	**N/R**	
	V6-170 (2.8L) SFI	H	**B1429**	**PA4091**	**PA4331**	**BF885**	**N/R**	
	W8-244 (4.0L) SFI	K	**P7136**	**PA4091**	**PA4331**	**BF885**	**N/R**	
	Pointer 4-2000cc (2.0L) FI Mexico		**B178**				**N/R**	
	Pointer Pick-up 4-1800cc (1.8L) FI Mexico		**B178**				**N/R**	
	Polo 4-2000cc (2.0L) FI Mexico		**B178**				**N/R**	
	Sharan 4-1800cc (1.8L) FI Turbo Mexico					**BF1195**	**N/R**	
2002	Beetle 4-109 (1.8L) SFI Turbo	D	**B178**	**PA4111**	**PA4331**	**BF7670**	**N/R**	Turbo S **M.T.**
	4-116 (1.9L) DI Turbo Diesel	F	**P7308**	**PA4111**	**PA4331**	**BF7958**	**N/R**	
	4-121 (2.0L) SFI	C	**B178**	**PA4111**	**PA4331**	**BF7670**	**N/R**	
	Cabrio 4-121 (2.0L) SFI	C	**B178**	**PA4082**	**PA4331**	**BF1195**	**N/R**	
	Combi 4-1800cc (1.8L) FI Mexico		**B178**	**PA2792**		**BF1195**	**N/R**	
	Derby 4-1800cc (1.8L) FI Mexico		**B178**				**N/R**	
	4-2000cc (2.0L) FI Mexico		**B178**				**N/R**	
	EuroVan V6-170 (2.8L) SFI AES	B	**P7136**			**BF1195**	**N/R**	
	V6-170 (2.8L) SFI AXK	B	**P7415**			**BF1195**	**N/R**	
	Golf, GTI 4-109 (1.8L) SFI Turbo	A	**B178**	**PA4111**	**PA4331**	**BF7670**	**N/R**	
	4-116 (1.9L) DI Turbo Diesel	P	**P7308**	**PA4111**	**PA4331**	**BF7958**	**N/R**	
	4-121 (2.0L) SFI	T	**B178**	**PA4111**	**PA4331**	**BF7670**	**N/R**	
	V6-170 (2.8L) SFI	E	**P7136**	**PA4111**	**PA4331**	**BF7670**	**N/R**	**M.T.**
	Jetta 4-109 (1.8L) SFI Turbo	D	**B178**	**PA4111**	**PA4331**	**BF7670**	**N/R**	
	4-116 (1.9L) DI Turbo Diesel	P	**P7308**	**PA4111**	**PA4331**	**BF7958**	**N/R**	
	4-1984cc (2.0L) SFI	T	**B178**	**PA4111**	**PA4331**	**BF7670**	**N/R**	
	V6-170 (2.8L) SFI AFP	G	**P7136**	**PA4111**	**PA4331**	**BF7670**	**N/R**	
	V6-170 (2.8L) SFI BDF	G	**P7415**	**PA4111**	**PA4331**	**BF7670**	**N/R**	
	Passat 4-109 (1.8L) MFI Turbo	A	**B114**	**PA4091**	**PA4331**	**BF1195**	**N/R**	
	V6-170 (2.8L) SFI	H	**B1429**	**PA4091**	**PA4331**	**BF1195**	**N/R**	
	W8-244 (4.0L) SFI	D	**P7136**	**PA4091**	**PA4331**	**BF885**	**N/R**	
	Pointer 4-2000cc (2.0L) FI Mexico		**B178**				**N/R**	
	Pointer Pick-up 4-1800cc (1.8L) FI Mexico		**B178**				**N/R**	
2001	Beetle 4-1984cc (1.8L) SFI Turbo	D	**B178**	**PA4111**	**PA4331**	**BF7670**	**N/R**	
	4-116 (1.9L) DI Turbo Diesel	F	**P7308**	**PA4111**	**PA4331**	**BF7958**	**N/R**	
	4-1984cc (2.0L) SFI	C	**B178**	**PA4111**	**PA4331**	**BF7670**	**N/R**	
	Cabrio 4-121 (2.0L) SFI	C	**B178**	**PA4082**	**PA4331**	**BF1195**	**N/R**	
	Combi 4-1800cc (1.8L) FI Mexico		**B178**	**PA2792**		**BF1195**	**N/R**	
	Derby 4-1800cc (1.8L) FI Mexico		**B178**				**N/R**	
	EuroVan V6-170 (2.8L) SFI	B	**P7136**			**BF1195**	**N/R**	
	Golf, GTI 4-109 (1.8L) SFI Turbo	D	**B178**	**PA4111**	**PA4331**	**BF7670**	**N/R**	
	4-116 (1.9L) DI Turbo Diesel	P	**P7308**	**PA4111**	**PA4331**	**BF7958**	**N/R**	
	4-121 (2.0L) SFI	B	**B178**	**PA4111**	**PA4331**	**BF7670**	**N/R**	
	V6-170 (2.8L) SFI		**P7136**	**PA4111**	**PA4331**	**BF7670**	**N/R**	
	Jetta 4-109 (1.8L) SFI Turbo	D	**B178**	**PA4111**	**PA4331**	**BF7670**	**N/R**	
	4-116 (1.9L) DI Turbo Diesel	P	**P7308**	**PA4111**	**PA4331**	**BF7958**	**N/R**	
	4-1984cc (2.0L) SFI	T	**B178**	**PA4111**	**PA4331**	**BF7670**	**N/R**	
	V6-170 (2.8L) SFI	G	**P7136**	**PA4111**	**PA4331**	**BF7670**	**N/R**	
	Passat 4-109 (1.8L) MFI Turbo	A	**B114**	**PA4091**		**BF1195**	**N/R**	
	V6-170 (2.8L) SFI	H	**B1429**	**PA4091**		**BF1195**	**N/R**	
	Pointer 4-1800cc (1.8L) FI Mexico		**B178**				**N/R**	
	4-2000cc (2.0L) FI Mexico		**B178**				**N/R**	
	Pointer Pick-up 4-1800cc (1.8L) FI Mexico		**B178**				**N/R**	
2000	Beetle 4-109 (1.8L) Turbo	D	**B178**	**PA4111**	**PA4331**	**BF7670**	**N/R**	
	4-116 (1.9L) Turbo Diesel	F	**P7308**	**PA4111**	**PA4331**	**BF7958**	**N/R**	
	4-121 (2.0L) SFI	A	**B178**	**PA4111**	**PA4331**	**BF7670**	**N/R**	
	Cabrio 4-121 (2.0L) SFI	C	**B178**	**PA4082**	**PA4331**	**BF1195**	**N/R**	
	Combi 4-1800cc (1.8L) FI Mexico		**B178**	**PA2792**		**BF1195**	**N/R**	
	Derby 4-1800cc (1.8L) FI Mexico		**B178**				**N/R**	
	EuroVan V6-170 (2.8L) SFI	H	**P7136**			**BF1195**	**N/R**	
	Golf 4-1781cc (1.8L) FI Turbo AWD Eng.		**B178**	**PA4082**	**PA4331**	**BF7670**	**N/R**	**18040**

[t] Transmission, Not Model, Determines Which Transmission Filter is Used. OBS = Obsolete. Availability Limited to Distributor Stock.

Year	Model and Engine	VIN	Lube	Air	Cabin Air	Fuel	Breather	Trans.t
VOLKSWAGEN Cont'd.								
2000	GTI 4-116 (1.9L) FI Turbo Diesel	F	P7308	PA4111	PA4331	BF7958	N/R	
	4-121 (2.0L) SFI	C	B178	PA4111	PA4331	BF7670	N/R	
	V6-170 (2.8L) SFI		P7136	PA4111	PA4331	BF7670	N/R	
	Jetta 4-109 (1.8L) SFI Turbo		B178	PA4111	PA4331	BF7670	N/R	
	4-116 (1.9L) Turbo Diesel	F	P7308	PA4111	PA4331	BF7958	N/R	
	4-121 (2.0L) SFI	C	B178	PA4111	PA4331	BF7670	N/R	
	V6-170 (2.8L) SFI	E	P7136	PA4111	PA4331	BF7670	N/R	
	Passat 4-109 (1.8L) MFI Turbo	A	B114	PA4091		BF1195	N/R	
	V6-170 (2.8L) SFI	H	B1429	PA4091		BF1195	N/R	
	Pointer 4-1800cc (1.8L) FI Mexico		B178				N/R	
	4-2000cc (2.0L) FI Mexico		B178				N/R	
	Pointer Pick-up 4-1800cc (1.8L) FI Mexico		B178				N/R	
1999	Beetle 4-109 (1.8L) Turbo		B178	PA4111	PA4331	BF7670	N/R	
	4-116 (1.9L) Turbo Diesel	F	P7308	PA4111	PA4331	BF7958	N/R	
	4-121 (2.0L) SFI	B	B178	PA4111	PA4331	BF7670	N/R	
	Cabrio 4-121 (2.0L) SFI	A	B178	PA4082	PA4331	BF1195	N/R	
	Combi 4-1800cc (1.8L) FI Mexico		B178	PA2792		BF1195	N/R	
	Derby 4-1800cc (1.8L) FI Mexico		B178				N/R	
	EuroVan V6-170 (2.8L) SFI	H	P7136			BF1195	N/R	
	Golf, GTI 4-1896cc (1.9L) FI Turbo Diesel, Canada		P7308	PA4111	PA4331	BF7958	N/R	
	4-121 (2.0L) SFI ABA	A	B178	PA4082	PA4331	BF1195	N/R	
	4-121 (2.0L) SFI AEG		B178	PA4111	PA4331	BF1195	N/R	
	V6-170 (2.8L) SFI AAA	D	P7136	PA4082	PA4331	BF1195	N/R	
	V6-170 (2.8L) SFI AFP		P7136	PA4111	PA4331	BF1195	N/R	
	Jetta 4-116 (1.9L) SFI Turbo Diesel	F	P7308	PA4082	PA4331	BF7958	N/R	
	4-121 (2.0L) SFI	A	B178	PA4082	PA4331	BF1195	N/R	
	4-170 (2.8L) SFI	D	P7136	PA4082	PA4331	BF1195	N/R	
	Passat 4-109 (1.8L) MFI Turbo	A	B114	PA4091		BF1195	N/R	
	V6-170 (2.8L) SFI	D	B1429	PA4091		BF1195	N/R	
	Pointer 4-1800cc (1.8L) FI Mexico		B178				N/R	
	Pointer Pick-up 4-1800cc (1.8L) FI Mexico		B178				N/R	
1998	Beetle 4-116 (1.9L) Turbo Diesel	F	P7308	PA4111	PA4331		N/R	
	4-121 (2.0L) SFI	B	B178	PA4111	PA4331	BF7670	N/R	
	Cabrio 4-121 (2.0L) SFI	A	B178	PA4082	PA4331	BF1195	N/R	
	Combi 4-1800cc (1.8L) FI Mexico		B178	PA2792		BF1195	N/R	
	Derby 4-1800cc (1.8L) FI Mexico		B178			BF1195	N/R	
	Golf 4-1780cc (1.8L) FI Canada	B	B178	PA4082	PA4331	BF1195	N/R	
	4-1896cc (1.9L) FI Turbo Diesel Canada		B114	PA4082	PA4331	BF7958	N/R	
	4-121 (2.0L) SFI	A,B	B178	PA4082	PA4331	BF1195	N/R	
	V6-170 (2.8L) SFI	D	P7136	PA4082	PA4331	BF1195	N/R	
	Jetta 4-116 (1.9L) FI Turbo Diesel	F	B114	PA4082	PA4331	BF1215	N/R	
	4-121 (2.0L) SFI	A,B	B178	PA4082	PA4331	BF1195	N/R	
	V6-170 (2.8L) SFI	D	P7136	PA4082	PA4331	BF1195	N/R	
	Passat 4-109 (1.8L) MFI Turbo	A	B114	PA4091		BF1195	N/R	
	4-116 (1.9L) Turbo Diesel	G	P7308	PA4091			N/R	
	V6-170 (2.8L) SFI	D	B1429	PA4091		BF1195	N/R	
	Pointer 4-1800cc (1.8L) FI Mexico		B178				N/R	
1997	Cabrio 4-121 (2.0L) SFI	A	B178	PA4082	PA4331	BF1195	N/R	
	Combi 4-1800cc (1.8L) FI Mexico		B178	PA2792		BF1195	N/R	
	Derby 4-1800cc (1.8L) FI Mexico		B178			BF1195	N/R	
	EuroVan 5-2390cc (2.4L) FI Diesel Canada						N/R	
	V6-2792cc (2.8L) FI	H	P7136			BF1195	N/R	
	Golf 4-1780cc (1.8L) FI Canada	B	B178	PA4082	PA4331	BF1195	N/R	
	4-116 (1.9L) Turbo Diesel		B114	PA4082	PA4331	BF1195	N/R	
	4-121 (2.0L) SFI	A,B	B178	PA4082	PA4331	BF1195	N/R	
	V6-170 (2.8L) SFI	D	P7136	PA4082	PA4331	BF1195	N/R	
	Jetta 4-116 (1.9L) Turbo Diesel	F,J	B114	PA4082	PA4331	BF1215	N/R	
	4-121 (2.0L) SFI	A,B	B178	PA4082	PA4331	BF1195	N/R	
	V6-170 (2.8L) SFI	D	P7136	PA4082	PA4331	BF1195	N/R	
	Passat 4-116 (1.9L) Turbo Diesel	G	B114			BF1215	N/R	
	V6-170 (2.8L) SFI	E				BF1195	N/R	
1996	Cabrio 4-121 (2.0L) SFI	A,B	B178	PA4082	PA4331	BF1195	N/R	
	Combi 4-1800cc (1.8L) FI Mexico		B178	PA2792	N/R	BF1195	N/R	
	Derby 4-1800cc (1.8L) FI Mexico		B178		N/R	BF1195	N/R	
	EuroVan 4-2370cc (2.4L) Diesel					BF1215	N/R	

OBS = Obsolete. Availability Limited to Distributor Stock. t Transmission, Not Model, Determines Which Transmission Filter is Used.

VOLKSWAGEN Cont'd.

Year	Model and Engine	VIN	Lube	Air	Cabin Air	Fuel	Breather	Trans.t
1996	Eurovan 5-150 (2.5L) MFI	E		**PA2772**		**BF1195**	**N/R**	
	Golf 4-1780cc (1.8L) FI Canada	B	**B178**	**PA4082**	**PA4331**	**BF1195**	**N/R**	
	4-116 (1.9L) Turbo Diesel	F	**B114**	**PA4082**	**PA4331**	**BF1195**	**N/R**	
	4-121 (2.0L) SFI	A,B	**B178**	**PA4082**	**PA4331**	**BF1195**	**N/R**	
	V6-170 (2.8L) SFI	D		**PA4082**	**PA4331**	**BF1195**	**N/R**	
	Jetta 4-116 (1.9L) Turbo Diesel	F	**B114**	**PA4082**	**PA4331**	**BF1215**	**N/R**	
	4-121 (2.0L) SFI	A,B,L	**B178**	**PA4082**	**PA4331**	**BF1195**	**N/R**	
	V6-170 (2.8L) SFI	D		**PA4082**	**PA4331**	**BF1195**	**N/R**	
	Passat 4-116 (1.9L) Turbo Diesel	G	**B114**			**BF1215**	**N/R**	
	4-121 (2.0L) SFI	C	**B178**			**BF1195**	**N/R**	
	V6-170 (2.8L) SFI	E	(From S/N AAA 176890) **P7136**			**BF1195**	**N/R**	
1995	Cabrio 4-121 (2.0L) SFI	B,C	**B178**	**PA4082**	**PA4331**	**BF1195**	**N/R**	
	Combi 4-1800cc (1.8L) FI Mexico		**B178**	**PA2792**	**N/R**	**BF1195**	**N/R**	
	Corrado V6-170 (2.8L) MFI Canada	F			**N/R**	**BF1195**	**N/R**	
	Derby 4-1800cc (1.8L) FI Mexico		**B178**		**N/R**	**BF1195**	**N/R**	
	EuroVan 5-2370cc (2.4L) FI Diesel Canada			**PA4693**	**N/R**	**BF1215**	**N/R**	
	5-150 (2.5L) MFI	E		Std. **PA4693** HvyDty. **PA2772**	**N/R**	**BF1195**	**N/R**	
	Golf 4-1788cc (1.8L) FI Canada	G	**B178**	**PA4082**	**PA4331**	**BF1195**	**N/R**	
	4-1896cc (1.9L) FI Diesel Canada		**B114**	**PA4082**	**PA4331**		**N/R**	
	4-121 (2.0L) SFI	A,B,C	**B178**	**PA4082**	**PA4331**	**BF1195**	**N/R**	
	V6-170 (2.8L) SFI	D,E		**PA4082**	**PA4331**	**BF1195**	**N/R**	
	Jetta 4-1788cc (1.8L) FI Canada		**B178**	**PA4082**	**PA4331**	**BF1195**	**N/R**	
	4-1896cc (1.9L) FI Diesel Canada		**B114**	**PA4082**	**PA4331**	**BF1215**	**N/R**	
	4-121 (2.0L) SFI	A,B,C	**B178**	**PA4082**	**PA4331**	**BF1195**	**N/R**	
	V6-170 (2.8L) SFI	D,E		**PA4082**	**PA4331**	**BF1195**	**N/R**	
	Passat 4-116 (1.9L) Turbo Diesel, Canada		**B114**			**BF1215**	**N/R**	
	4-1984cc (2.0L) SFI	C	**B178**	**PA4082**		**BF1195**	**N/R**	
	V6-170 (2.8L) SFI	E				**BF1195**	**N/R**	
1994	Combi 4-1800cc (1.8L) FI Mexico		**B178**	**PA2792**	**N/R**	**BF1195**	**N/R**	
	Corrado V6-170 (2.8L) SFI	F			**N/R**	**BF1195**	**N/R**	
	EuroVan 4-2370cc (2.4L)			**PA4693**	**N/R**	**BF1215**	**N/R**	
	5-150 (2.5L) FI SOHC	D		Std. **PA4693** HvyDty. **PA2772**	**N/R**	**BF1195**	**N/R**	
	Golf 4-1788cc (1.8L) FI Canada		**B178**	**PA4082**	**PA4331**	**BF1195**	**N/R**	
	4-1896cc (1.9L) FI Turbo Diesel, Canada		**B114**	**PA4082**	**PA4331**		**N/R**	
	4-121 (2.0L) SFI	A,B,C	**B178**	**PA4082**	**PA4331**	**BF1195**	**N/R**	
	Jetta 4-1788cc (1.8L) FI Canada	N	**B178**	**PA4082**	**PA4331**	**BF1195**	**N/R**	
	4-1896cc (1.9L) FI Diesel, Canada		**B114**	**PA4082**	**PA4331**	**BF1215**	**N/R**	
	4-121 (2.0L) SFI	A,B,C	**B178**	**PA4082**	**PA4331**	**BF1195**	**N/R**	
	V6-170 (2.8L) SFI	S		**PA4082**	**PA4331**	**BF1195**	**N/R**	
	Passat 4-1788cc (1.8L) FI Supercharged Canada	E	**B178**			**BF1195**	**N/R**	
	4-1896cc (1.9L) FI Diesel, Canada		**B114**			**BF1215**	**N/R**	
	4-1984cc (2.0L) FI Canada	N	**B178**			**BF1195**	**N/R**	
	V6-170 (2.8L) SFI	F				**BF1195**	**N/R**	
1993	Cabriolet 4-1780cc (1.8L) FI	B,C	**B178**	**PA2103**	**N/R**	**BF1195**	**N/R**	
	Combi 4-1800cc (1.8L) FI Mexico		**B178**	**PA2792**	**N/R**	**BF1195**	**N/R**	
	Corrado V6-2792cc (2.8L) MFI	D,E,F			**N/R**	**BF1195**	**N/R**	
	EuroVan 4-2390cc (2.4L) FI			**PA4693**	**N/R**	**BF1195**	**N/R**	
	5-2459cc (2.5L) FI	C,D		**PA2772**	**N/R**	**BF1195**	**N/R**	
	Fox 4-1780cc (1.8L) FI	A,B	**B178**	**PA2103**	**N/R**	**BF944**	**N/R**	
	Golf 4-1788cc (1.8L) FI Canada	N	**B178**	**PA4082**	**PA4331**	**BF944**	**N/R**	
	4-1896cc (1.9L) FI Turbo Diesel, Canada		**B114**	**PA4082**	**PA4331**	**BF1215**	**N/R**	
	4-121 (2.0L) SFI	L,R	**B178**	**PA4082**	**PA4331**	**BF1195**	**N/R**	
	GTI 4-1984cc (2.0L) EFI	L	**B178**		**N/R**	**BF1195**	**N/R**	
	Jetta 4-1788cc (1.8L) FI Canada		**B178**	**PA4082**	**PA4331**	**BF1195**	**N/R**	
	4-1896cc (1.9L) FI Diesel, Canada		**B178**	**PA4082**	**PA4331**	**BF1195**	**N/R**	
	4-121 (2.0L) SFI	L,R	**B178**	**PA4082**	**PA4331**	**BF1195**	**N/R**	
	Passat 4-1780cc (1.8L) FI Supercharged Canada	E	**B178**			**BF1195**	**N/R**	
	4-1896cc (1.9L) FI Diesel, Canada		**B114**			**BF1215**	**N/R**	
	4-1984cc (2.0L) MFI	B,C	**B178**			**BF944**	**N/R**	
	V6-2792cc (2.8L) MFI	D,E,F				**BF1195**	**N/R**	

t Transmission, Not Model, Determines Which Transmission Filter is Used. OBS = Obsolete. Availability Limited to Distributor Stock.

VOLKSWAGEN Cont'd.

Year	Model and Engine	VIN	Lube	Air	Cabin Air	Fuel	Breather	Trans.t
1992	Cabriolet 4-1780cc (1.8L) FI	B,C	**B178**	**PA2103**	**N/R**	**BF1195**	**N/R**	
	Combi 4-1800cc (1.8L) FI Mexico		**B178**	**PA2792**	**N/R**	**BF1195**	**N/R**	
	Corrado 4-1780cc (1.8L) EFI	B,C	**B178**		**N/R**	**BF1195**	**N/R**	
	V6-2792cc (2.8L) EFI	D,E			**N/R**	**BF1195**	**N/R**	
	EuroVan 5-2459cc (2.5L) FI	C		**PA4693**	**N/R**	**BF1195**	**N/R**	
	Fox 4-1780cc (1.8L) FI	A,B	**B178**	**PA2103**	**N/R**	**BF944**	**N/R**	
	Golf, GTI 4-1600cc (1.6L) Diesel	G	**B114**	**PA2101A**	**N/R**	**BF1215**	**N/R**	
	4-1800cc (1.8L) EFI	A,B,K	**B178**		**N/R**	**BF1195**	**N/R**	
	4-1984cc (2.0L) EFI	E,J	**B178**		**N/R**		**N/R**	
	Jetta 4-1600cc (1.6L) Diesel	F	**B114**		**N/R**	**BF1215**	**N/R**	
	4-1800cc (1.8L) FI	A,B,K	**B178**		**N/R**	**BF1195**	**N/R**	
	4-2000cc (2.0L) FI	E,J	**B178**		**N/R**		**N/R**	
	Passat 4-1780cc (1.8L) FI Supercharged Canada	E	**B178**		**N/R**	**BF1195**	**N/R**	
	4-2000cc (2.0L) EFI	B,C	**B178**		**N/R**	**BF944**	**N/R**	
1991	Cabriolet 4-1780cc (1.8L) FI 2H	B,C	**B178**	**PA2103**	**N/R**	**BF1195**	**N/R**	
	Combi 4-1800cc (1.8L) FI Mexico		**B178**	**PA2792**	**N/R**	**BF1195**	**N/R**	
	Corrado 4-1780cc (1.8L) EFI	B,C	**B178**		**N/R**	**BF1195**	**N/R**	
	Fox 4-1780cc (1.8L) FI	A,B	**B178**	**PA2103**	**N/R**	**BF944**	**N/R**	
	Golf, GTI 4-1600cc (1.6L) Diesel	G	**B114**	**PA2101A**	**N/R**	**BF1215**	**N/R**	
	4-1800cc (1.8L) FI	A,B,K	**B178**		**N/R**	**BF1195**	**N/R**	
	4-1984cc (2.0L) FI 16 Valve	E,J	**B178**		**N/R**		**N/R**	
	Jetta 4-1600cc (1.6L) Diesel	G	**B114**	**PA2101A**	**N/R**	**BF1215**	**N/R**	
	4-1800cc (1.8L) FI	A,B,K	**B178**		**N/R**	**BF1195**	**N/R**	
	4-2000cc (2.0L) FI	E,J	**B178**		**N/R**		**N/R**	
	Passat 4-1780cc (1.8L) FI Supercharged Canada	E	**B178**		**N/R**	**BF1195**	**N/R**	
	4-2000cc (2.0L) EFI	B,C	**B178**		**N/R**		**N/R**	
	Transporter H4-2109cc (2.1L) FI Canada	B	**B178**		**N/R**		**N/R**	
	Vanagon 4-2100cc (2.1L) FI	B	**B243**	**PA3773**	**N/R**	**BF1195**	**N/R**	
1990	Cabriolet 4-1780cc (1.8L) FI 2H	B	**B178**	**PA2103**	**N/R**	**BF1195**	**N/R**	
	Combi 4-1800cc (1.8L) FI Mexico		**B178**	**PA2792**	**N/R**	**BF1195**	**N/R**	
	Corrado 4-1780cc (1.8L) FI	B	**B178**		**N/R**	**BF1195**	**N/R**	
	Fox 4-1780cc (1.8L) FI	A,B	**B178**	**PA2103**	**N/R**	**BF944**	**N/R**	
	Golf, GTI 4-1600cc (1.6L) Diesel	G	**B114**	**PA2101A**	**N/R**	**BF1215**	**N/R**	
	4-1800cc (1.8L) FI	A,B,K	**B178**		**N/R**	**BF1195**	**N/R**	
	4-1984cc (2.0L) FI	E,J	**B178**		**N/R**		**N/R**	
	Jetta 4-1600cc (1.6L) Diesel	G	**B114**	**PA2101A**	**N/R**	**BF1215**	**N/R**	
	4-1800cc (1.8L) FI	A,B,K	**B178**		**N/R**	**BF1195**	**N/R**	
	4-2000cc (2.0L) FI	E,J	**B178**		**N/R**		**N/R**	
	Passat 4-2000cc (2.0L) EFI	B	**B178**		**N/R**		**N/R**	
	Scirocco 4-1800cc (1.8L) FI Canada		**B178**	**PA2103**	**N/R**		**N/R**	
	Transporter H4-2109cc (2.1L) FI Canada	B	**B178**		**N/R**		**N/R**	
	Vanagon 4-2100cc (2.1L) FI	B	**B243**	**PA3773**	**N/R**	**BF1195**	**N/R**	
1989	Cabriolet 4-1780cc (1.8L) FI	A	**B178**	**PA2103**	**N/R**	**BF885**	**N/R**	
	Fox 4-1780cc (1.8L) FI	A	**B178**	**PA2103**	**N/R**	**BF944**	**N/R**	
	Golf 4-1600cc (1.6L) Diesel		**B114**	**PA2101A**	**N/R**	**BF1215**	**N/R**	
	4-1800cc (1.8L) FI	A,B	**B178**	16 Valve **PA2101A**	**N/R**	8 Valve **BF1195** 16 Valve **BF944**	**N/R**	
	GTI 4-1800cc (1.8L) EFI	C	**B178**	**PA2101A**	**N/R**	**BF944**	**N/R**	**M.T.**
	Jetta 4-1600cc (1.6L) Diesel	G	**B114**	**PA2101A**	**N/R**	**BF1215**	**N/R**	
	4-1800cc (1.8L) FI	A,B,C	**B178**	16 Valve **PA2101A**	**N/R**	8 Valve **BF1195** 16 Valve **BF944**	**N/R**	
	Scirocco 4-1780cc (1.8L) FI Canada	A,B	**B178**	**PA2103**	**N/R**		**N/R**	
	Transporter H4-2109cc (2.1L) FI Canada	B	**B178**		**N/R**		**N/R**	
	Vanagon 4-2100cc (2.1L) FI	B	**B243**	**PA3773**	**N/R**	**BF1195**	**N/R**	
1988	Cabriolet, Scirocco 4-1780cc (1.8L) FI	A	**B178**	**PA2103**	**N/R**	8 Valve **BF885** 16 Valve **BF944**	**N/R**	
	Fox 4-1780cc (1.8L) FI	A	**B178**	**PA2103**	**N/R**	**BF944**	**N/R**	
	Golf, Jetta 4-1600cc (1.6L) Diesel	G	**B114**	**PA2101A**	**N/R** **N/R**		**N/R**	
	4-1800cc (1.8L) FI	A,B,C	**B178**	16 Valve **PA2101A**	**N/R**	8 Valve **BF1195** 16 Valve **BF944**	**N/R**	
	Quantum 5-2226cc (2.2L) FI	B	**B178**	**PA2101A**	**N/R**	**BF944**	**N/R**	
	Transporter H4-2109cc (2.1L) FI Canada	B	**B178**		**N/R**		**N/R**	
	Vanagon 4-2100cc (2.1L) FI	B	**B243**	**PA3773**	**N/R**	**BF1195**	**N/R**	
1987	Cabriolet, Fox 4-1780cc (1.8L) FI	A,B	**B178**	**PA2103**	**N/R**	**BF944**	**N/R**	

OBS = Obsolete. Availability Limited to Distributor Stock. t Transmission, Not Model, Determines Which Transmission Filter is Used.

VOLKSWAGEN Cont'd.

Year	Model and Engine	VIN	Lube	Air	Cabin Air	Fuel	Breather	Trans.t
1987	Golf, GTI, Jetta 4-1600cc (1.6L) Diesel	G	**B114**	**PA2101A**	**N/R**		**N/R**	
	4-1800cc (1.8L) FI	A,B	**B178**	**PA2101A**	**N/R**		**N/R**	
	Quantum 5-2226cc (2.2L) FI	B	**B178**	**PA2101A**	**N/R**	**BF944**	**N/R**	
	Scirocco 4-1800cc (1.8L) FI	A,B	**B178**	**PA2103**	**N/R**	**BF944**	**N/R**	
	Transporter H4-2109cc (2.1L) FI Canada	B	**B178**		**N/R**		**N/R**	
	Vanagon 4-2100cc (2.1L) FI	B	**B243**	**PA3773**	**N/R**	**BF1195**	**N/R**	**M.T.**
1986	Cabriolet 4-1780cc (1.8L) FI	A	**B178**	**PA2103**	**N/R**	**BF885**	**N/R**	
	Golf 4-1600cc (1.6L) Diesel	G	**B114**	**PA2101A**	**N/R**		**N/R**	
	4-1800cc (1.8L) FI	A,B	**B178**	**PA2101A**	**N/R**	**BF944**	**N/R**	
	GTI 4-1800cc (1.8L) FI	B	**B178**	**PA2101A**	**N/R**	**BF944**	**N/R**	
	Jetta 4-1600cc (1.6L) Diesel or Turbo Diesel	G,H	**B114**	**PA2101A**	**N/R**		**N/R**	
	4-1800cc (1.8L) FI	A,B	**B178**	**PA2101A**	**N/R**	**BF944**	**N/R**	
	Quantum 4-1800cc (1.8L) FI		**B178**	**PA2101A**	**N/R**	**BF885**	**N/R**	
	5-2226cc (2.2L) FI	B	**B178**	**PA2101A**	**N/R**	**BF944**	**N/R**	
	Scirocco 4-1800cc (1.8L) FI	A	**B178**	**PA2103**	**N/R**	**BF944**	**N/R**	
	Transporter H4-2109cc (2.1L) FI Canada	B	**B178**		**N/R**		**N/R**	
	Vanagon 4-2100cc (2.1L) FI	B	**B243**	**PA3773**	**N/R**	**BF1195**[31]	**N/R**	**M.T.**
1985	Cabriolet 4-1780cc (1.8L) FI	A	**B178**	**PA2103**	**N/R**	**BF885**	**N/R**	
	Golf, GTI 4-1600cc (1.6L) Diesel	G	**B114**	**PA2101A**	**N/R**	**BF587-D**	**N/R**	
	4-1800cc (1.8L) FI	A,B	**B178**	**PA2101A**	**N/R**	**BF944**	**N/R**	
	Jetta 4-1600cc (1.6L) Diesel	G	**B114**	**PA2101A**	**N/R**	**BF587-D**	**N/R**	
	4-1800cc (1.8L) FI	A,B	**B178**	**PA2103**	**N/R**	**BF885**	**N/R**	
	Quantum 4-1588cc (1.6L) Turbo Diesel	H	**B114**	**PA2101A**	**N/R**	**BF587-D**	**N/R**	
	4-1780cc (1.8L) FI	A	**B178**	**PA2101A**	**N/R**	**BF885**	**N/R**	
	5-2226cc (2.2L) FI	B	**B178**	**PA2101A**	**N/R**	**BF944**	**N/R**	
	Scirocco 4-1800cc (1.8L) FI	A	**B178**	**PA2103**	**N/R**	**BF944**	**N/R**	
	Transporter H4-1915cc (1.9L) FI Canada	B	**B178**		**N/R**		**N/R**	
	Vanagon 4-1900cc (1.9L) FI	B	**B178**	**PA2208**	**N/R**	**BF1195**[31]	**N/R**	**M.T.**
1984	Jetta 4-1600cc (1.6L) Diesel or Turbo Diesel	G,H	**B114**	**PA2101A**	**N/R**	**BF587-D**	**N/R**	
	4-1700cc (1.7L) FI	A	**B178**	**PA2103**	**N/R**	**BF885**	**N/R**	
	4-1780cc (1.8L) FI	B	**B178**	**PA2103**	**N/R**	**BF885**	**N/R**	
	Quantum 4-1600cc (1.6L) Turbo Diesel	H	**B114**	**PA2101A**	**N/R**	**BF587-D**	**N/R**	
	5-2144cc (2.2L) FI	B	**B178**	**PA2101A**	**N/R**	**BF944**	**N/R**	
	4-1780cc (1.8L) FI	B	**B178**	**PA2101A**	**N/R**	**BF944**	**N/R**	
	Rabbit 4-1600cc (1.6L) Diesel or Turbo Diesel	G	**B114**	**PA2101A**	**N/R**	**BF587-D**	**N/R**	
	4-1700cc (1.7L) 1 Bbl. or FI	A,B	**B178**	**PA2103**	**N/R**	FI **BF885**	**N/R**	
	4-1800cc (1.8L) FI	A,C	**B178**	**PA2103**	**N/R**	**BF885**	**N/R**	
	Scirocco 4-1800cc (1.8L) FI	A	**B178**	**PA2103**	**N/R**	**BF944**	**N/R**	
	Vanagon 4-1600cc (1.6L) Diesel	G	**B114**	**PA2101A**	**N/R**	**BF587-D**	**N/R**	
	4-1900cc (1.9L) FI	B	**B178**	**PA2208**	**N/R**	**BF1195**[31]	**N/R**	
1983	Jetta 4-1600cc (1.6L) Diesel	G	**B114**	**PA2101A**	**N/R**	**BF587-D**	**N/R**	
	4-1715cc (1.7L) FI	A	**B178**	**PA2103**	**N/R**	**BF885**	**N/R**	
	Pickups, Rabbit 4-1600cc (1.6L) Diesel or Turbo Diesel	G,H	**B114**	**PA2101A**	**N/R**	**BF587-D**	**N/R**	
	4-1715cc (1.7L) FI	A,B	**B178**	**PA2103**	**N/R**	**BF885**	**N/R**	
	4-1800cc (1.8L) FI	C	**B178**	**PA2103**	**N/R**	**BF885**	**N/R**	
	Quantum 4-1600cc (1.6L) Diesel or Turbo Diesel	H	**B114**	**PA2101A**	**N/R**	**BF587-D**	**N/R**	
	4-1700cc (1.7L) FI	A	**B178**	**PA2103**	**N/R**	**BF944**	**N/R**	
	5-2144cc (2.1L) FI	B	**B178**	**PA2103**	**N/R**	**BF944**	**N/R**	
	Scirocco 4-1700cc (1.7L) FI	A	**B178**	**PA2103**	**N/R**	**BF885**	**N/R**	
	4-1780cc (1.7L) FI	A	**B178**	**PA2103**	**N/R**	**BF885**	**N/R**	
	Vanagon 4-1588cc (1.6L) Diesel	G	**B114**	**PA2101A**	**N/R**	**BF587-D**	**N/R**	
	4-1915cc (1.9L) FI	B	**B178**	**PA2208**	**N/R**	**BF1195**[31]	**N/R**	
	4-1970cc (2.0L) FI Water Cooled	A	**B243**	**PA2208**	**N/R**	**BF1195**	**N/R**	
1982	Jetta, Pickups, Rabbit, Scirocco 4-1588cc (1.6L) Diesel	G	**B114**	**PA2101A**	**N/R**	**BF587-D**	**N/R**	
	4-1715cc (1.7L) FI	A,B	**B178**	**PA2103**	**N/R**	**BF885**	**N/R**	
	Quantum 4-1588cc (1.6L) Turbo Diesel	H	**B114**	**PA2101A**	**N/R**	**BF587-D**	**N/R**	
	4-1715cc (1.7L) FI	A	**B178**	**PA2103**	**N/R**	**BF944**	**N/R**	
	Vanagon 4-1600cc (1.6L) Diesel	G	**B114**	**PA2101A**	**N/R**	**BF587-D**	**N/R**	
	4-1970cc (2.0L) FI	A	**B233**	**PA2208**	**N/R**	**BF1195**[31]	**N/R**	
1981	Dasher 4-1600cc (1.6L) Diesel	G	**B114**	**PA2101A**	**N/R**	**BF587-D**	**N/R**	

[t] Transmission, Not Model, Determines Which Transmission Filter is Used. OBS = Obsolete. Availability Limited to Distributor Stock. [31] Calif.

Year	Model and Engine	VIN	Lube	Air	Cabin Air	Fuel	Breather	Trans.t
VOLKSWAGEN Cont'd.								
1981	Jetta, Pickups, Rabbit, Scirocco 4-1600cc (1.6L) Diesel	G	**B114**	**PA2101A**	**N/R**	**BF587-D**	**N/R**	
	4-1700cc (1.7L) FI	A,B	**B178**	**PA2103**	**N/R**	**BF885**	**N/R**	
	Transporter, Vanagon 4-1970cc (2.0L) FI	A	**B233**	**PA2208**	**N/R**	**BF1195**[31]	**N/R**	
1980	Dasher 4-1500cc (1.5L) Diesel		**B114**	**PA2101A**	**N/R**	**BF587-D**	**N/R**	
	4-1600cc (1.6L) Diesel		**B114**	**PA2101A**	**N/R**	**BF587-D**	**N/R**	
	4-1600cc (1.6L) FI		**B178**	**PA2103**	**N/R**	**BF885**	**N/R**	
	Jetta, Pickups 4-1600cc (1.6L) FI		**B178**	**PA2103**	**N/R**	**BF885**	**N/R**	
	Rabbit, Scirocco 4-1500cc (1.5L) Carb.		**B178**	**PA2101A**	**N/R**		**N/R**	
	4-1500cc (1.5L) Diesel		**B114**	**PA2101A**	**N/R**	**BF587-D**	**N/R**	
	4-1500cc (1.5L) FI		**B178**	**PA2103**	**N/R**	**BF885**	**N/R**	
	4-1600cc (1.6L) FI		**B178**	**PA2103**	**N/R**	**BF885**	**N/R**	
	Vanagon 4-1970cc (2.0L) FI	A	**B233**	**PA2208**	**N/R**	**BF1195**[31]	**N/R**	
VOLVO								
2010	C30 5-2400cc (2.4L) FI Canada		**P7417**				**N/R**	**N/S**
	5-2521cc (2.5L) FI Turbo		**P7417**				**N/R**	**N/S**
	C70 5-2521cc (2.5L) FI Turbo		**P7417**				**N/R**	**N/S**
	S40 5-2400cc (2.4L) FI		**P7417**				**N/R**	**N/S**
	5-2521cc (2.5L) FI Turbo		**P7417**				**N/R**	**N/S**
	S80 6-2953cc (3.0L) FI Turbo					**N/S**	**N/R**	**N/S**
	6-3192cc (3.2L) FI					**N/S**	**N/R**	**N/S**
	V8-4414cc (4.4L) FI		**P7338**			**N/S**	**N/R**	**N/S**
	V50 5-2435cc (2.4L) FI		**P7417**				**N/R**	**N/S**
	5-2435cc (2.4L) FI Turbo		**P7417**				**N/R**	**N/S**
	V70 6-3192cc (3.2L) FI	98					**N/R**	**N/S**
	XC60 6-2953cc (3.0L) FI Turbo	2				**N/S**	**N/R**	**N/S**
	6-3192cc (3.2L) FI	98				**N/S**	**N/R**	**N/S**
	XC70 6-3000cc (3.0L) FI Turbo						**N/R**	**N/S**
	6-3192cc (3.2L) FI						**N/R**	**N/S**
	XC90 6-3192cc (3.2L) FI	98					**N/R**	**N/S**
	V8-4414cc (4.4L) FI		**P7338**				**N/R**	**N/S**
2009	C30 5-2400cc (2.4L) FI Canada		**P7417**				**N/R**	**N/S**
	5-2521cc (2.5L) FI Turbo		**P7417**				**N/R**	**N/S**
	C70 5-154 (2.5L) FI Turbo		**P7417**				**N/R**	**N/S**
	S40 5-2435cc (2.4L) FI		**P7417**				**N/R**	**N/S**
	5-2521cc (2.5L) FI Turbo		**P7417**				**N/R**	**N/S**
	S60 5-2435cc (2.4L) FI Turbo		**P7338**	**PA4359**			**N/R**	**N/S**
	5-2521cc (2.5L) FI Turbo	59	**P7338**	**PA4359**			**N/R**	**N/S**
	S80 6-2953cc (3.0L) FI Turbo						**N/R**	**N/S**
	6-3192cc (3.2L) FI						**N/R**	**N/S**
	V8-4414cc (4.4L) FI		**P7338**				**N/R**	**N/S**
	V50 5-2435cc (2.4L) FI		**P7417**				**N/R**	**N/S**
	5-2521cc (2.5L) FI Turbo		**P7417**				**N/R**	**N/S**
	V70 6-3192cc (3.2L) FI	98					**N/R**	**N/S**
	XC70 6-2953cc (3.0L) FI Twin Turbo						**N/R**	**N/S**
	6-3192cc (3.2L) FI						**N/R**	**N/S**
	XC90 6-3192cc (3.2L) FI	98					**N/R**	**N/S**
	V8-4414cc (4.4L) FI		**P7338**				**N/R**	**N/S**
2008	C30 5-2521cc (2.5L) FI Turbo		**P7417**				**N/R**	**N/S**
	C70 5-154 (2.5L) FI Turbo		**P7417**				**N/R**	**N/S**
	S40 5-2435cc (2.4L) FI		**P7417**				**N/R**	**N/S**
	5-2521cc (2.5L) FI Turbo		**P7417**				**N/R**	**N/S**
	S60 5-2435cc (2.4L) FI Turbo		**P7338**	**PA4359**			**N/R**	**N/S**
	5-2521cc (2.5L) FI Turbo	59	**P7338**	**PA4359**			**N/R**	**N/S**
	S80 6-2953cc (3.0L) FI						**N/R**	**N/S**
	6-3192cc (3.2L) FI	98					**N/R**	**N/S**
	V8-4414cc (4.4L) FI		**P7338**				**N/R**	**N/S**
	V50 5-2435cc (2.4L) FI		**P7417**				**N/R**	**N/S**
	5-2521cc (2.5L) FI Turbo		**P7417**				**N/R**	**N/S**
	V70 6-3192cc (3.2L) FI	96					**N/R**	**N/S**
	XC70 6-3192cc (3.2L) FI	98					**N/R**	**N/S**
	XC90 6-3192cc (3.2L) FI	98					**N/R**	**N/S**
	V8-4414cc (4.4L) FI		**P7338**				**N/R**	**N/S**
2007	C70 5-154 (2.5L) FI Turbo		**P7417**				**N/R**	**N/S**
	S40 5-149 (2.4L) FI	38	**P7417**				**N/R**	**N/S**
	5-154 (2.5L) Turbo		**P7417**				**N/R**	**N/S**

OBS = Obsolete. Availability Limited to Distributor Stock. t Transmission, Not Model, Determines Which Transmission Filter is Used.

[31] Calif.

VOLVO Cont'd.

Year	Model and Engine	VIN	Lube	Air	Cabin Air	Fuel	Breather	Trans.[t]
2007	S60 5-154 (2.5L) FI Turbo	59	**P7338**	**PA4359**			**N/R**	**N/S**
	S60 R 5-154 (2.5L) FI Turbo		**P7338**				**N/R**	**N/S**
	S60 T5 5-149 (2.4L) FI Turbo		**P7338**	**PA4359**			**N/R**	**N/S**
	S80 6-3192cc (3.2L) FI						**N/R**	**N/S**
	V8-4414cc (4.4L) FI		**P7338**				**N/R**	**N/S**
	V50 5-149 (2.4L) FI	38	**P7417**				**N/R**	**N/S**
	V50 T5 5-154 (2.5L) Turbo	59	**P7417**				**N/R**	**N/S**
	V70 5-2435cc (2.4L) FI	61	**P7338**	**PA4359**			**N/R**	**N/S**
	5-154 (2.5L) Turbo	59	**P7338**	**PA4359**			**N/R**	**N/S**
	V70 R 5-154 (2.5L) FI HiPres. Turbo		**P7338**				**N/R**	**N/S**
	XC70 Cross Country 5-2521cc (2.5L) FI LoPres. Turbo	59	**P7338**				**N/R**	**N/S**
	XC90 6-3192cc (3.2L) FI						**N/R**	**N/S**
	V8-4414cc (4.4L) FI		**P7338**				**N/R**	**N/S**
2006	C70 5-2521cc (2.5L) FI LoPres. Turbo		**P7338**	**PA2244**			**N/R**	**N/S**
	S40 5-149 (2.4L) FI		**P7417**				**N/R**	**N/S**
	5-154 (2.5L) FI HiPres. Turbo		**P7417**				**N/R**	**N/S**
	S60 5-154 (2.5L) FI Turbo	59	**P7338**	**PA4359**			**N/R**	**N/S**
	S60 R 5-154 (2.5L) FI HiPres. Turbo		**P7338**				**N/R**	**N/S**
	S60 T5 5-149 (2.4L) FI Turbo		**P7338**	**PA4359**			**N/R**	**N/S**
	S80 5-154 (2.5L) FI LoPres. Turbo		**P7338**				**N/R**	**N/S**
	V50 5-149 (2.4L) FI		**P7417**				**N/R**	**N/S**
	V50 T5 5-154 (2.5L) Hi Pres. Turbo		**P7417**				**N/R**	
	V70 5-2435cc (2.4L) FI		**P7338**	**PA4359**			**N/R**	**N/S**
	5-154 (2.5L) FI LoPres.Turbo	59	**P7338**	**PA4359**			**N/R**	**N/S**
	V70 R 5-154 (2.5L) FI HiPres.Turbo		**P7338**				**N/R**	**N/S**
	XC70 Cross Country 5-2521cc (2.5L) FI LoPres. Turbo	59	**P7338**	**PA4359**			**N/R**	**N/S**
	XC90 5-154 (2.5L) FI LoPres. Turbo	59	**P7338**				**N/R**	**N/S**
	V8-4414cc (4.4L) FI	5	**P7338**				**N/R**	**N/S**
2005	S40 5-149 (2.4L) FI	2	**P7417**				**N/R**	
	5-154 (2.5L) FI HiPres. Turbo	2	**P7417**				**N/R**	
	S40 T5 5-154 (2.5L) FI Turbo	2	**P7417**				**N/R**	
	S60 5-2435cc (2.4L) FI	2	**P7338**	**PA4359**			**N/R**	
	5-154 (2.5L) FI Turbo	59	**P7338**	**PA4359**			**N/R**	
	S60 R 5-154 (2.5L) FI HiPres. Turbo	7	**P7338**				**N/R**	
	S60 T5 5-149 (2.4L) FI Turbo	2	**P7338**	**PA4359**			**N/R**	
	S80 5-154 (2.5L) FI LoPres. Turbo	59	**P7338**				**N/R**	**N/S**
	6-178 (2.9L) EFI	1	**P7338**				**N/R**	**N/S**
	S80 T6 6-178 (2.9L) EFI Twin Turbo	1	**P7338**				**N/R**	**N/S**
	V50 5-149 (2.4L) FI		**P7417**				**N/R**	
	V50 T5 5-154 (2.5L) FI HiPres. Turbo	2	**P7417**				**N/R**	
	V70 5-2435cc (2.4L) FI	2	**P7338**	**PA4359**			**N/R**	
	5-154 (2.5L) FI LoPres. Turbo	59	**P7338**	**PA4359**			**N/R**	
	V70 R 5-154 (2.5L) FI HiPres. Turbo	7	**P7338**				**N/R**	
	V70 T5 5-142 (2.3L) MFI HiPres. Turbo		**P7338**	**PA4359**			**N/R**	
	XC70 Cross Country 5-2521cc (2.5L) FI LoPres. Turbo	59	**P7338**	**PA4359**			**N/R**	**N/S**
	XC90 5-154 (2.5L) FI LoPres. Turbo	59	**P7338**				**N/R**	**N/S**
	5-178 (2.9L) FI Twin Turbo	1	**P7338**				**N/R**	**N/S**
	V8-4414cc (4.4L) FI	2	**P7338**				**N/R**	
2004	C70 5-142 (2.3L) MFI HiPres. Turbo	62	**P7338**	**PA2244**			**N/R**	**M.T.**
	5-149 (2.4L) MFI LoPres. Turbo	63	**P7338**	**PA2244**			**N/R**	
	S40 4-119 (1.9L) SFI Turbo		**P7338**				**N/R**	**N/S**
	5-2435cc (2.4L) FI		**P7417**				**N/R**	**N/S**
	5-2521cc (2.5L) FI Turbo		**P7417**				**N/R**	**N/S**
	S60, S60 T5 5-142 (2.3L) Turbo		**P7338**	**PA4359**			**N/R**	**M.T.**
	5-149 (2.4L) FI		**P7338**	**PA4359**			**N/R**	**M.T.**
	5-2521cc (2.5L) FI LoPres. Turbo	59	**P7338**	**PA4359**			**N/R**	
	S60 R 5-2521cc (2.5L) FI HiPres. Turbo	52	**P7338**				**N/R**	
	S80 5-2521cc (2.5L) Turbo FI	59	**P7338**				**N/R**	
	6-178 (2.9L) EFI	92	**P7338**				**N/R**	
	6-178 (2.9L) EFI Twin Turbo	91	**P7338**				**N/R**	**N/S**
	V40 4-119 (1.9L) SFI LoPres. Turbo		**P7338**				**N/R**	
	V70 5-142 (2.3L) MFI Turbo		**P7338**	**PA4359**			**N/R**	
	5-149 (2.4L) MFI		**P7338**	**PA4359**			**N/R**	
	5-2521cc (2.5L) MFI LoPres. Turbo	59	**P7338**	**PA4359**			**N/R**	

[t] Transmission, Not Model, Determines Which Transmission Filter is Used. OBS = Obsolete. Availability Limited to Distributor Stock.

VOLVO Cont'd.

Year	Model and Engine	VIN	Lube	Air	Cabin Air	Fuel	Breather	Trans.[t]
2004	V70 R 5-2521cc (2.5L) FI HiPres. Turbo	52	**P7338**		**N/R**		**N/R**	
	XC70 Cross Country 5-2521cc (2.5L) MFI LoPres. Turbo	59	**P7338**	**PA4359**			**N/R**	**N/S**
	XC90, XC90 T6 5-2521cc (2.5L) SFI LoPres. Turbo	59	**P7338**				**N/R**	**M.T.**
	6-178 (2.9L) EFI DOHC Twin Turbo		**P7338**				**N/R**	
2003	C70 5-142 (2.3L) HiPres. Turbo		**P7338**	**PA2244**		**BF1047**	**N/R**	**N/S**
	5-149 (2.4L) LoPres. Turbo		**P7338**	**PA2244**		**BF1047**	**N/R**	**N/S**
	S40, V40 4-119 (1.9L) Turbo		**P7338**				**N/R**	**N/S**
	S60, S60R 5-142 (2.3L) HiPres. Turbo		**P7338**	**PA4359**			**N/R**	**N/S**
	5-149 (2.4L) FI Turbo		**P7338**	**PA4359**			**N/R**	**N/S**
	5-2521cc (2.5L) FI LoPres. Turbo	59	**P7338**	**PA4359**			**N/R**	**N/S**
	S80, S80 T6 6-178 (2.9L) FI		**P7338**				**N/R**	
	V70, V70 Cross Country 5-142 (2.3L) HiPres. Turbo		**P7338**	**PA4359**			**N/R**	**N/S**
	5-149 (2.4L) FI		**P7338**	**PA4359**		**BF1047**	**N/R**	**N/S**
	5-149 (2.4L) LoPres. Turbo		**P7338**	**PA4359**		**BF1047**	**N/R**	**N/S**
	5-149 (2.4L) LoPres. Turbo Cross Country		**P7338**	**PA4359**			**N/R**	**N/S**
	5-2521cc (2.5L) FI Turbo	59	**P7338**	**PA4359**			**N/R**	
	XC70 Cross Country 5-2521cc (2.5L) Turbo	59	**P7338**	**PA4359**			**N/R**	**N/S**
	XC90 5-2521cc (2.5L) LoPres. Turbo	59	**P7338**				**N/R**	**M.T.**
	6-178 (2.9L) FI Twin Turbo		**P7338**				**N/R**	
2002	C70 5-142 (2.3L) HiPres. Turbo		**P7338**	**PA2244**		**BF1047**	**N/R**	**M.T.**
	5-149 (2.4L) LoPres. Turbo		**P7338**	**PA2244**		**BF1047**	**N/R**	**N/S**
	S40, V40 4-119 (1.9L) LoPres. Turbo	29	**P7338**				**N/R**	
	S60 5-142 (2.3L) HiPres. Turbo		**P7338**	**PA4359**			**N/R**	
	5-149 (2.4L) FI or Turbo		**P7338**	**PA4359**			**N/R**	
	S80, S80 T6 6-178 (2.9L) FI or Twin Turbo	90,94	**P7338**				**N/R**	
	V70, V70 Cross Country 5-142 (2.3L) HiPres. Turbo		**P7338**	**PA4359**		**BF1047**	**N/R**	
	5-149 (2.4L) FI		**B1434**	**PA4359**		**BF1047**	**N/R**	**M.T.**
	5-149 (2.4L) LoPres. Turbo		**P7338**	**PA4359**		**BF1047**	**N/R**	
	5-149 (2.4L) LoPres. Turbo Cross Country		**P7338**	**PA4359**		**BF1047**	**N/R**	
2001	C70, V70 5-142 (2.3L) HiPres. Turbo	53	**P7338**	**PA4359**		**BF1047**	**N/R**	
	5-149 (2.4L) FI or LoPres. Turbo	58	**P7338**	**PA4359**		**BF1047**	**N/R**	
	S40, V40 4-119 (1.9L) LoPres. Turbo	29	**P7338**				**N/R**	
	S60 5-142 (2.3L) HiPres. Turbo	53	**P7338**				**N/R**	
	5-149 (2.4L) FI		**P7338**				**N/R**	
	5-149 (2.4L) LoPres. Turbo		**P7338**	**PA4359**			**N/R**	
	S80, S80 T6 6-170 (2.8L) FI Twin Turbo	90	**P7338**				**N/R**	
	6-178 (2.9L) FI	94	**P7338**				**N/R**	
2000	C70, S70, V70 5-142 (2.3L) FI HiPres. Turbo	53	**P7338**	**PA2244**		**BF1047**	**N/R**	
	5-149 (2.4L) LoPres. Turbo	56	**P7338**	**PA2244**		**BF1047**	**N/R**	
	5-149 (2.4L) MFI	61	**P7338**	**PA2244**		**BF1047**	**N/R**	
	S40, V40 4-1948cc (1.9L) FI LoPres. Turbo	25	**P7338**				**N/R**	
	S80, S80 T-6 6-170 (2.8L) FI Turbo	90	**P7338**				**N/R**	
	6-178 (2.9L) FI	94	**P7338**				**N/R**	
1999	C70, S70, V70 5-142 (2.3L) FI Turbo	53	**P7338**	**PA2244**		**BF1047**	**N/R**	
	5-149 (2.4L) MFI	55	**P7338**	**PA2244**		**BF1047**	**N/R**	
	5-149 (2.4L) FI Turbo	56	**P7338**	**PA2244**		**BF1047**	**N/R**	
	S80, S80 T-6 6-170 (2.8L) FI Turbo	90	**P7338**				**N/R**	
	6-178 (2.9L) FI	97	**P7338**				**N/R**	
1998	C70, S70, V70 5-142 (2.3L) FI Turbo	52	**B1434**	**PA2244**		**BF1047**	**N/R**	
	5-149 (2.4L) MFI	55	**B1434**	**PA2244**		**BF1047**	**N/R**	
	5-149 (2.4L) FI Turbo	56	**B1434**	**PA2244**		**BF1047**	**N/R**	
	S90, V90 6-178 (2.9L) FI	96	**B132**				**N/R**	
1997	850 5-142 (2.3L) FI Turbo	7,8	**B1434**	**PA2244**		**BF1047**	**N/R**	
	5-149 (2.4L) MFI	55	**B1434**	**PA2244**		**BF1047**	**N/R**	
	960 6-178 (2.9L) EFI	96	**B1434**		**N/R**		**N/R**	
	S90 6-178 (2.9L) FI	96	**B132**				**N/R**	
	V90 6-178 (2.9L) FI	96	**B132**				**N/R**	
1996	850 5-142 (2.3L) Turbo	58	**B1434**	**PA2244**		**BF1047**	**N/R**	
	5-149 (2.4L) MFI	55	**B1434**	**PA2244**		**BF1047**	**N/R**	
	960 6-178 (2.9L) EFI	96	**B1434**		**N/R**		**N/R**	

OBS = Obsolete. Availability Limited to Distributor Stock. [t] Transmission, Not Model, Determines Which Transmission Filter is Used.

VOLVO Cont'd.

Year	Model and Engine	VIN	Lube	Air	Cabin Air	Fuel	Breather	Trans.t
1995	850 5-142 (2.3L) FI Turbo	58	**B1434**	**PA2244**		**BF1047**	**N/R**	
	5-149 (2.4L) MFI	55	**B1434**	**PA2244**		**BF1047**	**N/R**	
	940 4-141 (2.3L) EFI	8	**B1434**		**N/R**		**N/R**	
	4-141 (2.3L) EFI Turbo	8	**B1434**		**N/R**		**N/R**	
	960 6-178 (2.9L) EFI	96	**B1434**		**N/R**		**N/R**	
1994	850 5-2319cc (2.3L) FI Turbo	5	**B1434**	**PA2244**		**BF1047**	**N/R**	
	5-149 (2.4L) MFI	55	**B1434**	**PA2244**		**BF1047**	**N/R**	
	940 4-141 (2.3L) EFI	88	**B1434**		**N/R**		**N/R**	
	4-141 (2.3L) EFI Turbo	8	**B1434**		**N/R**		**N/R**	
	960 6-178 (2.9L) EFI	9	**B1434**		**N/R**		**N/R**	
1993	240 4-2316cc (2.3L) EFI	8	**B1434**	**PA2181**	**N/R**		**N/R**	
	850 5-2435cc (2.4L) MFI	55	**B1434**	**PA2244**		**BF1047**	**N/R**	
	940 4-2300cc (2.3L) EFI	8	**B1434**		**N/R**		**N/R**	
	4-2300cc (2.3L) EFI Turbo	8	**B1434**		**N/R**		**N/R**	
	960 V6-2917cc (2.9L) EFI	9	**B1434**		**N/R**		**N/R**	
1992	240 4-2316cc (2.3L) EFI	8	**B1434**	**PA2181**	**N/R**		**N/R**	
	740 4-2300cc (2.3L) EFI	8	**B1434**		**N/R**		**N/R**	
	4-2300cc (2.3L) EFI Turbo	8	**B1434**		**N/R**		**N/R**	
	940 4-2300cc (2.3L) EFI	8	**B1434**		**N/R**		**N/R**	
	4-2300cc (2.3L) EFI Turbo	7,8	**B1434**		**N/R**		**N/R**	
	960 6-2917cc (2.9L) EFI	9	**B1434**		**N/R**		**N/R**	
1991	240 4-2316cc (2.3L) EFI	8	**B1434**	**PA2181**	**N/R**		**N/R**	
	740 4-2300cc (2.3L) EFI	8	**B1434**		**N/R**		**N/R**	
	4-2300cc (2.3L) EFI Turbo	8	**B1434**		**N/R**		**N/R**	
	780 4-2300cc (2.3L) FI Turbo	8	**B1434**		**N/R**		**N/R**	
	940 4-2300cc (2.3L) EFI	8	**B1434**		**N/R**		**N/R**	
	4-2300cc (2.3L) EFI Turbo	8	**B1434**		**N/R**		**N/R**	
1990	240 4-2316cc (2.3L) EFI	8	**B1434**	**PA2181**	**N/R**		**N/R**	
	740 4-2300cc (2.3L) EFI	8	**B1434**		**N/R**		**N/R**	
	4-2300cc (2.3L) EFI Turbo	8	**B1434**		**N/R**		**N/R**	
	760, 780 4-2300cc (2.3L) EFI Turbo	8	**B1434**		**N/R**		**N/R**	
	V6-2800cc (2.8L) EFI	6	**B1434**		**N/R**		**N/R**	
1989	240 4-2316cc (2.3L) EFI	8	**B1434**	**PA2181**	**N/R**		**N/R**	
	740 4-2300cc (2.3L) EFI	8	**B1434**		**N/R**		**N/R**	
	4-2300cc (2.3L) EFI Turbo	8	**B1434**		**N/R**		**N/R**	
	760, 780 4-2300cc (2.3L) EFI Turbo	8	**B1434**		**N/R**		**N/R**	
	V6-2800cc (2.8L) EFI	6	**B1434**		**N/R**		**N/R**	
1988	240 4-2316cc (2.3L) EFI	8	**B1434**	**PA2181**	**N/R**		**N/R**	
	740 4-2300cc (2.3L) EFI	8	**B1434**		**N/R**		**N/R**	
	4-2300cc (2.3L) EFI Turbo	8	**B1434**		**N/R**		**N/R**	
	760 4-2300cc (2.3L) EFI Turbo	8	**B1434**		**N/R**		**N/R**	
	V6-2800cc (2.8L) EFI	6	**B1434**		**N/R**		**N/R**	
	780 V6-2800cc (2.8L) FI	6	**B1434**		**N/R**		**N/R**	
1987	240 4-2316cc (2.3L) FI	8	**B1434**	**PA2181**	**N/R**	**BF885**	**N/R**	
	740 4-2300cc (2.3L) FI	8	**B1434**		**N/R**		**N/R**	
	4-2300cc (2.3L) FI Turbo	8	**B1434**		**N/R**		**N/R**	
	760 4-2300cc (2.3L) FI Turbo	8	**B1434**		**N/R**	**BF944**	**N/R**	
	V6-2849cc (2.8L) FI	6	**B1434**		**N/R**	**BF944**	**N/R**	
	780 V6-2800cc (2.8L) FI	6	**B1434**		**N/R**		**N/R**	
1986	244 DL, GL 4-2316cc (2.3L) FI	8	**B1434**	**PA2181**	**N/R**	**BF885**	**N/R**	
	740 GLE 4-2300cc (2.3L) FI	8	**B1434**		**N/R**	**BF885**	**N/R**	
	4-2300cc (2.3L) FI Turbo	8	**B1434**		**N/R**		**N/R**	
	6-2400cc (2.4L) Turbo Diesel	7			**N/R**	**BF587-D**	**N/R**	
	760 GLE 4-2300cc (2.3L) FI Turbo	8	**B1434**		**N/R**	**BF885**	**N/R**	
	V6-2800cc (2.8L)	6	**B1434**		**N/R**	**BF885**	**N/R**	
1985	244, DL, GL, 245 4-2127cc (2.1L) FI Turbo	4	**B1434**		**N/R**	**BF885**	**N/R**	
	4-2316cc (2.3L) FI	8	**B1434**	**PA2181**	**N/R**		**N/R**	
	740, GLE 4-2316cc (2.3L) FI	8	**B1434**		**N/R**		**N/R**	
	4-2316cc (2.3L) FI Turbo	8	**B1434**		**N/R**		**N/R**	
	745 GLE 4-2316cc (2.3L) FI	8	**B1434**		**N/R**		**N/R**	
	4-2316cc (2.3L) FI Turbo	8	**B1434**		**N/R**		**N/R**	
	6-2383cc (2.4L) Diesel or Turbo Diesel	7			**N/R**	**BF587-D**	**N/R**	
	760, 760 GLE 4-2316cc (2.3L) FI Turbo	8	**B1434**		**N/R**		**N/R**	
	6-2383cc (2.4L) Diesel or Turbo Diesel	7			**N/R**	**BF587-D**	**N/R**	
	V6-2849cc (2.8L) FI	6	**B1434**		**N/R**		**N/R**	
1984	242 DL, GLT, 244 DL, DLT, GL, GLT, 245 DL, GLT 4-2127cc (2.1L) FI Turbo	4	**B1434**		**N/R**		**N/R**	

[t] Transmission, Not Model, Determines Which Transmission Filter is Used. OBS = Obsolete. Availability Limited to Distributor Stock.

Year	Model and Engine	VIN	Lube	Air	Cabin Air	Fuel	Breather	Trans.†
VOLVO Cont'd.								
1984	242, 244, 245 4-2316cc (2.3L) FI	8	**B1434**	**PA2181**	**N/R**		**N/R**	
	6-2383cc (2.4L) FI Diesel	7		**PA2208**	**N/R**	**BF587-D**	**N/R**	
	760, 760 GLE 4-2316cc (2.3L) FI Turbo	8	**B1434**		**N/R**		**N/R**	
	6-2383cc (2.4L) FI Diesel or Turbo Diesel	7			**N/R**	**BF587-D**	**N/R**	
	V6-2849cc (2.8L) FI	6	**B1434**		**N/R**		**N/R**	
1983	242 DL, GLT, 244 DL, GLT, 245 DL, GL, GLT 4-2127cc (2.1L) FI Turbo	4	**B1434**		**N/R**		**N/R**	
	4-2316cc (2.3L) FI	8	**B1434**	**PA2181**	**N/R**		**N/R**	
	6-2383cc (2.4L) FI Diesel	7		**PA2208**	**N/R**	**BF587-D**	**N/R**	
	760, 760 GLE 6-2383cc (2.4L) FI Diesel or Turbo Diesel	7			**N/R**	**BF587-D**	**N/R**	
	V6-2849cc (2.8L) FI	6	**B1434**		**N/R**		**N/R**	
1982	242 DL, GLT, 244 DL, GL, GLT, 245 DL, GL, GLT 4-2127cc (2.1L) FI	4	**B1434**	**PA2181**	**N/R**		**N/R**	
	4-2127cc (2.1L) FI Turbo	4	**B1434**		**N/R**		**N/R**	
	6-2383cc (2.4L) FI Diesel	7		**PA2208**	**N/R**	**BF587-D**	**N/R**	
	244 4-2316cc (2.3L) FI Canada	8	**B34**	**PA2181**	**N/R**		**N/R**	
	245 4-2316cc (2.3L) FI Canada	8	**B34**	**PA2181**	**N/R**		**N/R**	
	264 GLE V6-2849cc (2.8L) FI	6	**B1434**		**N/R**		**N/R**	
1981	242 DL, GL, GLT, 244, DL, 245, DL, GLT 4-2127cc (2.1L) FI	4	**B1434**	**PA2181**	**N/R**		**N/R**	
	4-2127cc (2.1L) FI Turbo	4	**B1434**		**N/R**		**N/R**	
	244 4-2316cc (2.3L) FI Canada	8	**B34**	**PA2181**	**N/R**		**N/R**	
	245 4-2316cc (2.3L) FI Canada	8	**B34**	**PA2181**	**N/R**		**N/R**	
	262 GL, 264 GL, GLE, 265 GLE 4-2127cc (2.1L) FI	4	**B1434**	**PA2181**	**N/R**		**N/R**	
	6-2383cc (2.4L) FI Diesel	7		**PA2208**	**N/R**	**BF587-D**	**N/R**	
	V6-2849cc (2.8L) FI	6	**B1434**		**N/R**		**N/R**	
1980	242 DL, 244 DL, 245 DL 4-2127cc (2.1L) FI	4	**B1434**	**PA2181**	**N/R**	**BF885**	**N/R**	
	262, 264 GL, GLE, 265 GLE 6-2383cc (2.4L) FI Diesel	7		**PA2208**	**N/R**	**BF587-D**	**N/R**	
	V6-2849cc (2.8L) FI	6	**B1434**		**N/R**	**BF885**	**N/R**	
YAMAHA Motorcycles								
	180 Riva							
	1300 Royal Star							
	BT1100 Bulldog							
	BW350 Big Wheel							
	FJ600, FJ600FZ							
	FJ1100							
	FJ1200							
	FJR1300 Series							
	FZ-1 Series		2001-05 **B1400**					
	FZ6 Series		2004-on **B1400**					
	FZ600							
	FZ700		1987 (7/8 In. I.D.) **P148**					
	FZ750 Series		1985-94 **B1400**					
	FZR250 Series		1991-94 **B1400**					
	FZR400		1990-94 **B1400**					
	FZR600		1991-99 **B1400**					
	FZR750							
	FZR1000		1991-95, 2001-03 **B1400**					
	FZS1000 Fazer		2001-05 **B1400**					
	FZX700 Fazer		1986-87 (7/8 In. I.D.) **P148**					
	FZX750 Fazer		1986-90 **B1400**					
	GTS1000		1993-2000 **B1400**					
	MT-01		2005, 2008 **B1400**					
	MT03							
	Royal Star Series		2001-on **B1400**					
	SR250 Series							
	SR400							
	SR500							
	SRX400							

OBS = Obsolete. Availability Limited to Distributor Stock. † Transmission, Not Model, Determines Which Transmission Filter is Used.

YAMAHA Motorcycles Cont'd.

Year	Model and Engine	VIN	Lube	Air	Cabin Air	Fuel	Breather	Trans.t
	SRX600							
	SZR660							
	TDM850							
	TDM900 Series							
	TRX850							
	TT250							
	TT250R							
	TT500							
	TT600 Series							
	Virago 250							
	V-Max VMX12		2003-07 **B1400**					
	VMX1200 V-Max		1996-2007 **B1400**					
	V-Star							
	VZS1000		2004-05 **B1400**					
	XC180 Riva							
	XC200 Series							
	XC250ZC							
	XJ550 Maxim, XJ550 Seca							
	XJ600 Seca II		1992-on **B1400**					
	XJ650 Maxim							
	XJ650 Midnight							
	XJ650 Seca, XJ650 Seca Turbo							
	XJ700 Maxim							
	XJ750 Maxim, XJ750 Midnight Maxim							
	XJ750 Seca							
	XJ900 Series		1994-2002 **B1400**					
	XJ1100 Maxim							
	XJR400		1992-98 **B1400**					
	XJR1200		1995-99 **B1400**					
	XJR1300		1999-2007 **B1400**					
	XS360, XS400							
	XS400 Maxim, XS400 Seca							
	XS400 Special							
	XS750							
	XS850							
	XS1100							
	XT250							
	XT400							
	XT500							
	XT550							
	XT600 Series							
	XT660 Series							
	XTZ660 Tenere							
	XTZ750 Super Tenere							
	XV125S Virago							
	XV250 Series							
	XV500 Virago							
	XV535 Series							
	XV535 Virago							
	XV550 Vision							
	XV700 Virago							
	XV750 Series							
	XV920 Series							
	XV1000 Virago							
	XV1100 Virago							
	XV1600 Road Star Series		1999-2005 **B1400**					
	XV1700 Road Star Series		2002-on **B1400**					
	XV1900 Series		2006-on **B1400**					
	XVS125 Dragstar							
	XVS400 Dragstar							
	XVS650 Series							
	XVS1100 Series							
	XVS1100 V-Star							
	XVZ13A Royal Star		1998-2000 **B1400**					
	XVZ1200 Venture							
	XVZ1300 Series		1996-on **B1400**					
	XVZ1300 Venture							

[t] Transmission, Not Model, Determines Which Transmission Filter is Used. OBS = Obsolete. Availability Limited to Distributor Stock.

Year	Model and Engine	VIN	Lube	Air	Cabin Air	Fuel	Breather	Trans.t
YAMAHA Motorcycles Cont'd.								
	XZ550 Vision							
	XZ750		1994-96 **B1400**					
	YD250							
	YX600 Radian							
	YZF-R Series		1999-2006 **B1400**					
	YZF600, YZF600R, YZF750		1994-on **B1400**					
	YZF1000, YZF1000RK, YZF1000RKC		1996-2002 **B1400**					
	XVS250 Dragstar							
YUGO								
1992	GV 4-1300cc (1.3L) FI	6	**BT223**		**N/R**	**BF1195**	**N/R**	
1991	Cabrio, GV 4-1300cc (1.3L) MFI	6,7	**BT223**		**N/R**	**BF1195**	**N/R**	**M.T.**
1990	Cabrio 4-1301cc (1.3L) 2 Bbl.	5	**BT223**		**N/R**	**BF1195**	**N/R**	**M.T.**
	GV 4-1301cc (1.3L) MFI	6	**BT223**		**N/R**	**BF1195**	**N/R**	
1989	GV, GVL 4-1100cc (1.1L) 2 Bbl.	2	**BT223**		**N/R**	**BF840,-K1**	**N/R**	**M.T.**
	GVX 4-1301cc (1.3L) 2 Bbl.	5	**BT223**		**N/R**	**BF881**	**N/R**	
1988	GV, GVL, GVS 4-1100cc (1.1L) 2 Bbl.	2	**BT223**		**N/R**	**BF840,-K1**	**N/R**	**M.T.**
	GVX 4-1300cc (1.3L) 2 Bbl.	5	**BT223**		**N/R**	**BF840,-K1**	**N/R**	
1987	GV 4-1100cc (1.1L) 1 Bbl.	2	**BT223**		**N/R**	**BF840,-K1**	**N/R**	**M.T.**
1986	GV 4-1100cc (1.1L) 1 Bbl.	2	**BT223**		**N/R**	**BF840,-K1**	**N/R**	**M.T.**

OBS = Obsolete. Availability Limited to Distributor Stock. t Transmission, Not Model, Determines Which Transmission Filter is Used.

ALFA ROMEO

1979
Spider Veloce, Sprint Veloce 4-1961cc (2.0L) FI
Lube..... BT5
Fuel..... BF1195
Oil Vapor..... PA643
Trans.....M.T.
Sport 4-1961cc (2.0L) FI
Lube..... BT5
Fuel..... BF1195
Oil Vapor..... PA643

1978
Spider Veloce, Sprint Veloce 4-1961cc (2.0L) FI
Lube..... BT5
Fuel..... BF1195
Oil Vapor..... PA643
Trans.....M.T.
Sport 4-1961cc (2.0L) FI
Lube..... BT5
Fuel..... BF1195
Oil Vapor..... PA643

1977
Alfetta GT 4-1961cc (2.0L) FI
Lube..... BT5
Oil Vapor..... PA643
Trans.....M.T.
Alfetta Sport 4-1961cc (2.0L) FI
Lube..... BT5
Fuel..... BF825
Trans.....M.T.
Spider Veloce, Sprint Veloce 4-1961cc (2.0L) FI
Lube..... BT5
Fuel..... BF1195
Oil Vapor..... PA643
Trans.....M.T.

1976
Alfetta GT, Alfetta Sport 4-1961cc (2.0L) FI
Lube..... BT5
Oil Vapor..... PA643
Trans.....M.T.
Spider Veloce 4-1961cc (2.0L) FI
Lube..... BT5
Fuel..... BF1195
Oil Vapor..... PA643
Trans.....M.T.

1975
Alfetta GT, Alfetta Sport 4-1961cc (2.0L) FI
Lube..... BT5
Fuel..... BF1195
Oil Vapor..... PA643
Trans.....M.T.
Spider Veloce 4-1961cc (2.0L) FI
Lube..... BT5
Fuel..... BF1195
Oil Vapor..... PA643
Trans.....M.T.

1974
GT Veloce, Spider Veloce 4-1961cc (2.0L) FI
Lube..... BT5
Fuel..... BF825
Oil Vapor..... N/R
Fuel Vapor.....N/R
Trans.....M.T.

1973
GT Veloce, Spider Veloce 4-1961cc (2.0L) FI
Lube..... BT5
Fuel..... BF825
Oil Vapor..... N/R
Fuel Vapor.....N/R
Trans.....M.T.

ALFA ROMEO (Cont'd.)

1972
GT Veloce, Spider Veloce 4-1961cc (2.0L) FI
Lube..... BT5
Fuel..... BF825
Oil Vapor..... N/R
Fuel Vapor.....N/R
Trans.....M.T.

1971
Berlina 4-1779cc (1.8L) FI
Fuel..... BF840,-K1
Oil Vapor..... N/R
Fuel Vapor.....N/R
Trans.....M.T.
Berlina 4-1961cc (2.0L) FI
Lube..... BT5
Trans.....M.T.
GT Veloce 4-1779cc (1.8L) FI
Lube..... BT5
Fuel..... BF825
Oil Vapor..... N/R
Fuel Vapor.....N/R
Trans.....M.T.
Spider 4-1779cc (1.8L) FI
Lube.....P177
Fuel..... BF840,-K1
Oil Vapor..... N/R
Fuel Vapor.....N/R
Spider Veloce 4-1961cc (2.0L) FI
Lube..... BT5
Trans.....M.T.

1970
Berlina 4-1779cc (1.8L) FI
Lube.....PT29
Trans.....M.T.
GT Veloce 4-1779cc (1.8L) FI
Lube.....PT29
Trans.....M.T.
Spider 4-1779cc (1.8L) FI
Lube.....PT29
Trans.....M.T.

1969
Berlina 4-1779cc (1.8L) FI
Lube.....PT29
GT Veloce 4-1779cc (1.8L) FI
Lube.....PT29
Spider 4-1779cc (1.8L) FI
Lube.....PT29
Fuel..... BF833,-K2

1968
Duetto 1600 4-1570cc (1.6L) Carb.
Air.....PA2037
Oil Vapor..... N/R
Fuel Vapor.....N/R
Trans.....M.T.
Giulia Sprint 4-1570cc (1.6L) Carb.
Lube.....PT29
Oil Vapor..... N/R
Fuel Vapor.....N/R
Trans.....M.T.
GTV 4-1570cc (1.6L) Carb.
Oil Vapor..... N/R
Fuel Vapor.....N/R
Trans.....M.T.

1967
Duetto 1600 4-1570cc (1.6L) Carb.
Air.....PA2037
Oil Vapor..... N/R
Fuel Vapor.....N/R
Trans.....M.T.
Giulia Sprint 4-1570cc (1.6L) Carb.
Lube.....PT29
Trans.....M.T.
GTV 4-1570cc (1.6L) Carb.
Lube.....PT29
Trans.....M.T.

AMERICAN MOTORS CORP.

1979
AMX 6-258 (4.2L) 1,2 Bbl. VIN A,C
Lube.....B39
Air.....PA642
Fuel..... BF886
Fuel Vapor.....SA2046
Trans.....18032
AMX V8-304 (5.0L) 2 Bbl. VIN H
Lube.....B39
Air.....PA642
Fuel..... BF886
Fuel Vapor.....SA2046
Trans.....18032
Concord 4-121 (2.0L) 2 Bbl. VIN G
Lube..... B178
Air.....PA642
Fuel..... BF886
Fuel Vapor.....SA2046
Concord 6-232 (3.8L) 1 Bbl. VIN E
Lube.....B39
Air.....PA642
Fuel..... BF886
Fuel Vapor.....SA2046
Trans.....18032
Concord 6-258 (4.2L) 1,2 Bbl. VIN A,C
Lube.....B39
Air.....PA642
Fuel..... BF886
Fuel Vapor.....SA2046
Trans.....18032
Concord V8-304 (5.0L) 2 Bbl. VIN H
Lube.....B39
Air.....PA1735
Fuel..... BF886
Fuel Vapor.....SA2046
Trans.....18032
Pacer 6-258 (4.2L) 1,2 Bbl. VIN A,C
Lube.....B39
Air.....PA642
Fuel..... BF886
Fuel Vapor.....SA2046
Trans.....18032
Pacer V8-304 (5.0L) 2 Bbl. VIN H
Lube.....B39
Air.....PA642
Fuel..... BF886
Fuel Vapor.....SA2046
Trans.....18032
Spirit 4-121 (2.0L) 2 Bbl. VIN G
Lube..... B178
Air.....PA642
Fuel..... BF886
Fuel Vapor.....SA2046
Spirit 6-232 (3.8L) 1 Bbl. VIN E
Lube.....B39
Air.....PA642
Fuel..... BF886
Fuel Vapor.....SA2046
Trans.....18032
Spirit 6-258 (4.2L) 1,2 Bbl. VIN A,C
Lube.....B39
Air.....PA642
Fuel..... BF886
Fuel Vapor.....SA2046
Trans.....18032
Spirit V8-304 (5.0L) 2 Bbl. VIN H
Lube.....B39
Air.....PA1735
Fuel..... BF886
Fuel Vapor.....SA2046
Trans.....18032

1978
AMX 6-258 (4.2L) 1,2 Bbl. VIN A,C
Lube.....B39
Air.....PA642
Fuel..... BF886
Fuel Vapor.....SA2046
Trans.....18032
AMX V8-304 (5.0L) 2 Bbl. VIN H
Lube.....B39
Air.....PA1735
Fuel..... BF886
Fuel Vapor.....SA2046
Trans.....18032

AMERICAN MOTORS CORP. (1978 (Cont'd.))

Concord 4-121 (2.0L) 2 Bbl. VIN G
Lube..... B178
Air.....PA642
Fuel..... BF886
Fuel Vapor.....SA2046
Concord 6-232 (3.8L) 1 Bbl. VIN E
Lube.....B39
Air.....PA642
Fuel..... BF886
Fuel Vapor.....SA2046
Trans.....18032
Concord 6-258 (4.2L) 1,2 Bbl. VIN A,C
Lube.....B39
Air.....PA642
Fuel..... BF886
Fuel Vapor.....SA2046
Trans.....18032
Concord V8-304 (5.0L) 2 Bbl. VIN H
Lube.....B39
Air.....PA1735
Fuel..... BF886
Fuel Vapor.....SA2046
Trans.....18032
Gremlin 4-121 (2.0L) 2 Bbl. VIN G
Lube..... B178
Air.....PA642
Fuel..... BF886
Fuel Vapor.....SA2046
Gremlin 6-232 (3.8L) 1 Bbl. VIN E
Lube.....B39
Air.....PA642
Fuel..... BF886
Fuel Vapor.....SA2046
Trans.....18032
Gremlin 6-258 (4.2L) 1,2 Bbl. VIN A,C
Lube.....B39
Air.....PA642
Fuel..... BF886
Fuel Vapor.....SA2046
Trans.....18032
Matador 6-258 (4.2L) 1,2 Bbl. VIN A
Lube.....B39
Air.....PA642
Fuel..... BF886
Fuel Vapor.....SA2046
Trans.....18032
Matador V8-360 (5.9L) 2 Bbl. VIN N
Lube.....B39
Air.....PA615
Fuel..... BF886
Fuel Vapor.....SA2046
Trans.....18032
Pacer 6-232 (3.8L) 1 Bbl. VIN E
Lube.....B39
Air.....PA642
Fuel..... BF886
Fuel Vapor.....SA2046
Trans.....18032
Pacer 6-258 (4.2L) 1,2 Bbl. VIN A,C
Lube.....B39
Air.....PA642
Fuel..... BF886
Fuel Vapor.....SA2046
Trans.....18032
Pacer V8-304 (5.0L) 2 Bbl. VIN H
Lube.....B39
Air.....PA642
Fuel..... BF886
Fuel Vapor.....SA2046
Trans.....18032

1977
Gremlin 4-121 (2.0L) 2 Bbl. VIN G,K
Lube..... B178
Air.....PA642
Fuel..... BF886
Fuel Vapor.....SA2046
Gremlin 6-232 (3.8L) 1 Bbl. VIN E
Lube.....B39
Air.....PA642
Fuel..... BF886
Fuel Vapor.....SA2046
Trans.....18032

OBS = Obsolete. Availability Limited to Distributor Stock.

AMERICAN MOTORS CORP.
1977 (Cont'd.)

Gremlin 6-258 (4.2L) 1,2 Bbl. VIN A,C
Lube.....B39
Air.....PA642
Fuel.....BF886
Fuel Vapor.....SA2046
Trans......18032

Hornet 6-232 (3.8L) 1 Bbl. VIN E
Lube.....B39
Air.....PA642
Fuel.....BF886
Fuel Vapor.....SA2046
Trans......18032

Hornet 6-258 (4.2L) 1,2 Bbl. VIN A,C
Lube.....B39
Air.....PA642
Fuel.....BF886
Fuel Vapor.....SA2046
Trans......18032

Hornet V8-304 (5.0L) 2 Bbl. VIN H
Lube.....B39
Air.....PA1735
Fuel.....BF886
Fuel Vapor.....SA2046
Trans......18032

Matador 6-258 (4.2L) 1,2 Bbl. VIN A
Lube.....B39
Air.....PA642
Fuel.....BF886
Fuel Vapor.....SA2046
Trans......18032

Matador V8-304 (5.0L) 2 Bbl. VIN H
Lube.....B39
Air.....PA615
Fuel.....BF886
Fuel Vapor.....SA2046
Trans......18032

Matador V8-360 (5.9L) 2 Bbl. VIN N
Lube.....B39
Air.....PA615
Fuel.....BF886
Fuel Vapor.....SA2046
Trans......18032

Pacer 6-232 (3.8L) 1 Bbl. VIN E
Lube.....B39
Air.....PA642
Fuel.....BF886
Fuel Vapor.....SA2046
Trans......18032

Pacer 6-258 (4.2L) 1,2 Bbl. VIN A,C
Lube.....B39
Air.....PA642
Fuel.....BF886
Fuel Vapor.....SA2046
Trans......18032

1976

Gremlin 6-232 (3.8L) 1 Bbl. VIN E
Lube.....B39
Air.....PA642
Fuel.....BF886
Fuel Vapor.....SA2046
Trans......18032

Gremlin 6-258 (4.2L) 1,2 Bbl. VIN A,C
Lube.....B39
Air.....PA642
Fuel.....BF886
Fuel Vapor.....SA2046
Trans......18032

Gremlin V8-304 (5.0L) 2 Bbl. VIN H
Lube.....B39
Air.....PA1735
Fuel.....BF886
Fuel Vapor.....SA2046
Trans......18032

Hornet 6-232 (3.8L) 1 Bbl. VIN E
Lube.....B39
Air.....PA642
Fuel.....BF886
Fuel Vapor.....SA2046
Trans......18032

AMERICAN MOTORS CORP.
1976 (Cont'd.)

Hornet 6-258 (4.2L) 1,2 Bbl. VIN A,C
Lube.....B39
Air.....PA642
Fuel.....BF886
Fuel Vapor.....SA2046
Trans......18032

Hornet V8-304 (5.0L) 2 Bbl. VIN H
Lube.....B39
Air.....PA1735
Fuel.....BF886
Fuel Vapor.....SA2046
Trans......18032

Matador 6-258 (4.2L) 1,2 Bbl. VIN A
Lube.....B39
Air.....PA642
Fuel.....BF886
Fuel Vapor.....SA2046
Trans......18032

Matador V8-304 (5.0L) 2 Bbl. VIN H
Lube.....B39
Air.....PA615
Fuel.....BF886
Fuel Vapor.....SA2046
Trans......18032

Matador V8-360 (5.9L) 2,4 Bbl. VIN N,P
Lube.....B39
Air.....PA615
Fuel.....BF886
Fuel Vapor.....SA2046
Trans......18032

Matador V8-401 (6.6L) 2,4 Bbl. VIN Z
Lube.....B39
Air.....PA615
Fuel.....BF886
Fuel Vapor.....SA2046

Pacer 6-232 (3.8L) 1 Bbl. VIN E
Lube.....B39
Air.....PA642
Fuel.....BF886
Fuel Vapor.....SA2046
Trans......18032

Pacer 6-258 (4.2L) 1,2 Bbl. VIN A,C
Lube.....B39
Air.....PA642
Fuel.....BF886
Fuel Vapor.....SA2046
Trans......18032

1975

Gremlin 6-232 (3.8L) 1 Bbl. VIN E
Lube.....B39
Air.....PA642
Fuel (Exc. Calif. or AirCond.).....BF840,-K1
Fuel (Calif. or AirCond.).....BF886
Fuel Vapor.....SA2046
Trans......18032

Gremlin 6-258 (4.2L) 1 Bbl. VIN A
Lube.....B39
Air.....PA642
Fuel (Exc. Calif. or AirCond.).....BF840,-K1
Fuel (Calif. or AirCond.).....BF886
Fuel Vapor.....SA2046
Trans......18032

Gremlin V8-304 (5.0L) 2 Bbl. VIN H
Lube.....B39
Air.....PA1735
Fuel.....BF886
Fuel Vapor.....SA2046
Trans......18032

Hornet 6-232 (3.8L) 1 Bbl. VIN E
Lube.....B39
Air.....PA642
Fuel (Exc. Calif. or AirCond.).....BF840,-K1
Fuel (Calif. or AirCond.).....BF886
Fuel Vapor.....SA2046
Trans......18032

AMERICAN MOTORS CORP.
1975 (Cont'd.)

Hornet 6-258 (4.2L) 1 Bbl. VIN A
Lube.....B39
Air.....PA642
Fuel (Exc. Calif. or AirCond.).....BF840,-K1
Fuel (Calif. or AirCond.).....BF886
Fuel Vapor.....SA2046
Trans......18032

Hornet V8-304 (5.0L) 2 Bbl. VIN H
Lube.....B39
Air.....PA1735
Fuel.....BF886
Fuel Vapor.....SA2046
Trans......18032

Matador 6-258 (4.2L) 1 Bbl. VIN A
Lube.....B39
Air.....PA642
Fuel (Exc. Calif. or AirCond.).....BF840,-K1
Fuel (Calif. or AirCond.).....BF886
Fuel Vapor.....SA2046
Trans......18032

Matador V8-304 (5.0L) 2 Bbl. VIN H
Lube.....B39
Air.....PA615
Fuel.....BF886
Fuel Vapor.....SA2046
Trans......18032

Pacer 6-232 (3.8L) 1 Bbl. VIN E
Lube.....B39
Air.....PA642
Fuel (Exc. Calif. or AirCond.).....BF840,-K1
Fuel (Calif. or AirCond.).....BF886
Fuel Vapor.....SA2046
Trans......18032

Pacer 6-258 (4.2L) 1 Bbl. VIN A
Lube.....B39
Air.....PA642
Fuel (Exc. Calif. or AirCond.).....BF840,-K1
Fuel (Calif. or AirCond.).....BF886
Fuel Vapor.....SA2046
Trans......18032

1974

Ambassador V8-304 (5.0L) Carb. VIN H
Lube.....B9
Air.....PA615
Fuel.....BF840,-K1
Fuel Vapor.....SA2046
Trans......18032

Ambassador V8-360 (5.9L) Carb. VIN N,P
Lube.....B9
Air.....PA615
Fuel.....BF840,-K1
Fuel Vapor.....SA2046
Trans......18032

Ambassador V8-401 (6.6L) Carb. VIN Z
Lube.....B9
Air.....PA615
Fuel.....BF840,-K1
Fuel Vapor.....SA2046
Trans......18032

AMX V8-304 (5.0L) Carb. VIN H
Lube.....B9
Air.....PA615
Fuel.....BF840,-K1
Fuel Vapor.....SA2046
Trans......18032

AMX V8-360 (5.9L) Carb. VIN N,P
Lube.....B9
Air.....PA615
Fuel.....BF840,-K1
Fuel Vapor.....SA2046
Trans......18032

AMX V8-401 (6.6L) Carb. VIN Z
Lube.....B9
Air.....PA615
Fuel.....BF840,-K1
Fuel Vapor.....SA2046
Trans......18032

AMERICAN MOTORS CORP.
1974 (Cont'd.)

Gremlin 6-232 (3.8L) Carb. VIN E
Lube.....B9
Air.....PA642
Fuel.....BF840,-K1
Fuel Vapor.....SA2046
Trans......18032

Gremlin 6-258 (4.2L) Carb. VIN A
Lube.....B9
Air.....PA642
Fuel.....BF840,-K1
Fuel Vapor.....SA2046
Trans......18032

Gremlin V8-304 (5.0L) Carb. VIN H
Lube.....B9
Air.....PA1735
Fuel.....BF840,-K1
Fuel Vapor.....SA2046
Trans......18032

Hornet, Hornet Sportabout 6-232 (3.8L) Carb. VIN E
Lube.....B9
Air.....PA642
Fuel.....BF840,-K1
Fuel Vapor.....SA2046
Trans......18032

Hornet, Hornet Sportabout 6-258 (4.2L) Carb. VIN A
Lube.....B9
Air.....PA642
Fuel.....BF840,-K1
Fuel Vapor.....SA2046
Trans......18032

Hornet, Hornet Sportabout V8-304 (5.0L) Carb. VIN H
Lube.....B9
Air.....PA1735
Fuel.....BF840,-K1
Fuel Vapor.....SA2046
Trans......18032

Hornet, Hornet Sportabout V8-360 (5.9L) Carb. VIN N
Lube.....B9
Air.....PA1735
Fuel.....BF840,-K1
Fuel Vapor.....SA2046
Trans......18032

Javelin 6-232 (3.8L) Carb. VIN E
Lube.....B9
Air.....PA642
Fuel.....BF840,-K1
Fuel Vapor.....SA2046
Trans......18032

Javelin 6-258 (4.2L) Carb. VIN A
Lube.....B9
Air.....PA642
Fuel.....BF840,-K1
Fuel Vapor.....SA2046
Trans......18032

Javelin V8-304 (5.0L) Carb. VIN H
Lube.....B9
Air.....PA615
Fuel.....BF840,-K1
Fuel Vapor.....SA2046
Trans......18032

Javelin V8-360 (5.9L) Carb. VIN N,P
Lube.....B9
Air.....PA615
Fuel.....BF840,-K1
Fuel Vapor.....SA2046
Trans......18032

Javelin V8-401 (6.6L) Carb. VIN Z
Lube.....B9
Air.....PA615
Fuel.....BF840,-K1
Fuel Vapor.....SA2046
Trans......18032

Matador, Matador Brougham, Matador X 6-232 (3.8L) Carb. VIN E
Lube.....B9
Air.....PA642
Fuel.....BF840,-K1
Fuel Vapor.....SA2046
Trans......18032

OBS = Obsolete. Availability Limited to Distributor Stock.

AMERICAN MOTORS CORP.
1974 (Cont'd.)

Matador, Matador Brougham, Matador X 6-258 (4.2L) Carb. VIN A
Lube.....B9
Air.....PA642
Fuel.....BF840,-K1
Fuel Vapor.....SA2046
Trans......18032

Matador, Matador Brougham, Matador X V8-304 (5.0L) Carb. VIN H
Lube.....B9
Air.....PA615
Fuel.....BF840,-K1
Fuel Vapor.....SA2046
Trans......18032

Matador, Matador Brougham, Matador X V8-360 (5.9L) Carb. VIN N,P
Lube.....B9
Air.....PA615
Fuel.....BF840,-K1
Fuel Vapor.....SA2046
Trans......18032

Matador, Matador Brougham, Matador X V8-401 (6.6L) Carb. VIN Z
Lube.....B9
Air.....PA615
Fuel.....BF840,-K1
Fuel Vapor.....SA2046
Trans......18032

1973

Ambassador V8-304 (5.0L) Carb. VIN H
Lube.....B9
Air.....PA615
Fuel.....BF840,-K1
Fuel Vapor.....SA2046
Trans......18032

Ambassador V8-360 (5.9L) Carb. VIN N,P
Lube.....B9
Air.....PA615
Fuel.....BF840,-K1
Fuel Vapor.....SA2046
Trans......18032

Ambassador V8-401 (6.6L) Carb. VIN Z
Lube.....B9
Air.....PA615
Fuel.....BF840,-K1
Fuel Vapor.....SA2046
Trans......18032

AMX V8-304 (5.0L) Carb. VIN H
Lube.....B9
Air.....PA615
Fuel.....BF840,-K1
Fuel Vapor.....SA2046
Trans......18032

AMX V8-360 (5.9L) Carb. VIN N,P
Lube.....B9
Air.....PA615
Fuel.....BF840,-K1
Fuel Vapor.....SA2046
Trans......18032

AMX V8-401 (6.6L) Carb. VIN Z
Lube.....B9
Air.....PA615
Fuel.....BF840,-K1
Fuel Vapor.....SA2046
Trans......18032

Gremlin 6-232 (3.8L) Carb. VIN E
Lube.....B9
Air.....PA642
Fuel.....BF840,-K1
Fuel Vapor.....SA2046
Trans......18032

AMERICAN MOTORS CORP.
1973 (Cont'd.)

Gremlin 6-258 (4.2L) Carb. VIN A
Lube.....B9
Air.....PA642
Fuel.....BF840,-K1
Fuel Vapor.....SA2046
Trans......18032

Gremlin V8-304 (5.0L) Carb. VIN H
Lube.....B9
Air.....PA1735
Fuel.....BF840,-K1
Fuel Vapor.....SA2046
Trans......18032

Hornet, Hornet Sportabout 6-232 (3.8L) Carb. VIN E
Lube.....B9
Air.....PA642
Fuel.....BF840,-K1
Fuel Vapor.....SA2046
Trans......18032

Hornet, Hornet Sportabout 6-258 (4.2L) Carb. VIN A
Lube.....B9
Air.....PA642
Fuel.....BF840,-K1
Fuel Vapor.....SA2046
Trans......18032

Hornet, Hornet Sportabout V8-304 (5.0L) Carb. VIN H
Lube.....B9
Air.....PA1735
Fuel.....BF840,-K1
Fuel Vapor.....SA2046
Trans......18032

Hornet, Hornet Sportabout V8-360 (5.9L) Carb. VIN N
Lube.....B9
Air.....PA1735
Fuel.....BF840,-K1
Fuel Vapor.....SA2046
Trans......18032

Javelin 6-232 (3.8L) Carb. VIN E
Lube.....B9
Air.....PA642
Fuel.....BF840,-K1
Fuel Vapor.....SA2046
Trans......18032

Javelin 6-258 (4.2L) Carb. VIN A
Lube.....B9
Air.....PA642
Fuel.....BF840,-K1
Fuel Vapor.....SA2046
Trans......18032

Javelin V8-304 (5.0L) Carb. VIN H
Lube.....B9
Air.....PA615
Fuel.....BF840,-K1
Fuel Vapor.....SA2046
Trans......18032

Javelin V8-360 (5.9L) Carb. VIN N,P
Lube.....B9
Air.....PA615
Fuel.....BF840,-K1
Fuel Vapor.....SA2046
Trans......18032

Javelin V8-401 (6.6L) Carb. VIN Z
Lube.....B9
Air.....PA615
Fuel.....BF840,-K1
Fuel Vapor.....SA2046
Trans......18032

Matador 6-232 (3.8L) Carb. VIN E
Lube.....B9
Air.....PA642
Fuel.....BF840,-K1
Fuel Vapor.....SA2046
Trans......18032

Matador 6-258 (4.2L) Carb. VIN A
Lube.....B9
Air.....PA642
Fuel.....BF840,-K1
Fuel Vapor.....SA2046
Trans......18032

AMERICAN MOTORS CORP.
1973 (Cont'd.)

Matador V8-304 (5.0L) Carb. VIN H
Lube.....B9
Air.....PA615
Fuel.....BF840,-K1
Fuel Vapor.....SA2046
Trans......18032

Matador V8-360 (5.9L) Carb. VIN N,P
Lube.....B9
Air.....PA615
Fuel.....BF840,-K1
Fuel Vapor.....SA2046
Trans......18032

Matador V8-401 (6.6L) Carb. VIN Z
Lube.....B9
Air.....PA615
Fuel.....BF840,-K1
Fuel Vapor.....SA2046
Trans......18032

1972

Ambassador V8-304 (5.0L) Carb. VIN H
Lube.....B9
Air.....PA615
Fuel.....BF840,-K1
Fuel Vapor.....SA2046
Trans......18032

Ambassador V8-360 (5.9L) Carb. VIN N,P
Lube.....B9
Air.....PA615
Fuel.....BF840,-K1
Fuel Vapor.....SA2046
Trans......18032

Ambassador V8-401 (6.6L) Carb. VIN Z
Lube.....B9
Air.....PA615
Fuel.....BF840,-K1
Fuel Vapor.....SA2046
Trans......18032

AMX V8-304 (5.0L) Carb. VIN H
Lube.....B9
Air.....PA615
Fuel.....BF840,-K1
Fuel Vapor.....SA2046
Trans......18032

AMX V8-360 (5.9L) Carb. VIN N,P
Lube.....B9
Air.....PA615
Fuel.....BF840,-K1
Fuel Vapor.....SA2046
Trans......18032

AMX V8-401 (6.6L) Carb. VIN Z
Lube.....B9
Air.....PA615
Fuel.....BF840,-K1
Fuel Vapor.....SA2046
Trans......18032

Gremlin 6-232 (3.8L) Carb. VIN E
Lube.....B9
Air.....PA642
Fuel.....BF840,-K1
Fuel Vapor.....SA2046
Trans......18032

Gremlin 6-258 (4.2L) Carb. VIN A
Lube.....B9
Air.....PA642
Fuel.....BF840,-K1
Fuel Vapor.....SA2046
Trans......18032

Gremlin V8-304 (5.0L) Carb. VIN H
Lube.....B9
Air.....PA647
Fuel.....BF840,-K1
Fuel Vapor.....SA2046
Trans......18032

Hornet 6-232 (3.8L) Carb. VIN E
Lube.....B9
Air.....PA642
Fuel.....BF840,-K1
Fuel Vapor.....SA2046
Trans......18032

AMERICAN MOTORS CORP.
1972 (Cont'd.)

Hornet 6-258 (4.2L) Carb. VIN A
Lube.....B9
Air.....PA642
Fuel.....BF840,-K1
Fuel Vapor.....SA2046
Trans......18032

Hornet V8-304 (5.0L) Carb. VIN H
Lube.....B9
Air.....PA647
Fuel.....BF840,-K1
Fuel Vapor.....SA2046
Trans......18032

Hornet V8-360 (5.9L) Carb. VIN N
Lube.....B9
Air.....PA647
Fuel.....BF840,-K1
Fuel Vapor.....SA2046
Trans......18032

Javelin 6-232 (3.8L) Carb. VIN E
Lube.....B9
Air.....PA642
Fuel.....BF840,-K1
Fuel Vapor.....SA2046
Trans......18032

Javelin 6-258 (4.2L) Carb. VIN A
Lube.....B9
Air.....PA642
Fuel.....BF840,-K1
Fuel Vapor.....SA2046
Trans......18032

Javelin V8-304 (5.0L) Carb. VIN H
Lube.....B9
Air.....PA615
Fuel.....BF840,-K1
Fuel Vapor.....SA2046
Trans......18032

Javelin V8-360 (5.9L) Carb. VIN N,P
Lube.....B9
Air.....PA615
Fuel.....BF840,-K1
Fuel Vapor.....SA2046
Trans......18032

Javelin V8-401 (6.6L) Carb. VIN Z
Lube.....B9
Air.....PA615
Fuel.....BF840,-K1
Fuel Vapor.....SA2046
Trans......18032

Matador 6-232 (3.8L) Carb. VIN E
Lube.....B9
Air.....PA642
Fuel.....BF840,-K1
Fuel Vapor.....SA2046
Trans......18032

Matador 6-258 (4.2L) Carb. VIN A
Lube.....B9
Air.....PA642
Fuel.....BF840,-K1
Fuel Vapor.....SA2046
Trans......18032

Matador V8-304 (5.0L) Carb. VIN H
Lube.....B9
Air.....PA615
Fuel.....BF840,-K1
Fuel Vapor.....SA2046
Trans......18032

Matador V8-360 (5.9L) Carb. VIN N,P
Lube.....B9
Air.....PA615
Fuel.....BF840,-K1
Fuel Vapor.....SA2046
Trans......18032

Matador V8-401 (6.6L) Carb. VIN Z
Lube.....B9
Air.....PA615
Fuel.....BF840,-K1
Fuel Vapor.....SA2046
Trans......18032

OBS = Obsolete. Availability Limited to Distributor Stock.

AMERICAN MOTORS CORP. (Cont'd.)

1971

Ambassador 6-258 (4.2L) Carb. VIN A
- **Lube**....B9
- **Air**....PA642
- **Fuel**....BF840,-K1
- **Fuel Vapor**....SA2046
- **Trans.**....18032

Ambassador V8-304 (5.0L) Carb. VIN H
- **Lube**....B9
- **Air**....PA615
- **Fuel**....BF840,-K1
- **Fuel Vapor**....SA2046
- **Trans.**....18032

Ambassador V8-360 (5.9L) Carb. VIN N,P
- **Lube**....B9
- **Air**....PA615
- **Fuel**....BF840,-K1
- **Fuel Vapor**....SA2046
- **Trans.**....18032

Ambassador V8-401 (6.6L) Carb. VIN Z
- **Lube**....B9
- **Air**....PA615
- **Fuel**....BF840,-K1
- **Fuel Vapor**....SA2046
- **Trans.**....18032

AMX V8-360 (5.9L) Carb. VIN N,P
- **Lube**....B9
- **Air**....PA615
- **Fuel**....BF840,-K1
- **Fuel Vapor**....SA2046
- **Trans.**....18032

AMX V8-401 (6.6L) Carb. VIN Z
- **Lube**....B9
- **Air**....PA615
- **Fuel**....BF840,-K1
- **Fuel Vapor**....SA2046
- **Trans.**....18032

Gremlin 6-232 (3.8L) Carb. VIN E
- **Lube**....B9
- **Air**....PA642
- **Fuel**....BF840,-K1
- **Fuel Vapor**....SA2046
- **Trans.**....18032

Gremlin 6-258 (4.2L) Carb. VIN A
- **Lube**....B9
- **Air**....PA642
- **Fuel**....BF840,-K1
- **Fuel Vapor**....SA2046
- **Trans.**....18032

Hornet 6-232 (3.8L) Carb. VIN E
- **Lube**....B9
- **Air**....PA642
- **Fuel**....BF840,-K1
- **Fuel Vapor**....SA2046
- **Trans.**....18032

Hornet 6-258 (4.2L) Carb. VIN A
- **Lube**....B9
- **Air**....PA642
- **Fuel**....BF840,-K1
- **Fuel Vapor**....SA2046
- **Trans.**....18032

Hornet V8-304 (5.0L) Carb. VIN H
- **Lube**....B9
- **Air**....PA647
- **Fuel**....BF840,-K1
- **Fuel Vapor**....SA2046
- **Trans.**....18032

Hornet V8-360 (5.9L) 2 Bbl. Carb. VIN N
- **Lube**....B9
- **Air**....PA647
- **Fuel**....BF840,-K1
- **Fuel Vapor**....SA2046
- **Trans.**....18032

Hornet V8-360 (5.9L) 4 Bbl. Carb. VIN P
- **Lube**....B9
- **Air**....PA615
- **Fuel**....BF840,-K1
- **Fuel Vapor**....SA2046
- **Trans.**....18032

AMERICAN MOTORS CORP. 1971 (Cont'd.)

Javelin 6-232 (3.8L) Carb. VIN E
- **Lube**....B9
- **Air**....PA642
- **Fuel**....BF840,-K1
- **Fuel Vapor**....SA2046
- **Trans.**....18032

Javelin 6-258 (4.2L) Carb. VIN A
- **Lube**....B9
- **Air**....PA642
- **Fuel**....BF840,-K1
- **Fuel Vapor**....SA2046
- **Trans.**....18032

Javelin V8-304 (5.0L) Carb. VIN H
- **Lube**....B9
- **Air**....PA615
- **Fuel**....BF840,-K1
- **Fuel Vapor**....SA2046
- **Trans.**....18032

Javelin V8-360 (5.9L) Carb. VIN N,P
- **Lube**....B9
- **Air**....PA615
- **Fuel**....BF840,-K1
- **Fuel Vapor**....SA2046
- **Trans.**....18032

Javelin V8-401 (6.6L) Carb. VIN Z
- **Lube**....B9
- **Air**....PA615
- **Fuel**....BF840,-K1
- **Fuel Vapor**....SA2046
- **Trans.**....18032

Matador 6-232 (3.8L) Carb. VIN E
- **Lube**....B9
- **Air**....PA642
- **Fuel**....BF840,-K1
- **Fuel Vapor**....SA2046
- **Trans.**....18032

Matador 6-258 (4.2L) Carb. VIN A
- **Lube**....B9
- **Air**....PA642
- **Fuel**....BF840,-K1
- **Fuel Vapor**....SA2046
- **Trans.**....18032

Matador V8-304 (5.0L) Carb. VIN H
- **Lube**....B9
- **Air**....PA615
- **Fuel**....BF840,-K1
- **Fuel Vapor**....SA2046
- **Trans.**....18032

Matador V8-360 (5.9L) Carb. VIN N,P
- **Lube**....B9
- **Air**....PA615
- **Fuel**....BF840,-K1
- **Fuel Vapor**....SA2046
- **Trans.**....18032

Matador V8-401 (6.6L) Carb. VIN Z
- **Lube**....B9
- **Air**....PA615
- **Fuel**....BF840,-K1
- **Fuel Vapor**....SA2046
- **Trans.**....18032

1970

Ambassador 6-232 (3.8L) 2 Bbl. Carb. VIN G
- **Lube**....B9
- **Air**....PA642
- **Fuel**....BF840,-K1
- **Oil Vapor**....N/R

Ambassador V8-304 (5.0L) 2 Bbl. Carb. VIN H
- **Lube**....B9
- **Air**....PA647
- **Fuel**....BF840,-K1
- **Oil Vapor**....N/R

Ambassador V8-360 (5.9L) 2,4 Bbl. Carb. VIN N,P
- **Lube**....B9
- **Air (2 Bbl.)**....PA647
- **Air (4 Bbl.)**....PA607
- **Fuel**....BF840,-K1
- **Oil Vapor**....N/R

AMERICAN MOTORS CORP. 1970 (Cont'd.)

Ambassador V8-390 (6.4L) 4 Bbl. Carb. VIN X
- **Lube**....B9
- **Air**....PA607
- **Fuel**....BF840,-K1
- **Oil Vapor**....N/R

AMX V8-360 (5.9L) 4 Bbl. Carb. VIN P
- **Lube**....B9
- **Air**....PA607
- **Fuel**....BF840,-K1
- **Oil Vapor**....N/R

AMX V8-390 (6.4L) 4 Bbl. Carb. VIN X
- **Lube**....B9
- **Air**....PA607
- **Fuel**....BF840,-K1
- **Oil Vapor**....N/R

Gremlin 6-199 (3.3L) 1 Bbl. Carb. VIN A
- **Lube**....B9
- **Air**....PA642
- **Fuel**....BF840,-K1
- **Oil Vapor**....N/R

Gremlin 6-232 (3.8L) 1-2 Bbl. Carb. VIN E,G
- **Lube**....B9
- **Air**....PA642
- **Fuel**....BF840,-K1
- **Oil Vapor**....N/R

Hornet 6-199 (3.3L) 1 Bbl. Carb. VIN A
- **Lube**....B9
- **Air**....PA642
- **Fuel**....BF840,-K1
- **Oil Vapor**....N/R

Hornet 6-232 (3.8L) 1-2 Bbl. Carb. VIN E,G
- **Lube**....B9
- **Air**....PA642
- **Fuel**....BF840,-K1
- **Oil Vapor**....N/R

Hornet V8-304 (5.0L) 2 Bbl. Carb. VIN H
- **Lube**....B9
- **Air**....PA647
- **Fuel**....BF840,-K1
- **Oil Vapor**....N/R

Javelin 6-232 (3.8L) 1 Bbl. Carb. VIN E,G
- **Lube**....B9
- **Air**....PA642
- **Fuel**....BF840,-K1
- **Oil Vapor**....N/R

Javelin V8-304 (5.0L) 2 Bbl. Carb. VIN H
- **Lube**....B9
- **Air**....PA647
- **Fuel**....BF840,-K1
- **Oil Vapor**....N/R

Javelin V8-360 (5.9L) 2,4 Bbl. Carb. VIN N,P
- **Lube**....B9
- **Air (2 Bbl.)**....PA647
- **Air (4 Bbl.)**....PA607
- **Fuel**....BF840,-K1
- **Oil Vapor**....N/R

Javelin V8-390 (6.4L) 4 Bbl. Carb. VIN X
- **Lube**....B9
- **Air**....PA607
- **Fuel**....BF840,-K1
- **Oil Vapor**....N/R

Rebel 6-232 (3.8L) 1,2 Bbl. Carb. VIN E,G
- **Lube**....B9
- **Air**....PA642
- **Fuel**....BF840,-K1
- **Oil Vapor**....N/R

AMERICAN MOTORS CORP. 1970 (Cont'd.)

Rebel V8-304 (5.0L) 2 Bbl. VIN H
- **Lube**....B9
- **Air**....PA647
- **Fuel**....BF840,-K1
- **Oil Vapor**....N/R

Rebel V8-360 (5.9L) 2,4 Bbl. VIN N,P
- **Lube**....B9
- **Air (2 Bbl.)**....PA647
- **Air (4 Bbl.)**....PA607
- **Fuel**....BF840,-K1
- **Oil Vapor**....N/R

Rebel V8-390 (6.4L) 4 Bbl. VIN X
- **Lube**....B9
- **Air**....PA607
- **Fuel**....BF840,-K1
- **Oil Vapor**....N/R

1969

Ambassador 6-232 (3.8L) Carb. VIN C
- **Lube**....B9
- **Air**....PA642
- **Fuel**....BF879

Ambassador V8-290 (4.8L) 2,4 Bbl. Carb. VIN M,N
- **Lube**....B9
- **Air**....PA647
- **Fuel**....BF879

Ambassador V8-343 (5.6L) 2,4 Bbl. Carb. VIN S,T
- **Lube**....B9
- **Air (2 Bbl.)**....PA647
- **Air (4 Bbl.)**....PA607
- **Fuel**....BF879
- **Trans. (6-904, 8-727)**....18032

Ambassador V8-390 (6.4L) Carb. VIN X
- **Lube**....B9
- **Air**....PA607
- **Fuel**....BF879

AMX V8-290 (4.8L) Carb. VIN N
- **Lube**....B9
- **Air**....PA607
- **Fuel**....PF859

AMX V8-343 (5.6L) Carb. VIN T
- **Lube**....B9
- **Air**....PA607
- **Fuel**....PF859

AMX V8-390 (6.4L) Carb. VIN X
- **Lube**....B9
- **Air**....PA607
- **Fuel**....PF859

Javelin 6-232 (3.8L) Carb. VIN B
- **Lube**....B9
- **Air**....PA642
- **Fuel**....BF879
- **Trans.**....18032

Javelin V8-290 (4.8L) 2,4 Bbl. Carb. VIN M,N
- **Lube**....B9
- **Air**....PA647
- **Fuel**....BF879
- **Oil Vapor**....N/R
- **Trans.**....18032

Javelin V8-343 (5.6L) Carb. VIN T
- **Lube**....B9
- **Air**....PA607
- **Fuel**....BF879
- **Oil Vapor**....N/R
- **Trans.**....18032

Javelin V8-390 (6.4L) Carb. VIN X
- **Lube**....B9
- **Air**....PA607
- **Fuel**....BF879
- **Oil Vapor**....N/R
- **Trans.**....18032

Rambler 6-199 (3.3L) Carb. VIN A
- **Lube**....B9
- **Air**....PA642
- **Fuel**....BF879

Rambler 6-232 (3.8L) Carb. VIN B
- **Lube**....B9
- **Air**....PA642
- **Fuel**....BF879
- **Trans.**....18032

OBS = Obsolete. Availability Limited to Distributor Stock.

AMERICAN MOTORS CORP.
1969 (Cont'd.)

Rambler V8-290 (4.8L) 2,4 Bbl. Carb. VIN M,N
- **Lube**....B9
- **Air**....PA607
- **Fuel**....BF879
- **Oil Vapor**....N/R
- **Trans.**....18032

Rebel 6-232 (3.8L) 1,2 Bbl. Carb. VIN B,C
- **Lube**....B9
- **Air**....PA642
- **Fuel**....BF879
- **Oil Vapor**....N/R
- **Trans.**....18032

Rebel V8-290 (4.8L) Carb. VIN M
- **Lube**....B9
- **Air**....PA647
- **Fuel**....BF879
- **Oil Vapor**....N/R
- **Trans.**....18032

Rebel V8-343 (5.6L) 2,4 Bbl. Carb. VIN S,T
- **Lube**....B9
- **Air (2 Bbl.)**....PA647
- **Air (4 Bbl.)**....PA607
- **Fuel**....BF879
- **Oil Vapor**....N/R
- **Trans.**....18032

Rebel V8-390 (6.4L) Carb. VIN X
- **Lube**....B9
- **Air**....PA607
- **Fuel**....BF879
- **Oil Vapor**....N/R
- **Trans.**....18032

1968

Ambassador 6-232 (3.8L) 1,2 Bbl. Carb. VIN B,C
- **Lube**....B9
- **Air (w/Snorkel)**....PA642
- **Fuel**....PF859
- **Oil Vapor**....N/R

Ambassador V8-290 (4.8L) 2,4 Bbl. Carb. VIN M
- **Lube**....B9
- **Air (2 Bbl.)**....PA647
- **Air (4 Bbl.)**....PA607
- **Fuel**....PF859
- **Oil Vapor**....N/R

Ambassador V8-343 (5.6L) 2,4 Bbl. Carb. VIN S,T
- **Lube**....B9
- **Air (2 Bbl.)**....PA647
- **Air (4 Bbl.)**....PA607
- **Fuel**....PF859
- **Oil Vapor**....N/R

Ambassador V8-390 (6.4L) Carb. VIN X
- **Lube**....B9
- **Air**....PA607
- **Fuel**....PF859
- **Oil Vapor**....N/R

American 6-199 (3.3L) Carb. VIN A
- **Lube**....B9
- **Air (w/Snorkel)**....PA642
- **Fuel**....PF859
- **Oil Vapor**....N/R

American 6-232 (3.8L) Carb. VIN B
- **Lube**....B9
- **Air (w/Snorkel)**....PA642
- **Fuel**....PF859
- **Oil Vapor**....N/R

American V8-290 (4.8L) 2,4 Bbl. Carb. VIN M,N
- **Lube**....B9
- **Air (2 Bbl.)**....PA647
- **Air (4 Bbl.)**....PA607
- **Fuel**....PF859
- **Oil Vapor**....N/R

AMX V8-290 (4.8L) Carb. VIN N
- **Lube**....B9
- **Air**....PA607
- **Fuel**....PF859
- **Oil Vapor**....N/R

AMERICAN MOTORS CORP.
1968 (Cont'd.)

AMX V8-343 (5.6L) Carb. VIN T
- **Lube**....B9
- **Air**....PA607
- **Fuel**....PF859
- **Oil Vapor**....N/R

AMX V8-390 (6.4L) Carb. VIN X
- **Lube**....B9
- **Air**....PA607
- **Fuel**....PF859
- **Oil Vapor**....N/R

Javelin 6-232 (3.8L) Carb. VIN B
- **Lube**....B9
- **Air (w/Snorkel)**....PA642
- **Fuel**....PF859
- **Oil Vapor**....N/R

Javelin V8-290 (4.8L) 2,4 Bbl. Carb. VIN M,N
- **Lube**....B9
- **Air (2 Bbl.)**....PA647
- **Air (4 Bbl.)**....PA607
- **Fuel**....PF859
- **Oil Vapor**....N/R

Javelin V8-343 (5.6L) Carb. VIN T
- **Lube**....B9
- **Air**....PA607
- **Fuel**....PF859
- **Oil Vapor**....N/R

Javelin V8-390 (6.4L) Carb. VIN X
- **Lube**....B9
- **Air**....PA607
- **Fuel**....PF859
- **Oil Vapor**....N/R

Rebel 6-232 (3.8L) Carb. VIN B,C
- **Lube**....B9
- **Air (w/Snorkel)**....PA642
- **Fuel**....PF859
- **Oil Vapor**....N/R

Rebel V8-290 (4.8L) Carb. VIN M
- **Lube**....B9
- **Air**....PA647
- **Fuel**....PF859
- **Oil Vapor**....N/R

Rebel V8-343 (5.6L) 2,4 Bbl. Carb. VIN S,T
- **Lube**....B9
- **Air (2 Bbl.)**....PA647
- **Air (4 Bbl.)**....PA607
- **Fuel**....PF859
- **Oil Vapor**....N/R

1967

Ambassador 6-199 (3.3L) Carb.
- **Lube**....B9
- **Air (w/Snorkel)**....PA642
- **Fuel**....PF859
- **Oil Vapor**....N/R
- **Trans.**....18032

Ambassador 6-232 (3.8L) Carb.
- **Lube**....B9
- **Air (w/Snorkel)**....PA642
- **Fuel**....PF859
- **Oil Vapor**....N/R
- **Trans.**....18032

Ambassador V8-290 (4.8L) Carb.
- **Lube**....B9
- **Air (w/Snorkel)**....PA607
- **Air (w/o Snorkel)**....PA647
- **Fuel**....PF859
- **Oil Vapor**....N/R
- **Trans.**....18032

Ambassador V8-343 (5.6L) Carb.
- **Lube**....B9
- **Air (w/Snorkel)**....PA607
- **Air (w/o Snorkel)**....PA647
- **Fuel**....PF859
- **Oil Vapor**....N/R
- **Trans.**....18032

American 6-199 (3.3L) Carb.
- **Lube**....B9
- **Air (w/Snorkel)**....PA607
- **Fuel**....PF859
- **Oil Vapor**....N/R
- **Trans.**....18032

AMERICAN MOTORS CORP.
1967 (Cont'd.)

American 6-232 (3.8L) Carb.
- **Lube**....B9
- **Air (w/Snorkel)**....PA642
- **Fuel**....PF859
- **Oil Vapor**....N/R
- **Trans.**....18032

American V8-290 (4.8L) Carb.
- **Lube**....B9
- **Air (w/Snorkel)**....PA607
- **Air (w/o Snorkel)**....PA647
- **Fuel**....PF859
- **Oil Vapor**....N/R
- **Trans.**....18032

American V8-343 (5.6L) Carb.
- **Lube**....B9
- **Air (w/Snorkel)**....PA607
- **Air (w/o Snorkel)**....PA647
- **Fuel**....PF859
- **Oil Vapor**....N/R

Marlin 6-199 (3.3L) Carb.
- **Lube**....B9
- **Air (w/Snorkel)**....PA642
- **Fuel**....PF859
- **Oil Vapor**....N/R
- **Trans.**....18032

Marlin 6-232 (3.8L) Carb.
- **Lube**....B9
- **Air (w/Snorkel)**....PA642
- **Fuel**....PF859
- **Oil Vapor**....N/R
- **Trans.**....18032

Marlin V8-290 (4.8L) Carb.
- **Lube**....B9
- **Air (w/Snorkel)**....PA607
- **Air (w/o Snorkel)**....PA647
- **Fuel**....PF859
- **Oil Vapor**....N/R
- **Trans.**....18032

Marlin V8-343 (5.6L) Carb.
- **Lube**....B9
- **Air (2 Bbl.)**....PA647
- **Air (4 Bbl.)**....PA607
- **Fuel**....PF859
- **Oil Vapor**....N/R
- **Trans.**....18032

Rebel 6-199 (3.3L) Carb.
- **Lube**....B9
- **Air (w/Snorkel)**....PA642
- **Fuel**....PF859
- **Oil Vapor**....N/R
- **Trans.**....18032

Rebel 6-232 (3.8L) Carb.
- **Lube**....B9
- **Air (w/Snorkel)**....PA642
- **Fuel**....PF859
- **Oil Vapor**....N/R
- **Trans.**....18032

Rebel V8-290 (4.8L) Carb.
- **Lube**....B9
- **Air (w/Snorkel)**....PA607
- **Air (w/o Snorkel)**....PA647
- **Fuel**....PF859
- **Oil Vapor**....N/R
- **Trans.**....18032

Rebel V8-343 (5.6L) Carb.
- **Lube**....B9
- **Air (w/Snorkel)**....PA607
- **Air (w/o Snorkel)**....PA647
- **Fuel**....PF859
- **Oil Vapor**....N/R
- **Trans.**....18032

1966

Ambassador 6-199 (3.3L) Carb.
- **Lube**....B9
- **Air**....PA642
- **Fuel**....PF859

Ambassador 6-232 (3.8L) Carb.
- **Lube**....B9
- **Air (w/Snorkel)**....PA642
- **Fuel**....PF859

Ambassador V8-287 (4.7L) Carb.
- **Lube**....B9
- **Air**....PA607

AMERICAN MOTORS CORP.
1966 (Cont'd.)

Ambassador V8-327 (5.4L) 2,4 Bbl. Carb.
- **Lube**....B9
- **Air (2 Bbl. w/o Snorkel)**....PA602
- **Air (2 Bbl. w/Snorkel)**....PA647
- **Air (4 Bbl.)**....PA607
- **Fuel**....PF859

American 6-196 (3.2L) Carb.
- **Lube**....B9
- **Air (w/Snorkel)**....PA642
- **Fuel**....PF859
- **Oil Vapor**....N/R
- **Trans.**....18032

American 6-199 (3.3L) Carb.
- **Lube**....B9
- **Air**....PA642
- **Fuel**....PF859
- **Oil Vapor**....N/R
- **Trans.**....18032

American 6-232 (3.8L) Carb.
- **Lube**....B9
- **Air (w/Snorkel)**....PA642
- **Fuel**....PF859
- **Oil Vapor**....N/R
- **Trans.**....18032

Classic 6-199 (3.3L) Carb.
- **Lube**....B9
- **Air**....PA642
- **Fuel**....PF859
- **Oil Vapor**....N/R
- **Trans.**....18032

Classic V8-287 (4.7L) Carb.
- **Lube**....B9
- **Air**....PA607
- **Fuel**....PF859
- **Oil Vapor**....N/R
- **Trans.**....18032

Classic V8-327 (5.4L) 2,4 Bbl. Carb.
- **Lube**....B9
- **Air (2 Bbl. w/o Snorkel)**....PA602
- **Air (2 Bbl. w/Snorkel)**....PA647
- **Air (4 Bbl.)**....PA607
- **Fuel**....PF859
- **Oil Vapor**....N/R
- **Trans.**....18032

Marlin 6-199 (3.3L) Carb.
- **Lube**....B9
- **Air**....PA642
- **Fuel**....PF859
- **Oil Vapor**....N/R
- **Trans.**....18032

Marlin 6-232 (3.8L) Carb.
- **Lube**....B9
- **Air (w/Snorkel)**....PA642
- **Fuel**....PF859
- **Oil Vapor**....N/R
- **Trans.**....18032

Marlin V8-287 (4.7L) Carb.
- **Lube**....B9
- **Air**....PA607
- **Fuel**....PF859
- **Oil Vapor**....N/R
- **Trans.**....18032

Marlin V8-327 (5.4L) 2,4 Bbl. Carb.
- **Lube**....B9
- **Air (2 Bbl. w/o Snorkel)**....PA602
- **Air (2 Bbl. w/Snorkel)**....PA647
- **Air (4 Bbl.)**....PA607
- **Fuel**....PF859
- **Oil Vapor**....N/R
- **Trans.**....18032

1965

Ambassador 6-232 (3.8L) Carb.
- **Lube**....B9
- **Air**....PA642
- **Fuel**....PF859
- **Oil Vapor**....N/R

Ambassador V8-327 (5.4L) Carb.
- **Lube**....B9
- **Fuel**....PF859
- **Oil Vapor**....N/R

OBS = Obsolete. Availability Limited to Distributor Stock.

AMERICAN MOTORS CORP.
1965 (Cont'd.)

American 6-196 (3.2L) Carb.
Lube....B9
Air....PA1648
Fuel....PF859
Oil Vapor....N/R

American 6-232 (3.8L) Carb.
Lube....B9
Air....PA642
Fuel....PF859
Oil Vapor....N/R

Classic 6-199 (3.3L) Carb.
Lube....B9
Air....PA642
Fuel....PF859
Oil Vapor....N/R

Classic 6-232 (3.8L) Carb.
Lube....B9
Air....PA642
Fuel....PF859
Oil Vapor....N/R

Classic V8-287 (4.7L) Carb.
Lube....B9
Air....PA607
Fuel....PF859
Oil Vapor....N/R

Marlin 6-232 (3.8L) Carb.
Lube....B9
Air....PA642
Fuel....PF859
Oil Vapor....N/R

Marlin V8-287 (4.7L) Carb.
Lube....B9
Air....PA607
Fuel....PF859
Oil Vapor....N/R

Marlin V8-327 (5.4L) Carb.
Lube....B9
Fuel....PF859
Oil Vapor....N/R

1964

Ambassador V8-327 (5.4L) Carb.
Lube....B9
Air....PA642
Fuel....PF859
Oil Vapor....N/R

American 6-196 (3.2L) Carb.
Lube....B50
Air....PA1648
Fuel....PF859
Oil Vapor....N/R

American 6-232 (3.8L) Carb.
Fuel....PF859
Oil Vapor....N/R

Classic 6-196 (3.2L) Carb.
Lube....B9
Air....PA642
Fuel....PF859
Oil Vapor....N/R

Classic 6-232 (3.8L) Carb.
Lube....B9
Air....PA642
Oil Vapor....N/R

Classic V8-287 (4.7L) Carb.
Lube....B9
Air....PA607
Fuel....PF859
Oil Vapor....N/R

1963

Ambassador V8-327 (5.4L) Carb.
Lube....B9
Air....PA602
Fuel....PF859
Oil Vapor....N/R

Classic 6-196 (3.2L) Carb.
Lube....B50
Air....PA648
Fuel....PF859
Oil Vapor....N/R

Classic V8-287 (4.7L) Carb.
Lube....B9
Fuel....PF859
Oil Vapor....N/R

AMERICAN MOTORS CORP.
(Cont'd.)

1962

Ambassador V8-327 (5.4L) 2 Bbl. Carb.
Lube....B9
Air....PA602
Fuel....PF859
Oil Vapor....N/R

American 6-196 (3.2L) 1 Bbl. Carb.
Lube....B50
Air....PA1648
Fuel....PF859
Oil Vapor....N/R

Classic 6-196 (3.2L) 1 Bbl. Carb.
Lube....B9
Air....PA1648
Fuel....PF859
Oil Vapor....N/R

Custom 6-196 (3.2L) 1 Bbl. Carb.
Lube....B50
Air....PA1648
Fuel....PF859
Oil Vapor....N/R

Deluxe 6-196 (3.2L) 1 Bbl. Carb.
Lube....B50
Air....PA1648
Fuel....PF859
Oil Vapor....N/R

Super Six 6-196 (3.2L) 1 Bbl. Carb.
Lube....B50
Air....PA1648
Fuel....PF859
Oil Vapor....N/R

1961

Ambassador V8-327 (5.4L) 2 Bbl. Carb.
Lube....B9
Air....PA602
Fuel....PF859
Oil Vapor....N/R

American 6-196 (3.2L) 1 Bbl. Carb.
Lube....B50
Air....PA1648
Fuel....BF840,-K1
Oil Vapor....N/R

Classic 6-196 (3.2L) 1 Bbl. Carb.
Lube....B9
Air....PA634
Fuel....BF840,-K1
Oil Vapor....N/R

Custom 6-196 (3.2L) 2 Bbl. Carb.
Lube....B9
Air....PA647
Fuel....BF840,-K1

Deluxe 6-196 (3.2L) 1 Bbl. Carb.
Lube....B9
Air....PA1648
Fuel....BF840,-K1

Rebel V8-250 (4.1L) 2 Bbl. Carb.
Lube....B9
Air....PA602
Fuel....PF859

Super Six 6-196 (3.2L) 1 Bbl. Carb.
Lube....B9
Air....PA1648
Fuel....PF859

1960

Ambassador V8-327 (5.4L) 2 Bbl. Carb.
Lube....B9
Air....PA602
Fuel....PF859
Oil Vapor....N/R

American 6-196 (3.2L) 1 Bbl. Carb.
Lube....B50
Air....PA634
Fuel....BF840,-K1
Oil Vapor....N/R

Rambler 6-196 (3.2L) 1 Bbl. Carb.
Lube....B50
Air....PA634
Fuel....BF840,-K1
Oil Vapor....N/R

AMERICAN MOTORS CORP.
1960 (Cont'd.)

Rebel V8-250 (4.1L) 2 Bbl. Carb.
Lube....B9
Air....PA602
Fuel....PF859
Oil Vapor....N/R

1959

American 6-196 (3.2L) 1 Bbl. Carb.
Lube....B50
Air....PA634
Fuel....BF840,-K1
Oil Vapor....N/R

Rambler 6-196 (3.2L) 1 Bbl. Carb.
Lube....B50
Air....PA634
Fuel....BF840,-K1
Oil Vapor....N/R

Rebel V8-250 (4.1L) 4 Bbl. Carb.
Lube (Early)....B2
Lube (Late)....B9
Air....PA602
Fuel....BF840,-K1
Oil Vapor....N/R

ASTON MARTIN

1979

V-8 Vantage V8-5340cc (5.3L) Carb.
Lube....B2
Air....PA2099
Fuel....PF816-S

V-8 Volante V8-5340cc (5.3L) Carb.
Lube....P174
Air....PA2099
Fuel....PF816-S

1978

V-8 Vantage, V-8 Volante V8-5340cc (5.3L) Carb.
Lube....B2
Air....PA2099
Fuel....PF816-S

1977

V-8 Vantage V8-5340cc (5.3L) Carb.
Lube....B2
Air....PA2099
Fuel....PF816-S

1976

V-8 V8-5340cc (5.3L) Carb. VIN N
Lube....B2
Air....PA2099
Fuel....PF816-S

1975

V-8 V8-5340cc (5.3L) Carb.
Lube....PT12
Air....PA2099
Fuel....PF816-S

1974

V-8 V8-5340cc-326 (5.3L) Carb.
Lube....PT12
Air....PA2099
Oil Vapor....N/R
Fuel Vapor....N/R
PCV....N/R

Vantage 6-3995cc (4.0L) Carb.
Lube....P174
Air....PA1719
Oil Vapor....N/R
Fuel Vapor....N/R
PCV....N/R

ASTON MARTIN (Cont'd.)

1973

V-8 V8-326 (5.3L) Carb.
Lube....PT12
Air....PA2099
Fuel....PF816
Oil Vapor....N/R
Fuel Vapor....N/R
PCV....N/R

Vantage 6-3995cc (4.0L) Carb.
Lube....P174
Air....PA1719
Fuel....BF833,-K2
Oil Vapor....N/R
Fuel Vapor....N/R
PCV....N/R

1972

V-8 V8-326 (5.3L) FI
Lube....PT12
Air....PA1719
Fuel....PF834
Oil Vapor....N/R
Fuel Vapor....N/R
PCV....N/R

Vantage 6-244 (4.0L) Carb.
Lube....P174
Air....PA1719
Oil Vapor....N/R
Fuel Vapor....N/R
PCV....N/R

1971

DBS 6-244 (4.0L) Carb.
Lube....P174
Air....PA1719
Oil Vapor....N/R
Fuel Vapor....N/R
PCV....N/R

DBS V8-326 (5.3L) FI
Air....PA1719
Fuel....PF834
Oil Vapor....N/R
Fuel Vapor....N/R
PCV....N/R

1970

DB6 6-244 (4.0L) Carb.
Lube....P174
Oil Vapor....N/R
PCV....N/R

DBS 6-244 (4.0L) Carb.
Lube....P174
Oil Vapor....N/R
PCV....N/R

DBS V8-326 (5.3L) Carb.
Oil Vapor....N/R
PCV....N/R

1969

DB6 6-244 (4.0L) Carb.
Lube....P174
Air....PA1719
Fuel....BF7903
Oil Vapor....N/R
PCV....N/R

DBS 6-244 (4.0L) Carb.
Lube....P174
Air....PA1719
Fuel....BF7903
Oil Vapor....N/R
PCV....N/R

1968

DB6 6-244 (4.0L) Carb.
Lube....P174
Air....PA1719
Fuel....BF833,-K2
Oil Vapor....N/R
PCV....N/R

DBS 6-244 (4.0L) Carb.
Lube....P174
Air....PA1719
Oil Vapor....N/R
PCV....N/R

OBS = Obsolete. Availability Limited to Distributor Stock.

ASTON MARTIN (Cont'd.)

1967

DB6 6-244 (4.0L) Carb.
- **Lube** **P174**
- **Air** **PA1719**
- **Fuel** **BF833,-K2**
- **Oil Vapor** ..... **N/R**
- **PCV** ..... **N/R**

DBS 6-244 (4.0L) Carb.
- **Lube** **P174**
- **Air** **PA1719**
- **Oil Vapor** ..... **N/R**
- **PCV** ..... **N/R**

1966

DB6 6-244 (4.0L) Carb.
- **Lube** **P174**
- **Air** **PA1719**
- **Fuel** **PF834**
- **Oil Vapor** ..... **N/R**
- **PCV** ..... **N/R**

1965

DB5 Series 6-244 (4.0L) Carb.
- **Lube** **P174**
- **Air** **PA1719**
- **Fuel** **BF833,-K2**
- **Oil Vapor** ..... **N/R**
- **PCV** ..... **N/R**

DB6 Series 6-244 (4.0L) Carb.
- **Lube** **P174**
- **Air** **PA1719**
- **Fuel** **BF833,-K2**
- **Oil Vapor** ..... **N/R**
- **PCV** ..... **N/R**

1964

DB5 6-244 (4.0L) Carb.
- **Lube** **P174**
- **Air** **PA1719**
- **Fuel** **BF833,-K2**
- **Oil Vapor** ..... **N/R**
- **PCV** ..... **N/R**

1963

DB4 Series 6-224 (3.7L) Carb.
- **Lube** **P174**
- **Air** **PA1719**
- **Fuel** **BF833,-K2**
- **Oil Vapor** ..... **N/R**
- **PCV** ..... **N/R**

DB5 6-244 (4.0L) Carb.
- **Lube** **P174**
- **Air** **PA1719**
- **Fuel** **BF833,-K2**
- **Oil Vapor** ..... **N/R**
- **PCV** ..... **N/R**

1962

DB4 Series 6-224 (3.7L) Carb.
- **Lube** **P174**
- **Air** **PA1719**
- **Fuel** **PF857**
- **Oil Vapor** ..... **N/R**
- **PCV** ..... **N/R**

1961

DB4 Series 6-224 (3.7L) Carb.
- **Lube** **P174**
- **Air** **PA1719**
- **Fuel** **PF857**
- **Oil Vapor** ..... **N/R**
- **PCV** ..... **N/R**

1960

DB4 Series 6-224 (3.7L) Carb.
- **Lube** **P174**
- **Air** **PA1719**
- **Fuel** **PF857**
- **Oil Vapor** ..... **N/R**
- **PCV** ..... **N/R**

ASTON MARTIN (Cont'd.)

1959

DB 6-178 (2.9L) Carb.
- **Lube** **P174**
- **Oil Vapor** ..... **N/R**
- **PCV** ..... **N/R**

DB4 6-224 (3.7L) Carb.
- **Lube** **P174**
- **Air** **PA1719**
- **Oil Vapor** ..... **N/R**
- **PCV** ..... **N/R**

DBD 6-178 (2.9L) Carb.
- **Lube** **P174**
- **Oil Vapor** ..... **N/R**
- **PCV** ..... **N/R**
- **Trans.** ..... **M.T.**

1958

DB 6-178 (2.9L) Carb.
- **Lube** **P174**
- **Oil Vapor** ..... **N/R**
- **PCV** ..... **N/R**

DBD 6-178 (2.9L) Carb.
- **Lube** **P174**
- **Oil Vapor** ..... **N/R**
- **PCV** ..... **N/R**
- **Trans.** ..... **M.T.**

1957

DB 6-178 (2.9L) Carb.
- **Lube** **P174**
- **Oil Vapor** ..... **N/R**
- **PCV** ..... **N/R**

DB2-4 6-178 (2.9L) Carb.
- **Lube** **P174**
- **Oil Vapor** ..... **N/R**
- **PCV** ..... **N/R**
- **Trans.** ..... **M.T.**

1956

DB2-4 6-178 (2.9L) Carb.
- **Lube** **P174**
- **Fuel** **BF833,-K2**
- **Oil Vapor** ..... **N/R**
- **PCV** ..... **N/R**
- **Trans.** ..... **M.T.**

DB3 6-178 (2.9L) Carb.
- **Lube** **P174**
- **Fuel** **BF833,-K2**
- **Oil Vapor** ..... **N/R**
- **PCV** ..... **N/R**
- **Trans.** ..... **M.T.**

1955

DB2-4 6-158 (2.6L) Carb.
- **Lube** **P174**
- **Fuel** **BF833,-K2**
- **Oil Vapor** ..... **N/R**
- **PCV** ..... **N/R**
- **Trans.** ..... **M.T.**

DB2-4 6-178 (2.9L) Carb.
- **Lube** **P174**
- **Fuel** **BF833,-K2**
- **Oil Vapor** ..... **N/R**
- **PCV** ..... **N/R**
- **Trans.** ..... **M.T.**

DB3 6-178 (2.9L) Carb.
- **Lube** **P174**
- **Fuel** **BF833,-K2**
- **Oil Vapor** ..... **N/R**
- **PCV** ..... **N/R**
- **Trans.** ..... **M.T.**

1954

DB2-4 6-158 (2.6L) Carb.
- **Lube** **P174**
- **Fuel** **BF833,-K2**
- **Oil Vapor** ..... **N/R**
- **PCV** ..... **N/R**
- **Trans.** ..... **M.T.**

DB2-4 6-178 (2.9L) Carb.
- **Lube** **P174**
- **Fuel** **BF833,-K2**
- **Oil Vapor** ..... **N/R**
- **PCV** ..... **N/R**
- **Trans.** ..... **M.T.**

ASTON MARTIN 1954 (Cont'd.)

DB3 6-178 (2.9L) Carb.
- **Lube** **P174**
- **Fuel** **BF833,-K2**
- **Oil Vapor** ..... **N/R**
- **PCV** ..... **N/R**
- **Trans.** ..... **M.T.**

1953

DB2 6-158 (2.6L) Carb.
- **Lube** **P174**
- **Fuel** **BF833,-K2**
- **Oil Vapor** ..... **N/R**
- **PCV** ..... **N/R**
- **Trans.** ..... **M.T.**

DB2-4 6-158 (2.6L) Carb.
- **Lube** **P174**
- **Fuel** **BF833,-K2**
- **Oil Vapor** ..... **N/R**
- **PCV** ..... **N/R**
- **Trans.** ..... **M.T.**

DB2-4 6-178 (2.9L) Carb.
- **Lube** **P174**
- **Fuel** **BF833,-K2**

DB3 6-178 (2.9L) Carb.
- **Lube** **P174**
- **Fuel** **BF833,-K2**
- **Oil Vapor** ..... **N/R**
- **PCV** ..... **N/R**
- **Trans.** ..... **M.T.**

1952

DB2 6-158 (2.6L) Carb.
- **Lube** **P174**
- **Fuel** **BF833,-K2**

DB3 6-158 (2.6L) Carb.
- **Lube** **P174**
- **Fuel** **BF833,-K2**

1951

DB2 6-158 (2.6L) Carb.
- **Lube** **P174**
- **Fuel** **BF833,-K2**

DB3 6-158 (2.6L) Carb.
- **Lube** **P174**
- **Fuel** **BF833,-K2**

1950

DB2 6-158 (2.6L) Carb.
- **Lube** **P174**
- **Fuel** **BF833,-K2**

AUDI

1979

5000, 5000S 5-1986cc (2.0L) Diesel
- **Lube Spin-on** **B114**
- **Air** **PA2101A**
- **Fuel** **BF587-D**
- **Oil Vapor** ..... **N/R**
- **Fuel Vapor** ..... **N/R**
- **PCV** ..... **N/R**

5000, 5000S 5-2144cc (2.2L) FI
- **Lube** **B178**
- **Air** **PA2208**
- **Fuel** **BF885**
- **Oil Vapor** ..... **N/R**
- **Fuel Vapor** ..... **N/R**
- **PCV** ..... **N/R**

Fox 5-1588cc (1.6L) FI
- **Lube** **B178**
- **Air** **PA2103**
- **Fuel** **BF885**
- **Oil Vapor** ..... **N/R**
- **Fuel Vapor** ..... **N/R**
- **PCV** ..... **N/R**

AUDI (Cont'd.)

1978

5000 5-2144cc (2.2L) FI
- **Lube** **B178**
- **Air** **PA2208**
- **Fuel** **BF885**
- **Oil Vapor** ..... **N/R**
- **Fuel Vapor** ..... **N/R**
- **PCV** ..... **N/R**

Fox 5-1588cc (1.6L) FI
- **Lube** **B178**
- **Air** **PA2103**
- **Fuel** **BF885**
- **Oil Vapor** ..... **N/R**
- **Fuel Vapor** ..... **N/R**
- **PCV** ..... **N/R**

1977

100 Series LS 4-1871cc (1.9L) FI
- **Lube** **B178**
- **Oil Vapor** ..... **N/R**
- **Fuel Vapor** ..... **N/R**
- **PCV** ..... **N/R**

Fox 4-1588cc (1.6L) FI
- **Lube** **B178**
- **Air** **PA2103**
- **Oil Vapor** ..... **N/R**
- **Fuel Vapor** ..... **N/R**
- **PCV** ..... **N/R**

1976

100 Series LS 4-1871cc (1.9L) FI
- **Lube** **B178**
- **Oil Vapor** ..... **N/R**
- **Fuel Vapor** ..... **N/R**
- **PCV** ..... **N/R**

Fox 5-1588cc (1.6L) FI
- **Lube** **B178**
- **Air** **PA2103**
- **Oil Vapor** ..... **N/R**
- **Fuel Vapor** ..... **N/R**
- **PCV** ..... **N/R**

1975

100 Series LS 4-1871cc (1.9L) FI
- **Lube** **B178**
- **Oil Vapor** ..... **N/R**
- **Fuel Vapor** ..... **N/R**
- **PCV** ..... **N/R**

Fox 4-1588cc (1.6L) FI
- **Lube** **B178**
- **Oil Vapor** ..... **N/R**
- **Fuel Vapor** ..... **N/R**
- **PCV** ..... **N/R**

1974

100 Series LS 4-1872cc (1.9L) Carb.
- **Lube** **B178**
- **Fuel** **BF833,-K2**
- **Oil Vapor** ..... **N/R**
- **Fuel Vapor** ..... **N/R**
- **PCV** ..... **N/R**

Fox 4-1471cc (1.5L) Carb.
- **Lube** **B178**
- **Air** **PA2103**
- **Fuel** **BF833,-K2**
- **Oil Vapor** ..... **N/R**
- **Fuel Vapor** ..... **N/R**
- **PCV** ..... **N/R**

1973

100 Series 4-1872cc (1.9L) Carb.
- **Lube** **B178**
- **Fuel** **BF833,-K2**
- **Oil Vapor** ..... **N/R**
- **Fuel Vapor** ..... **N/R**
- **PCV** ..... **N/R**

Fox 4-1471cc (1.5L) Carb.
- **Lube** **B178**
- **Air** **PA2103**
- **Fuel** **BF833,-K2**
- **Oil Vapor** ..... **N/R**
- **Fuel Vapor** ..... **N/R**
- **PCV** ..... **N/R**

AUDI (Cont'd.)

1972

100 Series 4-1872cc (1.9L) Carb.
- **Lube** ... **B178**
- **Fuel** ... **BF833,-K2**
- **Oil Vapor** ... **N/R**
- **Fuel Vapor** ... **N/R**
- **PCV** ... **N/R**

Super 90 4-1760cc (1.8L) Carb.
- **Lube** ... **B178**
- **Fuel** ... **BF833,-K2**
- **Oil Vapor** ... **N/R**
- **Fuel Vapor** ... **N/R**
- **PCV** ... **N/R**

1971

100 Series 4-1760cc (1.8L) Carb.
- **Lube** ... **B178**
- **Fuel** ... **BF833,-K2**
- **Oil Vapor** ... **N/R**
- **Fuel Vapor** ... **N/R**
- **PCV** ... **N/R**

Super 90 4-1760cc (1.8L) Carb.
- **Lube** ... **B178**
- **Fuel** ... **BF833,-K2**
- **Oil Vapor** ... **N/R**
- **Fuel Vapor** ... **N/R**
- **PCV** ... **N/R**

1970

100 Series 4-1760cc (1.8L) 2 Bbl. Carb. VIN T,Y
- **Lube** ... **B178**
- **Fuel** ... **BF833,-K2**
- **Oil Vapor** ... **N/R**
- **Fuel Vapor** ... **N/R**
- **PCV** ... **N/R**

Super 90 4-1760cc (1.8L) 2 Bbl. Carb.
- **Lube** ... **B178**
- **Fuel** ... **BF833,-K2**
- **Oil Vapor** ... **N/R**
- **Fuel Vapor** ... **N/R**
- **PCV** ... **N/R**

AUSTIN

1975

Marina, Marina GT 4-1798cc (1.8L) Carb.
- **Fuel** ... **BF840,-K1**

1974

Marina, Marina GT 4-1798cc (1.8L) Carb.
- **Lube** ... **B163**
- **Fuel** ... **BF840,-K1**

1973

Marina, Marina GT 4-1798cc (1.8L) Carb.
- **Lube** ... **B163**
- **Fuel** ... **BF840,-K1**

1972

America 4-1275cc (1.3L) Carb.
- **Lube (Ele.)** ... **P176**
- **Lube (Spin-on)** ... **B243**
- **Air** ... **PA2063**
- **Fuel** ... **BF840,-K1**

1971

America 4-1275cc (1.3L) Carb.
- **Lube (Ele.)** ... **P176**
- **Lube (Spin-on)** ... **B243**
- **Air** ... **PA2063**
- **Fuel** ... **BF840,-K1**

AUSTIN (Cont'd.)

1970

America 4-1275cc (1.3L) 1 Bbl. Carb.
- **Air** ... **PA2063**
- **Fuel** ... **BF840,-K1**

1969

America 4-1275cc (1.3L) Carb.
- **Lube** ... **P176**

Healey Sprite 4-1275cc (1.3L) Carb.
- **Lube** ... **P176**
- **Fuel** ... **BF840,-K1**

Mini Cooper 4-1275cc (1.3L) Carb.
- **Lube** ... **P176**
- **Fuel** ... **BF840,-K1**

1968

America 4-1275cc (1.3L) Carb.
- **Lube** ... **P176**
- **Air** ... **PA2063**

Healey Sprite 4-1275cc (1.3L) Carb.
- **Lube** ... **P176**
- **Fuel** ... **BF840,-K1**

Mini Cooper 4-1275cc (1.3L) Carb.
- **Lube** ... **P176**
- **Fuel** ... **BF840,-K1**

1967

Healey 3000 6-178 (2.9L) Carb.
- **Lube** ... **P174**

Healey Sprite 4-1275cc (1.3L) Carb.
- **Lube** ... **P176**
- **Fuel** ... **BF840,-K1**

Mini Cooper 4-1275cc (1.3L) Carb.
- **Lube** ... **P176**
- **Air** ... **PA1696**
- **Fuel** ... **BF840,-K1**
- **Oil Vapor** ... **N/R**

1966

Healey 3000 6-178 (2.9L) Carb.
- **Lube** ... **P174**

Mini 4-848cc (.9L) Carb.
- **Lube** ... **P176**
- **Fuel** ... **BF840,-K1**

Mini Cooper 4-997cc (.9L) Carb.
- **Lube** ... **P176**
- **Air** ... **PA1696**
- **Fuel** ... **BF840,-K1**
- **Oil Vapor** ... **N/R**

Mini Cooper 4-1275cc (1.3L) Carb.
- **Lube** ... **P176**
- **Air** ... **PA1696**
- **Fuel** ... **BF840,-K1**
- **Oil Vapor** ... **N/R**

1965

Healey 3000 6-178 (2.9L) Carb.
- **Lube** ... **P174**
- **Fuel** ... **BF840,-K1**

Healey Sprite 4-1100cc (1.1L) Carb.
- **Lube** ... **P176**
- **Fuel** ... **BF840,-K1**

Mini 4-848cc (.9L) Carb.
- **Lube** ... **P176**
- **Fuel** ... **BF840,-K1**

Mini Cooper 4-997cc (.9L) Carb.
- **Lube** ... **P176**
- **Air** ... **PA1696**
- **Fuel** ... **BF840,-K1**
- **Oil Vapor** ... **N/R**

Mini Cooper 4-1275cc (1.3L) Carb.
- **Lube** ... **P176**
- **Air** ... **PA1696**
- **Fuel** ... **BF840,-K1**
- **Oil Vapor** ... **N/R**

1964

Healey 3000 6-178 (2.9L) Carb.
- **Lube** ... **P174**
- **Fuel** ... **BF840,-K1**

Healey Sprite 4-1100cc (1.1L) Carb.
- **Lube** ... **P176**
- **Fuel** ... **BF840,-K1**

AUSTIN 1964 (Cont'd.)

Mini 4-848cc (.9L) Carb.
- **Lube** ... **P176**
- **Fuel** ... **BF840,-K1**

Mini Cooper 4-997cc (1.0L) Carb.
- **Lube** ... **P176**
- **Air** ... **PA1696**
- **Fuel** ... **BF840,-K1**
- **Oil Vapor** ... **N/R**

Mini Cooper 4-1071cc (1.1L) Carb.
- **Lube** ... **P176**
- **Air** ... **PA1696**
- **Fuel** ... **BF840,-K1**
- **Oil Vapor** ... **N/R**

Mini Cooper 4-1275cc (1.3L) Carb.
- **Lube** ... **P176**
- **Air** ... **PA1696**
- **Fuel** ... **BF840,-K1**
- **Oil Vapor** ... **N/R**

1963

Healey 3000 6-178 (2.9L) Carb.
- **Lube** ... **P174**
- **Fuel** ... **BF840,-K1**

Healey Sprite 4-1100cc (1.1L) Carb.
- **Lube** ... **P176**
- **Fuel** ... **BF840,-K1**

Mini 4-848cc (.9L) Carb.
- **Lube** ... **P176**

Mini Cooper 4-997cc (1.0L) Carb.
- **Lube** ... **P176**
- **Air** ... **PA1696**
- **Fuel** ... **BF840,-K1**
- **Oil Vapor** ... **N/R**

1962

Healey 3000 6-178 (2.9L) 2-1 Bbl. Carb.
- **Lube** ... **P174**
- **Fuel** ... **BF840,-K1**

Healey Sprite 4-58 (1.0L) 2-1 Bbl. Carb.
- **Lube** ... **P176**
- **Fuel** ... **BF840,-K1**

Mini 4-52 (.9L) 1 Bbl. Carb.
- **Lube** ... **P176**
- **Air** ... **PA1696**
- **Fuel** ... **BF840,-K1**
- **Oil Vapor** ... **N/R**

Mini Cooper 4-61 (1.0L) 2-1 Bbl. Carb.
- **Lube** ... **P176**
- **Air** ... **PA1696**
- **Fuel** ... **BF840,-K1**
- **Oil Vapor** ... **N/R**

1961

Healey 3000 6-178 (2.9L) 2-1 Bbl. Carb.
- **Lube** ... **P174**
- **Fuel** ... **BF840,-K1**

Mini 4-52 (.9L) 1 Bbl. Carb.
- **Lube** ... **P176**
- **Air** ... **PA1696**
- **Fuel** ... **BF840,-K1**
- **Oil Vapor** ... **N/R**

1960

Healey 100-6 6-178 (2.9L) 2-1 Bbl. Carb.
- **Lube** ... **P174**
- **Fuel** ... **BF840,-K1**

Healey 3000 6-178 (2.9L) 2-1 Bbl. Carb.
- **Lube** ... **P174**
- **Fuel** ... **BF840,-K1**

Mini 4-52 (.9L) 1 Bbl. Carb.
- **Fuel** ... **BF840,-K1**

AUSTIN (Cont'd.)

1959

Healey 100-6 6-161 (2.6L) 2-1 Bbl. Carb.
- **Lube** ... **P174**
- **Fuel** ... **BF840,-K1**

Healey 3000 6-178 (2.9L) 2-1 Bbl. Carb.
- **Lube** ... **P174**
- **Fuel** ... **BF840,-K1**

1958

Healey 100-6 6-161 (2.6L) 2-1 Bbl. Carb.
- **Lube** ... **P174**
- **Fuel** ... **BF840,-K1**

1957

Healey 100-6 6-161 (2.6L) 2-1 Bbl. Carb.
- **Lube** ... **P174**
- **Fuel** ... **BF840,-K1**

1956

Healey 100-6 6-161 (2.6L) 2-1 Bbl. Carb.
- **Lube** ... **P174**
- **Fuel** ... **BF840,-K1**

BMW

1979

320i 4-1990cc (2.0L) FI
- **Lube** ... **B228**
- **Air** ... **PA3756**
- **Oil Vapor** ... **N/R**
- **Fuel Vapor** ... **N/R**
- **PCV** ... **N/R**

528i 6-2788cc (2.8L) FI
- **Lube** ... **P7114**
- **Fuel** ... **BF1195**
- **Oil Vapor** ... **N/R**
- **Fuel Vapor** ... **N/R**
- **PCV** ... **N/R**

633CSI 6-3210cc (3.2L) FI
- **Lube** ... **P7114**
- **Fuel** ... **BF1195**
- **Oil Vapor** ... **N/R**
- **Fuel Vapor** ... **N/R**
- **PCV** ... **N/R**

733i 6-3210cc (3.2L) FI
- **Lube** ... **P7114**
- **Fuel** ... **BF1195**
- **Oil Vapor** ... **N/R**
- **Fuel Vapor** ... **N/R**
- **PCV** ... **N/R**

1978

320i 4-1990cc (2.0L) FI
- **Lube** ... **B228**
- **Air** ... **PA3756**
- **Oil Vapor** ... **N/R**
- **Fuel Vapor** ... **N/R**
- **PCV** ... **N/R**

530i 6-2985cc (3.0L) FI
- **Lube** ... **P7114**
- **Fuel** ... **BF833,-K2**
- **Oil Vapor** ... **N/R**
- **Fuel Vapor** ... **N/R**
- **PCV** ... **N/R**

633CSI 6-3210cc (3.2L) FI
- **Lube** ... **P7114**
- **Fuel** ... **BF1195**
- **Oil Vapor** ... **N/R**
- **Fuel Vapor** ... **N/R**
- **PCV** ... **N/R**

733i 6-3210cc (3.2L) FI
- **Lube** ... **P7114**
- **Fuel** ... **BF1195**
- **Oil Vapor** ... **N/R**
- **Fuel Vapor** ... **N/R**
- **PCV** ... **N/R**

OBS = Obsolete. Availability Limited to Distributor Stock.

BMW (Cont'd.)

1977

320i 4-1990cc (2.0L) FI
- **Lube** ... **B228**
- **Oil Vapor** ... **N/R**
- **Fuel Vapor** ... **N/R**
- **PCV** ... **N/R**

530i 6-2985cc (3.0L) FI
- **Lube** ... **PT12**
- **Oil Vapor** ... **N/R**
- **Fuel Vapor** ... **N/R**
- **PCV** ... **N/R**

630CSI 6-2985cc (3.0L) FI
- **Lube** ... **P7114**
- **Oil Vapor** ... **N/R**
- **Fuel Vapor** ... **N/R**
- **PCV** ... **N/R**

1976

3.0SI 6-2985cc (3.0L) FI
- **Lube** ... **PT12**
- **Oil Vapor** ... **N/R**
- **Fuel Vapor** ... **N/R**
- **PCV** ... **N/R**

530i 6-2985cc (3.0L) FI
- **Lube** ... **PT12**
- **Oil Vapor** ... **N/R**
- **Fuel Vapor** ... **N/R**
- **PCV** ... **N/R**

2002 4-1990cc (2.0L) Carb.
- **Lube** ... **B228**
- **Air** ... **PA1802**
- **Oil Vapor** ... **N/R**
- **Fuel Vapor** ... **N/R**
- **PCV** ... **N/R**

1975

3.0SI 6-2985cc (3.0L) FI
- **Lube** ... **PT12**
- **Oil Vapor** ... **N/R**
- **Fuel Vapor** ... **N/R**
- **PCV** ... **N/R**

530i 6-2985cc (3.0L) FI
- **Lube** ... **PT12**
- **Oil Vapor** ... **N/R**
- **Fuel Vapor** ... **N/R**
- **PCV** ... **N/R**

2002 4-1990cc (2.0L) Carb.
- **Lube** ... **B228**
- **Air** ... **PA1802**
- **Oil Vapor** ... **N/R**
- **Fuel Vapor** ... **N/R**
- **PCV** ... **N/R**

1974

3.0CS, 3.0S 6-2985cc (3.0L) Carb.
- **Lube** ... **PT12**

3.0CSI 6-2985cc (3.0L) FI
- **Lube** ... **PT12**

2002, 2002 Cabriolet 4-1990cc (2.0L) Carb.
- **Lube** ... **B228**
- **Air** ... **PA2065**
- **Fuel** ... **BF833,-K2**
- **Oil Vapor** ... **N/R**
- **Fuel Vapor** ... **N/R**
- **PCV** ... **N/R**

2002 Turbo 4-1990cc (2.0L) FI
- **Lube** ... **B228**
- **Air** ... **PA2065**
- **Fuel** ... **BF833,-K2**
- **Oil Vapor** ... **N/R**
- **Fuel Vapor** ... **N/R**
- **PCV** ... **N/R**

2002TII 4-1990cc (2.0L) FI
- **Lube** ... **B228**
- **Air** ... **PA2065**
- **Fuel** ... **BF833,-K2**
- **Oil Vapor** ... **N/R**
- **Fuel Vapor** ... **N/R**
- **PCV** ... **N/R**

2800 6-2788cc (2.8L) Carb.
- **Lube** ... **PT12**

Bavarian 6-2985cc (3.0L) Carb.
- **Lube** ... **PT12**

BMW (Cont'd.)

1973

3.0CS, 3.0S 6-2985cc (3.0L) Carb.
- **Lube** ... **PT12**
- **Fuel Vapor** ... **N/R**

3.0CSI 6-2985cc (3.0L) FI
- **Lube** ... **PT12**
- **Fuel Vapor** ... **N/R**

2002, 2002 Cabriolet 4-1990cc (2.0L) Carb.
- **Lube (Ele.)** ... **P106**
- **Lube (Spin-on)** ... **B228**
- **Air** ... **PA2065**
- **Fuel** ... **BF833,-K2**
- **Oil Vapor** ... **N/R**
- **Fuel Vapor** ... **N/R**
- **PCV** ... **N/R**

2002 Turbo 4-1990cc (2.0L) FI
- **Lube (Ele.)** ... **P106**
- **Lube (Spin-on)** ... **B228**
- **Air** ... **PA2065**
- **Fuel** ... **BF833,-K2**
- **Oil Vapor** ... **N/R**
- **Fuel Vapor** ... **N/R**
- **PCV** ... **N/R**

2002TII 4-1990cc (2.0L) FI
- **Lube** ... **B228**
- **Air** ... **PA2065**
- **Oil Vapor** ... **N/R**
- **Fuel Vapor** ... **N/R**
- **PCV** ... **N/R**

2800 6-2788cc (2.8L) Carb.
- **Lube** ... **PT12**

Bavarian 6-2985cc (3.0L) Carb.
- **Lube** ... **PT12**
- **Fuel Vapor** ... **N/R**

1972

3.0CS, 3.0S 6-2985cc (3.0L) Carb.
- **Lube** ... **PT12**
- **Fuel Vapor** ... **N/R**

3.0CSI 6-2985cc (3.0L) FI
- **Lube** ... **PT12**
- **Fuel Vapor** ... **N/R**

2000, 2000 Touring 4-1990cc (2.0L) Carb.
- **Fuel** ... **BF833**

2000 TII, 2000 TII Touring 4-1990cc (2.0L) FI
- **Lube** ... **B228**
- **Air** ... **PA2065**

2002, 2002 Cabriolet 4-1990cc (2.0L) Carb.
- **Lube** ... **B228**
- **Air** ... **PA2065**
- **Oil Vapor** ... **N/R**
- **Fuel Vapor** ... **N/R**
- **PCV** ... **N/R**

2002TII 4-1990cc (2.0L) FI
- **Lube** ... **B228**
- **Air** ... **PA2065**
- **Fuel** ... **BF7903**
- **Oil Vapor** ... **N/R**
- **Fuel Vapor** ... **N/R**
- **PCV** ... **N/R**

2800 6-2788cc (2.8L) Carb.
- **Lube** ... **PT12**
- **Fuel** ... **BF833,-K2**

Bavarian 6-2985cc (3.0L) Carb.
- **Lube** ... **PT12**
- **Fuel Vapor** ... **N/R**

1971

3.0CS, 3.0CSL, 3.0S 6-2985cc (3.0L) Carb.
- **Lube** ... **PT12**

3.0CSI, 3.0SI 6-2985cc (3.0L) FI
- **Lube** ... **PT12**

1600, 1602 4-1573cc (1.6L) Carb.
- **Fuel** ... **BF836-K3**
- **Fuel Vapor** ... **N/R**

1800 4-1766cc (1.8L) Carb.
- **Fuel** ... **BF836,-K3**

BMW 1971 (Cont'd.)

1802 4-1766cc (1.8L) Carb.
- **Lube** ... **B228**
- **Fuel** ... **BF836,-K3**

2000TI 4-1990cc (2.0L) Carb.
- **Lube** ... **B228**

2000TII 4-1990cc (2.0L) Carb.
- **Lube** ... **B228**

2000TII 4-1990cc (2.0L) FI
- **Lube** ... **B228**

2002, 2002 Cabriolet 4-1990cc (2.0L) Carb.
- **Lube** ... **B228**
- **Fuel** ... **BF836-K3**
- **Fuel Vapor** ... **N/R**

2002TI 4-1990cc (2.0L) Carb.
- **Lube** ... **B228**
- **Fuel** ... **BF836-K3**
- **Fuel Vapor** ... **N/R**

2002TII 4-1990cc (2.0L) FI
- **Lube** ... **B228**
- **Fuel** ... **BF836-K3**
- **Fuel Vapor** ... **N/R**

2500 6-2494cc (2.5L) Carb.
- **Lube** ... **PT12**
- **Fuel Vapor** ... **N/R**

2800, 2800CS 6-2788cc (2.8L) Carb.
- **Lube** ... **PT12**
- **Fuel Vapor** ... **N/R**

Bavarian 6-2788cc (2.8L) Carb.
- **Lube** ... **PT12**
- **Fuel Vapor** ... **N/R**

1970

1600 4-1573cc (1.6L) 1 Bbl. Carb.
- **Lube** ... **P106**
- **Fuel** ... **BF833,-K2**

1800 4-1766cc (1.8L) 1 Bbl. Carb.
- **Fuel** ... **BF833,-K2**

2000, 2000TI, 2000TII 4-1990cc (2.0L) Carb.
- **Lube** ... **B228**
- **Fuel** ... **BF833**

2000TII 4-1990cc (2.0L) FI
- **Lube** ... **B228**

2002, 2002TI 4-1990cc (2.0L) Carb.
- **Lube** ... **B228**
- **Fuel** ... **BF833,-K2**

2500 6-2494cc (2.5L) 2 Bbl. Carb.
- **Lube** ... **PT12**

2800, 2800CS 6-2788cc (2.8L) Carb.
- **Lube** ... **PT12**

1969

1600 4-1573cc (1.6L) Carb.
- **Lube** ... **P106**
- **Fuel** ... **BF833,-K2**

1800 4-1766cc (1.8L) Carb.
- **Lube** ... **P106**
- **Fuel** ... **BF833,-K2**

2000, 2000TI 4-1990cc (2.0L) Carb.
- **Lube** ... **B228**
- **Fuel** ... **BF833,-K2**

2000C, 2000CS 4-1990cc (2.0L) Carb.
- **Lube** ... **P106**

2000TII 4-1990cc (2.0L) 1 Bbl. Carb.
- **Lube** ... **B228**
- **Fuel** ... **BF833,-K2**

2000TII 4-1990cc (2.0L) FI
- **Lube** ... **B228**

2002 4-1990cc (2.0L) Carb.
- **Lube** ... **B228**
- **Fuel** ... **BF833,-K2**

2500 6-2494cc (2.5L) Carb.
- **Lube** ... **PT12**

2800 6-2788cc (2.8L) Carb.
- **Lube** ... **PT12**

2800CS 6-2788cc (2.8L) Carb.
- **Lube** ... **PT12**

1968

1600 4-1573cc (1.6L) Carb.
- **Lube** ... **P106**
- **Fuel** ... **BF833,-K2**

BMW 1968 (Cont'd.)

1600TI 4-1573cc (1.6L) Carb.
- **Lube** ... **P106**

1800 4-1766cc (1.8L) Carb.
- **Lube** ... **P106**
- **Fuel** ... **BF833,-K2**

2000CS 4-1990cc (2.0L) Carb.
- **Lube** ... **P106**

2000TII 4-1990cc (2.0L) Carb.
- **Lube** ... **B228**

2002, 2002TI 4-1990cc (2.0L) Carb.
- **Lube** ... **B228**

2800CS 6-2788cc (2.8L) Carb.
- **Lube** ... **PT12**

1967

1600 4-1573cc (1.6L) Carb.
- **Lube** ... **P106**
- **Fuel** ... **BF833,-K2**

1800 4-1766cc (1.8L) Carb.
- **Lube** ... **P106**

2000 4-1990cc (2.0L) Carb.
- **Lube** ... **B228**

2002 4-1990cc (2.0L) Carb.
- **Lube** ... **B228**

1966

1800 4-1766cc (1.8L) Carb.
- **Lube** ... **P106**

2000 4-1990cc (2.0L) Carb.
- **Lube** ... **B228**

2002 4-1990cc (2.0L) Carb.
- **Lube** ... **B228**

BUICK

1979

Century V6-196 (3.2L) 2 Bbl. VIN C
- **Lube** ... **B43-S**
- **Air** ... **PA1680**
- **Fuel** ... **PF893,-RV**
- **Fuel Vapor** ... **SA2046**
- **Trans.** ... **18031**

Century V6-231 (3.8L) 2 Bbl. VIN 2,A
- **Lube** ... **B43-S**
- **Air** ... **PA1680**
- **Fuel** ... **PF893,-RV**
- **Fuel Vapor** ... **SA2046**
- **Trans. (TH350)** ... **18031**

Century V6-231 (3.8L) 4 Bbl. Turbo VIN 3
- **Lube** ... **B43-S**
- **Air** ... **PA2140**
- **Fuel** ... **PF894,-RV**
- **Fuel Vapor** ... **SA2046**
- **Trans.** ... **18031**

Century V8-301 (4.9L) 2,4 Bbl. VIN W,Y
- **Lube** ... **B43-S**
- **Air** ... **PA2006**
- **Fuel (1 In. Ele.)** ... **PF893,-RV**
- **Fuel (2 1/32 In. Ele.)** ... **PF894,-RV**
- **Oil Vapor** ... **SA2027**
- **Fuel Vapor** ... **SA2046**
- **Trans. (TH350)** ... **18031**

Century V8-305 (5.0L) 4 Bbl. VIN H
- **Lube** ... **B27**
- **Air** ... **PA1680**
- **Fuel** ... **PF894,-RV**
- **Oil Vapor** ... **SA2027**
- **Fuel Vapor** ... **SA2046**

Century V8-350 (5.7L) 4 Bbl. VIN L
- **Lube** ... **B27**
- **Air** ... **PA2008**
- **Fuel** ... **PF894,-RV**
- **Oil Vapor** ... **SA2027**
- **Fuel Vapor** ... **SA2046**
- **Trans.** ... **18031**

Electra V8-350 (5.7L) 4 Bbl. VIN R
- **Lube** ... **B30**
- **Air** ... **PA1758**
- **Fuel** ... **PF894,-RV**
- **Oil Vapor** ... **SA2027**
- **Fuel Vapor** ... **SA2046**
- **Trans.** ... **6020**

OBS = Obsolete. Availability Limited to Distributor Stock.

BUICK 1979 (Cont'd.)

Electra V8-350 (5.7L) 4 Bbl. VIN X
- Lube....B39
- Air....PA2008
- Fuel....PF894,-RV
- Oil Vapor....SA2027
- Fuel Vapor....SA2046
- Trans.....6020

Electra V8-403 (6.6L) 4 Bbl. VIN K
- Lube....B30
- Air....PA1758
- Fuel....PF894,-RV
- Fuel Vapor....SA2046
- Trans.....6020

Estate Wagon V8-350 (5.7L) 4 Bbl. VIN R
- Lube....B30
- Air....PA1758
- Fuel....PF894,-RV
- Oil Vapor....SA2027
- Fuel Vapor....SA2046
- Trans.....18031

Estate Wagon V8-350 (5.7L) 4 Bbl. VIN X
- Lube....B39
- Air....PA2008
- Fuel....PF894,-RV
- Oil Vapor....SA2027
- Fuel Vapor....SA2046
- Trans.....18031

Estate Wagon V8-403 (6.6L) 4 Bbl. VIN K
- Lube....B30
- Air....PA1758
- Fuel....PF894,-RV
- Fuel Vapor....SA2046
- Trans.....18031

LeSabre V6-231 (3.8L) 4 Bbl. Turbo VIN 3
- Lube....B43-S
- Air....PA2140
- Fuel....PF894,-RV
- Fuel Vapor....SA2046
- Trans.....18031

LeSabre V6-231 (3.8L) 2 Bbl. VIN A
- Lube....B43-S
- Air....PA1680
- Fuel....PF893,-RV
- Fuel Vapor....SA2046
- Trans. (TH350)....18031

LeSabre V8-301 (4.9L) 2 Bbl. VIN Y
- Lube....B43-S
- Air....PA2006
- Fuel (1 In. Ele.)....PF893,-RV
- Fuel (2 1/32 In. Ele.)....PF894,-RV
- Oil Vapor....SA2027
- Fuel Vapor....SA2046
- Trans. (TH350)....18031

LeSabre V8-350 (5.7L) 4 Bbl. VIN R
- Lube....B30
- Air....PA1758
- Fuel....PF894,-RV
- Oil Vapor....SA2027
- Fuel Vapor....SA2046
- Trans.....18031

LeSabre V8-350 (5.7L) 4 Bbl. VIN X
- Lube....B39
- Air....PA2008
- Fuel....PF894,-RV
- Oil Vapor....SA2027
- Fuel Vapor....SA2046
- Trans. (TH350)....18031

LeSabre V8-403 (6.6L) 4 Bbl. VIN K
- Lube....B30
- Air....PA1758
- Fuel....PF894,-RV
- Fuel Vapor....SA2046
- Trans. (TH350)....18031
- Trans. (TH400)....6020

Opel 4-1816cc (1.8L) 2 Bbl. VIN B
- Lube....B141
- Air....PA1657
- Fuel....BF840,-K1

BUICK 1979 (Cont'd.)

Regal V6-196 (3.2L) 2 Bbl. VIN C
- Lube....B43-S
- Air....PA1680
- Fuel....PF893,-RV
- Fuel Vapor....SA2046
- Trans.....18031

Regal V6-231 (3.8L) 2 Bbl. VIN 2,A
- Lube....B43-S
- Air....PA1680
- Fuel....PF893,-RV
- Fuel Vapor....SA2046
- Trans. (TH350)....18031

Regal V6-231 (3.8L) Turbo 4 Bbl. VIN 3
- Lube....B43-S
- Air....PA2140
- Fuel....PF894,-RV
- Fuel Vapor....SA2046
- Trans.....18031

Regal V8-301 (4.9L) 2,4 Bbl. VIN W,Y
- Lube....B43-S
- Air....PA2006
- Fuel (1 In. Ele.)....PF893,-RV
- Fuel (2 1/32 In. Ele.)....PF894,-RV
- Oil Vapor....SA2027
- Fuel Vapor....SA2046
- Trans. (TH350)....18031

Regal V8-305 (5.0L) 4 Bbl. VIN H
- Lube....B27
- Air....PA1680
- Fuel....PF894,-RV
- Oil Vapor....SA2027
- Fuel Vapor....SA2046

Riviera V6-231 (3.8L) 4 Bbl. Turbo VIN 3
- Lube....B43-S
- Air....PA2140
- Fuel....PF894,-RV
- Fuel Vapor....SA2046

Riviera V8-350 (5.7L) 4 Bbl. VIN R
- Lube....B30
- Air....PA1758
- Fuel....PF894,-RV
- Oil Vapor....SA2027
- Fuel Vapor....SA2046

Skyhawk V6-231 (3.8L) 2 Bbl. VIN A
- Lube....B43-S
- Air....PA2006
- Fuel....PF893,-RV
- Oil Vapor....SA2027
- Fuel Vapor....SA2046
- Trans.....18031

Skylark V6-231 (3.8L) 2 Bbl. VIN A
- Lube....B43-S
- Air....PA1680
- Fuel....PF893,-RV
- Fuel Vapor....SA2046
- Trans.....18031

Skylark V8-305 (5.0L) 2 Bbl. VIN G
- Lube....B27
- Air....PA1680
- Fuel....PF893,-RV
- Oil Vapor....SA2027
- Fuel Vapor....SA2046
- Trans.....18031

Skylark V8-350 (5.7L) 4 Bbl. VIN L
- Lube....B27
- Air....PA2008
- Fuel....PF894,-RV
- Oil Vapor....SA2027
- Fuel Vapor....SA2046
- Trans.....18031

1978

Century V6-196 (3.2L) 2 Bbl. VIN C
- Lube....B43-S
- Air....PA2006
- Fuel....PF893,-RV
- Oil Vapor....SA2027
- Fuel Vapor....SA2046
- Trans.....18031

BUICK 1978 (Cont'd.)

Century V6-231 (3.8L) 2 Bbl. VIN A
- Lube....B43-S
- Air....PA1680
- Fuel (1 In. Ele.)....PF893,-RV
- Fuel (2 1/32 In. Ele.)....PF894,-RV
- Oil Vapor....SA2027
- Fuel Vapor....SA2046
- Trans. (TH350)....18031

Century V8-305 (5.0L) 2,4 Bbl. VIN H,U
- Lube....B27
- Air (2 Bbl.)....PA2006
- Air (4 Bbl.)....PA1680
- Fuel (1 In. Ele.)....PF893,-RV
- Fuel (2 1/32 In. Ele.)....PF894,-RV
- Oil Vapor....SA2027
- Fuel Vapor....SA2046
- Trans. (TH350)....18031

Century V8-350 (5.7L) 4 Bbl. VIN L
- Lube....B27
- Air....PA2008
- Fuel....PF894,-RV
- Oil Vapor....SA2027
- Fuel Vapor....SA2046
- Trans.....18031

Electra V8-350 (5.7L) 4 Bbl. VIN R
- Lube....B30
- Air....PA1758
- Fuel....PF894,-RV
- Fuel Vapor....SA2046
- Trans.....6020

Electra V8-350 (5.7L) 4 Bbl. VIN X
- Lube....B39
- Air....PA2008
- Fuel....PF894,-RV
- Oil Vapor....SA2027
- Fuel Vapor....SA2046
- Trans.....6020

Electra V8-403 (6.6L) 4 Bbl. VIN K
- Lube....B30
- Air....PA1758
- Fuel....PF894,-RV
- Fuel Vapor....SA2046
- Trans.....6020

Estate Wagon V8-350 (5.7L) 4 Bbl. VIN R
- Lube....B30
- Air....PA1758
- Fuel....PF894,-RV
- Fuel Vapor....SA2046
- Trans.....6020

Estate Wagon V8-350 (5.7L) 4 Bbl. VIN X
- Lube....B39
- Air....PA2008
- Fuel....PF894,-RV
- Oil Vapor....SA2027
- Fuel Vapor....SA2046
- Trans.....6020

Estate Wagon V8-403 (6.6L) 4 Bbl. VIN K
- Lube....B30
- Air....PA1758
- Fuel....PF894,-RV
- Fuel Vapor....SA2046
- Trans.....6020

LeSabre V6-231 (3.8L) 2 Bbl. or Turbo VIN A,G
- Lube....B43-S
- Air (w/o Turbo)....PA1680
- Air (w/Turbo)....PA2140
- Fuel (1 In. Ele.)....PF893,-RV
- Fuel (2 1/32 In. Ele.)....PF894,-RV
- Oil Vapor....SA2027
- Fuel Vapor....SA2046
- Trans. (TH350)....18031

LeSabre V6-231 (3.8L) 4 Bbl. or Turbo VIN 3
- Lube....B43-S
- Air (w/o Turbo)....PA1680
- Air (w/Turbo)....PA2140
- Fuel (1 In. Ele.)....PF893,-RV
- Fuel (2 1/32 In. Ele.)....PF894,-RV
- Oil Vapor....SA2027
- Fuel Vapor....SA2046
- Trans.....18031

BUICK 1978 (Cont'd.)

LeSabre V8-301 (4.9L) 2 Bbl. VIN Y
- Lube....B43-S
- Air....PA2006
- Fuel....PF894,-RV
- Oil Vapor....SA2027
- Fuel Vapor....SA2046
- Trans. (TH350)....18031

LeSabre V8-305 (5.0L) 2 Bbl. VIN U
- Lube....B27
- Air....PA2006
- Fuel (1 In.)....PF893,-RV
- Fuel (2 1/32 In.)....PF894,-RV
- Oil Vapor....SA2027
- Fuel Vapor....SA2046
- Trans. (TH350)....18031

LeSabre V8-350 (5.7L) 4 Bbl. VIN R
- Lube....B30
- Air....PA1758
- Fuel....PF894,-RV
- Fuel Vapor....SA2046
- Trans. (TH350)....18031
- Trans. (TH400)....6020

LeSabre V8-350 (5.7L) 4 Bbl. VIN X
- Lube....B39
- Air....PA2008
- Fuel....PF894,-RV
- Oil Vapor....SA2027
- Fuel Vapor....SA2046
- Trans. (TH350)....18031
- Trans. (TH400)....6020

LeSabre V8-403 (6.6L) 4 Bbl. VIN K
- Lube....B30
- Air....PA1758
- Fuel....PF894,-RV
- Fuel Vapor....SA2046
- Trans. (TH350)....18031
- Trans. (TH400)....6020

Opel 4-1816cc (1.8L) 2 Bbl. VIN B
- Lube....B141
- Air....PA1657
- Fuel....BF840,-K1

Regal V6-196 (3.2L) 2 Bbl. VIN C
- Lube....B43-S
- Air....PA2006
- Fuel....PF893,-RV
- Oil Vapor....SA2027
- Fuel Vapor....SA2046
- Trans.....18031

Regal V6-231 (3.8L) 2 Bbl. or Turbo VIN 2,A,G
- Lube....B43-S
- Air (w/o Turbo)....PA2006
- Air (w/Turbo)....PA2140
- Fuel (1 In. Ele.)....PF893,-RV
- Fuel (2 1/32 In. Ele.)....PF894,-RV
- Oil Vapor....SA2027
- Fuel Vapor....SA2046
- Trans. (TH350)....18031

Regal V6-231 (3.8L) 4 Bbl. or Turbo VIN 3
- Lube....B43-S
- Air (w/o Turbo)....PA2006
- Air (w/Turbo)....PA2140
- Fuel (1 In. Ele.)....PF893,-RV
- Fuel (2 1/32 In. Ele.)....PF894,-RV
- Oil Vapor....SA2027
- Fuel Vapor....SA2046
- Trans.....18031

Regal V8-305 (5.0L) 2,4 Bbl. VIN H,U
- Lube....B27
- Air (2 Bbl.)....PA2006
- Air (4 Bbl.)....PA1680
- Fuel (1 In. Ele.)....PF893,-RV
- Fuel (2 1/32 In. Ele.)....PF894,-RV
- Oil Vapor....SA2027
- Fuel Vapor....SA2046
- Trans. (TH350)....18031

Riviera V8-350 (5.7L) 4 Bbl. VIN R
- Lube....B30
- Air....PA1758
- Fuel....PF894,-RV
- Fuel Vapor....SA2046
- Trans. (TH350)....18031
- Trans. (TH400)....6020

OBS = Obsolete. Availability Limited to Distributor Stock.

BUICK 1978 (Cont'd.)

Riviera V8-350 (5.7L) 4 Bbl. VIN X
- **Lube** ... **B39**
- **Air** ... **PA2008**
- **Fuel** ... **PF894,-RV**
- **Oil Vapor** ... **SA2027**
- **Fuel Vapor** ... **SA2046**
- **Trans. (TH350)** ... **18031**
- **Trans. (TH400)** ... **6020**

Riviera V8-403 (6.6L) 4 Bbl. VIN K
- **Lube** ... **B30**
- **Air** ... **PA1758**
- **Fuel** ... **PF894,-RV**
- **Fuel Vapor** ... **SA2046**
- **Trans. (TH350)** ... **18031**
- **Trans. (TH400)** ... **6020**

Skyhawk V6-231 (3.8L) 2 Bbl. VIN A,2
- **Lube** ... **B43-S**
- **Air** ... **PA658**
- **Fuel** ... **PF893,-RV**
- **Oil Vapor** ... **SA2027**
- **Fuel Vapor** ... **SA2046**
- **Trans.** ... **18031**

Skylark V6-231 (3.8L) 2 Bbl. or Turbo VIN A
- **Lube** ... **B43-S**
- **Air (w/o Turbo)** ... **PA1680**
- **Air (w/Turbo)** ... **PA2140**
- **Fuel (1 In. Ele.)** ... **PF893,-RV**
- **Fuel (2 1/32 In. Ele.)** ... **PF894,-RV**
- **Oil Vapor** ... **SA2027**
- **Fuel Vapor** ... **SA2046**
- **Trans.** ... **18031**

Skylark V8-305 (5.0L) 2 Bbl. VIN U
- **Lube** ... **B27**
- **Air** ... **PA2006**
- **Fuel (1 In. Ele.)** ... **PF893,-RV**
- **Fuel (2 1/32 In. Ele.)** ... **PF894,-RV**
- **Oil Vapor** ... **SA2027**
- **Fuel Vapor** ... **SA2046**
- **Trans.** ... **18031**

Skylark V8-350 (5.7L) 4 Bbl. VIN L
- **Lube** ... **B27**
- **Air** ... **PA2008**
- **Fuel** ... **PF894,-RV**
- **Oil Vapor** ... **SA2027**
- **Fuel Vapor** ... **SA2046**
- **Trans.** ... **18031**

1977

Century, Century Wagon V6-231 (3.8L) 2 Bbl. VIN C
- **Lube** ... **B43-S**
- **Air** ... **PA1680**
- **Fuel** ... **PF893,-RV**
- **Oil Vapor** ... **SA2027**
- **Fuel Vapor** ... **SA2046**
- **Trans.** ... **18031**

Century, Century Wagon V8-305 (5.0L) 2 Bbl. VIN U
- **Lube** ... **B27**
- **Air** ... **PA2006**
- **Fuel** ... **PF893,-RV**
- **Oil Vapor** ... **SA2027**
- **Fuel Vapor** ... **SA2046**
- **Trans. (TH350, TH375B)** ... **18031**
- **Trans. (TH400)** ... **6020**

Century, Century Wagon V8-350 (5.7L) 2,4 Bbl. VIN H,J
- **Lube** ... **B39**
- **Air** ... **PA2006**
- **Fuel (2 Bbl.)** ... **PF893,-RV**
- **Fuel (4 Bbl.)** ... **PF894,-RV**
- **Oil Vapor** ... **SA2027**
- **Fuel Vapor** ... **SA2046**
- **Trans. (TH350)** ... **18031**
- **Trans. (TH400)** ... **6020**

Century, Century Wagon V8-350 (5.7L) 4 Bbl. VIN L
- **Lube** ... **B27**
- **Air** ... **PA2008**
- **Fuel** ... **PF894,-RV**
- **Oil Vapor** ... **SA2027**
- **Fuel Vapor** ... **SA2046**
- **Trans.** ... **18031**

BUICK 1977 (Cont'd.)

Century, Century Wagon V8-350 (5.7L) 4 Bbl. VIN R
- **Lube** ... **B39**
- **Air** ... **PA1758**
- **Fuel** ... **PF894,-RV**
- **Fuel Vapor** ... **SA2046**
- **Trans. (TH350)** ... **18031**
- **Trans. (TH400)** ... **6020**

Century, Century Wagon V8-403 (6.6L) 4 Bbl. VIN K
- **Lube** ... **B39**
- **Air** ... **PA1758**
- **Fuel** ... **PF894,-RV**
- **Fuel Vapor** ... **SA2046**
- **Trans. (TH350)** ... **18031**
- **Trans. (TH400)** ... **6020**

Electra V8-350 (5.7L) 2 Bbl. VIN H
- **Lube** ... **B39**
- **Air** ... **PA2006**
- **Fuel** ... **PF893,-RV**
- **Oil Vapor** ... **SA2027**
- **Fuel Vapor** ... **SA2046**
- **Trans. (TH350)** ... **18031**
- **Trans. (TH400)** ... **6020**

Electra V8-350 (5.7L) 4 Bbl. VIN R
- **Lube** ... **B39**
- **Air** ... **PA1758**
- **Fuel** ... **PF894,-RV**
- **Fuel Vapor** ... **SA2046**
- **Trans. (TH350)** ... **18031**
- **Trans. (TH400)** ... **6020**

Electra V8-350 (5.7L) 4 Bbl. VIN J
- **Lube** ... **B39**
- **Air** ... **PA2008**
- **Fuel** ... **PF894,-RV**
- **Oil Vapor** ... **SA2027**
- **Fuel Vapor** ... **SA2046**
- **Trans. (TH350)** ... **18031**
- **Trans. (TH400)** ... **6020**

Electra V8-403 (6.6L) 4 Bbl. VIN K
- **Lube** ... **B39**
- **Air** ... **PA1758**
- **Fuel** ... **PF894,-RV**
- **Fuel Vapor** ... **SA2046**
- **Trans. (TH350)** ... **18031**
- **Trans. (TH400)** ... **6020**

Estate Wagon V8-350 (5.7L) 4 Bbl. VIN R
- **Lube** ... **B39**
- **Air** ... **PA1758**
- **Fuel** ... **PF894,-RV**
- **Fuel Vapor** ... **SA2046**
- **Trans.** ... **18031**

Estate Wagon V8-403 (6.6L) 4 Bbl. VIN K
- **Lube** ... **B39**
- **Air** ... **PA1758**
- **Fuel** ... **PF894,-RV**
- **Fuel Vapor** ... **SA2046**
- **Trans.** ... **18031**

LeSabre V6-231 (3.8L) 2 Bbl. VIN A,C
- **Lube** ... **B43-S**
- **Air** ... **PA1680**
- **Fuel** ... **PF893,-RV**
- **Oil Vapor** ... **SA2027**
- **Fuel Vapor** ... **SA2046**
- **Trans. (TH350, TH375B)** ... **18031**
- **Trans. (TH400)** ... **6020**

LeSabre V8-301 (4.9L) 2 Bbl. VIN Y
- **Lube** ... **B31**
- **Air** ... **PA2006**
- **Fuel** ... **PF894,-RV**
- **Oil Vapor** ... **SA2027**
- **Fuel Vapor** ... **SA2046**
- **Trans. (TH350, TH375B)** ... **18031**
- **Trans. (TH400)** ... **6020**

LeSabre V8-350 (5.7L) 2,4 Bbl. VIN H,J
- **Lube** ... **B39**
- **Air** ... **PA2006**
- **Fuel (2 Bbl.)** ... **PF893,-RV**
- **Fuel (4 Bbl.)** ... **PF894,-RV**
- **Oil Vapor** ... **SA2027**
- **Fuel Vapor** ... **SA2046**
- **Trans. (TH350)** ... **18031**
- **Trans. (TH400)** ... **6020**

BUICK 1977 (Cont'd.)

LeSabre V8-350 (5.7L) 4 Bbl. VIN R
- **Lube** ... **B39**
- **Air** ... **PA1758**
- **Fuel** ... **PF894,-RV**
- **Fuel Vapor** ... **SA2046**
- **Trans. (TH350)** ... **18031**
- **Trans. (TH400)** ... **6020**

LeSabre V8-403 (6.6L) 4 Bbl. VIN K
- **Lube** ... **B39**
- **Air** ... **PA1758**
- **Fuel** ... **PF894,-RV**
- **Fuel Vapor** ... **SA2046**
- **Trans. (TH350)** ... **18031**
- **Trans. (TH400)** ... **6020**

Opel 4-1816cc (1.8L) 1 Bbl. VIN B
- **Lube** ... **B141**
- **Air** ... **PA1657**
- **Fuel** ... **BF840,-K1**

Regal V6-231 (3.8L) 2 Bbl. VIN C
- **Lube** ... **B43-S**
- **Air** ... **PA1680**
- **Fuel** ... **PF893,-RV**
- **Oil Vapor** ... **SA2027**
- **Fuel Vapor** ... **SA2046**
- **Trans.** ... **18031**

Regal V8-305 (5.0L) 2 Bbl. VIN U
- **Lube** ... **B27**
- **Air** ... **PA2006**
- **Fuel** ... **PF893,-RV**
- **Oil Vapor** ... **SA2027**
- **Fuel Vapor** ... **SA2046**
- **Trans. (TH350, TH375B)** ... **18031**
- **Trans. (TH400)** ... **6020**

Regal V8-350 (5.7L) 2,4 Bbl. VIN H,J
- **Lube** ... **B39**
- **Air** ... **PA2006**
- **Fuel (2 Bbl.)** ... **PF893,-RV**
- **Fuel (4 Bbl.)** ... **PF894,-RV**
- **Oil Vapor** ... **SA2027**
- **Fuel Vapor** ... **SA2046**
- **Trans. (TH350)** ... **18031**
- **Trans. (TH400)** ... **6020**

Regal V8-350 (5.7L) 4 Bbl. VIN L
- **Lube** ... **B27**
- **Air** ... **PA2008**
- **Fuel** ... **PF894,-RV**
- **Oil Vapor** ... **SA2027**
- **Fuel Vapor** ... **SA2046**
- **Trans.** ... **18031**

Regal V8-350 (5.7L) 4 Bbl. VIN R
- **Lube** ... **B39**
- **Air** ... **PA1758**
- **Fuel** ... **PF894,-RV**
- **Fuel Vapor** ... **SA2046**
- **Trans. (TH350)** ... **18031**
- **Trans. (TH400)** ... **6020**

Riviera V8-350 (5.7L) 4 Bbl. VIN J
- **Lube** ... **B39**
- **Air** ... **PA2008**
- **Fuel** ... **PF894,-RV**
- **Oil Vapor** ... **SA2027**
- **Fuel Vapor** ... **SA2046**
- **Trans. (TH350)** ... **18031**
- **Trans. (TH400)** ... **6020**

Riviera V8-350 (5.7L) 4 Bbl. VIN R
- **Lube** ... **B39**
- **Air** ... **PA1758**
- **Fuel** ... **PF894,-RV**
- **Fuel Vapor** ... **SA2046**
- **Trans. (TH350)** ... **18031**
- **Trans. (TH400)** ... **6020**

Riviera V8-403 (6.6L) 4 Bbl. VIN K
- **Lube** ... **B39**
- **Air** ... **PA1758**
- **Fuel** ... **PF894,-RV**
- **Fuel Vapor** ... **SA2046**
- **Trans. (TH350)** ... **18031**
- **Trans. (TH400)** ... **6020**

Skyhawk V6-231 (3.8L) 2 Bbl. VIN C
- **Lube** ... **B43-S**
- **Air** ... **PA658**
- **Fuel** ... **PF893,-RV**
- **Oil Vapor** ... **SA2027**
- **Fuel Vapor** ... **SA2046**

BUICK 1977 (Cont'd.)

Skylark V6-231 (3.8L) 2 Bbl. VIN C
- **Lube** ... **B43-S**
- **Air** ... **PA1680**
- **Fuel** ... **PF893,-RV**
- **Oil Vapor** ... **SA2027**
- **Fuel Vapor** ... **SA2046**

Skylark V8-301 (4.9L) 2 Bbl. VIN Y
- **Lube** ... **B31**
- **Air** ... **PA2006**
- **Fuel** ... **PF894,-RV**
- **Oil Vapor** ... **SA2027**
- **Fuel Vapor** ... **SA2046**
- **Trans.** ... **18031**

Skylark V8-305 (5.0L) 2 Bbl. VIN U
- **Lube** ... **B27**
- **Air** ... **PA2006**
- **Fuel** ... **PF893,-RV**
- **Oil Vapor** ... **SA2027**
- **Fuel Vapor** ... **SA2046**

Skylark V8-350 (5.7L) 4 Bbl. VIN L
- **Lube** ... **B27**
- **Air** ... **PA2008**
- **Fuel** ... **PF894,-RV**
- **Oil Vapor** ... **SA2027**
- **Fuel Vapor** ... **SA2046**
- **Trans.** ... **18031**

Skylark V8-350 (5.7L) 4 Bbl. VIN R
- **Lube** ... **B39**
- **Air** ... **PA1758**
- **Fuel** ... **PF894,-RV**
- **Fuel Vapor** ... **SA2046**
- **Trans.** ... **18031**

1976

Century V6-231 (3.8L) 2 Bbl. VIN C
- **Lube** ... **B31**
- **Air** ... **PA658**
- **Fuel** ... **PF893,-RV**
- **Oil Vapor** ... **SA2027**
- **Fuel Vapor** ... **SA2046**
- **Trans.** ... **18031**

Century V8-350 (5.7L) 2,4 Bbl. VIN H,J
- **Lube** ... **B39**
- **Air** ... **PA2006**
- **Fuel (1 In. Ele.)** ... **PF893,-RV**
- **Fuel (2 1/32 In. Ele.)** ... **PF894,-RV**
- **Oil Vapor** ... **SA2027**
- **Fuel Vapor** ... **SA2046**
- **Trans.** ... **18031**

Electra V8-455 (7.5L) 4 Bbl. VIN T
- **Lube** ... **B39**
- **Air** ... **PA1758**
- **Fuel** ... **PF894,-RV**
- **Oil Vapor** ... **SA2027**
- **Fuel Vapor** ... **SA2046**
- **Trans. (TH400)** ... **6020**

Estate Wagon V8-455 (7.5L) 4 Bbl. VIN Y
- **Lube** ... **B39**
- **Air** ... **PA1758**
- **Fuel** ... **PF894,-RV**
- **Oil Vapor** ... **SA2027**
- **Fuel Vapor** ... **SA2046**
- **Trans.** ... **6020**

LeSabre V6-231 (3.8L) 2 Bbl. VIN C
- **Lube** ... **B43-S**
- **Air** ... **PA658**
- **Fuel** ... **PF893,-RV**
- **Oil Vapor** ... **SA2027**
- **Fuel Vapor** ... **SA2046**
- **Trans.** ... **18031**

LeSabre V8-350 (5.7L) 4 Bbl. VIN J
- **Lube** ... **B39**
- **Air** ... **PA2006**
- **Fuel (1 In. Ele.)** ... **PF893,-RV**
- **Fuel (2 1/32 In. Ele.)** ... **PF894,-RV**
- **Oil Vapor** ... **SA2027**
- **Fuel Vapor** ... **SA2046**
- **Trans.** ... **18031**

OBS = Obsolete. Availability Limited to Distributor Stock.

BUICK 1976 (Cont'd.)

LeSabre V8-455 (7.5L) 4 Bbl. VIN Y
- **Lube**.....B39
- **Air**.....PA1758
- **Fuel**.....PF894,-RV
- **Oil Vapor**.....SA2027
- **Fuel Vapor**.....SA2046
- **Trans. (TH350, TH375B)**.....18031
- **Trans. (TH400)**.....6020

Regal 6-231 (3.8L) 2 Bbl. VIN C
- **Lube**.....B31
- **Air**.....PA658
- **Fuel**.....PF893,-RV
- **Oil Vapor**.....SA2027
- **Fuel Vapor**.....SA2046
- **Trans.**.....18031

Regal V8-350 (5.7L) 2,4 Bbl. VIN H,J
- **Lube**.....B39
- **Air**.....PA2006
- **Fuel (1 In. Ele.)**.....PF893,-RV
- **Fuel (2 1/32 In. Ele.)**.....PF894,-RV
- **Oil Vapor**.....SA2027
- **Fuel Vapor**.....SA2046
- **Trans.**.....18031

Riviera V8-455 (7.5L) 4 Bbl. VIN Y
- **Lube**.....B39
- **Air**.....PA1758
- **Fuel**.....PF894,-RV
- **Oil Vapor**.....SA2027
- **Fuel Vapor**.....SA2046
- **Trans.**.....6020

Skyhawk V6-231 (3.8L) 2 Bbl. VIN C
- **Lube**.....B43-S
- **Air**.....PA658
- **Fuel**.....PF893,-RV
- **Oil Vapor**.....SA2027
- **Fuel Vapor**.....SA2046

Skylark V6-231 (3.8L) 2 Bbl. VIN C
- **Lube**.....B31
- **Air**.....PA658
- **Fuel**.....PF893,-RV
- **Oil Vapor**.....SA2027
- **Fuel Vapor**.....SA2046

Skylark V8-260 (4.3L) 2 Bbl. VIN F
- **Lube**.....B39
- **Air**.....PA2008
- **Fuel**.....PF894,-RV
- **Fuel Vapor**.....SA2046
- **Trans.**.....18031

Skylark V8-350 (5.7L) 2,4 Bbl. VIN H,J
- **Lube**.....B39
- **Air**.....PA2006
- **Fuel (1 In. Ele.)**.....PF893,-RV
- **Fuel (2 1/32 In. Ele.)**.....PF894,-RV
- **Oil Vapor**.....SA2027
- **Fuel Vapor**.....SA2046
- **Trans.**.....18031

1975

Apollo 6-250 (4.1L) 1 Bbl. VIN D
- **Lube**.....B27
- **Air**.....PA658
- **Fuel**.....PF893,-RV
- **Oil Vapor**.....SA2027
- **Fuel Vapor**.....SA2046
- **Trans.**.....18031

Apollo V8-260 (4.3L) 2 Bbl. VIN F
- **Lube**.....B39
- **Air**.....PA2008
- **Fuel**.....PF894,-RV
- **Fuel Vapor**.....SA2046
- **Trans.**.....18031

Apollo V8-350 (5.7L) 2,4 Bbl. VIN H,J
- **Lube**.....B39
- **Air**.....PA2006
- **Fuel (1 In. Ele.)**.....PF893,-RV
- **Fuel (2 1/32 In. Ele.)**.....PF894,-RV
- **Oil Vapor**.....SA2027
- **Fuel Vapor**.....SA2046
- **Trans.**.....18031

Century V6-231 (3.8L) 2 Bbl. VIN C
- **Lube**.....B31
- **Air**.....PA658
- **Fuel**.....PF893,-RV
- **Oil Vapor**.....SA2027
- **Fuel Vapor**.....SA2046
- **Trans.**.....18031

BUICK 1975 (Cont'd.)

Century V8-350 (5.7L) 2,4 Bbl. Carb. VIN H,J
- **Lube**.....B39
- **Air**.....PA2006
- **Fuel (1 In. Ele.)**.....PF893,-RV
- **Fuel (2 1/32 In. Ele.)**.....PF894,-RV
- **Oil Vapor**.....SA2027
- **Fuel Vapor**.....SA2046
- **Trans.**.....18031

Century Wagon V6-231 (3.8) 2 Bbl. VIN C
- **Lube**.....B31
- **Air**.....PA658
- **Fuel**.....PF893,-RV
- **Oil Vapor**.....SA2027
- **Fuel Vapor**.....SA2046
- **Trans.**.....18031

Century Wagon V8-350 (5.7L) 2,4 Bbl. VIN H,J
- **Lube**.....B39
- **Air**.....PA2006
- **Fuel (1 In. Ele.)**.....PF893,-RV
- **Fuel (2 1/32 In. Ele.)**.....PF894,-RV
- **Oil Vapor**.....SA2027
- **Fuel Vapor**.....SA2046
- **Trans.**.....18031

Electra V8-455 (7.5L) 4 Bbl. VIN T
- **Lube**.....B39
- **Air**.....PA1758
- **Fuel**.....PF894,-RV
- **Oil Vapor**.....SA2027
- **Fuel Vapor**.....SA2046
- **Trans.**.....6020

Estate Wagon V8-455 (7.5L) 4 Bbl. VIN T
- **Lube**.....B39
- **Air**.....PA1758
- **Fuel**.....PF894,-RV
- **Oil Vapor**.....SA2027
- **Fuel Vapor**.....SA2046
- **Trans.**.....6020

LeSabre V8-350 (5.7L) 4 Bbl. VIN J
- **Lube**.....B39
- **Air**.....PA2006
- **Fuel (1 In. Ele.)**.....PF893,-RV
- **Fuel (2 1/32 In. Ele.)**.....PF894,-RV
- **Oil Vapor**.....SA2027
- **Fuel Vapor**.....SA2046
- **Trans. (TH350, TH375B)**.....18031
- **Trans. (TH400)**.....6020

LeSabre V8-400 (6.6L) 4 Bbl. VIN S
- **Lube**.....B39
- **Air**.....PA1758
- **Fuel**.....PF893,-RV
- **Oil Vapor**.....SA2027
- **Fuel Vapor**.....SA2046
- **Trans.**.....6020

LeSabre V8-455 (7.5L) 4 Bbl. VIN T
- **Lube**.....B39
- **Air**.....PA1758
- **Fuel**.....PF894,-RV
- **Oil Vapor**.....SA2027
- **Fuel Vapor**.....SA2046
- **Trans.**.....6020

Regal V6-231 (3.8L) 2 Bbl. VIN C
- **Lube**.....B31
- **Air**.....PA658
- **Fuel**.....PF893,-RV
- **Oil Vapor**.....SA2027
- **Fuel Vapor**.....SA2046
- **Trans.**.....18031

Regal V8-350 (5.7L) 2,4 Bbl. VIN H,J
- **Lube**.....B39
- **Air**.....PA2006
- **Fuel (1 In. Ele.)**.....PF893,-RV
- **Fuel (2 1/32 In. Ele.)**.....PF894,-RV
- **Oil Vapor**.....SA2027
- **Fuel Vapor**.....SA2046
- **Trans.**.....18031

Riviera V8-455 (7.5L) 4 Bbl. VIN T
- **Lube**.....B39
- **Air**.....PA1758
- **Fuel**.....PF894,-RV
- **Oil Vapor**.....SA2027
- **Fuel Vapor**.....SA2046
- **Trans.**.....6020

BUICK 1975 (Cont'd.)

Skyhawk V6-231 (3.8L) 2 Bbl. VIN C
- **Lube**.....B43-S
- **Air**.....PA658
- **Fuel**.....PF893,-RV
- **Oil Vapor**.....SA2027
- **Fuel Vapor**.....SA2046
- **Trans.**.....18031

Skylark V6-231 (3.8L) 2 Bbl. VIN C
- **Lube**.....B31
- **Air**.....PA658
- **Fuel**.....PF893,-RV
- **Oil Vapor**.....SA2027
- **Fuel Vapor**.....SA2046
- **Trans.**.....18031

Skylark V8-260 (4.3L) 2 Bbl. VIN F
- **Lube**.....B39
- **Air**.....PA2008
- **Fuel**.....PF894,-RV
- **Fuel Vapor**.....SA2046
- **Trans.**.....18031

Skylark V8-350 (5.7L) 2,4 Bbl. VIN H,J
- **Lube**.....B39
- **Air**.....PA2006
- **Fuel (1 In. Ele.)**.....PF893,-RV
- **Fuel (2 1/32 In. Ele.)**.....PF894,-RV
- **Oil Vapor**.....SA2027
- **Fuel Vapor**.....SA2046
- **Trans.**.....18031

1974

Apollo 6-250 (4.1L) 1 Bbl. Carb. VIN D
- **Lube**.....B27
- **Air**.....PA658
- **Fuel**.....PF893,-RV
- **Oil Vapor**.....SA2027
- **Fuel Vapor**.....SA2046
- **Trans.**.....6021

Apollo V8-350 (5.7L) 2,4 Bbl. Carb. VIN H,J
- **Lube**.....B39
- **Air**.....PA2006
- **Fuel (1 In. Ele.)**.....PF893,-RV
- **Fuel (2 1/32 In. Ele.)**.....PF894,-RV
- **Oil Vapor**.....SA2027
- **Fuel Vapor**.....SA2046
- **Trans.**.....6021

Century V8-350 (5.7L) 2,4 Bbl. Carb. VIN H,J
- **Lube**.....B39
- **Air**.....PA2006
- **Fuel (1 In. Ele.)**.....PF893,-RV
- **Fuel (2 1/32 In. Ele.)**.....PF894,-RV
- **Oil Vapor**.....SA2027
- **Fuel Vapor**.....SA2046
- **Trans.**.....6021

Century V8-455 (7.5L) 2,4 Bbl. Carb. VIN R,U,V
- **Lube**.....B39
- **Air (2 Bbl.)**.....PA2006
- **Air (4 Bbl.)**.....PA1758
- **Fuel**.....PF894,-RV
- **Oil Vapor**.....SA2027
- **Fuel Vapor**.....SA2046
- **Trans.**.....6020

Electra V8-455 (7.5L) 4 Bbl. Carb. VIN T,U,W
- **Lube**.....B39
- **Air**.....PA1758
- **Fuel**.....PF894,-RV
- **Oil Vapor**.....SA2027
- **Fuel Vapor**.....SA2046
- **Trans.**.....6020

Estate Wagon V8-455 (7.5L) 4 Bbl. Carb. VIN T,U,W
- **Lube**.....B39
- **Air**.....PA1758
- **Fuel**.....PF894,-RV
- **Oil Vapor**.....SA2027
- **Fuel Vapor**.....SA2046
- **Trans.**.....6020

BUICK 1974 (Cont'd.)

LeSabre V8-350 (5.7L) 2,4 Bbl. Carb. VIN H,J
- **Lube**.....B39
- **Air**.....PA2006
- **Fuel (1 In. Ele.)**.....PF893,-RV
- **Fuel (2 1/32 In. Ele.)**.....PF894,-RV
- **Oil Vapor**.....SA2027
- **Fuel Vapor**.....SA2046
- **Trans.**.....6021

LeSabre V8-455 (7.5L) 2,4 Bbl. Carb. VIN P,R,T,U,W
- **Lube**.....B39
- **Air**.....PA1758
- **Fuel**.....PF894,-RV
- **Oil Vapor**.....SA2027
- **Fuel Vapor**.....SA2046
- **Trans.**.....6020

Regal V8-350 (5.7L) 2,4 Bbl. Carb. VIN H,J
- **Lube**.....B39
- **Air**.....PA2006
- **Fuel (1 In. Ele.)**.....PF893,-RV
- **Fuel (2 1/32 In. Ele.)**.....PF894,-RV
- **Oil Vapor**.....SA2027
- **Fuel Vapor**.....SA2046
- **Trans.**.....6021

Regal V8-455 (7.5L) Carb.
- **Lube**.....B39
- **Air**.....PA1758
- **Fuel**.....PF894,-RV
- **Oil Vapor**.....SA2027
- **Fuel Vapor**.....SA2046
- **Trans.**.....6020

Riviera V8-455 (7.5L) 4 Bbl. Carb. VIN U,W
- **Lube**.....B39
- **Air**.....PA1758
- **Fuel**.....PF894,-RV
- **Oil Vapor**.....SA2027
- **Fuel Vapor**.....SA2046
- **Trans.**.....6020

1973

Apollo 6-250 (4.1L) 1 Bbl. Carb. VIN D
- **Lube**.....B27
- **Air**.....PA658
- **Fuel**.....PF893,-RV
- **Oil Vapor**.....SA2027
- **Fuel Vapor**.....SA2046
- **Trans.**.....6021

Apollo V8-350 (5.7L) 2,4 Bbl. Carb. VIN H,J
- **Lube**.....B39
- **Air**.....PA2006
- **Fuel (2 Bbl.)**.....PF893,-RV
- **Fuel (4 Bbl.)**.....PF894,-RV
- **Oil Vapor**.....SA2027
- **Fuel Vapor**.....SA2046
- **Trans.**.....6021

Centurion V8-350 (5.7L) 2,4 Bbl. Carb. VIN H,J
- **Lube**.....B39
- **Air**.....PA2006
- **Fuel (2 Bbl.)**.....PF893,-RV
- **Fuel (4 Bbl.)**.....PF894,-RV
- **Oil Vapor**.....SA2027
- **Fuel Vapor**.....SA2046
- **Trans.**.....6021

Centurion V8-455 (7.5L) 4 Bbl. Carb. VIN T,U,V
- **Lube**.....B39
- **Air**.....PA1758
- **Fuel**.....PF894,-RV
- **Oil Vapor**.....SA2027
- **Fuel Vapor**.....SA2046
- **Trans.**.....6020

OBS = Obsolete. Availability Limited to Distributor Stock.

BUICK 1973 (Cont'd.)

Century V8-350 (5.7L) 2,4 Bbl. Carb. VIN H,J
- **Lube**....B39
- **Air**....PA2006
- **Fuel (2 Bbl.)**....PF893,-RV
- **Fuel (4 Bbl.)**....PF894,-RV
- **Oil Vapor**....SA2027
- **Fuel Vapor**....SA2046
- **Trans.**....6021

Century V8-455 (7.5L) 4 Bbl. Carb. VIN T
- **Lube**....B39
- **Air**....PA1758
- **Fuel**....PF894,-RV
- **Oil Vapor**....SA2027
- **Fuel Vapor**....SA2046
- **Trans.**....6020

Electra V8-455 (7.5L) 4 Bbl. Carb. VIN T,V
- **Lube**....B39
- **Air**....PA1758
- **Fuel**....PF894,-RV
- **Oil Vapor**....SA2027
- **Fuel Vapor**....SA2046
- **Trans.**....6020

Estate Wagon V8-350 (5.7L) 2,4 Bbl. Carb. VIN H,J
- **Lube**....B39
- **Air**....PA1758
- **Fuel (2 Bbl.)**....PF893,-RV
- **Fuel (4 Bbl.)**....PF894,-RV
- **Oil Vapor**....SA2027
- **Fuel Vapor**....SA2046
- **Trans. (TH350, TH375)**....6021
- **Trans. (TH400)**....6020

Estate Wagon V8-455 (7.5L) 4 Bbl. Carb. VIN T
- **Lube**....B39
- **Air**....PA1758
- **Fuel**....PF894,-RV
- **Oil Vapor**....SA2027
- **Fuel Vapor**....SA2046
- **Trans.**....6020

LeSabre V8-350 (5.7L) 2,4 Bbl. Carb. VIN H,J
- **Lube**....B39
- **Air**....PA2006
- **Fuel (2 Bbl.)**....PF893,-RV
- **Fuel (4 Bbl.)**....PF894,-RV
- **Oil Vapor**....SA2027
- **Fuel Vapor**....SA2046
- **Trans.**....6021

LeSabre V8-455 (7.5L) 2,4 Bbl. Carb. VIN T,U,V
- **Lube**....B39
- **Air**....PA1758
- **Fuel**....PF894,-RV
- **Oil Vapor**....SA2027
- **Fuel Vapor**....SA2046
- **Trans.**....6020

Regal V8-350 (5.7L) 2,4 Bbl. Carb. VIN H,J
- **Lube**....B39
- **Air**....PA2006
- **Fuel (2 Bbl.)**....PF893,-RV
- **Fuel (4 Bbl.)**....PF894,-RV
- **Oil Vapor**....SA2027
- **Fuel Vapor**....SA2046
- **Trans.**....6021

Regal V8-455 (7.5L) Carb.
- **Lube**....B39
- **Air**....PA1758
- **Fuel**....PF894,-RV
- **Oil Vapor**....SA2027
- **Fuel Vapor**....SA2046
- **Trans.**....6020

Riviera V8-455 (7.5L) 4 Bbl. Carb. VIN U
- **Lube**....B39
- **Air**....PA1758
- **Fuel**....PF894,-RV
- **Oil Vapor**....SA2027
- **Fuel Vapor**....SA2046
- **Trans.**....6020

BUICK (Cont'd.)

1972

Centurion V8-350 (5.7L) 2,4 Bbl. Carb. VIN H,J
- **Lube**....B39
- **Air**....PA2006
- **Fuel (2 Bbl.)**....PF893,-RV
- **Fuel (4 Bbl.)**....PF894,-RV
- **Oil Vapor**....SA2027
- **Fuel Vapor**....SA2046
- **Trans.**....6021

Centurion V8-455 (7.5L) 4 Bbl. Carb. VIN T,W
- **Lube**....B39
- **Air**....PA1758
- **Fuel**....PF894,-RV
- **Oil Vapor**....SA2027
- **Fuel Vapor**....SA2046
- **Trans.**....6020

Electra V8-455 (7.5L) 4 Bbl. Carb. VIN T
- **Lube**....B39
- **Air**....PA1758
- **Fuel**....PF894,-RV
- **Oil Vapor**....SA2027
- **Fuel Vapor**....SA2046
- **Trans.**....6020

Estate Wagon V8-350 (5.7L) 4 Bbl. Carb. VIN J
- **Lube**....B39
- **Fuel**....PF894,-RV
- **Oil Vapor**....SA2027
- **Fuel Vapor**....SA2046
- **Trans.**....6021

Estate Wagon V8-455 (7.5L) 4 Bbl. Carb. VIN T
- **Lube**....B39
- **Air**....PA1758
- **Fuel**....PF894,-RV
- **Oil Vapor**....SA2027
- **Fuel Vapor**....SA2046
- **Trans.**....6020

GS V8-350 (5.7L) 2,4 Bbl. VIN H,K
- **Lube**....B39
- **Air**....PA1758
- **Fuel (2 Bbl.)**....PF893,-RV
- **Fuel (4 Bbl.)**....PF894,-RV
- **Oil Vapor**....SA2027
- **Fuel Vapor**....SA2046
- **Trans.**....6021

GS 455 V8-455 (7.5L) 4 Bbl. VIN U
- **Lube**....B39
- **Air**....PA1758
- **Fuel**....PF894,-RV
- **Oil Vapor**....SA2027
- **Fuel Vapor**....SA2046
- **Trans.**....6020

LeSabre V8-350 (5.7L) 2,4 Bbl. Carb. VIN H,J
- **Lube**....B39
- **Air**....PA2006
- **Fuel (2 Bbl.)**....PF893,-RV
- **Fuel (4 Bbl.)**....PF894,-RV
- **Oil Vapor**....SA2027
- **Fuel Vapor**....SA2046
- **Trans.**....6021

LeSabre V8-455 (7.5L) Carb. VIN T
- **Lube**....B39
- **Air**....PA1758
- **Fuel**....PF894,-RV
- **Oil Vapor**....SA2027
- **Fuel Vapor**....SA2046
- **Trans. (TH350, TH375)**....6021
- **Trans. (TH400)**....6020

Riviera V8-455 (7.5L) 4 Bbl. Carb. VIN U
- **Lube**....B39
- **Air**....PA1758
- **Fuel**....PF894,-RV
- **Oil Vapor**....SA2027
- **Fuel Vapor**....SA2046
- **Trans.**....6020

BUICK 1972 (Cont'd.)

Skylark V8-350 (5.7L) 2,4 Bbl. VIN H,J
- **Lube**....B39
- **Air**....PA2006
- **Fuel (2 Bbl.)**....PF893,-RV
- **Fuel (4 Bbl.)**....PF894,-RV
- **Oil Vapor**....SA2027
- **Fuel Vapor**....SA2046
- **Trans. (TH350, TH375)**....6021

Skylark V8-455 (7.5L) 4 Bbl. VIN U
- **Lube**....B39
- **Air**....PA1758
- **Fuel**....PF894,-RV
- **Oil Vapor**....SA2027
- **Fuel Vapor**....SA2046
- **Trans. (TH350, TH375)**....6021
- **Trans. (TH400)**....6020

Sportwagon V8-350 (5.7L) 2,4 Bbl. VIN H,J
- **Lube**....B39
- **Air**....PA2006
- **Fuel (2 Bbl.)**....PF893,-RV
- **Fuel (4 Bbl.)**....PF894,-RV
- **Oil Vapor**....SA2027
- **Fuel Vapor**....SA2046
- **Trans. (TH350, TH375)**....6021
- **Trans. (TH400)**....6020

1971

Centurion V8-455 (7.5L) 4 Bbl. Carb.
- **Lube**....B39
- **Air**....PA1758
- **Fuel**....PF894,-RV
- **Oil Vapor**....SA2027
- **Fuel Vapor**....SA2046
- **Trans.**....6020

Electra V8-455 (7.5L) 4 Bbl. Carb.
- **Lube**....B39
- **Air**....PA1758
- **Fuel**....PF894,-RV
- **Oil Vapor**....SA2027
- **Fuel Vapor**....SA2046
- **Trans.**....6020

Estate Wagon V8-455 (7.5L) 4 Bbl. Carb.
- **Lube**....B39
- **Air**....PA1758
- **Fuel**....PF894,-RV
- **Oil Vapor**....SA2027
- **Fuel Vapor**....SA2046
- **Trans. (TH350, TH375)**....6021
- **Trans. (TH400)**....6020

GS V8-350 (5.7L) Carb.
- **Lube**....B39
- **Air**....PA1758
- **Fuel**....PF894,-RV
- **Oil Vapor**....SA2027
- **Fuel Vapor**....SA2046
- **Trans.**....6021

GS 455 V8-455 (7.5L) 4 Bbl. VIN U
- **Lube**....B39
- **Air**....PA1758
- **Fuel**....PF894,-RV
- **Oil Vapor**....SA2027
- **Fuel Vapor**....SA2046
- **Trans.**....6020

LeSabre V8-350 (5.7L) 2,4 Bbl. Carb.
- **Lube**....B39
- **Air**....PA2006
- **Fuel (2 Bbl.)**....PF893,-RV
- **Fuel (4 Bbl.)**....PF894,-RV
- **Oil Vapor**....SA2027
- **Fuel Vapor**....SA2046
- **Trans.**....6021

LeSabre V8-455 (7.5L) Carb.
- **Lube**....B39
- **Air**....PA1758
- **Fuel**....PF894,-RV
- **Oil Vapor**....SA2027
- **Fuel Vapor**....SA2046
- **Trans.**....6020

BUICK 1971 (Cont'd.)

Riviera V8-455 (7.5L) 4 Bbl. Carb.
- **Lube**....B39
- **Air**....PA1758
- **Fuel**....PF894,-RV
- **Oil Vapor**....SA2027
- **Fuel Vapor**....SA2046
- **Trans.**....6020

Skylark 6-250 (4.1L) 1 Bbl. Carb.
- **Lube**....B27
- **Air**....PA658
- **Fuel**....PF893,-RV
- **Oil Vapor**....SA2027
- **Fuel Vapor**....SA2046
- **Trans.**....6021

Skylark V8-350 (5.7L) 2,4 Bbl.
- **Lube**....B39
- **Air**....PA2006
- **Fuel (2 Bbl.)**....PF893,-RV
- **Fuel (4 Bbl.)**....PF894,-RV
- **Oil Vapor**....SA2027
- **Fuel Vapor**....SA2046
- **Trans.**....6021

Sportwagon V8-350 (5.7L) 2,4 Bbl.
- **Lube**....B39
- **Air**....PA2006
- **Fuel (2 Bbl.)**....PF893,-RV
- **Fuel (4 Bbl.)**....PF894,-RV
- **Oil Vapor**....SA2027
- **Fuel Vapor**....SA2046
- **Trans.**....6021

1970

Electra V8-455 (7.5L) 4 Bbl. Carb.
- **Lube**....B39
- **Air**....PA1758
- **Fuel**....PF894,-RV
- **Oil Vapor**....SA2027
- **Fuel Vapor**....SA2046
- **Trans.**....6020

Estate Wagon V8-350 (5.7L) 2,4 Bbl. Carb.
- **Lube**....B39
- **Air**....PA2006
- **Fuel (2 Bbl.)**....PF893,-RV
- **Fuel (4 Bbl.)**....PF894,-RV
- **Oil Vapor**....SA2027
- **Fuel Vapor**....SA2046
- **Trans.**....6020

Estate Wagon V8-455 (7.5L) 4 Bbl. Carb.
- **Lube**....B39
- **Air**....PA1758
- **Fuel**....PF894,-RV
- **Oil Vapor**....SA2027
- **Fuel Vapor**....SA2046
- **Trans.**....6020

GS V8-350 (5.7L) 4 Bbl.
- **Lube**....B39
- **Air**....PA1758
- **Fuel**....PF894,-RV
- **Oil Vapor**....SA2027
- **Fuel Vapor**....SA2046
- **Trans.**....6021

GS 455 V8-455 (7.5L) 4 Bbl.
- **Lube**....B39
- **Air**....PA1758
- **Fuel**....PF894,-RV
- **Oil Vapor**....SA2027
- **Fuel Vapor**....SA2046
- **Trans.**....6021

LeSabre V8-350 (5.7L) 2,4 Bbl. Carb.
- **Lube**....B39
- **Air**....PA2006
- **Fuel (2 Bbl.)**....PF893,-RV
- **Fuel (4 Bbl.)**....PF894,-RV
- **Oil Vapor**....SA2027
- **Fuel Vapor**....SA2046
- **Trans. (TH350, TH375)**....6021
- **Trans. (TH400)**....6020

LeSabre V8-455 (7.5L) 4 Bbl. Carb.
- **Lube**....B39
- **Air**....PA1758
- **Fuel**....PF894,-RV
- **Oil Vapor**....SA2027
- **Fuel Vapor**....SA2046
- **Trans. (TH350, TH375)**....6021
- **Trans. (TH400)**....6020

OBS = Obsolete. Availability Limited to Distributor Stock.

BUICK 1970 (Cont'd.)

Riviera V8-455 (7.5L) 4 Bbl. Carb.
- **Lube** ... B39
- **Air** ... PA1758
- **Fuel** ... PF894,-RV
- **Oil Vapor** ... SA2027
- **Fuel Vapor** ... SA2046
- **Trans.** ... 6020

Skylark 6-250 (4.1L) 1 Bbl. Carb.
- **Lube** ... B27
- **Air** ... PA658
- **Fuel** ... PF893,-RV
- **Oil Vapor** ... SA2027
- **Fuel Vapor** ... SA2046
- **Trans.** ... 6021

Skylark V8-350 (5.7L) 2,4 Bbl.
- **Lube** ... B39
- **Air** ... PA2006
- **Fuel (2 Bbl.)** ... PF893,-RV
- **Fuel (4 Bbl.)** ... PF894,-RV
- **Oil Vapor** ... SA2027
- **Fuel Vapor** ... SA2046
- **Trans.** ... 6021

Skylark V8-455 (7.5L)
- **Lube** ... B39
- **Air** ... PA1758
- **Fuel** ... PF894,-RV
- **Oil Vapor** ... SA2027
- **Fuel Vapor** ... SA2046
- **Trans. (TH350, TH375)** ... 6021
- **Trans. (TH400)** ... 6020

Sportwagon V8-350 (5.7L)
- **Lube** ... B39
- **Air** ... PA2006
- **Oil Vapor** ... SA2027
- **Fuel Vapor** ... SA2046
- **Trans.** ... 6021

Sportwagon V8-455 (7.5L)
- **Lube** ... B39
- **Air** ... PA1758
- **Oil Vapor** ... SA2027
- **Fuel Vapor** ... SA2046
- **Trans. (TH350, TH375)** ... 6021
- **Trans. (TH400)** ... 6020

Wildcat V8-455 (7.5L) 4 Bbl.
- **Lube** ... B39
- **Air** ... PA1758
- **Fuel** ... PF894,-RV
- **Oil Vapor** ... SA2027
- **Fuel Vapor** ... SA2046
- **Trans.** ... 6020

1969

Electra 225 V8-430 (7.0L) Carb.
- **Lube** ... B39
- **Air** ... PA2006
- **Fuel** ... PF894,-RV
- **Oil Vapor** ... SA2027
- **Fuel Vapor** ... SA2046
- **Trans.** ... 6020

GS350 V8-350 (5.7L) Carb.
- **Lube** ... B39
- **Air** ... PA1758
- **Fuel** ... PF894,-RV
- **Oil Vapor** ... SA2027
- **Fuel Vapor** ... SA2046
- **Trans. (TH400)** ... 6020
- **Trans. (300 Super Turbine)** ... 6014

GS400 V8-400 (6.6L) Carb.
- **Lube** ... B39
- **Air** ... PA1758
- **Fuel** ... PF894,-RV
- **Oil Vapor** ... SA2027
- **Fuel Vapor** ... SA2046
- **Trans. (TH400)** ... 6020
- **Trans. (300 Super Turbine)** ... 6014

LeSabre V8-350 (5.7L) 2,4 Bbl. Carb.
- **Lube** ... B39
- **Air** ... PA2006
- **Fuel (2 Bbl.)** ... PF893,-RV
- **Fuel (4 Bbl.)** ... PF894,-RV
- **Oil Vapor** ... SA2027
- **Fuel Vapor** ... SA2046
- **Trans.** ... 6020

BUICK 1969 (Cont'd.)

Riviera V8-430 (7.0L) Carb.
- **Lube** ... B39
- **Air** ... PA2006
- **Fuel** ... PF894,-RV
- **Oil Vapor** ... SA2027
- **Fuel Vapor** ... SA2046
- **Trans.** ... 6020

Skylark 6-250 (4.1L) Carb.
- **Lube** ... B27
- **Air** ... PA658
- **Fuel** ... PF893,-RV
- **Oil Vapor** ... SA2027
- **Fuel Vapor** ... SA2046
- **Trans.** ... 6014

Skylark V8-350 (5.7L) 2,4 Bbl. Carb.
- **Lube** ... B39
- **Air** ... PA2006
- **Fuel (2 Bbl.)** ... PF893,-RV
- **Fuel (4 Bbl.)** ... PF894,-RV
- **Oil Vapor** ... SA2027
- **Fuel Vapor** ... SA2046
- **Trans. (TH400)** ... 6020
- **Trans. (300 Super Turbine)** ... 6014

Special 6-250 (4.1L) Carb.
- **Lube** ... B27
- **Air** ... PA658
- **Fuel** ... PF893,-RV
- **Oil Vapor** ... SA2027
- **Fuel Vapor** ... SA2046
- **Trans.** ... 6014

Special V8-350 (5.7L) 2,4 Bbl. Carb.
- **Lube** ... B39
- **Air** ... PA2006
- **Fuel (2 Bbl.)** ... PF893,-RV
- **Fuel (4 Bbl.)** ... PF894,-RV
- **Oil Vapor** ... SA2027
- **Fuel Vapor** ... SA2046
- **Trans. (TH400)** ... 6020
- **Trans. (300 Super Turbine)** ... 6014

Sportwagon V8-350 (5.7L) 2,4 Bbl. Carb.
- **Lube** ... B39
- **Air** ... PA2006
- **Fuel (2 Bbl.)** ... PF893,-RV
- **Fuel (4 Bbl.)** ... PF894,-RV
- **Oil Vapor** ... SA2027
- **Fuel Vapor** ... SA2046
- **Trans.** ... 6020

Wildcat V8-430 (7.0L) Carb.
- **Lube** ... B39
- **Air** ... PA2006
- **Fuel** ... PF894,-RV
- **Oil Vapor** ... SA2027
- **Fuel Vapor** ... SA2046
- **Trans.** ... 6020

1968

Electra 225 V8-430 (7.0L) Carb.
- **Lube** ... B39
- **Air** ... PA1758
- **Fuel** ... PF894,-RV
- **Oil Vapor** ... SA2027
- **Fuel Vapor** ... SA2046
- **Trans.** ... 6020

GS350 V8-350 (5.7L) Carb.
- **Lube** ... B39
- **Air** ... PA1758
- **Fuel** ... PF894,-RV
- **Oil Vapor** ... SA2027
- **Fuel Vapor** ... SA2046
- **Trans.** ... 6020

GS400 V8-400 (6.6L) Carb.
- **Lube** ... B39
- **Air** ... PA1758
- **Fuel** ... PF894,-RV
- **Oil Vapor** ... SA2027
- **Fuel Vapor** ... SA2046
- **Trans.** ... 6020

LeSabre V8-350 (5.7L) 2 Bbl. Carb.
- **Lube** ... B39
- **Air** ... PA658
- **Fuel** ... PF893,-RV
- **Oil Vapor** ... SA2027
- **Fuel Vapor** ... SA2046
- **Trans.** ... 6020

BUICK 1968 (Cont'd.)

LeSabre V8-350 (5.7L) 4 Bbl. Carb.
- **Lube** ... B39
- **Air** ... PA1758
- **Fuel** ... PF894,-RV
- **Oil Vapor** ... SA2027
- **Fuel Vapor** ... SA2046
- **Trans.** ... 6020

Riviera V8-430 (7.0L) Carb.
- **Lube** ... B39
- **Air** ... PA1758
- **Fuel** ... PF894,-RV
- **Oil Vapor** ... SA2027
- **Fuel Vapor** ... SA2046
- **Trans.** ... 6020

Skylark 6-250 (4.1L) Carb.
- **Lube** ... B27
- **Air** ... PA658
- **Fuel** ... PF893,-RV
- **Oil Vapor** ... SA2027
- **Fuel Vapor** ... SA2046
- **Trans.** ... 6014

Skylark V8-350 (5.7L) 2 Bbl. Carb.
- **Lube** ... B39
- **Air** ... PA658
- **Fuel** ... PF893,-RV
- **Oil Vapor** ... SA2027
- **Fuel Vapor** ... SA2046
- **Trans.** ... 6020

Skylark V8-350 (5.7L) 4 Bbl. Carb.
- **Lube** ... B39
- **Air** ... PA1758
- **Fuel** ... PF894,-RV
- **Oil Vapor** ... SA2027
- **Fuel Vapor** ... SA2046
- **Trans.** ... 6020

Skylark V8-400 (6.6L) Carb.
- **Lube** ... B39
- **Air** ... PA1758
- **Fuel** ... PF894,-RV
- **Oil Vapor** ... SA2027
- **Fuel Vapor** ... SA2046
- **Trans.** ... 6020

Special 6-250 (4.1L) Carb.
- **Lube** ... B27
- **Air** ... PA658
- **Fuel** ... PF893,-RV
- **Oil Vapor** ... SA2027
- **Fuel Vapor** ... SA2046
- **Trans.** ... 6014

Special V8-350 (5.7L) 2,4 Bbl. Carb.
- **Lube** ... B39
- **Air (2 Bbl.)** ... PA658
- **Air (4 Bbl.)** ... PA1758
- **Fuel** ... PF893,-RV
- **Oil Vapor** ... SA2027
- **Fuel Vapor** ... SA2046

Sportwagon V8-350 (5.7L) 2,4 Bbl. Carb.
- **Lube** ... B39
- **Air (2 Bbl.)** ... PA658
- **Air (4 Bbl.)** ... PA1758
- **Fuel** ... PF893,-RV
- **Oil Vapor** ... SA2027
- **Fuel Vapor** ... SA2046
- **Trans.** ... 6020

Sportwagon V8-400 (6.6L) Carb.
- **Lube** ... B39
- **Air** ... PA1758
- **Fuel** ... PF894,-RV
- **Oil Vapor** ... SA2027
- **Fuel Vapor** ... SA2046
- **Trans.** ... 6020

Wildcat V8-430 (7.0L) Carb.
- **Lube** ... B39
- **Air** ... PA1758
- **Fuel** ... PF894,-RV
- **Oil Vapor** ... SA2027
- **Fuel Vapor** ... SA2046
- **Trans.** ... 6020

1967

Gran Sport V8-340 (5.6L) Carb.
- **Lube** ... B39
- **Air** ... PA621
- **Fuel** ... PF893,-RV
- **Trans. (Early TH400)** ... 6013
- **Trans. (TH400)** ... 6020
- **Trans. (300 Super Turbine)** ... 6014

BUICK 1967 (Cont'd.)

Gran Sport V8-401 (6.6L) Carb.
- **Lube** ... B39
- **Air** ... PA621
- **Fuel** ... PF893,-RV
- **Trans.** ... 6020

LeSabre V8-340 (5.6L) Carb.
- **Lube** ... B39
- **Air** ... PA621
- **Fuel** ... PF893,-RV
- **Trans.** ... 6013

Riviera V8-430 (7.0L) Carb.
- **Lube** ... B39
- **Air** ... PA621
- **Fuel** ... PF893,-RV
- **Trans. (Early TH400)** ... 6013
- **Trans. (TH400)** ... 6020

Skylark 6-225 (3.7L) Carb.
- **Lube** ... B39
- **Air** ... PA658
- **Fuel** ... BF840,-K1
- **Fuel (SintBronze)** ... SF898
- **Trans.** ... 6014

Skylark V8-300 (4.9L) Carb.
- **Lube** ... B39
- **Air** ... PA621
- **Fuel** ... PF893,-RV
- **Trans. (Early TH400)** ... 6013
- **Trans. (TH400)** ... 6020
- **Trans. (300 Super Turbine)** ... 6014

Skylark V8-340 (5.6L) Carb.
- **Lube** ... B39
- **Air** ... PA621
- **Fuel** ... PF893,-RV
- **Trans. (Early TH400)** ... 6013
- **Trans. (TH400)** ... 6020
- **Trans. (300 Super Turbine)** ... 6014

Skylark V8-401 (6.6L) Carb.
- **Lube** ... B39
- **Air** ... PA621
- **Fuel** ... PF893,-RV
- **Trans. (Early TH400)** ... 6013
- **Trans. (TH400)** ... 6020
- **Trans. (300 Super Turbine)** ... 6014

Special 6-225 (3.7L) Carb.
- **Lube** ... B39
- **Air** ... PA658
- **Fuel** ... BF840,-K1
- **Fuel (SintBronze)** ... SF898
- **Trans.** ... 6014

Special V8-300 (4.9L) Carb.
- **Lube** ... B39
- **Air** ... PA621
- **Fuel** ... PF893,-RV
- **Trans. (Early TH400)** ... 6013
- **Trans. (TH400)** ... 6020
- **Trans. (300 Super Turbine)** ... 6014

Sportwagon V8-340 (5.6L) Carb.
- **Lube** ... B39
- **Air** ... PA621
- **Fuel** ... PF893,-RV
- **Trans. (Early TH400)** ... 6013
- **Trans. (TH400)** ... 6020
- **Trans. (300 Super Turbine)** ... 6014

Wildcat V8-430 (7.0L) Carb.
- **Lube** ... B39
- **Air** ... PA621
- **Fuel** ... PF893,-RV
- **Trans.** ... 6020

1966

Electra V8-401 (6.6L) Carb.
- **Lube** ... B9
- **Air** ... PA621
- **Trans.** ... 6013

Electra V8-425 (7.0L) Carb.
- **Lube** ... B9
- **Air** ... PA621
- **Trans.** ... 6013

Gran Sport V8-401 (6.6L) Carb.
- **Lube** ... B9
- **Fuel** ... BF840,-K1
- **Trans.** ... 6013

LeSabre V8-340 (5.6L) Carb.
- **Lube** ... B9
- **Air** ... PA621
- **Trans.** ... 6013

OBS = Obsolete. Availability Limited to Distributor Stock.

BUICK 1966 (Cont'd.)

Riviera V8-425 (7.0L) Carb.
Lube....B9
Air....PA621
Trans.....6013

Skylark 6-225 (3.7L) Carb.
Lube....B9
Air....PA658
Fuel....BF840,-K1
Fuel (SintBronze)....SF898
Trans.....6014

Skylark V8-300 (4.9L) Carb.
Lube....B9
Air....PA621
Trans.....6014

Skylark V8-340 (5.6L) Carb.
Lube....B9
Air....PA621
Trans.....6014

Skylark V8-401 (6.6L) Carb.
Lube....B9
Air....PA621
Fuel....BF840,-K1
Trans.....6014

Special 6-225 (3.7L) Carb.
Lube....B9
Air....PA658
Fuel....BF840,-K1
Fuel (SintBronze)....SF898
Trans.....6014

Special V8-300 (4.9L) Carb.
Lube....B9
Air....PA621
Trans.....6014

Sportwagon V8-340 (5.6L) Carb.
Lube....B9
Air....PA621
Fuel (w/o AirCond.)....BF836,-K3
Fuel (w/AirCond.)....BF886

Wildcat V8-401 (6.6L) Carb.
Lube....B9
Air....PA621
Trans.....6013

Wildcat V8-425 (7.0L) Carb.
Lube....B9
Air....PA621
Trans.....6013

1965

Electra V8-401 (6.6L) Carb.
Lube....B9
Air (Two 4 Bbl.)....PA631
Fuel....BF840,-K1
Trans.....6013

Electra V8-425 (7.0L) Carb.
Lube....B9
Air (Two 4 Bbl.)....PA631
Fuel....BF836,-K4
Trans.....6013

Gran Sport V8-401 (6.6L) Carb.
Lube....B9
Air (Two 4 Bbl.)....PA631
Fuel....BF836,-K4
Trans.....6013

LeSabre V8-300 (4.9L) Carb.
Lube....B9
Air....PA621
Fuel....BF836,-K4
Trans.....6013

Riviera V8-401 (6.6L) Carb.
Lube....B9
Air (Two 4 Bbl.)....PA631
Fuel....BF836,-K4
Trans.....6013

Riviera V8-425 (7.0L) Carb.
Lube....B9
Air (Two 4 Bbl.)....PA631
Fuel....BF836,-K4
Trans.....6013

Skylark V6-225 (3.7L) Carb.
Lube....B9
Air....PA658
Fuel....BF840,-K1
Trans.....6014

BUICK 1965 (Cont'd.)

Skylark V8-300 (4.9L) Carb.
Lube....B9
Air....PA621
Fuel....BF836,-K4
Trans.....6014

Skylark V8-401 (6.6L) Carb.
Lube....B9
Air....PA631
Fuel....BF836,-K4
Trans.....6013

Special V6-225 (3.7L) Carb.
Lube....B9
Air....PA658
Fuel....BF840,-K1
Trans.....6014

Special V8-300 (4.9L) Carb.
Lube....B9
Air....PA621
Fuel....BF840,-K1
Trans.....6014

Sportwagon V6-225 (3.7L) Carb.
Lube....B9
Air....PA658
Fuel....BF840,-K1
Trans.....6014

Sportwagon V8-300 (4.9L) Carb.
Lube....B9
Air....PA621
Fuel....BF836,-K4
Trans. (TH400)....6013
Trans. (300 Super Turbine)....6014

Wildcat V8-401 (6.6L) Carb.
Lube....B9
Air (Two 4 Bbl.)....PA631
Fuel....BF836,-K4
Trans.....6013

Wildcat V8-425 (7.0L) Carb.
Lube....B9
Air (Two 4 Bbl.)....PA631
Fuel....BF836,-K4
Trans.....6013

1964

Electra V8-401 (6.6L) Carb.
Lube....B9
Air....PA621
Fuel....BF886
Trans.....6013

LeSabre V8-401 (6.6L) Carb.
Lube....B9
Air....PA621
Fuel....BF886
Trans.....6013

LeSabre V8-425 (7.0L) Carb.
Lube....B9
Air....PA621
Fuel....BF886
Trans.....6013

Riviera V8-401 (6.6L) Carb.
Lube....B9
Air....PA621
Fuel....BF886
Trans.....6013

Riviera V8-425 (7.0L) Carb.
Lube....B9
Air....PA621
Fuel....BF886
Trans.....6013

Skylark V6-225 (3.7L) Carb.
Lube....B9
Air....PA658
Fuel (SintBronze)....SF898
Trans.....6014

Skylark V8-300 (4.9L) Carb.
Lube....B9
Air....PA621
Fuel....BF886
Trans. (300 Super Turbine)....6014
Trans. (TH400)....6013

Special V6-225 (3.7L) Carb.
Lube....B9
Air....PA658
Fuel (SintBronze)....SF898

BUICK 1964 (Cont'd.)

Special V8-300 (4.9L) Carb.
Lube....B9
Air....PA621
Fuel....BF886
Trans.....6013

Sportwagon V6-225 (3.7L) Carb.
Lube....B9
Air....PA658
Fuel (SintBronze)....SF898
Trans.....6014

Sportwagon V8-300 (4.9L) Carb.
Lube....B9
Air....PA621
Fuel....BF886
Trans. (300 Super Turbine)....6014
Trans. (TH400)....6013

Wildcat V8-401 (6.6L) Carb.
Lube....B9
Air....PA621
Fuel....BF886
Trans.....6013

Wildcat V8-425 (7.0L) Carb.
Lube....B9
Air....PA621
Fuel....BF886
Trans.....6013

1963

Electra V8-401 (6.6L) Carb.
Lube....B9
Air....PA621
Fuel....BF886
Trans.....6013

Invicta V8-401 (6.6L) Carb.
Lube....B9
Air....PA621
Fuel....BF886

LeSabre V8-401 (6.6L) Carb.
Lube....B9
Air....PA621
Fuel....BF886

Riviera V8-401 (6.6L) Carb.
Lube....B9
Fuel....BF886

Riviera V8-425 (7.0L) Carb.
Lube....B9

Skylark V6-198 (3.2L) Carb.
Lube....B9
Air....PA658
Fuel (SintBronze)....SF898

Skylark V8-215 (3.5L) Carb.
Lube....B9
Fuel....BF886

Special V6-198 (3.2L) Carb.
Lube....B9
Air....PA658
Fuel (SintBronze)....SF898

Special V8-215 (3.5L) Carb.
Lube....B9
Air....PA621

Wildcat V8-401 (6.6L) Carb.
Lube....B9
Air....PA621
Fuel....BF886

1962

Electra V8-401 (6.6L) 2,4 Bbl. Carb.
Lube....B9
Fuel....PF857

Invicta V8-401 (6.6L) 4 Bbl. Carb.
Lube....B9
Fuel....PF857

LeSabre V8-401 (6.6L) 2 Bbl. Carb.
Lube....B9
Air....PA621
Fuel....PF857

Skylark V6-198 (3.2L) 2 Bbl. Carb.
Lube....B9
Air....PA658

Skylark V8-215 (3.5L) 4 Bbl. Carb.
Lube....B9
Fuel....PF857

Special V6-198 (3.2L) 2 Bbl. Carb.
Lube....B9
Air....PA658
Fuel....PF857

BUICK 1962 (Cont'd.)

Special V8-215 (3.5L) 2 Bbl. Carb.
Lube....B9
Air....PA621
Fuel....PF857

1961

Electra V8-401 (6.6L) 4 Bbl. Carb.
Lube....B9
Fuel....PF857

Invicta V8-401 (6.6L) 4 Bbl. Carb.
Lube....B9
Fuel....PF857

LeSabre V8-364 (6.0L) 4 Bbl. Carb.
Lube....B9
Fuel....PF857

LeSabre V8-401 (6.6L) 4 Bbl. Carb.
Lube....B9
Fuel....PF857

Skylark V8-215 (3.5L) 2 Bbl. Carb.
Lube....B9
Air....PA621
Fuel....PF857

Special V8-215 (3.5L) 2 Bbl. Carb.
Lube....B9
Air....PA621
Fuel....PF857

1960

Electra V8-401 (6.6L) 4 Bbl. Carb.
Lube....B9
Fuel....PF857

Invicta V8-401 (6.6L) 4 Bbl. Carb.
Lube....B9
Fuel....PF857

LeSabre V8-364 (6.0L) 2 Bbl. Carb.
Lube....B9
Air....PA621
Fuel....PF857

LeSabre V8-401 (6.6L) 4 Bbl. Carb.
Lube....B9
Fuel....PF857

1959

Electra V8-401 (6.6L) 4 Bbl. Carb.
Lube....B9
Fuel....PF857

Invicta V8-401 (6.6L) 4 Bbl. Carb.
Lube....B9
Fuel....PF857

LeSabre V8-364 (6.0L) 2 Bbl. Carb.
Lube....B9
Air....PA625
Fuel....PF857

1958

Century V8-364 (6.0L) 4 Bbl. Carb.
Lube....P25
Fuel....PF857

Limited V8-364 (6.0L) 4 Bbl. Carb.
Lube....P25
Fuel....PF857

Roadmaster V8-364 (6.0L) 4 Bbl. Carb.
Lube....P25
Fuel....PF857

Special V8-364 (6.0L) 2 Bbl. Carb.
Lube....P25
Fuel....PF857

Super V8-364 (6.0L) 4 Bbl. Carb.
Lube....P25
Fuel....PF857

1957

Century V8-364 (6.0L) 4 Bbl. Carb.
Lube....P25
Fuel....PF857

Roadmaster V8-364 (6.0L) 4 Bbl. Carb.
Lube....P25
Fuel....PF857

Special V8-364 (6.0L) 2 Bbl. Carb.
Lube....P25
Fuel....PF857

OBS = Obsolete. Availability Limited to Distributor Stock.

BUICK 1957 (Cont'd.)

Super V8-364 (6.0L) 4 Bbl. Carb.
Lube.....**P25**
Fuel.....**PF857**

1956

Century V8-322 (5.3L) 4 Bbl. Carb.
Lube.....**P25**
Fuel.....**BF840,-K1**

Roadmaster V8-322 (5.3L) 4 Bbl. Carb.
Lube.....**P25**
Fuel.....**BF840,-K1**

Special V8-322 (5.3L) 2 Bbl. Carb.
Lube.....**P25**
Fuel.....**BF840,-K1**

Super V8-322 (5.3L) 4 Bbl. Carb.
Lube.....**P25**
Fuel.....**BF840,-K1**

1955

Century V8-322 (5.3L) 4 Bbl. Carb.
Lube.....**P25**
Fuel.....**BF840,-K1**

Roadmaster V8-322 (5.3L) 4 Bbl. Carb.
Lube.....**P25**
Fuel.....**BF840,-K1**

Special V8-264 (4.3L) 2 Bbl. Carb.
Lube.....**P25**
Fuel.....**BF840,-K1**

Super V8-322 (5.3L) 4 Bbl. Carb.
Lube.....**P25**
Fuel.....**BF840,-K1**

1954

Century V8-322 (5.3L) 4 Bbl. Carb.
Lube.....**P25**
Fuel.....**BF840,-K1**

Roadmaster V8-322 (5.3L) 4 Bbl. Carb.
Lube.....**P25**
Fuel.....**BF840,-K1**

Skylark V8-322 (5.3L) 4 Bbl. Carb.
Lube.....**P25**
Fuel.....**BF840,-K1**

Special V8-264 (4.3L) 2 Bbl. Carb.
Lube.....**P25**
Fuel.....**BF840,-K1**

Super V8-322 (5.3L) 2 Bbl. Carb.
Lube.....**P25**
Fuel.....**BF840,-K1**

1953

Roadmaster V8-322 (5.3L) 4 Bbl. Carb.
Lube.....**P25**

Super V8-322 (5.3L) 2 Bbl. Carb.
Lube.....**P25**

1952

Roadmaster V8-320 (5.2L) 4 Bbl. Carb.
Lube.....**P26**
Fuel.....**PF857**

Special 8-263 (4.3L) 2 Bbl. Carb.
Lube.....**P26**
Fuel.....**PF857**

Super 8-263 (4.3L) 2 Bbl. Carb.
Lube.....**P26**
Fuel.....**PF857**

1951

Roadmaster V8-320 (5.2L) 2 Bbl. Carb.
Lube.....**P26**
Fuel.....**PF857**

Special 8-263 (4.3L) 2 Bbl. Carb.
Lube.....**P26**
Fuel.....**PF857**

Super 8-263 (4.3L) 2 Bbl. Carb.
Lube.....**P26**
Fuel.....**PF857**

CADILLAC

1979

DeVille V8-350 (5.7L) FI Diesel VIN N
Lube.....**B30**
Air.....**PA2079**
Box-Style Fuel.....**BF806**
Fuel Vapor.....**SA2046**
Trans......**6020**

DeVille V8-425 (7.0L) 4 Bbl. VIN S
Lube.....**B30**
Air.....**PA2009**
Fuel.....**PF894,-RV**
Fuel Vapor.....**SA2046**
Trans......**6020**

DeVille V8-425 (7.0L) FI VIN T
Lube.....**B30**
Air.....**PA2009**
Fuel.....**PF827**
Fuel Vapor.....**SA2046**
Trans......**6020**

Eldorado V8-350 (5.7L) FI VIN B
Lube.....**B30**
Air.....**PA1758**
Fuel.....**PF827**
Fuel Vapor.....**SA2046**

Eldorado V8-350 (5.7L) FI Diesel VIN N
Lube.....**B30**
Air.....**PA2079**
Box-Style Fuel.....**BF806**
Fuel Vapor.....**SA2046**

Fleetwood V8-350 (5.7L) FI Diesel VIN N
Lube.....**B30**
Air.....**PA2079**
Box-Style Fuel.....**BF806**
Fuel Vapor.....**SA2046**
Trans......**6020**

Fleetwood V8-425 (7.0L) 4 Bbl. VIN S
Lube.....**B30**
Air.....**PA2009**
Fuel.....**PF894,-RV**
Fuel Vapor.....**SA2046**
Trans......**6020**

Fleetwood V8-425 (7.0L) FI VIN T
Lube.....**B30**
Air.....**PA2009**
Fuel.....**PF827**
Fuel Vapor.....**SA2046**
Trans......**6020**

Seville V8-350 (5.7L) FI VIN B
Lube.....**B30**
Air.....**PA1758**
Fuel.....**PF827**
Fuel Vapor.....**SA2046**
Trans......**6020**

Seville V8-350 (5.7L) FI Diesel VIN N
Lube.....**B30**
Air.....**PA2079**
Box-Style Fuel.....**BF806**
Fuel Vapor.....**SA2046**
Trans......**6020**

1978

DeVille V8-425 (7.0L) 4 Bbl. VIN S
Lube.....**B30**
Air.....**PA2009**
Fuel.....**PF894,-RV**
Fuel Vapor.....**SA2046**
Trans......**6020**

DeVille V8-425 (7.0L) FI VIN T
Lube.....**B30**
Air.....**PA2009**
Fuel.....**PF827**
Fuel Vapor.....**SA2046**
Trans......**6020**

Eldorado V8-425 (7.0L) 4 Bbl. VIN S
Lube.....**B30**
Air.....**PA2009**
Fuel.....**PF894,-RV**
Fuel Vapor.....**SA2046**

CADILLAC 1978 (Cont'd.)

Eldorado V8-425 (7.0L) FI VIN T
Lube.....**B30**
Air.....**PA2009**
Fuel.....**PF827**
Fuel Vapor.....**SA2046**

Fleetwood V8-425 (7.0L) 4 Bbl. VIN S
Lube.....**B30**
Air.....**PA2009**
Fuel.....**PF894,-RV**
Fuel Vapor.....**SA2046**
Trans......**6020**

Fleetwood V8-425 (7.0L) FI VIN T
Lube.....**B30**
Air.....**PA2009**
Fuel.....**PF827**
Fuel Vapor.....**SA2046**
Trans......**6020**

Seville V8-350 (5.7L) FI VIN B
Lube.....**B30**
Air.....**PA1758**
Fuel.....**PF827**
Fuel Vapor.....**SA2046**
Trans......**6020**

Seville V8-350 (5.7L) FI Diesel VIN N
Lube.....**B39**
Air.....**PA2079**
Box-Style Fuel.....**BF806**
Fuel Vapor.....**SA2046**
Trans......**6020**

1977

DeVille V8-425 (7.0L) 4 Bbl. VIN S
Lube.....**B30**
Air.....**PA2009**
Fuel.....**PF894,-RV**
Fuel Vapor.....**SA2046**
Trans......**6020**

DeVille V8-425 (7.0L) FI VIN T
Lube.....**B30**
Air.....**PA2009**
Fuel.....**PF827**
Fuel Vapor.....**SA2046**
Trans......**6020**

Eldorado V8-425 (7.0L) 4 Bbl. VIN S
Lube.....**B30**
Air.....**PA2009**
Fuel.....**PF894,-RV**
Fuel Vapor.....**SA2046**

Eldorado V8-425 (7.0L) FI VIN T
Lube.....**B30**
Air.....**PA2009**
Fuel.....**PF827**
Fuel Vapor.....**SA2046**

Fleetwood V8-425 (7.0L) 4 Bbl. VIN S
Lube.....**B30**
Air.....**PA2009**
Fuel.....**PF894,-RV**
Fuel Vapor.....**SA2046**
Trans......**6020**

Fleetwood V8-425 (7.0L) FI VIN T
Lube.....**B30**
Air.....**PA2009**
Fuel.....**PF827**
Fuel Vapor.....**SA2046**
Trans......**6020**

Seville V8-350 (5.7L) FI VIN R
Lube.....**B30**
Air.....**PA1758**
Fuel.....**PF827**
Fuel Vapor.....**SA2046**
Trans......**6020**

1976

Calais V8-500 (8.2L) 4 Bbl. VIN S
Lube.....**B39**
Air.....**PA2009**
Fuel.....**PF894,-RV**
Fuel Vapor.....**SA2046**
Trans......**6020**

CADILLAC 1976 (Cont'd.)

Calais V8-500 (8.2L) FI VIN S
Lube.....**B39**
Air.....**PA2009**
Fuel.....**PF827**
Fuel Vapor.....**SA2046**
Trans......**6020**

DeVille V8-500 (8.2L) 4 Bbl. VIN S
Lube.....**B39**
Air.....**PA2009**
Fuel.....**PF894,-RV**
Fuel Vapor.....**SA2046**
Trans......**6020**

DeVille V8-500 (8.2L) FI VIN S
Lube.....**B39**
Air.....**PA2009**
Fuel.....**PF827**
Fuel Vapor.....**SA2046**
Trans......**6020**

Eldorado V8-500 (8.2L) 4 Bbl. VIN S
Lube.....**B39**
Air.....**PA2009**
Fuel.....**PF894,-RV**
Fuel Vapor.....**SA2046**

Eldorado V8-500 (8.2L) FI VIN S
Lube.....**B39**
Air.....**PA2009**
Fuel.....**PF827**
Fuel Vapor.....**SA2046**

Fleetwood V8-500 (8.2L) 4 Bbl. VIN S
Lube.....**B39**
Air.....**PA2009**
Fuel.....**PF894,-RV**
Fuel Vapor.....**SA2046**
Trans......**6020**

Fleetwood V8-500 (8.2L) FI VIN S
Lube.....**B39**
Air.....**PA2009**
Fuel.....**PF827**
Fuel Vapor.....**SA2046**
Trans......**6020**

Seville V8-350 (5.7L) FI VIN R
Lube.....**B39**
Air.....**PA1758**
Fuel.....**PF827**
Fuel Vapor.....**SA2046**
Trans......**6020**

1975

Calais V8-500 (8.2L) 4 Bbl. VIN S
Lube.....**B39**
Air.....**PA2009**
Fuel.....**PF894,-RV**
Fuel Vapor.....**SA2046**
Trans......**6020**

DeVille V8-500 (8.2L) 4 Bbl. VIN S
Lube.....**B39**
Air.....**PA2009**
Fuel.....**PF894,-RV**
Fuel Vapor.....**SA2046**
Trans......**6020**

Eldorado V8-500 (8.2L) 4 Bbl. VIN S
Lube.....**B39**
Air.....**PA2009**
Fuel.....**PF894,-RV**
Fuel Vapor.....**SA2046**

Fleetwood V8-500 (8.2L) 4 Bbl. VIN S
Lube.....**B39**
Air.....**PA2009**
Fuel.....**PF894,-RV**
Fuel Vapor.....**SA2046**
Trans......**6020**

Seville V8-350 (5.7L) FI VIN R
Lube.....**B39**
Air.....**PA1758**
Fuel.....**PF827**
Fuel Vapor.....**SA2046**
Trans......**6020**

OBS = Obsolete. Availability Limited to Distributor Stock.

CADILLAC (Cont'd.)

1974

Calais V8-472 (7.7L) Carb. VIN R
- **Lube**.....B39
- **Air**.....PA2009
- **Fuel**.....PF894,-RV
- **Fuel Vapor**.....SA2046
- **Trans.**.....6020

DeVille V8-472 (7.7L) Carb. VIN R
- **Lube**.....B39
- **Air**.....PA2009
- **Fuel**.....PF894,-RV
- **Fuel Vapor**.....SA2046
- **Trans.**.....6020

DeVille V8-500 (8.2L) Carb. VIN S
- **Lube**.....B39
- **Air**.....PA2009
- **Fuel**.....PF894,-RV
- **Fuel Vapor**.....SA2046
- **Trans.**.....6020

Eldorado V8-500 (8.2L) Carb. VIN S
- **Lube**.....B39
- **Air**.....PA2009
- **Fuel**.....PF894,-RV
- **Fuel Vapor**.....SA2046

Fleetwood V8-472 (7.7L) Carb. VIN R
- **Lube**.....B39
- **Air**.....PA2009
- **Fuel**.....PF894,-RV
- **Fuel Vapor**.....SA2046
- **Trans.**.....6020

Fleetwood V8-500 (8.2L) Carb. VIN S
- **Lube**.....B39
- **Air**.....PA2009
- **Fuel**.....PF894,-RV
- **Fuel Vapor**.....SA2046

1973

Calais V8-472 (7.7L) Carb. VIN R
- **Lube**.....B39
- **Air**.....PA2009
- **Fuel**.....PF894,-RV
- **Fuel Vapor**.....SA2046
- **Trans.**.....6020

DeVille V8-472 (7.7L) Carb. VIN R
- **Lube**.....B39
- **Air**.....PA2009
- **Fuel**.....PF894,-RV
- **Fuel Vapor**.....SA2046
- **Trans.**.....6020

Eldorado V8-500 (8.2L) Carb. VIN S
- **Lube**.....B39
- **Air**.....PA2009
- **Fuel**.....PF894,-RV
- **Fuel Vapor**.....SA2046

Fleetwood V8-472 (7.7L) Carb. VIN R
- **Lube**.....B39
- **Air**.....PA2009
- **Fuel**.....PF894,-RV
- **Fuel Vapor**.....SA2046
- **Trans.**.....6020

1972

Calais V8-472 (7.7L) Carb. VIN R
- **Lube**.....B39
- **Air**.....PA2009
- **Fuel**.....PF894,-RV
- **Fuel Vapor**.....SA2046
- **Trans.**.....6020

DeVille V8-472 (7.7L) Carb. VIN R
- **Lube**.....B39
- **Air**.....PA2009
- **Fuel**.....PF894,-RV
- **Fuel Vapor**.....SA2046
- **Trans.**.....6020

Eldorado V8-500 (8.2L) Carb. VIN S
- **Lube**.....B39
- **Air**.....PA2009
- **Fuel**.....PF894,-RV
- **Fuel Vapor**.....SA2046

Fleetwood V8-472 (7.7L) Carb. VIN R
- **Lube**.....B39
- **Air**.....PA2009
- **Fuel**.....PF894,-RV
- **Fuel Vapor**.....SA2046
- **Trans.**.....6020

CADILLAC (Cont'd.)

1971

Calais V8-472 (7.7L) Carb.
- **Lube**.....B39
- **Air**.....PA2009
- **Fuel**.....PF894,-RV
- **Fuel Vapor**.....SA2046
- **Trans.**.....6020

DeVille V8-472 (7.7L) Carb.
- **Lube**.....B39
- **Air**.....PA2009
- **Fuel**.....PF894,-RV
- **Fuel Vapor**.....SA2046
- **Trans.**.....6020

Eldorado V8-500 (8.2L) Carb.
- **Lube**.....B39
- **Air**.....PA2009
- **Fuel**.....PF894,-RV
- **Fuel Vapor**.....SA2046

Fleetwood V8-472 (7.7L) Carb.
- **Lube**.....B39
- **Air**.....PA2009
- **Fuel**.....PF894,-RV
- **Fuel Vapor**.....SA2046
- **Trans.**.....6020

1970

Calais V8-472 (7.7L) 4 Bbl. Carb.
- **Lube**.....B39
- **Air**.....PA2009
- **Fuel**.....PF894,-RV
- **Fuel Vapor**.....SA2046
- **Trans.**.....6020

DeVille V8-472 (7.7L) 4 Bbl. Carb.
- **Lube**.....B39
- **Air**.....PA2009
- **Fuel**.....PF894,-RV
- **Fuel Vapor**.....SA2046
- **Trans.**.....6020

Eldorado V8-500 (8.2L) 4 Bbl. Carb.
- **Lube**.....B39
- **Air**.....PA2009
- **Fuel**.....PF894,-RV
- **Fuel Vapor**.....SA2046

Fleetwood V8-472 (7.7L) 4 Bbl. Carb.
- **Lube**.....B39
- **Air**.....PA2009
- **Fuel**.....PF894,-RV
- **Fuel Vapor**.....SA2046
- **Trans.**.....6020

1969

Calais V8-472 (7.7L) Carb.
- **Lube**.....B39
- **Air**.....PA2009
- **Fuel**.....PF894,-RV
- **Trans.**.....6020

DeVille V8-472 (7.7L) Carb.
- **Lube**.....B39
- **Air**.....PA2009
- **Fuel**.....PF894,-RV
- **Trans.**.....6020

Eldorado V8-472 (7.7L) Carb.
- **Lube**.....B39
- **Air**.....PA2009
- **Fuel**.....PF894,-RV

Fleetwood Series V8-472 (7.7L) Carb.
- **Lube**.....B39
- **Air**.....PA2009
- **Fuel**.....PF894,-RV
- **Fuel Vapor**.....SA2046
- **Trans.**.....6020

1968

Calais V8-472 (7.7L) Carb.
- **Lube**.....B39
- **Air**.....PA2009
- **Trans.**.....6020

DeVille V8-472 (7.7L) Carb.
- **Lube**.....B39
- **Air**.....PA2009
- **Trans.**.....6020

CADILLAC 1968 (Cont'd.)

Eldorado V8-472 (7.7L) Carb.
- **Lube**.....B39
- **Air**.....PA2009
- **Trans.**.....6020

Fleetwood Series V8-472 (7.7L) Carb.
- **Lube**.....B39
- **Air**.....PA2009
- **Trans.**.....6020

1967

Calais V8-429 (7.0L) Carb.
- **Lube**.....B9
- **Air**.....PA2007
- **Fuel**.....PF857
- **Trans. (TH400)**.....6020
- **Trans. (Early TH400)**.....6013

DeVille V8-429 (7.0L) Carb.
- **Lube**.....B9
- **Air**.....PA2007
- **Fuel**.....PF857
- **Trans. (TH400)**.....6020
- **Trans. (Early TH400)**.....6013

Eldorado V8-429 (7.0L) Carb.
- **Lube**.....B9
- **Fuel**.....PF857

Electra V8-430 (7.0L) Carb.
- **Lube**.....B39
- **Air**.....PA2007
- **Fuel**.....PF893,-RV
- **Trans. (TH400)**.....6020
- **Trans. (Early TH400)**.....6013

Fleetwood V8-429 (7.0L) Carb.
- **Lube**.....B9
- **Air**.....PA2007
- **Fuel (w/o AirCond.)**.....PF857
- **Fuel (w/AirCond.)**.....PF864
- **Trans.**.....6020

1966

Calais V8-429 (7.0L) Carb.
- **Lube**.....B9
- **Air**.....PA2007
- **Fuel**.....PF857
- **Trans.**.....6013

DeVille V8-429 (7.0L) Carb.
- **Lube**.....B9
- **Air**.....PA2007
- **Fuel**.....PF857
- **Trans.**.....6013

Eldorado V8-429 (7.0L) Carb.
- **Lube**.....B9
- **Air**.....PA2007
- **Fuel**.....PF857
- **Trans.**.....6013

Fleetwood V8-429 (7.0L) Carb.
- **Lube**.....B9
- **Air**.....PA2007
- **Fuel**.....PF857
- **Trans.**.....6013

1965

Calais V8-429 (7.0L) Carb.
- **Lube**.....B9
- **Air**.....PA2007
- **Trans.**.....6013

DeVille V8-429 (7.0L) Carb.
- **Lube**.....B9
- **Air**.....PA2007
- **Trans.**.....6013

Eldorado V8-429 (7.0L) Carb.
- **Lube**.....B9
- **Air**.....PA2007
- **Trans.**.....6013

Fleetwood V8-429 (7.0L) Carb.
- **Lube**.....B9
- **Air**.....PA2007
- **Trans.**.....6013

CADILLAC (Cont'd.)

1964

DeVille V8-429 (7.0L) Carb.
- **Lube**.....B9
- **Air**.....PA2007
- **Fuel (w/o AirCond.)**.....PF857
- **Fuel (w/AirCond.)**.....PF864
- **Trans.**.....6013

Eldorado V8-429 (7.0L) Carb.
- **Lube**.....B9
- **Air**.....PA2007
- **Fuel (w/o AirCond.)**.....PF857
- **Fuel (w/AirCond.)**.....PF864
- **Trans.**.....6013

Series 60 Fleetwood V8-429 (7.0L) Carb.
- **Lube**.....B9
- **Air**.....PA2007
- **Fuel (w/o AirCond.)**.....PF857
- **Fuel (w/AirCond.)**.....PF864
- **Trans.**.....6013

Series 62 V8-429 (7.0L) Carb.
- **Lube**.....B9
- **Air**.....PA2007
- **Fuel (w/o AirCond.)**.....PF857
- **Fuel (w/AirCond.)**.....PF864
- **Trans.**.....6013

Series 75 Fleetwood V8-429 (7.0L) Carb.
- **Lube**.....B9
- **Air**.....PA2007
- **Fuel (w/o AirCond.)**.....PF857
- **Fuel (w/AirCond.)**.....PF864
- **Trans.**.....6013

1963

DeVille V8-390 (6.4L) Carb.
- **Lube**.....B9
- **Fuel (w/o AirCond.)**.....PF857
- **Fuel (w/AirCond.)**.....PF864
- **Trans.**.....6013

Eldorado V8-390 (6.4L) Carb.
- **Lube**.....B9
- **Fuel (w/o AirCond.)**.....PF857
- **Fuel (w/AirCond.)**.....PF864
- **Trans.**.....6013

Series 60 Fleetwood V8-390 (6.4L) Carb.
- **Lube**.....B9
- **Fuel (w/o AirCond.)**.....PF857
- **Fuel (w/AirCond.)**.....PF864
- **Trans.**.....6013

Series 62 V8-390 (6.4L) Carb.
- **Lube**.....B9
- **Fuel (w/o AirCond.)**.....PF857
- **Fuel (w/AirCond.)**.....PF864
- **Trans.**.....6013

Series 75 Fleetwood V8-390 (6.4L) Carb.
- **Lube**.....B9
- **Fuel (w/o AirCond.)**.....PF857
- **Fuel (w/AirCond.)**.....PF864
- **Trans.**.....6013

1962

DeVille V8-390 (6.4L) 2 Bbl. Carb.
- **Lube**.....B9
- **Fuel (w/o AirCond.)**.....PF857
- **Fuel (w/AirCond.)**.....PF864
- **Trans.**.....6013

Eldorado V8-390 (6.4L) 2 Bbl. Carb.
- **Lube**.....B9
- **Fuel (w/o AirCond.)**.....PF857
- **Fuel (w/AirCond.)**.....PF864
- **Trans.**.....6013

Series 60 Fleetwood V8-390 (6.4L) 2 Bbl. Carb.
- **Lube**.....B9
- **Fuel (w/o AirCond.)**.....PF857
- **Fuel (w/AirCond.)**.....PF864
- **Trans.**.....6013

Series 62 V8-390 (6.4L) 2 Bbl. Carb.
- **Lube**.....B9
- **Fuel (w/o AirCond.)**.....PF857
- **Fuel (w/AirCond.)**.....PF864
- **Trans.**.....6013

OBS = Obsolete. Availability Limited to Distributor Stock.

CADILLAC 1962 (Cont'd.)

Series 75 Fleetwood V8-390 (6.4L)
2 Bbl. Carb.
Lube.....**B9**
Fuel (w/o AirCond.).....**PF857**
Fuel (w/AirCond.).....**PF864**

1961
DeVille V8-390 (6.4L) 4 Bbl. Carb.
Lube.....**B9**
Fuel (w/o AirCond.).....**PF857**
Fuel (w/AirCond.).....**PF864**
Trans......**6013**
Eldorado V8-390 (6.4L) 4 Bbl. Carb.
Lube.....**B9**
Fuel (w/o AirCond.).....**PF857**
Fuel (w/AirCond.).....**PF864**
Trans......**6013**
Series 60 Fleetwood V8-390 (6.4L)
4 Bbl. Carb.
Lube.....**B9**
Fuel (w/o AirCond.).....**PF857**
Fuel (w/AirCond.).....**PF864**
Trans......**6013**
Series 62 V8-390 (6.4L) 4 Bbl. Carb.
Lube.....**B9**
Fuel (w/o AirCond.).....**PF857**
Fuel (w/AirCond.).....**PF864**
Trans......**6013**
Series 75 Fleetwood V8-390 (6.4L)
4 Bbl. Carb.
Lube.....**B9**
Fuel (w/o AirCond.).....**PF857**
Fuel (w/AirCond.).....**PF864**
Trans......**6013**

1960
DeVille V8-390 (6.4L) Carb.
Lube.....**B9**
Air.....**PA631**
Fuel (w/o AirCond.).....**PF857**
Fuel (w/AirCond.).....**PF864**
Eldorado V8-390 (6.4L) 3-2 Bbl.
Carb.
Lube.....**B9**
Air.....**PA631**
Fuel (w/o AirCond.).....**PF857**
Fuel (w/AirCond.).....**PF864**
Series 60 Fleetwood V8-390 (6.4L)
Carb.
Lube.....**B9**
Air.....**PA631**
Fuel (w/o AirCond.).....**PF857**
Fuel (w/AirCond.).....**PF864**
Series 62 V8-390 (6.4L) Carb.
Lube.....**B9**
Air.....**PA631**
Fuel (w/o AirCond.).....**PF857**
Fuel (w/AirCond.).....**PF864**
Series 75 Fleetwood V8-390 (6.4L)
Carb.
Lube.....**B9**
Air.....**PA631**
Fuel (w/o AirCond.).....**PF857**
Fuel (w/AirCond.).....**PF864**

1959
DeVille V8-390 (6.4L) Carb.
Lube.....**P53**
Air.....**PA631**
Fuel.....**PF857**
Eldorado V8-390 (6.4L) Carb.
Lube.....**P53**
Air.....**PA631**
Fuel.....**PF857**
Series 60 Fleetwood V8-390 (6.4L)
Carb.
Lube.....**P53**
Air.....**PA631**
Fuel.....**PF857**
Series 62 V8-390 (6.4L) Carb.
Lube.....**P53**
Air.....**PA631**
Fuel.....**PF857**

CADILLAC 1959 (Cont'd.)

Series 75 Fleetwood V8-390 (6.4L)
Carb.
Lube.....**P53**
Air.....**PA631**
Fuel.....**PF857**

1958
DeVille V8-365 (6.0L) Carb.
Lube.....**P53**
Fuel.....**PF857**
Eldorado V8-365 (6.0L) 3-2 Bbl.
Carb.
Air.....**PA631**
Fuel.....**PF857**
Series 60 Fleetwood V8-365 (6.0L)
Carb.
Lube.....**P53**
Fuel.....**PF857**
Series 62 V8-365 (6.0L) Carb.
Lube.....**P53**
Fuel.....**PF857**
Series 70 Fleetwood V8-365 (6.0L)
4 Bbl. Carb.
Fuel.....**PF857**
Series 75 Fleetwood V8-365 (6.0L)
Carb.
Lube.....**P53**
Fuel.....**PF857**

1957
Eldorado V8-365 (6.0L) Carb.
Lube.....**P53**
Fuel.....**PF857**
Series 60 Fleetwood V8-365 (6.0L)
4 Bbl. Carb.
Lube.....**P53**
Fuel.....**PF857**
Series 62 V8-365 (6.0L) 4 Bbl. Carb.
Lube.....**P53**
Fuel.....**PF857**
Series 75 Fleetwood V8-365 (6.0L)
4 Bbl. Carb.
Lube.....**P53**
Fuel.....**PF857**

1956
DeVille V8-365 (6.0L) 4 Bbl. Carb.
Lube.....**P53**
Fuel.....**PF857**
Eldorado V8-365 (6.0L) 2,4 Bbl.
Carb.
Lube.....**P53**
Fuel.....**PF857**
Series 60 Fleetwood V8-365 (6.0L)
4 Bbl. Carb.
Lube.....**P53**
Fuel.....**PF857**
Series 62 V8-365 (6.0L) 4 Bbl. Carb.
Lube.....**P53**
Fuel.....**PF857**
Series 75 Fleetwood V8-365 (6.0L)
4 Bbl. Carb.
Lube.....**P53**
Fuel.....**PF857**

1955
DeVille V8-331 (5.4L) 4 Bbl. Carb.
Lube.....**P53**
Fuel.....**PF857**
Eldorado V8-331 (5.4L) 2,4 Bbl.
Carb.
Lube.....**P53**
Fuel.....**PF857**
Series 60 Fleetwood V8-331 (5.4L)
4 Bbl. Carb.
Lube.....**P53**
Fuel.....**PF857**
Series 62 V8-250 (4.1L) Carb.
Lube.....**P53**
Fuel.....**PF857**

CADILLAC 1955 (Cont'd.)

Series 62 V8-331 (5.4L) 4 Bbl. Carb.
Lube.....**P53**
Fuel.....**PF857**
Series 75 Fleetwood V8-331 (5.4L)
4 Bbl. Carb.
Lube.....**P53**
Fuel.....**PF857**

1954
DeVille V8-331 (5.4L) 4 Bbl. Carb.
Lube.....**P53**
Fuel.....**PF857**
Eldorado V8-331 (5.4L) 4 Bbl. Carb.
Lube.....**P53**
Fuel.....**PF857**
Series 60 Fleetwood V8-331 (5.4L)
4 Bbl. Carb.
Lube.....**P53**
Fuel.....**PF857**
Series 62 V8-331 (5.4L) 4 Bbl. Carb.
Lube.....**P53**
Fuel.....**PF857**
Series 75 Fleetwood V8-331 (5.4L)
4 Bbl. Carb.
Lube.....**P53**
Fuel.....**PF857**

1953
DeVille V8-331 (5.4L) 4 Bbl. Carb.
Lube.....**P53**
Fuel.....**PF857**
Eldorado V8-331 (5.4L) 4 Bbl. Carb.
Lube.....**P53**
Fuel.....**PF857**
Series 60 Fleetwood V8-331 (5.4L)
4 Bbl. Carb.
Lube.....**P53**
Fuel.....**PF857**
Series 62 V8-331 (5.4L) 4 Bbl. Carb.
Lube.....**P53**
Fuel.....**PF857**
Series 75 Fleetwood V8-331 (5.4L)
4 Bbl. Carb.
Lube.....**P53**
Fuel.....**PF857**

1952
Series 60 Fleetwood V8-331 (5.4L)
4 Bbl. Carb.
Lube.....**P53**
Fuel.....**PF857**
Series 62 V8-331 (5.4L) 4 Bbl. Carb.
Lube.....**P53**
Fuel.....**PF857**
Series 75 Fleetwood V8-331 (5.4L)
4 Bbl. Carb.
Lube.....**P53**
Fuel.....**PF857**

1951
Series 60 Fleetwood V8-331 (5.4L)
2 Bbl. Carb.
Lube.....**P53**
Fuel.....**PF857**
Series 61 V8-331 (5.4L) 2 Bbl. Carb.
Lube.....**P53**
Fuel.....**PF857**
Series 75 Fleetwood V8-331 (5.4L)
2 Bbl. Carb.
Lube.....**P53**
Fuel.....**PF857**

1950
Series 60 Fleetwood V8-331 (5.4L)
2 Bbl. Carb.
Lube.....**P53**
Fuel.....**PF857**
Series 61 V8-331 (5.4L) 2 Bbl. Carb.
Lube.....**P53**
Fuel.....**PF857**

CADILLAC 1950 (Cont'd.)

Series 75 Fleetwood V8-331 (5.4L)
2 Bbl. Carb.
Lube.....**P53**
Fuel.....**PF857**

CHECKER

1979
Marathon 6-250 (4.1L) FI
Lube.....**B27**
Air.....**PA658**
Fuel.....**PF893,-RV**
Oil Vapor.....**SA2027**
Fuel Vapor.....**SA2046**
Trans......**6020**
Marathon V8-305 (5.0L) FI
Lube.....**B27**
Air.....**PA2008**
Fuel.....**PF893,-RV**
Oil Vapor.....**SA2027**
Marathon V8-350 (5.7L) FI
Lube.....**B27**
Air.....**PA2008**
Fuel.....**PF893,-RV**
Oil Vapor.....**SA2027**
Fuel Vapor.....**SA2046**
Trans......**6020**

1978
Marathon 6-250 (4.1L) Carb.
Lube.....**B27**
Air.....**PA658**
Fuel.....**PF893,-RV**
Oil Vapor.....**SA2027**
Fuel Vapor.....**SA2046**
Trans......**6020**
Marathon V8-305 (5.0L) Carb.
Lube.....**B27**
Air.....**PA2008**
Fuel.....**PF893,-RV**
Oil Vapor.....**SA2027**
Marathon V8-350 (5.7L) Carb.
Lube.....**B27**
Air.....**PA2008**
Fuel.....**PF893,-RV**
Oil Vapor.....**SA2027**
Fuel Vapor.....**SA2046**
Trans......**6020**

1977
Marathon 6-250 (4.1L) Carb.
Lube.....**B27**
Air.....**PA658**
Fuel.....**PF893,-RV**
Oil Vapor.....**SA2027**
Fuel Vapor.....**SA2046**
Trans......**6020**
Marathon V8-350 (5.7L) Carb.
Lube.....**B27**
Air.....**PA2008**
Fuel.....**PF893,-RV**
Oil Vapor.....**SA2027**
Fuel Vapor.....**SA2046**
Trans......**6020**

1976
Marathon 6-250 (4.1L) Carb.
Lube.....**B27**
Air.....**PA658**
Fuel.....**PF893,-RV**
Oil Vapor.....**SA2027**
Fuel Vapor.....**SA2046**
Trans......**6020**
Marathon V8-350 (5.7L) Carb.
Lube.....**B27**
Air.....**PA2008**
Fuel.....**PF893,-RV**
Oil Vapor.....**SA2027**
Fuel Vapor.....**SA2046**
Trans......**6020**

OBS = Obsolete. Availability Limited to Distributor Stock.

CHECKER (Cont'd.)

1975

Marathon 6-250 (4.1L) Carb.
- **Lube** ... **B27**
- **Air** ... **PA658**
- **Fuel** ... **PF893,-RV**
- **Oil Vapor** ... **SA2027**
- **Fuel Vapor** ... **SA2046**
- **Trans.** ... **6020**

Marathon V8-350 (5.7L) Carb.
- **Lube** ... **B27**
- **Air** ... **PA2008**
- **Fuel** ... **PF893,-RV**
- **Oil Vapor** ... **SA2027**
- **Fuel Vapor** ... **SA2046**
- **Trans.** ... **6020**

1974

Marathon 6-250 (4.1L) Carb.
- **Lube** ... **B27**
- **Air** ... **PA658**
- **Fuel** ... **PF893,-RV**
- **Oil Vapor** ... **SA2027**
- **Fuel Vapor** ... **SA2046**
- **Trans.** ... **6020**

Marathon V8-350 (5.7L) Carb.
- **Lube** ... **B27**
- **Air** ... **PA2008**
- **Fuel** ... **PF893,-RV**
- **Oil Vapor** ... **SA2027**
- **Fuel Vapor** ... **SA2046**
- **Trans.** ... **6020**

1973

Marathon 6-250 (4.1L) Carb.
- **Lube** ... **B27**
- **Air** ... **PA658**
- **Fuel** ... **PF893,-RV**
- **Oil Vapor** ... **SA2027**
- **Fuel Vapor** ... **SA2046**
- **Trans.** ... **6020**

Marathon V8-350 (5.7L) Carb.
- **Lube** ... **B27**
- **Air** ... **PA2008**
- **Fuel** ... **PF893,-RV**
- **Oil Vapor** ... **SA2027**
- **Fuel Vapor** ... **SA2046**
- **Trans.** ... **6020**

1972

Marathon 6-250 (4.1L) Carb.
- **Lube** ... **B27**
- **Air** ... **PA658**
- **Fuel** ... **PF893,-RV**
- **Oil Vapor** ... **SA2027**
- **Fuel Vapor** ... **SA2046**
- **Trans.** ... **6020**

Marathon V8-350 (5.7L) Carb.
- **Lube** ... **B27**
- **Air** ... **PA2008**
- **Fuel** ... **PF893,-RV**
- **Oil Vapor** ... **SA2027**
- **Fuel Vapor** ... **SA2046**
- **Trans.** ... **6020**

1971

Marathon 6-250 (4.1L) Carb.
- **Lube** ... **B27**
- **Air** ... **PA658**
- **Fuel** ... **PF893,-RV**
- **Oil Vapor** ... **SA2027**
- **Fuel Vapor** ... **SA2046**
- **Trans.** ... **6020**

Marathon V8-350 (5.7L) Carb.
- **Lube** ... **B27**
- **Air** ... **PA2008**
- **Fuel** ... **PF893,-RV**
- **Fuel Vapor** ... **SA2046**

CHECKER (Cont'd.)

1970

Marathon 6-250 (4.1L) 1 Bbl. Carb.
- **Lube** ... **B27**
- **Air** ... **PA658**
- **Fuel** ... **PF893,-RV**
- **Oil Vapor** ... **SA2027**
- **Fuel Vapor** ... **SA2046**
- **Trans.** ... **6020**

Marathon V8-350 (5.7L) 2 Bbl. Carb.
- **Lube** ... **B27**
- **Fuel** ... **PF893,-RV**
- **Oil Vapor** ... **SA2027**
- **Fuel Vapor** ... **SA2046**
- **Trans.** ... **6020**

1969

Marathon 6-250 (4.1L) Carb.
- **Lube** ... **B27**
- **Air** ... **PA658**
- **Fuel** ... **PF893,-RV**
- **Oil Vapor** ... **SA2027**

Marathon V8-327 (5.4L) 2,4 Bbl. Carb.
- **Lube** ... **B27**
- **Fuel (4 Bbl.)** ... **PF893,-RV**
- **Fuel (2 Bbl., SintBronze)** ... **SF898**
- **Oil Vapor** ... **SA2027**

Marathon V8-350 (5.7L) Carb.
- **Lube** ... **B27**
- **Air** ... **PA625**

1968

Marathon 6-230 (3.8L) Carb.
- **Lube** ... **B27**
- **Air** ... **PA658**
- **Fuel** ... **PF893,-RV**
- **Oil Vapor** ... **SA2027**

Marathon V8-307 (5.0L) Carb.
- **Lube** ... **B27**
- **Fuel (SintBronze)** ... **SF898**
- **Oil Vapor** ... **SA2027**

Marathon V8-327 (5.4L) 2,4 Bbl. Carb.
- **Lube** ... **B27**
- **Fuel (2 Bbl., SintBronze)** ... **SF898**
- **Fuel (4 Bbl.)** ... **PF893,-RV**
- **Oil Vapor** ... **SA2027**

CHEVROLET

1979

Blazer 6-250 (4.1L) 2 Bbl. VIN D
- **Lube** ... **B27**
- **Air** ... **PA2077**
- **Fuel** ... **PF894,-RV**
- **Fuel Vapor** ... **SA2046**
- **Trans.** ... **6020**

Blazer V8-305 (5.0L) 2 Bbl. VIN U
- **Lube** ... **B6**
- **Air** ... **PA2006**
- **Fuel** ... **PF894,-RV**
- **Oil Vapor** ... **SA2027**
- **Fuel Vapor** ... **SA2046**
- **Trans. (TH350C, TH375B)** ... **18031**
- **Trans. (TH400)** ... **6020**

Blazer V8-350 (5.7L) 4 Bbl. VIN L
- **Lube (5 11/32 In.)** ... **B6**
- **Lube (8 11/16 In.)** ... **B7**
- **Air** ... **PA2008**
- **Fuel** ... **PF894,-RV**
- **Oil Vapor** ... **SA2027**
- **Fuel Vapor** ... **SA2046**
- **Trans. (TH350C, TH375B)** ... **18031**
- **Trans. (TH400)** ... **6020**

Blazer V8-400 (6.6L) 4 Bbl. VIN R
- **Lube (5 11/32 In.)** ... **B6**
- **Lube (8 11/16 In.)** ... **B7**
- **Air** ... **PA2008**
- **Fuel** ... **PF894,-RV**
- **Oil Vapor** ... **SA2027**
- **Fuel Vapor** ... **SA2046**
- **Trans. (TH350C, TH375B)** ... **18031**
- **Trans. (TH400)** ... **6020**

CHEVROLET 1979 (Cont'd.)

Camaro 6-250 (4.1L) 1 Bbl. VIN D
- **Lube** ... **B27**
- **Air** ... **PA658**
- **Fuel** ... **PF893,-RV**
- **Oil Vapor** ... **SA2027**
- **Fuel Vapor** ... **SA2046**
- **Trans.** ... **6021**

Camaro V8-305 (5.0L) 2 Bbl. VIN G
- **Lube** ... **B27**
- **Air** ... **PA658**
- **Fuel (1 In. Ele.)** ... **PF893,-RV**
- **Fuel (2 1/32 In. Ele.)** ... **PF894,-RV**
- **Oil Vapor** ... **SA2027**
- **Fuel Vapor** ... **SA2046**
- **Trans.** ... **6021**

Camaro V8-350 (5.7L) 4 Bbl. VIN L
- **Lube** ... **B27**
- **Air** ... **PA2008**
- **Fuel** ... **PF894,-RV**
- **Oil Vapor** ... **SA2027**
- **Fuel Vapor** ... **SA2046**
- **Trans.** ... **6021**

Caprice 6-250 (4.1L) 1 Bbl. VIN D
- **Lube** ... **B27**
- **Air** ... **PA658**
- **Fuel** ... **PF893,-RV**
- **Oil Vapor** ... **SA2027**
- **Fuel Vapor** ... **SA2046**
- **Trans.** ... **6021**

Caprice V8-305 (5.0L) 2 Bbl. VIN G
- **Lube** ... **B27**
- **Air** ... **PA1680**
- **Fuel (1 In. Ele.)** ... **PF893,-RV**
- **Fuel (2 1/32 In. Ele.)** ... **PF894,-RV**
- **Oil Vapor** ... **SA2027**
- **Fuel Vapor** ... **SA2046**
- **Trans. (TH350, TH375)** ... **6021**

Caprice V8-350 (5.7L) 4 Bbl. VIN L
- **Lube** ... **B27**
- **Air** ... **PA2008**
- **Fuel** ... **PF894,-RV**
- **Oil Vapor** ... **SA2027**
- **Fuel Vapor** ... **SA2046**
- **Trans. (TH350, TH375)** ... **6021**

Chevette 4-1600cc (1.6L) 2 Bbl. VIN 0,E
- **Lube** ... **B43-S**
- **Air** ... **PA2077**
- **Fuel** ... **PF893,-RV**

Corvette V8-350 (5.7L) 4 Bbl. VIN 4,8,L
- **Lube** ... **B27**
- **Air** ... **PA2008**
- **Fuel** ... **PF894,-RV**
- **Oil Vapor** ... **SA2027**
- **Fuel Vapor** ... **SA2046**
- **Trans.** ... **6021**

El Camino V6-200 (3.3L) 2 Bbl. VIN M
- **Lube** ... **B43-S**
- **Air** ... **PA1680**
- **Fuel** ... **PF894,-RV**
- **Oil Vapor** ... **SA2027**
- **Fuel Vapor** ... **SA2046**

El Camino V6-231 (3.8L) 2 Bbl. VIN 2,A
- **Lube** ... **B43-S**
- **Air** ... **PA1680**
- **Fuel** ... **PF893,-RV**
- **Oil Vapor** ... **SA2027**
- **Fuel Vapor** ... **SA2046**

El Camino V8-267 (4.4L) 2 Bbl. VIN J
- **Lube** ... **B27**
- **Air** ... **PA1680**
- **Fuel** ... **PF894,-RV**
- **Oil Vapor** ... **SA2027**
- **Fuel Vapor** ... **SA2046**

El Camino V8-305 (5.0L) 4 Bbl. VIN H
- **Lube** ... **B6**
- **Air** ... **PA2008**
- **Fuel** ... **PF894,-RV**
- **Oil Vapor** ... **SA2027**
- **Fuel Vapor** ... **SA2046**

CHEVROLET 1979 (Cont'd.)

El Camino V8-350 (5.7L) 4 Bbl. VIN L
- **Lube** ... **B27**
- **Air** ... **PA2008**
- **Fuel** ... **PF894,-RV**
- **Oil Vapor** ... **SA2027**
- **Fuel Vapor** ... **SA2046**

Impala 6-250 (4.1L) 1 Bbl. VIN D
- **Lube** ... **B27**
- **Air** ... **PA658**
- **Fuel** ... **PF893,-RV**
- **Oil Vapor** ... **SA2027**
- **Fuel Vapor** ... **SA2046**
- **Trans.** ... **6021**

Impala V8-305 (5.0L) 2 Bbl. VIN G
- **Lube** ... **B27**
- **Air** ... **PA1680**
- **Fuel (1 In. Ele.)** ... **PF893,-RV**
- **Fuel (2 1/32 In. Ele.)** ... **PF894,-RV**
- **Oil Vapor** ... **SA2027**
- **Fuel Vapor** ... **SA2046**
- **Trans. (TH350, TH375)** ... **6021**

Impala V8-350 (5.7L) 4 Bbl. VIN L
- **Lube** ... **B27**
- **Air** ... **PA2008**
- **Fuel** ... **PF894,-RV**
- **Oil Vapor** ... **SA2027**
- **Fuel Vapor** ... **SA2046**
- **Trans. (TH350, TH375)** ... **6021**

LUV 4-1800cc (1.8L) 2 Bbl. VIN N
- **Lube** ... **B173-S**
- **Air** ... **PA1657**
- **Fuel** ... **BF840** [84]

Malibu V6-200 (3.3L) 2 Bbl. VIN M
- **Lube** ... **B43-S**
- **Air** ... **PA1680**
- **Fuel** ... **PF894,-RV**
- **Oil Vapor** ... **SA2027**
- **Fuel Vapor** ... **SA2046**
- **Trans. (TH350, TH375)** ... **6021**

Malibu V6-231 (3.8L) 2 Bbl. VIN 2,A
- **Lube** ... **B43-S**
- **Air** ... **PA1680**
- **Fuel** ... **PF893,-RV**
- **Fuel Vapor** ... **SA2046**
- **Trans. (TH350, TH375)** ... **6021**

Malibu V8-267 (4.4L) 2 Bbl. VIN J
- **Lube** ... **B27**
- **Air** ... **PA2008**
- **Fuel** ... **PF894,-RV**
- **Oil Vapor** ... **SA2027**
- **Fuel Vapor** ... **SA2046**
- **Trans. (TH350, TH375)** ... **6021**

Malibu V8-305 (5.0L) 4 Bbl. VIN H
- **Lube** ... **B27**
- **Air** ... **PA2008**
- **Fuel (1 In. Ele.)** ... **PF893,-RV**
- **Fuel (2 1/32 In. Ele.)** ... **PF894,-RV**
- **Oil Vapor** ... **SA2027**
- **Fuel Vapor** ... **SA2046**
- **Trans. (TH350, TH375)** ... **6021**

Malibu V8-350 (5.7L) 4 Bbl. VIN 4,L
- **Lube** ... **B27**
- **Air** ... **PA2008**
- **Fuel** ... **PF894,-RV**
- **Oil Vapor** ... **SA2027**
- **Fuel Vapor** ... **SA2046**
- **Trans. (TH350, TH375)** ... **6021**

Monte Carlo V6-200 (3.3L) 2 Bbl. VIN M
- **Lube** ... **B43-S**
- **Air** ... **PA1680**
- **Fuel** ... **PF894,-RV**
- **Oil Vapor** ... **SA2027**
- **Fuel Vapor** ... **SA2046**
- **Trans. (TH350, TH375)** ... **6021**

Monte Carlo V6-231 (3.8L) 2 Bbl. VIN 2,A
- **Lube** ... **B43-S**
- **Air** ... **PA1680**
- **Fuel** ... **PF893,-RV**
- **Oil Vapor** ... **SA2027**
- **Fuel Vapor** ... **SA2046**
- **Trans.** ... **6021**

[84] w/Hoses and Clamps, Use BF840-K1

OBS = Obsolete. Availability Limited to Distributor Stock.

CHEVROLET 1979 (Cont'd.)

Monte Carlo V8-267 (4.4L) 2 Bbl. VIN J
Lube.....B27
Air.....PA1680
Fuel.....PF894,-RV
Oil Vapor.....SA2027
Fuel Vapor.....SA2046
Trans. (TH350, TH375).....6021

Monte Carlo V8-305 (5.0L) 4 Bbl. VIN H
Lube.....B27
Air.....PA2008
Fuel (1 In. Ele.).....PF893,-RV
Fuel (2 1/32 In. Ele.).....PF894,-RV
Oil Vapor.....SA2027
Fuel Vapor.....SA2046
Trans. (TH350, TH375).....6021

Monza 4-151 (2.5L) 2 Bbl. VIN 1,9,V
Lube (Exc. Calif.).....B43-S
Lube (Calif.).....B27
Air (Exc. Calif.).....PA2082 OBS
Fuel.....PF893,-RV
Oil Vapor (Exc. Calif.).....SA2027

Monza V6-196 (3.2L) 2 Bbl. VIN C
Lube.....B43-S
Air.....PA2006
Fuel.....PF893,-RV
Oil Vapor.....SA2027
Fuel Vapor.....SA2046
Trans......6021

Monza V6-231 (3.8L) 2 Bbl. VIN 2,A
Lube.....B43-S
Air.....PA2006
Fuel.....PF893,-RV
Oil Vapor.....SA2027
Fuel Vapor.....SA2046
Trans......6021

Monza V8-305 (5.0L) 2 Bbl. VIN G
Lube.....B27
Air.....PA658
Fuel (1 In. Ele.).....PF893,-RV
Fuel (2 1/32 In. Ele.).....PF894,-RV
Oil Vapor.....SA2027
Fuel Vapor.....SA2046
Trans......6021

Nova 6-250 (4.1L) 1 Bbl. VIN D
Lube.....B27
Air.....PA658
Fuel.....PF893,-RV
Fuel Vapor.....SA2046
Trans......6021

Nova V8-305 (5.0L) 2 Bbl. VIN G
Lube.....B27
Air.....PA1680
Fuel (1 In. Ele.).....PF893,-RV
Fuel (2 1/32 In. Ele.).....PF894,-RV
Oil Vapor.....SA2027
Fuel Vapor.....SA2046
Trans. (TH350, TH375).....6021

Nova V8-350 (5.7L) 4 Bbl. VIN L
Lube.....B27
Air.....PA2008
Fuel.....PF894,-RV
Oil Vapor.....SA2027
Fuel Vapor.....SA2046
Trans. (TH350, TH375).....6021

Pickups, C, K Series, Suburban, C, K Series 6-250 (4.1L) 2 Bbl. VIN D
Lube.....B27
Air.....PA2077
Fuel.....PF894,-RV
Fuel Vapor.....SA2046
Trans......6020

Pickups, C, K Series, Suburban, C, K Series 6-292 (4.8L) 1 Bbl. VIN T
Lube.....B27
Air.....PA648
Fuel.....PF893,-RV
Oil Vapor.....SA2027
Fuel Vapor.....SA2046
Trans. (TH350C, TH375B).....18031
Trans. (TH400).....6020

CHEVROLET 1979 (Cont'd.)

Pickups, C, K Series, Suburban, C, K Series V8-305 (5.0L) 2 Bbl. VIN U
Lube.....B6
Air.....PA2006
Fuel.....PF894,-RV
Oil Vapor.....SA2027
Fuel Vapor.....SA2046
Trans. (TH350C, TH375B).....18031
Trans. (TH400).....6020

Pickups, C, K Series, Suburban, C, K Series V8-350 (5.7L) 4 Bbl. VIN L
Lube (5 11/32 In.).....B6
Lube (8 11/16 In.).....B7
Air.....PA2008
Fuel.....PF894,-RV
Oil Vapor.....SA2027
Fuel Vapor.....SA2046
Trans. (TH350C, TH375B).....18031
Trans. (TH400).....6020

Pickups, C, K Series, Suburban, C, K Series V8-350 (5.7L) Diesel VIN Z
Lube.....B30
Air.....PA2079
Fuel (Box-Style).....BF806
Oil Vapor.....SA2027
Trans......6021

Pickups, C, K Series, Suburban, C, K Series V8-400 (6.6L) 4 Bbl. VIN R
Lube (5 11/32 In.).....B6
Lube (8 11/16 In.).....B7
Air.....PA2008
Fuel.....PF894,-RV
Oil Vapor.....SA2027
Fuel Vapor.....SA2046
Trans. (TH350C, TH375B).....18031
Trans. (TH400).....6020

Pickups, C, K Series, Suburban, C, K Series V8-454 (7.4L) 4 Bbl. VIN S
Lube (5 11/32 In.).....B6
Lube (8 11/16 In.).....B7
Air.....PA2008
Fuel.....PF894,-RV
Oil Vapor.....SA2027
Fuel Vapor.....SA2046
Trans......6020

Vans, G, P Series 6-250 (4.1L) 1 Bbl. VIN D
Lube.....B27
Air.....PA2077
Fuel.....PF894,-RV
Fuel Vapor.....SA2046
Trans. (TH350, TH375).....6021
Trans. (TH400).....6020

Vans, G, P Series V8-305 (5.0L) 2 Bbl. VIN U
Lube.....B6
Air.....PA1680
Fuel.....PF894,-RV
Oil Vapor.....SA2027
Fuel Vapor.....SA2046
Trans. (TH350C, TH375B).....18031
Trans. (TH400).....6020

Vans, G, P Series V8-350 (5.7L) 4 Bbl. VIN L
Lube (5 11/32 In.).....B6
Lube (8 11/16 In.).....B7
Air.....PA1680
Fuel.....PF894,-RV
Oil Vapor.....SA2027
Fuel Vapor.....SA2046
Trans. (TH350C, TH375B).....18031
Trans. (TH400).....6020

Vans, G, P Series V8-400 (6.6L) 4 Bbl. VIN R
Lube (5 11/32 In.).....B6
Lube (8 11/16 In.).....B7
Air.....PA1680
Fuel.....PF894,-RV
Oil Vapor.....SA2027
Fuel Vapor.....SA2046
Trans. (TH350C, TH375B).....18031
Trans. (TH400).....6020

CHEVROLET 1979 (Cont'd.)

Vans, G, P Series V8-454 (7.4L) 4 Bbl. VIN S
Lube (5 11/32 In.).....B6
Lube (8 11/16 In.).....B7
Air.....PA2008
Fuel.....PF894,-RV
Oil Vapor.....SA2027
Fuel Vapor.....SA2046
Trans......6020

Vans, P Series 6-292 (4.8L) 1 Bbl. VIN T
Lube.....B27
Air.....PA648
Fuel.....PF893,-RV
Oil Vapor.....SA2027
Fuel Vapor.....SA2046
Trans. (TH350C, TH375B).....18031
Trans. (TH400).....6020

1978

Blazer 6-250 (4.1L) 1 Bbl. VIN D
Lube.....B27
Air.....PA648
Fuel.....PF893,-RV
Oil Vapor.....SA2027
Fuel Vapor.....SA2046
Trans......6021

Blazer V8-305 (5.0L) 2 Bbl. VIN U
Lube.....B27
Air.....PA2006
Fuel.....PF893,-RV
Oil Vapor.....SA2027
Fuel Vapor.....SA2046
Trans......18031

Blazer V8-350 (5.7L) 4 Bbl. VIN L
Lube (5 11/32 In.).....B6
Lube (8 11/16 In.).....B7
Air.....PA2008
Fuel (1 In. Ele.).....PF893,-RV
Fuel (2 1/32 In. Ele.).....PF894,-RV
Oil Vapor.....SA2027
Fuel Vapor.....SA2046
Trans. (TH350, TH375).....6021
Trans. (TH400).....6020

Blazer V8-400 (6.6L) 4 Bbl. VIN R
Lube (5 11/32 In.).....B6
Lube (8 11/16 In.).....B7
Air.....PA2008
Fuel (1 In. Ele.).....PF893,-RV
Fuel (2 1/32 In. Ele.).....PF894,-RV
Oil Vapor.....SA2027
Fuel Vapor.....SA2046
Trans. (TH350, TH375).....6021
Trans. (TH400).....6020

Camaro 6-250 (4.1L) 1 Bbl. VIN D
Lube.....B27
Air.....PA658
Fuel.....PF893,-RV
Oil Vapor.....SA2027
Fuel Vapor.....SA2046
Trans......6021

Camaro V8-305 (5.0L) 2 Bbl. VIN U
Lube.....B27
Air.....PA2006
Fuel.....PF893,-RV
Oil Vapor.....SA2027
Fuel Vapor.....SA2046
Trans......6021

Camaro V8-350 (5.7L) 4 Bbl. VIN L
Lube.....B27
Air.....PA2008
Fuel.....PF894,-RV
Oil Vapor.....SA2027
Fuel Vapor.....SA2046
Trans......6021

Caprice 6-250 (4.1L) 1 Bbl. VIN D
Lube.....B27
Air.....PA658
Fuel.....PF893,-RV
Oil Vapor.....SA2027
Fuel Vapor.....SA2046
Trans......6021

CHEVROLET 1978 (Cont'd.)

Caprice V8-305 (5.0L) 2 Bbl. VIN U
Lube.....B27
Air.....PA2008
Fuel.....PF893,-RV
Oil Vapor.....SA2027
Fuel Vapor.....SA2046
Trans. (TH350, TH375).....6021

Caprice V8-350 (5.7L) 4 Bbl. VIN L
Lube.....B27
Air.....PA2008
Fuel.....PF894,-RV
Oil Vapor.....SA2027
Fuel Vapor.....SA2046
Trans. (TH350, TH375).....6021

Chevette 4-1600cc (1.6L) 1 Bbl. VIN E,J
Lube.....B43-S
Fuel.....PF893,-RV
Fuel Vapor.....SA2046

Corvette V8-350 (5.7L) 4 Bbl. VIN 4,H,L
Lube.....B27
Air.....PA2008
Fuel.....PF894,-RV
Oil Vapor.....SA2027
Fuel Vapor.....SA2046
Trans......6021

El Camino V6-200 (3.3L) 2 Bbl. VIN M
Lube.....B43-S
Air.....PA1680
Fuel.....PF894,-RV
Oil Vapor.....SA2027
Fuel Vapor.....SA2046

El Camino V6-231 (3.8L) 2 Bbl. VIN A
Lube.....B43-S
Air.....PA1680
Fuel.....PF893,-RV
Oil Vapor.....SA2027
Fuel Vapor.....SA2046

El Camino V8-305 (5.0L) 2 Bbl. VIN U
Lube.....B27
Air.....PA2006
Fuel.....PF893,-RV
Oil Vapor.....SA2027
Fuel Vapor.....SA2046

El Camino V8-350 (5.7L) 4 Bbl. VIN L
Lube.....B27
Air.....PA2008
Fuel (1 In. Ele.).....PF893,-RV
Fuel (2 1/32 In. Ele.).....PF894,-RV
Oil Vapor.....SA2027
Fuel Vapor.....SA2046

Impala 6-250 (4.1L) 1 Bbl. VIN D
Lube.....B27
Air.....PA658
Fuel.....PF893,-RV
Oil Vapor.....SA2027
Fuel Vapor.....SA2046
Trans......6021

Impala V8-305 (5.0L) 2 Bbl. VIN U
Lube.....B27
Air.....PA2008
Fuel.....PF893,-RV
Oil Vapor.....SA2027
Fuel Vapor.....SA2046
Trans. (TH350, TH375).....6021

Impala V8-350 (5.7L) 4 Bbl. VIN L
Lube.....B27
Air.....PA2008
Fuel.....PF894,-RV
Oil Vapor.....SA2027
Fuel Vapor.....SA2046
Trans. (TH350, TH375).....6021

LUV 4-1800cc (1.8L) 2 Bbl. VIN N
Lube.....B141
Air.....PA1657
Fuel.....BF840,-K1

Malibu V6-200 (3.3L) 2 Bbl. VIN M
Lube.....B43-S
Air.....PA1680
Fuel.....PF894,-RV
Oil Vapor.....SA2027
Fuel Vapor.....SA2046
Trans. (TH350, TH375).....6021

OBS = Obsolete. Availability Limited to Distributor Stock.

CHEVROLET 1978 (Cont'd.)

Malibu V6-231 (3.8L) 2 Bbl. VIN A
- Lube....B43-S
- Air....PA2006
- Fuel....PF893,-RV
- Oil Vapor....SA2027
- Fuel Vapor....SA2046
- Trans. (TH350, TH375)....6021

Malibu V8-305 (5.0L) 2 Bbl. VIN U
- Lube....B27
- Air....PA2006
- Fuel....PF893,-RV
- Oil Vapor....SA2027
- Fuel Vapor....SA2046
- Trans. (TH350, TH375)....6021

Malibu V8-350 (5.7L) 4 Bbl. VIN L
- Lube....B27
- Air....PA2008
- Fuel....PF894,-RV
- Oil Vapor....SA2027
- Fuel Vapor....SA2046
- Trans. (TH350, TH375)....6021

Monte Carlo 6-200 (3.3L) 2 Bbl. VIN M
- Lube....B43-S
- Air....PA1680
- Fuel....PF894,-RV
- Oil Vapor....SA2027
- Fuel Vapor....SA2046
- Trans. (TH350, TH375)....6021

Monte Carlo V6-231 (3.8L) 2 Bbl. VIN A
- Lube....B43-S
- Air....PA2006
- Fuel....PF893,-RV
- Oil Vapor....SA2027
- Fuel Vapor....SA2046
- Trans. (TH350, TH375)....6021

Monte Carlo V8-305 (5.0L) 2 Bbl. VIN U
- Lube....B27
- Air....PA2006
- Fuel....PF893,-RV
- Oil Vapor....SA2027
- Fuel Vapor....SA2046
- Trans. (TH350, TH375)....6021

Monza 4-151 (2.5L) 2 Bbl. VIN 1,V
- Lube....B27
- Fuel....PF893,-RV
- Fuel Vapor....SA2046
- Trans.....18031

Monza V6-196 (3.2L) 2 Bbl. VIN C
- Lube....B43-S
- Air....PA658
- Fuel....PF893,-RV
- Oil Vapor....SA2027
- Fuel Vapor....SA2046
- Trans.....6021

Monza V6-231 (3.8L) 2 Bbl. VIN A
- Lube....B43-S
- Air....PA658
- Fuel....PF893,-RV
- Oil Vapor....SA2027
- Fuel Vapor....SA2046
- Trans. (TH350, TH375)....6021
- Trans. (TH350C, TH375B)....18031

Monza V8-305 (5.0L) 2 Bbl. VIN U
- Lube....B27
- Air....PA2006
- Fuel....PF893,-RV
- Oil Vapor....SA2027
- Fuel Vapor....SA2046
- Trans. (TH200)....18031
- Trans. (TH350, TH375)....6021

Nova 6-250 (4.1L) 1 Bbl. VIN D
- Lube....B27
- Air....PA658
- Fuel....PF893,-RV
- Oil Vapor....SA2027
- Fuel Vapor....SA2046
- Trans.....6021

Nova V8-305 (5.0L) 2 Bbl. VIN U
- Lube....B27
- Air....PA2006
- Fuel....PF893,-RV
- Oil Vapor....SA2027
- Fuel Vapor....SA2046
- Trans.....6021

CHEVROLET 1978 (Cont'd.)

Nova V8-350 (5.7L) 4 Bbl. VIN L
- Lube....B27
- Air....PA2008
- Fuel....PF894,-RV
- Oil Vapor....SA2027
- Fuel Vapor....SA2046
- Trans.....6021

Pickups, C, K Series, Suburban, C, K Series 6-250 (4.1L) 1 Bbl. VIN D
- Lube....B27
- Air (1 7/8 In.)....PA658
- Air (3 In.)....PA648
- Fuel....PF893,-RV
- Oil Vapor....SA2027
- Fuel Vapor....SA2046
- Trans.....6021

Pickups, C, K Series, Suburban, C, K Series 6-292 (4.8L) 1 Bbl. VIN T
- Lube....B27
- Air....PA648
- Fuel....PF893,-RV
- Fuel Vapor....SA2046
- Trans. (TH350, TH375)....6021
- Trans. (TH400)....6020

Pickups, C, K Series, Suburban, C, K Series V8-305 (5.0L) 2 Bbl. VIN U
- Lube....B27
- Air....PA2006
- Fuel....PF893,-RV
- Oil Vapor....SA2027
- Fuel Vapor....SA2046
- Trans. (TH350)....6021
- Trans. (TH350C)....18031
- Trans. (TH400)....6020

Pickups, C, K Series, Suburban, C, K Series V8-350 (5.7L) 4 Bbl. VIN L
- Lube (5 11/32 In.)....B6
- Lube (8 11/16 In.)....B7
- Air....PA2008
- Fuel (1 In. Ele.)....PF893,-RV
- Fuel (2 1/32 In. Ele.)....PF894,-RV
- Oil Vapor....SA2027
- Fuel Vapor....SA2046
- Trans. (TH350, TH375)....6021
- Trans. (TH400)....6020

Pickups, C, K Series, Suburban, C, K Series V8-350 (5.7L) Diesel VIN Z
- Lube....B39
- Air....PA2079
- Fuel (Box-Style)....BF806
- Trans.....6021

Pickups, C, K Series, Suburban, C, K Series V8-400 (6.6L) 4 Bbl. VIN R
- Lube (5 11/32 In.)....B6
- Lube (8 11/16 In.)....B7
- Air....PA2008
- Fuel (1 In. Ele.)....PF893,-RV
- Fuel (2 1/32 In. Ele.)....PF894,-RV
- Oil Vapor....SA2027
- Fuel Vapor....SA2046
- Trans. (TH350, TH375)....6021
- Trans. (TH400)....6020

Pickups, C, K Series, Suburban, C, K Series V8-454 (7.4L) 4 Bbl. VIN S
- Lube (5 11/32 In.)....B6
- Lube (8 11/16 In.)....B7
- Air....PA2008
- Fuel (1 In. Ele.)....PF893,-RV
- Fuel (2 1/32 In. Ele.)....PF894,-RV
- Oil Vapor....SA2027
- Fuel Vapor....SA2046
- Trans. (TH350, TH375)....6021
- Trans. (TH400)....6020

Vans, G, P Series 6-250 (4.1L) 1 Bbl. VIN D
- Lube....B27
- Air....PA648
- Fuel....PF893,-RV
- Oil Vapor....SA2027
- Fuel Vapor....SA2046
- Trans.....18031

CHEVROLET 1978 (Cont'd.)

Vans, G, P Series 6-292 (4.8L) 1 Bbl. VIN T
- Lube....B27
- Air....PA648
- Fuel....PF893,-RV
- Fuel Vapor....SA2046
- Trans.....6020

Vans, G, P Series V8-305 (5.0L) 2 Bbl. VIN U
- Lube....B27
- Air....PA1680
- Fuel....PF893,-RV
- Oil Vapor....SA2027
- Fuel Vapor....SA2046
- Trans. (TH350C, TH375B)....18031
- Trans. (TH400)....6020

Vans, G, P Series V8-350 (5.7L) 4 Bbl. VIN L
- Lube (5 11/32 In.)....B6
- Lube (8 11/16 In.)....B7
- Air....PA1680
- Fuel (1 In. Ele.)....PF893,-RV
- Fuel (2 1/32 In. Ele.)....PF894,-RV
- Oil Vapor....SA2027
- Fuel Vapor....SA2046
- Trans.....6020

Vans, G, P Series V8-400 (6.6L) 4 Bbl. VIN R
- Lube (5 11/32 In.)....B6
- Lube (8 11/16 In.)....B7
- Air....PA1680
- Fuel (1 1/32 In. Ele.)....PF893,-RV
- Fuel (2 1/32 In. Ele.)....PF894,-RV
- Oil Vapor....SA2027
- Fuel Vapor....SA2046
- Trans.....6020

Vans, G, P Series V8-454 (7.4L) 4 Bbl. VIN S
- Lube (5 11/32 In.)....B6
- Lube (8 11/16 In.)....B7
- Air....PA2008
- Fuel (1 In. Ele.)....PF893,-RV
- Fuel (2 1/32 In. Ele.)....PF894,-RV
- Oil Vapor....SA2027
- Fuel Vapor....SA2046
- Trans.....6020

1977

Blazer 6-250 (4.1L) 1 Bbl. VIN D
- Lube....B27
- Air....PA648
- Fuel....PF893,-RV
- Oil Vapor....SA2027
- Fuel Vapor....SA2046
- Trans.....18031

Blazer V8-305 (5.0L) 2 Bbl. VIN U
- Lube....B6
- Air....PA2006
- Fuel....PF893,-RV
- Oil Vapor....SA2027
- Fuel Vapor....SA2046
- Trans.....18031

Blazer V8-350 (5.7L) 4 Bbl. VIN L
- Lube (5 11/32 In.)....B6
- Lube (8 11/16 In.)....B7
- Air....PA2008
- Fuel (1 In. Ele.)....PF893,-RV
- Fuel (2 1/32 In. Ele.)....PF894,-RV
- Oil Vapor....SA2027
- Fuel Vapor....SA2046
- Trans.....6020

Blazer V8-400 (6.6L) 4 Bbl. VIN R
- Lube (5 11/32 In.)....B6
- Lube (8 11/16 In.)....B7
- Air....PA2008
- Fuel (1 In. Ele.)....PF893,-RV
- Fuel (2 1/32 In. Ele.)....PF894,-RV
- Oil Vapor....SA2027
- Fuel Vapor....SA2046
- Trans.....6020

Camaro 6-250 (4.1L) 1 Bbl. VIN D
- Lube....B27
- Air....PA658
- Fuel....PF893,-RV
- Oil Vapor....SA2027
- Fuel Vapor....SA2046
- Trans.....6021

CHEVROLET 1977 (Cont'd.)

Camaro V8-305 (5.0L) 2 Bbl. VIN U
- Lube....B27
- Air....PA2006
- Fuel....PF893,-RV
- Oil Vapor....SA2027
- Fuel Vapor....SA2046
- Trans.....6021

Camaro V8-350 (5.7L) 4 Bbl. VIN L
- Lube....B27
- Air....PA2008
- Fuel....PF894,-RV
- Oil Vapor....SA2027
- Fuel Vapor....SA2046
- Trans.....6021

Caprice 6-250 (4.1L) 1 Bbl. VIN D
- Lube....B27
- Air....PA658
- Fuel....PF893,-RV
- Oil Vapor....SA2027
- Fuel Vapor....SA2046
- Trans.....6021

Caprice V8-305 (5.0L) 2 Bbl. VIN U
- Lube....B27
- Air....PA2008
- Fuel....PF893,-RV
- Oil Vapor....SA2027
- Fuel Vapor....SA2046
- Trans. (TH350, TH375)....6021

Caprice V8-350 (5.7L) 4 Bbl. VIN L
- Lube....B27
- Air....PA2008
- Fuel....PF894,-RV
- Oil Vapor....SA2027
- Fuel Vapor....SA2046
- Trans. (TH350, TH375)....6021

Chevelle 6-250 (4.1L) 1 Bbl. VIN D
- Lube....B27
- Air....PA658
- Fuel....PF893,-RV
- Oil Vapor....SA2027
- Fuel Vapor....SA2046
- Trans. (TH350, TH375)....6021
- Trans. (TH350C, TH375B)....18031

Chevelle V8-305 (5.0L) 2 Bbl. VIN U
- Lube....B27
- Air....PA2008
- Fuel....PF893,-RV
- Oil Vapor....SA2027
- Fuel Vapor....SA2046
- Trans. (TH350, TH375)....6021
- Trans. (TH350C, TH375B)....18031
- Trans. (TH400)....6020

Chevelle V8-350 (5.7L) 4 Bbl. VIN L
- Lube....B27
- Air....PA2008
- Fuel....PF894,-RV
- Oil Vapor....SA2027
- Fuel Vapor....SA2046
- Trans. (TH350, TH375)....6021
- Trans. (TH350C, TH375B)....18031
- Trans. (TH400)....6020

Chevette 4-1400cc (1.4L) 1 Bbl. VIN I
- Lube....B43-S
- Fuel....PF893,-RV

Chevette 4-1600cc (1.6L) 1 Bbl. VIN E
- Lube....B43-S
- Fuel....PF893,-RV

Corvette V8-350 (5.7L) 4 Bbl. VIN L,X
- Lube....B27
- Air....PA2008
- Fuel....PF894,-RV
- Oil Vapor....SA2027
- Fuel Vapor....SA2046
- Trans. (TH350, TH375)....6021
- Trans. (TH400)....6020

El Camino 6-250 (4.1L) 1 Bbl. VIN D
- Lube....B27
- Air....PA648
- Fuel....PF893,-RV
- Oil Vapor....SA2027
- Fuel Vapor....SA2046
- Trans.....6021

OBS = Obsolete. Availability Limited to Distributor Stock.

CHEVROLET 1977 (Cont'd.)

El Camino V8-305 (5.0L) 2 Bbl. VIN U
- **Lube** ... **B27**
- **Air** ... **PA2008**
- **Fuel** ... **PF893,-RV**
- **Oil Vapor** ... **SA2027**
- **Fuel Vapor** ... **SA2046**
- **Trans.** ... **6021**

El Camino V8-350 (5.7L) 4 Bbl. VIN L
- **Lube** ... **B27**
- **Air** ... **PA2008**
- **Fuel (1 In. Ele.)** ... **PF893,-RV**
- **Fuel (2 1/32 In. Ele.)** ... **PF894,-RV**
- **Oil Vapor** ... **SA2027**
- **Fuel Vapor** ... **SA2046**
- **Trans.** ... **6021**

Impala 6-250 (4.1L) 1 Bbl. VIN D
- **Lube** ... **B27**
- **Air** ... **PA658**
- **Fuel** ... **PF893,-RV**
- **Oil Vapor** ... **SA2027**
- **Fuel Vapor** ... **SA2046**
- **Trans.** ... **6021**

Impala V8-305 (5.0L) 2 Bbl. VIN U
- **Lube** ... **B27**
- **Air** ... **PA2008**
- **Fuel** ... **PF893,-RV**
- **Oil Vapor** ... **SA2027**
- **Fuel Vapor** ... **SA2046**
- **Trans. (TH350, TH375)** ... **6021**

Impala V8-350 (5.7L) 4 Bbl. VIN L
- **Lube** ... **B27**
- **Air** ... **PA2008**
- **Fuel** ... **PF894,-RV**
- **Oil Vapor** ... **SA2027**
- **Fuel Vapor** ... **SA2046**
- **Trans. (TH350, TH375)** ... **6021**

LUV 4-1800cc (1.8L) 2 Bbl. VIN N
- **Lube** ... **B141**
- **Air** ... **PA1657**
- **Fuel** ... **BF836,-K4**

Malibu 6-250 (4.1L) 1 Bbl. VIN D
- **Lube** ... **B27**
- **Air** ... **PA658**
- **Fuel** ... **PF893,-RV**
- **Oil Vapor** ... **SA2027**
- **Fuel Vapor** ... **SA2046**
- **Trans.** ... **6021**

Malibu V8-305 (5.0L) 2 Bbl. VIN U
- **Lube** ... **B27**
- **Air** ... **PA2008**
- **Fuel** ... **PF893,-RV**
- **Oil Vapor** ... **SA2027**
- **Fuel Vapor** ... **SA2046**
- **Trans.** ... **6021**

Malibu V8-350 (5.7L) 4 Bbl. VIN L
- **Lube** ... **B27**
- **Air** ... **PA2008**
- **Fuel** ... **PF894,-RV**
- **Oil Vapor** ... **SA2027**
- **Fuel Vapor** ... **SA2046**
- **Trans.** ... **6021**

Monte Carlo V8-305 (5.0L) 2 Bbl. VIN U
- **Lube** ... **B27**
- **Air** ... **PA2008**
- **Fuel** ... **PF893,-RV**
- **Oil Vapor** ... **SA2027**
- **Fuel Vapor** ... **SA2046**
- **Trans.** ... **6021**

Monte Carlo V8-350 (5.7L) 4 Bbl. VIN L
- **Lube** ... **B27**
- **Air** ... **PA2008**
- **Fuel** ... **PF894,-RV**
- **Oil Vapor** ... **SA2027**
- **Fuel Vapor** ... **SA2046**
- **Trans.** ... **6021**

Monza 4-140 (2.3L) 2 Bbl. VIN B
- **Lube** ... **B27**
- **Fuel** ... **PF893,-RV**
- **Trans.** ... **6021**

CHEVROLET 1977 (Cont'd.)

Monza V8-305 (5.0L) 2 Bbl. VIN U
- **Lube** ... **B27**
- **Air** ... **PA2006**
- **Fuel** ... **PF893,-RV**
- **Oil Vapor** ... **SA2027**
- **Fuel Vapor** ... **SA2046**
- **Trans. (TH350C, TH375B)** ... **18031**

Nova 6-250 (4.1L) 1 Bbl. VIN D
- **Lube** ... **B27**
- **Air** ... **PA658**
- **Fuel** ... **PF893,-RV**
- **Oil Vapor** ... **SA2027**
- **Fuel Vapor** ... **SA2046**
- **Trans.** ... **6021**

Nova V8-305 (5.0L) 2 Bbl. VIN U
- **Lube** ... **B27**
- **Air** ... **PA2006**
- **Fuel** ... **PF893,-RV**
- **Oil Vapor** ... **SA2027**
- **Fuel Vapor** ... **SA2046**

Nova V8-350 (5.7L) 4 Bbl. VIN L
- **Lube** ... **B27**
- **Air** ... **PA2008**
- **Fuel** ... **PF894,-RV**
- **Oil Vapor** ... **SA2027**
- **Fuel Vapor** ... **SA2046**
- **Trans.** ... **6021**

Pickups, C, K Series, Suburban, C, K Series 6-250 (4.1L) 1 Bbl. VIN D
- **Lube** ... **B27**
- **Air (1 7/8 In.)** ... **PA658**
- **Air (3 In.)** ... **PA648**
- **Fuel** ... **PF893,-RV**
- **Oil Vapor** ... **SA2027**
- **Fuel Vapor** ... **SA2046**
- **Trans. (TH350, TH375)** ... **6021**
- **Trans. (TH350C, TH375B)** ... **18031**

Pickups, C, K Series, Suburban, C, K Series 6-292 (4.8L) 1 Bbl. VIN T
- **Lube** ... **B27**
- **Air** ... **PA648**
- **Fuel** ... **PF893,-RV**
- **Oil Vapor** ... **SA2027**
- **Fuel Vapor** ... **SA2046**
- **Trans.** ... **6020**

Pickups, C, K Series, Suburban, C, K Series V8-305 (5.0L) 2 Bbl. VIN U
- **Lube** ... **B27**
- **Air** ... **PA2006**
- **Fuel** ... **PF893,-RV**
- **Oil Vapor** ... **SA2027**
- **Fuel Vapor** ... **SA2046**
- **Trans. (TH350C, TH375B)** ... **18031**
- **Trans. (TH400)** ... **6020**

Pickups, C, K Series, Suburban, C, K Series V8-350 (5.7L) 4 Bbl. VIN L
- **Lube (5 11/32 In.)** ... **B6**
- **Lube (8 11/16 In.)** ... **B7**
- **Air** ... **PA2008**
- **Fuel (1 In. Ele.)** ... **PF893,-RV**
- **Fuel (2 1/32 In. Ele.)** ... **PF894,-RV**
- **Oil Vapor** ... **SA2027**
- **Fuel Vapor** ... **SA2046**
- **Trans.** ... **6020**

Pickups, C, K Series, Suburban, C, K Series V8-400 (6.6L) 4 Bbl. VIN R
- **Lube (5 11/32 In.)** ... **B6**
- **Lube (8 11/16 In.)** ... **B7**
- **Air** ... **PA2008**
- **Fuel (1 In. Ele.)** ... **PF893,-RV**
- **Fuel (2 1/32 In. Ele.)** ... **PF894,-RV**
- **Oil Vapor** ... **SA2027**
- **Fuel Vapor** ... **SA2046**
- **Trans.** ... **6020**

Pickups, C, K Series, Suburban, C, K Series V8-454 (7.4L) 4 Bbl. VIN S
- **Lube (5 11/32 In.)** ... **B6**
- **Lube (8 11/16 In.)** ... **B7**
- **Air** ... **PA2008**
- **Fuel (1 In. Ele.)** ... **PF893,-RV**
- **Fuel (2 1/32 In. Ele.)** ... **PF894,-RV**
- **Oil Vapor** ... **SA2027**
- **Fuel Vapor** ... **SA2046**
- **Trans.** ... **6020**

CHEVROLET 1977 (Cont'd.)

Vans, G, P Series 6-250 (4.1L) 1 Bbl. VIN D
- **Lube** ... **B27**
- **Air** ... **PA648**
- **Fuel** ... **PF893,-RV**
- **Oil Vapor** ... **SA2027**
- **Fuel Vapor** ... **SA2046**
- **Trans.** ... **18031**

Vans, G, P Series 6-292 (4.8L) 1 Bbl. VIN T
- **Lube** ... **B27**
- **Air** ... **PA648**
- **Fuel** ... **PF893,-RV**
- **Oil Vapor** ... **SA2027**
- **Fuel Vapor** ... **SA2046**
- **Trans.** ... **6021**

Vans, G, P Series V8-305 (5.0L) 2 Bbl. VIN U
- **Lube** ... **B27**
- **Air** ... **PA1680**
- **Fuel** ... **PF893,-RV**
- **Oil Vapor** ... **SA2027**
- **Fuel Vapor** ... **SA2046**
- **Trans. (TH350C, TH375B)** ... **18031**
- **Trans. (TH400)** ... **6020**

Vans, G, P Series V8-350 (5.7L) 4 Bbl. VIN L
- **Lube (5 11/32 In.)** ... **B6**
- **Lube (8 11/16 In.)** ... **B7**
- **Air** ... **PA1680**
- **Fuel (1 In. Ele.)** ... **PF893,-RV**
- **Fuel (2 1/32 In. Ele.)** ... **PF894,-RV**
- **Oil Vapor** ... **SA2027**
- **Fuel Vapor** ... **SA2046**
- **Trans.** ... **6020**

Vans, G, P Series V8-454 (7.4L) 4 Bbl. VIN Y
- **Lube (5 11/32 In.)** ... **B6**
- **Lube (8 11/16 In.)** ... **B7**
- **Air** ... **PA1680**
- **Fuel (1 In. Ele.)** ... **PF893,-RV**
- **Fuel (2 1/32 In. Ele.)** ... **PF894,-RV**
- **Oil Vapor** ... **SA2027**
- **Fuel Vapor** ... **SA2046**
- **Trans.** ... **6020**

Vega 4-140 (2.3L) 2 Bbl. VIN B
- **Lube** ... **B27**
- **Fuel** ... **PF893,-RV**
- **Trans.** ... **6021**

1976

Blazer 6-250 (4.1L) 1 Bbl. VIN D
- **Lube** ... **B27**
- **Air** ... **PA648**
- **Fuel** ... **PF893,-RV**
- **Oil Vapor** ... **SA2027**
- **Fuel Vapor** ... **SA2046**
- **Trans. (TH350C, TH375B)** ... **18031**
- **Trans. (TH400)** ... **6020**

Blazer V8-350 (5.7L) 2,4 Bbl. VIN L,V
- **Lube (5 11/32 In.)** ... **B6**
- **Lube (8 11/16 In.)** ... **B7**
- **Air** ... **PA2008**
- **Fuel (1 In. Ele.)** ... **PF893,-RV**
- **Fuel (2 1/32 In. Ele.)** ... **PF894,-RV**
- **Oil Vapor** ... **SA2027**
- **Fuel Vapor** ... **SA2046**
- **Trans.** ... **6020**

Blazer V8-400 (6.6L) 4 Bbl. VIN U
- **Lube (5 11/32 In.)** ... **B6**
- **Lube (8 11/16 In.)** ... **B7**
- **Air** ... **PA2008**
- **Fuel (1 In. Ele.)** ... **PF893,-RV**
- **Fuel (2 1/32 In. Ele.)** ... **PF894,-RV**
- **Oil Vapor** ... **SA2027**
- **Fuel Vapor** ... **SA2046**
- **Trans.** ... **6020**

Camaro 6-250 (4.1L) 1 Bbl. VIN D
- **Lube** ... **B27**
- **Air** ... **PA658**
- **Fuel** ... **PF893,-RV**
- **Oil Vapor** ... **SA2027**
- **Fuel Vapor** ... **SA2046**
- **Trans.** ... **6021**

CHEVROLET 1976 (Cont'd.)

Camaro V8-305 (5.0L) 2 Bbl. VIN Q
- **Lube** ... **B27**
- **Air** ... **PA2006**
- **Fuel** ... **PF893,-RV**
- **Oil Vapor** ... **SA2027**
- **Fuel Vapor** ... **SA2046**
- **Trans.** ... **6021**

Camaro V8-350 (5.7L) 4 Bbl. VIN L
- **Lube** ... **B27**
- **Air** ... **PA2008**
- **Fuel (1 In. Ele.)** ... **PF893,-RV**
- **Fuel (2 1/32 In. Ele.)** ... **PF894,-RV**
- **Oil Vapor** ... **SA2027**
- **Fuel Vapor** ... **SA2046**
- **Trans.** ... **6021**

Caprice V8-350 (5.7L) 2,4 Bbl. VIN L,V
- **Lube** ... **B27**
- **Air** ... **PA2008**
- **Fuel (1 In. Ele.)** ... **PF893,-RV**
- **Fuel (2 1/32 In. Ele.)** ... **PF894,-RV**
- **Oil Vapor** ... **SA2027**
- **Fuel Vapor** ... **SA2046**
- **Trans. (2 Bbl.)** ... **6021**
- **Trans. (4 Bbl.)** ... **6020**

Caprice V8-400 (6.6L) 4 Bbl. VIN U
- **Lube** ... **B27**
- **Air** ... **PA2008**
- **Fuel** ... **PF894,-RV**
- **Oil Vapor** ... **SA2027**
- **Fuel Vapor** ... **SA2046**
- **Trans.** ... **6020**

Caprice V8-454 (7.4L) 4 Bbl. VIN S
- **Lube** ... **B27**
- **Air** ... **PA2008**
- **Fuel** ... **PF894,-RV**
- **Oil Vapor** ... **SA2027**
- **Fuel Vapor** ... **SA2046**
- **Trans.** ... **6020**

Chevelle 6-250 (4.1L) 1 Bbl. VIN D
- **Lube** ... **B27**
- **Air** ... **PA658**
- **Fuel** ... **PF893,-RV**
- **Oil Vapor** ... **SA2027**
- **Fuel Vapor** ... **SA2046**
- **Trans.** ... **6021**

Chevelle V8-305 (5.0L) 2 Bbl. VIN Q
- **Lube** ... **B27**
- **Air** ... **PA2008**
- **Fuel** ... **PF893,-RV**
- **Oil Vapor** ... **SA2027**
- **Fuel Vapor** ... **SA2046**
- **Trans.** ... **6021**

Chevelle V8-350 (5.7L) 2,4 Bbl. VIN L,V
- **Lube** ... **B27**
- **Air** ... **PA2008**
- **Fuel (2 Bbl.)** ... **PF893,-RV**
- **Fuel (4 Bbl.)** ... **PF894,-RV**
- **Oil Vapor** ... **SA2027**
- **Fuel Vapor** ... **SA2046**
- **Trans.** ... **6021**

Chevelle V8-400 (6.6L) 4 Bbl. VIN U
- **Lube** ... **B27**
- **Air** ... **PA2008**
- **Fuel** ... **PF894,-RV**
- **Oil Vapor** ... **SA2027**
- **Fuel Vapor** ... **SA2046**
- **Trans.** ... **6021**

Chevette 4-1400cc (1.4L) 1 Bbl. VIN I
- **Lube** ... **B43-S**
- **Fuel** ... **PF893,-RV**

Chevette 4-1600cc (1.6L) 1 Bbl. VIN E
- **Lube** ... **B43-S**
- **Fuel** ... **PF893,-RV**

Corvette V8-350 (5.7L) 4 Bbl. VIN L,X
- **Lube** ... **B27**
- **Air** ... **PA2008**
- **Fuel (1 In. Ele.)** ... **PF893,-RV**
- **Fuel (2 1/32 In. Ele.)** ... **PF894,-RV**
- **Oil Vapor** ... **SA2027**
- **Fuel Vapor** ... **SA2046**
- **Trans. (TH350, TH375)** ... **6021**
- **Trans. (TH400)** ... **6020**

OBS = Obsolete. Availability Limited to Distributor Stock.

CHEVROLET 1976 (Cont'd.)

El Camino 6-250 (4.1L) 1 Bbl. VIN D
Lube.....B27
Air.....PA658
Fuel.....PF893,-RV
Oil Vapor.....SA2027
Fuel Vapor.....SA2046
Trans. (TH350C, TH375B).....18031
Trans. (TH400).....6020

El Camino V8-305 (5.0L) 2 Bbl. VIN Q
Lube.....B27
Air.....PA2006
Fuel.....PF893,-RV
Oil Vapor.....SA2027
Fuel Vapor.....SA2046
Trans. (TH350C, TH375B).....18031
Trans. (TH400).....6020

El Camino V8-350 (5.7L) 2,4 Bbl. VIN L,V
Lube.....B27
Air.....PA2008
Fuel (1 In. Ele.).....PF893,-RV
Fuel (2 1/32 In. Ele.).....PF894,-RV
Oil Vapor.....SA2027
Fuel Vapor.....SA2046
Trans......6021

El Camino V8-400 (6.6L) 4 Bbl. VIN U
Lube.....B27
Air.....PA2008
Fuel.....PF894,-RV
Oil Vapor.....SA2027
Fuel Vapor.....SA2046
Trans......6021

Impala V8-350 (5.7L) 2,4 Bbl. VIN L,V
Lube.....B27
Air.....PA2008
Fuel (1 In. Ele.).....PF893,-RV
Fuel (2 1/32 In. Ele.).....PF894,-RV
Oil Vapor.....SA2027
Fuel Vapor.....SA2046
Trans. (2 Bbl.).....6021
Trans. (4 Bbl.).....6020

Impala V8-400 (6.6L) 4 Bbl. VIN U
Lube.....B27
Air.....PA2008
Fuel.....PF894,-RV
Oil Vapor.....SA2027
Fuel Vapor.....SA2046
Trans......6020

Impala V8-454 (7.4L) 4 Bbl. VIN S
Lube.....B27
Air.....PA2008
Fuel.....PF894,-RV
Oil Vapor.....SA2027
Fuel Vapor.....SA2046
Trans......6020

Laguna V8-305 (5.0L) 2 Bbl. VIN Q
Lube.....B27
Air.....PA2006
Fuel.....PF893,-RV
Oil Vapor.....SA2027
Fuel Vapor.....SA2046
Trans. (TH350, TH375).....6021
Trans. (TH350C, TH375B).....18031
Trans. (TH400).....6020

Laguna V8-350 (5.7L) 2,4 Bbl. VIN L,V
Lube.....B27
Air.....PA2008
Fuel (1 In. Ele.).....PF893,-RV
Fuel (2 1/32 In. Ele.).....PF894,-RV
Oil Vapor.....SA2027
Fuel Vapor.....SA2046
Trans. (TH350, TH375).....6021
Trans. (TH400).....6020

Laguna V8-400 (6.6L) 4 Bbl. VIN U
Lube.....B27
Air.....PA2008
Fuel.....PF894,-RV
Oil Vapor.....SA2027
Fuel Vapor.....SA2046
Trans. (TH350, TH375).....6021
Trans. (TH350C, TH375B).....18031
Trans. (TH400).....6020

CHEVROLET 1976 (Cont'd.)

LUV 4-1800cc (1.8L) 2 Bbl. VIN N
Lube.....B141
Air.....PA1657
Fuel.....BF836,-K4

Malibu 6-250 (4.1L) 1 Bbl. VIN D
Lube.....B27
Air.....PA658
Fuel.....PF893,-RV
Oil Vapor.....SA2027
Fuel Vapor.....SA2046
Trans......6021

Malibu V8-305 (5.0L) 2 Bbl. VIN Q
Lube.....B27
Air.....PA2006
Fuel.....PF893,-RV
Oil Vapor.....SA2027
Fuel Vapor.....SA2046
Trans......6021

Malibu V8-350 (5.7L) 2,4 Bbl. VIN L,V
Lube.....B27
Air.....PA2008
Fuel (1 In. Ele.).....PF893,-RV
Fuel (2 1/32 In. Ele.).....PF894,-RV
Oil Vapor.....SA2027
Fuel Vapor.....SA2046
Trans......6021

Malibu V8-400 (6.6L) 4 Bbl. VIN U
Lube.....B27
Air.....PA2008
Fuel.....PF894,-RV
Oil Vapor.....SA2027
Fuel Vapor.....SA2046
Trans......6021

Monte Carlo V8-305 (5.0L) 2 Bbl. VIN Q
Lube.....B27
Air.....PA2006
Fuel.....PF893,-RV
Oil Vapor.....SA2027
Fuel Vapor.....SA2046
Trans......6021

Monte Carlo V8-350 (5.7L) 2,4 Bbl. VIN L,V
Lube.....B27
Air.....PA2008
Fuel (1 In. Ele.).....PF893,-RV
Fuel (2 1/32 In. Ele.).....PF894,-RV
Oil Vapor.....SA2027
Fuel Vapor.....SA2046
Trans......6021

Monte Carlo V8-400 (6.6L) 4 Bbl. VIN U
Lube.....B27
Air.....PA2008
Fuel.....PF894,-RV
Oil Vapor.....SA2027
Fuel Vapor.....SA2046
Trans......6021

Monza 4-140 (2.3L) 1,2 Bbl. VIN A,B
Lube.....B27
Fuel.....PF893,-RV
Fuel Vapor.....SA2046

Monza V8-262 (4.3L) 2 Bbl. VIN G
Lube.....B27
Air.....PA2006
Fuel.....PF893,-RV
Oil Vapor.....SA2027
Fuel Vapor.....SA2046

Monza V8-305 (5.0L) 2 Bbl. VIN Q
Lube.....B27
Air.....PA2006
Fuel.....PF893,-RV
Oil Vapor.....SA2027
Fuel Vapor.....SA2046

Nova 6-250 (4.1L) 1 Bbl. VIN D
Lube.....B27
Air.....PA658
Fuel.....PF893,-RV
Oil Vapor.....SA2027
Fuel Vapor.....SA2046
Trans......6021

CHEVROLET 1976 (Cont'd.)

Nova V8-305 (5.0L) 2 Bbl. VIN Q
Lube.....B27
Air.....PA2006
Fuel.....PF893,-RV
Oil Vapor.....SA2027
Fuel Vapor.....SA2046
Trans......6021

Nova V8-350 (5.7L) 4 Bbl. VIN L
Lube.....B27
Air.....PA2008
Fuel (1 In. Ele.).....PF893,-RV
Fuel (2 1/32 In. Ele.).....PF894,-RV
Oil Vapor.....SA2027
Fuel Vapor.....SA2046
Trans......6021

Pickups, C, K Series, Suburban, C, K Series 6-250 (4.1L) 1 Bbl. VIN D
Lube.....B27
Air (w/o PowBrakes).....PA658
Air (w/PowBrakes).....PA648
Fuel.....PF893,-RV
Oil Vapor.....SA2027
Fuel Vapor.....SA2046
Trans. (TH350C, TH375B).....18031
Trans. (TH400).....6020

Pickups, C, K Series, Suburban, C, K Series 6-292 (4.8L) 1 Bbl. VIN T
Lube.....B27
Air.....PA648
Fuel.....PF893,-RV
Oil Vapor.....SA2027
Fuel Vapor.....SA2046
Trans......6020

Pickups, C, K Series, Suburban, C, K Series V8-350 (5.7L) 2,4 Bbl. VIN L,V
Lube (5 11/32 In.).....B6
Lube (8 11/16 In.).....B7
Air.....PA2008
Fuel (1 In. Ele.).....PF893,-RV
Fuel (2 1/32 In. Ele.).....PF894,-RV
Oil Vapor.....SA2027
Fuel Vapor.....SA2046
Trans......6020

Pickups, C, K Series, Suburban, C, K Series V8-400 (6.6L) 4 Bbl. VIN U
Lube (5 11/32 In.).....B6
Lube (8 11/16 In.).....B7
Air.....PA2008
Fuel (1 In. Ele.).....PF893,-RV
Fuel (2 1/32 In. Ele.).....PF894,-RV
Oil Vapor.....SA2027
Fuel Vapor.....SA2046
Trans......6020

Pickups, C, K Series, Suburban, C, K Series V8-454 (7.4L) 4 Bbl. VIN S
Lube (5 11/32 In.).....B6
Lube (8 11/16 In.).....B7
Air.....PA2008
Fuel (1 In. Ele.).....PF893,-RV
Fuel (2 1/32 In. Ele.).....PF894,-RV
Oil Vapor.....SA2027
Fuel Vapor.....SA2046
Trans......6020

Vans, G, P Series 6-250 (4.1L) 1 Bbl. VIN D
Lube.....B27
Air.....PA648
Fuel.....PF893,-RV
Oil Vapor.....SA2027
Fuel Vapor.....SA2046
Trans. (TH350C, TH375B).....18031
Trans. (TH400).....6020

Vans, G, P Series 6-292 (4.8L) 1 Bbl. VIN T
Lube.....B27
Air.....PA648
Fuel.....PF893,-RV
Oil Vapor.....SA2027
Fuel Vapor.....SA2046
Trans......6020

CHEVROLET 1976 (Cont'd.)

Vans, G, P Series V8-350 (5.7L) 2, 4 Bbl. VIN L,V
Lube (5 11/32 In.).....B6
Lube (8 11/16 In.).....B7
Air.....PA1680
Fuel (1 In. Ele.).....PF893,-RV
Fuel (2 1/32 In. Ele.).....PF894,-RV
Oil Vapor.....SA2027
Fuel Vapor.....SA2046
Trans......6020

Vans, G, P Series V8-400 (6.6L) 4 Bbl. VIN U
Lube (5 11/32 In.).....B6
Lube (8 11/16 In.).....B7
Air.....PA1680
Fuel (1 In. Ele.).....PF893,-RV
Fuel (2 1/32 In. Ele.).....PF894,-RV
Oil Vapor.....SA2027
Fuel Vapor.....SA2046
Trans......6020

Vans, P Series V8-454 (7.4L) 4 Bbl. VIN S,Y
Lube (5 11/32 In.).....B6
Lube (8 11/16 In.).....B7
Air.....PA1680
Fuel (1 In. Ele.).....PF893,-RV
Fuel (2 1/32 In. Ele.).....PF894,-RV
Oil Vapor.....SA2027
Fuel Vapor.....SA2046
Trans......6020

Vega 4-122 (2.0L) FI VIN O
Lube.....B27
Air.....PA640
Trans......6021

Vega 4-140 (2.3L) 1,2 Bbl. VIN A,B
Lube.....B27
Fuel.....PF893,-RV
Fuel Vapor.....SA2046
Trans......6021

1975

BelAir V8-350 (5.7L) 2,4 Bbl. VIN H,L
Lube.....B27
Air.....PA2008
Fuel (1 In. Ele.).....PF893,-RV
Fuel (2 1/32 In. Ele.).....PF894,-RV
Fuel (SintBronze).....SF898
Oil Vapor.....SA2027
Fuel Vapor.....SA2046
Trans. (TH350, TH375).....6021
Trans. (TH400).....6020

BelAir V8-400 (6.6L) 4 Bbl. VIN U
Lube.....B27
Air.....PA2008
Fuel.....PF894,-RV
Oil Vapor.....SA2027
Fuel Vapor.....SA2046
Trans. (TH350, TH375).....6021
Trans. (TH400).....6020

BelAir V8-454 (7.4L) 4 Bbl. VIN Y
Lube.....B27
Air.....PA2008
Fuel.....PF894,-RV
Oil Vapor.....SA2027
Fuel Vapor.....SA2046
Trans. (TH350, TH375).....6021
Trans. (TH400).....6020

Blazer 6-250 (4.1L) 1 Bbl. VIN Q
Lube.....B27
Air.....PA658
Fuel.....PF893,-RV
Oil Vapor.....SA2027
Fuel Vapor.....SA2046
Trans......6021

Blazer V8-350 (5.7L) 2,4 Bbl. VIN V,Y
Lube (5 11/32 In.).....B6
Lube (8 11/16 In.).....B7
Air.....PA2008
Fuel (1 In. Ele.).....PF893,-RV
Fuel (2 1/32 In. Ele.).....PF894,-RV
Oil Vapor.....SA2027
Fuel Vapor.....SA2046
Trans. (2 Bbl.).....6021
Trans. (4 Bbl.).....6020

OBS = Obsolete. Availability Limited to Distributor Stock.

CHEVROLET 1975 (Cont'd.)

Blazer V8-400 (6.6L) 4 Bbl. VIN M
- Lube (5 11/32 In.) B6
- Lube (8 11/16 In.) B7
- Air PA2008
- Fuel (1 In. Ele.) PF893,-RV
- Fuel (2 1/32 In. Ele.) PF894,-RV
- Oil Vapor SA2027
- Fuel Vapor SA2046
- Trans. 6020

Camaro 6-250 (4.1L) 1 Bbl. VIN D
- Lube B27
- Air PA658
- Fuel PF893,-RV
- Oil Vapor SA2027
- Fuel Vapor SA2046
- Trans. 6021

Camaro V8-350 (5.7L) 2,4 Bbl. VIN H,L
- Lube B27
- Air PA2006
- Fuel (1 In. Ele.) PF893,-RV
- Fuel (2 1/32 In. Ele.) PF894,-RV
- Fuel (SintBronze) SF898
- Oil Vapor SA2027
- Fuel Vapor SA2046
- Trans. 6021

Caprice V8-350 (5.7L) 2,4 Bbl. VIN H,L
- Lube B27
- Air PA2008
- Fuel (1 In. Ele.) PF893,-RV
- Fuel (2 1/32 In. Ele.) PF894,-RV
- Fuel (SintBronze) SF898
- Oil Vapor SA2027
- Fuel Vapor SA2046
- Trans. (TH350, TH375) 6021
- Trans. (TH400) 6020

Caprice V8-400 (6.6L) 4 Bbl. VIN R,U
- Lube B27
- Air PA2008
- Fuel PF894,-RV
- Oil Vapor SA2027
- Fuel Vapor SA2046
- Trans. (TH350, TH375) 6021
- Trans. (TH400) 6020

Caprice V8-454 (7.4L) 4 Bbl. VIN Y
- Lube B27
- Air PA2008
- Fuel PF894,-RV
- Oil Vapor SA2027
- Fuel Vapor SA2046
- Trans. (TH350, TH375) 6021
- Trans. (TH400) 6020

Chevelle 6-250 (4.1L) 1 Bbl. VIN D
- Lube B27
- Air PA658
- Fuel PF893,-RV
- Oil Vapor SA2027
- Fuel Vapor SA2046
- Trans. 6021

Chevelle V8-350 (5.7L) 2,4 Bbl. VIN H,L
- Lube B27
- Air PA2008
- Fuel (1 In. Ele.) PF893,-RV
- Fuel (2 1/32 In. Ele.) PF894,-RV
- Fuel (SintBronze) SF898
- Oil Vapor SA2027
- Fuel Vapor SA2046
- Trans. 6021

Chevelle V8-400 (6.6L) 4 Bbl. VIN U
- Lube B27
- Air PA2008
- Fuel PF894,-RV
- Oil Vapor SA2027
- Fuel Vapor SA2046
- Trans. 6021

Chevelle V8-454 (7.4L) 4 Bbl. VIN Y
- Lube B27
- Air PA2008
- Fuel PF894,-RV
- Oil Vapor SA2027
- Fuel Vapor SA2046
- Trans. 6020

Corvette V8-350 (5.7L) 4 Bbl. VIN J,T
- Lube B27
- Air PA2008
- Fuel (1 In. Ele.) PF893,-RV
- Fuel (2 1/32 In. Ele.) PF894,-RV
- Fuel (SintBronze) SF898
- Oil Vapor SA2027
- Fuel Vapor SA2046
- Trans. (TH350, TH375) 6021
- Trans. (TH400) 6020

El Camino 6-250 (4.1L) 1 Bbl. VIN D
- Lube B27
- Air PA658
- Fuel PF893,-RV
- Oil Vapor SA2027
- Fuel Vapor SA2046
- Trans. 6021

El Camino V8-350 (5.7L) 2,4 Bbl. VIN H,L
- Lube B27
- Air PA2008
- Fuel (1 In. Ele.) PF893,-RV
- Fuel (2 1/32 In. Ele.) PF894,-RV
- Oil Vapor SA2027
- Fuel Vapor SA2046
- Trans. (2 Bbl.) 6021
- Trans. (4 Bbl.) 6020

El Camino V8-400 (6.6L) 4 Bbl. VIN U
- Lube B27
- Air PA2008
- Fuel (1 In. Ele.) PF893,-RV
- Fuel (2 1/32 In. Ele.) PF894,-RV
- Oil Vapor SA2027
- Fuel Vapor SA2046
- Trans. 6020

El Camino V8-454 (7.4L) 4 Bbl. VIN Y
- Lube B27
- Air PA2008
- Fuel (1 In. Ele.) PF893,-RV
- Fuel (2 1/32 In. Ele.) PF894,-RV
- Oil Vapor SA2027
- Fuel Vapor SA2046
- Trans. 6020

Impala V8-350 (5.7L) 2,4 Bbl. VIN H,L
- Lube B27
- Air PA2008
- Fuel (1 In. Ele.) PF893,-RV
- Fuel (2 1/32 In. Ele.) PF894,-RV
- Fuel (SintBronze) SF898
- Oil Vapor SA2027
- Fuel Vapor SA2046
- Trans. (TH350, TH375) 6021
- Trans. (TH400) 6020

Impala V8-400 (6.6L) 4 Bbl. VIN M,U
- Lube B27
- Air PA2008
- Fuel PF894,-RV
- Oil Vapor SA2027
- Fuel Vapor SA2046
- Trans. (TH350, TH375) 6021
- Trans. (TH400) 6020

Impala V8-454 (7.4L) 4 Bbl. VIN Y
- Lube B27
- Air PA2008
- Fuel PF894,-RV
- Oil Vapor SA2027
- Fuel Vapor SA2046
- Trans. (TH350, TH375) 6021
- Trans. (TH400) 6020

Laguna V8-350 (5.7L) 2,4 Bbl. VIN H,L
- Lube B27
- Air PA2008
- Fuel (1 In. Ele.) PF893,-RV
- Fuel (2 1/32 In. Ele.) PF894,-RV
- Fuel (SintBronze) SF898
- Oil Vapor SA2027
- Fuel Vapor SA2046
- Trans. (TH350, TH375) 6021
- Trans. (TH400) 6020

Laguna V8-400 (6.6L) 4 Bbl. VIN U
- Lube B27
- Air PA2008
- Fuel PF894,-RV
- Oil Vapor SA2027
- Fuel Vapor SA2046
- Trans. (TH350, TH375) 6021
- Trans. (TH400) 6020

LUV 4-1816cc (1.8L) 1 Bbl. VIN N
- Lube Spin-on B295
- Air PA1657
- Fuel BF836,-K4

Malibu 6-250 (4.1L) 1 Bbl. VIN D
- Lube B27
- Air PA658
- Fuel PF893,-RV
- Oil Vapor SA2027
- Fuel Vapor SA2046
- Trans. 6021

Malibu V8-350 (5.7L) 2,4 Bbl. VIN H,L
- Lube B27
- Air PA2008
- Fuel (1 In. Ele.) PF893,-RV
- Fuel (2 1/32 In. Ele.) PF894,-RV
- Fuel (SintBronze) SF898
- Oil Vapor SA2027
- Fuel Vapor SA2046
- Trans. 6021

Malibu V8-400 (6.6L) 4 Bbl. VIN M,U
- Lube B27
- Air PA2008
- Fuel PF894,-RV
- Oil Vapor SA2027
- Fuel Vapor SA2046
- Trans. 6021

Malibu V8-454 (7.4L) 4 Bbl. VIN Y
- Lube B27
- Air PA2008
- Fuel PF894,-RV
- Oil Vapor SA2027
- Fuel Vapor SA2046
- Trans. 6021

Monte Carlo V8-350 (5.7L) 2,4 Bbl. VIN H,L
- Lube B27
- Air PA2008
- Fuel (1 In. Ele.) PF893,-RV
- Fuel (2 1/32 In. Ele.) PF894,-RV
- Fuel (SintBronze) SF898
- Oil Vapor SA2027
- Fuel Vapor SA2046
- Trans. (TH350, TH375) 6021
- Trans. (TH400) 6020

Monte Carlo V8-400 (6.6L) 4 Bbl. VIN U
- Lube B27
- Air PA2008
- Fuel PF894,-RV
- Oil Vapor SA2027
- Fuel Vapor SA2046
- Trans. (TH350, TH375) 6021
- Trans. (TH400) 6020

Monte Carlo V8-454 (7.4L) 4 Bbl. VIN Y
- Lube B27
- Air PA2008
- Fuel PF894,-RV
- Oil Vapor SA2027
- Fuel Vapor SA2046
- Trans. (TH350, TH375) 6021
- Trans. (TH400) 6020

Monza 4-140 (2.3L) 1,2 Bbl. VIN A,B
- Lube B27
- Fuel PF893,-RV
- Trans. (TH350, TH375) 6021

Monza V8-262 (4.3L) 2 Bbl. VIN G
- Lube B27
- Air PA2006
- Fuel PF893,-RV
- Oil Vapor SA2027
- Fuel Vapor SA2046
- Trans. (TH350, TH375) 6021
- Trans. (TH400) 6020

Monza V8-350 (5.7L) 2 Bbl. VIN H
- Lube B27
- Air PA2008
- Fuel (1 In. Ele.) PF893,-RV
- Fuel (2 1/32 In. Ele.) PF894,-RV
- Fuel (SintBronze) SF898
- Oil Vapor SA2027
- Fuel Vapor SA2046
- Trans. 6021

Nova 6-250 (4.1L) 1 Bbl. VIN D
- Lube B27
- Air PA658
- Fuel PF893,-RV
- Oil Vapor SA2027
- Fuel Vapor SA2046
- Trans. 6021

Nova V8-262 (4.3L) 2 Bbl. VIN G
- Lube B27
- Air PA2006
- Fuel PF893,-RV
- Oil Vapor SA2027
- Fuel Vapor SA2046
- Trans. 6021

Nova V8-350 (5.7L) 2,4 Bbl. VIN H,L
- Lube B27
- Air (2 Bbl.) PA2006
- Air (4 Bbl.) PA2008
- Fuel (1 In. Ele.) PF893,-RV
- Fuel (2 1/32 In. Ele.) PF894,-RV
- Fuel (SintBronze) SF898
- Oil Vapor SA2027
- Fuel Vapor SA2046
- Trans. 6021

Pickups, C, K Series, Suburban, C, K Series 6-250 (4.1L) 1 Bbl. VIN Q
- Lube B27
- Air (w/o PowBrakes) PA658
- Air (w/PowBrakes) PA648
- Fuel PF893,-RV
- Oil Vapor SA2027
- Fuel Vapor SA2046
- Trans. 6021

Pickups, C, K Series, Suburban, C, K Series 6-292 (4.8L) 1 Bbl. VIN T
- Lube B27
- Air PA648
- Fuel PF893,-RV
- Oil Vapor SA2027
- Fuel Vapor SA2046
- Trans. 6021

Pickups, C, K Series, Suburban, C, K Series V8-350 (5.7L) 2,4 Bbl. VIN V,Y
- Lube (5 11/32 In.) B6
- Lube (8 11/16 In.) B7
- Air (2 Bbl.) PA2006
- Air (4 Bbl.) PA2008
- Fuel (1 In. Ele.) PF893,-RV
- Fuel (2 1/32 In. Ele.) PF894,-RV
- Oil Vapor SA2027
- Fuel Vapor SA2046
- Trans. 6021

Pickups, C, K Series, Suburban, C, K Series V8-400 (6.6L) 4 Bbl. VIN M
- Lube (5 11/32 In.) B6
- Lube (8 11/16 In.) B7
- Air PA2008
- Fuel (1 In. Ele.) PF893,-RV
- Fuel (2 1/32 In. Ele.) PF894,-RV
- Oil Vapor SA2027
- Fuel Vapor SA2046
- Trans. 6020

Pickups, C, K Series, Suburban, C, K Series V8-454 (7.4L) 4 Bbl. VIN Z
- Lube (5 11/32 In.) B6
- Lube (8 11/16 In.) B7
- Air PA2008
- Fuel (1 In. Ele.) PF893,-RV
- Fuel (2 1/32 In. Ele.) PF894,-RV
- Oil Vapor SA2027
- Fuel Vapor SA2046
- Trans. 6020

OBS = Obsolete. Availability Limited to Distributor Stock.

CHEVROLET 1975 (Cont'd.)

Vans, G, P Series 6-250 (4.1L) 1 Bbl. VIN Q
- **Lube** ... **B27**
- **Air** ... **PA658**
- **Fuel** ... **PF893,-RV**
- **Oil Vapor** ... **SA2027**
- **Fuel Vapor** ... **SA2046**
- **Trans.** ... **6021**

Vans, G, P Series 6-292 (4.8L) 1 Bbl. VIN T
- **Lube** ... **B27**
- **Air** ... **PA648**
- **Fuel** ... **PF893,-RV**
- **Oil Vapor** ... **SA2027**
- **Fuel Vapor** ... **SA2046**
- **Trans.** ... **6021**

Vans, G, P Series V8-350 (5.7L) 2, 4 Bbl. VIN V,Y
- **Lube (5 11/32 In.)** ... **B6**
- **Lube (8 11/16 In.)** ... **B7**
- **Air (2 Bbl.)** ... **PA2006**
- **Air (4 Bbl.)** ... **PA1680**
- **Fuel (1 In. Ele.)** ... **PF893,-RV**
- **Fuel (2 1/32 In. Ele.)** ... **PF894,-RV**
- **Oil Vapor** ... **SA2027**
- **Fuel Vapor** ... **SA2046**
- **Trans. (2 Bbl.)** ... **6021**
- **Trans. (4 Bbl.)** ... **6020**

Vans, G, P Series V8-400 (6.6L) 4 Bbl. VIN M
- **Lube (5 11/32 In.)** ... **B6**
- **Lube (8 11/16 In.)** ... **B7**
- **Air** ... **PA2008**
- **Fuel (1 In. Ele.)** ... **PF893,-RV**
- **Fuel (2 1/32 In. Ele.)** ... **PF894,-RV**
- **Oil Vapor** ... **SA2027**
- **Fuel Vapor** ... **SA2046**
- **Trans.** ... **6020**

Vans, P Series V8-454 (7.4L) 4 Bbl. VIN L,Z
- **Lube (5 11/32 In.)** ... **B6**
- **Lube (8 11/16 In.)** ... **B7**
- **Air** ... **PA2008**
- **Fuel (1 In. Ele.)** ... **PF893,-RV**
- **Fuel (2 1/32 In. Ele.)** ... **PF894,-RV**
- **Oil Vapor** ... **SA2027**
- **Fuel Vapor** ... **SA2046**
- **Trans.** ... **6020**

Vega 4-122 (2.0L) FI VIN E
- **Lube** ... **B27**
- **Air** ... **PA640**
- **Fuel Vapor** ... **SA2046**
- **Trans.** ... **6021**

Vega 4-140 (2.3L) 1,2 Bbl. VIN A,B
- **Lube** ... **B27**
- **Fuel** ... **PF893,-RV**
- **Trans.** ... **6021**

1974

BelAir V8-350 (5.7L) 2,4 Bbl. Carb. VIN H,L
- **Lube** ... **B27**
- **Air** ... **PA2008**
- **Fuel (1 In. Ele.)** ... **PF893,-RV**
- **Fuel (2 1/32 In. Ele.)** ... **PF894,-RV**
- **Oil Vapor** ... **SA2027**
- **Fuel Vapor** ... **SA2046**
- **Trans. (TH350, TH375)** ... **6021**
- **Trans. (TH400)** ... **6020**

BelAir V8-400 (6.6L) Carb. VIN R,U
- **Lube** ... **B27**
- **Air** ... **PA2008**
- **Fuel** ... **PF893,-RV**
- **Oil Vapor** ... **SA2027**
- **Fuel Vapor** ... **SA2046**
- **Trans. (TH350, TH375)** ... **6021**
- **Trans. (TH400)** ... **6020**

BelAir V8-454 (7.4L) 4 Bbl. Carb. VIN Y
- **Lube** ... **B27**
- **Air** ... **PA2008**
- **Fuel** ... **PF893,-RV**
- **Oil Vapor** ... **SA2027**
- **Fuel Vapor** ... **SA2046**
- **Trans.** ... **6020**

CHEVROLET 1974 (Cont'd.)

Blazer 6-250 (4.1L) 1 Bbl. Carb. VIN Q
- **Lube** ... **B27**
- **Air (2 In.)** ... **PA658**
- **Air (3 In.)** ... **PA648**
- **Fuel** ... **PF893,-RV**
- **Oil Vapor** ... **SA2027**
- **Fuel Vapor** ... **SA2046**
- **Trans.** ... **6021**

Blazer V8-350 (5.7L) 2,4 Bbl. Carb. VIN V,Y
- **Lube** ... **B6**
- **Air (2 Bbl.)** ... **PA2006**
- **Air (4 Bbl.)** ... **PA2008**
- **Fuel (1 In. Ele.)** ... **PF893,-RV**
- **Fuel (2 1/32 In. Ele.)** ... **PF894,-RV**
- **Oil Vapor** ... **SA2027**
- **Fuel Vapor** ... **SA2046**
- **Trans. (TH350, TH375)** ... **6021**
- **Trans. (TH400)** ... **6020**

Camaro 6-250 (4.1L) Carb. VIN D
- **Lube** ... **B27**
- **Air** ... **PA658**
- **Fuel** ... **PF893,-RV**
- **Oil Vapor** ... **SA2027**
- **Fuel Vapor** ... **SA2046**
- **Trans.** ... **6021**

Camaro V8-350 (5.7L) 2,4 Bbl. Carb. VIN H,K,L
- **Lube** ... **B27**
- **Air** ... **PA2006**
- **Fuel (SintBronze)** ... **SF898**
- **Oil Vapor** ... **SA2027**
- **Fuel Vapor** ... **SA2046**
- **Trans.** ... **6021**

Camaro V8-350 (5.7L) 4 Bbl. HiPerf. Carb. VIN T
- **Lube** ... **B27**
- **Air** ... **PA2008**
- **Fuel** ... **PF893,-RV**
- **Oil Vapor** ... **SA2027**
- **Fuel Vapor** ... **SA2046**
- **Trans. (TH350, TH375)** ... **6021**
- **Trans. (TH400)** ... **6020**

Camaro V8-400 (6.6L) 2,4 Bbl. Carb. VIN R,U
- **Lube** ... **B27**
- **Air** ... **PA2008**
- **Fuel** ... **PF893,-RV**
- **Oil Vapor** ... **SA2027**
- **Fuel Vapor** ... **SA2046**
- **Trans. (TH350, TH375)** ... **6021**
- **Trans. (TH400)** ... **6020**

Camaro V8-454 (7.4L) 4 Bbl. Carb. VIN Y
- **Lube** ... **B27**
- **Air** ... **PA2008**
- **Fuel** ... **PF893,-RV**
- **Oil Vapor** ... **SA2027**
- **Fuel Vapor** ... **SA2046**
- **Trans.** ... **6020**

Caprice V8-350 (5.7L) 2,4 Bbl. Carb. VIN H,L
- **Lube** ... **B27**
- **Air** ... **PA2008**
- **Fuel** ... **PF893,-RV**
- **Oil Vapor** ... **SA2027**
- **Fuel Vapor** ... **SA2046**
- **Trans. (TH350, TH375)** ... **6021**
- **Trans. (TH400)** ... **6020**

Corvette V8-350 (5.7L) 4 Bbl. Carb. VIN J,T
- **Lube** ... **B27**
- **Air (2 1/2 In.)** ... **PA2006**
- **Air (3 15/32 In.)** ... **PA2008**
- **Fuel** ... **PF893,-RV**
- **Oil Vapor** ... **SA2027**
- **Fuel Vapor** ... **SA2046**
- **Trans.** ... **6020**

CHEVROLET 1974 (Cont'd.)

Corvette V8-454 (7.4L) 4 Bbl. Carb. VIN Z
- **Lube** ... **B27**
- **Air** ... **PA2006**
- **Fuel** ... **PF893,-RV**
- **Oil Vapor** ... **SA2027**
- **Fuel Vapor** ... **SA2046**
- **Trans.** ... **6020**

El Camino V8-350 (5.7L) 2,4 Bbl. Carb. VIN H,L
- **Lube** ... **B27**
- **Air** ... **PA2008**
- **Fuel** ... **PF893,-RV**
- **Oil Vapor** ... **SA2027**
- **Fuel Vapor** ... **SA2046**
- **Trans. (TH350, TH375)** ... **6021**
- **Trans. (TH400)** ... **6020**

El Camino V8-400 (6.6L) 4 Bbl. Carb. VIN R,U
- **Lube** ... **B27**
- **Air** ... **PA2008**
- **Fuel** ... **PF893,-RV**
- **Oil Vapor** ... **SA2027**
- **Fuel Vapor** ... **SA2046**
- **Trans. (TH350, TH375)** ... **6021**
- **Trans. (TH400)** ... **6020**

El Camino V8-454 (7.4L) 4 Bbl. Carb. VIN Y
- **Lube** ... **B27**
- **Air** ... **PA2008**
- **Fuel** ... **PF893,-RV**
- **Oil Vapor** ... **SA2027**
- **Fuel Vapor** ... **SA2046**
- **Trans.** ... **6020**

Impala V8-350 (5.7L) 2,4 Bbl. Carb. VIN H,K,L
- **Lube** ... **B27**
- **Air** ... **PA2008**
- **Fuel** ... **PF893,-RV**
- **Oil Vapor** ... **SA2027**
- **Fuel Vapor** ... **SA2046**
- **Trans. (TH350, TH375)** ... **6021**
- **Trans. (TH400)** ... **6020**

Impala V8-400 (6.6L) 2,4 Bbl. Carb. VIN R,U
- **Lube** ... **B27**
- **Air** ... **PA2008**
- **Fuel** ... **PF893,-RV**
- **Oil Vapor** ... **SA2027**
- **Fuel Vapor** ... **SA2046**
- **Trans. (TH350, TH375)** ... **6021**
- **Trans. (TH400)** ... **6020**

Impala V8-454 (7.4L) 4 Bbl. Carb. VIN Y
- **Lube** ... **B6**
- **Air** ... **PA2008**
- **Fuel** ... **PF893,-RV**
- **Oil Vapor** ... **SA2027**
- **Fuel Vapor** ... **SA2046**
- **Trans.** ... **6020**

Laguna V8-350 (5.7L) Carb. VIN H,K,L
- **Lube** ... **B27**
- **Air (2 1/2 In.)** ... **PA2006**
- **Air (3 15/32 In.)** ... **PA2008**
- **Fuel** ... **PF893,-RV**
- **Fuel (SintBronze)** ... **SF898**
- **Oil Vapor** ... **SA2027**
- **Fuel Vapor** ... **SA2046**
- **Trans. (TH350, TH375)** ... **6021**
- **Trans. (TH400)** ... **6020**

Laguna V8-400 (6.6L) Carb. VIN R,U
- **Lube** ... **B27**
- **Air** ... **PA2008**
- **Fuel** ... **PF893,-RV**
- **Fuel (SintBronze)** ... **SF898**
- **Oil Vapor** ... **SA2027**
- **Fuel Vapor** ... **SA2046**
- **Trans. (TH350, TH375)** ... **6021**
- **Trans. (TH400)** ... **6020**

CHEVROLET 1974 (Cont'd.)

Laguna V8-454 (7.4L) 4 Bbl. Carb. VIN Y
- **Air** ... **PA2008**
- **Fuel** ... **PF893,-RV**
- **Oil Vapor** ... **SA2027**
- **Fuel Vapor** ... **SA2046**
- **Trans. (TH350, TH375)** ... **6021**
- **Trans. (TH400)** ... **6020**

LUV 4-1816cc (1.8L) Carb. VIN N
- **Lube Spin-on** ... **B243**
- **Air** ... **PA1657**
- **Fuel** ... **BF840,-K1**
- **Oil Vapor** ... **SA2027**
- **Fuel Vapor** ... **SA2046**

Malibu 6-250 (4.1L) 1 Bbl. Carb. VIN D
- **Lube** ... **B27**
- **Air** ... **PA658**
- **Fuel** ... **PF893,-RV**
- **Oil Vapor** ... **SA2027**
- **Fuel Vapor** ... **SA2046**
- **Trans.** ... **6021**

Malibu V8-350 (5.7L) 2,4 Bbl. Carb. VIN H,L
- **Lube** ... **B27**
- **Air** ... **PA2008**
- **Fuel** ... **PF893,-RV**
- **Oil Vapor** ... **SA2027**
- **Fuel Vapor** ... **SA2046**
- **Trans.** ... **6021**

Malibu V8-400 (6.6L) Carb. VIN M,R
- **Lube** ... **B27**
- **Air** ... **PA2008**
- **Fuel** ... **PF893,-RV**
- **Oil Vapor** ... **SA2027**
- **Fuel Vapor** ... **SA2046**
- **Trans.** ... **6021**

Malibu V8-454 (7.4L) Carb. VIN Y
- **Lube** ... **B27**
- **Air** ... **PA2008**
- **Fuel** ... **PF893,-RV**
- **Oil Vapor** ... **SA2027**
- **Fuel Vapor** ... **SA2046**
- **Trans.** ... **6020**

Monte Carlo V8-350 (5.7L) Carb. VIN H,L
- **Lube** ... **B27**
- **Air** ... **PA2008**
- **Fuel** ... **PF893,-RV**
- **Oil Vapor** ... **SA2027**
- **Fuel Vapor** ... **SA2046**
- **Trans. (TH350, TH375)** ... **6021**
- **Trans. (TH400)** ... **6020**

Monte Carlo V8-400 (6.6L) Carb. VIN R,U
- **Lube** ... **B27**
- **Air** ... **PA2008**
- **Fuel** ... **PF893,-RV**
- **Oil Vapor** ... **SA2027**
- **Fuel Vapor** ... **SA2046**
- **Trans.** ... **6020**

Monte Carlo V8-454 (7.4L) Carb. VIN Y
- **Lube** ... **B27**
- **Air** ... **PA2008**
- **Fuel** ... **PF893,-RV**
- **Oil Vapor** ... **SA2027**
- **Fuel Vapor** ... **SA2046**
- **Trans.** ... **6020**

Nova 6-250 (4.1L) Carb. VIN D
- **Lube** ... **B27**
- **Air** ... **PA658**
- **Fuel** ... **PF893,-RV**
- **Oil Vapor** ... **SA2027**
- **Fuel Vapor** ... **SA2046**
- **Trans.** ... **6021**

Nova V8-350 (5.7L) Carb. VIN H,J,K,L
- **Lube** ... **B27**
- **Air** ... **PA2006**
- **Fuel** ... **PF893,-RV**
- **Oil Vapor** ... **SA2027**
- **Fuel Vapor** ... **SA2046**
- **Trans.** ... **6021**

OBS = Obsolete. Availability Limited to Distributor Stock.

CHEVROLET 1974 (Cont'd.)

Pickups, C, K Series, Suburban, C, K Series 6-250 (4.1L) 1 Bbl. Carb. VIN Q
- **Lube**....B27
- **Air (w/o PowBrakes)**....PA658
- **Air (w/PowBrakes)**....PA648
- **Fuel**....PF893,-RV
- **Oil Vapor**....SA2027
- **Fuel Vapor**....SA2046
- **Trans.**....6021

Pickups, C, K Series, Suburban, C, K Series 6-292 (4.8L) FI Natural Gas
- **Lube**....B27
- **Air**....PA648
- **Fuel**....PF893,-RV
- **Oil Vapor**....SA2027
- **Fuel Vapor**....SA2046
- **Trans.**....6021

Pickups, C, K Series, Suburban, C, K Series 6-292 (4.8L) 1 Bbl. Carb. VIN T
- **Lube**....B27
- **Air**....PA648
- **Fuel**....PF893,-RV
- **Oil Vapor**....SA2027
- **Fuel Vapor**....SA2046
- **Trans.**....6021

Pickups, C, K Series, Suburban, C, K Series V8-350 (5.7L) 2,4 Bbl. Carb. VIN V,Y
- **Lube**....B6
- **Air (2 Bbl.)**....PA2006
- **Air (4 Bbl.)**....PA2008
- **Fuel (1 In. Ele.)**....PF893,-RV
- **Fuel (2 1/32 In. Ele.)**....PF894,-RV
- **Oil Vapor**....SA2027
- **Fuel Vapor**....SA2046
- **Trans. (TH350, TH375B)**....6021
- **Trans. (TH400)**....6020

Pickups, C, K Series, Suburban, C, K Series V8-350 (5.7L) 4 Bbl. Carb. LPG VIN W
- **Lube**....B6
- **Air**....PA2008
- **Oil Vapor**....SA2027
- **Fuel Vapor**....SA2046
- **Trans. (TH350, TH375B)**....6021
- **Trans. (TH400)**....6020

Pickups, C, K Series, Suburban, C, K Series V8-454 (7.4L) 4 Bbl. Carb. VIN Z
- **Lube**....B6
- **Air**....PA2008
- **Fuel (1 In. Ele.)**....PF893,-RV
- **Fuel (2 1/32 In. Ele.)**....PF894,-RV
- **Oil Vapor**....SA2027
- **Fuel Vapor**....SA2046
- **Trans.**....6020

Vans, G Series V8-454 (7.4L) VIN Z
- **Lube**....B1428
- **Air**....PA2008
- **Fuel**....PF893
- **Oil Vapor**....SA2039
- **Fuel Vapor**....N/R
- **Trans.**....6020

Vans, G, P Series 6-250 (4.1L) 1 Bbl. Carb. VIN Q
- **Lube**....B27
- **Air**....PA648
- **Fuel**....PF893,-RV
- **Oil Vapor**....SA2027
- **Fuel Vapor**....SA2046
- **Trans.**....6021

Vans, G, P Series V8-350 (5.7L) 2, 4 Bbl. Carb. VIN V,Y
- **Lube**....B6
- **Air**....PA1680
- **Fuel**....PF893,-RV
- **Oil Vapor**....SA2027
- **Fuel Vapor**....SA2046
- **Trans. (TH350, TH375)**....6021
- **Trans. (TH400)**....6020

CHEVROLET 1974 (Cont'd.)

Vans, G, P Series V8-350 (5.7L) FI Natural Gas
- **Lube**....B6
- **Air**....PA1680
- **Fuel**....PF893,-RV
- **Fuel Vapor**....SA2046
- **Trans.**....6021

Vans, P Series 6-292 (4.8L) FI Natural Gas
- **Lube**....B27
- **Air**....PA648
- **Fuel**....PF893,-RV
- **Fuel Vapor**....SA2046
- **Trans.**....6021

Vans, P Series 6-292 (4.8L) 1 Bbl. Carb. VIN T
- **Lube**....B27
- **Air**....PA648
- **Fuel**....PF893,-RV
- **Oil Vapor**....SA2027
- **Fuel Vapor**....SA2046
- **Trans.**....6021

Vans, P Series V8-454 (7.4L) 4 Bbl. Carb. VIN L,Z
- **Lube**....B6
- **Air**....PA2008
- **Fuel**....PF893,-RV
- **Oil Vapor**....SA2027
- **Fuel Vapor**....SA2046
- **Trans.**....6020

Vega 4-140 (2.3L) Carb. VIN A,B
- **Lube**....B27
- **Air**....PA658
- **Fuel**....PF893,-RV
- **Fuel Vapor**....SA2046
- **Trans.**....6021

1973

BelAir V8-250 (4.1L) Carb. VIN D
- **Lube**....B27
- **Air**....PA658
- **Fuel**....PF893,-RV
- **Oil Vapor**....SA2027
- **Fuel Vapor**....SA2046
- **Trans.**....6017

BelAir V8-350 (5.7L) 2,4 Bbl. Carb. VIN H,K
- **Lube**....B27
- **Air**....PA2008
- **Fuel**....PF893,-RV
- **Oil Vapor**....SA2027
- **Fuel Vapor**....SA2046
- **Trans. (TH350, TH375)**....6021
- **Trans. (TH400)**....6020

BelAir V8-400 (6.6L) Carb. VIN R
- **Lube**....B27
- **Air**....PA2008
- **Fuel**....PF893,-RV
- **Oil Vapor**....SA2027
- **Fuel Vapor**....SA2046
- **Trans. (TH350, TH375)**....6021
- **Trans. (TH400)**....6020

BelAir V8-454 (7.4L) 4 Bbl. Carb. VIN X
- **Lube**....B27
- **Air**....PA2008
- **Fuel**....PF893,-RV
- **Oil Vapor**....SA2027
- **Fuel Vapor**....SA2046
- **Trans.**....6020

Blazer 6-250 (4.1L) 1 Bbl. Carb. VIN Q
- **Lube**....B27
- **Air (2 In.)**....PA658
- **Air (3 In.)**....PA648
- **Fuel**....PF893,-RV
- **Oil Vapor**....SA2027
- **Fuel Vapor**....SA2046
- **Trans. (TH350, TH375)**....6021
- **Trans. (TH400)**....6020
- **Trans. (PowerGlide)**....6017

CHEVROLET 1973 (Cont'd.)

Blazer 6-307 (5.0L) Carb. VIN X
- **Lube**....B27
- **Air**....PA1680
- **Fuel (SintBronze)**....SF898
- **Oil Vapor**....SA2027
- **Fuel Vapor**....SA2046
- **Trans. (TH350, TH375)**....6021
- **Trans. (TH400)**....6020

Blazer V8-350 (5.7L) 2,4 Bbl. Carb. VIN V,Y
- **Lube**....B6
- **Air (2 Bbl.)**....PA2006
- **Air (4 Bbl.)**....PA2008
- **Fuel**....PF893,-RV
- **Oil Vapor**....SA2027
- **Fuel Vapor**....SA2046
- **Trans. (TH350, TH375)**....6021
- **Trans. (TH400)**....6020
- **Trans. (PowerGlide)**....6017

Camaro 6-250 (4.1L) Carb. VIN D
- **Lube**....B27
- **Air**....PA658
- **Fuel**....PF893,-RV
- **Oil Vapor**....SA2027
- **Fuel Vapor**....SA2046
- **Trans.**....6021

Camaro 6-307 (5.0L) Carb. VIN F
- **Lube**....B27
- **Air**....PA658
- **Fuel (SintBronze)**....SF898
- **Oil Vapor**....SA2027
- **Fuel Vapor**....SA2046
- **Trans.**....6021

Camaro V8-350 (5.7L) 2,4 Bbl. Carb. VIN H,K
- **Lube**....B27
- **Air (Z28)**....PA1758
- **Air (Exc. Z28)**....PA2008
- **Fuel (SintBronze)**....SF898
- **Oil Vapor**....SA2027
- **Fuel Vapor**....SA2046
- **Trans. (TH350, TH375)**....6021
- **Trans. (TH400)**....6020

Caprice V8-350 (5.7L) 2,4 Bbl. Carb. VIN H,K
- **Lube**....B27
- **Air**....PA2008
- **Fuel**....PF893,-RV
- **Oil Vapor**....SA2027
- **Fuel Vapor**....SA2046
- **Trans. (TH350, TH375)**....6021
- **Trans. (TH400)**....6020

Caprice V8-400 (6.6L) Carb. VIN R
- **Lube**....B27
- **Air**....PA2008
- **Fuel**....PF893,-RV
- **Oil Vapor**....SA2027
- **Fuel Vapor**....SA2046
- **Trans. (TH350, TH375)**....6021
- **Trans. (TH400)**....6020

Caprice V8-454 (7.4L) Carb. VIN X,Y
- **Lube**....B27
- **Air**....PA2008
- **Fuel**....PF893,-RV
- **Oil Vapor**....SA2027
- **Fuel Vapor**....SA2046
- **Trans.**....6020

Chevelle 6-250 (4.1L) Carb. VIN D
- **Lube**....B27
- **Air**....PA658
- **Fuel**....PF893,-RV
- **Oil Vapor**....SA2027
- **Fuel Vapor**....SA2046
- **Trans. (TH350, TH375)**....6021
- **Trans. (TH400)**....6020
- **Trans. (PowerGlide)**....6017

Chevelle 6-307 (5.0L) Carb. VIN F
- **Lube**....B27
- **Air**....PA658
- **Fuel (SintBronze)**....SF898
- **Oil Vapor**....SA2027
- **Fuel Vapor**....SA2046
- **Trans.**....6021

CHEVROLET 1973 (Cont'd.)

Chevelle V8-454 (7.4L) 4 Bbl. Carb. VIN Y
- **Lube**....B27
- **Air**....PA2008
- **Fuel**....PF893,-RV
- **Oil Vapor**....SA2027
- **Fuel Vapor**....SA2046
- **Trans. (TH350, TH375)**....6021
- **Trans. (TH400)**....6020

Corvette V8-350 (5.7L) Carb. VIN J
- **Lube**....B27
- **Air**....PA2006
- **Fuel**....PF893,-RV
- **Oil Vapor**....SA2027
- **Fuel Vapor**....SA2046
- **Trans.**....6020

Corvette V8-454 (7.4L) Carb. VIN Z
- **Lube**....B27
- **Air**....PA2006
- **Fuel**....PF893,-RV
- **Oil Vapor**....SA2027
- **Fuel Vapor**....SA2046
- **Trans.**....6020

El Camino 6-250 (4.1L) Carb. VIN Q
- **Lube**....B27
- **Air (1 7/8 In.)**....PA658
- **Air (3 In.)**....PA648
- **Fuel**....PF893,-RV
- **Oil Vapor**....SA2027
- **Fuel Vapor**....SA2046
- **Trans.**....6021

El Camino 6-307 (5.0L) Carb. VIN X
- **Lube**....B27
- **Air**....PA2008
- **Fuel (SintBronze)**....SF898
- **Oil Vapor**....SA2027
- **Fuel Vapor**....SA2046
- **Trans.**....6021

El Camino V8-350 (5.7L) 2 Bbl. Carb. VIN H,K
- **Lube**....B6
- **Air**....PA2008
- **Fuel**....PF893,-RV
- **Oil Vapor**....SA2027
- **Fuel Vapor**....SA2046
- **Trans. (2 Bbl.)**....6021
- **Trans. (4 Bbl.)**....6020

El Camino V8-454 (7.4L) 4 Bbl. Carb. VIN Y
- **Lube**....B6
- **Air**....PA2008
- **Fuel**....PF893,-RV
- **Oil Vapor**....SA2027
- **Fuel Vapor**....SA2046
- **Trans.**....6020

Impala 6-250 (4.1L) Carb. VIN D
- **Lube**....B27
- **Air**....PA658
- **Fuel**....PF893,-RV
- **Oil Vapor**....SA2027
- **Fuel Vapor**....SA2046
- **Trans.**....6017

Impala V8-350 (5.7L) 2,4 Bbl. Carb. VIN H,J
- **Lube**....B27
- **Air**....PA2008
- **Fuel**....PF893,-RV
- **Oil Vapor**....SA2027
- **Fuel Vapor**....SA2046
- **Trans. (TH350, TH375)**....6021
- **Trans. (TH400)**....6020

Impala V8-400 (6.6L) Carb. VIN R
- **Lube**....B27
- **Air**....PA2008
- **Fuel**....PF893,-RV
- **Oil Vapor**....SA2027
- **Fuel Vapor**....SA2046
- **Trans. (TH350, TH375)**....6021
- **Trans. (TH400)**....6020

Impala V8-454 (7.4L) 4 Bbl. Carb. VIN X
- **Lube**....B27
- **Air**....PA2008
- **Fuel**....PF893,-RV
- **Oil Vapor**....SA2027
- **Fuel Vapor**....SA2046
- **Trans.**....6020

OBS = Obsolete. Availability Limited to Distributor Stock.

CHEVROLET 1973 (Cont'd.)

Laguna V8-350 (5.7L) Carb. VIN H,K
- **Lube**....B27
- **Air**....PA2008
- **Fuel (SintBronze)**....SF898
- **Oil Vapor**....SA2027
- **Fuel Vapor**....SA2046

Laguna V8-454 (7.4L) 4 Bbl. Carb. VIN Y
- **Lube**....B27
- **Air**....PA2008
- **Fuel**....PF893,-RV
- **Oil Vapor**....SA2027
- **Fuel Vapor**....SA2046

LUV 4-1816cc (1.8L) Carb. VIN N
- **Lube Spin-on**....B243
- **Air**....PA1657
- **Fuel**....BF840,-K1
- **Oil Vapor**....SA2027
- **Fuel Vapor**....SA2046

Malibu 6-250 (4.1L) 1 Bbl. Carb. VIN D
- **Lube**....B27
- **Air**....PA658
- **Fuel**....PF893,-RV
- **Oil Vapor**....SA2027
- **Fuel Vapor**....SA2046
- **Trans.**....6021

Malibu V8-307 (5.0L) Carb. VIN F
- **Lube**....B27
- **Air**....PA658
- **Fuel (SintBronze)**....SF898
- **Oil Vapor**....SA2027
- **Fuel Vapor**....SA2046
- **Trans.**....6021

Malibu V8-350 (5.7L) 2,4 Bbl. Carb. VIN H,K
- **Lube**....B27
- **Air**....PA2008
- **Fuel**....PF893,-RV
- **Oil Vapor**....SA2027
- **Fuel Vapor**....SA2046
- **Trans.**....6021

Malibu V8-454 (7.4L) Carb. VIN Y
- **Lube**....B27
- **Air**....PA2008
- **Fuel**....PF893,-RV
- **Oil Vapor**....SA2027
- **Fuel Vapor**....SA2046
- **Trans.**....6020

Monte Carlo V8-350 (5.7L) Carb. VIN H,J
- **Lube**....B27
- **Air**....PA2008
- **Fuel**....PF893,-RV
- **Oil Vapor**....SA2027
- **Fuel Vapor**....SA2046
- **Trans.**....6021

Monte Carlo V8-454 (7.4L) Carb. VIN X
- **Lube**....B27
- **Air**....PA2008
- **Fuel**....PF893,-RV
- **Oil Vapor**....SA2027
- **Fuel Vapor**....SA2046
- **Trans.**....6020

Nova 6-250 (4.1L) Carb. VIN D
- **Lube**....B27
- **Air**....PA658
- **Fuel**....PF893,-RV
- **Oil Vapor**....SA2027
- **Fuel Vapor**....SA2046
- **Trans.**....6017

Nova 6-307 (5.0L) Carb. VIN F
- **Lube**....B27
- **Air**....PA658
- **Fuel (SintBronze)**....SF898
- **Oil Vapor**....SA2027
- **Fuel Vapor**....SA2046
- **Trans.**....6021

CHEVROLET 1973 (Cont'd.)

Nova V8-350 (5.7L) 2,4 Bbl. Carb. VIN H,K
- **Lube**....B27
- **Air**....PA2006
- **Fuel**....PF893,-RV
- **Oil Vapor**....SA2027
- **Fuel Vapor**....SA2046
- **Trans. (TH350, TH375)**....6021
- **Trans. (TH400)**....6020

Pickups, C, K Series, Suburban, C, K Series 6-250 (4.1L) 1 Bbl. Carb. VIN Q
- **Lube**....B27
- **Air (w/PowBrakes)**....PA648
- **Air (w/o PowBrakes)**....PA658
- **Fuel**....PF893,-RV
- **Oil Vapor**....SA2027
- **Fuel Vapor**....SA2046
- **Trans. (TH350, TH375)**....6021
- **Trans. (PowerGlide)**....6017

Pickups, C, K Series, Suburban, C, K Series 6-292 (4.8L) 1 Bbl. Carb. VIN T
- **Lube**....B27
- **Air**....PA648
- **Fuel**....PF893,-RV
- **Oil Vapor**....SA2027
- **Fuel Vapor**....SA2046
- **Trans. (TH350, TH375)**....6021
- **Trans. (PowerGlide)**....6017

Pickups, C, K Series, Suburban, C, K Series 6-307 (5.0L) Carb. VIN F
- **Lube**....B6
- **Air**....PA2006
- **Fuel (SintBronze)**....SF898
- **Oil Vapor**....SA2027
- **Fuel Vapor**....SA2046
- **Trans.**....6021

Pickups, C, K Series, Suburban, C, K Series V8-350 (5.7L) 4 Bbl. Carb. VIN Y
- **Lube**....B6
- **Air**....PA2008
- **Fuel**....PF893,-RV
- **Oil Vapor**....SA2027
- **Fuel Vapor**....SA2046
- **Trans. (TH350, TH375)**....6021
- **Trans. (TH400)**....6020

Pickups, C, K Series, Suburban, C, K Series V8-454 (7.4L) 4 Bbl. Carb. VIN Z
- **Lube**....B6
- **Air**....PA2008
- **Fuel**....PF893,-RV
- **Oil Vapor**....SA2027
- **Fuel Vapor**....SA2046
- **Trans.**....6020

Vans, G, P Series 6-250 (4.1L) Carb. VIN Q
- **Lube**....B27
- **Air**....PA648
- **Fuel**....PF893,-RV
- **Oil Vapor**....SA2027
- **Fuel Vapor**....SA2046
- **Trans.**....6021

Vans, G, P Series 6-307 (5.0L) Carb. VIN X
- **Lube**....B6
- **Air**....PA1680
- **Fuel (SintBronze)**....SF898
- **Oil Vapor**....SA2027
- **Fuel Vapor**....SA2046
- **Trans.**....6021

Vans, G, P Series V8-350 (5.7L) 4 Bbl. Carb. VIN Y
- **Lube**....B6
- **Air**....PA1680
- **Fuel**....PF893,-RV
- **Oil Vapor**....SA2027
- **Fuel Vapor**....SA2046
- **Trans. (TH350, TH375)**....6021
- **Trans. (TH400)**....6020

CHEVROLET 1973 (Cont'd.)

Vans, P Series V8-454 (7.4L) 4 Bbl. Carb. VIN L,Z
- **Lube**....B6
- **Air**....PA2008
- **Fuel**....PF893,-RV
- **Oil Vapor**....SA2027
- **Fuel Vapor**....SA2046
- **Trans.**....6020

Vega 4-140 (2.3L) Carb. VIN A,B
- **Lube**....B27
- **Air**....PA658
- **Fuel**....PF893,-RV
- **Oil Vapor**....N/R
- **Fuel Vapor**....SA2046
- **Trans.**....6017

1972

BelAir 6-250 (4.1L) Carb. VIN D
- **Lube**....B27
- **Air**....PA658
- **Fuel**....PF893,-RV
- **Oil Vapor**....SA2027
- **Fuel Vapor**....SA2046
- **Trans.**....6017

BelAir V8-350 (5.7L) 2,4 Bbl. Carb. VIN H,K
- **Lube**....B27
- **Air**....PA2008
- **Fuel**....PF893,-RV
- **Oil Vapor**....SA2027
- **Fuel Vapor**....SA2046
- **Trans. (TH350, TH375)**....6021
- **Trans. (TH400)**....6020
- **Trans. (PowerGlide)**....6017

BelAir V8-400 (6.6L) Carb. VIN R
- **Lube**....B27
- **Air**....PA2008
- **Fuel**....PF893,-RV
- **Oil Vapor**....SA2027
- **Fuel Vapor**....SA2046
- **Trans. (TH350, TH375)**....6021
- **Trans. (TH400)**....6020
- **Trans. (PowerGlide)**....6017

BelAir V8-402 (6.6L) Carb. VIN S
- **Lube**....B27
- **Air**....PA2008
- **Fuel**....PF893,-RV
- **Oil Vapor**....SA2027
- **Fuel Vapor**....SA2046
- **Trans. (TH350, TH375)**....6021
- **Trans. (TH400)**....6020
- **Trans. (PowerGlide)**....6017

BelAir V8-454 (7.4L) 4 Bbl. Carb. VIN V
- **Lube**....B27
- **Air**....PA2008
- **Fuel**....PF893,-RV
- **Oil Vapor**....SA2027
- **Fuel Vapor**....SA2046
- **Trans. (TH400)**....6020
- **Trans. (PowerGlide)**....6017

Biscayne 6-250 (4.1L) Carb. VIN D
- **Lube**....B27
- **Air**....PA658
- **Fuel**....PF893,-RV
- **Oil Vapor**....SA2027
- **Fuel Vapor**....SA2046
- **Trans.**....6017

Biscayne V8-350 (5.7L) 2 Bbl. Carb. VIN H
- **Lube**....B27
- **Air**....PA2008
- **Fuel**....PF893,-RV
- **Oil Vapor**....SA2027
- **Fuel Vapor**....SA2046
- **Trans. (TH350, TH375)**....6021
- **Trans. (TH400)**....6020
- **Trans. (PowerGlide)**....6017

Biscayne V8-400 (6.6L) Carb. VIN R
- **Lube**....B27
- **Air**....PA2008
- **Fuel**....PF893,-RV
- **Oil Vapor**....SA2027
- **Fuel Vapor**....SA2046
- **Trans. (TH350, TH375)**....6021
- **Trans. (TH400)**....6020
- **Trans. (PowerGlide)**....6017

CHEVROLET 1972 (Cont'd.)

Biscayne V8-402 (6.6L) Carb. VIN S
- **Lube**....B27
- **Air**....PA2008
- **Fuel**....PF893,-RV
- **Oil Vapor**....SA2027
- **Fuel Vapor**....SA2046
- **Trans. (TH350, TH375)**....6021
- **Trans. (TH400)**....6020
- **Trans. (PowerGlide)**....6017

Biscayne V8-454 (7.4L) 4 Bbl. Carb. VIN W
- **Lube**....B27
- **Air**....PA2008
- **Fuel**....PF893,-RV
- **Oil Vapor**....SA2027
- **Fuel Vapor**....SA2046
- **Trans. (TH400)**....6020
- **Trans. (PowerGlide)**....6017

Blazer 6-250 (4.1L) 1 Bbl. Carb. VIN D
- **Lube**....B27
- **Air**....PA658
- **Fuel**....PF893,-RV
- **Oil Vapor**....SA2027
- **Fuel Vapor**....SA2046
- **Trans. (TH350, TH375)**....6021
- **Trans. (TH400)**....6020

Blazer V8-307 (5.0L) Carb. VIN F
- **Lube**....B6
- **Air**....PA1680
- **Fuel (SintBronze)**....SF898
- **Oil Vapor**....SA2027
- **Fuel Vapor**....SA2046
- **Trans. (TH350, TH375)**....6021
- **Trans. (TH400)**....6020

Blazer V8-350 (5.7L) Carb. VIN E
- **Lube**....B6
- **Air**....PA2006
- **Fuel**....PF893,-RV
- **Oil Vapor**....SA2027
- **Fuel Vapor**....SA2046
- **Trans. (TH350, TH375)**....6021
- **Trans. (TH400)**....6020

Brookwood V8-350 (5.7L) Carb. VIN H
- **Lube**....B6
- **Air**....PA2006
- **Fuel**....PF893,-RV
- **Oil Vapor**....SA2027
- **Fuel Vapor**....SA2046
- **Trans. (TH350, TH375)**....6021
- **Trans. (TH400)**....6020
- **Trans. (PowerGlide)**....6017

Brookwood V8-400 (6.6L) Carb. VIN R
- **Lube**....B6
- **Air**....PA2008
- **Fuel**....PF893,-RV
- **Oil Vapor**....SA2027
- **Fuel Vapor**....SA2046
- **Trans. (TH350, TH375)**....6021
- **Trans. (TH400)**....6020
- **Trans. (PowerGlide)**....6017

Brookwood V8-402 (6.6L) Carb. VIN S
- **Lube**....B6
- **Air**....PA2006
- **Fuel**....PF893,-RV
- **Oil Vapor**....SA2027
- **Fuel Vapor**....SA2046
- **Trans. (TH350, TH375)**....6021
- **Trans. (TH400)**....6020
- **Trans. (PowerGlide)**....6017

Camaro 6-250 (4.1L) Carb. VIN D
- **Lube**....B27
- **Air**....PA658
- **Fuel**....PF893,-RV
- **Oil Vapor**....SA2027
- **Fuel Vapor**....SA2046
- **Trans.**....6017

OBS = Obsolete. Availability Limited to Distributor Stock.

CHEVROLET 1972 (Cont'd.)

Camaro 6-307 (5.0L) Carb. VIN F
- **Lube** ... **B27**
- **Air** ... **PA658**
- **Fuel (SintBronze)** ... **SF898**
- **Oil Vapor** ... **SA2027**
- **Fuel Vapor** ... **SA2046**
- **Trans. (TH350, TH375)** ... **6021**
- **Trans. (PowerGlide)** ... **6017**

Camaro V8-350 (5.7L) 2,4 Bbl. Carb. VIN H,K
- **Lube** ... **B27**
- **Air** ... **PA2006**
- **Fuel (SintBronze)** ... **SF898**
- **Oil Vapor** ... **SA2027**
- **Fuel Vapor** ... **SA2046**
- **Trans. (TH350, TH375)** ... **6021**
- **Trans. (TH400)** ... **6020**
- **Trans. (PowerGlide)** ... **6017**

Camaro V8-402 (6.6L) Carb. VIN U
- **Lube** ... **B27**
- **Air** ... **PA2006**
- **Fuel** ... **PF893,-RV**
- **Oil Vapor** ... **SA2027**
- **Fuel Vapor** ... **SA2046**
- **Trans. (TH350, TH375)** ... **6021**
- **Trans. (TH400)** ... **6020**
- **Trans. (PowerGlide)** ... **6017**

Camaro Z28 V8-350 (5.7L) 4 Bbl. Carb. VIN L
- **Lube** ... **B27**
- **Air** ... **PA1758**
- **Fuel (SintBronze)** ... **SF898**
- **Fuel** ... **PF893,-RV**
- **Oil Vapor** ... **SA2027**
- **Fuel Vapor** ... **SA2046**
- **Trans. (TH350, TH375)** ... **6021**
- **Trans. (TH400)** ... **6020**
- **Trans. (PowerGlide)** ... **6017**

Caprice V8-350 (5.7L) 2 Bbl. Carb. VIN H
- **Lube** ... **B27**
- **Air** ... **PA2008**
- **Fuel** ... **PF893,-RV**
- **Oil Vapor** ... **SA2027**
- **Fuel Vapor** ... **SA2046**
- **Trans. (TH350, TH375)** ... **6021**
- **Trans. (TH400)** ... **6020**
- **Trans. (PowerGlide)** ... **6017**

Caprice V8-400 (6.6L) 2 Bbl. Carb. VIN R
- **Lube** ... **B27**
- **Air** ... **PA2008**
- **Fuel** ... **PF893,-RV**
- **Oil Vapor** ... **SA2027**
- **Fuel Vapor** ... **SA2046**
- **Trans. (TH350, TH375)** ... **6021**
- **Trans. (TH400)** ... **6020**
- **Trans. (PowerGlide)** ... **6017**

Caprice V8-402 (6.6L) 4 Bbl. Carb. VIN S
- **Lube** ... **B27**
- **Air** ... **PA2008**
- **Fuel** ... **PF893,-RV**
- **Oil Vapor** ... **SA2027**
- **Fuel Vapor** ... **SA2046**
- **Trans. (TH350, TH375)** ... **6021**
- **Trans. (TH400)** ... **6020**
- **Trans. (PowerGlide)** ... **6017**

Caprice V8-454 (7.4L) 4 Bbl. Carb. VIN V
- **Lube** ... **B27**
- **Air** ... **PA2008**
- **Fuel** ... **PF893,-RV**
- **Oil Vapor** ... **SA2027**
- **Fuel Vapor** ... **SA2046**
- **Trans. (TH400)** ... **6020**
- **Trans. (PowerGlide)** ... **6017**

Chevelle 6-250 (4.1L) Carb. VIN D
- **Lube** ... **B27**
- **Air** ... **PA658**
- **Fuel** ... **PF893,-RV**
- **Oil Vapor** ... **SA2027**
- **Fuel Vapor** ... **SA2046**
- **Trans. (TH350, TH375)** ... **6021**
- **Trans. (PowerGlide)** ... **6017**

CHEVROLET 1972 (Cont'd.)

Chevelle 6-307 (5.0L) Carb. VIN F
- **Lube** ... **B27**
- **Air** ... **PA2008**
- **Fuel (SintBronze)** ... **SF898**
- **Oil Vapor** ... **SA2027**
- **Fuel Vapor** ... **SA2046**
- **Trans. (TH350, TH375)** ... **6021**
- **Trans. (PowerGlide)** ... **6017**

Chevelle V8-350 (5.7L) 2,4 Bbl. Carb. VIN H,J
- **Lube** ... **B27**
- **Air** ... **PA2006**
- **Fuel** ... **PF893,-RV**
- **Oil Vapor** ... **SA2027**
- **Fuel Vapor** ... **SA2046**
- **Trans. (TH350, TH375)** ... **6021**
- **Trans. (PowerGlide)** ... **6017**

Chevelle V8-402 (6.6L) Carb. VIN U
- **Lube** ... **B27**
- **Air** ... **PA2008**
- **Fuel** ... **PF893,-RV**
- **Oil Vapor** ... **SA2027**
- **Fuel Vapor** ... **SA2046**
- **Trans. (TH350, TH375)** ... **6021**
- **Trans. (TH400)** ... **6020**

Chevelle V8-454 (7.4L) 4 Bbl. Carb. VIN W
- **Lube** ... **B27**
- **Air (2 1/2 In.)** ... **PA2006**
- **Air (3 In.)** ... **PA1758**
- **Fuel** ... **PF893,-RV**
- **Oil Vapor** ... **SA2027**
- **Fuel Vapor** ... **SA2046**
- **Trans. (TH400)** ... **6020**
- **Trans. (PowerGlide)** ... **6017**

Corvette V8-350 (5.7L) Carb. VIN K
- **Lube** ... **B27**
- **Air** ... **PA2006**
- **Fuel** ... **PF893,-RV**
- **Oil Vapor** ... **SA2027**
- **Fuel Vapor** ... **SA2046**
- **Trans. (TH350, TH375)** ... **6021**
- **Trans. (TH400)** ... **6020**

Corvette V8-454 (7.4L) Carb. VIN W
- **Lube** ... **B27**
- **Air (2 1/2 In.)** ... **PA2006**
- **Air (3 In.)** ... **PA1758**
- **Fuel** ... **PF893,-RV**
- **Fuel (SintBronze)** ... **SF898**
- **Oil Vapor** ... **SA2027**
- **Fuel Vapor** ... **SA2046**
- **Trans.** ... **6020**

El Camino 6-250 (4.1L) Carb. VIN D
- **Lube** ... **B27**
- **Air** ... **PA658**
- **Fuel** ... **PF893,-RV**
- **Oil Vapor** ... **SA2027**
- **Fuel Vapor** ... **SA2046**
- **Trans. (TH350, TH375)** ... **6021**
- **Trans. (TH400)** ... **6020**
- **Trans. (PowerGlide)** ... **6017**

El Camino V8-307 (5.0L) Carb. VIN F
- **Lube** ... **B27**
- **Air** ... **PA2008**
- **Fuel (SintBronze)** ... **SF898**
- **Oil Vapor** ... **SA2027**
- **Fuel Vapor** ... **SA2046**
- **Trans. (TH350, TH375)** ... **6021**
- **Trans. (TH400)** ... **6020**
- **Trans. (PowerGlide)** ... **6017**

El Camino V8-350 (5.7L) 2,4 Bbl. Carb. VIN H,J
- **Lube** ... **B6**
- **Air** ... **PA2008**
- **Fuel** ... **PF893,-RV**
- **Oil Vapor** ... **SA2027**
- **Fuel Vapor** ... **SA2046**
- **Trans. (TH350, TH375)** ... **6021**
- **Trans. (TH400)** ... **6020**
- **Trans. (PowerGlide)** ... **6017**

El Camino V8-402 (6.6L) Carb. VIN U
- **Lube** ... **B6**
- **Air** ... **PA2006**
- **Fuel** ... **PF893,-RV**
- **Oil Vapor** ... **SA2027**
- **Fuel Vapor** ... **SA2046**
- **Trans. (TH350, TH375)** ... **6021**
- **Trans. (TH400)** ... **6020**

CHEVROLET 1972 (Cont'd.)

El Camino V8-454 (7.4L) 4 Bbl. Carb. VIN W
- **Lube** ... **B6**
- **Air (2 1/2 In.)** ... **PA2006**
- **Air (3 1/2 In.)** ... **PA2008**
- **Fuel** ... **PF893,-RV**
- **Oil Vapor** ... **SA2027**
- **Fuel Vapor** ... **SA2046**
- **Trans.** ... **6020**

Impala 6-250 (4.1L) Carb. VIN D
- **Lube** ... **B27**
- **Air** ... **PA658**
- **Fuel** ... **PF893,-RV**
- **Oil Vapor** ... **SA2027**
- **Fuel Vapor** ... **SA2046**
- **Trans.** ... **6017**

Impala V8-350 (5.7L) 2,4 Bbl. Carb. VIN H,K
- **Lube** ... **B27**
- **Air** ... **PA2008**
- **Fuel** ... **PF893,-RV**
- **Oil Vapor** ... **SA2027**
- **Fuel Vapor** ... **SA2046**
- **Trans. (TH350, TH375)** ... **6021**
- **Trans. (TH400)** ... **6020**
- **Trans. (PowerGlide)** ... **6017**

Impala V8-400 (6.6L) Carb. VIN R
- **Lube** ... **B27**
- **Air** ... **PA2008**
- **Fuel** ... **PF893,-RV**
- **Oil Vapor** ... **SA2027**
- **Fuel Vapor** ... **SA2046**
- **Trans. (TH350, TH375)** ... **6021**
- **Trans. (TH400)** ... **6020**
- **Trans. (PowerGlide)** ... **6017**

Impala V8-402 (6.6L) Carb. VIN S
- **Lube** ... **B27**
- **Air** ... **PA2008**
- **Fuel** ... **PF893,-RV**
- **Oil Vapor** ... **SA2027**
- **Fuel Vapor** ... **SA2046**
- **Trans. (TH350, TH375)** ... **6021**
- **Trans. (TH400)** ... **6020**

Impala V8-454 (7.4L) 4 Bbl. Carb. VIN V
- **Lube** ... **B27**
- **Air** ... **PA2008**
- **Fuel** ... **PF893,-RV**
- **Oil Vapor** ... **SA2027**
- **Fuel Vapor** ... **SA2046**
- **Trans. (TH400)** ... **6020**
- **Trans. (PowerGlide)** ... **6017**

Kingswood V8-350 (5.7L) 2 Bbl. Carb. VIN H
- **Lube** ... **B6**
- **Air** ... **PA2006**
- **Fuel** ... **PF893,-RV**
- **Oil Vapor** ... **SA2027**
- **Fuel Vapor** ... **SA2046**
- **Trans. (TH350, TH375)** ... **6021**
- **Trans. (TH400)** ... **6020**
- **Trans. (PowerGlide)** ... **6017**

Kingswood V8-400 (6.6L) 2 Bbl. Carb. VIN R
- **Lube** ... **B6**
- **Air** ... **PA2008**
- **Fuel** ... **PF893,-RV**
- **Oil Vapor** ... **SA2027**
- **Fuel Vapor** ... **SA2046**
- **Trans. (TH350, TH375)** ... **6021**
- **Trans. (TH400)** ... **6020**
- **Trans. (PowerGlide)** ... **6017**

Kingswood V8-402 (6.6L) 4 Bbl. Carb. VIN S
- **Lube (Ele.)** ... **P476**
- **Lube (Spin-on)** ... **B6**
- **Air** ... **PA2006**
- **Fuel** ... **PF893,-RV**
- **Oil Vapor** ... **SA2027**
- **Fuel Vapor** ... **SA2046**
- **Trans. (TH350, TH375)** ... **6021**
- **Trans. (TH400)** ... **6020**
- **Trans. (PowerGlide)** ... **6017**

CHEVROLET 1972 (Cont'd.)

Kingswood V8-454 (7.4L) 4 Bbl. Carb. VIN V
- **Lube** ... **B27**
- **Air (2 1/2 In.)** ... **PA2006**
- **Air (3 In.)** ... **PA1758**
- **Air (3 1/2 In.)** ... **PA2008**
- **Fuel** ... **PF893,-RV**
- **Fuel (SintBronze)** ... **SF898**
- **Oil Vapor** ... **SA2027**
- **Fuel Vapor** ... **SA2046**
- **Trans. (TH350, TH375)** ... **6021**
- **Trans. (TH400)** ... **6020**
- **Trans. (PowerGlide)** ... **6017**

LUV 4-111 (1.8L) Carb. VIN N
- **Lube Spin-on** ... **B243**
- **Air** ... **PA1657**
- **Fuel** ... **BF836,-K4**

Monte Carlo V8-350 (5.7L) 2,4 Bbl. Carb. VIN H,J
- **Lube** ... **B27**
- **Air** ... **PA2008**
- **Fuel** ... **PF893,-RV**
- **Oil Vapor** ... **SA2027**
- **Fuel Vapor** ... **SA2046**
- **Trans. (TH350, TH375)** ... **6021**
- **Trans. (TH400)** ... **6020**
- **Trans. (PowerGlide)** ... **6017**

Monte Carlo V8-400 (6.6L) Carb. VIN R
- **Lube** ... **B27**
- **Air** ... **PA2008**
- **Fuel** ... **PF893,-RV**
- **Oil Vapor** ... **SA2027**
- **Fuel Vapor** ... **SA2046**
- **Trans. (TH350, TH375)** ... **6021**
- **Trans. (TH400)** ... **6020**
- **Trans. (PowerGlide)** ... **6017**

Monte Carlo V8-402 (6.6L) Carb. VIN S
- **Lube** ... **B27**
- **Air** ... **PA2008**
- **Fuel** ... **PF893,-RV**
- **Oil Vapor** ... **SA2027**
- **Fuel Vapor** ... **SA2046**
- **Trans. (TH350, TH375)** ... **6021**
- **Trans. (TH400)** ... **6020**

Monte Carlo V8-454 (7.4L) Carb. VIN V
- **Lube** ... **B27**
- **Air** ... **PA2008**
- **Fuel** ... **PF893,-RV**
- **Oil Vapor** ... **SA2027**
- **Fuel Vapor** ... **SA2046**
- **Trans. (TH400)** ... **6020**
- **Trans. (PowerGlide)** ... **6017**

Nova 6-250 (4.1L) Carb. VIN D
- **Lube** ... **B27**
- **Air** ... **PA658**
- **Fuel** ... **PF893,-RV**
- **Oil Vapor** ... **SA2027**
- **Fuel Vapor** ... **SA2046**
- **Trans.** ... **6017**

Nova 6-307 (5.0L) Carb. VIN F
- **Lube** ... **B27**
- **Air** ... **PA2006**
- **Fuel (SintBronze)** ... **SF898**
- **Oil Vapor** ... **SA2027**
- **Fuel Vapor** ... **SA2046**
- **Trans.** ... **6021**

Nova V8-350 (5.7L) 2,4 Bbl. Carb. VIN H,K
- **Lube** ... **B27**
- **Air** ... **PA2006**
- **Fuel** ... **PF893,-RV**
- **Oil Vapor** ... **SA2027**
- **Fuel Vapor** ... **SA2046**
- **Trans. (TH350, TH375)** ... **6021**
- **Trans. (TH400)** ... **6020**

OBS = Obsolete. Availability Limited to Distributor Stock.

CHEVROLET 1972 (Cont'd.)

Pickups, C, K Series 6-250 (4.1L) 1 Bbl. Carb. VIN D
- **Lube** ... **B27**
- **Air** ... **PA658**
- **Fuel** ... **PF893,-RV**
- **Oil Vapor** ... **SA2027**
- **Fuel Vapor** ... **SA2046**
- **Trans. (TH350, TH375)** ... **6021**
- **Trans. (PowerGlide)** ... **6017**

Pickups, C, K Series 6-292 (4.8L) 1 Bbl. Carb. VIN S
- **Lube** ... **B27**
- **Air** ... **PA648**
- **Fuel** ... **PF893,-RV**
- **Oil Vapor** ... **SA2027**
- **Fuel Vapor** ... **SA2046**
- **Trans. (TH350, TH375)** ... **6021**
- **Trans. (PowerGlide)** ... **6017**

Pickups, C, K Series 6-307 (5.0L) Carb. VIN F
- **Lube** ... **B6**
- **Air (9 3/4 In. O.D.)** ... **PA1680**
- **Air (12 In. O.D.)** ... **PA2006**
- **Fuel (SintBronze)** ... **SF898**
- **Oil Vapor** ... **SA2027**
- **Fuel Vapor** ... **SA2046**
- **Trans. (TH350, TH375)** ... **6021**
- **Trans. (PowerGlide)** ... **6017**

Pickups, C, K Series V8-350 (5.7L) Carb. VIN E,H,J
- **Lube** ... **B6**
- **Air** ... **PA2006**
- **Fuel** ... **PF893,-RV**
- **Oil Vapor** ... **SA2027**
- **Fuel Vapor** ... **SA2046**
- **Trans. (TH350, TH375)** ... **6021**
- **Trans. (TH400)** ... **6020**

Pickups, C, K Series V8-402 (6.6L) Carb. VIN E
- **Lube** ... **B6**
- **Air** ... **PA2006**
- **Fuel** ... **PF893,-RV**
- **Oil Vapor** ... **SA2027**
- **Fuel Vapor** ... **SA2046**
- **Trans.** ... **6020**

Suburban, C, K Series 6-250 (4.1L) 1 Bbl. Carb. VIN D
- **Lube** ... **B27**
- **Air** ... **PA658**
- **Fuel** ... **PF893,-RV**
- **Oil Vapor** ... **SA2027**
- **Fuel Vapor** ... **SA2046**
- **Trans. (TH350, TH375)** ... **6021**
- **Trans. (TH400)** ... **6020**

Suburban, C, K Series 6-292 (4.8L) 1 Bbl. Carb. VIN S
- **Lube** ... **B27**
- **Air** ... **PA648**
- **Fuel** ... **PF893,-RV**
- **Oil Vapor** ... **SA2027**
- **Fuel Vapor** ... **SA2046**
- **Trans. (TH350, TH375)** ... **6021**
- **Trans. (PowerGlide)** ... **6017**

Suburban, C, K Series 6-307 (5.0L) Carb. VIN F
- **Lube** ... **B6**
- **Air (9 3/4 In. O.D.)** ... **PA1680**
- **Air (12 In. O.D.)** ... **PA2006**
- **Fuel (SintBronze)** ... **SF898**
- **Oil Vapor** ... **SA2027**
- **Fuel Vapor** ... **SA2046**
- **Trans. (TH350, TH375)** ... **6021**
- **Trans. (TH400)** ... **6020**

Suburban, C, K Series V8-350 (5.7L) Carb. VIN E
- **Lube** ... **B6**
- **Air** ... **PA2006**
- **Fuel** ... **PF893,-RV**
- **Oil Vapor** ... **SA2027**
- **Fuel Vapor** ... **SA2046**
- **Trans. (TH350, TH375)** ... **6021**
- **Trans. (TH400)** ... **6020**

CHEVROLET 1972 (Cont'd.)

Suburban, C, K Series V8-402 (6.6L) Carb. VIN U
- **Lube** ... **B6**
- **Air** ... **PA2006**
- **Fuel** ... **PF893,-RV**
- **Oil Vapor** ... **SA2027**
- **Fuel Vapor** ... **SA2046**
- **Trans.** ... **6020**

Townsman V8-350 (5.7L) Carb. VIN H
- **Lube** ... **B6**
- **Air** ... **PA2006**
- **Fuel** ... **PF893,-RV**
- **Oil Vapor** ... **SA2027**
- **Fuel Vapor** ... **SA2046**
- **Trans. (TH350, TH375)** ... **6021**
- **Trans. (TH400)** ... **6020**
- **Trans. (PowerGlide)** ... **6017**

Townsman V8-400 (6.6L) Carb. VIN R
- **Lube** ... **B6**
- **Air** ... **PA2008**
- **Fuel** ... **PF893,-RV**
- **Oil Vapor** ... **SA2027**
- **Fuel Vapor** ... **SA2046**
- **Trans. (TH350, TH375)** ... **6021**
- **Trans. (TH400)** ... **6020**
- **Trans. (PowerGlide)** ... **6017**

Townsman V8-402 (6.6L) Carb. VIN S
- **Lube (Ele.)** ... **P476**
- **Lube (Spin-on)** ... **B6**
- **Air** ... **PA2006**
- **Fuel** ... **PF893,-RV**
- **Oil Vapor** ... **SA2027**
- **Fuel Vapor** ... **SA2046**
- **Trans. (TH350, TH375)** ... **6021**
- **Trans. (TH400)** ... **6020**
- **Trans. (PowerGlide)** ... **6017**

Townsman V8-454 (7.4L) Carb. VIN V
- **Lube** ... **B27**
- **Air (2 1/2 In.)** ... **PA2006**
- **Air (3 In.)** ... **PA1758**
- **Air (3 1/2 In.)** ... **PA2008**
- **Fuel** ... **PF893,-RV**
- **Fuel (SintBronze)** ... **SF898**
- **Oil Vapor** ... **SA2027**
- **Fuel Vapor** ... **SA2046**
- **Trans. (TH350, TH375)** ... **6021**
- **Trans. (TH400)** ... **6020**
- **Trans. (PowerGlide)** ... **6017**

Vans, G Series 6-250 (4.1L) Carb. VIN D
- **Lube** ... **B27**
- **Air** ... **PA648**
- **Fuel** ... **PF893,-RV**
- **Oil Vapor** ... **SA2027**
- **Fuel Vapor** ... **SA2046**
- **Trans.** ... **6021**

Vans, G Series 6-292 (4.8L) Carb. VIN S
- **Lube** ... **B27**
- **Fuel** ... **PF893,-RV**
- **Oil Vapor** ... **SA2027**
- **Fuel Vapor** ... **SA2046**
- **Trans.** ... **6021**

Vans, G Series 6-307 (5.0L) Carb. VIN F
- **Lube** ... **B6**
- **Air** ... **PA2006**
- **Fuel (SintBronze)** ... **SF898**
- **Oil Vapor** ... **SA2027**
- **Fuel Vapor** ... **SA2046**
- **Trans.** ... **6021**

Vans, G Series V8-350 (5.7L) Carb. VIN E,H
- **Lube** ... **B6**
- **Air** ... **PA1680**
- **Fuel** ... **PF893,-RV**
- **Oil Vapor** ... **SA2027**
- **Fuel Vapor** ... **SA2046**
- **Trans.** ... **6021**

CHEVROLET 1972 (Cont'd.)

Vans, P Series 6-250 (4.1L) Carb. VIN C,L
- **Lube** ... **B27**
- **Air** ... **PA1680**
- **Fuel** ... **PF893,-RV**
- **Oil Vapor** ... **SA2027**
- **Fuel Vapor** ... **SA2046**
- **Trans. (TH350, TH375)** ... **6021**
- **Trans. (TH400)** ... **6020**

Vans, P Series 6-292 (4.8L) Carb. VIN S
- **Lube** ... **B27**
- **Fuel** ... **PF893,-RV**
- **Oil Vapor** ... **SA2027**
- **Fuel Vapor** ... **SA2046**
- **Trans. (TH350, TH375)** ... **6021**
- **Trans. (TH400)** ... **6020**

Vans, P Series V8-350 (5.7L) Carb. VIN E
- **Lube** ... **B6**
- **Air** ... **PA1680**
- **Fuel** ... **PF893,-RV**
- **Oil Vapor** ... **SA2027**
- **Fuel Vapor** ... **SA2046**
- **Trans. (TH350, TH375)** ... **6021**
- **Trans. (TH400)** ... **6020**

Vans, P Series V8-400 (6.6L) Carb. VIN E
- **Lube** ... **B6**
- **Air** ... **PA2008**
- **Fuel** ... **PF893,-RV**
- **Oil Vapor** ... **SA2027**
- **Fuel Vapor** ... **SA2046**
- **Trans. (TH350, TH375)** ... **6021**
- **Trans. (TH400)** ... **6020**
- **Trans. (PowerGlide)** ... **6017**

Vega 4-140 (2.3L) 1,2 Bbl. Carb. VIN A,B
- **Lube** ... **B27**
- **Fuel (1 Bbl.)** ... **PF893,-RV**
- **Fuel (2 Bbl., SintBronze)** ... **SF898**
- **Fuel Vapor** ... **SA2046**
- **Trans.** ... **6017**

1971

BelAir 6-250 (4.1L) Carb.
- **Lube** ... **B27**
- **Air** ... **PA658**
- **Fuel** ... **PF893,-RV**
- **Oil Vapor** ... **SA2027**
- **Fuel Vapor** ... **SA2046**
- **Trans.** ... **6017**

BelAir V8-350 (5.7L) Carb.
- **Lube** ... **B27**
- **Air** ... **PA2008**
- **Fuel** ... **PF893,-RV**
- **Oil Vapor** ... **SA2027**
- **Fuel Vapor** ... **SA2046**
- **Trans. (TH350, TH375)** ... **6021**
- **Trans. (PowerGlide)** ... **6017**

BelAir V8-400 (6.6L) Carb.
- **Lube** ... **B27**
- **Air** ... **PA2008**
- **Fuel** ... **PF893,-RV**
- **Oil Vapor** ... **SA2027**
- **Fuel Vapor** ... **SA2046**
- **Trans. (TH350, TH375)** ... **6021**
- **Trans. (TH400)** ... **6020**

BelAir V8-402 (6.6L) Carb.
- **Lube** ... **B27**
- **Air** ... **PA2008**
- **Fuel** ... **PF893,-RV**
- **Oil Vapor** ... **SA2027**
- **Fuel Vapor** ... **SA2046**
- **Trans. (TH350, TH375)** ... **6021**
- **Trans. (TH400)** ... **6020**

BelAir V8-454 (7.4L) 4 Bbl. Carb.
- **Lube** ... **B27**
- **Air** ... **PA2008**
- **Fuel** ... **PF893,-RV**
- **Oil Vapor** ... **SA2027**
- **Fuel Vapor** ... **SA2046**
- **Trans.** ... **6020**

CHEVROLET 1971 (Cont'd.)

Biscayne 6-250 (4.1L) Carb.
- **Lube** ... **B27**
- **Air** ... **PA658**
- **Fuel** ... **PF893,-RV**
- **Oil Vapor** ... **SA2027**
- **Fuel Vapor** ... **SA2046**
- **Trans.** ... **6017**

Biscayne V8-350 (5.7L) Carb.
- **Lube** ... **B27**
- **Air** ... **PA2008**
- **Fuel** ... **PF893,-RV**
- **Oil Vapor** ... **SA2027**
- **Fuel Vapor** ... **SA2046**
- **Trans. (TH350, TH375)** ... **6021**
- **Trans. (TH400)** ... **6020**

Biscayne V8-400 (6.6L) Carb.
- **Lube** ... **B27**
- **Air** ... **PA2008**
- **Fuel** ... **PF893,-RV**
- **Oil Vapor** ... **SA2027**
- **Fuel Vapor** ... **SA2046**
- **Trans. (TH350, TH375)** ... **6021**
- **Trans. (TH400)** ... **6020**

Biscayne V8-402 (6.6L) Carb.
- **Lube** ... **B27**
- **Air** ... **PA2008**
- **Fuel** ... **PF893,-RV**
- **Oil Vapor** ... **SA2027**
- **Fuel Vapor** ... **SA2046**
- **Trans. (TH350, TH375)** ... **6021**
- **Trans. (TH400)** ... **6020**

Biscayne V8-454 (7.4L) 4 Bbl. Carb.
- **Lube** ... **B27**
- **Air** ... **PA2008**
- **Fuel** ... **PF893,-RV**
- **Oil Vapor** ... **SA2027**
- **Fuel Vapor** ... **SA2046**
- **Trans.** ... **6020**

Blazer 6-250 (4.1L) 1 Bbl. Carb. VIN C,L
- **Lube** ... **B27**
- **Air** ... **PA658**
- **Fuel** ... **PF893,-RV**
- **Oil Vapor** ... **SA2027**
- **Fuel Vapor** ... **SA2046**
- **Trans. (TH350, TH375)** ... **6021**
- **Trans. (TH400)** ... **6020**

Blazer V8-307 (5.0L) Carb. VIN H
- **Lube** ... **B6**
- **Air** ... **PA2006**
- **Fuel (SintBronze)** ... **SF898**
- **Oil Vapor** ... **SA2027**
- **Fuel Vapor** ... **SA2046**
- **Trans.** ... **6017**

Blazer V8-350 (5.7L) Carb. VIN E
- **Lube** ... **B6**
- **Air** ... **PA2006**
- **Fuel** ... **PF893,-RV**
- **Oil Vapor** ... **SA2027**
- **Fuel Vapor** ... **SA2046**
- **Trans. (PowerGlide)** ... **6017**
- **Trans. (TH350, TH375)** ... **6021**

Brookwood V8-350 (5.7L) Carb.
- **Lube** ... **B27**
- **Air** ... **PA2008**
- **Fuel** ... **PF893,-RV**
- **Oil Vapor** ... **SA2027**
- **Fuel Vapor** ... **SA2046**
- **Trans. (TH350, TH375)** ... **6021**
- **Trans. (TH400)** ... **6020**
- **Trans. (PowerGlide)** ... **6017**

Camaro 6-250 (4.1L) Carb.
- **Lube** ... **B27**
- **Air** ... **PA658**
- **Fuel** ... **PF893,-RV**
- **Oil Vapor** ... **SA2027**
- **Fuel Vapor** ... **SA2046**
- **Trans.** ... **6017**

Camaro 6-307 (5.0L) Carb.
- **Lube** ... **B27**
- **Air** ... **PA658**
- **Fuel (SintBronze)** ... **SF898**
- **Oil Vapor** ... **SA2027**
- **Fuel Vapor** ... **SA2046**
- **Trans. (TH350, TH375)** ... **6021**
- **Trans. (PowerGlide)** ... **6017**

OBS = Obsolete. Availability Limited to Distributor Stock.

CHEVROLET 1971 (Cont'd.)

Camaro V8-350 (5.7L) Carb.
- Lube....B27
- Air (w/o Holley Carb.)....PA2006
- Air (w/Holley Carb.)....PA1758
- Fuel (SintBronze)....SF898
- Fuel....PF893,-RV
- Oil Vapor....SA2027
- Fuel Vapor....SA2046
- Trans. (TH350, TH375)....6021
- Trans. (TH400)....6020
- Trans. (PowerGlide)....6017

Camaro V8-402 (6.6L) Carb.
- Lube....B27
- Air....PA2006
- Fuel....PF893,-RV
- Oil Vapor....SA2027
- Fuel Vapor....SA2046
- Trans.....6020

Caprice V8-350 (5.7L) Carb.
- Lube....B27
- Air....PA2008
- Fuel....PF893,-RV
- Oil Vapor....SA2027
- Fuel Vapor....SA2046
- Trans. (TH350, TH375)....6021
- Trans. (PowerGlide)....6017

Caprice V8-400 (6.6L) Carb.
- Lube....B27
- Air....PA2008
- Fuel....PF893,-RV
- Oil Vapor....SA2027
- Fuel Vapor....SA2046
- Trans.....6021

Caprice V8-402 (6.6L) Carb.
- Lube....B27
- Air....PA2008
- Fuel....PF893,-RV
- Oil Vapor....SA2027
- Fuel Vapor....SA2046
- Trans. (TH400)....6020
- Trans. (PowerGlide)....6017

Caprice V8-454 (7.4L) 4 Bbl. Carb.
- Lube....B27
- Air....PA2008
- Fuel....PF893,-RV
- Fuel (SintBronze)....SF898
- Oil Vapor....SA2027
- Fuel Vapor....SA2046
- Trans.....6020

Chevelle 6-250 (4.1L) Carb.
- Lube....B27
- Air....PA658
- Fuel....PF893,-RV
- Oil Vapor....SA2027
- Fuel Vapor....SA2046
- Trans. (TH350, TH375)....6021
- Trans. (PowerGlide)....6017

Chevelle 6-307 (5.0L) Carb.
- Lube....B27
- Air....PA658
- Fuel (SintBronze)....SF898
- Oil Vapor....SA2027
- Fuel Vapor....SA2046
- Trans. (TH350, TH375)....6021
- Trans. (PowerGlide)....6017

Chevelle V8-350 (5.7L) Carb.
- Lube....B27
- Air....PA2008
- Fuel....PF893,-RV
- Oil Vapor....SA2027
- Fuel Vapor....SA2046
- Trans. (TH350, TH375)....6021
- Trans. (PowerGlide)....6017

Chevelle V8-402 (6.6L) Carb.
- Lube....B27
- Air....PA2008
- Fuel....PF893,-RV
- Oil Vapor....SA2027
- Fuel Vapor....SA2046
- Trans.....6020

Chevelle V8-454 (7.4L) Carb.
- Lube....B27
- Air (2 1/2 In.)....PA2006
- Air (3 In.)....PA1758
- Fuel....PF893,-RV
- Fuel (SintBronze)....SF898
- Oil Vapor....SA2027
- Fuel Vapor....SA2046
- Trans.....6020

Corvette V8-350 (5.7L) Carb.
- Lube....B27
- Air....PA2006
- Fuel....PF893,-RV
- Oil Vapor....SA2027
- Fuel Vapor....SA2046
- Trans.....6020

Corvette V8-454 (7.4L) Carb.
- Lube....B27
- Air (2 1/2 In.)....PA2006
- Air (3 In.)....PA1758
- Fuel....PF893,-RV
- Fuel (SintBronze)....SF898
- Oil Vapor....SA2027
- Fuel Vapor....SA2046
- Trans.....6020

El Camino 6-250 (4.1L) Carb.
- Lube....B27
- Air....PA658
- Fuel....PF893,-RV
- Oil Vapor....SA2027
- Fuel Vapor....SA2046
- Trans.....6017

El Camino V8-307 (5.0L) Carb. VIN P
- Lube....B27
- Air....PA658
- Fuel (SintBronze)....SF898
- Oil Vapor....SA2027
- Fuel Vapor....SA2046
- Trans.....6017

El Camino V8-350 (5.7L) Carb.
- Lube....B6
- Air....PA2008
- Fuel....PF893,-RV
- Oil Vapor....SA2027
- Fuel Vapor....SA2046
- Trans. (TH350, TH375)....6021
- Trans. (PowerGlide)....6017

El Camino V8-402 (6.6L) Carb. VIN K
- Lube....B6
- Air....PA2006
- Fuel....PF893,-RV
- Oil Vapor....SA2027
- Fuel Vapor....SA2046
- Trans. (TH350, TH375)....6021
- Trans. (TH400)....6020

El Camino V8-454 (7.4L) 4 Bbl. Carb.
- Lube....B6
- Air (2 1/2 In.)....PA2006
- Air (3 In.)....PA1758
- Air (3 1/2 In.)....PA2008
- Fuel....PF893,-RV
- Fuel (SintBronze)....SF898
- Oil Vapor....SA2027
- Fuel Vapor....SA2046
- Trans.....6020

Impala 6-250 (4.1L) Carb.
- Lube....B27
- Air....PA658
- Fuel....PF893,-RV
- Oil Vapor....SA2027
- Fuel Vapor....SA2046
- Trans.....6017

Impala V8-350 (5.7L) Carb.
- Lube....B27
- Air....PA2008
- Fuel....PF893,-RV
- Oil Vapor....SA2027
- Fuel Vapor....SA2046
- Trans. (TH350, TH375)....6021
- Trans. (PowerGlide)....6017

Impala V8-400 (6.6L) Carb.
- Lube....B27
- Air....PA2008
- Fuel....PF893,-RV
- Oil Vapor....SA2027
- Fuel Vapor....SA2046
- Trans. (TH350, TH375)....6021
- Trans. (TH400)....6020

Impala V8-402 (6.6L) Carb.
- Lube....B27
- Air....PA2008
- Fuel....PF893,-RV
- Oil Vapor....SA2027
- Fuel Vapor....SA2046
- Trans. (TH350, TH375)....6021
- Trans. (TH400)....6020

Impala V8-454 (7.4L) 4 Bbl. Carb.
- Lube....B27
- Air (3 In.)....PA1758
- Air (3 1/2 In.)....PA2008
- Fuel....PF893,-RV
- Oil Vapor....SA2027
- Fuel Vapor....SA2046
- Trans.....6020

Kingswood V8-350 (5.7L) Carb.
- Lube....B27
- Air....PA2008
- Fuel....PF893,-RV
- Oil Vapor....SA2027
- Fuel Vapor....SA2046
- Trans. (TH350, TH375)....6021
- Trans. (TH400)....6020
- Trans. (PowerGlide)....6017

Kingswood V8-400 (6.6L) Carb.
- Lube....B27
- Air....PA2008
- Fuel....PF893,-RV
- Oil Vapor....SA2027
- Fuel Vapor....SA2046
- Trans. (TH350, TH375)....6021
- Trans. (TH400)....6020

Kingswood V8-402 (6.6L) Carb.
- Lube....B27
- Air....PA2008
- Fuel....PF893,-RV
- Oil Vapor....SA2027
- Fuel Vapor....SA2046
- Trans. (TH350, TH375)....6021
- Trans. (TH400)....6020

Monte Carlo V8-350 (5.7L) Carb.
- Lube....B27
- Air....PA2008
- Fuel....PF893,-RV
- Oil Vapor....SA2027
- Fuel Vapor....SA2046
- Trans. (TH350, TH375)....6021
- Trans. (TH400)....6020
- Trans. (PowerGlide)....6017

Monte Carlo V8-400 (6.6L) Carb.
- Lube....B27
- Air....PA2008
- Fuel....PF893,-RV
- Oil Vapor....SA2027
- Fuel Vapor....SA2046
- Trans. (TH350, TH375)....6021
- Trans. (TH400)....6020

Monte Carlo V8-454 (7.4L) Carb.
- Lube....B27
- Air....PA1758
- Fuel....PF893,-RV
- Fuel (SintBronze)....SF898
- Oil Vapor....SA2027
- Fuel Vapor....SA2046
- Trans. (TH350, TH375)....6021
- Trans. (TH400)....6020

Nova 6-250 (4.1L) Carb.
- Lube....B27
- Air....PA658
- Fuel....PF893,-RV
- Oil Vapor....SA2027
- Fuel Vapor....SA2046
- Trans.....6017

Nova 6-307 (5.0L) Carb.
- Lube....B27
- Air....PA658
- Fuel (SintBronze)....SF898
- Oil Vapor....SA2027
- Fuel Vapor....SA2046
- Trans. (TH350, TH375)....6021
- Trans. (PowerGlide)....6017

Nova V8-350 (5.7L) Carb.
- Lube....B27
- Air....PA2006
- Fuel....PF893,-RV
- Oil Vapor....SA2027
- Fuel Vapor....SA2046
- Trans. (TH400)....6020
- Trans. (PowerGlide)....6017

Pickups, C, K Series 6-250 (4.1L) 1 Bbl. Carb. VIN C,L,S
- Lube....B27
- Air....PA658
- Fuel....PF893,-RV
- Oil Vapor....SA2027
- Fuel Vapor....SA2046
- Trans.....6017

Pickups, C, K Series 6-292 (4.8L) 1 Bbl. Carb. VIN S
- Lube....B27
- Air....PA648
- Fuel....PF893,-RV
- Oil Vapor....SA2027
- Fuel Vapor....SA2046
- Trans.....6017

Pickups, C, K Series 6-307 (5.0L) Carb. VIN H
- Lube....B6
- Air....PA1680
- Fuel (SintBronze)....SF898
- Oil Vapor....SA2027
- Fuel Vapor....SA2046
- Trans.....6017

Pickups, C, K Series V8-350 (5.7L) Carb. VIN E
- Lube....B6
- Air....PA2006
- Fuel....PF893,-RV
- Oil Vapor....SA2027
- Fuel Vapor....SA2046
- Trans. (PowerGlide)....6017
- Trans. (TH350, TH375)....6021

Pickups, C, K Series V8-402 (6.6L) Carb. VIN E
- Lube....B6
- Air....PA2006
- Fuel....PF893,-RV
- Oil Vapor....SA2027
- Fuel Vapor....SA2046
- Trans. (TH400)....6020
- Trans. (PowerGlide)....6017

Suburban, C, K Series 6-250 (4.1L) 1 Bbl. Carb. VIN C,L
- Lube....B27
- Air....PA658
- Fuel....PF893,-RV
- Oil Vapor....SA2027
- Fuel Vapor....SA2046
- Trans. (TH350, TH375)....6021
- Trans. (TH400)....6020
- Trans. (PowerGlide)....6017

Suburban, C, K Series 6-292 (4.8L) 1 Bbl. Carb. VIN S
- Lube....B27
- Fuel....PF893,-RV
- Oil Vapor....SA2027
- Fuel Vapor....SA2046
- Trans.....6017

Suburban, C, K Series 6-307 (5.0L) Carb. VIN H
- Lube....B6
- Air....PA2006
- Fuel (SintBronze)....SF898
- Oil Vapor....SA2027
- Fuel Vapor....SA2046
- Trans.....6017

Suburban, C, K Series V8-350 (5.7L) Carb. VIN E,K
- Lube....B6
- Air....PA2006
- Fuel....PF893,-RV
- Oil Vapor....SA2027
- Fuel Vapor....SA2046
- Trans. (TH350, TH375)....6021
- Trans. (PowerGlide)....6017

Suburban, C, K Series V8-402 (6.6L) Carb. VIN K
- Lube....B6
- Air....PA2006
- Fuel....PF893,-RV
- Oil Vapor....SA2027
- Fuel Vapor....SA2046
- Trans. (TH400)....6020
- Trans. (PowerGlide)....6017

OBS = Obsolete. Availability Limited to Distributor Stock.

CHEVROLET 1971 (Cont'd.)

Townsman V8-350 (5.7L) Carb.
Lube.....B27
Air.....PA2008
Fuel.....PF893,-RV
Oil Vapor.....SA2027
Fuel Vapor.....SA2046
Trans. (TH350, TH375).....6021
Trans. (TH400).....6020
Trans. (PowerGlide).....6017

Townsman V8-400 (6.6L) Carb.
Lube.....B27
Air.....PA2008
Fuel.....PF893,-RV
Oil Vapor.....SA2027
Fuel Vapor.....SA2046
Trans. (TH350, TH375).....6021
Trans. (TH400).....6020

Vans, G Series 6-250 (4.1L) Carb.
VIN L
Lube.....B27
Air.....PA1680
Fuel.....PF893,-RV
Oil Vapor.....SA2027
Fuel Vapor.....SA2046
Trans. (TH350, TH375).....6021
Trans. (PowerGlide).....6017

Vans, G Series V8-307 (5.0L) Carb.
VIN H
Lube.....B6
Air.....PA2006
Fuel (SintBronze).....SF898
Oil Vapor.....SA2027
Fuel Vapor.....SA2046
Trans. (TH350, TH375).....6021
Trans. (PowerGlide).....6017

Vans, G Series V8-350 (5.7L) Carb.
VIN A,B,E
Lube.....B6
Air.....PA1680
Fuel.....PF893,-RV
Oil Vapor.....SA2027
Fuel Vapor.....SA2046
Trans......6021

Vans, P Series 6-250 (4.1L) Carb.
VIN C,L
Lube.....B27
Air.....PA1680
Fuel.....PF893,-RV
Oil Vapor.....SA2027
Fuel Vapor.....SA2046
Trans. (TH350, TH375).....6021
Trans. (TH400).....6020

Vans, P Series 6-292 (4.8L) Carb.
VIN S
Lube.....B27
Air.....PA648
Fuel.....PF893,-RV
Oil Vapor.....SA2027
Fuel Vapor.....SA2046
Trans. (TH350, TH375).....6021
Trans. (TH400).....6020

Vans, P Series V8-350 (5.7L) Carb.
VIN E
Lube.....B6
Air.....PA1680
Fuel.....PF893,-RV
Oil Vapor.....SA2027
Fuel Vapor.....SA2046
Trans. (TH350, TH375).....6021
Trans. (TH400).....6020

Vans, P Series V8-454 (7.4L) Carb.
VIN E
Lube.....B27
Air (2 1/2 In.).....PA2006
Air (3 In.).....PA1758
Air (3 1/2 In.).....PA2008
Fuel.....PF893,-RV
Fuel (SintBronze).....SF898
Oil Vapor.....SA2027
Fuel Vapor.....SA2046
Trans. (TH350, TH375).....6021
Trans. (TH400).....6020
Trans. (PowerGlide).....6017

CHEVROLET 1971 (Cont'd.)

Vega 4-140 (2.3L) 1,2 Bbl. Carb.
VIN A,B
Lube.....B27
Fuel (1 Bbl.).....PF893,-RV
Fuel (2 Bbl., SintBronze).....SF898
Oil Vapor.....N/R
Fuel Vapor.....SA2046
Trans......6017

1970

BelAir 6-250 (4.1L) 1 Bbl. Carb.
Lube.....B27
Fuel.....PF893,-RV
Oil Vapor.....SA2027
Fuel Vapor.....SA2046
Trans......6017

BelAir V8-350 (5.7L) Carb.
Lube.....B27
Air.....PA2008
Fuel.....PF893,-RV
Oil Vapor.....SA2027
Fuel Vapor.....SA2046
Trans......6017

BelAir V8-400 (6.6L) 2 Bbl. Carb.
Lube.....B27
Air.....PA2008
Fuel.....PF893,-RV
Oil Vapor.....SA2027
Fuel Vapor.....SA2046

BelAir V8-454 (7.4L) 4 Bbl. Carb.
Lube.....B27
Air.....PA2008
Fuel.....PF893,-RV
Oil Vapor.....SA2027
Fuel Vapor.....SA2046

Biscayne 6-250 (4.1L) 1 Bbl. Carb.
Lube.....B27
Fuel.....PF893,-RV
Oil Vapor.....SA2027
Fuel Vapor.....SA2046
Trans......6017

Biscayne V8-350 (5.7L) Carb.
Lube.....B27
Air.....PA2008
Fuel.....PF893,-RV
Oil Vapor.....SA2027
Fuel Vapor.....SA2046
Trans......6017

Biscayne V8-400 (6.6L) 2 Bbl. Carb.
Lube.....B27
Air.....PA2008
Fuel.....PF893,-RV
Oil Vapor.....SA2027
Fuel Vapor.....SA2046

Biscayne V8-454 (7.4L) 4 Bbl. Carb.
Lube.....B27
Air.....PA2008
Fuel.....PF893,-RV
Oil Vapor.....SA2027
Fuel Vapor.....SA2046

Blazer 6-250 (4.1L) 1 Bbl. Carb.
VIN N
Lube.....B27
Air.....PA658
Fuel.....PF893,-RV
Oil Vapor.....SA2027
Fuel Vapor.....SA2046
Trans......6017

Blazer V8-307 (5.0L) 2 Bbl. Carb.
VIN A,B
Lube.....B6
Air.....PA2008
Fuel (SintBronze).....SF898
Oil Vapor.....SA2027
Fuel Vapor.....SA2046
Trans......6017

Blazer V8-350 (5.7L) 2 Bbl. Carb.
VIN E
Lube.....B6
Air.....PA2006
Fuel.....PF893,-RV
Oil Vapor.....SA2027
Fuel Vapor.....SA2046
Trans. (TH350, TH375).....6021
Trans. (PowerGlide).....6017

CHEVROLET 1970 (Cont'd.)

Brookwood V8-350 (5.7L) Carb.
Lube.....B27
Air.....PA1758
Fuel.....PF893,-RV
Fuel (SintBronze).....SF898
Oil Vapor.....SA2027
Fuel Vapor.....SA2046
Trans. (TH350, TH375).....6021
Trans. (TH400).....6020
Trans. (PowerGlide).....6017

Brookwood V8-400 (6.6L) Carb.
Lube.....B27
Air.....PA2008
Fuel.....PF893,-RV
Fuel (SintBronze).....SF898
Oil Vapor.....SA2027
Fuel Vapor.....SA2046
Trans. (TH350, TH375).....6021
Trans. (TH400).....6020
Trans. (PowerGlide).....6017

Camaro 6-250 (4.1L) 1 Bbl. Carb.
Lube.....B27
Air.....PA658
Fuel.....PF893,-RV
Oil Vapor.....SA2027
Fuel Vapor.....SA2046
Trans. (TH350, TH375).....6021
Trans. (PowerGlide).....6017

Camaro 6-307 (5.0L) 2 Bbl. Carb.
Lube.....B27
Air.....PA658
Fuel (SintBronze).....SF898
Oil Vapor.....SA2027
Fuel Vapor.....SA2046
Trans. (TH350, TH375).....6021
Trans. (PowerGlide).....6017

Camaro V8-350 (5.7L) Carb.
Lube.....B27
Air.....PA2006
Fuel (SintBronze).....SF898
Fuel.....PF893,-RV
Oil Vapor.....SA2027
Fuel Vapor.....SA2046
Trans. (TH350, TH375).....6021
Trans. (TH400).....6020
Trans. (PowerGlide).....6017

Camaro V8-396 (6.5L) Carb.
Lube.....B27
Air.....PA1758
Fuel (Paper).....PF893,-RV
Fuel (SintBronze).....SF898
Oil Vapor.....SA2027
Fuel Vapor.....SA2046
Trans......6020

Camaro V8-402 (6.6L) 4 Bbl. Carb.
VIN N
Lube.....B27
Air.....PA1758
Fuel.....PF893,-RV
Oil Vapor.....SA2027
Fuel Vapor.....SA2046

Caprice V8-350 (5.7L) Carb.
Lube.....B27
Air.....PA2008
Fuel.....PF893,-RV
Oil Vapor.....SA2027
Fuel Vapor.....SA2046
Trans......6017

Caprice V8-400 (6.6L) 2 Bbl. Carb.
Lube.....B27
Air.....PA2008
Fuel.....PF893,-RV
Oil Vapor.....SA2027
Fuel Vapor.....SA2046
Trans......6017

Caprice V8-454 (7.4L) 4 Bbl. Carb.
Lube.....B27
Air.....PA2008
Fuel.....PF893,-RV
Fuel (SintBronze).....SF898
Oil Vapor.....SA2027
Fuel Vapor.....SA2046

CHEVROLET 1970 (Cont'd.)

Chevelle 6-250 (4.1L) 1 Bbl. Carb.
Lube.....B27
Air.....PA658
Fuel.....PF893,-RV
Oil Vapor.....SA2027
Fuel Vapor.....SA2046
Trans. (TH350, TH375).....6021
Trans. (PowerGlide).....6017

Chevelle V8-307 (5.0L) 2 Bbl. Carb.
Lube.....B27
Air.....PA658
Fuel (SintBronze).....SF898
Oil Vapor.....SA2027
Fuel Vapor.....SA2046
Trans. (TH350, TH375).....6021
Trans. (PowerGlide).....6017

Chevelle V8-350 (5.7L) Carb.
Lube.....B27
Air.....PA2008
Fuel.....PF893,-RV
Oil Vapor.....SA2027
Fuel Vapor.....SA2046
Trans. (TH350, TH375).....6021
Trans. (PowerGlide).....6017

Chevelle V8-400 (6.6L) 4 Bbl. Carb.
Lube.....B27
Air.....PA2008
Fuel.....PF893,-RV
Oil Vapor.....SA2027
Fuel Vapor.....SA2046
Trans. (TH400).....6020
Trans. (PowerGlide).....6017

Chevelle V8-402 (6.6L) Carb.
Lube.....B27
Air.....PA1758
Fuel.....PF893,-RV
Fuel (SintBronze).....SF898
Oil Vapor.....SA2027
Fuel Vapor.....SA2046
Trans......6020

Chevelle V8-454 (7.4L) 4 Bbl. Carb.
Lube.....B27
Air.....PA1758
Fuel.....PF893,-RV
Oil Vapor.....SA2027
Fuel Vapor.....SA2046
Trans......6020

Corvette V8-350 (5.7L) Carb.
Lube.....B27
Air.....PA2006
Fuel.....PF893,-RV
Fuel (SintBronze).....SF898
Oil Vapor.....SA2027
Fuel Vapor.....SA2046
Trans......6020

Corvette V8-454 (7.4L) 4 Bbl.
Lube.....B27
Air (2 1/2 In.).....PA2006
Air (3 In.).....PA1758
Air (3 1/2 In.).....PA2008
Fuel (Paper).....PF893,-RV
Fuel (SintBronze).....SF898
Oil Vapor.....SA2027
Fuel Vapor.....SA2046
Trans......6020

El Camino 6-250 (4.1L) Carb.
Lube.....B27
Air.....PA658
Fuel.....PF893,-RV
Oil Vapor.....SA2027
Fuel Vapor.....SA2046
Trans......6017

El Camino V8-307 (5.0L) 2 Bbl. Carb. VIN B
Lube.....B27
Air.....PA658
Fuel (SintBronze).....SF898
Oil Vapor.....SA2027
Fuel Vapor.....SA2046
Trans......6017

El Camino V8-350 (5.7L) Carb.
Lube.....B6
Air.....PA2008
Fuel.....PF893,-RV
Oil Vapor.....SA2027
Fuel Vapor.....SA2046
Trans. (TH350, TH375).....6021
Trans. (PowerGlide).....6017

CHEVROLET 1970 (Cont'd.)

El Camino V8-396 (6.5L) 4 Bbl. Carb.
- **Lube** ... **B6**
- **Air** ... **PA1758**
- **Fuel (Ele.)** ... **PF893,-RV**
- **Fuel (SintBronze)** ... **SF898**
- **Oil Vapor** ... **SA2027**
- **Fuel Vapor** ... **SA2046**
- **Trans. (TH350, TH375)** ... **6021**
- **Trans. (TH400)** ... **6020**

El Camino V8-400 (6.6L) 4 Bbl. Carb. VIN K
- **Lube** ... **B27**
- **Air** ... **PA2008**
- **Fuel** ... **PF893,-RV**
- **Oil Vapor** ... **SA2027**
- **Fuel Vapor** ... **SA2046**
- **Trans. (TH350, TH375)** ... **6021**
- **Trans. (TH400)** ... **6020**

El Camino V8-454 (7.4L) 4 Bbl. Carb.
- **Lube** ... **B6**
- **Air** ... **PA1758**
- **Fuel** ... **PF893,-RV**
- **Oil Vapor** ... **SA2027**
- **Fuel Vapor** ... **SA2046**
- **Trans.** ... **6020**

Impala 6-250 (4.1L) 1 Bbl. Carb.
- **Lube** ... **B27**
- **Fuel** ... **PF893,-RV**
- **Oil Vapor** ... **SA2027**
- **Fuel Vapor** ... **SA2046**
- **Trans.** ... **6017**

Impala V8-350 (5.7L) Carb.
- **Lube** ... **B27**
- **Air** ... **PA2008**
- **Fuel** ... **PF893,-RV**
- **Oil Vapor** ... **SA2027**
- **Fuel Vapor** ... **SA2046**
- **Trans.** ... **6017**

Impala V8-400 (6.6L) 2 Bbl. Carb.
- **Lube** ... **B27**
- **Air** ... **PA2008**
- **Fuel** ... **PF893,-RV**
- **Oil Vapor** ... **SA2027**
- **Fuel Vapor** ... **SA2046**
- **Trans.** ... **6017**

Impala V8-454 (7.4L) 4 Bbl. Carb.
- **Lube** ... **B27**
- **Air** ... **PA2008**
- **Fuel** ... **PF893,-RV**
- **Oil Vapor** ... **SA2027**
- **Fuel Vapor** ... **SA2046**

Kingswood V8-350 (5.7L) Carb.
- **Lube** ... **B27**
- **Air** ... **PA1758**
- **Fuel** ... **PF893,-RV**
- **Oil Vapor** ... **SA2027**
- **Fuel Vapor** ... **SA2046**
- **Trans. (TH350, TH375)** ... **6021**
- **Trans. (TH400)** ... **6020**
- **Trans. (PowerGlide)** ... **6017**

Kingswood V8-400 (6.6L) Carb.
- **Lube** ... **B27**
- **Air** ... **PA2008**
- **Fuel** ... **PF893,-RV**
- **Oil Vapor** ... **SA2027**
- **Fuel Vapor** ... **SA2046**
- **Trans. (TH350, TH375)** ... **6021**
- **Trans. (TH400)** ... **6020**
- **Trans. (PowerGlide)** ... **6017**

Kingswood V8-454 (7.4L) Carb.
- **Lube** ... **B27**
- **Air** ... **PA2008**
- **Fuel** ... **PF893,-RV**
- **Oil Vapor** ... **SA2027**
- **Fuel Vapor** ... **SA2046**
- **Trans. (TH350, TH375)** ... **6021**
- **Trans. (TH400)** ... **6020**

Monte Carlo V8-350 (5.7L) Carb.
- **Lube** ... **B27**
- **Air** ... **PA2008**
- **Fuel** ... **PF893,-RV**
- **Fuel (SintBronze)** ... **SF898**
- **Oil Vapor** ... **SA2027**
- **Fuel Vapor** ... **SA2046**
- **Trans. (TH350, TH375)** ... **6021**
- **Trans. (TH400)** ... **6020**
- **Trans. (PowerGlide)** ... **6017**

CHEVROLET 1970 (Cont'd.)

Monte Carlo V8-400 (6.6L) Carb.
- **Lube** ... **B27**
- **Air** ... **PA2008**
- **Fuel** ... **PF893,-RV**
- **Fuel (SintBronze)** ... **SF898**
- **Oil Vapor** ... **SA2027**
- **Fuel Vapor** ... **SA2046**
- **Trans. (TH350, TH375)** ... **6021**
- **Trans. (TH400)** ... **6020**
- **Trans. (PowerGlide)** ... **6017**

Monte Carlo V8-454 (7.4L) 4 Bbl. Carb.
- **Lube** ... **B27**
- **Air** ... **PA2008**
- **Fuel** ... **PF893,-RV**
- **Fuel (SintBronze)** ... **SF898**
- **Oil Vapor** ... **SA2027**
- **Fuel Vapor** ... **SA2046**
- **Trans. (TH350, TH375)** ... **6021**
- **Trans. (TH400)** ... **6020**

Nova 4-153 (2.5L) 1 Bbl. Carb.
- **Lube** ... **B27**
- **Air** ... **PA658**
- **Fuel** ... **PF893,-RV**
- **Oil Vapor** ... **SA2027**
- **Fuel Vapor** ... **SA2046**
- **Trans.** ... **6017**

Nova 6-230 (3.8L) 1 Bbl. Carb.
- **Lube** ... **B27**
- **Air** ... **PA658**
- **Fuel** ... **PF893,-RV**
- **Oil Vapor** ... **SA2027**
- **Fuel Vapor** ... **SA2046**
- **Trans. (TH350, TH375)** ... **6021**
- **Trans. (PowerGlide)** ... **6017**

Nova 6-250 (4.1L) 1 Bbl. Carb.
- **Lube** ... **B27**
- **Air** ... **PA658**
- **Fuel** ... **PF893,-RV**
- **Oil Vapor** ... **SA2027**
- **Fuel Vapor** ... **SA2046**
- **Trans. (TH350, TH375)** ... **6021**
- **Trans. (PowerGlide)** ... **6017**

Nova V8-307 (5.0L) 2 Bbl. Carb.
- **Lube** ... **B27**
- **Air** ... **PA658**
- **Fuel (SintBronze)** ... **SF898**
- **Oil Vapor** ... **SA2027**
- **Fuel Vapor** ... **SA2046**
- **Trans. (TH350, TH375)** ... **6021**
- **Trans. (PowerGlide)** ... **6017**

Nova V8-350 (5.7L) Carb.
- **Lube** ... **B27**
- **Air** ... **PA2006**
- **Fuel** ... **PF893,-RV**
- **Oil Vapor** ... **SA2027**
- **Fuel Vapor** ... **SA2046**
- **Trans. (TH350, TH375)** ... **6021**
- **Trans. (TH400)** ... **6020**
- **Trans. (PowerGlide)** ... **6017**

Nova V8-396 (6.5L) 4 Bbl. Carb.
- **Lube** ... **B27**
- **Air** ... **PA1758**
- **Fuel (SintBronze)** ... **SF898**
- **Oil Vapor** ... **SA2027**
- **Fuel Vapor** ... **SA2046**
- **Trans. (TH350, TH375)** ... **6021**
- **Trans. (TH400)** ... **6020**
- **Trans. (PowerGlide)** ... **6017**

Nova V8-402 (6.6L) Carb.
- **Lube** ... **B27**
- **Air** ... **PA1758**
- **Fuel (SintBronze)** ... **SF898**
- **Fuel** ... **PF893,-RV**
- **Oil Vapor** ... **SA2027**
- **Fuel Vapor** ... **SA2046**
- **Trans.** ... **6020**

Pickups, C, K Series 6-250 (4.1L) 1 Bbl. Carb. VIN N
- **Lube** ... **B27**
- **Air** ... **PA658**
- **Fuel** ... **PF893,-RV**
- **Oil Vapor** ... **SA2027**
- **Fuel Vapor** ... **SA2046**
- **Trans.** ... **6017**

CHEVROLET 1970 (Cont'd.)

Pickups, C, K Series 6-292 (4.8L) 1 Bbl. Carb. VIN S
- **Lube** ... **B27**
- **Air** ... **PA1680**
- **Fuel** ... **PF893,-RV**
- **Oil Vapor** ... **SA2027**
- **Fuel Vapor** ... **SA2046**
- **Trans. (TH350, TH375)** ... **6021**
- **Trans. (PowerGlide)** ... **6017**

Pickups, C, K Series V8-307 (5.0L) 2 Bbl. Carb. VIN A
- **Lube** ... **B6**
- **Air** ... **PA1680**
- **Fuel (SintBronze)** ... **SF898**
- **Oil Vapor** ... **SA2027**
- **Fuel Vapor** ... **SA2046**
- **Trans.** ... **6017**

Pickups, C, K Series V8-350 (5.7L) Carb. VIN E
- **Lube** ... **B6**
- **Air** ... **PA2006**
- **Fuel** ... **PF893,-RV**
- **Oil Vapor** ... **SA2027**
- **Fuel Vapor** ... **SA2046**
- **Trans. (TH350, TH375)** ... **6021**
- **Trans. (PowerGlide)** ... **6017**

Pickups, C, K Series V8-402 (6.6L) 4 Bbl. Carb. VIN E
- **Lube** ... **B27**
- **Air** ... **PA2006**
- **Fuel** ... **PF893,-RV**
- **Oil Vapor** ... **SA2027**
- **Fuel Vapor** ... **SA2046**
- **Trans.** ... **6020**

Suburban, C, K Series 6-250 (4.1L) 1 Bbl. Carb. VIN N
- **Lube** ... **B27**
- **Air** ... **PA658**
- **Fuel** ... **PF893,-RV**
- **Oil Vapor** ... **SA2027**
- **Fuel Vapor** ... **SA2046**
- **Trans. (TH350, TH375)** ... **6021**
- **Trans. (PowerGlide)** ... **6017**

Suburban, C, K Series 6-292 (4.8L) 1 Bbl. Carb. VIN S
- **Lube** ... **B27**
- **Fuel** ... **PF893,-RV**
- **Oil Vapor** ... **SA2027**
- **Fuel Vapor** ... **SA2046**
- **Trans. (TH350, TH375)** ... **6021**
- **Trans. (PowerGlide)** ... **6017**

Suburban, C, K Series V8-307 (5.0L) Carb. VIN A
- **Lube** ... **B6**
- **Air** ... **PA2006**
- **Fuel (SintBronze)** ... **SF898**
- **Oil Vapor** ... **SA2027**
- **Fuel Vapor** ... **SA2046**
- **Trans. (TH350, TH375)** ... **6021**
- **Trans. (TH400)** ... **6020**
- **Trans. (PowerGlide)** ... **6017**

Suburban, C, K Series V8-350 (5.7L) Carb. VIN E
- **Lube** ... **B6**
- **Air** ... **PA2006**
- **Fuel** ... **PF893,-RV**
- **Oil Vapor** ... **SA2027**
- **Fuel Vapor** ... **SA2046**
- **Trans. (TH350, TH375)** ... **6021**
- **Trans. (TH400)** ... **6020**
- **Trans. (PowerGlide)** ... **6017**

Suburban, C, K Series V8-402 (6.6L) 4 Bbl. Carb. VIN E
- **Lube** ... **B27**
- **Air** ... **PA2008**
- **Fuel** ... **PF893,-RV**
- **Oil Vapor** ... **SA2027**
- **Fuel Vapor** ... **SA2046**
- **Trans. (TH400)** ... **6020**
- **Trans. (PowerGlide)** ... **6017**

CHEVROLET 1970 (Cont'd.)

Townsman V8-350 (5.7L) Carb.
- **Lube** ... **B27**
- **Air** ... **PA1758**
- **Fuel** ... **PF893,-RV**
- **Oil Vapor** ... **SA2027**
- **Fuel Vapor** ... **SA2046**
- **Trans. (TH350, TH375)** ... **6021**
- **Trans. (TH400)** ... **6020**
- **Trans. (PowerGlide)** ... **6017**

Townsman V8-400 (6.6L) Carb.
- **Lube** ... **B27**
- **Air** ... **PA1758**
- **Fuel** ... **PF893,-RV**
- **Oil Vapor** ... **SA2027**
- **Fuel Vapor** ... **SA2046**
- **Trans. (TH350, TH375)** ... **6021**
- **Trans. (TH400)** ... **6020**
- **Trans. (PowerGlide)** ... **6017**

Townsman V8-454 (7.4L) Carb.
- **Lube** ... **B27**
- **Air** ... **PA1758**
- **Fuel** ... **PF893,-RV**
- **Oil Vapor** ... **SA2027**
- **Fuel Vapor** ... **SA2046**
- **Trans. (TH350, TH375)** ... **6021**
- **Trans. (TH400)** ... **6020**

Vans, G Series 6-250 (4.1L) 1 Bbl. Carb. VIN N
- **Lube** ... **B27**
- **Air** ... **PA1680**
- **Fuel** ... **PF893,-RV**
- **Oil Vapor** ... **SA2027**
- **Fuel Vapor** ... **SA2046**
- **Trans.** ... **6017**

Vans, G Series V8-307 (5.0L) 2 Bbl. Carb. VIN A
- **Lube** ... **B6**
- **Air** ... **PA1680**
- **Fuel (SintBronze)** ... **SF898**
- **Oil Vapor** ... **SA2027**
- **Fuel Vapor** ... **SA2046**
- **Trans.** ... **6017**

Vans, G Series V8-350 (5.7L) Carb. VIN E
- **Lube** ... **B6**
- **Air** ... **PA1680**
- **Fuel** ... **PF893,-RV**
- **Oil Vapor** ... **SA2027**
- **Fuel Vapor** ... **SA2046**
- **Trans. (TH350, TH375)** ... **6021**
- **Trans. (PowerGlide)** ... **6017**

Vans, P Series 6-250 (4.1L) 1 Bbl. Carb. VIN N,S
- **Lube** ... **B27**
- **Air** ... **PA1680**
- **Fuel** ... **PF893,-RV**
- **Oil Vapor** ... **SA2027**
- **Fuel Vapor** ... **SA2046**
- **Trans. (TH350, TH375)** ... **6021**
- **Trans. (PowerGlide)** ... **6017**

Vans, P Series 6-292 (4.8L) 1 Bbl. Carb. VIN S
- **Lube** ... **B27**
- **Air** ... **PA1680**
- **Fuel** ... **PF893,-RV**
- **Oil Vapor** ... **SA2027**
- **Fuel Vapor** ... **SA2046**
- **Trans. (TH400)** ... **6020**
- **Trans. (PowerGlide)** ... **6017**

Vans, P Series V8-350 (5.7L) 2 Bbl. Carb. VIN E
- **Lube** ... **B6**
- **Air** ... **PA2006**
- **Fuel** ... **PF893,-RV**
- **Oil Vapor** ... **SA2027**
- **Fuel Vapor** ... **SA2046**
- **Trans. (TH400)** ... **6020**
- **Trans. (PowerGlide)** ... **6017**

OBS = Obsolete. Availability Limited to Distributor Stock.

CHEVROLET 1970 (Cont'd.)

Vans, P Series V8-454 (7.4L) Carb. VIN E
- **Lube** ... **B27**
- **Air** ... **PA1758**
- **Fuel** ... **PF893,-RV**
- **Fuel (SintBronze)** ... **SF898**
- **Oil Vapor** ... **SA2027**
- **Fuel Vapor** ... **SA2046**
- **Trans. (TH350, TH375)** ... **6021**
- **Trans. (TH400)** ... **6020**

1969

BelAir 6-250 (4.1L) Carb.
- **Lube** ... **B27**
- **Air** ... **PA658**
- **Fuel** ... **PF893,-RV**
- **Oil Vapor** ... **SA2027**
- **Trans.** ... **6017**

BelAir V8-327 (5.4L) Carb.
- **Lube** ... **B27**
- **Air** ... **PA2008**
- **Fuel** ... **PF893,-RV**
- **Oil Vapor** ... **SA2027**
- **Trans.** ... **6017**

BelAir V8-350 (5.7L) Carb.
- **Lube** ... **B27**
- **Air** ... **PA2008**
- **Fuel** ... **PF893,-RV**
- **Oil Vapor** ... **SA2027**
- **Trans.** ... **6017**

BelAir V8-396 (6.5L) Carb.
- **Lube** ... **B27**
- **Air** ... **PA2006**
- **Fuel** ... **PF893,-RV**
- **Oil Vapor** ... **SA2027**
- **Trans. (TH400)** ... **6020**
- **Trans. (PowerGlide)** ... **6017**

BelAir V8-427 (7.0L) Carb.
- **Lube** ... **B27**
- **Air** ... **PA2006**
- **Fuel** ... **PF893,-RV**
- **Oil Vapor** ... **SA2027**
- **Trans. (TH400)** ... **6020**
- **Trans. (PowerGlide)** ... **6017**

Biscayne 6-250 (4.1L) Carb.
- **Lube** ... **B27**
- **Air** ... **PA658**
- **Fuel** ... **PF893,-RV**
- **Oil Vapor** ... **SA2027**
- **Trans.** ... **6017**

Biscayne V8-327 (5.4L) Carb.
- **Lube** ... **B27**
- **Air** ... **PA2008**
- **Fuel** ... **PF893,-RV**
- **Oil Vapor** ... **SA2027**
- **Trans.** ... **6017**

Biscayne V8-350 (5.7L) Carb.
- **Lube** ... **B27**
- **Air** ... **PA2008**
- **Fuel** ... **PF893,-RV**
- **Oil Vapor** ... **SA2027**
- **Trans.** ... **6017**

Biscayne V8-396 (6.5L) Carb.
- **Lube** ... **B27**
- **Air** ... **PA2006**
- **Fuel** ... **PF893,-RV**
- **Oil Vapor** ... **SA2027**
- **Trans. (TH400)** ... **6020**
- **Trans. (PowerGlide)** ... **6017**

Biscayne V8-427 (7.0L) Carb.
- **Lube** ... **B27**
- **Air** ... **PA2006**
- **Fuel** ... **PF893,-RV**
- **Oil Vapor** ... **SA2027**
- **Trans. (TH400)** ... **6020**
- **Trans. (PowerGlide)** ... **6017**

Blazer 6-250 (4.1L) Carb. VIN P
- **Lube** ... **B27**
- **Air** ... **PA658**
- **Fuel** ... **PF893,-RV**
- **Oil Vapor** ... **SA2027**
- **Trans.** ... **6017**

CHEVROLET 1969 (Cont'd.)

Blazer V8-307 (5.0L) Carb. VIN E
- **Lube** ... **B6**
- **Air** ... **PA1680**
- **Fuel (SintBronze)** ... **SF898**
- **Oil Vapor** ... **SA2027**
- **Trans.** ... **6017**

Blazer V8-350 (5.7L) Carb. VIN E
- **Air** ... **PA2006**
- **Fuel** ... **PF893,-RV**
- **Oil Vapor** ... **SA2027**
- **Trans.** ... **6021**

Brookwood 6-250 (4.1L) Carb.
- **Lube** ... **B27**
- **Air** ... **PA658**
- **Fuel** ... **PF893,-RV**
- **Oil Vapor** ... **SA2027**
- **Trans.** ... **6017**

Brookwood V8-350 (5.7L) Carb.
- **Lube** ... **B27**
- **Air** ... **PA2008**
- **Fuel** ... **PF893,-RV**
- **Oil Vapor** ... **SA2027**

Camaro 6-230 (3.8L) Carb.
- **Lube** ... **B27**
- **Air** ... **PA658**
- **Fuel** ... **PF893,-RV**
- **Oil Vapor** ... **SA2027**
- **Trans.** ... **6017**

Camaro 6-250 (4.1L) Carb.
- **Lube** ... **B27**
- **Air** ... **PA658**
- **Fuel** ... **PF893,-RV**
- **Oil Vapor** ... **SA2027**
- **Trans.** ... **6017**

Camaro V8-307 (5.0L) Carb.
- **Lube** ... **B27**
- **Air** ... **PA658**
- **Fuel (SintBronze)** ... **SF898**
- **Oil Vapor** ... **SA2027**
- **Trans.** ... **6017**

Camaro V8-327 (5.4L) Carb.
- **Lube** ... **B27**
- **Air** ... **PA658**
- **Fuel** ... **PF893,-RV**
- **Oil Vapor** ... **SA2027**
- **Trans.** ... **6017**

Camaro V8-350 (5.7L) Carb.
- **Lube** ... **B27**
- **Air (2 1/2 In.)** ... **PA2006**
- **Air (3 1/2 In.)** ... **PA2008**
- **Fuel** ... **PF893,-RV**
- **Oil Vapor** ... **SA2027**
- **Trans.** ... **6017**

Camaro V8-396 (6.5L) Carb.
- **Lube** ... **B27**
- **Air** ... **PA1758**
- **Fuel** ... **PF893,-RV**
- **Fuel (SintBronze)** ... **SF898**
- **Oil Vapor** ... **SA2027**
- **Trans. (TH400)** ... **6020**
- **Trans. (PowerGlide)** ... **6017**

Caprice 6-250 (4.1L) Carb.
- **Lube** ... **B27**
- **Air** ... **PA658**
- **Fuel** ... **PF893,-RV**
- **Oil Vapor** ... **SA2027**
- **Trans.** ... **6017**

Caprice V8-327 (5.4L) Carb.
- **Lube** ... **B27**
- **Air** ... **PA2008**
- **Fuel** ... **PF893,-RV**
- **Oil Vapor** ... **SA2027**
- **Trans.** ... **6017**

Caprice V8-350 (5.7L) Carb.
- **Lube** ... **B27**
- **Air** ... **PA2008**
- **Fuel** ... **PF893,-RV**
- **Oil Vapor** ... **SA2027**
- **Trans.** ... **6017**

Caprice V8-396 (6.5L) Carb.
- **Lube** ... **B27**
- **Air** ... **PA2006**
- **Fuel** ... **PF893,-RV**
- **Oil Vapor** ... **SA2027**
- **Trans. (TH400)** ... **6020**
- **Trans. (PowerGlide)** ... **6017**

CHEVROLET 1969 (Cont'd.)

Caprice V8-427 (7.0L) Carb.
- **Lube** ... **B27**
- **Air** ... **PA2006**
- **Fuel** ... **PF893,-RV**
- **Oil Vapor** ... **SA2027**
- **Trans. (TH400)** ... **6020**
- **Trans. (PowerGlide)** ... **6017**

Chevelle 6-230 (3.8L) Carb.
- **Lube** ... **B27**
- **Air** ... **PA658**
- **Fuel** ... **PF893,-RV**
- **Oil Vapor** ... **SA2027**
- **Trans.** ... **6017**

Chevelle 6-250 (4.1L) Carb.
- **Lube** ... **B27**
- **Air** ... **PA658**
- **Fuel** ... **PF893,-RV**
- **Oil Vapor** ... **SA2027**
- **Trans.** ... **6017**

Chevelle V8-307 (5.0L) Carb.
- **Lube** ... **B27**
- **Air** ... **PA658**
- **Fuel (SintBronze)** ... **SF898**
- **Oil Vapor** ... **SA2027**
- **Trans.** ... **6017**

Chevelle V8-350 (5.7L) Carb.
- **Lube** ... **B27**
- **Air** ... **PA2008**
- **Fuel** ... **PF893,-RV**
- **Oil Vapor** ... **SA2027**
- **Trans.** ... **6017**

Chevelle V8-396 (6.5L) 2,4 Bbl. Carb.
- **Lube** ... **B27**
- **Air (2 Bbl.)** ... **PA2006**
- **Air (4 Bbl.)** ... **PA1758**
- **Fuel** ... **PF893,-RV**
- **Oil Vapor** ... **SA2027**
- **Trans.** ... **6017**

Corvair 6-164 (2.7L) Carb.
- **Lube** ... **B4**
- **Air** ... **PA1680**
- **Fuel (SintBronze)** ... **SF898**
- **Oil Vapor** ... **N/R**
- **Trans.** ... **6017**

Corvette V8-350 (5.7L) Carb.
- **Lube** ... **B27**
- **Air** ... **PA1758**
- **Fuel (SintBronze)** ... **SF898**
- **Oil Vapor** ... **SA2027**
- **Trans.** ... **6020**

Corvette V8-427 (7.0L) Carb.
- **Lube** ... **B27**
- **Air** ... **PA1758**
- **Fuel (Three 2 Bbl., SintBronze)** ... [3] **SF898**
- **Fuel (4 Bbl.)** ... **PF893,-RV**
- **Oil Vapor** ... **SA2027**
- **Trans.** ... **6020**

El Camino 6-230 (3.8L) Carb. VIN S
- **Lube** ... **B27**
- **Air** ... **PA658**
- **Fuel** ... **PF893,-RV**
- **Oil Vapor** ... **SA2027**
- **Trans.** ... **6017**

El Camino 6-250 (4.1L) Carb.
- **Lube** ... **B27**
- **Air** ... **PA658**
- **Fuel** ... **PF893,-RV**
- **Oil Vapor** ... **SA2027**
- **Trans.** ... **6017**

El Camino V8-307 (5.0L) Carb.
- **Lube** ... **B27**
- **Air** ... **PA658**
- **Fuel (SintBronze)** ... **SF898**
- **Oil Vapor** ... **SA2027**
- **Trans.** ... **6021**

El Camino V8-350 (5.7L) Carb.
- **Lube** ... **B27**
- **Air** ... **PA2008**
- **Fuel** ... **PF893,-RV**
- **Oil Vapor** ... **SA2027**
- **Trans.** ... **6021**

CHEVROLET 1969 (Cont'd.)

El Camino V8-396 (6.5L) Carb.
- **Lube** ... **B27**
- **Air** ... **PA2006**
- **Air (HiPerf.)** ... **PA1758**
- **Fuel (SintBronze)** ... **SF898**
- **Oil Vapor** ... **SA2027**
- **Trans. (TH350, TH375)** ... **6021**
- **Trans. (TH400)** ... **6020**

Impala 6-250 (4.1L) Carb.
- **Lube** ... **B27**
- **Air** ... **PA658**
- **Fuel** ... **PF893,-RV**
- **Oil Vapor** ... **SA2027**
- **Trans.** ... **6017**

Impala V8-327 (5.4L) Carb.
- **Lube** ... **B27**
- **Air** ... **PA2008**
- **Fuel** ... **PF893,-RV**
- **Oil Vapor** ... **SA2027**
- **Trans.** ... **6017**

Impala V8-350 (5.7L) Carb.
- **Lube** ... **B27**
- **Air** ... **PA2008**
- **Fuel** ... **PF893,-RV**
- **Oil Vapor** ... **SA2027**
- **Trans.** ... **6017**

Impala V8-396 (6.5L) Carb.
- **Lube** ... **B27**
- **Air** ... **PA2006**
- **Fuel** ... **PF893,-RV**
- **Oil Vapor** ... **SA2027**
- **Trans. (TH400)** ... **6020**
- **Trans. (PowerGlide)** ... **6017**

Impala V8-427 (7.0L) Carb.
- **Lube** ... **B27**
- **Air** ... **PA1758**
- **Fuel** ... **PF893,-RV**
- **Oil Vapor** ... **SA2027**
- **Trans. (TH400)** ... **6020**
- **Trans. (PowerGlide)** ... **6017**

Kingswood V8-350 (5.7L) Carb.
- **Lube** ... **B27**
- **Air** ... **PA2008**
- **Fuel** ... **PF893,-RV**
- **Oil Vapor** ... **SA2027**
- **Trans. (TH350, TH375)** ... **6021**
- **Trans. (TH400)** ... **6020**
- **Trans. (PowerGlide)** ... **6017**

Nova 4-153 (2.5L) Carb.
- **Lube** ... **B27**
- **Air** ... **PA658**
- **Fuel** ... **PF893,-RV**
- **Oil Vapor** ... **SA2027**
- **Trans.** ... **6017**

Nova 6-230 (3.8L) Carb.
- **Lube** ... **B27**
- **Air** ... **PA658**
- **Fuel** ... **PF893,-RV**
- **Oil Vapor** ... **SA2027**
- **Trans.** ... **6017**

Nova 6-250 (4.1L) Carb.
- **Lube** ... **B27**
- **Air** ... **PA658**
- **Fuel** ... **PF893,-RV**
- **Oil Vapor** ... **SA2027**
- **Trans.** ... **6017**

Nova V8-307 (5.0L) Carb.
- **Lube** ... **B27**
- **Air** ... **PA658**
- **Fuel (SintBronze)** ... **SF898**
- **Oil Vapor** ... **SA2027**
- **Trans.** ... **6017**

Nova V8-350 (5.7L) Carb.
- **Lube** ... **B27**
- **Air** ... **PA2008**
- **Fuel** ... **PF893,-RV**
- **Oil Vapor** ... **SA2027**
- **Trans.** ... **6017**

Nova V8-396 (6.5L) Carb.
- **Lube** ... **B27**
- **Air** ... **PA1758**
- **Fuel (SintBronze)** ... **SF898**
- **Oil Vapor** ... **SA2027**
- **Trans. (TH400)** ... **6020**
- **Trans. (PowerGlide)** ... **6017**

OBS = Obsolete. Availability Limited to Distributor Stock.

CHEVROLET 1969 (Cont'd.)

Pickups, C, K Series 6-250 (4.1L) Carb. VIN P
- Lube....B27
- Air....PA658
- Air (HvyDty.)....PA1680
- Fuel....PF893,-RV
- Oil Vapor....SA2027
- Trans.....6017

Pickups, C, K Series 6-292 (4.8L) Carb. VIN S
- Lube....B27
- Air....PA1680
- Fuel....PF893,-RV
- Oil Vapor....SA2027
- Trans.....6021

Pickups, C, K Series V8-307 (5.0L) Carb. VIN E
- Lube....B6
- Air....PA1680
- Fuel (SintBronze)....SF898
- Oil Vapor....SA2027
- Trans.....6021

Pickups, C, K Series V8-350 (5.7L) Carb. VIN E
- Lube....B6
- Air....PA2006
- Fuel....PF893,-RV
- Oil Vapor....SA2027
- Trans. (TH350, TH375)....6021
- Trans. (PowerGlide)....6017

Pickups, C, K Series V8-396 (6.5L) Carb. VIN Y
- Lube....B27
- Air....PA1680
- Fuel....PF827
- Oil Vapor....SA2027
- Trans.....6021

Suburban, C, K Series 6-250 (4.1L) Carb. VIN P
- Lube....B27
- Air....PA658
- Air (HvyDty.)....PA1680
- Fuel....PF893,-RV
- Oil Vapor....SA2027
- Trans.....6017

Suburban, C, K Series 6-292 (4.8L) Carb. VIN S
- Lube....B27
- Air....PA1680
- Fuel....PF893,-RV
- Oil Vapor....SA2027
- Trans.....6021

Suburban, C, K Series V8-307 (5.0L) Carb. VIN E
- Lube....B6
- Air....PA1680
- Fuel (SintBronze)....SF898
- Oil Vapor....SA2027
- Trans.....6021

Suburban, C, K Series V8-350 (5.7L) Carb. VIN E
- Lube....B6
- Air....PA2006
- Fuel....PF893,-RV
- Oil Vapor....SA2027
- Trans. (TH350, TH375)....6021
- Trans. (PowerGlide)....6017

Suburban, C, K Series V8-396 (6.5L) Carb. VIN E
- Lube....B27
- Air....PA1680
- Fuel....PF827
- Oil Vapor....SA2027
- Trans.....6021

Townsman V8-350 (5.7L) Carb.
- Lube....B27
- Air....PA2008
- Fuel....PF893,-RV
- Oil Vapor....SA2027
- Trans. (TH350, TH375)....6021
- Trans. (TH400)....6020
- Trans. (PowerGlide)....6017

CHEVROLET 1969 (Cont'd.)

Vans, G Series 6-230 (3.8L) Carb. VIN S
- Lube....B27
- Air....PA658
- Fuel....PF893,-RV
- Oil Vapor....SA2027
- Trans.....6017

Vans, G Series 6-250 (4.1L) Carb. VIN P
- Lube....B27
- Air....PA658
- Fuel....PF893,-RV
- Oil Vapor....SA2027
- Trans.....6017

Vans, G Series V8-307 (5.0L) Carb. VIN U
- Lube....B6
- Air....PA1680
- Fuel (SintBronze)....SF898
- Oil Vapor....SA2027
- Trans.....6021

Vans, P Series 6-230 (3.8L) Carb. VIN S
- Lube....B27
- Air....PA658
- Fuel....PF893,-RV
- Oil Vapor....SA2027
- Trans.....6020

Vans, P Series 6-250 (4.1L) Carb. VIN P
- Lube....B27
- Air....PA648
- Fuel....PF893,-RV
- Oil Vapor....SA2027
- Trans.....6020

Vans, P Series 6-292 (4.8L) Carb. VIN S
- Lube....B27
- Air....PA1680
- Fuel....PF893,-RV
- Oil Vapor....SA2027
- Trans.....6020

Vans, P Series V8-307 (5.0L) Carb. VIN E
- Lube....B6
- Air....PA1680
- Fuel (SintBronze)....SF898
- Oil Vapor....SA2027
- Trans.....6020

1968

BelAir 6-250 (4.1L) Carb.
- Lube....B27
- Air....PA658
- Fuel....PF893,-RV
- Oil Vapor....SA2027
- Trans.....6017

BelAir V8-307 (5.0L) Carb. VIN E,M
- Lube....B27
- Air....PA658
- Fuel (SintBronze)....SF898
- Oil Vapor....SA2027
- Trans.....6017

BelAir V8-327 (5.4L) Carb. VIN H,J
- Lube....B27
- Air....PA2008
- Fuel....PF893,-RV
- Oil Vapor....SA2027
- Trans.....6017

BelAir V8-396 (6.5L) Carb.
- Lube....B27
- Air....PA2006
- Fuel....PF893,-RV
- Oil Vapor....SA2027
- Trans.....6020

BelAir V8-427 (7.0L) Carb.
- Lube....B27
- Air....PA2006
- Fuel....PF893,-RV
- Oil Vapor....SA2027
- Trans.....6020

CHEVROLET 1968 (Cont'd.)

Biscayne 6-250 (4.1L) Carb.
- Lube....B27
- Air....PA658
- Fuel....PF893,-RV
- Oil Vapor....SA2027
- Trans.....6017

Biscayne V8-307 (5.0L) Carb. VIN E,M
- Lube....B27
- Air....PA658
- Fuel (SintBronze)....SF898
- Oil Vapor....SA2027
- Trans.....6017

Biscayne V8-327 (5.4L) Carb. VIN H,J
- Lube....B27
- Air....PA2008
- Fuel....PF893,-RV
- Oil Vapor....SA2027
- Trans.....6017

Biscayne V8-396 (6.5L) Carb.
- Lube....B27
- Air....PA2006
- Fuel....PF893,-RV
- Oil Vapor....SA2027
- Trans.....6020

Biscayne V8-427 (7.0L) Carb.
- Lube....B27
- Air....PA2006
- Fuel....PF893,-RV
- Oil Vapor....SA2027
- Trans.....6020

Camaro 6-230 (3.8L) Carb.
- Lube....B27
- Air....PA658
- Fuel....PF893,-RV
- Oil Vapor....SA2027
- Trans.....6017

Camaro 6-250 (4.1L) Carb.
- Lube....B27
- Air....PA658
- Fuel....PF893,-RV
- Oil Vapor....SA2027
- Trans.....6017

Camaro V8-307 (5.0L) Carb. VIN M,O
- Lube....B27
- Air....PA1758
- Fuel....PF893,-RV
- Oil Vapor....SA2027
- Trans.....M.T.

Camaro V8-327 (5.4L) 2,4 Bbl. Carb. VIN H,J
- Lube....B27
- Air (2 Bbl.)....PA658
- Air (4 Bbl.)....PA2008
- Fuel....PF893,-RV
- Fuel (SintBronze)....SF898
- Oil Vapor....SA2027
- Trans.....6017

Camaro V8-350 (5.7L) Carb.
- Lube....B27
- Air....PA2008
- Fuel....PF893,-RV
- Oil Vapor....SA2027
- Trans.....6017

Camaro V8-396 (6.5L) Carb.
- Lube....B27
- Air....PA1758
- Fuel....PF893,-RV
- Oil Vapor....SA2027
- Trans.....6020

Caprice 6-250 (4.1L) Carb.
- Air....PA658
- Fuel....PF893,-RV
- Oil Vapor....SA2027

Caprice V8-307 (5.0L) Carb. VIN E,M
- Lube....B27
- Air....PA2008
- Fuel (SintBronze)....SF898
- Oil Vapor....SA2027
- Trans.....6017

CHEVROLET 1968 (Cont'd.)

Caprice V8-327 (5.4L) Carb. VIN H,J
- Lube....B27
- Air....PA2008
- Fuel....PF893,-RV
- Oil Vapor....SA2027
- Trans.....6017

Caprice V8-396 (6.5L) Carb.
- Lube....B27
- Air....PA2006
- Fuel....PF893,-RV
- Oil Vapor....SA2027
- Trans.....6020

Caprice V8-427 (7.0L) Carb.
- Air....PA2006
- Fuel....PF893,-RV
- Oil Vapor....SA2027
- Trans.....6020

Chevelle 6-230 (3.8L) Carb.
- Lube....B27
- Air....PA658
- Fuel....PF893,-RV
- Oil Vapor....SA2027
- Trans.....6017

Chevelle 6-250 (4.1L) Carb.
- Lube....B27
- Air....PA658
- Fuel....PF893,-RV
- Oil Vapor....SA2027
- Trans.....6017

Chevelle V8-307 (5.0L) Carb. VIN E,M
- Lube....B27
- Air....PA658
- Fuel (SintBronze)....SF898
- Oil Vapor....SA2027
- Trans.....6017

Chevelle V8-327 (5.4L) Carb. VIN H,J
- Lube....B27
- Air....PA2008
- Fuel....PF893,-RV
- Oil Vapor....SA2027
- Trans.....6017

Chevelle V8-396 (6.5L) Carb.
- Lube....B27
- Air....PA2006
- Fuel....PF893,-RV
- Oil Vapor....SA2027
- Trans.....6017

Chevy II 4-153 (2.5L) Carb.
- Air....PA658
- Fuel (SintBronze)....SF898
- Oil Vapor....SA2027
- Trans.....6017

Chevy II 6-230 (3.8L) Carb.
- Lube....B27
- Air....PA658
- Fuel....PF893,-RV
- Oil Vapor....SA2027
- Trans.....6017

Chevy II 6-250 (4.1L) Carb.
- Lube....B27
- Air....PA658
- Fuel....PF893,-RV
- Oil Vapor....SA2027
- Trans.....6017

Chevy II V8-307 (5.0L) Carb. VIN E,M
- Lube....B27
- Air....PA658
- Fuel (SintBronze)....SF898
- Oil Vapor....SA2027
- Trans.....6017

Chevy II V8-327 (5.4L) 2,4 Bbl. Carb. VIN H,J
- Lube....B27
- Air (2 Bbl.)....PA658
- Air (4 Bbl.)....PA2008
- Fuel....PF893,-RV
- Oil Vapor....SA2027
- Trans.....6017

Chevy II V8-350 (5.7L) Carb.
- Air....PA2008
- Fuel....PF893,-RV
- Oil Vapor....SA2027
- Trans.....6017

OBS = Obsolete. Availability Limited to Distributor Stock.

CHEVROLET 1968 (Cont'd.)

Chevy II V8-396 (6.5L) Carb.
Fuel....PF893,-RV
Oil Vapor....SA2027
Trans.....6017

Corvair 6-164 (2.7L) Carb.
Lube....B4
Air....PA1680
Fuel (SintBronze)....SF898
Oil Vapor....N/R
Trans.....6017

Corvette V8-327 (5.4L) Carb. VIN H,J
Lube....B27
Air....PA1758
Fuel....PF893,-RV
Oil Vapor....SA2027
Trans.....6020

Corvette V8-427 (7.0L) Carb.
Lube....B27
Air....PA1758
Fuel....PF893,-RV
Fuel (SintBronze)....SF898
Oil Vapor....SA2027
Trans.....6017

El Camino 6-230 (3.8L) Carb. VIN S
Air....PA658
Fuel....PF893,-RV
Oil Vapor....SA2027
Trans.....6017

El Camino 6-250 (4.1L) Carb.
Air....PA658
Fuel....PF893,-RV
Oil Vapor....SA2027
Trans.....6017

El Camino V8-307 (5.0L) Carb.
Air....PA658
Fuel (SintBronze)....SF898
Oil Vapor....SA2027
Trans.....6017

El Camino V8-327 (5.4L) Carb. VIN H,J
Air....PA2008
Fuel....PF893,-RV
Oil Vapor....SA2027
Trans.....6017

El Camino V8-396 (6.5L) Carb.
Lube....B27
Air....PA2006
Fuel....PF893,-RV
Oil Vapor....SA2027
Trans.....6020

Impala 6-250 (4.1L) Carb.
Lube....B27
Air....PA658
Fuel....PF893,-RV
Oil Vapor....SA2027
Trans.....6017

Impala V8-307 (5.0L) Carb. VIN E,M
Lube....B27
Air....PA2008
Fuel (SintBronze)....SF898
Oil Vapor....SA2027
Trans.....6017

Impala V8-327 (5.4L) Carb. VIN H,J
Lube....B27
Air....PA2008
Fuel....PF893,-RV
Oil Vapor....SA2027
Trans.....6017

Impala V8-396 (6.5L) Carb.
Lube....B27
Air....PA2006
Fuel....PF893,-RV
Oil Vapor....SA2027
Trans. (TH400)....6020
Trans. (PowerGlide)....6017

Impala V8-427 (7.0L) Carb.
Lube....B27
Air....PA1758
Fuel....PF893,-RV
Oil Vapor....SA2027
Trans. (TH350, TH375)....6021
Trans. (TH400)....6020

CHEVROLET 1968 (Cont'd.)

Pickups, C, K Series 6-250 (4.1L) Carb. VIN P
Lube....B27
Air (Exc. HvyDty.)....PA658
Air (HvyDty.)....PA1680
Fuel....PF893,-RV
Oil Vapor....SA2027
Trans.....6017

Pickups, C, K Series 6-292 (4.8L) Carb. VIN S
Lube....B6
Air....PA1680
Oil Vapor....SA2027
Trans.....6017

Pickups, C, K Series V8-307 (5.0L) Carb. VIN E
Lube....B6
Air....PA1680
Fuel (SintBronze)....SF898
Oil Vapor....SA2027
Trans.....6017

Pickups, C, K Series V8-327 (5.4L) Carb. VIN E
Lube....P18
Air....PA2006
Fuel....PF893,-RV
Oil Vapor....SA2027
Trans. (TH400)....6020
Trans. (PowerGlide)....6017

Pickups, C, K Series V8-396 (6.5L) Carb. VIN E
Air....PA2006
Fuel....PF893,-RV
Oil Vapor....SA2027
Trans. (TH400)....6020
Trans. (PowerGlide)....6017

Suburban, C, K Series 6-250 (4.1L) Carb. VIN P
Lube....B27
Air....PA658
Air (HvyDty.)....PA1680
Fuel....PF893,-RV
Oil Vapor....SA2027

Suburban, C, K Series 6-292 (4.8L) Carb. VIN S
Lube....B6
Air....PA1680
Oil Vapor....SA2027
Trans.....6017

Suburban, C, K Series V8-307 (5.0L) Carb. VIN E
Lube....B6
Air....PA1680
Fuel (SintBronze)....SF898
Oil Vapor....SA2027
Trans.....6017

Suburban, C, K Series V8-327 (5.4L) Carb. VIN E
Lube....P18
Air....PA2006
Fuel....PF893,-RV
Oil Vapor....SA2027
Trans. (TH400)....6020
Trans. (PowerGlide)....6017

Suburban, C, K Series V8-396 (6.5L) Carb. VIN E
Air....PA2006
Fuel....PF893,-RV
Oil Vapor....SA2027
Trans. (TH400)....6020
Trans. (PowerGlide)....6017

Vans, G Series 6-230 (3.8L) Carb. VIN S
Lube....B27
Air....PA658
Fuel....PF893,-RV
Oil Vapor....SA2027
Trans.....6017

Vans, G Series 6-250 (4.1L) Carb. VIN P
Lube....B27
Air....PA658
Fuel....PF893,-RV
Oil Vapor....SA2027

CHEVROLET 1968 (Cont'd.)

Vans, G Series V8-307 (5.0L) Carb. VIN E
Air....PA658
Fuel (SintBronze)....SF898
Oil Vapor....SA2027
Trans.....6017

Vans, P Series 6-230 (3.8L) Carb. VIN S
Lube....B27
Air....PA658
Fuel....PF893,-RV
Oil Vapor....SA2027
Trans.....6017

Vans, P Series 6-250 (4.1L) Carb. VIN P
Air....PA658
Fuel....PF893,-RV
Oil Vapor....SA2027

Vans, P Series 6-292 (4.8L) Carb. VIN S
Oil Vapor....SA2027
Trans.....6017

Vans, P Series V8-307 (5.0L) Carb. VIN E
Air....PA658
Fuel (SintBronze)....SF898
Oil Vapor....SA2027
Trans. (TH400)....6020
Trans. (PowerGlide)....6017

1967

BelAir 6-250 (4.1L) Carb.
Lube....B27
Air....PA658
Fuel (SintBronze)....SF898
Trans.....6017

BelAir V8-283 (4.6L) Carb.
Lube....P18
Air....PA658
Fuel....BF840,-K1
Fuel (SintBronze)....SF898
Trans.....6017

BelAir V8-327 (5.4L) Carb.
Lube....P18
Air....PA1758
Fuel (SintBronze)....SF898
Trans.....6017

BelAir V8-427 (7.0L) Carb.
Lube....P18
Air....PA1758
Trans. (TH350, TH375)....6021
Trans. (TH400)....6013

Biscayne 6-250 (4.1L) Carb.
Lube....B27
Air....PA658
Fuel (SintBronze)....SF898
Trans.....6017

Biscayne V8-283 (4.6L) Carb.
Lube....P18
Air....PA658
Fuel....BF840,-K1
Fuel (SintBronze)....SF898
Trans.....6017

Biscayne V8-327 (5.4L) Carb.
Lube....P18
Air....PA1758
Fuel (SintBronze)....SF898
Trans.....6017

Biscayne V8-427 (7.0L) Carb.
Lube....P18
Air....PA1758
Trans. (TH350, TH375)....6021
Trans. (TH400)....6013

Camaro 6-250 (4.1L) Carb.
Lube....B27
Air....PA658
Fuel (SintBronze)....SF898
Oil Vapor....N/R
Trans.....6017

Chevelle 6-250 (4.1L) Carb.
Lube....B27
Air....PA658
Fuel (SintBronze)....SF898
Trans.....6017

CHEVROLET 1967 (Cont'd.)

Chevy II 6-194 (3.2L) Carb.
Lube....B27
Air....PA658
Fuel (SintBronze)....SF898
Trans.....6017

Corvette V8-327 (5.4L) Carb.
Lube....P18
Air....PA1758
Fuel....SF898
Trans.....6017

Corvette V8-427 (7.0L) Carb.
Lube....P18
Air....PA1758
Trans.....6017

El Camino 6-250 (4.1L) Carb.
Lube....B27
Air....PA658
Fuel (SintBronze)....SF898
Trans.....6017

Impala V8-396 (6.5L) Carb.
Lube....P18
Air....PA1758
Trans.....6013

Malibu 6-250 (4.1L) Carb.
Lube....B27
Air....PA658
Fuel (SintBronze)....SF898
Trans.....6017

Malibu V8-396 (6.5L) Carb.
Lube....P18
Air....PA1758
Trans.....6013

Nova 6-194 (3.2L) Carb.
Lube....B27
Air....PA658
Fuel (SintBronze)....SF898
Trans.....6017

Pickups, C Series 6-250 (4.1L) Carb.
Lube....B27
Air....PA658
Fuel....PF893,-RV
Trans.....6017

1966

BelAir 6-250 (4.1L) Carb.
Lube....B27
Air....PA658
Fuel (SintBronze)....SF898
Trans.....6017

BelAir V8-283 (4.6L) Carb.
Lube....P18
Air....PA625
Fuel (SintBronze)....SF898
Trans.....6017

BelAir V8-327 (5.4L) Carb.
Lube....P18
Air....PA1758
Fuel (SintBronze)....SF898
Trans.....6017

BelAir V8-396 (6.5L) Carb.
Lube....P18
Air....PA1758
Trans.....6013

BelAir V8-427 (7.0L) Carb.
Lube....P18
Air....PA1758
Fuel....BF836
Trans. (TH400)....6013
Trans. (PowerGlide)....6017

Biscayne 6-250 (4.1L) Carb.
Lube....B27
Air....PA658
Fuel (SintBronze)....SF898
Trans.....6017

Biscayne V8-283 (4.6L) Carb.
Lube....P18
Air....PA625
Fuel (SintBronze)....SF898
Trans.....6017

Biscayne V8-327 (5.4L) Carb.
Lube....P18
Air....PA1758
Fuel (SintBronze)....SF898
Trans.....6017

OBS = Obsolete. Availability Limited to Distributor Stock.

CHEVROLET 1966 (Cont'd.)

Biscayne V8-396 (6.5L) Carb.
- **Lube**....P18
- **Air**....PA1758
- **Trans.**....6013

Biscayne V8-427 (7.0L) Carb.
- **Lube**....P18
- **Air**....PA1758
- **Fuel**....BF836,-K3
- **Trans. (TH400)**....6013
- **Trans. (PowerGlide)**....6017

Caprice V8-283 (4.6L) Carb.
- **Lube**....P18
- **Air**....PA625
- **Fuel (SintBronze)**....SF898
- **Trans.**....6017

Caprice V8-327 (5.4L) Carb.
- **Lube**....P18
- **Air**....PA1758
- **Fuel (SintBronze)**....SF898
- **Trans.**....6017

Caprice V8-396 (6.5L) Carb.
- **Lube**....P18
- **Air**....PA1758
- **Trans.**....6013

Caprice V8-427 (7.0L) Carb.
- **Lube**....P18
- **Air**....PA1758
- **Fuel**....BF836,-K3
- **Trans.**....6013

Chevelle 6-194 (3.2L) Carb.
- **Lube**....B27
- **Air**....PA658
- **Fuel (SintBronze)**....SF898
- **Trans.**....6017

Chevelle 6-230 (3.8L) Carb.
- **Lube**....B27
- **Air**....PA658
- **Fuel (SintBronze)**....SF898
- **Trans.**....6017

Chevelle V8-283 (4.6L) Carb.
- **Lube**....P18
- **Air**....PA625
- **Fuel (SintBronze)**....SF898
- **Trans.**....6017

Chevelle V8-327 (5.4L) Carb.
- **Lube**....P18
- **Air**....PA1758
- **Fuel (SintBronze)**....SF898
- **Trans.**....6017

Chevelle V8-396 (6.5L) Carb.
- **Lube**....P18
- **Air**....PA1758
- **Fuel (SintBronze)**....SF898
- **Trans. (TH400)**....6013
- **Trans. (PowerGlide)**....6017

Chevy II 4-153 (2.5L) Carb.
- **Lube**....B27
- **Air**....PA658
- **Fuel (SintBronze)**....SF898
- **Trans.**....6017

Chevy II 6-194 (3.2L) Carb.
- **Lube**....B27
- **Air**....PA658
- **Fuel (SintBronze)**....SF898
- **Trans.**....6017

Chevy II 6-230 (3.8L) Carb.
- **Lube**....B27
- **Air**....PA658
- **Fuel (SintBronze)**....SF898
- **Trans.**....6017

Chevy II V8-283 (4.6L) Carb.
- **Lube**....B6
- **Air**....PA625
- **Fuel (SintBronze)**....SF898
- **Trans.**....6017

Chevy II V8-327 (5.4L) Carb.
- **Lube**....B6
- **Air**....PA625
- **Fuel (SintBronze)**....SF898
- **Trans.**....6017

Corvair 6-164 (2.7L) 2-1 Bbl. Carb.
- **Lube**....B4
- **Air**....PA1680
- **Fuel (SintBronze)**....SF898
- **Trans.**....6017

Corvair 6-164 (2.7L) 4-1 Bbl. Carb.
- **Lube**....B4
- **Trans.**....6017

CHEVROLET 1966 (Cont'd.)

Corvette V8-327 (5.4L) Carb.
- **Lube**....P18
- **Air**....PA1758
- **Fuel**....BF836,-K3
- **Trans.**....6017

Corvette V8-427 (7.0L) Carb.
- **Lube**....P18
- **Air**....PA1758
- **Trans.**....6017

El Camino 6-230 (3.8L) Carb.
- **Lube**....B27
- **Air**....PA658
- **Fuel (SintBronze)**....SF898
- **Trans.**....6017

El Camino V8-283 (4.6L) Carb.
- **Lube**....P18
- **Air**....PA625
- **Fuel (SintBronze)**....SF898
- **Trans. (TH400)**....6013
- **Trans. (PowerGlide)**....6017

El Camino V8-327 (5.4L) Carb.
- **Lube**....P18
- **Air**....PA1758
- **Fuel (SintBronze)**....SF898
- **Trans. (TH400)**....6013
- **Trans. (PowerGlide)**....6017

El Camino V8-396 (6.5L) Carb.
- **Lube**....P18
- **Air**....PA1758
- **Fuel**....PF827
- **Trans.**....6013

Impala 6-250 (4.1L) Carb.
- **Lube**....B27
- **Air**....PA658
- **Fuel (SintBronze)**....SF898
- **Trans.**....6017

Impala V8-283 (4.6L) Carb.
- **Lube**....P18
- **Air**....PA625
- **Fuel (SintBronze)**....SF898
- **Trans.**....6017

Impala V8-327 (5.4L) Carb.
- **Lube**....P18
- **Air**....PA1758
- **Fuel (SintBronze)**....SF898
- **Trans.**....6017

Impala V8-396 (6.5L) Carb.
- **Lube**....P18
- **Air**....PA1758
- **Trans.**....6013

Impala V8-427 (7.0L) Carb.
- **Lube**....P18
- **Air**....PA1758
- **Fuel**....BF836,-K3
- **Trans.**....6013

Malibu 6-194 (3.2L) Carb.
- **Lube**....B27
- **Air**....PA658
- **Fuel (SintBronze)**....SF898
- **Trans.**....6017

Malibu 6-230 (3.8L) Carb.
- **Lube**....B27
- **Air**....PA658
- **Fuel (SintBronze)**....SF898
- **Trans.**....6017

Malibu V8-283 (4.6L) Carb.
- **Lube**....P18
- **Air**....PA625
- **Fuel (SintBronze)**....SF898
- **Trans.**....6017

Malibu V8-327 (5.4L) Carb.
- **Lube**....P18
- **Air**....PA1758
- **Fuel (SintBronze)**....SF898
- **Trans.**....6017

Malibu V8-396 (6.5L) Carb.
- **Lube**....P18
- **Air**....PA1758
- **Trans.**....6013

Nova 4-153 (2.5L) Carb.
- **Lube**....B27
- **Air**....PA658
- **Fuel**....BF833,-K2
- **Trans.**....6017

CHEVROLET 1966 (Cont'd.)

Nova 6-194 (3.2L) Carb.
- **Lube**....B27
- **Air**....PA658
- **Fuel (SintBronze)**....SF898
- **Trans.**....6017

Nova 6-230 (3.8L) Carb.
- **Lube**....B27
- **Air**....PA658
- **Fuel (SintBronze)**....SF898
- **Trans.**....6017

Nova V8-283 (4.6L) Carb.
- **Ele. Lube**....P18
- **Spin-on Lube**....B6
- **Air**....PA625
- **Fuel (SintBronze)**....SF898
- **Trans.**....6017

Nova V8-327 (5.4L) Carb.
- **Ele. Lube**....P18
- **Spin-on Lube**....B6
- **Air**....PA1758
- **Fuel (SintBronze)**....SF898
- **Trans.**....6017

P Series 6-194 (3.2L) Carb.
- **Lube**....B6
- **Air**....PA658
- **Fuel (SintBronze)**....SF898
- **Trans. (TH400)**....6013
- **Trans. (PowerGlide)**....6017

P Series 6-230 (3.8L) Carb.
- **Lube**....B6
- **Air**....PA658
- **Fuel (SintBronze)**....SF898
- **Trans. (TH400)**....6013
- **Trans. (PowerGlide)**....6017

P Series 6-250 (4.1L) Carb.
- **Lube**....B6
- **Air**....PA658
- **Fuel (SintBronze)**....SF898
- **Trans. (TH400)**....6013
- **Trans. (PowerGlide)**....6017

P Series 6-292 (4.8L) Carb.
- **Lube**....B6
- **Air**....PA658
- **Fuel**....PF857
- **Trans. (TH400)**....6013
- **Trans. (PowerGlide)**....6017

Pickups, C, K Series 6-230 (3.8L) Carb.
- **Lube**....B27
- **Air**....PA658
- **Fuel (SintBronze)**....SF898
- **Trans.**....6017

Pickups, C, K Series 6-250 (4.1L) Carb.
- **Lube**....B6
- **Air**....PA658
- **Fuel**....PF893,-RV
- **Trans.**....6017

Pickups, C, K Series 6-292 (4.8L) Carb.
- **Lube**....B6
- **Air**....PA625
- **Fuel**....PF857
- **Oil Vapor**....N/R
- **Trans.**....6017

Pickups, C, K Series V8-283 (4.6L) Carb.
- **Lube**....P18
- **Air**....PA625
- **Fuel**....PF827
- **Oil Vapor**....N/R
- **Trans. (TH400)**....6013
- **Trans. (PowerGlide)**....6017

Pickups, C, K Series V8-327 (5.4L) Carb.
- **Lube**....P18
- **Air**....PA625
- **Fuel**....PF827
- **Trans.**....6013

Pickups, C, K Series V8-366 (6.0L) Carb.
- **Lube**....P18
- **Fuel**....PF827
- **Trans.**....6013

CHEVROLET 1966 (Cont'd.)

Suburban 6-230 (3.8L) Carb.
- **Lube**....B27
- **Air**....PA658
- **Fuel (SintBronze)**....SF898
- **Trans.**....6017

Suburban 6-250 (4.1L) Carb.
- **Lube**....B6
- **Air**....PA658
- **Fuel**....PF893,-RV
- **Oil Vapor**....N/R
- **Trans.**....6017

Suburban 6-292 (4.8L) Carb.
- **Lube**....B6
- **Air**....PA625
- **Fuel**....PF857
- **Oil Vapor**....N/R
- **Trans.**....6017

Suburban V8-283 (4.6L) Carb.
- **Lube**....P18
- **Air**....PA625
- **Fuel**....PF827
- **Oil Vapor**....N/R
- **Trans. (TH400)**....6013
- **Trans. (PowerGlide)**....6017

Suburban V8-327 (5.4L) Carb.
- **Lube**....P18
- **Air**....PA625
- **Fuel**....PF827
- **Trans.**....6013

Vans, G Series 6-194 (3.2L) Carb.
- **Lube**....B27
- **Air**....PA658
- **Fuel (SintBronze)**....SF898
- **Trans.**....6017

Vans, G Series 6-230 (3.8L) Carb.
- **Lube**....B27
- **Air**....PA658
- **Fuel (SintBronze)**....SF898
- **Trans.**....6017

1965

BelAir 6-230 (3.8L) Carb.
- **Lube**....B27
- **Air**....PA658
- **Fuel (SintBronze)**....SF898
- **Fuel (1 In. Paper Ele.)**....PF893,-RV
- **Trans.**....6017

BelAir 6-250 (4.1L) Carb.
- **Lube**....B27
- **Air**....PA658
- **Fuel (SintBronze)**....SF898
- **Fuel**....PF893,-RV
- **Trans.**....6017

BelAir V8-283 (4.6L) Carb.
- **Lube**....P18
- **Air**....PA625
- **Fuel (SintBronze)**....SF898
- **Trans.**....6017

BelAir V8-327 (5.4L) Carb.
- **Lube**....P18
- **Air**....PA625
- **Fuel (SintBronze)**....SF898
- **Trans.**....6017

BelAir V8-409 (6.7L) Carb.
- **Lube**....P18
- **Air**....PA625
- **Fuel**....PF864
- **Trans.**....6017

Biscayne 6-230 (3.8L) Carb.
- **Lube**....B27
- **Air**....PA658
- **Fuel (SintBronze)**....SF898
- **Trans.**....6017

Biscayne 6-250 (4.1L) Carb.
- **Lube**....B27
- **Air**....PA658
- **Trans.**....6017

Biscayne V8-283 (4.6L) Carb.
- **Lube**....P18
- **Air**....PA625
- **Fuel (SintBronze)**....SF898
- **Trans.**....6017

Biscayne V8-327 (5.4L) Carb.
- **Lube**....P18
- **Air**....PA625
- **Fuel (SintBronze)**....SF898
- **Trans.**....6017

OBS = Obsolete. Availability Limited to Distributor Stock.

CHEVROLET 1965 (Cont'd.)

Biscayne V8-409 (6.7L) Carb.
Lube.....P18
Air.....PA625
Fuel.....PF864
Trans......6017
Chevelle 6-194 (3.2L) Carb.
Lube.....B27
Air.....PA658
Fuel (SintBronze)..... SF898
Trans......6017
Chevelle 6-230 (3.8L) Carb.
Lube.....B27
Air.....PA658
Fuel (SintBronze)..... SF898
Trans......6017
Chevelle V8-283 (4.6L) Carb.
Lube.....P18
Air.....PA625
Fuel (SintBronze)..... SF898
Trans......6017
Chevelle V8-327 (5.4L) Carb.
Lube.....P18
Air.....PA625
Fuel (SintBronze)..... SF898
Trans......6017
Chevy II 4-153 (2.5L) Carb.
Lube.....B27
Air.....PA658
Fuel (SintBronze)..... SF898
Trans......6017
Chevy II 6-194 (3.2L) Carb.
Lube.....B27
Air.....PA658
Fuel (SintBronze)..... SF898
Trans......6017
Chevy II 6-230 (3.8L) Carb.
Lube.....B27
Air.....PA658
Fuel (SintBronze)..... SF898
Trans......6017
Chevy II V8-283 (4.6L) Carb.
Lube (Ele.).....P18
Lube (Spin-on).....B27
Air.....PA625
Fuel (SintBronze)..... SF898
Trans......6017
Chevy II V8-327 (5.4L) Carb.
Lube.....B27
Air.....PA625
Fuel (SintBronze)..... SF898
Trans......6017
Corvair 6-164 (2.7L) Carb.
Lube.....B4
Air (Single Silencer)..... PA1680
Air (Dual Silencer).....[2] PA649
Fuel (SintBronze)..... SF898
Trans......6017
Corvette V8-327 (5.4L) Carb.
Lube.....P18
Trans......6017
Corvette V8-327 (5.4L) FI
Lube.....P18
Trans......6017
El Camino 6-194 (3.2L) Carb.
Lube.....B27
Air.....PA658
Fuel (SintBronze)..... SF898
Trans......6017
El Camino 6-230 (3.8L) Carb.
Lube.....B27
Air.....PA658
Fuel (SintBronze)..... SF898
Trans......6017
El Camino V8-283 (4.6L) Carb.
Lube.....P18
Air.....PA625
Fuel (SintBronze)..... SF898
Trans......6017
El Camino V8-327 (5.4L) Carb.
Lube.....P18
Air.....PA625
Fuel (SintBronze)..... SF898
Trans......6017
Impala 6-230 (3.8L) Carb.
Lube.....B27
Air.....PA658
Fuel (SintBronze)..... SF898
Trans......6017

CHEVROLET 1965 (Cont'd.)

Impala 6-250 (4.1L) Carb.
Lube.....B27
Air.....PA658
Trans......6017
Impala V8-283 (4.6L) Carb.
Lube.....P18
Air.....PA625
Fuel (SintBronze)..... SF898
Trans......6017
Impala V8-327 (5.4L) Carb.
Lube.....P18
Air.....PA625
Fuel (SintBronze)..... SF898
Trans......6017
Impala V8-409 (6.7L) Carb.
Lube.....P18
Air.....PA625
Fuel.....PF864
Trans......6017
Malibu 6-194 (3.2L) Carb.
Lube.....B27
Air.....PA658
Fuel (SintBronze)..... SF898
Trans......6017
Malibu 6-230 (3.8L) Carb.
Lube.....B27
Air.....PA658
Trans......6017
Malibu V8-283 (4.6L) Carb.
Lube.....P18
Air.....PA625
Fuel (SintBronze)..... SF898
Trans......6017
Malibu V8-327 (5.4L) Carb.
Lube.....P18
Air.....PA625
Fuel (SintBronze)..... SF898
Trans......6017
Nova 4-153 (2.5L) Carb.
Lube.....B27
Air.....PA658
Fuel..... BF833,-K2
Trans......6017
Nova 6-194 (3.2L) Carb.
Lube.....B27
Air.....PA658
Fuel (SintBronze)..... SF898
Trans......6017
Nova 6-230 (3.8L) Carb.
Lube.....B27
Air.....PA658
Fuel (SintBronze)..... SF898
Trans......6017
Nova V8-283 (4.6L) Carb.
Lube (Ele.).....P18
Lube (Spin-on).....B27
Air.....PA625
Fuel (SintBronze)..... SF898
Trans......6017
Nova V8-327 (5.4L) Carb.
Ele. Lube.....P18
Spin-on Lube.....B27
Air.....PA625
Fuel (SintBronze)..... SF898
Trans......6017
P Series 4-153 (2.5L) Carb.
Lube.....B27
Air.....PA658
Fuel (SintBronze)..... SF898
Oil Vapor..... N/R
Trans......6017
P Series 6-230 (3.8L) Carb.
Lube.....B6
Air.....PA658
Fuel (SintBronze)..... SF898
Trans......6017
P Series 6-292 (4.8L) Carb.
Lube.....B6
Air.....PA625
Fuel.....PF857
Oil Vapor..... N/R
Trans......6017
P Series V8-348 (5.7L) Carb.
Lube.....P18
Air.....PA625
Fuel.....PF827
Oil Vapor..... N/R
Trans......6017

CHEVROLET 1965 (Cont'd.)

P Series V8-409 (6.7L) Carb.
Lube.....P20-HD
Air.....PA625
Fuel.....PF827
Oil Vapor..... N/R
Trans......6017
Pickups, C, K Series 6-230 (3.8L) Carb.
Lube.....B27
Air.....PA658
Fuel (SintBronze)..... SF898
Trans......6017
Pickups, C, K Series 6-292 (4.8L) Carb.
Lube.....B6
Air.....PA625
Fuel.....PF857
Oil Vapor..... N/R
Trans......6017
Pickups, C, K Series V8-283 (4.6L) Carb.
Lube.....P18
Air.....PA625
Fuel.....PF827
Oil Vapor..... N/R
Trans......6017
Pickups, C, K Series V8-327 (5.4L) Carb.
Lube.....P18
Air.....PA625
Fuel.....PF827
Trans......6017
Pickups, C, K Series V8-348 (5.7L) Carb.
Lube.....P18
Air.....PA625
Fuel.....PF827
Oil Vapor..... N/R
Trans......6017
Pickups, C, K Series V8-409 (6.7L) Carb.
Lube.....P20-HD
Air.....PA625
Fuel.....PF827
Oil Vapor..... N/R
Trans......6017
Suburban 6-230 (3.8L) Carb.
Lube.....B27
Air.....PA658
Fuel (SintBronze)..... SF898
Trans......6017
Suburban 6-292 (4.8L) Carb.
Lube.....B6
Air.....PA625
Fuel.....PF857
Oil Vapor..... N/R
Trans......6017
Suburban V8-283 (4.6L) Carb.
Lube.....P18
Air.....PA625
Fuel.....PF827
Oil Vapor..... N/R
Trans......6017
Suburban V8-348 (5.7L) Carb.
Lube.....P18
Air.....PA625
Fuel.....PF827
Oil Vapor..... N/R
Trans......6017
Suburban V8-409 (6.7L) Carb.
Lube.....P20-HD
Air.....PA625
Oil Vapor..... N/R
Trans......6017
Vans, G Series 4-153 (2.5L) Carb.
Lube.....B27
Air.....PA658
Fuel (SintBronze)..... SF898
Trans......6017
Vans, G Series 6-194 (3.2L) Carb.
Lube.....B27
Air.....PA658
Fuel (SintBronze)..... SF898
Trans......6017

CHEVROLET (Cont'd.)

1964
BelAir 6-230 (3.8L) Carb.
Lube.....B27
Air.....PA658
Fuel (SintBronze)..... SF898
Fuel..... PF893,-RV
Trans......6017
BelAir V8-283 (4.6L) Carb.
Lube.....P18
Air.....PA625
Fuel (SintBronze)..... SF898
Trans......6017
BelAir V8-327 (5.4L) Carb.
Lube.....P18
Air.....PA625
Fuel (SintBronze)..... SF898
Trans......6017
BelAir V8-409 (6.7L) Carb.
Lube.....P18
Air (2 or 4 Bbl.)..... PA625
Air (Two 4 Bbl.).....PA631
Fuel (2 or 4 Bbl., SintBronze)..... SF898
Fuel (Two 4 Bbl.).....PF864
Trans......6017
Biscayne 6-230 (3.8L) Carb.
Lube.....B27
Air.....PA658
Fuel (SintBronze)..... SF898
Fuel..... PF893,-RV
Trans......6017
Biscayne V8-283 (4.6L) Carb.
Lube.....P18
Air.....PA625
Fuel (SintBronze)..... SF898
Trans......6017
Biscayne V8-327 (5.4L) Carb.
Lube.....P18
Air.....PA625
Fuel (SintBronze)..... SF898
Trans......6017
Biscayne V8-409 (6.7L) Carb.
Lube.....P18
Air (2 or 4 Bbl.)..... PA625
Air (Two 4 Bbl.).....PA631
Fuel (2 or 4 Bbl., SintBronze)..... SF898
Fuel (Two 4 Bbl.).....PF864
Trans......6017
Chevelle 6-194 (3.2L) Carb.
Lube.....B27
Air.....PA658
Fuel (SintBronze)..... SF898
Fuel..... PF893,-RV
Trans......6017
Chevelle 6-230 (3.8L) Carb.
Lube.....B27
Air.....PA658
Fuel (SintBronze)..... SF898
Fuel..... PF893,-RV
Trans......6017
Chevelle V8-283 (4.6L) Carb.
Lube.....P18
Air.....PA625
Fuel (SintBronze)..... SF898
Trans......6017
Chevelle V8-327 (5.4L) Carb.
Lube.....P18
Air.....PA625
Fuel (SintBronze)..... SF898
Trans......6017
Chevy II 4-153 (2.5L) Carb.
Lube.....B27
Air.....PA658
Fuel (SintBronze)..... SF898
Trans......6017
Chevy II 6-194 (3.2L) Carb.
Lube.....B27
Air.....PA658
Fuel (SintBronze)..... SF898
Trans......6017
Chevy II 6-230 (3.8L) Carb.
Lube.....B27
Air.....PA658
Fuel (SintBronze)..... SF898
Trans......6017

OBS = Obsolete. Availability Limited to Distributor Stock.

CHEVROLET 1964 (Cont'd.)

Chevy II V8-283 (4.6L) Carb.
Lube....B27
Air....PA625
Fuel (SintBronze)....SF898
Trans.....6017

Corvair 6-164 (2.7L) Carb.
Lube....B4
Air (Single Silencer)....PA1680
Air (Dual Silencer)....[2] PA649
Fuel (SintBronze)....SF898

Corvette V8-327 (5.4L) Carb.
Lube....P18
Fuel (SintBronze)....SF898
Trans.....6017

Corvette V8-327 (5.4L) FI
Lube....P18
Trans.....6017

El Camino 6-194 (3.2L) Carb.
Lube....B27
Air....PA658
Fuel (SintBronze)....SF898
Trans.....6017

El Camino 6-230 (3.8L) Carb.
Lube....B27
Air....PA658
Fuel (SintBronze)....SF898
Trans.....6017

El Camino V8-283 (4.6L) Carb.
Lube....P18
Air....PA625
Trans.....6017

El Camino V8-327 (5.4L) Carb.
Lube....P18
Air....PA625
Trans.....6017

Impala 6-230 (3.8L) Carb.
Lube....B27
Air....PA658
Fuel (SintBronze)....SF898
Fuel....PF893,-RV
Trans.....6017

Impala V8-283 (4.6L) Carb.
Lube....P18
Air....PA625
Trans.....6017

Impala V8-327 (5.4L) Carb.
Lube....P18
Air....PA625
Fuel (SintBronze)....SF898
Trans.....6017

Impala V8-409 (6.7L) Carb.
Lube....P18
Air (2 or 4 Bbl.)....PA625
Air (Two 4 Bbl.)....PA631
Fuel (2 or 4 Bbl., SintBronze)....SF898
Fuel (Two 4 Bbl.)....PF864
Trans.....6017

Malibu 6-194 (3.2L) Carb.
Lube....B27
Air....PA658
Fuel (SintBronze)....SF898
Fuel....PF893,-RV
Trans.....6017

Malibu 6-230 (3.8L) Carb.
Lube....B27
Air....PA658
Fuel (SintBronze)....SF898
Fuel....PF893,-RV
Trans.....6017

Malibu V8-283 (4.6L) Carb.
Lube....P18
Air....PA625
Fuel (SintBronze)....SF898
Trans.....6017

Malibu V8-327 (5.4L) Carb.
Lube....P18
Air....PA625
Fuel (SintBronze)....SF898
Trans.....6017

Nova 4-153 (2.5L) Carb.
Lube....B27
Air....PA658
Trans.....6017

CHEVROLET 1964 (Cont'd.)

Nova 6-194 (3.2L) Carb.
Lube....B27
Air....PA658
Fuel (SintBronze)....SF898
Trans.....6017

Nova 6-230 (3.8L) Carb.
Lube....B27
Air....PA658
Fuel (SintBronze)....SF898
Trans.....6017

Nova V8-283 (4.6L) Carb.
Lube (Ele.)....P18
Lube (Spin-on)....B27
Air....PA625
Trans.....6017

P Series 4-153 (2.5L) Carb.
Lube....B27
Air....PA658
Fuel (SintBronze)....SF898
Oil Vapor....N/R
Trans.....6017

P Series 6-230 (3.8L) Carb.
Lube....B6
Air....PA658
Fuel (SintBronze)....SF898
Fuel....PF893,-RV
Trans.....6017

P Series V8-292 (4.8L) Carb.
Lube....B6
Fuel....PF857
Oil Vapor....N/R
Trans.....6017

P Series V8-348 (5.7L) Carb.
Lube....B6
Air....PA625
Fuel....PF827
Oil Vapor....N/R
Trans.....6017

P Series V8-409 (6.7L) Carb.
Air (2 or 4 Bbl.)....PA625
Air (Two 4 Bbl.)....PA631
Fuel (2 or 4 Bbl., SintBronze)....SF898
Fuel (Two 4 Bbl.)....PF864
Oil Vapor....N/R
Trans.....6017

Pickups, C, K Series 6-230 (3.8L) Carb.
Air....PA658
Fuel (SintBronze)....SF898
Fuel....PF893,-RV
Trans.....6017

Pickups, C, K Series 6-292 (4.8L) Carb.
Lube....B6
Air....PA625
Fuel....PF857
Oil Vapor....N/R
Trans.....6017

Pickups, C, K Series V8-283 (4.6L) Carb.
Lube....P18
Air....PA625
Fuel....PF827
Oil Vapor....N/R
Trans.....6017

Pickups, C, K Series V8-327 (5.4L) Carb.
Lube (Ele.)....P18
Lube (Spin-on)....B6
Air....PA625
Fuel (SintBronze)....SF898
Trans.....6017

Pickups, C, K Series V8-348 (5.7L) Carb.
Lube....P18
Air....PA625
Fuel....PF827
Oil Vapor....N/R
Trans.....6017

CHEVROLET 1964 (Cont'd.)

Pickups, C, K Series V8-409 (6.7L) Carb.
Air (2 or 4 Bbl.)....PA625
Air (Two 4 Bbl.)....PA631
Fuel (Two 4 Bbl.)....PF864
Fuel (2 or 4 Bbl., SintBronze)....SF898
Oil Vapor....N/R
Trans.....6017

Suburban 6-230 (3.8L) Carb.
Air....PA658
Fuel (SintBronze)....SF898
Fuel....PF893,-RV
Trans.....6017

Suburban 6-292 (4.8L) Carb.
Lube....B6
Air....PA625
Fuel....PF857
Oil Vapor....N/R
Trans.....6017

Suburban V8-283 (4.6L) Carb.
Lube....P18
Air....PA625
Fuel....PF827
Oil Vapor....N/R
Trans.....6017

Suburban V8-348 (5.7L) Carb.
Lube....B6
Air....PA625
Oil Vapor....N/R
Trans.....6017

Suburban V8-409 (6.7L) Carb.
Air (2 or 4 Bbl.)....PA625
Air (Two 4 Bbl.)....PA631
Fuel (2 or 4 Bbl., SintBronze)....SF898
Fuel (Two 4 Bbl.)....PF864
Oil Vapor....N/R
Trans.....6017

Vans, G Series 4-153 (2.5L) Carb.
Lube....B27
Air....PA658
Fuel (SintBronze)....SF898
Trans.....6017

Vans, G Series 6-194 (3.2L) Carb.
Lube....B27
Air....PA658
Fuel (SintBronze)....SF898
Trans.....6017

1963

BelAir 6-230 (3.8L) Carb.
Lube....B27
Air....[2] PA658
Fuel (SintBronze)....SF898
Fuel....PF893,-RV
Trans.....6017

BelAir V8-283 (4.6L) Carb.
Lube....P18
Air....[2] PA625
Fuel (SintBronze)....SF898
Trans.....6017

BelAir V8-327 (5.4L) Carb.
Lube....P18
Air....[2] PA625
Fuel (SintBronze)....SF898
Trans.....6017

BelAir V8-409 (6.7L) Carb.
Lube....P18
Air (2-4 Bbl.)....PA631
Air (4 Bbl.)....PA625
Fuel....PF864
Trans.....6017

Biscayne 6-230 (3.8L) Carb.
Lube....B27
Air....[2] PA658
Fuel (SintBronze)....SF898
Fuel....PF893,-RV
Trans.....6017

Biscayne V8-283 (4.6L) Carb.
Lube....P18
Air....[2] PA625
Fuel (SintBronze)....SF898
Trans.....6017

CHEVROLET 1963 (Cont'd.)

Biscayne V8-327 (5.4L) Carb.
Lube....P18
Air....[2] PA625
Fuel (SintBronze)....SF898
Trans.....6017

Biscayne V8-409 (6.7L) Carb.
Lube....P18
Air (4 Bbl.)....PA625
Air (2-4 Bbl.)....PA631
Fuel....PF864
Trans.....6017

Chevy II 4-153 (2.5L) Carb.
Lube....B27
Air....[2] PA658
Fuel (SintBronze)....SF898
Trans.....6017

Chevy II 6-194 (3.2L) Carb.
Lube....B27
Air....[2] PA658
Fuel (SintBronze)....SF898
Trans.....6017

Chevy II V8-283 (4.6L) Carb.
Lube (Ele.)....P18
Lube (Spin-on)....B6
Air....[2] PA625
Fuel (SintBronze)....SF898
Trans.....6017

Corvair, Corvair 95 6-145 (2.4L) Carb.
Lube....B4
Air....[2] PA649
Fuel (SintBronze)....SF898

Corvette V8-327 (5.4L) FI
Lube....P18
Fuel....BF840,-K1
Trans.....6017

Corvette V8-327 (5.4L) Carb.
Lube....P18
Fuel....BF840,-K1
Trans.....6017

Impala 6-230 (3.8L) Carb.
Lube....B27
Air....[2] PA658
Fuel....PF893,-RV
Fuel (SintBronze)....SF898
Trans.....6017

Impala V8-283 (4.6L) Carb.
Lube....P18
Air....[2] PA625
Fuel (SintBronze)....SF898
Trans.....6017

Impala V8-327 (5.4L) Carb.
Lube....P18
Air....PA625
Fuel (SintBronze)....SF898
Trans.....6017

Impala V8-409 (6.7L) Carb.
Lube....P18
Air (4 Bbl.)....PA625
Air (2-4 Bbl.)....PA631
Fuel....PF864
Trans.....6017

Nova 4-153 (2.5L) Carb.
Lube....B27
Air....[2] PA658
Fuel (SintBronze)....SF898
Trans.....6017

Nova 6-194 (3.2L) Carb.
Lube....B27
Air....[2] PA658
Fuel (SintBronze)....SF898
Trans.....6017

Nova V8-283 (4.6L) Carb.
Lube....P18
Air....[2] PA625
Fuel (SintBronze)....SF898
Trans.....6017

P Series 4-153 (2.5L) Carb.
Lube....B27
Air....[2] PA658
Fuel (SintBronze)....SF898
Oil Vapor....N/R
Trans.....6017

OBS = Obsolete. Availability Limited to Distributor Stock.

CHEVROLET 1963 (Cont'd.)

P Series 6-230 (3.8L) Carb.
Lube.....**B6**
Air.....[2] **PA658**
Fuel.....**PF893,-RV**
Fuel (SintBronze).....**SF898**
Trans......**6017**

Pickups, C, K Series 6-230 (3.8L) Carb.
Air.....[2] **PA658**
Fuel.....**PF893,-RV**
Trans......**6017**

Pickups, C, K Series 6-292 (4.8L) Carb.
Lube.....**B6**
Air.....[2] **PA621**
Fuel.....**PF857**
Oil Vapor.....**N/R**
Trans......**6017**

Pickups, C, K Series V8-283 (4.6L) Carb.
Lube.....**P18**
Air.....[2] **PA1680**
Fuel.....**PF827**
Oil Vapor.....**N/R**
Trans......**6017**

Suburban 6-230 (3.8L) Carb.
Air.....[2] **PA658**
Fuel.....**PF893,-RV**
Trans......**6017**

Suburban 6-292 (4.8L) Carb.
Lube.....**B6**
Air.....[2] **PA621**
Fuel.....**PF857**
Oil Vapor.....**N/R**
Trans......**6017**

Suburban V8-283 (4.6L) Carb.
Lube.....**P18**
Air.....[2] **PA1680**
Fuel.....**PF827**
Oil Vapor.....**N/R**
Trans......**6017**

1962

BelAir 6-235 (3.9L) 1 Bbl. Carb.
Air.....**PA658**
Trans......**6017**

BelAir V8-283 (4.6L) 2 Bbl. Carb.
Lube.....**P18**
Air.....**PA625**
Fuel (SintBronze).....**SF898**
Trans......**6017**

BelAir V8-327 (5.4L) 4 Bbl. Carb.
Lube.....**P18**
Air.....**PA625**
Fuel (SintBronze).....**SF898**
Trans......**6017**

BelAir V8-409 (6.7L) Carb.
Lube.....**P20-HD**
Air.....**PA625**
Trans......**6017**

Biscayne 6-235 (3.9L) 1 Bbl. Carb.
Air.....**PA658**
Trans......**6017**

Biscayne V8-283 (4.6L) 2 Bbl. Carb.
Lube.....**P18**
Air.....**PA625**
Fuel (SintBronze).....**SF898**
Trans......**6017**

Biscayne V8-327 (5.4L) 4 Bbl. Carb.
Lube.....**P18**
Air.....**PA625**
Fuel (SintBronze).....**SF898**
Trans......**6017**

Biscayne V8-409 (6.7L) Carb.
Lube.....**P20-HD**
Air.....**PA625**
Trans......**6017**

Chevy II 4-153 (2.5L) 1 Bbl. Carb.
Lube.....**B27**
Air.....**PA658**
Fuel (SintBronze).....**SF898**
Trans......**6017**

CHEVROLET 1962 (Cont'd.)

Chevy II 6-194 (3.2L) 1 Bbl. Carb.
Lube.....**B27**
Air.....**PA658**
Fuel (SintBronze).....**SF898**
Trans......**6017**

Chevy II V8-283 (4.6L) Carb.
Lube.....**P18**
Air.....**PA625**
Fuel (SintBronze).....**SF898**
Trans......**6017**

Corvair, Corvair 95 6-145 (2.4L) 2-1 Bbl. Carb.
Lube.....**B4**
Air.....[2] **PA649**
Fuel (SintBronze).....**SF898**

Corvette V8-327 (5.4L) Carb.
Lube.....**P18**
Air.....**PA659**
Fuel (SintBronze).....**SF898**
Trans......**6017**

Corvette V8-327 (5.4L) FI
Lube.....**P18**
Fuel (SintBronze).....**SF898**
Trans......**6017**

Impala 6-235 (3.9L) 1 Bbl. Carb.
Air.....**PA658**
Trans......**6017**

Impala V8-283 (4.6L) 2 Bbl. Carb.
Lube.....**P18**
Air.....**PA625**
Fuel (SintBronze).....**SF898**
Trans......**6017**

Impala V8-327 (5.4L) 4 Bbl. Carb.
Lube.....**P18**
Air.....**PA625**
Fuel (SintBronze).....**SF898**
Trans......**6017**

Impala V8-409 (6.7L) Carb.
Lube.....**P20-HD**
Air.....**PA625**
Trans......**6017**

Nova 4-153 (2.5L) 1 Bbl. Carb.
Lube.....**B27**
Air.....**PA658**
Fuel (SintBronze).....**SF898**
Oil Vapor.....**N/R**
Trans......**6017**

Nova 6-194 (3.2L) 1 Bbl. Carb.
Lube.....**B6**
Air.....**PA658**
Fuel (SintBronze).....**SF898**
Oil Vapor.....**N/R**
Trans......**6017**

Nova V8-283 (4.6L) Carb.
Lube.....**P18**
Air (2 or 4 Bbl.).....**PA625**
Air (Two 4 Bbl.).....**PA631**
Oil Vapor.....**N/R**
Trans......**6017**

P Series 6-235 (3.9L) Carb.
Lube.....**P53**
Air.....**PA658**
Fuel (SintBronze).....**SF898**
Trans......**6017**

P Series V8-283 (4.6L) Carb.
Lube.....**P18**
Fuel.....**PF827**
Oil Vapor.....**N/R**
Trans......**6017**

P Series V8-327 (5.4L) Carb.
Lube.....**P18**
Fuel.....**PF827**
Oil Vapor.....**N/R**
Trans......**6017**

P Series V8-348 (5.7L) Carb.
Lube.....**P18**
Air.....**PA625**
Fuel.....**PF827**
Oil Vapor.....**N/R**
Trans......**6017**

P Series V8-409 (6.7L) Carb.
Lube.....**P20-HD**
Air.....**PA625**
Fuel.....**PF827**
Oil Vapor.....**N/R**
Trans......**6017**

CHEVROLET 1962 (Cont'd.)

Pickups, C, K Series 6-235 (3.9L) 1 Bbl. Carb.
Lube.....**P53**
Air.....**PA658**
Fuel (SintBronze).....**SF898**
Trans......**6017**

Pickups, C, K Series 6-261 (4.3L) 1 Bbl. Carb.
Lube.....**P18**
Air.....**PA621**
Fuel (1 1/8 In.).....**PF857**
Fuel (3 1/2 In.).....**PF827**

Pickups, C, K Series V8-283 (4.6L) 2 Bbl. Carb.
Lube.....**P18**
Fuel.....**PF827**
Oil Vapor.....**N/R**
Trans......**6017**

Pickups, C, K Series V8-327 (5.4L) Carb.
Lube.....**P18**
Fuel.....**PF827**
Oil Vapor.....**N/R**
Trans......**6017**

Pickups, C, K Series V8-348 (5.7L) Carb.
Lube.....**P18**
Air.....**PA625**
Fuel.....**PF827**
Oil Vapor.....**N/R**
Trans......**6017**

Pickups, C, K Series V8-409 (6.7L) Carb.
Lube.....**P20-HD**
Air.....**PA625**
Fuel.....**PF827**
Oil Vapor.....**N/R**
Trans......**6017**

Suburban 6-235 (3.9L) 1 Bbl. Carb.
Lube.....**P53**
Air.....**PA658**
Fuel (SintBronze).....**SF898**
Trans......**6017**

Suburban V8-283 (4.6L) 2 Bbl. Carb.
Lube.....**P18**
Fuel.....**PF827**
Oil Vapor.....**N/R**
Trans......**6017**

Suburban V8-327 (5.4L) Carb.
Lube.....**P18**
Fuel.....**PF827**
Oil Vapor.....**N/R**
Trans......**6017**

Suburban V8-348 (5.7L) Carb.
Lube.....**P18**
Air.....**PA625**
Fuel.....**PF827**
Oil Vapor.....**N/R**
Trans......**6017**

Suburban V8-409 (6.7L) Carb.
Lube.....**P20-HD**
Air.....**PA625**
Fuel.....**PF827**
Oil Vapor.....**N/R**
Trans......**6017**

1961

BelAir 6-235 (3.9L) 1 Bbl. Carb.
Lube.....**P53**
Fuel (SintBronze).....**SF898**

BelAir V8-283 (4.6L) 2,4 Bbl. Carb.
Lube.....**P18**
Air.....**PA625**
Fuel (SintBronze).....**SF898**

BelAir V8-348 (5.7L) Carb.
Lube.....**P18**
Air (2 or 4 Bbl.).....**PA625**
Air (Three 2 Bbl.).....**PA631**
Fuel.....**BF840,-K1**

BelAir V8-409 (6.7L) 4 Bbl. Carb.
Lube.....**P18**
Air.....**PA625**
Fuel (SintBronze).....**SF898**
Trans......**M.T.**

CHEVROLET 1961 (Cont'd.)

Biscayne 6-235 (3.9L) 1 Bbl. Carb.
Lube.....**P53**
Fuel (SintBronze).....**SF898**

Biscayne V8-283 (4.6L) 2,4 Bbl. Carb.
Lube.....**P18**
Air.....**PA625**
Fuel (SintBronze).....**SF898**

Biscayne V8-348 (5.7L) Carb.
Lube.....**P18**
Air (2 or 4 Bbl.).....**PA625**
Air (Three 2 Bbl.).....**PA631**
Fuel.....**BF840,-K1**

Biscayne V8-409 (6.7L) 4 Bbl. Carb.
Lube.....**P18**
Air.....**PA625**
Fuel (SintBronze).....**SF898**
Trans......**M.T.**

Corvair, Corvair 95 6-145 (2.4L) 2-1 Bbl. Carb.
Lube.....**B4**
Air.....[2] **PA649**
Fuel (SintBronze).....**SF898**

Corvette V8-283 (4.6L) Carb.
Lube.....**P18**
Air.....**PA659**
Fuel (SintBronze).....**SF898**

Corvette V8-283 (4.6L) FI
Lube.....**P18**
Air.....**PA659**
Fuel.....**BF840,-K1**
Trans......**M.T.**

Impala 6-235 (3.9L) 1 Bbl. Carb.
Lube.....**P53**
Fuel (SintBronze).....**SF898**

Impala V8-283 (4.6L) 2,4 Bbl. Carb.
Lube.....**P18**
Air.....**PA625**
Fuel (SintBronze).....**SF898**

Impala V8-348 (5.7L) Carb.
Lube.....**P18**
Air (2 or 4 Bbl.).....**PA625**
Air (Two 4 Bbl.).....**PA631**
Fuel.....**BF840,-K1**

Impala V8-409 (6.7L) 4 Bbl. Carb.
Lube.....**P18**
Air.....**PA625**
Fuel (SintBronze).....**SF898**
Trans......**M.T.**

P Series 6-235 (3.9L) Carb.
Lube.....**P53**
Fuel (SintBronze).....**SF898**

P Series V8-283 (4.6L) Carb.
Lube.....**P18**
Fuel.....**PF827**

P Series V8-348 (5.7L) Carb.
Lube.....**P18**

Pickups, C, K Series 6-235 (3.9L) 1 Bbl. Carb.
Lube.....**P53**
Fuel (SintBronze).....**SF898**

Pickups, C, K Series V8-283 (4.6L) 2 Bbl. Carb.
Lube.....**P18**
Air.....**PA625**
Fuel.....**PF827**
Oil Vapor.....**N/R**

Pickups, C, K Series V8-348 (5.7L) Carb.
Lube.....**P18**
Fuel.....**PF827**

Suburban 6-235 (3.9L) 1 Bbl. Carb.
Lube.....**P53**
Fuel (SintBronze).....**SF898**

Suburban V8-283 (4.6L) 2 Bbl. Carb.
Lube.....**P18**
Air.....**PA625**

Suburban V8-348 (5.7L) Carb.
Lube.....**P18**
Fuel.....**PF827**

CHEVROLET (Cont'd.)

1960

BelAir V8-283 (4.6L) 2,4 Bbl. Carb.
Lube....P18
Air....PA625
Fuel (SintBronze).... SF898

BelAir V8-348 (5.7L) Carb.
Lube....P18
Air (2 or 4 Bbl.).... PA625
Air (Three 2 Bbl.).... PA631

Biscayne V8-283 (4.6L) 2,4 Bbl. Carb.
Lube....P18
Air....PA625
Fuel (SintBronze).... SF898

Biscayne V8-348 (5.7L) Carb.
Lube....P18
Air (2 or 4 Bbl.).... PA625
Air (Three 2 Bbl.).... PA631

Corvair 6-140 (2.3L) 2-1 Bbl. Carb.
Lube....B4
Fuel (SintBronze).... SF898

Corvette V8-283 (4.6L) Carb.
Lube....P18
Air....PA625
Fuel (SintBronze).... SF898

Corvette V8-283 (4.6L) FI
Lube....P18
Fuel (SintBronze).... SF898

El Camino V8-283 (4.6L) 2,4 Bbl. Carb.
Lube....P18
Air....PA625
Fuel (SintBronze).... SF898

El Camino V8-348 (5.7L) Carb.
Lube....P18
Air (2 or 4 Bbl.).... PA625
Air (Three 2 Bbl.).... PA631

Impala V8-283 (4.6L) 2,4 Bbl. Carb.
Lube....P18
Air....PA625
Fuel (SintBronze).... SF898

Impala V8-348 (5.7L) Carb.
Lube....P18
Air (2 or 4 Bbl.).... PA625
Air (Three 2 Bbl.).... PA631
Fuel (SintBronze).... SF898

Pickups 6-235 (3.9L) 1 Bbl. Carb.
Lube....P53
Fuel (SintBronze).... SF898

Pickups V8-283 (4.6L) 2 Bbl. Carb.
Lube....P18
Fuel....PF827
Oil Vapor.... N/R

Pickups V8-348 (5.7L) Carb.
Lube....P18
Fuel....PF827
Oil Vapor.... N/R

1959

BelAir 6-235 (3.9L) 1 Bbl. Carb.
Lube....P53
Fuel (SintBronze).... SF898

BelAir V8-283 (4.6L) 2,4 Bbl. Carb.
Lube....P18
Air....PA625
Fuel (SintBronze).... SF898

BelAir V8-348 (5.7L) Carb.
Lube....P18
Air....PA625
Fuel (Three 2 Bbl.)....BF840,-K1
Fuel (2 or 4 Bbl., SintBronze).... SF898

Biscayne 6-235 (3.9L) 1 Bbl. Carb.
Lube....P53
Fuel (SintBronze).... SF898

Biscayne V8-283 (4.6L) 2,4 Bbl. Carb.
Lube....P18
Air....PA625
Fuel (SintBronze).... SF898

CHEVROLET 1959 (Cont'd.)

Biscayne V8-348 (5.7L) Carb.
Lube....P18
Air....PA625
Fuel (Three 2 Bbl.)....BF840,-K1
Fuel (2 or 4 Bbl., SintBronze).... SF898

Corvette V8-283 (4.6L) Carb.
Lube....P18
Fuel (SintBronze).... SF898

El Camino V8-283 (4.6L) 2,4 Bbl. Carb.
Lube....P18
Air....PA625
Fuel....PF857

El Camino V8-348 (5.7L) Carb.
Lube....P18
Air....PA625
Fuel (Three 2 Bbl.)....BF840,-K1
Fuel (2 or 4 Bbl., SintBronze).... SF898

Impala 6-235 (3.9L) 1 Bbl. Carb.
Lube....P53
Fuel (SintBronze).... SF898

Impala V8-283 (4.6L) 2,4 Bbl. Carb.
Lube....P18
Air....PA625
Fuel (SintBronze).... SF898

Impala V8-348 (5.7L) Carb.
Lube....P18
Air....PA625
Fuel (Three 2 Bbl.)....BF840,-K1
Fuel (2 or 4 Bbl., SintBronze).... SF898

Pickups 6-235 (3.9L) 1 Bbl. Carb.
Lube....P53
Fuel (SintBronze).... SF898
Oil Vapor.... N/R

Pickups 6-261 (4.3L) Carb.
Lube....P18
Oil Vapor.... N/R

Pickups V8-283 (4.6L) 2 Bbl. Carb.
Lube....P18
Air....PA625
Fuel....PF857
Oil Vapor.... N/R

Pickups V8-322 (5.3L) Carb.
Lube....P18
Fuel....PF857

Pickups V8-348 (5.7L) Carb.
Lube....P18
Oil Vapor.... N/R

1958

BelAir 6-235 (3.9L) 1 Bbl. Carb.
Lube....P53
Fuel (SintBronze).... SF898

BelAir V8-283 (4.6L) 2,4 Bbl. Carb.
Lube....P18

BelAir V8-348 (5.7L) 4 Bbl. Carb.
Lube....P18
Fuel (SintBronze).... SF898

Biscayne 6-235 (3.9L) 1 Bbl. Carb.
Lube....P53
Fuel (SintBronze).... SF898

Biscayne V8-283 (4.6L) 2,4 Bbl. Carb.
Lube....P18

Biscayne V8-348 (5.7L) Carb.
Lube....P18
Air....PA631
Fuel (SintBronze).... SF898

Corvette V8-283 (4.6L) Carb.
Lube....P18
Fuel (SintBronze).... SF898

Corvette V8-283 (4.6L) FI
Lube....P18
Fuel (SintBronze).... SF898

Del Ray 6-235 (3.9L) 1 Bbl. Carb.
Lube....P53
Fuel (SintBronze).... SF898

Del Ray V8-283 (4.6L) 2,4 Bbl. Carb.
Lube....P18

Del Ray V8-348 (5.7L) 4 Bbl. Carb.
Lube....P18
Fuel (SintBronze).... SF898

CHEVROLET 1958 (Cont'd.)

Pickups 6-235 (3.9L) 1 Bbl. Carb.
Lube....P53
Fuel (SintBronze).... SF898
Oil Vapor.... N/R

Pickups 6-261 (4.3L) Carb.
Lube....P53
Oil Vapor.... N/R

Pickups V8-283 (4.6L) 2 Bbl. Carb.
Lube....P18
Fuel....PF857
Oil Vapor.... N/R

Pickups V8-322 (5.3L) Carb.
Lube....P18
Fuel....PF857

Pickups V8-348 (5.7L) Carb.
Lube....P18
Fuel....PF857
Oil Vapor.... N/R

1957

BelAir 6-235 (3.9L) 1 Bbl. Carb.
Lube....P53
Fuel....PF857

BelAir V8-265 (4.3L) 2 Bbl. Carb.
Lube....P19
Air....PA602
Fuel....PF857

BelAir V8-283 (4.6L) Carb.
Lube....P19
Air....PA602
Fuel....PF857

Corvette V8-283 (4.6L) 4 Bbl. Carb.
Lube....P18

Corvette V8-283 (4.6L) FI
Lube....P19
Fuel....PF857

One-Fifty Series 6-235 (3.9L) 1 Bbl. Carb.
Lube....P53
Fuel....PF857

One-Fifty Series V8-265 (4.3L) 2 Bbl. Carb.
Lube....P19
Air....PA602
Fuel....PF857

One-Fifty Series V8-283 (4.6L) Carb.
Lube....P19
Air....PA602
Fuel....PF857

Pickups 6-235 (3.9L) 1 Bbl. Carb.
Lube....P53
Fuel.... BF840,-K1
Oil Vapor.... N/R

Pickups 6-261 (4.3L) Carb.
Lube....P53
Oil Vapor.... N/R

Pickups V8-265 (4.3L) 2 Bbl. Carb.
Lube....P19
Air....PA602
Fuel....PF857

Pickups V8-283 (4.6L) Carb.
Lube....P19
Fuel....PF857
Oil Vapor.... N/R

Pickups V8-322 (5.3L) Carb.
Lube....P19
Fuel....PF857

Two-Ten Series 6-235 (3.9L) 1 Bbl. Carb.
Lube....P53
Fuel....PF857

Two-Ten Series V8-265 (4.3L) 2 Bbl. Carb.
Lube....P19
Air....PA602
Fuel....PF857

Two-Ten Series V8-283 (4.6L) Carb.
Lube....P19
Air....PA602
Fuel....PF857

1956

BelAir 6-235 (3.9L) 1 Bbl. Carb.
Lube....P53
Fuel....PF857

CHEVROLET 1956 (Cont'd.)

BelAir V8-265 (4.3L) 2,4 Bbl. Carb.
Lube....P19
Air....PA602

Corvette V8-265 (4.3L) Carb.
Lube....P53
Fuel....PF857

One-Fifty Series 6-235 (3.9L) 1 Bbl. Carb.
Lube....P53
Fuel....PF857

One-Fifty Series V8-265 (4.3L) 2,4 Bbl. Carb.
Lube....P19
Air....PA602

Pickups 6-235 (3.9L) 1 Bbl. Carb.
Lube....P53
Fuel.... BF840,-K1
Oil Vapor.... N/R

Pickups 6-261 (4.3L) Carb.
Lube....P53
Oil Vapor.... N/R

Pickups V8-265 (4.3L) 2 Bbl. Carb.
Lube....P19
Air....PA602

Pickups V8-322 (5.3L) Carb.
Lube....P19
Fuel....PF857

Two-Ten Series 6-235 (3.9L) 1 Bbl. Carb.
Lube....P53
Fuel....PF857

Two-Ten Series V8-265 (4.3L) 2 Bbl. Carb.
Lube....P19
Air....PA602

1955

BelAir 6-235 (3.9L) 1 Bbl. Carb.
Lube....P53
Oil Vapor.... N/R

BelAir V8-265 (4.3L) 2,4 Bbl. Carb.
Lube....P53
Fuel.... BF833,-K2

Corvette 6-235 (3.9L) 2-1 Bbl. Carb.
Lube....P53
Fuel....PF857
Oil Vapor.... N/R

Corvette V8-265 (4.3L) 4 Bbl. Carb.
Lube....P53

One-Fifty Series 6-235 (3.9L) 1 Bbl. Carb.
Lube....P53
Oil Vapor.... N/R

One-Fifty Series V8-265 (4.3L) 2,4 Bbl. Carb.
Lube....P53
Fuel.... BF833,-K2

Pickups 6-235 (3.9L) 1 Bbl. Carb.
Lube....P53
Oil Vapor.... N/R

Pickups 6-261 (4.3L) Carb.
Lube....P53
Oil Vapor.... N/R

Pickups V8-265 (4.3L) 2 Bbl. Carb.
Lube....P53

Two-Ten Series 6-235 (3.9L) 1 Bbl. Carb.
Lube....P53
Oil Vapor.... N/R

Two-Ten Series V8-265 (4.3L) 2,4 Bbl. Carb.
Lube....P53
Fuel.... BF833,-K2

1954

BelAir 6-235 (3.9L) 1 Bbl. Carb.
Lube....P53
Oil Vapor.... N/R

Corvette 6-235 (3.9L) 3-1 Bbl. Carb.
Lube....P53
Fuel....PF857
Oil Vapor.... N/R

OBS = Obsolete. Availability Limited to Distributor Stock.

CHEVROLET 1954 (Cont'd.)

One-Fifty Series 6-235 (3.9L) 1 Bbl. Carb.
Lube.....P53
Oil Vapor.....N/R
Pickups 6-235 (3.9L) 1 Bbl. Carb.
Lube.....P53
Oil Vapor.....N/R
Pickups 6-261 (4.3L) Carb.
Lube.....P53
Oil Vapor.....N/R
Two-Ten Series 6-235 (3.9L) 1 Bbl. Carb.
Lube.....P53
Oil Vapor.....N/R

1953
BelAir 6-236 (3.9L) 1 Bbl. Carb.
Lube.....P53
Oil Vapor.....N/R
Corvette 6-236 (3.9L) 3-1 Bbl. Carb.
Lube.....P53
Fuel.....PF857
Oil Vapor.....N/R
One-Fifty Series 6-236 (3.9L) 1 Bbl. Carb.
Lube.....P53
Oil Vapor.....N/R
Pickups 6-216 (3.5L) 1 Bbl. Carb.
Lube.....P53
Oil Vapor.....N/R
Pickups 6-235 (3.9L) 1 Bbl. Carb.
Lube.....P53
Oil Vapor.....N/R
Two-Ten Series 6-236 (3.9L) 1 Bbl. Carb.
Lube.....P53
Oil Vapor.....N/R

1952
BelAir 6-217 (3.6L) 1 Bbl. Carb.
Lube.....P53
Oil Vapor.....N/R
BelAir 6-236 (3.9L) 1 Bbl. Carb.
Lube.....P53
Oil Vapor.....N/R
Fleetline Deluxe 6-217 (3.6L) 1 Bbl. Carb.
Lube.....P53
Oil Vapor.....N/R
Fleetline Deluxe 6-236 (3.9L) 1 Bbl. Carb.
Lube.....P53
Oil Vapor.....N/R
Fleetline Special 6-217 (3.6L) 1 Bbl. Carb.
Lube.....P53
Oil Vapor.....N/R
Pickups 6-216 (3.5L) 1 Bbl. Carb.
Lube.....P53
Oil Vapor.....N/R
Pickups 6-235 (3.9L) Carb.
Lube.....P53
Oil Vapor.....N/R
Styleline Deluxe 6-217 (3.6L) 1 Bbl. Carb.
Lube.....P53
Oil Vapor.....N/R
Styleline Deluxe 6-236 (3.9L) 1 Bbl. Carb.
Lube.....P53
Oil Vapor.....N/R
Styleline Special 6-217 (3.6L) 1 Bbl. Carb.
Lube.....P53
Oil Vapor.....N/R

1951
BelAir 6-217 (3.6L) 1 Bbl. Carb.
Lube.....P53
Oil Vapor.....N/R

CHEVROLET 1951 (Cont'd.)

BelAir 6-236 (3.9L) 1 Bbl. Carb.
Lube.....P53
Oil Vapor.....N/R
Fleetline Deluxe 6-217 (3.6L) 1 Bbl. Carb.
Lube.....P53
Oil Vapor.....N/R
Fleetline Deluxe 6-236 (3.9L) 1 Bbl. Carb.
Lube.....P53
Oil Vapor.....N/R
Fleetline Special 6-217 (3.6L) 1 Bbl. Carb.
Lube.....P53
Oil Vapor.....N/R
Pickups 6-216 (3.5L) 1 Bbl. Carb.
Lube.....P53
Fuel.....PF857
Oil Vapor.....N/R
Styleline Deluxe 6-217 (3.6L) 1 Bbl. Carb.
Lube.....P53
Oil Vapor.....N/R
Styleline Deluxe 6-236 (3.9L) 1 Bbl. Carb.
Lube.....P53
Oil Vapor.....N/R
Styleline Special 6-217 (3.6L) 1 Bbl. Carb.
Lube.....P53
Oil Vapor.....N/R

1950
BelAir 6-217 (3.6L) 1 Bbl. Carb.
Lube.....P53
Oil Vapor.....N/R
BelAir 6-236 (3.9L) 1 Bbl. Carb.
Lube.....P53
Oil Vapor.....N/R
Fleetline Deluxe 6-217 (3.6L) 1 Bbl. Carb.
Lube.....P53
Oil Vapor.....N/R
Fleetline Deluxe 6-236 (3.9L) 1 Bbl. Carb.
Lube.....P53
Oil Vapor.....N/R
Fleetline Special 6-217 (3.6L) 1 Bbl. Carb.
Lube.....P53
Oil Vapor.....N/R
Pickups 6-216 (3.5L) 1 Bbl. Carb.
Lube.....P53
Fuel.....PF857
Oil Vapor.....N/R
Styleline Deluxe 6-217 (3.6L) 1 Bbl. Carb.
Lube.....P53
Oil Vapor.....N/R
Styleline Deluxe 6-236 (3.9L) 1 Bbl. Carb.
Lube.....P53
Oil Vapor.....N/R
Styleline Special 6-217 (3.6L) 1 Bbl. Carb.
Lube.....P53
Oil Vapor.....N/R

1949
Fleetline Deluxe 6-217 (3.6L) 1 Bbl. Carb.
Lube.....P53
Fuel.....BF840,-K1
Fleetline Special 6-217 (3.6L) 1 Bbl. Carb.
Lube.....P53
Fuel.....BF840,-K1
Pickups 6-216 (3.5L) 1 Bbl. Carb.
Lube.....P53

CHEVROLET 1949 (Cont'd.)

Styleline Deluxe 6-217 (3.6L) 1 Bbl. Carb.
Lube.....P53
Fuel.....BF840,-K1
Styleline Special 6-217 (3.6L) 1 Bbl. Carb.
Lube.....P53
Fuel.....BF840,-K1

1948
Fleetline 6-217 (3.6L) 1 Bbl. Carb.
Lube.....P53
Fuel.....BF840,-K1
Fleetmaster 6-217 (3.6L) 1 Bbl. Carb.
Lube.....P53
Fuel.....BF840,-K1
Pickups 6-216 (3.5L) 1 Bbl. Carb.
Lube.....P53
Stylemaster 6-217 (3.6L) 1 Bbl. Carb.
Lube.....P53
Fuel.....BF840,-K1

1947
Fleetline 6-217 (3.6L) 1 Bbl. Carb.
Lube.....P53
Fuel.....BF840,-K1
Fleetmaster 6-217 (3.6L) 1 Bbl. Carb.
Lube.....P53
Fuel.....BF840,-K1
Pickups 6-216 (3.5L) 1 Bbl. Carb.
Lube.....P53
Stylemaster 6-217 (3.6L) 1 Bbl. Carb.
Lube.....P53
Fuel.....BF840,-K1

1946
Fleetline 6-217 (3.6L) 1 Bbl. Carb.
Lube.....P53
Fuel.....BF840,-K1
Fleetmaster 6-217 (3.6L) 1 Bbl. Carb.
Lube.....P53
Fuel.....BF840,-K1
Pickups 6-216 (3.5L) 1 Bbl. Carb.
Lube.....P53
Stylemaster 6-217 (3.6L) 1 Bbl. Carb.
Lube.....P53
Fuel.....BF840,-K1

1945
Pickups 6-216 (3.5L) 1 Bbl. Carb.
Lube.....P53

1944
Pickups 6-216 (3.5L) 1 Bbl. Carb.
Lube.....P53

1943
Pickups 6-216 (3.5L) 1 Bbl. Carb.
Lube.....P53

1942
Pickups 6-216 (3.5L) 1 Bbl. Carb.
Lube.....P53

CHRYSLER

1979
Cordoba V8-318 (5.2L) 2,4 Bbl. VIN G,H
Lube.....B233
Air (2 Bbl.).....PA615
Air (4 Bbl.).....PA2010
Fuel (Exc. Calif.).....BF840,-K1
Fuel (Calif.).....BF865,-K
Oil Vapor.....SA4141
Fuel Vapor.....SA2046
Trans......18032

CHRYSLER 1979 (Cont'd.)

Cordoba V8-360 (5.9L) 2,4 Bbl. VIN J,K,L
Lube.....B233
Air.....PA2010
Fuel (Exc. HiPerf. or Calif.).....BF840,-K1
Fuel (Calif.).....BF865,-K
Oil Vapor.....SA4141
Fuel Vapor.....SA2046
Trans......18032

LeBaron 6-225 (3.7L) 1,2 Bbl. VIN C,D
Lube.....B233
Air (8 1/4 In. O.D.).....PA650
Air (10 1/4 In. O.D.).....PA615
Fuel (Exc. Calif.).....BF840,-K1
Fuel (Calif.).....BF865,-K
Fuel Vapor.....SA2046
Trans......18032

LeBaron V8-318 (5.2L) 2,4 Bbl. VIN G,H
Lube.....B233
Air (2 Bbl.).....PA615
Air (4 Bbl.).....PA2010
Fuel (Exc. Calif.).....BF840,-K1
Fuel (Calif.).....BF865,-K
Oil Vapor.....SA4141
Fuel Vapor.....SA2046
Trans......18032

LeBaron V8-360 (5.9L) 2,4 Bbl. VIN J,K,L
Lube.....B233
Air.....PA2010
Fuel (Exc. HiPerf. or Calif.).....BF840,-K1
Fuel (Calif.).....BF865,-K
Oil Vapor.....SA4141
Fuel Vapor.....SA2046
Trans......18032

New Yorker V8-318 (5.2L) 2,4 Bbl. VIN G,H
Lube.....B233
Air (2 Bbl.).....PA615
Air (4 Bbl.).....PA2010
Fuel (Exc. Calif.).....BF840,-K1
Fuel (Calif.).....BF865,-K
Oil Vapor.....SA4141
Fuel Vapor.....SA2046
Trans......18032

New Yorker V8-360 (5.9L) 2,4 Bbl. VIN J,K,L
Lube.....B233
Air.....PA2010
Fuel (Exc. HiPerf. or Calif.).....BF840,-K1
Fuel (Calif.).....BF865,-K
Oil Vapor.....SA4141
Fuel Vapor.....SA2046
Trans......18032

Newport 6-225 (3.7L) 2 Bbl. VIN D
Lube.....B233
Air (8 1/4 In. O.D.).....PA650
Air (10 1/4 In. O.D.).....PA615
Fuel (Exc. Calif.).....BF840,-K1
Fuel (Calif.).....BF865,-K
Fuel Vapor.....SA2046
Trans......18032

Newport V8-318 (5.2L) 2,4 Bbl. VIN G,H
Lube.....B233
Air (2 Bbl.).....PA615
Air (4 Bbl.).....PA2010
Fuel (Exc. Calif.).....BF840,-K1
Fuel (Calif.).....BF865,-K
Oil Vapor.....SA4141
Fuel Vapor.....SA2046
Trans......18032

OBS = Obsolete. Availability Limited to Distributor Stock.

CHRYSLER 1979 (Cont'd.)

Newport V8-360 (5.9L) 2,4 Bbl. VIN J,K,L
- **Lube** ... **B233**
- **Air** ... **PA2010**
- **Fuel (Exc. HiPerf. or Calif.)** ... **BF840,-K1**
- **Fuel (Calif.)** ... **BF865,-K**
- **Oil Vapor** ... **SA4141**
- **Fuel Vapor** ... **SA2046**
- **Trans.** ... **18032**

Town & Country 6-225 (3.7L) 1,2 Bbl. VIN C,D
- **Lube** ... **B233**
- **Air (8 1/4 In. O.D.)** ... **PA650**
- **Air (10 1/4 In. O.D.)** ... **PA615**
- **Fuel (Exc. Calif.)** ... **BF840,-K1**
- **Fuel (Calif.)** ... **BF865,-K**
- **Fuel Vapor** ... **SA2046**
- **Trans.** ... **18032**

Town & Country V8-318 (5.2L) 2,4 Bbl. VIN G,H
- **Lube** ... **B233**
- **Air (2 Bbl.)** ... **PA615**
- **Air (4 Bbl.)** ... **PA2010**
- **Fuel (Exc. Calif.)** ... **BF840,-K1**
- **Fuel (Calif.)** ... **BF865,-K**
- **Oil Vapor** ... **SA4141**
- **Fuel Vapor** ... **SA2046**
- **Trans.** ... **18032**

Town & Country V8-360 (5.9L) 2,4 Bbl. VIN J,K,L
- **Lube** ... **B233**
- **Air** ... **PA2010**
- **Fuel (Exc. HiPerf. or Calif.)** ... **BF840,-K1**
- **Fuel (Calif.)** ... **BF865,-K**
- **Oil Vapor** ... **SA4141**
- **Fuel Vapor** ... **SA2046**
- **Trans.** ... **18032**

1978

Cordoba V8-318 (5.2L) 2,4 Bbl. VIN G,H
- **Lube** ... **B233**
- **Air (2 Bbl.)** ... **PA615**
- **Air (4 Bbl.)** ... **PA2010**
- **Fuel (Exc. Calif.)** ... **BF840,-K1**
- **Fuel (Calif.)** ... **BF865,-K**
- **Oil Vapor** ... **SA4141**
- **Fuel Vapor** ... **SA2046**
- **Trans.** ... **18032**

Cordoba V8-360 (5.9L) 2,4 Bbl. VIN J,K,L
- **Lube** ... **B233**
- **Air** ... **PA2010**
- **Fuel (Exc. Calif.)** ... **BF840,-K1**
- **Fuel (Calif.)** ... **BF865,-K**
- **Oil Vapor** ... **SA4141**
- **Fuel Vapor** ... **SA2046**
- **Trans.** ... **18032**

Cordoba V8-400 (6.6L) 4 Bbl. VIN N,P
- **Lube** ... **B233**
- **Air** ... **PA2010**
- **Fuel (Exc. Calif.)** ... **BF840,-K1**
- **Fuel (Calif.)** ... **BF865,-K**
- **Oil Vapor** ... **SA4141**
- **Fuel Vapor** ... **SA2046**
- **Trans.** ... **18032**

LeBaron 6-225 (3.7L) 1,2 Bbl. VIN C,D
- **Lube** ... **B233**
- **Air (8 1/4 In. O.D.)** ... **PA650**
- **Air (10 1/4 In. O.D.)** ... **PA615**
- **Fuel (Exc. Calif.)** ... **BF840,-K1**
- **Fuel (Calif.)** ... **BF865,-K**
- **Oil Vapor** ... **SA4141**
- **Fuel Vapor** ... **SA2046**
- **Trans.** ... **18032**

CHRYSLER 1978 (Cont'd.)

LeBaron V8-318 (5.2L) 2,4 Bbl. VIN G,H
- **Lube** ... **B233**
- **Air (2 Bbl.)** ... **PA615**
- **Air (4 Bbl.)** ... **PA2010**
- **Fuel (Exc. Calif.)** ... **BF840,-K1**
- **Fuel (Calif.)** ... **BF865,-K**
- **Oil Vapor** ... **SA4141**
- **Fuel Vapor** ... **SA2046**
- **Trans.** ... **18032**

LeBaron V8-360 (5.9L) 2,4 Bbl. VIN J,K,L
- **Lube** ... **B233**
- **Air** ... **PA2010**
- **Fuel (Exc. Calif.)** ... **BF840,-K1**
- **Fuel (Calif.)** ... **BF865,-K**
- **Oil Vapor** ... **SA4141**
- **Fuel Vapor** ... **SA2046**
- **Trans.** ... **18032**

New Yorker V8-360 (5.9L) 4 Bbl. VIN J
- **Lube** ... **B233**
- **Air** ... **PA2010**
- **Fuel (Exc. Calif.)** ... **BF840,-K1**
- **Fuel (Calif.)** ... **BF865,-K**
- **Oil Vapor** ... **SA4141**
- **Fuel Vapor** ... **SA2046**
- **Trans.** ... **18032**

New Yorker V8-400 (6.6L) 4 Bbl. VIN N
- **Lube** ... **B233**
- **Air** ... **PA693**
- **Fuel (Exc. Calif.)** ... **BF840,-K1**
- **Fuel (Calif.)** ... **BF865,-K**
- **Oil Vapor** ... **SA4141**
- **Fuel Vapor** ... **SA2046**
- **Trans.** ... **18032**

New Yorker V8-440 (7.2L) 4 Bbl. VIN T
- **Lube** ... **B233**
- **Air** ... **PA693**
- **Fuel (Exc. Calif.)** ... **BF840,-K1**
- **Fuel (Calif.)** ... **BF865,-K**
- **Oil Vapor** ... **SA4141**
- **Fuel Vapor** ... **SA2046**
- **Trans.** ... **18032**

Newport V8-360 (5.9L) 2,4 Bbl. VIN J,K
- **Lube** ... **B233**
- **Air** ... **PA2010**
- **Fuel (Exc. Calif.)** ... **BF840,-K1**
- **Fuel (Calif.)** ... **BF865,-K**
- **Oil Vapor** ... **SA4141**
- **Fuel Vapor** ... **SA2046**
- **Trans.** ... **18032**

Newport V8-400 (6.6L) 4 Bbl. VIN N
- **Lube** ... **B233**
- **Air** ... **PA693**
- **Fuel (Exc. Calif.)** ... **BF840,-K1**
- **Fuel (Calif.)** ... **BF865,-K**
- **Oil Vapor** ... **SA4141**
- **Fuel Vapor** ... **SA2046**
- **Trans.** ... **18032**

Newport V8-440 (7.2L) 4 Bbl. VIN T
- **Lube** ... **B233**
- **Air** ... **PA693**
- **Fuel (Exc. Calif.)** ... **BF840,-K1**
- **Fuel (Calif.)** ... **BF865,-K**
- **Oil Vapor** ... **SA4141**
- **Fuel Vapor** ... **SA2046**
- **Trans.** ... **18032**

Town & Country 6-225 (3.7L) 1,2 Bbl. VIN C,D
- **Lube** ... **B233**
- **Air (8 1/4 In. O.D.)** ... **PA650**
- **Air (10 1/4 In. O.D.)** ... **PA615**
- **Fuel (Exc. Calif.)** ... **BF840,-K1**
- **Fuel (Calif.)** ... **BF865,-K**
- **Oil Vapor** ... **SA4141**
- **Fuel Vapor** ... **SA2046**
- **Trans.** ... **18032**

CHRYSLER 1978 (Cont'd.)

Town & Country V8-318 (5.2L) 2,4 Bbl. VIN G,H
- **Lube** ... **B233**
- **Air (2 Bbl.)** ... **PA615**
- **Air (4 Bbl.)** ... **PA2010**
- **Fuel (Exc. Calif.)** ... **BF840,-K1**
- **Fuel (Calif.)** ... **BF865,-K**
- **Oil Vapor** ... **SA4141**
- **Fuel Vapor** ... **SA2046**
- **Trans.** ... **18032**

Town & Country V8-360 (5.9L) 2,4 Bbl. VIN J,K,L
- **Lube** ... **B233**
- **Air** ... **PA2010**
- **Fuel (Exc. Calif.)** ... **BF840,-K1**
- **Fuel (Calif.)** ... **BF865,-K**
- **Oil Vapor** ... **SA4141**
- **Fuel Vapor** ... **SA2046**
- **Trans.** ... **18032**

1977

Cordoba V8-318 (5.2L) 2 Bbl. VIN G
- **Lube** ... **B233**
- **Air** ... **PA615**
- **Fuel (Exc. Calif.)** ... **BF840,-K1**
- **Fuel (Calif.)** ... **BF865,-K**
- **Oil Vapor** ... **SA4141**
- **Fuel Vapor** ... **SA2046**
- **Trans.** ... **18032**

Cordoba V8-360 (5.9L) 2,4 Bbl. VIN J,K
- **Lube** ... **B233**
- **Air (2 Bbl.)** ... **PA615**
- **Air (4 Bbl.)** ... **PA2010**
- **Fuel (Exc. Calif.)** ... **BF840,-K1**
- **Fuel (Calif.)** ... **BF865,-K**
- **Oil Vapor** ... **SA4141**
- **Fuel Vapor** ... **SA2046**
- **Trans.** ... **18032**

Cordoba V8-400 (6.6L) 4 Bbl. VIN N
- **Lube** ... **B233**
- **Air (2 3/4 In.)** ... **PA2010**
- **Air (3 1/2 In.)** ... **PA693**
- **Fuel (Exc. HiPerf. or Calif.)** ... **BF840,-K1**
- **Fuel (Calif.)** ... **BF865,-K**
- **Oil Vapor** ... **SA4141**
- **Fuel Vapor** ... **SA2046**
- **Trans.** ... **18032**

LeBaron V8-318 (5.2L) 2 Bbl. VIN G
- **Lube** ... **B233**
- **Air** ... **PA615**
- **Fuel (Exc. Calif.)** ... **BF840,-K1**
- **Fuel (Calif.)** ... **BF865,-K**
- **Oil Vapor** ... **SA4141**
- **Fuel Vapor** ... **SA2046**
- **Trans.** ... **18032**

New Yorker V8-360 (5.9L) 4 Bbl. VIN J
- **Lube** ... **B233**
- **Air** ... **PA2010**
- **Fuel (Exc. Calif.)** ... **BF840,-K1**
- **Fuel (Calif.)** ... **BF865,-K**
- **Oil Vapor** ... **SA4141**
- **Fuel Vapor** ... **SA2046**
- **Trans.** ... **18032**

New Yorker V8-400 (6.6L) 4 Bbl. VIN N
- **Lube** ... **B233**
- **Air (2 3/4 In.)** ... **PA2010**
- **Air (3 1/2 In.)** ... **PA693**
- **Fuel (Exc. HiPerf or Calif.)** ... **BF840,-K1**
- **Fuel (Calif.)** ... **BF865,-K**
- **Oil Vapor** ... **SA4141**
- **Fuel Vapor** ... **SA2046**
- **Trans.** ... **18032**

CHRYSLER 1977 (Cont'd.)

New Yorker V8-440 (7.2L) 4 Bbl. VIN T
- **Lube** ... **B233**
- **Air (2 3/4 In.)** ... **PA2010**
- **Air (3 1/2 In.)** ... **PA693**
- **Fuel (Exc. HiPerf or Calif.)** ... **BF840,-K1**
- **Fuel (Calif.)** ... **BF865,-K**
- **Oil Vapor** ... **SA4141**
- **Fuel Vapor** ... **SA2046**
- **Trans.** ... **18032**

Newport V8-360 (5.9L) 4 Bbl. VIN J
- **Lube** ... **B233**
- **Air** ... **PA2010**
- **Fuel (Exc. Calif.)** ... **BF840,-K1**
- **Fuel (Calif.)** ... **BF865,-K**
- **Oil Vapor** ... **SA4141**
- **Fuel Vapor** ... **SA2046**
- **Trans.** ... **18032**

Newport V8-400 (6.6L) 4 Bbl. VIN N
- **Lube** ... **B233**
- **Air (2 3/4 In.)** ... **PA2010**
- **Air (3 1/2 In.)** ... **PA693**
- **Fuel (Exc. HiPerf. or Calif.)** ... **BF840,-K1**
- **Fuel (Calif.)** ... **BF865,-K**
- **Oil Vapor** ... **SA4141**
- **Fuel Vapor** ... **SA2046**
- **Trans.** ... **18032**

Newport V8-440 (7.2L) 4 Bbl. VIN T
- **Lube** ... **B233**
- **Air (2 3/4 In.)** ... **PA2010**
- **Air (3 1/2 In.)** ... **PA693**
- **Fuel (Exc. HiPerf. or Calif.)** ... **BF840,-K1**
- **Fuel (Calif.)** ... **BF865,-K**
- **Oil Vapor** ... **SA4141**
- **Fuel Vapor** ... **SA2046**
- **Trans.** ... **18032**

Town & Country V8-400 (6.6L) 4 Bbl. VIN N
- **Lube** ... **B233**
- **Air (2 3/4 In.)** ... **PA2010**
- **Air (3 1/2 In.)** ... **PA693**
- **Fuel (Exc. HiPerf. or Calif.)** ... **BF840,-K1**
- **Fuel (Calif.)** ... **BF865,-K**
- **Oil Vapor** ... **SA4141**
- **Fuel Vapor** ... **SA2046**
- **Trans.** ... **18032**

Town & Country V8-440 (7.2L) 4 Bbl. VIN T
- **Lube** ... **B233**
- **Air (2 3/4 In.)** ... **PA2010**
- **Air (3 1/2 In.)** ... **PA693**
- **Fuel (Exc. HiPerf. or Calif.)** ... **BF840,-K1**
- **Fuel (Calif.)** ... **BF865,-K**
- **Oil Vapor** ... **SA4141**
- **Fuel Vapor** ... **SA2046**
- **Trans.** ... **18032**

1976

Cordoba V8-318 (5.2L) 2 Bbl. VIN G
- **Lube** ... **B233**
- **Air** ... **PA615**
- **Fuel (Exc. Calif.)** ... **BF840,-K1**
- **Fuel (Calif., w/VapDiv.)** ... **BF865,-K**
- **Oil Vapor** ... **SA4141**
- **Fuel Vapor** ... **SA2046**
- **Trans.** ... **18032**

Cordoba V8-360 (5.9L) 2,4 Bbl. VIN J,K
- **Lube** ... **B233**
- **Air** ... **PA2010**
- **Fuel (Exc. Calif.)** ... **BF840,-K1**
- **Fuel (Calif., w/VapDiv.)** ... **BF865,-K**
- **Oil Vapor** ... **SA4141**
- **Fuel Vapor** ... **SA2046**
- **Trans.** ... **18032**

OBS = Obsolete. Availability Limited to Distributor Stock.

CHRYSLER 1976 (Cont'd.)

Cordoba V8-400 (6.6L) 2,4 Bbl. VIN M,N,P
- **Lube** ... B233
- **Air** ... PA2010
- **Fuel (Exc. Calif.)** ... BF840,-K1
- **Fuel (Calif., w/VapDiv.)** ... BF865,-K
- **Oil Vapor** ... SA4141
- **Fuel Vapor** ... SA2046
- **Trans.** ... 18032

New Yorker V8-400 (6.6L) 2,4 Bbl. VIN M,N
- **Lube** ... B233
- **Air** ... PA2010
- **Fuel (Exc. Calif.)** ... BF840,-K1
- **Fuel (Calif., w/VapDiv.)** ... BF865,-K
- **Oil Vapor** ... SA4141
- **Fuel Vapor** ... SA2046
- **Trans.** ... 18032

New Yorker V8-440 (7.2L) 4 Bbl. VIN T
- **Lube** ... B233
- **Air (2 3/4 In.)** ... PA2010
- **Air (3 1/2 In.)** ... PA693
- **Fuel (Exc. Calif.)** ... BF840,-K1
- **Fuel (Calif., Exc. HiPerf., VapDiv)** ... BF865,-K
- **Oil Vapor** ... SA4141
- **Fuel Vapor** ... SA2046
- **Trans.** ... 18032

Newport V8-360 (5.9L) 2,4 Bbl. VIN J,K
- **Lube** ... B233
- **Air** ... PA2010
- **Fuel (Exc. Calif.)** ... BF840,-K1
- **Fuel (Calif., w/VapDiv.)** ... BF865,-K
- **Oil Vapor** ... SA4141
- **Fuel Vapor** ... SA2046
- **Trans.** ... 18032

Newport V8-400 (6.6L) 2,4 Bbl. VIN M,N
- **Lube** ... B233
- **Air** ... PA2010
- **Fuel (Exc. Calif.)** ... BF840,-K1
- **Fuel (Calif., w/VapDiv.)** ... BF865,-K
- **Oil Vapor** ... SA4141
- **Fuel Vapor** ... SA2046
- **Trans.** ... 18032

Newport V8-440 (7.2L) 4 Bbl. VIN T
- **Lube** ... B233
- **Air (2 3/4 In.)** ... PA2010
- **Air (3 1/2 In.)** ... PA693
- **Fuel (Exc. Calif.)** ... BF840,-K1
- **Fuel (Calif., Exc. HiPerf., VapDiv)** ... BF865,-K
- **Oil Vapor** ... SA4141
- **Fuel Vapor** ... SA2046
- **Trans.** ... 18032

Town & Country V8-400 (6.6L) 2,4 Bbl. VIN M,N
- **Lube** ... B233
- **Air** ... PA2010
- **Fuel (Exc. Calif.)** ... BF840,-K1
- **Fuel (Calif., w/VapDiv.)** ... BF865,-K
- **Oil Vapor** ... SA4141
- **Fuel Vapor** ... SA2046
- **Trans.** ... 18032

Town & Country V8-440 (7.2L) 4 Bbl. VIN T
- **Lube** ... B233
- **Air (2 3/4 In.)** ... PA2010
- **Air (3 1/2 In.)** ... PA693
- **Fuel (Exc. Calif.)** ... BF840,-K1
- **Fuel (Calif., Exc. HiPerf., VapDiv)** ... BF865,-K
- **Oil Vapor** ... SA4141
- **Fuel Vapor** ... SA2046
- **Trans.** ... 18032

CHRYSLER (Cont'd.)

1975

Cordoba V8-318 (5.2L) 2 Bbl. VIN G
- **Lube** ... B233
- **Air** ... PA615
- **Fuel (Exc. Calif.)** ... BF840,-K1
- **Fuel (Calif., w/VapDiv.)** ... BF865,-K
- **Oil Vapor** ... SA4141
- **Fuel Vapor** ... SA2046
- **Trans.** ... 18032

Cordoba V8-360 (5.9L) 2,4 Bbl. VIN J,K
- **Lube** ... B233
- **Air** ... PA2010
- **Fuel (Exc. Calif.)** ... BF840,-K1
- **Fuel (Calif., w/VapDiv.)** ... BF865,-K
- **Oil Vapor** ... SA4141
- **Fuel Vapor** ... SA2046
- **Trans.** ... 18032

Cordoba V8-400 (6.6L) 2,4 Bbl. VIN M,N,P
- **Lube** ... B233
- **Air** ... PA2010
- **Fuel (Exc. Calif.)** ... BF840,-K1
- **Fuel (Calif., w/VapDiv.)** ... BF865,-K
- **Oil Vapor** ... SA4141
- **Fuel Vapor** ... SA2046
- **Trans.** ... 18032

Imperial V8-440 (7.2L) 4 Bbl. VIN T
- **Lube** ... B233
- **Air (2 3/4 In.)** ... PA2010
- **Air (3 1/2 In.)** ... PA693
- **Fuel (Exc. Calif.)** ... BF840,-K1
- **Fuel (Calif., Exc. HiPerf., VapDiv)** ... BF865,-K
- **Oil Vapor** ... SA4141
- **Fuel Vapor** ... SA2046
- **Trans.** ... 18032

New Yorker V8-400 (6.6L) 2,4 Bbl. VIN M,N
- **Lube** ... B233
- **Air** ... PA2010
- **Fuel (Exc. Calif.)** ... BF840,-K1
- **Fuel (Calif., w/VapDiv.)** ... BF865,-K
- **Oil Vapor** ... SA4141
- **Fuel Vapor** ... SA2046
- **Trans.** ... 18032

New Yorker V8-440 (7.2L) 4 Bbl. VIN T
- **Lube** ... B233
- **Air (2 3/4 In.)** ... PA2010
- **Air (3 1/2 In.)** ... PA693
- **Fuel (Exc. Calif.)** ... BF840,-K1
- **Fuel (Calif., Exc. HiPerf., VapDiv)** ... BF865,-K
- **Oil Vapor** ... SA4141
- **Fuel Vapor** ... SA2046
- **Trans.** ... 18032

Newport V8-360 (5.9L) 2,4 Bbl. VIN J,K
- **Lube** ... B233
- **Air** ... PA2010
- **Fuel (Exc. Calif.)** ... BF840,-K1
- **Fuel (Calif., w/VapDiv.)** ... BF865,-K
- **Oil Vapor** ... SA4141
- **Fuel Vapor** ... SA2046
- **Trans.** ... 18032

Newport V8-400 (6.6L) 2,4 Bbl. VIN M,N
- **Lube** ... B233
- **Air** ... PA2010
- **Fuel (Exc. Calif.)** ... BF840,-K1
- **Fuel (Calif., w/VapDiv.)** ... BF865,-K
- **Oil Vapor** ... SA4141
- **Fuel Vapor** ... SA2046
- **Trans.** ... 18032

Newport V8-440 (7.2L) 4 Bbl. VIN T,U
- **Lube** ... B233
- **Air (2 3/4 In.)** ... PA2010
- **Air (3 1/2 In.)** ... PA693
- **Fuel (Exc. Calif.)** ... BF840,-K1
- **Fuel (Calif., Exc. HiPerf., VapDiv)** ... BF865,-K
- **Oil Vapor** ... SA4141
- **Fuel Vapor** ... SA2046
- **Trans.** ... 18032

CHRYSLER 1975 (Cont'd.)

Town & Country V8-400 (6.6L) 2 Bbl. VIN M
- **Lube** ... B233
- **Air** ... PA2010
- **Fuel (Exc. Calif.)** ... BF840,-K1
- **Fuel (Calif., w/VapDiv.)** ... BF865,-K
- **Oil Vapor** ... SA4141
- **Fuel Vapor** ... SA2046
- **Trans.** ... 18032

Town & Country V8-440 (7.2L) 4 Bbl. VIN T
- **Lube** ... B233
- **Air (2 3/4 In.)** ... PA2010
- **Air (3 1/2 In.)** ... PA693
- **Fuel (Exc. Calif.)** ... BF840,-K1
- **Fuel (Calif., Exc. HiPerf., VapDiv)** ... BF865,-K
- **Oil Vapor** ... SA4141
- **Fuel Vapor** ... SA2046
- **Trans.** ... 18032

1974

Imperial V8-440 (7.2L) 4 Bbl. Carb. VIN T
- **Lube** ... B233
- **Air (2 3/4 In.)** ... PA2010
- **Air (3 1/2 In.)** ... PA693
- **Fuel** ... BF840,-K1
- **Oil Vapor** ... SA4141
- **Fuel Vapor** ... SA2046
- **Trans.** ... 18032

New Yorker V8-440 (7.2L) 4 Bbl. Carb. VIN T
- **Lube** ... B233
- **Air** ... PA693
- **Fuel** ... BF840,-K1
- **Oil Vapor** ... SA4141
- **Fuel Vapor** ... SA2046
- **Trans.** ... 18032

Newport V8-360 (5.9L) Carb. VIN J
- **Lube** ... B233
- **Air** ... PA2010
- **Fuel** ... BF840,-K1
- **Oil Vapor** ... SA4141
- **Fuel Vapor** ... SA2046
- **Trans.** ... 18032

Newport V8-400 (6.6L) Carb. VIN M,N
- **Lube** ... B233
- **Air** ... PA2010
- **Fuel** ... BF840,-K1
- **Oil Vapor** ... SA4141
- **Fuel Vapor** ... SA2046
- **Trans.** ... 18032

Newport V8-440 (7.2L) 4 Bbl. Carb. VIN T,U
- **Lube** ... B233
- **Air** ... PA2010
- **Fuel** ... BF840,-K1
- **Oil Vapor** ... SA4141
- **Fuel Vapor** ... SA2046
- **Trans.** ... 18032

Town & Country V8-440 (7.2L) 4 Bbl. Carb. VIN T
- **Fuel** ... BF840,-K1
- **Oil Vapor** ... SA4141
- **Fuel Vapor** ... SA2046
- **Trans.** ... 18032

1973

Imperial V8-440 (7.2L) 4 Bbl. Carb. VIN T
- **Lube** ... B233
- **Air** ... PA693
- **Fuel** ... BF840,-K1
- **Oil Vapor** ... SA4141
- **Fuel Vapor** ... SA2046
- **Trans.** ... 18032

CHRYSLER 1973 (Cont'd.)

New Yorker V8-440 (7.2L) 4 Bbl. Carb. VIN T
- **Lube** ... B233
- **Air** ... PA693
- **Fuel** ... BF840,-K1
- **Oil Vapor** ... SA4141
- **Fuel Vapor** ... SA2046
- **Trans.** ... 18032

Newport V8-400 (6.6L) Carb. VIN M
- **Lube** ... B233
- **Air** ... PA2010
- **Fuel** ... BF840,-K1
- **Oil Vapor** ... SA4141
- **Fuel Vapor** ... SA2046
- **Trans.** ... 18032

Newport V8-440 (7.2L) 4 Bbl. Carb. VIN T
- **Lube** ... B233
- **Air** ... PA2010
- **Fuel** ... BF840,-K1
- **Oil Vapor** ... SA4141
- **Fuel Vapor** ... SA2046
- **Trans.** ... 18032

Town & Country V8-440 (7.2L) 4 Bbl. Carb. VIN T
- **Lube** ... B233
- **Air** ... PA2010
- **Fuel** ... BF840,-K1
- **Oil Vapor** ... SA4141
- **Fuel Vapor** ... SA2046
- **Trans.** ... 18032

1972

Imperial V8-440 (7.2L) 4 Bbl. Carb. VIN T
- **Lube** ... B2
- **Air (2 3/4 In.)** ... PA2010
- **Air (3 1/2 In.)** ... PA693
- **Fuel** ... BF840,-K1
- **Oil Vapor** ... SA4141
- **Fuel Vapor** ... SA2046
- **Trans.** ... 18032

New Yorker V8-440 (7.2L) 4 Bbl. Carb. VIN T
- **Lube** ... B2
- **Air (2 3/4 In.)** ... PA2010
- **Air (3 1/2 In.)** ... PA693
- **Fuel** ... BF840,-K1
- **Oil Vapor** ... SA4141
- **Fuel Vapor** ... SA2046
- **Trans.** ... 18032

Newport V8-360 (5.9L) Carb. VIN K
- **Lube** ... B2
- **Air** ... PA2010
- **Fuel** ... BF840,-K1
- **Oil Vapor** ... SA4141
- **Fuel Vapor** ... SA2046
- **Trans.** ... 18032

Newport V8-400 (6.6L) Carb. VIN M
- **Lube** ... B2
- **Air** ... PA2010
- **Fuel** ... BF840,-K1
- **Oil Vapor** ... SA4141
- **Fuel Vapor** ... SA2046
- **Trans.** ... 18032

Newport V8-440 (7.2L) 4 Bbl. Carb. VIN T
- **Lube** ... B2
- **Air** ... PA2010
- **Fuel** ... BF840,-K1
- **Oil Vapor** ... SA4141
- **Fuel Vapor** ... SA2046
- **Trans.** ... 18032

Town & Country V8-400 (6.6L) Carb. VIN M
- **Lube** ... B2
- **Air** ... PA2010
- **Fuel** ... BF840,-K1
- **Oil Vapor** ... SA4141
- **Fuel Vapor** ... SA2046
- **Trans.** ... 18032

CHRYSLER 1972 (Cont'd.)

Town & Country V8-440 (7.2L) 4 Bbl. Carb. VIN T
- **Lube**....B2
- **Air**....PA2010
- **Fuel**....BF840,-K1
- **Oil Vapor**....SA4141
- **Fuel Vapor**....SA2046
- **Trans.**....18032

1971

300 V8-440 (7.2L) 4 Bbl. Carb. VIN T
- **Lube**....B2
- **Air (2 3/4 In.)**....PA2010
- **Air (3 1/2 In.)**....PA693
- **Fuel**....BF840,-K1
- **Oil Vapor**....SA4141
- **Fuel Vapor**....SA2046
- **Trans.**....18032

Imperial V8-440 (7.2L) 4 Bbl. Carb. VIN T
- **Lube**....B2
- **Air (2 3/4 In.)**....PA2010
- **Air (3 1/2 in.)**....PA693
- **Fuel**....BF840,-K1
- **Oil Vapor**....SA4141
- **Fuel Vapor**....SA2046
- **Trans.**....18032

New Yorker V8-440 (7.2L) 4 Bbl. Carb. VIN T
- **Lube**....B2
- **Air (2 3/4 In.)**....PA2010
- **Air (3 1/2 In.)**....PA693
- **Fuel**....BF840,-K1
- **Oil Vapor**....SA4141
- **Fuel Vapor**....SA2046
- **Trans.**....18032

Newport V8-360 (5.9L) Carb. VIN K
- **Lube**....B2
- **Air**....PA2010
- **Fuel**....BF840,-K1
- **Oil Vapor**....SA4141
- **Fuel Vapor**....SA2046
- **Trans.**....18032

Newport V8-383 (6.3L) Carb. VIN L,N
- **Lube**....B2
- **Air**....PA2010
- **Fuel**....BF840,-K1
- **Oil Vapor**....SA4141
- **Fuel Vapor**....SA2046
- **Trans.**....18032

Newport V8-440 (7.2L) 4 Bbl. Carb. VIN U
- **Lube**....B2
- **Air**....PA2010
- **Fuel**....BF840,-K1
- **Oil Vapor**....SA4141
- **Fuel Vapor**....SA2046
- **Trans.**....18032

Town & Country V8-383 (6.3L) Carb. VIN L,N
- **Lube**....B2
- **Air**....PA2010
- **Fuel**....BF840,-K1
- **Oil Vapor**....SA4141
- **Fuel Vapor**....SA2046
- **Trans.**....18032

Town & Country V8-440 (7.2L) 4 Bbl. Carb. VIN T
- **Lube**....B2
- **Air**....PA2010
- **Fuel**....BF840,-K1
- **Oil Vapor**....SA4141
- **Fuel Vapor**....SA2046
- **Trans.**....18032

1970

300 V8-440 (7.2L) 4 Bbl. Carb. VIN T
- **Lube**....B2
- **Air**....PA2010
- **Fuel**....BF840,-K1
- **Trans.**....18032

CHRYSLER 1970 (Cont'd.)

Imperial V8-440 (7.2L) 4 Bbl. Carb. VIN T
- **Lube**....B2
- **Air**....PA2010
- **Fuel**....BF840,-K1
- **Trans.**....18032

New Yorker V8-440 (7.2L) 4 Bbl. Carb. VIN T
- **Lube**....B2
- **Air**....PA693
- **Fuel**....BF840,-K1
- **Trans.**....18032

Newport V8-383 (6.3L) 2,4 Bbl. Carb. VIN L,N
- **Lube**....B2
- **Air**....PA2010
- **Fuel**....BF840,-K1
- **Trans.**....18032

Newport V8-440 (7.2L) 4 Bbl. Carb. VIN T,U
- **Lube**....B2
- **Air**....PA2010
- **Fuel**....BF840,-K1
- **Trans.**....18032

Town & Country V8-383 (6.3L) 2,4 Bbl. Carb. VIN L,N
- **Lube**....B2
- **Air**....PA2010
- **Fuel**....BF840,-K1
- **Trans.**....18032

Town & Country V8-440 (7.2L) 4 Bbl. Carb. VIN T
- **Lube**....B2
- **Air**....PA2010
- **Fuel**....BF840,-K1
- **Trans.**....18032

1969

300 V8-440 (7.2L) Carb. VIN K,L
- **Lube**....B2
- **Air (VIN K)**....PA693
- **Air (VIN L)**....PA2010
- **Fuel**....BF840,-K1
- **Trans.**....18032

Imperial V8-440 (7.2L) Carb. VIN K
- **Lube**....B2
- **Air**....PA693
- **Fuel**....BF840,-K1
- **Trans.**....18032

New Yorker V8-440 (7.2L) Carb. VIN L
- **Lube**....B2
- **Air**....PA2010
- **Fuel**....BF840,-K1
- **Trans.**....18032

Newport V8-383 (6.3L) Carb. VIN G,H
- **Lube**....B2
- **Air (VIN G)**....PA2010
- **Air (VIN H)**....PA693
- **Fuel**....BF840,-K1
- **Trans.**....18032

Newport V8-440 (7.2L) Carb. VIN L
- **Lube**....B2
- **Air**....PA2010
- **Fuel**....BF840,-K1
- **Trans.**....18032

Town & Country V8-383 (6.3L) Carb. VIN G,H
- **Lube**....B2
- **Air**....PA2010
- **Fuel**....BF840,-K1
- **Trans.**....18032

Town & Country V8-440 (7.2L) Carb. VIN K
- **Lube**....B2
- **Air**....PA2010
- **Fuel**....BF840,-K1
- **Trans.**....18032

CHRYSLER (Cont'd.)

1968

300 V8-440 (7.2L) Carb. VIN K,L
- **Lube**....B2
- **Air (VIN K)**....PA693
- **Air (VIN L)**....PA2010
- **Fuel**....BF840,-K1

Imperial V8-440 (7.2L) Carb. VIN K
- **Lube**....B2
- **Air**....PA693
- **Fuel**....BF840,-K1

New Yorker V8-440 (7.2L) Carb. VIN K,L
- **Lube**....B2
- **Air (VIN K)**....PA693
- **Air (VIN L)**....PA2010
- **Fuel**....BF840,-K1
- **Trans.**....18032

Newport V8-383 (6.3L) Carb. VIN G,H
- **Lube**....B2
- **Air (VIN G)**....PA2010
- **Air (VIN H)**....PA693
- **Fuel**....BF840,-K1

Newport V8-440 (7.2L) Carb. VIN K
- **Lube**....B2
- **Air**....PA693
- **Fuel**....BF840,-K1

Town & Country V8-383 (6.3L) Carb. VIN G,H
- **Lube**....B2
- **Air**....PA2010
- **Fuel**....BF840,-K1

Town & Country V8-440 (7.2L) Carb. VIN K
- **Lube**....B2
- **Air**....PA2010
- **Fuel**....BF840,-K1

1967

300 V8-440 (7.2L) Carb.
- **Lube**....B2
- **Air**....PA693
- **Fuel**....BF840,-K1
- **Trans.**....18032

Imperial V8-440 (7.2L) Carb.
- **Lube**....B2
- **Air**....PA693
- **Fuel**....BF840,-K1
- **Trans.**....18032

New Yorker V8-440 (7.2L) Carb.
- **Lube**....B2
- **Air**....PA693
- **Fuel**....BF840,-K1
- **Trans.**....18032

Newport V8-383 (6.3L) Carb.
- **Lube**....B2
- **Air**....PA693
- **Fuel**....BF840,-K1
- **Trans.**....18032

Newport V8-440 (7.2L) Carb.
- **Lube**....B2
- **Air**....PA693
- **Fuel**....BF840,-K1
- **Trans.**....18032

Town & Country V8-383 (6.3L) Carb.
- **Lube**....B2
- **Air**....PA693
- **Fuel**....BF840,-K1
- **Trans.**....18032

1966

300 V8-383 (6.3L) Carb.
- **Lube**....B2
- **Air**....PA693
- **Air (HiPerf. or Police)**....PA607
- **Fuel**....BF840,-K1

300 V8-440 (7.2L) Carb.
- **Lube**....B2
- **Air**....PA693
- **Air (HiPerf. or Police)**....PA607
- **Fuel**....BF840,-K1

Imperial V8-440 (7.2L) Carb.
- **Lube**....B2
- **Air**....PA693
- **Fuel**....BF840,-K1

CHRYSLER 1966 (Cont'd.)

New Yorker V8-440 (7.2L) Carb.
- **Lube**....B2
- **Air**....PA693
- **Fuel**....BF840,-K1

Newport V8-383 (6.3L) Carb.
- **Lube**....B2
- **Air**....PA693
- **Fuel**....BF840,-K1
- **Trans.**....18032

Newport V8-440 (7.2L) Carb.
- **Lube**....B2
- **Air**....PA693
- **Fuel**....BF840,-K1
- **Trans.**....18032

Town & Country V8-383 (6.3L) Carb.
- **Lube**....B2
- **Air**....PA693
- **Fuel**....BF840,-K1
- **Trans.**....18032

1965

300 V8-383 (6.3L) 2,4 Bbl. Carb.
- **Lube**....B2
- **Air (2 or 4 Bbl.)**....PA693 [74]
- **Air**....PA607 [73]
- **Fuel**....BF840,-K1
- **Trans.**....18032

300 V8-413 (6.8L) Carb.
- **Lube**....B2
- **Air**....PA607
- **Fuel**....BF840,-K1
- **Trans.**....18032

Imperial V8-413 (6.8L) Carb.
- **Lube**....B2
- **Air**....PA693
- **Fuel**....BF840,-K1
- **Trans.**....18032

New Yorker V8-413 (6.8L) Carb.
- **Lube**....B2
- **Air**....PA693
- **Fuel**....BF840,-K1
- **Trans.**....18032

Newport V8-383 (6.3L) Carb.
- **Lube**....B2
- **Air**....PA693
- **Fuel**....BF840,-K1
- **Trans.**....18032

Town & Country V8-383 (6.3L) Carb.
- **Lube**....B2
- **Air**....PA693
- **Fuel**....BF840,-K1
- **Trans.**....18032

Town & Country V8-413 (6.8L) Carb.
- **Lube**....B2
- **Air**....PA693
- **Fuel**....BF840,-K1
- **Trans.**....18032

1964

300 V8-383 (6.3L) 2,4 Bbl. Carb.
- **Lube**....B2
- **Air (2 or 4 Bbl.)**....PA693
- **Air (Police)**....PA607
- **Fuel**....BF840,-K1

300 V8-413 (6.8L) 2,4 Bbl. Carb.
- **Lube**....B2
- **Air (2 or 4 Bbl.)**....PA693
- **Air (Police)**....PA607
- **Fuel**....BF840,-K1

Imperial V8-413 (6.8L) Carb.
- **Lube**....B2
- **Air**....PA693
- **Fuel**....BF840,-K1

New Yorker V8-413 (6.8L) Carb.
- **Lube**....B2
- **Air**....PA693
- **Fuel**....BF840,-K1

Newport V8-361 (5.9L) 2,4 Bbl. Carb.
- **Lube**....B2
- **Air (2 or 4 Bbl.)**....PA693
- **Air (Police)**....PA607
- **Fuel**....BF840,-K1

Newport V8-413 (6.8L) 2,4 Bbl. Carb.
- **Lube**....B2
- **Air (2 or 4 Bbl.)**....PA693
- **Air (Police)**....PA607
- **Fuel**....BF840,-K1

[73] Police. [74] Exc. Police.

OBS = Obsolete. Availability Limited to Distributor Stock.

CHRYSLER 1964 (Cont'd.)

Town & Country V8-361 (5.9L) Carb.
Lube.....B2
Air.....PA693
Fuel.....BF840,-K1
Town & Country V8-383 (6.3L) Carb.
Lube.....B2
Air.....PA693
Fuel.....BF840,-K1
Town & Country V8-413 (6.8L) Carb.
Lube.....B2
Air.....PA693
Fuel.....BF840,-K1

1963

300 V8-383 (6.3L) Carb.
Lube.....B2
Air.....PA693
Fuel.....BF840,-K1
300 V8-413 (6.8L) Carb.
Lube.....B2
Air.....PA693
Fuel.....BF840,-K1
300 V8-426 (7.0L) Carb.
Lube.....B2
Fuel.....BF840,-K1
Imperial V8-413 (6.8L) Carb.
Lube.....B2
Air.....PA693
Fuel.....BF840,-K1
New Yorker V8-413 (6.8L) Carb.
Lube.....B2
Air.....PA693
Fuel.....BF840,-K1
New Yorker V8-426 (7.0L) Carb.
Lube.....B2
Air.....PA693
Fuel.....BF840,-K1
Newport V8-361 (5.9L) Carb.
Lube.....B2
Air.....PA693
Fuel.....BF840,-K1
Newport V8-413 (6.8L) Carb.
Lube.....B2
Air.....PA693
Fuel.....BF840,-K1
Newport V8-426 (7.0L) Carb.
Lube.....B2
Air.....PA693
Fuel.....BF840,-K1
Town & Country V8-361 (5.9L) Carb.
Lube.....B2
Air.....PA693
Fuel.....BF840,-K1
Town & Country V8-383 (6.3L) Carb.
Lube.....B2
Air.....PA693
Fuel.....BF840,-K1
Town & Country V8-413 (6.8L) Carb.
Lube.....B2
Air.....PA693
Fuel.....BF840,-K1
Town & Country V8-426 (7.0L) Carb.
Lube.....B2
Air.....PA693
Fuel.....BF840,-K1

1962

300 V8-383 (6.3L) 2 Bbl. Carb.
Lube.....B2
Air.....PA607
Fuel.....BF840,-K1
300 V8-413 (6.8L) 2,4 Bbl. Carb.
Lube.....B2
Air.....PA607
Fuel.....BF840,-K1
Imperial V8-413 (6.8L) 4 Bbl. Carb.
Lube.....B2
Air.....PA607
Fuel.....BF840,-K1
New Yorker V8-413 (6.8L) 4 Bbl. Carb.
Lube.....B2
Air.....PA607
Fuel.....BF840,-K1

CHRYSLER 1962 (Cont'd.)

Newport V8-361 (5.9L) 2 Bbl. Carb.
Lube.....B2
Air.....PA607
Fuel.....BF840,-K1
Newport V8-413 (6.8L) 4 Bbl. Carb.
Lube.....B2
Air.....PA607
Fuel.....BF840,-K1
Town & Country V8-361 (5.9L) 2 Bbl. Carb.
Lube.....B2
Air.....PA607
Fuel.....BF840,-K1
Town & Country V8-383 (6.3L) 2 Bbl. Carb.
Lube.....B2
Air.....PA607
Fuel.....BF840,-K1
Town & Country V8-413 (6.8L) 4 Bbl. Carb.
Lube.....B2
Air.....PA607
Fuel.....BF840,-K1

1961

300 V8-413 (6.8L) 2,4 Bbl. Carb.
Lube.....B2
Air.....PA607
Fuel.....BF840,-K1
Imperial V8-413 (6.8L) 4 Bbl. Carb.
Lube.....B2
Air.....PA607
Fuel.....BF840,-K1
New Yorker V8-413 (6.8L) 4 Bbl. Carb.
Lube.....B2
Air.....PA607
Fuel.....BF840,-K1
Newport V8-361 (5.9L) 2 Bbl. Carb.
Lube.....B2
Air.....PA607
Fuel.....BF840,-K1
Town & Country V8-361 (5.9L) 2 Bbl. Carb.
Lube.....B2
Air.....PA607
Fuel.....BF840,-K1
Town & Country V8-383 (6.3L) 2 Bbl. Carb.
Lube.....B2
Air.....PA607
Fuel.....BF840,-K1
Windsor V8-383 (6.3L) 2 Bbl. Carb.
Lube.....B2
Air.....PA607
Fuel.....BF840,-K1

1960

300 V8-413 (6.8L) 2,4 Bbl. Carb.
Lube.....B2
Air.....PA607
Fuel.....BF840,-K1
Imperial V8-413 (6.8L) 4 Bbl. Carb.
Lube.....B2
Air.....PA607
Fuel.....BF840,-K1
New Yorker V8-413 (6.8L) 4 Bbl. Carb.
Lube.....B2
Air.....PA607
Fuel.....BF840,-K1
Newport V8-413 (6.8L) Carb.
Lube.....B2
Fuel.....BF840,-K1
Saratoga V8-383 (6.3L) 4 Bbl. Carb.
Lube.....B2
Air.....PA607
Fuel.....BF840,-K1
Town & Country V8-383 (6.3L) 2 Bbl. Carb.
Lube.....B2
Air.....PA607
Fuel.....BF840,-K1

CHRYSLER 1960 (Cont'd.)

Town & Country V8-413 (6.8L) 4 Bbl. Carb.
Lube.....B2
Air.....PA607
Fuel.....BF840,-K1
Windsor V8-383 (6.3L) 2 Bbl. Carb.
Lube.....B2
Air.....PA607
Fuel.....BF840,-K1

1959

300 V8-413 (6.8L) 2,4 Bbl. Carb.
Lube.....B2
Fuel.....PF827
Imperial V8-413 (6.8L) 4 Bbl. Carb.
Lube.....B2
Air.....PA607
Fuel.....PF827
New Yorker V8-413 (6.8L) 4 Bbl. Carb.
Lube.....B2
Air.....PA607
Fuel.....PF827
Newport V8-413 (6.8L) Carb.
Lube.....B2
Air.....PA607
Fuel.....BF840,-K1
Saratoga V8-383 (6.3L) 4 Bbl. Carb.
Lube.....B2
Air.....PA607
Town & Country V8-383 (6.3L) 2 Bbl. Carb.
Lube.....B2
Air.....PA607
Fuel.....BF840,-K1
Town & Country V8-413 (6.8L) 4 Bbl. Carb.
Lube.....B2
Air.....PA607
Windsor V8-383 (6.3L) 2 Bbl. Carb.
Lube.....B2
Air.....PA607
Fuel.....BF840,-K1

1958

300 V8-392 (6.4L) 2,4 Bbl. Carb.
Lube.....P81
Fuel (2 Bbl.).....BF840,-K1
Fuel (4 Bbl.).....PF827
Imperial V8-392 (6.4L) 4 Bbl. Carb.
Lube.....P81
Air.....PA613
Fuel.....PF827
New Yorker V8-392 (6.4L) 4 Bbl. Carb.
Air.....PA613
Fuel.....PF827
Newport V8-392 (6.4L) Carb.
Lube.....P81
Air.....PA613
Fuel.....PF827
Saratoga V8-354 (5.8L) 4 Bbl. Carb.
Air.....PA613
Fuel.....PF827
Town & Country V8-354 (5.8L) 2 Bbl. Carb.
Air.....PA613
Fuel.....BF840,-K1
Town & Country V8-392 (6.4L) 4 Bbl. Carb.
Air.....PA613
Fuel.....PF827
Windsor V8-354 (5.8L) 2 Bbl. Carb.
Air.....PA613
Fuel.....BF840,-K1

1957

300 V8-392 (6.4L) 2,4 Bbl. Carb.
Lube.....P81
Air.....[2] PA613
Fuel.....PF827

CHRYSLER 1957 (Cont'd.)

Imperial V8-392 (6.4L) 4 Bbl. Carb.
Air.....PA613
Fuel.....PF827
New Yorker V8-392 (6.4L) 4 Bbl. Carb.
Air.....PA613
Fuel.....PF827
Newport V8-392 (6.4L) Carb.
Lube.....P81
Air.....[2] PA613
Fuel.....PF827
Saratoga V8-354 (5.8L) 4 Bbl. Carb.
Air.....PA613
Fuel.....PF827
Town & Country V8-354 (5.8L) 2 Bbl. Carb.
Air.....PA613
Fuel.....PF827
Town & Country V8-392 (6.4L) 4 Bbl. Carb.
Air.....PA613
Fuel.....PF827
Windsor V8-354 (5.8L) 2 Bbl. Carb.
Air.....PA613
Fuel.....PF827

1956

300 V8-354 (5.8L) 2,4 Bbl. Carb.
Fuel.....PF827
Nassau V8-331 (5.4L) Carb.
Lube.....P81
Fuel.....PF827
New Yorker V8-354 (5.8L) Carb.
Air.....PA607
Newport V8-331 (5.4L) Carb.
Fuel.....PF827
Newport V8-354 (5.8L) Carb.
Fuel.....PF827
St. Regis V8-354 (5.8L) Carb.
Fuel.....PF827
Town & Country V8-331 (5.4L) Carb.
Fuel.....PF827
Town & Country V8-354 (5.8L) Carb.
Fuel.....PF827
Windsor V8-331 (5.4L) Carb.
Fuel.....PF827

1955

300 V8-331 (5.4L) 2,4 Bbl. Carb.
Lube.....P60
Fuel.....BF840,-K1
PowSteer......P183
Imperial V8-331 (5.4L) 4 Bbl. Carb.
Lube.....P60
Fuel.....BF840,-K1
PowSteer......P183
Nassau V8-301 (4.9L) Carb.
Lube.....P60
Fuel.....BF840,-K1
PowSteer......P183
New Yorker V8-331 (5.4L) Carb.
Lube.....P60
Fuel.....BF840,-K1
PowSteer......P183
Newport V8-301 (4.9L) Carb.
Lube.....P60
Fuel.....BF840,-K1
PowSteer......P183
Newport V8-331 (5.4L) Carb.
Lube.....P60
Fuel.....BF840,-K1
PowSteer......P183
St. Regis V8-331 (5.4L) Carb.
Lube.....P60
Fuel.....BF840,-K1
PowSteer......P183
Town & Country V8-301 (4.9L) Carb.
Lube.....P60
Fuel.....BF840,-K1
PowSteer......P183
Town & Country V8-331 (5.4L) Carb.
Lube.....P60
Fuel.....BF840,-K1
PowSteer......P183

OBS = Obsolete. Availability Limited to Distributor Stock.

CHRYSLER 1955 (Cont'd.)

Windsor V8-301 (4.9L) Carb.
Lube.....P60
Fuel.....BF840,-K1
PowSteer......P183

1954

Imperial V8-331 (5.4L) 4 Bbl. Carb.
Lube.....P60
Fuel.....BF840,-K1
PowSteer......P186

New Yorker V8-331 (5.4L) Carb.
Lube.....P60
Fuel.....BF840,-K1
PowSteer......P186

Newport 6-265 (4.3L) Carb.
Lube.....P60
Fuel.....BF840,-K1
PowSteer......P186

Newport V8-331 (5.4L) Carb.
Lube.....P60
Fuel.....BF840,-K1
PowSteer......P186

Town & Country 6-265 (4.3L) Carb.
Lube.....P60
Fuel.....BF840,-K1
PowSteer......P186

Town & Country V8-331 (5.4L) Carb.
Lube.....P60
Fuel.....BF840,-K1
PowSteer......P186

1953

Imperial V8-331 (5.4L) 2 Bbl. Carb.
Lube.....P60
Fuel.....BF840,-K1
PowSteer......P186

New Yorker V8-331 (5.4L) Carb.
Lube.....P60
Fuel.....BF840,-K1
PowSteer......P186

Newport 6-265 (4.3L) Carb.
Lube.....P60
Fuel.....BF840,-K1
PowSteer......P186

Newport V8-331 (5.4L) Carb.
Lube.....P60
Fuel.....BF840,-K1
PowSteer......P186

Town & Country 6-265 (4.3L) Carb.
Lube.....P60
Fuel.....BF840,-K1
PowSteer......P186

Town & Country V8-331 (5.4L) Carb.
Lube.....P60
Fuel.....BF840,-K1
PowSteer......P186

Windsor 6-265 (4.3L) Carb.
Lube.....P60
Fuel.....BF840,-K1
PowSteer......P186

1952

Imperial V8-331 (5.4L) 2 Bbl. Carb.
Lube.....P60
Fuel.....BF840,-K1
PowSteer......P186

New Yorker V8-331 (5.4L) Carb.
Lube.....P60
Fuel.....BF840,-K1
PowSteer......P186

Newport 6-265 (4.3L) Carb.
Lube.....P60
Fuel.....BF840,-K1
PowSteer......P186

Newport V8-331 (5.4L) Carb.
Lube.....P60
Fuel.....BF840,-K1
PowSteer......P186

Saratoga V8-331 (5.4L) Carb.
Lube.....P60
Fuel.....BF840,-K1
PowSteer......P186

Town & Country 6-250 (4.1L) Carb.
Lube.....P60
PowSteer......P186

CHRYSLER 1952 (Cont'd.)

Town & Country V8-331 (5.4L) Carb.
Lube.....P60
Fuel.....BF840,-K1
PowSteer......P186

Windsor 6-265 (4.3L) Carb.
Lube.....P60
Fuel.....BF840,-K1
PowSteer......P186

1951

Imperial V8-331 (5.4L) 2 Bbl. Carb.
Lube.....P60
Fuel.....BF840,-K1
PowSteer......P186

New Yorker V8-331 (5.4L) Carb.
Lube.....P60
Fuel.....BF840,-K1
PowSteer......P186

Newport 6-250 (4.1L) Carb.
Lube.....P60
Fuel.....BF840,-K1
PowSteer......P186

Newport V8-331 (5.4L) Carb.
Lube.....P60
Fuel.....BF840,-K1
PowSteer......P186

Saratoga V8-331 (5.4L) Carb.
Lube.....P60
Fuel.....BF840,-K1
PowSteer......P186

Town & Country V8-331 (5.4L) Carb.
Lube.....P60
Fuel.....BF840,-K1
PowSteer......P186

Windsor 6-250 (4.1L) Carb.
Lube.....P60
Fuel.....BF840,-K1
PowSteer......P186

1950

Imperial V8-324 (5.3L) 1 Bbl. Carb.
Lube.....P60
Fuel.....BF840,-K1
PowSteer......P186

New Yorker V8-324 (5.3L) Carb.
Lube.....P60
Fuel.....BF840,-K1
PowSteer......P186

Newport 6-250 (4.1L) Carb.
Lube.....P60
Fuel.....BF840,-K1
PowSteer......P186

Newport V8-324 (5.3L) Carb.
Lube.....P60
Fuel.....BF840,-K1
PowSteer......P186

Royal 6-250 (4.1L) Carb.
Lube.....P60
Fuel.....BF840,-K1
PowSteer......P186

Saratoga V8-324 (5.3L) Carb.
Lube.....P60
Fuel.....BF840,-K1
PowSteer......P186

Town & Country V8-324 (5.3L) Carb.
Lube.....P60
Fuel.....BF840,-K1
PowSteer......P186

Windsor 6-250 (4.1L) Carb.
Lube.....P60
Fuel.....BF840,-K1
PowSteer......P186

CITROEN

1975

SM V6-2670cc (2.7L) Carb.
Trans......B252

1974

SM V6-2670cc (2.7L) Carb.
Trans......B252

SM V6-2965cc (3.0L) Carb.
Trans......B252

CITROEN (Cont'd.)

1973

SM V6-2670cc (2.7L) Carb.
Trans......B252

SM V6-2965cc (3.0L) Carb.
Trans......B252

1972

D Special 4-1985cc (2.0L) Carb.
Lube.....P174

D21 4-133 (2.2L) Carb.
Lube.....P174

DS21 4-133 (2.2L) Carb.
Lube.....P174
Air.....PA640

SM V6-2670cc (2.6L) Carb.
Trans......B252

1971

SM V6-2670cc (2.6L) Carb.
Trans......B252

1970

ID19 4-1985cc (2.0L) 2 Bbl. Carb.
Air.....PA640

1969

D21, DS21 4-133 (2.2L) Carb.
Lube.....P174

ID19 4-1985cc (2.0L) Carb.
Lube.....P174

1968

D21, DS21 4-133 (2.2L) Carb.
Lube.....P174

ID19 4-121 (2.0L) Carb.
Air.....PA640

DESOTO

1961

Desoto V8-361 (5.9L) 2,4 Bbl. Carb.
Lube.....B2
Air.....PA607
Fuel.....BF840

1960

Adventurer V8-383 (6.3L) 2,4 Bbl. Carb.
Lube.....B2
Air.....PA607
Fuel.....BF840

Fireflite V8-361 (5.9L) 2,4 Bbl. Carb.
Lube.....B2
Air.....PA607
Fuel.....BF840

1959

Adventurer V8-383 (6.3L) 2-4 Bbl. Carb.
Lube.....B2
Air.....PA2090
Fuel.....PF827

Firedome V8-361 (5.9L) 2 Bbl. Carb.
Lube.....B2
Air.....PA607
Fuel.....BF840,-K1 [77]

Fireflite V8-361 (5.9L) 4 Bbl. Carb.
Lube.....B2
Air.....PA607
Fuel.....BF840,-K1 [77]

Firesweep V8-361 (5.9L) 2 Bbl. Carb.
Lube.....B2
Air.....PA607
Fuel.....BF840,-K1 [77]

DESOTO (Cont'd.)

1958

Adventurer V8-361 (5.9L) 2-4 Bbl. Carb.
Lube.....B2
Air.....PA2090
Fuel.....PF827

Firedome V8-361 (5.9L) 2 Bbl. Carb.
Lube.....B2
Air.....PA607
Fuel.....BF840,-K1 [77]

Fireflite V8-361 (5.9L) 4 Bbl. Carb.
Lube.....B2
Air.....PA607
Fuel.....BF840,-K1 [77]

Firesweep V8-350 (5.7L) 2 Bbl. Carb.
Lube.....B2
Air.....PA607
Fuel.....BF840,-K1 [77]

1957

Adventurer V8-345 (5.7L) 2-4 Bbl. Carb.
Lube.....P81
Air.....PA2090
Fuel.....BF840-K1 [77]

Firedome V8-341 (5.6L) 2 Bbl. Carb.
Lube.....P81
Air.....PA612
Fuel.....BF840,-K1 [77]

Fireflite V8-341 (5.6L) 4 Bbl. Carb.
Lube.....B2
Air.....PA607
Fuel.....BF840,-K1 [77]

Firesweep V8-325 (5.3L) 2 Bbl. Carb.
Lube.....P81
Air.....PA613
Fuel.....BF840,-K1 [77]

1956

Adventurer V8-341 (5.6L) 2-4 Bbl. Carb.
Lube.....P81
PowSteer......P183
Fuel.....BF840-K1

Firedome V8-330 (5.4L) 2 Bbl. Carb.
Lube.....P81
PowSteer......P183
Fuel.....BF840-K1

Fireflite V8-330 (5.4L) 4 Bbl. Carb.
Lube.....P81
PowSteer......P183
Fuel.....BF840-K1

1955

Firedome V8-291 (4.8L) 2 Bbl. Carb.
Lube.....P81
PowSteer......P183
Fuel.....BF840-K1

Fireflite V8-291 (4.8L) 4 Bbl. Carb.
Lube.....P81
PowSteer......P183
Fuel.....BF840-K1

1954

Firedome V8-276 (4.5L) 2 Bbl. Carb.
Lube.....P81
PowSteer......P186
Fuel.....BF840-K1

Powermaster 6-251 (4.1L) Carb.
Lube.....P81
Fuel.....BF840-K1

1953

Firedome V8-276 (4.5L) 2 Bbl. Carb.
Lube.....P81
PowSteer......P186
Fuel.....BF840-K1

Powermaster 6-251 (4.1L) Carb.
Lube.....P81
Fuel.....BF840-K1

[77] Exc. Carter Carburetor

OBS = Obsolete. Availability Limited to Distributor Stock.

DESOTO (Cont'd.)

1952

Custom 6-251 (4.1L) Carb.
- **Lube** ... **P81**
- **Fuel** ... **BF840-K1**

Deluxe 6-251 (4.1L) Carb.
- **Lube** ... **P81**
- **Fuel** ... **BF840-K1**

Firedome V8-276 (4.5L) 2 Bbl. Carb.
- **Lube (To S/N 7057)** ... **P60**
- **Lube (S/N 7057-up)** ... **P81**
- **PowSteer.** ... **P186**
- **Fuel** ... **BF840-K1**

1951

Custom 6-251 (4.1L) Carb.
- **Lube** ... **P81**
- **Fuel** ... **BF840-K1**

Deluxe 6-251 (4.1L) Carb.
- **Lube** ... **P81**
- **Fuel** ... **BF840-K1**

1950

Custom 6-237 (3.9L) Carb.
- **Lube** ... **P81**
- **Fuel** ... **BF840-K1**

Deluxe 6-237 (3.9L) Carb.
- **Lube** ... **P81**
- **Fuel** ... **BF840-K1**

1949

Custom 6-237 (3.9L) Carb.
- **Lube** ... **P81**
- **Fuel** ... **BF840-K1**

Deluxe 6-237 (3.9L) Carb.
- **Lube** ... **P81**
- **Fuel** ... **BF840-K1**

1948

Custom 6-237 (3.9L) Carb.
- **Lube** ... **P81**
- **Fuel** ... **BF840-K1**

Deluxe 6-237 (3.9L) Carb.
- **Lube** ... **P81**
- **Fuel** ... **BF840-K1**

1947

Custom 6-237 (3.9L) Carb.
- **Lube** ... **P81**
- **Fuel** ... **BF840-K1**

Deluxe 6-237 (3.9L) Carb.
- **Lube** ... **P81**
- **Fuel** ... **BF840-K1**

1946

Custom 6-237 (3.9L) Carb.
- **Lube** ... **P81**
- **Fuel** ... **BF840-K1**

Deluxe 6-237 (3.9L) Carb.
- **Lube** ... **P81**
- **Fuel** ... **BF840-K1**

DETOMASO

1973

Pantera V8-351 (5.8L) Carb.
- **Lube** ... **B2**

1972

Mangusta V8-302 (5.0L) Carb.
- **Lube** ... **B2**
- **Lube (Racing Version)** ... **B253**
- **Air** ... **PA2002**
- **Fuel** ... **BF879**

Pantera V8-351 (5.8L) Carb.
- **Lube** ... **B2**

1971

Mangusta V8-302 (5.0L) Carb.
- **Lube** ... **B2**
- **Air** ... **PA2002**
- **Fuel** ... **BF879**

DETOMASO 1971 (Cont'd.)

Pantera V8-351 (5.8L) Carb.
- **Lube** ... **B2**

1970

Mangusta V8-302 (5.0L) Carb.
- **Lube** ... **B2**
- **Air** ... **PA2002**
- **Fuel** ... **BF879**

1968

Mangusta V8-302 (5.0L) Carb.
- **Lube** ... **B2**
- **Air** ... **PA2002**
- **Fuel** ... **BF879**

DODGE

1979

Aspen 6-225 (3.7L) 1,2 Bbl. VIN C,D
- **Lube** ... **B233**
- **Air** ... **PA615**
- **Fuel (Exc. Calif.)** ... **BF840,-K1**
- **Fuel (Calif.)** ... **BF865,-K**
- **Fuel Vapor** ... **SA2046**
- **Trans.** ... **18032**

Aspen V8-318 (5.2L) 2,4 Bbl. VIN G,H
- **Lube** ... **B233**
- **Air (10 1/4 O.D.)** ... **PA615**
- **Air (12 3/4 O.D.)** ... **PA2010**
- **Fuel (Exc. Calif.)** ... **BF840,-K1**
- **Fuel (Calif.)** ... **BF865,-K**
- **Oil Vapor** ... **SA4141**
- **Fuel Vapor** ... **SA2046**
- **Trans.** ... **18032**

Aspen V8-360 (5.9L) 4 Bbl. VIN L
- **Lube** ... **B233**
- **Air** ... **PA2010**
- **Fuel (Exc. HiPerf. or Calif.)** ... **BF840,-K1**
- **Fuel (Calif.)** ... **BF865,-K**
- **Oil Vapor** ... **SA4141**
- **Fuel Vapor** ... **SA2046**
- **Trans.** ... **18032**

CB300 6-225 (3.7L) 1 Bbl. VIN N
- **Lube** ... **B233**
- **Air** ... **PA642**
- **Fuel (Exc. Calif.)** ... **BF840,-K1**
- **Fuel (Calif.)** ... **BF865,-K**
- **Oil Vapor** ... **SA4141**
- **Fuel Vapor** ... **SA2046**
- **Trans.** ... **18032**

CB300 V8-318 (5.2L) 2,4 Bbl. VIN E,P
- **Lube** ... **B233**
- **Air (2 3/4 In.)** ... **PA615**
- **Air (3 1/2 In.)** ... **PA2052**
- **Fuel (Exc. Calif.)** ... **BF840,-K1**
- **Fuel (Calif.)** ... **BF865,-K**
- **Oil Vapor** ... **SA4141**
- **Fuel Vapor** ... **SA2046**
- **Trans.** ... **18032**

CB300 V8-360 (5.9L) 2,4 Bbl. VIN F,T
- **Lube** ... **B233**
- **Air (2 3/4 In.)** ... **PA615**
- **Air (3 1/2 In.)** ... **PA2052**
- **Fuel (Exc. HiPerf. or Calif.)** ... **BF840,-K1**
- **Fuel (Calif.)** ... **BF865,-K**
- **Oil Vapor** ... **SA4141**
- **Fuel Vapor** ... **SA2046**
- **Trans.** ... **18032**

CB300 V8-440 (7.2L) 4 Bbl. VIN D
- **Lube** ... **B233**
- **Air (2 3/4 In.)** ... **PA2010**
- **Air (3 1/2 In.)** ... **PA2052**
- **Fuel (Exc. Calif.)** ... **BF840,-K1**
- **Fuel (Calif.)** ... **BF865,-K**
- **Fuel Vapor** ... **SA2046**
- **Trans.** ... **18032**

DODGE 1979 (Cont'd.)

Challenger 4-1600cc (1.6L) 2 Bbl. VIN K
- **Lube** ... **B141**
- **Fuel** ... **BF928**

Challenger 4-2600cc (2.6L) 2 Bbl. VIN F
- **Lube** ... **B141**
- **Fuel** ... **BF928**

Colt 4-1400cc (1.4L) 2 Bbl. VIN J
- **Lube** ... **B173-S**
- **Air** ... **PA2090**
- **Fuel** ... **BF928**

Colt 4-1600cc (1.6L) 2 Bbl. VIN K
- **Lube (Exc. FWD Colt)** ... **B141**
- **Lube (FWD Colt)** ... **B173-S**
- **Air (FWD Colt)** ... **PA2090**
- **Fuel** ... **BF928**

Colt 4-2600cc (2.6L) 2 Bbl. VIN F
- **Lube** ... **B141**
- **Fuel** ... **BF928**

D50 4-2000cc (2.0L) 1 Bbl. VIN U
- **Lube** ... **B141**
- **Fuel** ... **BF928**

D50 4-2600cc (2.6L) 2 Bbl. VIN W
- **Lube** ... **B141**
- **Fuel** ... **BF928**

Diplomat 6-225 (3.7L) 1,2 Bbl. VIN C,D
- **Lube** ... **B233**
- **Air** ... **PA615**
- **Fuel (Exc. Calif.)** ... **BF840,-K1**
- **Fuel (Calif.)** ... **BF865,-K**
- **Oil Vapor** ... **SA4141**
- **Fuel Vapor** ... **SA2046**
- **Trans.** ... **18032**

Diplomat V8-318 (5.2L) 2,4 Bbl. VIN G,H
- **Lube** ... **B233**
- **Air (10 1/4 O.D.)** ... **PA615**
- **Air (12 3/4 O.D.)** ... **PA2010**
- **Fuel (Exc. Calif.)** ... **BF840,-K1**
- **Fuel (Calif.)** ... **BF865,-K**
- **Oil Vapor** ... **SA4141**
- **Fuel Vapor** ... **SA2046**
- **Trans.** ... **18032**

Diplomat V8-360 (5.9L) 2,4 Bbl. VIN J,K,L
- **Lube** ... **B233**
- **Air** ... **PA2010**
- **Fuel (Exc. HiPerf. or Calif.)** ... **BF840,-K1**
- **Fuel (Calif.)** ... **BF865,-K**
- **Oil Vapor** ... **SA4141**
- **Fuel Vapor** ... **SA2046**
- **Trans.** ... **18032**

Magnum V8-318 (5.2L) 2,4 Bbl. VIN G,H
- **Lube** ... **B233**
- **Air (10 1/4 O.D.)** ... **PA615**
- **Air (12 3/4 O.D.)** ... **PA2010**
- **Fuel (Exc. Calif.)** ... **BF840,-K1**
- **Fuel (Calif.)** ... **BF865,-K**
- **Oil Vapor** ... **SA4141**
- **Fuel Vapor** ... **SA2046**
- **Trans.** ... **18032**

Magnum V8-360 (5.9L) 2,4 Bbl. VIN J,K,L
- **Lube** ... **B233**
- **Air** ... **PA2010**
- **Fuel (Exc. HiPerf. or Calif.)** ... **BF840,-K1**
- **Fuel (Calif.)** ... **BF865,-K**
- **Oil Vapor** ... **SA4141**
- **Fuel Vapor** ... **SA2046**
- **Trans.** ... **18032**

Omni 4-1700cc (1.7L) 2 Bbl. VIN A
- **Lube** ... **B178**
- **Air** ... **PA2083**
- **Fuel** ... **PF893,-RV**

DODGE 1979 (Cont'd.)

Pickups, D, W Series 6-225 (3.7L) 1, 2 Bbl. VIN B,N
- **Lube** ... **B233**
- **Air** ... **PA642**
- **Fuel (Exc. Calif.)** ... **BF840,-K1**
- **Fuel (Calif.)** ... **BF865,-K**
- **Oil Vapor** ... **SA4141**
- **Fuel Vapor** ... **SA2046**
- **Trans.** ... **18032**

Pickups, D, W Series 6-243 (4.0L) Diesel VIN H
- **Lube** ... [2] **B233**
- **Air** ... **PA648**
- **Trans.** ... **18032**

Pickups, D, W Series V8-318 (5.2L) 2,4 Bbl. VIN E,P
- **Lube** ... **B233**
- **Air (2 3/4 In.)** ... **PA615**
- **Air (3 1/2 In.)** ... **PA2052**
- **Fuel (Exc. Calif.)** ... **BF840,-K1**
- **Fuel (Calif.)** ... **BF865,-K**
- **Oil Vapor** ... **SA4141**
- **Fuel Vapor** ... **SA2046**
- **Trans.** ... **18032**

Pickups, D, W Series V8-360 (5.9L) 2,4 Bbl. VIN F,S,T
- **Lube** ... **B233**
- **Air (2 3/4 In.)** ... **PA615**
- **Air (3 1/2 In.)** ... **PA2052**
- **Fuel (Exc. HiPerf. or Calif.)** ... **BF840,-K1**
- **Fuel (Calif.)** ... **BF865,-K**
- **Oil Vapor** ... **SA4141**
- **Fuel Vapor** ... **SA2046**
- **Trans.** ... **18032**

Ramcharger 6-225 (3.7L) 1 Bbl. VIN N
- **Lube** ... **B233**
- **Air** ... **PA642**
- **Fuel (Exc. Calif.)** ... **BF840,-K1**
- **Fuel (Calif.)** ... **BF865,-K**
- **Oil Vapor** ... **SA4141**
- **Fuel Vapor** ... **SA2046**
- **Trans.** ... **18032**

Ramcharger V8-318 (5.2L) 2,4 Bbl. VIN E,P
- **Lube** ... **B233**
- **Air (2 3/4 In.)** ... **PA615**
- **Air (3 1/2 In.)** ... **PA2052**
- **Fuel (Exc. Calif.)** ... **BF840,-K1**
- **Fuel (Calif.)** ... **BF865,-K**
- **Oil Vapor** ... **SA4141**
- **Fuel Vapor** ... **SA2046**
- **Trans.** ... **18032**

Ramcharger V8-360 (5.9L) 2,4 Bbl. VIN F,S,T
- **Lube** ... **B233**
- **Air (2 3/4 In.)** ... **PA615**
- **Air (3 1/2 In.)** ... **PA2052**
- **Fuel (Exc. HiPerf. or Calif.)** ... **BF840,-K1**
- **Fuel (Calif.)** ... **BF865,-K**
- **Oil Vapor** ... **SA4141**
- **Fuel Vapor** ... **SA2046**
- **Trans.** ... **18032**

RD200 V8-318 (5.2L) Carb. VIN P
- **Lube** ... **B233**
- **Air (2 3/4 In.)** ... **PA615**
- **Air (3 1/2 In.)** ... **PA2052**
- **Fuel (Exc. HiPerf. or Calif.)** ... **BF840,-K1**
- **Fuel (Calif.)** ... **BF865,-K**
- **Oil Vapor** ... **SA4141**
- **Fuel Vapor** ... **SA2046**
- **Trans.** ... **18032**

RD200 V8-360 (5.9L) 4 Bbl. VIN T
- **Lube** ... **B233**
- **Air (2 3/4 In.)** ... **PA615**
- **Air (3 1/2 In.)** ... **PA2052**
- **Fuel (Exc. HiPerf. or Calif.)** ... **BF840,-K1**
- **Fuel (Calif.)** ... **BF865,-K**
- **Oil Vapor** ... **SA4141**
- **Fuel Vapor** ... **SA2046**
- **Trans.** ... **18032**

OBS = Obsolete. Availability Limited to Distributor Stock.

DODGE 1979 (Cont'd.)

St. Regis 6-225 (3.7L) 2 Bbl. VIN D
Lube B233
Air PA615
Fuel (Exc. Calif.) BF840,-K1
Fuel (Calif.) BF865,-K
Oil Vapor SA4141
Fuel Vapor SA2046
Trans. 18032

St. Regis V8-318 (5.2L) 2,4 Bbl. VIN G,H
Lube B233
Air (10 1/4 O.D.) PA615
Air (12 3/4 O.D.) PA2010
Fuel (Exc. Calif.) BF840,-K1
Fuel (Calif.) BF865,-K
Oil Vapor SA4141
Fuel Vapor SA2046
Trans. 18032

St. Regis V8-360 (5.9L) 2,4 Bbl. VIN J,K,L
Lube B233
Air PA2010
Fuel (Exc. HiPerf. or Calif.) BF840,-K1
Fuel (Calif.) BF865,-K
Oil Vapor SA4141
Fuel Vapor SA2046
Trans. 18032

Vans 6-225 (3.7L) 1,2 Bbl. VIN B,N
Lube B233
Air PA642
Fuel (Exc. Calif.) BF840,-K1
Fuel (Calif.) BF865,-K
Oil Vapor SA4141
Fuel Vapor SA2046
Trans. 18032

Vans 6-243 (4.0L) Diesel VIN H
Lube [2] B233
Air PA648
Trans. 18032

Vans V8-318 (5.2L) 2,4 Bbl. VIN E,P
Lube B233
Air (2 3/4 In.) PA615
Air (3 1/2 In.) PA2052
Fuel (Exc. Calif.) BF840,-K1
Fuel (Calif.) BF865,-K
Oil Vapor SA4141
Fuel Vapor SA2046
Trans. 18032

Vans V8-360 (5.9L) 2,4 Bbl. VIN F,S,T
Lube B233
Air (2 3/4 In.) PA615
Air (3 1/2 In.) PA2052
Fuel (Exc. HiPerf. or Calif.) BF840,-K1
Fuel (Calif.) BF865,-K
Oil Vapor SA4141
Fuel Vapor SA2046
Trans. 18032

1978

Aspen 6-225 (3.7L) 1,2 Bbl. VIN C,D
Lube B233
Air (1 Bbl.) PA650
Air (2 Bbl.) PA615
Fuel (Exc. Calif.) BF840,-K1
Fuel Vapor SA2046
Trans. 18032

Aspen V8-318 (5.2L) 2,4 Bbl. VIN G,H
Lube B233
Air (10 1/4 O.D.) PA615
Air (12 3/4 O.D.) PA2010
Fuel (Exc. Calif.) BF840,-K1
Fuel (Opt. 3 15/32 In. Ele.) PF827
Oil Vapor SA4141
Fuel Vapor SA2046
Trans. 18032

Aspen V8-360 (5.9L) 2,4 Bbl. VIN K,L
Lube B233
Air PA2010
Fuel (Exc. Calif.) BF840,-K1
Fuel (Opt. 3 15/32 In. Ele.) PF827
Oil Vapor SA4141
Fuel Vapor SA2046
Trans. 18032

DODGE 1978 (Cont'd.)

CB300 6-225 (3.7L) 2 Bbl. VIN B
Lube B233
Air PA615
Fuel (Exc. Calif.) BF840,-K1
Fuel (Opt. 3 15/32 In. Ele.) PF827
Fuel Vapor SA2046
Trans. 18032

CB300 V8-318 (5.2L) 2 Bbl. VIN E
Lube B233
Air PA615
Fuel (Exc. Calif.) BF840,-K1
Fuel (Opt. 3 15/32 In. Ele.) PF827
Oil Vapor SA4141
Fuel Vapor SA2046
Trans. 18032

CB300 V8-360 (5.9L) 2 Bbl. VIN F
Lube B233
Air PA2052
Fuel (Exc. Calif.) BF840,-K1
Fuel (Opt. 3 15/32 In. Ele.) PF827
Oil Vapor SA4141
Fuel Vapor SA2046
Trans. 18032

CB300 V8-400 (6.6L) 2 Bbl. VIN J
Lube B233
Air PA2052
Fuel (Exc. Calif.) BF840,-K1
Fuel (Opt. 3 15/32 In. Ele.) PF827
Oil Vapor SA4141
Fuel Vapor SA2046
Trans. 18032

CB300 V8-440 (7.2L) 4 Bbl. VIN D
Lube B233
Air PA2052
Fuel (Exc. Calif.) BF840,-K1
Fuel (Opt. 3 15/32 In. Ele.) PF827
Oil Vapor SA4141
Fuel Vapor SA2046
Trans. 18032

Challenger 4-1600cc (1.6L) 2 Bbl. VIN K
Lube B141
Fuel BF928

Challenger 4-2600cc (2.6L) 2 Bbl. VIN F
Lube B141
Fuel BF928

Charger V8-318 (5.2L) 2,4 Bbl. VIN G,H
Lube B233
Air (10 1/4 O.D.) PA615
Air (12 3/4 O.D.) PA2010
Fuel (Exc. Calif.) BF840,-K1
Fuel (Opt. 3 15/32 In. Ele.) PF827
Oil Vapor SA4141
Fuel Vapor SA2046
Trans. 18032

Charger V8-360 (5.9L) 2,4 Bbl. VIN J,K,L
Lube B233
Air PA2010
Fuel (Exc. Calif.) BF840,-K1
Fuel (Opt. 3 15/32 In. Ele.) PF827
Oil Vapor SA4141
Fuel Vapor SA2046
Trans. 18032

Charger V8-400 (6.6L) 4 Bbl. VIN N,P
Lube B233
Air PA2010
Fuel (Exc. Calif.) BF840,-K1
Fuel (Opt. 3 15/32 In. Ele.) PF827
Oil Vapor SA4141
Fuel Vapor SA2046
Trans. 18032

Colt 4-1600cc (1.6L) 2 Bbl. VIN K
Lube B141
Fuel BF833,-K2

Colt 4-2000cc (2.0L) 2 Bbl. VIN U
Lube B141
Fuel BF833,-K2

Colt 4-2600cc (2.6L) 2 Bbl. VIN F
Lube B141
Fuel BF833,-K2

DODGE 1978 (Cont'd.)

Diplomat 6-225 (3.7L) 1,2 Bbl. VIN C,D
Lube B233
Air (1 Bbl.) PA650
Air (2 Bbl.) PA615
Fuel (Exc. Calif.) BF840,-K1
Fuel Vapor SA2046
Trans. 18032

Diplomat V8-318 (5.2L) 2,4 Bbl. VIN G,H
Lube B233
Air (10 1/4 O.D.) PA615
Air (12 3/4 O.D.) PA2010
Fuel (Exc. Calif.) BF840,-K1
Fuel (Opt. 3 15/32 In. Ele.) PF827
Oil Vapor SA4141
Fuel Vapor SA2046
Trans. 18032

Diplomat V8-360 (5.9L) 2,4 Bbl. VIN J,K,L
Lube B233
Air PA2010
Fuel (Exc. Calif.) BF840,-K1
Fuel (Opt. 3 15/32 In. Ele.) PF827
Oil Vapor SA4141
Fuel Vapor SA2046
Trans. 18032

Magnum V8-318 (5.2L) 2,4 Bbl. VIN G,H
Lube B233
Air (10 1/4 O.D.) PA615
Air (12 3/4 O.D.) PA2010
Fuel (Exc. Calif.) BF840,-K1
Fuel (Opt. 3 15/32 In. Ele.) PF827
Oil Vapor SA4141
Fuel Vapor SA2046
Trans. 18032

Magnum V8-360 (5.9L) 2,4 Bbl. VIN J,K,L
Lube B233
Air PA2010
Fuel (Exc. Calif.) BF840,-K1
Fuel (Opt. 3 15/32 In. Ele.) PF827
Oil Vapor SA4141
Fuel Vapor SA2046
Trans. 18032

Magnum V8-400 (6.6L) 2,4 Bbl. VIN N,P
Lube B233
Air PA2010
Fuel (Exc. Calif.) BF840,-K1
Fuel (Opt. 3 15/32 In. Ele.) PF827
Oil Vapor SA4141
Fuel Vapor SA2046
Trans. 18032

Monaco 6-225 (3.7L) 1,2 Bbl. VIN C,D
Lube B233
Air (1 Bbl.) PA650
Air (2 Bbl.) PA615
Fuel (Exc. Calif.) BF840,-K1
Fuel Vapor SA2046
Trans. 18032

Monaco V8-318 (5.2L) 2,4 Bbl. VIN G,H
Lube B233
Air (10 1/4 O.D.) PA615
Air (12 3/4 O.D.) PA2010
Fuel (Exc. Calif.) BF840,-K1
Fuel (Opt. 3 15/32 In. Ele.) PF827
Oil Vapor SA4141
Fuel Vapor SA2046
Trans. 18032

Monaco V8-360 (5.9L) 2,4 Bbl. VIN J,K,L
Lube B233
Air PA2010
Fuel (Exc. Calif.) BF840,-K1
Fuel (Opt. 3 15/32 In. Ele.) PF827
Oil Vapor SA4141
Fuel Vapor SA2046
Trans. 18032

DODGE 1978 (Cont'd.)

Monaco V8-400 (6.6L) 4 Bbl. VIN N,P
Lube B233
Air PA2010
Fuel (Exc. Calif.) BF840,-K1
Fuel (Opt. 3 15/32 In. Ele.) PF827
Oil Vapor SA4141
Fuel Vapor SA2046
Trans. 18032

Monaco V8-440 (7.2L) 4 Bbl. VIN U
Lube B233
Air PA2010
Fuel (Exc. Calif.) BF840,-K1
Fuel (Opt. 3 15/32 In. Ele.) PF827
Oil Vapor SA4141
Fuel Vapor SA2046
Trans. 18032

Omni 4-1700cc (1.7L) 2 Bbl. VIN A
Lube B178
Air PA2083
Fuel PF893,-RV

Pickups 6-225 (3.7L) 2 Bbl. VIN B,E
Lube B233
Air PA615
Fuel (Exc. Calif.) BF840,-K1
Fuel (Opt. 3 15/32 In. Ele.) PF827
Fuel Vapor SA2046
Trans. 18032

Pickups 6-243 (4.0L) Diesel VIN H
Lube [2] B233
Air PA648
Trans. 18032

Pickups V8-318 (5.2L) 2 Bbl. VIN E
Lube B233
Air PA615
Fuel (Exc. Calif.) BF840,-K1
Fuel (Opt. 3 15/32 In. Ele.) PF827
Oil Vapor SA4141
Fuel Vapor SA2046
Trans. 18032

Pickups V8-360 (5.9L) 2 Bbl. VIN F
Lube B233
Air PA2052
Fuel (Exc. Calif.) BF840,-K1
Fuel (Opt. 3 15/32 In. Ele.) PF827
Oil Vapor SA4141
Fuel Vapor SA2046
Trans. 18032

Pickups V8-400 (6.6L) 2 Bbl. VIN J
Lube B233
Air PA2052
Fuel (Exc. Calif.) BF840,-K1
Fuel (Opt. 3 15/32 In. Ele.) PF827
Oil Vapor SA4141
Fuel Vapor SA2046
Trans. 18032

Pickups V8-440 (7.2L) 4 Bbl. VIN D
Lube B233
Air PA2052
Fuel (Exc. Calif.) BF840,-K1
Fuel (Opt. 3 15/32 In. Ele.) PF827
Oil Vapor SA4141
Fuel Vapor SA2046
Trans. 18032

Ramcharger 6-225 (3.7L) 2 Bbl. VIN B
Lube B233
Air PA615
Fuel (Exc. Calif.) BF840,-K1
Fuel (Opt. 3 15/32 In. Ele.) PF827
Fuel Vapor SA2046
Trans. 18032

Ramcharger V8-318 (5.2L) 2 Bbl. VIN E
Lube B233
Air PA615
Fuel (Exc. Calif.) BF840,-K1
Fuel (Opt. 3 15/32 In. Ele.) PF827
Oil Vapor SA4141
Fuel Vapor SA2046
Trans. 18032

OBS = Obsolete. Availability Limited to Distributor Stock.

DODGE 1978 (Cont'd.)

Ramcharger V8-360 (5.9L) 2 Bbl. VIN F
- **Lube** ... **B233**
- **Air** ... **PA2052**
- **Fuel (Exc. Calif.)** ... **BF840,-K1**
- **Fuel (Opt. 3 15/32 In. Ele.)** ... **PF827**
- **Oil Vapor** ... **SA4141**
- **Fuel Vapor** ... **SA2046**
- **Trans.** ... **18032**

Ramcharger V8-400 (6.6L) 2 Bbl. VIN J
- **Lube** ... **B233**
- **Air** ... **PA2052**
- **Fuel (Exc. Calif.)** ... **BF840,-K1**
- **Fuel (Opt. 3 15/32 In. Ele.)** ... **PF827**
- **Oil Vapor** ... **SA4141**
- **Fuel Vapor** ... **SA2046**
- **Trans.** ... **18032**

Ramcharger V8-440 (7.2L) 4 Bbl. VIN D
- **Lube** ... **B233**
- **Air** ... **PA2052**
- **Fuel (Exc. Calif.)** ... **BF840,-K1**
- **Fuel (Opt. 3 15/32 In. Ele.)** ... **PF827**
- **Oil Vapor** ... **SA4141**
- **Fuel Vapor** ... **SA2046**
- **Trans.** ... **18032**

RD200 V8-318 (5.2L) 2 Bbl. VIN E
- **Lube** ... **B233**
- **Air** ... **PA615**
- **Fuel (Exc. Calif.)** ... **BF840,-K1**
- **Fuel (Opt. 3 15/32 In. Ele.)** ... **PF827**
- **Oil Vapor** ... **SA4141**
- **Fuel Vapor** ... **SA2046**
- **Trans.** ... **18032**

RD200 V8-360 (5.9L) 2 Bbl. VIN F
- **Lube** ... **B233**
- **Air** ... **PA2052**
- **Fuel (Exc. Calif.)** ... **BF840,-K1**
- **Fuel (Opt. 3 15/32 In. Ele.)** ... **PF827**
- **Oil Vapor** ... **SA4141**
- **Fuel Vapor** ... **SA2046**
- **Trans.** ... **18032**

Vans 6-225 (3.7L) 2 Bbl. VIN B
- **Lube** ... **B233**
- **Air** ... **PA1735**
- **Fuel (Exc. Calif.)** ... **BF840,-K1**
- **Fuel Vapor** ... **SA2046**
- **Trans.** ... **18032**

Vans V8-318 (5.2L) 2 Bbl. VIN E
- **Lube** ... **B233**
- **Air** ... **PA615**
- **Fuel (Exc. Calif.)** ... **BF840,-K1**
- **Fuel (Opt. 3 15/32 In. Ele.)** ... **PF827**
- **Oil Vapor** ... **SA4141**
- **Fuel Vapor** ... **SA2046**
- **Trans.** ... **18032**

Vans V8-360 (5.9L) 2 Bbl. VIN F
- **Lube** ... **B233**
- **Air** ... **PA2052**
- **Fuel (Exc. Calif.)** ... **BF840,-K1**
- **Fuel (Opt. 3 15/32 In. Ele.)** ... **PF827**
- **Oil Vapor** ... **SA4141**
- **Fuel Vapor** ... **SA2046**
- **Trans.** ... **18032**

Vans V8-400 (6.6L) 2 Bbl. VIN J
- **Lube** ... **B233**
- **Air** ... **PA2052**
- **Fuel (Exc. Calif.)** ... **BF840,-K1**
- **Fuel (Opt. 3 15/32 In. Ele.)** ... **PF827**
- **Oil Vapor** ... **SA4141**
- **Fuel Vapor** ... **SA2046**
- **Trans.** ... **18032**

Vans V8-440 (7.2L) 4 Bbl. VIN D
- **Lube** ... **B233**
- **Air** ... **PA2052**
- **Fuel (Exc. Calif.)** ... **BF840,-K1**
- **Fuel (Opt. 3 15/32 In. Ele.)** ... **PF827**
- **Oil Vapor** ... **SA4141**
- **Fuel Vapor** ... **SA2046**
- **Trans.** ... **18032**

DODGE (Cont'd.)

1977

Aspen 6-225 (3.7L) 1,2 Bbl. VIN C,D
- **Lube** ... **B233**
- **Air (1 Bbl.)** ... **PA650**
- **Air (2 Bbl.)** ... **PA615**
- **Fuel (Exc. Calif.)** ... **BF840,-K1**
- **Fuel (Calif.)** ... **BF865,-K**
- **Fuel (Opt. 3 15/32 In. Ele.)** ... **PF827**
- **Fuel Vapor** ... **SA2046**
- **Trans.** ... **18032**

Aspen V8-318 (5.2L) 2 Bbl. VIN G
- **Lube** ... **B233**
- **Air** ... **PA615**
- **Fuel (Exc. Calif.)** ... **BF840,-K1**
- **Fuel (Calif.)** ... **BF865,-K**
- **Fuel (Opt. 3 15/32 In. Ele.)** ... **PF827**
- **Fuel Vapor** ... **SA2046**
- **Trans.** ... **18032**

Aspen V8-360 (5.9L) 2,4 Bbl. VIN K,L
- **Lube** ... **B233**
- **Air** ... **PA2010**
- **Fuel (Exc. Calif.)** ... **BF840,-K1**
- **Fuel (Calif.)** ... **BF865,-K**
- **Fuel (Opt. 3 15/32 In. Ele.)** ... **PF827**
- **Oil Vapor** ... **SA4141**
- **Fuel Vapor** ... **SA2046**
- **Trans.** ... **18032**

CB300 6-225 (3.7L) 1,2 Bbl. VIN B
- **Lube** ... **B233**
- **Air (1 Bbl.)** ... **PA650**
- **Air (2 Bbl.)** ... **PA615**
- **Fuel (Exc. Calif.)** ... **BF840,-K1**
- **Fuel (Calif.)** ... **BF865,-K**
- **Fuel (Opt. 3 15/32 In. Ele.)** ... **PF827**
- **Fuel Vapor** ... **SA2046**
- **Trans.** ... **18032**

CB300 V8-318 (5.2L) 2 Bbl. VIN E
- **Lube** ... **B233**
- **Air** ... **PA2052**
- **Fuel (Exc. Calif.)** ... **BF840,-K1**
- **Fuel (Calif.)** ... **BF865,-K**
- **Fuel (Opt. 3 15/32 In. Ele.)** ... **PF827**
- **Oil Vapor** ... **SA4141**
- **Fuel Vapor** ... **SA2046**
- **Trans.** ... **18032**

CB300 V8-360 (5.9L) 2 Bbl. VIN F
- **Lube** ... **B233**
- **Air** ... **PA2052**
- **Fuel (Exc. Calif.)** ... **BF840,-K1**
- **Fuel (Calif.)** ... **BF865,-K**
- **Fuel (Opt. 3 15/32 In. Ele.)** ... **PF827**
- **Oil Vapor** ... **SA4141**
- **Fuel Vapor** ... **SA2046**
- **Trans.** ... **18032**

CB300 V8-400 (6.6L) 2 Bbl. VIN J
- **Lube** ... **B233**
- **Air** ... **PA2052**
- **Fuel (w/o VapDiv.)** ... **BF840,-K1**
- **Fuel (w/VapDiv.)** ... **BF865,-K**
- **Fuel (Opt. 3 15/32 In. Ele.)** ... **PF827**
- **Oil Vapor** ... **SA4141**
- **Fuel Vapor** ... **SA2046**
- **Trans.** ... **18032**

CB300 V8-440 (7.2L) 4 Bbl. VIN D
- **Lube** ... **B233**
- **Air** ... **PA2052**
- **Fuel (w/o VapDiv.)** ... **BF840,-K1**
- **Fuel (w/VapDiv.)** ... **BF865,-K**
- **Fuel (Opt. 3 15/32 In. Ele.)** ... **PF827**
- **Oil Vapor** ... **SA4141**
- **Fuel Vapor** ... **SA2046**
- **Trans.** ... **18032**

Charger V8-318 (5.2L) 2 Bbl. VIN G
- **Lube** ... **B233**
- **Air** ... **PA615**
- **Fuel (Exc. Calif.)** ... **BF840,-K1**
- **Fuel (Calif.)** ... **BF865,-K**
- **Fuel (Opt. 3 15/32 In. Ele.)** ... **PF827**
- **Oil Vapor** ... **SA4141**
- **Fuel Vapor** ... **SA2046**
- **Trans.** ... **18032**

DODGE 1977 (Cont'd.)

Charger V8-360 (5.9L) 2,4 Bbl. VIN J,K
- **Lube** ... **B233**
- **Air** ... **PA2010**
- **Fuel (Exc. Calif.)** ... **BF840,-K1**
- **Fuel (Calif.)** ... **BF865,-K**
- **Fuel (Opt. 3 15/32 In. Ele.)** ... **PF827**
- **Oil Vapor** ... **SA4141**
- **Fuel Vapor** ... **SA2046**
- **Trans.** ... **18032**

Charger V8-400 (6.6L) 4 Bbl. VIN N
- **Lube** ... **B233**
- **Air (2 3/4 In.)** ... **PA2010**
- **Air (3 1/2 In.)** ... **PA693**
- **Fuel (w/o VapDiv.)** ... **BF840,-K1**
- **Fuel (w/VapDiv.)** ... **BF865,-K**
- **Fuel (Opt. 3 15/32 In. Ele.)** ... **PF827**
- **Oil Vapor** ... **SA4141**
- **Fuel Vapor** ... **SA2046**
- **Trans.** ... **18032**

Colt 4-1600cc (1.6L) 2 Bbl. VIN K
- **Lube** ... **B141**
- **Fuel** ... **BF833,-K2**

Colt 4-2000cc (2.0L) 2 Bbl. VIN U
- **Lube** ... **B141**
- **Fuel** ... **BF833,-K2**

Diplomat V8-318 (5.2L) 2 Bbl. VIN G
- **Lube** ... **B233**
- **Air** ... **PA615**
- **Fuel (Exc. Calif.)** ... **BF840,-K1**
- **Fuel (Calif.)** ... **BF865,-K**
- **Fuel (Opt. 3 15/32 In. Ele.)** ... **PF827**
- **Oil Vapor** ... **SA4141**
- **Fuel Vapor** ... **SA2046**
- **Trans.** ... **18032**

Diplomat V8-360 (5.9L) 2 Bbl. VIN K
- **Lube** ... **B233**
- **Air** ... **PA2010**
- **Fuel (Exc. Calif.)** ... **BF840,-K1**
- **Fuel (Calif.)** ... **BF865,-K**
- **Fuel (Opt. 3 15/32 In. Ele.)** ... **PF827**
- **Oil Vapor** ... **SA4141**
- **Fuel Vapor** ... **SA2046**
- **Trans.** ... **18032**

Monaco, Royal Monaco 6-225 (3.7L) 1,2 Bbl. VIN C,D
- **Lube** ... **B233**
- **Air (1 Bbl.)** ... **PA650**
- **Air (2 Bbl.)** ... **PA615**
- **Fuel (Exc. Calif.)** ... **BF840,-K1**
- **Fuel (Calif.)** ... **BF865,-K**
- **Fuel (Opt. 3 15/32 In. Ele.)** ... **PF827**
- **Fuel Vapor** ... **SA2046**
- **Trans.** ... **18032**

Monaco, Royal Monaco V8-318 (5.2L) 2 Bbl. VIN G
- **Lube** ... **B233**
- **Air** ... **PA615**
- **Fuel (Exc. Calif.)** ... **BF840,-K1**
- **Fuel (Calif.)** ... **BF865,-K**
- **Fuel (Opt. 3 15/32 In. Ele.)** ... **PF827**
- **Oil Vapor** ... **SA4141**
- **Fuel Vapor** ... **SA2046**
- **Trans.** ... **18032**

Monaco, Royal Monaco V8-360 (5.9L) 2,4 Bbl. VIN J,K,L
- **Lube** ... **B233**
- **Air** ... **PA2010**
- **Fuel (Exc. Calif.)** ... **BF840,-K1**
- **Fuel (Calif.)** ... **BF865,-K**
- **Fuel (Opt. 3 15/32 In. Ele.)** ... **PF827**
- **Oil Vapor** ... **SA4141**
- **Fuel Vapor** ... **SA2046**
- **Trans.** ... **18032**

Monaco, Royal Monaco V8-400 (6.6L) 4 Bbl. VIN N,P
- **Lube** ... **B233**
- **Air (2 3/4 In.)** ... **PA2010**
- **Air (3 1/2 In.)** ... **PA693**
- **Fuel (w/o VapDiv.)** ... **BF840,-K1**
- **Fuel (w/VapDiv.)** ... **BF865,-K**
- **Fuel (Opt. 3 15/32 In. Ele.)** ... **PF827**
- **Oil Vapor** ... **SA4141**
- **Fuel Vapor** ... **SA2046**
- **Trans.** ... **18032**

DODGE 1977 (Cont'd.)

Monaco, Royal Monaco V8-440 (7.2L) 4 Bbl. VIN T,U
- **Lube** ... **B233**
- **Air (Exc. Opt. Ele.)** ... **PA2010**
- **Air (Opt. 3 1/2 In.)** ... **PA693**
- **Fuel (w/o VapDiv.)** ... **BF840,-K1**
- **Fuel (w/VapDiv.)** ... **BF865,-K**
- **Fuel (Opt. 3 15/32 In. Ele.)** ... **PF827**
- **Oil Vapor** ... **SA4141**
- **Fuel Vapor** ... **SA2046**
- **Trans.** ... **18032**

Pickups 6-225 (3.7L) 1,2 Bbl. VIN B,C
- **Lube** ... **B233**
- **Air (1 Bbl.)** ... **PA650**
- **Air (2 Bbl.)** ... **PA615**
- **Fuel (Exc. Calif.)** ... **BF840,-K1**
- **Fuel (Calif.)** ... **BF865,-K**
- **Fuel (Opt. 3 15/32 In. Ele.)** ... **PF827**
- **Fuel Vapor** ... **SA2046**
- **Trans.** ... **18032**

Pickups V8-318 (5.2L) 2 Bbl. VIN E
- **Lube** ... **B233**
- **Air** ... **PA2052**
- **Fuel (Exc. Calif.)** ... **BF840,-K1**
- **Fuel (Calif.)** ... **BF865,-K**
- **Fuel (Opt. 3 15/32 In. Ele.)** ... **PF827**
- **Oil Vapor** ... **SA4141**
- **Fuel Vapor** ... **SA2046**
- **Trans.** ... **18032**

Pickups V8-360 (5.9L) 2 Bbl. VIN F
- **Lube** ... **B233**
- **Air** ... **PA2052**
- **Fuel (Exc. Calif.)** ... **BF840,-K1**
- **Fuel (Calif.)** ... **BF865,-K**
- **Fuel (Opt. 3 15/32 In. Ele.)** ... **PF827**
- **Oil Vapor** ... **SA4141**
- **Fuel Vapor** ... **SA2046**
- **Trans.** ... **18032**

Pickups V8-400 (6.6L) 2 Bbl. VIN J
- **Lube** ... **B233**
- **Air** ... **PA2052**
- **Fuel (w/o VapDiv.)** ... **BF840,-K1**
- **Fuel (w/VapDiv.)** ... **BF865,-K**
- **Fuel (Opt. 3 15/32 In. Ele.)** ... **PF827**
- **Oil Vapor** ... **SA4141**
- **Fuel Vapor** ... **SA2046**
- **Trans.** ... **18032**

Pickups V8-440 (7.2L) 4 Bbl. VIN D
- **Lube** ... **B233**
- **Air** ... **PA2052**
- **Fuel (w/o VapDiv.)** ... **BF840,-K1**
- **Fuel (w/VapDiv.)** ... **BF865,-K**
- **Fuel (Opt. 3 15/32 In. Ele.)** ... **PF827**
- **Oil Vapor** ... **SA4141**
- **Fuel Vapor** ... **SA2046**
- **Trans.** ... **18032**

Ramcharger 6-225 (3.7L) 1,2 Bbl. VIN B
- **Lube** ... **B233**
- **Air (1 Bbl.)** ... **PA650**
- **Air (2 Bbl.)** ... **PA615**
- **Fuel (Exc. Calif.)** ... **BF840,-K1**
- **Fuel (Calif.)** ... **BF865,-K**
- **Fuel (Opt. 3 15/32 In. Ele.)** ... **PF827**
- **Fuel Vapor** ... **SA2046**
- **Trans.** ... **18032**

Ramcharger V8-318 (5.2L) 2 Bbl. VIN E
- **Lube** ... **B233**
- **Air** ... **PA2052**
- **Fuel (Exc. Calif.)** ... **BF840,-K1**
- **Fuel (Calif.)** ... **BF865,-K**
- **Fuel (Opt. 3 15/32 In. Ele.)** ... **PF827**
- **Oil Vapor** ... **SA4141**
- **Fuel Vapor** ... **SA2046**
- **Trans.** ... **18032**

Ramcharger V8-360 (5.9L) 2 Bbl. VIN F
- **Lube** ... **B233**
- **Air** ... **PA2052**
- **Fuel (Exc. Calif.)** ... **BF840,-K1**
- **Fuel (Calif.)** ... **BF865,-K**
- **Fuel (Opt. 3 15/32 In. Ele.)** ... **PF827**
- **Oil Vapor** ... **SA4141**
- **Fuel Vapor** ... **SA2046**
- **Trans.** ... **18032**

OBS = Obsolete. Availability Limited to Distributor Stock.

DODGE 1977 (Cont'd.)

Ramcharger V8-400 (6.6L) 2 Bbl. VIN J
- **Lube** ... **B233**
- **Air** ... **PA2052**
- **Fuel (w/o VapDiv.)** ... **BF840,-K1**
- **Fuel (w/VapDiv.)** ... **BF865,-K**
- **Fuel (Opt. 3 15/32 In. Ele.)** ... **PF827**
- **Oil Vapor** ... **SA4141**
- **Fuel Vapor** ... **SA2046**
- **Trans.** ... **18032**

Ramcharger V8-440 (7.2L) 4 Bbl. VIN D
- **Lube** ... **B233**
- **Air** ... **PA2052**
- **Fuel (w/o VapDiv.)** ... **BF840,-K1**
- **Fuel (w/VapDiv.)** ... **BF865,-K**
- **Fuel (Opt. 3 15/32 In. Ele.)** ... **PF827**
- **Oil Vapor** ... **SA4141**
- **Fuel Vapor** ... **SA2046**
- **Trans.** ... **18032**

Vans 6-225 (3.7L) 1,2 Bbl. VIN B
- **Lube** ... **B233**
- **Air (1 Bbl.)** ... **PA650**
- **Air (2 Bbl.)** ... **PA1735**
- **Fuel (Exc. Calif.)** ... **BF840,-K1**
- **Fuel (Calif.)** ... **BF865,-K**
- **Fuel (Opt. 3 15/32 In. Ele.)** ... **PF827**
- **Fuel Vapor** ... **SA2046**
- **Trans.** ... **18032**

Vans V8-318 (5.2L) 2 Bbl. VIN E
- **Lube** ... **B233**
- **Air** ... **PA615**
- **Fuel (Exc. Calif.)** ... **BF840,-K1**
- **Fuel (Calif.)** ... **BF865,-K**
- **Fuel (Opt. 3 15/32 In. Ele.)** ... **PF827**
- **Oil Vapor** ... **SA4141**
- **Fuel Vapor** ... **SA2046**
- **Trans.** ... **18032**

Vans V8-360 (5.9L) 2 Bbl. VIN F
- **Lube** ... **B233**
- **Air** ... **PA2052**
- **Fuel (Exc. Calif.)** ... **BF840,-K1**
- **Fuel (Calif.)** ... **BF865,-K**
- **Fuel (Opt. 3 15/32 In. Ele.)** ... **PF827**
- **Oil Vapor** ... **SA4141**
- **Fuel Vapor** ... **SA2046**
- **Trans.** ... **18032**

Vans V8-400 (6.6L) 2 Bbl. VIN J
- **Lube** ... **B233**
- **Air** ... **PA2052**
- **Fuel (w/o VapDiv.)** ... **BF840,-K1**
- **Fuel (w/VapDiv.)** ... **BF865,-K**
- **Fuel (Opt. 3 15/32 In. Ele.)** ... **PF827**
- **Oil Vapor** ... **SA4141**
- **Fuel Vapor** ... **SA2046**
- **Trans.** ... **18032**

Vans V8-440 (7.2L) 4 Bbl. VIN D
- **Lube** ... **B233**
- **Air** ... **PA2052**
- **Fuel (w/o VapDiv.)** ... **BF840,-K1**
- **Fuel (w/VapDiv.)** ... **BF865,-K**
- **Fuel (Opt. 3 15/32 In. Ele.)** ... **PF827**
- **Oil Vapor** ... **SA4141**
- **Fuel Vapor** ... **SA2046**
- **Trans.** ... **18032**

1976

Aspen 6-225 (3.7L) 1 Bbl. VIN C
- **Lube** ... **B233**
- **Air** ... **PA650**
- **Fuel (Exc. Calif.)** ... **BF840,-K1**
- **Fuel (Calif.)** ... **BF865,-K**
- **Fuel (Opt. 3 15/32 In. Ele.)** ... **PF827**
- **Fuel Vapor** ... **SA2046**
- **Trans.** ... **18032**

Aspen V8-318 (5.2L) 2 Bbl. VIN G
- **Lube** ... **B233**
- **Air** ... **PA615**
- **Fuel (Exc. Calif.)** ... **BF840,-K1**
- **Fuel (Calif., w/VapDiv.)** ... **BF865,-K**
- **Oil Vapor** ... **SA4141**
- **Fuel Vapor** ... **SA2046**
- **Trans.** ... **18032**

DODGE 1976 (Cont'd.)

Aspen V8-360 (5.9L) 2 Bbl. VIN K
- **Lube** ... **B233**
- **Air** ... **PA2010**
- **Fuel (Exc. Calif.)** ... **BF840,-K1**
- **Fuel (Calif., w/VapDiv.)** ... **BF865,-K**
- **Fuel (Opt. 3 15/32 In. Ele.)** ... **PF827**
- **Oil Vapor** ... **SA4141**
- **Fuel Vapor** ... **SA2046**
- **Trans.** ... **18032**

CB300 V8-318 (5.2L) 2 Bbl. VIN E
- **Lube** ... **B233**
- **Air** ... **PA615**
- **Fuel (Exc. Calif.)** ... **BF840,-K1**
- **Fuel (Calif., w/VapDiv.)** ... **BF865,-K**
- **Fuel (Opt. 3 15/32 In. Ele.)** ... **PF827**
- **Oil Vapor** ... **SA4141**
- **Fuel Vapor** ... **SA2046**
- **Trans.** ... **18032**

CB300 V8-360 (5.9L) 2 Bbl. VIN F
- **Lube** ... **B233**
- **Air** ... **PA2052**
- **Fuel (Exc. Calif.)** ... **BF840,-K1**
- **Fuel (Calif., w/VapDiv.)** ... **BF865,-K**
- **Fuel (Opt. 3 15/32 In. Ele.)** ... **PF827**
- **Oil Vapor** ... **SA4141**
- **Fuel Vapor** ... **SA2046**
- **Trans.** ... **18032**

CB300 V8-400 (6.6L) 2 Bbl. VIN J
- **Lube** ... **B233**
- **Air** ... **PA2052**
- **Fuel (Exc. Calif.)** ... **BF840,-K1**
- **Fuel (Calif., w/VapDiv.)** ... **BF865,-K**
- **Fuel (Opt. 3 15/32 In. Ele.)** ... **PF827**
- **Oil Vapor** ... **SA4141**
- **Fuel Vapor** ... **SA2046**
- **Trans.** ... **18032**

Charger 6-225 (3.7L) 1 Bbl. VIN C
- **Lube** ... **B233**
- **Air** ... **PA650**
- **Fuel (Exc. Calif.)** ... **BF840,-K1**
- **Fuel (Calif.)** ... **BF865,-K**
- **Fuel (Opt. 3 15/32 In. Ele.)** ... **PF827**
- **Fuel Vapor** ... **SA2046**
- **Trans.** ... **18032**

Charger V8-318 (5.2L) 2 Bbl. VIN G
- **Lube** ... **B233**
- **Air** ... **PA615**
- **Fuel (Exc. Calif.)** ... **BF840,-K1**
- **Fuel (Calif., w/VapDiv.)** ... **BF865,-K**
- **Oil Vapor** ... **SA4141**
- **Fuel Vapor** ... **SA2046**
- **Trans.** ... **18032**

Charger V8-360 (5.9L) 2,4 Bbl. VIN J,K
- **Lube** ... **B233**
- **Air** ... **PA2010**
- **Fuel (Exc. Calif.)** ... **BF840,-K1**
- **Fuel (Calif., w/VapDiv.)** ... **BF865,-K**
- **Fuel (Opt. 3 15/32 In. Ele.)** ... **PF827**
- **Oil Vapor** ... **SA4141**
- **Fuel Vapor** ... **SA2046**
- **Trans.** ... **18032**

Charger V8-400 (6.6L) 2,4 Bbl. VIN M,N,P
- **Lube** ... **B233**
- **Air** ... **PA2010**
- **Fuel (Exc. Calif.)** ... **BF840,-K1**
- **Fuel (Calif., w/VapDiv.)** ... **BF865,-K**
- **Fuel (Opt. 3 15/32 In. Ele.)** ... **PF827**
- **Oil Vapor** ... **SA4141**
- **Fuel Vapor** ... **SA2046**
- **Trans.** ... **18032**

Charger V8-440 (7.2L) 4 Bbl. VIN U
- **Lube** ... **B233**
- **Air** ... **PA2010**
- **Air (Opt. 3 1/2 In.)** ... **PA693**
- **Fuel (Exc. Calif.)** ... **BF840,-K1**
- **Fuel (Calif., Exc. HiPerf.)** ... **BF865,-K**
- **Fuel (Opt. 3 15/32 In. Ele.)** ... **PF827**
- **Oil Vapor** ... **SA4141**
- **Fuel Vapor** ... **SA2046**
- **Trans.** ... **18032**

Colt 4-1600cc (1.6L) 2 Bbl. VIN K
- **Lube** ... **B141**
- **Fuel** ... **BF833,-K2**

DODGE 1976 (Cont'd.)

Colt 4-2000cc (2.0L) 2 Bbl. VIN U
- **Lube** ... **B141**
- **Fuel** ... **BF833,-K2**

Coronet 6-225 (3.7L) 1 Bbl. VIN C
- **Lube** ... **B233**
- **Air** ... **PA650**
- **Fuel (Exc. Calif.)** ... **BF840,-K1**
- **Fuel (Calif.)** ... **BF865,-K**
- **Fuel (Opt. 3 15/32 In. Ele.)** ... **PF827**
- **Fuel Vapor** ... **SA2046**
- **Trans.** ... **18032**

Coronet V8-318 (5.2L) 2 Bbl. VIN G
- **Lube** ... **B233**
- **Air** ... **PA615**
- **Fuel (Exc. Calif.)** ... **BF840,-K1**
- **Fuel (Calif., w/VapDiv.)** ... **BF865,-K**
- **Oil Vapor** ... **SA4141**
- **Fuel Vapor** ... **SA2046**
- **Trans.** ... **18032**

Coronet V8-360 (5.9L) 2,4 Bbl. VIN J,K,L
- **Lube** ... **B233**
- **Air** ... **PA2010**
- **Fuel (Exc. Calif.)** ... **BF840,-K1**
- **Fuel (Calif., w/VapDiv.)** ... **BF865,-K**
- **Fuel (Opt. 3 15/32 In. Ele.)** ... **PF827**
- **Oil Vapor** ... **SA4141**
- **Fuel Vapor** ... **SA2046**
- **Trans.** ... **18032**

Coronet V8-400 (6.6L) 2,4 Bbl. VIN M,N,P
- **Lube** ... **B233**
- **Air** ... **PA2010**
- **Fuel (Exc. Calif.)** ... **BF840,-K1**
- **Fuel (Calif., w/VapDiv.)** ... **BF865,-K**
- **Fuel (Opt. 3 15/32 In. Ele.)** ... **PF827**
- **Oil Vapor** ... **SA4141**
- **Fuel Vapor** ... **SA2046**
- **Trans.** ... **18032**

Coronet V8-440 (7.2L) 4 Bbl. VIN U
- **Lube** ... **B233**
- **Air (2 3/4 In.)** ... **PA2010**
- **Air (3 1/2 In.)** ... **PA693**
- **Fuel (Exc. Calif.)** ... **BF840,-K1**
- **Fuel (Calif., Exc. HiPerf.)** ... **BF865,-K**
- **Fuel (Opt. 3 15/32 In. Ele.)** ... **PF827**
- **Oil Vapor** ... **SA4141**
- **Fuel Vapor** ... **SA2046**
- **Trans.** ... **18032**

Dart 6-225 (3.7L) 1 Bbl. VIN C
- **Lube** ... **B233**
- **Air** ... **PA650**
- **Fuel (Exc. Calif.)** ... **BF840,-K1**
- **Fuel (Calif.)** ... **BF865,-K**
- **Fuel (Opt. 3 15/32 In. Ele.)** ... **PF827**
- **Fuel Vapor** ... **SA2046**
- **Trans.** ... **18032**

Dart V8-318 (5.2L) 2 Bbl. VIN G
- **Lube** ... **B233**
- **Air** ... **PA615**
- **Fuel (Exc. Calif.)** ... **BF840,-K1**
- **Fuel (Calif., w/VapDiv.)** ... **BF865,-K**
- **Oil Vapor** ... **SA4141**
- **Fuel Vapor** ... **SA2046**
- **Trans.** ... **18032**

Dart V8-360 (5.9L) 4 Bbl. VIN L
- **Lube** ... **B233**
- **Air** ... **PA2010**
- **Fuel (Exc. Calif.)** ... **BF840,-K1**
- **Fuel (Calif., w/VapDiv.)** ... **BF865,-K**
- **Fuel (Opt. 3 15/32 In. Ele.)** ... **PF827**
- **Oil Vapor** ... **SA4141**
- **Fuel Vapor** ... **SA2046**
- **Trans.** ... **18032**

Monaco, Royal Monaco V8-318 (5.2L) 2 Bbl. VIN G
- **Lube** ... **B233**
- **Air** ... **PA615**
- **Fuel (Exc. Calif.)** ... **BF840,-K1**
- **Fuel (Calif., w/VapDiv.)** ... **BF865,-K**
- **Oil Vapor** ... **SA4141**
- **Fuel Vapor** ... **SA2046**
- **Trans.** ... **18032**

DODGE 1976 (Cont'd.)

Monaco, Royal Monaco V8-360 (5.9L) 2,4 Bbl. VIN J,K
- **Lube** ... **B233**
- **Air** ... **PA2010**
- **Fuel (Exc. Calif.)** ... **BF840,-K1**
- **Fuel (Calif., w/VapDiv.)** ... **BF865,-K**
- **Fuel (Opt. 3 15/32 In. Ele.)** ... **PF827**
- **Oil Vapor** ... **SA4141**
- **Fuel Vapor** ... **SA2046**
- **Trans.** ... **18032**

Monaco, Royal Monaco V8-400 (6.6L) 2,4 Bbl. VIN M,N,P
- **Lube** ... **B233**
- **Air** ... **PA2010**
- **Fuel (Exc. Calif.)** ... **BF840,-K1**
- **Fuel (Calif., w/VapDiv.)** ... **BF865,-K**
- **Fuel (Opt. 3 15/32 In. Ele.)** ... **PF827**
- **Oil Vapor** ... **SA4141**
- **Fuel Vapor** ... **SA2046**
- **Trans.** ... **18032**

Monaco, Royal Monaco V8-440 (7.2L) 4 Bbl. VIN T,U
- **Lube** ... **B233**
- **Air** ... **PA2010**
- **Air (Opt. 3 1/2 In.)** ... **PA693**
- **Fuel (Exc. Calif.)** ... **BF840,-K1**
- **Fuel (Calif., Exc. HiPerf.)** ... **BF865,-K**
- **Fuel (Opt. 3 15/32 In. Ele.)** ... **PF827**
- **Oil Vapor** ... **SA4141**
- **Fuel Vapor** ... **SA2046**
- **Trans.** ... **18032**

Pickups, D, W Series 6-225 (3.7L) 1 Bbl. VIN B
- **Lube** ... **B233**
- **Air (Exc. D300, W Series)** ... **PA650**
- **Fuel (Exc. Calif.)** ... **BF840,-K1**
- **Fuel (Calif.)** ... **BF865,-K**
- **Fuel (Opt. 3 15/32 In. Ele.)** ... **PF827**
- **Fuel Vapor** ... **SA2046**
- **Trans.** ... **18032**

Pickups, D, W Series V8-318 (5.2L) 2 Bbl. VIN E
- **Lube** ... **B233**
- **Air** ... **PA615**
- **Fuel (Exc. Calif.)** ... **BF840,-K1**
- **Fuel (Calif., w/VapDiv.)** ... **BF865,-K**
- **Fuel (3 15/32 In. Ele.)** ... **PF827**
- **Oil Vapor** ... **SA4141**
- **Fuel Vapor** ... **SA2046**
- **Trans.** ... **18032**

Pickups, D, W Series V8-360 (5.9L) 2 Bbl. VIN F
- **Lube** ... **B233**
- **Air** ... **PA2052**
- **Fuel (Exc. Calif.)** ... **BF840,-K1**
- **Fuel (Calif., w/VapDiv.)** ... **BF865,-K**
- **Fuel (Opt. 3 15/32 In. Ele.)** ... **PF827**
- **Oil Vapor** ... **SA4141**
- **Fuel Vapor** ... **SA2046**
- **Trans.** ... **18032**

Pickups, D, W Series V8-400 (6.6L) 2 Bbl. VIN J
- **Lube** ... **B233**
- **Air** ... **PA2052**
- **Fuel (Exc. Calif.)** ... **BF840,-K1**
- **Fuel (Calif., w/VapDiv.)** ... **BF865,-K**
- **Fuel (Opt. 3 15/32 In. Ele.)** ... **PF827**
- **Oil Vapor** ... **SA4141**
- **Fuel Vapor** ... **SA2046**
- **Trans.** ... **18032**

Pickups, D, W Series V8-440 (7.2L) 4 Bbl. VIN D
- **Lube** ... **B233**
- **Air** ... **PA2052**
- **Fuel (Exc. Calif.)** ... **BF840,-K1**
- **Fuel (Calif., Exc. HiPerf.)** ... **BF865,-K**
- **Fuel (Opt. 3 15/32 In. Ele.)** ... **PF827**
- **Oil Vapor** ... **SA4141**
- **Fuel Vapor** ... **SA2046**
- **Trans.** ... **18032**

OBS = Obsolete. Availability Limited to Distributor Stock.

DODGE 1976 (Cont'd.)

Ramcharger 6-225 (3.7L) 1 Bbl. VIN B
- **Lube** ... **B233**
- **Air (Exc. D300, W Series)** ... **PA650**
- **Fuel (Exc. Calif.)** ... **BF840,-K1**
- **Fuel (Calif.)** ... **BF865,-K**
- **Fuel (Opt. 3 15/32 In. Ele.)** ... **PF827**
- **Fuel Vapor** ... **SA2046**
- **Trans.** ... **18032**

Ramcharger V8-318 (5.2L) 2 Bbl. VIN E
- **Lube** ... **B233**
- **Air** ... **PA615**
- **Fuel (Exc. Calif.)** ... **BF840,-K1**
- **Fuel (Calif., w/VapDiv.)** ... **BF865,-K**
- **Fuel (Opt. 3 15/32 In. Ele.)** ... **PF827**
- **Oil Vapor** ... **SA4141**
- **Fuel Vapor** ... **SA2046**
- **Trans.** ... **18032**

Ramcharger V8-360 (5.9L) 2 Bbl. VIN F
- **Lube** ... **B233**
- **Air** ... **PA2052**
- **Fuel (Exc. Calif.)** ... **BF840,-K1**
- **Fuel (Calif., w/VapDiv.)** ... **BF865,-K**
- **Fuel (Opt. 3 15/32 In. Ele.)** ... **PF827**
- **Oil Vapor** ... **SA4141**
- **Fuel Vapor** ... **SA2046**
- **Trans.** ... **18032**

Ramcharger V8-400 (6.6L) 2 Bbl. VIN J
- **Lube** ... **B233**
- **Air** ... **PA2052**
- **Fuel (Exc. Calif.)** ... **BF840,-K1**
- **Fuel (Calif., w/VapDiv.)** ... **BF865,-K**
- **Fuel (Opt. 3 15/32 In. Ele.)** ... **PF827**
- **Oil Vapor** ... **SA4141**
- **Fuel Vapor** ... **SA2046**
- **Trans.** ... **18032**

Ramcharger V8-440 (7.2L) 4 Bbl. VIN D
- **Lube** ... **B233**
- **Air** ... **PA2052**
- **Fuel (Exc. Calif.)** ... **BF840,-K1**
- **Fuel (Calif., Exc. HiPerf.)** ... **BF865,-K**
- **Fuel (Opt. 3 15/32 In. Ele.)** ... **PF827**
- **Oil Vapor** ... **SA4141**
- **Fuel Vapor** ... **SA2046**
- **Trans.** ... **18032**

Vans 6-225 (3.7L) 1 Bbl. VIN B
- **Lube** ... **B233**
- **Air** ... **PA650**
- **Fuel (Exc. Calif.)** ... **BF840,-K1**
- **Fuel (Calif.)** ... **BF865,-K**
- **Fuel (Opt. 3 15/32 In. Ele.)** ... **PF827**
- **Fuel Vapor** ... **SA2046**
- **Trans.** ... **18032**

Vans V8-318 (5.2L) 2 Bbl. VIN E
- **Lube** ... **B233**
- **Air** ... **PA615**
- **Fuel (Exc. Calif.)** ... **BF840,-K1**
- **Fuel (Calif., w/VapDiv.)** ... **BF865,-K**
- **Oil Vapor** ... **SA4141**
- **Fuel Vapor** ... **SA2046**
- **Trans.** ... **18032**

Vans V8-360 (5.9L) 2 Bbl. VIN F
- **Lube** ... **B233**
- **Air** ... **PA2052**
- **Fuel (Exc. Calif.)** ... **BF840,-K1**
- **Fuel (Calif., w/VapDiv.)** ... **BF865,-K**
- **Fuel (Opt. 3 15/32 In. Ele.)** ... **PF827**
- **Oil Vapor** ... **SA4141**
- **Fuel Vapor** ... **SA2046**
- **Trans.** ... **18032**

Vans V8-400 (6.6L) 2 Bbl. VIN J
- **Lube** ... **B233**
- **Air** ... **PA693**
- **Fuel (Exc. Calif.)** ... **BF840,-K1**
- **Fuel (Calif., w/VapDiv.)** ... **BF865,-K**
- **Fuel (Opt. 3 15/32 In. Ele.)** ... **PF827**
- **Oil Vapor** ... **SA4141**
- **Fuel Vapor** ... **SA2046**
- **Trans.** ... **18032**

DODGE 1976 (Cont'd.)

Vans V8-440 (7.2L) 4 Bbl. VIN D
- **Lube** ... **B233**
- **Air** ... **PA693**
- **Fuel (Exc. Calif.)** ... **BF840,-K1**
- **Fuel (Calif., Exc. HiPerf.)** ... **BF865,-K**
- **Fuel (Opt. 3 15/32 In. Ele.)** ... **PF827**
- **Oil Vapor** ... **SA4141**
- **Fuel Vapor** ... **SA2046**
- **Trans.** ... **18032**

1975

CB300 6-225 (3.7L) 1 Bbl. VIN B
- **Lube** ... **B233**
- **Air** ... **PA650**
- **Fuel (Exc. Calif.)** ... **BF840,-K1**
- **Fuel (Calif.)** ... **BF865,-K**
- **Fuel (Opt. 3 15/32 In. Ele.)** ... **PF827**
- **Fuel Vapor** ... **SA2046**
- **Trans.** ... **18032**

CB300 V8-318 (5.2L) 2 Bbl. VIN E
- **Lube** ... **B233**
- **Air** ... **PA615**
- **Fuel (Exc. Calif.)** ... **BF840,-K1**
- **Fuel (Calif., w/VapDiv.)** ... **BF865,-K**
- **Fuel (3 15/32 In. Ele.)** ... **PF827**
- **Oil Vapor** ... **SA4141**
- **Fuel Vapor** ... **SA2046**
- **Trans.** ... **18032**

CB300 V8-360 (5.9L) 2 Bbl. VIN F
- **Lube** ... **B233**
- **Air** ... **PA2052**
- **Fuel (Exc. Calif.)** ... **BF840,-K1**
- **Fuel (Calif., w/VapDiv.)** ... **BF865,-K**
- **Fuel (Opt. 3 15/32 In. Ele.)** ... **PF827**
- **Oil Vapor** ... **SA4141**
- **Fuel Vapor** ... **SA2046**
- **Trans.** ... **18032**

Charger V8-318 (5.2L) 2 Bbl. VIN G
- **Lube** ... **B233**
- **Air** ... **PA615**
- **Fuel (Exc. Calif.)** ... **BF840,-K1**
- **Fuel (Calif., w/VapDiv.)** ... **BF865,-K**
- **Oil Vapor** ... **SA4141**
- **Fuel Vapor** ... **SA2046**
- **Trans.** ... **18032**

Charger V8-360 (5.9L) 2,4 Bbl. VIN J,K
- **Lube** ... **B233**
- **Air** ... **PA2010**
- **Fuel (Exc. Calif.)** ... **BF840,-K1**
- **Fuel (Calif., w/VapDiv.)** ... **BF865,-K**
- **Fuel (Opt. 3 15/32 In. Ele.)** ... **PF827**
- **Oil Vapor** ... **SA4141**
- **Fuel Vapor** ... **SA2046**
- **Trans.** ... **18032**

Charger V8-400 (6.6L) 2,4 Bbl. VIN M,N,P
- **Lube** ... **B233**
- **Air** ... **PA2010**
- **Fuel (Exc. Calif.)** ... **BF840,-K1**
- **Fuel (Calif., w/VapDiv.)** ... **BF865,-K**
- **Fuel (Opt. 3 15/32 In. Ele.)** ... **PF827**
- **Oil Vapor** ... **SA4141**
- **Fuel Vapor** ... **SA2046**
- **Trans.** ... **18032**

Colt 4-1600cc (1.6L) 2 Bbl. VIN K
- **Lube** ... **B141**
- **Fuel** ... **BF833,-K2**

Colt 4-2000cc (2.0L) 2 Bbl. VIN U
- **Lube** ... **B141**
- **Fuel** ... **BF833,-K2**

Coronet 6-225 (3.7L) 1 Bbl. VIN C
- **Lube** ... **B233**
- **Air** ... **PA650**
- **Fuel (Exc. Calif.)** ... **BF840,-K1**
- **Fuel (Calif.)** ... **BF865,-K**
- **Fuel (Opt. 3 15/32 In. Ele.)** ... **PF827**
- **Fuel Vapor** ... **SA2046**
- **Trans.** ... **18032**

DODGE 1975 (Cont'd.)

Coronet V8-318 (5.2L) 2 Bbl. VIN G
- **Lube** ... **B233**
- **Air** ... **PA615**
- **Fuel (Exc. Calif.)** ... **BF840,-K1**
- **Fuel (Calif., w/VapDiv.)** ... **BF865,-K**
- **Oil Vapor** ... **SA4141**
- **Fuel Vapor** ... **SA2046**
- **Trans.** ... **18032**

Coronet V8-360 (5.9L) 2,4 Bbl. VIN J,K,L
- **Lube** ... **B233**
- **Air** ... **PA2010**
- **Fuel (Exc. Calif.)** ... **BF840,-K1**
- **Fuel (Calif., w/VapDiv.)** ... **BF865,-K**
- **Fuel (Opt. 3 15/32 In. Ele.)** ... **PF827**
- **Oil Vapor** ... **SA4141**
- **Fuel Vapor** ... **SA2046**
- **Trans.** ... **18032**

Coronet V8-400 (6.6L) 2,4 Bbl. VIN M,N,P
- **Lube** ... **B233**
- **Air** ... **PA2010**
- **Fuel (Exc. Calif.)** ... **BF840,-K1**
- **Fuel (Calif., w/VapDiv.)** ... **BF865,-K**
- **Fuel (Opt. 3 15/32 In. Ele.)** ... **PF827**
- **Oil Vapor** ... **SA4141**
- **Fuel Vapor** ... **SA2046**
- **Trans.** ... **18032**

Coronet V8-440 (7.2L) 4 Bbl. VIN U
- **Lube** ... **B233**
- **Air (2 3/4 In.)** ... **PA2010**
- **Air (3 1/2 In.)** ... **PA693**
- **Fuel (Exc. Calif.)** ... **BF840,-K1**
- **Fuel (Calif., Exc. HiPerf.)** ... **BF865,-K**
- **Fuel (Opt. 3 15/32 In. Ele.)** ... **PF827**
- **Oil Vapor** ... **SA4141**
- **Fuel Vapor** ... **SA2046**
- **Trans.** ... **18032**

Dart 6-225 (3.7L) 1 Bbl. VIN C
- **Lube** ... **B233**
- **Air** ... **PA650**
- **Fuel (Exc. Calif.)** ... **BF840,-K1**
- **Fuel (Calif.)** ... **BF865,-K**
- **Fuel (Opt. 3 15/32 In. Ele.)** ... **PF827**
- **Fuel Vapor** ... **SA2046**
- **Trans.** ... **18032**

Dart V8-318 (5.2L) 2 Bbl. VIN G
- **Lube** ... **B233**
- **Air** ... **PA615**
- **Fuel (Exc. Calif.)** ... **BF840,-K1**
- **Fuel (Calif., w/VapDiv.)** ... **BF865,-K**
- **Oil Vapor** ... **SA4141**
- **Fuel Vapor** ... **SA2046**
- **Trans.** ... **18032**

Dart V8-360 (5.9L) 4 Bbl. VIN L
- **Lube** ... **B233**
- **Air** ... **PA2010**
- **Fuel (Exc. Calif.)** ... **BF840,-K1**
- **Fuel (Calif., w/VapDiv.)** ... **BF865,-K**
- **Fuel (Opt. 3 15/32 In. Ele.)** ... **PF827**
- **Oil Vapor** ... **SA4141**
- **Fuel Vapor** ... **SA2046**
- **Trans.** ... **18032**

Monaco, Royal Monaco V8-318 (5.2L) 2 Bbl. VIN G
- **Lube** ... **B233**
- **Air** ... **PA615**
- **Fuel (Exc. Calif.)** ... **BF840,-K1**
- **Fuel (Calif., w/VapDiv.)** ... **BF865,-K**
- **Oil Vapor** ... **SA4141**
- **Fuel Vapor** ... **SA2046**
- **Trans.** ... **18032**

Monaco, Royal Monaco V8-360 (5.9L) 2,4 Bbl. VIN J,K,L
- **Lube** ... **B233**
- **Air** ... **PA2010**
- **Fuel (Exc. Calif.)** ... **BF840,-K1**
- **Fuel (Calif., w/VapDiv.)** ... **BF865,-K**
- **Fuel (Opt. 3 15/32 In. Ele.)** ... **PF827**
- **Oil Vapor** ... **SA4141**
- **Fuel Vapor** ... **SA2046**
- **Trans.** ... **18032**

DODGE 1975 (Cont'd.)

Monaco, Royal Monaco V8-400 (6.6L) 2,4 Bbl. VIN M,N,P
- **Lube** ... **B233**
- **Air** ... **PA2010**
- **Fuel (Exc. Calif.)** ... **BF840,-K1**
- **Fuel (Calif., w/VapDiv.)** ... **BF865,-K**
- **Fuel (Opt. 3 15/32 In. Ele.)** ... **PF827**
- **Oil Vapor** ... **SA4141**
- **Fuel Vapor** ... **SA2046**
- **Trans.** ... **18032**

Monaco, Royal Monaco V8-440 (7.2L) 4 Bbl. VIN T,U
- **Lube** ... **B233**
- **Air (2 3/4 In.)** ... **PA2010**
- **Air (3 1/2 In.)** ... **PA693**
- **Fuel (Exc. Calif.)** ... **BF840,-K1**
- **Fuel (Calif., Exc. HiPerf.)** ... **BF865,-K**
- **Fuel (Opt. 3 15/32 In. Ele.)** ... **PF827**
- **Oil Vapor** ... **SA4141**
- **Fuel Vapor** ... **SA2046**
- **Trans.** ... **18032**

Pickups, D Series V8-400 (6.6L) 2 Bbl. VIN J
- **Lube** ... **B233**
- **Air** ... **PA2052**
- **Fuel (Exc. Calif.)** ... **BF840,-K1**
- **Fuel (Calif., w/VapDiv.)** ... **BF865,-K**
- **Fuel (Opt. 3 15/32 In. Ele.)** ... **PF827**
- **Oil Vapor** ... **SA4141**
- **Fuel Vapor** ... **SA2046**
- **Trans.** ... **18032**

Pickups, D, W Series 6-225 (3.7L) 1 Bbl. VIN B
- **Lube** ... **B233**
- **Air (Exc. D300, W200, W300)** ... **PA650**
- **Fuel (Exc. Calif.)** ... **BF840,-K1**
- **Fuel (Calif.)** ... **BF865,-K**
- **Fuel (Opt. 3 15/32 In. Ele.)** ... **PF827**
- **Fuel Vapor** ... **SA2046**
- **Trans.** ... **18032**

Pickups, D, W Series V8-318 (5.2L) 2 Bbl. VIN E,G
- **Lube** ... **B233**
- **Air** ... **PA615**
- **Fuel (Exc. Calif.)** ... **BF840,-K1**
- **Fuel (Calif., w/VapDiv.)** ... **BF865,-K**
- **Fuel (3 15/32 In. Ele.)** ... **PF827**
- **Oil Vapor** ... **SA4141**
- **Fuel Vapor** ... **SA2046**
- **Trans.** ... **18032**

Pickups, D, W Series V8-360 (5.9L) 2 Bbl. VIN F
- **Lube** ... **B233**
- **Air** ... **PA2052**
- **Fuel (Exc. Calif.)** ... **BF840,-K1**
- **Fuel (Calif., w/VapDiv.)** ... **BF865,-K**
- **Fuel (Opt. 3 15/32 In. Ele.)** ... **PF827**
- **Oil Vapor** ... **SA4141**
- **Fuel Vapor** ... **SA2046**
- **Trans.** ... **18032**

Pickups, D, W Series V8-440 (7.2L) 4 Bbl. VIN D
- **Lube** ... **B233**
- **Air** ... **PA2052**
- **Fuel (Exc. Calif.)** ... **BF840,-K1**
- **Fuel (Calif., Exc. HiPerf.)** ... **BF865,-K**
- **Fuel (Opt. 3 15/32 In. Ele.)** ... **PF827**
- **Oil Vapor** ... **SA4141**
- **Fuel Vapor** ... **SA2046**
- **Trans.** ... **18032**

Ramcharger 6-225 (3.7L) 1 Bbl. VIN B
- **Lube** ... **B233**
- **Air (Exc. D300, W200, W300)** ... **PA650**
- **Fuel (Exc. Calif.)** ... **BF840,-K1**
- **Fuel (Calif.)** ... **BF865,-K**
- **Fuel (Opt. 3 15/32 In. Ele.)** ... **PF827**
- **Fuel Vapor** ... **SA2046**
- **Trans.** ... **18032**

DODGE 1975 (Cont'd.)

Ramcharger V8-318 (5.2L) 2 Bbl.
VIN E
Lube **B233**
Air **PA615**
Fuel (Exc. Calif.) **BF840,-K1**
Fuel (Calif., w/VapDiv.) **BF865,-K**
Fuel (3 15/32 In. Ele.) **PF827**
Oil Vapor **SA4141**
Fuel Vapor **SA2046**
Trans. **18032**

Ramcharger V8-360 (5.9L) 2 Bbl.
VIN F
Lube **B233**
Air **PA2052**
Fuel (Exc. Calif.) **BF840,-K1**
Fuel (Calif., w/VapDiv.) **BF865,-K**
Fuel (Opt. 3 15/32 In. Ele.) **PF827**
Oil Vapor **SA4141**
Fuel Vapor **SA2046**
Trans. **18032**

Ramcharger V8-440 (7.2L) 4 Bbl.
VIN D
Lube **B233**
Air **PA2052**
Fuel (Exc. Calif.) **BF840,-K1**
Fuel (Calif., Exc. HiPerf) **BF865,-K**
Fuel (Opt. 3 15/32 In. Ele.) **PF827**
Oil Vapor **SA4141**
Fuel Vapor **SA2046**
Trans. **18032**

Vans 6-225 (3.7L) 1 Bbl. VIN B
Lube **B233**
Air **PA650**
Fuel (Exc. Calif.) **BF840,-K1**
Fuel (Calif.) **BF865,-K**
Fuel (Opt. 3 15/32 In. Ele.) **PF827**
Fuel Vapor **SA2046**
Trans. **18032**

Vans V8-318 (5.2L) 2 Bbl. VIN E
Lube **B233**
Air **PA615**
Fuel (Exc. Calif.) **BF840,-K1**
Fuel (Calif., w/VapDiv.) **BF865,-K**
Oil Vapor **SA4141**
Fuel Vapor **SA2046**
Trans. **18032**

Vans V8-360 (5.9L) 2 Bbl. VIN F
Lube **B233**
Air **PA2052**
Fuel (Exc. Calif.) **BF840,-K1**
Fuel (Calif., w/VapDiv.) **BF865,-K**
Fuel (Opt. 3 15/32 In. Ele.) **PF827**
Oil Vapor **SA4141**
Fuel Vapor **SA2046**
Trans. **18032**

Vans V8-440 (7.2L) 4 Bbl. VIN D
Lube **B233**
Air **PA2052**
Fuel (Exc. Calif.) **BF840,-K1**
Fuel (Calif., Exc. HiPerf) **BF865,-K**
Fuel (Opt. 3 15/32 In. Ele.) **PF827**
Oil Vapor **SA4141**
Fuel Vapor **SA2046**
Trans. **18032**

1974

CB300 6-225 (3.7L) Carb. VIN B
Lube **B233**
Air **PA650**
Fuel (Exc. Calif.) **BF840,-K1**
Fuel Vapor **SA2046**
Trans. **18032**

CB300 V8-318 (5.2L) Carb. VIN E
Lube **B233**
Air **PA615**
Fuel (Exc. Calif.) **BF840,-K1**
Fuel Vapor **SA2046**
Trans. **18032**

CB300 V8-360 (5.9L) Carb. VIN F
Lube **B233**
Air **PA2052**
Fuel (Exc. Calif.) **BF840,-K1**
Fuel Vapor **SA2046**
Trans. **18032**

DODGE 1974 (Cont'd.)

Challenger V8-318 (5.2L) Carb.
VIN G
Lube **B233**
Air **PA615**
Fuel (Exc. Calif.) **BF840,-K1**
Oil Vapor **SA4141**
Fuel Vapor **SA2046**
Trans. **18032**

Challenger V8-360 (5.9L) Carb.
VIN L
Lube **B233**
Air **PA2010**
Fuel (Exc. Calif.) **BF840,-K1**
Oil Vapor **SA4141**
Fuel Vapor **SA2046**
Trans. **18032**

Charger 6-225 (3.7L) Carb. VIN C
Lube **B233**
Air **PA650**
Fuel (Exc. Calif.) **BF840,-K1**
Fuel (Opt. 3 15/32 In. Ele.) **PF827**
Oil Vapor **SA4141**
Fuel Vapor **SA2046**
Trans. **18032**

Charger V8-318 (5.2L) Carb. VIN G
Lube **B233**
Air **PA615**
Fuel (Exc. Calif.) **BF840,-K1**
Oil Vapor **SA4141**
Fuel Vapor **SA2046**
Trans. **18032**

Charger V8-360 (5.9L) Carb.
VIN J,K,L
Lube **B233**
Air **PA2010**
Fuel (Exc. Calif.) **BF840,-K1**
Oil Vapor **SA4141**
Fuel Vapor **SA2046**
Trans. **18032**

Charger V8-400 (6.6L) Carb. VIN N,P
Lube **B233**
Air **PA2010**
Fuel (Exc. Calif.) **BF840,-K1**
Oil Vapor **SA4141**
Fuel Vapor **SA2046**
Trans. **18032**

Charger V8-440 (7.2L) 4 Bbl. Carb.
VIN U
Lube **B233**
Air **PA2010**
Fuel (Exc. Calif.) **BF840,-K1**
Oil Vapor **SA4141**
Fuel Vapor **SA2046**
Trans. **18032**

Colt 4-1597cc (1.6L) Carb. VIN K
Lube **B173-S**
Fuel **BF928**

Colt 4-1995cc (2.0L) Carb. VIN U
Lube **B173-S**
Fuel **BF928**

Coronet 6-225 (3.7L) Carb. VIN C
Lube **B233**
Air **PA650**
Fuel (Exc. Calif.) **BF840,-K1**
Oil Vapor **SA4141**
Fuel Vapor **SA2046**
Trans. **18032**

Coronet V8-318 (5.2L) Carb. VIN G
Lube **B233**
Air **PA615**
Fuel (Exc. Calif.) **BF840,-K1**
Oil Vapor **SA4141**
Fuel Vapor **SA2046**
Trans. **18032**

Coronet V8-360 (5.9L) Carb. VIN J,K
Lube **B233**
Air **PA2010**
Fuel (Exc. Calif.) **BF840,-K1**
Oil Vapor **SA4141**
Fuel Vapor **SA2046**
Trans. **18032**

DODGE 1974 (Cont'd.)

Coronet V8-400 (6.6L) Carb. VIN N,P
Lube **B233**
Air **PA2010**
Fuel (Exc. Calif.) **BF840,-K1**
Oil Vapor **SA4141**
Fuel Vapor **SA2046**
Trans. **18032**

Coronet V8-440 (7.2L) 4 Bbl. Carb.
VIN U
Lube **B233**
Air **PA2010**
Fuel (Exc. Calif.) **BF840,-K1**
Oil Vapor **SA4141**
Fuel Vapor **SA2046**
Trans. **18032**

Dart 6-198 (3.2L) Carb. VIN B
Lube **B233**
Air **PA650**
Fuel (Exc. Calif.) **BF840,-K1**
Oil Vapor **SA4141**
Fuel Vapor **SA2046**
Trans. **18032**

Dart 6-225 (3.7L) Carb. VIN C
Lube **B233**
Air **PA650**
Fuel (Exc. Calif.) **BF840,-K1**
Oil Vapor **SA4141**
Fuel Vapor **SA2046**
Trans. **18032**

Dart V8-318 (5.2L) Carb. VIN G
Lube **B233**
Air **PA615**
Fuel (Exc. Calif.) **BF840,-K1**
Oil Vapor **SA4141**
Fuel Vapor **SA2046**
Trans. **18032**

Dart V8-360 (5.9L) Carb. VIN L
Lube **B233**
Air **PA2010**
Fuel (Exc. Calif.) **BF840,-K1**
Oil Vapor **SA4141**
Fuel Vapor **SA2046**
Trans. **18032**

M300, M350 V8-318 (5.2L) Carb.
VIN G
Lube **B233**
Air **PA615**
Fuel (Exc. Calif.) **BF840,-K1**
Fuel Vapor **SA2046**

M300, M350 V8-440 (7.2L) Carb.
VIN A
Lube **B233**
Air **PA2052**
Fuel (Exc. Calif.) **BF840,-K1**
Fuel Vapor **SA2046**

Monaco V8-360 (5.9L) Carb. VIN J,K
Lube **B233**
Air **PA2010**
Fuel (Exc. Calif.) **BF840,-K1**
Oil Vapor **SA4141**
Fuel Vapor **SA2046**
Trans. **18032**

Monaco V8-400 (6.6L) Carb.
VIN M,N,P
Lube **B233**
Air **PA2010**
Fuel (Exc. Calif.) **BF840,-K1**
Oil Vapor **SA4141**
Fuel Vapor **SA2046**
Trans. **18032**

Monaco V8-440 (7.2L) 4 Bbl. Carb.
VIN T,U
Lube **B233**
Air **PA2010**
Fuel (Exc. Calif.) **BF840,-K1**
Oil Vapor **SA4141**
Fuel Vapor **SA2046**
Trans. **18032**

DODGE 1974 (Cont'd.)

Pickups, D, W Series 6-225 (3.7L)
Carb. VIN B
Lube **B2**
Air (Exc. D300, W200, W300) **PA650**
Fuel (Exc. Calif.) **BF840,-K1**
Fuel (Opt. 3 15/32 In. Ele.) **PF827**
Oil Vapor **SA4141**
Fuel Vapor **SA2046**
Trans. **18032**

Pickups, D, W Series V8-318 (5.2L)
Carb. VIN E
Lube **B2**
Air **PA615**
Fuel (Exc. Calif.) **BF840,-K1**
Oil Vapor **SA4141**
Fuel Vapor **SA2046**
Trans. **18032**

Pickups, D, W Series V8-360 (5.9L)
Carb. VIN F,T
Lube **B2**
Air **PA2052**
Fuel (Exc. Calif.) **BF840,-K1**
Oil Vapor **SA4141**
Fuel Vapor **SA2046**
Trans. **18032**

Pickups, D, W Series V8-400 (6.6L)
Carb. VIN J
Lube **B2**
Air **PA2052**
Fuel (Exc. Calif.) **BF840,-K1**
Oil Vapor **SA4141**
Fuel Vapor **SA2046**
Trans. **18032**

Pickups, D, W Series V8-440 (7.2L)
4 Bbl. Carb. VIN D
Lube **B2**
Air **PA2052**
Fuel (Exc. Calif.) **BF840,-K1**
Fuel (Opt. 3 15/32 In. Ele.) **PF827**
Oil Vapor **SA4141**
Fuel Vapor **SA2046**
Trans. **18032**

Ramcharger V8-318 (5.2L) Carb.
VIN E
Lube **B233**
Air **PA615**
Fuel (Exc. Calif.) **BF840,-K1**
Oil Vapor **SA4141**
Fuel Vapor **SA2046**
Trans. **18032**

Ramcharger V8-360 (5.9L) Carb.
VIN F,T
Lube **B233**
Air **PA2052**
Fuel (Exc. Calif.) **BF840,-K1**
Oil Vapor **SA4141**
Fuel Vapor **SA2046**
Trans. **18032**

Ramcharger V8-440 (7.2L) 4 Bbl.
Carb. VIN D
Lube **B233**
Air **PA2052**
Fuel (Exc. Calif.) **BF840,-K1**
Fuel (Opt. 3 15/32 In. Ele.) **PF827**
Oil Vapor **SA4141**
Fuel Vapor **SA2046**
Trans. **18032**

Vans 6-225 (3.7L) 1 Bbl. Carb. VIN B
Lube **B233**
Air **PA650**
Fuel (Exc. Calif.) **BF840,-K1**
Fuel (Opt. 3 15/32 In. Ele.) **PF827**
Oil Vapor **SA4141**
Fuel Vapor **SA2046**
Trans. **18032**

Vans V8-318 (5.2L) Carb. VIN E
Lube **B2**
Air **PA615**
Fuel (Exc. Calif.) **BF840,-K1**
Oil Vapor **SA4141**
Fuel Vapor **SA2046**
Trans. **18032**

OBS = Obsolete. Availability Limited to Distributor Stock.

DODGE 1974 (Cont'd.)

Vans V8-360 (5.9L) Carb. VIN F,T
- **Lube**.....B2
- **Air**.....PA2052
- **Fuel**.....BF840,-K1
- **Oil Vapor**.....SA4141
- **Fuel Vapor**.....SA2046
- **Trans.**.....18032

1973

Challenger V8-318 (5.2L) Carb. VIN G
- **Lube**.....B233
- **Air**.....PA615
- **Fuel**.....BF840,-K1
- **Oil Vapor**.....SA4141
- **Fuel Vapor**.....SA2046
- **Trans.**.....18032

Challenger V8-340 (5.6L) Carb. VIN H
- **Lube**.....B233
- **Air**.....PA2010
- **Fuel**.....BF840,-K1
- **Oil Vapor**.....SA4141
- **Fuel Vapor**.....SA2046
- **Trans.**.....18032

Charger 6-225 (3.7L) Carb. VIN C
- **Lube**.....B233
- **Air**.....PA650
- **Fuel**.....BF840,-K1
- **Oil Vapor**.....SA4141
- **Fuel Vapor**.....SA2046
- **Trans.**.....18032

Charger V8-318 (5.2L) Carb. VIN G
- **Lube**.....B233
- **Air**.....PA615
- **Fuel**.....BF840,-K1
- **Oil Vapor**.....SA4141
- **Fuel Vapor**.....SA2046
- **Trans.**.....18032

Charger V8-340 (5.6L) Carb. VIN H
- **Lube**.....B233
- **Air**.....PA2010
- **Fuel**.....BF840,-K1
- **Oil Vapor**.....SA4141
- **Fuel Vapor**.....SA2046
- **Trans.**.....18032

Charger V8-400 (6.6L) Carb. VIN M,P
- **Lube**.....B233
- **Air**.....PA2010
- **Fuel**.....BF840,-K1
- **Oil Vapor**.....SA4141
- **Fuel Vapor**.....SA2046
- **Trans.**.....18032

Charger V8-440 (7.2L) 4 Bbl. Carb. VIN U
- **Lube**.....B233
- **Air**.....PA2010
- **Fuel**.....BF840,-K1
- **Oil Vapor**.....SA4141
- **Fuel Vapor**.....SA2046
- **Trans.**.....18032

Colt 4-1597cc (1.6L) Carb. VIN K
- **Fuel**.....BF928
- **Oil Vapor**.....N/R
- **Fuel Vapor**.....SA2046

Coronet 6-225 (3.7L) Carb. VIN C
- **Lube**.....B233
- **Air**.....PA650
- **Fuel**.....BF840,-K1
- **Oil Vapor**.....SA4141
- **Fuel Vapor**.....SA2046
- **Trans.**.....18032

Coronet V8-318 (5.2L) Carb. VIN G
- **Lube**.....B233
- **Air**.....PA615
- **Fuel**.....BF840,-K1
- **Oil Vapor**.....SA4141
- **Fuel Vapor**.....SA2046
- **Trans.**.....18032

Coronet V8-340 (5.6L) Carb. VIN H
- **Lube**.....B233
- **Air**.....PA2010
- **Fuel**.....BF840,-K1
- **Oil Vapor**.....SA4141
- **Fuel Vapor**.....SA2046
- **Trans.**.....18032

DODGE 1973 (Cont'd.)

Coronet V8-360 (5.9L) Carb. VIN K
- **Lube**.....B233
- **Air**.....PA2010
- **Fuel**.....BF840,-K1
- **Fuel Vapor**.....SA2046
- **Trans.**.....18032

Coronet V8-400 (6.6L) Carb. VIN M,P
- **Lube**.....B233
- **Air**.....PA2010
- **Fuel**.....BF840,-K1
- **Oil Vapor**.....SA4141
- **Fuel Vapor**.....SA2046
- **Trans.**.....18032

Coronet V8-440 (7.2L) 4 Bbl. Carb. VIN U
- **Lube**.....B233
- **Air**.....PA2010
- **Fuel**.....BF840,-K1
- **Oil Vapor**.....SA4141
- **Fuel Vapor**.....SA2046
- **Trans.**.....18032

Dart 6-198 (3.2L) Carb. VIN B
- **Lube**.....B233
- **Air**.....PA650
- **Fuel**.....BF840,-K1
- **Oil Vapor**.....SA4141
- **Fuel Vapor**.....SA2046
- **Trans.**.....18032

Dart 6-225 (3.7L) Carb. VIN C
- **Lube**.....B233
- **Air**.....PA650
- **Fuel**.....BF840,-K1
- **Oil Vapor**.....SA4141
- **Fuel Vapor**.....SA2046
- **Trans.**.....18032

Dart V8-318 (5.2L) Carb. VIN G
- **Lube**.....B233
- **Air**.....PA615
- **Fuel**.....BF840,-K1
- **Oil Vapor**.....SA4141
- **Fuel Vapor**.....SA2046
- **Trans.**.....18032

Dart V8-340 (5.6L) Carb. VIN H
- **Lube**.....B233
- **Air**.....PA2010
- **Fuel**.....BF840,-K1
- **Oil Vapor**.....SA4141
- **Fuel Vapor**.....SA2046
- **Trans.**.....18032

Monaco V8-360 (5.9L) Carb. VIN K
- **Lube**.....B233
- **Air**.....PA2010
- **Fuel**.....BF840,-K1
- **Oil Vapor**.....SA4141
- **Fuel Vapor**.....SA2046
- **Trans.**.....18032

Monaco V8-400 (6.6L) Carb. VIN M,P
- **Lube**.....B233
- **Air**.....PA2010
- **Fuel**.....BF840,-K1
- **Oil Vapor**.....SA4141
- **Fuel Vapor**.....SA2046
- **Trans.**.....18032

Monaco V8-440 (7.2L) 4 Bbl. Carb. VIN T
- **Lube**.....B233
- **Air**.....PA2010
- **Fuel**.....BF840,-K1
- **Oil Vapor**.....SA4141
- **Fuel Vapor**.....SA2046
- **Trans.**.....18032

Pickups, D, W Series 6-225 (3.7L) Carb. VIN B
- **Lube**.....B2
- **Air (Exc. D300, W200, W300)**.....PA650
- **Fuel (Exc. Calif.)**.....BF840,-K1
- **Fuel (Opt. 3 15/32 In. Ele.)**...PF827
- **Oil Vapor**.....SA4141
- **Fuel Vapor**.....SA2046
- **Trans.**.....18032

DODGE 1973 (Cont'd.)

Pickups, D, W Series V8-318 (5.2L) Carb. VIN E
- **Lube**.....B2
- **Air**.....PA615
- **Fuel**.....BF840,-K1
- **Oil Vapor**.....SA4141
- **Fuel Vapor**.....SA2046
- **Trans.**.....18032

Pickups, D, W Series V8-360 (5.9L) Carb. VIN F
- **Lube**.....B2
- **Air**.....PA2052
- **Fuel**.....BF840,-K1
- **Oil Vapor**.....SA4141
- **Fuel Vapor**.....SA2046
- **Trans.**.....18032

Pickups, D, W Series V8-400 (6.6L) Carb.
- **Lube**.....B2
- **Air**.....PA2052
- **Fuel**.....BF840,-K1
- **Oil Vapor**.....SA4141
- **Fuel Vapor**.....SA2046
- **Trans.**.....18032

Pickups, D, W Series V8-440 (7.2L) 4 Bbl. Carb. VIN D
- **Lube**.....B2
- **Air**.....PA2010
- **Fuel**.....BF840,-K1
- **Oil Vapor**.....SA4141
- **Fuel Vapor**.....SA2046
- **Trans.**.....18032

Polara V8-318 (5.2L) Carb. VIN G
- **Lube**.....B233
- **Air**.....PA615
- **Fuel**.....BF840,-K1
- **Oil Vapor**.....SA4141
- **Fuel Vapor**.....SA2046
- **Trans.**.....18032

Polara V8-360 (5.9L) Carb. VIN K
- **Lube**.....B233
- **Air**.....PA2010
- **Fuel**.....BF840,-K1
- **Oil Vapor**.....SA4141
- **Fuel Vapor**.....SA2046
- **Trans.**.....18032

Polara V8-400 (6.6L) Carb. VIN M,P
- **Lube**.....B233
- **Air**.....PA2010
- **Fuel**.....BF840,-K1
- **Oil Vapor**.....SA4141
- **Fuel Vapor**.....SA2046
- **Trans.**.....18032

Polara V8-440 (7.2L) 4 Bbl. Carb. VIN T
- **Lube**.....B233
- **Air**.....PA2010
- **Fuel**.....BF840,-K1
- **Oil Vapor**.....SA4141
- **Fuel Vapor**.....SA2046
- **Trans.**.....18032

Vans 6-225 (3.7L) 1 Bbl. Carb. VIN B
- **Lube**.....B2
- **Air**.....PA650
- **Fuel (Exc. Calif.)**.....BF840,-K1
- **Fuel (Opt. 3 15/32 In. Ele.)**...PF827
- **Oil Vapor**.....SA4141
- **Fuel Vapor**.....SA2046
- **Trans.**.....18032

Vans V8-318 (5.2L) Carb. VIN E
- **Lube**.....B2
- **Air**.....PA615
- **Fuel (Exc. Calif.)**.....BF840,-K1
- **Oil Vapor**.....SA4141
- **Fuel Vapor**.....SA2046
- **Trans.**.....18032

Vans V8-360 (5.9L) Carb. VIN F
- **Lube**.....B2
- **Air**.....PA2052
- **Fuel**.....BF840,-K1
- **Oil Vapor**.....SA4141
- **Fuel Vapor**.....SA2046
- **Trans.**.....18032

DODGE (Cont'd.)

1972

Challenger 6-225 (3.7L) Carb. VIN C
- **Lube**.....B2
- **Air**.....PA650
- **Fuel**.....BF840,-K1
- **Oil Vapor**.....SA4141
- **Fuel Vapor**.....SA2046
- **Trans.**.....18032

Challenger V8-318 (5.2L) Carb. VIN G
- **Lube**.....B233
- **Air**.....PA615
- **Fuel**.....BF840,-K1
- **Oil Vapor**.....SA4141
- **Fuel Vapor**.....SA2046
- **Trans.**.....18032

Challenger V8-340 (5.6L) Carb. VIN H
- **Lube**.....B2
- **Air**.....PA2010
- **Fuel**.....BF840,-K1
- **Oil Vapor**.....SA4141
- **Fuel Vapor**.....SA2046
- **Trans.**.....18032

Charger 6-225 (3.7L) Carb. VIN C
- **Lube**.....B2
- **Air**.....PA650
- **Fuel**.....BF840,-K1
- **Oil Vapor**.....SA4141
- **Fuel Vapor**.....SA2046
- **Trans.**.....18032

Charger V8-318 (5.2L) Carb. VIN G
- **Lube**.....B233
- **Air**.....PA615
- **Fuel**.....BF840,-K1
- **Oil Vapor**.....SA4141
- **Fuel Vapor**.....SA2046
- **Trans.**.....18032

Charger V8-340 (5.6L) Carb. VIN H
- **Lube**.....B2
- **Air**.....PA2010
- **Fuel**.....BF840,-K1
- **Oil Vapor**.....SA4141
- **Fuel Vapor**.....SA2046
- **Trans.**.....18032

Charger V8-400 (6.6L) Carb. VIN M, P
- **Lube**.....B2
- **Air**.....PA2010
- **Fuel**.....BF840,-K1
- **Oil Vapor**.....SA4141
- **Fuel Vapor**.....SA2046
- **Trans.**.....18032

Charger V8-440 (7.2L) 2,4 Bbl. Carb. VIN U,V
- **Lube**.....B2
- **Air**.....PA2010
- **Fuel**.....BF840,-K1
- **Oil Vapor**.....SA4141
- **Fuel Vapor**.....SA2046
- **Trans.**.....18032

Colt 4-1597cc (1.6L) Carb. VIN K
- **Fuel Vapor**.....N/R

Coronet 6-225 (3.7L) Carb. VIN C
- **Lube**.....B2
- **Air**.....PA650
- **Fuel**.....BF840,-K1
- **Oil Vapor**.....SA4141
- **Fuel Vapor**.....SA2046
- **Trans.**.....18032

Coronet V8-318 (5.2L) Carb. VIN G
- **Lube**.....B233
- **Air**.....PA615
- **Fuel**.....BF840,-K1
- **Oil Vapor**.....SA4141
- **Fuel Vapor**.....SA2046
- **Trans.**.....18032

Coronet V8-340 (5.6L) Carb. VIN H
- **Lube**.....B2
- **Air**.....PA2010
- **Fuel**.....BF840,-K1
- **Oil Vapor**.....SA4141
- **Fuel Vapor**.....SA2046
- **Trans.**.....18032

OBS = Obsolete. Availability Limited to Distributor Stock.

DODGE 1972 (Cont'd.)

Coronet V8-400 (6.6L) Carb. VIN M,P
- **Lube** B2
- **Air** PA2010
- **Fuel** BF840,-K1
- **Oil Vapor** SA4141
- **Fuel Vapor** SA2046
- **Trans.** 18032

Coronet V8-440 (7.2L) 4 Bbl. Carb. VIN U
- **Lube** B2
- **Air** PA2010
- **Fuel** BF840,-K1
- **Oil Vapor** SA4141
- **Fuel Vapor** SA2046
- **Trans.** 18032

Dart 6-198 (3.2L) Carb. VIN B
- **Lube** B2
- **Air** PA650
- **Fuel** BF840,-K1
- **Oil Vapor** SA4141
- **Fuel Vapor** SA2046
- **Trans.** 18032

Dart 6-225 (3.7L) Carb. VIN C
- **Lube** B2
- **Air** PA650
- **Fuel** BF840,-K1
- **Oil Vapor** SA4141
- **Fuel Vapor** SA2046
- **Trans.** 18032

Dart V8-318 (5.2L) Carb. VIN G
- **Lube** B233
- **Air** PA615
- **Fuel** BF840,-K1
- **Oil Vapor** SA4141
- **Fuel Vapor** SA2046
- **Trans.** 18032

Dart V8-340 (5.6L) Carb. VIN H
- **Lube** B2
- **Air** PA2010
- **Fuel** BF840,-K1
- **Oil Vapor** SA4141
- **Fuel Vapor** SA2046
- **Trans.** 18032

Monaco V8-360 (5.9L) Carb. VIN K
- **Lube** B2
- **Air** PA2010
- **Fuel** BF840,-K1
- **Oil Vapor** SA4141
- **Fuel Vapor** SA2046
- **Trans.** 18032

Monaco V8-400 (6.6L) Carb. VIN M,P
- **Lube** B2
- **Air** PA2010
- **Fuel** BF840,-K1
- **Oil Vapor** SA4141
- **Fuel Vapor** SA2046
- **Trans.** 18032

Monaco V8-440 (7.2L) 4 Bbl. Carb. VIN T
- **Lube** B2
- **Air** PA2010
- **Fuel** BF840,-K1
- **Oil Vapor** SA4141
- **Fuel Vapor** SA2046
- **Trans.** 18032

P200, P300 6-225 (3.7L) Carb. VIN B,X
- **Lube (Ele.)** P84-2
- **Lube (Spin-on)** B2
- **Air** PA650
- **Fuel** BF840,-K1
- **Fuel Vapor** SA2046
- **Trans.** 18032

P200, P300 V8-360 (5.9L) Carb. VIN Y
- **Lube (Ele.)** P84-2
- **Lube (Spin-on)** B2
- **Air** PA2052
- **Fuel** BF840,-K1
- **Fuel Vapor** SA2046
- **Trans.** 18032

DODGE 1972 (Cont'd.)

Pickups, D Series 6-225 (3.7L) Carb. VIN B
- **Lube** B2
- **Air** PA650
- **Fuel (Opt. 3 15/32 In. Ele.)** PF827
- **Fuel (Calif.)** BF840,-K1
- **Oil Vapor** SA4141
- **Fuel Vapor** SA2046

Pickups, D Series V8-318 (5.2L) Carb. VIN E
- **Lube (Ele.)** P84-2
- **Lube (Spin-on)** B2
- **Air** PA615
- **Fuel** BF840,-K1
- **Oil Vapor** SA4141
- **Fuel Vapor** SA2046

Pickups, D Series V8-360 (5.9L) Carb. VIN F
- **Lube** B2
- **Air** PA2052
- **Fuel** BF840,-K1
- **Fuel Vapor** SA2046

Pickups, D Series V8-400 (6.6L) Carb. VIN J
- **Lube** B2
- **Air** PA2052
- **Fuel** BF840,-K1
- **Fuel Vapor** SA2046

Pickups, W Series 6-225 (3.7L) Carb. VIN B
- **Lube** B2
- **Air** PA650
- **Fuel (Opt. 3 15/32 In. Ele.)** PF827
- **Fuel** BF840,-K1
- **Oil Vapor** SA4141
- **Fuel Vapor** SA2046

Pickups, W Series V8-318 (5.2L) Carb. VIN E
- **Lube (Ele.)** P84-2
- **Lube (Spin-on)** B2
- **Air** PA615
- **Fuel** BF840,-K1
- **Oil Vapor** SA4141
- **Fuel Vapor** SA2046

Pickups, W Series V8-360 (5.9L) Carb. VIN F
- **Lube (Ele.)** P84-2
- **Lube (Spin-on)** B2
- **Air** PA2052
- **Fuel** BF840,-K1
- **Oil Vapor** SA4141
- **Fuel Vapor** SA2046

Polara V8-318 (5.2L) Carb. VIN G
- **Lube** B233
- **Air** PA615
- **Fuel** BF840,-K1
- **Oil Vapor** SA4141
- **Fuel Vapor** SA2046
- **Trans.** 18032

Polara V8-360 (5.9L) Carb. VIN K
- **Lube** B2
- **Air** PA2010
- **Fuel** BF840,-K1
- **Oil Vapor** SA4141
- **Fuel Vapor** SA2046
- **Trans.** 18032

Polara V8-400 (6.6L) 2,4 Bbl. Carb. VIN M,P
- **Lube** B2
- **Air** PA2010
- **Fuel** BF840,-K1
- **Oil Vapor** SA4141
- **Fuel Vapor** SA2046
- **Trans.** 18032

Polara V8-440 (7.2L) 4 Bbl. Carb. VIN T
- **Lube** B2
- **Air** PA2010
- **Fuel** BF840,-K1
- **Oil Vapor** SA4141
- **Fuel Vapor** SA2046
- **Trans.** 18032

DODGE 1972 (Cont'd.)

Vans 6-225 (3.7L) 1 Bbl. Carb. VIN B
- **Lube** B2
- **Air** PA650
- **Fuel (Exc. Calif.)** BF840,-K1
- **Fuel (Opt. 3 15/32 In. Ele.)** PF827
- **Oil Vapor** SA4141
- **Fuel Vapor** SA2046

Vans V8-318 (5.2L) Carb. VIN E
- **Lube (Ele.)** P84-2
- **Lube (Spin-on)** B2
- **Air** PA615
- **Fuel (Exc. Calif.)** BF840,-K1
- **Oil Vapor** SA4141
- **Fuel Vapor** SA2046

Vans V8-360 (5.9L) Carb. VIN F
- **Lube (Ele.)** P84-2
- **Lube (Spin-on)** B2
- **Air** PA2052
- **Fuel** BF840,-K1
- **Oil Vapor** SA4141
- **Fuel Vapor** SA2046

1971

Challenger 6-198 (3.2L) Carb. VIN B
- **Lube** B2
- **Air** PA650
- **Fuel** BF840,-K1
- **Fuel Vapor** SA2046
- **Trans.** 18032

Challenger 6-225 (3.7L) Carb. VIN C
- **Lube** B2
- **Air** PA650
- **Fuel** BF840,-K1
- **Fuel Vapor** SA2046
- **Trans.** 18032

Challenger V8-318 (5.2L) Carb. VIN G
- **Lube** B2
- **Air** PA615
- **Fuel** BF840,-K1
- **Fuel Vapor** SA2046
- **Trans.** 18032

Challenger V8-340 (5.6L) Carb. VIN H,J
- **Lube** B2
- **Air** PA2010
- **Fuel** BF840,-K1
- **Fuel Vapor** SA2046
- **Trans.** 18032

Challenger V8-383 (6.3L) Carb. VIN L,N
- **Lube** B2
- **Air** PA2010
- **Fuel** BF840,-K1
- **Fuel Vapor** SA2046
- **Trans.** 18032

Challenger V8-426 (7.0L) Carb. VIN R
- **Lube** B2
- **Fuel** [2] BF840,-K1
- **Fuel Vapor** SA2046
- **Trans.** 18032

Challenger V8-440 (7.2L) Carb. VIN V
- **Lube** B2
- **Air** PA2010
- **Fuel** BF840,-K1
- **Fuel Vapor** SA2046
- **Trans.** 18032

Charger 6-225 (3.7L) Carb. VIN C
- **Lube** B2
- **Air** PA650
- **Fuel** BF840,-K1
- **Fuel Vapor** SA2046
- **Trans.** 18032

Charger V8-318 (5.2L) Carb. VIN G
- **Lube** B2
- **Air** PA615
- **Fuel** BF840,-K1
- **Fuel Vapor** SA2046
- **Trans.** 18032

Charger V8-340 (5.6L) Carb. VIN H
- **Air** PA2010
- **Fuel** BF840,-K1
- **Trans.** 18032

DODGE 1971 (Cont'd.)

Charger V8-383 (6.3L) Carb. VIN L,N
- **Lube** B2
- **Air** PA2010
- **Fuel** BF840,-K1
- **Fuel Vapor** SA2046
- **Trans.** 18032

Charger V8-426 (7.0L) Carb. VIN R
- **Lube** B2
- **Fuel** [2] BF840,-K1
- **Fuel Vapor** SA2046
- **Trans.** 18032

Charger V8-440 (7.2L) Carb. VIN U,V
- **Lube** B2
- **Air** PA2010
- **Fuel** BF840,-K1
- **Fuel Vapor** SA2046
- **Trans.** 18032

Coronet 6-225 (3.7L) Carb. VIN C
- **Lube** B2
- **Air** PA650
- **Fuel** BF840,-K1
- **Fuel Vapor** SA2046
- **Trans.** 18032

Coronet 6-318 (5.2L) Carb. VIN G
- **Lube** B2
- **Air** PA615
- **Fuel** BF840,-K1
- **Fuel Vapor** SA2046
- **Trans.** 18032

Coronet 6-383 (6.3L) Carb. VIN L,N
- **Lube** B2
- **Air** PA2010
- **Fuel** BF840,-K1
- **Fuel Vapor** SA2046
- **Trans.** 18032

Dart 6-198 (3.2L) Carb. VIN B
- **Lube** B2
- **Air** PA650
- **Fuel** BF840,-K1
- **Fuel Vapor** SA2046
- **Trans.** 18032

Dart 6-225 (3.7L) Carb. VIN C
- **Lube** B2
- **Air** PA650
- **Fuel** BF840,-K1
- **Fuel Vapor** SA2046
- **Trans.** 18032

Dart V8-318 (5.2L) Carb. VIN G
- **Lube** B2
- **Air** PA615
- **Fuel** BF840,-K1
- **Fuel Vapor** SA2046
- **Trans.** 18032

Dart V8-340 (5.6L) Carb. VIN H
- **Lube** B2
- **Air** PA2010
- **Fuel** BF840,-K1
- **Fuel Vapor** SA2046
- **Trans.** 18032

Monaco V8-360 (5.9L) Carb. VIN K
- **Lube** B2
- **Air** PA2010
- **Fuel** BF840,-K1
- **Fuel Vapor** SA2046
- **Trans.** 18032

Monaco V8-383 (6.3L) Carb. VIN L,N
- **Lube** B2
- **Air** PA2010
- **Fuel** BF840,-K1
- **Fuel Vapor** SA2046
- **Trans.** 18032

Monaco V8-440 (7.2L) 4 Bbl. Carb. VIN T
- **Lube** B2
- **Air** PA2010
- **Fuel** BF840,-K1
- **Fuel Vapor** SA2046
- **Trans.** 18032

P200, P300 6-225 (3.7L) Carb. VIN B
- **Lube (Ele.)** P84-2
- **Lube (Spin-on)** B2
- **Air** PA650
- **Fuel** BF840,-K1

OBS = Obsolete. Availability Limited to Distributor Stock.

DODGE 1971 (Cont'd.)

P200, P300 V8-360 (5.9L) Carb. VIN Y
- **Lube (Ele.)** ... **P84-2**
- **Lube (Spin-on)** ... **B2**
- **Fuel** ... **BF840,-K1**

Pickups, D Series 6-198 (3.2L) Carb. VIN A
- **Lube** ... **B2**
- **Air** ... **PA650**
- **Fuel** ... **BF840,-K1**
- **Oil Vapor** ... **SA4141**

Pickups, D Series 6-225 (3.7L) Carb. VIN B,X
- **Lube** ... **B2**
- **Air** ... **PA650**
- **Fuel (Opt. 3 15/32 In. Ele.)** ... **PF827**
- **Fuel** ... **BF840,-K1**
- **Oil Vapor** ... **SA4141**

Pickups, D Series V8-318 (5.2L) Carb. VIN E
- **Lube (Ele.)** ... **P84-2**
- **Lube (Spin-on)** ... **B2**
- **Air** ... **PA615**
- **Fuel** ... **BF840,-K1**
- **Oil Vapor** ... **SA4141**
- **Fuel Vapor** ... **SA2046**

Pickups, D Series V8-360 (5.9L) Carb. VIN F,Y
- **Lube** ... **B2**
- **Air** ... **PA2052**
- **Fuel** ... **BF840,-K1**
- **Oil Vapor** ... **SA4141**

Pickups, D Series V8-383 (6.3L) Carb. VIN J
- **Lube (Ele.)** ... **P84-2**
- **Lube (Spin-on)** ... **B2**
- **Air** ... **PA2010**
- **Fuel** ... **BF840,-K1**
- **Oil Vapor** ... **SA4141**

Pickups, W Series 6-225 (3.7L) Carb. VIN B,X
- **Lube** ... **B2**
- **Air** ... **PA650**
- **Fuel (Opt. 3 15/32 In. Ele.)** ... **PF827**
- **Fuel** ... **BF840,-K1**
- **Oil Vapor** ... **SA4141**

Pickups, W Series V8-318 (5.2L) Carb. VIN E
- **Lube (Ele.)** ... **P84-2**
- **Lube (Spin-on)** ... **B2**
- **Air** ... **PA615**
- **Fuel** ... **BF840,-K1**
- **Oil Vapor** ... **SA4141**

Pickups, W Series V8-360 (5.9L) Carb. VIN F,Y
- **Lube** ... **B2**
- **Air** ... **PA2052**
- **Fuel** ... **BF840,-K1**
- **Oil Vapor** ... **SA4141**

Pickups, W Series V8-383 (6.3L) Carb. VIN J
- **Lube (Ele.)** ... **P84-2**
- **Lube (Spin-on)** ... **B2**
- **Air** ... **PA2010**
- **Fuel** ... **BF840,-K1**
- **Oil Vapor** ... **SA4141**

Polara 6-225 (3.7L) Carb. VIN C
- **Lube** ... **B2**
- **Air** ... **PA650**
- **Fuel** ... **BF840,-K1**
- **Fuel Vapor** ... **SA2046**
- **Trans.** ... **18032**

Polara V8-318 (5.2L) Carb. VIN G
- **Lube** ... **B2**
- **Air** ... **PA615**
- **Fuel** ... **BF840,-K1**
- **Fuel Vapor** ... **SA2046**
- **Trans.** ... **18032**

Polara V8-360 (5.9L) Carb. VIN K
- **Lube** ... **B2**
- **Air** ... **PA2010**
- **Fuel** ... **BF840,-K1**
- **Fuel Vapor** ... **SA2046**
- **Trans.** ... **18032**

DODGE 1971 (Cont'd.)

Polara V8-383 (6.3L) Carb. VIN L,N
- **Lube** ... **B2**
- **Air** ... **PA2010**
- **Fuel** ... **BF840,-K1**
- **Fuel Vapor** ... **SA2046**
- **Trans.** ... **18032**

Polara V8-440 (7.2L) Carb. VIN T
- **Lube** ... **B2**
- **Air** ... **PA2010**
- **Fuel** ... **BF840,-K1**
- **Fuel Vapor** ... **SA2046**
- **Trans.** ... **18032**

Vans 6-198 (3.2L) 1 Bbl. Carb. VIN A
- **Lube** ... **B2**
- **Air** ... **PA650**
- **Fuel** ... **BF840,-K1**
- **Oil Vapor** ... **SA4141**
- **Fuel Vapor** ... **N/R**

Vans 6-225 (3.7L) 1 Bbl. Carb. VIN B,C
- **Lube** ... **B2**
- **Air** ... **PA650**
- **Fuel (Exc. Calif.)** ... **BF840,-K1**
- **Fuel (Opt. 3 15/32 In. Ele.)** ... **PF827**
- **Oil Vapor** ... **SA4141**

Vans V8-318 (5.2L) Carb. VIN E,G
- **Lube (Ele.)** ... **P84-2**
- **Lube (Spin-on)** ... **B2**
- **Air** ... **PA615**
- **Fuel (Exc. Calif.)** ... **BF840,-K1**
- **Oil Vapor** ... **SA4141**

Vans V8-360 (5.9L) Carb. VIN F
- **Lube** ... **B2**
- **Air** ... **PA2052**
- **Fuel** ... **BF840,-K1**
- **Oil Vapor** ... **SA4141**

1970

A100 6-198 (3.2L) 1 Bbl. Carb. VIN A
- **Lube** ... **B2**
- **Air** ... **PA650**
- **Fuel (w/o Hoses & Clamps)** ... **BF840**
- **Fuel (w/Hoses & Clamps)** ... **BF840-K1**

A100 6-225 (3.7L) 1 Bbl. Carb. VIN B
- **Lube** ... **B2**
- **Air** ... **PA650**
- **Fuel (w/o Hoses & Clamps)** ... **BF840**
- **Fuel (w/Hoses & Clamps)** ... **BF840-K1**

A100 V8-318 (5.2L) 2 Bbl. Carb. VIN E
- **Lube (Ele.)** ... **P84-2**
- **Lube (Spin-on)** ... **B2**
- **Air** ... **PA615**
- **Fuel (w/o Hoses & Clamps)** ... **BF840**
- **Fuel (w/Hoses & Clamps)** ... **BF840-K1**

A108 Van 6-198 (3.2L) Carb.
- **Lube** ... **B2**
- **Air** ... **PA650**
- **Fuel** ... **BF840,-K1**
- **Oil Vapor** ... **N/R**

A108 Van 6-225 (3.7L) Carb. VIN C
- **Lube** ... **B2**
- **Air** ... **PA650**
- **Fuel** ... **BF840,-K1**
- **Oil Vapor** ... **N/R**

Challenger 6-198 (3.2L) 1 Bbl. Carb. VIN B
- **Lube** ... **B2**
- **Air** ... **PA650**
- **Fuel** ... **BF840,-K1**

Challenger 6-225 (3.7L) 1 Bbl. Carb. VIN C
- **Lube** ... **B2**
- **Air** ... **PA650**
- **Fuel** ... **BF840,-K1**

Challenger V8-318 (5.2L) 2 Bbl. Carb. VIN G
- **Lube** ... **B2**
- **Air** ... **PA615**
- **Fuel** ... **BF840,-K1**

DODGE 1970 (Cont'd.)

Challenger V8-340 (5.6L) 2,4 Bbl. Carb. VIN H
- **Lube** ... **B2**
- **Air** ... **PA2010**
- **Fuel** ... **BF840,-K1**

Challenger V8-383 (6.3L) 2,4 Bbl. Carb. VIN L,N
- **Lube** ... **B2**
- **Air** ... **PA2010**
- **Fuel** ... **BF840,-K1**

Challenger V8-426 (7.0L) Carb. VIN J
- **Lube** ... **B2**

Challenger V8-426 (7.0L) 4 Bbl. Carb. VIN R
- **Lube** ... **B2**
- **Fuel** ... [2] **BF840,-K1**

Challenger V8-440 (7.2L) 2,4 Bbl. Carb. VIN U,V
- **Lube** ... **B2**
- **Air** ... **PA2010**
- **Fuel** ... [2] **BF840,-K1**

Charger 6-225 (3.7L) 1 Bbl. Carb. VIN C
- **Lube** ... **B2**
- **Air** ... **PA650**
- **Fuel** ... **BF840,-K1**

Charger V8-318 (5.2L) 2 Bbl. Carb. VIN G
- **Lube** ... **B2**
- **Fuel** ... **BF840,-K1**

Charger V8-383 (6.3L) 2,4 Bbl. Carb. VIN L,N
- **Lube** ... **B2**
- **Air** ... **PA2010**
- **Fuel** ... **BF840,-K1**

Charger V8-426 (7.0L) Carb. VIN R
- **Lube** ... **B2**
- **Fuel** ... [2] **BF840,-K1**

Charger V8-440 (7.2L) 2,4 Bbl. Carb. VIN T,U,V
- **Lube** ... **B2**
- **Air** ... **PA2010**
- **Fuel** ... **BF840,-K1**

Coronet 6-225 (3.7L) 1 Bbl. Carb. VIN C
- **Lube** ... **B2**
- **Air** ... **PA650**
- **Fuel** ... **BF840,-K1**
- **Trans.** ... **18032**

Coronet V8-318 (5.2L) 2 Bbl. Carb. VIN G
- **Lube** ... **B2**
- **Air** ... **PA615**
- **Fuel** ... **BF840,-K1**
- **Trans.** ... **18032**

Coronet V8-383 (6.3L) 2,4 Bbl. Carb. VIN L,N
- **Lube** ... **B2**
- **Air** ... **PA2010**
- **Fuel** ... **BF840,-K1**
- **Trans.** ... **18032**

Coronet V8-426 (7.0L) Carb. VIN R
- **Lube** ... **B2**
- **Fuel** ... [2] **BF840,-K1**

Coronet V8-440 (7.2L) 2,4 Bbl. Carb. VIN T,U,V
- **Lube** ... **B2**
- **Air** ... **PA2010**
- **Fuel** ... **BF840,-K1**

Dart 6-198 (3.2L) 1 Bbl. Carb. VIN B
- **Lube** ... **B2**
- **Air** ... **PA650**
- **Fuel** ... **BF840,-K1**
- **Trans.** ... **18032**

Dart 6-225 (3.7L) 1 Bbl. Carb. VIN C
- **Lube** ... **B2**
- **Air** ... **PA650**
- **Fuel** ... **BF840,-K1**
- **Trans.** ... **18032**

DODGE 1970 (Cont'd.)

Dart V8-318 (5.2L) 2 Bbl. Carb. VIN G
- **Lube** ... **B2**
- **Air** ... **PA615**
- **Fuel** ... **BF840,-K1**
- **Trans.** ... **18032**

Dart V8-340 (5.6L) 4 Bbl. Carb. VIN H
- **Lube** ... **B2**
- **Air** ... **PA2010**
- **Fuel** ... **BF840,-K1**
- **Trans.** ... **18032**

Monaco V8-318 (5.2L) 2 Bbl. Carb. VIN G
- **Lube** ... **B2**
- **Fuel** ... **BF840,-K1**

Monaco V8-383 (6.3L) 2,4 Bbl. Carb. VIN L,N
- **Lube** ... **B2**
- **Air** ... **PA2010**
- **Fuel** ... **BF840,-K1**
- **Trans.** ... **18032**

Monaco V8-440 (7.2L) 4 Bbl. Carb. VIN T
- **Lube** ... **B2**
- **Air** ... **PA2010**
- **Fuel** ... **BF840,-K1**
- **Trans.** ... **18032**

P200, P300 6-225 (3.7L) Carb. VIN 6
- **Lube** ... **B2**
- **Air** ... **PA650**
- **Fuel** ... **BF840,-K1**

P200, P300 V8-360 (5.9L) Carb. VIN 8
- **Lube** ... **B2**
- **Air** ... **PA2010**
- **Fuel** ... **BF840,-K1**

Pickups, D Series 6-198 (3.2L) Carb. VIN A
- **Lube** ... **B2**
- **Air** ... **PA650**
- **Fuel** ... **BF840,-K1**
- **Oil Vapor** ... **N/R**

Pickups, D Series 6-225 (3.7L) 1 Bbl. Carb. VIN 6,B
- **Lube** ... **B2**
- **Air** ... **PA650**
- **Fuel (Opt. 3 15/32 In. Ele.)** ... **PF827**
- **Fuel** ... **BF840,-K1**
- **Oil Vapor** ... **N/R**

Pickups, D Series V8-318 (5.2L) 2 Bbl. Carb. VIN E
- **Lube (Ele.)** ... **P84-2**
- **Lube (Spin-on)** ... **B2**
- **Air** ... **PA615**
- **Fuel (Opt. 3 15/32 In. Ele.)** ... **PF827**
- **Fuel** ... **BF840,-K1**
- **Oil Vapor** ... **N/R**

Pickups, D Series V8-383 (6.3L) 4 Bbl. Carb. VIN J
- **Lube (Ele.)** ... **P84-2**
- **Lube (Spin-on)** ... **B2**
- **Air** ... **PA2010**
- **Fuel (Opt. 3 15/32 In. Ele.)** ... **PF827**
- **Fuel** ... **BF840,-K1**
- **Oil Vapor** ... **N/R**

Pickups, W Series 6-225 (3.7L) 1 Bbl. Carb. VIN 6,B,C
- **Lube** ... **B2**
- **Air** ... **PA650**
- **Fuel (Opt. 3 15/32 In. Ele.)** ... **PF827**
- **Fuel** ... **BF840,-K1**
- **Oil Vapor** ... **N/R**

Pickups, W Series V8-318 (5.2L) 2 Bbl. Carb. VIN E
- **Lube (Ele.)** ... **P84-2**
- **Lube (Spin-on)** ... **B2**
- **Air** ... **PA615**
- **Fuel** ... **BF840,-K1**
- **Oil Vapor** ... **N/R**

DODGE 1970 (Cont'd.)

Pickups, W Series V8-383 (6.3L) 4 Bbl. Carb. VIN J
- **Lube (Ele.)** ... **P84-2**
- **Lube (Spin-on)** ... **B2**
- **Air** ... **PA2010**
- **Fuel** ... **BF840,-K1**
- **Oil Vapor** ... **N/R**

Polara 6-225 (3.7L) 1 Bbl. Carb. VIN C
- **Lube** ... **B2**
- **Air** ... **PA650**
- **Fuel** ... **BF840,-K1**

Polara V8-318 (5.2L) 2 Bbl. Carb. VIN G
- **Lube** ... **B2**
- **Air** ... **PA615**
- **Fuel** ... **BF840,-K1**

Polara V8-383 (6.3L) 2,4 Bbl. Carb. VIN L,N
- **Lube** ... **B2**
- **Air** ... **PA2010**
- **Fuel** ... **BF840,-K1**

Polara V8-440 (7.2L) 4 Bbl. Carb. VIN T
- **Lube** ... **B2**
- **Air** ... **PA2010**
- **Fuel** ... **BF840,-K1**

1969

A100 6-170 (2.8L) Carb. VIN 6
- **Lube** ... **B2**
- **Air** ... **PA650**
- **Fuel (w/o Hoses & Clamps)** ... **BF840**
- **Fuel (w/Hoses & Clamps)** ... **BF840-K1**
- **Trans.** ... **18032**

A100 6-225 (3.7L) Carb. VIN 6
- **Lube** ... **B2**
- **Air** ... **PA650**
- **Fuel (w/o Hoses & Clamps)** ... **BF840**
- **Fuel (w/Hoses & Clamps)** ... **BF840-K1**
- **Oil Vapor** ... **N/R**

A100 V8-318 (5.2L) Carb. VIN 8
- **Lube** ... **P84-2**
- **Air** ... **PA615**
- **Fuel** ... **PF827**
- **Oil Vapor** ... **N/R**

A108 Van 6-170 (2.8L) Carb.
- **Lube** ... **B2**
- **Fuel** ... **BF840,-K1**
- **Oil Vapor** ... **N/R**
- **Trans.** ... **18032**

A108 Van 6-225 (3.7L) Carb.
- **Lube** ... **B2**
- **Air** ... **PA650**
- **Fuel** ... **BF840,-K1**
- **Oil Vapor** ... **N/R**

Charger 6-225 (3.7L) Carb. VIN B
- **Lube** ... **B2**
- **Air** ... **PA650**
- **Fuel** ... **BF840,-K1**
- **Trans.** ... **18032**

Charger V8-318 (5.2L) Carb. VIN F
- **Lube** ... **B2**
- **Air** ... **PA615**
- **Fuel** ... **BF840,-K1**
- **Trans.** ... **18032**

Charger V8-383 (6.3L) Carb. VIN G,H
- **Lube** ... **B2**
- **Air (VIN G)** ... **PA2010**
- **Air (VIN H)** ... **PA693**
- **Fuel** ... **BF840,-K1**
- **Trans.** ... **18032**

Charger V8-426 (7.0L) Carb. VIN J
- **Lube** ... **B2**
- **Fuel** ... **BF840,-K1**
- **Trans.** ... **18032**

Charger V8-440 (7.2L) Carb. VIN L
- **Lube** ... **B2**
- **Air** ... **PA693**
- **Fuel** ... **BF840,-K1**
- **Trans.** ... **18032**

DODGE 1969 (Cont'd.)

Coronet 6-225 (3.7L) Carb. VIN B
- **Lube** ... **B2**
- **Air** ... **PA650**
- **Fuel** ... **BF840,-K1**
- **Trans.** ... **18032**

Coronet V8-318 (5.2L) Carb. VIN F
- **Lube** ... **B2**
- **Air** ... **PA615**
- **Fuel** ... **BF840,-K1**
- **Trans.** ... **18032**

Coronet V8-383 (6.3L) Carb. VIN G,H
- **Lube** ... **B2**
- **Air (VIN G)** ... **PA2010**
- **Air (VIN H)** ... **PA693**
- **Fuel** ... **BF840,-K1**
- **Trans.** ... **18032**

Coronet V8-426 (7.0L) Carb. VIN J
- **Lube** ... **B2**
- **Fuel** ... **BF840,-K1**
- **Trans.** ... **18032**

Coronet V8-440 (7.2L) Carb. VIN L,M
- **Lube** ... **B2**
- **Air (VIN L)** ... **PA2010**
- **Air (VIN M)** ... **PA693**
- **Fuel** ... **BF840,-K1**
- **Trans.** ... **18032**

Dart 6-170 (2.8L) Carb. VIN A
- **Lube** ... **B2**
- **Air** ... **PA650**
- **Fuel** ... **BF840,-K1**
- **Trans.** ... **18032**

Dart 6-225 (3.7L) Carb. VIN B
- **Lube** ... **B2**
- **Air** ... **PA650**
- **Fuel** ... **BF840,-K1**
- **Trans.** ... **18032**

Dart V8-273 (4.5L) Carb. VIN D
- **Lube** ... **B2**
- **Air** ... **PA615**
- **Fuel** ... **BF840,-K1**
- **Trans.** ... **18032**

Dart V8-318 (5.2L) Carb. VIN F
- **Lube** ... **B2**
- **Air** ... **PA615**
- **Fuel** ... **BF840,-K1**
- **Trans.** ... **18032**

Dart V8-340 (5.6L) Carb. VIN P
- **Lube** ... **B2**
- **Air** ... **PA2010**
- **Fuel** ... **BF840,-K1**
- **Trans.** ... **18032**

Dart V8-383 (6.3L) Carb. VIN H
- **Lube** ... **B2**
- **Air** ... **PA2010**
- **Fuel** ... **BF840,-K1**
- **Trans.** ... **18032**

Monaco V8-318 (5.2L) Carb. VIN F
- **Lube** ... **B2**
- **Air** ... **PA615**
- **Fuel** ... **BF840,-K1**
- **Trans.** ... **18032**

Monaco V8-383 (6.3L) Carb. VIN G,H
- **Lube** ... **B2**
- **Air (VIN G)** ... **PA2010**
- **Air (VIN H)** ... **PA693**
- **Fuel** ... **BF840,-K1**
- **Trans.** ... **18032**

Monaco V8-440 (7.2L) Carb. VIN K
- **Lube** ... **B2**
- **Air** ... **PA693**
- **Fuel** ... **BF840,-K1**
- **Trans.** ... **18032**

P200, P300 6-225 (3.7L) Carb. VIN 6
- **Lube** ... **B2**
- **Air** ... **PA650**
- **Fuel** ... **BF840,-K1**
- **Oil Vapor** ... **N/R**

Pickups, D, W Series 6-225 (3.7L) Carb. VIN 6
- **Lube** ... **B2**
- **Air** ... **PA650**
- **Fuel** ... **BF840,-K1**
- **Oil Vapor** ... **N/R**

DODGE 1969 (Cont'd.)

Pickups, D, W Series V8-318 (5.2L) Carb. VIN 8
- **Lube** ... **P84-2**
- **Air** ... **PA615**
- **Fuel** ... **PF827**
- **Oil Vapor** ... **N/R**

Pickups, D, W Series V8-383 (6.3L) Carb. VIN 8
- **Lube** ... **B2**
- **Air** ... **PA693**
- **Fuel** ... **BF840,-K1**
- **Oil Vapor** ... **N/R**

Polara V8-318 (5.2L) Carb. VIN F
- **Lube** ... **B2**
- **Air** ... **PA615**
- **Fuel** ... **BF840,-K1**
- **Trans.** ... **18032**

Polara V8-383 (6.3L) Carb. VIN G,H
- **Lube** ... **B2**
- **Air (VIN G)** ... **PA2010**
- **Air (VIN H)** ... **PA693**
- **Fuel** ... **BF840,-K1**
- **Trans.** ... **18032**

Polara V8-440 (7.2L) Carb. VIN K
- **Lube** ... **B2**
- **Air** ... **PA693**
- **Fuel** ... **BF840,-K1**
- **Trans.** ... **18032**

1968

A100 6-170 (2.8L) Carb. VIN 6
- **Lube** ... **B2**
- **Air** ... **PA650**
- **Fuel (w/o Hoses & Clamps)** ... **BF840**
- **Fuel (w/Hoses & Clamps)** ... **BF840-K1**

A100 6-225 (3.7L) Carb. VIN 6
- **Lube** ... **B2**
- **Air** ... **PA650**
- **Fuel (w/o Hoses & Clamps)** ... **BF840**
- **Fuel (w/Hoses & Clamps)** ... **BF840-K1**
- **Oil Vapor** ... **N/R**

A100 V8-318 (5.2L) Carb. VIN 8
- **Lube** ... **P84-2**
- **Fuel** ... **PF827**
- **Oil Vapor** ... **N/R**

A108 Van 6-170 (2.8L) Carb.
- **Lube** ... **B2**
- **Air** ... **PA650**
- **Fuel** ... **BF840,-K1**

A108 Van 6-225 (3.7L) Carb.
- **Lube** ... **B2**
- **Air** ... **PA650**
- **Fuel** ... **BF840,-K1**
- **Oil Vapor** ... **N/R**

Charger 6-225 (3.7L) Carb. VIN B
- **Lube** ... **B2**
- **Air** ... **PA650**
- **Fuel** ... **BF840,-K1**

Charger V8-318 (5.2L) Carb. VIN F
- **Lube** ... **B2**
- **Air** ... **PA615**
- **Fuel** ... **BF840,-K1**
- **Trans.** ... **18032**

Charger V8-383 (6.3L) Carb. VIN G,H
- **Lube** ... **B2**
- **Air (VIN G)** ... **PA2010**
- **Air (VIN H)** ... **PA693**
- **Fuel** ... **BF840,-K1**
- **Trans.** ... **18032**

Charger V8-426 (7.0L) Carb. VIN J
- **Lube** ... **B2**
- **Fuel** ... **BF840,-K1**
- **Trans.** ... **18032**

Charger V8-440 (7.2L) Carb. VIN K
- **Lube** ... **B2**
- **Air** ... **PA693**
- **Fuel** ... **BF840,-K1**
- **Trans.** ... **18032**

DODGE 1968 (Cont'd.)

Coronet 6-225 (3.7L) Carb. VIN B
- **Lube** ... **B2**
- **Air** ... **PA650**
- **Fuel** ... **BF840,-K1**

Coronet V8-273 (4.5L) Carb. VIN D
- **Lube** ... **B2**
- **Air** ... **PA615**
- **Fuel** ... **BF840,-K1**
- **Trans.** ... **18032**

Coronet V8-318 (5.2L) Carb. VIN F
- **Lube** ... **B2**
- **Air** ... **PA615**
- **Fuel** ... **BF840,-K1**
- **Trans.** ... **18032**

Coronet V8-383 (6.3L) Carb. VIN G,H
- **Lube** ... **B2**
- **Fuel** ... **BF840,-K1**
- **Trans.** ... **18032**

Coronet V8-426 (7.0L) Carb. VIN J
- **Lube** ... **B2**
- **Fuel** ... **BF840,-K1**
- **Trans.** ... **18032**

Coronet V8-440 (7.2L) Carb. VIN L
- **Lube** ... **B2**
- **Air** ... **PA693**
- **Fuel** ... **BF840,-K1**
- **Trans.** ... **18032**

Dart 6-170 (2.8L) Carb. VIN A
- **Lube** ... **B2**
- **Air** ... **PA650**
- **Fuel** ... **BF840,-K1**
- **Trans.** ... **18032**

Dart 6-225 (3.7L) Carb. VIN B
- **Lube** ... **B2**
- **Air** ... **PA650**
- **Fuel** ... **BF840,-K1**
- **Trans.** ... **18032**

Dart V8-273 (4.5L) Carb. VIN D
- **Lube** ... **B2**
- **Air** ... **PA615**
- **Fuel** ... **BF840,-K1**
- **Trans.** ... **18032**

Dart V8-318 (5.2L) Carb. VIN F
- **Lube** ... **B2**
- **Air** ... **PA615**
- **Fuel** ... **BF840,-K1**
- **Trans.** ... **18032**

Dart V8-240 (5.6L) Carb. VIN P
- **Lube** ... **B2**
- **Fuel** ... **BF840,-K1**
- **Trans.** ... **18032**

Dart V8-383 (6.3L) Carb. VIN G,H
- **Lube** ... **B2**
- **Fuel** ... **BF840,-K1**
- **Trans.** ... **18032**

Monaco V8-318 (5.2L) Carb. VIN F
- **Lube** ... **B2**
- **Air** ... **PA615**
- **Fuel** ... **BF840,-K1**
- **Trans.** ... **18032**

Monaco V8-383 (6.3L) Carb. VIN G,H
- **Lube** ... **B2**
- **Air** ... **PA693**
- **Fuel** ... **BF840,-K1**
- **Trans.** ... **18032**

Monaco V8-440 (7.2L) Carb. VIN K,L
- **Lube** ... **B2**
- **Air (VIN K)** ... **PA693**
- **Air (VIN L)** ... **PA2010**
- **Fuel** ... **BF840,-K1**

P Series 6-225 (3.7L) Carb. VIN 6
- **Lube** ... **B2**
- **Air** ... **PA607**
- **Fuel** ... **BF840,-K1**
- **Trans.** ... **18032**

Pickups, D, W Series 6-225 (3.7L) Carb. VIN 6
- **Lube** ... **B2**
- **Air** ... **PA650**
- **Fuel** ... **BF840,-K1**
- **Oil Vapor** ... **N/R**

Pickups, D, W Series V8-318 (5.2L) Carb. VIN 8
- **Lube** ... **P84-2**
- **Fuel** ... **PF827**
- **Oil Vapor** ... **N/R**

OBS = Obsolete. Availability Limited to Distributor Stock.

DODGE 1968 (Cont'd.)

Pickups, D, W Series V8-383 (6.3L) Carb. VIN 8
- **Lube** ... **B2**
- **Air** ... **PA693**
- **Fuel** ... **BF840,-K1**
- **Oil Vapor** ... **N/R**

Polara V8-318 (5.2L) Carb. VIN F
- **Lube** ... **B2**
- **Air** ... **PA615**
- **Fuel** ... **BF840,-K1**

Polara V8-383 (6.3L) Carb. VIN G,H
- **Lube** ... **B2**
- **Air** ... **PA693**
- **Fuel** ... **BF840,-K1**
- **Trans.** ... **18032**

Polara V8-440 (7.2L) Carb. VIN K,L
- **Lube** ... **B2**
- **Air (VIN K)** ... **PA693**
- **Air (VIN L)** ... **PA2010**
- **Fuel** ... **BF840,-K1**

1967

A100 6-170 (2.8L) Carb.
- **Lube** ... **B2**
- **Air** ... **PA650**
- **Fuel (w/o Hoses & Clamps)** ... **BF840**
- **Fuel (w/Hoses & Clamps)** ... **BF840-K1**
- **Trans.** ... **18032**

A100 6-225 (3.7L) Carb.
- **Lube** ... **B2**
- **Air** ... **PA650**
- **Fuel (w/o Hoses & Clamps)** ... **BF840**
- **Fuel (w/Hoses & Clamps)** ... **BF840-K1**
- **Trans.** ... **18032**

A100 V8-318 (5.2L) Carb.
- **Lube** ... **B2**
- **Air** ... **PA607**
- **Fuel** ... **PF827**
- **Trans.** ... **18032**

A108 Van 6-170 (2.8L) Carb.
- **Lube** ... **B2**
- **Air** ... **PA650**
- **Fuel** ... **BF840,-K1**
- **Trans.** ... **18032**

A108 Van 6-225 (3.7L) Carb.
- **Lube** ... **B2**
- **Air** ... **PA650**
- **Fuel** ... **BF840,-K1**
- **Trans.** ... **18032**

Charger V8-318 (5.2L) Carb. VIN F
- **Lube** ... **B2**
- **Air** ... **PA615**
- **Fuel** ... **BF840,-K1**
- **Trans.** ... **18032**

Charger V8-383 (6.3L) Carb. VIN G,H
- **Lube (Ele.)** ... **P84-2**
- **Lube (Spin-on)** ... **B2**
- **Air (VIN G)** ... **PA693**
- **Air (VIN H)** ... **PA607**
- **Fuel** ... **BF840,-K1**
- **Trans.** ... **18032**

Charger V8-426 (7.0L) Carb. VIN J,R
- **Lube** ... **B2**
- **Fuel** ... **BF840,-K1**
- **Trans.** ... **18032**

Charger V8-440 (7.2L) Carb. VIN K,L
- **Lube** ... **B2**
- **Air** ... **PA693**
- **Fuel** ... **BF840,-K1**
- **Trans.** ... **18032**

Coronet 6-225 (3.7L) Carb.
- **Lube** ... **B2**
- **Air** ... **PA650**
- **Fuel** ... **BF840,-K1**
- **Trans.** ... **18032**

Coronet V8-273 (4.5L) Carb.
- **Lube** ... **B2**
- **Air** ... **PA615**
- **Fuel** ... **BF840,-K1**
- **Trans.** ... **18032**

DODGE 1967 (Cont'd.)

Coronet V8-318 (5.2L) Carb.
- **Lube** ... **B2**
- **Air** ... **PA615**
- **Fuel** ... **BF840,-K1**
- **Trans.** ... **18032**

Coronet V8-383 (6.3L) Carb. VIN G,H
- **Lube** ... **B2**
- **Air (VIN G)** ... **PA693**
- **Air (VIN H)** ... **PA607**
- **Fuel** ... **BF840,-K1**
- **Trans.** ... **18032**

Coronet V8-426 (7.0L) Carb. VIN J
- **Lube** ... **B2**
- **Air** ... **PA615**
- **Fuel** ... **BF840,-K1**
- **Trans.** ... **18032**

Coronet V8-440 (7.2L) Carb. VIN L
- **Lube** ... **B2**
- **Air** ... **PA693**
- **Fuel** ... **BF840,-K1**
- **Trans.** ... **18032**

Dart 6-170 (2.8L) Carb.
- **Lube** ... **B2**
- **Air** ... **PA650**
- **Fuel** ... **BF840,-K1**
- **Trans.** ... **18032**

Dart 6-225 (3.7L) Carb.
- **Lube** ... **B2**
- **Air** ... **PA650**
- **Fuel** ... **BF840,-K1**
- **Trans.** ... **18032**

Dart V8-273 (4.5L) Carb.
- **Lube** ... **B2**
- **Air** ... **PA615**
- **Fuel** ... **BF840,-K1**
- **Trans.** ... **18032**

Dart V8-383 (6.3L) Carb.
- **Lube** ... **B2**
- **Air** ... **PA607**
- **Fuel** ... **BF840,-K1**
- **Trans.** ... **18032**

Monaco V8-383 (6.3L) Carb. VIN G,H
- **Lube** ... **B2**
- **Air (VIN G)** ... **PA693**
- **Air (VIN H)** ... **PA607**
- **Fuel** ... **BF840,-K1**
- **Trans.** ... **18032**

Monaco V8-440 (7.2L) Carb.
- **Lube** ... **B2**
- **Air** ... **PA693**
- **Fuel** ... **BF840,-K1**
- **Trans.** ... **18032**

Pickups, D, W Series 6-225 (3.7L) Carb.
- **Lube** ... **B2**
- **Air** ... **PA650**
- **Fuel** ... **BF840,-K1**
- **Oil Vapor** ... **N/R**
- **Trans.** ... **18032**

Pickups, D, W Series V8-318 (5.2L) Carb.
- **Lube (Ele.)** ... **P84-2**
- **Lube (Spin-on)** ... **P82**
- **Air** ... **PA607**
- **Fuel** ... **PF827**
- **Oil Vapor** ... **N/R**
- **Trans.** ... **18032**

Pickups, D, W Series V8-383 (6.3L) Carb.
- **Lube** ... **B2**
- **Air** ... **PA693**
- **Fuel** ... **BF840,-K1**
- **Oil Vapor** ... **N/R**
- **Trans.** ... **18032**

Polara V8-273 (4.5L) Carb.
- **Lube** ... **B2**
- **Air** ... **PA615**
- **Fuel** ... **BF840,-K1**
- **Trans.** ... **18032**

Polara V8-318 (5.2L) Carb.
- **Lube** ... **B2**
- **Air** ... **PA615**
- **Fuel** ... **BF840,-K1**
- **Trans.** ... **18032**

DODGE 1967 (Cont'd.)

Polara V8-383 (6.3L) Carb.
- **Lube** ... **B2**
- **Air** ... **PA607**
- **Fuel** ... **BF840,-K1**
- **Trans.** ... **18032**

Polara V8-426 (7.0L) Carb.
- **Lube** ... **B2**
- **Fuel** ... **BF840,-K1**
- **Trans.** ... **18032**

Polara V8-440 (7.2L) Carb.
- **Lube** ... **B2**
- **Air** ... **PA693**
- **Fuel** ... **BF840,-K1**
- **Trans.** ... **18032**

WM300 Power Wagon 6-250 (4.1L) Carb.
- **Lube** ... **B2**
- **Air** ... **PA650**
- **Fuel** ... **BF840,-K1**
- **Trans.** ... **18032**

1966

A100 6-170 (2.8L) Carb.
- **Lube** ... **B2**
- **Air** ... **PA650**
- **Fuel (w/o Hoses & Clamps)** ... **BF840**
- **Fuel (w/Hoses & Clamps)** ... **BF840-K1**
- **Trans.** ... **18032**

A100 6-225 (3.7L) Carb.
- **Lube** ... **B2**
- **Air** ... **PA650**
- **Fuel** ... **BF840,-K1**
- **Trans.** ... **18032**

A100 V8-273 (4.5L) 2,4 Bbl. Carb.
- **Lube** ... **B2**
- **Air (2 Bbl.)** ... **PA615**
- **Air (4 Bbl.)** ... **PA607**
- **Fuel** ... **BF840,-K1**
- **Trans.** ... **18032**

Charger V8-273 (4.5L) Carb.
- **Lube** ... **B2**
- **Air (2 3/4 In.)** ... **PA615**
- **Air (3 1/4 In.)** ... **PA607**
- **Fuel** ... **BF840,-K1**

Coronet V8-273 (4.5L) Carb.
- **Lube** ... **B2**
- **Air** ... **PA615**
- **Fuel** ... **BF840,-K1**
- **Trans.** ... **18032**

Coronet V8-318 (5.2L) Carb.
- **Lube** ... **B2**
- **Air** ... **PA615**
- **Fuel** ... **BF840,-K1**
- **Trans.** ... **18032**

Coronet V8-426 (7.0L) Carb.
- **Lube** ... **B2**
- **Air** ... **PA693**
- **Fuel** ... **BF840,-K1**
- **Trans.** ... **18032**

Dart 6-170 (2.8L) Carb.
- **Lube** ... **B2**
- **Air** ... **PA650**
- **Fuel** ... **BF840,-K1**
- **Trans.** ... **18032**

Dart 6-225 (3.7L) Carb.
- **Lube** ... **B2**
- **Air** ... **PA650**
- **Fuel** ... **BF840,-K1**
- **Trans.** ... **18032**

Dart V8-273 (4.5L) 2,4 Bbl. Carb.
- **Lube** ... **B2**
- **Air (2 Bbl.)** ... **PA615**
- **Air (4 Bbl.)** ... **PA607**
- **Fuel** ... **BF840,-K1**
- **Trans.** ... **18032**

Dart V8-383 (6.3L) 2,4 Bbl. Carb.
- **Lube** ... **B2**
- **Air (2 Bbl.)** ... **PA615**
- **Air (4 Bbl.)** ... **PA607**
- **Fuel** ... **BF840,-K1**

Monaco V8-383 (6.3L) Carb.
- **Lube** ... **B2**
- **Air** ... **PA693**
- **Fuel** ... **BF840,-K1**
- **Trans.** ... **18032**

DODGE 1966 (Cont'd.)

Monaco V8-426 (7.0L) 2,4 Bbl. Carb.
- **Lube** ... **B2**
- **Air (2 Bbl.)** ... **PA615**
- **Air (4 Bbl.)** ... **PA607**
- **Fuel** ... **BF840,-K1**

Monaco V8-440 (7.2L) Carb.
- **Lube** ... **B2**
- **Air** ... **PA693**
- **Fuel** ... **BF840,-K1**

Pickups, D, W Series 6-225 (3.7L) Carb.
- **Lube** ... **B2**
- **Air** ... **PA650**
- **Fuel** ... **BF840,-K1**
- **Trans.** ... **18032**

Pickups, D, W Series V8-318 (5.2L) Carb.
- **Lube** ... **B2**
- **Air** ... **PA607**
- **Fuel** ... **PF827**
- **Oil Vapor** ... **N/R**
- **Trans.** ... **18032**

Pickups, D, W Series V8-383 (6.3L) Carb.
- **Lube** ... **B2**
- **Air** ... **PA693**
- **Fuel** ... **BF840,-K1**
- **Oil Vapor** ... **N/R**

Polara V8-273 (4.5L) 2,4 Bbl. Carb.
- **Lube** ... **B2**
- **Air (2 Bbl.)** ... **PA615**
- **Air (4 Bbl.)** ... **PA607**
- **Fuel** ... **BF840,-K1**

Polara V8-318 (5.2L) Carb.
- **Lube** ... **B2**
- **Air** ... **PA615**
- **Fuel** ... **BF840,-K1**

Polara V8-383 (6.3L) Carb.
- **Lube** ... **B2**
- **Air** ... **PA693**
- **Fuel** ... **BF840,-K1**
- **Trans.** ... **18032**

Polara V8-426 (7.0L) 2,4 Bbl. Carb.
- **Lube** ... **B2**
- **Air (2 Bbl.)** ... **PA615**
- **Air (4 Bbl.)** ... **PA607**
- **Fuel** ... **BF840,-K1**
- **Trans.** ... **18032**

Polara V8-440 (7.2L) Carb.
- **Lube** ... **B2**
- **Air** ... **PA693**
- **Fuel** ... **BF840,-K1**
- **Trans.** ... **18032**

1965

A100 6-170 (2.8L) Carb.
- **Lube (Ele.)** ... **P84-2**
- **Lube (Spin-on)** ... **B2**
- **Air** ... **PA650**
- **Fuel** ... **BF840,-K1**

A100 6-225 (3.7L) Carb.
- **Lube (Ele.)** ... **P84-2**
- **Lube (Spin-on)** ... **B2**
- **Air** ... **PA650**
- **Fuel** ... **BF840,-K1**
- **Trans.** ... **18032**

A100 V8-273 (4.5L) 2,4 Bbl. Carb.
- **Lube** ... **B2**
- **Air (2 Bbl.)** ... **PA615**
- **Air (4 Bbl.)** ... **PA607**
- **Fuel** ... **BF840,-K1**
- **Trans.** ... **18032**

Coronet V8-273 (4.5L) 2,4 Bbl. Carb.
- **Lube** ... **B2**
- **Air (2 Bbl.)** ... **PA615**
- **Air (4 Bbl.)** ... **PA607**
- **Fuel** ... **BF840,-K1**
- **Trans.** ... **18032**

Coronet V8-318 (5.2L) Carb.
- **Lube** ... **B2**
- **Air** ... **PA615**
- **Fuel** ... **BF840,-K1**
- **Trans.** ... **18032**

OBS = Obsolete. Availability Limited to Distributor Stock.

DODGE 1965 (Cont'd.)

Coronet V8-413 (6.8L) Carb.
Lube.....B2
Air.....PA693
Fuel.....BF840,-K1
Trans......18032

Coronet V8-426 (7.0L) Carb.
Lube.....B2
Air (4 Bbl.).....PA693
Fuel.....BF840,-K1
Trans......18032

Custom V8-273 (4.5L) 2,4 Bbl. Carb.
Lube.....B2
Air (2 Bbl.).....PA615
Air (4 Bbl.).....PA607
Fuel.....BF840,-K1
Trans......18032

Custom V8-318 (5.2L) 2,4 Bbl. Carb.
Lube.....B2
Air (2 Bbl.).....PA615
Air (4 Bbl.).....PA607
Fuel.....BF840,-K1
Trans......18032

Custom V8-383 (6.3L) Carb.
Lube.....B2
Air.....PA693
Fuel.....BF840,-K1
Trans......18032

Custom V8-413 (6.8L) Carb.
Lube.....B2
Air.....PA693
Fuel.....BF840,-K1
Trans......18032

Custom V8-426 (7.0L) Carb.
Lube.....B2
Air (4 Bbl.).....PA693
Fuel.....BF840,-K1
Trans......18032

Dart 6-170 (2.8L) Carb.
Lube.....B2
Air.....PA650
Fuel.....BF840,-K1
Trans......18032

Dart 6-225 (3.7L) Carb.
Lube.....B2
Air.....PA650
Fuel.....BF840,-K1
Trans......18032

Dart V8-273 (4.5L) 2,4 Bbl. Carb.
Lube.....B2
Air (2 Bbl.).....PA615
Air (4 Bbl.).....PA607
Fuel.....BF840,-K1
Trans......18032

Dart V8-383 (6.3L) Carb.
Lube.....B2
Air.....PA693
Fuel.....BF840,-K1
Trans......18032

Dart V8-413 (6.8L) Carb.
Lube.....B2
Air.....PA693
Fuel.....BF840,-K1
Trans......18032

Monaco V8-383 (6.3L) Carb.
Lube.....B2
Air.....PA693
Fuel.....BF840,-K1
Trans......18032

Monaco V8-413 (6.8L) Carb.
Lube.....B2
Air.....PA693
Fuel.....BF840,-K1
Trans......18032

Monaco V8-426 (7.0L) Carb.
Lube.....B2
Air (4 Bbl.).....PA693
Fuel.....BF840,-K1
Trans......18032

Pickups, D, W Series 6-170 (2.8L) Carb.
Lube.....P84-2
Air.....PA650
Fuel.....BF840,-K1
Trans......18032

DODGE 1965 (Cont'd.)

Pickups, D, W Series 6-225 (3.7L) Carb.
Lube (Ele.).....P84-2
Lube (Spin-on).....B2
Air.....PA607
Fuel.....BF840,-K1
Oil Vapor.....N/R
Trans......18032

Pickups, D, W Series V8-318 (5.2L) Carb.
Lube (Ele.).....P84-2
Lube (Spin-on).....B2
Air.....PA607
Fuel.....PF827
Oil Vapor.....N/R
Trans......18032

Pickups, D, W Series V8-383 (6.3L) Carb.
Lube.....B2
Air.....PA693
Fuel.....BF840,-K1
Trans......18032

Polara V8-273 (4.5L) 2,4 Bbl. Carb.
Lube.....B2
Air (2 Bbl.).....PA615
Air (4 Bbl.).....PA607
Fuel.....BF840,-K1
Trans......18032

Polara V8-318 (5.2L) 2,4 Bbl. Carb.
Lube.....B2
Air (2 Bbl.).....PA615
Air (4 Bbl.).....PA607
Fuel.....BF840,-K1
Trans......18032

Polara V8-383 (6.3L) Carb.
Lube.....B2
Air.....PA693
Fuel.....BF840,-K1
Trans......18032

Polara V8-413 (6.8L) Carb.
Lube.....B2
Air.....PA693
Fuel.....BF840,-K1
Trans......18032

Polara V8-426 (7.0L) Carb.
Lube.....B2
Air (4 Bbl.).....PA693
Fuel.....BF840,-K1
Trans......18032

1964

330 V8-273 (4.5L) Carb.
Lube.....B2
Air.....PA615
Fuel.....BF840,-K1

330 V8-318 (5.2L) Carb.
Lube (Ele.).....P84-2
Lube (Spin-on).....B2
Air.....PA615
Fuel.....BF840,-K1

330 V8-361 (5.9L) Carb.
Lube.....B2
Air.....PA693
Fuel.....BF840,-K1

330 V8-383 (6.3L) Carb.
Lube.....B2
Air.....PA693
Fuel.....BF840,-K1

330 V8-426 (7.0L) Carb.
Lube.....B2
Air (4 Bbl.).....PA693
Fuel (4 Bbl.).....BF840,-K1
Fuel (Two 4 Bbl.)..... [2] **BF840,-K1**

440 V8-273 (4.5L) Carb.
Lube.....B2
Air.....PA615
Fuel.....BF840,-K1

440 V8-318 (5.2L) Carb.
Lube (Ele.).....P84-2
Lube (Spin-on).....B2
Air.....PA615
Fuel.....BF840,-K1

440 V8-361 (5.9L) Carb.
Lube.....B2
Air.....PA693
Fuel.....BF840,-K1

DODGE 1964 (Cont'd.)

440 V8-383 (6.3L) Carb.
Lube.....B2
Air.....PA693
Fuel.....BF840,-K1

440 V8-426 (7.0L) Carb.
Lube.....B2
Air (4 Bbl.).....PA693
Fuel (4 Bbl.).....BF840,-K1
Fuel (Two 4 Bbl.)..... [2] **BF840,-K1**

880 V8-273 (4.5L) Carb.
Lube.....B2
Air.....PA615
Fuel.....BF840,-K1

880 V8-318 (5.2L) Carb.
Lube.....B2
Air.....PA615
Fuel.....BF840,-K1

880 V8-361 (5.9L) Carb.
Lube.....B2
Air.....PA693
Fuel.....BF840,-K1

880 V8-383 (6.3L) Carb.
Lube.....B2
Air.....PA693
Fuel.....BF840,-K1

880 V8-426 (7.0L) Carb.
Lube.....B2
Air (4 Bbl.).....PA693
Fuel (4 Bbl.).....BF840,-K1
Fuel (Two 4 Bbl.)..... [2] **BF840,-K1**

A100 6-170 (2.8L) Carb.
Lube.....P84-2
Air.....PA650
Fuel.....BF840,-K1

A100 6-225 (3.7L) Carb.
Lube.....P84-2
Air.....PA650
Fuel.....BF840,-K1

A100 V8-273 (4.5L) Carb.
Lube.....B2
Air.....PA615
Fuel.....BF840,-K1

Custom V8-273 (4.5L) Carb.
Lube.....B2
Air.....PA615
Fuel.....BF840,-K1

Custom V8-318 (5.2L) Carb.
Lube.....B2
Air.....PA615
Fuel.....BF840,-K1

Custom V8-361 (5.9L) Carb.
Lube.....B2
Air.....PA693
Fuel.....BF840,-K1

Custom V8-383 (6.3L) Carb.
Lube.....B2
Air.....PA693
Fuel.....BF840,-K1

Custom V8-426 (7.0L) Carb.
Lube.....B2
Air (4 Bbl.).....PA693
Fuel (4 Bbl.).....BF840,-K1
Fuel (Two 4 Bbl.)..... [2] **BF840,-K1**

Dart 6-170 (2.8L) Carb.
Lube (Ele.).....P84-2
Lube (Spin-on).....B2
Air.....PA650
Fuel.....BF840,-K1

Dart 6-225 (3.7L) Carb.
Lube.....B2
Air.....PA650
Fuel.....BF840,-K1

Dart V8-273 (4.5L) Carb.
Lube (Ele.).....P84-2
Lube (Spin-on).....B2
Air.....PA615
Fuel.....BF840,-K1

Dart V8-383 (6.3L) Carb.
Lube.....B2
Fuel.....BF840,-K1

Pickups, D, W Series 6-170 (2.8L) Carb.
Lube.....P84-2
Fuel.....BF840,-K1

DODGE 1964 (Cont'd.)

Pickups, D, W Series 6-225 (3.7L) Carb.
Lube.....P84-2
Air.....PA607
Fuel.....BF840,-K1
Oil Vapor.....N/R

Pickups, D, W Series V8-318 (5.2L) Carb.
Lube (Ele.).....P84-2
Lube (Spin-on).....B2
Air.....PA607
Fuel.....PF827
Oil Vapor.....N/R

Pickups, D, W Series V8-383 (6.3L) Carb.
Lube.....B2
Air.....PA693
Fuel.....BF840,-K1

Polara 6-170 (2.8L) Carb.
Lube (Ele.).....P84-2
Lube (Spin-on).....B2
Air.....PA650
Fuel.....BF840,-K1

Polara 6-225 (3.7L) Carb.
Lube (Ele.).....P84-2
Lube (Spin-on).....B2
Air.....PA650
Fuel.....BF840,-K1

Polara V8-273 (4.5L) 2,4 Bbl. Carb.
Lube (Ele.).....P84-2
Lube (Spin-on).....B2
Air (2 Bbl.).....PA615
Air (4 Bbl.).....PA607
Fuel.....BF840,-K1

Polara V8-318 (5.2L) Carb.
Lube (Ele.).....P84-2
Lube (Spin-on).....B2
Fuel.....BF840,-K1

Polara V8-361 (5.9L) Carb.
Lube.....B2
Air.....PA693
Fuel.....BF840,-K1

Polara V8-383 (6.3L) Carb.
Lube.....B2
Air.....PA693
Fuel.....BF840,-K1

Polara V8-426 (7.0L) Carb.
Lube.....B2
Air.....PA693
Fuel.....BF840,-K1

1963

330 V8-318 (5.2L) Carb.
Lube.....B2
Air.....PA615
Fuel.....BF840,-K1

330 V8-413 (6.8L) Carb.
Lube.....B2
Air.....PA693
Air (HiPerf. or Police).....PA607
Fuel.....BF840,-K1
Trans......18032

330 V8-426 (7.0L) Carb.
Lube.....B2
Air (4 Bbl.).....PA693
Fuel (4 Bbl.).....BF840,-K1
Fuel (Two 4 Bbl.)..... [2] **BF840,-K1**
Trans......18032

440 V8-318 (5.2L) Carb.
Lube.....B2
Air.....PA615
Fuel.....BF840,-K1

440 V8-413 (6.8L) Carb.
Lube.....B2
Air.....PA693
Air (HiPerf. or Police).....PA607
Fuel.....BF840,-K1
Trans......18032

440 V8-426 (7.0L) Carb.
Lube.....B2
Air (4 Bbl.).....PA693
Fuel (4 Bbl.).....BF840,-K1
Fuel (Two 4 Bbl.)..... [2] **BF840,-K1**
Trans......18032

OBS = Obsolete. Availability Limited to Distributor Stock.

DODGE 1963 (Cont'd.)

880 V8-318 (5.2L) Carb.
- **Lube** ... **B2**
- **Air** ... **PA615**
- **Fuel** ... **BF840,-K1**

880 V8-361 (5.9L) Carb.
- **Lube** ... **B2**
- **Air** ... **PA693**
- **Fuel** ... **BF840,-K1**

880 V8-383 (6.3L) Carb.
- **Lube** ... **B2**
- **Air** ... **PA693**
- **Air (HiPerf. or Police)** ... **PA607**
- **Fuel** ... **BF840,-K1**
- **Trans.** ... **18032**

880 V8-413 (6.8L) Carb.
- **Lube** ... **B2**
- **Air** ... **PA693**
- **Air (HiPerf. or Police)** ... **PA607**
- **Fuel** ... **BF840,-K1**
- **Trans.** ... **18032**

880 V8-426 (7.0L) Carb.
- **Lube** ... **B2**
- **Air (4 Bbl.)** ... **PA693**
- **Fuel (4 Bbl.)** ... **BF840,-K1**
- **Fuel (Two 4 Bbl.)** ... [2] **BF840,-K1**
- **Trans.** ... **18032**

Custom V8-318 (5.2L) Carb.
- **Lube** ... **B2**
- **Air** ... **PA615**
- **Fuel** ... **BF840,-K1**

Custom V8-361 (5.9L) Carb.
- **Lube** ... **B2**
- **Fuel** ... **BF840,-K1**

Custom V8-383 (6.3L) Carb.
- **Lube** ... **B2**
- **Air** ... **PA693**
- **Air (HiPerf. or Police)** ... **PA607**
- **Fuel** ... **BF840,-K1**
- **Trans.** ... **18032**

Custom V8-413 (6.8L) Carb.
- **Lube** ... **B2**
- **Air** ... **PA693**
- **Air (HiPerf. or Police)** ... **PA607**
- **Fuel** ... **BF840,-K1**
- **Trans.** ... **18032**

Custom V8-426 (7.0L) Carb.
- **Lube** ... **B2**
- **Air (4 Bbl.)** ... **PA693**
- **Fuel (4 Bbl.)** ... **BF840,-K1**
- **Fuel (Two 4 Bbl.)** ... [2] **BF840,-K1**
- **Trans.** ... **18032**

Dart 6-170 (2.8L) Carb.
- **Lube (Ele.)** ... **P84-2**
- **Lube (Spin-on)** ... **B2**
- **Air** ... **PA650**
- **Fuel** ... **BF840,-K1**

Dart 6-225 (3.7L) Carb.
- **Lube** ... **B2**
- **Air** ... **PA650**
- **Fuel** ... **BF840,-K1**

Dart V8-318 (5.2L) Carb.
- **Lube** ... **B2**
- **Air** ... **PA615**
- **Fuel** ... **BF840,-K1**

Dart V8-383 (6.3L) Carb.
- **Lube** ... **B2**
- **Air** ... **PA693**
- **Air (HiPerf. or Police)** ... **PA607**
- **Fuel** ... **BF840,-K1**
- **Trans.** ... **18032**

Dart V8-413 (6.8L) Carb.
- **Lube** ... **B2**
- **Air** ... **PA693**
- **Air (HiPerf. or Police)** ... **PA607**
- **Fuel** ... **BF840,-K1**
- **Trans.** ... **18032**

Pickups, D, W Series 6-170 (2.8L) Carb.
- **Lube** ... **P84-2**
- **Air** ... **PA607**
- **Fuel** ... **BF840,-K1**

Pickups, D, W Series 6-225 (3.7L) Carb.
- **Lube** ... **P84-2**
- **Air** ... **PA607**
- **Fuel** ... **BF840,-K1**
- **Oil Vapor** ... **N/R**

DODGE 1963 (Cont'd.)

Pickups, D, W Series V8-318 (5.2L) Carb.
- **Lube (Ele.)** ... **P84-2**
- **Lube (Spin-on)** ... **B2**
- **Air** ... **PA607**
- **Fuel** ... **PF827**
- **Oil Vapor** ... **N/R**

Pickups, D, W Series V8-383 (6.3L) Carb.
- **Lube** ... **B2**
- **Air** ... **PA693**
- **Air (HiPerf. or Police)** ... **PA607**
- **Fuel** ... **BF840,-K1**
- **Trans.** ... **18032**

Polara 6-170 (2.8L) Carb.
- **Lube** ... **B2**
- **Air** ... **PA650**
- **Fuel** ... **BF840,-K1**

Polara 6-225 (3.7L) Carb.
- **Lube (Ele.)** ... **P84-2**
- **Lube (Spin-on)** ... **B2**
- **Air** ... **PA650**
- **Fuel** ... **BF840,-K1**

Polara V8-318 (5.2L) Carb.
- **Lube** ... **B2**
- **Fuel** ... **BF840,-K1**

Polara V8-361 (5.9L) Carb.
- **Lube** ... **B2**
- **Air** ... **PA693**
- **Fuel** ... **BF840,-K1**

Polara V8-383 (6.3L) Carb.
- **Lube** ... **B2**
- **Air** ... **PA693**
- **Air (HiPerf. or Police)** ... **PA607**
- **Fuel** ... **BF840,-K1**
- **Trans.** ... **18032**

Polara V8-413 (6.8L) Carb.
- **Lube** ... **B2**
- **Air** ... **PA693**
- **Air (HiPerf. or Police)** ... **PA607**
- **Fuel** ... **BF840,-K1**
- **Trans.** ... **18032**

1962

Custom V8-318 (5.2L) Carb.
- **Air** ... **PA615**
- **Fuel** ... **BF840,-K1**

Custom V8-361 (5.9L) 2 Bbl. Carb.
- **Lube** ... **B2**
- **Air** ... **PA607**
- **Fuel** ... **BF840,-K1**

Custom V8-383 (6.3L) Carb.
- **Lube** ... **B2**
- **Air** ... **PA607**
- **Fuel** ... **BF840,-K1**

Custom V8-413 (6.8L) Carb.
- **Lube** ... **B2**
- **Air** ... **PA607**
- **Fuel** ... **BF840,-K1**

Dart 6-170 (2.8L) Carb.
- **Lube** ... **B2**
- **Air** ... **PA650**
- **Fuel** ... **BF840,-K1**

Dart 6-225 (3.7L) 1,4 Bbl. Carb.
- **Lube** ... **B2**
- **Air** ... **PA650**
- **Fuel** ... **BF840,-K1**

Dart V8-318 (5.2L) 2,4 Bbl. Carb.
- **Lube** ... **B2**
- **Air** ... **PA615**
- **Fuel** ... **BF840,-K1**

Dart V8-361 (5.9L) Carb.
- **Lube** ... **B2**
- **Air** ... **PA615**
- **Fuel** ... **BF840,-K1**

Dart V8-383 (6.3L) Carb.
- **Lube** ... **B2**
- **Air** ... **PA615**
- **Fuel** ... **BF840,-K1**

Dart V8-413 (6.8L) 2,4 Bbl. Carb.
- **Lube** ... **B2**
- **Fuel** ... **BF840,-K1**

Lancer 6-170 (2.8L) 1 Bbl. Carb.
- **Lube** ... **B2**
- **Air** ... **PA650**
- **Fuel** ... **BF840,-K1**

DODGE 1962 (Cont'd.)

Lancer 6-225 (3.7L) 1 Bbl. Carb.
- **Lube** ... **B2**
- **Air** ... **PA650**
- **Fuel** ... **BF840,-K1**

Lancer V8-413 (6.8L) Carb.
- **Lube** ... **B2**
- **Air** ... **PA615**
- **Fuel** ... **BF840,-K1**

Pickups, D, W Series 6-170 (2.8L) 1 Bbl. Carb.
- **Lube** ... **P84-2**
- **Air** ... **PA607**
- **Fuel** ... **BF840,-K1**
- **Trans.** ... **18032**

Pickups, D, W Series 6-225 (3.7L) 1 Bbl. Carb.
- **Lube** ... **P84-2**
- **Air** ... **PA607**
- **Fuel** ... **BF840,-K1**
- **Trans.** ... **18032**

Pickups, D, W Series V8-318 (5.2L) 2 Bbl. Carb.
- **Lube** ... **P84-2**
- **Air** ... **PA607**
- **Fuel** ... **PF827**
- **Oil Vapor** ... **N/R**
- **Trans.** ... **18032**

Polara V8-318 (5.2L) Carb.
- **Air** ... **PA615**
- **Fuel** ... **BF840,-K1**

Polara V8-361 (5.9L) Carb.
- **Lube** ... **B2**
- **Air** ... **PA607**
- **Fuel** ... **BF840,-K1**

Polara V8-383 (6.3L) Carb.
- **Lube** ... **B2**
- **Air** ... **PA607**
- **Fuel** ... **BF840,-K1**

Polara V8-413 (6.8L) Carb.
- **Lube** ... **B2**
- **Air** ... **PA607**
- **Fuel** ... **BF840,-K1**

WM300 Power Wagon V8-318 (5.2L) 2 Bbl. Carb.
- **Lube** ... **B2**
- **Air** ... **PA607**
- **Fuel** ... **PF827**

1961

Custom V8-361 (5.9L) Carb.
- **Lube** ... **B2**
- **Fuel** ... **BF840,-K1**

Dart 6-170 (2.8L) 1 Bbl. Carb.
- **Lube (Ele.)** ... **P84-2**
- **Lube (Spin-on)** ... **B2**
- **Air** ... **PA650**
- **Fuel** ... **BF840,-K1**

Dart 6-225 (3.7L) 1 Bbl. Carb.
- **Lube (Ele.)** ... **P84-2**
- **Lube (Spin-on)** ... **B2**
- **Air** ... **PA650**
- **Fuel** ... **BF840,-K1**

Dart V8-318 (5.2L) 2 Bbl. Carb.
- **Lube** ... **B2**
- **Air** ... **PA615**
- **Fuel** ... **BF840,-K1**

Dart V8-361 (5.9L) 2,4 Bbl. Carb.
- **Lube** ... **B2**
- **Fuel** ... **BF840,-K1**

Dart V8-383 (6.3L) Carb.
- **Lube** ... **B2**
- **Air** ... **PA607**
- **Fuel** ... **BF840,-K1**

Dart V8-413 (6.8L) Carb.
- **Lube** ... **B2**
- **Air** ... **PA615**
- **Fuel** ... **BF840,-K1**

Lancer 6-225 (3.7L) 1,4 Bbl. Carb.
- **Lube (Ele.)** ... **P84-2**
- **Lube (Spin-on)** ... **B2**
- **Air** ... **PA650**
- **Fuel** ... **BF840,-K1**

Lancer V8-413 (6.8L) Carb.
- **Lube** ... **B2**
- **Air** ... **PA615**
- **Fuel** ... **BF840,-K1**

DODGE 1961 (Cont'd.)

Pickups, D, W Series 6-170 (2.8L) 1 Bbl. Carb.
- **Lube** ... **P84-2**
- **Air** ... **PA607**
- **Fuel** ... **BF840,-K1**
- **Trans.** ... **18032**

Pickups, D, W Series 6-225 (3.7L) 1 Bbl. Carb.
- **Lube** ... **P84-2**
- **Air** ... **PA607**
- **Fuel** ... **BF840,-K1**
- **Trans.** ... **18032**

Pickups, D, W Series V8-318 (5.2L) 2 Bbl. Carb.
- **Lube** ... **P84-2**
- **Air** ... **PA607**
- **Fuel** ... **PF827**
- **Oil Vapor** ... **N/R**
- **Trans.** ... **18032**

Polara V8-318 (5.2L) Carb.
- **Air** ... **PA607**
- **Fuel** ... **BF840,-K1**

Polara V8-361 (5.9L) 2 Bbl. Carb.
- **Lube** ... **B2**
- **Air** ... **PA615**
- **Fuel** ... **BF840,-K1**

Polara V8-383 (6.3L) Carb.
- **Lube** ... **B2**
- **Air** ... **PA607**
- **Fuel** ... **BF840,-K1**

Polara V8-413 (6.8L) Carb.
- **Lube** ... **B2**
- **Fuel** ... **BF840,-K1**

WM300 Power Wagon V8-318 (5.2L) 2 Bbl. Carb.
- **Lube (Ele.)** ... **P84-2**
- **Lube (Spin-on)** ... **B2**
- **Fuel** ... **PF827**

1960

Custom V8-361 (5.9L) Carb.
- **Lube** ... **B2**
- **Fuel** ... **BF840,-K1**

Dart 6-225 (3.7L) 1 Bbl. Carb.
- **Lube (Ele.)** ... **P84-2**
- **Lube (Spin-on)** ... **B2**
- **Air** ... **PA650**
- **Fuel** ... **BF840,-K1**

Dart V8-318 (5.2L) 2,4 Bbl. Carb.
- **Lube** ... **B2**
- **Air** ... **PA615**
- **Fuel** ... **BF840,-K1**

Dart V8-361 (5.9L) 2,4 Bbl. Carb.
- **Lube** ... **B2**
- **Fuel** ... **BF840,-K1**

Dart V8-383 (6.3L) 2,4 Bbl. Carb.
- **Lube** ... **B2**
- **Air** ... **PA607**
- **Fuel** ... **BF840,-K1**

Matador V8-318 (5.2L) Carb.
- **Lube** ... **B2**
- **Air** ... **PA615**
- **Fuel** ... **BF840,-K1**

Matador V8-361 (5.9L) 2 Bbl. Carb.
- **Lube** ... **B2**
- **Fuel** ... **BF840,-K1**

Matador V8-383 (6.3L) 2,4 Bbl. Carb.
- **Lube** ... **B2**
- **Air** ... **PA607**
- **Fuel** ... **BF840,-K1**

Pickups, D, W Series 6-225 (3.7L) 1 Bbl. Carb.
- **Lube (Ele.)** ... **P84-2**
- **Lube (Spin-on)** ... **B2**
- **Air** ... **PA650**
- **Fuel** ... **BF840,-K1**
- **Trans.** ... **18032**

Pickups, D, W Series V8-318 (5.2L) 2 Bbl. Carb.
- **Lube** ... **P84-2**
- **Fuel** ... **BF840,-K1**
- **Oil Vapor** ... **N/R**
- **Trans.** ... **18032**

DODGE 1960 (Cont'd.)

Polara V8-318 (5.2L) Carb.
Lube.....B2
Air.....PA615
Fuel.....BF840,-K1
Polara V8-361 (5.9L) Carb.
Lube.....B2
Fuel.....BF840,-K1
Polara V8-383 (6.3L) Carb.
Lube.....B2
Fuel.....BF840,-K1
Truck 6-170 (2.8L) Carb.
Lube.....P84-2
Air.....PA650
Fuel.....BF840,-K1
Oil Vapor.....N/R
WM300 Power Wagon V8-318 (5.2L) 2 Bbl. Carb.
Lube.....P84-2
Fuel.....PF827
Oil Vapor.....N/R

1959

Coronet 6-230 (3.8L) Carb.
Lube.....P81
Air.....PA615
Fuel.....BF840,-K1
Coronet V8-326 (5.3L) 2 Bbl. Carb.
Lube (Ele.).....P84-2
Lube (Spin-on).....B2
Air.....PA615
Fuel.....BF840,-K1
Coronet V8-361 (5.9L) 2,4 Bbl. Carb.
Lube (Ele.).....P84-2
Lube (Spin-on).....B2
Air.....PA607
Fuel.....BF840,-K1
Custom V8-326 (5.3L) 2 Bbl. Carb.
Lube (Ele.).....P84-2
Lube (Spin-on).....B2
Air.....PA615
Fuel.....BF840,-K1
Custom V8-361 (5.9L) 2,4 Bbl. Carb.
Lube (Ele.).....P84-2
Lube (Spin-on).....B2
Air.....PA607
Fuel.....BF840,-K1
Custom V8-383 (6.3L) 4 Bbl. Carb.
Lube.....B2
Air.....PA607
Fuel.....BF840,-K1
Truck 6-230 (3.8L) 1 Bbl. Carb.
Lube.....P84-2
PowSteer......P183
Air.....PA615
Fuel.....BF840,-K1
Truck 6-250 (4.1L) 2 Bbl. Carb.
Lube.....P84-2
PowSteer......P183
Air.....PA615
Fuel.....BF840,-K1
Truck V8-318 (5.2L) 2 Bbl. Carb.
PowSteer......P183
Lube.....P84-2
Fuel.....PF827

1958

Coronet 6-230 (3.8L) 1 Bbl. Carb.
Lube.....P73
Air.....PA615
Fuel.....BF840,-K1
Coronet V8-325 (5.3L) 2,4 Bbl. Carb.
Air.....PA612
Fuel.....BF840,-K1
Coronet V8-350 (5.7L) 4 Bbl. Carb.
Lube.....B2
Air (w/o AirCond.).....PA607
Air (w/AirCond.).....PA613
Fuel.....BF840,-K1
Coronet V8-361 (5.9L) Carb.
Lube.....B2
Air.....PA607
Fuel.....BF840,-K1
Custom V8-325 (5.3L) 2 Bbl. Carb.
Air.....PA612
Fuel.....BF840,-K1

DODGE 1958 (Cont'd.)

Custom V8-350 (5.7L) 4 Bbl. Carb.
Lube.....B2
Air (w/o AirCond.).....PA607
Air (w/AirCond.).....PA613
Fuel.....BF840,-K1
Custom V8-361 (5.9L) 4 Bbl. Carb.
Lube.....B2
Air.....PA607
Fuel.....BF840,-K1
Truck 6-230 (3.8L) 1 Bbl. Carb.
PowSteer......P183
Air.....PA615
Fuel.....BF840,-K1
Truck 6-250 (4.1L) 2 Bbl. Carb.
PowSteer......P183
Air.....PA615
Fuel.....BF840,-K1
Truck V8-314 (5.1L) 2 Bbl. Carb.
PowSteer......P183
Fuel.....BF840,-K1

1957

Coronet 6-230 (3.8L) 1 Bbl. Carb.
Lube.....P81
Air.....PA615
Fuel.....BF840,-K1
Coronet V8-325 (5.3L) 2 Bbl. Carb.
Lube.....P81
Air.....PA612
Fuel.....BF840,-K1
Coronet V8-354 (5.8L) 2,4 Bbl. Carb.
Lube.....P81
Fuel.....BF840,-K1
Custom V8-325 (5.3L) 2 Bbl. Carb.
Lube.....P81
Air.....PA612
Fuel.....BF840,-K1
Custom V8-354 (5.8L) 2,4 Bbl. Carb.
Lube.....P81
Fuel.....BF840,-K1
D500 V8-325 (5.3L) Carb.
Lube.....P81
Air.....PA613
Fuel.....BF840,-K1
D501 V8-325 (5.3L) 2,4 Bbl. Carb.
Lube.....P81
Air.....PA613
Fuel.....BF840,-K1
Truck 6-230 (3.8L) 1 Bbl. Carb.
PowSteer......P183
Air.....PA615
Fuel.....BF840,-K1
Truck V8-314 (5.1L) 2 Bbl. Carb.
PowSteer......P183
Fuel.....BF840,-K1

1956

Coronet 6-230 (3.8L) 1 Bbl. Carb.
Lube.....P81
Air.....PA615
Fuel.....BF840,-K1
Coronet V8-270 (4.4L) 2 Bbl. Carb.
Lube.....P81
Air.....PA612
Fuel.....BF840,-K1
Coronet V8-315 (5.2L) 2,4 Bbl. Carb.
Lube.....P81
Air.....PA612
Fuel.....BF840,-K1
Custom V8-270 (4.4L) 2 Bbl. Carb.
Lube.....P81
Air.....PA612
Fuel.....BF840,-K1
Custom V8-315 (5.2L) 2,4 Bbl. Carb.
Lube.....P81
Air.....PA612
Fuel.....BF840,-K1
Truck V8-259 (4.2L) 2 Bbl. Carb.
PowSteer......P183
Fuel.....BF840,-K1

1955

Coronet 6-230 (3.8L) 1 Bbl. Carb.
Air.....PA615
Fuel.....BF840,-K1

DODGE 1955 (Cont'd.)

Coronet V8-270 (4.4L) 2 Bbl. Carb.
Fuel.....BF840,-K1
Custom V8-270 (4.4L) 2 Bbl. Carb.
Fuel.....BF840,-K1
Truck V8-259 (4.2L) 2 Bbl. Carb.
Fuel.....BF840,-K1

1954

Coronet 6-230 (3.8L) 1 Bbl. Carb.
Air.....PA615
Fuel.....BF840,-K1
Coronet V8-239 (3.9L) 2 Bbl. Carb.
Fuel.....BF840,-K1
Custom V8-239 (3.9L) Carb.
Lube.....P81
Fuel.....BF840,-K1
Meadowbrook 6-230 (3.8L) 1 Bbl. Carb.
Air.....PA615
Fuel.....BF840,-K1
Meadowbrook V8-239 (3.9L) 2 Bbl. Carb.
Fuel.....BF840,-K1
Truck V8-239 (3.9L) 2 Bbl. Carb.
Fuel.....BF840,-K1
Oil Vapor.....N/R

1953

Coronet 6-230 (3.8L) 1 Bbl. Carb.
Air.....PA615
Fuel.....BF840,-K1
Coronet V8-239 (3.9L) 2 Bbl. Carb.
Fuel.....BF840,-K1
Meadowbrook 6-230 (3.8L) 1 Bbl. Carb.
Air.....PA615
Fuel.....BF840,-K1
Meadowbrook V8-239 (3.9L) 2 Bbl. Carb.
Fuel.....BF840,-K1
Truck V8-239 (3.9L) Carb.
Oil Vapor.....N/R

1952

Coronet 6-230 (3.8L) 1 Bbl. Carb.
Air.....PA615
Fuel.....BF840,-K1
Meadowbrook 6-230 (3.8L) 1 Bbl. Carb.
Air.....PA615
Fuel.....BF840,-K1
Wayfarer 6-230 (3.8L) 1 Bbl. Carb.
Air.....PA615
Fuel.....BF840,-K1

1951

Coronet 6-230 (3.8L) 1 Bbl. Carb.
Air.....PA615
Fuel.....BF840,-K1
Meadowbrook 6-230 (3.8L) 1 Bbl. Carb.
Air.....PA615
Fuel.....BF840,-K1
Wayfarer 6-230 (3.8L) 1 Bbl. Carb.
Air.....PA615
Fuel.....BF840,-K1

1950

Coronet 6-230 (3.8L) 1 Bbl. Carb.
Air.....PA615
Fuel.....BF840,-K1
Meadowbrook 6-230 (3.8L) 1 Bbl. Carb.
Air.....PA615
Fuel.....BF840,-K1
Wayfarer 6-230 (3.8L) 1 Bbl. Carb.
Air.....PA615
Fuel.....BF840,-K1

DODGE (Cont'd.)

1949

Coronet 6-230 (3.8L) 1 Bbl. Carb.
Lube.....P73
Fuel.....BF840,-K1
Meadowbrook 6-230 (3.8L) 1 Bbl. Carb.
Lube.....P73
Fuel.....BF840,-K1
Wayfarer 6-230 (3.8L) 1 Bbl. Carb.
Lube.....P73
Fuel.....BF840,-K1

1948

Custom 6-230 (3.8L) 1 Bbl. Carb.
Lube.....P73
Fuel.....BF840,-K1
Deluxe 6-230 (3.8L) 1 Bbl. Carb.
Lube.....P73
Fuel.....BF840,-K1

1947

Custom 6-230 (3.8L) 1 Bbl. Carb.
Lube.....P73
Fuel.....BF840,-K1
Deluxe 6-230 (3.8L) 1 Bbl. Carb.
Lube.....P73
Fuel.....BF840,-K1

1946

Custom 6-230 (3.8L) 1 Bbl. Carb.
Lube.....P73
Fuel.....BF840,-K1
Deluxe 6-230 (3.8L) 1 Bbl. Carb.
Lube.....P73
Fuel.....BF840,-K1

FERRARI

1979

308GTB, 308GTS V8-2900cc (2.9L) 2,4 Bbl. Carb.
Lube.....B253
Air.....PA2094
Trans......M.T.
512 BB V8-4943cc (5.0L) Carb.
Lube.....B253
Air.....PA2094
Trans......M.T.
Dino 308 GT4 V8-2927cc (3.0L) 2,4 Bbl. Carb.
Lube.....B253
Air.....PA2094
Trans......M.T.

1978

308GTB, 308GTS V8-2927cc (3.0L) Carb.
Lube.....B253
Air.....PA2094
Trans......M.T.
512 BB V8-4943cc (5.0L) Carb.
Lube.....B253
Air.....PA2094
Trans......M.T.
Dino 308 GT4 V8-2927cc (3.0L) Carb.
Lube.....B253
Air.....PA2094
Trans......M.T.

1977

308GTB, 308GTS V8-2927cc (3.0L) Carb.
Lube.....B253
Air.....PA2094
Trans......M.T.
512 BB V8-4943cc (5.0L) Carb.
Lube.....B253
Air.....PA2094
Trans......M.T.

OBS = Obsolete. Availability Limited to Distributor Stock.

FERRARI 1977 (Cont'd.)

Dino 308 GT4 V8-2927cc (3.0L) Carb.
Lube.....**B253**
Air.....**PA2094**
Trans......**M.T.**

1976
308GTB V8-2927cc (3.0L) Carb.
Lube.....**B253**
Trans......**M.T.**
365 GT4 BB-4390cc (4.4L) Carb.
Air.....**PA2094**
Trans......**M.T.**
Dino 308 GT4 V8-2927cc (3.0L) Carb.
Air.....**PA2094**
Trans......**M.T.**

1975
308GTB V8-2927cc (3.0L) Carb.
Lube.....**B253**
Air.....**PA2094**
Trans......**M.T.**
365 GT4 BB-4390cc (4.4L) Carb.
Trans......**M.T.**
Dino 308 GT4 V8-2927cc (3.0L) Carb.
Lube.....**B253**
Air.....**PA2094**
Trans......**M.T.**

1974
365 GT4 V12-4390cc (4.4L) Carb.
Trans......**M.T.**
365 GT4 BB-4390cc (4.4L) Carb.
Trans......**M.T.**
365 GTB/4, 365 GTS/4 V12-4390cc (4.4L) Carb.
Lube.....[2] **B253**
Trans......**M.T.**
Dino 308 GT4 V8-2927cc (3.0L) Carb.
Air.....**PA2094**
Trans......**M.T.**

1973
365 GT4, 365 GTB/4, 365 GTS/4 V12-4390cc (4.4L) Carb.
Lube.....[2] **B253**
Trans......**M.T.**
Dino 246 GT, Dino 246 GTS V6-2418cc (2.4L) Carb.
Trans......**M.T.**
Dino 308 GT4 V8-2927cc (3.0L) Carb.
Air.....**PA2094**
Trans......**M.T.**

1972
365 GTS/4, 365 GTC/4, 365 GTB/4 V12-4390cc (4.4L) Carb.
Lube.....[2] **B253**
Dino 246 GT, Dino 246 GTS V6-2418cc (2.4L) Carb.
Lube.....**B253**
Trans......**M.T.**

1971
365 GTS/4, 365 GTC/4, 365 GTB/4 V12-4390cc (4.4L) Carb.
Lube.....[2] **B253**

1970
365 Series V12-4390cc (4.4L) Carb.
Lube.....[2] **B253**
Trans......**M.T.**
Dino 246 GT V6-2418cc (2.4L) Carb.
Lube.....**B253**
Trans......**M.T.**

FERRARI (Cont'd.)

1969
365 Series V12-4390cc (4.4L) Carb.
Lube.....[2] **B253**
Trans......**M.T.**
Dino 206 GT V6-1987cc (2.0L) Carb.
Lube.....[2] **B253**
Trans......**M.T.**
Dino 246 GT V6-2418cc (2.4L) Carb.
Trans......**M.T.**

1968
275 GT V12-3286cc (3.3L) Carb.
Lube.....**B2**
275 GTB V12-3286cc (3.3L) Carb.
Lube.....[2] **B253**
Trans......**M.T.**
330GT, 330GTC V12-3967cc (4.0L) Carb.
Lube.....[2] **B253**
Air.....**PA2025 OBS**
Trans......**M.T.**
330GTS V12-3967cc (4.0L) Carb.
Lube.....[2] **B253**
Trans......**M.T.**
365 Series V12-4390cc (4.4L) Carb.
Lube.....[2] **B253**
Trans......**M.T.**
Dino 206 GT V6-1987cc (2.0L) Carb.
Lube.....[2] **B253**
Trans......**M.T.**

1967
275 GTB V12-3286cc (3.3L) Carb.
Lube.....**B253**
Trans......**M.T.**

1966
275 GTB V12-3286cc (3.3L) Carb.
Lube.....**B253**
Trans......**M.T.**

1965
275 GTB V12-3286cc (3.3L) Carb.
Lube.....**B253**
Fuel.....**PF866**
Trans......**M.T.**

1964
275 GTB V12-3286cc (3.3L) Carb.
Fuel.....**PF866**

FIAT

1979
124 Spyder 4-1995cc (2.0L)
Lube.....**BT5**
Fuel.....**BF840,-K1**
128 4-1290cc (1.3L) Carb.
Lube.....**BT5**
Fuel.....**BF833,-K2**
Oil Vapor.....**PA643**
Trans......**M.T.**
Brava 4-1995cc (2.0L)
Lube.....**BT5**
Air.....**PA691**
Fuel.....**BF840,-K1**
Strada 4 Cyl. (1.5L) Carb.
Lube.....**BT5**
Air.....**PA658**
Fuel.....**BF833,-K2**
X1/9 4-1498cc (1.5L) Carb.
Lube.....**BT5**
Air.....**PA658**
Fuel.....**BF833,-K2**

FIAT (Cont'd.)

1978
124 Spyder 4-1756cc (1.8L)
Lube.....**BT5**
Air.....**PA691**
Fuel.....**BF840,-K1**
Oil Vapor.....**PA643**
Trans......**M.T.**
128 4-1290cc (1.3L) Carb.
Lube.....**BT5**
Fuel.....**BF833,-K2**
Oil Vapor.....**PA643**
Trans......**M.T.**
131 4-1756cc (1.8L) Carb.
Lube.....**BT5**
Air.....**PA691**
Fuel.....**BF833,-K2**
Oil Vapor.....**PA643**
X1/9 4-1290cc (1.3L) Carb.
Lube.....**BT5**
Air.....**PA2035**
Fuel.....**BF833,-K2**
Trans......**M.T.**

1977
124 Spyder 4-1756cc (1.8L) Carb.
Lube.....**BT5**
Air.....**PA691**
Fuel.....**BF833,-K2**
Oil Vapor.....**PA643**
Trans......**M.T.**
128 4-1290cc (1.3L) Carb.
Lube.....**BT5**
Fuel.....**BF833,-K2**
Oil Vapor.....**PA643**
Trans......**M.T.**
131 4-1756cc (1.8L) Carb.
Lube.....**BT5**
Air.....**PA691**
Fuel.....**BF833,-K2**
Oil Vapor.....**PA643**
X1/9 4-1290cc (1.3L) Carb.
Lube.....**BT5**
Fuel.....**BF833,-K2**
Oil Vapor.....**PA643**
Trans......**M.T.**

1976
124 Spyder 4-1756cc (1.8L) Carb.
Lube.....**BT5**
Air.....**PA691**
Fuel.....**BF833,-K2**
Oil Vapor.....**PA643**
Trans......**M.T.**
128 4-1290cc (1.3L) Carb.
Lube.....**BT5**
Fuel.....**BF833,-K2**
Oil Vapor.....**PA643**
Trans......**M.T.**
131 4-1756cc (1.8L) Carb.
Lube.....**BT5**
Air.....**PA691**
Fuel.....**BF833,-K2**
Oil Vapor.....**PA643**
X1/9 4-1290cc (1.3L) Carb.
Lube.....**BT5**
Fuel.....**BF833,-K2**
Oil Vapor.....**PA643**
Trans......**M.T.**

1975
124, 124 Spyder 4-1756cc (1.8L) Carb.
Lube.....**BT5**
Air.....**PA691**
Fuel.....**BF833,-K2**
Oil Vapor.....**PA643**
Trans......**M.T.**
128 4-1290cc (1.3L) Carb.
Lube.....**BT5**
Fuel.....**BF833,-K2**
Oil Vapor.....**PA643**
Trans......**M.T.**

FIAT 1975 (Cont'd.)

131 4-1756cc (1.8L) Carb.
Lube.....**BT5**
Air.....**PA691**
Fuel.....**BF833,-K2**
Oil Vapor.....**PA643**
X1/9 4-1290cc (1.3L) Carb.
Lube.....**BT5**
Fuel.....**BF833,-K2**
Oil Vapor.....**PA643**
Trans......**M.T.**

1974
124 4-1593cc (1.6L) Carb.
Lube.....**BT5**
Air.....**PA691**
Fuel.....**BF833,-K2**
Oil Vapor.....**PA643**
124, 124 Spyder 4-1756cc (1.8L) Carb.
Lube.....**BT5**
Air.....**PA691**
Fuel.....**BF833,-K2**
Trans. (Spyder).....**M.T.**
128 4-1290cc (1.3L) Carb.
Lube.....**BT5**
Fuel.....**BF833,-K2**
Trans......**M.T.**
X1/9 4-1290cc (1.3L) Carb.
Lube.....**BT5**
Fuel.....**BF833,-K2**
Oil Vapor.....**N/R**
Trans......**M.T.**

1973
124 4-1438cc (1.4L) Carb.
Lube.....**BT5**
Air.....**PA691**
Fuel.....**BF833,-K2**
Oil Vapor.....**PA643**
124, 124 Spyder 4-1608cc (1.6L) Carb.
Lube.....**BT5**
Air.....**PA691**
Fuel.....**BF833,-K2**
Oil Vapor.....**PA643**
128 4-1116cc (1.1L) Carb.
Lube.....**BT5**
Fuel.....**BF833,-K2**
Oil Vapor.....**N/R**
Trans......**M.T.**
128 4-1290cc (1.3L) Carb.
Lube.....**BT5**
Fuel.....**BF833,-K2**
Oil Vapor.....**N/R**
Trans......**M.T.**
850 Spyder 4-903cc (.9L) Carb.
Air.....**PA1814**
Fuel.....**BF833,-K2**
Oil Vapor.....**N/R**
Trans......**M.T.**

1972
124 4-1438cc (1.4L) Carb.
Lube.....**BT5**
Air.....**PA691**
Fuel.....**BF833,-K2**
Oil Vapor.....**PA643**
124, 124 Spyder 4-1608cc (1.6L) Carb.
Lube.....**BT5**
Air.....**PA691**
Fuel.....**BF833,-K2**
Oil Vapor.....**PA643**
128 4-1116cc (1.1L) Carb.
Lube.....**BT5**
Fuel.....**BF833,-K2**
Oil Vapor.....**N/R**
Trans......**M.T.**
850 Spyder 4-903cc (.9L) Carb.
Air.....**PA1814**
Fuel.....**BF833,-K2**
Oil Vapor.....**N/R**
Trans......**M.T.**

OBS = Obsolete. Availability Limited to Distributor Stock.

FIAT (Cont'd.)

1971
124 4-1438cc (1.4L) Carb.
Lube....BT5
Air....PA691
Fuel....BF833,-K2
Oil Vapor....PA643
124, 124 Spyder 4-1608cc (1.6L) Carb.
Lube....BT5
Air....PA691
Fuel....BF833,-K2
Oil Vapor....PA643
Trans. (Spyder)....M.T.
128 4-1116cc (1.1L) Carb.
Lube....BT5
Fuel....BF833,-K2
Oil Vapor....N/R
Trans.....M.T.
850 4-817cc (.8L) Carb.
Air....PA1814
Fuel....BF833,-K2
Oil Vapor....N/R
850 4-903cc (.9L) Carb.
Air....PA1814
Fuel....BF833,-K2
Oil Vapor....N/R
Trans.....M.T.

1970
124, 124 Spyder 4-1438cc (1.4L) 2 Bbl. Carb.
Lube....BT5
Air....PA691
Fuel....BF833,-K2
Oil Vapor....N/R
Trans.....M.T.
850 4-817cc (.8L) Carb.
Air....PA1814
850, 850 Racer, 850 Spyder 4-903cc (.9L) 2 Bbl. Carb.
Air....PA1814
Fuel....BF833,-K2
Oil Vapor....N/R
Trans. (Racer, Spyder)....M.T.

1969
124 4-1197cc (1.2L) Carb.
Lube....BT5
Fuel....BF833,-K2
Oil Vapor....N/R
Trans.....M.T.
124, 124 Spyder 4-1438cc (1.4L) Carb.
Lube....BT5
Air....PA691
Fuel....BF833,-K2
Oil Vapor....N/R
Trans. (Spyder)....M.T.
850, 850 Spyder 4-817cc (.8L) Carb.
Air....PA1814
Fuel....BF833,-K2
Trans. (Spyder)....M.T.

1968
124, 124 Spyder 4-1438cc (1.4L) Carb.
Lube....BT5
Air....PA691
Fuel....BF833,-K2
Oil Vapor....N/R
Trans. (Spyder)....M.T.
850, 850 Spyder 4-903cc (.9L) Carb.
Air....PA1814
Fuel....BF833,-K2
Oil Vapor....N/R
Trans. (Spyder)....M.T.

1967
124 4-1197cc (1.2L) Carb.
Lube....BT5
Air....PA2037
Fuel....BF833,-K2
Oil Vapor....N/R
Trans.....M.T.

FIAT 1967 (Cont'd.)

600D 4-767cc (.8L) Carb.
Air....PA675
Trans.....M.T.
850 4-903cc (.9L) Carb.
Air....PA1814
Fuel....BF833,-K2
Oil Vapor....N/R
Trans.....M.T.
1100 4-1089cc (1.1L) Carb.
Lube....P40
Air....PA634
Fuel....BF833,-K2
Oil Vapor....N/R
Trans.....M.T.
1500 4-1481cc (1.5L) Carb.
Lube....B50
Fuel....BF833,-K2
Oil Vapor....N/R
Trans.....M.T.

1966
600D 4-767cc (.8L) Carb.
Air....PA675
Trans.....M.T.
1100 4-1089cc (1.1L) Carb.
Lube....P40
Fuel....BF7903
Oil Vapor....N/R
1500 4-1481cc (1.5L) Carb.
Lube....B50
Fuel....BF833,-K2
Oil Vapor....N/R
Trans.....M.T.

1965
600D 4-767cc (.8L) Carb.
Air....PA675
Trans.....M.T.
1100 4-1221cc (1.2L) Carb.
Air....PA634
Oil Vapor....N/R
1500 4-1481cc (1.5L) Carb.
Lube....B50
Air....PA699
Fuel....BF833,-K2
Trans.....M.T.

1964
600D 4-767cc (.8L) Carb.
Air....PA675
Trans.....M.T.
1100 4-1221cc (1.2L) Carb.
Air....PA634
Fuel....BF833,-K2
Oil Vapor....N/R
Trans.....M.T.
1500 4-1481cc (1.5L) Carb.
Lube....B50
Air....PA699
Fuel....BF833,-K2
Trans.....M.T.

1963
600D 4-767cc (.8L) Carb.
Air....PA675
Trans.....M.T.
1100 4-1089cc (1.1L) Carb.
Lube....P40
Fuel....BF833,-K2
Oil Vapor....N/R
Trans.....M.T.
1100D 4-1221cc (1.2L) Carb.
Lube....P40
Air....PA699
Fuel....BF833,-K2
Trans.....M.T.
1200 4-1221cc (1.2L) Carb.
Lube....P40
Air....PA699
Fuel....BF833,-K2
Trans.....M.T.

FIAT (Cont'd.)

1962
600 4-767cc (.8L) 1 Bbl. Carb.
Air....PA675
Trans.....M.T.
1100 4-1089cc (1.1L) 2 Bbl. Carb.
Lube....P40
Oil Vapor....N/R
Trans.....M.T.
1200 4-1221cc (1.2L) 2 Bbl. Carb.
Lube....P40
Air....PA699
Fuel....BF833,-K2
Trans.....M.T.
1500 4-1491cc (1.5L) Carb.
Lube....B50
Air....PA699
Fuel....BF7903
Oil Vapor....N/R

1961
500 2-479cc (.5L) 1 Bbl. Carb.
Trans.....M.T.
500 2-499cc (.5L) 1 Bbl. Carb.
Trans.....M.T.
600 4-633cc (.6L) 2 Bbl. Carb.
Air....PA675
Trans.....M.T.
1100 4-1089cc (1.1L) 2 Bbl. Carb.
Lube....P40
Air....PA699
Fuel....BF833,-K2
Oil Vapor....N/R
Trans.....M.T.
1200 4-1221cc (1.2L) 2 Bbl. Carb.
Lube....P40
Air....PA699
Fuel....BF833,-K2
Trans.....M.T.
1500 4-1491cc (1.5L) 2 Bbl. Carb.
Lube....B50
Air....PA699
Fuel....BF833,-K2
Oil Vapor....N/R
Trans.....M.T.

1960
500 2-479cc (.5L) 1 Bbl. Carb.
Trans.....M.T.
500 2-499cc (.5L) 1 Bbl. Carb.
Trans.....M.T.
600 4-633cc (.6L) 2 Bbl. Carb.
Air....PA675
Trans.....M.T.
1100 4-1089cc (1.1L) 2 Bbl. Carb.
Lube....P40
Air....PA634
Fuel....BF833,-K2
Trans.....M.T.
1200 4-1221cc (1.2L) 2 Bbl. Carb.
Lube....P40
Air....PA699
Fuel....BF833,-K2
Trans.....M.T.
1500 4-1491cc (1.5L) 2 Bbl. Carb.
Lube....B50
Air....PA699
Fuel....BF833,-K2
Trans.....M.T.

1959
500 2-479cc (.5L) 1 Bbl. Carb.
Trans.....M.T.
500 2-499cc (.5L) 1 Bbl. Carb.
Trans.....M.T.
600 4-633cc (.6L) 2 Bbl. Carb.
Air....PA675
Trans.....M.T.
1100 4-1089cc (1.1L) 2 Bbl. Carb.
Lube....P40
Air....PA634
Fuel....BF833,-K2
Oil Vapor....N/R
Trans.....M.T.

FIAT 1959 (Cont'd.)

1200 4-1221cc (1.2L) 2 Bbl. Carb.
Lube....P40
Fuel....BF833,-K2
Trans.....M.T.
1500 4-1491cc (1.5L) 2 Bbl. Carb.
Lube....B50
Air....PA699
Fuel....BF833,-K2
Trans.....M.T.

1958
500 2-479cc (.5L) 1 Bbl. Carb.
Trans.....M.T.
600 4-633cc (.6L) 2 Bbl. Carb.
Air....PA675
Trans.....M.T.
1100 4-1089cc (1.1L) 2 Bbl. Carb.
Lube....P40
Fuel....BF833,-K2
Trans.....M.T.
1200 4-1221cc (1.2L) 2 Bbl. Carb.
Lube....P40
Fuel....BF833,-K2
Trans.....M.T.

1957
600 4-633cc (.6L) Carb.
Air....PA675
1100 4-1089cc (1.1L) Carb.
Lube....P40

1956
600 4-633cc (.6L) Carb.
Air....PA675
1100 4-1089cc (1.1L) Carb.
Lube....P40

1955
1100 4-1089cc (1.1L) Carb.
Lube....P40

1954
1100 4-1089cc (1.1L) Carb.
Lube....P40

1953
1100 4-1089cc (1.1L) Carb.
Lube....P40

1952
1100 4-1089cc (1.1L) Carb.
Lube....P40

1951
1100 4-1089cc (1.1L) Carb.
Lube....P40

1950
1100 4-1089cc (1.1L) Carb.
Lube....P40

1949
1100 4-1089cc (1.1L) Carb.
Lube....P40

1948
1100 4-1089cc (1.1L) Carb.
Lube....P40

1947
1100 4-1089cc (1.1L) Carb.
Lube....P40

OBS = Obsolete. Availability Limited to Distributor Stock.

FORD

1979

Bronco V8-351 (5.8L) 2 Bbl. VIN H
- **Lube** **B2**
- **Air** **PA2051**
- **Fuel (In-Line)** **BF989**
- **Fuel (Screw-in)** **BF995**
- **Oil Vapor** **SA2085**
- **Trans.** **18015**

Bronco V8-400 (6.6L) 2 Bbl. VIN S
- **Lube** **B2**
- **Air** **PA2051**
- **Fuel (In-Line)** **BF989**
- **Fuel (Screw-in)** **BF995**
- **Oil Vapor** **SA2085**
- **Trans.** **18015**

Country Squire V8-302 (5.0L) 2 Bbl. VIN F
- **Lube** **B2**
- **Air** **PA2051**
- **Fuel (In-Line, Exc. Calif.)** **BF989**
- **Oil Vapor** **SA2085**
- **Trans.** **19879**

Country Squire V8-351 (5.8L) 2 Bbl. VIN H
- **Lube** **B2**
- **Air** **PA2051**
- **Fuel (In-Line)** **BF989**
- **Fuel (Screw-in)** **BF995**
- **Oil Vapor** **SA2085**
- **Trans.** **19879**

Courier 4-122 (2.0L) 2 Bbl. VIN C
- **Lube** **B161-S**
- **Air** **PA2075**
- **Fuel** **BF840,-K1**

Courier 4-140 (2.3L) 2 Bbl. VIN B
- **Lube** **B233**
- **Air** **PA2075**
- **Fuel** **BF840,-K1**

Fairmont 4-140 (2.3L) 2 Bbl. VIN Y
- **Lube** **B2**
- **Air** **PA2005**
- **Fuel** **BF879**
- **Oil Vapor** **SA2039**

Fairmont 6-200 (3.3L) 1 Bbl. VIN T
- **Lube** **B2**
- **Air (A.T.)** **PA1802**
- **Air (M.T.)** **PA2005**
- **Fuel** **BF995**
- **Oil Vapor** **SA2039**
- **Trans. (C-4)** **19879**

Fairmont V8-302 (5.0L) 2 Bbl. VIN F
- **Lube** **B2**
- **Air** ..... **PA2066 OBS**
- **Fuel (Screw-in)** **BF995**
- **Oil Vapor** **SA2085**
- **Trans.** **19879**

Fiesta 4-98 (1.6L) 2 Bbl. VIN N
- **Lube** **B243**
- **Air** **PA2074**
- **Fuel** **BF879**
- **Oil Vapor** **SA2039**

Granada 6-250 (4.1L) 1 Bbl. VIN L
- **Lube** **B2**
- **Air** **PA2005**
- **Fuel** **BF989**
- **Oil Vapor** **SA2039**
- **Trans.** **19879**

Granada V8-302 (5.0L) 2 Bbl. VIN F
- **Lube** **B2**
- **Air** **PA2051**
- **Fuel (In-Line, Exc. Calif.)** **BF989**
- **Oil Vapor** **SA2085**
- **Trans.** **19879**

LTD, LTD II V8-302 (5.0L) 2 Bbl. VIN F
- **Lube** **B2**
- **Air** **PA2051**
- **Fuel (In-Line, Exc. Calif.)** **BF989**
- **Oil Vapor** **SA2085**
- **Trans.** **19879**

FORD 1979 (Cont'd.)

LTD, LTD II V8-351 (5.8L) 2 Bbl. VIN H
- **Lube** **B2**
- **Air** **PA2051**
- **Fuel (In-Line)** **BF989**
- **Fuel (Screw-in)** **BF995**
- **Oil Vapor** **SA2085**
- **Trans.** **19879**

Mustang 4-140 (2.3L) 2 Bbl. VIN Y
- **Lube** **B2**
- **Air** **PA2005**
- **Fuel** **BF879**
- **Oil Vapor** **SA2039**

Mustang 4-140 (2.3L) 2 Bbl. Turbo VIN W
- **Lube** **B2**
- **Air** **PA2005**
- **Fuel** **BF879**
- **Oil Vapor** **SA2039**

Mustang V6-171 (2.8L) 2 Bbl. VIN Z
- **Lube** **B163**
- **Air** **PA2074**
- **Fuel (In-Line, Exc. Calif.)** **BF879**
- **Oil Vapor** **SA2084**

Mustang 6-200 (3.3L) 1 Bbl. VIN T
- **Lube** **B2**
- **Air (A.T.)** **PA1802**
- **Air (M.T.)** **PA2005**
- **Fuel** **BF995**
- **Oil Vapor** **SA2039**

Mustang V8-302 (5.0L) 2 Bbl. VIN F
- **Lube** **B2**
- **Air** ..... **PA2066 OBS**
- **Fuel (In-Line, Exc. Calif.)** **BF989**
- **Oil Vapor** **SA2085**

Pickups, F Series 6-300 (4.9L) 1 Bbl. VIN B,K
- **Lube** **B2**
- **Air** **PA2005**
- **Fuel** **BF995**
- **Oil Vapor** **SA2039**
- **Trans. (C-4, 2WD)** **19879**
- **Trans. (C-6 S. Pan)** **19828**
- **Trans. (C-6 D. Pan)** **18015**

Pickups, F Series V8-302 (5.0L) 2 Bbl. VIN G
- **Lube** **B2**
- **Air** **PA2051**
- **Fuel** **BF995**
- **Oil Vapor** **SA2085**
- **Trans. (C-4, 2WD)** **19879**
- **Trans. (C-6 S. Pan)** **19828**
- **Trans. (C-6 D. Pan)** **18015**

Pickups, F Series V8-351 (5.8L) 2 Bbl. VIN H
- **Lube** **B2**
- **Air** **PA2051**
- **Fuel (In-Line)** **BF989**
- **Fuel (Screw-in)** **BF995**
- **Oil Vapor** **SA2085**
- **Trans. (C6 2WD)** **19828**
- **Trans. (C6 AWD)** **18015**

Pickups, F Series V8-400 (6.6L) 2 Bbl. VIN S
- **Lube** **B2**
- **Air** **PA2051**
- **Fuel (In-Line)** **BF989**
- **Fuel (Screw-in)** **BF995**
- **Oil Vapor** **SA2085**
- **Trans.** **18015**

Pickups, F Series V8-460 (7.5L) 4 Bbl. VIN A,J
- **Lube** **B2**
- **Air** **PA2002**
- **Fuel (SintBronze)** **SF898**
- **Oil Vapor** **SA2085**
- **Trans. (C-6 S. Pan, 2WD)** **19828**
- **Trans. (C-6 D. Pan, AWD)** **18015**

Pinto 4-140 (2.3L) 2 Bbl. VIN Y
- **Lube** **B2**
- **Air** **PA2005**
- **Fuel** **BF879**
- **Oil Vapor** **SA2039**

FORD 1979 (Cont'd.)

Pinto V6-171 (2.8L) 2 Bbl. VIN Z
- **Lube** **B199**
- **Air** **PA2074**
- **Fuel (In-Line, Exc. Calif.)** **BF879**
- **Oil Vapor** **SA2084**

Ranchero V8-302 (5.0L) 2 Bbl. VIN F
- **Lube** **B2**
- **Air** **PA2051**
- **Fuel (In-Line, Exc. Calif.)** **BF989**
- **Oil Vapor** **SA2085**
- **Trans.** **19828**

Ranchero V8-351 (5.8L) 2 Bbl. VIN H
- **Lube** **B2**
- **Air** **PA2051**
- **Fuel (In-Line)** **BF989**
- **Fuel (Screw-in)** **BF995**
- **Oil Vapor** **SA2085**
- **Trans.** **19828**

Thunderbird V8-302 (5.0L) 2 Bbl. VIN F
- **Lube** **B2**
- **Air** **PA2051**
- **Fuel (In-Line, Exc. Calif.)** **BF989**
- **Oil Vapor** **SA2085**
- **Trans.** **19879**

Thunderbird V8-351 (5.8L) 2 Bbl. VIN H
- **Lube** **B2**
- **Air** **PA2051**
- **Fuel (In-Line)** **BF989**
- **Fuel (Screw-in)** **BF995**
- **Oil Vapor** **SA2085**
- **Trans. (C-4)** **19879**
- **Trans. (C-6 S. Pan, 2WD)** **19828**

Vans, E Series 6-300 (4.9L) 1 Bbl. VIN B,K
- **Lube** **B2**
- **Air** **PA657**
- **Fuel** **BF879**
- **Oil Vapor** **SA2039**
- **Trans. (C-4, 2WD)** **19879**
- **Trans. (C-6 S. Pan)** **19828**

Vans, E Series V8-302 (5.0L) 2 Bbl. VIN G
- **Lube** **B2**
- **Air** **PA2051**
- **Fuel** **BF995**
- **Oil Vapor** **SA2085**
- **Trans.** **19828**

Vans, E Series V8-351 (5.8L) 2 Bbl. VIN H
- **Lube** **B2**
- **Air** **PA2051**
- **Fuel (In-Line)** **BF989**
- **Fuel (Screw-in)** **BF995**
- **Oil Vapor** **SA2085**
- **Trans.** **19828**

Vans, E Series V8-460 (7.5L) 4 Bbl. VIN A
- **Lube** **B2**
- **Air** **PA2002**
- **Fuel (SintBronze)** **SF898**
- **Oil Vapor** **SA2085**
- **Trans.** **19828**

1978

Bronco V8-351 (5.8L) 2 Bbl. VIN H
- **Lube** **B2**
- **Air** **PA2051**
- **Fuel (In-Line)** **BF989**
- **Fuel (Screw-in)** **BF995**
- **Oil Vapor** **SA2085**
- **Trans.** **18015**

Bronco V8-400 (6.6L) 2 Bbl. VIN S
- **Lube** **B2**
- **Air** **PA2051**
- **Fuel (In-Line)** **BF989**
- **Fuel (Screw-in)** **BF995**
- **Oil Vapor** **SA2085**
- **Trans.** **18015**

FORD 1978 (Cont'd.)

Country Squire V8-400 (6.6L) 2 Bbl. VIN S
- **Lube** **B2**
- **Air** **PA2051**
- **Fuel (In-Line)** **BF989**
- **Fuel (Screw-in)** **BF995**
- **Oil Vapor** **SA2085**
- **Trans.** **19828**

Country Squire V8-460 (7.5L) 4 Bbl. VIN A
- **Lube** **B2**
- **Air** ..... **PA2024** [74]
- **Air** ..... **PA2002** [73]
- **Oil Vapor** **SA2039**
- **Trans.** **19879**

Courier 4-110 (1.8L) 2 Bbl. VIN A
- **Lube** **B161-S**
- **Air (Std., Round)** **PA2075**
- **Air (Opt., Oval)** ..... **PA2059 OBS**
- **Fuel** **BF840,-K1**

Courier 4-140 (2.3L) 2 Bbl. VIN B
- **Lube** **B233**
- **Air** **PA2075**
- **Fuel** **BF840,-K1**

Fairmont 4-140 (2.3L) 2 Bbl. VIN Y
- **Lube** **B2**
- **Air** **PA2005**
- **Oil Vapor** **SA2039**

Fairmont 6-200 (3.3L) 1 Bbl. VIN T
- **Lube** **B2**
- **Air (A.T.)** **PA1802**
- **Air (M.T.)** **PA2005**
- **Fuel** **BF995**
- **Oil Vapor** **SA2039**
- **Trans. (C-4)** **19879**

Fairmont V8-302 (5.0L) 2 Bbl. VIN F
- **Lube** **B2**
- **Air** ..... **PA2066 OBS**
- **Fuel (In-Line, Exc. Calif.)** **BF995**
- **Oil Vapor** **SA2085**
- **Trans.** **19879**

Fiesta 4-98 (1.6L) 2 Bbl. VIN N
- **Lube** **B243**
- **Air** **PA2074**
- **Fuel** **BF879**
- **Oil Vapor** **SA2039**

Granada 6-250 (4.1L) 1 Bbl. VIN L
- **Lube** **B2**
- **Air** **PA2005**
- **Fuel** **BF995**
- **Oil Vapor** **SA2039**
- **Trans.** **19879**

Granada V8-302 (5.0L) 2 Bbl. VIN F
- **Lube** **B2**
- **Air** **PA2051**
- **Fuel (In-Line, Exc. Calif.)** **BF995**
- **Oil Vapor** **SA2085**
- **Trans.** **19879**

LTD, LTD II V8-302 (5.0L) 2 Bbl. VIN F
- **Lube** **B2**
- **Air** **PA2051**
- **Fuel (In-Line, Exc. Calif.)** **BF995**
- **Oil Vapor** **SA2085**
- **Trans.** **19879**

LTD, LTD II V8-351 (5.8L) 2 Bbl. VIN H
- **Lube** **B2**
- **Air** **PA2051**
- **Fuel (In-Line)** **BF989**
- **Fuel (Screw-in)** **BF995**
- **Oil Vapor** **SA2085**
- **Trans. (C-4)** **19879**
- **Trans. (C-6 S. Pan, 2WD)** **19828**

LTD, LTD II V8-400 (6.6L) 2 Bbl. VIN S
- **Lube** **B2**
- **Air** **PA2051**
- **Fuel (In-Line)** **BF989**
- **Fuel (Screw-in)** **BF995**
- **Oil Vapor** **SA2085**
- **Trans. (C-4)** **19879**
- **Trans. (C-6 S. Pan, 2WD)** **19828**

[73] Police. [74] Exc. Police.

OBS = Obsolete. Availability Limited to Distributor Stock.

FORD 1978 (Cont'd.)

LTD, LTD II V8-460 (7.5L) 4 Bbl. VIN A,C
- **Lube** ... **B2**
- **Air** ... **PA2024** [74]
- **Air** ... **PA2002** [73]
- **Oil Vapor** ... **SA2039**
- **Trans.** ... **19879**

Mustang II 4-140 (2.3L) 2 Bbl. VIN Y
- **Lube** ... **B2**
- **Air** ... **PA2005**
- **Fuel (Exc. Calif.)** ... **BF995**
- **Oil Vapor** ... **SA2039**

Mustang II V6-171 (2.8L) 2 Bbl. VIN Z
- **Lube** ... **B163**
- **Air** ... **PA2074**
- **Fuel (In-Line, Exc. Calif.)** ... **BF995**
- **Oil Vapor** ... **SA2084**

Mustang II V8-302 (5.0L) 2 Bbl. VIN F
- **Lube** ... **B2**
- **Air** ... **PA2066 OBS**
- **Fuel (In-Line, Exc. Calif.)** ... **BF995**
- **Oil Vapor** ... **SA2085**

Pickups, F Series 6-300 (4.9L) 1 Bbl. VIN B,K
- **Lube** ... **B2**
- **Air** ... **PA2005**
- **Fuel** ... **BF995**
- **Oil Vapor** ... **SA2039**
- **Trans.** ... **19879**

Pickups, F Series V8-302 (5.0L) 2 Bbl. VIN G
- **Lube** ... **B2**
- **Air** ... **PA2051**
- **Fuel (Screw-in, Exc. Calif.)** ... **BF995**
- **Oil Vapor** ... **SA2085**
- **Trans. (C-4, 2WD)** ... **19879**
- **Trans. (C-6 S. Pan)** ... **19828**
- **Trans. (C-6 D. Pan)** ... **18015**

Pickups, F Series V8-351 (5.8L) 2 Bbl. VIN H
- **Lube** ... **B2**
- **Air** ... **PA2051**
- **Fuel (In-Line)** ... **BF989**
- **Fuel (Screw-in)** ... **BF995**
- **Oil Vapor** ... **SA2085**
- **Trans. (C-6 S. Pan, 2WD)** ... **19828**
- **Trans. (C-6 D. Pan, AWD)** ... **18015**

Pickups, F Series V8-400 (6.6L) 2 Bbl. VIN S
- **Lube** ... **B2**
- **Air** ... **PA2051**
- **Fuel (In-Line)** ... **BF989**
- **Fuel (Screw-in)** ... **BF995**
- **Oil Vapor** ... **SA2085**
- **Trans. (C-6 S. Pan, 2WD)** ... **19828**
- **Trans. (C-6 D. Pan, AWD)** ... **18015**

Pickups, F Series V8-460 (7.5L) 4 Bbl. VIN J
- **Lube** ... **B2**
- **Air** ... **PA2002**
- **Oil Vapor** ... **SA2039**
- **Trans. (C-6 S. Pan, 2WD)** ... **19828**
- **Trans. (C-6 D. Pan, AWD)** ... **18015**

Pinto 4-140 (2.3L) 2 Bbl. VIN Y
- **Lube** ... **B2**
- **Air** ... **PA2005**
- **Fuel (Exc. Calif.)** ... **BF995**
- **Oil Vapor** ... **SA2039**

Pinto V6-171 (2.8L) 2 Bbl. VIN Z
- **Lube** ... **B199**
- **Air** ... **PA2074**
- **Fuel (In-Line, Exc. Calif.)** ... **BF995**
- **Oil Vapor** ... **SA2084**

Ranchero V8-302 (5.0L) 2 Bbl. VIN F
- **Lube** ... **B2**
- **Air** ... **PA2051**
- **Fuel (In-Line, Exc. Calif.)** ... **BF995**
- **Oil Vapor** ... **SA2085**
- **Trans.** ... **19828**

FORD 1978 (Cont'd.)

Ranchero V8-351 (5.8L) 2 Bbl. VIN H
- **Lube** ... **B2**
- **Air** ... **PA2051**
- **Fuel (In-Line)** ... **BF989**
- **Fuel (Screw-in)** ... **BF995**
- **Oil Vapor** ... **SA2085**
- **Trans.** ... **19828**

Ranchero V8-400 (6.6L) 2 Bbl. VIN S
- **Lube** ... **B2**
- **Air** ... **PA2051**
- **Fuel (In-Line)** ... **BF989**
- **Fuel (Screw-in)** ... **BF995**
- **Oil Vapor** ... **SA2085**
- **Trans.** ... **19828**

Thunderbird V8-302 (5.0L) 2 Bbl. VIN F
- **Lube** ... **B2**
- **Air** ... **PA2051**
- **Fuel (In-Line, Exc. Calif.)** ... **BF995**
- **Oil Vapor** ... **SA2085**
- **Trans.** ... **19879**

Thunderbird V8-351 (5.8L) 2 Bbl. VIN H
- **Lube** ... **B2**
- **Air** ... **PA2051**
- **Fuel (In-Line)** ... **BF989**
- **Fuel (Screw-in)** ... **BF995**
- **Oil Vapor** ... **SA2085**
- **Trans. (C-4)** ... **19879**
- **Trans. (C-6 S. Pan, 2WD)** ... **19828**

Thunderbird V8-400 (6.6L) 2 Bbl. VIN S
- **Lube** ... **B2**
- **Air** ... **PA2051**
- **Fuel (In-Line)** ... **BF989**
- **Fuel (Screw-in)** ... **BF995**
- **Oil Vapor** ... **SA2085**
- **Trans. (C-4)** ... **19879**
- **Trans. (C-6 S. Pan, 2WD)** ... **19828**

Vans, E100-350 6-300 (4.9L) 1 Bbl. VIN B,K
- **Lube** ... **B2**
- **Air** ... **PA657**
- **Fuel** ... **BF995**
- **Oil Vapor** ... **SA2039**
- **Trans.** ... **19828**

Vans, E100-350 V8-351 (5.8L) 2 Bbl. VIN H
- **Lube** ... **B2**
- **Air** ... **PA2051**
- **Fuel (In-Line)** ... **BF989**
- **Fuel (Screw-in)** ... **BF995**
- **Oil Vapor** ... **SA2085**
- **Trans.** ... **19828**

Vans, E100-350 V8-460 (7.5L) 4 Bbl. VIN A
- **Lube** ... **B2**
- **Air** ... **PA2002**
- **Oil Vapor** ... **SA2039**
- **Trans.** ... **19828**

1977

Bronco V8-302 (5.0L) 2 Bbl. VIN G
- **Lube** ... **B2**
- **Air** ... **PA657**
- **Fuel** ... **BF995**
- **Oil Vapor** ... **SA2039**

Country Squire V8-400 (6.6L) 2 Bbl. VIN S
- **Lube** ... **B2**
- **Air** ... **PA2051**
- **Fuel** ... **BF989**
- **Oil Vapor** ... **SA2039**
- **Trans.** ... **19828**

Country Squire V8-460 (7.5L) 4 Bbl. VIN A
- **Lube** ... **B2**
- **Air** ... **PA2024**
- **Oil Vapor** ... **SA2039**
- **Trans.** ... **19828**

Courier 4-110 (1.8L) 2 Bbl. VIN A
- **Lube** ... **B161-S**
- **Air (Std. Round)** ... **PA2075**
- **Air (Opt., Oval)** ... **PA2059 OBS**
- **Fuel** ... **BF840,-K1**

FORD 1977 (Cont'd.)

Courier 4-140 (2.3L) 2 Bbl. VIN B
- **Lube** ... **B233**
- **Air** ... **PA2075**
- **Fuel** ... **BF840,-K1**

Custom 500 V8-351 (5.8L) 2 Bbl. VIN H
- **Lube** ... **B2**
- **Air** ... **PA2051**
- **Fuel (In-Line)** ... **BF989**
- **Fuel (Screw-in)** ... **BF995**
- **Oil Vapor** ... **SA2039**
- **Oil Vapor (Pad Only)** ... **SA2045**
- **Trans.** ... **19828**

Custom 500 V8-400 (6.6L) 2 Bbl. VIN S
- **Lube** ... **B2**
- **Air** ... **PA2051**
- **Fuel** ... **BF989**
- **Oil Vapor** ... **SA2039**
- **Trans.** ... **19828**

Granada 6-200 (3.3L) 1 Bbl. VIN T
- **Lube** ... **B2**
- **Air** ... **PA2005**
- **Fuel** ... **BF879**
- **Oil Vapor** ... **SA2039**
- **Trans.** ... **19879**

Granada 6-250 (4.1L) 1 Bbl. VIN L
- **Lube** ... **B2**
- **Air** ... **PA2005**
- **Fuel** ... **BF879**
- **Oil Vapor** ... **SA2039**
- **Trans.** ... **19879**

Granada V8-302 (5.0L) 2 Bbl. VIN F
- **Lube** ... **B2**
- **Air** ... **PA2066 OBS**
- **Fuel** ... **BF995**
- **Oil Vapor (Pad Only)** ... **SA2045**
- **Trans.** ... **19879**

Granada V8-351 (5.8L) 2 Bbl. VIN H
- **Lube** ... **B2**
- **Air** ... **PA2051**
- **Fuel (In-Line)** ... **BF989**
- **Fuel (Screw-in)** ... **BF995**
- **Oil Vapor** ... **SA2039**
- **Oil Vapor (Pad Only)** ... **SA2045**
- **Trans.** ... **19879**

LTD V8-302 (5.0L) 2 Bbl. VIN F
- **Lube** ... **B2**
- **Air** ... **PA2066 OBS**
- **Fuel** ... **BF995**
- **Oil Vapor (Pad Only)** ... **SA2045**
- **Trans.** ... **19879**

LTD V8-351 (5.8L) 2 Bbl. VIN H
- **Lube** ... **B2**
- **Air** ... **PA2051**
- **Fuel (In-Line)** ... **BF989**
- **Fuel (Screw-in)** ... **BF995**
- **Oil Vapor (Pad Only)** ... **SA2045**
- **Trans. (C-4, 2WD)** ... **19879**
- **Trans. (C-6 S. Pan, 2WD)** ... **19828**

LTD V8-400 (6.6L) 2,4 Bbl. VIN R,S
- **Lube** ... **B2**
- **Air** ... **PA2051**
- **Fuel** ... **BF989**
- **Oil Vapor** ... **SA2039**
- **Trans.** ... **19828**

LTD V8-460 (7.5L) 4 Bbl. VIN A,C
- **Lube** ... **B2**
- **Air** ... **PA2024** [74]
- **Air** ... **PA2002** [73]
- **Oil Vapor** ... **SA2039**
- **Trans.** ... **19828**

LTD II V8-302 (5.0L) 2 Bbl. VIN F
- **Lube** ... **B2**
- **Air** ... **PA2066 OBS**
- **Fuel** ... **BF995**
- **Oil Vapor (Pad Only)** ... **SA2045**
- **Trans.** ... **19879**

LTD II V8-351 (5.8L) 2 Bbl. VIN H
- **Lube** ... **B2**
- **Air** ... **PA2051**
- **Fuel (In-Line)** ... **BF989**
- **Fuel (Screw-in)** ... **BF995**
- **Oil Vapor (Pad Only)** ... **SA2045**
- **Trans. (C-4, 2WD)** ... **19879**
- **Trans. (C-6 S. Pan, 2WD)** ... **19828**

FORD 1977 (Cont'd.)

LTD II V8-400 (6.6L) 2 Bbl. VIN S
- **Lube** ... **B2**
- **Air** ... **PA2051**
- **Fuel** ... **BF989**
- **Oil Vapor** ... **SA2039**
- **Trans. (C-4)** ... **19879**
- **Trans. (C-6 S. Pan, 2WD)** ... **19828**

Maverick 6-200 (3.3L) 1 Bbl. VIN T
- **Lube** ... **B2**
- **Air** ... **PA2005**
- **Fuel** ... **BF879**
- **Oil Vapor** ... **SA2039**
- **Trans.** ... **19879**

Maverick 6-250 (4.1L) 1 Bbl. VIN L
- **Lube** ... **B2**
- **Air** ... **PA2005**
- **Fuel** ... **BF879**
- **Oil Vapor** ... **SA2039**
- **Trans.** ... **19879**

Maverick V8-302 (5.0L) 2 Bbl. VIN F
- **Lube** ... **B2**
- **Air** ... **PA2066 OBS**
- **Fuel** ... **BF995**
- **Oil Vapor (Pad Only)** ... **SA2045**
- **Trans.** ... **19879**

Mustang II 4-140 (2.3L) 2 Bbl. VIN Y
- **Lube** ... **B2**
- **Air** ... **PA2005**
- **Fuel (Exc. Calif.)** ... **BF879**
- **Oil Vapor** ... **SA2039**

Mustang II V6-171 (2.8L) 2 Bbl. VIN Z
- **Lube** ... **B163**
- **Air** ... **PA2074**
- **Fuel (In-Line, Exc. Calif.)** ... **BF879**
- **Oil Vapor** ... **SA2084**

Mustang II V8-302 (5.0L) 2 Bbl. VIN F
- **Lube** ... **B2**
- **Air** ... **PA2066 OBS**
- **Fuel** ... **BF995**
- **Oil Vapor (Pad Only)** ... **SA2045**

Pickups, F Series 6-300 (4.9L) 1 Bbl. VIN B
- **Lube** ... **B2**
- **Air** ... **PA2005**
- **Fuel** ... **BF879**
- **Oil Vapor** ... **SA2039**
- **Trans. (C-4)** ... **19879**
- **Trans. (C-6 S. Pan)** ... **19828**
- **Trans. (C-6 D. Pan)** ... **18015**

Pickups, F Series V8-302 (5.0L) 2 Bbl. VIN G
- **Lube** ... **B2**
- **Air** ... **PA2051**
- **Fuel** ... **BF995**
- **Oil Vapor** ... **SA2039**
- **Trans. (C-4, 2WD)** ... **19879**
- **Trans. (C-6 S. Pan)** ... **19828**
- **Trans. (C-6 D. Pan, AWD)** ... **18015**

Pickups, F Series V8-351 (5.8L) 2 Bbl. VIN H
- **Lube** ... **B2**
- **Air** ... **PA2051**
- **Fuel (In-Line)** ... **BF989**
- **Fuel (Screw-in)** ... **BF995**
- **Oil Vapor** ... **SA2039**
- **Oil Vapor (Pad Only)** ... **SA2045**
- **Trans. (C-6 S. Pan, 2WD)** ... **19828**
- **Trans. (C-6 D. Pan, AWD)** ... **18015**

Pickups, F Series V8-400 (6.6L) 2 Bbl. VIN S
- **Lube** ... **B2**
- **Air** ... **PA2051**
- **Fuel** ... **BF879**
- **Oil Vapor** ... **SA2039**
- **Trans. (C-6 S. Pan, 2WD)** ... **19828**
- **Trans. (C-6 D. Pan, AWD)** ... **18015**

Pickups, F Series V8-460 (7.5L) 4 Bbl. VIN J
- **Lube** ... **B2**
- **Air** ... **PA2002**
- **Oil Vapor** ... **SA2039**
- **Trans. (C-6 S. Pan, 2WD)** ... **19828**
- **Trans. (C-6 D. Pan, AWD)** ... **18015**

[73] Police. [74] Exc. Police.
OBS = Obsolete. Availability Limited to Distributor Stock.

FORD 1977 (Cont'd.)

Pinto 4-140 (2.3L) 2 Bbl. VIN Y
- **Lube** ... **B2**
- **Air** ... **PA2005**
- **Fuel (Exc. Calif.)** ... **BF879**
- **Oil Vapor** ... **SA2039**

Pinto V6-171 (2.8L) 2 Bbl. VIN Z
- **Lube** ... **B199**
- **Air** ... **PA2074**
- **Fuel (In-Line, Exc. Calif.)** ... **BF879**
- **Oil Vapor** ... **SA2084**

Ranchero V8-302 (5.0L) 2 Bbl. VIN F
- **Lube** ... **B2**
- **Air** ... **PA2066 OBS**
- **Fuel** ... **BF995**
- **Oil Vapor (Pad Only)** ... **SA2045**
- **Trans.** ... **19828**

Ranchero V8-351 (5.8L) 2 Bbl. VIN H
- **Lube** ... **B2**
- **Air** ... **PA2051**
- **Fuel (In-Line)** ... **BF989**
- **Fuel (Screw-in)** ... **BF995**
- **Oil Vapor** ... **SA2039**
- **Oil Vapor (Pad Only)** ... **SA2045**
- **Trans.** ... **19828**

Ranchero V8-400 (6.6L) 2 Bbl. VIN S
- **Lube** ... **B2**
- **Air** ... **PA2051**
- **Fuel** ... **BF989**
- **Oil Vapor** ... **SA2039**
- **Trans.** ... **19828**

Thunderbird V8-302 (5.0L) 2 Bbl. VIN F
- **Lube** ... **B2**
- **Air** ... **PA2066 OBS**
- **Fuel** ... **BF995**
- **Trans.** ... **19828**

Thunderbird V8-351M (5.8L) 2 Bbl. VIN H
- **Lube** ... **B2**
- **Air** ... **PA2051**
- **Fuel (In-Line)** ... **BF989**
- **Fuel (Screw-in)** ... **BF995**
- **Oil Vapor** ... **SA2039**
- **Oil Vapor (Pad Only)** ... **SA2045**
- **Trans.** ... **19828**

Thunderbird V8-400 (6.6L) 2 Bbl. VIN S
- **Lube** ... **B2**
- **Air** ... **PA2051**
- **Fuel** ... **BF989**
- **Oil Vapor** ... **SA2039**
- **Trans.** ... **19828**

Vans, E100-350 6-300 (4.9L) 1 Bbl. VIN B
- **Lube** ... **B2**
- **Air** ... **PA657**
- **Fuel** ... **BF879**
- **Oil Vapor** ... **SA2039**
- **Trans. (C-4)** ... **19879**
- **Trans. (C-6 S. Pan)** ... **19828**

Vans, E100-350 V8-351 (5.8L) 2 Bbl. VIN H
- **Lube** ... **B2**
- **Air** ... **PA2051**
- **Fuel (In-Line)** ... **BF989**
- **Fuel (Screw-in)** ... **BF995**
- **Oil Vapor** ... **SA2039**
- **Oil Vapor (Pad Only)** ... **SA2045**
- **Trans.** ... **19828**

Vans, E100-350 V8-460 (7.5L) 4 Bbl. VIN A
- **Lube** ... **B2**
- **Air** ... **PA2002**
- **Oil Vapor** ... **SA2039**
- **Trans.** ... **19828**

1976

Bronco V8-302 (5.0L) 2 Bbl. VIN G
- **Lube** ... **B2**
- **Air** ... **PA657**
- **Fuel (Ele.)** ... **PF827**
- **Fuel (In-Line)** ... **BF879**
- **Oil Vapor** ... **SA2039**

FORD 1976 (Cont'd.)

Country Squire V8-400 (6.6L) 2 Bbl. VIN S
- **Lube** ... **B2**
- **Air** ... **PA2024**
- **Fuel** ... **BF879**
- **Oil Vapor** ... **SA2039**

Country Squire V8-460 (7.5L) 4 Bbl. VIN A
- **Lube** ... **B2**
- **Air** ... **PA2024**
- **Oil Vapor** ... **SA2039**
- **Trans.** ... **19828**

Courier 4-110 (1.8L) 2 Bbl. VIN N
- **Lube** ... **B161-S**
- **Air** ... **PA2059 OBS**
- **Fuel** ... **BF840,-K1**

Custom 500 V8-351 (5.8L) 2 Bbl. VIN H
- **Lube** ... **B2**
- **Air** ... **PA2051**
- **Fuel** ... **BF879**
- **Oil Vapor** ... **SA2039**
- **Trans. (C-4)** ... **19879**
- **Trans. (C-6 S. Pan)** ... **19828**

Custom 500 V8-400 (6.6L) 2 Bbl. VIN S
- **Lube** ... **B2**
- **Air** ... **PA2024**
- **Fuel** ... **BF879**
- **Oil Vapor** ... **SA2039**
- **Trans. (C-4)** ... **19879**
- **Trans. (C-6 S. Pan)** ... **19828**

Custom 500 V8-460 (7.5L) 4 Bbl. VIN A,C
- **Lube** ... **B2**
- **Air** ... **PA2024** [74]
- **Air** ... **PA2002** [73]
- **Oil Vapor** ... **SA2039**
- **Trans.** ... **19828**

Elite V8-351 (5.8L) 2 Bbl. VIN H
- **Lube** ... **B2**
- **Air** ... **PA2051**
- **Fuel** ... **BF879**
- **Oil Vapor** ... **SA2039**
- **Trans. (C-4)** ... **19879**
- **Trans. (C-6 S. Pan)** ... **19828**

Elite V8-400 (6.6L) 2 Bbl. VIN S
- **Lube** ... **B2**
- **Air** ... **PA2024**
- **Fuel** ... **BF879**
- **Oil Vapor** ... **SA2039**
- **Trans. (C-4)** ... **19879**
- **Trans. (C-6 S. Pan)** ... **19828**

Elite V8-460 (7.5L) 4 Bbl. VIN A
- **Lube** ... **B2**
- **Air** ... **PA2024**
- **Oil Vapor** ... **SA2039**
- **Trans.** ... **19828**

Granada 6-200 (3.3L) 1 Bbl. VIN T
- **Lube** ... **B2**
- **Air** ... **PA2005**
- **Fuel** ... **BF879**
- **Oil Vapor** ... **SA2039**
- **Trans.** ... **19879**

Granada 6-250 (4.1L) 1 Bbl. VIN L
- **Lube** ... **B2**
- **Air** ... **PA2005**
- **Fuel** ... **BF879**
- **Oil Vapor** ... **SA2039**
- **Trans.** ... **19879**

Granada V8-302 (5.0L) 2 Bbl. VIN F
- **Lube** ... **B2**
- **Air (1 3/4 In., Late)** ... **PA2066 OBS**
- **Air (2 1/2 In., Early)** ... **PA2051**
- **Fuel** ... **BF879**
- **Oil Vapor** ... **SA2039**
- **Trans.** ... **19879**

Granada V8-351 (5.8L) 2 Bbl. VIN H
- **Lube** ... **B2**
- **Air** ... **PA2051**
- **Fuel** ... **BF879**
- **Oil Vapor** ... **SA2039**
- **Trans.** ... **19879**

FORD 1976 (Cont'd.)

Grand Torino V8-351 (5.8L) 2 Bbl. VIN H
- **Lube** ... **B2**
- **Air** ... **PA2051**
- **Fuel** ... **BF879**
- **Oil Vapor** ... **SA2039**
- **Trans. (C-4)** ... **19879**
- **Trans. (C-6 S. Pan)** ... **19828**

Grand Torino V8-400 (6.6L) 2 Bbl. VIN S
- **Lube** ... **B2**
- **Air** ... **PA2024**
- **Fuel** ... **BF879**
- **Oil Vapor** ... **SA2039**
- **Trans. (C-4)** ... **19879**
- **Trans. (C-6 S. Pan)** ... **19828**

Grand Torino V8-460 (7.5L) 4 Bbl. VIN A
- **Lube** ... **B2**
- **Air** ... **PA2024**
- **Oil Vapor** ... **SA2039**
- **Trans.** ... **19828**

LTD V8-351 (5.8L) 2 Bbl. VIN H
- **Lube** ... **B2**
- **Air** ... **PA2051**
- **Fuel** ... **BF879**
- **Oil Vapor** ... **SA2039**
- **Trans. (C-4)** ... **19879**
- **Trans. (C-6 S. Pan)** ... **19828**

LTD V8-400 (6.6L) 2 Bbl. VIN S
- **Lube** ... **B2**
- **Air** ... **PA2024**
- **Fuel** ... **BF879**
- **Oil Vapor** ... **SA2039**
- **Trans.** ... **19828**

LTD V8-460 (7.5L) 4 Bbl. VIN A,C
- **Lube** ... **B2**
- **Air** ... **PA2024** [74]
- **Air** ... **PA2002** [73]
- **Oil Vapor** ... **SA2039**
- **Trans.** ... **19828**

Maverick 6-200 (3.3L) 1 Bbl. VIN T
- **Lube** ... **B2**
- **Air** ... **PA2005**
- **Fuel** ... **BF879**
- **Oil Vapor** ... **SA2039**
- **Trans.** ... **19879**

Maverick 6-250 (4.1L) 1 Bbl. VIN L
- **Lube** ... **B2**
- **Air** ... **PA2005**
- **Fuel** ... **BF879**
- **Oil Vapor** ... **SA2039**
- **Trans.** ... **19879**

Maverick V8-302 (5.0L) 2 Bbl. VIN F
- **Lube** ... **B2**
- **Air (1 3/4 In., Late)** ... **PA2066 OBS**
- **Air (2 1/2 In., Early)** ... **PA2051**
- **Fuel** ... **BF879**
- **Oil Vapor** ... **SA2039**
- **Trans.** ... **19879**

Mustang II 4-140 (2.3L) 2 Bbl. VIN Y
- **Lube** ... **B2**
- **Air** ... **PA2005**
- **Fuel** ... **BF879**
- **Oil Vapor (Pad Only)** ... **SA2045**

Mustang II V6-171 (2.8L) 2 Bbl. VIN Z
- **Lube** ... **B163**
- **Air** ... **PA1802**
- **Fuel** ... **BF879**
- **Oil Vapor** ... **SA2039**

Mustang II V8-302 (5.0L) 2 Bbl. VIN F
- **Lube** ... **B2**
- **Air** ... **PA2062 OBS**
- **Fuel** ... **BF879**
- **Oil Vapor** ... **SA2039**

P-350 6-300 (4.9L) 1 Bbl. VIN B
- **Lube** ... **B2**
- **Fuel** ... **BF879**
- **Oil Vapor** ... **SA2039**
- **Trans.** ... **19879**

FORD 1976 (Cont'd.)

P-350 V8-400 (6.6L) VIN S
- **Lube** ... **B2**
- **Fuel** ... **BF879**
- **Oil Vapor** ... **SA2039**
- **Trans. (C-4)** ... **19879**
- **Trans. (C-6 S. Pan)** ... **19828**

Pickups, F Series 6-300 (4.9L) 1 Bbl. VIN B
- **Lube** ... **B2**
- **Air** ... **PA2005**
- **Fuel** ... **BF879**
- **Oil Vapor** ... **SA2039**
- **Trans.** ... **19879**

Pickups, F Series V8-302 (5.0L) 2 Bbl. VIN G
- **Lube** ... **B2**
- **Air** ... **PA2051**
- **Fuel (Ele.)** ... **PF827**
- **Fuel (In-Line)** ... **BF879**
- **Oil Vapor** ... **SA2039**
- **Trans. (C-4)** ... **19879**
- **Trans. (C-6 S. Pan)** ... **19828**
- **Trans. (C-6 D. Pan, AWD)** ... **18015**

Pickups, F Series V8-360 (5.9L) 2 Bbl. VIN Y
- **Lube** ... **B2**
- **Air** ... **PA2002**
- **Fuel (Ele.)** ... **PF827**
- **Fuel (In-Line)** ... **BF879**
- **Oil Vapor** ... **SA2039**
- **Trans.** ... **19828**

Pickups, F Series V8-390 (6.4L) 4 Bbl. VIN M
- **Lube** ... **B2**
- **Air** ... **PA2002**
- **Fuel (Ele.)** ... **PF827**
- **Fuel (In-Line)** ... **BF879**
- **Oil Vapor** ... **SA2039**
- **Trans.** ... **19828**

Pickups, F Series V8-460 (7.5L) 4 Bbl. VIN J
- **Lube** ... **B2**
- **Air** ... **PA2002**
- **Oil Vapor** ... **SA2039**
- **Trans.** ... **19828**

Pinto 4-140 (2.3L) 2 Bbl. VIN Y
- **Lube** ... **B2**
- **Air** ... **PA2005**
- **Fuel** ... **BF879**
- **Oil Vapor (Pad Only)** ... **SA2045**

Pinto V6-171 (2.8L) 2 Bbl. VIN Z
- **Lube** ... **B199**
- **Air** ... **PA1802**
- **Fuel** ... **BF879**
- **Oil Vapor** ... **SA2039**

Ranch Wagon V8-400 (6.6L) 2 Bbl. Carb. VIN S
- **Lube** ... **B2**
- **Air** ... **PA2024**
- **Fuel** ... **BF879**
- **Oil Vapor** ... **SA2039**

Ranchero V8-351 (5.8L) 2 Bbl. VIN H
- **Lube** ... **B2**
- **Air** ... **PA2051**
- **Fuel** ... **BF879**
- **Oil Vapor** ... **SA2039**
- **Trans.** ... **19828**

Ranchero V8-400 (6.6L) 2 Bbl. VIN S
- **Lube** ... **B2**
- **Air** ... **PA2051**
- **Fuel** ... **BF879**
- **Oil Vapor** ... **SA2039**
- **Trans.** ... **19828**

Ranchero V8-460 (7.5L) 4 Bbl. VIN A
- **Lube** ... **B2**
- **Air** ... **PA2002**
- **Oil Vapor** ... **SA2039**
- **Trans.** ... **19828**

Thunderbird V8-460 (7.5L) 4 Bbl. VIN A
- **Lube** ... **B2**
- **Air** ... **PA2024**
- **Oil Vapor** ... **SA2039**
- **Trans.** ... **19828**

[73] Police. [74] Exc. Police.

OBS = Obsolete. Availability Limited to Distributor Stock.

FORD 1976 (Cont'd.)

Torino V8-351 (5.8L) 2 Bbl. VIN H
Lube.....B2
Air.....PA2051
Fuel.....BF879
Oil Vapor.....SA2039
Trans. (C-4).....19879
Trans. (C-6 S. Pan).....19828

Torino V8-400 (6.6L) 2 Bbl. VIN S
Lube.....B2
Air.....PA2024
Fuel.....BF879
Oil Vapor.....SA2039
Trans. (C-4).....19879
Trans. (C-6 S. Pan).....19828

Torino V8-460 (7.5L) 4 Bbl. VIN A,C
Lube.....B2
Air.....PA2024[74]
Air.....PA2002[73]
Oil Vapor.....SA2039
Trans......19828

Vans, E100-350 6-300 (4.9L) 1 Bbl. VIN B
Lube.....B2
Air.....PA657
Fuel.....BF879
Oil Vapor.....SA2039
Trans. (C-4).....19879
Trans. (C-6 S. Pan).....19828

Vans, E100-350 V8-351 (5.8L) 2 Bbl. VIN H
Lube.....B2
Air.....PA2051
Fuel.....BF879
Oil Vapor.....SA2039
Trans......19828

Vans, E100-350 V8-460 (7.5L) 4 Bbl. VIN A
Lube.....B2
Air.....PA2002
Oil Vapor.....SA2039
Trans......19828

1975

Bronco V8-302 (5.0L) 2 Bbl. VIN G
Lube.....B2
Air.....PA657
Fuel (In-Line).....BF879
Fuel (Opt. Ele.).....PF827
Oil Vapor.....SA2039

Country Squire V8-400 (6.6L) 2 Bbl. VIN S
Lube.....B2
Air.....PA2024
Fuel.....BF879
Oil Vapor.....SA2039

Country Squire V8-460 (7.5L) 4 Bbl. VIN A
Lube.....B2
Air.....PA2024
Oil Vapor.....SA2039
Trans......19828

Courier 4-110 (1.8L) 2 Bbl. VIN N
Lube.....B161-S
Air.....PA2059 OBS
Fuel.....BF840,-K1

Custom 500 V8-351M (5.8L) 2 Bbl. VIN H
Lube.....B2
Air.....PA2051
Fuel.....BF879
Oil Vapor.....SA2039

Custom 500 V8-400 (6.6L) 2 Bbl. VIN S
Lube.....B2
Air.....PA2024
Fuel.....BF879
Oil Vapor.....SA2039

Custom 500 V8-460 (7.5L) 4 Bbl. VIN A,C
Lube.....B2
Air.....PA2024
Oil Vapor.....SA2039
Trans......19828

FORD 1975 (Cont'd.)

Elite V8-351M (5.8L) 2 Bbl. VIN H
Lube.....B2
Air.....PA2051
Fuel.....BF879
Oil Vapor.....SA2039
Trans......19879

Elite V8-400 (6.6L) 2 Bbl. VIN S
Lube.....B2
Air.....PA2024
Fuel.....BF879
Oil Vapor.....SA2039

Elite V8-460 (7.5L) 4 Bbl. VIN A
Lube.....B2
Air.....PA2024
Oil Vapor.....SA2039
Trans......19828

Granada 6-200 (3.3L) 1 Bbl. VIN T
Lube.....B2
Air.....PA2005
Fuel.....BF879
Oil Vapor.....SA2039
Trans......19879

Granada 6-250 (4.1L) 1 Bbl. VIN L
Lube.....B2
Air.....PA2005
Fuel.....BF879
Oil Vapor.....SA2039
Trans......19879

Granada V8-302 (5.0L) 2 Bbl. VIN F
Lube.....B2
Air.....PA2051
Fuel (In-Line).....BF879
Fuel (Opt. Ele.).....PF827
Oil Vapor.....SA2039
Trans......19879

Granada V8-351W (5.8L) 2 Bbl. VIN H
Lube.....B2
Air.....PA2051
Fuel.....BF879
Oil Vapor.....SA2039
Trans......19879

LTD V8-351M (5.8L) 2 Bbl. VIN H
Lube.....B2
Air.....PA2051
Fuel.....BF879
Oil Vapor.....SA2039

LTD V8-400 (6.6L) 2 Bbl. VIN S
Lube.....B2
Air.....PA2024
Fuel.....BF879
Oil Vapor.....SA2039

LTD V8-460 (7.5L) 4 Bbl. VIN A,C
Lube.....B2
Air.....PA2024[74]
Air.....PA2002[73]
Oil Vapor.....SA2039
Trans......19828

Maverick 6-200 (3.3L) 1 Bbl. VIN T
Lube.....B2
Air.....PA2005
Fuel.....BF879
Oil Vapor.....SA2039
Trans......19879

Maverick 6-250 (4.1L) 1 Bbl. VIN L
Lube.....B2
Air.....PA2005
Fuel.....BF879
Oil Vapor.....SA2039
Trans......19879

Maverick V8-302 (5.0L) 2 Bbl. VIN F
Lube.....B2
Air.....PA2051
Fuel (In-Line).....BF879
Fuel (Opt. Ele.).....PF827
Oil Vapor.....SA2039
Trans......19879

Mustang II 4-140 (2.3L) 2 Bbl. VIN Y
Lube.....B2
Air.....PA2005
Fuel.....BF879

Mustang II V6-171 (2.8L) 2 Bbl. VIN Z
Lube.....B163
Air.....PA1802
Fuel.....BF879
Oil Vapor.....SA2039

FORD 1975 (Cont'd.)

Mustang II V8-302 (5.0L) 2 Bbl. VIN F
Lube.....B2
Air.....PA2062 OBS
Fuel (In-Line).....BF879
Fuel (Opt. Ele.).....PF827
Oil Vapor.....SA2039

P-350 6-300 (4.9L) Carb. VIN B
Lube.....B2
Fuel.....BF879
Oil Vapor.....SA2039
Trans......19879

Pickups, F Series 6-240 (3.9L) Carb. VIN A
Lube.....B2
Air.....PA2005
Fuel.....BF879
Oil Vapor.....SA2039
Trans......19879

Pickups, F Series 6-300 (4.9L) 1 Bbl. VIN B
Lube.....B2
Air.....PA2005
Fuel.....BF879
Oil Vapor.....SA2039
Trans......19879

Pickups, F Series V8-302 (5.0L) 2 Bbl. VIN G
Lube.....B2
Air.....PA2051
Fuel (Ele.).....PF827
Fuel (In-Line).....BF879
Oil Vapor.....SA2039
Trans......19828

Pickups, F Series V8-360 (5.9L) 2 Bbl. VIN Y
Lube.....B2
Air.....PA2002
Fuel (Ele.).....PF827
Fuel (In-Line).....BF879
Oil Vapor.....SA2039
Trans......19828

Pickups, F Series V8-390 (6.4L) 2,4 Bbl. VIN H,M
Lube.....B2
Air.....PA2002
Fuel (Ele.).....PF827
Fuel (In-Line).....BF879
Oil Vapor.....SA2039
Trans......19828

Pickups, F Series V8-460 (7.5L) 4 Bbl. VIN J
Lube.....B2
Air.....PA2002
Oil Vapor.....SA2039
Trans......19828

Pinto 4-140 (2.3L) 2 Bbl. VIN Y
Lube.....B2
Air.....PA2005
Fuel.....BF989
Oil Vapor (Pad Only).....SA2045

Pinto V6-171 (2.8L) 2 Bbl. VIN Z
Lube.....B199
Air.....PA1802
Fuel.....BF879
Oil Vapor.....SA2039

Ranch Wagon V8-400 (6.6L) Carb. VIN S
Lube.....B2
Air.....PA2024
Fuel.....BF879
Oil Vapor.....SA2039

Ranch Wagon V8-460 (7.5L) Carb. VIN A
Lube.....B2
Air.....PA2024[74]
Oil Vapor.....SA2039
Trans......19828

Ranchero V8-351 (5.8L) 2 Bbl. VIN H
Lube.....B2
Air.....PA2051
Fuel.....BF879
Oil Vapor.....SA2039
Trans......19879

FORD 1975 (Cont'd.)

Ranchero V8-400 (6.6L) 2 Bbl. VIN S
Lube.....B2
Air.....PA2051
Fuel.....BF879
Oil Vapor.....SA2039
Trans......19828

Ranchero V8-460 (7.5L) 4 Bbl. VIN A
Lube.....B2
Air.....PA2002
Oil Vapor.....SA2039
Trans......19828

Thunderbird V8-460 (7.5L) 4 Bbl. VIN A
Lube.....B2
Air.....PA2024
Oil Vapor.....SA2039
Trans......19828

Torino, Grand Torino V8-351 (5.8L) 2 Bbl. VIN H
Lube.....B2
Air.....PA2051
Fuel.....BF879
Oil Vapor.....SA2039
Trans......19879

Torino, Grand Torino V8-400 (6.6L) 2 Bbl. VIN S
Lube.....B2
Air.....PA2024
Fuel.....BF879
Oil Vapor.....SA2039
Trans......19828

Torino, Grand Torino V8-460 (7.5L) 4 Bbl. VIN A,C
Lube.....B2
Air.....PA2024[74]
Air.....PA2002[73]
Oil Vapor.....SA2039
Trans......19828

Vans, E100-350 6-300 (4.9L) 1 Bbl. VIN B
Lube.....B2
Air.....PA657
Fuel.....BF879
Oil Vapor.....SA2039
Trans. (C-4).....19879
Trans. (C-6 S. Pan).....19828

Vans, E100-350 V8-351 (5.8L) 2 Bbl. VIN H
Lube.....B2
Air.....PA2051
Fuel.....BF879
Oil Vapor.....SA2039
Trans......19828

Vans, E100-350 V8-460 (7.5L) 4 Bbl. VIN A
Lube.....B2
Air.....PA2002
Oil Vapor.....SA2039
Trans......19828

1974

Bronco 6-200 (3.3L) Carb. VIN T
Lube.....B2
Air.....PA2005
Fuel.....BF879
Oil Vapor.....SA2039

Bronco V8-302 (5.0L) Carb. VIN G
Lube.....B2
Air.....PA657
Fuel.....BF879
Oil Vapor.....SA2039
Trans......18015

Country Sedan, Country Squire V8-351 (5.8L) Carb. VIN H
Lube.....B2
Air.....PA2051
Fuel.....BF879
Oil Vapor.....SA2039
Trans......19879

Country Sedan, Country Squire V8-400 (6.6L) Carb. VIN S
Lube.....B2
Air.....PA2024
Fuel.....BF879
Oil Vapor.....SA2039

[73] Police. [74] Exc. Police.
OBS = Obsolete. Availability Limited to Distributor Stock.

FORD 1974 (Cont'd.)

Country Squire V8-460 (7.5L) Carb. VIN A
- **Lube (Ele.)** ... **P184**
- **Lube (Spin-on)** ... **B2**
- **Air** ... **PA2024**
- **Fuel** ... **BF879**
- **Oil Vapor** ... **SA2039**

Courier 4-110 (1.8L) Carb.
- **Lube** ... **B161-S**
- **Air** ... **PA2059 OBS**
- **Fuel** ... **BF840,-K1**

Custom 500 V8-351 (5.8L) 2 Bbl. Carb. VIN H
- **Lube** ... **B2**
- **Air** ... **PA2051**
- **Fuel** ... **BF879**
- **Oil Vapor** ... **SA2039**
- **Trans.** ... **19879**

Custom 500 V8-400 (6.6L) Carb. VIN S
- **Lube** ... **B2**
- **Air** ... **PA2024**
- **Fuel** ... **BF879**
- **Oil Vapor** ... **SA2039**

Custom 500 V8-460 (7.5L) 4 Bbl. Carb. VIN A,C
- **Lube** ... **B2**
- **Air** ... **PA2024**
- **Fuel** ... **BF879**
- **Oil Vapor** ... **SA2039**

Galaxie 500 V8-351 (5.8L) 2 Bbl. Carb. VIN H
- **Lube** ... **B2**
- **Air** ... **PA2051**
- **Fuel** ... **BF879**
- **Oil Vapor** ... **SA2039**
- **Trans.** ... **19879**

Galaxie 500 V8-400 (6.6L) Carb. VIN S
- **Lube** ... **B2**
- **Air** ... **PA2024**
- **Fuel** ... **BF879**
- **Oil Vapor** ... **SA2039**

Galaxie 500 V8-460 (7.5L) 4 Bbl. Carb. VIN A,C
- **Lube** ... **B2**
- **Air** ... **PA2024**
- **Fuel** ... **BF879**
- **Oil Vapor** ... **SA2039**

LTD V8-351 (5.8L) 2 Bbl. Carb. VIN H
- **Lube** ... **B2**
- **Air** ... **PA2051**
- **Fuel** ... **BF879**
- **Oil Vapor** ... **SA2039**
- **Trans.** ... **19879**

LTD V8-400 (6.6L) Carb. VIN S
- **Lube** ... **B2**
- **Air** ... **PA2024**
- **Fuel** ... **BF879**
- **Oil Vapor** ... **SA2039**

LTD V8-460 (7.5L) 4 Bbl. Carb. VIN A
- **Lube** ... **B2**
- **Air** ... **PA2024** [74]
- **Fuel** ... **BF879**
- **Oil Vapor** ... **SA2039**

M-450 V8-360 (5.9L) Carb. VIN Y
- **Lube** ... **B2**
- **Air** ... **PA2002**
- **Fuel (Ele.)** ... **PF827**
- **Fuel (In-Line)** ... **BF879**
- **Oil Vapor** ... **SA2039**

Maverick 6-200 (3.3L) 1 Bbl. Carb. VIN T
- **Lube** ... **B2**
- **Air** ... **PA2005**
- **Fuel** ... **BF879**
- **Oil Vapor** ... **SA2039**
- **Trans.** ... **19879**

FORD 1974 (Cont'd.)

Maverick 6-250 (4.1L) 1 Bbl. Carb. VIN L
- **Lube** ... **B2**
- **Air** ... **PA1802**
- **Fuel** ... **BF879**
- **Oil Vapor** ... **SA2039**
- **Trans.** ... **19879**

Maverick V8-302 (5.0L) Carb. VIN F
- **Lube** ... **B2**
- **Air** ... **PA2051**
- **Fuel** ... **BF879**
- **Oil Vapor** ... **SA2039**
- **Trans.** ... **19879**

Mustang II 4-1989cc (2.0L) Carb. VIN X
- **Lube** ... **B2**
- **Air** ... **PA2005**
- **Fuel** ... **BF879**
- **Oil Vapor** ... **SA2045**

Mustang II 4-140 (2.3L) Carb. VIN Y
- **Lube** ... **B2**
- **Air** ... **PA2005**
- **Fuel** ... **BF879**
- **Oil Vapor** ... **SA2045**

Mustang II 6-171 (2.8L) Carb. VIN Z
- **Lube** ... **B163**
- **Air** ... **PA1802**
- **Fuel** ... **BF879**
- **Oil Vapor** ... **SA2039**

P-350 6-300 (4.9L) Carb. VIN B
- **Lube** ... **B2**
- **Fuel (Ele.)** ... **PF827**
- **Fuel (In-Line)** ... **BF879**
- **Oil Vapor** ... **SA2039**
- **Trans.** ... **19879**

Pickups, F Series 6-240 (3.9L) Carb. VIN A
- **Lube** ... **B2**
- **Air** ... **PA2005**
- **Fuel** ... **BF879**
- **Oil Vapor** ... **SA2039**
- **Trans.** ... **19879**

Pickups, F Series 6-300 (4.9L) Carb. VIN B
- **Lube** ... **B2**
- **Air** ... **PA2005**
- **Fuel** ... **BF879**
- **Oil Vapor** ... **SA2039**
- **Trans.** ... **19879**

Pickups, F Series V8-302 (5.0L) Carb. VIN G
- **Lube** ... **B2**
- **Air** ... **PA2051**
- **Fuel** ... **BF879**
- **Oil Vapor** ... **SA2039**
- **Trans.** ... **19879**

Pickups, F Series V8-360 (5.9L) Carb. VIN Y
- **Lube** ... **B2**
- **Air** ... **PA2002**
- **Fuel** ... **BF879**
- **Oil Vapor** ... **SA2039**

Pickups, F Series V8-390 (6.4L) Carb. VIN H,M
- **Lube** ... **B2**
- **Air** ... **PA2002**
- **Fuel** ... **BF879**
- **Oil Vapor** ... **SA2039**

Pickups, F Series V8-460 (7.5L) Carb. VIN J
- **Lube** ... **B2**
- **Air** ... **PA2002**
- **Fuel (Ele.)** ... **PF827**
- **Fuel (In-Line)** ... **BF879**
- **Oil Vapor** ... **SA2039**

Pinto 4-1989cc (2.0L) Carb. VIN X
- **Lube** ... **B2**
- **Air** ... **PA2005**
- **Fuel** ... **BF989**
- **Oil Vapor (Pad Only)** ... **SA2045**

Pinto 4-140 (2.3L) Carb. VIN Y
- **Lube** ... **B2**
- **Air** ... **PA2005**
- **Fuel** ... **BF879**
- **Oil Vapor (Pad Only)** ... **SA2045**

FORD 1974 (Cont'd.)

Ranch Wagon V8-351 (5.8L) 2 Bbl. Carb. VIN H
- **Lube** ... **B2**
- **Air** ... **PA2051**
- **Fuel** ... **BF879**
- **Oil Vapor** ... **SA2039**

Ranch Wagon V8-400 (6.6L) Carb. VIN S
- **Lube** ... **B2**
- **Air** ... **PA2024**
- **Fuel** ... **BF879**
- **Oil Vapor** ... **SA2039**

Ranch Wagon V8-460 (7.5L) Carb. VIN A
- **Lube** ... **B2**
- **Fuel** ... **BF879**
- **Oil Vapor** ... **SA2039**

Ranchero V8-302 (5.0L) 2 Bbl. Carb. VIN F
- **Lube** ... **B2**
- **Air** ... **PA2051**
- **Fuel** ... **BF879**
- **Oil Vapor** ... **SA2039**
- **Trans.** ... **19879**

Ranchero V8-351 (5.8L) 2,4 Bbl. Carb. VIN H,Q
- **Lube** ... **B2**
- **Air (2 Bbl.)** ... **PA2051**
- **Air (4 Bbl.)** ... **PA2024**
- **Fuel** ... **BF879**
- **Oil Vapor** ... **SA2039**

Ranchero V8-400 (6.6L) Carb. VIN S
- **Lube** ... **B2**
- **Air** ... **PA2024**
- **Fuel** ... **BF879**
- **Oil Vapor** ... **SA2039**

Ranchero V8-460 (7.5L) 4 Bbl. Carb. VIN A
- **Lube** ... **B2**
- **Air** ... **PA2002**
- **Fuel (Ele.)** ... **PF827**
- **Fuel (In-Line)** ... **BF879**
- **Oil Vapor** ... **SA2039**

Thunderbird V8-460 (7.5L) 4 Bbl. Carb. VIN A
- **Lube** ... **B2**
- **Air** ... **PA2024**
- **Fuel** ... **BF879**
- **Oil Vapor** ... **SA2039**

Torino, Grand Torino V6-250 (4.1L) VIN H
- **Lube** ... **B2**
- **Air** ... **PA1802**
- **Fuel** ... **BF879**
- **Oil Vapor** ... **SA2039**
- **Trans.** ... **19879**

Torino, Grand Torino V8-302 (5.0L) VIN F
- **Lube** ... **B2**
- **Air** ... **PA2051**
- **Fuel** ... **BF879**
- **Oil Vapor** ... **SA2039**
- **Trans.** ... **19879**

Torino, Grand Torino V8-351 (5.8L) 2,4 Bbl. Carb. VIN H,Q
- **Lube** ... **B2**
- **Air (2 Bbl.)** ... **PA2051**
- **Air (4 Bbl.)** ... **PA2024**
- **Fuel** ... **BF879**
- **Oil Vapor** ... **SA2039**
- **Trans.** ... **19879**

Torino, Grand Torino V8-400 (6.6L) Carb. VIN S
- **Lube** ... **B2**
- **Air** ... **PA2024**
- **Fuel** ... **BF879**
- **Oil Vapor** ... **SA2039**

Torino, Grand Torino V8-460 (7.5L) 4 Bbl. Carb. VIN A
- **Lube** ... **B2**
- **Air** ... **PA2024** [74]
- **Fuel** ... **BF879**
- **Oil Vapor** ... **SA2039**

FORD 1974 (Cont'd.)

Vans, E100-350 6-240 (3.9L) Carb. VIN A
- **Lube** ... **B2**
- **Air** ... **PA657**
- **Fuel** ... **BF879**
- **Oil Vapor** ... **SA2039**
- **Trans.** ... **19879**

Vans, E100-350 6-300 (4.9L) Carb. VIN B
- **Lube** ... **B2**
- **Air** ... **PA657**
- **Fuel** ... **BF879**
- **Oil Vapor** ... **SA2039**
- **Trans.** ... **19879**

Vans, E100-350 V8-302 (5.0L) Carb. VIN G
- **Lube** ... **B2**
- **Air** ... **PA2051**
- **Fuel** ... **BF879**
- **Oil Vapor** ... **SA2039**
- **Trans.** ... **19879**

1973

Bronco 6-200 (3.3L) Carb. VIN T
- **Lube** ... **B2**
- **Air** ... **PA2005**
- **Fuel** ... **BF879**
- **Oil Vapor** ... **SA2039**

Bronco V8-302 (5.0L) Carb. VIN G
- **Lube** ... **B2**
- **Air** ... **PA657**
- **Fuel** ... **BF879**
- **Oil Vapor** ... **SA2039**

Country Sedan, Country Squire V8-351 (5.8L) 2 Bbl. Carb. VIN H
- **Lube** ... **B2**
- **Air** ... **PA2051**
- **Fuel** ... **BF879**
- **Oil Vapor** ... **SA2039**

Country Sedan, Country Squire V8-400 (6.6L) Carb. VIN S
- **Lube** ... **B2**
- **Air** ... **PA2024**
- **Fuel** ... **BF879**
- **Oil Vapor** ... **SA2039**

Country Sedan, Country Squire V8-429 (7.0L) Carb. VIN N
- **Lube** ... **B2**
- **Air** ... **PA2024**
- **Fuel** ... **BF879**
- **Oil Vapor** ... **SA2039**

Country Sedan, Country Squire V8-460 (7.5L) Carb. VIN A
- **Lube** ... **B2**
- **Air** ... **PA2024**
- **Fuel** ... **BF879**
- **Oil Vapor** ... **SA2039**

Courier 4-110 (1.8L) Carb.
- **Lube** ... **B161-S**
- **Air** ... **PA2059 OBS**
- **Fuel** ... **BF840,-K1**
- **Oil Vapor** ... **SA2039**

Custom 500 V8-351 (5.8L) 2 Bbl. Carb. VIN H
- **Lube** ... **B2**
- **Air** ... **PA2051**
- **Fuel** ... **BF879**
- **Oil Vapor** ... **SA2039**

Custom 500 V8-400 (6.6L) Carb. VIN S
- **Lube** ... **B2**
- **Air** ... **PA2024**
- **Fuel** ... **BF879**
- **Oil Vapor** ... **SA2039**

Custom 500 V8-429 (7.0L) Carb. VIN N
- **Lube** ... **B2**
- **Air** ... **PA2024**
- **Fuel** ... **BF879**
- **Oil Vapor** ... **SA2039**

[74] Exc. Police.

OBS = Obsolete. Availability Limited to Distributor Stock.

FORD 1973 (Cont'd.)

Custom 500 V8-460 (7.5L) 4 Bbl. Carb. VIN A
- **Lube** ... B2
- **Air** ... PA2024
- **Fuel** ... BF879
- **Oil Vapor** ... SA2039

Galaxie 500 V8-351 (5.8L) 2 Bbl. Carb. VIN H
- **Lube** ... B2
- **Air** ... PA2051
- **Fuel** ... BF879
- **Oil Vapor** ... SA2039

Galaxie 500 V8-400 (6.6L) Carb. VIN S
- **Lube** ... B2
- **Air** ... PA2024
- **Fuel** ... BF879
- **Oil Vapor** ... SA2039

Galaxie 500 V8-429 (7.0L) Carb. VIN N
- **Lube** ... B2
- **Air** ... PA2024
- **Fuel** ... BF879
- **Oil Vapor** ... SA2039

Galaxie 500 V8-460 (7.5L) 4 Bbl. Carb. VIN A
- **Lube** ... B2
- **Air** ... PA2024
- **Fuel** ... BF879
- **Oil Vapor** ... SA2039

LTD V8-351 (5.8L) 2 Bbl. Carb. VIN H
- **Lube** ... B2
- **Air** ... PA2051
- **Fuel** ... BF879
- **Oil Vapor** ... SA2039

LTD V8-400 (6.6L) Carb. VIN S
- **Lube** ... B2
- **Air** ... PA2024
- **Fuel** ... BF879
- **Oil Vapor** ... SA2039

LTD V8-429 (7.0L) Carb. VIN N
- **Lube** ... B2
- **Air** ... PA2024
- **Fuel** ... BF879
- **Oil Vapor** ... SA2039

LTD V8-460 (7.5L) 4 Bbl. Carb. VIN A
- **Lube** ... B2
- **Air** ... PA2024[74]
- **Fuel** ... BF879
- **Oil Vapor** ... SA2039

M-400 V8-360 (5.9L) Carb. VIN Y
- **Lube (Ele.)** ... P184
- **Lube (Spin-on)** ... B2
- **Air** ... PA2002
- **Fuel (Ele.)** ... PF827
- **Fuel (In-Line)** ... BF879
- **Oil Vapor** ... SA2039
- **Trans.** ... 19879

M-400 V8-390 (6.4L) Carb. VIN H
- **Lube (Ele.)** ... P184
- **Lube (Spin-on)** ... B2
- **Air** ... PA2002
- **Fuel (Ele.)** ... PF827
- **Fuel (In-Line)** ... BF879
- **Oil Vapor** ... SA2039
- **Trans.** ... 19879

Maverick 6-200 (3.3L) 1 Bbl. Carb. VIN T
- **Lube** ... B2
- **Air** ... PA2005
- **Fuel** ... BF879
- **Oil Vapor** ... SA2039
- **Trans.** ... 19879

Maverick 6-250 (4.1L) 1 Bbl. Carb. VIN L
- **Lube** ... B2
- **Air** ... PA1802
- **Fuel** ... BF879
- **Oil Vapor** ... SA2039
- **Trans.** ... 19879

Maverick V8-302 (5.0L) Carb. VIN F
- **Lube (Ele.)** ... P184
- **Lube (Spin-on)** ... B2
- **Air** ... PA2051
- **Fuel** ... BF879
- **Oil Vapor** ... SA2039
- **Trans.** ... 19879

Mustang 6-250 (4.1L) Carb. VIN L
- **Lube** ... B2
- **Air** ... PA1802
- **Fuel** ... BF879
- **Oil Vapor** ... SA2039
- **Trans.** ... 19879

Mustang 6-302 (5.0L) Carb. VIN F
- **Lube (Ele.)** ... P184
- **Lube (Spin-on)** ... B2
- **Air** ... PA2057
- **Fuel** ... BF879
- **Oil Vapor** ... SA2039
- **Trans. (C-4)** ... 19879

Mustang V8-351 (5.8L) 2,4 Bbl. Carb. VIN H,Q
- **Lube** ... B2
- **Air (w/o Ram Air)** ... PA2057
- **Air (w/Ram Air)** ... PA2024
- **Fuel** ... BF879
- **Oil Vapor** ... SA2039

P-350 6-300 (4.9L) Carb. VIN B
- **Lube (Ele.)** ... P184
- **Lube (Spin-on)** ... B2
- **Air** ... PA2005
- **Fuel (In-Line)** ... BF879
- **Fuel (Ele.)** ... PF827
- **Oil Vapor** ... SA2039
- **Trans.** ... 19879

P-350 V8-360 (5.9L) Carb. VIN Y
- **Lube (Ele.)** ... P184
- **Lube (Spin-on)** ... B2
- **Air** ... PA2002
- **Fuel (In-Line)** ... BF879
- **Fuel (Ele.)** ... PF827
- **Oil Vapor** ... SA2039
- **Trans.** ... 19879

P-350 V8-390 (6.4L) Carb. VIN H
- **Lube (Ele.)** ... P184
- **Lube (Spin-on)** ... B2
- **Air** ... PA2002
- **Fuel (In-Line)** ... BF879
- **Fuel (Ele.)** ... PF827
- **Oil Vapor** ... SA2039
- **Trans.** ... 19879

Pickups, F Series 6-240 (3.9L) Carb. VIN A
- **Lube (Ele.)** ... P184
- **Lube (Spin-on)** ... B2
- **Air** ... PA2005
- **Fuel** ... BF879
- **Oil Vapor** ... SA2039
- **Trans.** ... 19879

Pickups, F Series 6-300 (4.9L) Carb. VIN B
- **Lube (Ele.)** ... P184
- **Lube (Spin-on)** ... B2
- **Air** ... PA2005
- **Fuel (Ele.)** ... PF827
- **Fuel (In-Line)** ... BF879
- **Oil Vapor** ... SA2039
- **Trans.** ... 19879

Pickups, F Series V8-302 (5.0L) Carb. VIN G
- **Lube (Ele.)** ... P184
- **Lube (Spin-on)** ... B2
- **Air** ... PA2051
- **Fuel (Ele.)** ... PF827
- **Fuel (In-Line)** ... BF879
- **Oil Vapor** ... SA2039
- **Trans.** ... 19879

Pickups, F Series V8-360 (5.9L) Carb. VIN Y
- **Lube (Ele.)** ... P184
- **Lube (Spin-on)** ... B2
- **Air** ... PA2002
- **Fuel** ... PF827
- **Oil Vapor** ... SA2039

Pickups, F Series V8-390 (6.4L) Carb. VIN H
- **Lube (Ele.)** ... P184
- **Lube (Spin-on)** ... B2
- **Air** ... PA2002
- **Fuel** ... PF827
- **Oil Vapor** ... SA2039

Pickups, F Series V8-460 (7.5L) Carb. VIN J
- **Lube** ... B2
- **Air** ... PA2002
- **Fuel** ... PF827
- **Oil Vapor** ... SA2039
- **Trans.** ... 18015

Pinto 4-1598cc (1.6L) Carb. VIN W
- **Lube** ... B143
- **Air** ... PA2035
- **Fuel** ... BF989
- **Trans.** ... 19879

Pinto 4-1989cc (2.0L) Carb. VIN X
- **Lube** ... B2
- **Air** ... PA2005
- **Fuel** ... BF989
- **Oil Vapor (Pad Only)** ... SA2045
- **Trans.** ... 19879

Ranch Wagon V8-351 (5.8L) 2 Bbl. Carb. VIN H
- **Lube** ... B2
- **Air** ... PA2051
- **Fuel** ... BF879
- **Oil Vapor** ... SA2039
- **Trans. (C-4)** ... 19879

Ranch Wagon V8-400 (6.6L) Carb. VIN S
- **Lube** ... B2
- **Air** ... PA2024
- **Fuel** ... BF879
- **Oil Vapor** ... SA2039

Ranch Wagon V8-429 (7.0L) Carb. VIN N
- **Lube** ... B2
- **Air** ... PA2024
- **Fuel** ... BF879
- **Oil Vapor** ... SA2039

Ranch Wagon V8-460 (7.5L) Carb. VIN A
- **Lube (Ele.)** ... P184
- **Lube (Spin-on)** ... B2
- **Air** ... PA2002
- **Fuel** ... BF879
- **Oil Vapor** ... SA2039

Ranchero 6-250 (4.1L) Carb. VIN L
- **Lube** ... B2
- **Air** ... PA1802
- **Fuel** ... BF879
- **Oil Vapor** ... SA2039
- **Trans.** ... 19879

Ranchero V8-302 (5.0L) Carb. VIN F
- **Lube (Ele.)** ... P184
- **Lube (Spin-on)** ... B2
- **Air** ... PA2051
- **Fuel** ... BF879
- **Oil Vapor** ... SA2039
- **Trans.** ... 19879

Ranchero V8-351 (5.8L) 2,4 Bbl. Carb. VIN H,Q
- **Lube** ... B2
- **Air (2 Bbl.)** ... PA2051
- **Air (4 Bbl.)** ... PA2024
- **Fuel** ... BF879
- **Oil Vapor** ... SA2039
- **Trans. (C-4)** ... 19879

Ranchero V8-400 (6.6L) Carb. VIN S
- **Lube** ... B2
- **Air** ... PA2024
- **Fuel** ... BF879
- **Oil Vapor** ... SA2039

Ranchero V8-429 (7.0L) Carb. VIN N
- **Lube** ... B2
- **Air** ... PA2024
- **Fuel** ... BF879
- **Oil Vapor** ... SA2039

Thunderbird V8-429 (7.0L) Carb. VIN N
- **Lube** ... B2
- **Air** ... PA2024
- **Fuel** ... BF879
- **Oil Vapor** ... SA2039

Thunderbird V8-460 (7.5L) 4 Bbl. Carb. VIN A
- **Lube** ... B2
- **Air** ... PA2024
- **Fuel** ... BF879
- **Oil Vapor** ... SA2039

Torino, Grand Torino V6-250 (4.1L) VIN L
- **Lube** ... B2
- **Air** ... PA1802
- **Fuel** ... BF879
- **Oil Vapor** ... SA2039
- **Trans.** ... 19879

Torino, Grand Torino V8-302 (5.0L) VIN F
- **Lube** ... B2
- **Air** ... PA2051
- **Fuel** ... BF879
- **Oil Vapor** ... SA2039
- **Trans. (C-4)** ... 19879

Torino, Grand Torino V8-351 (5.8L) 2,4 Bbl. Carb. VIN H,Q
- **Lube** ... B2
- **Air (2 Bbl.)** ... PA2051
- **Air (4 Bbl.)** ... PA2024
- **Fuel** ... BF879
- **Oil Vapor** ... SA2039
- **Trans. (C-4)** ... 19879

Torino, Grand Torino V8-400 (6.6L) Carb. VIN S
- **Lube** ... B2
- **Air** ... PA2024
- **Fuel** ... BF879
- **Oil Vapor** ... SA2039

Torino, Grand Torino V8-429 (7.0L) Carb. VIN N
- **Lube** ... B2
- **Air** ... PA2024
- **Fuel** ... BF879
- **Oil Vapor** ... SA2039

Vans, E100-350 Vans E100-350 6-240 (3.9L) Carb. VIN A
- **Lube** ... B2
- **Air** ... PA657
- **Fuel** ... BF879
- **Oil Vapor** ... SA2039
- **Trans.** ... 19879

Vans, E100-350 6-300 (4.9L) Carb. VIN B
- **Lube** ... B2
- **Air** ... PA657
- **Fuel** ... BF879
- **Oil Vapor** ... SA2039
- **Trans.** ... 19879

Vans, E100-350 V8-302 (5.0L) Carb. VIN G
- **Lube** ... B2
- **Air** ... PA2051
- **Fuel** ... BF879
- **Oil Vapor** ... SA2039
- **Trans.** ... 19879

1972

Bronco 6-170 (2.8L) Carb. VIN F
- **Lube** ... B2
- **Air** ... PA2005
- **Fuel** ... BF879
- **Oil Vapor** ... SA2039

Bronco V8-302 (5.0L) Carb. VIN G
- **Lube** ... B2
- **Air** ... PA657
- **Fuel** ... BF879
- **Oil Vapor** ... SA2039

[74] Exc. Police.

OBS = Obsolete. Availability Limited to Distributor Stock.

FORD 1972 (Cont'd.)

Country Sedan, Country Squire V8-302 (5.0L) 2 Bbl. Carb. VIN F
- **Lube**....B2
- **Air**....PA2051
- **Fuel**....BF879
- **Oil Vapor**....SA2039
- **Trans. (C-4)**....19879

Country Sedan, Country Squire V8-351 (5.8L) 2 Bbl. Carb. VIN H
- **Lube**....B2
- **Air**....PA2051
- **Fuel**....BF879
- **Oil Vapor**....SA2039
- **Trans. (C-4)**....19879

Country Sedan, Country Squire V8-400 (6.6L) Carb. VIN S
- **Lube**....B2
- **Air**....PA2002
- **Fuel**....BF879
- **Oil Vapor**....SA2039

Country Sedan, Country Squire V8-429 (7.0L) Carb. VIN N
- **Lube**....B2
- **Air**....PA2002
- **Fuel**....BF879
- **Oil Vapor**....SA2039

Courier 4-110 (1.8L) Carb.
- **Lube**....B161-S
- **Air**....PA2059 OBS
- **Fuel**....BF840,-K1
- **Oil Vapor**....N/R

Custom, Custom 500 6-240 (3.9L) Carb. VIN E,V
- **Lube**....B2
- **Air**....PA2005
- **Fuel**....BF879
- **Oil Vapor**....SA2039
- **Trans. (C-4)**....19879

Custom, Custom 500 V8-302 (5.0L) Carb. VIN D
- **Lube**....B2
- **Air**....PA2051
- **Fuel**....BF879
- **Oil Vapor**....SA2039
- **Trans. (C-4)**....19879

Custom, Custom 500 V8-351 (5.8L) 2 Bbl. Carb. VIN H
- **Lube**....B2
- **Air**....PA2051
- **Fuel**....BF879
- **Oil Vapor**....SA2039
- **Trans. (C-4)**....19879

Custom, Custom 500 V8-400 (6.6L) Carb. VIN S
- **Lube**....B2
- **Air**....PA2002
- **Fuel**....BF879
- **Oil Vapor**....SA2039

Custom, Custom 500 V8-429 (7.0L) Carb. VIN N
- **Lube**....B2
- **Air**....PA2002
- **Fuel**....BF879
- **Oil Vapor**....SA2039

Galaxie 500 6-240 (3.9L) Carb. VIN E
- **Lube**....B2
- **Air**....PA2005
- **Fuel**....BF879
- **Oil Vapor**....SA2039
- **Trans. (C-4)**....19879

Galaxie 500 V8-302 (5.0L) Carb. VIN D
- **Lube**....B2
- **Air**....PA2051
- **Fuel**....BF879
- **Oil Vapor**....SA2039
- **Trans. (C-4)**....19879

Galaxie 500 V8-351 (5.8L) 2 Bbl. Carb. VIN H
- **Lube**....B2
- **Air**....PA2051
- **Fuel**....BF879
- **Oil Vapor**....SA2039
- **Trans. (C-4)**....19879

Galaxie 500 V8-400 (6.6L) Carb. VIN S
- **Lube**....B2
- **Air**....PA2002
- **Fuel**....BF879
- **Oil Vapor**....SA2039

Galaxie 500 V8-429 (7.0L) Carb. VIN N
- **Lube**....B2
- **Air**....PA2002
- **Fuel**....BF879
- **Oil Vapor**....SA2039

LTD V8-302 (5.0L) Carb. VIN D,F
- **Lube**....B2
- **Air**....PA2051
- **Fuel**....BF879
- **Oil Vapor**....SA2039
- **Trans. (C-4)**....19879

LTD V8-351 (5.8L) 2 Bbl. Carb. VIN H
- **Lube**....B2
- **Air**....PA2051
- **Fuel**....BF879
- **Oil Vapor**....SA2039
- **Trans. (C-4)**....19879

LTD V8-400 (6.6L) Carb. VIN S
- **Lube**....B2
- **Air**....PA2002
- **Fuel**....BF879
- **Oil Vapor**....SA2039

LTD V8-429 (7.0L) Carb. VIN N
- **Lube**....B2
- **Air**....PA2002
- **Fuel**....BF879
- **Oil Vapor**....SA2039

Maverick 6-170 (2.8L) 1 Bbl. Carb. VIN U
- **Lube**....B2
- **Air**....PA2005
- **Fuel**....BF879
- **Oil Vapor**....SA2039
- **Trans.**....19879

Maverick 6-200 (3.3L) 1 Bbl. Carb. VIN T
- **Lube**....B2
- **Air**....PA2005
- **Fuel**....BF879
- **Oil Vapor**....SA2039
- **Trans.**....19879

Maverick 6-250 (4.1L) 1 Bbl. Carb. VIN L
- **Lube**....B2
- **Air**....PA1802
- **Fuel**....BF879
- **Oil Vapor**....SA2039
- **Trans.**....19879

Maverick V8-302 (5.0L) Carb. VIN F
- **Lube**....B2
- **Air**....PA2051
- **Fuel**....BF879
- **Oil Vapor**....SA2039
- **Trans.**....19879

Mustang 6-250 (4.1L) Carb. VIN L
- **Lube**....B2
- **Air**....PA1802
- **Fuel**....BF879
- **Oil Vapor**....SA2039
- **Trans.**....19879

Mustang V8-302 (5.0L) Carb. VIN F
- **Lube**....B2
- **Air**....PA2051
- **Fuel**....BF879
- **Oil Vapor**....SA2039
- **Trans. (C-4)**....19879

Mustang V8-302 (5.0L) Carb. VIN G
- **Lube**....B2
- **Air**....PA2051
- **Fuel**....BF879
- **Oil Vapor**....SA2039
- **Trans.**....19879

Mustang V8-351 (5.8L) 2 Bbl. Carb. VIN H
- **Lube**....B2
- **Air**....PA2051
- **Fuel**....BF879
- **Oil Vapor**....SA2039

Mustang V8-351 (5.8L) 4 Bbl. Carb. VIN Q
- **Lube**....B2
- **Oil Vapor**....SA2039

P-350 6-240 (3.9L) Carb. VIN A
- **Lube (Ele.)**....P184
- **Lube (Spin-on)**....B2
- **Air**....PA2005
- **Fuel (Ele.)**....PF827
- **Fuel (In-Line)**....BF879
- **Oil Vapor**....SA2039
- **Trans. (C-4)**....19879

P-350 6-300 (4.9L) Carb. VIN B
- **Lube (Ele.)**....P184
- **Lube (Spin-on)**....B2
- **Air**....PA2005
- **Fuel (Ele.)**....PF827
- **Fuel (In-Line)**....BF879
- **Oil Vapor**....SA2039
- **Trans.**....19879

P-350 V8-302 (5.0L) Carb. VIN G
- **Lube**....B2
- **Air**....PA2051
- **Fuel**....BF879
- **Oil Vapor**....SA2039
- **Trans.**....19879

P-350 V8-390 (6.4L) Carb. VIN H
- **Lube**....B2
- **Air**....PA2002
- **Fuel**....BF879

Pickups, F Series 6-240 (3.9L) Carb. VIN A
- **Lube (Ele.)**....P184
- **Lube (Spin-on)**....B2
- **Air**....PA2005
- **Fuel (Ele.)**....PF827
- **Fuel (In-Line)**....BF879
- **Oil Vapor**....SA2039
- **Trans.**....19879

Pickups, F Series 6-300 (4.9L) Carb. VIN B
- **Lube (Ele.)**....P184
- **Lube (Spin-on)**....B2
- **Air**....PA2005
- **Fuel (Ele.)**....PF827
- **Fuel (In-Line)**....BF879
- **Oil Vapor**....SA2039
- **Trans.**....19879

Pickups, F Series V8-302 (5.0L) Carb. VIN G
- **Lube (Ele.)**....P184
- **Lube (Spin-on)**....B2
- **Air**....PA2002
- **Fuel**....BF879
- **Oil Vapor**....SA2039
- **Trans.**....19879

Pickups, F Series V8-360 (5.9L) Carb. VIN Y
- **Lube (Ele.)**....P184
- **Lube (Spin-on)**....B2
- **Air**....PA2002
- **Fuel**....PF827
- **Oil Vapor**....SA2039

Pickups, F Series V8-390 (6.4L) Carb. VIN H
- **Lube**....B2
- **Air**....PA2002
- **Fuel**....BF879
- **Oil Vapor**....SA2039

Pinto 4-1598cc (1.6L) Carb. VIN W
- **Lube**....B143
- **Air**....PA2035
- **Fuel**....BF989
- **Oil Vapor**....SA2039
- **Trans.**....19879

Pinto 4-1989cc (2.0L) Carb. VIN X
- **Lube**....B2
- **Fuel**....BF989
- **Oil Vapor**....SA2039
- **Trans.**....19879

Ranch Wagon V8-302 (5.0L) Carb. VIN F
- **Lube**....B2
- **Air**....PA2002
- **Fuel**....BF879
- **Oil Vapor**....SA2039
- **Trans.**....19879

Ranch Wagon V8-351 (5.8L) 2 Bbl. Carb. VIN H
- **Lube**....B2
- **Air**....PA2051
- **Fuel**....BF879
- **Oil Vapor**....SA2039
- **Trans. (C-4)**....19879

Ranch Wagon V8-400 (6.6L) Carb. VIN S
- **Lube**....B2
- **Air**....PA2002
- **Fuel**....BF879
- **Oil Vapor**....SA2039

Ranch Wagon V8-429 (7.0L) Carb. VIN N
- **Lube**....B2
- **Air**....PA2002
- **Fuel**....BF879
- **Oil Vapor**....SA2039

Ranchero 6-250 (4.1L) Carb. VIN L
- **Lube**....B2
- **Air**....PA1802
- **Fuel**....BF879
- **Oil Vapor**....SA2039
- **Trans.**....19879

Ranchero V8-302 (5.0L) Carb. VIN F
- **Lube**....B2
- **Air**....PA2051
- **Fuel**....BF879
- **Oil Vapor**....SA2039
- **Trans.**....19879

Ranchero V8-351 (5.8L) 2,4 Bbl. Carb. VIN H,Q
- **Lube**....B2
- **Air**....PA2051
- **Fuel**....BF879
- **Oil Vapor**....SA2039
- **Trans. (C-4)**....19879

Ranchero V8-400 (6.6L) Carb. VIN S
- **Lube**....B2
- **Air**....PA2002
- **Fuel**....BF879
- **Oil Vapor**....SA2039

Ranchero V8-429 (7.0L) Carb. VIN N
- **Lube**....B2
- **Air**....PA2002
- **Fuel**....BF879
- **Oil Vapor**....SA2039

Thunderbird V8-400 (6.6L) Carb. VIN S
- **Lube**....B2
- **Air**....PA2002
- **Fuel**....BF879
- **Oil Vapor**....SA2039

Thunderbird V8-429 (7.0L) Carb. VIN N
- **Lube**....B2
- **Air**....PA2002
- **Fuel**....BF879
- **Oil Vapor**....SA2039

Thunderbird V8-460 (7.5L) 4 Bbl. Carb. VIN A
- **Lube**....B2
- **Air**....PA2002
- **Fuel**....BF879
- **Oil Vapor**....SA2039

Torino, Grand Torino V8-250 (4.1L) Carb. VIN L
- **Lube**....B2
- **Air**....PA1802
- **Fuel**....BF879
- **Oil Vapor**....SA2039
- **Trans.**....19879

OBS = Obsolete. Availability Limited to Distributor Stock.

FORD 1972 (Cont'd.)

Torino, Grand Torino V8-302 (5.0L) VIN F
- **Lube** ... **B2**
- **Air** ... **PA2051**
- **Fuel** ... **BF879**
- **Oil Vapor** ... **SA2039**
- **Trans. (C-4)** ... **19879**

Torino, Grand Torino V8-351 (5.8L) 2,4 Bbl. Carb. VIN H,Q
- **Lube** ... **B2**
- **Air** ... **PA2051**
- **Fuel** ... **BF879**
- **Oil Vapor** ... **SA2039**
- **Trans. (C-4)** ... **19879**

Torino, Grand Torino V8-400 (6.6L) Carb. VIN S
- **Lube** ... **B2**
- **Air** ... **PA2002**
- **Fuel** ... **BF879**
- **Oil Vapor** ... **SA2039**

Torino, Grand Torino V8-429 (7.0L) Carb. VIN N
- **Lube** ... **B2**
- **Air** ... **PA2002**
- **Fuel** ... **BF879**
- **Oil Vapor** ... **SA2039**

Vans, E100-350 6-240 (3.9L) Carb. VIN A
- **Lube** ... **B2**
- **Air** ... **PA657**
- **Fuel (Ele.)** ... **PF827**
- **Fuel (In-Line)** ... **BF879**
- **Oil Vapor** ... **SA2039**
- **Trans.** ... **19879**

Vans, E100-350 6-300 (4.9L) Carb. VIN B
- **Lube (Ele.)** ... **P184**
- **Lube (Spin-on)** ... **B2**
- **Air** ... **PA2005**
- **Fuel** ... **BF879**
- **Oil Vapor** ... **SA2039**
- **Trans.** ... **19879**

Vans, E100-350 V8-302 (5.0L) Carb. VIN G
- **Lube (Ele.)** ... **P184**
- **Lube (Spin-on)** ... **B2**
- **Air** ... **PA657**
- **Fuel (Ele.)** ... **PF827**
- **Fuel (In-Line)** ... **BF879**
- **Oil Vapor** ... **SA2039**
- **Trans.** ... **19879**

1971

Bronco 6-170 (2.8L) Carb. VIN F
- **Lube** ... **B2**
- **Air** ... **PA2005**
- **Fuel** ... **BF879**
- **Oil Vapor** ... **SA2039**

Bronco V8-302 (5.0L) Carb. VIN G
- **Lube** ... **B2**
- **Air** ... **PA657**
- **Fuel** ... **BF879**
- **Oil Vapor** ... **SA2039**

Country Sedan, Country Squire V8-302 (5.0L) Carb. VIN D
- **Lube** ... **B2**
- **Air** ... **PA2002**
- **Fuel** ... **BF879**
- **Oil Vapor** ... **SA2039**
- **Trans. (C-4)** ... **19879**

Country Sedan, Country Squire V8-351 (5.8L) Carb. VIN H
- **Lube** ... **B2**
- **Air** ... **PA2002**
- **Fuel** ... **BF879**
- **Oil Vapor** ... **SA2039**

Country Sedan, Country Squire V8-390 (6.4L) Carb. VIN Y
- **Lube** ... **B2**
- **Air** ... **PA2002**
- **Fuel** ... **BF879**
- **Oil Vapor** ... **SA2039**

FORD 1971 (Cont'd.)

Country Sedan, Country Squire V8-400 (6.6L) Carb. VIN S
- **Lube** ... **B2**
- **Air** ... **PA2002**
- **Fuel** ... **BF879**
- **Oil Vapor** ... **SA2039**

Country Sedan, Country Squire V8-429 (7.0L) Carb. VIN K,N
- **Lube** ... **B2**
- **Air** ... **PA2002**
- **Fuel** ... **BF879**
- **Oil Vapor** ... **SA2039**

Custom, Custom 500 6-240 (3.9L) Carb. VIN E,V
- **Lube** ... **B2**
- **Air** ... **PA2005**
- **Fuel** ... **BF879**
- **Oil Vapor** ... **SA2039**
- **Trans. (C-4)** ... **19879**

Custom, Custom 500 V8-302 (5.0L) Carb. VIN D,F
- **Lube** ... **B2**
- **Air** ... **PA2002**
- **Fuel** ... **BF879**
- **Oil Vapor** ... **SA2039**
- **Trans. (C-4)** ... **19879**

Custom, Custom 500 V8-351 (5.8L) Carb. VIN H
- **Lube** ... **B2**
- **Air** ... **PA2002**
- **Fuel** ... **BF879**
- **Oil Vapor** ... **SA2039**

Custom, Custom 500 V8-390 (6.4L) Carb. VIN Y
- **Lube** ... **B2**
- **Air** ... **PA2002**
- **Fuel** ... **BF879**
- **Oil Vapor** ... **SA2039**

Custom, Custom 500 V8-400 (6.6L) Carb. VIN S
- **Lube** ... **B2**
- **Air** ... **PA2002**
- **Fuel** ... **BF879**
- **Oil Vapor** ... **SA2039**

Custom, Custom 500 V8-429 (7.0L) Carb. VIN K,N
- **Lube** ... **B2**
- **Air** ... **PA2002**
- **Fuel** ... **BF879**
- **Oil Vapor** ... **SA2039**

Galaxie 500 6-240 (3.9L) Carb. VIN E
- **Lube** ... **B2**
- **Air** ... **PA2005**
- **Fuel** ... **BF879**
- **Oil Vapor** ... **SA2039**
- **Trans. (C-4)** ... **19879**

Galaxie 500 V8-302 (5.0L) Carb. VIN F
- **Lube** ... **B2**
- **Air** ... **PA2002**
- **Fuel** ... **BF879**
- **Oil Vapor** ... **SA2039**
- **Trans. (C-4)** ... **19879**

Galaxie 500 V8-351 (5.8L) Carb. VIN H
- **Lube** ... **B2**
- **Air** ... **PA2002**
- **Fuel** ... **BF879**
- **Oil Vapor** ... **SA2039**

Galaxie 500 V8-390 (6.4L) Carb. VIN Y
- **Lube** ... **B2**
- **Air** ... **PA2002**
- **Fuel** ... **BF879**
- **Oil Vapor** ... **SA2039**

Galaxie 500 V8-400 (6.6L) Carb. VIN S
- **Lube** ... **B2**
- **Air** ... **PA2002**
- **Fuel** ... **BF879**
- **Oil Vapor** ... **SA2039**

FORD 1971 (Cont'd.)

Galaxie 500 V8-429 (7.0L) Carb. VIN K,N
- **Lube** ... **B2**
- **Air** ... **PA2002**
- **Fuel** ... **BF879**
- **Oil Vapor** ... **SA2039**

LTD V8-302 (5.0L) Carb. VIN D,F
- **Lube** ... **B2**
- **Air** ... **PA2002**
- **Fuel** ... **BF879**
- **Oil Vapor** ... **SA2039**
- **Trans. (C-4)** ... **19879**

LTD V8-351 (5.8L) Carb. VIN H
- **Lube** ... **B2**
- **Air** ... **PA2002**
- **Fuel** ... **BF879**
- **Oil Vapor** ... **SA2039**

LTD V8-390 (6.4L) Carb. VIN Y
- **Lube** ... **B2**
- **Air** ... **PA2002**
- **Fuel** ... **BF879**
- **Oil Vapor** ... **SA2039**

LTD V8-400 (6.6L) Carb. VIN S
- **Lube** ... **B2**
- **Air** ... **PA2002**
- **Fuel** ... **BF879**
- **Oil Vapor** ... **SA2039**

LTD V8-429 (7.0L) Carb. VIN K,N
- **Lube** ... **B2**
- **Air** ... **PA2002**
- **Fuel** ... **BF879**
- **Oil Vapor** ... **SA2039**

M-400 V8-390 (6.4L) Carb. VIN H
- **Lube (Ele.)** ... **P184**
- **Lube (Spin-on)** ... **B2**
- **Air** ... **PA2002**
- **Fuel (Ele.)** ... **PF827**
- **Fuel (In-Line)** ... **BF879**
- **Oil Vapor** ... **SA2039**

Maverick 6-170 (2.8L) 1 Bbl. Carb. VIN U
- **Lube** ... **B2**
- **Air** ... **PA2005**
- **Fuel** ... **BF879**
- **Oil Vapor** ... **SA2039**
- **Trans.** ... **19879**

Maverick 6-200 (3.3L) 1 Bbl. Carb. VIN T
- **Lube** ... **B2**
- **Air** ... **PA2005**
- **Fuel** ... **BF879**
- **Oil Vapor** ... **SA2039**
- **Trans.** ... **19879**

Maverick 6-250 (4.1L) 1 Bbl. Carb. VIN L
- **Lube** ... **B2**
- **Air** ... **PA1802**
- **Fuel** ... **BF879**
- **Oil Vapor** ... **SA2039**
- **Trans.** ... **19879**

Maverick V8-302 (5.0L) Carb. VIN F
- **Lube** ... **B2**
- **Air** ... **PA2002**
- **Fuel** ... **BF879**
- **Oil Vapor** ... **SA2039**
- **Trans.** ... **19879**

Mustang 6-250 (4.1L) Carb. VIN L
- **Lube** ... **B2**
- **Air** ... **PA1802**
- **Fuel** ... **BF879**
- **Oil Vapor** ... **SA2039**
- **Trans.** ... **19879**

Mustang V8-302 (5.0L) 2,4 Bbl. Carb. VIN F,G
- **Lube** ... **B2**
- **Air (2 1/4 In.)** ... **PA1828**
- **Air (2 3/4 In.)** ... **PA2002**
- **Fuel** ... **BF879**
- **Oil Vapor** ... **SA2039**
- **Trans.** ... **19879**

Mustang V8-351 (5.8L) Carb. VIN H,M
- **Lube** ... **B2**
- **Air** ... **PA2002**
- **Fuel** ... **BF879**
- **Oil Vapor** ... **SA2039**

FORD 1971 (Cont'd.)

Mustang V8-429 (7.0L) Carb. VIN C
- **Lube** ... **B2**
- **Air (2 1/4 In.)** ... **PA1828**
- **Air (2 3/4 In.)** ... **PA2002**
- **Oil Vapor** ... **SA2039**

P-350 6-240 (3.9L) Carb. VIN A
- **Lube (Ele.)** ... **P184**
- **Lube (Spin-on)** ... **B2**
- **Air** ... **PA2005**
- **Fuel (Ele.)** ... **PF827**
- **Fuel (In-Line)** ... **BF879**
- **Oil Vapor** ... **SA2039**
- **Trans.** ... **19879**

P-350 6-254 (4.2L) FI Diesel VIN L
- **Lube (Ele.)** ... **P184**
- **Lube (Spin-on)** ... **B2**
- **Air** ... **PA2005**
- **Fuel (Ele.)** ... **PF827**
- **Fuel (In-Line)** ... **BF879**
- **Oil Vapor** ... **SA2039**
- **Trans.** ... **19879**

P-350 6-300 (4.9L) Carb. VIN B
- **Lube (Ele.)** ... **P184**
- **Lube (Spin-on)** ... **B2**
- **Air** ... **PA2005**
- **Fuel (Ele.)** ... **PF827**
- **Fuel (In-Line)** ... **BF879**
- **Oil Vapor** ... **SA2039**
- **Trans.** ... **19879**

Pickups, F Series 6-240 (3.9L) Carb. VIN A
- **Lube (Ele.)** ... **P184**
- **Lube (Spin-on)** ... **B2**
- **Air** ... **PA2005**
- **Fuel (Ele.)** ... **PF827**
- **Fuel (In-Line)** ... **BF879**
- **Oil Vapor** ... **SA2039**
- **Trans.** ... **19879**

Pickups, F Series 6-300 (4.9L) Carb. VIN B
- **Lube (Ele.)** ... **P184**
- **Lube (Spin-on)** ... **B2**
- **Air** ... **PA2005**
- **Fuel (Ele.)** ... **PF827**
- **Fuel (In-Line)** ... **BF879**
- **Oil Vapor** ... **SA2039**
- **Trans.** ... **19879**

Pickups, F Series V8-302 (5.0L) Carb. VIN G
- **Lube (Ele.)** ... **P184**
- **Lube (Spin-on)** ... **B2**
- **Air** ... **PA2002**
- **Fuel (Ele.)** ... **PF827**
- **Fuel (In-Line)** ... **BF879**
- **Oil Vapor** ... **SA2039**
- **Trans.** ... **19879**

Pickups, F Series V8-360 (5.9L) Carb. VIN Y
- **Lube (Ele.)** ... **P184**
- **Lube (Spin-on)** ... **B2**
- **Air** ... **PA2002**
- **Fuel (Ele.)** ... **PF827**
- **Fuel (In-Line)** ... **BF879**
- **Oil Vapor** ... **SA2039**
- **Trans. (C-4)** ... **19879**

Pickups, F Series V8-390 (6.4L) Carb. VIN H
- **Lube (Ele.)** ... **P184**
- **Lube (Spin-on)** ... **B2**
- **Air** ... **PA2002**
- **Fuel (Ele.)** ... **PF827**
- **Fuel (In-Line)** ... **BF879**
- **Oil Vapor** ... **SA2039**

Pinto 4-1598cc (1.6L) Carb. VIN W
- **Lube** ... **B143**
- **Air** ... **PA2035**
- **Fuel** ... **BF989**
- **Oil Vapor** ... **SA2039**
- **Trans.** ... **19879**

Pinto 4-1989cc (2.0L) Carb. VIN X
- **Lube** ... **B2**
- **Fuel** ... **BF989**
- **Oil Vapor** ... **SA2039**
- **Trans.** ... **19879**

OBS = Obsolete. Availability Limited to Distributor Stock.

FORD 1971 (Cont'd.)

Ranch Wagon V8-302 (5.0L) Carb. VIN F
- **Lube**....B2
- **Air**....PA2002
- **Fuel**....BF879
- **Oil Vapor**....SA2039
- **Trans.**....19879

Ranch Wagon V8-351 (5.8L) Carb. VIN H
- **Lube**....B2
- **Air**....PA2002
- **Fuel**....BF879
- **Oil Vapor**....SA2039

Ranch Wagon V8-390 (6.4L) Carb. VIN Y
- **Lube**....B2
- **Air**....PA2002
- **Fuel**....BF879
- **Oil Vapor**....SA2039

Ranch Wagon V8-400 (6.6L) Carb. VIN S
- **Lube**....B2
- **Air**....PA2002
- **Fuel**....BF879
- **Oil Vapor**....SA2039

Ranch Wagon V8-429 (7.0L) Carb. VIN K,N
- **Lube**....B2
- **Air**....PA2002
- **Fuel**....BF879
- **Oil Vapor**....SA2039

Ranchero 6-250 (4.1L) Carb. VIN L
- **Lube**....B2
- **Air**....PA1802
- **Fuel**....BF879
- **Oil Vapor**....SA2039
- **Trans.**....19879

Ranchero V8-302 (5.0L) Carb. VIN F
- **Lube**....B2
- **Air**....PA2002
- **Fuel**....BF879
- **Oil Vapor**....SA2039
- **Trans.**....19879

Ranchero V8-351 (5.8L) Carb. VIN H,M
- **Lube**....B2
- **Air**....PA2002
- **Fuel**....BF879
- **Oil Vapor**....SA2039
- **Trans.**....19879

Ranchero V8-429 (7.0L) Carb. VIN C
- **Lube**....B2
- **Air (2 1/4 In.)**....PA1828
- **Air (2 3/4 In.)**....PA2002
- **Fuel**....BF879
- **Oil Vapor**....SA2039

Thunderbird V8-429 (7.0L) Carb. VIN N
- **Lube**....B2
- **Air**....PA2002
- **Fuel**....BF879
- **Oil Vapor**....SA2039

Torino V8-250 (4.1L) Carb. VIN L
- **Lube**....B2
- **Air**....PA1802
- **Fuel**....BF879
- **Oil Vapor**....SA2039
- **Trans.**....19879

Torino V8-302 (5.0L) Carb. VIN F
- **Lube**....B2
- **Air**....PA2002
- **Fuel**....BF879
- **Oil Vapor**....SA2039
- **Trans. (C-4)**....19879

Torino V8-351 (5.8L) Carb. VIN H,M
- **Lube**....B2
- **Air**....PA2002
- **Fuel**....BF879
- **Oil Vapor**....SA2039
- **Trans. (C-4)**....19879

Torino V8-429 (7.0L) Carb. VIN C,J
- **Lube**....B2
- **Air (2 1/4 In.)**....PA1828
- **Air (2 3/4 In.)**....PA2002
- **Fuel**....BF879
- **Oil Vapor**....SA2039

FORD 1971 (Cont'd.)

Vans, E100-350 6-240 (3.9L) Carb. VIN A
- **Lube**....B2
- **Air**....PA657
- **Fuel (Ele.)**....PF827
- **Fuel (In-Line)**....BF879
- **Oil Vapor**....SA2039
- **Trans.**....19879

Vans, E100-350 V8-302 (5.0L) Carb. VIN G
- **Lube**....B2
- **Air**....PA657
- **Fuel**....BF879
- **Oil Vapor**....SA2039
- **Trans.**....19879

1970

Bronco 6-170 (2.8L) 1 Bbl. Carb. VIN F
- **Lube**....B2
- **Air**....PA2005
- **Fuel**....BF879

Bronco V8-302 (5.0L) 2 Bbl. Carb. VIN G
- **Lube**....B2
- **Air**....PA657
- **Fuel**....BF879

Country Sedan 6-240 (3.9L) 1 Bbl. Carb. VIN V
- **Lube**....B2
- **Air**....PA2005
- **Fuel**....BF879
- **Oil Vapor**....SA2039
- **Trans.**....19879

Country Sedan V8-351 (5.8L) 2 Bbl. Carb. VIN H
- **Lube**....B2
- **Air**....PA2002
- **Fuel**....BF879
- **Oil Vapor**....SA2039
- **Trans. (C-4)**....19879

Country Sedan V8-390 (6.4L) 2 Bbl. Carb. VIN X
- **Lube**....B2
- **Air**....PA2002
- **Fuel**....BF879
- **Oil Vapor**....SA2039

Country Sedan V8-429 (7.0L) 2,4 Bbl. Carb. VIN K,N,P
- **Lube**....B2
- **Air**....PA2002 [74]
- **Air**....PA1828 [73]
- **Fuel**....BF879
- **Oil Vapor**....SA2039

Country Squire V8-302 (5.0L) 2 Bbl. Carb. VIN F
- **Lube**....B2
- **Air**....PA2002
- **Fuel**....BF879
- **Oil Vapor**....SA2039

Country Squire V8-351 (5.8L) 2 Bbl. Carb. VIN H
- **Lube**....B2
- **Air**....PA2002
- **Fuel**....BF879
- **Oil Vapor**....SA2039

Country Squire V8-390 (6.4L) 2 Bbl. Carb. VIN X
- **Lube**....B2
- **Air**....PA2002
- **Fuel**....BF879
- **Oil Vapor**....SA2039

Country Squire V8-429 (7.0L) 2,4 Bbl. Carb. VIN K,N
- **Lube**....B2
- **Air**....PA2002
- **Fuel**....BF879
- **Oil Vapor**....SA2039

FORD 1970 (Cont'd.)

Custom, Custom 500 6-240 (3.9L) 1 Bbl. Carb. VIN B
- **Lube**....B2
- **Air**....PA2005
- **Fuel**....BF879
- **Oil Vapor**....SA2039
- **Trans.**....19879

Custom, Custom 500 V8-302 (5.0L) 2 Bbl. Carb. VIN D
- **Lube**....B2
- **Air**....PA2002
- **Fuel**....BF879
- **Oil Vapor**....SA2039

Custom, Custom 500 V8-351 (5.8L) 2 Bbl. Carb. VIN H
- **Lube**....B2
- **Air**....PA2002
- **Fuel**....BF879
- **Oil Vapor**....SA2039

Custom, Custom 500 V8-390 (6.4L) 2 Bbl. Carb. VIN X,Y
- **Lube**....B2
- **Air**....PA2002
- **Fuel**....BF879
- **Oil Vapor**....SA2039

Custom, Custom 500 V8-429 (7.0L) 2,4 Bbl. Carb. VIN K,N,P
- **Lube**....B2
- **Air**....PA2002 [74]
- **Air**....PA1828 [73]
- **Fuel**....BF879
- **Oil Vapor**....SA2039

Fairlane 6-250 (4.1L) 1 Bbl. Carb. VIN L
- **Lube**....B2
- **Air**....PA1802
- **Fuel**....BF879
- **Oil Vapor**....SA2039
- **Trans.**....19879

Fairlane V8-302 (5.0L) 2 Bbl. Carb. VIN F
- **Lube**....B2
- **Air**....PA2002
- **Fuel**....BF879
- **Oil Vapor**....SA2039
- **Trans.**....19879

Fairlane V8-351 (5.8L) 2,4 Bbl. Carb. VIN H,M
- **Lube**....B2
- **Air (w/o Ram Air)**....PA2002
- **Air (w/Ram Air)**....PA2024
- **Fuel**....BF879
- **Oil Vapor**....SA2039
- **Trans. (C-4)**....19879

Fairlane V8-429 (7.0L) 4 Bbl. Carb. VIN C
- **Lube**....B2
- **Air (w/o Ram Air)**....PA2002
- **Air (w/Ram Air)**....PA2024
- **Fuel**....BF879
- **Oil Vapor**....SA2039

Falcon 6-200 (3.3L) 1 Bbl. Carb. VIN T
- **Lube**....B2
- **Air**....PA2005
- **Fuel**....BF879
- **Oil Vapor**....SA2039
- **Trans.**....19879

Falcon 6-250 (4.1L) 1 Bbl. Carb. VIN L
- **Lube**....B2
- **Air**....PA1802
- **Fuel**....BF879
- **Oil Vapor**....SA2039
- **Trans.**....19879

Falcon V8-302 (5.0L) 2 Bbl. Carb. VIN F
- **Lube**....B2
- **Air**....PA2002
- **Fuel**....BF879
- **Oil Vapor**....SA2039
- **Trans.**....19879

FORD 1970 (Cont'd.)

Galaxie 500 6-240 (3.9L) 1 Bbl. Carb. VIN B
- **Lube**....B2
- **Air**....PA2005
- **Fuel**....BF879
- **Oil Vapor**....SA2039
- **Trans.**....19879

Galaxie 500 V8-302 (5.0L) 2 Bbl. Carb. VIN F
- **Lube**....B2
- **Air**....PA2002
- **Fuel**....BF879
- **Oil Vapor**....SA2039

Galaxie 500 V8-351 (5.8L) 2 Bbl. Carb. VIN H
- **Lube**....B2
- **Air**....PA2002
- **Fuel**....BF879
- **Oil Vapor**....SA2039

Galaxie 500 V8-390 (6.4L) 2 Bbl. Carb. VIN X,Y
- **Lube**....B2
- **Air**....PA2002
- **Fuel**....BF879
- **Oil Vapor**....SA2039

Galaxie 500 V8-429 (7.0L) 2,4 Bbl. Carb. VIN K,N
- **Lube**....B2
- **Air**....PA2002
- **Fuel**....BF879
- **Oil Vapor**....SA2039

LTD V8-302 (5.0L) 2 Bbl. Carb. VIN F
- **Lube**....B2
- **Air**....PA2002
- **Fuel**....BF879
- **Oil Vapor**....SA2039

LTD V8-351 (5.8L) 2 Bbl. Carb. VIN H
- **Lube**....B2
- **Air**....PA2002
- **Fuel**....BF879
- **Oil Vapor**....SA2039

LTD V8-390 (6.4L) 2 Bbl. Carb. VIN X
- **Lube**....B2
- **Air**....PA2002
- **Fuel**....BF879
- **Oil Vapor**....SA2039

LTD V8-429 (7.0L) 2,4 Bbl. Carb. VIN K,N
- **Lube**....B2
- **Air**....PA2002
- **Fuel**....BF879
- **Oil Vapor**....SA2039

Maverick 6-170 (2.8L) 1 Bbl. Carb. VIN U
- **Lube**....B2
- **Air**....PA2005
- **Fuel**....BF879
- **Oil Vapor**....SA2039
- **Trans.**....19879

Maverick 6-200 (3.3L) 1 Bbl. Carb. VIN T
- **Lube**....B2
- **Air**....PA2005
- **Fuel**....BF879
- **Oil Vapor**....SA2039
- **Trans.**....19879

Maverick 6-250 (4.1L) 1 Bbl. Carb. VIN L
- **Lube**....B2
- **Air**....PA1802
- **Fuel**....BF879
- **Oil Vapor**....SA2039
- **Trans.**....19879

Mustang 6-200 (3.3L) 1 Bbl. Carb. VIN T
- **Lube**....B2
- **Air**....PA2005
- **Fuel**....BF879
- **Oil Vapor**....SA2039
- **Trans.**....19879

[73] Police. [74] Exc. Police.

OBS = Obsolete. Availability Limited to Distributor Stock.

FORD 1970 (Cont'd.)

Mustang 6-250 (4.1L) 1 Bbl. Carb. VIN L
- **Lube**.....B2
- **Air**.....PA1802
- **Fuel**.....BF879
- **Oil Vapor**.....SA2039
- **Trans.**.....19879

Mustang V8-302 (5.0L) 2,4 Bbl. Carb. VIN F,G
- **Lube**.....B2
- **Air (2 Bbl.)**.....PA2002
- **Air (4 Bbl.)**.....PA1828
- **Fuel**.....BF879
- **Oil Vapor**.....SA2039
- **Trans.**.....19879

Mustang V8-351 (5.8L) 2,4 Bbl. Carb. VIN H,M
- **Lube**.....B2
- **Air (w/o Ram Air)**.....PA2002
- **Air (w/Ram Air)**.....PA2024
- **Fuel**.....BF879
- **Oil Vapor**.....SA2039

Mustang V8-428 (7.0L) 4 Bbl. Carb. VIN Q
- **Lube**.....B2
- **Air**.....PA1828
- **Oil Vapor**.....SA2039

Mustang V8-429 (7.0L) 4 Bbl. Carb. VIN Z
- **Lube**.....B2
- **Air**.....PA1828
- **Oil Vapor**.....SA2039

P-350 6-240 (3.9L) Carb. VIN A
- **Lube (Ele.)**.....P184
- **Lube (Spin-on)**.....B2
- **Air**.....PA2005
- **Fuel**.....BF879
- **Trans. (C-4)**.....19879

P-350 6-300 (4.9L) Carb. VIN B
- **Lube (Ele.)**.....P184
- **Lube (Spin-on)**.....B2
- **Air**.....PA2005
- **Fuel (Ele.)**.....PF827
- **Fuel (In-Line)**.....BF879
- **Trans.**.....19879

Pickups, F Series 6-240 (3.9L) 1 Bbl. Carb. VIN A
- **Lube (Ele.)**.....P184
- **Lube (Spin-on)**.....B2
- **Air**.....PA2005
- **Fuel (Ele.)**.....PF827
- **Fuel (In-Line)**.....BF879
- **Oil Vapor**.....N/R
- **Trans.**.....19879

Pickups, F Series 6-300 (4.9L) 1 Bbl. Carb. VIN B
- **Lube (Ele.)**.....P184
- **Lube (Spin-on)**.....B2
- **Air**.....PA2005
- **Fuel (Ele.)**.....PF827
- **Fuel (In-Line)**.....BF879
- **Oil Vapor**.....N/R
- **Trans.**.....19879

Pickups, F Series V8-302 (5.0L) 2 Bbl. Carb. VIN G
- **Lube (Ele.)**.....P184
- **Lube (Spin-on)**.....B2
- **Air**.....PA2002
- **Fuel (Ele.)**.....PF827
- **Fuel (In-Line)**.....BF879
- **Oil Vapor**.....N/R
- **Trans.**.....19879

Pickups, F Series V8-360 (5.9L) 2 Bbl. Carb. VIN Y
- **Lube (Ele.)**.....P184
- **Lube (Spin-on)**.....B2
- **Air**.....PA2002
- **Fuel (Ele.)**.....PF827
- **Fuel (In-Line)**.....BF879
- **Oil Vapor**.....N/R

FORD 1970 (Cont'd.)

Pickups, F Series V8-390 (6.4L) 2 Bbl. Carb. VIN H
- **Lube (Ele.)**.....P184
- **Lube (Spin-on)**.....B2
- **Air**.....PA2002
- **Fuel (Ele.)**.....PF827
- **Fuel (In-Line)**.....BF879
- **Oil Vapor**.....N/R

Ranch Wagon V8-302 (5.0L) 2 Bbl. Carb. VIN F
- **Lube**.....B2
- **Air**.....PA2002
- **Fuel**.....BF879
- **Oil Vapor**.....SA2039

Ranch Wagon V8-351 (5.8L) 2 Bbl. Carb. VIN H
- **Lube**.....B2
- **Air**.....PA2002
- **Fuel**.....BF879
- **Oil Vapor**.....SA2039

Ranch Wagon V8-390 (6.4L) 2 Bbl. Carb. VIN Y
- **Lube**.....B2
- **Air**.....PA2002
- **Fuel**.....BF879
- **Oil Vapor**.....SA2039

Ranch Wagon V8-428 (7.0L) 4 Bbl. Carb. VIN P
- **Lube**.....B2
- **Air**.....PA1828
- **Fuel**.....BF879
- **Oil Vapor**.....SA2039

Ranch Wagon V8-429 (7.0L) 2,4 Bbl. Carb. VIN K,N
- **Lube**.....B2
- **Air**.....PA2002
- **Fuel**.....BF879
- **Oil Vapor**.....SA2039

Ranchero 6-250 (4.1L) 1 Bbl. Carb. VIN L
- **Lube**.....B2
- **Air**.....PA1802
- **Fuel**.....BF879
- **Oil Vapor**.....N/R
- **Trans.**.....19879

Ranchero V8-302 (5.0L) 2 Bbl. Carb. VIN F
- **Lube**.....B2
- **Air**.....PA2002
- **Fuel**.....BF879
- **Oil Vapor**.....N/R
- **Trans.**.....19879

Ranchero V8-351 (5.8L) 2,4 Bbl. Carb. VIN H,M
- **Lube**.....B2
- **Air (w/o Ram Air)**.....PA2002
- **Air (w/Ram Air)**.....PA2024
- **Fuel**.....BF879
- **Oil Vapor**.....N/R
- **Trans. (C-4)**.....19879

Ranchero V8-429 (7.0L) 4 Bbl. Carb. VIN C,J
- **Lube**.....B2
- **Air (w/o Ram Air)**.....PA2002
- **Air (w/Ram Air)**.....PA2024
- **Fuel**.....BF879
- **Oil Vapor**.....N/R

Thunderbird V8-429 (7.0L) 4 Bbl. Carb. VIN N
- **Lube**.....B2
- **Air**.....PA2002
- **Fuel**.....BF879
- **Oil Vapor**.....SA2039

Torino 6-250 (4.1L) 1 Bbl. Carb. VIN L
- **Lube**.....B2
- **Air**.....PA1802
- **Fuel**.....BF879
- **Oil Vapor**.....SA2039
- **Trans.**.....19879

FORD 1970 (Cont'd.)

Torino V8-302 (5.0L) 2 Bbl. Carb. VIN F
- **Lube**.....B2
- **Air**.....PA2002
- **Fuel**.....BF879
- **Oil Vapor**.....SA2039
- **Trans.**.....19879

Torino V8-351 (5.8L) 2,4 Bbl. Carb. VIN H,M
- **Lube**.....B2
- **Air (w/o Ram Air)**.....PA2002
- **Air (w/Ram Air)**.....PA2024
- **Fuel**.....BF879
- **Oil Vapor**.....SA2039
- **Trans. (C-4)**.....19879

Torino V8-429 (7.0L) 4 Bbl. Carb. VIN C,J,N
- **Lube**.....B2
- **Air (w/o Ram Air)**.....PA2002
- **Air (w/Ram Air)**.....PA2024
- **Fuel**.....BF879
- **Oil Vapor**.....SA2039

Vans, E100-350 6-170 (2.8L) 1 Bbl. Carb. VIN F
- **Lube**.....B2
- **Air**.....PA657
- **Fuel**.....BF879
- **Oil Vapor**.....N/R
- **Trans.**.....19879

Vans, E100-350 6-240 (3.9L) 1 Bbl. Carb. VIN A
- **Lube**.....B2
- **Air**.....PA657
- **Fuel (Ele.)**.....PF827
- **Fuel (In-Line)**.....BF879
- **Oil Vapor**.....N/R
- **Trans.**.....19879

Vans, E100-350 V8-302 (5.0L) 2 Bbl. Carb. VIN G
- **Lube**.....B2
- **Air**.....PA657
- **Fuel (Ele.)**.....PF827
- **Fuel (In-Line)**.....BF879
- **Oil Vapor**.....N/R
- **Trans.**.....19879

1969

Bronco 6-170 (2.8L) Carb. VIN F
- **Lube**.....B2
- **Air**.....PA2005
- **Fuel**.....BF879
- **Oil Vapor**.....N/R

Bronco V8-302 (5.0L) Carb. VIN G
- **Lube**.....B2
- **Air**.....PA657
- **Fuel**.....BF879
- **Oil Vapor**.....N/R

Country Sedan 6-240 (3.9L) Carb. VIN B
- **Lube**.....B2
- **Air (A.T.)**.....PA2004
- **Air (M.T.)**.....PA2005
- **Fuel**.....BF879

Country Sedan V8-302 (5.0L) Carb. VIN F
- **Lube**.....B2
- **Air**.....PA2002
- **Fuel**.....BF879

Country Sedan V8-351 (5.8L) Carb. VIN H
- **Lube**.....B2
- **Air**.....PA2002
- **Fuel**.....BF879

Country Sedan V8-390 (6.4L) Carb. VIN Y
- **Lube**.....B2
- **Air**.....PA2002
- **Fuel**.....BF879

Country Sedan V8-428 (7.0L) Carb. VIN P
- **Lube**.....B2
- **Air**.....PA1828

FORD 1969 (Cont'd.)

Country Sedan V8-429 (7.0L) Carb. VIN K,N
- **Lube**.....B2
- **Air**.....PA2002
- **Fuel**.....BF879

Country Squire V8-302 (5.0L) Carb. VIN F
- **Lube**.....B2
- **Air**.....PA2002
- **Fuel**.....BF879

Country Squire V8-351 (5.8L) Carb. VIN H
- **Lube**.....B2
- **Air**.....PA2002
- **Fuel**.....BF879

Country Squire V8-390 (6.4L) Carb. VIN S
- **Lube**.....B2
- **Air**.....PA2002
- **Fuel**.....BF879

Country Squire V8-390 (6.4L) Carb. VIN X
- **Lube**.....B2

Country Squire V8-428 (7.0L) Carb. VIN P
- **Lube**.....B2
- **Air**.....PA1828
- **Fuel**.....BF879

Country Squire V8-429 (7.0L) Carb. VIN K,N
- **Lube**.....B2
- **Air**.....PA2002
- **Fuel**.....BF879

Custom, Custom 500 6-240 (3.9L) Carb. VIN B,E
- **Lube**.....B2
- **Air (A.T.)**.....PA2004
- **Air (M.T.)**.....PA2005
- **Fuel**.....BF879

Custom, Custom 500 V8-302 (5.0L) Carb. VIN D,F
- **Lube**.....B2
- **Air**.....PA2002
- **Fuel**.....BF879

Custom, Custom 500 V8-351 (5.8L) Carb. VIN H
- **Lube**.....B2
- **Air**.....PA2002
- **Fuel**.....BF879

Custom, Custom 500 V8-390 (6.4L) Carb. VIN Y
- **Lube**.....B2
- **Air**.....PA2002
- **Fuel**.....BF879

Custom, Custom 500 V8-428 (7.0L) Carb. VIN P
- **Lube**.....B2
- **Air**.....PA1828

Custom, Custom 500 V8-429 (7.0L) Carb. VIN K,N
- **Lube**.....B2
- **Air**.....PA2002
- **Fuel**.....BF879

Fairlane, Fairlane 500 6-250 (4.1L) Carb. VIN L
- **Lube**.....B2
- **Air**.....PA2004
- **Fuel**.....BF879

Fairlane, Fairlane 500 V8-302 (5.0L) Carb. VIN F
- **Lube**.....B2
- **Air**.....PA2002
- **Fuel**.....BF879

Fairlane, Fairlane 500 V8-351 (5.8L) Carb. VIN H,M
- **Lube**.....B2
- **Air**.....PA2002
- **Fuel**.....BF879

Fairlane, Fairlane 500 V8-390 (6.4L) Carb. VIN S
- **Lube**.....B2
- **Air**.....PA1828

OBS = Obsolete. Availability Limited to Distributor Stock.

FORD 1969 (Cont'd.)

Fairlane, Fairlane 500 V8-427 (7.0L) Carb. VIN W
- **Lube**....B2
- **Air**....PA1828
- **Fuel**....BF879

Fairlane, Fairlane 500 V8-428 (7.0L) Carb. VIN Q
- **Lube**....B2
- **Air**....PA1828
- **Fuel**....BF879

Falcon 6-170 (2.8L) Carb. VIN U
- **Lube**....B2
- **Air**....PA2005
- **Fuel**....BF879

Falcon 6-200 (3.3L) Carb. VIN T
- **Lube**....B2
- **Air**....PA2004
- **Fuel**....BF879

Falcon V8-302 (5.0L) Carb. VIN F
- **Lube**....B2
- **Air**....PA2002
- **Fuel**....BF879

Galaxie, Galaxie 500 6-240 (3.9L) Carb. VIN E
- **Lube**....B2
- **Air (A.T.)**....PA2004
- **Air (M.T.)**....PA2005
- **Fuel**....BF879

Galaxie, Galaxie 500 V8-302 (5.0L) Carb. VIN F
- **Lube**....B2
- **Air**....PA2002
- **Fuel**....BF879

Galaxie, Galaxie 500 V8-351 (5.8L) Carb. VIN H
- **Lube**....B2
- **Air**....PA2002
- **Fuel**....BF879

Galaxie, Galaxie 500 V8-390 (6.4L) Carb. VIN S,Y
- **Lube**....B2
- **Air**....PA2002
- **Fuel**....BF879

Galaxie, Galaxie 500 V8-428 (7.0L) Carb. VIN P
- **Lube**....B2
- **Air**....PA1828
- **Fuel**....BF879

Galaxie, Galaxie 500 V8-429 (7.0L) Carb. VIN K,N
- **Lube**....B2
- **Air**....PA2002
- **Fuel**....BF879

LTD V8-302 (5.0L) Carb. VIN F
- **Lube**....B2
- **Air**....PA2002
- **Fuel**....BF879

LTD V8-351 (5.8L) Carb. VIN H
- **Lube**....B2
- **Air**....PA2002
- **Fuel**....BF879

LTD V8-390 (6.4L) Carb. VIN S,X
- **Lube**....B2
- **Air (VIN S)**....PA1828
- **Air (VIN X)**....PA2002
- **Fuel**....BF879

LTD V8-428 (7.0L) Carb. VIN P
- **Lube**....B2
- **Air**....PA1828
- **Fuel**....BF879

LTD V8-429 (7.0L) Carb. VIN K,N
- **Lube**....B2
- **Air**....PA2002
- **Fuel**....BF879

Mustang 6-200 (3.3L) Carb. VIN T
- **Lube**....B2
- **Air**....PA2004
- **Fuel**....BF879

Mustang 6-250 (4.1L) Carb. VIN L
- **Lube**....B2
- **Air**....PA1802
- **Fuel**....BF879

Mustang V8-302 (5.0L) Carb. VIN F
- **Lube**....B2
- **Air**....PA2002
- **Fuel**....BF879

Mustang V8-351 (5.8L) Carb. VIN H,M
- **Lube**....B2
- **Air**....PA2002
- **Fuel**....BF879

Mustang V8-390 (6.4L) Carb. VIN S
- **Lube**....B2
- **Air**....PA1828
- **Fuel**....BF879

Mustang V8-428 (7.0L) Carb. VIN Q
- **Lube**....B2
- **Air**....PA1828
- **Fuel**....BF879

Mustang V8-429 (7.0L) Carb. VIN Z
- **Lube**....B2
- **Air**....PA1828
- **Trans.**....M.T.

P-350 6-240 (3.9L) Carb. VIN A
- **Lube**....B2
- **Air**....PA2004
- **Fuel**....BF879
- **Oil Vapor**....N/R

P-350 V8-300 (4.9L) Carb. VIN B
- **Lube**....B2
- **Air**....PA2004
- **Fuel**....BF879
- **Oil Vapor**....N/R

Pickups, F Series 6-240 (3.9L) Carb. VIN A
- **Lube**....B2
- **Air**....PA2005
- **Fuel**....BF879
- **Oil Vapor**....N/R

Pickups, F Series 6-300 (4.9L) Carb. VIN B
- **Lube**....B2
- **Air**....PA2004
- **Fuel**....BF879
- **Oil Vapor**....N/R

Pickups, F Series V8-302 (5.0L) Carb. VIN G
- **Lube**....B2
- **Air**....PA657
- **Fuel**....BF879
- **Oil Vapor**....N/R

Pickups, F Series V8-360 (5.9L) Carb. VIN Y
- **Lube**....B2
- **Air**....PA2002
- **Fuel**....PF827
- **Oil Vapor**....N/R

Pickups, F Series V8-390 (6.4L) Carb. VIN H
- **Lube**....B2
- **Air**....PA2002
- **Fuel**....BF879
- **Oil Vapor**....N/R

Ranch Wagon V8-302 (5.0L) Carb. VIN D
- **Lube**....B2
- **Air**....PA2002
- **Fuel**....BF879

Ranch Wagon V8-351 (5.8L) Carb. VIN H
- **Lube**....B2
- **Air**....PA2002
- **Fuel**....BF879

Ranch Wagon V8-390 (6.4L) Carb. VIN Y
- **Lube**....B2
- **Air**....PA2002
- **Fuel**....BF879

Ranch Wagon V8-428 (7.0L) Carb. VIN P
- **Lube**....B2
- **Air**....PA1828
- **Fuel**....BF879

Ranch Wagon V8-429 (7.0L) Carb. VIN K,N
- **Lube**....B2
- **Air**....PA2002
- **Fuel**....BF879

Ranchero 6-250 (4.1L) Carb. VIN L
- **Lube**....B2
- **Air**....PA2004
- **Fuel**....BF879
- **Oil Vapor**....N/R

Ranchero V8-302 (5.0L) Carb. VIN F
- **Lube**....B2
- **Air**....PA2002
- **Fuel**....BF879
- **Oil Vapor**....N/R

Ranchero V8-351 (5.8L) Carb. VIN H,M
- **Lube**....B2
- **Air**....PA2002
- **Fuel**....BF879
- **Oil Vapor**....N/R

Ranchero V8-390 (6.4L) Carb. VIN S
- **Lube**....B2
- **Air**....PA1828
- **Fuel**....BF879
- **Oil Vapor**....N/R

Ranchero V8-428 (7.0L) Carb. VIN Q
- **Lube**....B2
- **Air**....PA1828
- **Fuel**....BF879
- **Oil Vapor**....N/R

Thunderbird V8-429 (7.0L) Carb. VIN N
- **Lube**....B2
- **Air**....PA2002
- **Fuel**....BF879

Torino 6-250 (4.1L) Carb. VIN L
- **Lube**....B2
- **Air**....PA2004
- **Fuel**....BF879

Torino V8-302 (5.0L) Carb. VIN F
- **Lube**....B2
- **Air**....PA2002
- **Fuel**....BF879

Torino V8-351 (5.8L) Carb. VIN H,M
- **Lube**....B2
- **Air**....PA2002
- **Fuel**....BF879

Torino V8-390 (6.4L) Carb. VIN S
- **Lube**....B2
- **Air**....PA1828

Torino V8-428 (7.0L) Carb. VIN Q
- **Lube**....B2
- **Air**....PA1828
- **Fuel**....BF879

Vans, E Series 6-170 (2.8L) Carb. VIN F
- **Lube**....B2
- **Air**....PA657
- **Fuel**....BF879
- **Oil Vapor**....N/R

Vans, E Series 6-240 (3.9L) Carb. VIN A
- **Lube**....B2
- **Air**....PA657
- **Fuel**....BF879
- **Oil Vapor**....N/R

Vans, E Series V8-302 (5.0L) Carb. VIN G
- **Lube**....B2
- **Air**....PA657
- **Fuel**....BF879
- **Oil Vapor**....N/R

1968

Bronco 6-170 (2.8L) Carb. VIN F
- **Lube**....B2
- **Air**....PA2005
- **Fuel**....BF879

Bronco V8-289 (4.7L) Carb. VIN N
- **Lube**....B2
- **Air**....PA657
- **Fuel**....BF879

FORD 1968 (Cont'd.)

Bronco V8-302 (5.0L) Carb. VIN G
- **Lube**....B2
- **Air**....PA657
- **Fuel**....BF879

Country Sedan 6-240 (3.9L) Carb. VIN V
- **Lube**....B2
- **Air (A.T.)**....PA2004
- **Air (M.T.)**....PA2005
- **Fuel**....BF879

Country Sedan V8-302 (5.0L) Carb. VIN F
- **Lube**....B2
- **Air**....PA2002
- **Fuel**....BF879

Country Sedan V8-390 (6.4L) Carb. VIN X,Z
- **Lube**....B2
- **Air**....PA2002
- **Fuel**....BF879

Country Sedan V8-428 (7.0L) Carb. VIN P
- **Lube**....B2
- **Air**....PA2002
- **Fuel**....BF879

Country Squire V8-302 (5.0L) Carb. VIN F
- **Lube**....B2
- **Air**....PA2002
- **Fuel**....BF879

Country Squire V8-390 (6.4L) Carb. VIN X,Z
- **Lube**....B2
- **Air**....PA2002
- **Fuel**....BF879

Country Squire V8-427 (7.0L) Carb. VIN W
- **Lube**....B2
- **Air**....PA1828
- **Fuel**....BF879

Country Squire V8-428 (7.0L) Carb. VIN P
- **Lube**....B2
- **Air**....PA2002
- **Fuel**....BF879

Custom, Custom 500 6-240 (3.9L) Carb. VIN B,E
- **Lube**....B2
- **Air (A.T.)**....PA2004
- **Air (M.T.)**....PA2005
- **Fuel**....BF879

Custom, Custom 500 V8-302 (5.0L) Carb. VIN F
- **Lube**....B2
- **Air**....PA2002
- **Fuel**....BF879

Custom, Custom 500 V8-390 (6.4L) Carb. VIN Y,Z
- **Lube**....B2
- **Air**....PA2002
- **Fuel**....BF879

Custom, Custom 500 V8-427 (7.0L) Carb. VIN W
- **Lube**....B2
- **Air**....PA1828
- **Fuel**....BF879

Custom, Custom 500 V8-428 (7.0L) Carb. VIN P
- **Lube**....B2
- **Air**....PA2002
- **Fuel**....BF879

Fairlane, Fairlane 500 6-200 (3.3L) Carb. VIN T
- **Lube**....B2
- **Air**....PA2004
- **Fuel**....BF879

Fairlane, Fairlane 500 V8-289 (4.7L) Carb. VIN C
- **Lube**....B2
- **Air**....PA2002
- **Fuel**....BF879

OBS = Obsolete. Availability Limited to Distributor Stock.

FORD 1968 (Cont'd.)

Fairlane, Fairlane 500 V8-302 (5.0L) Carb. VIN F
- **Lube**....B2
- **Air**....PA2002
- **Fuel**....BF879

Fairlane, Fairlane 500 V8-390 (6.4L) 4 Bbl. VIN S
- **Lube**....B2
- **Air**....PA2002

Fairlane, Fairlane 500 V8-428 (7.0L) Carb. VIN R
- **Lube**....B2
- **Air**....PA1828

Falcon 6-170 (2.8L) Carb. VIN U
- **Lube**....B2
- **Air**....PA2004
- **Fuel**....BF879

Falcon 6-200 (3.3L) Carb. VIN T
- **Lube**....B2
- **Air**....PA2004
- **Fuel**....BF879

Falcon V8-289 (4.7L) Carb. VIN C
- **Lube**....B2
- **Air**....PA2002
- **Fuel**....BF879

Falcon V8-302 (5.0L) Carb. VIN J
- **Lube**....B2
- **Air**....PA2002
- **Fuel**....BF879

Galaxie 500 6-240 (3.9L) Carb. VIN E
- **Lube**....B2
- **Air (A.T.)**....PA2004
- **Air (M.T.)**....PA2005
- **Fuel**....BF879

Galaxie 500 V8-302 (5.0L) Carb. VIN F
- **Lube**....B2
- **Air**....PA2002
- **Fuel**....BF879

Galaxie 500 V8-390 (6.4L) Carb. VIN X,Z
- **Lube**....B2
- **Air**....PA2002
- **Fuel**....BF879

Galaxie 500 V8-427 (7.0L) Carb. VIN W
- **Lube**....B2
- **Air**....PA1828
- **Fuel**....BF879

Galaxie 500 V8-428 (7.0L) Carb. VIN P,Q
- **Lube**....B2
- **Air**....PA2002
- **Fuel**....BF879

LTD V8-289 (4.7L) Carb. VIN C
- **Lube**....B2
- **Air**....PA2002
- **Fuel**....BF879

LTD V8-302 (5.0L) Carb. VIN F
- **Lube**....B2
- **Air**....PA2002
- **Fuel**....BF879

LTD V8-390 (6.4L) Carb. VIN X,Z
- **Lube**....B2
- **Air**....PA2002
- **Fuel**....BF879

LTD V8-427 (7.0L) Carb. VIN W
- **Lube**....B2
- **Air**....PA1828
- **Fuel**....BF879

LTD V8-428 (7.0L) Carb. VIN P
- **Lube**....B2
- **Air**....PA2002
- **Fuel**....BF879

Mustang 6-200 (3.3L) Carb. VIN T
- **Lube**....B2
- **Air**....PA2004
- **Fuel**....BF879

Mustang V8-289 (4.7L) Carb. VIN C
- **Lube**....B2
- **Air**....PA2002
- **Fuel**....BF879

FORD 1968 (Cont'd.)

Mustang V8-302 (5.0L) Carb. VIN F,J
- **Lube**....B2
- **Air**....PA2002
- **Fuel**....BF879

Mustang V8-390 (6.4L) Carb. VIN S
- **Lube**....B2
- **Air**....PA1828

Mustang V8-427 (7.0L) Carb. VIN W
- **Lube**....B2
- **Air**....PA1828

Mustang V8-428 (7.0L) Carb. VIN R
- **Lube**....B2
- **Air**....PA2002

P-350 6-240 (3.9L) Carb. VIN A
- **Lube**....B2
- **Fuel**....BF879

P-350 6-300 (4.9L) Carb. VIN B
- **Lube**....B2
- **Air**....PA2004
- **Fuel**....PF827

Pickups, F Series 6-240 (3.9L) Carb. VIN A
- **Lube**....B2
- **Air**....PA2004
- **Fuel**....BF879

Pickups, F Series 6-300 (4.9L) Carb. VIN B
- **Lube**....B2
- **Air**....PA2004
- **Fuel (Ele.)**....PF827
- **Fuel (Spin-on)**....BF879
- **Oil Vapor**....N/R

Pickups, F Series V8-360 (5.9L) Carb. VIN Y
- **Lube**....B2
- **Air**....PA2002
- **Fuel**....PF827

Pickups, F Series V8-390 (6.4L) Carb. VIN H
- **Lube**....B2
- **Air**....PA2002
- **Fuel**....BF879
- **Oil Vapor**....N/R

Ranch Wagon 6-240 (3.9L) Carb. VIN B
- **Lube**....B2
- **Fuel**....BF879

Ranch Wagon V8-289 (4.7L) Carb. VIN C
- **Lube**....B2
- **Air**....PA2002
- **Fuel**....BF879

Ranch Wagon V8-302 (5.0L) Carb. VIN F
- **Lube**....B2
- **Air**....PA2002
- **Fuel**....BF879

Ranch Wagon V8-390 (6.4L) Carb. VIN Y,Z
- **Lube**....B2
- **Air**....PA2002
- **Fuel**....BF879

Ranch Wagon V8-428 (7.0L) Carb. VIN P
- **Lube**....B2
- **Air**....PA2002
- **Fuel**....BF879

Ranchero 6-200 (3.3L) Carb. VIN T
- **Lube**....B2
- **Fuel**....BF879
- **Oil Vapor**....N/R

Ranchero V8-302 (5.0L) Carb. VIN F
- **Lube**....B2
- **Air**....PA2002
- **Fuel**....BF879
- **Oil Vapor**....N/R

Ranchero V8-390 (6.4L) Carb. VIN S,Y
- **Lube**....B2
- **Air**....PA2002
- **Fuel**....BF879
- **Oil Vapor**....N/R

FORD 1968 (Cont'd.)

Ranchero V8-428 (7.0L) Carb. VIN Q
- **Lube**....B2
- **Air**....PA2002
- **Fuel**....BF879
- **Oil Vapor**....N/R

Thunderbird V8-390 (6.4L) Carb. VIN Z
- **Lube**....B2
- **Air**....PA2002
- **Fuel**....BF879

Thunderbird V8-429 (7.0L) Carb. VIN N
- **Lube**....B2
- **Air**....PA2002
- **Fuel**....BF879

Torino 6-200 (3.3L) Carb. VIN T
- **Lube**....B2
- **Air**....PA2004
- **Fuel**....BF879

Torino V8-289 (4.7L) Carb. VIN C
- **Lube**....B2
- **Air**....PA2002
- **Fuel**....BF879

Torino V8-302 (5.0L) Carb. VIN F
- **Lube**....B2
- **Air**....PA2002
- **Fuel**....BF879

Torino V8-390 (6.4L) Carb. VIN S
- **Lube**....B2
- **Air**....PA1828

Torino V8-390 (6.4L) Carb. VIN Y
- **Lube**....B2
- **Air**....PA2002
- **Fuel**....BF879

Torino V8-428 (7.0L) Carb. VIN R
- **Lube**....B2
- **Air**....PA1828

Vans, E Series 6-170 (2.8L) Carb. VIN F
- **Lube**....B2
- **Air**....PA657
- **Fuel**....BF879
- **Oil Vapor**....N/R

Vans, E Series 6-240 (3.9L) Carb. VIN A
- **Lube**....B2
- **Air**....PA657
- **Fuel**....BF879
- **Oil Vapor**....N/R

Vans, E Series V8-302 (5.0L) Carb. VIN G
- **Lube**....B2
- **Air**....PA657
- **Fuel**....BF879
- **Oil Vapor**....N/R

1967

Bronco 6-170 (2.8L) Carb.
- **Lube**....B2
- **Air**....PA642
- **Fuel (Ele.)**....PF827
- **Fuel (Spin-on)**....BF879
- **Oil Vapor**....N/R

Bronco 6-240 (3.9L) Carb.
- **Lube**....B2
- **Air**....PA642
- **Fuel**....PF827
- **Oil Vapor**....N/R

Bronco V8-289 (4.7L) Carb.
- **Lube**....B2
- **Air**....PA657
- **Fuel**....BF879
- **Oil Vapor**....N/R

Club Wagon 6-170 (2.8L) Carb.
- **Lube**....B2
- **Fuel**....BF879

Club Wagon 6-240 (3.9L) Carb.
- **Lube**....B2
- **Fuel**....BF879

Country Sedan 6-170 (2.8L) Carb.
- **Lube**....B2
- **Fuel**....BF879

Country Sedan 6-200 (3.3L) Carb.
- **Lube**....B2
- **Fuel**....BF879

FORD 1967 (Cont'd.)

Country Sedan 6-240 (3.9L) Carb.
- **Lube**....B2
- **Fuel**....BF879

Country Sedan V8-289 (4.7L) Carb.
- **Lube**....B2
- **Air**....PA657
- **Fuel**....BF879

Country Sedan V8-390 (6.4L) Carb.
- **Lube**....B2
- **Air**....PA1735
- **Fuel**....BF879

Country Squire 6-170 (2.8L) Carb.
- **Lube**....B2
- **Fuel**....BF879

Country Squire 6-200 (3.3L) Carb.
- **Lube**....B2
- **Fuel**....BF879

Country Squire 6-240 (3.9L) Carb.
- **Lube**....B2
- **Fuel**....BF879

Country Squire V8-289 (4.7L) Carb.
- **Lube**....B2
- **Air**....PA657
- **Fuel**....BF879

Custom V8-289 (4.7L) Carb.
- **Lube**....B2
- **Air**....PA657
- **Fuel**....BF879

Custom V8-390 (6.4L) Carb.
- **Lube**....B2
- **Air**....PA1735
- **Fuel**....BF879

Econoline 6-170 (2.8L) Carb.
- **Lube**....B2
- **Fuel (Ele.)**....PF827
- **Fuel (In-Line)**....BF879

Econoline 6-240 (3.9L) Carb.
- **Lube**....B2
- **Fuel**....BF879

Fairlane 6-200 (3.3L) Carb.
- **Lube**....B2
- **Air**....PA642
- **Fuel**....BF879

Fairlane V8-289 (4.7L) Carb.
- **Lube**....B2
- **Air**....PA657
- **Fuel**....BF879

Fairlane V8-390 (6.4L) Carb.
- **Lube**....B2
- **Air**....PA1735
- **Fuel**....BF879

Fairlane V8-427 (7.0L) Carb. VIN R
- **Lube**....B2
- **Trans.**....M.T.

Fairlane V8-427 (7.0L) Carb. VIN W
- **Lube**....B2
- **Air**....PA1828
- **Fuel**....PF827
- **Trans.**....M.T.

Falcon 6-170 (2.8L) Carb.
- **Lube**....B2
- **Air**....PA642
- **Fuel**....BF879

Falcon 6-200 (3.3L) Carb.
- **Lube**....B2
- **Air**....PA642
- **Fuel**....BF879

Falcon V8-289 (4.7L) Carb.
- **Lube**....B2
- **Air**....PA657
- **Fuel**....BF879

Galaxie 6-240 (3.9L) Carb.
- **Lube**....B2
- **Fuel**....BF879

Galaxie V8-289 (4.7L) Carb.
- **Lube**....B2
- **Air**....PA657
- **Fuel**....BF879

Galaxie V8-390 (6.4L) Carb.
- **Lube**....B2
- **Air**....PA1735
- **Fuel**....BF879

Galaxie V8-428 (7.0L) Carb. VIN P,Q
- **Lube**....B2
- **Air**....PA1735
- **Fuel**....BF879

OBS = Obsolete. Availability Limited to Distributor Stock.

FORD 1967 (Cont'd.)

Galaxie 500 Galazie 500 V8-427 (7.0L) Carb. VIN R,W
- **Lube**....B2
- **Air**....PA1735
- **Fuel (VIN R)**....BF879
- **Fuel (VIN W)**....PF827

LTD V8-289 (4.7L) Carb.
- **Lube**....B2
- **Air**....PA657
- **Fuel**....BF879

LTD V8-390 (6.4L) Carb. VIN H,Y,Z
- **Lube**....B2
- **Air**....PA1735
- **Fuel**....BF879

LTD V8-427 (7.0L) Carb. VIN R,W
- **Lube**....B2
- **Air**....PA1735
- **Fuel (VIN R)**....BF879
- **Fuel (VIN W)**....PF827

LTD V8-428 (7.0L) Carb. VIN Q
- **Lube**....B2
- **Air**....PA1735
- **Fuel**....BF879

Mustang 6-200 (3.3L) Carb.
- **Lube**....B2
- **Air**....PA642
- **Fuel**....BF879

Mustang V8-289 (4.7L) Carb.
- **Lube**....B2
- **Air**....PA1735
- **Air (HiPerf.)**....PA1828
- **Fuel**....BF879

Mustang V8-390 (6.4L) Carb.
- **Lube**....B2
- **Air**....PA1828
- **Fuel**....BF879

Pickups, F Series 6-240 (3.9L) Carb.
- **Lube**....B2
- **Fuel**....BF879
- **Oil Vapor**....N/R

Pickups, F Series 6-300 (4.9L) Carb. VIN B
- **Lube**....B2
- **Air**....PA642
- **Fuel**....BF879

Pickups, F Series V8-352 (5.8L) Carb.
- **Lube**....B2
- **Air**....PA695
- **Fuel**....PF827
- **Oil Vapor**....N/R

Ranch Wagon 6-170 (2.8L) Carb.
- **Lube**....B2
- **Fuel**....BF879

Ranch Wagon 6-200 (3.3L) Carb.
- **Lube**....B2
- **Fuel**....BF879

Ranch Wagon 6-240 (3.9L) Carb.
- **Lube**....B2
- **Fuel**....BF879

Ranch Wagon V8-289 (4.7L) Carb.
- **Lube**....B2
- **Air**....PA657
- **Fuel**....BF879

Ranch Wagon V8-390 (6.4L) Carb.
- **Lube**....B2
- **Air**....PA1735
- **Fuel**....BF879

Ranchero 6-200 (3.3L) Carb.
- **Lube**....B2
- **Air**....PA642
- **Fuel**....BF879
- **Oil Vapor**....N/R

Ranchero V8-289 (4.7L) Carb.
- **Lube**....B2
- **Air**....PA657
- **Fuel**....BF879
- **Oil Vapor**....N/R

Ranchero V8-390 (6.4L) Carb.
- **Lube**....B2
- **Air**....PA1735
- **Fuel**....BF879
- **Oil Vapor**....N/R

FORD 1967 (Cont'd.)

Thunderbird V8-390 (6.4L) Carb.
- **Lube**....B2
- **Air**....PA1828
- **Fuel**....BF879

Thunderbird V8-427 (7.0L) Carb.
- **Lube**....B2
- **Air**....PA1735
- **Fuel**....BF879

Thunderbird V8-428 (7.0L) Carb.
- **Lube**....B2
- **Air**....PA1828
- **Fuel**....BF879

1966

Bronco 6-240 (3.9L) Carb.
- **Lube**....B2
- **Air**....PA642
- **Fuel (Ele.)**....PF827
- **Fuel (In-Line)**....BF879
- **Oil Vapor**....N/R

Bronco V8-289 (4.7L) Carb.
- **Lube**....B2
- **Air**....PA657
- **Fuel**....BF879
- **Oil Vapor**....N/R

Club Wagon 6-144 (2.4L) Carb.
- **Lube**....B2
- **Air**....PA642

Club Wagon 6-170 (2.8L) Carb.
- **Lube**....B2
- **Air**....PA642
- **Fuel (Ele.)**....PF827
- **Fuel (In-Line)**....BF879

Country Sedan 6-170 (2.8L) Carb.
- **Lube**....B2
- **Fuel**....BF879

Country Sedan 6-200 (3.3L) Carb.
- **Lube**....B2
- **Fuel**....BF879

Country Sedan 6-240 (3.9L) Carb.
- **Lube**....B2
- **Fuel**....BF879

Country Sedan V8-289 (4.7L) Carb.
- **Lube**....B2
- **Air**....PA657

Country Sedan V8-352 (5.8L) Carb.
- **Lube**....B2
- **Air**....PA1735

Country Sedan V8-390 (6.4L) Carb.
- **Lube**....B2
- **Air**....PA1735

Country Sedan V8-427 (7.0L) Carb.
- **Lube**....B2
- **Air**....PA1828
- **Fuel**....PF827

Country Squire 6-170 (2.8L) Carb.
- **Lube**....B2
- **Air**....PA1735
- **Fuel**....BF879

Country Squire 6-200 (3.3L) Carb.
- **Lube**....B2
- **Air**....PA1735
- **Fuel**....BF879

Country Squire 6-240 (3.9L) Carb.
- **Lube**....B2
- **Fuel**....BF879

Country Squire V8-289 (4.7L) Carb.
- **Lube**....B2
- **Air**....PA657

Country Squire V8-352 (5.8L) Carb.
- **Lube**....B2
- **Air**....PA1735

Country Squire V8-427 (7.0L) Carb.
- **Lube**....B2
- **Air**....PA1828
- **Fuel**....PF827

Custom V8-289 (4.7L) Carb.
- **Lube**....B2
- **Air**....PA657

Custom V8-352 (5.8L) Carb.
- **Lube**....B2
- **Air**....PA1735

Custom V8-390 (6.4L) Carb.
- **Lube**....B2
- **Air**....PA1735
- **Fuel**....PF827

FORD 1966 (Cont'd.)

Custom V8-427 (7.0L) Carb.
- **Lube**....B2
- **Air**....PA1828
- **Fuel**....PF827

Econoline 6-144 (2.4L) Carb.
- **Lube**....B2
- **Fuel (Ele.)**....PF827
- **Fuel (In-Line)**....BF879
- **Oil Vapor**....N/R

Econoline 6-170 (2.8L) Carb.
- **Lube**....B2
- **Fuel (Ele.)**....PF827
- **Fuel (In-Line)**....BF879
- **Oil Vapor**....N/R

Fairlane 6-170 (2.8L) Carb.
- **Lube**....B2
- **Air**....PA642
- **Fuel**....BF879

Fairlane 6-200 (3.3L) Carb.
- **Lube**....B2
- **Air**....PA642
- **Fuel**....BF879

Fairlane V8-289 (4.7L) Carb.
- **Lube**....B2
- **Air**....PA657

Fairlane V8-390 (6.4L) Carb.
- **Lube**....B2
- **Air**....PA1735

Fairlane V8-427 (7.0L) Carb.
- **Lube**....B2
- **Air**....PA1828
- **Fuel**....PF827

Falcon 6-170 (2.8L) Carb.
- **Lube**....B2
- **Air**....PA642
- **Fuel**....BF879

Falcon 6-200 (3.3L) Carb.
- **Lube**....B2
- **Air**....PA642
- **Fuel**....BF879

Falcon V8-289 (4.7L) Carb.
- **Lube**....B2
- **Air**....PA657

Galaxie 6-240 (3.9L) Carb.
- **Lube**....B2
- **Fuel**....BF879

Galaxie V8-289 (4.7L) Carb.
- **Lube**....B2
- **Air**....PA657

Galaxie V8-352 (5.8L) Carb.
- **Lube**....B2
- **Air**....PA1735

Galaxie V8-390 (6.4L) Carb.
- **Lube**....B2
- **Air**....PA1735

Galaxie V8-427 (7.0L) Carb.
- **Lube**....B2
- **Air**....PA1828
- **Fuel**....PF827

Galaxie V8-428 (7.0L) Carb.
- **Lube**....B2
- **Air**....PA1735

LTD V8-390 (6.4L) Carb.
- **Lube**....B2
- **Air**....PA1735
- **Fuel**....PF827

LTD V8-427 (7.0L) Carb.
- **Lube**....B2
- **Air**....PA1828
- **Fuel**....PF827

Mustang 6-200 (3.3L) Carb.
- **Lube**....B2
- **Air**....PA642
- **Fuel**....BF879

Mustang V8-289 (4.7L) Carb.
- **Lube**....B2
- **Air**....PA1735

P-100 6-170 (2.8L) Carb.
- **Lube**....B2
- **Fuel**....BF879

Pickups, F Series 6-240 (3.9L) Carb.
- **Lube**....B2
- **Fuel**....BF879
- **Oil Vapor**....N/R

FORD 1966 (Cont'd.)

Pickups, F Series 6-300 (4.9L) Carb. VIN B
- **Lube**....B2
- **Fuel**....BF879
- **Oil Vapor**....N/R

Pickups, F Series 8-352 (5.8L) Carb.
- **Lube**....B2
- **Air**....PA695
- **Fuel**....PF827
- **Oil Vapor**....N/R

Ranch Wagon 6-170 (2.8L) Carb.
- **Lube**....B2
- **Fuel**....BF879

Ranch Wagon 6-200 (3.3L) Carb.
- **Lube**....B2
- **Fuel**....BF879

Ranch Wagon 6-240 (3.9L) Carb.
- **Lube**....B2
- **Fuel**....BF879

Ranch Wagon V8-289 (4.7L) Carb.
- **Lube**....B2
- **Air**....PA657

Ranch Wagon V8-352 (5.8L) Carb.
- **Lube**....B2
- **Air**....PA1735

Ranch Wagon V8-390 (6.4L) Carb.
- **Lube**....B2
- **Air**....PA1735

Ranch Wagon V8-427 (7.0L) Carb.
- **Lube**....B2
- **Air**....PA1828
- **Fuel**....PF827

Ranchero 6-200 (3.3L) Carb.
- **Lube**....B2
- **Air**....PA642
- **Fuel**....BF879
- **Oil Vapor**....N/R

Ranchero V8-289 (4.7L) Carb.
- **Lube**....B2
- **Air**....PA657
- **Fuel**....BF879

Thunderbird V8-390 (6.4L) Carb.
- **Lube**....B2
- **Air**....PA1735

Thunderbird V8-427 (7.0L) Carb.
- **Lube**....B2
- **Air**....PA1735

Thunderbird V8-428 (7.0L) Carb.
- **Lube**....B2
- **Air**....PA1735

1965

Club Wagon 6-144 (2.4L) Carb.
- **Lube**....B2
- **Fuel**....PF827

Club Wagon 6-170 (2.8L) Carb.
- **Lube**....B2
- **Fuel**....PF827

Country Sedan 6-170 (2.8L) Carb.
- **Lube**....B2
- **Fuel**....PF827

Country Sedan 6-200 (3.3L) Carb.
- **Lube**....B2
- **Fuel**....PF827

Country Sedan 6-240 (3.9L) Carb.
- **Lube**....B2
- **Fuel**....PF827

Country Sedan V8-289 (4.7L) Carb.
- **Lube**....B2
- **Air**....PA657
- **Fuel**....PF827

Country Sedan V8-352 (5.8L) Carb.
- **Lube**....B2
- **Air**....PA1735
- **Fuel**....PF827

Country Sedan V8-390 (6.4L) Carb.
- **Lube**....B2
- **Air**....PA1735
- **Fuel**....PF827

Country Sedan V8-427 (7.0L) Carb.
- **Lube**....B2
- **Fuel**....PF827

Country Squire 6-170 (2.8L) Carb.
- **Lube**....B2
- **Fuel**....PF827

FORD 1965 (Cont'd.)

Country Squire 6-200 (3.3L) Carb.
Lube....B2
Fuel....PF827
Country Squire 6-240 (3.9L) Carb.
Lube....B2
Fuel....PF827
Country Squire V8-289 (4.7L) Carb.
Lube....B2
Air....PA657
Fuel....PF827
Country Squire V8-352 (5.8L) Carb.
Lube....B2
Air....PA1735
Fuel....PF827
Custom V8-289 (4.7L) Carb.
Lube....B2
Air....PA657
Fuel....PF827
Custom V8-352 (5.8L) Carb.
Lube....B2
Air....PA1735
Fuel....PF827
Custom V8-390 (6.4L) Carb.
Lube....B2
Air....PA1735
Fuel....PF827
Econoline 6-144 (2.4L) Carb.
Lube....B2
Fuel....PF827
Econoline 6-170 (2.8L) Carb.
Lube....B2
Fuel....PF827
Fairlane 6-170 (2.8L) Carb.
Lube....B2
Air....PA642
Fuel....PF827
Fairlane 6-200 (3.3L) Carb.
Lube....B2
Air....PA642
Fuel....PF827
Fairlane V8-289 (4.7L) Carb.
Lube....B2
Air....PA657
Fuel....PF827
Fairlane V8-427 (7.0L) Carb.
Lube....B2
Fuel....PF827
Falcon 6-170 (2.8L) Carb.
Lube....B2
Air....PA642
Fuel....PF827
Falcon 6-200 (3.3L) Carb.
Lube....B2
Air....PA642
Fuel....PF827
Falcon V8-289 (4.7L) Carb.
Lube....B2
Air....PA657
Fuel....PF827
Falcon Sedan 6-170 (2.8L) Carb.
Lube....B2
Air....PA642
Fuel....PF827
Falcon Sedan 6-200 (3.3L) Carb.
Lube....B2
Air....PA642
Fuel....PF827
Falcon Sedan V8-289 (4.7L) Carb.
Lube....B2
Air....PA657
Fuel....PF827
Galaxie 6-240 (3.9L) Carb.
Lube....B2
Fuel....PF827
Galaxie V8-289 (4.7L) Carb.
Lube....B2
Air....PA657
Fuel....PF827
Galaxie V8-352 (5.8L) Carb.
Lube....B2
Air (w/o CES)....PA1735
Air (w/CES)....PA1828
Fuel....PF827
Galaxie V8-390 (6.4L) Carb.
Lube....B2
Air....PA1735
Fuel....PF827

FORD 1965 (Cont'd.)

Galaxie V8-427 (7.0L) Carb.
Lube....B2
Fuel....PF827
LTD V8-390 (6.4L) Carb.
Lube....B2
Air....PA1735
Fuel....PF827
LTD V8-427 (7.0L) Carb.
Lube....B2
Fuel....PF827
Mustang 6-170 (2.8L) Carb.
Lube....B2
Air....PA642
Fuel....PF827
Mustang 6-200 (3.3L) Carb.
Lube....B2
Air....PA642
Fuel....PF827
Mustang V8-289 (4.7L) Carb.
Lube....B2
Air....PA1735
Air (HiPerf.)....PA1828
Fuel....PF827
P-100 6-170 (2.8L) Carb.
Lube....B2
Air....PA642
Fuel....PF827
Pickups, F Series 6-240 (3.9L) Carb.
Lube....B2
Fuel....PF827
Oil Vapor....N/R
Pickups, F Series V8-292 (4.8L) Carb.
Lube....B2
Air....PA657
Fuel....PF827
Pickups, F Series V8-300 (4.9L) Carb.
Lube....B2
Fuel....BF879
Oil Vapor....N/R
Ranch Wagon 6-240 (3.9L) Carb.
Lube....B2
Fuel....PF827
Ranch Wagon V8-289 (4.7L) Carb.
Lube....B2
Air....PA657
Fuel....PF827
Ranch Wagon V8-352 (5.8L) Carb.
Lube....B2
Air....PA1735
Fuel....PF827
Ranch Wagon V8-390 (6.4L) Carb.
Lube....B2
Air....PA1735
Fuel....PF827
Ranchero 6-170 (2.8L) Carb.
Lube....B2
Fuel....PF827
Ranchero 6-200 (3.3L) Carb.
Lube....B2
Air....PA642
Fuel....PF827
Ranchero V8-289 (4.7L) Carb.
Lube....B2
Fuel....PF827
Thunderbird V8-390 (6.4L) Carb.
Lube....B2
Air....PA1735
Fuel....PF827
Thunderbird V8-427 (7.0L) Carb.
Lube....B2
Air....PA1735
Fuel....PF827

1964

Club 6-223 (3.7L) Carb.
Lube....B2
Air....PA642
Fuel....PF827
Club V8-260 (4.3L) Carb.
Lube....B2
Fuel....PF827
Club V8-289 (4.7L) Carb.
Lube....B2
Fuel....PF827

FORD 1964 (Cont'd.)

Club V8-352 (5.8L) Carb.
Lube....P184
Air (w/o CES)....PA695
Air (w/CES)....PA642
Fuel....PF827
Club V8-390 (6.4L) 2,4 Bbl. Carb.
Lube....P184
Air (2 Bbl. Police)....PA1828
Air (4 Bbl. Police w/o CES)....PA695
Air (w/o CES)....PA695
Air (w/CES)....PA642
Fuel....PF827
Club Wagon 6-144 (2.4L) Carb.
Lube....B2
Air....PA642
Fuel....PF827
Club Wagon 6-170 (2.8L) Carb.
Lube....B2
Air....PA642
Fuel....PF827
Country Sedan 6-170 (2.8L) Carb.
Lube....B2
Air....PA642
Fuel....PF827
Country Sedan 6-200 (3.3L) Carb.
Lube....B2
Air....PA642
Fuel....PF827
Country Sedan 6-223 (3.7L) Carb.
Lube....B2
Air....PA642
Fuel....PF827
Country Sedan V8-260 (4.3L) Carb.
Lube....B2
Fuel....PF827
Country Sedan V8-289 (4.7L) Carb.
Lube....B2
Air....PA657
Fuel....PF827
Country Sedan V8-352 (5.8L) Carb.
Lube....P184
Air (w/o CES)....PA695
Air (w/CES)....PA642
Fuel....PF827
Country Sedan V8-390 (6.4L) Carb.
Lube....P184
Air (w/o CES)....PA695
Air (w/CES)....PA642
Fuel....PF827
Country Sedan V8-427 (7.0L) Carb.
Lube....B2
Fuel....PF827
Country Squire 6-170 (2.8L) Carb.
Lube....B2
Air....PA642
Fuel....PF827
Country Squire 6-200 (3.3L) Carb.
Lube....B2
Air....PA642
Fuel....PF827
Country Squire 6-223 (3.7L) Carb.
Lube....B2
Air....PA642
Fuel....PF827
Country Squire V8-260 (4.3L) Carb.
Lube....B2
Fuel....PF827
Country Squire V8-289 (4.7L) Carb.
Lube....B2
Air....PA657
Fuel....PF827
Country Squire V8-352 (5.8L) Carb.
Lube....P184
Air (w/o CES)....PA695
Air (w/CES)....PA642
Fuel....PF827
Country Squire V8-390 (6.4L) Carb.
Lube....P184
Air (w/o CES)....PA695
Air (w/CES)....PA642
Fuel....PF827
Country Squire V8-427 (7.0L) Carb.
Lube....B2
Fuel....PF827

FORD 1964 (Cont'd.)

Custom 6-223 (3.7L) Carb.
Lube....B2
Air....PA642
Fuel....PF827
Custom V8-260 (4.3L) Carb.
Lube....B2
Fuel....PF827
Custom V8-352 (5.8L) Carb.
Lube....P184
Air (w/o CES)....PA695
Air (w/CES)....PA642
Fuel....PF827
Custom V8-390 (6.4L) Carb.
Lube....P184
Air (w/o CES)....PA695
Air (w/CES)....PA642
Fuel....PF827
Econoline 6-144 (2.4L) Carb.
Lube....B2
Fuel....PF827
Econoline 6-170 (2.8L) Carb.
Lube....B2
Fuel....PF827
Fairlane 6-170 (2.8L) Carb.
Lube....B2
Air....PA642
Fuel....PF827
Fairlane V8-260 (4.3L) Carb.
Lube....B2
Fuel....PF827
Fairlane V8-289 (4.7L) Carb.
Lube....B2
Air....PA1735
Fuel....PF827
Fairlane V8-390 (6.4L) Carb.
Lube....B2
Air (w/o CES)....PA695
Air (w/CES)....PA642
Fuel....PF827
Fairlane V8-427 (7.0L) Carb.
Lube....B2
Fuel....PF827
Falcon 6-144 (2.4L) Carb.
Lube....B2
Air....PA642
Fuel....PF827
Falcon 6-170 (2.8L) Carb.
Lube....B2
Air....PA642
Fuel....PF827
Falcon 6-200 (3.3L) Carb.
Lube....B2
Air....PA642
Fuel....PF827
Falcon V8-260 (4.3L) Carb.
Lube....B2
Fuel....PF827
Falcon V8-289 (4.7L) Carb.
Lube....B2
Air (Hi-Perf.)....PA1828
Fuel....PF827
Falcon Sedan 6-144 (2.4L) Carb.
Lube....B2
Air....PA642
Fuel....PF827
Falcon Sedan 6-170 (2.8L) Carb.
Lube....B2
Air....PA642
Fuel....PF827
Falcon Sedan 6-200 (3.3L) Carb.
Lube....B2
Air....PA642
Fuel....PF827
Falcon Sedan V8-260 (4.3L) Carb.
Lube....B2
Fuel....PF827
Galaxie 6-223 (3.7L) Carb.
Lube....B2
Air....PA642
Fuel....PF827
Galaxie V8-260 (4.3L) Carb.
Lube....B2
Fuel....PF827
Galaxie V8-289 (4.7L) Carb.
Lube....B2
Air....PA657
Fuel....PF827

OBS = Obsolete. Availability Limited to Distributor Stock.

FORD 1964 (Cont'd.)

Galaxie V8-352 (5.8L) Carb.
- **Lube** **B2**
- **Air** **PA695**
- **Fuel** **PF827**

Galaxie V8-390 (6.4L) Carb.
- **Lube** **B2**
- **Air** **PA695**
- **Fuel** **PF827**

Mustang 6-170 (2.8L) Carb.
- **Lube** **B2**
- **Air** **PA642**
- **Fuel** **PF827**

Mustang 6-200 (3.3L) Carb.
- **Lube** **B2**
- **Air** **PA642**
- **Fuel** **PF827**

Mustang V8-260 (4.3L) Carb.
- **Lube** **B2**
- **Air** **PA1735**
- **Fuel** **PF827**

Mustang V8-289 (4.7L) Carb.
- **Lube** **B2**
- **Air** **PA1735**
- **Air (Hi-Perf.)** **PA1828**
- **Fuel** **PF827**

Pickups, F Series 6-223 (3.7L) Carb.
- **Lube** **B2**
- **Air** **PA642**
- **Fuel** **PF827**

Pickups, F Series V8-260 (4.3L) Carb.
- **Lube** **P80**

Pickups, F Series V8-292 (4.8L) Carb.
- **Lube** **P184**
- **Air** **PA602**
- **Fuel** **PF857**

Ranch Wagon 6-170 (2.8L) Carb.
- **Lube** **B2**
- **Air** **PA642**
- **Fuel** **PF827**

Ranch Wagon 6-223 (3.7L) Carb.
- **Lube** **B2**
- **Air** **PA642**
- **Fuel** **PF827**

Ranch Wagon V8-260 (4.3L) Carb.
- **Lube** **B2**
- **Fuel** **PF827**

Ranch Wagon V8-352 (5.8L) Carb.
- **Lube** **B2**
- **Air** **PA695**
- **Fuel** **PF827**

Ranch Wagon V8-390 (6.4L) Carb.
- **Lube** **B2**
- **Air** **PA695**
- **Fuel** **PF827**

Ranch Wagon V8-427 (7.0L) Carb.
- **Lube** **B2**
- **Fuel** **PF827**

Ranchero 6-144 (2.4L) Carb.
- **Lube** **B2**
- **Air** **PA642**
- **Fuel** **PF827**
- **Oil Vapor** ..... **N/R**

Ranchero 6-170 (2.8L) Carb.
- **Lube** **B2**
- **Air** **PA642**
- **Fuel** **PF827**
- **Oil Vapor** ..... **N/R**

Ranchero 6-200 (3.3L) Carb.
- **Lube** **B2**
- **Air** **PA642**
- **Fuel** **PF827**
- **Oil Vapor** ..... **N/R**

Ranchero V8-260 (4.3L) Carb.
- **Lube** **B2**
- **Fuel** **PF827**

Sprint V8-260 (4.3L) Carb.
- **Lube** **B2**
- **Fuel** **PF827**

Sunliner 6-223 (3.7L) Carb.
- **Lube** **B2**
- **Air** **PA642**
- **Fuel** **PF827**

FORD 1964 (Cont'd.)

Sunliner V8-260 (4.3L) Carb.
- **Lube** **B2**
- **Fuel** **PF827**

Sunliner V8-352 (5.8L) Carb.
- **Lube** **B2**
- **Air** **PA695**
- **Fuel** **PF827**

Sunliner V8-390 (6.4L) Carb.
- **Lube** **B2**
- **Air** **PA695**
- **Fuel** **PF827**

Thunderbird V8-390 (6.4L) Carb.
- **Lube** **B2**
- **Air** **PA695**
- **Fuel** **PF827**

Thunderbird V8-427 (7.0L) Carb.
- **Lube** **B2**
- **Fuel** **PF827**

Victoria 6-223 (3.7L) Carb.
- **Lube** **B2**
- **Air** **PA642**
- **Fuel** **PF827**

Victoria V8-260 (4.3L) Carb.
- **Lube** **B2**
- **Fuel** **PF827**

Victoria V8-289 (4.7L) Carb.
- **Lube** **B2**
- **Air** **PA657**
- **Fuel** **PF827**

Victoria V8-352 (5.8L) Carb.
- **Lube** **B2**
- **Air** **PA695**
- **Fuel** **PF827**

Victoria V8-390 (6.4L) Carb.
- **Lube** **B2**
- **Air** **PA695**
- **Fuel** **PF827**

1963

Club 6-200 (3.3L) Carb.
- **Lube** **B2**
- **Air** **PA642**
- **Fuel** **PF827**

Club 6-223 (3.7L) Carb.
- **Lube** **B2**
- **Air** **PA642**
- **Fuel** **PF827**

Club V8-260 (4.3L) Carb.
- **Lube** **B2**
- **Air** **PA657**
- **Fuel** **PF827**

Club V8-289 (4.7L) Carb.
- **Lube** **B2**
- **Air** **PA657**
- **Fuel** **PF827**

Club V8-352 (5.8L) Carb.
- **Lube** **B2**
- **Air** **PA695**
- **Fuel** **PF827**

Club V8-390 (6.4L) Carb.
- **Lube** **B2**
- **Air** **PA695**
- **Fuel** **PF827**

Club Wagon 6-144 (2.4L) Carb.
- **Lube** **B2**
- **Air** **PA642**
- **Fuel** **PF827**

Club Wagon 6-170 (2.8L) Carb.
- **Lube** **B2**
- **Air** **PA642**
- **Fuel** **PF827**

Country Sedan 6-170 (2.8L) Carb.
- **Lube** **B2**
- **Air** **PA642**
- **Fuel** **PF827**

Country Sedan 6-200 (3.3L) Carb.
- **Lube** **B2**
- **Air** **PA642**
- **Fuel** **PF827**

Country Sedan 6-223 (3.7L) Carb.
- **Lube** **B2**
- **Air** **PA642**
- **Fuel** **PF827**

Country Sedan V8-260 (4.3L) Carb.
- **Lube** **B2**
- **Air** **PA657**
- **Fuel** **PF827**

FORD 1963 (Cont'd.)

Country Sedan V8-289 (4.7L) Carb.
- **Lube** **B2**
- **Air** **PA657**
- **Fuel** **PF827**

Country Sedan V8-352 (5.8L) Carb.
- **Lube** **B2**
- **Air** **PA695**
- **Fuel** **PF827**

Country Sedan V8-390 (6.4L) Carb.
- **Lube** **B2**
- **Air** **PA695**
- **Fuel** **PF827**

Country Squire 6-170 (2.8L) Carb.
- **Lube** **B2**
- **Air** **PA642**
- **Fuel** **PF827**

Country Squire 6-200 (3.3L) Carb.
- **Lube** **B2**
- **Air** **PA642**
- **Fuel** **PF827**

Country Squire 6-223 (3.7L) Carb.
- **Lube** **B2**
- **Air** **PA642**
- **Fuel** **PF827**

Country Squire V8-260 (4.3L) Carb.
- **Lube** **B2**
- **Air** **PA657**
- **Fuel** **PF827**

Country Squire V8-289 (4.7L) Carb.
- **Lube** **B2**
- **Air** **PA657**
- **Fuel** **PF827**

Country Squire V8-352 (5.8L) Carb.
- **Lube** **B2**
- **Air** **PA695**
- **Fuel** **PF827**

Country Squire V8-390 (6.4L) Carb.
- **Lube** **B2**
- **Air** **PA695**
- **Fuel** **PF827**

Econoline 6-144 (2.4L) Carb.
- **Lube** **B2**
- **Fuel** **PF827**

Econoline 6-170 (2.8L) Carb.
- **Lube** **B2**
- **Air** **PA642**
- **Fuel** **PF827**

Fairlane 6-170 (2.8L) Carb.
- **Lube** **B2**
- **Air** **PA642**
- **Fuel** **PF827**

Fairlane V8-221 (3.6L) Carb.
- **Lube** **B2**
- **Air** **PA657**
- **Fuel** **PF827**

Fairlane V8-260 (4.3L) Carb.
- **Lube** **B2**
- **Air** **PA657**
- **Fuel** **PF827**

Falcon 6-144 (2.4L) Carb.
- **Lube** **B2**
- **Air** **PA642**
- **Fuel** **PF827**

Falcon 6-170 (2.8L) Carb.
- **Lube** **B2**
- **Air** **PA642**
- **Fuel** **PF827**

Falcon 6-200 (3.3L) Carb.
- **Lube** **B2**
- **Air** **PA642**
- **Fuel** **PF827**

Falcon V8-260 (4.3L) Carb.
- **Lube** **B2**
- **Air** **PA657**
- **Fuel** **PF827**

Falcon Sedan 6-144 (2.4L) Carb.
- **Lube** **B2**
- **Air** **PA642**
- **Fuel** **PF827**

Falcon Sedan V8-260 (4.3L) Carb.
- **Lube** **B2**
- **Air** **PA657**
- **Fuel** **PF827**

Ford 300 6-200 (3.3L) Carb.
- **Lube** **B2**
- **Air** **PA642**
- **Fuel** **PF827**

FORD 1963 (Cont'd.)

Ford 300 6-223 (3.7L) Carb.
- **Lube** **B2**
- **Air** **PA642**
- **Fuel** **PF827**

Ford 300 V8-260 (4.3L) Carb.
- **Lube** **B2**
- **Air** **PA657**
- **Fuel** **PF827**

Ford 300 V8-289 (4.7L) Carb.
- **Lube** **B2**
- **Air** **PA657**
- **Fuel** **PF827**

Ford 300 V8-352 (5.8L) Carb.
- **Lube** **B2**
- **Air** **PA695**
- **Fuel** **PF827**

Galaxie 6-200 (3.3L) Carb.
- **Lube** **B2**
- **Air** **PA642**
- **Fuel** **PF827**

Galaxie 6-223 (3.7L) Carb.
- **Lube** **B2**
- **Air** **PA642**
- **Fuel** **PF827**

Galaxie V8-289 (4.7L) Carb.
- **Lube** **B2**
- **Air** **PA657**
- **Fuel** **PF827**

Galaxie V8-352 (5.8L) Carb.
- **Lube** **B2**
- **Air** **PA695**
- **Fuel** **PF827**

Galaxie V8-390 (6.4L) Carb.
- **Lube** **B2**
- **Air** **PA695**
- **Fuel** **PF827**

Pickups, F Series 6-223 (3.7L) Carb.
- **Air** **PA642**
- **Fuel** **PF857**

Pickups, F Series V8-292 (4.8L) Carb.
- **Lube** **P184**
- **Fuel** **PF857**

Ranch Wagon 6-200 (3.3L) Carb.
- **Lube** **B2**
- **Air** **PA642**
- **Fuel** **PF827**

Ranch Wagon 6-223 (3.7L) Carb.
- **Lube** **B2**
- **Air** **PA642**
- **Fuel** **PF827**

Ranch Wagon V8-260 (4.3L) Carb.
- **Lube** **B2**
- **Air** **PA657**
- **Fuel** **PF827**

Ranch Wagon V8-289 (4.7L) Carb.
- **Lube** **B2**
- **Air** **PA657**
- **Fuel** **PF827**

Ranch Wagon V8-352 (5.8L) Carb.
- **Lube** **B2**
- **Air** **PA695**
- **Fuel** **PF827**

Ranch Wagon V8-390 (6.4L) Carb.
- **Lube** **B2**
- **Air** **PA695**
- **Fuel** **PF827**

Ranchero 6-144 (2.4L) Carb.
- **Lube** **B2**
- **Air** **PA642**
- **Fuel** **PF827**
- **Oil Vapor** ..... **N/R**

Ranchero V8-260 (4.3L) Carb.
- **Lube** **B2**
- **Air** **PA657**
- **Fuel** **PF827**

Sprint 6-170 (2.8L) Carb.
- **Lube** **B2**
- **Air** **PA642**
- **Fuel** **PF827**

Sprint V8-221 (3.6L) Carb.
- **Lube** **B2**
- **Air** **PA1828**
- **Fuel** **PF827**

Sprint V8-260 (4.3L) Carb.
- **Lube** **B2**
- **Fuel** **PF827**

OBS = Obsolete. Availability Limited to Distributor Stock.

FORD 1963 (Cont'd.)

Sunliner 6-200 (3.3L) Carb.
Lube....B2
Air....PA642
Fuel....PF827

Sunliner 6-223 (3.7L) Carb.
Lube....B2
Air....PA642
Fuel....PF827

Sunliner V8-289 (4.7L) Carb.
Lube....B2
Air....PA657
Fuel....PF827

Sunliner V8-352 (5.8L) Carb.
Lube....B2
Air....PA695
Fuel....PF827

Sunliner V8-390 (6.4L) Carb.
Lube....B2
Air....PA695
Fuel....PF827

Thunderbird V8-390 (6.4L) Carb.
Lube....B2
Air....PA632
Fuel....PF827

Thunderbird V8-410 (6.7L) Carb.
Lube....B2
Fuel....PF827

Thunderbird V8-427 (7.0L) Carb.
Lube....B2
Fuel....PF827

Victoria 6-200 (3.3L) Carb.
Lube....B2
Air....PA642
Fuel....PF827

Victoria 6-223 (3.7L) Carb.
Lube....B2
Air....PA642
Fuel....PF827

Victoria V8-260 (4.3L) Carb.
Lube....B2
Air....PA657
Fuel....PF827

Victoria V8-289 (4.7L) Carb.
Lube....B2
Air....PA657
Fuel....PF827

Victoria V8-352 (5.8L) Carb.
Lube....B2
Air....PA695
Fuel....PF827

1962

Club 6-223 (3.7L) Carb.
Lube....B2
Air....PA642
Fuel....BF840,-K1

Club V8-292 (4.8L) Carb.
Lube....B2
Air....PA632
Fuel....PF827

Club V8-352 (5.8L) Carb.
Lube....B2
Air....PA632
Fuel....PF827

Club V8-390 (6.4L) Carb.
Lube....B2
Air....PA632
Fuel....PF827

Club Wagon 6-144 (2.4L) 1 Bbl. Carb.
Lube....B2
Air....PA642
Fuel....PF827

Club Wagon 6-170 (2.8L) Carb.
Lube....B2
Air....PA642
Fuel....PF827

Country Sedan 6-144 (2.4L) Carb.
Lube....B2
Air....PA642
Fuel....PF827

Country Sedan 6-170 (2.8L) Carb.
Lube....B2
Air....PA642
Fuel....PF827

FORD 1962 (Cont'd.)

Country Sedan 6-223 (3.7L) 1 Bbl. Carb. VIN V
Lube....B2
Air....PA642
Fuel....BF840,-K1

Country Sedan V8-292 (4.8L) 2 Bbl. Carb.
Lube....B2
Air....PA632
Fuel....PF827

Country Sedan V8-352 (5.8L) 2 Bbl. Carb.
Lube....B2
Air....PA632
Fuel....PF827

Country Sedan V8-390 (6.4L) 4 Bbl. Carb.
Lube....B2
Air....PA632
Fuel....PF827

Country Squire 6-144 (2.4L) Carb.
Lube....B2
Air....PA642
Fuel....PF827

Country Squire 6-170 (2.8L) Carb.
Lube....B2
Air....PA642
Fuel....PF827

Country Squire 6-223 (3.7L) 1 Bbl. Carb. VIN V
Lube....B2
Air....PA642
Fuel....BF840,-K1

Country Squire V8-292 (4.8L) 2 Bbl. Carb. VIN W
Lube....B2
Air....PA632
Fuel....PF827

Country Squire V8-352 (5.8L) 2 Bbl. Carb. VIN X
Lube....B2
Air....PA632
Fuel....PF827

Country Squire V8-390 (6.4L) 4 Bbl. Carb. VIN Z
Lube....B2
Air....PA632
Fuel....PF827

Econoline 6-144 (2.4L) 1 Bbl. Carb.
Lube....B2
Air....PA642
Fuel....BF840,-K1

Econoline 6-170 (2.8L) 1 Bbl. Carb.
Lube....B2
Air....PA642
Fuel....BF840,-K1

Fairlane 6-223 (3.7L) Carb.
Lube....B2
Air....PA642
Fuel....PF827

Fairlane V8-221 (3.6L) 2 Bbl. Carb. VIN L
Lube....B2
Air....PA657
Fuel....PF827

Fairlane V8-260 (4.3L) 2 Bbl. Carb. VIN F
Lube....B2
Air....PA657
Fuel....PF827

Falcon 6-144 (2.4L) 1 Bbl. Carb. VIN S
Lube....B2
Air....PA642

Falcon 6-170 (2.8L) 1 Bbl. Carb. VIN U
Lube....B2
Air....PA642

Falcon Sedan 6-144 (2.4L) 1 Bbl. Carb. VIN U
Lube....B2
Air....PA642

FORD 1962 (Cont'd.)

Galaxie 6-223 (3.7L) 1 Bbl. Carb. VIN V
Lube....B2
Air....PA642
Fuel....PF827

Galaxie V8-292 (4.8L) 2 Bbl. Carb. VIN W
Lube....B2
Fuel....PF827

Galaxie V8-352 (5.8L) 2 Bbl. Carb. VIN X
Lube....B2
Fuel....PF827

Galaxie V8-390 (6.4L) 4 Bbl. Carb. VIN Z
Lube....B2
Fuel....PF827

Pickups, F Series 6-223 (3.7L) 1 Bbl. Carb.
Lube....P184
Air....PA642
Fuel....PF857

Pickups, F Series 6-262 (4.3L) Carb.
Lube....B2
Air....PA642
Fuel....PF827

Pickups, F Series V8-292 (4.8L) 2 Bbl. Carb.
Lube....B2
Air....PA632
Fuel....PF827

Pickups, F Series V8-332 (5.4L) Carb.
Lube....B2
Air....PA632
Fuel....PF827

Ranch Wagon 6-144 (2.4L) Carb.
Lube....B2
Air....PA642
Fuel....PF827

Ranch Wagon 6-170 (2.8L) Carb.
Lube....B2
Air....PA642
Fuel....PF827

Ranch Wagon 6-223 (3.7L) 1 Bbl. Carb. VIN V
Lube....B2
Air....PA642
Fuel....PF827

Ranch Wagon V8-292 (4.8L) 2 Bbl. Carb. VIN W
Lube....B2
Fuel....PF827

Ranch Wagon V8-352 (5.8L) 2 Bbl. Carb. VIN X
Lube....B2
Fuel....PF827

Ranch Wagon V8-390 (6.4L) 4 Bbl. Carb. VIN Z
Lube....B2
Fuel....PF827

Ranchero 6-144 (2.4L) 1 Bbl. Carb.
Lube....B2
Air....PA642
Fuel....BF840,-K1
Oil Vapor....N/R

Sunliner V8-292 (4.8L) Carb.
Lube....B2
Fuel....PF827

Sunliner V8-352 (5.8L) Carb.
Lube....B2
Fuel....PF827

Sunliner V8-390 (6.4L) Carb.
Lube....B2
Fuel....PF827

Thunderbird V8-390 (6.4L) Carb.
Lube....B2
Air....PA632
Fuel....PF827

Thunderbird V8-410 (6.7L) Carb.
Lube....B2
Air....PA632
Fuel....PF827

FORD 1962 (Cont'd.)

Victoria 6-223 (3.7L) Carb.
Lube....B2
Air....PA642
Fuel....PF827

Victoria V8-292 (4.8L) Carb.
Lube....B2
Fuel....PF827

Victoria V8-352 (5.8L) Carb.
Lube....B2
Fuel....PF827

Victoria V8-390 (6.4L) Carb.
Lube....B2
Air....PA632
Fuel....PF827

1961

Club 6-223 (3.7L) 1 Bbl. Carb.
Lube....B2
Air....PA642
Fuel....BF840,-K1

Club V8-292 (4.8L) Carb.
Lube....B2
Fuel....BF840,-K1

Club V8-352 (5.8L) Carb.
Lube....B2
Fuel....BF840,-K1

Country Sedan 6-223 (3.7L) 1 Bbl. Carb. VIN V
Lube....B2
Air....PA642
Fuel....BF840,-K1

Country Sedan V8-292 (4.8L) 2 Bbl. Carb. VIN W
Lube....B2
Fuel....BF840,-K1

Country Sedan V8-352 (5.8L) 2 Bbl. Carb. VIN X
Lube....B2
Fuel....BF840,-K1

Country Squire 6-223 (3.7L) 1 Bbl. Carb. VIN V
Lube....B2
Air....PA642
Fuel....BF840,-K1

Country Squire V8-292 (4.8L) 2 Bbl. Carb. VIN W
Lube....B2
Fuel....BF840,-K1

Country Squire V8-352 (5.8L) 2 Bbl. Carb. VIN X
Lube....B2
Fuel....BF840,-K1

Econoline 6-144 (2.4L) 1 Bbl. Carb.
Lube....B2
Air....PA642
Fuel....BF840,-K1

Fairlane 6-223 (3.7L) 1 Bbl. Carb. VIN V
Lube....B2
Air....PA642
Fuel....BF840,-K1

Fairlane V8-292 (4.8L) 2 Bbl. Carb. VIN W
Lube....B2
Fuel....BF840,-K1

Fairlane V8-352 (5.8L) 2 Bbl. Carb. VIN X
Lube....B2
Fuel....BF840,-K1

Falcon 6-144 (2.4L) 1 Bbl. Carb. VIN S
Lube....B2
Air....PA642
Fuel....BF840,-K1

Falcon 6-170 (2.8L) 1 Bbl. Carb. VIN U
Lube....B2
Air....PA642
Fuel....BF840,-K1

OBS = Obsolete. Availability Limited to Distributor Stock.

FORD 1961 (Cont'd.)

Falcon Sedan 6-144 (2.4L) 1 Bbl. Carb. VIN S
Lube.....B2
Air.....PA642
Fuel.....BF840,-K1

Falcon Sedan 6-170 (2.8L) 1 Bbl. Carb. VIN U
Lube.....B2
Air.....PA642
Fuel.....BF840,-K1

Galaxie 6-223 (3.7L) 1 Bbl. Carb. VIN V
Lube.....B2
Air.....PA642
Fuel.....BF840,-K1

Galaxie V8-292 (4.8L) 2 Bbl. Carb. VIN W
Lube.....B2
Fuel.....BF840,-K1

Galaxie V8-352 (5.8L) 2 Bbl. Carb. VIN X
Lube.....B2
Fuel.....BF840,-K1

Pickups, F Series 6-223 (3.7L) 1 Bbl. Carb.
Lube.....B2
Air.....PA642
Fuel.....PF857

Pickups, F Series 6-262 (4.3L) Carb.
Air.....PA642
Fuel.....BF833,-K2

Pickups, F Series V8-292 (4.8L) 2 Bbl. Carb.
Lube.....B2
Air.....PA602
Fuel.....PF857

Ranch Wagon 6-223 (3.7L) 1 Bbl. Carb. VIN V
Lube.....B2
Air.....PA642
Fuel.....BF840,-K1

Ranch Wagon V8-292 (4.8L) 2 Bbl. Carb. VIN W
Lube.....B2
Fuel.....BF840,-K1

Ranch Wagon V8-352 (5.8L) 2 Bbl. Carb. VIN X
Lube.....B2
Fuel.....BF840,-K1

Ranchero 6-144 (2.4L) 1 Bbl. Carb.
Lube.....B2
Air.....PA642
Fuel.....BF840,-K1
Oil Vapor.....N/R

Ranchero 6-170 (2.8L) 1 Bbl. Carb.
Lube.....B2
Air.....PA642
Fuel.....BF840,-K1

Starliner 6-223 (3.7L) 1 Bbl. Carb. VIN V
Lube.....B2
Air.....PA642
Fuel.....BF840,-K1

Starliner V8-292 (4.8L) 2 Bbl. Carb. VIN W
Lube.....B2
Fuel.....BF840,-K1

Starliner V8-352 (5.8L) 2 Bbl. Carb. VIN X
Lube.....B2
Fuel.....BF840,-K1

Sunliner 6-223 (3.7L) 1 Bbl. Carb. VIN V
Lube.....B2
Air.....PA642
Fuel.....BF840,-K1

Sunliner V8-292 (4.8L) 2 Bbl. Carb. VIN W
Lube.....B2
Fuel.....BF840,-K1

FORD 1961 (Cont'd.)

Sunliner V8-352 (5.8L) 2 Bbl. Carb. VIN X
Lube.....B2
Fuel.....BF840,-K1

Thunderbird V8-390 (6.4L) 4 Bbl. Carb. VIN Z
Lube.....B2
Fuel.....BF840,-K1

Victoria 6-223 (3.7L) 1 Bbl. Carb. VIN V
Lube.....B2
Air.....PA642
Fuel.....BF840,-K1

Victoria V8-292 (4.8L) 2 Bbl. Carb. VIN W
Lube.....B2
Fuel.....BF840,-K1

Victoria V8-352 (5.8L) 2 Bbl. Carb. VIN X
Lube.....B2
Fuel.....BF840,-K1

1960

Club 6-223 (3.7L) Carb.
Lube.....B2
Air.....PA642

Club V8-292 (4.8L) Carb.
Lube.....B2

Club V8-352 (5.8L) Carb.
Lube.....B2

Country Sedan 6-223 (3.7L) 1 Bbl. Carb. VIN V
Lube.....B2
Air.....PA642

Country Sedan V8-292 (4.8L) 2 Bbl. Carb. VIN W
Lube.....B2

Country Sedan V8-352 (5.8L) 2 Bbl. Carb. VIN X
Lube.....B2

Country Squire 6-223 (3.7L) 1 Bbl. Carb. VIN V
Lube.....B2
Air.....PA642

Country Squire V8-292 (4.8L) 2 Bbl. Carb. VIN W
Lube.....B2

Country Squire V8-352 (5.8L) 2 Bbl. Carb. VIN X
Lube.....B2

Courier Sedan Delivery 6-223 (3.7L) 1 Bbl. Carb.
Lube.....B2
Air.....PA642

Custom 300 V8-352 (5.8L) 2 Bbl. Carb. VIN X
Lube.....B2

Fairlane 6-223 (3.7L) 1 Bbl. Carb. VIN V
Lube.....B2
Air.....PA642

Fairlane V8-292 (4.8L) 2 Bbl. Carb. VIN W
Lube.....B2

Fairlane V8-352 (5.8L) 2 Bbl. Carb. VIN X
Lube.....B2

Falcon 6-144 (2.4L) 1 Bbl. Carb. VIN S
Lube.....B2
Air (Late).....PA642
Fuel.....BF843

Falcon 6-170 (2.8L) 1 Bbl. Carb. VIN U
Lube.....B2
Air (Late).....PA642
Fuel.....BF843

FORD 1960 (Cont'd.)

Galaxie 6-223 (3.7L) 1 Bbl. Carb. VIN V
Lube.....B2
Air.....PA642

Galaxie V8-292 (4.8L) 2 Bbl. Carb. VIN W
Lube.....B2

Galaxie V8-352 (5.8L) 2,4 Bbl. Carb. VIN X,Y
Lube.....B2

Pickups, F Series V8-292 (4.8L) 2 Bbl. Carb.
Air.....PA602
Fuel.....PF857

Ranch Wagon 6-223 (3.7L) 1 Bbl. Carb. VIN V
Lube.....B2
Air.....PA642

Ranch Wagon V8-292 (4.8L) 2 Bbl. Carb. VIN W
Lube.....B2

Ranch Wagon V8-352 (5.8L) 2 Bbl. Carb. VIN X
Lube.....B2

Ranchero 6-144 (2.4L) 1 Bbl. Carb. VIN S
Lube.....B2
Air.....PA642
Fuel.....BF843
Oil Vapor.....N/R

Starliner 6-223 (3.7L) 1 Bbl. Carb. VIN V
Lube.....B2
Air.....PA642

Starliner V8-292 (4.8L) 2 Bbl. Carb. VIN W
Lube.....B2

Starliner V8-352 (5.8L) 2 Bbl. Carb. VIN X
Lube.....B2

Sunliner 6-223 (3.7L) 1 Bbl. Carb. VIN V
Lube.....B2
Air.....PA642

Sunliner V8-292 (4.8L) 2 Bbl. Carb. VIN W
Lube.....B2

Sunliner V8-352 (5.8L) 2 Bbl. Carb. VIN X
Lube.....B2

Thunderbird V8-352 (5.8L) 4 Bbl. Carb. VIN Y
Lube.....B2
Air.....PA642

Thunderbird V8-430 (7.0L) 4 Bbl. Carb. VIN J
Lube.....B2
Air.....PA642
Fuel.....BF843

Victoria 6-223 (3.7L) 1 Bbl. Carb. VIN V
Lube.....B2
Air.....PA642

Victoria V8-292 (4.8L) 2 Bbl. Carb. VIN W
Lube.....B2

Victoria V8-352 (5.8L) 2 Bbl. Carb. VIN X
Lube.....B2

1959

Club 6-223 (3.7L) Carb.
Lube.....B2

Club V8-292 (4.8L) Carb.
Lube.....B2

Club V8-352 (5.8L) Carb.
Lube.....B2

FORD 1959 (Cont'd.)

Country Sedan 6-223 (3.7L) 1 Bbl. Carb.
Lube.....B2
Fuel.....BF840,-K1

Country Sedan V8-292 (4.8L) 2 Bbl. Carb.
Lube.....B2
Fuel.....PF857

Country Sedan V8-332 (5.4L) 2 Bbl. Carb.
Lube.....B2

Country Sedan V8-352 (5.8L) 4 Bbl. Carb.
Lube.....B2

Country Squire 6-223 (3.7L) 1 Bbl. Carb.
Lube.....B2
Fuel.....BF840,-K1

Country Squire V8-292 (4.8L) 2 Bbl. Carb.
Lube.....B2
Fuel.....PF857

Country Squire V8-332 (5.4L) 2 Bbl. Carb.
Lube.....B2

Country Squire V8-352 (5.8L) 4 Bbl. Carb.
Lube.....B2

Courier Sedan Delivery 6-223 (3.7L) 1 Bbl. Carb.
Lube (Ele.).....P80
Lube (Spin-on).....B2
Fuel.....PF857

Custom 300 6-223 (3.7L) 1 Bbl. Carb.
Lube.....B2
Fuel.....BF840,-K1

Custom 300 V8-292 (4.8L) 2 Bbl. Carb.
Lube.....B2
Fuel.....PF857

Custom 300 V8-332 (5.4L) 2 Bbl. Carb.
Lube.....B2

Custom 300 V8-352 (5.8L) 4 Bbl. Carb.
Lube.....B2

Fairlane 6-223 (3.7L) 1 Bbl. Carb.
Lube.....B2
Fuel.....BF840,-K1

Fairlane V8-292 (4.8L) 2 Bbl. Carb.
Lube.....B2
Fuel.....PF857

Fairlane V8-332 (5.4L) 2 Bbl. Carb.
Lube.....B2

Fairlane V8-352 (5.8L) 4 Bbl. Carb.
Lube.....B2

Galaxie 6-223 (3.7L) 1 Bbl. Carb.
Lube.....B2
Fuel.....BF840,-K1

Galaxie V8-292 (4.8L) 2 Bbl. Carb.
Lube.....B2
Fuel.....PF857

Galaxie V8-332 (5.4L) 2 Bbl. Carb.
Lube.....B2

Galaxie V8-352 (5.8L) 4 Bbl. Carb.
Lube.....B2

Pickups, F Series 6-223 (3.7L) 1 Bbl. Carb.
Lube.....B2
Air.....PA602
Fuel.....PF857

Pickups, F Series V8-292 (4.8L) 2 Bbl. Carb.
Lube.....B2
Air.....PA602
Fuel.....PF857

Pickups, F Series V8-352 (5.8L) Carb.
Lube.....B2

OBS = Obsolete. Availability Limited to Distributor Stock.

FORD 1959 (Cont'd.)

Ranch Wagon 6-223 (3.7L) 1 Bbl. Carb.
Lube.....B2
Fuel.....BF840,-K1
Ranch Wagon V8-292 (4.8L) 2 Bbl. Carb.
Lube.....B2
Fuel.....PF857
Ranch Wagon V8-332 (5.4L) 2 Bbl. Carb.
Lube.....B2
Ranch Wagon V8-352 (5.8L) 4 Bbl. Carb.
Lube.....B2
Ranchero 6-223 (3.7L) 1 Bbl. Carb.
Lube.....B2
Fuel.....BF840,-K1
Ranchero V8-292 (4.8L) 2 Bbl. Carb.
Lube.....B2
Fuel.....PF857
Ranchero V8-352 (5.8L) 4 Bbl. Carb.
Lube.....B2
Skyliner V8-292 (4.8L) 2 Bbl. Carb.
Lube.....B2
Fuel.....PF857
Skyliner V8-332 (5.4L) 2 Bbl. Carb.
Lube.....B2
Skyliner V8-352 (5.8L) 4 Bbl. Carb.
Lube.....B2
Sunliner 6-223 (3.7L) 1 Bbl. Carb.
Lube.....B2
Fuel.....BF840,-K1
Sunliner V8-292 (4.8L) 2 Bbl. Carb.
Lube.....B2
Fuel.....PF857
Sunliner V8-332 (5.4L) 2 Bbl. Carb.
Lube.....B2
Sunliner V8-352 (5.8L) 4 Bbl. Carb.
Lube.....B2
Thunderbird V8-332 (5.4L) 2 Bbl. Carb.
Lube.....B2
Thunderbird V8-352 (5.8L) 4 Bbl. Carb.
Lube.....B2
Thunderbird V8-430 (7.0L) 4 Bbl. Carb.
Lube.....B2
Victoria 6-223 (3.7L) 1 Bbl. Carb.
Lube.....B2
Fuel.....BF840,-K1
Victoria V8-292 (4.8L) 2 Bbl. Carb.
Lube.....B2
Fuel.....PF857
Victoria V8-332 (5.4L) 2 Bbl. Carb.
Lube.....B2
Victoria V8-352 (5.8L) 4 Bbl. Carb.
Lube.....B2

1958

Club 6-223 (3.7L) Carb.
Lube.....B2
PowSteer.....P183
Club V8-292 (4.8L) Carb.
Lube.....B2
Air.....PA602
PowSteer.....P183
Club V8-352 (5.8L) Carb.
Lube.....B2
PowSteer.....P183
Country Sedan 6-223 (3.7L) 1 Bbl. Carb.
Lube.....B2
PowSteer.....P183
Country Sedan V8-292 (4.8L) 2 Bbl. Carb.
Lube.....B2
Air.....PA602
PowSteer.....P183
Country Sedan V8-332 (5.4L) 2 Bbl. Carb.
Lube.....B2
PowSteer.....P183

FORD 1958 (Cont'd.)

Country Sedan V8-352 (5.8L) 4 Bbl. Carb.
Lube.....B2
PowSteer.....P183
Country Squire 6-223 (3.7L) 1 Bbl. Carb.
Lube.....B2
PowSteer.....P183
Country Squire V8-292 (4.8L) 2 Bbl. Carb.
Lube.....B2
Air.....PA602
PowSteer.....P183
Country Squire V8-332 (5.4L) 2 Bbl. Carb.
Lube.....B2
PowSteer.....P183
Country Squire V8-352 (5.8L) 4 Bbl. Carb.
Lube.....B2
PowSteer.....P183
Courier Sedan Delivery 6-223 (3.7L) 1 Bbl. Carb.
Lube (Ele.).....P80
Lube (Spin-on).....B2
Fuel.....BF840,-K1
PowSteer.....P183
Courier Sedan Delivery V8-292 (4.8L) Carb.
Lube.....B2
Air.....PA602
PowSteer.....P183
Courier Sedan Delivery V8-352 (5.8L) Carb.
Lube.....B2
PowSteer.....P183
Custom 300 6-223 (3.7L) 1 Bbl. Carb.
Lube.....B2
PowSteer.....P183
Custom 300 V8-292 (4.8L) 2 Bbl. Carb.
Lube.....B2
Air.....PA602
PowSteer.....P183
Custom 300 V8-332 (5.4L) 2 Bbl. Carb.
Lube.....B2
PowSteer.....P183
Del Rio Wagon 6-223 (3.7L) 1 Bbl. Carb.
Lube.....B2
PowSteer.....P183
Del Rio Wagon V8-292 (4.8L) 2 Bbl. Carb.
Lube.....B2
Air.....PA602
PowSteer.....P183
Del Rio Wagon V8-332 (5.4L) 2 Bbl. Carb.
Lube.....B2
PowSteer.....P183
Del Rio Wagon V8-352 (5.8L) 4 Bbl. Carb.
Lube.....B2
PowSteer.....P183
Fairlane 6-223 (3.7L) 1 Bbl. Carb.
Lube.....B2
PowSteer.....P183
Fairlane V8-292 (4.8L) 2 Bbl. Carb.
Lube.....B2
Air.....PA602
PowSteer.....P183
Fairlane V8-332 (5.4L) 2 Bbl. Carb.
Lube.....B2
PowSteer.....P183
Pickups, F Series 6-223 (3.7L) 1 Bbl. Carb.
Lube.....B2
Air.....PA602
Fuel.....PF857

FORD 1958 (Cont'd.)

Pickups, F Series V8-292 (4.8L) Carb.
Lube.....B2
Air.....PA602
Fuel.....PF857
Pickups, F Series V8-352 (5.8L) Carb.
Lube.....B2
Fuel.....PF857
Ranch Wagon 6-223 (3.7L) 1 Bbl. Carb.
Lube.....B2
PowSteer.....P183
Ranch Wagon V8-292 (4.8L) 2 Bbl. Carb.
Lube.....B2
Air.....PA602
PowSteer.....P183
Ranch Wagon V8-332 (5.4L) 2 Bbl. Carb.
Lube.....B2
PowSteer.....P183
Ranch Wagon V8-352 (5.8L) 4 Bbl. Carb.
Lube.....B2
PowSteer.....P183
Ranchero 6-223 (3.7L) 1 Bbl. Carb.
Lube.....B2
Ranchero V8-292 (4.8L) 2 Bbl. Carb.
Lube.....B2
Air.....PA602
Ranchero V8-352 (5.8L) 4 Bbl. Carb.
Lube.....B2
Air.....PA602
Skyliner V8-292 (4.8L) 2 Bbl. Carb.
Lube.....B2
Air.....PA602
PowSteer.....P183
Skyliner V8-332 (5.4L) 2 Bbl. Carb.
Lube.....B2
PowSteer.....P183
Skyliner V8-352 (5.8L) 4 Bbl. Carb.
Lube.....B2
PowSteer.....P183
Sunliner 6-223 (3.7L) 1 Bbl. Carb.
Lube.....B2
Sunliner V8-292 (4.8L) 2 Bbl. Carb.
Lube.....B2
Air.....PA602
PowSteer.....P183
Sunliner V8-332 (5.4L) 2 Bbl. Carb.
Lube.....B2
PowSteer.....P183
Sunliner V8-352 (5.8L) 4 Bbl. Carb.
Lube.....B2
PowSteer.....P183
Thunderbird V8-292 (4.8L) 2 Bbl. Carb.
Lube.....B2
PowSteer.....P183
Thunderbird V8-332 (5.4L) 2,4 Bbl. Carb.
Lube.....B2
PowSteer.....P183
Thunderbird V8-352 (5.8L) 4 Bbl. Carb.
Lube.....B2
Fuel.....PF857
PowSteer.....P183
Victoria 6-223 (3.7L) 1 Bbl. Carb.
Lube.....B2
Victoria V8-292 (4.8L) 2 Bbl. Carb.
Lube.....B2
Air.....PA602
PowSteer.....P183
Victoria V8-332 (5.4L) 2 Bbl. Carb.
Lube.....B2
PowSteer.....P183
Victoria V8-352 (5.8L) 4 Bbl. Carb.
Lube.....B2
PowSteer.....P183

FORD (Cont'd.)

1957

Club 6-223 (3.7L) 1 Bbl. Carb.
Lube (Ele.).....P80
Lube (Spin-on).....B2
Fuel.....BF840,-K1
PowSteer.....P183
Club V8-272 (4.5L) 2 Bbl. Carb.
Lube (Ele.).....P80
Lube (Spin-on).....B2
Air.....PA602
Fuel.....BF840,-K1
PowSteer.....P183
Country Sedan 6-223 (3.7L) 1 Bbl. Carb.
Lube (Ele.).....P80
Lube (Spin-on).....B2
Fuel.....BF840,-K1
PowSteer.....P183
Country Sedan V8-272 (4.5L) 2 Bbl. Carb.
Lube (Ele.).....P80
Lube (Spin-on).....B2
Air.....PA602
Fuel.....BF840,-K1
PowSteer.....P183
Country Squire 6-223 (3.7L) 1 Bbl. Carb.
Lube (Ele.).....P80
Lube (Spin-on).....B2
Fuel.....BF840,-K1
PowSteer.....P183
Country Squire V8-272 (4.5L) 2 Bbl. Carb.
Lube (Ele.).....P80
Lube (Spin-on).....B2
Air.....PA602
Fuel.....BF840,-K1
PowSteer.....P183
Courier Sedan Delivery 6-223 (3.7L) 1 Bbl. Carb.
Lube (Ele.).....P80
Lube (Spin-on).....B2
Fuel.....BF840,-K1
PowSteer.....P183
Courier Sedan Delivery V8-272 (4.5L) 2 Bbl. Carb.
Lube (Ele.).....P80
Lube (Spin-on).....B2
Air.....PA602
Fuel.....BF840,-K1
PowSteer.....P183
Courier Sedan Delivery V8-292 (4.8L) 2 Bbl. Carb.
Lube (Ele.).....P80
Lube (Spin-on).....B2
Air.....PA602
Fuel.....BF840,-K1
PowSteer.....P183
Courier Sedan Delivery V8-352 (5.8L) 4 Bbl. Carb.
Lube (Ele.).....P80
Lube (Spin-on).....B2
Air.....PA602
Fuel.....BF840,-K1
PowSteer.....P183
Custom 6-223 (3.7L) 1 Bbl. Carb.
Lube (Ele.).....P80
Lube (Spin-on).....B2
Fuel.....BF840,-K1
PowSteer.....P183
Custom V8-272 (4.5L) 2 Bbl. Carb.
Lube (Ele.).....P80
Lube (Spin-on).....B2
Air.....PA602
Fuel.....BF840,-K1
PowSteer.....P183
Custom V8-292 (4.8L) 4 Bbl. Carb.
Lube (Ele.).....P80
Lube (Spin-on).....B2
Air.....PA602
Fuel.....BF840,-K1
PowSteer.....P183

OBS = Obsolete. Availability Limited to Distributor Stock.

FORD 1957 (Cont'd.)

Del Rio Wagon 6-223 (3.7L) 1 Bbl. Carb.
- **Lube (Ele.)** ... **P80**
- **Lube (Spin-on)** ... **B2**
- **Fuel** ... **BF840,-K1**
- **PowSteer.** ... **P183**

Del Rio Wagon V8-272 (4.5L) 2 Bbl. Carb.
- **Lube (Ele.)** ... **P80**
- **Lube (Spin-on)** ... **B2**
- **Air** ... **PA602**
- **Fuel** ... **BF840,-K1**
- **PowSteer.** ... **P183**

Del Rio Wagon V8-292 (4.8L) 2 Bbl. Carb.
- **Lube (Ele.)** ... **P80**
- **Lube (Spin-on)** ... **B2**
- **Air** ... **PA602**
- **Fuel** ... **BF840,-K1**
- **PowSteer.** ... **P183**

Del Rio Wagon V8-312 (5.1L) 4 Bbl. Carb.
- **Lube (Ele.)** ... **P80**
- **Lube (Spin-on)** ... **B2**
- **Air** ... **PA602**
- **Fuel** ... **BF840,-K1**
- **PowSteer.** ... **P183**

Fairlane 6-223 (3.7L) 1 Bbl. Carb.
- **Lube (Ele.)** ... **P80**
- **Lube (Spin-on)** ... **B2**
- **Fuel** ... **BF840,-K1**
- **PowSteer.** ... **P183**

Fairlane V8-272 (4.5L) 2 Bbl. Carb.
- **Lube (Ele.)** ... **P80**
- **Lube (Spin-on)** ... **B2**
- **Air** ... **PA602**
- **Fuel** ... **BF840,-K1**
- **PowSteer.** ... **P183**

Fairlane V8-312 (5.1L) 4 Bbl. Carb.
- **Lube (Ele.)** ... **P80**
- **Lube (Spin-on)** ... **B2**
- **Air** ... **PA602**
- **Fuel** ... **BF840,-K1**
- **PowSteer.** ... **P183**

Pickups, F Series 6-223 (3.7L) 1 Bbl. Carb.
- **Lube (Ele.)** ... **P80**
- **Lube (Spin-on)** ... **B2**

Pickups, F Series V8-272 (4.5L) 2 Bbl. Carb.
- **Lube (Ele.)** ... **P80**
- **Lube (Spin-on)** ... **B2**
- **Air** ... **PA602**
- **Fuel** ... **PF857**

Pickups, F Series V8-292 (4.8L) Carb.
- **Lube (Ele.)** ... **P80**
- **Lube (Spin-on)** ... **B2**
- **Air** ... **PA602**
- **Fuel** ... **PF857**

Pickups, F Series V8-352 (5.8L) Carb.
- **Lube (Ele.)** ... **P80**
- **Lube (Spin-on)** ... **B2**
- **Air** ... **PA602**
- **Fuel** ... **PF857**

Ranch Wagon 6-223 (3.7L) 1 Bbl. Carb.
- **Lube (Ele.)** ... **P80**
- **Lube (Spin-on)** ... **B2**
- **Fuel** ... **BF840,-K1**
- **PowSteer.** ... **P183**

Ranch Wagon V8-272 (4.5L) 2 Bbl. Carb.
- **Lube (Ele.)** ... **P80**
- **Lube (Spin-on)** ... **B2**
- **Air** ... **PA602**
- **Fuel** ... **BF840,-K1**
- **PowSteer.** ... **P183**

Ranchero 6-223 (3.7L) 1 Bbl. Carb.
- **Lube (Ele.)** ... **P80**
- **Lube (Spin-on)** ... **B2**

FORD 1957 (Cont'd.)

Ranchero V8-272 (4.5L) 2 Bbl. Carb.
- **Lube (Ele.)** ... **P80**
- **Lube (Spin-on)** ... **B2**
- **Air** ... **PA602**
- **Fuel** ... **PF857**

Ranchero V8-292 (4.8L) 2 Bbl. Carb.
- **Lube (Ele.)** ... **P80**
- **Lube (Spin-on)** ... **B2**
- **Air** ... **PA602**

Ranchero V8-352 (5.8L) 4 Bbl. Carb.
- **Lube (Ele.)** ... **P80**
- **Lube (Spin-on)** ... **B2**
- **Air** ... **PA602**

Skyliner V8-272 (4.5L) 2 Bbl. Carb.
- **Lube (Ele.)** ... **P80**
- **Lube (Spin-on)** ... **B2**
- **Air** ... **PA602**
- **Fuel** ... **BF840,-K1**
- **PowSteer.** ... **P183**

Sunliner 6-223 (3.7L) 1 Bbl. Carb.
- **Lube (Ele.)** ... **P80**
- **Lube (Spin-on)** ... **B2**
- **Fuel** ... **BF840,-K1**
- **PowSteer.** ... **P183**

Sunliner V8-272 (4.5L) 2 Bbl. Carb.
- **Lube (Ele.)** ... **P80**
- **Lube (Spin-on)** ... **B2**
- **Air** ... **PA602**
- **Fuel** ... **BF840,-K1**
- **PowSteer.** ... **P183**

Thunderbird V8-292 (4.8L) 4 Bbl. Carb.
- **Lube (Ele.)** ... **P80**
- **Lube (Spin-on)** ... **B2**
- **Fuel** ... **PF857**
- **PowSteer.** ... **P183**

Thunderbird V8-312 (5.1L) 4 Bbl. Carb.
- **Lube (Ele.)** ... **P80**
- **Lube (Spin-on)** ... **B2**
- **Fuel** ... **PF857**
- **PowSteer.** ... **P183**

Victoria 6-223 (3.7L) 1 Bbl. Carb.
- **Lube (Ele.)** ... **P80**
- **Lube (Spin-on)** ... **B2**
- **Fuel** ... **BF840,-K1**
- **PowSteer.** ... **P183**

Victoria V8-272 (4.5L) 2 Bbl. Carb.
- **Lube (Ele.)** ... **P80**
- **Lube (Spin-on)** ... **B2**
- **Air** ... **PA602**
- **Fuel** ... **BF840,-K1**
- **PowSteer.** ... **P183**

1956

Club 6-223 (3.7L) 1 Bbl. Carb.
- **Lube** ... **P80**
- **Fuel** ... **BF840,-K1**
- **PowSteer.** ... **P183**

Club V8-272 (4.5L) 2 Bbl. Carb.
- **Lube** ... **P80**
- **Air** ... **PA602**
- **Fuel** ... **BF840,-K1**
- **PowSteer.** ... **P183**

Country Sedan 6-223 (3.7L) 1 Bbl. Carb.
- **Lube** ... **P80**
- **Fuel** ... **BF840,-K1**
- **PowSteer.** ... **P183**

Country Sedan V8-272 (4.5L) 2 Bbl. Carb.
- **Lube** ... **P80**
- **Air** ... **PA602**
- **Fuel** ... **BF840,-K1**
- **PowSteer.** ... **P183**

Country Squire 6-223 (3.7L) 1 Bbl. Carb.
- **Lube** ... **P80**
- **Fuel** ... **BF840,-K1**
- **PowSteer.** ... **P183**

FORD 1956 (Cont'd.)

Country Squire V8-272 (4.5L) 2 Bbl. Carb.
- **Lube** ... **P80**
- **Air** ... **PA602**
- **Fuel** ... **BF840,-K1**
- **PowSteer.** ... **P183**

Courier Sedan Delivery 6-223 (3.7L) 1 Bbl. Carb.
- **Lube** ... **P80**
- **Fuel** ... **BF840,-K1**
- **PowSteer.** ... **P183**

Courier Sedan Delivery V8-272 (4.5L) 2 Bbl. Carb.
- **Lube** ... **P80**
- **Air** ... **PA602**
- **Fuel** ... **BF840,-K1**
- **PowSteer.** ... **P183**

Customline 6-223 (3.7L) 1 Bbl. Carb.
- **Lube** ... **P80**
- **Fuel** ... **BF840,-K1**
- **PowSteer.** ... **P183**

Customline V8-272 (4.5L) 2 Bbl. Carb.
- **Lube** ... **P80**
- **Air** ... **PA602**
- **Fuel** ... **BF840,-K1**
- **PowSteer.** ... **P183**

Fairlane 6-223 (3.7L) 1 Bbl. Carb.
- **Lube** ... **P80**
- **Fuel** ... **BF840,-K1**
- **PowSteer.** ... **P183**

Fairlane V8-272 (4.5L) 2 Bbl. Carb.
- **Lube** ... **P80**
- **Fuel** ... **BF840,-K1**
- **PowSteer.** ... **P183**

Mainline 6-223 (3.7L) 1 Bbl. Carb.
- **Lube** ... **P80**
- **Fuel** ... **BF840,-K1**
- **PowSteer.** ... **P183**

Mainline V8-272 (4.5L) 2 Bbl. Carb.
- **Lube** ... **P80**
- **Fuel** ... **BF840,-K1**
- **PowSteer.** ... **P183**

Mainline V8-292 (4.8L) 4 Bbl. Carb.
- **Lube** ... **P80**
- **Fuel** ... **BF840,-K1**
- **PowSteer.** ... **P183**

Mainline V8-312 (5.1L) 4 Bbl. Carb.
- **Lube** ... **P80**
- **Fuel** ... **BF840,-K1**
- **PowSteer.** ... **P183**

Park Lane Wagon 6-223 (3.7L) 1 Bbl. Carb.
- **Lube** ... **P80**
- **Fuel** ... **BF840,-K1**
- **PowSteer.** ... **P183**

Park Lane Wagon V8-272 (4.5L) 2 Bbl. Carb.
- **Lube** ... **P80**
- **Fuel** ... **BF840,-K1**
- **PowSteer.** ... **P183**

Pickups, F Series 6-223 (3.7L) 1 Bbl. Carb.
- **Lube** ... **P80**
- **Fuel** ... **BF840,-K1**
- **PowSteer.** ... **P183**

Pickups, F Series V8-272 (4.5L) 2 Bbl. Carb.
- **Lube** ... **P80**
- **Air** ... **PA602**
- **Fuel** ... **BF840,-K1**
- **PowSteer.** ... **P183**

Ranch Wagon 6-223 (3.7L) 1 Bbl. Carb.
- **Lube** ... **P80**
- **Fuel** ... **BF840,-K1**
- **PowSteer.** ... **P183**

Ranch Wagon V8-272 (4.5L) 2 Bbl. Carb.
- **Lube** ... **P80**
- **Fuel** ... **BF840,-K1**
- **PowSteer.** ... **P183**

FORD 1956 (Cont'd.)

Skyliner 6-223 (3.7L) 1 Bbl. Carb.
- **Lube** ... **P80**
- **Fuel** ... **BF840,-K1**
- **PowSteer.** ... **P183**

Skyliner V8-272 (4.5L) 2 Bbl. Carb.
- **Lube** ... **P80**
- **Fuel** ... **BF840,-K1**
- **PowSteer.** ... **P183**

Sunliner 6-223 (3.7L) 1 Bbl. Carb.
- **Lube** ... **P80**
- **Fuel** ... **BF840,-K1**
- **PowSteer.** ... **P183**

Sunliner V8-272 (4.5L) 2 Bbl. Carb.
- **Lube** ... **P80**
- **Fuel** ... **BF840,-K1**
- **PowSteer.** ... **P183**

Thunderbird V8-292 (4.8L) 4 Bbl. Carb.
- **Lube** ... **P80**
- **Air** ... **PA2059 OBS**
- **Fuel** ... **PF857**
- **PowSteer.** ... **P183**

Thunderbird V8-312 (5.1L) 4 Bbl. Carb.
- **Lube** ... **P80**
- **Fuel** ... **PF857**
- **PowSteer.** ... **P183**

Victoria 6-223 (3.7L) 1 Bbl. Carb.
- **Lube** ... **P80**
- **Fuel** ... **BF840,-K1**
- **PowSteer.** ... **P183**

Victoria V8-272 (4.5L) 2 Bbl. Carb.
- **Lube** ... **P80**
- **Air** ... **PA602**
- **Fuel** ... **BF840,-K1**
- **PowSteer.** ... **P183**

1955

Club 6-223 (3.7L) 1 Bbl. Carb.
- **Lube** ... **P80**
- **Fuel** ... **BF840,-K1**
- **PowSteer.** ... **P183**

Club V8-272 (4.5L) 2 Bbl. Carb.
- **Lube** ... **P80**
- **Fuel** ... **BF840,-K1**
- **PowSteer.** ... **P183**

Country Sedan 6-223 (3.7L) 1 Bbl. Carb.
- **Lube** ... **P80**
- **Fuel** ... **BF840,-K1**
- **PowSteer.** ... **P183**

Country Sedan V8-272 (4.5L) 2 Bbl. Carb.
- **Lube** ... **P80**
- **Fuel** ... **BF840,-K1**
- **PowSteer.** ... **P183**

Country Squire 6-223 (3.7L) 1 Bbl. Carb.
- **Lube** ... **P80**
- **Fuel** ... **BF840,-K1**
- **PowSteer.** ... **P183**

Country Squire V8-272 (4.5L) 2 Bbl. Carb.
- **Lube** ... **P80**
- **Fuel** ... **BF840,-K1**
- **PowSteer.** ... **P183**

Courier Sedan Delivery 6-223 (3.7L) 1 Bbl. Carb.
- **Lube** ... **P80**
- **Fuel** ... **BF840,-K1**
- **PowSteer.** ... **P183**

Customline 6-223 (3.7L) 1 Bbl. Carb.
- **Lube** ... **P80**
- **Fuel** ... **BF840,-K1**
- **PowSteer.** ... **P183**

Customline V8-272 (4.5L) 2 Bbl. Carb.
- **Lube** ... **P80**
- **Fuel** ... **BF840,-K1**
- **PowSteer.** ... **P183**

Fairlane 6-223 (3.7L) 1 Bbl. Carb.
- **Lube** ... **P80**
- **Fuel** ... **BF840,-K1**
- **PowSteer.** ... **P183**

OBS = Obsolete. Availability Limited to Distributor Stock.

FORD 1955 (Cont'd.)

Fairlane V8-272 (4.5L) 2 Bbl. Carb.
Lube.....P80
Fuel.....BF840,-K1
PowSteer.....P183
Mainline 6-223 (3.7L) 1 Bbl. Carb.
Lube.....P80
Fuel.....BF840,-K1
PowSteer.....P183
Mainline V8-272 (4.5L) 2 Bbl. Carb.
Lube.....P80
Fuel.....BF840,-K1
PowSteer.....P183
Pickups, F Series 6-223 (3.7L) 1 Bbl. Carb.
Lube.....P80
Fuel.....BF840,-K1
PowSteer.....P183
Pickups, F Series V8-239 (3.9L) 2 Bbl. Carb.
Lube.....P80
Fuel.....BF840,-K1
PowSteer.....P183
Pickups, F Series V8-272 (4.5L) Carb.
Lube.....P80
PowSteer.....P183
Ranch Wagon 6-223 (3.7L) 1 Bbl. Carb.
Lube.....P80
Fuel.....BF840,-K1
PowSteer.....P183
Ranch Wagon V8-272 (4.5L) 2 Bbl. Carb.
Lube.....P80
Fuel.....BF840,-K1
PowSteer.....P183
Skyliner 6-223 (3.7L) 1 Bbl. Carb.
Lube.....P80
Fuel.....BF840,-K1
PowSteer.....P183
Skyliner V8-272 (4.5L) 2 Bbl. Carb.
Lube.....P80
Fuel.....BF840,-K1
PowSteer.....P183
Sunliner 6-223 (3.7L) 1 Bbl. Carb.
Lube.....P80
Fuel.....BF840,-K1
PowSteer.....P183
Sunliner V8-272 (4.5L) 2 Bbl. Carb.
Lube.....P80
Fuel.....BF840,-K1
PowSteer.....P183
Victoria 6-223 (3.7L) 1 Bbl. Carb.
Lube.....P80
Fuel.....BF840,-K1
PowSteer.....P183
Victoria V8-272 (4.5L) 2 Bbl. Carb.
Lube.....P80
Fuel.....BF840,-K1
PowSteer.....P183

1954

Country Sedan 6-223 (3.7L) 1 Bbl. Carb.
Lube.....P80
Fuel.....BF840,-K1
PowSteer.....P183
Country Sedan V8-239 (3.9L) 2 Bbl. Carb.
Lube.....P80
PowSteer.....P183
Country Sedan V8-256 (4.2L) Carb.
Lube.....P80
PowSteer.....P183
Country Squire 6-223 (3.7L) 1 Bbl. Carb.
Lube.....P80
Fuel.....BF840,-K1
PowSteer.....P183
Country Squire V8-239 (3.9L) 2 Bbl. Carb.
Lube.....P80
PowSteer.....P183

FORD 1954 (Cont'd.)

Country Squire V8-256 (4.2L) Carb.
Lube.....P80
PowSteer.....P183
Courier Sedan Delivery 6-223 (3.7L) 1 Bbl. Carb.
Lube.....P80
Fuel.....BF840,-K1
PowSteer.....P183
Courier Sedan Delivery V8-239 (3.9L) 2 Bbl. Carb.
Lube.....P80
PowSteer.....P183
Crestline 6-223 (3.7L) 1 Bbl. Carb.
Lube.....P80
Fuel.....BF840,-K1
PowSteer.....P183
Crestline V8-239 (3.9L) 2 Bbl. Carb.
Lube.....P80
PowSteer.....P183
Crestline V8-256 (4.2L) Carb.
Lube.....P80
PowSteer.....P183
Customline 6-223 (3.7L) 1 Bbl. Carb.
Lube.....P80
Fuel.....BF840,-K1
PowSteer.....P183
Customline V8-239 (3.9L) 2 Bbl. Carb.
Lube.....P80
PowSteer.....P183
Customline V8-256 (4.2L) Carb.
Lube.....P80
PowSteer.....P183
Mainline 6-223 (3.7L) 1 Bbl. Carb.
Lube.....P80
Fuel.....BF840,-K1
PowSteer.....P183
Mainline V8-239 (3.9L) 2 Bbl. Carb.
Lube.....P80
PowSteer.....P183
Mainline V8-256 (4.2L) Carb.
Lube.....P80
PowSteer.....P183
Pickups, F Series 6-223 (3.7L) 1 Bbl. Carb.
Lube.....P80
Fuel.....BF840,-K1
PowSteer.....P183
Pickups, F Series V8-239 (3.9L) 2 Bbl. Carb.
Lube.....P80
PowSteer.....P183
Ranch Wagon 6-223 (3.7L) 1 Bbl. Carb.
Lube.....P80
Fuel.....BF840,-K1
PowSteer.....P183
Ranch Wagon V8-239 (3.9L) 2 Bbl. Carb.
Lube.....P80
PowSteer.....P183
Ranch Wagon V8-256 (4.2L) Carb.
Lube.....P80
PowSteer.....P183
Skyliner 6-223 (3.7L) 1 Bbl. Carb.
Lube.....P80
Fuel.....BF840,-K1
PowSteer.....P183
Skyliner V8-239 (3.9L) 2 Bbl. Carb.
Lube.....P80
PowSteer.....P183
Skyliner V8-256 (4.2L) Carb.
Lube.....P80
PowSteer.....P183
Sunliner 6-223 (3.7L) 1 Bbl. Carb.
Lube.....P80
Fuel.....BF840,-K1
PowSteer.....P183
Sunliner V8-239 (3.9L) 2 Bbl. Carb.
Lube.....P80
PowSteer.....P183
Sunliner V8-256 (4.2L) Carb.
Lube.....P80
PowSteer.....P183

FORD 1954 (Cont'd.)

Victoria 6-223 (3.7L) 1 Bbl. Carb.
Lube.....P80
Fuel.....BF840,-K1
PowSteer.....P183
Victoria V8-239 (3.9L) 2 Bbl. Carb.
Lube.....P80
PowSteer.....P183
Victoria V8-256 (4.2L) Carb.
Lube.....P80
PowSteer.....P183

1953

Club 6-215 (3.5L) Carb.
Lube.....P80
Club V8-239 (3.9L) 2 Bbl. Carb.
Lube.....P41
Country Sedan 6-215 (3.5L) Carb.
Lube.....P80
Country Sedan V8-239 (3.9L) 2 Bbl. Carb.
Lube.....P41
Country Squire 6-215 (3.5L) Carb.
Lube.....P80
Country Squire V8-239 (3.9L) 2 Bbl. Carb.
Lube.....P41
Crestline V8-239 (3.9L) 2 Bbl. Carb.
Lube.....P41
Customline 6-215 (3.5L) Carb.
Lube.....P80
Customline V8-239 (3.9L) 2 Bbl. Carb.
Lube.....P41
Mainline 6-215 (3.5L) Carb.
Lube.....P80
Mainline V8-239 (3.9L) 2 Bbl. Carb.
Lube.....P41
Pickups, F Series 6-215 (3.5L) 1 Bbl. Carb.
Lube.....P80
Fuel.....PF857
Pickups, F Series V8-239 (3.9L) 2 Bbl. Carb.
Lube.....P41
Ranch Wagon 6-215 (3.5L) Carb.
Lube.....P80
Ranch Wagon V8-239 (3.9L) 2 Bbl. Carb.
Lube.....P41
Sunliner V8-239 (3.9L) 2 Bbl. Carb.
Lube.....P41
Victoria V8-239 (3.9L) 2 Bbl. Carb.
Lube.....P41

1952

Country Sedan 6-215 (3.5L) 1 Bbl. Carb.
Lube.....P80
Country Sedan V8-239 (3.9L) 2 Bbl. Carb.
Lube.....P41
Fuel.....BF833,-K2
Country Squire 6-215 (3.5L) 1 Bbl. Carb.
Lube.....P80
Country Squire V8-239 (3.9L) 2 Bbl. Carb.
Lube.....P41
Fuel.....BF833,-K2
Crestline V8-239 (3.9L) 2 Bbl. Carb.
Lube.....P41
Fuel.....BF833,-K2
Custom 6-215 (3.5L) 1 Bbl. Carb.
Lube.....P80
Custom V8-239 (3.9L) 2 Bbl. Carb.
Lube.....P41
Fuel.....BF833,-K2
Customline 6-215 (3.5L) 1 Bbl. Carb.
Lube.....P80

FORD 1952 (Cont'd.)

Customline V8-239 (3.9L) 2 Bbl. Carb.
Lube.....P41
Fuel.....BF833,-K2
Mainline 6-215 (3.5L) 1 Bbl. Carb.
Lube.....P80
Mainline V8-239 (3.9L) 2 Bbl. Carb.
Lube.....P41
Fuel.....BF833,-K2
Pickups, F Series 6-215 (3.5L) 1 Bbl. Carb.
Lube.....P80
Fuel.....PF857
Pickups, F Series V8-239 (3.9L) 2 Bbl. Carb.
Lube.....P41
Fuel.....BF833,-K2
Ranch Wagon 6-215 (3.5L) 1 Bbl. Carb.
Lube.....P80
Ranch Wagon V8-239 (3.9L) 2 Bbl. Carb.
Lube.....P41
Fuel.....BF833,-K2
Sunliner V8-239 (3.9L) 2 Bbl. Carb.
Lube.....P41
Fuel.....BF833,-K2
Victoria V8-239 (3.9L) 2 Bbl. Carb.
Lube.....P41
Fuel.....BF833,-K2

1951

Country Sedan 6-226 (3.7L) 1 Bbl. Carb.
Lube.....P41
Fuel.....BF833,-K2
Country Sedan V8-239 (3.9L) 2 Bbl. Carb.
Lube.....P41
Fuel.....BF833,-K2
Country Squire 6-226 (3.7L) 1 Bbl. Carb.
Lube.....P41
Fuel.....BF833,-K2
Country Squire V8-239 (3.9L) 2 Bbl. Carb.
Lube.....P41
Fuel.....BF833,-K2
Crestline V8-239 (3.9L) 2 Bbl. Carb.
Lube.....P41
Fuel.....BF833,-K2
Custom 6-226 (3.7L) 1 Bbl. Carb.
Lube.....P41
Fuel.....BF833,-K2
Custom V8-239 (3.9L) 2 Bbl. Carb.
Lube.....P41
Fuel.....BF833,-K2
Deluxe 6-226 (3.7L) 1 Bbl. Carb.
Lube.....P41
Fuel.....BF833,-K2
Deluxe V8-239 (3.9L) 2 Bbl. Carb.
Lube.....P41
Fuel.....BF833,-K2
Pickups, F Series 6-215 (3.5L) 1 Bbl. Carb.
Lube.....P80
Fuel.....BF833,-K2
Pickups, F Series V8-239 (3.9L) 2 Bbl. Carb.
Lube.....P41
Fuel.....BF833,-K2
Ranch Wagon 6-226 (3.7L) 1 Bbl. Carb.
Lube.....P41
Fuel.....BF833,-K2
Ranch Wagon V8-239 (3.9L) 2 Bbl. Carb.
Lube.....P41
Fuel.....BF833,-K2
Victoria V8-239 (3.9L) 2 Bbl. Carb.
Lube.....P41
Fuel.....BF833,-K2

OBS = Obsolete. Availability Limited to Distributor Stock.

FORD (Cont'd.)

1950

Country Sedan 6-226 (3.7L) 1 Bbl. Carb.
Lube....P41
Fuel....BF833,-K2

Country Sedan V8-239 (3.9L) 2 Bbl. Carb.
Lube....P41
Fuel....BF833,-K2

Country Squire 6-226 (3.7L) 1 Bbl. Carb.
Lube....P41
Fuel....BF833,-K2

Country Squire V8-239 (3.9L) 2 Bbl. Carb.
Lube....P41
Fuel....BF833,-K2

Crestline V8-239 (3.9L) 2 Bbl. Carb.
Lube....P41
Fuel....BF833,-K2

Custom 6-226 (3.7L) 1 Bbl. Carb.
Lube....P41
Fuel....BF833,-K2

Custom V8-239 (3.9L) 2 Bbl. Carb.
Lube....P41
Fuel....BF833,-K2

Deluxe 6-226 (3.7L) 1 Bbl. Carb.
Lube....P41
Fuel....BF833,-K2

Deluxe V8-239 (3.9L) 2 Bbl. Carb.
Lube....P41
Fuel....BF833,-K2

Pickups, F Series 6-226 (3.7L) 1 Bbl. Carb.
Lube....P41
Fuel....BF833,-K2

Pickups, F Series V8-239 (3.9L) 2 Bbl. Carb.
Lube....P41
Fuel....BF833,-K2

Ranch Wagon 6-226 (3.7L) 1 Bbl. Carb.
Lube....P41
Fuel....BF833,-K2

Ranch Wagon V8-239 (3.9L) 2 Bbl. Carb.
Lube....P41
Fuel....BF833,-K2

1949

Custom 500 6-226 (3.7L) 1 Bbl. Carb.
Lube....P41
Fuel....BF833,-K2

Custom 500 V8-239 (3.9L) 2 Bbl. Carb.
Lube....P41
Fuel....BF833,-K2

Deluxe 6-226 (3.7L) 1 Bbl. Carb.
Lube....P41
Fuel....BF833,-K2

Deluxe V8-239 (3.9L) 2 Bbl. Carb.
Lube....P41
Fuel....BF833,-K2

Ford 6-226 (3.7L) 1 Bbl. Carb.
Lube....P41
Fuel....BF833,-K2

Ford V8-239 (3.9L) 2 Bbl. Carb.
Lube....P41
Fuel....BF833,-K2

Pickups, F Series 6-226 (3.7L) 1 Bbl. Carb.
Lube....P41
Fuel....BF833,-K2

Pickups, F Series V8-239 (3.9L) 2 Bbl. Carb.
Lube....P41
Fuel....BF833,-K2

1948

Deluxe 6-226 (3.7L) 1 Bbl. Carb.
Lube....P41
Fuel....BF833,-K2

FORD 1948 (Cont'd.)

Deluxe V8-239 (3.9L) 2 Bbl. Carb.
Lube....P41
Fuel....BF833,-K2

Pickups, F Series 6-226 (3.7L) 1 Bbl. Carb.
Lube....P41
Fuel....BF833,-K2

Pickups, F Series V8-239 (3.9L) 2 Bbl. Carb.
Lube....P41
Fuel....BF833,-K2

Super Deluxe 6-226 (3.7L) 1 Bbl. Carb.
Lube....P41
Fuel....BF833,-K2

Super Deluxe V8-239 (3.9L) 2 Bbl. Carb.
Lube....P41
Fuel....BF833,-K2

1947

Deluxe 6-226 (3.7L) 1 Bbl. Carb.
Fuel....BF833,-K2

Deluxe V8-239 (3.9L) 2 Bbl. Carb.
Lube....P41
Fuel....BF833,-K2

Super Deluxe 6-226 (3.7L) 1 Bbl. Carb.
Fuel....BF833,-K2

Super Deluxe V8-239 (3.9L) 2 Bbl. Carb.
Lube....P41
Fuel....BF833,-K2

1946

Deluxe 6-226 (3.7L) 1 Bbl. Carb.
Lube....P41
Fuel....BF833,-K2

Deluxe V8-239 (3.9L) 2 Bbl. Carb.
Lube....P41
Fuel....BF833,-K2

Super Deluxe 6-226 (3.7L) 1 Bbl. Carb.
Lube....P41
Fuel....BF833,-K2

Super Deluxe V8-239 (3.9L) 2 Bbl. Carb.
Lube....P41
Fuel....BF833,-K2

FORD (ENGLAND)

1979

Capri 4-2300cc (2.3L)
Lube....B2
Air....PA2005
In-Line Fuel (Carb.)....BF879

Capri 6-2800cc (2.8L)
Lube....B163
Air....PA2074
In-Line Fuel (Carb.)....BF879

Escort 4-1600cc (1.6L)
Lube....B233
Air....PA642

1978

Capri 4-2300cc (2.3L)
Lube....B233
Air....PA2005
In-Line Fuel (Carb.)....BF879

Capri 6-2800cc (2.8L)
Lube....B233
Air....PA1802
In-Line Fuel (Carb.)....BF879

Escort 4-1600cc (1.6L)
Lube....B233
Air....PA642

FORD (ENGLAND) (Cont'd.)

1977

Capri 4-2300cc (2.3L)
Lube....B233
Air....PA2005
In-Line Fuel (Carb.)....BF879

Capri 6-2800cc (2.8L)
Lube....B233
Air....PA1802
In-Line Fuel (Carb.)....BF879

Escort 4-1600cc (1.6L)
Lube....B233
Air....PA642

1976

Capri 4-2300cc (2.3L)
Lube....B233
Air....PA2005
In-Line Fuel (Carb.)....BF879

Capri 6-2800cc (2.8L)
Lube....B233
Air....PA1802
In-Line Fuel (Carb.)....BF879

Escort 4-1600cc (1.6L)
Lube....B233
Air....PA642

1975

Capri 2300cc (2.3L)
Lube....B233
Air....PA2005
In-Line Fuel (Carb.)....BF879

Capri 6-2800cc (2.8L)
Lube....B233
Air....PA1802
In-Line Fuel (Carb.)....BF879

Escort 4-1600cc (1.6L)
Lube....B233
Air....PA642

1974

Capri 2800cc (2.8L)
Lube....B233
Air....PA1802
In-Line Fuel (Carb.)....BF879

GMC Light-Duty Trucks

1979

Caballero V6-200 (3.3L) 2 Bbl. VIN M
Lube....B43-S
Air....PA1680
Fuel....PF894,-RV
Oil Vapor....SA2027
Fuel Vapor....SA2046

Caballero V6-231 (3.8L) 2 Bbl. VIN 2,A
Lube....B43-S
Air....PA1680
Fuel....PF893,-RV
Fuel Vapor....SA2046

Caballero V8-305 (5.0L) 4 Bbl. VIN H
Lube....B6
Air....PA2008
Fuel....PF893,-RV
Oil Vapor....SA2027
Fuel Vapor....SA2046

Caballero V8-350 (5.7L) 4 Bbl. VIN L
Lube....B6
Air....PA2008
Fuel....PF894,-RV
Oil Vapor....SA2027
Fuel Vapor....SA2046

Jimmy 6-250 (4.1L) 2 Bbl. VIN D
Lube....B27
Air....PA2077
Fuel....PF894,-RV
Fuel Vapor....SA2046
Trans.....6020

GMC Light-Duty Trucks 1979 (Cont'd.)

Jimmy V8-305 (5.0L) 2 Bbl. VIN U
Lube....B6
Air....PA2006
Fuel....PF893,-RV
Oil Vapor....SA2027
Fuel Vapor....SA2046
Trans. (TH350C, TH375B)....18031
Trans. (TH400)....6020

Jimmy V8-350 (5.7L) 4 Bbl. VIN L
Lube....B6
Air....PA2008
Fuel....PF894,-RV
Oil Vapor....SA2027
Fuel Vapor....SA2046
Trans. (TH350C, TH375B)....18031
Trans. (TH400)....6020

Jimmy V8-400 (6.6L) 4 Bbl. VIN R
Lube....B6
Air....PA2008
Fuel....PF894,-RV
Oil Vapor....SA2027
Fuel Vapor....SA2046
Trans. (TH350C, TH375B)....18031
Trans. (TH400)....6020

Pickups, C, K Series 6-250 (4.1L) 2 Bbl. VIN D
Lube....B27
Air....PA2077
Fuel....PF894,-RV
Fuel Vapor....SA2046
Trans.....6020

Pickups, C, K Series 6-292 (4.8L) 1 Bbl. VIN T
Lube....B27
Air....PA648
Fuel....PF893,-RV
Fuel Vapor....SA2046
Trans. (TH350C, TH375B)....18031
Trans. (TH400)....6020

Pickups, C, K Series V8-305 (5.0L) 2 Bbl. VIN U
Lube....B6
Air....PA2006
Fuel....PF893,-RV
Oil Vapor....SA2027
Fuel Vapor....SA2046
Trans. (TH350C, TH375B)....18031
Trans. (TH400)....6020

Pickups, C, K Series V8-350 (5.7L) 4 Bbl. VIN L,M
Lube....B6
Air....PA2008
Fuel....PF894,-RV
Oil Vapor....SA2027
Fuel Vapor....SA2046
Trans. (TH350C, TH375B)....18031
Trans. (TH400)....6020

Pickups, C, K Series V8-350 (5.7L) Diesel VIN Z
Lube....B30
Air....PA2079
Fuel (Box-Style)....BF806
Trans.....6021

Pickups, C, K Series V8-400 (6.6L) 4 Bbl. VIN R
Lube....B6
Air....PA2008
Fuel....PF894,-RV
Oil Vapor....SA2027
Fuel Vapor....SA2046
Trans. (TH350C, TH375B)....18031
Trans. (TH400)....6020

Pickups, C, K Series V8-454 (7.4L) 4 Bbl. VIN S
Lube....B6
Air....PA2008
Fuel....PF894,-RV
Oil Vapor....SA2027
Fuel Vapor....SA2046
Trans.....6020

OBS = Obsolete. Availability Limited to Distributor Stock.

GMC Light-Duty Trucks
1979 (Cont'd.)

Suburban, C, K Series 6-250 (4.1L) 1 Bbl. VIN D
- **Lube**....B27
- **Air**....PA2077
- **Fuel**....PF894,-RV
- **Fuel Vapor**....SA2046
- **Trans.**....6020

Suburban, C, K Series 6-292 (4.8L) 1 Bbl. VIN T
- **Lube**....B27
- **Air**....PA648
- **Fuel**....PF893,-RV
- **Fuel Vapor**....SA2046
- **Trans. (TH350)**....6021
- **Trans. (TH350C, TH375B)**....18031
- **Trans. (TH400)**....6020

Suburban, C, K Series V8-305 (5.0L) 2 Bbl. VIN U
- **Lube**....B6
- **Air**....PA2006
- **Fuel**....PF893,-RV
- **Oil Vapor**....SA2027
- **Fuel Vapor**....SA2046
- **Trans. (TH350C, TH375B)**....18031
- **Trans. (TH400)**....6020

Suburban, C, K Series V8-350 (5.7L) 4 Bbl. VIN L
- **Lube**....B6
- **Air**....PA2008
- **Fuel**....PF894,-RV
- **Oil Vapor**....SA2027
- **Fuel Vapor**....SA2046
- **Trans. (TH350C, TH375B)**....18031
- **Trans. (TH400)**....6020

Suburban, C, K Series V8-350 (5.7L) Diesel VIN Z
- **Lube**....B30
- **Air**....PA2079
- **Fuel (Box-Style)**....BF806
- **Trans. (TH350)**....6021
- **Trans. (TH400)**....6020

Suburban, C, K Series V8-400 (6.6L) 4 Bbl. VIN R
- **Lube**....B6
- **Air**....PA2008
- **Fuel**....PF894,-RV
- **Oil Vapor**....SA2027
- **Fuel Vapor**....SA2046
- **Trans. (TH350C, TH375B)**....18031
- **Trans. (TH400)**....6020

Suburban, C, K Series V8-454 (7.4L) 4 Bbl. VIN S
- **Lube**....B6
- **Air**....PA2008
- **Fuel**....PF894,-RV
- **Oil Vapor**....SA2027
- **Fuel Vapor**....SA2046
- **Trans.**....6020

Vans, G Series 6-250 (4.1L) 1 Bbl. VIN D
- **Lube**....B27
- **Air**....PA2077
- **Fuel**....PF894,-RV
- **Fuel Vapor**....SA2046
- **Trans. (TH350C, TH375B)**....18031
- **Trans. (TH400)**....6020

Vans, G Series V8-305 (5.0L) 2 Bbl. VIN U
- **Lube**....B6
- **Air**....PA1680
- **Fuel**....PF893,-RV
- **Oil Vapor**....SA2027
- **Fuel Vapor**....SA2046
- **Trans. (TH350C, TH375B)**....18031
- **Trans. (TH400)**....6020

Vans, G Series V8-350 (5.7L) 4 Bbl. VIN L
- **Lube**....B6
- **Air**....PA1680
- **Fuel**....PF894,-RV
- **Oil Vapor**....SA2027
- **Fuel Vapor**....SA2046
- **Trans. (TH350C, TH375B)**....18031
- **Trans. (TH400)**....6020

GMC Light-Duty Trucks
1979 (Cont'd.)

Vans, G Series V8-400 (6.6L) 4 Bbl. VIN R
- **Lube**....B6
- **Air**....PA1680
- **Fuel**....PF894,-RV
- **Oil Vapor**....SA2027
- **Fuel Vapor**....SA2046
- **Trans. (TH350C, TH375B)**....18031
- **Trans. (TH400)**....6020

Vans, P Series 6-292 (4.8L) 1 Bbl. VIN T
- **Lube**....B27
- **Air**....PA648
- **Fuel**....PF893,-RV
- **Fuel Vapor**....SA2046
- **Trans.**....6020

Vans, P Series V8-350 (5.7L) 4 Bbl. VIN L
- **Lube**....B6
- **Air**....PA1680
- **Fuel**....PF894,-RV
- **Oil Vapor**....SA2027
- **Fuel Vapor**....SA2046
- **Trans.**....6020

Vans, P Series V8-454 (7.4L) 4 Bbl. VIN S
- **Lube**....B6
- **Air**....PA2008
- **Fuel**....PF894,-RV
- **Oil Vapor**....SA2027
- **Fuel Vapor**....SA2046
- **Trans.**....6020

1978

Caballero V6-200 (3.3L) 2 Bbl. VIN M
- **Lube**....B43-S
- **Air**....PA1680
- **Fuel**....PF894,-RV
- **Oil Vapor**....SA2027
- **Fuel Vapor**....SA2046

Caballero V6-231 (3.8L) 2 Bbl. VIN A
- **Lube**....B43-S
- **Air**....PA1680
- **Fuel**....PF893,-RV
- **Oil Vapor**....SA2027
- **Fuel Vapor**....SA2046

Caballero V8-305 (5.0L) 2 Bbl. VIN U
- **Lube**....B27
- **Air**....PA2006
- **Fuel**....PF893,-RV
- **Oil Vapor**....SA2027
- **Fuel Vapor**....SA2046

Caballero V8-350 (5.7L) 4 Bbl. VIN L
- **Lube**....B27
- **Air**....PA2008
- **Fuel (1 In. Ele.)**....PF893,-RV
- **Fuel (2 1/32 In. Ele.)**....PF894,-RV
- **Oil Vapor**....SA2027
- **Fuel Vapor**....SA2046

Jimmy 6-250 (4.1L) 1 Bbl. VIN D
- **Lube**....B27
- **Air (1 7/8 In.)**....PA658
- **Air (3 In.)**....PA648
- **Fuel**....PF893,-RV
- **Oil Vapor**....SA2027
- **Fuel Vapor**....SA2046
- **Trans. (TH350, TH375)**....6021
- **Trans. (TH400)**....6020

Jimmy V8-305 (5.0L) 2 Bbl. VIN U
- **Lube**....B6
- **Air**....PA2006
- **Fuel**....PF893,-RV
- **Oil Vapor**....SA2027
- **Fuel Vapor**....SA2046
- **Trans. (TH350, TH375)**....18031
- **Trans. (TH400)**....6020

Jimmy V8-350 (5.7L) 4 Bbl. VIN L
- **Lube**....B6
- **Air**....PA2008
- **Fuel (1 In. Ele.)**....PF893,-RV
- **Fuel (2 1/32 In. Ele.)**....PF894,-RV
- **Oil Vapor**....SA2027
- **Fuel Vapor**....SA2046
- **Trans. (TH350, TH375)**....6021
- **Trans. (TH400)**....6020

GMC Light-Duty Trucks
1978 (Cont'd.)

Jimmy V8-400 (6.6L) 4 Bbl. VIN R
- **Lube**....B6
- **Air**....PA2008
- **Fuel (1 In. Ele.)**....PF893,-RV
- **Fuel (2 1/32 In. Ele.)**....PF894,-RV
- **Oil Vapor**....SA2027
- **Fuel Vapor**....SA2046
- **Trans. (TH350, TH375)**....6021
- **Trans. (TH400)**....6020

Pickups, C, K Series 6-250 (4.1L) 1 Bbl. VIN D
- **Lube**....B27
- **Air (1 7/8 In.)**....PA658
- **Air (3 In.)**....PA648
- **Fuel**....PF893,-RV
- **Oil Vapor**....SA2027
- **Fuel Vapor**....SA2046
- **Trans. (TH350, TH375)**....6021
- **Trans. (TH400)**....6020

Pickups, C, K Series 6-292 (4.8L) 1 Bbl. VIN T
- **Lube**....B27
- **Air**....PA648
- **Fuel**....PF893,-RV
- **Fuel Vapor**....SA2046
- **Trans. (TH350, TH375)**....6021
- **Trans. (TH400)**....6020

Pickups, C, K Series V8-305 (5.0L) 2 Bbl. VIN U
- **Lube**....B6
- **Air**....PA2006
- **Fuel**....PF893,-RV
- **Oil Vapor**....SA2027
- **Fuel Vapor**....SA2046
- **Trans. (TH350, TH375)**....18031
- **Trans. (TH400)**....6020

Pickups, C, K Series V8-350 (5.7L) 4 Bbl. VIN L
- **Lube**....B6
- **Air**....PA2008
- **Fuel (1 In. Ele.)**....PF893,-RV
- **Fuel (2 1/32 In. Ele.)**....PF894,-RV
- **Oil Vapor**....SA2027
- **Fuel Vapor**....SA2046
- **Trans. (TH350, TH375)**....6021
- **Trans. (TH400)**....6020

Pickups, C, K Series V8-350 (5.7L) Diesel VIN Z
- **Lube**....B39
- **Air**....PA2079
- **Fuel (Box-Style)**....BF806
- **Trans.**....6020

Pickups, C, K Series V8-400 (6.6L) 4 Bbl. VIN R
- **Lube**....B6
- **Air**....PA2008
- **Fuel (1 In. Ele.)**....PF893,-RV
- **Fuel (2 1/32 In. Ele.)**....PF894,-RV
- **Oil Vapor**....SA2027
- **Fuel Vapor**....SA2046
- **Trans. (TH350, TH375)**....6021
- **Trans. (TH400)**....6020

Pickups, C, K Series V8-454 (7.4L) 4 Bbl. VIN S
- **Lube**....B6
- **Air**....PA2008
- **Fuel**....PF894,-RV
- **Oil Vapor**....SA2027
- **Fuel Vapor**....SA2046
- **Trans. (TH350, TH375)**....6021
- **Trans. (TH400)**....6020

Suburban, C, K Series 6-250 (4.1L) 1 Bbl. VIN D
- **Lube**....B27
- **Air (1 7/8 In.)**....PA658
- **Air (3 In.)**....PA648
- **Fuel**....PF893,-RV
- **Oil Vapor**....SA2027
- **Fuel Vapor**....SA2046
- **Trans. (TH350, TH375)**....6021
- **Trans. (TH400)**....6020

GMC Light-Duty Trucks
1978 (Cont'd.)

Suburban, C, K Series 6-292 (4.8L) 1 Bbl. VIN T
- **Lube**....B27
- **Air**....PA648
- **Fuel**....PF893,-RV
- **Fuel Vapor**....SA2046
- **Trans. (TH350, TH375)**....6021
- **Trans. (TH400)**....6020

Suburban, C, K Series V8-305 (5.0L) 2 Bbl. VIN U
- **Lube**....B6
- **Air**....PA2006
- **Fuel**....PF893,-RV
- **Oil Vapor**....SA2027
- **Fuel Vapor**....SA2046
- **Trans. (TH350, TH375)**....18031
- **Trans. (TH400)**....6020

Suburban, C, K Series V8-350 (5.7L) 4 Bbl. VIN L
- **Lube**....B6
- **Air**....PA2008
- **Fuel (1 In. Ele.)**....PF893,-RV
- **Fuel (2 1/32 In. Ele.)**....PF894,-RV
- **Oil Vapor**....SA2027
- **Fuel Vapor**....SA2046
- **Trans. (TH350, TH375)**....6021
- **Trans. (TH400)**....6020

Suburban, C, K Series V8-350 (5.7L) Diesel VIN Z
- **Lube**....B39
- **Air**....PA2079
- **Fuel (Box-Style)**....BF806
- **Trans.**....6021

Suburban, C, K Series V8-400 (6.6L) 4 Bbl. VIN R
- **Lube**....B6
- **Air**....PA2008
- **Fuel (1 In. Ele.)**....PF893,-RV
- **Fuel (2 1/32 In. Ele.)**....PF894,-RV
- **Oil Vapor**....SA2027
- **Fuel Vapor**....SA2046
- **Trans. (TH350, TH375)**....6021
- **Trans. (TH400)**....6020

Suburban, C, K Series V8-454 (7.4L) 4 Bbl. VIN S
- **Lube**....B6
- **Air**....PA2008
- **Fuel**....PF894,-RV
- **Oil Vapor**....SA2027
- **Fuel Vapor**....SA2046
- **Trans. (TH350, TH375)**....6021
- **Trans. (TH400)**....6020

Vans, G Series 6-250 (4.1L) 1 Bbl. VIN D
- **Lube**....B27
- **Air (1 7/8 In.)**....PA658
- **Air (3 In.)**....PA648
- **Fuel**....PF893,-RV
- **Oil Vapor**....SA2027
- **Fuel Vapor**....SA2046
- **Trans.**....18031

Vans, G Series 6-292 (4.8L) 1 Bbl. VIN T
- **Lube**....B27
- **Air**....PA648
- **Fuel**....PF893,-RV
- **Fuel Vapor**....SA2046
- **Trans.**....18031

Vans, G Series V8-305 (5.0L) 2 Bbl. VIN U
- **Lube**....B6
- **Air**....PA1680
- **Fuel**....PF893,-RV
- **Oil Vapor**....SA2027
- **Fuel Vapor**....SA2046
- **Trans. (TH350)**....18031
- **Trans. (TH400)**....6020

OBS = Obsolete. Availability Limited to Distributor Stock.

GMC Light-Duty Trucks
1978 (Cont'd.)

Vans, G Series V8-350 (5.7L) 4 Bbl. VIN L
- **Lube**....B6
- **Air**....PA1680
- **Fuel (1 In. Ele.)**....PF893,-RV
- **Fuel (2 1/32 In. Ele.)**....PF894,-RV
- **Oil Vapor**....SA2027
- **Fuel Vapor**....SA2046
- **Trans.**....6020

Vans, G Series V8-400 (6.6L) 4 Bbl. VIN R
- **Lube**....B6
- **Air**....PA1680
- **Fuel (1 In. Ele.)**....PF893,-RV
- **Fuel (2 1/32 In. Ele.)**....PF894,-RV
- **Oil Vapor**....SA2027
- **Fuel Vapor**....SA2046
- **Trans.**....6020

Vans, P Series 6-292 (4.8L) 1 Bbl. VIN T
- **Lube**....B27
- **Air**....PA648
- **Fuel**....PF893,-RV
- **Fuel Vapor**....SA2046
- **Trans.**....6020

Vans, P Series V8-350 (5.7L) 4 Bbl. VIN L
- **Lube**....B6
- **Air**....PA1680
- **Fuel (1 In. Ele.)**....PF893,-RV
- **Fuel (2 1/32 In. Ele.)**....PF894,-RV
- **Oil Vapor**....SA2027
- **Fuel Vapor**....SA2046
- **Trans.**....6020

Vans, P Series V8-454 (7.4L) 4 Bbl. VIN S
- **Lube**....B6
- **Air**....PA2008
- **Fuel**....PF894,-RV
- **Oil Vapor**....SA2027
- **Fuel Vapor**....SA2046
- **Trans.**....6020

1977

Jimmy 6-250 (4.1L) 1 Bbl. VIN D
- **Lube**....B27
- **Air (1 7/8 In.)**....PA658
- **Air (3 In.)**....PA648
- **Fuel**....PF893,-RV
- **Oil Vapor**....SA2027
- **Fuel Vapor**....SA2046
- **Trans. (TH350C, TH375B)**....18031
- **Trans. (TH400)**....6020

Jimmy V8-305 (5.0L) 2 Bbl. VIN U
- **Lube**....B6
- **Air**....PA2006
- **Fuel**....PF893,-RV
- **Oil Vapor**....SA2027
- **Fuel Vapor**....SA2046
- **Trans.**....18031

Jimmy V8-350 (5.7L) 4 Bbl. VIN L
- **Lube**....B6
- **Air**....PA2008
- **Fuel (1 In. Ele.)**....PF893,-RV
- **Fuel (2 1/32 In. Ele.)**....PF894,-RV
- **Oil Vapor**....SA2027
- **Fuel Vapor**....SA2046
- **Trans. (TH350C, TH375B)**....18031
- **Trans. (TH400)**....6020

Jimmy V8-400 (6.6L) 4 Bbl. VIN R
- **Lube**....B6
- **Air**....PA2008
- **Fuel (1 In. Ele.)**....PF893,-RV
- **Fuel (2 1/32 In. Ele.)**....PF894,-RV
- **Oil Vapor**....SA2027
- **Fuel Vapor**....SA2046
- **Trans. (TH350C, TH375B)**....18031
- **Trans. (TH400)**....6020

GMC Light-Duty Trucks
1977 (Cont'd.)

Pickups, C, K Series 6-250 (4.1L) 1 Bbl. VIN D
- **Lube**....B27
- **Air (1 7/8 In.)**....PA658
- **Air (3 In.)**....PA648
- **Fuel**....PF893,-RV
- **Oil Vapor**....SA2027
- **Fuel Vapor**....SA2046
- **Trans. (TH350C, TH375B)**....18031
- **Trans. (TH400)**....6020

Pickups, C, K Series 6-292 (4.8L) 1 Bbl. VIN T
- **Lube**....B27
- **Air**....PA648
- **Fuel**....PF893,-RV
- **Fuel Vapor**....SA2046
- **Trans. (TH350C, TH375B)**....18031
- **Trans. (TH400)**....6020

Pickups, C, K Series V8-305 (5.0L) 2 Bbl. VIN U
- **Lube**....B6
- **Air**....PA2006
- **Fuel**....PF893,-RV
- **Oil Vapor**....SA2027
- **Fuel Vapor**....SA2046
- **Trans.**....18031

Pickups, C, K Series V8-350 (5.7L) 4 Bbl. VIN L
- **Lube**....B6
- **Air**....PA2008
- **Fuel (1 In. Ele.)**....PF893,-RV
- **Fuel (2 1/32 In. Ele.)**....PF894,-RV
- **Oil Vapor**....SA2027
- **Fuel Vapor**....SA2046
- **Trans. (TH350C, TH375B)**....18031
- **Trans. (TH400)**....6020

Pickups, C, K Series V8-400 (6.6L) 4 Bbl. VIN R
- **Lube**....B6
- **Air**....PA2008
- **Fuel (1 In. Ele.)**....PF893,-RV
- **Fuel (2 1/32 In. Ele.)**....PF894,-RV
- **Oil Vapor**....SA2027
- **Fuel Vapor**....SA2046
- **Trans. (TH350C, TH375B)**....18031
- **Trans. (TH400)**....6020

Pickups, C, K Series V8-454 (7.4L) 4 Bbl. VIN S
- **Lube**....B6
- **Air**....PA2008
- **Fuel**....PF894,-RV
- **Oil Vapor**....SA2027
- **Fuel Vapor**....SA2046
- **Trans.**....6020

Sprint 6-250 (4.1L) 1 Bbl. VIN D
- **Lube**....B27
- **Air (1 7/8 In.)**....PA658
- **Air (3 In.)**....PA648
- **Fuel**....PF893,-RV
- **Oil Vapor**....SA2027
- **Fuel Vapor**....SA2046
- **Trans.**....6021

Sprint V8-305 (5.0L) 2 Bbl. VIN U
- **Lube**....B27
- **Air**....PA2008
- **Fuel**....PF893,-RV
- **Oil Vapor**....SA2027
- **Fuel Vapor**....SA2046
- **Trans.**....6021

Sprint V8-350 (5.7L) 4 Bbl. VIN L
- **Lube**....B27
- **Air**....PA2008
- **Fuel (1 In. Ele.)**....PF893,-RV
- **Fuel (2 1/32 In. Ele.)**....PF894,-RV
- **Oil Vapor**....SA2027
- **Fuel Vapor**....SA2046
- **Trans.**....6021

GMC Light-Duty Trucks
1977 (Cont'd.)

Suburban, C, K Series 6-250 (4.1L) 1 Bbl. VIN D
- **Lube**....B27
- **Air (1 7/8 In.)**....PA658
- **Air (3 In.)**....PA648
- **Fuel**....PF893,-RV
- **Oil Vapor**....SA2027
- **Fuel Vapor**....SA2046
- **Trans. (TH350C, TH375B)**....18031
- **Trans. (TH400)**....6020

Suburban, C, K Series 6-292 (4.8L) 1 Bbl. VIN T
- **Lube**....B27
- **Air**....PA648
- **Fuel**....PF893,-RV
- **Fuel Vapor**....SA2046
- **Trans. (TH350, TH375)**....6021
- **Trans. (TH350C, TH375B)**....18031
- **Trans. (TH400)**....6020

Suburban, C, K Series V8-305 (5.0L) 2 Bbl. VIN U
- **Lube**....B6
- **Air**....PA2006
- **Fuel**....PF893,-RV
- **Oil Vapor**....SA2027
- **Fuel Vapor**....SA2046
- **Trans.**....18031

Suburban, C, K Series V8-350 (5.7L) 4 Bbl. VIN L
- **Lube**....B6
- **Air**....PA2008
- **Fuel (1 In. Ele.)**....PF893,-RV
- **Fuel (2 1/32 In. Ele.)**....PF894,-RV
- **Oil Vapor**....SA2027
- **Fuel Vapor**....SA2046
- **Trans. (TH350C, TH375B)**....18031
- **Trans. (TH400)**....6020

Suburban, C, K Series V8-400 (6.6L) 4 Bbl. VIN R
- **Lube**....B6
- **Air**....PA2008
- **Fuel (1 In. Ele.)**....PF893,-RV
- **Fuel (2 1/32 In. Ele.)**....PF894,-RV
- **Oil Vapor**....SA2027
- **Fuel Vapor**....SA2046
- **Trans. (TH350C, TH375B)**....18031
- **Trans. (TH400)**....6020

Suburban, C, K Series V8-454 (7.4L) 4 Bbl. VIN S
- **Lube**....B6
- **Air**....PA2008
- **Fuel**....PF894,-RV
- **Oil Vapor**....SA2027
- **Fuel Vapor**....SA2046
- **Trans.**....6020

Vans, G Series 6-250 (4.1L) 1 Bbl. VIN D
- **Lube**....B27
- **Air (1 7/8 In.)**....PA658
- **Air (3 In.)**....PA648
- **Fuel**....PF893,-RV
- **Oil Vapor**....SA2027
- **Fuel Vapor**....SA2046
- **Trans. (TH350C, TH375B)**....18031
- **Trans. (TH400)**....6020

Vans, G Series 6-292 (4.8L) 1 Bbl. VIN T
- **Lube**....B27
- **Air**....PA648
- **Fuel**....PF893,-RV
- **Fuel Vapor**....SA2046
- **Trans. (TH350C, TH375B)**....18031
- **Trans. (TH400)**....6020

Vans, G Series V8-305 (5.0L) 2 Bbl. VIN U
- **Lube**....B6
- **Air**....PA1680
- **Fuel**....PF893,-RV
- **Oil Vapor**....SA2027
- **Fuel Vapor**....SA2046
- **Trans. (TH350C, TH375B)**....18031
- **Trans. (TH400)**....6020

GMC Light-Duty Trucks
1977 (Cont'd.)

Vans, G Series V8-350 (5.7L) 4 Bbl. VIN L
- **Lube**....B6
- **Air**....PA1680
- **Fuel (1 In. Ele.)**....PF893,-RV
- **Fuel (2 1/32 In. Ele.)**....PF894,-RV
- **Oil Vapor**....SA2027
- **Fuel Vapor**....SA2046
- **Trans. (TH350C, TH375B)**....18031
- **Trans. (TH400)**....6020

Vans, G Series V8-400 (6.6L) 4 Bbl. VIN R
- **Lube**....B6
- **Air**....PA1680
- **Fuel (1 In. Ele.)**....PF893,-RV
- **Fuel (2 1/32 In. Ele.)**....PF894,-RV
- **Oil Vapor**....SA2027
- **Fuel Vapor**....SA2046
- **Trans. (TH350C, TH375B)**....18031
- **Trans. (TH400)**....6020

Vans, P Series 6-292 (4.8L) 1 Bbl. VIN T
- **Lube**....B27
- **Air**....PA648
- **Fuel**....PF893,-RV
- **Fuel Vapor**....SA2046
- **Trans.**....6020

Vans, P Series V8-350 (5.7L) 4 Bbl. VIN L
- **Lube**....B6
- **Air**....PA1680
- **Fuel (1 In. Ele.)**....PF893,-RV
- **Fuel (2 1/32 In. Ele.)**....PF894,-RV
- **Oil Vapor**....SA2027
- **Fuel Vapor**....SA2046
- **Trans.**....6020

Vans, P Series V8-454 (7.4L) 4 Bbl. VIN Y
- **Lube**....B6
- **Air**....PA2008
- **Fuel**....PF894,-RV
- **Oil Vapor**....SA2027
- **Fuel Vapor**....SA2046
- **Trans.**....6020

1976

Jimmy 6-250 (4.1L) 1 Bbl. VIN D
- **Lube**....B27
- **Air (1 7/8 In.)**....PA658
- **Air (3 In.)**....PA648
- **Fuel**....PF893,-RV
- **Oil Vapor**....SA2027
- **Fuel Vapor**....SA2046
- **Trans.**....6020

Jimmy V8-350 (5.7L) 2,4 Bbl. VIN L,V
- **Lube**....B6
- **Air**....PA2008
- **Fuel (1 In. Ele.)**....PF893,-RV
- **Fuel (2 1/32 In. Ele.)**....PF894,-RV
- **Oil Vapor**....SA2027
- **Fuel Vapor**....SA2046
- **Trans.**....6020

Jimmy V8-400 (6.6L) 4 Bbl. VIN U
- **Lube**....B6
- **Air**....PA2008
- **Fuel (1 In. Ele.)**....PF893,-RV
- **Fuel (2 1/32 In. Ele.)**....PF894,-RV
- **Oil Vapor**....SA2027
- **Fuel Vapor**....SA2046
- **Trans.**....6020

Pickups, C, K Series 6-250 (4.1L) 1 Bbl. VIN D
- **Lube**....B27
- **Air (1 7/8 In.)**....PA658
- **Air (3 In.)**....PA648
- **Fuel**....PF893,-RV
- **Oil Vapor**....SA2027
- **Fuel Vapor**....SA2046
- **Trans.**....6020

GMC Light-Duty Trucks
1976 (Cont'd.)

Pickups, C, K Series 6-292 (4.8L) 1 Bbl. VIN T
- **Lube**.....B27
- **Air**.....PA648
- **Fuel**.....PF893,-RV
- **Fuel Vapor**.....SA2046
- **Trans.**.....6020

Pickups, C, K Series V8-350 (5.7L) 4 Bbl. VIN L,V
- **Lube**.....B6
- **Air**.....PA2008
- **Fuel (1 In. Ele.)**.....PF893,-RV
- **Fuel (2 1/32 In. Ele.)**.....PF894,-RV
- **Oil Vapor**.....SA2027
- **Fuel Vapor**.....SA2046
- **Trans.**.....6020

Pickups, C, K Series V8-400 (6.6L) 4 Bbl. VIN U
- **Lube**.....B6
- **Air**.....PA2008
- **Fuel (1 In. Ele.)**.....PF893,-RV
- **Fuel (2 1/32 In. Ele.)**.....PF894,-RV
- **Oil Vapor**.....SA2027
- **Fuel Vapor**.....SA2046
- **Trans.**.....6020

Pickups, C, K Series V8-454 (7.4L) 4 Bbl. VIN S,Y
- **Lube**.....B6
- **Air**.....PA2008
- **Fuel (1 In. Ele.)**.....PF893,-RV
- **Fuel (2 1/32 In. Ele.)**.....PF894,-RV
- **Oil Vapor**.....SA2027
- **Fuel Vapor**.....SA2046
- **Trans.**.....6020

Sprint 6-250 (4.1L) 1 Bbl. VIN D
- **Lube**.....B27
- **Air (1 7/8 In.)**.....PA658
- **Air (3 In.)**.....PA648
- **Fuel**.....PF893,-RV
- **Oil Vapor**.....SA2027
- **Fuel Vapor**.....SA2046
- **Trans.**.....6020

Sprint V8-305 (5.0L) 2 Bbl. VIN Q
- **Lube**.....B27
- **Air**.....PA2008
- **Fuel**.....PF893,-RV
- **Oil Vapor**.....SA2027
- **Fuel Vapor**.....SA2046
- **Trans.**.....6020

Sprint V8-350 (5.7L) 2,4 Bbl. VIN L,V
- **Lube**.....B27
- **Air**.....PA2008
- **Fuel (1 In. Ele.)**.....PF893,-RV
- **Fuel (2 1/32 In. Ele.)**.....PF894,-RV
- **Oil Vapor**.....SA2027
- **Fuel Vapor**.....SA2046
- **Trans.**.....6021

Sprint V8-400 (6.6L) 4 Bbl. VIN U
- **Lube**.....B27
- **Air**.....PA2008
- **Fuel (1 In. Ele.)**.....PF893,-RV
- **Fuel (2 1/32 In. Ele.)**.....PF894,-RV
- **Oil Vapor**.....SA2027
- **Fuel Vapor**.....SA2046
- **Trans.**.....6021

Suburban, C, K Series 6-250 (4.1L) 1 Bbl. VIN D
- **Lube**.....B27
- **Air (1 7/8 In.)**.....PA658
- **Air (3 In.)**.....PA648
- **Fuel**.....PF893,-RV
- **Oil Vapor**.....SA2027
- **Fuel Vapor**.....SA2046
- **Trans.**.....6020

Suburban, C, K Series 6-292 (4.8L) 1 Bbl. VIN T
- **Lube**.....B27
- **Air**.....PA648
- **Fuel**.....PF893,-RV
- **Fuel Vapor**.....SA2046
- **Trans. (TH350, TH375)**.....6021
- **Trans. (TH400)**.....6020

GMC Light-Duty Trucks
1976 (Cont'd.)

Suburban, C, K Series V8-350 (5.7L) 4 Bbl. VIN L,V
- **Lube**.....B6
- **Air**.....PA2008
- **Fuel (1 In. Ele.)**.....PF893,-RV
- **Fuel (2 1/32 In. Ele.)**.....PF894,-RV
- **Oil Vapor**.....SA2027
- **Fuel Vapor**.....SA2046
- **Trans.**.....6020

Suburban, C, K Series V8-400 (6.6L) 4 Bbl. VIN U
- **Lube**.....B6
- **Air**.....PA2008
- **Fuel (1 In. Ele.)**.....PF893,-RV
- **Fuel (2 1/32 In. Ele.)**.....PF894,-RV
- **Oil Vapor**.....SA2027
- **Fuel Vapor**.....SA2046
- **Trans.**.....6020

Suburban, C, K Series V8-454 (7.4L) 4 Bbl. VIN S,Y
- **Lube**.....B6
- **Air**.....PA2008
- **Fuel (1 In. Ele.)**.....PF893,-RV
- **Fuel (2 1/32 In. Ele.)**.....PF894,-RV
- **Oil Vapor**.....SA2027
- **Fuel Vapor**.....SA2046
- **Trans.**.....6020

Vans, G Series 6-250 (4.1L) 1 Bbl. VIN D
- **Lube**.....B27
- **Air (1 7/8 In.)**.....PA658
- **Air (3 In.)**.....PA648
- **Fuel**.....PF893,-RV
- **Oil Vapor**.....SA2027
- **Fuel Vapor**.....SA2046
- **Trans.**.....6020

Vans, G Series 6-292 (4.8L) 1 Bbl. VIN T
- **Lube**.....B27
- **Air**.....PA648
- **Fuel**.....PF893,-RV
- **Fuel Vapor**.....SA2046
- **Trans.**.....6020

Vans, G Series V8-350 (5.7L) 2,4 Bbl. VIN L,V
- **Lube**.....B6
- **Air (Exc. Calif.)**.....PA1680
- **Fuel (1 In. Ele.)**.....PF893,-RV
- **Fuel (2 1/32 In. Ele.)**.....PF894,-RV
- **Oil Vapor**.....SA2027
- **Fuel Vapor**.....SA2046
- **Trans.**.....6020

Vans, G Series V8-400 (6.6L) 4 Bbl. VIN U
- **Lube**.....B6
- **Air (Exc. Calif.)**.....PA1680
- **Fuel (1 In. Ele.)**.....PF893,-RV
- **Fuel (2 1/32 In. Ele.)**.....PF894,-RV
- **Oil Vapor**.....SA2027
- **Fuel Vapor**.....SA2046
- **Trans.**.....6020

Vans, P Series 6-292 (4.8L) 1 Bbl. VIN T
- **Lube**.....B27
- **Air**.....PA648
- **Fuel**.....PF893,-RV
- **Fuel Vapor**.....SA2046
- **Trans.**.....6020

Vans, P Series V8-350 (5.7L) 4 Bbl. VIN L
- **Lube**.....B6
- **Air (Exc. Calif.)**.....PA1680
- **Fuel (1 In. Ele.)**.....PF893,-RV
- **Fuel (2 1/32 In. Ele.)**.....PF894,-RV
- **Oil Vapor**.....SA2027
- **Fuel Vapor**.....SA2046
- **Trans.**.....6020

GMC Light-Duty Trucks
1976 (Cont'd.)

Vans, P Series V8-454 (7.4L) 4 Bbl. VIN Y
- **Lube**.....B6
- **Air**.....PA2008
- **Fuel (1 In. Ele.)**.....PF893,-RV
- **Fuel (2 1/32 In. Ele.)**.....PF894,-RV
- **Oil Vapor**.....SA2027
- **Fuel Vapor**.....SA2046
- **Trans.**.....6020

1975

Jimmy 6-250 (4.1L) 1 Bbl. VIN Q
- **Lube**.....B27
- **Air (1 7/8 In.)**.....PA658
- **Air (3 In.)**.....PA648
- **Fuel**.....PF893,-RV
- **Oil Vapor**.....SA2027
- **Fuel Vapor**.....SA2046
- **Trans.**.....6021

Jimmy V8-350 (5.7L) 2 Bbl. VIN V
- **Lube**.....B6
- **Air**.....PA2006
- **Fuel (1 In. Ele.)**.....PF893,-RV
- **Fuel (2 1/32 In. Ele.)**.....PF894,-RV
- **Oil Vapor**.....SA2027
- **Fuel Vapor**.....SA2046
- **Trans.**.....6021

Jimmy V8-350 (5.7L) 4 Bbl. VIN Y
- **Lube**.....B6
- **Air**.....PA2008
- **Fuel (1 In. Ele.)**.....PF893,-RV
- **Fuel (2 1/32 In. Ele.)**.....PF894,-RV
- **Oil Vapor**.....SA2027
- **Fuel Vapor**.....SA2046
- **Trans.**.....6020

Jimmy V8-400 (6.6L) 4 Bbl. VIN M
- **Lube**.....B6
- **Air**.....PA2008
- **Fuel (1 In. Ele.)**.....PF893,-RV
- **Fuel (2 1/32 In. Ele.)**.....PF894,-RV
- **Oil Vapor**.....SA2027
- **Fuel Vapor**.....SA2046
- **Trans.**.....6020

Pickups, C, K Series 6-250 (4.1L) 1 Bbl. VIN Q
- **Lube**.....B27
- **Air (1 7/8 In.)**.....PA658
- **Air (3 In.)**.....PA648
- **Fuel**.....PF893,-RV
- **Oil Vapor**.....SA2027
- **Fuel Vapor**.....SA2046
- **Trans.**.....6021

Pickups, C, K Series 6-292 (4.8L) 1 Bbl. VIN T
- **Lube (Ele.)**.....P476
- **Lube (Spin-on)**.....B27
- **Air**.....PA648
- **Fuel**.....PF893,-RV
- **Fuel Vapor**.....SA2046
- **Trans.**.....6021

Pickups, C, K Series V8-350 (5.7L) 2 Bbl. VIN V
- **Lube**.....B6
- **Air**.....PA2006
- **Fuel (1 In. Ele.)**.....PF893,-RV
- **Fuel (2 1/32 In. Ele.)**.....PF894,-RV
- **Oil Vapor**.....SA2027
- **Fuel Vapor**.....SA2046
- **Trans.**.....6021

Pickups, C, K Series V8-350 (5.7L) 4 Bbl. VIN Y
- **Lube**.....B6
- **Air**.....PA2008
- **Fuel (1 In. Ele.)**.....PF893,-RV
- **Fuel (2 1/32 In. Ele.)**.....PF894,-RV
- **Oil Vapor**.....SA2027
- **Fuel Vapor**.....SA2046
- **Trans.**.....6020

GMC Light-Duty Trucks
1975 (Cont'd.)

Pickups, C, K Series V8-400 (6.6L) 4 Bbl. VIN M
- **Lube**.....B6
- **Air**.....PA2008
- **Fuel (1 In. Ele.)**.....PF893,-RV
- **Fuel (2 1/32 In. Ele.)**.....PF894,-RV
- **Oil Vapor**.....SA2027
- **Fuel Vapor**.....SA2046
- **Trans.**.....6020

Pickups, C, K Series V8-454 (7.4L) 4 Bbl. VIN Z
- **Lube**.....B6
- **Air**.....PA2008
- **Fuel (1 In. Ele.)**.....PF893,-RV
- **Fuel (2 1/32 In. Ele.)**.....PF894,-RV
- **Oil Vapor**.....SA2027
- **Fuel Vapor**.....SA2046
- **Trans.**.....6020

Sprint 6-250 (4.1L) 1 Bbl. VIN D
- **Lube**.....B27
- **Air (1 7/8 In.)**.....PA658
- **Air (3 In.)**.....PA648
- **Fuel**.....PF893,-RV
- **Oil Vapor**.....SA2027
- **Fuel Vapor**.....SA2046
- **Trans.**.....6021

Sprint V8-350 (5.7L) 2,4 Bbl. VIN H,L
- **Lube**.....B27
- **Air**.....PA2008
- **Fuel (1 In. Ele.)**.....PF893,-RV
- **Fuel (2 1/32 In. Ele.)**.....PF894,-RV
- **Oil Vapor**.....SA2027
- **Fuel Vapor**.....SA2046
- **Trans. (2 Bbl.)**.....6021
- **Trans. (4 Bbl.)**.....6020

Sprint V8-400 (6.6L) 4 Bbl. VIN U
- **Lube**.....B27
- **Air**.....PA2008
- **Fuel (1 In. Ele.)**.....PF893,-RV
- **Fuel (2 1/32 In. Ele.)**.....PF894,-RV
- **Oil Vapor**.....SA2027
- **Fuel Vapor**.....SA2046
- **Trans.**.....6020

Sprint V8-454 (7.4L) 4 Bbl. VIN Y
- **Lube**.....B27
- **Air**.....PA2008
- **Fuel (1 In. Ele.)**.....PF893,-RV
- **Fuel (2 1/32 In. Ele.)**.....PF894,-RV
- **Oil Vapor**.....SA2027
- **Fuel Vapor**.....SA2046
- **Trans.**.....6020

Suburban, C, K Series 6-250 (4.1L) 1 Bbl. VIN Q
- **Lube**.....B27
- **Air (1 7/8 In.)**.....PA658
- **Air (3 In.)**.....PA648
- **Fuel**.....PF893,-RV
- **Oil Vapor**.....SA2027
- **Fuel Vapor**.....SA2046
- **Trans.**.....6021

Suburban, C, K Series 6-292 (4.8L) 1 Bbl. VIN T
- **Lube (Ele.)**.....P476
- **Lube (Spin-on)**.....B27
- **Air**.....PA648
- **Fuel**.....PF893,-RV
- **Fuel Vapor**.....SA2046
- **Trans.**.....6021

Suburban, C, K Series V8-350 (5.7L) 2,4 Bbl. VIN V,Y
- **Lube**.....B6
- **Air (2 Bbl.)**.....PA2006
- **Air (4 Bbl.)**.....PA2008
- **Fuel (1 In. Ele.)**.....PF893,-RV
- **Fuel (2 1/32 In. Ele.)**.....PF894,-RV
- **Oil Vapor**.....SA2027
- **Fuel Vapor**.....SA2046
- **Trans. (2 Bbl.)**.....6021
- **Trans. (4 Bbl.)**.....6020

OBS = Obsolete. Availability Limited to Distributor Stock.

GMC Light-Duty Trucks
1975 (Cont'd.)

Suburban, C, K Series V8-400 (6.6L) 4 Bbl. VIN M
- **Lube**....B6
- **Air**....PA2008
- **Fuel (1 In. Ele.)**....PF893,-RV
- **Fuel (2 1/32 In. Ele.)**....PF894,-RV
- **Oil Vapor**....SA2027
- **Fuel Vapor**....SA2046
- **Trans.**....6020

Suburban, C, K Series V8-454 (7.4L) 4 Bbl. VIN Z
- **Lube**....B6
- **Air**....PA2008
- **Fuel (1 In. Ele.)**....PF893,-RV
- **Fuel (2 1/32 In. Ele.)**....PF894,-RV
- **Oil Vapor**....SA2027
- **Fuel Vapor**....SA2046
- **Trans.**....6020

Vans, G Series 6-250 (4.1L) 1 Bbl. VIN Q
- **Lube**....B27
- **Air (1 7/8 In.)**....PA658
- **Air (3 In.)**....PA648
- **Fuel**....PF893,-RV
- **Oil Vapor**....SA2027
- **Fuel Vapor**....SA2046
- **Trans.**....6021

Vans, G Series 6-292 (4.8L) 1 Bbl. VIN T
- **Lube (Ele.)**....P476
- **Lube (Spin-on)**....B27
- **Air**....PA648
- **Fuel**....PF893,-RV
- **Fuel Vapor**....SA2046
- **Trans.**....6021

Vans, G Series V8-350 (5.7L) 2,4 Bbl. VIN V,Y
- **Lube**....B6
- **Air**....PA1680
- **Fuel (1 In. Ele.)**....PF893,-RV
- **Fuel (2 1/32 In. Ele.)**....PF894,-RV
- **Oil Vapor**....SA2027
- **Fuel Vapor**....SA2046
- **Trans.**....6020

Vans, G Series V8-400 (6.6L) 4 Bbl. VIN M
- **Lube**....B6
- **Air**....PA1680
- **Fuel (1 In. Ele.)**....PF893,-RV
- **Fuel (2 1/32 In. Ele.)**....PF894,-RV
- **Oil Vapor**....SA2027
- **Fuel Vapor**....SA2046
- **Trans.**....6020

Vans, P Series 6-292 (4.8L) 1 Bbl. VIN T
- **Lube (Ele.)**....P476
- **Lube (Spin-on)**....B27
- **Air**....PA648
- **Fuel**....PF893,-RV
- **Fuel Vapor**....SA2046
- **Trans.**....6021

Vans, P Series V8-350 (5.7L) 4 Bbl. VIN Y
- **Lube**....B6
- **Air**....PA1680
- **Fuel (1 In. Ele.)**....PF893,-RV
- **Fuel (2 1/32 In. Ele.)**....PF894,-RV
- **Oil Vapor**....SA2027
- **Fuel Vapor**....SA2046
- **Trans.**....6021

Vans, P Series V8-454 (7.4L) 4 Bbl. VIN L
- **Lube**....B6
- **Air**....PA1680
- **Fuel (1 In. Ele.)**....PF893,-RV
- **Fuel (2 1/32 In. Ele.)**....PF894,-RV
- **Oil Vapor**....SA2027
- **Fuel Vapor**....SA2046
- **Trans.**....6021

GMC Light-Duty Trucks
(Cont'd.)

1974

Jimmy 6-250 (4.1L) 1 Bbl. Carb. VIN Q
- **Lube**....B27
- **Air (1 7/8 In.)**....PA658
- **Air (3 In.)**....PA648
- **Fuel**....PF893,-RV
- **Oil Vapor**....SA2027
- **Fuel Vapor**....SA2046
- **Trans.**....6021

Jimmy V8-350 (5.7L) 2,4 Bbl. Carb. VIN V,Y
- **Lube**....B6
- **Air (2 Bbl.)**....PA2006
- **Air (4 Bbl.)**....PA2008
- **Fuel**....PF893,-RV
- **Oil Vapor**....SA2027
- **Fuel Vapor**....SA2046
- **Trans. (TH350, TH375)**....6021
- **Trans. (TH400)**....6020

Pickups, C, K Series 6-250 (4.1L) 1 Bbl. Carb. VIN Q
- **Lube**....B27
- **Air (1 7/8 In.)**....PA658
- **Air (3 In.)**....PA648
- **Fuel**....PF893,-RV
- **Oil Vapor**....SA2027
- **Fuel Vapor**....SA2046
- **Trans.**....6021

Pickups, C, K Series 6-292 (4.8L) 1 Bbl. Carb. VIN T
- **Lube**....B27
- **Air**....PA648
- **Fuel**....PF893,-RV
- **Oil Vapor**....SA2027
- **Fuel Vapor**....SA2046
- **Trans.**....6021

Pickups, C, K Series 6-292 (4.8L) FI Natural Gas
- **Lube**....B27
- **Air**....PA648
- **Fuel**....PF893,-RV
- **Oil Vapor**....SA2027
- **Fuel Vapor**....SA2046
- **Trans.**....6021

Pickups, C, K Series V8-350 (5.7L) 2,4 Bbl. Carb. VIN V,Y
- **Lube**....B6
- **Air (2 Bbl.)**....PA2006
- **Air (4 Bbl.)**....PA2008
- **Fuel**....PF893,-RV
- **Oil Vapor**....SA2027
- **Fuel Vapor**....SA2046
- **Trans. (TH350, TH375)**....6021
- **Trans. (TH400)**....6020

Pickups, C, K Series V8-350 (5.7L) FI Natural Gas
- **Lube**....B6
- **Air**....PA2008
- **Fuel**....PF893,-RV
- **Oil Vapor**....SA2027
- **Fuel Vapor**....SA2046
- **Trans. (TH350, TH375)**....6021
- **Trans. (TH400)**....6020

Pickups, C, K Series V8-454 (7.4L) 4 Bbl. Carb. VIN Z
- **Lube**....B6
- **Air**....PA2008
- **Fuel**....PF893,-RV
- **Oil Vapor**....SA2027
- **Fuel Vapor**....SA2046
- **Trans.**....6020

Sprint V8-350 (5.7L) 2,4 Bbl. Carb. VIN H,L
- **Lube**....B6
- **Air**....PA2008
- **Fuel**....PF893,-RV
- **Oil Vapor**....SA2027
- **Fuel Vapor**....SA2046
- **Trans.**....6021

GMC Light-Duty Trucks
1974 (Cont'd.)

Sprint V8-400 (6.6L) 4 Bbl. Carb. VIN R,U
- **Lube**....B6
- **Air**....PA2008
- **Fuel**....PF893,-RV
- **Oil Vapor**....SA2027
- **Trans. (TH350, TH375)**....6021
- **Trans. (TH400)**....6020

Sprint V8-454 (7.4L) 4 Bbl. Carb. VIN Y
- **Lube**....B6
- **Air**....PA2008
- **Fuel**....PF893,-RV
- **Oil Vapor**....SA2027
- **Fuel Vapor**....SA2046
- **Trans.**....6020

Suburban, C, K Series 6-250 (4.1L) 1 Bbl. Carb. VIN Q
- **Lube**....B27
- **Air (1 7/8 In.)**....PA658
- **Air (3 In.)**....PA648
- **Fuel**....PF893,-RV
- **Oil Vapor**....SA2027
- **Fuel Vapor**....SA2046
- **Trans.**....6021

Suburban, C, K Series 6-292 (4.8L) 1 Bbl. Carb. VIN T
- **Lube**....B27
- **Air**....PA648
- **Fuel**....PF893,-RV
- **Oil Vapor**....SA2027
- **Fuel Vapor**....SA2046
- **Trans.**....6021

Suburban, C, K Series 6-292 (4.8L) FI Natural Gas VIN T
- **Lube**....B27
- **Air**....PA648
- **Fuel**....PF893,-RV
- **Oil Vapor**....SA2027
- **Fuel Vapor**....SA2046
- **Trans.**....6021

Suburban, C, K Series V8-350 (5.7L) 2,4 Bbl. Carb. VIN V,Y
- **Lube**....B6
- **Air (2 Bbl.)**....PA2006
- **Air (4 Bbl.)**....PA2008
- **Fuel**....PF893,-RV
- **Oil Vapor**....SA2027
- **Fuel Vapor**....SA2046
- **Trans. (TH350, TH375)**....6021
- **Trans. (TH400)**....6020

Suburban, C, K Series V8-350 (5.7L) FI Natural Gas
- **Lube**....B6
- **Air**....PA2008
- **Fuel**....PF893,-RV
- **Oil Vapor**....SA2027
- **Fuel Vapor**....SA2046
- **Trans. (TH350, TH375)**....6021
- **Trans. (TH400)**....6020

Suburban, C, K Series V8-454 (7.4L) 4 Bbl. Carb. VIN Z
- **Lube**....B6
- **Air**....PA2008
- **Fuel**....PF893,-RV
- **Oil Vapor**....SA2027
- **Fuel Vapor**....SA2046
- **Trans.**....6020

Vans, G Series 6-250 (4.1L) 1 Bbl. Carb. VIN Q
- **Lube**....B27
- **Air**....PA648
- **Fuel**....PF893,-RV
- **Oil Vapor**....SA2027
- **Fuel Vapor**....SA2046
- **Trans.**....6021

GMC Light-Duty Trucks
1974 (Cont'd.)

Vans, G Series V8-350 (5.7L) 2,4 Bbl. Carb. VIN V,Y
- **Lube**....B6
- **Air**....PA1680
- **Fuel**....PF893,-RV
- **Oil Vapor**....SA2027
- **Fuel Vapor**....SA2046
- **Trans. (TH350, TH375)**....6021
- **Trans. (TH400)**....6020

Vans, P Series 6-250 (4.1L) 1 Bbl. Carb. VIN Q
- **Lube**....B27
- **Air**....PA648
- **Fuel**....PF893,-RV
- **Oil Vapor**....SA2027
- **Fuel Vapor**....SA2046
- **Trans.**....6021

Vans, P Series 6-292 (4.8L) 1 Bbl. Carb. VIN T
- **Lube**....B27
- **Air**....PA648
- **Fuel**....PF893,-RV
- **Oil Vapor**....SA2027
- **Fuel Vapor**....SA2046
- **Trans. (TH350, TH375)**....6021
- **Trans. (TH400)**....6020

Vans, P Series V8-350 (5.7L) 4 Bbl. Carb. VIN Y
- **Lube**....B6
- **Air**....PA1680
- **Fuel**....PF893,-RV
- **Oil Vapor**....SA2027
- **Fuel Vapor**....SA2046
- **Trans. (TH350, TH375)**....6021
- **Trans. (TH400)**....6020

Vans, P Series V8-454 (7.4L) 4 Bbl. Carb. VIN L,Z
- **Lube**....B6
- **Air**....PA2008
- **Fuel**....PF893,-RV
- **Oil Vapor**....SA2027
- **Fuel Vapor**....SA2046
- **Trans.**....6020

1973

Jimmy 6-250 (4.1L) Carb. VIN Q
- **Lube**....B27
- **Air (1 7/8 In.)**....PA658
- **Air (3 In.)**....PA648
- **Fuel**....PF893,-RV
- **Oil Vapor**....SA2027
- **Fuel Vapor**....SA2046
- **Trans. (PowerGlide)**....6017
- **Trans. (TH350, TH375)**....6021

Jimmy V8-350 (5.7L) Carb. VIN Y
- **Lube**....B6
- **Air**....PA2008
- **Fuel**....PF893,-RV
- **Oil Vapor**....SA2027
- **Fuel Vapor**....SA2046
- **Trans.**....6021

Pickups, C, K Series 6-250 (4.1L) 1 Bbl. Carb. VIN Q
- **Lube**....B27
- **Air (1 7/8 In.)**....PA658
- **Air (3 In.)**....PA648
- **Fuel**....PF893,-RV
- **Oil Vapor**....SA2027
- **Fuel Vapor**....SA2046
- **Trans. (PowerGlide)**....6017
- **Trans. (TH350, TH375)**....6021

Pickups, C, K Series 6-292 (4.8L) Carb. VIN T
- **Lube**....B27
- **Air**....PA648
- **Fuel**....PF893,-RV
- **Oil Vapor**....SA2027
- **Fuel Vapor**....SA2046
- **Trans. (PowerGlide)**....6017
- **Trans. (TH350, TH375)**....6021

OBS = Obsolete. Availability Limited to Distributor Stock.

GMC Light-Duty Trucks
1973 (Cont'd.)

Pickups, C, K Series 6-307 (5.0L) Carb. VIN X
- **Lube**....B6
- **Air**....PA2006
- **Fuel (SintBronze)**....SF898
- **Oil Vapor**....SA2027
- **Fuel Vapor**....SA2046
- **Trans. (PowerGlide)**....6017
- **Trans. (TH350, TH375)**....6021

Pickups, C, K Series V8-350 (5.7L) Carb. VIN Y
- **Lube**....B6
- **Air**....PA2008
- **Fuel**....PF893,-RV
- **Oil Vapor**....SA2027
- **Fuel Vapor**....SA2046
- **Trans. (TH350, TH375)**....6021
- **Trans. (TH400)**....6020

Pickups, C, K Series V8-454 (7.4L) 4 Bbl. Carb. VIN Z
- **Lube (5 11/32 In.)**....B6
- **Lube (8 11/16 In.)**....B7
- **Air**....PA2008
- **Fuel**....PF893,-RV
- **Oil Vapor**....SA2027
- **Fuel Vapor**....SA2046
- **Trans.**....6020

Sprint V8-307 (5.0L) Carb. VIN F
- **Lube**....B27
- **Air**....PA2008
- **Fuel (SintBronze)**....SF898
- **Oil Vapor**....SA2027
- **Fuel Vapor**....SA2046
- **Trans.**....6017

Sprint V8-350 (5.7L) 2,4 Bbl. Carb. VIN H,K
- **Lube**....B6
- **Air**....PA2008
- **Fuel**....PF893,-RV
- **Oil Vapor**....SA2027
- **Fuel Vapor**....SA2046
- **Trans. (PowerGlide)**....6017
- **Trans. (TH350, TH375)**....6021

Sprint V8-454 (7.4L) 4 Bbl. Carb. VIN Y
- **Lube**....B6
- **Air**....PA2008
- **Fuel**....PF893,-RV
- **Oil Vapor**....SA2027
- **Fuel Vapor**....SA2046
- **Trans.**....6020

Suburban, C, K Series 6-250 (4.1L) Carb. VIN Q
- **Lube**....B27
- **Air (1 7/8 In.)**....PA658
- **Air (3 In.)**....PA648
- **Fuel**....PF893,-RV
- **Oil Vapor**....SA2027
- **Fuel Vapor**....SA2046
- **Trans. (PowerGlide)**....6017
- **Trans. (TH350, TH375)**....6021

Suburban, C, K Series 6-292 (4.8L) Carb. VIN T
- **Lube**....B27
- **Air**....PA648
- **Fuel**....PF893,-RV
- **Oil Vapor**....SA2027
- **Fuel Vapor**....SA2046
- **Trans. (PowerGlide)**....6017
- **Trans. (TH350, TH375)**....6021

Suburban, C, K Series V8-307 (5.0L) Carb. VIN X
- **Lube**....B6
- **Air**....PA2006
- **Fuel (SintBronze)**....SF898
- **Oil Vapor**....SA2027
- **Fuel Vapor**....SA2046
- **Trans.**....6021

GMC Light-Duty Trucks
1973 (Cont'd.)

Suburban, C, K Series V8-350 (5.7L) Carb. VIN Y
- **Lube**....B6
- **Air**....PA2008
- **Fuel**....PF893,-RV
- **Oil Vapor**....SA2027
- **Fuel Vapor**....SA2046
- **Trans. (TH350, TH375)**....6021
- **Trans. (TH400)**....6020

Suburban, C, K Series V8-454 (7.4L) 4 Bbl. Carb. VIN Z
- **Lube (5 11/32 In.)**....B6
- **Lube (8 11/16 In.)**....B7
- **Air**....PA2008
- **Fuel**....PF893,-RV
- **Oil Vapor**....SA2027
- **Fuel Vapor**....SA2046
- **Trans.**....6020

Vans, G Series 6-250 (4.1L) 1 Bbl. Carb. VIN Q
- **Lube**....B27
- **Air**....PA648
- **Fuel**....PF893,-RV
- **Oil Vapor**....SA2027
- **Fuel Vapor**....SA2046
- **Trans. (PowerGlide)**....6017
- **Trans. (TH350, TH375)**....6021

Vans, G Series V8-307 (5.0L) Carb. VIN X
- **Lube**....B6
- **Air**....PA2006
- **Fuel (SintBronze)**....SF898
- **Oil Vapor**....SA2027
- **Fuel Vapor**....SA2046
- **Trans. (PowerGlide)**....6017
- **Trans. (TH350, TH375)**....6021

Vans, G Series V8-350 (5.7L) Carb. VIN Y
- **Lube**....B6
- **Air**....PA1680
- **Fuel**....PF893,-RV
- **Oil Vapor**....SA2027
- **Fuel Vapor**....SA2046
- **Trans. (TH350, TH375)**....6021
- **Trans. (TH400)**....6020

Vans, P Series 6-250 (4.1L) 1 Bbl. Carb. VIN Q
- **Lube**....B27
- **Air**....PA648
- **Fuel**....PF893,-RV
- **Oil Vapor**....SA2027
- **Fuel Vapor**....SA2046
- **Trans.**....6021

Vans, P Series 6-292 (4.8L) Carb. VIN T
- **Lube**....B27
- **Air**....PA648
- **Fuel**....PF893,-RV
- **Oil Vapor**....SA2027
- **Fuel Vapor**....SA2046
- **Trans.**....6021

Vans, P Series V8-350 (5.7L) Carb. VIN Y
- **Lube**....B6
- **Air**....PA2008
- **Fuel**....PF893,-RV
- **Oil Vapor**....SA2027
- **Fuel Vapor**....SA2046
- **Trans. (TH350, TH375)**....6021
- **Trans. (TH400)**....6020

Vans, P Series V8-454 (7.4L) 4 Bbl. Carb. VIN Z
- **Lube**....B6
- **Air**....PA2008
- **Fuel**....PF893,-RV
- **Oil Vapor**....SA2027
- **Fuel Vapor**....SA2046
- **Trans.**....6020

GMC Light-Duty Trucks
(Cont'd.)

1972

Jimmy 6-250 (4.1L) Carb. VIN D
- **Lube**....B27
- **Air**....PA658
- **Fuel**....PF893,-RV
- **Oil Vapor**....SA2027
- **Fuel Vapor**....SA2046
- **Trans. (TH350, TH375)**....6021
- **Trans. (TH400)**....6020

Jimmy V8-307 (5.0L) Carb. VIN F
- **Lube**....B6
- **Air**....PA1680
- **Fuel (SintBronze)**....SF898
- **Oil Vapor**....SA2027
- **Fuel Vapor**....SA2046
- **Trans. (TH350, TH375)**....6021
- **Trans. (TH400)**....6020

Jimmy V8-307 (5.0L) 2 Bbl. Carb. VIN A,B
- **Lube**....B6
- **Air**....PA1680
- **Fuel (SintBronze)**....SF898
- **Oil Vapor**....SA2027
- **Fuel Vapor**....SA2046
- **Trans. (TH350, TH375)**....6021
- **Trans. (TH400)**....6020
- **Trans. (PowerGlide)**....6017

Jimmy V8-350 (5.7L) Carb. VIN E
- **Lube**....B6
- **Air**....PA2006
- **Fuel**....PF893,-RV
- **Oil Vapor**....SA2027
- **Fuel Vapor**....SA2046
- **Trans. (TH350, TH375)**....6021
- **Trans. (TH400)**....6020
- **Trans. (PowerGlide)**....6017

Pickups, C, K Series 6-250 (4.1L) 1 Bbl. Carb. VIN D
- **Lube**....B27
- **Air**....PA658
- **Fuel**....PF893,-RV
- **Oil Vapor**....SA2027
- **Fuel Vapor**....SA2046
- **Trans. (TH350, TH375)**....6021
- **Trans. (TH400)**....6020

Pickups, C, K Series 6-292 (4.8L) Carb. VIN S
- **Lube**....B27
- **Air**....PA648
- **Fuel**....PF893,-RV
- **Oil Vapor**....SA2027
- **Fuel Vapor**....SA2046
- **Trans. (TH350, TH375)**....6021
- **Trans. (TH400)**....6020

Pickups, C, K Series V8-307 (5.0L) Carb. VIN F
- **Lube**....B6
- **Air**....PA1680
- **Fuel (SintBronze)**....SF898
- **Oil Vapor**....SA2027
- **Fuel Vapor**....SA2046
- **Trans. (TH350, TH375)**....6021
- **Trans. (TH400)**....6020

Pickups, C, K Series V8-350 (5.7L) Carb. VIN E,H,J
- **Lube**....B6
- **Air**....PA2006
- **Fuel**....PF893,-RV
- **Oil Vapor**....SA2027
- **Fuel Vapor**....SA2046
- **Trans. (TH350, TH375)**....6021
- **Trans. (TH400)**....6020

Pickups, C, K Series V8-402 (6.6L) 4 Bbl. Carb. VIN U
- **Lube**....B6
- **Air**....PA2008
- **Fuel**....PF893,-RV
- **Oil Vapor**....SA2027
- **Fuel Vapor**....SA2046
- **Trans.**....6020

GMC Light-Duty Trucks
1972 (Cont'd.)

Sprint 6-250 (4.1L) Carb. VIN D
- **Lube**....B27
- **Air**....PA658
- **Fuel**....PF893,-RV
- **Oil Vapor**....SA2027
- **Fuel Vapor**....SA2046
- **Trans. (PowerGlide)**....6017
- **Trans. (TH350, TH375)**....6021
- **Trans. (TH400)**....6020

Sprint V8-307 (5.0L) Carb.
- **Lube (4 1/2 In.)**....B27
- **Lube (5 1/2 In.)**....B6
- **Air**....PA2008
- **Fuel (SintBronze)**....SF898
- **Oil Vapor**....SA2027
- **Fuel Vapor**....SA2046
- **Trans. (PowerGlide)**....6017
- **Trans. (TH350, TH375)**....6021
- **Trans. (TH400)**....6020

Sprint V8-350 (5.7L) 2,4 Bbl. Carb. VIN H,J
- **Lube**....B6
- **Air**....PA2008
- **Fuel**....PF893,-RV
- **Oil Vapor**....SA2027
- **Fuel Vapor**....SA2046
- **Trans. (PowerGlide)**....6017
- **Trans. (TH350, TH375)**....6021
- **Trans. (TH400)**....6020

Sprint V8-402 (6.6L) 4 Bbl. Carb.
- **Lube**....B6
- **Air**....PA2008
- **Fuel**....PF893,-RV
- **Oil Vapor**....SA2027
- **Fuel Vapor**....SA2046
- **Trans. (TH350, TH375)**....6021
- **Trans. (TH400)**....6020

Sprint V8-454 (7.4L) 4 Bbl. Carb. VIN W
- **Lube**....B6
- **Air**....PA2008
- **Fuel**....PF893,-RV
- **Oil Vapor**....SA2027
- **Fuel Vapor**....SA2046
- **Trans.**....6020

Suburban, C, K Series 6-250 (4.1L) Carb. VIN D
- **Lube**....B27
- **Air**....PA658
- **Fuel**....PF893,-RV
- **Oil Vapor**....SA2027
- **Fuel Vapor**....SA2046
- **Trans. (TH350, TH375)**....6021
- **Trans. (TH400)**....6020

Suburban, C, K Series 6-292 (4.8L) Carb. VIN S
- **Lube**....B27
- **Air (9 1/2 In. O.D.)**....PA648
- **Air (10 In. O.D.)**....PA1841
- **Fuel**....PF893,-RV
- **Oil Vapor**....SA2027
- **Fuel Vapor**....SA2046
- **Trans. (PowerGlide)**....6017
- **Trans. (TH350, TH375)**....6021
- **Trans. (TH400)**....6020

Suburban, C, K Series V8-307 (5.0L) Carb. VIN F
- **Lube**....B6
- **Air**....PA1680
- **Fuel (SintBronze)**....SF898
- **Oil Vapor**....SA2027
- **Fuel Vapor**....SA2046
- **Trans. (TH350, TH375)**....6021
- **Trans. (TH400)**....6020

Suburban, C, K Series V8-350 (5.7L) Carb. VIN E,H
- **Lube**....B6
- **Air**....PA2006
- **Fuel**....PF893,-RV
- **Oil Vapor**....SA2027
- **Fuel Vapor**....SA2046
- **Trans. (TH350, TH375)**....6021
- **Trans. (TH400)**....6020

OBS = Obsolete. Availability Limited to Distributor Stock.

GMC Light-Duty Trucks
1972 (Cont'd.)

Suburban, C, K Series V8-402 (6.6L) 4 Bbl. Carb. VIN E
- **Air**....PA2008
- **Fuel**....PF893,-RV
- **Oil Vapor**....SA2027
- **Fuel Vapor**....SA2046
- **Trans.**....6020

Vans, G Series 6-250 (4.1L) 1 Bbl. Carb. VIN D
- **Lube**....B27
- **Air**....PA648
- **Fuel**....PF893,-RV
- **Oil Vapor**....SA2027
- **Fuel Vapor**....SA2046
- **Trans.**....6021

Vans, G Series V8-307 (5.0L) Carb. VIN F
- **Lube (4 3/8 In.)**....B27
- **Lube (5 11/32 In.)**....B6
- **Air**....PA1680
- **Fuel (SintBronze)**....SF898
- **Oil Vapor**....SA2027
- **Fuel Vapor**....SA2046
- **Trans.**....6021

Vans, G Series V8-350 (5.7L) Carb. VIN E
- **Lube**....B6
- **Air**....PA2006
- **Fuel**....PF893,-RV
- **Oil Vapor**....SA2027
- **Fuel Vapor**....SA2046
- **Trans.**....6021

Vans, P Series 6-250 (4.1L) 1 Bbl. Carb. VIN L
- **Lube**....B27
- **Air**....PA648
- **Fuel**....PF893,-RV
- **Oil Vapor**....SA2027
- **Fuel Vapor**....SA2046
- **Trans. (TH350, TH375)**....6021
- **Trans. (TH400)**....6020

Vans, P Series 6-292 (4.8L) Carb. VIN S
- **Lube**....B27
- **Air**....PA648
- **Fuel**....PF893,-RV
- **Oil Vapor**....SA2027
- **Fuel Vapor**....SA2046
- **Trans. (TH350, TH375)**....6021
- **Trans. (TH400)**....6020

Vans, P Series V8-350 (5.7L) Carb. VIN E
- **Lube**....B6
- **Air**....PA2006
- **Fuel**....PF893,-RV
- **Oil Vapor**....SA2027
- **Fuel Vapor**....SA2046
- **Trans. (TH350, TH375)**....6021
- **Trans. (TH400)**....6020

1971

Jimmy 6-250 (4.1L) Carb. VIN C,L
- **Lube**....B27
- **Air**....PA658
- **Fuel**....PF893,-RV
- **Oil Vapor**....SA2027
- **Fuel Vapor**....SA2046
- **Trans. (TH350, TH375)**....6021
- **Trans. (TH400)**....6020
- **Trans. (PowerGlide)**....6017

Jimmy V8-307 (5.0L) Carb. VIN H
- **Lube**....B6
- **Air**....PA2006
- **Fuel (SintBronze)**....SF898
- **Oil Vapor**....SA2027
- **Fuel Vapor**....SA2046
- **Trans. (TH350, TH375)**....6021
- **Trans. (TH400)**....6020
- **Trans. (PowerGlide)**....6017

GMC Light-Duty Trucks
1971 (Cont'd.)

Jimmy V8-350 (5.7L) Carb. VIN E
- **Lube**....B6
- **Air**....PA2006
- **Fuel**....PF893,-RV
- **Oil Vapor**....SA2027
- **Fuel Vapor**....SA2046
- **Trans. (TH350, TH375)**....6021
- **Trans. (PowerGlide)**....6017

Pickups, C, K Series 6-250 (4.1L) 1 Bbl. Carb. VIN C,L
- **Lube**....B27
- **Air**....PA658
- **Fuel**....PF893,-RV
- **Oil Vapor**....SA2027
- **Fuel Vapor**....SA2046
- **Trans. (TH350, TH375)**....6021
- **Trans. (TH400)**....6020
- **Trans. (PowerGlide)**....6017

Pickups, C, K Series 6-292 (4.8L) Carb. VIN S
- **Lube**....B27
- **Air**....PA1680
- **Fuel**....PF893,-RV
- **Oil Vapor**....SA2027
- **Fuel Vapor**....SA2046
- **Trans. (TH350, TH375)**....6021
- **Trans. (TH400)**....6020
- **Trans. (PowerGlide)**....6017

Pickups, C, K Series V8-307 (5.0L) Carb. VIN H,P
- **Lube**....B6
- **Air**....PA1680
- **Fuel (SintBronze)**....SF898
- **Oil Vapor**....SA2027
- **Fuel Vapor**....SA2046
- **Trans. (TH350, TH375)**....6021
- **Trans. (TH400)**....6020
- **Trans. (PowerGlide)**....6017

Pickups, C, K Series V8-350 (5.7L) Carb. VIN A,B,E
- **Lube**....B6
- **Air**....PA2006
- **Fuel**....PF893,-RV
- **Oil Vapor**....SA2027
- **Fuel Vapor**....SA2046
- **Trans. (TH350, TH375)**....6021
- **Trans. (PowerGlide)**....6017

Pickups, C, K Series V8-402 (6.6L) Carb. VIN E,K
- **Lube**....B6
- **Fuel**....PF893,-RV
- **Oil Vapor**....SA2027
- **Fuel Vapor**....SA2046

Sprint 6-250 (4.1L) Carb.
- **Lube**....B27
- **Air**....PA1680
- **Fuel**....PF893,-RV
- **Oil Vapor**....SA2027
- **Fuel Vapor**....SA2046
- **Trans.**....6017

Sprint V8-307 (5.0L) Carb.
- **Lube**....B27
- **Air**....PA658
- **Fuel (SintBronze)**....SF898
- **Oil Vapor**....SA2027
- **Fuel Vapor**....SA2046
- **Trans. (TH350, TH375)**....6021
- **Trans. (TH400)**....6020
- **Trans. (PowerGlide)**....6017

Sprint V8-350 (5.7L) Carb.
- **Lube**....B6
- **Air**....PA2006
- **Fuel**....PF893,-RV
- **Oil Vapor**....SA2027
- **Fuel Vapor**....SA2046
- **Trans. (TH350, TH375)**....6021
- **Trans. (TH400)**....6020
- **Trans. (PowerGlide)**....6017

Sprint V8-402 (6.6L) Carb.
- **Lube**....B6
- **Air**....PA2006
- **Fuel**....PF893,-RV
- **Oil Vapor**....SA2027
- **Fuel Vapor**....SA2046
- **Trans.**....6021

GMC Light-Duty Trucks
1971 (Cont'd.)

Sprint V8-454 (7.4L) Carb.
- **Lube**....B6
- **Air**....PA2008
- **Fuel**....PF893,-RV
- **Oil Vapor**....SA2027
- **Fuel Vapor**....SA2046
- **Trans.**....6020

Suburban, C, K Series 6-250 (4.1L) Carb. VIN C,L
- **Lube**....B27
- **Air**....PA658
- **Fuel**....PF893,-RV
- **Oil Vapor**....SA2027
- **Fuel Vapor**....SA2046
- **Trans.**....6017

Suburban, C, K Series 6-292 (4.8L) Carb. VIN S
- **Lube**....B27
- **Air**....PA648
- **Fuel**....PF893,-RV
- **Oil Vapor**....SA2027
- **Fuel Vapor**....SA2046
- **Trans.**....6017

Suburban, C, K Series V8-307 (5.0L) Carb. VIN H,P
- **Lube**....B6
- **Air**....PA2006
- **Fuel (SintBronze)**....SF898
- **Oil Vapor**....SA2027
- **Fuel Vapor**....SA2046
- **Trans.**....6017

Suburban, C, K Series V8-350 (5.7L) Carb. VIN B,E
- **Lube**....B6
- **Air**....PA2006
- **Fuel**....PF893,-RV
- **Oil Vapor**....SA2027
- **Fuel Vapor**....SA2046
- **Trans. (TH350, TH375)**....6021
- **Trans. (PowerGlide)**....6017

Suburban, C, K Series V8-402 (6.6L) Carb. VIN E
- **Lube**....B6
- **Fuel**....PF893,-RV
- **Oil Vapor**....SA2027
- **Fuel Vapor**....SA2046

Vans, G Series 6-250 (4.1L) 1 Bbl. Carb. VIN C,L
- **Lube**....B27
- **Air**....PA648
- **Fuel**....PF893,-RV
- **Oil Vapor**....SA2027
- **Fuel Vapor**....SA2046
- **Trans.**....6021

Vans, G Series V8-307 (5.0L) Carb. VIN H,P
- **Lube**....B6
- **Air**....PA2006
- **Fuel (SintBronze)**....SF898
- **Oil Vapor**....SA2027
- **Fuel Vapor**....SA2046
- **Trans.**....6021

Vans, G Series V8-350 (5.7L) Carb. VIN A,B,E
- **Lube**....B6
- **Air**....PA2006
- **Fuel**....PF893,-RV
- **Oil Vapor**....SA2027
- **Fuel Vapor**....SA2046
- **Trans.**....6021

Vans, P Series 6-250 (4.1L) 1 Bbl. Carb. VIN C,L
- **Lube**....B27
- **Air**....PA648
- **Fuel**....PF893,-RV
- **Oil Vapor**....SA2027
- **Fuel Vapor**....SA2046
- **Trans. (TH350, TH375)**....6021
- **Trans. (TH400)**....6020

GMC Light-Duty Trucks
1971 (Cont'd.)

Vans, P Series 6-292 (4.8L) Carb. VIN S
- **Lube**....B27
- **Fuel**....PF893,-RV
- **Oil Vapor**....SA2027
- **Fuel Vapor**....SA2046
- **Trans. (TH350, TH375)**....6021
- **Trans. (TH400)**....6020

Vans, P Series V8-350 (5.7L) Carb. VIN E
- **Lube**....B6
- **Air**....PA2006
- **Oil Vapor**....SA2027
- **Fuel Vapor**....SA2046
- **Trans. (TH350, TH375)**....6021
- **Trans. (TH400)**....6020

Vans, P Series V8-454 (7.4L) Carb. VIN E
- **Lube**....B6
- **Air**....PA2006
- **Fuel**....PF893,-RV
- **Oil Vapor**....SA2027
- **Fuel Vapor**....SA2046
- **Trans.**....6020

1970

Jimmy 6-250 (4.1L) 1 Bbl. Carb. VIN S,N
- **Lube**....B27
- **Air**....PA658
- **Fuel**....PF893,-RV
- **Oil Vapor**....SA2027
- **Fuel Vapor**....SA2046
- **Trans. (TH350, TH375)**....6021
- **Trans. (TH400)**....6020
- **Trans. (PowerGlide)**....6017

Pickups, C, K Series 6-250 (4.1L) 1 Bbl. Carb. VIN N
- **Lube**....B27
- **Air**....PA658
- **Fuel**....PF893,-RV
- **Oil Vapor**....SA2027
- **Fuel Vapor**....SA2046
- **Trans. (TH350, TH375)**....6021
- **Trans. (TH400)**....6020
- **Trans. (PowerGlide)**....6017

Pickups, C, K Series 6-292 (4.8L) 1 Bbl. Carb. VIN S
- **Lube**....B27
- **Air**....PA1680
- **Fuel**....PF893,-RV
- **Oil Vapor**....SA2027
- **Fuel Vapor**....SA2046
- **Trans. (TH350, TH375)**....6021
- **Trans. (TH400)**....6020
- **Trans. (PowerGlide)**....6017

Pickups, C, K Series V8-307 (5.0L) 2 Bbl. Carb. VIN A,B
- **Lube**....B6
- **Air**....PA1680
- **Fuel (SintBronze)**....SF898
- **Oil Vapor**....SA2027
- **Fuel Vapor**....SA2046
- **Trans. (TH350, TH375)**....6021
- **Trans. (TH400)**....6020
- **Trans. (PowerGlide)**....6017

Pickups, C, K Series V8-350 (5.7L) 2 Bbl. Carb. VIN E
- **Lube**....B6
- **Air**....PA2006
- **Fuel**....PF893,-RV
- **Oil Vapor**....SA2027
- **Fuel Vapor**....SA2046
- **Trans. (TH350, TH375)**....6021
- **Trans. (TH400)**....6020
- **Trans. (PowerGlide)**....6017

Pickups, C, K Series V8-402 (6.6L) 4 Bbl. Carb. VIN E
- **Lube**....B6
- **Air**....PA2006
- **Fuel**....PF893,-RV
- **Oil Vapor**....SA2027
- **Fuel Vapor**....SA2046

OBS = Obsolete. Availability Limited to Distributor Stock.

GMC Light-Duty Trucks
1970 (Cont'd.)

Suburban, C, K Series 6-250 (4.1L) 1 Bbl. Carb. VIN N
- **Lube**....B27
- **Air**....PA658
- **Fuel**....PF893,-RV
- **Oil Vapor**....SA2027
- **Fuel Vapor**....SA2046
- **Trans. (TH350, TH375)**....6021
- **Trans. (TH400)**....6020
- **Trans. (PowerGlide)**....6017

Suburban, C, K Series 6-292 (4.8L) 1 Bbl. Carb. VIN S
- **Lube**....B27
- **Air**....PA1680
- **Fuel**....PF893,-RV
- **Oil Vapor**....SA2027
- **Fuel Vapor**....SA2046
- **Trans. (TH350, TH375)**....6021
- **Trans. (TH400)**....6020
- **Trans. (PowerGlide)**....6017

Suburban, C, K Series V8-307 (5.0L) 2 Bbl. Carb. VIN A,B
- **Lube**....B6
- **Air**....PA1680
- **Fuel (SintBronze)**....SF898
- **Oil Vapor**....SA2027
- **Fuel Vapor**....SA2046
- **Trans. (TH350, TH375)**....6021
- **Trans. (TH400)**....6020
- **Trans. (PowerGlide)**....6017

Suburban, C, K Series V8-350 (5.7L) 2 Bbl. Carb. VIN E
- **Lube**....B6
- **Air**....PA2006
- **Fuel**....PF893,-RV
- **Oil Vapor**....SA2027
- **Fuel Vapor**....SA2046
- **Trans. (TH350, TH375)**....6021
- **Trans. (TH400)**....6020
- **Trans. (PowerGlide)**....6017

Suburban, C, K Series V8-402 (6.6L) 4 Bbl. Carb. VIN E
- **Lube**....B6
- **Air**....PA2006
- **Fuel**....PF893,-RV
- **Oil Vapor**....SA2027
- **Fuel Vapor**....SA2046

Vans, G Series 6-250 (4.1L) 1 Bbl. Carb. VIN N
- **Lube**....B27
- **Air**....PA658
- **Fuel**....PF893,-RV
- **Oil Vapor**....SA2027
- **Fuel Vapor**....SA2046
- **Trans.**....6017

Vans, G Series V8-307 (5.0L) 2 Bbl. Carb. VIN A,B
- **Lube**....B6
- **Air**....PA1680
- **Fuel (SintBronze)**....SF898
- **Oil Vapor**....SA2027
- **Fuel Vapor**....SA2046
- **Trans.**....6017

Vans, G Series V8-350 (5.7L) Carb. VIN E
- **Lube**....B6
- **Air**....PA2006
- **Fuel**....PF893,-RV
- **Oil Vapor**....SA2027
- **Fuel Vapor**....SA2046
- **Trans. (TH350, TH375)**....6021
- **Trans. (PowerGlide)**....6017

Vans, P Series 6-250 (4.1L) 1 Bbl. Carb. VIN N
- **Lube**....B27
- **Air**....PA1680
- **Fuel**....PF893,-RV
- **Oil Vapor**....SA2027
- **Fuel Vapor**....SA2046
- **Trans. (TH400)**....6020
- **Trans. (PowerGlide)**....6017

GMC Light-Duty Trucks
1970 (Cont'd.)

Vans, P Series 6-292 (4.8L) 1 Bbl. Carb. VIN S
- **Lube**....B27
- **Air**....PA1680
- **Fuel**....PF893,-RV
- **Oil Vapor**....SA2027
- **Fuel Vapor**....SA2046
- **Trans. (TH400)**....6020
- **Trans. (PowerGlide)**....6017

Vans, P Series V8-350 (5.7L) 2 Bbl. Carb. VIN E
- **Lube**....B6
- **Air**....PA2006
- **Fuel**....PF893,-RV
- **Oil Vapor**....SA2027
- **Fuel Vapor**....SA2046
- **Trans. (TH400)**....6020
- **Trans. (PowerGlide)**....6017

Vans, P Series V8-454 (7.4L) 4 Bbl. Carb. VIN E
- **Air**....PA2006
- **Fuel**....PF893,-RV
- **Oil Vapor**....SA2027
- **Fuel Vapor**....SA2046
- **Trans.**....6020

1969

Pickups, C, K Series V8-350 (5.7L) 2 Bbl. Carb. VIN E
- **Lube**....B6
- **Air**....PA2006
- **Fuel**....PF893,-RV
- **Oil Vapor**....SA2027
- **Fuel Vapor**....SA2046
- **Trans. (PowerGlide)**....6017
- **Trans. (TH350, TH375)**....6021
- **Trans. (TH400)**....6020

Pickups, C, K Series 6-230 (3.8L) Carb. VIN S
- **Lube**....B27
- **Air**....PA658
- **Fuel**....PF893,-RV
- **Oil Vapor**....SA2027

Pickups, C, K Series 6-250 (4.1L) Carb. VIN P
- **Lube**....B27
- **Air**....PA658
- **Fuel**....PF893,-RV
- **Oil Vapor**....SA2027
- **Trans.**....6017

Pickups, C, K Series 6-292 (4.8L) Carb. VIN S
- **Lube**....B27
- **Air**....PA1680
- **Fuel**....PF893,-RV
- **Oil Vapor**....SA2027
- **Trans. (TH350, TH375)**....6021
- **Trans. (PowerGlide)**....6017

Pickups, C, K Series V8-307 (5.0L) Carb. VIN E
- **Lube**....B6
- **Air**....PA1680
- **Fuel (SintBronze)**....SF898
- **Oil Vapor**....SA2027
- **Trans. (TH350, TH375)**....6021
- **Trans. (PowerGlide)**....6017

Pickups, C, K Series V8-396 (6.5L) Carb. VIN E
- **Air**....PA2006
- **Fuel (SintBronze)**....SF898
- **Oil Vapor**....SA2027
- **Trans.**....6020

Suburban, C, K Series 6-250 (4.1L) Carb. VIN P
- **Lube**....B27
- **Air**....PA658
- **Fuel**....PF893,-RV
- **Oil Vapor**....SA2027
- **Trans.**....6017

GMC Light-Duty Trucks
1969 (Cont'd.)

Suburban, C, K Series 6-292 (4.8L) Carb. VIN S
- **Lube**....B27
- **Air**....PA1680
- **Fuel**....PF893,-RV
- **Oil Vapor**....SA2027
- **Trans. (TH350, TH375)**....6021
- **Trans. (PowerGlide)**....6017

Suburban, C, K Series V8-307 (5.0L) Carb. VIN U
- **Lube**....B6
- **Air**....PA1680
- **Fuel (SintBronze)**....SF898
- **Oil Vapor**....SA2027
- **Trans. (TH350, TH375)**....6021
- **Trans. (PowerGlide)**....6017

Suburban, C, K Series V8-350 (5.7L) Carb. VIN E
- **Oil Vapor**....SA2027
- **Trans. (TH350, TH375)**....6021
- **Trans. (PowerGlide)**....6017

Suburban, C, K Series V8-396 (6.5L) Carb. VIN Y
- **Air**....PA2006
- **Fuel (SintBronze)**....SF898
- **Oil Vapor**....SA2027
- **Trans.**....6020

Vans, G Series 6-230 (3.8L) Carb. VIN S
- **Lube**....B27
- **Air**....PA658
- **Fuel**....PF893,-RV
- **Oil Vapor**....SA2027
- **Trans.**....6017

Vans, G Series 6-250 (4.1L) Carb. VIN P
- **Lube**....B27
- **Air**....PA658
- **Fuel**....PF893,-RV
- **Oil Vapor**....SA2027
- **Trans.**....6017

Vans, G Series V8-307 (5.0L) Carb. VIN E
- **Lube**....B6
- **Air**....PA1680
- **Fuel (SintBronze)**....SF898
- **Oil Vapor**....SA2027
- **Trans. (TH350, TH375)**....6021
- **Trans. (PowerGlide)**....6017

Vans, P Series 6-230 (3.8L) Carb. VIN S
- **Lube**....B27
- **Air**....PA658
- **Fuel**....PF893,-RV
- **Oil Vapor**....SA2027
- **Trans.**....6020

Vans, P Series 6-250 (4.1L) Carb. VIN P
- **Lube**....B27
- **Air**....PA658
- **Fuel**....PF893,-RV
- **Oil Vapor**....SA2027
- **Trans. (TH400)**....6020
- **Trans. (PowerGlide)**....6017

Vans, P Series 6-292 (4.8L) Carb. VIN S
- **Lube**....B27
- **Air**....PA1680
- **Fuel**....PF893,-RV
- **Oil Vapor**....SA2027
- **Trans. (TH400)**....6020
- **Trans. (PowerGlide)**....6017

Vans, P Series V8-307 (5.0L) Carb. VIN E
- **Lube**....B6
- **Air**....PA1680
- **Fuel (SintBronze)**....SF898
- **Oil Vapor**....SA2027
- **Trans. (TH400)**....6020
- **Trans. (PowerGlide)**....6017

GMC Light-Duty Trucks
(Cont'd.)

1968

Pickups, C, K Series 6-230 (3.8L) Carb. VIN S
- **Lube**....B27
- **Air**....PA658
- **Fuel**....PF893,-RV
- **Oil Vapor**....SA2027

Pickups, C, K Series 6-250 (4.1L) Carb. VIN P
- **Lube**....B6
- **Air**....PA658
- **Fuel**....PF893,-RV
- **Oil Vapor**....SA2027
- **Trans.**....6017

Pickups, C, K Series 6-292 (4.8L) Carb. VIN S
- **Lube**....B6
- **Air**....PA1680
- **Fuel**....PF893,-RV
- **Oil Vapor**....SA2027
- **Trans.**....6017

Pickups, C, K Series V8-307 (5.0L) Carb. VIN E
- **Lube (Ele.)**....P18
- **Lube (Spin-on)**....B6
- **Fuel (SintBronze)**....SF898
- **Trans.**....6017

Pickups, C, K Series V8-327 (5.4L) Carb. VIN E
- **Lube**....P18
- **Air**....PA2006
- **Fuel**....PF827
- **Oil Vapor**....SA2027
- **Trans.**....6017

Pickups, C, K Series V8-396 (6.5L) Carb. VIN E
- **Lube**....P18
- **Air**....PA2006
- **Fuel**....PF827
- **Oil Vapor**....SA2027
- **Trans.**....6020

Suburban, C, K Series 6-250 (4.1L) Carb. VIN P
- **Lube**....B6
- **Air**....PA658
- **Fuel**....PF893,-RV
- **Oil Vapor**....SA2027
- **Trans.**....6017

Suburban, C, K Series 6-292 (4.8L) Carb. VIN S
- **Lube**....B6
- **Air**....PA1680
- **Fuel**....PF893,-RV
- **Oil Vapor**....SA2027
- **Trans.**....6017

Suburban, C, K Series V8-307 (5.0L) Carb. VIN E
- **Lube (Ele.)**....P18
- **Lube (Spin-on)**....B27
- **Fuel (SintBronze)**....SF898
- **Trans.**....6017

Suburban, C, K Series V8-327 (5.4L) Carb. VIN E
- **Lube**....P18
- **Air**....PA2006
- **Fuel**....PF827
- **Oil Vapor**....SA2027
- **Trans.**....6017

Suburban, C, K Series V8-396 (6.5L) Carb. VIN Y
- **Lube**....P18
- **Air**....PA2006
- **Fuel**....PF827
- **Oil Vapor**....SA2027
- **Trans.**....6020

Vans, G Series 6-230 (3.8L) Carb. VIN S
- **Lube**....B27
- **Air**....PA658
- **Fuel**....PF893,-RV
- **Oil Vapor**....SA2027
- **Trans.**....6017

OBS = Obsolete. Availability Limited to Distributor Stock.

GMC Light-Duty Trucks
1968 (Cont'd.)

Vans, G Series 6-250 (4.1L) Carb.
VIN P
Lube.....B6
Air.....PA658
Fuel.....PF893,-RV
Oil Vapor.....SA2027
Trans......6017

Vans, G Series V8-307 (5.0L) Carb.
VIN E
Fuel (SintBronze).....SF898
Trans......6017

Vans, P Series 3-159 (2.6L) FI Diesel VIN T
Lube.....B27
Air.....PA658
Fuel (SintBronze).....SF898

Vans, P Series 6-230 (3.8L) Carb.
VIN S
Lube.....B27
Air.....PA658
Fuel.....PF893,-RV
Oil Vapor.....SA2027
Trans......6017

Vans, P Series 6-250 (4.1L) Carb.
VIN P
Lube.....B27
Air.....PA658
Fuel.....PF893,-RV
Oil Vapor.....SA2027
Trans......6017

Vans, P Series 6-292 (4.8L) Carb.
VIN S
Lube.....B27
Air.....PA1680
Fuel.....PF893,-RV
Oil Vapor.....SA2027
Trans......6017

Vans, P Series V8-307 (5.0L) Carb.
VIN E
Fuel (SintBronze).....SF898
Trans......6017

1967

Pickups, C, K Series 6-230 (3.8L) Carb.
Lube.....B6
Air.....PA658
Fuel (SintBronze).....SF898
Trans. (TH400).....6020
Trans. (Early TH400).....6013
Trans. (PowerGlide).....6017

Pickups, C, K Series 6-250 (4.1L) Carb.
Lube.....B6
Air (Std.).....PA658
Air (HvyDty.).....PA1680
Fuel.....PF893,-RV
Oil Vapor.....N/R
Trans......6017

Pickups, C, K Series 6-292 (4.8L) Carb.
Lube.....B6
Air.....PA625
Fuel.....PF857
Oil Vapor.....N/R
Trans......6017

Pickups, C, K Series V8-283 (4.6L) Carb.
Lube.....P18
Air.....PA625
Fuel.....PF827
Oil Vapor.....N/R
Trans......6017

Pickups, C, K Series V6-305 (5.0L) Carb.
Lube.....B9
Fuel.....PF857
Trans......6017

GMC Light-Duty Trucks
1967 (Cont'd.)

Pickups, C, K Series V8-327 (5.4L) Carb.
Lube.....P18
Air.....PA625
Fuel.....PF827
Trans......6017

Suburban 6-230 (3.8L) Carb.
Lube.....B27
Air.....PA658
Fuel.....PF893,-RV
Trans......6017

Suburban 6-250 (4.1L) Carb.
Lube.....B6
Air.....PA658
Fuel.....PF893,-RV
Oil Vapor.....N/R
Trans......6017

Suburban 6-292 (4.8L) Carb.
Lube.....B6
Air.....PA625
Fuel.....PF857
Oil Vapor.....N/R
Trans......6017

Suburban V6-305 (5.0L) Carb.
Lube.....B9
Fuel.....PF857
Trans......6017

Suburban V8-327 (5.4L) Carb.
Lube.....P18
Air.....PA625
Fuel.....PF827
Trans......6017

Vans, G, P Series 6-230 (3.8L) Carb.
Lube.....B27
Air.....PA658
Fuel.....PF893,-RV
Trans......6017

Vans, G, P Series 6-250 (4.1L) Carb.
Lube.....B6
Air.....PA658
Fuel.....PF893,-RV
Oil Vapor.....N/R
Trans......6017

Vans, G, P Series 6-292 (4.8L) Carb.
Lube.....B6
Air.....PA625
Fuel.....PF827
Oil Vapor.....N/R
Trans......6017

Vans, G, P Series V8-283 (4.6L) Carb.
Lube.....P18
Air.....PA625
Fuel.....PF827
Oil Vapor.....N/R
Trans......6017

Vans, G, P Series V8-327 (5.4L) Carb.
Lube.....P18
Air.....PA625
Fuel.....PF827
Trans......6017

1966

G1000 Series 6-194 (3.2L) Carb.
Lube.....B6
Air.....PA658
Fuel (SintBronze).....SF898
Trans. (PowerGlide).....6017
Trans. (TH400).....6013

G1000 Series 6-230 (3.8L) Carb.
Lube.....B6
Air.....PA658
Fuel (SintBronze).....SF898
Trans. (PowerGlide).....6017
Trans. (TH400).....6013

PB1500 Series 6-194 (3.2L) Carb.
Lube.....B6
Air.....PA658
Fuel (SintBronze).....SF898
Trans. (PowerGlide).....6017
Trans. (TH400).....6013

GMC Light-Duty Trucks
1966 (Cont'd.)

PB1500 Series 6-230 (3.8L) Carb.
Lube.....B6
Air.....PA658
Fuel (SintBronze).....SF898
Trans. (PowerGlide).....6017
Trans. (TH400).....6013

PB1500 Series 6-250 (4.1L) Carb.
Lube.....B6
Air (Std.).....PA658
Air (HvyDty.).....PA1680
Fuel.....PF893,-RV
Oil Vapor.....N/R
Trans......6017

PB1500 Series 6-292 (4.8L) Carb.
Lube.....B6
Air.....PA625
Fuel.....PF857
Oil Vapor.....N/R
Trans......6017

PB2500 Series 6-230 (3.8L) Carb.
Lube.....B6
Air.....PA658
Fuel (SintBronze).....SF898
Trans. (PowerGlide).....6017
Trans. (TH400).....6013

PB2500 Series 6-250 (4.1L) Carb.
Lube.....B6
Air (Std.).....PA658
Air (HvyDty.).....PA1680
Fuel.....PF893,-RV
Oil Vapor.....N/R
Trans......6017

PB2500 Series 6-292 (4.8L) Carb.
Lube.....B6
Air.....PA625
Fuel.....PF857
Oil Vapor.....N/R
Trans......6017

Pickups, C, K Series 6-230 (3.8L) Carb.
Lube.....B27
Air.....PA658
Fuel.....PF893,-RV
Trans......6017

Pickups, C, K Series 6-250 (4.1L) Carb.
Lube.....B6
Air.....PA658
Fuel.....PF893,-RV
Oil Vapor.....N/R
Trans......6017

Pickups, C, K Series 6-292 (4.8L) Carb.
Lube.....B6
Air.....PA625
Fuel.....PF857
Oil Vapor.....N/R
Trans......6017

Pickups, C, K Series V8-305 (5.0L) Carb.
Lube.....B9
Fuel.....PF857
Trans......6017

Suburban 6-230 (3.8L) Carb.
Lube.....B27
Air.....PA658
Fuel.....PF893,-RV
Trans......6017

Suburban 6-250 (4.1L) Carb.
Lube.....B6
Air.....PA658
Fuel.....PF893,-RV
Oil Vapor.....N/R
Trans......6017

Suburban 6-292 (4.8L) Carb.
Lube.....B6
Air.....PA625
Fuel.....BF879
Oil Vapor.....N/R
Trans......6017

Suburban V6-305 (5.0L) Carb.
Lube.....B9
Fuel.....PF857
Trans......6017

GMC Light-Duty Trucks
1966 (Cont'd.)

Vans 6-240 (4.1L) Carb.
Lube.....B6
Air.....PA658
Fuel.....PF893,-RV
Oil Vapor.....N/R
Trans......6017

1965

1000 Series 6-230 (3.8L) Carb.
Lube.....B27
Air.....PA658
Fuel.....PF893,-RV
Trans......6017

1000 Series V6-305 (5.0L) Carb.
Lube.....P25
Fuel.....PF827
Trans......6017

1500 Series 6-230 (3.8L) Carb.
Lube.....B27
Air.....PA658
Fuel.....PF893,-RV
Trans......6017

1500 Series V6-305 (5.0L) Carb.
Lube.....P25
Fuel.....PF827
Trans......6017

G1000 Series 6-230 (3.8L) Carb.
Lube.....B27
Air.....PA1680
Fuel.....PF893,-RV
Trans......6017

PB1000 Series 4-153 (2.5L) Carb.
Lube.....B27
Fuel (SintBronze).....SF898
Oil Vapor.....N/R
Trans......6017

Suburban 6-230 (3.8L) Carb.
Lube.....B27
Air.....PA658
Fuel (SintBronze).....SF898
Trans......6017

1964

1000 Series 6-230 (3.8L) Carb.
Air.....PA658
Trans......6017

1000 Series V6-305 (5.0L) Carb.
Lube.....P25
Fuel.....PF827
Trans......6017

1500 Series 6-230 (3.8L) Carb.
Air.....PA658
Trans......6017

1500 Series V6-305 (5.0L) Carb.
Lube.....P25
Fuel.....PF827
Trans......6017

G1000 Series 6-230 (3.8L) Carb.
Lube.....B6
Air.....PA658
Fuel (SintBronze).....SF898
Trans......6017

PB1000 Series 4-153 (2.5L) Carb.
Lube.....B27
Air.....PA658
Fuel (SintBronze).....SF898
Oil Vapor.....N/R
Trans......6017

Suburban 6-230 (3.8L) Carb.
Air.....PA658
Fuel (SintBronze).....SF898
Trans......6017

1963

1000 Series V6-305 (5.0L) Carb.
Lube.....P25
Fuel.....PF827
Trans......6017

1500 Series V6-305 (5.0L) Carb.
Lube.....P25
Fuel.....PF827
Trans......6017

OBS = Obsolete. Availability Limited to Distributor Stock.

GMC Light-Duty Trucks
1963 (Cont'd.)

2500 Series V6-305 (5.0L) Carb.
Lube....P25
Fuel....PF827
Trans.....6017
PB1000 Series 4-153 (2.5L) Carb.
Lube....B27
Air....PA1680
Fuel (SintBronze)....SF898
Oil Vapor....N/R
Trans.....6017
PB1000 Series 6-230 (3.8L) Carb.
Air....PA658
Trans.....6017
PB2500 Series 6-230 (3.8L) Carb.
Air....PA658
Trans.....6017
Suburban 4-153 (2.5L) Carb.
Lube....B27
Air....PA1680
Fuel (SintBronze)....SF898
Oil Vapor....N/R
Trans.....6017
Suburban 6-230 (3.8L) Carb.
Air....PA658
Fuel (SintBronze)....SF898
Trans.....6017

1962

1000 Series 6-270 (4.4L) 1 Bbl. Carb.
Lube....P20-HD
Air....PA1603
Fuel....PF893,-RV
1000 Series V6-305 (5.0L) 2 Bbl. Carb.
Lube....P25
Fuel....PF827
1500 Series 6-270 (4.4L) 1 Bbl. Carb.
Lube....P20-HD
Air....PA1603
Fuel....PF893,-RV
1500 Series V6-305 (5.0L) 2 Bbl. Carb.
Lube....P25
Fuel....PF827
2500 Series 6-270 (4.4L) 1 Bbl. Carb.
Lube....P20-HD
Air....PA1603
Fuel....PF893,-RV
2500 Series V6-305 (5.0L) 2 Bbl. Carb.
Lube....P25
Fuel....PF827
V3000 6-270 (4.4L) 1 Bbl. Carb.
Lube....P20-HD
Air....PA1603
Fuel....PF893,-RV
V3000 V6-305 (5.0L) 2 Bbl. Carb.
Lube....P25
Fuel....PF827

1961

1000 Series 6-270 (4.4L) 1 Bbl. Carb.
Air....PA1603
Fuel....PF893,-RV
Oil Vapor....N/R
1000 Series V6-305 (5.0L) 2 Bbl. Carb.
Lube....P19
Fuel....PF827
Oil Vapor....N/R
1500 Series 6-270 (4.4L) 1 Bbl. Carb.
Air....PA1603
Fuel....PF893,-RV
Oil Vapor....N/R
1500 Series V6-305 (5.0L) 2 Bbl. Carb.
Lube....P19
Fuel....PF827
Oil Vapor....N/R
2500 Series 6-270 (4.4L) 1 Bbl. Carb.
Air....PA1603
Fuel....PF893,-RV
Oil Vapor....N/R

GMC Light-Duty Trucks
1961 (Cont'd.)

2500 Series V6-305 (5.0L) 2 Bbl. Carb.
Lube....P19
Fuel....PF827
Oil Vapor....N/R

V3000 6-270 (4.4L) 1 Bbl. Carb.
Air....PA1603
Fuel....PF893,-RV
Oil Vapor....N/R

V3000 V6-305 (5.0L) 2 Bbl. Carb.
Lube....P19
Fuel....PF827
Oil Vapor....N/R

1960

Truck 6-270 (4.4L) 1 Bbl. Carb.
Air....PA1603
Fuel....PF893,-RV
Oil Vapor....N/R

Truck V6-305 (5.0L) 2 Bbl. Carb.
Lube....P19
Fuel....PF827

1959

Truck 6-270 (4.4L) 1 Bbl. Carb.
Lube (F-F)....P25
Lube (B-P)....P52
Air....PA1603
Fuel....PF893,-RV
Oil Vapor....N/R

Truck V8-336 (5.5L) 2 Bbl. Carb.
Lube....P25
Fuel....PF857
Oil Vapor....N/R

1958

Truck 6-270 (4.4L) 1 Bbl. Carb.
Lube (F-F)....P25
Lube (B-P)....P52
Air....PA1603
Fuel....PF893,-RV
Oil Vapor....N/R

Truck V8-336 (5.5L) 2 Bbl. Carb.
Lube....P25
Fuel....PF857
Oil Vapor....N/R

1957

Truck 6-270 (4.4L) 1 Bbl. Carb.
Lube (F-F)....P25
Lube (B-P)....P52
Air....PA1603
Fuel....PF893,-RV
Oil Vapor....N/R

Truck V8-347 (5.7L) 2 Bbl. Carb.
Lube....P25
Fuel....PF857
Oil Vapor....N/R
PowSteer....P183

1956

Truck 6-270 (4.4L) 1 Bbl. Carb.
Lube (F-F)....P25
Lube (B-P)....P52
Air....PA1603
Fuel....PF893,-RV
Oil Vapor....N/R

1955

Truck 6-248 (4.1L) 1 Bbl. Carb.
Lube (F-F)....P25
Lube (B-P)....P52
Air....PA1603
Fuel....PF893,-RV
Oil Vapor....N/R

Truck V8-288 (4.7L) 2 Bbl. Carb.
Lube....P25
Fuel....PF857
Oil Vapor....N/R

HONDA

1979

Accord 4-1751cc (1.8L) 3 Bbl. VIN 1
Lube....B156
Air....PA2075
Fuel....BF840,-K1
Civic 4-1237cc (1.2L) 2 Bbl. VIN 3
Lube....B166
Air....PA2088
Fuel....BF934
Civic 4-1488cc (1.5L) 3 Bbl. VIN 3,4
Lube....B166
Air....PA2090
Fuel (Exc. Wagon)....BF934
Fuel (Wagon)....BF840,-K1
Prelude 4-1751cc (1.8L) 3 Bbl. VIN 1
Lube....B156
Air....PA2075
Fuel....BF840-K1

1978

Accord 4-1599cc (1.6L) 3 Bbl. VIN 1
Lube....B166
Air....PA2090
Fuel (Canada)....BF840,-K1
Civic 4-1237cc (1.2L) 2 Bbl. VIN 3
Lube....B166
Air....PA2088
Fuel....BF934
Civic 4-1488cc (1.5L) 3 Bbl. VIN 3,4
Lube....B166
Air....PA2090
Fuel (Exc. Wagon)....BF934
Fuel (Wagon)....BF840,-K1

1977

Accord 4-1599cc (1.6L) 3 Bbl. VIN 1
Lube....B166
Air....PA2090
Fuel (Canada)....BF840,-K1
Civic 4-1237cc (1.2L) 2 Bbl. VIN 2
Lube....B166
Air....PA2088
Fuel....BF934
Civic 4-1488cc (1.5L) 3 Bbl. VIN 3,4
Lube....B166
Air....PA2090
Fuel (Exc. Wagon)....BF934
Fuel (Wagon)....BF840,-K1

1976

Accord 4-1599cc (1.6L) 3 Bbl. VIN 1
Lube....B166
Air....PA2090
Fuel (Canada)....BF840,-K1
Civic 4-1237cc (1.2L) 2 Bbl. VIN 2
Lube....B166
Air....PA2088
Fuel....BF934
Civic 1488cc (1.5L) 3 Bbl. VIN 2,3
Lube....B166
Fuel (Exc. Wagon)....BF934
Fuel (Wagon)....BF833,-K2

1975

Civic 4-1237cc (1.2L) 2 Bbl. VIN 2
Lube....B166
Air....PA2088
Fuel....BF934
Civic 4-1488cc (1.5L) 3 Bbl. VIN 1,2,4
Lube....B166
Fuel (Exc. Wagon)....BF934
Fuel (Wagon)....BF840,-K1

1974

Civic 4-1237cc (1.2L) Carb.
Lube....B166
Air....PA2088
Fuel....BF833,-K2
Oil Vapor....N/R

HONDA (Cont'd.)

1973

Civic 4-1237cc (1.2L) Carb.
Lube....B166
Air....PA2088
Fuel....BF833,-K2
Oil Vapor....N/R

1972

600 2-598cc (.6L) Carb.
Fuel....BF934
Fuel Vapor....N/R

1971

600 2-598cc (.6L) Carb.
Fuel....BF934
Fuel Vapor....N/R

1970

600 2-598cc (.6L) Carb.
Fuel....BF934

IHC Light-Duty Trucks

1979

Scout II 4-196 (3.2L) 1 Bbl.
Lube....B2
Air....PA1735
Fuel....BF840,-K1
Fuel Vapor....SA2046
Trans.....18032
Scout 6-198 (3.2L) Diesel
Lube....PT153
Air....PA1735
Fuel (P. Spin-on)....BF991
Fuel (S. Ele.)....PF861
Trans.....18032
Scout V8-304 (5.0L) 2 Bbl.
Lube....B2
Air....PA1735
Fuel....BF840,-K1
Fuel Vapor....SA2046
Trans.....18032
Scout V8-345 (5.6L) 2 Bbl.
Lube....B2
Air....PA1735
Fuel....BF840,-K1
Fuel Vapor....SA2046
Trans.....18032

1978

Scout II 4-196cc-196 (3.2L) 1 Bbl.
Lube....B2
Air....PA1735
Fuel....BF840,-K1
Fuel Vapor....SA2046
Trans.....18032
Scout 6-198 (3.2L) Diesel
Lube....PT153
Air....PA1735
Fuel (P. Spin-on)....BF991
Fuel (S. Ele.)....PF861
Trans.....18032
Scout V8-304 (5.0L) 2 Bbl.
Lube....B2
Air....PA1735
Fuel....BF840,-K1
Fuel Vapor....SA2046
Trans.....18032
Scout V8-345 (5.6L) 2 Bbl.
Lube....B2
Air....PA1735
Fuel....BF840,-K1
Fuel Vapor....SA2046
Trans.....18032

1977

Scout II 4-196 (3.2L) 1 Bbl.
Lube....B2
Air....PA1735
Fuel....BF840,-K1
Fuel Vapor....SA2046
Trans.....18032

OBS = Obsolete. Availability Limited to Distributor Stock.

IHC Light-Duty Trucks
1977 (Cont'd.)

Scout 6-198 (3.2L) Diesel
Lube.....PT153
Air.....PA1735
Fuel (P. Spin-on).....BF991
Fuel (S. Ele.).....PF861
Scout V8-304 (5.0L) 2 Bbl.
Lube.....B2
Air.....PA1735
Fuel (Ele., Bowl-Type).....PF859
Fuel (In-Line).....BF840,-K1
Fuel Vapor.....SA2046
Trans......18032
PowSteer......P446
Scout V8-345 (5.6L) 2 Bbl.
Lube.....B2
Air.....PA1735
Fuel (Ele.).....PF859
Fuel (In-Line).....BF840,-K1
Fuel Vapor.....SA2046
Trans......18032
PowSteer......P446

1976
Scout II 4-196cc-196 (3.2L) 1 Bbl.
Lube.....B2
Air.....PA1735
Fuel.....BF840,-K1
Fuel Vapor.....SA2046
Trans......18032
Scout 6-198 (3.2L) Diesel
Lube.....PT153
Air.....PA1735
Fuel (P. Spin-on).....BF991
Fuel (S. Ele.).....PF861
Scout V8-304 (5.0L) 2 Bbl.
PowSteer......P446
Lube.....B2
Air.....PA1735
Fuel (Ele., Bowl-Type).....PF859
Fuel (In-Line).....BF840,-K1
Fuel Vapor.....SA2046
Trans......18032
Scout V8-345 (5.6L) 2 Bbl.
Lube.....B2
PowSteer......P446
Air.....PA1735
Fuel (Ele.).....PF859
Fuel (In-Line).....BF840,-K1
Fuel Vapor.....SA2046
Trans......18032

1975
Pickups V8-304 (5.0L) 2 Bbl.
Lube.....B2
Air.....PA1735
Fuel.....BF840,-K1
Fuel Vapor.....SA2046
PowSteer......P446
Trans......18032
Pickups V8-345 (5.6L) 2 Bbl.
Lube.....B2
Air.....PA1735
Fuel.....BF840,-K1
Fuel Vapor.....SA2046
PowSteer......P446
Trans......18032
Pickups V8-392 (6.4L) 2 Bbl.
Lube.....B2
Air.....PA1735
Fuel.....BF840,-K1
Fuel Vapor.....SA2046
PowSteer......P446
Trans......18032
Scout II 4-196 (3.2L) 1 Bbl.
Lube.....B2
Air.....PA1735
Fuel.....BF840,-K1
Fuel Vapor.....SA2046
Trans......18032
Scout V8-304 (5.0L) 2 Bbl.
Lube.....B2
Air.....PA1735
Fuel.....BF840,-K1
Fuel Vapor.....SA2046
Trans......18032
PowSteer......P446

IHC Light-Duty Trucks
1975 (Cont'd.)

Scout V8-345 (5.6L) 2,4 Bbl.
Lube.....B2
Air.....PA1735
Fuel.....BF840,-K1
Fuel Vapor.....SA2046
PowSteer......P446
Trans......18032
Scout V8-392 (6.4L) 4 Bbl.
Lube.....B2
Air.....PA1735
Fuel.....BF840,-K1
PowSteer......P446
Fuel Vapor.....SA2046
Trans......18032

1974
MS1210 6-258 (4.2L) Carb.
Lube.....B9
Air.....PA1735
Fuel.....BF840,-K1
Oil Vapor.....N/R
Fuel Vapor.....SA2046
Trans......18032
MS1210 V8-304 (5.0L) Carb.
Lube.....B2
Air.....PA1735
Fuel.....BF840,-K1
Oil Vapor.....N/R
Fuel Vapor.....SA2046
Trans......18032
PowSteer......P446
MHC1310 6-258 (4.2L) Carb.
Lube.....B9
Air.....PA1735
Fuel.....BF840,-K1
Oil Vapor.....N/R
Fuel Vapor.....SA2046
Trans......18032
MHC1310 V8-304 (5.0L) FI Natural Gas
Lube.....B2
PowSteer......P446
Air.....PA1735
Fuel.....BF840,-K1
Oil Vapor.....N/R
Fuel Vapor.....SA2046
Trans......18032
MHC1310 V8-304 (5.0L) Carb.
Lube.....B2
Air.....PA1735
Fuel.....BF840,-K1
Oil Vapor.....N/R
Fuel Vapor.....SA2046
Trans......18032
PowSteer......P446
Pickups 6-258 (4.2L) 1 Bbl. Carb.
Lube.....B9
Air.....PA1735
Fuel.....BF840,-K1
Oil Vapor.....N/R
Fuel Vapor.....SA2046
Trans......18032
Pickups V8-304 (5.0L) 2 Bbl. Carb.
Lube.....B2
Air.....PA1735
Fuel.....BF840,-K1
Oil Vapor.....N/R
Fuel Vapor.....SA2046
PowSteer......P446
Trans......18032
Pickups V8-345 (5.6L) 2 Bbl. Carb.
Lube.....B2
Air.....PA1735
Fuel.....BF840,-K1
Oil Vapor.....N/R
Fuel Vapor.....SA2046
PowSteer......P446
Trans......18032
Pickups V8-392 (6.4L) 2 Bbl. Carb.
Lube.....B2
Air.....PA1735
Fuel.....BF840,-K1
Oil Vapor.....N/R
Fuel Vapor.....SA2046
Trans......18032
PowSteer......P446

IHC Light-Duty Trucks
1974 (Cont'd.)

Scout II 4-196 (3.2L) 1 Bbl. Carb.
Lube.....B2
Air.....PA1735
Fuel.....BF840,-K1
Fuel Vapor.....SA2046
Trans......18032
Scout II V8-304 (5.0L) 2 Bbl. Carb.
Lube.....B2
Air.....PA1735
Fuel.....BF840,-K1
Oil Vapor.....N/R
Fuel Vapor.....SA2046
PowSteer......P446
Trans......18032
Scout II V8-345 (5.7L) Carb.
Lube.....B2
Air.....PA1735
Fuel Vapor.....SA2046
PowSteer......P446
Trans......18032

1973
1010, 1110, 1210, 1310 6-258 (4.2L) Carb.
Lube.....B9
Air.....PA1735
Fuel.....BF840,-K1
Fuel Vapor.....SA2046
Trans......18032
1010, 1110, 1210, 1310 V8-304 (5.0L) Carb.
Lube.....B2
Air.....PA1735
Fuel.....PF859
Oil Vapor.....N/R
Fuel Vapor.....SA2046
Trans......18032
PowSteer......P446
1010, 1110, 1210, 1310 V8-345 (5.7L) Carb.
Lube.....B2
Air.....PA1735
Fuel.....PF859
Oil Vapor.....N/R
Fuel Vapor.....SA2046
Trans......18032
PowSteer......P446
1010, 1110, 1210, 1310 V8-392 (6.4L) Carb.
Lube.....B2
Air.....PA1735
Fuel.....PF859
Oil Vapor.....N/R
Fuel Vapor.....SA2046
PowSteer......P446
Trans......18032
MS1210 6-258 (4.2L) Carb.
Lube.....B39
Air.....PA1735
Fuel.....PF859
Fuel Vapor.....SA2046
Trans......18032
MS1210 V8-304 (5.0L) Carb.
Lube.....B2
Air.....PA1735
Fuel.....PF859
Fuel Vapor.....SA2046
PowSteer......P446
Trans......18032
Scout II 4-196 (3.2L) 1 Bbl. Carb.
Lube.....B2
Air.....PA1735
Fuel.....BF840,-K1
Fuel Vapor.....SA2046
Scout II V8-304 (5.0L) Carb.
Lube.....B2
Air.....PA1735
Fuel.....PF859
Oil Vapor.....N/R
Fuel Vapor.....SA2046
PowSteer......P446
Trans......18032

IHC Light-Duty Trucks
1973 (Cont'd.)

Scout II V8-345 (5.7L) Carb.
Lube.....B2
Air.....PA1735
Fuel.....PF859
Oil Vapor.....N/R
Fuel Vapor.....SA2046
PowSteer......P446
Trans......18032

1972
1010, 1110, 1210, 1310 6-258 (4.2L) Carb.
Lube.....B9
Air.....PA1735
Fuel Vapor.....N/R
Trans......18032
1010, 1110, 1210, 1310 V8-304 (5.0L) Carb.
Air.....PA1735
Fuel.....PF859
Fuel Vapor.....N/R
PowSteer......P446
Trans......18032
1010, 1110, 1210, 1310 V8-345 (5.7L) Carb.
Air.....PA1735
Fuel.....PF859
Fuel Vapor.....N/R
PowSteer......P446
Trans......18032
1010, 1110, 1210, 1310 V8-392 (6.4L) Carb.
Air.....PA1735
Fuel.....PF859
Fuel Vapor.....N/R
Trans......18032
PowSteer......P446
DM10 6-258 (4.2L) Carb.
Lube.....B9
Air.....PA1735
Fuel.....PF859
Trans......18032
DM10 V8-304 (5.0L) Carb.
Lube.....B2
Air.....PA1735
Fuel.....PF859
Trans......18032
PowSteer......P446
M800, M1100, M1200 6-258 (4.2L) Carb.
Lube.....B9
Air.....PA1735
Fuel Vapor.....N/R
Trans......18032
M800, M1100, M1200 V8-304 (5.0L) Carb.
Air.....PA1735
Fuel.....PF859
Fuel Vapor.....N/R
PowSteer......P446
Trans......18032
MS1210 6-258 (4.2L) Carb.
Lube.....B9
Air.....PA1735
Fuel Vapor.....N/R
Trans......18032
MS1210 V8-304 (5.0L) Carb.
Lube.....B2
Air.....PA1735
Fuel.....PF859
Fuel Vapor.....N/R
PowSteer......P446
Trans......18032
Scout II 4-196 (3.2L) 1 Bbl. Carb.
Lube.....B2
Air.....PA1735
Fuel.....BF840,-K1
Fuel Vapor.....N/R
Trans......18032

IHC Light-Duty Trucks
1972 (Cont'd.)

Scout II V8-304 (5.0L) Carb.
Lube.....B2
Air.....PA1735
Fuel.....PF859
Fuel Vapor.....N/R
PowSteer......P446
Trans......18032

Scout II V8-345 (5.7L) Carb.
Lube.....B2
Air.....PA1735
Fuel.....PF859
Fuel Vapor.....N/R
Trans......18032
PowSteer......P446

1971

1010, 1110, 1210, 1310 6-232 (3.8L) Carb.
Lube.....B9
Air.....PA1735
Fuel.....PF859
Fuel Vapor.....N/R
Trans......18032

1010, 1110, 1210, 1310 V8-304 (5.0L) Carb.
Lube (Ele.).....P203
Lube (Spin-on).....B2
Air.....PA1735
Fuel.....PF859
Fuel Vapor.....N/R
Trans......18032

1010, 1110, 1210, 1310 V8-345 (5.7L) Carb.
Lube (Ele.).....P203
Lube (Spin-on).....B2
Air.....PA1735
Fuel.....PF859
Fuel Vapor.....N/R
Trans......18032

M800 V8-304 (5.0L) Carb.
Air.....PA1735
Fuel.....PF859
Fuel Vapor.....N/R
Trans......18032

M1100 4-196 (3.2L) Carb.
Air.....PA1735
Fuel.....BF840,-K1
Fuel Vapor.....N/R
Trans......18032

M1100 V8-304 (5.0L) Carb.
Air.....PA1735
Fuel.....PF859
Fuel Vapor.....N/R
Trans......18032

M1200, MA1200 6-232 (3.8L) Carb.
Lube.....B9
Air.....PA1735
Fuel Vapor.....N/R
Trans......18032

M1200, MA1200 V8-304 (5.0L) Carb.
Air.....PA1735
Fuel.....PF859
Fuel Vapor.....N/R
Trans......18032

Scout II 4-196 (3.2L) 1 Bbl. Carb.
Lube.....B2
Air.....PA1735
Fuel.....BF840,-K1
Fuel Vapor.....N/R
Trans......18032

Scout II 4-232 (3.8L) Carb.
Lube.....B9
Air.....PA1735
Fuel.....PF859
Fuel Vapor.....N/R
Trans......18032

Scout II V8-304 (5.0L) Carb.
Lube.....B2
Air.....PA1735
Fuel.....PF859
Fuel Vapor.....N/R
Trans......18032

IHC Light-Duty Trucks
1971 (Cont'd.)

Scout II V8-345 (5.7L) Carb.
Lube.....B2
Air.....PA1735
Fuel.....PF859
Fuel Vapor.....N/R
Trans......18032

1970

1000D, 1100D 6-232 (3.8L) 1 Bbl. Carb.
Lube.....B9
Air.....PA1735
Fuel.....PF859
Oil Vapor.....N/R
Trans......18032

1000D, 1100D 6-241 (3.9L) 1 Bbl. Carb.
Lube (Ele.).....P203
Lube (Spin-on).....B2
Fuel.....PF859

1000D, 1100D V8-266 (4.4L) 2 Bbl. Carb.
Lube (Ele.).....P203
Lube (Spin-on).....B2
Air.....PA1735
Fuel.....PF859
Oil Vapor.....N/R

1000D, 1100D V8-304 (5.0L) 2 Bbl. Carb.
Lube (Ele.).....P203
Lube (Spin-on).....B2
Air.....PA1735
Fuel.....PF859
Oil Vapor.....N/R
Trans......18032

1200D, 1300D 6-241 (3.9L) 1 Bbl. Carb.
Lube (Ele.).....P203
Lube (Spin-on).....B2
Fuel.....PF859

1200D, 1300D V8-266 (4.4L) 2 Bbl. Carb.
Lube (Ele.).....P203
Lube (Spin-on).....B2
Air.....PA1735
Fuel.....PF859
Oil Vapor.....N/R

1200D, 1300D V8-304 (5.0L) 2 Bbl. Carb.
Lube (Ele.).....P203
Lube (Spin-on).....B2
Air.....PA1735
Fuel.....PF859
Oil Vapor.....N/R
Trans......18032

M800, M1100, M1200, MA1200 6-232 (3.8L) 1 Bbl. Carb.
Lube.....B9
Air.....PA1735
Fuel.....PF859
Oil Vapor.....N/R
Trans......18032

M800, M1100, M1200, MA1200 6-241 (3.9L) 1 Bbl. Carb.
Lube (Ele.).....P203
Lube (Spin-on).....B2
Fuel.....PF859

M800, M1100, M1200, MA1200 V8-304 (5.0L) 2 Bbl. Carb.
Lube (Ele.).....P203
Lube (Spin-on).....B2
Air.....PA1735
Fuel.....PF859
Oil Vapor.....N/R
Trans......18032

Scout V8-304 (5.0L) 2 Bbl. Carb.
Lube (Ele.).....P203
Lube (Spin-on).....B2
Air.....PA1735
Fuel.....PF859
Fuel Vapor.....N/R
Trans......18032

IHC Light-Duty Trucks
(Cont'd.)

1969

908B, 908C V8-304 (5.0L) Carb.
Lube (Ele.).....P203
Lube (Spin-on).....B2
Air.....PA1735
Fuel (Ele.).....PF859
Fuel (In-Line).....BF840,-K1
PowSteer......P446
Trans......18032

1000 Series, 1100 Series, 1200 Series, 1300 Series 6-232 (3.8L) Carb.
Lube.....B9
Air.....PA1735
Fuel.....PF859
PowSteer......P446
Trans......18032

1000 Series, 1100 Series, 1200 Series, 1300 Series 6-241 (3.9L) Carb.
Lube (Ele.).....P203
Lube (Spin-on).....B2
Fuel.....PF859

1000 Series, 1100 Series, 1200 Series, 1300 Series V8-266 (4.4L) Carb.
Lube (Ele.).....P203
Lube (Spin-on).....B2
Fuel.....BF840,-K1
PowSteer......P446
Trans......18032

1000 Series, 1100 Series, 1200 Series, 1300 Series V8-304 (5.0L) Carb.
Lube (Ele.).....P203
Lube (Spin-on).....B2
Air.....PA1735
Fuel (Ele.).....PF859
Fuel (In-Line).....BF840,-K1
PowSteer......P446
Trans......18032

M Series 6-232 (3.8L) Carb.
Lube.....B9
Air.....PA1735
Fuel.....PF859
PowSteer......P446
Trans......18032

M Series 6-241 (3.9L) Carb.
Lube (Ele.).....P203
Lube (Spin-on).....B2
Fuel.....PF859

M Series V8-304 (5.0L) Carb.
Lube (Ele.).....P203
Lube (Spin-on).....B2
Air.....PA1735
Fuel (Ele.).....PF859
Fuel (In-Line).....BF840,-K1
PowSteer......P446
Trans......18032

Scout V8-304 (5.0L) Carb.
Lube (Ele.).....P203
Lube (Spin-on).....B2
Air.....PA1735
Fuel.....PF859

1968

908B, 908C V8-266 (4.4L) Carb.
Lube (Ele.).....P203
Lube (Spin-on).....B2
Fuel.....PF859
PowSteer......P446

1000 Series, 1100 Series, 1200 Series, 1300 Series 6-241 (3.9L) Carb.
Lube.....P203
Fuel.....BF840,-K1
PowSteer......P446

IHC Light-Duty Trucks
1968 (Cont'd.)

1000 Series, 1100 Series, 1200 Series, 1300 Series 6-241 (4.0L) Carb.
Lube.....P203
Fuel.....BF840,-K1
PowSteer......P446

1000 Series, 1100 Series, 1200 Series, 1300 Series V8-266 (4.4L) Carb.
Lube (Ele.).....P203
Lube (Spin-on).....B2
Fuel.....PF859
PowSteer......P446

M Series 4-152 (2.5L) Carb.
Lube.....B2
Fuel.....BF840,-K1
PowSteer......P446

M Series 6-241 (3.9L) Carb.
Lube.....P203
Fuel.....BF840,-K1
PowSteer......P446

M Series V8-266 (4.4L) Carb.
Lube (Ele.).....P203
Lube (Spin-on).....B2
Fuel.....PF859
PowSteer......P446

Scout 4-152 (2.5L) Carb.
Lube.....B2
Fuel.....BF840,-K1
PowSteer......P446

Scout 4-196 (3.2L) Carb.
Lube.....B2
Air.....PA642
Fuel.....BF840,-K1
PowSteer......P446

Scout V8-266 (4.4L) Carb.
Lube (Ele.).....P203
Lube (Spin-on).....B2
Fuel.....PF859
PowSteer......P446

1967

Scout 4-152 (2.5L) Carb.
Lube.....B2
Fuel.....PF859

1966

M Series Van 4-152 (2.5L) Carb.
Lube.....P203
Fuel.....BF840,-K1
PowSteer......P446

M Series Van 6-220 (3.6L) Carb.
Lube.....P203
Air.....PA604
Fuel.....BF840,-K1
Oil Vapor.....N/R

Scout 4-152 (2.5L) Carb.
Lube.....P203
Fuel.....PF859

1965

M Series Van 4-152 (2.5L) Carb.
Lube.....P203
Fuel.....BF840,-K1
PowSteer......P446

M Series Van 6-220 (3.6L) Carb.
Lube.....P203
Air.....PA604
Fuel.....BF840,-K1
Oil Vapor.....N/R
PowSteer......P446

Scout 4-152 (2.5L) Carb.
Lube.....P203
Fuel.....PF859
PowSteer......P446

1964

M Series Van 4-152 (2.5L) Carb.
Lube.....P203
Fuel.....BF840,-K1

Scout 4-152 (2.5L) Carb.
Lube.....P203

OBS = Obsolete. Availability Limited to Distributor Stock.

IHC Light-Duty Trucks
1964 (Cont'd.)

Scout 6-220 (3.6L) Carb.
Lube.....P203
Air.....PA604
Fuel.....BF840,-K1
Oil Vapor.....N/R

1963

M Series Van 4-152 (2.5L) Carb.
Lube.....P203
Fuel.....BF840,-K1

M Series Van 6-220 (3.6L) Carb.
Lube (3 3/4 In.).....P206
Lube (5 In.).....P203
Air.....PA604
Fuel.....BF840,-K1
Oil Vapor.....N/R

Scout 4-152 (2.5L) Carb.
Lube.....P203

1962

M Series Van 4-152 (2.5L) Carb.
Fuel.....BF840,-K1
Oil Vapor.....N/R

Scout 4-152 (2.5L) 1 Bbl. Carb.
Lube.....P203
Oil Vapor.....N/R

1961

M Series Van 4-152 (2.5L) Carb.
Fuel.....BF840,-K1
Oil Vapor.....N/R

Scout 4-152 (2.5L) Carb.
Lube.....P203
Oil Vapor.....N/R

JAGUAR

1979

XJ6 6-4235cc (4.2L) FI VIN N
Lube.....B7424
Fuel.....BF1105
Trans......6020

XJ12 V12-5343cc (5.3L) FI VIN V,X
Lube.....BT292
Fuel.....BF1105
Trans......6020

XJS V12-5343cc (5.3L) FI VIN V,X
Lube.....BT292
Fuel.....BF1105
Trans......6020

1978

XJ6 6-4235cc (4.2L) FI VIN N
Lube.....B7424
Fuel.....BF1105
Trans......6020

XJ12 V12-5343cc (5.3L) FI
Lube.....BT292
Fuel.....BF1105
Trans......6020

XJS V12-5343cc (5.3L) FI
Lube.....BT292
Fuel.....BF1105
Trans......6020

1977

XJ6 6-4235cc (4.2L) FI Carb. VIN N
Lube (To 8/77).....BT292
Lube (8/77-on).....BT364
Fuel.....BF1105

XJ12 V12-5343cc (5.3L) FI
Lube.....BT292
Fuel.....BF1105

XJS V12-5343cc (5.3L) FI
Lube.....BT292
Fuel.....BF1105
Trans......6020

JAGUAR (Cont'd.)

1976

XJ6 6-4235cc (4.2L) Carb.
Lube.....BT292
Fuel.....BF1105

XJ12 V12-5343cc (5.3L) FI
Lube.....BT292
Fuel.....BF1105

XJS V12-5343cc (5.3L) FI
Lube.....BT292
Fuel.....BF1105
Trans......6020

1975

XJ6 6-4235cc (4.2L) Carb.
Fuel.....BF1105

XJ12 V12-5343cc (5.3L) FI
Fuel.....BF1105
Trans......6020

1974

XJ6 6-4235cc (4.2L) Carb.
Oil Vapor.....N/R

XJ12 V12-5343cc (5.3L) Carb.
Oil Vapor.....N/R

XKE V12-5343cc (5.3L) Carb.
Oil Vapor.....N/R

1973

XJ6 6-4235cc (4.2L) Carb.
Fuel.....BF1105
Oil Vapor.....N/R

XJ12 V12-5343cc (5.3L) Carb.
Fuel.....BF1105
Oil Vapor.....N/R

XKE V12-5343cc (5.3L) Carb.
Oil Vapor.....N/R

1972

XJ6 6-4235cc (4.2L) Carb.
Oil Vapor.....N/R

XKE V12-5343cc (5.3L) Carb.
Lube.....PT29

1971

XJ 6-4235cc (4.2L) Carb.
Fuel.....BF1105
Oil Vapor.....N/R

XKE 6-4235cc (4.2L) Carb.
Lube.....P177
Fuel.....BF1105
Oil Vapor.....N/R

XKE V12-5343cc (5.3L) Carb.
Lube.....PT29
Oil Vapor.....N/R

1969

XJ 6-4235cc (4.2L) Carb.
Fuel.....BF1105

XKE 6-4235cc (4.2L) Carb.
Fuel.....BF1105

1967

340 6-210 (3.4L) Carb.
Lube.....PT29

420 6-258 (4.2L)
Lube.....PT29

XKE 6-258 (4.2L)
Lube.....PT29

1966

3.8 6-231 (3.8L) Carb.
Lube.....PT29
Air.....PA1828

Mark X 6-258 (4.2L) Carb.
Lube.....PT29

1965

3.8 6-231 (3.8L) Carb.
Lube.....PT29

Mark X 6-258 (4.2L) Carb.
Lube.....PT29

JAGUAR (Cont'd.)

1964

3.8 6-231 (3.8L) Carb.
Air.....PA1828

XKE 6-231 (3.8L) Carb.
Lube.....P177

XKE 6-255 (4.2L) Carb.
Lube.....P177

1963

3.8 6-231 (3.8L) Carb.
Air.....PA1828

1962

3.8 6-3781cc (3.8L) 2-1 Bbl. Carb.
Air.....PA1828

1961

3.8 6-231 (3.8L) 2-1 Bbl. Carb.
Air.....PA1828

XKE 6-231 (3.8L) 3-1 Bbl. Carb.
Lube.....P177

XK150 6-3442cc (3.4L) 2-1 Bbl. Carb.
Lube.....P177

XK150 6-3781cc (3.8L) 3-1 Bbl. Carb.
Lube.....P177

1960

3.4 6-3442cc (3.4L) 2-1 Bbl. Carb.
Air.....PA1828

3.8 6-3781cc (3.8L) 2-1 Bbl. Carb.
Air.....PA1828

XK150 6-3442cc (3.4L) Carb.
Lube.....P177

XK150 6-3781cc (3.8L) Carb.
Lube.....P177

1959

3.4 6-3442cc (3.4L) 2-1 Bbl. Carb.
Air.....PA1828

XK150 6-3442cc (3.4L) Carb.
Lube.....P177

XK150 6-3781cc (3.8L) Carb.
Lube.....P177

1958

3.4 6-3442cc (3.4L) 2-1 Bbl. Carb.
Air.....PA1828

XK150 6-3442cc (3.4L) Carb.
Lube.....P177

XK150 6-3781cc (3.8L) Carb.
Lube.....P177

1957

2.4 6-2483cc (2.5L) 2-1 Bbl. Carb.
Air.....PA1828

3.4 6-3442cc (3.4L) 2-1 Bbl. Carb.
Air.....PA1828

XKSS 6-3442cc (3.4L) 3-1 Bbl. Carb.
Lube.....PT29

1956

2.4 6-2483cc (2.5L) 2-1 Bbl. Carb.
Air.....PA1828

D-Type 6-3442cc (3.4L) 3-1 Bbl. Carb.
Lube.....PT29

1955

D-Type 6-3442cc (3.4L) 3-1 Bbl. Carb.
Lube.....PT29

1954

D-Type 6-3442cc (3.4L) 3-1 Bbl. Carb.
Lube.....PT29

JAGUAR (Cont'd.)

1953

C-Type 6-3442cc (3.4L) 2-1 Bbl. Carb.
Lube.....PT29

1952

C-Type 6-3442cc (3.4L) 2-1 Bbl. Carb.
Lube.....PT29

1951

C-Type 6-3442cc (3.4L) 2-1 Bbl. Carb.
Lube.....PT29

1950

Mark V 6-2664cc (2.7L) 2-1 Bbl. Carb.
Lube.....PT29

Mark V 6-3485cc (3.5L) 2-1 Bbl. Carb.
Lube.....PT29

1949

Mark V 6-2664cc (2.7L) 2-1 Bbl. Carb.
Lube.....PT29

Mark V 6-3485cc (3.5L) 2-1 Bbl. Carb.
Lube.....PT29

JEEP

1979

Cherokee 6-258 (4.2L) 2 Bbl. VIN C
Lube.....B39
Air.....PA642
Fuel.....BF886
Fuel Vapor.....SA2046
Trans......6020

Cherokee V8-360 (5.9L) 2 Bbl. VIN N
Lube.....B39
Air.....PA615
Fuel.....BF886
Fuel Vapor.....SA2046
Trans......6020

CJ Series 6-258 (4.2L) 2 Bbl. VIN C
Lube.....B39
Air.....PA642
Fuel.....BF886
Fuel Vapor.....SA2046
Trans......6020

CJ Series V8-304 (5.0L) 2 Bbl. VIN H
Lube.....B39
Air.....PA615
Fuel.....BF886
Fuel Vapor.....SA2046
Trans......6020

Pickups 6-258 (4.2L) 2 Bbl. VIN C
Lube.....B39
Air.....PA642
Fuel.....BF886
Fuel Vapor.....SA2046
Trans......6020

Pickups V8-360 (5.9L) 2 Bbl. VIN N
Lube.....B39
Air.....PA615
Fuel.....BF886
Fuel Vapor.....SA2046
Trans......6020

Wagoneer V8-360 (5.9L) 2 Bbl. VIN N
Lube.....B39
Air.....PA615
Fuel.....BF886
Fuel Vapor.....SA2046
Trans......6020

OBS = Obsolete. Availability Limited to Distributor Stock.

JEEP (Cont'd.)

1978

Cherokee 6-258 (4.2L) 2 Bbl. VIN C
- **Lube**....B39
- **Air**....PA642
- **Fuel**....BF886
- **Fuel Vapor**....SA2046
- **Trans.**....6020

Cherokee V8-360 (5.9L) 2,4 Bbl. VIN N,P
- **Lube**....B9
- **Air**....PA615
- **Fuel**....BF886
- **Fuel Vapor**....SA2046
- **Trans.**....6020

Cherokee V8-401 (6.6L) 4 Bbl. VIN Z
- **Lube**....B9
- **Air**....PA615
- **Fuel**....BF886
- **Fuel Vapor**....SA2046
- **Trans.**....6020

CJ Series 6-232 (3.8L) 1 Bbl. VIN E
- **Lube**....B39
- **Air**....PA642
- **Fuel**....BF886
- **Fuel Vapor**....SA2046
- **Trans.**....6020

CJ Series 6-258 (4.2L) 1 Bbl. VIN A
- **Lube**....B39
- **Air**....PA642
- **Fuel**....BF886
- **Fuel Vapor**....SA2046
- **Trans.**....6020

CJ Series V8-304 (5.0L) 2 Bbl. VIN H
- **Lube**....B39
- **Air**....PA615
- **Fuel**....BF886
- **Fuel Vapor**....SA2046
- **Trans.**....6020

Pickups 6-258 (4.2L) 2 Bbl. VIN C
- **Lube**....B39
- **Air**....PA642
- **Fuel**....BF886
- **Fuel Vapor**....SA2046
- **Trans.**....6020

Pickups V8-360 (5.9L) 2,4 Bbl. VIN N,P
- **Lube**....B9
- **Air**....PA615
- **Fuel**....BF886
- **Fuel Vapor**....SA2046
- **Trans.**....6020

Pickups V8-401 (6.6L) 4 Bbl. VIN Z
- **Lube**....B9
- **Air**....PA615
- **Fuel**....BF886
- **Fuel Vapor**....SA2046
- **Trans.**....6020

Wagoneer V8-360 (5.9L) 2,4 Bbl. VIN N,P
- **Lube**....B9
- **Air**....PA615
- **Fuel**....BF886
- **Fuel Vapor**....SA2046
- **Trans.**....6020

Wagoneer V8-401 (6.6L) 4 Bbl. VIN Z
- **Lube**....B9
- **Air**....PA615
- **Fuel**....BF886
- **Fuel Vapor**....SA2046
- **Trans.**....6020

1977

Cherokee 6-258 (4.2L) 2 Bbl. VIN A,C
- **Lube**....B39
- **Air**....PA642
- **Fuel**....BF886
- **Fuel Vapor**....SA2046
- **Trans.**....6020

Cherokee V8-360 (5.9L) 2,4 Bbl. VIN N,P
- **Lube**....B9
- **Air**....PA615
- **Fuel**....BF886
- **Fuel Vapor**....SA2046
- **Trans.**....6020

JEEP 1977 (Cont'd.)

Cherokee V8-401 (6.6L) 4 Bbl. VIN Z
- **Lube**....B9
- **Air**....PA615
- **Fuel**....BF886
- **Fuel Vapor**....SA2046
- **Trans.**....6020

CJ Series 6-232 (3.8L) 1 Bbl. VIN E
- **Lube**....B39
- **Air**....PA642
- **Fuel**....BF886
- **Fuel Vapor**....SA2046
- **Trans.**....6020

CJ Series 6-258 (4.2L) 1 Bbl. VIN A
- **Lube**....B39
- **Air**....PA642
- **Fuel**....BF886
- **Fuel Vapor**....SA2046
- **Trans.**....6020

CJ Series V8-304 (5.0L) 2 Bbl. VIN H
- **Lube**....B39
- **Air**....PA615
- **Fuel**....BF886
- **Fuel Vapor**....SA2046
- **Trans.**....6020

Pickups 6-258 (4.2L) 2 Bbl. VIN C
- **Lube**....B39
- **Air**....PA642
- **Fuel**....BF886
- **Fuel Vapor**....SA2046
- **Trans.**....6020

Pickups V8-360 (5.9L) 2,4 Bbl. VIN N,P
- **Lube**....B9
- **Air**....PA615
- **Fuel**....BF886
- **Fuel Vapor**....SA2046
- **Trans.**....6020

Pickups V8-401 (6.6L) 4 Bbl. VIN Z
- **Lube**....B9
- **Air**....PA615
- **Fuel**....BF886
- **Fuel Vapor**....SA2046
- **Trans.**....6020

Wagoneer V8-360 (5.9L) 2,4 Bbl. VIN N,P
- **Lube**....B9
- **Air**....PA615
- **Fuel**....BF886
- **Fuel Vapor**....SA2046
- **Trans.**....6020

Wagoneer V8-401 (6.6L) 4 Bbl. VIN Z
- **Lube**....B9
- **Air**....PA615
- **Fuel**....BF886
- **Fuel Vapor**....SA2046
- **Trans.**....6020

1976

Cherokee 6-258 (4.2L) 1 Bbl. VIN A
- **Lube**....B39
- **Air**....PA642
- **Fuel**....BF886
- **Fuel Vapor**....SA2046
- **Trans.**....6020

Cherokee V8-360 (5.9L) 2,4 Bbl. VIN N,P
- **Lube**....B9
- **Air**....PA615
- **Fuel**....BF886
- **Fuel Vapor**....SA2046
- **Trans.**....6020

Cherokee V8-401 (6.6L) 4 Bbl. VIN Z
- **Lube**....B9
- **Air**....PA615
- **Fuel**....BF886
- **Fuel Vapor**....SA2046
- **Trans.**....6020

CJ Series 6-232 (3.8L) 1 Bbl. VIN E
- **Lube**....B39
- **Air**....PA642
- **Fuel**....BF886
- **Fuel Vapor**....SA2046
- **Trans.**....6020

JEEP 1976 (Cont'd.)

CJ Series 6-258 (4.2L) 1 Bbl. VIN A
- **Lube**....B39
- **Air**....PA642
- **Fuel**....BF886
- **Fuel Vapor**....SA2046
- **Trans.**....6020

CJ Series V8-304 (5.0L) 2 Bbl. VIN H
- **Lube**....B39
- **Air**....PA615
- **Fuel**....BF886
- **Fuel Vapor**....SA2046
- **Trans.**....6020

Pickups 6-258 (4.2L) 1 Bbl. VIN A
- **Lube**....B39
- **Air**....PA642
- **Fuel**....BF886
- **Fuel Vapor**....SA2046
- **Trans.**....6020

Pickups V8-360 (5.9L) 2,4 Bbl. VIN N,P
- **Lube**....B9
- **Air**....PA615
- **Fuel**....BF886
- **Fuel Vapor**....SA2046
- **Trans.**....6020

Pickups V8-401 (6.6L) 4 Bbl. VIN Z
- **Lube**....B9
- **Air**....PA615
- **Fuel**....BF886
- **Fuel Vapor**....SA2046
- **Trans.**....6020

Wagoneer V8-360 (5.9L) 2,4 Bbl. VIN N,P
- **Lube**....B9
- **Air**....PA615
- **Fuel**....BF886
- **Fuel Vapor**....SA2046
- **Trans.**....6020

Wagoneer V8-401 (6.6L) 4 Bbl. VIN Z
- **Lube**....B9
- **Air**....PA615
- **Fuel**....BF886
- **Fuel Vapor**....SA2046
- **Trans.**....6020

1975

Cherokee 6-258 (4.2L) 1 Bbl. VIN A
- **Lube**....B9
- **Air**....PA642
- **Fuel (w/VapDiv.)**....BF886
- **Fuel (w/o VapDiv.)**....BF840,-K1
- **Fuel Vapor**....SA2046
- **Trans.**....6020

Cherokee V8-360 (5.9L) 2,4 Bbl. VIN N,P
- **Lube**....B9
- **Air**....PA615
- **Fuel (w/VapDiv.)**....BF886
- **Fuel (w/o VapDiv.)**....BF840,-K1
- **Fuel Vapor**....SA2046
- **Trans.**....6020

Cherokee V8-401 (6.6L) 4 Bbl. VIN Z
- **Lube**....B9
- **Air**....PA615
- **Fuel (w/VapDiv.)**....BF886
- **Fuel (w/o VapDiv.)**....BF840,-K1
- **Fuel Vapor**....SA2046
- **Trans.**....6020

CJ Series 6-232 (3.8L) 1 Bbl. VIN E
- **Lube**....B9
- **Air**....PA642
- **Fuel (w/VapDiv.)**....BF886
- **Fuel (w/o VapDiv.)**....BF840,-K1
- **Fuel Vapor**....SA2046
- **Trans.**....6020

CJ Series 6-258 (4.2L) 1 Bbl. VIN A
- **Lube**....B9
- **Air**....PA642
- **Fuel (w/VapDiv.)**....BF886
- **Fuel (w/o VapDiv.)**....BF840,-K1
- **Fuel Vapor**....SA2046
- **Trans.**....6020

JEEP 1975 (Cont'd.)

CJ Series V8-304 (5.0L) 2 Bbl. VIN H
- **Lube**....B9
- **Air**....PA615
- **Fuel (w/VapDiv.)**....BF886
- **Fuel (w/o VapDiv.)**....BF840,-K1
- **Fuel Vapor**....SA2046
- **Trans.**....6020

Pickups 6-258 (4.2L) 1 Bbl. VIN A
- **Lube**....B9
- **Air**....PA642
- **Fuel (w/VapDiv.)**....BF886
- **Fuel (w/o VapDiv.)**....BF840,-K1
- **Fuel Vapor**....SA2046
- **Trans.**....6020

Pickups V8-360 (5.9L) 2,4 Bbl. VIN N,P
- **Lube**....B9
- **Air**....PA615
- **Fuel (w/VapDiv.)**....BF886
- **Fuel (w/o VapDiv.)**....BF840,-K1
- **Fuel Vapor**....SA2046
- **Trans.**....6020

Pickups V8-401 (6.6L) 4 Bbl. VIN Z
- **Lube**....B9
- **Air**....PA615
- **Fuel (w/VapDiv.)**....BF886
- **Fuel (w/o VapDiv.)**....BF840,-K1
- **Fuel Vapor**....SA2046
- **Trans.**....6020

Wagoneer V8-360 (5.9L) 2,4 Bbl. VIN N,P
- **Lube**....B9
- **Air**....PA615
- **Fuel (w/VapDiv.)**....BF886
- **Fuel (w/o VapDiv.)**....BF840,-K1
- **Fuel Vapor**....SA2046
- **Trans.**....6020

Wagoneer V8-401 (6.6L) 4 Bbl. VIN Z
- **Lube**....B9
- **Air**....PA615
- **Fuel (w/VapDiv.)**....BF886
- **Fuel (w/o VapDiv.)**....BF840,-K1
- **Fuel Vapor**....SA2046
- **Trans.**....6020

1974

Cherokee 6-258 (4.2L) 1 Bbl. Carb. VIN A
- **Lube**....B9
- **Air**....PA642
- **Fuel**....BF840,-K1
- **Oil Vapor**....N/R
- **Fuel Vapor**....SA2046
- **Trans.**....6020

Cherokee V8-360 (5.9L) 2,4 Bbl. Carb. VIN N,P
- **Lube**....B9
- **Air**....PA615
- **Fuel**....BF840,-K1
- **Oil Vapor**....N/R
- **Fuel Vapor**....SA2046
- **Trans.**....6020

Cherokee V8-401 (6.6L) 4 Bbl. Carb. VIN Z
- **Lube**....B9
- **Air**....PA615
- **Fuel**....BF840,-K1
- **Oil Vapor**....N/R
- **Fuel Vapor**....SA2046
- **Trans.**....6020

CJ Series 6-232 (3.8L) 1 Bbl. Carb. VIN E
- **Lube**....B9
- **Air**....PA642
- **Fuel**....BF840,-K1
- **Oil Vapor**....N/R
- **Fuel Vapor**....SA2046
- **Trans.**....6020

CJ Series 6-258 (4.2L) 1 Bbl. Carb. VIN A
- **Lube**....B9
- **Air**....PA642
- **Fuel**....BF840,-K1
- **Oil Vapor**....N/R
- **Fuel Vapor**....SA2046
- **Trans.**....6020

OBS = Obsolete. Availability Limited to Distributor Stock.

JEEP 1974 (Cont'd.)

CJ Series V8-304 (5.0L) 2 Bbl. Carb. VIN H
- **Lube**....B9
- **Air**....PA615
- **Fuel**....BF840,-K1
- **Oil Vapor**....N/R
- **Fuel Vapor**....SA2046
- **Trans.**....6020

DJ5 6-232 (3.8L) 1 Bbl. Carb. VIN E
- **Lube**....B9
- **Air**....PA642
- **Fuel**....BF840,-K1
- **Fuel Vapor**....SA2046
- **Trans.**....6020

DJ5 6-258 (4.2L) 1 Bbl. Carb. VIN A
- **Lube**....B9
- **Air**....PA642
- **Fuel**....BF840,-K1
- **Fuel Vapor**....SA2046
- **Trans.**....6020

DJ5 V8-304 (5.0L) 2 Bbl. Carb. VIN H
- **Lube**....B9
- **Air**....PA615
- **Fuel**....BF840,-K1
- **Fuel Vapor**....SA2046
- **Trans.**....6020

J Series 6-258 (4.2L) 1 Bbl. Carb. VIN A
- **Lube**....B9
- **Air**....PA642
- **Fuel**....BF840,-K1
- **Oil Vapor**....N/R
- **Fuel Vapor**....SA2046
- **Trans.**....6020

J Series V8-360 (5.9L) 2,4 Bbl. Carb. VIN N,P
- **Lube**....B9
- **Air**....PA615
- **Fuel**....BF840,-K1
- **Oil Vapor**....N/R
- **Fuel Vapor**....SA2046
- **Trans.**....6020

J Series V8-401 (6.6L) 4 Bbl. Carb. VIN Z
- **Lube**....B9
- **Air**....PA615
- **Fuel**....BF840,-K1
- **Oil Vapor**....N/R
- **Fuel Vapor**....SA2046
- **Trans.**....6020

Wagoneer V8-360 (5.9L) 2,4 Bbl. Carb. VIN N,P
- **Lube**....B9
- **Air**....PA615
- **Fuel**....BF840,-K1
- **Oil Vapor**....N/R
- **Fuel Vapor**....SA2046
- **Trans.**....6020

Wagoneer V8-401 (6.6L) 4 Bbl. Carb. VIN Z
- **Lube**....B9
- **Air**....PA615
- **Fuel**....BF840,-K1
- **Oil Vapor**....N/R
- **Fuel Vapor**....SA2046
- **Trans.**....6020

1973

CJ Series 6-232 (3.8L) 1 Bbl. Carb. VIN E
- **Lube**....B39
- **Air**....PA642
- **Fuel**....BF840,-K1
- **Oil Vapor**....N/R
- **Fuel Vapor**....SA2046
- **Trans.**....6020

CJ Series 6-258 (4.2L) 1 Bbl. Carb. VIN A
- **Lube**....B39
- **Air**....PA642
- **Fuel**....BF840,-K1
- **Oil Vapor**....N/R
- **Fuel Vapor**....SA2046
- **Trans.**....6020

JEEP 1973 (Cont'd.)

CJ Series V8-304 (5.0L) 2 Bbl. Carb. VIN H
- **Lube**....B39
- **Air**....PA615
- **Fuel**....BF840,-K1
- **Oil Vapor**....N/R
- **Fuel Vapor**....SA2046
- **Trans.**....6020

DJ5 6-232 (3.8L) 1 Bbl. Carb. VIN E
- **Lube**....B39
- **Air**....PA642
- **Fuel**....BF840,-K1
- **Oil Vapor**....N/R
- **Fuel Vapor**....SA2046
- **Trans.**....6020

DJ5 6-258 (4.2L) 1 Bbl. Carb. VIN A
- **Lube**....B39
- **Air**....PA642
- **Fuel**....BF840,-K1
- **Oil Vapor**....N/R
- **Fuel Vapor**....SA2046
- **Trans.**....6020

J Series 6-258 (4.2L) 1 Bbl. Carb. VIN A
- **Lube**....B9
- **Air**....PA642
- **Fuel**....BF840,-K1
- **Oil Vapor**....N/R
- **Fuel Vapor**....SA2046
- **Trans.**....6020

J Series V8-360 (5.9L) 2,4 Bbl. Carb. VIN N,P
- **Lube**....B9
- **Air**....PA615
- **Fuel**....BF840,-K1
- **Oil Vapor**....N/R
- **Fuel Vapor**....SA2046
- **Trans.**....6020

Jeepster 6-232 (3.8L) 1 Bbl. Carb. VIN E
- **Lube**....B39
- **Air**....PA642
- **Fuel**....BF840,-K1
- **Oil Vapor**....N/R
- **Fuel Vapor**....SA2046
- **Trans.**....6020

Jeepster 6-258 (4.2L) 1 Bbl. Carb. VIN A
- **Lube**....B39
- **Air**....PA642
- **Fuel**....BF840,-K1
- **Oil Vapor**....N/R
- **Fuel Vapor**....SA2046
- **Trans.**....6020

Jeepster V8-304 (5.0L) 2 Bbl. Carb. VIN H
- **Lube**....B39
- **Air**....PA615
- **Fuel**....BF840,-K1
- **Oil Vapor**....N/R
- **Fuel Vapor**....SA2046
- **Trans.**....6020

Wagoneer 6-258 (4.2L) 1 Bbl. Carb. VIN A
- **Lube**....B39
- **Air**....PA642
- **Fuel**....BF840,-K1
- **Oil Vapor**....N/R
- **Fuel Vapor**....SA2046
- **Trans.**....6020

Wagoneer V8-360 (5.9L) 2,4 Bbl. Carb. VIN N,P
- **Lube**....B9
- **Air**....PA615
- **Fuel**....BF840,-K1
- **Oil Vapor**....N/R
- **Fuel Vapor**....SA2046
- **Trans.**....6020

JEEP (Cont'd.)

1972

CJ Series 6-232 (3.8L) 1 Bbl. Carb. VIN E
- **Lube**....B9
- **Air**....PA642
- **Fuel**....BF840,-K1
- **Fuel Vapor**....SA2046
- **Trans.**....6020

CJ Series 6-258 (4.2L) 1 Bbl. Carb. VIN A
- **Lube**....B9
- **Air**....PA642
- **Fuel**....BF840,-K1
- **Fuel Vapor**....SA2046
- **Trans.**....6020

CJ Series V8-304 (5.0L) 2 Bbl. Carb. VIN H
- **Lube**....B9
- **Air**....PA615
- **Fuel**....BF840,-K1
- **Fuel Vapor**....SA2046
- **Trans.**....6020

DJ5 6-232 (3.8L) 1 Bbl. Carb. VIN E
- **Lube**....B9
- **Air**....PA642
- **Fuel**....BF840,-K1
- **Fuel Vapor**....SA2046
- **Trans.**....6020

J Series 6-258 (4.2L) 1 Bbl. Carb. VIN A
- **Lube**....B9
- **Air**....PA642
- **Fuel**....BF840,-K1
- **Fuel Vapor**....SA2046
- **Trans.**....6020

J Series V8-304 (5.0L) Carb. VIN H
- **Lube**....B9
- **Air**....PA615
- **Fuel**....BF840,-K1
- **Fuel Vapor**....SA2046
- **Trans.**....6020

J Series V8-360 (5.9L) Carb. VIN N
- **Lube**....B9
- **Air**....PA615
- **Fuel**....BF840,-K1
- **Fuel Vapor**....SA2046
- **Trans.**....6020

Jeepster 6-232 (3.8L) 1 Bbl. Carb. VIN E
- **Lube**....B9
- **Air**....PA642
- **Fuel**....BF840,-K1
- **Fuel Vapor**....SA2046
- **Trans.**....6020

Jeepster 6-258 (4.2L) 1 Bbl. Carb. VIN A
- **Lube**....B9
- **Air**....PA642
- **Fuel**....BF840,-K1
- **Fuel Vapor**....SA2046
- **Trans.**....6020

Jeepster V8-304 (5.0L) 2 Bbl. Carb. VIN H
- **Lube**....B9
- **Air**....PA615
- **Fuel**....BF840,-K1
- **Fuel Vapor**....SA2046
- **Trans.**....6020

Wagoneer 6-258 (4.2L) 1 Bbl. Carb. VIN A
- **Lube**....B9
- **Air**....PA642
- **Fuel**....BF840,-K1
- **Fuel Vapor**....SA2046
- **Trans.**....6020

Wagoneer V8-360 (5.9L) Carb. VIN N
- **Lube**....B9
- **Air**....PA615
- **Fuel**....BF840,-K1
- **Fuel Vapor**....SA2046
- **Trans.**....6020

JEEP (Cont'd.)

1971

CJ Series, DJ Series 4-134 (2.2L) Carb.
- **Lube**....B50
- **Air**....PA658
- **Fuel Vapor**....SA2046
- **Trans.**....6020

CJ Series, DJ Series V6-225 (3.7L) Carb.
- **Lube**....B9
- **Air**....PA1680
- **Fuel Vapor**....SA2046
- **Trans.**....6020

J Series 6-232 (3.8L) Carb.
- **Lube**....B9
- **Air**....PA642
- **Fuel**....BF840,-K1
- **Fuel Vapor**....SA2046
- **Trans.**....6020

J Series V8-350 (5.7L) 2 Bbl. VIN 9
- **Lube**....B9
- **Air**....PA2006
- **Fuel (w/o Hoses & Clamps)**....BF840
- **Fuel (w/Hoses & Clamps)**....BF840-K1
- **Fuel Vapor**....SA2046
- **Trans.**....6020

Jeepster 4-134 (2.2L) Carb.
- **Lube**....B50
- **Air**....PA658
- **Fuel Vapor**....SA2046
- **Trans.**....6020

Jeepster V6-225 (3.7L) Carb.
- **Lube**....B39
- **Air**....PA1680
- **Fuel Vapor**....SA2046
- **Trans.**....6020

Wagoneer 6-232 (3.8L) Carb.
- **Lube**....B9
- **Air**....PA642
- **Fuel**....BF840,-K1
- **Fuel Vapor**....SA2046
- **Trans.**....6020

Wagoneer V8-350 (5.7L) Carb. VIN K
- **Lube**....B9
- **Air**....PA2006
- **Fuel (w/o Hoses & Clamps)**....BF836
- **Fuel (w/Hoses & Clamps)**....BF836-K3
- **Fuel Vapor**....SA2046
- **Trans.**....6020

1970

CJ Series, DJ Series 4-134 (2.2L) 1 Bbl. Carb.
- **Lube**....B50
- **Air**....PA658
- **Fuel**....BF833,-K2
- **Oil Vapor**....N/R
- **Trans.**....6020

CJ Series, DJ Series V6-225 (3.7L) 2 Bbl. Carb.
- **Lube**....B9
- **Air**....PA1680
- **Oil Vapor**....N/R
- **Trans.**....6020

J Series 6-232 (3.8L) 1 Bbl. Carb.
- **Lube**....B9
- **Air**....PA642
- **Oil Vapor**....N/R
- **Trans.**....6020

J Series V8-350 (5.7L) 2 Bbl. VIN 9
- **Lube**....B9
- **Air**....PA2006
- **Fuel (w/o Hoses & Clamps)**....BF840
- **Fuel (w/Hoses & Clamps)**....BF840-K1
- **Oil Vapor**....N/R
- **Trans.**....6020

JEEP 1970 (Cont'd.)

Jeepster 4-134 (2.2L) 1 Bbl. Carb.
Lube.....B50
Air.....PA658
Fuel.....BF833,-K2
Oil Vapor.....N/R
Trans......6020
Jeepster V6-225 (3.7L) 2 Bbl. Carb.
Lube.....B9
Air.....PA1680
Oil Vapor.....N/R
Trans......6020

1969

CJ Series, DJ Series 4-134 (2.2L) Carb.
Lube.....B50
Air.....PA658
Oil Vapor.....SA2027
Trans......6020
CJ Series, DJ Series V6-225 (3.7L) Carb.
Lube.....B9
Air.....PA658
Fuel.....BF886
Oil Vapor.....SA2027
Trans......6020
J Series 6-232 (3.8L) Carb.
Lube.....B9
Air.....PA642
Fuel.....BF879
Oil Vapor.....SA2027
Trans......6020
J Series V8-350 (5.7L) 2 Bbl. VIN 9
Lube.....B9
Air.....PA1680
Fuel (w/o Hoses & Clamps).....BF840
Fuel (w/Hoses & Clamps).....BF840-K1
Oil Vapor.....SA2027
Trans......6020
Jeepster 4-134 (2.2L) Carb.
Lube.....B50
Air.....PA658
Oil Vapor.....SA2027
Trans......6020
Jeepster V6-225 (3.7L) Carb.
Lube.....B9
Air.....PA658
Fuel.....BF886
Oil Vapor.....SA2027
Trans......6020

1968

CJ Series, DJ Series 4-134 (2.2L) Carb.
Lube.....B50
Air.....PA658
Oil Vapor.....SA2027
Trans......6020
CJ Series, DJ Series 4-192 (3.1L) FI Diesel
Lube.....PT108
Fuel.....PF816-S
Trans......6020
CJ Series, DJ Series V6-225 (3.7L) Carb.
Lube.....B9
Air.....PA658
Fuel.....BF886
Oil Vapor.....SA2027
Trans......6020
J Series 6-232 (3.8L) Carb.
Lube.....B9
Air.....PA642
Fuel.....PF859
Oil Vapor.....SA2027
Trans......6020
J Series V8-327 (5.4L) Carb.
Lube.....B9
Fuel (w/o Hoses & Clamps).....BF840
Fuel (w/Hoses & Clamps).....BF840-K1
Oil Vapor.....SA2027
Trans......6020

JEEP 1968 (Cont'd.)

Jeepster 4-134 (2.2L) Carb.
Lube.....B50
Air.....PA658
Oil Vapor.....SA2027
Trans......6020
Jeepster V6-225 (3.7L) Carb.
Lube.....B9
Air.....PA658
Fuel.....BF886
Oil Vapor.....SA2027
Trans......6020

1967

CJ Series, DJ Series V6-225 (3.7L) Carb.
Lube.....B9
Air.....PA658
Fuel.....BF886
Oil Vapor.....N/R
Trans......6021
Commando 4-134 (2.2L) Carb. VIN 4,J
Lube.....B50
Air.....PA658
Fuel.....BF840,-K1
Oil Vapor.....N/R
Trans......6021
Commando V6-225 (3.7L) Carb.
Lube.....B9
Air.....PA658
Fuel.....BF886
Oil Vapor.....N/R
Trans......6021
Dispatcher 4-134 (2.2L) Carb.
Lube.....B50
Fuel.....BF840,-K1
Oil Vapor.....N/R
Trans......6021
Dispatcher V6-225 (3.7L) Carb.
Lube.....B9
Air.....PA658
Fuel.....BF886
Oil Vapor.....N/R
Trans......6021
DJ Series 4-134 (2.2L) Carb. VIN 4,J
Lube.....B50
Air.....PA658
Fuel.....BF840,-K1
Oil Vapor.....N/R
Trans......6021
Gladiator 6-230 (3.8L) Carb.
Lube.....B39
Fuel.....PF859
Oil Vapor.....N/R
Trans......6021
Gladiator 6-232 (3.8L) Carb.
Lube.....B9
Fuel.....PF859
Oil Vapor.....N/R
Trans......6021
Gladiator V8-327 (5.4L) Carb.
Lube.....B9
Fuel.....BF836,-K3
Trans......6021
J Series 6-230 (3.8L) Carb.
Oil Vapor.....N/R
Trans......6021
J Series 6-232 (3.8L) Carb.
Lube.....B9
Fuel.....PF859
Oil Vapor.....N/R
Trans......6021
J Series V8-327 (5.4L) Carb.
Lube.....B9
Fuel.....BF836,-K3
Trans......6021
Jeepster 4-134 (2.2L) Carb. VIN 4,J
Lube.....B50
Air.....PA658
Fuel.....BF840,-K1
Oil Vapor.....N/R
Trans......6021

JEEP 1967 (Cont'd.)

Jeepster V6-225 (3.7L) Carb.
Lube.....B9
Air.....PA658
Fuel.....BF886
Oil Vapor.....N/R
Trans......6021
Universal 4-134 (2.2L) Carb.
Lube.....B50
Fuel.....BF840,-K1
Oil Vapor.....N/R
Trans......6021
Universal V6-225 (3.7L) Carb.
Lube.....B9
Air.....PA658
Fuel.....BF886
Oil Vapor.....N/R
Trans......6021
Wagoneer 6-230 (3.8L) Carb.
Lube.....B9
Fuel.....PF859
Oil Vapor.....N/R
Trans......6021
Wagoneer V8-327 (5.4L) Carb.
Lube.....B9
Air.....PA658
Fuel.....BF836,-K3
Oil Vapor.....N/R
Trans......6021

1966

CJ Series, DJ Series V6-225 (3.7L) Carb.
Lube.....B9
Air.....PA658
Fuel.....BF886
Oil Vapor.....N/R
Trans......6021
Commando V6-225 (3.7L) Carb.
Lube.....B9
Air.....PA658
Fuel.....BF886
Oil Vapor.....N/R
Trans......6021
Dispatcher 4-134 (2.2L) Carb.
Lube.....B50
Air.....PA658
Fuel.....BF840,-K1
Oil Vapor.....N/R
Trans......6021
Dispatcher V6-225 (3.7L) Carb.
Lube.....B9
Air.....PA658
Fuel.....BF886
Oil Vapor.....N/R
Trans......6021
FC150 4-134 (2.2L) Carb.
Lube.....B50
Air.....PA658
Fuel.....BF840,-K1
Oil Vapor.....N/R
Trans......6021
FC150 V6-225 (3.7L) Carb.
Lube.....B9
Air.....PA658
Fuel.....BF886
Oil Vapor.....N/R
Trans......6021
FC170 4-134 (2.2L) Carb.
Lube.....B50
Air.....PA658
Fuel.....BF840,-K1
Oil Vapor.....N/R
Trans......6021
FC170 V6-225 (3.7L) Carb.
Lube.....B9
Air.....PA658
Fuel.....BF886
Oil Vapor.....N/R
Trans......6021
Gladiator 6-230 (3.8L) Carb.
Air.....PA658
Oil Vapor.....N/R
Trans......6021
Gladiator 6-232 (3.8L) Carb.
Lube.....B39
Oil Vapor.....N/R
Trans......6021

JEEP 1966 (Cont'd.)

Gladiator V8-327 (5.4L) Carb.
Lube.....B9
Fuel.....BF836,-K3
Trans......6021
J Series 6-230 (3.8L) Carb.
Lube.....B2
Air.....PA602
Oil Vapor.....N/R
Trans......6021
J Series 6-232 (3.8L) Carb.
Air.....PA602
Oil Vapor.....N/R
Trans......6021
J Series V8-327 (5.4L) Carb.
Lube.....B9
Fuel.....BF836,-K3
Trans......6021
Jeepster V6-225 (3.7L) Carb.
Lube.....B9
Air.....PA658
Fuel.....BF886
Oil Vapor.....N/R
Trans......6021
Universal 4-134 (2.2L) Carb.
Lube.....B50
Fuel.....BF840,-K1
Oil Vapor.....N/R
Trans......6021
Universal V6-225 (3.7L) Carb.
Lube.....B9
Air.....PA658
Fuel.....BF886
Oil Vapor.....N/R
Trans......6021
Wagoneer 6-230 (3.8L) Carb.
Air.....PA658
Oil Vapor.....N/R
Trans......6021
Wagoneer V8-327 (5.4L) Carb.
Lube.....B9
Fuel.....BF836,-K3
Trans......6021

1965

Dispatcher 4-134 (2.2L) Carb.
Lube.....B50
Air.....PA658
Fuel.....BF840,-K1
Oil Vapor.....N/R
Trans......6021
FC150 4-134 (2.2L) Carb.
Lube.....B50
Air.....PA658
Fuel.....BF840,-K1
Oil Vapor.....N/R
Trans......6021
FC150 6-226 (3.7L) Carb.
Lube.....B2
Air.....PA602
Fuel.....BF840,-K1
Oil Vapor.....N/R
Trans......6021
FC170 4-134 (2.2L) Carb.
Lube.....B50
Air.....PA658
Fuel.....BF840,-K1
Oil Vapor.....N/R
Trans......6021
FC170 6-226 (3.7L) Carb.
Lube.....B50
Air.....PA602
Fuel.....BF840,-K1
Oil Vapor.....N/R
Trans......6021
Gladiator 6-230 (3.8L) Carb.
Lube.....B2
Air.....PA602
Fuel.....BF840,-K1
Trans......6021
Gladiator 6-232 (3.8L) Carb.
Lube.....B2
Air.....PA602
Fuel.....BF840,-K1
Trans......6021

OBS = Obsolete. Availability Limited to Distributor Stock.

JEEP 1965 (Cont'd.)

Gladiator V8-327 (5.4L) Carb.
Lube.....B9
Fuel.....BF836,-K3
Trans......6013
J Series 6-230 (3.8L) Carb.
Lube.....B2
Air.....PA602
Fuel.....BF840,-K1
Trans......6021
J Series 6-232 (3.8L) Carb.
Lube.....B2
Air.....PA602
Fuel.....BF840,-K1
Trans......6021
J Series V8-327 (5.4L) Carb.
Lube.....B9
Fuel.....BF836,-K3
Trans......6021
Universal 4-134 (2.2L) Carb.
Lube.....B50
Fuel.....BF840,-K1
Oil Vapor.....N/R
Trans......6021
Wagoneer 6-230 (3.8L) Carb.
Lube.....B2
Air.....PA602
Fuel.....BF840,-K1
Trans......6021
Wagoneer V8-327 (5.4L) Carb.
Lube.....B9
Fuel.....BF836,-K3
Trans......6021

1964
Dispatcher 4-134 (2.2L) Carb.
Lube (Ele.).....P40
Lube (Spin-on).....B50
Air.....PA671
Fuel.....BF833,-K2
Oil Vapor.....N/R
FC150 4-134 (2.2L) Carb.
Lube (Ele.).....P40
Lube (Spin-on).....B50
Air.....PA671
Fuel.....BF833,-K2
Oil Vapor.....N/R
FC150 6-226 (3.7L) Carb.
Lube.....B2
Air.....PA602
Fuel.....BF840,-K1
Oil Vapor.....N/R
FC170 4-134 (2.2L) Carb.
Lube.....P40
Air.....PA671
Fuel.....BF833,-K2
Oil Vapor.....N/R
FC170 6-226 (3.7L) Carb.
Air.....PA602
Fuel.....BF840,-K1
Oil Vapor.....N/R
Gladiator 6-230 (3.8L) Carb.
Lube.....B2
Air.....PA602
Fuel.....BF840,-K1
J Series 6-230 (3.8L) Carb.
Lube.....B2
Air.....PA602
Fuel.....BF840,-K1
Universal 4-134 (2.2L) Carb.
Lube.....P40
Air.....PA671
Fuel.....BF833,-K2
Oil Vapor.....N/R
Wagoneer 6-230 (3.8L) Carb.
Lube.....B2
Air.....PA602
Fuel.....BF840,-K1

1963
Dispatcher 4-134 (2.2L) Carb.
Lube.....P40
Air.....PA671
Fuel.....BF833,-K2
Oil Vapor.....N/R

JEEP 1963 (Cont'd.)

FC150 4-134 (2.2L) Carb.
Lube.....P40
Air.....PA671
Fuel.....BF833,-K2
Oil Vapor.....N/R
FC150 6-226 (3.7L) Carb.
Lube.....B2
Air.....PA602
Fuel.....BF840,-K1
Oil Vapor.....N/R
FC170 4-134 (2.2L) Carb.
Lube.....P40
Air.....PA671
Fuel.....BF833,-K2
Oil Vapor.....N/R
FC170 6-226 (3.7L) Carb.
Lube.....B2
Air.....PA602
Fuel.....BF840,-K1
Oil Vapor.....N/R
Gladiator 6-230 (3.8L) Carb.
Lube.....B2
Air.....PA602
Fuel.....BF840,-K1
J Series 6-230 (3.8L) Carb.
Lube.....B2
Air.....PA602
Fuel.....BF840,-K1
Universal 4-134 (2.2L) Carb.
Lube.....P40
Air.....PA671
Fuel.....BF833,-K2
Oil Vapor.....N/R
Wagoneer 6-230 (3.8L) Carb.
Lube.....B2
Air.....PA602
Fuel.....BF840,-K1

1962
Dispatcher 4-134 (2.2L) 1 Bbl. Carb.
Lube.....P40
Fuel.....BF833,-K2
FC150 4-134 (2.2L) 1 Bbl. Carb.
Lube.....P40
Fuel.....BF833,-K2
FC150 6-226 (3.7L) Carb.
Lube.....B50
Oil Vapor.....N/R
Tornado 6-230 (3.8L) Carb.
Lube.....B2
Air.....PA602
Fuel.....BF840,-K1
Oil Vapor.....N/R
Universal 4-134 (2.2L) Carb.
Lube.....P40
Fuel.....BF833,-K2
Utility 4-134 (2.2L) 1 Bbl. Carb.
Lube.....P40
Fuel.....BF833,-K2

1961
Dispatcher 4-134 (2.2L) 1 Bbl. Carb.
Lube.....P40
Fuel.....BF833,-K2
FC150 4-134 (2.2L) 1 Bbl. Carb.
Lube.....P40
Fuel.....BF833,-K2
Universal 4-134 (2.2L) Carb.
Lube.....P40
Fuel.....BF833,-K2
Utility 4-134 (2.2L) 1 Bbl. Carb.
Lube.....P40
Fuel.....BF833,-K2

1960
CJ Series, DJ Series 4-134 (2.2L) 1 Bbl. Carb.
Lube.....P40
Fuel.....BF833,-K2
FC150 4-134 (2.2L) 1 Bbl. Carb.
Lube.....P40
Fuel.....BF833,-K2

JEEP (Cont'd.)

1959
CJ Series, DJ Series 4-134 (2.2L) 1 Bbl. Carb.
Lube.....P40
Oil Vapor.....N/R
FC150 4-134 (2.2L) 1 Bbl. Carb.
Lube.....P40
Oil Vapor.....N/R

1958
CJ Series, DJ Series 4-134 (2.2L) 1 Bbl. Carb.
Lube.....P40
Oil Vapor.....N/R
F4 4-134 (2.2L) Carb.
Lube.....P40
Oil Vapor.....N/R
FC150 4-134 (2.2L) 1 Bbl. Carb.
Lube.....P40
Oil Vapor.....N/R

1957
CJ Series, DJ Series 4-134 (2.2L) 1 Bbl. Carb.
Lube.....P40
Oil Vapor.....N/R
F4 4-134 (2.2L) Carb.
Lube.....P40
Oil Vapor.....N/R

1956
CJ Series, DJ Series 4-134 (2.2L) 1 Bbl. Carb.
Lube.....P40
Oil Vapor.....N/R

1955
1-Ton 4-134 (2.2L) 1 Bbl. Carb.
Lube.....P40
Oil Vapor.....N/R
CJ Series 4-134 (2.2L) 1 Bbl. Carb.
Lube.....P40
Oil Vapor.....N/R
Sedan 4-134 (2.2L) 1 Bbl. Carb.
Lube.....P40
Oil Vapor.....N/R

1954
1-Ton 4-134 (2.2L) 1 Bbl. Carb.
Lube.....P40
Oil Vapor.....N/R
CJ Series 4-134 (2.2L) 1 Bbl. Carb.
Lube.....P40
Oil Vapor.....N/R
Sedan 4-134 (2.2L) 1 Bbl. Carb.
Lube.....P40
Oil Vapor.....N/R

1953
1-Ton 4-134 (2.2L) 1 Bbl. Carb.
Lube.....P40
Oil Vapor.....N/R
CJ Series 4-134 (2.2L) 1 Bbl. Carb.
Lube.....P40
Oil Vapor.....N/R
Sedan 4-134 (2.2L) 1 Bbl. Carb.
Lube.....P40
Oil Vapor.....N/R

1952
1-Ton 4-134 (2.2L) 1 Bbl. Carb.
Lube.....P40
Oil Vapor.....N/R
CJ Series 4-134 (2.2L) 1 Bbl. Carb.
Lube.....P40
Oil Vapor.....N/R
Jeepster 4-134 (2.2L) Carb.
Lube.....P40
Oil Vapor.....N/R

JEEP 1952 (Cont'd.)

Sedan 4-134 (2.2L) 1 Bbl. Carb.
Lube.....P40
Oil Vapor.....N/R

1951
1-Ton 4-134 (2.2L) 1 Bbl. Carb.
Lube.....P40
Oil Vapor.....N/R
CJ Series 4-134 (2.2L) 1 Bbl. Carb.
Lube.....P40
Oil Vapor.....N/R
Jeepster 4-134 (2.2L) 1 Bbl. Carb.
Lube.....P40
Oil Vapor.....N/R
Sedan 4-134 (2.2L) 1 Bbl. Carb.
Lube.....P40
Oil Vapor.....N/R

1950
1-Ton 4-134 (2.2L) 1 Bbl. Carb.
Lube.....P40
Oil Vapor.....N/R
CJ Series 4-134 (2.2L) 1 Bbl. Carb.
Lube.....P40
Oil Vapor.....N/R
Jeepster 4-134 (2.2L) 1 Bbl. Carb.
Lube.....P40
Oil Vapor.....N/R
Panel 4-134 (2.2L) 1 Bbl. Carb.
Lube.....P40
Oil Vapor.....N/R

1949
1-Ton 4-134 (2.2L) 1 Bbl. Carb.
Oil Vapor.....N/R
CJ Series 4-134 (2.2L) 1 Bbl. Carb.
Oil Vapor.....N/R
Jeepster 4-134 (2.2L) 1 Bbl. Carb.
Oil Vapor.....N/R
Panel 4-134 (2.2L) 1 Bbl. Carb.
Oil Vapor.....N/R

1948
1-Ton 4-134 (2.2L) 1 Bbl. Carb.
Oil Vapor.....N/R
CJ Series 4-134 (2.2L) 1 Bbl. Carb.
Oil Vapor.....N/R
Panel 4-134 (2.2L) 1 Bbl. Carb.
Oil Vapor.....N/R

1947
1-Ton 4-134 (2.2L) 1 Bbl. Carb.
Oil Vapor.....N/R
CJ Series 4-134 (2.2L) 1 Bbl. Carb.
Oil Vapor.....N/R
Panel 4-134 (2.2L) 1 Bbl. Carb.
Lube.....P73

1946
CJ Series 4-134 (2.2L) 1 Bbl. Carb.
Oil Vapor.....N/R
Panel 4-134 (2.2L) 1 Bbl. Carb.
Oil Vapor.....N/R

JENSEN

1976
Healey GT 4-1973cc (2.0L) Carb.
Lube.....B233
Fuel.....BF840,-K1
Interceptor MK III V8-440 (7.2L) Carb.
Lube.....B2
Air.....PA2010

1975
Healey 4-1973cc (2.0L) Carb.
Lube.....B233
Fuel.....BF840,-K1

OBS = Obsolete. Availability Limited to Distributor Stock.

JENSEN 1975 (Cont'd.)

Interceptor MK III V8-440 (7.2L) Carb.
Lube.....B2
Air.....PA2010

1974
Healey 4-1973cc (2.0L) Carb.
Lube.....B233
Fuel.....BF840,-K1
Interceptor MK III V8-440 (7.2L) Carb.
Lube.....B2
Air.....PA2010

1973
Healey 4-1973cc (2.0L) Carb.
Lube.....B233
Fuel.....BF840,-K1
Interceptor SP, Interceptor MK III V8-440 (7.2L) Carb.
Lube.....B2
Air.....PA2010

1972
Healey 4-1973cc (2.0L) Carb.
Lube.....B233
Interceptor MK III V8-383 (6.3L) Carb.
Lube.....B2
Air.....PA2010
Interceptor SP V8-440 (7.2L) Carb.
Lube.....B2
Air.....PA2010

1971
Interceptor V8-383 (6.3L) Carb.
Lube.....B2
Air.....PA2010

LAMBORGHINI

1978
Espada, Jarama 400GTS V12-3929cc (3.9L) Carb.
Lube.....P162

1977
Espada, Jarama 400GTS V12-3929cc (3.9L) Carb.
Lube.....P162

1976
Espada, Jarama 400GTS V12-3929cc (3.9L) Carb.
Lube.....P162
Urraco P200 V8-1994cc (2.0L) Carb.
Lube.....BT292
Urraco P250 V8-2463cc (2.5L) Carb.
Lube.....BT292
Urraco P300 V8-2996cc (3.0L) Carb.
Lube.....BT292

1975
Espada, Jarama 400GTS V12-3929cc (3.9L) Carb.
Lube.....P162
Urraco P200 V8-1994cc (2.0L) Carb.
Lube.....BT292
Urraco P250 V8-2463cc (2.5L) Carb.
Lube.....BT292
Urraco P300 V8-2996cc (3.0L) Carb.
Lube.....BT292

1974
Espada, Jarama 400GTS V12-3929cc (3.9L) Carb.
Lube.....P162

LAMBORGHINI 1974 (Cont'd.)

Urraco P200 V8-1994cc (2.0L) Carb.
Lube.....BT292
Urraco P250 V8-2463cc (2.5L) Carb.
Lube.....BT292
Urraco P300 V8-2996cc (3.0L) Carb.
Lube.....BT292

1973
Espada, Jarama 400GTS V12-3929cc (3.9L) Carb.
Lube.....P162

1972
Espada, Miura V12-3929cc (4.0L) Carb.
Lube.....P162

1971
Espada, Jarama 400GTS, Miura V12-3929cc (4.0L) Carb.
Lube.....P162

1970
Espada, Islero, Jarama 400GTS, Miura V12-3929cc (4.0L) Carb.
Lube.....P162

LANCIA

1979
Beta, Beta HPE 4-1994cc (2.0L) Carb.
Lube.....BT5
Air.....PA691
Fuel.....BF833,-K2
Zagato 4-1994cc (2.0L) Carb.
Lube.....BT5
Air.....PA691

1978
Beta, Beta HPE 4-1755cc (1.8L) Carb.
Lube.....BT5
Air.....PA691
Fuel.....BF833,-K2

1977
Beta, Beta HPE, Beta Scorpion 4-1755cc (1.8L) Carb.
Lube.....BT5
Air.....PA691
Fuel.....BF833,-K2

1976
Beta, Beta HPE, Beta Scorpion 4-1755cc (1.8L) Carb.
Lube.....BT5
Air.....PA691
Fuel.....BF833,-K2

LINCOLN

1979
Continental V8-400 (6.6L) 2 Bbl. VIN S
Lube.....B2
Air.....PA2051
Fuel (Screw-in).....BF995
Oil Vapor.....SA2085
Trans......19828
Mark V V8-400 (6.6L) 2 Bbl. VIN S
Lube.....B2
Air.....PA2051
Fuel (Screw-in).....BF995
Oil Vapor.....SA2085
Trans......19828

LINCOLN 1979 (Cont'd.)

Versailles V8-302 (5.0L) 2 Bbl. VIN F
Lube.....B2
Air.....PA2051
Fuel (Screw-in, Exc. Calif.).....BF995
Oil Vapor.....SA2085

1978
Continental V8-400 (6.6L) 2 Bbl. VIN S
Lube.....B2
Air.....PA2051
Fuel.....BF995
Oil Vapor.....SA2085
Trans......19828
Continental V8-460 (7.5L) 4 Bbl. VIN A
Lube.....B2
Air.....PA2024
Oil Vapor.....SA2039
Trans......19828
Mark V V8-400 (6.6L) 2 Bbl. VIN S
Lube.....B2
Air.....PA2051
Fuel.....BF995
Oil Vapor.....SA2085
Trans......19828
Mark V V8-460 (7.5L) 4 Bbl. VIN A
Lube.....B2
Air.....PA2024
Oil Vapor.....SA2039
Trans......19828
Versailles V8-302 (5.0L) 2 Bbl. VIN F
Lube.....B2
Air.....PA2051
Fuel (Screw-in, Exc. Calif.).....BF995
Oil Vapor.....SA2085

1977
Continental V8-400 (6.6L) 2 Bbl. VIN S
Lube.....B2
Air.....PA2051
Fuel.....BF989
Oil Vapor.....SA2039
Trans......19828
Continental V8-460 (7.5L) 4 Bbl. VIN A
Lube.....B2
Air.....PA2024
Oil Vapor.....SA2039
Trans......19828
Mark V V8-400 (6.6L) 2 Bbl. VIN S
Lube.....B2
Air.....PA2051
Fuel.....BF989
Oil Vapor.....SA2039
Trans......19828
Mark V V8-460 (7.5L) 4 Bbl. VIN A
Lube.....B2
Air.....PA2024
Oil Vapor.....SA2039
Trans......19828
Versailles V8-302 (5.0L) 2 Bbl. VIN F
Lube.....B2
Air.....PA2051
Fuel (Exc. Calif.).....BF995
Oil Vapor.....SA2085
Versailles V8-351W (5.8L) 2 Bbl. VIN H
Lube.....B2
Air.....PA2051
Fuel (Exc. Calif.).....BF995
Oil Vapor.....SA2085

1976
Continental V8-460 (7.5L) 4 Bbl. VIN A
Lube.....B2
Air.....PA2024
Oil Vapor.....SA2039
Trans......19828

LINCOLN 1976 (Cont'd.)

Mark IV V8-460 (7.5L) 4 Bbl. VIN A
Lube.....B2
Air.....PA2024
Oil Vapor.....SA2039
Trans......19828

1975
Continental V8-460 (7.5L) 4 Bbl. VIN A
Lube.....B2
Air.....PA2024
Oil Vapor.....SA2039
Trans......19828

Mark IV V8-460 (7.5L) 4 Bbl. VIN A
Lube.....B2
Air.....PA2024
Oil Vapor.....SA2039
Trans......19828

1974
Continental V8-460 (7.5L) 4 Bbl. Carb. VIN A
Lube.....B2
Air.....PA2024
Fuel.....BF879
Oil Vapor.....SA2039

Mark IV V8-460 (7.5L) 4 Bbl. Carb. VIN A
Lube.....B2
Air.....PA2024
Fuel.....BF879
Oil Vapor.....SA2039

1973
Continental V8-460 (7.5L) 4 Bbl. Carb. VIN A
Lube.....B2
Air.....PA2024
Fuel.....BF879
Oil Vapor.....SA2039

Mark IV V8-460 (7.5L) 4 Bbl. Carb. VIN A
Lube.....B2
Air.....PA2024
Fuel.....BF879
Oil Vapor.....SA2039

1972
Continental V8-460 (7.5L) 4 Bbl. Carb. VIN A
Lube.....B2
Air.....PA2002
Fuel.....BF879
Oil Vapor.....SA2039

Mark IV V8-460 (7.5L) 4 Bbl. Carb. VIN A
Lube.....B2
Air.....PA2002
Fuel.....BF879
Oil Vapor.....SA2039

1971
Continental, Mark III V8-460 (7.5L) 4 Bbl. Carb. VIN A
Lube.....B2
Air.....PA2002
Fuel.....BF879
Oil Vapor.....SA2039

1970
Continental, Mark III V8-460 (7.5L) 4 Bbl. Carb. VIN A
Lube.....B2
Air.....PA2002
Fuel.....BF879
Oil Vapor.....SA2039

OBS = Obsolete. Availability Limited to Distributor Stock.

LINCOLN (Cont'd.)

1969
Continental, Mark III V8-460 (7.5L) Carb. VIN A
Lube....B2
Air....PA2002
Fuel....BF879

1968
Continental, Mark III V8-460 (7.5L) Carb. VIN A
Lube....B2
Air....PA2002
Fuel....BF879
Continental, Mark III V8-462 (7.6L) Carb. VIN G
Lube....B2
Air....PA642
Fuel....BF843

1967
Continental V8-462 (7.6L) Carb.
Lube....B2
Fuel....BF843

1966
Continental V8-462 (7.6L) Carb.
Lube....B2
Air....PA642
Fuel....BF843

1965
Continental V8-430 (7.0L) Carb.
Lube....B2
Air....PA642
Fuel....BF843

1964
Continental V8-430 (7.0L) Carb.
Lube....B2
Fuel....BF843

1963
Continental V8-430 (7.0L) Carb.
Lube....B2
Fuel....BF843

1962
Continental V8-430 (7.0L) 2 Bbl. Carb. VIN H
Lube....B2
Fuel....BF843

1961
Continental V8-430 (7.0L) 2 Bbl. Carb. VIN H
Lube....B2
Fuel....BF843

1960
Continental V8-430 (7.0L) 2 Bbl. Carb. VIN H
Lube....B2
Air....PA642
Fuel....BF843
Lincoln Series V8-430 (7.0L) 2 Bbl. Carb. VIN H
Lube....B2
Air....PA642
Fuel....BF843
Premier V8-430 (7.0L) 2 Bbl. Carb. VIN H
Lube....B2
Air....PA642
Fuel....BF843

1959
Capri V8-430 (7.0L) 4 Bbl. Carb. VIN H
Lube....B2

LINCOLN 1959 (Cont'd.)

Continental V8-430 (7.0L) 4 Bbl. Carb. VIN H
Lube....B2
Premier V8-430 (7.0L) 4 Bbl. Carb. VIN H
Lube....B2

1958
Capri V8-430 (7.0L) 4 Bbl. Carb. VIN H
Lube....B2
Fuel....PF857
Continental V8-430 (7.0L) 4 Bbl. Carb. VIN H
Lube....B2
Fuel....PF857
Premier V8-430 (7.0L) 4 Bbl. Carb. VIN H
Lube....B2
Fuel....PF857

1957
Capri V8-368 (6.0L) 4 Bbl. Carb.
Lube....B2
Fuel....BF840,-K1
PowSteer.....P183
Mark II V8-368 (6.0L) 4 Bbl. Carb.
Lube....B2
Fuel....BF840,-K1
PowSteer.....P183
Premier V8-368 (6.0L) 4 Bbl. Carb.
Lube....B2
Fuel....BF840,-K1
PowSteer.....P183

1956
Capri V8-368 (6.0L) 4 Bbl. Carb.
Lube....P80
Fuel....BF840,-K1
PowSteer.....P183
Mark II V8-368 (6.0L) 4 Bbl. Carb.
Lube....P80
Fuel....BF840,-K1
PowSteer.....P183
Premier V8-368 (6.0L) 4 Bbl. Carb.
Lube....P80
Fuel....BF840,-K1
PowSteer.....P183

1955
Capri V8-341 (5.6L) 4 Bbl. Carb.
Lube....P80
Fuel....BF840,-K1
PowSteer.....P183
Custom V8-341 (5.6L) 4 Bbl. Carb.
Lube....P80
Fuel....BF840,-K1
PowSteer.....P183

1954
Capri V8-318 (5.2L) 4 Bbl. Carb.
Lube....P80
Fuel....BF840,-K1
PowSteer.....P183
Cosmopolitan V8-318 (5.2L) 4 Bbl. Carb.
Lube....P80
Fuel....BF840,-K1
PowSteer.....P183

1953
Capri V8-318 (5.2L) 4 Bbl. Carb.
Lube....P80
Fuel....BF840,-K1
PowSteer.....P183
Cosmopolitan V8-318 (5.2L) 4 Bbl. Carb.
Lube....P80
Fuel....BF840,-K1
PowSteer.....P183

LINCOLN (Cont'd.)

1952
Capri V8-318 (5.2L) 2 Bbl. Carb.
Lube....P80
Fuel....BF840,-K1
Cosmopolitan V8-318 (5.2L) 2 Bbl. Carb.
Lube....P80
Fuel....BF840,-K1

LOTUS

1979
Eclat, Eclat Sprint 4-1973cc (2.0L) Carb. VIN 7
Lube....B34
Fuel....BF840,-K1
Elite 4-1973cc (2.0L) Carb. VIN 7
Lube....B34
Fuel....BF840,-K1
Espirit 4-1973cc (2.0L) Carb. VIN 7
Lube....B34
Fuel....BF840,-K1

1978
Eclat, Eclat Sprint 4-1973cc (2.0L) Carb. VIN 7
Lube....B34
Fuel....BF840,-K1
Elite 4-1973cc (2.0L) Carb. VIN 7
Lube....B34
Fuel....BF840,-K1
Espirit 4-1973cc (2.0L) Carb. VIN 7
Lube....B34
Fuel....BF840,-K1

1977
Eclat, Eclat Sprint 4-1973cc (2.0L) Carb. VIN 7
Lube....B34
Fuel....BF840,-K1
Elite 4-1973cc (2.0L) Carb. VIN 7
Lube....B34
Fuel....BF840,-K1
Espirit 4-1973cc (2.0L) Carb. VIN 7
Lube....B34
Fuel....BF840,-K1

1976
Eclat, Eclat Sprint 4-1973cc (2.0L) Carb. VIN 7
Lube....B34
Fuel....BF840,-K1
Elite 4-1973cc (2.0L) Carb. VIN 7
Lube....B34
Fuel....BF840,-K1
Espirit 4-1973cc (2.0L) Carb. VIN 7
Lube....B34
Fuel....BF840,-K1

1975
Elan 4-1558cc (1.6L) Carb.
Lube....P271
Europa 4-1558cc (1.6L) Carb.
Lube....B178
Air....PA2099
Fuel....BF840,-K1
Seven 4-1298cc (1.3L) Carb.
Lube....B178
Seven 4-1599cc (1.6L) Carb.
Lube....B178

1974
Elan 4-1558cc (1.6L) Carb.
Lube....B178
Europa 4-1558cc (1.6L) Carb.
Lube....B178
Air....PA2099
Fuel....BF840,-K1

LOTUS 1974 (Cont'd.)

Europa 4-1565cc (1.6L) Carb.
Lube....B132
Air....PA2099
Fuel....BF840,-K1
Europa Twin 4-1558cc (1.6L) Carb.
Air....PA2099
Fuel....BF840,-K1
Seven 4-1298cc (1.3L) Carb.
Lube....B178
Seven 4-1599cc (1.6L) Carb.
Lube....B178

1973
Europa 4-1558cc (1.6L) Carb.
Lube....B132
Air....PA2099
Fuel....BF840,-K1
Europa 4-1565cc (1.6L) Carb.
Lube....B132
Air....PA2099
Fuel....BF840,-K1
Europa Twin 4-1558cc (1.6L) Carb.
Lube....B178
Air....PA2099
Fuel....BF840,-K1
Seven 4-1298cc (1.3L) Carb.
Lube....B178
Seven 4-1599cc (1.6L) Carb.
Lube....B178

1972
Europa 4-1558cc (1.6L) Carb.
Lube....B132
Air....PA2099
Fuel....BF840,-K1
Europa 4-1565cc (1.6L) Carb.
Lube....B132
Air....PA2099
Fuel....BF840,-K1
Seven 4-1298cc (1.3L) Carb.
Lube....B178
Seven 4-1599cc (1.6L) Carb.
Lube....B178

1971
Europa 4-1558cc (1.6L) Carb.
Air....PA2099
Fuel....BF840,-K1
Europa 4-1565cc (1.6L) Carb.
Lube....B132
Air....PA2099
Fuel....BF840,-K1
Seven 4-1599cc (1.6L) Carb.
Lube....B178

1970
Europa 4-1470cc (1.5L) 2 Bbl. Carb.
Lube....B132
Air....PA2099
Fuel....BF840,-K1
Europa 4-1565cc (1.6L) 2 Bbl. Carb.
Lube....B132
Air....PA2099
Fuel....BF840,-K1

1969
Elan 4-1558cc (1.6L) Carb.
Lube....P172
Europa 4-1470cc (1.5L) Carb.
Lube....B132
Air....PA2099
Fuel....BF840,-K1
Europa 4-1565cc (1.6L) Carb.
Lube....B132
Air....PA2099
Fuel....BF840,-K1
Seven 4-1558cc (1.6L) Carb.
Lube....P172
Seven 4-1599cc (1.6L) Carb.
Lube....P172

OBS = Obsolete. Availability Limited to Distributor Stock.

LOTUS (Cont'd.)

1968
Europa 4-1470cc (1.5L) Carb.
Air.....**PA2099**
Fuel.....**BF840,-K1**
Seven 4-1498cc (1.5L) Carb.
Lube.....**P271**
Super Seven 4-1340cc (1.3L) Carb.
Lube.....**P172**

1967
Elan 4-1558cc (1.6L) Carb.
Lube.....**P172**
Europa 4-1470cc (1.5L) Carb.
Lube.....**B132**
Air.....**PA2099**
Fuel.....**BF840,-K1**
Super Seven 4-1340cc (1.3L) Carb.
Lube.....**P172**
Super Seven 4-1498cc (1.5L) Carb.
Lube.....**P172**

1966
Elan 4-1558cc (1.6L) Carb.
Lube.....**P172**
Elite 4-1216cc (1.2L) Carb.
Lube.....**P174**
Super Seven 4-1340cc (1.3L) Carb.
Lube.....**P172**
Super Seven 4-1498cc (1.5L) Carb.
Lube.....**P172**

1965
Elan 4-1558cc (1.6L) Carb.
Lube.....**P172**
Elite 4-1216cc (1.2L) Carb.
Lube.....**P174**
Super Seven 4-1340cc (1.3L) Carb.
Lube.....**P172**
Super Seven 4-1498cc (1.5L) Carb.
Lube.....**P172**

1964
Elan 4-1558cc (1.6L) Carb.
Lube.....**P271**
Elite 4-1216cc (1.2L) Carb.
Lube.....**P174**
Super Seven 4-1340cc (1.3L) Carb.
Lube.....**P172**

1963
Elan 4-1558cc (1.6L) Carb.
Lube.....**P172**
Elite 4-1216cc (1.2L) Carb.
Lube.....**P174**
Super Seven 4-1340cc (1.3L) Carb.
Lube.....**P172**
Super Seven 4-1498cc (1.5L) Carb.
Lube.....**P172**

1962
Elan 4-1558cc (1.6L) 2-2 Bbl. Carb.
Lube.....**P172**
Elite 4-1216cc (1.2L) 2-2 Bbl. Carb.
Lube.....**P174**
Super Seven 4-1340cc (1.3L) 2-2 Bbl. Carb.
Lube.....**P172**
Super Seven 4-1498cc (1.5L) Carb.
Lube.....**P172**

1961
Elite 4-1216cc (1.2L) 2-2 Bbl. Carb.
Lube.....**P174**
Seven 4-1098cc (1.1L) 2-2 Bbl. Carb.
Lube.....**P172**
Seven 4-1172cc (1.2L) 2 Bbl. Carb.
Lube.....**P172**
Super Seven 4-1098cc (1.1L) 2-2 Bbl. Carb.
Lube.....**P172**

LOTUS (Cont'd.)

1960
Elite 4-1172cc (1.2L) 2-2 Bbl. Carb.
Lube.....**P174**
Seven 4-1172cc (1.2L) 2-2 Bbl. Carb.
Lube.....**P172**
Super Seven 4-1098cc (1.1L) 2-2 Bbl. Carb.
Lube.....**P172**

1959
Elite 4-1216cc (1.2L) 2-2 Bbl. Carb.
Lube.....**P174**
Seven 4-1172cc (1.2L) 2-2 Bbl. Carb.
Lube.....**P172**
Super Seven 4-1098cc (1.1L) 2-2 Bbl. Carb.
Lube.....**P172**

1958
Elite 4-1216cc (1.2L) 2-2 Bbl. Carb.
Lube.....**P174**
Super Seven 4-1098cc (1.1L) 2-2 Bbl. Carb.
Lube.....**P172**

1957
Seven 4-1172cc (1.2L) 2 Bbl. Carb.
Lube.....**P172**

MASERATI

1979
Bora V8-301 (4.9L) Carb.
Lube.....**B281**

1978
Bora V8-301 (4.9L) Carb.
Lube.....**B281**

1977
Bora V8-301 (4.9L) Carb.
Lube.....**B281**

1976
Bora V8-301 (4.9L) Carb.
Lube.....**B281**

1975
Bora V8-301 (4.9L) Carb.
Lube.....**B281**

1974
Bora V8-301 (4.9L) Carb.
Lube.....**B281**

1973
Bora V8-301 (4.9L) Carb.
Lube.....**B281**
Ghibli V8-301 (4.9L) Carb.
Lube.....**P162**

1972
Bora V8-301 (4.9L) Carb.
Lube.....**B281**
Ghibli V8-301 (4.9L) Carb.
Lube.....**P162**

1971
Ghibli V8-4719cc (4.7L) Carb.
Lube.....**P162**
Ghibli V8-4930cc (4.9L) Carb.
Lube.....**P162**

1970
Ghibli V8-4719cc (4.7L) Carb.
Lube.....**P162**

MASERATI 1970 (Cont'd.)

Ghibli V8-4930cc (4.9L) Carb.
Lube.....**P162**
Mistral 6-3694cc (3.7L) FI
Lube.....**P162**
Mistral 6-4014cc (4.0L) FI
Lube.....**P162**

MAZDA

1979
626 4-1970cc (2.0L) 2 Bbl.
Lube.....**B161-S**
Air.....**PA2075**
Fuel.....**BF840,-K1**
Oil Vapor.....**N/R**
Fuel Vapor.....**N/R**
B2000 Pickup 4-1970cc (2.0L) 2 Bbl.
Lube.....**B161-S**
Air.....**PA2075**
Fuel.....**BF840,-K1**
Oil Vapor.....**N/R**
Fuel Vapor.....**N/R**
GLC 4-1415cc (1.4L) 2 Bbl.
Lube.....**B227**
Air.....**PA2031**
Air (Cabin).....**N/R**
Fuel.....**BF840,-K1**
RX7 Rotary 1146cc (1.1L) 4 Bbl.
Lube.....**B161-S**
Air.....**PA2133 OBS**
Fuel.....**BF840,-K1**

1978
B1800 Pickup 4-1796cc (1.8L) 2 Bbl.
Lube.....**B161-S**
Air.....**PA2075**
Fuel.....**BF840,-K1**
Cosmos with Rotary 1308cc (1.3L) 4 Bbl.
Lube.....**B161-S**
Air.....**PA2133 OBS**
Fuel.....**BF840,-K1**
GLC 4-1272cc (1.3L) 2 Bbl.
Lube.....**B227**
Air.....**PA2031**
Air (Cabin).....**N/R**
Fuel.....**BF840,-K1**
RX3 Rotary 1146cc (1.1L) 4 Bbl.
Lube.....**B161-S**
Air.....**PA2133 OBS**
Fuel.....**BF840,-K1**
RX4 Rotary 1308cc (1.3L) 4 Bbl.
Lube.....**B161-S**
Air.....**PA2133 OBS**
Fuel.....**BF840,-K1**

1977
808 4-1587cc (1.6L) 2 Bbl.
Lube.....**B161-S**
Air.....**PA2075**
Fuel.....**BF840,-K1**
B1800 Pickup 4-1796cc (1.8L) 2 Bbl.
Lube.....**B161-S**
Air.....**PA2075**
Fuel.....**BF840,-K1**
Cosmos with Rotary 1308cc (1.3L) 4 Bbl.
Lube.....**B161-S**
Air.....**PA2133 OBS**
Fuel.....**BF840,-K1**
GLC 4-1272cc (1.3L) 2 Bbl.
Lube.....**B227**
Air.....**PA2031**
Air (Cabin).....**N/R**
Fuel.....**BF840,-K1**
Mizer 4-1272cc (1.3L) 2 Bbl.
Lube.....**B227**
Air.....**PA2031**
Fuel.....**BF840,-K1**
Rotary Pickup 1308cc (1.3L) 4 Bbl.
Lube.....**B161-S**
Air.....**PA2133 OBS**
Fuel.....**BF840,-K1**

MAZDA 1977 (Cont'd.)

RX3 Rotary 1146cc (1.1L) 4 Bbl.
Lube.....**B161-S**
Air.....**PA2133 OBS**
Fuel.....**BF840,-K1**
RX4 Rotary 1308cc (1.3L) 4 Bbl.
Lube.....**B161-S**
Air.....**PA2133 OBS**
Fuel.....**BF840,-K1**

1976
808 4-1587cc (1.6L) 2 Bbl.
Lube.....**B161-S**
Air.....**PA2075**
Fuel.....**BF840,-K1**
Trans......**18015**
B1600 Pickup 4-1586cc (1.6L) 2 Bbl.
Lube.....**B161-S**
Air.....**PA2075**
Fuel.....**BF840,-K1**
Cosmos with Rotary 1308cc (1.3L) 4 Bbl.
Lube.....**B161-S**
Air.....**PA2133 OBS**
Fuel.....**BF840,-K1**
Trans......**18015**
Mizer 4-1272cc (1.3L) 2 Bbl.
Lube.....**B161-S**
Air.....**PA2031**
Fuel.....**BF840,-K1**
Trans......**18015**
Rotary Pickup 1308cc (1.3L) 4 Bbl.
Lube.....**B161-S**
Air.....**PA2133 OBS**
Fuel.....**BF840,-K1**
RX3 Rotary 1146cc (1.1L) 4 Bbl.
Lube.....**B161-S**
Air.....**PA2133 OBS**
Fuel.....**BF840,-K1**
Trans......**18015**
RX4 Rotary 1308cc (1.3L) 4 Bbl.
Lube.....**B161-S**
Air.....**PA2133 OBS**
Fuel.....**BF840,-K1**
Trans......**18015**

1975
808 4-1587cc (1.6L) 2 Bbl.
Lube.....**B161-S**
Air.....**PA2075**
Fuel.....**BF840,-K1**
B1600 Pickup 4-1586cc (1.6L) 2 Bbl.
Lube.....**B161-S**
Air.....**PA2075**
Fuel.....**BF840,-K1**
Rotary Pickup 1308cc (1.3L) 4 Bbl.
Lube.....**B161-S**
Air.....**PA2133 OBS**
Fuel.....**BF840,-K1**
RX3 Rotary 1146cc (1.1L) 4 Bbl.
Lube.....**B161-S**
Air.....**PA2133 OBS**
Fuel.....**BF840,-K1**
Trans......**18015**
RX4 Rotary 1308cc (1.3L) 4 Bbl.
Lube.....**B161-S**
Air.....**PA2133 OBS**
Fuel.....**BF840,-K1**

1974
808 4-1587cc (1.6L) Carb.
Lube.....**B227**
Air.....**PA2075**
Fuel.....**BF840,-K1**
Oil Vapor.....**N/R**
B1600 Pickup 4-1586cc (1.6L) Carb.
Lube.....**B161-S**
Air.....**PA2075**
Fuel.....**BF840,-K1**
Oil Vapor.....**N/R**
Rotary Pickup 1308cc (1.3L) Carb.
Lube.....**B161-S**
Air.....**PA2133 OBS**
Fuel.....**BF840,-K1**
Oil Vapor.....**N/R**
PCV.....**N/R**

OBS = Obsolete. Availability Limited to Distributor Stock.

MAZDA 1974 (Cont'd.)

RX-2 1146cc (1.1L) Carb.
- **Lube**.....B161-S
- **Air**.....PA2133 OBS
- **Fuel**.....BF840,-K1
- **Oil Vapor**.....N/R
- **PCV**.....N/R
- **Trans.**.....18015

RX-3 1146cc (1.1L) Carb.
- **Lube**.....B161-S
- **Air**.....PA2133 OBS
- **Fuel**.....BF840,-K1
- **Oil Vapor**.....N/R
- **PCV**.....N/R
- **Trans.**.....18015

RX-4 1308cc (1.3L) Carb.
- **Lube**.....B161-S
- **Air**.....PA2133 OBS
- **Fuel**.....BF840,-K1
- **Oil Vapor**.....N/R
- **PCV**.....N/R

1973

808 4-1587cc (1.6L) Carb.
- **Lube**.....B161-S
- **Air**.....PA2075
- **Fuel**.....BF840,-K1
- **Oil Vapor**.....N/R

B1600 Pickup 4-1586cc (1.6L) Carb.
- **Lube**.....B161-S
- **Air**.....PA2075
- **Fuel**.....BF840,-K1
- **Oil Vapor**.....N/R
- **Trans.**.....18015

RX-2 1146cc (1.1L) Carb.
- **Lube**.....B161-S
- **Air**.....PA2133 OBS
- **Fuel**.....BF840,-K1
- **Oil Vapor**.....N/R
- **PCV**.....N/R
- **Trans.**.....18015

RX-3 1146cc (1.1L) Carb.
- **Lube**.....B161-S
- **Air**.....PA2133 OBS
- **Fuel**.....BF840,-K1
- **Oil Vapor**.....N/R
- **PCV**.....N/R
- **Trans.**.....18015

1972

618 4-1796cc (1.8L) Carb.
- **Lube**.....B161-S
- **Air**.....PA2075
- **Fuel**.....BF840,-K1
- **Fuel Vapor**.....N/R
- **Trans.**.....18015

808 4-1587cc (1.6L) Carb.
- **Air**.....PA2075
- **Fuel**.....BF840,-K1
- **Fuel Vapor**.....N/R

B1600 Pickup 4-1586cc (1.6L) Carb.
- **Lube**.....B161-S
- **Air**.....PA2075
- **Fuel**.....BF840,-K1
- **Fuel Vapor**.....N/R
- **Trans.**.....18015

R100 1146cc (1.1L) Carb.
- **Lube**.....B161-S
- **Air**.....PA2133 OBS
- **Fuel**.....BF840,-K1
- **Fuel Vapor**.....N/R
- **PCV**.....N/R
- **Trans.**.....18015

RX-2 1146cc (1.1L) Carb.
- **Lube**.....B161-S
- **Air**.....PA2133 OBS
- **Fuel**.....BF840,-K1
- **Fuel Vapor**.....N/R
- **PCV**.....N/R
- **Trans.**.....18015

RX-3 1146cc (1.1L) Carb.
- **Lube**.....B161-S
- **Air**.....PA2133 OBS
- **Fuel**.....BF840,-K1
- **Fuel Vapor**.....N/R
- **PCV**.....N/R
- **Trans.**.....18015

MAZDA (Cont'd.)

1971

616 4-1586cc (1.6L) Carb.
- **Lube**.....B161-S
- **Air**.....PA2075
- **Fuel**.....BF840,-K1
- **Oil Vapor**.....N/R
- **Trans.**.....18015

R100 1146cc (1.1L) Carb.
- **Lube**.....B161-S
- **Air**.....PA2133 OBS
- **Fuel**.....BF840,-K1
- **Oil Vapor**.....N/R
- **PCV**.....N/R
- **Trans.**.....18015

RX-2 1146cc (1.1L) Carb.
- **Lube**.....B161-S
- **Air**.....PA2133 OBS
- **Fuel**.....BF840,-K1
- **Oil Vapor**.....N/R
- **PCV**.....N/R
- **Trans.**.....18015

MERCEDES-BENZ

1979

240D 4-2404cc (2.4L) FI Diesel
- **Lube**.....P102
- **Air**.....PA2081
- **Fuel (Pri.)**.....BF7848
- **Fuel (Sec.)**.....BF1056
- **Oil Vapor**.....N/R
- **Fuel Vapor**.....N/R
- **PCV**.....N/R

280CE, 280E, 280SE 6-2746cc (2.8L) FI
- **Lube**.....P125
- **Fuel**.....BF1177
- **Oil Vapor**.....N/R
- **Fuel Vapor**.....N/R
- **PCV**.....N/R

300CD, 300D 5-3005cc (3.0L) FI Diesel
- **Lube**.....P102
- **Air**.....PA2081
- **Fuel (Pri.)**.....BF7725
- **Fuel (Sec.)**.....BF1056
- **Oil Vapor**.....N/R
- **Fuel Vapor**.....N/R
- **PCV**.....N/R

300SD, 300TD 5-3005cc (3.0L) FI Diesel VIN T
- **Lube**.....P102
- **Fuel (Pri.)**.....BF7725
- **Fuel (Sec.)**.....BF1056
- **Oil Vapor**.....N/R
- **Fuel Vapor**.....N/R
- **PCV**.....N/R

450SEL, 450SL, 450SLC V8-4520cc (4.5L) FI VIN N
- **Lube**.....P125
- **Fuel**.....BF1177
- **Oil Vapor**.....N/R
- **Fuel Vapor**.....N/R
- **PCV**.....N/R

450SEL V8-6835cc (6.8L) FI VIN N
- **Lube**.....P125
- **Fuel**.....BF1177
- **Oil Vapor**.....N/R
- **Fuel Vapor**.....N/R
- **PCV**.....N/R

1978

230 4-2307cc (2.3L) FI
- **Lube**.....P102
- **Air**.....PA2081
- **Oil Vapor**.....N/R
- **Fuel Vapor**.....N/R
- **PCV**.....N/R

MERCEDES-BENZ 1978 (Cont'd.)

240D 4-2404cc (2.4L) FI Diesel
- **Lube**.....P102
- **Air**.....PA2081
- **Fuel (Pri.)**.....BF7848
- **Fuel (Sec.)**.....BF1056
- **Oil Vapor**.....N/R
- **Fuel Vapor**.....N/R
- **PCV**.....N/R

280CE, 280E, 280SE 6-2746cc (2.8L) FI
- **Lube**.....P125
- **Fuel**.....BF1177
- **Oil Vapor**.....N/R
- **Fuel Vapor**.....N/R
- **PCV**.....N/R

300CD, 300D 5-3005cc (3.0L) FI Diesel
- **Lube**.....P102
- **Air**.....PA2081
- **Fuel (Pri.)**.....BF7725
- **Fuel (Sec.)**.....BF1056
- **Oil Vapor**.....N/R
- **Fuel Vapor**.....N/R
- **PCV**.....N/R

300SD 5-3005cc (3.0L) FI Diesel VIN T
- **Lube**.....P102
- **Air**.....PA2081
- **Fuel (Pri.)**.....BF7725
- **Fuel (Sec.)**.....BF1056
- **Oil Vapor**.....N/R
- **Fuel Vapor**.....N/R
- **PCV**.....N/R

450SEL, 450SL, 450SLC V8-4520cc (4.5L) FI VIN N
- **Lube**.....P125
- **Fuel**.....BF1177
- **Oil Vapor**.....N/R
- **Fuel Vapor**.....N/R
- **PCV**.....N/R

450SEL V8-6835cc (6.8L) FI VIN N
- **Lube**.....P125
- **Fuel**.....BF1177
- **Oil Vapor**.....N/R
- **Fuel Vapor**.....N/R
- **PCV**.....N/R

1977

230 4-2307cc (2.3L) Carb.
- **Oil Vapor**.....N/R
- **Fuel Vapor**.....N/R
- **PCV**.....N/R

240D 4-2404cc (2.4L) FI Diesel
- **Lube**.....P102
- **Air**.....PA2081
- **Fuel (Spin-on)**.....BF1056
- **Fuel (In-line)**.....BF7848
- **Oil Vapor**.....N/R
- **Fuel Vapor**.....N/R
- **PCV**.....N/R

280E, 280SE 6-2746cc (2.8L) FI
- **Lube**.....P125
- **Fuel**.....BF1177
- **Oil Vapor**.....N/R
- **Fuel Vapor**.....N/R
- **PCV**.....N/R

300D 5-3005cc (3.0L) FI Diesel
- **Lube**.....P102
- **Air**.....PA2081
- **Fuel**.....BF1056
- **Oil Vapor**.....N/R
- **Fuel Vapor**.....N/R
- **PCV**.....N/R

450SEL, 450SL, 450SLC V8-4520cc (4.5L) FI VIN N
- **Lube**.....P125
- **Fuel**.....BF1177
- **Oil Vapor**.....N/R
- **Fuel Vapor**.....N/R
- **PCV**.....N/R

MERCEDES-BENZ 1977 (Cont'd.)

450SEL V8-6835cc (6.8L) FI VIN N
- **Lube**.....P125
- **Fuel**.....BF1177
- **Oil Vapor**.....N/R
- **Fuel Vapor**.....N/R
- **PCV**.....N/R

1976

230 4-2307cc (2.3L) Carb.
- **Oil Vapor**.....N/R
- **Fuel Vapor**.....N/R
- **PCV**.....N/R

240D 4-2404cc (2.4L) FI Diesel
- **Lube**.....P40
- **Air**.....PA2081
- **Fuel (Spin-on)**.....BF1056
- **Fuel (In-line)**.....BF7848
- **Oil Vapor**.....N/R
- **Fuel Vapor**.....N/R
- **PCV**.....N/R

280, 280C, 280S 6-2746cc (2.8L) Carb.
- **Lube**.....P125
- **Oil Vapor**.....N/R
- **Fuel Vapor**.....N/R
- **PCV**.....N/R

300D 5-3005cc (3.0L) FI Diesel
- **Lube**.....P40
- **Air**.....PA1901
- **Fuel**.....PF834
- **Oil Vapor**.....N/R
- **Fuel Vapor**.....N/R
- **PCV**.....N/R

450SE, 450SEL, 450SL, 450SLC V8-4520cc (4.5L) FI
- **Lube**.....P125
- **Fuel**.....BF1177
- **Oil Vapor**.....N/R
- **Fuel Vapor**.....N/R
- **PCV**.....N/R

1975

230 4-2307cc (2.3L) Carb.
- **Fuel**.....BF833,-K2
- **Oil Vapor**.....N/R
- **Fuel Vapor**.....N/R
- **PCV**.....N/R

240D 4-2404cc (2.4L) FI Diesel
- **Lube**.....P40
- **Fuel (Pri.)**.....BF7725
- **Fuel (Sec.)**.....PF834
- **Oil Vapor**.....N/R
- **Fuel Vapor**.....N/R
- **PCV**.....N/R

280, 280C, 280S 6-2746cc (2.8L) Carb.
- **Lube**.....P125
- **Fuel**.....BF1177
- **Oil Vapor**.....N/R
- **Fuel Vapor**.....N/R
- **PCV**.....N/R

300D 5-3005cc (3.0L) FI Diesel
- **Lube**.....P40
- **Air**.....PA1901
- **Fuel**.....PF834
- **Oil Vapor**.....N/R
- **Fuel Vapor**.....N/R
- **PCV**.....N/R

450SE, 450SEL, 450SL, 450SLC V8-4520cc (4.5L) FI
- **Lube**.....P125
- **Oil Vapor**.....N/R
- **Fuel Vapor**.....N/R
- **PCV**.....N/R

1974

230 4-2307cc (2.3L) Carb.
- **Oil Vapor**.....N/R

240D 4-2404cc (2.4L) FI Diesel
- **Lube**.....P40
- **Air**.....PA1901
- **Fuel (Pri.)**.....BF7725
- **Fuel (Sec.)**.....PF834
- **Oil Vapor**.....N/R

OBS = Obsolete. Availability Limited to Distributor Stock.

MERCEDES-BENZ
1974 (Cont'd.)

280, 280C 6-2746cc (2.8L) Carb.
Lube.....**P125**
Fuel.....**BF833,-K2**
Oil Vapor.....**N/R**
450SE, 450SEL, 450SL, 450SLC V8-4520cc (4.5L) FI
Lube.....**P125**
Oil Vapor.....**N/R**

1973
220 4-2197cc (2.2L) Carb.
Fuel (Pri.).....**BF7725**
Fuel (Sec.).....**PF834**
220D 4-2197cc (2.2L) FI Diesel
Lube.....**P40**
Fuel (Pri.).....**BF7725**
Fuel (Sec.).....**PF834**
280, 280C 6-2746cc (2.8L) Carb.
Lube.....**P125**
Fuel.....**BF833,-K2**
Oil Vapor.....**N/R**
280SE, 280SEL V8-4520cc (4.5L) FI
Lube.....**P125**
Oil Vapor.....**N/R**
300SEL V8-4520cc (4.5L) FI
Lube.....**P125**
Oil Vapor.....**N/R**
450SE, 450SEL, 450SL, 450SLC V8-4520cc (4.5L) FI
Lube.....**P125**
Oil Vapor.....**N/R**

1972
220 4-2197cc (2.2L) Carb.
Fuel Vapor.....**N/R**
220D 4-2197cc (2.2L) FI Diesel
Lube.....**P40**
Fuel (Pri.).....**BF7725**
Fuel (Sec.).....**PF834**
Fuel Vapor.....**N/R**
250, 250C 6-2778cc (2.8L) Carb.
Fuel Vapor.....**N/R**
280SE 6-2778cc (2.8L) FI
Air.....**PA1901**
Fuel.....**PF834**
Fuel Vapor.....**N/R**
280SE V8-4520cc (4.5L) FI
Lube.....**P125**
Fuel Vapor.....**N/R**
280SEL V8-4520cc (4.5L) FI
Lube.....**P125**
Fuel Vapor.....**N/R**
300SEL V8-4520cc (4.5L) FI
Lube.....**P125**
Fuel Vapor.....**N/R**
350SL V8-4520cc (4.5L) FI
Lube.....**P125**
Fuel Vapor.....**N/R**
600 V8-386 (6.3L) FI
Lube.....**P41**
Air.....**PA1901**
Fuel.....**PF834**
Fuel Vapor.....**N/R**

1971
220 4-2197cc (2.2L) Carb.
Fuel (Pri.).....**BF7725**
Fuel (Sec.).....**PF834**
Oil Vapor.....**N/R**
220D 4-2197cc (2.2L) FI Diesel
Fuel (Pri.).....**BF7725**
Fuel (Sec.).....**PF834**
Oil Vapor.....**N/R**
250, 250C 6-2778cc (2.8L) Carb.
Oil Vapor.....**N/R**
280S 6-2778cc (2.8L) Carb.
Air.....**PA1901**
Fuel.....**PF834**
Oil Vapor.....**N/R**

MERCEDES-BENZ
1971 (Cont'd.)

280SE, 280SEL, 280SL 6-2778cc (2.8L) FI
Air.....**PA1901**
Fuel.....**PF834**
Oil Vapor.....**N/R**
300SEL V8-3504cc (3.5L) FI
Lube.....**P125**
Oil Vapor.....**N/R**
300SEL V8-6329cc (6.3L) FI
Lube.....**P41**
Air.....**PA1901**
Fuel.....**PF834**
Oil Vapor.....**N/R**
600 V8-6329cc (6.3L) FI
Lube.....**P41**
Air.....**PA1901**
Fuel.....**PF834**
Oil Vapor.....**N/R**

1970
220D 4-2197cc (2.2L) FI Diesel
Fuel (Pri.).....**BF7725**
Fuel (Sec.).....**PF834**
250 6-2496cc (2.5L) Carb.
Fuel (Pri.).....**BF7725**
Fuel (Sec.).....**PF834**
250C 6-2778cc (2.8L) 2 Bbl. Carb.
Air.....**PA1901**
Fuel (Pri.).....**BF7725**
Fuel (Sec.).....**PF834**
280S 6-2778cc (2.8L) 2 Bbl. Carb.
Fuel (Pri.).....**BF7725**
Fuel (Sec.).....**PF834**
280SE, 280SEL, 280SL 6-2778cc (2.8L) FI
Air.....**PA1901**
Fuel.....**PF834**
280SE V8-3504cc (3.5L) FI
Lube.....**P125**
300SEL V8-3504cc (3.5L) FI
Lube.....**P125**
300SEL V8-6329cc (6.3L) FI
Lube.....**P41**
Air.....**PA1901**
Fuel.....**PF834**
600 V8-6329cc (6.3L) FI
Lube.....**P41**
Air.....**PA1901**
Fuel.....**PF834**

1969
220D 4-2197cc (2.2L) FI Diesel
Lube.....**P40**
Fuel.....**BF7725**
280S 6-2778cc (2.8L) Carb.
Fuel.....**BF833,-K2**
280SE, 280SEL, 280SL 6-2778cc (2.8L) FI
Air.....**PA1901**
Fuel.....**PF834**
300SEL 6-2778cc (2.8L) FI
Air.....**PA1901**
Fuel.....**PF834**
600 V8-6329cc (6.3L) FI
Lube.....**P41**
Air.....**PA1901**
Fuel.....**PF834**

1968
220D 4-121 (2.0L) FI Diesel
Lube.....**P40**
Fuel (Pri.).....**BF7725**
Fuel (Sec.).....**PF834**
230 6-2306cc (2.3L) Carb.
Fuel.....**PF834**
280S 6-2778cc (2.8L) Carb.
Fuel.....**BF833,-K2**
280SE, 280SEL 6-2778cc (2.8L) FI
Air.....**PA1901**
Fuel.....**PF834**
280SL 6-2778cc (2.8L) Carb.
Air.....**PA1901**
Fuel.....**PF834**

MERCEDES-BENZ
1968 (Cont'd.)

300SEL 6-2778cc (2.8L) FI
Air.....**PA1901**
Fuel.....**PF834**
600 V8-6329cc (6.3L) FI
Lube.....**P41**
Air.....**PA1901**
Fuel.....**PF834**

1967
200 4-121 (2.0L) Carb.
Air.....**PA1901**
200D 4-121 (2.0L) FI Diesel
Air.....**PA1901**
Fuel.....**PF834**
230 6-141 (2.3L) Carb.
Fuel.....**PF834**
250SE 6-152 (2.5L) FI
Air.....**PA1901**
Fuel.....**PF834**
250SL 6-152 (2.5L) Carb.
Air.....**PA1901**
Fuel.....**PF834**
600 V8-386 (6.3L) FI
Lube.....**P41**
Air.....**PA1901**
Fuel.....**PF834**

1966
200D 4-121 (2.0L) FI Diesel
Lube.....**PT151**
Fuel (Pri.).....**BF7725**
Fuel (Sec.).....**PF834**
230 6-141 (2.3L) Carb.
Fuel.....**PF834**
230SL 6-141 (2.3L) Carb.
Air.....**PA1901**
Fuel.....**PF834**
250SE 6-152 (2.5L) FI
Air.....**PA1901**
Fuel.....**PF834**
300SE 6-183 (3.0L) Carb.
Air.....**PA1901**
Fuel.....**BF7725**
600 V8-386 (6.3L) Carb.
Lube.....**P41**
Air.....**PA1901**
Fuel.....**BF7725**

1965
190C 4-116 (1.9L) Carb.
Air.....**PA1852**
190DC 4-121 (2.0L) FI Diesel
Lube.....**P41**
Fuel.....**PF834**
220SE 6-134 (2.2L) Carb.
Air.....**PA1901**
Fuel.....**PF834**
230SL 6-141 (2.3L) Carb.
Air.....**PA1901**
Fuel.....**PF834**
300SE 6-183 (3.0L) Carb.
Air.....**PA1901**
Fuel.....**PF834**
300SEL 6-183 (3.0L) Carb.
Air.....**PA1901**
Fuel.....**PF834**
600 V8-386 (6.3L) Carb.
Lube.....**P41**
Air.....**PA1901**
Fuel.....**PF834**

1964
190C 4-116 (1.9L) Carb.
Air.....**PA1852**
190DC 4-121 (2.0L) FI Diesel
Lube.....**P41**
Fuel.....**PF834**
220SE 6-134 (2.2L) Carb.
Air.....**PA1901**
Fuel.....**PF834**
230SL 6-141 (2.3L) Carb.
Air.....**PA1901**
Fuel.....**PF834**

MERCEDES-BENZ
1964 (Cont'd.)

300SE 6-183 (3.0L) Carb.
Air.....**PA1901**
300SEL 6-183 (3.0L) Carb.
Air.....**PA1901**
600 V8-386 (6.3L) Carb.
Lube.....**P41**
Air.....**PA1901**
Fuel.....**PF834**

1963
180D 4-121 (2.0L) FI Diesel
Lube.....**P41**
Fuel.....**PF834**
190C 4-116 (1.9L) Carb.
Air.....**PA1852**
190DC 4-121 (2.0L) FI Diesel
Lube.....**P41**
Fuel.....**PF834**
220SE 6-134 (2.2L) Carb.
Air.....**PA1901**
Fuel.....**PF834**
230SL 6-141 (2.3L) Carb.
Air.....**PA1901**
Fuel.....**PF834**
300SE 6-183 (3.0L) Carb.
Air.....**PA1901**
300SEL 6-183 (3.0L) Carb.
Air.....**PA1901**
300SL 6-183 (3.0L) FI
Air.....**PA1901**

1962
180D 4-108 (1.8L) FI Diesel
Lube.....**P41**
Fuel.....**PF834**
190DB 4-108 (1.8L) FI Diesel
Lube.....**P41**
Fuel.....**PF834**
220SE 6-134 (2.2L) FI
Air.....**PA1901**
Fuel.....**PF834**
300 6-183 (3.0L) FI
Air.....**PA1901**
Fuel.....**PF834**
300SE 6-183 (3.0L) FI
Air.....**PA1901**
Fuel.....**PF834**
300SL 6-183 (3.0L) FI
Air.....**PA1901**

1961
180D 4-108 (1.8L) FI Diesel
Lube.....**P41**
Fuel.....**PF834**
190DB 4-108 (1.8L) FI Diesel
Fuel.....**PF834**
220SE 6-134 (2.2L) FI
Air.....**PA1901**
Fuel.....**PF834**
300 6-183 (3.0L) FI
Air.....**PA1901**
Fuel.....**PF834**
300SE 6-183 (3.0L) FI
Air.....**PA1901**
Fuel.....**PF834**
300SL 6-183 (3.0L) FI
Air.....**PA1901**

1960
180D 4-108 (1.8L) FI Diesel
Lube.....**P41**
Fuel.....**PF834**
190B 4-116 (1.9L) Carb.
Lube.....**P106**
190DB 4-108 (1.8L) FI Diesel
Lube.....**P106**
Fuel.....**PF834**
220SE 6-134 (2.2L) FI
Air.....**PA1901**
Fuel.....**PF834**
300 6-183 (3.0L) FI
Air.....**PA1901**
Fuel.....**PF834**

OBS = Obsolete. Availability Limited to Distributor Stock.

MERCEDES-BENZ
1960 (Cont'd.)

300SE 6-183 (3.0L) FI
Air.....**PA1901**
300SL 6-183 (3.0L) FI
Air.....**PA1901**

1959
300SL 6-2996cc (3.0L) FI
Air.....**PA1901**

1958
300SL 6-2996cc (3.0L) FI
Air.....**PA1901**

MERCURY

1979
Bobcat 4-140 (2.3L) 2 Bbl. VIN Y
Lube.....**B2**
Air.....**PA2005**
Fuel.....**BF879**
Oil Vapor.....**SA2039**
Bobcat V6-171 (2.8L) 2 Bbl. VIN Z
Lube.....**B199**
Air.....**PA2074**
Fuel (In-Line, Exc. Calif.).....**BF879**
Oil Vapor.....**SA2084**
Capri 4-140 (2.3L) 2 Bbl. VIN W,Y
Lube.....**B2**
Air.....**PA2005**
Fuel.....**BF879**
Oil Vapor.....**SA2039**
Capri V6-171 (2.8L) 2 Bbl. VIN Z
Lube.....**B163**
Air.....**PA2074**
Fuel (In-Line, Exc. Calif.).....**BF879**
Oil Vapor.....**SA2084**
Capri 6-200 (3.3L) 1 Bbl. VIN T
Lube.....**B2**
Air (A.T.).....**PA1802**
Air (M.T.).....**PA2005**
Fuel.....**BF995**
Oil Vapor.....**SA2039**
Capri V8-302 (5.0L) 2 Bbl. VIN F
Lube.....**B2**
Air.....**PA2066 OBS**
Fuel (In-Line, Exc. Calif.).....**BF989**
Oil Vapor.....**SA2085**
Colony Park V8-302 (5.0L) 2 Bbl. VIN F
Lube.....**B2**
Air.....**PA2051**
Fuel (In-Line, Exc. Calif.).....**BF989**
Oil Vapor.....**SA2085**
Trans......**19879**
Colony Park V8-351 (5.8L) 2 Bbl. VIN H
Lube.....**B2**
Air.....**PA2051**
Fuel (In-Line, Exc. Calif.).....**BF989**
Oil Vapor.....**SA2085**
Trans. (C-4).....**19879**
Trans. (C-6 S. Pan).....**19828**
Cougar V8-302 (5.0L) 2 Bbl. VIN F
Lube.....**B2**
Air.....**PA2051**
Fuel (In-Line, Exc. Calif.).....**BF989**
Oil Vapor.....**SA2085**
Trans......**19879**
Cougar V8-351 (5.8L) 2 Bbl. VIN H
Lube.....**B2**
Air.....**PA2051**
Fuel (In-Line, Exc. Calif.).....**BF989**
Oil Vapor.....**SA2085**
Trans. (C-4).....**19879**
Trans. (C-6 S. Pan).....**19828**
Marquis, Grand Marquis V8-302 (5.0L) 2 Bbl. VIN F
Lube.....**B2**
Air.....**PA2051**
Fuel (In-Line, Exc. Calif.).....**BF989**
Oil Vapor.....**SA2085**
Trans......**19879**

MERCURY 1979 (Cont'd.)

Marquis, Grand Marquis V8-351 (5.8L) 2 Bbl. VIN H
Lube.....**B2**
Air.....**PA2051**
Fuel (In-Line, Exc. Calif.).....**BF989**
Oil Vapor.....**SA2085**
Trans. (C-4).....**19879**
Trans. (C-6 S. Pan).....**19828**
Monarch 6-250 (4.1L) 1 Bbl. VIN L
Lube.....**B2**
Air.....**PA2005**
Fuel.....**BF879**
Oil Vapor.....**SA2039**
Trans. (C-4).....**19879**
Monarch V8-302 (5.0L) 2 Bbl. VIN F
Lube.....**B2**
Air.....**PA2051**
Fuel (In-Line).....**BF879**
Oil Vapor.....**SA2085**
Trans......**19879**
Zephyr 4-140 (2.3L) 2 Bbl. VIN Y
Lube.....**B2**
Air.....**PA2005**
Fuel.....**BF995**
Oil Vapor.....**SA2039**
Zephyr 6-200 (3.3L) 1 Bbl. VIN T
Lube.....**B2**
Air (A.T.).....**PA1802**
Air (M.T.).....**PA2005**
Fuel.....**BF995**
Oil Vapor.....**SA2039**
Trans. (C-4).....**19879**
Zephyr V8-302 (5.0L) 2 Bbl. VIN F
Lube.....**B2**
Air.....**PA2066 OBS**
Fuel (In-Line).....**BF879**
Oil Vapor.....**SA2085**
Trans......**19879**

1978
Bobcat 4-140 (2.3L) 2 Bbl. VIN Y
Lube.....**B2**
Air.....**PA2005**
Fuel.....**BF995**
Oil Vapor.....**SA2039**
Bobcat V6-171 (2.8L) 2 Bbl. VIN Z
Lube.....**B199**
Air.....**PA2074**
Fuel (Screw-in, Exc. Calif.).....**BF995**
Oil Vapor.....**SA2084**
Capri 4-2300cc-140 (2.3L) 2 Bbl. VIN Y
Lube.....**B2**
Air.....**PA2005**
Fuel.....**BF995**
Oil Vapor.....**SA2039**
Capri 6-2800cc-171 (2.8L) 2 Bbl. VIN Z
Lube.....**B199**
Air.....**PA2074**
Fuel (Screw-in, Exc. Calif.).....**BF995**
Oil Vapor.....**SA2084**
Cougar V8-302 (5.0L) 2 Bbl. VIN F
Lube.....**B2**
Air.....**PA2066 OBS**
Fuel (Screw-in, Exc. Calif.).....**BF995**
Oil Vapor.....**SA2085**
Trans......**19879**
Cougar V8-351 (5.8L) 2 Bbl. VIN H
Lube.....**B2**
Air.....**PA2051**
Fuel.....**BF995**
Oil Vapor.....**SA2085**
Trans. (C-4).....**19879**
Trans. (C-6 S. Pan).....**19828**
Cougar V8-400 (6.6L) 2 Bbl. VIN S
Lube.....**B2**
Air.....**PA2051**
Fuel.....**BF995**
Oil Vapor.....**SA2085**
Trans......**19828**

MERCURY 1978 (Cont'd.)

Grand Marquis, Marquis V8-351 (5.8L) 2 Bbl. VIN H
Lube.....**B2**
Air.....**PA2051**
Fuel.....**BF995**
Oil Vapor.....**SA2085**
Trans......**19828**
Marquis, Grand Marquis V8-400 (6.6L) 2 Bbl. VIN S
Lube.....**B2**
Air.....**PA2051**
Fuel.....**BF995**
Oil Vapor.....**SA2085**
Trans......**19828**
Marquis, Grand Marquis V8-460 (7.5L) 4 Bbl. VIN A,C
Lube.....**B2**
Air.....**PA2024** [74]
Air.....**PA2002** [73]
Oil Vapor.....**SA2039**
Trans......**19828**
Monarch 6-250 (4.1L) 1 Bbl. VIN L
Lube.....**B2**
Air.....**PA2005**
Fuel.....**BF995**
Oil Vapor.....**SA2039**
Trans......**19879**
Monarch V8-302 (5.0L) 2 Bbl. VIN F
Lube.....**B2**
Air.....**PA2066 OBS**
Fuel (Screw-in, Exc. Calif.).....**BF995**
Oil Vapor.....**SA2085**
Trans......**19879**
Zephyr 4-140 (2.3L) 2 Bbl. VIN Y
Lube.....**B2**
Air.....**PA2005**
Fuel.....**BF995**
Oil Vapor.....**SA2039**
Zephyr 6-200 (3.3L) 1 Bbl. VIN T
Lube.....**B2**
Air (A.T.).....**PA1802**
Air (M.T.).....**PA2005**
Fuel.....**BF995**
Oil Vapor.....**SA2039**
Trans. (C-4).....**19879**
Zephyr V8-302 (5.0L) 2 Bbl. VIN F
Lube.....**B2**
Air.....**PA2066 OBS**
Fuel (Screw-in, Exc. Calif.).....**BF995**
Oil Vapor.....**SA2085**
Trans......**19879**

1977
Bobcat 4-140 (2.3L) 2 Bbl. VIN Y
Lube.....**B2**
Air.....**PA2005**
Fuel (In-Line, Exc. Calif.).....**BF879**
Oil Vapor.....**SA2039**
Bobcat V6-171 (2.8L) 2 Bbl. VIN Z
Lube.....**B199**
Air.....**PA2074**
Fuel (In-Line, Exc. Calif.).....**BF879**
Capri 4-140 (2.3L) 2 Bbl. VIN Y
Lube.....**B2**
Air.....**PA2005**
Fuel (In-Line, Exc. Calif.).....**BF879**
Oil Vapor.....**SA2039**
Capri 6-171 (2.8L) 2 Bbl. VIN Z
Lube.....**B199**
Air.....**PA2074**
Fuel (In-Line, Exc. Calif.).....**BF879**
Oil Vapor.....**SA2039**
Comet 6-200 (3.3L) 1 Bbl. VIN T
Lube.....**B2**
Air.....**PA2005**
Fuel.....**BF879**
Oil Vapor.....**SA2039**
Trans......**19879**
Comet 6-250 (4.1L) 1 Bbl. VIN L
Lube.....**B2**
Air.....**PA2005**
Fuel.....**BF879**
Oil Vapor.....**SA2039**
Trans......**19879**

MERCURY 1977 (Cont'd.)

Comet V8-302 (5.0L) 2 Bbl. VIN F
Lube.....**B2**
Air.....**PA2066 OBS**
Fuel (Screw-in, Exc. Calif.).....**BF995**
Oil Vapor.....**SA2039**
Trans......**19879**
Cougar V8-302 (5.0L) 2 Bbl. VIN F
Lube.....**B2**
Air.....**PA2066 OBS**
Fuel (Screw-in, Exc. Calif.).....**BF995**
Oil Vapor.....**SA2039**
Trans......**19879**
Cougar V8-351M (5.8L) 2 Bbl. VIN H
Lube.....**B2**
Air.....**PA2051**
Fuel.....**BF989**
Oil Vapor.....**SA2039**
Trans. (C-4).....**19879**
Trans. (C-6 S. Pan).....**19828**
Cougar V8-351W (5.8L) 2 Bbl. VIN H
Lube.....**B2**
Air.....**PA2051**
Fuel.....**BF995**
Oil Vapor.....**SA2039**
Trans. (C-4).....**19879**
Trans. (C-6 S. Pan).....**19828**
Cougar V8-400 (6.6L) 2 Bbl. VIN S
Lube.....**B2**
Air.....**PA2051**
Fuel.....**BF989**
Oil Vapor.....**SA2039**
Trans......**19828**
Grand Marquis, Marquis V8-400 (6.6L) 2,4 Bbl. VIN S
Lube.....**B2**
Air.....**PA2051**
Fuel (2 Bbl.).....**BF989**
Oil Vapor.....**SA2039**
Trans......**19828**
Marquis, Grand Marquis V8-460 (7.5L) 4 Bbl. VIN A,C
Lube.....**B2**
Air.....**PA2024** [74]
Air.....**PA2002** [73]
Oil Vapor.....**SA2039**
Trans......**19828**
Monarch 6-200 (3.3L) 1 Bbl. VIN T
Lube.....**B2**
Air.....**PA2005**
Fuel.....**BF879**
Oil Vapor.....**SA2039**
Trans......**19879**
Monarch 6-250 (4.1L) 1 Bbl. VIN L
Lube.....**B2**
Air.....**PA2005**
Fuel.....**BF879**
Oil Vapor.....**SA2039**
Trans......**19879**
Monarch V8-302 (5.0L) 2 Bbl. VIN F
Lube.....**B2**
Air.....**PA2066 OBS**
Fuel (Screw-in, Exc. Calif.).....**BF995**
Oil Vapor.....**SA2039**
Trans......**19879**
Monarch V8-351 (5.8L) 2 Bbl. VIN H
Lube.....**B2**
Air.....**PA2051**
Fuel.....**BF995**
Oil Vapor.....**SA2039**
Trans. (C-4).....**19879**
Trans. (C-6 S. Pan).....**19828**

1976
Bobcat 4-140 (2.3L) 2 Bbl. VIN Y
Lube.....**B2**
Air.....**PA2005**
Fuel.....**BF879**
Oil Vapor.....**SA2039**
Bobcat V6-171 (2.8L) 2 Bbl. VIN Z
Lube.....**B199**
Air.....**PA1802**
Fuel.....**BF879**
Oil Vapor.....**SA2039**

[73] Police. [74] Exc. Police.

OBS = Obsolete. Availability Limited to Distributor Stock.

MERCURY 1976 (Cont'd.)

Capri 4-140 (2.3L) 2 Bbl. VIN Y
Lube **B233**
Air **PA2005**
Fuel **BF879**
Oil Vapor **SA2039**

Capri V6-171 (2.8L) 2 Bbl. VIN Z
Lube **B233**
Air **PA1802**
Fuel **BF879**
Oil Vapor **SA2039**

Colony Park V8-400 (6.6L) 2 Bbl. VIN S
Lube **B2**
Air **PA2051**
Fuel **BF879**
Oil Vapor **SA2039**
Trans. **19828**

Colony Park V8-460 (7.5L) 4 Bbl. VIN A
Lube **B2**
Air ..... **PA2024** [74]
Air ..... **PA2002** [73]
Fuel **BF995**
Oil Vapor **SA2039**
Trans. **19828**

Comet 6-200 (3.3L) 1 Bbl. VIN T
Lube **B2**
Air **PA2005**
Fuel **BF879**
Oil Vapor **SA2039**
Trans. **19879**

Comet 6-250 (4.1L) 1 Bbl. VIN L
Lube **B2**
Air **PA2005**
Fuel **BF879**
Oil Vapor **SA2039**
Trans. **19879**

Comet V8-302 (5.0L) 2 Bbl. VIN F
Lube **B2**
Air **PA2051**
Fuel **BF879**
Oil Vapor **SA2039**
Trans. **19879**

Cougar V8-351 (5.8L) 2 Bbl. VIN H
Lube **B2**
Air **PA2051**
Fuel **BF879**
Oil Vapor **SA2039**

Cougar V8-400 (6.6L) 2 Bbl. VIN S
Lube **B2**
Air **PA2024**
Fuel **BF879**
Oil Vapor **SA2039**

Cougar V8-460 (7.5L) 4 Bbl. VIN A
Lube **B2**
Air **PA2024**
Oil Vapor **SA2039**

Grand Marquis, Marquis V8-400 (6.6L) 2 Bbl. VIN S
Lube **B2**
Air **PA2024**
Fuel **BF879**
Oil Vapor **SA2039**

Grand Marquis, Marquis V8-460 (7.5L) 4 Bbl. VIN A,C
Lube **B2**
Air ..... **PA2024** [74]
Air ..... **PA2002** [73]
Oil Vapor **SA2039**

Monarch 6-200 (3.3L) 1 Bbl. VIN T
Lube **B2**
Air **PA2005**
Fuel **BF879**
Oil Vapor **SA2039**
Trans. **19879**

Monarch 6-250 (4.1L) 1 Bbl. VIN L
Lube **B2**
Air **PA2005**
Fuel **BF879**
Oil Vapor **SA2039**
Trans. **19879**

Monarch V8-302 (5.0L) 2 Bbl. VIN F
Lube **B2**
Air **PA2051**
Fuel **BF879**
Oil Vapor **SA2039**
Trans. **19879**

MERCURY 1976 (Cont'd.)

Monarch V8-351 (5.8L) 2 Bbl. VIN H
Lube **B2**
Air **PA2051**
Fuel **BF879**
Oil Vapor **SA2039**
Trans. **19879**

Montego V8-351 (5.8L) 2 Bbl. VIN H
Lube **B2**
Air **PA2051**
Fuel **BF879**
Oil Vapor **SA2039**

Montego V8-400 (6.6L) 2 Bbl. VIN S
Lube **B2**
Air **PA2024**
Fuel **BF879**
Oil Vapor **SA2039**

Montego V8-460 (7.5L) 4 Bbl. VIN A
Lube **B2**
Air **PA2024**
Oil Vapor **SA2039**

1975

Bobcat 4-140 (2.3L) 2 Bbl. VIN Y
Lube **B2**
Air **PA2005**
Fuel **BF879**
Oil Vapor **SA2039**

Bobcat V6-171 (2.8L) 2 Bbl. VIN Z
Lube **B199**
Air **PA1802**
Fuel **BF879**
Oil Vapor **SA2039**

Capri 4-140 (2.3L) 2 Bbl. VIN Y
Lube **B233**
Fuel **BF879**
Oil Vapor **SA2045**

Capri V6-171 (2.8L) 2 Bbl. VIN Z
Lube **B199**
Air **PA1802**
Fuel **BF879**
Oil Vapor **SA2039**

Colony Park V8-400 (6.6L) 2 Bbl. VIN S
Lube **B2**
Air **PA2024**
Fuel **BF879**
Oil Vapor **SA2039**

Colony Park V8-460 (7.5L) 4 Bbl. VIN A
Lube **B2**
Air **PA2024**
Oil Vapor **SA2039**
Trans. **19828**

Comet 6-200 (3.3L) 1 Bbl. VIN T
Lube **B2**
Air **PA2005**
Fuel **BF879**
Oil Vapor **SA2039**
Trans. **19879**

Comet 6-250 (4.1L) 1 Bbl. VIN L
Lube **B2**
Air **PA2005**
Fuel **BF879**
Oil Vapor **SA2039**
Trans. **19879**

Comet V8-302 (5.0L) 2 Bbl. VIN F
Lube **B2**
Air **PA2051**
Fuel **BF879**
Oil Vapor **SA2039**
Trans. **19879**

Cougar V8-351 (5.8L) 2 Bbl. VIN H
Lube **B2**
Air **PA2051**
Fuel **BF879**
Oil Vapor **SA2039**
Trans. (C-4) **19879**
Trans. (C-6 S. Pan) **19828**

Cougar V8-400 (6.6L) 2 Bbl. VIN S
Lube **B2**
Air **PA2024**
Fuel **BF879**
Oil Vapor **SA2039**
Trans. (C-6 S. Pan) **19828**

MERCURY 1975 (Cont'd.)

Cougar V8-460 (7.5L) 4 Bbl. VIN A
Lube **B2**
Air **PA2024**
Oil Vapor **SA2039**
Trans. **19828**

Grand Marquis, Marquis V8-400 (6.6L) 2 Bbl. VIN S
Lube **B2**
Air **PA2024**
Fuel **BF879**
Oil Vapor **SA2039**

Grand Marquis, Marquis V8-460 (7.5L) 4 Bbl. VIN A,C
Lube **B2**
Air ..... **PA2024** [74]
Air ..... **PA2002** [73]
Oil Vapor **SA2039**
Trans. **19828**

Monarch 6-200 (3.3L) 1 Bbl. VIN T
Lube **B2**
Air **PA2005**
Fuel **BF879**
Oil Vapor **SA2039**
Trans. **19879**

Monarch 6-250 (4.1L) 1 Bbl. VIN L
Lube **B2**
Air **PA2005**
Fuel **BF879**
Oil Vapor **SA2039**
Trans. **19879**

Monarch V8-302 (5.0L) 2 Bbl. VIN F
Lube **B2**
Air **PA2051**
Fuel **BF879**
Oil Vapor **SA2039**
Trans. **19879**

Monarch V8-351 (5.8L) 2 Bbl. VIN H
Lube **B2**
Air **PA2051**
Fuel **BF879**
Oil Vapor **SA2039**
Trans. **19879**

Montego V8-351 (5.8L) 2 Bbl. VIN H
Lube **B2**
Air **PA2051**
Fuel **BF879**
Oil Vapor **SA2039**
Trans. **19879**

Montego V8-400 (6.6L) 2 Bbl. VIN S
Lube **B2**
Air **PA2024**
Fuel **BF879**
Oil Vapor **SA2039**
Trans. **19828**

Montego V8-460 (7.5L) 4 Bbl. VIN A
Lube **B2**
Air **PA2024**
Oil Vapor **SA2039**
Trans. **19828**

1974

Capri 4-1989cc (2.0L) Carb.
Lube **B233**
Fuel **BF989**
Oil Vapor (Pad Only) **SA2045**

Capri 6-171 (2.8L) Carb.
Lube **B233**
Air **PA1802**
Fuel **BF879**
Oil Vapor **SA2039**
Trans. **19879**

Colony Park V8-400 (6.6L) Carb. VIN S
Lube **B2**
Air **PA2024**
Fuel **BF879**
Oil Vapor **SA2039**

Colony Park V8-460 (7.5L) Carb. VIN A
Lube **B2**
Air **PA2024**
Fuel **BF879**
Oil Vapor **SA2039**

MERCURY 1974 (Cont'd.)

Comet 6-200 (3.3L) Carb. VIN T
Lube **B2**
Air **PA2005**
Fuel **BF879**
Oil Vapor **SA2039**
Trans. **19879**

Comet 6-250 (4.1L) Carb. VIN L
Lube **B2**
Air **PA1802**
Fuel **BF879**
Oil Vapor **SA2039**
Trans. **19879**

Comet V8-302 (5.0L) Carb. VIN F
Lube **B2**
Air **PA2051**
Fuel **BF879**
Oil Vapor **SA2039**
Trans. **19879**

Cougar XR-7 V8-351 (5.8L) 2,4 Bbl. Carb. VIN H,Q
Lube **B2**
Air (2 Bbl.) **PA2051**
Air (4 Bbl.) **PA2024**
Fuel **BF879**
Oil Vapor **SA2039**

Cougar XR-7 V8-400 (6.6L) 2 Bbl. Carb. VIN S
Lube **B2**
Air **PA2024**
Fuel **BF879**
Oil Vapor **SA2039**

Cougar XR-7 V8-460 (7.5L) 4 Bbl. Carb. VIN A
Lube **B2**
Air **PA2024**
Fuel **BF879**
Oil Vapor **SA2039**

Marquis V8-400 (6.6L) Carb. VIN S
Lube **B2**
Air **PA2024**
Fuel **BF879**
Oil Vapor **SA2039**

Marquis V8-460 (7.5L) 4 Bbl. VIN A
Lube **B2**
Air ..... **PA2024** [74]
Air ..... **PA2002** [73]
Fuel **BF879**
Oil Vapor **SA2039**

Montego V8-250 (4.1L) Carb. VIN L
Lube **B2**
Air **PA1802**
Fuel **BF879**
Oil Vapor **SA2039**
Trans. **19879**

Montego V8-302 (5.0L) Carb. VIN F
Lube **B2**
Air **PA2051**
Fuel **BF879**
Oil Vapor **SA2039**
Trans. (C-4) **19879**

Montego V8-351 (5.8L) 2,4 Bbl. Carb. VIN H,Q
Lube **B2**
Air (2 Bbl.) **PA2051**
Air (4 Bbl.) **PA2024**
Fuel **BF879**
Oil Vapor **SA2039**
Trans. (C-4) **19879**

Montego V8-400 (6.6L) Carb. VIN S
Lube **B2**
Air **PA2024**
Fuel **BF879**
Oil Vapor **SA2039**

Montego V8-460 (7.5L) 4 Bbl. Carb. VIN A
Lube **B2**
Air **PA2024**
Fuel **BF879**
Oil Vapor **SA2039**

Monterey V8-400 (6.6L) Carb. VIN S
Lube **B2**
Air **PA2024**
Fuel **BF879**
Oil Vapor **SA2039**

[73] Police. [74] Exc. Police.
OBS = Obsolete. Availability Limited to Distributor Stock.

MERCURY 1974 (Cont'd.)

Monterey V8-460 (7.5L) 4 Bbl. Carb. VIN A,C
- **Lube**.....B2
- **Air**.....PA2024 [74]
- **Air**.....PA2002 [73]
- **Fuel**.....BF879
- **Oil Vapor**.....SA2039

1973

Capri 4-1989cc (2.0L) Carb.
- **Lube**.....B233
- **Fuel**.....BF989
- **Oil Vapor**.....SA2039
- **Trans.**.....19879

Capri V6-2606cc (2.6L) Carb.
- **Lube**.....B2
- **Air**.....PA2005
- **Fuel**.....BF879
- **Oil Vapor**.....SA2039
- **Trans.**.....19879

Colony Park V8-351 (5.8L) Carb. VIN H
- **Lube**.....B2
- **Air**.....PA2051
- **Fuel**.....BF879
- **Oil Vapor**.....SA2039

Colony Park V8-400 (6.6L) Carb. VIN S
- **Lube**.....B2
- **Air**.....PA2024
- **Fuel**.....BF879
- **Oil Vapor**.....SA2039

Colony Park V8-429 (7.0L) Carb. VIN N
- **Lube**.....B2
- **Air**.....PA2024
- **Fuel**.....BF879
- **Oil Vapor**.....SA2039

Colony Park V8-460 (7.5L) Carb. VIN A
- **Lube**.....B2
- **Air**.....PA2024
- **Fuel**.....BF879
- **Oil Vapor**.....SA2039

Comet 6-200 (3.3L) Carb. VIN T
- **Lube**.....B2
- **Air**.....PA2005
- **Fuel**.....BF879
- **Oil Vapor**.....SA2039
- **Trans.**.....19879

Comet 6-250 (4.1L) Carb. VIN L
- **Lube**.....B2
- **Air**.....PA1802
- **Fuel**.....BF879
- **Oil Vapor**.....SA2039
- **Trans.**.....19879

Comet V8-302 (5.0L) Carb. VIN F
- **Lube**.....B2
- **Air**.....PA2051
- **Fuel**.....BF879
- **Oil Vapor**.....SA2039
- **Trans.**.....19879

Cougar, Cougar XR-7 V8-351 (5.8L) 2,4 Bbl. Carb. VIN H,Q
- **Lube**.....B2
- **Air (2 Bbl.)**.....PA2057
- **Air (4 Bbl.)**.....PA2024
- **Fuel**.....BF879
- **Oil Vapor**.....SA2039

Cougar, Cougar XR-7 V8-400 (6.6L) Carb. VIN S
- **Lube**.....B2
- **Air**.....PA2024
- **Fuel**.....BF879
- **Oil Vapor**.....SA2039

Cougar XR-7 V8-460 (7.5L) 4 Bbl. Carb. VIN A
- **Lube**.....B2
- **Air**.....PA2024
- **Fuel**.....BF879
- **Oil Vapor**.....SA2039

MERCURY 1973 (Cont'd.)

Marquis V8-351 (5.8L) 2 Bbl. Carb. VIN H
- **Lube**.....B2
- **Air**.....PA2051
- **Fuel**.....BF879
- **Oil Vapor**.....SA2039

Marquis V8-400 (6.6L) Carb. VIN S
- **Lube**.....B2
- **Air**.....PA2024
- **Fuel**.....BF879
- **Oil Vapor**.....SA2039

Marquis V8-429 (7.0L) Carb. VIN N
- **Lube**.....B2
- **Air**.....PA2024
- **Fuel**.....BF879
- **Oil Vapor**.....SA2039

Marquis V8-460 (7.5L) 4 Bbl. Carb. VIN A
- **Lube**.....B2
- **Air**.....PA2024 [74]
- **Fuel**.....BF879
- **Oil Vapor**.....SA2039

Montego V8-250 (4.1L) Carb. VIN L
- **Lube**.....B2
- **Air**.....PA1802
- **Fuel**.....BF879
- **Oil Vapor**.....SA2039
- **Trans.**.....19879

Montego V8-302 (5.0L) Carb. VIN F
- **Lube**.....B2
- **Air**.....PA2051
- **Fuel**.....BF879
- **Oil Vapor**.....SA2039
- **Trans. (C-4)**.....19879

Montego V8-351 (5.8L) 2 Bbl. Carb. VIN H
- **Lube**.....B2
- **Air**.....PA2051
- **Fuel**.....BF879
- **Oil Vapor**.....SA2039
- **Trans. (C-4)**.....19879

Montego V8-351 (5.8L) 4 Bbl. Carb. VIN Q
- **Lube**.....B2
- **Air**.....PA2024
- **Oil Vapor**.....SA2039
- **Trans. (C-4)**.....19879

Montego V8-400 (6.6L) Carb. VIN S
- **Lube**.....B2
- **Air**.....PA2024
- **Fuel**.....BF879
- **Oil Vapor**.....SA2039

Montego V8-429 (7.0L) Carb. VIN N
- **Lube**.....B2
- **Air**.....PA2024
- **Fuel**.....BF879
- **Oil Vapor**.....SA2039

Montego V8-460 (7.5L) 4 Bbl. Carb. VIN C
- **Lube**.....B2
- **Air**.....PA2024
- **Fuel**.....BF879
- **Oil Vapor**.....SA2039

Monterey V8-351 (5.8L) 2 Bbl. Carb. VIN H
- **Lube**.....B2
- **Air**.....PA2051
- **Fuel**.....BF879
- **Oil Vapor**.....SA2039

Monterey V8-400 (6.6L) Carb. VIN S
- **Lube**.....B2
- **Air**.....PA2024
- **Fuel**.....BF879
- **Oil Vapor**.....SA2039

Monterey V8-429 (7.0L) Carb. VIN N
- **Lube**.....B2
- **Air**.....PA2024
- **Fuel**.....BF879
- **Oil Vapor**.....SA2039

Monterey V8-460 (7.5L) 4 Bbl. Carb. VIN A
- **Lube**.....B2
- **Air**.....PA2024
- **Fuel**.....BF879
- **Oil Vapor**.....SA2039

MERCURY (Cont'd.)

1972

Capri 4-1598cc (1.6L) Carb. VIN L
- **Lube**.....B143
- **Air**.....PA2035
- **Fuel**.....BF989
- **Oil Vapor**.....N/R
- **Trans.**.....19879

Capri 4-1989cc (2.0L) Carb.
- **Lube**.....B233
- **Fuel**.....BF989
- **Oil Vapor**.....SA2039
- **Trans.**.....19879

Capri V6-2606cc (2.6L) Carb.
- **Lube**.....B2
- **Air**.....PA2005
- **Fuel**.....BF879
- **Oil Vapor**.....SA2039
- **Trans.**.....19879

Colony Park V8-351 (5.8L) 2 Bbl. Carb. VIN H
- **Lube**.....B2
- **Air**.....PA2051
- **Fuel**.....BF879
- **Oil Vapor**.....SA2039

Colony Park V8-400 (6.6L) Carb. VIN S
- **Lube**.....B2
- **Air**.....PA2002
- **Fuel**.....BF879
- **Oil Vapor**.....SA2039

Colony Park V8-429 (7.0L) Carb. VIN N
- **Lube**.....B2
- **Air**.....PA2002
- **Fuel**.....BF879
- **Oil Vapor**.....SA2039

Colony Park V8-460 (7.5L) Carb. VIN A
- **Lube**.....B2
- **Air**.....PA2002
- **Fuel**.....BF879
- **Oil Vapor**.....SA2039

Comet 6-170 (2.8L) Carb. VIN U
- **Lube**.....B2
- **Air**.....PA2005
- **Fuel**.....BF879
- **Oil Vapor**.....SA2039
- **Trans.**.....19879

Comet 6-200 (3.3L) Carb. VIN T
- **Lube**.....B2
- **Air**.....PA2005
- **Fuel**.....BF879
- **Oil Vapor**.....SA2039
- **Trans.**.....19879

Comet 6-250 (4.1L) Carb. VIN L
- **Lube**.....B2
- **Air**.....PA1802
- **Fuel**.....BF879
- **Oil Vapor**.....SA2039
- **Trans.**.....19879

Comet V8-302 (5.0L) Carb. VIN F
- **Lube**.....B2
- **Air**.....PA2051
- **Fuel**.....BF879
- **Oil Vapor**.....SA2039
- **Trans.**.....19879

Cougar, Cougar XR-7 V8-351 (5.8L) 2 Bbl. Carb. VIN H
- **Lube**.....B2
- **Air**.....PA2051
- **Fuel**.....BF879
- **Oil Vapor**.....SA2039

Cougar, Cougar XR-7 V8-351 (5.8L) 4 Bbl. Carb. VIN Q
- **Lube**.....B2
- **Air**.....PA2002
- **Oil Vapor**.....SA2039

Marquis V8-351 (5.8L) 2 Bbl. Carb. VIN H
- **Lube**.....B2
- **Air**.....PA2051
- **Fuel**.....BF879
- **Oil Vapor**.....SA2039

MERCURY 1972 (Cont'd.)

Marquis V8-400 (6.6L) Carb. VIN S
- **Lube**.....B2
- **Air**.....PA2002
- **Fuel**.....BF879
- **Oil Vapor**.....SA2039

Marquis V8-429 (7.0L) Carb. VIN N
- **Lube**.....B2
- **Air**.....PA2002
- **Fuel**.....BF879
- **Oil Vapor**.....SA2039

Marquis V8-460 (7.5L) 4 Bbl. Carb. VIN A
- **Lube**.....B2
- **Air**.....PA2002 [74]
- **Fuel**.....BF879
- **Oil Vapor**.....SA2039

Montego V8-250 (4.1L) Carb. VIN L
- **Lube**.....B2
- **Air**.....PA1802
- **Fuel**.....BF879
- **Oil Vapor**.....SA2039
- **Trans.**.....19879

Montego V8-302 (5.0L) Carb. VIN F
- **Lube**.....B2
- **Air**.....PA2051
- **Fuel**.....BF879
- **Oil Vapor**.....SA2039
- **Trans.**.....19879

Montego V8-351 (5.8L) 2 Bbl. Carb. VIN H
- **Lube**.....B2
- **Air**.....PA2051
- **Fuel**.....BF879
- **Oil Vapor**.....SA2039

Montego V8-351 (5.8L) 4 Bbl. Carb. VIN Q
- **Lube**.....B2
- **Oil Vapor**.....SA2039

Montego V8-400 (6.6L) Carb. VIN S
- **Lube**.....B2
- **Air**.....PA2002
- **Fuel**.....BF879
- **Oil Vapor**.....SA2039

Montego V8-429 (7.0L) Carb. VIN N
- **Lube**.....B2
- **Air**.....PA2002
- **Fuel**.....BF879
- **Oil Vapor**.....SA2039

Monterey V8-351 (5.8L) 2 Bbl. Carb. VIN H
- **Lube**.....B2
- **Air**.....PA2051
- **Fuel**.....BF879
- **Oil Vapor**.....SA2039

Monterey V8-400 (6.6L) Carb. VIN S
- **Lube**.....B2
- **Air**.....PA2002
- **Fuel**.....BF879
- **Oil Vapor**.....SA2039

Monterey V8-429 (7.0L) Carb. VIN N
- **Lube**.....B2
- **Air**.....PA2002
- **Fuel**.....BF879
- **Oil Vapor**.....SA2039

Monterey V8-460 (7.5L) 4 Bbl. Carb. VIN A
- **Lube**.....B2
- **Air**.....PA2002
- **Fuel**.....BF879
- **Oil Vapor**.....SA2039

1971

Capri 4-1598cc (1.6L) Carb. VIN L
- **Lube**.....B143
- **Air**.....PA2035
- **Fuel**.....BF989
- **Oil Vapor**.....N/R
- **Trans.**.....19879

Capri 4-1989cc (2.0L) Carb.
- **Lube**.....B233
- **Fuel**.....BF989
- **Oil Vapor**.....SA2039
- **Trans.**.....19879

[73] Police. [74] Exc. Police.

OBS = Obsolete. Availability Limited to Distributor Stock.

MERCURY 1971 (Cont'd.)

Colony Park V8-351 (5.8L) Carb. VIN H
- **Lube**....B2
- **Air**....PA2002
- **Fuel**....BF879
- **Oil Vapor**....SA2039

Colony Park V8-400 (6.6L) Carb. VIN S
- **Lube**....B2
- **Air**....PA2002
- **Fuel**....BF879
- **Oil Vapor**....SA2039

Colony Park V8-429 (7.0L) Carb. VIN K,N
- **Lube**....B2
- **Air**....PA2002
- **Fuel**....BF879
- **Oil Vapor**....SA2039

Comet 6-170 (2.8L) Carb. VIN U
- **Lube**....B2
- **Air**....PA2005
- **Fuel**....BF879
- **Oil Vapor**....SA2039
- **Trans.**....19879

Comet 6-200 (3.3L) Carb. VIN T
- **Lube**....B2
- **Air**....PA2005
- **Fuel**....BF879
- **Oil Vapor**....SA2039
- **Trans.**....19879

Comet 6-250 (4.1L) Carb. VIN L
- **Lube**....B2
- **Air**....PA1802
- **Fuel**....BF879
- **Oil Vapor**....SA2039
- **Trans.**....19879

Comet V8-302 (5.0L) Carb. VIN F
- **Lube**....B2
- **Air**....PA2002
- **Fuel**....BF879
- **Oil Vapor**....SA2039
- **Trans.**....19879

Cougar, Cougar XR-7 V8-351 (5.8L) Carb. VIN H,M
- **Lube**....B2
- **Air**....PA2002
- **Fuel**....BF879
- **Oil Vapor**....SA2039

Cougar, Cougar XR-7 V8-429 (7.0L) Carb. VIN C,J
- **Lube**....B2
- **Air (w/o Ram Air)**....PA2002
- **Air (w/Ram Air)**....PA1828
- **Oil Vapor**....SA2039

Cyclone V8-351 (5.8L) Carb. VIN H,M
- **Lube**....B2
- **Air**....PA2002
- **Fuel**....BF879
- **Oil Vapor**....SA2039

Cyclone V8-429 (7.0L) Carb. VIN C
- **Lube**....B2
- **Air**....PA2002
- **Oil Vapor**....SA2039

Marquis V8-351 (5.8L) Carb. VIN H
- **Lube**....B2
- **Air**....PA2002
- **Fuel**....BF879
- **Oil Vapor**....SA2039

Marquis V8-400 (6.6L) Carb. VIN S
- **Lube**....B2
- **Air**....PA2002
- **Fuel**....BF879
- **Oil Vapor**....SA2039

Marquis V8-429 (7.0L) Carb. VIN K,N
- **Lube**....B2
- **Air**....PA2002
- **Fuel**....BF879
- **Oil Vapor**....SA2039

Montego V8-250 (4.1L) Carb. VIN L
- **Lube**....B2
- **Air**....PA1802
- **Fuel**....BF879
- **Oil Vapor**....SA2039
- **Trans.**....19879

MERCURY 1971 (Cont'd.)

Montego V8-302 (5.0L) Carb. VIN F
- **Lube**....B2
- **Air**....PA2002
- **Fuel**....BF879
- **Oil Vapor**....SA2039
- **Trans.**....19879

Montego V8-351 (5.8L) Carb. VIN F,H
- **Lube**....B2
- **Air**....PA2002
- **Fuel**....BF879
- **Oil Vapor**....SA2039

Montego V8-429 (7.0L) Carb. VIN J
- **Lube**....B2
- **Air**....PA2002
- **Oil Vapor**....SA2039

Monterey V8-351 (5.8L) Carb. VIN H
- **Lube**....B2
- **Air**....PA2002
- **Fuel**....BF879
- **Oil Vapor**....SA2039

Monterey V8-400 (6.6L) Carb. VIN S
- **Lube**....B2
- **Air**....PA2002
- **Fuel**....BF879
- **Oil Vapor**....SA2039

Monterey V8-429 (7.0L) Carb. VIN K,N
- **Lube**....B2
- **Air**....PA2002
- **Fuel**....BF879
- **Oil Vapor**....SA2039

1970

Colony Park V8-390 (6.4L) Carb. VIN Y
- **Lube**....B2
- **Air**....PA2002
- **Fuel**....BF879

Colony Park V8-429 (7.0L) Carb. VIN K,N
- **Lube**....B2
- **Air**....PA2002
- **Fuel**....BF879

Cougar, Cougar XR-7 V8-302 (5.0L) 4 Bbl. Carb. VIN G
- **Lube**....B2
- **Air**....PA1828
- **Trans.**....19879

Cougar, Cougar XR-7 V8-351 (5.8L) 2,4 Bbl. Carb. VIN H,M
- **Lube**....B2
- **Air (w/o Ram Air)**....PA2002
- **Air (w/Ram Air)**....PA1828
- **Fuel**....BF879
- **Oil Vapor**....SA2039

Cougar, Cougar XR-7 V8-429 (7.0L) 4 Bbl. Carb. VIN Q
- **Lube**....B2
- **Air**....PA1828
- **Fuel**....BF879

Cougar Boss 429 V8-429 (7.0L) 4 Bbl. Carb. VIN Z
- **Lube**....B2
- **Air**....PA1828
- **Fuel**....BF879

Cougar Cobra Jet V8-429 (7.0L) 4 Bbl. Carb. VIN R
- **Lube**....B2
- **Air**....PA1828

Cyclone V8-302 (5.0L) 4 Bbl. Carb. VIN F
- **Lube**....B2
- **Air**....PA2002
- **Fuel**....BF879
- **Trans.**....19879

Cyclone V8-351 (5.8L) 2,4 Bbl. Carb. VIN H,M
- **Lube**....B2
- **Air**....PA2002
- **Fuel**....BF879

MERCURY 1970 (Cont'd.)

Cyclone V8-429 (7.0L) 4 Bbl. Carb. VIN C
- **Lube**....B2
- **Air**....PA2024

Marauder V8-390 (6.4L) 2 Bbl. Carb. VIN Y
- **Lube**....B2
- **Air**....PA2002
- **Fuel**....BF879

Marauder V8-429 (7.0L) 2,4 Bbl. Carb. VIN K,N
- **Lube**....B2
- **Air**....PA2002
- **Fuel**....BF879

Marquis V8-390 (6.4L) 2 Bbl. Carb. VIN X
- **Lube**....B2
- **Air**....PA2002
- **Fuel**....BF879

Marquis V8-429 (7.0L) 2,4 Bbl. Carb. VIN K,N
- **Lube**....B2
- **Air**....PA2002
- **Fuel**....BF879

Montego 6-250 (4.1L) 1 Bbl. Carb. VIN L
- **Lube**....B2
- **Air**....PA1802
- **Fuel**....BF879
- **Trans.**....19879

Montego V8-302 (5.0L) 2 Bbl. Carb. VIN F
- **Lube**....B2
- **Air**....PA2002
- **Fuel**....BF879
- **Trans.**....19879

Montego V8-351 (5.8L) 2,4 Bbl. Carb. VIN H,M
- **Lube**....B2
- **Air**....PA2002
- **Fuel**....BF879

Montego V8-429 (7.0L) 4 Bbl. Carb. VIN N
- **Lube**....B2
- **Air**....PA2002
- **Fuel**....BF879

Monterey V8-390 (6.4L) 2 Bbl. Carb. VIN X
- **Lube**....B2
- **Air**....PA2002
- **Fuel**....BF879

Monterey V8-428 (7.0L) 4 Bbl. Carb. VIN P
- **Lube**....B2
- **Fuel**....BF879

Monterey V8-429 (7.0L) 2,4 Bbl. Carb. VIN K,N
- **Lube**....B2
- **Air**....PA2002
- **Fuel**....BF879

1969

Colony Park V8-390 (6.4L) Carb. VIN Y
- **Lube**....B2
- **Air**....PA2002
- **Fuel**....BF879

Colony Park V8-429 (7.0L) Carb. VIN K,N
- **Lube**....B2
- **Air**....PA2002
- **Fuel**....BF879

Comet 6-250 (4.1L) Carb. VIN L
- **Lube**....B2
- **Air**....PA2004
- **Fuel**....BF879

Comet V8-302 (5.0L) Carb. VIN F
- **Lube**....B2
- **Air**....PA2002
- **Fuel**....BF879

MERCURY 1969 (Cont'd.)

Comet V8-351 (5.8L) Carb. VIN H,M
- **Lube**....B2
- **Air**....PA2002
- **Fuel**....BF879

Comet V8-390 (6.4L) Carb. VIN S
- **Lube**....B2
- **Air**....PA1828
- **Fuel**....BF879

Cougar Boss V8-302 (5.0L) Carb. VIN G
- **Lube**....B2
- **Fuel**....BF879

Cougar V8-351 (5.8L) Carb. VIN H,M
- **Lube**....B2
- **Air**....PA2002
- **Fuel**....BF879

Cougar V8-390 (6.4L) Carb. VIN S
- **Lube**....B2
- **Air**....PA1828
- **Fuel**....BF879

Cougar V8-428 (7.0L) Carb. VIN R
- **Lube**....B2
- **Air**....PA1828
- **Fuel**....BF879

Cougar Cobra V8-428 (7.0L) Carb. VIN Q
- **Lube**....B2
- **Air**....PA1828
- **Fuel**....BF879

Cyclone V8-302 (5.0L) Carb. VIN F
- **Lube**....B2
- **Air**....PA2002
- **Fuel**....BF879

Cyclone V8-351 (5.8L) Carb. VIN H,M
- **Lube**....B2
- **Air**....PA2002
- **Fuel**....BF879

Cyclone V8-390 (6.4L) Carb. VIN S
- **Lube**....B2
- **Air**....PA2002
- **Fuel**....BF879

Cyclone V8-428 (7.0L) Carb. VIN R
- **Lube**....B2
- **Air**....PA1828

Marauder V8-390 (6.4L) Carb. VIN X
- **Lube**....B2
- **Air**....PA2002
- **Fuel**....BF879

Marauder V8-429 (7.0L) Carb. VIN K,N
- **Lube**....B2
- **Air**....PA2002
- **Fuel**....BF879

Marquis V8-390 (6.4L) Carb. VIN X
- **Lube**....B2
- **Air**....PA2002
- **Fuel**....BF879

Marquis V8-428 (7.0L) Carb. VIN P
- **Lube**....B2
- **Air**....PA1828

Marquis V8-429 (7.0L) Carb. VIN K,N
- **Lube**....B2
- **Air**....PA2002
- **Fuel**....BF879

Montego 6-250 (4.1L) Carb. VIN L
- **Lube**....B2
- **Air**....PA2004
- **Fuel**....BF879

Montego V8-302 (5.0L) Carb. VIN F
- **Lube**....B2
- **Air**....PA2002
- **Fuel**....BF879

Montego V8-351 (5.8L) Carb. VIN H,M
- **Lube**....B2
- **Air**....PA2002
- **Fuel**....BF879

Montego V8-390 (6.4L) Carb. VIN S
- **Lube**....B2
- **Air**....PA1828
- **Fuel**....BF879

Montego V8-428 (7.0L) Carb. VIN R
- **Lube**....B2
- **Air**....PA1828

OBS = Obsolete. Availability Limited to Distributor Stock.

MERCURY 1969 (Cont'd.)

Monterey V8-390 (6.4L) Carb.
VIN S,X
Lube.....**B2**
Air.....**PA2002**
Fuel.....**BF879**
Monterey V8-428 (7.0L) Carb. VIN P
Lube.....**B2**
Air.....**PA1828**
Monterey V8-429 (7.0L) Carb.
VIN K,N
Lube.....**B2**
Air.....**PA2002**
Fuel.....**BF879**

1968

Colony Park V8-390 (6.4L) Carb.
VIN X,Z
Lube.....**B2**
Air.....**PA2002**
Fuel.....**BF879**
Colony Park V8-428 (7.0L) Carb.
VIN Q
Lube.....**B2**
Air.....**PA1828**
Fuel.....**BF879**
Comet 6-200 (3.3L) Carb. VIN T
Lube.....**B2**
Air.....**PA642**
Fuel.....**BF879**
Comet V8-302 (5.0L) Carb. VIN F,J
Lube.....**B2**
Air.....**PA2002**
Fuel.....**BF879**
Comet V8-390 (6.4L) Carb. VIN S,Y
Lube.....**B2**
Air.....**PA2002**
Fuel.....**BF879**
Commuter V8-390 (6.4L) Carb.
VIN X,Z
Lube.....**B2**
Air.....**PA2002**
Fuel.....**BF879**
Commuter V8-428 (7.0L) Carb.
VIN Q
Lube.....**B2**
Air.....**PA1828**
Fuel.....**BF879**
Cougar, Cougar XR-7 V8-289 (4.7L)
Carb. VIN C
Lube.....**B2**
Air.....**PA1735**
Fuel.....**BF879**
Cougar, Cougar XR-7 V8-302 (5.0L)
Carb. VIN F,J
Lube.....**B2**
Air.....**PA2002**
Fuel.....**BF879**
Cougar, Cougar XR-7 V8-390 (6.4L)
Carb. VIN S,X
Lube.....**B2**
Air.....**PA2002**
Cougar, Cougar XR-7 V8-427 (7.0L)
Carb. VIN W
Lube.....**B2**
Air.....**PA1828**
Cougar, Cougar XR-7 V8-428 (7.0L)
Carb. VIN R
Lube.....**B2**
Air.....**PA1828**
Fuel.....**BF879**
Cyclone V8-302 (5.0L) Carb. VIN F,J
Lube.....**B2**
Air.....**PA2002**
Fuel.....**BF879**
Cyclone V8-390 (6.4L) Carb. VIN S,Y
Lube.....**B2**
Air.....**PA2002**
Fuel.....**BF879**
Cyclone V8-427 (7.0L) Carb. VIN W
Lube.....**B2**
Air.....**PA2002**
Fuel.....**BF879**

MERCURY 1968 (Cont'd.)

Cyclone V8-428 (7.0L) Carb. VIN R
Lube.....**B2**
Air.....**PA2002**
Fuel.....**BF879**
Marquis V8-390 (6.4L) Carb. VIN Y,Z
Lube.....**B2**
Air.....**PA2002**
Fuel.....**BF879**
Marquis V8-428 (7.0L) Carb. VIN Q
Lube.....**B2**
Air.....**PA2002** [74]
Air.....**PA1828** [73]
Fuel.....**BF879**
Montclair V8-390 (6.4L) Carb.
VIN X,Z
Lube.....**B2**
Air.....**PA2002**
Fuel.....**BF879**
Montclair V8-428 (7.0L) Carb.
VIN P,Q
Lube.....**B2**
Air.....**PA2002**
Fuel.....**BF879**
Montego 6-200 (3.3L) Carb. VIN T
Lube.....**B2**
Air.....**PA2004**
Fuel.....**BF879**
Montego V8-302 (5.0L) Carb. VIN F,J
Lube.....**B2**
Air.....**PA2002**
Fuel.....**BF879**
Montego V8-390 (6.4L) Carb.
VIN S,Y
Lube.....**B2**
Air.....**PA2002**
Montego V8-427 (7.0L) Carb. VIN W
Lube.....**B2**
Air.....**PA1828**
Montego V8-428 (7.0L) Carb. VIN Q
Lube.....**B2**
Air.....**PA1828**
Monterey V8-390 (6.4L) Carb.
VIN X,Z
Lube.....**B2**
Air.....**PA2002**
Fuel.....**BF879**
Monterey V8-428 (7.0L) Carb. VIN P
Lube.....**B2**
Air.....**PA2002**
Fuel.....**BF879**
Park Lane V8-390 (6.4L) Carb.
VIN X,Z
Lube.....**B2**
Air.....**PA2002**
Fuel.....**BF879**
Park Lane V8-428 (7.0L) Carb.
VIN P,Q
Lube.....**B2**
Air.....**PA2002**
Fuel.....**BF879**

1967

Breezeway V8-390 (6.4L) Carb.
Lube.....**B2**
Air.....**PA1735**
Fuel.....**BF879**
Breezeway V8-410 (6.7L) Carb.
Lube.....**B2**
Air.....**PA1735**
Fuel.....**BF879**
Breezeway V8-427 (7.0L) Carb.
Lube.....**B2**
Air.....**PA1735**
Fuel.....**BF879**
Breezeway V8-428 (7.0L) Carb.
Lube.....**B2**
Air.....**PA1735**
Fuel.....**BF879**
Brougham V8-410 (6.7L) Carb.
Lube.....**B2**
Air.....**PA1735**
Fuel.....**BF879**

MERCURY 1967 (Cont'd.)

Brougham V8-427 (7.0L) Carb.
Lube.....**B2**
Air.....**PA1735**
Fuel.....**BF879**
Brougham V8-428 (7.0L) Carb.
Lube.....**B2**
Air.....**PA1735**
Fuel.....**BF879**
Caliente 6-200 (3.3L) Carb.
Lube.....**B2**
Air.....**PA642**
Fuel.....**BF879**
Caliente V8-289 (4.7L) Carb.
Lube.....**B2**
Air.....**PA657**
Fuel.....**BF879**
Caliente V8-390 (6.4L) Carb.
Lube.....**B2**
Air.....**PA1735**
Fuel.....**BF879**
Capri 6-200 (3.3L) Carb.
Lube.....**B2**
Air.....**PA642**
Fuel.....**BF879**
Colony Park V8-390 (6.4L) Carb.
Lube.....**B2**
Air.....**PA1735**
Fuel.....**BF879**
Colony Park V8-410 (6.7L) Carb.
Lube.....**B2**
Air.....**PA1735**
Fuel.....**BF879**
Colony Park V8-427 (7.0L) Carb.
Lube.....**B2**
Air.....**PA1735**
Fuel.....**BF879**
Colony Park V8-428 (7.0L) Carb.
Lube.....**B2**
Air.....**PA1735**
Fuel.....**BF879**
Comet 6-200 (3.3L) Carb.
Lube.....**B2**
Air.....**PA642**
Fuel.....**BF879**
Comet V8-289 (4.7L) Carb.
Lube.....**B2**
Air.....**PA657**
Fuel.....**BF879**
Comet V8-390 (6.4L) Carb.
Lube.....**B2**
Air.....**PA1735**
Fuel.....**BF879**
Comet V8-427 (7.0L) Carb.
Lube.....**B2**
Air.....**PA1828**
Fuel.....**BF879**
Commuter V8-289 (4.7L) Carb.
Lube.....**B2**
Air.....**PA657**
Fuel.....**BF879**
Commuter V8-390 (6.4L) Carb.
Lube.....**B2**
Air.....**PA1735**
Fuel.....**BF879**
Commuter V8-410 (6.7L) Carb.
Lube.....**B2**
Air.....**PA1735**
Fuel.....**BF879**
Commuter V8-427 (7.0L) Carb.
Lube.....**B2**
Air.....**PA1735**
Fuel.....**BF879**
Commuter V8-428 (7.0L) Carb.
Lube.....**B2**
Air.....**PA1735**
Fuel.....**BF879**
Cougar, Cougar XR-7 V8-289 (4.7L)
Carb.
Lube.....**B2**
Air.....**PA1735**
Fuel.....**BF879**
Cougar, Cougar XR-7 V8-390 (6.4L)
Carb.
Lube.....**B2**
Air.....**PA1828**

MERCURY 1967 (Cont'd.)

Cyclone V8-289 (4.7L) Carb.
Lube.....**B2**
Air.....**PA1735**
Fuel.....**BF879**
Cyclone V8-390 (6.4L) Carb.
Lube.....**B2**
Air.....**PA1735**
Fuel.....**BF879**
Marauder V8-390 (6.4L) Carb.
Lube.....**B2**
Air.....**PA1735**
Fuel.....**BF879**
Marquis V8-410 (6.7L) Carb.
Lube.....**B2**
Air.....**PA1735**
Fuel.....**BF879**
Marquis V8-427 (7.0L) Carb.
Lube.....**B2**
Air.....**PA1735**
Fuel.....**BF879**
Marquis V8-428 (7.0L) Carb.
Lube.....**B2**
Air.....**PA1735**
Fuel.....**BF879**
Montclair V8-390 (6.4L) Carb.
Lube.....**B2**
Air.....**PA1735**
Fuel.....**BF879**
Montclair V8-410 (6.7L) Carb.
Lube.....**B2**
Air.....**PA1735**
Fuel.....**BF879**
Montclair V8-427 (7.0L) Carb.
Lube.....**B2**
Air.....**PA1735**
Fuel.....**BF879**
Montclair V8-428 (7.0L) Carb.
Lube.....**B2**
Air.....**PA1735**
Fuel.....**BF879**
Monterey V8-390 (6.4L) Carb.
Lube.....**B2**
Air.....**PA1735**
Fuel.....**BF879**
Monterey V8-410 (6.7L) Carb.
Lube.....**B2**
Air.....**PA1735**
Fuel.....**BF879**
Monterey V8-427 (7.0L) Carb.
Lube.....**B2**
Air.....**PA1735**
Fuel.....**BF879**
Monterey V8-428 (7.0L) Carb.
Lube.....**B2**
Air.....**PA1735**
Fuel.....**BF879**
Park Lane V8-410 (6.7L) Carb.
Lube.....**B2**
Air.....**PA1735**
Fuel.....**BF879**
Park Lane V8-427 (7.0L) Carb.
Lube.....**B2**
Air.....**PA1735**
Fuel.....**BF879**
Park Lane V8-428 (7.0L) Carb.
Lube.....**B2**
Air.....**PA1735**
Fuel.....**BF879**
Villager 6-200 (3.3L) Carb.
Lube.....**B2**
Air.....**PA642**
Fuel.....**BF879**
Villager V8-289 (4.7L) Carb.
Lube.....**B2**
Air.....**PA657**
Fuel.....**BF879**
Villager V8-390 (6.4L) Carb.
Lube.....**B2**
Air.....**PA1735**
Fuel.....**BF879**
Voyager 6-200 (3.3L) Carb.
Lube.....**B2**
Air.....**PA642**
Fuel.....**BF879**

[73] Police. [74] Exc. Police.

OBS = Obsolete. Availability Limited to Distributor Stock.

MERCURY 1967 (Cont'd.)

Voyager V8-289 (4.7L) Carb.
Lube.....B2
Air.....PA657
Fuel.....BF879
Voyager V8-390 (6.4L) Carb.
Lube.....B2
Air.....PA1735
Fuel.....BF879

1966
Breezeway V8-390 (6.4L) Carb.
Lube.....B2
Air (Exc. Calif.).....PA1735
Air (Calif.).....PA642
Breezeway V8-410 (6.7L) Carb.
Lube.....B2
Air (Exc. Calif.).....PA1735
Air (Calif.).....PA642
Breezeway V8-427 (7.0L) Carb.
Lube.....B2
Air.....PA642
Breezeway V8-428 (7.0L) Carb.
Lube.....B2
Air (Exc. Calif.).....PA1735
Air (Calif.).....PA642
Caliente 6-200 (3.3L) Carb.
Lube.....B2
Air.....PA642
Fuel.....BF879
Caliente V8-289 (4.7L) Carb.
Lube.....B2
Air.....PA1735
Caliente V8-390 (6.4L) Carb.
Lube.....B2
Air (Exc. Calif.).....PA1735
Air (Calif.).....PA642
Capri 6-200 (3.3L) Carb.
Lube.....B2
Air.....PA642
Fuel.....BF879
Colony Park V8-390 (6.4L) Carb.
Lube.....B2
Air (Exc. Calif.).....PA1735
Air (Calif.).....PA642
Colony Park V8-410 (6.7L) Carb.
Lube.....B2
Air (Exc. Calif.).....PA1735
Air (Calif.).....PA642
Colony Park V8-427 (7.0L) Carb.
Lube.....B2
Air.....PA642
Colony Park V8-428 (7.0L) Carb.
Lube.....B2
Air (Exc. Calif.).....PA1735
Air (Calif.).....PA642
Comet 6-200 (3.3L) Carb.
Lube.....B2
Air.....PA642
Fuel.....BF879
Comet V8-289 (4.7L) Carb.
Lube.....B2
Air.....PA1735
Comet V8-390 (6.4L) Carb.
Lube.....B2
Air (Exc. Calif.).....PA1735
Air (Calif.).....PA642
Commuter V8-390 (6.4L) Carb.
Lube.....B2
Air (Exc. Calif.).....PA1735
Air (Calif.).....PA642
Commuter V8-410 (6.7L) Carb.
Lube.....B2
Air (Exc. Calif.).....PA1735
Air (Calif.).....PA642
Commuter V8-427 (7.0L) Carb.
Lube.....B2
Air.....PA642
Commuter V8-428 (7.0L) Carb.
Lube.....B2
Air (Exc. Calif.).....PA1735
Air (Calif.).....PA642
Cyclone V8-289 (4.7L) Carb.
Lube.....B2
Air.....PA1735

MERCURY 1966 (Cont'd.)

Cyclone V8-390 (6.4L) Carb.
Lube.....B2
Air (Exc. Calif.).....PA1735
Air (Calif.).....PA642
Marauder V8-390 (6.4L) Carb.
Lube.....B2
Air (Exc. Calif.).....PA1735
Air (Calif.).....PA642
Montclair V8-390 (6.4L) Carb.
Lube.....B2
Air (Exc. Calif.).....PA1735
Air (Calif.).....PA642
Montclair V8-410 (6.7L) Carb.
Lube.....B2
Air (Exc. Calif.).....PA1735
Air (Calif.).....PA642
Montclair V8-427 (7.0L) Carb.
Lube.....B2
Air.....PA642
Montclair V8-428 (7.0L) Carb.
Lube.....B2
Air (Exc. Calif.).....PA1735
Air (Calif.).....PA642
Monterey V8-390 (6.4L) Carb.
Lube.....B2
Air (Exc. Calif.).....PA1735
Air (Calif.).....PA642
Monterey V8-410 (6.7L) Carb.
Lube.....B2
Air (Exc. Calif.).....PA1735
Air (Calif.).....PA642
Monterey V8-427 (7.0L) Carb.
Lube.....B2
Air.....PA642
Monterey V8-428 (7.0L) Carb.
Lube.....B2
Air (Exc. Calif.).....PA1735
Air (Calif.).....PA642
Park Lane V8-390 (6.4L) Carb.
Lube.....B2
Air (Exc. Calif.).....PA1735
Air (Calif.).....PA642
Park Lane V8-410 (6.7L) Carb.
Lube.....B2
Air (Exc. Calif.).....PA1735
Air (Calif.).....PA642
Park Lane V8-427 (7.0L) Carb.
Lube.....B2
Air.....PA642
Park Lane V8-428 (7.0L) Carb.
Lube.....B2
Air (Exc. Calif.).....PA1735
Air (Calif.).....PA642
S-55 V8-390 (6.4L) Carb.
Lube.....B2
Air (Exc. Calif.).....PA1735
Air (Calif.).....PA642
S-55 V8-410 (6.7L) Carb.
Lube.....B2
Air (Exc. Calif.).....PA1735
Air (Calif.).....PA642
S-55 V8-427 (7.0L) Carb.
Lube.....B2
S-55 V8-428 (7.0L) Carb.
Lube.....B2
Air (Exc. Calif.).....PA1735
Air (Calif.).....PA642
Villager 6-200 (3.3L) Carb.
Lube.....B2
Air.....PA642
Villager V8-289 (4.7L) Carb.
Lube.....B2
Air.....PA657
Villager V8-390 (6.4L) Carb.
Lube.....B2
Air (Exc. Calif.).....PA1735
Air (Calif.).....PA642
Voyager 6-200 (3.3L) Carb.
Lube.....B2
Air.....PA642
Fuel.....BF879
Voyager V8-289 (4.7L) Carb.
Lube.....B2
Air.....PA657

MERCURY 1966 (Cont'd.)

Voyager V8-390 (6.4L) Carb.
Lube.....B2
Air (Exc. Calif.).....PA1735
Air (Calif.).....PA642

1965
Breezeway V8-390 (6.4L) Carb.
Lube.....B2
Air.....PA1735
Fuel.....PF827
Breezeway V8-427 (7.0L) Carb.
Lube.....B2
Fuel.....PF827
Caliente 6-200 (3.3L) Carb.
Lube.....B2
Air.....PA642
Fuel.....BF879
Caliente V8-289 (4.7L) Carb.
Lube.....B2
Air.....PA657
Caliente V8-427 (7.0L) Carb.
Lube.....B2
Fuel.....PF827
Colony Park V8-390 (6.4L) Carb.
Lube.....B2
Air.....PA1735
Fuel.....PF827
Colony Park V8-427 (7.0L) Carb.
Lube.....B2
Fuel.....PF827
Comet 6-200 (3.3L) Carb.
Lube.....B2
Air.....PA642
Fuel.....PF827
Comet V8-289 (4.7L) Carb.
Lube.....B2
Air.....PA657
Fuel.....PF827
Comet V8-427 (7.0L) Carb.
Lube.....B2
Fuel.....PF827
Commuter V8-390 (6.4L) Carb.
Lube.....B2
Air.....PA1735
Fuel.....PF827
Commuter V8-427 (7.0L) Carb.
Lube.....B2
Fuel.....PF827
Cyclone V8-289 (4.7L) Carb.
Lube.....B2
Air.....PA657
Fuel.....PF827
Cyclone V8-427 (7.0L) Carb.
Lube.....B2
Fuel.....PF827
Marauder V8-390 (6.4L) Carb.
Lube.....B2
Air.....PA1735
Fuel.....PF827
Marauder V8-427 (7.0L) Carb.
Lube.....B2
Fuel.....PF827
Montclair V8-390 (6.4L) Carb.
Lube.....B2
Air.....PA1735
Fuel.....PF827
Montclair V8-427 (7.0L) Carb.
Lube.....B2
Fuel.....PF827
Monterey V8-390 (6.4L) Carb.
Lube.....B2
Air.....PA1735
Fuel.....PF827
Monterey V8-427 (7.0L) Carb.
Lube.....B2
Fuel.....PF827
Park Lane V8-390 (6.4L) Carb.
Lube.....B2
Air.....PA1735
Fuel.....PF827
Park Lane V8-427 (7.0L) Carb.
Lube.....B2
Fuel.....PF827

MERCURY 1965 (Cont'd.)

Villager 6-200 (3.3L) Carb.
Lube.....B2
Air.....PA657
Fuel.....PF827
Villager V8-289 (4.7L) Carb.
Lube.....B2
Air.....PA657
Fuel.....PF827
Villager V8-427 (7.0L) Carb.
Lube.....B2
Fuel.....PF827

1964
Caliente 6-200 (3.3L) Carb.
Lube.....B2
Air.....PA642
Fuel.....PF827
Caliente V8-260 (4.3L) Carb.
Lube.....B2
Air.....PA657
Fuel.....PF827
Caliente V8-289 (4.7L) Carb.
Lube.....B2
Air.....PA657
Fuel.....PF827
Colony Park V8-390 (6.4L) Carb.
Lube.....B2
Air.....PA695
Fuel.....PF827
Comet 6-170 (2.8L) Carb.
Lube.....B2
Air.....PA642
Fuel.....PF827
Comet 6-200 (3.3L) Carb.
Lube.....B2
Air.....PA642
Fuel.....PF827
Comet V8-260 (4.3L) Carb.
Lube.....B2
Air.....PA657
Fuel.....PF827
Comet V8-289 (4.7L) Carb.
Lube.....B2
Air.....PA657
Fuel.....PF827
Commuter V8-390 (6.4L) Carb.
Lube.....B2
Air.....PA695
Fuel.....PF827
Cyclone 6-200 (3.3L) Carb.
Lube.....B2
Air.....PA642
Fuel.....PF827
Cyclone V8-260 (4.3L) Carb.
Lube.....B2
Air.....PA657
Fuel.....PF827
Cyclone V8-289 (4.7L) Carb.
Lube.....B2
Air.....PA657
Fuel.....PF827
Marauder V8-390 (6.4L) Carb.
Lube.....B2
Air.....PA695[74]
Air.....PA1828[73]
Fuel.....PF827
Montclair V8-390 (6.4L) Carb.
Lube.....B2
Air.....PA695[74]
Air.....PA1828[73]
Fuel.....PF827
Monterey V8-390 (6.4L) Carb.
Lube.....B2
Air.....PA695[74]
Air.....PA1828[73]
Fuel.....PF827
Park Lane V8-390 (6.4L) Carb.
Lube.....B2
Air.....PA695
Fuel.....PF827
Villager 6-200 (3.3L) Carb.
Lube.....B2
Air.....PA642
Fuel.....PF827

[73] Police. [74] Exc. Police.
OBS = Obsolete. Availability Limited to Distributor Stock.

MERCURY 1964 (Cont'd.)

Villager V8-260 (4.3L) Carb.
Lube.....**B2**
Air.....**PA657**
Fuel.....**PF827**
Villager V8-289 (4.7L) Carb.
Lube.....**B2**
Fuel.....**PF827**

1963
Colony Park V8-390 (6.4L) Carb.
Lube.....**B2**
Air.....**PA695**
Fuel.....**PF827**
Comet 6-144 (2.4L) Carb.
Lube.....**B2**
Air.....**PA642**
Fuel.....**PF827**
Comet 6-170 (2.8L) Carb.
Lube.....**B2**
Air.....**PA642**
Fuel.....**PF827**
Comet V8-260 (4.3L) Carb.
Lube.....**B2**
Air.....**PA657**
Fuel.....**PF827**
Commuter V8-390 (6.4L) Carb.
Lube.....**B2**
Air.....**PA695**
Fuel.....**PF827**
Country Cruiser 6-200 (3.3L) Carb.
Lube.....**B2**
Fuel.....**PF827**
Country Cruiser V8-221 (3.6L) Carb.
Lube.....**B2**
Air.....**PA657**
Fuel.....**PF827**
Marauder V8-390 (6.4L) Carb.
Lube.....**B2**
Fuel.....**PF827**
Meteor 6-170 (2.8L) Carb.
Lube.....**B2**
Air.....**PA642**
Fuel.....**PF827**
Meteor 6-200 (3.3L) Carb.
Lube.....**B2**
Air.....**PA642**
Fuel.....**PF827**
Meteor V8-221 (3.6L) Carb.
Lube.....**B2**
Air.....**PA657**
Fuel.....**PF827**
Monterey V8-390 (6.4L) Carb.
Lube.....**B2**
Fuel.....**PF827**
Villager 6-144 (2.4L) Carb.
Lube.....**B2**
Air.....**PA642**
Fuel.....**PF827**
Villager V8-260 (4.3L) Carb.
Lube.....**B2**
Air.....**PA657**
Fuel.....**PF827**

1962
Colony Park 6-223 (3.7L) 1 Bbl. Carb. VIN V
Lube.....**B2**
Air.....**PA642**
Fuel.....**PF827**
Colony Park V8-292 (4.8L) 2 Bbl. Carb. VIN W
Lube.....**B2**
Fuel.....**PF827**
Colony Park V8-352 (5.8L) 2 Bbl. Carb. VIN X
Lube.....**B2**
Fuel.....**PF827**
Colony Park V8-390 (6.4L) 4 Bbl. Carb. VIN Z
Lube.....**B2**
Fuel.....**PF827**
Comet 6-144 (2.4L) 1 Bbl. Carb.
Lube.....**B2**
Air.....**PA642**

MERCURY 1962 (Cont'd.)

Comet 6-170 (2.8L) 1 Bbl. Carb. VIN U
Lube.....**B2**
Air.....**PA642**
Commuter V8-390 (6.4L) 4 Bbl. Carb. VIN Z
Lube.....**B2**
Fuel.....**PF827**
Meteor 6-170 (2.8L) 1 Bbl. Carb. VIN U
Lube.....**B2**
Air.....**PA642**
Fuel.....**PF827**
Meteor V8-221 (3.6L) 2 Bbl. Carb. VIN L
Lube.....**B2**
Air.....**PA657**
Fuel.....**PF827**
Monterey 6-223 (3.7L) 1 Bbl. Carb. VIN V
Lube.....**B2**
Air.....**PA642**
Fuel.....**PF827**
Monterey V8-292 (4.8L) 2 Bbl. Carb. VIN W
Lube.....**B2**
Fuel.....**PF827**
Monterey V8-352 (5.8L) 2 Bbl. Carb. VIN X
Lube.....**B2**
Fuel.....**PF827**
Monterey V8-390 (6.4L) 4 Bbl. Carb. VIN B,Z
Lube.....**B2**
Fuel.....**PF827**
Villager 6-144 (2.4L) 1 Bbl. Carb. VIN S
Lube.....**B2**
Air.....**PA642**
Fuel.....**PF827**

1961
Colony Park 6-223 (3.7L) 1 Bbl. Carb. VIN V
Lube.....**B2**
Air.....**PA642**
Fuel.....**BF840,-K1**
Colony Park V8-292 (4.8L) 2 Bbl. Carb. VIN W
Lube.....**B2**
Fuel.....**BF840,-K1**
Colony Park V8-352 (5.8L) 2 Bbl. Carb. VIN X
Lube.....**B2**
Fuel.....**BF840,-K1**
Comet 6-144 (2.4L) 1 Bbl. Carb. VIN S
Lube.....**B2**
Air.....**PA642**
Fuel.....**BF840,-K1**
Comet 6-170 (2.8L) 1 Bbl. Carb. VIN E
Lube.....**B2**
Air.....**PA642**
Fuel.....**BF840,-K1**
Commuter 6-223 (3.7L) 1 Bbl. Carb. VIN V
Lube.....**B2**
Air.....**PA642**
Fuel.....**BF840,-K1**
Commuter V8-292 (4.8L) 2 Bbl. Carb. VIN W
Lube.....**B2**
Fuel.....**BF840,-K1**
Commuter V8-352 (5.8L) 2 Bbl. Carb. VIN X
Lube.....**B2**
Fuel.....**BF840,-K1**

MERCURY 1961 (Cont'd.)

Commuter V8-390 (6.4L) 4 Bbl. Carb. VIN Z
Lube.....**B2**
Fuel.....**BF840,-K1**
Meteor 6-170 (2.8L) Carb.
Lube.....**B2**
Air.....**PA642**
Fuel.....**BF840,-K1**
Meteor 6-223 (3.7L) 1 Bbl. Carb. VIN V
Lube.....**B2**
Air.....**PA642**
Fuel.....**BF840,-K1**
Meteor V8-292 (4.8L) 2 Bbl. Carb. VIN W
Lube.....**B2**
Fuel.....**BF840,-K1**
Meteor V8-352 (5.8L) 2 Bbl. Carb. VIN X
Lube.....**B2**
Fuel.....**BF840,-K1**
Meteor V8-390 (6.4L) 4 Bbl. Carb. VIN Z
Lube.....**B2**
Fuel.....**BF840,-K1**
Monterey 6-223 (3.7L) 1 Bbl. Carb. VIN V
Lube.....**B2**
Air.....**PA642**
Fuel.....**BF840,-K1**
Monterey V8-292 (4.8L) 2 Bbl. Carb. VIN W
Lube.....**B2**
Fuel.....**BF840,-K1**
Monterey V8-352 (5.8L) 2 Bbl. Carb. VIN X
Lube.....**B2**
Fuel.....**BF840,-K1**

1960
Colony Park V8-312 (5.1L) Carb.
Lube.....**B2**
Air.....**PA642**
Fuel.....**BF843**
Comet 6-144 (2.4L) 1 Bbl. Carb. VIN S
Lube.....**B2**
Air.....**PA642**
Fuel.....**BF843**
Commuter V8-312 (5.1L) 2 Bbl. Carb. VIN P
Lube.....**B2**
Air.....**PA642**
Fuel.....**BF843**
Country Cruiser V8-312 (5.1L) Carb.
Lube.....**B2**
Air.....**PA642**
Fuel.....**BF843**
Montclair V8-312 (5.1L) Carb.
Lube.....**B2**
Air.....**PA642**
Fuel.....**BF843**
Monterey V8-312 (5.1L) 2 Bbl. Carb. VIN P
Lube.....**B2**
Air.....**PA642**
Fuel.....**BF843**

1959
Colony Park V8-312 (5.1L) 2 Bbl. Carb. VIN P
Lube.....**B2**
Fuel.....**PF857**
Colony Park V8-383 (6.3L) 2 Bbl. Carb. VIN N
Lube.....**B2**
Fuel.....**PF857**
Colony Park V8-430 (7.0L) 4 Bbl. Carb. VIN L
Lube.....**B2**
Fuel.....**PF827**

MERCURY 1959 (Cont'd.)

Commuter V8-312 (5.1L) 2 Bbl. Carb. VIN P
Lube.....**B2**
Fuel.....**PF857**
Commuter V8-383 (6.3L) 2 Bbl. Carb. VIN N
Lube.....**B2**
Fuel.....**PF857**
Commuter V8-430 (7.0L) 4 Bbl. Carb. VIN L
Lube.....**B2**
Fuel.....**PF827**
Country Cruiser V8-312 (5.1L) 2 Bbl. Carb. VIN P
Lube.....**B2**
Fuel.....**PF857**
Country Cruiser V8-383 (6.3L) 2 Bbl. Carb. VIN N
Lube.....**B2**
Fuel.....**PF857**
Country Cruiser V8-430 (7.0L) 4 Bbl. Carb. VIN L
Lube.....**B2**
Fuel.....**PF827**
Montclair V8-312 (5.1L) 2 Bbl. Carb. VIN P
Lube.....**B2**
Fuel.....**PF857**
Montclair V8-383 (6.3L) 4 Bbl. Carb. VIN M
Lube.....**B2**
Fuel.....**PF857**
Montclair V8-430 (7.0L) Carb.
Lube.....**B2**
Fuel.....**PF827**
Monterey V8-312 (5.1L) 2 Bbl. Carb. VIN P
Lube.....**B2**
Fuel.....**PF857**
Monterey V8-383 (6.3L) 2 Bbl. Carb. VIN N
Lube.....**B2**
Fuel.....**PF857**
Monterey V8-430 (7.0L) Carb.
Lube.....**B2**
Fuel.....**PF827**
Park Lane V8-312 (5.1L) 2 Bbl. Carb. VIN P
Lube.....**B2**
Fuel.....**PF857**
Park Lane V8-383 (6.3L) 2 Bbl. Carb. VIN N
Lube.....**B2**
Fuel.....**PF857**
Park Lane V8-430 (7.0L) Carb.
Lube.....**B2**
Fuel.....**PF827**
Voyager V8-312 (5.1L) 2 Bbl. Carb. VIN P
Lube.....**B2**
Fuel.....**PF857**
Voyager V8-383 (6.3L) 2 Bbl. Carb. VIN N
Lube.....**B2**
Fuel.....**PF857**
Voyager V8-430 (7.0L) 4 Bbl. Carb. VIN L
Lube.....**B2**
Fuel.....**PF827**

1958
Colony Park V8-383 (6.3L) 4 Bbl. Carb.
Lube.....**B2**
Fuel.....**PF857**
Colony Park V8-430 (7.0L) 4 Bbl. Carb.
Lube.....**B2**
Fuel.....**PF827**

OBS = Obsolete. Availability Limited to Distributor Stock.

MERCURY 1958 (Cont'd.)

Commuter V8-312 (5.1L) 4 Bbl. Carb.
Lube....B2
Fuel....PF857
Commuter V8-383 (6.3L) 4 Bbl. Carb.
Lube....B2
Fuel....PF857
Medalist V8-312 (5.1L) 4 Bbl. Carb.
Lube....B2
Fuel....PF857
Montclair V8-312 (5.1L) 2 Bbl. Carb.
Lube....B2
Fuel....PF857
Montclair V8-383 (6.3L) 4 Bbl. Carb.
Lube....B2
Fuel....PF857
Montclair V8-430 (7.0L) Carb.
Lube....B2
Fuel....PF827
Monterey V8-312 (5.1L) 4 Bbl. Carb.
Lube....B2
Fuel....PF857
Monterey V8-383 (6.3L) 4 Bbl. Carb.
Lube....B2
Fuel....PF857
Park Lane V8-430 (7.0L) Carb.
Lube....B2
Fuel....PF827
Voyager V8-383 (6.3L) 4 Bbl. Carb.
Lube....B2
Fuel....PF857
Voyager V8-430 (7.0L) 4 Bbl. Carb.
Lube....B2
Fuel....PF827

1957

Colony Park V8-368 (6.0L) Carb.
Lube....B2
Air....PA602
PowSteer.....P183
Commuter V8-312 (5.1L) Carb.
Lube....B2
Air....PA602
PowSteer.....P183
Commuter V8-368 (6.0L) Carb.
Lube....B2
Air....PA602
PowSteer.....P183
Montclair V8-312 (5.1L) 4 Bbl. Carb.
Lube....B2
Air....PA602
Fuel....BF840,-K1
PowSteer.....P183
Montclair V8-368 (6.0L) Carb.
Lube....B2
Air....PA602
Fuel....BF840,-K1
PowSteer.....P183
Monterey V8-312 (5.1L) 4 Bbl. Carb.
Lube....B2
Air....PA602
Fuel....BF840,-K1
PowSteer.....P183
Monterey V8-368 (6.0L) Carb.
Lube....B2
Air....PA602
Fuel....BF840,-K1
PowSteer.....P183
Turnpike Cruiser V8-368 (6.0L) 4 Bbl. Carb.
Lube....B2
Fuel....BF840,-K1
PowSteer.....P183
Voyager V8-312 (5.1L) Carb.
Lube....B2
Air....PA602
PowSteer.....P183
Voyager V8-368 (6.0L) Carb.
Lube....B2
Air....PA602
Fuel....BF840,-K1

1956

Custom V8-312 (5.1L) Carb.
Lube....P80
Fuel....BF840,-K1
PowSteer.....P183

MERCURY 1956 (Cont'd.)

Medalist V8-312 (5.1L) Carb.
Lube....P80
Fuel....BF840,-K1
PowSteer.....P183
Montclair V8-312 (5.1L) Carb.
Lube....P80
Fuel....BF840,-K1
PowSteer.....P183
Monterey V8-312 (5.1L) Carb.
Lube....P80
Fuel....BF840,-K1
PowSteer.....P183

1955

Custom V8-292 (4.8L) 4 Bbl. Carb.
Lube....P80
Fuel....BF840,-K1
PowSteer.....P183
Montclair V8-292 (4.8L) 4 Bbl. Carb.
Lube....P80
Fuel....BF840,-K1
PowSteer.....P183
Monterey V8-292 (4.8L) 4 Bbl. Carb.
Lube....P80
Fuel....BF840,-K1
PowSteer.....P183

1954

Custom V8-256 (4.2L) 4 Bbl. Carb.
Lube....P80
Fuel....BF840,-K1
PowSteer.....P183
Monterey V8-256 (4.2L) 4 Bbl. Carb.
Lube....P80
Fuel....BF840,-K1
PowSteer.....P183

1953

Monterey V8-225 (3.7L) Carb.
Lube....P41
Fuel....PF857
PowSteer.....P183

1949

Mercury V8-225 (3.7L) Carb.
Lube....P41
Fuel....PF857
PowSteer.....P183

1948

Mercury V8-239 (3.9L) 2 Bbl. Carb.
Lube....P41
PowSteer.....P183

1947

Mercury V8-239 (3.9L) 2 Bbl. Carb.
Lube....P41
PowSteer.....P183

1946

Mercury V8-239 (3.9L) 2 Bbl. Carb.
Lube....P41
PowSteer.....P183

MG

1979

MGB 4-1798cc (1.8L) Carb. VIN H
Lube....B233
Fuel....BF840,-K1
Midget 4-1493cc (1.5L) Carb. VIN A
Fuel....BF833,-K2

1978

MGB 4-1798cc (1.8L) Carb. VIN H
Lube....B233
Fuel....BF840,-K1
Midget 4-1493cc (1.5L) Carb. VIN A
Fuel....BF833,-K2

MG (Cont'd.)

1977

MGB 4-1798cc (1.8L) Carb. VIN H
Lube....B233
Fuel....BF840,-K1
Midget 4-1493cc (1.5L) Carb. VIN A
Fuel....BF833,-K2

1976

MGB 4-1798cc (1.8L) Carb. VIN H
Lube....B233
Fuel....BF840,-K1
Midget 4-1493cc (1.5L) Carb. VIN A
Fuel....BF833,-K2

1975

MGB 4-1798cc (1.8L) Carb. VIN H
Lube....B233
Fuel....BF840,-K1
Midget 4-1493cc (1.5L) Carb. VIN A
Fuel....BF833,-K2

1974

MGB 4-1798cc (1.8L) Carb. VIN H
Lube....B233
Air....[2] PA1696
Fuel....BF840,-K1
Oil Vapor....N/R
PCV....N/R
Midget 4-1275cc (1.3L) Carb. VIN A
Air....PA1697
PCV....N/R

1973

MGB 4-1798cc (1.8L) Carb.
Lube....B233
Air....[2] PA1696
Fuel....BF840,-K1
Oil Vapor....N/R
PCV....N/R
Midget 4-1275cc (1.3L) Carb.
Air....PA1697
PCV....N/R

1972

MGB, MGB GT 4-1798cc (1.8L) Carb.
Lube....B233
Air....[2] PA1696
Fuel....BF840,-K1
Oil Vapor....N/R
PCV....N/R
Midget 4-1275cc (1.3L) Carb.
Air....PA1697
PCV....N/R

1971

MGB, MGB GT 4-1798cc (1.8L) Carb.
Lube....B233
Air....[2] PA1696
Fuel....BF840,-K1
Oil Vapor....N/R
PCV....N/R
Midget 4-1275cc (1.3L) Carb.
Lube....B228
Air....[2] PA1697
PCV....N/R

1970

MGB, MGB GT 4-1798cc (1.8L) Carb.
Lube....P172
Air....[2] PA1696
Fuel....BF840,-K1
Oil Vapor....N/R
PCV....N/R
Midget 4-1275cc (1.3L) Carb.
Lube....P176
Air....[2] PA1697
Oil Vapor....N/R
PCV....N/R

MG (Cont'd.)

1969

MGB, MGB GT 4-1798cc (1.8L) Carb.
Lube....P172
Air....[2] PA1696
Fuel....BF840,-K1
Oil Vapor....N/R
PCV....N/R
MGC 6-2912cc (2.9L) Carb.
Lube....P174
Fuel....BF833,-K2
PCV....N/R
Midget 4-1275cc (1.3L) Carb.
Lube....P176
Air....[2] PA1697
Oil Vapor....N/R
PCV....N/R

1968

MGB, MGB GT 4-1798cc (1.8L) Carb.
Lube....P172
Air....[2] PA1696
Fuel....BF840,-K1
Oil Vapor....N/R
PCV....N/R
Midget 4-1275cc (1.3L) Carb.
Lube....P176
Air....[2] PA1697
Oil Vapor....N/R
PCV....N/R

1967

MGB, MGB GT 4-1798cc (1.8L) Carb.
Lube....P172
Air....[2] PA1696
Fuel....BF840,-K1
Oil Vapor....N/R
PCV....N/R
Midget 4-1275cc (1.3L) Carb.
Lube....P176
Air....[2] PA1697
Oil Vapor....N/R
PCV....N/R

1966

MGB 4-1798cc (1.8L) Carb.
Lube....P172
Air....[2] PA1696
Fuel....BF840,-K1
Oil Vapor....N/R
PCV....N/R
Midget 4-67 (1.1L) Carb.
Lube....P176
Air....PA1697
Oil Vapor....N/R
PCV....N/R

1965

MGB 4-1798cc (1.8L) Carb.
Lube....P172
Air....[2] PA1696
Fuel....BF840,-K1
Oil Vapor....N/R
PCV....N/R
Midget 4-67 (1.1L) Carb.
Lube....P176
Air....PA1697
Oil Vapor....N/R
PCV....N/R

1964

MGB 4-1798cc (1.8L) Carb.
Lube....P172
Air....[2] PA1696
Fuel....BF840,-K1
Oil Vapor....N/R
PCV....N/R
Midget 4-67 (1.1L) Carb.
Lube....P176
Air....PA1697
Oil Vapor....N/R
PCV....N/R

OBS = Obsolete. Availability Limited to Distributor Stock.

MG (Cont'd.)

1963
MGB 4-1798cc (1.8L) Carb.
Lube.....P172
Air.....[2] PA1696
Fuel.....BF840,-K1
Oil Vapor.....N/R
PCV.....N/R

Midget 4-67 (1.1L) Carb.
Lube.....P176
Air.....PA1697
Oil Vapor.....N/R
PCV.....N/R

1962
MGA 4-97 (1.6L) 2-1 Bbl. Carb.
Lube.....P172
Fuel.....BF840,-K1
Oil Vapor.....N/R
PCV.....N/R

Midget 4-58 (1.0L) 2-1 Bbl. Carb.
Lube.....P176
Oil Vapor.....N/R
PCV.....N/R

1961
MGA 4-97 (1.6L) 2-1 Bbl. Carb.
Lube.....P172
Fuel.....BF840,-K1
Oil Vapor.....N/R
PCV.....N/R

1960
MGA 4-97 (1.6L) 2-1 Bbl. Carb.
Lube.....P172
Fuel.....BF840,-K1
Oil Vapor.....N/R
PCV.....N/R

1959
MGA 4-1493cc (1.5L) 2-1 Bbl. Carb.
Lube.....P172
Fuel.....BF840,-K1
Oil Vapor.....N/R
PCV.....N/R

1958
MGA 4-1493cc (1.5L) 2-1 Bbl. Carb.
Lube.....P172
Fuel.....BF840,-K1
Oil Vapor.....N/R
PCV.....N/R

ZB 4-1493cc (1.5L) 2-1 Bbl. Carb.
Lube.....P172
Fuel.....BF840,-K1
Oil Vapor.....N/R
PCV.....N/R

1957
MGA 4-1493cc (1.5L) 2-1 Bbl. Carb.
Lube.....P172
Fuel.....BF840,-K1
Oil Vapor.....N/R
PCV.....N/R

ZB 4-1493cc (1.5L) 2-1 Bbl. Carb.
Lube.....P172
Fuel.....BF840,-K1
Oil Vapor.....N/R
PCV.....N/R

1956
MGA 4-1493cc (1.5L) 2-1 Bbl. Carb.
Lube.....P172
Fuel.....BF840,-K1
PCV.....N/R

ZA 4-1493cc (1.5L) 2-1 Bbl. Carb.
Lube.....P172
Fuel.....BF840,-K1
PCV.....N/R

MG (Cont'd.)

1955
TF 4-1466cc (1.5L) 2-1 Bbl. Carb.
Lube.....P172
Fuel.....BF840,-K1
PCV.....N/R

ZA 4-1466cc (1.5L) 2-1 Bbl. Carb.
Lube.....P172
Fuel.....BF840,-K1
PCV.....N/R

1954
TF 4-1250cc (1.3L) 2-1 Bbl. Carb.
Lube.....P172
Fuel.....BF840,-K1
PCV.....N/R

ZA 4-1466cc (1.5L) 2-1 Bbl. Carb.
Lube.....P172
Fuel.....BF840,-K1
PCV.....N/R

1953
TD 4-1250cc (1.3L) Carb.
Lube.....P172

TDC 4-1250cc (1.3L) Carb.
Lube.....P172

1952
TD 4-1250cc (1.3L) Carb.
Lube.....P172

TDC 4-1250cc (1.3L) Carb.
Lube.....P172

1951
TD 4-1250cc (1.3L) Carb.
Lube.....P172

TDC 4-1250cc (1.3L) Carb.
Lube.....P172

1950
TD 4-1250cc (1.3L) Carb.
Lube.....P172

1949
TC 4-1250cc (1.3L) Carb.
Lube.....P172

1948
TC 4-1250cc (1.3L) Carb.
Lube.....P172

1947
TC 4-1250cc (1.3L) Carb.
Lube.....P172

1946
TC 4-1250cc (1.3L) Carb.
Lube.....P172

1945
TC 4-1250cc (1.3L) Carb.
Lube.....P172

MORRIS

1971
Minor 4-848cc (.9L) Carb.
Lube.....P176
Fuel.....BF840,-K1
Trans......M.T.

Minor 4-970cc (1.0L) Carb.
Lube.....P176
Fuel.....BF840,-K1
Trans......M.T.

Minor 4-998cc (1.0L) Carb.
Lube.....P176
Fuel.....BF840,-K1
Trans......M.T.

MORRIS 1971 (Cont'd.)

Minor 4-1098cc (1.1L) Carb.
Lube.....P176
Fuel.....BF840,-K1
Trans......M.T.

Minor 4-1275cc (1.3L) Carb.
Lube.....P176
Fuel.....BF840,-K1
Trans......M.T.

1970
Minor 4-848cc (.9L) Carb.
Lube.....P176
Fuel.....BF840,-K1
Trans......M.T.

Minor 4-970cc (1.0L) Carb.
Lube.....P176
Fuel.....BF840,-K1
Trans......M.T.

Minor 4-998cc (1.0L) Carb.
Lube.....P176
Fuel.....BF840,-K1
Trans......M.T.

Minor 4-1098cc (1.1L) Carb.
Lube.....P176
Fuel.....BF840,-K1
Trans......M.T.

Minor 4-1275cc (1.3L) Carb.
Lube.....P176
Fuel.....BF840,-K1
Trans......M.T.

1969
Minor 4-848cc (.9L) Carb.
Lube.....P176
Fuel.....BF840,-K1
Trans......M.T.

Minor 4-970cc (1.0L) Carb.
Lube.....P176
Fuel.....BF840,-K1
Trans......M.T.

Minor 4-998cc (1.0L) Carb.
Lube.....P176
Fuel.....BF840,-K1
Trans......M.T.

Minor 4-1098cc (1.1L) Carb.
Lube.....P176
Fuel.....BF840,-K1
Trans......M.T.

Minor 4-1275cc (1.3L) Carb.
Lube.....P176
Fuel.....BF840,-K1
Trans......M.T.

1968
Minor 4-848cc (.9L) Carb.
Lube.....P176
Fuel.....BF840,-K1
Trans......M.T.

Minor 4-970cc (1.0L) Carb.
Lube.....P176
Fuel.....BF840,-K1
Trans......M.T.

Minor 4-998cc (1.0L) Carb.
Lube.....P176
Fuel.....BF840,-K1
Trans......M.T.

Minor 4-1098cc (1.1L) Carb.
Lube.....P176
Fuel.....BF840,-K1
Trans......M.T.

Minor 4-1275cc (1.3L) Carb.
Lube.....P176
Fuel.....BF840,-K1
Trans......M.T.

1967
Minor 4-848cc (.9L) Carb.
Lube.....P176
Fuel.....BF840,-K1
Trans......M.T.

Minor 4-970cc (1.0L) Carb.
Lube.....P176
Fuel.....BF840,-K1
Trans......M.T.

MORRIS 1967 (Cont'd.)

Minor 4-998cc (1.0L) Carb.
Lube.....P176
Fuel.....BF840,-K1
Trans......M.T.

Minor 4-1098cc (1.1L) Carb.
Lube.....P176
Fuel.....BF840,-K1
Trans......M.T.

Minor 4-1275cc (1.3L) Carb.
Lube.....P176
Fuel.....BF840,-K1
Trans......M.T.

1966
Minor 4-848cc (.9L) Carb.
Lube.....P176
Fuel.....BF840,-K1
Trans......M.T.

Minor 4-970cc (1.0L) Carb.
Lube.....P176
Fuel.....BF840,-K1
Trans......M.T.

Minor 4-998cc (1.0L) Carb.
Lube.....P176
Fuel.....BF840,-K1
Trans......M.T.

Minor 4-1098cc (1.1L) Carb.
Lube.....P176
Fuel.....BF840,-K1
Trans......M.T.

Minor 4-1275cc (1.3L) Carb.
Lube.....P176
Fuel.....BF840,-K1
Trans......M.T.

1965
Minor 4-848cc (.9L) Carb.
Lube.....P176
Fuel.....BF840,-K1
Trans......M.T.

Minor 4-970cc (1.0L) Carb.
Lube.....P176
Fuel.....BF840,-K1
Trans......M.T.

Minor 4-998cc (1.0L) Carb.
Lube.....P176
Fuel.....BF840,-K1
Trans......M.T.

Minor 4-1098cc (1.1L) Carb.
Lube.....P176
Fuel.....BF840,-K1
Trans......M.T.

Minor 4-1275cc (1.3L) Carb.
Lube.....P176
Fuel.....BF840,-K1
Trans......M.T.

1964
Minor 4-848cc (.9L) Carb.
Trans......M.T.

Minor 4-997cc (1.0L) Carb.
Trans......M.T.

Minor 4-998cc (1.0L) Carb.
Trans......M.T.

Minor 4-1098cc (1.1L) Carb.
Trans......M.T.

1963
Minor 4-848cc (.9L) Carb.
Lube.....P176
Trans......M.T.

Minor 4-997cc (1.0L) Carb.
Lube.....P176
Trans......M.T.

Minor 4-1098cc (1.1L) Carb.
Lube.....P176
Trans......M.T.

1962
Minor 4-848cc (.9L) 2 Bbl. Carb.
Lube.....P176
Fuel.....BF840,-K1
Trans......M.T.

MORRIS 1962 (Cont'd.)

Minor 4-948cc (1.0L) 2 Bbl. Carb.
Lube.....P176
Fuel.....BF840,-K1
Trans......M.T.

1961
Minor 4-848cc (.9L) 2 Bbl. Carb.
Lube.....P176
Fuel.....BF840,-K1
Trans......M.T.
Minor 4-948cc (1.0L) 2 Bbl. Carb.
Lube.....P176
Fuel.....BF840,-K1
Trans......M.T.

1960
Minor 4-848cc (.9L) 2 Bbl. Carb.
Lube.....P176
Fuel.....BF840,-K1
Trans......M.T.
Minor 4-948cc (1.0L) 2 Bbl. Carb.
Lube.....P176
Fuel.....BF840,-K1
Trans......M.T.

1959
Minor 4-948cc (1.0L) 2 Bbl. Carb.
Fuel.....BF840,-K1
Oil Vapor.....N/R
Trans......M.T.

1958
Minor 4-948cc (1.0L) 2 Bbl. Carb.
Lube.....P176
Fuel.....BF840,-K1
Trans......M.T.

1957
Minor 4-948cc (1.0L) 2 Bbl. Carb.
Lube.....P176
Fuel.....BF840,-K1
Trans......M.T.

NISSAN

1979
200SX 4-1952cc (2.0L) 2 Bbl. VIN B
Lube.....B120
Air.....PA2174
Fuel.....BF932
Trans......18015
210 4-1237cc (1.2L) Carb.
Lube.....B113
Air.....PA2031
Fuel.....BF932
210 4-1393cc (1.4L) 2 Bbl.
Lube.....B113
Air.....PA2031
Fuel.....BF932
Trans......18015
210 4-1488cc (1.5L) 2 Bbl.
Lube.....B113
Air.....PA2031
Fuel.....BF932
Trans......18015
280ZX 6-2753cc (2.8L) FI VIN E
Lube.....B120
Fuel.....BF1105
Oil Vapor.....N/R
Fuel Vapor.....SA2046
Trans......18015
310 4-1393cc (1.4L) 2 Bbl.
Lube.....B113
Air.....PA2031
Fuel (Pri.).....BF991
Fuel (Sec.).....PF861
Oil Vapor.....N/R
Trans......18015
510 4-1952cc (2.0L) 2 Bbl. VIN B
Lube.....B120
Air.....PA2174
Trans......18015

NISSAN 1979 (Cont'd.)

620 Pickup 4-1952cc (2.0L) 2 Bbl. VIN B
Lube.....B120
Air.....PA1657
Trans......18015
810 6-2393cc (2.4L) FI VIN E
Lube.....B120
Air.....PA2121
Fuel.....BF1105
Trans......18015

1978
200SX 4-1952cc (2.0L) 2 Bbl. VIN B
Lube.....B120
Air.....PA2174
Fuel.....BF932
Trans......18015
280Z 6-2753cc (2.8L) FI VIN E
Lube.....B120
Air.....PA2121
Fuel.....BF1105
Trans......18015
510 4-1952cc (2.0L) 2 Bbl. VIN B
Lube.....B120
Air.....PA2174
Fuel.....BF932
Trans......18015
620 Pickup 4-1952cc (2.0L) 2 Bbl. VIN B
Lube.....B120
Air.....PA1657
Fuel.....BF932
Trans......18015
810 6-2393cc (2.4L) FI VIN E
Lube.....B120
Air.....PA2121
Fuel.....BF1105
Trans......18015
B210 4-1393cc (1.4L) 2 Bbl.
Lube.....B113
Air.....PA2031
Fuel.....BF932
Trans......18015
F10 4-1393cc (1.4L) 2 Bbl.
Lube.....B113
Fuel.....BF932
Trans......18015

1977
200SX 4-1952cc (2.0L) 2 Bbl. VIN B
Lube.....B120
Air.....PA2174
Fuel.....BF932
Trans......18015
280Z 6-2753cc (2.8L) FI VIN E
Lube.....B120
Air.....PA2121
Fuel.....BF1105
Trans......18015
620 Pickup 4-1952cc (2.0L) 2 Bbl. VIN B
Lube.....B120
Air.....PA1657
Fuel.....BF932
Trans......18015
710 4-1952cc (2.0L) 2 Bbl. VIN B
Lube.....B120
Air.....PA2174
Fuel.....BF932
Trans......18015
810 6-2393cc (2.4L) FI VIN E
Lube.....B120
Air.....PA2121
Fuel.....BF1105
Trans......18015
B210 4-1393cc (1.4L) 2 Bbl.
Lube.....B113
Air.....PA2031
Fuel.....BF932
Trans......18015
F10 4-1393cc (1.4L) 2 Bbl.
Lube.....B113
Fuel.....BF932
Trans......18015

NISSAN (Cont'd.)

1976
280Z 6-2753cc (2.8L) FI VIN E
Lube.....B120
Air.....PA2121
Fuel.....BF1105
Trans......18015
610 4-1952cc (2.0L) 2 Bbl. VIN B
Lube.....B120
Air.....PA2174
Fuel.....BF932
Trans......18015
620 Pickup 4-1952cc (2.0L) 2 Bbl. VIN B
Lube.....B120
Air.....PA1657
Fuel.....BF932
Trans......18015
710 4-1952cc (2.0L) 2 Bbl. VIN B
Lube.....B120
Air.....PA2174
Fuel.....BF932
Trans......18015
B210 4-1393cc (1.4L) 2 Bbl.
Lube.....B113
Air.....PA2031
Fuel.....BF932
Trans......18015
F10 4-1393cc (1.4L) 2 Bbl.
Lube.....B113
Fuel.....BF932
Trans......18015

1975
260Z 6-2565cc (2.6L) Carb. VIN R
Lube.....B120
Fuel.....BF928
280Z 6-2753cc (2.8L) FI VIN E
Lube.....B120
Air.....PA2121
Fuel.....BF1105
Trans......18015
610 4-1952cc (2.0L) 2 Bbl. VIN B
Lube.....B120
Air.....PA2174
Fuel.....BF932
Trans......18015
620 Pickup 4-1952cc (2.0L) 2 Bbl. VIN B
Lube.....B120
Air.....PA1657
Fuel.....BF932
Trans......18015
710 4-1952cc (2.0L) 2 Bbl. VIN B
Lube.....B120
Air.....PA2174
Fuel.....BF932
Trans......18015
B210 4-1393cc (1.4L) 2 Bbl.
Lube.....B113
Air.....PA2031
Fuel.....BF932
Trans......18015

1974
260Z 6-2565cc (2.6L) Carb. VIN R
Lube.....B120
Fuel.....BF928
Oil Vapor.....N/R
610 4-1952cc (2.0L) Carb. VIN H
Lube.....B120
Air.....PA2174
Fuel.....BF932
Oil Vapor.....N/R
Trans......18015
620 Pickup 4-1770cc (1.8L) Carb. VIN P
Lube.....B118
Air.....PA1657
Fuel.....BF932
Oil Vapor.....N/R

NISSAN 1974 (Cont'd.)

710 4-1770cc (1.8L) Carb. VIN H
Lube.....B118
Air.....PA1657
Fuel.....BF932
Oil Vapor.....N/R
Trans......18015
B210 4-1288cc (1.3L) Carb. VIN H
Lube.....B113
Air.....PA2031
Fuel.....BF932
Oil Vapor.....N/R

1973
240Z 6-2393cc (2.4L) Carb.
Lube.....B120
Fuel.....BF928
Oil Vapor.....N/R
510 4-1595cc (1.6L) Carb.
Lube.....B120
Air.....PA1657
Fuel.....BF932
Oil Vapor.....N/R
Trans......18015
610 4-1770cc (1.8L) Carb.
Lube.....B120
Air.....PA1657
Fuel.....BF932
Oil Vapor.....N/R
Trans......18015
620 Pickup 4-1595cc (1.6L) Carb.
Lube.....B118
Air.....PA1657
Fuel.....BF932
Oil Vapor.....N/R
1200 4-1171cc (1.2L) Carb.
Lube.....B295
Air.....PA2031
Fuel.....BF932

1972
240Z 6-2393cc (2.4L) Carb.
Lube.....B120
Fuel.....BF928
Oil Vapor.....N/R
510 4-1595cc (1.6L) Carb.
Lube.....B120
Air.....PA1657
Fuel.....BF932
Oil Vapor.....N/R
521 Pickup 4-1595cc (1.6L) Carb.
Lube.....B118
Air.....PA1657
Fuel.....BF932
Oil Vapor.....N/R
620 Pickup 4-1595cc (1.6L) Carb.
Lube.....B118
Air.....PA1657
Fuel.....BF932
Oil Vapor.....N/R
1200 4-1171cc (1.2L) Carb.
Air.....PA2031

1971
240Z 6-2393cc (2.4L) Carb.
Lube.....B118
Fuel.....BF928
Oil Vapor.....N/R
Trans......18015
510 4-1595cc (1.6L) Carb.
Lube.....B118
Air.....PA1657
Fuel.....BF932
Oil Vapor.....N/R
Trans......18015
521 Pickup 4-1595cc (1.6L) Carb.
Lube.....B118
Air.....PA1657
Fuel.....BF932
Oil Vapor.....N/R
1200 4-1171cc (1.2L) Carb.
Air.....PA2031
Trans......18015

OBS = Obsolete. Availability Limited to Distributor Stock.

NISSAN (Cont'd.)

1970
240Z 6-2393cc (2.4L) Carb.
Lube....B120
Fuel....BF928
510 4-1595cc (1.6L) 2 Bbl. Carb.
Lube....B120
Air....PA1657
Fuel....BF932
521 Pickup 4-1595cc (1.6L) 2 Bbl. Carb.
Lube....B118
Air....PA1657
Fuel....BF932
1600 4-1595cc (1.6L) Carb.
Lube....B295
2000 4-1982cc (2.0L) Carb.
Lube....B295
Air....PA2174

1969
510 4-1595cc (1.6L) Carb.
Lube....B120
Air....PA1657
Fuel....BF932
521 Pickup 4-1299cc (1.3L) Carb.
Air....PA2031
1600 4-1595cc (1.6L) Carb.
Lube....B295
2000 4-1982cc (2.0L) Carb.
Lube....B295
Air....PA2174

1968
510 4-1595cc (1.6L) Carb.
Lube....B120
Air....PA1657
Fuel....BF932
520 Pickup 4-1299cc (1.3L) Carb.
Lube....B295
Air....PA2031
1600 4-1595cc (1.6L) Carb.
Lube....B295
2000 4-1982cc (2.0L) Carb.
Lube....B295
Air....PA2174

1967
411 4-1595cc (1.6L) Carb.
Lube....B295
520 Pickup 4-1299cc (1.3L) Carb.
Lube....B295
Air....PA2031
1600 4-1595cc (1.6L) Carb.
Lube....B295

1966
520 Pickup 4-1299cc (1.3L) Carb.
Lube....P174
Air....PA1657
1600 4-1595cc (1.6L) Carb.
Lube....B295

1965
410 4-1229cc (1.2L) Carb.
Lube....P174
Air....PA1657
411 4-1229cc (1.2L) Carb. VIN 1,E
Lube....B295
Air....PA1657
520 Pickup 4-1299cc (1.3L) Carb.
Lube....P174
Air....PA1657

1964
410 4-1229cc (1.2L) Carb.
Air....PA1657

1963
410 4-1229cc (1.2L) Carb.
Lube....P174
Air....PA1657

OLDSMOBILE

1979
Custom Cruiser V8-350 (5.7L) Diesel VIN N
Lube....B30
Air....PA2079
Fuel (Box-Style)....BF806
Trans.....6020
Custom Cruiser V8-350 (5.7L) 4 Bbl. VIN R
Lube....B30
Air....PA1758
Fuel....PF894,-RV
Fuel Vapor....SA2046
Trans.....6020
Custom Cruiser V8-403 (6.6L) 4 Bbl. VIN K
Lube....B30
Air....PA1758
Fuel....PF894,-RV
Fuel Vapor....SA2046
Trans.....6020
Cutlass, Cutlass Supreme V6-231 (3.8L) 2 Bbl. VIN 2,A
Lube....B43-S
Air....PA1680
Fuel....PF893,-RV
Fuel Vapor....SA2046
Trans. (TH350C, TH375B)....18031
Cutlass, Cutlass Supreme V8-260 (4.3L) 2 Bbl. VIN F
Lube....B30
Air....PA2008
Fuel....PF894,-RV
Fuel Vapor....SA2046
Trans. (TH350C, TH375B)....18031
Cutlass, Cutlass Supreme V8-260 (4.3L) Diesel VIN P
Lube....B30
Air....PA2079
Fuel (Box-Style)....BF806
Cutlass, Cutlass Supreme V8-305 (5.0L) 4 Bbl. VIN H
Lube....B27
Air....PA2008
Fuel....PF894,-RV
Oil Vapor....SA2027
Fuel Vapor....SA2046
Trans. (TH350C, TH375B)....18031
Cutlass, Cutlass Supreme V8-350 (5.7L) 4 Bbl. VIN L
Lube....B27
Air....PA2008
Fuel....PF894,-RV
Oil Vapor....SA2027
Fuel Vapor....SA2046
Trans.....18031
Cutlass, Cutlass Supreme V8-350 (5.7L) Diesel VIN N
Lube....B30
Air....PA2079
Fuel (Box-Style)....BF806
Trans.....18031
Cutlass, Cutlass Supreme V8-350 (5.7L) 4 Bbl. VIN R
Lube....B30
Air....PA1758
Fuel....PF894,-RV
Fuel Vapor....SA2046
Trans. (TH350C, TH375B)....18031
Trans. (TH400)....6020
Delta 88 V6-231 (3.8L) 2 Bbl. VIN A
Lube....B43-S
Air....PA1680
Fuel....PF893,-RV
Fuel Vapor....SA2046
Trans.....18031
Delta 88 V8-260 (4.3L) 2 Bbl. VIN F
Lube....B30
Air....PA2008
Fuel....PF894,-RV
Fuel Vapor....SA2046
Trans.....18031

OLDSMOBILE
1979 (Cont'd.)

Delta 88 V8-301 (4.9L) 2 Bbl. VIN Y
Lube....B43-S
Air....PA2006
Fuel....PF893,-RV
Oil Vapor....SA2027
Fuel Vapor....SA2046
Trans.....18031
Delta 88 V8-350 (5.7L) Diesel VIN N
Lube....B30
Air....PA2079
Fuel (Box-Style)....BF806
Trans. (TH350C, TH375B)....18031
Trans. (TH400)....6020
Delta 88 V8-350 (5.7L) 4 Bbl. VIN R
Lube....B30
Air....PA1758
Fuel....PF894,-RV
Fuel Vapor....SA2046
Trans. (TH350C, TH375B)....18031
Trans. (TH400)....6020
Delta 88 V8-403 (6.6L) 4 Bbl. VIN K
Lube....B30
Air....PA1758
Fuel....PF894,-RV
Fuel Vapor....SA2046
Trans.....18031
Ninety-Eight V8-350 (5.7L) Diesel VIN N
Lube....B30
Air....PA2079
Fuel (Box-Style)....BF806
Trans.....6020
Ninety-Eight V8-350 (5.7L) 4 Bbl. VIN R
Lube....B30
Air....PA1758
Fuel....PF894,-RV
Fuel Vapor....SA2046
Trans.....6020
Ninety-Eight V8-403 (6.6L) 4 Bbl. VIN K
Lube....B30
Air....PA1758
Fuel....PF894,-RV
Fuel Vapor....SA2046
Trans.....6020
Omega V6-231 (3.8L) 2 Bbl. VIN A
Lube....B43-S
Air....PA1680
Fuel....PF893,-RV
Fuel Vapor....SA2046
Trans.....18031
Omega V8-305 (5.0L) 2 Bbl. VIN G
Lube....B27
Air....PA1680
Fuel....PF893,-RV
Oil Vapor....SA2027
Fuel Vapor....SA2046
Trans.....18031
Omega V8-350 (5.7L) 4 Bbl. VIN L
Lube....B27
Air....PA2008
Fuel....PF894,-RV
Oil Vapor....SA2027
Fuel Vapor....SA2046
Trans.....18031
Starfire 4-151 (2.5L) 2 Bbl. VIN 1,V
Lube (Exc. Calif.)....B43-S
Lube (Calif.)....B27
Air (Exc. Calif.)....PA2082 OBS
Fuel....PF893,-RV
Oil Vapor (Exc. Calif.)....SA2027
Fuel Vapor....SA2046
Trans.....18031
Starfire V6-231 (3.8L) 2 Bbl. VIN A
Lube....B43-S
Air....PA2006
Fuel....PF893,-RV
Fuel Vapor....SA2046
Trans. (TH350C, TH375B)....18031

OLDSMOBILE
1979 (Cont'd.)

Starfire V8-305 (5.0L) 2 Bbl. VIN G
Lube....B27
Air....PA658
Fuel....PF893,-RV
Oil Vapor....SA2027
Fuel Vapor....SA2046
Trans. (TH350C, TH375B)....18031
Toronado V8-350 (5.7L) Diesel VIN N
Lube....B30
Air....PA2078 OBS
Fuel (Box-Style)....BF806
Toronado V8-350 (5.7L) 4 Bbl. VIN R
Lube....B30
Air....PA2078 OBS
Fuel....PF894,-RV
Fuel Vapor....SA2046

1978
Custom Cruiser V8-350 (5.7L) 4 Bbl. VIN R
Lube....B30
Air....PA1758
Fuel....PF894,-RV
Fuel Vapor....SA2046
Trans.....6020
Custom Cruiser V8-350 (5.7L) Diesel VIN N
Lube....B39
Air....PA2073
Fuel (Box-Style)....BF806
Trans.....6020
Custom Cruiser V8-403 (6.6L) 4 Bbl. VIN K
Lube....B30
Air....PA1758
Fuel....PF894,-RV
Fuel Vapor....SA2046
Trans.....6020
Cutlass, Cutlass Supreme V6-231 (3.8L) 2 Bbl. VIN A
Lube....B43-S
Air....PA2006
Fuel....PF893,-RV
Oil Vapor....SA2027
Fuel Vapor....SA2046
Trans. (TH350C, TH375B)....18031
Cutlass, Cutlass Supreme V8-260 (4.3L) 2 Bbl. VIN F
Lube....B30
Air....PA2008
Fuel....PF894,-RV
Fuel Vapor....SA2046
Trans. (TH350C, TH375B)....18031
Cutlass, Cutlass Supreme V8-305 (5.0L) 2,4 Bbl. VIN H,U
Lube....B27
Air (2 Bbl.)....PA2006
Air (4 Bbl.)....PA2008
Fuel (2 Bbl.)....PF893,-RV
Fuel (4 Bbl.)....PF894,-RV
Oil Vapor....SA2027
Fuel Vapor....SA2046
Trans. (TH350C, TH375B)....18031
Cutlass, Cutlass Supreme V8-350 (5.7L) 4 Bbl. VIN L
Lube....B27
Air....PA2008
Fuel....PF894,-RV
Oil Vapor....SA2027
Fuel Vapor....SA2046
Trans.....18031
Delta 88 V6-231 (3.8L) 2 Bbl. VIN A
Lube....B43-S
Air....PA1680
Fuel....PF893,-RV
Oil Vapor....SA2027
Fuel Vapor....SA2046
Trans.....18031
Delta 88 V8-260 (4.3L) 2 Bbl. VIN F
Lube....B30
Air....PA2008
Fuel....PF894,-RV
Fuel Vapor....SA2046
Trans.....18031

OLDSMOBILE
1978 (Cont'd.)

Delta 88 V8-350 (5.7L) Diesel VIN N
Lube.....B39
Air.....PA2073
Fuel (Box-Style).....BF806

Delta 88 V8-350 (5.7L) 4 Bbl. VIN R
Lube.....B30
Air.....PA1758
Fuel.....PF894,-RV
Fuel Vapor.....SA2046
Trans. (TH350C, TH375B).....18031
Trans. (TH400).....6020

Delta 88 V8-403 (6.6L) 4 Bbl. VIN K
Lube.....B30
Air.....PA1758
Fuel.....PF894,-RV
Fuel Vapor.....SA2046
Trans......18031

Ninety-Eight V8-350 (5.7L) Diesel VIN N
Lube.....B39
Air.....PA2073
Fuel (Box-Style).....BF806
Trans......6020

Ninety-Eight V8-350 (5.7L) 4 Bbl. VIN R
Lube.....B30
Air.....PA1758
Fuel.....PF894,-RV
Fuel Vapor.....SA2046
Trans......6020

Ninety-Eight V8-403 (6.6L) 4 Bbl. VIN K
Lube.....B30
Air.....PA1758
Fuel.....PF894,-RV
Fuel Vapor.....SA2046
Trans......6020

Omega V6-231 (3.8L) 2 Bbl. VIN A
Lube.....B43-S
Air.....PA1680
Fuel.....PF893,-RV
Oil Vapor.....SA2027
Fuel Vapor.....SA2046
Trans......18031

Omega V8-305 (5.0L) 2 Bbl. VIN U
Lube.....B27
Air.....PA2006
Fuel.....PF893,-RV
Oil Vapor.....SA2027
Fuel Vapor.....SA2046
Trans......18031

Omega V8-350 (5.7L) 4 Bbl. VIN L
Lube.....B27
Air.....PA2008
Fuel.....PF894,-RV
Oil Vapor.....SA2027
Fuel Vapor.....SA2046
Trans......18031

Starfire 4-151 (2.5L) 2 Bbl. VIN 1,V
Lube.....B27
Fuel.....PF893,-RV

Starfire V6-231 (3.8L) 2 Bbl. VIN A
Lube.....B43-S
Air.....PA658
Fuel.....PF893,-RV
Oil Vapor.....SA2027
Fuel Vapor.....SA2046
Trans. (TH350C, TH375B).....18031

Starfire V8-305 (5.0L) 2 Bbl. VIN U
Lube.....B27
Air.....PA2006
Fuel.....PF893,-RV
Oil Vapor.....SA2027
Fuel Vapor.....SA2046
Trans. (TH350C, TH375B).....18031

Toronado V8-403 (6.6L) 4 Bbl. VIN K
Lube.....B30
Air.....PA1758
Fuel.....PF894,-RV
Fuel Vapor.....SA2046

OLDSMOBILE (Cont'd.)

1977

Custom Cruiser V8-350 (5.7L) 4 Bbl. VIN L
Lube.....B27
Air.....PA2008
Fuel.....PF894,-RV
Oil Vapor.....SA2027
Fuel Vapor.....SA2046
Trans. (TH350C, TH375B).....18031
Trans. (TH400).....6020

Custom Cruiser V8-350 (5.7L) 4 Bbl. VIN R
Lube.....B39
Air.....PA1758
Fuel.....PF894,-RV
Fuel Vapor.....SA2046
Trans. (TH350C, TH375B).....18031
Trans. (TH400).....6020

Custom Cruiser V8-403 (6.6L) 4 Bbl. VIN K
Lube.....B39
Air.....PA1758
Fuel.....PF894,-RV
Fuel Vapor.....SA2046
Trans......18031

Cutlass, Cutlass Supreme V6-231 (3.8L) 2 Bbl. VIN C
Lube.....B43-S
Air.....PA1680
Fuel.....PF893,-RV
Oil Vapor.....SA2027
Fuel Vapor.....SA2046
Trans......18031

Cutlass, Cutlass Supreme V8-260 (4.3L) 2 Bbl. VIN F
Lube.....B39
Air.....PA1758
Fuel.....PF894,-RV
Fuel Vapor.....SA2046
Trans......18031

Cutlass, Cutlass Supreme V8-350 (5.7L) 4 Bbl. VIN R
Lube.....B39
Air.....PA1758
Fuel.....PF894,-RV
Fuel Vapor.....SA2046
Trans. (TH350C, TH375B).....18031
Trans. (TH400).....6020

Cutlass, Cutlass Supreme V8-403 (6.6L) 4 Bbl. VIN K
Lube.....B39
Air.....PA1758
Fuel.....PF894,-RV
Fuel Vapor.....SA2046
Trans......18031

Delta 88 V6-231 (3.8L) 2 Bbl. VIN A,C
Lube.....B43-S
Air.....PA1680
Fuel.....PF893,-RV
Oil Vapor.....SA2027
Fuel Vapor.....SA2046
Trans......18031

Delta 88 V8-260 (4.3L) 2 Bbl. VIN F
Lube.....B39
Air.....PA1758
Fuel.....PF894,-RV
Fuel Vapor.....SA2046

Delta 88 V8-350 (5.7L) 2 Bbl. VIN G
Lube.....B39
Air.....PA1758
Fuel.....PF894,-RV
Trans. (TH350C, TH375B).....18031
Trans. (TH400).....6020

Delta 88 V8-350 (5.7L) 4 Bbl. VIN L
Lube.....B27
Air.....PA2008
Fuel.....PF894,-RV
Oil Vapor.....SA2027
Fuel Vapor.....SA2046
Trans. (TH350C, TH375B).....18031
Trans. (TH400).....6020

OLDSMOBILE
1977 (Cont'd.)

Delta 88 V8-350 (5.7L) 4 Bbl. VIN R
Lube.....B39
Air.....PA1758
Fuel.....PF894,-RV
Fuel Vapor.....SA2046
Trans. (TH350C, TH375B).....18031
Trans. (TH400).....6020

Delta 88 V8-403 (6.6L) 4 Bbl. VIN K
Lube.....B39
Air.....PA1758
Fuel.....PF894,-RV
Fuel Vapor.....SA2046
Trans......18031

Ninety-Eight V8-350 (5.7L) 4 Bbl. VIN R
Lube.....B39
Air.....PA1758
Fuel.....PF894,-RV
Fuel Vapor.....SA2046
Trans......18031

Ninety-Eight V8-403 (6.6L) 4 Bbl. VIN K
Lube.....B39
Air.....PA1758
Fuel.....PF894,-RV
Fuel Vapor.....SA2046
Trans......6020

Omega V6-231 (3.8L) 2 Bbl. VIN C
Lube.....B43-S
Air.....PA1680
Fuel.....PF893,-RV
Oil Vapor.....SA2027
Fuel Vapor.....SA2046
Trans. (TH350C, TH375B).....18031

Omega V8-260 (4.3L) 2 Bbl. VIN F
Lube.....B39
Air.....PA1758
Fuel.....PF894,-RV
Fuel Vapor.....SA2046
Trans. (TH350C, TH375B).....18031

Omega V8-305 (5.0L) 2 Bbl. VIN U
Lube.....B27
Air.....PA2006
Fuel.....PF893,-RV
Oil Vapor.....SA2027
Fuel Vapor.....SA2046
Trans. (TH350C, TH375B).....18031

Omega V8-350 (5.7L) 4 Bbl. VIN L
Lube.....B27
Air.....PA2008
Fuel.....PF894,-RV
Oil Vapor.....SA2027
Fuel Vapor.....SA2046
Trans. (TH350C, TH375B).....18031

Omega V8-350 (5.7L) 4 Bbl. VIN R
Lube.....B39
Air.....PA1758
Fuel.....PF894,-RV
Fuel Vapor.....SA2046
Trans. (TH350C, TH375B).....18031

Starfire 4-140 (2.3L) 2 Bbl. VIN B
Lube.....B27
Fuel.....PF893,-RV
Trans......18031

Starfire V6-231 (3.8L) 2 Bbl. VIN A,C
Lube.....B43-S
Air.....PA658
Fuel.....PF893,-RV
Oil Vapor.....SA2027
Fuel Vapor.....SA2046
Trans. (TH350C, TH375B).....18031

Starfire V8-305 (5.0L) 2 Bbl. VIN U
Lube.....B27
Air.....PA2006
Fuel.....PF893,-RV
Oil Vapor.....SA2027
Fuel Vapor.....SA2046
Trans. (TH350C, TH375B).....18031

Toronado V8-350 (5.7L) 4 Bbl. VIN R
Lube.....B39
Air.....PA1758
Fuel.....PF894,-RV
Fuel Vapor.....SA2046

OLDSMOBILE
1977 (Cont'd.)

Toronado V8-403 (6.6L) 4 Bbl. VIN K
Lube.....B39
Air.....PA1758
Fuel.....PF894,-RV
Fuel Vapor.....SA2046

Vista Cruiser V8-350 (5.7L) 4 Bbl. VIN R
Lube.....B39
Air.....PA1758
Fuel.....PF894,-RV
Fuel Vapor.....SA2046
Trans......18031

Vista Cruiser V8-403 (6.6L) 4 Bbl. VIN K
Lube.....B39
Air.....PA1758
Fuel.....PF894,-RV
Fuel Vapor.....SA2046
Trans......6020

1976

Custom Cruiser V8-455 (7.5L) 4 Bbl. VIN T
Lube.....B39
Air.....PA1758
Fuel.....PF894,-RV
Fuel Vapor.....SA2046
Trans......6020

Cutlass, Cutlass Supreme 6-250 (4.1L) 2 Bbl. VIN D
Lube.....B27
Air.....PA658
Fuel.....PF893,-RV
Oil Vapor.....SA2027
Fuel Vapor.....SA2046
Trans......18031

Cutlass, Cutlass Supreme V8-260 (4.3L) 2 Bbl. VIN F
Lube.....B39
Air.....PA2008
Fuel.....PF894,-RV
Fuel Vapor.....SA2046
Trans......18031

Cutlass, Cutlass Supreme V8-350 (5.7L) 4 Bbl. VIN R
Lube.....B39
Air.....PA1758
Fuel (1 In. Ele.).....PF893,-RV
Fuel (2 1/32 In. Ele.).....PF894,-RV
Fuel Vapor.....SA2046
Trans. (TH350C, TH375B).....18031
Trans. (TH400).....6020

Cutlass, Cutlass Supreme V8-455 (7.5L) 4 Bbl. VIN T
Lube.....B39
Air.....PA1758
Fuel.....PF894,-RV
Fuel Vapor.....SA2046
Trans......6020

Delta 88 V8-350 (5.7L) 4 Bbl. VIN R
Lube.....B39
Air.....PA1758
Fuel (1 In. Ele.).....PF893,-RV
Fuel (2 1/32 In. Ele.).....PF894,-RV
Fuel Vapor.....SA2046
Trans. (TH350C, TH375B).....18031
Trans. (TH400).....6020

Delta 88 V8-455 (7.5L) 4 Bbl. VIN T
Lube.....B39
Air.....PA1758
Fuel.....PF894,-RV
Fuel Vapor.....SA2046
Trans......6020

Ninety-Eight V8-455 (7.5L) 4 Bbl. VIN T
Lube.....B39
Air.....PA1758
Fuel.....PF894,-RV
Fuel Vapor.....SA2046
Trans......6020

OBS = Obsolete. Availability Limited to Distributor Stock.

OLDSMOBILE
1976 (Cont'd.)

Omega 6-250 (4.1L) 1 Bbl. VIN D
- **Lube**....B27
- **Air**....PA658
- **Fuel**....PF893,-RV
- **Oil Vapor**....SA2027
- **Fuel Vapor**....SA2046
- **Trans.**....18031

Omega V8-260 (4.3L) 2 Bbl. VIN F
- **Lube**....B39
- **Air**....PA2008
- **Fuel**....PF894,-RV
- **Fuel Vapor**....SA2046
- **Trans.**....18031

Omega V8-350 (5.7L) 2,4 Bbl. VIN H,J
- **Lube**....B39
- **Air**....PA2006
- **Fuel (1 In. Ele.)**....PF893,-RV
- **Fuel (2 1/32 In. Ele.)**....PF894,-RV
- **Oil Vapor**....SA2027
- **Fuel Vapor**....SA2046
- **Trans.**....18031

Starfire 4-140 (2.3L) 2 Bbl. VIN B
- **Lube**....B27
- **Fuel**....PF893,-RV
- **Trans.**....18031

Starfire V6-231 (3.8L) 2 Bbl. VIN C
- **Lube**....B43-S
- **Air**....PA658
- **Fuel**....PF893,-RV
- **Oil Vapor**....SA2027
- **Fuel Vapor**....SA2046
- **Trans.**....18031

Toronado Torondao V8-455 (7.5L) 4 Bbl. VIN S
- **Lube**....B39
- **Air**....PA1758
- **Fuel**....PF894,-RV
- **Fuel Vapor**....SA2046

Vista Cruiser V8-350 (5.7L) 4 Bbl. VIN R
- **Lube**....B39
- **Air**....PA1758
- **Fuel (1 In. Ele.)**....PF893,-RV
- **Fuel (2 1/32 In. Ele.)**....PF894,-RV
- **Fuel Vapor**....SA2046
- **Trans. (TH350C, TH375B)**....18031
- **Trans. (TH400)**....6020

Vista Cruiser V8-455 (7.5L) 4 Bbl. VIN T
- **Lube**....B39
- **Air**....PA1758
- **Fuel**....PF894,-RV
- **Fuel Vapor**....SA2046
- **Trans.**....6020

1975

Custom Cruiser V8-400 (6.6L) 2,4 Bbl. VIN R,S
- **Lube**....B39
- **Air**....PA1758
- **Fuel**....PF894,-RV
- **Oil Vapor**....SA2027
- **Fuel Vapor**....SA2046
- **Trans. (TH350C, TH375B)**....18031
- **Trans. (TH400)**....6020

Custom Cruiser V8-455 (7.5L) 4 Bbl. VIN T
- **Lube**....B27
- **Air**....PA1758
- **Fuel**....PF894,-RV
- **Fuel Vapor**....SA2046
- **Trans.**....6020

Cutlass, Cutlass Supreme 6-250 (4.1L) 1 Bbl. VIN D
- **Lube**....B27
- **Air**....PA658
- **Fuel**....PF893,-RV
- **Oil Vapor**....SA2027
- **Fuel Vapor**....SA2046
- **Trans.**....18031

OLDSMOBILE
1975 (Cont'd.)

Cutlass, Cutlass Supreme V8-260 (4.3L) 2 Bbl. VIN F
- **Lube**....B39
- **Air**....PA2008
- **Fuel**....PF894,-RV
- **Fuel Vapor**....SA2046
- **Trans.**....18031

Cutlass, Cutlass Supreme V8-350 (5.7L) 4 Bbl. VIN K
- **Lube**....B39
- **Air**....PA1758
- **Fuel (1 In. Ele.)**....PF893,-RV
- **Fuel (2 1/32 In. Ele.)**....PF894,-RV
- **Fuel Vapor**....SA2046
- **Trans. (TH350C, TH375B)**....18031
- **Trans. (TH400)**....6020

Cutlass, Cutlass Supreme V8-455 (7.5L) 4 Bbl. VIN T
- **Lube**....B27
- **Air**....PA1758
- **Fuel**....PF894,-RV
- **Fuel Vapor**....SA2046
- **Trans.**....6020

Delta 88 V8-350 (5.7L) 4 Bbl. VIN K
- **Lube**....B39
- **Air**....PA1758
- **Fuel (1 In. Ele.)**....PF893,-RV
- **Fuel (2 1/32 In. Ele.)**....PF894,-RV
- **Fuel Vapor**....SA2046
- **Trans. (TH350C, TH375B)**....18031
- **Trans. (TH400)**....6020

Delta 88 V8-400 (6.6L) 2 Bbl. VIN R
- **Lube**....B39
- **Air**....PA1758
- **Fuel**....PF894,-RV
- **Oil Vapor**....SA2027
- **Fuel Vapor**....SA2046
- **Trans. (TH350C, TH375B)**....18031
- **Trans. (TH400)**....6020

Delta 88 V8-455 (7.5L) 4 Bbl. VIN T
- **Lube**....B27
- **Air**....PA1758
- **Fuel**....PF894,-RV
- **Fuel Vapor**....SA2046
- **Trans.**....6020

Ninety-Eight V8-400 (6.6L) 4 Bbl. VIN S
- **Lube**....B39
- **Air**....PA1758
- **Fuel**....PF894,-RV
- **Oil Vapor**....SA2027
- **Fuel Vapor**....SA2046
- **Trans.**....6020

Ninety-Eight V8-455 (7.5L) 4 Bbl. VIN T
- **Lube**....B27
- **Air**....PA1758
- **Fuel**....PF894,-RV
- **Fuel Vapor**....SA2046
- **Trans.**....6020

Omega 6-250 (4.1L) 1 Bbl. VIN D
- **Lube**....B27
- **Air**....PA658
- **Fuel**....PF893,-RV
- **Oil Vapor**....SA2027
- **Fuel Vapor**....SA2046
- **Trans.**....18031

Omega V8-260 (4.3L) 2 Bbl. VIN F
- **Lube**....B39
- **Air**....PA2008
- **Fuel**....PF894,-RV
- **Fuel Vapor**....SA2046
- **Trans.**....18031

Omega V8-350 (5.7L) 2,4 Bbl. VIN H,J
- **Lube**....B39
- **Air**....PA2006
- **Fuel (1 In. Ele.)**....PF893,-RV
- **Fuel (2 1/32 In. Ele.)**....PF894,-RV
- **Oil Vapor**....SA2027
- **Fuel Vapor**....SA2046
- **Trans.**....18031

OLDSMOBILE
1975 (Cont'd.)

Starfire V6-231 (3.8L) 2 Bbl. VIN C
- **Air**....PA658
- **Fuel**....PF893,-RV
- **Oil Vapor**....SA2027
- **Fuel Vapor**....SA2046
- **Trans.**....18031

Toronado V8-455 (7.5L) 4 Bbl. VIN W
- **Lube**....B27
- **Air**....PA1758
- **Fuel**....PF894,-RV
- **Fuel Vapor**....SA2046

Vista Cruiser V8-350 (5.7L) 4 Bbl. VIN K
- **Lube**....B39
- **Air**....PA1758
- **Fuel (1 In. Ele.)**....PF893,-RV
- **Fuel (2 1/32 In. Ele.)**....PF894,-RV
- **Fuel Vapor**....SA2046
- **Trans. (TH350C, TH375B)**....18031
- **Trans. (TH400)**....6020

Vista Cruiser V8-455 (7.5L) 4 Bbl. VIN T
- **Lube**....B27
- **Air**....PA1758
- **Fuel**....PF894,-RV
- **Fuel Vapor**....SA2046
- **Trans. (TH400)**....6020

1974

Custom Cruiser V8-455 (7.5L) Carb. VIN T
- **Lube**....B39
- **Air**....PA1758
- **Fuel**....PF894,-RV
- **Fuel Vapor**....SA2046
- **Trans.**....6020

Cutlass, Cutlass Supreme V8-350 (5.7L) Carb. VIN K,M
- **Lube**....B39
- **Air**....PA1758
- **Fuel**....PF894,-RV
- **Fuel Vapor**....SA2046
- **Trans. (TH350, TH375)**....6021
- **Trans. (TH400)**....6020

Cutlass, Cutlass Supreme V8-455 (7.5L) Carb. VIN U
- **Lube**....B27
- **Air**....PA1758
- **Fuel**....PF894,-RV
- **Fuel Vapor**....SA2046
- **Trans.**....6020

Delta 88 V8-350 (5.7L) Carb. VIN K
- **Lube**....B39
- **Air**....PA1758
- **Fuel**....PF894,-RV
- **Fuel Vapor**....SA2046
- **Trans. (TH350, TH375)**....6021
- **Trans. (TH400)**....6020

Delta 88 V8-455 (7.5L) Carb. VIN R,T,U
- **Lube**....B39
- **Air**....PA1758
- **Fuel**....PF894,-RV
- **Fuel Vapor**....SA2046
- **Trans.**....6020

Ninety-Eight V8-455 (7.5L) Carb. VIN T,U
- **Lube**....B39
- **Air**....PA1758
- **Fuel**....PF894,-RV
- **Fuel Vapor**....SA2046
- **Trans.**....6020

Omega 6-250 (4.1L) Carb. VIN D
- **Lube**....B27
- **Air**....PA658
- **Fuel**....PF893,-RV
- **Oil Vapor**....SA2027
- **Fuel Vapor**....SA2046
- **Trans.**....6021

OLDSMOBILE
1974 (Cont'd.)

Omega V8-350 (5.7L) Carb. VIN K
- **Lube**....B39
- **Air**....PA2006
- **Fuel**....PF894,-RV
- **Fuel Vapor**....SA2046
- **Trans.**....6021

Toronado V8-455 (7.5L) Carb. VIN W
- **Lube**....B39
- **Air**....PA1758
- **Fuel**....PF894,-RV
- **Fuel Vapor**....SA2046

Vista Cruiser V8-350 (5.7L) Carb. VIN K
- **Lube**....B39
- **Air**....PA1758
- **Fuel**....PF894,-RV
- **Fuel Vapor**....SA2046
- **Trans. (TH350, TH375)**....6021
- **Trans. (TH400)**....6020

Vista Cruiser V8-455 (7.5L) Carb. VIN U
- **Lube**....B39
- **Air**....PA1758
- **Fuel**....PF894,-RV
- **Fuel Vapor**....SA2046
- **Trans. (TH400)**....6020

1973

Custom Cruiser V8-350 (5.7L) 4 Bbl. Carb. VIN K
- **Lube**....B39
- **Air**....PA1758
- **Fuel**....PF894,-RV
- **Fuel Vapor**....SA2046
- **Trans. (TH350, TH375)**....6021
- **Trans. (TH400)**....6020

Custom Cruiser V8-455 (7.5L) Carb. VIN T
- **Lube**....B39
- **Air**....PA1758
- **Fuel**....PF894,-RV
- **Fuel Vapor**....SA2046
- **Trans.**....6020

Cutlass, Cutlass Supreme V8-350 (5.7L) 2,4 Bbl. Carb. VIN H,K
- **Lube**....B39
- **Air (2 Bbl.)**....PA2007
- **Air (4 Bbl.)**....PA1758
- **Fuel**....PF894,-RV
- **Fuel Vapor**....SA2046
- **Trans. (TH350, TH375)**....6021
- **Trans. (TH400)**....6020

Cutlass, Cutlass Supreme V8-455 (7.5L) Carb. VIN U
- **Lube**....B39
- **Air**....PA1758
- **Fuel**....PF894,-RV
- **Fuel Vapor**....SA2046
- **Trans.**....6020

Delta 88 V8-350 (5.7L) 2,4 Bbl. Carb. VIN H,K
- **Lube**....B39
- **Air (2 Bbl.)**....PA2007
- **Air (4 Bbl.)**....PA1758
- **Fuel**....PF894,-RV
- **Fuel Vapor**....SA2046
- **Trans. (TH350, TH375)**....6021
- **Trans. (TH400)**....6020

Delta 88 V8-455 (7.5L) Carb. VIN T
- **Lube**....B39
- **Air**....PA1758
- **Fuel**....PF894,-RV
- **Fuel Vapor**....SA2046
- **Trans.**....6020

Ninety-Eight V8-350 (5.7L) 2,4 Bbl. Carb. VIN H,K
- **Lube**....B39
- **Air (2 Bbl.)**....PA2007
- **Air (4 Bbl.)**....PA1758
- **Fuel**....PF894,-RV
- **Fuel Vapor**....SA2046
- **Trans. (TH350, TH375)**....6021
- **Trans. (TH400)**....6020

OBS = Obsolete. Availability Limited to Distributor Stock.

OLDSMOBILE
1973 (Cont'd.)

Ninety-Eight V8-455 (7.5L) 4 Bbl. VIN T
- **Lube**....B39
- **Air**....PA1758
- **Fuel**....PF894,-RV
- **Fuel Vapor**....SA2046
- **Trans.**....6020

Omega 6-250 (4.1L) Carb. VIN D
- **Lube**....B27
- **Air**....PA658
- **Fuel**....PF893,-RV
- **Oil Vapor**....SA2027
- **Fuel Vapor**....SA2046
- **Trans.**....6021

Omega V8-350 (5.7L) 2,4 Bbl. Carb. VIN H,K
- **Lube**....B39
- **Air (2 Bbl.)**....PA2007
- **Air (4 Bbl.)**....PA1758
- **Fuel**....PF894,-RV
- **Fuel Vapor**....SA2046
- **Trans.**....6021

Toronado V8-455 (7.5L) Carb. VIN W
- **Lube**....B39
- **Air**....PA1758
- **Fuel**....PF894,-RV
- **Fuel Vapor**....SA2046

Vista Cruiser V8-350 (5.7L) 2 Bbl. Carb. VIN H
- **Lube**....B39
- **Air**....PA2007
- **Fuel**....PF894,-RV
- **Fuel Vapor**....SA2046
- **Trans. (TH350, TH375)**....6021
- **Trans. (TH400)**....6020

Vista Cruiser V8-350 (5.7L) 4 Bbl. Carb. VIN K
- **Lube**....B39
- **Air**....PA1758
- **Fuel**....PF894,-RV
- **Fuel Vapor**....SA2046
- **Trans. (TH350, TH375)**....6021
- **Trans. (TH400)**....6020

Vista Cruiser V8-455 (7.5L) Carb. VIN U
- **Lube**....B39
- **Air**....PA1758
- **Fuel**....PF894,-RV
- **Fuel Vapor**....SA2046
- **Trans.**....6020

1972

Custom Cruiser V8-455 (7.5L) Carb. VIN T
- **Lube**....B39
- **Air**....PA1758
- **Fuel**....PF894,-RV
- **Fuel Vapor**....SA2046
- **Trans.**....6020

Cutlass, Cutlass Supreme V8-350 (5.7L) 2 Bbl. Carb. VIN H
- **Lube**....B39
- **Air**....PA2007
- **Fuel**....PF894,-RV
- **Fuel Vapor**....SA2046
- **Trans.**....6021

Cutlass, Cutlass Supreme V8-350 (5.7L) 4 Bbl. Carb. VIN K
- **Lube**....B39
- **Air**....PA1758
- **Fuel**....PF894,-RV
- **Fuel Vapor**....SA2046
- **Trans. (TH350, TH375)**....6021
- **Trans. (TH400)**....6020

Cutlass, Cutlass Supreme V8-455 (7.5L) Carb. VIN U
- **Lube**....B39
- **Air**....PA1758
- **Fuel**....PF894,-RV
- **Fuel Vapor**....SA2046
- **Trans.**....6020

OLDSMOBILE
1972 (Cont'd.)

Delta 88 V8-350 (5.7L) 2,4 Bbl. Carb. VIN H,K
- **Lube**....B39
- **Air (2 Bbl.)**....PA2007
- **Air (4 Bbl.)**....PA1758
- **Fuel**....PF894,-RV
- **Fuel Vapor**....SA2046
- **Trans. (TH350, TH375)**....6021
- **Trans. (TH400)**....6020

Delta 88 V8-455 (7.5L) 4 Bbl. Carb. VIN T
- **Lube**....B39
- **Air**....PA1758
- **Fuel**....PF894,-RV
- **Fuel Vapor**....SA2046
- **Trans. (TH350, TH375)**....6021
- **Trans. (TH400)**....6020

F85 V8-350 (5.7L) 2,4 Bbl. Carb. VIN H,K
- **Lube**....B39
- **Air (2 Bbl.)**....PA2007
- **Air (4 Bbl.)**....PA1758
- **Fuel**....PF894,-RV
- **Fuel Vapor**....SA2046
- **Trans.**....6021

F85 V8-455 (7.5L) 4 Bbl. Carb. VIN U
- **Lube**....B39
- **Air**....PA1758
- **Fuel**....PF894,-RV
- **Fuel Vapor**....SA2046
- **Trans.**....6020

Ninety-Eight V8-350 (5.7L) 2 Bbl. Carb. VIN H
- **Lube**....B39
- **Air**....PA2007
- **Fuel**....PF894,-RV
- **Fuel Vapor**....SA2046
- **Trans.**....6021

Ninety-Eight V8-455 (7.5L) 4 Bbl. VIN T
- **Lube**....B39
- **Air**....PA1758
- **Fuel**....PF894,-RV
- **Fuel Vapor**....SA2046
- **Trans.**....6020

Toronado V8-455 (7.5L) Carb. VIN W
- **Lube**....B39
- **Air**....PA1758
- **Fuel**....PF894,-RV
- **Fuel Vapor**....SA2046

Vista Cruiser V8-350 (5.7L) 2,4 Bbl. Carb. VIN H,K
- **Lube**....B39
- **Air (2 Bbl.)**....PA2007
- **Air (4 Bbl.)**....PA1758
- **Fuel**....PF894,-RV
- **Fuel Vapor**....SA2046
- **Trans. (TH350, TH375)**....6021
- **Trans. (TH400)**....6020

Vista Cruiser V8-455 (7.5L) 4 Bbl. Carb. VIN U
- **Lube**....B39
- **Air**....PA1758
- **Fuel**....PF894,-RV
- **Fuel Vapor**....SA2046
- **Trans.**....6020

1971

442 V8-455 (7.5L) Carb.
- **Lube**....B39
- **Fuel**....PF894,-RV
- **Fuel Vapor**....SA2046
- **Trans. (TH350, TH375)**....6021
- **Trans. (TH400)**....6020

Custom Cruiser V8-455 (7.5L) Carb.
- **Lube**....B39
- **Air**....PA1758
- **Fuel**....PF894,-RV
- **Fuel Vapor**....SA2046
- **Trans.**....6020

OLDSMOBILE
1971 (Cont'd.)

Cutlass, Cutlass Supreme 6-250 (4.1L) Carb.
- **Lube**....B27
- **Air**....PA658
- **Fuel**....PF893,-RV
- **Oil Vapor**....SA2027
- **Fuel Vapor**....SA2046
- **Trans.**....6021

Cutlass, Cutlass Supreme V8-350 (5.7L) 2,4 Bbl. Carb.
- **Lube**....B39
- **Air (2 Bbl.)**....PA2007
- **Air (4 Bbl.)**....PA1758
- **Fuel**....PF894,-RV
- **Fuel Vapor**....SA2046
- **Trans. (TH350, TH375)**....6021
- **Trans. (TH400)**....6020

Cutlass, Cutlass Supreme V8-455 (7.5L) 2,4 Bbl. Carb.
- **Lube**....B39
- **Air (2 Bbl.)**....PA2007
- **Air (4 Bbl.)**....PA1758
- **Fuel**....PF894,-RV
- **Fuel Vapor**....SA2046
- **Trans.**....6020

Delta 88 V8-350 (5.7L) Carb.
- **Lube**....B39
- **Air**....PA2007
- **Fuel**....PF894,-RV
- **Fuel Vapor**....SA2046
- **Trans. (TH350, TH375)**....6021
- **Trans. (TH400)**....6020

Delta 88 V8-455 (7.5L) Carb.
- **Lube**....B39
- **Air**....PA1758
- **Fuel**....PF894,-RV
- **Fuel Vapor**....SA2046
- **Trans. (TH350, TH375)**....6021
- **Trans. (TH400)**....6020

F85 6-250 (4.1L) Carb.
- **Air**....PA658
- **Fuel**....PF893,-RV
- **Oil Vapor**....SA2027
- **Fuel Vapor**....SA2046
- **Trans.**....6021

F85 V8-350 (5.7L) Carb.
- **Lube**....B39
- **Air**....PA2007
- **Fuel**....PF894,-RV
- **Fuel Vapor**....SA2046
- **Trans.**....6021

Ninety-Eight V8-455 (7.5L)
- **Lube**....B39
- **Air**....PA1758
- **Fuel**....PF894,-RV
- **Fuel Vapor**....SA2046
- **Trans.**....6020

Toronado V8-455 (7.5L) Carb.
- **Lube**....B39
- **Air**....PA1758
- **Fuel**....PF894,-RV
- **Fuel Vapor**....SA2046

Vista Cruiser V8-350 (5.7L) Carb.
- **Lube**....B39
- **Air**....PA1758
- **Fuel**....PF894,-RV
- **Fuel Vapor**....SA2046
- **Trans.**....6021

Vista Cruiser V8-455 (7.5L) 2,4 Bbl. Carb.
- **Lube**....B39
- **Air (2 Bbl.)**....PA2007
- **Air (4 Bbl.)**....PA1758
- **Fuel**....PF894,-RV
- **Fuel Vapor**....SA2046
- **Trans.**....6020

1970

442 V8-350 (5.7L) 4 Bbl. Carb.
- **Lube**....B39
- **Air**....PA1758
- **Fuel**....PF894,-RV
- **Fuel Vapor**....SA2046
- **Trans.**....6021

OLDSMOBILE
1970 (Cont'd.)

442 V8-455 (7.5L) 4 Bbl. Carb.
- **Lube**....B39
- **Air**....PA1758
- **Fuel**....PF894,-RV
- **Fuel Vapor**....SA2046
- **Trans.**....6020

Cutlass 6-250 (4.1L) 1 Bbl. Carb.
- **Lube**....B27
- **Air**....PA658
- **Fuel**....PF893,-RV
- **Fuel Vapor**....SA2046
- **Trans.**....6021

Cutlass V8-350 (5.7L) 2 Bbl. Carb.
- **Lube**....B39
- **Air**....PA2007
- **Fuel**....PF894,-RV
- **Fuel Vapor**....SA2046
- **Trans.**....6021

Cutlass V8-455 (7.5L) 2 Bbl. Carb.
- **Lube**....B39
- **Air**....PA2007
- **Fuel**....PF894,-RV
- **Fuel Vapor**....SA2046
- **Trans.**....6020

Delta 88 V8-350 (5.7L) Carb.
- **Lube**....B39
- **Fuel**....PF894,-RV
- **Fuel Vapor**....SA2046
- **Trans. (TH350, TH375)**....6021
- **Trans. (TH400)**....6020

Delta 88 V8-455 (7.5L) Carb.
- **Lube**....B39
- **Fuel**....PF894,-RV
- **Fuel Vapor**....SA2046
- **Trans. (TH350, TH375)**....6021
- **Trans. (TH400)**....6020

F85 6-250 (4.1L) 1 Bbl. Carb.
- **Lube**....B27
- **Air**....PA658
- **Fuel**....PF893,-RV
- **Oil Vapor**....SA2027
- **Fuel Vapor**....SA2046
- **Trans.**....6021

F85 V8-350 (5.7L) 2 Bbl. Carb.
- **Lube**....B39
- **Air**....PA2007
- **Fuel**....PF894,-RV
- **Fuel Vapor**....SA2046
- **Trans.**....6021

F85 V8-455 (7.5L) 2 Bbl. Carb.
- **Lube**....B39
- **Air**....PA2007
- **Fuel**....PF894,-RV
- **Fuel Vapor**....SA2046
- **Trans.**....6020

Ninety-Eight V8-455 (7.5L) 4 Bbl.
- **Lube**....B39
- **Air**....PA1758
- **Fuel**....PF894,-RV
- **Fuel Vapor**....SA2046
- **Trans.**....6020

Toronado V8-455 (7.5L) 4 Bbl. Carb.
- **Lube**....B39
- **Air**....PA1758
- **Fuel**....PF894,-RV
- **Fuel Vapor**....SA2046

Vista Cruiser V8-350 (5.7L) 2 Bbl. Carb.
- **Lube**....B39
- **Air**....PA2007
- **Fuel**....PF894,-RV
- **Fuel Vapor**....SA2046
- **Trans.**....6021

Vista Cruiser V8-455 (7.5L) 4 Bbl. Carb.
- **Lube**....B39
- **Air**....PA1758
- **Fuel**....PF894,-RV
- **Fuel Vapor**....SA2046
- **Trans.**....6020

OBS = Obsolete. Availability Limited to Distributor Stock.

OLDSMOBILE (Cont'd.)

1969

442 V8-350 (5.7L) Carb.
Lube.....B39
Air.....PA1758
Fuel.....PF894,-RV
Trans......6020

442 V8-400 (6.6L) Carb.
Lube.....B39
Air.....PA1758
Fuel.....PF894,-RV
Trans......6020

442 V8-455 (7.5L) 2,4 Bbl. Carb.
Lube.....B39
Air (2 Bbl.).....PA2007
Air (4 Bbl.).....PA1758
Fuel.....PF894,-RV
Trans......6020

Cutlass 6-250 (4.1L) Carb.
Lube.....B27
Air.....PA658
Fuel.....PF893,-RV
Oil Vapor.....SA2027
Trans......6021

Cutlass V8-350 (5.7L) 2,4 Bbl. Carb.
Lube.....B39
Air (2 Bbl.).....PA2007
Air (4 Bbl.).....PA1758
Fuel.....PF894,-RV
Trans......6020

Delta 88 V8-350 (5.7L) Carb.
Lube.....B39
Air.....PA2007
Fuel.....PF894,-RV
Trans......6020

Delta 88 V8-455 (7.5L) 2,4 Bbl. Carb.
Lube.....B39
Air (2 Bbl.).....PA2007
Air (4 Bbl.).....PA1758
Fuel.....PF894,-RV
Trans......6020

F85 6-250 (4.1L) Carb.
Lube.....B27
Air.....PA658
Fuel.....PF893,-RV
Oil Vapor.....SA2027
Trans......6021

F85 V8-350 (5.7L) 2,4 Bbl.
Lube.....B39
Air (2 Bbl.).....PA2007
Air (4 Bbl.).....PA1758
Fuel.....PF894,-RV
Trans......6020

Ninety-Eight V8-455 (7.5L) Carb.
Lube.....B39
Air.....PA1758
Fuel.....PF894,-RV
Trans......6020

Toronado V8-455 (7.5L) Carb.
Lube.....B39
Air.....PA1758
Fuel.....PF894,-RV

Vista Cruiser V8-350 (5.7L) Carb.
Lube.....B39
Air.....PA2007
Fuel.....PF894,-RV
Trans......6020

Vista Cruiser V8-400 (6.6L) Carb.
Lube.....B39
Air.....PA1758
Fuel.....PF894,-RV
Trans......6020

1968

442 V8-350 (5.7L) 2,4 Bbl. Carb.
Lube.....B39
Air (2 Bbl.).....PA2007
Air (4 Bbl.).....PA1758
Fuel.....PF894,-RV
Oil Vapor.....SA2027
Trans. (TH350, TH375).....6021
Trans. (TH400).....6020
Trans. (C-4).....6014

OLDSMOBILE
1968 (Cont'd.)

442 V8-400 (6.6L) 2,4 Bbl. Carb.
Lube.....B39
Air (2 Bbl.).....PA2007
Air (4 Bbl.).....PA1758
Fuel.....PF894,-RV
Oil Vapor.....SA2027
Trans......6020

442 V8-455 (7.5L) Carb.
Lube.....B39
Air.....PA1758
Fuel.....PF894,-RV
Oil Vapor.....SA2027
Trans......6020

Cutlass 6-250 (4.1L) Carb.
Air.....PA658
Fuel.....PF893,-RV
Oil Vapor.....SA2027
Trans......6021

Cutlass V8-350 (5.7L) 2,4 Bbl. Carb.
Lube.....B39
Air (2 Bbl.).....PA2007
Air (4 Bbl.).....PA1758
Fuel.....PF894,-RV
Oil Vapor.....SA2027
Trans......6020

Cutlass V8-400 (6.6L) Carb.
Lube.....B39
Air.....PA1758
Fuel.....PF894,-RV
Oil Vapor.....SA2027
Trans......6020

Delmont 88 V8-350 (5.7L) 2,4 Bbl. Carb.
Lube.....B39
Air (2 Bbl.).....PA2007
Air (4 Bbl.).....PA1758
Fuel.....PF894,-RV
Oil Vapor.....SA2027
Trans......6020

Delta 88 V8-350 (5.7L) 2,4 Bbl. Carb.
Lube.....B39
Air (2 Bbl.).....PA2007
Air (4 Bbl.).....PA1758
Fuel.....PF894,-RV
Oil Vapor.....SA2027
Trans. (TH350, TH375).....6021
Trans. (TH400).....6020
Trans. (C-4).....6014

Delta 88 V8-455 (7.5L) 2,4 Bbl. Carb.
Lube.....B39
Air (2 Bbl.).....PA2007
Air (4 Bbl.).....PA1758
Fuel.....PF894,-RV
Trans......6020

F85 6-250 (4.1L) Carb.
Lube.....B27
Air.....PA658
Fuel.....PF893,-RV
Oil Vapor.....SA2027
Trans......6021

F85 V8-350 (5.7L) 2,4 Bbl. Carb.
Lube.....B39
Air (2 Bbl.).....PA2007
Air (4 Bbl.).....PA1758
Fuel.....PF894,-RV
Oil Vapor.....SA2027
Trans......6020

Ninety-Eight V8-455 (7.5L) Carb.
Lube.....B39
Air.....PA1758
Fuel.....PF894,-RV
Oil Vapor.....SA2027

Toronado V8-455 (7.5L) Carb.
Lube.....B39
Air.....PA1758
Fuel.....PF894,-RV
Oil Vapor.....SA2027

Vista Cruiser V8-350 (5.7L) 2,4 Bbl. Carb.
Lube.....B39
Air (2 Bbl.).....PA2007
Air (4 Bbl.).....PA1758
Fuel.....PF894,-RV
Oil Vapor.....SA2027
Trans......6020

OLDSMOBILE
1968 (Cont'd.)

Vista Cruiser V8-400 (6.6L) 2,4 Bbl. Carb.
Lube.....B39
Air (2 Bbl.).....PA2007
Air (4 Bbl.).....PA1758
Fuel.....PF894,-RV
Oil Vapor.....SA2027
Trans......6020

1967

442 V8-400 (6.6L) Carb.
Lube.....B9
Air.....PA1758
Fuel.....PF893,-RV

Cutlass V8-330 (5.4L) Carb.
Lube.....B9
Air.....PA2007
Fuel.....PF893,-RV
Trans......6014

Cutlass V8-400 (6.6L) Carb.
Lube.....B9
Air.....PA2007
Fuel.....PF893,-RV
Trans......6013

Delmont 88 V8-330 (5.4L) Carb.
Lube.....B9
Fuel.....PF893,-RV
Oil Vapor.....SA2027
Trans......6014

Delmont 88 V8-425 (7.0L) Carb.
Lube.....B9
Air.....PA2007
Fuel.....PF893,-RV
Trans......6013

Delta 88 V8-330 (5.4L) Carb.
Lube.....B9
Air (2 Bbl.).....PA2007
Fuel.....PF893,-RV
Oil Vapor.....SA2027
Trans......6014

Delta 88 V8-425 (7.0L) Carb.
Lube.....B9
Air.....PA2007
Fuel.....PF893,-RV
Trans......6013

F85 6-250 (4.1L) Carb.
Lube.....B27
Air.....PA658
Fuel (SintBronze).....SF898
Trans......6014

F85 V8-330 (5.4L) Carb.
Lube.....B9
Air.....PA2007
Fuel.....PF893,-RV
Trans......6013

Ninety-Eight V8-425 (7.0L) Carb.
Lube.....B9
Air.....PA1758
Fuel.....PF893,-RV
Trans......6013

Toronado V8-425 (7.0L) Carb.
Lube.....B9
Air.....PA1758
Fuel.....PF893,-RV

Vista Cruiser V8-330 (5.4L) Carb.
Lube.....B9
Air.....PA2007
Fuel.....PF893,-RV
Trans......6014

1966

442 V8-400 (6.6L) Carb.
Lube.....B9
Air (M.T.).....PA1758
Fuel (SintBronze).....SF898

Cutlass V8-330 (5.4L) Carb.
Lube.....B9
Fuel (SintBronze).....SF898

Cutlass V8-400 (6.6L) Carb.
Lube.....B9
Air (M.T.).....PA1758
Fuel (SintBronze).....SF898

OLDSMOBILE
1966 (Cont'd.)

Delta 88 V8-425 (7.0L) Carb.
Lube.....B9
Air (2 Bbl.).....PA2007
Fuel (SintBronze).....SF898
Trans......6020

Dynamic V8-425 (7.0L) Carb.
Lube.....B9
Air (2 Bbl.).....PA2007
Fuel (SintBronze).....SF898
Trans. (TH400).....6020
Trans. (Early TH400).....6013

F85 6-250 (4.1L) Carb.
Lube.....B27
Air.....PA658
Fuel (SintBronze).....SF898
Trans......6014

F85 V8-330 (5.4L) Carb.
Lube.....B9
Air (2 Bbl.).....PA2007
Fuel (SintBronze).....SF898
Trans......6013

F85 V8-400 (6.6L) Carb.
Lube.....B9
Air.....PA2007
Fuel (SintBronze).....SF898
Trans......6013

Jetstar 88 V8-330 (5.4L) Carb.
Lube.....B9
Air (2 Bbl.).....PA2007
Fuel (SintBronze).....SF898
Trans......6013

Ninety-Eight V8-425 (7.0L) Carb.
Lube.....B9
Fuel (SintBronze).....SF898
Trans......6020

Starfire V8-425 (7.0L) 2,4 Bbl. Carb.
Lube.....B9
Air (2 Bbl.).....PA2007
Air (4 Bbl.).....PA1758
Fuel (SintBronze).....SF898
Trans......6020

Toronado V8-425 (7.0L) Carb.
Lube.....B9
Air.....PA1758
Fuel (SintBronze).....SF898

Vista Cruiser V8-330 (5.4L) Carb.
Lube.....B9
Air.....PA2007
Fuel (SintBronze).....SF898

1965

442 V8-400 (6.6L) Carb.
Lube.....B9
Fuel (SintBronze).....SF898
Trans. (300 Super Turbine).....6014
Trans. (TH400).....6013

Cutlass V8-330 (5.4L) Carb.
Lube.....B9
Air.....PA2007
Fuel (SintBronze).....SF898
Trans......6014

Cutlass V8-400 (6.6L) Carb.
Lube.....B9
Air.....PA1758
Fuel (SintBronze).....SF898
Trans. (300 Super Turbine).....6014
Trans. (TH400).....6013

Delta 88 V8-425 (7.0L) Carb.
Lube.....B9
Fuel (SintBronze).....SF898
Trans......6020

Dynamic V8-425 (7.0L) Carb.
Lube.....B9
Fuel (SintBronze).....SF898
Trans......6013

F85 V6-225 (3.7L) Carb.
Lube.....B9
Air.....PA658
Fuel (SintBronze).....SF898
Trans......6014

F85 V8-330 (5.4L) Carb.
Lube.....B9
Air.....PA2007
Fuel (SintBronze).....SF898
Trans......6013

OBS = Obsolete. Availability Limited to Distributor Stock.

OLDSMOBILE
1965 (Cont'd.)

F85 V8-400 (6.6L) Carb.
Lube.....B9
Fuel (SintBronze)..... SF898
Trans......6013
Jetstar 88 V8-330 (5.4L) Carb.
Lube.....B9
Air.....PA2007
Fuel (SintBronze)..... SF898
Trans......6014
Jetstar 88 V8-425 (7.0L) Carb.
Lube.....B9
Fuel (SintBronze)..... SF898
Trans......6020
Ninety-Eight V8-425 (7.0L) Carb.
Lube.....B9
Fuel (SintBronze)..... SF898
Trans......6020
Starfire V8-425 (7.0L) Carb.
Lube.....B9
Fuel (SintBronze)..... SF898
Trans......6020
Vista Cruiser V6-225 (3.7L) Carb.
Lube.....B9
Air.....PA658
Fuel (SintBronze)..... SF898
Trans......6014
Vista Cruiser V8-330 (5.4L) Carb.
Lube.....B9
Air.....PA2007
Fuel (SintBronze)..... SF898
Trans......6014

1964
Cutlass V8-330 (5.4L) Carb.
Lube.....B9
Dynamic V8-394 (6.5L) Carb.
Lube.....B9
Fuel.....PF864
F85 V6-225 (3.7L) Carb.
Lube.....B9
Air.....PA658
Fuel (SintBronze)..... SF898
F85 V8-330 (5.4L) Carb.
Lube.....B9
Air.....PA2007
Jetstar 88 V8-330 (5.4L) Carb.
Lube.....B9
Air.....PA2007
Fuel (SintBronze)..... SF898
Jetstar 88 V8-394 (6.5L) Carb.
Lube.....B9
Fuel.....PF864
Ninety-Eight V8-394 (6.5L) Carb.
Lube.....B9
Fuel.....PF864
Starfire V8-394 (6.5L) Carb.
Lube.....B9
Fuel.....PF864
Super 88 V8-394 (6.5L) Carb.
Lube.....B9
Fuel.....PF864
Vista Cruiser V6-225 (3.7L) Carb.
Lube.....B9
Air.....PA658
Fuel (SintBronze)..... SF898
Vista Cruiser V8-330 (5.4L) Carb.
Lube.....B9

1963
Cutlass V8-215 (3.5L) Carb.
Lube.....B9
Air.....PA2007
Fuel.....PF864
Dynamic V8-394 (6.5L) Carb.
Lube.....B9
Air.....PA2007
Fuel.....PF864
F85 V8-215 (3.5L) Carb.
Lube.....B9
Air.....PA2007
Fuel.....PF864
Fiesta V8-394 (6.5L) Carb.
Lube.....B9
Air.....PA2007
Fuel.....PF864

OLDSMOBILE
1963 (Cont'd.)

Jetfire V8-215 (3.5L) Carb.
Lube.....B9
Fuel.....PF864
Ninety-Eight V8-394 (6.5L) Carb.
Lube.....B9
Fuel.....PF864
Starfire V8-394 (6.5L) Carb.
Lube.....B9
Fuel.....PF864
Super 88 V8-394 (6.5L) Carb.
Lube.....B9
Fuel.....PF864

1962
Cutlass V8-215 (3.5L) Carb.
Lube.....B9
Fuel.....PF857
Dynamic V8-394 (6.5L) 2,4 Bbl. Carb.
Lube.....B9
Fuel.....PF857
F85 V8-215 (3.5L) 2,4 Bbl. Carb.
Lube.....B9
Air (2 Bbl.).....PA648
Air (4 Bbl.).....PA2007
Fiesta V8-394 (6.5L) Carb.
Lube.....B9
Fuel.....PF857
Jetfire V8-215 (3.5L) Carb.
Lube.....B9
Fuel.....PF857
Ninety-Eight V8-394 (6.5L) 4 Bbl. Carb.
Lube.....B9
Fuel.....PF857
Starfire V8-394 (6.5L) 4 Bbl. Carb.
Lube.....B9
Fuel.....PF857
Super 88 V8-394 (6.5L) 4 Bbl. Carb.
Lube.....B9
Fuel.....PF857

1961
Dynamic V8-394 (6.5L) 2,4 Bbl. Carb.
Lube.....B9
Fuel.....PF857
F85 V8-215 (3.5L) 2,4 Bbl. Carb.
Lube.....B9
Air (2 Bbl.).....PA648
Air (4 Bbl.).....PA2007
Fuel.....PF864
Fiesta V8-394 (6.5L) Carb.
Lube.....B9
Fuel.....PF857
Ninety-Eight V8-394 (6.5L) 4 Bbl. Carb.
Lube.....B9
Fuel.....PF857
Starfire V8-394 (6.5L) 4 Bbl. Carb.
Lube.....B9
Fuel.....PF857
Super 88 V8-394 (6.5L) 4 Bbl. Carb.
Lube.....B9
Fuel.....PF857

1960
Dynamic V8-371 (6.1L) 2 Bbl. Carb.
Lube.....B9
Fuel.....PF857
Dynamic V8-394 (6.5L) 4 Bbl. Carb.
Lube.....B9
Air.....PA2007
Fuel.....PF857
Fiesta V8-371 (6.1L) 2 Bbl. Carb.
Lube.....B9
Fuel.....PF857
Fiesta V8-394 (6.5L) 4 Bbl. Carb.
Lube.....B9
Air.....PA2007
Fuel.....PF857

OLDSMOBILE
1960 (Cont'd.)

Ninety-Eight V8-394 (6.5L) 4 Bbl. Carb.
Lube.....B9
Air.....PA2007
Fuel.....PF857
Super 88 V8-371 (6.1L) 2 Bbl. Carb.
Lube.....B9
Fuel.....PF857
Super 88 V8-394 (6.5L) 4 Bbl. Carb.
Lube.....B9
Air.....PA2007
Fuel.....PF857

1959
Dynamic V8-371 (6.1L) 2,4 Bbl. Carb.
Lube (Ele.).....P25
Lube (Spin-on)..... B9
Fuel.....PF857
Fiesta V8-371 (6.1L) Carb.
Lube (Ele.).....P25
Lube (Spin-on)..... B9
Fuel.....PF857
Ninety-Eight V8-371 (6.1L) Carb.
Lube (Ele.).....P25
Lube (Spin-on)..... B9
Fuel.....PF857
Super 88 V8-371 (6.1L) Carb.
Lube (Ele.).....P25
Lube (Spin-on)..... B9
Fuel.....PF857

1958
Dynamic V8-371 (6.1L) Carb.
Lube.....P25
Fuel.....PF857
Fiesta V8-371 (6.1L) Carb.
Lube.....P25
Air.....PA631
Fuel.....PF857
Ninety-Eight V8-371 (6.1L) 4 Bbl. Carb.
Lube.....P25
Fuel.....PF857
Super 88 V8-371 (6.1L) 4 Bbl. Carb.
Lube.....P25
Fuel.....PF857

1957
Eighty-Eight V8-371 (6.1L) Carb.
Lube.....P25
Fuel.....PF857
Fiesta V8-371 (6.1L) Carb.
Lube.....P25
Fuel.....PF857
Starfire V8-371 (6.1L) 4 Bbl. Carb.
Lube.....P25
Fuel.....PF857
Super 88 V8-371 (6.1L) 4 Bbl. Carb.
Lube.....P25
Fuel.....PF857

OPEL

1978
Opel Deluxe 4-1816cc (1.8L) Carb. VIN B
Lube..... B227
Air.....PA1657
Fuel..... BF840,-K1
Oil Vapor..... N/R
Fuel Vapor.....N/R
Opel Sport 4-1816cc (1.8L) Carb. VIN B
Lube..... B227
Air.....PA1657
Fuel..... BF840,-K1
Oil Vapor..... N/R
Fuel Vapor.....N/R

OPEL (Cont'd.)

1977
Opel Deluxe 4-1816cc (1.8L) Carb. VIN B
Lube..... B227
Air.....PA1657
Fuel..... BF840,-K1
Oil Vapor..... N/R
Fuel Vapor.....N/R

1976
Isuzu 4-1816cc (1.8L) Carb. VIN B
Lube..... B421
Air.....PA1657
Fuel..... BF840,-K1
Oil Vapor..... N/R
Fuel Vapor.....N/R
Opel 4-1816cc (1.8L) Carb. VIN B
Lube..... B227
Air.....PA1657
Fuel..... BF840,-K1
Oil Vapor..... N/R
Fuel Vapor.....N/R
Opel Deluxe 4-1816cc (1.8L) Carb. VIN B
Lube..... B195
Air.....PA1657
Fuel..... BF840,-K1
Oil Vapor..... N/R
Fuel Vapor.....N/R
Opel Sport 4-1816cc (1.8L) Carb. VIN B
Lube..... B195
Air.....PA1657
Fuel..... BF840,-K1
Oil Vapor..... N/R
Fuel Vapor.....N/R

1975
Manta 4-1898cc (1.9L) FI VIN N
Lube..... B228
Air.....PA2190
Oil Vapor..... N/R
Fuel Vapor.....N/R
Opel 4-1898cc (1.9L) FI
Lube..... B228
Air.....PA2190
Oil Vapor..... N/R
Fuel Vapor.....N/R

1974
1900 4-1898cc (1.9L) Carb.
Lube..... B228
Air.....PA2190
Fuel..... BF886
Oil Vapor..... N/R
Manta 4-1898cc (1.9L) Carb. VIN N
Lube..... B228
Air.....PA2190
Oil Vapor..... N/R

1973
1900 4-1898cc (1.9L) Carb. VIN N
Lube..... B228
Air.....PA2190
Fuel..... BF886
Oil Vapor..... N/R
Manta 4-1898cc (1.9L) Carb. VIN N
Lube..... B228
Air.....PA2190
Oil Vapor..... N/R
Opel GT 4-1898cc (1.9L) Carb. VIN N
Lube..... B228
Air.....PA1852
Fuel..... BF833,-K2
Oil Vapor..... N/R

1972
1900 4-1898cc (1.9L) Carb.
Lube..... B228
Oil Vapor..... N/R

OBS = Obsolete. Availability Limited to Distributor Stock.

OPEL 1972 (Cont'd.)

Kadett 4-1077cc (1.1L) Carb.
Lube..... **B228**
Air..... **PA2190**
Oil Vapor..... **N/R**
Manta 4-1897cc (1.9L) Carb. VIN N
Lube..... **B228**
Air..... **PA2190**
Fuel..... **BF833,-K2**
Opel GT 4-1898cc (1.9L) Carb.
Lube..... **B228**
Air..... **PA1852**
Fuel..... **BF840,-K1**
Oil Vapor..... **N/R**

1971
1900 4-1898cc (1.9L) Carb.
Lube..... **B228**
Fuel..... **BF840,-K1**
Oil Vapor..... **N/R**
Deluxe 4-1077cc (1.1L) Carb.
Lube..... **B228**
Fuel..... **BF833,-K2**
Kadett 4-1077cc (1.1L) Carb.
Lube..... **B228**
Oil Vapor..... **N/R**
Manta 4-1897cc (1.9L) Carb.
Lube..... **B228**
Air..... **PA2190**
Fuel..... **BF833,-K2**
Opel GT 4-1898cc (1.9L) Carb.
Lube..... **B228**
Air..... **PA1852**
Fuel..... **BF840,-K1**
Oil Vapor..... **N/R**

1970
Kadett 4-1077cc (1.1L) Carb.
Lube..... **B228**
Air..... **PA2190**
Oil Vapor..... **N/R**
Opel GT 4-1077cc (1.1L) Carb.
Lube..... **B228**
Air..... **PA1852**
Oil Vapor..... **N/R**
Ralley 4-1077cc (1.1L) Carb.
Lube..... **B228**
Air..... **PA2190**
Oil Vapor..... **N/R**

1969
Kadett 4-1077cc (1.1L) Carb.
Lube..... **B228**
Air..... **PA2063**
Oil Vapor..... **N/R**
Opel GT 4-1077cc (1.1L) Carb.
Lube..... **B228**
Air..... **PA1852**
Oil Vapor..... **N/R**
Ralley 4-1077cc (1.1L) Carb.
Lube..... **B228**
Fuel..... **BF833,-K2**

1967
Kadett 4-1077cc (1.1L) Carb.
Lube..... **B228**
Fuel..... **BF833,-K2**
Oil Vapor..... **N/R**

PEUGEOT

1979
504 4-1971cc (2.0L) FI VIN N
Lube..... **B195**
Fuel..... **BF833,-K2**
504 4-2304cc (2.3L) Diesel VIN N
Lube..... **B195**
Fuel (Can-Type)..... **BF825**
604 V6-2849cc (2.8L) FI VIN N
Lube..... **B163**
Fuel..... **BF833,-K2**

1978
504 4-1971cc (2.0L) FI VIN N
Lube..... **B195**
Fuel..... **BF833,-K2**
504 4-2304cc (2.3L) Diesel VIN N
Lube..... **B195**
Fuel (Can-Type)..... **BF825**
604 6-2664cc (2.7L) FI VIN N
Lube..... **B163**
Fuel..... **BF833,-K2**

1977
504 4-1971cc (2.0L) Carb. VIN N
Lube..... **B195**
Fuel..... **BF833,-K2**
504 4-2304cc (2.3L) FI Diesel VIN N
Lube..... **B195**
Fuel (Can-Type)..... **BF825**
604 6-2664cc (2.7L) FI VIN N
Lube..... **B163**

1976
504 4-1971cc (2.0L) Carb.
Lube..... **B195**
Fuel..... **BF833,-K2**
504 4-2112cc (2.1L) FI Diesel
Lube..... **B195**
Fuel (Can-Type)..... **BF825**

1975
504 4-1971cc (2.0L) Carb.
Lube..... **B195**
Fuel..... **BF833,-K2**
504 4-2112cc (2.1L) FI Diesel
Lube..... **B195**
Fuel (Can-Type)..... **BF825**

1974
504 4-1971cc (2.0L) Carb.
Lube..... **B195**
Fuel..... **BF833,-K2**
Oil Vapor..... **N/R**

1973
504 4-1971cc (2.0L) Carb.
Lube..... **B195**
Fuel..... **BF833,-K2**
Oil Vapor..... **N/R**

1972
304 4-1290cc (1.3L) Carb.
Lube..... **B195**
Fuel..... **BF7903**
Oil Vapor..... **N/R**
504 4-1971cc (2.0L) Carb.
Lube..... **B195**
Fuel..... **BF833,-K2**
Oil Vapor..... **N/R**

1971
304 4-1290cc (1.3L) Carb.
Lube..... **B195**
Oil Vapor..... **N/R**
504 4-1971cc (2.0L) Carb.
Lube..... **B195**
Fuel..... **BF833,-K2**
Oil Vapor..... **N/R**

1970
404 4-1796cc (1.8L) 1 Bbl. Carb.
Lube..... **B195**
Oil Vapor..... **N/R**
504 4-1796cc (1.8L) Carb.
Lube..... **B195**
Oil Vapor..... **N/R**

PEUGEOT (Cont'd.)

1969
404 4-1618cc (1.6L) Carb.
Lube..... **B195**
Fuel..... **BF833,-K2**
Oil Vapor..... **N/R**

1968
404 4-1618cc (1.6L) Carb.
Lube..... **B195**
Fuel..... **BF833,-K2**
Oil Vapor..... **N/R**

1967
404 4-1618cc (1.6L) Carb.
Lube..... **B195**
Fuel..... **BF833,-K2**
Oil Vapor..... **N/R**

PLYMOUTH

1979
Arrow 4-98 (1.6L) 2 Bbl. VIN K
Lube..... **B141**
Fuel..... **BF928**
Arrow 4-156 (2.6L) 2 Bbl. VIN F
Lube..... **B141**
Fuel..... **BF928**
Arrow Pickup 4-122 (2.0L) 2 Bbl. VIN U
Lube..... **B141**
Fuel..... **BF928**
Arrow Pickup 4-156 (2.6L) 2 Bbl. VIN W
Lube..... **B141**
Fuel..... **BF928**
Champ 4-1410cc (1.4L) 2 Bbl. VIN J
Lube..... **B173-S**
Air..... **PA2090**
Fuel..... **BF928**
Champ 4-1597cc (1.6L) 2 Bbl. VIN K
Lube..... **B173-S**
Air..... **PA2090**
Fuel..... **BF928**
Horizon 4-105 (1.7L) 2 Bbl. VIN A
Lube..... **B178**
Air..... **PA2083**
Fuel..... **PF893,-RV**
Sapporo 4-98 (1.6L) 2 Bbl. VIN K
Lube..... **B141**
Fuel..... **BF928**
Sapporo 4-156 (2.6L) 2 Bbl. VIN F
Lube..... **B141**
Fuel..... **BF928**
Trailduster 6-225 (3.7L) 1,2 Bbl. VIN B,N
Lube..... **B233**
Air..... **PA642**
Fuel (Exc. Calif.)..... **BF840,-K1**
Fuel (Calif.)..... **BF865,-K**
Oil Vapor..... **SA4141**
Fuel Vapor..... **SA2046**
Trans...... **18032**
Trailduster V8-318 (5.2L) 2,4 Bbl. VIN E,P
Lube..... **B233**
Air (2 Bbl.)..... **PA615**
Air (4 Bbl.)..... **PA2052**
Fuel (Exc. Calif.)..... **BF840,-K1**
Fuel (Calif.)..... **BF865,-K**
Oil Vapor..... **SA4141**
Fuel Vapor..... **SA2046**
Trans...... **18032**
Trailduster V8-360 (5.9L) 2 Bbl. VIN F
Lube..... **B233**
Air..... **PA615**
Fuel (Exc. Calif.)..... **BF840,-K1**
Fuel (Calif.)..... **BF865,-K**
Oil Vapor..... **SA4141**
Fuel Vapor..... **SA2046**
Trans...... **18032**

PLYMOUTH 1979 (Cont'd.)

Trailduster V8-360 (5.9L) 4 Bbl. VIN T
Lube..... **B233**
Air (2 3/4 In.)..... **PA2010**
Air (3 1/2 In.)..... **PA2052**
Fuel (Exc. Calif.)..... **BF840,-K1**
Fuel (Calif.)..... **BF865,-K**
Oil Vapor..... **SA4141**
Fuel Vapor..... **SA2046**
Trans...... **18032**
Volare 6-225 (3.7L) 1,2 Bbl. VIN C,D
Lube..... **B233**
Air..... **PA615**
Fuel (Exc. Calif.)..... **BF840,-K1**
Fuel (Calif.)..... **BF865,-K**
Oil Vapor..... **SA4141**
Fuel Vapor..... **SA2046**
Trans...... **18032**
Volare V8-318 (5.2L) 2,4 Bbl. VIN G,H
Lube..... **B233**
Air (2 Bbl.)..... **PA615**
Air (4 Bbl.)..... **PA2010**
Fuel (Exc. Calif.)..... **BF840,-K1**
Fuel (Calif.)..... **BF865,-K**
Oil Vapor..... **SA4141**
Fuel Vapor..... **SA2046**
Trans...... **18032**
Volare V8-360 (5.9L) 4 Bbl. VIN J,L
Lube..... **B233**
Air..... **PA2010**
Fuel (Exc. HiPerf. or Calif.)..... **BF840,-K1**
Fuel (Calif.)..... **BF865,-K**
Oil Vapor..... **SA4141**
Fuel Vapor..... **SA2046**
Trans...... **18032**
Voyager Van 6-225 (3.7L) 1 Bbl. VIN N
Lube..... **B233**
Air..... **PA642**
Fuel (Exc. Calif.)..... **BF840,-K1**
Fuel (Calif.)..... **BF865,-K**
Oil Vapor..... **SA4141**
Fuel Vapor..... **SA2046**
Trans...... **18032**
Voyager Van V8-318 (5.2L) 2,4 Bbl. VIN E,P
Lube..... **B233**
Air (2 Bbl.)..... **PA615**
Air (4 Bbl.)..... **PA2052**
Fuel (Exc. Calif.)..... **BF840,-K1**
Fuel (Calif.)..... **BF865,-K**
Oil Vapor..... **SA4141**
Fuel Vapor..... **SA2046**
Trans...... **18032**
Voyager Van V8-360 (5.9L) 2 Bbl. VIN F
Lube..... **B233**
Air..... **PA615**
Fuel (Exc. Calif.)..... **BF840,-K1**
Fuel (Calif.)..... **BF865,-K**
Oil Vapor..... **SA4141**
Fuel Vapor..... **SA2046**
Trans...... **18032**
Voyager Van V8-360 (5.9L) 4 Bbl. VIN T
Lube..... **B233**
Air (2 3/4 In.)..... **PA2010**
Air (3 1/2 In.)..... **PA2052**
Fuel (Exc. Calif.)..... **BF840,-K1**
Fuel (Calif.)..... **BF865,-K**
Oil Vapor..... **SA4141**
Fuel Vapor..... **SA2046**
Trans...... **18032**

1978
Arrow 4-98 (1.6L) 2 Bbl. VIN K
Lube..... **B141**
Fuel..... **BF928**
Arrow 4-122 (2.0L) 2 Bbl. VIN U
Lube..... **B141**
Fuel..... **BF928**

OBS = Obsolete. Availability Limited to Distributor Stock.

PLYMOUTH 1978 (Cont'd.)

Fury 6-225 (3.7L) 1,2 Bbl. VIN C,D
- **Lube** ... **B233**
- **Air (1 Bbl.)** ... **PA650**
- **Air (2 Bbl.)** ... **PA615**
- **Fuel (Exc. Calif.)** ... **BF840,-K1**
- **Fuel (Calif.)** ... **BF865,-K**
- **Fuel Vapor** ... **SA2046**
- **Trans.** ... **18032**

Fury V8-318 (5.2L) 2,4 Bbl. VIN G,H
- **Lube** ... **B233**
- **Air (2 Bbl.)** ... **PA615**
- **Air (4 Bbl.)** ... **PA2010**
- **Fuel (Exc. Calif.)** ... **BF840,-K1**
- **Fuel (Calif.)** ... **BF865,-K**
- **Oil Vapor** ... **SA4141**
- **Fuel Vapor** ... **SA2046**
- **Trans.** ... **18032**

Fury V8-360 (5.9L) 2,4 Bbl. VIN J,K,L
- **Lube** ... **B233**
- **Air** ... **PA2010**
- **Fuel (Exc. Calif.)** ... **BF840,-K1**
- **Fuel (Calif.)** ... **BF865,-K**
- **Oil Vapor** ... **SA4141**
- **Fuel Vapor** ... **SA2046**
- **Trans.** ... **18032**

Fury V8-400 (6.6L) 4 Bbl. VIN N,P
- **Lube** ... **B233**
- **Air** ... **PA2010**
- **Fuel (Exc. Calif.)** ... **BF840,-K1**
- **Fuel (Calif.)** ... **BF865,-K**
- **Oil Vapor** ... **SA4141**
- **Fuel Vapor** ... **SA2046**
- **Trans.** ... **18032**

Fury V8-440 (7.2L) 4 Bbl. VIN U
- **Lube** ... **B233**
- **Air** ... **PA2010**
- **Fuel (Exc. Calif.)** ... **BF840,-K1**
- **Fuel (Calif.)** ... **BF865,-K**
- **Oil Vapor** ... **SA4141**
- **Fuel Vapor** ... **SA2046**
- **Trans.** ... **18032**

Horizon 4-105 (1.7L) 2 Bbl. VIN A
- **Lube** ... **B178**
- **Air** ... **PA2083**
- **Fuel** ... **PF893,-RV**

Sapporo 4-98 (1.6L) 2 Bbl. VIN K
- **Lube** ... **B141**
- **Fuel** ... **BF928**

Sapporo 4-156 (2.6L) 2 Bbl. VIN F
- **Lube** ... **B141**
- **Fuel** ... **BF928**

Trailduster 6-225 (3.7L) 2 Bbl. VIN B
- **Lube** ... **B233**
- **Air** ... **PA1735**
- **Fuel (Exc. Calif.)** ... **BF840,-K1**
- **Fuel (Calif.)** ... **BF865,-K**
- **Fuel Vapor** ... **SA2046**
- **Trans.** ... **18032**

Trailduster V8-318 (5.2L) 2 Bbl. VIN E
- **Lube** ... **B233**
- **Air** ... **PA615**
- **Fuel (Exc. Calif.)** ... **BF840,-K1**
- **Fuel (Calif.)** ... **BF865,-K**
- **Oil Vapor** ... **SA4141**
- **Fuel Vapor** ... **SA2046**
- **Trans.** ... **18032**

Trailduster V8-360 (5.9L) 2 Bbl. VIN F
- **Lube** ... **B233**
- **Air** ... **PA2052**
- **Fuel (Exc. Calif.)** ... **BF840,-K1**
- **Fuel (Calif.)** ... **BF865,-K**
- **Oil Vapor** ... **SA4141**
- **Fuel Vapor** ... **SA2046**
- **Trans.** ... **18032**

Trailduster V8-400 (6.6L) 2 Bbl. VIN J
- **Lube** ... **B233**
- **Air** ... **PA2052**
- **Fuel (Exc. Calif.)** ... **BF840,-K1**
- **Fuel (Calif.)** ... **BF865,-K**
- **Oil Vapor** ... **SA4141**
- **Fuel Vapor** ... **SA2046**
- **Trans.** ... **18032**

PLYMOUTH 1978 (Cont'd.)

Trailduster V8-440 (7.2L) 4 Bbl. VIN D
- **Lube** ... **B233**
- **Air** ... **PA2052**
- **Fuel (Exc. Calif.)** ... **BF840,-K1**
- **Fuel (Calif.)** ... **BF865,-K**
- **Oil Vapor** ... **SA4141**
- **Fuel Vapor** ... **SA2046**
- **Trans.** ... **18032**

Volare 6-225 (3.7L) 1,2 Bbl. VIN C,D
- **Lube** ... **B233**
- **Air (1 Bbl.)** ... **PA650**
- **Air (2 Bbl.)** ... **PA615**
- **Fuel (Exc. Calif.)** ... **BF840,-K1**
- **Fuel (Calif.)** ... **BF865,-K**
- **Fuel Vapor** ... **SA2046**
- **Trans.** ... **18032**

Volare V8-318 (5.2L) 2,4 Bbl. VIN G,H
- **Lube** ... **B233**
- **Air (2 Bbl.)** ... **PA615**
- **Air (4 Bbl.)** ... **PA2010**
- **Fuel (Exc. Calif.)** ... **BF840,-K1**
- **Fuel (Calif.)** ... **BF865,-K**
- **Oil Vapor** ... **SA4141**
- **Fuel Vapor** ... **SA2046**
- **Trans.** ... **18032**

Volare V8-360 (5.9L) 2,4 Bbl. VIN K,L
- **Lube** ... **B233**
- **Air** ... **PA2010**
- **Fuel (Exc. Calif.)** ... **BF840,-K1**
- **Fuel (Calif.)** ... **BF865,-K**
- **Oil Vapor** ... **SA4141**
- **Fuel Vapor** ... **SA2046**
- **Trans.** ... **18032**

Voyager Van 6-225 (3.7L) 1,2 Bbl. VIN B
- **Lube** ... **B233**
- **Air** ... **PA1735**
- **Fuel (Exc. Calif.)** ... **BF840,-K1**
- **Fuel (Calif.)** ... **BF865,-K**
- **Fuel Vapor** ... **SA2046**
- **Trans.** ... **18032**

Voyager Van V8-318 (5.2L) 2 Bbl. VIN E
- **Lube** ... **B233**
- **Air** ... **PA615**
- **Fuel (Exc. Calif.)** ... **BF840,-K1**
- **Fuel (Calif.)** ... **BF865,-K**
- **Oil Vapor** ... **SA4141**
- **Fuel Vapor** ... **SA2046**
- **Trans.** ... **18032**

Voyager Van V8-360 (5.9L) 2 Bbl. VIN F
- **Lube** ... **B233**
- **Air** ... **PA2052**
- **Fuel (Exc. Calif.)** ... **BF840,-K1**
- **Fuel (Calif.)** ... **BF865,-K**
- **Oil Vapor** ... **SA4141**
- **Fuel Vapor** ... **SA2046**
- **Trans.** ... **18032**

Voyager Van V8-400 (6.6L) 2 Bbl. VIN J
- **Lube** ... **B233**
- **Air** ... **PA2052**
- **Fuel (Exc. Calif.)** ... **BF840,-K1**
- **Fuel (Calif.)** ... **BF865,-K**
- **Oil Vapor** ... **SA4141**
- **Fuel Vapor** ... **SA2046**
- **Trans.** ... **18032**

Voyager Van V8-440 (7.2L) 4 Bbl. VIN D
- **Lube** ... **B233**
- **Air** ... **PA2052**
- **Fuel (Exc. Calif.)** ... **BF840,-K1**
- **Fuel (Calif.)** ... **BF865,-K**
- **Oil Vapor** ... **SA4141**
- **Fuel Vapor** ... **SA2046**
- **Trans.** ... **18032**

1977

Arrow 4-98 (1.6L) 2 Bbl. VIN K
- **Lube** ... **B141**
- **Fuel** ... **BF928**

PLYMOUTH 1977 (Cont'd.)

Arrow 4-122 (2.0L) 2 Bbl. VIN U
- **Lube** ... **B141**
- **Fuel** ... **BF928**

Fury 6-225 (3.7L) 1,2 Bbl. VIN C,D
- **Lube** ... **B233**
- **Air (1 Bbl.)** ... **PA650**
- **Air (2 Bbl.)** ... **PA615**
- **Fuel (Exc. Calif.)** ... **BF840,-K1**
- **Fuel (Calif.)** ... **BF865,-K**
- **Fuel Vapor** ... **SA2046**
- **Trans.** ... **18032**

Fury V8-318 (5.2L) 2 Bbl. VIN G
- **Lube** ... **B233**
- **Air** ... **PA615**
- **Fuel (Exc. Calif.)** ... **BF840,-K1**
- **Fuel (Calif.)** ... **BF865,-K**
- **Oil Vapor** ... **SA4141**
- **Fuel Vapor** ... **SA2046**
- **Trans.** ... **18032**

Fury V8-360 (5.9L) 2,4 Bbl. VIN J,K,L
- **Lube** ... **B233**
- **Air** ... **PA2010**
- **Fuel (Exc. Calif.)** ... **BF840,-K1**
- **Fuel (Calif.)** ... **BF865,-K**
- **Oil Vapor** ... **SA4141**
- **Fuel Vapor** ... **SA2046**
- **Trans.** ... **18032**

Fury V8-400 (6.6L) 4 Bbl. VIN N,P
- **Lube** ... **B233**
- **Air (w/o Sgl. Snorkel)** ... **PA2010**
- **Air (w/Sgl. Snorkel)** ... **PA693**
- **Fuel (w/o VapDiv.)** ... **BF840,-K1**
- **Fuel (w/VapDiv.)** ... **BF865,-K**
- **Oil Vapor** ... **SA4141**
- **Fuel Vapor** ... **SA2046**
- **Trans.** ... **18032**

Fury V8-440 (7.2L) 4 Bbl. VIN U
- **Lube** ... **B233**
- **Air (w/o Sgl. Snorkel)** ... **PA2010**
- **Air (w/Sgl. Snorkel)** ... **PA693**
- **Fuel (w/o VapDiv.)** ... **BF840,-K1**
- **Fuel (w/VapDiv.)** ... **BF865,-K**
- **Oil Vapor** ... **SA4141**
- **Fuel Vapor** ... **SA2046**
- **Trans.** ... **18032**

Gran Fury V8-318 (5.2L) 2 Bbl. VIN G
- **Lube** ... **B233**
- **Air** ... **PA615**
- **Fuel (Exc. Calif.)** ... **BF840,-K1**
- **Fuel (Calif.)** ... **BF865,-K**
- **Oil Vapor** ... **SA4141**
- **Fuel Vapor** ... **SA2046**
- **Trans.** ... **18032**

Gran Fury V8-360 (5.9L) 2,4 Bbl. VIN J,K
- **Lube** ... **B233**
- **Air** ... **PA2010**
- **Fuel (Exc. Calif.)** ... **BF840,-K1**
- **Fuel (Calif.)** ... **BF865,-K**
- **Oil Vapor** ... **SA4141**
- **Fuel Vapor** ... **SA2046**
- **Trans.** ... **18032**

Gran Fury V8-400 (6.6L) 4 Bbl. VIN N,P
- **Lube** ... **B233**
- **Air (w/o Sgl. Snorkel)** ... **PA2010**
- **Air (w/Sgl. Snorkel)** ... **PA693**
- **Fuel (w/o VapDiv.)** ... **BF840,-K1**
- **Fuel (w/VapDiv.)** ... **BF865,-K**
- **Oil Vapor** ... **SA4141**
- **Fuel Vapor** ... **SA2046**
- **Trans.** ... **18032**

Gran Fury V9-440 (7.2L) 4 Bbl. VIN T,U
- **Lube** ... **B233**
- **Air (w/o Sgl. Snorkel)** ... **PA2010**
- **Air (w/Sgl. Snorkel)** ... **PA693**
- **Fuel (w/o VapDiv.)** ... **BF840,-K1**
- **Fuel (w/VapDiv.)** ... **BF865,-K**
- **Oil Vapor** ... **SA4141**
- **Fuel Vapor** ... **SA2046**
- **Trans.** ... **18032**

PLYMOUTH 1977 (Cont'd.)

Trailduster 6-225 (3.7L) 1,2 Bbl. VIN B
- **Lube** ... **B233**
- **Air** ... **PA1735**
- **Fuel (Exc. Calif.)** ... **BF840,-K1**
- **Fuel (Calif.)** ... **BF865,-K**
- **Fuel Vapor** ... **SA2046**
- **Trans.** ... **18032**

Trailduster V8-318 (5.2L) 2 Bbl. VIN E
- **Lube** ... **B233**
- **Air** ... **PA615**
- **Fuel (Exc. Calif.)** ... **BF840,-K1**
- **Fuel (Calif.)** ... **BF865,-K**
- **Oil Vapor** ... **SA4141**
- **Fuel Vapor** ... **SA2046**
- **Trans.** ... **18032**

Trailduster V8-360 (5.9L) 2 Bbl. VIN F
- **Lube** ... **B233**
- **Air** ... **PA2052**
- **Fuel (Exc. Calif.)** ... **BF840,-K1**
- **Fuel (Calif.)** ... **BF865,-K**
- **Oil Vapor** ... **SA4141**
- **Fuel Vapor** ... **SA2046**
- **Trans.** ... **18032**

Trailduster V8-400 (6.6L) 2 Bbl. VIN J
- **Lube** ... **B233**
- **Air** ... **PA2052**
- **Fuel (Exc. Calif.)** ... **BF840,-K1**
- **Fuel (Calif.)** ... **BF865,-K**
- **Oil Vapor** ... **SA4141**
- **Fuel Vapor** ... **SA2046**
- **Trans.** ... **18032**

Trailduster V8-440 (7.2L) 4 Bbl. VIN D
- **Lube** ... **B233**
- **Air** ... **PA2052**
- **Fuel (Exc. Calif.)** ... **BF840,-K1**
- **Fuel (Calif.)** ... **BF865,-K**
- **Oil Vapor** ... **SA4141**
- **Fuel Vapor** ... **SA2046**
- **Trans.** ... **18032**

Volare 6-225 (3.7L) 1,2 Bbl. VIN C,D
- **Lube** ... **B233**
- **Air (1 Bbl.)** ... **PA650**
- **Air (2 Bbl.)** ... **PA615**
- **Fuel (Exc. Calif.)** ... **BF840,-K1**
- **Fuel (Calif.)** ... **BF865,-K**
- **Fuel Vapor** ... **SA2046**
- **Trans.** ... **18032**

Volare V8-318 (5.2L) 2 Bbl. VIN G
- **Lube** ... **B233**
- **Air** ... **PA615**
- **Fuel (Exc. Calif.)** ... **BF840,-K1**
- **Fuel (Calif.)** ... **BF865,-K**
- **Oil Vapor** ... **SA4141**
- **Fuel Vapor** ... **SA2046**
- **Trans.** ... **18032**

Volare V8-360 (5.9L) 2,4 Bbl. VIN K,L
- **Lube** ... **B233**
- **Air** ... **PA2010**
- **Fuel (Exc. Calif.)** ... **BF840,-K1**
- **Fuel (Calif.)** ... **BF865,-K**
- **Oil Vapor** ... **SA4141**
- **Fuel Vapor** ... **SA2046**
- **Trans.** ... **18032**

Voyager Van 6-225 (3.7L) 1,2 Bbl. VIN B
- **Lube** ... **B233**
- **Air** ... **PA1735**
- **Fuel (Exc. Calif.)** ... **BF840,-K1**
- **Fuel (Calif.)** ... **BF865,-K**
- **Fuel Vapor** ... **SA2046**
- **Trans.** ... **18032**

Voyager Van V8-318 (5.2L) 2 Bbl. VIN E
- **Lube** ... **B233**
- **Air** ... **PA615**
- **Fuel (Exc. Calif.)** ... **BF840,-K1**
- **Fuel (Calif.)** ... **BF865,-K**
- **Oil Vapor** ... **SA4141**
- **Fuel Vapor** ... **SA2046**
- **Trans.** ... **18032**

OBS = Obsolete. Availability Limited to Distributor Stock.

PLYMOUTH 1977 (Cont'd.)

Voyager Van V8-360 (5.9L) 2 Bbl. VIN F
- **Lube** **B233**
- **Air** **PA2052**
- **Fuel (Exc. Calif.)** **BF840,-K1**
- **Fuel (Calif.)** **BF865,-K**
- **Oil Vapor** **SA4141**
- **Fuel Vapor** **SA2046**
- **Trans.** **18032**

Voyager Van V8-400 (6.6L) 2 Bbl. VIN J
- **Lube** **B233**
- **Air** **PA2052**
- **Fuel (Exc. Calif.)** **BF840,-K1**
- **Fuel (Calif.)** **BF865,-K**
- **Oil Vapor** **SA4141**
- **Fuel Vapor** **SA2046**
- **Trans.** **18032**

Voyager Van V8-440 (7.2L) 4 Bbl. VIN D
- **Lube** **B233**
- **Air** **PA2052**
- **Fuel (Exc. Calif.)** **BF840,-K1**
- **Fuel (Calif.)** **BF865,-K**
- **Oil Vapor** **SA4141**
- **Fuel Vapor** **SA2046**
- **Trans.** **18032**

1976

Arrow 4-98 (1.6L) 2 Bbl. VIN K
- **Lube** **B141**
- **Fuel** **BF928**

Arrow 4-122 (2.0L) 2 Bbl. VIN U
- **Lube** **B141**
- **Fuel** **BF928**

Duster 6-225 (3.7L) 1 Bbl. VIN C
- **Lube** **B233**
- **Air** **PA650**
- **Fuel** **BF840,-K1**
- **Fuel Vapor** **SA2046**
- **Trans.** **18032**

Duster V8-318 (5.2L) 2 Bbl. VIN G
- **Lube** **B233**
- **Air** **PA615**
- **Fuel** **BF840,-K1**
- **Oil Vapor** **SA4141**
- **Fuel Vapor** **SA2046**
- **Trans.** **18032**

Duster V8-360 (5.9L) 4 Bbl. VIN L
- **Lube** **B233**
- **Air** **PA2010**
- **Fuel (Exc. Calif.)** **BF840,-K1**
- **Oil Vapor** **SA4141**
- **Fuel Vapor** **SA2046**
- **Trans.** **18032**

Fury 6-225 (3.7L) 1 Bbl. VIN C
- **Lube** **B233**
- **Air** **PA650**
- **Fuel** **BF840,-K1**
- **Fuel Vapor** **SA2046**
- **Trans.** **18032**

Fury V8-318 (5.2L) 2 Bbl. VIN G
- **Lube** **B233**
- **Air** **PA615**
- **Fuel** **BF840,-K1**
- **Oil Vapor** **SA4141**
- **Fuel Vapor** **SA2046**
- **Trans.** **18032**

Fury V8-360 (5.9L) 2,4 Bbl. VIN J,K,L
- **Lube** **B233**
- **Air** **PA2010**
- **Fuel (Exc. Calif.)** **BF840,-K1**
- **Oil Vapor** **SA4141**
- **Fuel Vapor** **SA2046**
- **Trans.** **18032**

Fury V8-400 (6.6L) 2,4 Bbl. VIN M,N,P
- **Lube** **B233**
- **Air** **PA2010**
- **Fuel (Exc. Calif.)** **BF840,-K1**
- **Oil Vapor** **SA4141**
- **Fuel Vapor** **SA2046**
- **Trans.** **18032**

PLYMOUTH 1976 (Cont'd.)

Gran Fury V8-318 (5.2L) 2 Bbl. VIN G
- **Lube** **B233**
- **Air** **PA615**
- **Fuel** **BF840,-K1**
- **Oil Vapor** **SA4141**
- **Fuel Vapor** **SA2046**
- **Trans.** **18032**

Gran Fury V8-360 (5.9L) 2,4 Bbl. VIN J,K
- **Lube** **B233**
- **Air** **PA2010**
- **Fuel (Exc. Calif.)** **BF840,-K1**
- **Oil Vapor** **SA4141**
- **Fuel Vapor** **SA2046**
- **Trans.** **18032**

Gran Fury V8-400 (6.6L) 2,4 Bbl. VIN M,N,P
- **Lube** **B233**
- **Air** **PA2010**
- **Fuel (Exc. Calif.)** **BF840,-K1**
- **Oil Vapor** **SA4141**
- **Fuel Vapor** **SA2046**
- **Trans.** **18032**

Gran Fury V8-440 (7.2L) 4 Bbl. VIN T,U
- **Lube** **B233**
- **Air** **PA2010**
- **Fuel (Exc. Calif.)** **BF840,-K1**
- **Oil Vapor** **SA4141**
- **Fuel Vapor** **SA2046**
- **Trans.** **18032**

Scamp 6-225 (3.7L) 1 Bbl. VIN C
- **Lube** **B233**
- **Air** **PA650**
- **Fuel** **BF840,-K1**
- **Fuel Vapor** **SA2046**
- **Trans.** **18032**

Scamp V8-318 (5.2L) 2 Bbl. VIN G
- **Lube** **B233**
- **Air** **PA615**
- **Fuel** **BF840,-K1**
- **Oil Vapor** **SA4141**
- **Fuel Vapor** **SA2046**
- **Trans.** **18032**

Trailduster 6-225 (3.7L) 1 Bbl. VIN B
- **Lube** **B233**
- **Air** **PA650**
- **Fuel** **BF840,-K1**
- **Fuel Vapor** **SA2046**
- **Trans.** **18032**

Trailduster V8-318 (5.2L) 2 Bbl. VIN E
- **Lube** **B233**
- **Air** **PA615**
- **Fuel** **BF840,-K1**
- **Oil Vapor** **SA4141**
- **Fuel Vapor** **SA2046**
- **Trans.** **18032**

Trailduster V8-360 (5.9L) 2 Bbl. VIN F
- **Lube** **B233**
- **Air** **PA2052**
- **Fuel (Exc. Calif.)** **BF840,-K1**
- **Oil Vapor** **SA4141**
- **Fuel Vapor** **SA2046**
- **Trans.** **18032**

Trailduster V8-400 (6.6L) 2 Bbl. VIN J
- **Lube** **B233**
- **Air** **PA2052**
- **Fuel (Exc. Calif.)** **BF840,-K1**
- **Oil Vapor** **SA4141**
- **Fuel Vapor** **SA2046**
- **Trans.** **18032**

Trailduster V8-440 (7.2L) 4 Bbl. VIN D
- **Lube** **B233**
- **Air** **PA2052**
- **Fuel (Exc. Calif.)** **BF840,-K1**
- **Oil Vapor** **SA4141**
- **Fuel Vapor** **SA2046**
- **Trans.** **18032**

PLYMOUTH 1976 (Cont'd.)

Valiant 6-225 (3.7L) 1 Bbl. VIN C
- **Lube** **B233**
- **Air** **PA650**
- **Fuel** **BF840,-K1**
- **Fuel Vapor** **SA2046**
- **Trans.** **18032**

Valiant V8-318 (5.2L) 2 Bbl. VIN G
- **Lube** **B233**
- **Air** **PA615**
- **Fuel** **BF840,-K1**
- **Oil Vapor** **SA4141**
- **Fuel Vapor** **SA2046**
- **Trans.** **18032**

Valiant V8-360 (5.9L) 4 Bbl. VIN L
- **Lube** **B233**
- **Air** **PA2010**
- **Fuel (Exc. Calif.)** **BF840,-K1**
- **Oil Vapor** **SA4141**
- **Fuel Vapor** **SA2046**
- **Trans.** **18032**

Volare 6-225 (3.7L) 1 Bbl. VIN C
- **Lube** **B233**
- **Air** **PA650**
- **Fuel** **BF840,-K1**
- **Fuel Vapor** **SA2046**
- **Trans.** **18032**

Volare V8-318 (5.2L) 2 Bbl. VIN G
- **Lube** **B233**
- **Air** **PA615**
- **Fuel** **BF840,-K1**
- **Oil Vapor** **SA4141**
- **Fuel Vapor** **SA2046**
- **Trans.** **18032**

Volare V8-360 (5.9L) 2 Bbl. VIN K
- **Lube** **B233**
- **Air** **PA2010**
- **Fuel (Exc. Calif.)** **BF840,-K1**
- **Oil Vapor** **SA4141**
- **Fuel Vapor** **SA2046**
- **Trans.** **18032**

Voyager Van 6-225 (3.7L) 1 Bbl. VIN B
- **Lube** **B233**
- **Air** **PA650**
- **Fuel** **BF840,-K1**
- **Fuel Vapor** **SA2046**
- **Trans.** **18032**

Voyager Van V8-318 (5.2L) 2 Bbl. VIN E
- **Lube** **B233**
- **Air** **PA615**
- **Fuel** **BF840,-K1**
- **Oil Vapor** **SA4141**
- **Fuel Vapor** **SA2046**
- **Trans.** **18032**

Voyager Van V8-360 (5.9L) 2 Bbl. VIN F
- **Lube** **B233**
- **Air** **PA2052**
- **Fuel (Exc. Calif.)** **BF840,-K1**
- **Oil Vapor** **SA4141**
- **Fuel Vapor** **SA2046**
- **Trans.** **18032**

Voyager Van V8-400 (6.6L) 2 Bbl. VIN J
- **Lube** **B233**
- **Air** **PA2052**
- **Fuel (Exc. Calif.)** **BF840,-K1**
- **Oil Vapor** **SA4141**
- **Fuel Vapor** **SA2046**
- **Trans.** **18032**

Voyager Van V8-440 (7.2L) 4 Bbl. VIN D
- **Lube** **B233**
- **Air** **PA2052**
- **Fuel (Exc. Calif.)** **BF840,-K1**
- **Oil Vapor** **SA4141**
- **Fuel Vapor** **SA2046**
- **Trans.** **18032**

PLYMOUTH (Cont'd.)

1975

Duster 6-225 (3.7L) 1 Bbl. VIN C
- **Lube** **B233**
- **Air** **PA650**
- **Fuel (Exc. Calif.)** **BF840,-K1**
- **Fuel (Calif.)** **BF865,-K**
- **Fuel Vapor** **SA2046**
- **Trans.** **18032**

Duster V8-318 (5.2L) 2 Bbl. VIN G
- **Lube** **B233**
- **Air** **PA615**
- **Fuel (Exc. Calif.)** **BF840,-K1**
- **Fuel (Calif.)** **BF865,-K**
- **Oil Vapor** **SA4141**
- **Fuel Vapor** **SA2046**
- **Trans.** **18032**

Duster V8-360 (5.9L) 4 Bbl. VIN L
- **Lube** **B233**
- **Air** **PA2010**
- **Fuel (Exc. Calif.)** **BF840,-K1**
- **Fuel (Calif., Exc. HiPerf.)** **BF865,-K**
- **Oil Vapor** **SA4141**
- **Fuel Vapor** **SA2046**
- **Trans.** **18032**

Fury 6-225 (3.7L) 1 Bbl. VIN C
- **Lube** **B233**
- **Air** **PA650**
- **Fuel (Exc. Calif.)** **BF840,-K1**
- **Fuel (Calif.)** **BF865,-K**
- **Fuel Vapor** **SA2046**
- **Trans.** **18032**

Fury V8-318 (5.2L) 2 Bbl. VIN G
- **Lube** **B233**
- **Air** **PA615**
- **Fuel (Exc. Calif.)** **BF840,-K1**
- **Fuel (Calif.)** **BF865,-K**
- **Oil Vapor** **SA4141**
- **Fuel Vapor** **SA2046**
- **Trans.** **18032**

Fury V8-360 (5.9L) 2,4 Bbl. VIN J,K,L
- **Lube** **B233**
- **Air** **PA2010**
- **Fuel (Exc. Calif.)** **BF840,-K1**
- **Fuel (Calif., Exc. HiPerf.)** **BF865,-K**
- **Oil Vapor** **SA4141**
- **Fuel Vapor** **SA2046**
- **Trans.** **18032**

Fury V8-400 (6.6L) 2,4 Bbl. VIN M,N,P
- **Lube** **B233**
- **Air** **PA2010**
- **Fuel (Exc. Calif.)** **BF840,-K1**
- **Fuel (Calif., Exc. HiPerf.)** **BF865,-K**
- **Oil Vapor** **SA4141**
- **Fuel Vapor** **SA2046**
- **Trans.** **18032**

Fury V8-440 (7.2L) 4 Bbl. VIN U
- **Lube** **B233**
- **Air** **PA2010**
- **Fuel (Exc. Calif.)** **BF840,-K1**
- **Fuel (Calif., Exc. HiPerf.)** **BF865,-K**
- **Oil Vapor** **SA4141**
- **Fuel Vapor** **SA2046**
- **Trans.** **18032**

Gran Fury V8-318 (5.2L) 2 Bbl. VIN G
- **Lube** **B233**
- **Air** **PA615**
- **Fuel (Exc. Calif.)** **BF840,-K1**
- **Fuel (Calif.)** **BF865,-K**
- **Oil Vapor** **SA4141**
- **Fuel Vapor** **SA2046**
- **Trans.** **18032**

Gran Fury V8-360 (5.9L) 2,4 Bbl. VIN J,K
- **Lube** **B233**
- **Air** **PA2010**
- **Fuel (Exc. Calif.)** **BF840,-K1**
- **Fuel (Calif., Exc. HiPerf.)** **BF865,-K**
- **Oil Vapor** **SA4141**
- **Fuel Vapor** **SA2046**
- **Trans.** **18032**

OBS = Obsolete. Availability Limited to Distributor Stock.

PLYMOUTH 1975 (Cont'd.)

Gran Fury V8-400 (6.6L) 2,4 Bbl.
VIN M,N,P
Lube..... **B233**
Air..... **PA2010**
Fuel (Exc. Calif.)..... **BF840,-K1**
Fuel (Calif., Exc. HiPerf.)..... **BF865,-K**
Oil Vapor..... **SA4141**
Fuel Vapor..... **SA2046**
Trans...... **18032**

Gran Fury V8-440 (7.2L) 4 Bbl.
VIN T,U
Lube..... **B233**
Air..... **PA2010**
Fuel (Exc. Calif.)..... **BF840,-K1**
Fuel (Calif., Exc. HiPerf.)..... **BF865,-K**
Oil Vapor..... **SA4141**
Fuel Vapor..... **SA2046**
Trans...... **18032**

Roadrunner V8-318 (5.2L) 2 Bbl.
VIN G
Lube..... **B233**
Air..... **PA615**
Fuel (Exc. Calif.)..... **BF840,-K1**
Fuel (Calif.)..... **BF865,-K**
Oil Vapor..... **SA4141**
Fuel Vapor..... **SA2046**
Trans...... **18032**

Roadrunner V8-360 (5.9L) 2,4 Bbl.
VIN K,L
Lube..... **B233**
Air..... **PA2010**
Fuel (Exc. Calif.)..... **BF840,-K1**
Fuel (Calif., Exc. HiPerf.)..... **BF865,-K**
Oil Vapor..... **SA4141**
Fuel Vapor..... **SA2046**
Trans...... **18032**

Roadrunner V8-400 (6.6L) 2,4 Bbl.
VIN M,N,P
Lube..... **B233**
Air..... **PA2010**
Fuel (Exc. Calif.)..... **BF840,-K1**
Fuel (Calif., Exc. HiPerf.)..... **BF865,-K**
Oil Vapor..... **SA4141**
Fuel Vapor..... **SA2046**
Trans...... **18032**

Scamp 6-225 (3.7L) 1 Bbl. VIN C
Lube..... **B233**
Air..... **PA650**
Fuel (Exc. Calif.)..... **BF840,-K1**
Fuel (Calif.)..... **BF865,-K**
Fuel Vapor..... **SA2046**
Trans...... **18032**

Scamp V8-318 (5.2L) 2 Bbl. VIN G
Lube..... **B233**
Air..... **PA615**
Fuel (Exc. Calif.)..... **BF840,-K1**
Fuel (Calif.)..... **BF865,-K**
Oil Vapor..... **SA4141**
Fuel Vapor..... **SA2046**
Trans...... **18032**

Trailduster 6-225 (3.7L) 1 Bbl. VIN B
Lube..... **B233**
Air..... **PA650**
Fuel (Exc. Calif.)..... **BF840,-K1**
Fuel (Calif.)..... **BF865,-K**
Fuel Vapor..... **SA2046**
Trans...... **18032**

Trailduster V8-318 (5.2L) 2 Bbl.
VIN E
Lube..... **B233**
Air..... **PA615**
Fuel (Exc. Calif.)..... **BF840,-K1**
Fuel (Calif.)..... **BF865,-K**
Oil Vapor..... **SA4141**
Fuel Vapor..... **SA2046**
Trans...... **18032**

PLYMOUTH 1975 (Cont'd.)

Trailduster V8-360 (5.9L) 2 Bbl.
VIN F
Lube..... **B233**
Air..... **PA2052**
Fuel (Exc. Calif.)..... **BF840,-K1**
Fuel (Calif., Exc. HiPerf.)..... **BF865,-K**
Oil Vapor..... **SA4141**
Fuel Vapor..... **SA2046**
Trans...... **18032**

Trailduster V8-440 (7.2L) 4 Bbl.
VIN D
Lube..... **B233**
Air..... **PA2052**
Fuel (Exc. Calif.)..... **BF840,-K1**
Fuel (Calif., Exc. HiPerf.)..... **BF865,-K**
Oil Vapor..... **SA4141**
Fuel Vapor..... **SA2046**
Trans...... **18032**

Valiant 6-225 (3.7L) 1 Bbl. VIN C
Lube..... **B233**
Air..... **PA650**
Fuel (Exc. Calif.)..... **BF840,-K1**
Fuel (Calif.)..... **BF865,-K**
Fuel Vapor..... **SA2046**
Trans...... **18032**

Valiant V8-318 (5.2L) 2 Bbl. VIN G
Lube..... **B233**
Air..... **PA615**
Fuel (Exc. Calif.)..... **BF840,-K1**
Fuel (Calif.)..... **BF865,-K**
Oil Vapor..... **SA4141**
Fuel Vapor..... **SA2046**
Trans...... **18032**

Voyager Van 6-225 (3.7L) 1 Bbl.
VIN B
Lube..... **B233**
Air..... **PA650**
Fuel (Exc. Calif.)..... **BF840,-K1**
Fuel (Calif.)..... **BF865,-K**
Fuel Vapor..... **SA2046**
Trans...... **18032**

Voyager Van V8-318 (5.2L) 2 Bbl.
VIN E
Lube..... **B233**
Air..... **PA615**
Fuel (Exc. Calif.)..... **BF840,-K1**
Fuel (Calif.)..... **BF865,-K**
Oil Vapor..... **SA4141**
Fuel Vapor..... **SA2046**
Trans...... **18032**

Voyager Van V8-360 (5.9L) 2 Bbl.
VIN F
Lube..... **B233**
Air..... **PA2052**
Fuel (Exc. Calif.)..... **BF840,-K1**
Fuel (Calif., Exc. HiPerf.)..... **BF865,-K**
Oil Vapor..... **SA4141**
Fuel Vapor..... **SA2046**
Trans...... **18032**

1974

Barracuda, Cuda V8-318 (5.2L)
Carb. VIN G
Lube..... **B233**
Air..... **PA615**
Fuel..... **BF840,-K1**
Oil Vapor..... **SA4141**
Fuel Vapor..... **SA2046**
Trans...... **18032**

Barracuda, Cuda V8-360 (5.9L)
Carb. VIN L
Lube..... **B233**
Air..... **PA2010**
Fuel..... **BF840,-K1**
Oil Vapor..... **SA4141**
Fuel Vapor..... **SA2046**
Trans...... **18032**

PLYMOUTH 1974 (Cont'd.)

Duster 6-198 (3.2L) Carb. VIN B
Lube..... **B233**
Air..... **PA650**
Fuel..... **BF840,-K1**
Oil Vapor..... **SA4141**
Fuel Vapor..... **SA2046**
Trans...... **18032**

Duster 6-225 (3.7L) Carb. VIN C
Lube..... **B233**
Air..... **PA650**
Fuel..... **BF840,-K1**
Oil Vapor..... **SA4141**
Fuel Vapor..... **SA2046**
Trans...... **18032**

Duster V8-318 (5.2L) Carb. VIN G
Lube..... **B233**
Air..... **PA615**
Fuel..... **BF840,-K1**
Oil Vapor..... **SA4141**
Fuel Vapor..... **SA2046**
Trans...... **18032**

Duster V8-360 (5.9L) Carb. VIN L
Lube..... **B233**
Air..... **PA2010**
Fuel..... **BF840,-K1**
Oil Vapor..... **SA4141**
Fuel Vapor..... **SA2046**
Trans...... **18032**

Fury V8-360 (5.9L) 2,4 Bbl. Carb.
VIN J,K,L
Lube..... **B233**
Air..... **PA2010**
Fuel..... **BF840,-K1**
Oil Vapor..... **SA4141**
Fuel Vapor..... **SA2046**
Trans...... **18032**

Fury V8-400 (6.6L) 2,4 Bbl. Carb.
VIN M,N,P
Lube..... **B233**
Air..... **PA2010**
Fuel..... **BF840,-K1**
Oil Vapor..... **SA4141**
Fuel Vapor..... **SA2046**
Trans...... **18032**

Fury V8-440 (7.2L) 4 Bbl. Carb.
VIN U
Lube..... **B233**
Air..... **PA2010**
Fuel..... **BF840,-K1**
Oil Vapor..... **SA4141**
Fuel Vapor..... **SA2046**
Trans...... **18032**

Gran Fury V8-360 (5.9L) 2,4 Bbl.
Carb. VIN J,K
Lube..... **B233**
Air..... **PA2010**
Fuel..... **BF840,-K1**
Oil Vapor..... **SA4141**
Fuel Vapor..... **SA2046**
Trans...... **18032**

Gran Fury V8-400 (6.6L) 2,4 Bbl.
Carb. VIN M,N,P
Lube..... **B233**
Air..... **PA2010**
Fuel..... **BF840,-K1**
Oil Vapor..... **SA4141**
Fuel Vapor..... **SA2046**
Trans...... **18032**

Gran Fury V8-440 (7.2L) 4 Bbl.
Carb. VIN T
Lube..... **B233**
Air..... **PA2010**
Fuel..... **BF840,-K1**
Oil Vapor..... **SA4141**
Fuel Vapor..... **SA2046**
Trans...... **18032**

Roadrunner V8-318 (5.2L) Carb.
VIN G
Lube..... **B233**
Air..... **PA615**
Fuel..... **BF840,-K1**
Oil Vapor..... **SA4141**
Fuel Vapor..... **SA2046**
Trans...... **18032**

PLYMOUTH 1974 (Cont'd.)

Roadrunner V8-360 (5.9L) Carb.
VIN L
Lube..... **B233**
Air..... **PA2010**
Fuel..... **BF840,-K1**
Oil Vapor..... **SA4141**
Fuel Vapor..... **SA2046**
Trans...... **18032**

Roadrunner V8-400 (6.6L) Carb.
VIN P
Lube..... **B233**
Air..... **PA2010**
Fuel..... **BF840,-K1**
Oil Vapor..... **SA4141**
Fuel Vapor..... **SA2046**
Trans...... **18032**

Roadrunner V8-440 (7.2L) Carb.
VIN U
Lube..... **B233**
Air..... **PA2010**
Fuel..... **BF840,-K1**
Oil Vapor..... **SA4141**
Fuel Vapor..... **SA2046**
Trans...... **18032**

Satellite 6-225 (3.7L) Carb. VIN C
Lube..... **B233**
Air..... **PA650**
Fuel..... **BF840,-K1**
Oil Vapor..... **SA4141**
Fuel Vapor..... **SA2046**
Trans...... **18032**

Satellite V8-318 (5.2L) Carb. VIN G
Lube..... **B233**
Air..... **PA615**
Fuel..... **BF840,-K1**
Oil Vapor..... **SA4141**
Fuel Vapor..... **SA2046**
Trans...... **18032**

Satellite V8-360 (5.9L) Carb. VIN J,K
Lube..... **B253**
Air..... **PA2010**
Fuel..... **BF840,-K1**
Oil Vapor..... **SA4141**
Fuel Vapor..... **SA2046**
Trans...... **18032**

Satellite V8-400 (6.6L) Carb. VIN N,P
Lube..... **B233**
Air..... **PA2010**
Fuel..... **BF840,-K1**
Oil Vapor..... **SA4141**
Fuel Vapor..... **SA2046**
Trans...... **18032**

Satellite V8-440 (7.2L) Carb. VIN U
Lube..... **B233**
Air..... **PA2010**
Fuel..... **BF840,-K1**
Oil Vapor..... **SA4141**
Fuel Vapor..... **SA2046**
Trans...... **18032**

Scamp 6-198 (3.2L) Carb. VIN B
Lube..... **B233**
Air..... **PA650**
Fuel..... **BF840,-K1**
Oil Vapor..... **SA4141**
Fuel Vapor..... **SA2046**
Trans...... **18032**

Scamp 6-225 (3.7L) Carb. VIN C
Lube..... **B233**
Air..... **PA650**
Fuel..... **BF840,-K1**
Oil Vapor..... **SA4141**
Fuel Vapor..... **SA2046**
Trans...... **18032**

Scamp V8-318 (5.2L) Carb. VIN G
Lube..... **B233**
Air..... **PA615**
Fuel..... **BF840,-K1**
Oil Vapor..... **SA4141**
Fuel Vapor..... **SA2046**
Trans...... **18032**

Trailduster V8-318 (5.2L) Carb.
VIN E
Air..... **PA615**
Fuel..... **BF840,-K1**
Oil Vapor..... **SA4141**
Fuel Vapor..... **SA2046**
Trans...... **18032**

OBS = Obsolete. Availability Limited to Distributor Stock.

PLYMOUTH 1974 (Cont'd.)

Trailduster V8-360 (5.9L) 2,4 Bbl. Carb. VIN F,T
- **Air**.....PA2052
- **Fuel**.....BF840,-K1
- **Oil Vapor**.....SA4141
- **Fuel Vapor**.....SA2046
- **Trans.**.....18032

Trailduster V8-440 (7.2L) 4 Bbl. Carb. VIN D
- **Air**.....PA2052
- **Fuel**.....BF840,-K1
- **Oil Vapor**.....SA4141
- **Fuel Vapor**.....SA2046
- **Trans.**.....18032

Valiant 6-198 (3.2L) Carb. VIN B
- **Lube**.....B233
- **Air**.....PA650
- **Fuel**.....BF840,-K1
- **Oil Vapor**.....SA4141
- **Fuel Vapor**.....SA2046
- **Trans.**.....18032

Valiant 6-225 (3.7L) Carb. VIN C
- **Lube**.....B233
- **Air**.....PA650
- **Fuel**.....BF840,-K1
- **Oil Vapor**.....SA4141
- **Fuel Vapor**.....SA2046
- **Trans.**.....18032

Valiant V8-318 (5.2L) Carb. VIN G
- **Lube**.....B233
- **Air**.....PA615
- **Fuel**.....BF840,-K1
- **Oil Vapor**.....SA4141
- **Fuel Vapor**.....SA2046
- **Trans.**.....18032

Voyager Van 6-225 (3.7L) Carb. VIN B
- **Air**.....PA650
- **Fuel**.....BF840,-K1
- **Oil Vapor**.....SA4141
- **Fuel Vapor**.....SA2046
- **Trans.**.....18032

Voyager Van V8-318 (5.2L) Carb. VIN E
- **Air**.....PA615
- **Fuel**.....BF840,-K1
- **Oil Vapor**.....SA4141
- **Fuel Vapor**.....SA2046
- **Trans.**.....18032

Voyager Van V8-360 (5.9L) Carb. VIN F
- **Air**.....PA2052
- **Fuel**.....BF840,-K1
- **Oil Vapor**.....SA4141
- **Fuel Vapor**.....SA2046
- **Trans.**.....18032

1973

Barracuda, Cuda V8-318 (5.2L) Carb. VIN G
- **Lube**.....B233
- **Air**.....PA615
- **Fuel**.....BF840,-K1
- **Oil Vapor**.....SA4141
- **Fuel Vapor**.....SA2046
- **Trans.**.....18032

Barracuda, Cuda V8-340 (5.6L) Carb. VIN H
- **Lube**.....B233
- **Air**.....PA2010
- **Fuel**.....BF840,-K1
- **Oil Vapor**.....SA4141
- **Fuel Vapor**.....SA2046
- **Trans.**.....18032

Cricket 4-1498cc (1.5L) Carb. VIN G,L
- **Lube**.....B233

Duster 6-198 (3.2L) Carb. VIN B
- **Lube**.....B233
- **Air**.....PA650
- **Fuel**.....BF840,-K1
- **Oil Vapor**.....SA4141
- **Fuel Vapor**.....SA2046
- **Trans.**.....18032

PLYMOUTH 1973 (Cont'd.)

Duster 6-225 (3.7L) Carb. VIN C
- **Lube**.....B233
- **Air**.....PA650
- **Fuel**.....BF840,-K1
- **Oil Vapor**.....SA4141
- **Fuel Vapor**.....SA2046
- **Trans.**.....18032

Duster V8-318 (5.2L) Carb. VIN G
- **Lube**.....B233
- **Air**.....PA615
- **Fuel**.....BF840,-K1
- **Oil Vapor**.....SA4141
- **Fuel Vapor**.....SA2046
- **Trans.**.....18032

Duster V8-340 (5.6L) Carb. VIN H
- **Lube**.....B233
- **Air**.....PA2010
- **Fuel**.....BF840,-K1
- **Oil Vapor**.....SA4141
- **Fuel Vapor**.....SA2046
- **Trans.**.....18032

Fury 6-225 (3.7L) Carb. VIN C
- **Lube**.....B233
- **Air**.....PA650
- **Fuel**.....BF840,-K1
- **Oil Vapor**.....SA4141
- **Fuel Vapor**.....SA2046
- **Trans.**.....18032

Fury V8-318 (5.2L) Carb. VIN G
- **Lube**.....B233
- **Air**.....PA615
- **Fuel**.....BF840,-K1
- **Oil Vapor**.....SA4141
- **Fuel Vapor**.....SA2046
- **Trans.**.....18032

Fury V8-360 (5.9L) Carb. VIN K
- **Lube**.....B233
- **Air**.....PA2010
- **Fuel**.....BF840,-K1
- **Oil Vapor**.....SA4141
- **Fuel Vapor**.....SA2046
- **Trans.**.....18032

Fury V8-400 (6.6L) Carb. VIN M,P
- **Lube**.....B233
- **Air**.....PA2010
- **Fuel**.....BF840,-K1
- **Oil Vapor**.....SA4141
- **Fuel Vapor**.....SA2046
- **Trans.**.....18032

Fury V8-440 (7.2L) Carb. VIN T
- **Lube**.....B233
- **Air**.....PA2010
- **Fuel**.....BF840,-K1
- **Oil Vapor**.....SA4141
- **Fuel Vapor**.....SA2046
- **Trans.**.....18032

Gran Fury V8-318 (5.2L) Carb. VIN G
- **Lube**.....B233
- **Air**.....PA615
- **Fuel**.....BF840,-K1
- **Oil Vapor**.....SA4141
- **Fuel Vapor**.....SA2046
- **Trans.**.....18032

Gran Fury V8-360 (5.9L) Carb. VIN K
- **Lube**.....B233
- **Air**.....PA2010
- **Fuel**.....BF840,-K1
- **Oil Vapor**.....SA4141
- **Fuel Vapor**.....SA2046
- **Trans.**.....18032

Gran Fury V8-400 (6.6L) Carb. VIN M,P
- **Lube**.....B233
- **Air**.....PA2010
- **Fuel**.....BF840,-K1
- **Oil Vapor**.....SA4141
- **Fuel Vapor**.....SA2046
- **Trans.**.....18032

Gran Fury V8-440 (7.2L) 4 Bbl. Carb. VIN T
- **Lube**.....B233
- **Air**.....PA2010
- **Fuel**.....BF840,-K1
- **Oil Vapor**.....SA4141
- **Fuel Vapor**.....SA2046
- **Trans.**.....18032

PLYMOUTH 1973 (Cont'd.)

Roadrunner V8-318 (5.2L) Carb. VIN G
- **Lube**.....B233
- **Air**.....PA615
- **Fuel**.....BF840,-K1
- **Oil Vapor**.....SA4141
- **Fuel Vapor**.....SA2046
- **Trans.**.....18032

Roadrunner V8-340 (5.6L) Carb. VIN H
- **Lube**.....B233
- **Air**.....PA2010
- **Fuel**.....BF840,-K1
- **Oil Vapor**.....SA4141
- **Fuel Vapor**.....SA2046
- **Trans.**.....18032

Roadrunner V8-400 (6.6L) Carb. VIN M,P
- **Lube**.....B233
- **Air**.....PA2010
- **Fuel**.....BF840,-K1
- **Oil Vapor**.....SA4141
- **Fuel Vapor**.....SA2046
- **Trans.**.....18032

Roadrunner V8-440 (7.2L) Carb. VIN U
- **Lube**.....B233
- **Air**.....PA2010
- **Fuel**.....BF840,-K1
- **Oil Vapor**.....SA4141
- **Fuel Vapor**.....SA2046
- **Trans.**.....18032

Satellite 6-225 (3.7L) Carb. VIN C
- **Lube**.....B233
- **Air**.....PA650
- **Fuel**.....BF840,-K1
- **Oil Vapor**.....SA4141
- **Fuel Vapor**.....SA2046
- **Trans.**.....18032

Satellite V8-318 (5.2L) Carb. VIN G
- **Lube**.....B233
- **Air**.....PA615
- **Fuel**.....BF840,-K1
- **Oil Vapor**.....SA4141
- **Fuel Vapor**.....SA2046
- **Trans.**.....18032

Satellite V8-400 (6.6L) Carb. VIN M,P
- **Lube**.....B233
- **Air**.....PA2010
- **Fuel**.....BF840,-K1
- **Oil Vapor**.....SA4141
- **Fuel Vapor**.....SA2046
- **Trans.**.....18032

Scamp 6-198 (3.2L) Carb. VIN B
- **Lube**.....B233
- **Air**.....PA650
- **Fuel**.....BF840,-K1
- **Oil Vapor**.....SA4141
- **Fuel Vapor**.....SA2046
- **Trans.**.....18032

Scamp 6-225 (3.7L) Carb. VIN C
- **Lube**.....B233
- **Air**.....PA650
- **Fuel**.....BF840,-K1
- **Oil Vapor**.....SA4141
- **Fuel Vapor**.....SA2046
- **Trans.**.....18032

Scamp V8-318 (5.2L) Carb. VIN G
- **Lube**.....B233
- **Air**.....PA615
- **Fuel**.....BF840,-K1
- **Oil Vapor**.....SA4141
- **Fuel Vapor**.....SA2046
- **Trans.**.....18032

Valiant 6-198 (3.2L) Carb. VIN B
- **Lube**.....B233
- **Air**.....PA650
- **Fuel**.....BF840,-K1
- **Oil Vapor**.....SA4141
- **Fuel Vapor**.....SA2046
- **Trans.**.....18032

PLYMOUTH 1973 (Cont'd.)

Valiant 6-225 (3.7L) Carb. VIN C
- **Lube**.....B233
- **Air**.....PA650
- **Fuel**.....BF840,-K1
- **Oil Vapor**.....SA4141
- **Fuel Vapor**.....SA2046
- **Trans.**.....18032

Valiant V8-318 (5.2L) Carb. VIN G
- **Lube**.....B233
- **Air**.....PA615
- **Fuel**.....BF840,-K1
- **Oil Vapor**.....SA4141
- **Fuel Vapor**.....SA2046
- **Trans.**.....18032

1972

Barracuda 6-225 (3.7L) Carb. VIN C
- **Lube**.....B2
- **Air**.....PA650
- **Fuel**.....BF840,-K1
- **Oil Vapor**.....SA4141
- **Fuel Vapor**.....SA2046
- **Trans.**.....18032

Barracuda, Cuda V8-318 (5.2L) Carb. VIN G
- **Lube**.....B233
- **Air**.....PA615
- **Fuel**.....BF840,-K1
- **Oil Vapor**.....SA4141
- **Fuel Vapor**.....SA2046
- **Trans.**.....18032

Barracuda, Cuda V8-340 (5.6L) Carb. VIN H
- **Lube**.....B2
- **Air**.....PA2010
- **Fuel**.....BF840,-K1
- **Oil Vapor**.....SA4141
- **Fuel Vapor**.....SA2046
- **Trans.**.....18032

Cricket 4-1498cc (1.5L) Carb. VIN G,L
- **Lube**.....B233
- **Fuel Vapor**.....N/R

Duster 6-198 (3.2L) Carb. VIN B
- **Lube**.....B2
- **Air**.....PA650
- **Fuel**.....BF840,-K1
- **Oil Vapor**.....SA4141
- **Fuel Vapor**.....SA2046
- **Trans.**.....18032

Duster 6-225 (3.7L) Carb. VIN C,E
- **Lube**.....B2
- **Air**.....PA650
- **Fuel**.....BF840,-K1
- **Oil Vapor**.....SA4141
- **Fuel Vapor**.....SA2046
- **Trans.**.....18032

Duster V8-318 (5.2L) Carb. VIN G
- **Lube**.....B233
- **Air**.....PA615
- **Fuel**.....BF840,-K1
- **Oil Vapor**.....SA4141
- **Fuel Vapor**.....SA2046
- **Trans.**.....18032

Duster V8-340 (5.6L) Carb. VIN H
- **Lube**.....B2
- **Air**.....PA2010
- **Fuel**.....BF840,-K1
- **Oil Vapor**.....SA4141
- **Fuel Vapor**.....SA2046
- **Trans.**.....18032

Fury 6-225 (3.7L) Carb. VIN C
- **Lube**.....B2
- **Air**.....PA650
- **Fuel**.....BF840,-K1
- **Oil Vapor**.....SA4141
- **Fuel Vapor**.....SA2046
- **Trans.**.....18032

Fury V8-318 (5.2L) Carb. VIN G
- **Lube**.....B2
- **Air**.....PA615
- **Fuel**.....BF840,-K1
- **Oil Vapor**.....SA4141
- **Fuel Vapor**.....SA2046
- **Trans.**.....18032

OBS = Obsolete. Availability Limited to Distributor Stock.

PLYMOUTH 1972 (Cont'd.)

Fury V8-360 (5.9L) Carb. VIN K
Lube....B2
Air....PA2010
Fuel....BF840,-K1
Oil Vapor....SA4141
Fuel Vapor....SA2046
Trans.....18032

Fury V8-400 (6.6L) Carb. VIN M,P
Lube....B2
Air....PA2010
Fuel....BF840,-K1
Oil Vapor....SA4141
Fuel Vapor....SA2046
Trans.....18032

Fury V8-440 (7.2L) Carb. VIN T
Lube....B2
Air....PA2010
Fuel....BF840,-K1
Oil Vapor....SA4141
Fuel Vapor....SA2046
Trans.....18032

Gran Fury V8-318 (5.2L) Carb. VIN G
Lube....B2
Air....PA615
Fuel....BF840,-K1
Oil Vapor....SA4141
Fuel Vapor....SA2046
Trans.....18032

Gran Fury V8-360 (5.9L) Carb. VIN K
Lube....B2
Air....PA2010
Fuel....BF840,-K1
Oil Vapor....SA4141
Fuel Vapor....SA2046
Trans.....18032

Gran Fury V8-400 (6.6L) Carb. VIN M,P
Lube....B2
Air....PA2010
Fuel....BF840,-K1
Oil Vapor....SA4141
Fuel Vapor....SA2046
Trans.....18032

Gran Fury V8-440 (7.2L) 4 Bbl. Carb. VIN T
Lube....B2
Air....PA2010
Fuel....BF840,-K1
Oil Vapor....SA4141
Fuel Vapor....SA2046
Trans.....18032

Roadrunner V8-318 (5.2L) Carb. VIN G
Air....PA615
Fuel....BF840,-K1
Oil Vapor....SA4141
Fuel Vapor....SA2046
Trans.....18032

Roadrunner V8-340 (5.6L) Carb. VIN H
Lube....B2
Air....PA2010
Fuel....BF840,-K1
Oil Vapor....SA4141
Fuel Vapor....SA2046
Trans.....18032

Roadrunner V8-400 (6.6L) Carb. VIN P
Lube....B2
Air....PA2010
Fuel....BF840,-K1
Oil Vapor....SA4141
Fuel Vapor....SA2046
Trans.....18032

Roadrunner V8-440 (7.2L) Carb. VIN U,V
Lube....B2
Air....PA2010
Fuel....BF840,-K1
Oil Vapor....SA4141
Fuel Vapor....SA2046
Trans.....18032

PLYMOUTH 1972 (Cont'd.)

Satellite 6-225 (3.7L) Carb. VIN C,E
Lube....B2
Air....PA650
Fuel....BF840,-K1
Oil Vapor....SA4141
Fuel Vapor....SA2046
Trans.....18032

Satellite V8-318 (5.2L) Carb. VIN G
Lube....B233
Air....PA615
Fuel....BF840,-K1
Oil Vapor....SA4141
Fuel Vapor....SA2046
Trans.....18032

Satellite V8-340 (5.6L) Carb. VIN H
Lube....B2
Air....PA2010
Fuel....BF840,-K1
Oil Vapor....SA4141
Fuel Vapor....SA2046
Trans.....18032

Satellite V8-400 (6.6L) Carb. VIN M,P
Lube....B2
Air....PA2010
Fuel....BF840,-K1
Oil Vapor....SA4141
Fuel Vapor....SA2046
Trans.....18032

Scamp 6-198 (3.2L) Carb. VIN B
Lube....B233
Air....PA650
Fuel....BF840,-K1
Oil Vapor....SA4141
Fuel Vapor....SA2046
Trans.....18032

Scamp 6-225 (3.7L) Carb. VIN C
Lube....B233
Air....PA650
Fuel....BF840,-K1
Oil Vapor....SA4141
Fuel Vapor....SA2046
Trans.....18032

Scamp V8-318 (5.2L) Carb. VIN G
Lube....B233
Air....PA615
Fuel....BF840,-K1
Oil Vapor....SA4141
Fuel Vapor....SA2046
Trans.....18032

Valiant 6-198 (3.2L) Carb. VIN B
Lube....B2
Air....PA650
Fuel....BF840,-K1
Oil Vapor....SA4141
Fuel Vapor....SA2046
Trans.....18032

Valiant 6-225 (3.7L) Carb. VIN E
Air....PA650
Fuel....BF840,-K1
Fuel Vapor....SA2046
Trans.....18032

Valiant 6-225 (3.7L) Carb. VIN C
Lube....B2
Air....PA650
Fuel....BF840,-K1
Oil Vapor....SA4141
Fuel Vapor....SA2046
Trans.....18032

Valiant V8-318 (5.2L) Carb. VIN G
Lube....B233
Air....PA615
Fuel....BF840,-K1
Oil Vapor....SA4141
Fuel Vapor....SA2046
Trans.....18032

1971

Barracuda 6-198 (3.2L) Carb. VIN B
Lube....B2
Air....PA650
Fuel....BF840,-K1
Oil Vapor....SA4141
Fuel Vapor....SA2046
Trans.....18032

PLYMOUTH 1971 (Cont'd.)

Barracuda 6-225 (3.7L) Carb. VIN C
Lube....B2
Air....PA650
Fuel....BF840,-K1
Oil Vapor....SA4141
Fuel Vapor....SA2046
Trans.....18032

Barracuda V8-318 (5.2L) Carb. VIN G
Lube....B2
Air....PA615
Fuel....BF840,-K1
Oil Vapor....SA4141
Fuel Vapor....SA2046
Trans.....18032

Barracuda, Cuda V8-383 (6.3L) Carb. VIN L,N
Lube....B2
Air....PA2010
Fuel....BF840,-K1
Oil Vapor....SA4141
Fuel Vapor....SA2046

Cricket 4-1498cc (1.5L) Carb. VIN J
Lube....B233
Air....PA2053
Oil Vapor....N/R
Fuel Vapor....SA2046

Cuda V8-340 (5.6L) Carb. VIN H
Lube....B2
Air....PA2010
Fuel....BF840,-K1
Oil Vapor....SA4141
Fuel Vapor....SA2046
Trans.....18032

Cuda V8-426 (7.0L) Carb. VIN R
Lube....B2
Fuel....BF840,-K1
Oil Vapor....SA4141
Fuel Vapor....SA2046

Cuda V8-440 (7.2L) Carb. VIN V
Lube....B2
Air....PA2010
Fuel....BF840,-K1
Oil Vapor....SA4141
Fuel Vapor....SA2046
Trans.....18032

Duster 6-198 (3.2L) Carb. VIN B
Lube....B2
Air....PA650
Fuel....BF840,-K1
Oil Vapor....SA4141
Fuel Vapor....SA2046
Trans.....18032

Duster 6-225 (3.7L) Carb. VIN C
Lube....B2
Air....PA650
Fuel....BF840,-K1
Oil Vapor....SA4141
Fuel Vapor....SA2046
Trans.....18032

Duster V8-318 (5.2L) Carb. VIN G
Lube....B2
Air....PA615
Fuel....BF840,-K1
Oil Vapor....SA4141
Fuel Vapor....SA2046
Trans.....18032

Duster V8-340 (5.6L) Carb. VIN H
Lube....B2
Air....PA2010
Fuel....BF840,-K1
Oil Vapor....SA4141
Fuel Vapor....SA2046
Trans.....18032

Fury 6-225 (3.7L) Carb. VIN C
Lube....B2
Air....PA650
Fuel....BF840,-K1
Oil Vapor....SA4141
Fuel Vapor....SA2046
Trans.....18032

Fury V8-318 (5.2L) Carb. VIN G
Lube....B2
Air....PA615
Fuel....BF840,-K1
Oil Vapor....SA4141
Fuel Vapor....SA2046
Trans.....18032

PLYMOUTH 1971 (Cont'd.)

Fury V8-360 (5.9L) Carb. VIN K
Lube....B2
Air....PA2010
Fuel....BF840,-K1
Oil Vapor....SA4141
Fuel Vapor....SA2046
Trans.....18032

Fury V8-383 (6.3L) Carb. VIN L,N
Lube....B2
Air....PA2010
Fuel....BF840,-K1
Oil Vapor....SA4141
Fuel Vapor....SA2046
Trans.....18032

Fury V8-440 (7.2L) Carb. VIN T
Lube....B2
Air....PA2010
Fuel....BF840,-K1
Oil Vapor....SA4141
Fuel Vapor....SA2046
Trans.....18032

GTX V8-426 (7.0L) Carb. VIN R
Lube....B2
Fuel....BF840,-K1
Oil Vapor....SA4141
Fuel Vapor....SA2046
Trans.....18032

GTX V8-440 (7.2L) Carb. VIN U
Lube....B2
Air....PA2010
Fuel....BF840,-K1
Oil Vapor....SA4141
Fuel Vapor....SA2046
Trans.....18032

GTX V8-440 (7.2L) Carb. VIN V
Lube....B2
Fuel....BF840,-K1
Oil Vapor....SA4141
Fuel Vapor....SA2046
Trans.....18032

Roadrunner V8-340 (5.6L) Carb. VIN H
Lube....B2
Air....PA2010
Fuel....BF840,-K1
Oil Vapor....SA4141
Fuel Vapor....SA2046
Trans.....18032

Roadrunner V8-383 (6.3L) Carb. VIN N
Lube....B2
Air....PA2010
Fuel....BF840,-K1
Oil Vapor....SA4141
Fuel Vapor....SA2046
Trans.....18032

Roadrunner V8-426 (7.0L) Carb. VIN R
Lube....B2
Fuel....[2] BF840,-K1
Oil Vapor....SA4141
Fuel Vapor....SA2046
Trans.....18032

Roadrunner V8-440 (7.2L) Carb. VIN V
Lube....B2
Air....PA2010
Fuel....BF840,-K1
Oil Vapor....SA4141
Fuel Vapor....SA2046
Trans.....18032

Satellite 6-225 (3.7L) Carb. VIN C
Lube....B2
Air....PA650
Fuel....BF840,-K1
Oil Vapor....SA4141
Fuel Vapor....SA2046
Trans.....18032

Satellite V8-318 (5.2L) Carb. VIN G
Lube....B2
Air....PA615
Fuel....BF840,-K1
Oil Vapor....SA4141
Fuel Vapor....SA2046
Trans.....18032

OBS = Obsolete. Availability Limited to Distributor Stock.

PLYMOUTH 1971 (Cont'd.)

Satellite V8-383 (6.3L) Carb. VIN L,N
Lube.....B2
Air.....PA2010
Fuel.....BF840,-K1
Oil Vapor.....SA4141
Fuel Vapor.....SA2046
Trans......18032

Scamp 6-198 (3.2L) Carb. VIN B
Lube.....B2
Air.....PA650
Fuel.....BF840,-K1
Oil Vapor.....SA4141
Fuel Vapor.....SA2046
Trans......18032

Scamp 6-225 (3.7L) Carb. VIN C
Lube.....B2
Air.....PA650
Fuel.....BF840,-K1
Oil Vapor.....SA4141
Fuel Vapor.....SA2046
Trans......18032

Scamp V8-318 (5.2L) Carb. VIN G
Lube.....B2
Air.....PA615
Fuel.....BF840,-K1
Oil Vapor.....SA4141
Fuel Vapor.....SA2046
Trans......18032

Valiant 6-198 (3.2L) Carb. VIN B
Lube.....B2
Air.....PA650
Fuel.....BF840,-K1
Oil Vapor.....SA4141
Fuel Vapor.....SA2046
Trans......18032

Valiant 6-225 (3.7L) Carb. VIN C
Lube.....B2
Air.....PA650
Fuel.....BF840,-K1
Oil Vapor.....SA4141
Fuel Vapor.....SA2046
Trans......18032

Valiant V8-318 (5.2L) Carb. VIN G
Lube.....B2
Air.....PA615
Fuel.....BF840,-K1
Oil Vapor.....SA4141
Fuel Vapor.....SA2046
Trans......18032

1970

Barracuda 6-198 (3.2L) 1 Bbl. Carb. VIN B
Lube.....B2
Air.....PA650
Fuel.....BF840,-K1
Trans......18032

Barracuda 6-225 (3.7L) 1 Bbl. Carb. VIN C
Lube.....B2
Air.....PA650
Fuel.....BF840,-K1
Trans......18032

Barracuda V8-318 (5.2L) 2 Bbl. Carb. VIN G
Lube.....B2
Air.....PA615
Fuel.....BF840,-K1
Trans......18032

Barracuda V8-383 (6.3L) 2,4 Bbl. Carb. VIN L,N
Lube.....B2
Air.....PA2010
Fuel.....BF840,-K1
Trans......18032

Belvedere 6-225 (3.7L) 1 Bbl. Carb. VIN C
Lube.....B2
Air.....PA650
Fuel.....BF840,-K1
Trans......18032

PLYMOUTH 1970 (Cont'd.)

Belvedere V8-318 (5.2L) 2 Bbl. Carb. VIN G
Lube.....B2
Air.....PA615
Fuel.....BF840,-K1
Trans......18032

Belvedere V8-383 (6.3L) 2,4 Bbl. Carb. VIN L,N
Lube.....B2
Air.....PA2010
Fuel.....BF840,-K1
Trans......18032

Cuda V8-340 (5.6L) 4 Bbl. Carb. VIN H
Lube.....B2
Air.....PA2010
Fuel.....BF840,-K1
Trans......18032

Cuda V8-383 (6.3L) 4 Bbl. Carb. VIN N
Lube.....B2
Air.....PA2010
Fuel.....BF840,-K1

Cuda V8-426 (7.0L) Carb. VIN R
Lube.....B2
Fuel.....BF840,-K1

Cuda V8-440 (7.2L) 4 Bbl. Carb. VIN U,V
Lube.....B2
Air.....PA2010
Fuel.....BF840,-K1
Trans......18032

Duster 6-198 (3.2L) 1 Bbl. Carb. VIN B
Lube.....B2
Air.....PA650
Fuel.....BF840,-K1
Trans......18032

Duster 6-225 (3.7L) 1 Bbl. Carb. VIN C
Lube.....B2
Air.....PA650
Fuel.....BF840,-K1
Trans......18032

Duster V8-318 (5.2L) 2 Bbl. Carb. VIN G
Lube.....B2
Air.....PA615
Fuel.....BF840,-K1
Trans......18032

Duster V8-340 (5.6L) 4 Bbl. Carb. VIN H
Lube.....B2
Air.....PA2010
Fuel.....BF840,-K1
Trans......18032

Fury 6-225 (3.7L) 1 Bbl. Carb. VIN C
Lube.....B2
Air.....PA650
Fuel.....BF840,-K1
Trans......18032

Fury V8-318 (5.2L) 2 Bbl. Carb. VIN G
Lube.....B2
Air.....PA615
Fuel.....BF840,-K1
Trans......18032

Fury V8-383 (6.3L) 2,4 Bbl. Carb. VIN L,N
Lube.....B2
Air.....PA2010
Fuel.....BF840,-K1
Trans......18032

Fury V8-440 (7.2L) 4 Bbl. Carb. VIN T
Lube.....B2
Air.....PA2010
Fuel.....BF840,-K1
Trans......18032

GTX V8-426 (7.0L) Carb. VIN R
Lube.....B2
Fuel.....BF840,-K1
Trans......18032

PLYMOUTH 1970 (Cont'd.)

GTX V8-440 (7.2L) 4 Bbl. Carb. VIN U
Lube.....B2
Air.....PA2010
Fuel.....BF840,-K1
Trans......18032

GTX V8-440 (7.2L) Carb. VIN V
Lube.....B2
Trans......18032

Roadrunner V8-383 (6.3L) 4 Bbl. Carb. VIN N
Lube.....B2
Air.....PA2010
Fuel.....BF840,-K1
Trans......18032

Roadrunner V8-426 (7.0L) Carb. VIN R
Lube.....B2
Fuel.....BF840,-K1
Trans......18032

Roadrunner V8-440 (7.2L) 4 Bbl. Carb. VIN U,V
Lube.....B2
Air.....PA2010
Fuel.....BF840,-K1
Trans......18032

Satellite V8-318 (5.2L) 2 Bbl. Carb. VIN G
Lube.....B2
Air.....PA615
Fuel.....BF840,-K1
Trans......18032

Satellite V8-383 (6.3L) 2,4 Bbl. Carb. VIN L,N
Lube.....B2
Air.....PA2010
Fuel.....BF840,-K1
Trans......18032

Superbird V8-440 (7.2L) 4 Bbl. Carb. VIN U
Lube.....B2
Air.....PA2010
Fuel.....BF840,-K1

Valiant 6-198 (3.2L) 1 Bbl. Carb. VIN B
Lube.....B2
Air.....PA650
Fuel.....BF840,-K1
Trans......18032

Valiant 6-225 (3.7L) 1 Bbl. Carb. VIN C
Lube.....B2
Air.....PA650
Fuel.....BF840,-K1
Trans......18032

Valiant V8-318 (5.2L) 2 Bbl. Carb. VIN G
Lube.....B2
Air.....PA615
Fuel.....BF840,-K1
Trans......18032

1969

Barracuda 6-225 (3.7L) Carb. VIN B
Lube.....B2
Air.....PA650
Fuel.....BF840,-K1
Trans......18032

Barracuda V8-318 (5.2L) Carb. VIN F
Lube.....B2
Air.....PA615
Fuel.....BF840,-K1
Trans......18032

Barracuda V8-340 (5.6L) Carb. VIN P
Lube.....B2
Air.....PA2010
Fuel.....BF840,-K1
Trans......18032

Barracuda V8-383 (6.3L) Carb. VIN H
Lube.....B2
Air.....PA2010
Fuel.....BF840,-K1
Trans......18032

PLYMOUTH 1969 (Cont'd.)

Belvedere 6-225 (3.7L) Carb. VIN B
Lube.....B2
Air.....PA650
Fuel.....BF840,-K1
Trans......18032

Belvedere V8-318 (5.2L) Carb. VIN F
Lube.....B2
Air.....PA615
Fuel.....BF840,-K1
Trans......18032

Belvedere V8-383 (6.3L) Carb. VIN G,H
Lube.....B2
Air (w/o Snorkel).....PA2010
Air (w/Snorkel).....PA693
Fuel.....BF840,-K1
Trans......18032

Fury 6-225 (3.7L) Carb. VIN B
Lube.....B2
Air.....PA650
Fuel.....BF840,-K1
Trans......18032

Fury V8-318 (5.2L) Carb. VIN F
Lube.....B2
Air.....PA615
Fuel.....BF840,-K1
Trans......18032

Fury V8-383 (6.3L) Carb. VIN G,H
Lube.....B2
Air (w/o Snorkel).....PA2010
Air (w/Snorkel).....PA693
Fuel.....BF840,-K1
Trans......18032

Fury V8-440 (7.2L) Carb. VIN K
Lube.....B2
Air (w/o Snorkel).....PA2010
Air (w/Snorkel).....PA693
Fuel.....BF840,-K1
Trans......18032

GTX V8-426 (7.0L) Carb. VIN J
Lube.....B2
Fuel.....BF840,-K1
Trans......18032

GTX V8-440 (7.2L) Carb. VIN L,M
Lube.....B2
Air.....PA2010
Fuel.....BF840,-K1

Roadrunner V8-383 (6.3L) Carb. VIN H
Lube.....B2
Air.....PA2010
Fuel.....BF840,-K1
Trans......18032

Roadrunner V8-426 (7.0L) Carb. VIN J
Lube.....B2
Fuel.....BF840,-K1
Trans......18032

Roadrunner V8-440 (7.2L) Carb. VIN M
Lube.....B2
Air (w/o Snorkel).....PA2010
Air (w/Snorkel).....PA693
Fuel.....BF840,-K1
Trans......18032

Satellite V8-318 (5.2L) Carb. VIN F
Lube.....B2
Air.....PA615
Fuel.....BF840,-K1
Trans......18032

Satellite V8-383 (6.3L) Carb. VIN G,H
Lube.....B2
Air (w/o Snorkel).....PA2010
Air (w/Snorkel).....PA693
Fuel.....BF840,-K1
Trans......18032

Valiant 6-170 (2.8L) Carb. VIN A
Lube.....B2
Air.....PA650
Fuel.....BF840,-K1
Trans......18032

Valiant 6-225 (3.7L) Carb. VIN B
Lube.....B2
Air.....PA650
Fuel.....BF840,-K1
Trans......18032

PLYMOUTH 1969 (Cont'd.)

Valiant V8-273 (4.5L) Carb. VIN D
Lube.....B2
Air.....PA615
Fuel.....BF840,-K1
Trans......18032
Valiant V8-318 (5.2L) Carb. VIN F
Lube.....B2
Air.....PA615
Fuel.....BF840,-K1
Trans......18032

1968

Barracuda 6-225 (3.7L) Carb. VIN B
Lube.....B2
Air.....PA650
Fuel.....BF840,-K1
Trans......18032
Barracuda V8-318 (5.2L) Carb. VIN F
Lube.....B2
Air.....PA615
Fuel.....BF840,-K1
Trans......18032
Barracuda V8-340 (5.6L) Carb. VIN P
Lube.....B2
Air.....PA2010
Fuel.....BF840,-K1
Trans......18032
Barracuda V8-383 (6.3L) Carb. VIN H
Lube.....B2
Air.....PA2010
Fuel.....BF840,-K1
Trans......18032
Belvedere 6-225 (3.7L) Carb. VIN B
Lube.....B2
Air.....PA650
Fuel.....BF840,-K1
Trans......18032
Belvedere V8-273 (4.5L) Carb. VIN D
Lube.....B2
Air (w/o Snorkel).....PA2010
Air (w/Snorkel).....PA693
Fuel.....BF840,-K1
Trans......18032
Belvedere V8-318 (5.2L) Carb. VIN F
Lube.....B2
Air.....PA615
Fuel.....BF840,-K1
Trans......18032
Belvedere V8-383 (6.3L) Carb. VIN G,H
Lube.....B2
Air.....PA693
Fuel.....BF840,-K1
Trans......18032
Fury 6-225 (3.7L) Carb. VIN B
Lube.....B2
Air.....PA650
Fuel.....BF840,-K1
Trans......18032
Fury V8-318 (5.2L) Carb. VIN F
Lube.....B2
Air.....PA615
Fuel.....BF840,-K1
Trans......18032
Fury V8-383 (6.3L) Carb. VIN G,H
Lube.....B2
Air.....PA693
Fuel.....BF840,-K1
Trans......18032
Fury V8-440 (7.2L) Carb. VIN K,L
Lube.....B2
Air (w/o Snorkel).....PA2010
Air (w/Snorkel).....PA693
Fuel.....BF840,-K1
Trans......18032
GTX V8-318 (5.2L) Carb. VIN F
Lube.....B2
Air.....PA615
Fuel.....BF840,-K1
Trans......18032
GTX V8-383 (6.3L) Carb. VIN G,H
Lube.....B2
Air (w/o Snorkel).....PA2010
Air (w/Snorkel).....PA693
Fuel.....BF840,-K1
Trans......18032

PLYMOUTH 1968 (Cont'd.)

GTX V8-426 (7.0L) Carb. VIN J
Lube.....B2
Fuel.....BF840,-K1
Trans......18032
GTX V8-440 (7.2L) Carb. VIN L
Lube.....B2
Air.....PA2010
Fuel.....BF840,-K1
Trans......18032
Roadrunner V8-273 (4.5L) Carb. VIN D
Lube.....B2
Fuel.....BF840,-K1
Trans......18032
Roadrunner V8-318 (5.2L) Carb. VIN F
Lube.....B2
Air.....PA615
Fuel.....BF840,-K1
Trans......18032
Roadrunner V8-383 (6.3L) Carb. VIN G,H
Lube.....B2
Air.....PA693
Fuel.....BF840,-K1
Trans......18032
Roadrunner V8-426 (7.0L) Carb. VIN J
Lube.....B2
Fuel.....BF840,-K1
Trans......18032
Satellite V8-273 (4.5L) Carb. VIN D
Lube.....B2
Fuel.....BF840,-K1
Trans......18032
Satellite V8-318 (5.2L) Carb. VIN F
Lube.....B2
Air.....PA615
Fuel.....BF840,-K1
Trans......18032
Satellite V8-383 (6.3L) Carb. VIN G,H
Lube.....B2
Air.....PA693
Fuel.....BF840,-K1
Trans......18032
Valiant 6-170 (2.8L) Carb. VIN A
Lube.....B2
Air.....PA650
Fuel.....BF840,-K1
Trans......18032
Valiant 6-225 (3.7L) Carb. VIN B
Lube.....B2
Air.....PA650
Fuel.....BF840,-K1
Trans......18032
Valiant V8-273 (4.5L) Carb. VIN D
Lube.....B2
Air.....PA615
Fuel.....BF840,-K1
Trans......18032
Valiant V8-318 (5.2L) Carb. VIN F
Lube.....B2
Air.....PA615
Fuel.....BF840,-K1
Trans......18032

1967

Barracuda 6-225 (3.7L) Carb.
Lube.....B2
Air.....PA650
Fuel.....BF840,-K1
Trans......18032
Barracuda V8-273 (4.5L) 2,4 Bbl. Carb.
Lube.....B2
Air (2 Bbl.).....PA615
Air (4 Bbl.).....PA607
Fuel.....BF840,-K1
Trans......18032
Barracuda V8-383 (6.3L) Carb. VIN H
Lube.....B2
Air.....PA693
Fuel.....BF840,-K1
Trans......18032

PLYMOUTH 1967 (Cont'd.)

Belvedere 6-225 (3.7L) Carb.
Lube.....B2
Air.....PA650
Fuel.....BF840,-K1
Trans......18032
Belvedere V8-273 (4.5L) Carb.
Lube.....B2
Air.....PA615
Fuel.....BF840,-K1
Trans......18032
Belvedere V8-318 (5.2L) Carb.
Lube.....B2
Air.....PA615
Fuel.....BF840,-K1
Trans......18032
Belvedere V8-383 (6.3L) Carb.
Lube.....B2
Air.....PA693
Fuel.....BF840,-K1
Trans......18032
Belvedere V8-426 (7.0L) 2,4 Bbl. Carb.
Lube.....B2
Air (2 Bbl.).....PA615
Air (4 Bbl.).....PA693
Fuel.....BF840,-K1
Trans......18032
Belvedere V8-440 (7.2L) Carb.
Lube.....B2
Air (2 Bbl.).....PA615
Air (4 Bbl.).....PA693
Fuel.....BF840,-K1
Trans......18032
Fury V8-318 (5.2L) Carb.
Lube.....B2
Air.....PA615
Fuel.....BF840,-K1
Trans......18032
Fury V8-383 (6.3L) Carb.
Lube.....B2
Air.....PA693
Fuel.....BF840,-K1
Trans......18032
Fury V8-440 (7.2L) Carb. VIN K,L
Lube.....B2
Air.....PA693
Fuel.....BF840,-K1
Trans......18032
GTX V8-273 (4.5L) 2,4 Bbl. Carb.
Lube.....B2
Air (2 Bbl.).....PA615
Air (4 Bbl.).....PA693
Fuel.....BF840,-K1
Trans......18032
GTX V8-318 (5.2L) 2,4 Bbl. Carb.
Lube.....B2
Air (2 Bbl.).....PA615
Air (4 Bbl.).....PA693
Fuel.....BF840,-K1
Trans......18032
GTX V8-383 (6.3L) Carb.
Lube.....B2
Air.....PA693
Fuel.....BF840,-K1
Trans......18032
GTX V8-426 (7.0L) Carb.
Lube.....B2
Air.....PA693
Fuel.....BF840,-K1
Trans......18032
GTX V8-440 (7.2L) Carb.
Lube.....B2
Air.....PA693
Fuel.....BF840,-K1
Trans......18032
Satellite 6-225 (3.7L) Carb.
Lube.....B2
Air.....PA650
Fuel.....BF840,-K1
Trans......18032
Satellite V8-273 (4.5L) Carb.
Lube.....B2
Air.....PA615
Fuel.....BF840,-K1
Trans......18032

PLYMOUTH 1967 (Cont'd.)

Satellite V8-318 (5.2L) Carb.
Lube.....B2
Air.....PA615
Fuel.....BF840,-K1
Trans......18032
Satellite V8-383 (6.3L) Carb.
Lube.....B2
Air.....PA693
Fuel.....BF840,-K1
Trans......18032
Satellite V8-426 (7.0L) Carb.
Lube.....B2
Air.....PA693
Fuel.....BF840,-K1
Trans......18032
Satellite V8-440 (7.2L) 2,4 Bbl. Carb.
Lube.....B2
Air (2 Bbl.).....PA615
Air (4 Bbl.).....PA693
Fuel.....BF840,-K1
Trans......18032
Valiant 6-170 (2.8L) Carb.
Lube.....B2
Air.....PA650
Fuel.....BF840,-K1
Trans......18032
Valiant 6-225 (3.7L) Carb.
Lube.....B2
Air.....PA650
Fuel.....BF840,-K1
Trans......18032
Valiant V8-273 (4.5L) 2,4 Bbl. Carb.
Lube.....B2
Air (2 Bbl.).....PA615
Air (4 Bbl.).....PA607
Fuel.....BF840,-K1
Trans......18032
VIP V8-318 (5.2L) Carb.
Lube.....B2
Air.....PA615
Fuel.....BF840,-K1
Trans......18032
VIP V8-383 (6.3L) Carb.
Lube.....B2
Air.....PA693
Fuel.....BF840,-K1
Trans......18032
VIP V8-440 (7.2L) Carb.
Lube.....B2
Air.....PA693
Fuel.....BF840,-K1
Trans......18032

1966

Barracuda 6-170 (2.8L) Carb.
Lube.....B2
Air.....PA650
Fuel.....BF840,-K1
Trans......18032
Barracuda 6-225 (3.7L) Carb.
Lube.....B2
Air.....PA650
Fuel.....BF840,-K1
Trans......18032
Barracuda V8-273 (4.5L) 2,4 Bbl. Carb.
Lube.....B2
Air (2 Bbl.).....PA615
Air (4 Bbl.).....PA607
Fuel.....BF840,-K1
Trans......18032
Belvedere 6-225 (3.7L) Carb.
Lube.....B2
Air.....PA650
Fuel.....BF840,-K1
Trans......18032
Belvedere V8-273 (4.5L) Carb.
Lube.....B2
Air.....PA615
Fuel.....BF840,-K1
Trans......18032
Belvedere V8-318 (5.2L) Carb.
Lube.....B2
Air.....PA615
Fuel.....BF840,-K1
Trans......18032

OBS = Obsolete. Availability Limited to Distributor Stock.

PLYMOUTH 1966 (Cont'd.)

Belvedere V8-383 (6.3L) Carb.
Lube.....B2
Air.....PA607
Fuel.....BF840,-K1
Trans......18032

Belvedere V8-426 (7.0L) Carb.
Lube.....B2
Air.....PA693
Fuel.....BF840,-K1
Trans......18032

Belvedere V8-440 (7.2L) 2,4 Bbl. Carb.
Lube.....B2
Air (2 Bbl.).....PA615
Air (4 Bbl.).....PA693
Fuel.....BF840,-K1

Fury V8-361 (5.9L) 2,4 Bbl. Carb.
Lube.....B2
Air (2 Bbl.).....PA615
Air (4 Bbl.).....PA693
Fuel.....BF840,-K1

Fury V8-383 (6.3L) Carb.
Lube.....B2
Air.....PA693
Air (Police, HiPerf.).....PA607
Fuel.....BF840,-K1
Trans......18032

Fury V8-426 (7.0L) 2,4 Bbl. Carb.
Lube.....B2
Air (2 Bbl.).....PA615
Air (4 Bbl.).....PA693
Fuel.....BF840,-K1

Satellite 6-225 (3.7L) Carb.
Lube.....B2
Air.....PA650
Fuel.....BF840,-K1
Trans......18032

Satellite V8-273 (4.5L) Carb.
Lube.....B2
Air.....PA615
Fuel.....BF840,-K1
Trans......18032

Satellite V8-318 (5.2L) Carb.
Lube.....B2
Air.....PA615
Fuel.....BF840,-K1
Trans......18032

Satellite V8-383 (6.3L) Carb.
Lube.....B2
Air.....PA607
Fuel.....BF840,-K1
Trans......18032

Satellite V8-426 (7.0L) 2,4 Bbl. Carb.
Lube.....B2
Air (2 Bbl.).....PA615
Air (4 Bbl.).....PA693
Fuel.....BF840,-K1
Trans......18032

Satellite V8-440 (7.2L) 2,4 Bbl. Carb.
Lube.....B2
Air (2 Bbl.).....PA615
Air (4 Bbl.).....PA693
Fuel.....BF840,-K1

Valiant 6-170 (2.8L) Carb.
Lube.....B2
Air.....PA650
Fuel.....BF840,-K1
Trans......18032

Valiant 6-225 (3.7L) Carb.
Lube.....B2
Air.....PA650
Fuel.....BF840,-K1
Trans......18032

Valiant V8-273 (4.5L) Carb.
Lube.....B2
Air.....PA615
Fuel.....BF840,-K1
Trans......18032

1965

Barracuda 6-225 (3.7L) Carb.
Lube.....B2
Air.....PA650
Fuel.....BF840,-K1

PLYMOUTH 1965 (Cont'd.)

Barracuda V8-273 (4.5L) 2,4 Bbl. Carb.
Lube.....B2
Air (2 Bbl.).....PA615
Air (4 Bbl.).....PA607
Fuel.....BF840,-K1

Belvedere 6-225 (3.7L) Carb.
Lube.....B2
Air.....PA650
Fuel.....BF840,-K1

Belvedere V8-273 (4.5L) 2,4 Bbl. Carb.
Lube.....B2
Air (2 Bbl.).....PA615
Air (4 Bbl.).....PA607
Fuel.....BF840,-K1

Belvedere V8-318 (5.2L) Carb.
Lube.....B2
Air.....PA615
Fuel.....BF840,-K1

Belvedere V8-361 (5.9L) Carb.
Lube.....B2
Air.....PA693
Fuel.....BF840,-K1

Belvedere V8-383 (6.3L) Carb.
Lube.....B2
Air.....PA693
Fuel.....BF840,-K1

Belvedere V8-426 (7.0L) Carb.
Lube.....B2
Fuel.....BF840,-K1

Fury V8-273 (4.5L) 2,4 Bbl. Carb.
Lube.....B2
Air (2 Bbl.).....PA615
Air (4 Bbl.).....PA607
Fuel.....BF840,-K1

Fury V8-361 (5.9L) Carb.
Lube.....B2
Air.....PA693
Fuel.....BF840,-K1

Fury V8-383 (6.3L) Carb.
Lube.....B2
Air.....PA693
Fuel.....BF840,-K1

Fury V8-426 (7.0L) Carb.
Lube.....B2
Air.....PA693
Fuel.....BF840,-K1

Satellite V8-273 (4.5L) 2,4 Bbl. Carb.
Lube.....B2
Air (2 Bbl.).....PA615
Air (4 Bbl.).....PA607
Fuel.....BF840,-K1

Satellite V8-318 (5.2L) Carb.
Lube.....B2
Air.....PA615
Fuel.....BF840,-K1

Satellite V8-383 (6.3L) Carb.
Lube.....B2
Air.....PA693
Fuel.....BF840,-K1

Satellite V8-426 (7.0L) Carb.
Lube.....B2
Air.....PA693
Fuel.....BF840,-K1

Valiant 6-170 (2.8L) Carb.
Lube.....B2
Air.....PA650
Fuel.....BF840,-K1

Valiant 6-225 (3.7L) Carb.
Lube.....B2
Air.....PA650
Fuel.....BF840,-K1

Valiant V8-273 (4.5L) 2,4 Bbl. Carb.
Lube.....B2
Air (2 Bbl.).....PA615
Air (4 Bbl.).....PA607
Fuel.....BF840,-K1

1964

Barracuda V8-273 (4.5L) Carb.
Lube.....B2
Air.....PA615
Fuel.....BF840,-K1

PLYMOUTH 1964 (Cont'd.)

Barracuda V8-361 (5.9L) Carb.
Lube.....B2
Air.....PA693 [74]
Air.....PA607 [73]
Fuel.....BF840,-K1

Belvedere 6-225 (3.7L) Carb.
Lube (Ele.).....P84-2
Lube (Spin-on).....B2
Air.....PA650
Fuel.....BF840,-K1

Belvedere V8-273 (4.5L) Carb.
Lube.....B2
Air.....PA615
Fuel.....BF840,-K1

Belvedere V8-318 (5.2L) Carb.
Lube.....B2
Air.....PA615
Fuel.....BF840,-K1

Belvedere V8-361 (5.9L) Carb.
Lube.....B2
Air.....PA693 [74]
Air.....PA607 [73]
Fuel.....BF840,-K1

Belvedere V8-383 (6.3L) Carb.
Lube.....B2
Air.....PA615
Fuel.....BF840,-K1

Belvedere V8-426 (7.0L) Carb.
Lube.....B2
Fuel.....BF840,-K1

Fury V8-273 (4.5L) 2,4 Bbl. Carb.
Lube.....B2
Air (2 Bbl.).....PA615
Air (4 Bbl.).....PA607
Fuel.....BF840,-K1

Fury V8-361 (5.9L) Carb.
Lube.....B2
Air.....PA693
Fuel.....BF840,-K1

Fury V8-383 (6.3L) Carb.
Lube.....B2
Air.....PA615
Fuel.....BF840,-K1

Fury V8-426 (7.0L) Carb.
Lube.....B2
Air.....PA693 [74]
Air.....PA607 [73]
Fuel.....BF840,-K1

Savoy 6-225 (3.7L) Carb.
Lube (Ele.).....P84-2
Lube (Spin-on).....B2
Air.....PA650
Fuel.....BF840,-K1

Savoy V8-273 (4.5L) 2,4 Bbl. Carb.
Lube (Ele.).....P84-2
Lube (Spin-on).....B2
Air (2 Bbl.).....PA615
Air (4 Bbl.).....PA607
Fuel.....BF840,-K1

Savoy V8-318 (5.2L) Carb.
Lube.....B2
Air.....PA615
Fuel.....BF840,-K1

Savoy V8-361 (5.9L) Carb.
Lube.....B2
Air.....PA693
Fuel.....BF840,-K1

Savoy V8-383 (6.3L) Carb.
Lube.....B2
Air.....PA693
Fuel.....BF840,-K1

Savoy V8-426 (7.0L) Carb.
Lube.....B2
Air.....PA693
Fuel.....BF840,-K1

Valiant 6-170 (2.8L) Carb.
Lube (Ele.).....P84-2
Lube (Spin-on).....B2
Air.....PA650
Fuel.....BF840,-K1

Valiant V8-273 (4.5L) Carb.
Lube.....B2
Air.....PA615
Fuel.....BF840,-K1

PLYMOUTH (Cont'd.)

1963

Belvedere 6-225 (3.7L) 1 Bbl. Carb.
Lube.....B2
Air.....PA650
Fuel.....BF840,-K1

Belvedere V8-318 (5.2L) 2 Bbl. Carb.
Lube.....B2
Air.....PA615
Fuel.....BF840,-K1

Belvedere V8-361 (5.9L) 2 Bbl. Carb.
Lube.....B2
Fuel.....BF840,-K1

Belvedere V8-426 (7.0L) 2,4 Bbl. Carb.
Lube.....B2
Fuel.....BF840,-K1

Belvedere V8-383 (6.3L) Carb.
Lube.....B2
Air.....PA693
Fuel.....BF840,-K1

Fleet Special 6-225 (3.7L) 1 Bbl. Carb.
Lube.....B2
Air.....PA650
Fuel.....BF840,-K1

Fleet Special V8-318 (5.2L) 2 Bbl. Carb.
Lube.....B2
Air.....PA615
Fuel.....BF840,-K1

Fleet Special V8-361 (5.9L) 2 Bbl. Carb.
Lube.....B2
Air.....PA693
Fuel.....BF840,-K1

Fleet Special V8-383 (6.3L) Carb.
Lube.....B2
Air.....PA693
Fuel.....BF840,-K1

Fleet Special V8-426 (7.0L) 4 Bbl. Carb.
Lube.....B2
Air.....PA693
Fuel.....BF840,-K1

Fury V8-361 (5.9L) 2 Bbl. Carb.
Lube.....B2
Air.....PA693
Fuel.....BF840,-K1

Fury V8-383 (6.3L) Carb.
Lube.....B2
Air.....PA693
Fuel.....BF840,-K1

Fury V8-426 (7.0L) Carb.
Lube.....B2
Air.....PA693
Fuel.....BF840,-K1

Savoy 6-225 (3.7L) 1 Bbl. Carb.
Lube.....B2
Air.....PA650
Fuel.....BF840,-K1

Savoy V8-318 (5.2L) Carb.
Lube.....B2
Air.....PA615
Fuel.....BF840,-K1

Savoy V8-361 (5.9L) 2 Bbl. Carb.
Lube.....B2
Air.....PA693
Fuel.....BF840,-K1

Savoy V8-383 (6.3L) Carb.
Lube.....B2
Fuel.....BF840,-K1

Savoy V8-426 (7.0L) Carb.
Lube.....B2
Air.....PA693
Fuel.....BF840,-K1

Valiant 6-170 (2.8L) Carb.
Lube (Ele.).....P84-2
Lube (Spin-on).....B2
Air.....PA650
Fuel.....BF840,-K1

[73] Police. [74] Exc. Police.

OBS = Obsolete. Availability Limited to Distributor Stock.

PLYMOUTH (Cont'd.)

1962

Belvedere 6-225 (3.7L) 1 Bbl. Carb.
- **Lube (Ele.)** ... **P84-2**
- **Lube (Spin-on)** ... **B2**
- **Air** ... **PA650**
- **Fuel** ... **BF840,-K1**

Belvedere V8-318 (5.2L) 2 Bbl. Carb.
- **Lube** ... **P84-2**
- **Air** ... **PA615**
- **Fuel** ... **BF840,-K1**

Belvedere V8-361 (5.9L) 4 Bbl. Carb.
- **Lube** ... **P84-2**
- **Air** ... **PA607**
- **Fuel** ... **BF840,-K1**

Belvedere V8-383 (6.3L) 4 Bbl. Carb.
- **Lube** ... **P84-2**
- **Fuel** ... **BF840,-K1**

Fleet Special 6-225 (3.7L) 1 Bbl. Carb.
- **Lube (Ele.)** ... **P84-2**
- **Lube (Spin-on)** ... **B2**
- **Air** ... **PA650**
- **Fuel** ... **BF840,-K1**

Fleet Special V8-318 (5.2L) 4 Bbl. Carb.
- **Lube** ... **P84-2**
- **Fuel** ... **BF840,-K1**

Fleet Special V8-361 (5.9L) 4 Bbl. Carb.
- **Lube** ... **P84-2**
- **Air** ... **PA607**
- **Fuel** ... **BF840,-K1**

Fleet Special V8-383 (6.3L) 4 Bbl. Carb.
- **Lube** ... **P84-2**
- **Fuel** ... **BF840,-K1**

Fury V8-361 (5.9L) 4 Bbl. Carb.
- **Lube** ... **P84-2**
- **Air** ... **PA607**
- **Fuel** ... **BF840,-K1**

Fury V8-383 (6.3L) 4 Bbl. Carb.
- **Lube** ... **P84-2**
- **Fuel** ... **BF840,-K1**

Savoy 6-225 (3.7L) 1 Bbl. Carb.
- **Lube (Ele.)** ... **P84-2**
- **Lube (Spin-on)** ... **B2**
- **Air** ... **PA650**
- **Fuel** ... **BF840,-K1**

Savoy V8-318 (5.2L) 4 Bbl. Carb.
- **Lube** ... **P84-2**
- **Fuel** ... **BF840,-K1**

Savoy V8-361 (5.9L) 4 Bbl. Carb.
- **Lube** ... **P84-2**
- **Air** ... **PA607**
- **Fuel** ... **BF840,-K1**

Savoy V8-383 (6.3L) 4 Bbl. Carb.
- **Lube** ... **P84-2**
- **Fuel** ... **BF840,-K1**

Valiant 6-170 (2.8L) 1 Bbl. Carb.
- **Lube (Ele.)** ... **P84-2**
- **Lube (Spin-on)** ... **B2**
- **Air** ... **PA650**
- **Fuel** ... **BF840,-K1**

1961

Belvedere 6-225 (3.7L) 1 Bbl. Carb.
- **Lube (Ele.)** ... **P84-2**
- **Lube (Spin-on)** ... **B2**
- **Air** ... **PA650**
- **Fuel** ... **BF840,-K1**

Belvedere V8-318 (5.2L) 2,4 Bbl. Carb.
- **Lube (Ele.)** ... **P84-2**
- **Lube (Spin-on)** ... **B2**
- **Air (2 Bbl.)** ... **PA615**
- **Air (4 Bbl.)** ... **PA607**
- **Fuel** ... **BF840,-K1**

Belvedere V8-361 (5.9L) 4 Bbl. Carb.
- **Lube** ... **B2**
- **Air** ... **PA612**
- **Fuel** ... **BF840,-K1**

Belvedere V8-383 (6.3L) 4 Bbl. Carb.
- **Lube** ... **B2**
- **Air** ... **PA612**
- **Fuel** ... **BF840,-K1**

PLYMOUTH 1961 (Cont'd.)

Custom 6-225 (3.7L) Carb.
- **Lube** ... **B2**
- **Air** ... **PA650**
- **Fuel** ... **BF840,-K1**

Custom V8-361 (5.9L) Carb.
- **Lube** ... **P84-2**
- **Fuel** ... **BF840,-K1**

Custom V8-383 (6.3L) Carb.
- **Lube** ... **P84-2**
- **Fuel** ... **BF840,-K1**

Fleet Special 6-225 (3.7L) 1 Bbl. Carb.
- **Lube (Ele.)** ... **P84-2**
- **Lube (Spin-on)** ... **B2**
- **Air** ... **PA650**
- **Fuel** ... **BF840,-K1**

Fleet Special V8-318 (5.2L) 2,4 Bbl. Carb.
- **Lube (Ele.)** ... **P84-2**
- **Lube (Spin-on)** ... **B2**
- **Air (2 Bbl.)** ... **PA615**
- **Air (4 Bbl.)** ... **PA607**
- **Fuel** ... **BF840,-K1**

Fleet Special V8-361 (5.9L) 4 Bbl. Carb.
- **Lube** ... **B2**
- **Fuel** ... **BF840,-K1**

Fleet Special V8-383 (6.3L) 4 Bbl. Carb.
- **Lube** ... **B2**
- **Fuel** ... **BF840,-K1**

Fury 6-225 (3.7L) 1 Bbl. Carb.
- **Lube (Ele.)** ... **P84-2**
- **Lube (Spin-on)** ... **B2**
- **Air** ... **PA650**
- **Fuel** ... **BF840,-K1**

Fury V8-318 (5.2L) 2,4 Bbl. Carb.
- **Lube (Ele.)** ... **P84-2**
- **Lube (Spin-on)** ... **B2**
- **Air (2 Bbl.)** ... **PA615**
- **Air (4 Bbl.)** ... **PA607**
- **Fuel** ... **BF840,-K1**

Fury V8-361 (5.9L) 4 Bbl. Carb.
- **Lube** ... **B2**
- **Fuel** ... **BF840,-K1**

Fury V8-383 (6.3L) 4 Bbl. Carb.
- **Lube** ... **B2**
- **Fuel** ... **BF840,-K1**

Savoy 6-225 (3.7L) 1 Bbl. Carb.
- **Lube (Ele.)** ... **P84-2**
- **Lube (Spin-on)** ... **B2**
- **Air** ... **PA650**
- **Fuel** ... **BF840,-K1**

Savoy V8-318 (5.2L) 2,4 Bbl. Carb.
- **Lube (Ele.)** ... **P84-2**
- **Lube (Spin-on)** ... **B2**
- **Air (2 Bbl.)** ... **PA615**
- **Air (4 Bbl.)** ... **PA607**
- **Fuel** ... **BF840,-K1**

Savoy V8-361 (5.9L) 4 Bbl. Carb.
- **Lube** ... **B2**
- **Fuel** ... **BF840,-K1**

Savoy V8-383 (6.3L) 4 Bbl. Carb.
- **Lube** ... **B2**
- **Fuel** ... **BF840,-K1**

Sport Wagon 6-225 (3.7L) Carb.
- **Lube** ... **B2**
- **Air** ... **PA650**
- **Fuel** ... **BF840,-K1**

Sport Wagon V8-318 (5.2L) Carb.
- **Lube** ... **P84-2**
- **Fuel** ... **BF840,-K1**

Sport Wagon V8-361 (5.9L) Carb.
- **Lube** ... **P84-2**
- **Fuel** ... **BF840,-K1**

Sport Wagon V8-383 (6.3L) Carb.
- **Lube** ... **P84-2**
- **Fuel** ... **BF840,-K1**

Suburban 6-225 (3.7L) Carb.
- **Lube** ... **B2**
- **Air** ... **PA650**
- **Fuel** ... **BF840,-K1**

Suburban V8-318 (5.2L) Carb.
- **Lube** ... **P84-2**
- **Fuel** ... **BF840,-K1**

PLYMOUTH 1961 (Cont'd.)

Suburban V8-361 (5.9L) Carb.
- **Lube** ... **P84-2**
- **Fuel** ... **BF840,-K1**

Suburban V8-383 (6.3L) 2,4 Bbl. Carb.
- **Lube** ... **P84-2**
- **Air (2 Bbl.)** ... **PA615**
- **Air (4 Bbl.)** ... **PA612**
- **Fuel** ... **BF840,-K1**

Valiant 6-170 (2.8L) 1,4 Bbl. Carb.
- **Lube (Ele.)** ... **P84-2**
- **Lube (Spin-on)** ... **B2**
- **Air** ... **PA650**
- **Fuel** ... **BF840,-K1**

Valiant 6-225 (3.7L) 1,4 Bbl. Carb.
- **Lube (Ele.)** ... **P84-2**
- **Lube (Spin-on)** ... **B2**
- **Air** ... **PA650**
- **Fuel** ... **BF840,-K1**

1960

Belvedere 6-225 (3.7L) 1 Bbl. Carb.
- **Lube (Ele.)** ... **P84-2**
- **Lube (Spin-on)** ... **B2**
- **Air** ... **PA650**
- **Fuel** ... **BF840,-K1**

Belvedere V8-318 (5.2L) 2,4 Bbl. Carb. VIN A,B
- **Lube (Ele.)** ... **P84-2**
- **Lube (Spin-on)** ... **B2**
- **Air (2 Bbl.)** ... **PA615**
- **Air (4 Bbl.)** ... **PA612**
- **Fuel** ... **BF840,-K1**

Belvedere V8-361 (5.9L) 2,4 Bbl. Carb.
- **Lube (Ele.)** ... **P84-2**
- **Lube (Spin-on)** ... **B2**
- **Air (2 Bbl.)** ... **PA615**
- **Air (4 Bbl.)** ... **PA612**
- **Fuel** ... **BF840,-K1**

Belvedere V8-383 (6.3L) 2,4 Bbl. Carb.
- **Lube (Ele.)** ... **P84-2**
- **Lube (Spin-on)** ... **B2**
- **Air (2 Bbl.)** ... **PA615**
- **Air (4 Bbl.)** ... **PA612**
- **Fuel** ... **BF840,-K1**

Custom 6-225 (3.7L) Carb.
- **Lube (Ele.)** ... **P84-2**
- **Lube (Spin-on)** ... **B2**
- **Air** ... **PA650**
- **Fuel** ... **BF840,-K1**

Custom V8-361 (5.9L) 2,4 Bbl. Carb.
- **Lube** ... **P84-2**
- **Air (2 Bbl.)** ... **PA615**
- **Air (4 Bbl.)** ... **PA612**
- **Fuel** ... **BF840,-K1**

Custom V8-383 (6.3L) 2,4 Bbl. Carb.
- **Lube** ... **P84-2**
- **Air (2 Bbl.)** ... **PA615**
- **Air (4 Bbl.)** ... **PA612**
- **Fuel** ... **BF840,-K1**

Fleet Special 6-225 (3.7L) 1 Bbl. Carb.
- **Lube (Ele.)** ... **P84-2**
- **Lube (Spin-on)** ... **B2**
- **Air** ... **PA650**
- **Fuel** ... **BF840,-K1**

Fleet Special V8-318 (5.2L) 2,4 Bbl. Carb. VIN A,B
- **Lube (Ele.)** ... **P84-2**
- **Lube (Spin-on)** ... **B2**
- **Air (2 Bbl.)** ... **PA615**
- **Air (4 Bbl.)** ... **PA612**
- **Fuel** ... **BF840,-K1**

Fleet Special V8-361 (5.9L) 2,4 Bbl. Carb.
- **Lube (Ele.)** ... **P84-2**
- **Lube (Spin-on)** ... **B2**
- **Air (2 Bbl.)** ... **PA615**
- **Air (4 Bbl.)** ... **PA612**
- **Fuel** ... **BF840,-K1**

PLYMOUTH 1960 (Cont'd.)

Fleet Special V8-383 (6.3L) 2,4 Bbl. Carb.
- **Lube** ... **P84-2**
- **Air (2 Bbl.)** ... **PA615**
- **Air (4 Bbl.)** ... **PA612**
- **Fuel** ... **BF840,-K1**

Fury 6-225 (3.7L) 1 Bbl. Carb.
- **Lube (Ele.)** ... **P84-2**
- **Lube (Spin-on)** ... **B2**
- **Air** ... **PA650**
- **Fuel** ... **BF840,-K1**

Fury V8-318 (5.2L) 2,4 Bbl. Carb. VIN A,B
- **Lube (Ele.)** ... **P84-2**
- **Lube (Spin-on)** ... **B2**
- **Air (2 Bbl.)** ... **PA615**
- **Air (4 Bbl.)** ... **PA612**
- **Fuel** ... **BF840,-K1**

Fury V8-361 (5.9L) 2,4 Bbl. Carb.
- **Lube (Ele.)** ... **P84-2**
- **Lube (Spin-on)** ... **B2**
- **Air (2 Bbl.)** ... **PA615**
- **Air (4 Bbl.)** ... **PA612**
- **Fuel** ... **BF840,-K1**

Fury V8-383 (6.3L) 2,4 Bbl. Carb.
- **Lube (Ele.)** ... **P84-2**
- **Lube (Spin-on)** ... **B2**
- **Air (2 Bbl.)** ... **PA615**
- **Air (4 Bbl.)** ... **PA612**
- **Fuel** ... **BF840,-K1**

Savoy 6-225 (3.7L) 1 Bbl. Carb.
- **Lube (Ele.)** ... **P84-2**
- **Lube (Spin-on)** ... **B2**
- **Air** ... **PA650**
- **Fuel** ... **BF840,-K1**

Savoy V8-318 (5.2L) 2,4 Bbl. Carb. VIN A,B
- **Lube (Ele.)** ... **P84-2**
- **Lube (Spin-on)** ... **B2**
- **Air (2 Bbl.)** ... **PA615**
- **Air (4 Bbl.)** ... **PA612**
- **Fuel** ... **BF840,-K1**

Savoy V8-361 (5.9L) 2,4 Bbl. Carb.
- **Lube (Ele.)** ... **P84-2**
- **Lube (Spin-on)** ... **B2**
- **Air (2 Bbl.)** ... **PA615**
- **Air (4 Bbl.)** ... **PA612**
- **Fuel** ... **BF840,-K1**

Savoy V8-383 (6.3L) 4 Bbl. Carb.
- **Lube (Ele.)** ... **P84-2**
- **Lube (Spin-on)** ... **B2**
- **Fuel** ... **BF840,-K1**

Sport Wagon 6-225 (3.7L) Carb.
- **Lube (Ele.)** ... **P84-2**
- **Lube (Spin-on)** ... **B2**
- **Air** ... **PA650**
- **Fuel** ... **BF840,-K1**

Sport Wagon V8-318 (5.2L) 2,4 Bbl. Carb.
- **Lube** ... **P84-2**
- **Air (2 Bbl.)** ... **PA615**
- **Air (4 Bbl.)** ... **PA612**
- **Fuel** ... **BF840,-K1**

Sport Wagon V8-361 (5.9L) 2,4 Bbl. Carb.
- **Lube** ... **P84-2**
- **Air (2 Bbl.)** ... **PA615**
- **Air (4 Bbl.)** ... **PA612**
- **Fuel** ... **BF840,-K1**

Sport Wagon V8-383 (6.3L) 2,4 Bbl. Carb.
- **Lube** ... **P84-2**
- **Air (2 Bbl.)** ... **PA615**
- **Air (4 Bbl.)** ... **PA612**
- **Fuel** ... **BF840,-K1**

Suburban 6-225 (3.7L) Carb.
- **Lube (Ele.)** ... **P84-2**
- **Lube (Spin-on)** ... **B2**
- **Air** ... **PA650**
- **Fuel** ... **BF840,-K1**

Suburban V8-318 (5.2L) 2,4 Bbl. Carb.
- **Lube** ... **P84-2**
- **Air (2 Bbl.)** ... **PA615**
- **Air (4 Bbl.)** ... **PA612**
- **Fuel** ... **BF840,-K1**

OBS = Obsolete. Availability Limited to Distributor Stock.

PLYMOUTH 1960 (Cont'd.)

Suburban V8-361 (5.9L) 2,4 Bbl. Carb.
- **Lube** ... **P84-2**
- **Air (2 Bbl.)** ... **PA615**
- **Air (4 Bbl.)** ... **PA612**
- **Fuel** ... **BF840,-K1**

Suburban V8-383 (6.3L) 2,4 Bbl. Carb.
- **Lube** ... **P84-2**
- **Air (2 Bbl.)** ... **PA615**
- **Air (4 Bbl.)** ... **PA612**
- **Fuel** ... **BF840,-K1**

Valiant 6-170 (2.8L) 1,4 Bbl. Carb.
- **Lube (Ele.)** ... **P84-2**
- **Lube (Spin-on)** ... **B2**
- **Air** ... **PA650**
- **Fuel** ... **BF840,-K1**

1959

Belvedere 6-230 (3.8L) 1 Bbl. Carb.
- **Lube** ... **P73**
- **Air** ... **PA650**
- **Fuel** ... **BF840,-K1**

Belvedere V8-317 (5.2L) 2 Bbl. Carb. VIN A
- **Lube** ... **P84-2**
- **Air** ... **PA615**
- **Fuel** ... **BF840,-K1**

Belvedere V8-318 (5.2L) 4 Bbl. Carb. VIN B
- **Lube** ... **P84-2**
- **Fuel** ... **PF827**

Belvedere V8-360 (5.9L) 4 Bbl. Carb.
- **Lube** ... **P84-2**
- **Fuel** ... **PF827**

Custom V8-317 (5.2L) 2 Bbl. Carb.
- **Lube** ... **P84-2**
- **Air** ... **PA615**
- **Fuel** ... **BF840,-K1**

Custom V8-360 (5.9L) 4 Bbl. Carb.
- **Lube** ... **P84-2**
- **Air** ... **PA612**

Fury 6-230 (3.8L) 1 Bbl. Carb.
- **Lube** ... **P73**
- **Air** ... **PA650**
- **Fuel** ... **BF840,-K1**

Fury V8-317 (5.2L) 2 Bbl. Carb. VIN A
- **Lube** ... **P84-2**
- **Air** ... **PA615**
- **Fuel** ... **BF840,-K1**

Fury V8-318 (5.2L) 4 Bbl. Carb. VIN B
- **Lube** ... **P84-2**
- **Fuel** ... **PF827**

Savoy 6-230 (3.8L) 1 Bbl. Carb.
- **Lube** ... **P73**
- **Air** ... **PA650**
- **Fuel** ... **BF840,-K1**

Savoy V8-317 (5.2L) 2 Bbl. Carb. VIN A
- **Lube** ... **P84-2**
- **Air** ... **PA615**
- **Fuel** ... **BF840,-K1**

Savoy V8-318 (5.2L) 4 Bbl. Carb. VIN B
- **Lube** ... **P84-2**
- **Fuel** ... **PF827**

Savoy V8-360 (5.9L) 4 Bbl. Carb.
- **Lube** ... **P84-2**
- **Fuel** ... **PF827**

Suburban 6-230 (3.8L) 1 Bbl. Carb.
- **Lube** ... **P73**
- **Air** ... **PA650**
- **Fuel** ... **BF840,-K1**

Suburban V8-317 (5.2L) 2 Bbl. Carb. VIN A
- **Lube** ... **P84-2**
- **Air** ... **PA615**
- **Fuel** ... **BF840,-K1**

Suburban V8-318 (5.2L) 4 Bbl. Carb. VIN B
- **Lube** ... **P84-2**
- **Fuel** ... **PF827**

PLYMOUTH 1959 (Cont'd.)

Suburban V8-360 (5.9L) 4 Bbl. Carb.
- **Lube** ... **P84-2**
- **Fuel** ... **PF827**

1958

Belvedere 6-230 (3.8L) 1 Bbl. Carb.
- **Lube** ... **P73**
- **Air** ... **PA650**
- **Fuel** ... **BF840,-K1**

Belvedere V8-317 (5.2L) 2 Bbl. Carb. VIN A
- **Lube** ... **P84-2**
- **Air** ... **PA615**
- **Fuel** ... **BF840,-K1**

Belvedere V8-318 (5.2L) 4 Bbl. Carb. VIN B
- **Lube** ... **P84-2**
- **Air** ... **PA607**
- **Fuel** ... **PF827**

Belvedere V8-350 (5.7L) 2,4 Bbl. Carb.
- **Lube** ... **P84-2**
- **Air** ... **PA615**
- **Fuel** ... **PF827**

Custom V8-317 (5.2L) 2 Bbl. Carb.
- **Lube** ... **P84-2**
- **Air** ... **PA615**
- **Fuel** ... **BF840,-K1**

Custom V8-350 (5.7L) 2,4 Bbl. Carb.
- **Lube** ... **P84-2**
- **Air** ... **PA615**

Fury 6-230 (3.8L) Carb.
- **Lube** ... **P73**
- **Air** ... **PA650**
- **Fuel** ... **BF840,-K1**

Fury V8-317 (5.2L) 2,4 Bbl. Carb. VIN A
- **Lube** ... **P84-2**
- **Air** ... **PA615**
- **Fuel** ... **PF827**

Fury V8-318 (5.2L) 2,4 Bbl. Carb. VIN B
- **Lube** ... **P84-2**
- **Air** ... **PA615**
- **Fuel** ... **PF827**

Fury V8-350 (5.7L) 2,4 Bbl. Carb.
- **Lube** ... **P84-2**
- **Air** ... **PA615**
- **Fuel** ... **PF827**

Plaza 6-230 (3.8L) 1 Bbl. Carb.
- **Lube** ... **P73**
- **Air** ... **PA650**
- **Fuel** ... **BF840,-K1**

Plaza V8-317 (5.2L) 2 Bbl. Carb. VIN A
- **Lube** ... **P84-2**
- **Air** ... **PA615**
- **Fuel** ... **BF840,-K1**

Plaza V8-318 (5.2L) 4 Bbl. Carb. VIN B
- **Lube** ... **P84-2**
- **Air** ... **PA607**
- **Fuel** ... **PF827**

Plaza V8-350 (5.7L) 2,4 Bbl. Carb.
- **Lube** ... **P84-2**
- **Air** ... **PA615**
- **Fuel** ... **PF827**

Savoy 6-230 (3.8L) 1 Bbl. Carb.
- **Lube** ... **P73**
- **Air** ... **PA650**
- **Fuel** ... **BF840,-K1**

Savoy V8-317 (5.2L) 2 Bbl. Carb. VIN A
- **Lube** ... **P84-2**
- **Air** ... **PA615**
- **Fuel** ... **BF840,-K1**

Savoy V8-318 (5.2L) 4 Bbl. Carb. VIN B
- **Lube** ... **P84-2**
- **Air** ... **PA607**
- **Fuel** ... **PF827**

PLYMOUTH 1958 (Cont'd.)

Savoy V8-350 (5.7L) 2,4 Bbl. Carb.
- **Lube** ... **P84-2**
- **Air** ... **PA615**
- **Fuel** ... **PF827**

Suburban 6-230 (3.8L) 1 Bbl. Carb.
- **Lube** ... **P73**
- **Air** ... **PA650**
- **Fuel** ... **BF840,-K1**

Suburban V8-317 (5.2L) 2 Bbl. Carb. VIN A
- **Lube** ... **P84-2**
- **Air** ... **PA615**
- **Fuel** ... **BF840,-K1**

Suburban V8-318 (5.2L) 4 Bbl. Carb. VIN B
- **Lube** ... **P84-2**
- **Air** ... **PA607**
- **Fuel** ... **PF827**

Suburban V8-350 (5.7L) 2,4 Bbl. Carb.
- **Lube** ... **P84-2**
- **Air** ... **PA615**
- **Fuel** ... **PF827**

1957

Belvedere 6-230 (3.8L) 1,2 Bbl. Carb.
- **Lube** ... **P73**
- **Air** ... **PA650**
- **Fuel** ... **BF840,-K1**
- **PowSteer.** ... **P183**

Belvedere V8-273 (4.5L) 2 Bbl. Carb.
- **Lube** ... **P84-2**
- **Air** ... **PA615**
- **Fuel** ... **BF840,-K1**
- **PowSteer.** ... **P183**

Belvedere V8-299 (4.9L) 2,4 Bbl. Carb.
- **Lube** ... **P84-2**
- **Air (2 Bbl.)** ... **PA615**
- **Air (4 Bbl.)** ... **PA612**
- **Fuel** ... **BF840,-K1**
- **PowSteer.** ... **P183**

Fury 6-230 (3.8L) 2 Bbl. Carb.
- **Lube** ... **P73**
- **Air** ... **PA650**
- **Fuel** ... **BF840,-K1**
- **PowSteer.** ... **P183**

Fury V8-299 (4.9L) 4 Bbl. Carb.
- **Lube** ... **P84-2**
- **Air** ... **PA612**
- **PowSteer.** ... **P183**

Fury V8-317 (5.2L) 2,4 Bbl. Carb.
- **Lube** ... **P84-2**
- **Air** ... **PA612**
- **PowSteer.** ... **P183**

Plaza 6-230 (3.8L) 1,2 Bbl. Carb.
- **Lube** ... **P73**
- **Air** ... **PA650**
- **Fuel** ... **BF840,-K1**
- **PowSteer.** ... **P183**

Plaza V8-273 (4.5L) 2 Bbl. Carb.
- **Lube** ... **P84-2**
- **Air** ... **PA615**
- **Fuel** ... **BF840,-K1**
- **PowSteer.** ... **P183**

Plaza V8-299 (4.9L) 2,4 Bbl. Carb.
- **Lube** ... **P84-2**
- **Air (2 Bbl.)** ... **PA615**
- **Air (4 Bbl.)** ... **PA612**
- **Fuel** ... **BF840,-K1**
- **PowSteer.** ... **P183**

Savoy 6-230 (3.8L) 1,2 Bbl. Carb.
- **Lube** ... **P73**
- **Air** ... **PA650**
- **Fuel** ... **BF840,-K1**
- **PowSteer.** ... **P183**

Savoy V8-273 (4.5L) 2 Bbl. Carb.
- **Lube** ... **P84-2**
- **Air** ... **PA615**
- **Fuel** ... **BF840,-K1**
- **PowSteer.** ... **P183**

PLYMOUTH 1957 (Cont'd.)

Savoy V8-299 (4.9L) 2,4 Bbl. Carb.
- **Lube** ... **P84-2**
- **Air (2 Bbl.)** ... **PA615**
- **Air (4 Bbl.)** ... **PA612**
- **Fuel** ... **BF840,-K1**
- **PowSteer.** ... **P183**

Suburban 6-230 (3.8L) 1,2 Bbl. Carb.
- **Lube** ... **P73**
- **Air** ... **PA650**
- **Fuel** ... **BF840,-K1**
- **PowSteer.** ... **P183**

Suburban V8-273 (4.5L) 2 Bbl. Carb.
- **Lube** ... **P84-2**
- **Air** ... **PA615**
- **Fuel** ... **BF840,-K1**
- **PowSteer.** ... **P183**

Suburban V8-299 (4.9L) 2,4 Bbl. Carb.
- **Lube** ... **P84-2**
- **Air (2 Bbl.)** ... **PA615**
- **Air (4 Bbl.)** ... **PA612**
- **Fuel** ... **BF840,-K1**
- **PowSteer.** ... **P183**

1956

Belvedere 6-230 (3.8L) 1 Bbl. Carb.
- **Lube** ... **P73**
- **Fuel** ... **BF840,-K1**
- **PowSteer.** ... **P183**

Belvedere V8-270 (4.4L) 2 Bbl. Carb.
- **Lube** ... **P84-2**
- **Fuel** ... **BF840,-K1**
- **PowSteer.** ... **P183**

Belvedere V8-273 (4.5L) 2,4 Bbl. Carb.
- **Lube** ... **P84-2**
- **Fuel** ... **BF840,-K1**

Fury 6-230 (3.8L) Carb.
- **Fuel** ... **BF840,-K1**
- **PowSteer.** ... **P183**

Fury V8-270 (4.4L) Carb.
- **Fuel** ... **BF840,-K1**

Fury V8-273 (4.5L) Carb.
- **Fuel** ... **BF840,-K1**

Fury V8-303 (5.0L) 4 Bbl. Carb.
- **Lube** ... **P84-2**
- **Fuel** ... **BF840,-K1**

Plaza 6-230 (3.8L) 1 Bbl. Carb.
- **Lube** ... **P73**
- **Fuel** ... **BF840,-K1**
- **PowSteer.** ... **P183**

Plaza V8-270 (4.4L) 2 Bbl. Carb.
- **Lube** ... **P84-2**
- **Fuel** ... **BF840,-K1**

Plaza V8-273 (4.5L) 2,4 Bbl. Carb.
- **Lube** ... **P84-2**
- **Fuel** ... **BF840,-K1**

Savoy 6-230 (3.8L) 1 Bbl. Carb.
- **Lube** ... **P73**
- **Fuel** ... **BF840,-K1**
- **PowSteer.** ... **P183**

Savoy V8-270 (4.4L) 2 Bbl. Carb.
- **Lube** ... **P84-2**
- **Fuel** ... **BF840,-K1**

Savoy V8-273 (4.5L) 2,4 Bbl. Carb.
- **Lube** ... **P84-2**
- **Fuel** ... **BF840,-K1**

Suburban 6-230 (3.8L) 1 Bbl. Carb.
- **Lube** ... **P73**
- **Fuel** ... **BF840,-K1**
- **PowSteer.** ... **P183**

Suburban V8-270 (4.4L) 2 Bbl. Carb.
- **Lube** ... **P84-2**
- **Fuel** ... **BF840,-K1**

Suburban V8-273 (4.5L) 2,4 Bbl. Carb.
- **Lube** ... **P84-2**
- **Fuel** ... **BF840,-K1**

1955

Belvedere 6-230 (3.8L) 1 Bbl. Carb.
- **Lube** ... **P73**
- **Fuel** ... **BF840,-K1**
- **PowSteer.** ... **P183**

OBS = Obsolete. Availability Limited to Distributor Stock.

PLYMOUTH 1955 (Cont'd.)

Belvedere V8-239 (3.9L) 2 Bbl. Carb.
Lube.....P73
Fuel.....BF840,-K1
PowSteer......P183

Belvedere V8-259 (4.2L) 2,4 Bbl. Carb.
Lube.....P73
Fuel.....BF840,-K1
PowSteer......P183

Belvedere V8-260 (4.3L) Carb.
Fuel.....BF840,-K1
PowSteer......P183

Plaza 6-230 (3.8L) 1 Bbl. Carb.
Lube.....P73
Fuel.....BF840,-K1
PowSteer......P183

Plaza V8-239 (3.9L) 2 Bbl. Carb.
Lube.....P73
Fuel.....BF840,-K1
PowSteer......P183

Plaza V8-259 (4.2L) 2,4 Bbl. Carb.
Lube.....P73
Fuel.....BF840,-K1
PowSteer......P183

Plaza V8-260 (4.3L) Carb.
Fuel.....BF840,-K1
PowSteer......P183

Savoy 6-230 (3.8L) 1 Bbl. Carb.
Lube.....P73
Fuel.....BF840,-K1
PowSteer......P183

Savoy V8-239 (3.9L) 2 Bbl. Carb.
Lube.....P73
Fuel.....BF840,-K1
PowSteer......P183

Savoy V8-259 (4.2L) 2,4 Bbl. Carb.
Lube.....P73
Fuel.....BF840,-K1
PowSteer......P183

Savoy V8-260 (4.3L) Carb.
Fuel.....BF840,-K1
PowSteer......P183

Suburban 6-230 (3.8L) 1 Bbl. Carb.
Lube.....P73
Fuel.....BF840,-K1
PowSteer......P183

Suburban V8-239 (3.9L) 2 Bbl. Carb.
Lube.....P73
Fuel.....BF840,-K1
PowSteer......P183

Suburban V8-259 (4.2L) 2,4 Bbl. Carb.
Lube.....P73
Fuel.....BF840,-K1
PowSteer......P183

Suburban V8-260 (4.3L) Carb.
Fuel.....BF840,-K1
PowSteer......P183

1954

Belvedere 6-218 (3.6L) 1 Bbl. Carb.
Lube.....P73
Fuel.....BF840,-K1
PowSteer......P183

Belvedere 6-230 (3.8L) 1 Bbl. Carb.
Lube.....P73
Fuel.....BF840,-K1
PowSteer......P183

Plaza 6-218 (3.6L) 1 Bbl. Carb.
Lube.....P73
Fuel.....BF840,-K1
PowSteer......P183

Plaza 6-230 (3.8L) 1 Bbl. Carb.
Lube.....P73
Fuel.....BF840,-K1
PowSteer......P183

Savoy 6-218 (3.6L) 1 Bbl. Carb.
Lube.....P73
Fuel.....BF840,-K1
PowSteer......P183

Savoy 6-230 (3.8L) 1 Bbl. Carb.
Lube.....P73
Fuel.....BF840,-K1
PowSteer......P183

PLYMOUTH 1954 (Cont'd.)

Suburban 6-218 (3.6L) 1 Bbl. Carb.
Lube.....P73
Fuel.....BF840,-K1
PowSteer......P183

Suburban 6-230 (3.8L) 1 Bbl. Carb.
Lube.....P73
Fuel.....BF840,-K1
PowSteer......P183

1953

Belvedere 6-218 (3.6L) 1 Bbl. Carb.
Lube.....P73
Fuel.....BF840,-K1
PowSteer......P186

Cambridge 6-218 (3.6L) 1 Bbl. Carb.
Lube.....P73
Fuel.....BF840,-K1
PowSteer......P186

Cranbrook 6-218 (3.6L) 1 Bbl. Carb.
Lube.....P73
Fuel.....BF840,-K1
PowSteer......P186

Savoy 6-218 (3.6L) 1 Bbl. Carb.
Lube.....P73
Fuel.....BF840,-K1
PowSteer......P186

Suburban 6-218 (3.6L) Carb.
Lube.....P73
Fuel.....BF840,-K1
PowSteer......P186

1952

Cambridge 6-218 (3.6L) 1 Bbl. Carb.
Lube.....P73
Fuel.....BF840,-K1

Concord 6-218 (3.6L) 1 Bbl. Carb.
Lube.....P73
Fuel.....BF840,-K1

Cranbrook 6-218 (3.6L) 1 Bbl. Carb.
Lube.....P73
Fuel.....BF840,-K1

Suburban 6-218 (3.6L) 1 Bbl. Carb.
Lube.....P73
Fuel.....BF840,-K1

1951

Cambridge 6-218 (3.6L) 1 Bbl. Carb.
Lube.....P73
Fuel.....BF840,-K1

Concord 6-218 (3.6L) 1 Bbl. Carb.
Lube.....P73
Fuel.....BF840,-K1

Cranbrook 6-218 (3.6L) 1 Bbl. Carb.
Lube.....P73
Fuel.....BF840,-K1

Suburban 6-218 (3.6L) 1 Bbl. Carb.
Lube.....P73
Fuel.....BF840,-K1

1950

Deluxe 6-218 (3.6L) 1 Bbl. Carb.
Lube.....P73
Fuel.....BF840,-K1

Suburban 6-218 (3.6L) 1 Bbl. Carb.
Lube.....P73
Fuel.....BF840,-K1

1949

Deluxe 6-218 (3.6L) 1 Bbl. Carb.
Fuel.....BF840,-K1

Suburban 6-218 (3.6L) 1 Bbl. Carb.
Fuel.....BF840,-K1

PONTIAC

1979

Acadian 4-1606cc (1.6L) Carb. VIN 0,E
Lube.....B43-S
Air.....PA2077
Fuel.....PF893,-RV

PONTIAC 1979 (Cont'd.)

Bonneville V8-301 (4.9L) 2,4 Bbl. VIN W,Y
Lube.....B43-S
Air.....PA2006
Fuel.....PF894,-RV
Oil Vapor.....SA2027
Fuel Vapor.....SA2046
Trans. (TH350).....18031

Bonneville V8-350 (5.7L) 4 Bbl. VIN R
Lube.....B30
Air.....PA1758
Fuel.....PF894,-RV
Fuel Vapor.....SA2046
Trans......18031

Bonneville V8-350 (5.7L) 4 Bbl. VIN X
Lube.....B39
Air.....PA2008
Fuel.....PF894,-RV
Oil Vapor.....SA2027
Fuel Vapor.....SA2046
Trans......18031

Bonneville V8-403 (6.6L) 4 Bbl. VIN K
Lube.....B30
Air.....PA1758
Fuel.....PF894,-RV
Fuel Vapor.....SA2046
Trans......18031

Catalina V6-231 (3.8L) 2 Bbl. VIN A
Lube.....B43-S
Air.....PA1680
Fuel.....PF893,-RV
Fuel Vapor.....SA2046
Trans......18031

Catalina V8-301 (4.9L) 2,4 Bbl. VIN W,Y
Lube.....B43-S
Air.....PA2006
Fuel.....PF894,-RV
Oil Vapor.....SA2027
Fuel Vapor.....SA2046
Trans......18031

Catalina V8-350 (5.7L) 4 Bbl. VIN R
Lube.....B30
Air.....PA1758
Fuel.....PF894,-RV
Fuel Vapor.....SA2046
Trans......18031

Catalina V8-350 (5.7L) 4 Bbl. VIN X
Lube.....B39
Air.....PA2008
Fuel.....PF894,-RV
Oil Vapor.....SA2027
Fuel Vapor.....SA2046
Trans......18031

Catalina V8-403 (6.6L) 4 Bbl. VIN K
Lube.....B30
Air.....PA1758
Fuel.....PF894,-RV
Fuel Vapor.....SA2046
Trans......18031

Firebird V6-231 (3.8L) 2 Bbl. VIN A
Lube.....B43-S
Air.....PA2006
Fuel.....PF893,-RV
Oil Vapor.....SA2027
Fuel Vapor.....SA2046
Trans......18031

Firebird V8-301 (4.9L) 2,4 Bbl. VIN W,Y
Lube.....B43-S
Air (Exc. 4 Bbl. Trans Am).....PA2006
Fuel.....PF894,-RV
Oil Vapor.....SA2027
Fuel Vapor.....SA2046
Trans......18031

Firebird V8-305 (5.0L) 2 Bbl. VIN G
Lube.....B27
Air.....PA2008
Fuel.....PF893,-RV
Oil Vapor.....SA2027
Fuel Vapor.....SA2046
Trans......18031

PONTIAC 1979 (Cont'd.)

Firebird V8-350 (5.7L) 4 Bbl. VIN L
Lube.....B27
Air.....PA2008
Fuel.....PF894,-RV
Oil Vapor.....SA2027
Fuel Vapor.....SA2046
Trans......18031

Firebird V8-400 (6.6L) 4 Bbl. VIN Z
Lube.....B39
Air.....PA1758
Fuel.....PF894,-RV
Oil Vapor.....SA2027
Fuel Vapor.....SA2046
Trans......18031

Firebird V8-403 (6.6L) 4 Bbl. VIN K
Lube.....B30
Air.....PA1758
Fuel.....PF894,-RV
Fuel Vapor.....SA2046
Trans......18031

Grand Am 6-231 (3.8L) 2 Bbl. VIN A
Lube.....B43-S
Air.....PA1680
Fuel.....PF893,-RV
Fuel Vapor.....SA2046

Grand Am V8-301 (4.9L) 2,4 Bbl. VIN W,Y
Lube.....B43-S
Air.....PA2006
Fuel.....PF894,-RV
Oil Vapor.....SA2027
Fuel Vapor.....SA2046

Grand Am V8-305 (5.0L) 2 Bbl. VIN H
Lube.....B27
Air.....PA2008
Fuel.....PF894,-RV
Oil Vapor.....SA2027
Fuel Vapor.....SA2046

Grand LeMans, LeMans, LeMans Safari V6-231 (3.8L) 2 Bbl. VIN 2,A
Lube.....B43-S
Air.....PA1680
Fuel.....PF893,-RV
Fuel Vapor.....SA2046
Trans. (TH350).....6021
Trans. (TH350C, TH375B).....18031

Grand LeMans, LeMans, LeMans Safari V8-267 (4.4L) Carb. VIN J
Lube.....B27
Air.....PA1680
Fuel.....PF894,-RV

Grand LeMans, LeMans, LeMans Safari V8-301 (4.9L) 2,4 Bbl. VIN W,Y
Lube.....B43-S
Air.....PA2006
Fuel.....PF894,-RV
Oil Vapor.....SA2027
Fuel Vapor.....SA2046
Trans. (TH350C, TH375B).....18031

Grand LeMans, LeMans, LeMans Safari V8-305 (5.0L) 4 Bbl. VIN H
Lube.....B27
Air.....PA2008
Fuel.....PF894,-RV
Oil Vapor.....SA2027
Fuel Vapor.....SA2046
Trans. (TH350C, TH375B).....18031

Grand LeMans, LeMans, LeMans Safari V8-350 (5.7L) 4 Bbl. VIN L
Lube.....B27
Air.....PA2008
Fuel.....PF894,-RV
Oil Vapor.....SA2027
Fuel Vapor.....SA2046
Trans......18031

Grand Prix V6-231 (3.8L) 2 Bbl. VIN 2,A
Lube.....B43-S
Air.....PA1680
Fuel.....PF893,-RV
Fuel Vapor.....SA2046

OBS = Obsolete. Availability Limited to Distributor Stock.

PONTIAC 1979 (Cont'd.)

Grand Prix V8-301 (4.9L) 2,4 Bbl.
VIN W,Y
Lube.....B43-S
Air.....PA2006
Fuel.....PF894,-RV
Oil Vapor.....SA2027
Fuel Vapor.....SA2046

Grand Prix V8-305 (5.0L) 4 Bbl.
VIN H
Lube.....B27
Air.....PA2008
Fuel.....PF894,-RV
Oil Vapor.....SA2027
Fuel Vapor.....SA2046

Laurentian V8-305 (5.0L) 2 Bbl.
VIN G
Lube.....B27
Air.....PA2008
Oil Vapor.....SA2027
Fuel Vapor.....SA2046

Laurentian V8-350 (5.7L) Carb. VIN L
Lube.....B27
Air.....PA2008
Fuel.....PF894,-RV
Oil Vapor.....SA2027
Fuel Vapor.....SA2046
Trans......6021

Parisienne V8-305 (5.0L) 2 Bbl.
VIN G
Lube.....B27
Air.....PA2008
Oil Vapor.....SA2027
Fuel Vapor.....SA2046

Parisienne V8-350 (5.7L) 4 Bbl.
VIN L
Lube.....B27
Air.....PA2008
Fuel.....PF894,-RV
Oil Vapor.....SA2027
Fuel Vapor.....SA2046
Trans......6021

Phoenix V6-231 (3.8L) 2 Bbl. VIN A
Lube.....B43-S
Air.....PA1680
Fuel.....PF893,-RV
Fuel Vapor.....SA2046
Trans. (TH350C, TH375B).... 18031

Phoenix V8-305 (5.0L) 2 Bbl. VIN G
Lube.....B27
Air.....PA1680
Fuel.....PF893,-RV
Oil Vapor.....SA2027
Fuel Vapor.....SA2046
Trans. (TH350C, TH375B).... 18031

Phoenix V8-350 (5.7L) 4 Bbl. VIN L
Lube.....B27
Air.....PA2008
Fuel.....PF894,-RV
Oil Vapor.....SA2027
Fuel Vapor.....SA2046
Trans......18031

Sunbird 4-151 (2.5L) 2 Bbl. VIN 1,9,V
Lube (Exc. Calif.).....B43-S
Lube (Calif.).....B27
Air (Exc. Calif.)..... PA2082 OBS
Fuel.....PF893,-RV
Oil Vapor (Exc. Calif.)..... SA2027
Fuel Vapor.....SA2046

Sunbird V6-231 (3.8L) 2 Bbl. VIN A
Lube.....B43-S
Air.....PA2006
Fuel.....PF893,-RV
Oil Vapor.....SA2027
Fuel Vapor.....SA2046
Trans. (TH350C, TH375B).... 18031

Sunbird V8-305 (5.0L) 2 Bbl. VIN G
Lube.....B27
Air.....PA658
Fuel.....PF893,-RV
Oil Vapor.....SA2027
Fuel Vapor.....SA2046
Trans......18031

PONTIAC (Cont'd.)

1978

Acadian 4-1606cc (1.6L) Carb.
VIN E,J
Lube.....B43-S
Air.....PA2077
Fuel.....PF893,-RV

Bonneville V8-301 (4.9L) 2,4 Bbl.
VIN W,Y
Lube.....B43-S
Air.....PA2006
Fuel.....PF894,-RV
Oil Vapor.....SA2027
Fuel Vapor.....SA2046
Trans......18031

Bonneville V8-350 (5.7L) 4 Bbl.
VIN R
Lube.....B30
Air.....PA1758
Fuel.....PF894,-RV
Fuel Vapor.....SA2046
Trans......18031

Bonneville V8-350 (5.7L) 4 Bbl.
VIN X
Lube.....B39
Air.....PA2008
Fuel.....PF894,-RV
Oil Vapor.....SA2027
Fuel Vapor.....SA2046
Trans......18031

Bonneville V8-400 (6.6L) 4 Bbl. VIN Z
Lube.....B39
Air.....PA1758
Fuel.....PF894,-RV
Oil Vapor.....SA2027
Fuel Vapor.....SA2046
Trans......18031

Bonneville V8-403 (6.6L) 4 Bbl.
VIN K
Lube.....B30
Air.....PA1758
Fuel.....PF894,-RV
Fuel Vapor.....SA2046
Trans......18031

Catalina 6-231 (3.8L) 2 Bbl. VIN A
Lube.....B43-S
Air.....PA1680
Fuel.....PF893,-RV
Oil Vapor.....SA2027
Fuel Vapor.....SA2046
Trans......18031

Catalina 6-250 (4.1L) Carb. VIN D
Lube.....B27
Air.....PA658
Fuel.....PF893,-RV
Oil Vapor.....SA2027
Fuel Vapor.....SA2046
Trans......6021

Catalina V8-301 (4.9L) 2 Bbl. VIN Y
Lube.....B43-S
Air.....PA2006
Fuel.....PF894,-RV
Oil Vapor.....SA2027
Fuel Vapor.....SA2046
Trans......18031

Catalina V8-350 (5.7L) 4 Bbl. VIN R
Lube.....B30
Air.....PA1758
Fuel.....PF894,-RV
Fuel Vapor.....SA2046
Trans......18031

Catalina V8-350 (5.7L) 4 Bbl. VIN X
Lube.....B39
Air.....PA2008
Fuel.....PF894,-RV
Oil Vapor.....SA2027
Fuel Vapor.....SA2046
Trans......18031

Catalina V8-400 (6.6L) 4 Bbl. VIN Z
Lube.....B39
Air.....PA1758
Fuel.....PF894,-RV
Oil Vapor.....SA2027
Fuel Vapor.....SA2046
Trans......18031

PONTIAC 1978 (Cont'd.)

Catalina V8-403 (6.6L) 4 Bbl. VIN K
Lube.....B30
Air.....PA1758
Fuel.....PF894,-RV
Fuel Vapor.....SA2046
Trans......18031

Firebird V6-231 (3.8L) 2 Bbl. VIN A
Lube.....B43-S
Air.....PA658
Fuel.....PF893,-RV
Oil Vapor.....SA2027
Fuel Vapor.....SA2046
Trans......18031

Firebird V8-305 (5.0L) 2 Bbl. VIN U
Lube.....B27
Air.....PA2006
Fuel (1 In. Ele.).....PF893,-RV
Fuel (2 1/32 In. Ele.)..... PF894,-RV
Oil Vapor.....SA2027
Fuel Vapor.....SA2046
Trans......18031

Firebird V8-350 (5.7L) 4 Bbl. VIN L
Lube.....B27
Air.....PA2008
Fuel.....PF894,-RV
Oil Vapor.....SA2027
Fuel Vapor.....SA2046
Trans......18031

Firebird V8-400 (6.6L) 4 Bbl. VIN Z
Lube.....B39
Air.....PA1758
Fuel.....PF894,-RV
Oil Vapor.....SA2027
Fuel Vapor.....SA2046
Trans......18031

Firebird V8-403 (6.6L) 4 Bbl. VIN K
Lube.....B30
Air.....PA1758
Fuel.....PF894,-RV
Fuel Vapor.....SA2046
Trans......18031

Grand Am V8-301 (4.9L) 2,4 Bbl.
VIN W,Y
Lube.....B43-S
Air.....PA2006
Fuel.....PF894,-RV
Oil Vapor.....SA2027
Fuel Vapor.....SA2046

Grand Am V8-305 (5.0L) 2 Bbl.
VIN U
Lube.....B27
Air.....PA2006
Fuel (1 In. Ele.).....PF893,-RV
Fuel (2 1/32 In. Ele.)..... PF894,-RV
Oil Vapor.....SA2027
Fuel Vapor.....SA2046

Grand Prix 6-231 (3.8L) 2 Bbl. VIN A
Lube.....B43-S
Air.....PA2006
Fuel.....PF893,-RV
Oil Vapor.....SA2027
Fuel Vapor.....SA2046

Grand Prix V8-301 (4.9L) 2,4 Bbl.
VIN W,Y
Lube.....B43-S
Air.....PA2006
Fuel.....PF894,-RV
Oil Vapor.....SA2027
Fuel Vapor.....SA2046

Grand Prix V8-305 (5.0L) 2 Bbl.
VIN U
Lube.....B27
Air.....PA2006
Fuel (1 In. Ele.).....PF893,-RV
Fuel (2 1/32 In. Ele.)..... PF894,-RV
Oil Vapor.....SA2027
Fuel Vapor.....SA2046

Grand Safari V8-400 (6.6L) 4 Bbl.
VIN Z
Lube.....B39
Air.....PA1758
Fuel.....PF894,-RV
Oil Vapor.....SA2027
Fuel Vapor.....SA2046
Trans......18031

PONTIAC 1978 (Cont'd.)

Grand Safari V8-403 (6.6L) 4 Bbl.
VIN K
Lube.....B30
Air.....PA1758
Fuel.....PF894,-RV
Fuel Vapor.....SA2046
Trans......18031

Laurentian 6-250 (4.1L) VIN D
Lube.....B27
Air.....PA2007
Fuel.....PF893,-RV
Oil Vapor.....SA2027
Fuel Vapor.....SA2046
Trans......18031

Laurentian V8-305 (5.0L) VIN U
Lube.....B27
Air.....PA2006
Fuel.....PF893,-RV
Oil Vapor.....SA2027
Fuel Vapor.....SA2046
Trans......6021

Laurentian V8-350 (5.7L) Carb. VIN L
Lube.....B27
Air.....PA2008
Fuel.....PF894,-RV
Oil Vapor.....SA2027
Fuel Vapor.....SA2046
Trans......18031

LeMans V6-231 (3.8L) 2 Bbl. VIN A
Lube.....B43-S
Air.....PA2006
Fuel.....PF893,-RV
Oil Vapor.....SA2027
Fuel Vapor.....SA2046
Trans. (TH350).....6021
Trans. (TH350C, TH375B).... 18031

LeMans V8-305 (5.0L) 2 Bbl. VIN U
Lube.....B27
Air.....PA2006
Fuel (1 In. Ele.).....PF893,-RV
Fuel (2 1/32 In. Ele.)..... PF894,-RV
Oil Vapor.....SA2027
Fuel Vapor.....SA2046
Trans. (TH350C, TH375B).... 18031

LeMans V8-350 (5.7L) 4 Bbl. VIN L
Lube.....B27
Air.....PA2008
Fuel.....PF894,-RV
Oil Vapor.....SA2027
Fuel Vapor.....SA2046
Trans......18031

Parisienne 6-250 (4.1L) Carb. VIN D
Lube.....B27
Air.....PA2007
Fuel.....PF893,-RV
Oil Vapor.....SA2027
Fuel Vapor.....SA2046
Trans......18031

Parisienne V8-305 (5.0L) Carb.
VIN U
Lube.....B27
Air.....PA2006
Fuel.....PF893,-RV
Oil Vapor.....SA2027
Fuel Vapor.....SA2046
Trans......6021

Parisienne V8-350 (5.7L) Carb. VIN L
Lube.....B27
Air.....PA2008
Fuel.....PF894,-RV
Oil Vapor.....SA2027
Fuel Vapor.....SA2046
Trans......18031

Phoenix 4-151 (2.5L) 2 Bbl. VIN V
Lube.....B27
Fuel.....PF893,-RV
Fuel Vapor.....SA2046

Phoenix V6-231 (3.8L) 2 Bbl. VIN A
Lube.....B43-S
Air.....PA1680
Fuel.....PF893,-RV
Oil Vapor.....SA2027
Fuel Vapor.....SA2046
Trans. (TH350C, TH375B).... 18031

OBS = Obsolete. Availability Limited to Distributor Stock.

PONTIAC 1978 (Cont'd.)

Phoenix V8-305 (5.0L) 2 Bbl. VIN U
- **Lube**.....B27
- **Air**.....PA2006
- **Fuel (1 In. Ele.)**.....PF893,-RV
- **Fuel (2 1/32 In. Ele.)**.....PF894,-RV
- **Oil Vapor**.....SA2027
- **Fuel Vapor**.....SA2046
- **Trans. (TH350C, TH375B)**.....18031

Phoenix V8-350 (5.7L) 4 Bbl. VIN L
- **Lube**.....B27
- **Air**.....PA2008
- **Fuel**.....PF894,-RV
- **Oil Vapor**.....SA2027
- **Fuel Vapor**.....SA2046
- **Trans.**.....18031

Sunbird 4-151 (2.5L) 2 Bbl. VIN 1,V
- **Lube**.....B27
- **Fuel**.....PF893,-RV
- **Fuel Vapor**.....SA2046

Sunbird V6-231 (3.8L) 2 Bbl. VIN A
- **Lube**.....B43-S
- **Air**.....PA658
- **Fuel**.....PF893,-RV
- **Oil Vapor**.....SA2027
- **Fuel Vapor**.....SA2046
- **Trans. (TH350C, TH375B)**.....18031

Sunbird V8-305 (5.0L) 2 Bbl. VIN U
- **Lube**.....B27
- **Air**.....PA2006
- **Fuel (1 In. Ele.)**.....PF893,-RV
- **Fuel (2 1/32 In. Ele.)**.....PF894,-RV
- **Oil Vapor**.....SA2027
- **Fuel Vapor**.....SA2046
- **Trans. (TH350C, TH375B)**.....18031

1977

Acadian 4-1393cc (1.4L) Carb. VIN 1
- **Lube**.....B43-S
- **Fuel**.....PF893,-RV

Acadian 4-1606cc (1.6L) Carb. VIN E
- **Lube**.....B43-S
- **Air**.....PA2077
- **Fuel**.....PF894,-RV

Astre 4-140 (2.3L) 2 Bbl. VIN B
- **Lube**.....B27
- **Fuel**.....PF893,-RV
- **Fuel Vapor**.....SA2046
- **Trans.**.....18031

Astre 4-151 (2.5L) 2 Bbl. VIN V
- **Lube**.....B27
- **Fuel**.....PF893,-RV
- **Fuel Vapor**.....SA2046

Bonneville V8-301 (4.9L) 2 Bbl. VIN Y
- **Lube**.....B31
- **Air**.....PA2006
- **Fuel**.....PF894,-RV
- **Oil Vapor**.....SA2027
- **Fuel Vapor**.....SA2046
- **Trans. (TH350)**.....6021
- **Trans. (TH350)**.....18031
- **Trans. (TH400)**.....6020

Bonneville V8-350 (5.7L) 4 Bbl. VIN P,R
- **Lube**.....B39
- **Air**.....PA1758
- **Fuel**.....PF894,-RV
- **Oil Vapor**.....SA2027
- **Fuel Vapor**.....SA2046
- **Trans.**.....18031

Bonneville V8-400 (6.6L) 4 Bbl. VIN Z
- **Lube**.....B39
- **Air**.....PA1758
- **Fuel**.....PF894,-RV
- **Oil Vapor**.....SA2027
- **Fuel Vapor**.....SA2046
- **Trans.**.....18031

Bonneville V8-403 (6.6L) 4 Bbl. VIN K
- **Lube**.....B39
- **Air**.....PA1758
- **Fuel**.....PF894,-RV
- **Oil Vapor**.....SA2027
- **Fuel Vapor**.....SA2046
- **Trans.**.....18031

PONTIAC 1977 (Cont'd.)

Catalina 6-231 (3.8L) 2 Bbl. VIN A,C
- **Lube**.....B43-S
- **Air**.....PA1680
- **Fuel**.....PF893,-RV
- **Oil Vapor**.....SA2027
- **Fuel Vapor**.....SA2046
- **Trans.**.....18031

Catalina 6-250 (4.1L) Carb. VIN D
- **Lube**.....B27
- **Air**.....PA2007
- **Fuel**.....PF893,-RV
- **Oil Vapor**.....SA2027
- **Fuel Vapor**.....SA2046
- **Trans.**.....18031

Catalina V8-301 (4.9L) 2 Bbl. VIN Y
- **Lube**.....B31
- **Air**.....PA2006
- **Fuel**.....PF894,-RV
- **Oil Vapor**.....SA2027
- **Fuel Vapor**.....SA2046

Catalina V8-350 (5.7L) 4 Bbl. VIN P,R
- **Lube**.....B39
- **Air**.....PA1758
- **Fuel**.....PF894,-RV
- **Oil Vapor**.....SA2027
- **Fuel Vapor**.....SA2046
- **Trans.**.....18031

Catalina V8-400 (6.6L) 4 Bbl. VIN Z
- **Lube**.....B39
- **Air**.....PA1758
- **Fuel**.....PF894,-RV
- **Oil Vapor**.....SA2027
- **Fuel Vapor**.....SA2046
- **Trans.**.....18031

Catalina V8-403 (6.6L) 4 Bbl. VIN K
- **Lube**.....B39
- **Air**.....PA1758
- **Fuel**.....PF894,-RV
- **Oil Vapor**.....SA2027
- **Fuel Vapor**.....SA2046
- **Trans.**.....18031

Firebird V6-231 (3.8L) 2 Bbl. VIN C
- **Lube**.....B43-S
- **Air**.....PA658
- **Fuel**.....PF893,-RV
- **Oil Vapor**.....SA2027
- **Fuel Vapor**.....SA2046
- **Trans.**.....18031

Firebird V8-301 (4.9L) 2 Bbl. VIN Y
- **Lube**.....B31
- **Air**.....PA2006
- **Fuel**.....PF894,-RV
- **Oil Vapor**.....SA2027
- **Fuel Vapor**.....SA2046
- **Trans.**.....18031

Firebird V8-305 (5.0L) 4 Bbl. VIN U
- **Lube**.....B27
- **Air**.....PA2006
- **Fuel**.....PF893,-RV
- **Oil Vapor**.....SA2027
- **Fuel Vapor**.....SA2046
- **Trans.**.....18031

Firebird V8-350 (5.7L) 4 Bbl. VIN P,R
- **Lube**.....B39
- **Air**.....PA1758
- **Fuel**.....PF894,-RV
- **Oil Vapor**.....SA2027
- **Fuel Vapor**.....SA2046
- **Trans.**.....18031

Firebird V8-400 (6.6L) 4 Bbl. VIN Z
- **Lube**.....B39
- **Air**.....PA1758
- **Fuel**.....PF894,-RV
- **Oil Vapor**.....SA2027
- **Fuel Vapor**.....SA2046
- **Trans.**.....18031

Firebird V8-403 (6.6L) 4 Bbl. VIN K
- **Lube**.....B39
- **Air**.....PA1758
- **Fuel**.....PF894,-RV
- **Oil Vapor**.....SA2027
- **Fuel Vapor**.....SA2046
- **Trans.**.....18031

PONTIAC 1977 (Cont'd.)

Grand Prix V8-301 (4.9L) 2 Bbl. VIN Y
- **Lube**.....B31
- **Air**.....PA2006
- **Fuel**.....PF894,-RV
- **Oil Vapor**.....SA2027
- **Fuel Vapor**.....SA2046
- **Trans. (TH350C, TH375B)**.....18031
- **Trans. (TH400)**.....6020

Grand Prix V8-350 (5.7L) 2 Bbl. VIN P,R
- **Lube**.....B39
- **Air**.....PA1758
- **Fuel**.....PF894,-RV
- **Oil Vapor**.....SA2027
- **Fuel Vapor**.....SA2046
- **Trans. (TH350C, TH375B)**.....18031
- **Trans. (TH400)**.....6020

Grand Prix V8-400 (6.6L) 4 Bbl. VIN Z
- **Lube**.....B39
- **Air**.....PA1758
- **Fuel**.....PF894,-RV
- **Oil Vapor**.....SA2027
- **Fuel Vapor**.....SA2046
- **Trans.**.....6020

Grand Prix V8-403 (6.6L) 4 Bbl. VIN K
- **Lube**.....B39
- **Air**.....PA1758
- **Fuel**.....PF894,-RV
- **Oil Vapor**.....SA2027
- **Fuel Vapor**.....SA2046
- **Trans.**.....18031

Grand Safari V8-301 (4.9L) Carb. VIN Y
- **Lube**.....B31
- **Air**.....PA2006
- **Fuel**.....PF894,-RV
- **Oil Vapor**.....SA2027
- **Fuel Vapor**.....SA2046
- **Trans. (TH350C, TH375B)**.....18031
- **Trans. (TH400)**.....6020

Grand Safari V8-350 (5.7L) 4 Bbl. VIN R
- **Lube**.....B39
- **Air**.....PA1758
- **Fuel**.....PF894,-RV
- **Oil Vapor**.....SA2027
- **Fuel Vapor**.....SA2046
- **Trans. (TH350C, TH375B)**.....18031
- **Trans. (TH400)**.....6020

Grand Safari V8-400 (6.6L) 4 Bbl. VIN Z
- **Lube**.....B39
- **Air**.....PA1758
- **Fuel**.....PF894,-RV
- **Oil Vapor**.....SA2027
- **Fuel Vapor**.....SA2046
- **Trans. (TH350C, TH375B)**.....18031
- **Trans. (TH400)**.....6020

Grand Safari V8-403 (6.6L) 4 Bbl. VIN K
- **Lube**.....B39
- **Air**.....PA1758
- **Fuel**.....PF894,-RV
- **Oil Vapor**.....SA2027
- **Fuel Vapor**.....SA2046
- **Trans. (TH350C, TH375B)**.....18031
- **Trans. (TH400)**.....6020

Laurentian 6-250 (4.1L) Carb. VIN D
- **Lube**.....B27
- **Air**.....PA2007
- **Fuel**.....PF893,-RV
- **Oil Vapor**.....SA2027
- **Fuel Vapor**.....SA2046

Laurentian V8-305 (5.0L) Carb. VIN U
- **Lube**.....B27
- **Air**.....PA2006
- **Fuel**.....PF893,-RV
- **Oil Vapor**.....SA2027
- **Fuel Vapor**.....SA2046

PONTIAC 1977 (Cont'd.)

Laurentian V8-350 (5.7L) Carb. VIN P
- **Lube**.....B39
- **Air**.....PA1758
- **Fuel**.....PF894,-RV
- **Oil Vapor**.....SA2027
- **Fuel Vapor**.....SA2046

LeMans 6-231 (3.8L) 2 Bbl. VIN C
- **Lube**.....B43-S
- **Air**.....PA1680
- **Fuel**.....PF893,-RV
- **Oil Vapor**.....SA2027
- **Fuel Vapor**.....SA2046
- **Trans. (TH350C, TH375B)**.....18031

LeMans 6-250 (4.1L) 1 Bbl. VIN D
- **Lube**.....B27
- **Air**.....PA658
- **Fuel**.....PF893,-RV
- **Oil Vapor**.....SA2027
- **Fuel Vapor**.....SA2046
- **Trans.**.....18031

LeMans V8-301 (4.9L) 2 Bbl. VIN Y
- **Lube**.....B31
- **Air**.....PA2006
- **Fuel**.....PF894,-RV
- **Oil Vapor**.....SA2027
- **Fuel Vapor**.....SA2046
- **Trans. (TH350C, TH375B)**.....18031

LeMans V8-305 (5.0L) 4 Bbl. VIN U
- **Lube**.....B27
- **Air**.....PA2006
- **Fuel**.....PF893,-RV
- **Oil Vapor**.....SA2027
- **Fuel Vapor**.....SA2046
- **Trans. (TH350C, TH375B)**.....18031

LeMans V8-350 (5.7L) 4 Bbl. VIN L
- **Lube**.....B27
- **Air**.....PA2008
- **Fuel**.....PF894,-RV
- **Oil Vapor**.....SA2027
- **Fuel Vapor**.....SA2046
- **Trans.**.....6020

LeMans V8-350 (5.7L) 4 Bbl. VIN P,R
- **Lube**.....B39
- **Air**.....PA1758
- **Fuel**.....PF894,-RV
- **Oil Vapor**.....SA2027
- **Fuel Vapor**.....SA2046
- **Trans.**.....6020

LeMans V8-400 (6.6L) 4 Bbl. VIN Z
- **Lube**.....B39
- **Air**.....PA1758
- **Fuel**.....PF894,-RV
- **Oil Vapor**.....SA2027
- **Fuel Vapor**.....SA2046
- **Trans.**.....6020

LeMans V8-403 (6.6L) 4 Bbl. VIN K
- **Lube**.....B39
- **Air**.....PA1758
- **Fuel**.....PF894,-RV
- **Oil Vapor**.....SA2027
- **Fuel Vapor**.....SA2046
- **Trans.**.....18031

Parisienne 6-250 (4.1L) Carb. VIN D
- **Lube**.....B27
- **Air**.....PA2007
- **Fuel**.....PF893,-RV
- **Oil Vapor**.....SA2027
- **Fuel Vapor**.....SA2046

Parisienne V8-305 (5.0L) Carb. VIN U
- **Lube**.....B27
- **Air**.....PA2006
- **Fuel**.....PF893,-RV
- **Oil Vapor**.....SA2027
- **Fuel Vapor**.....SA2046

Parisienne V8-350 (5.7L) Carb. VIN P
- **Lube**.....B39
- **Air**.....PA1758
- **Fuel**.....PF894,-RV
- **Oil Vapor**.....SA2027
- **Fuel Vapor**.....SA2046

Phoenix 4-151 (2.5L) 2 Bbl. VIN V
- **Lube**.....B27
- **Fuel**.....PF893,-RV
- **Fuel Vapor**.....SA2046

OBS = Obsolete. Availability Limited to Distributor Stock.

PONTIAC 1977 (Cont'd.)

Phoenix 6-231 (3.8L) 2 Bbl. VIN C
Lube....B43-S
Air....PA1680
Fuel....PF893,-RV
Oil Vapor....SA2027
Fuel Vapor....SA2046
Trans. (TH350C, TH375B)....18031

Phoenix V8-305 (5.0L) 2 Bbl. VIN U
Lube....B27
Air....PA2006
Fuel....PF893,-RV
Oil Vapor....SA2027
Fuel Vapor....SA2046
Trans. (TH350C, TH375B)....18031

Phoenix V8-350 (5.7L) 4 Bbl. VIN R
Lube....B39
Air....PA1758
Fuel....PF894,-RV
Oil Vapor....SA2027
Fuel Vapor....SA2046
Trans....18031

Phoenix V8-350 (5.7L) VIN L
Lube....B27
Air....PA2008
Fuel....PF894,-RV
Oil Vapor....SA2027
Fuel Vapor....SA2046
Trans....18031

Sunbird 4-140 (2.3L) 2 Bbl. VIN B
Lube....B27
Fuel....PF893,-RV
Fuel Vapor....SA2046
Trans....18031

Sunbird 4-151 (2.5L) 2 Bbl. VIN V
Lube....B27
Fuel....PF893,-RV
Fuel Vapor....SA2046

Sunbird V6-231 (3.8L) 2 Bbl. VIN A,C
Lube....B43-S
Air....PA658
Fuel....PF893,-RV
Oil Vapor....SA2027
Fuel Vapor....SA2046
Trans. (TH350C, TH375B)....18031

Ventura 4-151 (2.5L) 2 Bbl. VIN V
Lube....B27
Fuel....PF893,-RV
Fuel Vapor....SA2046

Ventura V6-231 (3.8L) 2 Bbl. VIN C
Lube....B43-S
Air....PA1680
Fuel....PF893,-RV
Oil Vapor....SA2027
Fuel Vapor....SA2046
Trans. (TH350C, TH375B)....18031

Ventura V8-301 (4.9L) 2 Bbl. VIN Y
Lube....B31
Air....PA2006
Fuel....PF894,-RV
Oil Vapor....SA2027
Fuel Vapor....SA2046
Trans....18031

Ventura V8-305 (5.0L) 2 Bbl. VIN U
Lube....B27
Air....PA2006
Fuel....PF893,-RV
Oil Vapor....SA2027
Fuel Vapor....SA2046
Trans. (TH350C, TH375B)....18031

Ventura V8-350 (5.7L) 4 Bbl. VIN L
Lube....B27
Air....PA2008
Fuel....PF894,-RV
Oil Vapor....SA2027
Fuel Vapor....SA2046
Trans....18031

Ventura V8-350 (5.7L) 4 Bbl. VIN R
Lube....B39
Air....PA1758
Fuel....PF894,-RV
Oil Vapor....SA2027
Fuel Vapor....SA2046
Trans....18031

1976

Acadian 4-1393cc (1.4L) Carb. VIN 1
Lube....B43-S
Fuel....PF893,-RV

PONTIAC 1976 (Cont'd.)

Acadian 4-1606cc (1.6L) Carb. VIN E
Lube....B43-S
Fuel....PF894,-RV

Astre 4-140 (2.3L) 1 Bbl. VIN A,B
Lube....B27
Fuel....PF893,-RV
Oil Vapor....SA2027
Fuel Vapor....SA2046
Trans....18031

Bonneville V8-400 (6.6L) 2,4 Bbl. VIN N,Z
Lube....B39
Air (2 Bbl.)....PA2007
Air (4 Bbl.)....PA1758
Fuel (1 In. Ele.)....PF893,-RV
Fuel (2 1/32 In. Ele.)....PF894,-RV
Oil Vapor....SA2027
Fuel Vapor....SA2046
Trans....6020

Bonneville V8-455 (7.5L) 4 Bbl. VIN W
Lube....B39
Air....PA2007
Fuel....PF894,-RV
Oil Vapor....SA2027
Fuel Vapor....SA2046
Trans....6020

Catalina V8-350 (5.7L) Carb. VIN L,M,V
Lube....B39
Air....PA2007
Air (Some)....PA1758
Fuel....PF893,-RV
Oil Vapor....SA2027
Fuel Vapor....SA2046
Trans....6020

Catalina V8-400 (6.6L) 2,4 Bbl. VIN N,Z
Lube....B39
Air (2 Bbl.)....PA2007
Air (4 Bbl.)....PA1758
Fuel (1 In. Ele.)....PF893,-RV
Fuel (2 1/32 In. Ele.)....PF894,-RV
Oil Vapor....SA2027
Fuel Vapor....SA2046
Trans....6020

Catalina V8-455 (7.5L) 4 Bbl. VIN W
Lube....B39
Air....PA2007
Fuel....PF894,-RV
Oil Vapor....SA2027
Fuel Vapor....SA2046
Trans....6020

Firebird 6-250 (4.1L) 1 Bbl. VIN D
Lube....B27
Air....PA658
Fuel....PF893,-RV
Oil Vapor....SA2027
Fuel Vapor....SA2046
Trans....18031

Firebird V8-350 (5.7L) 2,4 Bbl. VIN M,P
Lube....B39
Air....PA1758
Fuel (2 Bbl.)....PF893,-RV
Fuel (4 Bbl.)....PF894,-RV
Oil Vapor....SA2027
Fuel Vapor....SA2046
Trans....18031

Firebird V8-400 (6.6L) 4 Bbl. VIN Z
Lube....B39
Air....PA1758
Fuel (1 In. Ele.)....PF893,-RV
Fuel (2 1/32 In. Ele.)....PF894,-RV
Oil Vapor....SA2027
Fuel Vapor....SA2046
Trans....18031

Firebird V8-455 (7.5L) 4 Bbl. VIN W
Lube....B39
Air....PA2007
Fuel....PF894,-RV
Oil Vapor....SA2027
Fuel Vapor....SA2046
Trans....18031

PONTIAC 1976 (Cont'd.)

Grand Prix V8-350 (5.7L) 2 Bbl. VIN M
Lube....B39
Air....PA2007
Fuel....PF893,-RV
Oil Vapor....SA2027
Fuel Vapor....SA2046
Trans....6020

Grand Prix V8-350 (5.7L) 4 Bbl. VIN P
Lube....B39
Air....PA1758
Fuel....PF894,-RV
Oil Vapor....SA2027
Fuel Vapor....SA2046
Trans....6020

Grand Prix V8-400 (6.6L) 2,4 Bbl. VIN N,Z
Lube....B39
Air (2 Bbl.)....PA2007
Air (4 Bbl.)....PA1758
Fuel (1 In. Ele.)....PF893,-RV
Fuel (2 1/32 In. Ele.)....PF894,-RV
Oil Vapor....SA2027
Fuel Vapor....SA2046
Trans....6020

Grand Prix V8-455 (7.5L) 4 Bbl. VIN W
Lube....B39
Air....PA1758
Fuel....PF894,-RV
Oil Vapor....SA2027
Fuel Vapor....SA2046
Trans....6020

Grand Safari V8-455 (7.5L) Carb. VIN W
Lube....B39
Air....PA2007
Fuel....PF894,-RV
Oil Vapor....SA2027
Fuel Vapor....SA2046
Trans. (TH350C, TH375B)....18031
Trans. (TH400)....6020

Laurentian V8-350 (5.7L) Carb. VIN V
Lube....B27
Air....PA2008
Fuel....PF893,-RV
Oil Vapor....SA2027
Fuel Vapor....SA2046
Trans....6021

Laurentian V8-350 (5.7L) Carb. VIN L
Lube....B27
Air....PA2008
Fuel....PF894,-RV
Oil Vapor....SA2027
Fuel Vapor....SA2046
Trans....6020

Laurentian V8-400 (6.6L) Carb. VIN N
Lube....B39
Air....PA2007
Fuel....PF893,-RV
Oil Vapor....SA2027
Fuel Vapor....SA2046
Trans....6020

Laurentian V8-400 (6.6L) Carb. VIN S
Lube....B39
Air....PA1758
Fuel....PF894,-RV
Oil Vapor....SA2027
Fuel Vapor....SA2046
Trans....6020

Laurentian V8-455 (7.5L) Carb. VIN W
Lube....B39
Air....PA2007
Fuel....PF894,-RV
Oil Vapor....SA2027
Fuel Vapor....SA2046
Trans....6020

PONTIAC 1976 (Cont'd.)

LeMans 6-250 (4.1L) 1 Bbl. VIN D
Lube....B27
Air....PA658
Fuel....PF893,-RV
Oil Vapor....SA2027
Fuel Vapor....SA2046
Trans....18031

LeMans V8-260 (4.3L) 2 Bbl. VIN F
Lube....B39
Air....PA2008
Fuel....PF894,-RV
Fuel Vapor....SA2046
Trans....18031

LeMans V8-305 (5.0L) Carb. VIN Q
Lube....B27
Air....PA2008
Fuel....PF893,-RV
Oil Vapor....SA2027
Fuel Vapor....SA2046
Trans....18031

LeMans V8-350 (5.7L) Carb. VIN L
Lube....B39
Air....PA1758
Fuel....PF894,-RV
Oil Vapor....SA2027
Fuel Vapor....SA2046
Trans....6020

LeMans V8-350 (5.7L) 2 Bbl. VIN M
Lube....B39
Air....PA2007
Fuel....PF893,-RV
Oil Vapor....SA2027
Fuel Vapor....SA2046
Trans....18031

LeMans V8-350 (5.7L) 4 Bbl. VIN P
Lube....B39
Air....PA1758
Fuel....PF894,-RV
Oil Vapor....SA2027
Fuel Vapor....SA2046
Trans....6020

LeMans V8-400 (6.6L) 2,4 Bbl. VIN N,Z
Lube....B39
Air (2 Bbl.)....PA2007
Air (4 Bbl.)....PA1758
Fuel (1 In. Ele.)....PF893,-RV
Fuel (2 1/32 In. Ele.)....PF894,-RV
Oil Vapor....SA2027
Fuel Vapor....SA2046
Trans....6020

LeMans V8-455 (7.5L) 4 Bbl. VIN W
Lube....B39
Air....PA1758
Fuel....PF894,-RV
Oil Vapor....SA2027
Fuel Vapor....SA2046
Trans....6020

Parisienne V8-350 (5.7L) Carb. VIN L
Lube....B27
Air....PA2008
Fuel....PF894,-RV
Oil Vapor....SA2027
Fuel Vapor....SA2046
Trans....6020

Parisienne V8-350 (5.7L) Carb. VIN V
Lube....B27
Air....PA2008
Fuel....PF893,-RV
Oil Vapor....SA2027
Fuel Vapor....SA2046
Trans....6021

Parisienne V8-400 (6.6L) Carb. VIN N
Lube....B39
Air....PA2007
Fuel....PF893,-RV
Oil Vapor....SA2027
Fuel Vapor....SA2046
Trans....6020

PONTIAC 1976 (Cont'd.)

Parisienne V8-400 (6.6L) Carb.
VIN S
Lube.....B39
Air.....PA1758
Fuel.....PF894,-RV
Oil Vapor.....SA2027
Fuel Vapor.....SA2046
Trans......6020

Parisienne V8-455 (7.5L) Carb.
VIN W
Lube.....B39
Air.....PA2007
Fuel.....PF894,-RV
Oil Vapor.....SA2027
Fuel Vapor.....SA2046
Trans......6020

Sunbird 4-140 (2.3L) 1,2 Bbl. VIN A,B
Lube.....B27
Fuel.....PF893,-RV
Oil Vapor.....SA2027
Fuel Vapor.....SA2046
Trans......6021

Sunbird V6-231 (3.8L) 2 Bbl. VIN C
Lube.....B43-S
Air.....PA658
Fuel.....PF893,-RV
Oil Vapor.....SA2027
Fuel Vapor.....SA2046
Trans. (TH350C, TH375B).....18031

Ventura 6-250 (4.1L) 1 Bbl. VIN D
Lube.....B27
Air.....PA658
Fuel.....PF893,-RV
Oil Vapor.....SA2027
Fuel Vapor.....SA2046

Ventura V8-260 (4.3L) 2 Bbl. VIN F
Lube.....B39
Air.....PA2008
Fuel.....PF894,-RV
Fuel Vapor.....SA2046

Ventura V8-350 (5.7L) 2 Bbl. VIN H
Lube.....B27
Air.....PA2006
Fuel.....PF893,-RV
Oil Vapor.....SA2027
Fuel Vapor.....SA2046
Trans......18031

Ventura V8-350 (5.7L) 4 Bbl. VIN J
Lube.....B39
Air.....PA2006
Fuel.....PF894,-RV
Oil Vapor.....SA2027
Fuel Vapor.....SA2046
Trans......18031

1975

Astre 4-140 (2.3L) 1,2 Bbl. VIN A,B
Lube.....B27
Fuel.....PF893,-RV
Oil Vapor.....SA2027
Fuel Vapor.....SA2046
Trans......18031

Bonneville V8-400 (6.6L) 2,4 Bbl.
VIN R,S
Lube.....B39
Air (10 3/4 In. O.D.).....PA2007
Air (14 In. O.D.).....PA1758
Fuel (1 In. Ele.).....PF893,-RV
Fuel (2 1/32 In. Ele.).....PF894,-RV
Fuel (SintBronze).....SF898
Oil Vapor.....SA2027
Fuel Vapor.....SA2046
Trans......6020

Bonneville V8-455 (7.5L) 4 Bbl.
VIN W
Lube.....B39
Air.....PA1758
Fuel.....PF893,-RV
Oil Vapor.....SA2027
Fuel Vapor.....SA2046
Trans......6020

PONTIAC 1975 (Cont'd.)

Catalina V8-400 (6.6L) 2,4 Bbl.
VIN R,S
Lube.....B39
Air (10 3/4 In. O.D.).....PA2007
Air (14 In. O.D.).....PA1758
Fuel (1 In. Ele.).....PF893,-RV
Fuel (2 1/32 In. Ele.).....PF894,-RV
Fuel (SintBronze).....SF898
Oil Vapor.....SA2027
Fuel Vapor.....SA2046
Trans......6020

Catalina V8-455 (7.5L) 4 Bbl. VIN W
Lube.....B39
Air.....PA1758
Fuel.....PF893,-RV
Oil Vapor.....SA2027
Fuel Vapor.....SA2046
Trans......6020

Firebird 6-250 (4.1L) 1 Bbl. VIN D
Lube.....B27
Air.....PA658
Fuel.....PF893,-RV
Oil Vapor.....SA2027
Fuel Vapor.....SA2046
Trans......18031

Firebird V8-350 (5.7L) 2,4 Bbl.
VIN E,M
Lube.....B39
Air.....PA1758
Fuel.....PF893,-RV
Oil Vapor.....SA2027
Fuel Vapor.....SA2046
Trans......18031

Firebird V8-400 (6.6L) 4 Bbl. VIN S
Lube.....B39
Air (10 3/4 In. O.D.).....PA2007
Air (14 In. O.D.).....PA1758
Fuel (1 In. Ele.).....PF893,-RV
Fuel (2 1/32 In. Ele.).....PF894,-RV
Fuel (SintBronze).....SF898
Oil Vapor.....SA2027
Fuel Vapor.....SA2046
Trans......18031

Firebird V8-455 (7.5L) 4 Bbl. VIN W
Lube.....B39
Air.....PA1758
Fuel.....PF893,-RV
Oil Vapor.....SA2027
Fuel Vapor.....SA2046
Trans......18031

Grand Am V8-350 (5.7L) 4 Bbl.
VIN H
Lube.....B39
Air.....PA2007
Fuel (SintBronze).....SF898
Oil Vapor.....SA2027
Fuel Vapor.....SA2046
Trans......18031

Grand Am V8-400 (6.6L) 2,4 Bbl.
VIN R,S
Lube.....B39
Air (10 3/4 In. O.D.).....PA2007
Air (14 In. O.D.).....PA1758
Fuel (1 In. Ele.).....PF893,-RV
Fuel (2 1/32 In. Ele.).....PF894,-RV
Fuel (SintBronze).....SF898
Oil Vapor.....SA2027
Fuel Vapor.....SA2046
Trans. (TH350C, TH375B).....18031
Trans. (TH400).....6020

Grand Am V8-455 (7.5L) 4 Bbl.
VIN W
Lube.....B39
Air.....PA1758
Fuel.....PF893,-RV
Oil Vapor.....SA2027
Fuel Vapor.....SA2046
Trans. (TH350C, TH375B).....18031
Trans. (TH400).....6020

PONTIAC 1975 (Cont'd.)

Grand Prix V8-400 (6.6L) 2,4 Bbl.
VIN R,S
Lube.....B39
Air (10 3/4 In. O.D.).....PA2007
Air (14 In. O.D.).....PA1758
Fuel (1 In. Ele.).....PF893,-RV
Fuel (2 1/32 In. Ele.).....PF894,-RV
Fuel (SintBronze).....SF898
Oil Vapor.....SA2027
Fuel Vapor.....SA2046
Trans......6020

Grand Prix V8-455 (7.5L) 4 Bbl.
VIN W
Lube.....B39
Air.....PA1758
Fuel.....PF893,-RV
Oil Vapor.....SA2027
Fuel Vapor.....SA2046
Trans......6020

Grand Safari V8-400 (6.6L) Carb.
VIN S
Lube.....B39
Air (10 3/4 In. O.D.).....PA2007
Air (14 In. O.D.).....PA1758
Fuel (1 In. Ele.).....PF893,-RV
Fuel (2 1/32 In. Ele.).....PF894,-RV
Fuel (SintBronze).....SF898
Oil Vapor.....SA2027
Fuel Vapor.....SA2046
Trans. (TH350C, TH375B).....18031
Trans. (TH400).....6020

Grand Safari V8-455 (7.5L) Carb.
VIN W
Lube.....B39
Air.....PA1758
Fuel.....PF893,-RV
Oil Vapor.....SA2027
Fuel Vapor.....SA2046
Trans......6020

Grandville V8-400 (6.6L) 2,4 Bbl.
VIN R,S
Lube.....B39
Air (10 3/4 In. O.D.).....PA2007
Air (14 In. O.D.).....PA1758
Fuel (1 In. Ele.).....PF893,-RV
Fuel (2 1/32 In. Ele.).....PF894,-RV
Fuel (SintBronze).....SF898
Oil Vapor.....SA2027
Fuel Vapor.....SA2046
Trans......6020

Grandville V8-455 (7.5L) 4 Bbl.
VIN W
Lube.....B39
Air.....PA1758
Fuel.....PF893,-RV
Oil Vapor.....SA2027
Fuel Vapor.....SA2046
Trans......6020

LeMans 6-250 (4.1L) 1 Bbl. VIN D
Lube.....B27
Air.....PA658
Fuel.....PF893,-RV
Oil Vapor.....SA2027
Fuel Vapor.....SA2046
Trans......18031

LeMans V8-350 (5.7L) 2 Bbl.
VIN H,M
Lube.....B39
Air.....PA2007
Fuel (SintBronze).....SF898
Oil Vapor.....SA2027
Fuel Vapor.....SA2046
Trans......18031

LeMans V8-350 (5.7L) 4 Bbl. VIN E,J
Lube.....B39
Air.....PA1758
Fuel.....PF894,-RV
Oil Vapor.....SA2027
Fuel Vapor.....SA2046
Trans......18031

PONTIAC 1975 (Cont'd.)

LeMans V8-400 (6.6L) 2,4 Bbl.
VIN R,S
Lube.....B39
Air (10 3/4 In. O.D.).....PA2007
Air (14 In. O.D.).....PA1758
Fuel (1 In. Ele.).....PF893,-RV
Fuel (2 1/32 In. Ele.).....PF894,-RV
Fuel (SintBronze).....SF898
Oil Vapor.....SA2027
Fuel Vapor.....SA2046
Trans......6020

LeMans V8-455 (7.5L) 4 Bbl. VIN W
Lube.....B39
Air.....PA1758
Fuel.....PF893,-RV
Oil Vapor.....SA2027
Fuel Vapor.....SA2046
Trans......6020

Ventura 6-250 (4.1L) 1 Bbl. VIN D
Lube.....B27
Air.....PA658
Fuel.....PF893,-RV
Oil Vapor.....SA2027
Fuel Vapor.....SA2046
Trans......18031

Ventura V8-260 (4.3L) 2 Bbl. VIN F
Lube.....B39
Air.....PA2008
Fuel.....PF894,-RV
Fuel Vapor.....SA2046
Trans......18031

Ventura V8-350 (5.7L) 2 Bbl.
VIN H,M
Lube.....B39
Air.....PA2006
Fuel.....PF893,-RV
Oil Vapor.....SA2027
Fuel Vapor.....SA2046
Trans......18031

Ventura V8-350 (5.7L) 4 Bbl. VIN E,J
Lube.....B39
Air.....PA1758
Fuel.....PF894,-RV
Oil Vapor.....SA2027
Fuel Vapor.....SA2046
Trans......18031

1974

Bonneville V8-400 (6.6L) 2 Bbl.
Carb. VIN P,R
Lube.....B39
Air.....PA2007
Fuel (SintBronze).....SF898
Oil Vapor.....SA2027
Fuel Vapor.....SA2046
Trans......6020

Bonneville V8-400 (6.6L) 4 Bbl.
Carb. VIN S,T
Lube.....B39
Air.....PA1758
Fuel.....PF893,-RV
Oil Vapor.....SA2027
Fuel Vapor.....SA2046
Trans......6020

Bonneville V8-455 (7.5L) 4 Bbl.
Carb. VIN W,Y
Lube.....B39
Air.....PA1758
Fuel.....PF893,-RV
Oil Vapor.....SA2027
Fuel Vapor.....SA2046
Trans......6020

Catalina V8-400 (6.6L) 2 Bbl. Carb.
VIN P,R
Lube.....B39
Air.....PA2007
Fuel (SintBronze).....SF898
Oil Vapor.....SA2027
Fuel Vapor.....SA2046
Trans......6020

OBS = Obsolete. Availability Limited to Distributor Stock.

PONTIAC 1974 (Cont'd.)

Catalina V8-400 (6.6L) 4 Bbl. Carb. VIN S,T
- **Lube** ... **B39**
- **Air** ... **PA1758**
- **Fuel** ... **PF893,-RV**
- **Oil Vapor** ... **SA2027**
- **Fuel Vapor** ... **SA2046**
- **Trans.** ... **6020**

Catalina V8-455 (7.5L) 4 Bbl. Carb. VIN W,Y
- **Lube** ... **B39**
- **Air** ... **PA1758**
- **Fuel** ... **PF893,-RV**
- **Oil Vapor** ... **SA2027**
- **Fuel Vapor** ... **SA2046**
- **Trans.** ... **6020**

Firebird 6-250 (4.1L) 1 Bbl. Carb. VIN D
- **Lube** ... **B27**
- **Air** ... **PA658**
- **Fuel** ... **PF893,-RV**
- **Oil Vapor** ... **SA2027**
- **Fuel Vapor** ... **SA2046**
- **Trans.** ... **6021**

Firebird V8-350 (5.7L) 2 Bbl. Carb. VIN M,N
- **Lube** ... **B39**
- **Air** ... **PA1758**
- **Fuel (SintBronze)** ... **SF898**
- **Oil Vapor** ... **SA2027**
- **Fuel Vapor** ... **SA2046**
- **Trans.** ... **6021**

Firebird V8-400 (6.6L) Carb. VIN P,R
- **Lube** ... **B39**
- **Air** ... **PA1758**
- **Fuel (SintBronze)** ... **SF898**
- **Oil Vapor** ... **SA2027**
- **Fuel Vapor** ... **SA2046**
- **Trans.** ... **6020**

Firebird V8-400 (6.6L) 4 Bbl. Carb. VIN T
- **Lube** ... **B39**
- **Air** ... **PA1758**
- **Fuel** ... **PF893,-RV**
- **Oil Vapor** ... **SA2027**
- **Fuel Vapor** ... **SA2046**
- **Trans.** ... **6020**

Firebird V8-455 (7.5L) 4 Bbl. Carb. VIN X,Y
- **Lube** ... **B39**
- **Air** ... **PA1758**
- **Fuel** ... **PF893,-RV**
- **Oil Vapor** ... **SA2027**
- **Fuel Vapor** ... **SA2046**
- **Trans.** ... **6020**

Grand Am V8-400 (6.6L) 2 Bbl. Carb. VIN P,R,S
- **Lube** ... **B39**
- **Air** ... **PA2007**
- **Fuel (SintBronze)** ... **SF898**
- **Oil Vapor** ... **SA2027**
- **Fuel Vapor** ... **SA2046**
- **Trans. (TH350, TH375)** ... **6021**
- **Trans. (TH400)** ... **6020**

Grand Am V8-400 (6.6L) 4 Bbl. Carb. VIN T
- **Lube** ... **B39**
- **Air** ... **PA1758**
- **Fuel** ... **PF893,-RV**
- **Oil Vapor** ... **SA2027**
- **Fuel Vapor** ... **SA2046**
- **Trans. (TH350, TH375)** ... **6021**
- **Trans. (TH400)** ... **6020**

Grand Am V8-455 (7.5L) 4 Bbl. Carb. VIN W,Y
- **Lube** ... **B39**
- **Air** ... **PA1758**
- **Fuel** ... **PF893,-RV**
- **Oil Vapor** ... **SA2027**
- **Fuel Vapor** ... **SA2046**
- **Trans. (TH350, TH375)** ... **6021**
- **Trans. (TH400)** ... **6020**

PONTIAC 1974 (Cont'd.)

Grand Prix V8-400 (6.6L) 4 Bbl. Carb. VIN S,T
- **Lube** ... **B39**
- **Air** ... **PA1758**
- **Fuel** ... **PF893,-RV**
- **Oil Vapor** ... **SA2027**
- **Fuel Vapor** ... **SA2046**
- **Trans. (TH350, TH375)** ... **6021**
- **Trans. (TH400)** ... **6020**

Grand Prix V8-455 (7.5L) 4 Bbl. Carb. VIN Y
- **Lube** ... **B39**
- **Air** ... **PA1758**
- **Fuel** ... **PF893,-RV**
- **Oil Vapor** ... **SA2027**
- **Fuel Vapor** ... **SA2046**
- **Trans. (TH350, TH375)** ... **6021**
- **Trans. (TH400)** ... **6020**

Grand Safari V8-400 (6.6L) 4 Bbl. Carb. VIN S
- **Lube** ... **B39**
- **Air** ... **PA1758**
- **Fuel** ... **PF893,-RV**
- **Oil Vapor** ... **SA2027**
- **Fuel Vapor** ... **SA2046**
- **Trans. (TH350, TH375)** ... **6021**
- **Trans. (TH400)** ... **6020**

Grand Safari V8-455 (7.5L) 4 Bbl. Carb. VIN W
- **Lube** ... **B39**
- **Air** ... **PA1758**
- **Fuel** ... **PF893,-RV**
- **Oil Vapor** ... **SA2027**
- **Fuel Vapor** ... **SA2046**
- **Trans. (TH350, TH375)** ... **6021**
- **Trans. (TH400)** ... **6020**

Grandville V8-455 (7.5L) 4 Bbl. Carb. VIN W,Y
- **Lube** ... **B39**
- **Air** ... **PA1758**
- **Fuel** ... **PF893,-RV**
- **Oil Vapor** ... **SA2027**
- **Fuel Vapor** ... **SA2046**
- **Trans.** ... **6020**

LeMans 6-250 (4.1L) 1 Bbl. Carb. VIN D
- **Lube** ... **B27**
- **Air** ... **PA658**
- **Fuel** ... **PF893,-RV**
- **Oil Vapor** ... **SA2027**
- **Fuel Vapor** ... **SA2046**
- **Trans.** ... **6021**

LeMans V8-350 (5.7L) 2 Bbl. Carb. VIN M,N
- **Lube** ... **B39**
- **Air** ... **PA2007**
- **Fuel (SintBronze)** ... **SF898**
- **Oil Vapor** ... **SA2027**
- **Fuel Vapor** ... **SA2046**
- **Trans.** ... **6021**

LeMans V8-350 (5.7L) 4 Bbl. Carb. VIN A,B
- **Lube** ... **B39**
- **Air** ... **PA1758**
- **Fuel** ... **PF893,-RV**
- **Oil Vapor** ... **SA2027**
- **Fuel Vapor** ... **SA2046**
- **Trans.** ... **6020**

LeMans V8-400 (6.6L) 2,4 Bbl. Carb. VIN P,R
- **Lube** ... **B39**
- **Air (10 3/4 In. O.D.)** ... **PA2007**
- **Air (13 7/8 O.D.)** ... **PA1758**
- **Fuel (SintBronze)** ... **SF898**
- **Oil Vapor** ... **SA2027**
- **Fuel Vapor** ... **SA2046**
- **Trans. (TH350, TH375)** ... **6021**
- **Trans. (TH400)** ... **6020**

PONTIAC 1974 (Cont'd.)

LeMans V8-400 (6.6L) 4 Bbl. Carb. VIN S,T
- **Lube** ... **B39**
- **Air** ... **PA1758**
- **Fuel** ... **PF893,-RV**
- **Oil Vapor** ... **SA2027**
- **Fuel Vapor** ... **SA2046**
- **Trans. (TH350, TH375)** ... **6021**
- **Trans. (TH400)** ... **6020**

LeMans V8-455 (7.5L) 4 Bbl. Carb. VIN Y
- **Lube** ... **B39**
- **Air** ... **PA1758**
- **Fuel** ... **PF893,-RV**
- **Oil Vapor** ... **SA2027**
- **Fuel Vapor** ... **SA2046**
- **Trans. (TH350, TH375)** ... **6021**
- **Trans. (TH400)** ... **6020**

Ventura 6-250 (4.1L) 1 Bbl. Carb. VIN D
- **Lube** ... **B27**
- **Air** ... **PA658**
- **Fuel** ... **PF893,-RV**
- **Oil Vapor** ... **SA2027**
- **Fuel Vapor** ... **SA2046**
- **Trans.** ... **6021**

Ventura V8-350 (5.7L) 2 Bbl. Carb. VIN M,N
- **Lube** ... **B39**
- **Air** ... **PA1758**
- **Fuel (SintBronze)** ... **SF898**
- **Oil Vapor** ... **SA2027**
- **Fuel Vapor** ... **SA2046**
- **Trans.** ... **6021**

Ventura V8-350 (5.7L) 4 Bbl. Carb. VIN A,B
- **Lube** ... **B39**
- **Air** ... **PA1758**
- **Fuel** ... **PF893,-RV**
- **Oil Vapor** ... **SA2027**
- **Fuel Vapor** ... **SA2046**
- **Trans. (TH350, TH375)** ... **6021**
- **Trans. (TH400)** ... **6020**

1973

Bonneville V8-400 (6.6L) 2 Bbl. Carb. VIN P
- **Lube** ... **B39**
- **Air** ... **PA2007**
- **Fuel (SintBronze)** ... **SF898**
- **Oil Vapor** ... **SA2027**
- **Fuel Vapor** ... **SA2046**
- **Trans.** ... **6020**

Bonneville V8-400 (6.6L) 4 Bbl. Carb. VIN S
- **Lube** ... **B39**
- **Air** ... **PA1758**
- **Fuel** ... **PF893,-RV**
- **Oil Vapor** ... **SA2027**
- **Fuel Vapor** ... **SA2046**
- **Trans.** ... **6020**

Bonneville V8-455 (7.5L) 4 Bbl. Carb. VIN W
- **Lube** ... **B39**
- **Air** ... **PA1758**
- **Fuel** ... **PF893,-RV**
- **Oil Vapor** ... **SA2027**
- **Fuel Vapor** ... **SA2046**
- **Trans.** ... **6020**

Catalina V8-350 (5.7L) 2 Bbl. Carb. VIN M
- **Lube** ... **B39**
- **Air** ... **PA2007**
- **Fuel (SintBronze)** ... **SF898**
- **Oil Vapor** ... **SA2027**
- **Fuel Vapor** ... **SA2046**
- **Trans. (TH350, TH375)** ... **6021**
- **Trans. (TH400)** ... **6020**

PONTIAC 1973 (Cont'd.)

Catalina V8-400 (6.6L) 2 Bbl. Carb. VIN P
- **Lube** ... **B39**
- **Air** ... **PA2007**
- **Fuel (SintBronze)** ... **SF898**
- **Oil Vapor** ... **SA2027**
- **Fuel Vapor** ... **SA2046**
- **Trans.** ... **6020**

Catalina V8-400 (6.6L) 4 Bbl. Carb. VIN S
- **Lube** ... **B39**
- **Air** ... **PA1758**
- **Fuel** ... **PF893,-RV**
- **Oil Vapor** ... **SA2027**
- **Fuel Vapor** ... **SA2046**
- **Trans.** ... **6020**

Catalina V8-455 (7.5L) 4 Bbl. Carb. VIN W
- **Lube** ... **B39**
- **Air** ... **PA1758**
- **Fuel** ... **PF893,-RV**
- **Oil Vapor** ... **SA2027**
- **Fuel Vapor** ... **SA2046**
- **Trans.** ... **6020**

Firebird 6-250 (4.1L) 1 Bbl. Carb. VIN D
- **Lube** ... **B27**
- **Air** ... **PA658**
- **Fuel** ... **PF893,-RV**
- **Oil Vapor** ... **SA2027**
- **Fuel Vapor** ... **SA2046**
- **Trans.** ... **6021**

Firebird V8-350 (5.7L) 2 Bbl. Carb. VIN M
- **Lube** ... **B39**
- **Air** ... **PA1758**
- **Fuel (SintBronze)** ... **SF898**
- **Oil Vapor** ... **SA2027**
- **Fuel Vapor** ... **SA2046**
- **Trans.** ... **6021**

Firebird V8-400 (6.6L) 2,4 Bbl. Carb. VIN R,T
- **Lube** ... **B39**
- **Air** ... **PA1758**
- **Fuel (2 Bbl., SintBronze)** ... **SF898**
- **Fuel (4 Bbl.)** ... **PF893,-RV**
- **Oil Vapor** ... **SA2027**
- **Fuel Vapor** ... **SA2046**
- **Trans.** ... **6020**

Firebird V8-455 (7.5L) 4 Bbl. Carb. VIN X
- **Lube** ... **B39**
- **Air** ... **PA1758**
- **Fuel** ... **PF893,-RV**
- **Oil Vapor** ... **SA2027**
- **Fuel Vapor** ... **SA2046**
- **Trans.** ... **6020**

Grand Am V8-350 (5.7L) 2 Bbl. Carb. VIN M
- **Lube** ... **B39**
- **Air** ... **PA2007**
- **Fuel (SintBronze)** ... **SF898**
- **Oil Vapor** ... **SA2027**
- **Fuel Vapor** ... **SA2046**
- **Trans. (TH350, TH375)** ... **6021**
- **Trans. (TH400)** ... **6020**

Grand Am V8-400 (6.6L) 2 Bbl. Carb. VIN P
- **Lube** ... **B39**
- **Air** ... **PA2007**
- **Fuel (SintBronze)** ... **SF898**
- **Oil Vapor** ... **SA2027**
- **Fuel Vapor** ... **SA2046**
- **Trans. (TH350, TH375)** ... **6021**
- **Trans. (TH400)** ... **6020**

Grand Am V8-400 (6.6L) 4 Bbl. Carb. VIN T
- **Lube** ... **B39**
- **Air** ... **PA1758**
- **Fuel** ... **PF893,-RV**
- **Oil Vapor** ... **SA2027**
- **Fuel Vapor** ... **SA2046**
- **Trans.** ... **6020**

OBS = Obsolete. Availability Limited to Distributor Stock.

PONTIAC 1973 (Cont'd.)

Grand Am V8-455 (7.5L) 4 Bbl. Carb. VIN X
- **Lube** ... **B39**
- **Air** ... **PA1758**
- **Fuel** ... **PF893,-RV**
- **Oil Vapor** ... **SA2027**
- **Fuel Vapor** ... **SA2046**
- **Trans.** ... **6020**

Grand Prix V8-400 (6.6L) 4 Bbl. Carb. VIN S
- **Lube** ... **B39**
- **Air** ... **PA1758**
- **Fuel** ... **PF893,-RV**
- **Oil Vapor** ... **SA2027**
- **Fuel Vapor** ... **SA2046**
- **Trans.** ... **6020**

Grand Prix V8-455 (7.5L) 4 Bbl. Carb. VIN W
- **Lube** ... **B39**
- **Air** ... **PA1758**
- **Fuel** ... **PF893,-RV**
- **Oil Vapor** ... **SA2027**
- **Fuel Vapor** ... **SA2046**
- **Trans.** ... **6020**

Grand Safari V8-400 (6.6L) 4 Bbl. Carb. VIN S
- **Lube** ... **B39**
- **Air** ... **PA1758**
- **Fuel** ... **PF893,-RV**
- **Oil Vapor** ... **SA2027**
- **Fuel Vapor** ... **SA2046**
- **Trans.** ... **6020**

Grand Safari V8-455 (7.5L) 4 Bbl. Carb. VIN W
- **Lube** ... **B39**
- **Air** ... **PA1758**
- **Fuel** ... **PF893,-RV**
- **Oil Vapor** ... **SA2027**
- **Fuel Vapor** ... **SA2046**
- **Trans.** ... **6020**

Grandville V8-400 (6.6L) 4 Bbl. Carb. VIN T
- **Lube** ... **B39**
- **Air** ... **PA1758**
- **Fuel** ... **PF893,-RV**
- **Oil Vapor** ... **SA2027**
- **Fuel Vapor** ... **SA2046**
- **Trans.** ... **6020**

Grandville V8-455 (7.5L) 4 Bbl. Carb. VIN W
- **Lube** ... **B39**
- **Air** ... **PA1758**
- **Fuel** ... **PF893,-RV**
- **Oil Vapor** ... **SA2027**
- **Fuel Vapor** ... **SA2046**
- **Trans.** ... **6020**

GTO V8-400 (6.6L) 4 Bbl. Carb.
- **Lube** ... **B39**
- **Fuel** ... **PF893,-RV**
- **Oil Vapor** ... **SA2027**
- **Fuel Vapor** ... **SA2046**

GTO V8-455 (7.5L) 4 Bbl. Carb.
- **Lube** ... **B39**
- **Fuel** ... **PF893,-RV**
- **Oil Vapor** ... **SA2027**
- **Fuel Vapor** ... **SA2046**

LeMans 6-250 (4.1L) 1 Bbl. Carb. VIN D
- **Lube** ... **B27**
- **Air** ... **PA658**
- **Fuel** ... **PF893,-RV**
- **Oil Vapor** ... **SA2027**
- **Fuel Vapor** ... **SA2046**
- **Trans.** ... **6021**

LeMans V8-350 (5.7L) 2 Bbl. Carb. VIN M
- **Lube** ... **B39**
- **Air** ... **PA2007**
- **Fuel (SintBronze)** ... **SF898**
- **Oil Vapor** ... **SA2027**
- **Fuel Vapor** ... **SA2046**
- **Trans.** ... **6021**

PONTIAC 1973 (Cont'd.)

LeMans V8-400 (6.6L) 2 Bbl. Carb. VIN P
- **Lube** ... **B39**
- **Air** ... **PA2007**
- **Fuel (SintBronze)** ... **SF898**
- **Oil Vapor** ... **SA2027**
- **Fuel Vapor** ... **SA2046**
- **Trans.** ... **6020**

LeMans V8-400 (6.6L) 4 Bbl. Carb. VIN T
- **Lube** ... **B39**
- **Air** ... **PA1758**
- **Fuel** ... **PF893,-RV**
- **Oil Vapor** ... **SA2027**
- **Fuel Vapor** ... **SA2046**
- **Trans.** ... **6020**

LeMans V8-455 (7.5L) 4 Bbl. Carb. VIN W
- **Lube** ... **B39**
- **Air** ... **PA1758**
- **Fuel** ... **PF893,-RV**
- **Oil Vapor** ... **SA2027**
- **Fuel Vapor** ... **SA2046**
- **Trans.** ... **6020**

Ventura 6-250 (4.1L) 1 Bbl. Carb. VIN D
- **Lube** ... **B27**
- **Air** ... **PA658**
- **Fuel** ... **PF893,-RV**
- **Oil Vapor** ... **SA2027**
- **Fuel Vapor** ... **SA2046**
- **Trans.** ... **6021**

Ventura V8-350 (5.7L) 2 Bbl. Carb. VIN M
- **Lube** ... **B39**
- **Air** ... **PA1758**
- **Fuel (SintBronze)** ... **SF898**
- **Oil Vapor** ... **SA2027**
- **Fuel Vapor** ... **SA2046**
- **Trans. (TH350, TH375)** ... **6021**
- **Trans. (TH400)** ... **6020**

1972

Bonneville V8-455 (7.5L) 2 Bbl. Carb. VIN U
- **Lube** ... **B39**
- **Air** ... **PA2007**
- **Fuel (SintBronze)** ... **SF898**
- **Oil Vapor** ... **SA2027**
- **Fuel Vapor** ... **SA2046**
- **Trans.** ... **6020**

Bonneville V8-455 (7.5L) 4 Bbl. Carb. VIN Y
- **Lube** ... **B39**
- **Air** ... **PA1758**
- **Fuel** ... **PF893,-RV**
- **Oil Vapor** ... **SA2027**
- **Fuel Vapor** ... **SA2046**
- **Trans.** ... **6020**

Catalina V8-350 (5.7L) 2 Bbl. Carb. VIN M
- **Lube** ... **B39**
- **Air** ... **PA2007**
- **Fuel (SintBronze)** ... **SF898**
- **Oil Vapor** ... **SA2027**
- **Fuel Vapor** ... **SA2046**
- **Trans. (TH350, TH375)** ... **6021**
- **Trans. (TH400)** ... **6020**

Catalina V8-400 (6.6L) 2 Bbl. Carb. VIN P
- **Lube** ... **B39**
- **Air** ... **PA2007**
- **Fuel (SintBronze)** ... **SF898**
- **Oil Vapor** ... **SA2027**
- **Fuel Vapor** ... **SA2046**
- **Trans.** ... **6020**

Catalina V8-400 (6.6L) 4 Bbl. Carb. VIN S
- **Lube** ... **B39**
- **Air** ... **PA1758**
- **Fuel** ... **PF893,-RV**
- **Oil Vapor** ... **SA2027**
- **Fuel Vapor** ... **SA2046**
- **Trans.** ... **6020**

PONTIAC 1972 (Cont'd.)

Catalina V8-455 (7.5L) 2 Bbl. Carb. VIN U,V
- **Lube** ... **B39**
- **Air** ... **PA2007**
- **Fuel (SintBronze)** ... **SF898**
- **Oil Vapor** ... **SA2027**
- **Fuel Vapor** ... **SA2046**
- **Trans.** ... **6020**

Catalina V8-455 (7.5L) 4 Bbl. Carb. VIN W,Y
- **Lube** ... **B39**
- **Air** ... **PA1758**
- **Fuel** ... **PF893,-RV**
- **Oil Vapor** ... **SA2027**
- **Fuel Vapor** ... **SA2046**
- **Trans.** ... **6020**

Firebird 6-250 (4.1L) 1 Bbl. Carb. VIN D
- **Lube** ... **B27**
- **Air** ... **PA658**
- **Fuel** ... **PF893,-RV**
- **Oil Vapor** ... **SA2027**
- **Fuel Vapor** ... **SA2046**
- **Trans. (TH350, TH375)** ... **6021**
- **Trans. (PowerGlide)** ... **6017**

Firebird V8-350 (5.7L) 2 Bbl. Carb. VIN M
- **Lube** ... **B39**
- **Air** ... **PA1758**
- **Fuel (SintBronze)** ... **SF898**
- **Oil Vapor** ... **SA2027**
- **Fuel Vapor** ... **SA2046**
- **Trans.** ... **6021**

Firebird V8-400 (6.6L) 2,4 Bbl. Carb. VIN R,T
- **Lube** ... **B39**
- **Air** ... **PA1758**
- **Fuel (2 Bbl., SintBronze)** ... **SF898**
- **Fuel (4 Bbl.)** ... **PF893,-RV**
- **Oil Vapor** ... **SA2027**
- **Fuel Vapor** ... **SA2046**
- **Trans.** ... **6020**

Firebird V8-455 (7.5L) 4 Bbl. Carb. VIN X
- **Lube** ... **B39**
- **Air** ... **PA1758**
- **Fuel** ... **PF893,-RV**
- **Oil Vapor** ... **SA2027**
- **Fuel Vapor** ... **SA2046**
- **Trans.** ... **6020**

Grand Prix V8-400 (6.6L) 4 Bbl. Carb. VIN S
- **Lube** ... **B39**
- **Air** ... **PA1758**
- **Fuel** ... **PF893,-RV**
- **Oil Vapor** ... **SA2027**
- **Fuel Vapor** ... **SA2046**
- **Trans.** ... **6020**

Grand Prix V8-455 (7.5L) 4 Bbl. Carb. VIN Y
- **Lube** ... **B39**
- **Air** ... **PA1758**
- **Fuel** ... **PF893,-RV**
- **Oil Vapor** ... **SA2027**
- **Fuel Vapor** ... **SA2046**
- **Trans.** ... **6020**

Grand Safari V8-455 (7.5L) Carb. VIN U,W
- **Lube** ... **B39**
- **Air** ... **PA1758**
- **Fuel** ... **PF893,-RV**
- **Oil Vapor** ... **SA2027**
- **Fuel Vapor** ... **SA2046**
- **Trans.** ... **6020**

Grandville V8-455 (7.5L) 4 Bbl. Carb. VIN W
- **Lube** ... **B39**
- **Air** ... **PA1758**
- **Fuel** ... **PF893,-RV**
- **Oil Vapor** ... **SA2027**
- **Fuel Vapor** ... **SA2046**
- **Trans.** ... **6020**

PONTIAC 1972 (Cont'd.)

GTO V8-400 (6.6L) 4 Bbl. Carb.
- **Lube** ... **B39**
- **Air** ... **PA1758**
- **Fuel** ... **PF893,-RV**
- **Oil Vapor** ... **SA2027**
- **Fuel Vapor** ... **SA2046**
- **Trans.** ... **6020**

GTO V8-455 (7.5L) 4 Bbl. Carb.
- **Lube** ... **B39**
- **Air** ... **PA1758**
- **Fuel** ... **PF893,-RV**
- **Oil Vapor** ... **SA2027**
- **Fuel Vapor** ... **SA2046**
- **Trans.** ... **6020**

LeMans 6-250 (4.1L) 1 Bbl. Carb. VIN D
- **Lube** ... **B27**
- **Air** ... **PA658**
- **Fuel** ... **PF893,-RV**
- **Oil Vapor** ... **SA2027**
- **Fuel Vapor** ... **SA2046**
- **Trans. (TH350, TH375)** ... **6021**
- **Trans. (PowerGlide)** ... **6017**

LeMans V8-350 (5.7L) 2 Bbl. Carb. VIN M
- **Lube** ... **B39**
- **Air** ... **PA2007**
- **Fuel (SintBronze)** ... **SF898**
- **Oil Vapor** ... **SA2027**
- **Fuel Vapor** ... **SA2046**
- **Trans. (TH350, TH375)** ... **6021**
- **Trans. (PowerGlide)** ... **6017**

LeMans V8-400 (6.6L) 2 Bbl. Carb. VIN P
- **Lube** ... **B39**
- **Air** ... **PA2007**
- **Fuel (SintBronze)** ... **SF898**
- **Oil Vapor** ... **SA2027**
- **Fuel Vapor** ... **SA2046**
- **Trans. (TH350, TH375)** ... **6021**
- **Trans. (TH400)** ... **6020**
- **Trans. (PowerGlide)** ... **6017**

LeMans V8-400 (6.6L) 4 Bbl. Carb. VIN S
- **Lube** ... **B39**
- **Air** ... **PA1758**
- **Fuel** ... **PF893,-RV**
- **Oil Vapor** ... **SA2027**
- **Fuel Vapor** ... **SA2046**
- **Trans. (TH375, TH400)** ... **6020**
- **Trans. (PowerGlide)** ... **6017**

LeMans V8-455 (7.5L) Carb. VIN W,X
- **Lube** ... **B39**
- **Air** ... **PA1758**
- **Fuel** ... **PF893,-RV**
- **Oil Vapor** ... **SA2027**
- **Fuel Vapor** ... **SA2046**
- **Trans. (TH375, TH400)** ... **6020**
- **Trans. (PowerGlide)** ... **6017**

Ventura 6-250 (4.1L) 1 Bbl. Carb. VIN D
- **Lube** ... **B27**
- **Air** ... **PA658**
- **Fuel** ... **PF893,-RV**
- **Oil Vapor** ... **SA2027**
- **Fuel Vapor** ... **SA2046**
- **Trans. (TH350, TH375)** ... **6021**
- **Trans. (PowerGlide)** ... **6017**

Ventura V8-307 (5.0L) Carb. VIN F
- **Lube** ... **B27**
- **Air** ... **PA2006**
- **Fuel (SintBronze)** ... **SF898**
- **Oil Vapor** ... **SA2027**
- **Fuel Vapor** ... **SA2046**
- **Trans. (TH400)** ... **6020**
- **Trans. (PowerGlide)** ... **6017**

Ventura V8-350 (5.7L) 2 Bbl. Carb. VIN M
- **Lube** ... **B39**
- **Air** ... **PA1758**
- **Fuel (SintBronze)** ... **SF898**
- **Oil Vapor** ... **SA2027**
- **Fuel Vapor** ... **SA2046**
- **Trans. (TH350, TH375)** ... **6021**
- **Trans. (PowerGlide)** ... **6017**

OBS = Obsolete. Availability Limited to Distributor Stock.

PONTIAC (Cont'd.)

1971

Bonneville V8-400 (6.6L) 4 Bbl. Carb.
- **Lube**....B39
- **Air**....PA1758
- **Fuel**....PF893,-RV
- **Fuel (SintBronze)**....SF898
- **Oil Vapor**....SA2027
- **Fuel Vapor**....SA2046
- **Trans.**....6020

Bonneville V8-455 (7.5L) 4 Bbl. Carb.
- **Lube**....B39
- **Air**....PA1758
- **Fuel**....PF893,-RV
- **Oil Vapor**....SA2027
- **Fuel Vapor**....SA2046
- **Trans.**....6020

Catalina V8-350 (5.7L) Carb.
- **Lube**....B39
- **Air**....PA2007
- **Fuel (SintBronze)**....SF898
- **Oil Vapor**....SA2027
- **Fuel Vapor**....SA2046
- **Trans.**....6021

Catalina V8-400 (6.6L) Carb.
- **Lube**....B39
- **Air**....PA2007
- **Fuel (SintBronze)**....SF898
- **Oil Vapor**....SA2027
- **Fuel Vapor**....SA2046
- **Trans.**....6020

Catalina V8-455 (7.5L) Carb.
- **Lube**....B39
- **Air**....PA1758
- **Fuel**....PF893,-RV
- **Oil Vapor**....SA2027
- **Fuel Vapor**....SA2046
- **Trans.**....6020

Firebird 6-250 (4.1L) 1 Bbl. Carb.
- **Lube**....B27
- **Air**....PA658
- **Fuel**....PF893,-RV
- **Oil Vapor**....SA2027
- **Fuel Vapor**....SA2046
- **Trans. (TH350, TH375)**....6021
- **Trans. (PowerGlide)**....6017

Firebird V8-350 (5.7L) Carb.
- **Lube**....B39
- **Air**....PA1758
- **Fuel (SintBronze)**....SF898
- **Oil Vapor**....SA2027
- **Fuel Vapor**....SA2046
- **Trans.**....6021

Firebird V8-400 (6.6L) Carb.
- **Lube**....B39
- **Air**....PA1758
- **Fuel**....PF893,-RV
- **Fuel (SintBronze)**....SF898
- **Oil Vapor**....SA2027
- **Fuel Vapor**....SA2046
- **Trans.**....6020

Firebird V8-455 (7.5L) Carb.
- **Lube**....B39
- **Air**....PA1758
- **Fuel**....PF893,-RV
- **Oil Vapor**....SA2027
- **Fuel Vapor**....SA2046
- **Trans.**....6020

Grand Prix V8-400 (6.6L) 4 Bbl. Carb.
- **Lube**....B39
- **Air**....PA1758
- **Fuel**....PF893,-RV
- **Fuel (SintBronze)**....SF898
- **Oil Vapor**....SA2027
- **Fuel Vapor**....SA2046
- **Trans.**....6020

Grand Prix V8-455 (7.5L) 4 Bbl. Carb.
- **Lube**....B39
- **Air**....PA1758
- **Fuel**....PF893,-RV
- **Oil Vapor**....SA2027
- **Fuel Vapor**....SA2046
- **Trans.**....6020

PONTIAC 1971 (Cont'd.)

Grand Safari V8-400 (6.6L) 4 Bbl. Carb.
- **Lube**....B39
- **Air**....PA2007
- **Fuel**....PF893,-RV
- **Fuel (SintBronze)**....SF898
- **Oil Vapor**....SA2027
- **Fuel Vapor**....SA2046
- **Trans.**....6020

Grand Safari V8-455 (7.5L) 4 Bbl. Carb.
- **Lube**....B39
- **Air**....PA1758
- **Fuel**....PF893,-RV
- **Oil Vapor**....SA2027
- **Fuel Vapor**....SA2046
- **Trans.**....6020

Grandville V8-400 (6.6L) 4 Bbl. Carb.
- **Lube**....B39
- **Air**....PA1758
- **Fuel**....PF893,-RV
- **Fuel (SintBronze)**....SF898
- **Oil Vapor**....SA2027
- **Fuel Vapor**....SA2046
- **Trans.**....6020

Grandville V8-455 (7.5L) 4 Bbl. Carb.
- **Lube**....B39
- **Air**....PA1758
- **Fuel**....PF893,-RV
- **Oil Vapor**....SA2027
- **Fuel Vapor**....SA2046
- **Trans.**....6020

GTO V8-400 (6.6L) 4 Bbl. Carb.
- **Lube**....B39
- **Air**....PA2007
- **Fuel**....PF893,-RV
- **Fuel (SintBronze)**....SF898
- **Oil Vapor**....SA2027
- **Fuel Vapor**....SA2046
- **Trans.**....6020

GTO V8-455 (7.5L) 4 Bbl. Carb.
- **Lube**....B39
- **Air**....PA1758
- **Fuel**....PF893,-RV
- **Oil Vapor**....SA2027
- **Fuel Vapor**....SA2046
- **Trans.**....6020

LeMans 6-250 (4.1L) 1 Bbl. Carb.
- **Lube**....B27
- **Air**....PA658
- **Fuel**....PF893,-RV
- **Oil Vapor**....SA2027
- **Fuel Vapor**....SA2046
- **Trans. (TH350, TH375)**....6021
- **Trans. (PowerGlide)**....6017

LeMans V8-350 (5.7L) Carb.
- **Lube**....B39
- **Air**....PA2007
- **Fuel (SintBronze)**....SF898
- **Oil Vapor**....SA2027
- **Fuel Vapor**....SA2046
- **Trans.**....6021

LeMans V8-400 (6.6L) Carb.
- **Lube**....B39
- **Fuel**....PF893,-RV
- **Fuel (SintBronze)**....SF898
- **Oil Vapor**....SA2027
- **Fuel Vapor**....SA2046
- **Trans.**....6020

Ventura 6-250 (4.1L) 1 Bbl. Carb.
- **Lube**....B27
- **Air**....PA658
- **Fuel**....PF893,-RV
- **Oil Vapor**....SA2027
- **Fuel Vapor**....SA2046
- **Trans. (TH350, TH375)**....6021
- **Trans. (PowerGlide)**....6017

Ventura V8-307 (5.0L) Carb.
- **Lube**....B27
- **Air**....PA658
- **Fuel (SintBronze)**....SF898
- **Oil Vapor**....SA2027
- **Fuel Vapor**....SA2046
- **Trans. (TH350, TH375)**....6021
- **Trans. (PowerGlide)**....6017

PONTIAC (Cont'd.)

1970

Bonneville V8-350 (5.7L) 2 Bbl. Carb.
- **Lube**....B39
- **Air**....PA2007
- **Fuel (SintBronze)**....SF898
- **Oil Vapor**....SA2027
- **Fuel Vapor**....SA2046
- **Trans. (TH350, TH375)**....6021
- **Trans. (TH400)**....6020

Bonneville V8-400 (6.6L) 2 Bbl. Carb.
- **Lube**....B39
- **Air**....PA2007
- **Fuel (SintBronze)**....SF898
- **Oil Vapor**....SA2027
- **Fuel Vapor**....SA2046
- **Trans.**....6020

Bonneville V8-455 (7.5L) 4 Bbl. Carb.
- **Lube**....B39
- **Air**....PA1758
- **Fuel**....PF893,-RV
- **Oil Vapor**....SA2027
- **Fuel Vapor**....SA2046
- **Trans.**....6020

Catalina V8-350 (5.7L) 2 Bbl. Carb.
- **Lube**....B39
- **Air**....PA2007
- **Fuel (SintBronze)**....SF898
- **Oil Vapor**....SA2027
- **Fuel Vapor**....SA2046
- **Trans. (TH350, TH375)**....6021
- **Trans. (TH400)**....6020

Catalina V8-400 (6.6L) 2 Bbl. Carb.
- **Lube**....B39
- **Air**....PA2007
- **Fuel (SintBronze)**....SF898
- **Oil Vapor**....SA2027
- **Fuel Vapor**....SA2046
- **Trans. (TH350, TH375)**....6021
- **Trans. (TH400)**....6020

Catalina V8-455 (7.5L) 4 Bbl. Carb.
- **Lube**....B39
- **Air**....PA1758
- **Fuel**....PF893,-RV
- **Oil Vapor**....SA2027
- **Fuel Vapor**....SA2046
- **Trans. (TH350, TH375)**....6021
- **Trans. (TH400)**....6020

Executive V8-350 (5.7L) 2 Bbl. Carb.
- **Lube**....B39
- **Air**....PA2007
- **Fuel (SintBronze)**....SF898
- **Oil Vapor**....SA2027
- **Fuel Vapor**....SA2046
- **Trans. (TH350, TH375)**....6021
- **Trans. (TH400)**....6020

Executive V8-400 (6.6L) 2 Bbl. Carb.
- **Lube**....B39
- **Air**....PA2007
- **Fuel (SintBronze)**....SF898
- **Oil Vapor**....SA2027
- **Fuel Vapor**....SA2046
- **Trans. (TH350, TH375)**....6021
- **Trans. (TH400)**....6020

Executive V8-455 (7.5L) 4 Bbl. Carb.
- **Lube**....B39
- **Air**....PA1758
- **Fuel**....PF893,-RV
- **Oil Vapor**....SA2027
- **Fuel Vapor**....SA2046
- **Trans. (TH350, TH375)**....6021
- **Trans. (TH400)**....6020

Firebird 6-250 (4.1L) 1 Bbl. Carb.
- **Lube**....B27
- **Air**....PA658
- **Fuel**....PF893,-RV
- **Oil Vapor**....SA2027
- **Fuel Vapor**....SA2046
- **Trans. (TH350, TH375)**....6021
- **Trans. (TH400)**....6020
- **Trans. (PowerGlide)**....6017

PONTIAC 1970 (Cont'd.)

Firebird V8-350 (5.7L) 2 Bbl. Carb.
- **Lube**....B39
- **Air**....PA2007
- **Fuel (SintBronze)**....SF898
- **Oil Vapor**....SA2027
- **Fuel Vapor**....SA2046
- **Trans. (TH350, TH375)**....6021
- **Trans. (TH400)**....6020
- **Trans. (PowerGlide)**....6017

Firebird V8-400 (6.6L) 4 Bbl. Carb.
- **Lube**....B39
- **Air**....PA1758
- **Fuel (SintBronze)**....PF893,-RV
- **Oil Vapor**....SA2027
- **Fuel Vapor**....SA2046
- **Trans.**....6020

Grand Prix V8-400 (6.6L) 4 Bbl. Carb.
- **Lube**....B39
- **Air**....PA1758
- **Fuel**....PF893,-RV
- **Oil Vapor**....SA2027
- **Fuel Vapor**....SA2046
- **Trans.**....6020

Grand Prix V8-455 (7.5L) 4 Bbl. Carb.
- **Lube**....B39
- **Air**....PA1758
- **Fuel**....PF893,-RV
- **Oil Vapor**....SA2027
- **Fuel Vapor**....SA2046
- **Trans.**....6020

GTO V8-350 (5.7L) Carb.
- **Lube**....B39
- **Air**....PA2007
- **Fuel (SintBronze)**....SF898
- **Oil Vapor**....SA2027
- **Fuel Vapor**....SA2046
- **Trans.**....6021

GTO V8-400 (6.6L) 2,4 Bbl. Carb.
- **Lube**....B39
- **Air (2 Bbl.)**....PA2007
- **Air (4 Bbl.)**....PA1758
- **Fuel (2 Bbl., SintBronze)**....SF898
- **Fuel (4 Bbl.)**....PF893,-RV
- **Oil Vapor**....SA2027
- **Fuel Vapor**....SA2046
- **Trans.**....6020

GTO V8-455 (7.5L) 4 Bbl. Carb.
- **Lube**....B39
- **Air**....PA1758
- **Fuel**....PF893,-RV
- **Oil Vapor**....SA2027
- **Fuel Vapor**....SA2046
- **Trans.**....6020

LeMans 6-250 (4.1L) 1 Bbl. Carb.
- **Lube**....B27
- **Air**....PA658
- **Fuel**....PF893,-RV
- **Oil Vapor**....SA2027
- **Fuel Vapor**....SA2046

LeMans V8-350 (5.7L) 2 Bbl. Carb.
- **Lube**....B39
- **Air**....PA2007
- **Fuel (SintBronze)**....SF898
- **Oil Vapor**....SA2027
- **Fuel Vapor**....SA2046
- **Trans.**....6021

LeMans V8-400 (6.6L) 2 Bbl. Carb.
- **Lube**....B39
- **Air**....PA2007
- **Fuel (SintBronze)**....SF898
- **Oil Vapor**....SA2027
- **Fuel Vapor**....SA2046
- **Trans.**....6020

LeMans V8-455 (7.5L) 4 Bbl. Carb.
- **Lube**....B39
- **Air**....PA1758
- **Fuel**....PF893,-RV
- **Oil Vapor**....SA2027
- **Fuel Vapor**....SA2046
- **Trans.**....6020

OBS = Obsolete. Availability Limited to Distributor Stock.

PONTIAC 1970 (Cont'd.)

Safari 6-250 (4.1L) Carb.
Lube....B27
Air....PA658
Fuel....PF893,-RV
Oil Vapor....SA2027
Fuel Vapor....SA2046
Trans.....6021

Safari V8-350 (5.7L) Carb.
Lube....B39
Air....PA2007
Fuel (SintBronze)....SF898
Oil Vapor....SA2027
Fuel Vapor....SA2046
Trans.....6021

Tempest 6-250 (4.1L) 1 Bbl. Carb.
Lube....B27
Air....PA658
Fuel....PF893,-RV
Oil Vapor....SA2027
Fuel Vapor....SA2046
Trans. (TH350, TH375)....6021
Trans. (PowerGlide)....6017

Tempest V8-350 (5.7L) 2 Bbl. Carb.
Lube....B39
Air....PA2007
Fuel (SintBronze)....SF898
Oil Vapor....SA2027
Fuel Vapor....SA2046
Trans. (TH350, TH375)....6021
Trans. (PowerGlide)....6017

Tempest V8-400 (6.6L) Carb.
Lube....B39
Oil Vapor....SA2027
Fuel Vapor....SA2046
Trans.....6020

1969

Bonneville V8-400 (6.6L) Carb.
Lube....B39
Air....PA2007
Fuel....PF893,-RV
Oil Vapor....SA2027
Trans.....6020

Bonneville V8-428 (7.0L) Carb.
Lube....B39
Air....PA1758
Fuel....PF893,-RV
Oil Vapor....SA2027
Trans.....6020

Catalina V8-400 (6.6L) Carb.
Lube....B39
Air....PA2007
Fuel....PF893,-RV
Oil Vapor....SA2027
Trans.....6020

Catalina V8-428 (7.0L) Carb.
Lube....B39
Air....PA1758
Fuel....PF893,-RV
Oil Vapor....SA2027
Trans.....6020

Executive V8-400 (6.6L) Carb.
Lube....B39
Air....PA2007
Fuel....PF893,-RV
Oil Vapor....SA2027
Trans.....6020

Executive V8-428 (7.0L) Carb.
Lube....B39
Air....PA1758
Fuel....PF893,-RV
Oil Vapor....SA2027
Trans.....6020

Firebird 6-250 (4.1L) Carb.
Lube....B39
Air....PA658
Fuel....PF893,-RV
Oil Vapor....SA2027
Trans.....6021

Firebird V8-350 (5.7L) Carb.
Lube....B39
Air....PA2007
Fuel....PF893,-RV
Oil Vapor....SA2027
Trans.....6021

PONTIAC 1969 (Cont'd.)

Firebird V8-400 (6.6L) Carb.
Lube....B39
Air....PA1758
Fuel....PF893,-RV
Oil Vapor....SA2027
Trans.....6021

Grand Prix V8-400 (6.6L) 2,4 Bbl. Carb.
Lube....B39
Air (2 or 4 Bbl. w/Ram Air)....PA2007
Air (4 Bbl. w/o Ram Air)....PA1758
Fuel....PF893,-RV
Fuel (SintBronze)....SF898
Oil Vapor....SA2027
Trans.....6020

Grand Prix V8-428 (7.0L) Carb.
Lube....B39
Air....PA1758
Fuel....PF893,-RV
Oil Vapor....SA2027
Trans.....6020

GTO V8-400 (6.6L) 2,4 Bbl. Carb.
Lube....B39
Air (2 or 4 Bbl. w/Ram Air)....PA2007
Air (4 Bbl. w/o Ram Air)....PA1758
Fuel....PF893,-RV
Oil Vapor....SA2027
Trans.....6020

LeMans 6-225 (4.1L) Carb.
Lube....B39
Air....PA658
Fuel....PF893,-RV
Fuel (SintBronze)....SF898
Oil Vapor....SA2027
Trans. (TH350, TH375)....6021
Trans. (TH400)....6020

LeMans V8-350 (5.7L) 2,4 Bbl. Carb.
Lube....B39
Air (2 or 4 Bbl. w/Ram Air)....PA2007
Air (4 Bbl. w/o Ram Air)....PA1758
Fuel....PF893,-RV
Fuel (SintBronze)....SF898
Oil Vapor....SA2027
Trans. (TH350, TH375)....6021
Trans. (TH400)....6020

LeMans V8-400 (6.6L) 2,4 Bbl. Carb.
Lube....B39
Air (2 or 4 Bbl. w/Ram Air)....PA2007
Air (4 Bbl. w/o Ram Air)....PA1758
Fuel....PF893,-RV
Oil Vapor....SA2027
Trans.....6020

LeMans V8-428 (7.0L) Carb.
Lube....B39
Air....PA1758
Fuel....PF893,-RV
Oil Vapor....SA2027
Trans.....6020

Tempest 6-225 (4.1L) Carb.
Lube....B39
Air....PA658
Fuel....PF893,-RV
Oil Vapor....SA2027
Trans.....6021

Tempest V8-400 (6.6L) 2,4 Bbl. Carb.
Lube....B39
Air (2 or 4 Bbl. w/Ram Air)....PA2007
Air (4 Bbl. w/o Ram Air)....PA1758
Fuel....PF893,-RV
Oil Vapor....SA2027
Trans. (TH350, TH375)....6021
Trans. (TH400)....6020

Tempest V8-428 (7.0L) Carb.
Lube....B39
Air....PA1758
Fuel....PF893,-RV
Oil Vapor....SA2027
Trans. (TH350, TH375)....6021
Trans. (TH400)....6020

PONTIAC (Cont'd.)

1968

Bonneville V8-400 (6.6L) 2,4 Bbl. Carb.
Lube....B39
Air (2 Bbl.)....PA2007
Air (4 Bbl.)....PA1758
Fuel....PF893,-RV
Fuel (SintBronze)....SF898
Oil Vapor....SA2027
Trans.....6020

Bonneville V8-428 (7.0L) Carb.
Lube....B39
Air....PA1758
Fuel....PF893,-RV
Oil Vapor....SA2027
Trans.....6020

Catalina V8-400 (6.6L) 2,4 Bbl. Carb.
Lube....B39
Air (2 Bbl.)....PA2007
Air (4 Bbl.)....PA1758
Fuel....PF893,-RV
Fuel (SintBronze)....SF898
Oil Vapor....SA2027
Trans.....6020

Catalina V8-428 (7.0L) Carb.
Lube....B39
Air....PA1758
Fuel....PF893,-RV
Oil Vapor....SA2027
Trans.....6020

Executive V8-400 (6.6L) 2,4 Bbl. Carb.
Lube....B39
Air (2 Bbl.)....PA2007
Air (4 Bbl.)....PA1758
Fuel....PF893,-RV
Fuel (SintBronze)....SF898
Oil Vapor....SA2027
Trans.....6020

Executive V8-428 (7.0L) Carb.
Lube....B39
Air....PA1758
Fuel....PF893,-RV
Oil Vapor....SA2027
Trans.....6020

Firebird 6-250 (4.1L) Carb.
Lube....B39
Air....PA658
Fuel....PF893,-RV
Fuel (SintBronze)....SF898
Oil Vapor....SA2027

Firebird V8-350 (5.7L) 2,4 Bbl. Carb.
Lube....B39
Air (2 Bbl.)....PA2007
Air (4 Bbl.)....PA1758
Fuel....PF893,-RV
Fuel (SintBronze)....SF898
Oil Vapor....SA2027
Trans.....6020

Firebird V8-400 (6.6L) Carb.
Lube....B39
Air....PA1758
Fuel....PF893,-RV
Oil Vapor....SA2027
Trans.....6020

Grand Prix V8-400 (6.6L) 2,4 Bbl. Carb.
Lube....B39
Air (2 Bbl.)....PA2007
Air (4 Bbl.)....PA1758
Fuel....PF893,-RV
Fuel (SintBronze)....SF898
Oil Vapor....SA2027
Trans.....6020

Grand Prix V8-428 (7.0L) Carb.
Lube....B39
Air....PA1758
Fuel....PF893,-RV
Oil Vapor....SA2027
Trans.....6020

PONTIAC 1968 (Cont'd.)

GTO V8-400 (6.6L) 2,4 Bbl. Carb.
Lube....B39
Air (2 Bbl.)....PA2007
Air (4 Bbl.)....PA1758
Fuel....PF893,-RV
Fuel (SintBronze)....SF898
Oil Vapor....SA2027
Trans.....6020

LeMans 6-250 (4.1L) Carb.
Lube....B39
Air....PA658
Fuel....PF893,-RV
Fuel (SintBronze)....SF898
Oil Vapor....SA2027

LeMans V8-350 (5.7L) 2,4 Bbl. Carb.
Lube....B39
Air (2 Bbl.)....PA2007
Air (4 Bbl.)....PA1758
Fuel....PF893,-RV
Fuel (SintBronze)....SF898
Oil Vapor....SA2027
Trans.....6020

LeMans V8-400 (6.6L) 2,4 Bbl. Carb.
Lube....B39
Air (2 Bbl.)....PA2007
Air (4 Bbl.)....PA1758
Fuel....PF893,-RV
Fuel (SintBronze)....SF898
Oil Vapor....SA2027
Trans.....6020

LeMans V8-428 (7.0L) 2,4 Bbl. Carb.
Lube....B39
Air (2 Bbl.)....PA2007
Air (4 Bbl.)....PA1758
Fuel....PF893,-RV
Fuel (SintBronze)....SF898
Oil Vapor....SA2027
Trans.....6020

Safari 6-250 (4.1L) Carb.
Lube....B39
Air....PA658
Fuel....PF893,-RV
Fuel (SintBronze)....SF898
Oil Vapor....SA2027
Trans.....6020

Safari V8-350 (5.7L) 2,4 Bbl. Carb.
Lube....B39
Air (2 Bbl.)....PA2007
Air (4 Bbl.)....PA1758
Fuel....PF893,-RV
Fuel (SintBronze)....SF898
Oil Vapor....SA2027
Trans.....6020

Safari V8-400 (6.6L) 2,4 Bbl. Carb.
Lube....B39
Air (2 Bbl.)....PA2007
Air (4 Bbl.)....PA1758
Fuel....PF893,-RV
Fuel (SintBronze)....SF898
Oil Vapor....SA2027
Trans.....6020

Tempest 6-250 (4.1L) Carb.
Lube....B39
Air....PA658
Fuel....PF893,-RV
Fuel (SintBronze)....SF898
Oil Vapor....SA2027

Tempest V8-350 (5.7L) 2,4 Bbl. Carb.
Lube....B39
Air (2 Bbl.)....PA2007
Air (4 Bbl.)....PA1758
Fuel....PF893,-RV
Fuel (SintBronze)....SF898
Oil Vapor....SA2027
Trans.....6020

Tempest V8-400 (6.6L) 2,4 Bbl. Carb.
Lube....B39
Air (2 Bbl.)....PA2007
Air (4 Bbl.)....PA1758
Fuel....PF893,-RV
Fuel (SintBronze)....SF898
Oil Vapor....SA2027
Trans.....6014

OBS = Obsolete. Availability Limited to Distributor Stock.

PONTIAC (Cont'd.)

1967

Bonneville V8-428 (7.0L) Carb.
- **Lube**....B39
- **Air**....PA1758
- **Fuel (SintBronze)**....SF898
- **Trans. (Early TH400)**....6013
- **Trans. (TH400)**....6020

Catalina V8-400 (6.6L) 2,4 Bbl. Carb.
- **Lube**....B39
- **Air (2 Bbl.)**....PA2007
- **Air (4 Bbl.)**....PA621
- **Fuel (SintBronze)**....SF898
- **Trans. (Early TH400)**....6013
- **Trans. (TH400)**....6020

Catalina V8-428 (7.0L) Carb.
- **Lube**....B39
- **Air**....PA1758
- **Fuel (SintBronze)**....SF898
- **Trans. (TH400)**....6020
- **Trans. (Early TH400)**....6013

Executive V8-400 (6.6L) 2,4 Bbl. Carb.
- **Lube**....B39
- **Air (2 Bbl.)**....PA2007
- **Air (4 Bbl.)**....PA621
- **Fuel (SintBronze)**....SF898
- **Trans. (Early TH400)**....6013
- **Trans. (TH400)**....6020

Executive V8-428 (7.0L) Carb.
- **Lube**....B39
- **Air**....PA1758
- **Fuel (SintBronze)**....SF898
- **Trans. (TH400)**....6020
- **Trans. (Early TH400)**....6013

Firebird 6-230 (3.8L) Carb.
- **Lube**....B39
- **Air**....PA658
- **Fuel (SintBronze)**....SF898

Firebird V8-326 (5.3L) Carb.
- **Lube**....B39
- **Air**....PA2007
- **Fuel (SintBronze)**....SF898
- **Trans.**....6014

Firebird V8-400 (6.6L) Carb.
- **Lube**....B39
- **Air**....PA659
- **Fuel (SintBronze)**....SF898
- **Trans. (TH400)**....6020
- **Trans. (300 Super Turbine)**....6014

Grand Prix V8-428 (7.0L) Carb.
- **Lube**....B39
- **Air**....PA1758
- **Fuel (SintBronze)**....SF898
- **Fuel**....BF836,-K3
- **Trans.**....6020

GTO V8-400 (6.6L) Carb.
- **Lube**....B39
- **Air**....PA2007
- **Fuel (SintBronze)**....SF898
- **Trans. (Early TH400)**....6013
- **Trans. (TH400)**....6020

LeMans 6-230 (3.8L) Carb.
- **Lube**....B39
- **Air**....PA658
- **Fuel (SintBronze)**....SF898
- **Fuel**....BF836,-K3

LeMans V8-326 (5.3L) Carb.
- **Lube**....B39
- **Air**....PA2007
- **Fuel (SintBronze)**....SF898
- **Trans.**....6013

Tempest 6-230 (3.8L) Carb.
- **Lube**....B39
- **Air**....PA658
- **Fuel (SintBronze)**....SF898
- **Trans.**....6014

Tempest V8-326 (5.3L) Carb.
- **Lube**....B39
- **Air**....PA2007
- **Fuel (SintBronze)**....SF898
- **Trans.**....6014

PONTIAC (Cont'd.)

1966

Bonneville V8-389 (6.4L) Carb.
- **Lube**....B9
- **Air**....PA621
- **Fuel**....BF836,-K3
- **Trans.**....6013

Bonneville V8-421 (6.9L) Carb.
- **Lube**....B9
- **Air**....PA621
- **Fuel**....BF836,-K3
- **Fuel (SintBronze)**....SF898
- **Trans.**....6013

Catalina V8-389 (6.4L) Carb.
- **Lube**....B9
- **Air**....PA621
- **Fuel**....BF836,-K3
- **Trans.**....6013

Catalina V8-421 (6.9L) Carb.
- **Lube**....B9
- **Air**....PA621
- **Fuel**....BF836,-K3
- **Fuel (SintBronze)**....SF898
- **Trans.**....6013

Grand Prix V8-389 (6.4L) Carb.
- **Lube**....B9
- **Air**....PA621
- **Fuel**....BF836,-K3
- **Trans.**....6013

Grand Prix V8-421 (6.9L) Carb.
- **Lube**....B9
- **Air**....PA621
- **Fuel**....BF836,-K3
- **Fuel (SintBronze)**....SF898
- **Trans.**....6013

GTO V8-326 (5.3L) Carb.
- **Lube**....B9
- **Air**....PA2007
- **Fuel (SintBronze)**....SF898
- **Trans.**....6014

GTO V8-389 (6.4L) 2,4 Bbl. Carb.
- **Lube**....B9
- **Air (2 Bbl.)**....PA2007
- **Air (4 Bbl.)**....PA659
- **Fuel (SintBronze)**....SF898
- **Fuel**....BF836,-K3
- **Trans.**....6013

LeMans 6-230 (3.8L) 1,4 Bbl. Carb.
- **Lube**....B9
- **Air (1 Bbl.)**....PA658
- **Air (4 Bbl. w/CES)**....PA2007
- **Air (4 Bbl. w/o CES)**....PA659
- **Fuel (1 Bbl., SintBronze)**....SF898
- **Fuel (4 Bbl.)**....BF886

LeMans V8-326 (5.3L) Carb.
- **Lube**....B9
- **Air**....PA2007
- **Fuel (SintBronze)**....SF898
- **Trans.**....6013

Star Chief V8-389 (6.4L) Carb.
- **Lube**....B9
- **Air**....PA621
- **Fuel**....BF836,-K3
- **Trans.**....6013

Star Chief V8-421 (6.9L) Carb.
- **Lube**....B9
- **Air**....PA621
- **Fuel**....BF836,-K3
- **Fuel (SintBronze)**....SF898
- **Trans.**....6013

Tempest 6-230 (3.8L) 1,4 Bbl. Carb.
- **Lube**....B9
- **Air (1 Bbl.)**....PA658
- **Air (4 Bbl. w/CES)**....PA2007
- **Air (4 Bbl. w/o CES)**....PA659
- **Fuel (1 Bbl., SintBronze)**....SF898
- **Fuel (4 Bbl.)**....BF886
- **Trans.**....6014

Tempest V8-326 (5.3L) Carb.
- **Lube**....B9
- **Air**....PA2007
- **Fuel (SintBronze)**....SF898
- **Trans.**....6014

PONTIAC (Cont'd.)

1965

Bonneville V8-389 (6.4L) Carb.
- **Lube**....B9
- **Air (2 Bbl.)**....PA625
- **Air (4 Bbl.)**....PA621
- **Air (Three 2 Bbl.)**....PA631
- **Fuel (2 or 4 Bbl., SintBronze)**....SF898
- **Fuel (Three 2 Bbl.)**....BF836,-K3
- **Trans.**....6013

Bonneville V8-421 (6.9L) Carb.
- **Lube**....B9
- **Air (2+2 4 Bbl.)**....PA659
- **Air (4 Bbl.)**....PA621
- **Air (Three 2 Bbl.)**....PA631
- **Fuel (2 or 4 Bbl., SintBronze)**....SF898
- **Fuel (Three 2 Bbl.)**....BF836,-K3
- **Trans.**....6013

Catalina V8-389 (6.4L) Carb.
- **Lube**....B9
- **Air (2 Bbl.)**....PA625
- **Air (4 Bbl.)**....PA621
- **Air (Three 2 Bbl.)**....PA631
- **Fuel (2 or 4 Bbl., SintBronze)**....SF898
- **Fuel (Three 2 Bbl.)**....BF836,-K3
- **Trans.**....6013

Grand Prix V8-389 (6.4L) Carb.
- **Lube**....B9
- **Air (2 Bbl.)**....PA625
- **Air (4 Bbl.)**....PA621
- **Air (Three 2 Bbl.)**....PA631
- **Fuel (2 or 4 Bbl., SintBronze)**....SF898
- **Fuel (Three 2 Bbl.)**....BF836,-K3
- **Trans.**....6013

Grand Prix V8-421 (6.9L) Carb.
- **Lube**....B9
- **Air (2+2 4 Bbl.)**....PA659
- **Air (4 Bbl.)**....PA621
- **Air (Three 2 Bbl.)**....PA631
- **Fuel (2 or 4 Bbl., SintBronze)**....SF898
- **Fuel (Three 2 Bbl.)**....BF836,-K3
- **Trans.**....6013

GTO V8-326 (5.3L) Carb.
- **Lube**....B9
- **Air**....PA2007
- **Fuel (SintBronze)**....BF836,-K3
- **Trans.**....6013

GTO V8-389 (6.4L) Carb.
- **Lube**....B9
- **Air (4 Bbl., Exc. Calif.)**....PA659
- **Air (4 Bbl. Calif.)**....PA2007
- **Fuel (2 or 4 Bbl., SintBronze)**....SF898
- **Fuel (Three 2 Bbl.)**....BF836,-K3
- **Trans.**....6013

LeMans 6-215 (3.5L) Carb.
- **Lube**....B6
- **Air**....PA658
- **Fuel (SintBronze)**....SF898
- **Trans.**....6014

LeMans V8-326 (5.3L) Carb.
- **Lube**....B9
- **Air**....PA2007
- **Fuel (SintBronze)**....BF836,-K3
- **Trans.**....6013

LeMans V8-389 (6.4L) Carb.
- **Lube**....B9
- **Air (2 Bbl.)**....PA625
- **Air (4 Bbl.)**....PA621
- **Air (Three 2 Bbl.)**....PA631
- **Fuel (2 or 4 Bbl., SintBronze)**....SF898
- **Fuel (Three 2 Bbl.)**....BF836,-K3
- **Trans.**....6013

Safari V8-389 (6.4L) Carb.
- **Lube**....B9
- **Air (2 Bbl.)**....PA625
- **Air (4 Bbl.)**....PA621
- **Air (Three 2 Bbl.)**....PA631
- **Fuel (2 or 4 Bbl., SintBronze)**....SF898
- **Fuel (Three 2 Bbl.)**....BF836,-K3
- **Trans.**....6013

PONTIAC 1965 (Cont'd.)

Safari V8-421 (6.9L) Carb.
- **Lube**....B9
- **Air (2+2 4 Bbl.)**....PA659
- **Air (4 Bbl.)**....PA621
- **Air (Three 2 Bbl.)**....PA631
- **Fuel (2 or 4 Bbl., SintBronze)**....SF898
- **Fuel (Three 2 Bbl.)**....BF836,-K3
- **Trans.**....6013

Star Chief V8-389 (6.4L) Carb.
- **Lube**....B9
- **Air (2 Bbl.)**....PA625
- **Air (4 Bbl.)**....PA621
- **Air (Three 2 Bbl.)**....PA631
- **Fuel (2 or 4 Bbl., SintBronze)**....SF898
- **Fuel (Three 2 Bbl.)**....BF836,-K3
- **Trans.**....6013

Star Chief V8-421 (6.9L) Carb.
- **Lube**....B9
- **Air (2+2 4 Bbl.)**....PA659
- **Air (4 Bbl.)**....PA621
- **Air (Three 2 Bbl.)**....PA631
- **Fuel (2 or 4 Bbl., SintBronze)**....SF898
- **Fuel (Three 2 Bbl.)**....BF836,-K3
- **Trans.**....6013

Tempest 6-215 (3.5L) Carb.
- **Lube**....B6
- **Air**....PA658
- **Fuel (SintBronze)**....SF898
- **Trans.**....6014

Tempest V8-326 (5.3L) Carb.
- **Lube**....B9
- **Air**....PA2007
- **Fuel**....BF836,-K3
- **Trans.**....6014

1964

Bonneville V8-389 (6.4L) Carb.
- **Lube**....B9
- **Air (2 Bbl.)**....PA625
- **Fuel (2 or 4 Bbl. w/o AirCond, SintBronze)**....SF898
- **Fuel (Three 3 Bbl. w/o AirCond.)**....BF836,-K3

Bonneville V8-421 (6.9L) Carb.
- **Air**....PA631
- **Fuel (2 or 4 Bbl. w/o AirCond, SintBronze)**....SF898
- **Fuel (Three 3 Bbl. w/o AirCond.)**....BF836,-K3

Catalina V8-389 (6.4L) Carb.
- **Lube**....B9
- **Air (2 Bbl.)**....PA625
- **Fuel (2 or 4 Bbl. w/o AirCond, SintBronze)**....SF898
- **Fuel (Three 3 Bbl. w/o AirCond.)**....BF836,-K3

Catalina V8-421 (6.9L) Carb.
- **Lube**....B9
- **Air**....PA631
- **Fuel (2 or 4 Bbl. w/o AirCond, SintBronze)**....SF898
- **Fuel (Three 3 Bbl. w/o AirCond.)**....BF836,-K3

Grand Prix V8-389 (6.4L) Carb.
- **Lube**....B9
- **Air (2 Bbl.)**....PA625
- **Fuel (2 or 4 Bbl. w/o AirCond, SintBronze)**....SF898
- **Fuel (Three 3 Bbl. w/o AirCond.)**....BF836,-K3

Grand Prix V8-421 (6.9L) Carb.
- **Lube**....B9
- **Air**....PA631
- **Fuel (2 or 4 Bbl. w/o AirCond, SintBronze)**....SF898
- **Fuel (Three 3 Bbl. w/o AirCond.)**....BF836,-K3

GTO 6-215 (3.5L) Carb.
- **Air**....PA658
- **Fuel (SintBronze)**....SF898

GTO V8-326 (5.3L) Carb.
- **Lube**....B9
- **Fuel (SintBronze)**....SF898

OBS = Obsolete. Availability Limited to Distributor Stock.

PONTIAC 1964 (Cont'd.)

GTO V8-389 (6.4L) Carb.
Lube....B9
Air....PA625
Fuel (2 or 4 Bbl. w/o AirCond, SintBronze)....SF898
Fuel (Three 3 Bbl. w/o AirCond.)....BF836,-K3

LeMans 6-215 (3.5L) Carb.
Lube....B6
Air....PA658
Fuel (SintBronze)....SF898

LeMans V8-326 (5.3L) Carb.
Lube....B9
Air....PA625
Fuel (SintBronze)....SF898

LeMans V8-389 (6.4L) Carb.
Lube....B9
Air (2 Bbl.)....PA625
Fuel (2 or 4 Bbl. w/o AirCond, SintBronze)....SF898
Fuel (Three 3 Bbl. w/o AirCond.)....BF836,-K3

Safari V8-389 (6.4L) Carb.
Lube....B9
Air (2 Bbl.)....PA625
Fuel (2 or 4 Bbl. w/o AirCond, SintBronze)....SF898
Fuel (Three 3 Bbl. w/o AirCond.)....BF836,-K3

Safari V8-421 (6.9L) Carb.
Lube....B9
Air....PA631
Fuel (2 or 4 Bbl. w/o AirCond, SintBronze)....SF898
Fuel (Three 3 Bbl. w/o AirCond.)....BF836,-K3

Star Chief V8-389 (6.4L) Carb.
Lube....B9
Air (2 Bbl.)....PA625
Fuel (2 or 4 Bbl. w/o AirCond, SintBronze)....SF898
Fuel (Three 3 Bbl. w/o AirCond.)....BF836,-K3

Star Chief V8-421 (6.9L) Carb.
Lube....B9
Air....PA631
Fuel (2 or 4 Bbl. w/o AirCond, SintBronze)....SF898
Fuel (Three 3 Bbl. w/o AirCond.)....BF836,-K3

Tempest 6-215 (3.5L) Carb.
Lube....B6
Air....PA658
Fuel (SintBronze)....SF898

Tempest V8-326 (5.3L) Carb.
Lube....B9
Fuel (SintBronze)....SF898

Tempest V8-389 (6.4L) Carb.
Lube....B9
Air (2 Bbl.)....PA625
Fuel (2 or 4 Bbl. w/o AirCond, SintBronze)....SF898
Fuel (Three 3 Bbl. w/o AirCond.)....BF836,-K3

1963

Bonneville V8-389 (6.4L) 2,4 Bbl. Carb.
Lube....B9
Air (2 Bbl.)....PA625
Air (4 Bbl.)....PA631
Fuel....BF836,-K3

Bonneville V8-421 (6.9L) 2,4 Bbl. Carb.
Lube....B9
Air (2 Bbl.)....PA625
Air (4 Bbl.)....PA631
Fuel....BF836,-K3

Catalina V8-389 (6.4L) 2,4 Bbl. Carb.
Lube....B9
Air (2 Bbl.)....PA625
Air (4 Bbl.)....PA631
Fuel....BF836,-K3

PONTIAC 1963 (Cont'd.)

Catalina V8-421 (6.9L) 2,4 Bbl. Carb.
Lube....B9
Air (2 Bbl.)....PA625
Air (4 Bbl.)....PA631
Fuel....BF836,-K3

Grand Prix V8-389 (6.4L) 2,4 Bbl. Carb.
Lube....B9
Air (2 Bbl.)....PA625
Air (4 Bbl.)....PA631
Fuel....BF836,-K3

Grand Prix V8-421 (6.9L) 2,4 Bbl. Carb.
Lube....B9
Air (2 Bbl.)....PA625
Air (4 Bbl.)....PA631
Fuel....BF836,-K3

LeMans V8-326 (5.3L) 2,4 Bbl. Carb.
Lube....B9
Air (2 Bbl.)....PA625
Air (4 Bbl.)....PA631
Fuel....BF836,-K3
Trans.....6017

Safari V8-389 (6.4L) 2,4 Bbl. Carb.
Lube....B9
Air (2 Bbl.)....PA625
Air (4 Bbl.)....PA631
Fuel....BF836,-K3

Safari V8-421 (6.9L) 2,4 Bbl. Carb.
Lube....B9
Air (2 Bbl.)....PA625
Air (4 Bbl.)....PA631
Fuel....BF836,-K3

Star Chief V8-389 (6.4L) 2,4 Bbl. Carb.
Lube....B9
Air (2 Bbl.)....PA625
Air (4 Bbl.)....PA631
Fuel....BF836,-K3

Star Chief V8-421 (6.9L) 2,4 Bbl. Carb.
Lube....B9
Air (2 Bbl.)....PA625
Air (4 Bbl.)....PA631
Fuel....BF836,-K3

Tempest V8-326 (5.3L) 2,4 Bbl. Carb.
Lube....B9
Air (2 Bbl.)....PA625
Fuel....BF840,-K1
Fuel (SintBronze)....SF898
Trans.....6017

Tempest V8-389 (6.4L) 2,4 Bbl. Carb.
Lube....B9
Air (2 Bbl.)....PA625
Air (4 Bbl.)....PA631
Fuel....BF836,-K3

1962

Bonneville V8-389 (6.4L) Carb.
Lube....B9
Air (2 Bbl.)....PA625
Air (Three 2 Bbl.)....PA631
Fuel....BF836,-K3

Catalina V8-389 (6.4L) Carb.
Lube....B9
Air (2 Bbl.)....PA625
Air (Three 2 Bbl.)....PA631
Fuel....BF836,-K3

Grand Prix V8-389 (6.4L) Carb.
Lube....B9
Air (2 Bbl.)....PA625
Air (Three 2 Bbl.)....PA631
Fuel....BF836,-K3

Safari V8-389 (6.4L) Carb.
Lube....B9
Air (2 Bbl.)....PA625
Air (Three 2 Bbl.)....PA631
Fuel....BF836,-K3

Star Chief V8-389 (6.4L) Carb.
Lube....B9
Air (2 Bbl.)....PA625
Air (Three 2 Bbl.)....PA631
Fuel....BF836,-K3

PONTIAC 1962 (Cont'd.)

Tempest V8-389 (6.4L) Carb.
Lube....B9
Air (2 Bbl.)....PA625
Air (Three 2 Bbl.)....PA631
Fuel (SintBronze)....SF898

1961

Bonneville V8-389 (6.4L) Carb.
Lube....B9
Air (2 Bbl.)....PA625
Air (Three 2 Bbl.)....PA631
Fuel....BF836,-K3

Catalina V8-389 (6.4L) Carb.
Lube....B9
Air (2 Bbl.)....PA625
Air (Three 2 Bbl.)....PA631
Fuel....BF836,-K3

Safari V8-389 (6.4L) Carb.
Lube....B9
Fuel....BF836,-K3

Star Chief V8-389 (6.4L) Carb.
Lube....B9
Air (2 Bbl.)....PA625
Air (Three 2 Bbl.)....PA631
Fuel....BF836,-K3

Tempest V8-389 (6.4L) Carb.
Lube....B9
Air....PA625
Fuel....BF836,-K3

Ventura V8-389 (6.4L) Carb.
Lube....B9
Air (2 Bbl.)....PA625
Air (Three 2 Bbl.)....PA631
Fuel....BF836,-K3

1960

Bonneville V8-389 (6.4L) Carb.
Lube....B9
Air (2 Bbl.)....PA625
Air (Three 2 Bbl.)....PA631
Fuel....BF836,-K3

Catalina V8-389 (6.4L) Carb.
Lube....B9
Air (2 Bbl.)....PA625
Air (Three 2 Bbl.)....PA631
Fuel....BF836,-K3

Star Chief V8-389 (6.4L) Carb.
Lube....B9
Air (2 Bbl.)....PA625
Air (Three 2 Bbl.)....PA631
Fuel....BF836,-K3

Ventura V8-389 (6.4L) Carb.
Lube....B9
Air (2 Bbl.)....PA625
Air (Three 2 Bbl.)....PA631
Fuel....BF836,-K3

1959

Bonneville V8-389 (6.4L) Carb.
Lube....P25
Air (2 Bbl.)....PA625
Air (Three 2 Bbl.)....PA631

Catalina V8-389 (6.4L) Carb.
Lube....P25
Air (2 Bbl.)....PA625
Air (Three 2 Bbl.)....PA631

Star Chief V8-389 (6.4L) Carb.
Lube....P25
Air (2 Bbl.)....PA625
Air (Three 2 Bbl.)....PA631

1958

Bonneville V8-370 (6.1L) Carb.
Lube....P25
Fuel....PF857

Catalina V8-370 (6.1L) 2 Bbl. Carb.
Lube....P25
Fuel....PF857

Chieftain V8-370 (6.1L) 2 Bbl. Carb.
Lube....P25
Fuel....PF857

Star Chief V8-370 (6.1L) Carb.
Lube....P25
Air (3-2 Bbl.)....PA631
Fuel....PF857

PONTIAC 1958 (Cont'd.)

Super Chief V8-370 (6.1L) 2 Bbl. Carb.
Lube....P25
Fuel....PF857

1957

Bonneville V8-347 (5.7L) Carb.
Lube....P25

Catalina V8-347 (5.7L) 2 Bbl. Carb.
Lube....P25
Fuel....PF857

Chieftain V8-347 (5.7L) 2 Bbl. Carb.
Lube....P25
Fuel....PF857

Star Chief V8-347 (5.7L) 4 Bbl. Carb.
Lube....P25
Fuel....PF857

Super Chief V8-347 (5.7L) Carb.
Lube....P25
Air....PA631
Fuel....PF857

1956

Catalina V8-316 (5.2L) 2 Bbl. Carb.
Lube....P25
Fuel....BF840,-K1

Chieftain V8-316 (5.2L) 2 Bbl. Carb.
Lube....P25
Fuel....BF840,-K1

Star Chief V8-316 (5.2L) 2-4 Bbl. Carb.
Lube....P25
Fuel....BF840,-K1

1955

Catalina V8-287 (4.7L) 2 Bbl. Carb.
Lube....P25
Fuel....BF840,-K1

Chieftain V8-287 (4.7L) 2 Bbl. Carb.
Lube....P25
Fuel....BF840,-K1

Star Chief V8-287 (4.7L) 2 Bbl. Carb.
Lube....P25
Fuel....BF840,-K1

1954

Catalina 6-239 (3.9L) Carb.
Lube....P53

Catalina V8-268 (4.4L) Carb.
Lube....P53

Chieftain 6-239 (3.9L) Carb.
Lube....P53

Chieftain V8-268 (4.4L) Carb.
Lube....P53

Star Chief V8-268 (4.4L) Carb.
Lube....P53

1953

Catalina 6-239 (3.9L) Carb.
Lube....P53

Catalina 8-268 (4.4L) Carb.
Lube....P53

Chieftain 6-239 (3.9L) Carb.
Lube....P53

Chieftain 8-268 (4.4L) Carb.
Lube....P53

1952

Catalina 6-239 (3.9L) Carb.
Lube....P53

Catalina 8-268 (4.4L) Carb.
Lube....P53

Chieftain 6-239 (3.9L) Carb.
Lube....P53

Chieftain 8-268 (4.4L) Carb.
Lube....P53

Streamliner 6-239 (3.9L) Carb.
Lube....P53

Streamliner 8-268 (4.4L) Carb.
Lube....P53

OBS = Obsolete. Availability Limited to Distributor Stock.

PONTIAC (Cont'd.)

1951
Catalina 6-239 (3.9L) Carb.
Lube....P53
Catalina 8-268 (4.4L) Carb.
Lube....P53
Chieftain 6-239 (3.9L) Carb.
Lube....P53
Chieftain 8-268 (4.4L) Carb.
Lube....P53
Streamliner 6-239 (3.9L) Carb.
Lube....P53
Streamliner 8-268 (4.4L) Carb.
Lube....P53

1950
Catalina 6-239 (3.9L) Carb.
Lube....P53
Catalina 8-268 (4.4L) Carb.
Lube....P53
Chieftain 6-239 (3.9L) Carb.
Lube....P53
Chieftain 8-268 (4.4L) Carb.
Lube....P53
Streamliner 6-239 (3.9L) Carb.
Lube....P53
Streamliner 8-268 (4.4L) Carb.
Lube....P53

PORSCHE

1979
911SC 6-2999cc (3.0L) FI
Lube....BT292
Air....PA4042
Fuel....BF885
Trans.....M.T.
924 4-1983cc (2.0L) FI
Lube....B178
Air....PA4042
Fuel....BF885
928 V8-4474cc (4.5L) FI
Fuel....BF885
930 6-3294cc (3.3L) FI
Lube....BT292
Fuel....BF885

1978
911SC 6-2999cc (3.0L) FI VIN 2
Lube....BT292
Air....PA4042
Fuel....BF885
Trans.....M.T.
924 4-1983cc (2.0L) FI VIN 2
Lube....B178
Air....PA2208
Fuel....BF885
928 V8-4474cc (4.5L) FI VIN 2
Fuel....BF944
930 6-3294cc (3.3L) FI VIN 8
Lube....BT292
Fuel....BF885
Trans.....M.T.

1977
911 S 6-2688cc (2.7L) FI VIN 2
Lube....BT292
Air....PA4042
Fuel....BF885
911 Turbo 6-2999cc (3.0L) FI VIN 8
Lube....BT292
Air....PA4042
Fuel....BF885
924 4-1983cc (2.0L) FI
Lube....B178
Air....PA2208

1976
911 S 6-2688cc (2.7L) FI VIN 2
Lube....BT292
Air....PA4042

PORSCHE 1976 (Cont'd.)

911 Turbo 6-2999cc (3.0L) FI VIN 8
Lube....BT292
Air....PA4042
Fuel....BF885
Trans.....M.T.
912E 4-1967cc (2.0L) FI VIN 0
Air....PA2023
914 4-1967cc (2.0L) FI VIN 2
Air....PA2208

1975
911 Carrera, 911 S 6-2688cc (2.7L) FI VIN 2,4
Lube....BT292
Air....PA4042
914 4-1795cc (1.8L) FI VIN 2
Air....PA2208
Trans.....M.T.
914 4-1971cc (2.0L) FI VIN 2
Air....PA2208
Trans.....M.T.

1974
911, 911 Carrera, 911 S 6-2688cc (2.7L) FI
Lube....BT292
Air....PA4042
Oil Vapor....N/R
914 4-1795cc (1.8L) FI VIN 2
Air....PA2208
Oil Vapor....N/R
Trans.....M.T.
914 4-1971cc (2.0L) FI VIN 2
Air....PA2208
Oil Vapor....N/R
Trans.....M.T.

1973
911 6-2341cc (2.3L) FI
Lube....BT292
Air....PA1901
Oil Vapor....N/R
914 4-1679cc (1.7L) FI
Oil Vapor....N/R
Trans.....M.T.

1972
911 E, 911 S 6-2341cc (2.3L) FI VIN 2
Lube....BT292
Air....PA1901
Oil Vapor....N/R
911 T 6-2341cc (2.3L) Carb.
Lube....BT292
Air....PA1901
Oil Vapor....N/R
914 4-1679cc (1.7L) FI
Oil Vapor....N/R
Trans.....M.T.

1971
911 E, 911 S 6-2195cc (2.2L) FI VIN 2,3
Lube....B253
Air....PA1901
Oil Vapor....N/R
Trans. (911S)....M.T.
911 T 6-2195cc (2.2L) Carb. VIN 1
Lube....B253
Air....PA1901
Oil Vapor....N/R
914 4-1679cc (1.7L) FI VIN 2
Oil Vapor....N/R
Trans.....M.T.
914 6-1991cc (2.0L) Carb. VIN 4
Air....PA1901
Oil Vapor....N/R
Trans.....M.T.

PORSCHE (Cont'd.)

1970
911 E, 911 T 6-2195cc (2.2L) 2 Bbl. Carb. VIN 1
Lube....B253
Air....PA1901
911 S 6-2195cc (2.2L) 2 Bbl. Carb. VIN 1
Lube....B253
Air....PA1901
Trans.....M.T.
914 4-1679cc (1.7L) FI VIN 2
Trans.....M.T.
914 6-1991cc (2.0L) Carb. VIN 4
Lube....B253
Air....PA1901
Trans.....M.T.

1969
911 E, 911 T 6-1991cc (2.0L) Carb.
Lube....B253
Air....PA1901
911 S 6-1991cc (2.0L) Carb.
Lube....B253
Air....PA1901
Trans.....M.T.
912 4-1582cc (1.6L) FI
Lube....P40

1968
911 6-1991cc (2.0L) Carb.
Lube....B253
Air....PA1901
912 4-1582cc (1.6L) FI
Lube....P40
Air....PA2023

1967
911 6-1991cc (2.0L) Carb.
Lube....B253
Air....PA1901
Trans.....M.T.
912 4-1582cc (1.6L) Carb.
Lube....P40
Air....PA2023
Trans.....M.T.

1966
911 6-1991cc (2.0L) Carb.
Lube....B253
Air....PA1901
Trans.....M.T.
912 4-1582cc (1.6L) Carb.
Lube....P40
Air....PA640
Fuel....BF7903
Trans.....M.T.

1965
911 6-1991cc (2.0L) Carb.
Lube....B253
Air....PA1901
Trans.....M.T.
912 4-1582cc (1.6L) Carb.
Lube....P40
Air....PA640
Trans.....M.T.

1964
356C 4-1582cc (1.6L) Carb.
Lube....P40
Air....PA1802
Fuel....BF833,-K2
Carrera 4-1966cc (2.0L) Carb.
Lube....P40
Air....PA1901
Fuel....BF833,-K2

PORSCHE (Cont'd.)

1963
356B 4-1582cc (1.6L) Carb.
Lube....P40
Air....PA1802
Fuel....BF833,-K2
Trans.....M.T.
Carrera 4-1966cc (2.0L) Carb.
Lube....P40
Air....PA1901
Trans.....M.T.

1962
356B 4-1582cc (1.6L) Carb.
Lube....P40
Air....PA1802
Fuel....BF833,-K2
Trans.....M.T.
Carrera 4-1966cc (2.0L) Carb.
Lube....P40
Air....PA1802
Fuel....BF833,-K2
Trans.....M.T.

1961
356B 4-1582cc (1.6L) Carb.
Lube....P40
Air....PA1802
Fuel....BF833,-K2
Trans.....M.T.
Carrera 4-1966cc (2.0L) Carb.
Air....PA1901

1960
356B 4-1582cc (1.6L) Carb.
Lube....P40
Air....PA1802
Fuel....BF833,-K2
Trans.....M.T.
Carrera 4-1966cc (2.0L) Carb.
Air....PA1901

1959
356A 4-1582cc (1.6L) Carb.
Lube....P40
Air....PA1802
Fuel....BF833,-K2
Trans.....M.T.
356A 4-1498cc (1.5L) Carb.
Lube....P40
Air....PA1802
Fuel....BF833,-K2
Carrera 4-1587cc (1.6L) Carb.
Lube....P40

1958
356A 4-1582cc (1.6L) Carb.
Lube....P40
Air....PA1802
Fuel....BF833,-K2
Trans.....M.T.
356A 4-1498cc (1.5L) Carb.
Lube....P40
Air....PA1802
Fuel....BF833,-K2
Carrera 4-1587cc (1.6L) Carb.
Lube....P40

1957
356A 4-1582cc (1.6L) Carb.
Trans.....M.T.
356A 4-1498cc (1.5L) Carb.
Lube....P40

1956
356A 4-1582cc (1.6L) Carb.
Lube....P40
Trans.....M.T.
356A 4-1498cc (1.5L) Carb.
Lube....P40

OBS = Obsolete. Availability Limited to Distributor Stock.

PORSCHE (Cont'd.)

1955
356 4-1286cc (1.3L) Carb.
Lube....P40
356 4-1488cc (1.5L) Carb.
Lube....P40
Trans.....M.T.

1954
356 4-1286cc (1.3L) Carb.
Lube....P40
356 4-1488cc (1.5L) Carb.
Lube....P40

1953
356 4-1286cc (1.3L) Carb.
Lube....P40
356 4-1488cc (1.5L) Carb.
Lube....P40

1952
356 4-1286cc (1.3L) Carb.
Lube....P40
356 4-1488cc (1.5L) Carb.
Lube....P40

1951
356 4-1286cc (1.3L) Carb.
Lube....P40
356 4-1488cc (1.5L) Carb.
Lube....P40

1950
356 4-1086cc (1.1L) Carb.
Lube....P40
356 4-1488cc (1.5L) Carb.
Lube....P40

1949
356 4-1086cc (1.1L) Carb.
Lube....P40

1948
356 4-1086cc (1.1L) Carb.
Lube....P40

RENAULT

1979
LeCar Le Car 4-1289cc (1.3L) Carb.
Lube.... B132
Air....PA2099
Fuel.... BF833,-K2
R17 Gordini 4-1647cc (1.6L) FI
Lube.... B132
Air....PA2099

1978
LeCar Le Car 4-1289cc (1.3L) Carb. VIN N
Lube.... B132
Air....PA2099
Fuel.... BF833,-K2
R17 Gordini 4-1647cc (1.6L) FI
Lube.... B132
Air....PA2099

1977
LeCar Le Car 4-1289cc (1.3L) Carb. VIN N
Lube.... B132
Air....PA2099
Fuel.... BF833,-K2
R12 4-1647cc (1.6L) Carb. VIN N
Lube.... B132
Fuel.... BF833,-K2
R17 Gordini 4-1647cc (1.6L) FI VIN N
Lube.... B132

RENAULT 1977 (Cont'd.)

R17 GTL 4-1647cc (1.6L) FI VIN N
Lube.... B132

1976
R5 4-1289cc (1.3L) Carb.
Lube.... B132
Fuel.... BF833,-K2
R12 4-1647cc (1.6L) Carb.
Lube.... B132
Fuel.... BF833,-K2
R15 4-1647cc (1.6L) Carb.
Lube.... B132
Fuel.... BF833,-K2
R17 Gordini 4-1647cc (1.6L) FI
Lube.... B132
R17 TL 4-1647cc (1.6L) Carb.
Lube.... B132

1975
R12 4-1647cc (1.6L) Carb.
Lube.... B132
Fuel.... BF833,-K2
R15 4-1647cc (1.6L) Carb.
Lube.... B132
Fuel.... BF833,-K2
R17 4-1647cc (1.6L) Carb.
Lube.... B132

1974
R12 4-1647cc (1.6L) Carb.
Lube.... B132
Fuel.... BF833,-K2
Oil Vapor.... N/R
R15 4-1647cc (1.6L) Carb.
Lube.... B132
Fuel.... BF833,-K2
Oil Vapor.... N/R
R17 Gordini 4-1565cc (1.6L) Carb.
Lube.... B132
Oil Vapor.... N/R
R17 TL 4-1647cc (1.6L) Carb.
Lube.... B132
Oil Vapor.... N/R

1973
R12 4-1647cc (1.6L) Carb.
Lube.... B132
Fuel.... BF833,-K2
Oil Vapor.... N/R
R15 4-1647cc (1.6L) Carb.
Lube.... B132
Fuel.... BF833,-K2
Oil Vapor.... N/R

1972
R12 4-1565cc (1.6L) Carb.
Lube.... B132
Fuel.... BF833,-K2
Oil Vapor.... N/R
R15 4-1565cc (1.6L) Carb.
Lube.... B132
Air....PA2099
Fuel.... BF833,-K2
Oil Vapor.... N/R
R16 4-1565cc (1.6L) Carb.
Lube.... B132
Fuel.... BF833,-K2
Oil Vapor.... N/R
R17 4-1565cc (1.6L) Carb.
Lube.... B132
Oil Vapor.... N/R

1971
R10 4-1289cc (1.3L) Carb.
Lube.... B132
Air....PA650
Fuel.... BF833,-K2
Oil Vapor.... N/R
R12 4-1565cc (1.6L) Carb.
Lube.... B132
Fuel.... BF833,-K2
Oil Vapor.... N/R

RENAULT 1971 (Cont'd.)

R16 4-1565cc (1.6L) Carb.
Lube.... B132
Fuel.... BF833,-K2
Oil Vapor.... N/R

1970
R10 4-1289cc (1.3L) 2 Bbl. Carb.
Lube.... B132
Air....PA650
Oil Vapor.... N/R
R16 4-1565cc (1.6L) 2 Bbl. Carb.
Lube.... B132
Oil Vapor.... N/R

1969
R10 4-1289cc (1.3L) Carb.
Lube.... B132
Air....PA650
Fuel.... BF833,-K2
Oil Vapor.... N/R
R16 4-1565cc (1.6L) Carb.
Lube.... B132
Air....PA695
Fuel.... BF833,-K2
Oil Vapor.... N/R

1968
R10 4-1289cc (1.3L) Carb.
Lube.... B132
Fuel.... BF7903
Oil Vapor.... N/R

ROLLS ROYCE

1979
Camargue, Corniche, Silver Shadow II, Silver Wraith II V8-412 (6.7L) Carb.
Lube....P104

1978
Camargue, Corniche, Silver Shadow II, Silver Wraith II V8-412 (6.7L) Carb.
Lube....P104

1977
Camargue, Corniche, Silver Shadow II, Silver Wraith II V8-412 (6.7L) Carb.
Lube....P104

1976
Camargue, Corniche, Silver Shadow Camargue, Corniche, Silver Shadow V8-415 (6.8L) Carb.
Lube....P104

1975
Camargue, Corniche, Silver Shadow V8-415 (6.8L) Carb.
Lube....P104

1974
Camargue, Corniche, Silver Shadow V8-380 (6.2L) Carb.
Lube....P104
Camargue, Corniche, Silver Shadow V8-415 (6.8L) Carb.
Lube....P104

1973
Corniche, Silver Shadow V8-380 (6.2L) Carb.
Lube....P104

ROLLS ROYCE 1973 (Cont'd.)

Corniche, Silver Shadow V8-415 (6.8L) Carb.
Lube....P104

1972
Corniche, Silver Shadow V8-380 (6.2L) Carb.
Lube....P104

Corniche, Silver Shadow V8-415 (6.8L) Carb.
Lube....P104

1971
Corniche, Silver Shadow V8-380 (6.2L) Carb.
Lube....P104

Corniche, Silver Shadow V8-6750cc (6.8L) Carb.
Lube....P104

ROVER

1971
2000, 2000 TC 4-1978cc (2.0L) Carb.
Lube....B2

3500S V8-215 (3.5L) Carb.
Fuel.... BF833,-K2

1970
2000, 2000 TC 4-1978cc (2.0L) Carb.
Lube....B2

3500S V8-215 (3.5L) Carb.
Fuel.... BF833,-K2

1969
2000, 2000 TC 4-1978cc (2.0L) Carb.
Lube....B2

1968
2000 TC 4-1978cc (2.0L) Carb.
Lube....B2

SAAB

1979
99 4-1985cc (2.0L) FI VIN N
Lube.... BT223
Fuel.... BF885
Trans.....M.T.

900 4-1985cc (2.0L) FI VIN N,T
Lube.... BT223
Fuel.... BF885
Trans.....M.T.

1978
99 4-1985cc (2.0L) FI VIN N,T
Lube.... B233
Fuel.... BF885
Trans.....M.T.

1977
99 4-1985cc (2.0L) FI VIN N
Lube.... BT223
Fuel.... BF885
Trans.....M.T.

1976
99 4-1985cc (2.0L) FI
Lube.... BT223
Fuel.... BF885
Trans.....M.T.

OBS = Obsolete. Availability Limited to Distributor Stock.

SAAB (Cont'd.)

1975
99 4-1985cc (2.0L) FI
Lube.....BT223
Fuel.....BF885
Trans......M.T.

1974
99 4-1985cc (2.0L) FI
Lube (Ele.).....P176
Lube (Spin-on).....B233
Fuel.....BF836-K3
Oil Vapor.....N/R
Trans......M.T.
99 4-1985cc (2.0L) Carb. VIN B
Lube (Ele.).....P176
Lube (Spin-on).....B233
Fuel.....BF836-K3
Oil Vapor.....N/R
Trans......M.T.
Sonett 4-1698cc (1.7L) Carb.
Lube.....BT223
Fuel.....BF833,-K2
Oil Vapor.....N/R
Trans......M.T.

1973
95, 96 4-1698cc (1.7L) Carb.
Lube.....B233
Air.....PA2023
Fuel.....BF833,-K2
Oil Vapor.....N/R
Trans......M.T.
99 4-1985cc (2.0L) Carb.
Lube.....P176
Fuel.....BF833,-K2
Oil Vapor.....N/R
Trans......M.T.
Sonett 4-1698cc (1.7L) Carb.
Lube.....BT223
Fuel.....BF833,-K2
Oil Vapor.....N/R
Trans......M.T.

1972
95, 96 4-1698cc (1.7L) Carb.
Lube.....P176
Air.....PA2023
Fuel.....BF833,-K2
Oil Vapor.....N/R
Trans......M.T.
99 4-1854cc (1.9L) FI
Lube.....P176
Fuel.....BF833-K2
Oil Vapor.....N/R
Trans......M.T.
99 4-1985cc (2.0L) FI
Lube.....P176
Fuel (w/o Clamps & Hoses).....BF836
Fuel (w/Clamps & Hoses).....BF836-K3
Oil Vapor.....N/R
Trans......M.T.
Sonett 4-1698cc (1.7L) Carb.
Lube.....P176
Fuel.....BF833,-K2
Oil Vapor.....N/R
Trans......M.T.

1971
95, 96 4-1698cc (1.7L) Carb.
Fuel.....BF833,-K2
Oil Vapor.....N/R
Trans......M.T.
99 4-1709cc (1.7L) Carb.
Lube.....P176
Oil Vapor.....N/R
Trans......M.T.
99 4-1854cc (1.9L) FI
Lube.....P176
Trans......M.T.
99 4-1854cc (1.9L) Carb.
Lube.....P176

SAAB 1971 (Cont'd.)

Sonett 4-1698cc (1.7L) Carb.
Fuel.....BF833,-K2
Oil Vapor.....N/R
Trans......M.T.

1970
95, 96 4-1498cc (1.5L) 1 Bbl. Carb.
Fuel.....BF833,-K2
Trans......M.T.
99 4-1709cc (1.7L) 1 Bbl. Carb.
Lube.....P176
Trans......M.T.
99 4-1709cc (1.7L) FI
Lube.....P176
Fuel.....BF833,-K2
Trans......M.T.
Sonett 4-1698cc (1.7L) 1 Bbl. Carb.
Trans......M.T.

1969
95, 96 4-1498cc (1.5L) Carb.
Fuel.....BF833,-K2
Trans......M.T.
99 4-1709cc (1.7L) Carb.
Lube.....P176
Trans......M.T.
Sonett 4-1498cc (1.5L) Carb.
Fuel.....BF833,-K2
Trans......M.T.

1968
95, 96 3-795cc (.8L) Carb.
Lube.....B163
Air.....PA695
Fuel.....BF833,-K2
Trans......M.T.
95, 96 4-1498cc (1.5L) Carb.
Lube.....B7165
Air.....PA2023
Fuel.....BF833,-K2
Trans......M.T.
Sonett 4-1498cc (1.5L) Carb.
Lube (Ele.).....P176
Lube (Spin-on).....B7165
Fuel.....BF833,-K2
Trans......M.T.

1967
95, 96, Monte Carlo, Sonett 3-841cc (0.8L) Carb.
Fuel.....BF833,-K2
Trans......M.T.
Monte Carlo 4-1498cc (1.5L) Carb.
Lube.....B7165
Fuel.....BF833,-K2
Trans......M.T.

1966
95, 96 3-841cc (.8L) Carb.
Fuel.....BF833,-K2
Trans......M.T.

SHELBY

1967
Cobra V8-427 (7.0L) Carb.
Lube.....B2
Trans......M.T.

1966
Cobra V8-427 (7.0L) Carb.
Lube.....B2
Trans......M.T.

1965
Cobra V8-289 (4.7L) Carb.
Lube.....B2
Trans......M.T.
Cobra V8-427 (7.0L) Carb.
Lube.....B2
Trans......M.T.

SHELBY (Cont'd.)

1964
Cobra V8-289 (4.7L) Carb.
Lube.....B2
Trans......M.T.

STUDEBAKER

1966
Commander 6-194 (3.2L) Carb.
Lube.....B27
Air.....PA642
Fuel.....BF840,-K1
Commander V8-283 (4.7L) Carb.
Lube.....P18
Fuel.....BF840,-K1
Cruiser 6-194 (3.2L) Carb.
Lube.....B27
Air.....PA642
Fuel.....BF840,-K1
Cruiser V8-283 (4.7L) Carb.
Lube.....P18
Fuel.....BF840,-K1
Dayton 6-194 (3.2L) Carb.
Lube.....B27
Air.....PA642
Fuel.....BF840,-K1
Dayton V8-283 (4.7L) Carb.
Lube.....P18
Fuel.....BF840,-K1
Wagonaire 6-194 (3.2L) Carb.
Lube.....B27
Air.....PA642
Fuel.....BF840,-K1
Wagonaire V8-283 (4.7L) Carb.
Lube.....P18
Fuel.....BF840,-K1

1965
Commander 6-194 (3.2L) Carb.
Lube.....B27
Air.....PA642
Fuel.....BF840,-K1
Commander V8-283 (4.7L) Carb.
Lube.....P18
Fuel.....BF840,-K1
Cruiser 6-194 (3.2L) Carb.
Lube.....B27
Air.....PA642
Fuel.....BF840,-K1
Cruiser V8-283 (4.7L) Carb.
Lube.....P18
Fuel.....BF840,-K1
Dayton V8-283 (4.7L) Carb.
Lube.....P18
Fuel.....BF840,-K1

1964
Avanti V8-289 (4.8L) Carb.
Lube.....B9
Air.....[2] PA1648
Fuel.....BF840,-K1
Challenger 6-170 (2.8L) Carb.
Lube.....B9
Air.....PA642
Fuel.....BF840,-K1
Challenger V8-259 (4.2L) Carb.
Lube (Ele.).....P80
Lube (Spin-on).....B9
Air.....PA647
Fuel.....BF840,-K1
Commander 6-170 (2.8L) Carb.
Lube.....B9
Air.....PA642
Fuel.....BF840,-K1
Commander V8-259 (4.2L) Carb.
Lube (Ele.).....P80
Lube (Spin-on).....B9
Air.....PA647
Fuel.....BF840,-K1
Commander V8-289 (4.8L) Carb.
Lube (Ele.).....P80
Lube (Spin-on).....B9
Air.....PA647
Fuel.....BF840,-K1

STUDEBAKER
1964 (Cont'd.)

Cruiser 6-170 (2.8L) Carb.
Lube.....B9
Air.....PA642
Fuel.....BF840,-K1
Cruiser V8-259 (4.2L) Carb.
Lube (Ele.).....P80
Lube (Spin-on).....B9
Air.....PA647
Fuel.....BF840,-K1
Cruiser V8-289 (4.8L) Carb.
Lube (Ele.).....P80
Lube (Spin-on).....B9
Air.....PA647
Fuel.....BF840,-K1
Dayton 6-170 (2.8L) Carb.
Lube.....B9
Air.....PA642
Fuel.....BF840,-K1
Dayton V8-259 (4.2L) Carb.
Lube (Ele.).....P80
Lube (Spin-on).....B9
Air.....PA647
Fuel.....BF840,-K1
Dayton V8-289 (4.8L) Carb.
Lube (Ele.).....P80
Lube (Spin-on).....B9
Air.....PA647
Fuel.....BF840,-K1
Gran 6-170 (2.8L) Carb.
Lube.....B9
Air.....PA642
Fuel.....BF840,-K1

1963
Avanti V8-289 (4.8L) 4 Bbl. Carb.
Lube.....B9
Air.....[2] PA1648
Fuel.....BF840,-K1
Gran 6-170 (2.8L) Carb.
Lube.....B9
Air.....PA1648
Gran V8-259 (4.2L) 2 Bbl. Carb.
Lube.....B9
Air.....PA647
Fuel.....BF840,-K1
Lark 6-170 (2.8L) 1 Bbl. Carb.
Lube.....B9
Air.....PA1648
Fuel.....BF840,-K1
Lark V8-259 (4.2L) 2 Bbl. Carb.
Air.....PA647
Fuel.....BF840,-K1
Lark V8-289 (4.8L) 2 Bbl. Carb.
Air.....PA647
Fuel.....BF840,-K1

1962
Hawk 6-170 (2.8L) 1 Bbl. Carb.
Lube (Early).....B50
Lube (Late).....B9
Air.....PA1648
Fuel.....BF840,-K1
Hawk V8-259 (4.2L) 2 Bbl. Carb.
Lube (Early).....B50
Lube (Late).....B9
Air.....PA647
Fuel.....BF840,-K1
Hawk V8-289 (4.8L) 2 Bbl. Carb.
Lube (Early).....B50
Lube (Late).....B9
Air.....PA647
Fuel.....BF840,-K1
Lark 6-170 (2.8L) 1 Bbl. Carb.
Lube (Early).....B50
Lube (Late).....B9
Air.....PA1648
Fuel.....BF840,-K1
Lark V8-259 (4.2L) 2 Bbl. Carb.
Lube (Early).....B50
Lube (Late).....B9
Air.....PA647
Fuel.....BF840,-K1

STUDEBAKER (Cont'd.)

1961

Hawk 6-170 (2.8L) 1 Bbl. Carb.
- **Lube**....B50
- **Air**....PA634
- **Fuel**....BF840,-K1

Hawk V8-259 (4.2L) 2 Bbl. Carb.
- **Lube**....B50
- **Air**....PA647
- **Fuel**....BF840,-K1

Hawk V8-289 (4.8L) 2 Bbl. Carb.
- **Lube**....B50
- **Air**....PA647
- **Fuel**....BF840,-K1

Lark 6-170 (2.8L) 1 Bbl. Carb.
- **Lube**....B50
- **Air**....PA634
- **Fuel**....BF840,-K1

Lark V8-259 (4.2L) 2 Bbl. Carb.
- **Lube**....B50
- **Air**....PA647
- **Fuel**....BF840,-K1

1960

Hawk 6-170 (2.8L) 1 Bbl. Carb.
- **Lube**....B50
- **Air**....PA634
- **Fuel**....BF840,-K1

Hawk V8-259 (4.2L) 2 Bbl. Carb.
- **Lube**....B50
- **Air**....PA634
- **Fuel**....BF840,-K1

Hawk V8-289 (4.8L) 2 Bbl. Carb.
- **Lube**....B50
- **Air**....PA634
- **Fuel**....BF840,-K1

Lark 6-170 (2.8L) 1 Bbl. Carb.
- **Lube**....B50
- **Air**....PA634
- **Fuel**....BF840,-K1

Lark V8-259 (4.2L) 2 Bbl. Carb.
- **Lube**....B50
- **Air**....PA634
- **Fuel**....BF840,-K1

1959

Lark 6-170 (2.8L) 1 Bbl. Carb.
- **Lube**....B50
- **Air**....PA634
- **Fuel**....BF840,-K1

Lark V8-259 (4.2L) 2 Bbl. Carb.
- **Lube**....B50
- **Air**....PA634
- **Fuel**....BF840,-K1

Silver Hawk 6-170 (2.8L) 1 Bbl. Carb.
- **Lube**....B50
- **Air**....PA634
- **Fuel**....BF840,-K1

Silver Hawk V8-259 (4.2L) 2 Bbl. Carb.
- **Lube**....B50
- **Air**....PA634
- **Fuel**....BF840,-K1

1958

Champion 6-186 (3.0L) 1 Bbl. Carb.
- **Lube**....B50
- **Air**....PA634

Commander V8-259 (4.2L) 2 Bbl. Carb.
- **Lube**....B50
- **Air**....PA634
- **Fuel**....BF840,-K1

Golden Hawk V8-289 (4.8L) 2 Bbl. Carb.
- **Lube**....B50
- **Air**....PA634
- **Fuel**....BF840,-K1

President V8-289 (4.8L) 4 Bbl. Carb.
- **Lube**....B50
- **Air**....PA634
- **Fuel**....BF840,-K1

Silver Hawk 6-186 (3.0L) 1 Bbl. Carb.
- **Lube**....B50
- **Air**....PA634

STUDEBAKER 1958 (Cont'd.)

Silver Hawk V8-259 (4.2L) 2 Bbl. Carb.
- **Lube**....B50
- **Air**....PA634
- **Fuel**....BF840,-K1

Silver Hawk V8-289 (4.8L) 2 Bbl. Carb.
- **Lube**....B50
- **Air**....PA634
- **Fuel**....BF840,-K1

1957

Champion 6-186 (3.0L) 1 Bbl. Carb.
- **Lube**....B50
- **Air**....PA634

Commander V8-259 (4.2L) 2 Bbl. Carb.
- **Lube**....B50
- **Air**....PA634
- **Fuel**....BF840,-K1

Golden Hawk V8-289 (4.8L) 2 Bbl. Carb.
- **Lube**....B50
- **Air**....PA634
- **Fuel**....BF840,-K1

President V8-289 (4.8L) 2 Bbl. Carb.
- **Lube**....B50
- **Air**....PA634
- **Fuel**....BF840,-K1

Silver Hawk 6-186 (3.0L) 1 Bbl. Carb.
- **Lube**....B50

Silver Hawk V8-259 (4.2L) 2 Bbl. Carb.
- **Lube**....B50
- **Air**....PA634
- **Fuel**....BF840,-K1

Silver Hawk V8-289 (4.8L) 2 Bbl. Carb.
- **Lube**....B50
- **Air**....PA634
- **Fuel**....BF840,-K1

1956

Champion 6-186 (3.0L) 1 Bbl. Carb.
- **Air**....PA634
- **Fuel**....BF833,-K2

Commander V8-259 (4.2L) 2 Bbl. Carb.
- **Lube**....P41
- **Air**....PA634
- **Fuel**....BF840,-K1

Flight Hawk 6-186 (3.0L) 1 Bbl. Carb.
- **Air**....PA634
- **Fuel**....BF833,-K2

Power Hawk V8-259 (4.2L) 2 Bbl. Carb.
- **Lube**....P41
- **Air**....PA634
- **Fuel**....BF840,-K1

President V8-289 (4.8L) 2 Bbl. Carb.
- **Lube**....P41
- **Air**....PA634
- **Fuel**....BF840,-K1

Sky Hawk V8-289 (4.8L) 4 Bbl. Carb.
- **Lube**....P41
- **Air**....PA634
- **Fuel**....BF840,-K1

1955

Champion 6-186 (3.0L) 1 Bbl. Carb.
- **Air**....PA634
- **Fuel**....BF833,-K2

Commander V8-224 (3.7L) 2 Bbl. Carb.
- **Air**....PA634
- **Fuel**....BF840,-K1

President V8-259 (4.2L) 4 Bbl. Carb.
- **Air**....PA634
- **Fuel**....BF840,-K1

SUBARU

1979

Brat, DL, FE, GF, GL, Standard 4-1595cc (1.6L) Carb.
- **Lube Spin-on**....B113
- **Air**....PA2031
- **Fuel**....BF840,-K1

1978

Brat, DL, GF, Standard 4-1595cc (1.6L) Carb.
- **Lube Spin-on**....B113
- **Air**....PA2031
- **Fuel**....BF840,-K1

1977

DL, GF, Standard 4-1595cc (1.6L) Carb.
- **Lube Spin-on**....B113
- **Air**....PA2031
- **Fuel**....BF840,-K1

1976

DL, GF 4-1361cc (1.4L) Carb.
- **Lube Spin-on**....B113
- **Air**....PA2031
- **Fuel**....BF840,-K1

DL, GF 4-1595cc (1.6L) Carb.
- **Lube Spin-on**....B113
- **Air**....PA2031
- **Fuel**....BF840

Standard 4-1361cc (1.4L) Carb.
- **Lube Spin-on**....B113
- **Air**....PA2031
- **Fuel**....BF840,-K1

1975

DL, DL All-Star, DL Star Cruiser, DL Super Star, GF, GL 4-1361cc (1.4L) Carb.
- **Lube Spin-on**....B113
- **Air**....PA2031
- **Fuel**....BF840,-K1

1974

DL, GL 4-1361cc (1.4L) Carb.
- **Lube Spin-on**....B113
- **Air**....PA2031
- **Fuel**....BF840,-K1
- **Oil Vapor**....N/R

1973

Deluxe, GL 4-1361cc (1.4L) Carb.
- **Lube Spin-on**....B113
- **Air**....PA2031
- **Fuel**....BF840,-K1
- **Oil Vapor**....N/R

1972

Deluxe, GL, Star 4-1267cc (1.3L) Carb.
- **Lube Spin-on**....B113
- **Air**....PA2031
- **Fuel**....BF840,-K1
- **Oil Vapor**....N/R

1971

Star 4-1088cc (1.1L) Carb.
- **Lube Spin-on**....B113
- **Air**....PA2031
- **Fuel**....BF840,-K1
- **Oil Vapor**....N/R

SUNBEAM

1967

Tiger V8-260 (4.3L) Carb.
- **Lube**....B2
- **Fuel**....BF833,-K2

SUNBEAM 1967 (Cont'd.)

Tiger V8-289 (4.7L) Carb.
- **Lube**....B2
- **Fuel**....BF833,-K2

1966

Tiger V8-260 (4.3L) Carb.
- **Lube**....B2

Tiger V8-289 (4.7L) Carb.
- **Lube**....B2
- **Fuel**....BF833,-K2

1965

Tiger V8-260 (4.3L) Carb.
- **Lube**....B2

Tiger V8-289 (4.7L) Carb.
- **Lube**....B2
- **Fuel**....BF833,-K2

1964

Tiger V8-260 (4.3L) Carb.
- **Lube**....B2
- **Fuel**....BF833,-K2

Tiger V8-289 (4.7L) Carb.
- **Fuel**....BF833,-K2

TOYOTA

1979

Celica 4-2189cc (2.2L) 2 Bbl. VIN R
- **Lube**....B233
- **Air**....PA2065
- **Fuel**....BF805

Corolla 4-1166cc (1.2L) 2 Bbl. VIN K
- **Lube**....B143
- **Air**....PA2037
- **Fuel**....BF805

Corolla 4-1588cc (1.6L) 2 Bbl. VIN T
- **Lube**....B233
- **Air**....PA2125
- **Fuel**....BF805

Corona 4-2189cc (2.2L) 2 Bbl. VIN R
- **Lube**....B233
- **Air**....PA2065
- **Fuel**....BF805

Cressida 6-2563cc (2.6L) 2 Bbl. VIN M
- **Lube**....B233
- **Air**....PA2065
- **Fuel**....BF1140

Land Cruiser 6-4227cc (4.2L) 2 Bbl. VIN F
- **Lube**....B2

Pickups 4-2189cc (2.2L) 2 Bbl. VIN R
- **Lube**....B233
- **Air**....PA2065
- **Fuel**....BF805

Supra 6-2563cc (2.6L) FI 4ME VIN M
- **Lube**....B233
- **Fuel**....BF1140

1978

Celica 4-2189cc (2.2L) 2 Bbl. VIN R
- **Lube**....B233
- **Air**....PA2065
- **Fuel**....BF805

Corolla 4-1166cc (1.2L) 2 Bbl. VIN K
- **Lube**....B143
- **Air**....PA2037
- **Fuel**....BF805

Corolla 4-1588cc (1.6L) 2 Bbl. VIN T
- **Lube**....B233
- **Air**....PA2125
- **Fuel**....BF805

Corona 4-2189cc (2.2L) 2 Bbl. VIN R
- **Lube**....B233
- **Air**....PA2065
- **Fuel**....BF805

Cressida 6-2563cc (2.6L) 2 Bbl. VIN M
- **Lube**....B233
- **Air**....PA2065
- **Fuel**....BF1140

OBS = Obsolete. Availability Limited to Distributor Stock.

TOYOTA 1978 (Cont'd.)

Land Cruiser 6-4227cc (4.2L) 2 Bbl. VIN F
Lube.....**B2**
Pickups 4-2189cc (2.2L) 2 Bbl. VIN R
Lube.....**B233**
Air.....**PA2065**
Fuel.....**BF805**

1977
Celica 4-2189cc (2.2L) 2 Bbl. VIN R
Lube.....**B233**
Air.....**PA2065**
Fuel.....**BF932**
Corolla 4-1166cc (1.2L) 2 Bbl. VIN K
Lube.....**B143**
Air.....**PA2037**
Fuel.....**BF932**
Corolla 4-1588cc (1.6L) 2 Bbl. VIN T
Lube.....**B233**
Air.....**PA2125**
Fuel.....**BF805**
Corona 4-2189cc (2.2L) 2 Bbl. VIN R
Lube.....**B233**
Air.....**PA2065**
Fuel.....**BF933**
Land Cruiser 6-4227cc (4.2L) 2 Bbl. VIN F
Lube.....**B2**
Pickups 4-2189cc (2.2L) 2 Bbl. VIN R
Lube.....**B233**
Air.....**PA2065**
Fuel.....**BF932**

1976
Celica 4-2189cc (2.2L) 2 Bbl. VIN R
Lube.....**B233**
Air.....**PA2065**
Fuel.....**BF932**
Corolla 4-1166cc (1.2L) 2 Bbl. VIN K
Lube.....**B143**
Air.....**PA2037**
Fuel.....**BF932**
Corolla 4-1588cc (1.6L) 2 Bbl. VIN T
Lube.....**B233**
Air.....**PA2125**
Fuel.....**BF932**
Corona 4-2189cc (2.2L) 2 Bbl. VIN R
Lube.....**B233**
Air.....**PA2065**
Fuel.....**BF933**
Land Cruiser 6-4227cc (4.2L) 2 Bbl. VIN F
Lube.....**B2**
Mark II 6-2563cc (2.6L) 2 Bbl. VIN M
Lube.....**B2**
Air.....**PA2065**
Pickups 4-2189cc (2.2L) 2 Bbl. VIN R
Lube.....**B233**
Air.....**PA2065**
Fuel.....**BF933**

1975
Celica 4-2189cc (2.2L) 2 Bbl. VIN R
Lube.....**B233**
Air.....**PA2065**
Fuel.....**BF933**
Corolla 4-1166cc (1.2L) 2 Bbl. VIN K
Lube.....**B143**
Air.....**PA2037**
Fuel.....**BF932**
Corolla 4-1588cc (1.6L) 2 Bbl. VIN T
Lube.....**B233**
Air.....**PA2125**
Fuel.....**BF932**
Corona 4-2189cc (2.2L) 2 Bbl. VIN R
Lube.....**B233**
Air.....**PA2065**
Fuel.....**BF933**
Land Cruiser 6-4227cc (4.2L) 2 Bbl. VIN F
Lube.....**B2**
Mark II 6-2563cc (2.6L) 2 Bbl. VIN M
Lube.....**B2**
Air.....**PA2065**

TOYOTA 1975 (Cont'd.)

Pickups 4-2189cc (2.2L) 2 Bbl. VIN R
Lube.....**B233**
Air.....**PA2065**
Fuel.....**BF933**

1974
Celica 4-1968cc (2.0L) Carb. VIN R
Lube.....**B295**
Air.....**PA2065**
Fuel.....**BF933**
Oil Vapor.....**N/R**
Corolla 4-1166cc (1.2L) Carb. VIN K
Lube.....**B143**
Air.....**PA2037**
Fuel.....**BF932**
Oil Vapor.....**N/R**
Corolla 4-1588cc (1.6L) Carb. VIN T
Lube.....**B163**
Air.....**PA2125**
Oil Vapor.....**N/R**
Corona 4-1968cc (2.0L) Carb. VIN R
Lube.....**B295**
Air.....**PA2065**
Fuel.....**BF933**
Oil Vapor.....**N/R**
Land Cruiser 6-3878cc (3.9L) Carb. VIN F
Lube.....**B2**
Air.....**PA2042**
Oil Vapor.....**N/R**
Mark II 6-2563cc (2.6L) Carb. VIN M
Lube.....**B2**
Air.....**PA2065**
Oil Vapor.....**N/R**
Pickups 4-1968cc (2.0L) Carb. VIN R
Lube.....**B295**
Air.....**PA2065**
Oil Vapor.....**N/R**

1973
Carina 4-1588cc (1.6L) Carb.
Lube.....**B233**
Air.....**PA2125**
Oil Vapor.....**N/R**
Celica 4-1968cc (2.0L) Carb.
Lube.....**B295**
Air.....**PA2065**
Fuel.....**BF933**
Oil Vapor.....**N/R**
Corolla 4-1166cc (1.2L) Carb.
Lube.....**B243**
Air.....**PA2037**
Oil Vapor.....**N/R**
Corolla 4-1588cc (1.6L) Carb.
Lube.....**B163**
Air.....**PA2125**
Oil Vapor.....**N/R**
Corona 4-1968cc (2.0L) Carb.
Lube.....**B295**
Air.....**PA2065**
Fuel.....**BF933**
Oil Vapor.....**N/R**
Land Cruiser 6-3878cc (3.9L) Carb.
Lube.....**B2**
Air.....**PA2042**
Oil Vapor.....**N/R**
Mark II 6-2563cc (2.6L) Carb.
Lube.....**B2**
Air.....**PA2065**
Fuel.....**BF1140**
Oil Vapor.....**N/R**
Pickups 4-1968cc (2.0L) Carb.
Lube.....**B243**
Air.....**PA2065**
Oil Vapor.....**N/R**

1972
Carina 4-1588cc (1.6L) Carb.
Lube.....**B233**
Air.....**PA2125**
Oil Vapor.....**N/R**
Celica 4-1968cc (2.0L) Carb.
Lube.....**B295**
Air.....**PA2065**
Oil Vapor.....**N/R**

TOYOTA 1972 (Cont'd.)

Corolla 4-1166cc (1.2L) Carb.
Lube.....**B243**
Air.....**PA2037**
Oil Vapor.....**N/R**
Corolla 4-1588cc (1.6L) Carb.
Air.....**PA2125**
Oil Vapor.....**N/R**
Corona 4-1968cc (2.0L) Carb.
Lube.....**B295**
Air.....**PA2065**
Oil Vapor.....**N/R**
Land Cruiser 6-3878cc (3.9L) Carb.
Lube.....**B2**
Air.....**PA2042**
Oil Vapor.....**N/R**
Trans......**M.T.**
Mark II 6-2253cc (2.3L) Carb.
Lube.....**B2**
Air.....**PA2065**
Oil Vapor.....**N/R**
Pickups 4-1968cc (2.0L) Carb.
Lube.....**B243**
Air (To 4/72).....**PA2125**
Air (4/72-on).....**PA2065**
Oil Vapor.....**N/R**

1971
Celica 4-1898cc (1.9L) Carb.
Lube.....**B295**
Air.....**PA2065**
Oil Vapor.....**N/R**
Corolla 4-1166cc (1.2L) Carb.
Lube.....**B243**
Air.....**PA2037**
Oil Vapor.....**N/R**
Corolla 4-1588cc (1.6L) Carb.
Air.....**PA2125**
Oil Vapor.....**N/R**
Corona 4-1858cc (1.9L) Carb.
Lube.....**B295**
Oil Vapor.....**N/R**
Land Cruiser 6-3878cc (3.9L) Carb.
Lube.....**B2**
Air.....**PA2042**
Oil Vapor.....**N/R**
Trans......**M.T.**
Pickups 4-1858cc (1.9L) Carb.
Lube.....**B243**
Air.....**PA2125**
Oil Vapor.....**N/R**

1970
Corolla 4-1166cc (1.2L) 2 Bbl. Carb.
Lube.....**B143**
Air.....**PA2037**
Corona 4-1898cc (1.9L) 2 Bbl. Carb.
Air.....**PA2125**
Crown 6-2253cc (2.3L) Carb.
Lube.....**B2**
Air.....**PA2015 OBS**
Land Cruiser 6-3878cc (3.9L) 2 Bbl. Carb.
Lube.....**B2**
Air.....**PA2042**
Trans......**M.T.**
Pickups 4-1858cc (1.9L) 3RC Carb.
Air.....**PA2125**
Pickups 4-1858cc (1.9L) 2 Bbl. 8RC Carb.
Lube.....**B243**
Air.....**PA2125**

1969
Corolla 4-1077cc (1.1L) Carb.
Lube.....**B243**
Air.....**PA2037**
Corolla 4-1166cc (1.2L) Carb.
Air.....**PA2037**
Corona 4-1898cc (1.9L) 3RC Carb.
Lube.....**P497**
Air.....**PA2125**
Corona 4-1898cc (1.9L) 8R Carb.
Air.....**PA2125**
Corona 4-1898cc (1.9L) 8RC Carb.
Air.....**PA2125**

TOYOTA 1969 (Cont'd.)

Corona Mk II 4-1858cc (1.9L) Carb.
Lube.....**P497**
Air.....**PA2125**
Crown 6-2253cc (2.3L) Carb.
Lube.....**B2**
Air.....**PA2015 OBS**
Fuel.....**BF833,-K2**
Land Cruiser 6-3878cc (3.9L) Carb.
Lube.....**B2**
Air.....**PA2042**
Fuel.....**BF833,-K2**
Trans......**M.T.**
Pickups 4-1898cc (1.9L) Carb.
Lube.....**B243**
Air.....**PA2125**

1968
Corolla 4-1077cc (1.1L) Carb.
Lube.....**B243**
Air.....**PA2037**
Corona 4-1898cc (1.9L) Carb.
Lube.....**P497**
Air.....**PA2125**
Crown 6-2253cc (2.3L) Carb.
Lube.....**B2**
Air.....**PA2015 OBS**
Fuel.....**BF833,-K2**
Land Cruiser 6-3878cc (3.9L) Carb.
Lube.....**B2**
Air.....**PA2042**
Fuel.....**BF833,-K2**
Trans......**M.T.**
Pickups 4-1898cc (1.9L) Carb.
Lube.....**P497**
Fuel.....**BF833,-K2**

1967
Corona 4-1898cc (1.9L) Carb.
Lube.....**P497**
Air.....**PA2125**
Fuel.....**BF833,-K2**
Crown 6-2253cc (2.3L) Carb.
Lube.....**P497**
Air.....**PA2015 OBS**
Fuel.....**BF833,-K2**
Land Cruiser 6-3878cc (3.9L) Carb. VIN F
Lube.....**B2**
Fuel.....**BF833,-K2**
Pickups 4-1898cc (1.9L) Carb.
Lube.....**P497**
Fuel.....**BF833,-K2**

TRIUMPH

1979
Spitfire 4-1493cc (1.5L) Carb.
Air.....**PA1814**
Fuel.....**BF840,-K1**
Trans......**M.T.**
TR7 4-1998cc (2.0L) Carb.
Lube.....**P176**
Fuel.....**BF840,-K1**

1978
Spitfire 4-1493cc (1.5L) Carb.
Fuel.....**BF840,-K1**
Trans......**M.T.**
TR7 4-1998cc (2.0L) Carb.
Lube.....**P176**
Fuel.....**BF840,-K1**

1977
Spitfire 4-1493cc (1.5L) Carb.
Fuel.....**BF840,-K1**
Trans......**M.T.**
TR7 4-1998cc (2.0L) Carb.
Lube.....**P176**
Fuel.....**BF840,-K1**

OBS = Obsolete. Availability Limited to Distributor Stock.

TRIUMPH (Cont'd.)

1976

Spitfire 4-1493cc (1.5L) Carb.
- **Fuel** ... **BF840,-K1**
- **Trans.** ... **M.T.**

TR6 6-2498cc (2.5L) Carb.
- **Lube** ... **P190**
- **Fuel** ... **BF840,-K1**
- **Trans.** ... **M.T.**

TR7 4-1998cc (2.0L) Carb.
- **Lube** ... **P176**
- **Fuel** ... **BF840,-K1**

1975

Spitfire 4-1493cc (1.5L) Carb.
- **Fuel** ... **BF840,-K1**
- **Trans.** ... **M.T.**

TR6 6-2498cc (2.5L) Carb.
- **Lube** ... **P190**
- **Fuel** ... **BF840,-K1**
- **Trans.** ... **M.T.**

TR7 4-1998cc (2.0L) Carb.
- **Lube** ... **P176**
- **Fuel** ... **BF840,-K1**

1974

Spitfire 4-1493cc (1.5L) Carb.
- **Lube** ... **B163**
- **Fuel** ... **BF840,-K1**
- **Oil Vapor** ... **N/R**
- **Trans.** ... **M.T.**

TR6 6-2498cc (2.5L) Carb.
- **Lube** ... **P190**
- **Fuel** ... **BF840,-K1**
- **Oil Vapor** ... **N/R**
- **Trans.** ... **M.T.**

1973

GT6 6-1998cc (2.0L) Carb.
- **Lube** ... **P190**
- **Fuel** ... **BF840,-K1**
- **Oil Vapor** ... **N/R**
- **Trans.** ... **M.T.**

Spitfire 4-1493cc (1.5L) Carb.
- **Lube** ... **B163**
- **Fuel** ... **BF840,-K1**
- **Oil Vapor** ... **N/R**
- **Trans.** ... **M.T.**

Stag V8-2997cc (3.0L) Carb.
- **Lube** ... **P176**
- **Fuel** ... **BF840,-K1**
- **Oil Vapor** ... **N/R**
- **Trans.** ... **M.T.**

TR6 6-2498cc (2.5L) Carb.
- **Lube** ... **P190**
- **Fuel** ... **BF840,-K1**
- **Oil Vapor** ... **N/R**
- **Trans.** ... **M.T.**

1972

GT6 6-1998cc (2.0L) Carb.
- **Lube** ... **P190**
- **Fuel** ... **BF840,-K1**
- **Oil Vapor** ... **N/R**
- **Trans.** ... **M.T.**

Spitfire 4-1296cc (1.3L) Carb.
- **Fuel** ... **BF840,-K1**
- **Oil Vapor** ... **N/R**
- **Trans.** ... **M.T.**

Stag V8-2997cc (3.0L) Carb.
- **Lube** ... **P176**
- **Fuel** ... **BF840,-K1**
- **Oil Vapor** ... **N/R**
- **Trans.** ... **M.T.**

TR6 6-2498cc (2.5L) Carb.
- **Lube** ... **P190**
- **Fuel** ... **BF840,-K1**
- **Oil Vapor** ... **N/R**
- **Trans.** ... **M.T.**

TRIUMPH (Cont'd.)

1971

GT6 6-1998cc (2.0L) Carb.
- **Lube** ... **P190**
- **Fuel** ... **BF840,-K1**
- **Oil Vapor** ... **N/R**
- **Trans.** ... **M.T.**

Spitfire 4-1296cc (1.3L) Carb.
- **Fuel** ... **BF840,-K1**
- **Oil Vapor** ... **N/R**
- **Trans.** ... **M.T.**

Stag V8-2997cc (3.0L) Carb.
- **Lube** ... **P176**
- **Fuel** ... **BF840,-K1**
- **Oil Vapor** ... **N/R**
- **Trans.** ... **M.T.**

TR6 6-2498cc (2.5L) Carb.
- **Lube** ... **P190**
- **Fuel** ... **BF840,-K1**
- **Oil Vapor** ... **N/R**
- **Trans.** ... **M.T.**

1970

GT6 6-1998cc (2.0L) Carb.
- **Lube** ... **P190**
- **Fuel** ... **BF840,-K1**
- **Oil Vapor** ... **N/R**
- **Trans.** ... **M.T.**

Spitfire 4-1296cc (1.3L) Carb.
- **Fuel** ... **BF840,-K1**
- **Oil Vapor** ... **N/R**
- **Trans.** ... **M.T.**

TR6 6-2498cc (2.5L) Carb.
- **Lube** ... **P190**
- **Fuel** ... **BF840,-K1**
- **Oil Vapor** ... **N/R**
- **Trans.** ... **M.T.**

1969

GT6 6-1998cc (2.0L) Carb.
- **Lube** ... **P190**
- **Fuel** ... **BF840,-K1**
- **Oil Vapor** ... **N/R**
- **Trans.** ... **M.T.**

Spitfire 4-1296cc (1.3L) Carb.
- **Air** ... **PA1814**
- **Fuel** ... **BF840,-K1**
- **Oil Vapor** ... **N/R**
- **Trans.** ... **M.T.**

TR6 6-2498cc (2.5L) Carb.
- **Lube** ... **P190**
- **Air** ... **PA1814**
- **Fuel** ... **BF840,-K1**
- **Oil Vapor** ... **N/R**
- **Trans.** ... **M.T.**

1968

GT6 6-1998cc (2.0L) Carb.
- **Lube** ... **P190**
- **Fuel** ... **BF840,-K1**
- **Oil Vapor** ... **N/R**
- **Trans.** ... **M.T.**

Spitfire 4-1296cc (1.3L) Carb.
- **Air** ... **PA1814**
- **Fuel** ... **BF840,-K1**
- **Oil Vapor** ... **N/R**
- **Trans.** ... **M.T.**

TR250 6-2498cc (2.5L) Carb.
- **Lube** ... **P190**
- **Air** ... **PA1814**
- **Fuel** ... **BF840,-K1**
- **Oil Vapor** ... **N/R**
- **Trans.** ... **M.T.**

1967

Spitfire 4-70 (1.2L) Carb.
- **Fuel** ... **BF840,-K1**
- **Oil Vapor** ... **N/R**
- **Trans.** ... **M.T.**

TR4A 4-130 (2.1L) Carb.
- **Lube** ... **P174**
- **Oil Vapor** ... **N/R**
- **Trans.** ... **M.T.**

TRIUMPH (Cont'd.)

1966

Spitfire 4-70 (1.2L) Carb.
- **Fuel** ... **BF840,-K1**
- **Trans.** ... **M.T.**

TR4A 4-130 (2.1L) Carb.
- **Lube** ... **P174**
- **Trans.** ... **M.T.**

1965

Spitfire 4-70 (1.2L) Carb.
- **Lube** ... **B228**
- **Fuel** ... **BF840,-K1**
- **Oil Vapor** ... **N/R**
- **Trans.** ... **M.T.**

TR4A 4-130 (2.1L) Carb.
- **Lube** ... **P174**
- **Oil Vapor** ... **N/R**
- **Trans.** ... **M.T.**

1964

Spitfire 4-70 (1.2L) Carb.
- **Fuel** ... **BF840,-K1**
- **Oil Vapor** ... **N/R**
- **Trans.** ... **M.T.**

TR4 4-130 (2.1L) Carb.
- **Lube** ... **P174**
- **Oil Vapor** ... **N/R**
- **Trans.** ... **M.T.**

1963

Spitfire 4-70 (1.2L) 2-1 Bbl. Carb.
- **Air** ... **PA1814**
- **Fuel** ... **BF840,-K1**
- **Oil Vapor** ... **N/R**
- **Trans.** ... **M.T.**

TR4 4-130 (2.1L) 2-1 Bbl. Carb.
- **Lube** ... **P174**
- **Oil Vapor** ... **N/R**
- **Trans.** ... **M.T.**

1962

TR3B 4-1998cc (2.0L) 2-1 Bbl. Carb.
- **Lube** ... **P174**
- **Oil Vapor** ... **N/R**
- **Trans.** ... **M.T.**

TR4 4-130 (2.1L) 2-1 Bbl. Carb.
- **Lube** ... **P174**
- **Oil Vapor** ... **N/R**
- **Trans.** ... **M.T.**

1961

TR3A 4-1998cc (2.0L) 2-1 Bbl. Carb.
- **Lube** ... **P174**
- **Oil Vapor** ... **N/R**
- **Trans.** ... **M.T.**

1960

TR3A 4-1998cc (2.0L) 2-1 Bbl. Carb.
- **Lube** ... **P174**
- **Fuel** ... **BF833,-K2**
- **Oil Vapor** ... **N/R**
- **Trans.** ... **M.T.**

VOLKSWAGEN

1979

Beetle, Super Beetle 4-1584cc (1.6L) FI VIN J
- **Air** ... **PA2101A**

Campmobile 4-1970cc (2.0L) FI
- **Lube** ... **B233**

Dasher 4-1471cc (1.5L) Diesel VIN K
- **Lube** ... **B114**
- **Air** ... **PA2101A**
- **Fuel** ... **BF587-D**

Dasher 4-1588cc (1.6L) FI VIN G,H
- **Lube** ... **B178**
- **Air** ... **PA2103**
- **Fuel** ... **BF885**

VOLKSWAGEN
1979 (Cont'd.)

Rabbit 4-1457cc (1.5L) FI VIN H
- **Lube** ... **B178**
- **Air** ... **PA2103**
- **Fuel** ... **BF885**

Rabbit 4-1471cc (1.5L) Diesel VIN K
- **Lube** ... **B114**
- **Air** ... **PA2101A**
- **Fuel** ... **BF587-D**

Scirocco 4-1588cc (1.6L) FI VIN J
- **Lube** ... **B178**
- **Air** ... **PA2103**
- **Fuel** ... **BF885**

Transporter 4-1970cc (2.0L) FI VIN E,J
- **Lube** ... **B34**
- **Air** ... **PA2208**

1978

Beetle, Super Beetle 4-1584cc (1.6L) FI VIN J
- **Air** ... **PA2101A**

Campmobile 4-1970cc (2.0L) FI
- **Lube** ... **B233**

Dasher 4-1588cc (1.6L) FI VIN G,H
- **Lube** ... **B178**
- **Air** ... **PA2103**
- **Fuel** ... **BF885**

Rabbit 4-1457cc (1.5L) FI VIN H,N,X
- **Lube** ... **B178**
- **Air** ... **PA2103**
- **Fuel** ... **BF885**

Rabbit 4-1471cc (1.5L) Diesel VIN K
- **Lube** ... **B114**
- **Air** ... **PA2101A**
- **Fuel** ... **BF587-D**

Scirocco 4-1457cc (1.5L) FI VIN N
- **Lube** ... **B178**
- **Air** ... **PA2103**
- **Fuel** ... **BF885**

Transporter 4-1970cc (2.0L) FI VIN E,J
- **Lube** ... **B34**
- **Air** ... **PA2208**

1977

Beetle, Super Beetle 4-1584cc (1.6L) FI VIN J
- **Lube (If Adapted to 3/4 In. Spin-on)** ... **B113**
- **Air** ... **PA2101A**

Campmobile 4-1970cc (2.0L) FI
- **Lube** ... **B233**

Dasher 4-1588cc (1.6L) FI VIN G,H
- **Lube** ... **B178**
- **Air** ... **PA2103**

Rabbit 4-1471cc (1.5L) Diesel VIN K
- **Lube** ... **B114**
- **Air** ... **PA2101A**
- **Fuel** ... **BF587-D**

Rabbit 4-1588cc (1.6L) FI VIN E
- **Lube** ... **B178**
- **Air** ... **PA2103**

Scirocco 4-1588cc (1.6L) FI VIN E
- **Lube** ... **B178**
- **Air** ... **PA2103**

Transporter 4-1970cc (2.0L) FI VIN D,J
- **Lube** ... **B34**
- **Air** ... **PA2208**

1976

Beetle, Super Beetle 4-1584cc (1.6L) FI VIN J
- **Lube (If Adapted to 3/4 In. Spin-on)** ... **B113**
- **Air** ... **PA2101A**

Campmobile 4-1970cc (2.0L) FI
- **Lube** ... **B233**

Dasher 4-1588cc (1.6L) FI VIN G,H,K
- **Lube** ... **B178**
- **Air** ... **PA2103**
- **Fuel** ... **BF833,-K2**

OBS = Obsolete. Availability Limited to Distributor Stock.

VOLKSWAGEN
1976 (Cont'd.)

Rabbit 4-1588cc (1.6L) Carb 2 Bbl.
VIN N
Lube..... **B178**
Air..... **PA2101A**
Fuel..... **BF833,-K2**
Scirocco 4-1588cc (1.6L) 2 Bbl.
VIN E,N
Lube..... **B178**
Air..... **PA2101A**
Fuel..... **BF833,-K2**
Transporter 4-1970cc (2.0L) FI
VIN D,J
Lube..... **B34**
Air..... **PA2208**

1975

Beetle, Super Beetle 4-1584cc (1.6L) FI VIN J
Lube (If Adapted to 3/4 In. Spin-on)..... **B113**
Air..... **PA2101A**
Campmobile 4-1975cc (1.8L) FI
Lube..... **B233**
Dasher 4-1471cc (1.5L) 2 Bbl.
VIN R,S
Lube..... **B178**
Fuel..... **BF833,-K2**
Rabbit 4-1471cc (1.5L) Carb 2 Bbl.
VIN C,G
Lube..... **B178**
Air..... **PA2101A**
Fuel..... **BF833,-K2**
Scirocco 4-1471cc (1.5L) 2 Bbl.
VIN C,G
Lube..... **B178**
Air..... **PA2101A**
Fuel..... **BF833,-K2**
Transporter 4-1795cc (1.8L) FI
VIN D,P
Lube..... **B34**
Air..... **PA2208**

1974

412 4-1679cc (1.7L) FI
Lube..... **B163**
Fuel..... **BF833,-K2**
Oil Vapor..... **N/R**
412 4-1795cc (1.8L) FI
Lube..... **B163**
Fuel..... **BF833,-K2**
Oil Vapor..... **N/R**
Beetle 4-1584cc (1.6L) Carb.
Lube..... **B113**
Air..... **PA2101A**
Fuel..... **BF833,-K2**
Oil Vapor..... **N/R**
Campmobile 4-1795cc (1.8L) FI
Lube..... **B233**
Dasher 4-1471cc (1.5L) Carb.
Lube..... **B178**
Fuel..... **BF833,-K2**
Oil Vapor..... **N/R**
Karmann Ghia 4-1584cc (1.6L) Carb.
Air..... **PA2101A**
Fuel..... **BF833,-K2**
Oil Vapor..... **N/R**
Super Beetle 4-1584cc (1.6L) Carb.
Air..... **PA2101A**
Thing 4-1584cc (1.6L) Carb.
Air..... **PA2101A**
Fuel..... **BF833,-K2**
Oil Vapor..... **N/R**
Transporter 4-1795cc (1.8L) FI
Lube..... **B163**
Air..... **PA2208**
Fuel..... **BF833,-K2**
Oil Vapor..... **N/R**

1973

412 4-1679cc (1.7L) FI
Fuel..... **BF833,-K2**
Oil Vapor..... **N/R**

VOLKSWAGEN
1973 (Cont'd.)

Beetle 4-1584cc (1.6L) Carb.
Lube..... **B113**
Air..... **PA2101A**
Fuel..... **BF833,-K2**
Oil Vapor..... **N/R**
Campmobile 4-1679cc (1.7L) FI
Lube..... **B233**
Fastback 4-1584cc (1.6L) FI
Air..... **PA2101A**
Fuel..... **BF833,-K2**
Oil Vapor..... **N/R**
Karmann Ghia 4-1584cc (1.6L) Carb.
Air..... **PA2101A**
Fuel..... **BF833,-K2**
Oil Vapor..... **N/R**
Squareback 4-1584cc (1.6L) FI
Air..... **PA2101A**
Fuel..... **BF833,-K2**
Oil Vapor..... **N/R**
Super Beetle 4-1584cc (1.6L) Carb.
Air..... **PA2101A**
Fuel..... **BF833,-K2**
Oil Vapor..... **N/R**
Thing 4-1584cc (1.6L) Carb.
Air..... **PA2101A**
Fuel..... **BF833,-K2**
Oil Vapor..... **N/R**
Transporter 4-1679cc (1.7L) FI
Air..... **PA2208**
Fuel..... **BF833,-K2**
Oil Vapor..... **N/R**

1972

411 4-1679cc (1.7L) FI
Fuel..... **BF833,-K2**
Oil Vapor..... **N/R**
Beetle 4-1584cc (1.6L) Carb.
Lube..... **B113**
Air..... **PA2101A**
Fuel..... **BF833,-K2**
Oil Vapor..... **N/R**
Campmobile 4-1679cc (1.7L) FI
Lube..... **B233**
Fastback 4-1584cc (1.6L) FI
Fuel..... **BF833,-K2**
Oil Vapor..... **N/R**
Karmann Ghia 4-1584cc (1.6L) Carb.
Lube..... **B113**
Air..... **PA2101A**
Fuel..... **BF833,-K2**
Oil Vapor..... **N/R**
Squareback 4-1584cc (1.6L) FI
Lube..... **B120**
Fuel..... **BF833,-K2**
Oil Vapor..... **N/R**
Super Beetle 4-1584cc (1.6L) Carb.
Lube..... **B113**
Air..... **PA2101A**
Fuel..... **BF833,-K2**
Oil Vapor..... **N/R**
Transporter 4-1679cc (1.7L) FI
Air..... **PA2208**
Fuel..... **BF833,-K2**
Oil Vapor..... **N/R**

1971

411 4-1679cc (1.7L) FI
Oil Vapor..... **N/R**
Beetle 4-1584cc (1.6L) Carb.
Lube..... **B113**
Air..... **PA2101A**
Oil Vapor..... **N/R**
Campmobile 4-1584cc (1.6L) FI
Lube..... **B233**
Fuel..... **BF833,-K2**
Fastback 4-1584cc (1.6L) FI
Fuel..... **BF833,-K2**
Oil Vapor..... **N/R**
Karmann Ghia 4-1584cc (1.6L) Carb.
Lube..... **B113**
Fuel..... **BF833,-K2**
Oil Vapor..... **N/R**
Squareback 4-1584cc (1.6L) FI
Fuel..... **BF833,-K2**
Oil Vapor..... **N/R**

VOLKSWAGEN
1971 (Cont'd.)

Super Beetle 4-1584cc (1.6L) Carb.
Lube..... **B113**
Air..... **PA2101A**
Fuel..... **BF833,-K2**
Oil Vapor..... **N/R**
Transporter 4-1584cc (1.6L) Carb.
Air..... **PA2101A**
Fuel..... **BF833,-K2**
Oil Vapor..... **N/R**

1970

Beetle 4-1584cc (1.6L) 1 Bbl. Carb.
VIN B
Lube..... **B113**
Air..... **PA2101A**
Fuel..... **BF833,-K2**
Trans...... **M.T.**
Campmobile 4-1584cc (1.6L) FI
VIN B,C
Lube..... **B233**
Fastback 4-1584cc (1.6L) FI
VIN P,T,U
Lube..... **B113**
Fuel..... **BF833,-K2**
Karmann Ghia 4-1584cc (1.6L) 1 Bbl. Carb. VIN B
Lube..... **B113**
Fuel..... **BF833,-K2**
Trans...... **M.T.**
Squareback 4-1584cc (1.6L) FI
VIN P,T,U
Lube..... **B113**
Fuel..... **BF833,-K2**
Transporter 4-1584cc (1.6L) 1 Bbl. Carb. VIN B,C
Air..... **PA2101A**
Fuel..... **BF833,-K2**

1969

Beetle 4-1457cc (1.5L) Carb.
Lube..... **B113**
Fuel..... **BF833,-K2**
Trans...... **M.T.**
Campmobile 4-1584cc (1.6L) FI
Lube..... **B233**
Fastback 4-1584cc (1.6L) FI
Lube..... **B113**
Fuel..... **BF833,-K2**
Karmann Ghia 4-1457cc (1.5L) Carb.
Lube..... **B113**
Fuel..... **BF833,-K2**
Squareback 4-1584cc (1.6L) FI
Lube..... **B113**
Fuel..... **BF833,-K2**
Transporter 4-1584cc (1.6L) Carb.
Air..... **PA2101A**
Fuel..... **BF833,-K2**

1968

Beetle 4-1457cc (1.5L) Carb.
Lube..... **B113**
Fuel..... **BF833,-K2**
Trans...... **M.T.**
Campmobile 4-1584cc (1.6L) FI
Lube..... **B233**
Fastback 4-1584cc (1.6L) FI
Lube..... **B113**
Fuel..... **BF833,-K2**
Karmann Ghia 4-1457cc (1.5L) Carb.
Lube..... **B113**
Fuel..... **BF833,-K2**
Trans...... **M.T.**
Squareback 4-1584cc (1.6L) FI
Lube..... **B113**
Fuel..... **BF833,-K2**
Transporter 4-1584cc (1.6L) Carb.
Lube..... **B113**
Air..... **PA2101A**
Fuel..... **BF833,-K2**

VOLKSWAGEN (Cont'd.)

1967

Beetle 4-1457cc (1.5L) Carb.
Lube..... **B113**
Fuel..... **BF833,-K2**
Trans...... **M.T.**
Fastback 4-1584cc (1.6L) Carb.
VIN 4
Lube..... **B113**
Fuel..... **BF833,-K2**
Trans...... **M.T.**
Karmann Ghia 4-1457cc (1.5L) Carb.
Lube..... **B113**
Fuel..... **BF833,-K2**
Trans...... **M.T.**
Squareback 4-1584cc (1.6L) Carb.
VIN 4
Lube..... **B113**
Fuel..... **BF833,-K2**
Trans...... **M.T.**
Transporter 4-1457cc (1.5L) Carb.
Lube..... **B113**
Fuel..... **BF833,-K2**
Trans...... **M.T.**

1966

Beetle 4-1285cc (1.3L) Carb.
Lube..... **B113**
Fuel..... **BF833,-K2**
Trans...... **M.T.**
Fastback 4-1584cc (1.6L) Carb.
VIN 4
Lube..... **B113**
Fuel..... **BF833,-K2**
Trans...... **M.T.**
Karmann Ghia 4-1285cc (1.3L) Carb.
Lube..... **B113**
Fuel..... **BF833,-K2**
Trans...... **M.T.**
Squareback 4-1584cc (1.6L) Carb.
VIN 4
Lube..... **B113**
Fuel..... **BF833,-K2**
Trans...... **M.T.**
Transporter 4-1457cc (1.5L) Carb.
Lube..... **B113**
Fuel..... **BF833,-K2**
Trans...... **M.T.**

1965

Beetle 4-1192cc (1.2L) Carb.
Lube..... **B113**
Fuel..... **BF833,-K2**
Trans...... **M.T.**
Karmann Ghia 4-1192cc (1.2L) Carb.
Lube..... **B113**
Fuel..... **BF833,-K2**
Trans...... **M.T.**
Transporter 4-1457cc (1.5L) Carb.
Lube..... **B113**
Fuel..... **BF833,-K2**
Trans...... **M.T.**

1964

Beetle 4-1192cc (1.2L) Carb.
Lube..... **B113**
Fuel..... **BF833,-K2**
Trans...... **M.T.**
Karmann Ghia 4-1192cc (1.2L) Carb.
Lube..... **B113**
Fuel..... **BF833,-K2**
Trans...... **M.T.**
Transporter 4-1457cc (1.5L) Carb.
Lube..... **B113**
Fuel..... **BF833,-K2**
Trans...... **M.T.**

1963

Beetle 4-1192cc (1.2L) 1 Bbl. Carb.
Lube..... **B113**
Fuel..... **BF833,-K2**
Trans...... **M.T.**

VOLKSWAGEN
1963 (Cont'd.)

Karmann Ghia 4-1192cc (1.2L) 1 Bbl. Carb.
Lube..... **B113**
Fuel..... **BF833,-K2**
Trans...... **M.T.**

Transporter 4-1457cc (1.5L) 1 Bbl. Carb.
Lube..... **B113**
Fuel..... **BF833,-K2**
Trans...... **M.T.**

1962

Beetle 4-1192cc (1.2L) 1 Bbl. Carb.
Lube..... **B113**
Fuel..... **BF833,-K2**
Trans...... **M.T.**

Karmann Ghia 4-1192cc (1.2L) 1 Bbl. Carb.
Lube..... **B113**
Fuel..... **BF833,-K2**
Trans...... **M.T.**

Transporter 4-1192cc (1.2L) 1 Bbl. Carb.
Lube..... **B113**
Fuel..... **BF833,-K2**
Trans...... **M.T.**

1961

Beetle 4-1192cc (1.2L) 1 Bbl. Carb.
Lube..... **B113**
Fuel..... **BF833,-K2**
Trans...... **M.T.**

Karmann Ghia 4-1192cc (1.2L) 1 Bbl. Carb.
Lube..... **B113**
Fuel..... **BF833,-K2**
Trans...... **M.T.**

Transporter 4-1192cc (1.2L) 1 Bbl. Carb.
Lube..... **B113**
Fuel..... **BF833,-K2**
Trans...... **M.T.**

1960

Beetle 4-1192cc (1.2L) 1 Bbl. Carb.
Lube..... **B113**
Fuel..... **BF833,-K2**
Trans...... **M.T.**

Karmann Ghia 4-1192cc (1.2L) 1 Bbl. Carb.
Lube..... **B113**
Fuel..... **BF833,-K2**
Trans...... **M.T.**

Transporter 4-1192cc (1.2L) 1 Bbl. Carb.
Lube..... **B113**
Fuel..... **BF833,-K2**
Trans...... **M.T.**

1959

Beetle 4-1192cc (1.2L) 1 Bbl. Carb.
Fuel..... **BF833,-K2**
Trans...... **M.T.**

Karmann Ghia 4-1192cc (1.2L) 1 Bbl. Carb.
Fuel..... **BF833,-K2**
Trans...... **M.T.**

Transporter 4-1192cc (1.2L) 1 Bbl. Carb.
Fuel..... **BF833,-K2**
Trans...... **M.T.**

1958

Beetle 4-1192cc (1.2L) 1 Bbl. Carb.
Fuel..... **BF833,-K2**
Trans...... **M.T.**

Karmann Ghia 4-1192cc (1.2L) 1 Bbl. Carb.
Fuel..... **BF833,-K2**
Trans...... **M.T.**

VOLKSWAGEN
1958 (Cont'd.)

Transporter 4-1192cc (1.2L) 1 Bbl. Carb.
Fuel..... **BF833,-K2**
Trans...... **M.T.**

1957

Beetle 4-1192cc (1.2L) 1 Bbl. Carb.
Fuel..... **BF833,-K2**
Trans...... **M.T.**

Karmann Ghia 4-1192cc (1.2L) 1 Bbl. Carb.
Fuel..... **BF833,-K2**
Trans...... **M.T.**

Transporter 4-1192cc (1.2L) 1 Bbl. Carb.
Fuel..... **BF833,-K2**
Trans...... **M.T.**

1956

Beetle 4-1192cc (1.2L) 1 Bbl. Carb.
Fuel..... **BF833,-K2**
Trans...... **M.T.**

Karmann Ghia 4-1192cc (1.2L) 1 Bbl. Carb.
Fuel..... **BF833,-K2**
Trans...... **M.T.**

Transporter 4-1192cc (1.2L) 1 Bbl. Carb.
Fuel..... **BF833,-K2**
Trans...... **M.T.**

1955

Beetle 4-1192cc (1.2L) 1 Bbl. Carb.
Fuel..... **BF833,-K2**
Trans...... **M.T.**

Transporter 4-1192cc (1.2L) 1 Bbl. Carb.
Fuel..... **BF833,-K2**
Trans...... **M.T.**

1954

Beetle 4-1192cc (1.2L) 1 Bbl. Carb.
Fuel..... **BF833,-K2**
Trans...... **M.T.**

Transporter 4-1192cc (1.2L) 1 Bbl. Carb.
Fuel..... **BF833,-K2**
Trans...... **M.T.**

VOLVO

1979

242, 244, 245 4-2127cc (2.1L) FI
VIN 4
Lube..... **B163**
Air..... **PA2181**
Fuel..... **BF885**

262, 264, 265 V6-2673cc (2.7L) FI
VIN 6
Lube..... **B163**
Fuel..... **BF885**

1978

242, 244, 245 4-2127cc (2.1L) FI
VIN 4
Lube..... **B163**
Air..... **PA2181**
Fuel..... **BF885**

262, 264, 265 V6-2673cc (2.7L) FI
VIN 6
Lube..... **B163**
Fuel..... **BF885**

VOLVO (Cont'd.)

1977

242, 244, 245 4-2127cc (2.1L) FI
VIN 4
Lube..... **B163**
Air..... **PA2181**
Fuel..... **BF885**

264, 265 V6-2673cc (2.7L) FI
Lube..... **B163**
Fuel..... **BF885**

1976

242, 244, 245 4-2127cc (2.1L) FI
VIN 4
Lube..... **B163**
Air..... **PA2181**
Fuel..... **BF885**

262, 264, 265 V6-2673cc (2.7L) FI
VIN 6
Lube..... **B163**
Fuel..... **BF885**

1975

164 6-2980cc (3.0L) FI
Lube..... **B163**
Air..... **PA625**
Fuel..... **BF1105**

242, 244, 245 4-1990cc (2.0L) FI
Lube..... **B163**
Air..... **PA2181**
Fuel..... **BF885**

1974

142, 144, 145 4-1990cc (2.0L) FI
Lube..... **B163**
Air..... **PA2101A**
Oil Vapor..... **N/R**

164 6-2980cc (3.0L) FI
Lube..... **B163**
Air..... **PA625**
Fuel..... **BF1105**
Oil Vapor..... **N/R**

1973

142, 144, 145 4-1990cc (2.0L) FI
Lube..... **B163**
Air..... **PA2101A**
Fuel..... **BF1105**
Oil Vapor..... **N/R**

164 6-2980cc (3.0L) FI
Lube..... **B163**
Air..... **PA625**
Fuel..... **BF1105**
Oil Vapor..... **N/R**

1800 4-1990cc (2.0L) FI
Lube..... **B163**
Fuel..... **BF1105**
Oil Vapor..... **N/R**

1972

142, 144, 145 4-1990cc (2.0L) FI
Lube..... **B163**
Air..... **PA2101A**
Oil Vapor..... **N/R**

164 6-2980cc (3.0L) FI
Lube..... **B163**
Air..... **PA625**
Oil Vapor..... **N/R**

1800E, 1800ES 4-1990cc (2.0L) FI
Lube..... **B163**
Fuel..... **BF1105**
Oil Vapor..... **N/R**
Fuel Vapor..... **N/R**

1971

142, 144, 145 4-1990cc (2.0L) Carb.
Lube..... **B163**
Air..... **PA2101A**
Fuel..... **BF833,-K2**
Oil Vapor..... **N/R**

164 6-2980cc (3.0L) Carb.
Lube..... **B163**
Oil Vapor..... **N/R**

VOLVO 1971 (Cont'd.)

1800 4-1990cc (2.0L) FI
Lube..... **B163**
Oil Vapor..... **N/R**

1970

142, 144, 145 4-1990cc (2.0L) Carb.
Lube..... **B163**
Air..... **PA2101A**

164 6-2980cc (3.0L) Carb.
Lube..... **B163**
Air..... **PA2101A**

1800 4-1990cc (2.0L) FI
Lube..... **B163**

1969

142, 144, 145 4-1990cc (2.0L) Carb.
Lube..... **B163**
Air..... **PA2101A**
Fuel..... **BF833,-K2**

1800 4-1990cc (2.0L) Carb.
Lube..... **B163**
Fuel..... **BF833,-K2**

1968

122 4-1780cc (1.8L) Carb.
Lube..... **B163**
Fuel..... **BF833,-K2**

142, 144, 145 4-1780cc (1.8L) Carb.
Lube..... **B163**
Air..... **PA2101A**
Fuel..... **BF833,-K2**

1800 4-1780cc (1.8L) Carb.
Lube..... **B163**
Fuel..... **BF833,-K2**

1967

122 4-1780cc (1.8L) Carb.
Lube..... **B34**
Fuel..... **BF833,-K2**

144 4-1780cc (1.8L) Carb.
Lube..... **B34**
Fuel..... **BF833,-K2**

1800 4-1780cc (1.8L) Carb.
Lube..... **B34**
Fuel..... **BF833,-K2**

1966

122 4-1780cc (1.8L) Carb.
Fuel..... **BF833,-K2**

1965

122 4-1780cc (1.8L) Carb.
Lube..... **B163**

544 4-1780cc (1.8L) Carb.
Lube..... **B163**
Fuel..... **BF833,-K2**

1800 4-1780cc (1.8L) Carb.
Lube..... **B163**

1964

122 4-1780cc (1.8L) Carb.
Lube..... **B163**
Fuel..... **BF833,-K2**

544 4-1780cc (1.8L) Carb.
Lube..... **B163**
Fuel..... **BF833,-K2**

1800 4-1780cc (1.8L) Carb.
Lube..... **B163**
Fuel..... **BF833,-K2**

1963

122 4-1780cc (1.8L) 2-1 Bbl. Carb.
Fuel..... **BF833,-K2**

544 4-1780cc (1.8L) 2-1 Bbl. Carb.
Lube..... **B34**
Fuel..... **BF833,-K2**

1800 4-1780cc (1.8L) 2-1 Bbl. Carb.
Lube..... **B34**
Fuel..... **BF833,-K2**

OBS = Obsolete. Availability Limited to Distributor Stock.

VOLVO (Cont'd.)

1962
122 4-1780cc (1.8L) 2-1 Bbl. Carb.
Fuel..... **BF833,-K2**
544 4-1780cc (1.8L) 2-1 Bbl. Carb.
Lube.....**B34**
Fuel..... **BF833,-K2**
1800 4-1780cc (1.8L) 2-1 Bbl. Carb.
Lube.....**B34**
Fuel..... **BF833,-K2**

1961
122 4-1588cc (1.6L) 2-1 Bbl. Carb.
Fuel..... **BF833,-K2**
544 4-1588cc (1.6L) 2-1 Bbl. Carb.
Fuel..... **BF833,-K2**
1800 4-1780cc (1.8L) 2-1 Bbl. Carb.
Fuel..... **BF833,-K2**

1960
122 4-1580cc (1.6L) 2-1 Bbl. Carb.
Fuel..... **BF833,-K2**
445 4-1580cc (1.6L) 2-1 Bbl. Carb.
Fuel..... **BF833,-K2**
544 4-1580cc (1.6L) 2-1 Bbl. Carb.
Fuel..... **BF833,-K2**

1959
122 4-1580cc (1.6L) 2-1 Bbl. Carb.
Fuel..... **BF833,-K2**
445 4-1580cc (1.6L) 2-1 Bbl. Carb.
Fuel..... **BF833,-K2**
544 4-1580cc (1.6L) 2-1 Bbl. Carb.
Fuel..... **BF833,-K2**

NOTES

NOTES

NOTES

OBS = Obsolete. Availability Limited to Distributor Stock.

SPIN-ON FILTER INSTALLATION INSTRUCTIONS

An increasing number of motorists today are performing oil and filter changes on their cars. However, present installation instructions vary from manufacturer to manufacturer, and may be confusing to the installer.

These instructions may be used in changing any spin-on oil filter.

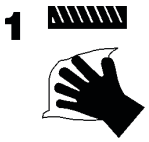

1. **Clean base.**
   Unscrew and remove old filter. Be sure old gasket is removed with filter. Wipe filter mounting base with clean cloth.



2. **Apply clean oil to gasket.**
   Apply thin film of clean motor oil to new filter gasket. Do not use grease.

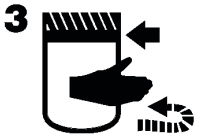

3. **Hand tighten to gasket contact.**
   Line up threads carefully to avoid cross-threading. Spin new filter on until gasket contacts base.

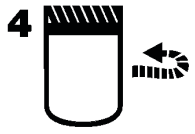

4. **Tighten additional turns.**
   Important – Follow instructions (usually found on filter) of the filter manufacturer for final tightening.



5. **No leaks.**
   Be sure oil shows full on dipstick. Start engine and check for leaks. Correct source of any leaks observed. Shut off engine. Re-check oil level. Add oil if necessary.



6. **Inspect for dents.**
   Important – Do not use filter if it is dented.

EASY STEPS IN CHANGING TRANSMISSION FILTERS

1. Warm up the car so the transmission is at normal operating temperature. Pull the transmission dipstick (located near the firewall in most cars). Fresh fluid is translucent and cherry red. Some darkening is normal, but if it is a reddish-brown or mustard color and smells like burnt varnish, it is worn out. Turn the vehicle off.
2. Drain the fluid by loosening the pan. Select the correct Baldwin replacement filter and prepare a large pan to catch the fluid. Then, loosen each pan bolt a turn or two, loosening one corner more than the rest. Drain mostly from this corner.
3. Finish removing the pan and any gasket material from the pan or case. Avoid scratching the metal and make sure the pan's gasket surface isn't bent or distorted.
4. Remove the old filter. Most transmission filters are held in place with a bolt or two, but some are held by a clip. Be careful to include O-Rings or other seals.
5. Install a new filter. Use the clips or bolts from the old filter. Be sure O-Rings, etc. are in place. If the filter has a long intake neck, gently push the neck into place without unseating the O-Ring.
6. Inspect the pan before cleaning. A small amount of fine gray clutch dust is normal. However, if you find metal shavings, there has been transmission damage. Clean the pan thoroughly with solvent and wipe dry so there is no harmful residue.
7. Position gasket on pan. Some gaskets have four holes slightly smaller than the rest to allow four bolts through the pan and through these smaller holes to hold the gasket in place.
8. Hand tighten pan bolts in a criss-cross pattern. After that, use a torque wrench to tighten to 10 or 15 pounds maximum.
9. Refill the transmission fluid using only the amount and type of fluid specified. Be sure the dipstick funnel is clean before using it.
10. Recheck the fluid level. With the car on level ground, set the parking brake and the transmission in "Park" or "Neutral." Let the engine idle for a few minutes. Shift the transmission into different positions before returning the lever to "Park" or "Neutral." Check the fluid level again and check for leaks.

TRANSMISSION IDENTIFICATION CODE LISTING

FORD AUTOMATIC TRANSMISSIONS

The transmission code is shown on the vehicle identification plate located on the driver's side door frame. The code letter is the first character listed under Trans. or TR.

I.D. Code	Year	Model	Baldwin Number	Ford Number
A	2000-02	4F27E	**18267**	XS4Z-7A098-AB
A	2000-03	5R55N	**20007**	XW4Z-7A098-BB
B	1981-95	ATX (Automatic Transaxle)	**18040**	E1EZ-7A098-A
C	1982-87	C-5 (2WD, Select Shift)	**18082**	E2DZ-7A098-A
C	1986-96	AXOD (Overdrive Transaxle)	**18171**	E6SP-7G186-AB
C	1989-90	GA4-HL	**19828**	D5AZ-7A098-A
D	1997-on	5R55E (2WD)	**18024**	F5TZ-7A098-A
D	1997-on	5R55E (4WD)	**18025**	F5TZ-7A098-B
E	1989-92	4EAT (Probe)	**18270**	E92Z-7A098-A
E	1991-2002	4EAT (Escort, Tracer)	**18268**	F1CZ-7A098-A
E	1993-97	4EAT (Probe)	**18005**	F32Z-7A098-A
E	1989-2006	E40D/4R100 (2WD)	**18264**	E9TZ-7A098-A
E	1989-on	E40D/4R100 (4WD)	**18265**	E9TZ-7A098-B
G	1970-81	C-4 (Trucks)	**19879**	D0DZ-7A098-C
G	1973-77	C-4 (Deep Pan)	**18023**	D3BZ-7A098-A
G	1973-on	C-6 (4WD Trucks)	**18015**	D3TZ-7A098-A
H	1997-2003	4R70W (4WD)	**18029**	F4TZ-7A098-A
J	1979-82	C-4 (Trucks)	**19879**	D0DZ-7A098-C
K	1979-on	C-6 (2WD)	**19828**	D5AZ-7A098-BA
L	1986-88	A4LD (2WD)	**18147**	E6TZ-7A098-B
L	1986-on	A4LD (4WD)	**18025**	E6TZ-7A098-A
L	1989-on	A4LD (Cars)	**18024**	E9TZ-7A098-C
L	1996-on	AX4S	**18034**	F6DZ-7A098-A
O	1984-on	ATX (Automatic Transaxle)	**18040**	E1EZ-7A098-A
P	1992-2001	AODE, AODE-W	**18002**	F2VY-7A098-A
R	2002-03	5R55S	**20006**	3W4Z-7A098-AB
R	2002-03	5R55W	**20002**	1L2Z-7A098-AC
T	1980-96	AOD, AOT (2WD, Automatic Overdrive)	**19640**	E0AZ-7A098-A
T	1985-95	AOD, AOT (4WD Trucks, Automatic Overdrive)	**18198**	E4TP-7F003-AA
T	1986-88	A4LD (2WD)	**18147**	E6TZ-7A098-B
T	1986-on	A4LD (4WD)	**18025**	E6TZ-7A098-A
T	1986-96	AXODE (FWD, Overdrive Transaxle)	**18171**	E6SP-7G186-AB
U	1973-on	C-6 (Deep Pan)	**18015**	D3TZ-7A098-B
U	1975-82	C-6 (XPL)	**19828**	D5AZ-7A098-BA
U	1994-2006	AODE/4R70W (4WD)	**18029**	F4TZ-7A098-A
V	2002-03	5R55S	**20002**	1L2Z-7A098-AC
W	1967-69	C-4 (XP3)	**19941**	C5AZ-7A098-C
W	1970-81	C-4	**19879**	D0DZ-7A098-B
W	1973-77	C-4 (Ford Bronco)	**18023**	D3BZ-7A098-A
W	1974-81	C-4 (Bobcat, Capri, Mustang, Pinto)	**19801**	D4FZ-7A098-A
W	1982-84	C-5	**18082**	E2AZ-7A098-A
X	1968-77	Cruise-O-Matic (FMX)	**19925**	D0AZ-7A098-A
X	1978-80	FMX	**19925**	C8AZ-7A098-C
X	1993-99	AX4N	**18033**	F5DZ-7A098-A
X	2006-on	6R60	**20018**	6L2Z-7A098-AA
X	2007-on	6R60	**20019**	7L1Z-7A098-A
Z	1973-on	C-6 (Deep Pan)	**18015**	D3TZ-7A098-B
Z	1975-on	C-6 (XPL Special)	**19828**	D5AZ-7A098-BA
6	1966	C-4 (XP)	**19941**	C5AZ-7A098-C

TRANSMISSION IDENTIFICATION CODE LISTING

GENERAL MOTORS AUTOMATIC TRANSMISSIONS

GM has placed labels on cars since 1984 (on trucks since early 1970's) containing Regular Production Option (RPO) families of different vehicle areas (ex. axles, brakes, transmissions).

Locations for Label:

On Automobiles
1. Spare Tire Cover
2. Deck Lid
3. Right Rear Wheel Well
4. Rear Quarter Panel

On Trucks
1. Engine Compartment
2. Glove Box
3. Hood

The RPO transmission codes are listed alpha-numerically from M01 - M99 and MA2 - MY9 in the chart below.

To determine the correct transmission filter:
1. Locate the RPO code
2. Use the chart to determine the correct transmission
3. Refer to the transmission model on the following pages for proper filter

RPO	OLD	NEW
M10	Isuzu 4 Spd.	
M13	---	4T60E
M15	---	4T65E
M29	TH200	---
M30	---	4L60E
M31	TH250	---
M32	TH325	---
M33	TH350, TH375	---
M34	TH125, TH125C	3T40
M38	TH350	---
M39	TH375	---
M40	TH400 RWD, TH425 FWD	---
M57	TH325-4L	---
M82	---	5L40E
M84	---	5T50E
M90	---	4L40E
MD1	Allison 540	---
MD2	TH180	3L30
MD3	TH180, TH180C	3L30
MD4	TH475	3L80-HD
MD8	TH700-R4	4L60
MD9	TH125, TH125C	3T40
ME3	Allison MT643D	---
ME4	Allison MT643G	---

RPO	OLD	NEW
ME5	Allison MT653DRD	---
ME6	Allison MT653DRG	---
ME9	TH440-T4	4T60
MF1	Allison AT545	---
MH1	---	4T80E
MN3	---	4T65E
MN4	---	4T40E
MN5	---	4T45E
MP5	Saturn 5 Spd.	---
MP7	Saturn 4 Spd.	---
MS7	Geo 4 Spd.	---
MT1	THM R2	4L80E
MT9	Allison AT542	---
MV2	TH350	---
MV4	TH350	---
MV9	TH200	---
MW9	TH200-4R w/Overdrive	---
MX1	Geo 3 Spd.	---
MX2	TH350	---
MX3	TH350	---
MX5	TH350	---
---	TH400	3L80
---	THM R1	4L30E
---	THM A1	3T40A

CHRYSLER AUTOMATIC TRANSMISSIONS

NEW CODE EXAMPLE

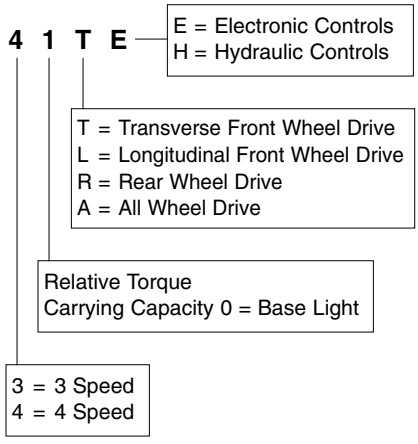

OLD	NEW
A404	30TH
A413	31TH
A470	31TH
A500/MMC (A904 Front)	40RH
A500/CORP (A999 Front)	42RH
A500SE	42RE
A518	46RH
A518SE	46RE
A604	41TE
A604 AWD	41AE
A604 LD	40TE
A606	42LE
A618	47RH
A670	31TH
A727	36RH
A727 HD (Diesel)	37RH
A904	30RH
A998	31RH
A999	32RH

TRANSMISSION FILTERS for Cars, Light-Duty Trucks, Etc.

ALLISON

MT, AT540 SERIES
(RWD, Felt Media)

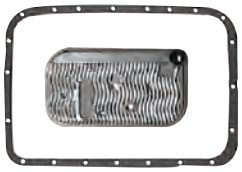

18236
OE: 6884270
Chevrolet, Dodge, Ford, GMC, International Medium-Duty Trucks
Bolt Holes: 21 **Capacity:** 20-24 Qts.*

(RWD, Mesh Screen)



19992
OE: 6837428
Chevrolet, Dodge, Ford, GMC, Hino, International, Nissan Medium-Duty Trucks
Bolt Holes: 21 **Capacity:** 20-24 Qts.*

AT545, MT600 SERIES
(RWD)



19739
OE: 6834831
Freightliner, Hino, IHC, Kenworth, Nissan, Sterling Medium-Duty Trucks
Bolt Holes: 21 **Capacity:** 19-24 Qts.*

1000, 2000 SERIES
(5 Spd.)



BT8460
OE: 29531007
2002-06 Chevrolet Avalanche
2001-on Chevrolet Silverado Light-Duty Trucks, GMC Sierra Series Light-Duty Trucks
2001-06 Chevrolet Suburban, GMC Yukon
2006 Hummer H1 Alpha

ALLISON

1000, 2000 SERIES (Cont'd.)
(5 Spd., Deep Pan)



20003
OE: 29537966
Note: Reuse OE gasket

(5 Spd., Shallow Pan)



20004
OE: 29537965
2002-06 Chevrolet Avalanche
2001-on Chevrolet Silverado, GMC Sierra Series Light-Duty Trucks,
2001-06 Chevrolet Suburban
2006 Hummer H1 Alpha
Note: Reuse OE gasket

(Shallow Pan)



20016
OE: 29537965
2002-06 Chevrolet Avalanche
2001-on Chevrolet Silverado, GMC Sierra Light-Duty Trucks
2001-06 Chevrolet Suburban
2006 Hummer H1 Alpha
Bolt Holes: 12

(Deep Pan)



20017
OE: 29537966
2002-06 Chevrolet Avalanche
2001-on Chevrolet Silverado, GMC Sierra Light-Duty Trucks
2001-06 Chevrolet Suburban
2006 Hummer H1 Alpha
Bolt Holes: 12

CHRYSLER - AMC

JATCO 4N71B
AW4
(RWD)



18245
OE: 83504032
1987-95, 1997-2001 Jeep
Bolt Holes: 19 **Capacity:** 4.8 Qts.*

TORQUE-COMMAND
30RH (A904), 31RH (A999), 36RH (A727)
(RWD)

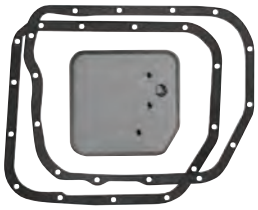

18032
OE: 3515996
1966-87 AMC
1965-89 Chrysler
1960-99 Dodge
1969-80 IHC
1980-2002 Jeep
1966-89 Plymouth
Note: Contains (2) gaskets
Bolt Holes: 14 **Capacity:** 4 Qts.*

TORQUE-FLITE
30TH (A404), 31TH (A413), 31TH (A470), 31TH (A670)
(FWD, 3 Spd., Deep Pan)



18104
OE: 4269649
1983-96, 2000-02 Chrysler
1982-2002 Dodge
1983-2001 Plymouth
Caution: Can only be used with 2 1/4" pan
Bolt Holes: 14 **Capacity:** 3-4 Qts.*

* Capacity May Vary, Check for Proper Fill Level.

TRANSMISSION FILTERS for Cars, Light-Duty Trucks, Etc.

CHRYSLER - AMC

TORQUE-FLITE 40TE, 41AE, 41TE (A604)
(FWD, 4 Spd. with Overdrive)



18004
OE: 4504048
1989-on Chrysler, Dodge
1995-98 Eagle Talon
1989-2001 Plymouth
Bolt Holes: 14 **Capacity:** 4 Qts.*

TORQUE-FLITE 42LE (A606)
(FWD, 4 Spd.)



18003
OE: 4626449
1993-2004 Chrysler, Dodge Intrepid
1993-97 Eagle Vision
1999-2001 Plymouth Prowler
Bolt Holes: 13 **Capacity:** 9.9 Qts.*

42RE, 44RE, 46RE, 47RE
(RWD, 4 Spd. with Overdrive, Electronic Controls)

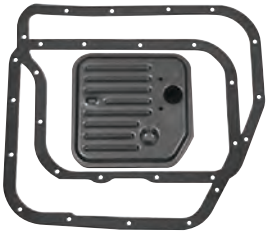

18055
OE: 52118789
1998-2003 Dodge Durango
1998-on Dodge Light-Duty Trucks
1998-2003 Dodge Vans
1998-2004 Jeep Grand Cherokee
Note: Contains (2) gaskets
Bolt Holes: 14

CHRYSLER - AMC

42RLE
(RWD, 4 Spd.)

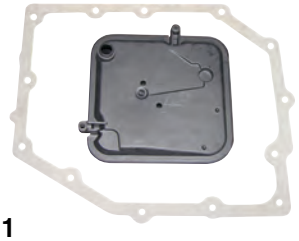

20011
OE: 52852913AB
2005 Chrysler LX
2005-on Chrysler 300
2006-on Dodge Charger
2004-on Dodge Dakota, Jeep Liberty, TJ, Wrangler
2006-09 Dodge Durango
2007-on Dodge Nitro
Bolt Holes: 13

45RFE, 55RFE
(2WD, RWD, Multi-Spd. with Overdrive and Spin-on Filter)



19999
OE: 4799662, 4800029AA
2007-09 Chrysler Aspen
2000-on Dodge Dakota
2000-09 Dodge Durango
2002-on Dodge Light-Duty Trucks, Jeep Grand Cherokee,
2002-07 Jeep Liberty
2004 Jeep TJ, Wrangler
Note: Spin-on contains anti-drainback valve
Bolt Holes: 15 **Capacity:** 8 Qts.*

(4WD, RWD, Multi-Spd. with Overdrive and Spin-on Filter)



20000
OE: 4799507, 4799662
2007-09 Chrysler Aspen
2000-on Dodge Dakota
2000-09 Dodge Durango
2002-on Dodge Light-Duty Trucks, Jeep Grand Cherokee
2006-on Jeep Commander
2002-07 Jeep Liberty
2004 Jeep TJ, Wrangler
Note: Spin-on contains anti-drainback valve
Bolt Holes: 15 **Capacity:** 8 Qts.*

CHRYSLER - AMC

KM172-5, KM177
(FWD, 4 Spd.)



18021
OE: MD729955
1981-91 Dodge Colt, Colt Vista
1981-92 Plymouth
Note: Contains (2) gaskets
Bolt Holes: 12 & 13 **Capacity:** 6.1-6.4 Qts.*

FORD

AOD, AOT
(2WD, RWD, 4 Spd.)



19640
OE: E1AZ-7A098-A
1980-96 Ford
1980-92 Lincoln
1980-93 Mercury
Note: Metric
Bolt Holes: 14 **Capacity:** 3.4 Qts.*

(4WD, RWD, 4 Spd.)

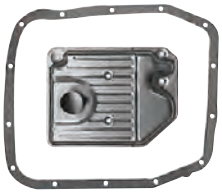

18198
OE: E5TZ-7A098-C
1983-95 Ford Light-Duty Trucks, Vans
Bolt Holes: 14 **Capacity:** 3.4 Qts.*

AODE, AODE-W
(2WD, RWD)



18002
OE: F2VY-7A098-A
1992-97, 1999 Ford
1991-95 Lincoln
1992-95 Mercury
Bolt Holes: 14 **Capacity:** 4 Qts.*

* Capacity May Vary, Check for Proper Fill Level.

TRANSMISSION FILTERS for Cars, Light-Duty Trucks, Etc.

FORD

AODE, 4R70W
(RWD, Deep Pan)



18029
OE: F4TZ-7A098-A, F6AZ-7A098-A
1994-on Ford
1996-on Lincoln
1996-on Mercury
Bolt Holes: 14 **Capacity:** 4 Qts.*

ATX, JATCO F3A
(FWD, 3 Spd.)

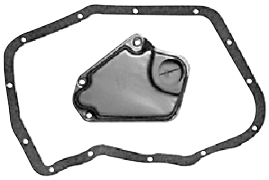

18040
OE: E9FZ-7A098-A
1981-94 Ford, Mercury
Note: Metric
Bolt Holes: 13 **Capacity:** 8-10 Qts.*

AXOD, AX4N
(FWD, 4 Spd.)



18171
OE: E6DZ-7A098-A
1986-95 Ford
1988-94 Lincoln Continental
1986-93 Mercury
Bolt Holes: 17 **Capacity:** 12.2-13.3 Qts.*

4EAT
(FWD, 4 Spd.)

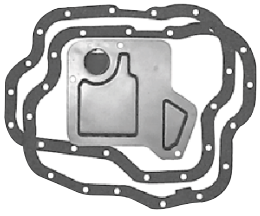

18270
OE: E92Z-7A098-A
1989-92 Ford Probe
Note: Filter is 1" thick
Contains (2) gaskets
Bolt Holes: 17 **Capacity:** 6-7.2 Qts.*

FORD

4EAT (Cont'd.)
(FWD, 4 Spd.)

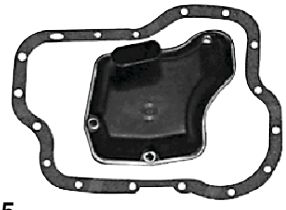

18005
OE: F32Z-7A098-A
1993-97 Ford Probe
Bolt Holes: 17 **Capacity:** 6-7.2 Qts.*

4EAT-F
(FWD, 4 Spd.)



18268
OE: F1CZ-7A098-A
1991-2003 Ford Escort
1991-99 Mercury Tracer
Bolt Holes: 19

4F27E
(FWD, 4 Spd. with Overdrive)



18267
OE: XS4Z-7A098-AB
2000-on Ford Focus
2010 Ford Transit Connect
Bolt Holes: 20 **Capacity:** 7 Qts.*

A4LD
(2WD, RWD, 4 Spd.)



18024
OE: E9TZ-7A098-C
1989-on Ford Cars, Light-Duty Trucks, Vans
1998-2001 Mercury Mountaineer
Bolt Holes: 18 **Capacity:** 9.7 Qts.*

FORD

A4LD (Cont'd.)
(2WD, RWD, 4 Spd., Shallow Pan)



18147
OE: E6TZ-7A098-B
1987-88 Ford Mustang, Thunderbird
1986-88 Ford Light-Duty Trucks, Vans
1988-89 Merkur Scorpio
Bolt Holes: 18 **Capacity:** 9.7 Qts.*

(4WD, RWD, 4 Spd., Deep Pan)

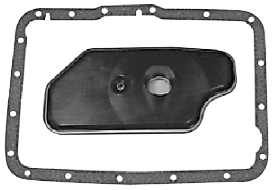

18025
OE: 85GT-7A098-C
1985-on Ford Light-Duty Trucks, Vans
1998-2001 Mercury Mountaineer
Bolt Holes: 18 **Capacity:** 10 Qts.*

AX4N, AX4S
(FWD, 4 Spd., Deep Pan)

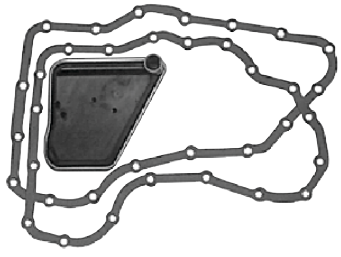

18033
OE: F5DZ-7A098-A
2004-05 Ford Freestar, Mercury Monterey
1990-99 Ford Taurus, Mercury Sable
2000-02 Ford Windstar
1995-2002 Lincoln Continental
Note: Contains (2) gaskets
Bolt Holes: 19 (AX4N), 17 (AX4S)
Capacity: 12.2-13.3 Qts.*

* Capacity May Vary, Check for Proper Fill Level.

TRANSMISSION FILTERS for Cars, Light-Duty Trucks, Etc.

FORD

AX4S
(FWD, 4 Spd., Shallow Pan)

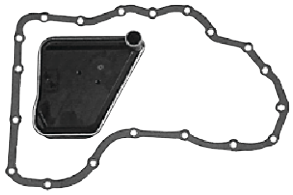

18034
OE: F6DZ-7A098-A
2006-07 Ford Freestar, Mercury Monterey
1996-2007 Ford Taurus
1995-2003 Ford Windstar
1996-2005 Mercury Sable
Bolt Holes: 19 **Capacity:** 13-13.3 Qts.*

C-4
(RWD, 3 Spd., Aluminum Case)



19879
OE: D0DZ-7A098-C
1970-81 Ford
1970-84 Mercury
Note: Square pan with bulge from corner passenger side; regular size filter
Bolt Holes: 11 **Capacity:** 3 Qts.*

RE4F04A
(FWD, 4 Spd.)



18011
OE: 31728-80X03
1993-2002 Mercury Villager
Bolt Holes: 21 **Capacity:** 10.1 Qts.*

5R55N
(RWD, 5 Spd. with Overdrive)



20007
OE: XW4Z-7A098-BB
2002, 2004 Ford Thunderbird
2000-02 Lincoln LS
Capacity: 11.9 Qts.*

FORD

5R55S
(RWD, 5 Spd. with Overdrive)



20006
OE: 3W4Z-7A098-AB
2003-05 Ford Thunderbird
2005-on Ford Mustang
2003-08 Ford Explorer
2003-06 Lincoln LS
2002-05 Mercury Mountaineer
Capacity: 11.9 Qts.*

5R55W
(RWD, 5 Spd.)



20002
OE: FT140
2002-on Ford Explorer, Mercury Mountaineer
2003-05 Lincoln Aviator
Note: Reuse OE gasket
Capacity: 4 Qts.*

5R110W
(5 Spd. with Overdrive)



P7247
OE: 3C3Z-7B155-BA
2003-05 Ford Excursion
2004-on Ford E Series Vans
2003-on Ford Super Duty Light-Duty Trucks

(5 Spd. with Overdrive)



20005
OE: 3C3P-7G186-AF, 3C3Z-7A098-AA
2003-05 Ford Excursion
2004-on Ford E Series Vans
2005 Ford F Series Light-Duty Trucks
2003-on Ford Super Duty Light-Duty Trucks

FORD

6R60
(6 Spd.)



20018
OE: 6L2Z-7A098-AA
2006-07 Ford Explorer
2009-on Ford Explorer Sport trac
2006-on Mercury Mountaineer
Bolt Holes: 21 **Capacity:** 11.2 Qts.*

(6 Spd.)



20019
OE: 7L1Z-7A098-A
2007-on Ford Expedition
2008-on Ford Explorer
2008 Ford Explorer Sport trac
2010 Ford F Series Pickups
Bolt Holes: 21 **Capacity:** 11.2 Qts.*

C-6
(Late, 2WD, RWD, Aluminum Case, Shallow Pan)



19828
OE: D5AZ-7A098-BA
1975-98 Ford Light-Duty Trucks, Vans
1975-79 Lincoln
1975-80 Mercury
Note: Deeper pan than early model C-6 Contains (2) gaskets
Bolt Holes: 17 **Capacity:** 5 Qts.*

(4WD, RWD, Deep Pan)



18015
OE: D3TZ-7A098-B
1994 Ford E Series Vans
1973-74, 1976-98 Ford Light-Duty Trucks
Note: Recess rear corner passenger side Contains (2) gaskets
Bolt Holes: 17 **Capacity:** 5 Qts.*

* Capacity May Vary, Check for Proper Fill Level.

TRANSMISSION FILTERS for Cars, Light-Duty Trucks, Etc.

FORD

E40D (4R100)
(RWD, Shallow Pan)



18264
OE: E9TZ-7A098-A
1990-2007 Ford Light-Duty Trucks, Vans
2002 Lincoln Blackwood
1998-2006 Lincoln Navigator
Bolt Holes: 20 **Capacity:** 15.7 Qts.*

(RWD, Deep Pan)



18265
OE: E9TZ-7A098-B
1990-2007 Ford Light-Duty Trucks, Vans
2002 Lincoln Blackwood
1998-2006 Lincoln Navigator
Bolt Holes: 20 **Capacity:** 16.9 Qts.*

GMC

POWERGLIDE
(RWD, Aluminum Case)



6017
OE: 6438815
1962-73 Chevrolet, GMC
Note: POWERGLIDE embossed on case
Bolt Holes: 14 **Capacity:** 3 Qts.*

3T40 (TH125, TH125C)
(FWD, 3 Spd.)

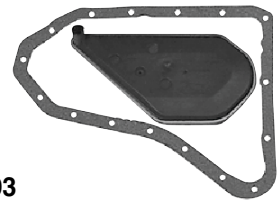

19593
OE: 8631621, 8660100
1980-96 Buick, Oldsmobile
1982-88 Cadillac
1980-2001 Chevrolet, Pontiac
Note: Metric
Bolt Holes: 16 **Capacity:** 4 Qts.*

GMC

4T40E
(FWD, 4 Spd.)



18057
OE: 24203770, 8685185
1995-on Chevrolet, Pontiac
1999-2004 Oldsmobile Alero
2000-on Saturn
Bolt Holes: 12 **Capacity:** 12.9 Qts.*

4L60 (TH700-R4)
(RWD, 4 Spd. with Overdrive)



18155
OE: 8667689
1986-93 Buick
1990-93 Cadillac
1982-95 Chevrolet
1982-93 GMC Light-Duty Trucks
1988-93 Oldsmobile
1983-93 Pontiac
Bolt Holes: 16 **Capacity:** 4-5 Qts.*

4L60E
(RWD, 4 Spd. with Electronic Transmission)



18010
OE: 24200796
1993-96, 2004-07 Buick
1994-2006 Cadillac
1993-on Chevrolet Cars; Chevrolet, GMC Light-Duty Trucks
1993-2004 Oldsmobile
1993-2002 Pontiac
Bolt Holes: 16 **Capacity:** 5 Qts.*

GMC

4L60E (Cont'd.)
(RWD, 4 Spd., Shallow Pan with Electronic Transmission)



19998
OE: 24208148
Note: Contains (1) neck seal
Bolt Holes: 16 **Capacity:** 5 Qts.*

(RWD, 4 Spd., Deep Pan with Electronic Transmission)



18056
OE: 24208576
2004-07 Buick Rainier, Pontiac GTO
1999-2009 Cadillac Escalade
1998-on Chevrolet, GMC Light-Duty Trucks, Vans
2003-07 Hummer
2002-04 Oldsmobile Bravada
Bolt Holes: 16 **Capacity:** 5 Qts.*

4T60 (TH440-T4)
(FWD, 4 Spd.)



18139
OE: 8682471
1984-94 Buick, Oldsmobile
1985-92 Cadillac
1984-93 Chevrolet
1985-91 Pontiac
Bolt Holes: 19 **Capacity:** 6.5 Qts.*

4T60E
(FWD, 4 Spd. with Electronic Transmission)



18022
OE: 8651909
1991-on Buick, Chevrolet
1991-95 Cadillac
1991-2004 Oldsmobile
1992-on Pontiac
2005-on Saturn Relay
Caution: Can only be used with 2 1/4" pan
Note: Reuse OE gasket with 20 bolt holes
Capacity: 5-7.4 Qts.*

* Capacity May Vary, Check for Proper Fill Level.

TRANSMISSION FILTERS for Cars, Light-Duty Trucks, Etc.

GMC

4L80E
(RWD, 4 Spd. with Electronic Transmission)



18007
OE: 8684221
1991-96 Chevrolet, GMC Light-Duty Trucks, Vans
1994-99 Hummer
Note: Reuse OE gasket with 20 bolt holes Pickup tube attached
Capacity: 5-7.2 Qts.*

(RWD, 4 Spd. with Electronic Transmission)



18027
OE: 24208847
2002-06 Cadillac Escalade
1997-on Chevrolet, GMC Light-Duty Trucks, Vans
2000-04 Hummer
Note: Reuse OE gasket with 17 bolt holes Pickup tube attached
Capacity: 5-7.2 Qts.*

4T80E
(FWD, 4 Spd. with Electronic Transmission)

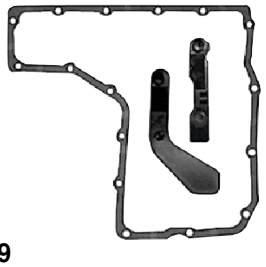

18009
OE: 8684953
2006-09 Buick Lucerne
1993-on Cadillac
1995-99, 2001-03 Oldsmobile Aurora
2004-05 Pontiac Bonneville
Bolt Holes: 16 **Capacity:** 12.6 Qts.*

GMC

4L60E
(4 Spd., Shallow Pan)



20020
OE: 24225323
2004-on Chevrolet Colorado, GMC Canyon
2009 GMC Envoy, Envoy Denali
2006-on Hummer H3
2006-07 Hummer H3 SUT
2007-09 Hummer H3x
2008-on Hummer H3 Alpha
Bolt Holes: 16 **Capacity:** 5 Qts.*

MP6, MP7 (TAAT)
(FWD, 4 Spd. with Overdrive)



BT8413
OE: 21003298
1991-2002 Saturn SC, SL, SW Series
Capacity: 7.25 Qts.*

TH250, TH250C, TH350, TH350C, TH375B
(RWD, 3 Spd., Chevrolet Built)



6021
OE: 8640848
1970-74, 1982-84 Buick
1982 Cadillac
1967-84, 1986 Chevrolet, GMC Light-Duty Trucks
1965-67 Jeep
1968-74, 1981-84 Oldsmobile
1969-83 Pontiac
Bolt Holes: 13 **Capacity:** 3-4 Qts.*

GMC

300 SUPER TURBINE

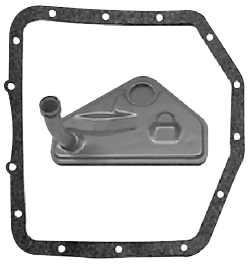

6014
OE: 6438817
1964-69 Buick
1965-68 Oldsmobile, Pontiac
Note: Protrusion on passenger side
Bolt Holes: 14 **Capacity:** 3.5 Qts.*

TH325-4L
(FWD, 4 Spd. with Overdrive)

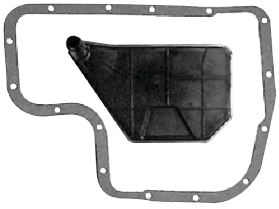

18091
OE: 8635710
1982-85 Buick Riviera, Cadillac Eldorado, Seville, Oldsmobile Toronado
Note: Metric
Bolt Holes: 15 **Capacity:** 5 Qts.*

TH350, TH350C, TH375B
(RWD, 3 Spd., Buick Built)



18031
OE: 8641910
1975-83 Buick, Oldsmobile, Pontiac
1980 Cadillac
1976-83 Chevrolet
1976-80, 1983 GMC
Bolt Holes: 13 **Capacity:** 3-4 Qts.*

* Capacity May Vary, Check for Proper Fill Level.

TRANSMISSION FILTERS for Cars, Light-Duty Trucks, Etc.

GMC

TH375, TH400
(RWD, 3 Spd.)



6013
OE: 5579822
1963-67 Buick, Chevrolet
1961-67 Cadillac
1966-67 GMC
1965-67 Oldsmobile, Pontiac
Note: Pan has 3 dimples
Bolt Holes: 13 **Capacity:** 5 Qts.*

(RWD, 3 Spd.)



6020
OE: 6438348
1967-80 Buick, Pontiac
1967-84, 1988-90 Cadillac
1970-79 Checker Marathon
1967-89 Chevrolet, GMC
1992-93 Hummer
1968-79 Jeep
1965-80 Oldsmobile
Note: Pan has 3 dimples on 1964-67 models; 2 dimples on 1967-on models
Bolt Holes: 13 **Capacity:** 5 Qts.*

1000, 2000 SERIES
(5 Spd.)



BT8460
OE: 29531007
2002-06 Chevrolet Avalanche
2001-on Chevrolet Silverado Light-Duty Trucks, GMC Sierra Series Light-Duty Trucks
2001-06 Chevrolet Suburban, GMC Yukon
2001-04 Chevrolet Tahoe
2006 Hummer H1 Alpha

GMC

1000, 2000 SERIES (Cont'd.)
(5 Spd., Deep Pan)



20003
OE: 29537966
Note: Reuse OE gasket

(5 Spd., Shallow Pan)



20004
OE: 29537965
2002-06 Chevrolet Avalanche
2001-on Chevrolet Silverado, GMC Sierra Series Light-Duty Trucks,
2001-06 Chevrolet Suburban
2006 Hummer H1 Alpha
Note: Reuse OE gasket

(Shallow Pan)



20016
OE: 29537965
2002-06 Chevrolet Avalanche
2001-on Chevrolet Silverado, GMC Sierra Light-Duty Trucks
2001-06 Chevrolet Suburban
2006 Hummer H1 Alpha
Bolt Holes: 12

(Deep Pan)



20017
OE: 29537966
2002-06 Chevrolet Avalanche
2001-on Chevrolet Silverado, GMC Sierra Light-Duty Trucks
2001-06 Chevrolet Suburban
2006 Hummer H1 Alpha
Bolt Holes: 12

IMPORTS

GM IMPORTS

A130L, A131L, A132L
(FWD, 3 Spd.)



18163
OE: 35330-20010
1985-88 Chevrolet Nova
1999-2002 Chevrolet Prizm
1989-97 Geo Prizm
Bolt Holes: 15

HYUNDAI

A4AF-3
(FWD. 4 Spd. with Overdrive)



20010
OE: 46321-22731
2000 Hyundai Elantra
2001-on Hyundai Accent
Bolt Holes: 13 **Capacity:** 2.1 Qts.*

KM172-5, KM177
(FWD, 4 Spd.)



18021
OE: 46321-36011
1986-95 Hyundai
Note: Contains (2) gaskets
Bolt Holes: 12 & 13 **Capacity:** 6.1-6.4 Qts.*

ISUZU

JATCO F3A, F10
(FWD, 3 Spd.)



18262
OE: 8-94428-489-0
1985, 1991-93 Isuzu
Bolt Holes: 18 **Capacity:** 6 Qts.*

* Capacity May Vary, Check for Proper Fill Level.

TRANSMISSION FILTERS for Cars, Light-Duty Trucks, Etc.

IMPORTS

JAGUAR

4L80E
(RWD, 4 Spd. with Electronic Transmission)



18007
OE: 8684221
1993-97 Jaguar
Note: Reuse OE gasket with 20 bolt holes
Pickup tube attached
Capacity: 12.6 Qts.*

TH375, TH400
(RWD, 3 Spd.)



6020
OE: AAU6690
1975-92 Jaguar
Bolt Holes: 13 **Capacity:** 5 Qts.*

5R55N
(RWD, 5 Spd. with Overdrive)



20007
OE: XW4Z-7A098-BB
2003-08 Jaguar

KIA

F4AEL
(FWD, 4 Spd.)



18268
OE: MFU61-21-500B
1994-2001 Kia Sephia
Bolt Holes: 19 **Capacity:** 6.4 Qts.*

A43DE, A46DE, A46DF
(RWD, 4 Spd.)

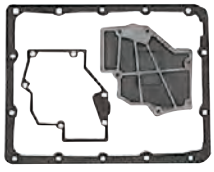

18012
OE: OK015-19-815
1995-2002, 2005 Kia Sportage
Note: Contains (2) gaskets
Bolt Holes: 14 **Capacity:** 2.5 Qts.*

IMPORTS

MAZDA

A4LD
(2WD, RWD, 4 Spd.)



18024
OE: ZZL2-21-500
1994-2009 Mazda Light-Duty Trucks
1991-94 Mazda Navajo
Bolt Holes: 18

(4WD, RWD, 4 Spd., Deep Pan)



18025
OE: ZZL1-21-500
1994-2009 Mazda Light-Duty Trucks
1991-94 Mazda Navajo
Bolt Holes: 18

F4AEL
(FWD, 4 Spd.)



18268
OE: FU61-21-500B
1990-98 Mazda 323, MX3, Protegé
Bolt Holes: 19 **Capacity:** 6.4 Qts.*

JATCO G4AEL
(FWD, 4 Spd.)

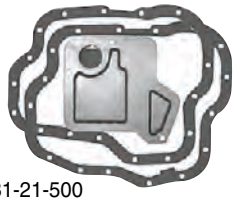

18270
OE: FU31-21-500
1991-92 Mazda 626, MX6
Note: Filter is 1" thick
Contains (2) gaskets
Bolt Holes: 17 **Capacity:** 6.6-7.2 Qts.*

(FWD, 4 Spd.)



18005
OE: FU9A-21-500
1993-2002 Mazda
Bolt Holes: 17 **Capacity:** 6.6-7.2 Qts.*

IMPORTS

MAZDA

RE4R01A
(4WD, RWD, 4 Spd., Deep Pan)

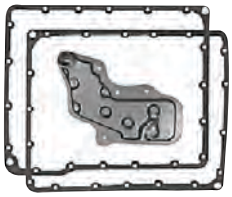

18273
OE: BV11-19-815
1989-98 Mazda
Note: Contains (2) gaskets
Bolt Holes: 20 **Capacity:** 8.4-9 Qts.*

C-6
(4WD, RWD, Deep Pan)

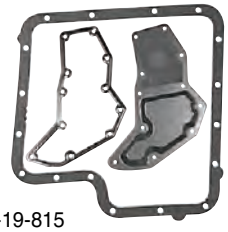

18015
OE: 338-19-815
1971-76 Mazda Automotive
1982-84 Mazda Light-Duty Trucks
Note: Recess rear corner passenger side
Contains (2) gaskets
Bolt Holes: 17 **Capacity:** 5 Qts.*

J39A
(FWD, 4 Spd. with Overdrive)



18267
OE: FN0-121-500
1999-on Mazda
Bolt Holes: 20 **Capacity:** 7 Qts.*

MITSUBISHI

TORQUE-FLITE 40TE, 41AE, 41TE (A604)
(FWD, 4 Spd. with Overdrive)



18004
OE: MO4504048
1997-98 Mitsubishi Eclipse
Bolt Holes: 14 **Capacity:** 4 Qts.*

* Capacity May Vary, Check for Proper Fill Level.

TRANSMISSION FILTERS for Cars, Light-Duty Trucks, Etc.

IMPORTS

MITSUBISHI

42RLE
(RWD, 4 Spd.)

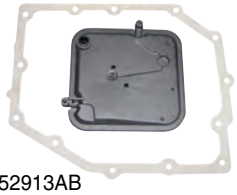

20011
OE: 52852913AB
2006-on Mitsubishi Raider
Bolt Holes: 13

RA51, VA51, V5A51
(FWD, 5 Spd.)



20012
OE: MR357710
1998-2001 Mitsubishi Montero
Bolt Holes: 20 **Capacity:** 9.9 Qts.*

R4A51, V4A51, R5A51, V5A51
(RWD, 4 Spd.)



20013
OE: MR528836
2000-06 Mitsubishi Montero, Montero Sport
Bolt Holes: 20 **Capacity:** 10.0 Qts.*

KM172-5, KM177
(FWD, 4 Spd.)



18021
OE: MD729955
1991 Mitsubishi Galant, Sigma
Note: Contains (2) gaskets
Bolt Holes: 12 & 13 **Capacity:** 6.1-6.4 Qts.*

A340H
(4WD, RWD)

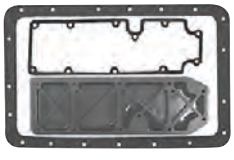

18281
OE: MR166573
1995-2002 Mitsubishi
Note: Contains (2) gaskets
Bolt Holes: 19 **Capacity:** 4.8 Qts.*

IMPORTS

NISSAN

RE4R01A
(2WD, RWD, 4 Spd., Shallow Pan)



19993
OE: 31728-41X02
1990-2000 Infiniti
1990-2004 Nissan
Bolt Holes: 20 **Capacity:** 8.4-9 Qts.*

RE4R01A
(4WD, RWD, 4 Spd., Deep Pan)

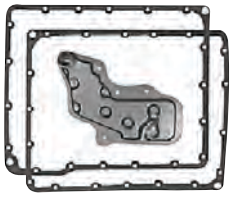

18273
OE: 31728-41X01
1997-2003 Infiniti QX4
1989-on Nissan
Note: Contains (2) gaskets
Bolt Holes: 20 **Capacity:** 8.4-9 Qts.*

RE4F04A
(FWD, 4 Spd.)

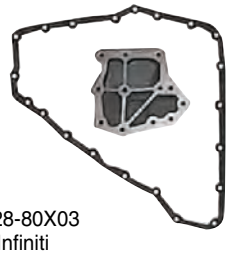

18011
OE: 31728-80X03
1996-99 Infiniti
1992-2002 Nissan
Bolt Holes: 21 **Capacity:** 10.1 Qts.*

RL4R01A
(4 Spd.)



20001
OE: 31728-48X01
1998-2009 Nissan Light-Duty Trucks
Bolt Holes: 20

IMPORTS

NISSAN

C-6
(4WD, RWD, Deep Pan)

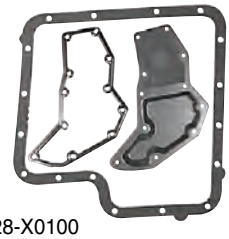

18015
OE: 31728-X0100
1971, 1973-81 Nissan
Note: Recess rear corner passenger side
Contains (2) gaskets
Bolt Holes: 17 **Capacity:** 5 Qts.*

SUZUKI

A43DE, A46DE, A46DF
(RWD, 4 Spd.)

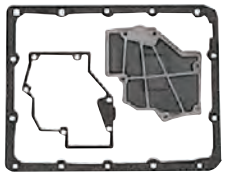

18012
OE: 26582-57B00
1989-2005 Suzuki
Note: Contains (2) gaskets
Bolt Holes: 14 **Capacity:** 2.5 Qts.*

TOYOTA

A43DE, A46DE, A46DF
(RWD, 4 Spd.)

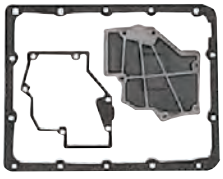

18012
OE: 35303-30060
1982-86, 1991-97 Toyota
Note: Contains (2) gaskets
Bolt Holes: 14 **Capacity:** 2.5 Qts.*

A130L, A131L, A132L
(FWD, 3 Spd.)

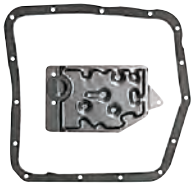

18163
OE: 35330-20010
1983-2002 Toyota
Bolt Holes: 15 **Capacity:** 2.4 Qts.*

* Capacity May Vary, Check for Proper Fill Level.

TRANSMISSION FILTERS for Cars, Light-Duty Trucks, Etc.

IMPORTS

TOYOTA

A140E, A140L
(FWD, 4 Spd.)



18013
OE: 35330-32022
1985-2001 Toyota
Note: Filter features clip for solenoid wire
Bolt Holes: 15 **Capacity:** 2.4 Qts.*

U151E
(FWD, 5 Spd.)

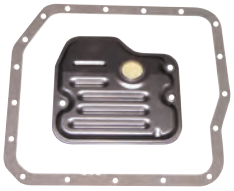

20008
OE: 35330-08010
2004-on Lexus
2003-on Toyota
Bolt Holes: 18

U241E
(4 Spd.)



20015
OE: 35330-06010, 35330-0W010
1999-2001 Lexus ES300
1999-2003 Lexus RX300
2005-on Scion tC
2008-on Scion xB
2002-07 Toyota Camry, Solara
2000-05 Toyota Celica GTS
2001-07 Toyota Highlander, RAV4
Bolt Holes: 18 **Capacity:** 9-9.5 Qts.*

A340E
(2WD)



20009
OE: 35330-30020
2001-02 Toyota 4Runner
2003, 2010 Toyota Tundra
Bolt Holes: 19 **Capacity:** 2.1 Qts.*

IMPORTS

TOYOTA

A340F
(4WD, 4 Spd.)

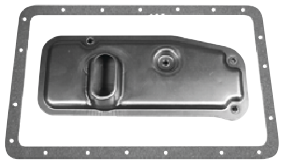

19997
OE: 35330-35020
1994-95 Lexus GS300
1996-97 Toyota 4Runner
Bolt Holes: 19 **Capacity:** 4.8 Qts.*

A340F, A343F
(4WD, 4 Spd.)

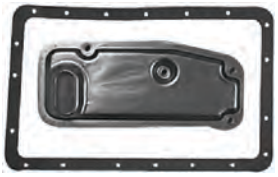

19995
OE: 35330-22010
1995-97 Toyota Light-Duty Trucks
Bolt Holes: 19 **Capacity:** 4.8 Qts.*

A340H
(4WD, RWD)

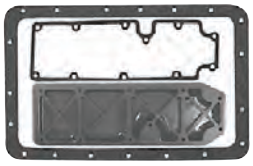

18281
OE: 35330-35010
1985-97 Toyota
Note: Contains (2) gaskets
Bolt Holes: 19 **Capacity:** 4.8 Qts.*

U340E
(FWD, 4 Spd.)



18289
OE: 35330-20020
2004-on Scion
2000-on Toyota
Bolt Holes: 19 **Capacity:** 3 Qts.*

IMPORTS

TOYOTA

A341E
(RWD, 4 Spd.)

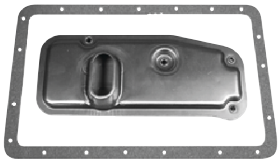

19997
OE: 35330-35020
1994-95 Lexus GS300
1996-97 Toyota 4Runner
Bolt Holes: 19 **Capacity:** 2 Qts.*

A343F
(4WD, 4 Spd.)

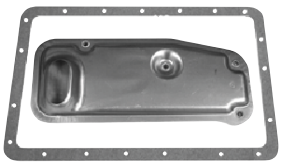

19994
OE: 35330-60020
1995-2000 Toyota Light-Duty Trucks
Bolt Holes: 19

(4WD, 4 Spd.)

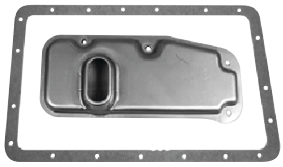

19996
OE: 35330-60030
1998-2002 Lexus LX470
1998-on Toyota Light-Duty Trucks, Vans
Bolt Holes: 19

* Capacity May Vary, Check for Proper Fill Level.

CABIN AIR INSTALLATION INSTRUCTIONS



WHAT IS A CABIN AIR FILTER?

A cabin air filter reduces the amount of airborne pollutants and particles entering the interior of a vehicle by capturing dust, pollen and other airborne contaminants.

WHAT ARE THE BENEFITS OF A BALDWIN CABIN AIR FILTER?

Baldwin cabin air filters are built to OE specifications to give you and your vehicle the best protection available.

A Baldwin cabin air filter will:

- Protect passengers from airborne pollen, bacteria, dust and smog.
- Reduce dust and dirt accumulation in the vehicle's interior.
- Increase air conditioning and heat output and performance.

CABIN AIR FILTER FACTS:

- Cabin air filters are incorporated into the heating, ventilation and air conditioning systems on more than 85% of all new vehicles.
- Most consumers and installers are unaware that cabin air filters exist on their vehicles.
- Unchanged cabin air filters can impair the health of drivers and passengers, leading to headaches, nausea and allergies.
- An estimated 85% of cabin air filters in cars today have not had their recommended replacement.
- If a cabin air filter goes unchanged, the restricted air flow may cause decreased performance in heating and air conditioning.

HOW DO I INSTALL A BALDWIN CABIN AIR FILTER?

Most cabin air filters are in a location that makes it moderately easy to access and replace. Cabin air filters are typically located under the hood, or behind or under the glove compartment. The cabin air filter should be changed every year or 12,000-15,000 miles.

Baldwin cabin air filters come with easy-to-follow installation instructions. These instructions tell you where to locate your cabin air filter and how to replace it step-by-step.



Note: The information provided on the cabin air installation instructions is based on the latest authoritative information available at press time. However, due to manufacturers' changes, and year and model variations, Baldwin Filters cannot be responsible for misapplications and instruction errors.

CABIN AIR FILTER INSTALLATION INSTRUCTIONS

PA4174 CHRYSLER NOTES

Chrysler 300, 300C, 300C SRT8; Dodge Charger, Charger SRT8, Magnum, Magnum SRT8

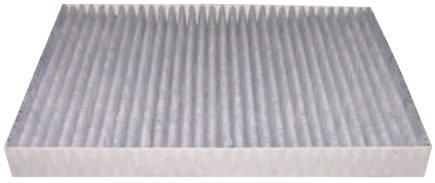

OE: 4596501AB

Fits: 2005-on Chrysler 300, 300C, 300C SRT8
2006-on Dodge Charger, Charger SRT8
2005-08 Dodge Magnum
2006-08 Dodge Magnum SRT8

Size: 12 1/8 x 8 11/32 x 1 3/16
(308.0 x 211.9 x 30.2)

Note: Contains Charcoal Impregnated Media for Odor Control

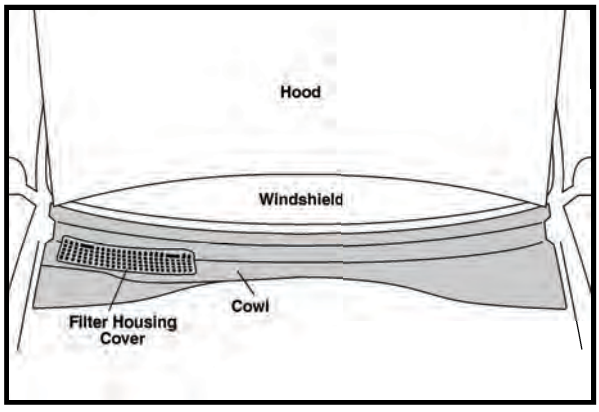

1. Open hood.
2. Unsnap and pivot filter housing cover on passenger side of cowl.

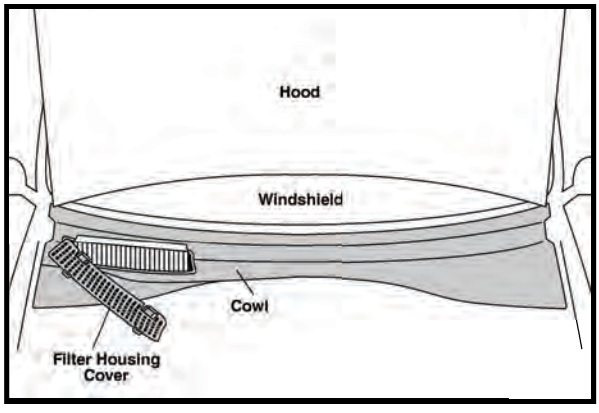

3. Replace filter and reassemble.

CABIN AIR FILTER INSTALLATION INSTRUCTIONS

PA4373 CHRYSLER

Chrysler Cirrus, Sebring; Dodge Avenger, Caliber, Caliber SRT4, Journey; Jeep Compass, Patriot



OE: 5058381AA, 5058693AA

Fits: 2007-09 Chrysler Cirrus
2007-on Chrysler Sebring, Dodge Caliber, Jeep Compass Patriot
2008-on Dodge Avenger
2008-09 Dodge Caliber SRT4
2009-on Dodge Journey

Size: 8 1/2 x 7 21/32 x 31/32 (215.9 x 194.5 x 24.6)

Note: Contains Charcoal Impregnated Media for Odor Control

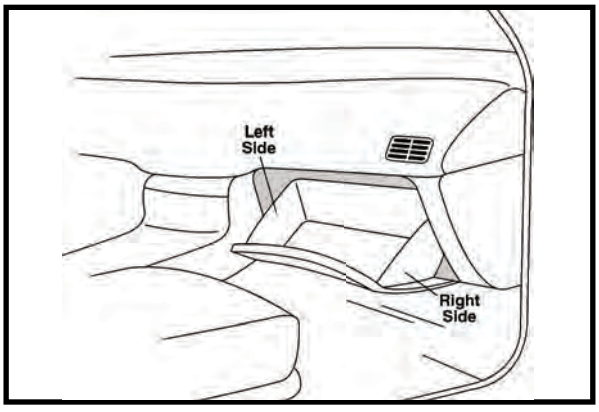

1. Open passenger side door.
2. Open glove compartment.
3. Push in on left and right sides of glove compartment to release glove compartment.

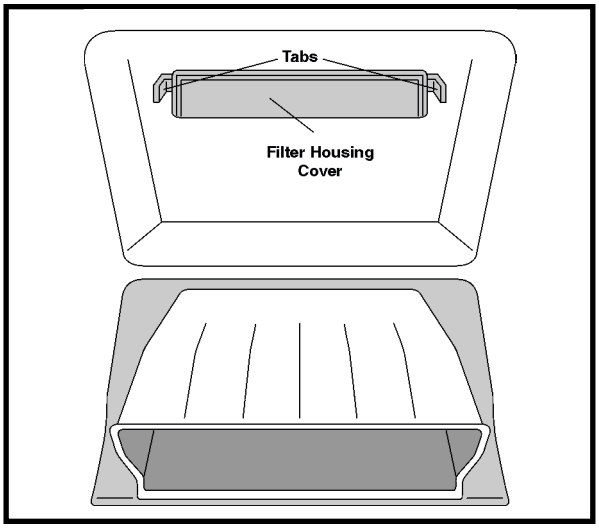

4. Remove glove compartment.
5. Squeeze tabs on filter housing cover and remove.

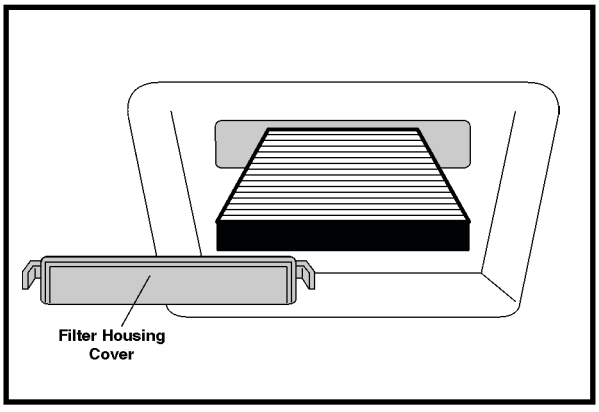

6. Replace filter and reassemble.

CABIN AIR FILTER INSTALLATION INSTRUCTIONS

PA4159 CHRYSLER NOTES

Chrysler Pacifica, Town & Country, Voyager; Dodge Caravan, Grand Caravan



OE: 82205905

Fits: 2004-08 Chrysler Pacifica
2000-09 Chrysler Town & Country
2001-03 Chrysler Voyager
2001-07 Dodge Caravan
2001-09 Dodge Grand Caravan

Size: 12 7/32 x 9 7/32 x 29/32
(310.4 x 234.2 x 23.0)

Note: Contains Charcoal Impregnated Media for Odor Control

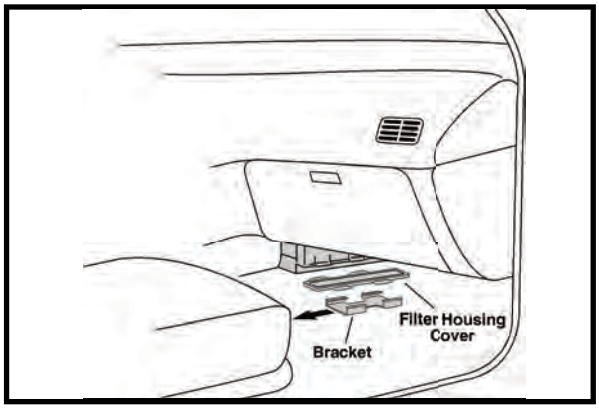

1. Open passenger side door.
2. Locate sliding bracket on filter housing cover located under glove compartment.
3. Slide bracket toward seat to remove both housing cover and bracket.

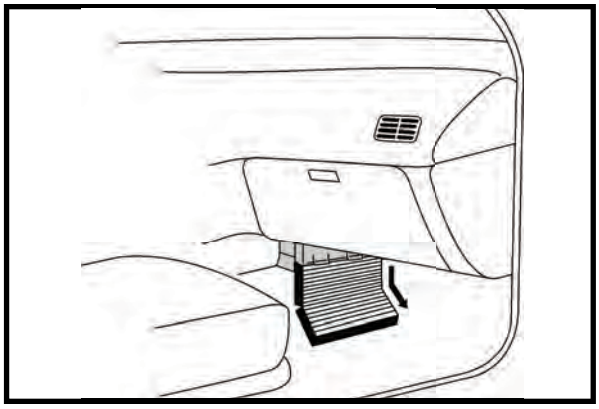

4. Pull filter down and bend at folding point to remove.
5. Replace filter and reassemble.

CABIN AIR FILTER INSTALLATION INSTRUCTIONS

PA4409 CHRYSLER

Dodge Sprinter



OE: 5103600AA
Fits: 2002-06 Dodge Sprinter
Size: 14 13/16 x 6 5/8 x 1 3/32 (376.2 x 168.3 x 27.8)
A. Gskt.: [1] Attached
Note: Contains Charcoal Impregnated Media for Odor Control

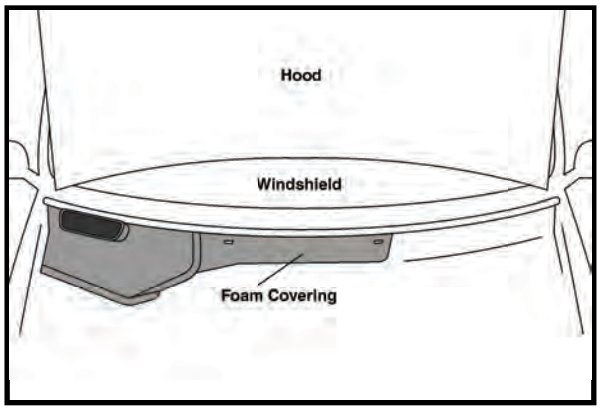

1. Open hood.
2. Remove foam covering from filter housing cover.

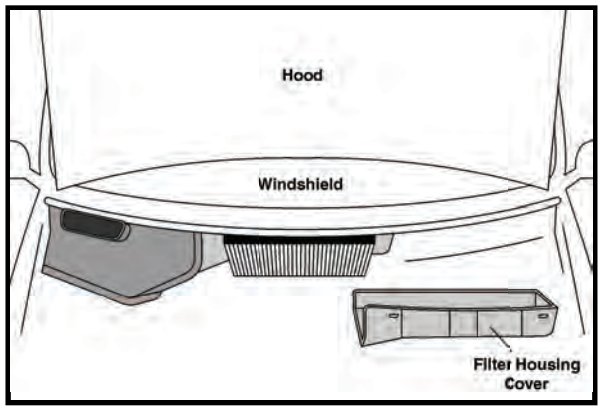

5. Pull down filter to remove.
6. Replace filter and reassemble.

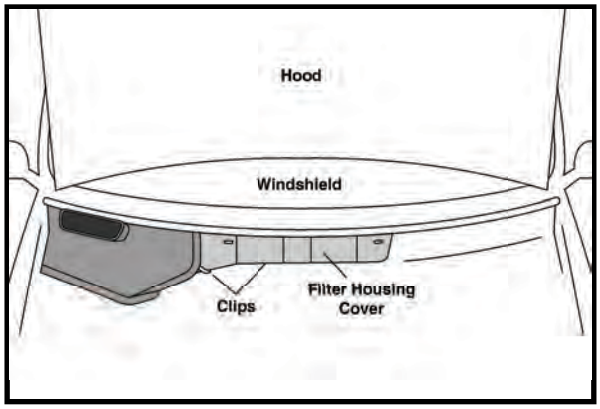

3. Release clips in front and back of filter housing cover.
4. Slide filter housing cover to the right to remove.

CABIN AIR FILTER INSTALLATION INSTRUCTIONS

PA4336 CHRYSLER

Dodge Sprinter; Mercedes-Benz Sprinter II



OE: 68012876AA

Fits: 2007-on Dodge Sprinter
April 2006-on Mercedes-Benz Sprinter II

Size: 14 9/16 x 11 5/32 x 1 3/8
(369.9 x 283.4 x 34.9)

Note: Contains Charcoal Impregnated Media for Odor Control

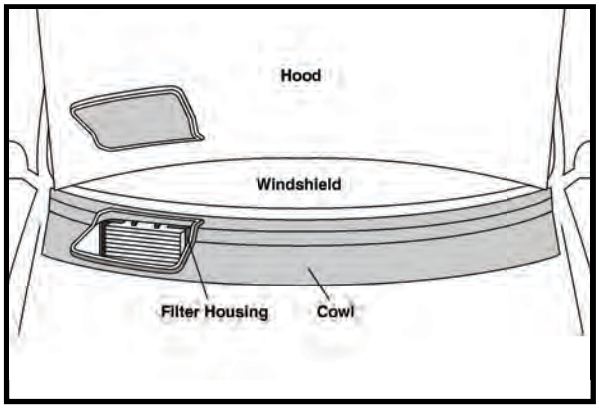

1. Open hood.
2. Replace filter and reassemble.

PA4168 CHRYSLER

Jeep Grand Cherokee, Grand Cherokee SRT-8



OE: 5013595AB, 82208300

Fits: 1999-on Jeep Grand Cherokee
2006-on Jeep Grand Cherokee SRT-8

Size: 18 5/16 x 3 1/16 x 1 5/8
(465.1 x 77.8 x 41.3)

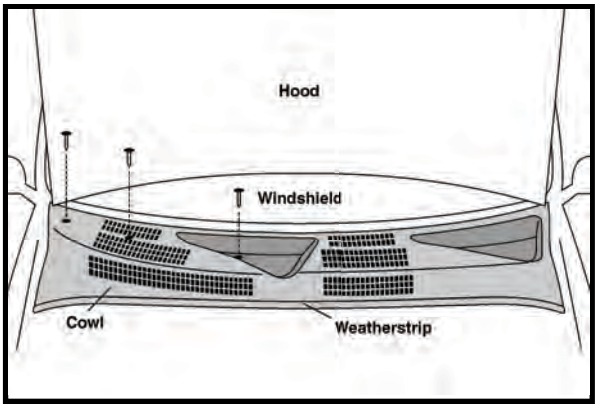

1. Open hood.
2. Pull back weatherstrip from passenger side of cowl.
3. Remove fasteners on passenger side of cowl.

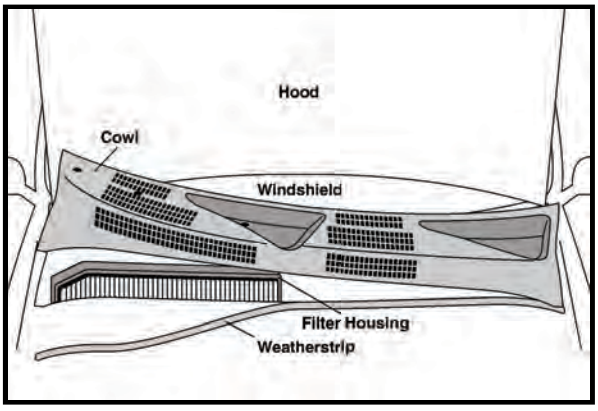

4. Lift up passenger side of cowl.
5. Remove filter from filter housing. (If installing for the first time, remove and discard factory inlet cover. Purchase and insert new filter housing.)
6. Replace filter and reassemble.

CABIN AIR FILTER INSTALLATION INSTRUCTIONS

PA4153 FORD

Ford Contour; Mercury Cougar, Mystique

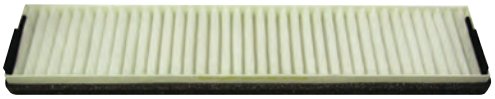

OE: F5RZ-19N619-BA

Fits: 1995-2000 Ford Contour, Mercury Mystique
1999-2002 Mercury Cougar

Size: 20 11/32 x 4 1/8 x 1 1/8
(516.7 x 104.8 x 28.6)

A. Gskt.: [1] Attached

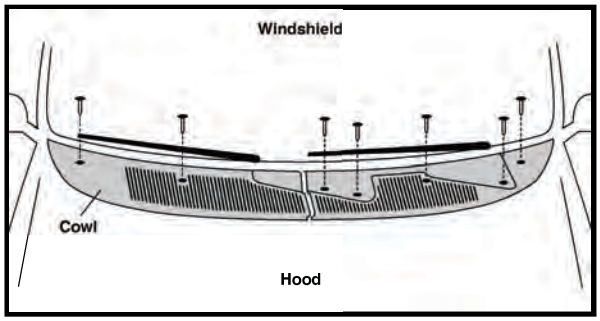

1. Remove plastic caps and screws on passenger and driver sides of cowl.
2. Remove windshield wipers if screwed directly into grill. (To remove, place wipers in upright position, open cover at base of wiper, remove nut and lift wiper off bolt.)

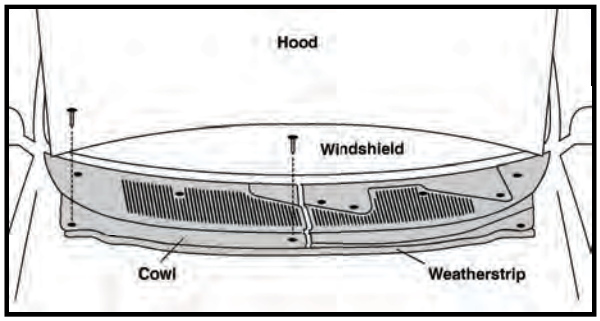

3. Open hood.
4. Pull back weatherstrip from passenger side of cowl.
5. Remove screws on passenger side of cowl and slide out from under driver side of cowl.

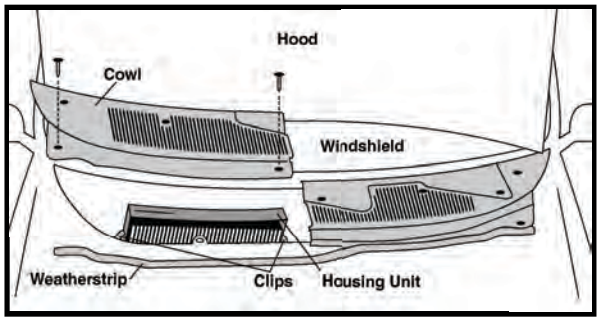

6. Undo clips and slide out filter housing.
7. Replace filter and reassemble.

PA4365 FORD

Ford Edge; Lincoln MKS, MKT, MKX

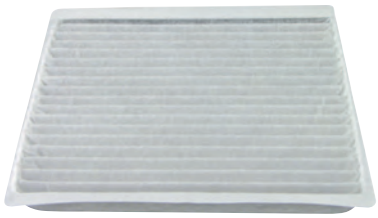

OE: 7T4Z-19N619-B

Fits: 2007-on Ford Edge, Lincoln MKX
2010 Lincoln MKS, MKT

Size: 7 7/8 x 7 7/16 x 23/32
(200.0 x 188.9 x 18.3)

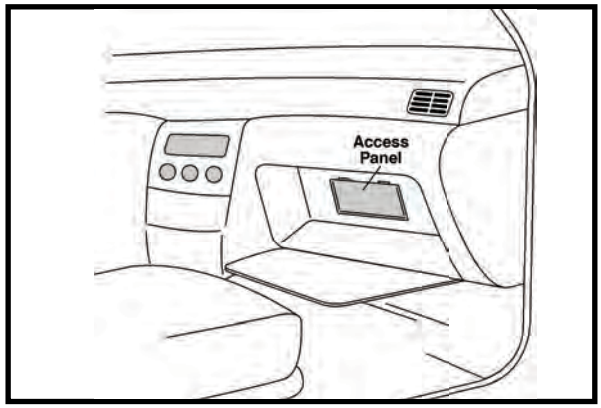

1. Open passenger side door.
2. Open glove compartment.
3. Remove access panel.

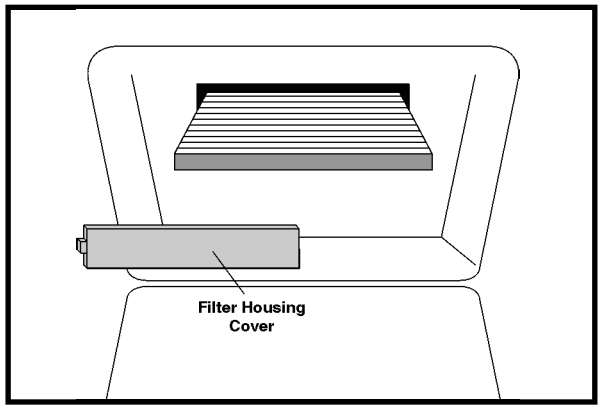

4. Remove filter housing cover.
5. Replace filter and reassemble.

CABIN AIR FILTER INSTALLATION INSTRUCTIONS

PA4370 FORD

Ford Escape, Escape Hybrid;
Mazda Tribute;
Mercury Mariner, Mariner Hybrid

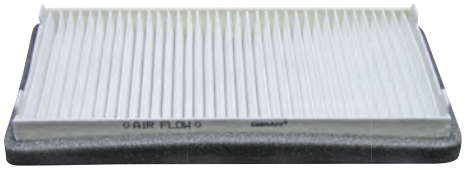

OE: YL8Z-19N619-AB

Fits: 2001-07 Ford Escape
2005-08 Ford Escape Hybrid
2001-06 Mazda Tribute
2005-07 Mercury Mariner
2006-07 Mercury Mariner Hybrid

Size: 10 11/32 x 6 23/32 x 1 13/32
(262.7 x 170.7 x 35.7)

A. Gskt.: [1] Attached

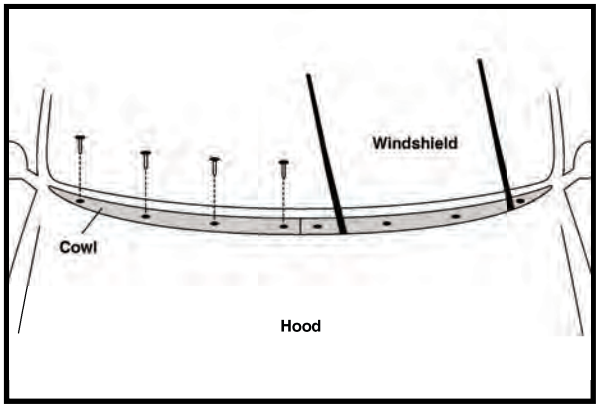

1. Place windshield wipers in upright position.
2. Remove plastic caps and screws on passenger side of cowl.

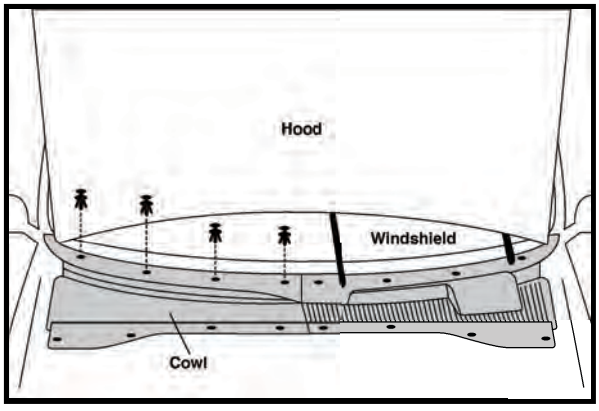

3. Open hood.
4. Remove retainers on passenger side of cowl.

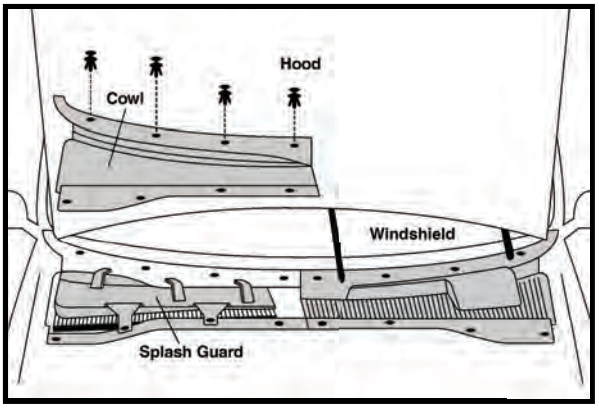

5. Remove passenger side of cowl.
6. Unsnap splash guard and remove.
7. Replace filter and reassemble.

CABIN AIR FILTER INSTALLATION INSTRUCTIONS

PA4394 FORD

Ford Escape, Escape Hybrid; Mazda Tribute, Tribute Hybrid; Mercury Mariner, Mariner Hybrid



OE: 8L8Z-19N619-B

Fits: 2008-on Ford Escape, Mazda Tribute, Tribute Hybrid, Mercury Mariner, Mariner Hybrid
2009-on Ford Escape Hybrid

Size: 12 3/16 x (4 to 7 1/16) x 25/32
(309.6 x (101.6 to 179.4) x 19.8)

A. Gskt.: [1] Attached

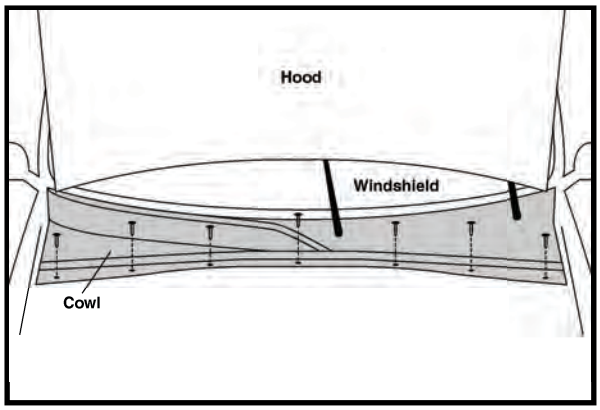

1. Place windshield wipers in upright position.
2. Open hood.
3. Remove plastic fasteners on front edge of cowl.

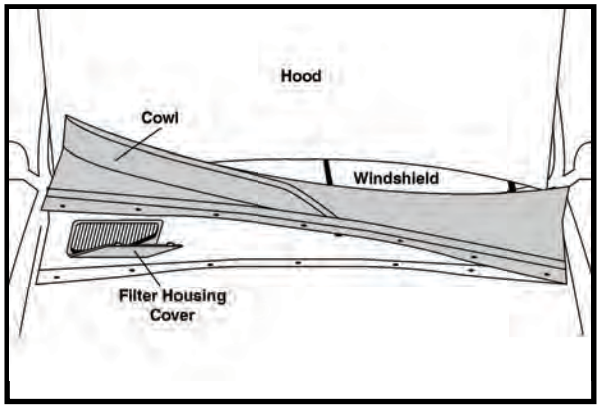

4. Lift up passenger side of cowl.
5. Open filter housing cover.
6. Replace filter and reassemble.

PA4133 FORD

Ford Expedition, F-Series, Super Duty; Lincoln Blackwood, Navigator



OE: F65Z-19N619-AB

Fits: 1997-2004 Ford Expedition
1997-2007 F-Series
2000-01 Ford Super Duty
2002 Lincoln Blackwood
1998-2006 Lincoln Navigator

Size: 10 9/16 x 9 31/32 x 1 7/32
(268.3 x 253.2 x 31.0)

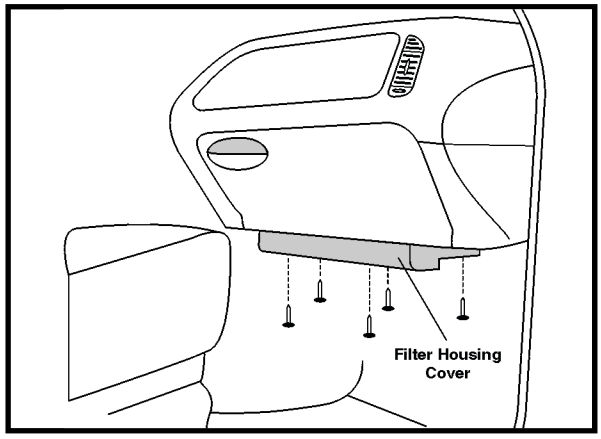

1. Open passenger side door.
2. Remove screws on filter housing cover located under glove compartment.

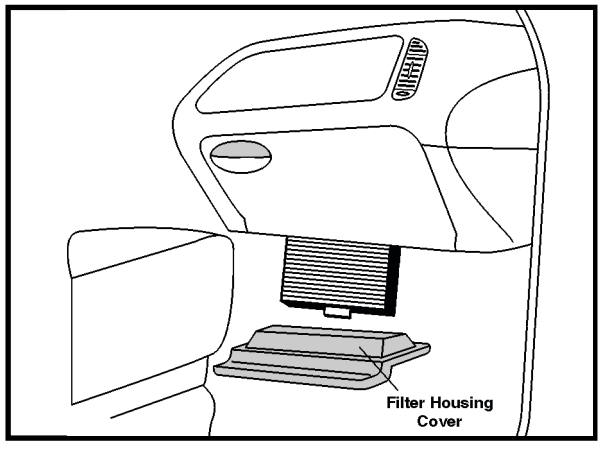

3. Remove filter housing cover.
4. Replace filter and reassemble.

CABIN AIR FILTER INSTALLATION INSTRUCTIONS

PA4152 FORD

Ford Freestar, Windstar; Mercury Monterey

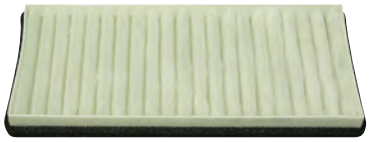

OE: XF2Z-19N619-AB

Fits: 2004-07 Ford Freestar, Mercury Monterey
1999-2003 Ford Windstar

Size: 11 13/32 x 5 3/16 x 31/32
(289.7 x 131.8 x 24.6)

A. Gskt.: [1] Attached

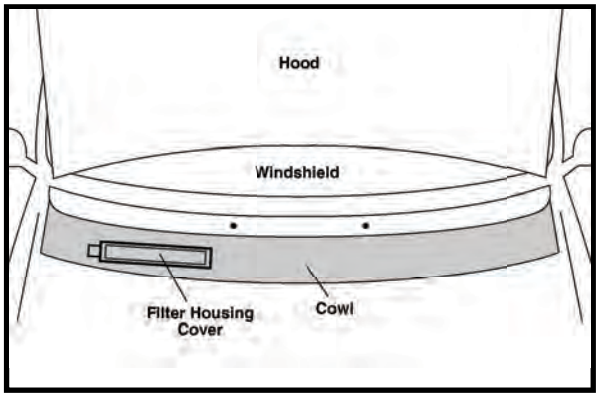

1. Open hood.
2. Unsnap and remove filter housing cover on passenger side of cowl.

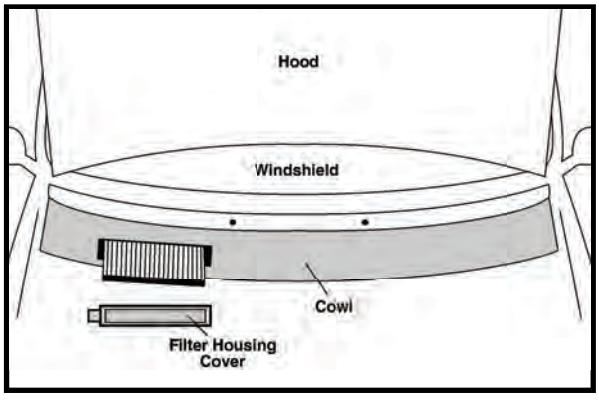

3. Replace filter and reassemble.

PA4112 FORD

Ford Taurus; Mercury Sable

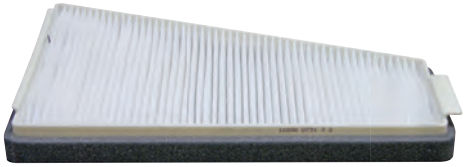

OE: F6DZ-19N619-BA, F7DZ-19N619-AB

Fits: 1996-2007 Ford Taurus
1996-2005 Mercury Sable

Size: 10 15/16 x (3 1/4 to 7) x 1 1/8
(277.8 x (82.6 to 177.8) x 28.6)

A. Gskt.: [1] Attached

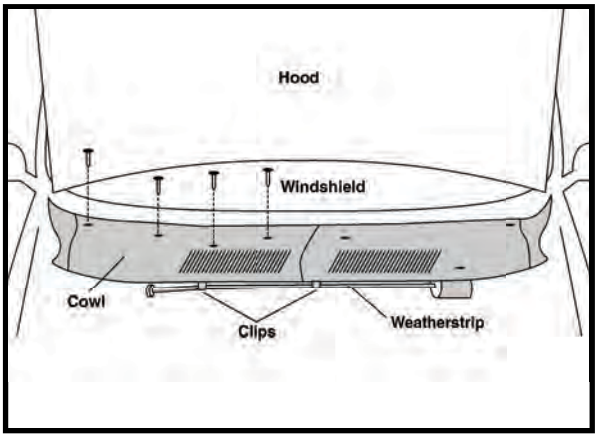

1. Open hood.
2. Remove plastic caps and screws on passenger side of cowl.
3. Undo clips.
4. Pull back weatherstrip from passenger side of cowl.

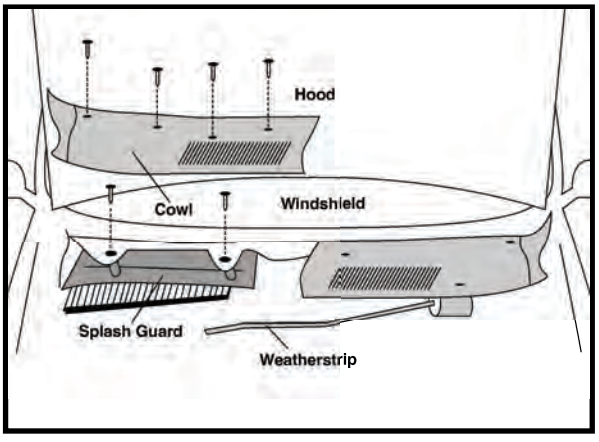

5. Remove passenger side of cowl.
6. Remove screws on splash guard.
7. Remove splash guard.
8. Replace filter and reassemble.

CABIN AIR FILTER INSTALLATION INSTRUCTIONS

PA4154 GM

Buick Allure, Allure Super, Century, LaCrosse, LaCrosse Super, Regal; Chevrolet Impala, Impala SS, Monte Carlo, Monte Carlo SS; Oldsmobile Intrigue; Pontiac Grand Prix



OE: 10261703, 10406026, 10446783

Fits: 2005-09 Buick Allure, LaCrosse
2008-09 Buick Allure Super, LaCrosse Super
1997-2005 Buick Century
1997-2004 Buick Regal
2000-09 Chevrolet Impala
2003, 2006-on Chevrolet Impala SS
2000-07 Chevrolet Monte Carlo
2006-07 Chevrolet Monte Carlo SS
1998-2002 Oldsmobile Intrigue
2000-08 Pontiac Grand Prix

Size: 11 15/32 x 7 11/32 x 1 5/32
(291.3 x 186.5 x 29.4)

A. Gskt.: [1] Attached

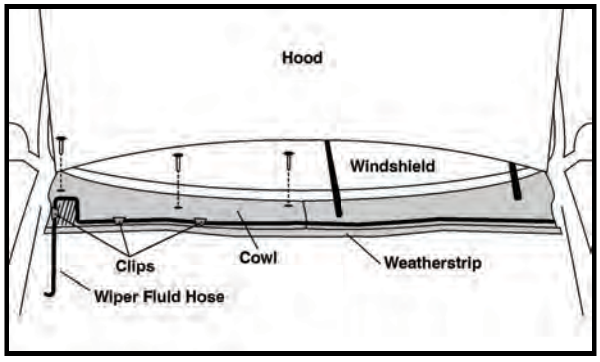

1. Place windshield wipers in upright position.
2. Open hood.
3. Pull back weatherstrip from passenger side of cowl.
4. Unclip wiper fluid hose and remove.
5. Remove plastic caps and screws on passenger side of cowl.

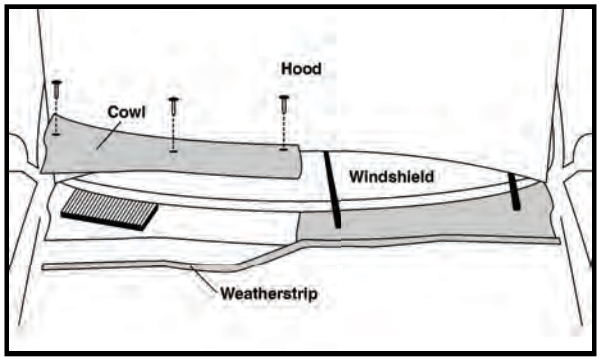

6. Remove passenger side of cowl.
7. Replace filter and reassemble.

PA4330 GM

Buick LeSabre, Lucerne, Lucerne Super; Cadillac DeVille, DTS; Oldsmobile Aurora; Pontiac Bonneville



OE: 25654414

Fits: 2000-05 Buick LeSabre, Cadillac DeVille, Pontiac Bonneville
2006-on Buick Lucerne, Cadillac DTS
2008-on Buick Lucerne Super
2001-03 Oldsmobile Aurora

Size: 11 1/4 x 8 5/8 x 29/32
(285.8 x 219.1 x 23.0)

Note: Related to PA4384 (Charcoal Version)

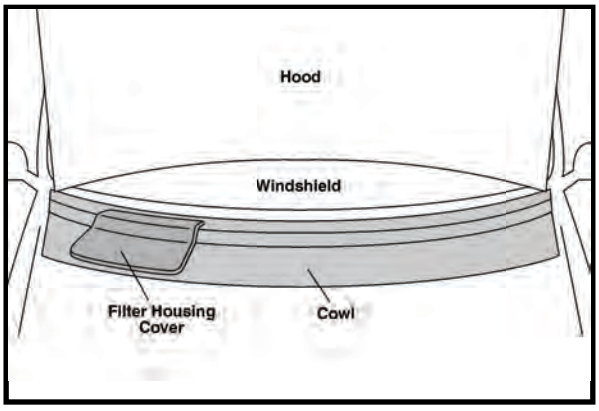

1. Open hood.
2. Unsnap and remove filter housing cover on passenger side of cowl.

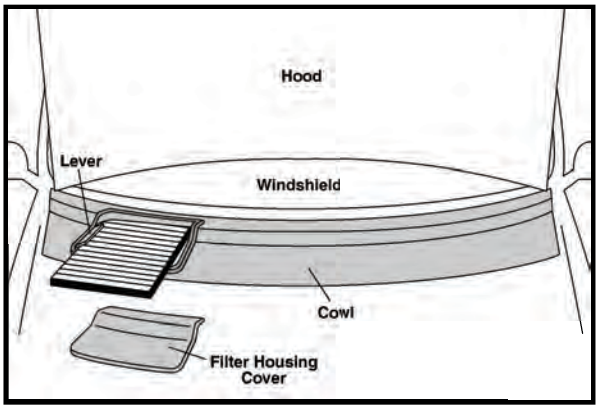

3. Pull lever away from filter.
4. Replace filter and reassemble.

CABIN AIR FILTER INSTALLATION INSTRUCTIONS

PA4384 GM

Buick LeSabre, Lucerne, Lucerne Super; Cadillac DeVille, DTS; Oldsmobile Aurora; Pontiac Bonneville



OE: 25689297

Fits: 2000-05 Buick LeSabre, Cadillac DeVille, Pontiac Bonneville
2006-on Buick Lucerne, Cadillac DTS
2008-on Buick Lucerne Super
2001-03 Oldsmobile Aurora

Size: 11 21/32 x 8 13/16 x 7/8
(296.1 x 223.8 x 22.2)

Note: Contains Charcoal Impregnated Media for Odor Control
Related to PA4330 (Non-Charcoal Version)

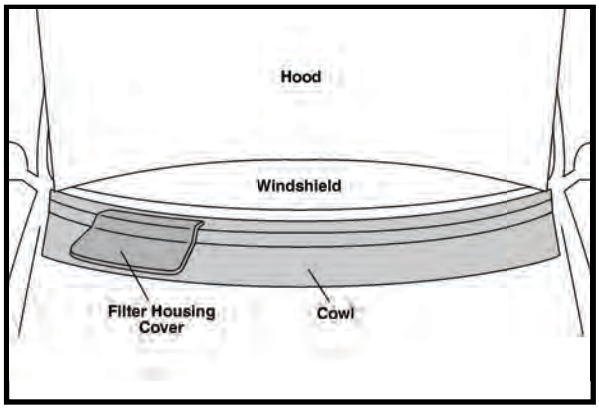

1. Open hood.
2. Unsnap and remove filter housing cover on passenger side of cowl.

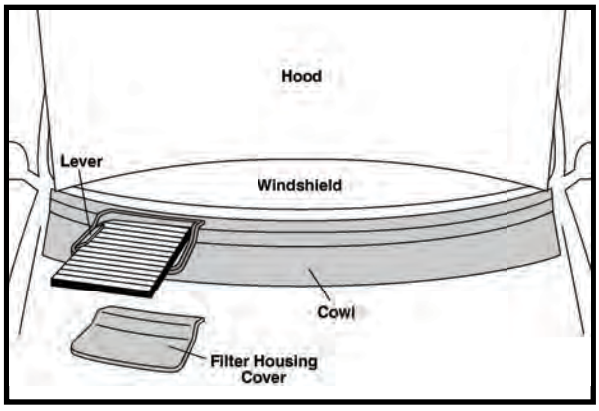

3. Pull lever away from filter.
4. Replace filter and reassemble.

PA4156 KIT GM

Buick Rendezvous, Terraza; Chevrolet Uplander, Venture; Oldsmobile Silhouette APV; Pontiac Aztek, Montana, Montana SV6; Saturn Relay

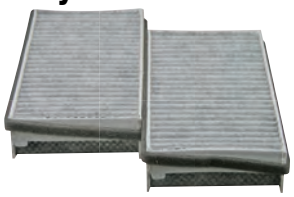

OE: 10302760, 10322538

Fits: 2002-07 Buick Rendezvous
2005-07 Buick Terraza, Saturn Relay
2005-09 Chevrolet Uplander
2001-05 Chevrolet Venture, Pontiac Aztek, Montana
2001-04 Oldsmobile Silhouette APV
2005-09 Pontiac Montana SV6

Size: 8 11/16 x 4 1/4 x 1 17/32
(220.7 x 108.0 x 38.9)

A. Gskt.: [1] Attached

Note: Contains Charcoal Impregnated Media for Odor Control
2 Required per Vehicle (Sold as Set of 2)

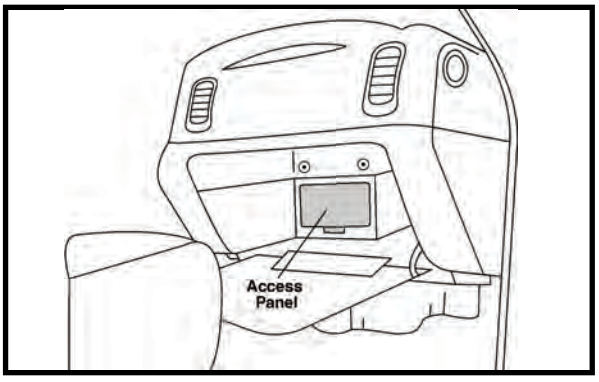

1. Open passenger side door.
2. Open glove compartment.
3. Remove access panel by pulling up and out.

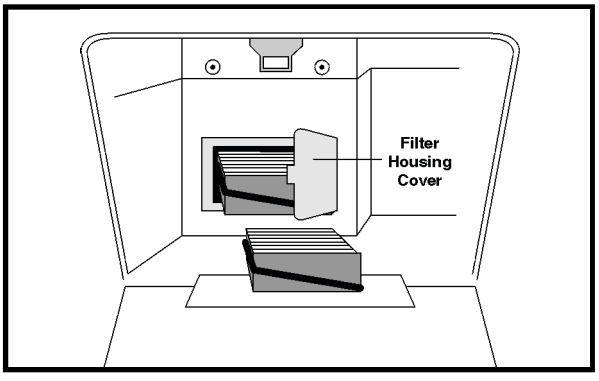

4. Open filter housing cover by squeezing tab on left.
5. Remove first filter.
6. Slide second filter to the right and then out.
7. Replace filters in reverse order and reassemble. (Make sure foam is angled in same direction on both filters.)

CABIN AIR FILTER INSTALLATION INSTRUCTIONS

PA4169 GM

Cadillac Escalade; Chevrolet Avalanche, Silverado, Silverado Hybrid, Suburban, Tahoe; GMC Sierra Series, Sierra Series Hybrid, Yukon, Yukon Denali, Yukon XL; Hummer H2, H2 SUT



OE: 88986533

Fits: 2004 Cadillac Escalade
2003-04 Chevrolet Avalanche, Suburban
2003-05 Chevrolet Silverado, GMC Sierra Series, Yukon, Yukon Denali, Yukon XL
2005 Chevrolet Silverado Hybrid, GMC Sierra Series Hybrid
2003 Chevrolet Tahoe
2003-05, 2008-on Hummer H2
2005, 2008-on Hummer H2 SUT

Size: 10 5/8 x 9 7/16 x 1
(269.9 x 239.7 x 25.4)

A. Gskt.: [1] Attached

Note: Contains Charcoal Impregnated Media for Odor Control

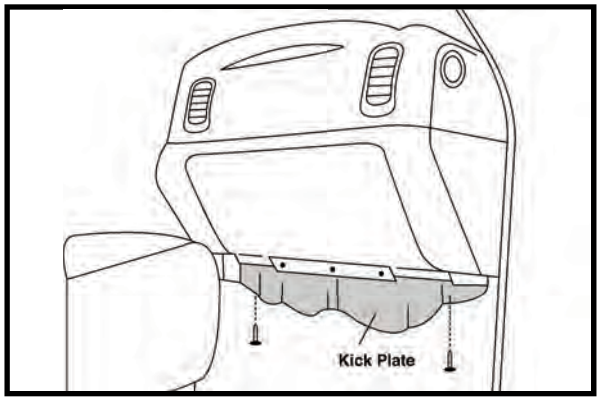

1. Open passenger side door.
2. Remove screws on kick plate located under glove compartment.

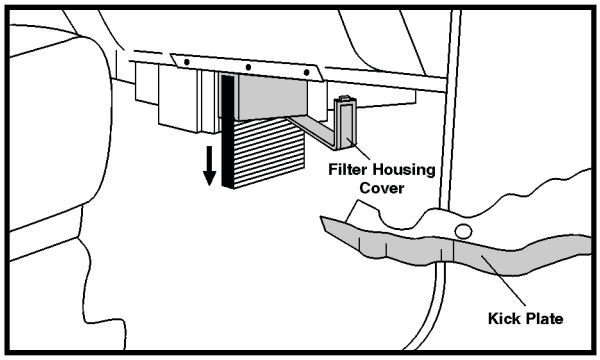

3. Remove kick plate.
4. Unclip and swing filter housing cover to right.
5. Remove filter by pulling straight down.
6. Replace filter and reassemble.

PA4149 KIT GM

Cadillac Escalade; Chevrolet Avalanche, Silverado, Suburban, Tahoe; GMC Sierra Series, Suburban, Yukon, Yukon Denali



OE: 52485513

Fits: 2002-03 Cadillac Escalade
2002 Chevrolet Avalanche, GMC Yukon Denali
1999-2002 Chevrolet Silverado, GMC Sierra Series, Yukon
2000-02 Chevrolet Suburban, Tahoe
1999 GMC Suburban

Size: 9 11/32 x 5 7/16 x 29/32
(237.3 x 138.1 x 23.0)

Note: 2 Required per Vehicle (Sold as Set of 2)

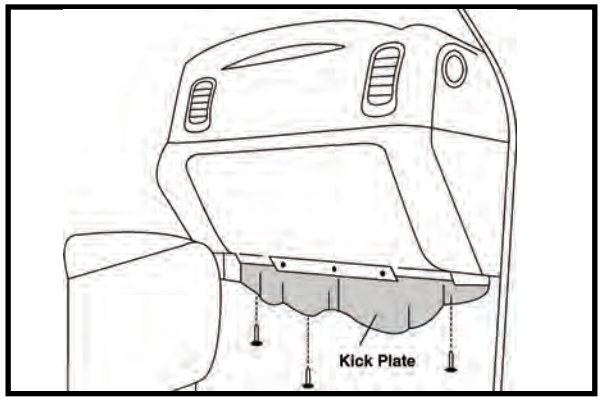

1. Open passenger side door.
2. Remove screws on kick plate located under glove compartment.

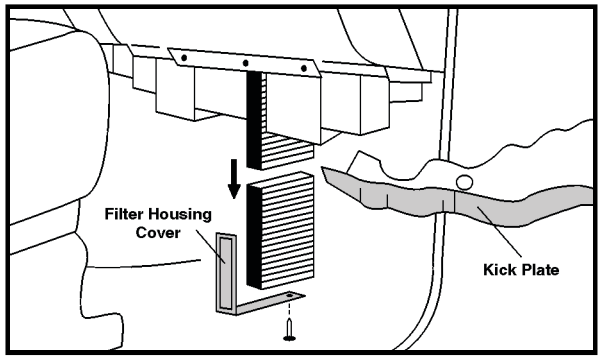

3. Remove kick plate.
4. Remove screw on filter housing cover.
5. Remove filter housing cover.
6. Remove first filter by pulling straight down.
7. Slide second filter forward and then pull down.
8. Replace filters in reverse order and reassemble.

CABIN AIR FILTER INSTALLATION INSTRUCTIONS

PA4317 GM

Chevrolet Cobalt, Cobalt SS, HHR, HHR SS; Pontiac G5, Pursuit; Saturn ION, ION Red Line



OE: 52493319

Fits: 2005-on Chevrolet Cobalt
2008-on Chevrolet Cobalt SS, HHR SS
2006-on Chevrolet HHR
2007-on Pontiac G5
2005-08 Pontiac Pursuit
2003-07 Saturn ION
2004-07 Saturn ION Red Line

Size: 9 23/32 x 8 1/2 x 29/32
(246.9 x 215.9 x 23.0)

A. Gskt.: [2] Attached

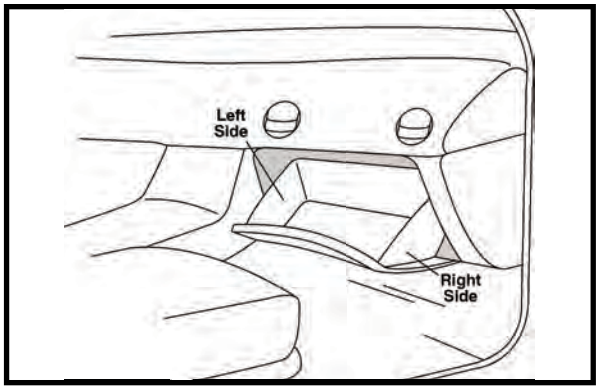

1. Open passenger side door.
2. Open glove compartment.
3. Push in on left and right sides of glove compartment to release glove compartment.

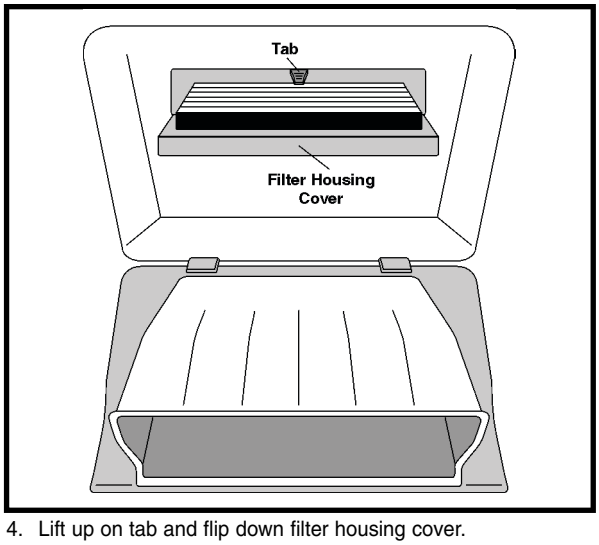

4. Lift up on tab and flip down filter housing cover.
5. Replace filter and reassemble.

PA4340 GM

Chevrolet Equinox; Pontiac Torrent; Saturn Sky, Sky Red Line, VUE, VUE Green Line Hybrid, VUE Red Line



OE: 22665802

Fits: 2005-09 Chevrolet Equinox
2006-09 Pontiac Torrent
2009 Saturn Sky, Sky Red Line
2002-07 Saturn VUE
2007 Saturn VUE Green Line Hybrid
2005-07 Saturn VUE Red Line

Size: 16 3/4 x 4 13/32 x 1 1/8
(425.5 x 111.9 x 28.6)

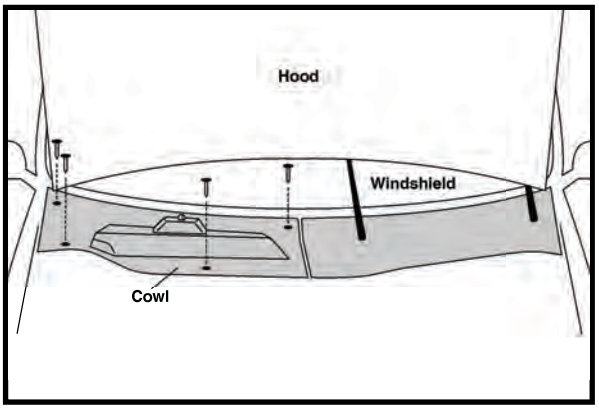

1. Place windshield wipers in upright position.
2. Open hood.
3. Remove push pins from passenger side of cowl.

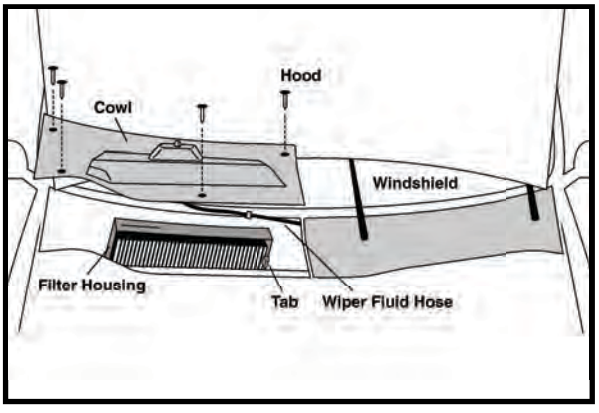

4. Remove passenger side of cowl. (Cowl remains attached to wiper fluid hose.)
5. Pull tab away from filter.
6. Replace filter and reassemble.

CABIN AIR FILTER INSTALLATION INSTRUCTIONS

PA4398 GM

Chevrolet Equinox;
GMC Terrain;
Saturn VUE, VUE Green Line Hybrid, VUE Hybrid, VUE Red Line



OE: 19130294

Fits: 2010 Chevrolet Equinox, GMC Terrain
2008-on Saturn, VUE, VUE Red Line
2008 Saturn VUE Green Line Hybrid
2009-on Saturn VUE Hybrid

Size: 10 1/16 x 8 3/4 x 11/16
(255.6 x 222.3 x 17.5)

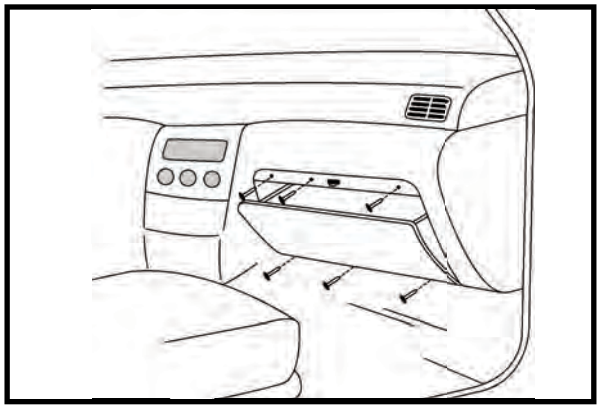

1. Open passenger side door.
2. Open glove compartment.
3. Remove screws on glove compartment.
4. Remove glove compartment.

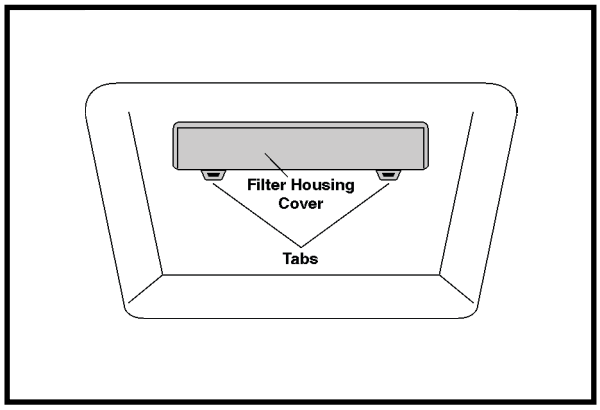

5. Release tabs on bottom of filter housing cover and flip up filter housing cover.

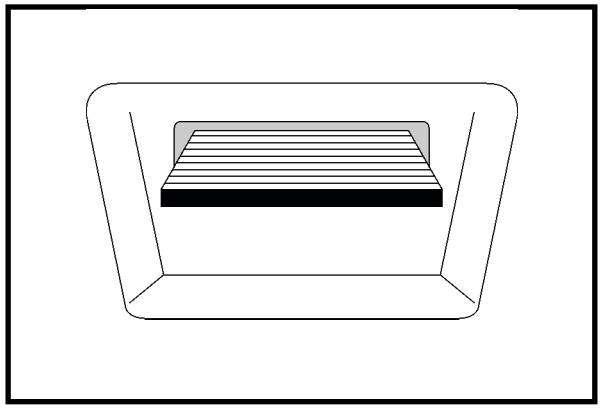

6. Replace filter and reassemble.

CABIN AIR FILTER INSTALLATION INSTRUCTIONS

PA4116 GM

Chevrolet Lumina, Monte Carlo



OE: 3092099

Fits: 1997-2000 Chevrolet Lumina
1997-99 Chevrolet Monte Carlo

Size: 11 3/8 x 7 9/16 x 5/16
(288.9 x 192.1 x 7.9)

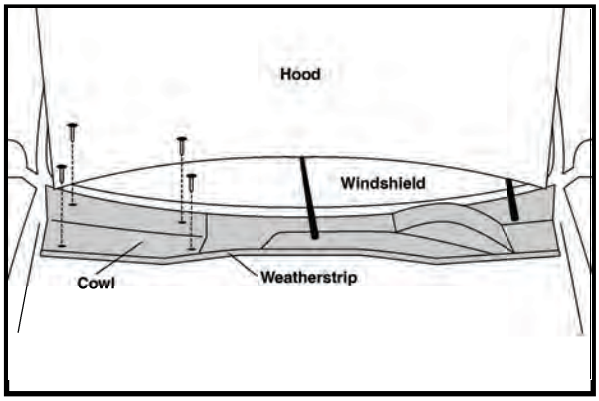

1. Place windshield wipers in upright position.
2. Open hood.
3. Pull back weatherstrip from passenger side of cowl.
4. Remove screws on passenger side of cowl.

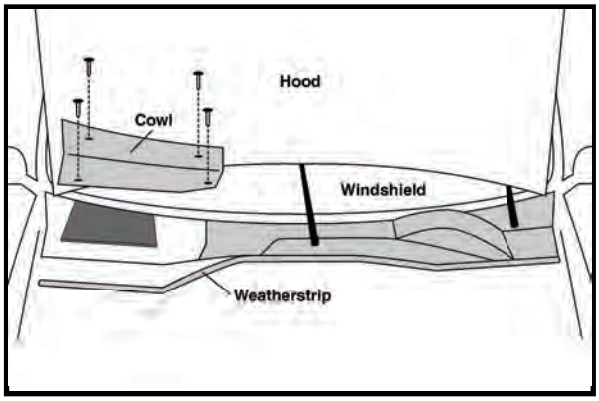

5. Remove passenger side of cowl.
6. Replace filter and reassemble.

PA4155 KIT GM

Chevrolet Venture; Oldsmobile Silhouette APV; Pontiac Montana, Trans Sport APV

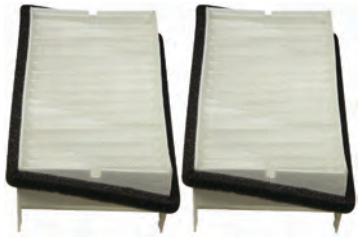

OE: 52470574, 52482929

Fits: 1997-2000 Chevrolet Venture,
Oldsmobile Silhouette APV
1999-2000 Pontiac Montana
1996-99 Pontiac Trans Sport APV

Size: 9 1/32 x 4 9/16 x 2 7/32
(229.4 x 115.9 x 56.4)

A. Gskt.: [1] Attached

Note: 2 Required per Vehicle (Sold as Set of 2)

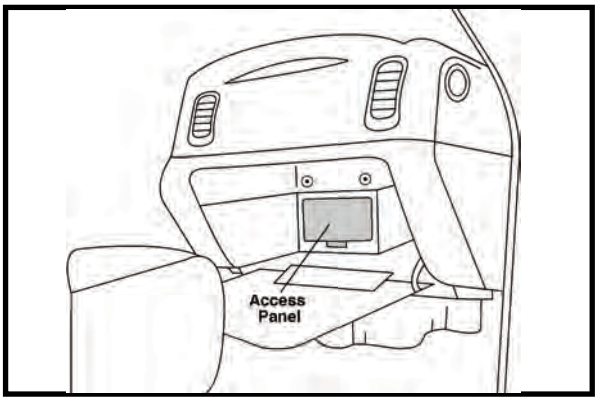

1. Open passenger side door.
2. Open glove compartment.
3. Remove access panel by pulling up and out.

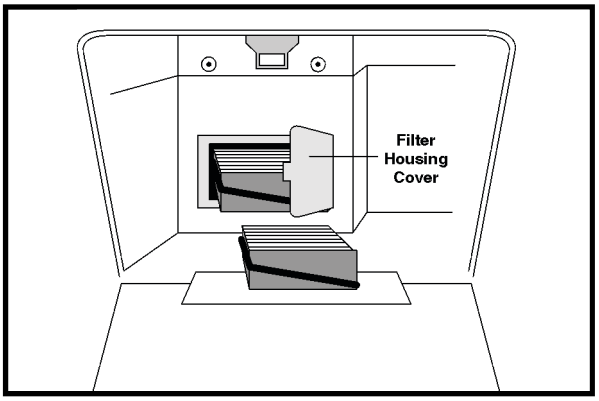

4. Open filter housing cover by squeezing tab on left.
5. Remove first filter.
6. Slide second filter to the right and then out.
7. Replace filters in reverse order and reassemble. (Make sure foam is angled in same direction on both filters.)

CABIN AIR FILTER INSTALLATION INSTRUCTIONS

PA4416 KIT — IMPORTS

Acura CL, CL Type S, TL, TL Type S; Honda Accord

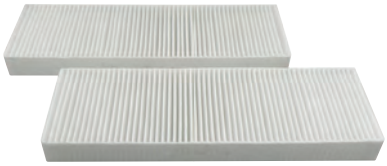

OE: 80291-S84-A01

Fits: 2001-03 Acura CL, CL Type S
1999-2003 Acura TL
2002-03 Acura TL Type S
1998-2002 Honda Accord

Size: 11 19/32 x 3 3/4 x 1 3/16
(294.5 x 95.3 x 30.2)

Note: 2 Required per Vehicle (Sold as Set of 2)

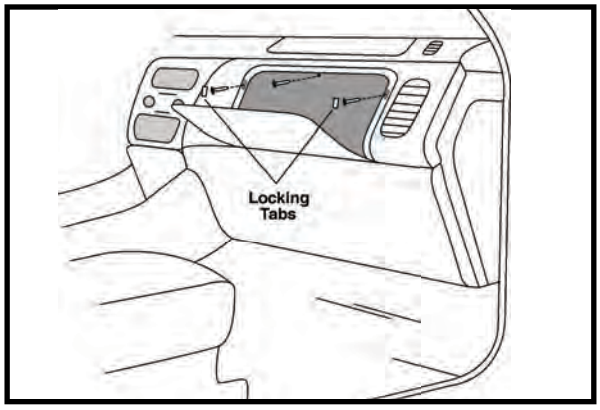

1. Open passenger side door.
2. Open glove compartment.
3. Remove square locking tabs from either side of glove compartment opening.
4. Remove screws on left, center and right of glove compartment opening.

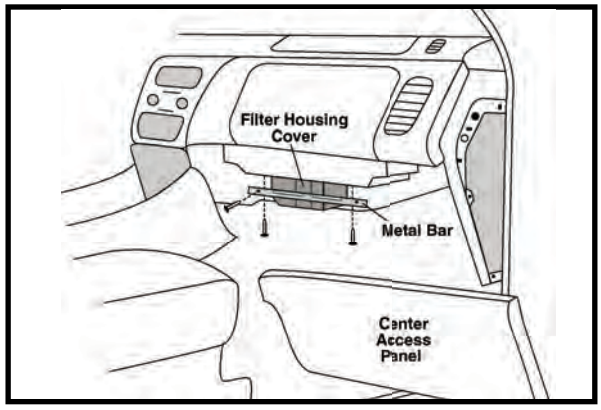

10. Remove center access panel under glove compartment.
11. Remove two screws under glove compartment and one screw on metal bar.

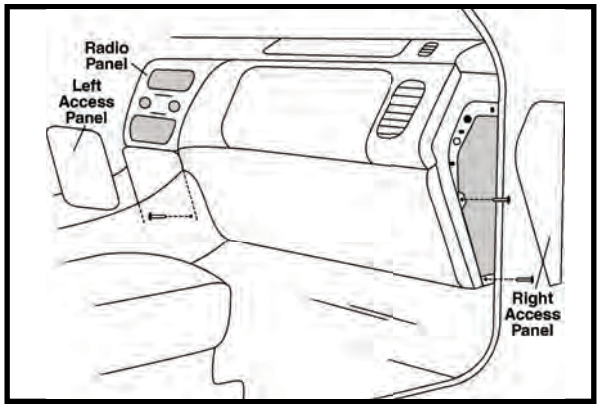

5. Close glove compartment.
6. Remove right access panel on right side of glove compartment.
7. Remove screws under right access panel.
8. Remove left access panel (under radio panel) on left side of glove compartment.
9. Remove screw on right side under left access panel.

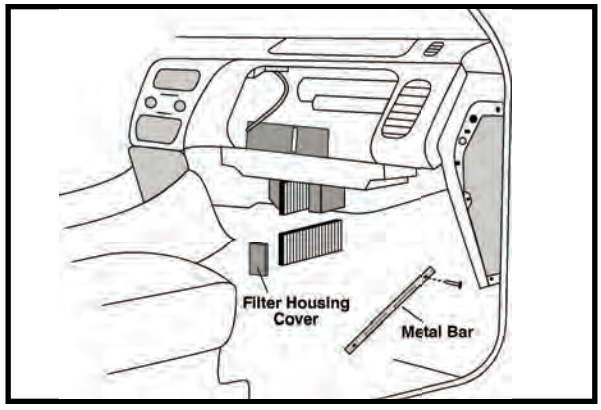

12. Remove glove compartment and disconnect light wire on left side.
13. Remove remaining screw on metal bar and remove metal bar.
14. Remove filter housing cover.
15. Pull out first filter. Slide second filter into opening, then remove.
16. Replace filters in reverse order and reassemble.

CABIN AIR FILTER INSTALLATION INSTRUCTIONS

PA4195 KIT — IMPORTS

Acura CSX, EL, RSX, RSX Type S; Honda Civic, Civic Hybrid, CR-V, Element



OE: 80292-S5A-003, 80292-S5D-A01

Fits: 2006 Acura CSX
2001-05 Acura EL
2002-06 Acura RSX, RSX Type S, Honda CR-V
2001-05 Honda Civic
2003-05 Honda Civic Hybrid
2003-on Honda Element

Size: 8 27/32 x 4 13/32 x 1 1/8
(224.6 x 111.9 x 28.6)

Note: 2 Required per Vehicle (Sold as Set of 2)

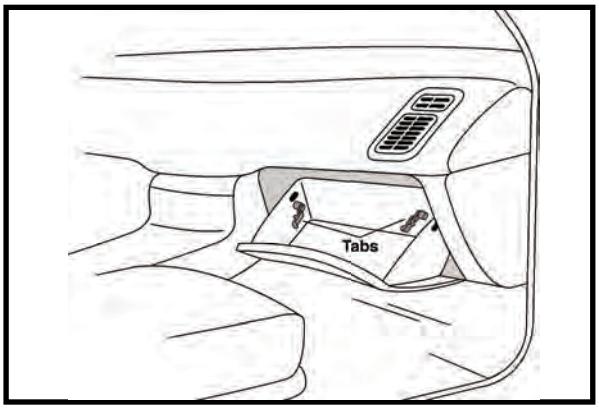

1. Open passenger side door.
2. Open glove compartment.
3. Close glove compartment part way to relieve pressure on tabs.
4. Push in tabs on outside of glove compartment to release glove compartment.
5. Remove tabs.

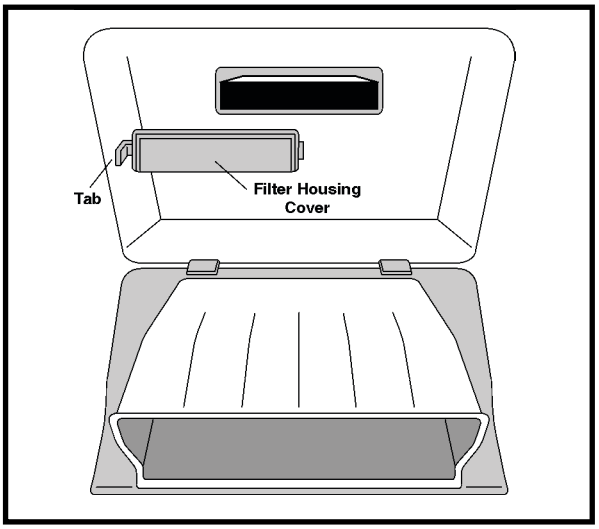

6. Flip down glove compartment.
7. Remove filter housing cover by squeezing tab on left side.

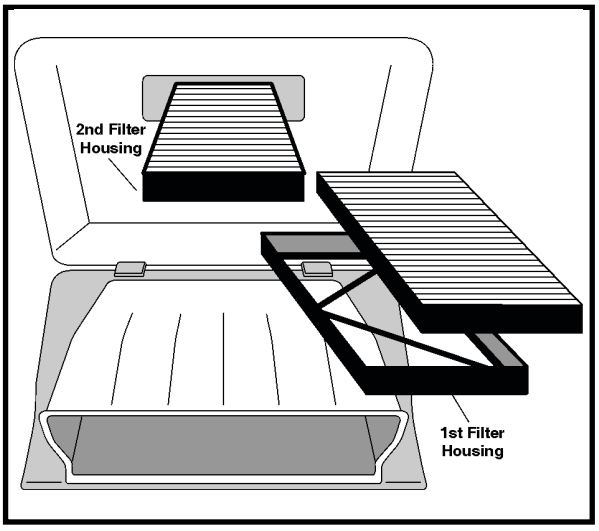

8. Remove first filter and filter housing.
9. Slide second filter and filter housing to the left and then out.
10. Remove filters from filter housings.
11. Replace filters and filter housings in reverse order and reassemble.

CABIN AIR FILTER INSTALLATION INSTRUCTIONS

PA4196 IMPORTS

Acura CSX, CSX Type S, MDX, RDX, RL, TL, TL Type S, TSX; Honda Accord, Accord Hybrid, Civic, Civic Hybrid, CR-V, Odyssey, Pilot, Ridgeline

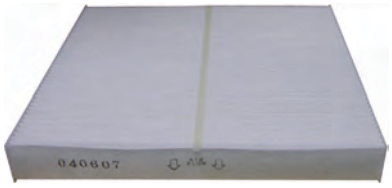

OE: 80292-SEC-A01

Fits: 2007-on Acura CSX, CSX Type S, MDX, RDX, Honda CR-V
2005-on Acura RL, Honda Odyssey
2004-on Acura TL, TSX
2007-08 Acura TL Type S
2003-on Honda Accord
2005-07 Honda Accord Hybrid
2006-on Honda Civic, Ridgeline
2006-09 Honda Civic Hybrid
2009-on Honda Pilot

Size: 9 7/32 x 8 21/32 x 1 1/8
(234.2 x 219.9 x 28.6)

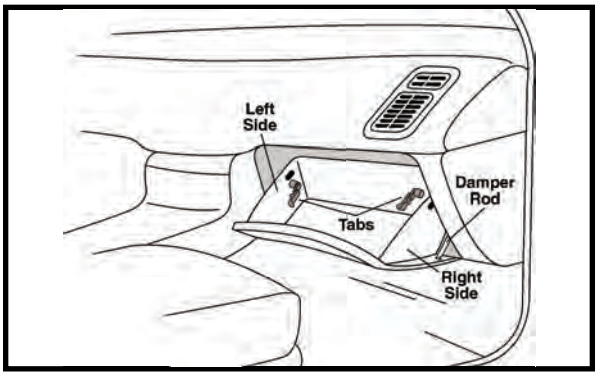

1. Open passenger side door.
2. Open glove compartment.
3. Detach damper rod from glove compartment.
4. Push in on left and right sides of glove compartment to release glove compartment.

   If equipped with tabs:
   a. Close glove compartment part way to relieve pressure on tabs.
   b. Push in tabs on outside of glove compartment to release glove compartment.
   c. Remove tabs.

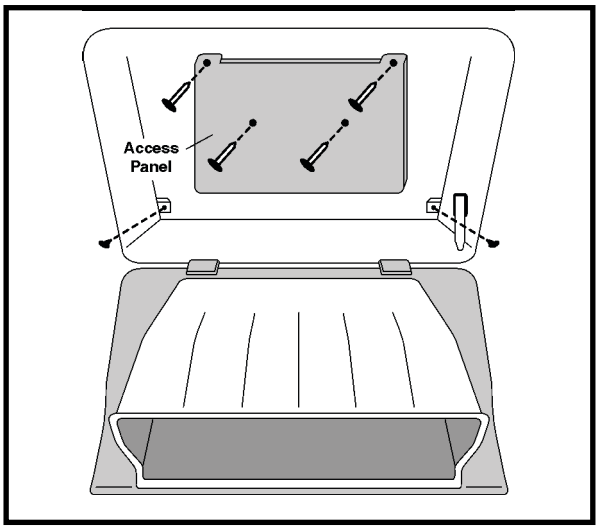

5. Remove screws on left and right sides (if equipped) while holding glove compartment.
6. Flip down glove compartment.
   If vehicle has an access panel:
   a. Remove clips at top of access panel.
   b. Remove screws in middle of access panel (if equipped).
   c. Remove access panel.

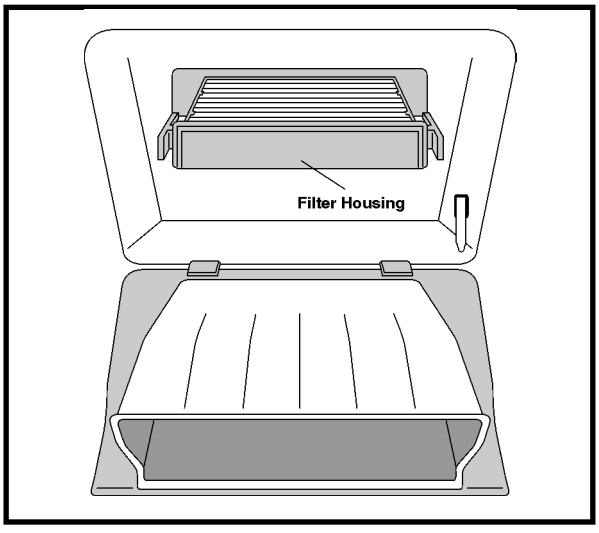

7. Remove filter housing.
8. Remove filter from filter housing.
9. Replace filter and reassemble.

CABIN AIR FILTER INSTALLATION INSTRUCTIONS

PA4304 IMPORTS

Acura MDX;
Honda Odyssey, Pilot

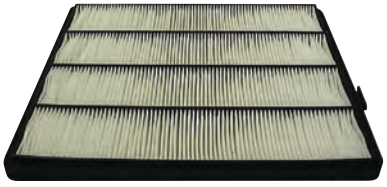

OE: 80290-S0X-A01

Fits: 2001-06 Acura MDX
1999-2004 Honda Odyssey
2003-08 Honda Pilot

Size: 11 5/8 x 10 3/8 x 25/32
(295.3 x 263.5 x 19.8)

A. Gskt.: [1] Attached

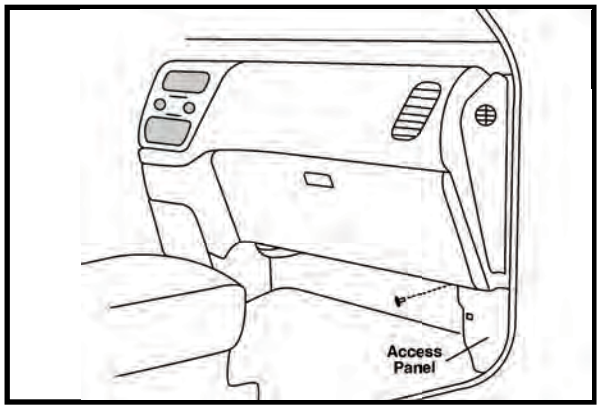

1. Open passenger side door.
2. Remove pin on access panel located under glove compartment.
3. Remove access panel.

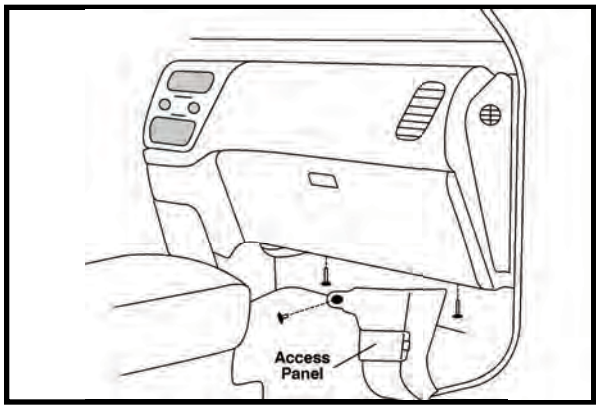

4. Remove bolts on left and right sides under glove compartment.
5. Remove glove compartment.

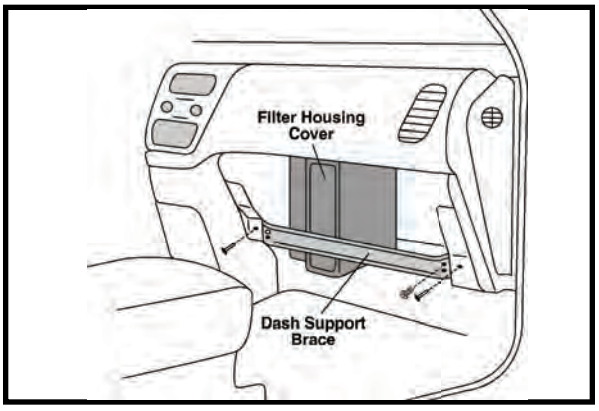

6. Remove screw and bolt on right side of dash support brace.
7. Remove screw and loosen bolt on left side of dash support brace.

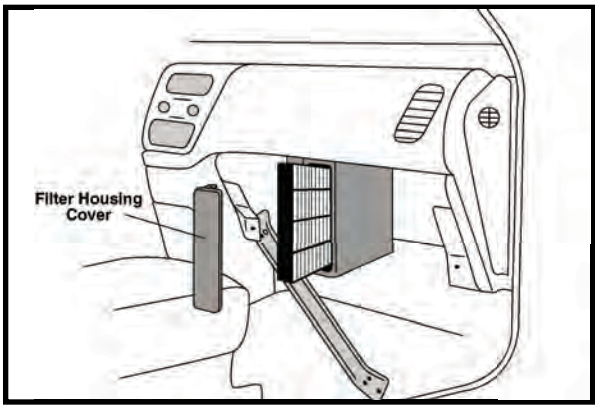

8. Lower right side of dash support brace (Left side of dash support brace remains attached.)
9. Remove filter housing cover.
10. Replace filter and reassemble.

CABIN AIR FILTER INSTALLATION INSTRUCTIONS

PA4395 IMPORTS

Audi A3, TT, TTS; Volkswagen CC, City Golf, City Jetta, Eos, GLI, Golf, GTI, Jetta, Passat, R32, Rabbit, Tiguan

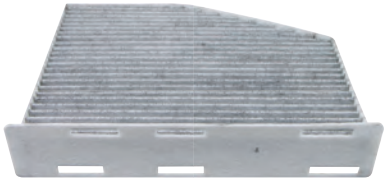

OE: 1K1819653A, 1K1819653B

Fits: 2006-on Audi A3, Volkswagen GTI, Passat
2008-on Audi TT, Volkswagen GLI
2009-on Audi TTS, Volkswagen CC, City Golf, Tiguan
2006-09 Volkswagen City Jetta
2007-on Volkswagen Eos
2007, 2010 Volkswagen Golf
2005-on Volkswagen Jetta
2007-08 Volkswagen R32
2007-09 Volkswagen Rabbit

Size: 11 1/4 x (6 to 8 9/32) x 2 1/4
(285.8 x (152.4 to 210.3) x 57.2)

Note: Contains Charcoal Impregnated Media for Odor Control

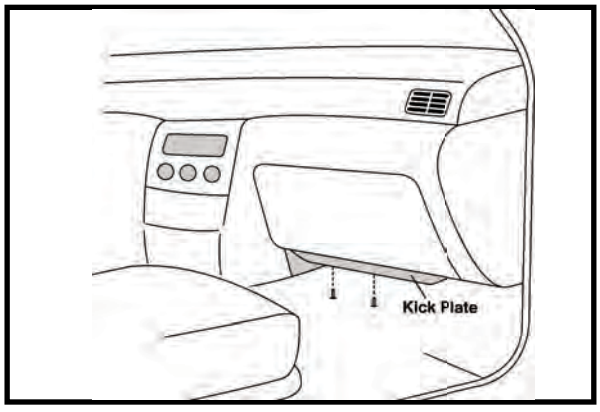

1. Open passenger side door.
2. Remove screws on kick plate located under glove compartment.

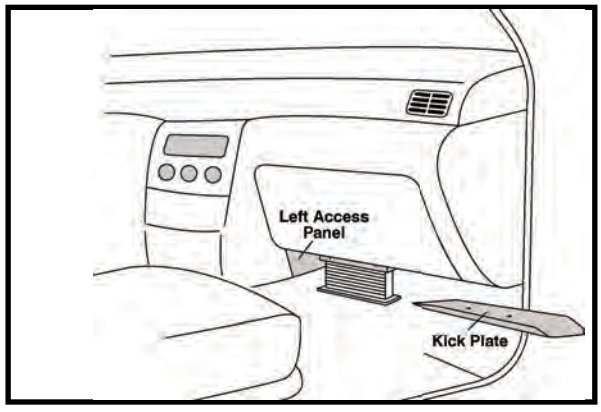

3. Remove kick plate.
4. Pull back left access panel to access filter.
5. Replace filter and reassemble.

CABIN AIR FILTER INSTALLATION INSTRUCTIONS

PA4331 IMPORTS

Audi TT, TT Quattro, TT Roadster; Seat Toledo; Volkswagen Beetle, Beetle Turbo S, Cabrio, Golf, GTI, Jetta, Passat, R32

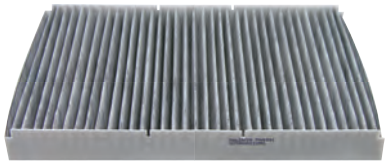

OE: 1J0819644, 1J0819644A

Fits: 2000-06 Audi TT
2000-02, 2006 Audi TT Quattro
2005 Audi TT Roadster
2000-05 Seat Toledo
1998-on Volkswagen Beetle
2003-05 Volkswagen Beetle Turbo S
1995-2007 Volkswagen Cabrio
1993-2006 Volkswagen Golf
1999-2006 Volkswagen GTI
1993-2005 Volkswagen Jetta
2002-05 Volkswagen Passat
2004-05 Volkswagen R32

Size: 11 3/32 x 8 3/16 x 1 3/16
(281.8 x 208.0 x 30.2)

Note: Contains Charcoal Impregnated Media for Odor Control

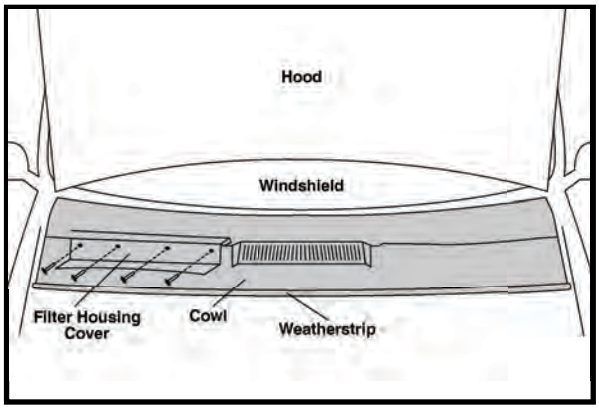

1. Open hood.
2. Pull back weatherstrip from passenger side of cowl.
3. Remove screws on filter housing cover.

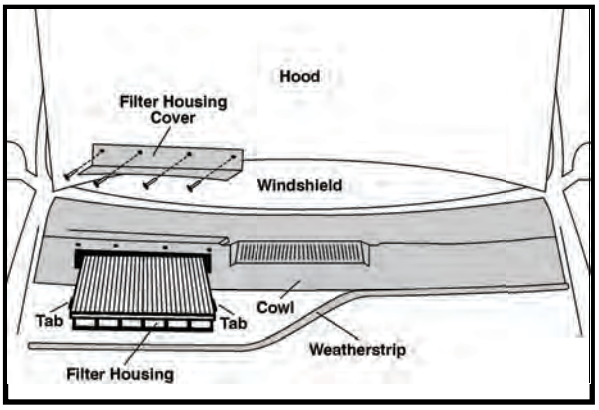

4. Remove filter housing cover.
5. Remove filter and filter housing by squeezing tabs on both sides of filter housing.
6. Remove filter from filter housing.
7. Replace filter and reassemble.

CABIN AIR FILTER INSTALLATION INSTRUCTIONS

PA4096 IMPORTS

BMW 318, 325i, 325iC, 325iS, 325iX, 328 Series, M3



OE: 64111393489, 64119069895

Fits: 1996-99 BMW 318, 328 Series, M3
1990-95 BMW 325i, 325iS
1990-92 BMW 325iC
1990-91 BMW 325iX

Size: 11 5/8 x 6 1/2 x 31/32
(295.3 x 165.1 x 24.6)

A. Gskt.: [1] Attached

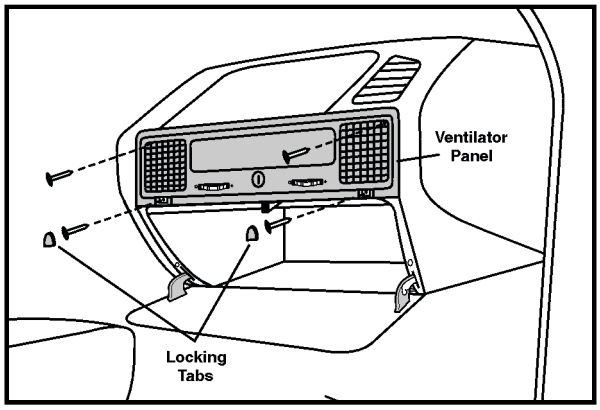

1. Open passenger side door.
2. Close vents.
3. Remove screws in vents above glove compartment.
4. Open glove compartment.
5. Remove locking tabs and screws under vents.

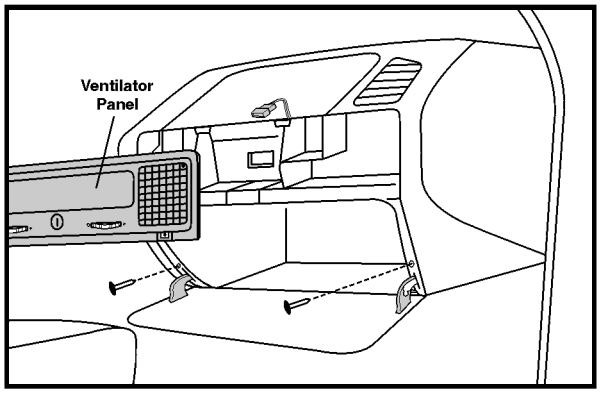

6. Remove ventilator panel.
7. Unhook hinges on glove compartment door and remove door.
8. Remove screws above door hinges.

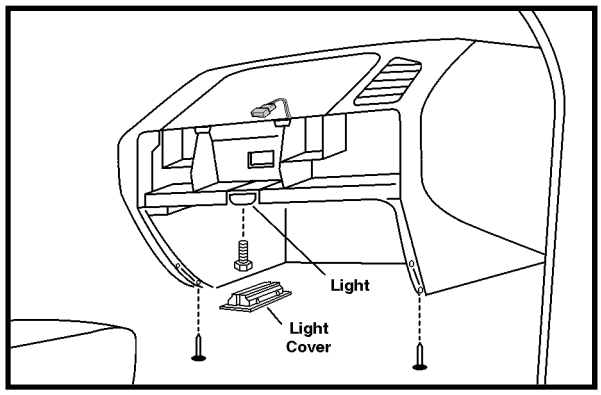

9. Remove screws on either side of glove compartment opening.
10. Remove light cover to access hex bolt and remove hex bolt.
11. Unplug and remove light.
12. Remove glove compartment.

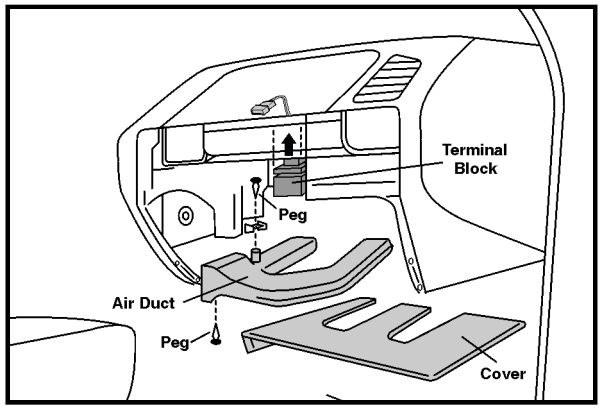

13. Remove cover.
14. Remove plastic pegs from air duct.
15. Remove air duct.
16. Move any cable assembly to side and push terminal block upwards, out of holder.

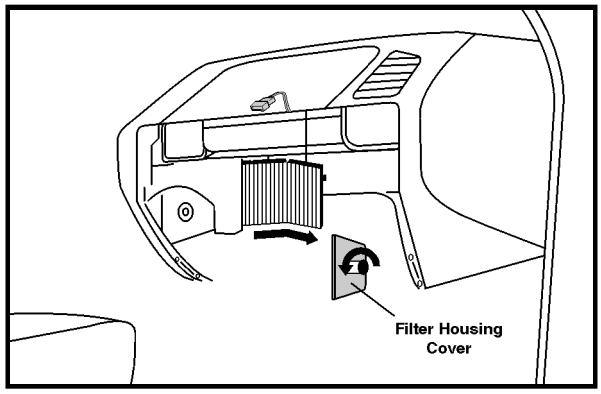

17. Turn wheel on filter housing cover 90° counter clockwise.
18. Remove filter housing cover.
19. Bend filter at folding points and remove.
20. Replace filter (bend new filter at folding points, with tab facing out) and reassemble.

CABIN AIR FILTER INSTALLATION INSTRUCTIONS

PA4097	IMPORTS	NOTES

BMW 740i, 740iL, 750iL



OE: 64118390447, 64319070072
Fits: 1996-2001 BMW 740i, 740iL, 750iL
Size: 15 1/8 x 7 1/4 x 1 3/16 (384.2 x 184.2 x 30.2)
A. Gskt.: [1] Attached
Note: 2 Required per Vehicle (Sold Individually)

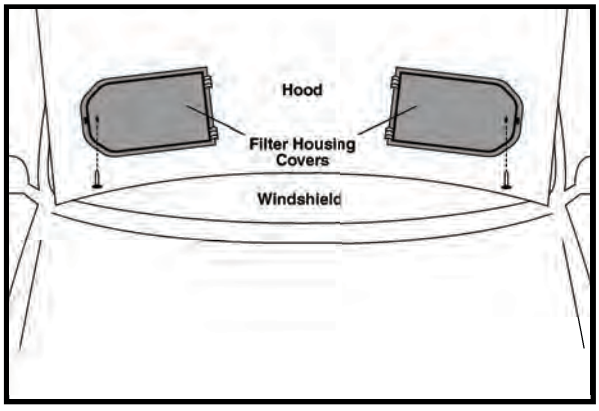

1. Open hood.
2. Remove screws on filter housing covers located on underside of hood.

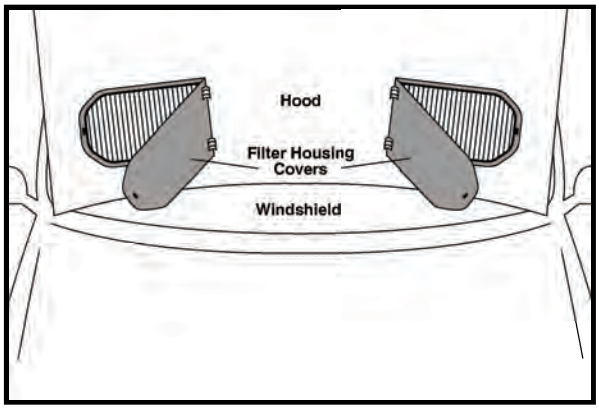

3. Open filter housing covers.
4. Replace filters and reassemble.

CABIN AIR FILTER INSTALLATION INSTRUCTIONS

PA4411 IMPORTS

Honda Fit

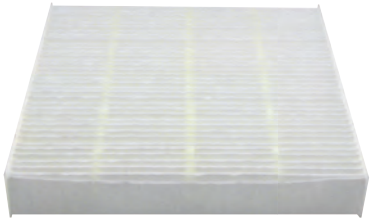

OE: 80291-SAA-J01
Fits: 2007-08 Honda Fit
Size: 7 3/16 x 7 1/16 x 1 1/8
(182.6 x 179.4 x 28.6)

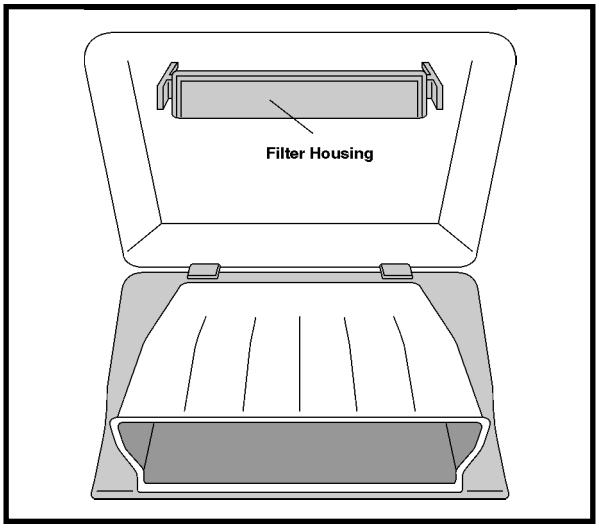

4. Flip down glove compartment.
5. Remove filter housing.

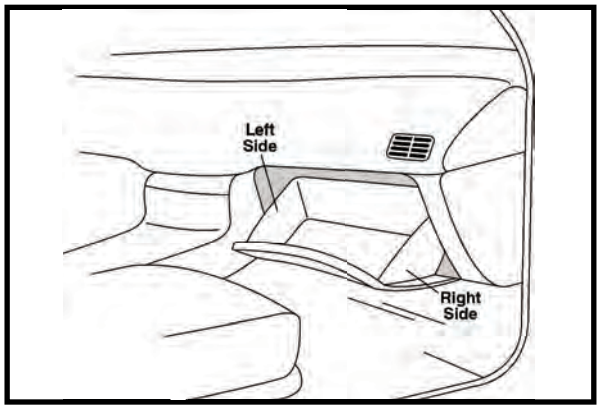

1. Open passenger side door.
2. Open glove compartment.
3. Push in on left and right sides of glove compartment to release glove compartment.

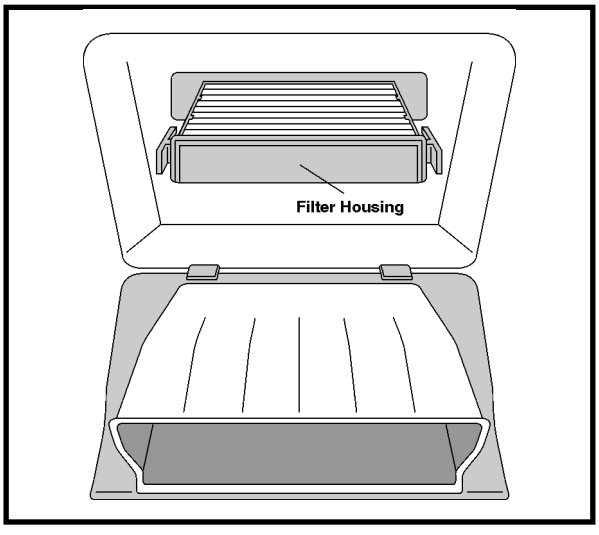

6. Remove filter from filter housing.
7. Replace filter and reassemble.

CABIN AIR FILTER INSTALLATION INSTRUCTIONS

PA4404	IMPORTS	NOTES

Hyundai Accent

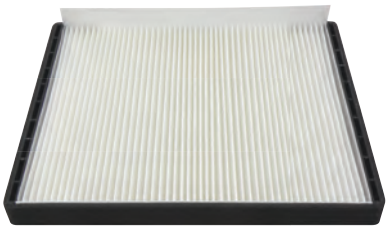

OE: 87901-E000A, 97133-1E000
Fits: 2007-on Hyundai Accent
Size: 9 21/32 x 8 1/32 x 3/4
(245.3 x 204.0 x 19.1)
A. Gskt.: [1] Attached

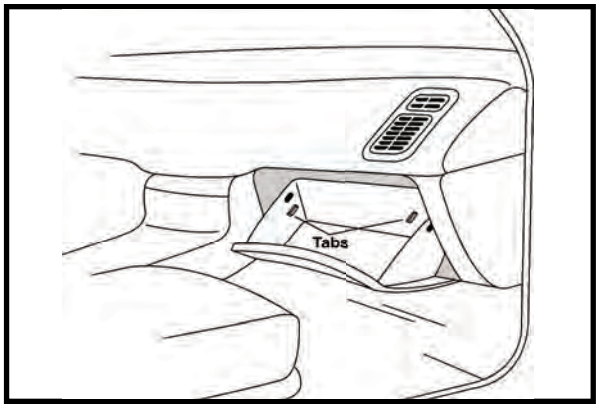

1. Open passenger side door.
2. Open glove compartment.
3. Remove tabs to release glove compartment.
4. Remove glove compartment.

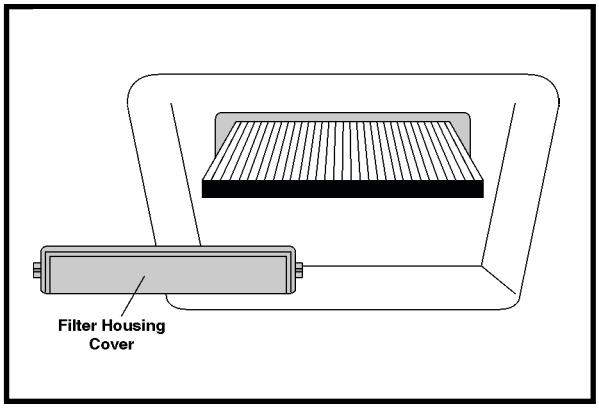

5. Remove filter housing cover.
6. Replace filter and reassemble.

CABIN AIR FILTER INSTALLATION INSTRUCTIONS

PA4334 IMPORTS

Hyundai Azera, Santa Fe, Sonata; Kia Magentis, Optima



OE: 97133-2B010, 97133-3K000

Fits: 2006-09 Hyundai Azera
2007-09 Hyundai Santa Fe
2006-on Hyundai Sonata, Kia Optima
2007-on Kia Magentis

Size: 9 7/8 x 8 23/32 x 1 3/16
(250.8 x 221.5 x 30.2)

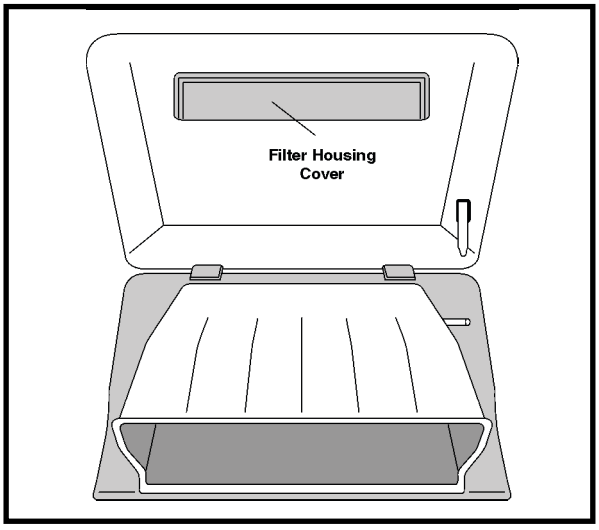

5. Flip down glove compartment.
6. Remove filter housing cover.

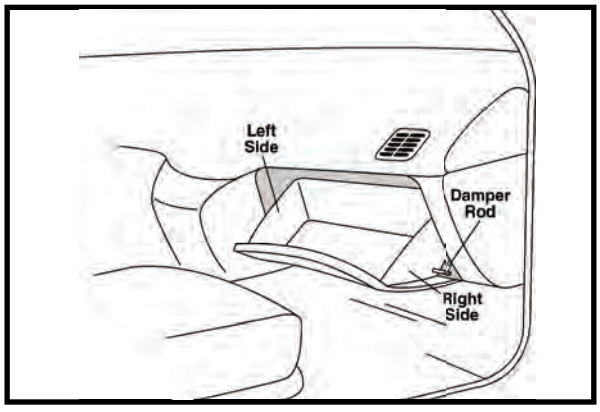

1. Open passenger side door.
2. Open glove compartment.
3. Detach damper rod from glove compartment.
4. Push in on left and right sides of glove compartment to release glove compartment.

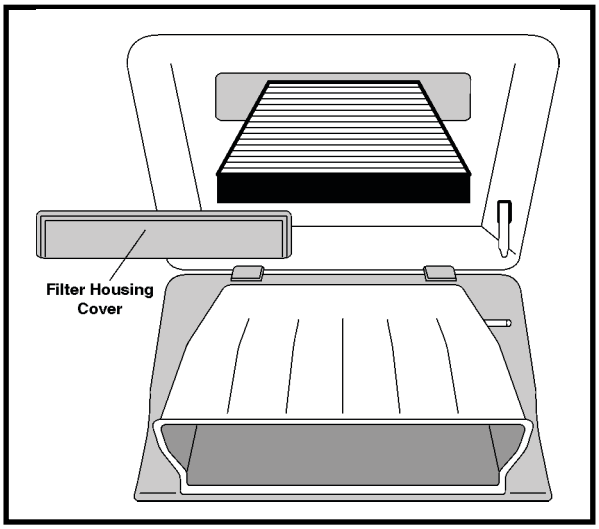

7. Replace filter and reassemble.

CABIN AIR FILTER INSTALLATION INSTRUCTIONS

PA4391 IMPORTS

Hyundai Genesis Coupe, Tucson; Kia Forte, Rio, Rio5, Rondo, Sportage

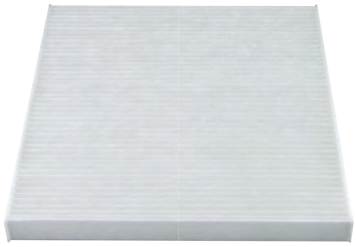

OE: 97133-2E200, 97133-2E210

Fits: 2010 Hyundai Genesis Coupe, Kia Forte
2005-on Hyundai Tucson, Kia Sportage
2006-on Kia Rio, Rio5
2007-on Kia Rondo

Size: 8 7/8 x 7 29/32 x 21/32
(225.4 x 200.8 x 16.7)

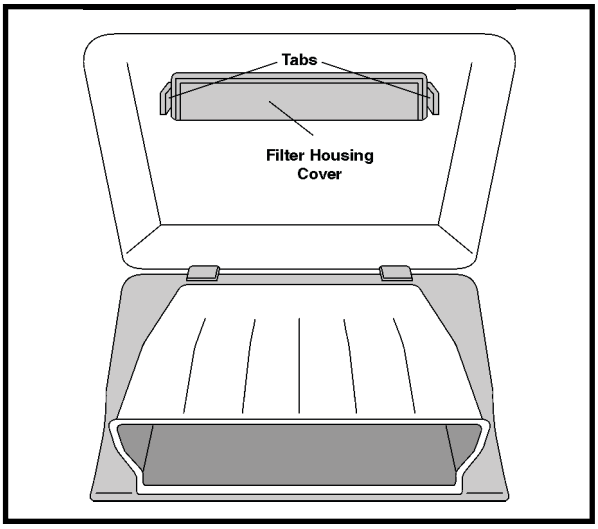

4. Flip down glove compartment.
5. Squeeze tabs on filter housing cover and remove.

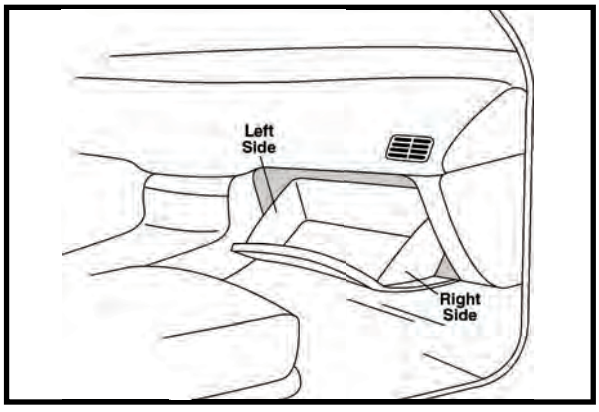

1. Open passenger side door.
2. Open glove compartment.
3. Push in on left and right sides of glove compartment to release glove compartment.

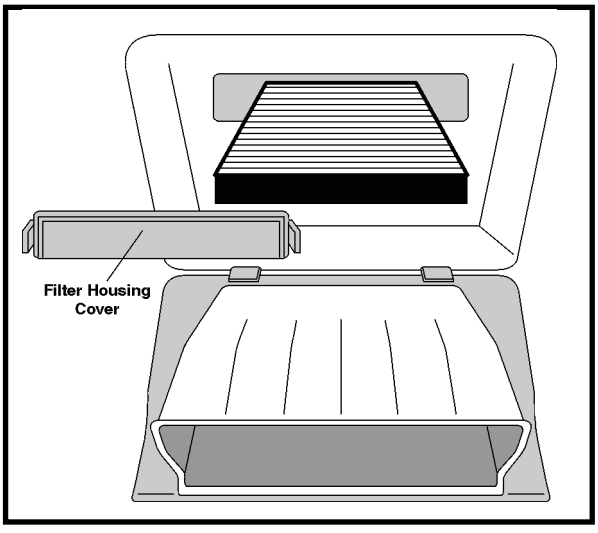

6. Replace filter and reassemble.

CABIN AIR FILTER INSTALLATION INSTRUCTIONS

PA4405 IMPORTS

Infiniti EX35, FX35, G37, M35, M45; Nissan GT-R

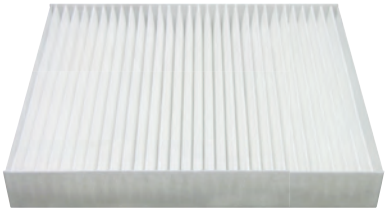

OE: 27277-EG025

Fits: 2008-on Infiniti EX35, G37
2010 Infiniti FX35
2006-on Infiniti M35, M45
2009-on Nissan GT-R

Size: 9 x 7 13/16 x 1 1/4
(228.6 x 198.4 x 31.8)

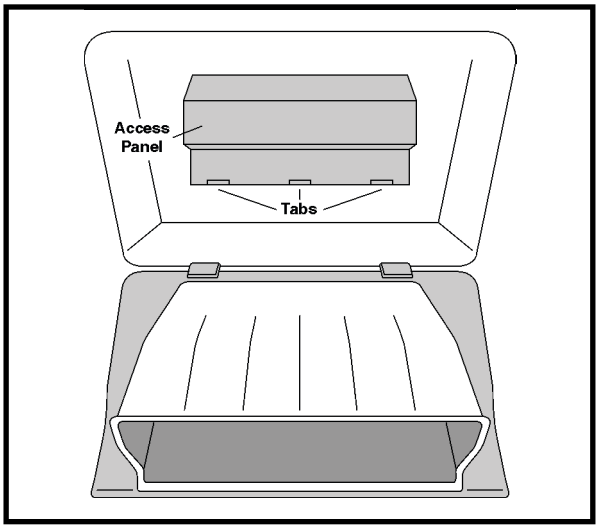

5. Flip down glove compartment.
6. Pull tabs to flip up access panel.

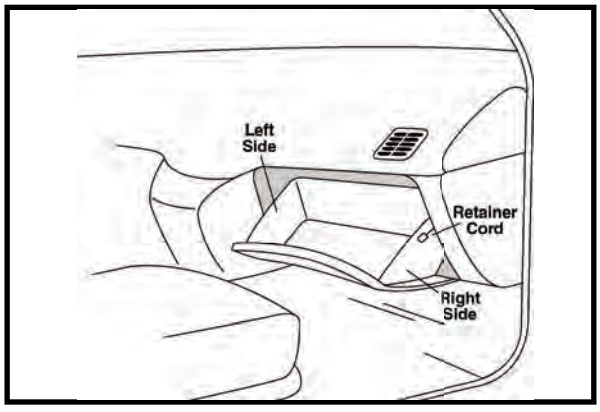

1. Open passenger side door.
2. Open glove compartment.
3. Push in on left and right sides of glove compartment to release glove compartment.
4. Release retainer cord from glove compartment.

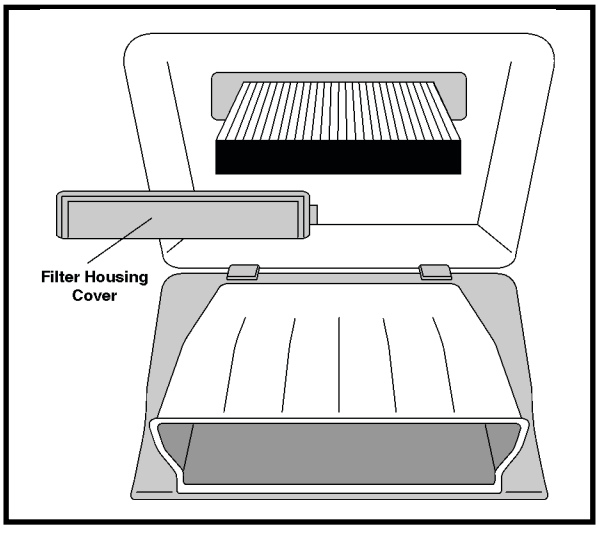

7. Remove filter housing cover.
8. Replace filter and reassemble.

CABIN AIR FILTER INSTALLATION INSTRUCTIONS

PA4199 IMPORTS

Infiniti FX35, FX45, G35, QX56; Nissan Altima, Maxima, Murano, Sentra, X-Trail



OE: B7200-5M000

Fits: 2003-09 Infiniti FX35
2003-08 Infiniti FX45, G35
2004 Infiniti QX56
2002-06 Nissan Altima
2004-on Nissan Maxima
2003-07 Nissan Murano
2000-06 Nissan Sentra
2005-08 Nissan X-Trail

Size: 8 11/16 x 7 27/32 x 1 3/16
(220.7 x 199.2 x 30.2)

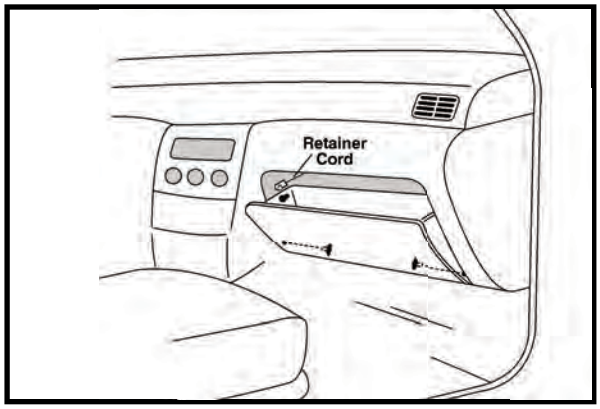

1. Open passenger side door.
2. Open glove compartment.
3. Remove hinge pins.
4. Unsnap retainer cord from glove compartment.

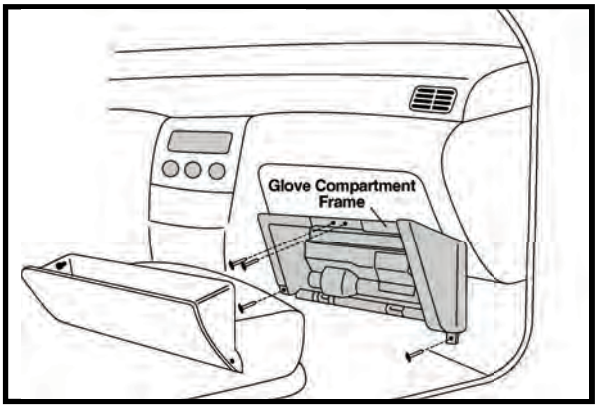

5. Remove glove compartment.
6. Remove screws from glove compartment frame (on Nissan Sentra only).
7. Remove glove compartment frame.

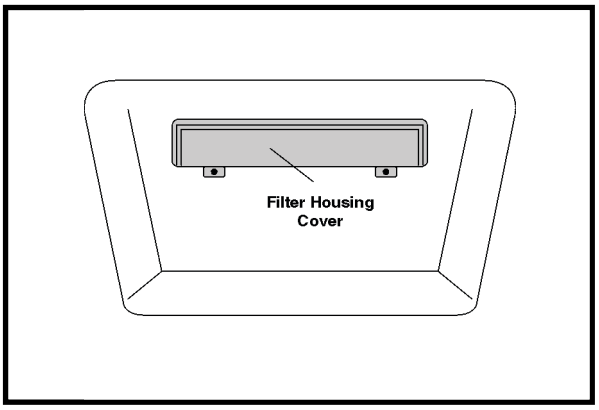

8. Remove filter housing cover.

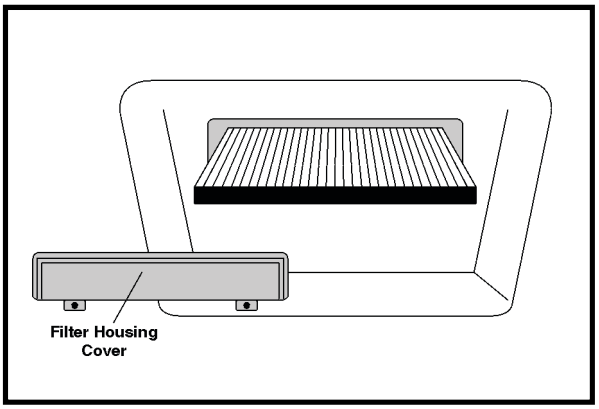

9. Replace filter and reassemble.

CABIN AIR FILTER INSTALLATION INSTRUCTIONS

PA4407	IMPORTS	NOTES

Land Rover Freelander



OE: JKR100280
Fits: 2002-05 Land Rover Freelander
Size: 9 9/32 x 7 27/32 x 2 15/16 (235.7 x 199.2 x 74.6)
A. Gskt.: [1] Attached

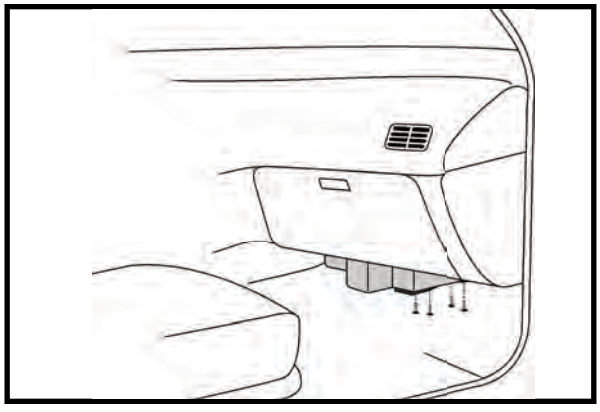

1. Open passenger side door.
2. Remove screws from filter located under glove compartment.

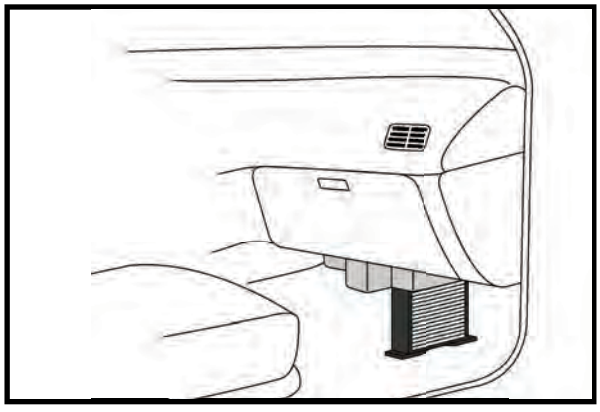

3. Replace filter and reassemble.

CABIN AIR FILTER INSTALLATION INSTRUCTIONS

PA4194 IMPORTS

Lexus ES300, ES330, RX350, RX400h Hybrid; Toyota Avalon, Camry, Sienna, Solara

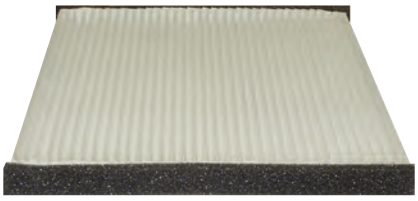

OE: 87139-32010

Fits: 2002-03 Lexus ES300
2004-06 Lexus ES330
2007-09 Lexus RX350
2006-09 Lexus RX400h Hybrid
2000-04 Toyota Avalon
2002-06 Toyota Camry
2004-09 Toyota Sienna
2002-09 Toyota Solara

Size: 8 3/8 x 8 5/16 x 21/32
(212.7 x 211.1 x 16.7)

A. Gskt.: [2] Attached

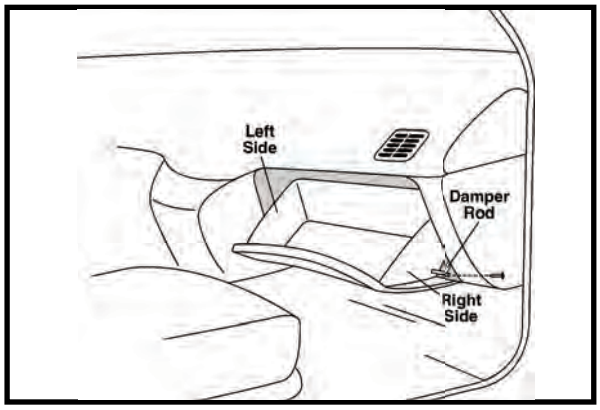

1. Open passenger side door.
2. Open glove compartment.
3. Remove screw holding damper rod in place on right side of glove compartment.
4. Detach damper rod from glove compartment.
5. Push in on left and right sides of glove compartment to release glove compartment.

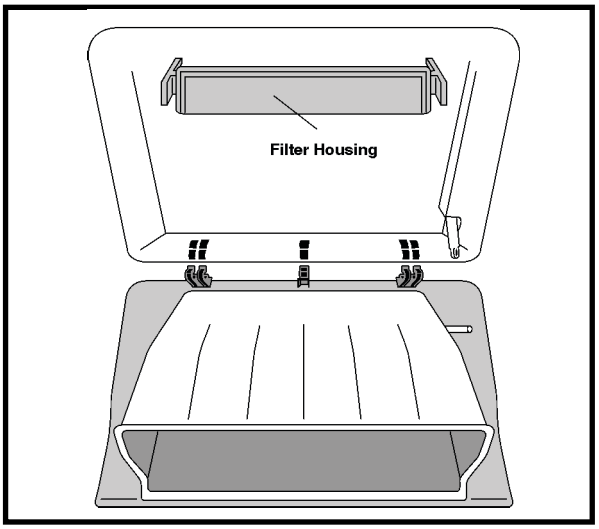

6. Remove glove compartment.
7. Remove filter housing.

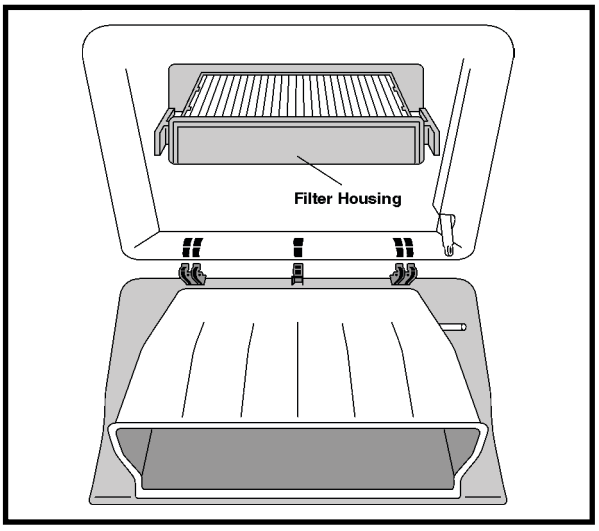

8. Remove filter from filter housing.
9. Replace filter and reassemble.

CABIN AIR FILTER INSTALLATION INSTRUCTIONS

PA4393 (1 of 2) IMPORTS

Lexus ES350, GS450h Hybrid, GS460, IS250, IS350, LX570, RX350, RX450h Hybrid; Toyota Camry Hybrid, Land Cruiser, Tundra



OE: 87139-07010

Fits: 2007-on Lexus ES350, GS450h Hybrid, IS250, IS350, Toyota Tundra
2008-on Lexus GS460, LX570, Toyota Land Cruiser
2010 Lexus RX350, RX450h Hybrid, Toyota Camry Hybrid

Size: 8 15/32 x 7 19/32 x 1 1/8 (215.1 x 192.9 x 28.6)

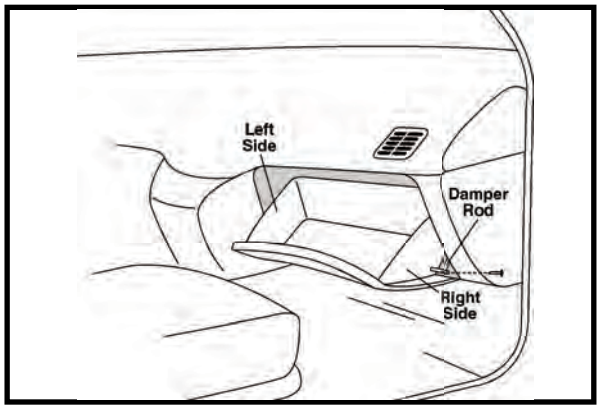

1. Open passenger side door.
2. Open glove compartment.
3. Remove screw holding damper rod in place on right side of glove compartment.
4. Detach damper rod from glove compartment.
5. Push in on left and right sides of glove compartment to release glove compartment.

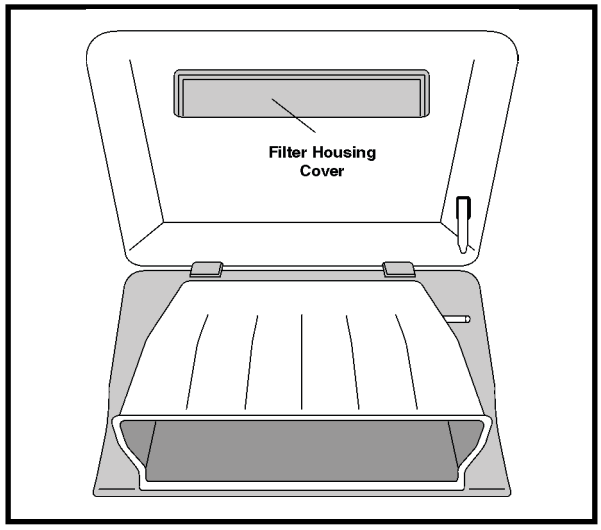

6. Flip down glove compartment.
7. Remove filter housing cover.

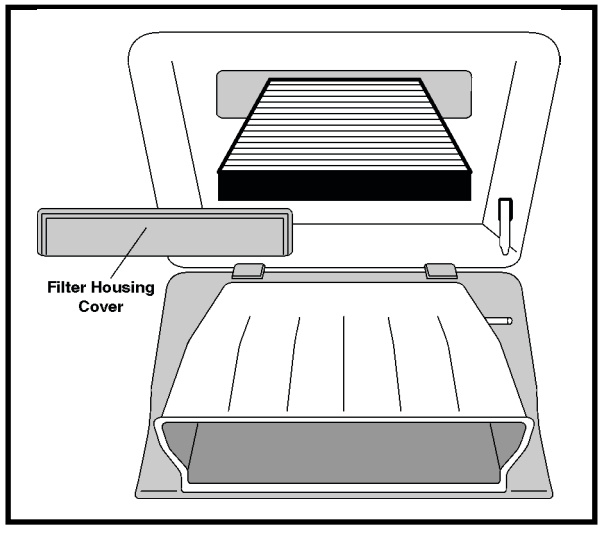

8. Replace filter and reassemble.

CABIN AIR FILTER INSTALLATION INSTRUCTIONS

PA4393 (2 of 2) IMPORTS

Lexus GS350, GS430



OE: 87139-07010

Fits: 2007-on Lexus GS350
2007 Lexus GS430

Size: 8 15/32 x 7 19/32 x 1 1/8
(215.1 x 192.9 x 28.6)

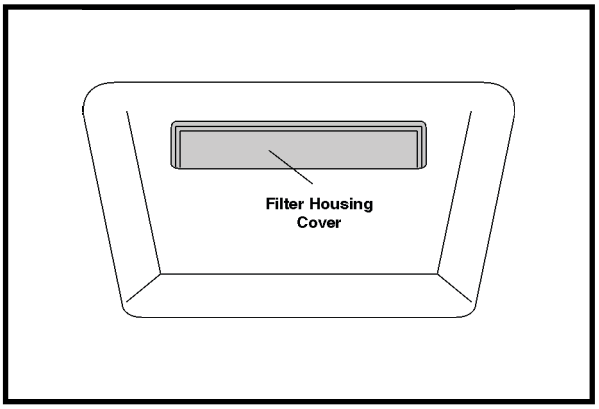

5. Remove filter housing cover.
6. Remove filter housing.

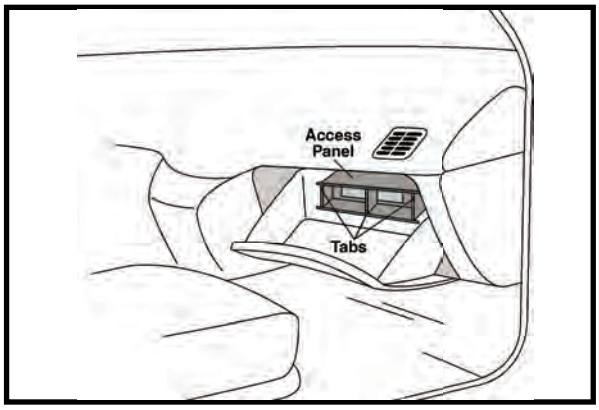

1. Open passenger side door.
2. Open glove compartment.
3. Push on tabs to remove access panel.
4. Remove access panel.

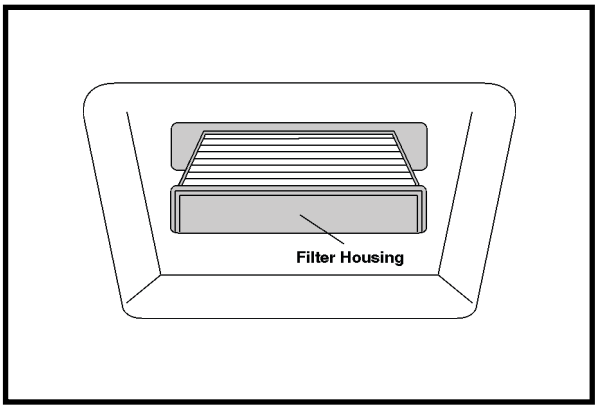

7. Remove filter from filter housing.
8. Replace filter and reassemble.

CABIN AIR FILTER INSTALLATION INSTRUCTIONS

PA4327 IMPORTS

Lexus GS300, GS430, HS250h Hybrid, IS250, IS350, IS-F;
Scion xB, xD;
Toyota Avalon, Camry, Camry Hybrid, Corolla, Highlander, Matrix, Prius, RAV4, Sequoia, Sienna, Venza, Yaris



OE: 87139-YZZ08

Fits: 2006 Lexus GS300, GS430, IS250, IS350
2010 Lexus HS250h Hybrid, Toyota Prius, Sienna
2008-on Lexus IS-F, Scion xB, xD, Toyota Highlander, Sequoia
2005-on Toyota Avalon
2007-on Toyota Camry
2007-09 Toyota Camry Hybrid
2009-on Toyota Corolla, Matrix, Venza
2006-on Toyota RAV4, Yaris

Size: 8 9/16 x 7 11/16 x 1 1/8
(217.5 x 195.3 x 28.8)

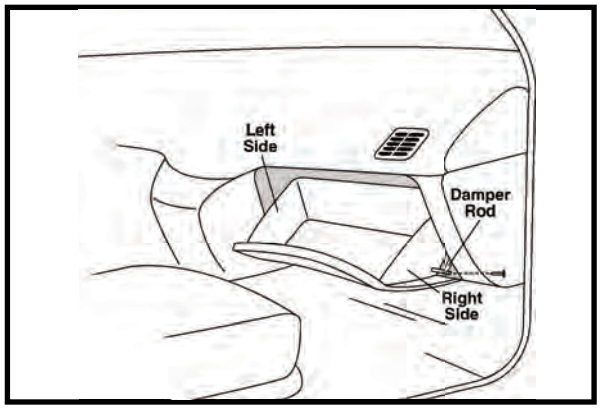

1. Open passenger side door.
2. Open glove compartment.
3. Remove screw holding damper rod in place on right side of glove compartment.
4. Detach damper rod from glove compartment.
5. Push in on left and right sides of glove compartment to release glove compartment.

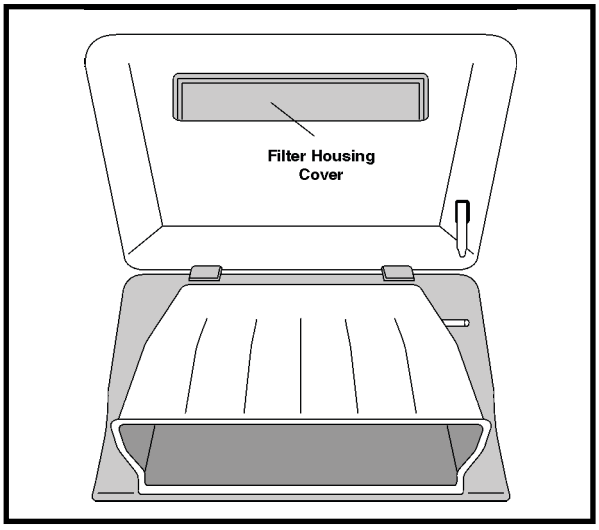

6. Flip down glove compartment.
7. Remove filter housing cover.

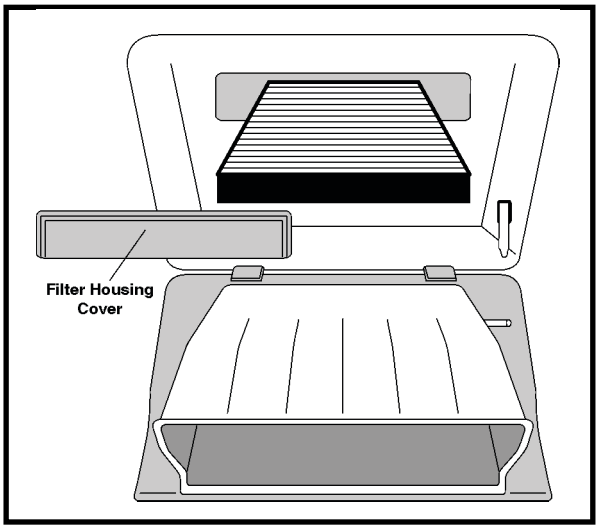

8. Replace filter and reassemble.

CABIN AIR FILTER INSTALLATION INSTRUCTIONS

PA4371	IMPORTS	NOTES

Lexus IS300, RX300, SportCross; Toyota Highlander, Highlander Hybrid



OE: 87139-48020

Fits: 2001-05 Lexus IS300
1999-2003 Lexus RX300
2003-05 Lexus SportCross
2001-07 Toyota Highlander
2006-on Toyota Highlander Hybrid

Size: 9 7/32 x 8 7/16 x 23/32
(234.2 x 214.3 x 18.3)

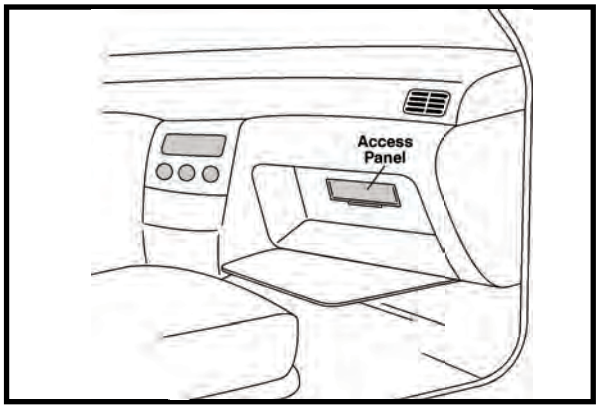

1. Open passenger side door.
2. Open glove compartment.
3. Remove access panel.

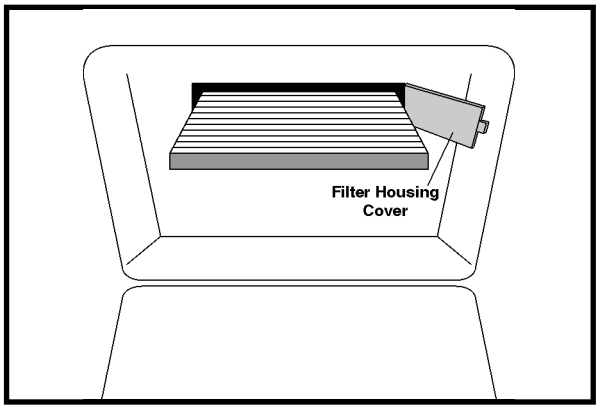

4. Open filter housing cover.
5. Replace filter and reassemble.

CABIN AIR FILTER INSTALLATION INSTRUCTIONS

PA4392	IMPORTS	NOTES

Mazda 626



OE: GD7A-61-J6X
Fits: 1998-2002 Mazda 626
Size: 9 1/8 x 8 21/32 x 5/16
(231.8 x 219.9 x 7.9)

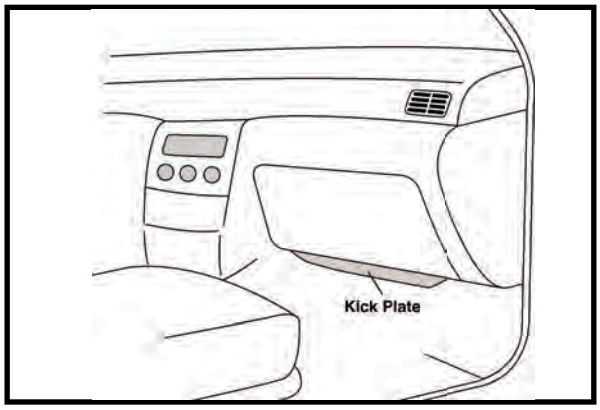

1. Open passenger side door.
2. Unsnap and remove kick plate.

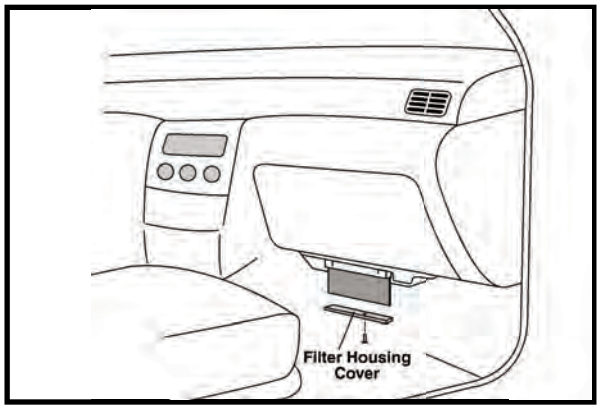

3. Remove screw on filter housing cover.
4. Remove filter housing cover.
5. Replace filter and reassemble.

CABIN AIR FILTER INSTALLATION INSTRUCTIONS

PA4403 IMPORTS

Mazda Mazda3, Mazda5, MazdaSpeed3



OE: BP4K-61-J6X

Fits: 2006-on Mazda Mazda3, Mazda5
2007-on Mazda MazdaSpeed3

Size: 9 5/16 x 4 x 7/8
(236.5 x 101.6 x 22.2)
9 1/4 x 3 25/32 x 7/8
(235.0 x 96.0 x 22.2)

A. Gskt.: [1] Attached to Smaller Filter

Note: 2 Required per Vehicle (Sold as Set of 2)

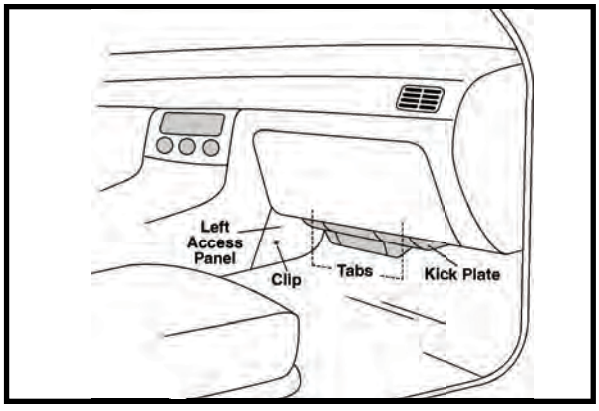

1. Open passenger side door.
2. Push tabs to release kick plate located under glove compartment.
3. Remove kick plate.
4. Remove clip on left access panel.
5. Remove left access panel.

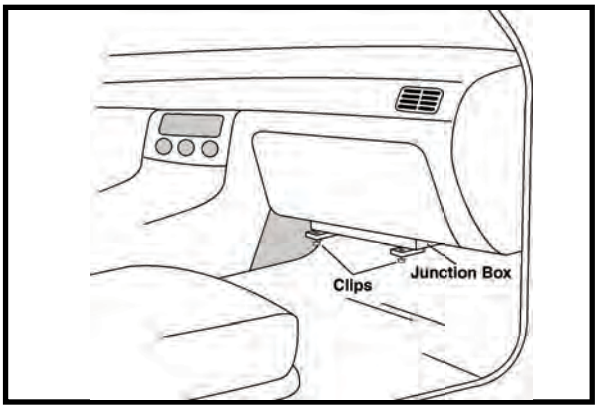

6. Unscrew clips and remove all connectors to junction box.
7. Remove junction box.

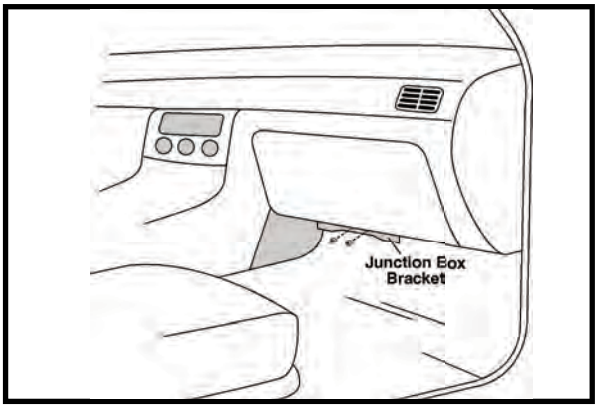

8. Remove nuts from junction box bracket.
9. Remove junction box bracket.

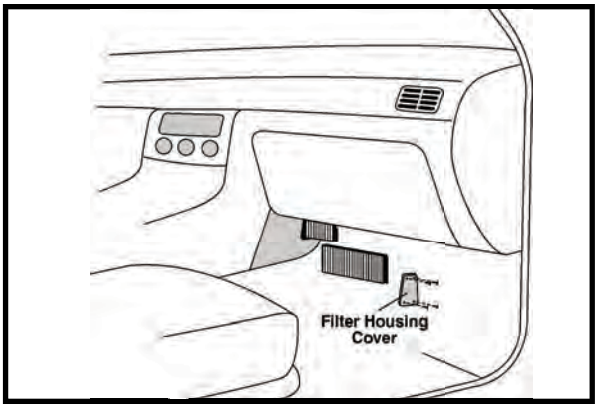

10. Remove screws from filter housing cover and unplug connector.
11. Remove filter housing cover.
12. Remove first filter.
13. Slide second filter down and then out.
14. Replace filters in reverse order and reassemble.

CABIN AIR FILTER INSTALLATION INSTRUCTIONS

PA4406 KIT IMPORTS

Mazda Millenia



OE: TA05-61-J6X
Fits: 2001-02 Mazda Millenia
Size: 8 7/8 x 4 5/8 x 7/8
(225.4 x 117.5 x 22.2)
A. Gskt.: [1] Attached to One Filter
Note: 2 Required per Vehicle (Sold as Set of 2)

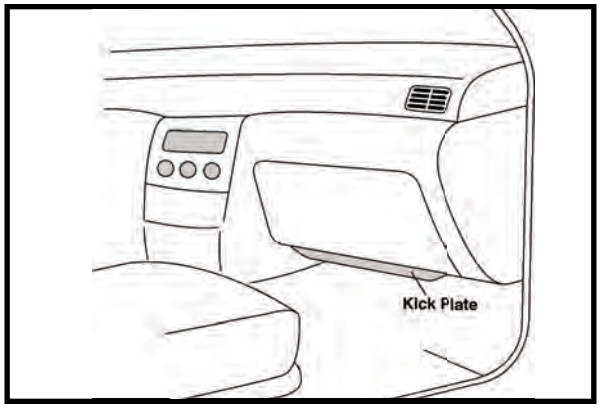

1. Open passenger side door.
2. Remove kick plate located under glove compartment.

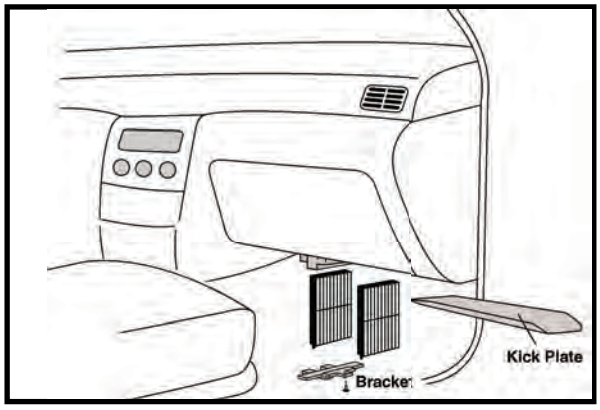

3. Remove screw on bracket.
4. Remove bracket to access filters.
5. Remove filters (one at a time).
5. Replace filters in reverse order and reassemble.

PA4415 IMPORTS

Mini Cooper, Cooper S



OE: 64311496710
Fits: 2002-08 Mini Cooper, Cooper S
Size: 18 9/16 x 4 21/32 x 1 3/8
(471.5 x 118.3 x 34.9)

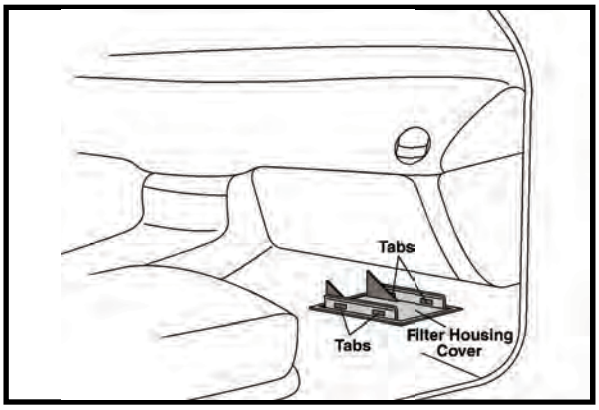

1. Open passenger side door.
2. Unsnap tabs on back of filter housing cover located under glove compartment.
3. Slide filter housing cover forward to unsnap tabs in front.
4. Remove filter housing cover.

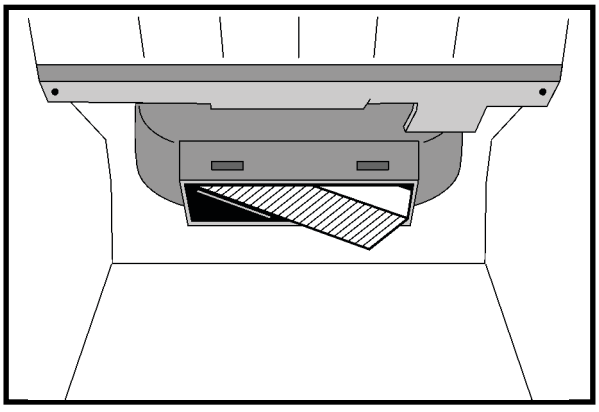

5. Remove filter by sliding out along the rails in the housing.
6. Replace filter and reassemble.

CABIN AIR FILTER INSTALLATION INSTRUCTIONS

PA4188 IMPORTS

Mitsubishi Endeavor; Subaru B9 Tribeca, Legacy, Legacy 2.5 GT, Outback, Tribeca; Toyota 4Runner, Celica GT, Celica GTS, FJ Cruiser, Prius, Sienna



OE: 87139-47010, 88508-20120

Fits: 2004-05 Mitsubishi Endeavor, Toyota Sienna
2006-07 Subaru B9 Tribeca
2007-08 Subaru Legacy, Outback
2007 Subaru Legacy 2.5 GT
2008-on Subaru Tribeca
2003-on Toyota 4Runner
2000-05 Toyota Celica GT, Celica GTS
2007-on Toyota FJ Cruiser
2001-09 Toyota Prius

Size: 8 15/32 x 8 15/32 x 21/32
(215.1 x 215.1 x 16.7)

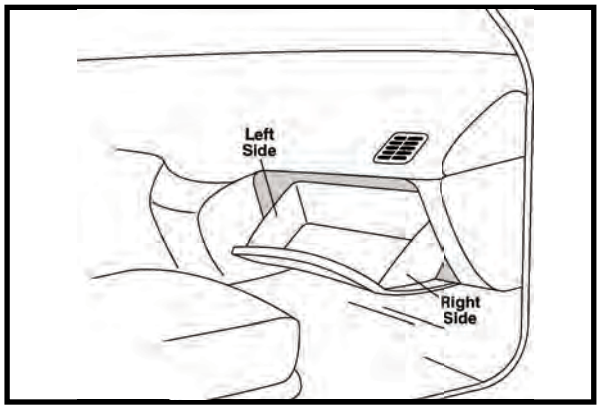

1. Open passenger side door.
2. Open glove compartment.
3. Push in on left and right sides of glove compartment to release glove compartment.

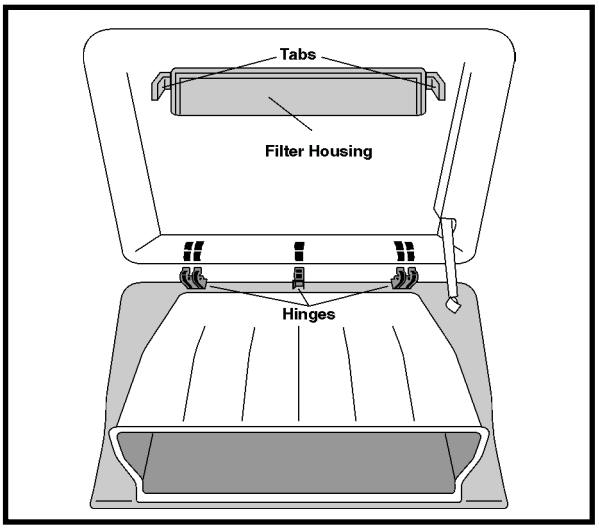

4. Push up on back of glove compartment to release glove compartment hinges.
5. Pull out glove compartment. (Right side of glove compartment remains attached.)
6. Squeeze tabs on left and right sides of filter housing and remove.

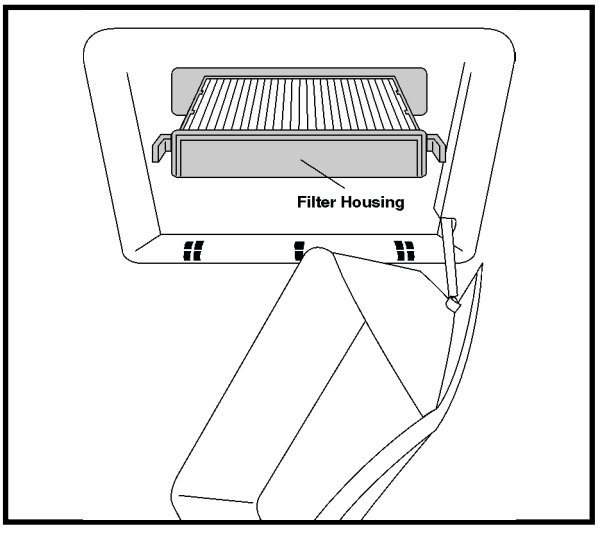

7. Remove filter from filter housing.
8. Replace filter and reassemble.

CABIN AIR FILTER INSTALLATION INSTRUCTIONS

PA4410 KIT — IMPORTS

Nissan Frontier, Pathfinder, Xterra; Suzuki Equator



OE: 999M1-VR056

Fits: 2005-on Nissan Frontier, Pathfinder, Xterra
2009-on Suzuki Equator

Size: 10 5/32 x 3 31/32 x 31/32
(258.0 x 100.8 x 24.6)

Note: 2 Required per Vehicle (Sold as Set of 2)

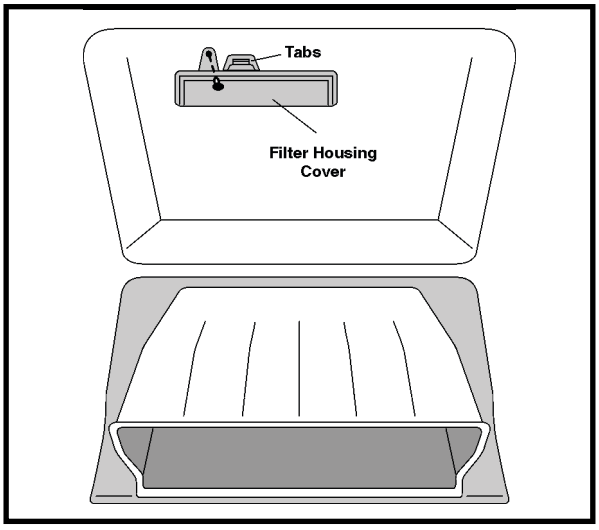

4. Remove glove compartment.
5. Remove bolt on filter housing cover.
6. Remove filter housing cover by pushing up on tab.

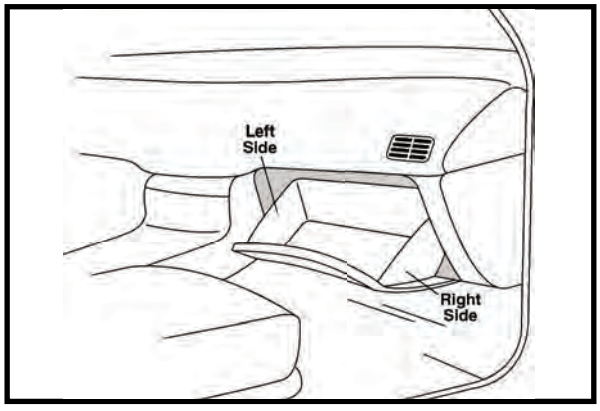

1. Open passenger side door.
2. Open glove compartment.
3. Push in on left and right sides of glove compartment to release glove compartment.

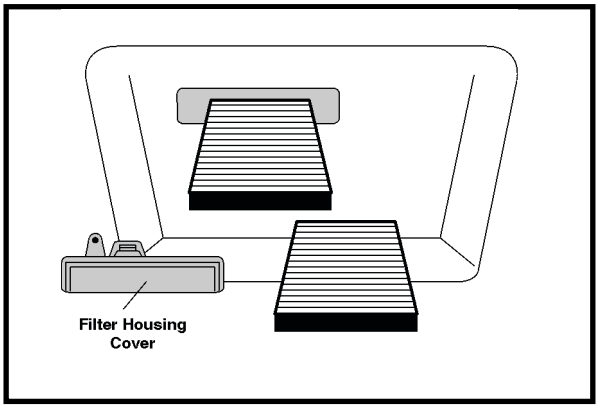

7. Remove first filter.
8. Slide second filter to the left and then out.
9. Replace filters in reverse order and reassemble.

CABIN AIR FILTER INSTALLATION INSTRUCTIONS

PA4372 IMPORTS

Scion tC, xA, xB; Toyota Echo, RAV4



OE: 88568-52010

Fits: 2005-on Scion tC
2004-07 Scion xA, xB
2000-05 Toyota Echo
2001-05 Toyota RAV4

Size: 8 1/2 x 7 11/16 x 5/8
(215.9 x 195.3 x 15.9)

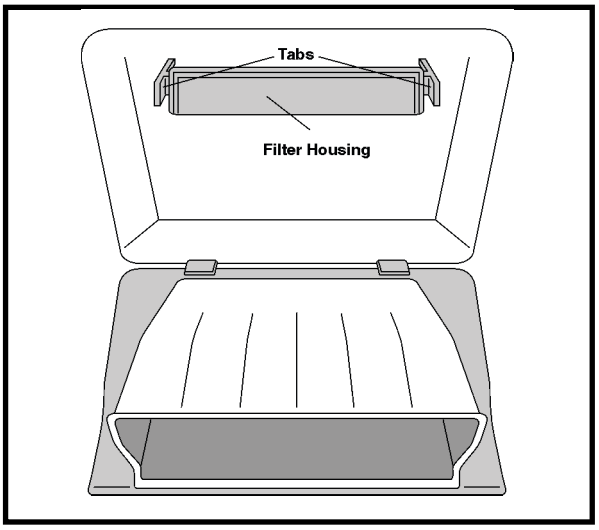

4. Flip down glove compartment.
5. Pull tabs on left and right sides of filter housing and remove.

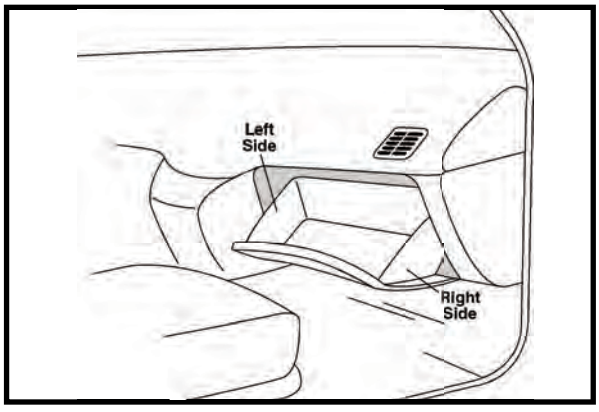

1. Open passenger side door.
2. Open glove compartment.
3. Push in on left and right sides of glove compartment to release glove compartment.

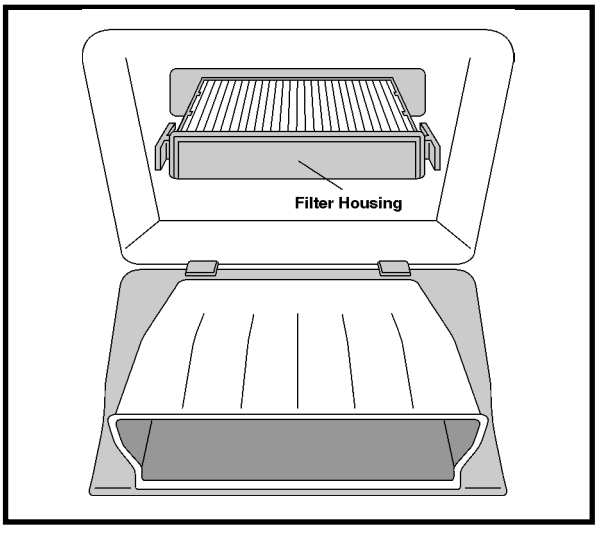

6. Remove filter from filter housing.
7. Replace filter and reassemble.

CABIN AIR FILTER INSTALLATION INSTRUCTIONS

PA4408 IMPORTS

Subaru Forester, Impreza, Impreza Outback Sport, Impreza RS, Impreza 2.5 RS, Impreza WRX, Impreza WRX STi



OE: 3B451-30361, 72880-FE000, G3210-FE100

Fits: 2004 Subaru Forester
2003-04, 2008, 2010 Subaru Impreza
2005-on Subaru Impreza Outback Sport
2005 Subaru Impreza RS
2006-07 Subaru Impreza 2.5 RS
2004-on Subaru Impreza WRX
2006-on Subaru Impreza WRX STi

Size: 8 3/8 x 7 1/4 x 1 1/8
(212.7 x 184.2 x 28.6)

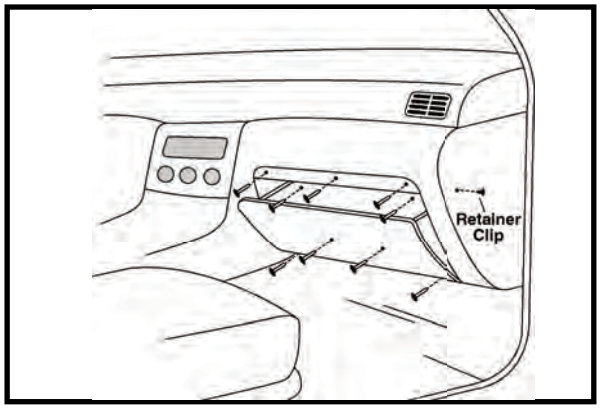

1. Open passenger side door.
2. Remove screws and retainer clip.

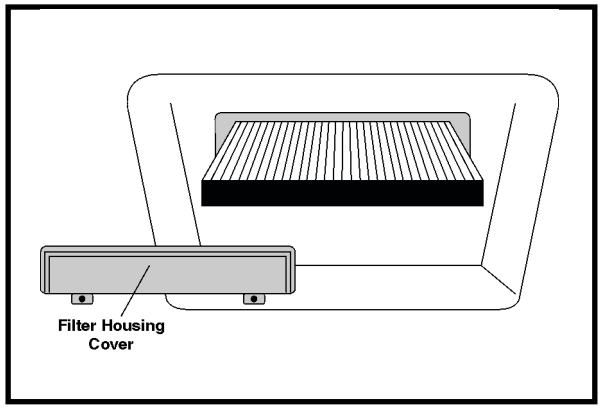

3. Remove glove compartment.
4. Remove filter housing cover.
5. Replace filter and reassemble.

CABIN AIR FILTER INSTALLATION INSTRUCTIONS

PA4424 | **IMPORTS** | **NOTES**

Subaru Forester, Impreza, Impreza Outback Sport, Impreza 2.5 RS, Impreza WRX, Impreza WRX STi



OE: G3010-SA100, 72880-SA000

Fits: 2005-08 Subaru Forester
2003-04 Subaru Impreza
2006-07 Subaru Impreza Outback Sport, Impreza 2.5 RS, Impreza WRX STi
2004-07 Subaru Impreza WRX

Size: 8 11/16 x 7 7/8 x 25/32
(220.7 x 200.0 x 45.2)

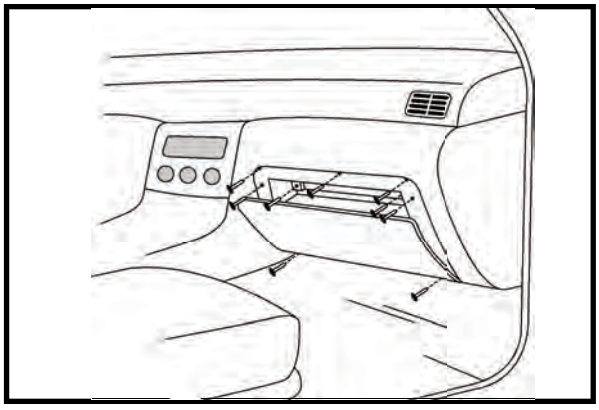

1. Open passenger side door.
2. Remove screws on top and bottom of glove compartment.

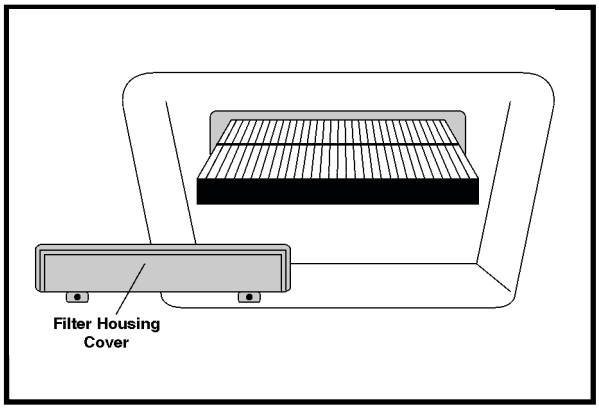

3. Remove glove compartment.
4. Remove filter housing cover.
5. Replace filter and reassemble.

CABIN AIR FILTER INSTALLATION INSTRUCTIONS

PA4332 IMPORTS

Toyota Corolla, Matrix, Matrix XR, Matrix XRS



OE: 88568-02020

Fits: 2002-08 Toyota Corolla
2003-06 Toyota Matrix XR, Matrix XRS
2002, 2007-08 Toyota Matrix

Size: 8 21/32 x 7 27/32 x 25/32
(219.9 x 199.2 x 19.8)

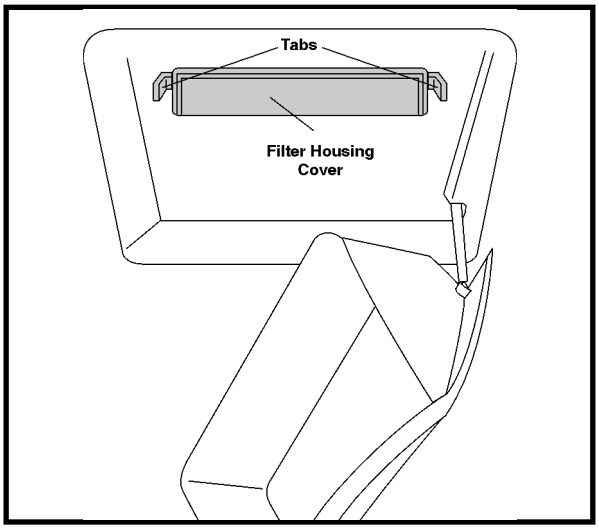

4. Pull out glove compartment. (Right side of glove compartment remains attached.)
5. Squeeze tabs on left and right sides of filter housing cover and remove.

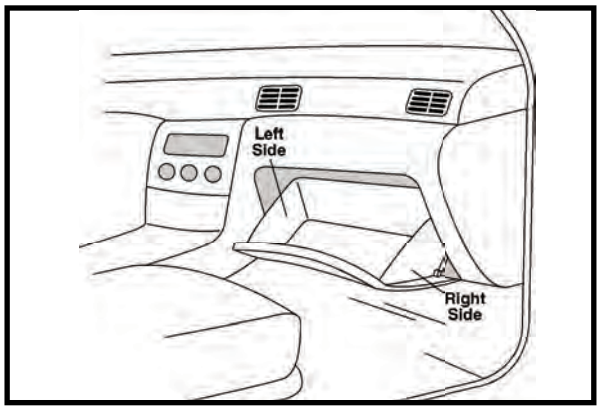

1. Open passenger side door.
2. Open glove compartment.
3. Push in on left and right sides of glove compartment to release glove compartment.

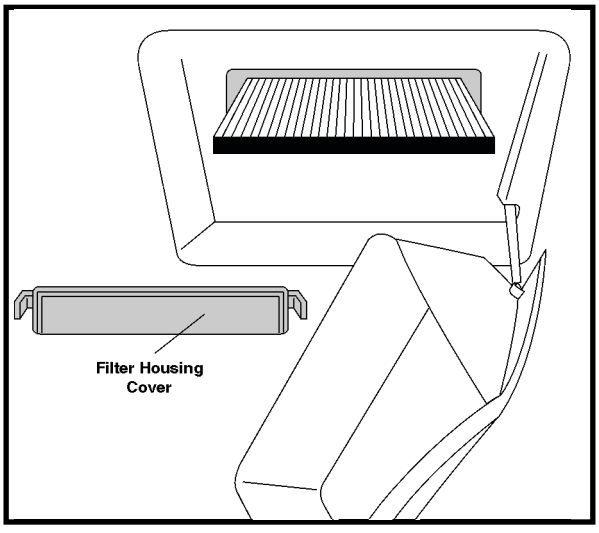

6. Replace filter and reassemble.

DIAGNOSING ENGINE OIL FILTERS WITH COLLAPSED CENTERTUBES

When a collapsed centertube or element is discovered, the natural tendency is to assume something is wrong with the filter (Figure 1). This is not the case, but is a symptom of problems with internal engine components.

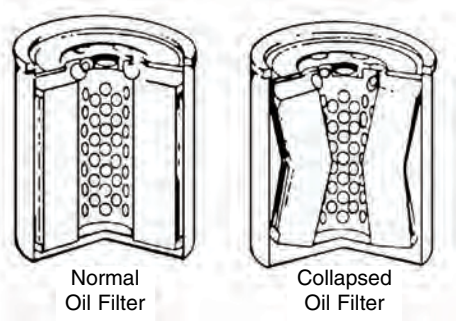

Figure 1

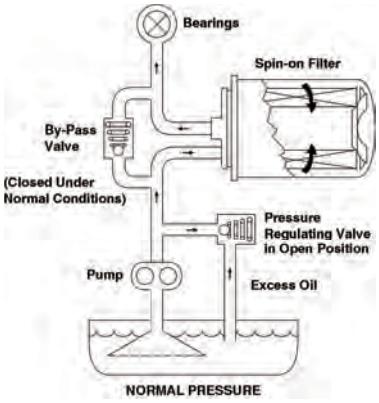

Figure 2

Most engines incorporate within the oiling system a by-pass valve across the inlet and outlet of the full-flow oil filter. The valve is designed to open and by-pass oil around the filter and/or element when the restriction reaches its open pressure *(Figure 2)*. The by-pass flow circuit insures oil flow to the engine when there is a significant restriction across the filter due to plugging or cold start conditions. Typically, engine manufacturers design by-pass valves to open at a pressure differential of approximately 10 to 30 psid with some as low as 4 psid (28 kPad), with some opening as high as 75 psid (500 kPad). Some engine manufacturers have the by-pass valve located in the filter mounting base on the engine, while others locate the valve in the filter. Either way, the same purpose is served.

Oil filters are designed to withstand, without collapsing, differential pressures significantly greater than those experienced under normal operating conditions. Therefore, when a centertube or element has collapsed, it is usually the result of a “sticking” or otherwise malfunctioning by-pass valve.

A collapsed centertube or element can lead to a loss of filtration and oil flow to the engine. There is the possibility that interior parts of the filter or filter media may be physically displaced and could migrate into the oiling system interfering with the oil flow.

The malfunction of the filter by-pass valve, as well as the subsequent collapse of the centertube or element, may not be visually apparent. However, a catastrophic failure of the engine may result due to the seizure of a piston, connecting rod, or main crankshaft bearings among other failure possibilities.

The malfunction of filter by-pass valves and pressure regulating valves has been traced to:

- sticky surfaces caused by cold, highly viscous oil
- oil contaminated by excessive condensation, coolant or oxidation
- improper oil drain and filter change intervals
- carbon grit that temporarily jams a valve
- Sudden acceleration of the engine with any of the above conditions

An oil filter with a collapsed centertube or element indicates a malfunction within the system. Inspection of the system and a review of the engine’s performance and maintenance history should be conducted.

Reprinted with permission from the Filter Manufacturers Council, Research Triangle Park, North Carolina 27709-3966. www.filtercouncil.org.

PRODUCT INVESTIGATION

Procedure for Service Engineering Product Investigation

This procedure outlines the steps necessary for Baldwin Filters Service Engineering to complete an investigation of products from the field. The steps of this procedure are necessary to provide the most accurate and timely investigation possible.

If a filter is suspected of causing a failure, don't throw away the evidence. In order to process a warranty claim, follow the Product Investigation Procedure . . .

1. Complete a Field Report Form (Form 387) (see next page). Describe the events on a separate sheet.
2. Obtain a sample of oil, fuel or coolant in the system at the time of the failure.
3. Save damaged parts for evidence of the claimed damage.
4. For an air filter, cover the open end(s) with tape to prevent dust from entering the element during shipping.
5. Send copies of any repair bills.
6. Send the entire suspect filter, including the gaskets.

If the investigation is being requested for warranty consideration, repair bills (not estimates) should also accompany the request. Damaged equipment components such as bearings, liners, etc. should be retained by the customer for possible examination by Service Engineering.

Filter products are **NOT** to be cut open or otherwise tampered with. This may prevent objective analysis and testing, and **may void the warranty**.

Notice of damages and claims should be made immediately when the damage occurs. Every claim will receive careful and objective consideration. If a Baldwin product is proven to have caused damage, Baldwin will pay the cost required to repair the equipment to its condition at the time the failure occurred. Liability payment will not include consequential damages such as downtime, motel bills, etc.

If you have any questions regarding this procedure, or any product investigation, please contact our Service Engineering Team at

(308) 237-9729

FIELD REPORT FORM

DISTRIBUTOR

Company Name _____

Address _____

City _____

State _____ ZIP _____

Contact Person _____

Phone _____

EQUIPMENT OWNER

Company Name _____

Address _____

City _____

State _____ ZIP _____

Contact Person _____

Phone _____

Filter Number _____ Installation Date _____ Removal Date _____

Repair Shop Name _____ Cost of Repairs $ _____

(ATTACH ITEMIZED REPAIR BILL)

Street _____ Contact _____

City _____ Phone _____

State _____ ZIP _____ FAX _____

EQUIPMENT Model _____ Year _____ Serial No. _____

Type of Equipment _____ Make _____

Damaged Part (Engine, Pump, Etc.) _____ Total Miles or Hours on Unit _____

AIR FILTER Has the system recently been worked on? _____

Has the filter been washed? _____ Miles/Hours on Oil _____ Oil Sump Capacity _____

Pressure/Restriction Gauge reading at removal _____ (psi/inches of H_2O/Mercury)

Usual Filter Change Interval _____ (Miles/Hours)

COOLANT How often is the system tested? _____

Type of Antifreeze Used _____ Cooling System Capacity _____ Type of SCA Used _____

Cooling System Last Cleaned _____(Miles/Hours)

OIL/HYDRAULIC Has the system recently been worked on? _____

Type of Oil _____ Oil Sump Capacity _____ Miles/Hours on Oil _____

Usual Oil Change Interval _____ (Miles/Hours)

FUEL Has the system recently been worked on? _____

Type of Fuel _____ Miles/Hours on Filter _____ Fuel System Pressure _____

PLEASE USE A SEPARATE PAGE TO DESCRIBE WHAT HAPPENED!

Signature of Distributor _____ Signature of Owner _____

Please send this Report, any Repair Bills, Explanation, Oil/Coolant Samples and Filters to:

ATTN: SERVICE ENGINEERING

BALDWIN FILTERS

4400 E Hwy 30

Kearney, NE 68847

Form 387

BALDWIN FILTER DATE CODING METHODS

You will find several different date coding methods used on Baldwin products and packaging. Please look for one of these coding methods whenever you are trying to find the date of manufacture for a Baldwin product.

■ **Six (6) Digit Numeric Code - e.g. 010310**
Introduced November 8, 2002 (Replaces (3) Digit Numeric Code)

1st Two Digits	- 01 -	indicate month (January)
2nd Two Digits	- 03 -	indicate day of month (3rd)
Last Two Digits	- 10 -	indicate year (2010)

■ **Eleven (11) Digit Numeric Code - e.g. 08291014301**
Introduced November 8, 2002 (Replaces (10) Digit Numeric Code)

1st Two Digits	- 08 -	indicate month (August)
2nd Two Digits	- 29 -	indicate day of month (29th)
5th and 6th Digits	- 10 -	indicate year (2010)
Next 4 Digits	- 1430 -	indicate time of day (Military) (2:30 p.m.)
Last Digit	- 1 -	indicates filter line

Date Coding Methods Used Prior to 2003

■ **Three (3) Digit Numeric Code - e.g. 082**

1st Two Digits	- 08 -	indicate month (August)
Last Digit	- 2 -	indicates year (2002)

■ **Ten (10) Digit Numeric Code - e.g. 0829214303**

1st Two Digits	- 08 -	indicate month (August)
2nd Two Digits	- 29 -	indicate day of month (29th)
5th Digit	- 2 -	indicates year (2002)
Next 4 Digits	- 1430 -	indicate time of day (Military) (2:30 p.m.)
Last Digit	- 3 -	for internal control purposes

■ **Numeric Digits and Diamonds - e.g. 234 ◆◆◆◆◆**

1st Digit	- 2 -	indicates last digit of the year (2002)
Diamonds	- ◆◆◆◆◆ -	indicate month (August) Number of diamonds subtracted from 13 equals the month (13 - 5 = 8 = August)

A WORD ABOUT WARRANTIES

Heavy-duty equipment manufacturers and dealers like to sell their brand of filter. But, the law does not permit them to require you to use their brand in order to keep the warranty in effect. Baldwin filters meet or exceed manufacturers' requirements and specifications. If engine damage is caused by our filter, our warranty applies regardless of whether your equipment is still under the manufacturer's warranty.

If a filter is suspected of causing a failure, don't throw away the evidence. Instead, in order to process a warranty claim, follow the Product Investigation Procedure . . .

1. Complete a Field Report Form (Form 387). Describe the events on a separate sheet.
2. Obtain a sample of oil, fuel or coolant in the system at the time of the failure.
3. Save damaged parts for evidence of the claimed damage.
4. For an air filter, cover the open ends with tape to prevent dust from entering the element during shipping.
5. Send copies of any repair bills.
6. Send the entire suspect filter, including the gaskets. Do not cut open the filter or tamper with it in any way. Package the filter carefully to prevent damage to packaging or paperwork.

MÉTHODES DE CODAGE DE DATE DES FILTRES BALDWIN

Vous trouverez plusieurs méthodes de codage de date sur les produits et emballages Baldwin. Veuillez rechercher une de ces méthodes de codage lorsque vous essayez de trouver la date de fabrication d'un produit Baldwin.

■ **Code numérique à six (6) chiffres - Ex.: 010310**
Introduit le 8 novembre 2002 (remplace le code numérique à trois (3) chiffres)

Deux premiers chiffres	- 01 -	indiquent le mois (janvier)
Deux chiffres du milieu	- 03 -	indiquent le jour du mois (3e)
Deux derniers chiffres	- 10 -	indiquent l'année (2010)

■ **Code numérique à onze (11) chiffres - Ex.: 08290914301**
Introduit le 8 novembre 2002 (remplace le code numérique à dix (10) chiffres)

Deux premiers chiffres	- 08 -	indiquent le mois (août)
Deux chiffres suivants	- 29 -	indiquent le jour du mois (29e)
5e et 6e chiffres	- 09 -	indiquent l'année (2009)
Quatre chiffres suivants	- 1430 -	indiquent l'heure (14h30)
Dernier chiffre	- 1 -	indique la gamme du filtre

Méthodes de codage de date utilisées avant 2003

■ **Code numérique à trois (3) chiffres - Ex.: 082**

Deux premiers chiffres	- 08 -	indiquent le mois (août)
Dernier chiffre	- 2 -	indique l'année (2002)

■ **Code numérique à dix (10) chiffres - Ex.: 0829214303**

Deux premiers chiffres	- 08 -	indiquent le mois (août)
Deux chiffres suivants	- 29 -	indiquent le jour du mois (29e)
5e chiffre	- 2 -	indique l'année (2002)
Quatre chiffres suivants	- 1430 -	indiquent l'heure (14h30)
Dernier chiffre	- 3 -	pour contrôle interne

■ **Chiffres et losanges - Ex.: 234 ◆◆◆◆◆**

Premier chiffre	- 2 -	indique le dernier chiffre de l'année (2002)
Losanges	- ◆◆◆◆◆ -	indiquent le mois (août) Nombre de losanges soustrait de 13 égal le mois (13 – 5 = 8 = août)

UN MOT SUR LES GARANTIES

Les concessionnaires et les fabricants de gros équipement aiment vendre les filtres de leur marque. Mais la loi ne les autorise pas à vous obliger d'utiliser leur marque pour conserver la garantie active. Les filtres Baldwin répondent ou surpassent les exigences et spécifications des fabricants. Si votre moteur est endomagé par nos filtres, notre garantie s'applique que votre équipement soit encore ou non sous la garantie du fabricant.

Si un filtre est soupçonné causer une défaillance, n'en jetez pas la preuve. Afin de pouvoir faire une réclamation au titre de la garantie, suivez la Procédure d'investigation de produit . . .

1. Remplissez un formulaire de rapport terrain (Form. 387). Décrivez les événements sur une feuille séparée.
2. Obtenez un échantillon d'huile, de carburant ou de liquide de refroidissement du système au moment de la défaillance.
3. Conservez les pièces endommagées comme preuve des dégâts pour la réclamation.
4. Pour un filtre à air, couvrez de ruban adhésif les extrémités ouvertes pour éviter que la poussière n'entre dans la cartouche pendant l'expédition.
5. Envoyez des copies des factures de réparation éventuelles.
6. Envoyez le filtre suspect entier, y compris les joints. N'ouvrez pas le filtre et n'essayez pas de le modifier de quelque façon que ce soit. Emballez-le soigneusement pour éviter d'endommager l'emballage ou les papiers.

MÉTODOS DE CODIFICACIÓN DE LA FECHA EN LOS FILTROS BALDWIN

En los productos y envases de Baldwin se encontrarán varios métodos distintos de codificación de la fecha. Rogamos buscar uno de estos métodos de codificación cuando se desee encontrar la fecha de fabricación de un producto Baldwin.

■ **Código numérico de seis (6) dígitos - por ej., 010310**
Presentado el 8 de noviembre de 2002 (reemplaza al código numérico de tres (3) dígitos)

Primeros dos dígitos	- 01 -	indican el mes (enero)
Segundos dos dígitos	- 03 -	indican el día del mes (tercer)
Últimos dos dígitos	- 10 -	indican el año (2010)

■ **Código numérico de once (11) dígitos - por ej., 08291014301**
Presentado el 8 de noviembre de 2002 (reemplaza al código numérico de diez (10) dígitos)

Primeros dos dígitos	- 08 -	indican el mes (agosto)
Segundos dos dígitos	- 29 -	indican el día del mes (29)
Quinto y sexto dígito	- 10 -	indican el año (2010)
Siguientes 4 dígitos	- 1430 -	indican la hora del día (militar) (2:30 p.m.)
Último dígito	- 1 -	indica la línea de filtro

Métodos de codificación de fecha utilizados antes de 2003

■ **Código numérico de tres (3) dígitos - por ej., 082**

Primeros dos dígitos	- 08 -	indican el mes (agosto)
Último dígito	- 2 -	indica el año (2002)

■ **Código numérico de 10 dígitos - por ej., 0829214303**

Primeros dos dígitos	- 08 -	indican el mes (agosto)
Segundos dos dígitos	- 29 -	indican el día del mes (29)
Quinto dígito	- 2 -	indica el año (2002)
Próximos 4 dígitos	- 1430 -	indican la hora del día (militar) (2:30 pm)
Último dígito	- 3 -	para propósitos de control interno

■ **Dígitos numéricos y rombos - por ej., 234 ◆◆◆◆◆**

Primer dígito	- 2 -	indica el último dígito del ano (2002)
Rombos	- ◆◆◆◆◆ -	indican el mes (agosto) 13 menos el número de rombos es igual al mes (13 – 5 = 8 = Agosto)

UNA PALABRA ACERCA DE LAS GARANTÍAS

Los fabricantes y concesionarios de equipos para servicio pesado prefieren vender su marca de filtro. Pero, por ley no les está permitido a exigir el uso de su marca para mantener vigente la garantía. Los filtros Baldwin cumplen o exceden los requerimientos y las especificaciones de los fabricantes. Si el motor se llegara a dañar por culpa de nuestro filtro, nuestra garantía es la que es válida indiferente a si el equipo todavía está cubierto por la garantía del fabricante.

Si se sospecha que un filtro es el causante de la avería, no tire a la basura la evidencia. En vez, para poder tramitar el reclamo de garantía, siga el procedimiento de investigación del producto...

1. Llene un formulario de informe de campo (Form 387). Describa los eventos en una hoja aparte.
2. Saque una muestra del aceite, combustible o refrigerante del sistema al momento de ocurrir la avería.
3. Guarde las piezas dañadas como evidencia del daño reclamado.
4. Para un filtro de aire, tape los extremos abiertos con cinta adhesiva con el fin de evitar la entrada de polvo al elemento durante el transporte.
5. Envíe copias de cualquier factura de reparación.
6. Envíe el filtro sospechoso completo, incluidas las juntas. No abra el filtro ni lo estorbe de manera alguna. Empaquete el filtro cuidadosamente para impedir que se dañe el empaquetado o los documentos.

BALDWIN FILTER WARRANTY

BALDWIN FILTER WARRANTY (English)

BALDWIN FILTERS warrants each new Baldwin filter used on applicable equipment to be free of defects in workmanship and material. Baldwin will replace any filter found to be defective when you return it to your Baldwin distributor where you purchased the filter.

In addition, if any machinery damage is directly caused by a new, properly installed Baldwin filter during a normal service interval, Baldwin will reimburse the owner for that portion of the repair costs which were necessary to restore the machine to its condition immediately prior to the time of damage. If damage from a filter is suspected, contact the Baldwin distributor where you purchased the filter. He will help you complete the necessary form and pack the filter and other materials in accordance with his Baldwin Manual.

Baldwin Filters shall not be liable for any consequential or incidental damages, besides machinery damage, or for breach of any expressed or implied warranty.

****

GARANTIE DES FILTRES BALDWIN (French / Français)

BALDWIN FILTERS garantit chaque nouveau filtre Baldwin utilisé dans le cadre d'une application recommandée, contre tout vice de fabrication ou défaut dans les matériaux utilisés. Baldwin remplacera tout filtre qui s'avérerait défectueux si vous le retournez au distributeur chez qui vous l'avez acheté.

Par ailleurs, si des dommages sont directement causés au matériel par un filtre Baldwin neuf, correctement installé, durant un intervalle de service normal, Baldwin remboursera le propriétaire des frais encourus nécessaires pour remettre le matériel dans un état équivalent à celui dans lequel il se trouvait avant l'incident. Si des dommages causés par le filtre sont suspectés, veuillez contacter le distributeur Baldwin chez qui vous avez acheté le filtre. Il vous aidera à remplir le formulaire nécessaire et emballera le filtre et autres pièces conformément aux instructions de son manuel Baldwin.

Hormis la réparation du matériel directement endommagé, Baldwin Filters ne pourra être tenue responsable de tout autre dommage, fortuit ou induit, ou pour la rupture de toute autre garantie, explicite ou implicite.

****

GARANTIA DEL FILTRO BALDWIN (Spanish / Español)

BALDWIN FILTERS garantiza que cada filtro neuvo usado en el equipo de aplicación estará libre de defectos en materiales y en su fabricación. Baldwin reemplazará cualquier filtro que se encuentre defectuoso que devuelva al distribuidor Baldwin donde lo compró.

Además si un daño en la maquinaria es directamente causado por un filtro Baldwin nuevo, correctamente instalado durante el intervalo de servicio normal, Baldwin reembolsará al propietario la proporción de los costos de reparación donde sea necesario restaurar la máquina a su condición inmediata anterior al momento del daño. Si se sospecha de un daño por un filtro, contacte al distribuidor Baldwin donde compró el mismo. El lo ayudará a completar la forma necesaria y a empacar el filtro y otros materiales de acuerdo con su Manual Baldwin.

Baldwin Filters no se hace responsable por cualquier daño consiguiente o incidental, además del daño a la maquinaria, por incumplimiento de cualquier garantía expresada o implícita de Baldwin Filters.

We would like to hear from you!

BALDWIN FILTERS®
a CLARCOR company

Mail or FAX completed page to:

Baldwin Filters, c/o Catalog Dept.
P.O. Box 6010, Kearney, NE 68848-6010
FAX 1-800-634-1951
Internet: www.baldwinfilter.com
E-mail: info@baldwinfilter.com

Customer Data:

Name

Company

Street Address

City, State, Zip

Phone #

FAX #

E-Mail

We would appreciate your input in helping us provide you with improved catalogs. Please use this page to jot down any of the following:

- **Errors**
- **Omissions**
- **Comments**
- **Suggestions**
- **Product Ideas**
- **Cross-Reference Information**



- ❑ Please send ____ additional Automotive Filter Applications Catalogs (**Form 123-10**)
- ❑ Please send ____ additional Trucks, Buses & Off-Highway Filter Applications Catalogs (**Form 124-10**)
- ❑ Please send ____ additional Manufacturers' Cross-Reference Catalogs (**Form 560-10**)
- ❑ Please send ____ additional Number-Finder Cross-Reference Catalogs (**Form 561-10**)
- ❑ Please send ____ additional Product Guide Catalogs (**Form 562-10**)

Cut along dotted line

Additional space available on back...



Cut along dotted line

Thank you for your assistance.

The PureForce® Hydraulic Filtration Product Line

BASES

❶ **Two-Piece Base Design**, combines die cast aluminum construction with an integral threaded steel stud to achieve lightweight functionality and greater durability.

❷ **Optional By-Pass Valve,** available in 25 or 50 psi, protects the filter from pressure surges and catastrophic element collapse.

❸ **Threaded Steel Stud** resists thread damage and reduces the possibility of galling. The integral steel stud will not fuse to aluminum filter baseplates the way other hydraulic filter bases can.

❹ **Threaded Steel Stud** has a thinner wall than machined aluminum threads to provide 40% more flow area – reducing pressure drop and extending filter life.

❺ **Indicator Ports** are available on both sides for flexibility in installation.

INDICATORS

❶ **Visual Indicator** features a self-housed design, which isolates the button from system pressure by communicating via magnetic force. Once triggered, the indicator stays activated until it is reset – even when the hydraulic system is shut down.

❷ **Electrical Indicators** are available in single-post, 2-wire and 3-wire designs. Like the visual indicator, the 2-wire and 3-wire electrical indicators feature self-housed designs that provide clean on/off switching.

FILTERS

❶ **Heavy-Duty, All-Metal Housing** is built to handle the stress and punishment of sophisticated, modern hydraulic systems.

❷ **High Strength Spiral Louvered Centertube** helps prevent collapse caused by a sudden difference between internal and external pressure.

❸ **High Efficiency Media**, either synthetic or cellulose, is designed to meet or exceed the requirements designated by the OEM.

❹ **Seamless Canister Design** provides highest possible integrity.

❺ **L-Lock Hem** joins the canister and baseplate to protect against high-pressure surges.

❻ **Integral Housing Seal** prevents leakage.

❼ **Heavy-Duty Baseplate** is constructed of aluminum, offering the strength and durability necessary for 500 psi hydraulic systems.

❽ **Heavy-Duty O-Ring Seal** requires only 1/2 turn after gasket contact, for easier installation.

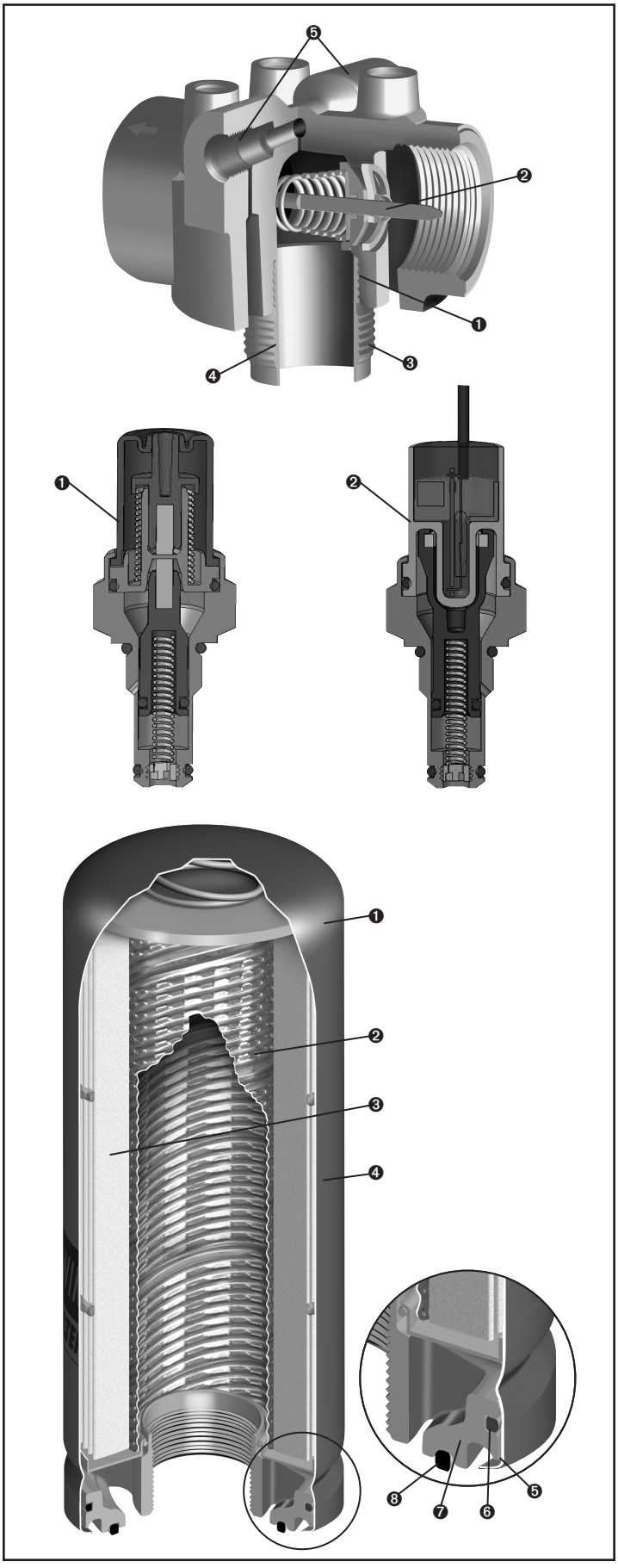

PUREFORCE®

Baldwin Online

Find the Information You Need

- New Product Releases
- Online Catalog Updated Weekly
- Product Guide
- Online Training
- Product Information
- Literature Library
- Image Bank
- Available in Multiple Languages

www.baldwinfilter.com

BALDWIN FILTERS® BALDWIN
a CLARCOR company

4400 East Highway 30 ▪ P.O. Box 6010
Kearney, Nebraska 68848-6010
Phone: (308) 234-1951 ▪ Toll Free: (800) 822-5394
Fax: (800) 828-4453 ▪ Int'l Fax: (308) 237-9769
Internet: www.baldwinfilter.com

TS 16949
ISO 9001
QUALITY SYSTEM CERTIFIED

Africa
Baldwin Filters South Africa
Ph: 27-21-534-0029
Fax: 27-21-534-3730
E-mail: africa@baldwinfilter.com

China
CLARCOR Filtration (China) Co., Ltd.
Ph: 86-0536-2606308
Fax: 86-0536-8656108
E-mail: china@baldwinfilter.com

Middle East
Baldwin Filters
Ph: (308) 237-9782
Fax: (308) 237-9769
E-mail: middleeast@baldwinfilter.com

Southeast Asia & Pacific Rim
Baldwin Filters
Ph: 65-6382-6619
Fax: 65-6382-6182
E-mail: southeastasia@baldwinfilter.com

Australia & New Zealand
Baldwin Filters Aust., Pty. Ltd.
Ph: 61-3-9353-7300
Fax: 61-3-9353-7301
E-mail: australia-newzealand@baldwinfilter.com

Europe
Baldwin Filters N.V.
Ph: 32 3 328 18 88
Fax: 32 3 328 18 99
E-mail: europe@baldwinfilter.com

Morocco
Baldwin Filters
Ph: (212) 22 70 00 25
Fax: (212) 22 70 00 28
E-mail: morocco@baldwinfilter.com

UK & Ireland
Baldwin Filters Ltd.
Ph: 44-1702-291668
Fax: 44-1702-290846
E-mail: uk-ireland@baldwinfilter.com

Central & South America
Baldwin Filters
Ph: (308) 233-9220
Fax: (308) 237-9769
E-mail: latinamerica@baldwinfilter.com

Mexico
Filtros Baldwin de Mexico, S.A. de C.V.
Ph: 52-442-227-3400
Fax: 52-442-227-3427
E-mail: mexico@baldwinfilter.com

Russia
Baldwin Filters
Ph: (308) 237-9749
Fax: (308) 237-9769
E-mail: russia@baldwinfilter.com

NCMA National Catalog Managers Association

Form 123-10

© 2010 Baldwin Filters, Inc.

Printed in U.S.A.